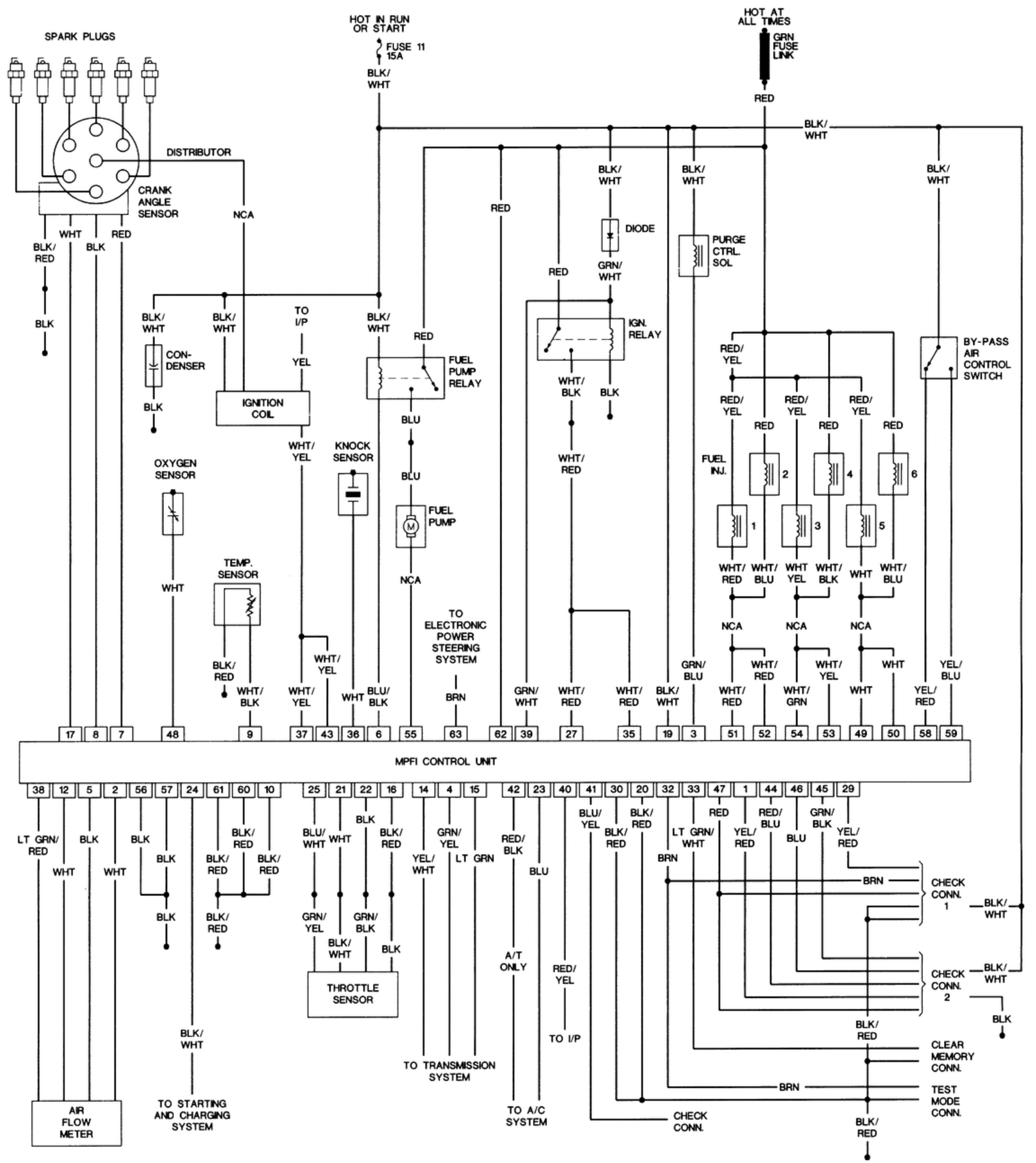
SPARK PLUGS
HOT IN RUN OR START
FUSE 11 15A
BLK/ WHT
HOT AT ALL TIMES
GRN FUSE LINK
RED
BLK/ WHT
DISTRIBUTOR
CRANK ANGLE SENSOR
NCA
WHT
RED
BLK/ RED
BLK
BLK
RED
DIODE
GRN/ WHT
PURGE CTRL. SOL
BLK/ WHT
CON-DENSER
BLK
TO I/P
YEL
IGNITION COIL
WHT/ YEL
KNOCK SENSOR
FUEL PUMP RELAY
BLU
FUEL PUMP
NCA
IGN. RELAY
WHT/ BLK
WHT/ RED
RED/ YEL
FUEL INJ.
BY-PASS AIR CONTROL SWITCH
OXYGEN SENSOR
WHT
TEMP. SENSOR
BLK/ RED
WHT/ BLK
WHT/ YEL
BLU/ BLK
TO ELECTRONIC POWER STEERING SYSTEM
BRN
GRN/ BLU
WHT/ RED
WHT/ BLU
WHT/ YEL
WHT/ BLK
WHT
YEL/ BLU
YEL/ RED
WHT/ GRN
17 8 7 48 9 37 43 36 6 55 63 62 39 27 35 19 3 51 52 54 53 49 50 58 59
MPFI CONTROL UNIT
38 12 5 2 56 57 24 61 60 10 25 21 22 16 14 4 15 42 23 40 41 30 20 32 33 47 1 44 46 45 29
LT GRN/ RED
WHT
BLK
WHT
BLK
BLK
BLK
BLK/ WHT
BLK/ RED
BLK/ RED
BLK/ RED
BLK/ RED
BLU/ WHT
WHT
GRN/ YEL
BLK/ WHT
BLK
GRN/ BLK
BLK/ RED
BLK
THROTTLE SENSOR
YEL/ WHT
GRN/ YEL
LT GRN
TO TRANSMISSION SYSTEM
RED/ BLK
A/T ONLY
TO A/C SYSTEM
BLU
RED/ YEL
TO I/P
BLU/ YEL
BLK/ RED
BLK/ RED
BRN
LT GRN/ WHT
RED
YEL/ RED
RED/ BLU
BLU
GRN/ BLK
YEL/ RED
BRN
CHECK CONN. 1
BLK/ WHT
CHECK CONN. 2
BLK/ WHT
BLK
BLK/ RED
CLEAR MEMORY CONN.
BRN
TEST MODE CONN.
CHECK CONN.
BLK/ RED
AIR FLOW METER
TO STARTING AND CHARGING SYSTEM