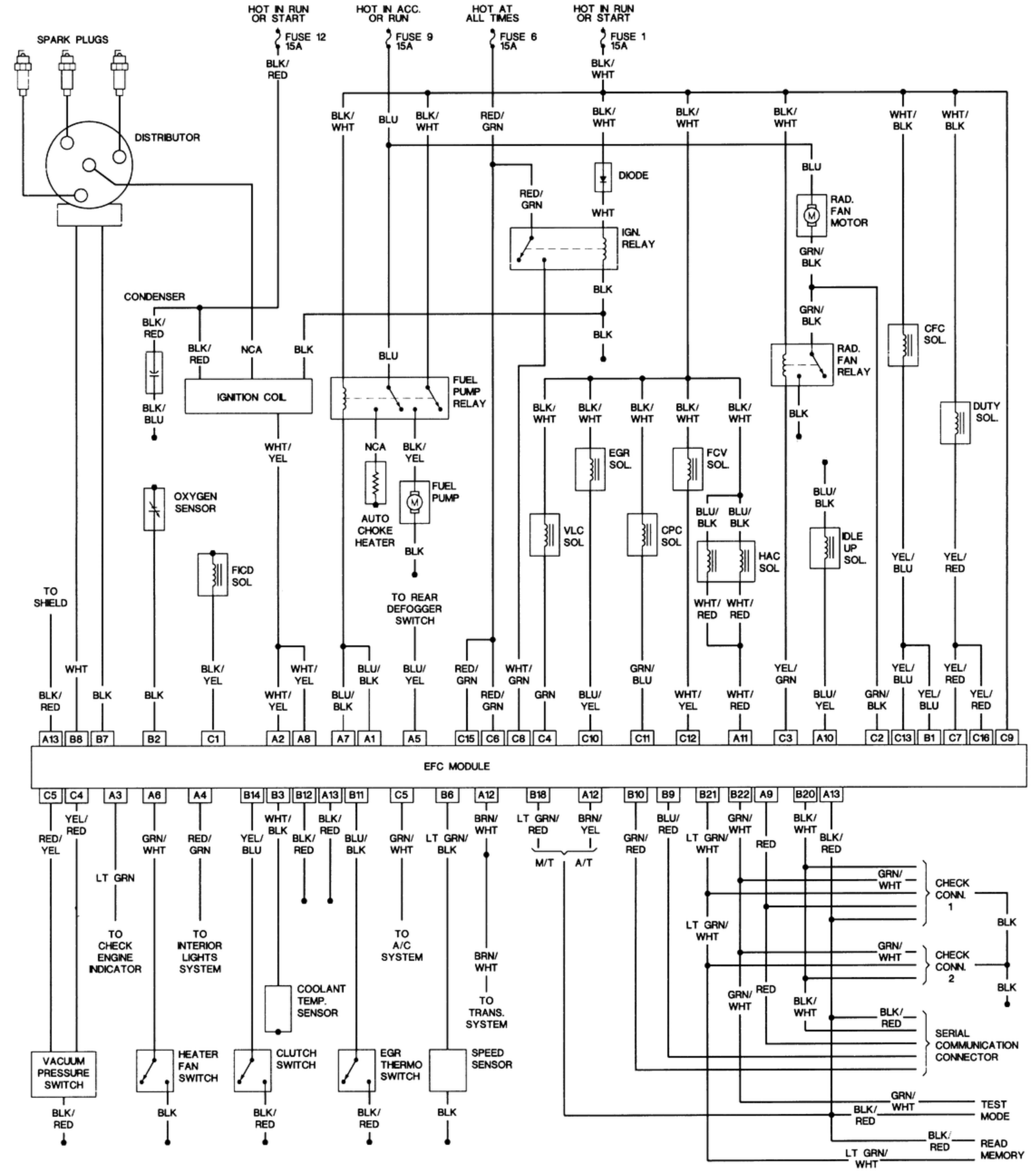
HOT IN RUN OR START
FUSE 12 15A
HOT IN ACC. OR RUN
FUSE 9 15A
HOT AT ALL TIMES
FUSE 6 15A
HOT IN RUN OR START
FUSE 1 15A
SPARK PLUGS
DISTRIBUTOR
BLK/ RED
BLK/ WHT
BLU
BLK/ WHT
RED/ GRN
BLK/ WHT
BLK/ WHT
BLK/ WHT
WHT/ BLK
WHT/ BLK
DIODE
WHT
IGN. RELAY
BLK
BLU
RAD. FAN MOTOR
GRN/ BLK
GRN/ BLK
RAD. FAN RELAY
CFC SOL.
DUTY SOL.
CONDENSER
BLK/ RED
BLK/ BLU
BLK/ RED
NCA
BLK
IGNITION COIL
FUEL PUMP RELAY
BLK/ WHT
BLK/ WHT
BLK/ WHT
BLK/ WHT
BLK/ WHT
BLK
WHT/ YEL
NCA
BLK/ YEL
OXYGEN SENSOR
AUTO CHOKE HEATER
FUEL PUMP
EGR SOL.
FCV SOL.
BLU/ BLK
BLU/ BLK
BLU/ BLK
VLC SOL
CPC SOL
HAC SOL
IDLE UP SOL.
FICD SOL
TO REAR DEFOGGER SWITCH
YEL/ BLU
YEL/ RED
TO SHIELD
WHT
BLK/ YEL
WHT/ YEL
BLU/ BLK
BLU/ YEL
RED/ GRN
WHT/ GRN
GRN/ BLU
YEL/ GRN
YEL/ BLU
YEL/ RED
BLK/ RED
BLK
BLK
WHT/ YEL
WHT/ YEL
BLU/ BLK
RED/ GRN
GRN
BLU/ YEL
WHT/ YEL
WHT/ RED
BLU/ YEL
GRN/ BLK
YEL/ BLU
YEL/ RED
A13 B8 B7 B2 C1 A2 A8 A7 A1 A5 C15 C6 C8 C4 C10 C11 C12 A11 C3 A10 C2 C13 B1 C7 C16 C9
EFC MODULE
C5 C4 A3 A6 A4 B14 B3 B12 A13 B11 C5 B6 A12 B18 A12 B10 B9 B21 B22 A9 B20 A13
RED/ YEL
YEL/ RED
LT GRN
GRN/ WHT
RED/ GRN
YEL/ BLU
WHT/ BLK
BLK/ RED
BLU/ BLK
GRN/ WHT
LT GRN/ BLK
BRN/ WHT
LT GRN/ RED
BRN/ YEL
M/T
A/T
GRN/ RED
BLU/ RED
LT GRN/ WHT
GRN/ WHT
RED
BLK/ WHT
BLK/ RED
TO CHECK ENGINE INDICATOR
TO INTERIOR LIGHTS SYSTEM
TO A/C SYSTEM
BRN/ WHT
TO TRANS. SYSTEM
COOLANT TEMP. SENSOR
CHECK CONN. 1
CHECK CONN. 2
BLK
SERIAL COMMUNICATION CONNECTOR
VACUUM PRESSURE SWITCH
HEATER FAN SWITCH
CLUTCH SWITCH
EGR THERMO SWITCH
SPEED SENSOR
BLK/ RED
BLK
BLK/ RED
BLK/ RED
BLK
GRN/ WHT
BLK/ RED
TEST MODE
BLK/ RED
READ MEMORY
LT GRN/ WHT