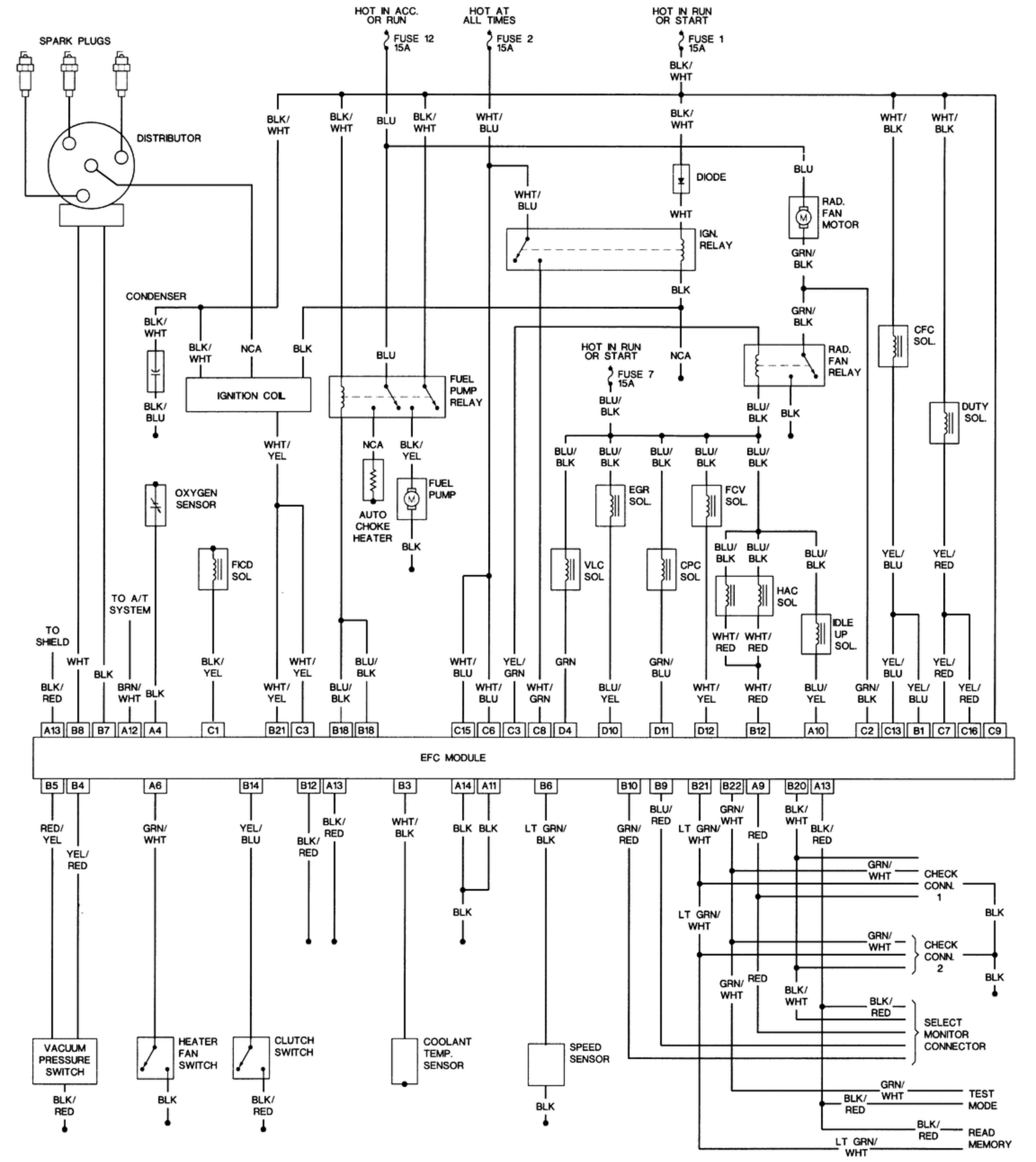
HOT IN ACC. OR RUN
HOT AT ALL TIMES
HOT IN RUN OR START
FUSE 12 15A
FUSE 2 15A
FUSE 1 15A
SPARK PLUGS
DISTRIBUTOR
BLK/ WHT
BLU
WHT/ BLU
WHT/ BLK
DIODE
WHT
IGN. RELAY
RAD. FAN MOTOR
GRN/ BLK
BLK
CONDENSER
BLK/ BLU
NCA
IGNITION COIL
FUEL PUMP RELAY
HOT IN RUN OR START
FUSE 7 15A
BLU/ BLK
RAD. FAN RELAY
CFC SOL.
DUTY SOL.
WHT/ YEL
BLK/ YEL
OXYGEN SENSOR
AUTO CHOKE HEATER
FUEL PUMP
EGR SOL.
FCV SOL.
FICD SOL
VLC SOL
CPC SOL
HAC SOL
IDLE UP SOL.
TO A/T SYSTEM
TO SHIELD
WHT
BRN/ WHT
YEL/ BLU
YEL/ RED
WHT/ RED
YEL/ GRN
GRN
GRN/ BLU
BLU/ YEL
GRN/ BLK
BLU/ BLK
WHT/ GRN
A13 B8 B7 A12 A4 C1 B21 C3 B18 B18 C15 C6 C3 C8 D4 D10 D11 D12 B12 A10 C2 C13 B1 C7 C16 C9
EFC MODULE
B5 B4 A6 B14 B12 A13 B3 A14 A11 B6 B10 B9 B21 B22 A9 B20 A13
RED/ YEL
YEL/ RED
GRN/ WHT
YEL/ BLU
BLK/ RED
WHT/ BLK
BLK BLK
LT GRN/ BLK
GRN/ RED
BLU/ RED
LT GRN/ WHT
RED
CHECK CONN. 1
CHECK CONN. 2
SELECT MONITOR CONNECTOR
VACUUM PRESSURE SWITCH
HEATER FAN SWITCH
CLUTCH SWITCH
COOLANT TEMP. SENSOR
SPEED SENSOR
TEST MODE
READ MEMORY