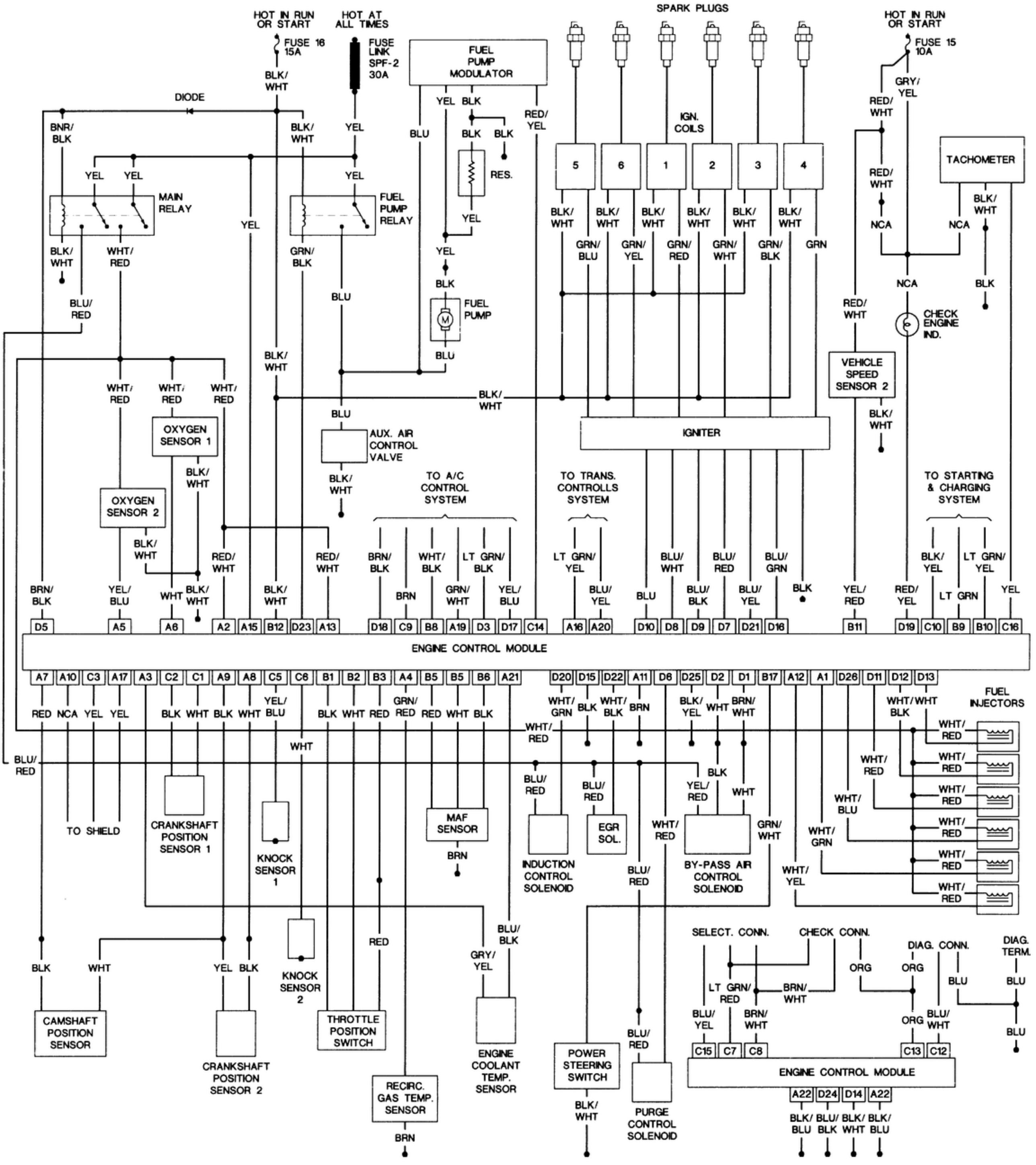
HOT IN RUN OR START
HOT AT ALL TIMES
FUSE 16 15A
FUSE LINK SPF-2 30A
FUEL PUMP MODULATOR
SPARK PLUGS
HOT IN RUN OR START
FUSE 15 10A
DIODE
BNR/BLK
BLK/WHT
YEL
YEL YEL
MAIN RELAY
FUEL PUMP RELAY
BLU
YEL BLK
BLK BLK
RES.
RED/YEL
IGN. COILS
5 6 1 2 3 4
GRY/YEL
RED/WHT
TACHOMETER
BLK/WHT
WHT/RED
GRN/BLK
BLU/RED
FUEL PUMP
M
BLU
BLK/WHT
GRN/BLU GRN/YEL GRN/RED GRN/WHT GRN/BLK GRN
NCA
CHECK ENGINE IND.
VEHICLE SPEED SENSOR 2
WHT/RED
OXYGEN SENSOR 1
OXYGEN SENSOR 2
AUX. AIR CONTROL VALVE
IGNITER
TO A/C CONTROL SYSTEM
TO TRANS. CONTROLLS SYSTEM
TO STARTING & CHARGING SYSTEM
BRN/BLK YEL/BLU WHT BLK/WHT RED/WHT BLK/WHT RED/WHT BRN/BLK BRN WHT/BLK GRN/WHT LT GRN/BLK YEL/BLU LT GRN/YEL BLU/YEL BLU BLU/WHT BLU/BLK BLU/RED BLU/YEL BLU/GRN BLK YEL/RED RED/YEL BLK/YEL LT GRN LT GRN/YEL YEL
D5 A5 A6 A2 A15 B12 D23 A13 D18 C9 B8 A19 D3 D17 C14 A16 A20 D10 D8 D9 D7 D21 D16 B11 D19 C10 B9 B10 C16
ENGINE CONTROL MODULE
A7 A10 C3 A17 A3 C2 C1 A9 A8 C5 C6 B1 B2 B3 A4 B5 B5 B6 A21 D20 D15 D22 A11 D6 D25 D2 D1 B17 A12 A1 D26 D11 D12 D13
RED NCA YEL YEL BLK WHT BLK WHT YEL/BLU BLK WHT RED GRN/RED RED WHT BLK WHT/GRN BLK WHT/BLK BRN BLK/YEL WHT BRN/WHT WHT/BLK WHT
FUEL INJECTORS
WHT/RED
BLU/RED
WHT
TO SHIELD
CRANKSHAFT POSITION SENSOR 1
KNOCK SENSOR 1
MAF SENSOR
BRN
INDUCTION CONTROL SOLENOID
EGR SOL.
BY-PASS AIR CONTROL SOLENOID
GRN/WHT
WHT/YEL
WHT/GRN
WHT/BLU
YEL/RED
BLK
BLU/BLK
RED
GRY/YEL
KNOCK SENSOR 2
THROTTLE POSITION SWITCH
CAMSHAFT POSITION SENSOR
CRANKSHAFT POSITION SENSOR 2
RECIRC. GAS TEMP. SENSOR
ENGINE COOLANT TEMP. SENSOR
POWER STEERING SWITCH
PURGE CONTROL SOLENOID
SELECT. CONN.
CHECK CONN.
DIAG. CONN.
DIAG. TERM.
ORG
LT GRN/RED
BRN/WHT
BLU/YEL
C15 C7 C8 C13 C12
ENGINE CONTROL MODULE
A22 D24 D14 A22
BLK/BLU BLU/BLK BLK/WHT BLK/BLU