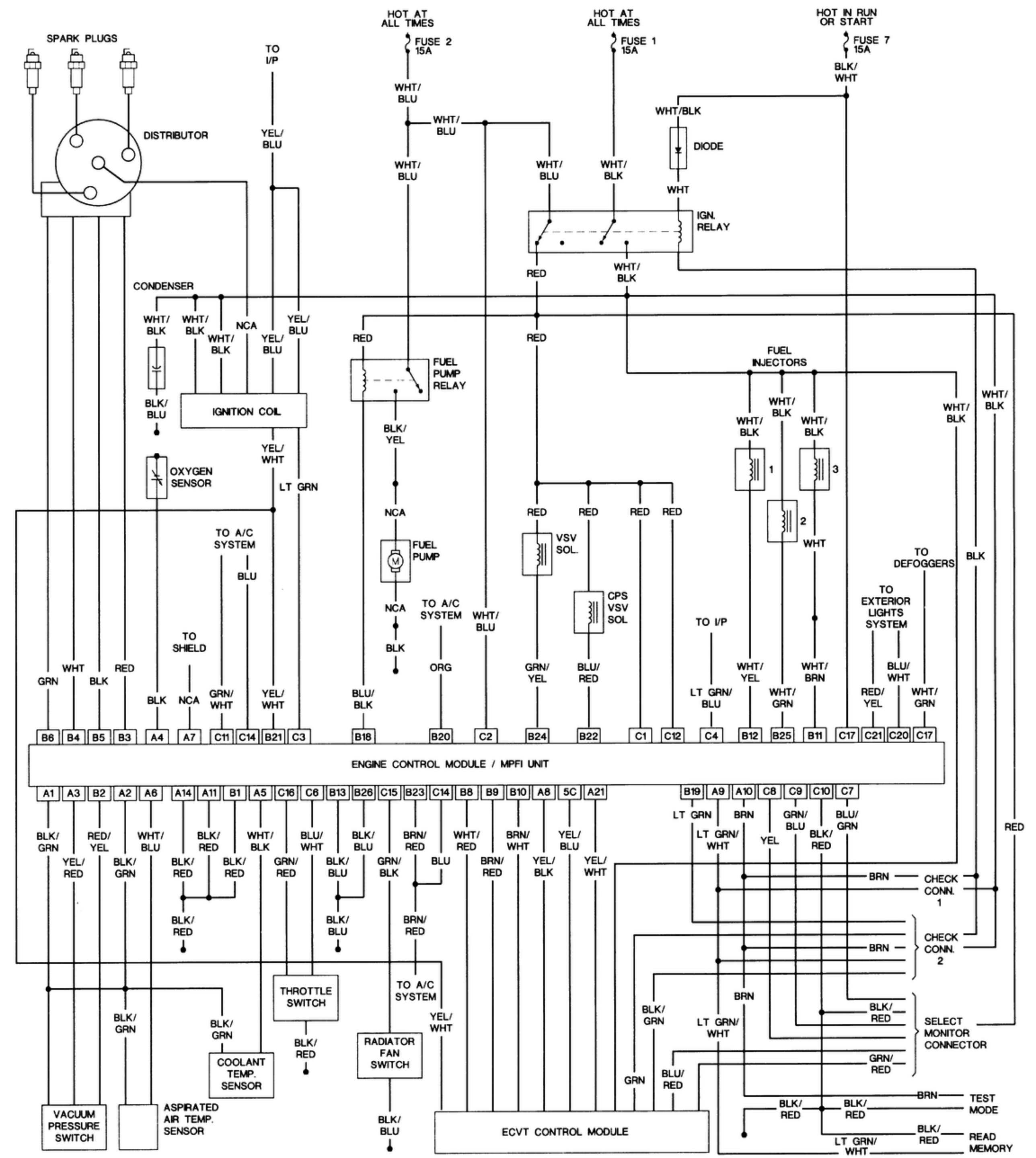
SPARK PLUGS
DISTRIBUTOR
TO I/P
YEL/ BLU
HOT AT ALL TIMES
FUSE 2 15A
WHT/ BLU
HOT AT ALL TIMES
FUSE 1 15A
HOT IN RUN OR START
FUSE 7 15A
BLK/ WHT
WHT/BLK
DIODE
WHT
IGN. RELAY
WHT/ BLK
RED
CONDENSER
WHT/ BLK
NCA
YEL/ BLU
BLK/ BLU
IGNITION COIL
OXYGEN SENSOR
YEL/ WHT
LT GRN
FUEL PUMP RELAY
BLK/ YEL
FUEL PUMP
FUEL INJECTORS
VSV SOL.
CPS VSV SOL
TO A/C SYSTEM
BLU
TO SHIELD
TO DEFOGGERS
TO EXTERIOR LIGHTS SYSTEM
BLK
GRN
WHT
RED
ORG
GRN/ YEL
BLU/ RED
LT GRN/ BLU
WHT/ YEL
WHT/ GRN
WHT/ BRN
BLU/ WHT
RED/ YEL
GRN/ WHT
BLU/ BLK
B6 B4 B5 B3 A4 A7 C11 C14 B21 C3 B18 B20 C2 B24 B22 C1 C12 C4 B12 B25 B11 C17 C21 C20 C17
ENGINE CONTROL MODULE / MPFI UNIT
A1 A3 B2 A2 A6 A14 A11 B1 A5 C16 C6 B13 B26 C15 B23 C14 B8 B9 B10 A8 5C A21 B19 A9 A10 C8 C9 C10 C7
BLK/ GRN
YEL/ RED
RED/ YEL
BLK/ GRN
WHT/ BLU
BLK/ RED
WHT/ BLK
BLU/ WHT
BLK/ BLU
BRN/ RED
WHT/ RED
BRN/ WHT
YEL/ BLU
YEL/ WHT
LT GRN
BRN
GRN/ BLU
BLU/ GRN
LT GRN/ WHT
YEL
BLK/ RED
GRN/ RED
GRN/ BLK
BLU
BRN/ RED
YEL/ BLK
CHECK CONN. 1
CHECK CONN. 2
SELECT MONITOR CONNECTOR
THROTTLE SWITCH
COOLANT TEMP. SENSOR
RADIATOR FAN SWITCH
VACUUM PRESSURE SWITCH
ASPIRATED AIR TEMP. SENSOR
ECVT CONTROL MODULE
TEST MODE
READ MEMORY