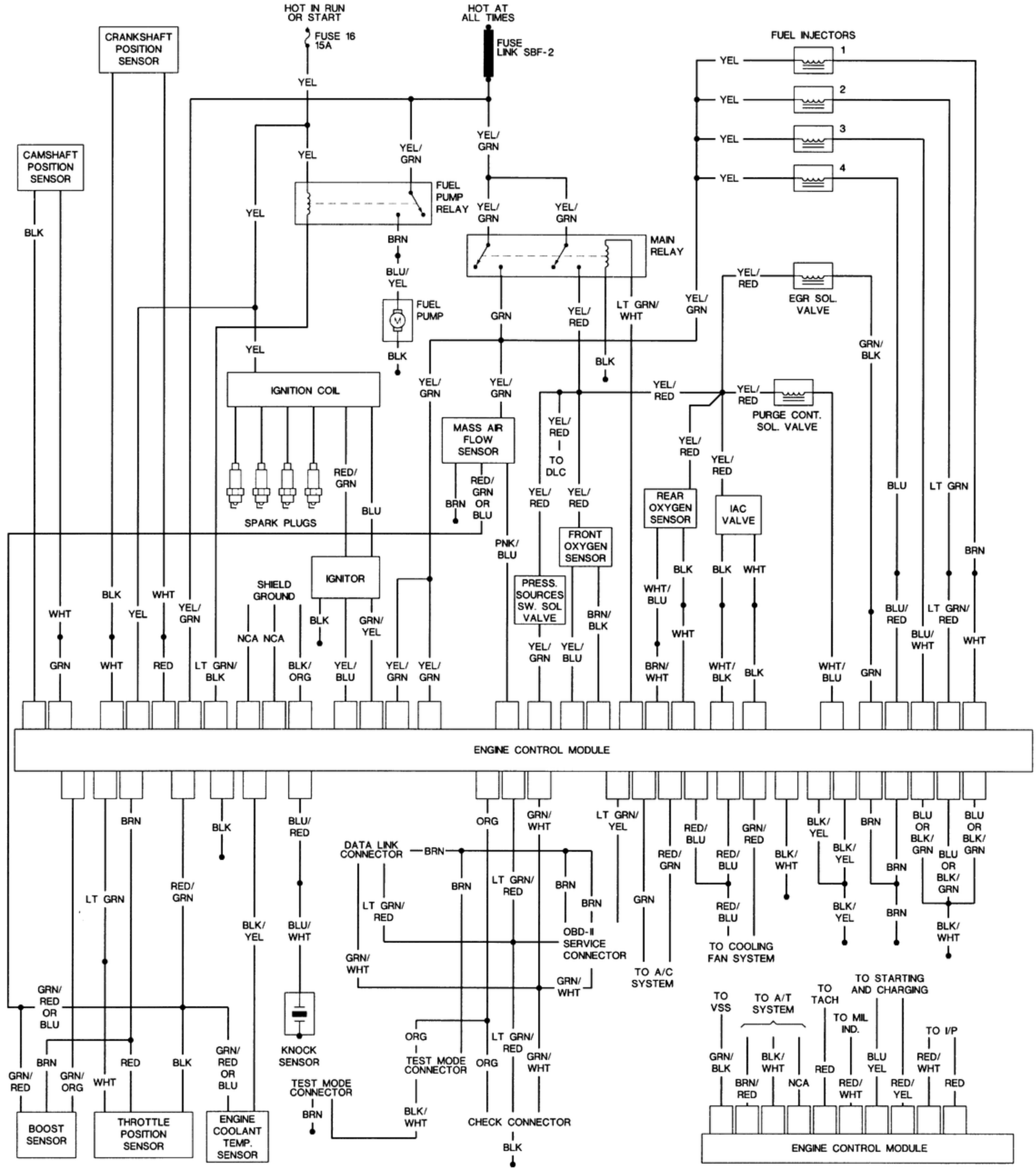
HOT IN RUN OR START
FUSE 16 15A
HOT AT ALL TIMES
FUSE LINK SBF-2
FUEL INJECTORS
CRANKSHAFT POSITION SENSOR
CAMSHAFT POSITION SENSOR
FUEL PUMP RELAY
MAIN RELAY
FUEL PUMP
EGR SOL. VALVE
IGNITION COIL
SPARK PLUGS
MASS AIR FLOW SENSOR
PURGE CONT. SOL. VALVE
TO DLC
REAR OXYGEN SENSOR
IAC VALVE
FRONT OXYGEN SENSOR
IGNITOR
SHIELD GROUND
PRESS. SOURCES SW. SOL VALVE
ENGINE CONTROL MODULE
DATA LINK CONNECTOR
OBD-II SERVICE CONNECTOR
TO COOLING FAN SYSTEM
TO A/C SYSTEM
KNOCK SENSOR
TEST MODE CONNECTOR
CHECK CONNECTOR
BOOST SENSOR
THROTTLE POSITION SENSOR
ENGINE COOLANT TEMP. SENSOR
TO VSS
TO A/T SYSTEM
TO TACH
TO MIL IND.
TO STARTING AND CHARGING
TO I/P
ENGINE CONTROL MODULE