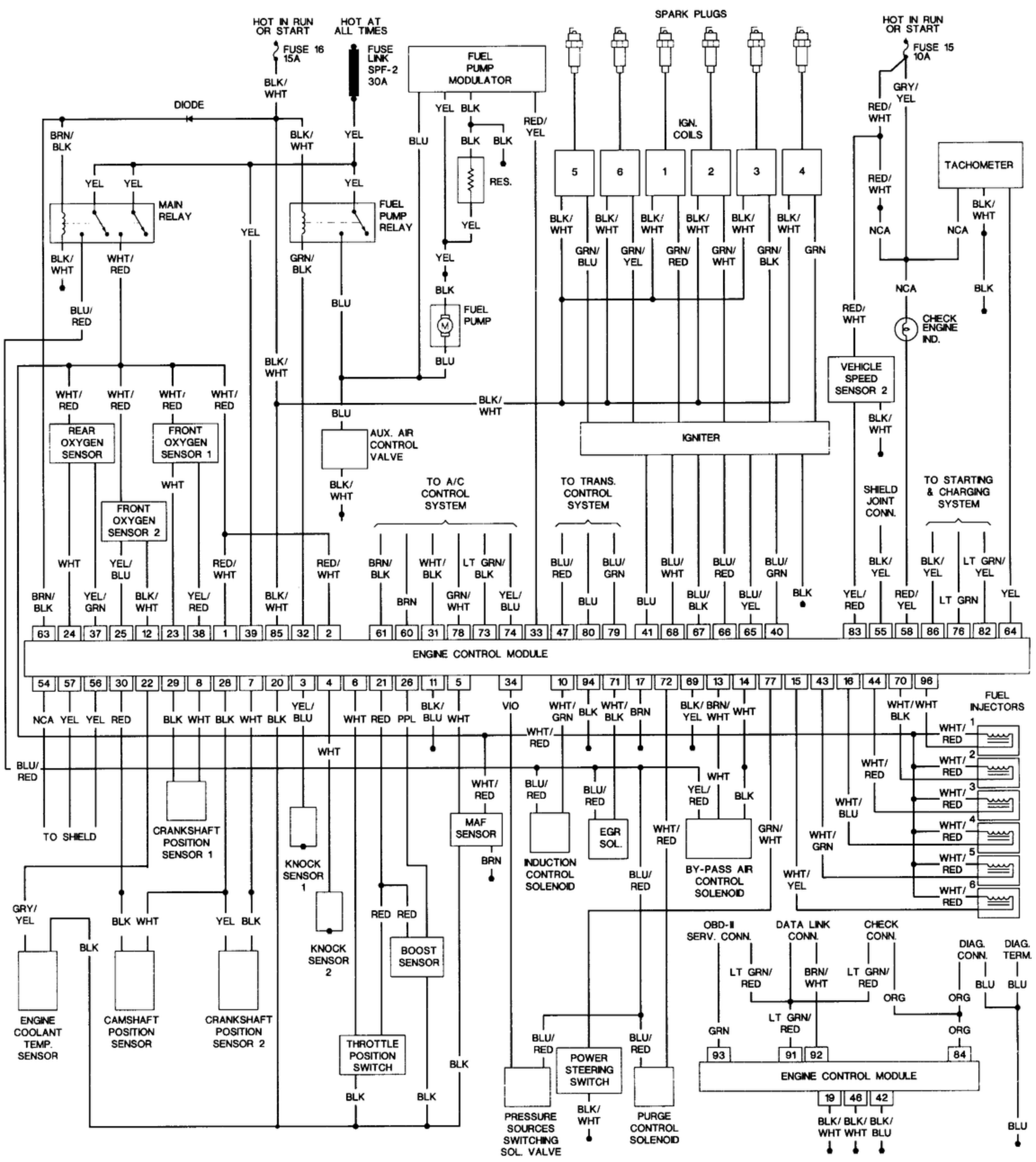
HOT IN RUN OR START
FUSE 16 15A
HOT AT ALL TIMES
FUSE LINK SPF-2 30A
FUEL PUMP MODULATOR
SPARK PLUGS
HOT IN RUN OR START
FUSE 15 10A
DIODE
BLK/WHT
YEL
YEL BLK
RED/YEL
BLU
BLK BLK
RES.
IGN. COILS
5 6 1 2 3 4
GRY/YEL
RED/WHT
TACHOMETER
BRN/BLK
YEL YEL
MAIN RELAY
FUEL PUMP RELAY
YEL
BLK/WHT
NCA
BLK/WHT
BLK/WHT WHT/RED
GRN/BLK
BLU
YEL
BLK
FUEL PUMP
BLU
BLU/RED
BLK/WHT
GRN/BLU GRN/YEL GRN/RED GRN/WHT GRN/BLK GRN
NCA
NCA
BLK
RED/WHT
CHECK ENGINE IND.
VEHICLE SPEED SENSOR 2
WHT/RED WHT/RED WHT/RED WHT/RED
BLU
BLK/WHT
IGNITER
BLK/WHT
REAR OXYGEN SENSOR
FRONT OXYGEN SENSOR 1
AUX. AIR CONTROL VALVE
WHT
BLK/WHT
FRONT OXYGEN SENSOR 2
TO A/C CONTROL SYSTEM
TO TRANS. CONTROL SYSTEM
SHIELD JOINT CONN.
TO STARTING & CHARGING SYSTEM
WHT YEL/BLU BLK/WHT YEL/RED RED/WHT BLK/WHT RED/WHT
BRN/BLK WHT/BLK LT GRN/BLK
BLU/RED BLU/GRN
BLU/WHT BLU/RED BLU/GRN
BLK/YEL BLK/YEL LT GRN/YEL
BRN/BLK YEL/GRN BLK/WHT YEL/RED BLK/WHT BRN GRN/WHT YEL/BLU BLU BLU BLU/BLK BLU/YEL BLK YEL/RED RED/YEL LT GRN YEL
63 24 37 25 12 23 38 1 39 85 32 2 61 60 31 78 73 74 33 47 80 79 41 68 67 66 65 40 83 55 58 86 76 82 64
ENGINE CONTROL MODULE
54 57 56 30 22 29 8 28 7 20 3 4 6 21 26 11 5 34 10 94 71 17 72 69 13 14 77 15 43 16 44 70 96
NCA YEL YEL RED BLK WHT BLK WHT BLK YEL/BLU WHT RED PPL BLK/BLU WHT VIO WHT/GRN BLK WHT/BLK BRN BLK/YEL BRN/WHT WHT WHT/BLK WHT/WHT
FUEL INJECTORS
WHT/RED
WHT
BLU/RED
WHT/RED
BLU/RED
BLU/RED
YEL/RED
WHT
BLK
WHT/RED
WHT/BLU
WHT/RED
WHT/RED
WHT/RED
WHT/RED
WHT/RED
WHT/RED
TO SHIELD
CRANKSHAFT POSITION SENSOR 1
KNOCK SENSOR 1
MAF SENSOR
BRN
INDUCTION CONTROL SOLENOID
EGR SOL.
BLU/RED
BY-PASS AIR CONTROL SOLENOID
GRN/WHT
WHT/GRN
WHT/YEL
GRY/YEL
BLK WHT
YEL BLK
RED RED
KNOCK SENSOR 2
BOOST SENSOR
OBD-II SERV. CONN.
DATA LINK CONN.
CHECK CONN.
DIAG. CONN.
DIAG. TERM.
LT GRN/RED
BRN/WHT
LT GRN/RED
ORG
ORG
BLU
BLU
BLK
ENGINE COOLANT TEMP. SENSOR
CAMSHAFT POSITION SENSOR
CRANKSHAFT POSITION SENSOR 2
THROTTLE POSITION SWITCH
BLK
BLU/RED
POWER STEERING SWITCH
BLU/RED
LT GRN/RED
GRN
ORG
93 91 92 84
ENGINE CONTROL MODULE
19 46 42
BLK/WHT BLK/WHT BLK/BLU
BLU
PRESSURE SOURCES SWITCHING SOL. VALVE
BLK/WHT
PURGE CONTROL SOLENOID