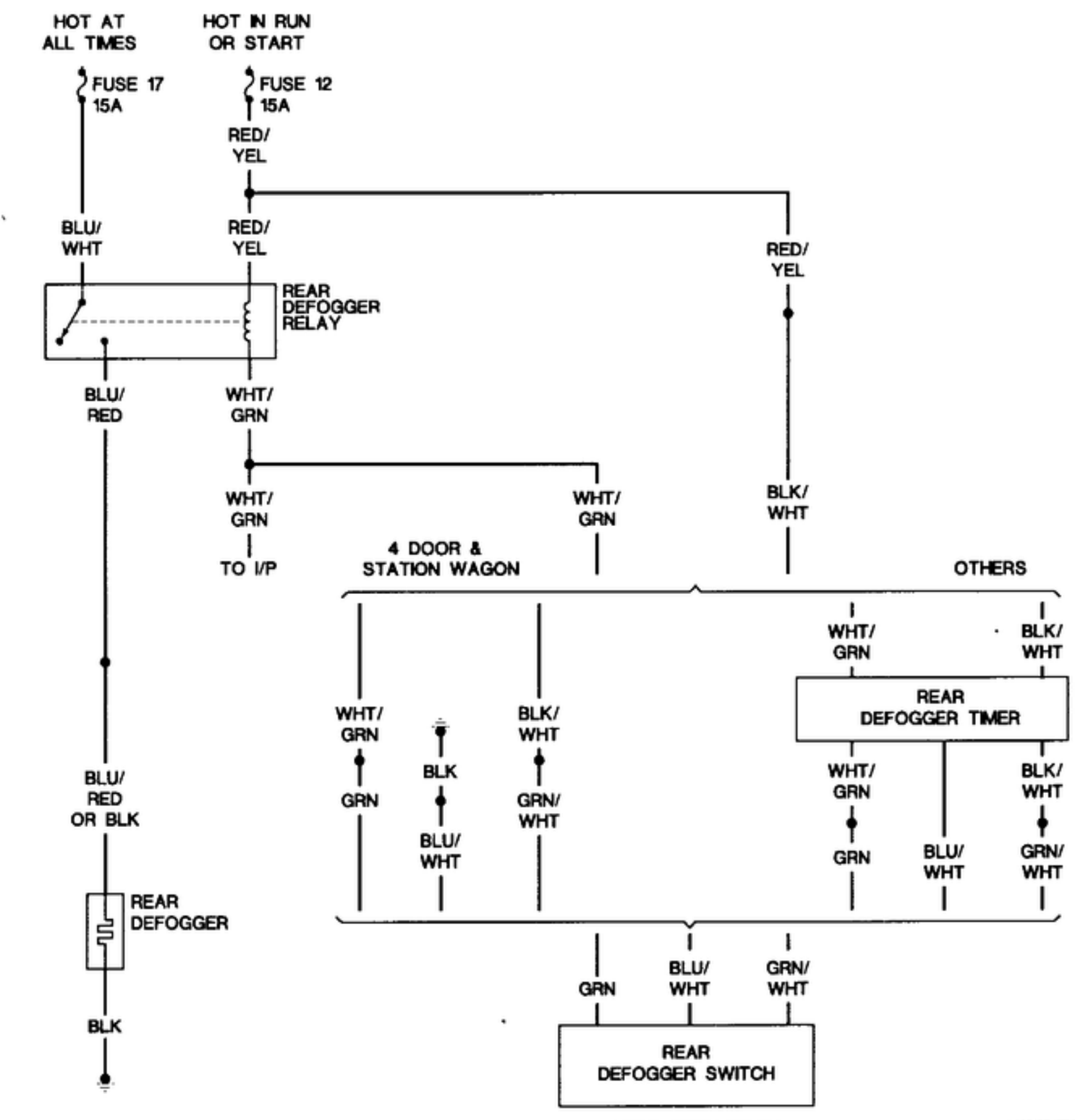
HOT AT ALL TIMES
HOT IN RUN OR START
FUSE 17 15A
FUSE 12 15A
RED/ YEL
BLU/ WHT
RED/ YEL
REAR DEFOGGER RELAY
RED/ YEL
BLU/ RED
WHT/ GRN
WHT/ GRN
WHT/ GRN
BLK/ WHT
TO I/P
4 DOOR & STATION WAGON
OTHERS
WHT/ GRN
BLK/ WHT
REAR DEFOGGER TIMER
WHT/ GRN
BLK
BLK/ WHT
BLU/ RED OR BLK
GRN
BLU/ WHT
GRN/ WHT
WHT/ GRN
BLK/ WHT
GRN
BLU/ WHT
GRN/ WHT
REAR DEFOGGER
BLK
GRN
BLU/ WHT
GRN/ WHT
REAR DEFOGGER SWITCH

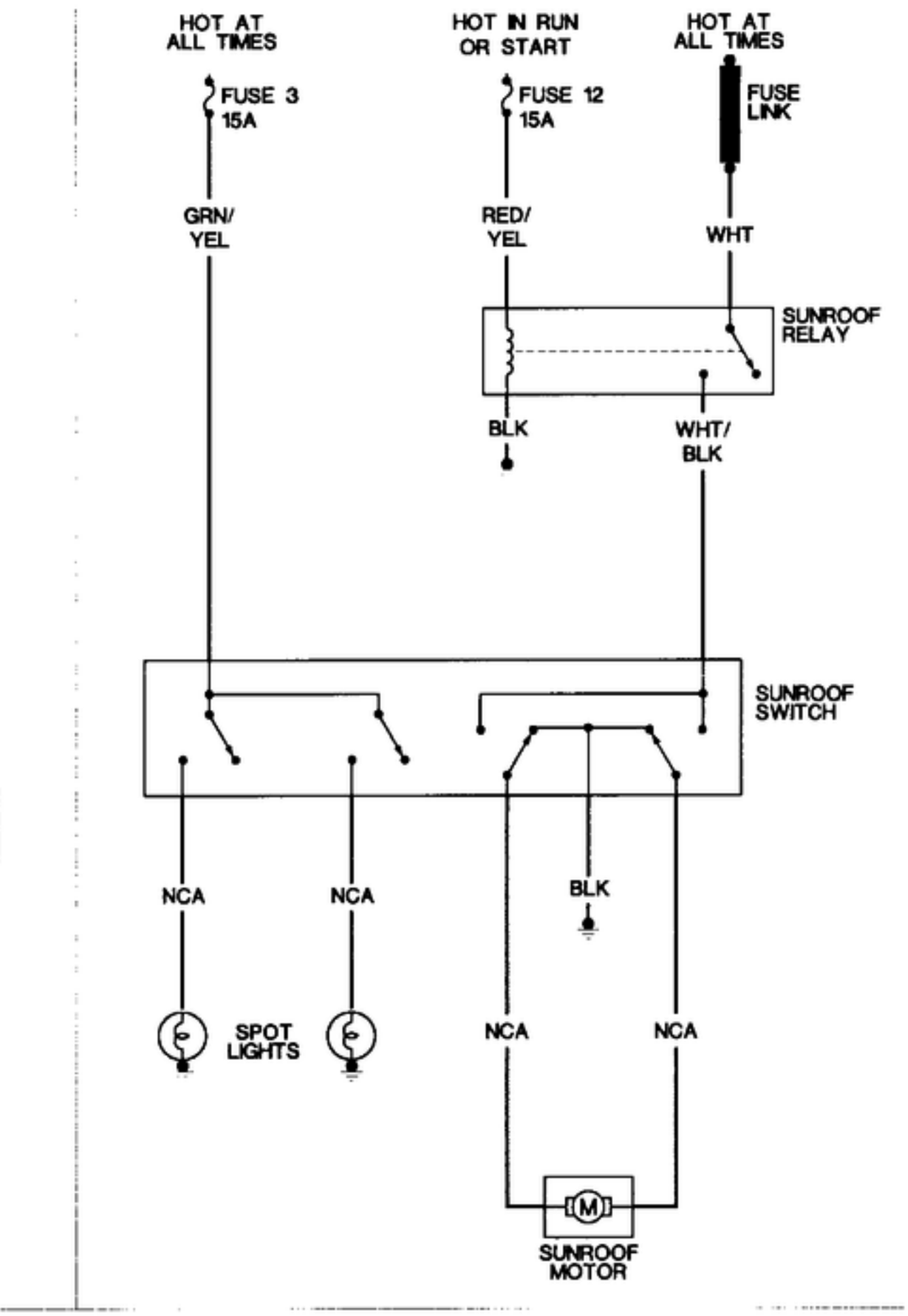
HOT AT ALL TIMES
HOT IN RUN OR START
HOT AT ALL TIMES
FUSE 3 15A
FUSE 12 15A
FUSE LINK
GRN/ YEL
RED/ YEL
WHT
SUNROOF RELAY
BLK
WHT/ BLK
SUNROOF SWITCH
NCA
NCA
BLK
SPOT LIGHTS
NCA
NCA
SUNROOF MOTOR

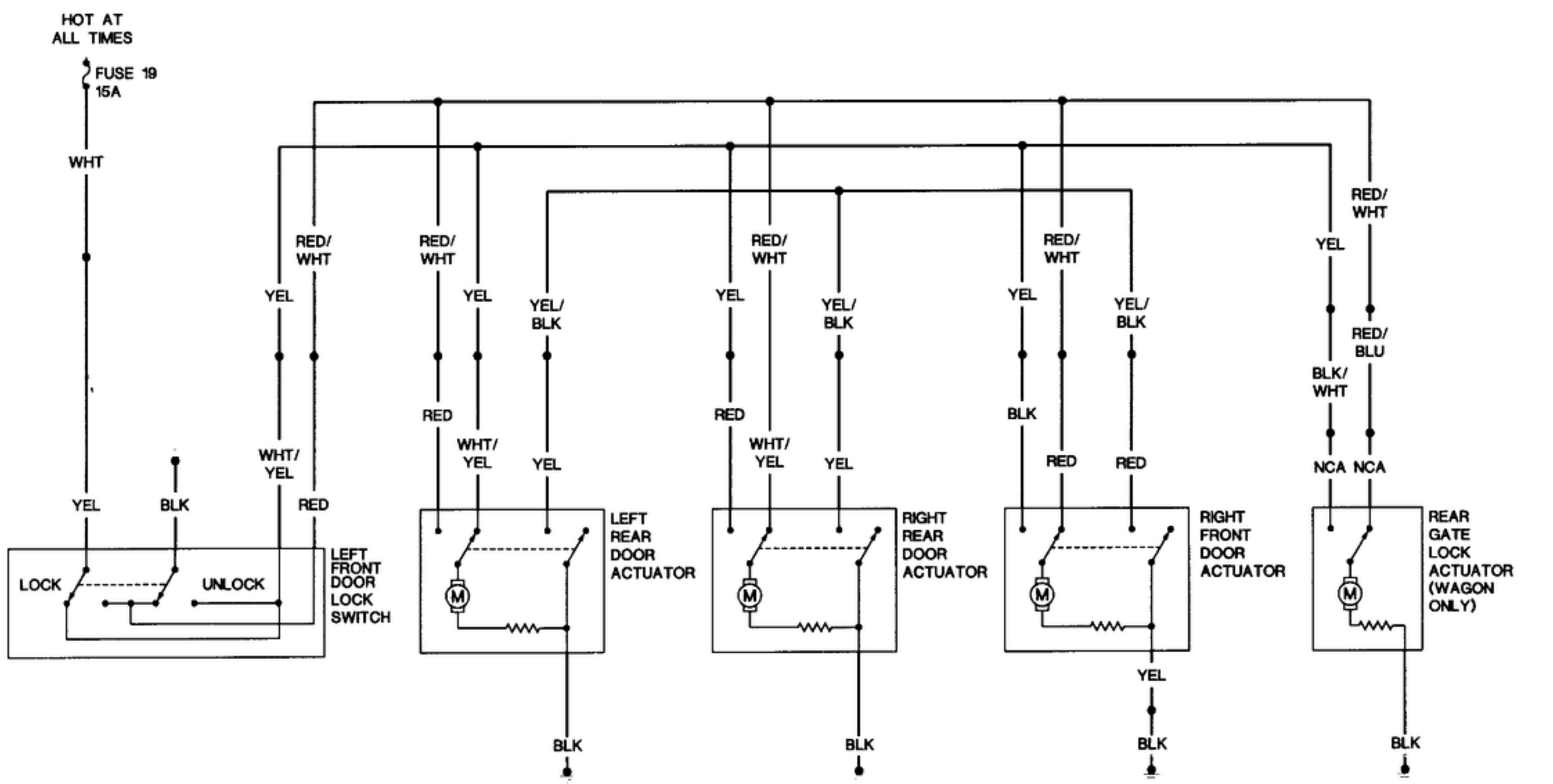
HOT AT ALL TIMES
FUSE 19 15A
WHT
RED/ WHT
RED/ WHT
RED/ WHT
RED/ WHT
RED/ WHT
YEL
YEL
YEL/ BLK
YEL
YEL/ BLK
YEL
YEL/ BLK
YEL
RED/ BLU
BLK/ WHT
RED
RED
BLK
WHT/ YEL
WHT/ YEL
YEL
WHT/ YEL
YEL
RED
RED
NCA NCA
YEL
BLK
RED
LOCK
UNLOCK
LEFT FRONT DOOR LOCK SWITCH
LEFT REAR DOOR ACTUATOR
RIGHT REAR DOOR ACTUATOR
RIGHT FRONT DOOR ACTUATOR
REAR GATE LOCK ACTUATOR (WAGON ONLY)
YEL
BLK
BLK
BLK
BLK