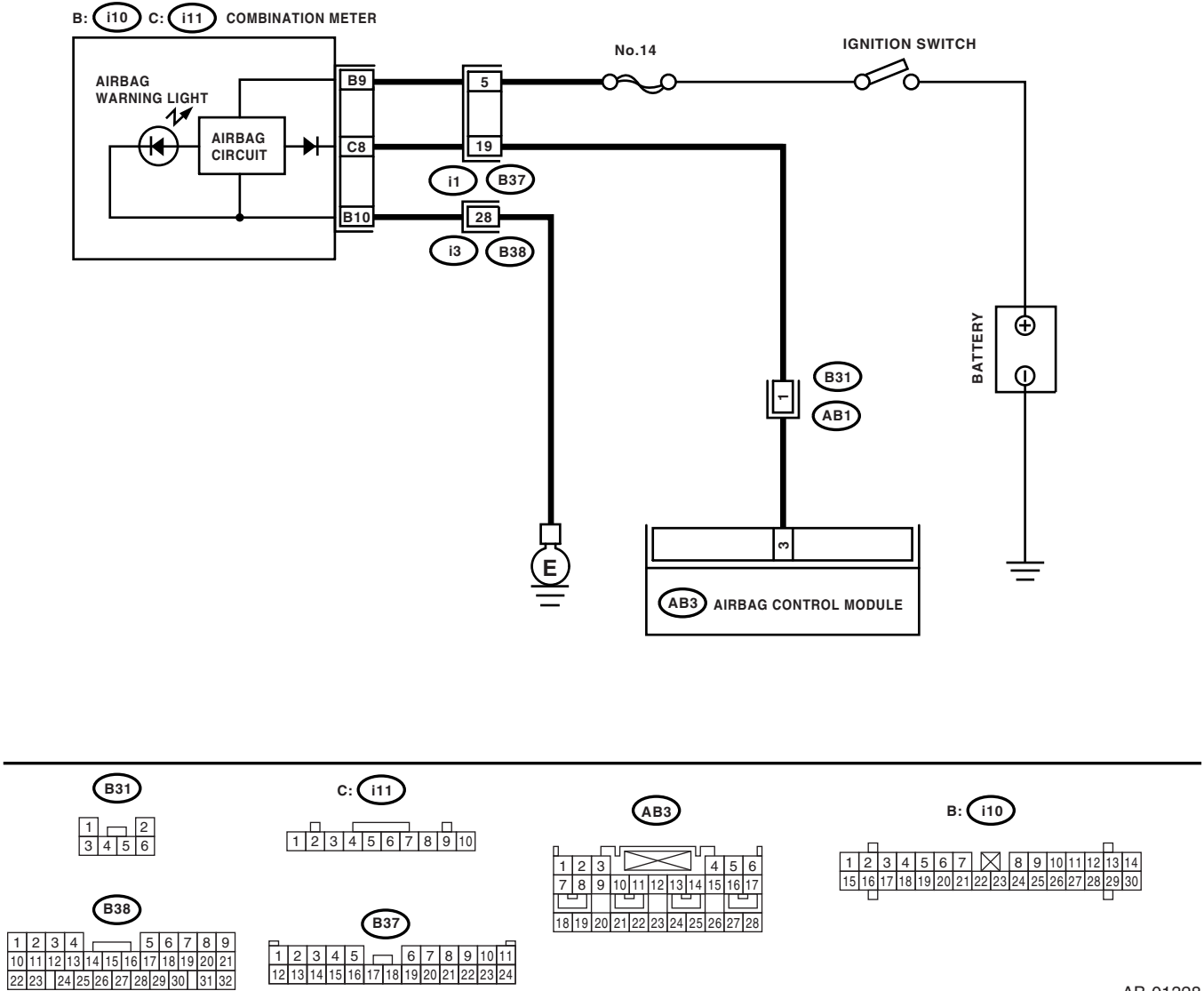
B: i10 C: i11 COMBINATION METER
AIRBAG WARNING LIGHT
AIRBAG CIRCUIT
B9
C8
B10
5
19
28
i1
B37
i3
B38
No.14
IGNITION SWITCH
BATTERY
B31
AB1
1
3
E
AB3 AIRBAG CONTROL MODULE
B31
C: i11
AB3
B: i10
B38
B37
AB-01328