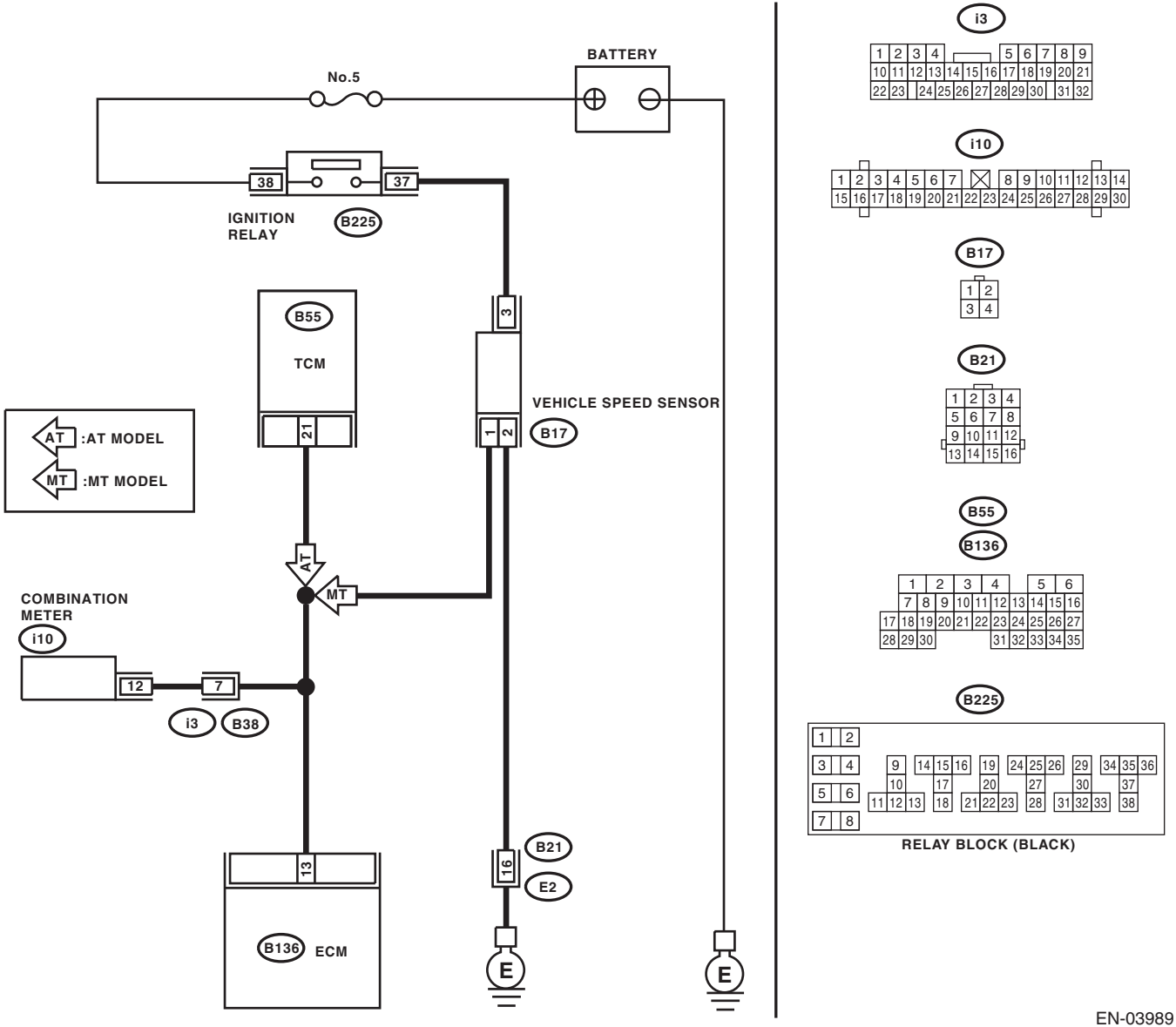
BATTERY
No.5
38
37
IGNITION RELAY
B225
B55
TCM
21
3
VEHICLE SPEED SENSOR
1
2
B17
AT :AT MODEL
MT :MT MODEL
AT
MT
COMBINATION METER
i10
12
7
i3
B38
13
B136
ECM
16
B21
E2
E
E
i3
i10
B17
B21
B55
B136
B225
RELAY BLOCK (BLACK)

EN-03989