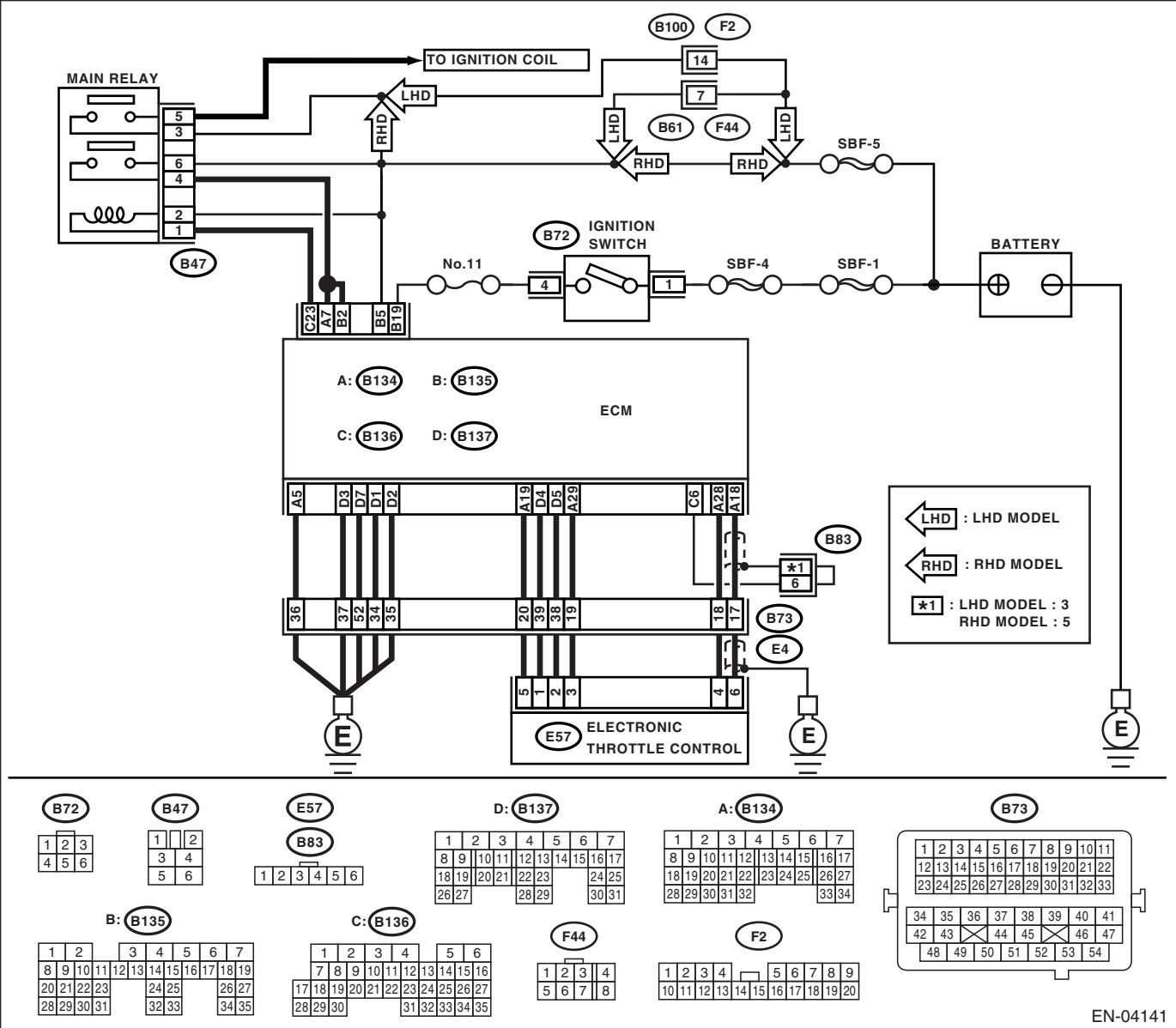
MAIN RELAY
TO IGNITION COIL
B100
F2
14
7
LHD
RHD
B61
F44
SBF-5
B47
B72
IGNITION SWITCH
No.11
SBF-4
SBF-1
BATTERY
C23
A7
B2
B5
B19
A: B134
B: B135
C: B136
D: B137
ECM
A5
D3
D7
D1
D2
A19
D4
D5
A29
C6
A28
A18
B83
*1
36
37
52
34
35
20
39
38
19
18
17
B73
E4
5
1
2
3
4
6
E57
ELECTRONIC THROTTLE CONTROL
E
LHD : LHD MODEL
RHD : RHD MODEL
*1 : LHD MODEL : 3
RHD MODEL : 5
B72
B47
E57
B83
D: B137
A: B134
B73
B: B135
C: B136
F44
F2
EN-04141