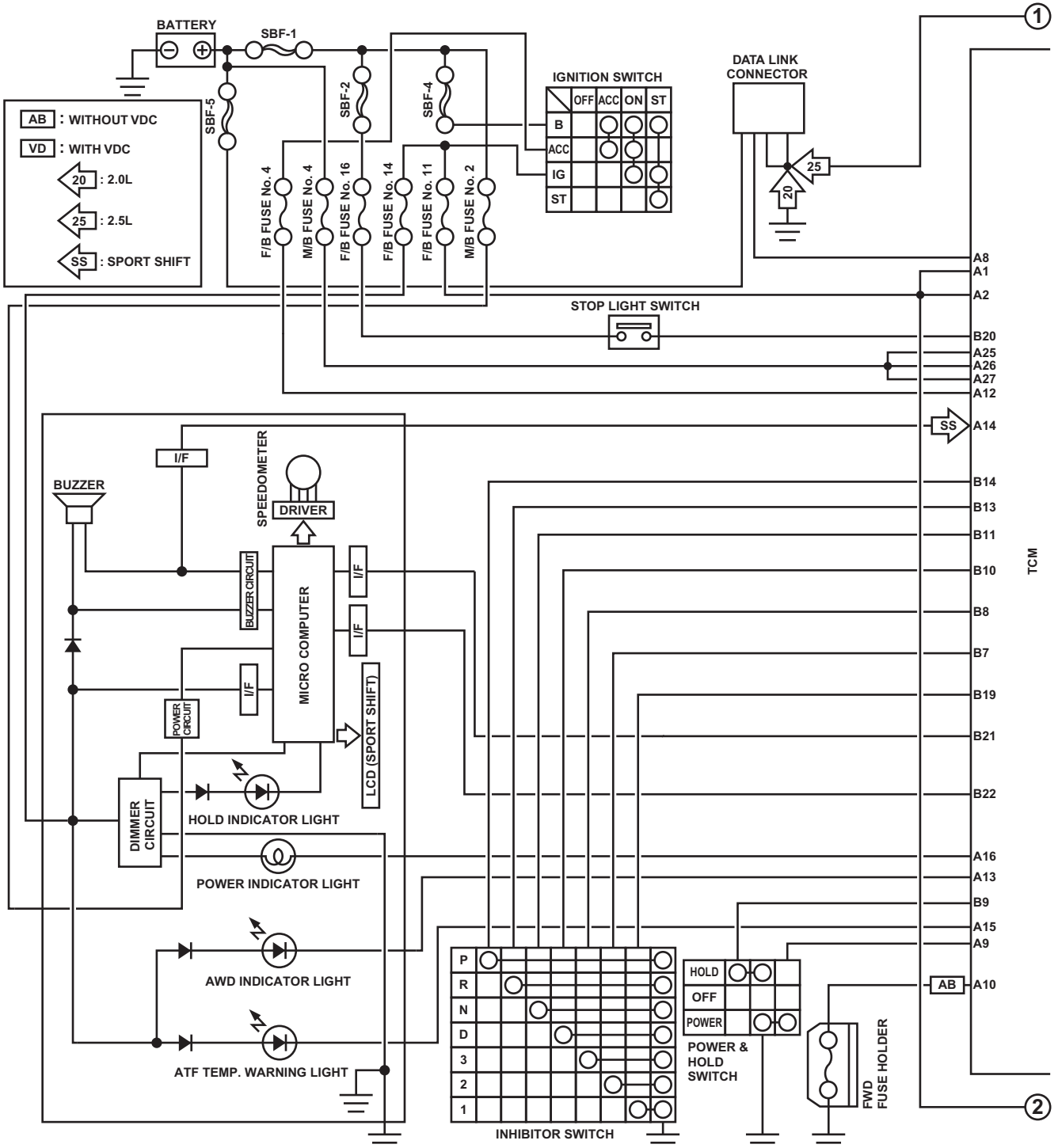
BATTERY
SBF-1
SBF-2
SBF-4
SBF-5
AB : WITHOUT VDC
VD : WITH VDC
20 : 2.0L
25 : 2.5L
SS : SPORT SHIFT
F/B FUSE No. 4
M/B FUSE No. 4
F/B FUSE No. 16
F/B FUSE No. 14
F/B FUSE No. 11
M/B FUSE No. 2
IGNITION SWITCH
OFF ACC ON ST
B
ACC
IG
ST
DATA LINK CONNECTOR
25
20
STOP LIGHT SWITCH
BUZZER
I/F
SPEEDOMETER
DRIVER
BUZZER CIRCUIT
MICRO COMPUTER
I/F
I/F
I/F
POWER CIRCUIT
LCD (SPORT SHIFT)
DIMMER CIRCUIT
HOLD INDICATOR LIGHT
POWER INDICATOR LIGHT
AWD INDICATOR LIGHT
ATF TEMP. WARNING LIGHT
P
R
N
D
3
2
1
INHIBITOR SWITCH
HOLD
OFF
POWER
POWER & HOLD SWITCH
FWD FUSE HOLDER
TCM
A8
A1
A2
B20
A25
A26
A27
A12
SS
A14
B14
B13
B11
B10
B8
B7
B19
B21
B22
A16
A13
B9
A15
A9
AB
A10
1
2

WI-09488