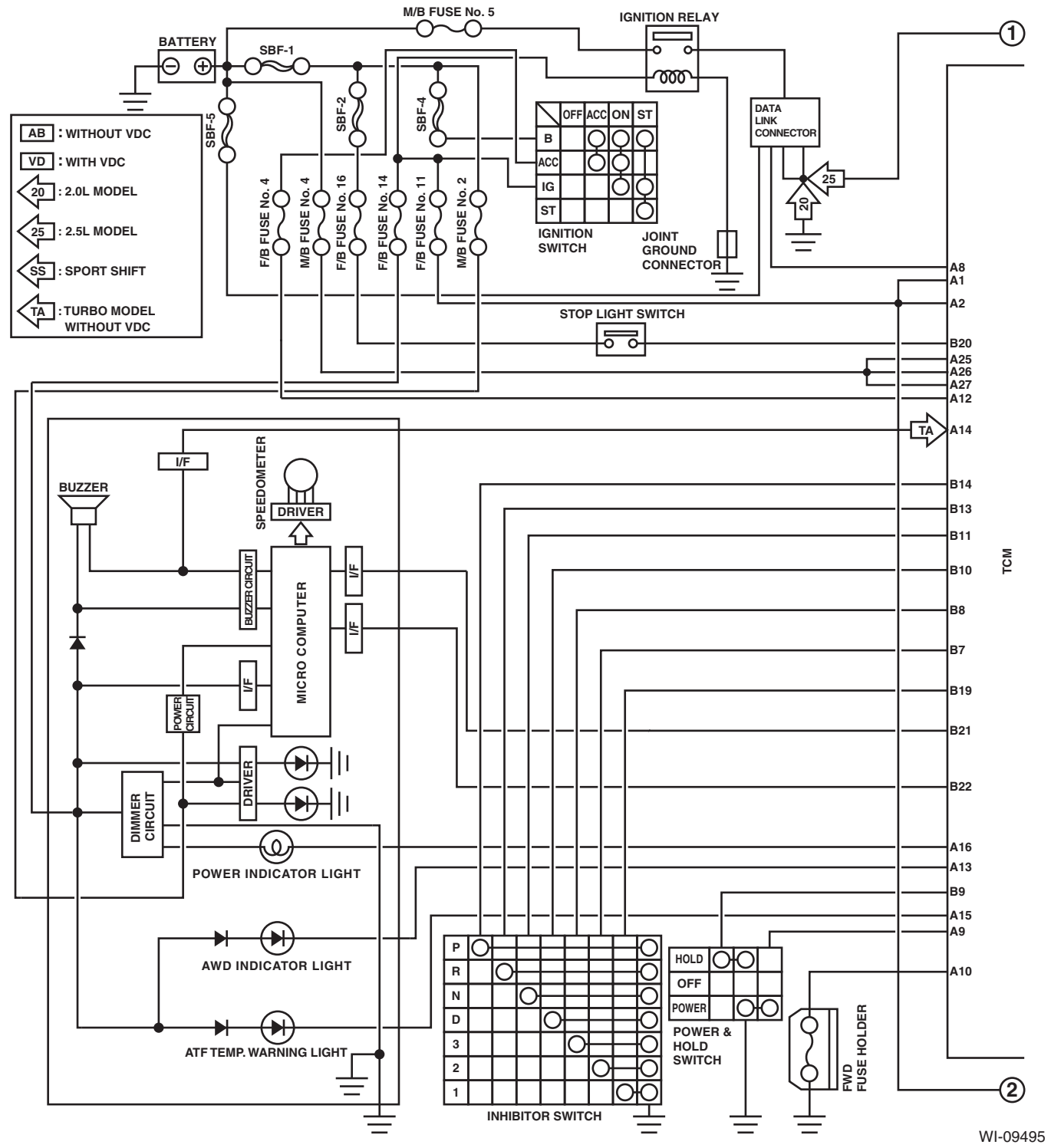
M/B FUSE No. 5
IGNITION RELAY
BATTERY
SBF-1
SBF-5
SBF-2
SBF-4
AB : WITHOUT VDC
VD : WITH VDC
20 : 2.0L MODEL
25 : 2.5L MODEL
SS : SPORT SHIFT
TA : TURBO MODEL WITHOUT VDC
F/B FUSE No. 4
M/B FUSE No. 4
F/B FUSE No. 16
F/B FUSE No. 14
F/B FUSE No. 11
M/B FUSE No. 2
OFF ACC ON ST
B
ACC
IG
ST
IGNITION SWITCH
JOINT GROUND CONNECTOR
DATA LINK CONNECTOR
25
20
STOP LIGHT SWITCH
A8
A1
A2
B20
A25
A26
A27
A12
TA
A14
B14
B13
B11
B10
B8
B7
B19
B21
B22
A16
A13
B9
A15
A9
A10
TCM
I/F
SPEEDOMETER
DRIVER
BUZZER
BUZZER CIRCUIT
MICRO COMPUTER
I/F
I/F
I/F
POWER CIRCUIT
DRIVER
DIMMER CIRCUIT
POWER INDICATOR LIGHT
AWD INDICATOR LIGHT
ATF TEMP. WARNING LIGHT
P
R
N
D
3
2
1
INHIBITOR SWITCH
HOLD
OFF
POWER
POWER & HOLD SWITCH
FWD FUSE HOLDER
1
2
WI-09495