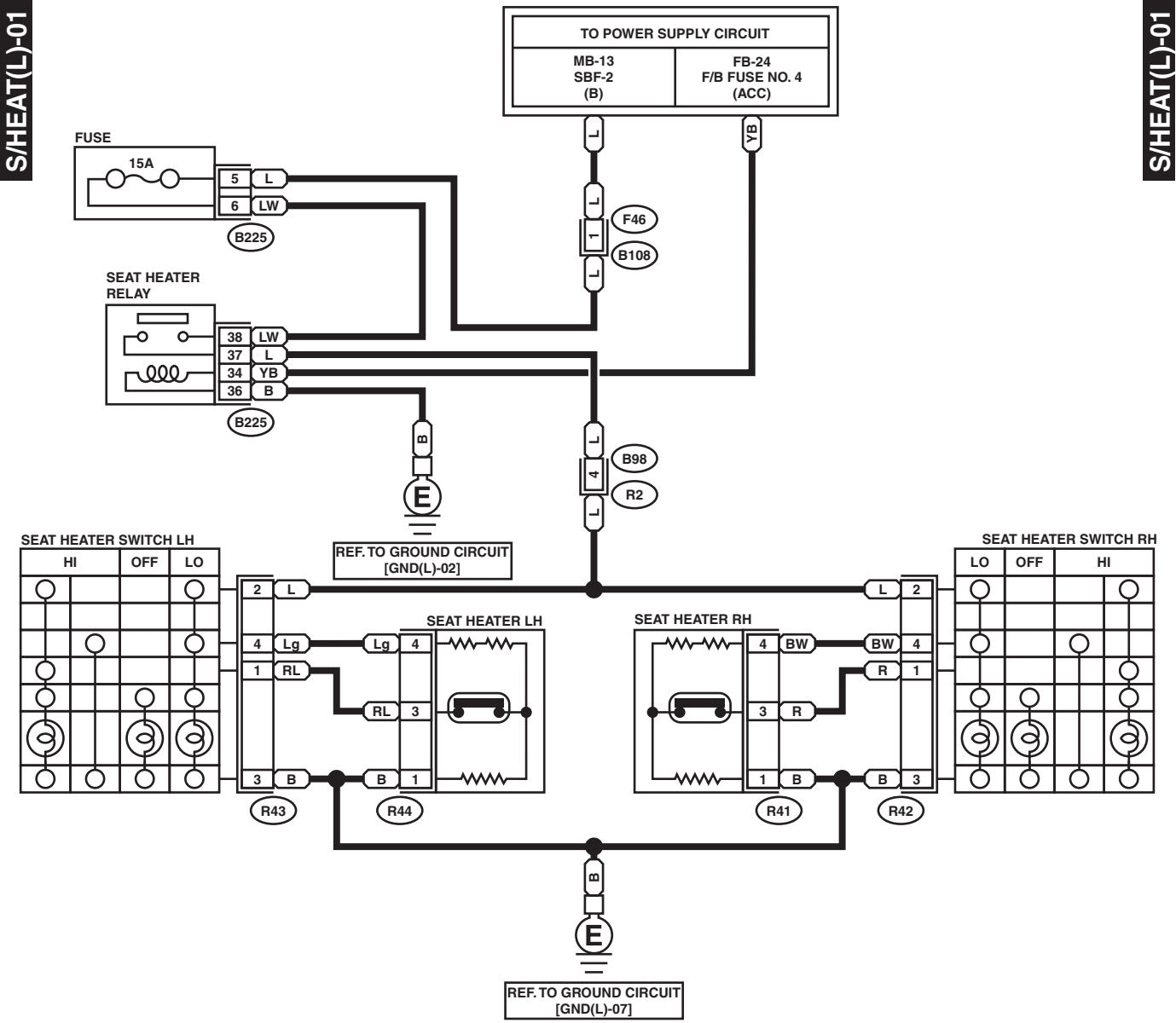

F46 (BLACK)

R42

R41 (BLUE)
R43 (BLUE)
R44 (BLUE)

B98

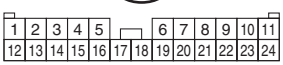

B225 (BLACK)

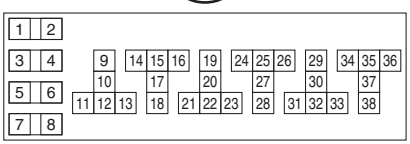

RELAY BLOCK