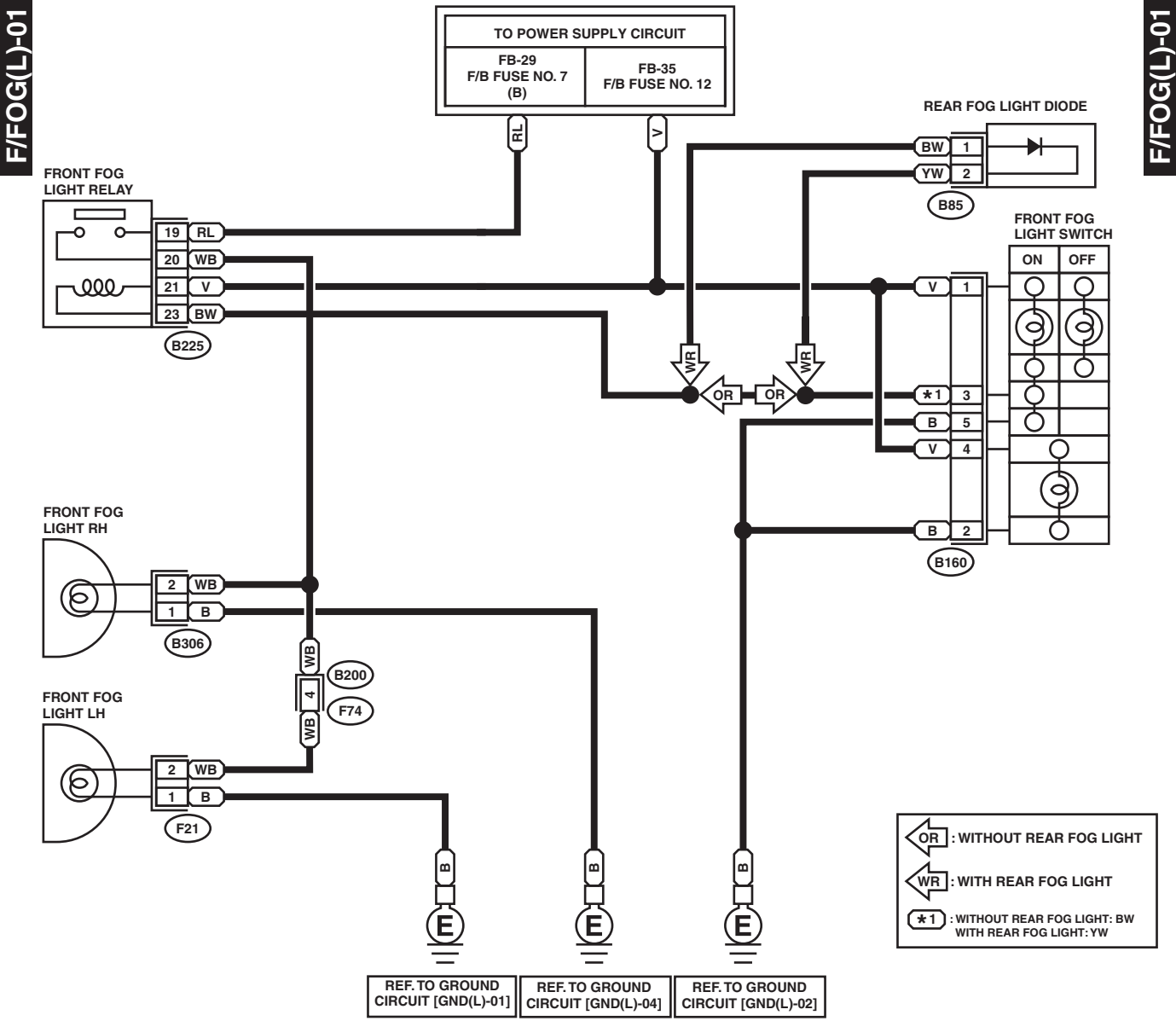

B306 (BROWN)

F21 (BLACK)

B85 (BROWN)

B160 (GRAY)

F74 (BLACK)

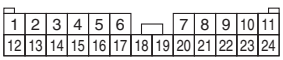

B225 (BLACK)

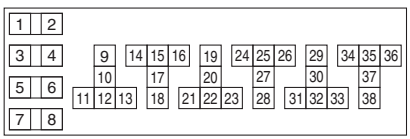

RELAY BLOCK