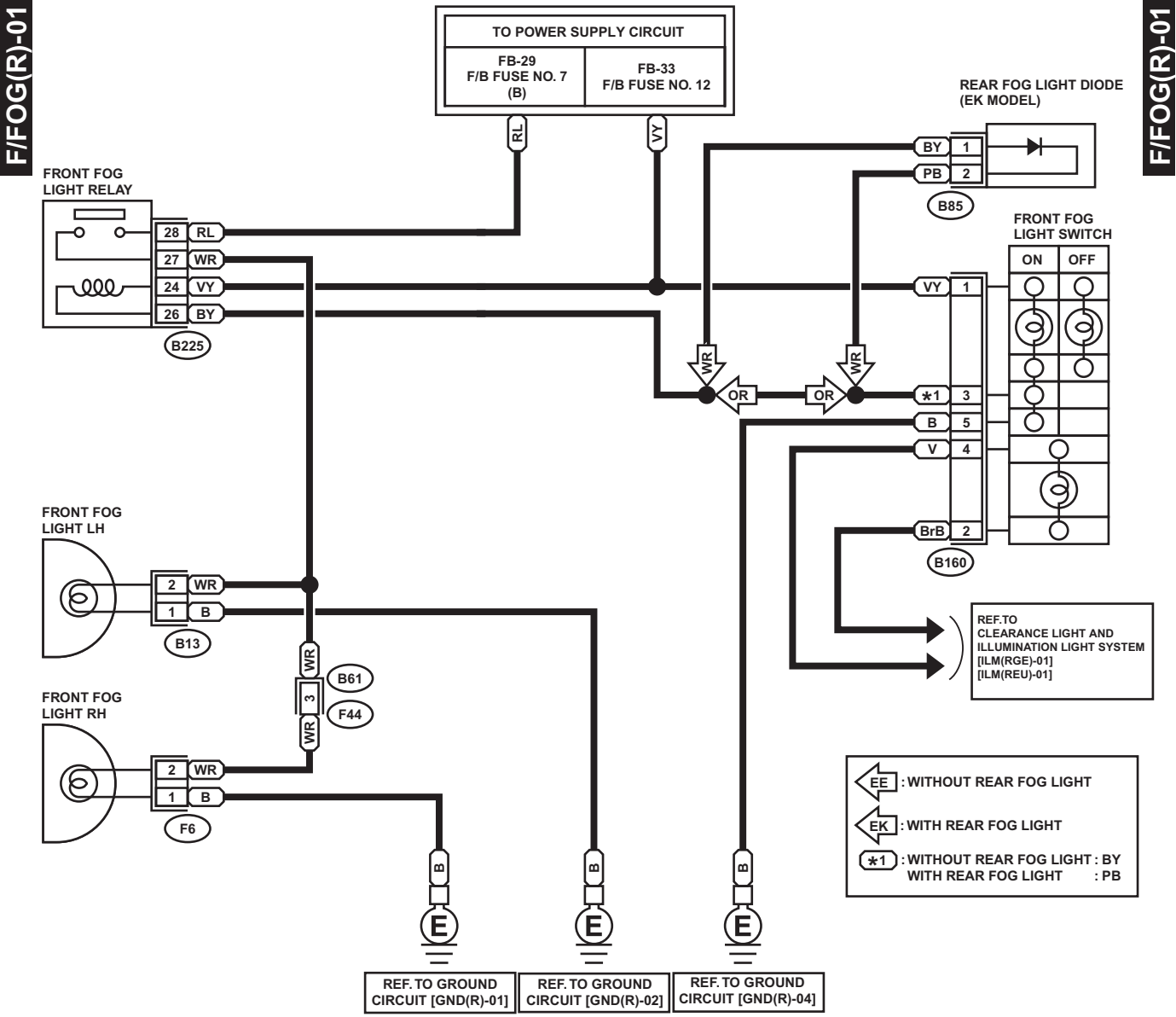

B13 (BROWN)

F6 (BROWN)

B85

B160 (GRAY)

F44 (BLACK)

B225 (BLACK)

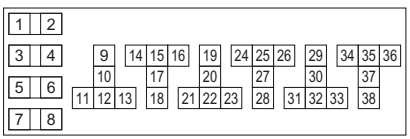

RELAY BLOCK