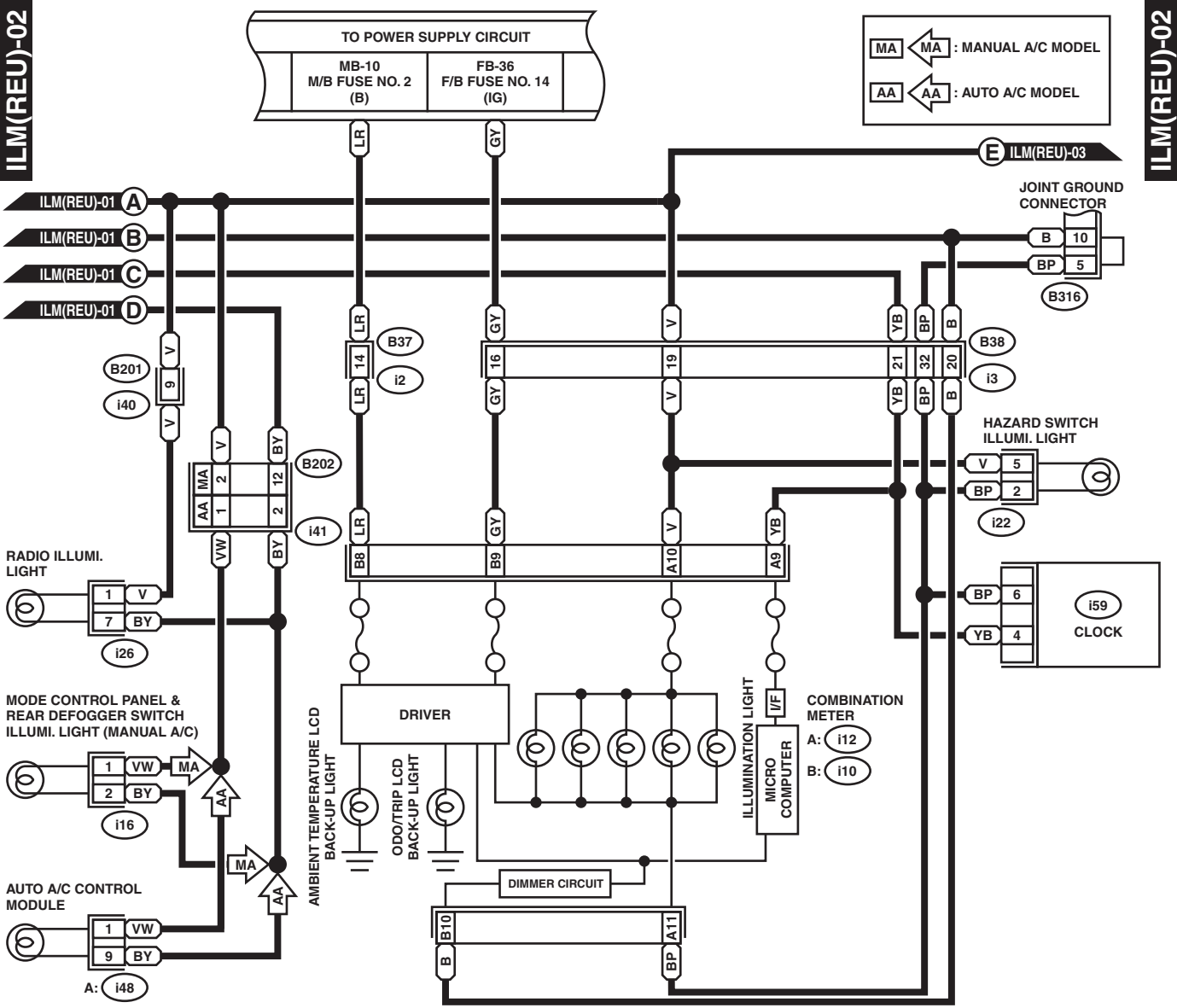
TO POWER SUPPLY CIRCUIT
MB-10
M/B FUSE NO. 2
(B)
FB-36
F/B FUSE NO. 14
(IG)
MA : MANUAL A/C MODEL
AA : AUTO A/C MODEL
ILM(REU)-03
ILM(REU)-01
JOINT GROUND CONNECTOR
B316
B201
i40
B202
i41
B37
i2
B38
i3
HAZARD SWITCH ILLUMI. LIGHT
i22
RADIO ILLUMI. LIGHT
i26
i59
CLOCK
MODE CONTROL PANEL & REAR DEFOGGER SWITCH ILLUMI. LIGHT (MANUAL A/C)
i16
AUTO A/C CONTROL MODULE
A: i48
DRIVER
AMBIENT TEMPERATURE LCD BACK-UP LIGHT
ODO/TRIP LCD BACK-UP LIGHT
ILLUMINATION LIGHT
MICRO COMPUTER
COMBINATION METER
A: i12
B: i10
DIMMER CIRCUIT

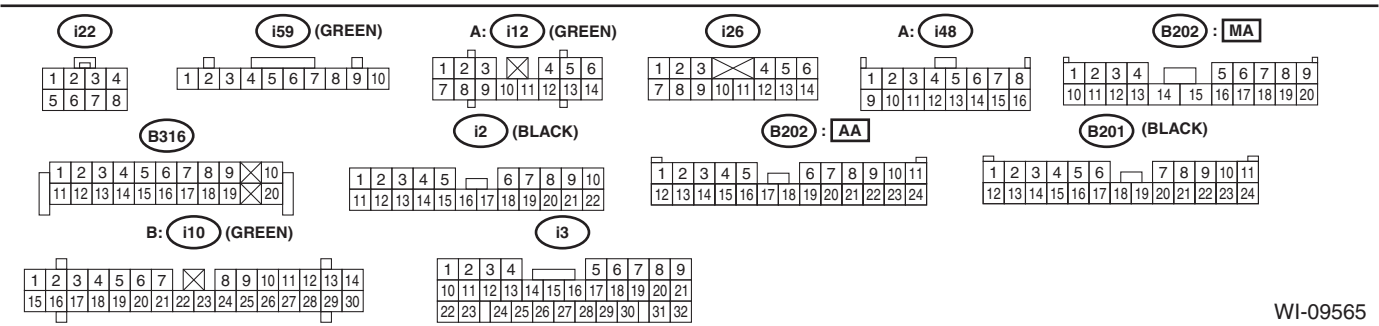
i22
i59 (GREEN)
A: i12 (GREEN)
i26
A: i48
B202 : MA
B316
i2 (BLACK)
B202 : AA
B201 (BLACK)
B: i10 (GREEN)
i3