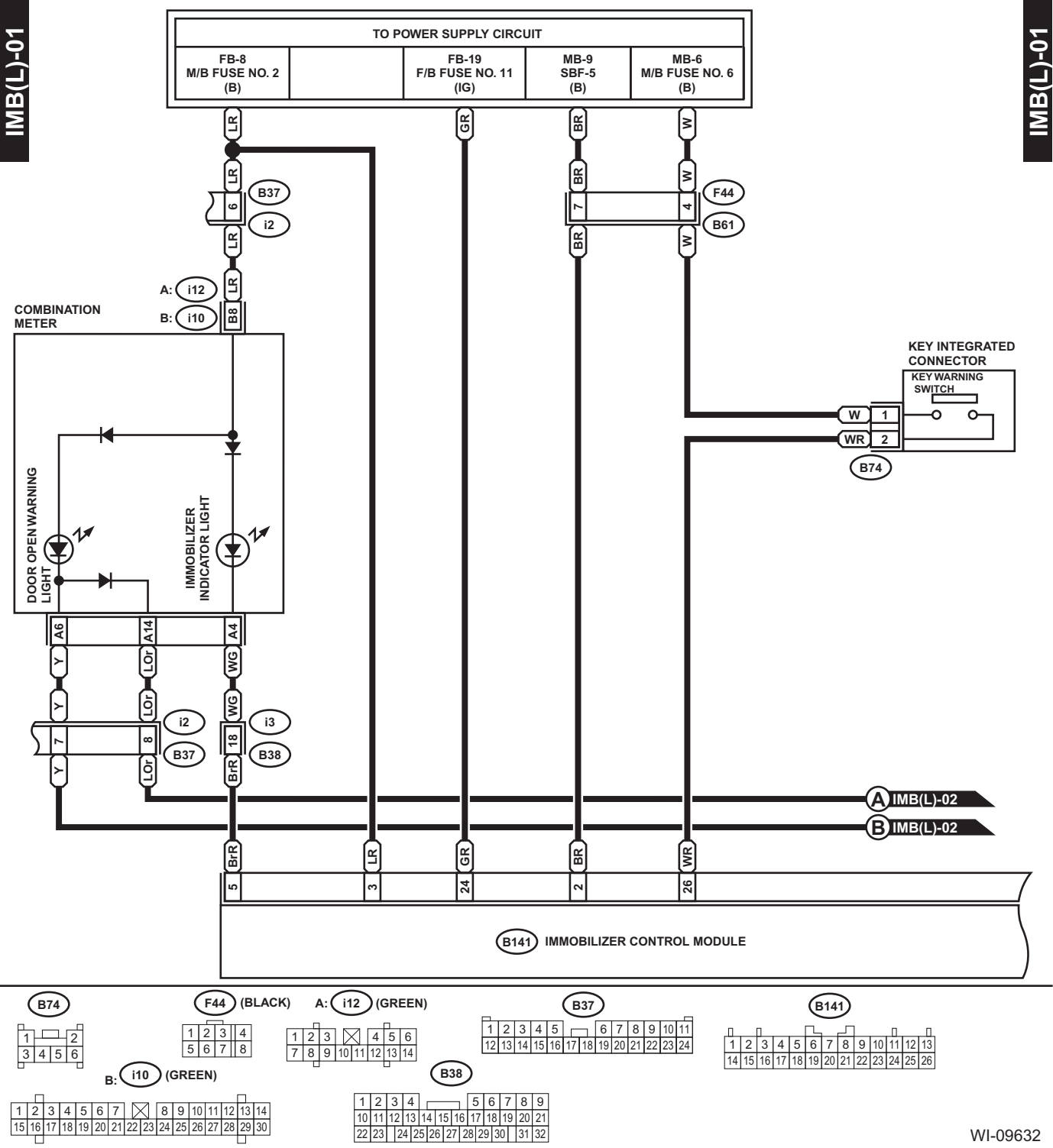
TO POWER SUPPLY CIRCUIT
FB-8 M/B FUSE NO. 2 (B)
FB-19 F/B FUSE NO. 11 (IG)
MB-9 SBF-5 (B)
MB-6 M/B FUSE NO. 6 (B)
LR
GR
BR
W
B37
i2
F44
B61
A: i12
B: i10
B8
COMBINATION METER
KEY INTEGRATED CONNECTOR
KEY WARNING SWITCH
WR
B74
DOOR OPEN WARNING LIGHT
IMMOBILIZER INDICATOR LIGHT
A6
A14
A4
Y
LOr
WG
i3
B38
BrR
A IMB(L)-02
B IMB(L)-02
WR
B141 IMMOBILIZER CONTROL MODULE
B74
F44 (BLACK)
A: i12 (GREEN)
B: i10 (GREEN)
B37
B38
B141