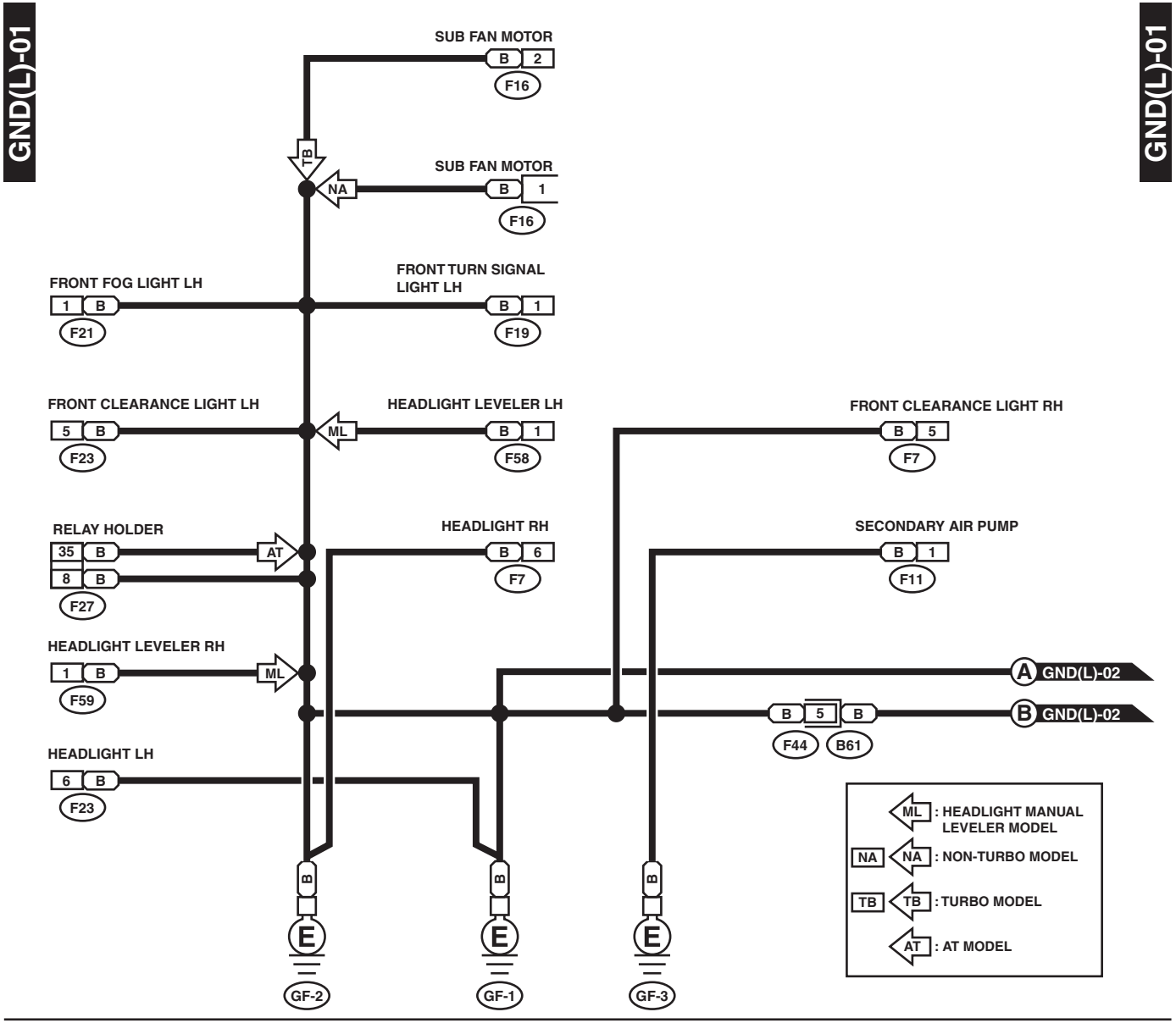
GND(L)-01
GND(L)-01
SUB FAN MOTOR
B 2
F16
TB
SUB FAN MOTOR
NA
B 1
F16
FRONT FOG LIGHT LH
1 B
F21
FRONT TURN SIGNAL LIGHT LH
B 1
F19
FRONT CLEARANCE LIGHT LH
5 B
F23
HEADLIGHT LEVELER LH
ML
B 1
F58
FRONT CLEARANCE LIGHT RH
B 5
F7
RELAY HOLDER
35 B
8 B
F27
AT
HEADLIGHT RH
B 6
F7
SECONDARY AIR PUMP
B 1
F11
HEADLIGHT LEVELER RH
1 B
F59
ML
A GND(L)-02
B 5 B
F44 B61
B GND(L)-02
HEADLIGHT LH
6 B
F23
B
E
GF-2
GF-1
GF-3
ML : HEADLIGHT MANUAL LEVELER MODEL
NA : NON-TURBO MODEL
TB : TURBO MODEL
AT : AT MODEL
F11
F16 (GRAY) : TB
F19 HR (GRAY)
F16 (BLACK) : NA
F21 (BLACK)
F58 (BLACK)
F59 (BLACK)
F7 HR (BLACK)
F23 HR (BLACK)
F44 (BLACK)
F27 (BLACK)
RELAY HOLDER

WI-12012