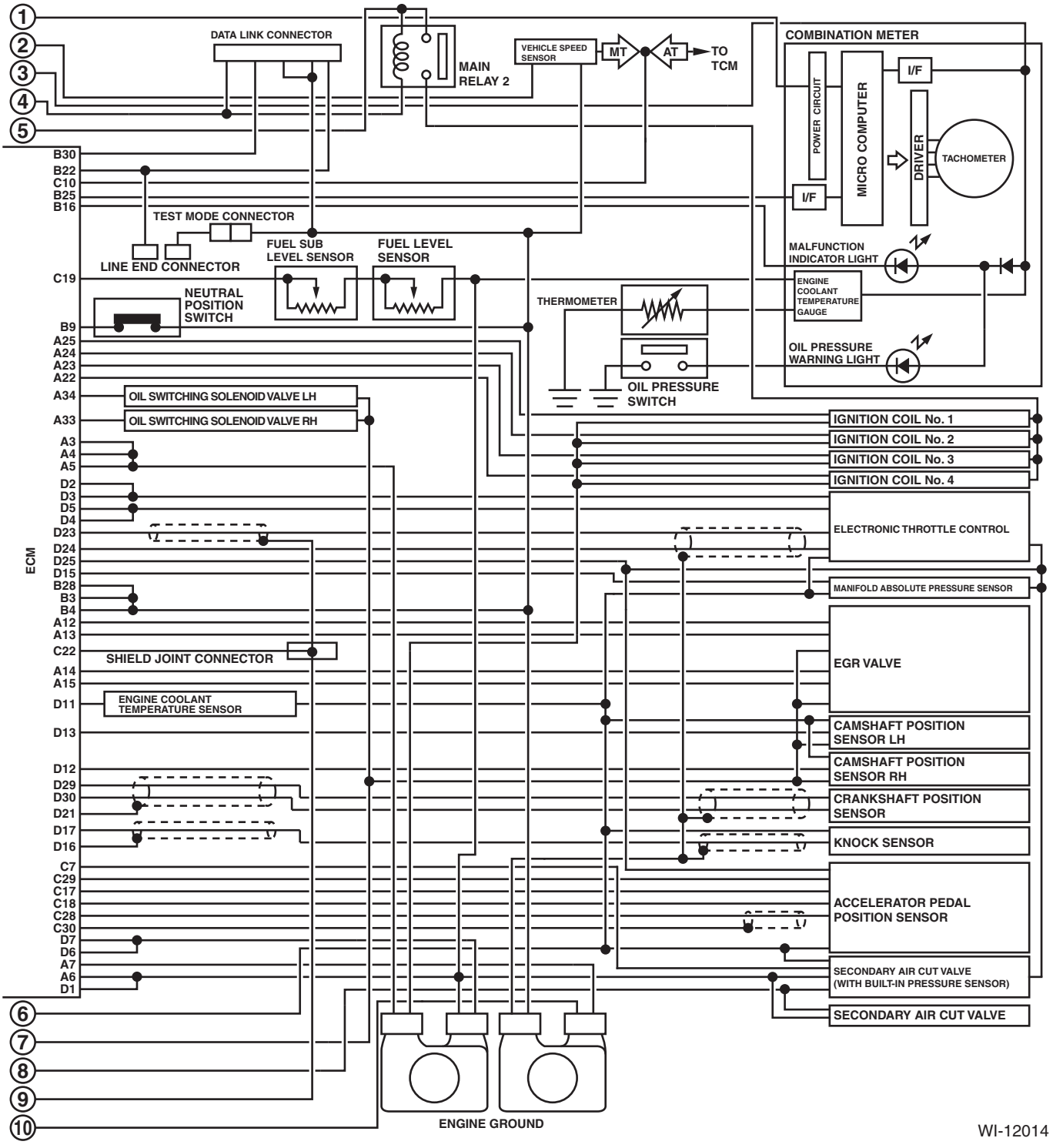
DATA LINK CONNECTOR
MAIN RELAY 2
VEHICLE SPEED SENSOR
MT
AT
TO TCM
COMBINATION METER
POWER CIRCUIT
MICRO COMPUTER
I/F
DRIVER
TACHOMETER
I/F
MALFUNCTION INDICATOR LIGHT
ENGINE COOLANT TEMPERATURE GAUGE
OIL PRESSURE WARNING LIGHT
TEST MODE CONNECTOR
LINE END CONNECTOR
FUEL SUB LEVEL SENSOR
FUEL LEVEL SENSOR
NEUTRAL POSITION SWITCH
THERMOMETER
OIL PRESSURE SWITCH
OIL SWITCHING SOLENOID VALVE LH
OIL SWITCHING SOLENOID VALVE RH
IGNITION COIL No. 1
IGNITION COIL No. 2
IGNITION COIL No. 3
IGNITION COIL No. 4
ELECTRONIC THROTTLE CONTROL
MANIFOLD ABSOLUTE PRESSURE SENSOR
EGR VALVE
SHIELD JOINT CONNECTOR
ENGINE COOLANT TEMPERATURE SENSOR
CAMSHAFT POSITION SENSOR LH
CAMSHAFT POSITION SENSOR RH
CRANKSHAFT POSITION SENSOR
KNOCK SENSOR
ACCELERATOR PEDAL POSITION SENSOR
SECONDARY AIR CUT VALVE (WITH BUILT-IN PRESSURE SENSOR)
SECONDARY AIR CUT VALVE
ECM
B30
B22
C10
B25
B16
C19
B9
A25
A24
A23
A22
A34
A33
A3
A4
A5
D2
D3
D5
D4
D23
D24
D25
D15
B28
B3
B4
A12
A13
C22
A14
A15
D11
D13
D12
D29
D30
D21
D17
D16
C7
C29
C17
C18
C28
C30
D7
D6
A7
A6
D1
ENGINE GROUND
WI-12014