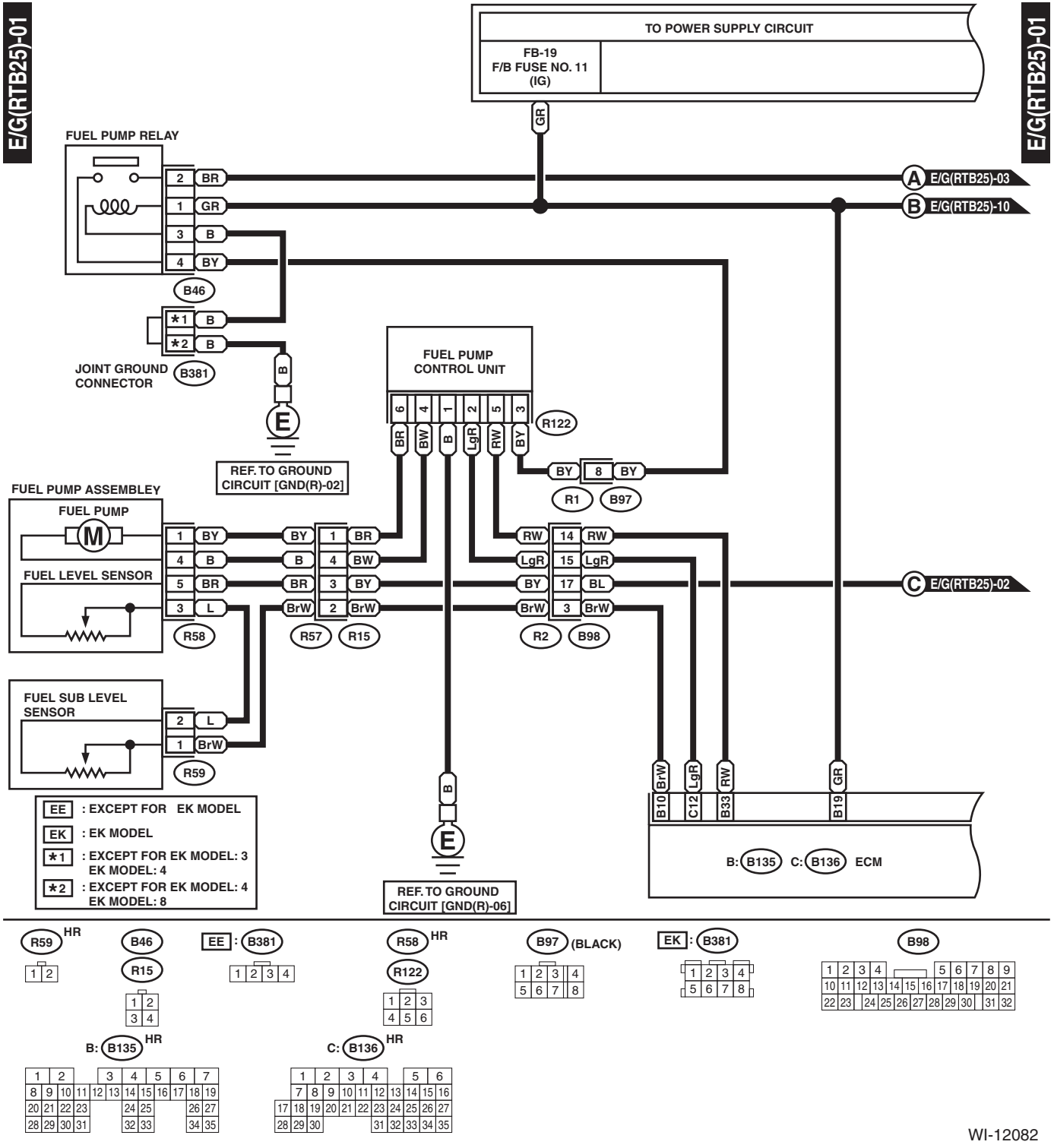
E/G(RTB25)-01
TO POWER SUPPLY CIRCUIT
FB-19
F/B FUSE NO. 11
(IG)
GR
FUEL PUMP RELAY
2 BR
1 GR
3 B
4 BY
B46
A E/G(RTB25)-03
B E/G(RTB25)-10
*1 B
*2 B
JOINT GROUND CONNECTOR
B381
B
E
REF. TO GROUND CIRCUIT [GND(R)-02]
FUEL PUMP CONTROL UNIT
6 4 1 2 5 3
R122
BR BW B LgR RW BY
BY 8 BY
R1 B97
FUEL PUMP ASSEMBLEY
FUEL PUMP
M
FUEL LEVEL SENSOR
1 BY
4 B
5 BR
3 L
R58
BY 1 BR
B 4 BW
BR 3 BY
BrW 2 BrW
R57 R15
RW 14 RW
LgR 15 LgR
BY 17 BL
BrW 3 BrW
R2 B98
C E/G(RTB25)-02
FUEL SUB LEVEL SENSOR
2 L
1 BrW
R59
EE : EXCEPT FOR EK MODEL
EK : EK MODEL
*1 : EXCEPT FOR EK MODEL: 3
EK MODEL: 4
*2 : EXCEPT FOR EK MODEL: 4
EK MODEL: 8
REF. TO GROUND CIRCUIT [GND(R)-06]
B10 BrW
C12 LgR
B33 RW
B19 GR
B: B135 C: B136 ECM
R59 HR
B46
R15
EE : B381
R58 HR
R122
B97 (BLACK)
EK : B381
B98
B: B135 HR
C: B136 HR
WI-12082