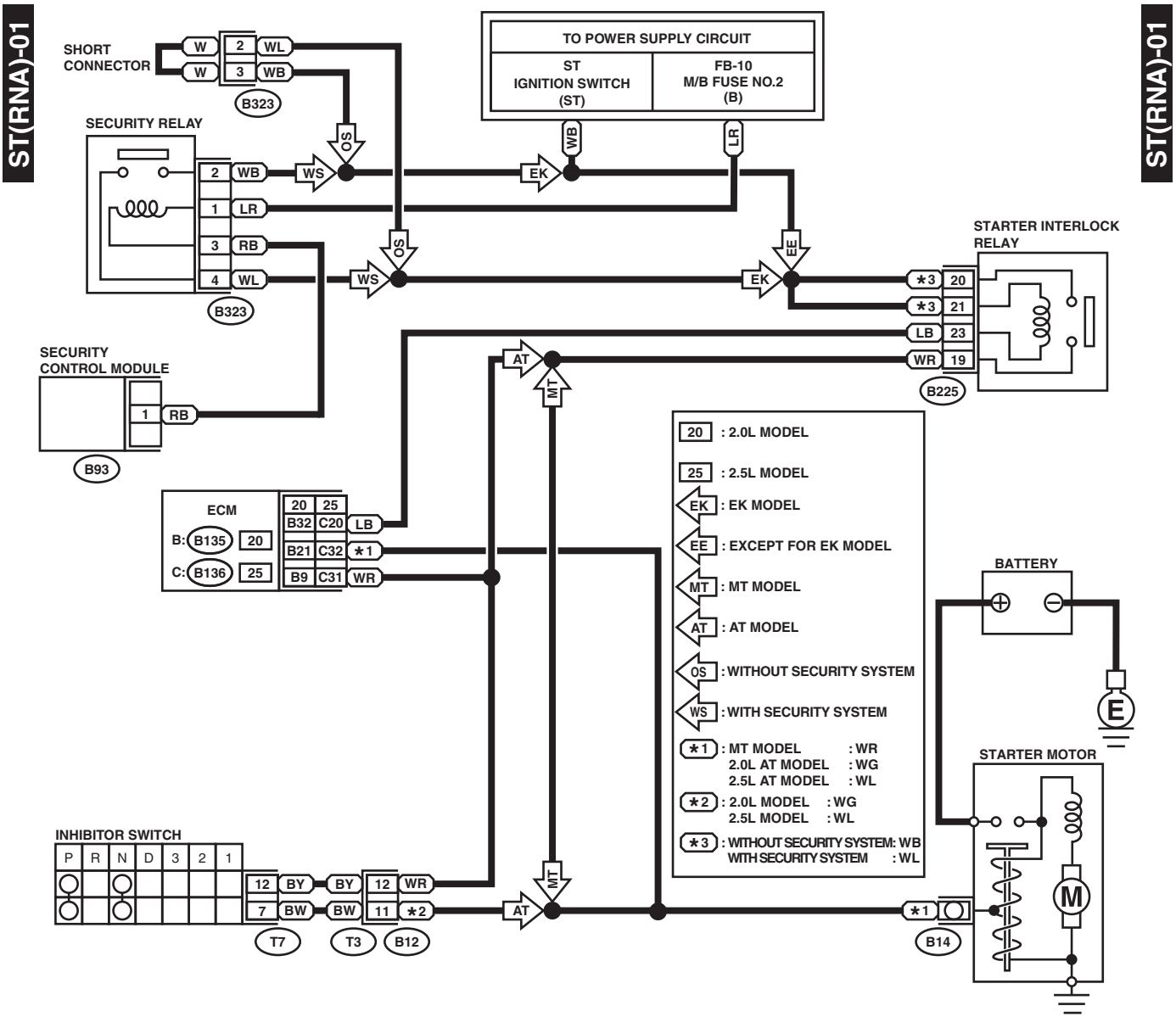
SHORT CONNECTOR
W
W
2
3
WL
WB
B323
TO POWER SUPPLY CIRCUIT
ST
IGNITION SWITCH
(ST)
FB-10
M/B FUSE NO.2
(B)
SECURITY RELAY
2 WB
1 LR
3 RB
4 WL
B323
OS
WS
WB
LR
EK
EE
STARTER INTERLOCK RELAY
*3 20
*3 21
LB 23
WR 19
B225
SECURITY CONTROL MODULE
1 RB
B93
AT
MT
ECM
B: B135 20
C: B136 25
20 25
B32 C20 LB
B21 C32 *1
B9 C31 WR
20 : 2.0L MODEL
25 : 2.5L MODEL
EK : EK MODEL
EE : EXCEPT FOR EK MODEL
MT : MT MODEL
AT : AT MODEL
OS : WITHOUT SECURITY SYSTEM
WS : WITH SECURITY SYSTEM
*1 : MT MODEL : WR
2.0L AT MODEL : WG
2.5L AT MODEL : WL
*2 : 2.0L MODEL : WG
2.5L MODEL : WL
*3 : WITHOUT SECURITY SYSTEM: WB
WITH SECURITY SYSTEM : WL
BATTERY
E
STARTER MOTOR
M
INHIBITOR SWITCH
P R N D 3 2 1
12 BY
7 BW
BY
BW
12 WR
11 *2
T7
T3
B12
*1
B14

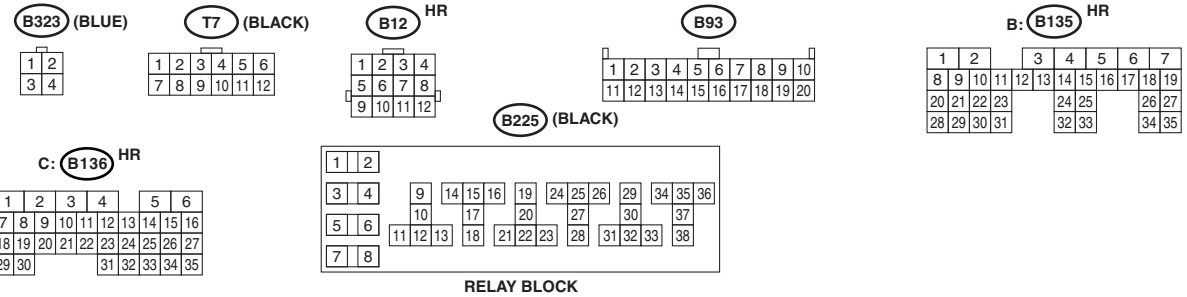
B323 (BLUE)
T7 (BLACK)
B12 HR
B93
B: B135 HR
B225 (BLACK)
C: B136 HR
RELAY BLOCK