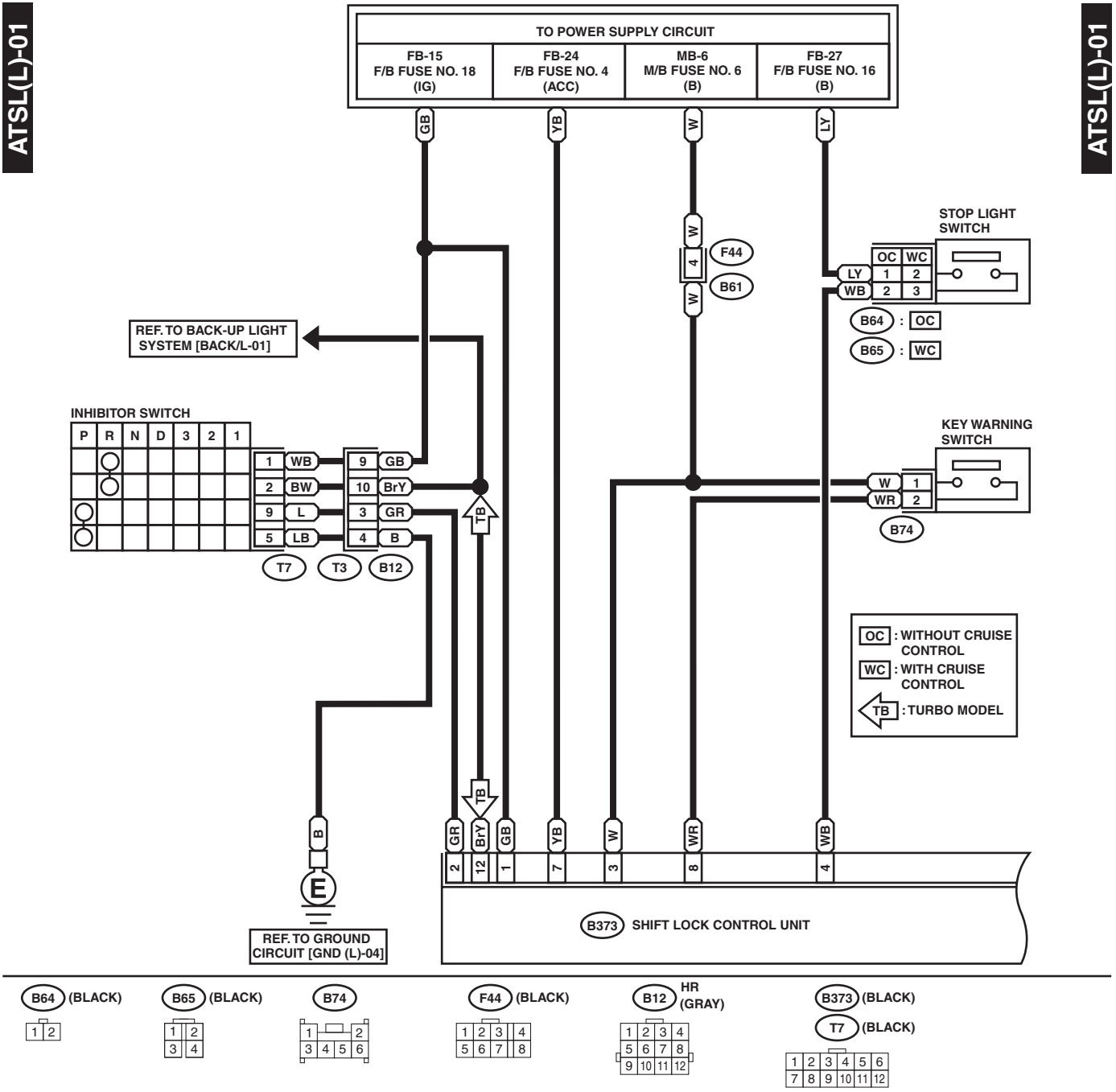
TO POWER SUPPLY CIRCUIT
FB-15 F/B FUSE NO. 18 (IG)
FB-24 F/B FUSE NO. 4 (ACC)
MB-6 M/B FUSE NO. 6 (B)
FB-27 F/B FUSE NO. 16 (B)
GB
YB
W
LY
STOP LIGHT SWITCH
OC WC
LY 1 2
WB 2 3
B64 : OC
B65 : WC
F44
B61
REF. TO BACK-UP LIGHT SYSTEM [BACK/L-01]
INHIBITOR SWITCH
P R N D 3 2 1
1 WB
2 BW
9 L
5 LB
9 GB
10 BrY
3 GR
4 B
T7
T3
B12
TB
KEY WARNING SWITCH
W 1
WR 2
B74
OC : WITHOUT CRUISE CONTROL
WC : WITH CRUISE CONTROL
TB : TURBO MODEL
B
E
REF. TO GROUND CIRCUIT [GND (L)-04]
GR BrY GB YB W WR WB
2 12 1 7 3 8 4
B373 SHIFT LOCK CONTROL UNIT
B64 (BLACK)
B65 (BLACK)
B74
F44 (BLACK)
B12 HR (GRAY)
B373 (BLACK)
T7 (BLACK)