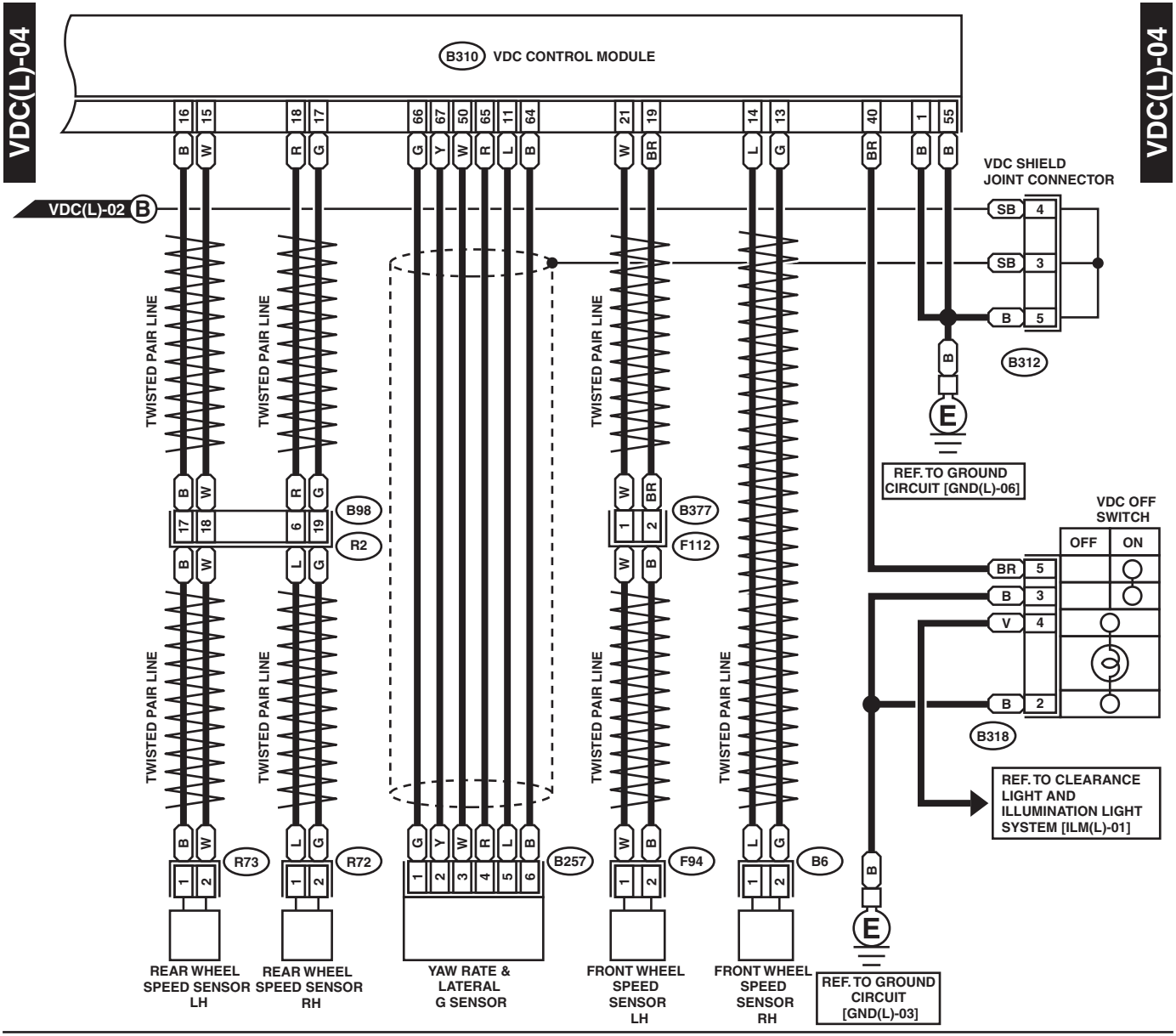
B310 VDC CONTROL MODULE
VDC(L)-02 B
VDC SHIELD JOINT CONNECTOR
B312
REF. TO GROUND CIRCUIT [GND(L)-06]
VDC OFF SWITCH
OFF
ON
B318
REF. TO CLEARANCE LIGHT AND ILLUMINATION LIGHT SYSTEM [ILM(L)-01]
TWISTED PAIR LINE
B98
R2
B377
F112
R73
R72
B257
F94
B6
REAR WHEEL SPEED SENSOR LH
REAR WHEEL SPEED SENSOR RH
YAW RATE & LATERAL G SENSOR
FRONT WHEEL SPEED SENSOR LH
FRONT WHEEL SPEED SENSOR RH
REF. TO GROUND CIRCUIT [GND(L)-03]

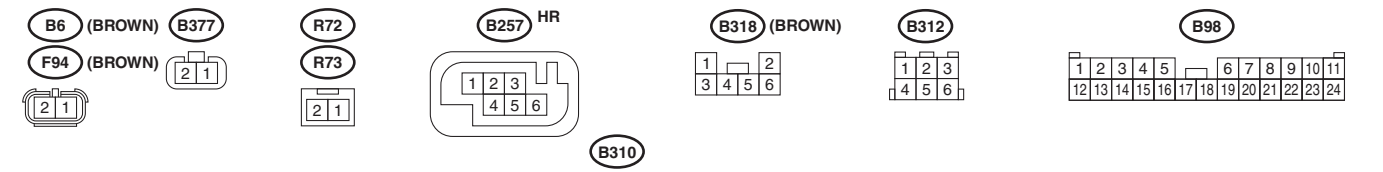
B6 (BROWN)
F94 (BROWN)
B377
R72
R73
B257 HR
B318 (BROWN)
B312
B98
B310

WI-12123