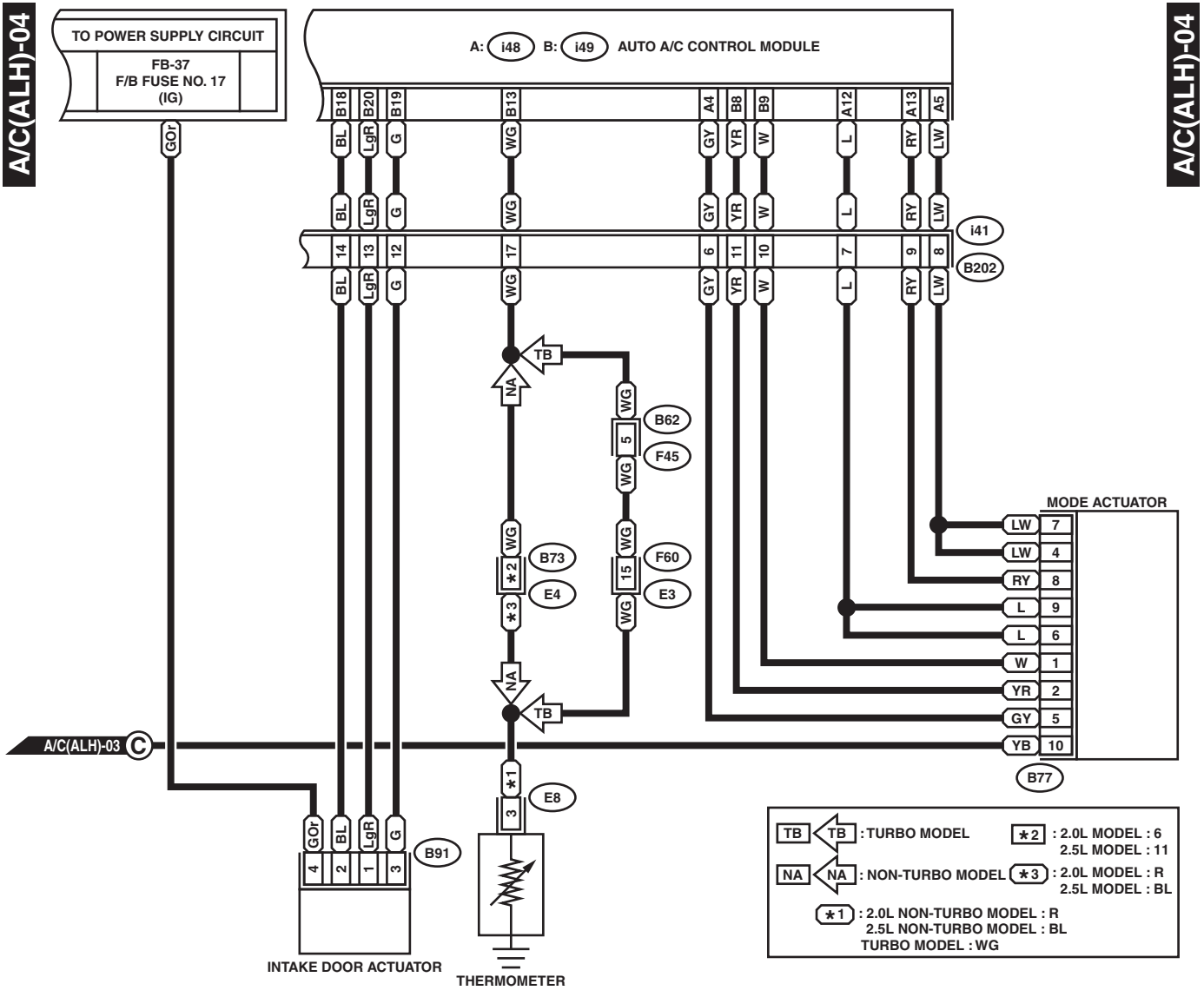
TO POWER SUPPLY CIRCUIT
FB-37
F/B FUSE NO. 17
(IG)
A: i48 B: i49 AUTO A/C CONTROL MODULE
i41
B202
B62
F45
B73
E4
F60
E3
E8
B91
B77
MODE ACTUATOR
A/C(ALH)-03 C
INTAKE DOOR ACTUATOR
THERMOMETER
TB : TURBO MODEL
NA : NON-TURBO MODEL
*2 : 2.0L MODEL : 6
2.5L MODEL : 11
*3 : 2.0L MODEL : R
2.5L MODEL : BL
*1 : 2.0L NON-TURBO MODEL : R
2.5L NON-TURBO MODEL : BL
TURBO MODEL : WG

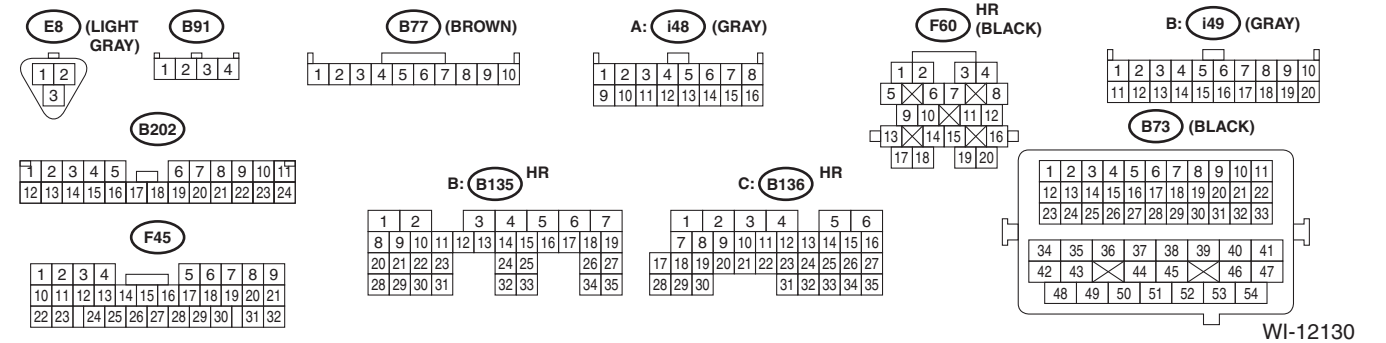
E8 (LIGHT GRAY)
B91
B77 (BROWN)
A: i48 (GRAY)
F60 HR (BLACK)
B: i49 (GRAY)
B202
B: B135 HR
C: B136 HR
B73 (BLACK)
F45