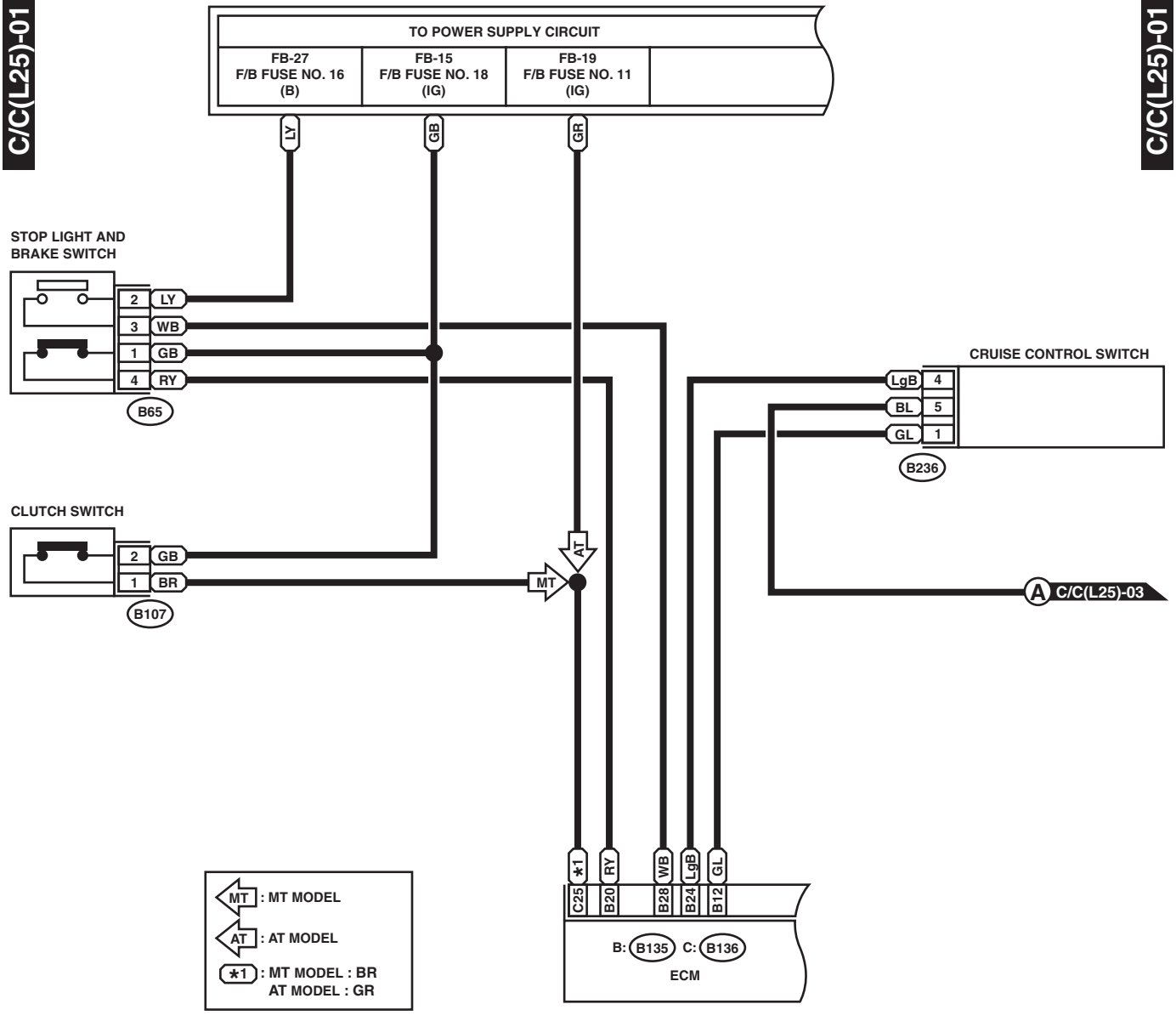
TO POWER SUPPLY CIRCUIT
FB-27
F/B FUSE NO. 16
(B)
FB-15
F/B FUSE NO. 18
(IG)
FB-19
F/B FUSE NO. 11
(IG)
LY
GB
GR
STOP LIGHT AND
BRAKE SWITCH
2 LY
3 WB
1 GB
4 RY
B65
CRUISE CONTROL SWITCH
LgB 4
BL 5
GL 1
B236
CLUTCH SWITCH
2 GB
1 BR
B107
AT
MT
A C/C(L25)-03
*1
RY
WB
LgB
GL
C25
B20
B28
B24
B12
B: B135 C: B136
ECM
MT : MT MODEL
AT : AT MODEL
*1 : MT MODEL : BR
AT MODEL : GR

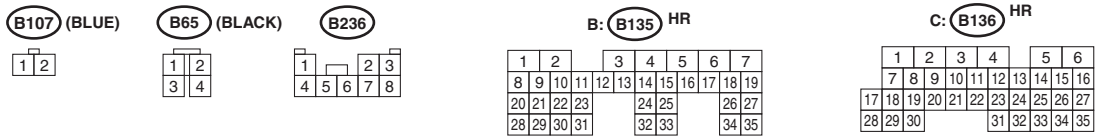
B107 (BLUE)
B65 (BLACK)
B236
B: B135 HR
C: B136 HR