AIR CONDITIONING SYSTEM 4-7

Page

S SPECIFICATIONS 2
1. Air Conditioning System 2

C COMPONENT PARTS 3
1. Air Conditioning System 3
2. Evaporator 4
3. Compressor 5

W SERVICE PROCEDURE 6
1. Safety Precautions 6
2. Basic Information 8
3. Tools and Equipment 9
4. O-ring Connections 12
5. Refrigerant Service Procedure 14
6. Discharge the System 15
7. Evacuating and Charging 15
8. Leak Testing 20
9. Lubrication 23
10. Performance Test 24
11. Compressor 25
12. Condenser 31
13. Receiver Drier 32
14. Evaporator 33
15. Condenser Fan Assembly 34
16. Flexible Hose 35
17. Relay and Fuse 36
18. Pressure Switch (Dual Switch) 37

T DIAGNOSTICS 38
1. Air Conditioning System Diagnosis 38
2. Performance Test Diagnosis 39
3. Blower Motor Diagnosis 42
4. Compressor Diagnosis 43
5. Compressor Clutch Diagnosis 44
6. Radiator Fan (Main Fan) Diagnosis 45
7. Condenser Fan (Sub Fan) Diagnosis (I) 46
8. Condenser Fan (Sub Fan) Diagnosis (II) 47

1. Air Conditioning System

Item		Specifications
Type of air conditioner		Reheat air-mix type
Cooling capacity (IMACA)		5.234 kW (4,500 kcal/h, 17,856 BTU/h)
Refrigerant		HFC-134a (CH_2FCF_3) [0.6 — 0.7 kg (1.3 — 1.5 lb)]
Compressor	Type	5-vane rotary, fix volume (CR-14)
	Discharge	144 cm^3 (8.79 cu in)/rev
	Max. permissible speed	7,000 rpm
Magnet clutch	Type	Dry, single-disc type
	Power consumption	47 W
	Type of belt	V-Ribbed 4 PK
	Pulley dia. (effective dia.)	120 mm (4.72 in)
	Pulley ratio	1.8 model: 1.11, 1.6 model: 0.92
Condenser	Type	Corrugated fin (Multi-flow)
	Core face area	0.196 m^2 (2.1 sq ft)
	Core thickness	19 mm (0.75 in)
	Radiation area	4.7 m^2 (51 sq ft)
Receiver drier	Effective inner capacity	250 cm^3 (15.26 cu in)
Expansion valve	Type	External equalizing
Evaporator	Type	Single tank
	Dimensions (W x H x T)	86 x 222 x 235 mm (3.39 x 8.74 x 9.25 in)
Blower fan	Fan type	Sirocco fan
	Outer diameter x width	150 x 75 mm (5.91 x 2.95 in)
	Power consumption	230 W at 12 V
Condenser fan (Sub fan)	Motor type	Magnet
	Power consumption	120 W at 12 V
	Fan outer diameter	320 mm (12.60 in)
Radiator fan (Main fan)	Motor type	Magnet
	Power consumption	120 W at 12 V
	Fan outer diameter	320 mm (12.60 in)
Idling speed (A/C ON)	MPFI model	850±50 rpm (700±50 rpm “D” range in AT model)
Dual switch (Pressure switch)	Low-pressure switch operating pressure kPa (kg/cm^2, psi)	ON → OFF: 176±20 (1.80±0.20, 25.5±2.9)
		OFF → ON: 186±29 (1.90±0.30, 27.0±4.2)
	High-pressure switch operating pressure kPa (kg/cm^2, psi)	ON → OFF: 2,648±196 (27±2, 384±28)
		DIFF: 588±196 (6±2, 85±28)
Compressor relief valve blow-out pressure kPa (kg/cm^2, psi)		3,727±196 (38±2.0, 540±28)
Thermo control amplifier working temperature (Evaporator outlet air)	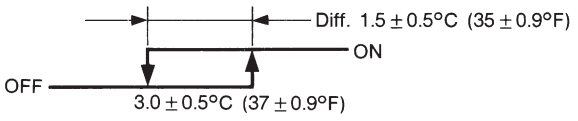 G4M0938	
Compressor thermocut temperature		140±5°C (284±9°F) Diff. 15±5°C (59±9°F)

1. Air Conditioning System

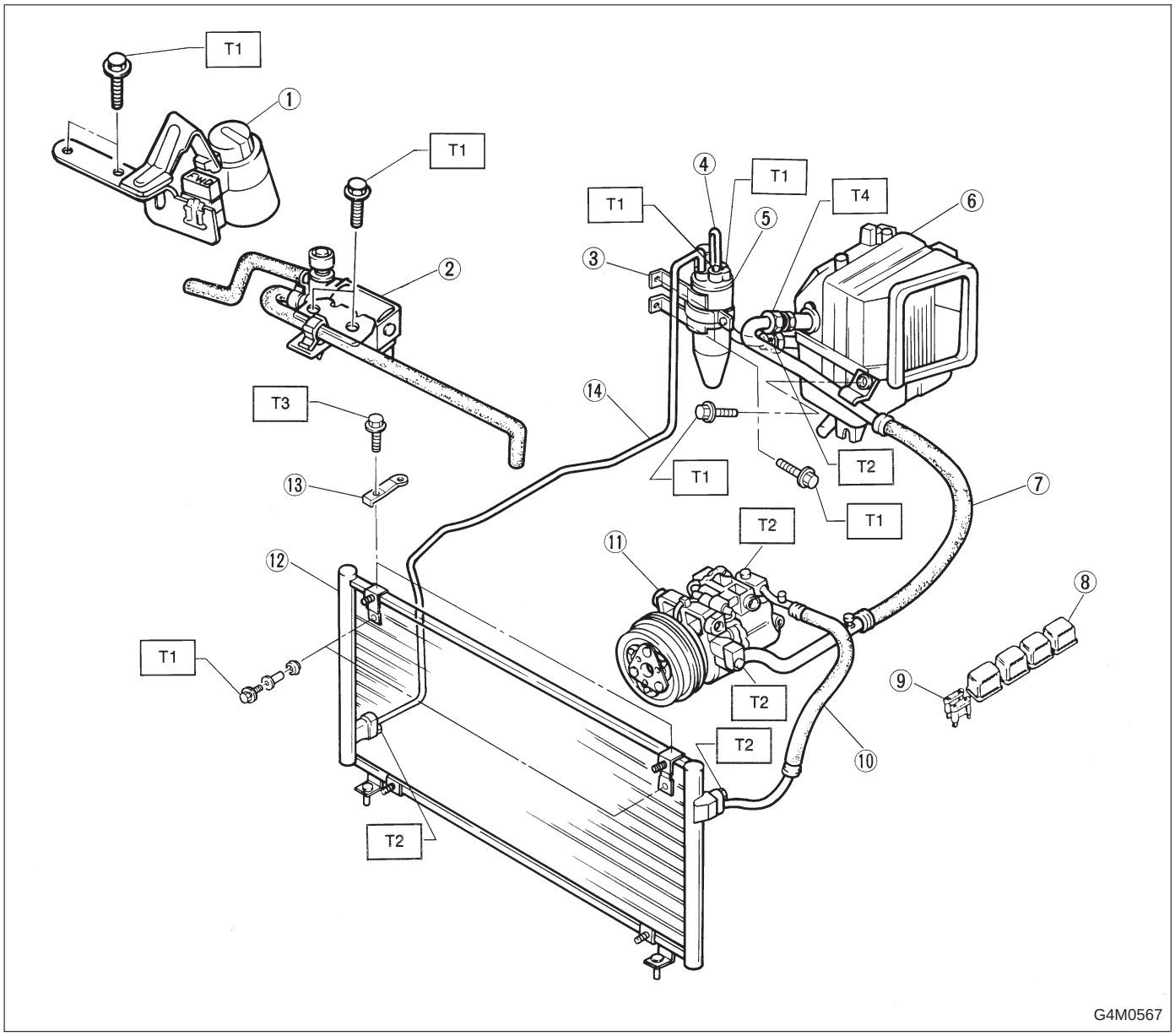

① A/C cut relay
② FICD (1800 cc model)
③ Receiver drier bracket
④ Pipe (Receiver drier — C/unit)
⑤ Receiver drier
⑥ Cooling unit
⑦ Hose (Low-pressure)
⑧ A/C relay
⑨ Fuse
⑩ Hose (High-pressure)
⑪ Compressor
⑫ Condenser
⑬ Radiator bracket
⑭ Pipe (Condenser — Receiver drier)

Tightening torque: N·m (kg-m, ft-lb)
T1: 5.39 — 9.31 (0.55 — 0.95, 4.0 — 6.9)
T2: 13 — 23 (1.3 — 2.3, 9 — 17)
T3: 9.8 — 19.6 (1.00 — 2.00, 7.2 — 14.4)
T4: 19.6 — 29.4 (2.00 — 3.00, 14.4 — 21.5)

2. Evaporator

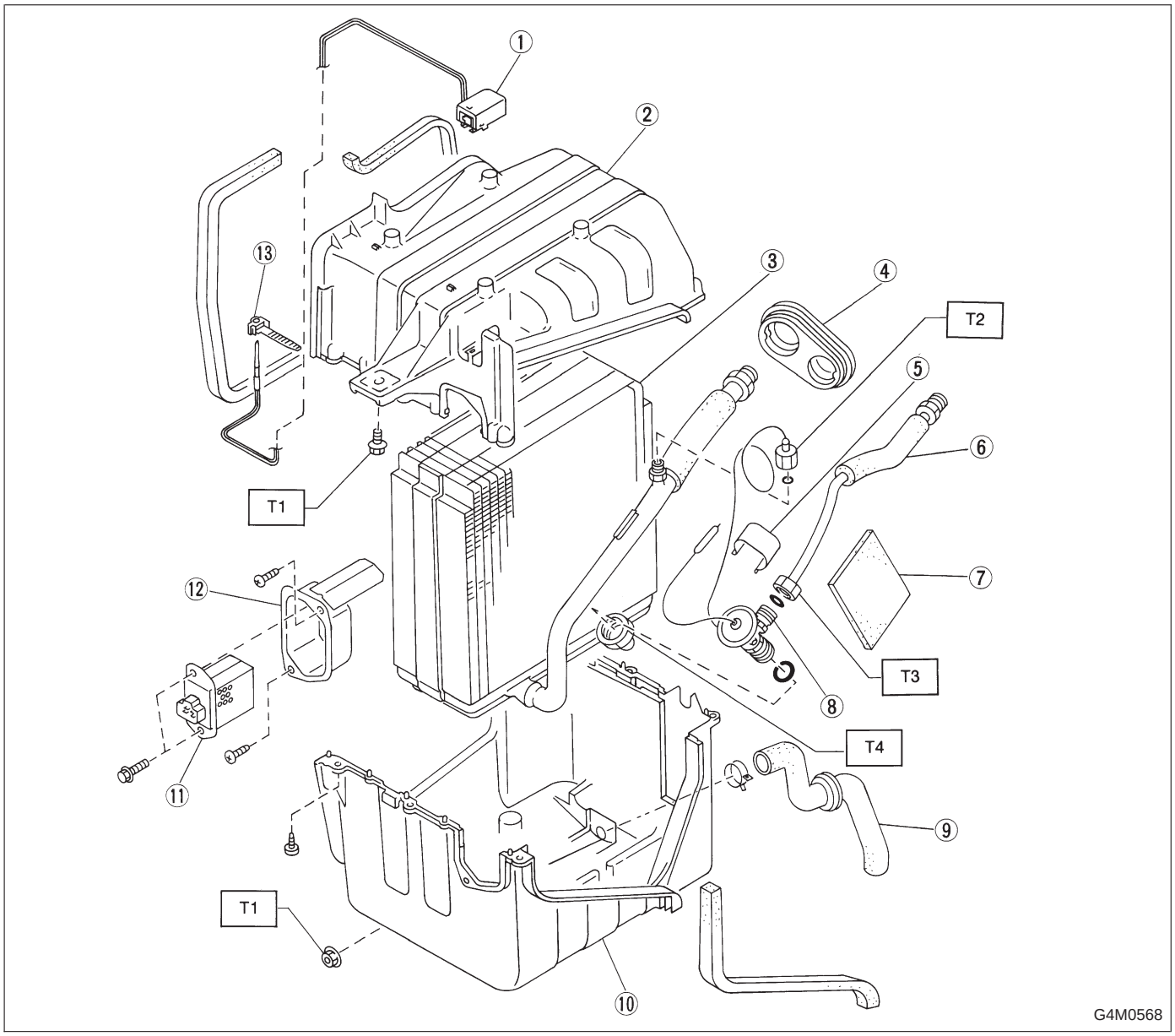

① Thermo control amplifier
② Case upper
③ Cooling unit
④ Grommet
⑤ Clip
⑥ Pipe
⑦ Seat
⑧ Expansion valve
⑨ Drain hose
⑩ Case lower
⑪ Resistor
⑫ Resistor bracket
⑬ Thermistor bracket

Tightening torque: N·m (kg-m, ft-lb)
T1: 5.5 — 9.5
(0.56 — 0.97, 4.1 — 7.0)
T2: 13.2 — 16.2
(1.35 — 1.65, 9.7 — 11.9)
T3: 17.6 — 21.6
(1.80 — 2.20, 13.0 — 15.9)
T4: 21.5 — 27.5
(2.20 — 2.80, 15.9 — 20.3)

3. Compressor

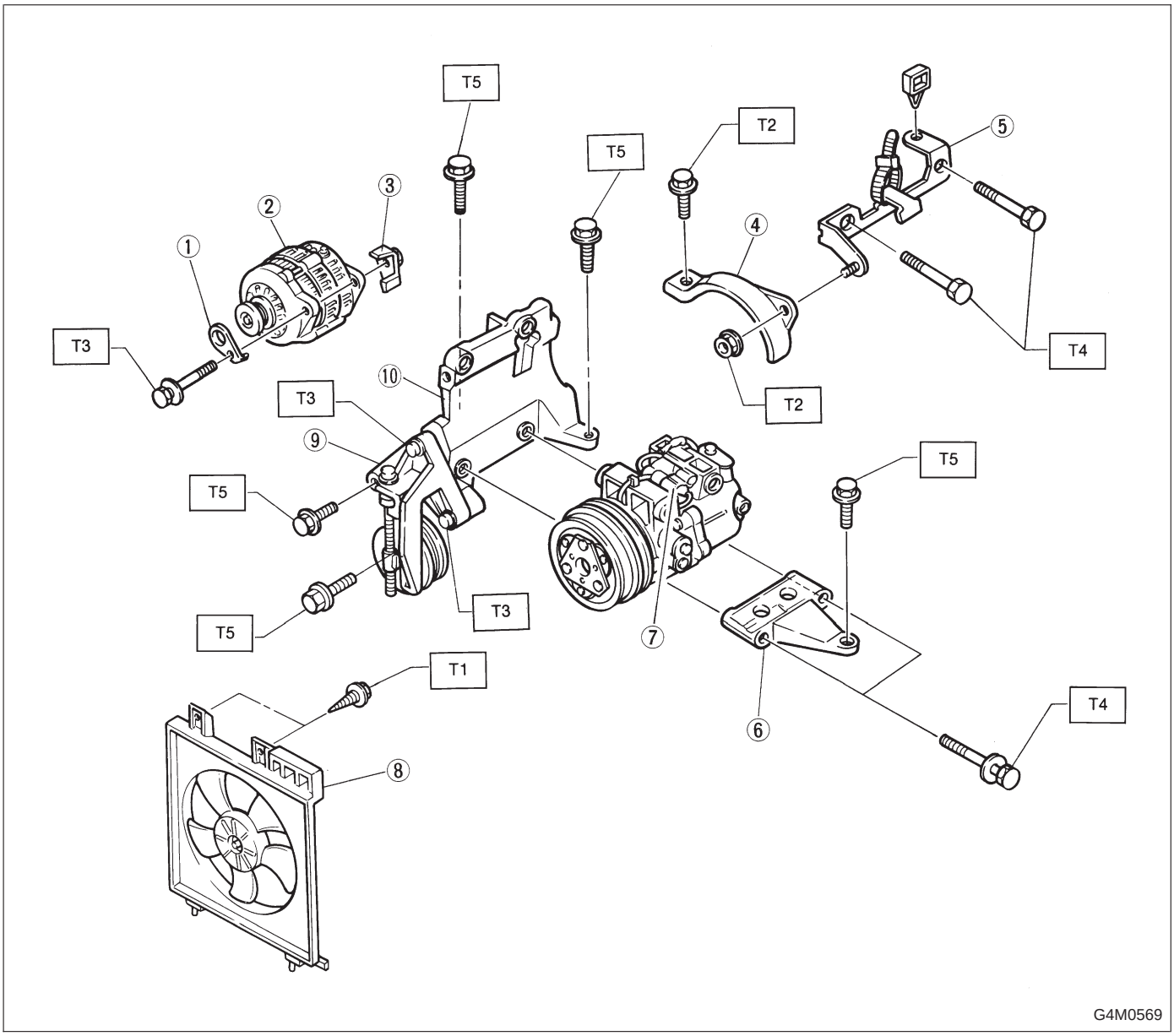

① Alternator bracket
② Alternator
③ Alternator bracket nut
④ Compressor belt cover
⑤ Bracket
⑥ Compressor bracket lower
⑦ Compressor
⑧ Condenser fan motor ASSY
⑨ Idler pulley ASSY
⑩ Compressor bracket upper

Tightening torque: N·m (kg-m, ft-lb)
T1: 3 — 5 (0.3 — 0.5, 2.2 — 3.7)
T2: 5.39 — 9.31 (0.55 — 0.95, 4.0 — 6.9)
T3: 19 — 27 (1.9 — 2.8, 14 — 20)
T4: 24.2 — 33.6 (2.47 — 3.43, 17.8 — 24.8)
T5: 31 — 41 (3.2 — 4.2, 23 — 30)

1. Safety Precautions

1. HFC-134a AIR CONDITIONING SYSTEM

Component parts of the cooling system, refrigerant, compressor oil, and other parts are not the same for the HFC-134a system and the older CFC-12 system. Do not interchange parts or liquid.
Vehicles with HFC-134a air conditioning systems, use only HFC-134a parts that are indicated on a label attached to the vehicle. Before performing any maintenance, verify the type of air conditioning system installed in the vehicle.

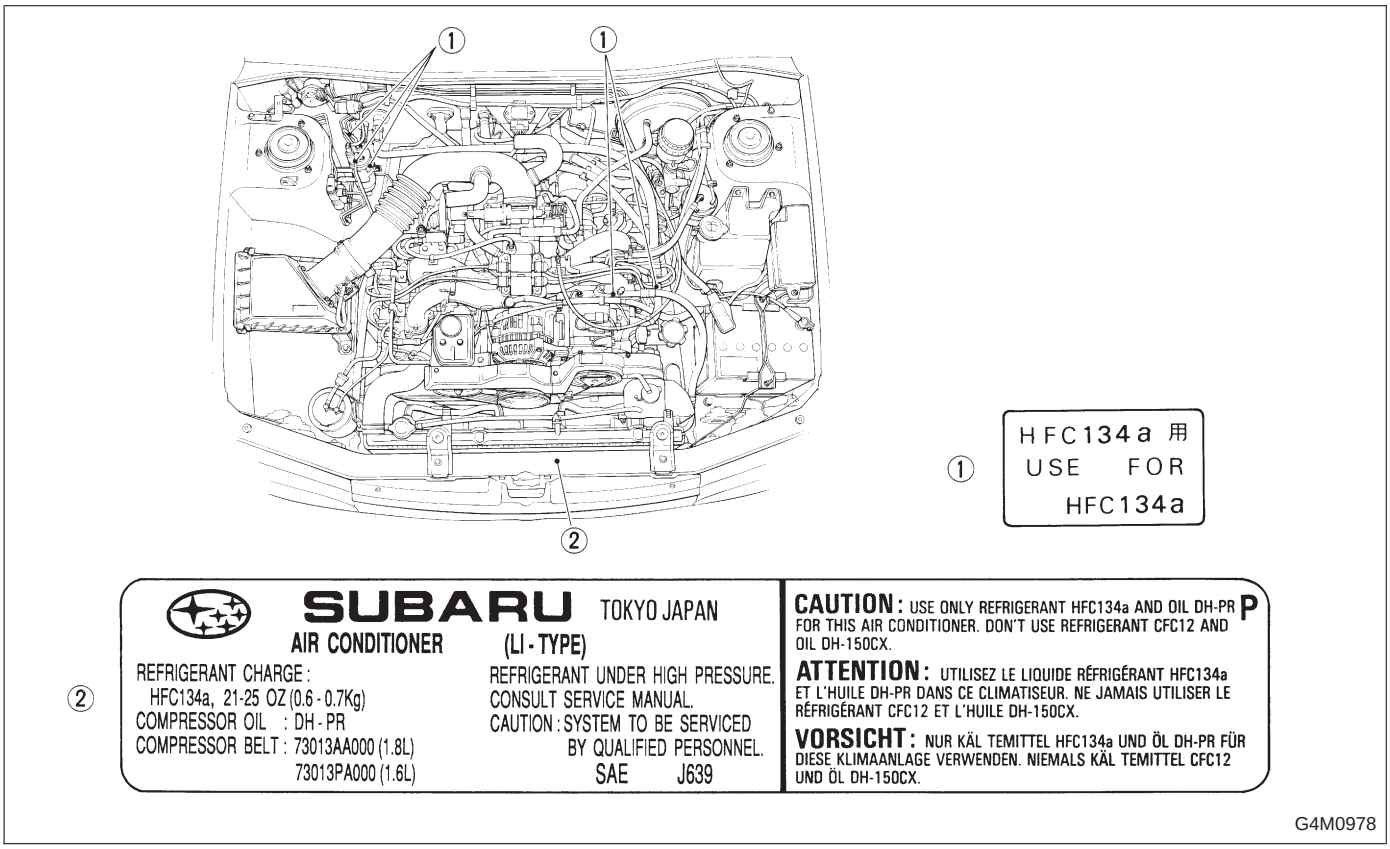

2. COMPRESSOR OIL

Do not use any compressor oil that is not specifically designated for the HFC-134a air conditioning system; only use DH-PR. Also, do not use HFC-134a compressor oil in the CFC-12 air conditioning system. If compression oils are mixed, poor lubrication will result and the compressor itself may be damaged.
Because HFC-134a compressor oil is very hygroscopic (easily absorbs moisture), when parts of the air conditioning system are being removed, quickly install a blind plug to prevent contact with the outside air. Also, always make sure that the service container for compressor oil is tightly closed except when in use. Store compressor oil in a tightly closed steel container.

3. REFRIGERANT

Do not put CFC-12 refrigerant into a HFC-134a air conditioning system. Also, do not put HFC-134a refrigerant into a CFC-12 air conditioning system. If the wrong refrigerant is used, poor lubrication will result and the compressor itself may be destroyed.

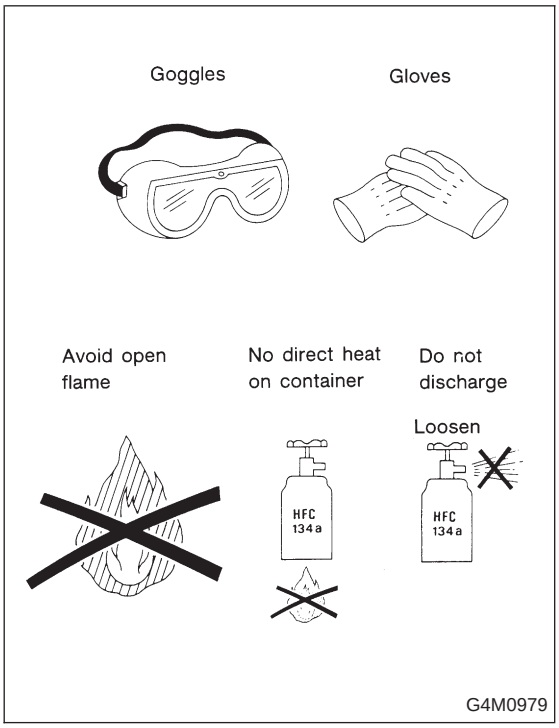

4. HANDLING OF REFRIGERANT

Because refrigerant boils at approx. −30°C (−22°F) at sea level, it is cold enough to give you severe frostbite. Always wear goggles to protect your eyes and gloves to protect your hands. Also, even under the pressures normally found in CFC-12 containers, refrigerant will boil with the addition of heat. This could raise the pressure inside the container to a dangerous level.

Never expose a can of HFC-134a to direct sunlight, or to temperatures over 40°C (104°F). One more thing to remember about HFC-134a is that when it is exposed to an open flame or to hot metal, it forms phosgene, a deadly gas. Do not discharge HFC-134a into the atmosphere on purpose. Always read and follow the precautions on the HFC-134a bottle.

2. Basic Information

1) The combination of moisture and refrigerant forms acid, therefore, moisture should not be allowed to enter the refrigerant.
2) Refrigerant oil readily absorbs moisture, therefore, keep refrigerant oil containers tightly capped.
3) The process of evacuating the system is performed to remove small amounts of moisture. This is accomplished by lowering the pressure inside the system, which allows the moisture to boil off, in much the same way that a pot of water will boil away to nothing given enough time. The evacuation process does not suck the moisture out of the system.
4) A minimum level of vacuum must be reached to satisfactorily evacuate the system. This minimum level of vacuum depends on the temperature inside the system. The chart below shows the level of vacuum required to boil water at various temperatures.
Additionally, the vacuum level shown on a gauge will read approx. 4 kPa (25 mmHg, 1 inHg) less for each 304.8 m (1,000 ft) above sea level, due to the decrease in atmospheric pressure at altitude.

Vacuum level required to boil water (at sea level)

Temperature °C (°F)	Vacuum kPa (mmHg, inHg)
1.7 (35)	100.9 (757, 29.8)
7.2 (45)	100.6 (754, 29.7)
12.8 (55)	99.9 (749, 29.5)
18.3 (65)	99.2 (744, 29.3)
23.9 (75)	98.5 (739, 29.1)
29.4 (85)	97.2 (729, 28.7)
35 (95)	95.8 (719, 28.3)

3. Tools and Equipment

The following section provides information about the tools and equipment that will be necessary to properly service the A/C system.
Since equipment may vary slightly depending on the manufacturer, it is important to always read and follow the manufacturer's instructions.

CAUTION:
When working on vehicles with the HFC-134a system, only use HFC-134a specified tools and parts. Do not mix with CFC-12 tools and parts. If HFC-134a and CFC-12 refrigerant or compressor oil is mixed, poor lubrication will result and the compressor itself may be destroyed.
In order to help prevent mixing HFC-134a and CFC-12 parts and liquid, the tool and screw type and the type of service valves used are different. The gas leak detectors for the HFC-134a and CFC-12 systems must also not be interchanged.

	HFC-134a	CFC-12
Tool & screw type	Millimeter size	Inch size
Valve type	Quick joint type	Screw-in type

Tools and Equipment	Description
● WRENCH Various **WRENCHES** will be required to service any A/C system. A 7 to 40 N·m (0.7 to 4.1 kg-m, 5 to 30 ft-lb) torque wrench with various crowfoot wrenches will be needed. Open end or flare nut wrenches will be needed for back-up on the tube and hose fittings.	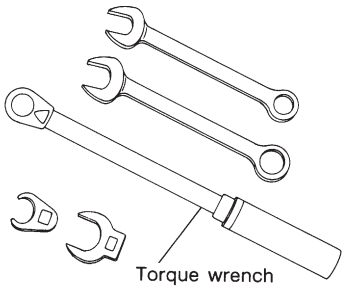 G4M0571
● APPLICATOR BOTTLE A small **APPLICATOR BOTTLE** is recommended to apply refrigerant oil to the various parts. They can be obtained at a hardware or drug store.	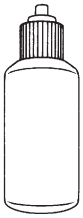 G4M0572

Tools and Equipment	Description
● MANIFOLD GAUGE SET A **MANIFOLD GAUGE SET** (with hoses) can be obtained from either a commercial refrigeration supply house or from an auto shop equipment supplier.	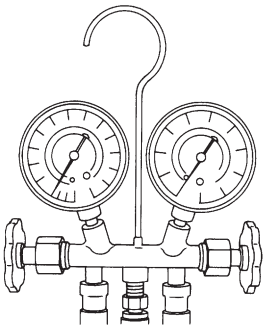 G4M0573
● REFRIGERANT RECOVERY SYSTEM A **REFRIGERANT RECOVERY SYSTEM** is used for the recovery and reuse of A/C system refrigerant after contaminants and moisture have been removed from the refrigerant.	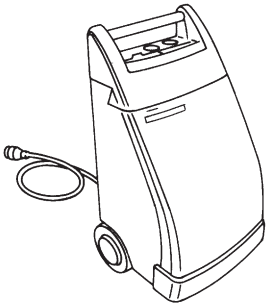 G4M0574
● SYRINGE A graduated plastic **SYRINGE** will be needed to add oil back into the system. The syringe can be found at a pharmacy or drug store.	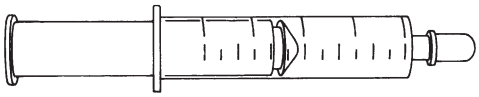 G4M0575
● VACUUM PUMP A **VACUUM PUMP** (in good working condition) is necessary, and may be obtained from either a commercial refrigeration supply house or an automotive equipment supplier.	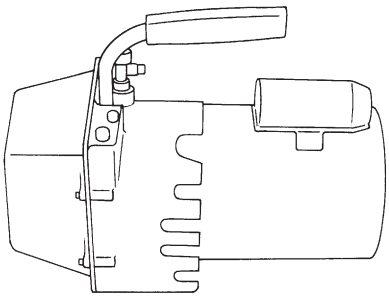 G4M0576

Tools and Equipment	Description
● CAN TAP A **CAN TAP** for the 397 g (14 oz) can is available from an auto supply store.	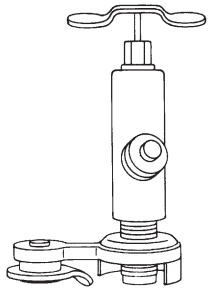 G4M0577
● THERMOMETER Pocket **THERMOMETERS** are available from either industrial hardware store or commercial refrigeration supply houses.	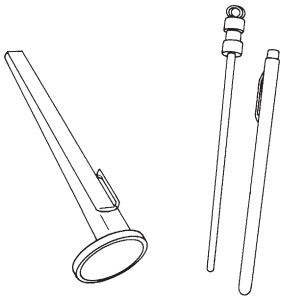 G4M0578
● ELECTRONIC LEAK DETECTOR An **ELECTRONIC LEAK DETECTOR** can be obtained from either a specialty tool supply or an A/C equipment supplier.	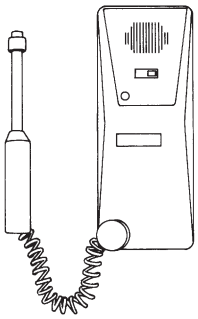 G4M0579
● WEIGHT SCALE A **WEIGHT SCALE** such as an electronic charging scale or a bathroom scale with digital display will be needed if a 13.6 kg (30 lb) refrigerant container is used.	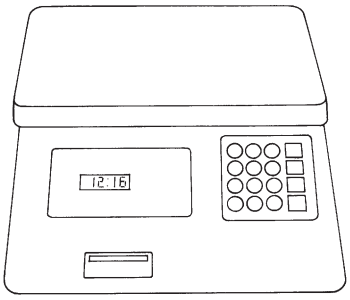 G4M0580

4. O-ring Connections

1. GENERAL

The following points should be kept in mind when assembling O-ring connections:
1) Avoid unnecessary handling and contact of O-rings with your hands, since even clean fingers contain body acids, which can contaminate the O-ring surface.
2) Do not handle O-rings with gloves, shop towels, etc., since lint particles may cling to the O-ring, possibly causing a leak upon assembly.
3) Always lubricate O-rings before assembly to allow the O-ring to seat itself properly.
4) Be certain to use torque wrenches when tightening O-ring fittings, because overtightening can not only damage the O-ring, but it can distort the tube end as well.

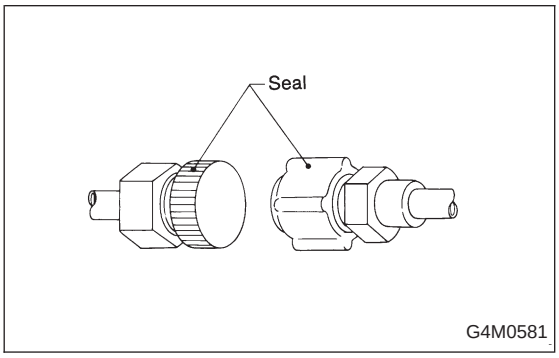

2. REMOVE PROTECTIVE SEALS

Just prior to making the connection, remove the protective seals.

CAUTION:
If for any reason you have to stop before making a connection, recap the tube, component or fitting.

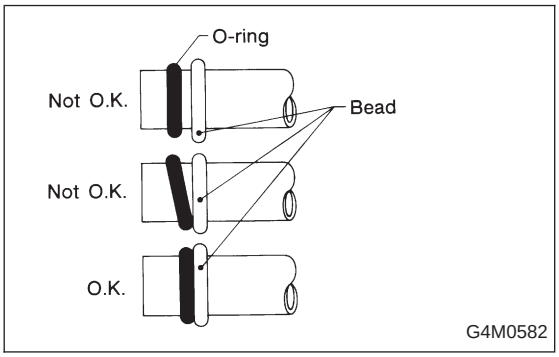

Visually inspect the O-ring surface, the O-ring mating surface, the threads and the connection points. If a defective part is found, replace it.
The O-ring must sit square against the tube bead. If necessary, slide the O-ring into proper position **with clean hands**.

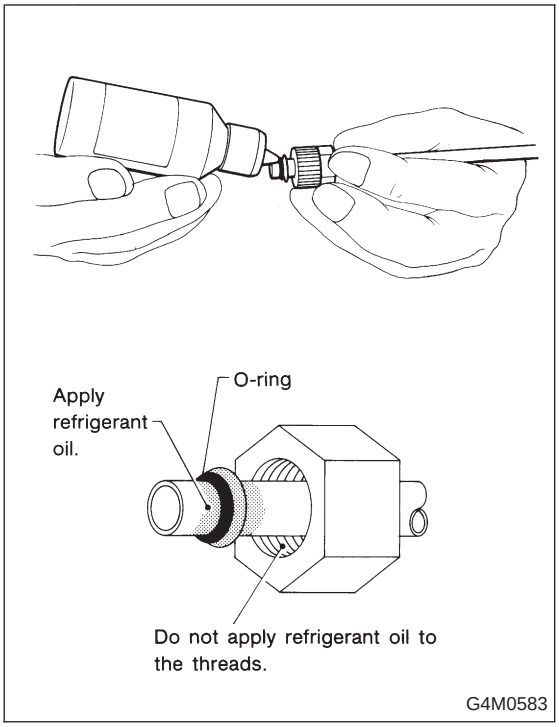

3. LUBRICATE THE COMPONENTS

For lubrication of the components, use only refrigerant oil as described in the appropriate service manual. Apply oil from an oil squirt gun or other closed container. Do not use your finger to spread the oil over the O-ring.

Apply a small amount of refrigerant oil to the top and sides of the O-ring. The area covered by oil should include the O-ring and the tube bead.

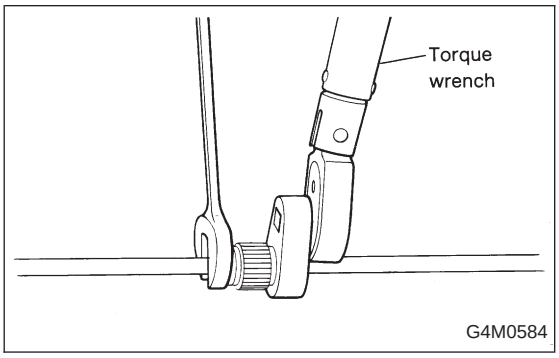

4. TORQUE THE FITTING

Using a back-up wrench in conjunction with a calibrated torque wrench, torque the connection to the midrange of the specification.

After completion of torquing, use a clean shop towel to remove any excess oil from the connection or any oil that may have dripped on the vehicle body or other parts.

CAUTION:

If a leak is suspected after torquing, do not retighten or retorque the connection. Instead, disassemble the connection, remove the O-ring, and inspect the O-ring, threads, joints and seating surfaces.

5. Refrigerant Service Procedure

1. WORK FLOW

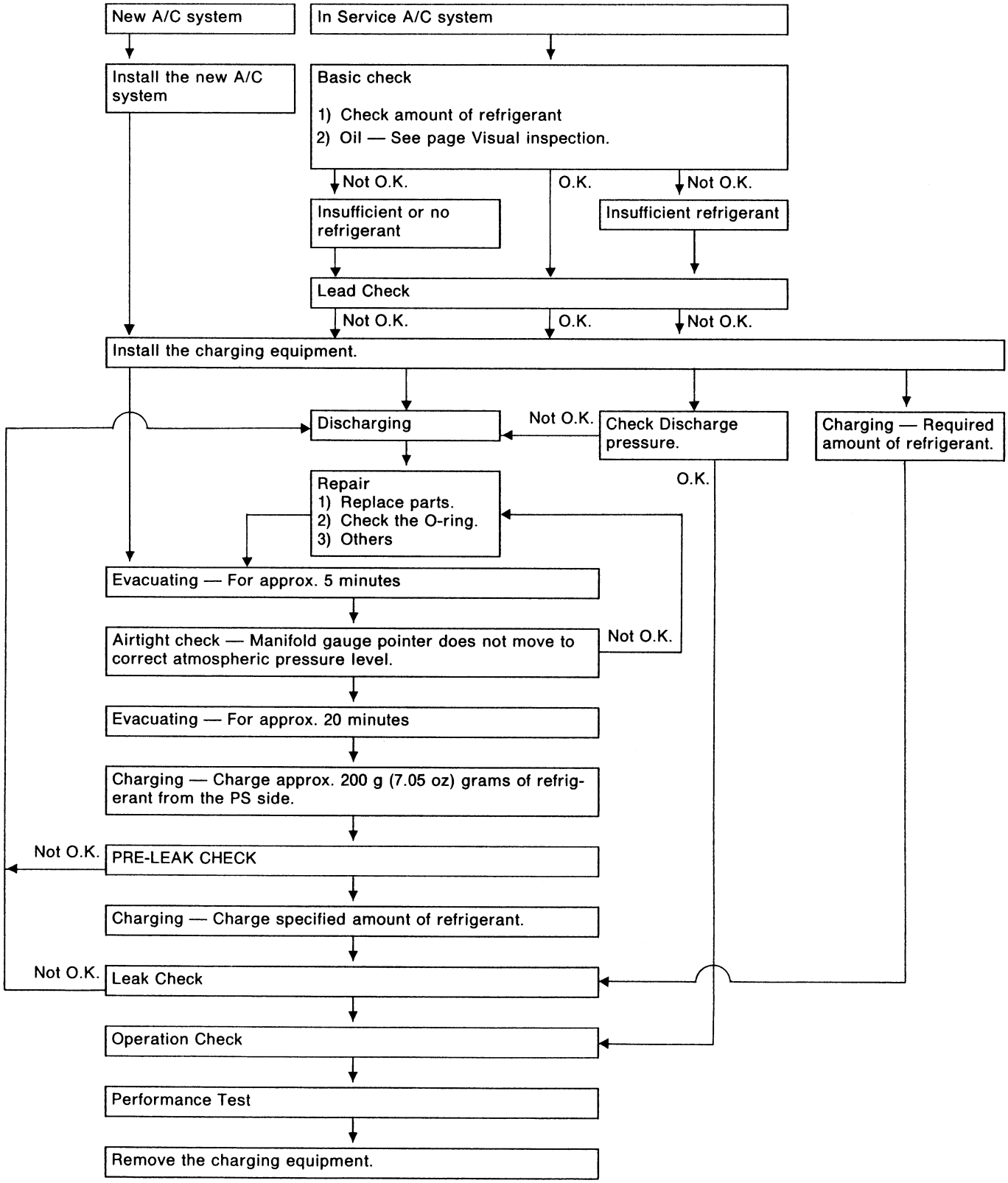

EPA0114

6. Discharge the System

CAUTION:
The following points must be kept in mind when discharging the system.

1) Be certain that goggles and gloves are worn.
2) Connect refrigerant recovery system to manifold gauge set and remove recycle refrigerant from the A/C system.
NOTE:
Refer to that refrigerant recovery system instruction manual for operating procedures.

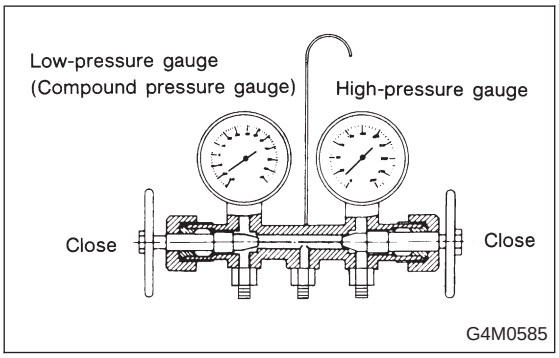

1. CONNECTING THE MANIFOLD GAUGE SET

1) Close the high and low side manifold valves

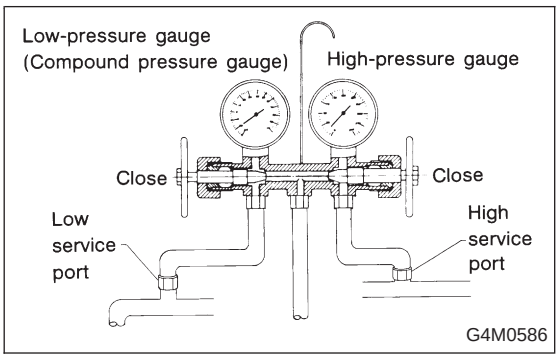

2) Attach the high- and low-pressure manifolds to the high and low services port on the vehicle.

2. PREPARE FOR DISCHARGING

1) Connect center manifold hose to refrigerant recovery system to recycle refrigerant.

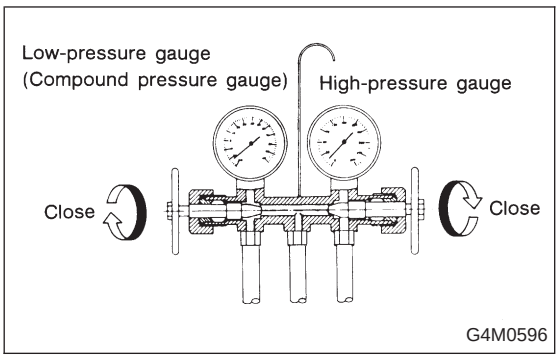

7. Evacuating and Charging

The following points should be kept in mind when evacuating and charging with a manifold gauge set:
1) Be certain that goggles and gloves are worn.
2) If bulk refrigerant [13.6 kg (30 lb) canister] is used, be certain to weigh the charge amount carefully, using the correct equipment, to avoid overcharging the system.

3) The charging procedure described in this section begins by charging **liquid** refrigerant into the high-pressure side of the system **with the engine off.** The procedure is completed by charging refrigerant **vapor** into the low-pressure side of the system with the engine running.

CAUTION:
Never open the high-pressure manifold valve when the engine is running.

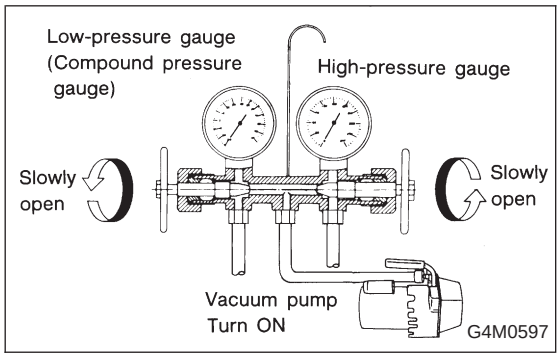

1. CONNECT THE GAUGE SET

1) Close the high- and low-pressure manifold valves

2) Attach the low-pressure manifold hose to the low-pressure service port on the vehicle. Check the low-pressure gauge. If more than 68.6 kPa (0.70 kg/cm^2, 10 psi) is indicated, discharge the system prior to charging.
3) Attach the high-pressure manifold hose to the high-pressure service port on the vehicle.
4) Connect the center hose from the manifold to the vacuum pump.
5) Turn on the vacuum pump.
6) Slowly open the low-pressure manifold valve.
7) When the low-pressure gauge reaches approximately 66.43 kPa (498.3 mmHg, 19.62 inHg), slowly open the high-pressure manifold valve.

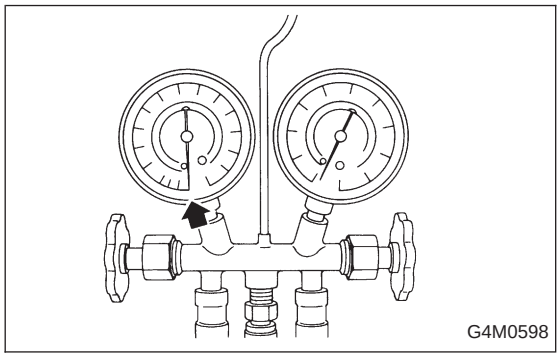

8) Maintain a minimum vacuum level of 100.56 kPa (754.4 mmHg, 29.70 inHg) for a minimum of 15 minutes on a new system or 30 minutes for an in-service system.

NOTE:
The gauge will read 4 kPa (25 mmHg, 1 inHg) less for every 304.8 m (1,000 ft) above sea level.

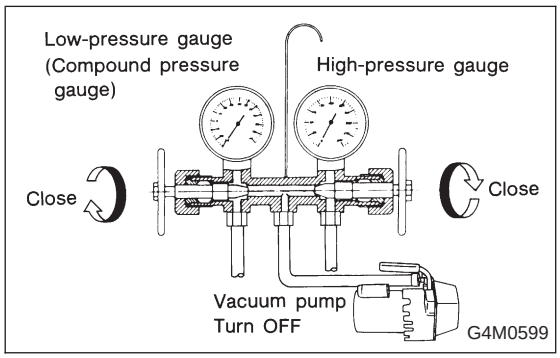

2. PERFORM A VACUUM LEAK TEST

1) After 15 minutes (or more) of evacuation, close the high-pressure manifold valve.
2) Close the low-pressure manifold valve.
3) Turn off the vacuum pump.

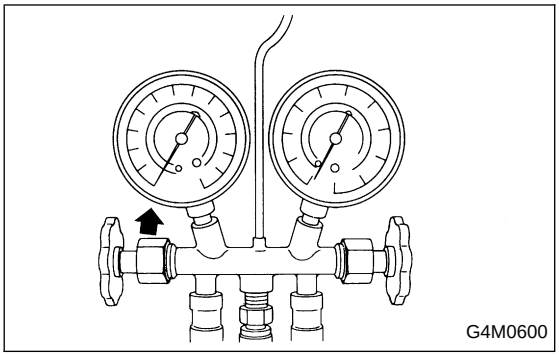

4) Note the low side gauge reading.
5) After 5 minutes, re-check the low-pressure gauge reading.
If the vacuum level has changed more than 4 kPa (25 mmHg, 1 inHg), perform an HFC-134a leak test.
If the vacuum reading is about the same as noted in step 2-4), continue on to step 2-6).

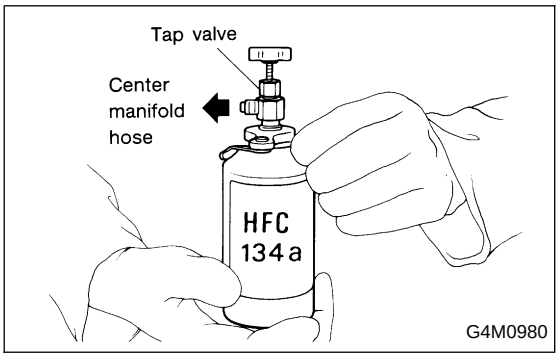

6) Carefully attach the can tap to the refrigerant can by following the can tap manufacturer's instructions.
7) Disconnect the center manifold hose from the vacuum pump and connect the hose to the tap valve.

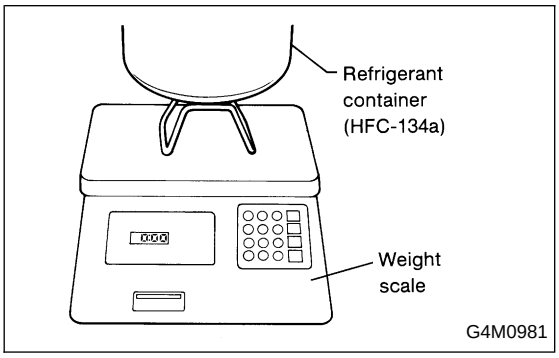

8) If a 13.6 kg (30 lb) container of refrigerant is used a weight scale will be needed. This scale is to determine the amount of refrigerant that is used.
Connect the center hose from the manifold to the valve. Place the 13.6 kg (30 lb) container on the scale, valve end down.

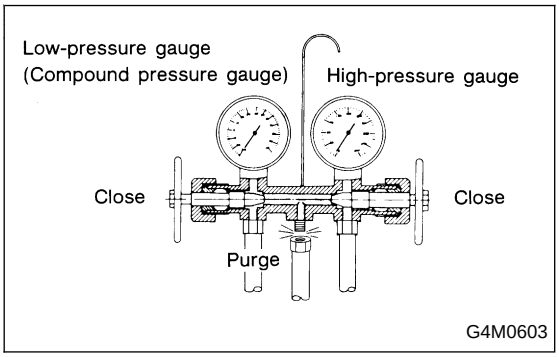

3. PURGE THE CENTER HOSE

1) Verify that all three hose connections are tight at the manifold gauge set.
2) Open the valve on the HFC-134a source.
3) **With safety equipment in place (goggles and gloves), use extreme caution** and loosen the center hose connection at the manifold and allow the HFC-134a to escape for no more than two or three seconds, then quickly retighten the hose fitting at the manifold.

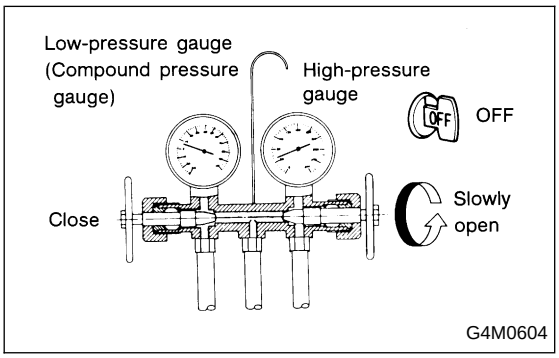

4. INITIAL CHARGING THROUGH THE HIGH SIDE

1) Connect a tachometer to the engine.
2) **With the engine off**, start charging by slowly opening the high-pressure manifold valve.

NOTE:
The initial charge rate can be increased by immersing the can in lukewarm [below 38°C (100°F)] water for a short time.

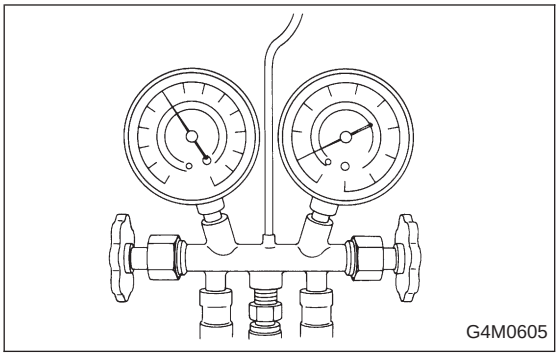

5. CHECK THE GAUGE READINGS

When both the high- and low-pressure gauge readings are about equal, or the HFC-134a source is empty, or the system has been filled to specifications, close the high-pressure manifold valve.

6. ADD ADDITIONAL CANS

If the HFC-134a source is exhausted, first close the high-pressure manifold valve, second, close the can tap valve, then slowly purge the refrigerant from the service hose by loosening the fitting at the can tap. Repeat steps 15 through 19 as necessary.

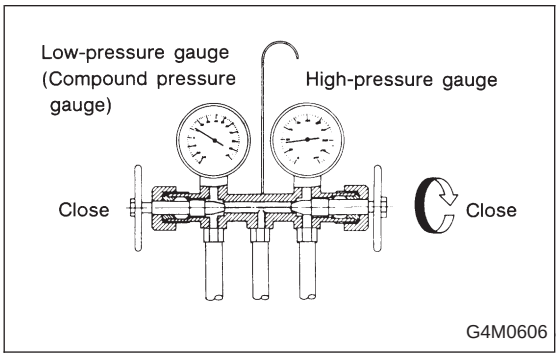

7. COMPLETE CHARGING THROUGH THE LOW SIDE

1) Verify that the high-pressure manifold valve is closed (should have already been closed).
2) Verify that the low-pressure manifold valve is closed (should have already been closed).

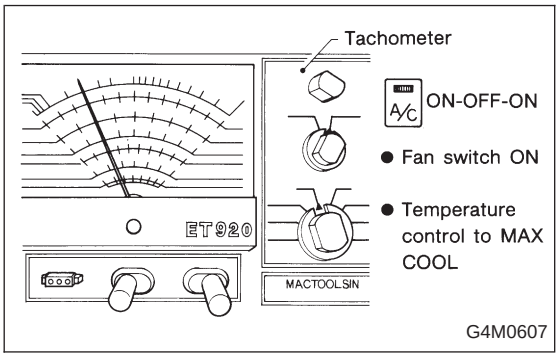

3) With the A/C switch off and the windows rolled down, start the engine and run at idle rpm.
4) Set the A/C controls on maximum cool and set the blower speed on the highest setting.
5) Quickly turn the A/C switch on-off-on-off a few times to prevent initial compressor damage due to “load shock”. Finish this operation with the A/C switch in the ON position.
6) Raise engine rpm to approximately 1,500 rpm.

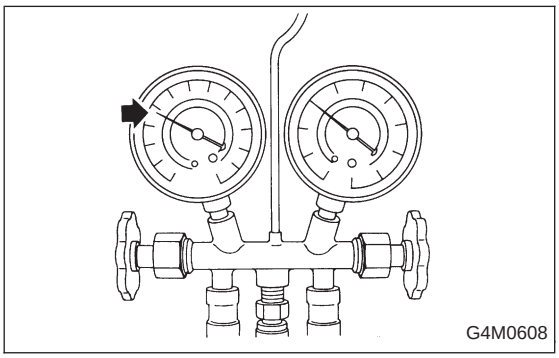

8. CHARGE THE SYSTEM

1) With the refrigerant source connected and the service hose purged, slowly open the low-pressure manifold valve, while checking the low-pressure gauge reading.

CAUTION:
The refrigerant source must be positioned for vapor (valve up).

2) Keep the low side pressure below 276 kPa (2.81 kg/cm^2, 40 psi) by using the low-pressure manifold valve to regulate the flow of refrigerant into the system.

3) When the system is fully charged, close the low-pressure manifold valve.
4) Close the valve at the refrigerant source.

● Refrigerant capacity

Unit: kg (lb)

Refrigerant	Minimum	Maximum
HFC-134a	0.6 (1.3)	0.7 (1.5)

9. COMPLETE ALL SYSTEM CHECKS

1) Evaluate the system performance (refer to performance testing section).
2) Perform leak detection test.

CAUTION:
Always perform leak checking in an environment free of refrigerant pollution.
Do not disconnect the high- or low-pressure hoses from the vehicle before leak checking.

10. DISCONNECT THE MANIFOLD GAUGE SET

1) Remove the high- or low-pressure hoses from the service ports and install the service port caps.

8. Leak Testing

The following points should be kept in mind when conducting a refrigerant leak test.
1) The A/C system to be tested must have an adequate refrigerant charge to begin with.
2) The area where the leak test is conducted must be free of wind and drafts, with still air being the ideal condition.
3) The atmosphere where the leak test is conducted must be free of refrigerant contamination.
4) Operate the A/C system for approx. 10 minutes, then turn the engine off an begin the leak test.
5) Refrigerant gas is heavier than air, therefore always hold the probe below the connection being tested.
6) When checking for a leak along a length of hose or tube, the leak detector probe must be moved slowly, approx. 25 mm (1 in) per second making sure probe does not come in contact with the component being tested.
7) When checking for a leak at a certain point, the leak detector probe must be held at that point for at least 5 seconds.

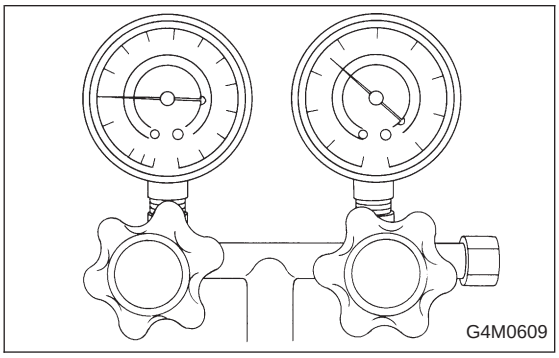

1. CHECK THE SYSTEM PRESSURE

1) With gauges connected to the A/C system, operate the A/C and confirm that the high side pressure is above 690 kPa (7.03 kg/cm^2, 100 psi). If not, evacuate and charge the system before leak checking (refer to evacuation and charging sections).

2. CLEAN CONNECTIONS BEFORE TESTING

Before testing, use a clean shop towel to wipe off refrigerant oil, dirt, or foreign material from all of the connections and components to be tested.

NOTE:
Since refrigerant oil absorbs refrigerant, excess oil on or near a connection may falsely signal a leak.

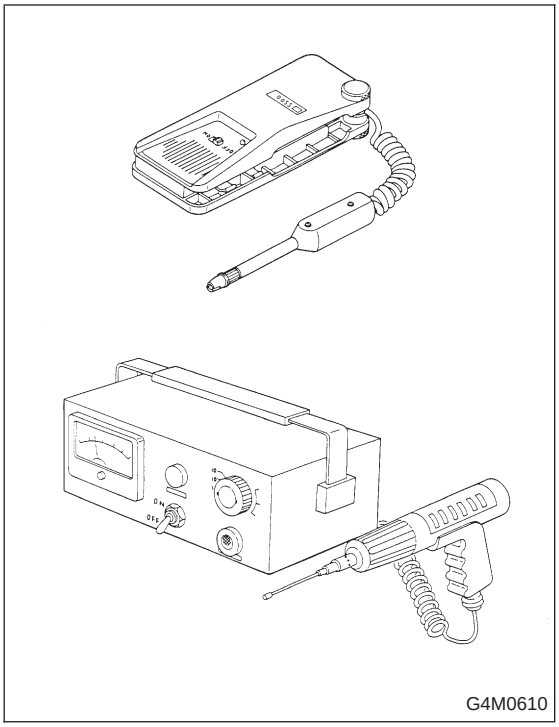

3. CALIBRATE LEAK DETECTOR

Refer to the manufacturer's instructions for the particular type of detector used and calibrate the instrument.

CAUTION:
Always make sure that the probe tip filter is clean and free of contamination.

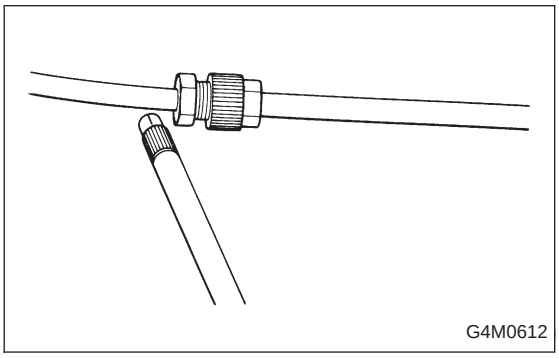

4. LEAK TEST — HIGH-PRESSURE SIDE

Operate the A/C system for approx. 10 minutes, then turn the engine off and begin the leak test.

1) Begin at the connection of the high-pressure tube to the evaporator, and work your way along the high-pressure side of the system to the compressor. There are three places to check each tube connection.

2) Check the area

(1) Check the area where the fitting meets the tube.

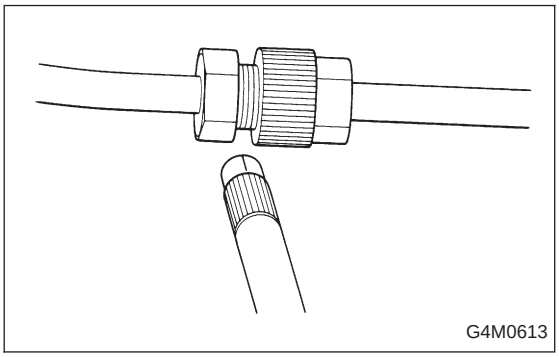

(2) Check the area where the two parts of the fitting join each other.

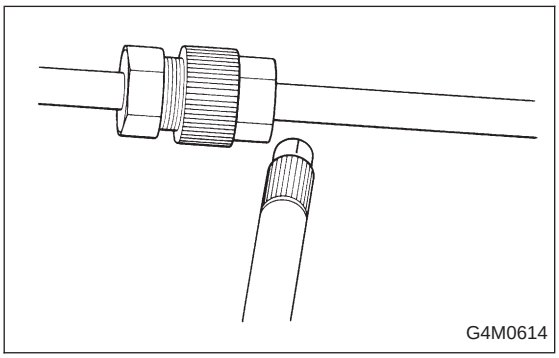

(3) Check the area where the nut meets the tube.

3) Check the area of the pressure switch (dual switch), and also check the seams of the receiver drier.
4) Check the connections of the tubes to the condenser, and also check any welded joints on the condenser.

CAUTION:
An oily area on the fins of the condenser may indicate a leak.

5) Check the area where the hoses attach to the compressor.
6) Check around the machined portions of the compressor (where the compressor sections join each other).
7) If equipped, check the thermal limiter on the compressor housing.
8) Check the compressor shaft seal by probing near the center of the compressor clutch pulley.

NOTE:
Some shaft seals have a very slight amount of normal leakage [approximately 28 g (1.0 oz) per year].

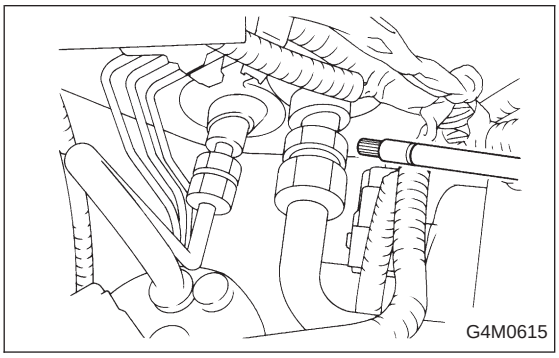
G4M0615

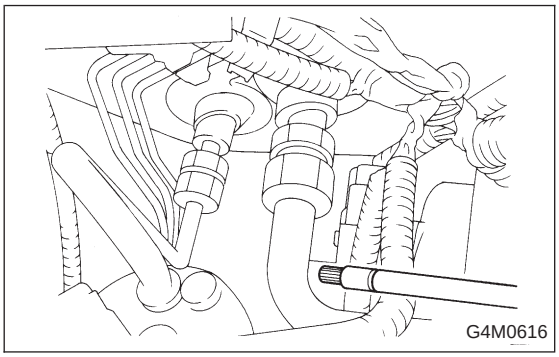
G4M0616

5. LEAK TEST — LOW-PRESSURE SIDE

1) Begin at the connection of the low pressure tube to the evaporator, and work your way along the low-pressure of the system to the compressor. There are three places to check on each tube connection.
2) Check the area.
   (1) Check the area where the fitting joins the tube.
   (2) Check the area where the two parts of the fitting join each other.
   (3) Check the area where the nut joins the tube.

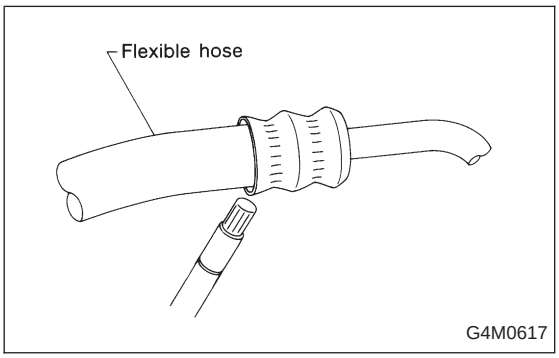

G4M0617

6. CHECK THE FLEXIBLE HOSES

1) Visually inspect the rubber portions of the flexible hoses for cracking. Probe the rubber section, including the ends of any insulators or protectors which may cover sections of the rubber hose, and near the ends where the rubber meets the metal collar.

NOTE:
Be certain to move the probe slowly [approximately 25 mm (1 in) per second] when probing along any length of hose or tube.

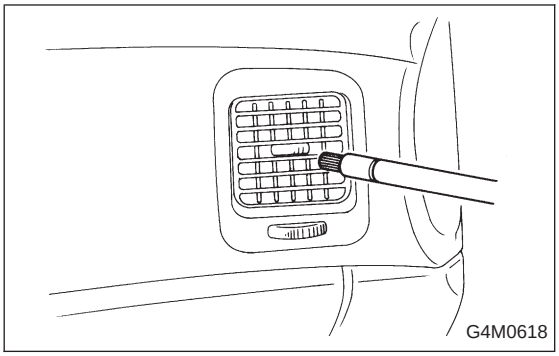

7. CHECK THE EVAPORATOR ASSEMBLY

1) Use one or both of the following methods to check the evaporator assembly.
2) Remove the drain hose from the case drain nipple. Hold the probe at the end of the case drain nipple for at least 10 seconds. Be certain to reconnect the drain hose when finished.
3) With the ignition key in the “ACC” position, run the blower on high speed for 1 minute, then turn the blower off. Place the probe in the center instrument panel vent, an turn the blower on low speed for 1 to 2 seconds, then turn the blower off. Leave the probe in the vent for at least 10 seconds.

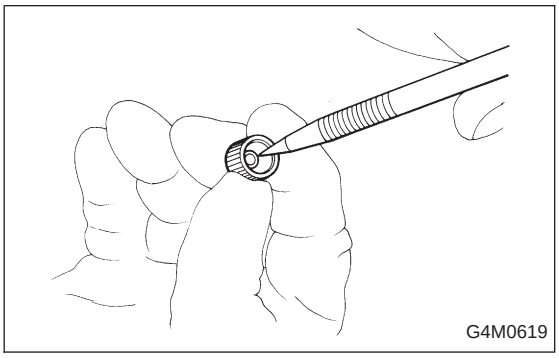

8. CHECK THE SERVICE PORT CAPS

Visually inspect the inside of the service port caps. Make sure the rubber seal is in place on the inside of the caps. Disconnect the gauges from the vehicle and install the service port caps.

9. Lubrication

1. SYSTEM OIL STABILIZATION

Prior to opening the refrigerant system for repairs (except compressor seizure) the system must be stabilized for correct oil replenishment.
Follow these procedures:
1) Engine speed set to 1,500 rpm.
2) A/C “ON”.
3) Air source to recirculate
4) Blower 4th or high speed position
   - Make sure the air entering the evaporator is above 26.7°C (80°F).
   - The discharge (high) side pressure must be above 588 kPa (6 kg/cm^2, 85 psi).
5) Operate the A/C for 10 minutes.

2. SYSTEM DISCHARGE

Slowly, discharge the system starting with the high-pressure side until the pressure drops below 345 kPa (3.52 kg/cm^2, 50 psi), then open the low-pressure side.

3. OIL REPLACEMENT

After stabilization and discharge, replace the component, adding the appropriate amount of oil (DH-PR) to the new component before installation.

Evaporator	75 mℓ (2.5 US fl oz, 2.6 Imp fl oz)
Receiver drier	10 mℓ (0.34 US fl oz, 0.4 Imp fl oz)
Condenser	35 mℓ (1.2 US fl oz, 1.2 Imp fl oz)
Hose	1 mℓ (0.03 US fl oz, 0.04 Imp fl oz)

If the compressor is replaced (after stabilization):
1) Drain and measure the oil from the original compressor.
2) Drain the oil from the replacement compressor and refill with the same amount that was drained from the original [20 mℓ (0.7 US fl oz, 0.7 imp fl oz) minimum]. Always use DH-PR for the replacement oil.

10. Performance Test

1. VEHICLE SET UP

In order to obtain meaningful test results, the vehicle must be set up to meet the following conditions:
1) Vehicle in shade
2) No wind
3) All vehicle doors closed
4) Front windows open
5) Hood open
6) Engine speed set at 1,500 rpm.
7) A/C ON
8) Temperature control lever — Maximum cold
9) Air source — Recirculation
10) Blower speed — 4th position (High)
11) Operate A/C for 10 minutes (Minimum) before taking measurement.

2. MEASUREMENTS

After 10 minutes (Minimum) of A/C operation and using accurate test equipment, take the following measurements (in order):
1) Evaporator intake air temperature at recirculation door.
2) Evaporator discharge air temperature at center grill.
3) Condenser (Ambient) intake air temperature measured 0.9 m (3 ft) in front and in line with the center of the condenser
4) Suction (Low) side pressure
5) Discharge (High) side pressure

NOTE:
If only one thermometer is available; 1) take the ambient measurement first; then 2) the intake air; and 3) discharge air temperature.

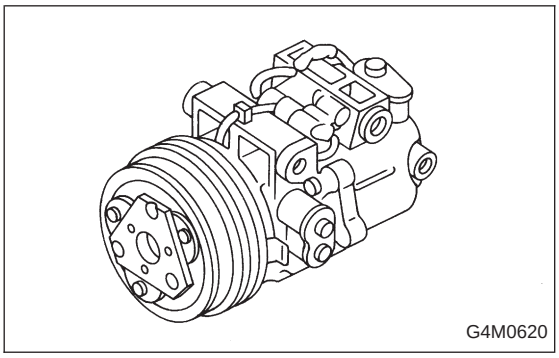
G4M0620

11. Compressor

Compressor is a 5-vane rotary type. When trouble occurs, replace compressor as a single unit.

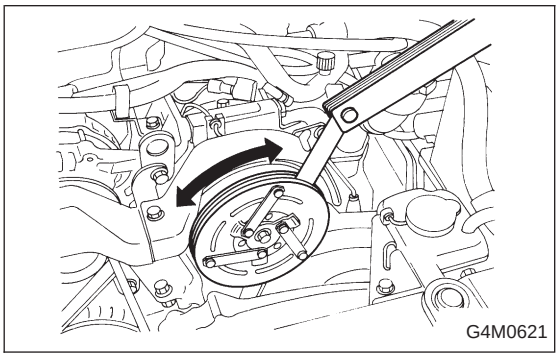
G4M0621

1. COMPRESSOR CLUTCH

Compressor clutch trouble is often caused by clutch slippage and noise. Check and take corrective measures, as required.

1) Check that clearance between drive plate and pulley over the entire perimeter is within specifications.

Clearance:
0.3 — 0.6 mm (0.012 — 0.024 in)

2) Check that voltage applied to magnetic coil is at least 10.5 volts.

3) When noise is noted, check that it originates in either compressor or pulley bearing.

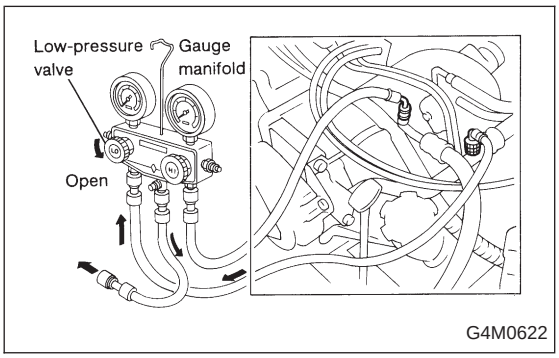

G4M0622

A: REMOVAL

1) Disconnect ground cable from battery.
2) Discharge refrigerant using manifold gauge.
   (1) Fully close low-pressure valve of manifold gauge.
   (2) Connect low-pressure charging hose of manifold gauge to low-pressure service valve.
   (3) Open low-pressure manifold gauge valve slightly, and slowly discharge refrigerant from system.

CAUTION:
Do not allow refrigerant to rush out. Otherwise, compressor oil will be discharged along with refrigerant.

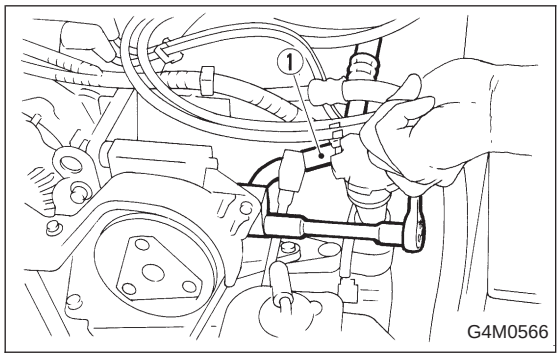

3) Low-pressure hose ① (Flexible hose Ps)

CAUTION:
- **Be careful not to lose O-ring of low-pressure hose.**
- **Plug the opening to prevent foreign matter from entering.**

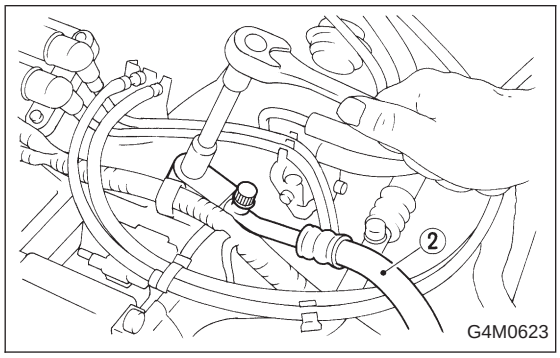

4) High-pressure hose ② (Flexible hose Pd)

CAUTION:
- **Be careful not to lose O-ring of high-pressure hose.**
- **Plug the opening to prevent foreign matter from entering.**

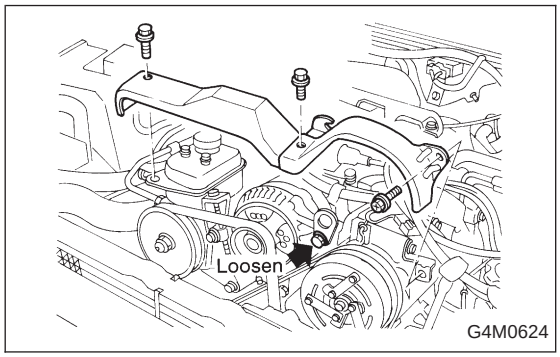

5) Compressor belt cover and generator belt cover
Remove bolts which secure belt covers.

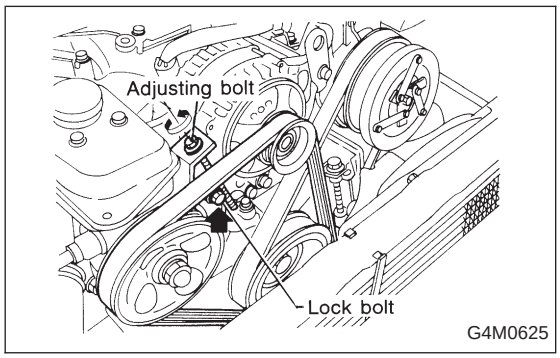

6) Generator V-belt
Loosen lock bolt on generator bracket. Turn adjusting bolt and remove V-belt.

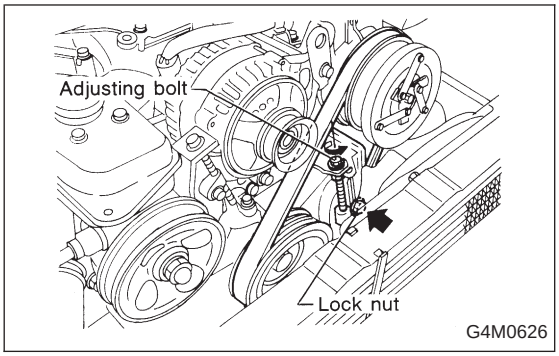

7) Compressor V-belt
Loosen lock bolt on idler pulley. Turn adjusting bolt and remove V-belt.

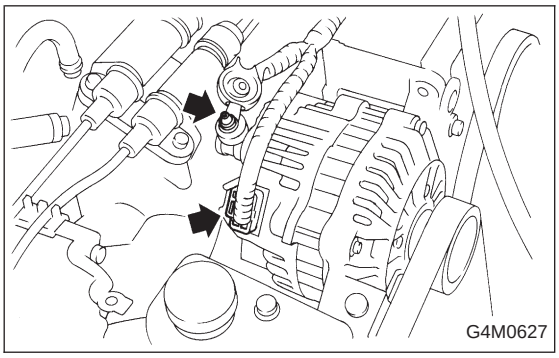

8) Generator harness

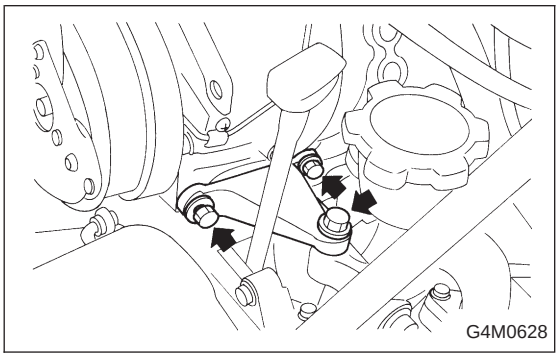

9) Compressor harness
Disconnect compressor harness from body harness.
10) Lower bracket
Remove bolts which secure lower compressor bracket.

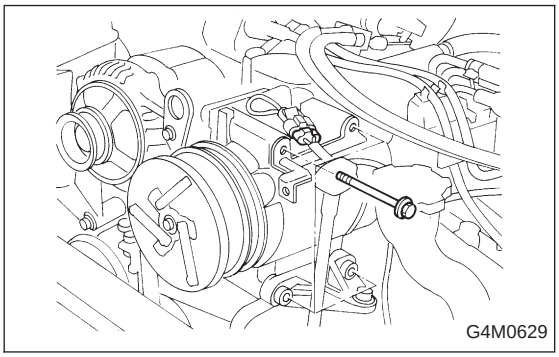

11) Compressor
Remove bolts which secure compressor. Remove compressor from bracket.

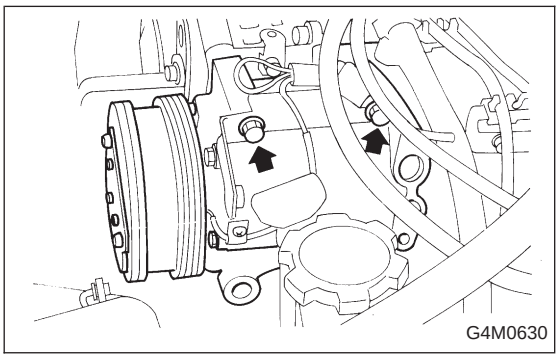

B: INSTALLATION

1) Compressor
Install compressor on bracket.

2) Compressor harness
3) Generator harness
4) Compressor V-belt (Rear)
After adjusting belt tension, tighten tension pulley lock bolt securely.

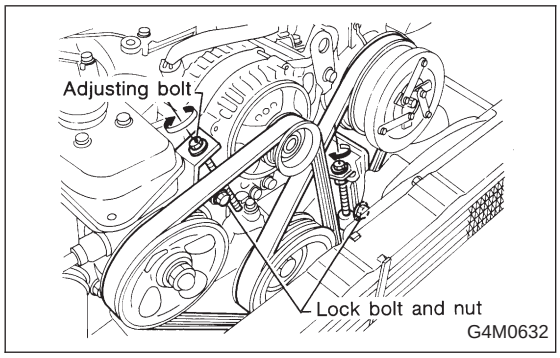

5) Generator V-belt
After adjusting V-belt tension, tighten generator bracket lock bolt securely.

6) Check drive belt tension and adjust it if necessary by changing generator position and/or idler pulley position.

Pulley arrangement	Tension mm (in)/98 N (10 kg, 22 lb)	
	A	B
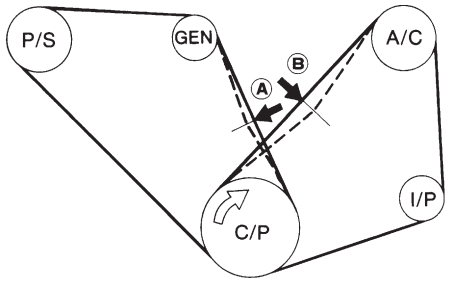 G4M0633	*New belt: 7.0 — 9.0 (0.276 — 0.354) Existing belt: 9.0 — 11.0 (0.354 — 0.433)	*New belt: 7.5 — 8.5 (0.295 — 0.335) Existing belt: 9.0 — 10.0 (0.354 — 0.394)

* When replacing belts with new ones, adjust tensions to specification and then readjust to the same specification after running engine for 5 minutes.

Figures in table refer to the number of grooves in pulleys.
C/P : Crankshaft pulley
GEN : Generator pulley
P/S : Power steering oil pump pulley
A/C : Air conditioner compressor pulley
I/P : Idler pulley

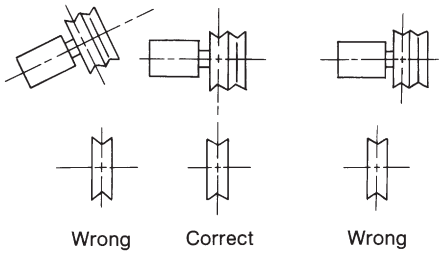

G4M0634

CAUTION:
● Ensure that the V-belt is aligned correctly. If it is not, check for loose bolts.
● The V-belt should not be too tight or too loose.
A belt which is too tight may break bearing or cause gas to leak from the shaft seal. A belt which is too loose slips, thereby causing the belt cut.
● After completing the compressor installation and testing the system operation, check and adjust the tension of both V-belts again.

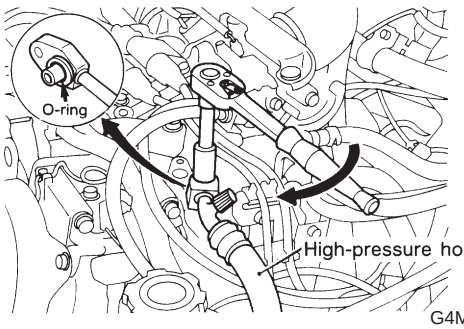

G4M0635

7) High-pressure hose (Flexible hose Pd)
Connect high-pressure hose with compressor.

CAUTION:
Be sure to apply compressor oil to the periphery of O-ring.

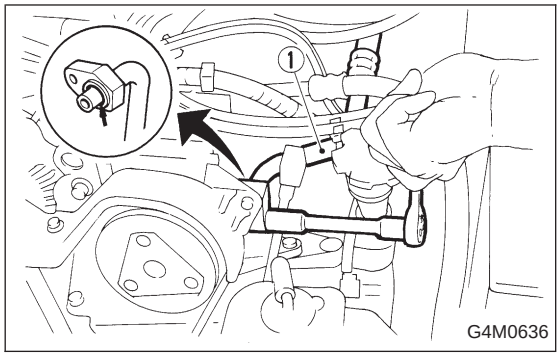

8) Low-pressure hose ① (Flexible hose Ps)
Connect low-pressure hose with compressor.

CAUTION:
Be sure to apply compressor oil to the periphery of O-ring.

9) Install belt cover.

CAUTION:
- **After installing belt cover, make sure it is not misaligned or twisted.**
- **After installing belt cover, check the clearance between pulley and belt cover.**

10) Connect ground cable to negative terminal of battery.
11) Charging refrigerant. <Ref. to 4-7 [W700].>

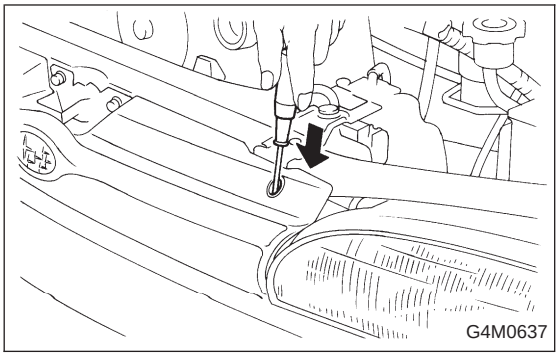

12. Condenser

A: REMOVAL AND INSTALLATION

1) Disconnect battery negative terminal.
2) Discharge refrigerant from low-pressure side.
3) Remove front grille.

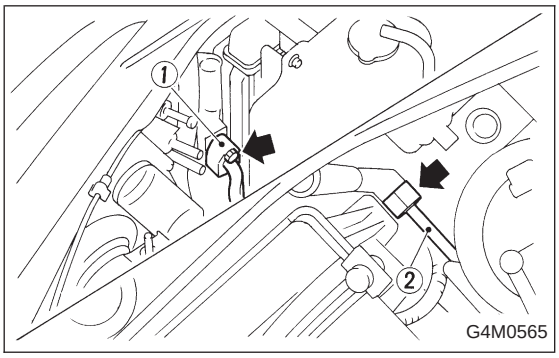

4) Remove the radiator bracket.
5) Disconnect high-pressure hose ① and high-pressure pipe ② from condenser.

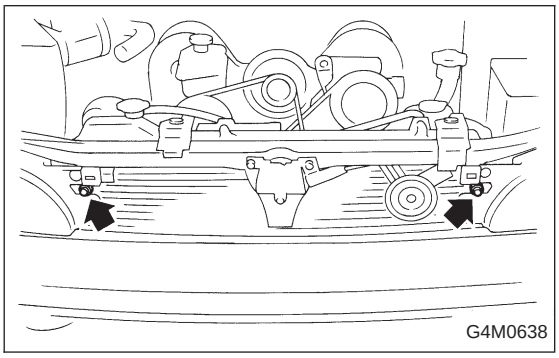

6) Remove the two bolts which secure condenser. While lifting condenser, remove it through space between radiator and radiator panel.

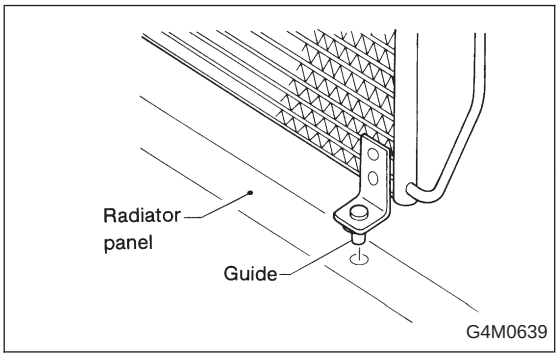

7) The condenser should be installed in the reverse order in which it was removed.
When installing the condenser, pay attention to the following:

CAUTION:
Before connecting the pipe, be sure to apply oil to the periphery of O-ring.

NOTE:
After installing condenser, ensure that guide on lower side of condenser is inserted into hole in radiator panel. Tighten attaching bolts.

B: INSPECTION

1) Make sure the condenser fins are free from dust and insects. If the fins are clogged, clean by blowing air or water through them.

NOTE:
To prevent dust and water from getting into the condenser, this work must be done when the condenser is installed in an actual vehicle.

2) Check the condenser to see if it shows any sign of oil seepage. Should oil ooze or gas leak from the condenser replace it with a new one.

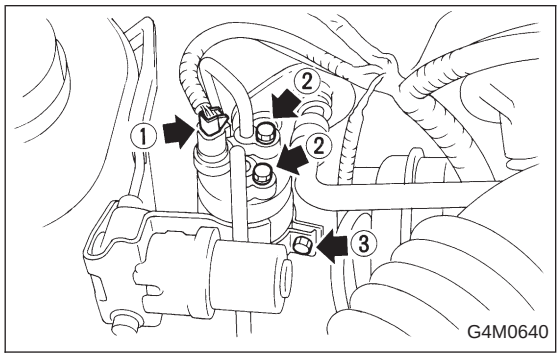

13. Receiver Drier

A: REMOVAL AND INSTALLATION

1) Disconnect battery negative terminal.
2) Discharge refrigerant.
3) Disconnect pressure switch harness ①.
4) Disconnect pipes ②.
5) Remove mounting bolt ③ and remove receiver drier.

CAUTION:
The receiver drier contains a desiccant. Be sure to put a blind plug in the detached receiver drier to protect it from moisture.

6) Install the receiver drier in the reverse order of removal.

14. Evaporator

A: REMOVAL AND INSTALLATION

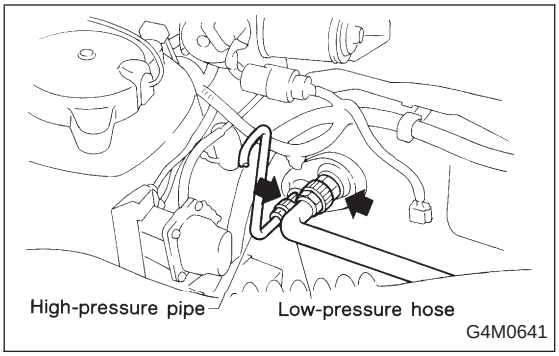

1) Disconnect battery negative terminal.
2) Discharge refrigerant.
3) Disconnect discharge pipe, suction pipe and grommets.

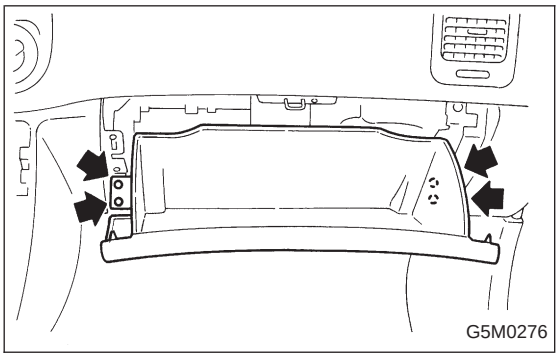

4) Remove glove box.

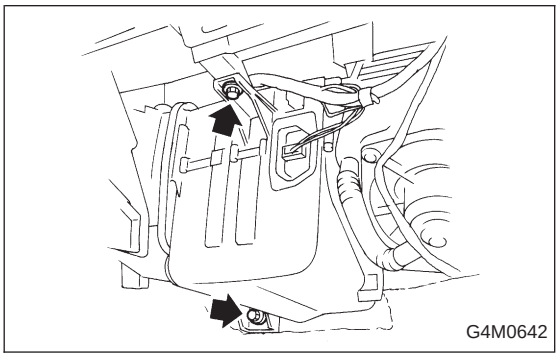

5) Disconnect the harness connector from evaporator.
6) Disconnect drain hose.
7) Remove evaporator mounting bolt and nut.
8) Install the evaporator in the reverse order of removal.

B: DISASSEMBLY AND ASSEMBLY

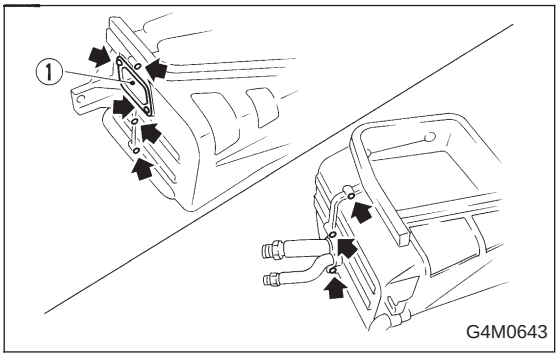

1) Remove resistor assembly ① and remove six screws from evaporator case.

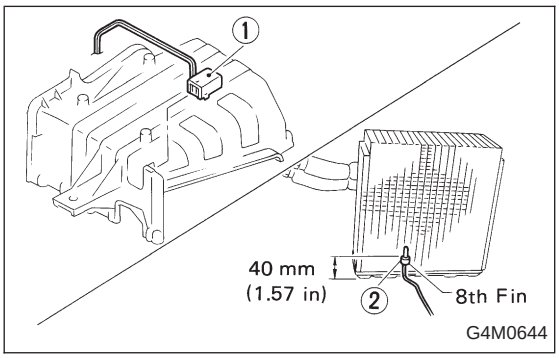

2) Remove thermostat ① from upper case. (Thermistor ② is inserted into specified evaporator fin position.) When installing thermostat, be sure to insert thermistor into specified fin position.

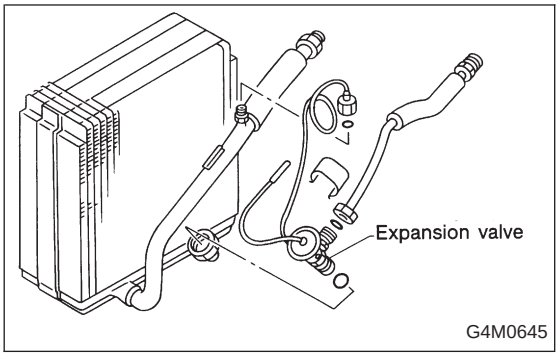

3) Disconnect the connection between the expansion valve and pipe from receiver drier.
4) Remove the expansion valve from pipes.
5) To install expansion valve, reverse removal procedures. Properly wrap capillary tube of expansion valve with seal.
6) Check to see if the evaporator fins are clogged. If they are, clean them with compressed air.

CAUTION:
Water must never be used to clean the evaporator.

7) Check parts that have been removed for cracks or scratches, and repair or replace them with new ones, if necessary.
8) Reassemble the evaporator in the reverse order of disassembly.

NOTE:
Confirm that the O-ring is inserted in the specified position.

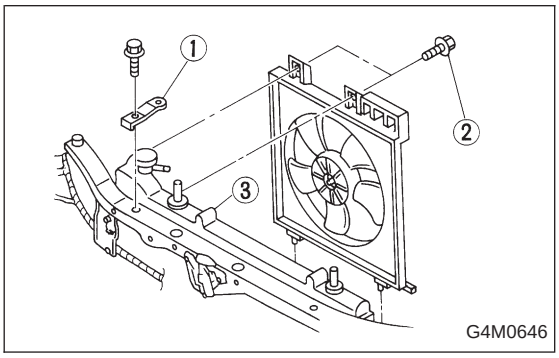

15. Condenser Fan Assembly

A: REMOVAL AND INSTALLATION

1) Disconnect battery negative terminal.
2) Disconnect harness connector from fan motor.
3) Remove radiator bracket (RH) ① and remove condenser fan bolt ② from radiator ③.
4) Pull condenser fan assembly.
5) Install the condenser fan assembly in the reverse order of removal.

16. Flexible Hose

With the following cautions, replace flexible hoses with new ones if they are damaged or swollen.

(1) The flexible hoses should be free from twists and tension after they have been connected.
(2) The flexible hoses must not be bent or twisted forcibly.

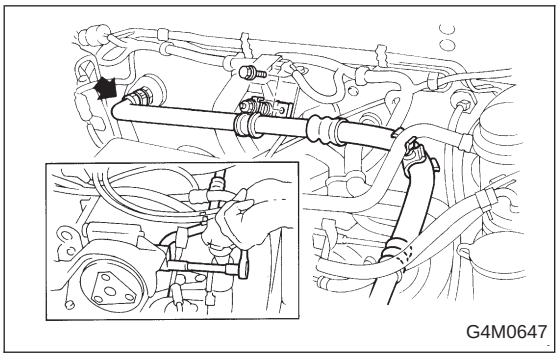

A: REMOVAL

1) Disconnect battery negative terminal.
2) Discharge refrigerant.
3) Remove low-pressure hose.
   (1) Remove hose attaching bolts.
   (2) Remove hose clip.

CAUTION:
Plug the opening to prevent foreign matter from getting in.

   (3) Disconnect the connector at evaporator unit.

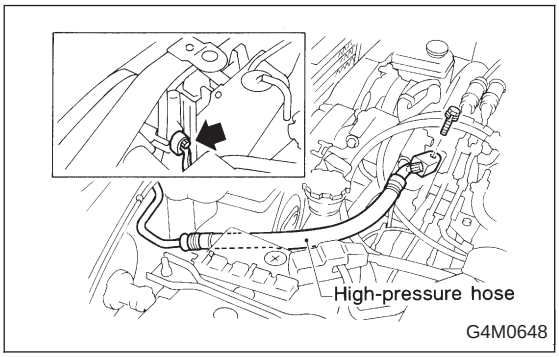

4) Remove high-pressure hose.
   (1) Disconnect hose attaching bolt (compressor side).
   (2) Disconnect hose attaching bolt (condenser side).

CAUTION:
Plug the opening to prevent foreign matter from getting in.

B: INSTALLATION

Installation is in the reverse order of removal.

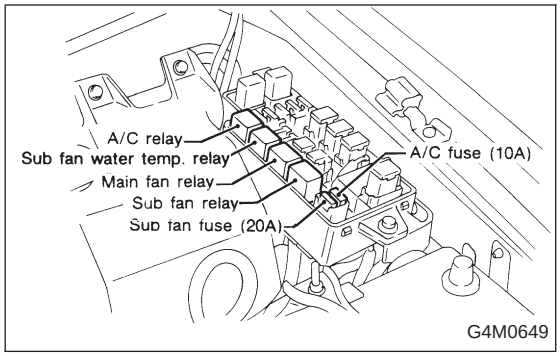

17. Relay and Fuse

A: LOCATION

Relays used with A/C system are located as shown in figure.

1) A/C relay
2) Main fan (radiator fan) relay
3) Sub fan (condenser fan) relay
4) Sub fan (condenser fan) water temperature relay
5) Fuses (10 A and 20 A)

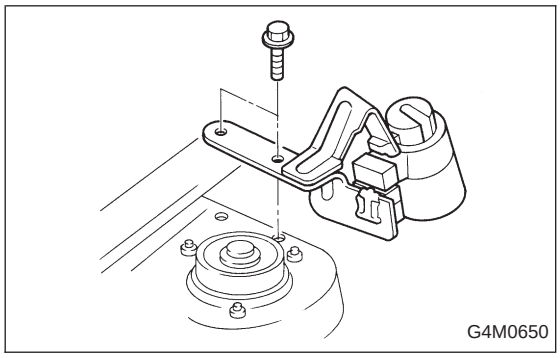

6) A/C cut relay

A/C cut relay is attached by a bolt to top of front suspension bracket (RH) via a bracket.

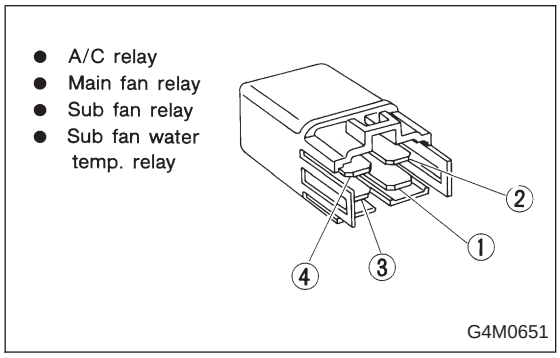

B: INSPECTION

1) Check conduction with a circuit tester (ohm range) according to the following table in figure.

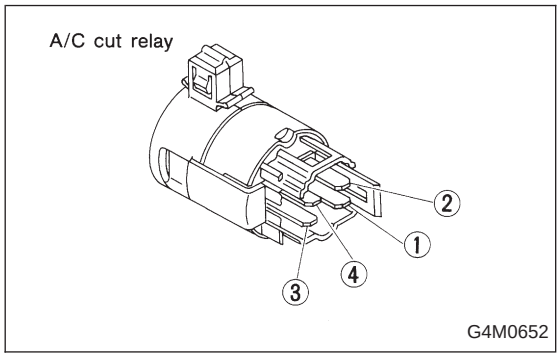

A/C relay Main fan relay Sub fan relay Sub fan water temp. relay	A/C cut relay
④ ③ ② ①	④ ③ ② ①
About 100Ω between ① and ②	About 120Ω between ① and ②
∞Ω between ③ and ④	∞Ω between ③ and ④

G4M0653

2) Replace relays which do not meet specifications.

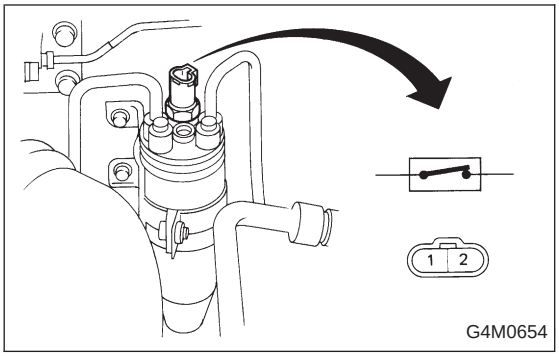

18. Pressure Switch (Dual Switch)

Pressure switch is attached to receiver dryer. It has two built-in switches.

- High and low pressure switch

A: INSPECTION

1) Remove cap from high-pressure line service valve, and connect gauge manifold to service valve.
2) Disconnect pressure switch harness connector, and check pressure switch for proper ON-OFF operation. Use a circuit tester.

	Terminal	Operation	High-pressure side line pressure kPa (kg/cm^2, psi)
High and low pressure switch	① — ②	Turns OFF.	Increasing to 2,648±196 (27±2, 384±28)
			Decreasing to 176±20 (1.8±0.2, 25.5±2.8)
		Turns ON.	Increasing to 186±29 (1.9±0.3, 27.0±4.2)
			Decreasing to 2,059±196 (21±2, 299±28)

1. Air Conditioning System Diagnosis

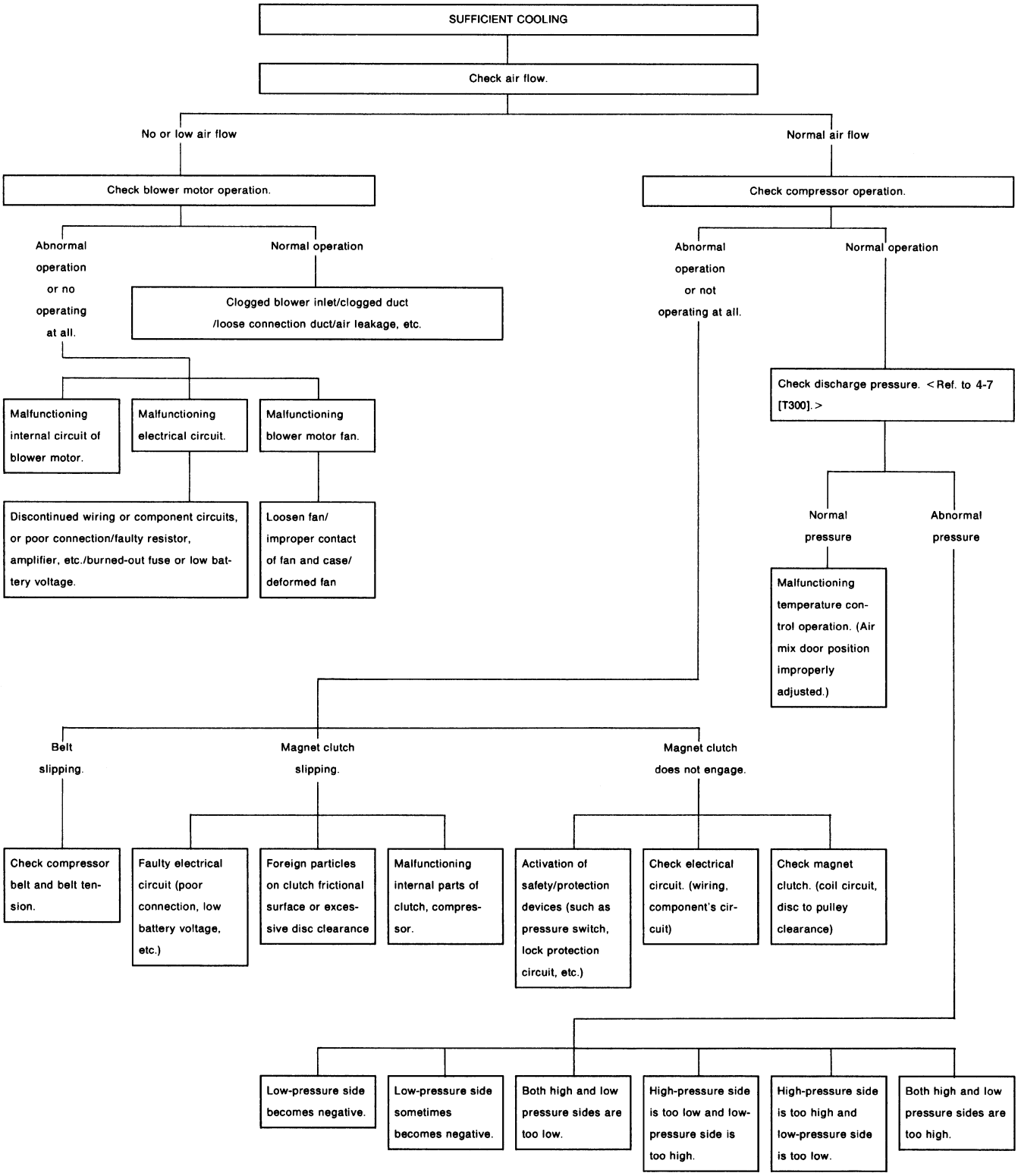

EPA0115

2. Performance Test Diagnosis

If various conditions caused to other air conditioning system, the characteristics revealed on manifold gauge reading are shown in the following.
As to the method of a performance test, refer to the item of “Performance Test”.
Each shaded area on the following tables indicates a reading of the normal system when the temperature of outside air is 32.5°C (91°F).

Condition		Probable cause	Corrective action
INSUFFICIENT REFRIGERANT CHARGE 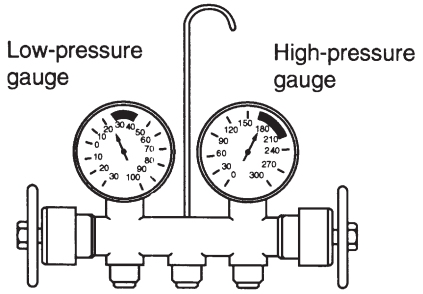 G4M0673	Insufficient cooling.	Refrigerant is small, or leaking a little.	1. Leak test. 2. Repair leak. 3. Charge system. **Evacuate, as necessary, and recharge system.**
ALMOST NO REFRIGERANT 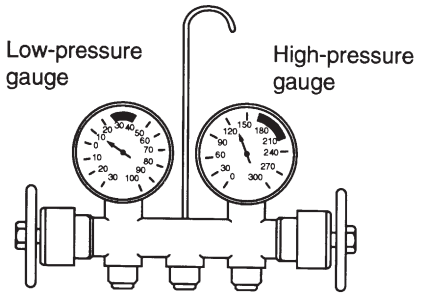 G4M0674	No cooling action.	Serious refrigerant leak.	**Stop compressor immediately.** 1. Leak test. 2. Discharge system. 3. Repair leak(s). 4. Replace receiver drier if necessary. 5. Check oil level. 6. Evacuate and recharge system.
FAULTY EXPANSION VALVE 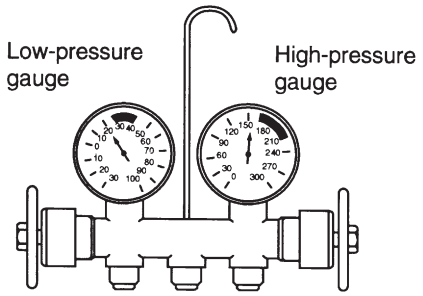 G4M0675	Slight cooling. Sweating or frosted expansion valve inlet.	Expansion valve restricts refrigerant flow. ● Expansion valve is clogged. ● Expansion valve is inoperative. Valve stuck closed. Thermal bulb has lost charge.	If valve inlet reveals sweat or frost: 1. Discharge system. 2. Remove valve and clean it. Replace it if necessary. 3. Evacuate system. 4. Charge system. If valve does not operate: 1. Discharge system. 2. Replace valve. 3. Evacuate and charge system.

Condition		Probable cause	Corrective action
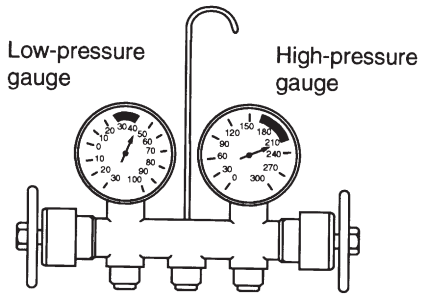 G4M0676 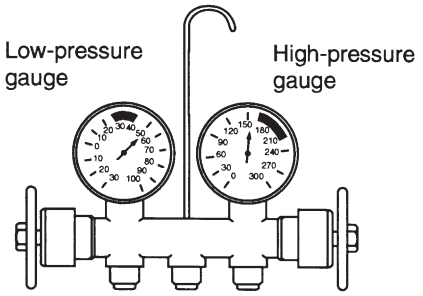 G4M0677	Insufficient cooling. Sweated suction line. No cooling. Sweating or frosted suction line.	Expansion valve allows too much refrigerant through evaporator. Faulty seal of O-ring in expansion valve.	Check valve for operation. If suction side does not show a pressure decrease, replace valve. 1. Discharge system. 2. Remove expansion valve and replace O-ring. 3. Evacuate and replace system.
AIR IN SYSTEM 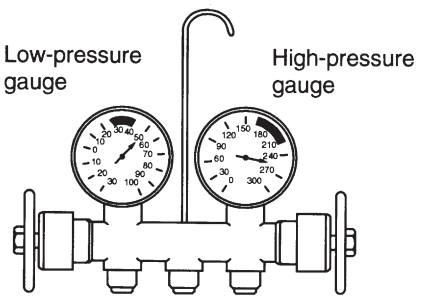 G4M0678	Insufficient cooling.	Air mixed with refrigerant in system.	1. Discharge system. 2. Replace receiver drier. 3. Evacuate and charge system.
MOISTURE IN SYSTEM 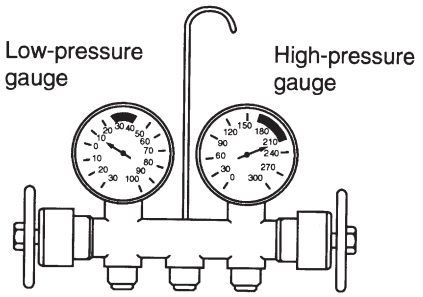 G4M0679	After operation for a while, pressure on suction side may show vacuum pressure reading. During this condition, discharge air will be warm. As warning of this, reading shows 39 kPa (0.4 kg/cm^2, 6 psi) vibration.	Drier is saturated with moisture. Moisture has frozen at expansion valve. Refrigerant flow is restricted.	1. Discharge system. 2. Replace receiver drier (twice if necessary). 3. Evacuate system completely. (Repeat 30 minute evacuating three times.) 4. Recharge system.

Condition		Probable cause	Corrective action
FAULTY CONDENSER 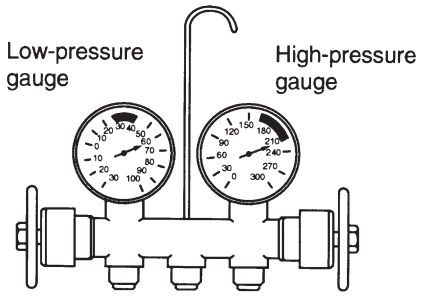 G4M0680	No cooling action. Engine may overheat. Suction line is very hot.	Condenser is often found not functioning well.	● Check condenser cooling fan. ● Check condenser for dirt accumulation. ● Check engine cooling system for overheat. ● Check for refrigerant overcharge. **If pressure remains high in spite of all above actions taken, remove and inspect the condenser for possible oil clogging.**
HIGH-PRESSURE LINE BLOCKED 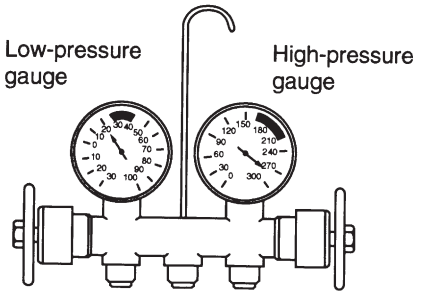 G4M0681	Insufficient cooling. Frosted high-pressure liquid line.	Drier clogged, or restriction in high-pressure line.	1. Discharge system. 2. Remove receiver drier or strainer and replace it. 3. Evacuate and charge system.
FAULTY COMPRESSOR 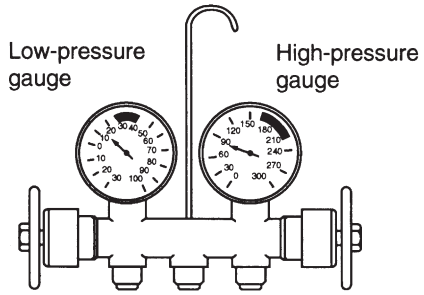 G4M0682	Insufficient cooling.	Internal problem in compressor, or damaged gasket and valve.	1. Discharge system. 2. Remove and check compressor. 3. Repair or replace compressor. 4. Check oil level. 5. Replace receiver drier. 6. Evacuate and charge system.

3. Blower Motor Diagnosis

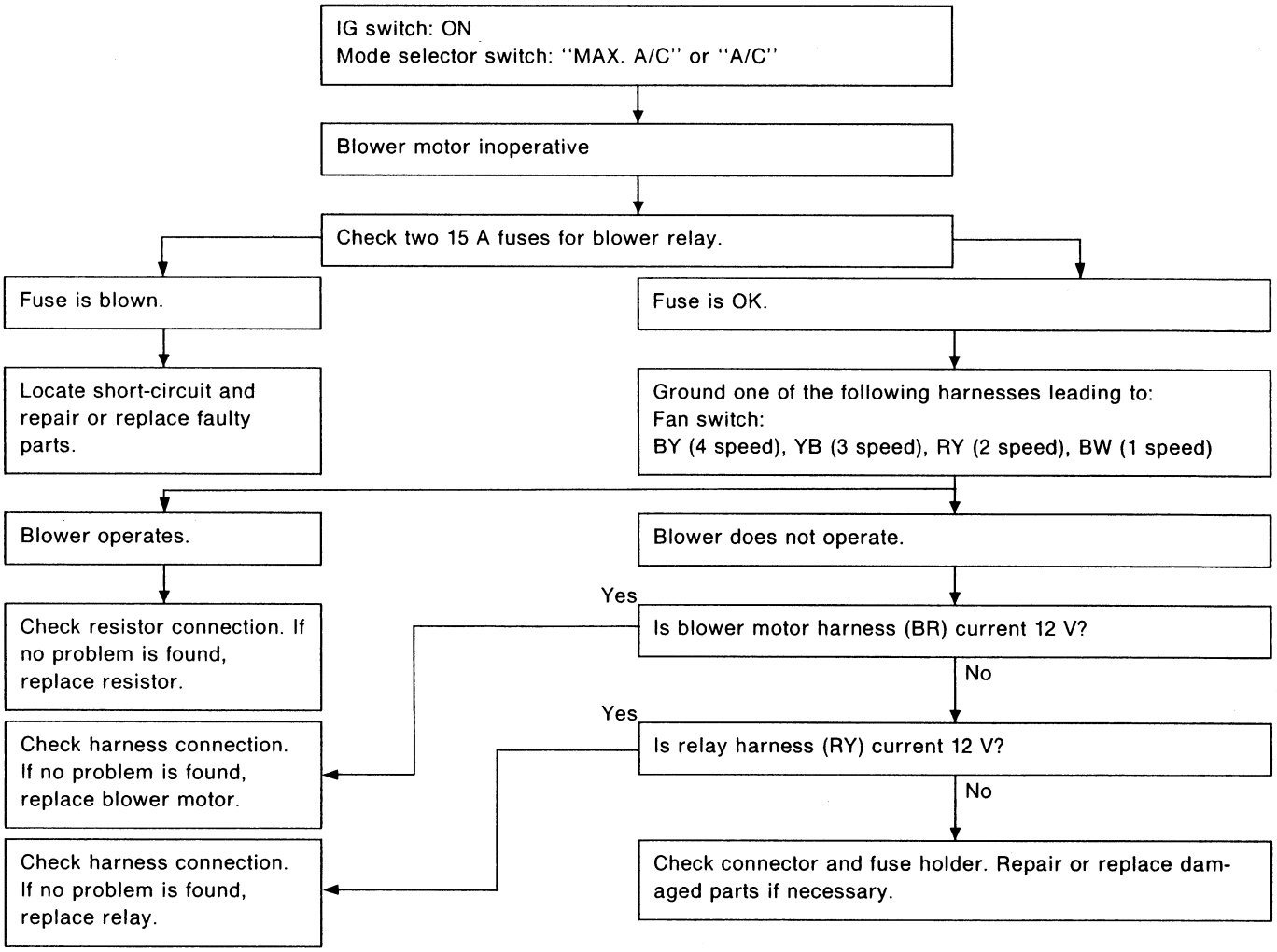

4. Compressor Diagnosis

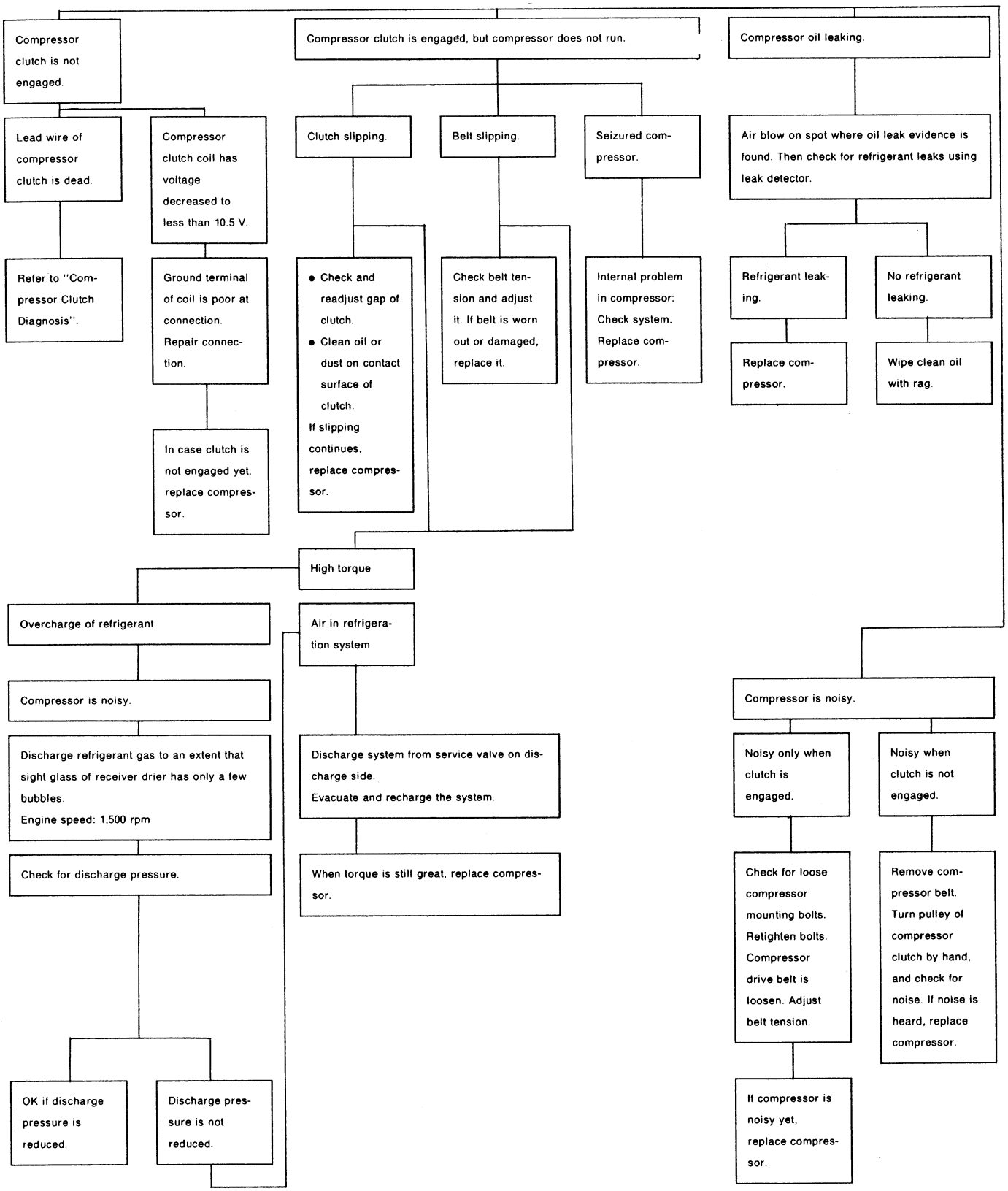

EPA0005

5. Compressor Clutch Diagnosis

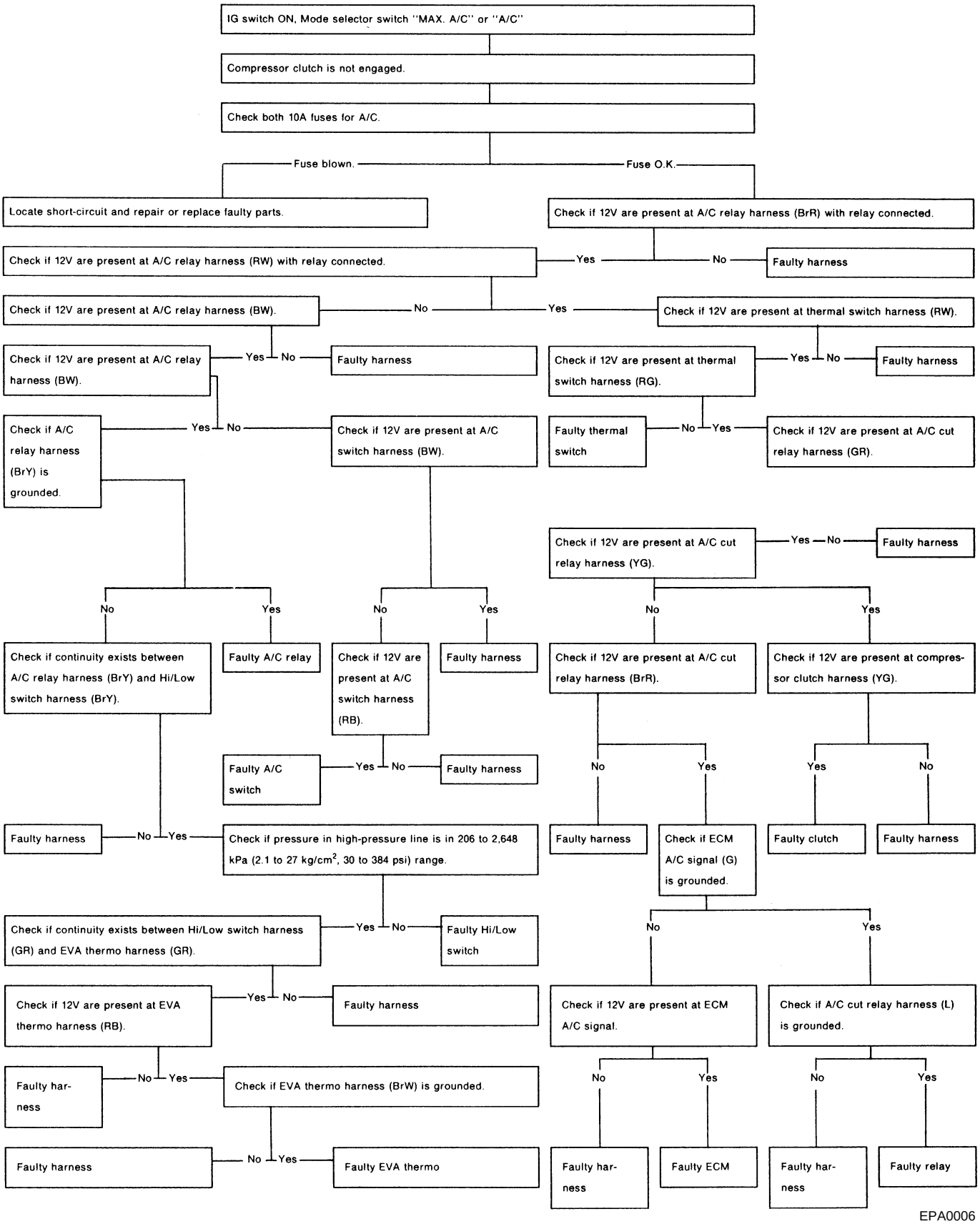

EPA0006

6. Radiator Fan (Main Fan) Diagnosis

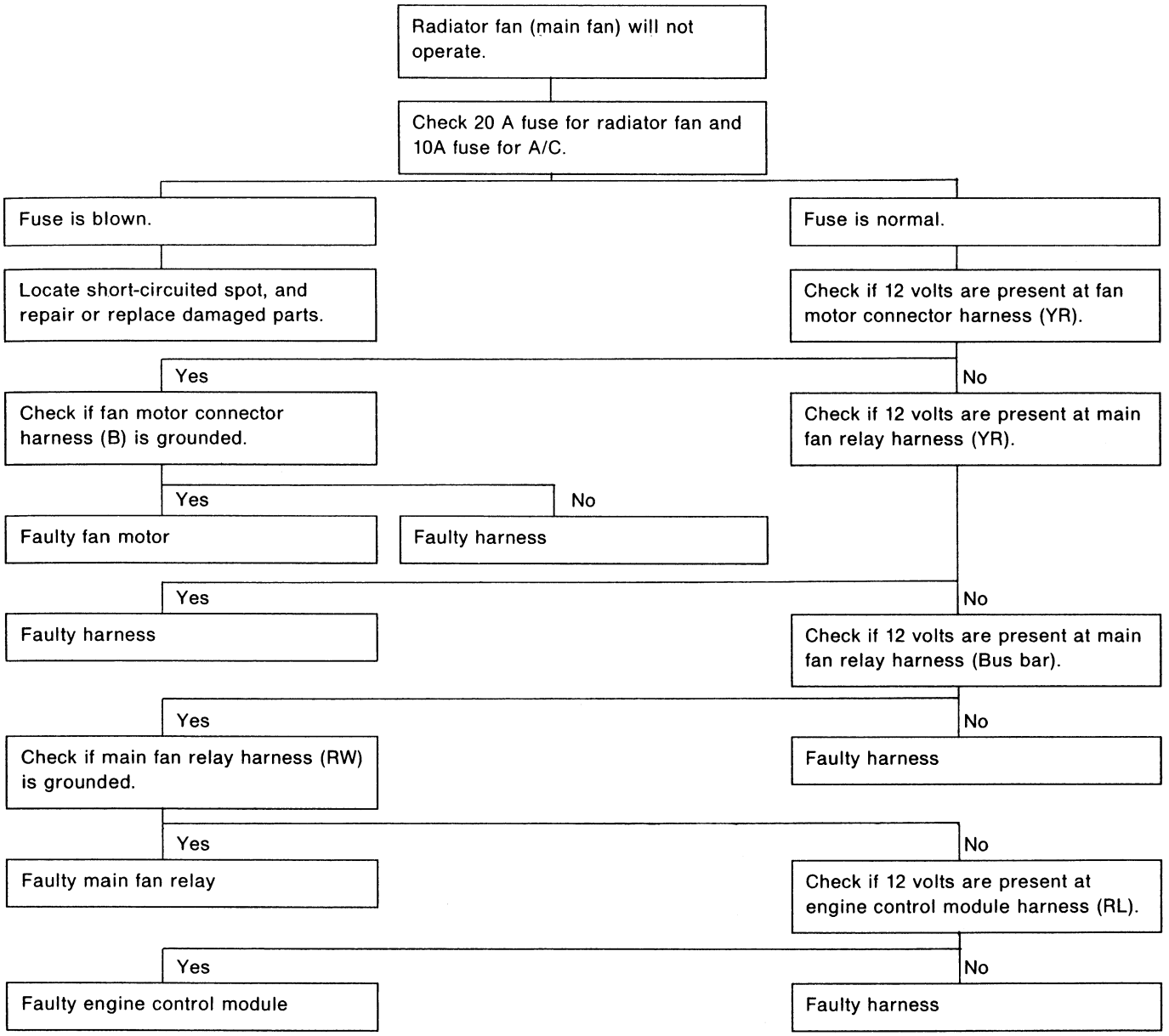

EPA0007

7. Condenser Fan (Sub Fan) Diagnosis (I)

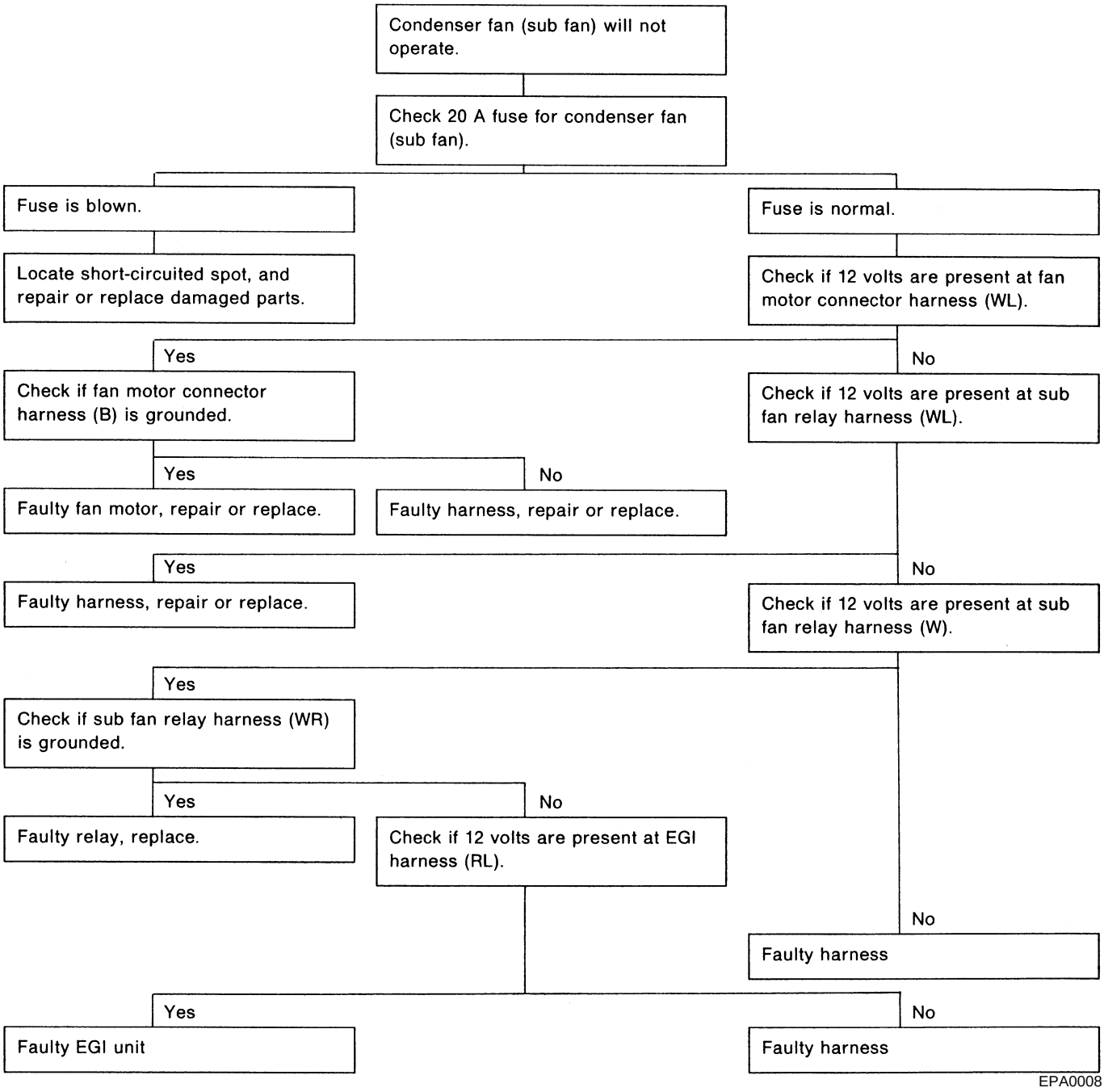

8. Condenser Fan (Sub Fan) Diagnosis (II)

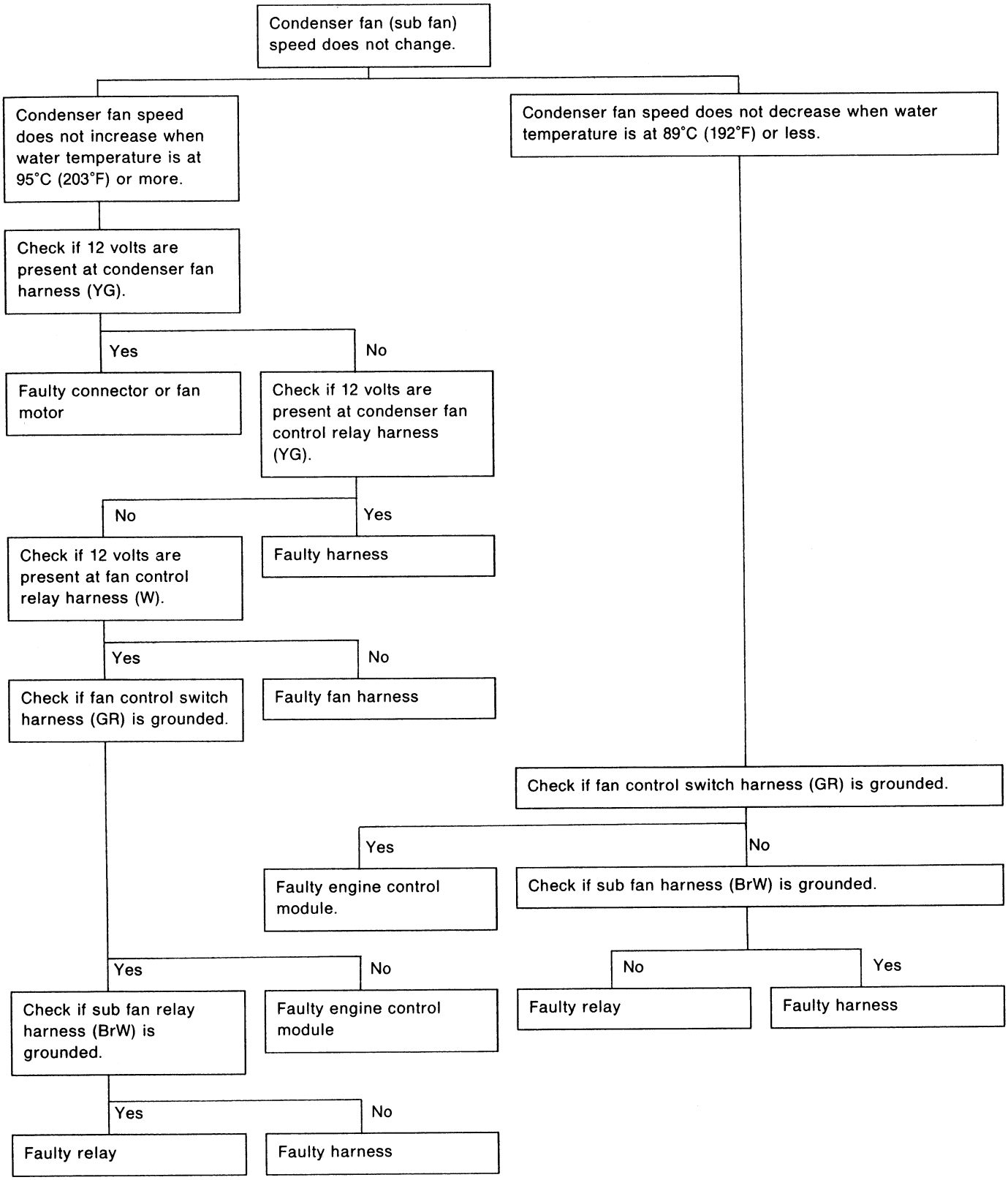

EPA0009

BRAKES 4-4

Page

S SPECIFICATIONS AND SERVICE DATA 2
1. Brakes 2
C COMPONENT PARTS 6
1. Front Disc Brake 6
2. Rear Disc Brake 7
3. Rear Drum Brake 8
4. Master Cylinder 9
5. Brake Booster 10
6. A.B.S. System 11
7. Hill Holder 13
8. Parking (Hand) Brake 14
W SERVICE PROCEDURE 15
1. Front Disc Brake 15
2. Rear Disc Brake 21
3. Rear Drum Brake 27
4. Parking Brake (Rear Disc Brake) 32
5. Master Cylinder 35
6. Brake Booster 38
7. Brake Hose 44
8. Hill Holder 45
9. Parking Brake Lever 47
10. Parking Brake Cable 48
11. Air Bleeding 50
12. Brake Fluid Replacement 53
13. Proportioning Valve 55
14. A.B.S. Sensor 56
15. Hydraulic Unit for A.B.S. System 61
16. A.B.S. Control Module 68
17. G Sensor for A.B.S. System 69
18. Brake Hose and Pipe AIRBAG 70
T DIAGNOSTICS 72
1. Entire Brake System 72
2. Hill Holder 74

PRECAUTION FOR SUPPLEMENTAL RESTRAINT SYSTEM “AIRBAG”

The Supplemental Restraint System “Airbag” helps to reduce the risk or severity of injury to the driver in a frontal collision.

The Supplemental Restraint System consists of an airbag module (located in the center of the steering wheel), sensors, a control module, warning light, wiring harness and roll connector.

Information necessary to service the safety is included in the “5-5. SUPPLEMENTAL RESTRAINT SYSTEM” of this Service Manual.

WARNING:

- **To avoid rendering the Airbag system inoperative, which could lead to personal injury or death in the event of a severe frontal collision, all maintenance must be performed by an authorized SUBARU dealer.**
- **Improper maintenance, including incorrect removal and installation of the Airbag system, can lead to personal injury caused by unintentional activation of the Airbag system.**
- **All Airbag system electrical wiring harnesses and connectors are covered with yellow outer insulation. Do not use electrical test equipment on any circuit related to the Supplemental Restraint System “Airbag”.**

1. Brakes

A: SPECIFICATIONS

1. SEDAN

	Engine (cc)	1800				2200
	Driving system	FWD		AWD		AWD
		Base	L	Base	L	LX
Front brake	Type	Disc (Floating type, ventilated)				
	Effective disc diameter mm (in)	194 (7.64)	194 (7.64) [210 (8.27)]	210 (8.27)		
	Disc thickness x outer diameter mm (in)	18 x 242 (0.71 x 9.53)	18 x 242 (0.71 x 9.53) [24 x 260 (0.94 x 10.24)]	24 x 260 (0.94 x 10.24)		
	Effective cylinder diameter mm (in)	53.97 (2.1248)				
	Pad dimensions (length x width x thickness) mm (in)	112.4 x 44.3 x 11.0 (4.43 x 1.744 x 0.433)				
	Clearance adjustment	Automatic adjustment				
Rear brake	Type	Drum (Leading-trailing type)	Drum (Leading-trailing type) [Disc (Floating type)]	Drum (Leading-trailing type)	Drum (Leading-trailing type) [Disc (Floating type)]	Disc (Floating type)
	Effective drum or disc diameter mm (in)	228.6 (9)	228.6 (9) [230 (9.06)]	228.6 (9)	228.6 (9) [230 (9.06)]	230 (9.06)
	Disc thickness x outer diameter mm (in)	—	— [10 x 266 (0.39 x 10.47)]	—	— [10 x 266 (0.39 x 10.47)]	10 x 266 (0.39 x 10.47)
	Effective cylinder diameter mm (in)	17.46 (0.6874)	17.46 (0.6874) [34.93 (1.3752)]	19.05 (0.7500)	19.05 (0.7500) [34.93 (1.3752)]	34.93 (1.3752)
	Lining or pad dimensions (length x width x thickness) mm (in)	218.8 x 35.0 x 4.1 (8.61 x 1.378 x 0.161)	218.8 x 35.0 x 4.1 (8.61 x 1.378 x 0.161) [92.4 x 33.7 x 10.0 (3.638 x 1.327 x 0.394)]	218.8 x 35.0 x 4.1 (8.61 x 1.378 x 0.161)	218.8 x 35.0 x 4.1 (8.61 x 1.378 x 0.161) [92.4 x 33.7 x 10.0 (3.638 x 1.327 x 0.394)]	92.4 x 33.7 x 10.0 (3.638 x 1.327 x 0.394)
	Clearance adjustment	Automatic adjustment				
Parking brake	Type	Mechanical on rear brake drums				
	Effective drum diameter mm (in)	228.6 (9)	228.6 (9) [170 (6.69)]	228.6 (9)	228.6 (9) [170 (6.69)]	170 (6.69)
	Lining or pad dimensions (length x width x thickness) mm (in)	218.8 x 35.0 x 4.1 (8.61 x 1.378 x 0.161)	218.8 x 35.0 x 4.1 (8.61 x 1.378 x 0.161) [162.6 x 30.0 x 3.2 (6.40 x 1.181 x 0.126)]	218.8 x 35.0 x 4.1 (8.61 x 1.378 x 0.161)	218.8 x 35.0 x 4.1 (8.61 x 1.378 x 0.161) [162.6 x 30.0 x 3.2 (6.40 x 1.181 x 0.126)]	162.6 x 30.0 x 3.2 (6.40 x 1.181 x 0.126)
	Clearance adjustment	Automatic adjustment	Automatic adjustment [Manual adjustment]	Automatic adjustment	Automatic adjustment [Manual adjustment]	Manual adjustment
Master cylinder	Type	Tandem				
	Effective diameter mm (in)	23.81 (0.9374)	23.81 (0.9374) [25.40 (1)]	23.81 (0.9374)	23.81 (0.9374) [25.40 (1)]	25.40 (1)
	Reservoir type	Sealed type				
	Brake fluid reservoir capacity cm^3 (cu in)	190 (11.59)				
Brake booster	Type	Vacuum suspended				
	Effective diameter mm (in)	230 (9.06)	230 (9.06) [180 + 205 (7.09 + 8.07)]	230 (9.06)	230 (9.06) [180 + 205 (7.09 + 8.07)]	180 + 205 (7.09 + 8.07)
Proportioning valve	Split point kPa (kg/cm^2, psi)	2,942 (30.0, 427)	2,942 (30.0, 427) [1,961 (20.0, 284)]	2,942 (30.0, 427)	2,942 (30.0, 427) [1,961 (20.0, 284)]	1,961 (20.0, 284)
	Reducing ratio	0.4				
Brake line		Dual circuit system				
A.B.S.		—	OP	—	OP	STD

[ ]: A.B.S. equipped vehicle.

2. WAGON

	Engine (cc)	1800			2200	
	Driving system	FWD		AWD	AWD	
		Base	L	L	Outback	LX
Front brake	Type	Disc (Floating type, ventilated)				
	Effective disc diameter mm (in)	194 (7.64)	194 (7.64) [210 (8.27)]	210 (8.27)		
	Disc thickness x outer diameter mm (in)	18 x 242 (0.71 x 9.53)	18 x 242 (0.71 x 9.53) [24 x 260 (0.94 x 10.24)]	24 x 260 (0.94 x 10.24)		
	Effective cylinder diameter mm (in)	53.97 (2.1248)				
	Pad dimensions (length x width x thickness) mm (in)	112.4 x 44.3 x 11.0 (4.43 x 1.744 x 0.433)				
	Clearance adjustment	Automatic adjustment				
Rear brake	Type	Drum (Leading-trailing type)	Drum (Leading-trailing type) [Disc (Floating type)]	Drum (Leading-trailing type) [Disc (Floating type)]	Drum (Leading-trailing type)	Disc (Floating type)
	Effective drum or disc diameter mm (in)	228.6 (9)	228.6 (9) [230 (9.06)]	228.6 (9) [230 (9.06)]	228.6 (9)	230 (9.06)
	Disc thickness x outer diameter mm (in)	—	— [10 x 266 (0.39 x 10.47)]	— [10 x 266 (0.39 x 10.47)]	—	10 x 266 (0.39 x 10.47)
	Effective cylinder diameter mm (in)	19.05 (0.7500)	19.05 (0.7500) [34.93 (1.3752)]	19.05 (0.7500) [38.1 (1.500)]	19.05 (0.7500)	38.1 (1.500)
	Lining or pad dimensions (length x width x thickness) mm (in)	218.8 x 35.0 x 4.1 (8.61 x 1.378 x 0.161)	218.8 x 35.0 x 4.1 (8.61 x 1.378 x 0.161) [92.4 x 33.7 x 10.0 (3.638 x 1.327 x 0.394)]	218.8 x 35.0 x 4.1 (8.61 x 1.378 x 0.161) [92.4 x 33.7 x 10.0 (3.638 x 1.327 x 0.394)]	218.8 x 35.0 x 4.1 (8.61 x 1.378 x 0.161)	92.4 x 33.7 x 10.0 (3.638 x 1.327 x 0.394)
	Clearance adjustment	Automatic adjustment				
Parking brake	Type	Mechanical on rear brake drums				
	Effective drum diameter mm (in)	228.6 (9)	228.6 (9) [170 (6.69)]	228.6 (9) [170 (6.69)]	228.6 (9)	170 (6.69)
	Lining or pad dimensions (length x width x thickness) mm (in)	218.8 x 35.0 x 4.1 (8.61 x 1.378 x 0.161)	218.8 x 35.0 x 4.1 (8.61 x 1.378 x 0.161) [162.6 x 30.0 x 3.2 (6.40 x 1.181 x 0.126)]	218.8 x 35.0 x 4.1 (8.61 x 1.378 x 0.161) [162.6 x 30.0 x 3.2 (6.40 x 1.181 x 0.126)]	218.8 x 35.0 x 4.1 (8.61 x 1.378 x 0.161)	162.6 x 30.0 x 3.2 (6.40 x 1.181 x 0.126)
	Clearance adjustment	Automatic adjustment	Automatic adjustment [Manual adjustment]	Automatic adjustment [Manual adjustment]	Automatic adjustment	Manual adjustment
Master cylinder	Type	Tandem				
	Effective diameter mm (in)	23.81 (0.9374)	23.81 (0.9374) [25.40 (1)]	23.81 (0.9374) [25.40 (1)]	23.81 (0.9374)	25.40 (1)
	Reservoir type	Sealed type				
	Brake fluid reservoir capacity cm^3 (cu in)	190 (11.59)				
Brake booster	Type	Vacuum suspended				
	Effective diameter mm (in)	230 (9.06)	230 (9.06) [180 + 205 (7.09 + 8.07)]	230 (9.06) [180 + 205 (7.09 + 8.07)]	230 (9.06)	180 + 205 (7.09 + 8.07)
Proportioning valve	Split point kPa (kg/cm^2, psi)	2,942 (30.0, 427)	2,942 (30.0, 427) [1,961 (20.0, 284)]	2,942 (30.0, 427) [1,961 (20.0, 284)]	2,942 (30.0, 427)	1,961 (20.0, 284)
	Reducing ratio	0.4				
Brake line		Dual circuit system				
A.B.S.		—	OP	OP	—	STD

[ ]: A.B.S. equipped vehicle.

SPECIFICATIONS AND SERVICE DATA

3. COUPE

	Engine (cc)	1800				2200
	Driving system	FWD		AWD		AWD
		Base	L	Base	L	LX
Front brake	Type	Disc (Floating type, ventilated)				
	Effective disc diameter mm (in)	194 (7.64)	210 (8.27)			
	Disc thickness x outer diameter mm (in)	18 x 242 (0.71 x 9.53)	24 x 260 (0.94 x 10.24)			
	Effective cylinder diameter mm (in)	53.97 (2.1248)				
	Pad dimensions (length x width x thickness) mm (in)	112.4 x 44.3 x 11.0 (4.43 x 1.744 x 0.433)				
	Clearance adjustment	Automatic adjustment				
Rear brake	Type	Drum (Leading-trailing type)	Drum (Leading-trailing type) [Disc (Floating type)]	Drum (Leading-trailing type)	Drum (Leading-trailing type) [Disc (Floating type)]	Disc (Floating type)
	Effective drum or disc diameter mm (in)	228.6 (9)	228.6 (9) [230 (9.06)]	228.6 (9)	228.6 (9) [230 (9.06)]	230 (9.06)
	Disc thickness x outer diameter mm (in)	—	— [10 x 266 (0.39 x 10.47)]	—	— [10 x 266 (0.39 x 10.47)]	10 x 266 (0.39 x 10.47)
	Effective cylinder diameter mm (in)	17.46 (0.6874)	17.46 (0.6874) [34.93 (1.3752)]	19.05 (0.7500)	19.05 (0.7500) [34.93 (1.3752)]	34.93 (1.3752)
	Lining or pad dimensions (length x width x thickness) mm (in)	218.8 x 35.0 x 4.1 (8.61 x 1.378 x 0.161)	218.8 x 35.0 x 4.1 (8.61 x 1.378 x 0.161) [92.4 x 33.7 x 10.0 (3.638 x 1.327 x 0.394)]	218.8 x 35.0 x 4.1 (8.61 x 1.378 x 0.161)	218.8 x 35.0 x 4.1 (8.61 x 1.378 x 0.161) [92.4 x 33.7 x 10.0 (3.638 x 1.327 x 0.394)]	92.4 x 33.7 x 10.0 (3.638 x 1.327 x 0.394)
	Clearance adjustment	Automatic adjustment				
Parking brake	Type	Mechanical on rear brake drums				
	Effective drum diameter mm (in)	228.6 (9)	228.6 (9) [170 (6.69)]	228.6 (9)	228.6 (9) [170 (6.69)]	170 (6.69)
	Lining or pad dimensions (length x width x thickness) mm (in)	218.8 x 35.0 x 4.1 (8.61 x 1.378 x 0.161)	218.8 x 35.0 x 4.1 (8.61 x 1.378 x 0.161) [162.6 x 30.0 x 3.2 (6.40 x 1.181 x 0.126)]	218.8 x 35.0 x 4.1 (8.61 x 1.378 x 0.161)	218.8 x 35.0 x 4.1 (8.61 x 1.378 x 0.161) [162.6 x 30.0 x 3.2 (6.40 x 1.181 x 0.126)]	162.6 x 30.0 x 3.2 (6.40 x 1.181 x 0.126)
	Clearance adjustment	Automatic adjustment	Automatic adjustment [Manual adjustment]	Automatic adjustment	Automatic adjustment [Manual adjustment]	Manual adjustment
Master cylinder	Type	Tandem				
	Effective diameter mm (in)	23.81 (0.9374)	23.81 (0.9374) [25.40 (1)]	23.81 (0.9374)	23.81 (0.9374) [25.40 (1)]	25.40 (1)
	Reservoir type	Sealed type				
	Brake fluid reservoir capacity cm^3 (cu in)	190 (11.59)				
Brake booster	Type	Vacuum suspended				
	Effective diameter mm (in)	230 (9.06)	230 (9.06) [180 + 205 (7.09 + 8.07)]	230 (9.06)	230 (9.06) [180 + 205 (7.09 + 8.07)]	180 + 205 (7.09 + 8.07)
Proportioning valve	Split point kPa(kg/cm^2, psi)	2,942 (30.0, 427)	2,942 (30.0, 427) [1,961 (20.0, 284)]	2,942 (30.0, 427)	2,942 (30.0, 427) [1,961 (20.0, 284)]	1,961 (20.0, 284)
	Reducing ratio	0.4				
Brake line		Dual circuit system				
A.B.S.		—	OP	—	OP	STD

[ ]: A.B.S. equipped vehicle.

B: SERVICE DATA

ITEM		STANDARD	SERVICE LIMIT
Front brake	Pad thickness (including back metal)	17 mm (0.67 in)	7.5 mm (0.295 in)
	Disc thickness	13-inch type: 18 mm (0.71 in) 14-inch type: 24 mm (0.94 in)	13-inch type: 16 mm (0.63 in) 14-inch type: 22 mm (0.87 in)
	Disc run-out	—	0.075 mm (0.0030 in)
Rear brake (Disc type)	Pad thickness (including back metal)	15 mm (0.59 in)	6.5 mm (0.256 in)
	Disc thickness	10 mm (0.39 in)	8.5 mm (0.335 in)
	Disc run-out	—	0.10 mm (0.0039 in)
Rear brake (Drum type)	Inside diameter	228.6 mm (9 in)	230.6 mm (9.079 in)
	Lining thickness	4.1 mm (0.161 in)	1.5 mm (0.059 in)
Rear brake (Disc type Parking)	Inside diameter	170 mm (6.69 in)	171 mm (6.73 in)
	Lining thickness	3.2 mm (0.126 in)	1.5 mm (0.059 in)
Parking brake	Lever stroke	7 to 8 notches/196N (20 kg,44 lb)	

			Models without A.B.S.	Models with A.B.S.
Brake booster		Brake pedal force	Fluid pressure	
	Brake fluid pressure without engine running	147 N (15 kg, 33 lb)	785 kPa (8 kg/cm^2, 114 psi)	588 kPa (6 kg/cm^2, 85 psi)
		294 N (30 kg, 66 lb)	2,158 kPa (22 kg/cm^2, 313 psi)	1,863 kPa (19 kg/cm^2, 270 psi)
	Brake fluid pressure with engine running and vacuum at 66.7 kPa (500 mmHg, 19.69 inHg)	147 N (15 kg, 33 lb)	5,492 kPa (56 kg/cm^2, 796 psi)	5,394 kPa (55 kg/cm^2, 782 psi)
		294 N (30 kg, 66 lb)	8,434 kPa (86 kg/cm^2, 1,223 psi)	9,219 kPa (94 kg/cm^2, 1,337 psi)

C: RECOMMENDED BRAKE FLUID

FMVSS No. 116, fresh DOT3 or 4 brake fluid

CAUTION:

- **Avoid mixing brake fluid of different brands to prevent the fluid performance from degrading.**
- **When brake fluid is supplemented, be careful not to allow any dust into the reservoir.**
- **Use fresh DOT3 or 4 brake fluid when replacing or refilling the fluid.**

D: BRAKE FLUID LEVEL INDICATOR

Reserve tank with level indicator:

Residual fluid quantity at light ON

Approx. 80 cm^3 (80cc, 4.88 cu in)

Tank capacity

190 cm^3 (190cc, 11.59 cu in)

1. Front Disc Brake

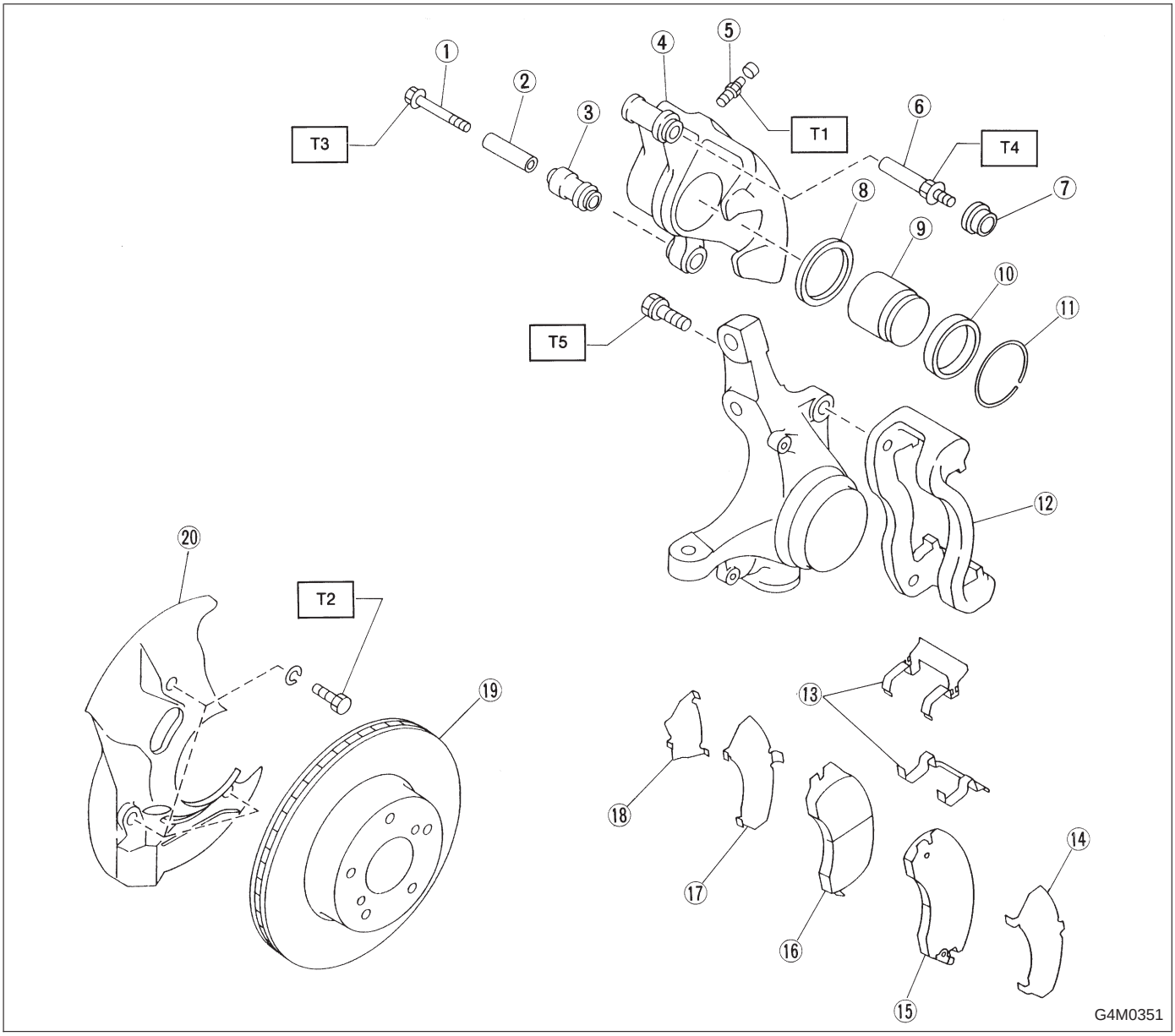

① Lock pin
② Lock pin sleeve
③ Lock pin boot
④ Caliper body
⑤ Air bleeder screw
⑥ Guide pin
⑦ Guide pin boot
⑧ Piston seal
⑨ Piston
⑩ Piston boot
⑪ Boot ring
⑫ Support
⑬ Pad clip
⑭ Outer shim
⑮ Pad (Outside)
⑯ Pad (Inside)
⑰ Inner shim
⑱ Shim
⑲ Disc rotor
⑳ Disc cover

Tightening torque: N·m (kg-m, ft-lb)
T1: 8±1 (0.8±0.1, 5.8±0.7)
T2: 14±4 (1.4±0.4, 10.1±2.9)
T3: 36±5 (3.7±0.5, 26.8±3.6)
T4: 49±5 (5.0±0.5, 36.2±3.6)
T5: 78±10 (8.0±1.0, 58±7)

2. Rear Disc Brake

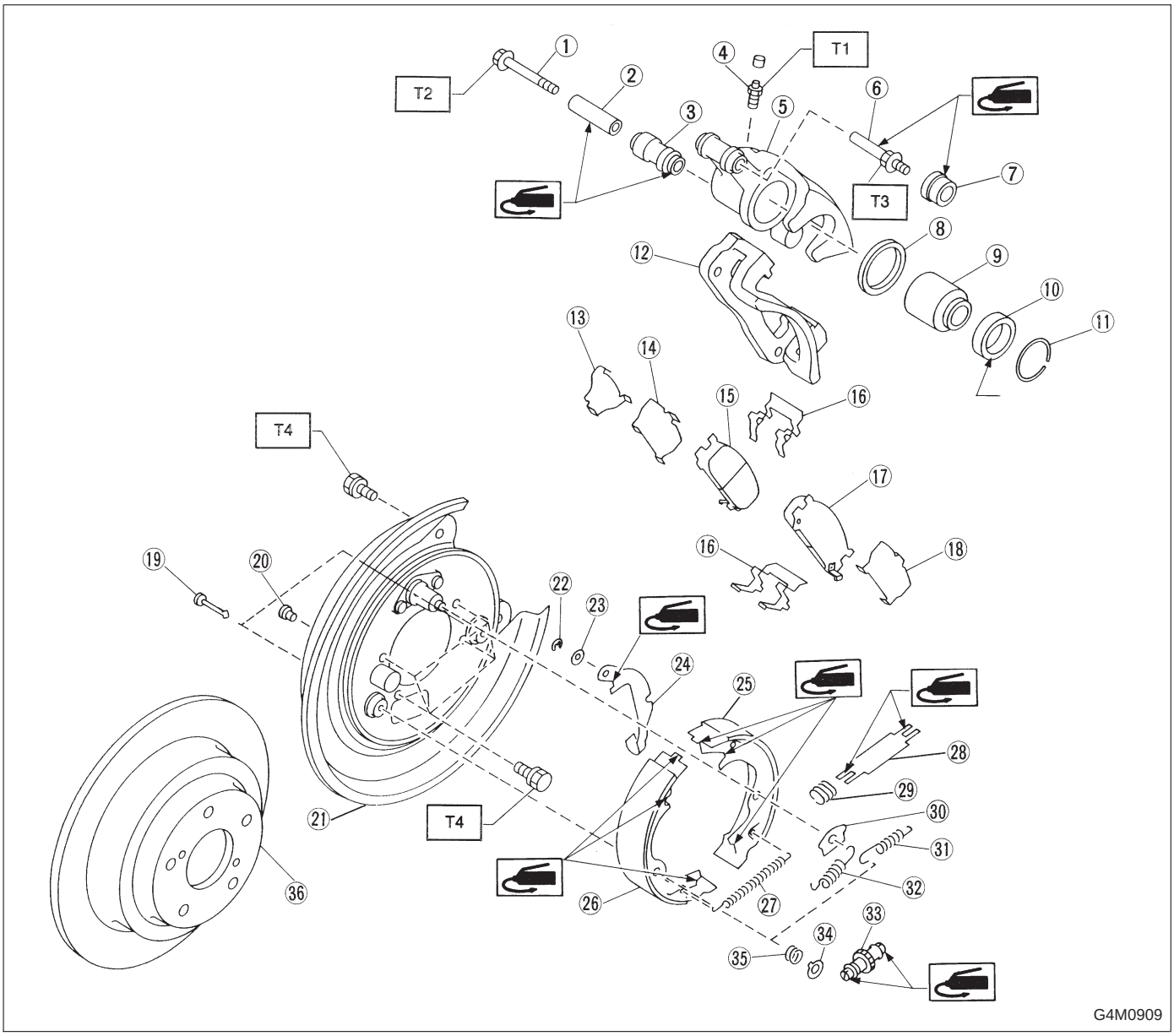

① Lock pin
② Lock pin sleeve
③ Lock pin boot
④ Air bleeder screw
⑤ Caliper body
⑥ Guide pin
⑦ Guide pin boot
⑧ Piston seal
⑨ Piston
⑩ Piston boot
⑪ Boot ring
⑫ Support
⑬ Shim
⑭ Inner shim
⑮ Inner pad
⑯ Pad clip
⑰ Outer pad
⑱ Outer shim
⑲ Shoe hold-down pin
⑳ Cover
㉑ Back plate
㉒ Retainer
㉓ Spring washer
㉔ Parking brake lever
㉕ Parking brake shoe (Secondary)
㉖ Parking brake shoe (Primary)
㉗ Adjusting spring
㉘ Strut
㉙ Strut shoe spring
㉚ Shoe guide plate
㉛ Secondary shoe return spring
㉜ Primary shoe return spring
㉝ Adjuster
㉞ Shoe hold-down cup
㉟ Shoe hold-down spring
㊱ Disc rotor

Tightening torque: N·m (kg-m, ft-lb)
T1: 8±1 (0.8±0.1, 5.8±0.7)
T2: 20±4 (2.0±0.4, 14.5±2.9)
T3: 26±5 (2.7±0.5, 19.5±3.6)
T4: 52±6 (5.3±0.6, 38.3±4.3)

3. Rear Drum Brake

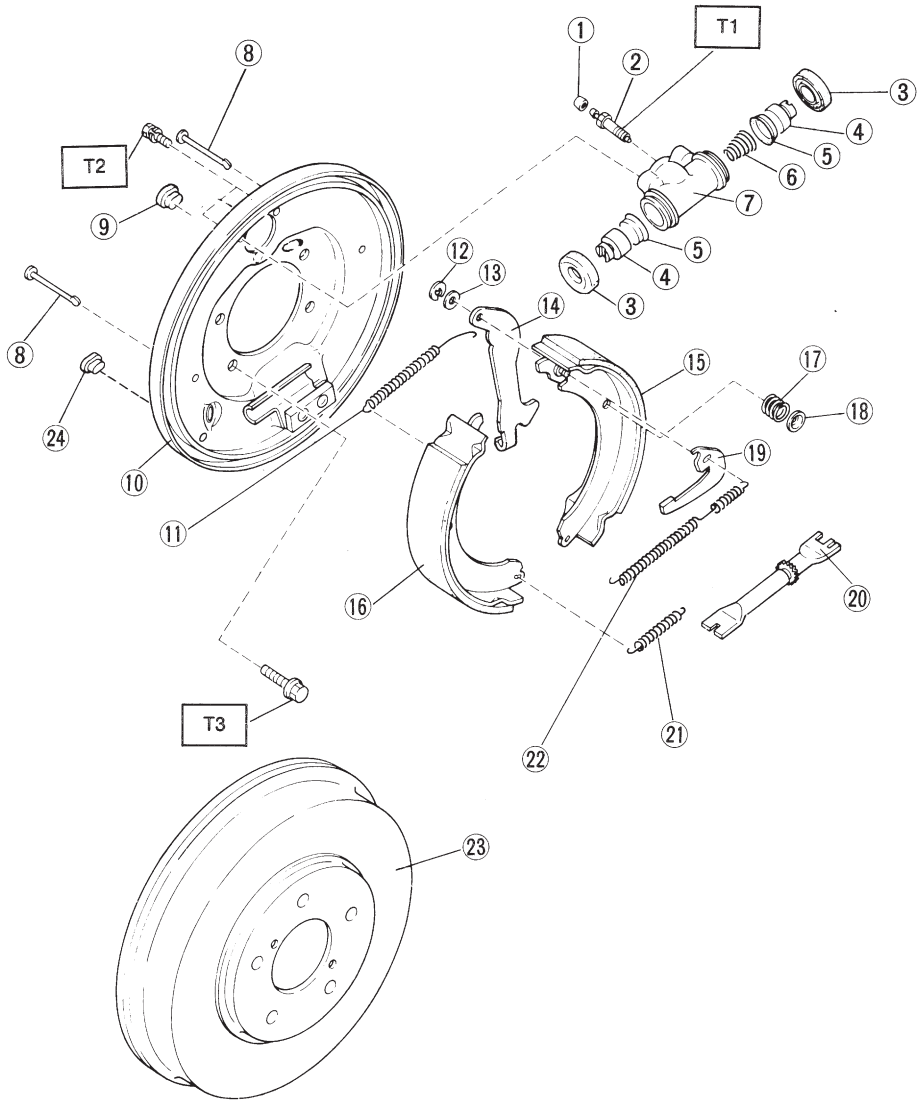

① Air bleeder cap
② Air bleeder screw
③ Boot
④ Piston
⑤ Cup
⑥ Spring
⑦ Wheel cylinder body
⑧ Pin
⑨ Plug
⑩ Back plate
⑪ Upper shoe return spring
⑫ Retainer
⑬ Washer
⑭ Parking brake lever
⑮ Brake shoe (Trailing)
⑯ Brake shoe (Leading)
⑰ Shoe hold-down spring
⑱ Cup
⑲ Adjusting lever
⑳ Adjuster
㉑ Lower shoe return spring
㉒ Adjusting spring
㉓ Drum
㉔ Plug

Tightening torque: N·m (kg-m, ft-lb)
T1: 8±1 (0.8±0.1, 5.8±0.7)
T2: 10±2 (1.0±0.2, 7.2±1.4)
T3: 52±6 (5.3±0.6, 38.3±4.3)

4. Master Cylinder

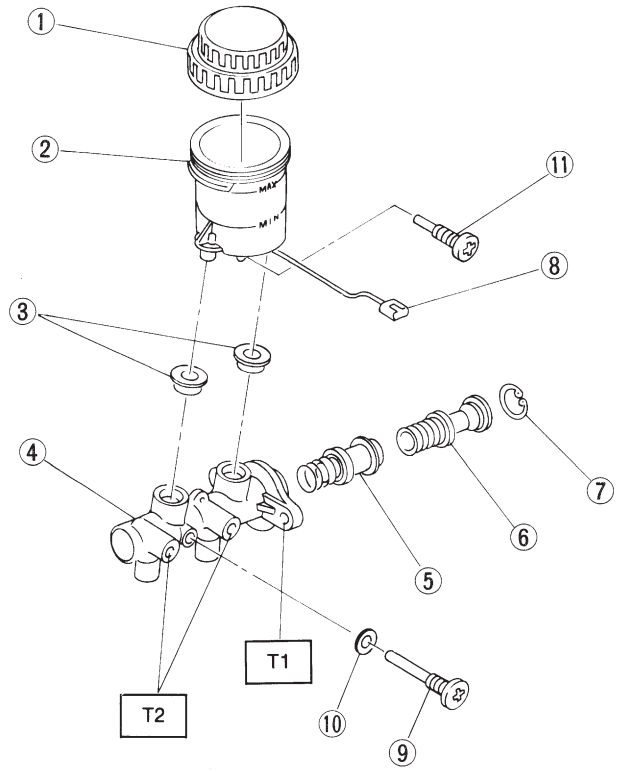

G4M0354

① Cap
② Reserve tank
③ Seal
④ Cylinder body
⑤ Secondary piston
⑥ Primary piston
⑦ C-ring
⑧ Level indicator ASSY
⑨ Supply valve stopper (With A.B.S.)
⑩ Gasket (With A.B.S.)
⑪ Reservoir stopper bolt

Tightening torque: N·m (kg-m, ft-lb)
T1: 14±4 (1.4±0.4, 10.1±2.9)
T2: 14.7^{+3}_{-2}
($1.5^{+0.3}_{-0.2}$, $10.8^{+2.2}_{-1.4}$)

5. Brake Booster

1. MODELS WITH A.B.S.

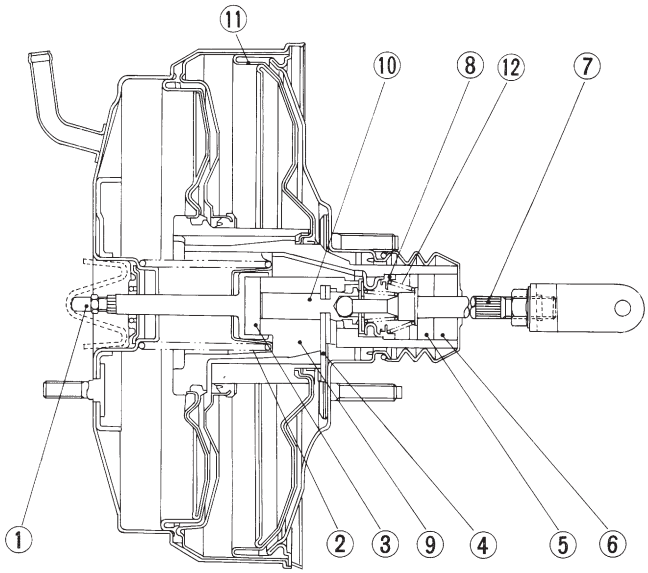

G4M0355

① Push rod
② Return spring
③ Reaction disc
④ Key
⑤ Filter
⑥ Silencer
⑦ Operating rod
⑧ Poppet valve
⑨ Valve body
⑩ Plunger valve
⑪ Diaphragm plate
⑫ Valve return spring

2. MODELS WITHOUT A.B.S.

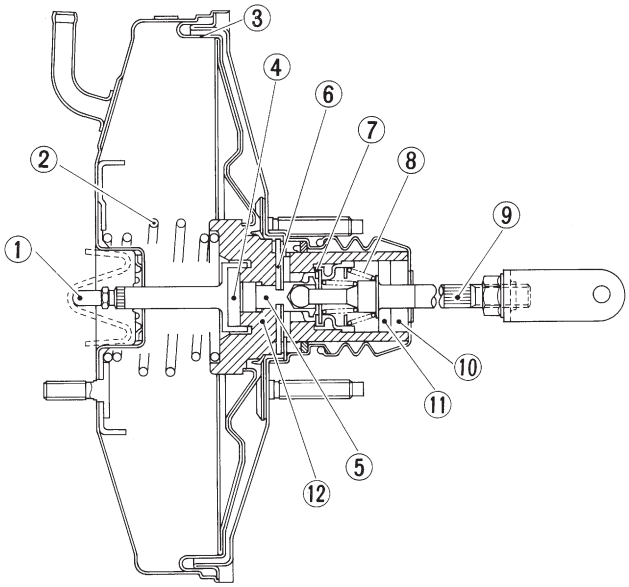

G4M0356

① Push rod
② Return spring
③ Diaphragm plate
④ Reaction disc
⑤ Plunger valve
⑥ Key
⑦ Poppet valve
⑧ Valve return spring
⑨ Operating rod
⑩ Silencer
⑪ Filter
⑫ Valve body

6. A.B.S. System

1. SENSOR AND CONTROL MODULE

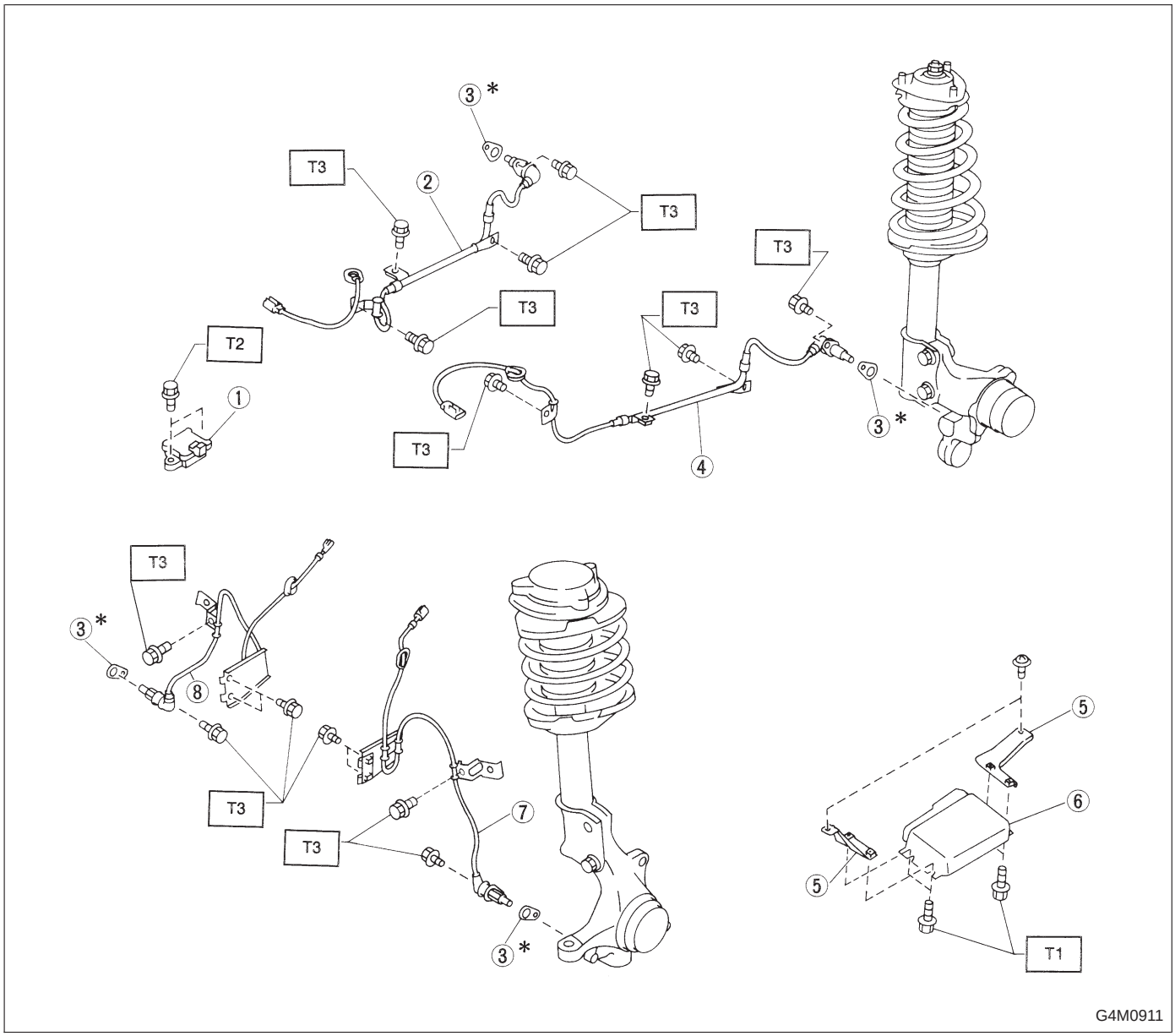

① G sensor (AWD MT only)
② Rear A.B.S. sensor RH
③ A.B.S. spacer
④ Rear A.B.S. sensor LH
⑤ Bracket
⑥ A.B.S. control module
⑦ Front A.B.S. sensor LH
⑧ Front A.B.S. sensor RH

Tightening torque: N·m (kg-m, ft-lb)
T1: 5.9±1.5 (0.60±0.15, 4.3±1.1)
T2: 7.4±2.0 (0.75±0.2, 5.4±1.4)
T3: 32±10 (3.3±1.0, 24±7)

2. HYDRAULIC UNIT

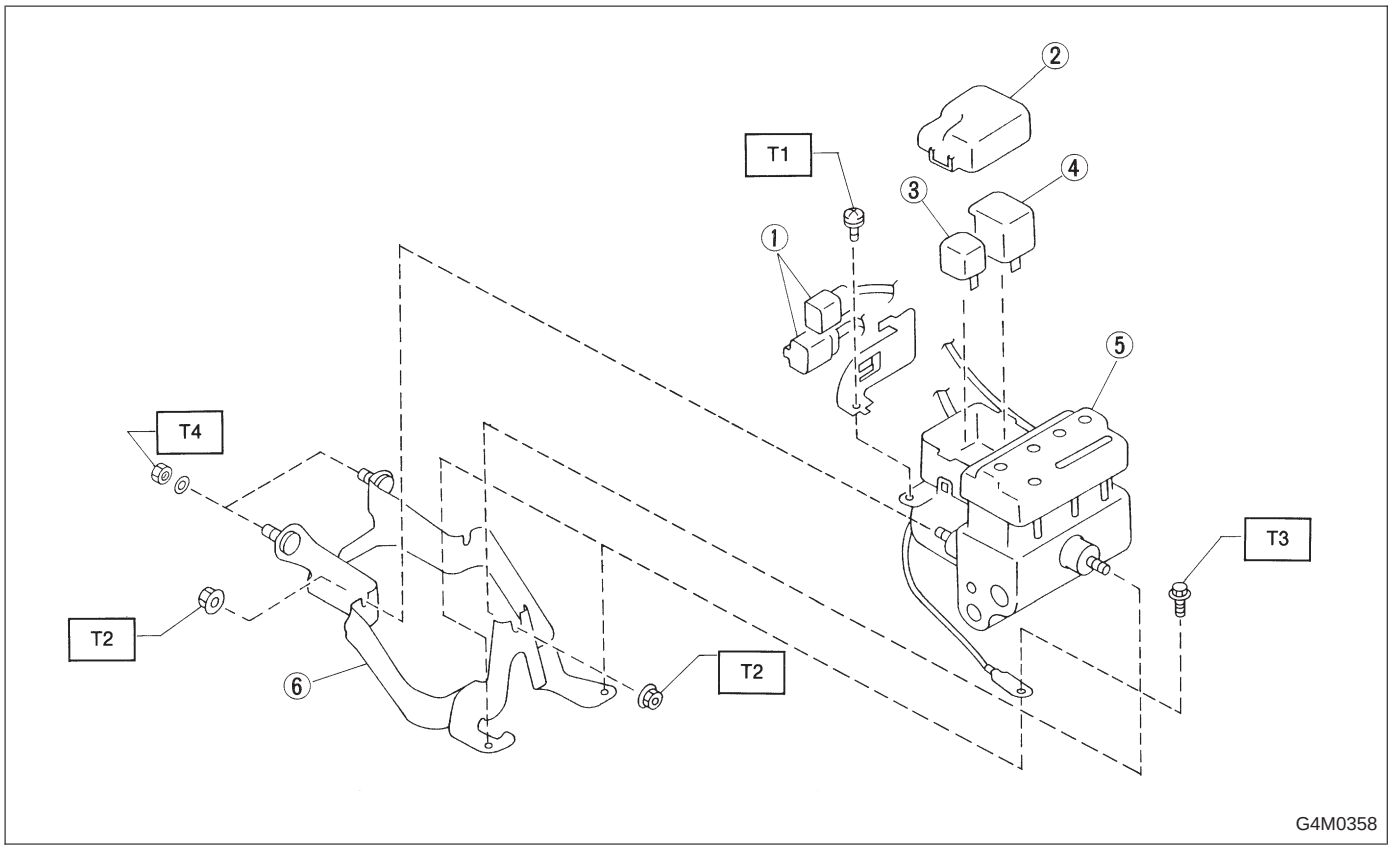

① Connector
② Cap
③ Motor relay
④ Valve relay
⑤ Hydraulic control unit
⑥ Bracket

Tightening torque: N·m (kg-m, ft-lb)
T1: 1.2±0.2 (0.125±0.025, 0.9±0.2)
T2: 18±5 (1.8±0.5, 13.0±3.6)
T3: 32±10 (3.3±1.0, 24±7)
T4: 52±15 (5.3±1.5, 38±11)

7. Hill Holder

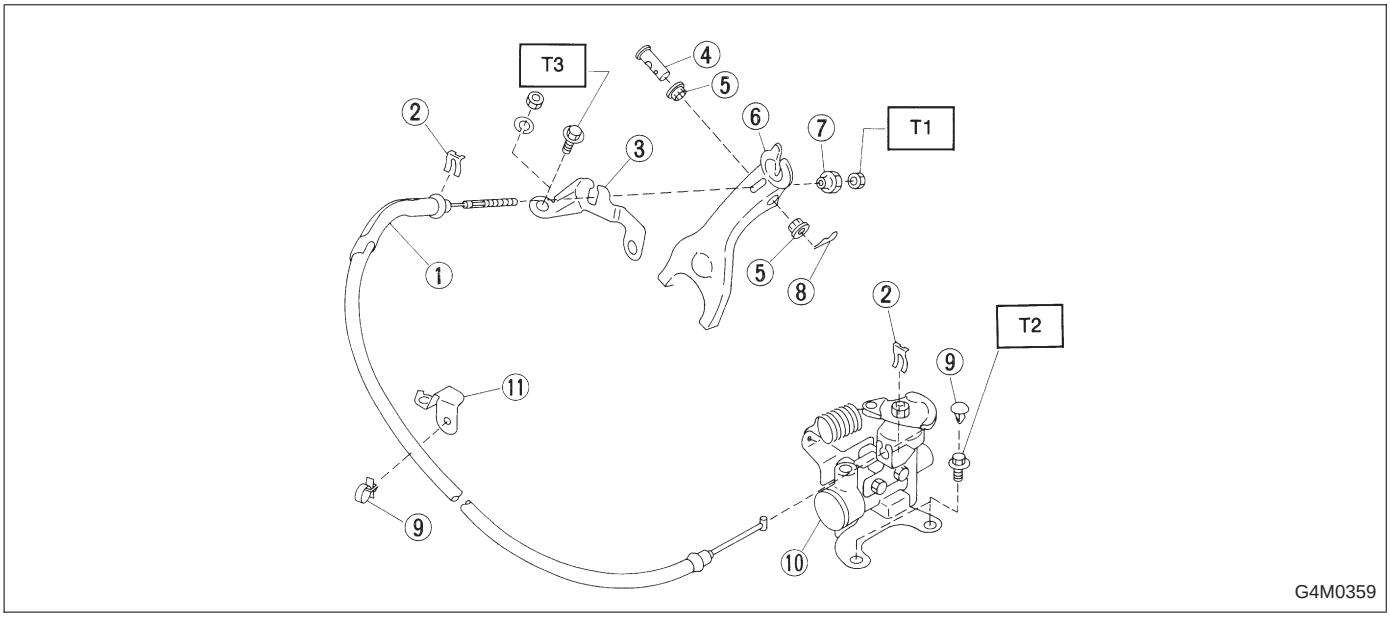

① PHV cable
② Clamp
③ Bracket A
④ Pin
⑤ Bushing
⑥ Release fork
⑦ Adjusting nut
⑧ Snap pin
⑨ Clip
⑩ PHV (Pressure hold valve)
⑪ Bracket

Tightening torque: N·m (kg-m, ft-lb)
T1: 3.4±1.0 (0.35±0.10, 2.5±0.7)
T2: 18±5 (1.8±0.5, 13.0±3.6)
T3: 33±3 (3.4±0.3, 24.6±2.2)

8. Parking (Hand) Brake

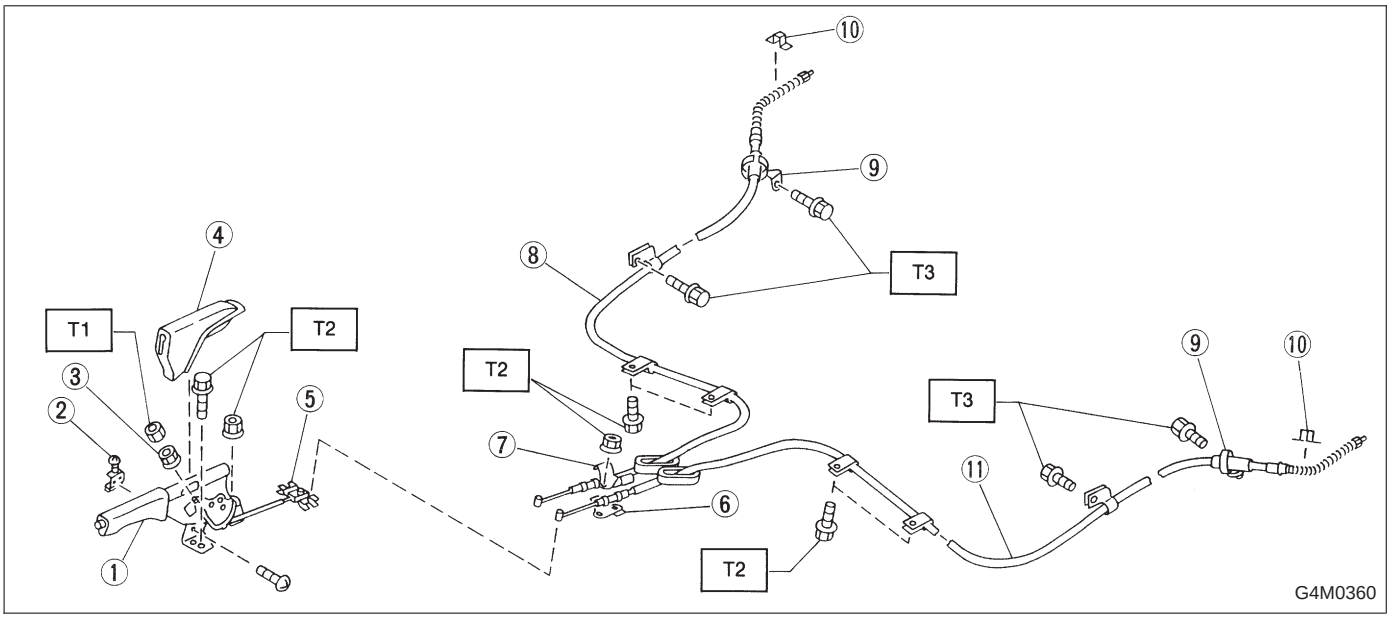

① Parking brake lever
② Parking brake switch
③ Adjusting nut
④ Cover
⑤ Equalizer
⑥ Bracket
⑦ Clamp
⑧ Parking brake cable RH
⑨ Cable guide
⑩ Clamp
(Rear disc brake model only)
⑪ Parking brake cable LH

Tightening torque: N·m (kg-m, ft-lb)
T1: 5.9±1.5 (0.60±0.15, 4.3±1.1)
T2: 18±5 (1.8±0.5, 13.0±3.6)
T3: 32±10 (3.3±1.0, 24±7)

1. Front Disc Brake

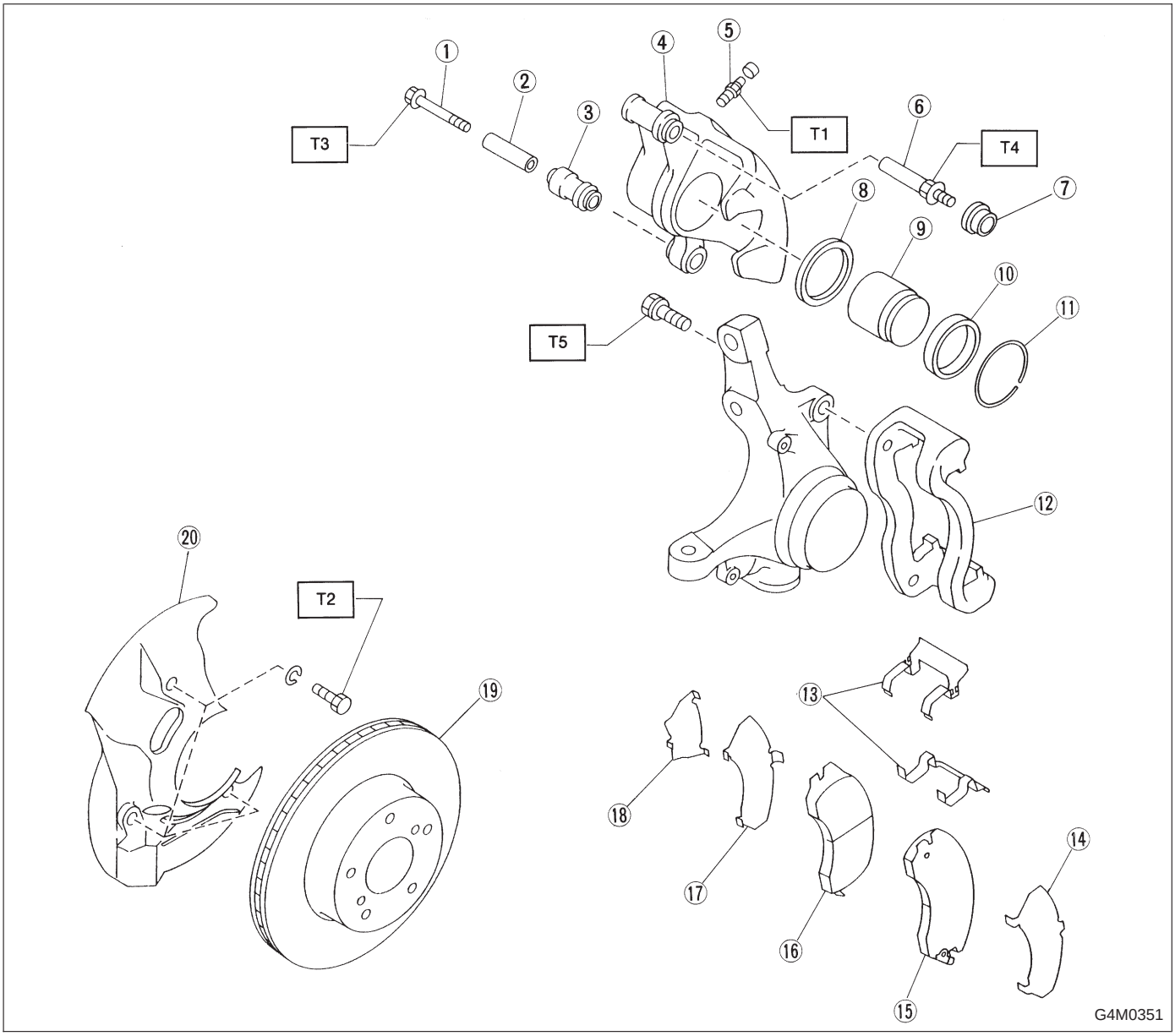

① Lock pin
② Lock pin sleeve
③ Lock pin boot
④ Caliper body
⑤ Air bleeder screw
⑥ Guide pin
⑦ Guide pin boot
⑧ Piston seal
⑨ Piston
⑩ Piston boot
⑪ Boot ring
⑫ Support
⑬ Pad clip
⑭ Outer shim
⑮ Pad (Outside)
⑯ Pad (Inside)
⑰ Inner shim
⑱ Shim
⑲ Disc rotor
⑳ Disc cover

Tightening torque: N·m (kg-m, ft-lb)
T1: 8±1 (0.8±0.1, 5.8±0.7)
T2: 14±4 (1.4±0.4, 10.1±2.9)
T3: 36±5 (3.7±0.5, 26.8±3.6)
T4: 49±5 (5.0±0.5, 36.2±3.6)
T5: 78±10 (8.0±1.0, 58±7)

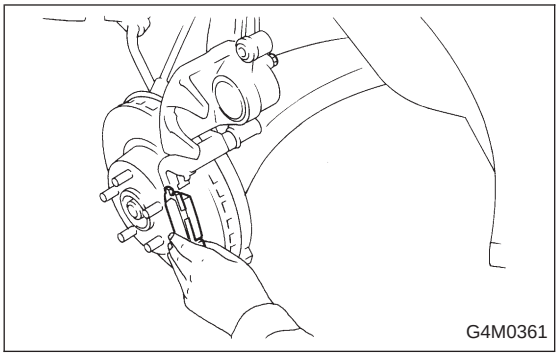

A: ON-CAR SERVICE

1. PAD

1) Remove lock pin.
2) Raise caliper body.
3) Remove pad.

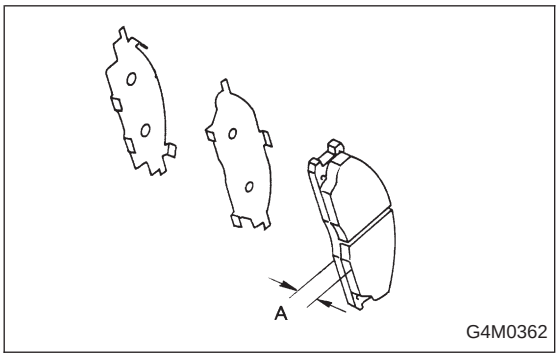

4) Check pad thickness A.

Pad thickness (including back metal) mm (in)	Standard value	17 (0.67)
	Wear limit	7.5 (0.295)

CAUTION:

- **Always replace the pads for both the left and right wheels at the same time. Also replace pad clips if they are twisted or worn.**
- **A wear indicator is provided on the inner disc brake pad. If the pad wears down to such an extent that the end of the wear indicator contacts the disc rotor, a squeaking sound is produced as the wheel rotates. If this sound is heard, replace the pad.**
- **Replace pad if there is oil or grease on it.**

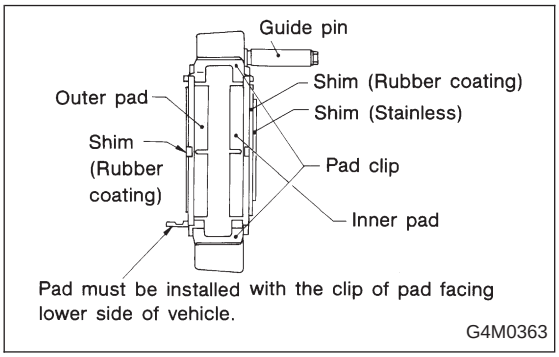

5) Apply thin coat of PBC GREASE (Part No. 003607000) to the frictional portion between pad and pad clip.
6) Install pads on support.
7) Install caliper body on support.

NOTE:
If it is difficult to push piston during pad replacement, loosen air bleeder to facilitate work.

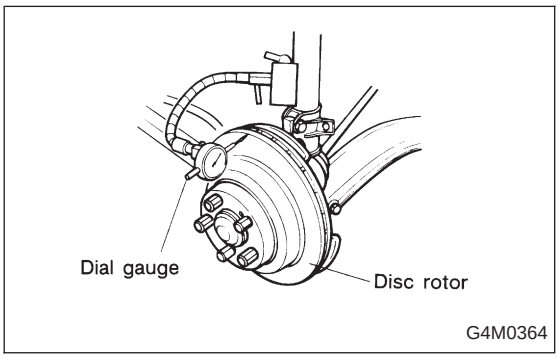

2. DISC ROTOR

1) Install disc rotor by tightening the five wheel nuts.
2) Set a dial gauge on the disc rotor. Turn disc rotor to check runout.

NOTE:
Make sure that dial gauge is set 5 mm (0.20 in) inward of rotor outer perimeter.

Disc rotor runout limit:
0.075 mm (0.003 in)

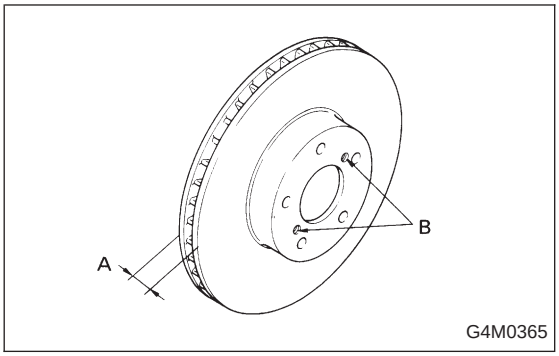

3) Measure disc rotor thickness.

NOTE:
Make sure that micrometer is set 5 mm (0.20 in) inward of rotor outer perimeter.

	Tire dia.	Standard value	Service limit	Disc outside dia.
Disc rotor thickness A mm (in)	13″	18.0 (0.709)	16.0 (0.630)	242 (9.53)
	14″	24.0 (0.945)	22.0 (0.866)	260 (10.24)

B: REMOVAL

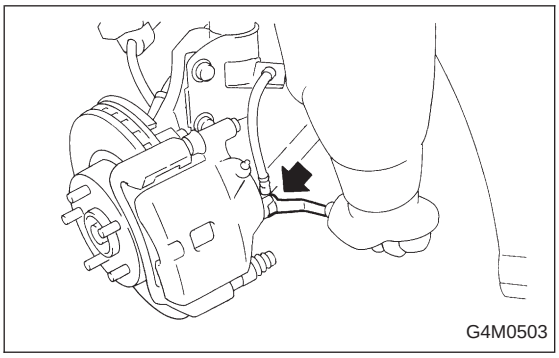

1) Remove union bolt and disconnect brake hose from caliper body assembly.

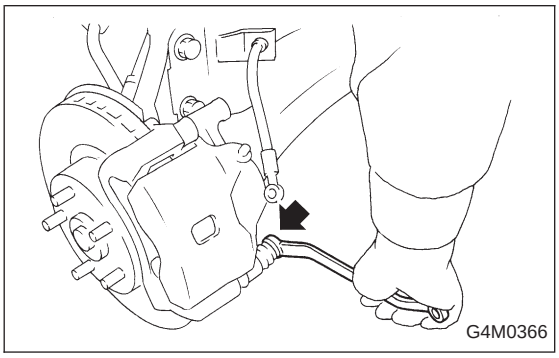

2) Loosen lock pin.

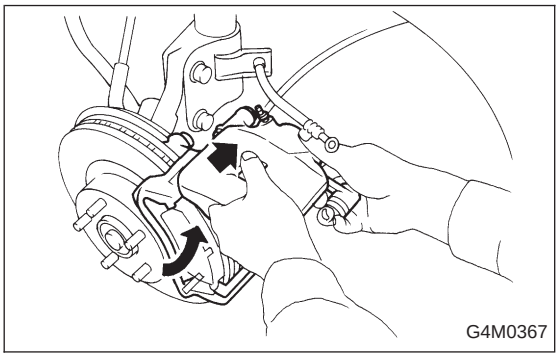

3) Raise caliper body and move it toward vehicle center to separate it from support.

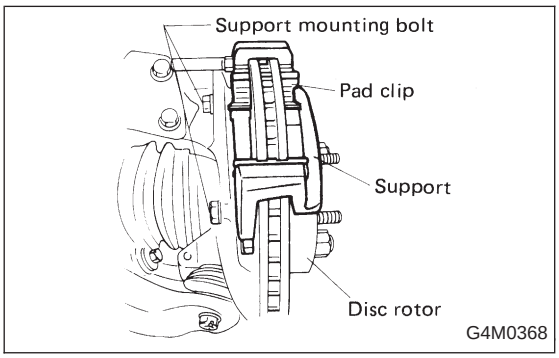

4) Remove support from housing.

NOTE:
Remove support only when replacing it or the rotor. It need not be removed when servicing caliper body assembly.

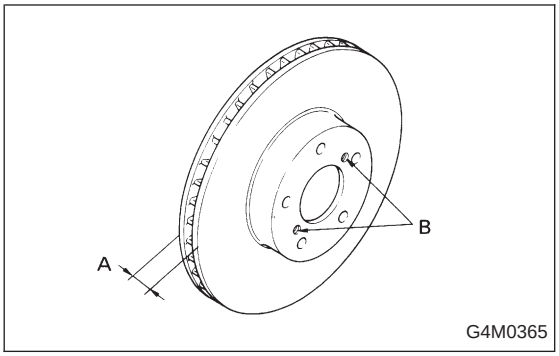

5) Remove disc rotor from hub.

NOTE:
If disc rotor seizes up within hub, drive disc rotor out by installing an 8-mm bolt in holes B on the rotor.

6) Clean mud and foreign particles from caliper body assembly and support.

C: DISASSEMBLY

1) Clean mud and foreign particles from caliper body assembly and support.

CAUTION:
Be careful not to allow foreign particles to enter inlet (at brake hose connector).

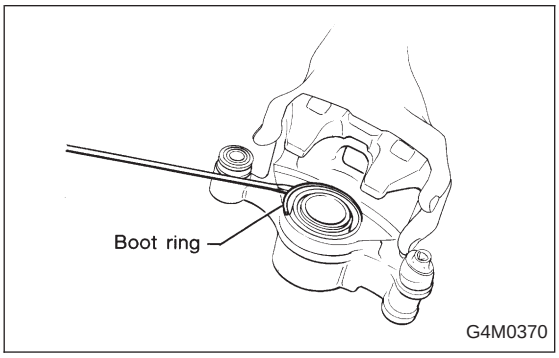

2) Using a standard screwdriver, remove boot ring from piston.

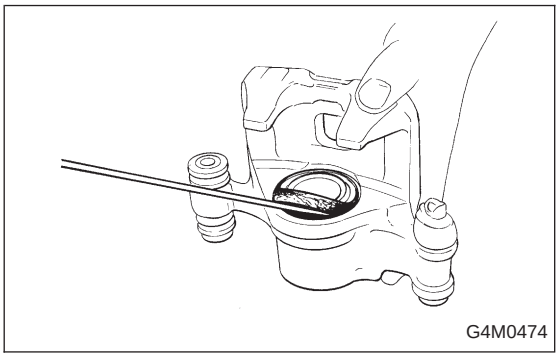

3) Remove boot from piston end.

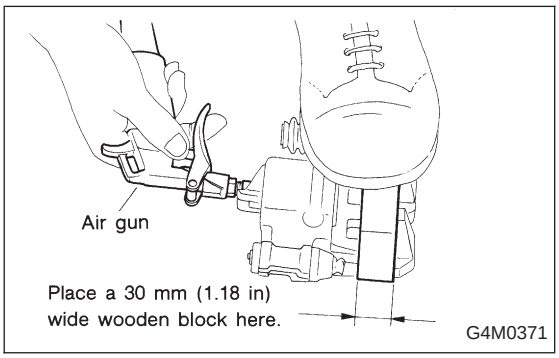

4) Gradually supply compressed air via caliper body brake hose to force piston out.

CAUTION:
Place a wooden block as shown in Figure to prevent damage to piston.

5) Remove piston seal from caliper body cylinder.
6) Remove lock pin sleeve and boot from caliper body.
7) Remove guide pin boot.

D: INSPECTION

1) Repair or replace faulty parts.
2) Check caliper body and piston for uneven wear, damage or rust.
3) Check rubber parts for damage or deterioration.

E: ASSEMBLY

1) Clean caliper body interior using brake fluid.
2) Apply a coat of brake fluid to piston seal and fit piston seal in groove on caliper body.
3) Apply a coat of brake fluid to the entire inner surface of cylinder and outer surface of piston.

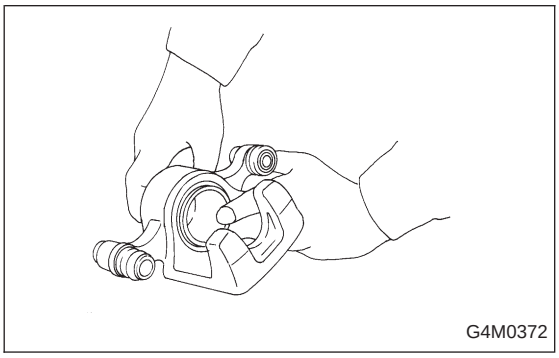

4) Insert piston into cylinder.

CAUTION:
Do not force piston into cylinder.

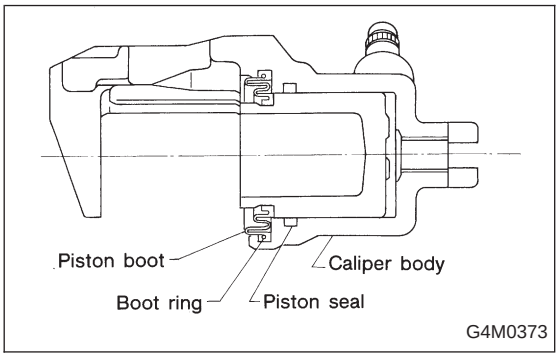

5) Apply a coat of specified grease to boot and fit in groove on ends of cylinder and piston.

Grease:
NIGLUBE RX-2 (Part No. 003606000)

To facilitate installation, fit boot starting with piston end.

6) Install boot ring. Be careful not scratch boot.

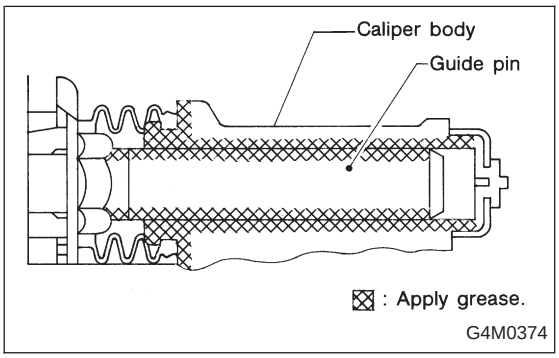

7) Apply a coat of specified grease to guide pin, outer surface, sleeve outer surface, cylinder inner surface, and boot grooves.

Grease:
NIGLUBE RX-2 (Part No. 003606000)

8) Install guide pin boots on caliper body.
9) Install lock pin boots on caliper body and insert lock pin sleeve into place.

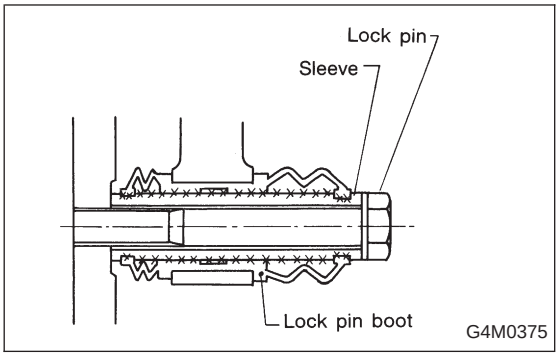

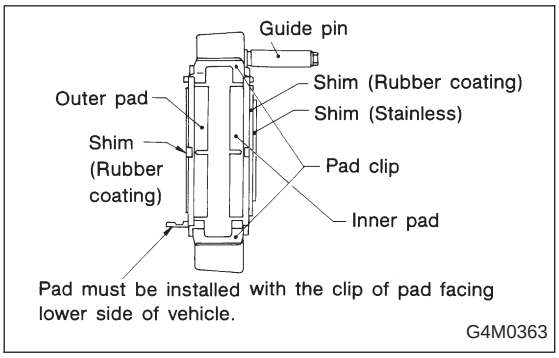

F: INSTALLATION

1) Install disc rotor on hub.
2) Install support on housing.

Tightening torque:
78±10 N·m (8±1 kg-m, 58±7 ft-lb)

CAUTION:
- **Always replace the pads for both the left and right wheels at the same time. Also replace pad clips if they are twisted or worn.**
- **A wear indicator is provided on the inner disc brake pad. If the pad wears down to such an extent that the end of the wear indicator contacts the disc rotor, a squeaking sound is produced as the wheel rotates. If this sound is heard, replace the pad.**
- **When replacing the pad, replace pads of the right and left wheels at the same time.**

3) Apply thin coat of PBC GREASE (Part No. 003607000) to the frictional portion between pad and pad clip.

4) Install pads, rubber coated shim and stainless shim on support.

5) Install caliper body on support.

Tightening torque:
36±5 N·m (3.7±0.5 kg-m, 27±3.6 ft-lb)

6) Connect brake hose.

Tightening torque:
18±3 N·m (1.8±0.3 kg-m, 13.0±2.2 ft-lb)

CAUTION:
Replace brake hose gaskets with new ones.

7) Bleed air from brake system.

2. Rear Disc Brake

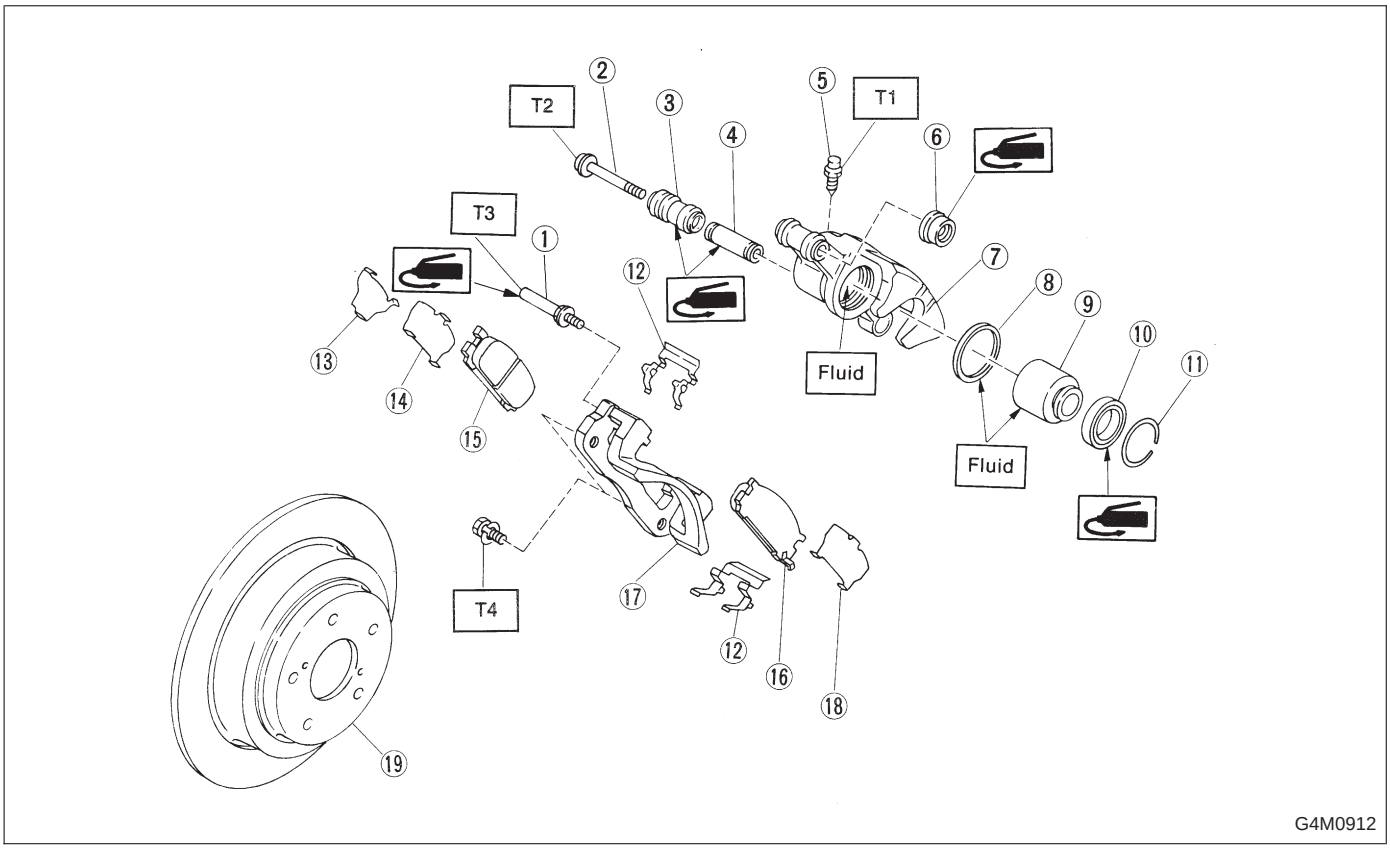

① Guide pin
② Lock pin
③ Lock pin boot
④ Lock pin sleeve
⑤ Air bleeder screw
⑥ Guide pin boot
⑦ Caliper body
⑧ Piston seal
⑨ Piston
⑩ Piston boot
⑪ Boot ring
⑫ Pad clip
⑬ Shim
⑭ Inner shim
⑮ Inner pad
⑯ Outer pad
⑰ Support
⑱ Outer shim
⑲ Disc rotor

Tightening torque: N·m (kg-m, ft-lb)
T1: 8±1 (0.8±0.1, 5.8±0.7)
T2: 20±4 (2.0±0.4, 14.5±2.9)
T3: 26±5 (2.7±0.5, 19.5±3.6)
T4: 52±6 (5.3±0.6, 38.3±4.3)

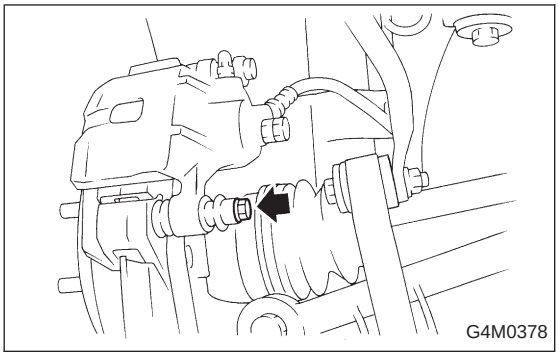

A: ON-CAR SERVICE

1. PAD

1) Remove lock pin.

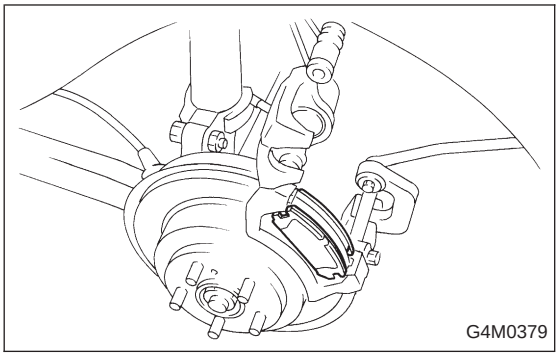

2) Raise caliper body.
3) Remove pad from support.

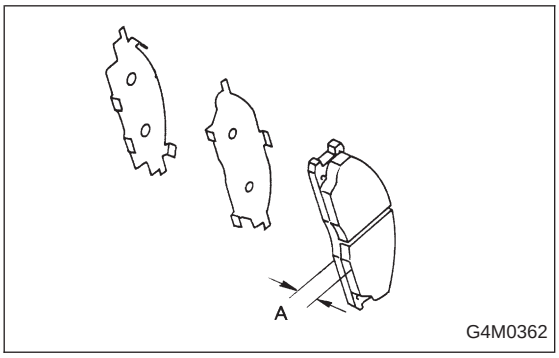

4) Check pad thickness (including back metal).

Pad thickness: A
Standard value 15.0 mm (0.591 in)
Wear limit 6.5 mm (0.256 in)

CAUTION:

- **Always replace the pads for both the left and right wheels at the same time. Also replace pad clips if they are twisted or worn.**
- **A wear indicator is provided on the inner disc brake pad. If the pad wears down to such an extent that the end of the wear indicator contacts the disc rotor, a squeaking sound is produced as the wheel rotates. If this sound is heard, replace the pad.**
- **Replace pad if there is oil or grease on it.**

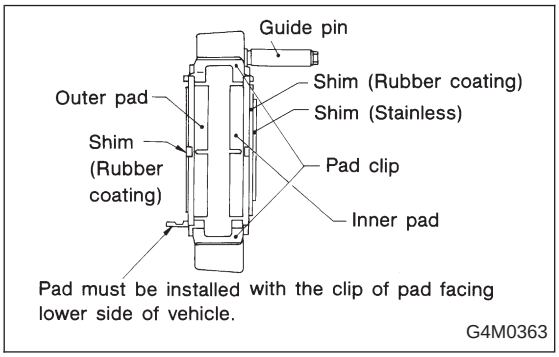

5) Apply thin coat of PBC GREASE (Part No. 03607000) to the frictional portion between pad and pad clip.
6) Install pad on support.

7) Install caliper body on support.

Tightening torque:
20±4 N·m (2.0±0.4 kg-m, 14.5±2.9 ft-lb)

NOTE:
If it is difficult to push piston during pad replacement, loosen air bleeder to facilitate work.

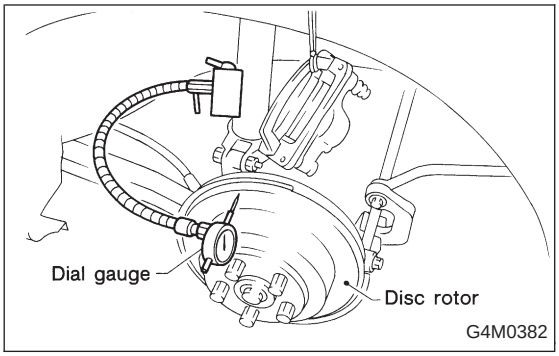

2. DISC ROTOR

1) Install disc rotor by tightening the five wheel nuts.
2) Set a dial gauge on the disc rotor. Turn disc rotor to check runout.

NOTE:
Make sure that dial gauge is set 5 mm (0.20 in) inward of rotor outer perimeter.

Disc rotor runout limit:
0.1 mm (0.004 in)

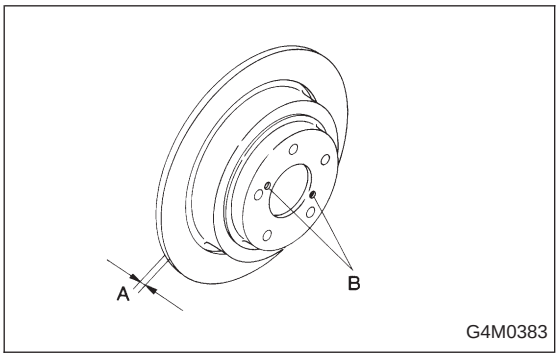

3) Measure disc rotor thickness.

NOTE:
Make sure that micrometer is set 5 mm (0.20 in) inward of rotor outer perimeter.

Disc rotor thickness: A
Standard value 10 mm (0.39 in)
Service limit 8.5 mm (0.335 in)

NOTE:
When removing disc rotor, refer to instructions under Parking Brake 4-4 [W4A0].

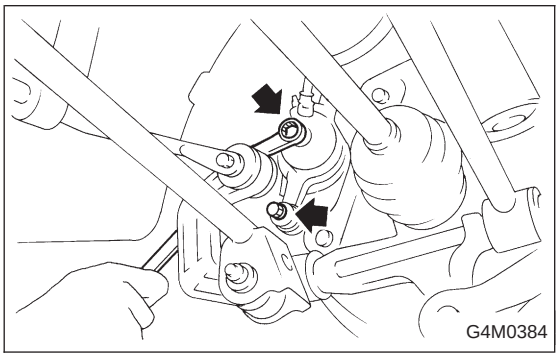

B: REMOVAL

1) Lift up vehicle and remove wheels.
2) Disconnect brake hose from caliper body assembly.

CAUTION:
Do not allow brake fluid to come in contact with vehicle body; wipe off completely if spilled.

3) Remove lock pin.
4) Raise caliper body and move it toward vehicle center to separate it from support.
5) Remove support from back plate.

NOTE:
Remove support only when replacing it or the rotor. It need not be removed when servicing caliper body assembly.

6) Clean mud and foreign particles from caliper body assembly and support.

CAUTION:
Be careful not to allow foreign particles to enter inlet (at brake hose connector).

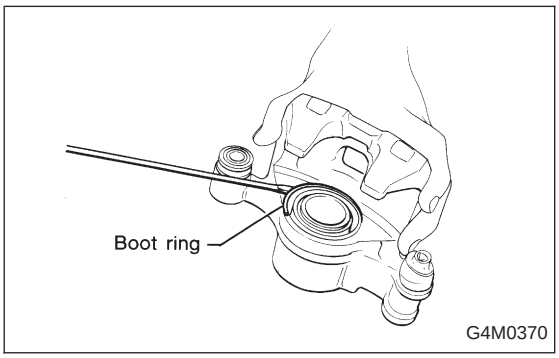

C: DISASSEMBLY

1) Remove the boot ring.

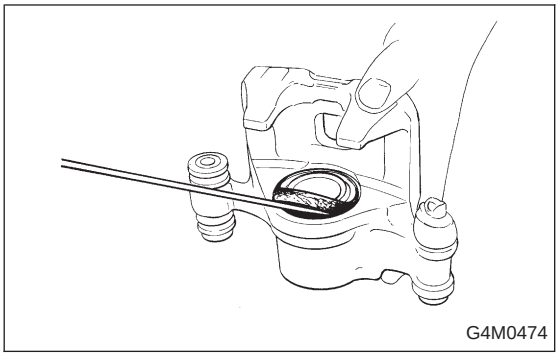

2) Remove the piston boot.

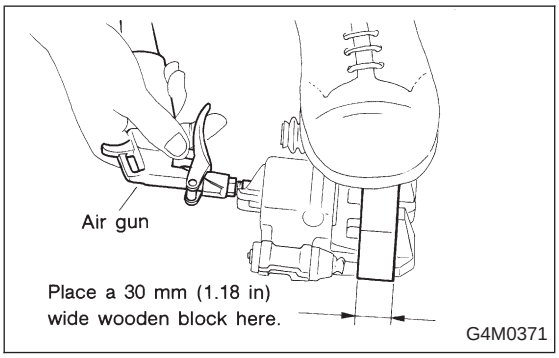

3) Gradually supply compressed air via inlet of caliper body to force piston out.

CAUTION:

- **Place a wooden block as shown in Figure to prevent damage to piston.**
- **Do not apply excessively high pressure.**

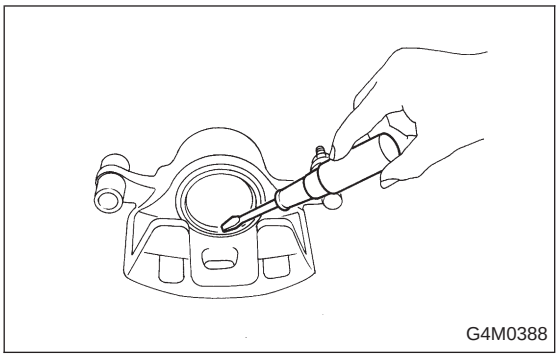

4) Remove piston seal from caliper body cylinder.
5) Remove lock pin sleeve and boot from caliper body.
6) Remove guide pin boot.

D: INSPECTION

1) Repair or replace faulty parts.
2) Check caliper body and piston for uneven wear, damage or rust.
3) Check rubber parts for damage or deterioration.

E: ASSEMBLY

1) Clean caliper body interior using brake fluid.
2) Apply a coat of brake fluid to piston seal and fit piston seal in groove on caliper body.
3) Apply a coat of brake fluid to the entire inner surface of cylinder and outer surface of piston.
4) Insert piston into cylinder.

CAUTION:
Do not force piston into cylinder.

5) Apply a coat of specified grease to boot and fit in groove on ends of cylinder and piston.

Grease:
NIGLUBE RX-2 (Part No. 003606000)

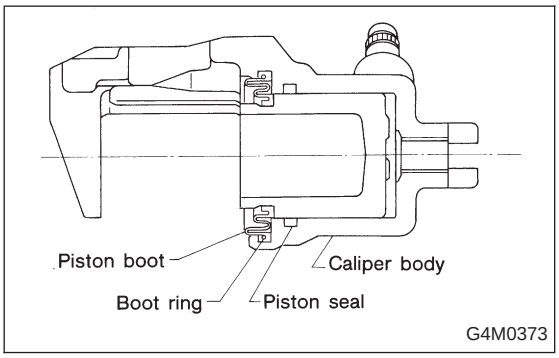

6) Install the piston boot to the caliper body, and attach boot ring.

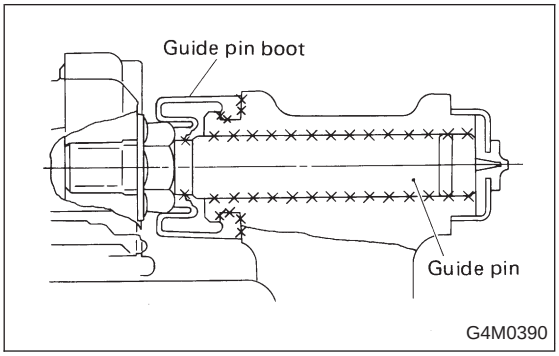

7) Apply a coat of specified grease to guide pin, outer surface, sleeve outer surface, cylinder inner surface, and boot grooves.

Grease:
NIGLUBE RX-2 (Part No. 003606000)

8) Install guide pin boots on caliper body.
9) Install lock pin boots on caliper body and insert lock pin sleeve into place.

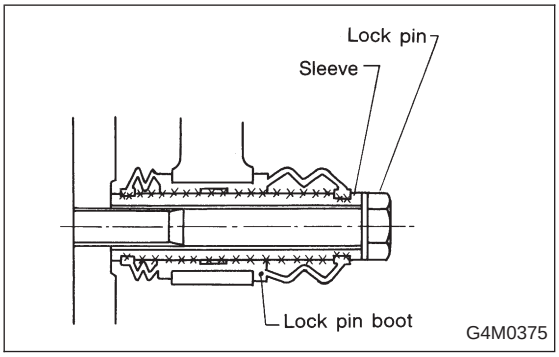

F: INSTALLATION

1) Install disc rotor on hub.
2) Install support on back plate.

Tightening torque:
52±6 N·m (5.3±0.6 kg-m, 38.3±4.3 ft-lb)

CAUTION:
● Always replace the pads for both the left and right wheels at the same time. Also replace pad clips if they are twisted or worn.

- **A wear indicator is provided on the inner disc brake pad. If the pad wears down to such an extent that the end of the wear indicator contacts the disc rotor, a squeaking sound is produced as the wheel rotates. If this sound is heard, replace the pad.**
- **Replace pads if there is oil or grease on them.**

3) Apply thin coat of PBC GREASE (Part No. 003607000) to the frictional portion between pad and pad clip.

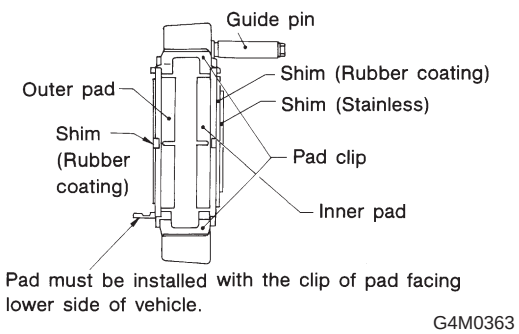

4) Install pads on support.

5) Install caliper body on support.

Tightening torque:
20±4 N·m (2.0±0.4 kg-m, 14.5±2.9 ft-lb)

6) Connect brake hose.

Tightening torque:
18±3 N·m (1.8±0.3 kg-m, 13.0±2.2 ft-lb)

CAUTION:
- **The brake hose must be connected without any twist.**
- **Replace brake hose gaskets with new ones.**

7) Bleed air from brake system.

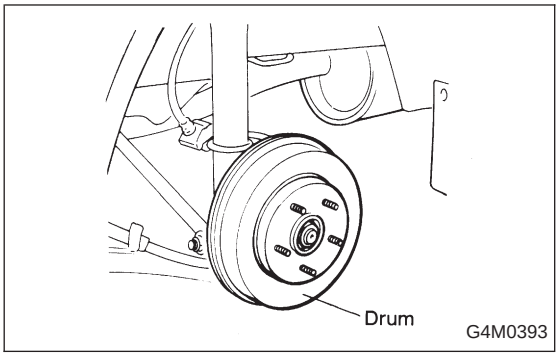

3. Rear Drum Brake

A: REMOVAL

1. BRAKE DRUM AND SHOE

1) Loosen wheel nuts, jack-up vehicle, support it with rigid racks, and remove wheel.
2) Release parking brake.
3) Remove brake drum from brake assembly.

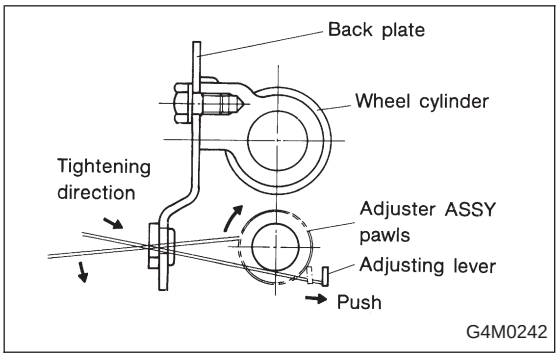

NOTE:
If it is difficult to remove brake drum, remove adjusting hole cover from back plate, and then, turn adjusting screw using a slot-type screwdriver until brake shoe separates from the drum.

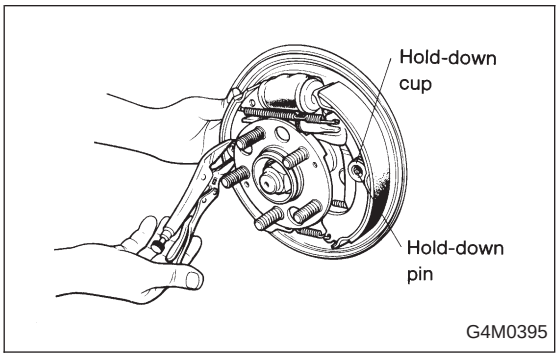

4) Hold hold-down pin by securing rear of back plate with your hand.
5) Disconnect hold-down cup from hold-down pin by rotating hold-down cup.

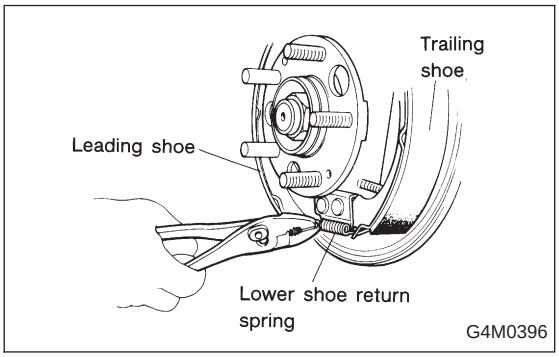

6) Disconnect lower shoe return spring from shoes.

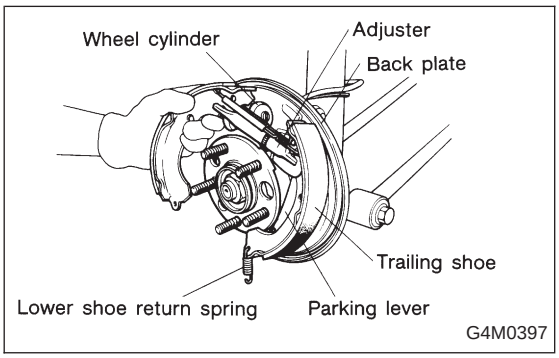

7) Remove shoes one by one from back plate with adjuster.

CAUTION:
Be careful not to bend parking brake cable excessively when removing brake shoes.

8) Disconnect parking brake cable from parking lever.

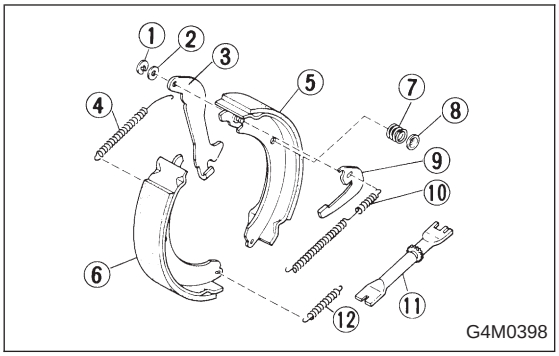

9) Remove the following.

① Retainer
② Washer
③ Parking lever
④ Upper shoe return spring
⑤ Trailing shoe
⑥ Leading shoe
⑦ Shoe hold-down spring
⑧ Shoe hold-down cup
⑨ Adjusting lever
⑩ Adjuster spring
⑪ Adjuster
⑫ Lower shoe return spring

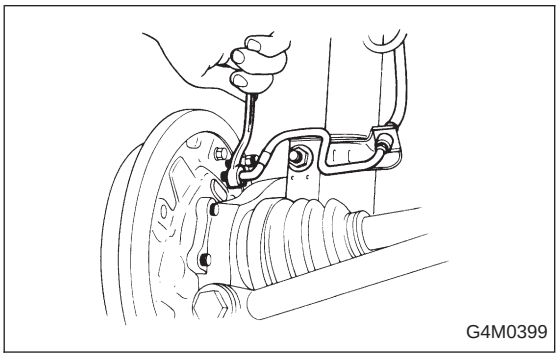

2. BRAKE ASSEMBLY

1) Remove wheel.
2) Remove axle nut.
3) Remove brake drum
4) Unscrew the brake pipe flare nut and disconnect brake pipe.
5) Remove hub. <Ref. to 4-2 [W2A0], [W3A0].>

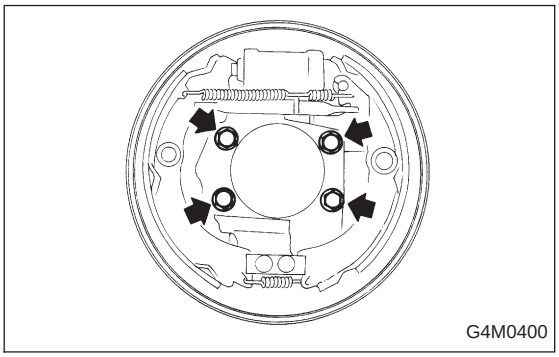

6) Remove the bolts installing back plate, and then, remove brake assembly.

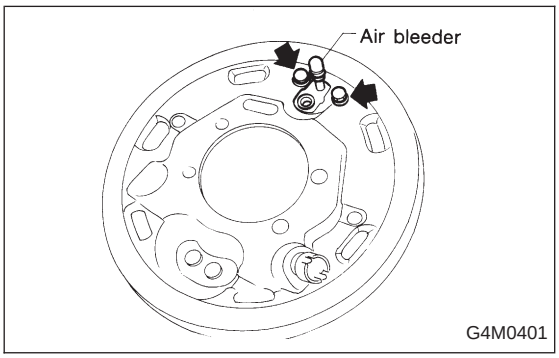

3. WHEEL CYLINDER

1) Remove brake drum and shoes.
2) Unscrew brake pipe flare nut; and disconnect brake pipe.
3) Remove the bolts installing wheel cylinder on back plate, and remove it.

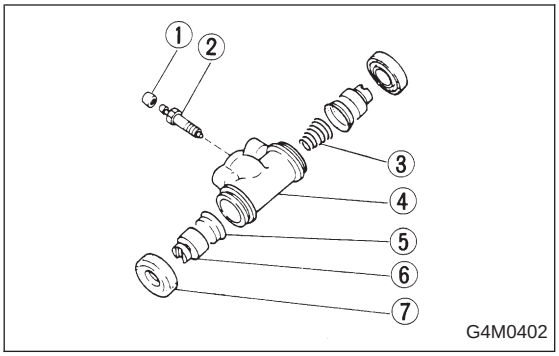

B: DISASSEMBLY

1. WHEEL CYLINDER

1) Remove right and left dust boots from wheel cylinder.
2) Remove piston, cup, spring and air bleeder screw and cap.

① Bleeder cap
② Bleeder screw
③ Spring
④ Cylinder
⑤ Cup
⑥ Piston
⑦ Boot

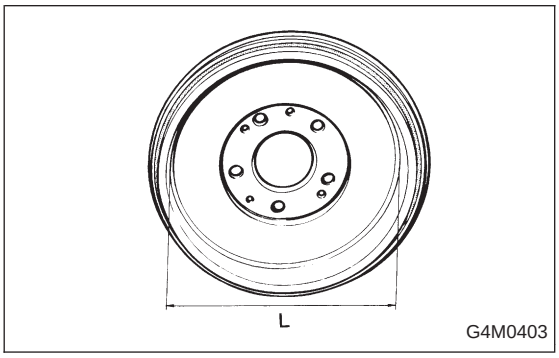

C: INSPECTION

1) If the inside surface of brake drum is streaked, correct the surface. And, if it is unevenly worn, taperingly streaked, or the outside surface of brake drum is damaged, correct or replace it.
2) Measure the drum inner diameter.

Drum inner diameter: "L"
Standard: 228.6 mm (9 in)
Service limit: 230.6 mm (9.08 in)

3) Measure the lining thickness.

Lining thickness:
Standard: 4.1 mm (0.161 in)
Service limit: 1.5 mm (0.059 in)

4) If the deformation or wear of back plate, shoe, etc. are notable, replace them.
5) When the shoe return spring tension is excessively weakened, replace it, taking care to identify upper and lower springs.

D: ASSEMBLY

1. WHEEL CYLINDER

Clean all parts in brake fluid. Check and replace faulty parts.

- Cup and boot for damage or fatigue
- Cylinder, piston and spring or damage or rust formation

1) Assembly is the reverse order of disassembly.

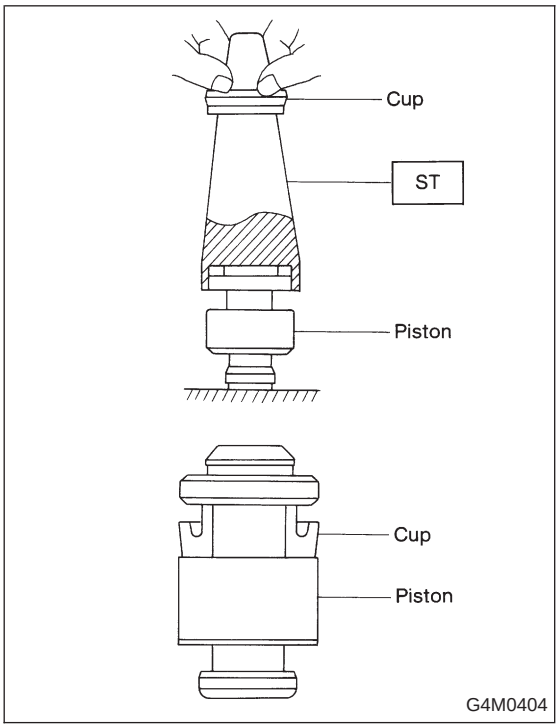

(1) When installing the cup, use ST, apply brake fluid to the frictional surface for smooth installation and pay attention to cup direction.
(2) STs are available in different sizes.

CAUTION:
- **When replacing the repair kit, make sure that the sizes of cylinder and cup are the same as those which were replaced.**
- **Use only the tool of the correct size.**

ST: ADAPTER	
Applicable size	Part No.
17.46 mm (11/16 in)	925460000
19.05 mm (3/4 in)	926460000

CAUTION:
While assembling, be careful to prevent any metal chip, dust or dirt from entering the wheel cylinder.

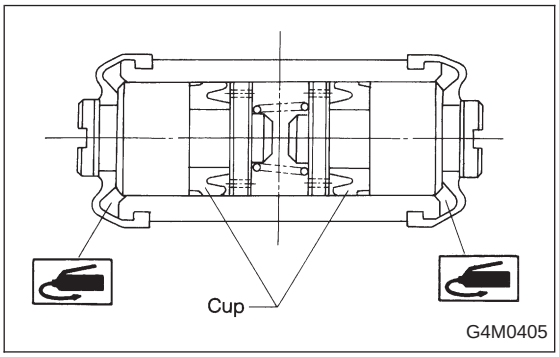

2) Apply rubber grease to the boot inside as shown in Figure.

Grease:
NIGLUBE RX-2 (Part No. 003606000)

CAUTION:
Never use brake grease.

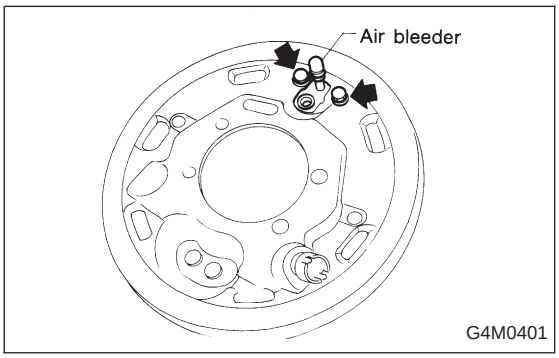

E: INSTALLATION

1. WHEEL CYLINDER

Install wheel cylinder on back plate, and tighten bolts.

Tightening torque:
10±2 N·m (1.0±0.2 kg-m, 7.2±1.4 ft-lb)

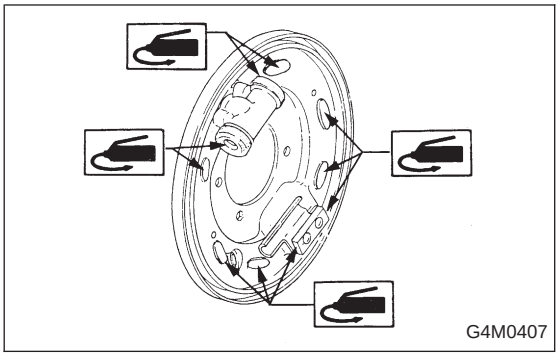

2. BRAKE DRUM AND SHOE

1) Clean back plate and wheel cylinder.
2) Apply grease to portions indicated by arrows in Figure.

Brake grease:
Dow Corning Molykote No. 7439 (Part No. 725191460)

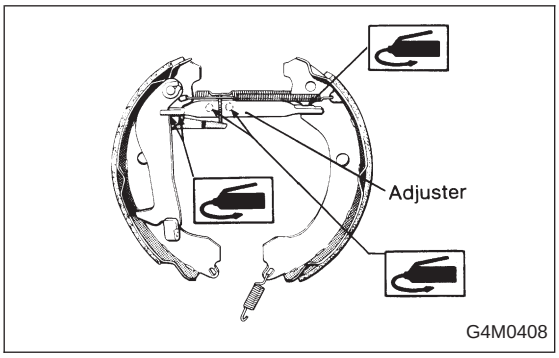

3) Apply grease to adjusting screw and both ends of adjuster.

Brake grease:
Dow Corning Molykote No. 7439 (Part No. 725191460)

4) Connect upper shoe return spring to shoes.

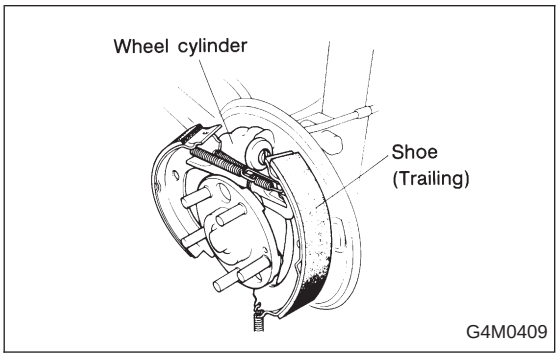

5) While positioning shoes (one at a time) in groove on wheel cylinder, secure shoes.
6) Connect lower shoe return spring.
7) Fix shoes by connecting hold-down cup to hold-down pin.

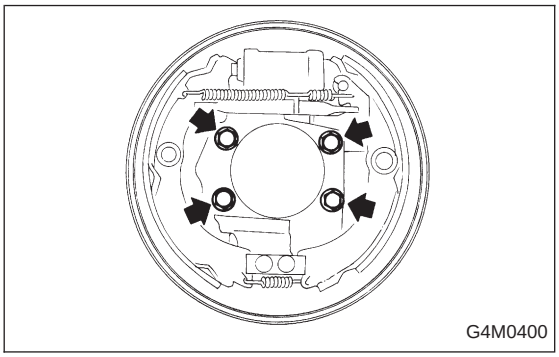

3. BRAKE ASSEMBLY

1) Install brake assembly on housing, and tighten bolts to install back plate.

Tightening torque:
52±6 N·m (5.3±0.6 kg-m, 38.3±4.3 ft-lb)

2) Install hub. <Ref. to 4-2 [W2D0], [W3D0].>
3) Connect brake pipe, and tighten brake pipe flange nut.

Tightening torque:
14.7^{+3}_{-2} N·m ($1.5^{+0.3}_{-0.2}$ kg-m, $10.8^{+2.2}_{-1.4}$ ft-lb)

4) Set the outside diameter of brake shoes less than 0.5 — 0.8 mm (0.020 — 0.031 in) in comparison with the inside diameter of brake drum.
5) Install brake drum.
6) After installing brake assembly, bleed air from brake line.

4. Parking Brake (Rear Disc Brake)

A: REMOVAL

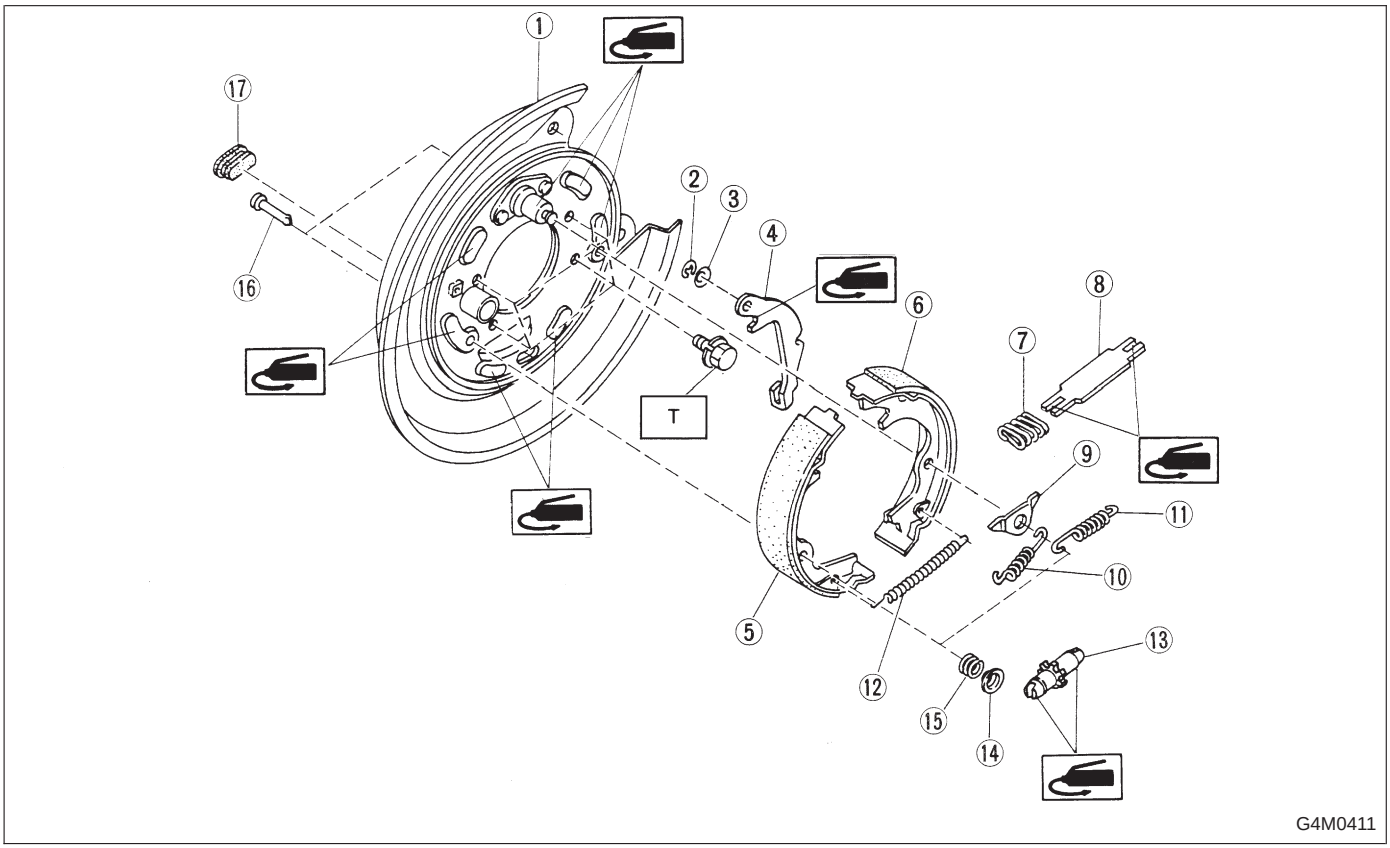

① Back plate
② Retainer
③ Spring washer
④ Lever
⑤ Parking brake shoe (Primary)
⑥ Parking brake show (Secondary)
⑦ Strut spring
⑧ Strut
⑨ Shoe guide plate
⑩ Primary return spring
⑪ Secondary return spring
⑫ Adjusting spring
⑬ Adjuster
⑭ Shoe hold down cup
⑮ Shoe hold down spring
⑯ Shoe hold down pin
⑰ Adjusting hole cover

Tightening torque: N·m (kg-m, ft-lb)
T: 52±6 (5.3±0.6, 38.3±4.3)

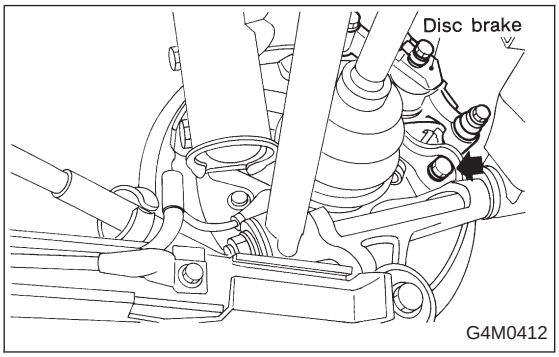

1) Remove the two mounting bolts and remove the disc brake assembly.
2) Suspend the disc brake assembly so that the hose is not stretched.
3) Remove the disc rotor.
4) Remove shoe return spring from parking brake assembly.
5) Remove front shoe hold down spring and pin with pliers.
6) Remove strut and strut spring.
7) Remove adjuster assembly from parking brake assembly.
8) Remove brake shoe.
9) Remove rear shoe hold-down spring and pin with pliers.

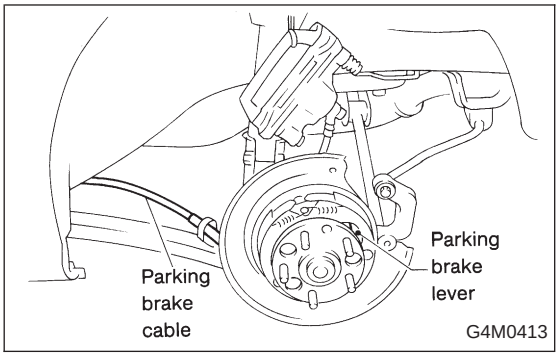

10) Remove parking cable from parking lever.

11) Using a standard screwdriver, raise retainer. Remove parking lever and washer from brake shoe.

B: INSPECTION

1) Measure brake disc inside diameter. If the disc is scored or worn, replace the brake disc.

Disc inside diameter:
Standard
170 mm (6.69 in)
Service limit
171 mm (6.73 in)

2) Measure the lining thickness. If it exceeds the limit, replace shoe assembly.

Lining thickness:
Standard
3.2 mm (0.126 in)
Service limit
1.5 mm (0.059 in)

CAUTION:

Replace the brake shoes on the right and left brake assembly at the same time.

C: INSTALLATION

CAUTION:

Be sure lining surface is free from oil contamination.

Brake grease:
Dow Corning Molykote No 7439 (Part No. 725191460)

1) Apply brake grease to the following places.
(1) Six contact surfaces of shoe rim and back plate packing.
(2) Contact surface of shoe wave and anchor pin
(3) Contact surface of lever and strut
(4) Contact surface of shoe wave and adjuster assembly
(5) Contact surface of shoe wave and strut
(6) Contact surface of lever and shoe wave

2) Installation is in reverse order of removal.

CAUTION:
- **Use new retainers and clinch them when installing brake shoes to levers.**
- **Ensure that parking lever moves smoothly.**
- **Do not confuse left parking lever with right one.**
- **Do not confuse left strut with right one.**

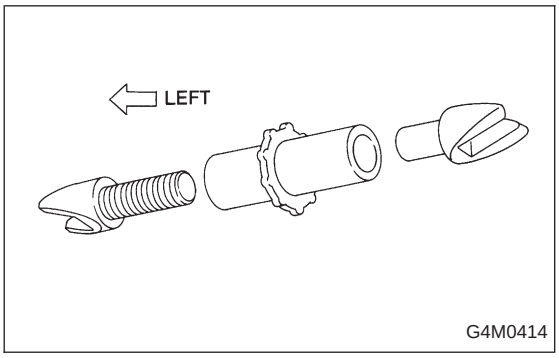

NOTE:
Ensure that adjuster assembly is securely installed with screw in the left side, facing vehicle front.

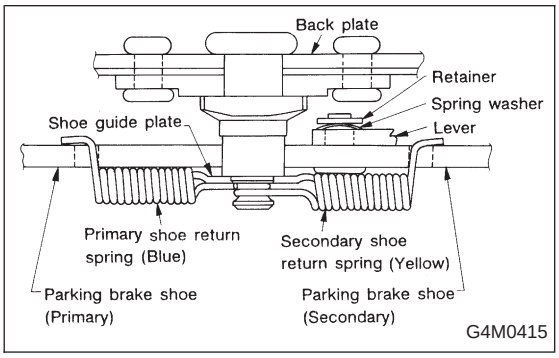

NOTE:
Ensure that shoe return spring is installed as shown in Figure.

3) Adjust parking brakes. <Ref. to 4-4 [W4D1].>

CAUTION:
After replacing parking brake lining, be sure to drive vehicle for “break-in” purposes.
(1) Drive the vehicle about 35 km/h (22 MPH).
(2) With the parking brake release button pushed in, pull the parking brake lever gently.
(3) Drive the vehicle for about 200 meter (0.12 mile) in this condition.
(4) Wait 5 to 10 minutes for the parking brake to cool down. Repeat this procedure once more.
(5) After breaking-in, re-adjust parking brakes.

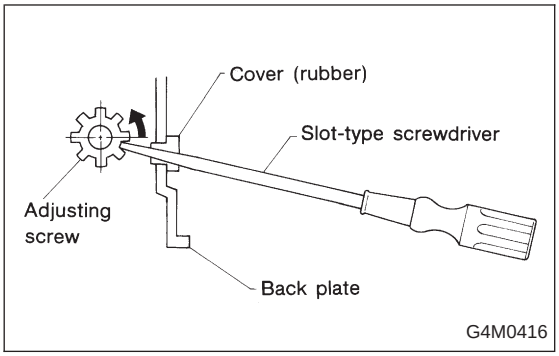

D: PARKING BRAKE ADJUSTMENT

1. SHOE CLEARANCE ADJUSTMENT

1) Remove adjusting hole cover from back plate.
2) Turn adjusting screw using a slot-type screwdriver until brake shoe is in close contact with disc rotor.
3) Turn back (downward) adjusting screw 3 or 4 notches.
4) Install adjusting hole cover to back plate.

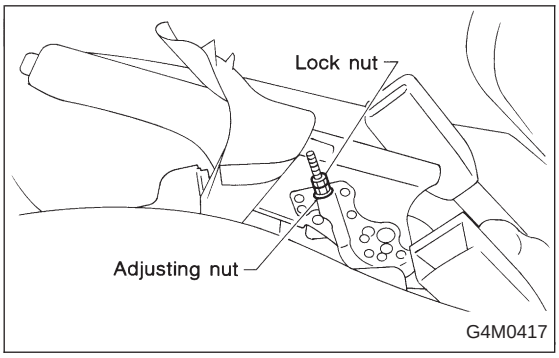

2. LEVER STROKE ADJUSTMENT

1) Remove console box lid.
2) Forcibly pull parking brake lever 3 to 5 times.
3) Adjust parking brake lever by turning adjuster until parking brake lever stroke is set at 6 notches with operating force of 196 N (20 kg, 44 lb).
4) Tighten lock nut.
5) Install console box lid.

Lever stroke:
7 to 8 notches when pulled with a force of 196 N (20 kg, 44 lb)

Torque (Adjuster lock nut):
5.9±1.5 N·m (0.60±0.15 kg-m, 4.3±1.1 ft-lb)

5. Master Cylinder

A: REMOVAL

1) Thoroughly drain brake fluid from reservoir tank.
2) Disconnect fluid level indicator harness connector.
3) Remove brake pipes from master cylinder.
4) Remove master cylinder mounting nuts, and take out master cylinder from brake booster.

CAUTION:
Be extremely careful not to spill brake fluid. Brake fluid spilt on the vehicle body will harm the painted surface; wipe it off quickly if spilt.

B: DISASSEMBLY

1. PRECAUTIONS FOR DISASSEMBLING

1) Remove mud and dirt from the surface of brake master cylinder.
2) Prepare tools necessary for disassembly operation, and arrange them neatly on work bench.
3) Clean work bench.
4) Tools for disassembly operation:
- 1 Phillips screwdriver
- 1 C-ring pliers

2. DISASSEMBLING PROCEDURE

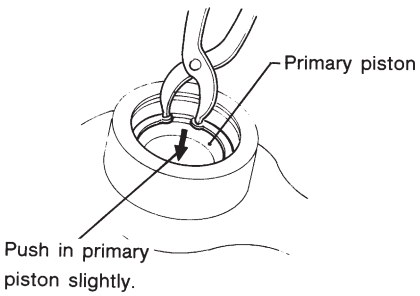

1) Remove supply valve stopper. (only vehicle equipped with A.B.S.)
2) Remove C-ring with C-ring pliers pushing in primary piston slightly.

NOTE:
Piston may jump out from master cylinder.

3) Extract primary piston assembly and secondary piston assembly.

CAUTION:
- **Do not disassemble the piston assembly; otherwise, the spring set value may be changed.**
- **Use brake fluid or methanol to wash inside wall of cylinder, pistons and piston cups. Be careful not to damage parts when washing. If methanol is used for washing, do not dip rubber parts, such as piston cups, in it for more than 30 seconds; otherwise, they may become swelled.**

C: INSPECTION

If any damage, deformation, wear, swelling, rust, and other faults are found on the primary piston assembly, secondary piston assembly, supply valve stopper, or gasket, replace the faulty part.

CAUTION:
- **The primary and secondary pistons must be replaced as complete assemblies.**
- **The service limit of the clearance between each piston and the master cylinder inner dia. is 0.11 mm (0.0043 in).**
- **When handling parts, be extremely careful not to damage or scratch the parts, or let any foreign matter get on them.**

D: ASSEMBLY

1. PRECAUTIONS FOR ASSEMBLING

1) When assembling, be sure to use recommended brake fluid.
2) Ensure that the inside wall of cylinder, pistons, and piston cups are free from dirt when assembling.
3) Be extremely careful not to damage, scratch, or dent cylinder inside wall, pistons, and piston cups.
4) Do not drop parts. Never attempt to use any part that has been dropped accidentally.

2. ASSEMBLING OPERATION

1) Assembling piston assembly:
Apply recommended brake fluid to inside wall of cylinder, and to outer surface of piston assembly, and install piston assemblies carefully into cylinder.
2) Assembling supply valve stopper:
After installing piston into cylinder, push primary piston in about 10 mm (0.39 in), using a rod, such as push rod then assemble gasket and supply valve stopper.

Tightening torque:
2.2±0.7 N·m (0.225±0.075 kg-m, 1.6±0.5 ft-lb)

CAUTION:
If the gasket and supply valve stopper are assembled without pushing in the primary piston, scratches may be caused on the secondary piston, and no pressure may be built up in the secondary side. To avoid such an error, be sure to push in the primary piston before assembling these parts.

3) Assembling C-ring:
With primary piston pushed in slightly, attach C-ring by using C-ring pliers.

NOTE:
After assembling, ensure that the C-ring is fitted securely in the ring groove.

E: INSTALLATION

To install the master cylinder to the body, reverse the sequence of removal procedure.

Tightening torque:
Master cylinder mounting nut
14±4 N·m (1.4±0.4 kg-m, 10.1±2.9 ft-lb)
Piping flare nut
14.7^{+3}_{-2} N·m ($1.5^{+0.3}_{-0.2}$ kg-m, $10.8^{+2.2}_{-1.4}$ ft-lb)

CAUTION:
Be sure to use recommended brake fluid.

6. Brake Booster

A: REMOVAL

1) Remove the following parts at engine compartment.
   (1) Disconnect connector for brake fluid level indicator.
   (2) Remove brake pipes from master cylinder.
   (3) Remove master cylinder installing nuts.
   (4) Disconnect vacuum hose from brake booster.
2) Remove the following parts from the pedal bracket.
   (1) Snap pin and clevis pin.
   (2) Four brake booster installing nuts.
3) Remove brake booster while shunning brake pipes.

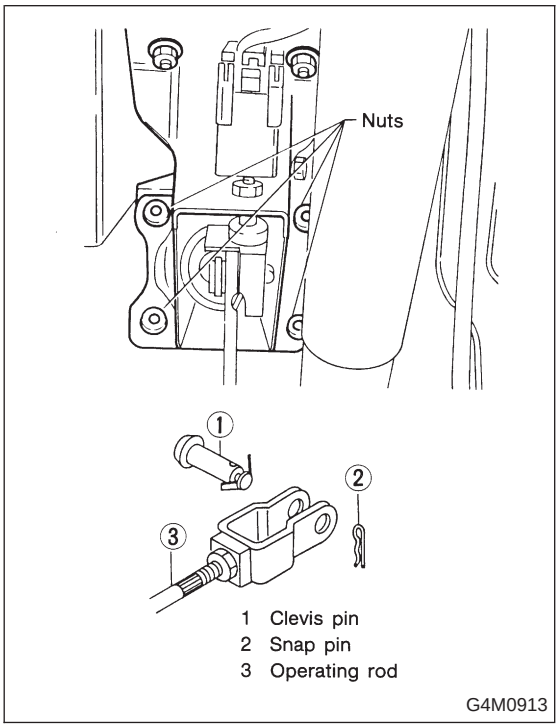

B: INSTALLATION

1) Mount brake booster in position.
2) Connect operating rod to brake pedal with clevis pin and snap pin.

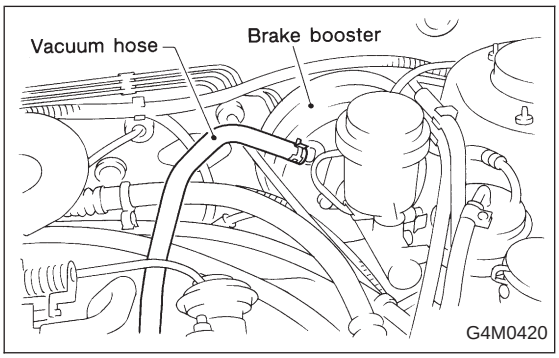

3) Connect vacuum hose to brake booster.
4) Mount master cylinder onto brake booster.
5) Connect brake pipes to master cylinder.
6) Connect electric connector for brake fluid level indicator.

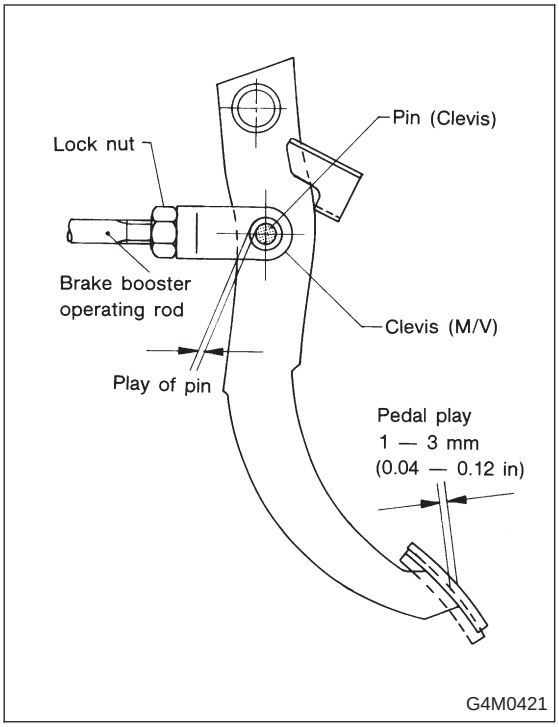

7) Adjust operating rod of brake booster as follows:
   (1) Be sure engine is off. (No vacuum is applied to brake booster.)
   (2) There should be play between brake booster clevis and pin at brake pedal installing portion.
   (Depress brake pedal pad with a force of less than 10 N [1 kg, 2 lb] to a stroke of 1 to 3 mm [0.04 to 0.12 in].)

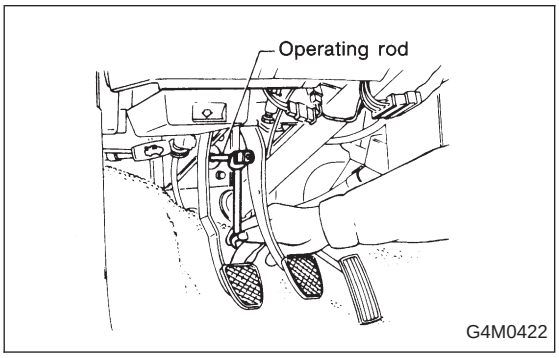

   (3) Depress the surface of brake pad by hand.
   (4) If there is no free play between clevis pin and clevis, loosen lock nut for operating rod and adjust operating rod by turning in the direction that shortens it.
8) Bleed air from brake system.

Torque (Air bleeder screw):
8±1 N·m (0.8±0.1 kg-m, 5.8±0.7 ft-lb)

9) Conduct road tests to ensure brakes do not drag.

C: OPERATION CHECK

CAUTION:

When checking operation, be sure to securely apply the hand brake.

1. CHECKING WITHOUT USING GAUGES

This method cannot determine the exact portion which has failed, but it can provide a rough understanding of the nature of the failure if checking is conducted in accordance with the following procedure.

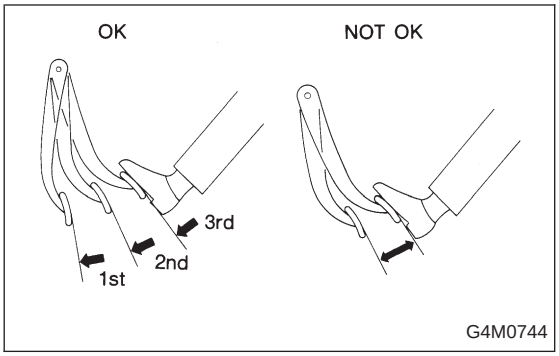

2. AIR TIGHTNESS CHECK

Start engine, and run it for 1 to 2 minutes, then turn it off. Depress brake pedal several times applying the same pedal force as that used in ordinary braking operations. The pedal stroke should be greatest on the 1st depression, and it should become smaller with each successive depression. If no change occurs in the pedal height while in a depressed state, brake booster is faulty.

NOTE:
- In the event of defective operation, inspect the condition of the check valve and vacuum hose.
- Replace them if faulty and conduct the test again.
- If no improvement is observed, check precisely with gauges.

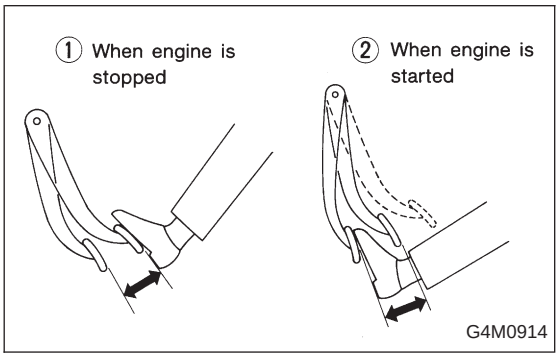

3. OPERATION CHECK

1) With engine off, depress brake pedal several times applying the same pedal force and make sure that the pedal height does not vary with each depression of the pedal.
2) With brake pedal depressed, start engine.
3) As engine starts, brake pedal should move slightly toward the floor. If no change occurs in the pedal height, brake booster is faulty.

NOTE:
If faulty, check precisely with gauges.

4. LOADED AIR TIGHTNESS CHECK

Depress brake pedal while engine is running, and turn off engine while the pedal is still depressed. Keep the pedal depressed for 30 seconds; if no change occurs in the pedal height, brake booster is functioning normally; if the pedal height increases, it is faulty.

NOTE:
If faulty, check precisely with gauges.

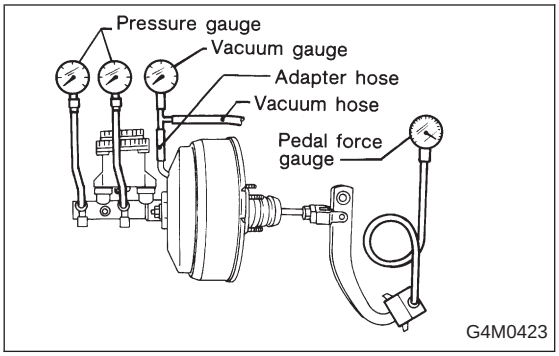

5. CHECKING WITH GAUGES

Connect gauges as shown in Figure. After bleeding air from pressure gauges, proceed to each check.

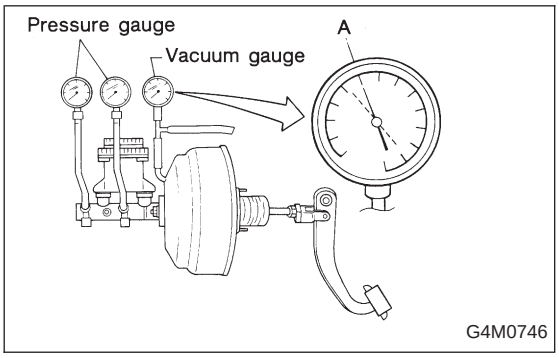

6. AIR TIGHTNESS CHECK

1) Start engine and keep it running until a vacuum of 66.7 kPa (500 mmHg, 19.69 inHg) = point A is indicated on vacuum gauge. Do not depress brake pedal.
2) Stop engine and watch the gauge. If the vacuum drop range is less than 3.3 kPa (25 mmHg, 0.98 inHg) within 15 seconds after stopping engine, brake booster is functioning properly.
If defective, the cause may be one of those listed below.

- Check valve malfunction
- Leak from vacuum hose
- Leak from the shell jointed portion or stud bolt welded portion
- Damaged diaphragm
- Leak from valve body seal and bearing portion
- Leak from plate and seal assembly portion
- Leak from poppet valve assembly portion

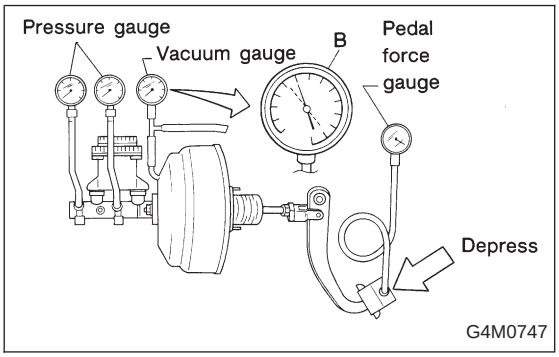

7. LOADED AIR TIGHTNESS CHECK

1) Start engine and depress brake pedal with pedal force of 196 N (20 kg, 44 lb). Keep engine running until a vacuum of 66.7 kPa (500 mmHg, 19.69 inHg) = point B is indicated on vacuum gauge while the pedal is still depressed.
2) Stop engine and watch vacuum gauge.
If the vacuum drop range is less than 3.3 kPa (25 mmHg, 0.98 inHg) within 15 seconds after stopping engine, brake booster is functioning properly.
If defective, refer to “AIR TIGHTNESS CHECK” described above.

8. LACK OF BOOSTING ACTION CHECK

Turn off engine, and set the vacuum gauge reading at “0”. Then, check the fluid pressure when brake pedal is depressed. The pressure must be greater than the standard value listed below.

Brake pedal force	147 N (15 kg, 33 lb)	294 N (30kg, 66 lb)
Models without A.B.S.	785 kPa (8 kg/cm^2, 114 psi)	2,158 kPa (22 kg/cm^2, 313 psi)
Models with A.B.S.	588 kPa (6 kg/cm^2, 85 psi)	1,863 kPa (19 kg/cm^2, 270 psi)

9. BOOSTING ACTION CHECK

Set the vacuum gauge reading at 66.7 kPa (500 mmHg, 19.69 inHg) by running engine. Then, check the fluid pressure when brake pedal is depressed. The pressure must be greater than the standard value listed below.

Brake pedal force	147 N (15 kg, 33 lb)	294 N (30kg, 66 lb)
Models without A.B.S.	5,492 kPa (56 kg/cm^2, 796 psi)	8,434 kPa (86 kg/cm^2, 1,223 psi)
Models with A.B.S.	5,394 kPa (55 kg/cm^2, 782 psi)	9,219 kPa (94 kg/cm^2, 1,337 psi)

D: HANDLING PRECAUTIONS

1) After protector has been removed from push rod, do not turn the master cylinder side of brake booster downwards.

(1) If the master cylinder side is turned downwards, push rod may come loose by virtue of its own weight, and reaction disc may drop into brake booster.

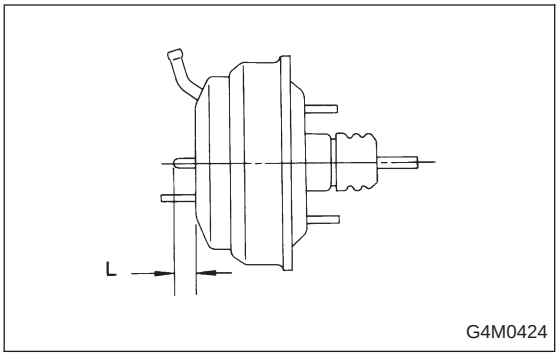

(2) Whether or not reaction disc has dropped can be determined by measuring the dimension “L”.
The projected amount “L” of pushrod should be as follows:

Standard (Correct):
L = 10.4 mm (0.409 in)

Incorrect:
L = 4.4 mm (0.173 in)

(3) If protector is fitted correctly, reaction disc will not fall out.

2) Be careful not to drop brake booster. Brake booster should be discarded if it has been dropped.

3) Use special care when handling operating rod.
If excessive force is applied to operating rod, sufficient to cause a change in the angle in excess of ±3°, it may result in damage to the power piston cylinder.

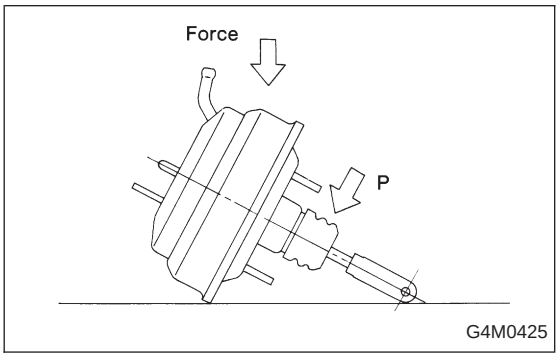

4) Use care when placing brake booster on the floor.

CAUTION:
If external force is applied from above when brake booster is placed in this position, the resin portion as indicated by “P”, may be damaged.

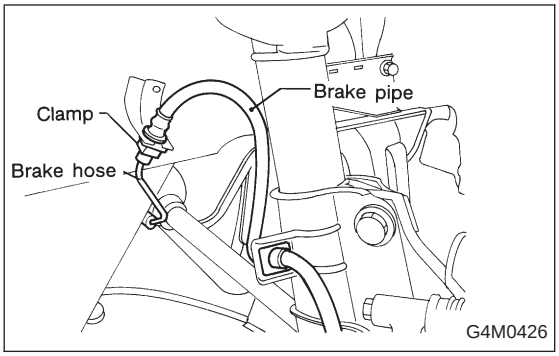

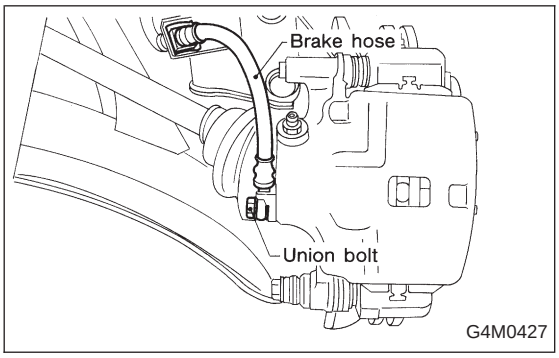

7. Brake Hose

A: REMOVAL

1) Separate brake pipe from brake hose.
(Always use flare nut wrench and be careful not to deform flare nut.)

2) Pull out clamp to remove brake hose.
3) Remove clamp at strut and union bolt.

B: INSTALLATION

1. FRONT BRAKE HOSE

1) Route end of brake hose (on caliper side) through hole in brake hose bracket at strut location.
2) Tighten end of brake hose at caliper using a union bolt.

Torque (Union bolt):
18±3 N·m (1.8±0.3 kg-m, 13.0±2.2 ft-lb)

3) Secure middle fitting of brake hose to bracket at strut location using a clamp.
4) Position disc in straight-forward direction and route brake hose through hole in bracket on wheel apron side.

CAUTION:
Be sure brake hose is not twisted.

5) Temporarily tighten flare nut to connect brake pipe and hose.
6) Fix brake hose with clamp at wheel apron bracket.
7) While holding hexagonal part of brake hose fitting with a wrench, tighten flare nut to the specified torque.

Torque (Brake pipe flare nut):
14.7^{+3}_{-2} N·m ($1.5^{+0.3}_{-0.2}$ kg-m, $10.8^{+2.2}_{-1.4}$ ft-lb)

8) Bleed air from the brake system.

2. REAR BRAKE HOSE

1) Pass brake hose through the hole of bracket, and lightly tighten flare nut to connect brake pipe.
2) Insert clamp upward to fix brake hose.
3) Perform the same procedures as before mentioned in steps 7) and 8).

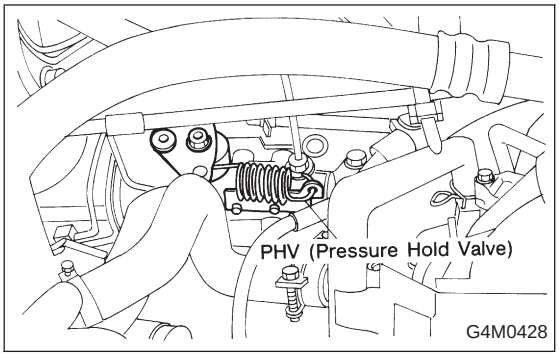

8. Hill Holder

A: REMOVAL

1) Drain brake fluid from reservoir of master cylinder.
2) Remove adjusting nut and cable clamp, and disconnect PHV cable from cable bracket on engine.
3) Detach PHV cable from clips.
4) Remove cable clamp, and disconnect PHV cable from PHV stay.

CAUTION:
Carefully protect boots and inner cable from damage when disconnecting PHV cable.

5) Disconnect brake pipes from PHV.

CAUTION:
- **Pay attention not to drop brake fluid onto body painting since it may dissolve paint.**
- **Pay attention not to damage hexagonal head of flare nut by using pipe wrench without fail.**

6) Detach PHV along with support from side frame.

CAUTION:
Exercise utmost care to prevent foreign matter from entering into PHV when removing it.

B: INSPECTION

Check up removed parts as follows, and replace defective ones.
1) Check if boots of PHV cable are damaged or degraded, and if inner cable is damaged or corroded.
2) Check if return spring is worn out, damaged or corroded.
3) Confirm that rolling sound of ball is heard with PHV inclined and lever rotates smoothly.

CAUTION:
Never disassemble PHV. Replace entire PHV assembly if necessary.

C: INSTALLATION

1) Install PHV onto side frame.

Torque:
18±5 N·m (1.8±0.5 kg-m, 13.0±3.6 ft-lb)

2) Connect brake pipes to PHV.

Torque:
14.7^{+3}_{-2} N·m ($1.5^{+0.3}_{-0.2}$ kg-m, $10.8^{+2.2}_{-1.4}$ ft-lb)

CAUTION:
Confirm that brake pipes are not deformed and/or damaged. Replace them with new ones if necessary.

3) Install PHV cable to PHV stay.

CAUTION:
If cable clamp (and clips) is damaged, replace it with a new one.

4) Connect PHV cable with clips.

NOTE:
Avoid sharp bending of PHV cable as it may cause breakage.

5) Install PHV cable onto cable bracket on engine.
6) Apply grease to the following points.
- Hook portion of return spring
- Cable end portion of lever

Grease:
SUNLIGHT 2 (Part No. 003602010)

7) Be sure to bleed air from the system.

CAUTION:
After replacing PHV cable or clutch cable with new one, operate clutch pedal about 30 times as a running-in operation prior to adjustment.

D: ADJUSTMENTS

1) Confirm stopping and starting performances by activating hill holder on an uphill road of 3° or higher inclination.

(1) If vehicle does not stop;
Tighten adjust nut of PHV cable.
(2) If vehicle does not start properly;
- Case A — When hill holder is released later than engagement of clutch pedal (Engine tends to stall.):
  Loosen adjust nut gradually until smooth starting is enabled.
- Case B — When hill holder is released earlier than engagement of clutch pedal (Vehicle slips down slightly.):
  Tighten adjusting nut so that hill holder is released later than engagement of clutch pedal (status in Case A). Then make adjustment the same as in Case A.

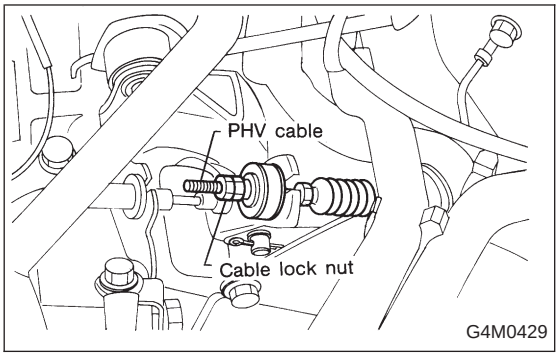

NOTE:
Whenever turning adjust nut, prevent PHV cable from revolving as shown in Figure.

9. Parking Brake Lever

A: REPLACEMENT

1) Remove console box from front floor.
2) Disconnect electric connector for parking brake switch.
3) Loosen parking brake adjuster, and remove inner cable end from equalizer.
4) Remove parking brake lever.
5) Install parking brake lever in the reverse order of removal.

Torque (Lever installing bolt):
18±5 N·m (1.8±0.5 kg-m, 13.0±3.6 ft-lb)

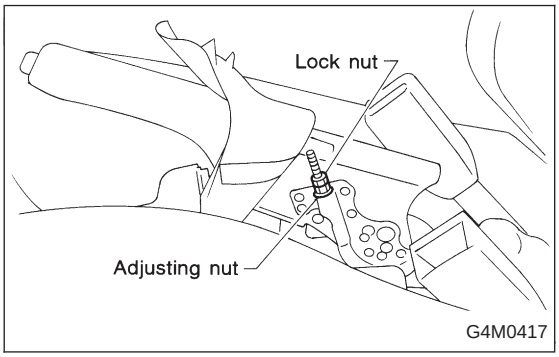

6) Adjust parking brake lever by turning adjuster until parking brake lever stroke is set at 7 to 8 notches with operating force of 196 N (20 kg, 44 lb).
7) Tighten lock nut.

Torque (Adjuster lock nut):
5.9±1.5 N·m (0.60±0.15 kg-m, 4.3±1.1 ft-lb)

10. Parking Brake Cable

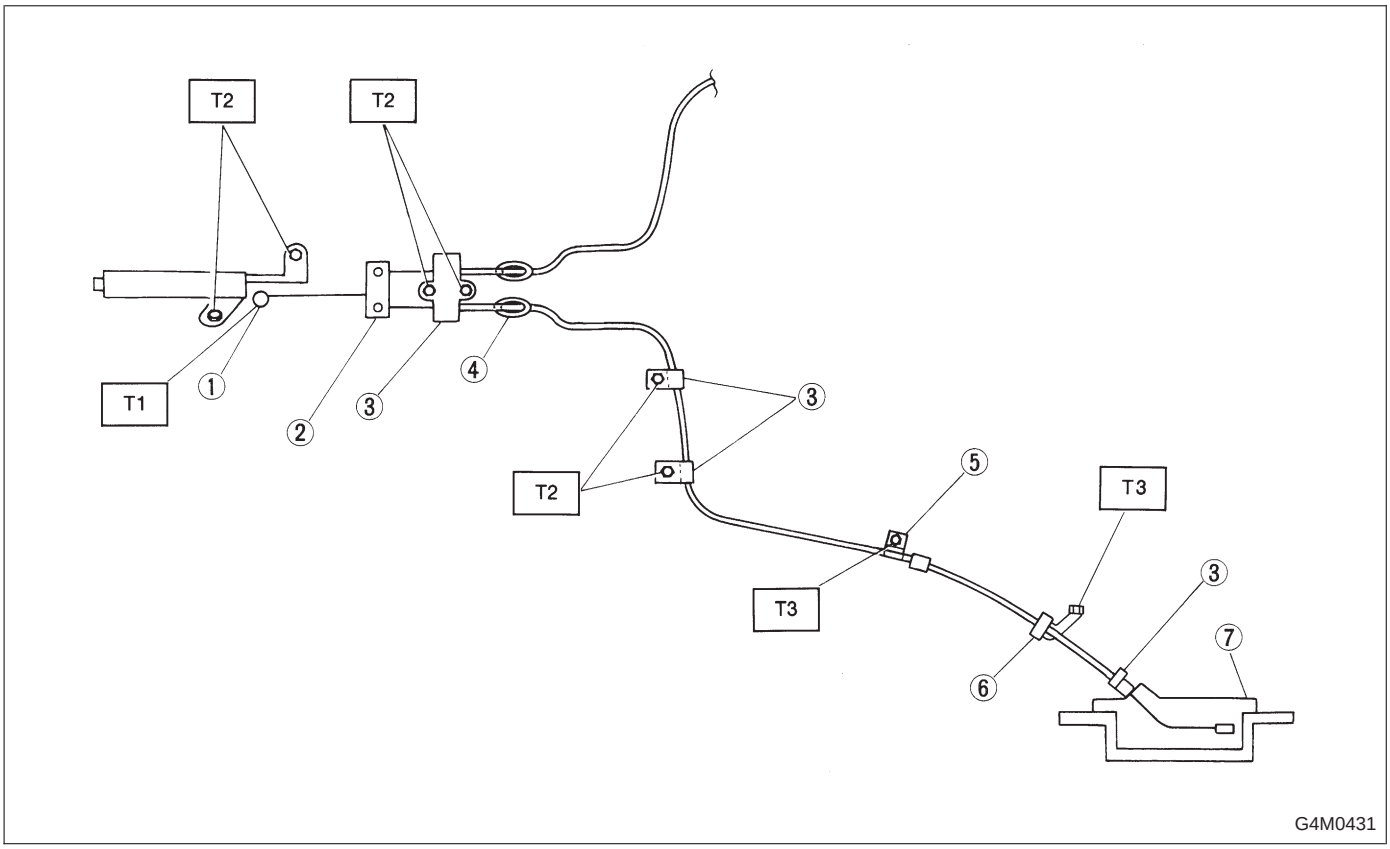

① Adjuster
② Equalizer
③ Clamp
④ Grommet
⑤ Bracket
⑥ Cable guide (Trailing link)
⑦ Parking brake ASSY

Tightening torque: N·m (kg-m, ft-lb)
T1: 5.9±1.5 (0.60±0.15, 4.3±1.1)
T2: 18±5 (1.8±0.5, 13.0±3.6)
T3: 32±10 (3.3±1.0, 24±7)

A: REPLACEMENT

1) Remove rear tires and wheels.
2) Remove rear cushion.
3) Remove console box from front floor.
4) Loosen parking cable adjuster, then remove inner cable end from equalizer, and detach clamps.

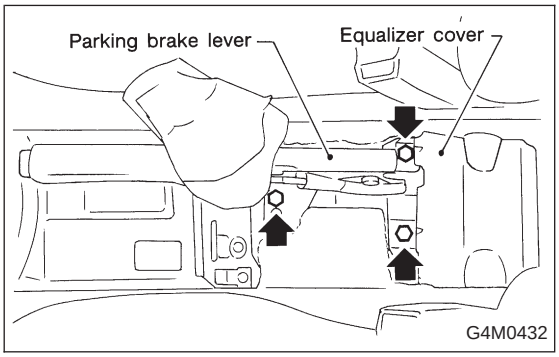

5) Remove parking brake lever.

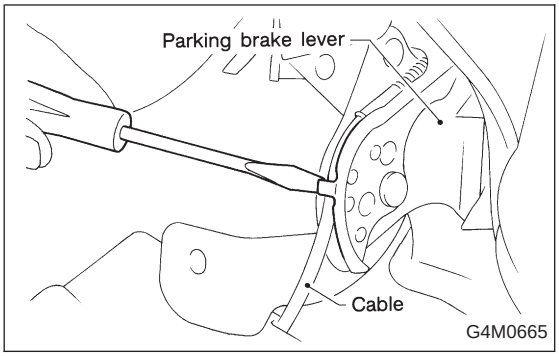

6) Unbend parking brake lever pawls and remove cable.

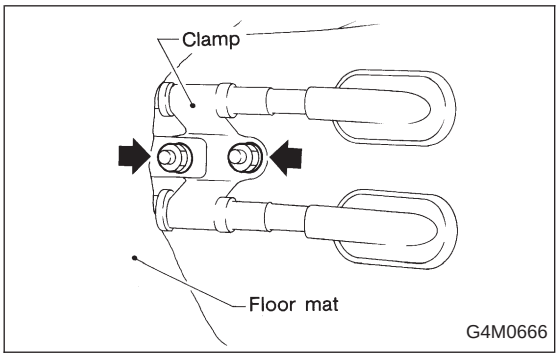

7) Roll up floor mat and remove clamps.
8) Remove equalizer cover.

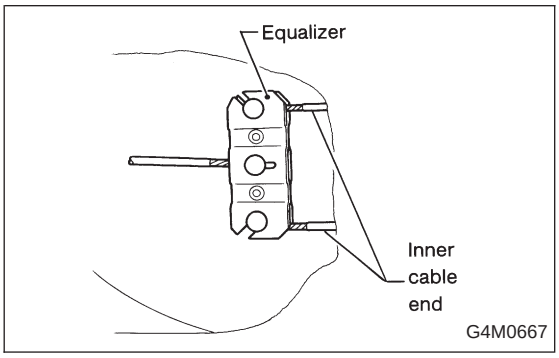

9) Remove inner cable end from equalizer.

10) Pull out parking brake cable from parking brake assembly. <Ref. to 4-4 [W4A0].>
11) Pull out clamp from parking brake assembly.
12) Remove bolt and bracket from trailing link bracket.

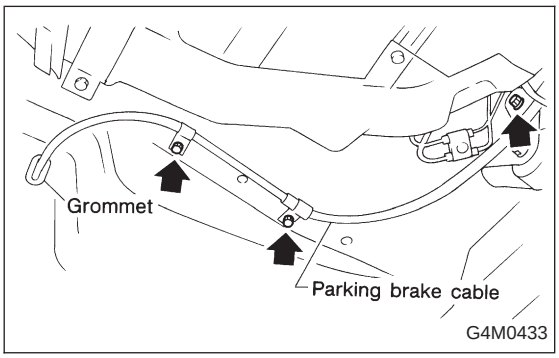

13) Remove bolt and clamp from rear floor.
14) Detach grommet from rear floor.
15) Remove cable assembly from cabin by forcibly pulling it backward.

16) Detach parking brake cable from cable guide at rear trailing link.
17) Install (new) parking brake assembly in the reverse order of removal.

NOTE:
● Be sure to pass cable through cable guide inside the tunnel.
● Be sure to adjust the lever stroke. <Refer to 4-4 [W4D2].>

11. Air Bleeding

A: GENERAL RULES FOR EFFECTIVE BLEEDING

1) Start with the brakes (wheels) connecting to the secondary chamber of the master cylinder.
2) The time interval between two brake pedal operations (from the time when the pedal is released to the time when it is depressed another time) shall be approximately 3 seconds.
3) The air bleeder on each brake shall be released for 1 to 2 seconds.

B: BLEEDING PROCEDURE

CAUTION:
● The FMVSS No. 116, fresh DOT3 or 4 brake fluid must be used.
● Cover bleeder with waste cloth, when loosening it, to prevent brake fluid from being splashed over surrounding parts.
● Avoid mixing different brands of brake fluid to prevent degrading the quality of the fluid.
● Be careful not to allow dirt or dust to get into the reservoir tank.

NOTE:
● During bleeding operation, keep the brake reserve tank filled with brake fluid to eliminate entry of air.
● Brake pedal operating must be very slow.
● For convenience and safety, it is advisable to have two man working.

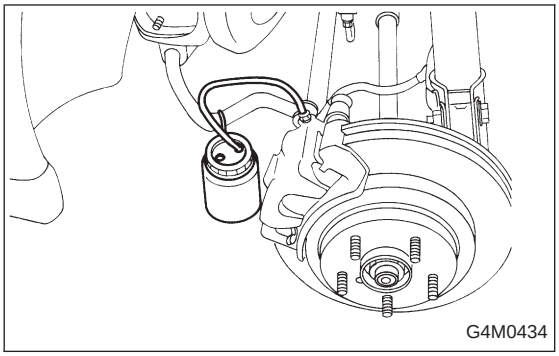

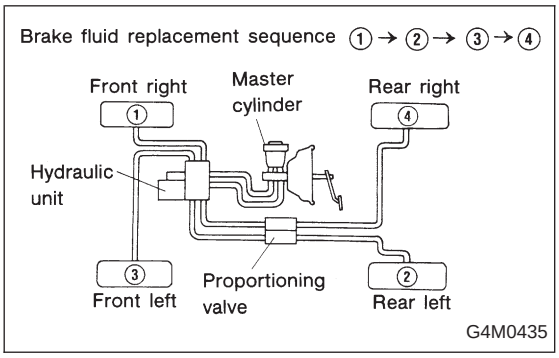

1) Make sure that there is no leak from joints and connections of the brake system.
2) Fit one end of vinyl tube into the air bleeder and put the other end into a brake fluid container.

3) Slowly depress the brake pedal and keep it depressed. Then, open the air bleeder to discharge air together with the fluid.
Release air bleeder for 1 to 2 seconds.
Next, with the bleeder closed, slowly release the brake pedal.
Repeat these steps until there are no more air bubbles in the vinyl tube.
Allow 3 to 4 seconds between two brake pedal operations.

CAUTION:
Cover bleeder with waste cloth, when loosening it, to prevent brake fluid from being splashed over surrounding parts.

NOTE:
Brake pedal operating must be very slow.

4) Tighten air bleeder securely when no air bubbles are visible.

Air bleeder tightening torque:
8±1 N·m (0.8±0.1 kg-m, 5.8±0.7 ft-lb)

5) Perform these steps for the brakes connecting to the secondary chamber of master cylinder, first, and then for the ones connecting to primary chamber. With all procedures completed, fully depress the brake pedal and keep it in that position for approximately 20 seconds to make sure that there is no leak evident in the entire system.

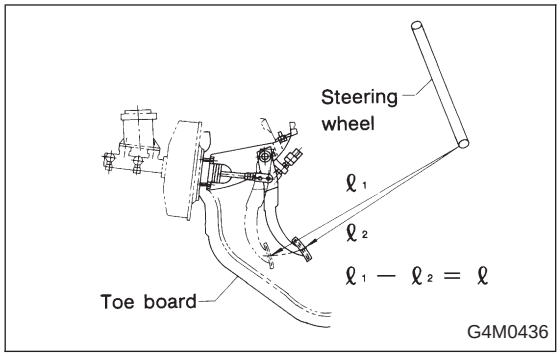

6) Check the pedal stroke.
While the engine is idling, depress the brake pedal with a 490 N (50 kg, 110 lb) load and measure the distance between the brake pedal and steering wheel. With the brake pedal released, measure the distance between the pedal and steering wheel again. The difference between the two measurements must be more than specified.

Specified pedal stroke:
Without A.B.S.
90 mm (3.54 in)
With A.B.S.
95 mm (3.74 in)
When depressing brake pedal with a 490 N (50 kg, 110 lb) load.

(1) Models without A.B.S.
If the distance is more than specifications, there is a possibility that air is in the brake line. Bleed air from the brake line.
(2) Models with A.B.S.
If the distance is more than specifications, there is a possibility air is in the inside of the hydraulic unit. Therefore, air must be bled from the inside of the hydraulic unit to the brake pipes in accordance with the bleeding sequence control. <Ref. to 4-4 [W15C0].>

7) Add brake fluid to the required level (MAX level) of reserve tank.
8) As a final step, test run the vehicle at low speed and apply brakes relatively hard 2 to 3 times to ensure that brakes provide normal braking action on all four wheels without dragging and uneven braking.

12. Brake Fluid Replacement

NOTE:
To always maintain the brake fluid characteristics, replace the brake fluid according to maintenance schedule or earlier than that when used in severe condition.

A: REPLACEMENT

CAUTION:
● The FMVSS No. 116, fresh DOT3 or 4 brake fluid must be used.
● Cover bleeder with waste cloth, when loosening it, to prevent brake fluid from being splashed over surrounding parts.
● Avoid mixing different brands of brake fluid to prevent degrading the quality of the fluid.
● Be careful not to allow dirt or dust to get into the reservoir tank.

NOTE:
● During bleeding operation, keep the brake reserve tank filled with brake fluid to eliminate entry of air.
● Brake pedal operating must be very slow.
● For convenience and safety, it is advisable to have two man working.
● The amount of brake fluid required is approximately 300 mℓ (10.1 US fl oz, 10.6 Imp fl oz) for total brake system.

1) Either jack-up vehicle and place a safety stand under it, or left up vehicle.
2) Remove both front and rear wheels.
3) Draw out the brake fluid from master cylinder with syringe.
4) Refill reservoir tank with recommended brake fluid.

Recommended brake fluid:
FMVSS No. 116, fresh DOT3 or 4 brake fluid

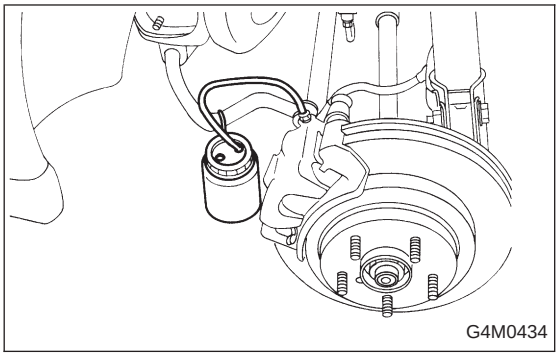
G4M0434

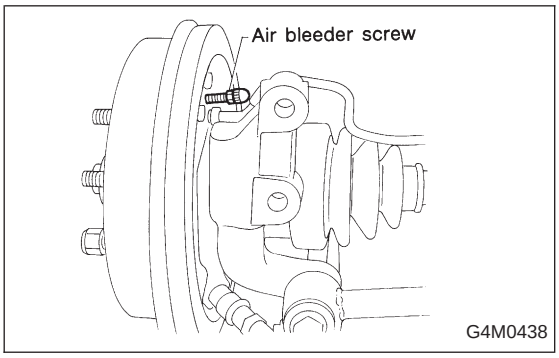

G4M0438

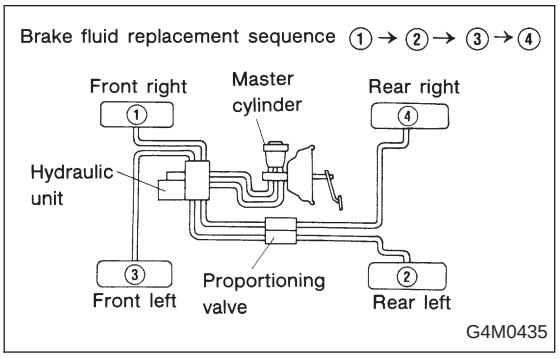

G4M0435

5) Install one end of a vinyl tube onto the air bleeder of and insert the other end of the tube into a container to collect the brake fluid.
6) Instruct your co-worker to depress the brake pedal slowly two or three times and then hold it depressed.
7) Loosen bleeder screw approximately 1/4 turn until a small amount of brake fluid drains into container, and then quickly tighten screw.
8) Repeat steps 6) and 7) above until there are no air bubbles in drained brake fluid and new fluid flows through vinyl tube.

NOTE:
Add brake fluid as necessary while performing the air bleed operation, in order to prevent the tank from running short of brake fluid.

9) After completing the bleeding operation, hold brake pedal depressed and tighten screw and install bleeder cap.

Tightening torque (Bleeder screw):
8±1 N·m (0.8±0.1 kg-m, 5.8±0.7 ft-lb)

10) Bleed air from each wheel cylinder using the same procedures as described in steps 6) through 7) above.
11) Depress brake pedal with a force of approximately 294 N (30 kg, 66 lb) and hold it there for approximately 20 seconds. At this time check pedal to see if it shows any unusual movement.
Visually inspect bleeder screws and brake pipe joints to make sure that there is no fluid leakage.
12) Install wheels, and drive car for a short distance between 2 to 3 km (1 to 2 miles) to make sure that brakes are operating properly.

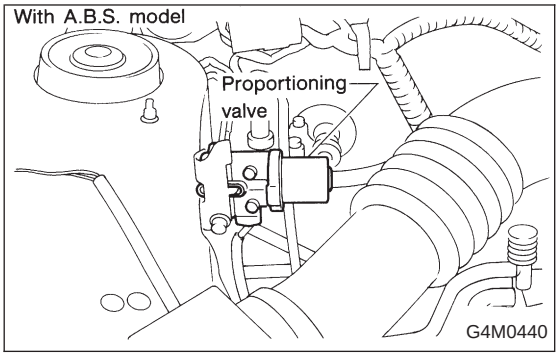

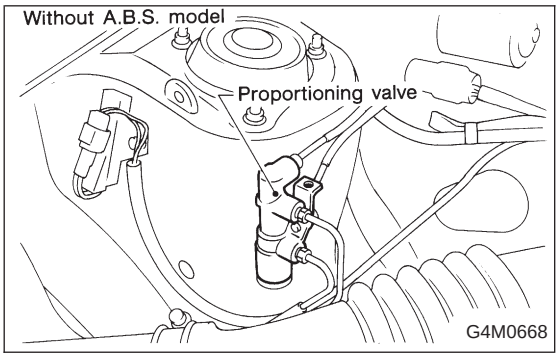

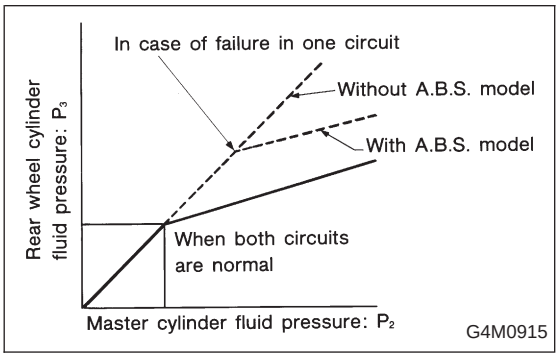

13. Proportioning Valve

A: INSPECTION

1) Install the oil pressure gauges to measure the master cylinder fluid pressure (front wheel brake fluid pressure) and rear wheel cylinder fluid pressure.
2) Bleed air from the oil pressure gauges.
3) Check the master cylinder fluid pressure and rear wheel cylinder fluid pressure.
The standard values are shown in Figure.
4) For the oil pressure in case of split point, refer to A: SPECIFICATIONS <Refer to 4-4 [S1A0].>

B: REMOVAL

1) Remove brake pipe from proportioning valve at four places.
2) Remove proportioning valve from its bracket.

CAUTION:
Do not disassemble or adjust the proportioning valve. (The proportioning valve must be replaced as an assembly.)

C: INSTALLATION

1) Install proportioning valve to bracket.
2) Connect brake pipes correctly to proportioning valve.
3) Bleed air, then check each joint of brake pipe for oil leaks.

Tightening torque:
Proportioning valve to brake pipe flare nut
14.7^{+3}_{-2} N·m ($1.5^{+0.3}_{-0.2}$ kg-m, $10.8^{+2.2}_{-1.4}$ ft-lb)

Proportioning valve to bracket
Normal brake vehicle:
22±4.4 N·m (2.25±0.45 kg-m, 16.3±3.3 ft-lb)
A.B.S. equipped vehicle:
18±5 N·m (1.8±0.5 kg-m, 13.0±3.6 ft-lb)

14. A.B.S. Sensor

A: REMOVAL

1. FRONT A.B.S. SENSOR

1) Disconnect front A.B.S. sensor located in engine compartment.

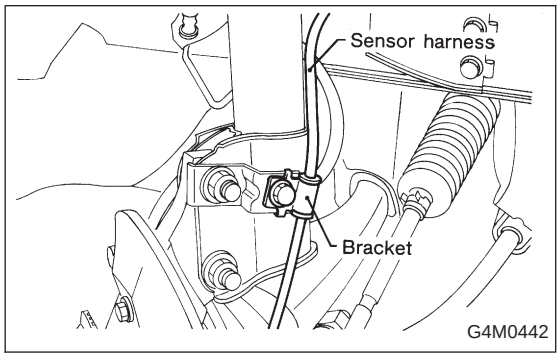

2) Remove bolts which secure sensor harness to bracket.

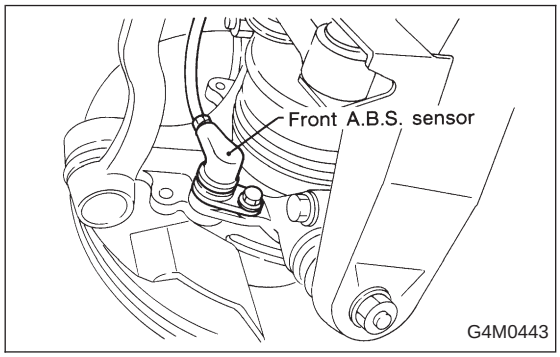

3) Remove bolts which secure front A.B.S. sensor to housing, and remove front A.B.S. sensor.

CAUTION:
Be careful not to damage pole piece located at tip of the sensor during removal.

4) Remove front disc brake caliper and disc rotor from housing after removing front tire.
5) Remove front drive shaft and housing and hub assembly. <Ref. to 4-2 [W1A0].>

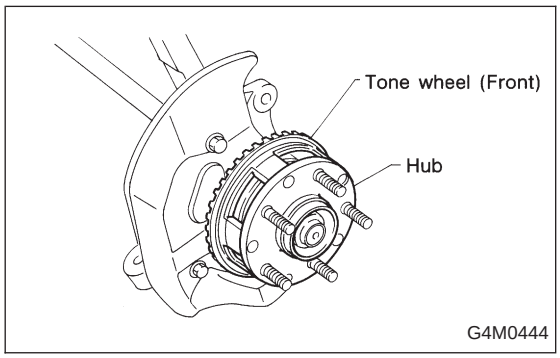

6) Remove tone wheel while removing hub from housing and hub assembly. <Ref. to 4-2 [W1B0].>

CAUTION:
Be careful not to damage teeth faces of tone wheel during removal.

2. REAR A.B.S. SENSOR

1) Remove rear seat and disconnect rear A.B.S. sensor connector.
2) Remove rear sensor harness bracket from rear trailing link.

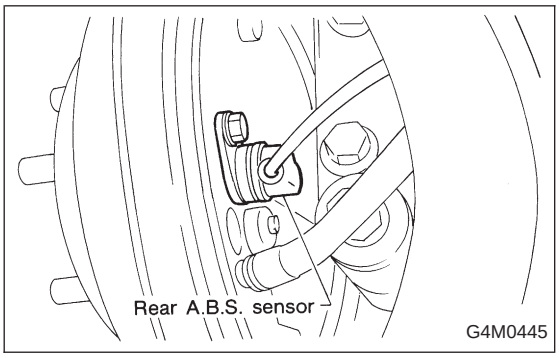

3) Remove rear A.B.S. sensor from rear back plate.
4) Remove rear tone wheel while removing hub from housing and hub assembly. <Ref. to 4-2 [W2A0].>

CAUTION:
- **Be careful not to damage pole piece of sensor and teeth faces.**
- **Do not pull sensor harness during removal.**

B: INSPECTION

1. A.B.S. SENSOR

1) Check pole piece of A.B.S. sensor for foreign particles or damage. If necessary, clean pole piece or replace A.B.S. sensor.

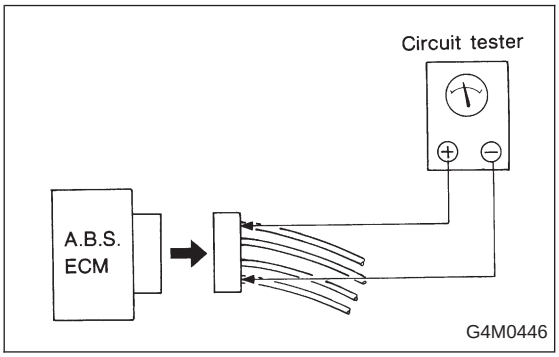

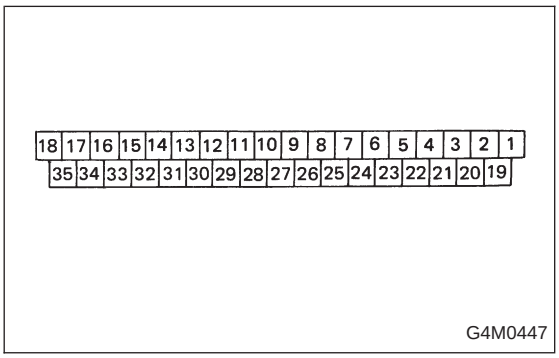

2) Measure resistance between A.B.S. ECM terminals.

A.B.S. sensor	Model	Terminal No.	Standard
Front - LH	AWD	22 and 4	1.0±0.2 kΩ
	FWD	5 and 4	
Front - RH	ALL	23 and 21	
Rear - LH	ALL	8 and 9	
Rear - RH	ALL	24 and 26	
Front - LH	AWD	22 and 10, 20, 34	More than 1×10^3 kΩ (Insulation resistance)
	FWD	5 and 10, 20, 34	
Front - RH	ALL	23 and 10, 20, 34	
Rear - LH	ALL	8 and 10, 20, 34	
Rear - RH	ALL	24 and 10, 20, 34	

CAUTION:
If resistance is outside the standard value, replace wheel A.B.S. sensor with new one or adjust sensor gap between A.B.S. sensor and tone wheel.

NOTE:
Check A.B.S. sensor cable for discontinuity. If necessary, replace with a new one.

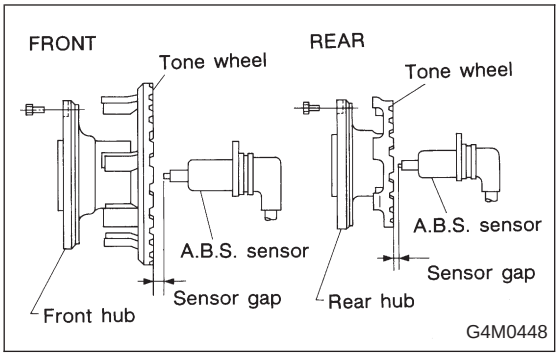

2. TONE WHEEL

1) Check tone wheel's teeth (44 pieces) for cracks or dents. If necessary, replace tone wheel with a new one.

2) Clearances (sensor gaps) should be measured one by one to ensure tone wheel and speed sensor are installed correctly.

A.B.S. sensor clearance:

Front

0.9 — 1.4 mm (0.035 — 0.055 in)

Rear

0.7 — 1.2 mm (0.028 — 0.047 in)

NOTE:

- If clearance is narrow, adjust by using spacer (Part No. 26755AA000)
- If clearance is wide, check the outputted voltage then replace A.B.S. sensor or tone wheel if the outputted voltage is outside the specification.

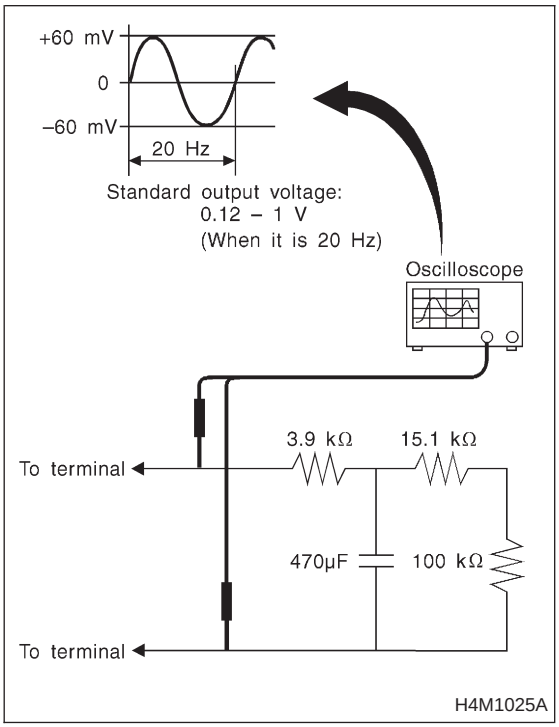

3. OUTPUT VOLTAGE

1) Output voltage can be checked by the following method. Install resistor and condenser as follows, then rotate wheel about 2.75 km/h (1.7 MPH) or equivalent.

NOTE:

Regarding terminal No., please refer to item A.B.S. SENSOR.

C: INSTALLATION

1. FRONT A.B.S. SENSOR

1) Install tone wheel on hub, then install housing on hub assembly. <Ref. to 4-2 [W1D0].>

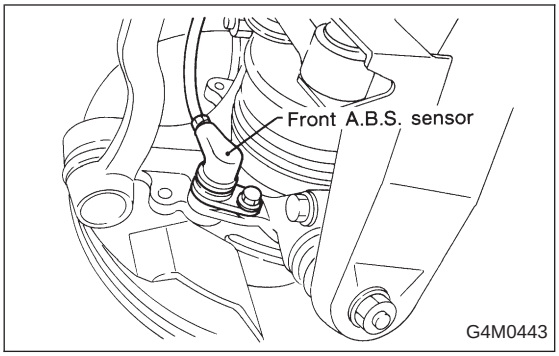

2) Temporarily install front A.B.S. sensor on housing.

CAUTION:
Be careful not to strike A.B.S. sensor's pole piece and tone wheel's teeth against adjacent metal parts during installation.

3) Install front drive shaft to hub spline. <Ref. to 4-2 [W1E0].>

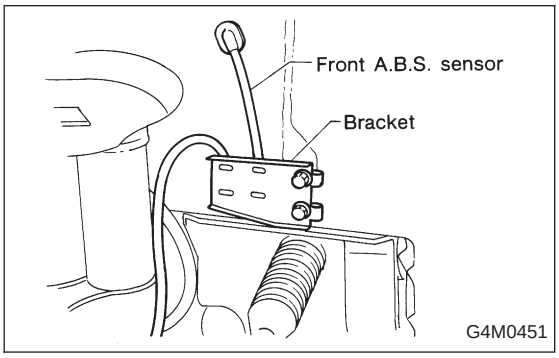

4) Install front A.B.S. sensor on strut and wheel apron bracket.

Tightening torque:
32±10 N·m (3.3±1.0 kg-m, 24±7 ft-lb)

5) Place a thickness gauge between A.B.S. sensor's pole piece and tone wheel's tooth face. After standard clearance is obtained over the entire perimeter, tighten A.B.S. sensor on housing to specified torque.

A.B.S. sensor standard clearance:
0.9 — 1.4 mm (0.035 — 0.055 in)

Tightening torque:
32±10 N·m (3.3±1.0 kg-m, 24±7 ft-lb)

NOTE:
If the clearance is outside specifications, readjust.

2. REAR A.B.S. SENSOR

1) Install rear tone wheel on hub, then rear housing on hub. <Ref. to 4-2 [W2D0].>

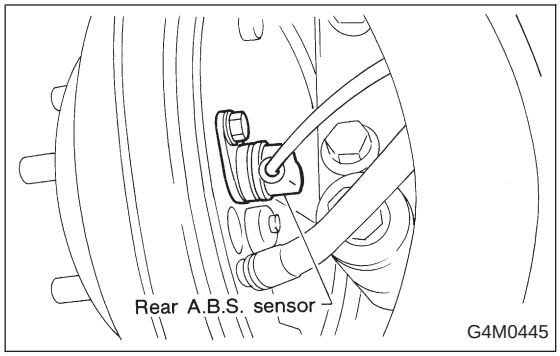

2) Temporarily install rear A.B.S. sensor on back plate.

CAUTION:
Be careful not to strike A.B.S. sensor's pole piece and tone wheel's teeth against adjacent metal parts.

3) Install rear drive shaft to rear housing and rear differential spindle. <Ref. to 4-2 [W2E0].>

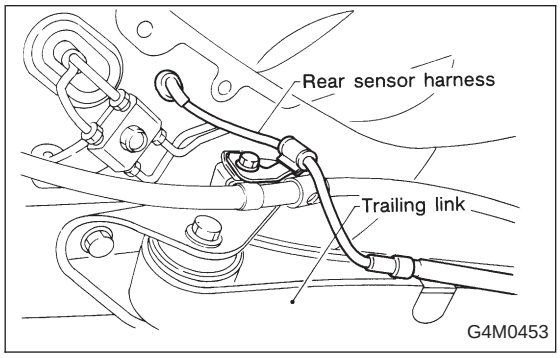

4) Install rear sensor harness on rear trailing link.

Tightening torque:
32±10 N·m (3.3±1.0 kg-m, 24±7 ft-lb)

5) Place a thickness gauge between A.B.S. sensor's pole piece and tone wheel's tooth face. After standard clearance is obtained over the entire perimeter, tighten A.B.S. sensor on back plate to specified torque.

A.B.S. sensor standard clearance:
0.7 — 1.2 mm (0.028 — 0.047 in)

Tightening torque:
32±10 N·m (3.3±1.0 kg-m, 24±7 ft-lb)

NOTE:
If the clearance is outside specifications, readjust.

15. Hydraulic Unit for A.B.S. System

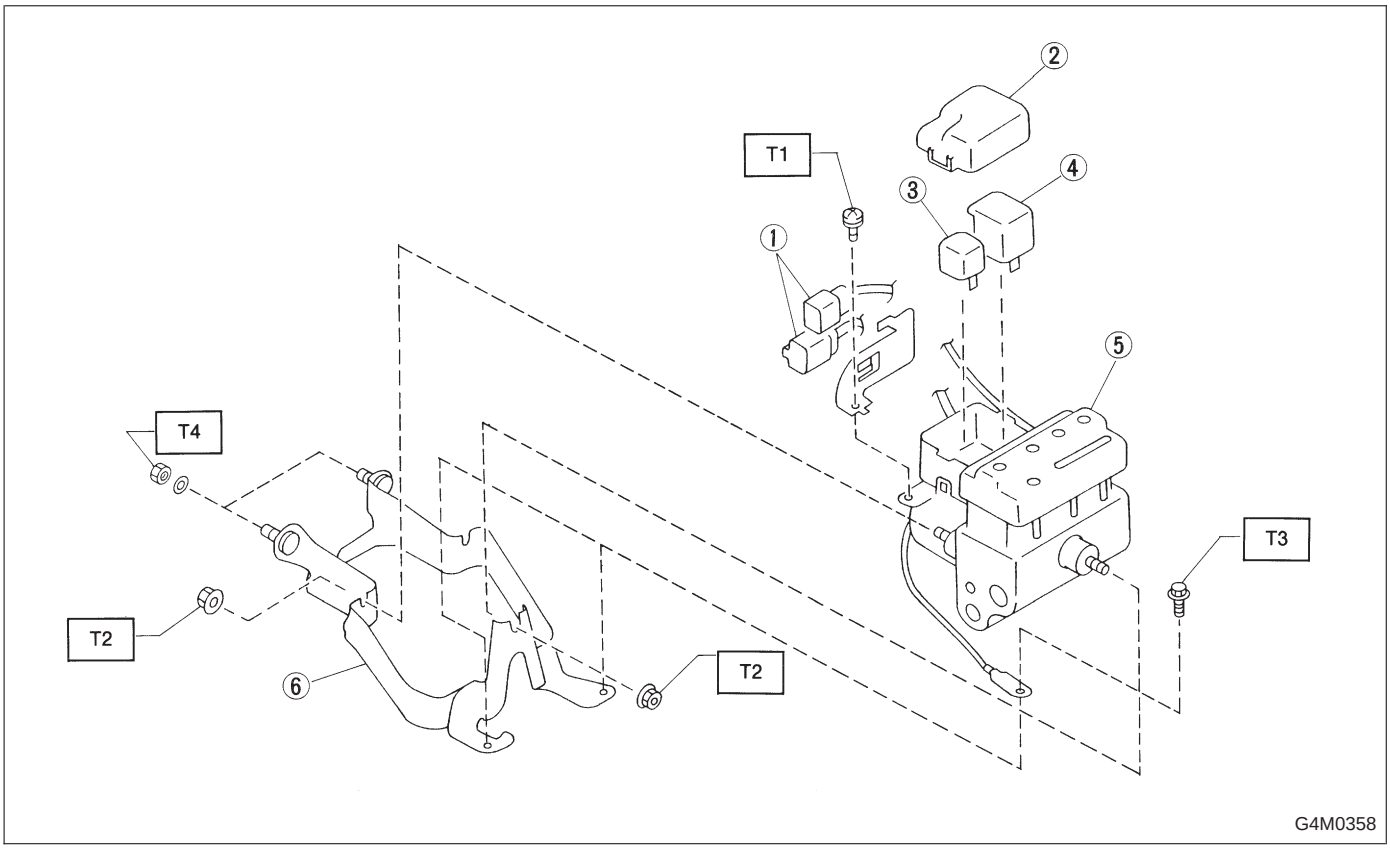

① Connector
② Cap
③ Motor relay
④ Valve relay
⑤ Hydraulic control unit
⑥ Bracket

Tightening torque: N·m (kg-m, ft-lb)
T1: 1.2±0.2 (0.125±0.025, 0.9±0.2)
T2: 18±5 (1.8±0.5, 13.0±3.6)
T3: 32±10 (3.3±1.0, 24±7)
T4: 52±15 (5.3±1.5, 38±11)

A: REMOVAL

1) Remove canister from engine compartment to facilitate removal of hydraulic unit.
2) Disconnect brake pipes from hydraulic unit and plug open joints to prevent entry of foreign particles.

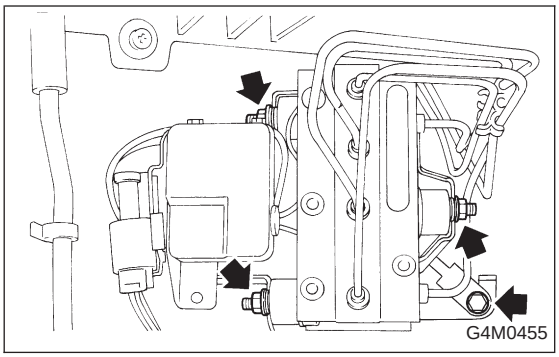

3) Remove nuts and bolt which secure hydraulic unit, and remove hydraulic unit from engine compartment.

CAUTION:
- **Hydraulic unit cannot be disassembled. Do not attempt to loosen bolts and nuts.**
- **Do not drop or bump hydraulic unit.**
- **Do not turn the hydraulic unit upside down or place it on its side.**
- **Be careful to prevent foreign particles from getting into hydraulic unit.**

- **When a new hydraulic unit is installed, apply a coat of rust-preventive wax (Nippeco LT or GB) to bracket attaching bolts after tightening.**
- **Do not pull harness disconnecting harness connector.**

B: INSPECTION

1. CHECKING HYDRAULIC UNIT

1) Check connected and fixed condition of connector.
2) Open hydraulic unit relay box and check for discontinuity or short circuits.

	Condition	Terminal number	Standard	Diagram	Terminal location
Valve relay	Turning off electricity.	85 — 86	93 — 113 Ω	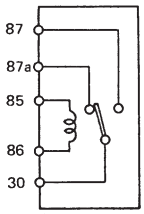 G4M0456	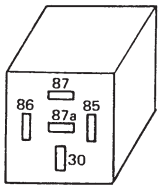 G4M0457
		30 — 87a	0 Ω		
		30 — 87	■		
	Turning on electricity between 85 and 86. (DC 12 V)	30 — 87a	■		
		30 — 87	0 Ω		
Motor relay	Turning off electricity.	85 — 86	72 — 88 Ω	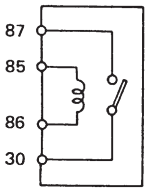 G4M0458	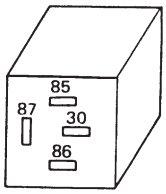 G4M0459
		30 — 87	■		
	Turning on electricity between 85 and 86. (DC 12 V)	30 — 87	0 Ω		

2. CHECKING THE HYDRAULIC UNIT OPERATION BY PRESSURE GAUGE

1) Remove the FL and FR pipes from the hydraulic unit.

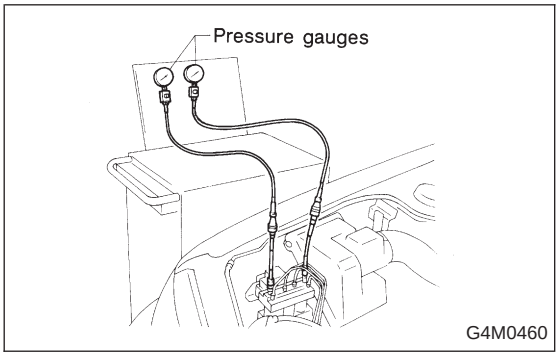

2) Connect a pressure gauge to the end of the removed FL and FR pipes.

CAUTION:

- **Pressure gauges used exclusively for brake fluid must be used.**
- **Do not employ pressure gauge previously used for transmission since the piston seal is expanded which may lead to malfunction of the brake.**

3) Bleed air from the pressure gauges.

4) Perform sequence control. <Ref. to 4-4 [W15C0].>

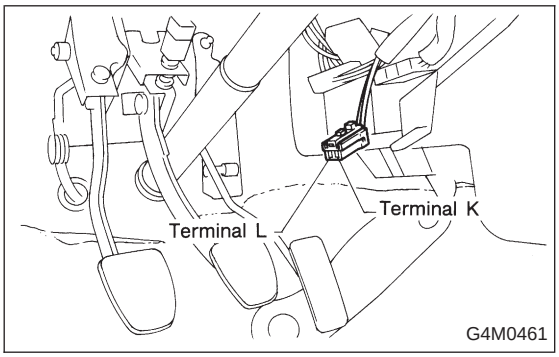

(1) Ground check connector body K and L terminals which are accessible after removing A.B.S. check connector from lower side of steering column.

(2) Turn ignition switch ON.
(3) The A.B.S. warning light comes on.
(4) Depress the brake pedal within 0.5 seconds after the warning light goes out so that the pressure gauge registers a pressure equal to the initial value.

CAUTION:
Do not depress the clutch pedal.

NOTE:
The engine must not be operating.

5) When the hydraulic unit begins to work, and first the FL side performs decompression, holding, and compression, and then the FR side performs decompression, holding, and compression.
6) Read values indicated on the pressure gauge and check if the fluctuation of the values between decompression and compression meets the standard values. Also check if any irregular brake pedal tightness is felt.

	Initial value	When decompressed	When compressed
Front wheel	3,432 kPa (35 kg/cm^2, 498 psi)	490 kPa (5 kg/cm^2, 71 psi)	3,432 kPa (35 kg/cm^2, 498 psi)
Rear wheel	3,432 kPa (35 kg/cm^2, 498 psi)	490 kPa (5 kg/cm^2, 71psi)	3,432 kPa (35 kg/cm^2, 498 psi)

- In case of hydraulic unit plunger piston malfunction

	Initial value	When decompressed	When compressed
Rear right wheel	3,432 kPa (35 kg/cm^2, 498 psi)	490 kPa (5 kg/cm^2, 71 psi)	3,432 kPa (35 kg/cm^2, 498 psi)
Rear left wheel	3,432 kPa (35 kg/cm^2, 498 psi)	3,432 kPa (35 kg/cm^2, 498 psi)	3,432 kPa (35 kg/cm^2, 498 psi)

7) Connect the same pressure gauges to the end of the removed RL and RR pipes of the hydraulic unit.
8) Connect the FL and FR pipes to the hydraulic unit.
9) Bleed air from the pressure gauges and the FL and FR wheel cylinders.
10) Repeat step 4) procedures.
11) The hydraulic unit begins to work, and simultaneously the RL and RR wheel cylinders perform decompression, holding, and compression.
12) Read values indicated on the pressure gauges and check if they meet the standard value.
13) After checking, remove the pressure gauges from the RL and RR pipes and connect the RL and RR pipes to the hydraulic unit, and bleed air.

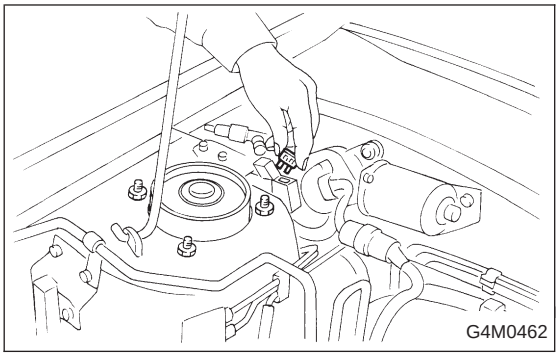

3. CHECKING THE HYDRAULIC UNIT WITH BRAKE TESTER

1) In the case of AWD AT vehicles, install a spare fuse with the FWD connector in the engine compartment to simulate FWD vehicles.

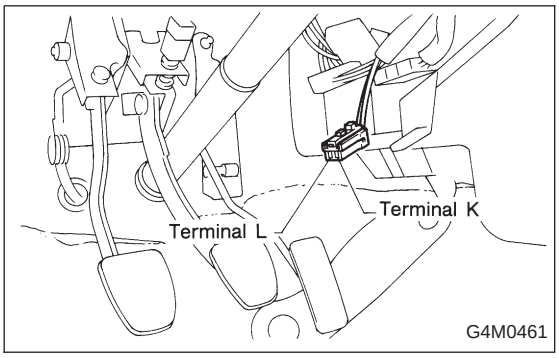

2) Ground check connector body K and L terminals which are accessible after removing A.B.S. check connector from lower side of steering column.

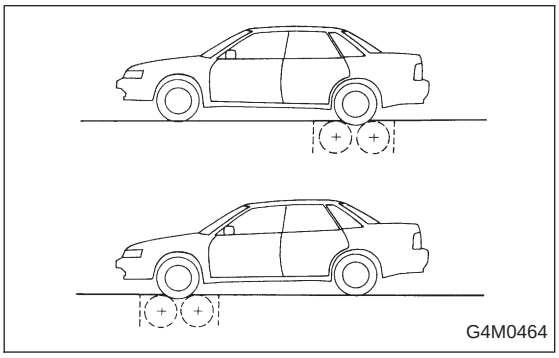

3) Set the front wheels or rear wheels on the brake tester and set the select lever's position at "neutral".

4) Operate the brake tester.
5) Perform sequence control.
   (1) Turn ignition switch ON.
   (2) The A.B.S. warning light comes on.
   (3) Depress the brake pedal within 0.5 seconds after the warning light goes out so that the brake tester registers a pressure equal to the initial value.

CAUTION:
Do not depress the clutch pedal.

NOTE:
The engine must not be operating.

6) Hydraulic unit begins to work; and check the following working sequence.
   (1) The right front wheel performs decompression, holding, and compression in sequence, and subsequently the left front wheel repeats the cycle.
   (2) Simultaneously both right and left rear wheel perform decompression, holding, and compression in sequence.

7) Read values indicated on the brake tester and check if the fluctuation of values, when decompressed and compressed, meet the standard values.

	Initial value	When decompressed	When compressed
Front wheel	1,961 N (200 kg, 441 lb)	245 N (25 kg, 55 lb)	1,961 N (200 kg, 441 lb)
Rear wheel	686 N (70 kg, 154 lb)	245 N (25 kg, 55 lb)	686 N (70 kg, 154 lb)

- In case of hydraulic unit plunger piston malfunction

	Initial value	When decompressed	When compressed
Rear right wheel	686 N (70 kg, 154 lb)	245 N (25 kg, 55 lb)	686 N (70 kg, 154 lb)
Rear left wheel	686 N (70 kg, 154 lb)	686 N (70 kg, 154 lb)	686 N (70 kg, 154 lb)

8) After checking, also check if any irregular brake pedal tightness is felt.
9) In case of AWD AT vehicles, remove the spare fuse from the FWD connector in the engine compartment to return to the original AWD state.

C: SEQUENCE CONTROL

Under the sequence control, after the hydraulic unit solenoid valve is driven, the operation of the hydraulic unit can be checked by means of the brake tester or pressure gauge.

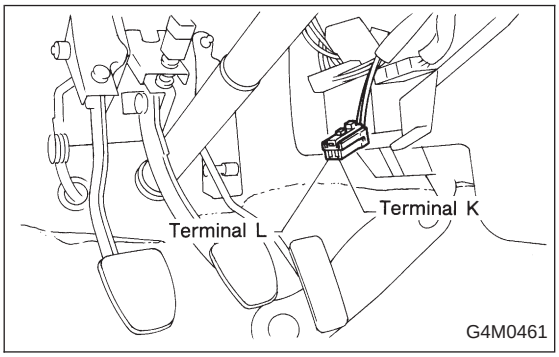

1. OPERATIONAL GUIDELINES OF THE SEQUENCE CONTROL

1) Ground the body K and L terminals.
2) Remove A.B.S. check connector from lower side of steering column.
3) Set the speed of all wheels at 4 km/h (2 MPH) or less.
4) Within 0.5 seconds after the A.B.S. warning lamp goes out, immediately after the ignition switch is turned to on, depress the brake pedal and hold.

CAUTION:
Do not depress the clutch pedal.

NOTE:
- When the ignition switch is set to on, the brake pedal must not be depressed.
- Engine must not operate.

2. CONDITIONS FOR COMPLETION OF SEQUENCE CONTROL

1) When the speed of at least one wheel reaches 10 km/h (6 MPH), the operation is returned to the normal control mode.
2) When L terminal is separated from ground, the operation is returned to the normal control mode.
3) When K terminal is no longer ground with the body, the operation is returned to the normal control mode.
4) When the brake pedal is released during sequence control and the braking lamp switch is set to off, the operation is returned to the normal control mode.
5) After completion of the sequence control, the operation is returned to the normal control mode.

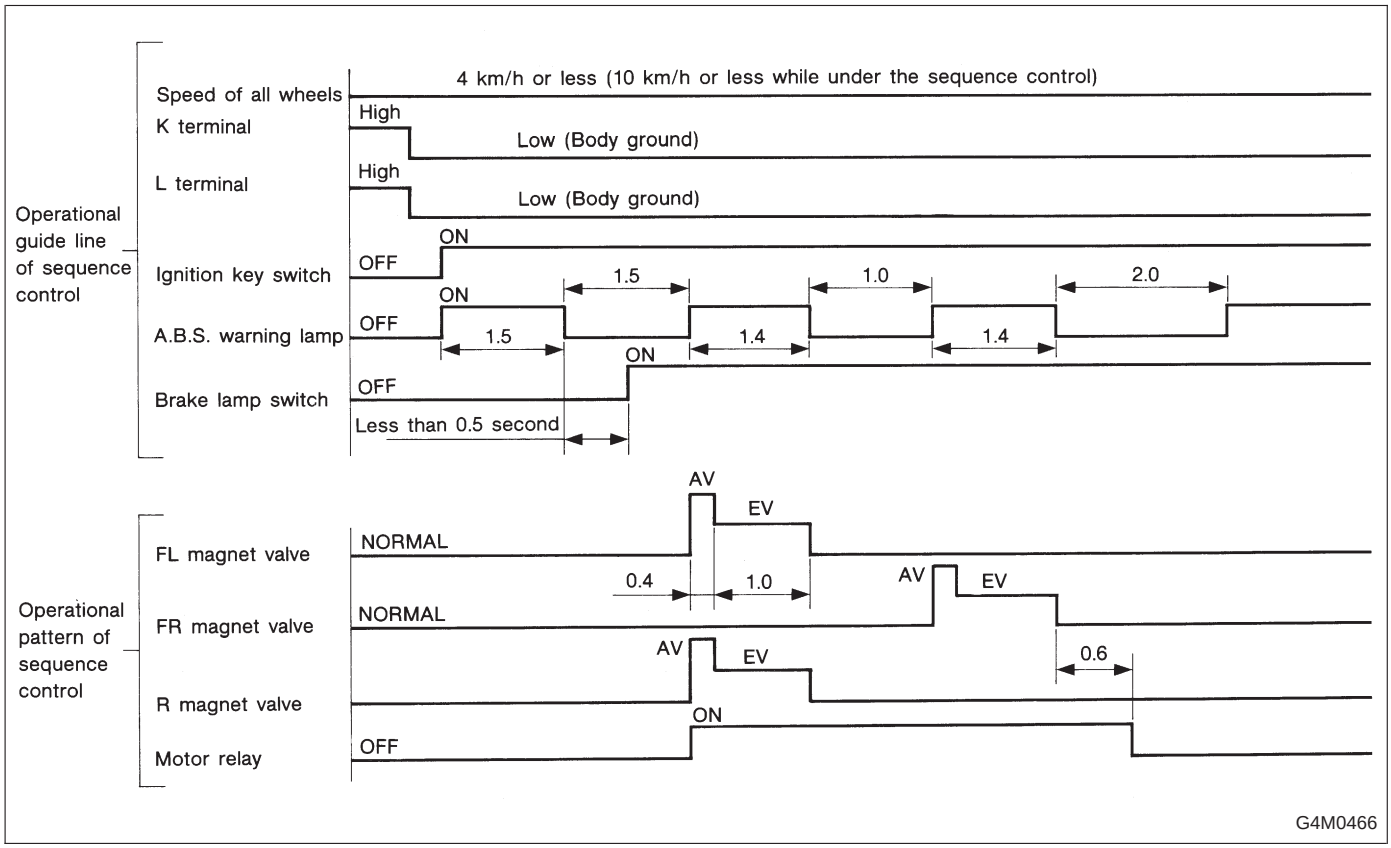

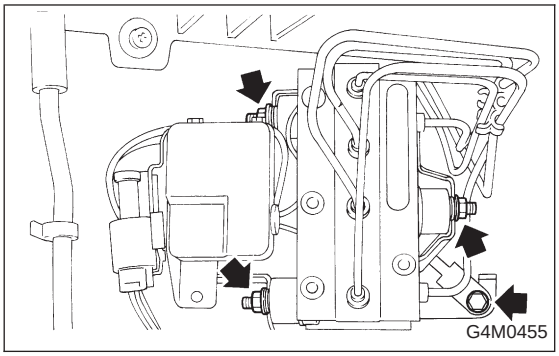

D: INSTALLATION

1) Install relay box cover on hydraulic unit.
2) Install hydraulic unit to bracket.

Tightening torque:
18±5 N·m (1.8±0.5 kg-m, 13.0±3.6 ft-lb)

3) Tighten bracket and motor ground lead as a unit.

Tightening torque:
32±10 N·m (3.3±1.0 kg-m, 24±7 ft-lb)

4) Connect brake pipes to their correct hydraulic unit connections.

Tightening torque:
14.7^{+3}_{-2} N·m ($1.5^{+0.3}_{-0.2}$ kg-m, $10.8^{+2.2}_{-1.4}$ ft-lb)

16. A.B.S. Control Module

A: REMOVAL

1) Remove floor mat located under lower right side of front seat.

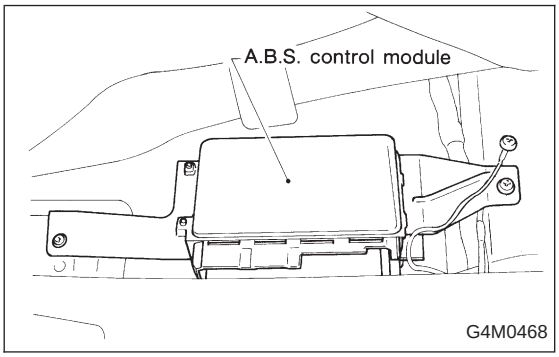

2) Remove screw which secure A.B.S. control module from body.

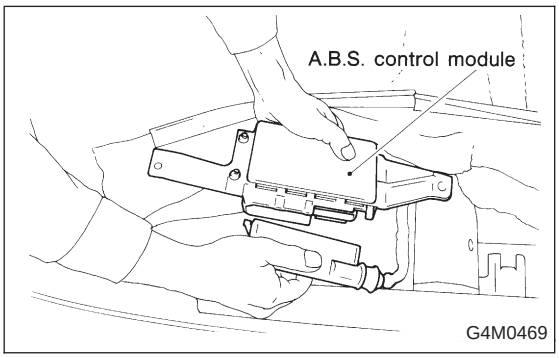

3) Disconnect connector from A.B.S. control module.

B: INSPECTION

Check that connector is connected correctly and that connector terminal sliding resistance is correct.

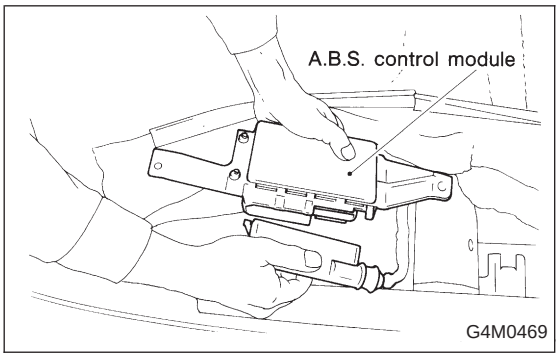

C: INSTALLATION

1) Connect connector to A.B.S. control module.
2) Install A.B.S. control module on body.

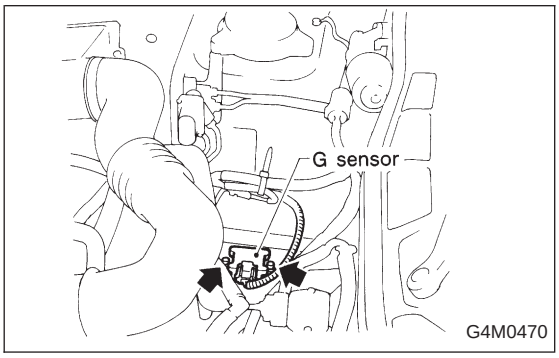

17. G Sensor for A.B.S. System

A: REMOVAL AND INSTALLATION

The G sensor is located on the right front wheel apron.

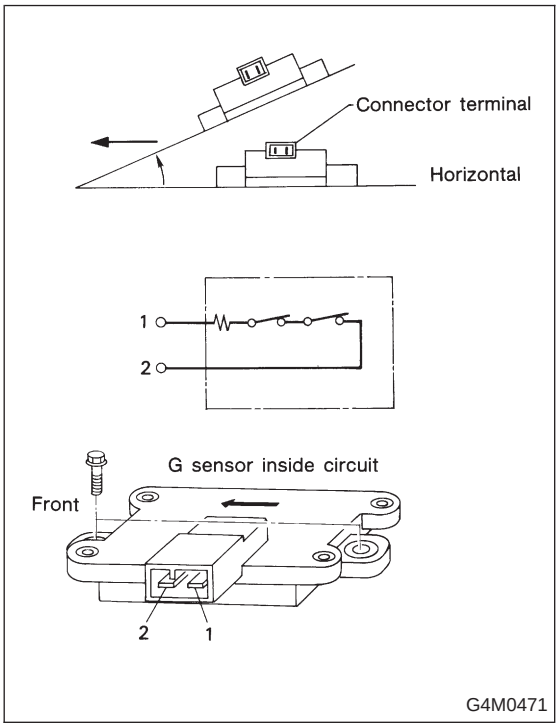

B: INSPECTION

1) Check to ensure that G sensor is securely installed on front wheel apron, and that connector is properly installed.
2) Disconnect connector from G sensor and measure contact resistance between terminals.

Condition of G sensor	Standard
On flat surface	610±60 Ω
* When slanting about 14° — 21.3° (θ)	610±60 Ω → More than 100 kΩ

NOTE:
- Tilt G sensor forward as shown in Figure. If it is tilted backward, it will not operate.
- Hysteresis occurs during ON-OFF operation of sensor. Sensor should turn OFF from ON (610 Ω → More than 100 kΩ) when it is tilted in a range from 14° to 21.3°.

Tightening torque:
7.4±2.0 N·m (0.75±0.2 kg-m, 5.4±1.4 ft-lb)

18. Brake Hose and Pipe AIRBAG

SUPPLEMENTAL RESTRAINT SYSTEM "AIRBAG"

Airbag system wiring harness is routed near the center brake pipe.

CAUTION:

- **All Airbag system wiring harness and connectors are colored yellow. Do not use electrical test equipment on these circuit.**
- **Be careful not to damage Airbag system wiring harness when servicing the center brake pipe.**

A: REMOVAL AND INSTALLATION

CAUTION:

- **When removing and installing the brake pipe, make sure that it is not bent.**
- **After installing the brake pipe and hose, bleed the air.**
- **After installing the brake hose, make sure that it does not touch the tire or suspension assembly, etc.**

1. MODELS WITHOUT A.B.S.

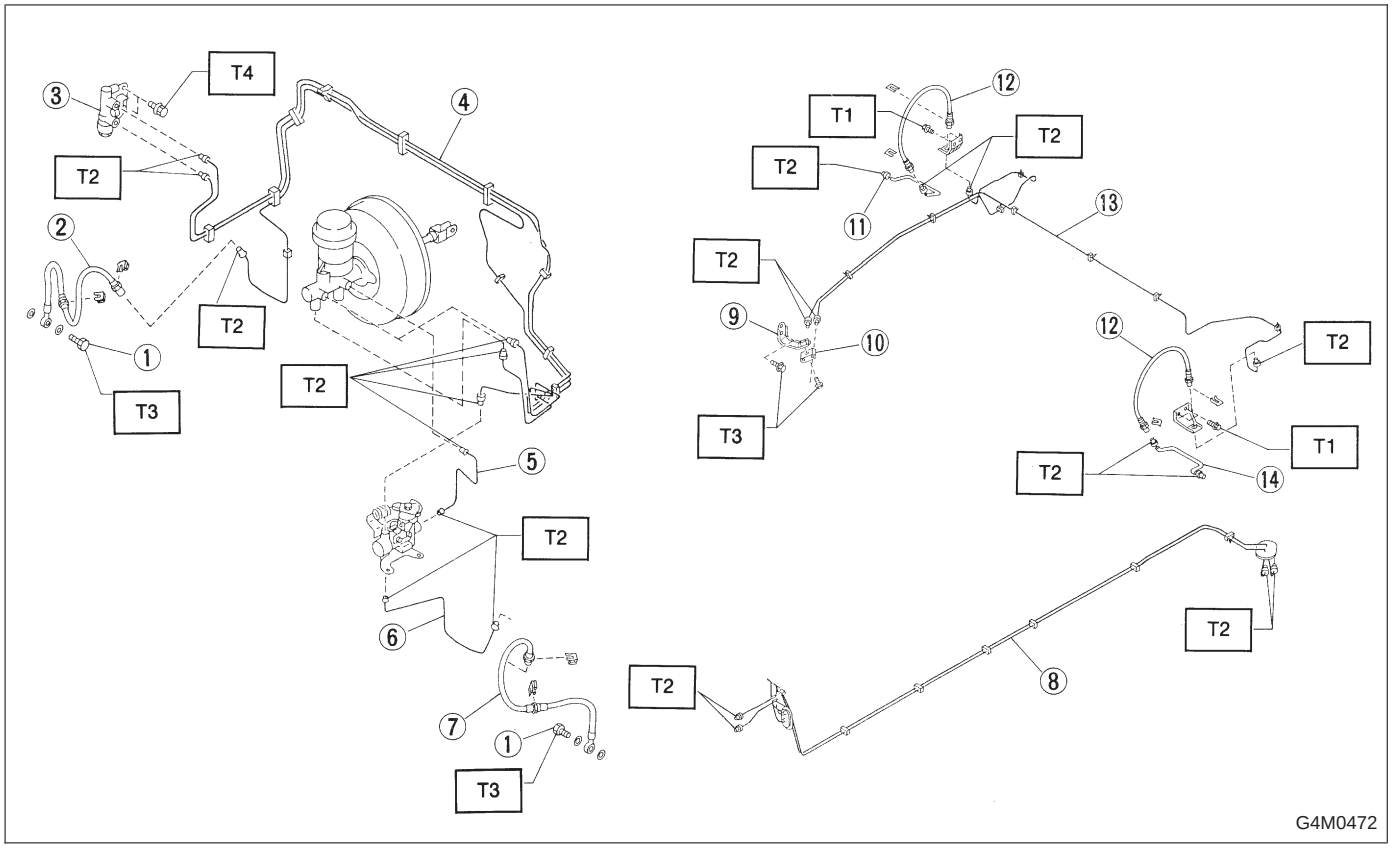

① Union bolt
② Front brake hose RH
③ Proportioning valve
④ Front brake pipe
⑤ Front adapter pipe (UPPER)
⑥ Front adapter pipe (LOWER)
⑦ Front brake hose LH
⑧ Center brake pipe ASSY
⑨ Connector bracket
⑩ Two-way connector
⑪ Rear brake pipe RH
⑫ Rear brake hose drum
⑬ Rear brake pipe ASSY
⑭ Rear brake pipe LH

Tightening torque: N·m (kg-m, ft-lb)
T1: 13±3 (1.3±0.3, 9.4±2.2)
T2: 14.7^{+3}_{-2} ($1.5^{+0.3}_{-0.2}$, $10.8^{+2.2}_{-1.4}$)
T3: 18±3 (1.8±0.3, 13.0±2.2)
T4: 18±5 (1.8±0.5, 13.0±3.6)

2. MODELS WITH A.B.S.

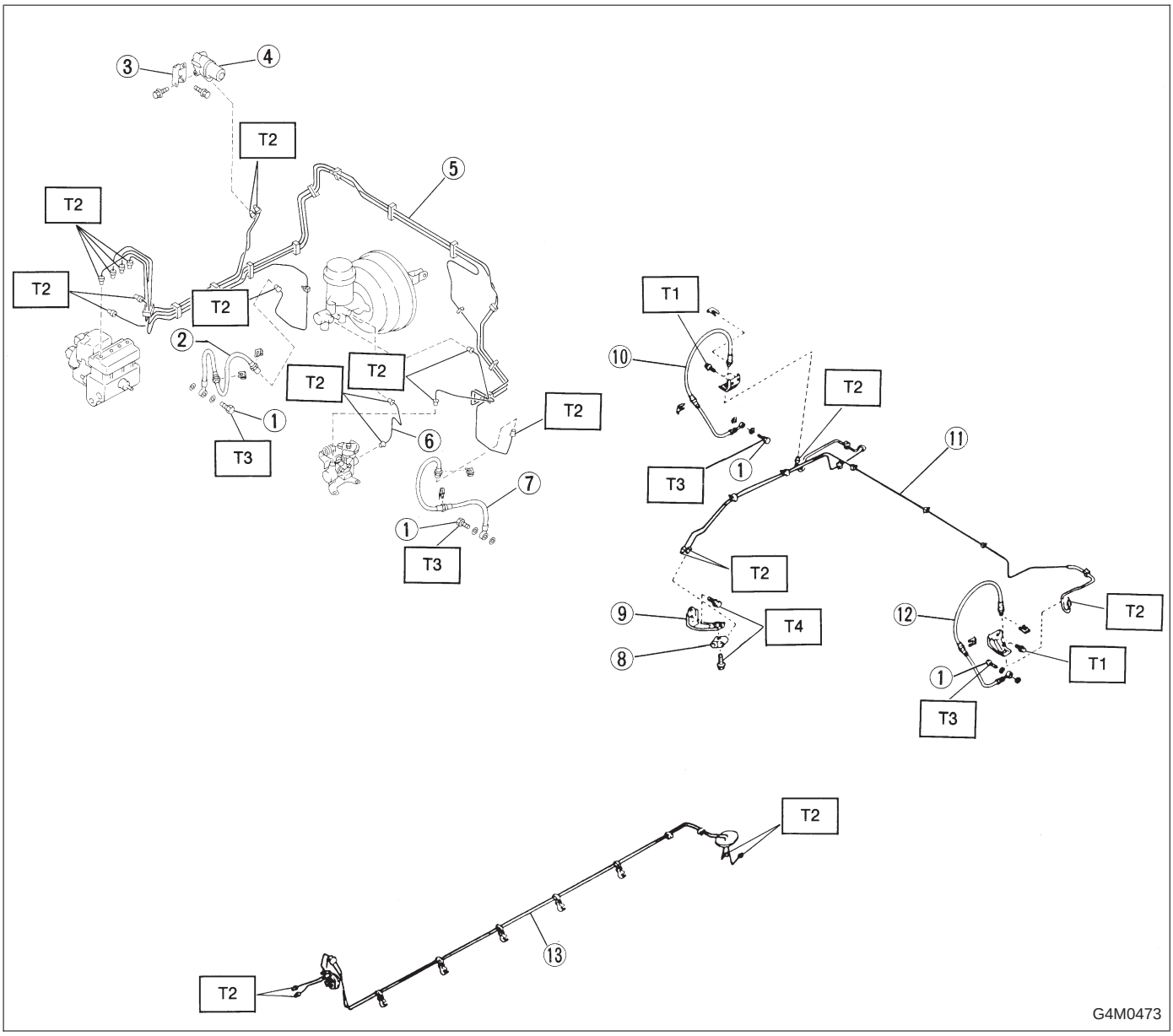

① Union bolt
② Front brake hose RH
③ Valve bracket
④ Proportioning valve
⑤ Front brake pipe ASSY
⑥ Front adapter pipe
⑦ Front brake hose LH
⑧ Two-way connector
⑨ Connector bolt
⑩ Rear brake hose RH
⑪ Rear brake pipe ASSY
⑫ Rear brake hose LH
⑬ Center brake pipe ASSY

Tightening torque: N·m (kg-m, ft-lb)
T1: 13±3 (1.3±0.3, 9.4±2.2)
T2: 14.7$^{+3}_{-2}$
(1.5$^{+0.3}_{-0.2}$, 10.8$^{+2.2}_{-1.4}$)
T3: 18±3 (1.8±0.3, 13.0±2.2)
T4: 18±5 (1.8±0.5, 13.0±3.6)

1. Entire Brake System

Trouble and possible cause	Corrective action
1. Insufficient braking	
(1) Fluid leakage from the hydraulic mechanism	Repair or replace (cup, piston seal, piston boot, master cylinder piston kit, pipe or hose).
(2) Entry of air into the hydraulic mechanism	Bleed the air.
(3) Excessively wide shoe clearance	Adjust the clearance.
(4) Wear, deteriorated surface material, adhering water or fluid on the lining	Replace, grind or clean.
(5) Improper operation of master cylinder, disc caliper, brake booster or check valve	Correct or replace.
2. Unstable or uneven braking	
(1) Fluid on the lining, drum or rotor	Eliminate cause of fluid leakage, clean, or replace.
(2) Drum or rotor eccentricity	Correct or replace the drum or rotor.
(3) Worn brake drum, or damage to the drum caused by sand	Correct by grinding, or replace.
(4) Improper lining contact, deteriorated surface material, improper inferior material, or wear	Correct by grinding, or replace.
(5) Deformed back plate	Correct or replace.
(6) Improper tire inflation	Inflate to correct pressure.
(7) Disordered wheel alignment	Adjust alignment.
(8) Loosened back plate or the support installing bolts	Retighten.
(9) Loosened wheel bearing	Retighten to normal tightening torque or replace.
(10) Trouble in the hydraulic system	Replace the cylinder, brake pipe or hose.
(11) Uneven effect of the parking brake	Check, adjust, or replace the rear brake and cable system.
3. Excessive pedal stroke	
(1) Entry of air into the hydraulic mechanism	Bleed the air.
(2) Excessive play in the master cylinder push rod	Adjust.
(3) Fluid leakage from the hydraulic mechanism	Repair or replace (cup, piston seal, piston boot, master cylinder piston kit, pipe or hose).
(4) Improperly adjusted shoe clearance	Adjust.
(5) Improper lining contact or worn lining	Correct or replace.

Trouble and possible cause	Corrective action
4. Brake dragging or improper brake return	
(1) Insufficient pedal play	Adjust play.
(2) Improper master cylinder return	Clean or replace the cylinder.
(3) Clogged hydraulic system	Replace.
(4) Improper return or adjustment of parking brake	Correct or adjust.
(5) Weakened spring tension or breakage of shoe return spring	Replace the spring.
(6) Excessively narrow shoe clearance	Adjust the clearance.
(7) Improper disc caliper operation	Correct or replace.
(8) Improper adjusted wheel bearing	Adjust or replace.
5. Brake noise (1) (creak sound)	
(1) Hardened or deteriorated lining	Replace the shoe assembly or pad.
(2) Worn lining	Replace the shoe assembly or pad.
(3) Loosened back plate or the support installing bolts	Retighten.
(4) Loose wheel bearing	Retighten to normal tightening torque.
(5) Dirty drum or rotor	Clean the drum or rotor, or clean and replace the brake assembly.
6. Brake noise (2) (hissing sound)	
(1) Worn lining	Replace the shoe assembly or pad.
(2) Improper installed shoe or pad	Correct or replace the shoe assembly or pad.
(3) Loose or bent drum or rotor	Retighten or replace.
7. Brake noise (3) (click sound)	
In the case of the disc brake:	
(1) Excessively worn pad or the support	Replace the pad or the support.
In the case of the drum brake:	
(1) Excessively worn shoe ridge	Replace the back plate.
(2) Lack of oil on the shoe ridge surface and anchor	Add more grease.

2. Hill Holder

Trouble and possible cause	Corrective action
1. Counterforce of clutch pedal is too strong.	
(1) PHV cable is damaged or does not operate properly.	Repair or replace.
(2) Lever of PHV is defective.	Replace entire PHV assembly.
(3) Clutch system is anomalous.	Refer to “Clutch and pedal cable system”.
2. Vehicle does not stop on uphill road of 3° or higher inclination.	
(1) Front side of vehicle is lowered.	Refer to “Suspension”.
(2) PHV cable is broken.	Replace.
(3) Play of clutch is excessive.	Adjust.
(4) PHV cable is elongated.	Adjust.
(5) Sealing of PHV is poor.	Replace entire PHV assembly.
3. Shock is felt when starting.	
(1) Poor adjustment of starting performance.	Adjust.
(2) When depressing the brake pedal strongly:	(The stronger brake pedal depressing force, the later hill holder releasing.)
(3) When starting on flat road after stopping reverse movement:	(Because hill holder is activated.)
4. Vehicle slips down when starting.	
(1) PHV cable is elongated.	Adjust.
(2) Clutch facing is worn out.	Adjust or replace.
(3) Bracket (cable) or stay (PHV) is deformed.	Repair or replace.
5. Vehicle cannot start after stoppage.	
(1) Return spring is fatigued or broken.	Replace.
(2) PHV lever won’t return.	Replace entire PHV assembly.
(3) When intentionally depressing brake pedal strongly:	[When the brake pedal is depressed by a force of 1,177 N (120 kg, 265 lb) or more.]
6. Abnormal sound is generated upon releasing brake pedal when stopping.	
(1) Rotor and pad matched with each other due to inadequate depressing force to brake pedal.	(Abnormal sound is not generated when depressing brake pedal a little stronger.)
7. Abnormal sound is generated when operating clutch pedal.	
(1) Grease is inadequate for the hook of return spring and sliding portion of PHV cable end.	Apply grease.
(2) When releasing after maintaining high fluid pressure:	(Flowing sound of fluid when releasing high fluid pressure.)
(3) Clutch system is anomalous.	Refer to “Clutch and pedal cable system”.

CAUTION:
- **Description in parentheses is a characteristic of hill holder and does not indicate abnormality.**

Depressing force required for clutch pedal equipped to hill holder specifications is 20 to 29 N (2 to 3 kg, 4 to 7 lb) larger than the conventional specifications, which does not constitute abnormality.
- **When vehicle cannot travel (brake cannot be released) because return spring is broken, remove adjust nut, disconnect clutch and PHV, and then return PHV lever to release the brake. (Be sure to apply the parking brake before starting this operation.)**
- **The hill holder may not be activated on a slope of an extremely small inclination.**

HEATER AND VENTILATOR 4-6

Page

S SPECIFICATIONS AND SERVICE DATA 2
1. Heater and Ventilation 2

C COMPONENT PARTS 3
1. Heater Unit 3
2. Intake Unit 4
3. Control Unit 5

W SERVICE PROCEDURE 6
1. Supplemental Restraint System “Airbag” 6
2. Heater Unit 6
3. Blower Motor Assembly 7
4. Control Unit 7
5. Intake Door Motor 10

1. Heater and Ventilation

A: SPECIFICATIONS

Item		Specifications	Condition	
Heating capacity		4.652 kW (4,000 kcal/h, 15,872 BTU/h) or more	● Mode selector switch	: HEAT
			● Temp. control switch	: FULL HOT
			● Temperature difference between hot water and inlet air	: 65°C (149°F)
			● Hot water flow rate	: 360 ℓ (95.1 US gal, 79.2 Imp gal)/h
Air flow rate		270 m^3 (9,534 cu ft)/h	Heat mode (FRESH), FULL HOT at 12.5 V	
Max air flow rate		480 m^3 (16,949 cu ft)/h	● Temperature control switch	: FULL COLD
			● Blower fan speed	: 4th position
			● Mode selector switch	: RECIRC (MAX. A/C)
Heater core size (height x length x width x thickness)		192.4 x 152.0 x 25.0 x 1.8 mm (7.57 x 5.98 x 0.984 x 0.071 in)	—	
Blower motor	Type	Magnet motor 230 W or less	at 12 V	
	Fan type and size (diameter x width)	Sirocco fan type 150 x 75 mm (5.91 x 2.95 in)	—	

1. Heater Unit

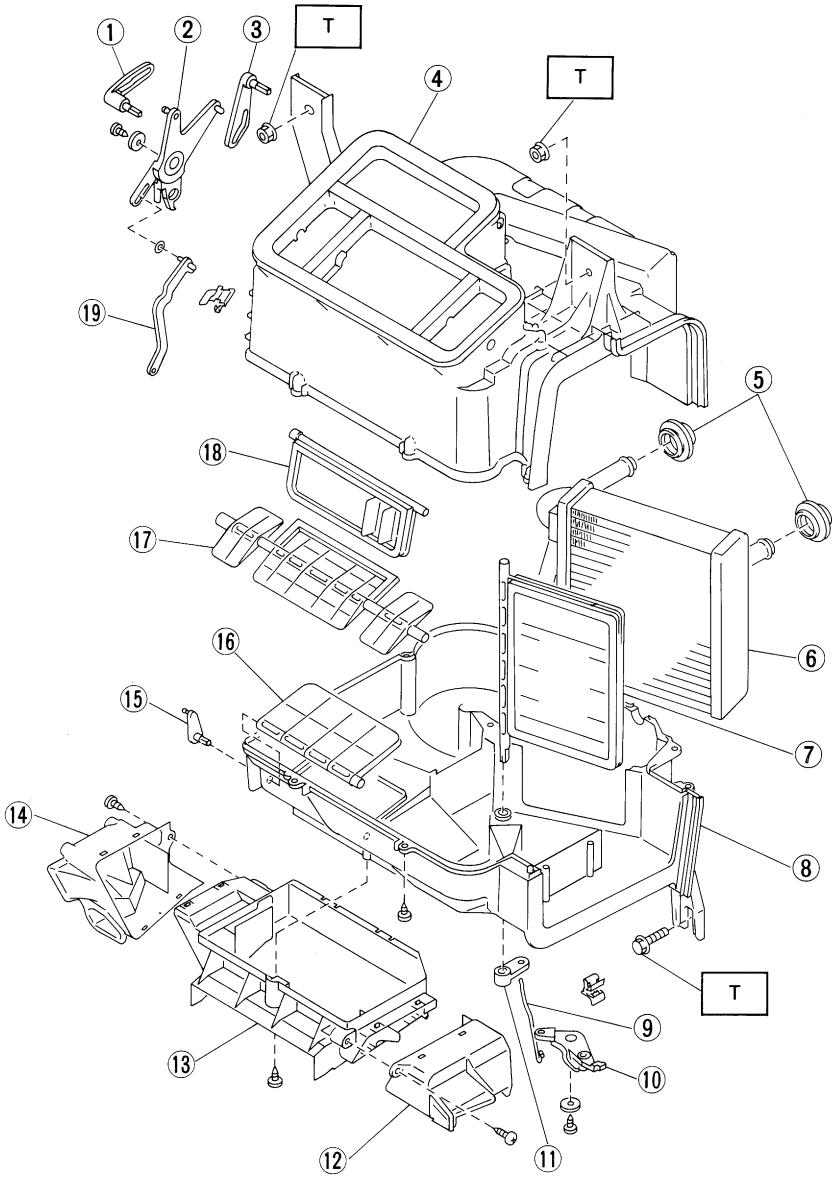

① Vent lever
② Side link
③ DEF. lever
④ Heater case upper
⑤ Heater grommet
⑥ Heater core
⑦ Mix door
⑧ Heater case lower
⑨ Mix rod
⑩ Mix link
⑪ Mix lever
⑫ Foot duct (RH)
⑬ Foot duct (CTR)
⑭ Foot duct (LH)
⑮ Foot lever lower
⑯ Foot door
⑰ Vent door
⑱ DEF. door
⑲ Foot lever upper

Tightening torque: N·m (kg-m, ft-lb)
T: 7.35±1.96
(0.750±0.200, 5.421±1.446)

2. Intake Unit

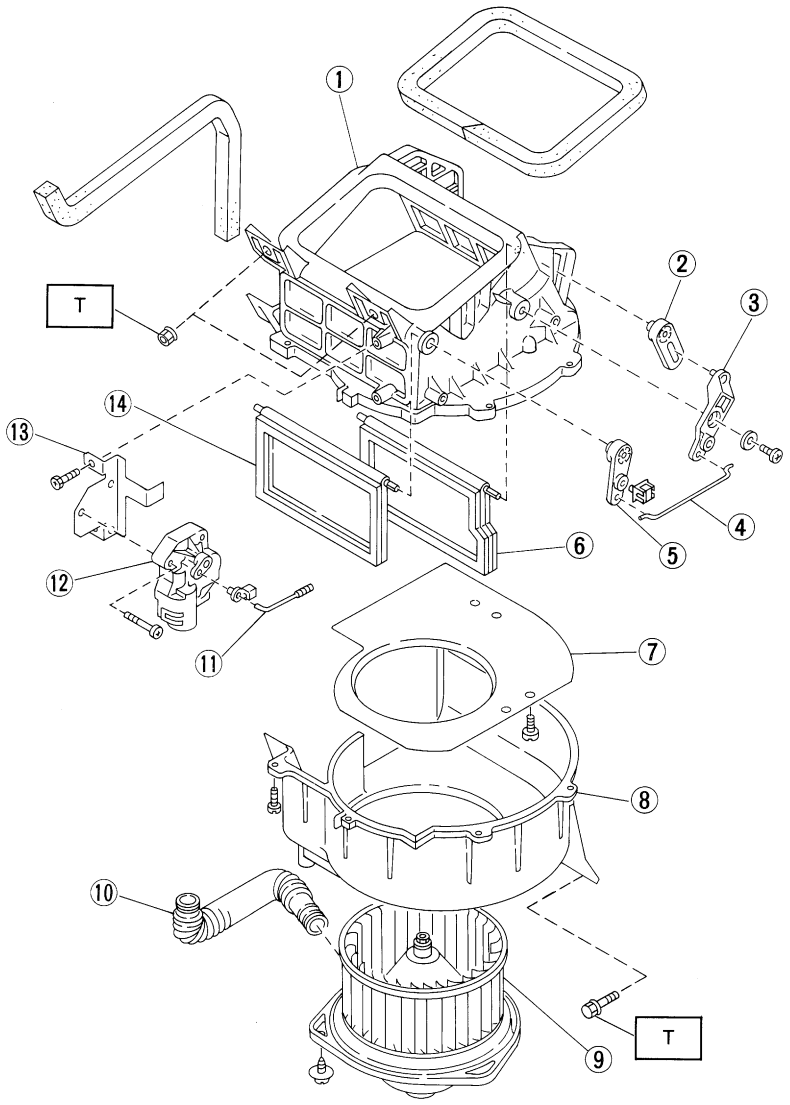

G4M0552

① Intake unit case upper
② Lever (A)
③ Link
④ Rod
⑤ Lever (B)
⑥ Door (A)
⑦ Bell mouth-intake
⑧ Intake unit case lower
⑨ Blower motor ASSY
⑩ Hose
⑪ Actuator rod
⑫ Actuator motor
⑬ Actuator bracket
⑭ Door (B)

Tightening torque: N·m (kg-m, ft-lb)
T: 7.35±1.96
(0.750±0.200, 5.421±1.446)

3. Control Unit

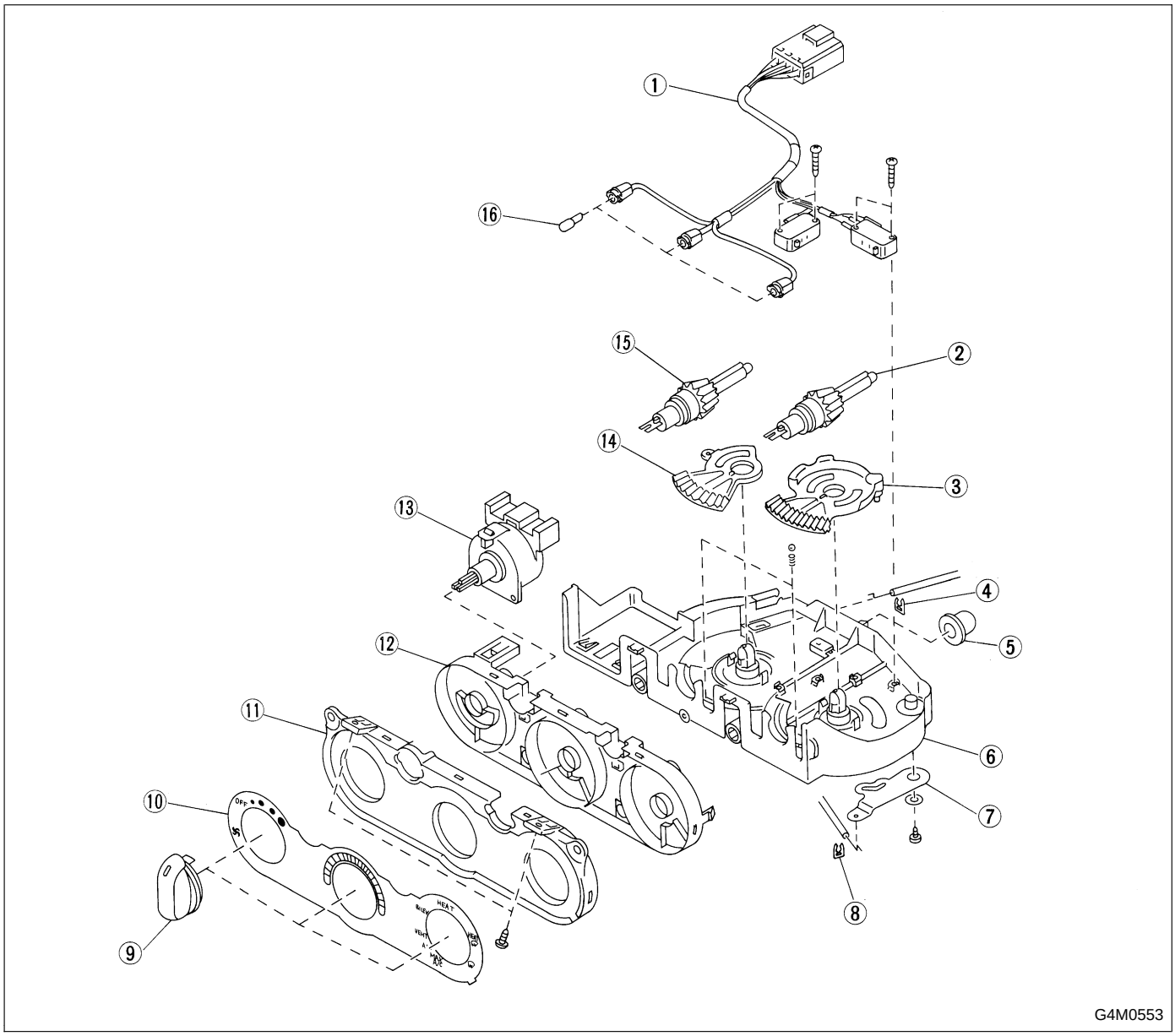

① Harness ASSY
② Shaft
③ Mode lever LH
④ Clip
⑤ Grommet
⑥ Base plate
⑦ Link
⑧ Clip
⑨ Control dial knob
⑩ Plate
⑪ Base plate
⑫ Light box
⑬ Switch ASSY
⑭ TEMP. lever
⑮ Shaft
⑯ Bulb

1. Supplemental Restraint System “Airbag”

Airbag system wiring harness is routed near the instrument panel, heater unit, blower motor and control unit.

CAUTION:

- **All Airbag system wiring harness and connectors are colored yellow. Do not use electrical test equipment on these circuit.**
- **Be careful not to damage Airbag system wiring harness when servicing the instrument panel, heater unit, blower motor and control unit.**

2. Heater Unit

A: REMOVAL

1) Disconnect GND cable from battery.
2) Remove heater hoses (inlet, outlet) in engine compartment.

NOTE:
Drain as much coolant from heater unit as possible, and plug disconnected hose with cloth.

3) Disconnect temperature control cable and mode door control cable from heater unit.
<Ref. to 5-4 [W1A0].>
4) Remove instrument panel.
<Ref. to 5-4 [W1A0].>
5) Remove steering support beam.
<Ref. to 5-1 [C600].>
6) Remove cooling unit.
<Ref. to 4-7 [W14A0].>

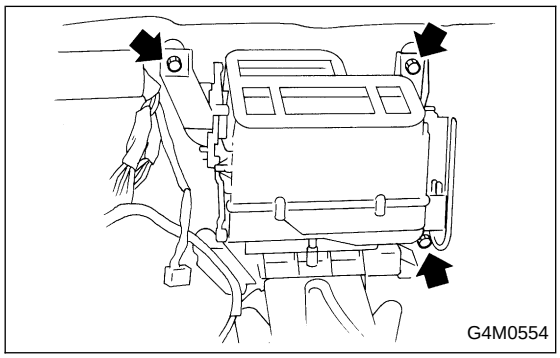

7) Remove heater unit.

B: INSTALLATION

Installation is in the reverse order of removal.

Fitted length of heater hose over pipe: 25 — 30 mm (0.98 — 1.18 in)

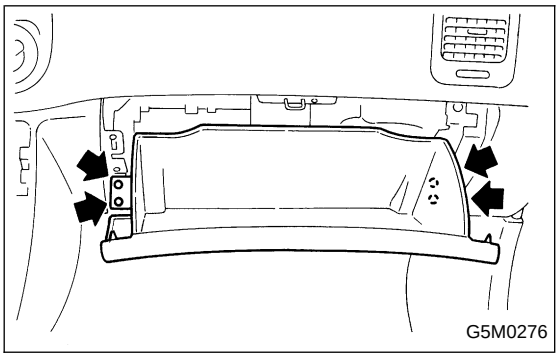

3. Blower Motor Assembly

A: REMOVAL

1) Disconnect GND cable from battery.
2) Remove glove box.
3) Disconnect blower motor harness connector.

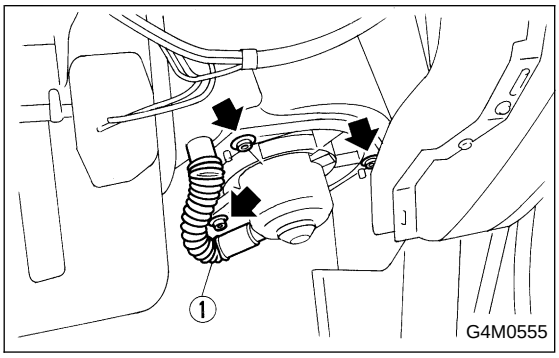

4) Disconnect aspirator pipe ①.
5) Remove blower motor mounting screw.
6) Remove blower motor assembly.

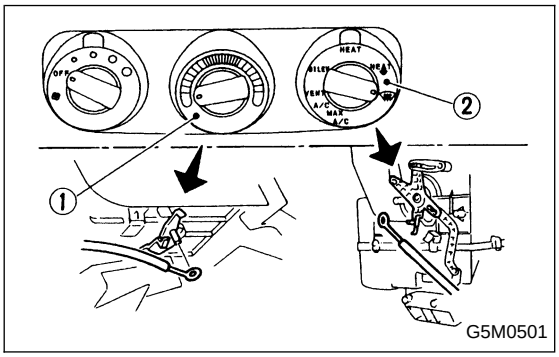

4. Control Unit

A: REMOVAL

1) Disconnect GND cable from battery.
2) Set temperature control switch ① to “FULL COLD” and mode selector switch ② to “DEF” position.
3) Remove temperature control cable and mode door control cable from heater unit.

NOTE:
- Do not attempt to move links during installation.
- Before control unit installation, set temperature control switch to “FULL COLD” and mode selector switch to “DEF” position.

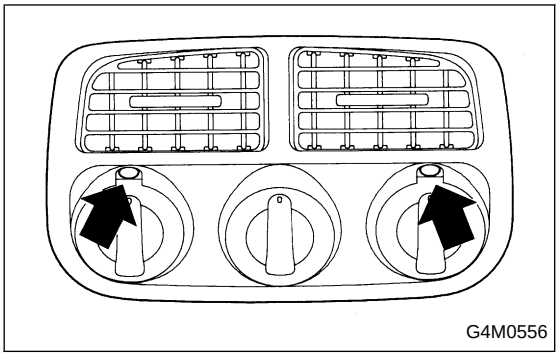

4) Remove center panel.

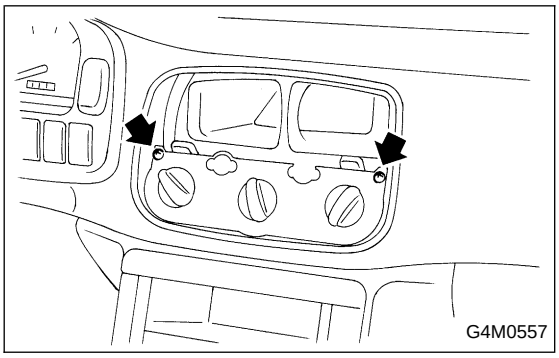

5) Remove control unit assembly and disconnect connector.

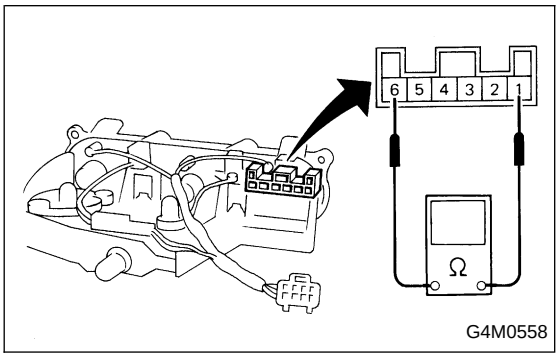

B: INSPECTION

1. FAN SWITCH

Check continuity between terminals at each switch position.

Switch position	Terminals					
	1	2	3	4	5	6
Low	○	○				○
Med. 1	○		○			○
Med. 2	○			○		○
High	○				○	○

2. CONTROL UNIT

1) Ignition switch is turned OFF.
2) Disconnect connector from control unit.
3) Check circuit continuity between each terminal.

Terminal	Mode selector switch position			Illumi.
	MAX A/C (RECIRC)	Except MAX A/C (FRESH)	● MAX A/C ● A/C (A/C ON)	
1	○	○		
2	○			
3		○		
4			○	
5				○
6				○
7			○	

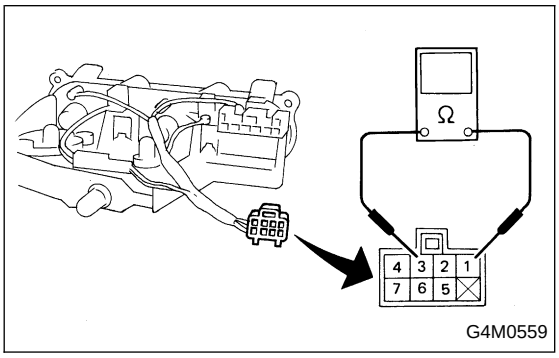

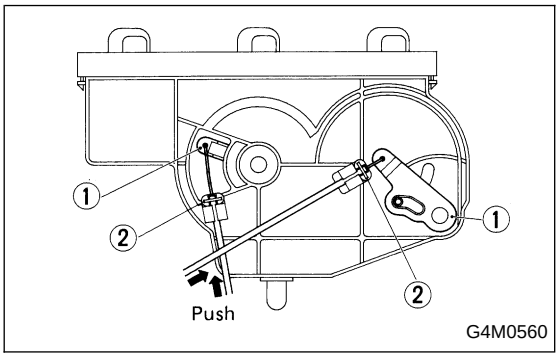

C: ADJUSTMENT

1) Operate temperature control switch to “FULL COLD” and mode selector switch to “MAX A/C” position.
2) Install control cable to lever ①. While pushing outer cable, secure control cable with clip ②.

D: INSTALLATION

Installation is in the reverse order of removal.

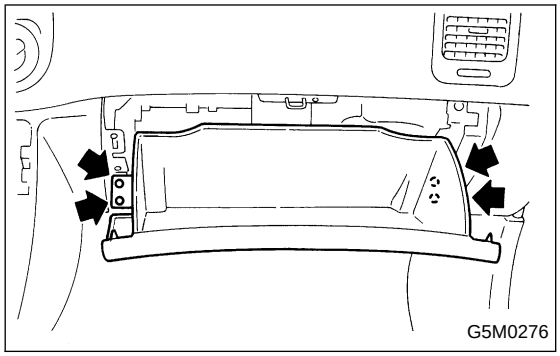

5. Intake Door Motor

A: REMOVAL

1) Disconnect GND cable from battery.
2) Remove glove box.
3) Remove heater duct (or cooling unit with A/C model). <Ref. to 4-7 [W14A0].>

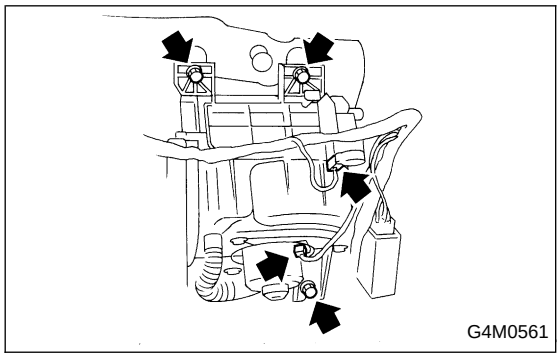

4) Remove intake unit from the vehicle.

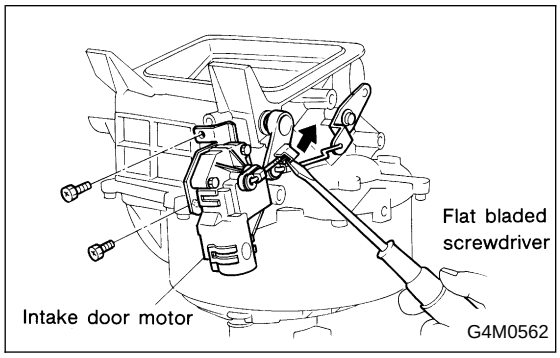

5) Remove screws which secure intake door motor to intake unit.

NOTE:
Ensure that RECIRC switch is set to “ON”.

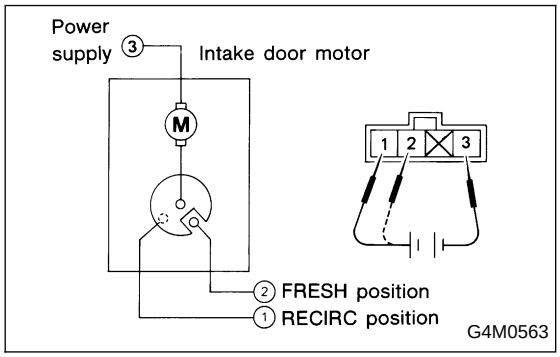

B: INSPECTION

When approx. 12 V is applied to the intake door motor terminals, intake door motor operates as follows.

Intake door motor position	Terminal		Intake door motor operation
	⊕	⊖	
FRESH	3	2	Door motor moved to FRESH position.
RECIRC		1	Door motor moved to RECIRC position.

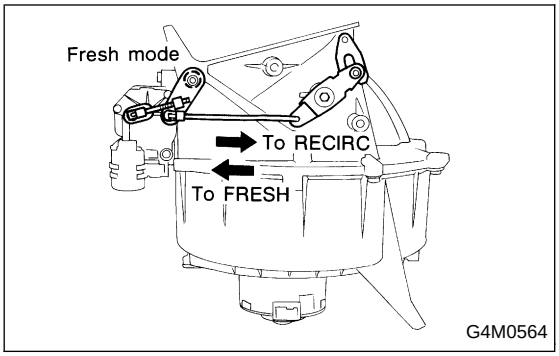

1) Connect harness to intake door motor.
2) Turn ignition switch to “ACC” and set RECIRC switch to“ON” switch to “RECIRC”.

NOTE:
Ensure that intake door motor is set in the “RECIRC” mode.

3) Install intake door motor on intake unit.
4) Secure rod holder to link, and install link to intake unit.
5) Manually set rod in the “RECIRC” mode, and secure to rod holder.
6) Operate mode selector switch to ensure that system changes from intake air to “RECIRC” and from “RECIRC” to intake air in full-stroke range.

C: INSTALLATION

Installation is in the reverse order of removal.

PEDAL SYSTEM AND CONTROL CABLES 4-5

Page

S SPECIFICATIONS AND SERVICE DATA 2
1. Pedal System 2
C COMPONENT PARTS 3
1. Pedal (MT Model) 3
2. Pedal (AT Model) 4
W SERVICE PROCEDURE 5
1. Pedal 5
2. Clutch Cable 11
3. Accelerator Cable 12
4. Speedometer Cable 14
T DIAGNOSTICS 16
1. Pedal System and Control Cables 16

1. Pedal System

A: SERVICE DATA

Brake pedal	Free play		1 — 3 mm (0.04 — 0.12 in) [Depress brake pedal pad with a force of less than 10 N (1 kg, 2 lb).]
Clutch pedal	Free play	At clutch pedal pad	10 — 20 mm (0.39 — 0.79 in)
	Full stroke	At clutch pedal pad	140 — 145 mm (5.51 — 5.71 in)
Accelerator pedal	Free play	At pedal pad	1 — 4 mm (0.04 — 0.16 in)
	Stroke	At pedal pad	46 — 50 mm (1.81 — 1.97 in)

1. Pedal (MT Model)

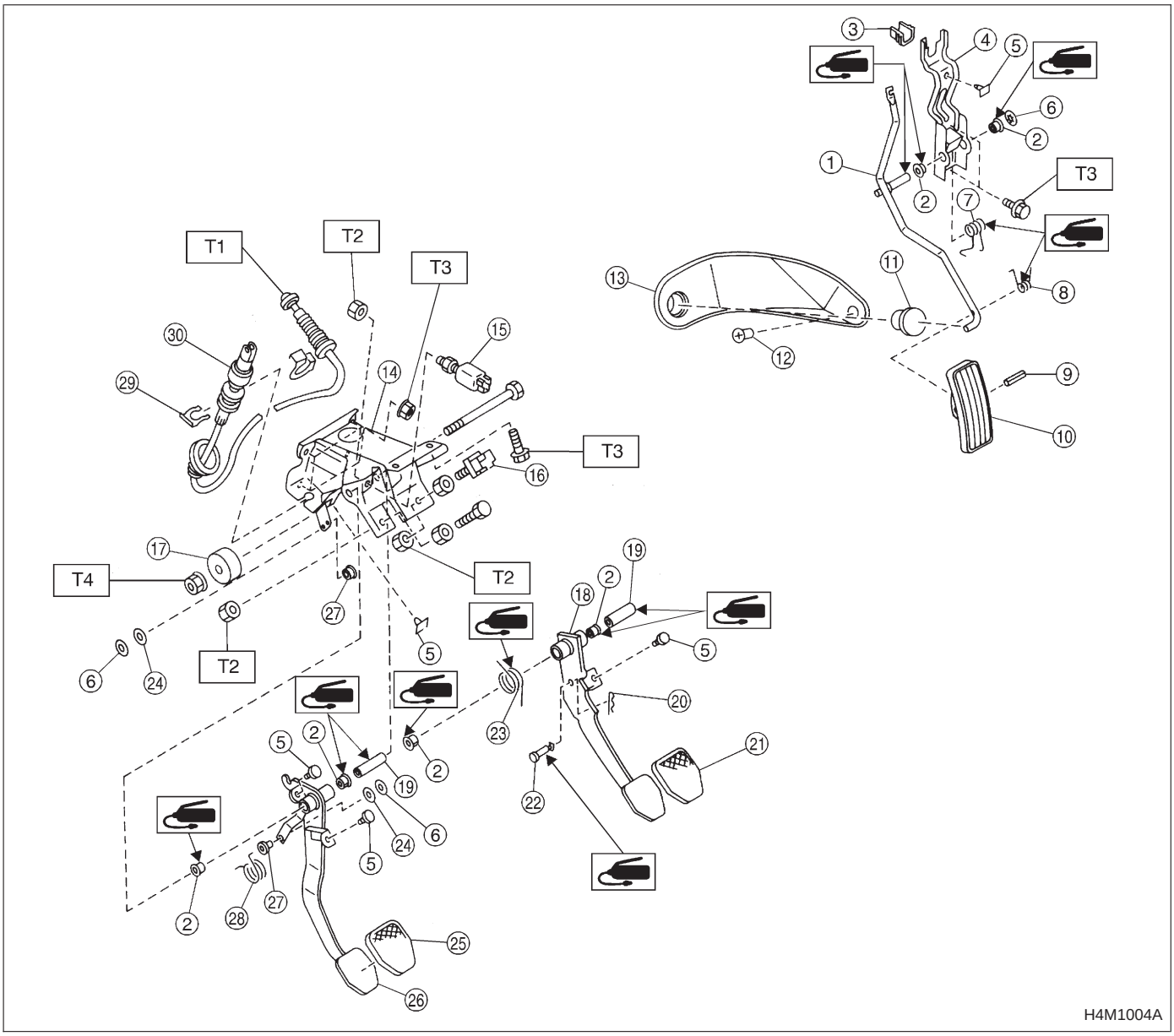

① Accelerator pedal
② Bushing
③ Holder
④ Accelerator bracket
⑤ Stopper
⑥ Clip
⑦ Accelerator spring
⑧ Accelerator pedal spring
⑨ Spring pin
⑩ Accelerator pedal pad
⑪ Accelerator stopper
⑫ Clip
⑬ Accelerator plate
⑭ Pedal bracket
⑮ Clutch switch (Starter interlock)
⑯ Stop light switch
⑰ Mass damper
⑱ Brake pedal
⑲ Spacer
⑳ Snap pin
㉑ Brake pedal pad
㉒ Clevis pin
㉓ Brake pedal spring
㉔ Washer
㉕ Clutch pedal pad
㉖ Clutch pedal
㉗ Bushing assist
㉘ Spring assist
㉙ Clutch cable clamp
㉚ Clutch cable

Tightening torque: N·m (kg-m, ft-lb)
T1: 5.9±1.5 (0.60±0.15, 4.3±1.1)
T2: 8±2 (0.8±0.2, 5.8±1.4)
T3: 18±5 (1.8±0.5, 13.0±3.6)
T4: 29±7 (3.0±0.7, 21.7±5.1)

2. Pedal (AT Model)

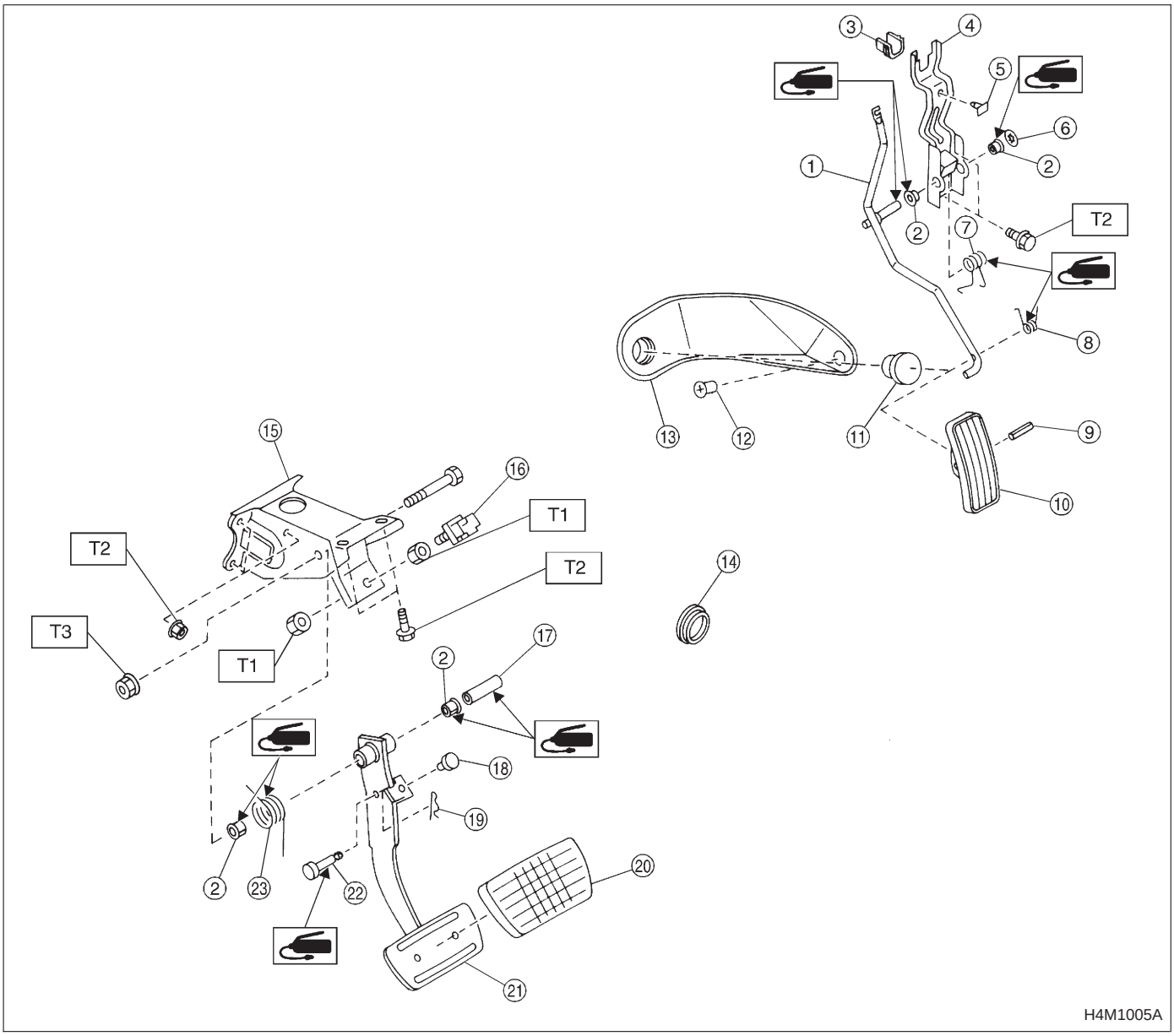

① Accelerator pedal
② Bushing
③ Holder
④ Accelerator bracket
⑤ Stopper
⑥ Clip
⑦ Accelerator spring
⑧ Accelerator pedal spring
⑨ Spring pin
⑩ Accelerator pedal
⑪ Accelerator stopper
⑫ Clip
⑬ Accelerator plate
⑭ Plug
⑮ Pedal bracket
⑯ Stop light switch
⑰ Spacer
⑱ Stopper
⑲ Snap pin
⑳ Brake pedal pad
㉑ Brake pedal
㉒ Clevis pin
㉓ Brake pedal spring

Tightening torque: N·m (kg-m, ft-lb)
T1: 8±2 (0.8±0.2, 5.8±1.4)
T2: 18±5 (1.8±0.5, 13.0±3.6)
T3: 29±7 (3.0±0.7, 21.7±5.1)

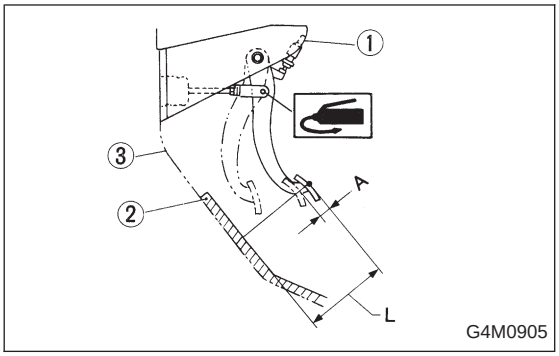

1. Pedal

A: ON-CAR SERVICE

1. BRAKE PEDAL

1) Check position of pedal pad.

① Stop light switch
② Mat
③ Toe board

Pedal height: L
158 mm (6.22 in)

If it is not in specified value, adjust it by adjusting brake booster operating rod length.

2) Check free play by operating pedal by hand.

If it is not in specified value, adjust it by adjusting position of stop light switch.

CAUTION:
Be careful not to rotate stop light switch.

Brake pedal free play: A
1 — 3 mm (0.04 — 0.12 in)
[Depress brake pedal pad with a force of less than 10 N (1 kg, 2 lb).]

3) Apply grease to operating rod connecting pin to prevent it from wearing.

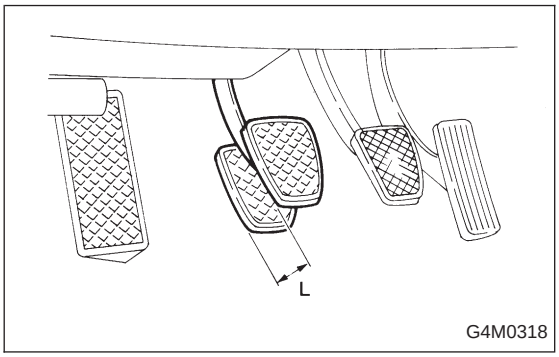

2. CLUTCH PEDAL

1) Check clutch pedal free play by operating pedal by hand.

Free play: L (At clutch pedal pad)
10 — 20 mm (0.39 — 0.79 in)

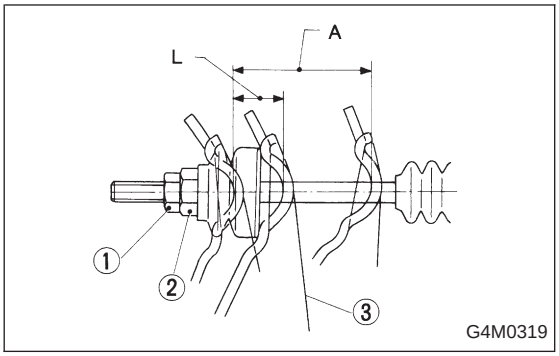

2) If it is not in specified value, adjust it by turning adjusting nut on engine side end of clutch cable.

Free play: L
3 — 4 mm (0.12 — 0.16 in)

Full stroke: A
25.5 — 27 mm (1.004 — 1.063 in)

3) Apply grease to connecting portion of clutch pedal and clutch cable.

① Lock nut
② Adjusting nut
③ Release fork

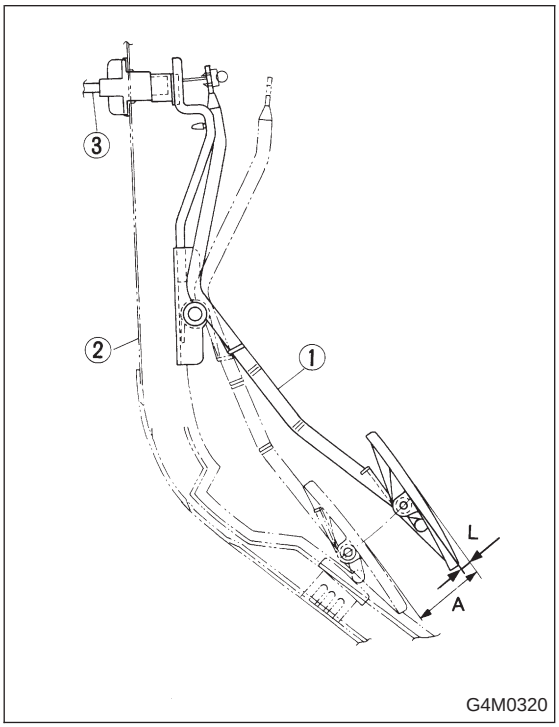

3. ACCELERATOR PEDAL

Check pedal stroke and free play by operating accelerator pedal by hand.
If it is not within specified value, adjust it by turning nut connecting accelerator cable to throttle body.

Free play at pedal pad: L
1 — 4 mm (0.04 — 0.16 in)

Stroke at pedal pad: A
46 — 50 mm (1.81 — 1.97 in)

① Accelerator pedal
② Toe board
③ Accelerator cable

B: REMOVAL

1. ACCELERATOR PEDAL

1) Disconnect ground cable from battery.
2) Disconnect accelerator cable from throttle body.

CAUTION:
Be careful not to kink accelerator cable.

3) Remove instrument panel lower cover from instrument panel, and connector.

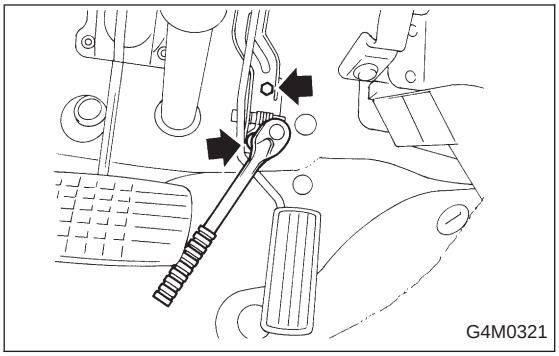

4) Remove accelerator pedal connecting bolt from accelerator pedal bracket.

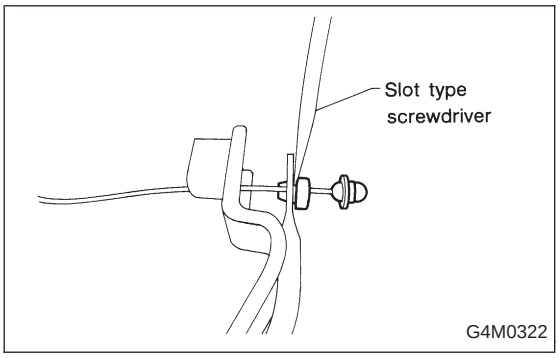

5) Disconnect accelerator cable from accelerator pedal lever.

2. BRAKE AND CLUTCH PEDAL (MT model)

1) Disconnect ground cable from battery.
2) Disconnect clutch cable from release lever.
3) Remove instrument panel lower cover from instrument panel.
4) Disconnect the following parts from pedal bracket.
   (1) Operating rod of brake booster
   (2) Electrical connectors (for stop light switch, etc.)
5) Remove clevis pin which secures pedal to push rod.

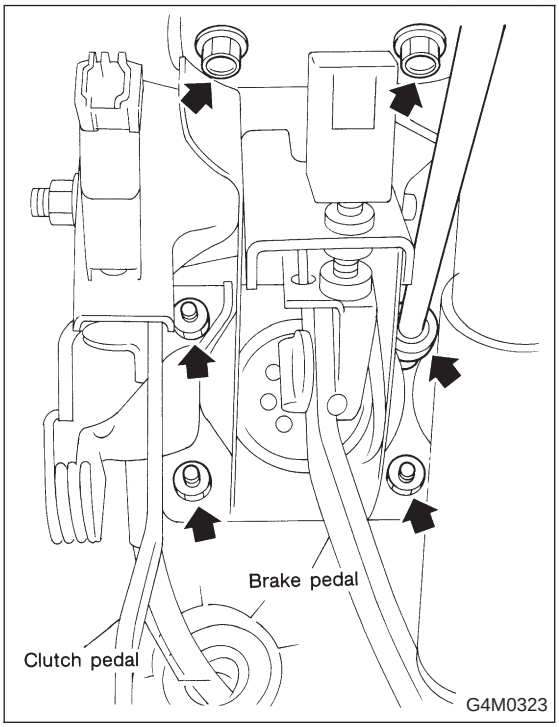

6) Remove bolts and nuts which secure brake and clutch pedals, and remove pedal bracket and clutch cable as a unit.

CAUTION:
Before removing clutch cable from toe board, remove grommet. Slowly remove clutch cable, being careful not to scratch it.

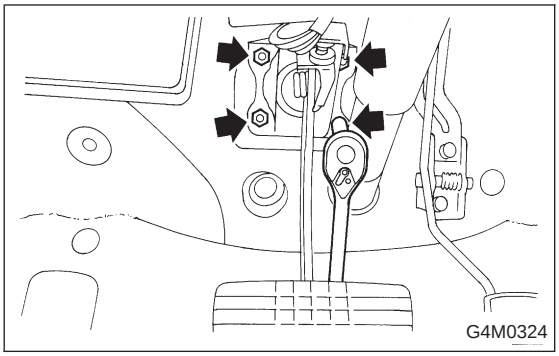

3. BRAKE PEDAL (AT model)

1) Disconnect ground cable from battery.
2) Remove instrument panel lower cover from instrument panel.
3) Remove clevis pin which secures brake pedal to brake booster operating rod. Also disconnect stop lamp switch connector.
4) Remove two bolts and four nuts which secure brake pedal to pedal.

C: INSPECTION

1. BRAKE AND CLUTCH PEDALS

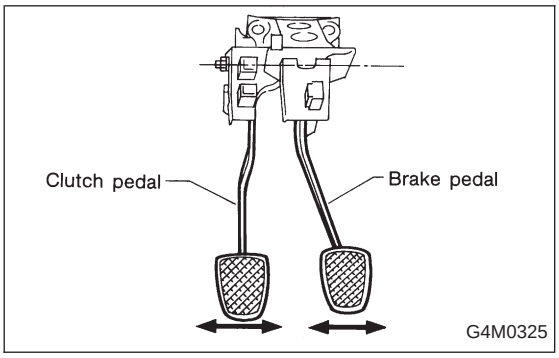

Move brake and clutch pedal pads in the lateral direction with a force of approximately 10 N (1 kg, 2 lb) to ensure pedal deflection is in specified range.

Deflection of brake and clutch pedal:
Service limit
5.0 mm (0.197 in) or less

CAUTION:
If excessive deflection is noted, replace bushings with new ones.

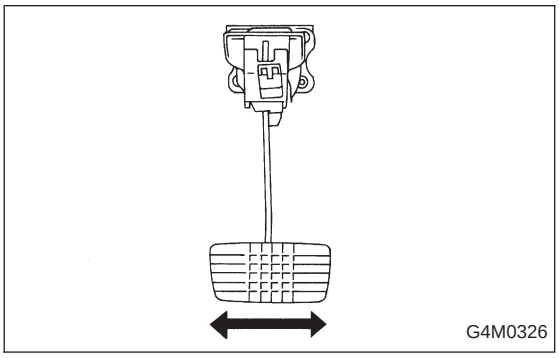

2. ACCELERATOR PEDAL

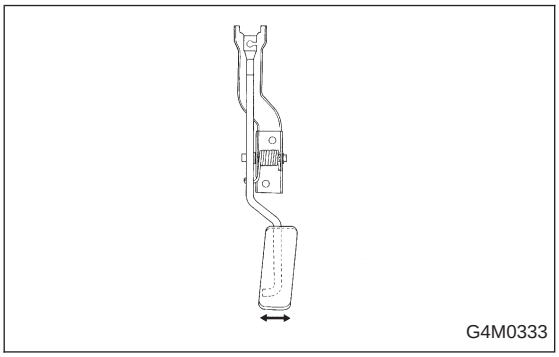

Lightly move pedal pad in lateral the direction to ensure pedal deflection is in specified range.

Deflection of accelerator pedal:
Service limit
5.0 mm (0.197 in) or less

CAUTION:
If excessive deflection is noted, replace bushing and clip with new ones.

3. STOP LIGHT SWITCH

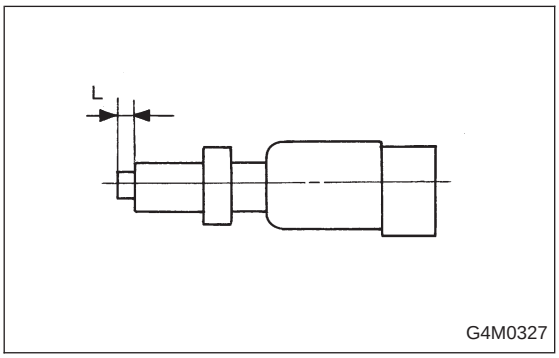

If stop light switch does not operate properly (or if it does not stop at the specified position), replace with a new one.

Specified position: L
$2^{+1.5}_{0}$ mm (0.079 $^{+0.059}_{0}$ in)

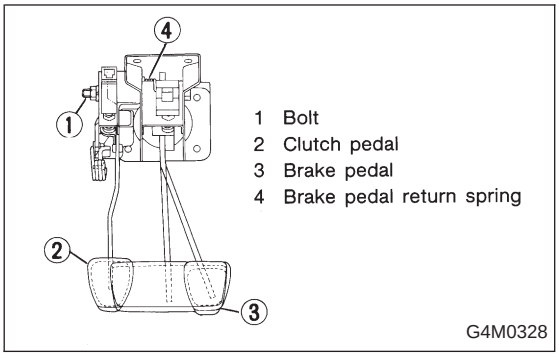

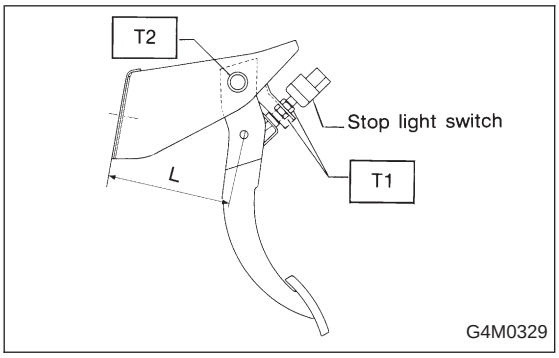

D: ASSEMBLY

1. BRAKE AND CLUTCH PEDAL

1) Attach stop light switch, etc. to pedal bracket temporarily.

2) Clean inside of bores of clutch pedal and brake pedal, apply grease, and set bushings into bores.

3) Align bores of pedal bracket, clutch pedal and brake pedal, attach brake pedal return spring and clutch pedal effort reducing spring (vehicle with Hill holder), and then install pedal bolt.

Tightening torque:
T2: 29±7 N·m (3.0±0.7 kg-m, 21.7±5.1 ft-lb)

NOTE:
Clean up inside of bushings and apply grease before installing spacer.

4) Set brake pedal position by adjusting position of stop light switch.

Pedal position: L
125.9 mm (4.96 in)

Tightening torque:
T1: 8±2 N·m (0.8±0.2 kg-m, 5.8±1.4 ft-lb)

2. ACCELERATOR PEDAL

1) Clean and apply grease to spacer and inside bore of accelerator pedal. Install accelerator pedal onto pedal bracket.

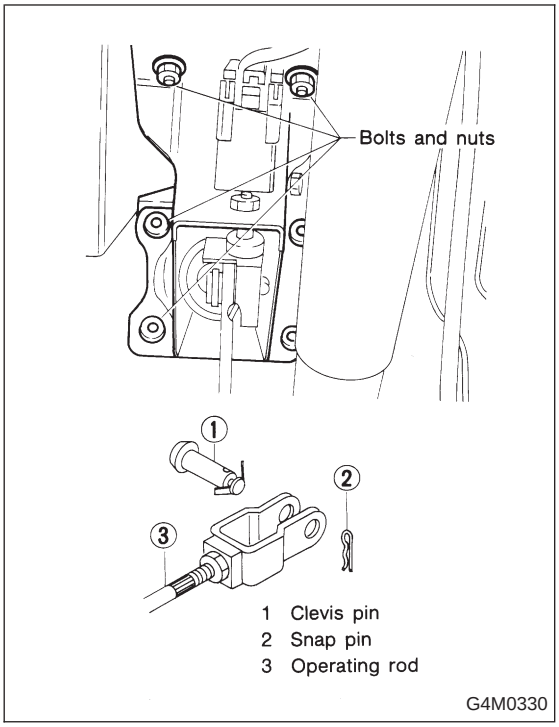

E: INSTALLATION

1. BRAKE AND CLUTCH PEDAL

1) Insert clutch cable into hole on toe board, and set pedal bracket above steering column.

CAUTION:
Be careful not to bend clutch cable too much.

2) Insert bolts of brake booster into holes on toe board, support it from engine room, and fit holes of pedal bracket onto the bolts.
At this time, operating rod of brake booster should be engaged with brake pedal.
3) While pushing pedal bracket upward firmly, tighten 4 nuts and 2 bolts at its upper surface.

Tightening torque:
18±5 N·m (1.8±0.5 kg-m, 13.0±3.6 ft-lb)

4) Connect operating rod of brake booster to brake pedal using clevis pin and snap pin.
5) Connect electrical connectors for stop light switch, etc.
6) Attach clutch cable grommet to toe board, and then connect clutch cable to clutch release fork.
7) Adjustment after pedal installation <Ref. to 4-5 [W1A1].>

CAUTION:
Never fail to cover outer cable end with boot.

2. ACCELERATOR PEDAL

1) Pull out accelerator inner cable to its maximum stroke, and attach it to accelerator pedal.
Pull accelerator cable from throttle body side.

CAUTION:
Be careful not to kink accelerator cable.

2) Connect accelerator cable to throttle body.
3) Adjustment after pedal installation <Ref. to 4-5 [W1A3].>

NOTE:
Make sure to check operation of accelerator cable by operating accelerator pedal by hand.

2. Clutch Cable

A: REMOVAL

1) Disconnect clutch cable from release lever.

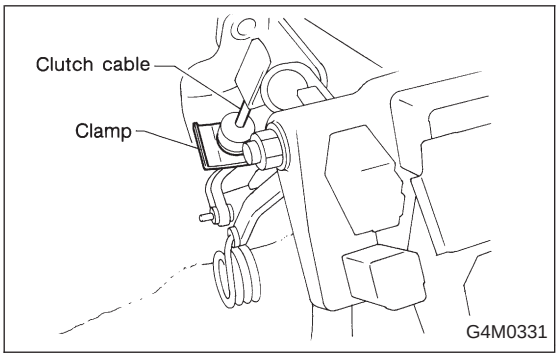

2) Remove clutch cable clamp from pedal bracket.
3) Disconnect clutch cable from pedal bracket and pedal end.
4) Remove clutch cable from body.

CAUTION:
Before removing clutch cable from toe board, remove grommet. Slowly remove clutch cable, being careful not to scratch it.

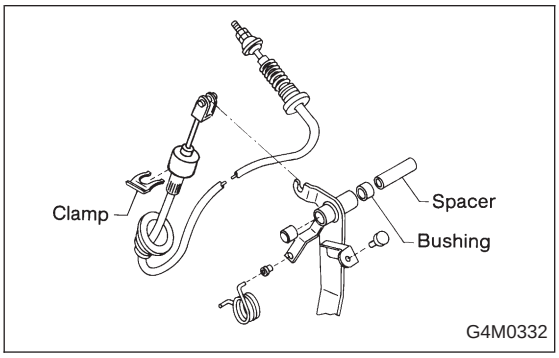

B: INSTALLATION

1) Clean clutch pedal fitting hole, and apply grease. Connect clutch cable to clutch pedal.
2) Fit clutch pedal to pedal bolt, and connect clutch cable to bracket with clamp.
3) Connect clutch cable end to pedal end.
4) Connect clutch cable from release lever.
5) Install grommet to toe board.
6) Adjustment after cable installation <Ref. to 4-5 [W1A2].>

3. Accelerator Cable

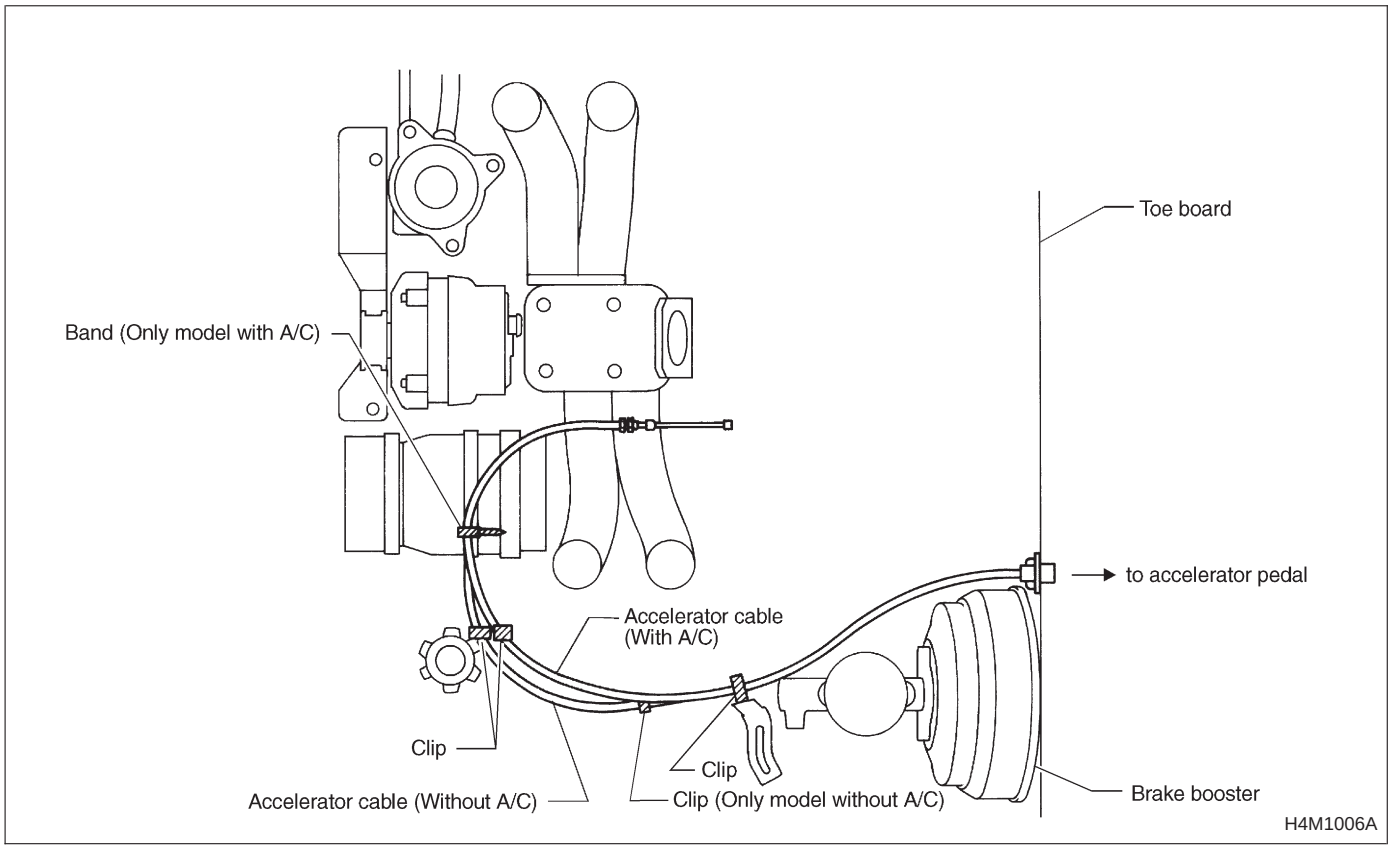

A: REMOVAL

1) Disconnect accelerator cable from connector inside engine compartment first.

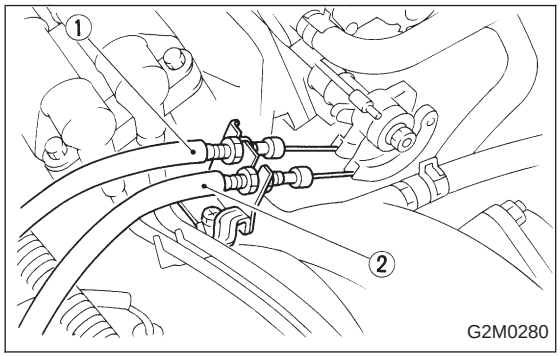

2) Remove lock nut from accelerator cable bracket.
3) Separate accelerator cable ① from bracket, then unlock inner cable.
4) Remove cable end from throttle cam using your fingertips.

CAUTION:
Be careful not to bend inner cable.

5) Disconnect cable end from accelerator cable bracket inside driver compartment.
6) Remove clip inside engine compartment.

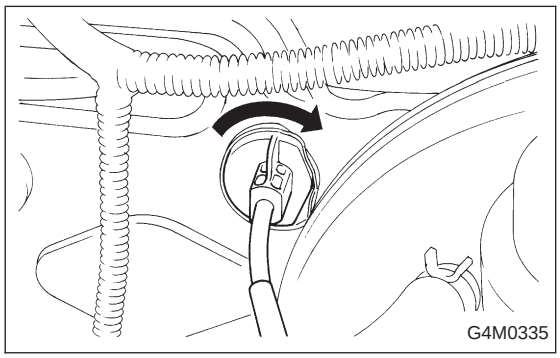

7) Working inside engine compartment, remove cable connection by turning toe board clockwise.

B: INSTALLATION

1) Pass inner cable through toe board hole and route inside driver compartment. Install cable bushing on accelerator pedal end.
2) While turning accelerator cable counterclockwise, transfer it to driver compartment through toe board hole.
3) Connect accelerator cable to upper holder of accelerator pedal.
4) Install clip inside engine compartment.
5) To install cable to throttle cam, reverse the order of the removal procedures.

Tightening torque:
14±4 N·m (1.4±0.4 kg-m, 10.1±2.9 ft-lb)

6) Adjustment after cable installation <Ref. to 4-5 [W1A3].>

4. Speedometer Cable

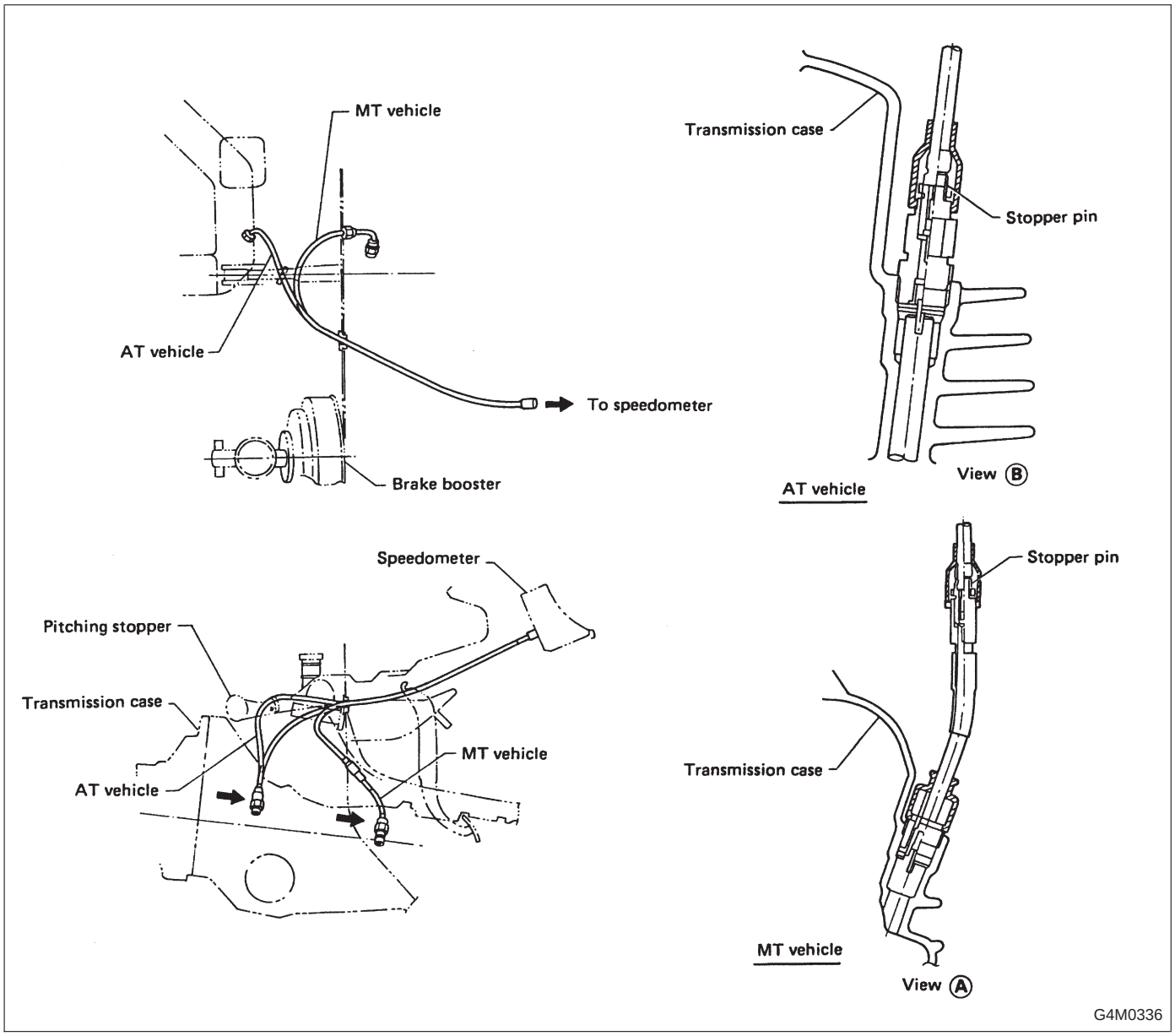

A: REMOVAL

1) Remove speedometer cable, starting with its midpoint connection inside engine compartment.
2) While holding up boot located at speedometer cable connection, slightly expand clip. Extract speedometer cable by pulling it upward 2 to 3 mm (0.08 to 0.12 in) on speedometer side. Then, release clip and remove speedometer cable.
3) After disconnecting cable from speedometer, pull it out of toe board.
4) Remove screw which secures speedometer cable to transmission side.

B: INSTALLATION

1) After manually screwing speedometer cable on transmission side, tighten it 45 to 90° using a wrench.
2) Securely install boot onto midpoint connection of speedometer cable to prevent entry of water.

1. Pedal System and Control Cables

Trouble	Corrective action
Excessively worn brake pedal pad	Replace.
Failure of clutch and/or accelerator pedals to operate	Connect cables correctly.
Speedometer does not work.	Connect speedometer cable correctly.
Stop light switch does not light up.	Adjust position of stop light switch.
Stop light switch is not smooth and/or stroke is not correct.	Replace.
Insufficient pedal play	Adjust pedal play.
Clutch and/or brake pedal free play insufficient	Adjust pedal free play.
Maladjustment of brake pedal or booster push rod	Inspect and adjust.
Excessively worn and damaged pedal shaft and/or bushing	Replace bushing and/or shaft with new one.

STEERING SYSTEM 4-3

Page

S SPECIFICATIONS AND SERVICE DATA 2
1. Steering System 2

C COMPONENT PARTS 4
1. Steering Wheel and Column (Tilt) 4
2. Power Steering System 6
3. Power Steering Oil Pump 8

W SERVICE PROCEDURE 9
1. Supplemental Restraint System “Airbag” AIRBAG 9
2. Tilt Steering Column 9
3. Steering Gearbox (Power Steering System) 15
4. Control Valve (Power Steering Gearbox) 28
5. Pipe Assembly (Power Steering System) 36
6. Oil Pump (Power Steering System) 41
7. Power Steering Fluid 51

T DIAGNOSTICS 53
1. Power Steering 53

PRECAUTION FOR SUPPLEMENTAL RESTRAINT SYSTEM “AIRBAG”

The Supplemental Restraint System “Airbag” helps to reduce the risk or severity of injury to the driver in a frontal collision.

The Supplemental Restraint System consists of an airbag module (located in the center of the steering wheel), sensors, a control module, warning light, wiring harness and roll connector.

Information necessary to service the safety is included in the “5-5. SUPPLEMENTAL RESTRAINT SYSTEM” of this Service Manual.

WARNING:

- **To avoid rendering the Airbag system inoperative, which could lead to personal injury or death in the event of a severe frontal collision, all maintenance must be performed by an authorized SUBARU dealer.**
- **Improper maintenance, including incorrect removal and installation of the Airbag system, can lead to personal injury caused by unintentional activation of the Airbag system.**
- **All Airbag system electrical wiring harnesses and connectors are covered with yellow outer insulation. Do not use electrical test equipment on any circuit related to the Supplemental Restraint System “Airbag”.**

1. Steering System

A: SPECIFICATIONS

Whole system	Minimum turning radius m (ft)	5.1 (16.7)
	Steering angle (Inside-Outside)	37.5° — 32.6°
	Steering wheel diameter mm (in)	385 (15.16)
	Overall gear ratio (Turns, lock to lock)	16.5 (3.2)
Gearbox	Type	Rack and pinion, Integral
	Backlash	0 (Automatically adjustable)
	Valve (Power steering system)	Rotary valve
Pump (Power steering system)	Type	Vane pump
	Oil tank	Installed on pump
	Output cm^3 (cu in)/rev.	7.2 (0.439)
	Relief pressure kPa (kg/cm^2, psi)	1800 cc model: 6,375 (65, 924) 2200 cc model: 7,355 (75, 1,067)
	Hydraulic fluid control	Dropping in response to increased engine revolutions
	Hydraulic fluid ℓ (US qt, Imp qt)	1,000 rpm: 7 (7.4, 6.2) 3,000 rpm: 5 (5.3, 4.4)
	Range of revolution rpm	500 — 7,500
	Revolving direction	Clockwise
Working Fluid (Power steering system)	Name	ATF DEXRON II or IIE
	Capacity Oil tank ℓ (US qt, Imp qt) Total	0.3 (0.3, 0.3) 0.7 (0.7, 0.6)

B: SERVICE DATA

Steering wheel	Free play mm (in)	17 (0.67)
Turning angle	Inner tire & wheel	37.5°
	Outer tire & wheel	32.6°
Steering shaft	Clearance between steering wheel and column cover mm (in)	3.0 (0.118)
Steering gearbox (Power steering system)	Sliding resistance N (kg, lb)	240.3 (24.5, 54.0) or less
	Rack shaft play in radial direction mm (in) Right-turn steering Left-turn steering	 0.15 (0.0059) or less Horizontal movement: 0.3 (0.012) or less Vertical movement: 0.15 (0.0059) or less
	Input shaft play mm (in) In radial direction In axial direction	 0.18 (0.0071) or less 0.1 (0.004) or less
	Turning resistance N (kg, lb)	Within 30 mm (1.18 in) from rack center in straight ahead position: Less than 11.18 (1.14, 2.51) Maximum allowable value: 12.7 (1.3, 2.9)
Oil pump (Power steering system)	Pulley shaft mm (in) Radial play Axial play	 0.4 (0.016) or less 0.9 (0.035) or less
	Pulley Ditch deflection mm (in) Resistance to rotation N (kg, lb)	 1.0 (0.039) or less 9.22 (0.94, 2.07) or less
	Regular pressure kPa (kg/cm^2, psi)	981 (10, 142) or less
	Relief pressure kPa (kg/cm^2, psi)	6,375 (65, 924)
Steering wheel effort (Power steering system)	At standstill with engine idling on a concrete road N (kg, lb)	31.4 (3.2, 7.1) or less
	At standstill with engine stalled on a concrete road N (kg, lb)	147 (15, 33) or less

C: RECOMMENDED POWER STEERING FLUID

Recommended power steering fluid	Manufacturer
ATF DEXRON II or IIE	B.P.
	CALTEX
	CASTROL
	MOBIL
	SHELL
	TEXACO

1. Steering Wheel and Column (Tilt)

1. WITH AIRBAG MODEL

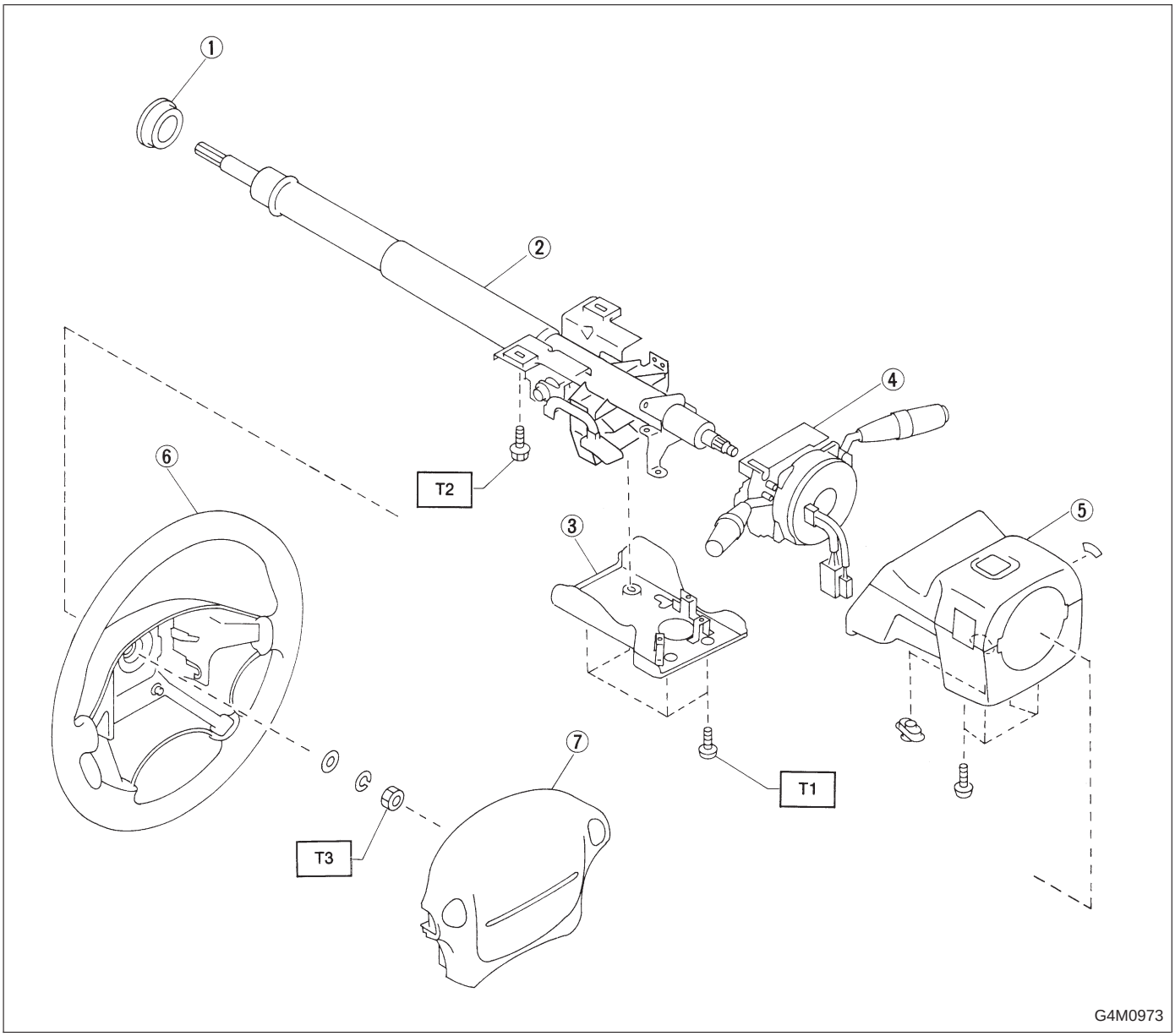

1. Bushing
2. Steering shaft
3. Knee protector
4. Steering roll connector
5. Column cover
6. Steering wheel
7. Airbag module

Tightening torque: N·m (kg-m, ft-lb)
T1: 3.4±1.0 (0.35±0.1, 2.5±0.7)
T2: 25±5 (2.5±0.5, 18.1±3.6)
T3: 34±5 (3.5±0.5, 25.3±3.6)

2. WITHOUT AIRBAG MODEL

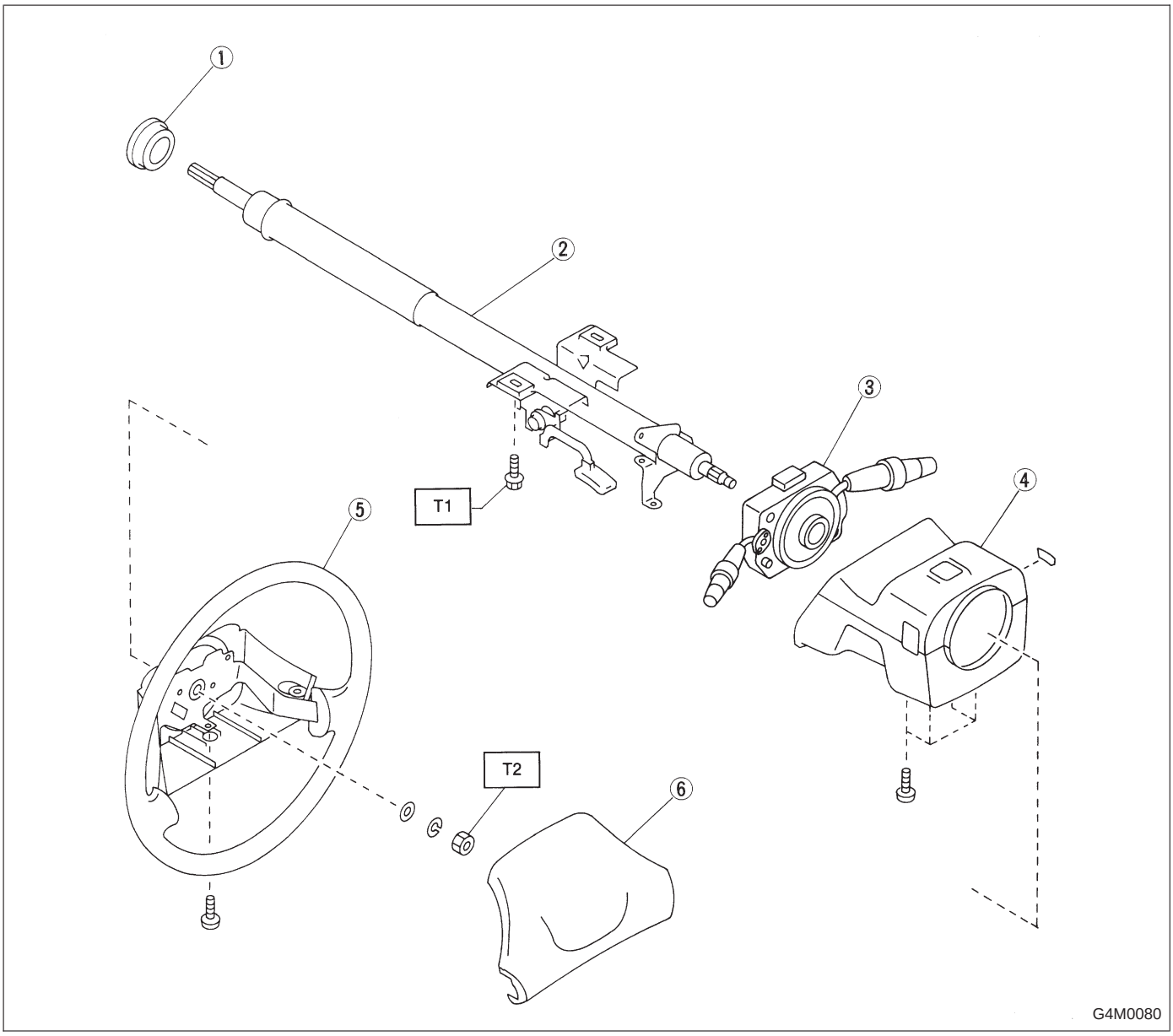

1. Bushing
2. Steering shaft
3. Combination switch
4. Column cover
5. Steering wheel
6. Pad ASSY

Tightening torque: N·m (kg-m, ft-lb)
T1: 25±5 (2.5±0.5, 18.1±3.6)
T2: 34±5 (3.5±0.5, 25.3±3.6)

2. Power Steering System

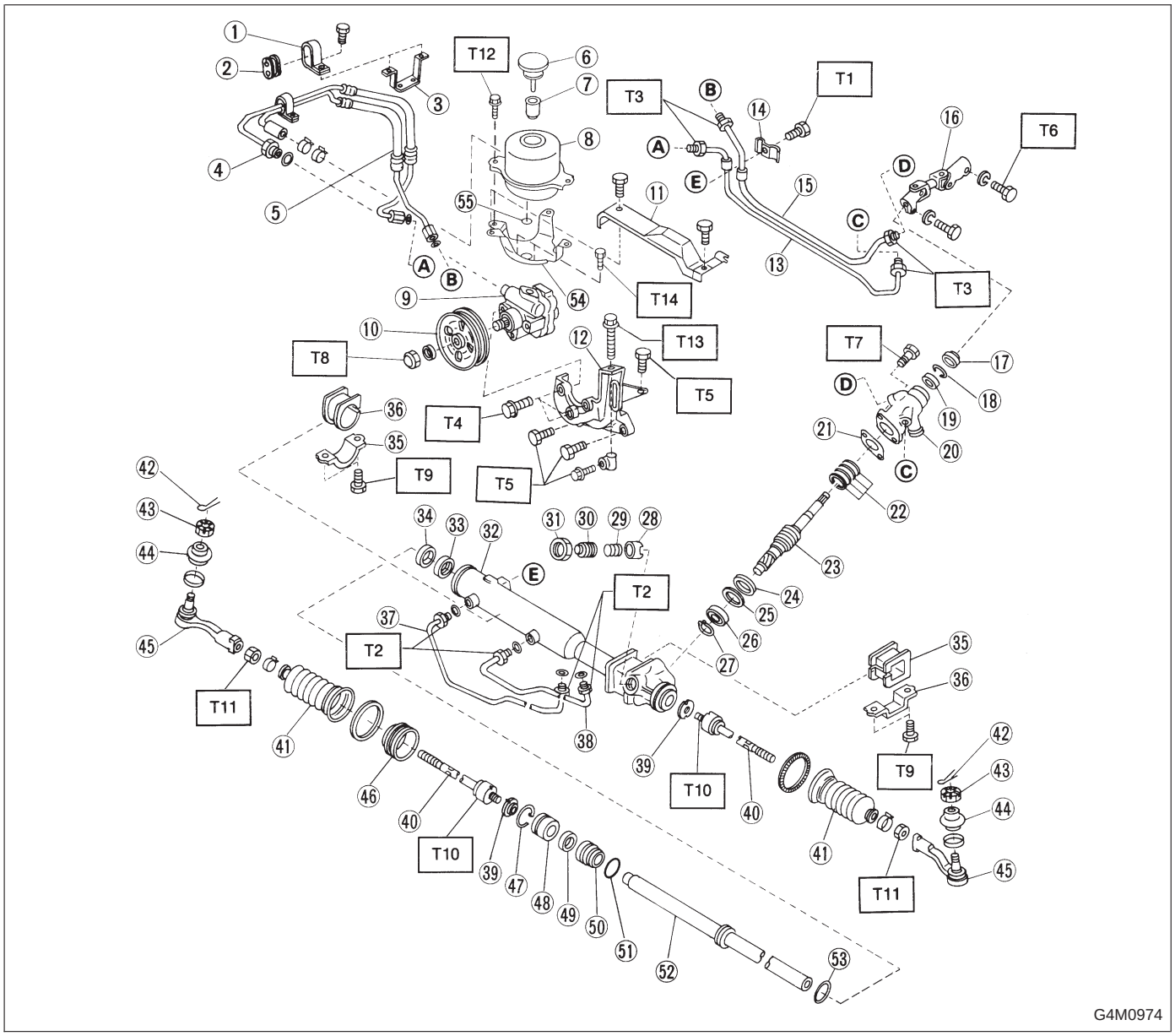

Tightening torque: N·m (kg-m, ft-lb)

- ***T1: 5.4±1.5 (0.55±0.15, 4.0±1.1)***
- ***T2: 13±3 (1.3±0.3, 9.4±2.2)***
- ***T3: 15±5 (1.5±0.5, 10.8±3.6)***
- ***T4: 20.1±2.5 (2.05±0.25, 14.8±1.8)***
- ***T5: 22±2 (2.2±0.2, 15.9±1.4)***
- ***T6: 24±3 (2.4±0.3, 17.4±2.2)***
- ***T7: 25±5 (2.5±0.5, 18.1±3.6)***
- ***T8: 52±10 (5.3±1.0, 38±7)***
- ***T9: 59±12 (6.0±1.2, 43±9)***
- ***T10: 78±10 (8.0±1.0, 58±7)***
- ***T11: 83±5 (8.5±0.5, 61.5±3.6)***
- ***T12: 7.4±2.0 (0.75±0.20, 5.4±1.4)***
- ***T13: 8±2 (0.8±0.2, 5.8±1.4)***
- ***T14: 18^{+5}_{0} ($1.8^{+0.5}_{0}$, $13.0^{+3.6}_{0}$)***

1. Clamp
2. Adapter
3. Hose bracket
4. Pipe C
5. Pipe D
6. Cap
7. Strainer
8. Tank
9. Oil pump
10. Pulley
11. Belt cover
12. Bracket
13. Pipe E
14. Clamp plate
15. Pipe F
16. Universal joint
17. Dust seal
18. C-ring
19. Oil seal
20. Valve housing
21. Packing
22. Seal ring
23. Pinion and valve ASSY
24. Oil seal
25. Back-up washer
26. Ball bearing
27. Snap ring
28. Sleeve
29. Spring
30. Adjusting screw
31. Lock nut
32. Housing ASSY
33. Back-up washer
34. Oil seal
35. Adapter
36. Clamp
37. Pipe A
38. Pipe B
39. Lock washer
40. Tie-rod
41. Boot
42. Cotter pin
43. Castle nut
44. Dust seal
45. Tie-rod end
46. Spacer
47. Circlip
48. Rack stopper
49. Oil seal
50. Rack bushing
51. O-ring
52. Rack
53. Piston ring
54. Tank bracket
55. O-ring

3. Power Steering Oil Pump

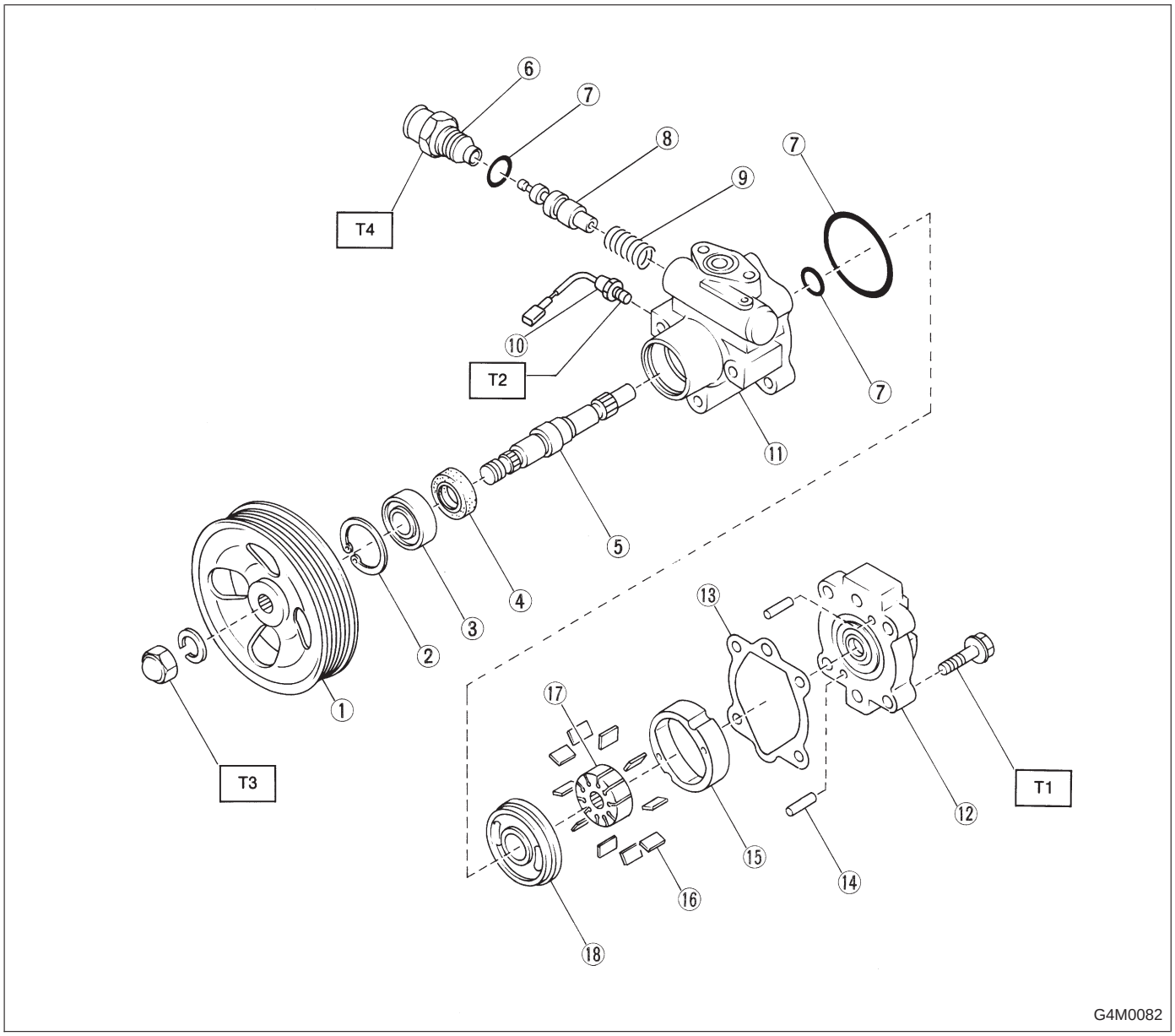

① Pulley
② Snap ring
③ Bearing
④ Oil seal
⑤ Shaft
⑥ Connector
⑦ O-ring
⑧ Spool valve
⑨ Spring
⑩ Pressure switch
⑪ Front casing
⑫ Rear cover
⑬ Gasket
⑭ Knock pin
⑮ Cam ring
⑯ Vane
⑰ Rotor
⑱ Side plate

Tightening torque: N·m (kg-m, ft-lb)
T1: 16±2 (1.6±0.2, 11.6±1.4)
T2: 20±3 (2.0±0.3, 14.5±2.2)
T3: 61±6.9 (6.2±0.7, 44.8±5.1)
T4: 74±5 (7.5±0.5, 54.2±3.6)

1. Supplemental Restraint System “Airbag” AIRBAG

Airbag system wiring harness is routed near the steering wheel, steering shaft and column.

WARNING:

- **All Airbag system wiring harness and connectors are colored yellow. Do not use electrical test equipment on these circuit.**
- **Be careful not to damage Airbag system wiring harness when servicing the steering wheel, steering shaft and column.**

2. Tilt Steering Column

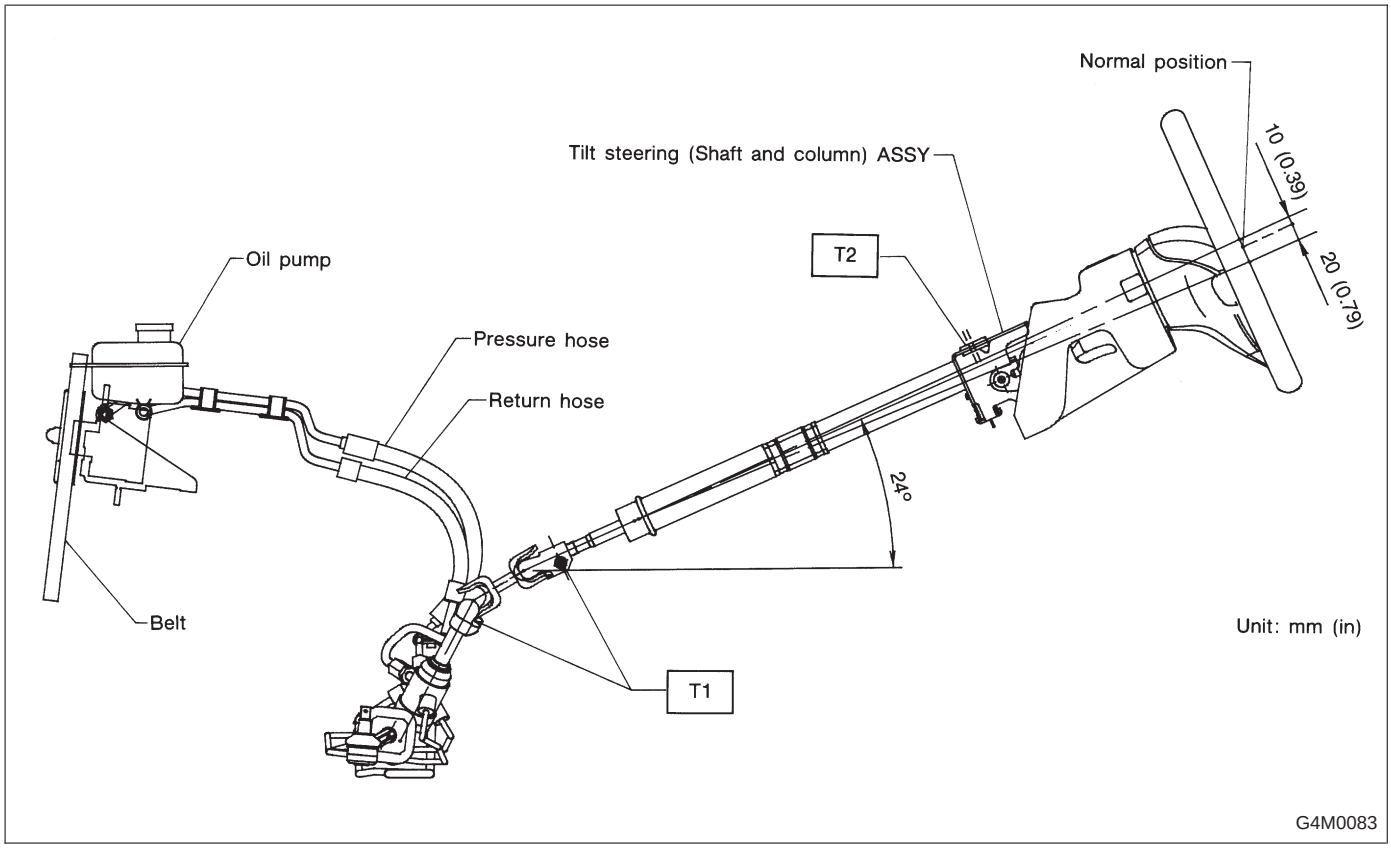

Tightening torque: N·m (kg-m, ft-lb)
T1: 24±3 (2.4±0.3, 17.4±2.2)
T2: 25±5 (2.5±0.5, 18.1±3.6)

A: REMOVAL

1) Disconnect battery minus terminal.
2) Lift up vehicle.
3) Remove airbag module. (with airbag model) <Ref. to 5-5 [W2A0].>

WARNING:

Always refer to “5-5 Supplemental Restraint System” before performing airbag module service (if so equipped).

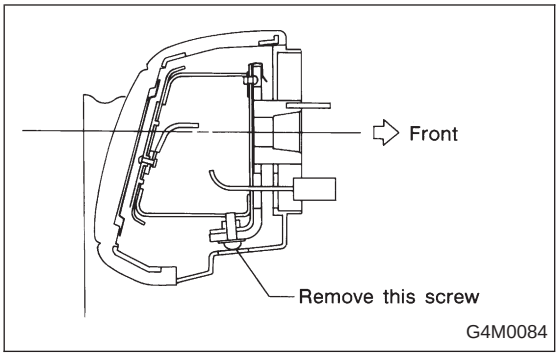

4) Remove lower screw and slide horn pad assembly forward, then disconnect connector. (without airbag model)
5) Remove horn pad by pulling on it. (without airbag model)

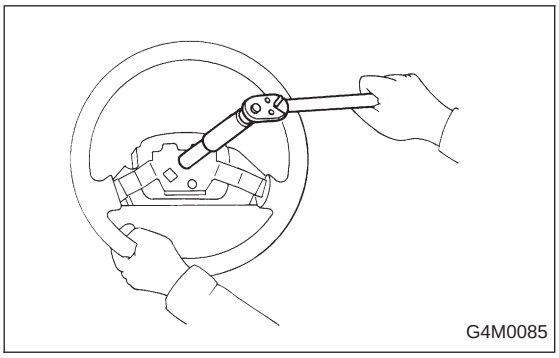

6) Remove steering wheel nut, then draw out steering wheel from shaft using steering puller.

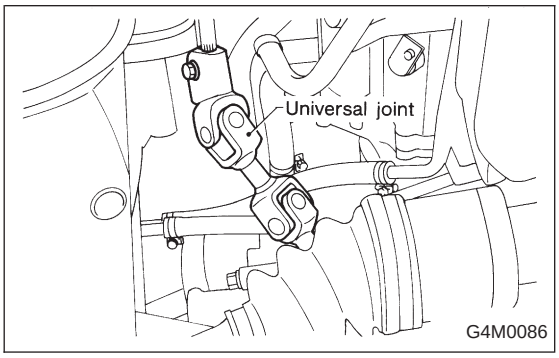

7) Remove universal joint bolts and then remove universal joint.

CAUTION:
Scribe alignment marks on universal joint so that it can be reassembled at the original serration.

8) Remove trim panel under instrument panel.
9) Disconnect connectors for ignition switch and combination switch wiring harness under instrument panel.

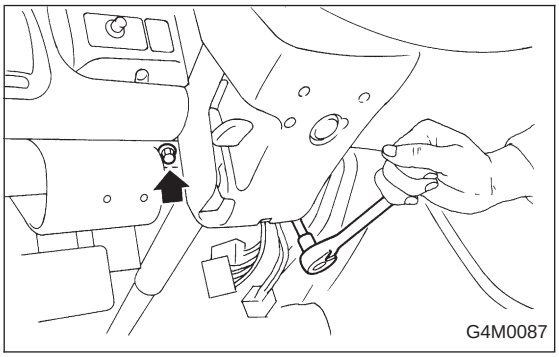

10) Remove the two bolts under instrument panel securing steering shaft.
11) Pull out steering shaft assembly from hole on toe board.

CAUTION:
Be sure to remove universal joint before removing steering shaft assembly installing bolts when removing steering shaft assembly or when lowering it for servicing of other parts.

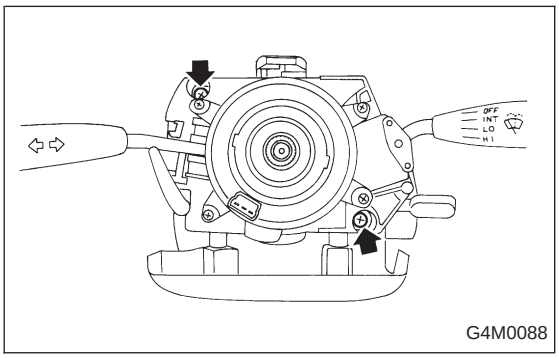

B: DISASSEMBLY

1) Remove the four screws securing upper and lower steering column covers, and the two screws securing combination switch, then remove related parts.

C: INSPECTION

1. BASIC INSPECTION

Clean the disassembled parts with a cloth, and check for wear, damage, or any other faults. If necessary, repair or replace faulty parts.

Part name	Inspection	Corrective action
Universal joint	● Free play ● Swinging torque Yawing torque Looseness 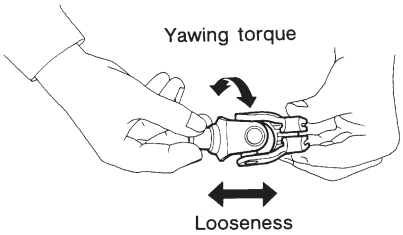 G4M0089 **Standard value of universal joint free play: 0 mm (0 in)** **Max. value of universal joint swinging torque:** **0.3 N·m (0.03 kg-m, 0.2 ft-lb)**	Replace if faulty.
Steering column	● Overall length of steering column Measure overall length of steering column. Standard overall length of steering column: 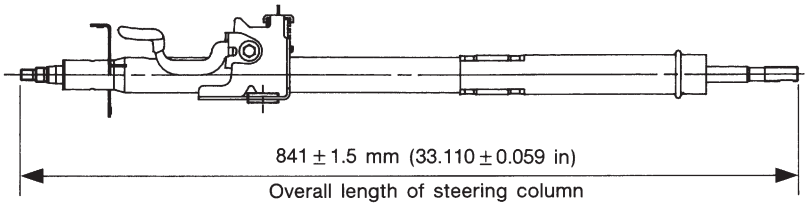 G4M0090	Replace steering column assembly.

2. AIRBAG MODEL INSPECTION

WARNING:
For airbag module inspection procedures, refer to 5-5 [S101].

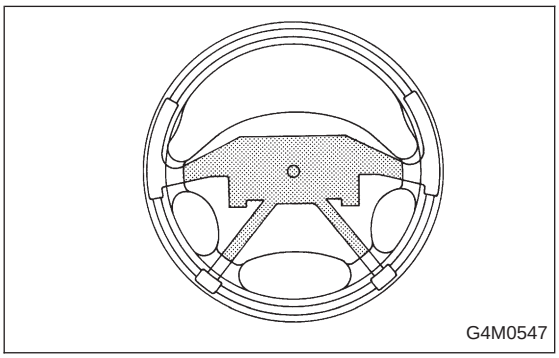

1) Check steering wheel insert for cracks or deformities.

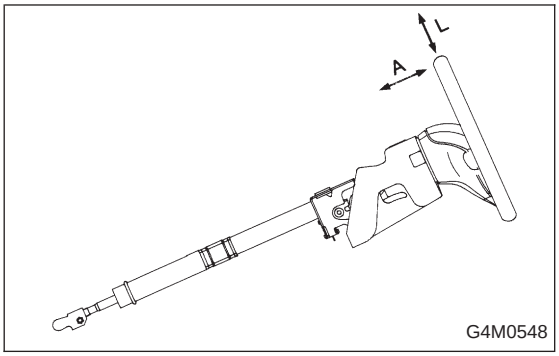

2) Check steering wheel free play in axial and radial directions:

Specifications:

Axial free play A

Less than ±6 mm (0.24 in)

Radial free play L

Less than ±7 mm (0.28 in)

3) Check to ensure that new airbag module is properly installed in steering wheel.

4) After installing airbag module, check to ensure that it is free of interference with steering wheel and that clearance between the two is equal at all points.

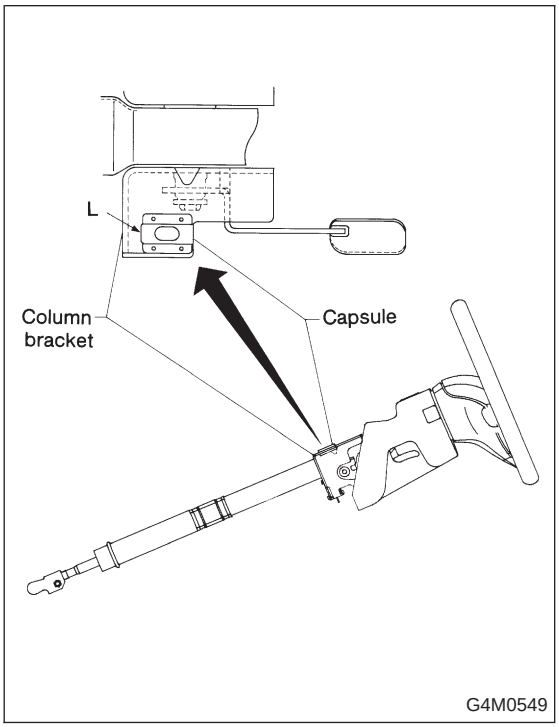

5) Check to ensure that clearance between capsule (at steering column) and cutout portion of column bracket on steering column upper side is within specifications.

Clearance between capsule and cutout portion of column bracket: L

Less than 0.5 mm (0.020 in)

6) If clearance is outside specifications, replace faulty parts with new ones.

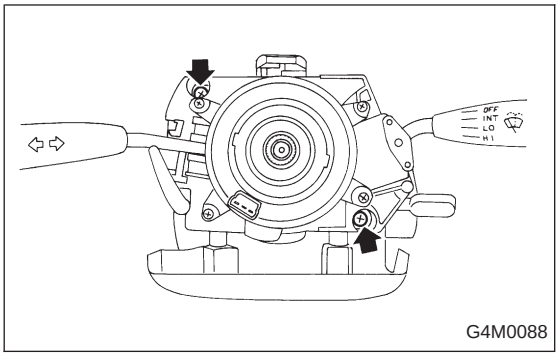

D: ASSEMBLY

1) Insert combination switch to upper column shaft, and install lower column cover with tilt lever held in the lowered position. Then route ignition key harness and combination switch harness between column cover mounting bosses.
2) Fit upper column cover to lower column cover, and tighten combination switch and column cover.

Tightening torque:
1.2±0.2 N·m (0.12±0.02 kg-m, 0.9±0.1 ft-lb)

CAUTION:
Don't overtorque screw.

E: INSTALLATION

1) Insert end of steering shaft into toeboard grommet.
2) Tighten steering shaft mounting bolts under instrument panel.

Tightening torque:
25±5 N·m (2.5±0.5 kg-m, 18.1±3.6 ft-lb)

3) Connect ignition and combination switch connectors under instrument panel.
4) Connect airbag system connector at harness spool.

NOTE:
Make sure to apply double lock.

5) Install universal joint.
   (1) Align bolt hole on the long yoke side of universal joint with the cutout at the serrated section of shaft end, and insert universal joint.
   (2) Align bolt hole on the short yoke side of universal joint with the cutout at the serrated section of gearbox assembly. Lower universal joint completely.
   (3) Temporarily tighten bolt on the short yoke side. Raise universal joint to make sure the bolt is properly passing through the cutout at the serrated section.
   (4) Tighten bolt on the long yoke side, then that on the short yoke side.

Tightening torque:
24±3 N·m (2.4±0.3 kg-m, 17.4±2.2 ft-lb)

CAUTION:
- **Make sure that universal joint bolts is tightened through notch in shaft serration.**
- **Excessively large tightening torque of universal joint bolts may lead to heavy steering wheel operation.**

Standard clearance between gearbox to DOJ:
Over 15 mm (0.59 in)

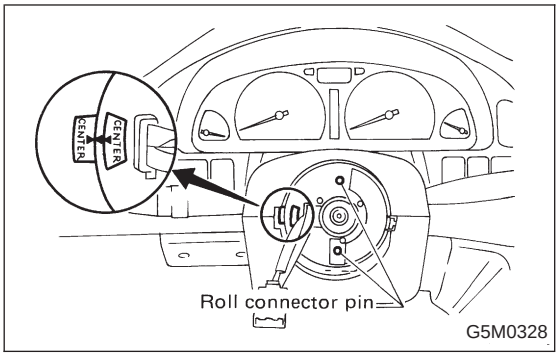

6) Align center of roll connector. (with airbag model) <Ref. to 5-5 [W501].>

CAUTION:
Ensure that front wheels are set in straightforward direction.

7) Set steering wheel to neutral and install it onto steering shaft.

Tightening torque:
34±5 N·m (3.5±0.5 kg-m, 25.3±3.6 ft-lb)

Column cover-to-steering wheel clearance:
2 — 4 mm (0.08 — 0.16 in)

CAUTION:
Insert roll connector guide pin into guide hole on lower end of surface of steering wheel to prevent damage.
Draw out airbag system connector, horn connector and cruise control connectors from guide hole of steering wheel lower end. (with airbag model)

8) Install airbag module to steering wheel. (with airbag model)

WARNING:
Always refer to 5-5 [W2B0] before performing the service operation.

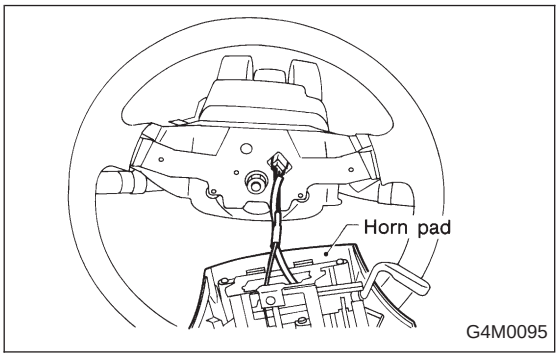

9) Install horn pad to steering wheel. (without airbag model)

(1) Connect harness connector of horn pad to connector of slip ring unit.
(2) Insert horn pad from the top and attach hooks to it.
(3) Secure horn pad to steering wheel with screws.

3. Steering Gearbox (Power Steering System)

NOTE:
For disassembly and assembly of gearbox unit, refer to section Control Valve (Power Steering Gearbox).

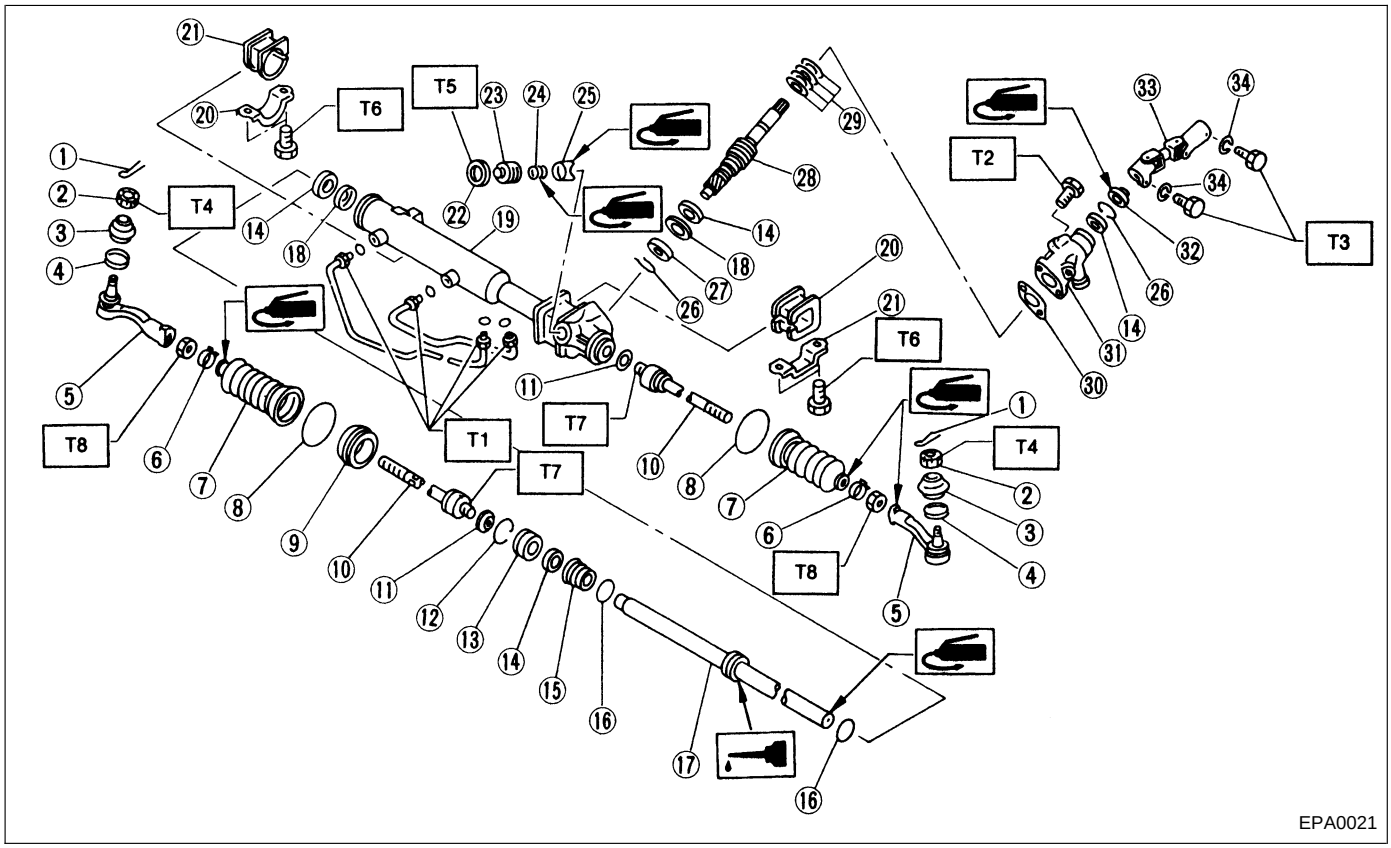

① Cotter pin
② Castle nut
③ Dust cover
④ Clip
⑤ Tie-rod end
⑥ Clip
⑦ Boot
⑧ Clip
⑨ Spacer
⑩ Tie-rod
⑪ Lock washer
⑫ Circlip
⑬ Rack stopper
⑭ Oil seal
⑮ Rack bushing
⑯ O-ring
⑰ Rack
⑱ Back-up washer
⑲ Rack housing
⑳ Adapter
㉑ Clamp
㉒ Lock nut
㉓ Adjusting screw
㉔ Spring
㉕ Sleeve
㉖ C-ring
㉗ Ball bearing
㉘ Valve
㉙ Seal ring
㉚ Packing
㉛ Valve housing
㉜ Dust seal
㉝ Universal joint
㉞ Spring washer

Tightening torque: N·m (kg-m, ft-lb)
T1: 13±3 (1.3±0.3, 9.4±2.2)
T2: 25±5 (2.5±0.5, 18.1±3.6)
T3: 24±3 (2.4±0.3, 17.4±2.2)
T4: 27.0±2.5 (2.75±0.25, 19.9±1.8)
T5: 39±10 (4.0±1.0, 29±7)
T6: 59±12 (6.0±1.2, 43±9)
T7: 78±10 (8.0±1.0, 58±7)
T8: 83±5 (8.5±0.5, 61.5±3.6)

A: REMOVAL

1) Disconnect battery minus terminal.
2) Loosen front wheel nut.
3) Lift vehicle and remove front wheels.
4) Remove front exhaust pipe assembly.

WARNING:
Be careful, exhaust pipe is hot.

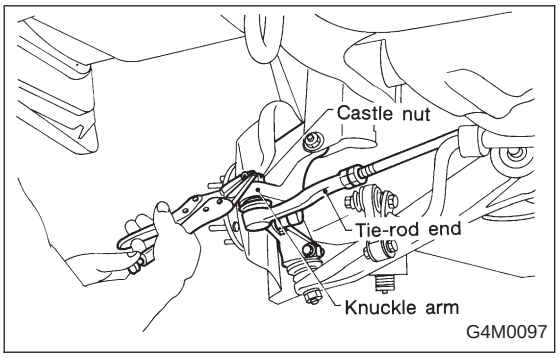

5) Using a puller, remove tie-rod end from knuckle arm after pulling off cotter pin and removing castle nut.

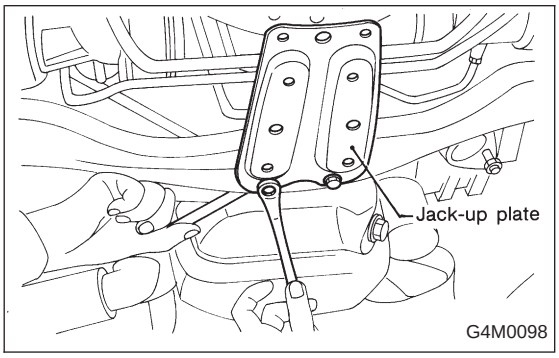

6) Remove jack-up plate and front stabilizer.

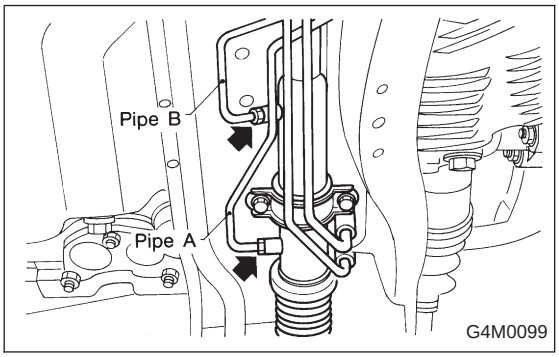

7) Remove one pipe joint at the center of gearbox, and connect vinyl hose to pipe and joint. Discharge fluid by turning steering wheel fully clockwise and counterclockwise. Discharge fluid similarly from the other pipe.

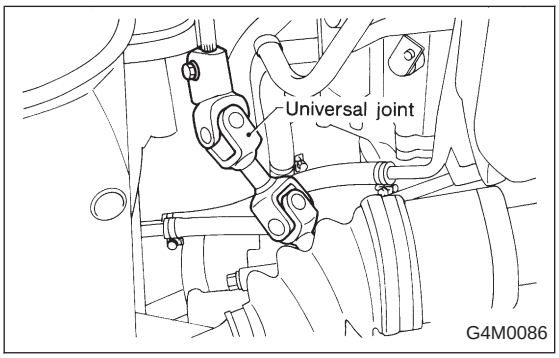

8) Remove lower side bolt of universal joint, then remove upper side bolt and lift the joint upward.

NOTE:
Place a mark on the joint and mating serration so that they can be re-installed at the original position.

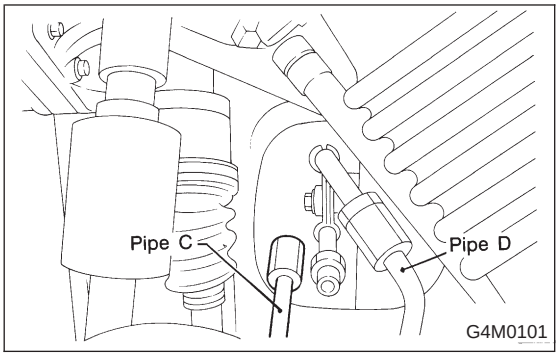

9) Disconnect pipes C and D from pipe of gearbox.

CAUTION:
Be careful not to damage these pipes.

NOTE:
Disconnect upper pipe D first, and lower pipe C second.

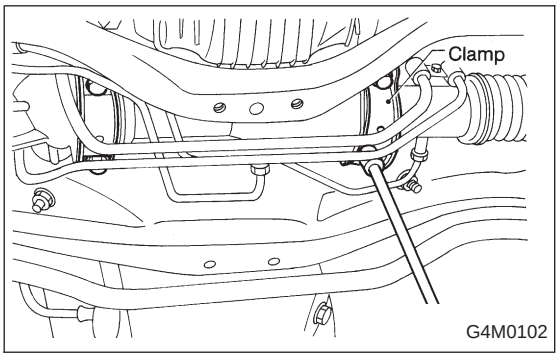

10) Remove clamp bolts securing gearbox to crossmember, and remove gearbox.

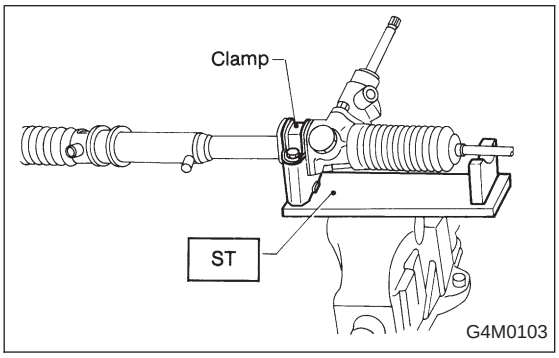

B: DISASSEMBLY

1) Disconnect four pipes from gearbox.
2) Secure gearbox removed from vehicle in vice using ST.

ST 926200000 STAND

CAUTION:
Secure the gearbox in a vice using the ST as shown. Do not attempt to secure it without this ST.

3) Remove tie-rod end and lock nut from gearbox.

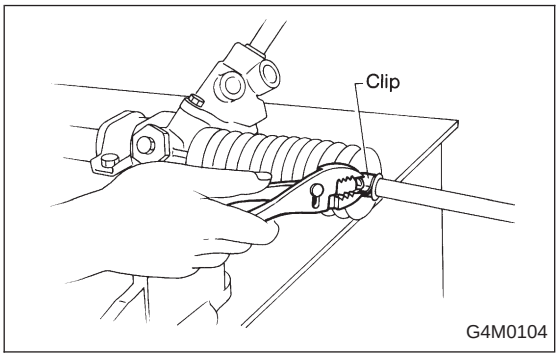

4) Remove small clip from boot using pliers, and move boot to tie-rod end side.

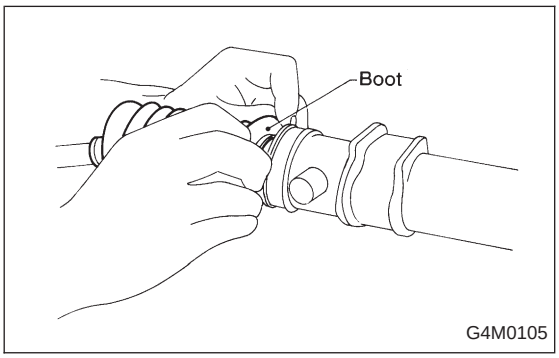

5) Remove boot together with large clips.

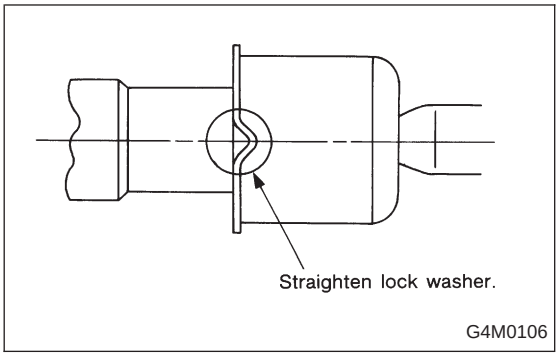

6) Straighten lock washer under ball joint.

CAUTION:

- **Be extremely careful not to hit surface of right hand rack; otherwise, oil leakage may result.**
- **Tie-rod lock washer must be replaced with a new one whenever it is removed.**

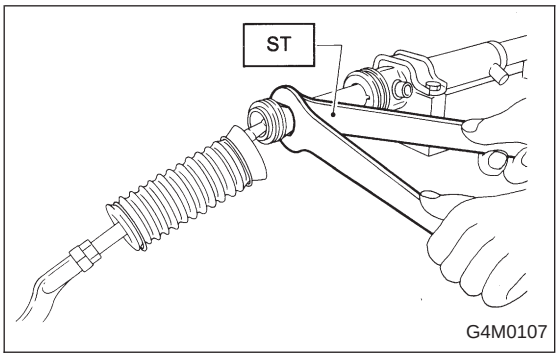

7) Loosen ball joint using ST and spanner and remove tie-rod from rack.

NOTE:
When loosening ball joint, securely fix the rack using ST.

ST 925700000 WRENCH

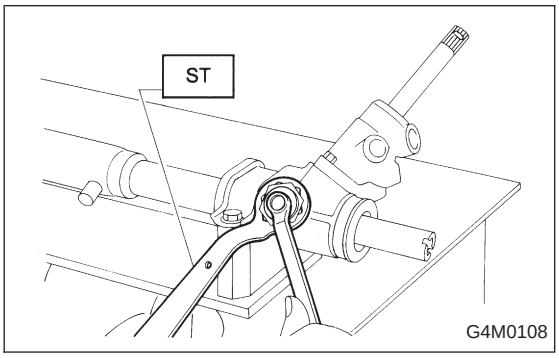

8) Loosen lock nut using ST, and remove adjusting screw.

ST 926230000 SPANNER

9) Remove spring and sleeve.

10) Remove dust seal.

CAUTION:

Be careful not to damage housing and input shaft, or to allow foreign matters to get inside when removing dust seal.

C: INSPECTION

1) Clean all disassembled parts, and check for wear, damage, or any other faults, then repair or replace as necessary.
2) When disassembling, check inside of gearbox for water. If any water is found, carefully check boot for damage, input shaft dust seal, adjusting screw and boot clips for poor sealing. If faulty, replace with new parts.

No.	Parts	Inspection	Corrective action
1	Input shaft	(1) Bend of input shaft (2) Damage on serration	If bend or damage is excessive, replace entire gearbox.
2	Dust seal	(1) Crack or damage (2) Wear	If outer wall slips, lip is worn out or damage is found, replace it with new one.
3	Rack and pinion	Poor mating of rack with pinion	(1) Adjust backlash properly. By measuring turning torque of gearbox and sliding resistance of rack, check if rack and pinion engage uniformly and smoothly with each other. (Refer to “Service limit”.) (2) Keeping rack pulled out all the way so that all teeth emerge, check teeth for damage. Even if abnormality is found in either (1) or (2), replace entire gearbox.
4	Gearbox unit	(1) Bend of rack shaft (2) Bend of cylinder portion (3) Crack or damage on cast iron portion	Replace gearbox with new one.
		(4) Wear or damage on rack bush	If free play of rack shaft in radial direction is out of the specified range, replace gearbox with new one. (Refer to “Service limit”.)
		(5) Wear on input shaft bearing	If free plays of input shaft in radial and axial directions are out of the specified ranges, replace gearbox with new one. (Refer to “Service limit”.)
5	Boot	Crack, damage or deterioration	Replace.
6	Tie-rod	(1) Looseness of ball joint (2) Bend of tie-rod	Replace.
7	Tie-rod end	Damage or deterioration on dust seal	Replace.
8	Adjusting screw spring	Deterioration	Replace.
9	Boot clip	Deterioration	Replace.
10	Sleeve	Damage	Replace.
11	Pipes	(1) Damage to flared surface (2) Damage to flare nut (3) Damage to pipe	Replace.

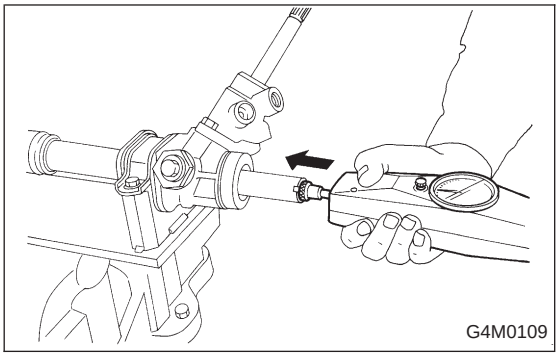

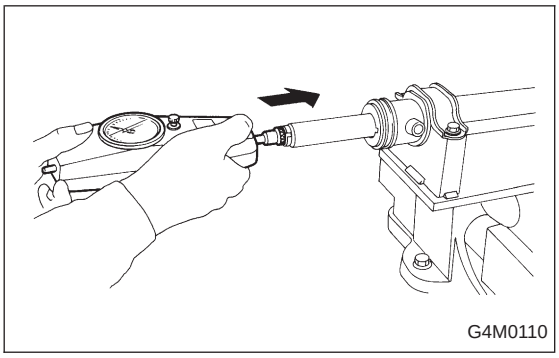

1. SERVICE LIMIT

Make a measurement as follows. If it exceeds the specified service limit, adjust or replace.

NOTE:
When making a measurement, vise gearbox by using ST. Never vise gearbox by inserting aluminum plates, etc. between vise and gearbox.

ST 926200000 STAND

Sliding resistance of rack shaft:

Service limit
240.3 N (24.5 kg, 54.0 lb) or less

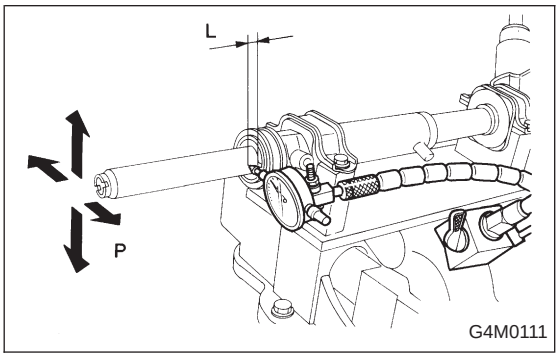

2. RACK SHAFT PLAY IN RADIAL DIRECTION

Right-turn steering:

Service limit
0.15 mm (0.0059 in) or less

On condition
L: 5 mm (0.20 in)
P: 98 N (10 kg, 22 lb)

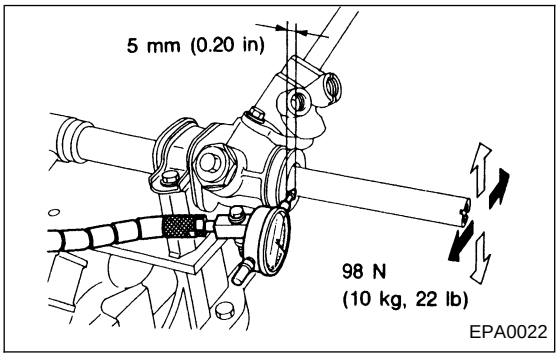

Left-turn steering:

Service limit
Direction ⇳
0.3 mm (0.012 in) or less
Direction ← →
0.15 mm (0.0059 in) or less

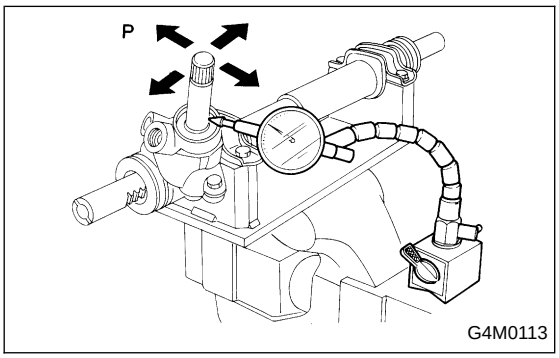

3. INPUT SHAFT PLAY

In radial direction:

Service limit
0.18 mm (0.0071 in) or less

On condition
P: 98 N (10 kg, 22 lb)

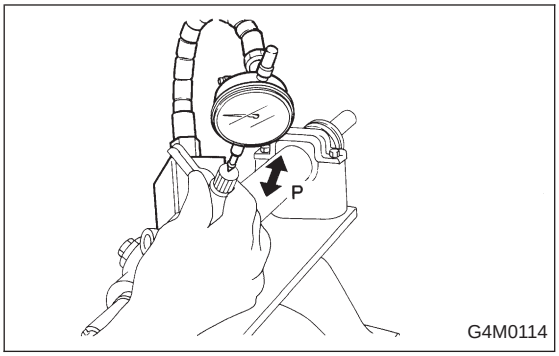

In axial direction:

Service limit

0.1 mm (0.004 in) or less

On condition

P: 20 — 49 N (2 — 5 kg, 4 — 11 lb)

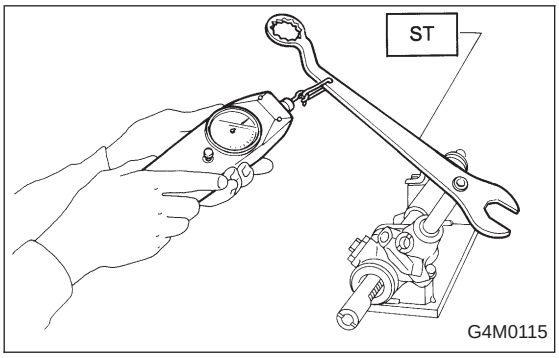

4. TURNING RESISTANCE OF GEARBOX

Using ST, measure gearbox turning resistance.

ST 926230000 SPANNER

Service limit:

Straight-ahead position within 30 mm (1.18 in) from rack center

Less than 11.18 N (1.14 kg, 2.51 lb)

Maximum allowable resistance

12.7 N (1.3 kg, 2.9 lb)

D: ASSEMBLY

CAUTION:

Use only SUBARU genuine grease for gearbox.

Grease:

VALIANT GREASE M2

[Part No. 003608001, net 0.5 kg (1.1 lb)]

1) Apply grease to teeth of rack so that grease applied is about as high as teeth, and also apply a thin film of grease to sliding portion of rack shaft.

CAUTION:

- **When moving rack to stroke end without tie-rod attached, prevent shocks from being applied at the end.**
- **Do not apply grease to threaded portion at end of rack shaft.**
- **Move rack shaft to stroke end two (2) or three (3) times to squeeze grease which accumulates on both ends. Remove grease to prevent it from choking air passage hole.**

2) Apply grease to sleeve insertion hole.

3) Apply grease to dust seal insertion hole.

CAUTION:

Apply clean grease with clean hands. If material having a sharp edge is used for applying grease, oil seal at the inside might be damaged.

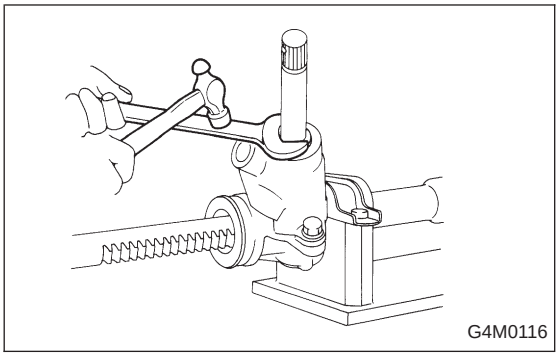

4) Press-fit dust seal into gearbox housing while tapping it via a spanner or the like so that stepping between gearbox and dust seal is normally 2 mm (0.08 in).

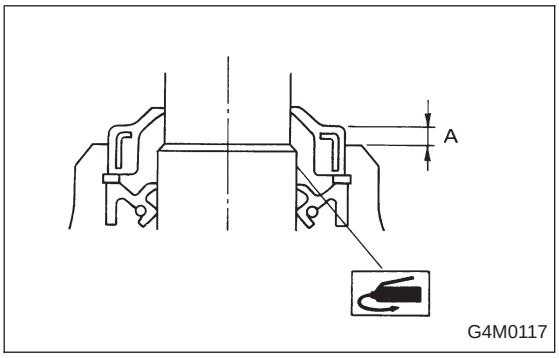

Depth: A
2 mm (0.08 in)

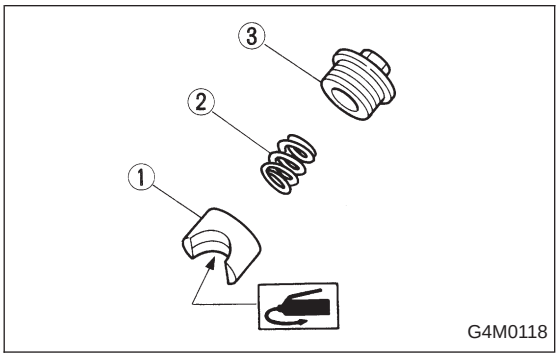

5) Apply grease to sliding surface of sleeve and spring seat, then insert sleeve into pinion housing. Fit spring into sleeve screw, pack grease inside of screw, then install the screw.

① Sleeve
② Spring
③ Adjusting screw

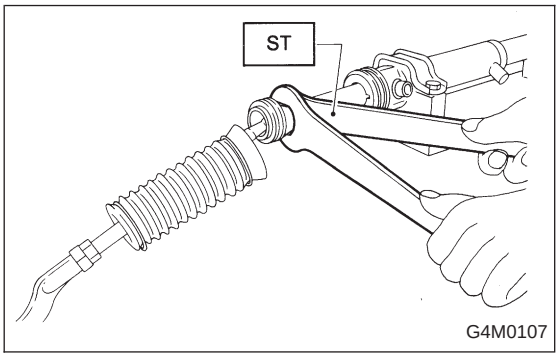

6) Fit new lock washer on screwed portion of rack end. Aligning cut portion of rack and nail of washer, screw in and tighten ball joint by using ST and spanner.

ST 925700000 WRENCH

Tightening torque (Ball joint):
78±10 N·m (8.0±1.0 kg-m, 58±7 ft-lb)

CAUTION:
Pay attention to prevent rack surface on the right side from being damaged by a tool or the like, otherwise oil leakage might be caused.

NOTE:
While tightening ball joint, hold rack with ST to prevent it from revolving.

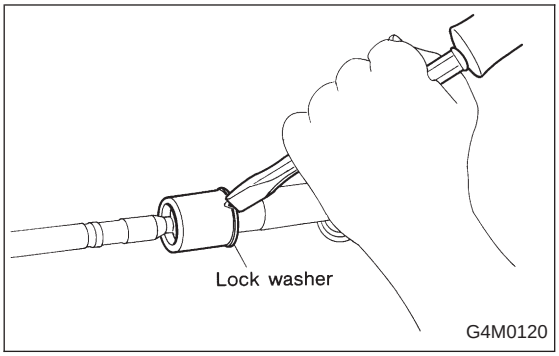

7) Bend lock washer using a chisel.

CAUTION:
Be careful not to scratch rack when bending lock washer.

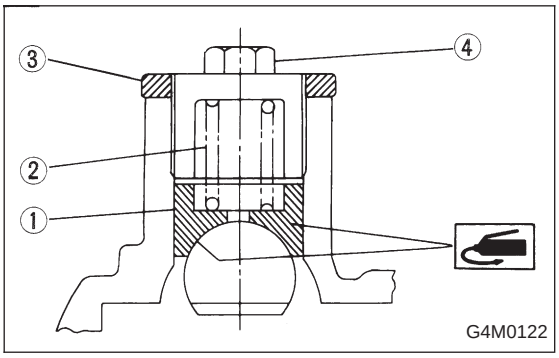

8) Rack and pinion backlash adjustment

(1) Loosen adjusting screw.
(2) Rotate input shaft so that rack is in the straight ahead direction.
(3) Apply grease to sleeve.

① Sleeve
② Spring
③ Lock nut
④ Adjusting screw

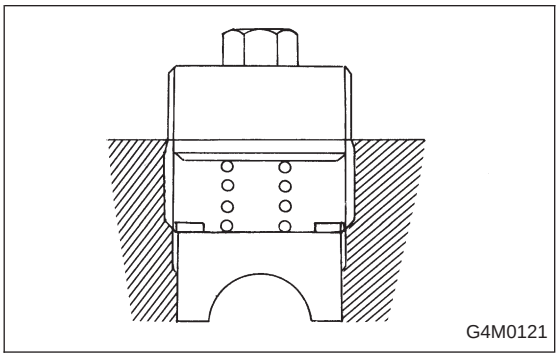

(4) Tighten adjusting screw by two threads.

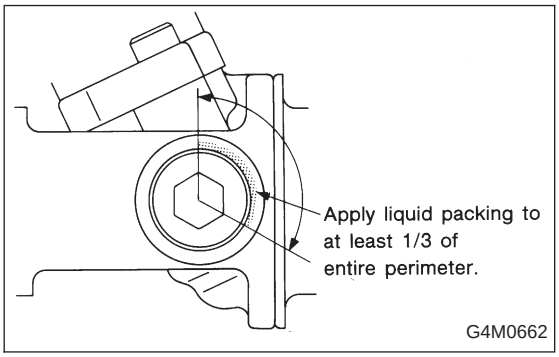

(5) Apply liquid packing to at least 1/3 of entire perimeter of adjusting screw thread.

Liquid packing:
THREE BOND 1141

(6) Tighten adjusting screw to 15 N·m (1.5 kg-m, 11 ft-lb) and back off 20°.
(7) Install lock nut. While holding adjusting screw with a wrench, tighten lock nut using ST.

ST 926230000 SPANNER

Tightening torque (Lock nut):
39±10 N·m (4.0±1.0 kg-m, 29±7 ft-lb)

NOTE:
● Hold adjusting screw with a wrench to prevent it from turning while tightening lock nut.

● Make adjustment so that steering wheel can be rotated fully from lock to lock without binding.

9) Check for service limit as per article of “Service limit”. <Ref. to 4-3 [W3C1].> Make replacement and adjustment if necessary.

10) Install boot and mounting rubber to housing.

NOTE:
Apply grease through small hole in boot.

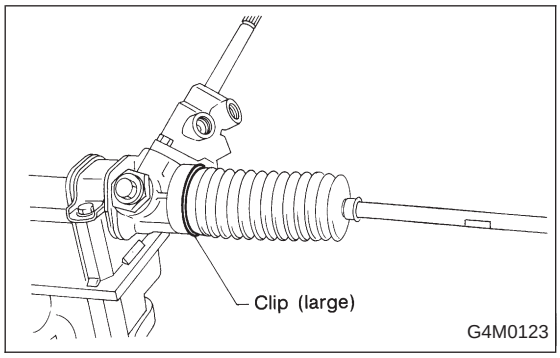

11) Fit clip (large) to boot, and then install boot to gearbox while holding boot flange.
After installing boot, fold back boot flange to the extent that large clip can not be seen.

NOTE:
● Before installing boot, be sure to apply grease to the groove of tie-rod.
● Install fitting portions of boots to the following portions in both sides of assembled steering gearbox.
1. The groove on gearbox
2. The groove on the rod
● Make sure that boot is installed without unusual inflation or deflation.

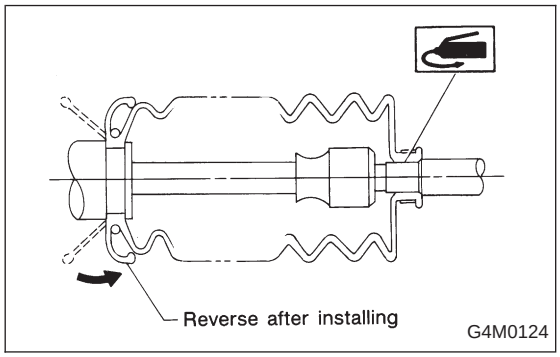

12) Turn boot until it seats well on gearbox and rubber mounting, then bend boot flange back.

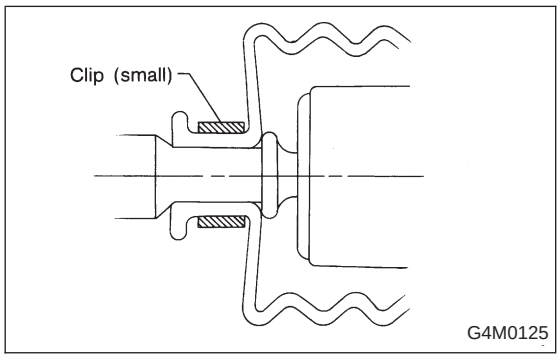

13) Fix boot end with clip (small).

CAUTION:
Use screwdriver with blunted tip to prevent boot from damage, when installing.

NOTE:
After installing, check boot end is positioned into groove on tie-rod.

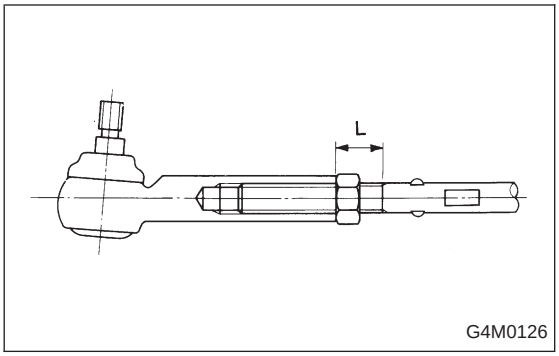

14) If tie-rod end was removed, screw in lock nut and tie-rod end to screwed portion of tie-rod, and tighten lock nut temporarily in a position as shown in figure.

Installed tie-rod length: L
15 mm (0.59 in)

NOTE:
Pay attention to difference between right and left tie-rod ends.

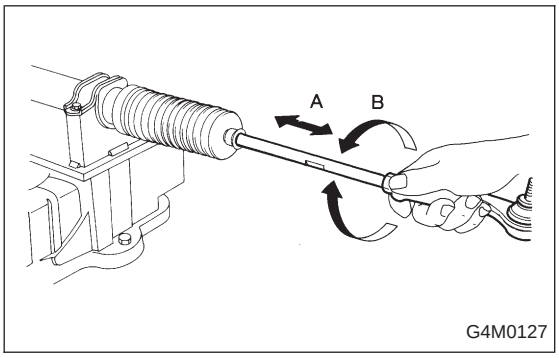

15) Inspect gearbox as follows:

A. Holding tie-rod end, repeat lock to lock two (2) or three (3) times as quickly as possible.

B. Holding tie-rod end, turn it slowly at a radius one (1) or two (2) times as large as possible.

After all, make sure that boot is installed in the specified position without deflation.

16) Remove gearbox from ST.

ST 926200000 STAND

17) Install four pipes on gearbox.

(1) Connect pipes A and B to four pipe joints of gearbox. Connect upper pipe B first, and lower pipe A.

Tightening torque:
13±3 N·m (1.3±0.3 kg-m, 9.4±2.2 ft-lb)

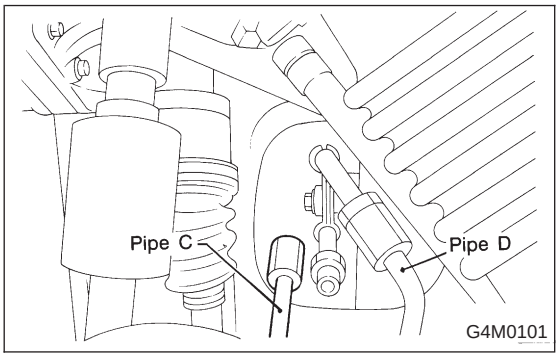

(2) Connect pipes C and D to gearbox.
Connect lower pipe C first, and upper pipe D second.

Tightening torque:
15±5 N·m (1.5±0.5 kg-m, 10.8±3.6 ft-lb)

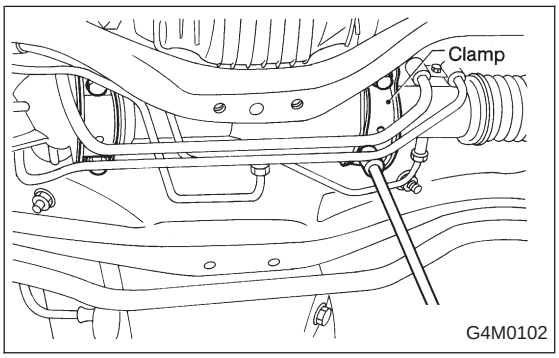

E: INSTALLATION

1) Insert gearbox into crossmember, being careful not to damage gearbox boot.

2) Tighten gearbox to crossmember bracket via clamp with bolt to the specified torque.

Tightening torque:
59±12 N·m (6.0±1.2 kg-m, 43±9 ft-lb)

3) How to install the joint.

(1) Push the long yoke of the joint, all the way into the serrated portion of the steering shaft, setting the bolt hole in the cutout.

(2) Then pull the short yoke all way out of the serrated portion of the gear box, setting the bolt hole in the cutout.

(3) Insert the bolt through the short yoke, pull the joint and confirm that the bolt is on cutout of the gearbox.

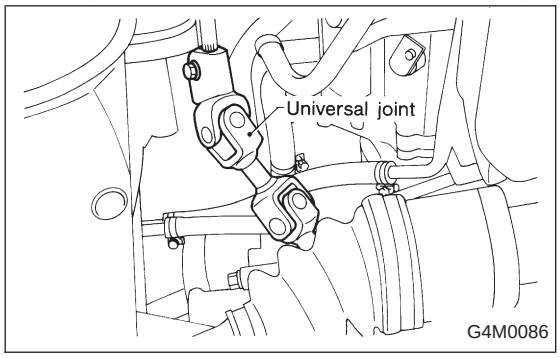

(4) Fasten the short yoke side with a spring washer and bolt, then fasten the long yoke side.

Tightening torque:
24±3 N·m (2.4±0.3 kg-m, 17.4±2.2 ft-lb)

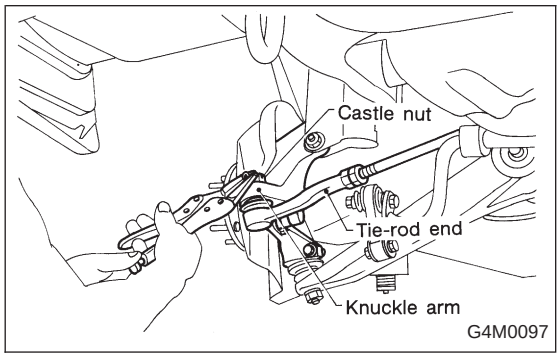

4) Connect tie-rod end and knuckle arm, and tighten with castle nut. Fit cotter pin into the nut and bend the pin to lock.

Castle nut tightening torque:
Tighten to 27.0±2.5 N·m (2.75±0.25 kg-m, 19.9±1.8 ft-lb), and tighten further within 60° until cotter pin hole is aligned with a slot in the nut.

CAUTION:
When connecting, do not hit cap at the bottom of tie-rod end with hammer.

5) Install front stabilizer to vehicle.
6) Install front exhaust pipe assembly.
<Ref. to 2-9 [W1B0].>
7) Install tires.
8) Tighten wheel nuts to the specified torque.

Tightening torque:
88±10 N·m (9.0±1.0 kg-m, 65±7 ft-lb)

9) Connect ground cable to battery.
10) Pour fluid into oil tank, and bleed air. <Ref. to 4-3 [W7A0].>
11) Check for fluid leaks.
12) Install jack-up plate.

WARNING:
Be careful, exhaust manifold is hot.

13) Lower vehicle.
14) Check fluid level in oil tank.

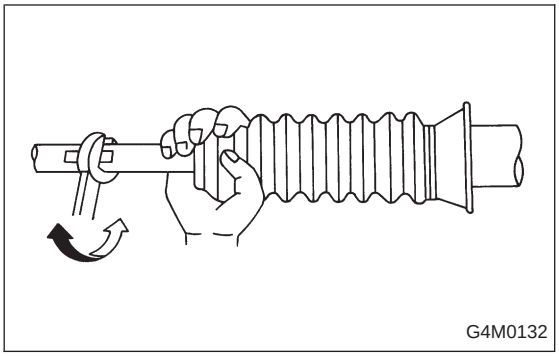

15) After adjusting toe-in and steering angle, tighten lock nut on tie-rod end.

Tightening torque:
83±5 N·m (8.5±0.5 kg-m, 61.5±3.6 ft-lb)

CAUTION:
When adjusting toe-in, hold boot as shown to prevent it from being rotated or twisted. If twisted, straighten it.

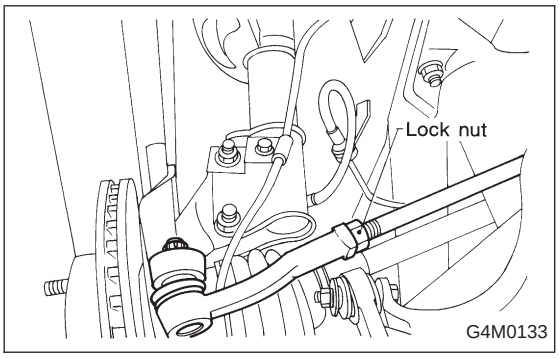

F: ADJUSTMENT

1) Adjust front toe.

Standard of front toe:
IN 3 — OUT 3 mm (IN 0.12 — OUT 0.12 in)

2) Adjust steering angle of wheels.

Inner wheel: 37.5° $^{+1°}_{-1.5°}$
Outer wheel: 32.6° $^{+1°}_{-1.5°}$

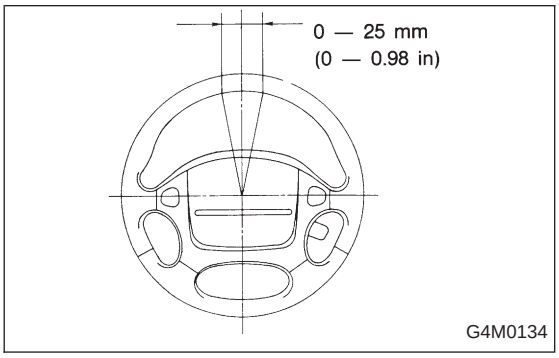

3) If steering wheel spokes are not horizontal when wheels are set in the straight ahead position, and error is more than 5° on the periphery of steering wheel, correctly re-install the steering wheel.

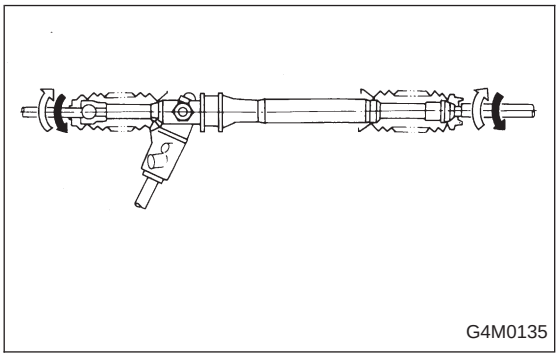

4) If steering wheel spokes are not horizontal with vehicle set in the straight ahead position after this adjustment, correct it by turning the right and left tie-rods in the same direction by the same turns.

4. Control Valve (Power Steering Gearbox)

NOTE:
This section focuses on the disassembly and reassembly of control valve. For the inspection and adjustment and the service procedures for associated parts, refer to “Steering Gearbox” <Ref. to 4-3 [W3A0].>

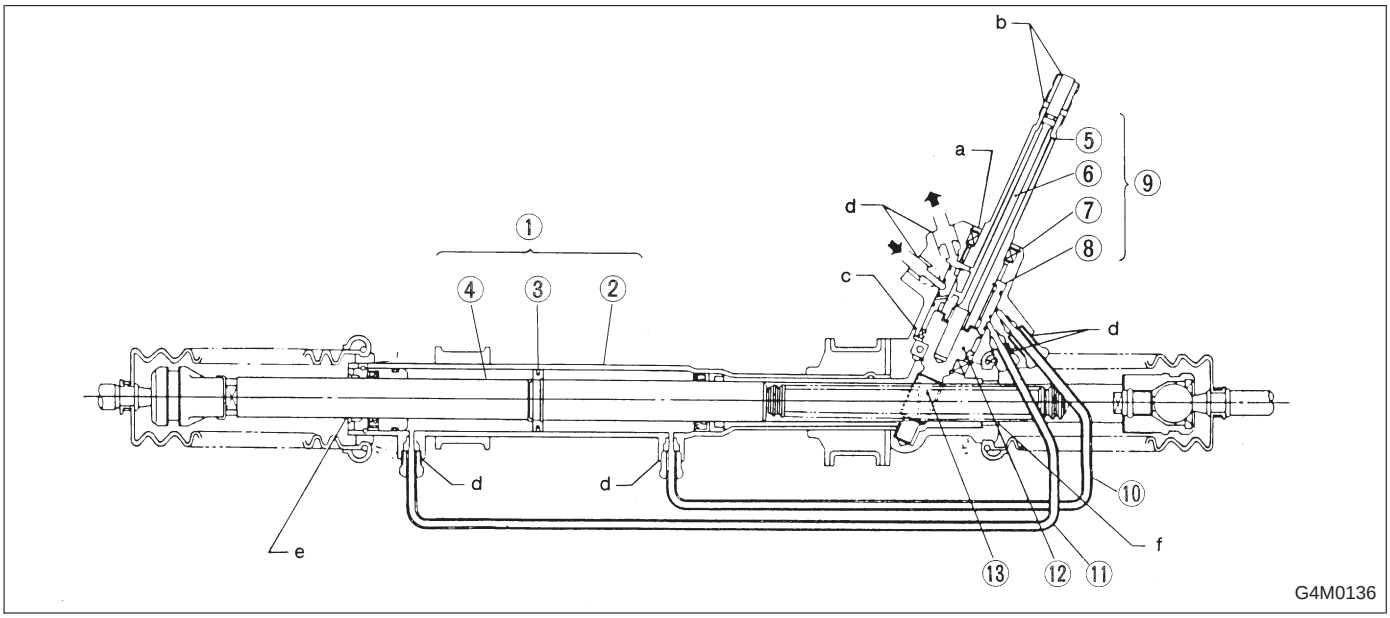

① Power cylinder
② Cylinder
③ Rack piston
④ Rack axle
⑤ Input shaft
⑥ Torsion bar
⑦ Valve housing
⑧ Valve body
⑨ Control valve
⑩ Pipe B
⑪ Pipe A
⑫ Pinion
⑬ Pinion axle

A: CHECKING OIL LEAKING POINTS

1. OIL LEAKING POINTS

1) If leak point is other than a, b, c, or d, perform check step 5 in 4-3 [W4A2] before dismounting gearbox from vehicle. If gearbox is dismounted without confirming where the leak is, it must be mounted again to locate the leak point.
2) Even if the location of the leak can be easily found by observing the leaking condition, it is necessary to thoroughly remove the oil from the suspected portion and turn the steering wheel from lock to lock about 30 to 40 times with engine running, then make comparison of the suspected portion between immediately after and several hours after this operation.
3) Before starting oil leak repair work, be sure to clean the gearbox, hoses, pipes, and surrounding parts. After completing repair work, clean these areas again.

2. OIL LEAK CHECK PROCEDURE AND REPLACEMENT PARTS

NOTE:
Parts requiring replacement are described in the smallest unit of spare parts including damaged parts and spare parts damaged. In actual disassembly work, accidental damage as well as inevitable damage to some related parts must be taken into account, and spare parts for them must also be prepared. However, it is essential to pinpoint the cause of trouble, and limit the number of replacement parts as much as possible.

1) Leakage from “a”
The oil seal is damaged. Replace valve assembly with a new one.
2) Leakage from “b”
The torsion bar O-ring is damaged. Replace valve assembly with a new one.

3) Leakage from “c”
The oil seal is damaged. Replace valve assembly with a new one.
4) Leakage from “d”
The pipe is damaged. Replace the faulty pipe or O-ring.
5) If leak is other than a, b, c, or d, and if oil is leaking from the gearbox, move the right and left boots toward tie-rod end side, respectively, with the gearbox mounted to the vehicle, and remove oil from the surrounding portions. Then, turn the steering wheel from lock to lock 30 to 40 times with the engine running, then make comparison of the leaked portion immediately after and several hours after this operation.

(1) Leakage from “e”
The cylinder seal is damaged. Replace rack bush with a new one.
(2) Leakage from “f”
There are two possible causes. Take following step first. Remove the pipe assembly B from the valve housing, and close the circuit with ST.

ST 926420000 PLUG

Turn the steering wheel from lock to lock 30 to 40 times with the engine running, then make comparison of the leaked portion between immediately after and several hours after this operation.

CAUTION:
- **If leakage from “f” is noted again:**

The oil seal of pinion and valve assembly is damaged. Replace pinion and valve assembly with a new one. Or replace the oil seal and the parts that are damaged during disassembly with new ones.
- **If oil stops leaking from “f”:**

The oil seal of rack housing is damaged.
Replace the oil seal and the parts that are damaged during disassembly with new ones.

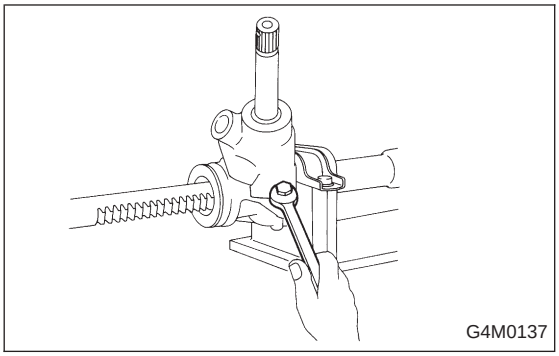

B: DISASSEMBLY

1. VALVE ASSEMBLY

1) Loosen two bolts securing valve assembly.

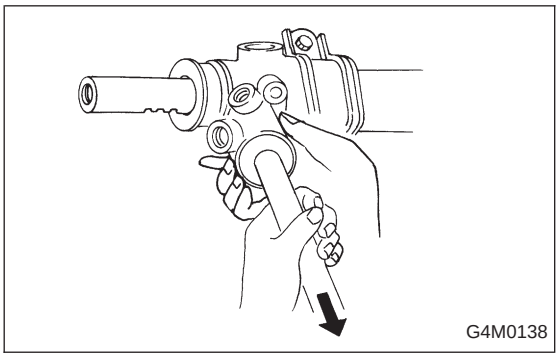

2) Carefully draw out input shaft and remove valve assembly.

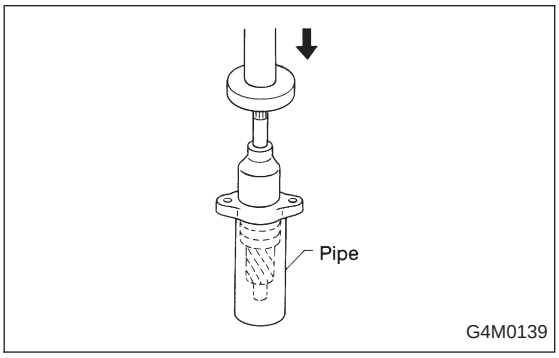

3) Draw out pinion and valve assembly from valve housing, as necessary, using pipe of I.D. 44 to 46 mm (1.73 to 1.81 in) and a press.

2. RACK ASSEMBLY

1) Slide mounting rubber to expose slit.

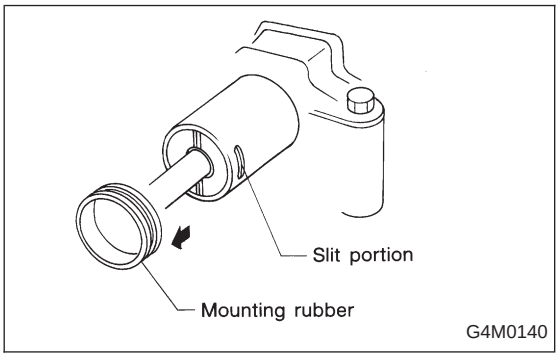

2) Rotate rack stopper in the direction of arrow using ST until the end of circlip comes out of stopper, then rotate it in the opposite direction, and pull out circlip.

ST 926340001 WRENCH

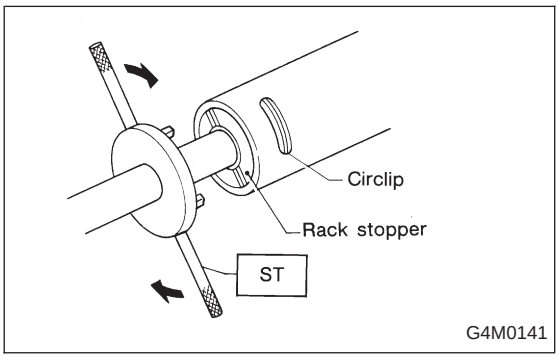

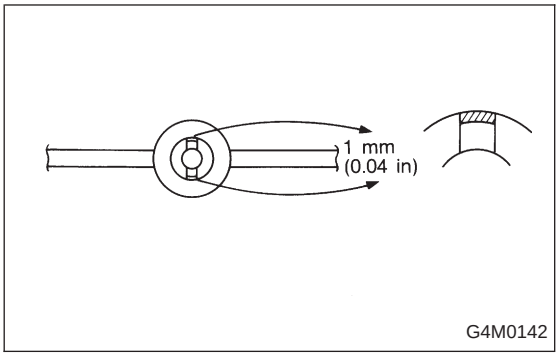

NOTE:
If ST is used, grind area (shown in figure) by 1 mm (0.04 in) in advance.

ST 926340000 WRENCH

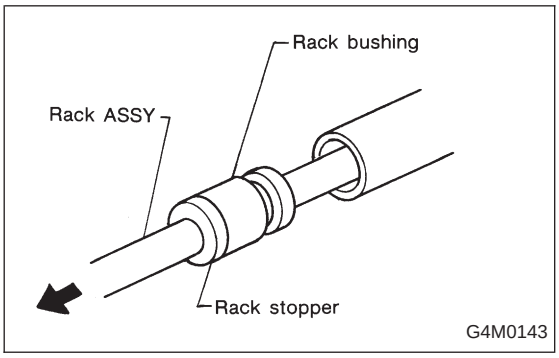

3) Pull rack assembly from cylinder side, and draw out rack bushing and rack stopper together with rack assembly.

CAUTION:
Be careful not to contact rack to inner wall of cylinder when drawing out. Any scratch on cylinder inner wall will cause oil leakage.

4) Remove rack bushing and rack stopper from rack assembly.

CAUTION:
Do not reuse removed rack bushing and circlip.

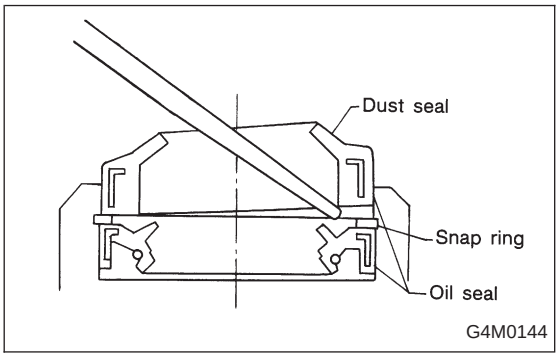

C: REPLACEMENT OF SEAL AND PACKING

1. VALVE HOUSING OIL SEAL

● Removal

1) Pry off dust seal using screwdriver.
2) Remove snap ring using snap ring pliers.

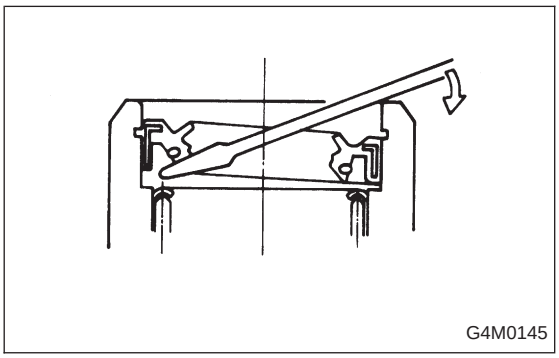

3) Pry off oil seal using screwdriver.

CAUTION:
After removing, check inside surface of valve housing for damage. If oil seal contacting surface is damaged, replace valve housing with a new one.

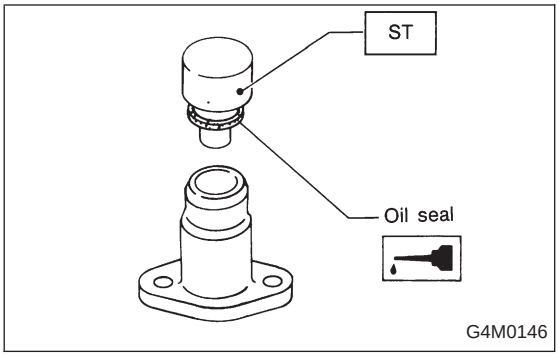

● Installation

1) Press-fit oil seal into valve housing using ST and press.

ST 927610000 INSTALLER

NOTE:
Before fitting, coat oil seal fully with ATF DEXRON II or II-E.

2) Fit snap ring in snap ring groove using snap ring pliers.

CAUTION:
Be careful not to scratch oil seal with snap ring pliers.

NOTE:
Rotate snap ring to check for proper installation.

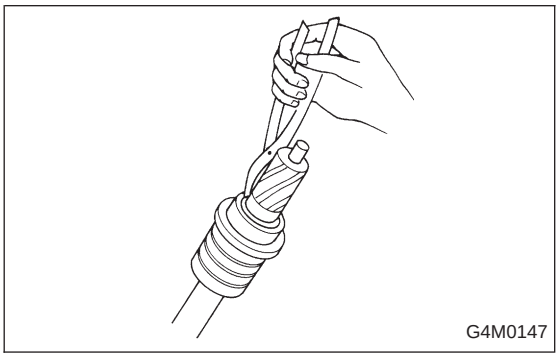

2. PINION AND VALVE ASSEMBLY

● Removal

1) Remove snap ring using snap ring pliers.

CAUTION:
- **Do not reuse removed snap ring.**
- **Be careful not to scratch pinion and valve assembly.**

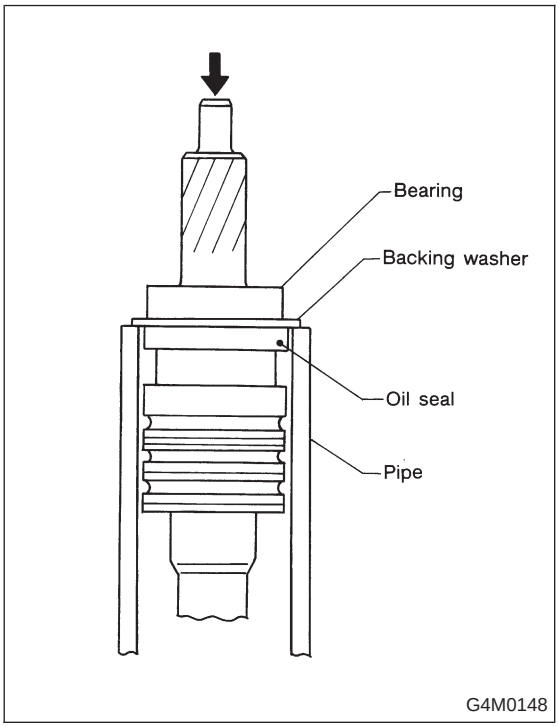

2) Press out bearing together with backing washer using pipe of I.D. 38.5 to 39.5 mm (1.516 to 1.555 in) and press.

CAUTION:
Do not reuse removed bearing.

3) Remove oil seal.

CAUTION:
Do not reuse removed oil seal.

● Installation
1) Fit pinion and valve assembly into valve housing.

NOTE:
Apply ATF DEXRON II or II-E to outer diameter surface of input shaft and outer surface of valve body seal ring, and pay special attention not to damage seal when inserting pinion and valve assembly.

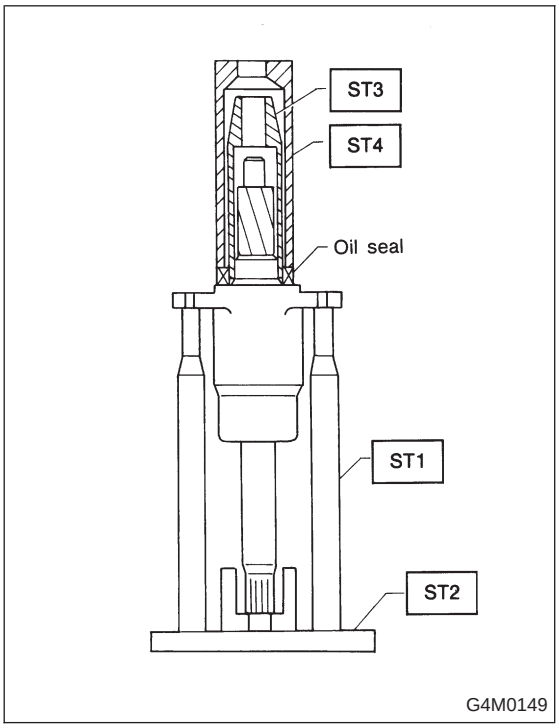

2) Secure valve assembly to ST1 and ST2.

3) Put ST3 over pinion, and insert oil seal, then force-fit oil seal into housing using ST4.

NOTE:
● Apply ATF DEXRON II or II-E to oil seal and ST3, being careful not to damage oil seal lip.
● Push oil seal until ST3 contacts housing end face.

4) Remove ST3, and fit backing washer.

ST1	926370000	INSTALLER A
ST2	927630000	STAND BASE
ST3	926360000	INSTALLER A
ST4	927620000	INSTALLER B

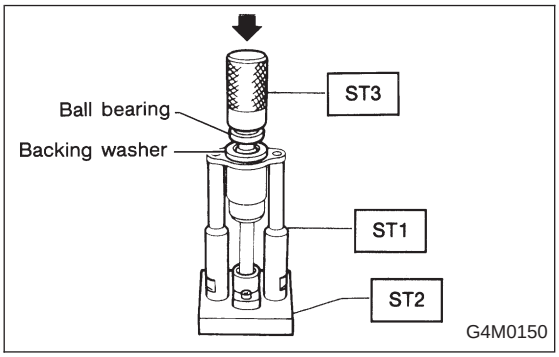

5) Force-fit ball bearing using ST3.

ST1	926370000	INSTALLER A
ST2	927630000	STAND BASE
ST3	927640000	INSTALLER B

NOTE:
Be careful not to tilt ball bearing during installation.

6) Install snap ring using snap ring pliers.

NOTE:
Rotate snap ring to check for proper installation.

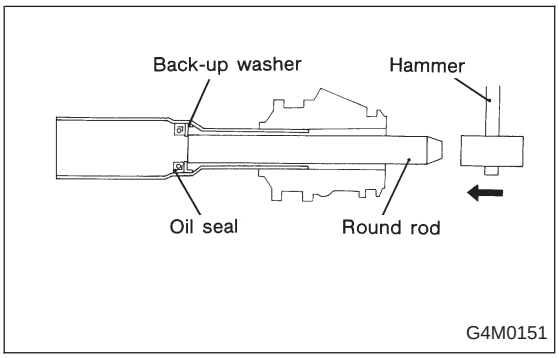

3. RACK HOUSING OIL SEAL AND BACK-UP WASHER

● Removal
1) Insert a round rod [26 — 27 mm (1.02 — 1.06 in) dia.] from pinion housing side and remove oil seal and back-up washer by hammering the rod.

NOTE:
● Discard removed oil seal and back-up washer.
● Apply the unchamfered end of remover to back-up washer.

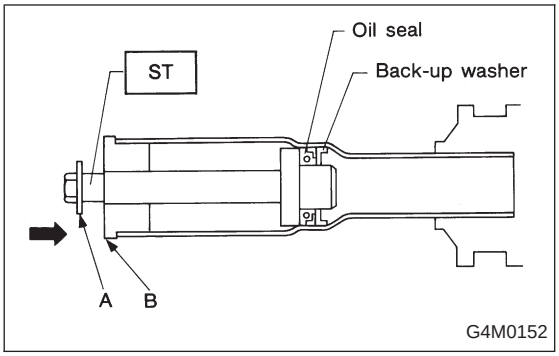

● Installation

2) Force-fit oil seal and back-up washer using ST.

ST 927650000 INSTALLER

CAUTION:

Be careful not to damage or scratch cylinder inner wall.

NOTE:

● Apply ATF DEXRON II or II-E to oil seal.

● Pay special attention not to install back-up washer and oil seal in wrong direction.

● Push oil seal until the stepped portion of A contacts end face of B.

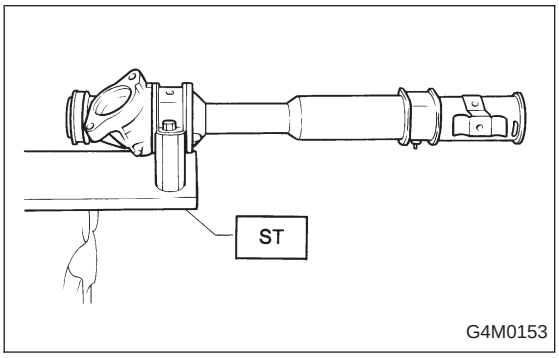

D: ASSEMBLY

1. RACK ASSEMBLY

1) Fixing rack housing

Fix rack housing in vice using ST.

ST 926200000 STAND

CAUTION:

● When fixing rack housing in vice, be sure to use this special tool. Do not fix rack housing in vice using pad such as aluminum plates, etc.

● When using old rack housing, be sure to clean and remove rust before assembling. Check pinion housing bushing carefully.

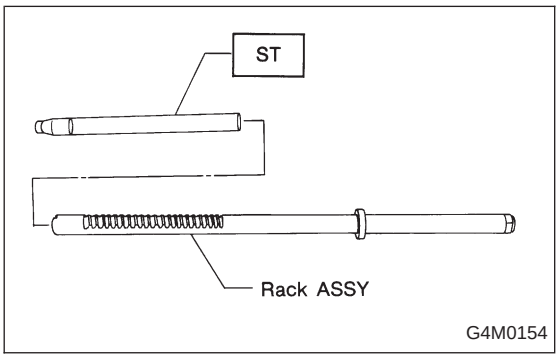

2) Fit ST over toothed portion of rack assembly, and check for binding or unsmooth insertion. If any deformation is noted on flats at the end of rack, shape by using file, and wash with cleaning fluid.

3) Apply genuine grease to teeth of thoroughly washed rack assembly, and fit ST over the toothed portion.

ST 926390001 COVER and REMOVER

NOTE:

● Be careful not to block air passage with grease. Remove excessive grease.

● After fitting cover, check air passage hole for clogging. If clogged, open by removing grease from the hole.
● Check rack shaft for damage.
● Apply ATF DEXRON II or II-E to this ST and surface of piston ring to prevent seal from being damaged.

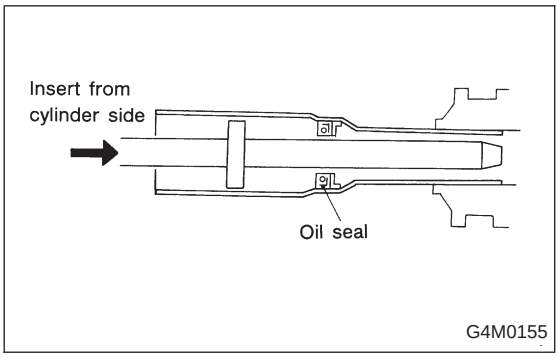

4) Insert rack assembly into rack housing from cylinder side, and remove ST after it has passed completely through oil seal.

NOTE:
Before inserting rack assembly, apply a coat of ATF DEXRON II or II-E to surfaces of ST and rack piston.

ST 926390001 COVER AND REMOVER

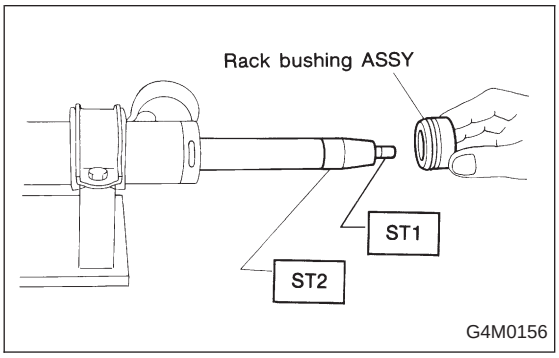

5) Fit ST1 and ST2 over the end of rack, and install rack bushing.

ST1 926400000 GUIDE
ST2 927660000 GUIDE

CAUTION:
● If burrs, or nicks are found on this guide and rack shaft portion, remove by filing.
● Dip rack bushing in ATF DEXRON II or II-E before installing, and pay attention not to damage O-ring and oil seal.

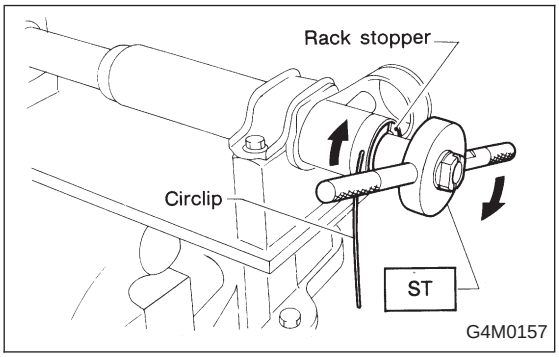

6) Insert rack stopper into cylinder tube until internal groove (on cylinder side) is aligned with external groove (on rack stopper). Turn rack stopper with ST so that rack stopper hole is seen through cylinder slits.
7) Insert rack stopper into rack housing, and wrap circlip using ST to secure rack stopper in position.

ST 926340001 WRENCH

CAUTION:
Be careful not to scratch rack while winding circlip.

NOTE:
Rotate wrench another 90 to 180° after the end of circlip has been wrapped in.

8) Fit mounting rubber onto rack housing.

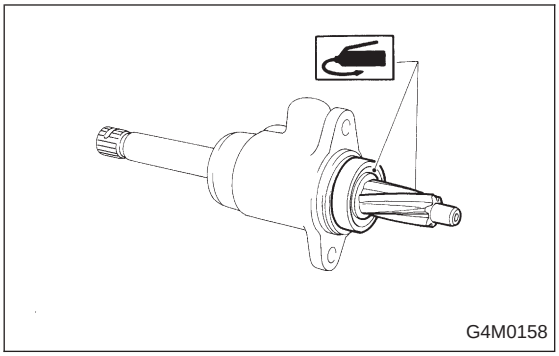

2. VALVE ASSEMBLY

1) Apply genuine grease to pinion gear and bearing of valve assembly.

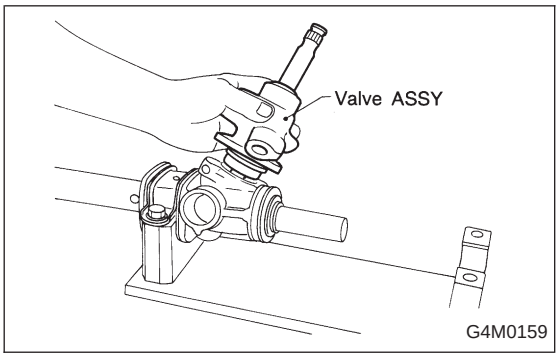

2) Install packing on valve assembly. Insert valve assembly into place while facing rack teeth toward pinion.

CAUTION:
Be sure to use a new packing.

NOTE:
Do not allow packing to be caught when installing valve assembly.

3) Tighten bolts alternately to secure valve assembly.

Tightening torque:
25±5 N·m (2.5±0.5 kg-m, 18.1±3.6 ft-lb)

CAUTION:
Be sure to alternately tighten bolts.

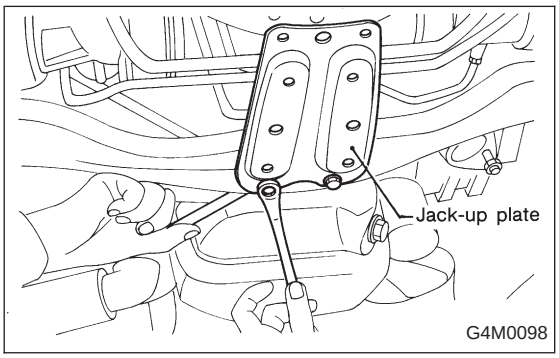

5. Pipe Assembly (Power Steering System)

A: REMOVAL

1) Disconnect battery minus terminal.

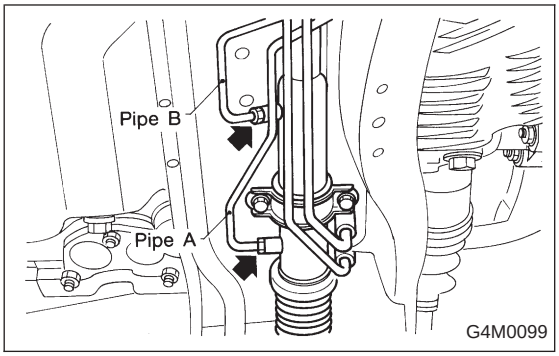

2) Lift vehicle and remove jack-up plate.
3) Remove one pipe joint at the center of gearbox, and connect vinyl hose to pipe and joint. Discharge fluid by turning steering wheel fully clockwise and counterclockwise. Discharge fluid similarly from the other pipe.

CAUTION:
Improper removal and installation of parts often causes fluid leak trouble. To prevent this, clean the surrounding portions before disassembly and reassembly, and pay special attention to keep dirt and other foreign matter from mating surfaces.

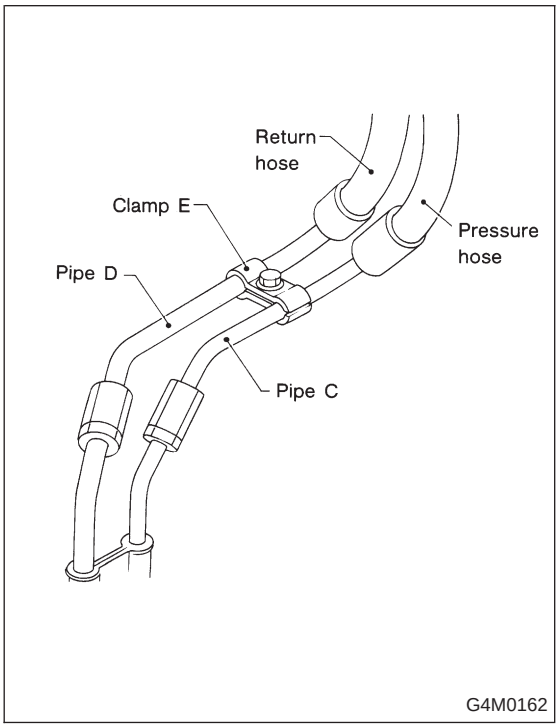

4) Remove clamp E from pipes C and D.

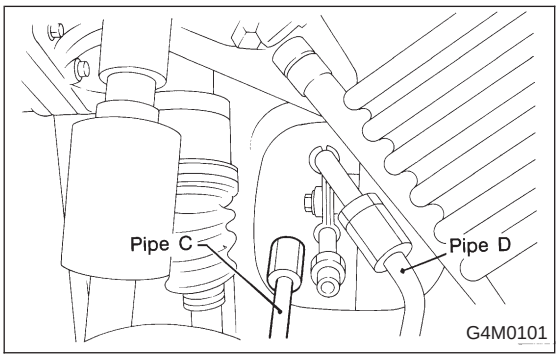

5) Disconnect pipe C from pipe (on the gearbox side).

CAUTION:
- **When disconnecting pipe C, use two wrenches to prevent deformities.**
- **Be careful to keep pipe connections free from foreign matter.**

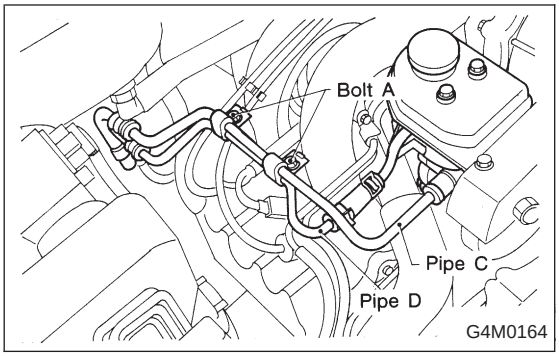

6) Remove bolt A.
Disconnect pipe C from oil pump. Disconnect pipe D from oil tank.

CAUTION:
● Do not allow fluid from the hose end to come into contact with pulley belt.
● To prevent foreign matter from entering the hose and pipe, cover the open ends of them with a clean cloth.

B: CHECK

Check all disassembled parts for wear, damage or other abnormalities. Repair or replace faulty parts as required.

Part name	Inspection	Remedy
Pipe	● O-ring fitting surface for damage ● Nut for damage ● Pipe for damage	Replace with new one.
Clamp B	● Clamps for weak clamping force	Replace with new one.
Clamp C		
Clamp E		
Hose	● Flared surface for damage ● Flare nut for damage ● Outer surface for cracks ● Outer surface for wear ● Clip for damage ● End coupling or adapter for degradation	Replace with new one.

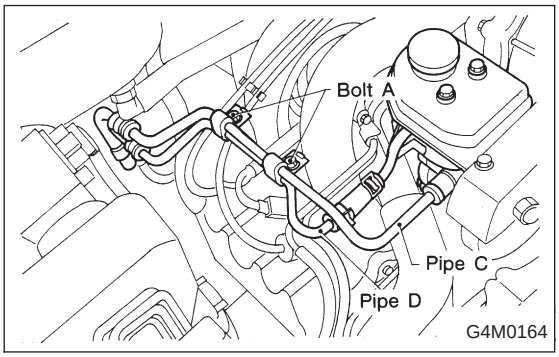

C: ASSEMBLY

1) Interconnect pipes C and D.

Tightening torque:
Joint nut
15±5 N·m (1.5±0.5 kg-m, 10.8±3.6 ft-lb)

CAUTION:
Visually check that hose between tank and pipe D is free from bending or twisting.

2) Tighten bolt A.

Tightening torque:
13±3 N·m (1.3±0.3 kg-m, 9.4±2.2 ft-lb)

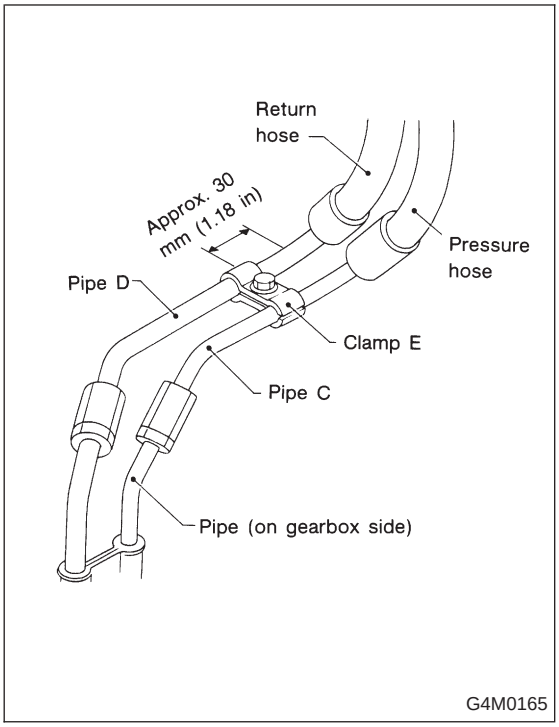

3) Temporarily connect pipes C and D to pipes (on the gearbox side).
4) Temporarily install clamp E on pipes C and D.

CAUTION:
Ensure that the “8” letter side of clamp E is on the pipe C side.

5) Tighten joint nut.

Tightening torque:
15±5 N·m (1.5±0.5 kg-m, 10.8±3.6 ft-lb)

6) Tighten clamp E firmly.

Tightening torque:
5.4±1.5 N·m (0.55±0.15 kg-m, 4.0±1.1 ft-lb)

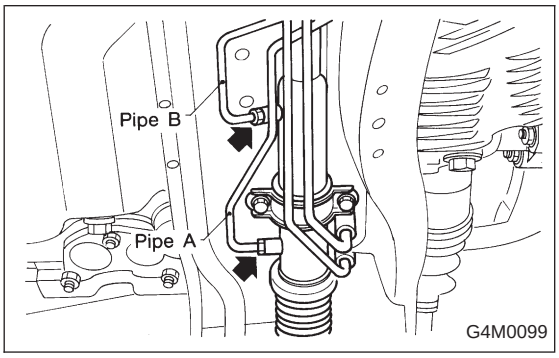

7) Connect pipes A and B to four pipe joints of gearbox. Connect upper pipe B first, and lower pipe A second.

Tightening torque:
13±3 N·m (1.3±0.3 kg-m, 9.4±2.2 ft-lb)

8) Install jack-up plate.
9) Connect battery minus terminal.
10) Feed the specified fluid and discharge air.

NOTE:
Never start the engine before feeding the fluid; otherwise vane pump might be seized up.

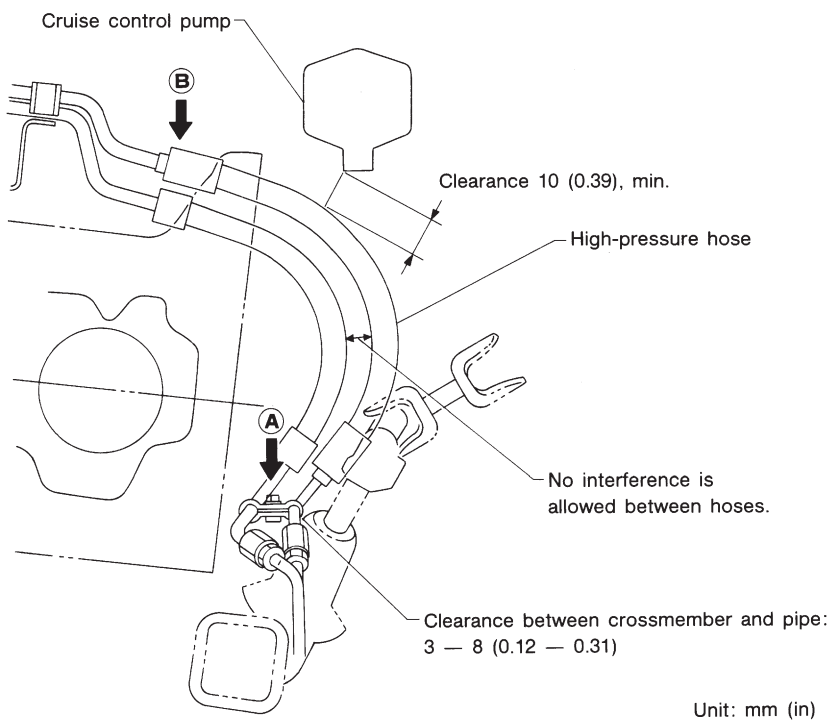

11) Finally check clearance between pipes and/or hoses, as shown above.

If clearance between cruise control pump and power steering hose is less than 10 mm (0.39 in), proceed as follows:

(1) Move clamped section Ⓐ (refer to figure above) down to a point where pipe is close to crossmember (pipe-to-crossmember clearance: 10 mm (0.39 in), min.).

(2) Check that clearance between cruise control pump and power steering hose is at least 10 mm (0.39 in). If it is not, bend section Ⓑ down until a clearance of at least 10 mm (0.39 in) is obtained.

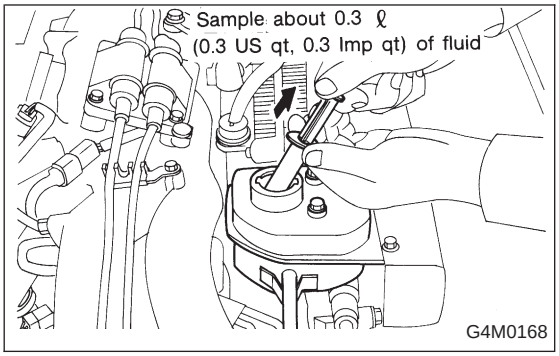

6. Oil Pump (Power Steering System)

A: REMOVAL

1) Remove ground cable from battery.
2) Drain the working fluid about 0.3 ℓ (0.3 US qt, 0.3 Imp qt) from oil tank.
3) Remove pulley belt cover bracket.

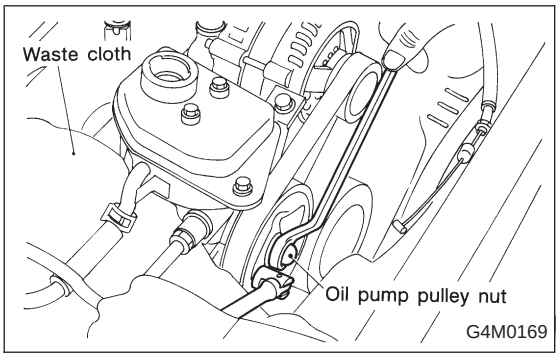

4) Loosen oil pump pulley nut, then remove bolts which secure alternator.
5) Loosen pulley belt(s).
6) Remove the nut and detach oil pump pulley.

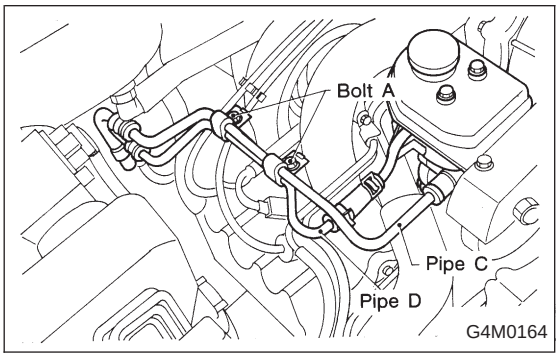

7) Disconnect pipe C from oil pump. Disconnect pipe D from oil tank.

CAUTION:
- **Do not allow fluid from the hose end to come into contact with pulley belt.**
- **To prevent foreign matter from entering the hose and pipe, cover the open ends of them with a clean cloth.**
- **Except when only oil tank needs to be inspected, detach oil tank and oil pump as a unit. Then separate one from the other on a work bench to prevent oil from spilling on any part of the engine.**

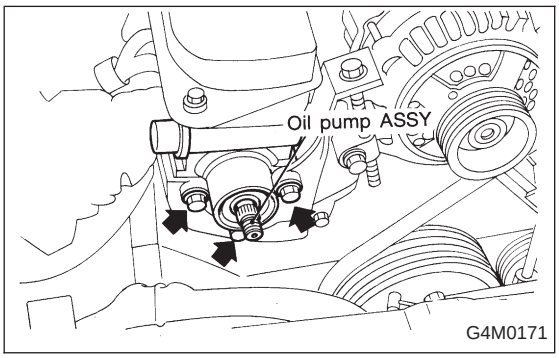

8) Remove three bolts from the front side of oil pump and detach the pump.
9) Remove three bolts from the lower side of bracket and detach the bracket.

CAUTION:
The bracket does not need to be removed unless it is damaged.

10) Place oil pump in a vise, remove two bolts from the upper side of oil tank and detach oil tank.

CAUTION:
Do not place oil pump directly in the vise; use soft pads and hold oil pump lightly to protect the pump.

B: CHECK

● In accordance with the following table, check all removed parts for wear and damage, and make repair or replacement if necessary.

No.	Parts	Inspection	Corrective action
1	Oil pump (Exterior)	(1) Crack, damage or oil leakage	Replace oil pump with a new one.
		(2) Play of pulley shaft	Measure radial play and axial play. If any of these exceeds the service limit, replace oil pump with a new one. <Ref. to 4-3 [W6B1].>
2	Pulley	(1) Damage	Replace it with a new one.
		(2) Bend	Measure V ditch deflection. If it exceeds the service limit, replace pulley with a new one. <Ref. to 4-3 [W6B1].>
3	Cap	Crack or damage	Replace it with a new one.
4	Strainer	(1) Clogging with dirt	Wash it.
		(2) Breakage	Replace it with a new one.
5	Oil pump (Interior)	(1) Defect or burning of vane pump	Check resistance to rotation of pulley. If it is past the service limit, replace oil pump with a new one. <Ref. to 4-3 [W6B1].>
		(2) Bend in the shaft or damage to bearing	Oil pump emits a noise that is markedly different in tone and loudness from a sound of a new oil pump when turning with a string put around its pulley, replace oil pump with a new one.
6	O-ring	Crack or deterioration	Replace it with a new one.
7	Oil tank	Crack, damage or oil leakage	Replace it with a new one.
8	Bracket	Crack	Replace it with a new one.

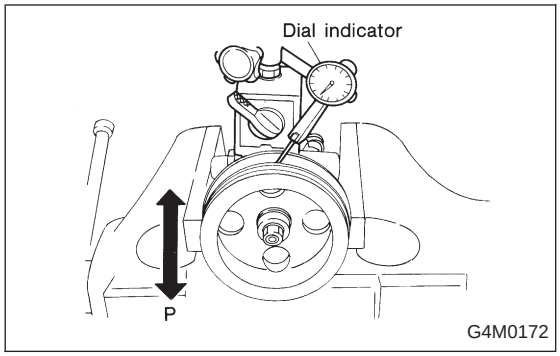

1. SERVICE LIMIT

Make a measurement as follows. If it exceeds the specified service limit, replace the parts with new ones.

CAUTION:

- **Fix oil pump on a vise to make a measurement. At this time, hold oil pump with the least possible force between two wood pieces.**
- **Do not set outside of flow control valve or pulley on a vise; otherwise outside or pulley might be deformed. Select properly sized wood pieces.**

Play of pulley shaft

Service limit:

Radial play (Direction ⟷)
0.4 mm (0.016 in) or less
Axial play (Direction ⇔)
0.9 mm (0.035 in) or less

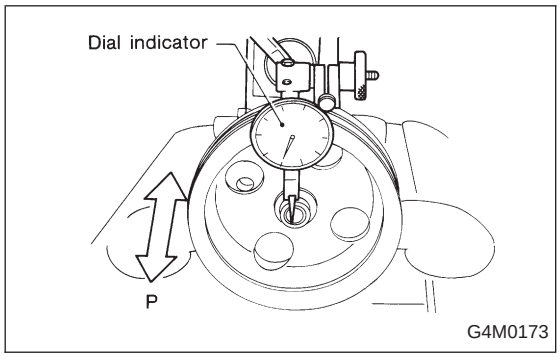

Ditch deflection of pulley

Service limit:

1.0 mm (0.039 in) or less

NOTE:
Read the value for one surface of V ditch, and then the value for another off the dial.

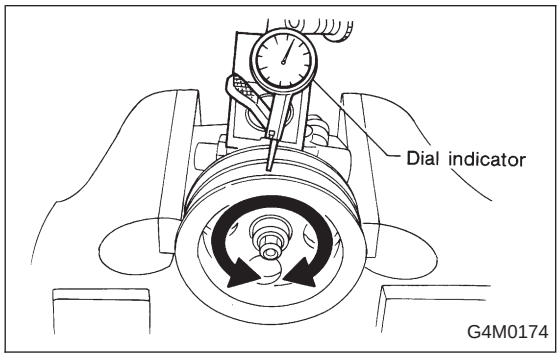

Resistance to rotation of pulley

Service limit:

Maximum load; 9.22 N (0.94 kg, 2.07 lb) or less

NOTE:

- A rather higher value may be indicated when pulley starts turning.
- Measure the load during rotation and make a judgment.

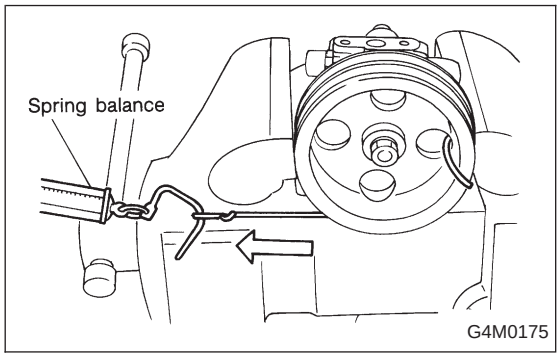

C: DISASSEMBLY

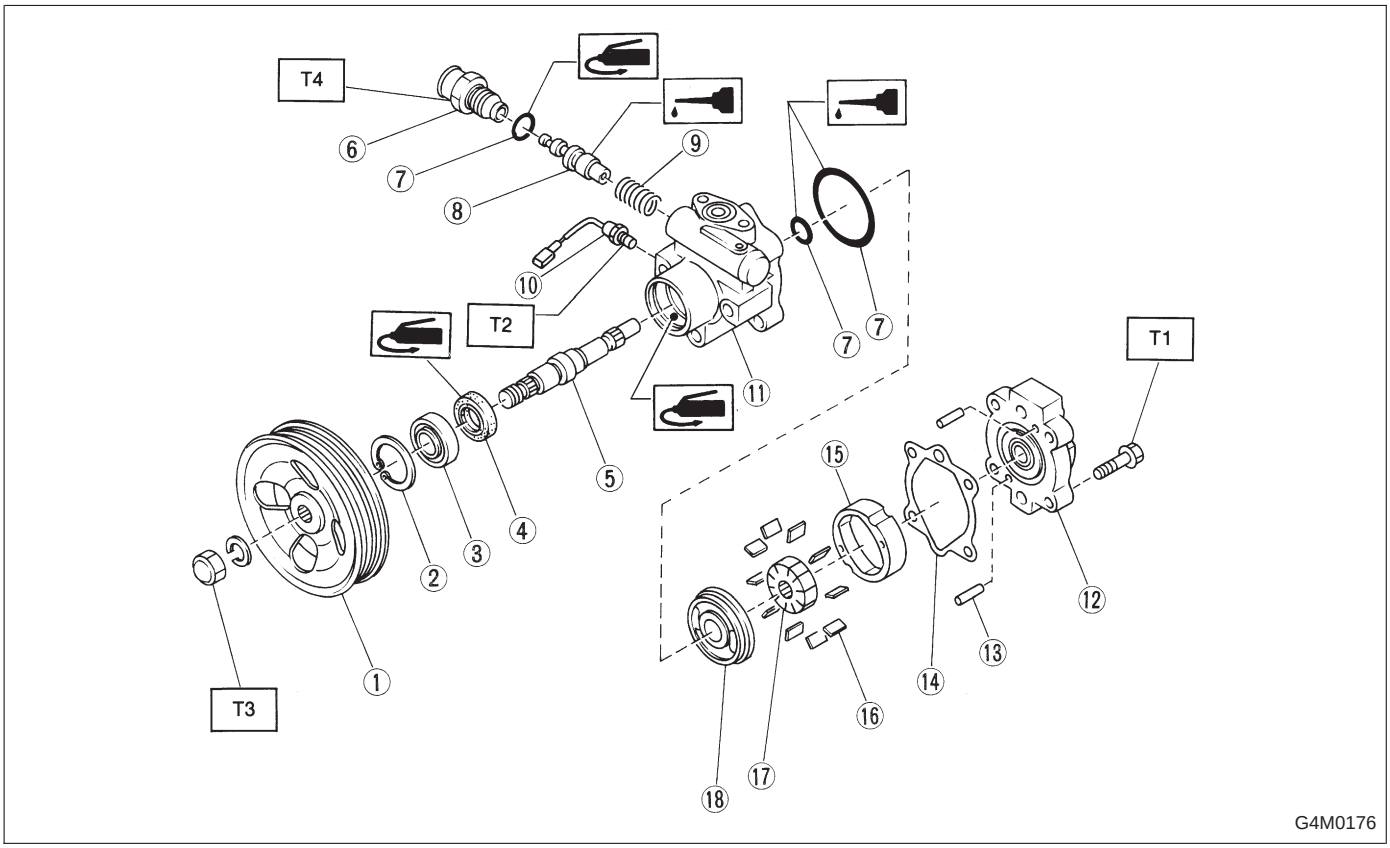

① Pulley
② Snap ring
③ Bearing
④ Oil seal
⑤ Shaft
⑥ Connector
⑦ O-ring
⑧ Spool valve
⑨ Spring
⑩ Pressure switch
⑪ Front casing
⑫ Rear cover
⑬ Knock pin
⑭ Seal washer
⑮ Cam ring
⑯ Vane
⑰ Rotor
⑱ Side plate

Tightening torque: N·m (kg-m, ft-lb)
T1: 16±2 (1.6±0.2, 11.6±1.4)
T2: 20±3 (2.0±0.3, 14.5±2.2)
T3: 52±10 (5.3±1.0, 38±7)
T4: 74±5 (7.5±0.5, 54.2±3.6)

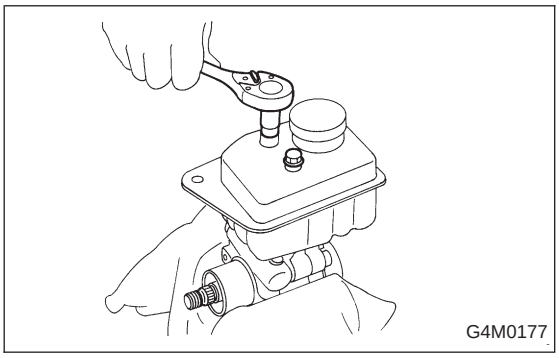

1) Oil pump body

(1) Place oil pump in a vise, and loose bolts which secure tank.

CAUTION:
Do not clamp oil pump too hard; otherwise oil pump may be dented.

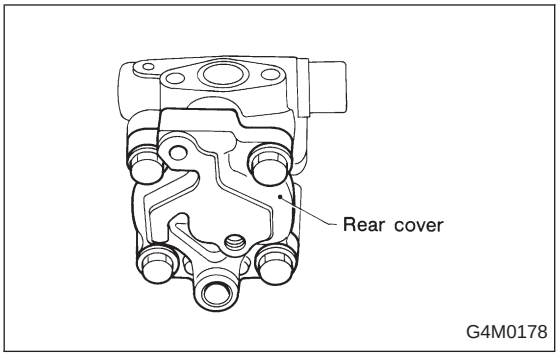

(2) Remove four bolts which secure rear cover.

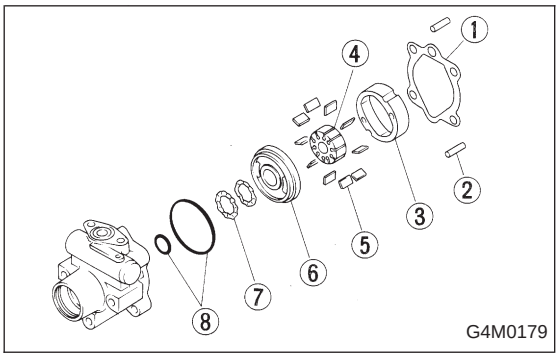

(3) Remove the following parts from front casing.

① Seal washer
② Knock pin .....2 ea.
③ Cam ring
④ Rotor
⑤ Vane .....10 ea.
⑥ Side plate
⑦ Wave washer .....2 ea.
⑧ O-ring .....2 ea.

CAUTION:

Discard old seal washer; replace with a new one.

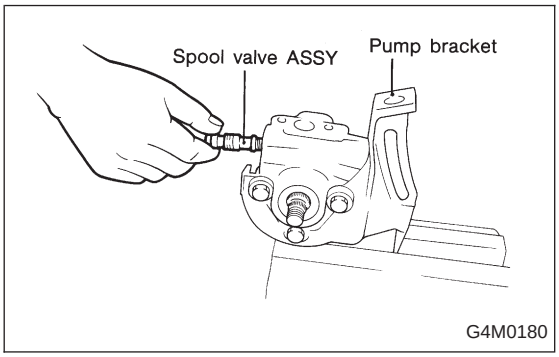

2) Control valve

Slightly loosen outlet connector, and remove connector. Remove the following parts for pump casing.

- Spool valve assembly
- Flow control spring
- Connector
- O-ring

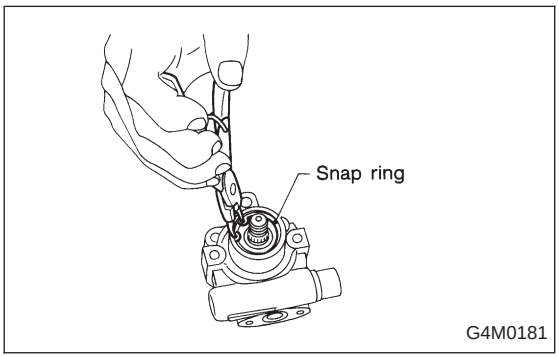

3) Shaft

(1) Remove snap ring from front casing.

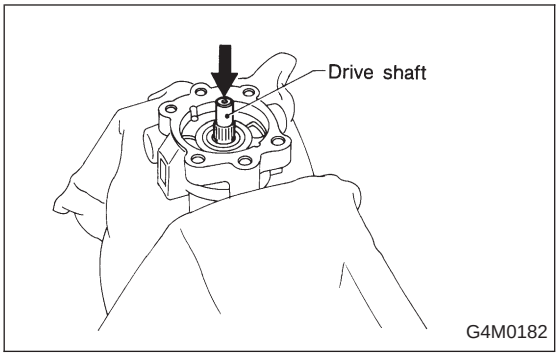

(2) Remove shaft using a hand press.

CAUTION:
- **Discard old shaft assembly; replace with a new one.**
- **Be careful not to scratch or dent casing's surface which serves as a seal.**

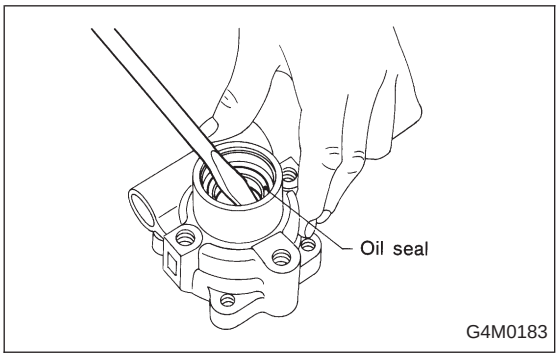

(3) Pry oil seal off using a screwdriver.

CAUTION:
Be careful not to scratch inner surface of casing.

4) Remove pressure switch.

D: INSPECTION

Perform the following inspection procedures and repair or replace defective parts.

Part name	Description	Remedy
1. Front casing	1) Damage on body surfaces 2) Excessive wear on hole, into which spool valve is inserted. 3) Wear and damage on cartridge assembly mounting surface 4) Wear and damage on surfaces in contact with shaft and oil seal	Replace with a new one together with spool valve as selective fit is made.
2. Rear cover	1) Damage on body surfaces 2) Wear and damage on sliding surfaces	Replace with a new one.
3. Shaft	1) Shaft bend 2) Wear and damage on surfaces in contact with bushing and oil seal 3) Wear and damage on rotor mounting surfaces 4) Bearing damage	Replace with a new one.
4. Side plate	Wear and damage on sliding surfaces	Replace with a new one.
5. Cam ring	Ridge wear on sliding surfaces	If damage is serious, replace with a new cartridge assembly.
6. Vane	Excessive wear on nose radius and side surfaces	
7. Rotor	1) Wear and damage on sliding surfaces 2) Ridge wear on vane sliding grooves (If light leaks with vane in slit against light source)	
	3) Damage resulting from snap ring removal	Correct with oil stone. If damage is serious, replace with a new cartridge assembly.
8. Spool valve	Damage or burrs on sliding surface periphery	Replace with a new one together with front casing as selective fit is made.
9. Connector	Damage on threads	Replace with a new one.
10. Spring	Damage	Replace with a new one.
11. Bolts and nuts	Damage on threads	Replace with a new one.

E: ASSEMBLY

1) Reassembly precautions

(1) Whenever O-rings, oil seals, and snap rings are removed, they must be replaced with new ones.
(2) Thoroughly wash parts and allow to dry. They must be kept free from cleaning oil and dust.
(3) Reassembly procedure must be performed in clean place. Ensure that parts are kept away from waste threads or other dust particles.
(4) Cleaning oil tends to stay inside the front casing. Remove it completely by blowing compressed air.
(5) Ensure that parts are free from rust. (Use specified hydraulic oil for rust prevention after cleaning and drying.)
(6) Reverse the sequence of disassembly procedures.

2) Shaft

(1) Apply grease to oil seal and inner surface of front casing (at bearing location).

CAUTION:
Make sure that the front body internal surfaces are free from damage.

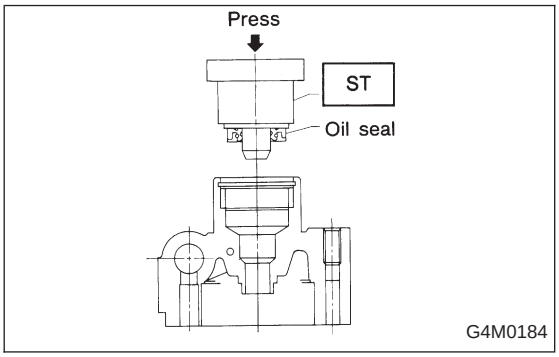

(2) Using ST, press-fit oil seal into front body.

ST 340099AA000 INSTALLER

CAUTION:
When press-fitting, use care to prevent damage to surface mating with rear body.

NOTE:
Orient oil seal toward correct direction.

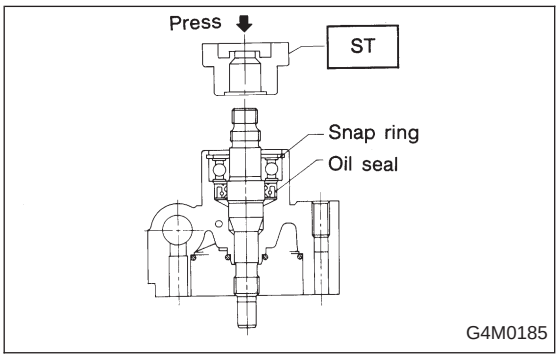

(3) Using ST, press-fit shaft assembly into front body and mount snap ring.

ST 340099AA020 INSTALLER

NOTE:
Turn snap ring to ensure that it fits right into the groove.

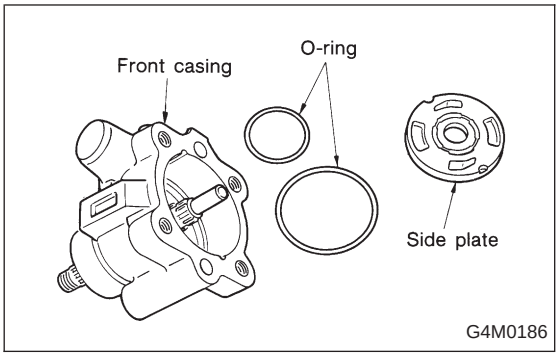

3) Cartridge assembly

(1) Apply specified hydraulic oil to O-rings and fit them into front casing.
(2) Install side plate to front casing.

CAUTION:
Use care not to let side plate gall.

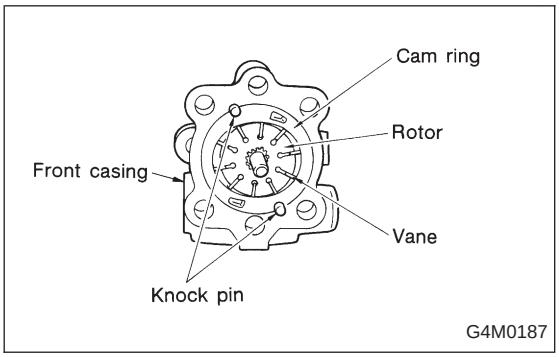

(3) Mount rotor onto shaft.
(4) Install 10 vanes into rotor with their nose radius facing toward cam ring.
(5) Install cam ring to front casing, securing with knock pins.

CAUTION:
Do not use hammer to fit knock pins in position.

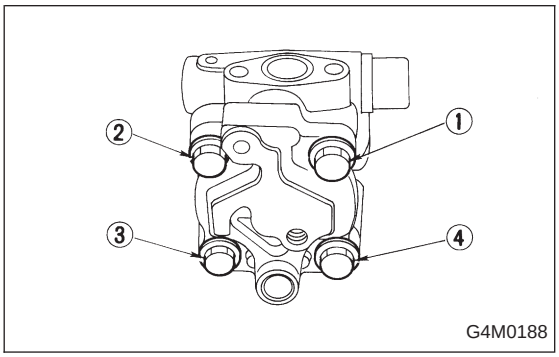

4) Rear cover

(1) Mount seal washer on front casing.
(2) With knock pin positions aligned, install rear cover.

Tightening torque:
16±2 N·m (1.6±0.2 kg-m, 11.6±1.4 ft-lb)

CAUTION:

Loosely tighten bolts in the sequence (1), (3), (2), and (4) shown in figure. Then, tighten in the same sequence.

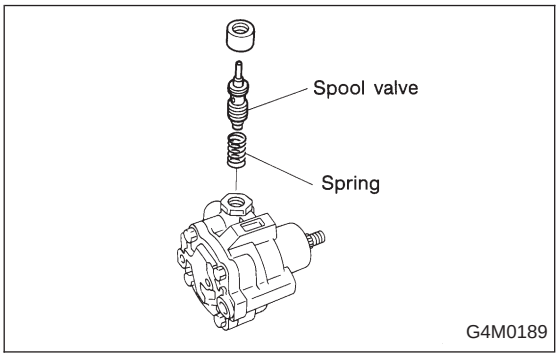

5) Spool Valve

(1) Install spring into front casing. Then, with spool valve dipped in specified hydraulic oil, install it into the front casing.

(2) Using a 5-mm dia. round bar, ensure that valve moves smoothly.
(3) Set O-ring, with grease applied to it, onto connector and secure connector to front casing.

Tightening torque:
74±5 N·m (7.5±0.5 kg-m, 54.2±3.6 ft-lb)

CAUTION:
- **Use care to prevent damage to O-ring at installation.**
- **When tightening connector, ensure that O-ring does not protrude or get caught.**

6) Check

(1) When reassembly procedures have been completed, turn shaft by hand to ensure it turns smoothly. If it binds or other unusual conditions are evident, disassemble again and check for foreign matter trapped on sliding surfaces and improper installation. Eliminate the cause of trouble.

(2) Check followings by referring to “CHECK” article.

- Excessive play in pulley shaft
- Ditch deflection of pulley
- Resistance to rotation of pulley
- Measurement of generated oil pressure

F: INSTALLATION

1) Install bracket on engine.

Tightening torque:
22±2 N·m (2.2±0.2 kg-m, 15.9±1.4 ft-lb)

2) Install oil pump on oil tank as follows outside the vehicle:

NOTE:
Prior to installation, make sure that all oil is removed from oil pump, oil tank and pipe.

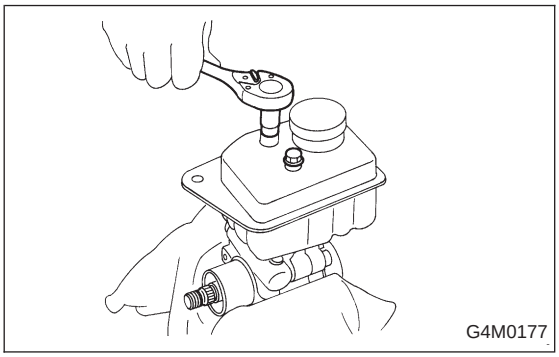

(1) Place oil pump in vise, tighten the two bolts on upper side of oil tank to oil pump.

Tightening torque:
25±7 N·m (2.5±0.7 kg-m, 18.1±5.1 ft-lb)

CAUTION:
Do not place oil pump directly in vise; use soft pads and hold oil pump lightly to protect it.

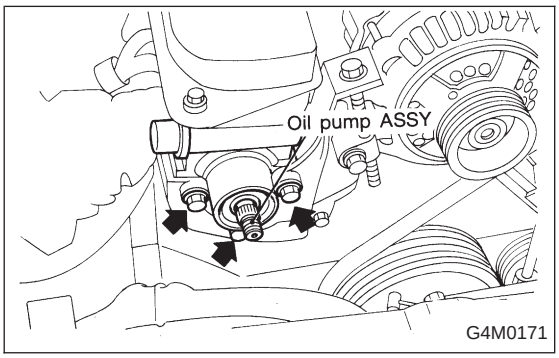

3) Install oil pump, previously assembled to oil tank, on bracket.

Tightening torque:
20.1±2.5 N·m (2.05±0.25 kg-m, 14.8±1.8 ft-lb)

4) Place oil pump pulley and tighten pulley nut temporarily.

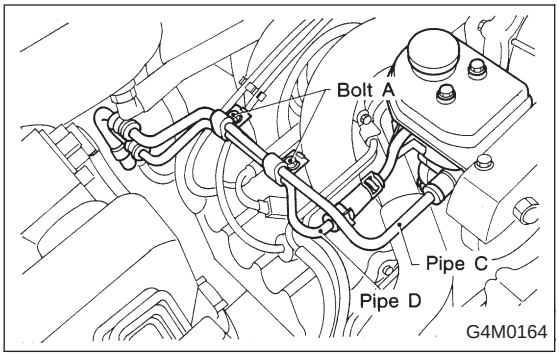

5) Interconnect pipes C and D.

Tightening torque:
Joint nut
15±5 N·m (1.5±0.5 kg-m, 10.8±3.6 ft-lb)

CAUTION:
If a hose is twisted at this step, the hose may come into contact with some other parts.

6) Install pulley belt to oil pump.
7) Tighten oil pump pulley nut to the specified torque.

Tightening torque:
52±10 N·m (5.3±1.0 kg-m, 38±7 ft-lb)

8) Check pulley belt tension. <Ref. to 1-5 [01A0].>
9) Tighten bolt belt tension.

Tightening torque:
8±2 N·m (0.8±0.2 kg-m, 5.8±1.4 ft-lb)

10) Install pulley belt cover bracket.
11) Connect minus terminal of battery.
12) Feed the specified fluid and discharge air.

NOTE:
Never start the engine before feeding the fluid; otherwise vane pump might be seized up.

7. Power Steering Fluid

A: RECOMMENDED AIR BLEEDING AND POWER STEERING FLUID

Recommended power steering fluid	Manufacturer
ATF DEXRON II or IIE	B.P.
	CALTEX
	CASTROL
	MOBIL
	SHELL
	TEXACO

1) Feed the specified fluid with its level being about 4 cm (1.6 in) lower than the mouth of tank.
2) Continue to turn steering wheel slowly from lock to lock until bubbles stop appearing in the tank while keeping the fluid at that level.
3) In case air is absorbed to deliver bubbles into piping because the fluid level is lower, leave it about half an hour and then do the step 2) all over again.
4) Start, and idle the engine.
5) Continue to turn steering wheel slowly from lock to lock again until bubbles stop appearing in the tank while keeping the fluid at that level.
It is normal that bubbles stop appearing after three times turning of steering wheel.
6) In case bubbles do not stop appearing in the tank, leave it about half an hour and then do the step 5) all over again.
7) Stop the engine, and take out safety stands after jacking up vehicle again.
Then lower the vehicle, and idle the engine.
8) Continue to turn steering wheel from lock to lock until bubbles stop appearing and change of the fluid level is within 3 mm (0.12 in).
9) In case the following happens, leave it about half an hour and then do step 8) again.
   (1) The fluid level changes over 3 mm (0.12 in).
   (2) Bubbles remain on the upper surface of the fluid.
   (3) Grinding noise is generated from oil pump.

10) Check the fluid leakage at flare nuts after turning steering wheel from lock to lock with engine running.

CAUTION:

- **Before checking, wipe off any fluid on flare nuts and piping.**
- **In case the fluid leaks from flare nut, it is caused by dust (or the like) and/or damage between flare and tapered seat in piping.**
- **So remove the flare nut, tighten again it to the specified torque after cleaning flare and tapered seat. If flare or tapered seat is damaged, replace it with a new one.**

11) Inspect fluid level on flat and level surface with engine "OFF" by indicator of filler cap.
If the level is at lower point or below, add fluid to keep the level in the specified range of the indicator. If at upper point or above, drain fluid by using a syringe or the like.

Fluid capacity:
0.7 ℓ (0.7 US qt, 0.6 Imp qt)

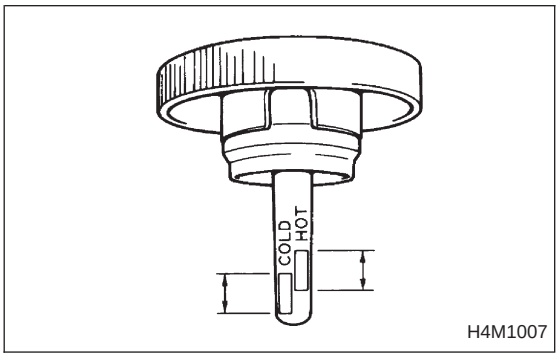

(1) Check at temperature 21°C (70°F) on reservoir surface of oil pump, read the fluid level on the "COLD" side.

(2) Check at temperature 60°C (140°F) on reservoir surface of oil pump, read the fluid level on the "HOT" side.

1. Power Steering

1. STEERING CONDITION

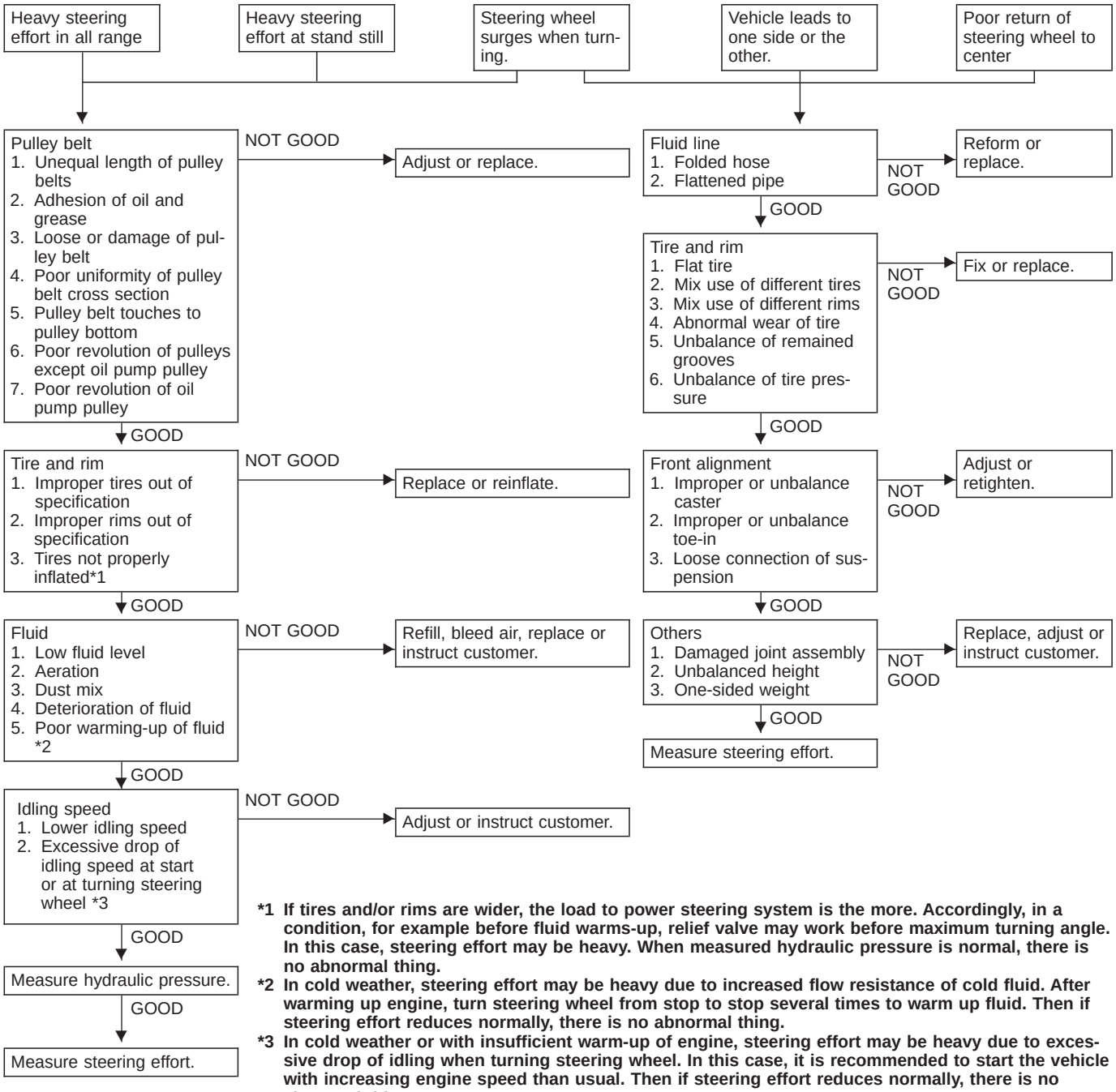

***1 If tires and/or rims are wider, the load to power steering system is the more. Accordingly, in a condition, for example before fluid warms-up, relief valve may work before maximum turning angle. In this case, steering effort may be heavy. When measured hydraulic pressure is normal, there is no abnormal thing.**

***2 In cold weather, steering effort may be heavy due to increased flow resistance of cold fluid. After warming up engine, turn steering wheel from stop to stop several times to warm up fluid. Then if steering effort reduces normally, there is no abnormal thing.**

***3 In cold weather or with insufficient warm-up of engine, steering effort may be heavy due to excessive drop of idling when turning steering wheel. In this case, it is recommended to start the vehicle with increasing engine speed than usual. Then if steering effort reduces normally, there is no abnormal thing.**

2. MEASUREMENT OF HYDRAULIC PRESSURE

CAUTION:
Be sure to complete all items aforementioned in "STEERING CONDITION" 4-3 [T101], prior to measuring hydraulic pressure. Otherwise, pressure can not be measured correctly.

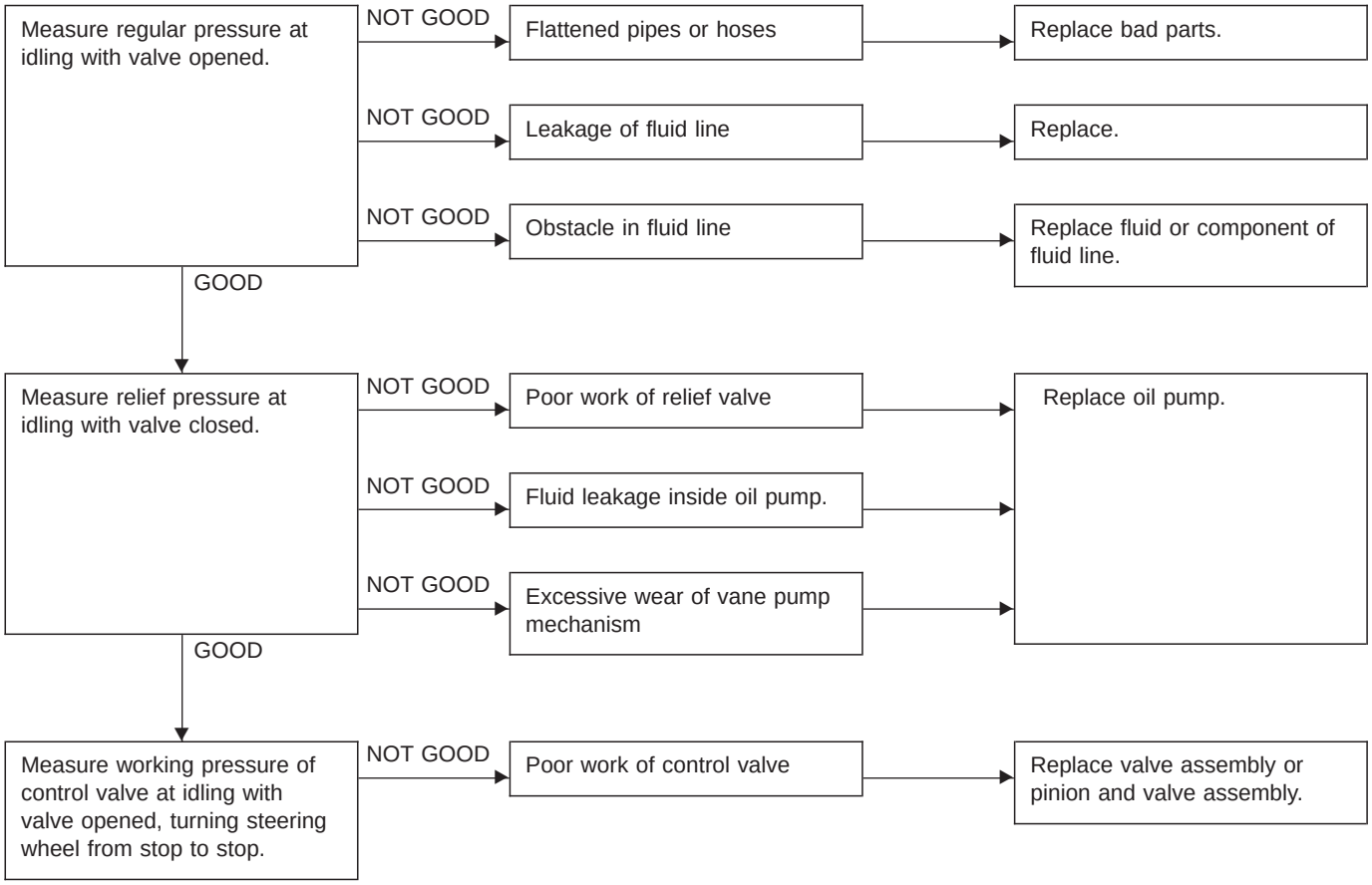

CAUTION:
- **Do not leave the valve of pressure gauge closed or hold the steering wheel at stop end for 5 seconds or more in any case, as the oil pump may be damaged due to long keep of these conditions.**
- **Put cotton cloth waste at a place where fluid drops before pressure gauge is installed. Wipe off split fluid thoroughly after the measurement.**

NOTE:
Keep engine idling during the measurement.

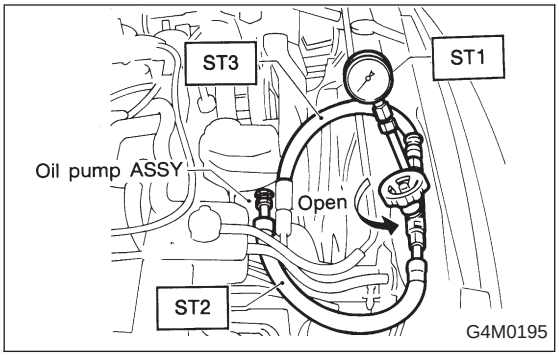

Using STs, measure regulator pressure.

Regular pressure:

981 kPa (10 kg/cm^2, 142 psi) or less

ST1	925711000	PRESSURE GAUGE
ST2	926220000	ADAPTER B
ST3	926210000	ADAPTER A

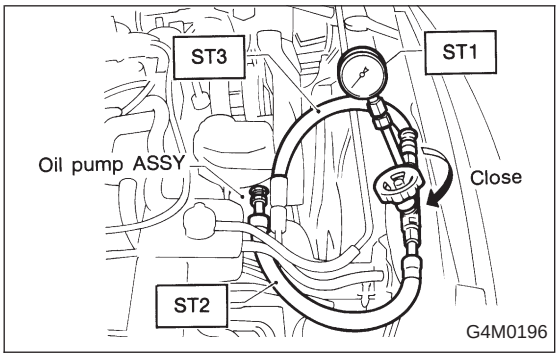

Using STs, measure relief pressure.

Relief pressure:

1800 cc model

6,178 — 6,767 kPa (63 — 69 kg/cm^2, 896 — 981 psi)

2200 cc model

7,159 — 7,748 kPa (73 — 79 kg/cm^2, 1,038 — 1,123 psi)

ST1	925711000	PRESSURE GAUGE
ST2	926220000	ADAPTER B
ST3	926210000	ADAPTER A

3. MEASUREMENT OF STEERING EFFORT

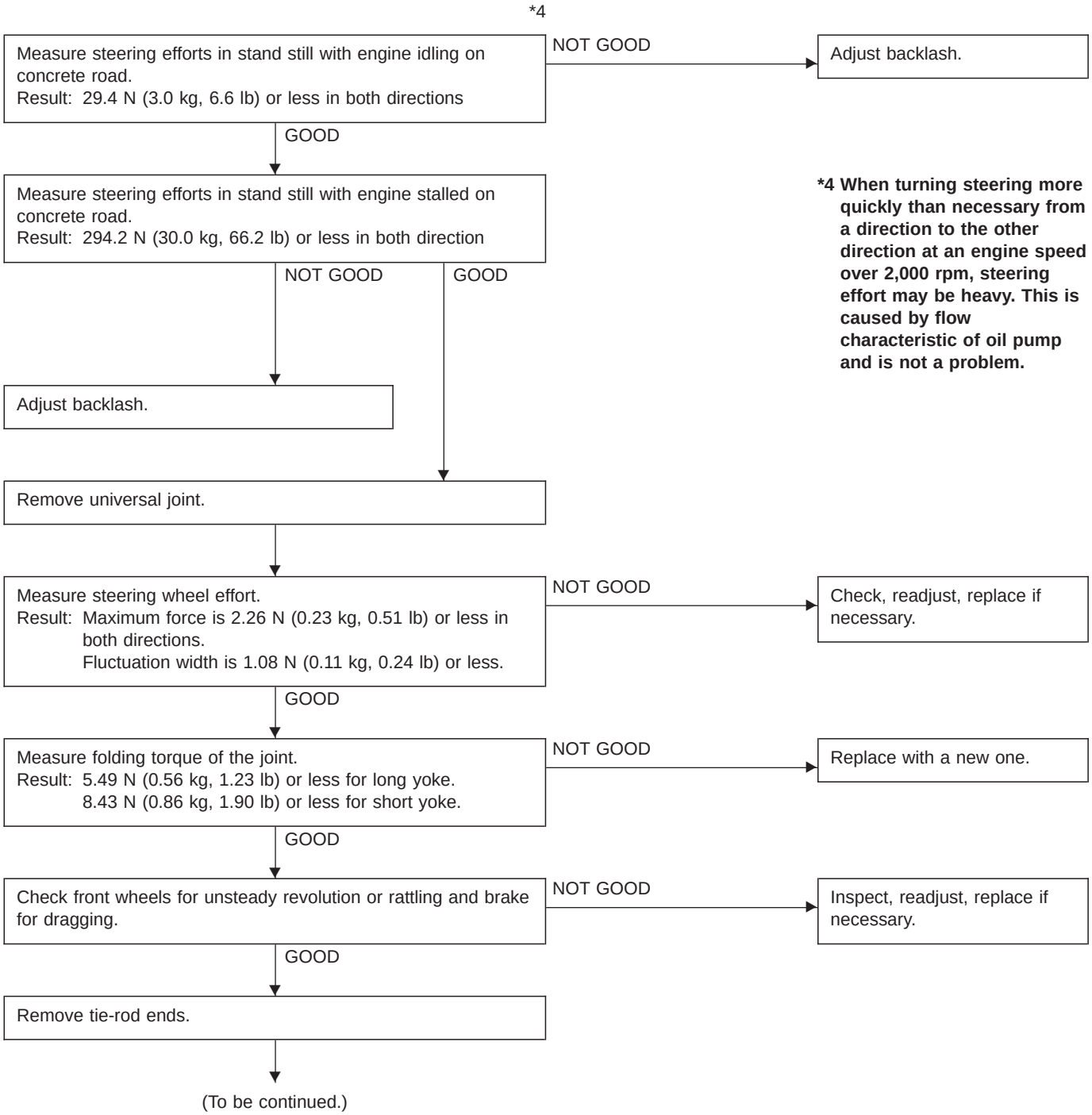

***4 When turning steering more quickly than necessary from a direction to the other direction at an engine speed over 2,000 rpm, steering effort may be heavy. This is caused by flow characteristic of oil pump and is not a problem.**

Check tie-rod ends, tie-rods and ball joints of suspension for unsteady revolution or rattling.

NOT GOOD → Inspect, replace if necessary.

GOOD ↓

Measure rotating and sliding resistance of gearbox.
Result: Rotating resistance is 11.18 N (1.14 kg, 2.51 lb) or less around center position and 1.79 N (1.61 kg, 3.55 lb) or less in all positions within 20% difference between clockwise and counterclockwise.
Sliding resistance is 304 N (31 kg, 68 lb) or less with 20% difference between left and right directions.

NOT GOOD → Readjust backlash, if ineffective replace bad parts.

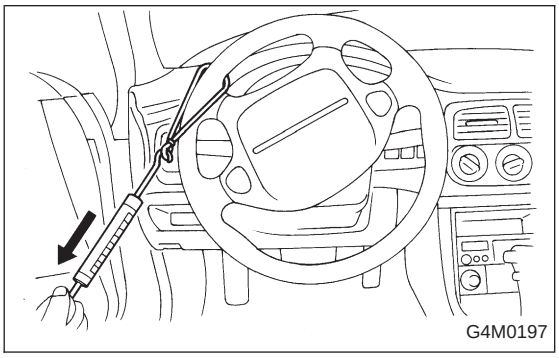
G4M0197

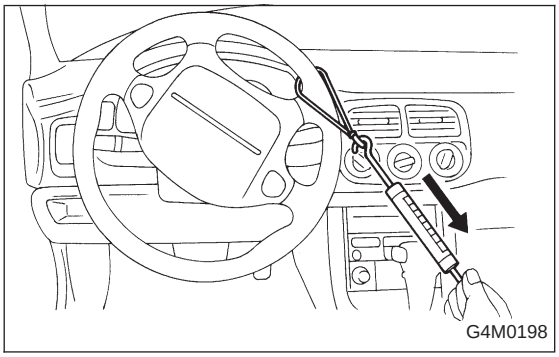
G4M0198

NOTE:
Measurement of steering effort

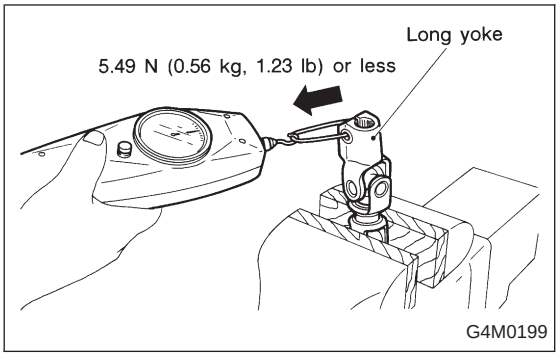

NOTE:
Measurement of folding torque of universal joint

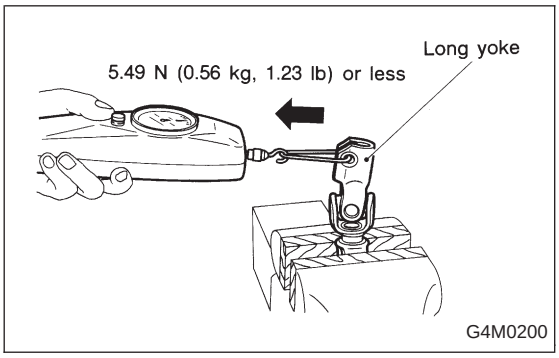

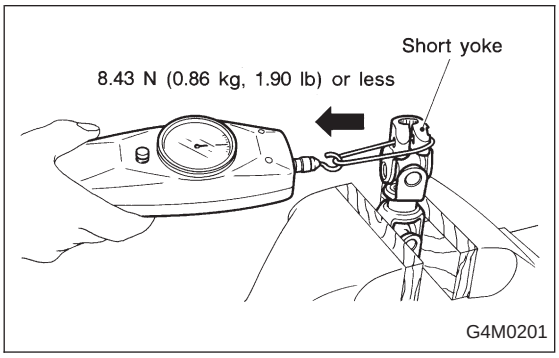

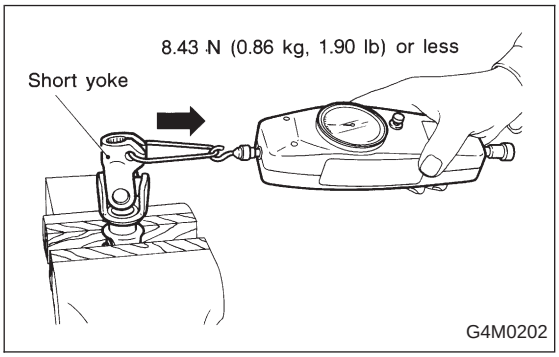

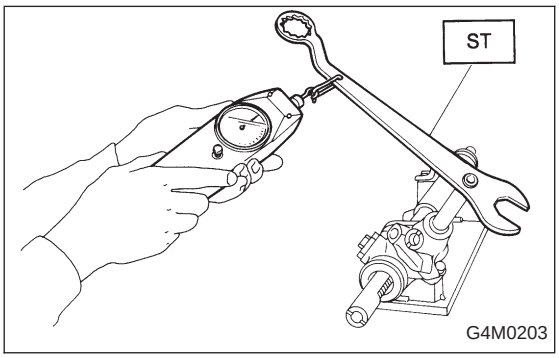

NOTE:
Using ST, measure resistances of gearbox.

ST 926230000 SPANNER

Rotating resistance:

Straight-ahead position within 30 mm (1.18 in) from rack center

Less than 11.18 N (1.14 kg, 2.51 lb)

Maximum allowable torque

15.7 N (1.6 kg, 3.5 lb)

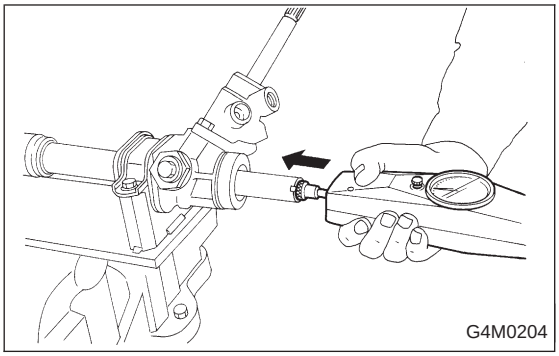

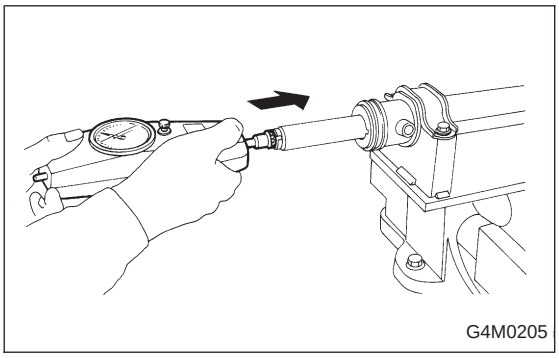

Sliding resistance:
Right-turn steering
304 N (31 kg, 68 lb) or less
Left-turn steering
304 N (31 kg, 68 lb) or less

4. FLUID LEAKAGE

CAUTION:
It is likely that although one judges fluid leakage, there is actually no leakage. This is because the fluid spilt during the last maintenance was not completely wiped off. Be sure to wipe off spilt fluid thoroughly after maintenance.

Leakage from connecting portions of pipes and hoses, numbered with ① thru ⑨ in figure	Insufficient tightening of flare nut, catching dirt or the like, damage to flare or flare nut	Loosen and retighten, if ineffective, replace.
	Poor insertion of hose, poor clamping	Retighten or replace clamp.
	Damaged O-ring	Replace O-ring pipe or hose with new one, if ineffective, replace gearbox also.
Leakage from hose ⑩ and ⑪ in figure	Crack or damage in hose	Replace with a new one.
	Crack or damage in hose hardware	
Leakage from surrounding of cast iron portion of oil pump ⑫ and ⑬ in figure	Damaged oil seal, ⑫	Replace oil pump.
	Damaged oil seal, ⑬	
Leakage from oil tank, ⑭ and ⑮ in figure	Crack in oil tank, ⑭	Replace oil tank.
	Damaged O-ring, ⑮	Replace O-ring.
Leakage from filler neck ⑯	Damaged cap packing	Replace cap.
	Crack in root of filler neck	Replace oil tank.
	High fluid level *5	Adjust fluid level.
Leakage from surrounding of power cylinder of gearbox, ⑰ in figure	Damaged oil seal	Replace bad parts.
Leakage from control valve of gearbox, ⑱ and ⑲ in figure	Damaged packing or oil seal	
	Damage in control valve	

***5 Fluid level is specified at optimum position (range) for ordinary use. Accordingly, if the car is used often under hard conditions such as on very rough roads or in mountainous areas, fluid may bleed out from cap air vent hole. This is not a problem. If a customer complains strongly and is not likely to be satisfied with the leakage, lower the fluid level to the extent that fluid will not bleed out under the conditions described, and have the customer check the fluid level and its quality more frequency than usual.**

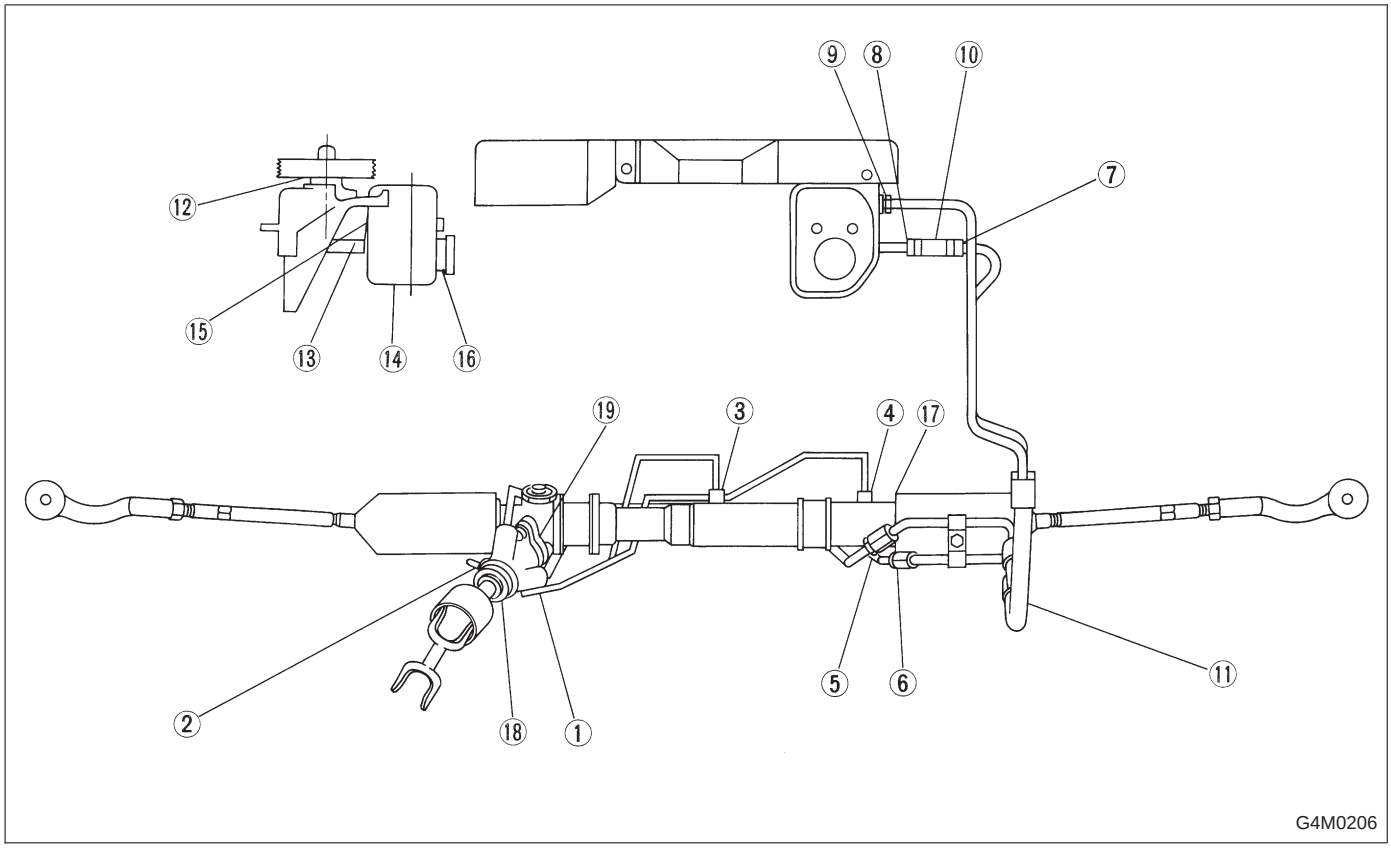
⑨
⑧
⑩
⑦
⑫
⑮
⑬
⑭
⑯
⑲
③
④
⑰
⑤
⑥
⑪
②
⑱
①
G4M0206

5. NOISE AND VIBRATION

Hiss noise (continuous) While engine is running with maximum turning angle.	Relief valve sound *6	Generates at max. turning angle.	Normal (Don't keep this condition over 5 seconds.)
		Generates without steering operation.	Defective Replace oil pump.
Rattling noise (intermittent) While engine is running.	Interference with adjacent parts		Check clearance. [Refer to next article 6.] Correct if necessary.
	Loosened installation of oil pump, oil tank, pump bracket, gearbox or crossmember.		Retighten.
	Loosened installation of oil pump pulley or other pulley(s).		Retighten.
	Loosened linkage or play of steering or suspension. Loosened tightening of joint or steering column.		Retighten or replace.
	Sound generates from the inside of gearbox or oil pump.		Replace the gearbox or oil pump.
Knocking When turning steering wheel in both direction with small angle repeatedly at engine ON or OFF.	Excessive backlash Loosened Lock nut for adjusting backlash.		Adjust and retighten.
	Loosened tightening or play of Tie-rod, Tie-rod end.		Retighten or replace.

***6 Don't keep the relief valve operated over 5 sec. at any time or inner parts of the oil pump may be damaged due to rapid increase of fluid temperature.**

Grinding noise (continuous) While engine is running.	Vane pump aeration *7	Inspect and retighten fluid line connection. Refill fluid and vent air.
	Vane pump seizing	Replace oil pump.
	Pulley bearing seizing of oil pump	
	Folded hose, flat pipe	Replace.
Squeal, squeak. (intermittent or continuous) While engine is running.	Maladjustment of pulley belt Damaged or charged pulley belt Unequal length of pulley belts	Adjust or replace (Replace two belts as a set.)
	Run out or soilage of V-groove surface of oil pump pulley	Clean or replace.
Sizzling noise (continuous) While engine is running.	Fluid aeration	Fix wrong part causing aeration. Replace fluid and vent air.
	Damaged pipe of gearbox	Replace pipe.
	Abnormal inside of hose or pipe. Flat hose or pipe	Rectify or replace.
	Abnormal inside of oil tank	Replace.
	Removed oil tank cap	Install cap.
Whistle (continuous) While engine is running.	Abnormal pipe of gearbox or abnormal inside of hose	Replace bad parts of gearbox or hose.

***7 Grinding noise may be heard immediately after the engine start in extremely cold condition.
In this case, if the noise goes off during warm-up there is no abnormal function in the system.
This is due to the fluid characteristic in extremely cold condition.**

Whine or growl (continuous or intermittent) While engine is running with/ without steering turned.	Loosened installation of Oil pump, oil pump bracket	Retighten.
	*8 Abnormal inside of oil pump, hose	Replace oil pump, hose, if the noise can be heard when running as well as stand still.
	Torque converter growl air conditioner compression growl	Remove power steering pulley belt and confirm.
Creaking noise (intermittent) While engine is running with steering turned.	Abnormal inside of gearbox.	Replace bad parts of gearbox
	Abnormal bearing for steering shaft	Apply grease or replace.
	*9 Generates when turning steering wheel with brake (service or parking) applied	If the noise goes off when brake is released, normal.
*10 Vibration While engine is running with/ without steering turned.	Tool low engine speed at start	Adjust and instruct customers.
	Vane pump aeration	Fix wrong part. Vent air.
	Damaged valve in oil pump, Gearbox	Replace oil pump, bad parts of gearbox.
	Looseness of play of steering, suspension parts	Retighten.

***8 Oil pump makes whine or growl noise slightly due to its mechanism. Even if the noise can be heard when steering wheel is turned at standstill there is no abnormal function in the system provided that the noise eliminates when the car is running.**

***9 When stopping with service brake and/or parking brake applied, power steering can be operated easily due to its light steering effort. If doing so, the disk rotates slightly and makes creaking noise. The noise is generated by creaking between the disk and pads. If the noise goes off when the brake is released, there is no abnormal function in the system.**

***10 There may be a little vibration around the steering devices when turning steering wheel at standstill, even though the component parts are properly adjusted and have no defects.**
Hydraulic systems are likely to generate this kind of vibration as well as working noise and fluid noise because of combined conditions, i.e.,
Road surface and tire surface, Engine speed and turning speed of steering wheel, Fluid temperature and braking condition.
This phenomena does not indicate there is some abnormal function in the system.
The vibration can be known when steering wheel is turned repeatedly at various speeds from slow to rapid step by step with parking brake applied on concrete road and in “D” range for automatic transmission vehicle.

6. CLEARANCE TABLE

CAUTION:

This table lists various clearances that must be correctly adjusted to ensure normal vehicle driving without interfering noise, or any other faults.

Location	Minimum allowance mm (in)	Location	Minimum allowance mm (in)
① Crossmember — Pipe	5 (0.20)	⑥ Exhaust pipe — Pipe	15 (0.59)
② DOJ — Shaft or joint	14 (0.55)	⑦ Exhaust pipe — Gearbox bolt	15 (0.59)
③ DOJ — Valve housing	11 (0.43)	⑧ Side frame — Hose A and B	15 (0.59)
④ Pipe — Pipe	2 (0.08)	⑨ Cruise control pump — Hose A and B	15 (0.59)
Pipe — Crossmember		⑩ Pipe portion of hose A — Pipe portion of hose B	1.5 (0.059)
⑤ Stabilizer — Pipe	5 (0.20)	⑪ AT cooling hose — Joint	20 (0.79)

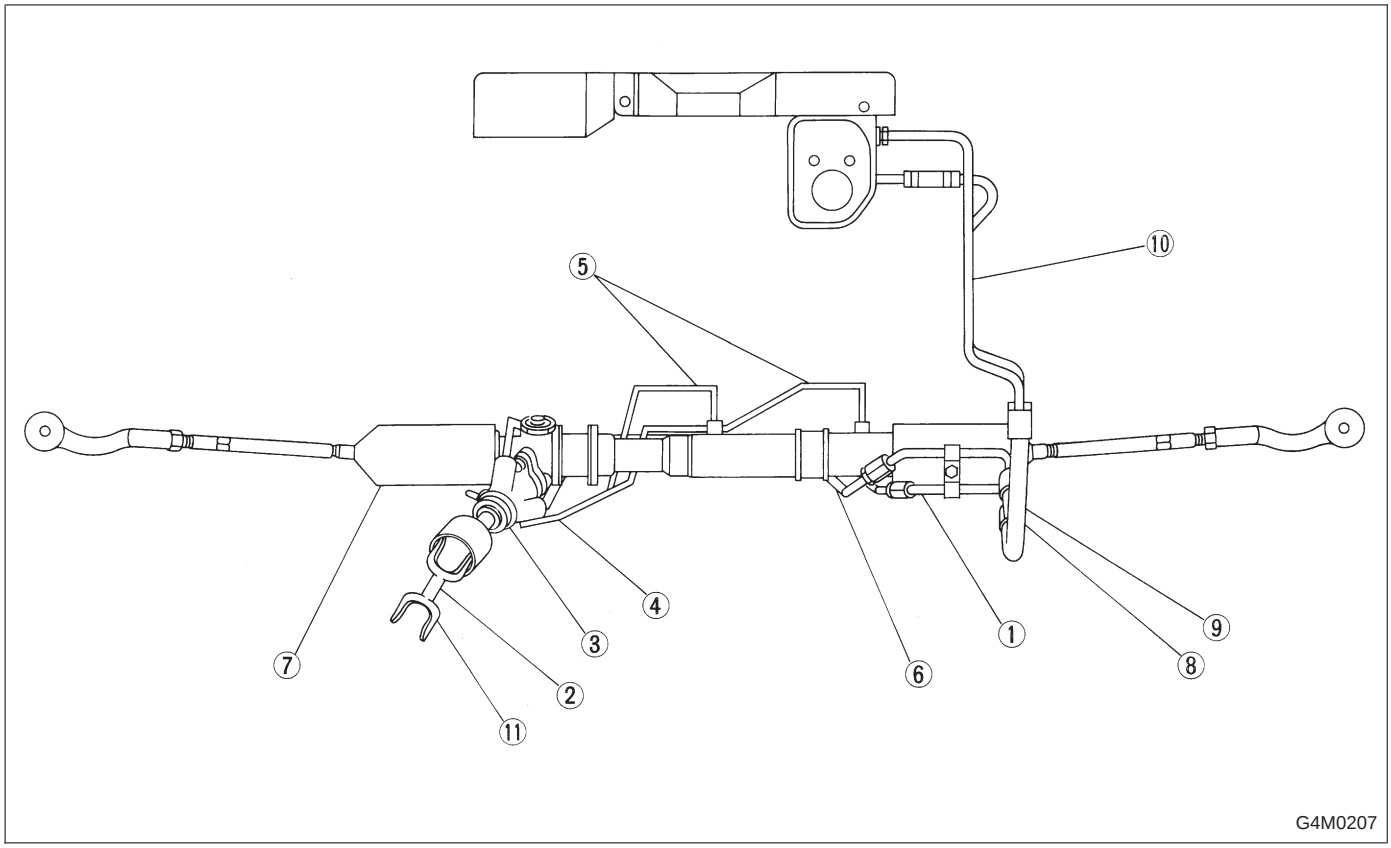

7. BREAKAGE OF HOSES

Pressure hose burst	Excessive holding time of relief status	Instruct customers.
	Malfunction of relief valve	Replace oil pump.
	Poor cold characteristic of fluid	Replace fluid.
Forced out return hose	Poor connection	Correct.
	Poor holding of clip	Retighten.
	Poor cold characteristic of fluid	Replace fluid.
Fluid bleeding out of hose slightly	Wrong layout, tensioned	Replace hose.
	Excessive play of engine due to deterioration of engine mounting rubber	Replace defective parts.
	Improper stop position of pitching stopper	Replace defective parts.
*11 Crack on hose	Excessive holding time of relief status	Replace. Instruct customer.
	Excessive tightening torque for return hose clip	Replace.
	Power steering fluid, brake fluid, engine oil, electrolyte adhere on the hose surface	Replace. Pay attention on service work.
	Too many times use in extremely cold weather.	Replace. Instruct customers.

***11 Although surface layer materials of rubber hoses have excellent weathering resistance, heat resistance and resistance for low temperature brittleness, they are likely to be damaged chemically by brake fluid, battery electrolyte, engine oil and automatic transmission fluid and their service lives are to be very shortened. It is very important to keep the hoses free from before-mentioned fluids and to wipe out immediately when the hoses are adhered with the fluids.**
Since resistances for heat or low temperature brittleness are gradually declining according to time accumulation of hot or cold conditions for the hoses and their service lives are shortening accordingly, it is necessary to perform careful inspection frequently when the car is used in hot weather areas, cold weather area and/or a driving condition in which many steering operations are required in short time. Particularly continuous work of relief valve over 5 seconds causes to reduce service lives of the hoses, the oil pump, the fluid, etc. due to over heat.
So, avoid to keep this kind of condition when servicing as well as driving.

SUSPENSION 4-1

Page

S SPECIFICATIONS AND SERVICE DATA 2
1. Suspension 2
C COMPONENT PARTS 5
1. Suspension 5
W SERVICE PROCEDURE 8
1. On-car Services 8
2. Front Transverse Link 15
3. Front Ball Joint 19
4. Front Strut 20
5. Front Stabilizer 25
6. Front Crossmember 27
7. Rear Trailing Link 28
8. Lateral Link 32
9. Rear Strut 37
10. Rear Crossmember (FWD Model) 41
11. Rear Crossmember (AWD Model) 43
T DIAGNOSTICS 45
1. Suspension 45

1. Suspension

A: SPECIFICATIONS

1. STABILIZER

Model			Bar dia. mm (in)	
			Front	Rear
SEDAN	FWD	BASE, L	18 (0.71)	—
	AWD	BASE, L	18 (0.71)	—
		LX	19 (0.75)	13 (0.51)
WAGON	FWD	BASE, L	19 (0.75)	—
	AWD	L	19 (0.75)	—
		LX	19 (0.75)	13 (0.51)
COUPE	FWD	BASE, L	19 (0.75)	—
	AWD	BASE, L	19 (0.75)	—
		LX	19 (0.75)	13 (0.51)

B: WHEEL ALIGNMENT

		Sedan, Coupe		Wagon	
		FWD	AWD	FWD	AWD
Front	Camber (tolerance: ±0°30′)	0°	0°	0°	0°
	Caster (common difference: ±1°)	3°	3°	3°	3°
	Toe-in mm (in)	0±3 (0±0.12) Toe-in angle: −0°09′ [when toe-in is −3 (−0.12)] Toe-out angle: 0°09′ [when toe-out is 3 (0.12)]			
	Kingpin angle	14°	14°	14°	14°
	Wheel arch height [tolerance: $^{+12}_{-24}$ mm ($^{+0.47}_{-0.94}$ in)] mm (in)	391 (15.39)	391 (15.39)	391 (15.39)	391 (15.39)
Rear	Camber (tolerance: ±0°45′)	−0°50′	−0°55′	−0°50′	−0°55′
	Toe-in mm (in)	0±3 (0±0.12) Total toe angle: 0°±18′			
	Wheel arch height [tolerance: ±10 mm (±0.39 in)] mm (in)	378 (14.88)	379 (14.92)	378 (14.88)	379 (14.92)
	Thrust angle (tolerance: 0°±20′)	0°	0°	0°	0°

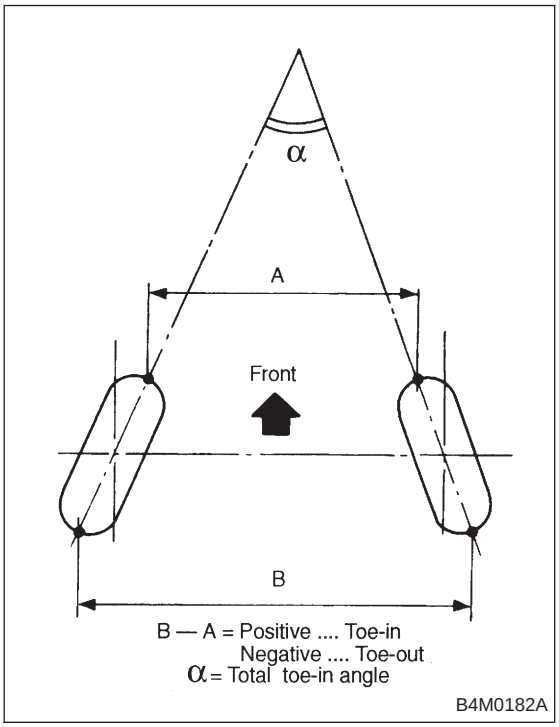

NOTE:
- Front and rear toe-ins and front camber can be adjusted. If toe-in or camber tolerance exceeds specifications, adjust toe-in and camber to the specification.
- The other items indicated in the specification table cannot be adjusted. If the other items exceeds specifications, check suspension parts and connections for deformities; and replace with new ones as required.

C: SERVICE DATA

Strut	Piston rod deflection Limit	0.8 mm (0.031 in)/ 20 N (2 kg, 4 lb)

1. Suspension

1. FRONT SUSPENSION

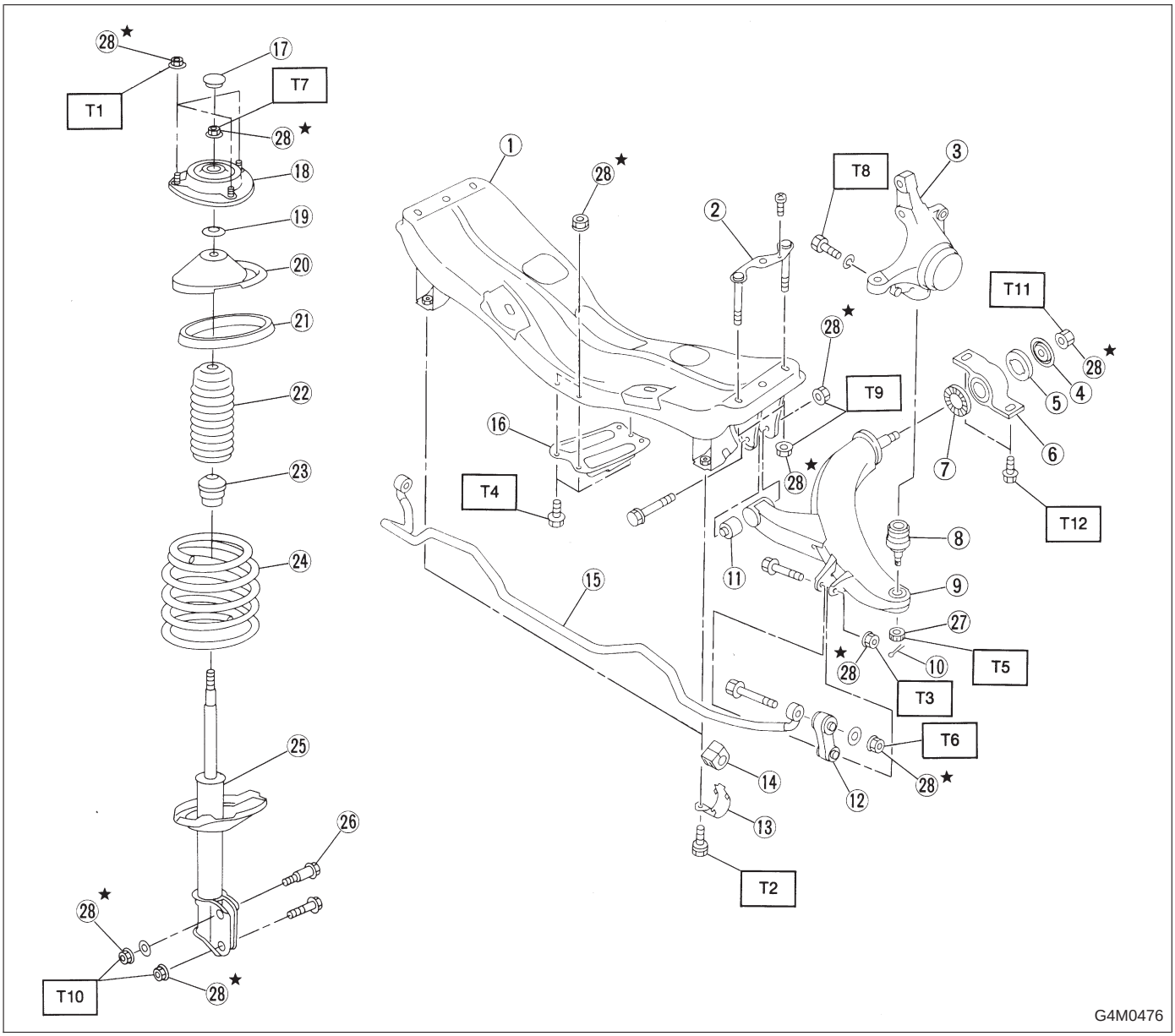

① Crossmember
② Bolt ASSY
③ Housing
④ Washer
⑤ Stop rubber (Rear)
⑥ Rear bushing
⑦ Stop rubber (Front)
⑧ Ball joint
⑨ Transverse link
⑩ Cotter pin
⑪ Front bushing
⑫ Stabilizer link
⑬ Clamp
⑭ Bushing
⑮ Stabilizer
⑯ Jack-up plate
⑰ Dust seal
⑱ Strut mount
⑲ Spacer
⑳ Upper spring seat
㉑ Rubber seat
㉒ Dust cover
㉓ Helper
㉔ Coil spring
㉕ Damper strut
㉖ Adjusting bolt
㉗ Castle nut
㉘ Self-locking nut

Tightening torque: N·m (kg-m, ft-lb)
T1: 20±6 (2.0±0.6, 14.5±4.3)
T2: 25±4 (2.5±0.4, 18.1±2.9)
T3: 29±5 (3.0±0.5, 21.7±3.6)
T4: 32±10 (3.3±1.0, 24±7)
T5: 39 (4, 29)
T6: 44±6 (4.5±0.6, 32.5±4.3)
T7: 49^{+10}_{-0} (5.0^{+10}_{-0}, 36^{+7}_{-0})
T8: 49±10 (5.0±1.0, 36±7)
T9: 98±15 (10.0±1.5, 72±11)
T10:152±20 (15.5±2.0, 112±14)
T11:196±25 (20.0±2.5, 145±18)
T12:245±49 (25.0±5.0, 181±36)

COMPONENT PARTS

2. REAR SUSPENSION (AWD MODEL)

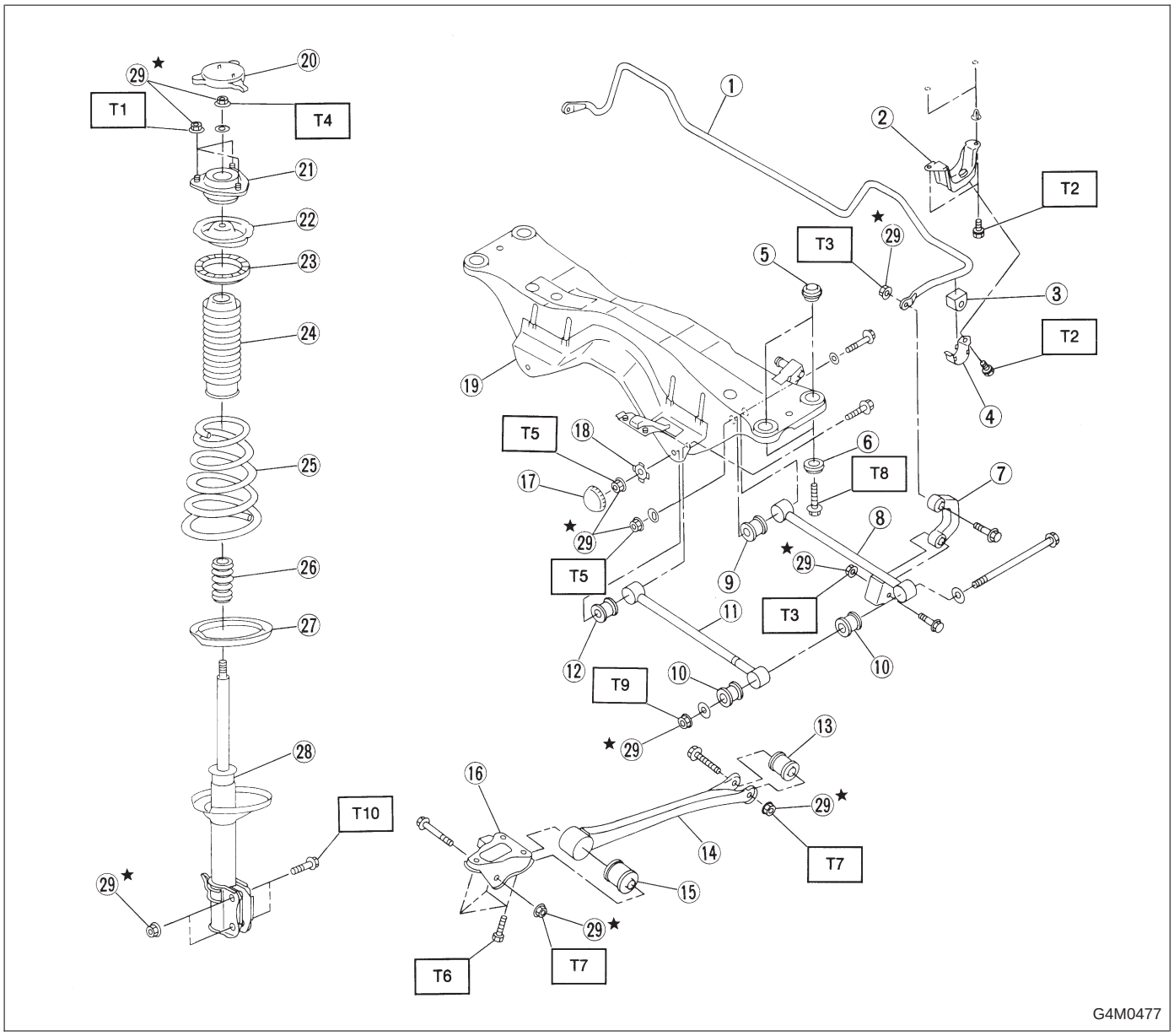

① Stabilizer
② Stabilizer bracket
③ Stabilizer bushing
④ Clamp
⑤ Floating bushing
⑥ Stopper
⑦ Stabilizer link
⑧ Rear lateral link
⑨ Bushing (C)
⑩ Bushing (A)
⑪ Front lateral link
⑫ Bushing (B)
⑬ Trailing link rear bushing
⑭ Trailing link
⑮ Trailing link front bushing
⑯ Trailing link bracket
⑰ Cap
⑱ Washer
⑲ Crossmember
⑳ Cap
㉑ Strut mount
㉒ Spring seat
㉓ Rubber seat upper
㉔ Dust cover
㉕ Coil spring
㉖ Helper
㉗ Rubber seat lower
㉘ Damper strut
㉙ Self-locking nut

Tightening torque: N·m (kg-m, ft-lb)
T1: 20±6 (2.0±0.6, 14.5±4.3)
T2: 25±7 (2.5±0.7, 18.1±5.1)
T3: 44±6 (4.5±0.6, 32.5±4.3)
T4: 59±10 (6.0±1.0, 43±7)
T5: 98±15 (10.0±1.5, 72±11)
T6: 98±20 (10.0±2.0, 72±14)
T7: 113±15 (11.5±1.5, 83±11)
T8: 127±20 (13.0±2.0, 94±14)
T9: 137±20 (14.0±2.0, 101±14)
T10: 196^{+39}_{-10} ($20.0^{+4.0}_{-1.0}$, 145^{+29}_{-7})

3. REAR SUSPENSION (FWD MODEL)

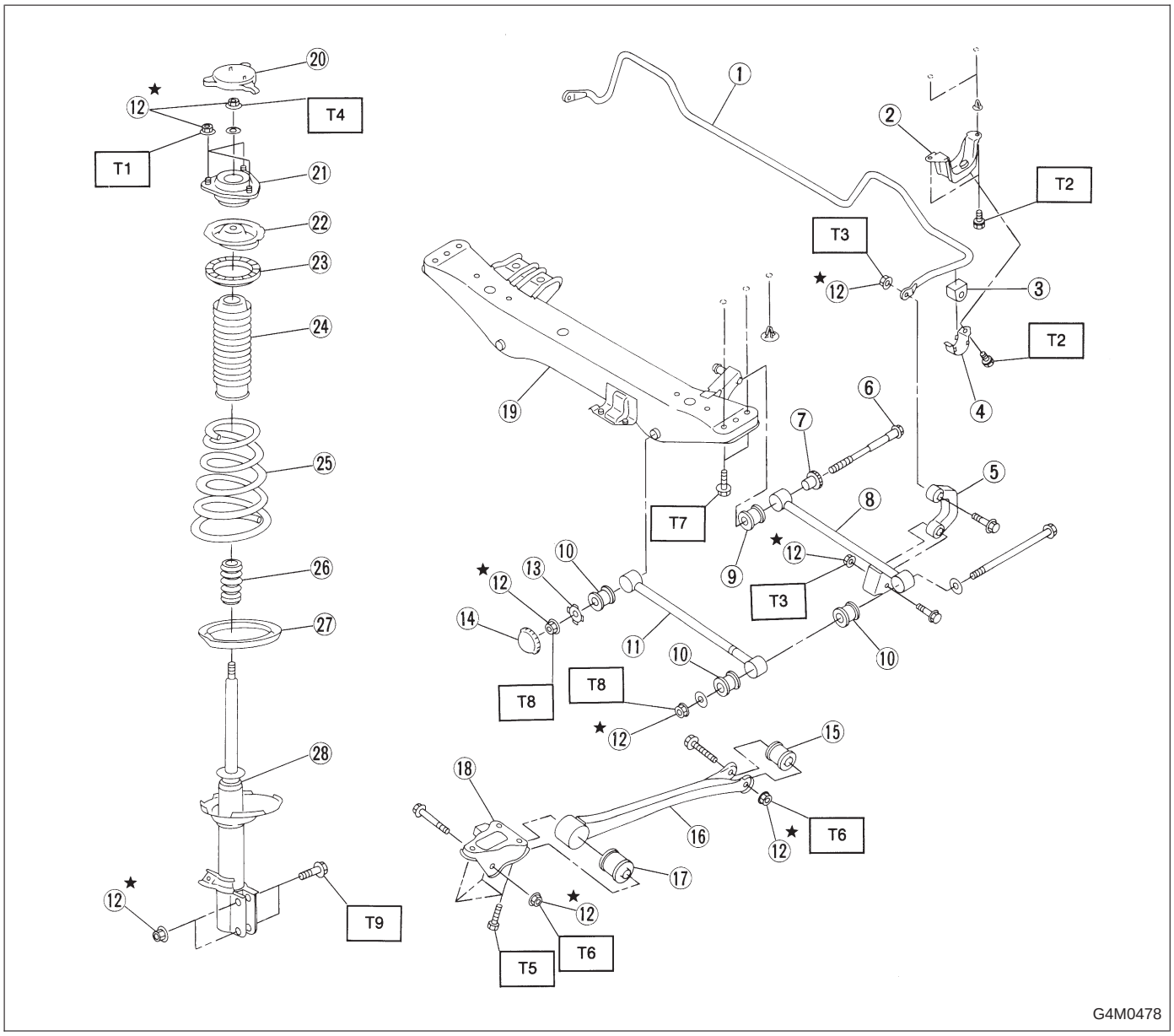

① Stabilizer
② Stabilizer bracket
③ Stabilizer bushing
④ Clamp
⑤ Stabilizer link
⑥ Adjusting bolt
⑦ Adjusting wheel
⑧ Rear lateral link
⑨ Bushing (D)
⑩ Bushing (A)
⑪ Front lateral link
⑫ Self-locking nut
⑬ Washer
⑭ Cap
⑮ Trailing link rear bushing
⑯ Trailing link
⑰ Trailing link front bushing
⑱ Trailing link bracket
⑲ Crossmember
⑳ Cap
㉑ Strut mount
㉒ Spring seat
㉓ Rubber seat upper
㉔ Dust cover
㉕ Coil spring
㉖ Helper
㉗ Rubber seat lower
㉘ Damper strut

Tightening torque: N·m (kg-m, ft-lb)
T1: 20±6 (2.0±0.6, 14.5±4.3)
T2: 25±7 (2.5±0.7, 18.1±5.1)
T3: 44±6 (4.5±0.6, 32.5±4.3)
T4: 59±10 (6.0±1.0, 43±7)
T5: 98±20 (10.0±2.0, 72±14)
T6: 113±15 (11.5±1.5, 83±11)
T7: 127±20 (13.0±2.0, 94±14)
T8: 137±20 (14.0±2.0, 101±14)
T9: 196^{+39}_{-10} ($20.0^{+4.0}_{-1.0}$, 145^{+29}_{-7})

1. On-car Services

A: WHEEL ALIGNMENT

Check, adjust and/or measure wheel alignment in accordance with procedures indicated below:

1. Wheel arch height (Front and rear)
2. Caster (Front)
3. Camber (Front and rear)
4. Rear toe-in
5. Thrust angle (Rear)
6. Front toe-in
7. Wheel steering angle

1. WHEEL ARCH HEIGHT

1) Adjust tire pressure to specifications.
2) Set vehicle under “curb weight” conditions. (Empty luggage compartment, install spare tire, jack, service tools, and top up fuel tank.)
3) Set steering wheel in a wheel-forward position.
4) Suspend thread from wheel arch (point “A” in figure below) to determine a point directly above center of spindle.
5) Measure distance between measuring point “A” and center of spindle.

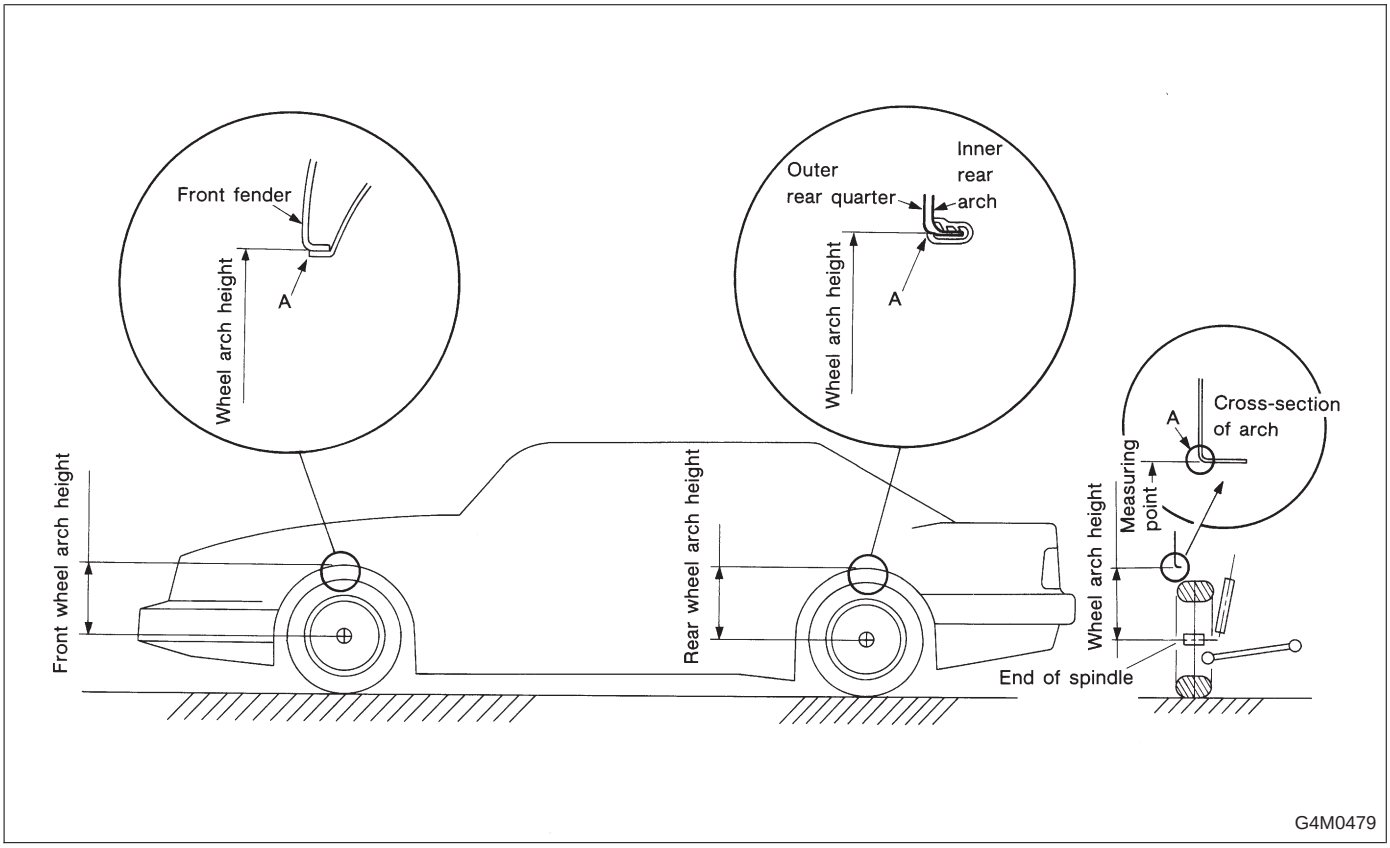

Vehicles		Specified wheel arch height mm (in)	
		Front	Rear
Sedan	FWD	391^{+12}_{-24} ($15.39^{+0.47}_{-0.94}$)	378^{+12}_{-24} ($14.88^{+0.47}_{-0.94}$)
	AWD	391^{+12}_{-24} ($15.39^{+0.47}_{-0.94}$)	379^{+12}_{-24} ($14.92^{+0.47}_{-0.94}$)
Wagon	FWD	391^{+12}_{-24} ($15.39^{+0.47}_{-0.94}$)	378^{+12}_{-24} ($14.88^{+0.47}_{-0.94}$)
	AWD	391^{+12}_{-24} ($15.39^{+0.47}_{-0.94}$)	379^{+12}_{-24} ($14.92^{+0.47}_{-0.94}$)

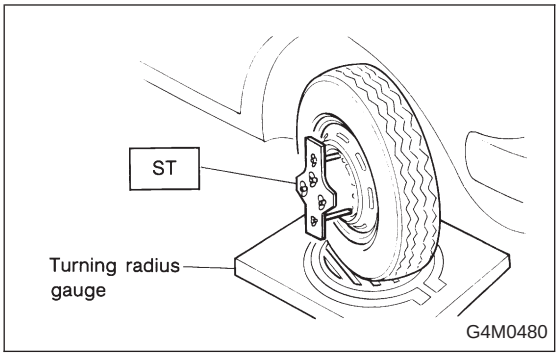

2. CAMBER AND CASTER

● Inspection

1) Place front wheel to be measured on turning radius gauge. Make sure vehicle is level and ground contacting surfaces of front and rear wheels are set at the same height.

2) Set ST into the center of the wheel, and then install the wheel alignment gauge.

ST 927380000 ADAPTER

NOTE:
Refer to the “SPECIFICATIONS AND SERVICE DATA” for the camber and caster values.

● Front camber adjustment

1) Loosen two self-locking nuts located at lower front portion of strut.

CAUTION:
● When adjusting bolt needs to be adjusted, hold its head with a wrench and turn self-locking nut.
● Discard loosened self-locking nut and replace with a new one.

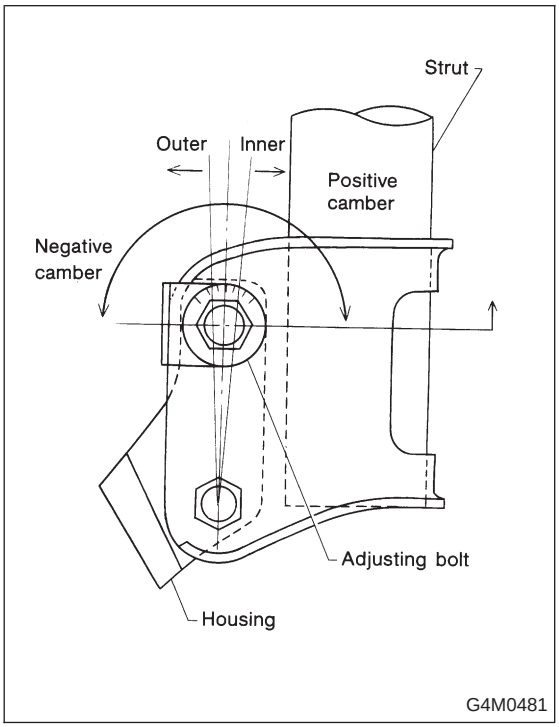

2) Turn camber adjusting bolt so that camber is set at the middle value of specifications.

NOTE:
Moving the adjusting bolt by one scale graduation changes camber by approximately 0°10′.

	Left side	Right side
Rotate clockwise	Camber is increased.	Camber is decreased.
Rotate counterclockwise	Camber is decreased.	Camber is increased.

3) Tighten the two self-locking nuts.

Tightening torque:
152±20 N·m (15.5±2.0 kg-m, 112±14 ft-lb)

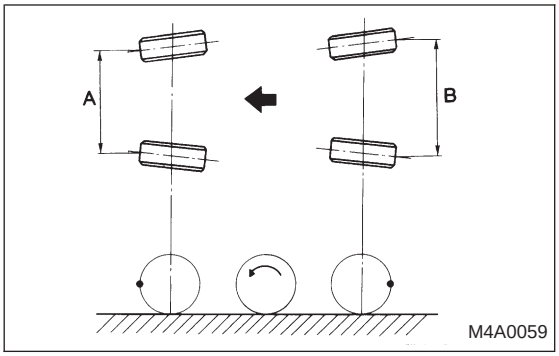

3. FRONT WHEEL TOE-IN

● Inspection

1) Using a toe gauge, measure front wheel toe-in.

Toe-in: 0±3 mm (0±0.12 in)

2) Mark rear sides of left and right tires at height corresponding to center of spindles and measure distance “B” between marks.

3) Move vehicle forward so that marks line up with front sides at height corresponding to center of spindles.

4) Measure distance “A” between left and right marks. Toe-in can then be obtained by the following equation:

B − A = Toe-in

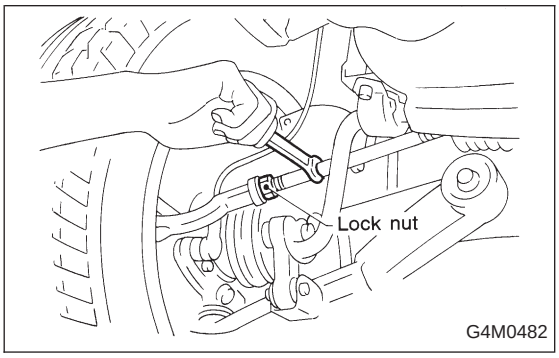

● Adjustment

1) Loosen the left and right side setting tie-rods lock nuts.

2) Turn the left and right tie rods equal amounts until the toe-in is at the middle value of specifications.

Both the left and right tie-rods are right-hand threaded. To increase toe-in, turn both tie-rods clockwise equal amounts (as viewed from the inside of the vehicle).

3) Tighten tie-rod lock nut.

Tightening torque:
83±5 N·m (8.5±0.5 kg-m, 61.5±3.6 ft-lb)

CAUTION:
Correct tie-rod boot, if it is twisted.

NOTE:
Check the left and right wheel steering angle is within specifications.

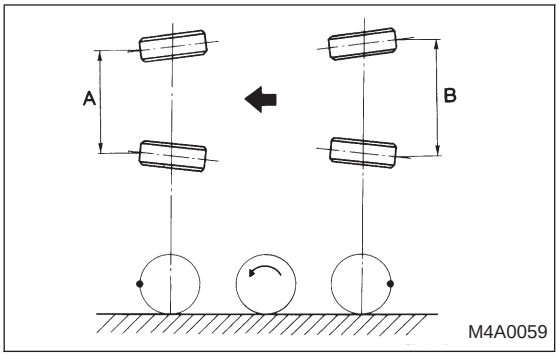

4. REAR WHEEL TOE-IN (FWD MODEL)

● Inspection

Using a toe gauge, measure rear wheel toe-in.

Toe-in: 0±3 mm (0±0.12 in)

2) Mark rear sides of left and right tires at height corresponding to center of spindles and measure distance “B” between marks.

3) Move vehicle forward so that marks line up with front sides at height corresponding to center of spindles.

4) Measure distance “A” between left and right marks. Toe-in can then be obtained by the following equation:

B − A = Toe-in

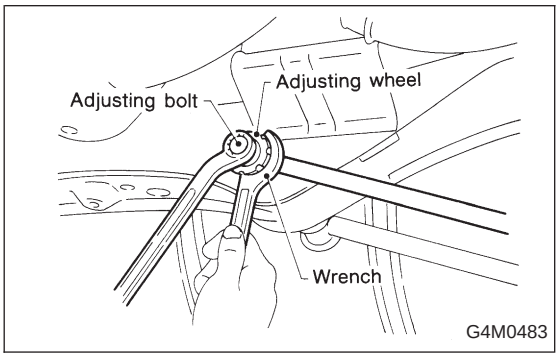

● Adjustment

1) Remove cap from lateral link and loosen self-locking nut.

CAUTION:

- **When loosening or tightening adjustment bolt, hold bolt head and loosen self-locking nut.**
- **Replace self-locking nut with a new one.**

2) Using two wrenches, turn adjusting wheel and adjusting bolt equally in opposite directions so that toe-in is at the middle value of specification.

Rotary direction of adjusting wheel and adjusting bolt		Left wheel toe-in	Right wheel toe-in
Turn adjusting wheel counterclockwise and adjusting bolt clockwise.	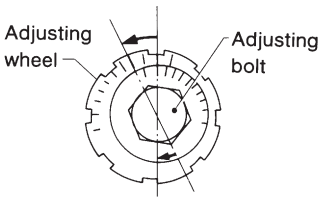	Toe-in is increased.	Toe-in is decreased.
Turn adjusting wheel clockwise and adjusting bolt counterclockwise.	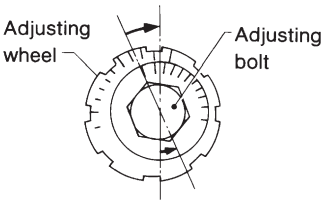	Toe-in is decreased.	Toe-in is increased.

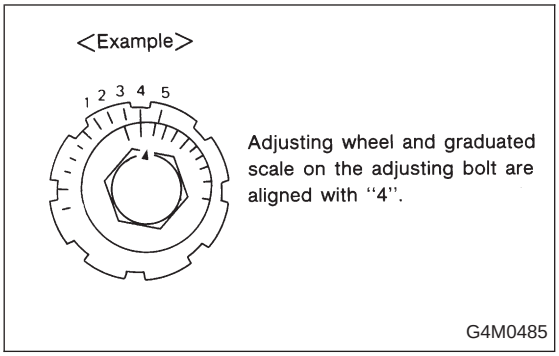

NOTE:
● When toe-ins for left and right wheels are adjusted at the same time, moving one scale graduation changes toe-in by approximately 4 mm (0.16 in.)
● Turn adjusting wheel and adjusting bolt equally in opposite directions so that same scale graduations are positioned directly above center of the adjusting bolt.

3) Tighten self-locking nut.

Tightening torque:
137±20 N·m (14±2 kg-m, 101±14 ft-lb)

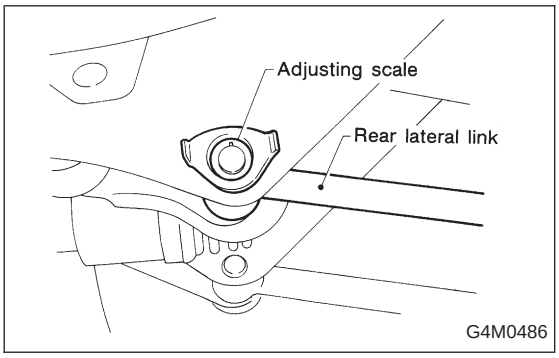

5. REAR WHEEL TOE-IN (AWD MODEL)

● Inspection

Toe-in:
0±3 mm (0±0.12 in)

● Adjustment

1) Loosen self-locking nut on inner side of rear lateral link.

CAUTION:
● When loosening or tightening adjusting bolt, hold bolt head and turn self-locking nut.
● Discard loosened self-locking nut and replace with a new one.

2) Turn adjusting bolt head until toe-in and -out are at the middle value of specifications.

Rotary direction of adjusting bolt	Left wheel toe-in	Right wheel toe-in
Clockwise 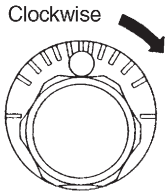 H4M1016A	Toe-in is increased.	Toe-in is decreased.
Counterclockwise 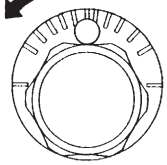 H4M1017A	Toe-in is decreased.	Toe-in is increased.

NOTE:
Movement of one scale graduation changes toe-in by approximately 3 mm (0.12 in).

3) Tighten self-locking nut.

Tightening torque:
98±15 N·m (10±1.5 kg-m, 72±11 ft-lb)

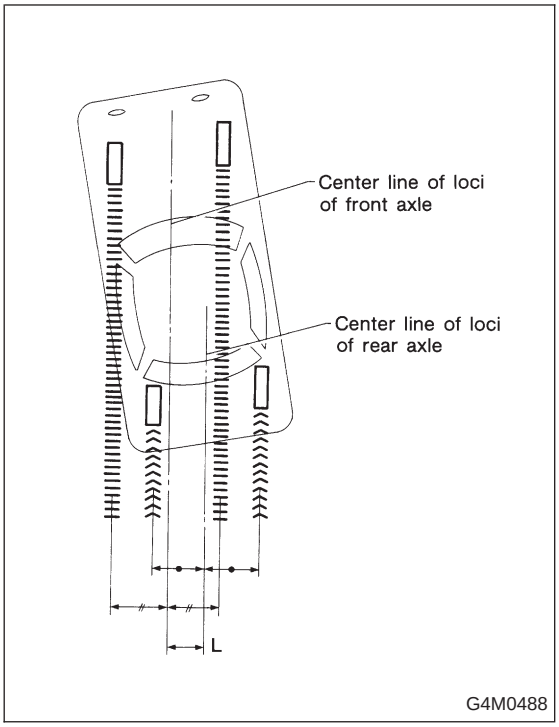

6. THRUST ANGLE

● Inspection

1) Position vehicle on a level surface.
2) Move vehicle 3 to 4 meters directly forward.
3) Determine locus of both front and rear axles.
4) Measure distance “L” between center line of loci of the axles.

(For reference)

· Thrust angle is less than 20’ when “L” is equal to or less than 15 mm (0.59 in).

● Adjustment

Make thrust angle adjustments by turning toe-in adjusting bolts of rear suspension equally in the same direction.

NOTE:
On FWD models, turn one rear wheel in the opposite direction of the adjusting bolt by the same amount as for the adjusting wheel.

(For reference)

· When one rear wheel is adjusted in a toe-in direction, adjust the other rear wheel equally in toe-out direction, in order to make thrust angle adjustment.

· When left and right adjusting bolts are turned incrementally by one graduation in the same direction (except for FWD models), the thrust angle of the AWD model will change approximately 10’ [“L” is almost equal to 7.5 mm (0.295 in)] and the thrust angle of the FWD model will change approximately 12’ [“L” is almost equal to 9 mm (0.35 in)].

Tolerance of thrust angle:
Less than ±20’

7. STEERING ANGLE

● Inspection

1) Place vehicles on a turning radius gauge.
2) While depressing brake pedal, turn steering wheel fully to the left and right. With steering wheel held at each fully turned position, measure both the inner and outer wheel steering angle.

Tolerance of steering angle:
Inner wheel $39^{\circ}_{-1.5^{\circ}}^{+1^{\circ}}$
Outer wheel $33.5^{\circ}_{-1.5^{\circ}}^{+1^{\circ}}$

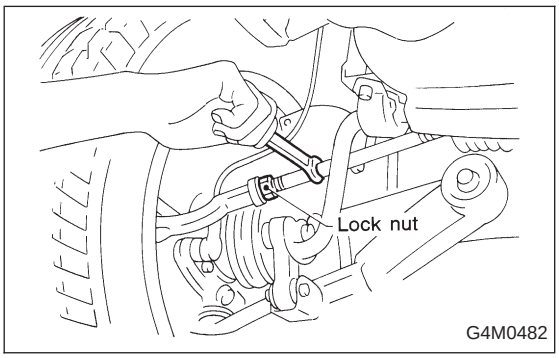

● Adjustment

Turn tie-rod to adjust steering angle of both inner and outer wheels.

CAUTION:
- **Check toe-in.**
- **Correct boot if it is twisted.**

2. Front Transverse Link

A: REMOVAL

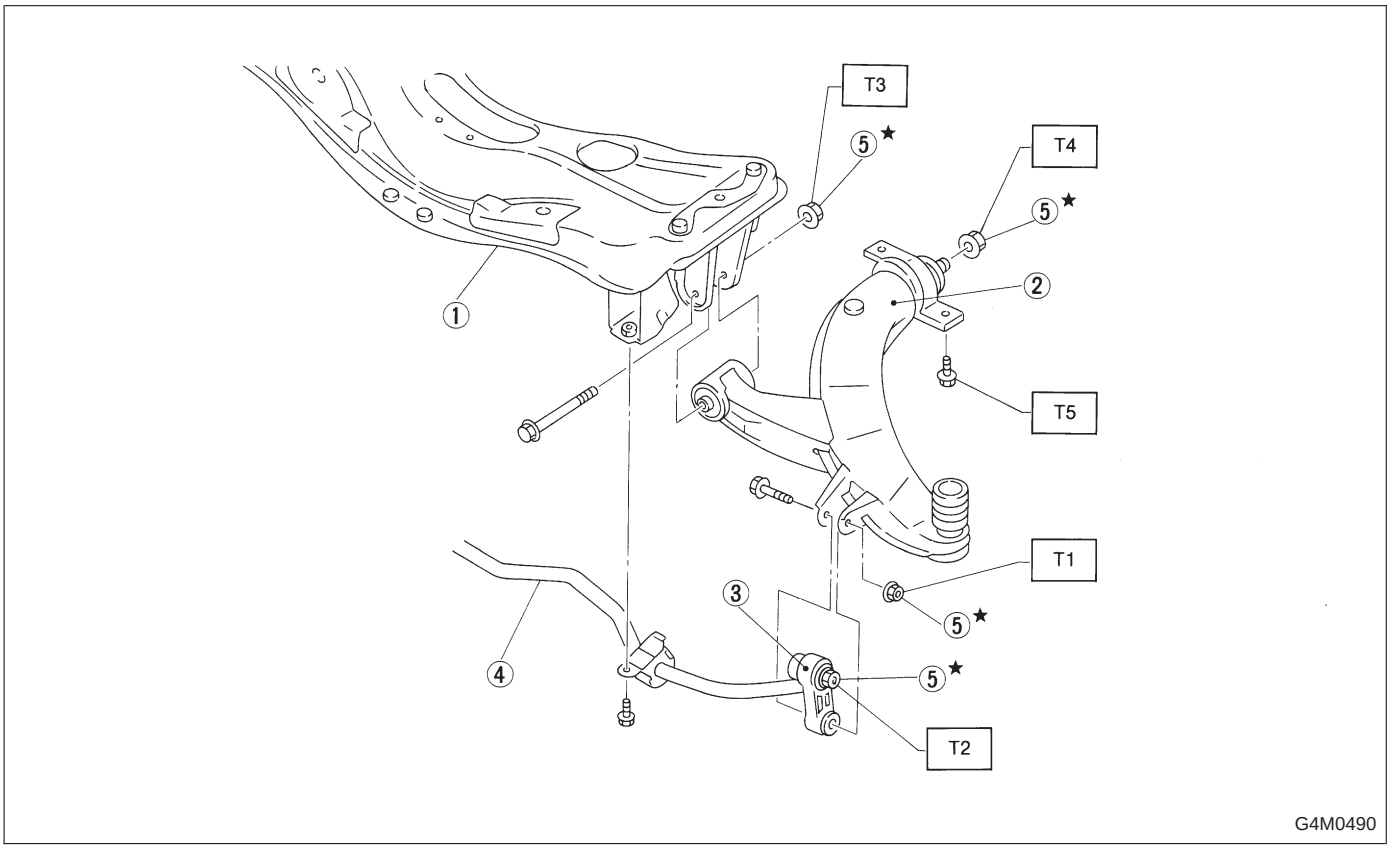

① Front crossmember
② Transverse link
③ Stabilizer link
④ Front stabilizer
⑤ Self-locking nut

Tightening torque: N·m (kg-m, ft-lb)
T1: 29±5 (3.0±0.5, 21.7±3.6)
T2: 44±6 (4.5±0.6, 32.5±4.3)
T3: 98±15 (10.0±1.5, 72±11)
T4: 196±25 (20.0±2.5, 145±18)
T5: 245±49 (25.0±5.0, 181±36)

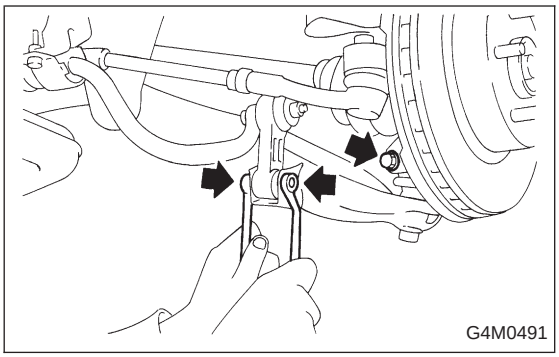

1) Disconnect stabilizer link from transverse link.
2) Remove bolt securing ball joint of transverse link to housing.

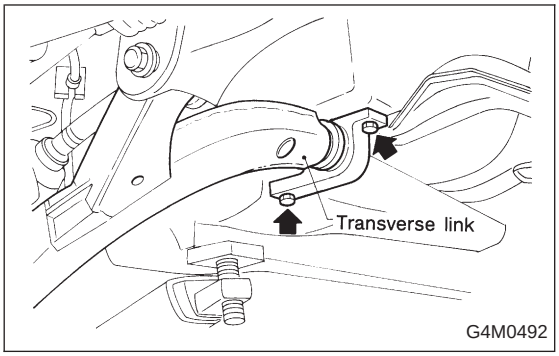

3) Remove nuts (do not remove bolts.) securing transverse link to crossmember.
4) Remove two bolts securing bushing bracket of transverse link to car body at rear bushing location.

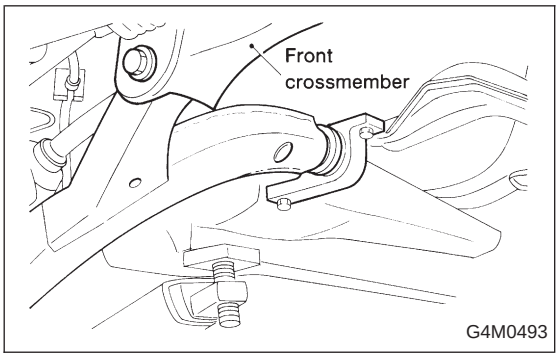

5) Extract ball joint from housing.
6) Remove bolts securing transverse link to crossmember and extract transverse link from crossmember.

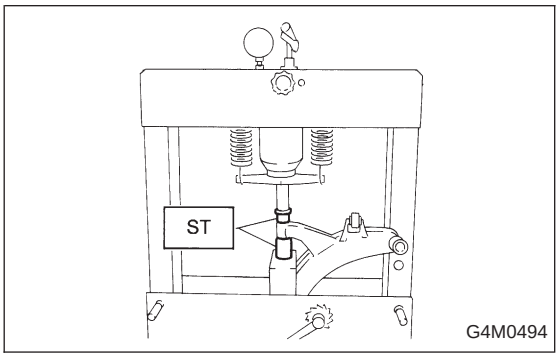

B: DISASSEMBLY

1. FRONT BUSHING

Using ST, press front bushing out of place.

ST 927680000 INSTALLER & REMOVER SET

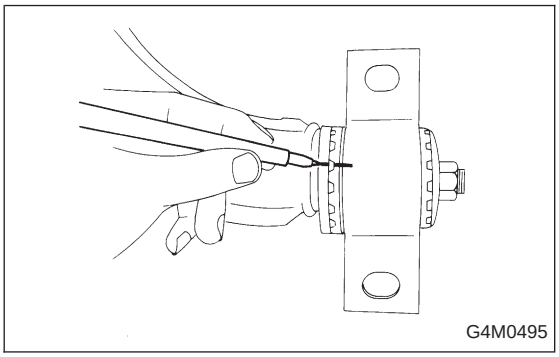

2. REAR BUSHING

1) Scribe an aligning mark on transverse link and rear bushing.

2) Loosen nut and remove rear bushing.

C: INSPECTION

1) Check transverse link for wear, damage and cracks, and correct or replace if defective.
2) Check bushings for cracks, fatigue or damage.
3) Check rear bushing for oil leaks.

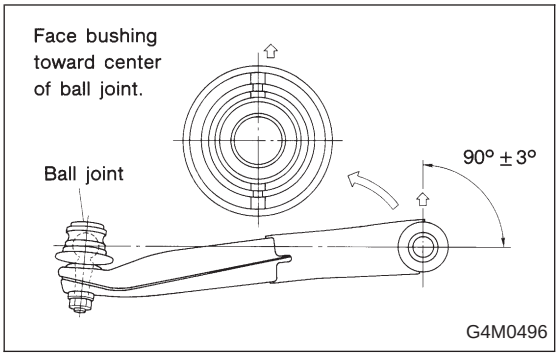

D: ASSEMBLY

1. FRONT BUSHING

To reassemble, reverse disassembly procedures.

CAUTION:
Install front bushing in correct direction, as shown in figure.

2. REAR BUSHING

1) Install rear bushing to transverse link and align aligning marks scribed on the two.
2) Tighten self-locking nut.

CAUTION:
- **Discard loosened self-locking nut and replace with a new one.**
- **While holding rear bushing so as not to change position of aligning marks, tighten self-locking nut.**

Tightening torque:
196±25 N·m (20.0±2.5 kg-m, 145±18 ft-lb)

E: INSTALLATION

1) Temporarily tighten the two bolts used to secure rear bushing of the transverse link to body.

NOTE:
These bolts should be tightened to such an extent that they can still move back and forth in the oblong shaped hole in the bracket (which holds the bushing).

2) Install bolts used to connect transverse link to cross-member and temporarily tighten with nuts.

CAUTION:
Discard loosened self-locking nut and replace with a new one.

3) Insert ball joint into housing.

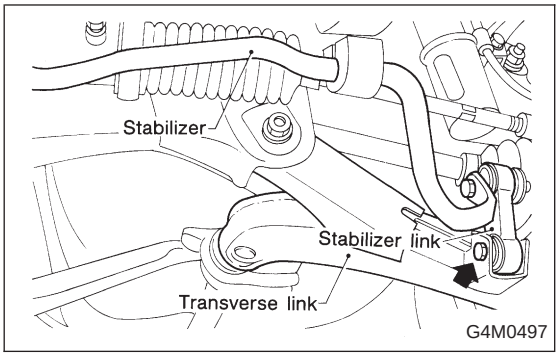

4) Connect stabilizer link to transverse link, and temporarily tighten bolts.

CAUTION:
Discard loosened self-locking nut and replace with a new one.

5) Tighten the following points in the order shown below when wheels are in full contact with the ground and vehicle is curb weight.

(1) Transverse link and stabilizer

Tightening torque:
29±5 N·m (3.0±0.5 kg-m, 21.7±3.6 ft-lb)

(2) Transverse link and crossmember

Tightening torque:
98±15 N·m (10.0±1.5 kg-m, 72±11 ft-lb)

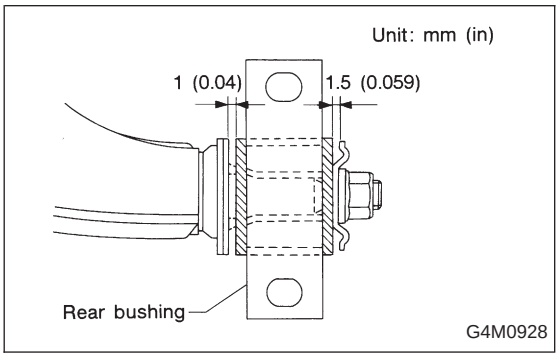

(3) Transverse link rear bushing and body

Tightening torque:
245±49 N·m (25±5 kg-m, 181±36 ft-lb)

NOTE:
Move rear bushing back and forth until transverse link-to-rear bushing clearance is established (as indicated in figure.) before tightening.

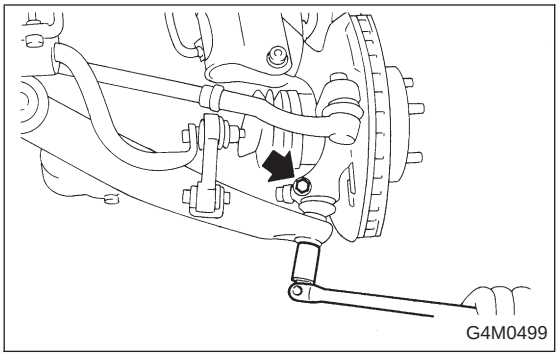
G4M0499

3. Front Ball Joint

A: REMOVAL

1) Remove the wheels.
2) Pull out the cotter pin from the ball stud, remove the castle nut, and extract the ball stud from the transverse link.
3) Remove the bolt securing the ball joint to the housing.
4) Extract the ball joint from the housing.

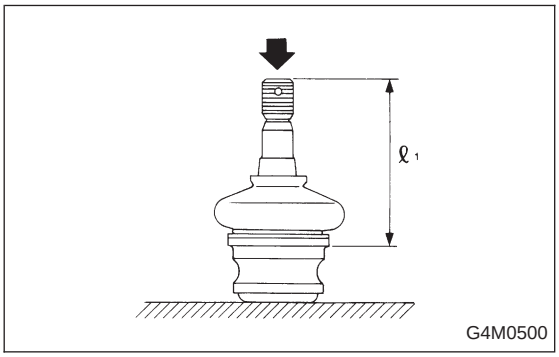

G4M0500

B: INSPECTION

1) Measure play of ball joint by the following procedures. Replace with a new one when the play exceeds the specified value.

(1) With 686 N (70 kg, 154 lb) loaded in the direction shown in the figure, measure dimension ℓ_1.

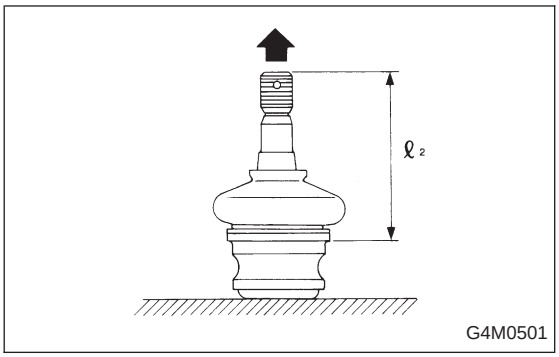

G4M0501

(2) With 686 N (70 kg, 154 lb) loaded in the opposite direction shown in the figure, measure dimension ℓ_2.
(3) Calculate plays from the following formula.
$S = \ell_2 - \ell_1$
(4) When plays is larger than the following value, replace with a new one.

FRONT BALL JOINT
Specified play for replacement: S
Less than 0.3 mm (0.012 in)

2) When play is smaller than the specified value, visually inspect the dust cover.
3) The ball joint and cover that have been removed must be checked for wear, damage or cracks, and any defective part must be replaced.
4) If the dust cover is damaged, replace with the new ball joint.

C: INSTALLATION

1) Install ball joint onto housing.

Torque (Bolt):
49 N·m (5.0 kg-m, 36 ft-lb)

CAUTION:
Do not apply grease to tapered portion of ball stud.

2) Connect ball joint to transverse link.

Torque (Castle nut):
39 N·m (4.0 kg-m, 29 ft-lb)

3) Retighten castle nut further within 60° until a slot in castle nut is aligned with the hole in ball stud end, then insert new cotter pin and bend it around castle nut.
4) Install front wheels.

4. Front Strut

A: REMOVAL

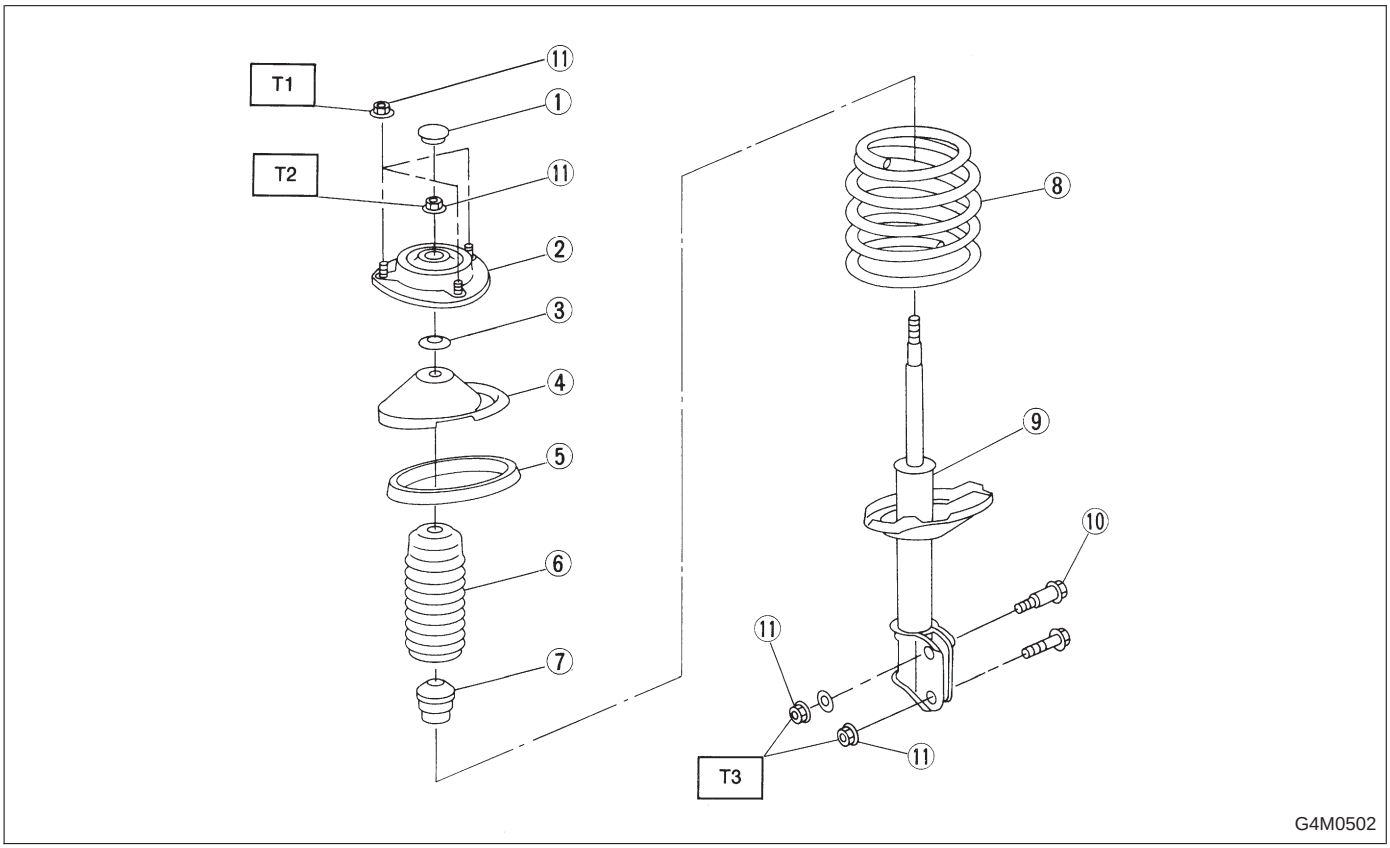

① Dust seal
② Strut mount
③ Spacer
④ Upper spring seat
⑤ Rubber seat
⑥ Dust cover
⑦ Helper
⑧ Coil spring
⑨ Damper strut
⑩ Adjusting bolt
⑪ Self-locking nut

Tightening torque: N·m (kg-m, ft-lb)
T1: 20±6 (2.0±0.6, 14.5±4.3)
T2: 49^{+10}_{-0} (5.0^{+10}_{-0}, 36^{+7}_{-0})
T3: 152±20 (15.5±2.0, 112±14)

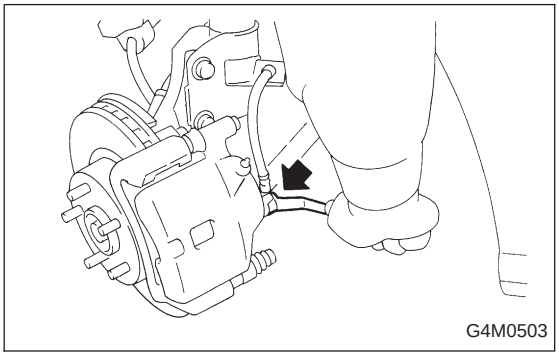

1) Remove wheel.
2) Depress brake pedal and hold it down using a wooden block etc.
3) Remove union bolts from caliper.

CAUTION:
Use brake hose cap to prevent brake fluid from escaping.

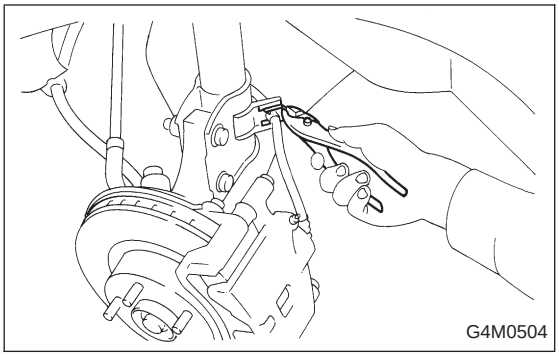

4) Remove brake hose clamp and disconnect brake hose from strut. Attach brake hose to body using gum tape.
5) Scribe an alignment mark on the camber adjusting bolt which secures strut to housing.
6) Remove bolt securing the A.B.S. sensor harness on models equipped with A.B.S.

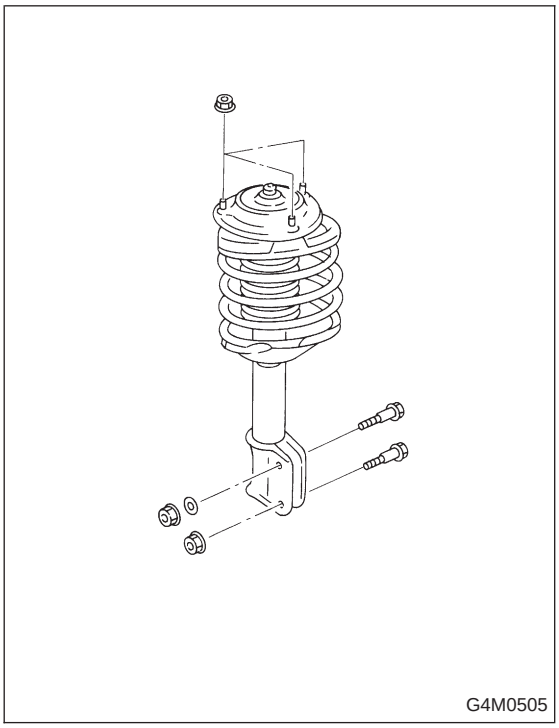

7) Remove two bolts securing housing to strut.

CAUTION:
While holding head of adjusting bolt, loosen self-locking nut.

8) Remove the three nuts securing strut mount to body.

B: DISASSEMBLY

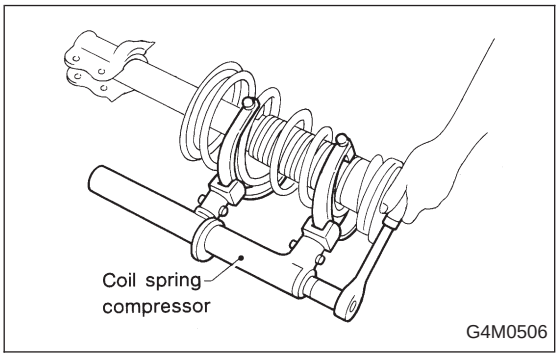

1) Using a coil spring compressor, compress coil spring.

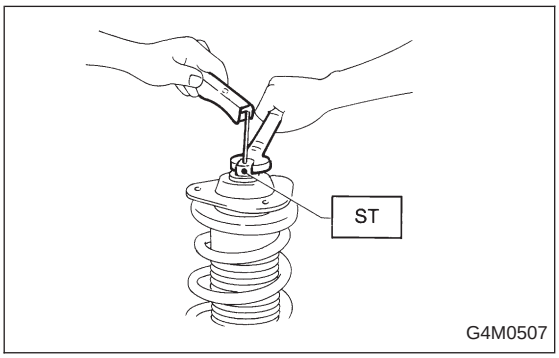

2) Using ST, remove self-locking nut.

ST 927760000 STRUT MOUNT SOCKET

3) Remove strut mount, upper spring seat and rubber seat from strut.
4) Gradually decreasing compression force, and remove coil spring.
5) Remove dust cover and helper spring.

C: INSPECTION

Check the disassembled parts for cracks, damage and wear, and replace with new parts if defective.

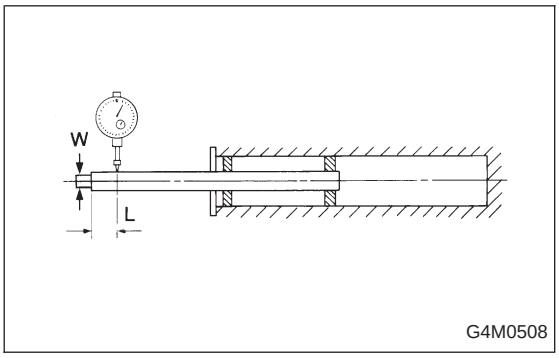

1. DAMPER STRUT

1) Check for oil leakage.
2) Move the piston rod up and down to check its operates smoothly without any binding.
3) Play of piston rod

Measure the play as follows:
Fix outer shell and fully extend the rod. Set a dial gauge at the end of the rod: L [10 mm (0.39 in)], then apply a force of: W [±20 N (±2 kg, ±4 lb)] to threaded portion. With the force of ±20 N (±2 kg, ±4 lb) applied, read both dial gauge readings, P_1 and P_2. The free play is determined by the following equation:

Limit of play:
Less than 0.8 mm (0.031 in)

If the play is greater, replace the strut.

2. STRUT MOUNT

Check rubber part for creep, cracks and deterioration, and replace it with new one if defective.

3. DUST COVER

If any cracks or damage are found, replace it with a new one.

4. COIL SPRING

One having permanent strain should be replaced with a new one. When vehicle posture is uneven, although there are no considerable reasons like tire puncture, uneven loading, etc., check coil spring for its free length, cracks, etc., referring to specifications, and replace it with a new one if defective.

5. HELPER

Replace it with new one if cracked or damaged.

D: ASSEMBLY

1) Before installing coil spring, strut mount, etc., on the strut, check for the presence of air in the dampening force generating mechanism of the strut since air prevents proper dampening force from being produced.

2) Checking for the presence of air

(1) Place the strut vertically with the piston rod facing up.
(2) Move the piston rod to the center of its entire stroke.
(3) While holding the piston rod end with fingertips, move the rod up and down.
(4) If the piston rod moves at least 10 mm (0.39 in) in step (3), purge air from the strut.

3) Air purging procedure

(1) Place the strut vertically with the piston rod facing up.
(2) Fully extend the piston rod.
(3) With the piston rod fully extended, place the piston rod side down. The strut must stand vertically.
(4) Fully contract the piston rod.
(5) Repeat steps (1) through (4) above 3 or 4 times.

NOTE:
After completely purging air from the strut, be sure to place the strut with the piston rod facing up. If it is laid down, check for entry of air in the strut as outlined under item 2) above.

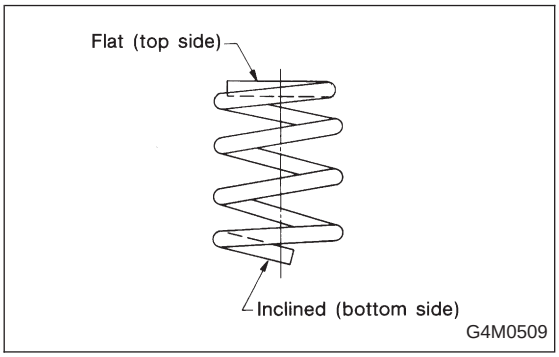

4) Using a coil spring compressor, compress the coil spring.

NOTE:
Make sure that the vertical installing direction of coil spring is as shown in figure.

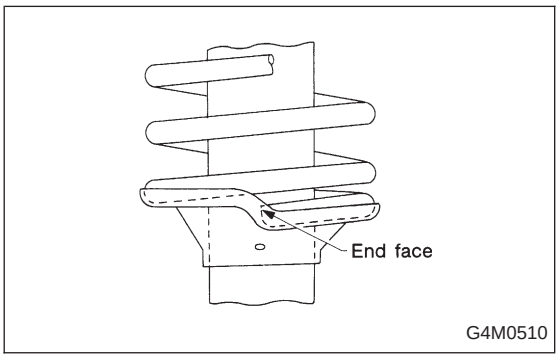

5) Set the coil spring correctly so that its end face fits well into the spring seat as shown.

6) Install helper and dust cover to the piston rod.

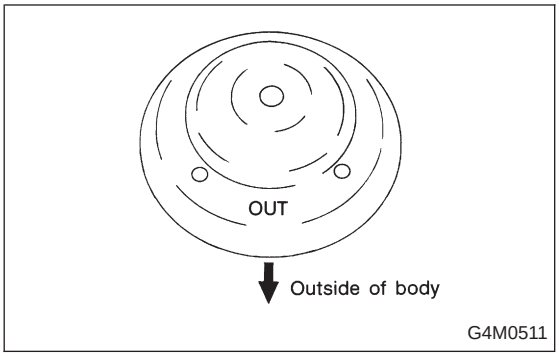

7) Pull the piston rod fully upward, and install rubber seat and spring seat.

NOTE:
Ensure that upper spring seat is positioned with “OUT” mark facing outward.

8) Install strut mount to the piston rod, and tighten the self-locking nut temporarily.

CAUTION:
Be sure to use a new self-locking nut.

9) Loosen the coil spring carefully.

10) Using hexagon wrench to prevent strut rod from turning, tighten self-locking nut with ST.

Tightening torque:
49^{+10}_{-0} N·m ($5.0^{+1.0}_{-0}$ kg-m, 36^{+7}_{-0} ft-lb)

ST 927760000 STRUT MOUNT SOCKET

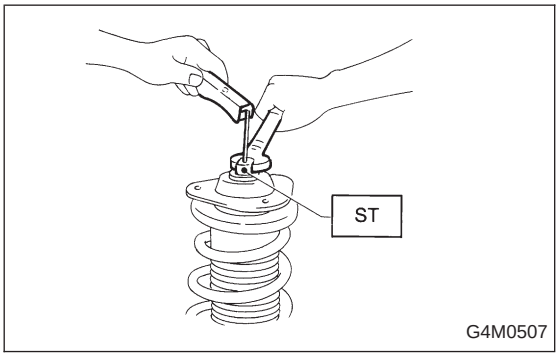

E: INSTALLATION

1) Install upper strut mount at upper side of strut to body and tighten with nuts.

Tightening torque:
20±6 N·m (2.0±0.6 kg-m, 14.5±4.3 ft-lb)

2) Install A.B.S. sensor harness to strut. (A.B.S. equipped models)

Tightening torque:
152±20 N·m (15.5±2.0 kg-m, 112±14 ft-lb)

3) Position aligning mark on camber adjustment bolt with aligning mark on lower side of strut.

CAUTION:
- **While holding head of adjusting bolt, tighten self-locking nut.**
- **Be sure to use new self-locking nut.**

Tightening torque:
152±20 N·m (15.5±2.0 kg-m, 112±14 ft-lb)

4) Install brake hose at lower side of strut with clamp.

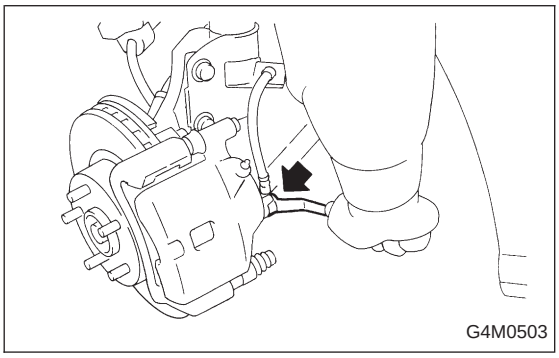

5) Install union bolts which secure brake caliper to brake hose.

Tightening torque:
18±3 N·m (1.8±0.3 kg-m, 13.0±2.2 ft-lb)

CAUTION:
Be sure to bleed air from brake system.

6) Install wheels.

NOTE:
Check wheel alignment and adjust if necessary.

5. Front Stabilizer

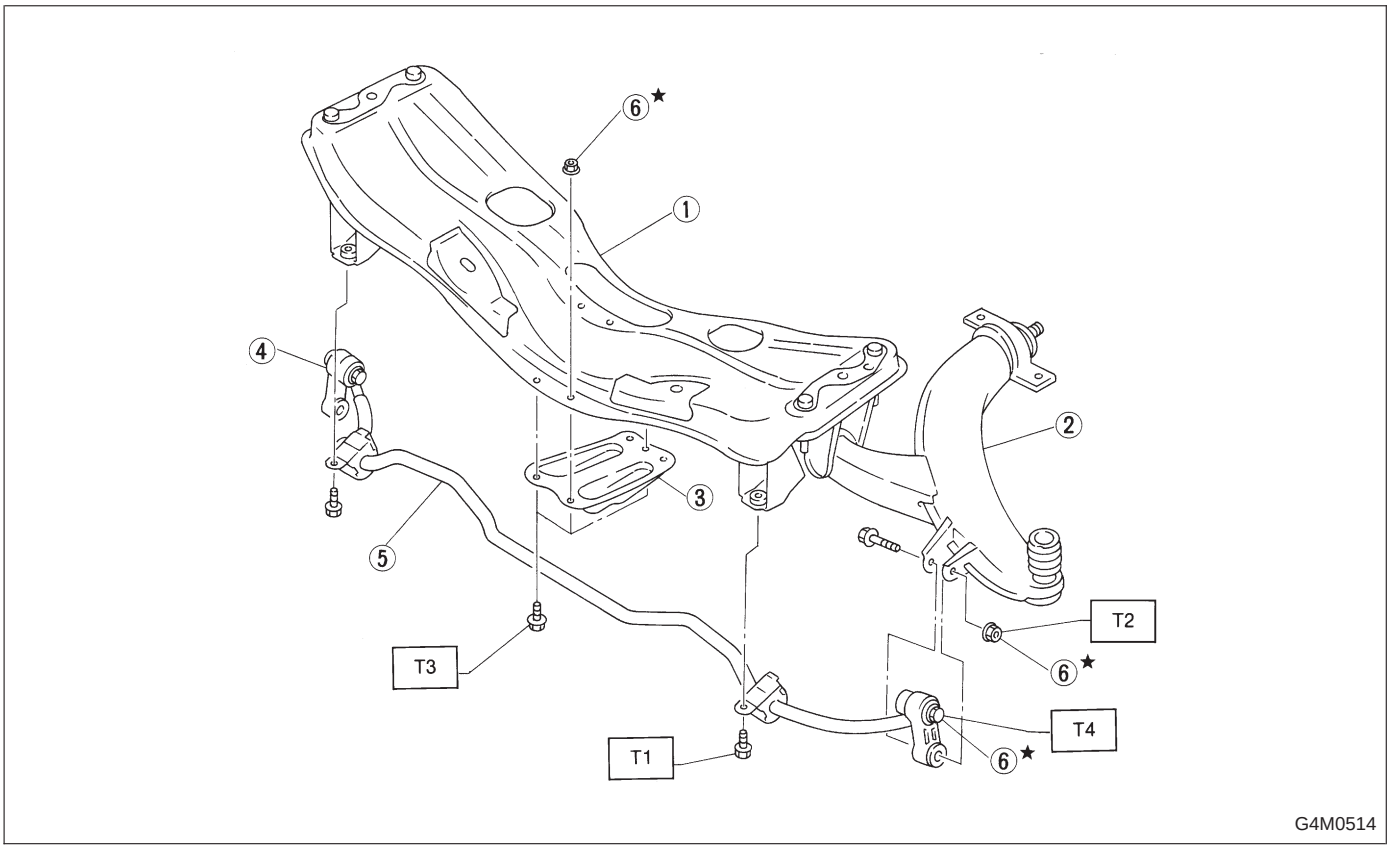

① Front crossmember
② Transverse link
③ Jack-up plate
④ Stabilizer link
⑤ Front stabilizer
⑥ Self-locking nut

Tightening torque: N·m (kg-m, ft-lb)
T1: 25±4 (2.5±0.4, 18.1±2.9)
T2: 29±5 (3.0±0.5, 21.7±3.6)
T3: 32±10 (3.3±1.0, 24±7)
T4: 44±6 (4.5±0.6, 32.5±4.3)

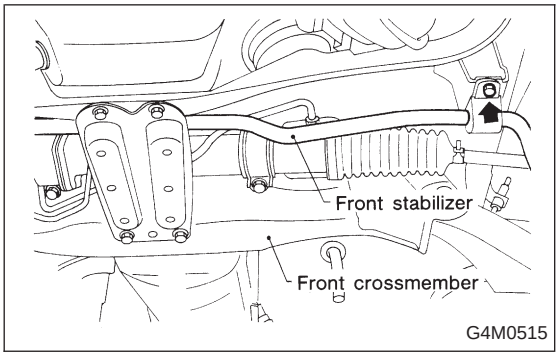

A: REMOVAL

1) Jack-up the front part of the vehicle.
2) Remove bolts which secure stabilizer to crossmember.

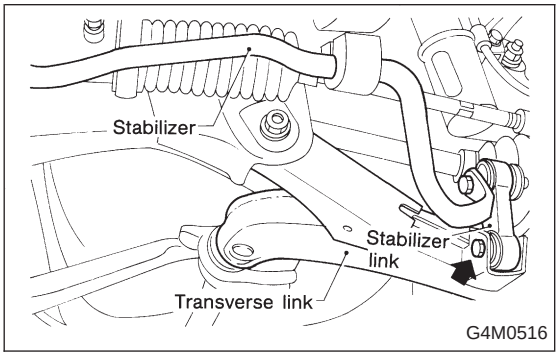

3) Remove bolts which secure stabilizer link to front transverse link.
4) Remove jack-up plate from lower part of crossmember.

B: INSPECTION

1) Check bushing for cracks, fatigue or damage.
2) Check stabilizer links for deformities, cracks, or damage, and bushing for protrusions from the hole of stabilizer link.

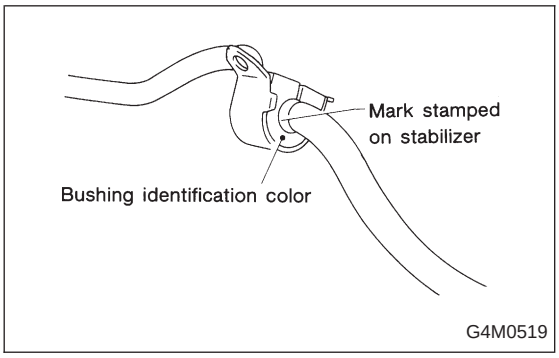

C: INSTALLATION

1) To install, reverse the removal procedure.

NOTE:
- Install bushing (on front crossmember side) while aligning it with paint mark on stabilizer.
- Ensure that bushing and stabilizer have the same identification colors when installing.

2) Always tighten rubber bushing location when wheels are in full contact with the ground and vehicle is curb weight.
3) Tightening torque:

Jack-up plate to crossmember:
32±10 N·m (3.3±1.0 kg-m, 24±7 ft-lb)
Stabilizer link to front transverse link:
29±5 N·m (3.0±0.5 kg-m, 21.7±3.6 ft-lb)
Stabilizer to crossmember:
25±4 N·m (2.5±0.4 kg-m, 18.1±2.9 ft-lb)

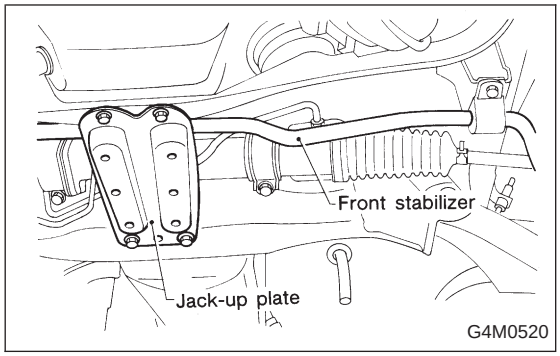

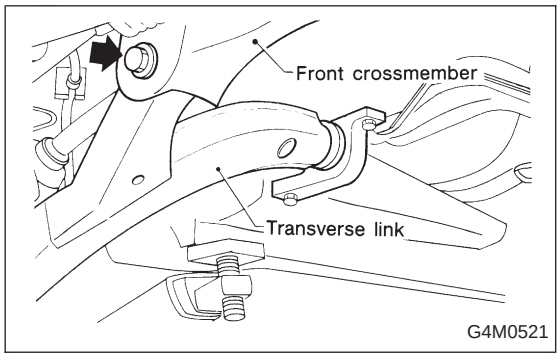

6. Front Crossmember

A: REMOVAL

1) Disconnect ground cable from battery.
2) Loosen front wheel nuts.
3) Jack-up vehicle, support it with safety stands (rigid racks), and remove front tires and wheels.
4) Remove both stabilizer and jack-up plate.
5) Disconnect tie-rod end from housing.
6) Remove front exhaust pipe.

7) Remove front transverse link from front crossmember.
8) Remove nuts attaching engine mount cushion rubber to crossmember.
9) Remove self-locking nuts connecting steering U/J and pinion shaft.
10) Lift engine by approx. 10 mm (0.39 in) by using chain block.
11) Support crossmember with a jack, remove nuts securing crossmember to body and lower crossmember gradually along with steering gearbox.

CAUTION:
When removing crossmember downward, be careful that tie-rod end does not interfere with DOJ boot.

B: INSTALLATION

1) Installation is in the reverse order of removal procedures.

CAUTION:
Always tighten rubber bushing location when wheels are in full contact with the ground and vehicle is curb weight.

2) Tightening torque

Transverse link bushing to crossmember:
98±15 N·m (10.0±1.5 kg-m, 72±11 ft-lb)
Stabilizer to bush:
25±4 N·m (2.5±0.4 kg-m, 18.1±2.9 ft-lb)
Tie-rod end to housing:
27.0±2.5 N·m (2.75±0.25 kg-m, 19.9±1.8 ft-lb)
Front cushion rubber to crossmember:
69±15 N·m (7.0±1.5 kg-m, 51±11 ft-lb)
Universal joint to pinion shaft:
24±3 N·m (2.4±0.3 kg-m, 17.4±2.2 ft-lb)
Crossmember to body:
98±15 N·m (10.0±1.5 kg-m, 72±11 ft-lb)

3) Purge air from power steering system.

NOTE:
Check wheel alignment and adjust if necessary.

7. Rear Trailing Link

A: REMOVAL

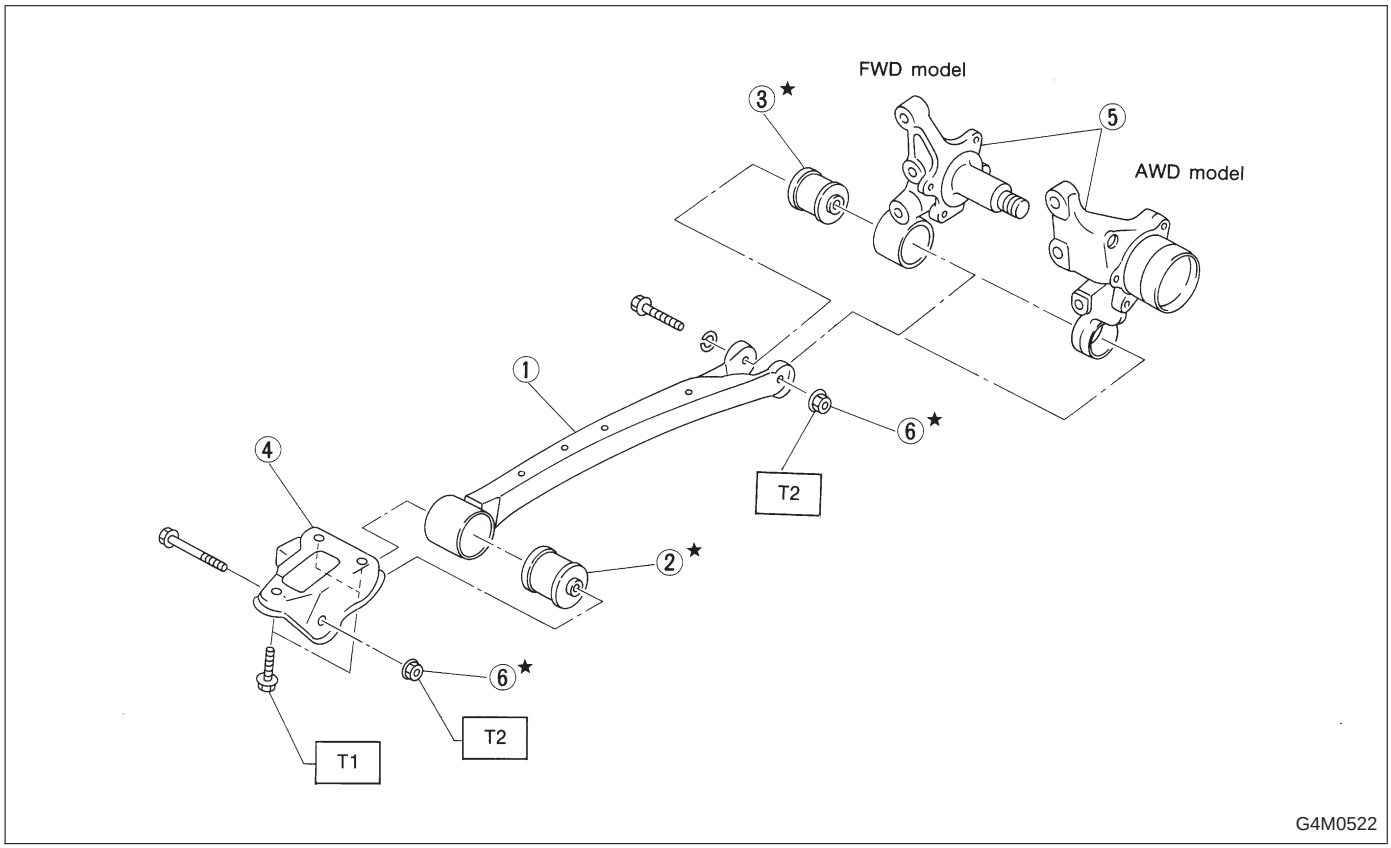

① Trailing link
② Front bushing
③ Rear bushing
④ Bracket
⑤ Housing
⑥ Self-locking nut

Tightening torque: N·m (kg-m, ft-lb)
T1: 98±20 (10.0±2.0, 72±14)
T2: 113±15 (11.5±1.5, 83±11)

1) Loosen rear wheel nuts.
2) Jack-up vehicle, support it with safety stands (rigid racks) and remove rear wheels.
3) Remove both rear parking brake clamp and A.B.S. sensor harness. (only vehicle equipped with A.B.S.)

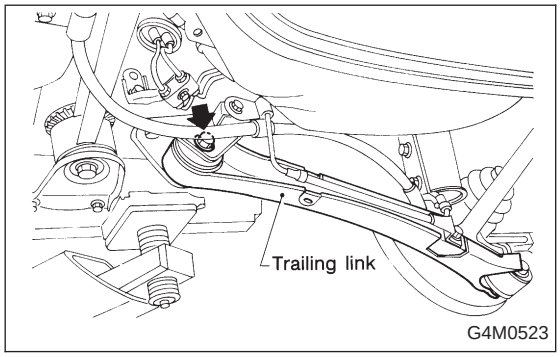

4) Remove bolt which secure trailing link to trailing link bracket.
5) Remove bolt which secure trailing link to rear housing.

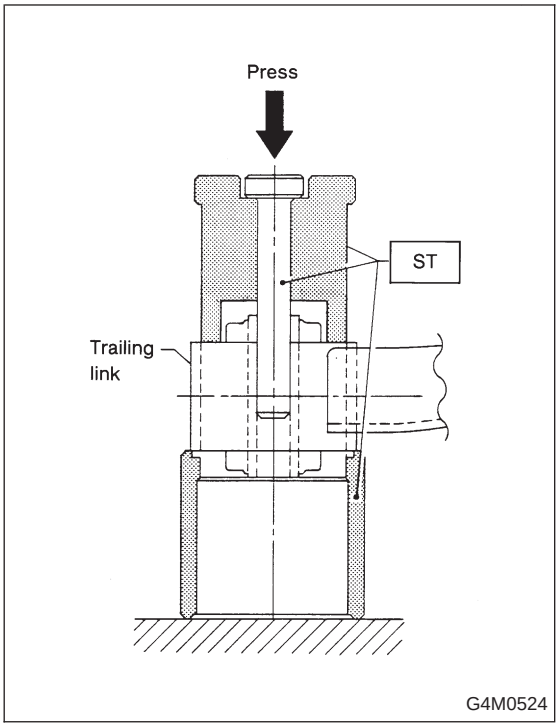

B: DISASSEMBLY

1. FRONT BUSHING

Using ST, press front bushing out of place.

ST 927720000 INSTALLER & REMOVER SET

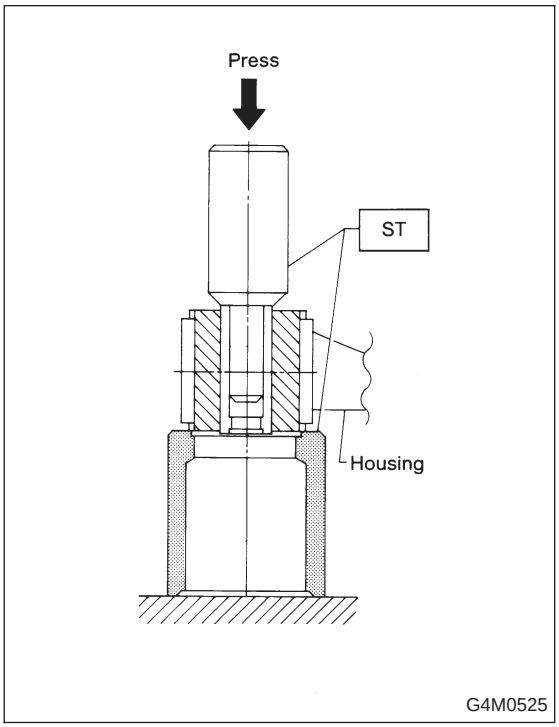

2. REAR BUSHING

1) Remove housing. Refer to “4-2. WHEELS AND AXLES” for removal procedures.
2) Using ST, press rear bushing out of place.

ST 927730000 INSTALLER & REMOVER SET

C: INSPECTION

Check trailing links for bends, corrosion or damage.

D: ASSEMBLY

To assemble, reverse above disassembly procedures.

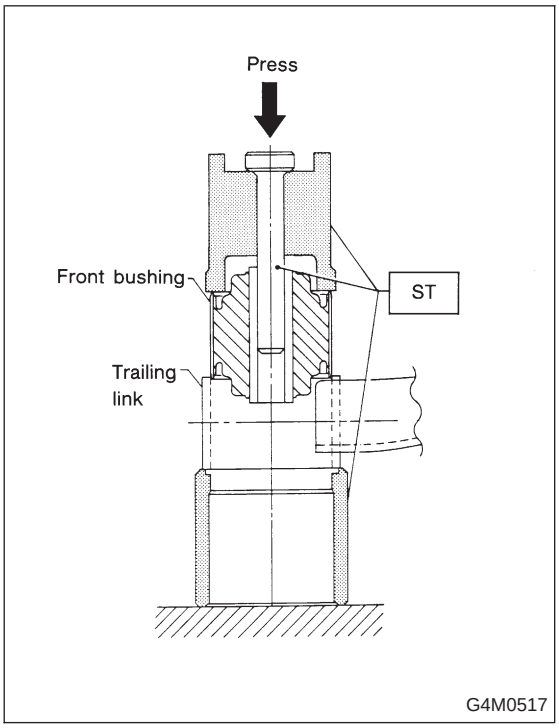

1. FRONT BUSHING

Using ST, press bushing into trailing link.

ST 927720000 INSTALLER & REMOVER SET

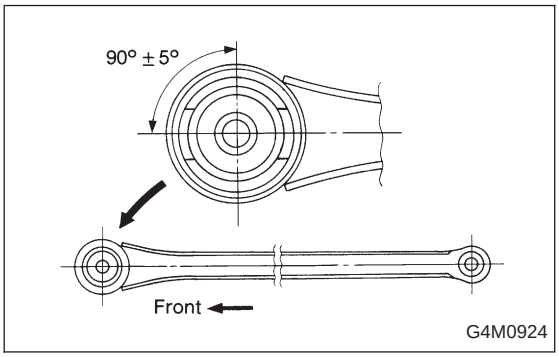

CAUTION:
Install front bushing in the proper direction, as shown in figure.

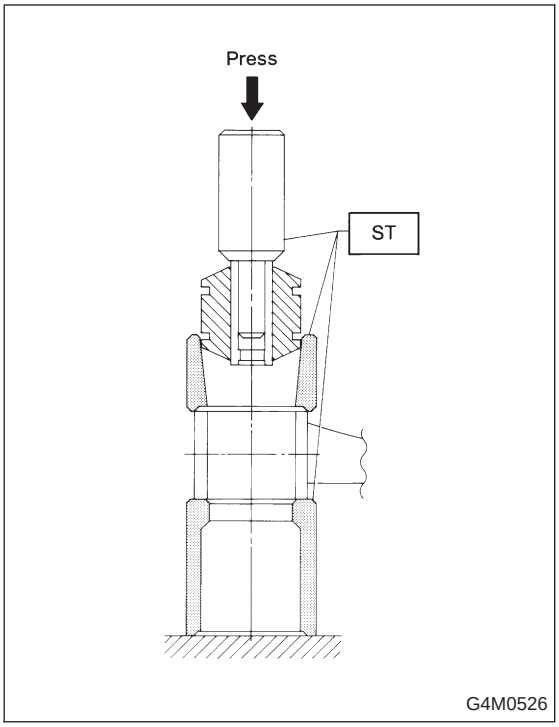

2. REAR BUSHING

Using ST, press bushing into trailing link.

ST 927730000 INSTALLER & REMOVER SET

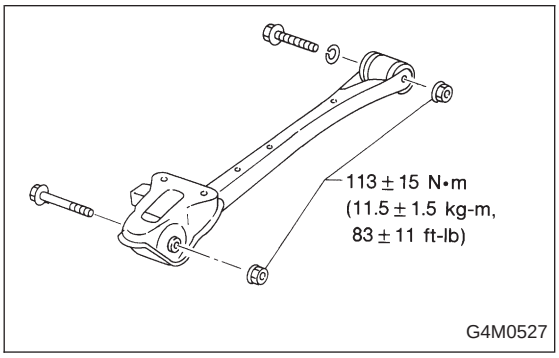

E: INSTALLATION

Installation is in the reverse order of removal.

CAUTION:
Always tighten rubber bushing location when wheels are in full contact with the ground and vehicle is curb weight.

NOTE:
Check wheel alignment and adjust if necessary.

8. Lateral Link

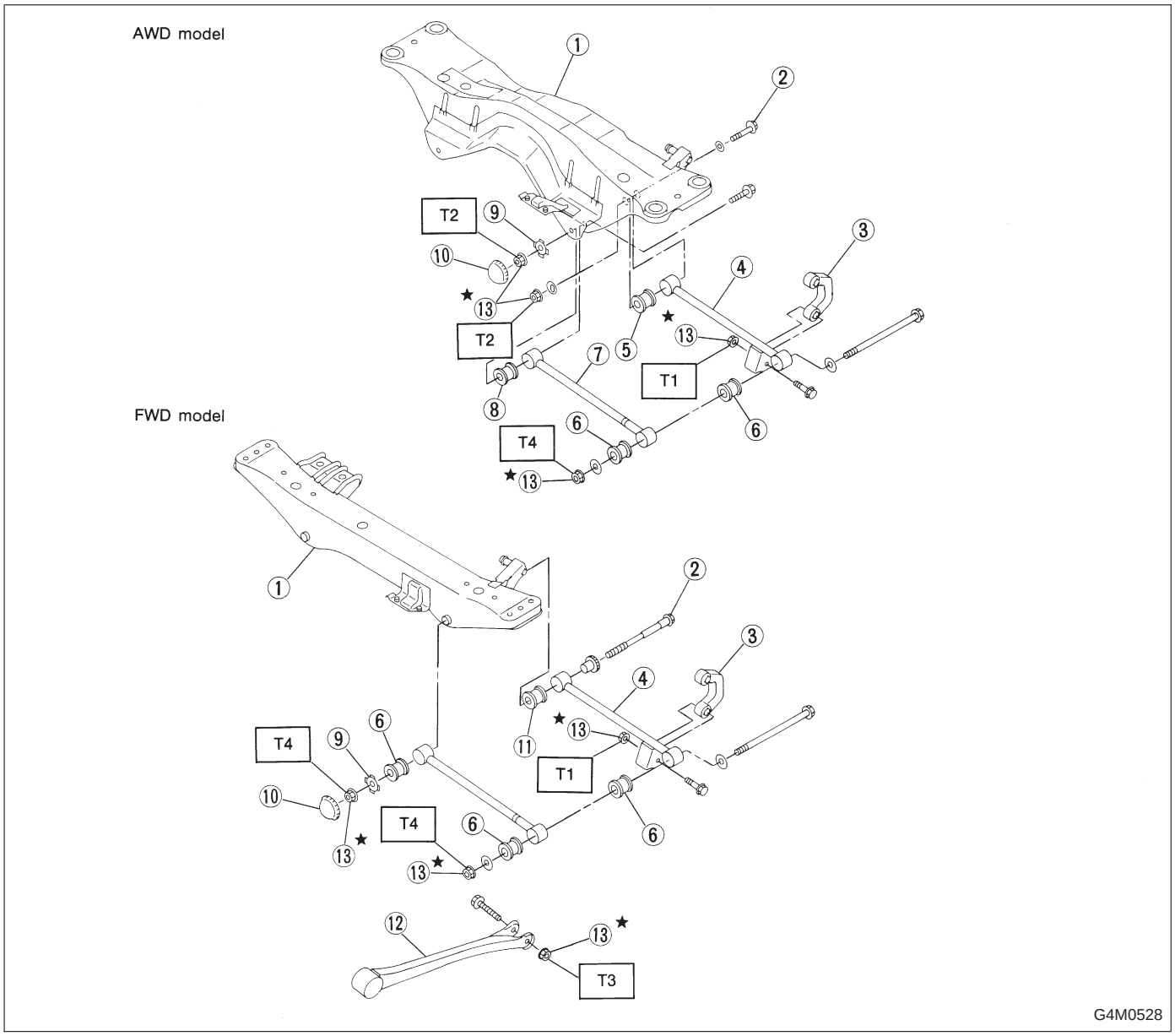

① Crossmember
② Adjusting bolt
③ Stabilizer link
④ Rear lateral link
⑤ Bushing (C)
⑥ Bushing (A)
⑦ Front lateral link
⑧ Bushing (B)
⑨ Washer
⑩ Cap
⑪ Bushing (D)
⑫ Trailing link
⑬ Self-locking nut

Tightening torque: N·m (kg-m, ft-lb)
T1: 44±6 (4.5±0.6, 32.5±4.3)
T2: 98±15 (10.0±1.5, 72±11)
T3: 113±15 (11.5±1.5, 83±11)
T4: 137±20 (14.0±2.0, 101±14)

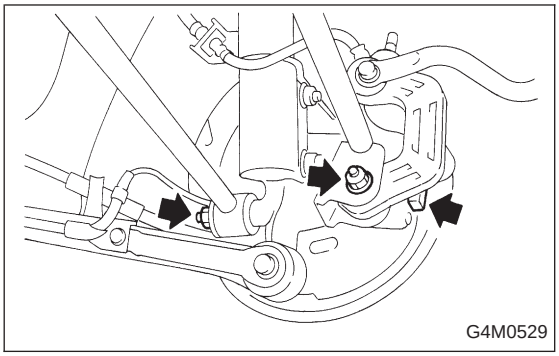

A: REMOVAL

1. FWD MODEL

1) Remove rear exhaust pipe and muffler.
2) Remove stabilizer from rear lateral link.
3) Scribe an aligning mark on adjusting bolt, adjusting wheel and crossmember.
4) Remove bolts securing lateral links to housing.
5) Turn cap (lateral link) counterclockwise until it contacts stopper, then remove cap.
6) While holding adjusting bolt head with a wrench, loosen self-locking nut.

CAUTION:
Always loosen self-locking nut before turning adjusting bolt.

7) Lateral link removal
   (1) Left lateral links
   Remove adjusting bolt and front and rear lateral links.
   (2) Right lateral links
   Remove bolts securing crossmember to car body. Remove adjusting bolt and front and rear lateral links.

2. AWD MODEL

1) Loosen wheel nuts. Jack-up vehicle and remove wheel.
2) Remove stabilizers.
3) (Models equipped with A.B.S.)
Remove A.B.S. sensor harness from trailing link.

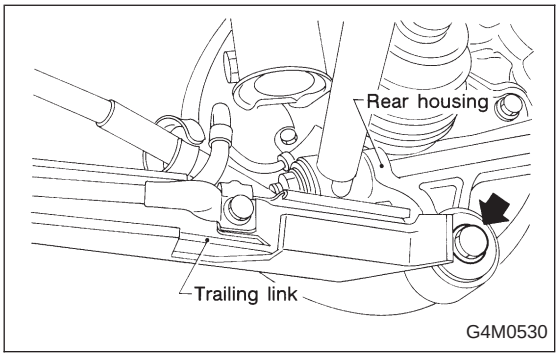

4) Remove bolt securing trailing link to housing.
5) Remove DOJ from differential. <Ref. to 4-2 [W4A2].>
6) Scribe an alignment mark on rear lateral link adjusting bolt and crossmember.
7) Remove outer lateral link bolt securing lateral link to housing.
8) Remove bolts securing front and rear lateral links to crossmember, detach lateral links.

CAUTION:
To loosen adjusting bolt, always loosen nut while holding the head of adjusting bolt.

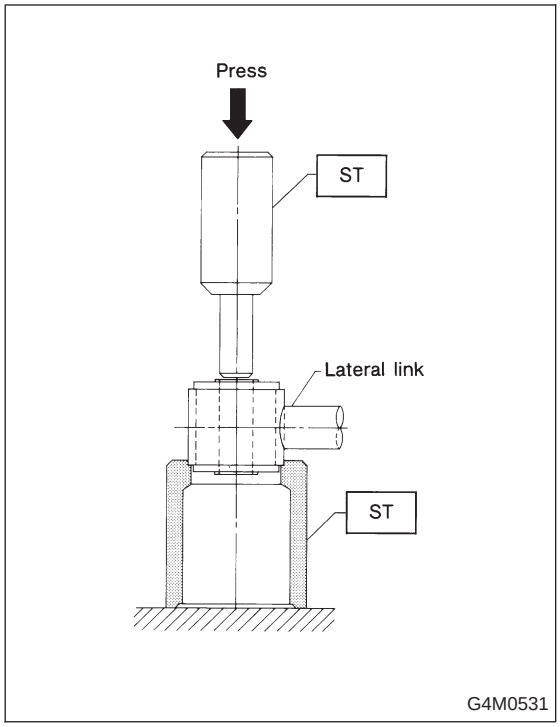

B: DISASSEMBLY

Using ST, press bushing out of place.

NOTE:

- Using the following figure as a guide, verify the type of bushings.
- Select ST according to the type of bushings used.

Bushing	INSTALLER & REMOVER SET
Bushing A	927700000
Bushing B	927690000
Bushing C	927700000
Bushing D	927710000

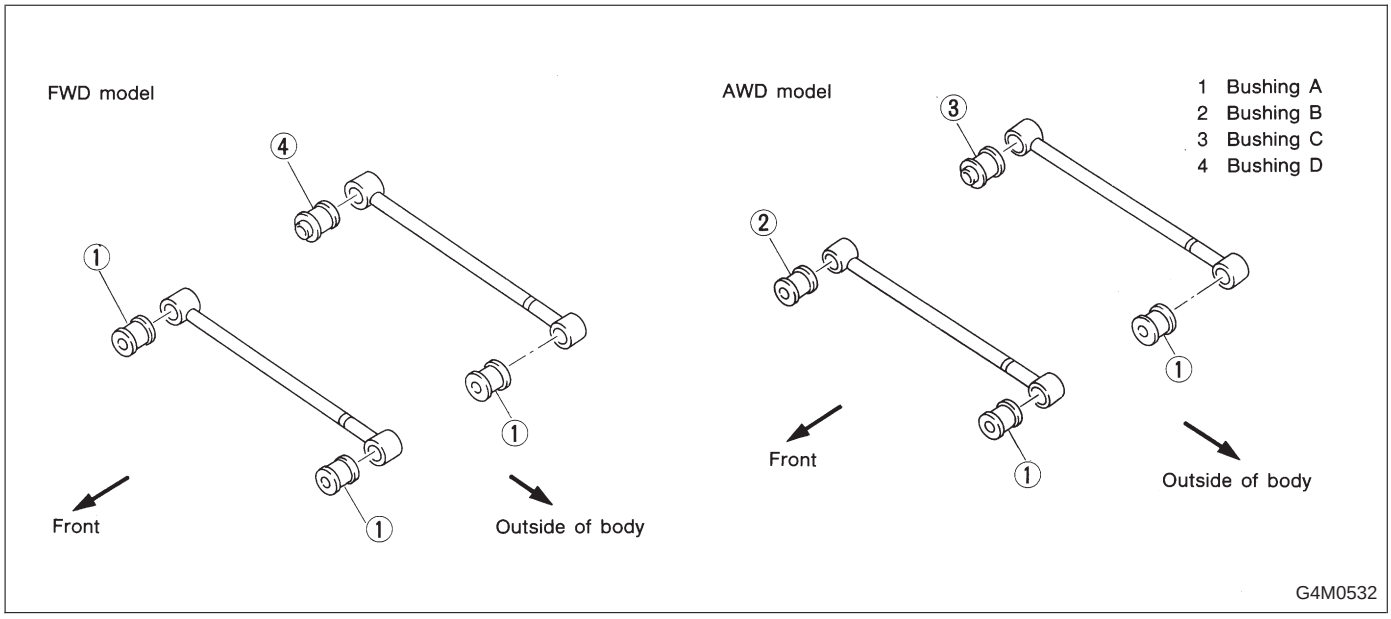

C: INSPECTION

Visually check lateral links for damage or bends.

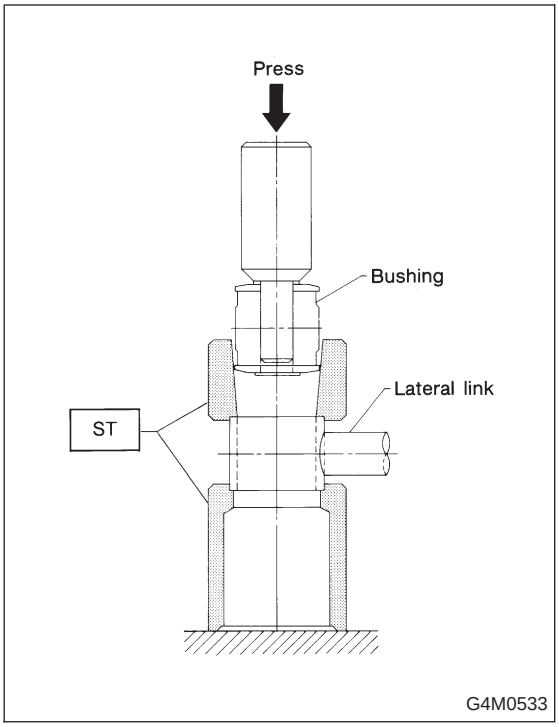

D: ASSEMBLY

Using ST, press bushing into place.

CAUTION:
Select ST according to the type of bushings used.

NOTE:
Use the same ST as that used during disassembly.

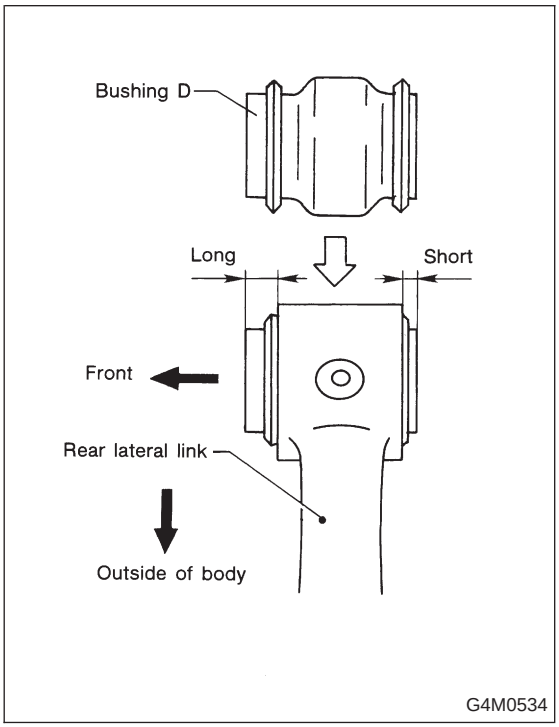

NOTE:
Pay attention to the direction of bushing “D” as shown in figure.

E: INSTALLATION

To install, reverse removal procedures, observing the following instructions.

CAUTION:

- **Always tighten rubber bushing location when wheels are in full contact with the ground and vehicle is curb weight.**
- **Tighten nut when installing adjusting bolt.**
- **Replace self-locking nut and DOJ circlip with new ones.**

NOTE:

- Lateral link washers for FWD and AWD models can be identified by colors, as follows:
  Olive (FWD model)
  Gold (AWD model)
- Check wheel alignment and adjust if necessary.

9. Rear Strut

A: REMOVAL

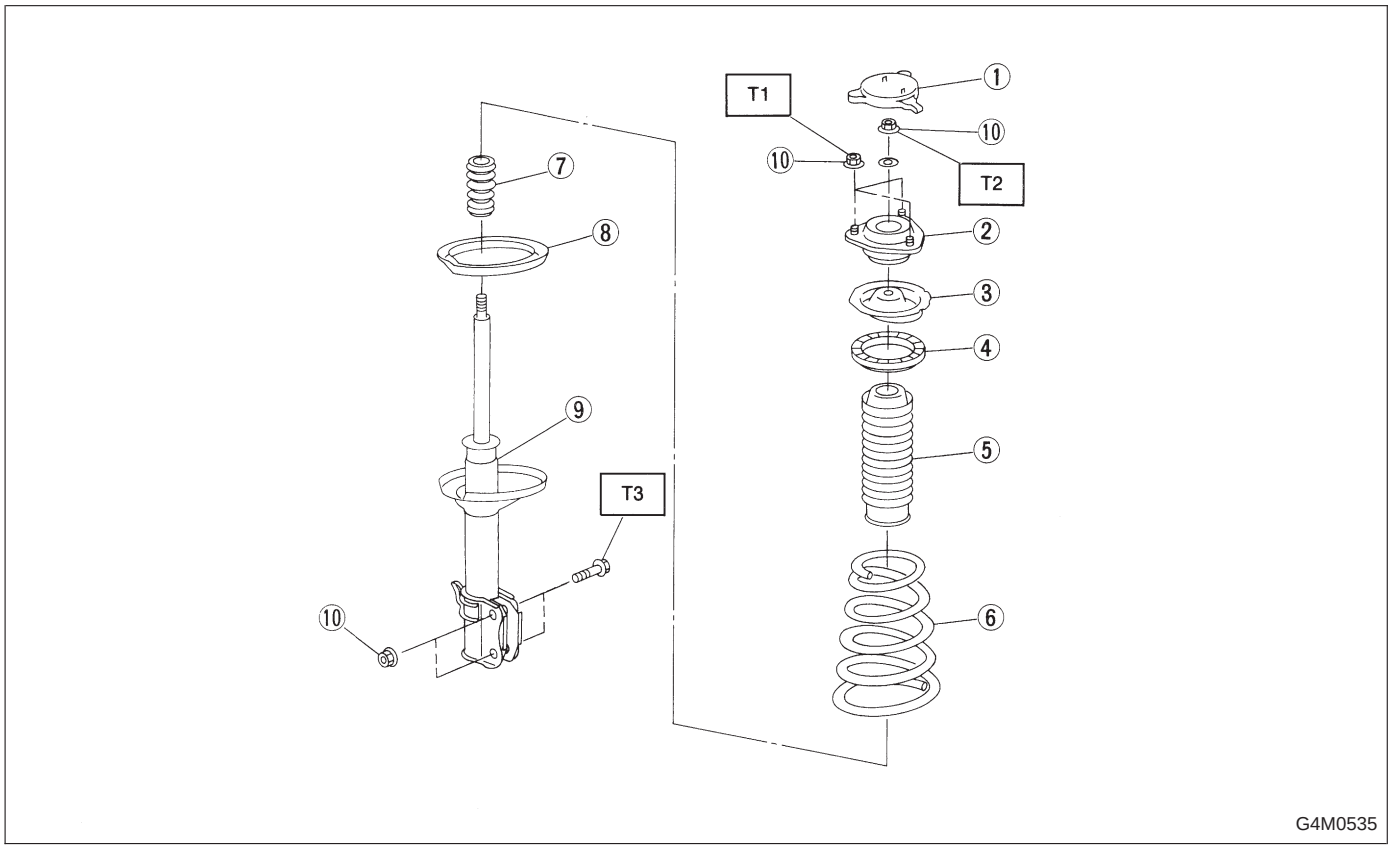

① Cap
② Strut mount
③ Spring seat
④ Rubber seat upper
⑤ Dust cover
⑥ Coil spring
⑦ Helper
⑧ Rubber seat lower
⑨ Damper strut
⑩ Self-locking nut

Tightening torque: N·m (kg-m, ft-lb)
T1: 20±6 (2.0±0.6, 14.5±4.3)
T2: 59±10 (6.0±1.0, 43±7)
T3: 196^{+39}_{-10} ($20.0^{+4.0}_{-1.0}$, 145^{+29}_{-7})

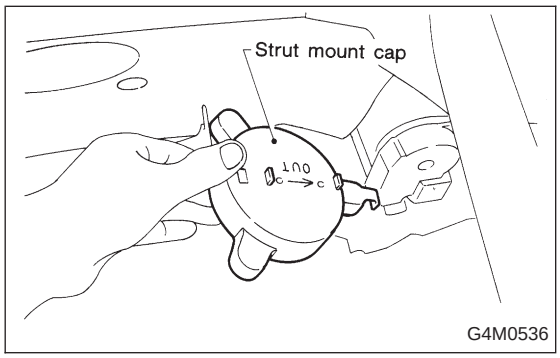

1) Depress brake pedal and secure it in that position using a wooden block, etc.

2) Remove rear seat cushion and backrest. (Sedan model)

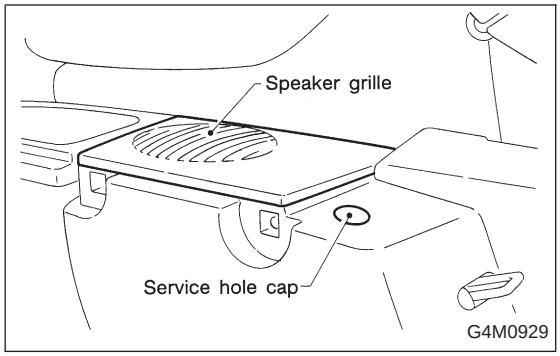

3) Remove rear speaker grille and service hole cap. (Wagon model)
4) Remove strut mount cap.
5) Loosen rear wheel nuts.
6) Jack-up vehicle, support it with safety stands (rigid racks) and remove rear wheels.
7) Remove brake hose clip.

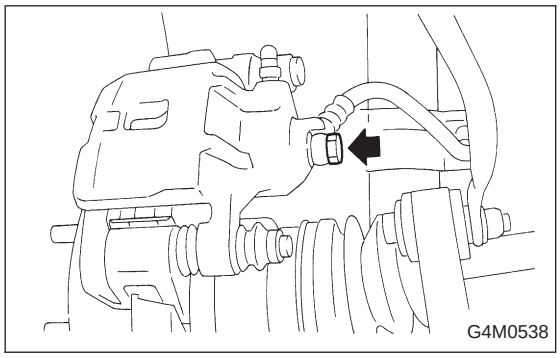

8) (Model equipped with rear disc brakes)
Remove union bolt from brake caliper.
9) (Model equipped with rear drum brakes)
Disconnect brake hose from brake pipe from strut, and disconnect brake pipe from dram brake.

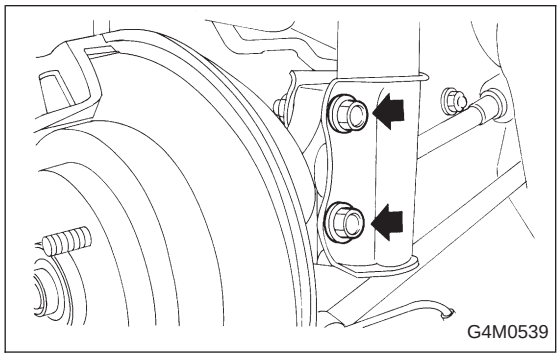

10) Remove bolts which secure rear strut to housing.
11) Remove nuts securing strut mount to body.

B: DISASSEMBLY

For disassembly of rear strut, refer to procedures outlined under front strut as a guide.

<Ref. to 4-1 [W4B0].>

C: INSPECTION

For inspection of rear strut, refer to procedures outlined under front strut as a guide. <Refer to 4-1 [W4C0].>

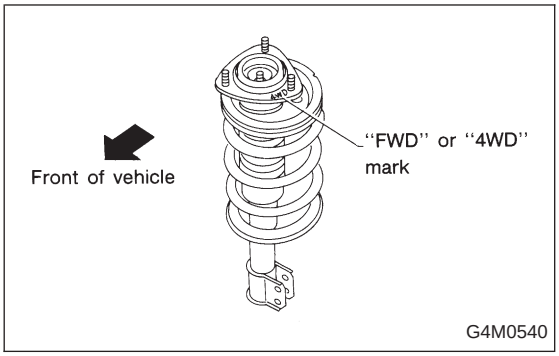

D: ASSEMBLY

Refer to Front Strut <Ref. to 4-1 [W4D0].> as a guide for assembly procedures.

CAUTION:
Install rear strut with "FWD" or "4WD" mark on strut mount facing outside of car body.

E: INSTALLATION

1) Tighten self-locking nut used to secure strut mount to car body.

CAUTION:
Discard loosened self-locking nut, and replace with a new one.

Tightening torque:
20±6 N·m (2.0±0.6 kg-m, 14.5±4.3 ft-lb)

2) Tighten bolts which secure rear strut to housing.

Tightening torque:
196^{+39}_{-10} N·m ($20.0^{+4.0}_{-1.0}$ kg-m, 145^{+29}_{-7} ft-lb)

Discard loosened self-locking nut, and replace with a new one.

3) (Model with rear disc brake)
Tighten brake hose union bolt on brake caliper.

Tightening torque:
18±3 N·m (1.8±0.3 kg-m, 13.0±2.2 ft-lb)

(Model with rear drum brakes)
Connect brake hose to brake pipe.

Tightening torque:
15^{+3}_{-2} N·m ($1.5^{+0.3}_{-0.2}$ kg-m, $10.8^{+2.2}_{-1.4}$ ft-lb)

4) Insert brake hose clip between brake hose and lower side of strut.

CAUTION:
- **Check that hose clip is positioned properly.**
- **Check brake hose for twisting, or excessive tension.**
- **(Model equipped with A.B.S.)**

Do not subject A.B.S. sensor harness to excessive tension.

5) Be sure to bleed air from brake system.

6) Lower vehicle and tighten wheel nut.

Tightening torque:
88±10 N·m (9±1 kg-m, 65±7 ft-lb)

7) Install strut mount cap.

8) (Sedan model)
Install rear seat backrest and rear seat cushion.
(Wagon model)
Install rear speaker grille.

NOTE:
Check wheel alignment and adjust if necessary.

10. Rear Crossmember (FWD Model)

A: REMOVAL

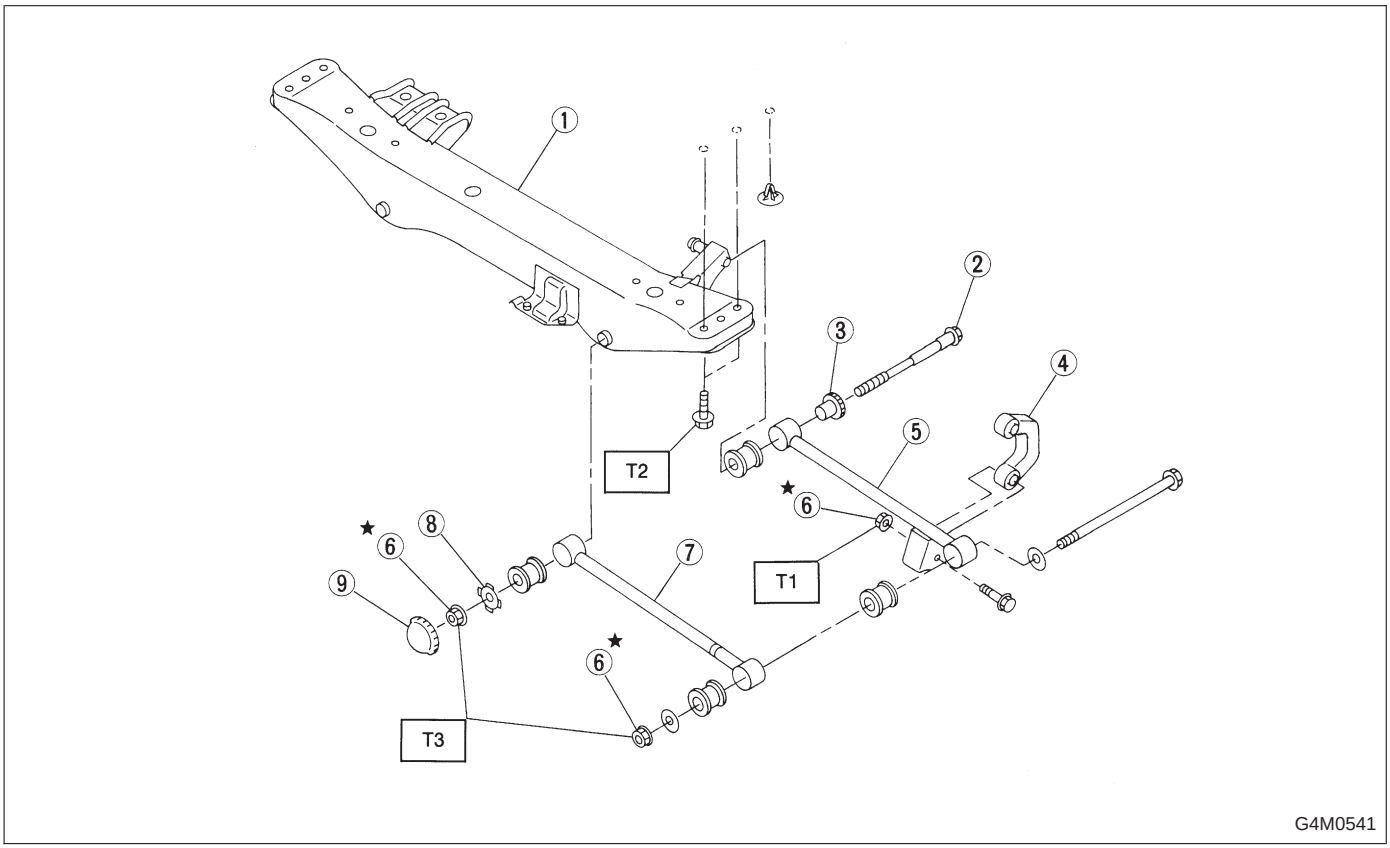

① Crossmember
② Adjusting bolt
③ Adjusting wheel
④ Stabilizer link
⑤ Rear lateral link
⑥ Self-locking nut
⑦ Front lateral link
⑧ Washer
⑨ Cap

Tightening torque: N·m (kg-m, ft-lb)
T1: 44±6 (4.5±0.6, 32.5±4.3)
T2: 127±20 (13.0±2.0, 94±14)
T3: 137±20 (14.0±2.0, 101±14)

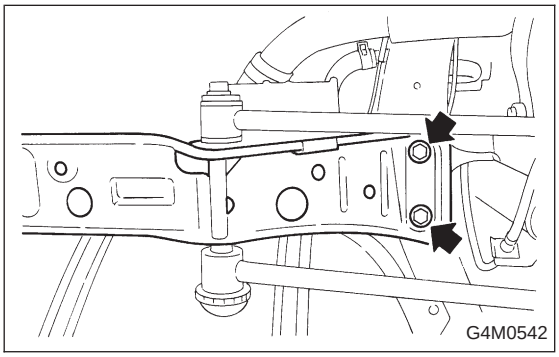

1) Disconnect lateral links from housing.
2) Remove rear exhaust pipe and muffler.
3) Remove heat-shield cover.
4) Remove four bolts securing crossmember to body.

B: INSPECTION

Check removed parts for wear, damage and cracks, and correct or replace if defective.

C: INSTALLATION

Installation is in reverse order of removal procedure.

CAUTION:

- **Discard loosened self-locking nut and replace with a new one.**
- **Always tighten nut (not adjusting bolt), when tightening adjusting bolt.**
- **Always tighten rubber bushing location when wheels are in full contact with the ground and vehicle is curb weight.**

NOTE:
Check wheel alignment and adjust if necessary.

11. Rear Crossmember (AWD Model)

A: REMOVAL

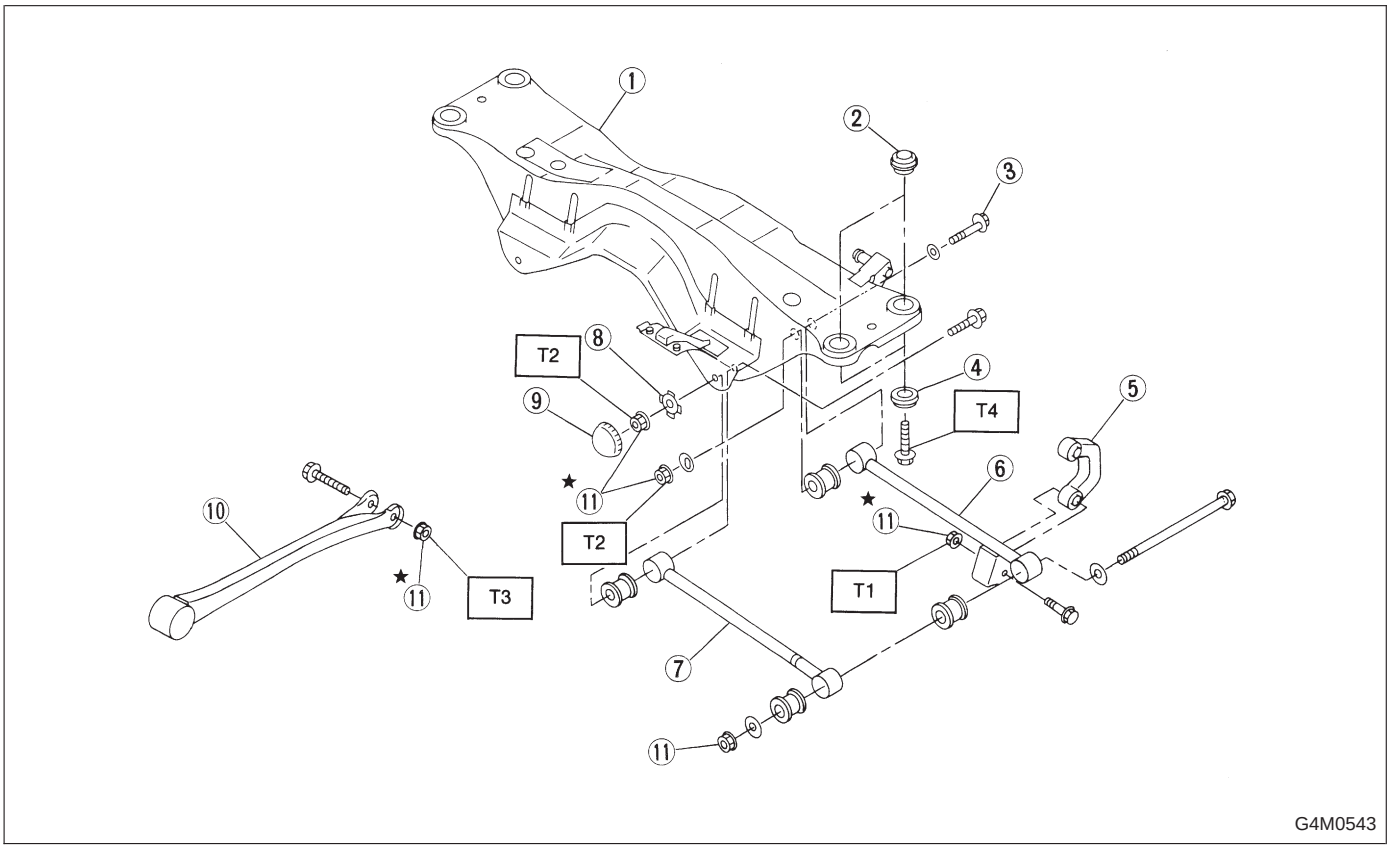

① Crossmember
② Floating bushing
③ Adjusting bolt
④ Stopper
⑤ Stabilizer link
⑥ Rear lateral link
⑦ Front lateral link
⑧ Washer
⑨ Cap
⑩ Trailing link
⑪ Self-locking nut

Tightening torque: N·m (kg-m, ft-lb)
T1: 44±6 (4.5±0.6, 32.5±4.3)
T2: 98±15 (10.0±1.5, 72±11)
T3: 113±15 (11.5±1.5, 83±11)
T4: 127±20 (13.0±2.0, 94±14)

CAUTION:
Do not subject A.B.S. sensor harness to excessive tension (if equipped).

1) Separate front exhaust pipe and rear exhaust pipe.
2) Remove rear exhaust pipe and muffler.
3) Remove rear differential. <Ref. to 3-4 [W2C0].>

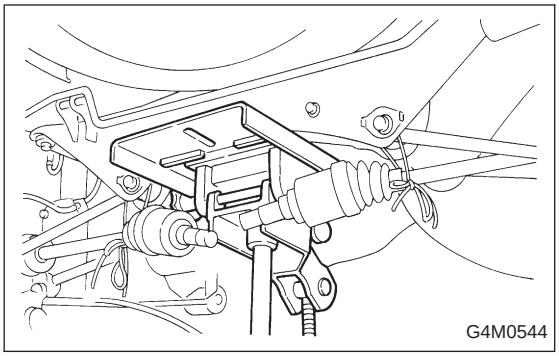

4) Place transmission jack under rear crossmember.

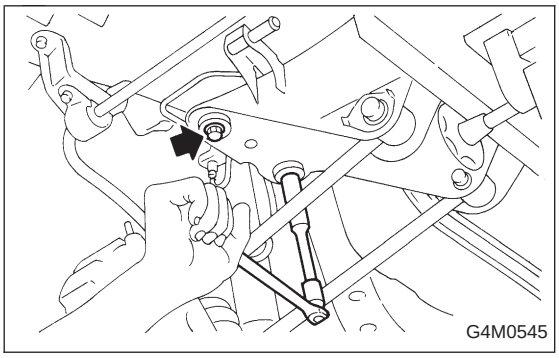

5) Remove bolts securing crossmember to car body, and remove crossmember.

6) Scribe an alignment mark on rear lateral link cam bolt and crossmember.
7) Remove front and rear lateral links by loosening nuts.

B: INSPECTION

Check removed parts for wear, damage and cracks, and correct or replace if defective.

C: INSTALLATION

1) Install in reverse order of removal.
2) For installation and tightening torque of rear differential, refer to 3-4 [W2G0].
3) Always tighten rubber bushing location when wheels are in full contact with the ground and vehicle is curb weight.

NOTE:
Check wheel alignment and adjust if necessary.

1. Suspension

1. IMPROPER VEHICLE POSTURE OR IMPROPER WHEEL ARCH HEIGHT

Possible causes	Countermeasures
(1) Permanent distortion or breakage of coil spring	Replace.
(2) Unsmooth operation of damper strut	Replace.
(3) Installation of wrong strut	Replace with proper parts.
(4) Installation of wrong coil spring	Replace with proper parts.

2. POOR RIDE COMFORT

1) Large rebound shock
2) Rocking of vehicle continues too long after running over bump and/or hump.
3) Large shock in bumping

Possible causes	Countermeasures
(1) Breakage of coil spring	Replace.
(2) Overinflation pressure of tire	Adjust.
(3) Improper wheel arch height	Adjust or replace coil springs with new ones.
(4) Fault in operation of damper strut	Replace.
(5) Damage or deformation of strut mount	Replace.
(6) Unsuitability of maximum and/or minimum length of damper strut	Replace with proper parts.
(7) Deformation or loss of bushing	Replace.
(8) Deformation or damage of helper in strut assembly	Replace.

3. NOISE

Possible causes	Countermeasures
(1) Wear or damage of damper strut component parts	Replace.
(2) Loosening of suspension link installing bolt	Retighten to the specified torque.
(3) Deformation or loss of bushing	Replace.
(4) Unsuitability of maximum and/or minimum length of damper strut	Replace with proper parts.
(5) Breakage of coil spring	Replace.
(6) Wear or damage of ball joint	Replace.

WHEELS AND AXLES 4-2

Page

S SPECIFICATIONS AND SERVICE DATA 2
1. Wheels and Axles 2

C COMPONENT PARTS 5
1. Front Axle 5
2. Rear Axle 6

W SERVICE PROCEDURE 8
1. Front Axle 8
2. Rear Axle (AWD Model) 15
3. Rear Axle (FWD Model) 22
4. Front and Rear Drive Shafts 27
5. Full Wheel Cap 36
6. Steel Wheel and Tire 36
7. Wheel Balancing 37
8. Installation of Wheel Assembly to Vehicle 38
9. Tire Rotation 38
10. “T-type” Tire 39
11. Aluminum Wheel 39

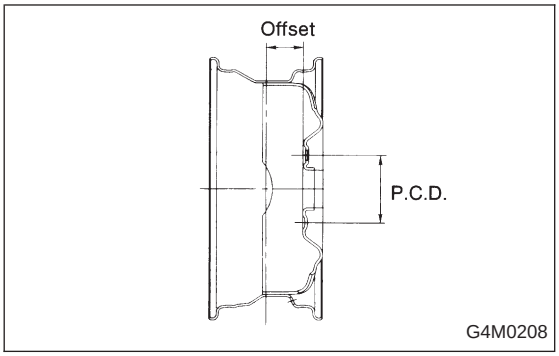

1. Wheels and Axles

A: SPECIFICATIONS

1. TIRE AND WHEEL SIZE

Model		Front and rear				T-type tire		
		Tire size	Rim size	Rim offset mm (in)	P.C.D. mm (in)	Tire size	Rim size	Rim offset mm (in)
FWD	Base	P165/80R13 83S	13 x 5.00B	50 (1.97)	100 (3.94) dia.	T125/70D15	15 x 4T	53 (2.09)
	L	P165/80R13 83S [P175/70R14 84S]	13 × 5.00B [14 x 5 1/2JJ]	50 (1.97) [55 (2.17)]				
	Coupe L	P175/70R14 84S	14 × 5 1/2JJ	55 (2.17)				
AWD	Base	P175/70R14 84S	14 x 5 1/2JJ	55 (2.17)		T125/70D16	16 x 4T	50 (1.97)
	L							
	LX	P195/60R15 87H P185/70R14 87H	15 x 6JJ 14 x 5 1/2JJ			T135/70D16		

[ ]: A.B.S. equipped vehicle.
NOTE: “T-type” tire for temporary use is supplied as a spare tire.

2. TIRE INFLATION PRESSURE

	Tire size	Tire inflation pressure kPa (kg/cm^2, psi)	
		Light load	Full load
Sedan Wagon Coupe	165/80R13 83S 175/70R14 84S P185/70R14 87H P195/60R15 87H	Ft: 220 (2.2, 32) Rr: 200 (2.0, 29)	
T-type tire	T125/70D15 T125/70D16 T135/70D16	420 (4.2, 60)	

3. FRONT DRIVE SHAFT ASSEMBLY

Type of axle shaft assembly	SHAFT	DOJ
	No. of identification paddings on shaft	No. of spline teeth
82AC-25	1 (One)	25
87AC-25	2 (Two)	25

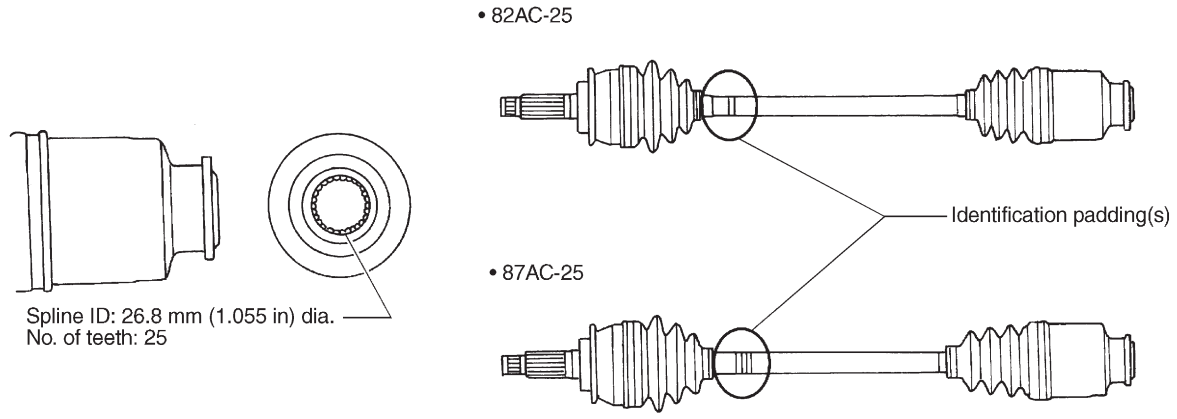

H4M0998A

4. REAR DRIVE SHAFT ASSEMBLY (AWD MODEL)

Type of axle shaft assembly	SHAFT
	No. of identification paddings on shaft
79AC	None
79AC-RH	1 (One)
79AC-LH	1 (One)

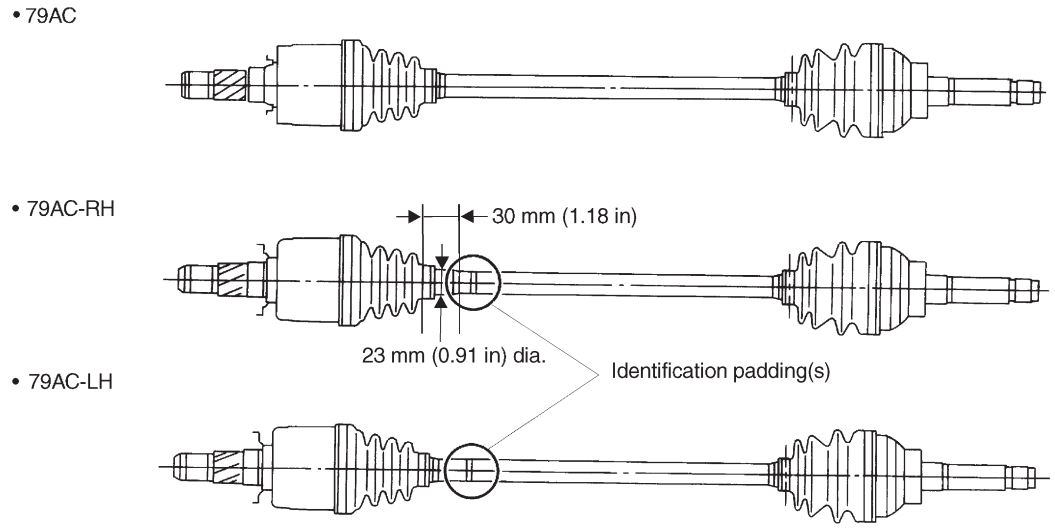

B4M0049B

5. APPLICATION TABLE

Model	Power unit	Front drive shaft		Rear drive shaft
		5MT	4AT	
FWD	1800 cc	87AC-25	87AC-25	—
AWD	1800 cc	82AC-25	82AC-25	79AC
AWD	2200 cc	—	82AC-25	79AC-RH 79AC-LH

B: SERVICE DATA

Wheel balancing	Standard	Service limit
Dynamic unbalance	Less than 5 g (0.18 oz)	

Balance weight part number (For steel wheel)	Weight g (oz)
28101AA001	5 (0.18)
28101AA011	10 (0.35)
28101AA021	15 (0.53)
28101AA031	20 (0.71)
28101AA041	25 (0.88)
28101AA051	30 (1.06)
28101AA061	35 (1.23)
28101AA071	40 (1.41)
28101AA081	45 (1.59)
28101AA091	50 (1.76)
28101AA101	55 (1.94)
28101AA111	60 (2.12)

Balance weight part number (For aluminum wheel)	Weight g (oz)
23141GA462	5 (0.18)
23141GA472	10 (0.35)
23141GA482	15 (0.53)
23141GA492	20 (0.71)
23141GA502	25 (0.88)
23141GA512	30 (1.06)
23141GA522	35 (1.23)
23141GA532	40 (1.41)
23141GA542	45 (1.59)
23141GA552	50 (1.76)
—	55 (1.94)
23141GA572	60 (2.12)

1. Front Axle

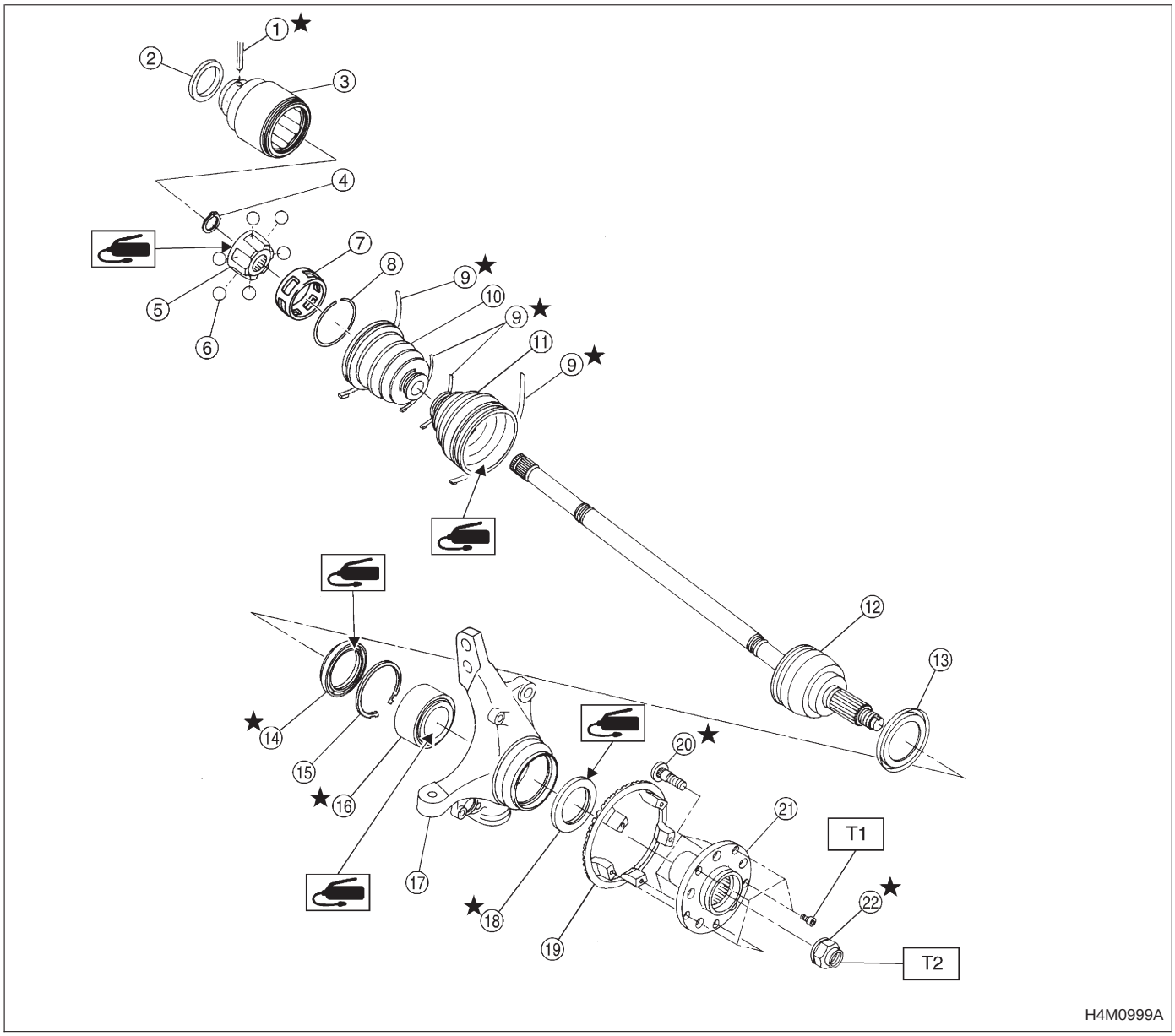

① Spring pin
② Baffle plate (DOJ)
③ Outer race (DOJ)
④ Snap ring
⑤ Inner race (DOJ)
⑥ Ball
⑦ Cage
⑧ Circlip
⑨ Boot band
⑩ Boot (DOJ)
⑪ Boot (UFJ)
⑫ UFJ ASSY
⑬ Baffle plate
⑭ Oil seal (IN)
⑮ Snap ring
⑯ Bearing
⑰ Housing
⑱ Oil seal (OUT)
⑲ Tone wheel
⑳ Hub bolt
㉑ Hub
㉒ Axle nut

Tightening torque: N·m (kg-m, ft-lb)
T1: 13±3 (1.3±0.3, 9.4±2.2)
T2: 186±20 (19±2, 137±14)

2. Rear Axle

1. AWD MODEL

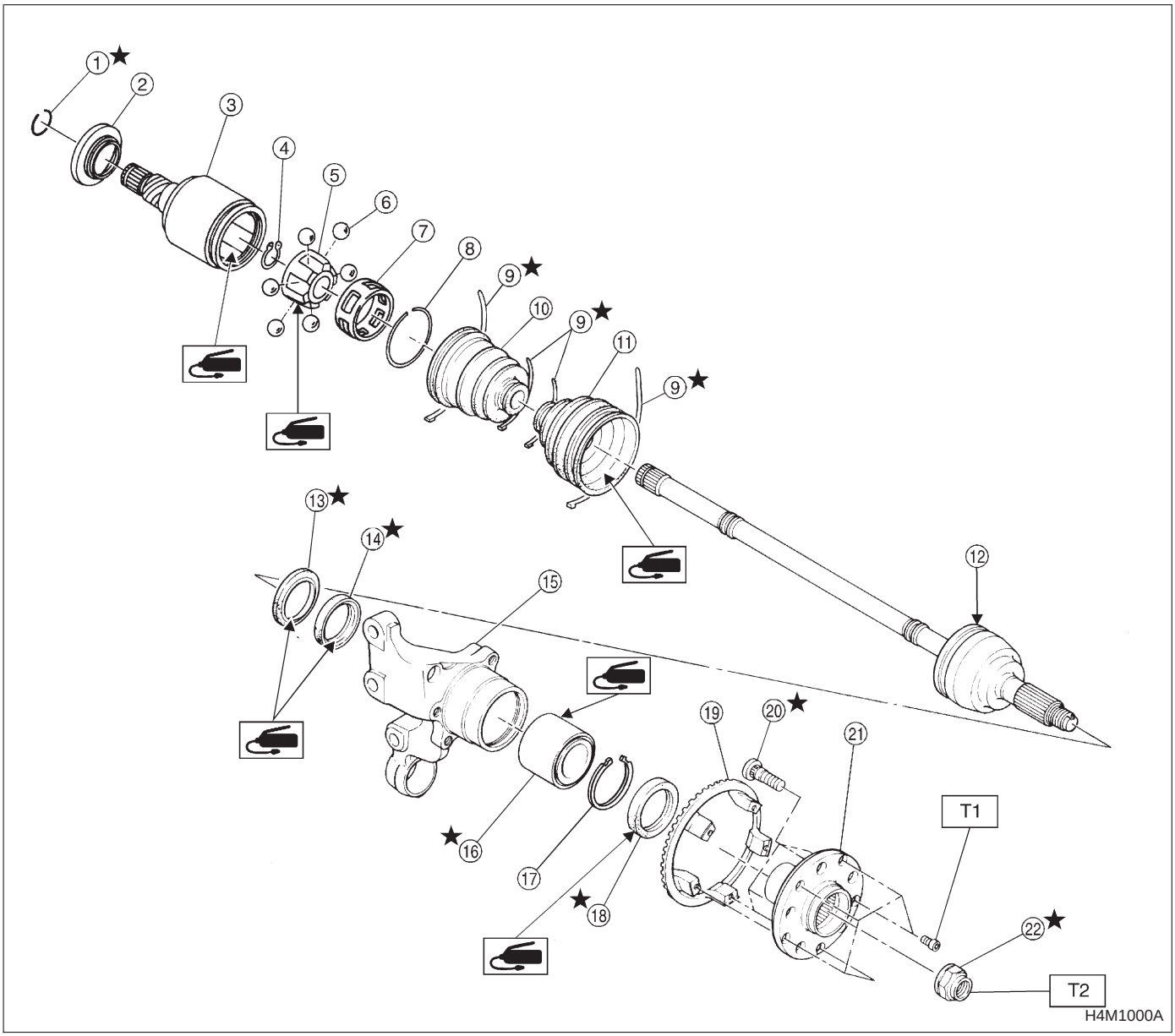

① Circlip (1800 cc model)
② Baffle plate (DOJ)
③ Outer race (DOJ)
④ Snap ring
⑤ Inner race
⑥ Ball
⑦ Cage
⑧ Circlip
⑨ Boot band
⑩ Boot (DOJ)
⑪ Boot (BJ)
⑫ BJ ASSY
⑬ Oil seal (IN. No. 2)
⑭ Oil seal (IN. No. 3)
⑮ Housing
⑯ Bearing
⑰ Snap ring
⑱ Oil seal (OUT)
⑲ Tone wheel
⑳ Hub bolt
㉑ Hub
㉒ Axle nut

Tightening torque: N·m (kg-m, ft-lb)
T1: 13±3 (1.3±0.3, 9.4±2.2)
T2: 186±20 (19±2, 137±14)

2. FWD MODEL

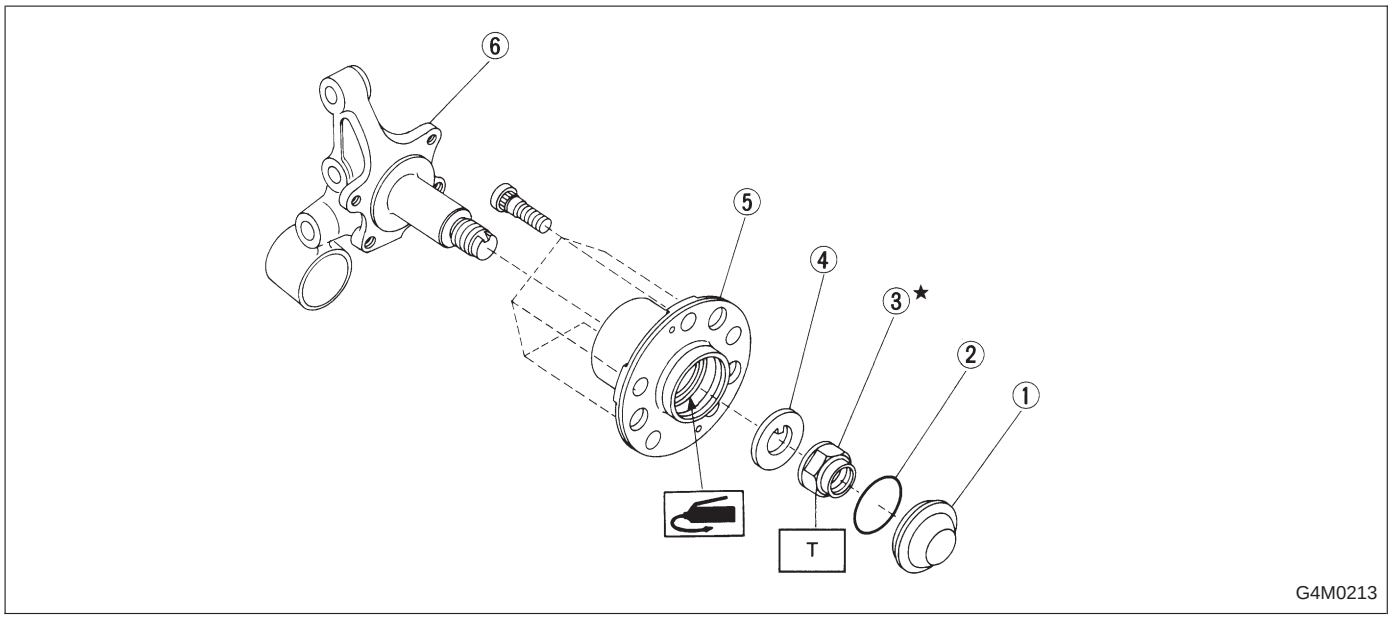

① Hub cap
② O-ring
③ Axle nut
④ Washer
⑤ Hub unit
⑥ Spindle

Tightening torque: N·m (kg-m, ft-lb)
T: 186±20 (19±2, 137±14)

1. Front Axle

A: REMOVAL

1) Disconnect ground cable from battery.
2) Jack-up vehicle, support it with safety stands, and remove front wheels.

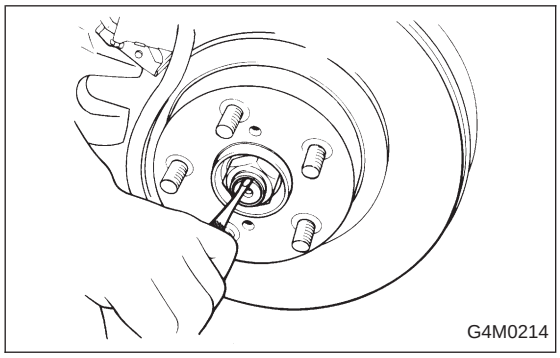

3) Unlock axle nut.
4) Remove axle nut using a socket wrench.

CAUTION:
Be sure to loose and retighten axle nut after removing wheel from vehicle. Failure to follow this rule may damage wheel bearings.

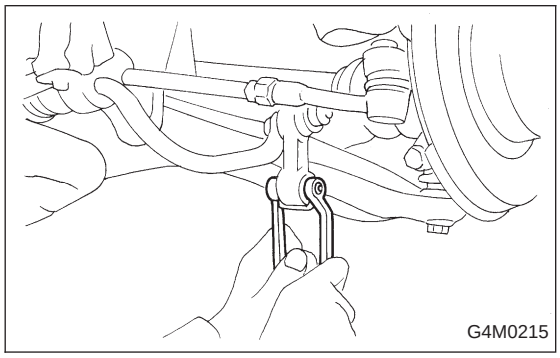

5) Remove stabilizer link.

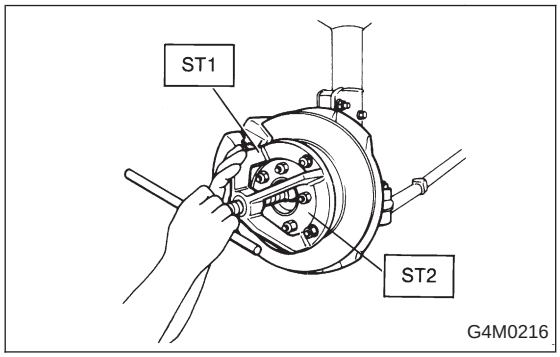

6) Remove DOJ from transmission spindle.
7) Remove front drive shaft assembly from hub. If it is hard to remove, use STs.

ST1 926470000 AXLE SHAFT PULLER
ST2 927140000 PLATE

CAUTION:
- **Be careful not to damage oil seal lip when removing front drive shaft.**
- **When replacing front drive shaft, also replace inner oil seal.**

8) Remove disc brake caliper from housing, and suspend it from strut using a wire.

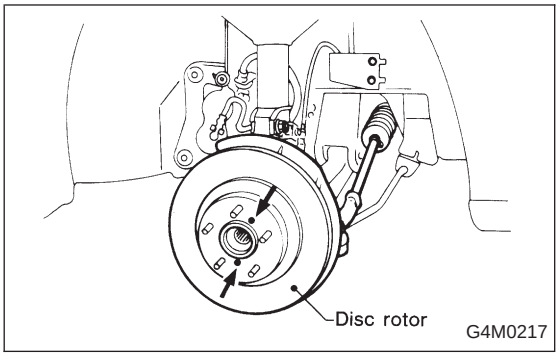

9) Remove disc rotor from hub.
If disc rotor seizes up within hub, drive disc rotor out by installing an 8-mm bolt in screw hole on the rotor.

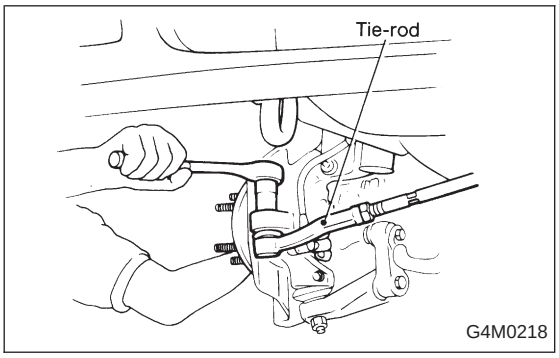

10) Remove cotter pin and castle nut which secure tie-rod end to housing knuckle arm.

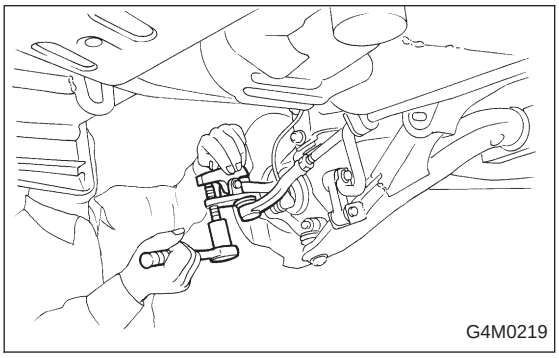

11) Using a puller, remove tie rod ball joint from knuckle arm.

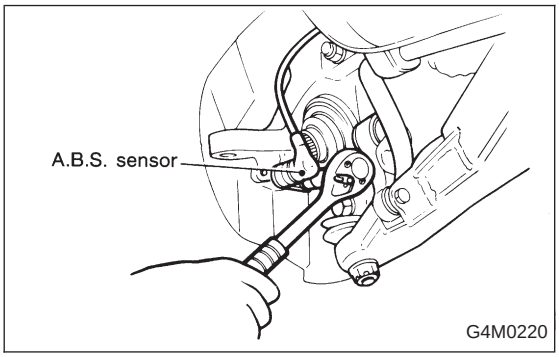

12) On A.B.S. equipped models, remove A.B.S. sensor assembly and harness in advance.

NOTE:
Be sure to use soft jaws (such as aluminum plates) when placing the mating surfaces of housing and strut in a vise.

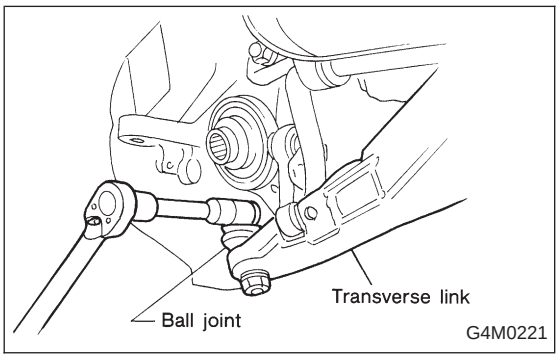

13) Remove transverse link ball joint from housing.

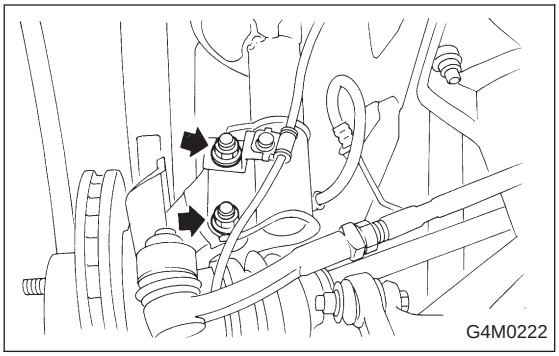

14) After scribing an alignment mark on camber adjusting bolt head, remove bolts which connect housing and strut, and disconnect housing from strut.

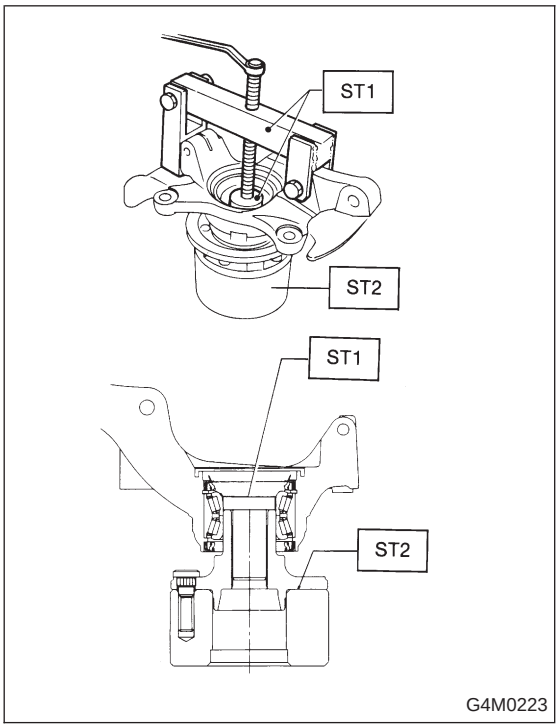

B: DISASSEMBLY

1) Using ST1, support housing and hub securely.
2) Attach ST2 to housing and drive hub out.

ST1 927080000 HUB STAND
ST2 927060000 HUB REMOVER

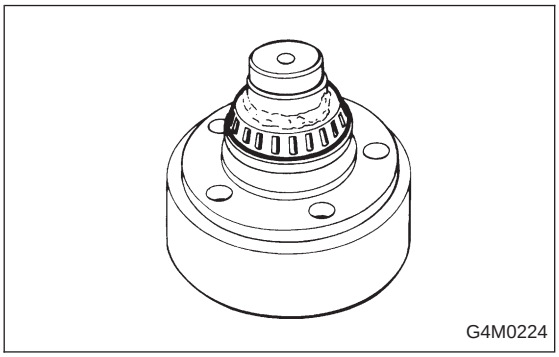

If inner bearing race remains in the hub, remove it with a suitable tool (commercially available).

CAUTION:
- **Be careful not to scratch polished area of hub.**
- **Be sure to install inner race on the side of outer race from which it was removed.**

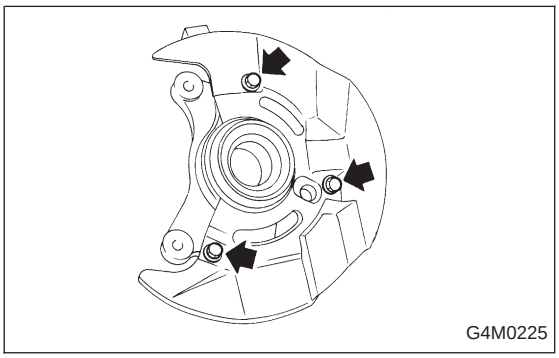

3) Remove disc cover from housing.
4) Using a standard screwdriver, remove outer and inner oil seals.

CAUTION:
Do not use old oil seals.

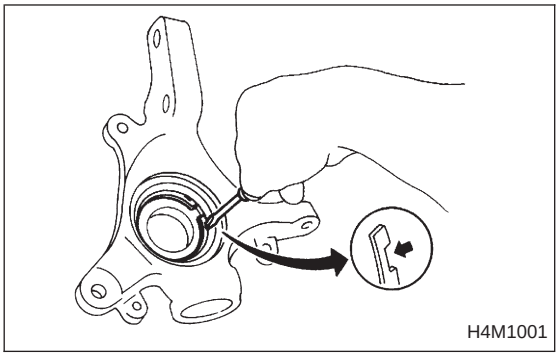

5) Using flat bladed screwdriver, remove snap ring.

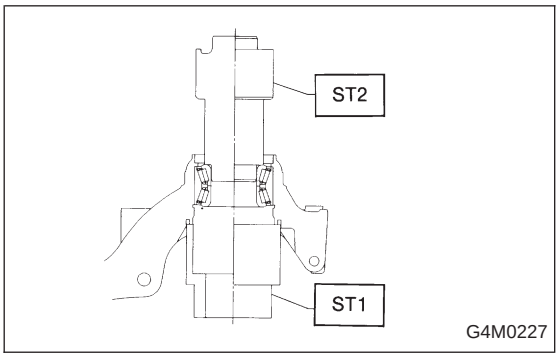

6) Using ST1, support housing securely.
7) Using ST2, press inner race to drive out outer bearing.

ST1 927400000 HOUSING STAND
ST2 927100000 BEARING REMOVER

CAUTION:
- **Do not remove outer race unless it is faulty.**
- **Discard outer race after removal.**
- **Do not replace inner or outer race separately; always replace as a unit.**

8) Loosen bolts which secure tone wheel to hub. Remove tone wheel (only vehicle equipped with A.B.S.).

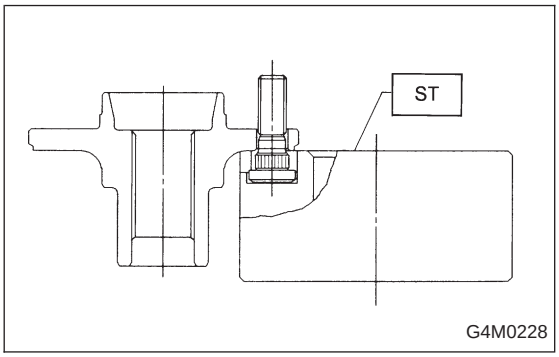

9) Using ST and a hydraulic press, drive hub bolts out.

ST 927080000 HUB STAND

CAUTION:
Be careful not to hammer hub bolts. This may deform hub.

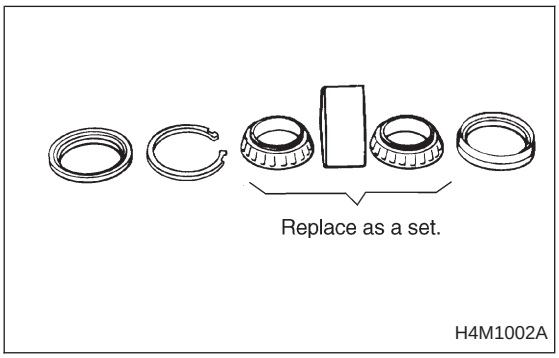

C: INSPECTION

Check the removed parts for wear and damage. If defective, replace with a new one.

CAUTION:
- **If bearing is faulty, replace it as the bearing set.**
- **Be sure to replace oil seal at every overhaul.**

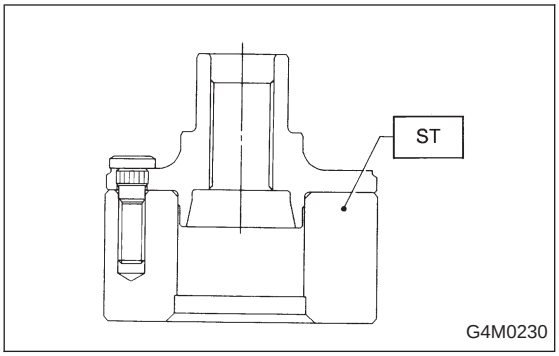

D: ASSEMBLY

1) Attach hub to ST securely.

ST 927080000 HUB STAND

2) Using a hydraulic press, press new hub bolts into place.

CAUTION:
Be sure to press hub bolts until their seating surfaces contact the hub.

NOTE:
Use 12 mm (0.47 in) dia. holes in HUB STAND to prevent bolts from tilting.

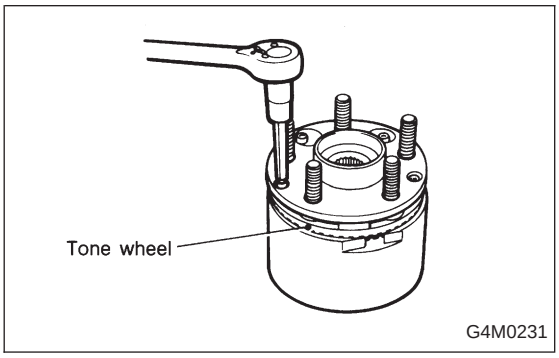

3) Remove foreign particles (dust, rust, etc.) from mating surfaces of hub and tone wheel, and install tone wheel to hub (only vehicle equipped with A.B.S.).

CAUTION:
Be careful not to damage tone wheel teeth.

NOTE:
Ensure tone wheel closely contacts hub.

4) Clean dust or foreign particles from inside the housing.

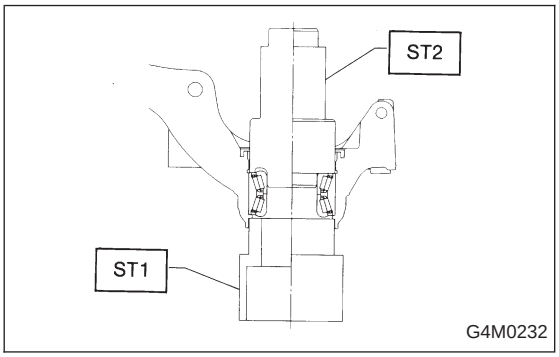

5) Using ST1 and ST2, press a new bearing into place.

ST1 927400000 HOUSING STAND
ST2 927100000 BEARING REMOVER

CAUTION:
- **Always press outer race when installing bearing.**
- **Be careful not to remove plastic lock from inner race when installing bearing.**
- **Charge bearing with new grease when outer race is not removed.**

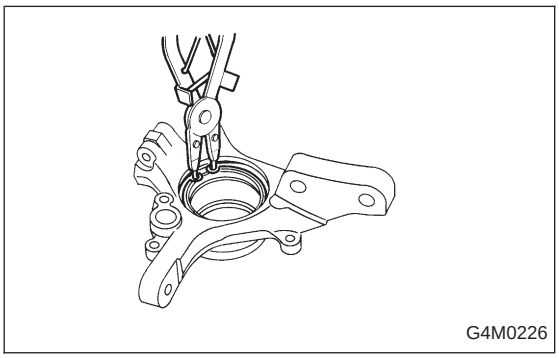

6) Using pliers, install snap ring in its groove.

CAUTION:
Make sure to install it firmly to groove.

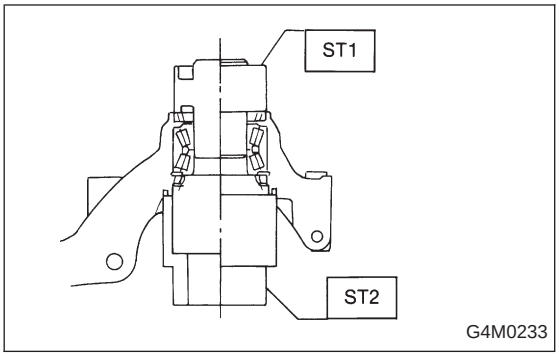

7) Using ST1 and ST2, press outer oil seal until it contacts the bottom of housing.

ST1 927410000 OIL SEAL INSTALLER
ST2 927400000 HOUSING STAND

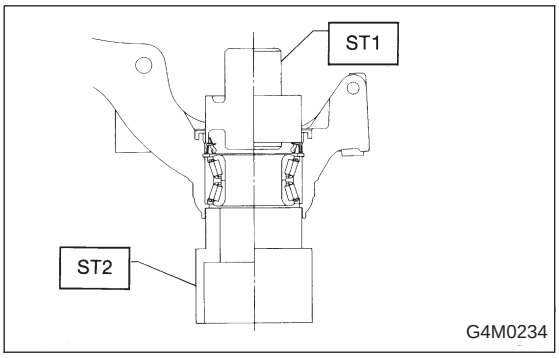

8) Using ST1 and ST2, press inner oil seal until it contacts circlip.

ST1 927410000 OIL SEAL INSTALLER
ST2 927400000 HOUSING STAND

9) Invert ST and housing.

ST 927400000 HOUSING STAND

10) Apply sufficient grease to oil seal lip.

Specified grease
SHELL 6459N

CAUTION:
- **If specified grease is not available, remove bearing grease and apply Auto Rex A instead.**
- **Do not mix different types of grease.**

11) Install disc cover to housing the three bolts.

Tightening torque:
14±4 N·m (1.4±0.4 kg-m, 10.1±2.9 ft-lb)

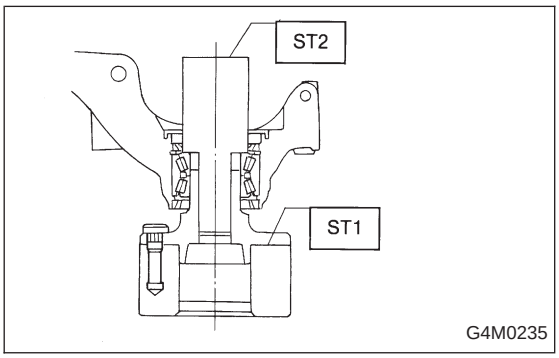

12) Attach hub to ST1 securely.
13) Clean dust or foreign particles from the polished surface of hub.
14) Using ST2, press bearing into hub by driving inner race.

ST1 927080000 HUB STAND
ST2 927120000 HUB INSTALLER

E: INSTALLATION

1) Install transverse link ball joint to housing.

Tightening torque:
44±6 N·m (4.5±0.6 kg-m, 32.5±4.3 ft-lb)

2) While aligning alignment mark on camber adjusting bolt head, connect housing and strut.

CAUTION:
Use a new self-locking nut.

Tightening torque:
147±15 N·m (15±1.5 kg-m, 108±11 ft-lb)

3) Install speed sensor and harness on housing (only vehicle equipped with A.B.S.).
4) Install disc rotor on hub.
5) Install disc brake caliper on housing.

Tightening torque:
59±10 N·m (6±1 kg-m, 43±7 ft-lb)

6) Install front drive shaft. <Ref. to 4-2 [W4E1].>
7) Connect stabilizer link.

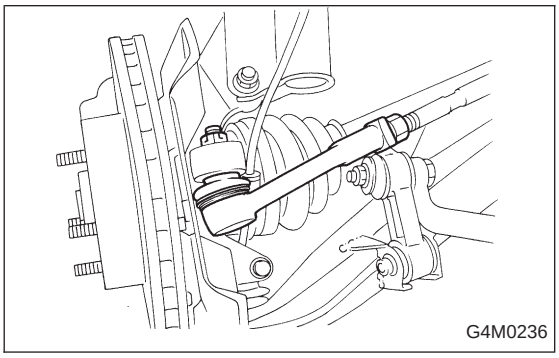
G4M0236

8) Install tie-rod end ball joint on housing knuckle arm.

Tightening torque:
27.0±2.5 N·m (2.75±0.25 kg-m, 19.9±1.8 ft-lb)

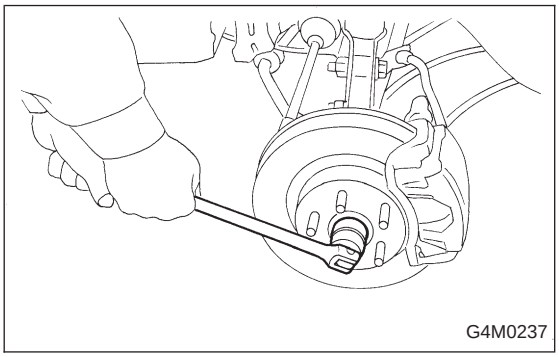
G4M0237

9) While depressing brake pedal, tighten axle nut and lock it securely.

Tightening torque:
186±20 N·m (19±2 kg-m, 137±14 ft-lb)

CAUTION:
- **Use a new axle nut.**
- **Always tighten axle nut before installing wheel on vehicle. If wheel is installed and comes in contact with ground when axle nut is loose, wheel bearings may be damaged.**
- **Be sure to tighten axle nut to specified torque. Do not overtighten it as this may damage wheel bearing.**

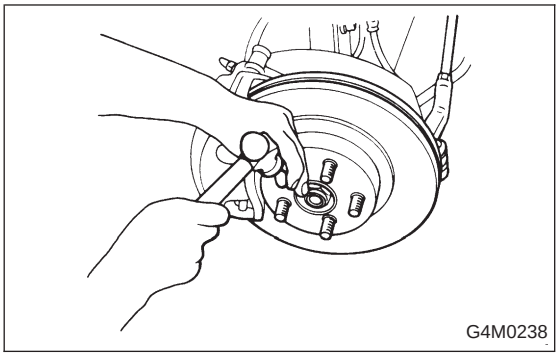

10) After tightening axle nut, lock it securely.
11) Install wheel and tighten wheel nuts to specified torque.

Tightening torque:
88±10 N·m (9±1 kg-m, 65±7 ft-lb)

2. Rear Axle (AWD Model)

A: REMOVAL

1) Disconnect ground cable from battery.
2) Jack-up vehicle, and remove rear wheel cap and wheels.

CAUTION:
Be sure to loosen and retighten axle nut after removing wheel from vehicle. Failure to follow this rule may damage wheel bearings.

3) Unlock axle nut.
4) Remove axle nut using a socket wrench.

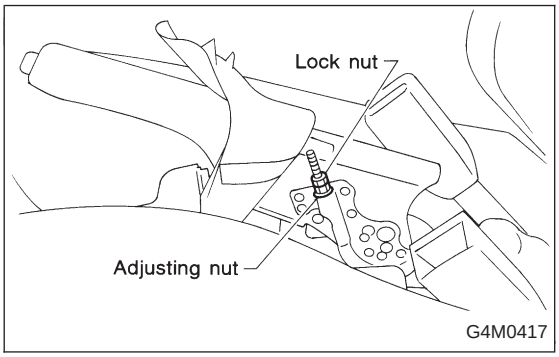

5) Return parking brake lever and loosen adjuster.
   (1) Disc brake: Perform steps 6) and 7).
   (2) Drum brake: Perform steps 8) and 10).

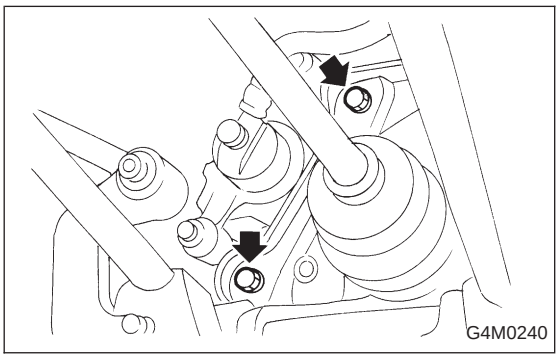

6) Remove disc brake caliper from back plate, and suspend it from strut using a piece of wire.
7) Remove disc rotor from hub.

NOTE:
If disc rotor seizes up within hub, drive it out by installing an 8-mm bolt into bolt hole in disc rotor.

8) Remove brake drum from hub.

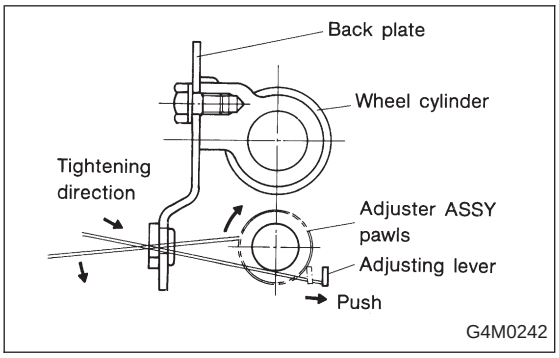

9) If it is difficult to remove brake drum, remove adjusting hole cover from back plate, and then turn adjusting screw using a slot-type screwdriver until brake shoe separates from the drum.

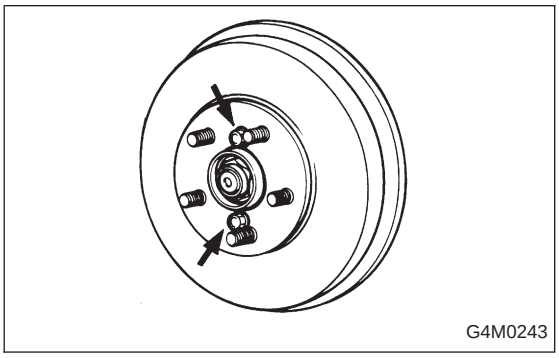

NOTE:
If brake drum is difficult to remove, drive it out by installing an 8-mm bolt into bolt hole in brake drum.

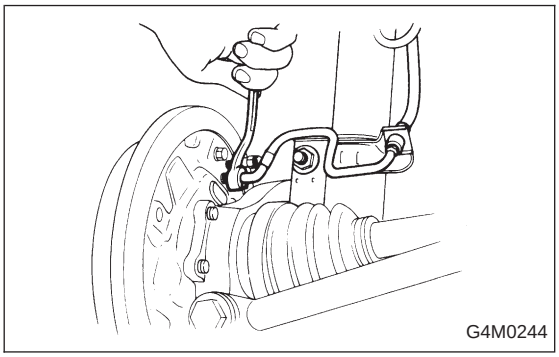

10) Using a flare-nut wrench, disconnect brake pipe from wheel cylinder.

CAUTION:
Cover open end of wheel cylinder to prevent entry of foreign particles.

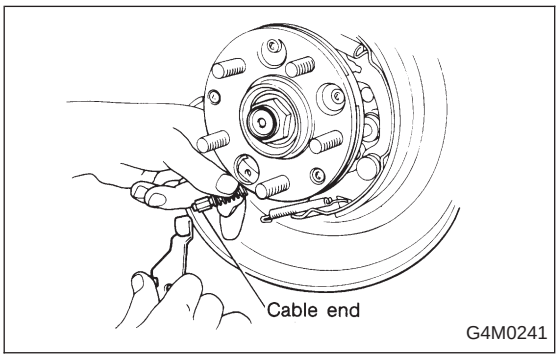

11) Disconnect end of parking brake cable.

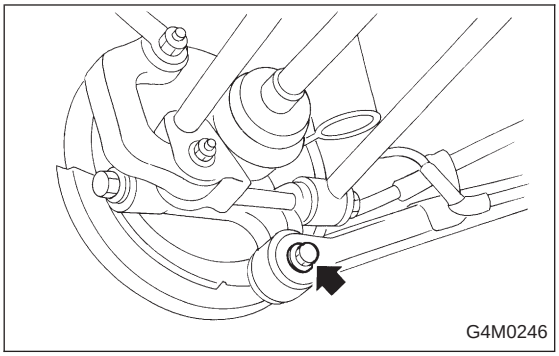

12) Remove bolts which secure trailing link assembly to rear housing.

CAUTION:
Discard old self-locking nut. Replace with a new one.

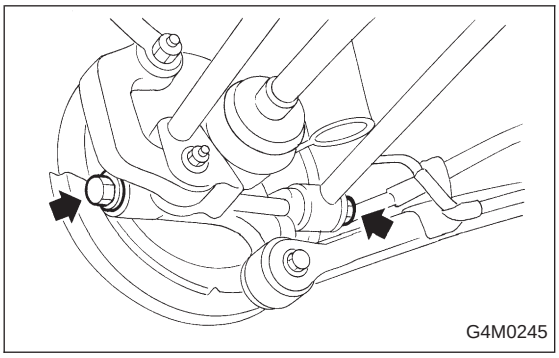

13) Remove bolts which secure lateral link assembly to rear housing.

CAUTION:
Discard old self-locking nut. Replace with a new one.

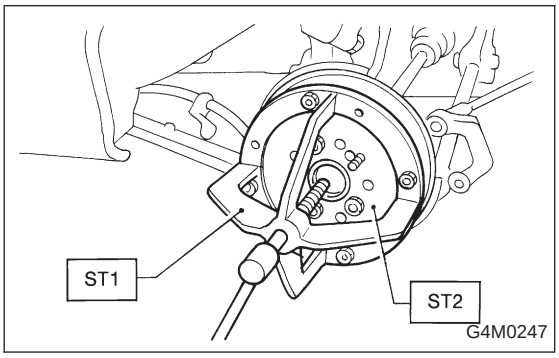

14) Disengage BJ from housing splines, and remove rear drive shaft assembly. If it is hard to remove, use STs.

ST1 926470000 AXLE SHAFT PULLER
ST2 927140000 PLATE

CAUTION:
- **Be careful not to damage oil seal lip when removing rear drive shaft.**
- **When rear drive shaft is to be replaced, also replace inner oil seal with a new one.**

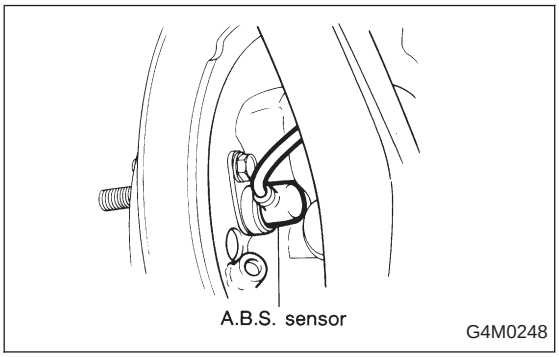

15) Remove rear A.B.S. sensor from back plate (only vehicle equipped with A.B.S.).

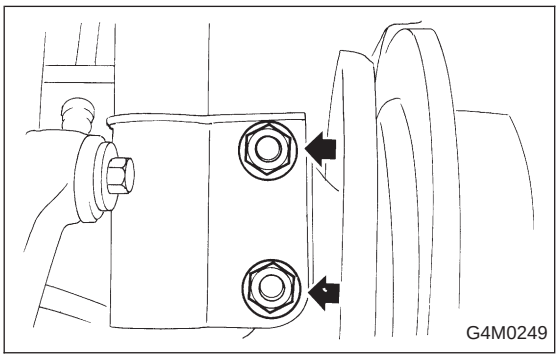

16) Remove bolts which secure rear housing to strut, and separate the two.

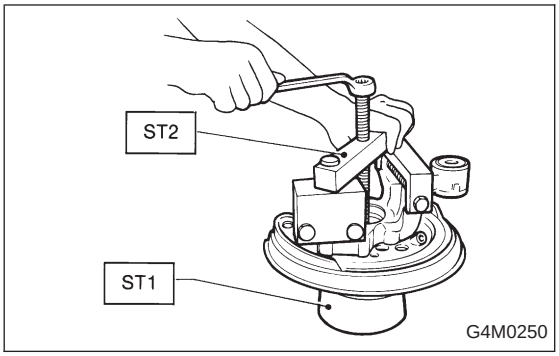

B: DISASSEMBLY

1) Using ST1 and ST2, remove hub from rear housing.

ST1 927080000 HUB STAND
ST2 927420000 HUB REMOVER

2) Remove back plate from rear housing.
3) Using a standard screwdriver, remove outer and inner oil seals.

CAUTION:
Use new oil seals.

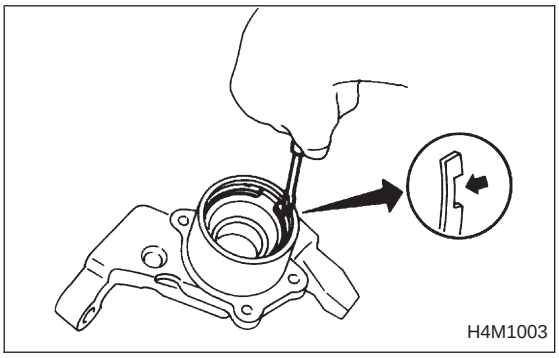

4) Using flat bladed screwdriver, remove snap ring.

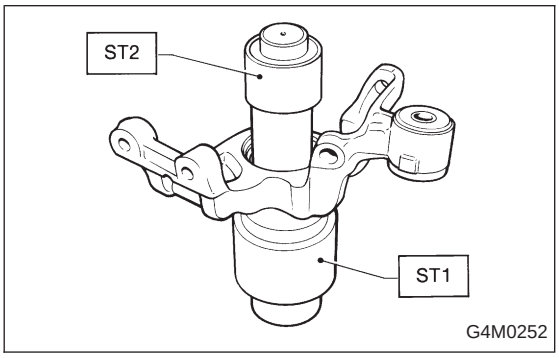

5) Using ST1 and ST2, remove bearing by pressing inner race.

ST1 927430000 HOUSING STAND
ST2 927440000 BEARING REMOVER

CAUTION:
- **Do not remove bearing unless damaged.**
- **Do not re-use bearing after removal.**

6) Remove tone wheel bolts and remove tone wheel from hub (only vehicle equipped with A.B.S.).

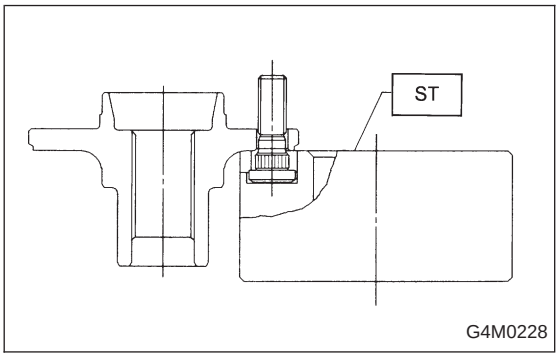

7) Using ST, press hub bolt out.

ST 927080000 HUB STAND

CAUTION:
Be careful not to hammer hub bolts. This may deform hub.

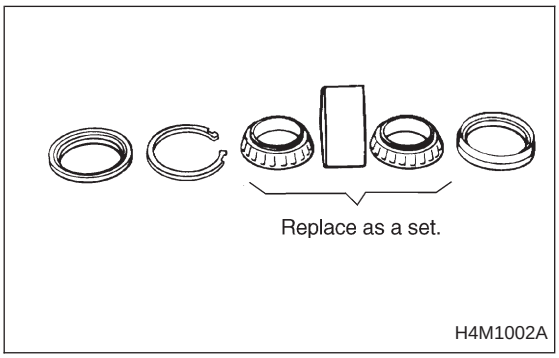

C: INSPECTION

Check the removed parts for wear and damage. If defective, replace with a new one.

CAUTION:
- **If a bearing is faulty, replace it as the bearing set.**
- **Be sure to replace oil seal at every overhaul.**

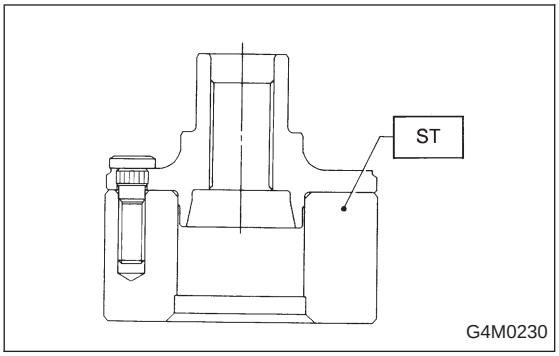

D: ASSEMBLY

1) Using ST, press new hub bolt into place.

CAUTION:
- **Ensure hub bolt closely contacts hub.**
- **Use a 12 mm (0.47 in) hole in the ST to prevent hub bolt from tilting during installation.**

ST 927080000 HUB STAND

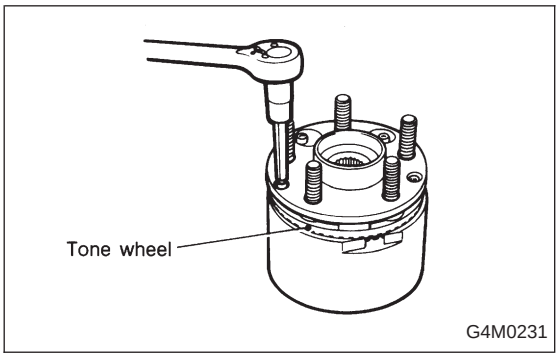

2) Remove foreign particles (dust, rust, etc.) from mating surfaces of hub and tone wheel, and install tone wheel to hub (only vehicle equipped with A.B.S.).

CAUTION:
- **Ensure tone wheel closely contacts hub.**
- **Be careful not to damage tone wheel teeth.**

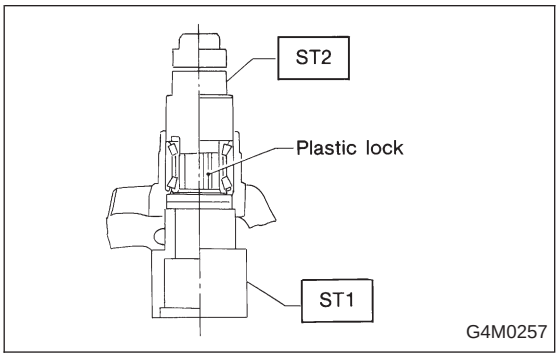

3) Clean housing interior completely. Using ST1 and ST2, press bearing into housing.

ST1 927430000 HOUSING STAND
ST2 927440000 BEARING REMOVER

CAUTION:
- **Always press outer race when installing bearing.**
- **Be careful not to remove plastic lock from inner race when installing bearing.**
- **Charge bearing with new grease when outer race is not removed.**

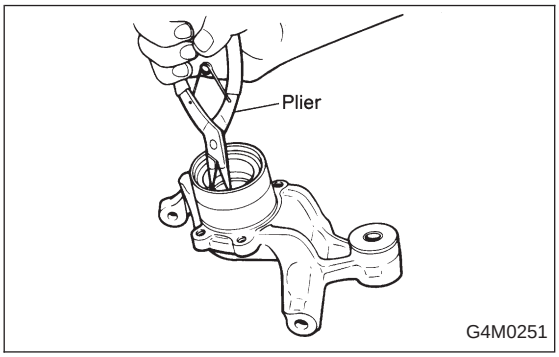

4) Using plier, install snap ring.

CAUTION:
Ensure snap ring fits in groove properly.

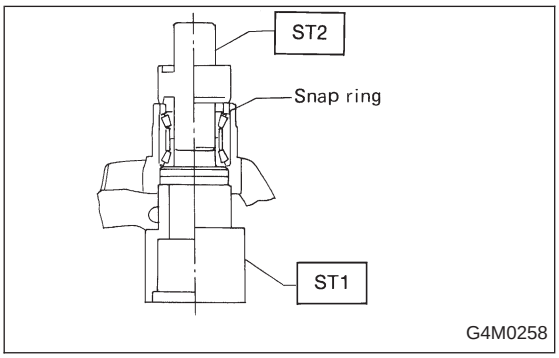

5) Using ST1 and ST2, press outer oil seal until it comes in contact with snap ring.

ST1 927430000 HOUSING STAND
ST2 927460000 OIL SEAL INSTALLER

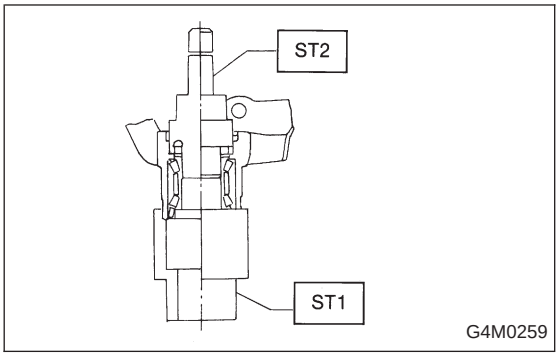

6) Invert both ST1 and housing.
7) Using ST2, press inner oil seal into housing until it touches bottom.

ST1 927430000 HOUSING STAND
ST2 927460000 OIL SEAL INSTALLER

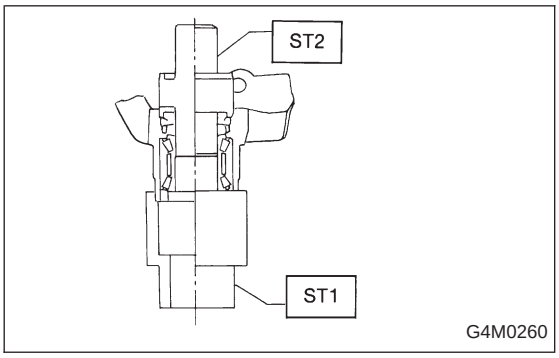

8) Using ST1 and ST2, press sub seal into place.
ST1 927430000 HOUSING STAND
ST2 927460000 OIL SEAL INSTALLER

9) Apply sufficient grease to oil seal lip.

Specified grease:
SHELL 6459N

CAUTION:
- **If specified grease is not available, remove bearing grease and apply Auto Rex A instead.**
- **Do not mix different types of grease.**

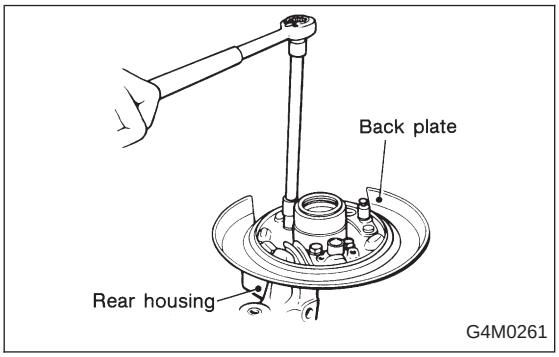

10) Install back plate to rear housing.

Tightening torque:
52±6 N·m (5.3±0.6 kg-m, 38.3±4.3 ft-lb)

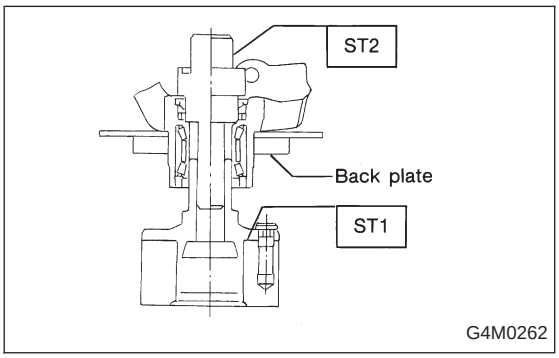

11) Using ST1 and ST2, press bearing into hub.
ST1 927080000 HUB STAND
ST2 927450000 HUB INSTALLER

E: INSTALLATION

1) Connect rear housing assembly and strut assembly.

CAUTION:
Use a new self-locking nut.

Tightening torque:
147±15 N·m (15±1.5 kg-m, 108±11 ft-lb)

2) Fit BJ (bell joint) to rear housing splines.

CAUTION:
Be careful not to damage inner oil seal lip.

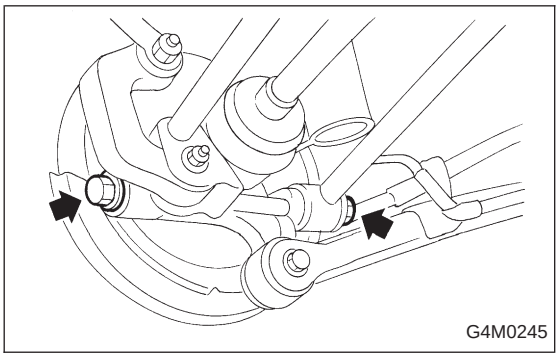

3) Connect rear housing assembly to lateral link assembly.

CAUTION:
Use a new self-locking nut.

Tightening torque:
137±20 N·m (14±2 kg-m, 101±14 ft-lb)

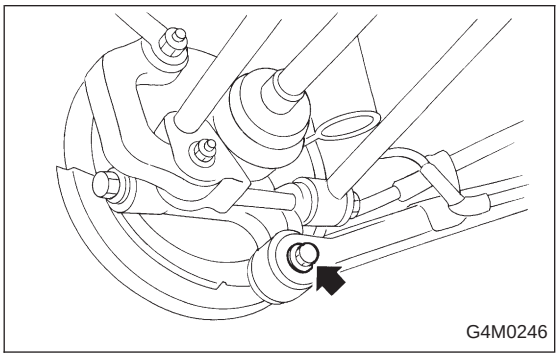

4) Connect rear housing assembly to trailing link assembly.

CAUTION:
Use a new self-locking nut.

Tightening torque:
98 — 127 N·m (10 — 13 kg-m, 72 — 94 ft-lb)

Disc brake: Perform steps 5) and 6).

5) Connect parking brake cable to parking brake.

6) Install disc rotor on rear housing assembly.

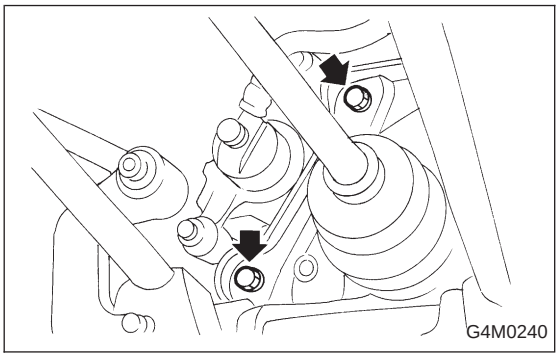

7) Install disc brake caliper on back plate.

Tightening torque:
52±6 N·m (5.3±0.6 kg-m, 38.3±4.3 ft-lb)

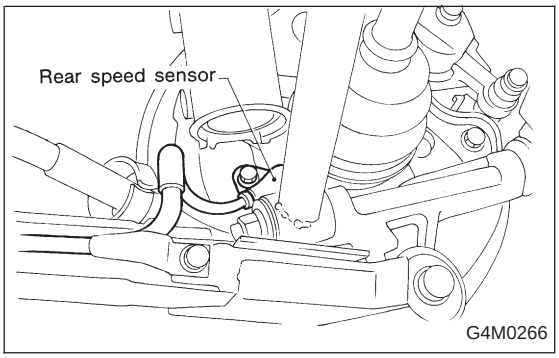

8) Install rear speed sensor to back plate (only vehicle equipped with A.B.S.).

Drum brake: Perform steps 9) through 11).
9) Clean brake pipe connection. Using a flare-nut wrench, connect brake pipe to wheel cylinder.
10) Connect parking brake cable to lever.
11) Install brake drum on rear housing assembly.
12) Bleed air from brake system. <Ref. to 4-4 [W11B0].>
13) Adjust parking brake lever stroke by turning adjuster.
14) Move brake lever back to apply brakes. While depressing brake pedal, tighten axle nut using a socket wrench. Lock axle nut after tightening.

Tightening torque:
186±20 N·m (19±2 kg-m, 137±14 ft-lb)

CAUTION:
- **Use a new axle nut.**
- **Always tighten axle nut before installing wheel on vehicle. If wheel is installed and comes in contact with ground when axle nut is loose, wheel bearings may be damaged.**
- **Be sure to tighten axle nut to specified torque. Do not overtighten it as this may damage wheel bearing.**

15) Install wheel and tighten wheel nuts to specified torque.

Tightening torque:
88±10 N·m (9±1 kg-m, 65±7 ft-lb)

3. Rear Axle (FWD Model)

A: REMOVAL

1) Disconnect ground cable from battery.
2) Jack-up vehicle, and remove rear wheel cap and wheels.

CAUTION:
Be sure to loosen and retighten axle nut after removing wheel from vehicle. Failure to follow this rule may damage wheel bearings.

3) Pry hub cap off with a screwdriver placed between it and hub.
4) Unlock axle nut.
5) Remove axle nut using a socket wrench. Remove washer.

CAUTION:
Do not re-use old axle nut. Replace with a new one.

NOTE:
Temporarily tighten axle nut to hold hub in place.

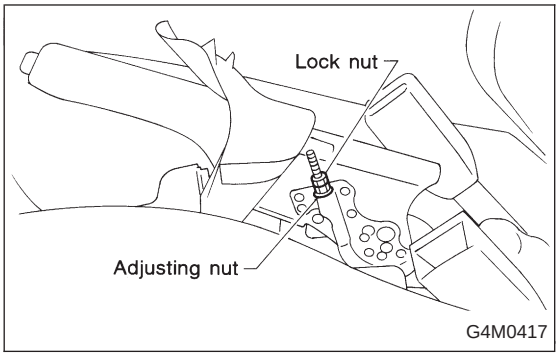

6) Return parking brake lever and loosen adjuster.
   (1) Disc brake: Perform steps 7) through 9).
   (2) Drum brake: Perform steps 10) through 13).

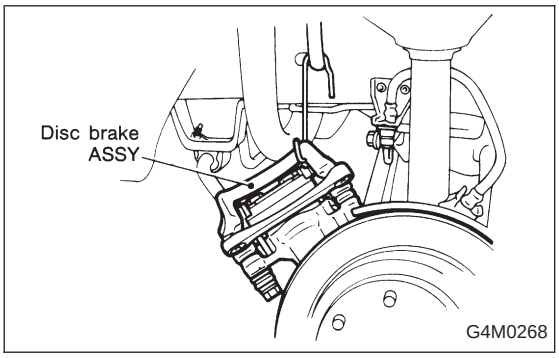

7) Remove disc brake assembly from back plate. Suspend disc brake assembly from strut using a wire.

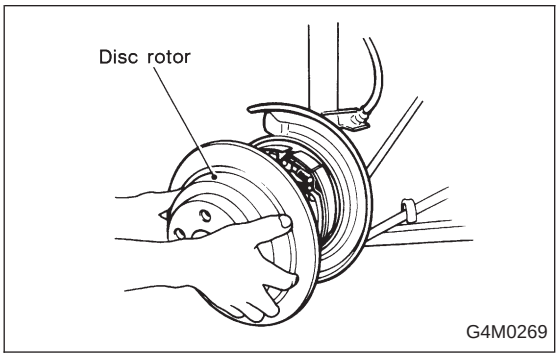

8) Remove disc rotor from hub.
If disc rotor seizes up within hub, drive it out by installing an 8-mm bolt in bolt hole on disc rotor.

9) Disconnect end of parking brake cable.

10) Remove brake drum from hub.

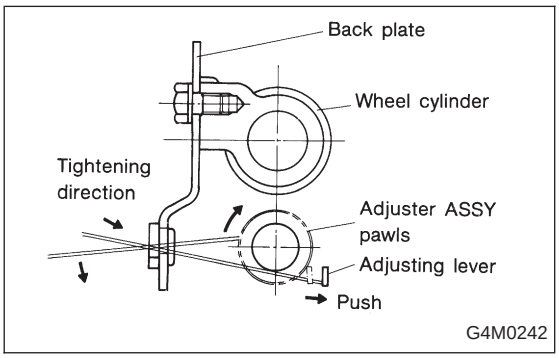

11) If it is difficult to remove brake drum, remove adjusting hole cover from back plate, and then turn adjusting screw using a slot-type screwdriver until brake shoe separates from the drum.

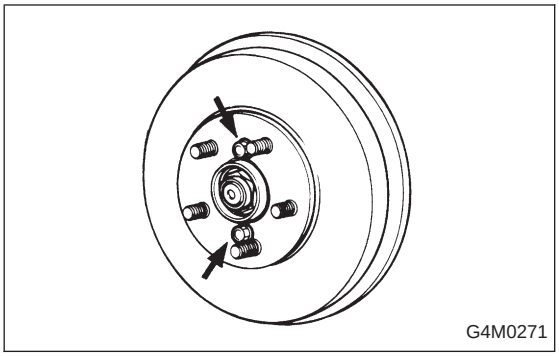
G4M0271

NOTE:
If brake drum seizes up within hub, drive it out by installing an 8-mm bolt in bolt hole on brake drum.

12) Disconnect end of parking brake cable.
13) Using a flare-nut wrench, disconnect brake pipe from wheel cylinder.

CAUTION:
Cover brake pipe connection to prevent entry of foreign particles.

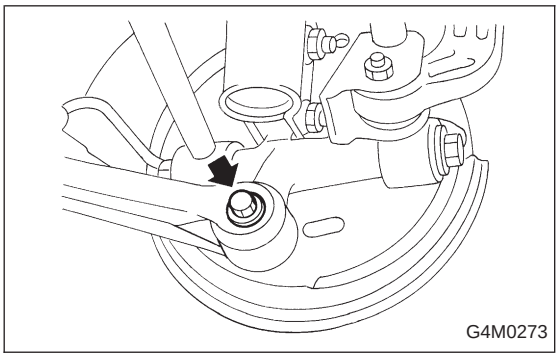
G4M0273

14) Remove bolts which secure trailing link assembly to rear spindle.

CAUTION:
Discard old self-locking nut. Replace with a new one.

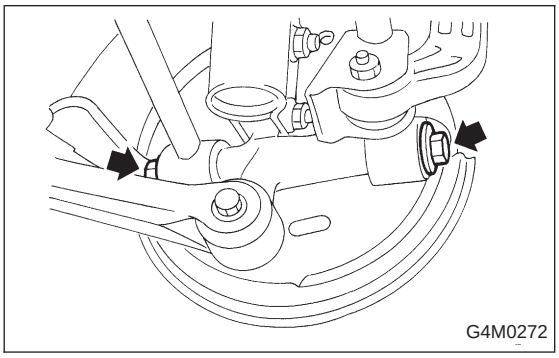
G4M0272

15) Remove bolts which secure lateral link assembly to rear spindle.

CAUTION:
Discard old self-locking nut. Replace with a new one.

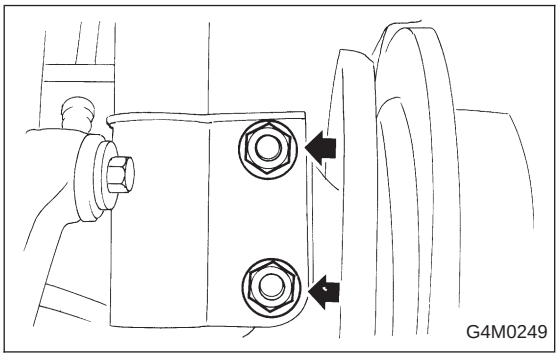
G4M0249

16) Remove bolts which secure strut assembly to rear spindle.
Remove rear spindle, back plate and hub as a unit.

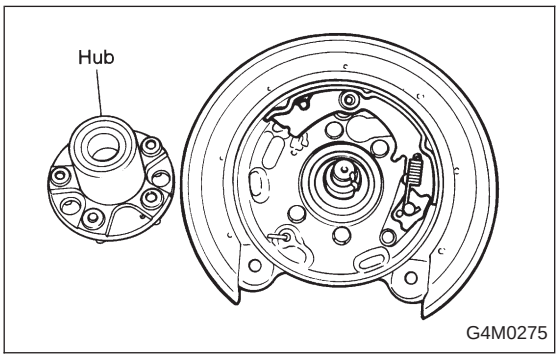

G4M0275

B: DISASSEMBLY

1) Remove hub from rear spindle.

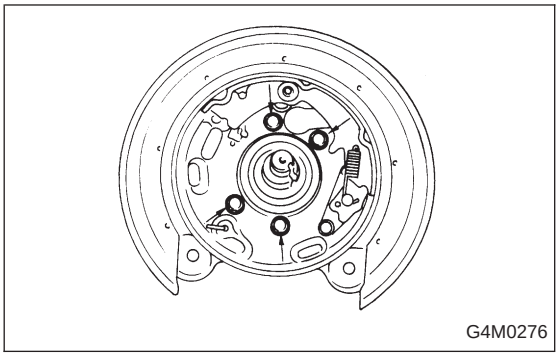

2) Remove back plate from rear spindle.

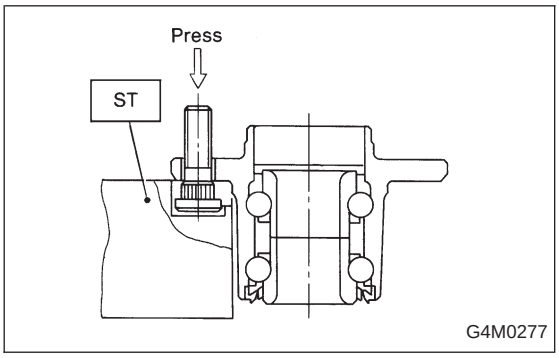

3) Using ST, press hub bolts out.

CAUTION:
Do not hammer hub bolt since this may deform hub.

ST 927080000 HUB STAND

C: INSPECTION

Clean the removed parts and check them for wear, damage and corrosion. If faulty, replace.

CAUTION:
Hub unit cannot be disassembled. If faulty, replace it as a unit.

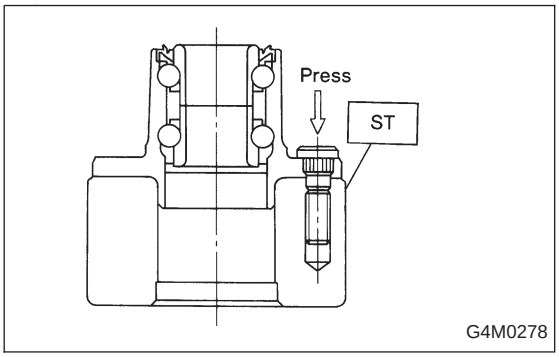

D: ASSEMBLY

1) Using ST, press new hub bolts into place.

NOTE:
- Use a 12 mm (0.47 in) hole in ST to prevent hub bolt from tilting during installation.
- Ensure hub bolt closely contacts hub.

ST 927080000 HUB STAND

2) Completely clean dust or dirt from the mating/polished surface of rear spindle back plate.

3) Install back plate to rear spindle.

Tightening torque:
52±6 N·m (5.3±0.6 kg-m, 38.3±4.3 ft-lb)

4) Charge oil seal located on the rear of hub with grease.

Specified grease:
SHELL 6459N

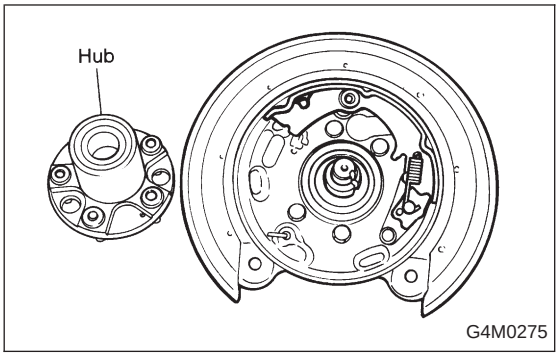

5) Install hub on rear spindle. Temporarily tighten axle nut and washer to hold hub in place.

CAUTION:
Discard old axle nut. Replace with a new one.

E: INSTALLATION

1) Connect rear spindle assembly to strut assembly.

Tightening torque:
147±15 N·m (15±1.5 kg-m, 108±11 ft-lb)

CAUTION:
Use a new self-locking nut.

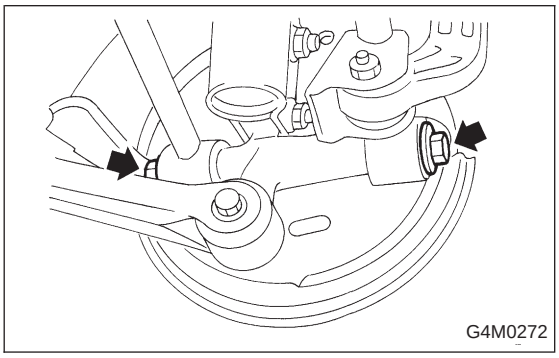

2) Connect rear spindle assembly to lateral link assembly.

Tightening torque:
137±20 N·m (14±2 kg-m, 101±14 ft-lb)

CAUTION:
Use new self-locking nut.

3) Connect rear spindle assembly to trailing link assembly.

Tightening torque:
113±15 N·m (11.5±1.5 kg-m, 83±11 ft-lb)

CAUTION:
Use a new self-locking nut.

Disc brake: Perform steps 4) through 6).

4) Connect end of parking brake cable.
5) Install disc rotor to hub unit.
6) Install disc brake assembly to back plate.

Tightening torque:
52±6 N·m (5.3±0.6 kg-m, 38.3±4.3 ft-lb)

Drum brake: Perform steps 7) through 10).
7) Completely clean brake pipe connection. Using a flare-nut wrench, connect brake pipe to wheel cylinder.
8) Connect parking brake cable to lever.
9) Install brake drum on hub unit.
10) Bleed air from brake system. <Ref. to 4-4 [W11B0].>
11) Tighten axle nut using a socket wrench, and lock securely.

Tightening torque:
186±20 N·m (19±2 kg-m, 137±14 ft-lb)

CAUTION:
- **Use a new axle nut.**
- **Always tighten axle nut before installing wheel on vehicle. If wheel is installed and comes in contact with ground when axle nut is loose, wheel bearings may be damaged.**
- **Be sure to tighten axle nut to specified torque. Do not overtighten it as this may damage wheel bearing.**

12) Install O-ring to hub cap flange, and install hub cap by lightly tapping it with a plastic-faced hammer.
13) Install wheel and tighten wheel nuts to specified torque.

Tightening torque (Wheel nut):
88±10 N·m (9±1 kg-m, 65±7 ft-lb)

4. Front and Rear Drive Shafts

A: REMOVAL

1. FRONT DRIVE SHAFT

1) Disconnect ground cable from battery.
2) Jack-up vehicle, support it with safety stands (rigid rocks), and remove front wheel cap and wheels.
3) Unlock axle nut.
4) Remove axle nut using a socket wrench.

CAUTION:
Be sure to loosen and retighten axle nut after removing wheel from vehicle. Failure to follow this rule may damage wheel bearings.

5) Disconnect transverse link from housing.

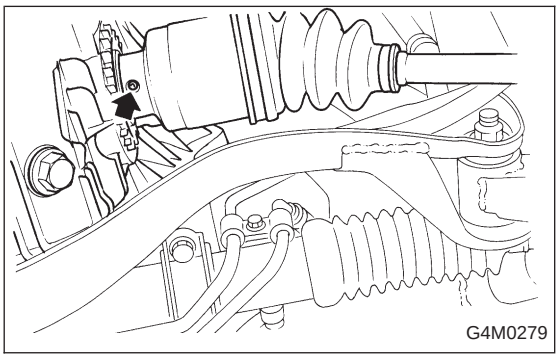

6) Remove spring pin which secures transmission spindle to DOJ.

CAUTION:
Use a new spring pin.

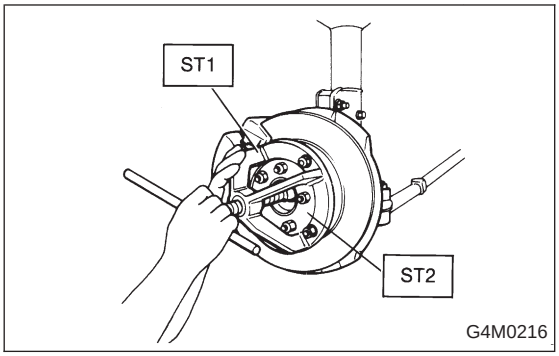

7) Remove front drive shaft assembly. If it is hard to remove, use ST1 and ST2.

ST1 926470000 AXLE SHAFT PULLER
ST2 927140000 PLATE

CAUTION:
- **Be careful not to damage oil seal lip when removing front drive shaft.**
- **When front drive shaft is to be replaced, also replace inner oil seal.**

2. REAR DRIVE SHAFT

1) Disconnect ground cable from battery.
2) Lift-up vehicle, and remove rear wheel cap and wheels.

CAUTION:
Be sure to loosen and retighten axle nut after removing wheel from vehicle. Failure to follow this rule may damage wheel bearings.

3) Unlock axle nut.
4) Loosen axle nut using a socket wrench.

CAUTION:
Do not remove axle nut.

5) Remove A.B.S. sensor clamps and parking brake cable bracket.
6) Remove bolts which secure lateral link assembly to rear housing.

CAUTION:
Discard old self-locking nut. Replace with a new one.

7) Remove bolts which secure trailing link assembly to rear housing.

CAUTION:
Discard old self-locking nut. Replace with a new one.

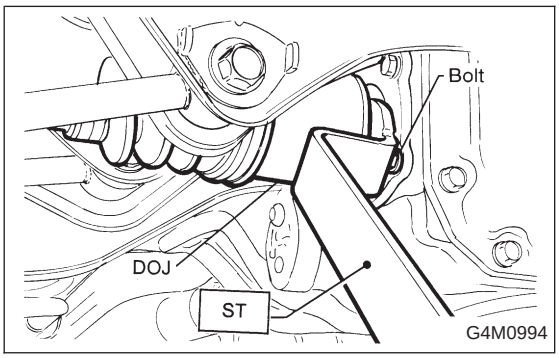

Except 1800 cc model: Perform step 8).
8) Remove DOJ from rear differential using ST.
ST 28099PA100 DRIVE SHAFT REMOVER

CAUTION:
Do not remove circlip attached to inside of differential.

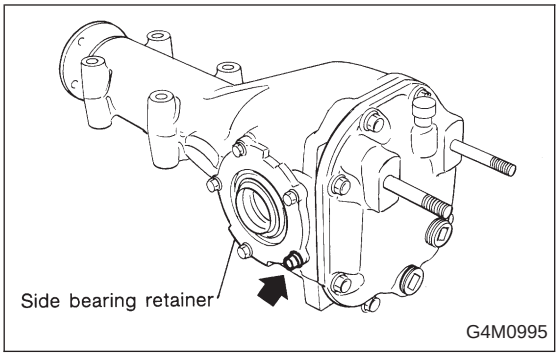

CAUTION:
Be careful not to damage side bearing retainer. Always use bolt as shown in figure, as supporting point for ST during removal.

ST 28099PA100 DRIVE SHAFT REMOVER

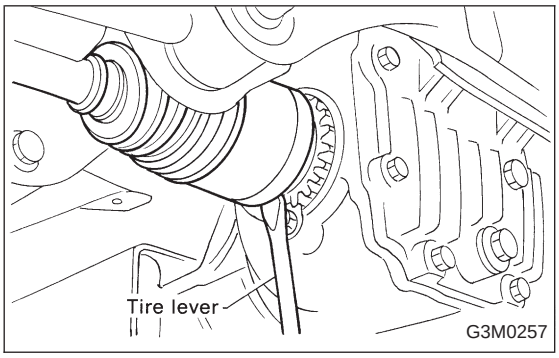

1800 cc model: Perform step 9).
9) Remove DOJ from rear differential using tire lever.

NOTE:
The side spline shaft circlip comes out together with the shaft.

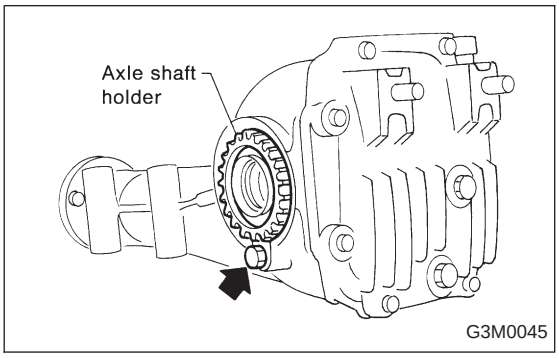

CAUTION:
When removing the DOJ from the rear differential, fit tire lever to the bolt as shown in figure so as not to damage the axle shaft holder.

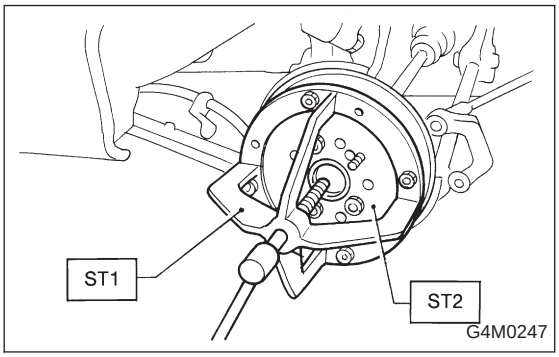

10) Remove axle nut and drive shaft. If it is hard to remove, use ST1 and ST2.

ST1 926470000 AXLE SHAFT PULLER
ST2 927140000 PLATE

CAUTION:
- **Be careful not to damage oil seal lip when removing rear drive shaft.**
- **When rear drive shaft is to be replaced, also replace inner oil seal with a new one.**

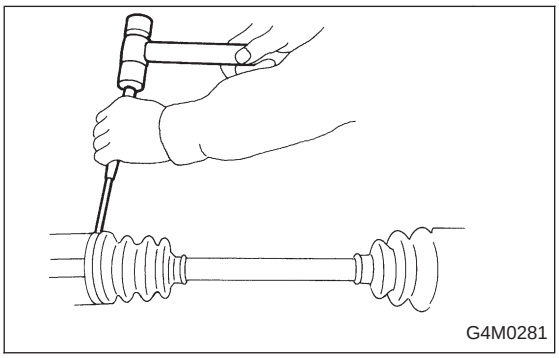

B: DISASSEMBLY

1) Straighten bent claw of larger end of DOJ boot.
2) Loosen band by means of screwdriver or pliers with care of not damaging boot.
3) Remove boot band on the small end of DOJ boot in the same manner.
4) Remove the larger end of DOJ boot from DOJ outer race.

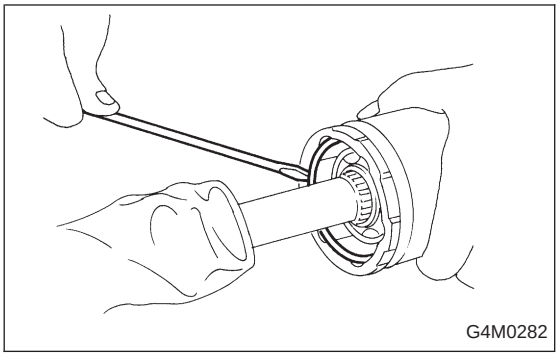

5) Pry and remove round circlip located at the neck of DOJ outer race with a screwdriver.

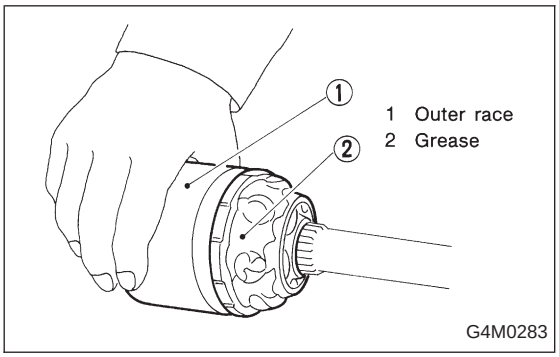

6) Take out DOJ outer race from shaft assembly.
7) Wipe off grease and take out balls.

CAUTION:
The grease is a special grease (grease for constant-velocity joint). Do not confuse with other greases.

NOTE:
Disassemble exercising care not to lose balls (6 pcs).

8) To remove the cage from the inner race, turn the cage by a half pitch to the track groove of the inner race and shift the cage.
9) Remove snap ring, which fixes inner race to shaft, by using pliers.
10) Take out DOJ inner race.
11) Take off DOJ cage from shaft and remove DOJ boot.

CAUTION:
Be sure to wrap shaft splines with vinyl tape to prevent boot from scratches.

12) Remove UFJ/BJ boot in the same procedure as steps 1) to 3).
13) Thus, disassembly of axle is completed, but UFJ/BJ is unable to be disassembled.

C: INSPECTION

Check the removed parts for damage, wear, corrosion and etc. If faulty, repair or replace.
1) DOJ (Double Offset Joint)
Check seizure, corrosion, damage, wear and excessive play.
2) Shaft
Check excessive bending, twisting, damage and wear.
3) UFJ (Under cut Free Joint)
Check seizure, corrosion, damage and excessive play.

4) Boot
Check for wear, warping, breakage or scratches.
5) Grease
Check for discoloration or fluidity.

D: ASSEMBLY

Use specified grease.

UFJ/BJ side:
UFJ (Front) — NTG2218 (Part No. 28093AA020)
BJ (Rear) — Molylex No. 2 (Part No. 723223010) or Sunlight TB2-A

DOJ side:
AT model — VU-3A702 (Yellow) (Part No. 23223GA050)
MT model — Molylex No. 2 (Part No. 723223010) or Sunlight TB2-A

1) Install BJ boot in specified position, and fill it with 60 to 70 g (2.12 to 2.47 oz) of specified grease.
2) Place DOJ boot at the center of shaft.

CAUTION:
Be sure to wrap shaft splines with vinyltape to prevent boot from scratches.

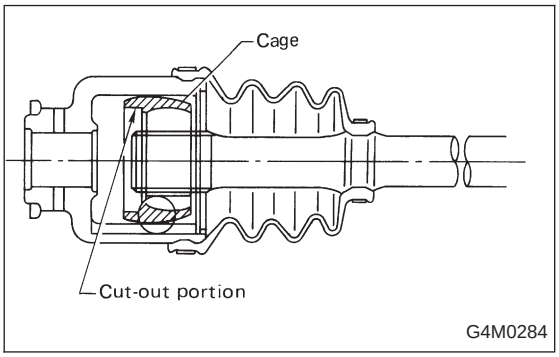

3) Insert DOJ cage onto shaft.

NOTE:
Insert the cage with the cut-out portion facing the shaft end, since the cage has an orientation.

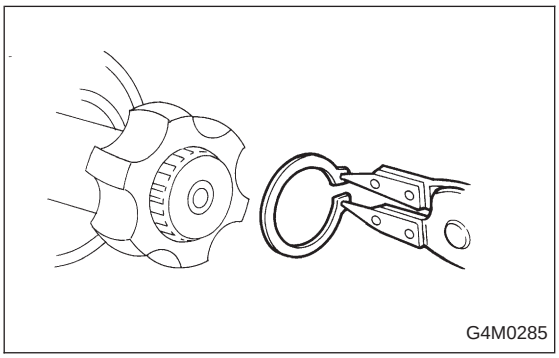

4) Install DOJ inner race on shaft and fit snap ring with pliers.

NOTE:
Confirm that the snap ring is completely fitted in the shaft groove.

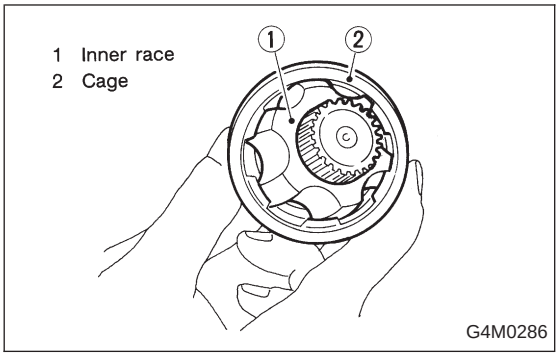

5) Install cage, which was previously fitted, to inner race fixed upon shaft.

NOTE:
Fit the cage with the protruded part aligned with the track on the inner race and then turn by a half pitch.

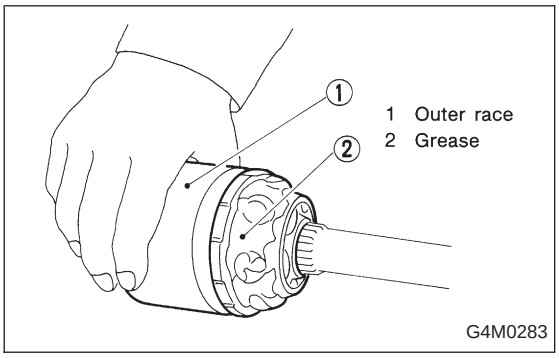

6) Fill 80 to 90 g (2.82 to 3.17 oz) of specified grease into the interior of DOJ outer race.
7) Apply a coat of specified grease to the cage pocket and six balls.
8) Insert six balls into the cage pocket.
9) Align the outer race track and ball positions and place in the part where shaft, inner race, cage and balls are previously installed, and then fit outer race.

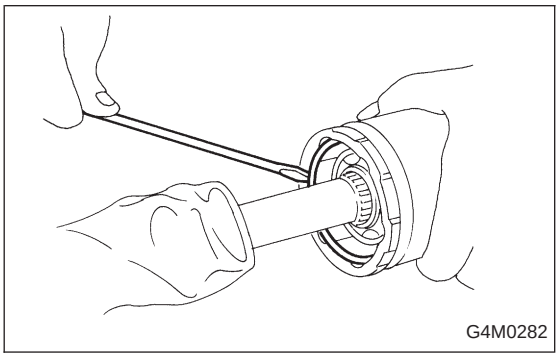

10) Install circlip in the groove on DOJ outer race.

NOTE:
- Assure that the balls, cage and inner race are completely fitted in the outer race of DOJ.
- Exercise care not to place the matched position of circlip in the ball groove of outer race.
- Pull the shaft lightly and assure that the circlip is completely fitted in the groove.

11) Apply an even coat of the specified grease [20 to 30 g (0.71 to 1.06 oz)] to the entire inner surface of boot. Also apply grease to shaft.
12) Install DOJ boot taking care not to twist it.

NOTE:
- The inside of the larger end of DOJ boot and the boot groove shall be cleaned so as to be free from grease and other substances.
- When installing DOJ boot, position outer race of DOJ at center of its travel.

13) Put a band through the clip and wind twice in alignment with band groove of boot.

CAUTION:
Use a new band.

14) Pinch the end of band with pliers. Hold the clip and tighten securely.

NOTE:
When tightening boot, exercise care so that the air within the boot is appropriate.

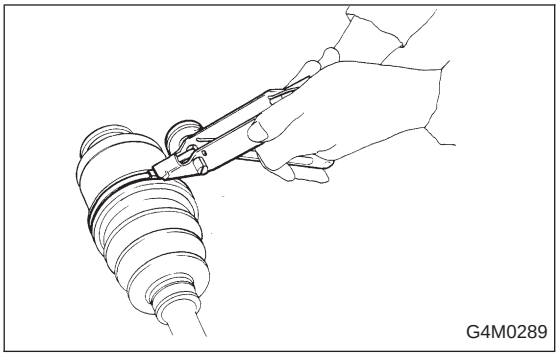

15) Tighten band by using ST.

ST 925091000 BAND TIGHTENING TOOL

NOTE:
Tighten band until it cannot be moved by hand.

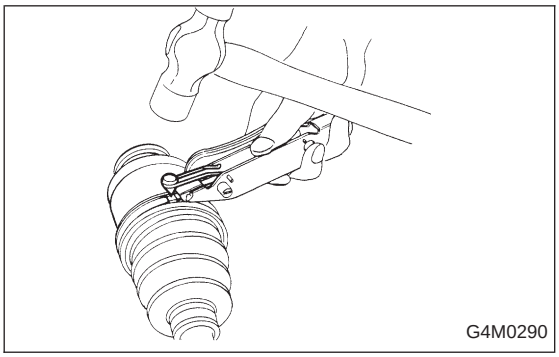

16) Tap on the clip with the punch provided at the end of ST.

ST 925091000 BAND TIGHTENING TOOL

CAUTION:
Tap to an extent that the boot underneath is not damaged.

17) Cut off band with an allowance of about 10 mm (0.39 in) left from the clip and bend this allowance over the clip.

CAUTION:
Be careful so that the end of the band is in close contact with clip.

18) Fix up boot on BJ in the same manner.
19) Install protector onto BJ boot band. (For rear side only)

NOTE:
Extend and retract DOJ to provide equal grease coating.

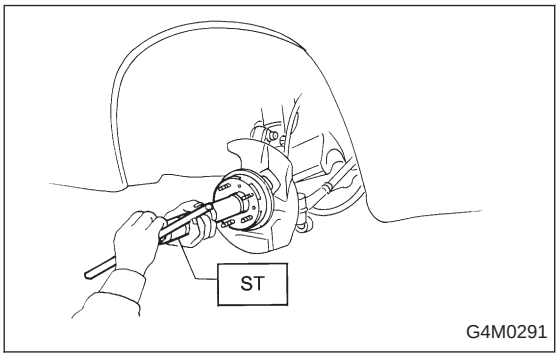

E: INSTALLATION

1. FRONT DRIVE SHAFT

1) Insert UFJ (Under cut Free Joint) into hub splines.

CAUTION:
Be careful not to damage inner oil seal lip.

2) Using ST1 and ST2, pull drive shaft into place.

ST1 922431000 AXLE SHAFT INSTALLER
ST2 927390000 ADAPTER

CAUTION:
Do not hammer drive shaft when installing it.

3) Tighten axle nut temporarily.

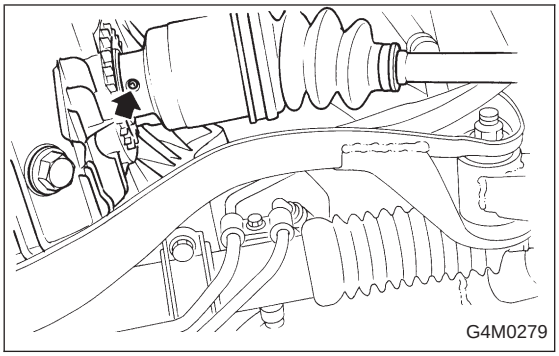

4) Install DOJ on transmission spindle and drive spring pin into place.

CAUTION:
Always use a new spring pin.

5) Connect transverse link to housing.

Torque (self-locking nut):
49±10 N·m (5.0±1.0 kg-m, 36±7 ft-lb)

CAUTION:
Use a new self-locking nut.

6) Install stabilizer bracket.
7) While depressing brake pedal, tighten axle nut to the specified torque.

Tightening torque:
186±20 N·m (19±2 kg-m, 137±14 ft-lb)

CAUTION:
- **Use a new axle nut.**
- **Always tighten axle nut before installing wheel on vehicle. If wheel is installed and comes in contact with ground when axle nut is loose, wheel bearings may be damaged.**
- **Be sure to tighten axle nut to specified torque. Do not overtighten it as this may damage wheel bearing.**

8) After tightening axle nut, lock it securely.

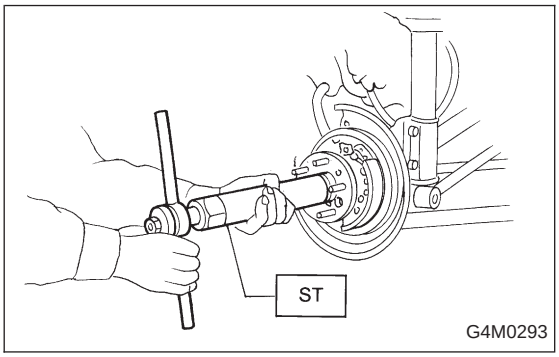

2. REAR DRIVE SHAFT

1) Insert BJ into rear housing splines.

CAUTION:
Be careful not to damage inner oil seal lip.

2) Using ST1 and ST2, pull drive shaft into place.

ST1	922431000	AXLE SHAFT INSTALLER
ST2	927390000	ADAPTER

CAUTION:
Do not hammer drive shaft when installing it.

3) Tighten axle nut temporarily.

4) Replace circlips from DOJ spline with new one (only 1800 cc model).

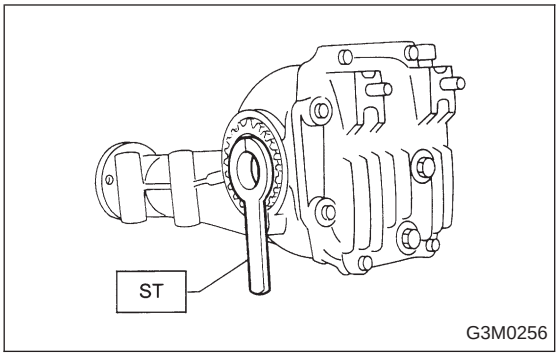

5) Using ST, install DOJ into differential.

ST 28099PA090 SIDE OIL SEAL PROTECTOR

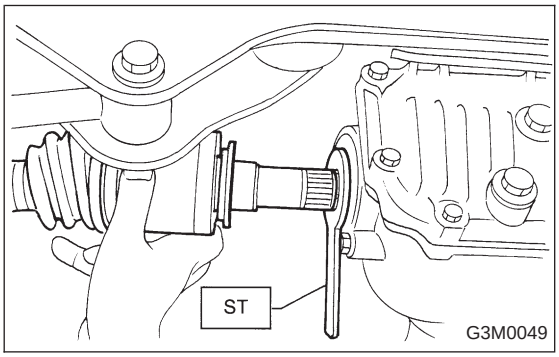

6) Insert DOJ spline end into bore of side oil seal, and remove ST.

CAUTION:
Do not allow DOJ splines to damage side oil seal.

ST 28099PA090 SIDE OIL SEAL PROTECTOR

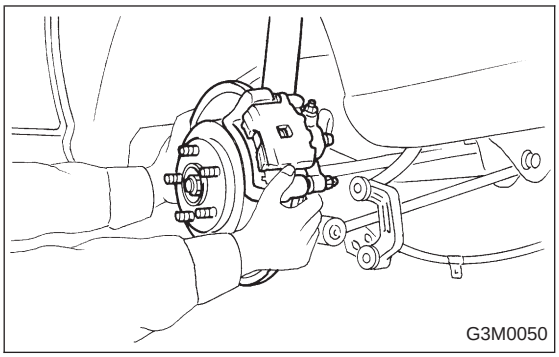

7) Align DOJ and differential splines.
8) Push housing to insert DOJ into differential.

NOTE:
Make sure DOJ is inserted properly.

9) Connect rear housing assembly to trailing link assembly, and tighten self-locking nut.

Tightening torque:
113±15 N·m (11.5±1.5 kg-m, 83±11 ft-lb)

10) Connect rear housing assembly to lateral link assembly, and tighten self-locking nut.

Tightening torque:
137±20 N·m (14±2 kg-m, 101±14 ft-lb)

11) Install stabilizer bracket.
12) While depressing brake pedal, tighten axle nut using a socket wrench.

Tightening torque:
186±20 N·m (19±2 kg-m, 137±14 ft-lb)

CAUTION:
- **Use a new axle nut.**
- **Always tighten axle nut before installing wheel on vehicle. If wheel is installed and comes in contact with ground when axle nut is loose, wheel bearings may be damaged.**

● **Be sure to tighten axle nut to specified torque. Do not overtighten it as this may damage wheel bearing.**

13) After tightening axle nut, lock it securely.

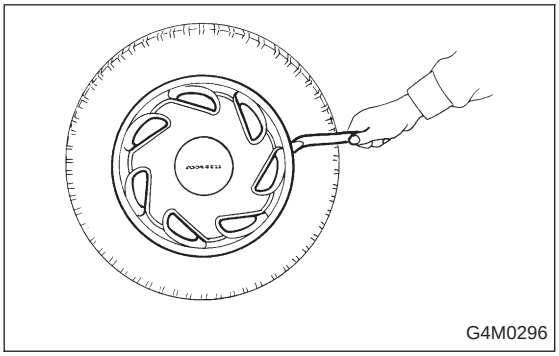

5. Full Wheel Cap

A: REMOVAL

Pry off the full wheel cap with a wheel cap remover inserted between openings in the cap.

B: INSTALLATION

Align the valve hole in the wheel cap with the valve on the wheel and secure the wheel cap by tapping four points by hand.

6. Steel Wheel and Tire

1) Deformation or damage on the rim can cause air leakage. Check the rim flange for deformation, crack, or damage, and repair or replace as necessary.
2) Take stone, glass, nail etc. off the tread groove.

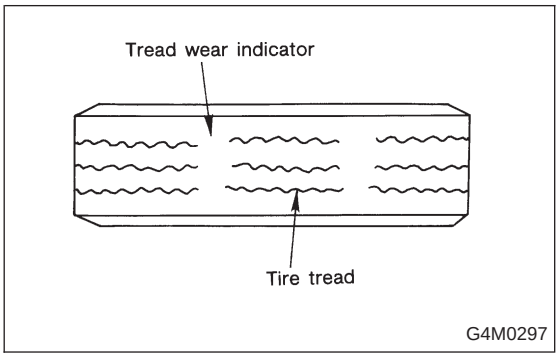

3) Replace tire:
   - when large crack on side wall, damage or crack on tread is found.
   - when the “tread wear indicator” appears as a solid band across the tread.

CAUTION:

● **When replacing a tire, make sure to use only the same size, construction and load range as originally installed.**

● **Avoid mixing radial, belted bias or bias tires on the vehicle.**

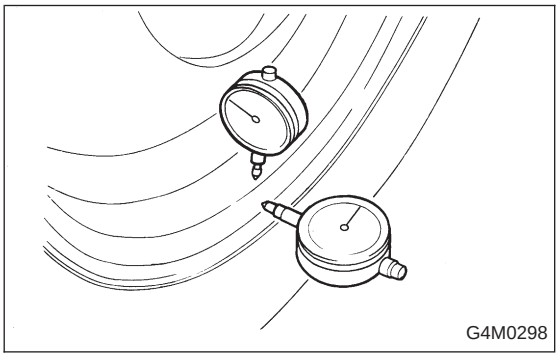

A: INSPECTION OF WHEEL RUNOUT

1) Jack-up vehicle until wheels clear the floor.
2) Slowly rotate wheel to check rim “runout” using a dial gauge.

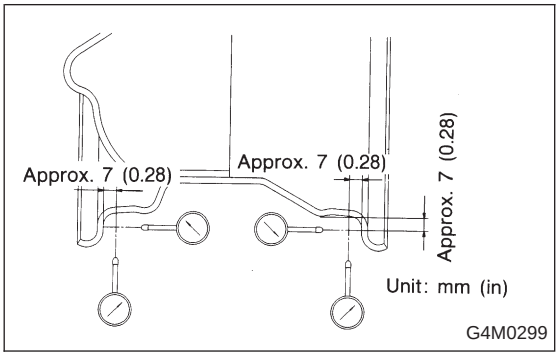

	Axial runout limit	Radial runout limit
Steel wheel	1.5 mm (0.059 in)	
Aluminum wheel	1.0 mm (0.039 in)	

3) If rim runout exceeds specifications, remove tire from rim and check runout while attaching dial gauge to positions shown in figure.
4) If measured runout still exceeds specifications, replace the wheel.

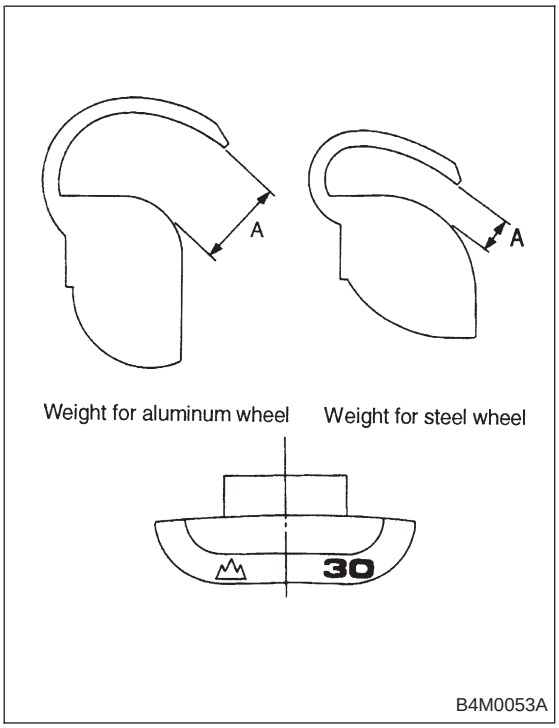

7. Wheel Balancing

1) Proper wheel balance may be lost if the tire is repaired or if it wears. Check the tire for dynamic balance, and repair as necessary.
2) To check for dynamic balance, use a dynamic balancer. Drive in the balance weight on both the top and rear sides of the rim.
3) Some types of balancer can cause damage to the wheel. Use an appropriate balancer when adjusting the wheel balance.
4) Use genuine balance weights.

Service limit: A
Weight for steel wheel;
1.6 — 2.0 mm (0.063 — 0.079 in)
Weight for aluminum wheel;
4.3 — 4.7 mm (0.169 — 0.185 in)

CAUTION:
● **55 g (1.94 oz) weight used with aluminum wheel is not available.**
● **Balance weights are available for use with any of 13- to 15-inch wheels.**

8. Installation of Wheel Assembly to Vehicle

1) Attach the wheel to the hub by aligning the wheel bolt hole with the hub bolt.
2) Temporarily attach the wheel nuts to the hub bolts. (In the case of aluminum wheel, use SUBARU genuine wheel nut for aluminum wheel.)
3) Manually tighten the nuts making sure the wheel hub hole is aligned correctly to the guide portion of hub.
4) Tighten the wheel nuts in a diagonal selection to the specified torque. Use a wheel nut wrench.

Wheel nut tightening torque:
88±10 N·m (9±1 kg-m, 65±7 ft-lb)

CAUTION:
- **Tighten the wheel nuts in two or three steps by gradually increasing the torque and working diagonally, until the specified torque is reached. For drum brake models, excess tightening of wheel nuts may cause wheels to "judder".**
- **Do not depress the wrench with a foot; Always use both hands when tightening.**
- **Make sure the bolt, nut and the nut seating surface of the wheel are free from oils.**

5) If a wheel is removed for replacement or for repair of a puncture, retighten the wheel nuts to the specified torque after running 1,000 km (600 miles).

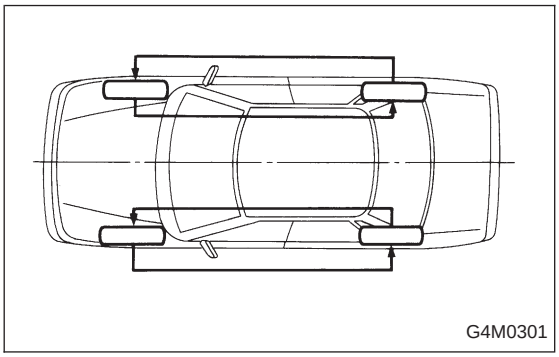

9. Tire Rotation

If tires are maintained at the same positions for a long period of time, uneven wear results. Therefore, they should be periodically rotated.
This lengthens service life of tires.

CAUTION:
When rotating tires, replace unevenly worn or damaged tires with new ones.

10. “T-type” Tire

“T-type” tire for temporary use is prepared as a spare tire.

CAUTION:

- **Keep the inflation pressure at 412 kPa (4.2 kg/cm^2, 60 psi) at all times.**
- **When the wear indicator appears on the tread surface, replace the tire with a new one.**
- **Do not use a tire chain with the “T-type” tire. Because of the smaller tire size, a tire chain will not fit properly and will result in damage to the vehicle and the tire.**
- **Do not drive at a speed greater than 80 km/h (50 MPH).**
- **Drive as slowly as possible and avoid passing over bumps.**
- **Replace with a conventional tire as soon as possible since this “T-type” tire is only for temporary use.**

11. Aluminum Wheel

A: INSPECTION

Inspection for aluminum wheels is basically the same as the one for steel wheels. However, check the rim flange for cracks or damage, and replace (not repair) aluminum wheel if air leakage is found.

B: PRECAUTIONS

Aluminum wheels are easily scratched. To maintain their appearance and safety, do the following:

1) Do not damage aluminum wheels during removal, disassembly, installation, wheel balancing, etc. After removing aluminum wheels, place them on a rubber mat, etc.

2) While vehicle is being driven, be careful not to ride over sharp obstacles or allow aluminum wheels to contact the shoulder of the road.

3) When installing tire chain, be sure to install it properly not to have a slack; otherwise it may hit wheel while driving.

4) When washing aluminum wheel, use neutral synthetic detergent and water. Avoid using the cleanser including abrasive, hard brushes or an automatic car washer.