GENERAL INFORMATION SECTION

FOREWORD	FW
HOW TO USE THIS MANUALS	HU
SPECIFICATIONS	SPC
PRECAUTION	PC
NOTE	NT
IDENTIFICATION	ID
RECOMMENDED MATERIALS	RM
PRE-DELIVERY INSPECTION	PI
PERIODIC MAINTENANCE SERVICES	PM

This service manual has been prepared to provide SUBARU service personnel with the necessary information and data for the correct maintenance and repair of SUBARU vehicles.
This manual includes the procedures for maintenance, disassembling, reassembling, inspection and adjustment of components and diagnostics for guidance of experienced mechanics.
Please peruse and utilize this manual fully to ensure complete repair work for satisfying our customers by keeping their vehicle in optimum condition. When replacement of parts during repair work is needed, be sure to use SUBARU genuine parts.

All information, illustration and specifications contained in this manual are based on the latest product information available at the time of publication approval.

FUJI HEAVY INDUSTRIES LTD. G1171BE1

FOREWORD

FW

Page

1. Foreword 2

1. Foreword

A: FOREWORD

These manuals are used when performing maintenance, repair or diagnosis of SUBARU IMPREZA, SUBARU XV CROSSTREK^{TM}, and SUBARU XV CROSSTREK^{TM} HYBRID.
Applicable model:
2014MY GJ*****, GP*****
The manuals contain the latest information at the time of publication. Changes in the specifications, methods, etc. may be made without notice.

HOW TO USE THIS MANUALS

HU

Page

1. How to Use This Manuals 2

1. How to Use This Manuals

A: HOW TO USE THIS MANUALS

1. STRUCTURE

Each section consists of SCT that are broken down into SC that are divided into sections for each component. The specification, maintenance and other information for the components are included, and the diagnostic information has also been added where necessary.

2. CONTENTS

The first page has an index with tabs.

3. COMPONENT

Illustrations are provided for each component. The information necessary for repair work (tightening torque, grease up points, etc.) is described on these illustrations. Information is described using symbol.
To order parts, refer to parts catalogue.

Example:

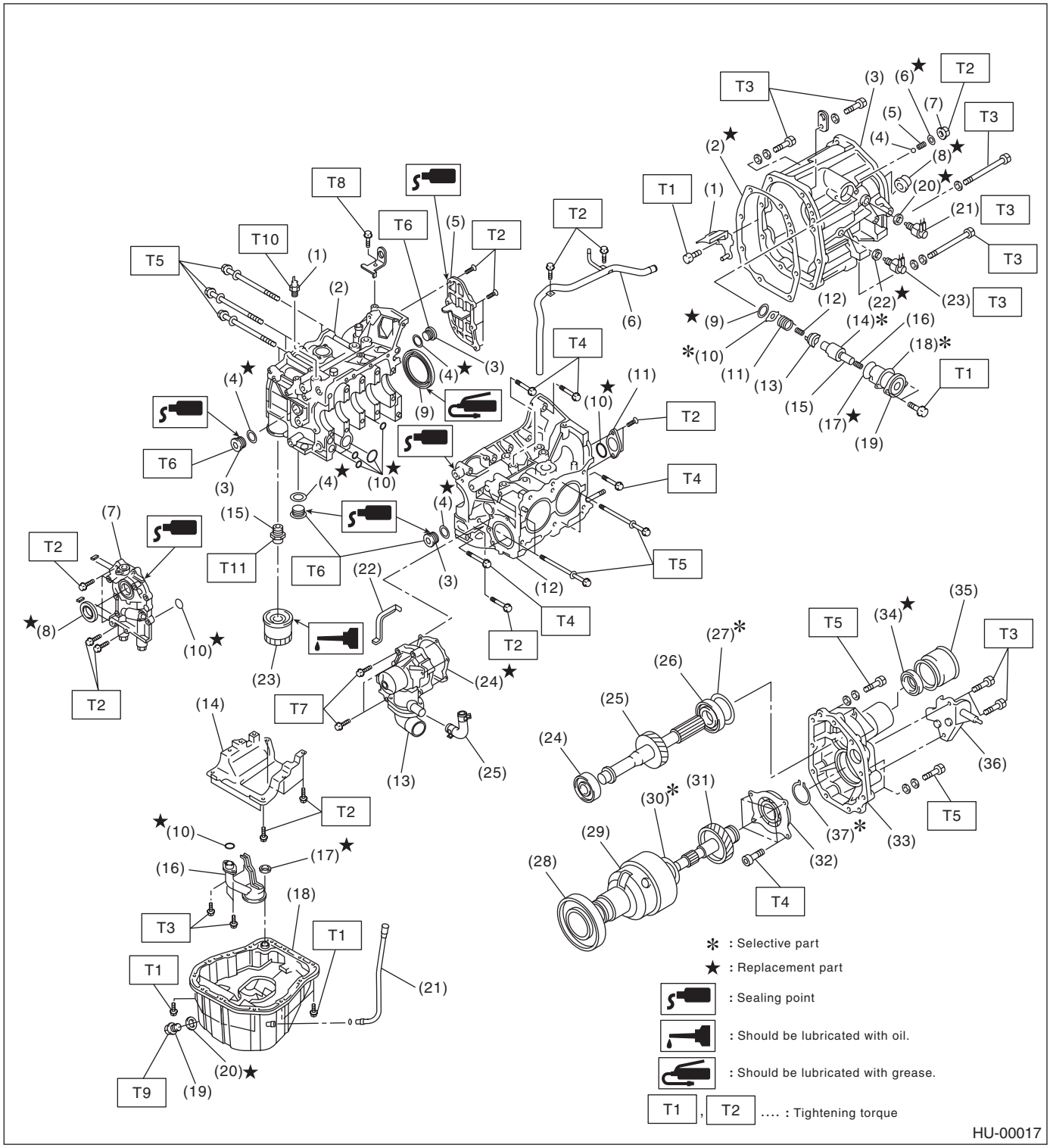

4. DEFINITIONS OF “NOTE”, “CAUTION”, AND “WARNING”

- NOTE:

Describes additional information to make works easier.

- CAUTION:

Describes prohibited matters to prevent vehicle or parts damage, or matters that requires special attention during work.

- WARNING:

Describes matters that may cause serious damage to the operator or other person, or that may cause damage or accident.

5. SPECIFICATIONS

If necessary, specifications are also included.

6. INSPECTION

Inspections to be carried out before and after maintenance are included.

7. MAINTENANCE

• Maintenance instructions for serviceable parts describe work area and detailed step with illustration. It also describes the use of special tool, tightening torque, caution for each procedure.
• If many serviceable parts are included in one service procedure, appropriate reference is provided for each part.

Example:

15.Main Shaft ← (A)

A: REMOVAL ← (B)

1) Remove the manual transmission assembly from vehicle. <Ref. to MT-33, REMOVAL, Manual Transmission Assembly.> ← (C)

---

11) Tighten the lock nuts to the specified torque using ST1 and ST2.

NOTE: ← (D)
Secure the lock nuts in two places after tightening.

ST1 498937000 TRANSMISSION HOLDER
ST2 499987003 (E) SOCKET WRENCH (35) (F)

Tightening torque:
118 N·m (12.0 kgf-m, 86.8 ft-lb) ← (G)

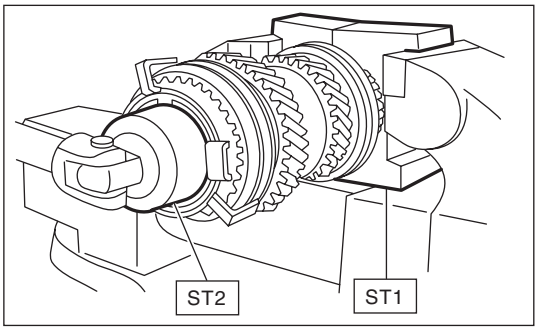

← (H)

HU-00020

(A) Component
(B) Process
(C) Reference
(D) Cautions
(E) Tool number of special tool
(F) Name of special tool
(G) Tightening torque
(H) Illustration

8. DIAGNOSIS

Step-by-step process is employed for easier diagnosis.

9. SI UNITS

Measurements in these manuals are according to the SI units. Metric and yard/pound measurements are also included.

Example:

Tightening torque:
44 N·m (4.5 kgf-m, 33 ft-lb)

List of SI unit

Item	SI units	Conventional unit	Remarks
Force	N (Newton)	kgf	1 kgf = 9.807 N
Mass (Weight)	kg, g	kg, g	
Capacity	L, mL or cm^3	L or cc	1 cc = 1 cm^3 = 1 mL
Torque	N·m	kgf-m, kgf-cm	1 kgf-m = 9.807 N·m
Rotating speed	rpm	rpm	
Pressure	kPa (Kilopascal)	kgf/cm^2	1 kgf/cm^2 = 98.07 kPa
		mmHg	1 mmHg = 0.1333 kPa
Power	W	PS	1 PS = 0.7355 kW
Calorie	W·h	cal	1 kcal = 1.163 W·h
Fuel consumption rate	g/kW·h	g/PS·h	1 g/PS·h = 1.3596 g/kW·h

The figure used in these manuals are described in the SI units and conventional units are described in ( ).

10.EXPLANATION OF TERMINOLOGY

List

2ndr	Secondary
AAI	Air Assist Injection
AAR	Angular Adjusted Roller
A/B	Airbag
ABS	Anti-lock Brake System
A/C	Air Conditioner
AC	Angular Contact
ACC	Accessory
A/F	Air Fuel Ratio
ALT	Generator
APS	Accessory Power Supply Socket
ASSY	Assembly
AT	Automatic Transmission
ATF	Automatic Transmission Fluid
AUX	Auxiliary Storage Unit (External storage)
AVCS	Active Valve Control System
AWD	All Wheel Drive
BATT	Battery
BCM	Brake Control Module
BJ	Bell Joint
CAN	Controller Area Network
CCA	Cold Cranking Ampere
CD	Compact Disc
CD-R/RW	CD Recordable/Rewritable
COMPL	Complete
CPC	Canister Purge Control Solenoid Valve
CPU	Central Processing Unit
CM	Control Module
CVT	Continuously Variable Transmission
CVTF	Continuously Variable Transmission Fluid
DCCD	Driver's Control Center Differential
DOHC	Double Overhead Camshaft
DOJ	Double Offset Joint
DTC	Diagnosis Trouble Code
DU	Drive Unit
DVD	Digital Versatile Disc or Digital Video Disc
EBD	Electronic Brake Distribution
EBJ	High-Efficiency Compact Ball Fixed Joint
ECM	Engine Control Module
EDJ	High-Efficiency Compact Double Offset Joint
E/G	Engine
EGI	Electronic Gasoline Injection
EGR	Exhaust Gas Recirculation
ELR	Emergency Locking Retractor
ETC	Electronic Throttle Control
EX	Exhaust
F/B	Fuse & Joint Box
FL	Fusible Link
Ft	Front
FWD	Front Wheel Drive
GPS	Global Positioning System
HI	High
HID	High-Intensity Discharge
HPCM	Hybrid Powertrain Control Module
H/L	Headlight
H/U	Hydraulic Unit
HVAC	Heater, Ventilator and Air Conditioner
I/F	Interface
IG	Ignition
IN	Intake
INT	Intermittent
I/O	Input/Output
IR	Infrared Ray
ISC	Idle Speed Control
ISG	Integrated Starter Generator
LAN	Local Area Network
LCD	Liquid Crystal Display
LED	Light Emitting Diode
LH	LH (Left Hand)
LHD	Left Hand Drive
LSD	Limited Slip Differential
M/B	Main Fuse & Relay Box
MD	Mini Disc
MID	Multi Information Display
MFI	Multi-Point Fuel Injection
MP-T	Multi-Plate Transfer
MT	Manual Transmission
NA	Natural Aspiration
NC	Normal Close (Relay)
NO	Normal Open (Relay)
OBD	On-Board Diagnosis
OP	Option Parts
PC	Personal Computer
PCD	Pitch Circle Diameter
PCV	Positive Crankcase Ventilation
PID	Parameter Identification
Pr	Primary
P/S	Power Steering
PTJ	Pillow Tripod Joint
P/W	Power Window
RAM	Random Access Memory
RH	RH (Right Hand)
RHD	Right Hand Drive
ROM	Read Only Memory
rpm	Revolution Per Minute
Rr	Rear
SDI	Subaru Diagnostic Interface

SI	Subaru Intelligent
SOHC	Single Overhead Camshaft
SRS	Supplemental Restraint System
SSM	Subaru Select Monitor
ST	Special Tool
STD	Standard
SW	Switch
T/B	Turbocharger
TCS	Traction Control System
TCM	Transmission Control Module
TGV	Tumble Generator Valve
T/M	Transmission
TPMS	Tire Pressure Monitoring System
UJ	Universal Joint
UV	Ultraviolet
VDC	Vehicle Dynamics Control
V.I.N.	Vehicle Identification Number
ViS-C	Viscous Coupling
VSV	Vacuum Switching Valve
VTD	Variable Torque Distribution
W/H	Wiring Harness

SPECIFICATIONS

SPC

Page

1. Impreza 2
2. XV 16

1. Impreza

A: DIMENSION

Model			4 door	5 door	SPORT
Overall length		mm (in)	4,580 (180.3)	4,415 (173.8)	
Overall width		mm (in)	1,740 (68.5)		
Overall height (at C.W.)		mm (in)	1,465 (57.7)		1,515 (59.5)
Compartment	Length	mm (in)	2,005 (78.9)		
	Width	mm (in)	1,490 (58.7)		
	Height	mm (in)	Model without sunroof: 1,010 (39.8) Model with sunroof: 946 (37.2)		
Wheelbase		mm (in)	2,645 (104.1)		
Tread	Front	mm (in)	1,510 (59.4)		
	Rear	mm (in)	1,515 (59.6)		
Minimum road clearance		mm (in)	145 (5.7)		150 (5.9)

B: ENGINE

Model		2.0 L
Engine type		Horizontally opposed, liquid cooled, 4-cylinder, 4-stroke gasoline engine
Valve arrangement		DOHC
Bore × stroke	mm (in)	84.0 × 90.0 (3.31 × 3.54)
Displacement	cm^3 (cu in)	1,995 (121.73)
Compression ratio		10.5
Ignition order		1 — 3 — 2 — 4
Idle speed at parking or neutral position	rpm	650±100
Maximum output	kW (HP)/rpm	110 (147)/6,200
Maximum torque	N·m (kgf-m, ft-lb)/rpm	196 (20.0, 145)/4,200

C: ELECTRICAL

Model			2.0 L
Ignition timing (at idling)		BTDC	MT: 16°±10° CVT: 16°±10°
Spark plug	Type and manufacturer		NGK: SILZKAR7B11
Generator			12 V — 110 A
Battery	Type and capacity (5HR)		12 V — 48 AH (55D23L)
	CCA		390 A

D: TRANSMISSION

1. MT

Model			2.0 L DOHC non-turbo
Transmission type			5MT
Clutch type			DSPD
Gear ratio		1st	3.454
		2nd	1.888
		3rd	1.296
		4th	0.972
		5th	0.738
		Rev.	3.333
Reduction gear (Front)		Type of gear	Hypoid
		Gear ratio	4.111
Reduction gear (Rear)	Transfer reduction	Type of gear	Helical
		Gear ratio	1.000
	Final reduction	Type of gear	Hypoid
		Gear ratio	4.111

5MT: 5-forward speeds and 1-reverse with synchromesh
DSPD: Dry Single Plate Diaphragm

2. CVT

Model			2.0 L DOHC non-turbo
Transmission type			CVT
Clutch type			TCC
Gear ratio		Forward	3.581 — 0.570
		Rev.	3.667
Reduction gear (front)	Final reduction	Type of gear	Hypoid
		Gear ratio	3.700
Transfer reduction ratio			1.000
Reduction gear (rear)		Type of gear	Hypoid
		Gear ratio	3.700

TCC: Torque Converter Clutch
CVT: Forward continuously variable speed change, 1-reverse

E: STEERING

Type			Rack and pinion
Turns, lock to lock			3.2
Minimum turning diameter	m (ft)	Curb to curb	10.6 (34.8)
		Wall to wall	11.5 (37.7)

F: SUSPENSION

Front	Macpherson strut type suspension
Rear	Double-wishbone type suspension

G: BRAKE

Service brake system	Dual circuit hydraulic with vacuum suspended power unit
Front	Ventilated disc brake
Rear	Disc brake
Parking brake	Mechanical on rear brakes

H: TIRE

Rim size	15 × 6J	16 × $6^{1}/_{2}$J	17 × 7J, 17 × 7JJ
Tire size	P195/65R15 89H	P205/55R16 89V	P205/50R17 88V
Type	Tubeless, Steel belted radial		

I: CAPACITY

Model			2.0 L	
			5MT	CVT
Fuel tank		L (US gal, Imp gal)	55 (14.5, 12.1)	
Engine oil	Total capacity (at overhaul)	L (US qt, Imp qt)	5.7 (6.0, 5.0)	
	When replacing engine oil and oil filter	L (US qt, Imp qt)	4.8 (5.1, 4.2)	
	When replacing engine oil only	L (US qt, Imp qt)	4.6 (4.9, 4.0)	
Transmission gear oil		L (US qt, Imp qt)	3.5 (3.7, 3.1)	—
CVTF		L (US qt, Imp qt)	—	11.93 — 12.43 (12.6 — 13.1, 10.5 — 10.9)
Front differential gear oil		L (US qt, Imp qt)	—	1.3 — 1.4 (1.4 — 1.5, 1.1 — 1.2)
Rear differential gear oil		L (US qt, Imp qt)	0.8 (0.8, 0.7)	
Engine coolant		L (US qt, Imp qt)	7.8 (8.2, 6.9)	8.2 (8.7, 7.2)

J: WEIGHT

Model			4 door					
			2.0 i					
Transmission			MT			CVT		
OP code			C0	U5	U6	C0	U5	U6
			MB	MB	MB	MB	MB	MB
Curb weight (C.W.)	Total	kg (lb)	1,335 (2,944)	1,335 (2,944)	1,335 (2,944)	1,365 (3,010)	1,365 (3,010)	1,365 (3,010)
	Front	kg (lb)	780 (1,720)	780 (1,720)	780 (1,720)	815 (1,797)	815 (1,797)	815 (1,797)
	Rear	kg (lb)	555 (1,224)	555 (1,224)	555 (1,224)	550 (1,213)	550 (1,213)	550 (1,213)
Gross vehicle weight (G.V.W.)		kg (lb)	1,950 (4,299)	1,950 (4,299)	1,950 (4,299)	1,950 (4,299)	1,950 (4,299)	1,950 (4,299)
Gross axle weight (G.A.W.)	Front	kg (lb)	990 (2,183)	990 (2,183)	990 (2,183)	990 (2,183)	990 (2,183)	990 (2,183)
	Rear	kg (lb)	1,000 (2,205)	1,000 (2,205)	1,000 (2,205)	1,000 (2,205)	1,000 (2,205)	1,000 (2,205)
Option	Aluminum wheel		—	—	—	—	—	—
	Auto A/C		—	—	—	—	—	—
	Manual A/C		○	○	○	○	○	○
	Leather package		—	—	—	—	—	—
	Genuine leather seat		—	—	—	—	—	—
	Standard audio		—	—	—	—	—	—
	High grade audio		○	○	○	○	○	○
	Navigation		—	—	—	—	—	—
	Display audio		—	—	—	—	—	—
	Side airbag		○	○	○	○	○	○
	Curtain airbag		○	○	○	○	○	○
	HID headlight		—	—	—	—	—	—
	Cold weather package		—	—	—	—	—	—
	Sunroof		—	—	—	—	—	—

Model			4 door					
			2.0 i-Premium					
Transmission			MT					
OP code			C0	C0	U5	U5	U6	U6
			3C	2P	3B	3C	3B	3C
Curb weight (C.W.)	Total	kg (lb)	1,350 (2,977)	1,365 (3,010)	1,350 (2,977)	1,350 (2,977)	1,350 (2,977)	1,350 (2,977)
	Front	kg (lb)	790 (1,742)	795 (1,753)	790 (1,742)	790 (1,742)	790 (1,742)	790 (1,742)
	Rear	kg (lb)	560 (1,235)	570 (1,257)	560 (1,235)	560 (1,235)	560 (1,235)	560 (1,235)
Gross vehicle weight (G.V.W.)		kg (lb)	1,950 (4,299)	1,950 (4,299)	1,950 (4,299)	1,950 (4,299)	1,950 (4,299)	1,950 (4,299)
Gross axle weight (G.A.W.)	Front	kg (lb)	990 (2,183)	990 (2,183)	990 (2,183)	990 (2,183)	990 (2,183)	990 (2,183)
	Rear	kg (lb)	1,000 (2,205)	1,000 (2,205)	1,000 (2,205)	1,000 (2,205)	1,000 (2,205)	1,000 (2,205)
Option	Aluminum wheel		○	○	○	○	○	○
	Auto A/C		—	—	—	—	—	—
	Manual A/C		○	○	○	○	○	○
	Leather package		—	○	—	—	—	—
	Genuine leather seat		—	—	—	—	—	—
	Standard audio		—	—	—	—	—	—
	High grade audio		○	○	○	○	○	○
	Navigation		—	—	—	—	—	—
	Display audio		—	—	—	—	—	—
	Side airbag		○	○	○	○	○	○
	Curtain airbag		○	○	○	○	○	○
	HID headlight		—	—	—	—	—	—
	Cold weather package		○	○	—	○	—	○
	Sunroof		—	○	—	—	—	—

Model			4 door						
			2.0 i-Premium						
Transmission			CVT						
OP code			C0	C0	U5	U5	U6	U6	C4
			3C	2P	3B	3C	3B	3C	3C
Curb weight (C.W.)	Total	kg (lb)	1,380 (3,043)	1,395 (3,076)	1,380 (3,043)	1,380 (3,043)	1,380 (3,043)	1,380 (3,043)	1,390 (3,065)
	Front	kg (lb)	830 (1,830)	835 (1,841)	830 (1,830)	830 (1,830)	830 (1,830)	830 (1,830)	830 (1,830)
	Rear	kg (lb)	550 (1,213)	560 (1,235)	550 (1,213)	550 (1,213)	550 (1,213)	550 (1,213)	560 (1,235)
Gross vehicle weight (G.V.W.)		kg (lb)	1,950 (4,299)	1,950 (4,299)	1,950 (4,299)	1,950 (4,299)	1,950 (4,299)	1,950 (4,299)	1,950 (4,299)
Gross axle weight (G.A.W.)	Front	kg (lb)	990 (2,183)	990 (2,183)	990 (2,183)	990 (2,183)	990 (2,183)	990 (2,183)	990 (2,183)
	Rear	kg (lb)	1,000 (2,205)	1,000 (2,205)	1,000 (2,205)	1,000 (2,205)	1,000 (2,205)	1,000 (2,205)	1,000 (2,205)
Option	Aluminum wheel		○	○	○	○	○	○	○
	Auto A/C		—	—	—	—	—	—	—
	Manual A/C		○	○	○	○	○	○	○
	Leather package		—	○	—	—	—	—	—
	Genuine leather seat		—	—	—	—	—	—	—
	Standard audio		—	—	—	—	—	—	—
	High grade audio		○	○	○	○	○	○	○
	Navigation		—	—	—	—	—	—	—
	Display audio		—	—	—	—	—	—	—
	Side airbag		○	○	○	○	○	○	○
	Curtain airbag		○	○	○	○	○	○	○
	HID headlight		—	—	—	—	—	—	—
	Cold weather package		○	○	—	○	—	○	○
	Sunroof		—	○	—	—	—	—	—

SPECIFICATIONS

Model			4 door									
			2.0 i-Premium+									
Transmission			MT			CVT						
OP code			C0	U5	U6	C0	U5	U5	U5	U6	U6	U6	C4
			CP	2P	2P	CP	2P	WC	WP	2P	WC	WP	CP
Curb weight (C.W.)	Total	kg (lb)	1,375 (3,032)	1,375 (3,032)	1,375 (3,032)	1,405 (3,098)	1,405 (3,098)	1,390 (3,065)	1,405 (3,098)	1,405 (3,098)	1,390 (3,065)	1,405 (3,098)	1,400 (3,087)
	Front	kg (lb)	800 (1,764)	800 (1,764)	800 (1,764)	840 (1,852)	840 (1,852)	835 (1,841)	840 (1,852)	840 (1,852)	835 (1,841)	840 (1,852)	835 (1,841)
	Rear	kg (lb)	575 (1,268)	575 (1,268)	575 (1,268)	565 (1,246)	565 (1,246)	555 (1,224)	565 (1,246)	565 (1,246)	555 (1,224)	565 (1,246)	565 (1,246)
Gross vehicle weight (G.V.W.)		kg (lb)	1,950 (4,299)	1,950 (4,299)	1,950 (4,299)	1,950 (4,299)	1,950 (4,299)	1,950 (4,299)	1,950 (4,299)	1,950 (4,299)	1,950 (4,299)	1,950 (4,299)	1,950 (4,299)
Gross axle weight (G.A.W.)	Front	kg (lb)	990 (2,183)	990 (2,183)	990 (2,183)	990 (2,183)	990 (2,183)	990 (2,183)	990 (2,183)	990 (2,183)	990 (2,183)	990 (2,183)	990 (2,183)
	Rear	kg (lb)	1,000 (2,205)	1,000 (2,205)	1,000 (2,205)	1,000 (2,205)	1,000 (2,205)	1,000 (2,205)	1,000 (2,205)	1,000 (2,205)	1,000 (2,205)	1,000 (2,205)	1,000 (2,205)
Option	Aluminum wheel		○	○	○	○	○	○	○	○	○	○	○
	Auto A/C		○	—	—	○	—	—	—	—	—	—	○
	Manual A/C		—	○	○	—	○	○	○	○	○	○	—
	Leather package		○	○	○	○	○	○	○	○	○	○	○
	Genuine leather seat		—	—	—	—	—	—	—	—	—	—	—
	Standard audio		—	—	—	—	—	—	—	—	—	—	—
	High grade audio		○	○	○	○	○	—	—	○	—	—	○
	Navigation		—	—	—	—	—	○	○	—	○	○	—
	Display audio		—	—	—	—	—	—	—	—	—	—	—
	Side airbag		○	○	○	○	○	○	○	○	○	○	○
	Curtain airbag		○	○	○	○	○	○	○	○	○	○	○
	HID headlight		—	—	—	—	—	—	—	—	—	—	—
	Cold weather package		○	○	○	○	○	○	○	○	○	○	○
	Sunroof		○	○	○	○	○	—	○	○	—	○	○

Model			4 door								
			2.0 i-Limited								
Transmission			MT	CVT							
OP code			C0	C0	U5	U5	U5	U6	U6	U6	C4
			HR	HR	YC	YP	HP	YC	YP	HP	4R
Curb weight (C.W.)	Total	kg (lb)	1,380 (3,043)	1,415 (3,120)	1,400 (3,087)	1,415 (3,120)	1,415 (3,120)	1,400 (3,087)	1,415 (3,120)	1,415 (3,120)	1,410 (3,109)
	Front	kg (lb)	805 (1,775)	845 (1,863)	840 (1,852)	845 (1,863)	845 (1,863)	840 (1,852)	845 (1,863)	845 (1,863)	840 (1,852)
	Rear	kg (lb)	575 (1,268)	570 (1,257)	560 (1,235)	570 (1,257)	570 (1,257)	560 (1,235)	570 (1,257)	570 (1,257)	570 (1,257)
Gross vehicle weight (G.V.W.)		kg (lb)	1,950 (4,299)	1,950 (4,299)	1,950 (4,299)	1,950 (4,299)	1,950 (4,299)	1,950 (4,299)	1,950 (4,299)	1,950 (4,299)	1,950 (4,299)
Gross axle weight (G.A.W.)	Front	kg (lb)	990 (2,183)	990 (2,183)	990 (2,183)	990 (2,183)	990 (2,183)	990 (2,183)	990 (2,183)	990 (2,183)	990 (2,183)
	Rear	kg (lb)	1,000 (2,205)	1,000 (2,205)	1,000 (2,205)	1,000 (2,205)	1,000 (2,205)	1,000 (2,205)	1,000 (2,205)	1,000 (2,205)	1,000 (2,205)
Option	Aluminum wheel		○	○	○	○	○	○	○	○	○
	Auto A/C		○	○	○	○	○	○	○	○	○
	Manual A/C		—	—	—	—	—	—	—	—	—
	Leather package		○	○	○	○	○	○	○	○	○
	Genuine leather seat		○	○	○	○	○	○	○	○	○
	Standard audio		—	—	—	—	—	—	—	—	—
	High grade audio		—	—	—	—	—	—	—	—	○
	Navigation		○	○	—	—	○	—	—	○	—
	Display audio		—	—	○	○	—	○	○	—	—
	Side airbag		○	○	○	○	○	○	○	○	○
	Curtain airbag		○	○	○	○	○	○	○	○	○
	HID headlight		○	○	—	—	—	—	—	—	○
	Cold weather package		○	○	○	○	○	○	○	○	○
	Sunroof		○	○	—	○	○	—	○	○	○

Model			5 door					
			2.0 i					
Transmission			MT			CVT		
OP code			C0	U5	U6	C0	U5	U6
			MB	MB	MB	MB	MB	MB
Curb weight (C.W.)	Total	kg (lb)	1,335 (2,944)	1,335 (2,944)	1,335 (2,944)	1,365 (3,010)	1,365 (3,010)	1,365 (3,010)
	Front	kg (lb)	780 (1,720)	780 (1,720)	780 (1,720)	815 (1,797)	815 (1,797)	815 (1,797)
	Rear	kg (lb)	555 (1,224)	555 (1,224)	555 (1,224)	550 (1,213)	550 (1,213)	550 (1,213)
Gross vehicle weight (G.V.W.)		kg (lb)	1,950 (4,299)	1,950 (4,299)	1,950 (4,299)	1,950 (4,299)	1,950 (4,299)	1,950 (4,299)
Gross axle weight (G.A.W.)	Front	kg (lb)	990 (2,183)	990 (2,183)	990 (2,183)	990 (2,183)	990 (2,183)	990 (2,183)
	Rear	kg (lb)	1,000 (2,205)	1,000 (2,205)	1,000 (2,205)	1,000 (2,205)	1,000 (2,205)	1,000 (2,205)
Option	Aluminum wheel		—	—	—	—	—	—
	Auto A/C		—	—	—	—	—	—
	Manual A/C		○	○	○	○	○	○
	Leather package		—	—	—	—	—	—
	Genuine leather seat		—	—	—	—	—	—
	Standard audio		—	—	—	—	—	—
	High grade audio		○	○	○	○	○	○
	Navigation		—	—	—	—	—	—
	Display audio		—	—	—	—	—	—
	Side airbag		○	○	○	○	○	○
	Curtain airbag		○	○	○	○	○	○
	HID headlight		—	—	—	—	—	—
	Cold weather package		—	—	—	—	—	—
	Sunroof		—	—	—	—	—	—

Model			5 door					
			2.0 i-Premium					
Transmission			MT					
OP code			C0	C0	U5	U5	U6	U6
			3C	2P	3B	3C	3B	3C
Curb weight (C.W.)	Total	kg (lb)	1,350 (2,977)	1,365 (3,010)	1,350 (2,977)	1,350 (2,977)	1,350 (2,977)	1,350 (2,977)
	Front	kg (lb)	790 (1,742)	795 (1,753)	790 (1,742)	790 (1,742)	790 (1,742)	790 (1,742)
	Rear	kg (lb)	560 (1,235)	570 (1,257)	560 (1,235)	560 (1,235)	560 (1,235)	560 (1,235)
Gross vehicle weight (G.V.W.)		kg (lb)	1,950 (4,299)	1,950 (4,299)	1,950 (4,299)	1,950 (4,299)	1,950 (4,299)	1,950 (4,299)
Gross axle weight (G.A.W.)	Front	kg (lb)	990 (2,183)	990 (2,183)	990 (2,183)	990 (2,183)	990 (2,183)	990 (2,183)
	Rear	kg (lb)	1,000 (2,205)	1,000 (2,205)	1,000 (2,205)	1,000 (2,205)	1,000 (2,205)	1,000 (2,205)
Option	Aluminum wheel		○	○	○	○	○	○
	Auto A/C		—	—	—	—	—	—
	Manual A/C		○	○	○	○	○	○
	Leather package		—	○	—	—	—	—
	Genuine leather seat		—	—	—	—	—	—
	Standard audio		—	—	—	—	—	—
	High grade audio		○	○	○	○	○	○
	Navigation		—	—	—	—	—	—
	Display audio		—	—	—	—	—	—
	Side airbag		○	○	○	○	○	○
	Curtain airbag		○	○	○	○	○	○
	HID headlight		—	—	—	—	—	—
	Cold weather package		○	○	—	○	—	○
	Sunroof		—	○	—	—	—	—

SPECIFICATIONS

Model			5 door						
			2.0 i-Premium						
Transmission			CVT						
OP code			C0	C0	U5	U5	U6	U6	C4
			3C	2P	3B	3C	3B	3C	3C
Curb weight (C.W.)	Total	kg (lb)	1,380 (3,043)	1,395 (3,076)	1,380 (3,043)	1,380 (3,043)	1,380 (3,043)	1,380 (3,043)	1,390 (3,065)
	Front	kg (lb)	830 (1,830)	835 (1,841)	830 (1,830)	830 (1,830)	830 (1,830)	830 (1,830)	830 (1,830)
	Rear	kg (lb)	550 (1,213)	560 (1,235)	550 (1,213)	550 (1,213)	550 (1,213)	550 (1,213)	560 (1,235)
Gross vehicle weight (G.V.W.)		kg (lb)	1,950 (4,299)	1,950 (4,299)	1,950 (4,299)	1,950 (4,299)	1,950 (4,299)	1,950 (4,299)	1,950 (4,299)
Gross axle weight (G.A.W.)	Front	kg (lb)	990 (2,183)	990 (2,183)	990 (2,183)	990 (2,183)	990 (2,183)	990 (2,183)	990 (2,183)
	Rear	kg (lb)	1,000 (2,205)	1,000 (2,205)	1,000 (2,205)	1,000 (2,205)	1,000 (2,205)	1,000 (2,205)	1,000 (2,205)
Option	Aluminum wheel		○	○	○	○	○	○	○
	Auto A/C		—	—	—	—	—	—	—
	Manual A/C		○	○	○	○	○	○	○
	Leather package		—	○	—	—	—	—	—
	Genuine leather seat		—	—	—	—	—	—	—
	Standard audio		—	—	—	—	—	—	—
	High grade audio		○	○	○	○	○	○	○
	Navigation		—	—	—	—	—	—	—
	Display audio		—	—	—	—	—	—	—
	Side airbag		○	○	○	○	○	○	○
	Curtain airbag		○	○	○	○	○	○	○
	HID headlight		—	—	—	—	—	—	—
	Cold weather package		○	○	—	○	—	○	○
	Sunroof		—	○	—	—	—	—	—

Model			5 door										
			2.0 i-Premium+										
Transmission			MT			CVT							
OP code			C0	U5	U6	C0	U5	U5	U5	U6	U6	U6	C4
			CP	2P	2P	CP	2P	WC	WP	2P	WC	WP	CP
Curb weight (C.W.)	Total	kg (lb)	1,375 (3,032)	1,375 (3,032)	1,375 (3,032)	1,405 (3,098)	1,405 (3,098)	1,390 (3,065)	1,405 (3,098)	1,405 (3,098)	1,380 (3,043)	1,405 (3,098)	1,400 (3,087)
	Front	kg (lb)	800 (1,764)	800 (1,764)	800 (1,764)	840 (1,852)	840 (1,852)	835 (1,841)	840 (1,852)	840 (1,852)	835 (1,841)	840 (1,852)	835 (1,841)
	Rear	kg (lb)	575 (1,268)	575 (1,268)	575 (1,268)	565 (1,246)	565 (1,246)	555 (1,224)	565 (1,246)	565 (1,246)	555 (1,224)	565 (1,246)	565 (1,246)
Gross vehicle weight (G.V.W.)		kg (lb)	1,950 (4,299)	1,950 (4,299)	1,950 (4,299)	1,950 (4,299)	1,950 (4,299)	1,950 (4,299)	1,950 (4,299)	1,950 (4,299)	1,950 (4,299)	1,950 (4,299)	1,950 (4,299)
Gross axle weight (G.A.W.)	Front	kg (lb)	990 (2,183)	990 (2,183)	990 (2,183)	990 (2,183)	990 (2,183)	990 (2,183)	990 (2,183)	990 (2,183)	990 (2,183)	990 (2,183)	990 (2,183)
	Rear	kg (lb)	1,000 (2,205)	1,000 (2,205)	1,000 (2,205)	1,000 (2,205)	1,000 (2,205)	1,000 (2,205)	1,000 (2,205)	1,000 (2,205)	1,000 (2,205)	1,000 (2,205)	1,000 (2,205)
Option	Aluminum wheel		○	○	○	○	○	○	○	○	○	○	○
	Auto A/C		○	—	—	○	—	—	—	—	—	—	○
	Manual A/C		—	○	○	—	○	○	○	○	○	○	—
	Leather package		○	○	○	○	○	○	○	○	○	○	○
	Genuine leather seat		—	—	—	—	—	—	—	—	—	—	—
	Standard audio		—	—	—	—	—	—	—	—	—	—	—
	High grade audio		○	○	○	○	○	—	—	○	—	—	○
	Navigation		—	—	—	—	—	○	○	—	○	○	—
	Display audio		—	—	—	—	—	—	—	—	—	—	—
	Side airbag		○	○	○	○	○	○	○	○	○	○	○
	Curtain airbag		○	○	○	○	○	○	○	○	○	○	○
	HID headlight		—	—	—	—	—	—	—	—	—	—	—
	Cold weather package		○	○	○	○	○	○	○	○	○	○	○
	Sunroof		○	○	○	○	○	—	○	○	—	○	○

SPECIFICATIONS

Model			5 door								
			2.0 i-Limited								
Transmission			MT	CVT							
OP code			C0	C0	U5	U5	U5	U6	U6	U6	C4
			HR	HR	YC	YP	HP	YC	YP	HP	4R
Curb weight (C.W.)	Total	kg (lb)	1,380 (3,043)	1,415 (3,120)	1,400 (3,087)	1,415 (3,120)	1,415 (3,120)	1,400 (3,087)	1,415 (3,120)	1,415 (3,120)	1,410 (3,109)
	Front	kg (lb)	805 (1,775)	845 (1,863)	840 (1,852)	845 (1,863)	845 (1,863)	840 (1,852)	845 (1,863)	845 (1,863)	840 (1,852)
	Rear	kg (lb)	575 (1,268)	570 (1,257)	560 (1,235)	570 (1,257)	570 (1,257)	560 (1,235)	570 (1,257)	570 (1,257)	570 (1,257)
Gross vehicle weight (G.V.W.)		kg (lb)	1,950 (4,299)	1,950 (4,299)	1,950 (4,299)	1,950 (4,299)	1,950 (4,299)	1,950 (4,299)	1,950 (4,299)	1,950 (4,299)	1,950 (4,299)
Gross axle weight (G.A.W.)	Front	kg (lb)	990 (2,183)	990 (2,183)	990 (2,183)	990 (2,183)	990 (2,183)	990 (2,183)	990 (2,183)	990 (2,183)	990 (2,183)
	Rear	kg (lb)	1,000 (2,205)	1,000 (2,205)	1,000 (2,205)	1,000 (2,205)	1,000 (2,205)	1,000 (2,205)	1,000 (2,205)	1,000 (2,205)	1,000 (2,205)
Option	Aluminum wheel		○	○	○	○	○	○	○	○	○
	Auto A/C		○	○	○	○	○	○	○	○	○
	Manual A/C		—	—	—	—	—	—	—	—	—
	Leather package		○	○	○	○	○	○	○	○	○
	Genuine leather seat		○	○	○	○	○	○	○	○	○
	Standard audio		—	—	—	—	—	—	—	—	—
	High grade audio		—	—	—	—	—	—	—	—	○
	Navigation		○	○	—	—	○	—	—	○	—
	Display audio		—	—	○	○	—	○	○	—	—
	Side airbag		○	○	○	○	○	○	○	○	○
	Curtain airbag		○	○	○	○	○	○	○	○	○
	HID headlight		○	○	—	—	—	—	—	—	○
	Cold weather package		○	○	○	○	○	○	○	○	○
	Sunroof		○	○	—	○	○	—	○	○	○

Model			5 door									
			SPORT				SPORT-Limited					
Transmission			MT		CVT							
OP code			U5	U6	U5	U6	U5	U5	U5	U6	U6	U6
			2C	2C	2C	2C	YC	YP	HP	YC	YP	HP
Curb weight (C.W.)	Total	kg (lb)	1,370 (3,021)	1,370 (3,021)	1,405 (3,098)	1,405 (3,098)	1,410 (3,109)	1,425 (3,142)	1,425 (3,142)	1,410 (3,109)	1,425 (3,142)	1,425 (3,142)
	Front	kg (lb)	800 (1,764)	800 (1,764)	835 (1,841)	835 (1,841)	840 (1,852)	845 (1,863)	845 (1,863)	840 (1,852)	845 (1,863)	845 (1,863)
	Rear	kg (lb)	570 (1,257)	570 (1,257)	570 (1,257)	570 (1,257)	570 (1,257)	580 (1,279)	580 (1,279)	570 (1,257)	580 (1,279)	580 (1,279)
Gross vehicle weight (G.V.W.)		kg (lb)	1,950 (4,299)	1,950 (4,299)	1,950 (4,299)	1,950 (4,299)	1,950 (4,299)	1,950 (4,299)	1,950 (4,299)	1,950 (4,299)	1,950 (4,299)	1,950 (4,299)
Gross axle weight (G.A.W.)	Front	kg (lb)	990 (2,183)	990 (2,183)	990 (2,183)	990 (2,183)	990 (2,183)	990 (2,183)	990 (2,183)	990 (2,183)	990 (2,183)	990 (2,183)
	Rear	kg (lb)	1,000 (2,205)	1,000 (2,205)	1,000 (2,205)	1,000 (2,205)	1,000 (2,205)	1,000 (2,205)	1,000 (2,205)	1,000 (2,205)	1,000 (2,205)	1,000 (2,205)
Option	Aluminum wheel		○	○	○	○	○	○	○	○	○	○
	Auto A/C		—	—	—	—	○	○	○	○	○	○
	Manual A/C		○	○	○	○	—	—	—	—	—	—
	Leather package		○	○	○	○	○	○	○	○	○	○
	Genuine leather seat		—	—	—	—	○	○	○	○	○	○
	Standard audio		—	—	—	—	—	—	—	—	—	—
	High grade audio		○	○	○	○	—	—	—	—	—	—
	Navigation		—	—	—	—	—	—	○	—	—	○
	Display audio		—	—	—	—	○	○	—	○	○	—
	Side airbag		○	○	○	○	○	○	○	○	○	○
	Curtain airbag		○	○	○	○	○	○	○	○	○	○
	HID headlight		—	—	—	—	—	—	—	—	—	—
	Cold weather package		○	○	○	○	○	○	○	○	○	○
	Sunroof		—	—	—	—	—	○	○	—	○	○

2. XV

A: DIMENSION

Model			5 door
Overall length		mm (in)	4,450 (175.2)
Overall width		mm (in)	1,780 (70.1)
Overall height (at C.W.)		mm (in)	1,615 (63.6)
Compartment	Length	mm (in)	2,005 (78.9)
	Width	mm (in)	1,490 (58.7)
	Height	mm (in)	Model without sunroof: 1,205 (47.4) Model with sunroof: 1,180 (46.5)
Wheelbase		mm (in)	2,635 (103.7)
Tread	Front	mm (in)	1,525 (60)
	Rear	mm (in)	1,525 (60)
Minimum road clearance		mm (in)	220 (8.7)

B: ENGINE

Model		2.0 L	2.0 L HEV
Engine type		Horizontally opposed, liquid cooled, 4-cylinder, 4-stroke gasoline engine	
Valve arrangement		DOHC	
Bore × stroke	mm (in)	84.0 × 90.0 (3.31 × 3.54)	
Displacement	cm^3 (cu in)	1,995 (121.73)	
Compression ratio		10.5	10.8
Ignition order		1 — 3 — 2 — 4	
Idle speed at parking or neutral position	rpm	650±100	
Maximum output	kW (HP)/rpm	110 (147)/6,200	110 (147)/6,000
Maximum torque	N·m (kgf-m, ft-lb)/rpm	196 (20.0, 145)/4,200	

C: ELECTRICAL

Model		2.0 L	2.0 L HEV
Ignition timing (at idling)	BTDC	MT: 16°±10° CVT: 16°±10°	10°±10°
Spark plug	Type and manufacturer	NGK: SILZKAR7B11	NGK: DILZKAR7B11
Generator		12 V — 110 A	—
Integrated starter generator (ISG)		—	12 V — 200 A
DC/DC converter		—	12 V — 130 A
Battery	Type and capacity (5HR)	12 V — 48 AH (55D23L)	12 V — 48 AH (55D23L) (12 volt auxiliary battery) 12 V — 41 AH (N55-R) (12 volt engine restart battery)
	CCA	390 A	390 A (12 volt auxiliary battery) 450 A (12 volt engine restart battery)
High voltage battery	Type and capacity (1HR)	—	100.8 V — 5.5 AH Ni-MH (nickel metal hydride) battery
Drive motor	kind	—	Three-phase AC synchronous motor
	Rated voltage	—	100 V
	Maximum output	—	10 kW [13.4 HP]
	Maximum torque	—	65 N·m [6.6 kgf-m]

D: TRANSMISSION

1. MT

Model			2.0 L DOHC non-turbo
Transmission type			5MT
Clutch type			DSPD
Gear ratio		1st	3.545
		2nd	1.888
		3rd	1.296
		4th	0.972
		5th	0.780
		Rev.	3.333
Reduction gear (Front)		Type of gear	Hypoid
		Gear ratio	4.444
Reduction gear (Rear)	Transfer reduction	Type of gear	Helical
		Gear ratio	1.000
	Final reduction	Type of gear	Hypoid
		Gear ratio	4.444

5MT: 5-forward speeds and 1-reverse with synchromesh
DSPD: Dry Single Plate Diaphragm

2. CVT

Model			2.0 L DOHC non-turbo	2.0 L DOHC motor hybrid
Transmission type			CVT	CVT (HEV)
Clutch type			TCC	
Gear ratio		Forward	3.581 — 0.570	3.420 — 0.544
		Rev.	3.667	3.502
Reduction gear (front)	Final reduction	Type of gear	Hypoid	
		Gear ratio	3.700	
Transfer reduction ratio			1.000	
Reduction gear (rear)		Type of gear	Hypoid	
		Gear ratio	3.700	

TCC: Torque Converter Clutch
CVT: Forward continuously variable speed change, 1-reverse

E: STEERING

Model			2.0 L	2.0 L HEV
Type			Rack and pinion	
Turns, lock to lock			3.1	2.8
Minimum turning diameter	m (ft)	Curb to curb	10.6 (34.8)	
		Wall to wall	11.5 (37.7)	

F: SUSPENSION

Front	Macpherson strut type suspension
Rear	Double-wishbone type suspension

G: BRAKE

Service brake system	Dual circuit hydraulic with vacuum suspended power unit
Front	Ventilated disc brake
Rear	Disc brake
Parking brake	Mechanical on rear brakes

H: TIRE

Model	2.0 L	2.0 L HEV
Tire size	P225/55R17 95H	
	225/55R17 97V	—
Type	Tubeless, steel belted radial	

I: CAPACITY

Model			2.0 L		2.0 L HEV
			5MT	CVT	CVT
Fuel tank		L (US gal, Imp gal)	60 (15.9, 13.2)		52 (13.7, 11.4)
Engine oil	Total capacity (at overhaul)	L (US qt, Imp qt)	5.7 (6.0, 5.0)		
	When replacing engine oil and oil filter	L (US qt, Imp qt)	4.8 (5.1, 4.2)		
	When replacing engine oil only	L (US qt, Imp qt)	4.6 (4.9, 4.0)		
Transmission gear oil		L (US qt, Imp qt)	3.5 (3.7, 3.1)	—	—
CVTF		L (US qt, Imp qt)	—	11.93 — 12.43 (12.6 — 13.1, 10.5 — 10.9)	13.46 — 13.96 (14.2 — 14.8, 11.8 — 12.3)
Front differential gear oil		L (US qt, Imp qt)	—	1.3 — 1.4 (1.4 — 1.5, 1.1 — 1.2)	1.3 — 1.4 (1.4 — 1.5, 1.1 — 1.2)
Rear differential gear oil		L (US qt, Imp qt)	0.8 (0.8, 0.7)		
Engine coolant		L (US qt, Imp qt)	7.6 (8.0, 6.7)	8.0 (8.5, 7.0)	8.2 (8.7, 7.2)

J: WEIGHT

Model			5 door									
			2.0 i-Premium									
Transmission			MT									
OP code			C0	C0	U5	U6	U5	U6	U5	U6	U5	U6
			IE	CM	3A	3A	3E	3E	3S	3S	VS	VS
Curb weight (C.W.)	Total	kg (lb)	1,405 (3,098)	1,420 (3,131)	1,405 (3,098)	1,405 (3,098)	1,405 (3,098)	1,405 (3,098)	1,420 (3,131)	1,420 (3,131)	1,420 (3,131)	1,420 (3,131)
	Front	kg (lb)	820 (1,808)	825 (1,819)	820 (1,808)	820 (1,808)	820 (1,808)	820 (1,808)	825 (1,819)	825 (1,819)	825 (1,819)	825 (1,819)
	Rear	kg (lb)	585 (1,290)	595 (1,312)	585 (1,290)	585 (1,290)	585 (1,290)	585 (1,290)	595 (1,312)	595 (1,312)	595 (1,312)	595 (1,312)
Gross vehicle weight (G.V.W.)		kg (lb)	1,970 (4,343)	1,970 (4,343)	1,970 (4,343)	1,970 (4,343)	1,970 (4,343)	1,970 (4,343)	1,970 (4,343)	1,970 (4,343)	1,970 (4,343)	1,970 (4,343)
Gross axle weight (G.A.W.)	Front	kg (lb)	1,010 (2,227)	1,010 (2,227)	1,010 (2,227)	1,010 (2,227)	1,010 (2,227)	1,010 (2,227)	1,010 (2,227)	1,010 (2,227)	1,010 (2,227)	1,010 (2,227)
	Rear	kg (lb)	1,000 (2,205)	1,000 (2,205)	1,000 (2,205)	1,000 (2,205)	1,000 (2,205)	1,000 (2,205)	1,000 (2,205)	1,000 (2,205)	1,000 (2,205)	1,000 (2,205)
Option	Aluminum wheel		○	○	○	○	○	○	○	○	○	○
	Auto A/C		○	○	—	—	—	—	—	—	—	—
	Manual A/C		—	—	○	○	○	○	○	○	○	○
	Leather package		—	○	—	—	—	—	—	—	—	—
	Genuine leather seat		—	—	—	—	—	—	—	—	—	—
	High grade audio		○	○	○	○	○	○	○	○	—	—
	Navigation		—	—	—	—	—	—	—	—	○	○
	Display audio		—	—	—	—	—	—	—	—	—	—
	Side airbag		○	○	○	○	○	○	○	○	○	○
	Curtain airbag		○	○	○	○	○	○	○	○	○	○
	HID headlight		—	○	—	—	—	—	—	—	—	—
	Cold weather package		○	○	—	—	○	○	○	○	○	○
	Privacy glass		○	○	○	○	○	○	○	○	○	○
	Sunroof		—	○	—	—	—	—	○	○	○	○

Model			5 door							
			2.0 i-Premium							
Transmission			CVT							
OP code			C0	C0	U5	U6	U5	U6	U5	U6
			IE	CM	3A	3A	3E	3E	3S	3S
Curb weight (C.W.)	Total	kg (lb)	1,440 (3,175)	1,455 (3,208)	1,440 (3,175)	1,440 (3,175)	1,440 (3,175)	1,440 (3,175)	1,455 (3,208)	1,455 (3,208)
	Front	kg (lb)	860 (1,896)	865 (1,907)	860 (1,896)	860 (1,896)	860 (1,896)	860 (1,896)	865 (1,907)	865 (1,907)
	Rear	kg (lb)	580 (1,279)	590 (1,301)	580 (1,279)	590 (1,301)	580 (1,279)	580 (1,279)	590 (1,301)	590 (1,301)
Gross vehicle weight (G.V.W.)		kg (lb)	1,970 (4,343)	1,970 (4,343)	1,970 (4,343)	1,970 (4,343)	1,970 (4,343)	1,970 (4,343)	1,970 (4,343)	1,970 (4,343)
Gross axle weight (G.A.W.)	Front	kg (lb)	1,010 (2,227)	1,010 (2,227)	1,010 (2,227)	1,010 (2,227)	1,010 (2,227)	1,010 (2,227)	1,010 (2,227)	1,010 (2,227)
	Rear	kg (lb)	1,000 (2,205)	1,000 (2,205)	1,000 (2,205)	1,000 (2,205)	1,000 (2,205)	1,000 (2,205)	1,000 (2,205)	1,000 (2,205)
Option	Aluminum wheel		○	○	○	○	○	○	○	○
	Auto A/C		○	○	—	—	—	—	—	—
	Manual A/C		—	—	○	○	○	○	○	○
	Leather package		—	○	—	—	—	—	—	—
	Genuine leather seat		—	—	—	—	—	—	—	—
	High grade audio		○	○	○	○	○	○	○	○
	Navigation		—	—	—	—	—	—	—	—
	Display audio		—	—	—	—	—	—	—	—
	Side airbag		○	○	○	○	○	○	○	○
	Curtain airbag		○	○	○	○	○	○	○	○
	HID headlight		—	○	—	—	—	—	—	—
	Cold weather package		○	○	—	—	○	○	○	○
	Privacy glass		○	○	○	○	○	○	○	○
	Sunroof		—	○	—	—	—	—	○	○

Model			5 door				
			2.0 i-Premium				
Transmission			CVT				
OP code			U5	U6	U5	U6	C4
			VE	VE	VS	VS	CC
Curb weight (C.W.)	Total	kg (lb)	1,440 (3,175)	1,440 (3,175)	1,455 (3,208)	1,455 (3,208)	1,450 (3,197)
	Front	kg (lb)	860 (1,896)	860 (1,896)	865 (1,907)	865 (1,907)	860 (1,896)
	Rear	kg (lb)	580 (1,279)	580 (1,279)	590 (1,301)	590 (1,301)	590 (1,301)
Gross vehicle weight (G.V.W.)		kg (lb)	1,970 (4,343)	1,970 (4,343)	1,970 (4,343)	1,970 (4,343)	1,970 (4,343)
Gross axle weight (G.A.W.)	Front	kg (lb)	1,010 (2,227)	1,010 (2,227)	1,010 (2,227)	1,010 (2,227)	1,010 (2,227)
	Rear	kg (lb)	1,000 (2,205)	1,000 (2,205)	1,000 (2,205)	1,000 (2,205)	1,000 (2,205)
Option	Aluminum wheel		○	○	○	○	○
	Auto A/C		—	—	—	—	○
	Manual A/C		○	○	○	○	—
	Leather package		—	—	—	—	○
	Genuine leather seat		—	—	—	—	—
	High grade audio		—	—	—	—	○
	Navigation		○	○	○	○	—
	Display audio		—	—	—	—	—
	Side airbag		○	○	○	○	○
	Curtain airbag		○	○	○	○	○
	HID headlight		—	—	—	—	—
	Cold weather package		○	○	○	○	○
	Privacy glass		○	○	○	○	—
	Sunroof		—	—	○	○	—

Model			5 door								
			2.0 i-Limited								
Transmission			MT	CVT							
OP code			C0	C0	U5	U6	U5	U6	U5	U6	C4
			HU	HU	YE	YE	YS	YS	HS	HS	4R
Curb weight (C.W.)	Total	kg (lb)	1,465 (3,230)	1,450 (3,197)	1,450 (3,197)	1,465 (3,230)	1,465 (3,230)	1,465 (3,230)	1,465 (3,230)	1,465 (3,230)	1,460 (3,219)
	Front	kg (lb)	875 (1,929)	870 (1,918)	870 (1,918)	875 (1,929)	875 (1,929)	875 (1,929)	875 (1,929)	875 (1,929)	870 (1,918)
	Rear	kg (lb)	590 (1,301)	580 (1,279)	580 (1,279)	590 (1,301)	590 (1,301)	590 (1,301)	590 (1,301)	590 (1,301)	590 (1,301)
Gross vehicle weight (G.V.W.)		kg (lb)	1,970 (4,343)	1,970 (4,343)	1,970 (4,343)	1,970 (4,343)	1,970 (4,343)	1,970 (4,343)	1,970 (4,343)	1,970 (4,343)	1,970 (4,343)
Gross axle weight (G.A.W.)	Front	kg (lb)	1,010 (2,227)	1,010 (2,227)	1,010 (2,227)	1,010 (2,227)	1,010 (2,227)	1,010 (2,227)	1,010 (2,227)	1,010 (2,227)	1,010 (2,227)
	Rear	kg (lb)	1,000 (2,205)	1,000 (2,205)	1,000 (2,205)	1,000 (2,205)	1,000 (2,205)	1,000 (2,205)	1,000 (2,205)	1,000 (2,205)	1,000 (2,205)
Option	Aluminum wheel		○	○	○	○	○	○	○	○	○
	Auto A/C		○	○	○	○	○	○	○	○	○
	Manual A/C		—	—	—	—	—	—	—	—	—
	Leather package		○	○	○	○	○	○	○	○	○
	Genuine leather seat		○	○	○	○	○	○	○	○	○
	High grade audio		—	—	—	—	—	—	—	—	○
	Navigation		○	○	—	—	—	—	○	○	—
	Display audio		—	—	○	○	○	○	—	—	—
	Side airbag		○	○	○	○	○	○	○	○	○
	Curtain airbag		○	○	○	○	○	○	○	○	○
	HID headlight		○	○	—	—	—	—	—	—	○
	Cold weather package		○	○	○	○	○	○	○	○	○
	Privacy glass		○	○	○	○	○	○	○	○	—
	Sunroof		○	○	—	—	○	○	○	○	○

Model			5 door HEV								
			2.0 i-Premium								
Transmission			CVT (HEV)								
OP code			U5	U5	U5	U5	U5	C5	C5	C5	C5
			IA	IE	IS	IE	KS	IE	IS	CM	1U
Curb weight (C.W.)	Total	kg (lb)	1,560 (3,440)	1,560 (3,440)	1,580 (3,484)	1,565 (3,451)	1,580 (3,484)	1,560 (3,440)	1,575 (3,473)	1,575 (3,473)	1,580 (3,484)
	Front	kg (lb)	930 (2,051)	930 (2,051)	940 (2,073)	935 (2,062)	940 (2,073)	930 (2,051)	935 (2,062)	935 (2,062)	940 (2,073)
	Rear	kg (lb)	630 (1,389)	630 (1,389)	640 (1,411)	630 (1,389)	640 (1,411)	630 (1,389)	640 (1,411)	640 (1,411)	640 (1,411)
Gross vehicle weight (G.V.W.)		kg (lb)	2,120 (4,674)	2,120 (4,674)	2,120 (4,674)	2,120 (4,674)	2,120 (4,674)	2,120 (4,674)	2,120 (4,674)	2,120 (4,674)	2,120 (4,674)
Gross axle weight (G.A.W.)	Front	kg (lb)	1,110 (2,447)	1,110 (2,447)	1,110 (2,447)	1,110 (2,447)	1,110 (2,447)	1,110 (2,447)	1,110 (2,447)	1,110 (2,447)	1,110 (2,447)
	Rear	kg (lb)	1,050 (2,315)	1,050 (2,315)	1,050 (2,315)	1,050 (2,315)	1,050 (2,315)	1,050 (2,315)	1,050 (2,315)	1,050 (2,315)	1,050 (2,315)
Option	Aluminum wheel		○	○	○	○	○	○	○	○	○
	Keyless access with push button start		—	—	○	○	○	—	—	—	○
	Auto A/C		○	○	○	○	○	○	○	○	○
	Leather package		—	—	○	○	○	—	—	○	○
	Genuine leather seat		—	—	—	—	—	—	—	—	—
	High grade audio		○	○	○	○	—	○	○	○	○
	Navigation		—	—	—	—	○	—	—	—	—
	Display audio		—	—	—	—	—	—	—	—	—
	Side airbag		○	○	○	○	○	○	○	○	○
	Curtain airbag		○	○	○	○	○	○	○	○	○
	HID headlight		—	—	—	—	—	—	—	○	○
	Cold weather package		—	○	○	○	○	○	○	○	○
	Privacy glass		○	○	○	○	○	○	○	○	○
	Sunroof		—	—	○	—	○	—	○	○	○

Model			5 door HEV			
			2.0 i-Limited			
Transmission			CVT (HEV)			
OP code			U5	U5	U5	C5
			5E	5S	ES	EU
Curb weight (C.W.)	Total	kg (lb)	1,565 (3,451)	1,580 (3,484)	1,580 (3,484)	1,580 (3,484)
	Front	kg (lb)	935 (2,062)	940 (2,073)	940 (2,073)	940 (2,073)
	Rear	kg (lb)	630 (1,389)	640 (1,411)	640 (1,411)	640 (1,411)
Gross vehicle weight (G.V.W.)		kg (lb)	2,120 (4,674)	2,120 (4,674)	2,120 (4,674)	2,120 (4,674)
Gross axle weight (G.A.W.)	Front	kg (lb)	1,110 (2,447)	1,110 (2,447)	1,110 (2,447)	1,110 (2,447)
	Rear	kg (lb)	1,050 (2,315)	1,050 (2,315)	1,050 (2,315)	1,050 (2,315)
Option	Aluminum wheel		○	○	○	○
	Keyless access with push button start		○	○	○	○
	Auto A/C		○	○	○	○
	Leather package		○	○	○	○
	Genuine leather seat		○	○	○	○
	High grade audio		—	—	—	—
	Navigation		—	—	○	○
	Display audio		○	○	—	—
	Side airbag		○	○	○	○
	Curtain airbag		○	○	○	○
	HID headlight		—	—	—	○
	Cold weather package		○	○	○	○
	Privacy glass		○	○	○	○
	Sunroof		—	○	○	○

PRECAUTION

PC

Page
1. Precaution 2

1. Precaution

A: CAUTION

Please clearly understand and adhere to the following general precautions for environmental protection and to avoid minor or serious injury to the person doing the work or people in the area.

1. VEHICLE DYNAMICS CONTROL (VDC)

Handle the VDC as a total system. Do not disassemble or attempt to repair individual parts. Follow the directions in this manual when performing maintenance on the VDCCM&H/U. When parts other than those specified are disassembled, it is possible that the VDC system will not operate when needed or cause it to operate incorrectly and result in injury.

2. BRAKE FLUID

If brake fluid gets in your eyes or on your skin, do the following:

- Wash eyes and seek immediate medical attention.
- Wash your skin with soap and then rinse thoroughly with water.

3. RADIATOR FAN

The radiator fan may rotate without warning, even when the engine is not ON. Do not place your hand, cloth, tools or other items near the fan at any time.

4. ACTIVE GRILLE SHUTTER

The active grille shutter may open and close without warning, even when the engine is not ON. Do not place your hand, cloth, tools or other items nearby at any time.

To prevent unexpected deployment, turn the ignition switch to OFF and disconnect the ground cable from battery, then wait at least 30 seconds before starting work. Also, wait at least 30 seconds before starting work after connecting the battery.

5. ROAD TEST

Always conduct road tests in accordance with traffic rules and regulations to avoid bodily injury and interrupting traffic.

6. AIRBAG

To prevent bodily injury from unexpected deployment of airbags and unnecessary maintenance, follow the instructions in this manual when performing maintenance on the airbag components or nearby, around front of the vehicle (radiator panel, front wheel apron, front side frame, bumper, hood, front fender), around side of the vehicle (front door, rear door, center pillar, rear fender, side sill, rear wheel apron), around rear of the vehicle (rear seat cushion, rear floor, rear sub frame assembly) and the airbag wiring harnesses or nearby.

To prevent unexpected deployment, turn the ignition switch to OFF and disconnect the ground cable from battery, then wait at least 60 seconds before starting work.

7. AIRBAG MODULE AND SEAT BELT PRETENSIONER DISPOSAL

To prevent bodily injury from unexpected airbag deployment, do not dispose the airbag modules or seat belt pretensioner in the same way as other waste. Follow all government regulations concerning disposal of refuse.

8. AIRBAG MODULE

Adhere to the following when handing and storing the airbag module to prevent bodily injury from unexpected deployment:

- Do not hold the harnesses or connectors to carry the module.
- Do not face the bag in the direction that it opens towards yourself or other people.
- Do not face the bag in the direction that it opens towards the floor or walls.

9. AIRBAG SPECIAL TOOL

To prevent unexpected deployment, only use special tools.

10.WINDOW

Always wear safety glasses when working around any glass to prevent glass fragments from damaging your eyes.

11.WINDOW ADHESIVE

Always use the recommended or equivalent adhesive when attaching glass to prevent it from falling off, resulting in accidents and injury.

12.OIL

When handling oil, adhere to the following to prevent unexpected accident.

- Prepare a container and cloth to prevent scattering of oil when performing work where oil can be spilled. If the oil spills, wipe it off immediately to prevent from penetrating into floor or flowing out for environmental protection.
- Follow all government and local regulations concerning disposal of refuse when disposing.

13.FUEL

When handling and storing fuel, adhere to the following to prevent from unexpected accident.

- Fuel is flammable. Prevent exposure to flames or sparks or any source of ignition.
- Prepare a container and cloth to prevent scattering of fuels when performing work where fuels can be spilled. If the fuel spills, wipe it off immediately to prevent from penetrating into floor or flowing out for environmental protection.
- Follow all government and local regulations concerning disposal of refuse when disposing.

14.ENGINE COOLANT

When handling engine coolant, adhere to the following to prevent from unexpected accident.

- Never remove the radiator cap since engine coolant may blow out when the engine is hot.
- Prepare a container and cloth to prevent scattering of engine coolant when performing work where engine coolant can be spilled. If the coolant spills, wipe it off immediately to prevent from penetrating into floor or flowing out for environmental protection.
- Follow all government and local regulations concerning disposal of refuse when disposing.

15.AIR CONDITIONER REFRIGERANT

In order to prevent from global warming, avoid releasing air conditioner refrigerant into the atmosphere. Using a refrigerant recovery system, discharge and reuse it.

16.REMOVAL AND INSTALLATION OPERATION OF HOSES, ETC.

1. Before the removal and installation operation of hoses, etc.

- If you reuse a damaged or deformed hose, it can result in leakage or disconnection of the hose.
- Do not bend hoses. Remove the hose to prevent damage by bending during service of a component.

2. Removal and installation operation of hoses, etc. during the inspection

- **Follow the instructions below when removing hose.**
  - Do not use a pointed hose remover (hose plucker) when removing a hose. It may damage the inner surface or the hose.

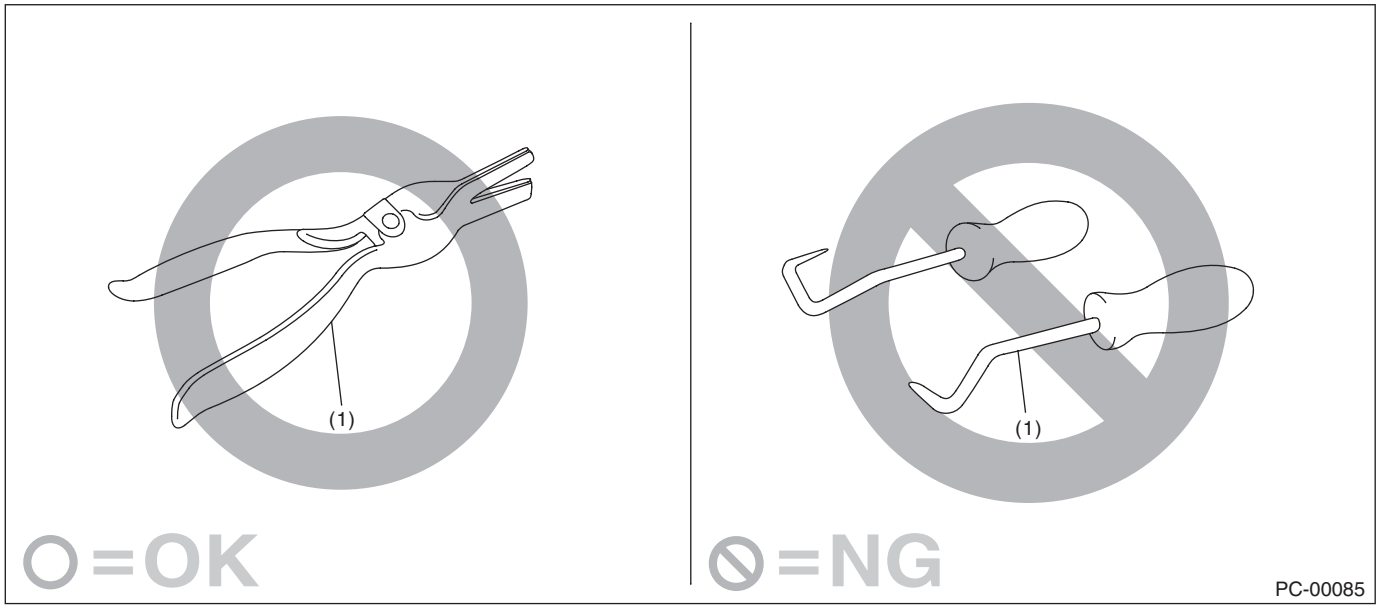

(1) Hose remover

  - When removing a hose using pliers, be sure to cover the hose with cloth and rotate the hose slightly to extract straight.

- **If you keep using the hose, perform the inspection below and replace the hose with a new part if faulty.**
  - Replace the hose with a new part if it rides over the stay or the top of spool.

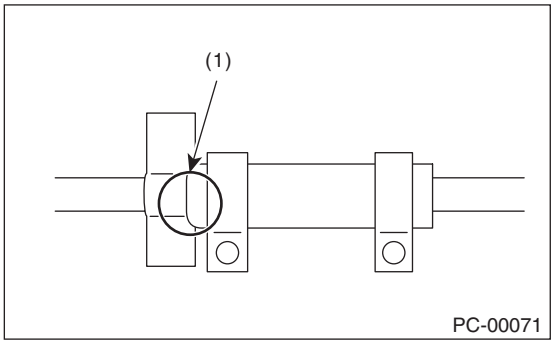

(1) Hose rides over the stay

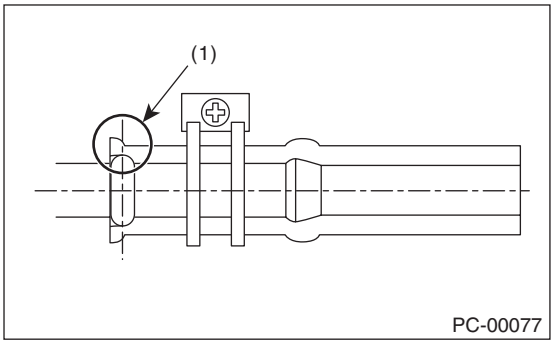

(1) Hose rides over the top of spool

  - Check if the surface and the inner surface of the hose are damaged, cracked, bend, hardened, softened, swollen, peeled or deformed due to the adherence or the entry of the foreign matter by bending the hose. Replace with the new part if faulty.

- **Follow the instructions below during installation.**
  - Check carefully for assembling position.
  - Never use lubricants.

• Insert the hose to the specified position (stopper or spool) securely. (The stopper of the spool is between the top of the spool and the bottom section.)

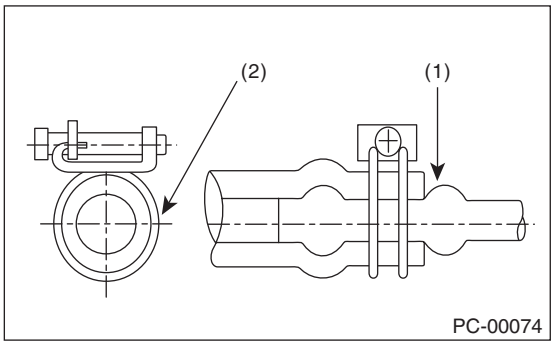

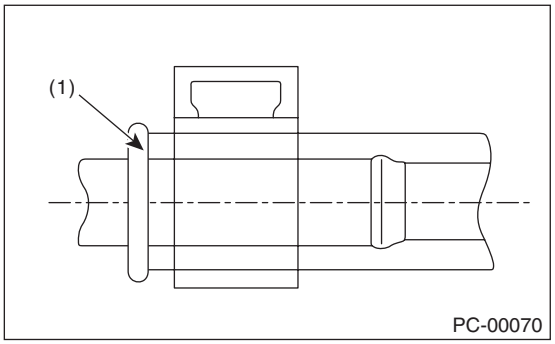

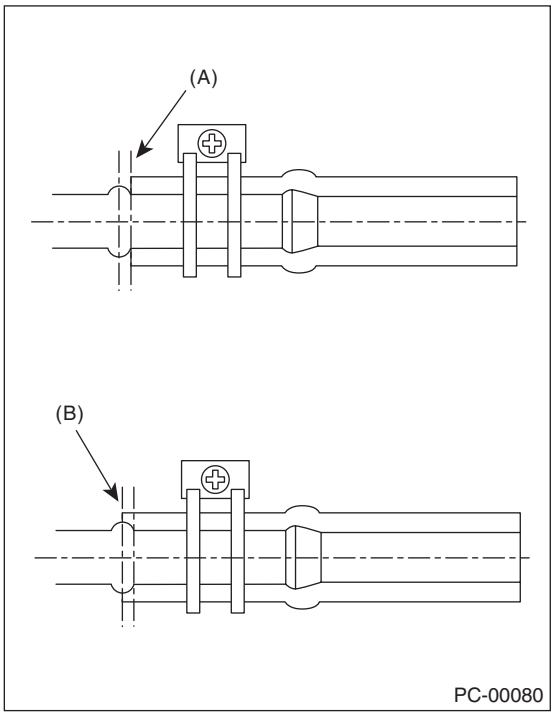

(1) Push against the spool. (Insert the hose and prevent it from becoming wrinkled.)
(2) Tighten the hose cramp completely.
(A) OK position (bottom of spool)
(B) OK position (top of spool)

• Check if the position, direction and hose layout of the hose clamp are correct. (Check if the position, direction, length and the gap around are correct, or if it is different from the condition before the work)
• After the installation, check that the hose is installed securely and there is no leakage. (Check if it is fixed securely with the clamp)

• For hose clips and hose clamps, perform the inspection below and replace them with a new part if faulty.

• Check for deformation, rust, damage or foreign matters.
• For hose clip, check if it works and has clamping force.
• For hose clamp, check if it can be tightened properly, and the band is not deformed.

• For hose pipes, perform the inspection below and replace with a new part if faulty.

Check if the pipe is not damaged, rusted, peeled (peeled plates included), covered with foreign matter, bent, compressed or cracked.

• For the parts below, replaces with a new part when the hose is removed or the installation position is changed.

CVTF oil cooler hose, fuel hose (delivery) (except for those with quick connector)

17.HANDLING PRECAUTIONS FOR SILICON-CONTAINING SPRAY

When a lubricant containing silicone is used the rust inhibitor or glazing agent adheres to the electrical contact of the relay or switch, forming silica dioxide (SiO_2) film will be formed, which may lead to poor continuity. Therefore, the following precautions must be observed when using the silicon-containing spray.

- Never spray directly to the electrical equipment.
- When using the spray close to the electrical equipment, always put the cover on the component. Be sure to put the cover on the electrical equipment especially when using the spray in the locations shown in the figure below and their surrounding areas.

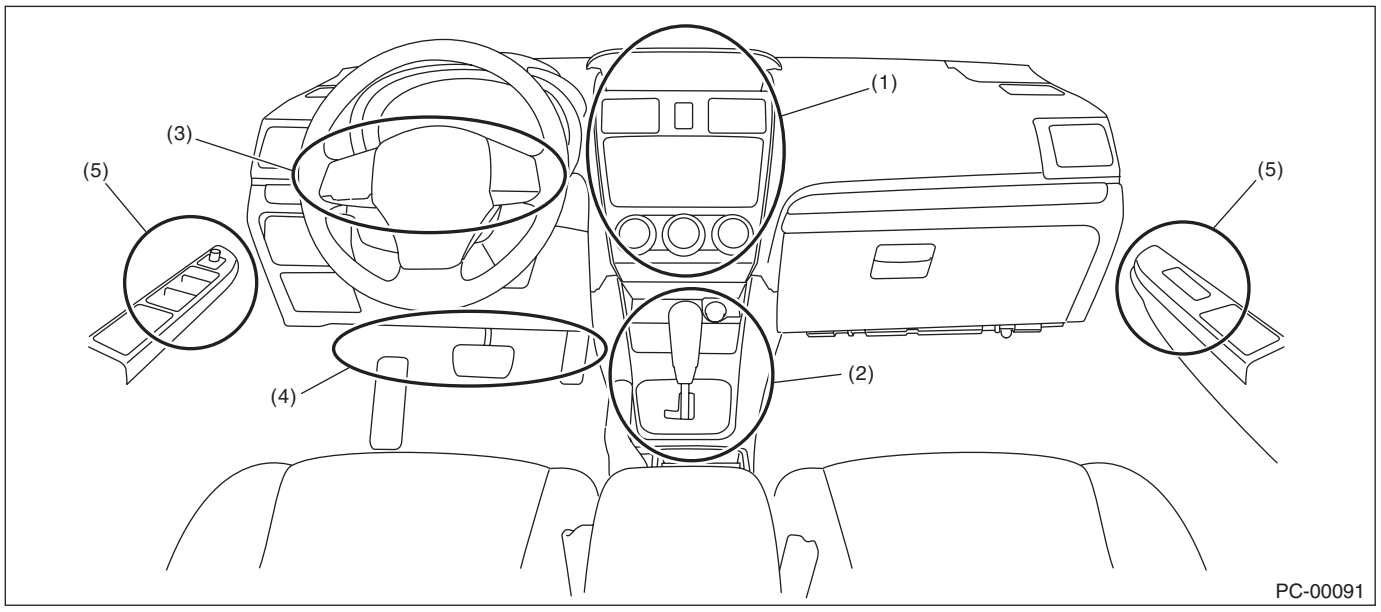

(1)	Audio, heater control switch	(3)	Combination switch, steering switch, paddle shift switch	(5)	Power window switch
(2)	Shift/select lever switch, parking switch	(4)	Stop light switch, brake light switch, clutch switch, clutch start switch		

- If the residual silicon remains in the vicinity of the electrical equipment after the spray has been used, the vaporized silicon stands around the electrical equipment and it may adhere to electrical contact. After using the spray, be sure to wipe the silicon off with a cloth.
- Even when using the spray to the place away from the electrical equipment, the droplet of the spray may be splashed to the periphery. Use as small amount of spray as possible, and take care not to splash the silicon to the periphery.

NOTE:
The “silicon” used in this section refers to “silicone”, that is, silicon polymer.

B: CAUTION (HYBRID SYSTEM)

1. PRECAUTIONS FOR MAINTENANCE

The hybrid system includes a high voltage circuit. Mishandling may cause electric shocks and leakage. Therefore, perform proper operations by following procedures in this manual.

HIGH VOLTAGE CAUTION LABEL

- Before working on the HEV, the vehicle should be marked with a caution sign.
- Copy this page, fold along the perforation and put it on the roof of the vehicle in service before performing any service on the HEV system.

HIGH VOLTAGE CAUTION LABEL

Person in charge: _____

CAUTION:
HIGH VOLTAGE.
DO NOT TOUCH
DURING OPERATION

CAUTION:
HIGH VOLTAGE.
DO NOT TOUCH
DURING OPERATION

Person in charge: _____

Copy this page and put it after folding on the roof of the vehicle in service.

HEV00088

- Only technicians who have received the Subaru training for HEV Systems should be allowed to perform service or maintenance of high voltage circuits.
- All the harnesses and connectors for power cables are orange in color. In addition, caution labels indicating [High Voltage] are attached on the High voltage battery and its battery cover. Do not touch the wires and parts related to high voltage without proper Personal Protective Equipment (PPE) and extreme caution.

- Use great care when handling the high voltage system power supply circuits shown in the figure below.

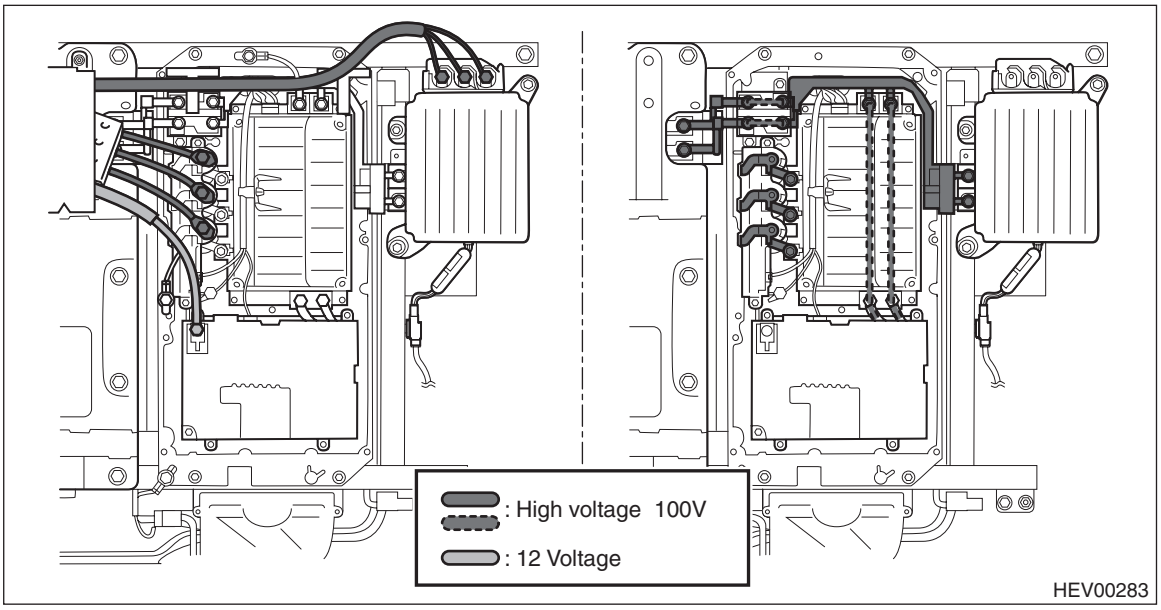

PERSONAL PROTECTIVE EQUIPMENT (PPE)

- Always wear PPE which is in good condition when working on the HEV system. Never touch any high voltage terminals or components without proper PPE.
- Personal Protective Equipment consists of insulated rubber gloves, protective goggles, rubber boots or insulated protective shoes or insulating rubber sheet for the shop floor.
- Always check the insulated gloves for holes or damage before starting work. To check for leaks, create a tight seal around your wrist with the glove gauntlet, and squeeze the glove to confirm that the trapped air does not leak, indicating a hole in the insulating material.

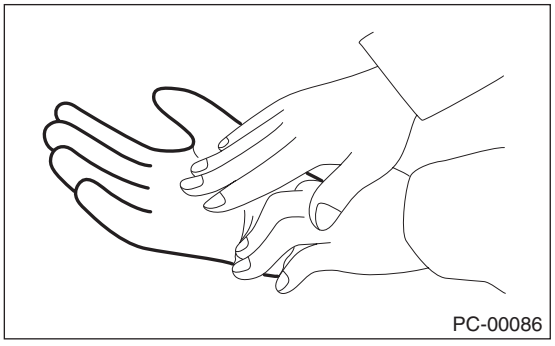

- Never use wet insulated gloves.

NOTE:
Maintenance of the high voltage battery cooling fan and cooling duct parts outside the battery cover, and drive motor control module parts does not require you to wear PPE, even in the compartment, because the voltage is only 12 V.
PPE is not required for maintenance or service of engine compartment and CVT unit, except for the power cables (orange in color).

PROPER WORK PROCEDURES

In addition to PPE, other precautions must be observed when working on the HEV system since parts with high voltage and strong magnetic force are used.

- Do not carry any metallic products, such as mechanical pencils and rulers, etc., which may be dropped and cause a short circuit.
- Do not wear any metallic objects such as belts or buckles, chains, etc.
- The strong magnetic force can damage or erase magnetic recording media (such as cash cards and prepaid cards), etc.
- Always confirm that the voltage at any high voltage terminal is at 0 V using an Insulation multimeter before beginning work.
- To work on the high voltage wire connections, always use insulated tools. If insulated tools are not available, wrap tools with electrical tape for insulation before use.
- When using tools wrapped with electrical tape as alternatives to insulated tools, confirm the insulated condition before working, using a Insulation multimeter.
- Make sure to maintain the proper polarity of the positive and negative terminal connections during the high voltage battery removal and installation procedures.
- Never connect the high voltage battery in reverse polarity. Otherwise, the control module will be broken instantly, and other parts will also be damaged.
- Do not disconnect the battery terminals while the engine is running. A large counter electromotive force will be generated, and this voltage may damage electronic parts such as control modules.
- When disconnecting the connectors of the electrical components, always be sure to turn the ignition switch to OFF. Perform the Clear Memory Mode after connecting the connectors.
- When measuring the voltage or resistance of individual sensors or all control modules, use a tapered pin with a diameter of less than 0.6 mm (0.024 in). Do not insert the pin 4 mm (0.16 in) or more into the part.
- Take care not to allow water to get into the connectors when servicing or washing the vehicle in rainy weather. Avoid exposure to water even if the connectors are waterproof.
- Use the engine ground terminal or engine assembly for the grounding point when measuring the voltage and resistance in engine compartment.
- Use the body ground bolt on the inverter frame as the grounding point, when measuring voltage and resistance in rear of the vehicle.

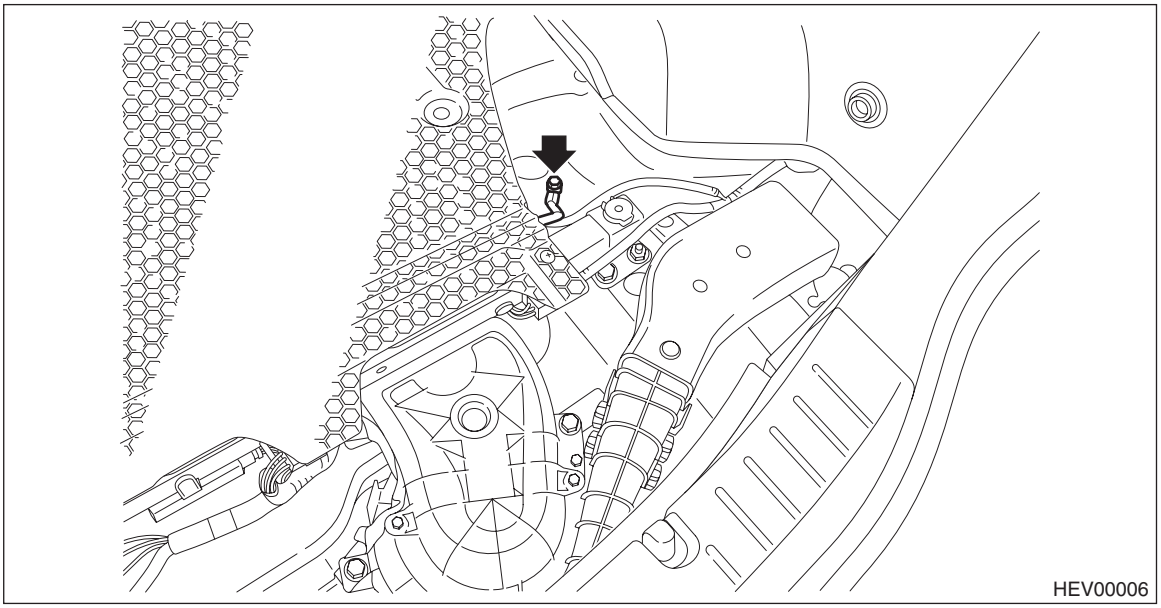

- All parts related to the hybrid system are precision parts. Do not drop or otherwise apply impact. Do not reuse the parts that are dropped accidentally.
- Each warning light may illuminate during or after the diagnosis. However, this does not indicate a system malfunction. After the hybrid system diagnosis, perform Clear Memory Mode.
- Take the ignition key or access key out of the vehicle, except when the key is needed inside.

• When the part is replaced or the label is detached, make sure to attach a new label in the original position and direction. Many of the HEV components are labeled with caution warnings.

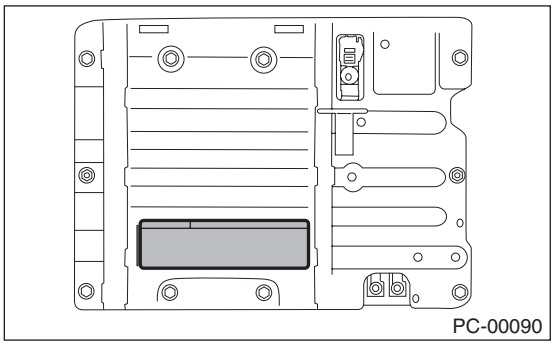

• This engine starts and stops automatically, when the Hybrid READY indicator light in the meter illuminates. Make sure to turn the ignition to OFF before performing maintenance.

2. SERVICE DISCONNECT PLUG REMOVAL

• Always remove the Service disconnect plug before beginning work on the HEV system.
• The ignition must be OFF before removing the Service disconnect plug.
  1. Turn off the ignition switch and remove the key, or move the remote transmitter away from the vehicle.
  2. Confirm that the READY light is not illuminated.

1) Remove the ground terminal from the 12 volt auxiliary battery.
2) Remove the ground terminal from the 12 volt engine restart battery sensor.

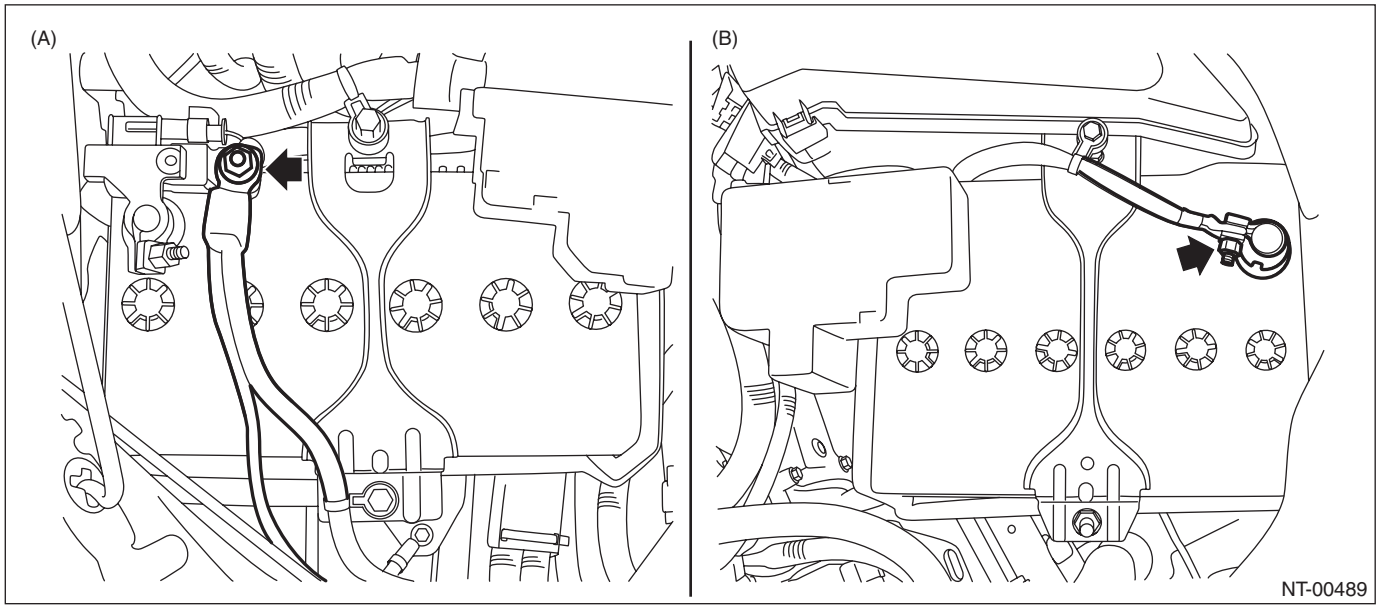

(A) 12 volt engine restart battery (B) 12 volt auxiliary battery

3) Remove the mat from the rear floor area.

4) Remove the Service disconnect plug.

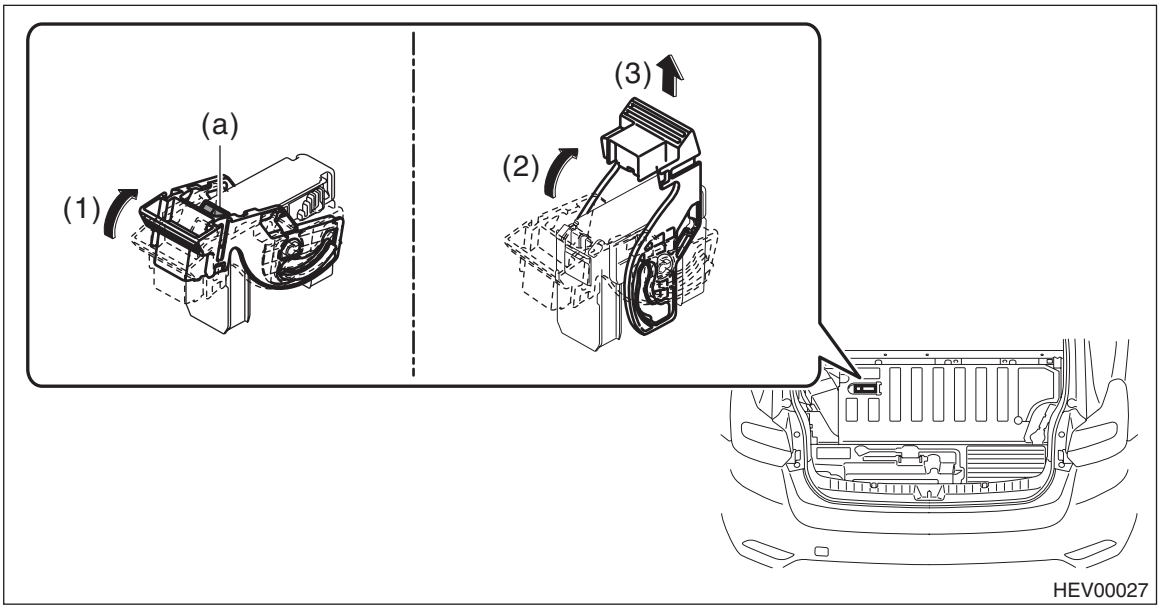

(1) Pull up the lever until it touches the stopper.
(2) Move the lever upwards while pressing the claw (a).

NOTE:
The lever locks in the vertical position.

(3) Remove the Service disconnect plug.

WARNING:
After removing the Service disconnect plug, be sure to wait for ten minutes before touching the high voltage connectors and terminals.

NOTE:
This time allows the high voltage condenser in the inverter to discharge.

- Always confirm that the voltage at any high voltage terminal is at 0 V using an Insulation multimeter before beginning additional work.

CAUTION:
After removing the Service disconnect plug and waiting ten minutes, cover the connection on the battery with electrical tape to protect from intrusion of foreign matter such as water or dust, tools, etc.

- Do not turn the ignition to ON with the Service disconnect plug removed in order to prevent system damage.
- After removal, always carry the removed Service disconnect plug in your pocket in order to prevent other technicians from accidentally re-installing it while you are working on the system.
- Even after the Service disconnect plug is removed, make sure to wear insulated gloves (PPE) during maintenance of all the parts inside the cover including the battery cover, and underfloor power cable.
- Insulate the high voltage power cables, connectors and terminals with electrical tape immediately after removing them.
- Be sure to tighten the high voltage screw terminals firmly to the specified torque. Lack of, or excess torque causes failures.
- Be careful not to allow foreign matter to enter the high voltage battery.

3. INSTALLATION OF THE SERVICE DISCONNECT PLUG

WARNING:
Make sure the connectors are connected completely and locked securely.
- After performing work for the high voltage system, make sure to check again for misplaced parts and tools, tightening conditions of high voltage terminals, and connector connections, before connecting the Service disconnect plug.
- Always replace faulty or damaged Service disconnect plug with a new part.
- If not damaged, always re-use the original Service disconnect plug form the vehicle you are servicing. Never use a Service disconnect plug removed from another vehicle.

Install in the reverse order of removal.

NOTE:
Move the lever to the horizontal position and push it until a click is heard and confirm it is securely locked.

4. PROCEDURES AT AN ACCIDENT SCENE

- Preparation items

Protective equipment (insulated gloves, rubber gloves, protective goggles, and rubber boots for electrical purposes)
Saturated boric-acid solution 20 L (In a container, dissolve 800 g of boric acid powder purchased at a drug store in 20 L of water.)
Red litmus paper (purchase at a drug store)
Fire extinguisher (used for both oil fire and electric fire)
Cloth, old towels (for wiping electrolytic solution)
Insulating tape
Circuit tester

- Procedures at an accident scene

Do not touch the exposed wires, when whether they are high voltage wires or not is unknown. When it is necessary or possible to touch them, make sure to wear insulated gloves and insulate the wires using insulating tape.
When vehicle is on fire, extinguish a fire using an electrical fire extinguisher. Attempting to extinguish a fire with a small amount of water may be more of a danger. Therefore, spray a large amount of water from a fire hydrant, or wait for arrival of firefighters.
When the vehicle is submerged in water, do not touch the service disconnect plug and any other high voltage parts and wires due to a possibility of electrical shock. Perform work after completely pulling out the vehicle.

- Check for any leakage in the high voltage battery vicinity.

CAUTION:
- **Do not touch any leaked fluid, because it may be strong alkaline electrolytic solution. When it is necessary to touch it, wear insulated gloves and protective goggles, neutralize with saturated boric-acid solution, confirm that red litmus paper does not change to blue, and then wipe off with cloth.**
- **Do not touch the skin or eyes with rubber gloves with the electrolytic solution (strong alkaline) adhered, because it may cause inflammation and blindness.**

- When the vehicle is damaged due to collision, stop the hybrid system in the following steps.
  1. Turn the ignition to OFF.

NOTE:
When the ignition cannot be turned to OFF, remove the fuse in engine compartment.

2. Wear insulated gloves and remove the service disconnect plug. <Ref. to PC-10, SERVICE DISCONNECT PLUG REMOVAL, CAUTION (HYBRID SYSTEM), Precaution.>

5. MOVING DAMAGED VEHICLE

- When one of the following conditions applies, use a tow truck to move the vehicle.

CAUTION:
Refer to [Towing] for towing procedures. <Ref. to NT-16, TOWING, NOTE, Note.>
High voltage system parts and wires are damaged.
The Hybrid READY indicator light does not illuminate with the ignition at ON.

CAUTION:
Using a tow truck, tow the vehicle with the negative terminal of 12 volt auxiliary battery disconnected, and the service disconnect plug removed. <Ref. to PC-10, SERVICE DISCONNECT PLUG REMOVAL, CAUTION (HYBRID SYSTEM), Precaution.>

- Move the vehicle by driving it, only when towing by a tow truck is unnecessary and there is no problem to drive the vehicle.

CAUTION:
When the hybrid fail lamp illuminates, or abnormal noise, odor, or strong vibration is detected during driving, perform the following procedures.

1. Bring the vehicle to a stop in a safe place.
2. Apply the parking brake.
3. Turn the ignition to OFF and disconnect the negative terminal from 12 volt auxiliary battery.
4. Wear insulated gloves and remove the service disconnect plug. <Ref. to PC-10, SERVICE DISCONNECT PLUG REMOVAL, CAUTION (HYBRID SYSTEM), Precaution.>

- Procedure after moving damaged vehicle

When there is fluid leakage on the road surface, it may be strong alkaline electrolytic solution. Wear insulated gloves and protective goggles, neutralize with saturated boric-acid solution, confirm that red litmus paper does not change to blue, and then wipe off with cloth.

6. PRECAUTION DURING REPAIR OF DAMAGED VEHICLE

- Preparation items

Protective equipment (insulated gloves, rubber gloves, protective goggles, and rubber boots for electrical purposes)
Saturated boric-acid solution 20 L (In a container, dissolve 800 g of boric acid powder purchased at a drug store in 20 L of water.)
Red litmus paper (purchase at a drug store)
Cloth, old towels (for wiping electrolytic solution)
Insulating tape
Circuit tester

- Precaution during repair of damaged vehicle

CAUTION:
Follow the procedures to ensure safety.
Make sure to use insulated tools, and wear insulated gloves or rubber gloves, protective goggles, and rubber boots for electrical purposes.
Check for any leakage in the high voltage battery vicinity.

CAUTION:

- **Do not touch any leaked fluid, because it may be strong alkaline electrolytic solution. When it is necessary to touch it, wear insulated gloves and protective goggles, neutralize with saturated boric-acid solution, confirm that red litmus paper does not change to blue, and then wipe off with cloth.**
- **If the electrolytic solution should touch the skin directly, immediately wash it away with saturated boric-acid solution or plenty of water. Also, take off the contaminated clothes.**
- **If it enters your eyes, scream for help, do not rub your eyes, immediately wash it away with plenty of water, and consult a doctor.**

When the vehicle is damaged due to collision, stop the hybrid system in the following steps.

CAUTION:
Do not touch the exposed wires, when whether they are high voltage wires or not is unknown. When it is necessary or possible to touch them, make sure to wear insulated gloves and insulate the wires using insulating tape.

1. Turn the ignition to OFF.

NOTE:
When the ignition cannot be turned to OFF, remove the fuse in engine compartment.

2. Wear insulated gloves and remove the service disconnect plug. <Ref. to PC-10, SERVICE DISCONNECT PLUG REMOVAL, CAUTION (HYBRID SYSTEM), Precaution.>

7. PRECAUTION FOR HIGH VOLTAGE BATTERY

Through the route specified by the manufacturer, make sure to collect the high voltage batteries that are no longer needed due to replacement or other reasons.

CAUTION:
• When high voltage batteries are dumped or left without proper measures, electric shock accidents may occur. Be sure to collect the high voltage batteries through the route specified by the manufacturer.
• Do not leave the removed high voltage batteries in a place where water may splash, because generated heat may cause fire.
• When the collision is severe, high impact is applied to the high voltage battery, possibly causing damage inside the high voltage battery. Therefore, visually check the exterior of high voltage battery, and replace with a new one if deformation or such evidence is found at the following locations.

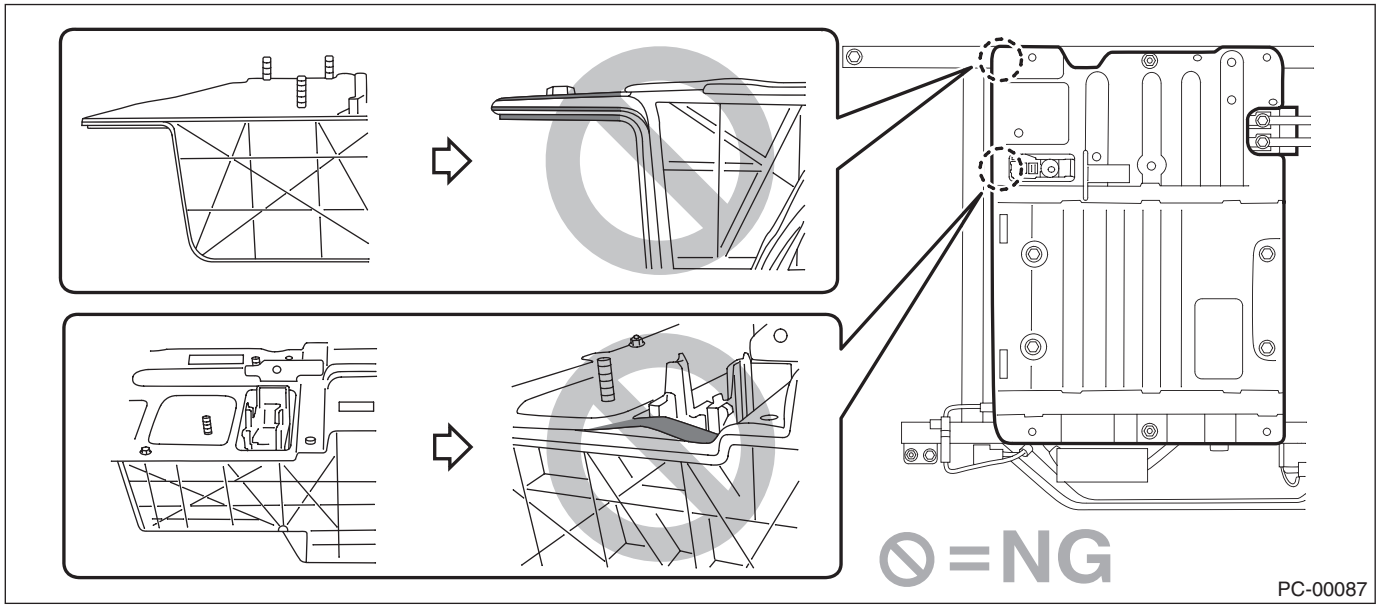

NOTE

NT

Page
1. Note 2

1. Note

A: BASIC REPAIR HINT

This section describes basic points that the service operator must understand before performing the service operation.

1. APPEARANCE

- Always wear clean work clothing.
- Wear a cap and protective shoes.

2. PROTECTION OF VEHICLE UNDER MAINTENANCE AND PREPARATION OF TOOLS/ EQUIPMENT

- Before work, cover the vehicle body. (Ex. grille cover, fender cover, seat cover and floor mat cover)
- Before performing the service operation, prepare tools, equipment, container box, grease and cloth etc.

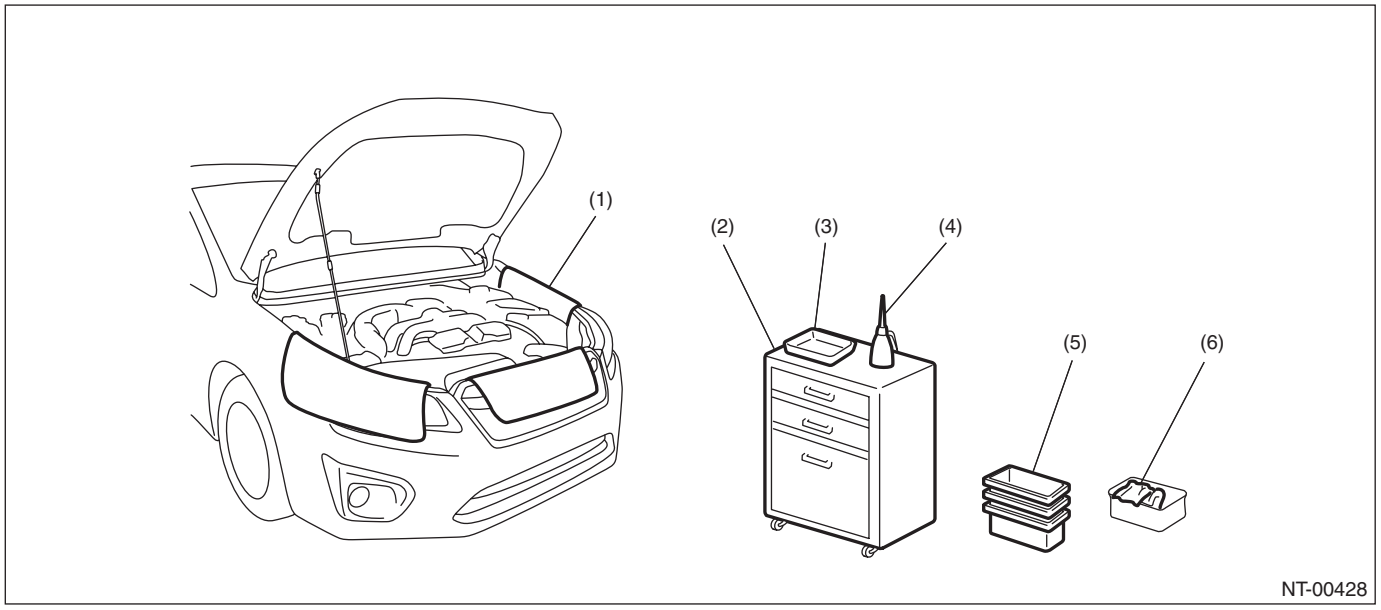

(1)	Fender cover	(3)	Tray	(5)	Container box
(2)	Tools/equipment case	(4)	Oil	(6)	Cloth

3. SAFETY

- Before work, set the wheel stoppers to secure the vehicle.
- When performing work by multiple workers, call to each other to make sure that service operation is performed safely.
- Ventilate the room when starting the engine.
- When performing the service operation of high-temperature parts like muffler, or rotating parts like fan and other movable parts, be careful not to get burned or injured.
- For the jack-up and lift up, set the tool to the proper location to support the vehicle correctly. And use the safety device properly when lifting up.
- When touching the power cables, wear insulation protectors.

4. SERVICE OPERATION

- By identifying the vehicle problems thoroughly before work, service operation will be performed effectively.
- Before removing parts, confirm the installation condition or the damage of the parts.
- To reinstall parts properly, leave a note of the condition before work as necessary.
- For a part which needs positioning, take appropriate action such as putting alignment marks.
- For a removed part, clean it as necessary and check for damage and defect before installation. If the part is damaged or defective, replace it with a new part.

5. REMOVED PART

- A removed part must be organized to avoid mixing up with similar parts. When same parts are used in multiple locations, such as pistons in engine, manage the parts by using labels with cylinder No. so that the parts are not installed to the wrong location.
- Always replace nonreusable parts such as gasket and O-ring with new parts.
- After work, have a customer confirm the replaced part.

6. WHEN REMOVING BATTERY

When removing battery, power supply is cut off and the information stored in the computer memory is volatilized. Therefore, setting information of some device is initialized to the factory default. The device and functions initialized by removing battery are as follows.

No.	Item	Job contents when connecting battery
1	Clock (MFD) (settings that the customer set)	Set the clock to the current time.
2	MFD (high grade type)	Set to the contents checked before disconnecting the battery.
3	Audio (settings that the customer set)	Set to the contents checked before disconnecting the battery.
4	Navigation system (settings that the customer set)	• Time setting is not necessary because the time information is received via GPS. • Set the sound and other settings (items that were set in the selection) to the contents checked before disconnecting the battery.
5	Temperature setting of fully automatic air conditioner (settings that the customer set)	Set to the contents checked before disconnecting the battery.
6	Power window system	Initialize automatic full open/close of driver's window (power window system). For the initialization procedure, refer to "GW" section. <Ref. to GW-10, OPERATION, Power Window System.>
7	Electronic throttle system	Turn the ignition switch to ON, wait for 10 seconds or more, and start the engine.
8	Engine control system	Let the engine run at idle until it fully warms up (the radiator fan turns 2 times or more) under no electrical load condition.
9	Past trouble history (memory code)	—
10	Active grille shutter system	Perform active test to close the shutter. For procedures, refer to EN(H4DO HEV)(diag). <Ref. to EN(H4DO HEV)(diag)-64, OPERATION, System Operation Check Mode.>

NOTE

7. OTHER ADJUSTMENT OPERATIONS BEFORE DELIVERING THE VEHICLE TO CUSTOMER

Due to service and parts replacement convenience, perform the following operations before delivering the vehicle to the customer.

No.	Item	Check operation	Adjustment operation	Additional adjustment operations when replacing parts
1	Positions of devices • Steering • Room mirror • Door mirror • Seat • Air conditioner vent grille	Is the device set to the same position when the vehicle was received from the customer?	Adjust the device to the similar position when the vehicle was received from the customer.	When removing/installing each device • Meter, instrument panel, steering column, etc. • Room mirror, roof trim, sunroof assembly, etc. • Door mirror, door panel, etc. • Seat, floor carpet, parking brake lever, etc. • Vent grille, instrument panel, console box, etc.
2	Positions of switches • SI-Drive • Wiper, light (AUTO or OFF) • Headlight beam leveler • Illumination control • Room light • Seat heater, etc.	Is the switch set to the same position when the vehicle was received from the customer?	Set the switch to the same position when the vehicle was received from the customer.	When removing/installing each switch
3	Position of antenna	Is the antenna set to the same position when the vehicle was received from the customer?	Adjust the position of antenna.	When removing/installing the antenna and washing the vehicle

B: NOTE

This is the information that can improve the efficiency of maintenance and assure the sound work.

1. CLEANING

- Perform the operation in a clean location and use extra caution in dust proofing.
- Clean the items (except for assembly components) with steam, etc. before disassembly. During steam cleaning, wrap the air breather, oil level gauge, connectors, etc. with vinyl tape to prevent steam from entering inside the parts.
- Use an appropriate cleaning solvent.
- Do not clean rubber parts such as O-ring, gasket and oil seal with cleaning solution.

2. FASTENERS NOTICE

Tighten the bolts and nuts to the specified torque.
Do not apply paint, lubricant, rust retardant or other substance to the surface around bolts, nuts, etc. It may cause troubles with tightening to the specified torque and result in looseness and other problems of bolts and nuts.

3. STATIC ELECTRICITY DAMAGE

Do not touch the control modules, connectors, logic boards and other such parts when there is a risk of static electricity. Always use a static electricity prevention cord or touch grounded metal for the elimination of static electricity before conducting work.

4. BATTERY

When removing the battery terminal, always be sure to turn the ignition switch to OFF and disconnect the battery ground terminal first.

1. Gasoline engine model

- Disconnect the ground cable from battery.

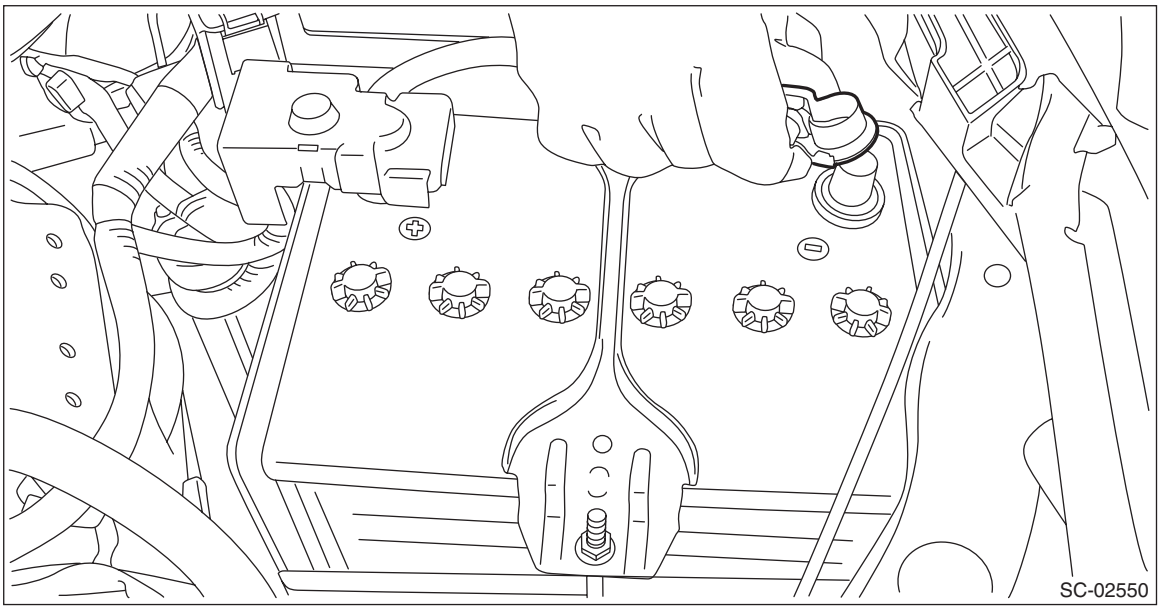

- Install in the reverse order of removal.

NOTE:

- Clean the battery cable terminals and apply grease to retard the formation of corrosion.
- Connect the positive (+) terminal, and then connect the negative (–) terminal of the battery.
- After the battery is installed, initial diagnosis of the electronic throttle control is performed. Wait for 10 seconds or more after turning the ignition switch to ON, and then start the engine.

2. HEV model

- After disconnecting the negative terminal from 12 volt auxiliary battery, disconnect the ground terminal from 12V engine restart battery sensor for 12 volt engine restart battery.

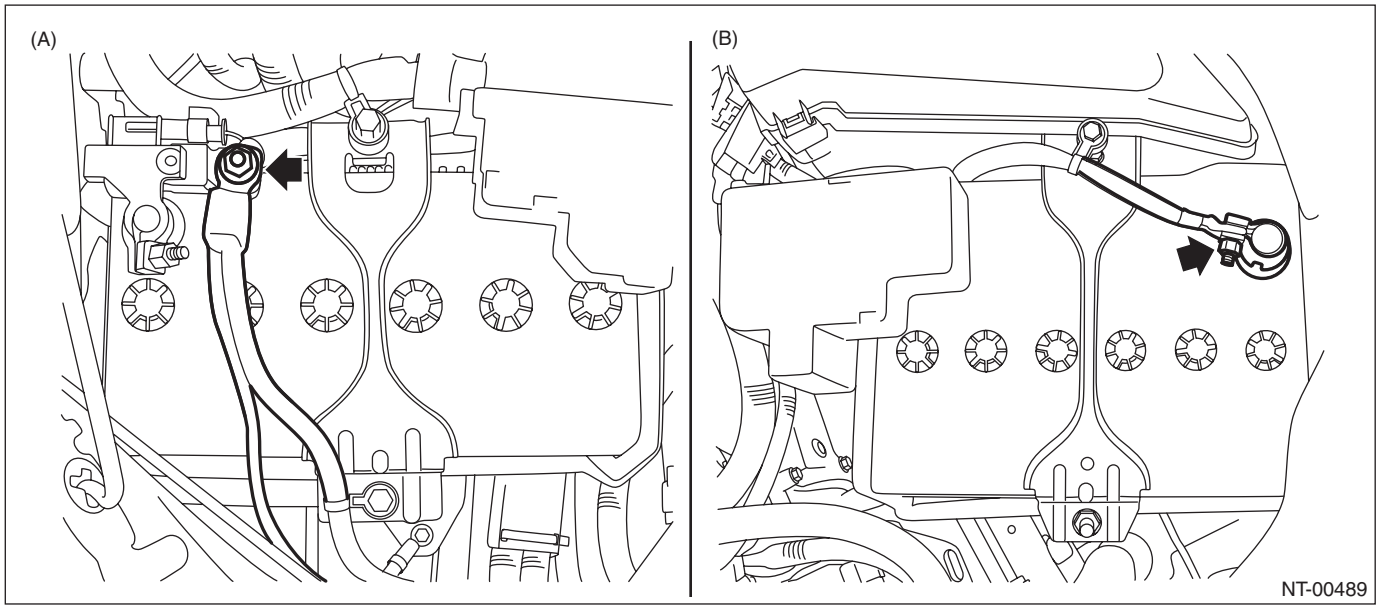

(A) 12 volt engine restart battery (B) 12 volt auxiliary battery

NOTE

- Install in the reverse order of removal.

NOTE:

- Install the 12V engine restart battery sensor while holding it with your hand to prevent the sensor from turning.
- Clean the battery cable terminals and apply grease to retard the formation of corrosion.
- Connect the positive (+) terminal, and then connect the negative (–) terminal of the battery.
- After connecting the battery ground terminal, the following operations are automatically performed in the vehicle.
  - Initial diagnosis of electronic throttle control
  - Learning control of brake pedal stroke sensor

  Therefore, before starting the engine, be sure to place the select lever in “P” position, turn the ignition switch to ON, and wait at least 10 seconds without depressing the brake pedal.
  - Initialization operation of active grille shutter

  Do not place your hand, cloth, tools or other items nearby, because the active grille shutter opens approximately four seconds after the battery installation.

Tightening torque:
7.5 N·m (0.8 kgf-m, 5.5 ft-lb)

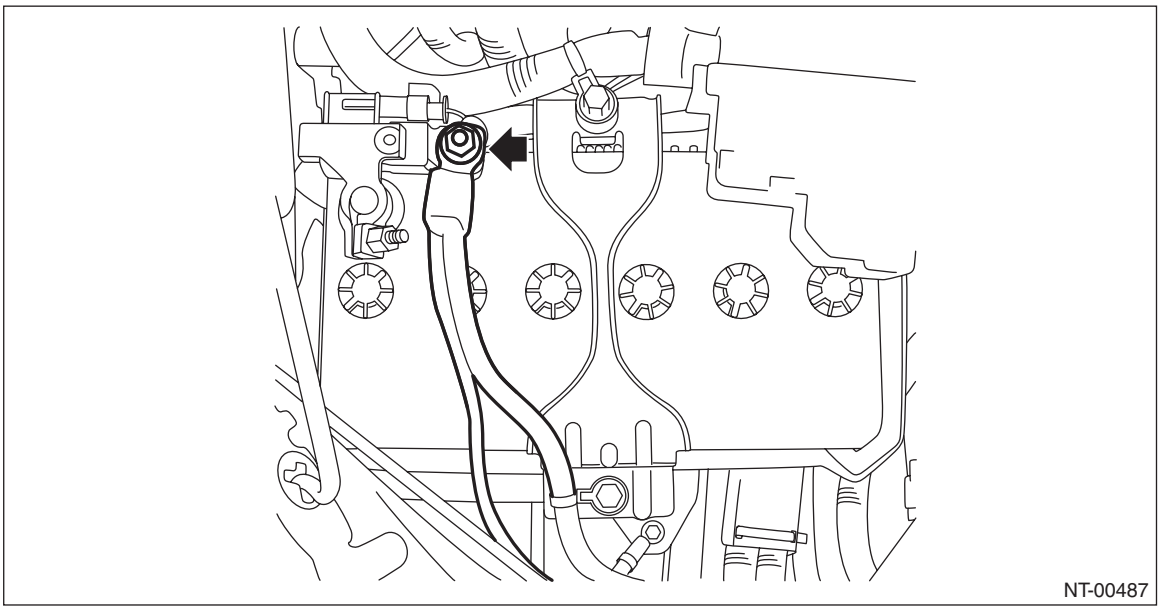

5. BACKUP/POWER SUPPLY FUSE

Backup fuse (20A) remains removed to prevent the battery consumption when vehicles are delivered. Install the backup fuse by following the illustration.

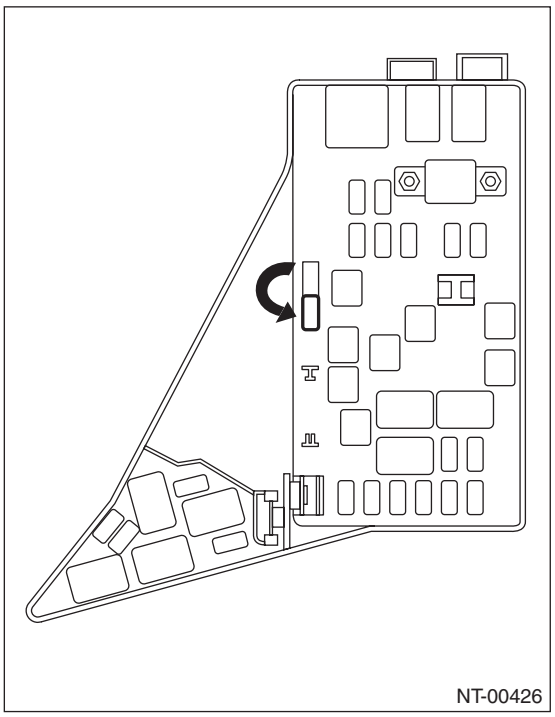

6. IMMOBILIZER RELATED PART

Do not replace parts which have immobilizer ID with the parts from other vehicle.

- Models without keyless access function

All ignition keys, combination meter (except for C0 and C5 models), body integrated unit, ECM, security CM (for C0 and C5 models)

- Models with keyless access function

All access keys, keyless access CM, steering lock CM, ECM, ID code box (for C0 and C5 models)

7. SERVICE PARTS

Use genuine parts for maximum performance and maintenance when conducting repairs. Subaru/FHI will not be responsible for poor performance resulting from the use of parts except for genuine parts.

8. PROTECTING VEHICLE UNDER MAINTENANCE

Make sure to attach the fender cover, seat covers, etc. before work.

9. ENSURING SECURITY DURING WORK

When working in a group of two or more, perform the work with calling each other to ensure mutual safety.

10.LIFT AND JACK

When using a lift or shop jack to raise a vehicle or using rigid rack to support a vehicle, always follow instructions concerning jack-up points and weight limits to prevent the vehicle from falling, which could result in injury. Be especially careful that the vehicle is balanced before raising it. Be sure to set the wheel stoppers when jacking-up only the front or rear side of the vehicle.

CAUTION:
Select the lift attachment so that the side sill does not contact the lift arm.

NOTE:

- When using a lift, follow its operation manual.
- When the side sill cover contacts the lift arm, use a lift attachment.
- Do not work or leave unattended while the vehicle is supported with jack, support it with rigid racks.
- Be sure to use the rigid racks with rubber attached to cradle to support the vehicle.
- When using a lift, use an attachment or something similar.
- When using a plate lift, use a rubber attachment.

Place the attachment to the specified position of the vehicle, by adjusting front/rear and left/right sides accordingly.

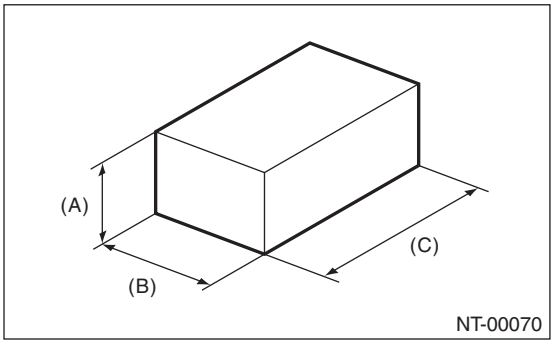

(A) 80 mm (3.1 in) or more
(B) 80 — 100 mm (3.15 — 3.94 in)
(C) 120 — 200 mm (4.72 — 7.87 in)

- Align the cushion rubber center part of plate lift with the center part of rubber attachment.
- Do not use the plate lift whose attachment does not reach the supporting locations.

NOTE

- **Support locations**

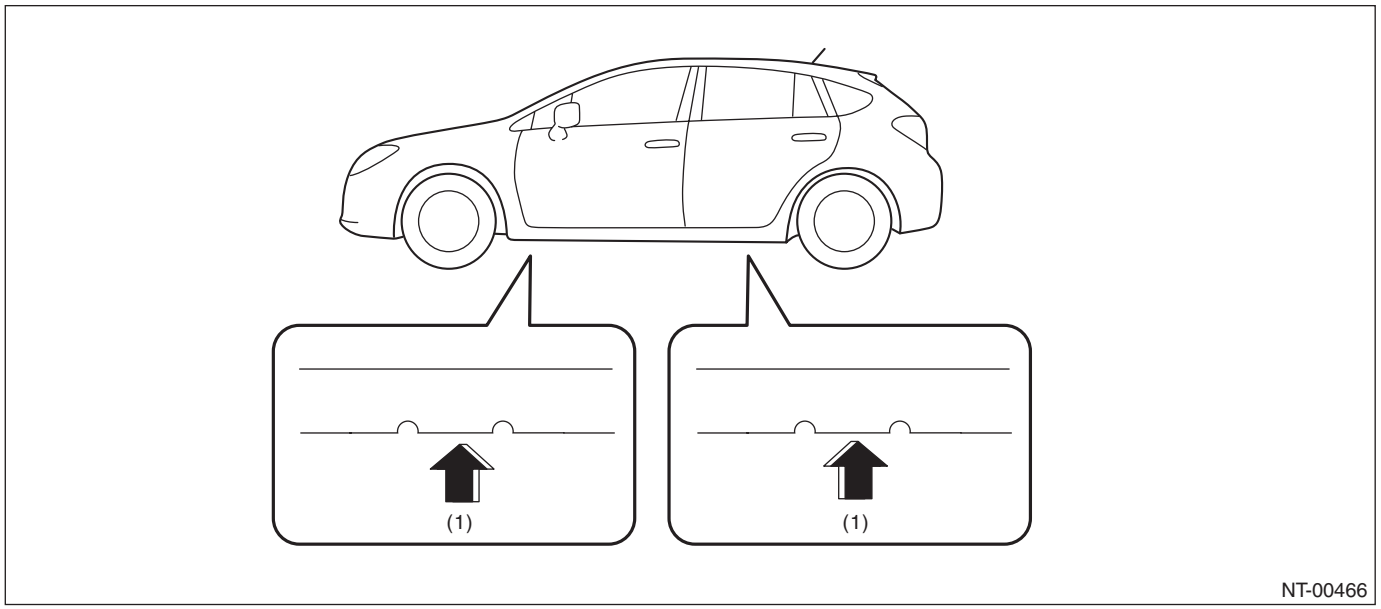

(1) Jack-up point

- **Pantograph jack**

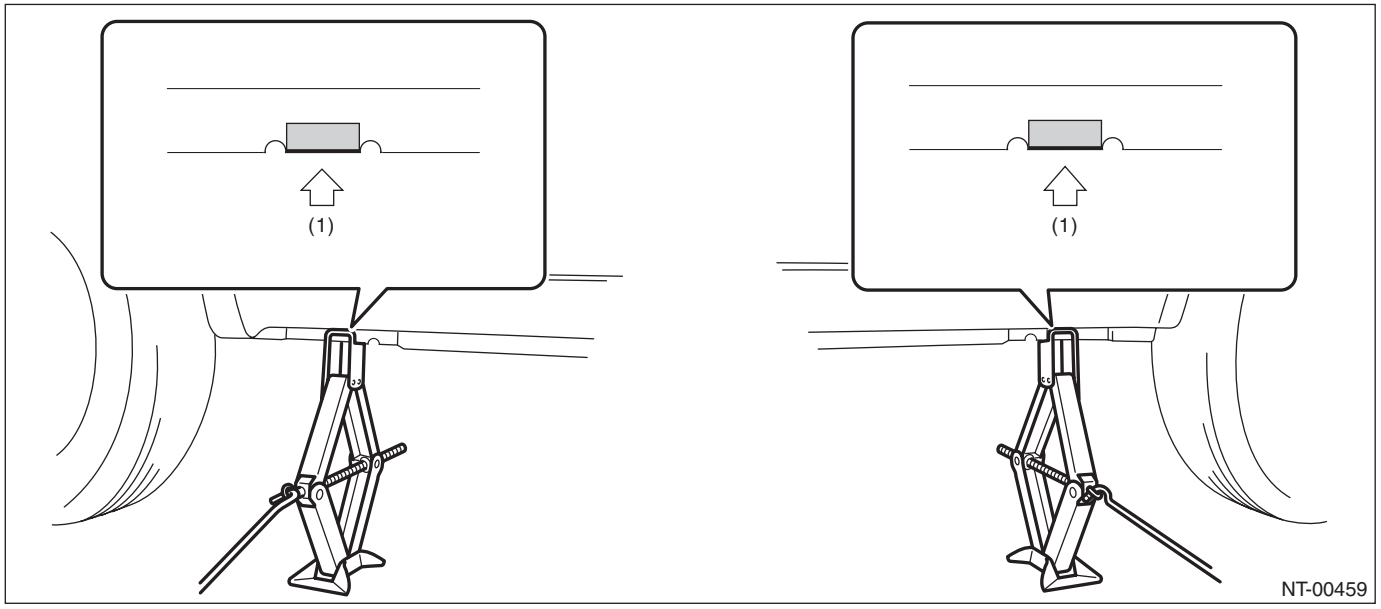

(1) Jack-up point

- **Lift**

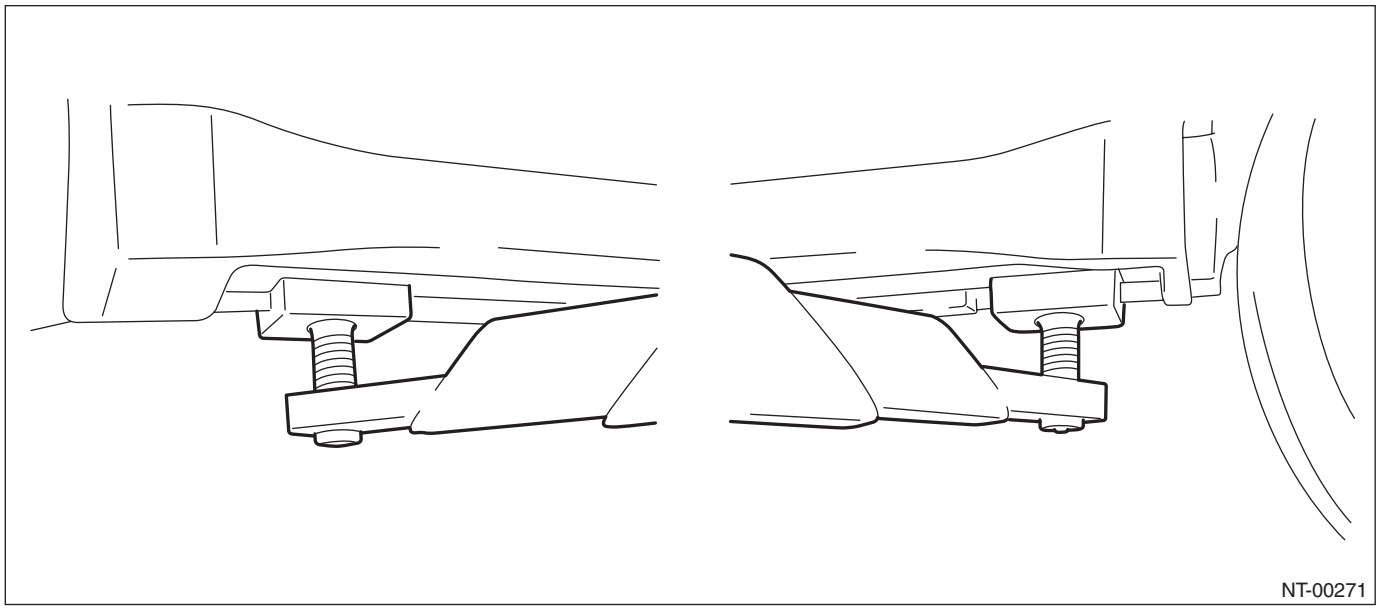

CAUTION:
For models with side under skirt, use a spacer or an attachment to lift up the vehicle securely at jack up point, without contact of side under skirt and lift.

- **Rigid rack**

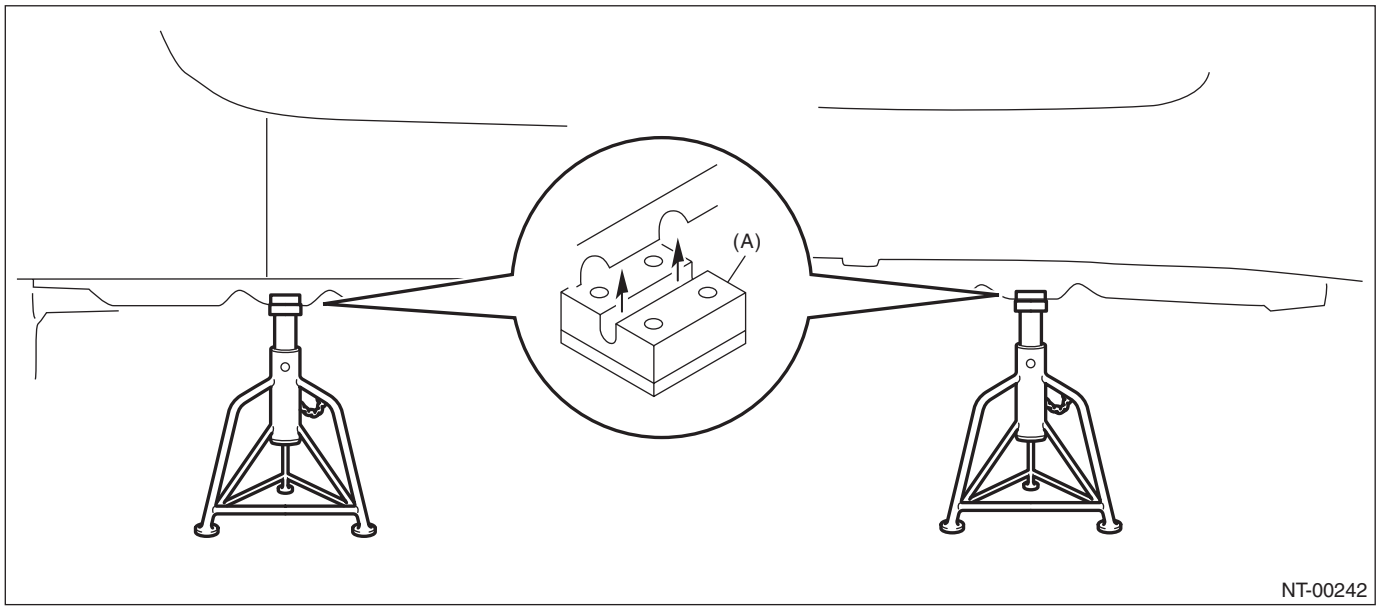

(A) Attachment

NOTE

- **Plate lift**

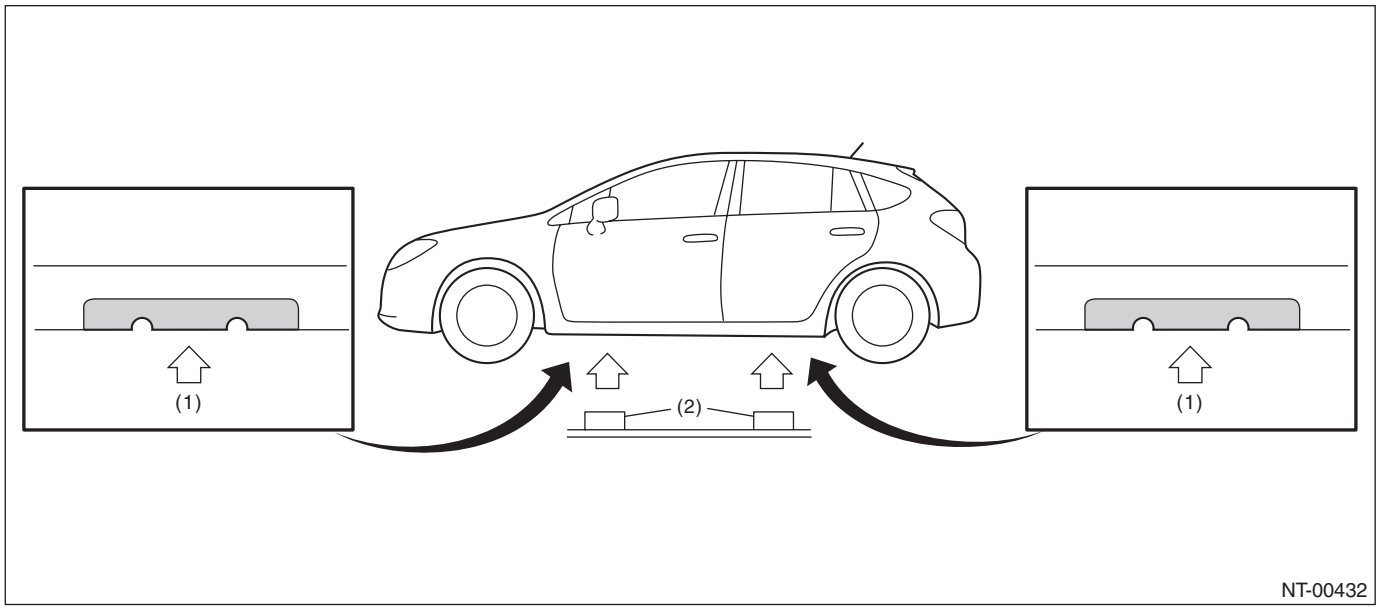

(1) Jack-up point (2) Attachment

- **Jack-up point (when using a garage jack)**

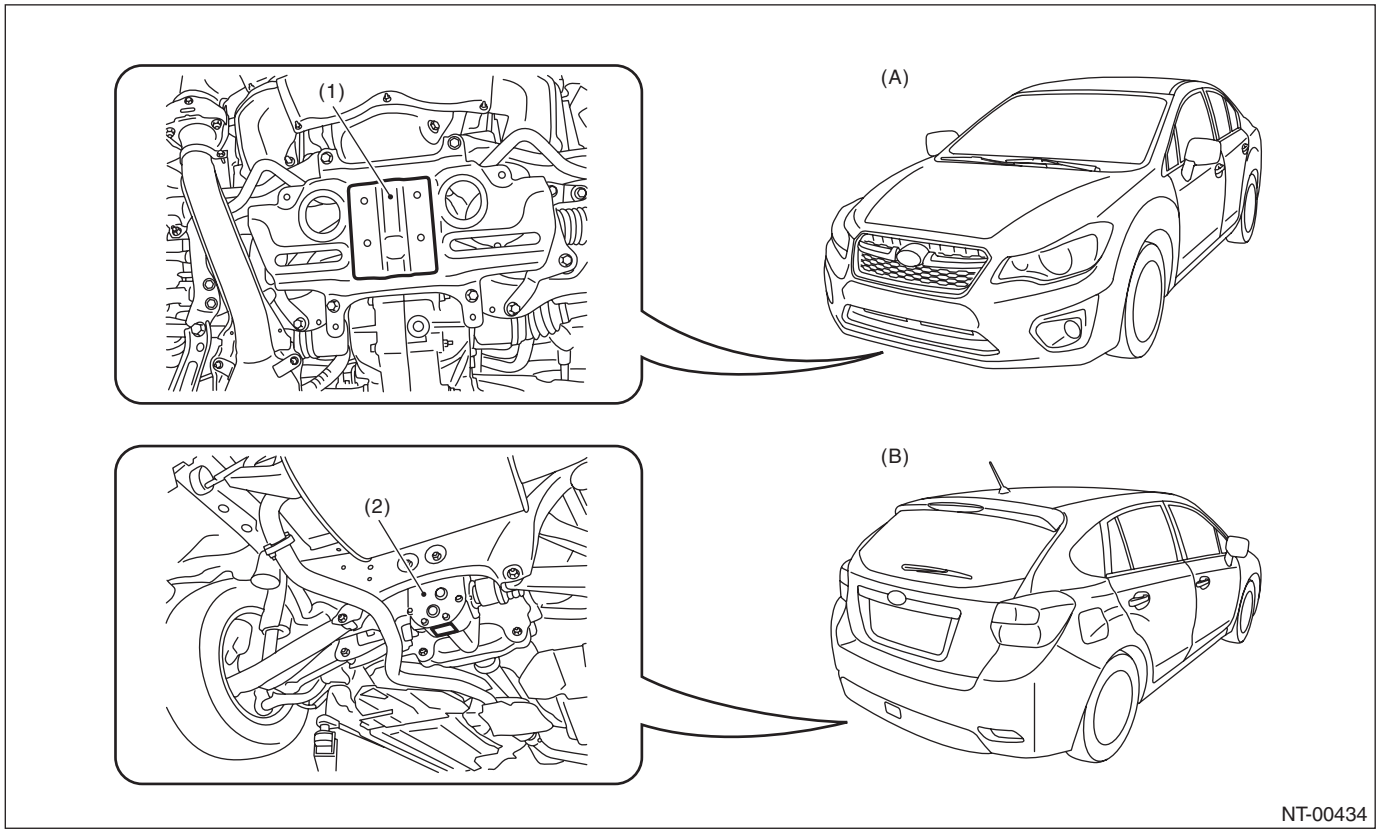

(A) Front (B) Rear

(1) Front crossmember (2) Rear differential

CAUTION:
If jacking up the front side of the vehicle, make sure that the jack is attached at the center of the jack-up plate not at the sides.

11.TIE-DOWNS

Tie-downs are used when transporting vehicles and when using the chassis dynamo. Remove the grommet of the tie-down hole and install the tie-down only to the specified locations on the vehicle.

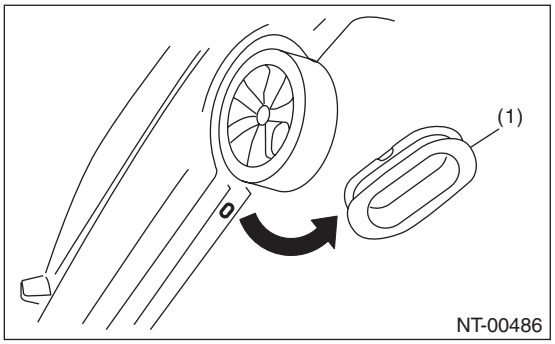

(1) Grommet

- **Tie-down location**

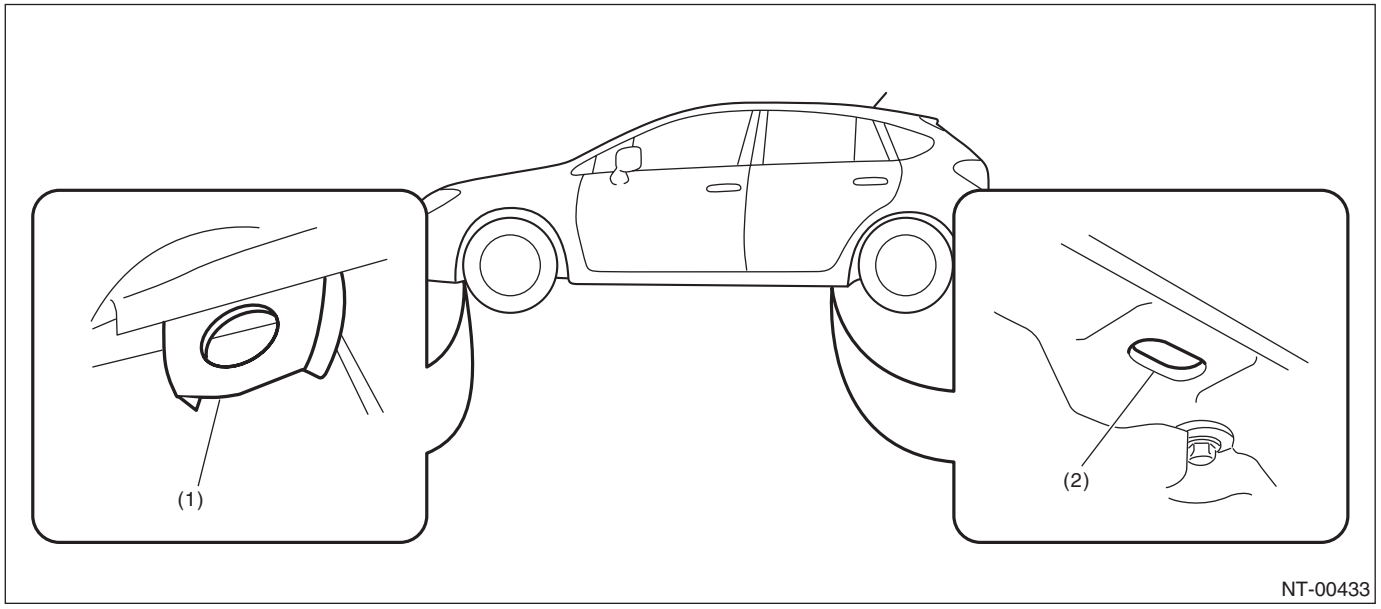

(1) Hook for tie-down
(2) Tie-down hole

NOTE

• Chain direction at tie-down condition

CAUTION:

• Pull the front and rear of the vehicle in the opposite direction, and pull the left and right of the vehicle in the same direction.

• Patterns except for the followings (recommended) are not allowed.

	Recommended
Tie-down direction	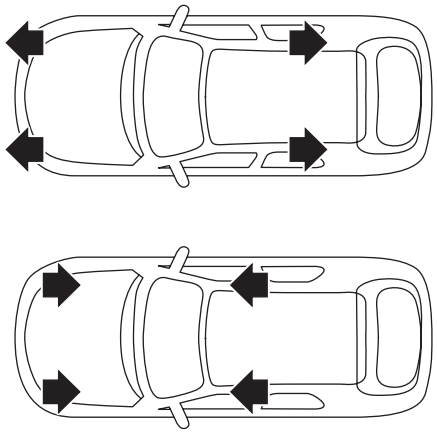 NT-00214

- **Tie-down range**

For ground transportation

CAUTION:

When the vehicle is tied down from vehicle inside, hook the hooks of tie-down chain on the rear tie-down holes from vehicle inside. When the vehicle is tied down from vehicle outside, hook the hooks of tie-down chain on the rear tie-down hooks from vehicle outside.

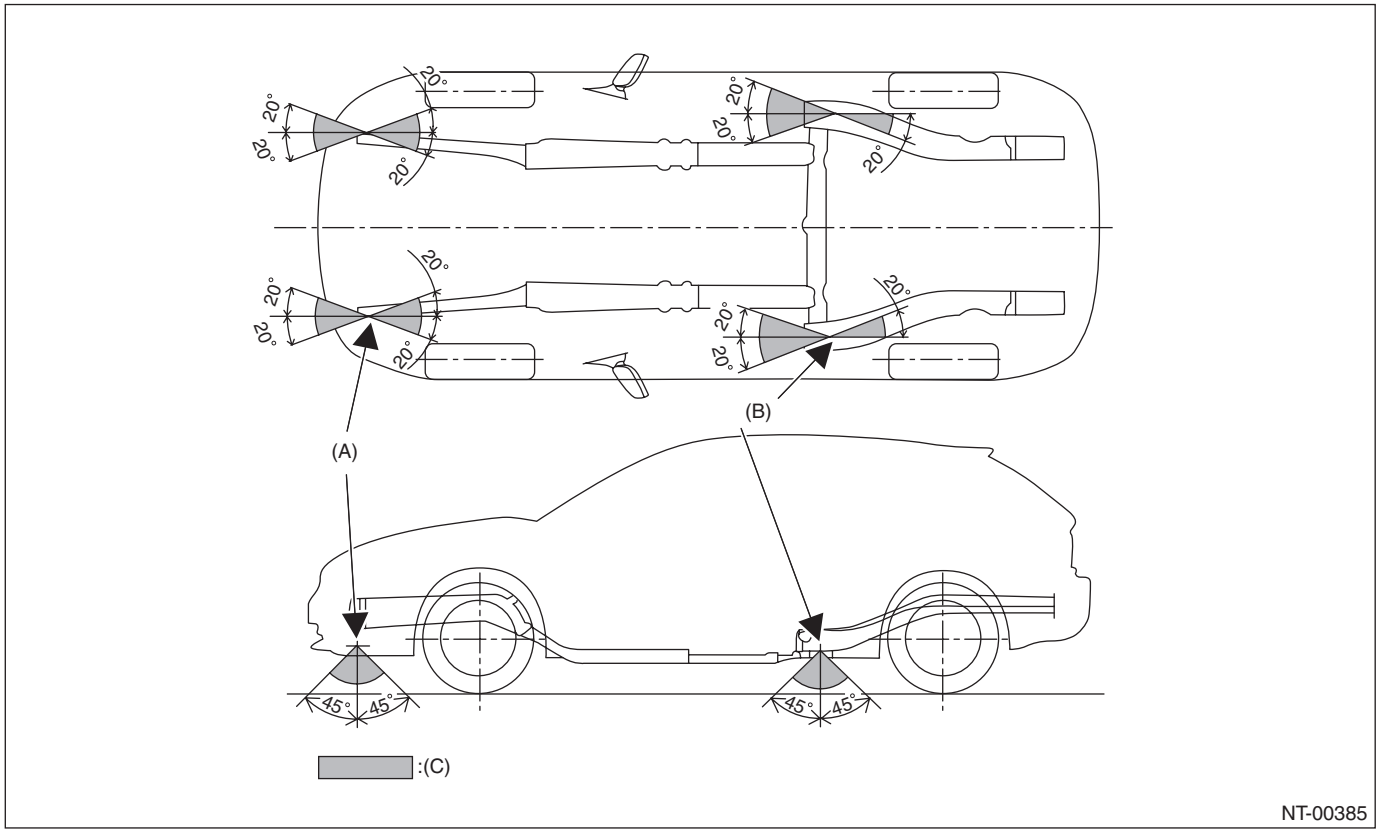

(A) Front tie-down hook

(B) Rear tie-down hole

(C) Chain pulling range at tie-down condition

NOTE

For sea transportation

CAUTION:
The eyebolts are exclusively used for towing and sea transportation tie-down, and do not use them for ground and freight transportation.

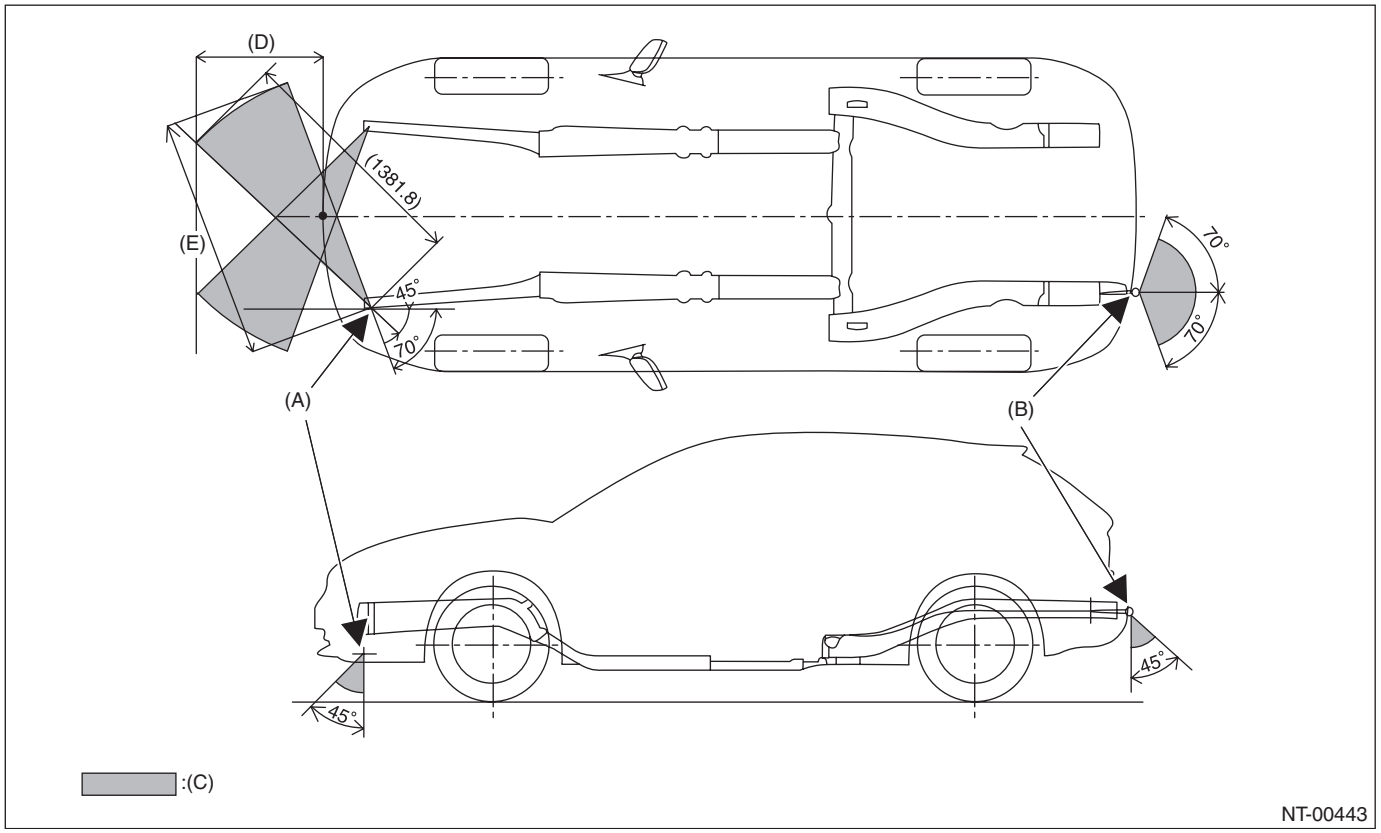

(A)	Front tie-down hook	(C)	Chain pulling range at tie-down condition	(E)	1,320 mm (52.0 in)
(B)	Eyebolt	(D)	400 mm (15.7 in)		

- **Vehicle sinking volume at tie-down condition**

CAUTION:
The vehicle sinking volume at tie-down condition should be less than 50 mm (1.97 in) and make sure to fix the vehicle securely.
Check to see if the tensions of chains or belts at tie-down condition are appropriate in the following procedures.
1) Before tie-down, measure the distance between the highest tire point and highest arch point at the center of wheel.
2) After tie-down, measure the distance between the highest tire point and highest arch point at the center of wheel.
3) If the distance (A) between the measured value of 1) and 2) above, is less than 50 mm (1.97 in), it is judged as OK. If the distance is 50 mm (1.97 in) or more, it is judged as NG because the tension is too high.

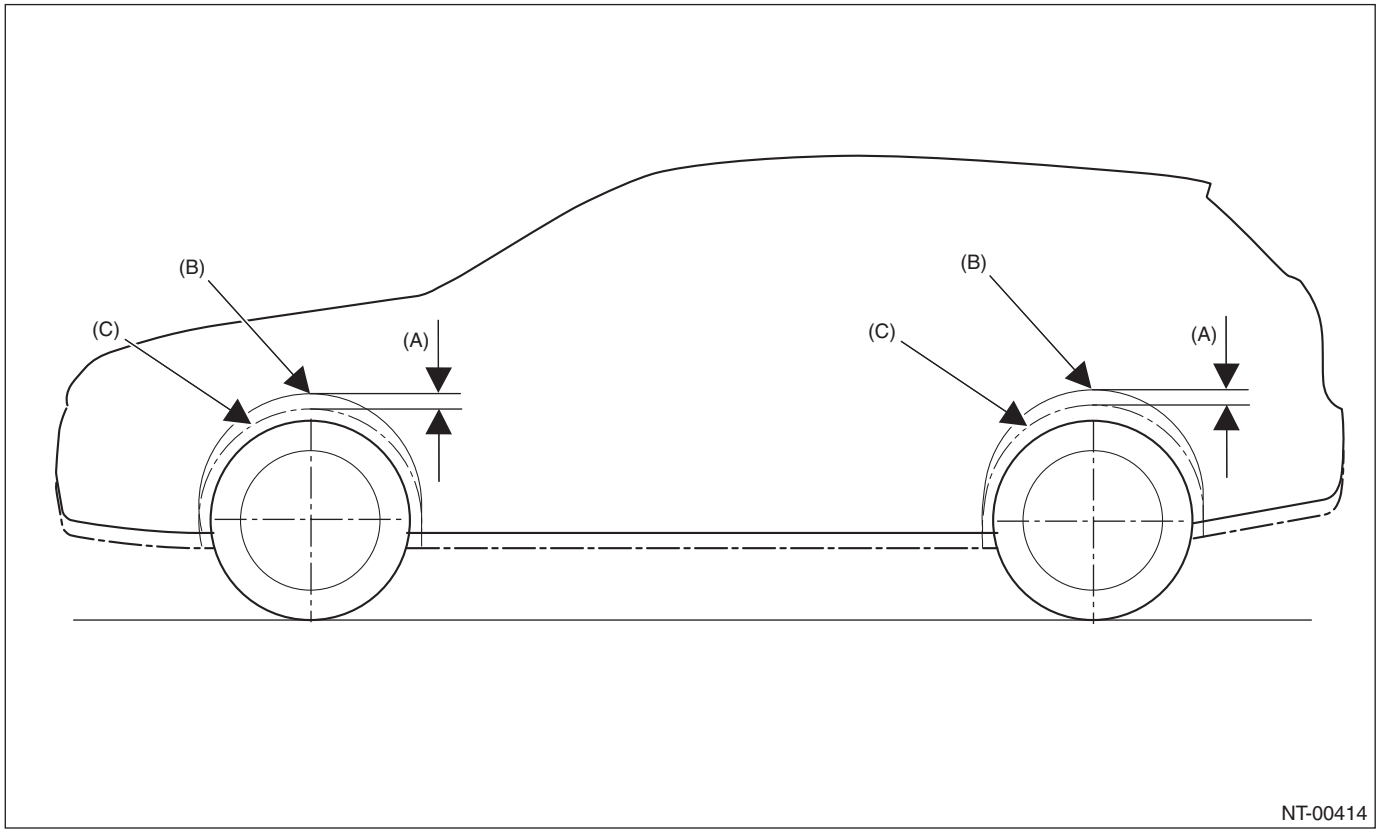

(B) Arch position before tie-down (C) Arch position after tie-down

- **Notes for the use of tie-down hook**

When the vehicle is tied down from vehicle inside, hook the hooks of tie-down chain from vehicle inside, and when the vehicle is tied down from vehicle outside, hook the hooks of tie-down chain from vehicle outside.
For front tie-down hook, use S hook and J hook, and for rear tie-down hole, use S hook, J hook and T hook. T hook can be used only for rear tie-down hole.

NOTE

12.TOWING

Avoid towing vehicles except when the vehicle cannot be driven. For models with AWD, CVT or VTD, use a loader instead of towing. When towing other vehicles, pay attention to the following to prevent hook or vehicle damage resulting from excessive weight.

- Do not tow other vehicles with a front tie-down hook.
- Make sure the vehicle towing is heavier than the vehicle being towed.
- Front

Remove the hook cover, and install the towing hook (eyebolt).

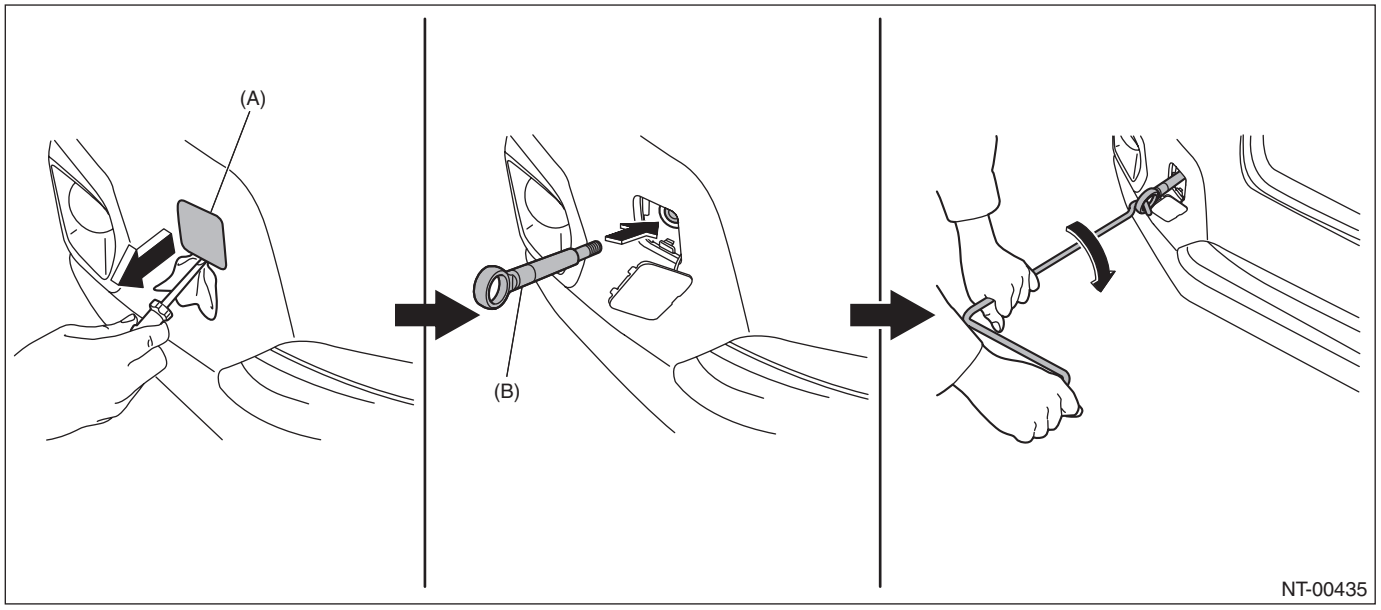

(A) Hook cover (B) Towing hook (eyebolt)

- Rear

Remove the hook cover, and install the towing hook (eyebolt).

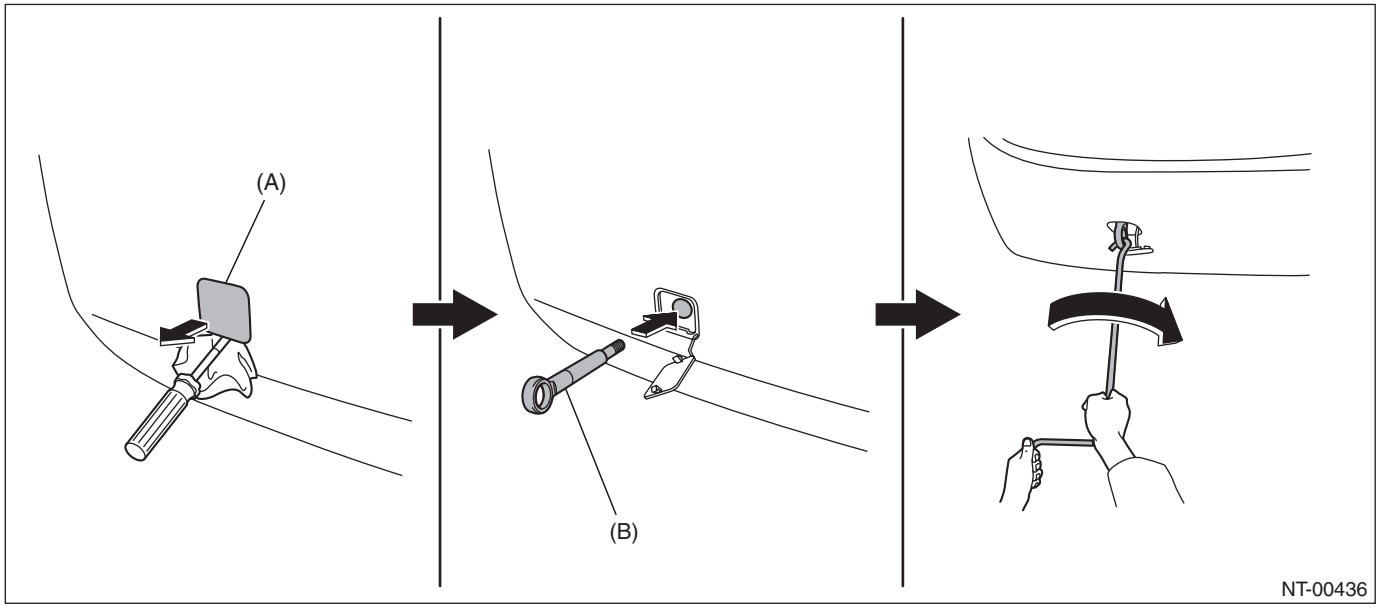

(A) Hook cover (B) Towing hook (eyebolt)

- Precautions

Towing	Precautions	MT	CVT
Lifting up four wheels (on a trailer) 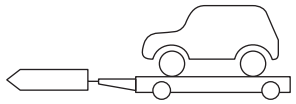 NT-00023	Towing the vehicle after lifting up all four wheels is a basic rule for AWD model.	○	○
Rope  NT-00024	• Check if both front and rear wheels are rotated normally. • CVT model driving conditions: Driving speed of 30 km/h (19 MPH) or less Allow driving distance 50 km (31 miles) or less	○	▲
Raising the front wheels 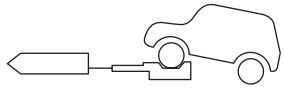 NT-00025	Prohibited for full-time AWD model.	×	×
Lifting up the front wheels 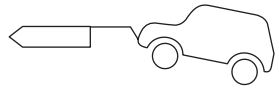 NT-00026	• Prohibited, due to damage on bumper, front grille, etc. • Do not raise the vehicle with bumper.	×	×

Marked ○: OK, Marked ×: Prohibited, Marked ▲: Conditionally OK

NOTE

CAUTION:
- **Place the shift lever in "N" position during towing.**
- **Do not lift up the rear wheels to avoid unsteady rotation.**
- **Turn the ignition key to "ACC", then check the steering wheel moves freely.**
- **Release the parking brake to avoid tire dragging.**
- **Since the power steering does not work, be careful for the heavy steering effort. (When engine is stopped)**
- **Since the servo brake does not work, be careful that the brake is not applied effectively. (When engine is stopped)**
- **In case of the malfunction of internal transmission or drive system, lift up four wheels (on a trailer) for towing.**
- **Do not use towing hook (eyebolt) except when towing.**
- **Make sure to detach the towing hook (eyebolt) after towing. If the hook remains attached, airbag may not operate properly when receiving a shock from front side. And it may also affect the crash performance of the vehicle.**
- **While being towed with all four wheels on the ground, turn the engine switch to ON but do not start the engine.**

13.CARRIER CAR

Before lowering the vehicle from the carrier car, perform the following operations.

CAUTION:
Always perform the following operations before lowering the vehicle from the carrier car. Otherwise, the power unit will rotate reversely, which may cause the damage to the engine, vacuum pump, and transmission.

1) Start the engine.
2) Set the transmission shift position into driving direction of the vehicle. (When the vehicle drives forward, do not set the transmission into R range. When the vehicle drives rearward, do not set the transmission into 1 — 5 speed, or D range.)

CAUTION:
Be sure to perform 2) mentioned above even if the engine cannot be started in some reasons.

14.FRONT HOOD STAY

1) Always attach the stay to the normal position when performing works such as inspections and general maintenance.

CAUTION:
- **During the inspection and general maintenance, always be sure to turn the ignition switch to OFF.**
- **At the inspection and general maintenance, do not detach the stay.**

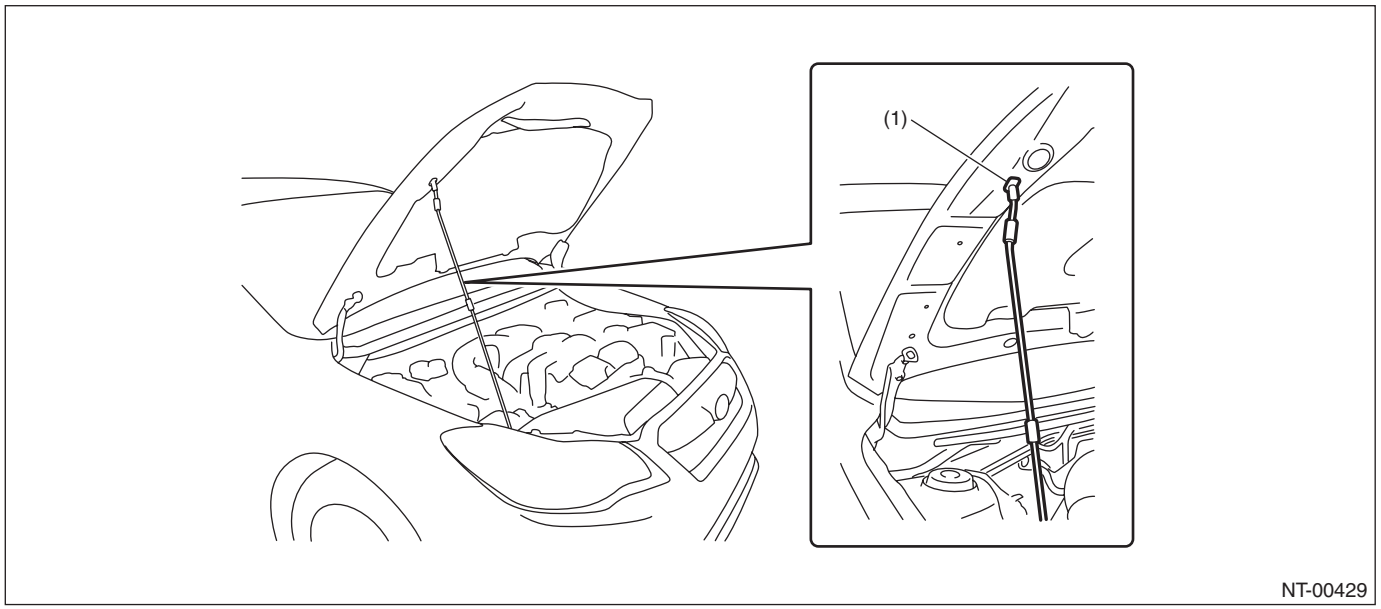

(1) Normal attached position

2) When wider front hood opening is necessary, set the stay to the lower position (hood hinge) as shown in the figure.

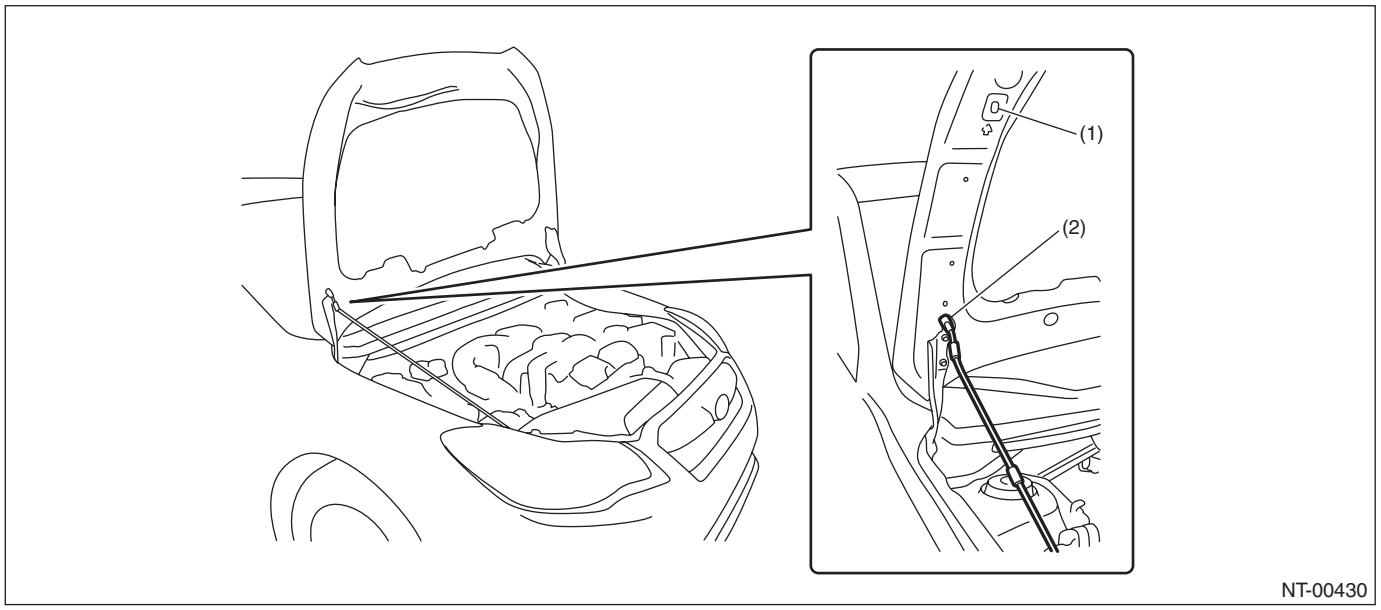

(1) Normal attached position (2) Installation position at full open

NOTE

15.GENERAL SCAN TOOL

Using general scan tools will greatly improve the efficiency of repairing engine electronic throttle controls. Subaru Select Monitor can be used to diagnose the engine, VDC, air conditioner and other parts.

16.AWD CIRCUIT MEASURES

1) Full-time AWD MT model
Since viscous coupling (limited slip differential) is used in the center differential, cut-off of AWD circuit cannot be carried out.
2) Full-time AWD CVT model
Since electronically controlled MP-T hydraulic multi-plate clutch is adapted for center differential, switch to FWD by using Subaru Select Monitor.

17.SPEEDOMETER TEST

1) Rear wheel free roller system

(1) Set the free roller on the floor of rear wheel side securely according to the wheel base and rear tread of the vehicle.

(2) Let the vehicle ride on the tester and free roller gently.

CAUTION:
Fix the vehicle using a pulling metal (chain or wire) to the front and rear towing hooks or tie-down hook to prevent the lateral runout of front wheels and springing out of vehicle.

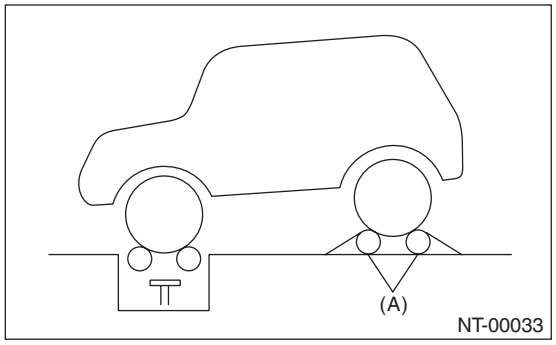

(A) Free roller

(3) Set the speedometer tester.

(4) Conduct the speedometer test work.

CAUTION:
Do not operate the clutch quickly and do not accelerate or decelerate suddenly during work.

2) Rear wheel jack-up system

(1) Set the vehicle on speedometer tester.

CAUTION:
Fix the vehicle using a pulling metal (chain or wire) to the front and rear towing hooks or tie-down hook to prevent the lateral runout of front wheels and springing out of vehicle.

(2) Jack up the rear wheels and set the rigid racks to the specified locations of side sill.

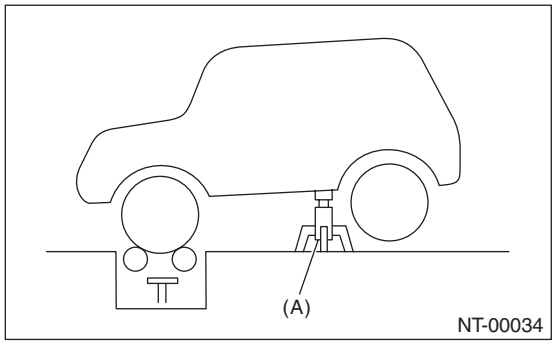

(A) Rigid rack

(3) Conduct the speedometer test work.

CAUTION:
Do not operate the clutch quickly and do not accelerate or decelerate suddenly during work.

18.BRAKE TEST

1) Full-time AWD MT model

(1) Perform this test after driving the vehicle 2 to 3 km (1.24 to 1.86 miles) on road in order to stabilize the viscous torque of viscous coupling.

(2) Keep the front or rear wheels on the ground for this test.

NOTE:
Effect of the viscous torque on braking force will be added approx. 25 kg compared with FWD model.

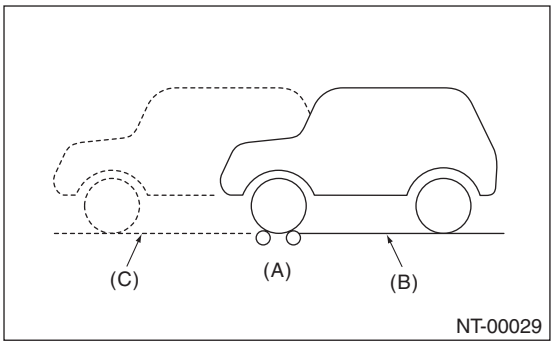

(A) Brake tester

(B) Position for measuring front wheel

(C) Position for measuring rear wheel

(3) When the brake dragging force is large.

• Check the dragging of brake pad or brake shoe.

• Since it may be affected by the viscosity of viscous coupling, jack up either of the front or rear two wheels to check the each wheel rotation condition with the viscous coupling affection removed.

2) Full-time AWD CVT model

(1) Keep the front or rear wheels on the ground during measurement.

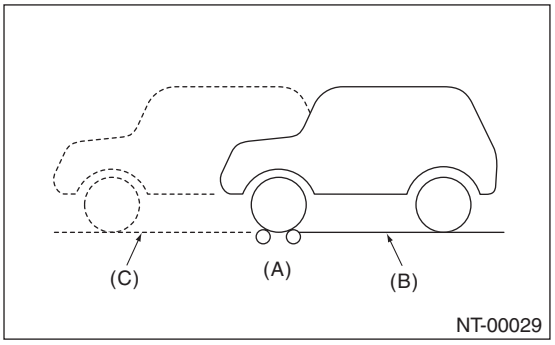

(A) Brake tester

(B) Position for measuring front wheel

(C) Position for measuring rear wheel

(2) When the brake dragging force is large.
• Check the dragging of brake pad or brake shoe.

Specifications:

	Braking force
Rear wheel total	10% or more of load on front or rear wheels
Difference between right and left wheels	8% or less of load on front or rear wheels
Grand total	50% or more of vehicle weight at the time of test

• When measurement is difficult to carry out because both of front wheels are locked, break force measurement in this condition conforms to standard grand total.

19.ON THE CAR WHEEL BALANCING

CAUTION:
• Carry out the procedures after measuring the balance of each single tire.
• Set the vehicle so that the front and rear wheels are the same height.
• Release the parking brake during measurement.
• Rotate each wheel by hands, and make sure it rotates without dragging.
• Do not operate the clutch quickly and do not accelerate or decelerate suddenly during work.
• When an error is indicated during engine drive, do not use the motor drive together.
1) Set the rigid rack to the specified locations of side sill, jack up the front or rear two wheels of non-measuring side and set the pickup stands to two wheels of measuring side.

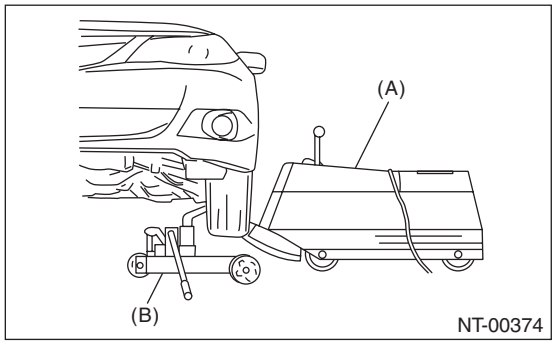

(A) Balancer body
(B) Pickup stand (left and right)

2) For drive wheel, drive the tires with engine for measurement.
3) For non-drive wheel, drive the tires from the on the car wheel balancer for measurement.

IDENTIFICATION

ID

Page
1. Identification 2

1. Identification

A: IDENTIFICATION

1. IDENTIFICATION NUMBER & LABEL LOCATIONS

The V.I.N. (Vehicle Identification Numbers) is used to classify the vehicle.

- **Positioning of the label for identification**

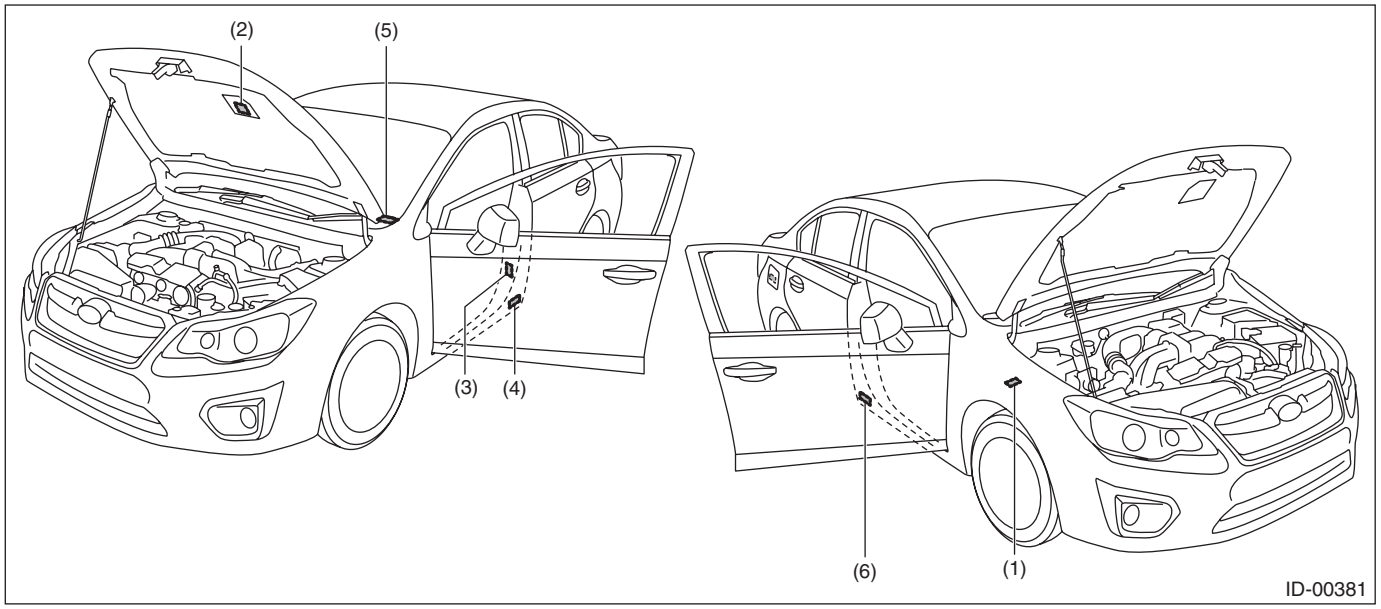

(1) Vehicle identification number (V.I.N.) (below the driver's floor carpet)
(2) Emission control label
(3) Tire inflation pressure label
(4) MVSS label
(5) Vehicle identification number (V.I.N.) plate
(6) Model number label

- **Engine**

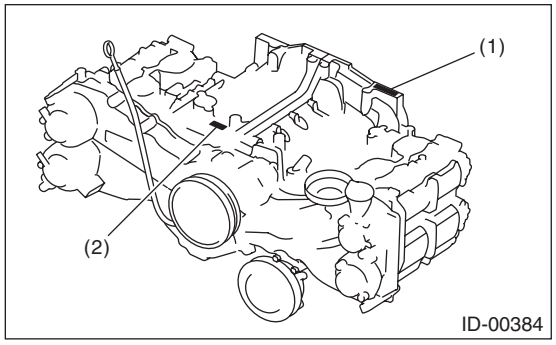

(1) Engine serial number
(2) Engine type (casting) cylinder block upper side

- **Manual transmission**

5MT

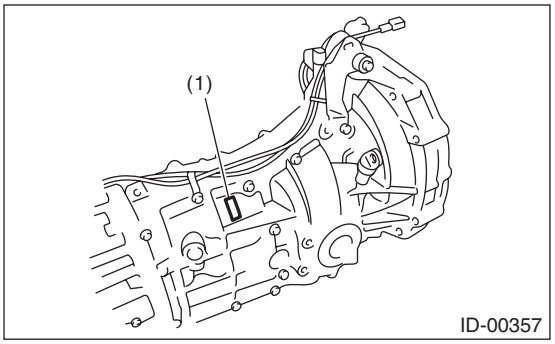

(1) MT type and transmission serial number

- **Automatic transmission**

CVT

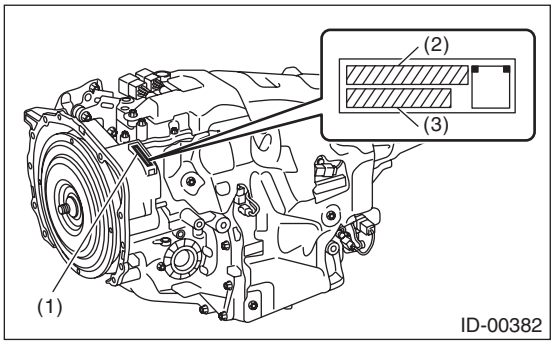

(1) Label
(2) CVT type label
(3) Transmission serial No. label

- **Rear differential**

T-type

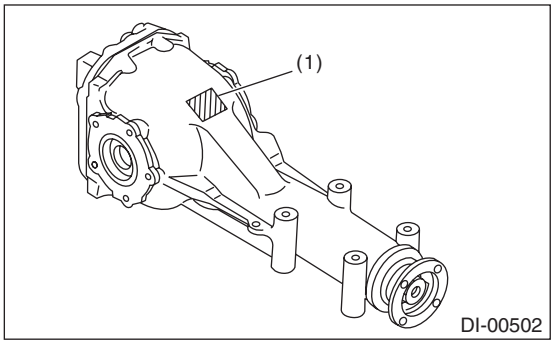

(1) Identification (white paint)

VA1-type

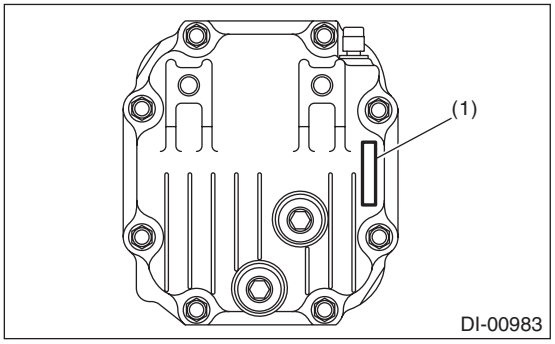

(1) Type (label)

- **MVSS label (except for XV model)**

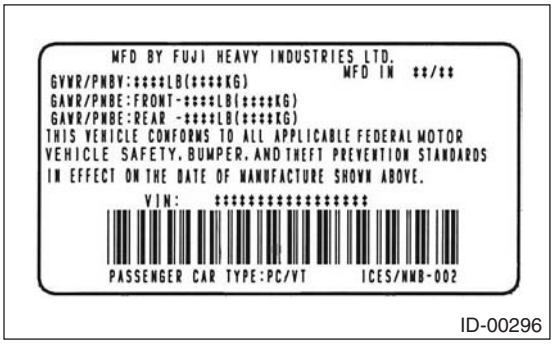

- **MVSS label (XV model)**



- **Model number label**

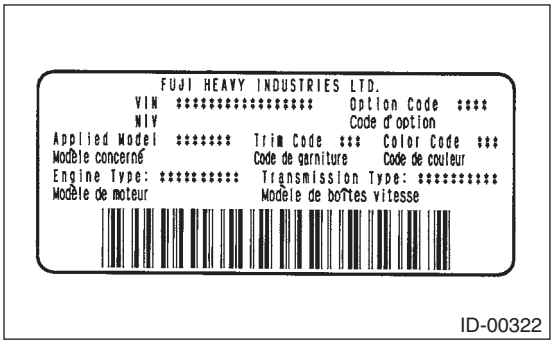

2. MEANING OF V.I.N.

The meaning of the V.I.N. is as follows:
]JF1GJAA6XEG002001[
The starting and ending brackets ( ] [ ) are stop marks.

Digits	Code	Meaning	Details
1 — 3	JF1	Manufacturer body area	JF1: Passenger car, FHI made (except for XV model) JF2: Passenger car, FHI made (XV model)
4	G	Car line	G: IMPREZA, XV
5	J	Body type	J: 4 door P: 5 door
6	A	Displacement	A: 2.0 L non-turbo B: 2.0L HEV
7	A	Grade	A: Base B: Premium C: Premium+AWP D: Premium Plus+S/R E: Premium Plus+NAVI F: Premium Plus+S/R+NAVI G: Limited H: Limited+S/R J: Limited+NAVI K: Limited+S/R+NAVI L: Sport M: Sport+S/R N: Sport+NAVI P: Sport+S/R+NAVI R: Sport-Limited S: Sport-Limited+S/R T: Sport-Limited+NAVI U: Sport-Limited+S/R+NAVI V: Premium+AWP+S/R W: Premium+AWP+NAVI Y: Premium+AWP+S/R+NAVI
8	6	Restraint	6: Manual belts, dual airbag, side airbag for seat back, curtain airbag for roof C: Manual belt, dual airbag, side airbag for seat back, curtain airbag for roof, class C (GVWR 4001 — 5000 lb) (XV model)
9	X	Check digit	0 — 9& X
10	E	Model year	E: 2014MY
11	G	Transmission type	G: Full-time AWD single range 5 speed MT (Yajima plant, Gunma) H: Full-time AWD CVT (Yajima plant, Gunma) 8: Full-time AWD CVT (main plant, Gunma) 9: Full-time AWD single range 5 speed MT (main plant, Gunma)
12 — 17	002001	Serial number	002001 — 199999: 4 door 200001 — 399999: 5 door

3. MODEL NUMBER LABEL

The model number label indicates: the applied model, the option code, the trim code, the engine type, the transmission type, and the exterior color code. This information is helpful when placing orders for parts.

GJ7CY4C

Digits	Code	Meaning	Details
1	G	Series	G: IMPREZA, XV
2	J	Body type	J: 4 door P: 5 door
3	7	Total engine displacement Drive system Suspension system	7: 2.0 L AWD E: 2.0L AWD HEV
4	C	Model year	C: 2014MY
5	Y	Destination	Y: U.S., Canada
6	4	Grade	4: 2.0 i 5: 2.0 i-Premium 6: 2.0 i-Premium+ 7: 2.0 i-Limited 8: Sport 9: Sport-Limited F: 2.0 i-Premium (XV) G: 2.0 i-Limited (XV)
7	C	Transmission, fuel feed system	C: MFI CVT F: MFI 5 speed MT

The engine and transmission type are as follows.

Engine

FB20BAZA4A

Digits	Code	Meaning	Details
1 and 2	FB	Engine type	FB: 4 cylinders
3 and 4	20	Displacement	20: 2.0 L
5	B	Fuel feed system	B: MFI non-turbo (DOHC) X: HEV
6	A	Exhaust regulations	A: For states not using California emission standards C: For states using California emission standards
7	Z	Intake/exhaust system	Z: Intake AVCS, exhaust AVCS, TGV, EGR
8	A	Mounted transmission	A: 5MT H: CVT
9 — 10	4A	Detailed specifications	Used when ordering parts. For details, refer to the parts catalog.

Transmission (MT)

TY758VD7AA

Digits	Code	Meaning	Details
1	T	Transmission	T: Transmission
2	Y	Transmission system	Y: Full-time AWD MT center differential
3 and 4	75	Distance between gear center	75: Between main shaft and drive pinion
5	8	Series	8: 5MT
6	V	Transmission specifications	V: Full-time AWD single range 5 speed MT with viscous coupling center differential
7	D	Mounted engine	D: 2.0 L DOHC non-turbo
8 — 10	7AA	Detailed specifications	Used when ordering parts. For details, refer to the parts catalog.

Transmission (CVT)

TR580GD7AA

Digits	Code	Meaning	Details
1	T	Transmission	T: Transmission
2	R	Transmission system	R: Full-time AWD H: HEV full-time AWD
3 and 4	58	Between pulley centers	58: Between pulley centers
5	0	Series	0: CVT A: MA1
6	G	Transmission specifications	D: With Auto Start Stop, with CVTF warmer, CVT without air-cooled cooler G: With CVTF warmer, CVT without air-cooled cooler
7	D	Engine type	D: 2.0 L DOHC
8 — 10	7AA	Detailed specifications	Used when ordering parts. For details, refer to the parts catalog.

Rear differential

Identification	Reduction gear ratio	LSD
XD	3.700	None
T2	4.111	None
TP	4.444	None

Option code

CP

- 1-digit number

	C	E	F	H	I	M	V	W	Y	1	2	3	5
Aluminum wheel	❍	❍	❍	❍	❍	—	❍	❍	❍	❍	❍	❍	❍
Auto A/C	❍	❍	❍	❍	❍	—	—	—	❍	❍	—	—	❍
Manual A/C	—	—	—	—	—	❍	❍	❍	—	—	❍	❍	—
Leather package	❍	❍	❍	❍	—	—	—	❍	❍	❍	❍	—	❍
Genuine leather seat	—	❍	❍	❍	—	—	—	—	❍	—	—	—	❍
High grade audio	❍	—	❍	—	❍	—	—	—	—	❍	❍	❍	—
Display audio	—	—	—	—	—	—	—	—	❍	—	—	—	❍
Navigation system	—	❍	—	❍	—	—	❍	❍	—	—	—	—	—
Keyless access with push button start	—	❍	❍	—	—	—	—	—	—	❍	—	—	❍

- 2-digit number

	A	B	C	E	P	R	S	U
Side airbag	❍	❍	❍	❍	❍	❍	❍	❍
Curtain airbag	❍	❍	❍	❍	❍	❍	❍	❍
HID headlight	—	—	—	—	—	❍	—	❍
Cold weather package	—	—	❍	❍	❍	❍	❍	❍
Privacy glass	❍	—	—	❍	—	—	❍	❍
Sunroof	—	—	—	—	❍	❍	❍	❍

RECOMMENDED MATERIALS

RM

Page
1. Recommended Materials 2

1. Recommended Materials

A: RECOMMENDED MATERIALS

1. GENERAL

To insure the best performance, always use the specified oil, gasoline, adhesive, sealant, etc. or a substitute of equivalent quality.

2. FUEL

• Use unleaded gasoline to reduce air pollution, because using leaded gasoline will damage the catalytic converter.
• Do not use the low quality gasoline, or improper fuel such as diesel fuel, fuel alcohol, or gasoline additive because they will adversely affect on engine components and fuel system components.
• Always use gasoline that is equivalent to that prescribed in the owner's manual or that of high octane value. There is the possibility of damaging or improper operation of the engine and fuel injection system if the specifications are not observed. Use the prescribed gasoline type to maintain proper vehicle performance.

3. LUBRICANTS

Use the lubricants shown in the table below, or equivalent. See the table below to choose the correct SAE viscosity.

Lubricant	Recommended materials	
	API standard	ILSAC standard
Engine oil Choose oil suitable for the standard from the right.	SN or SM grade "Resource conserving" or "Energy conserving" 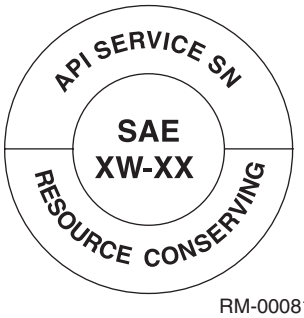 RM-00081 Those with the above API service labels	GF-5 or GF-4  RM-00002 Those with the above ILSAC certification mark (Starburst mark)
Front differential gear oil	GL-5	—
Rear differential gear oil	GL-5	—

SAE viscosity No. and applicable temperature
Engine oil

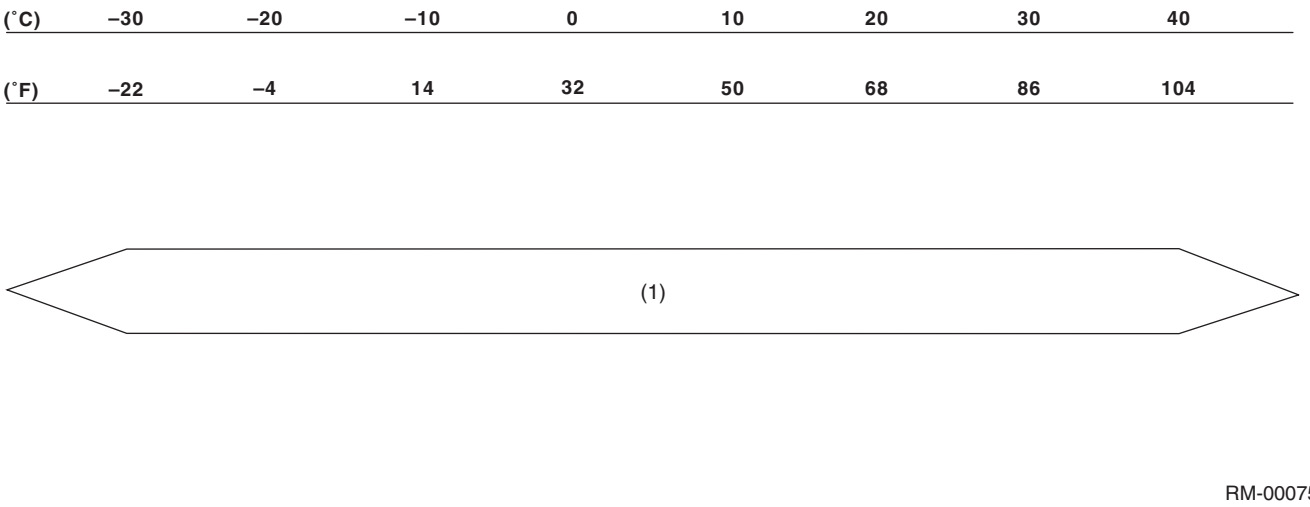

(1) 0W-20 (synthetic oil) Specified

Rear differential gear oil*1 and CVT front differential gear oil

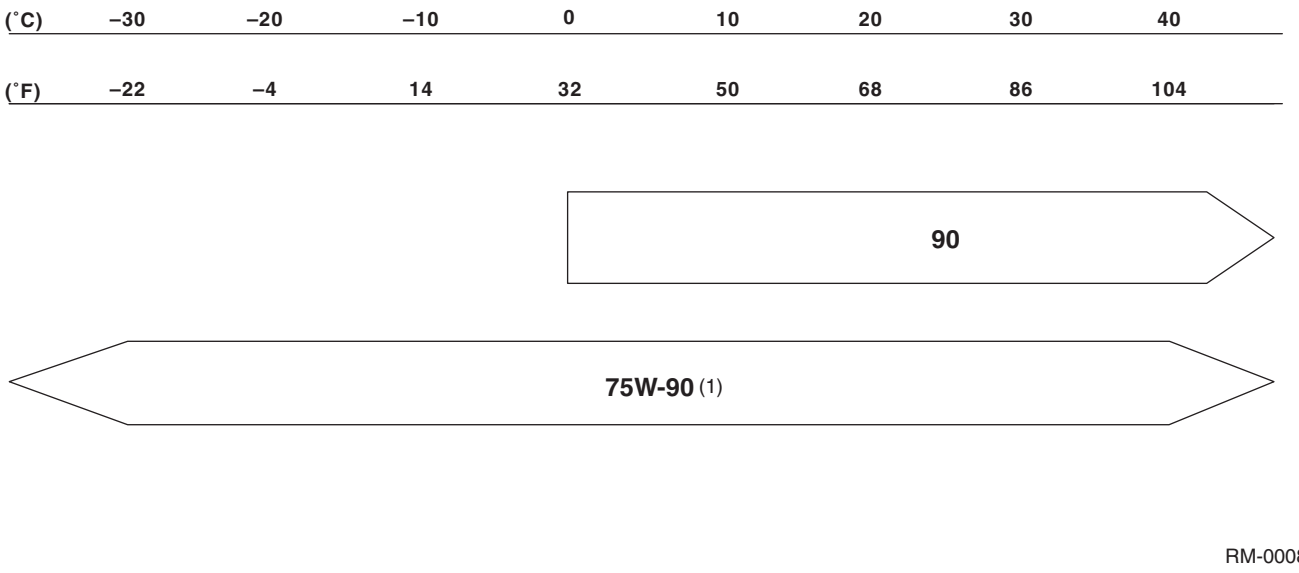

(1) Recommended materials

*1

CAUTION:
If an alternative rear differential gear oil is used, you may not have expected functionality and performance.

4. FLUID

Use the fluids specified in the table below. Do not mix two different kinds or makes of fluid.

CAUTION:
- **Always use the recommended CVTF for CVT. Using other fluid will cause malfunction.**
- **If an alternative transmission gear oil is used, you may not have expected functionality and performance.**

Fluid	Recommended materials	Item number	Alternative
Automatic transmission fluid	SUBARU CVT OIL FOR LINEARTRONIC	K0425Y0710	—
Transmission gear oil	SUBARU EXTRA MT	—	GL-5 (75W-90)
Brake fluid and clutch fluid	FMVSS No. 116 DOT3, or DOT4	—	—

5. ENGINE COOLANT

Use genuine engine coolant to protect the engine.

Engine coolant	Recommended materials	Item number	Alternative
Coolant	SUBARU SUPER COOLANT (Concentrated type)	—	—
	SUBARU SUPER COOLANT (Diluted type)	K0670Y0001	
Water for dilution	Distilled water	—	Soft water or tap water
Cooling system protective agent	Cooling system conditioner	SOA345001	—

6. REFRIGERANT

Standard air conditioners on Subaru vehicles use HFC134a refrigerant. Do not mix it with other refrigerants. Also, do not use any air compressor oil except for DH-PR.

Air conditioner	Recommended materials	Item number	Alternative
Refrigerant	HFC134a	—	—
Compressor oil	DH-PR	—	—

7. GREASE

Use grease and supplementary lubricants shown in the table below.

Grease	Application point	Recommended materials	Item number	Alternative
Supplementary lubricants	Oxygen sensor	Spray type lubricant	—	—
Grease	• MT main shaft (spline parts) • MT main shaft (oil seal lip) • Transfer driven gear (front roller bearing, rear roller bearing) • Clutch release lever • Clutch release bearing (inner circumference) • Clutch operating cylinder	NICHIMOLY N-130	—	—
	Clutch master cylinder push rod	SILICONE GREASE G-40M	—	—
	• Gear shift lever • Clutch pedal • Brake pedal	NIGTIGHT LYW No. 2	—	—
	Select lever	Multemp D	—	—
	• Door latch • Door striker	SILICONE GREASE G-30M	004404002	—
	Steering gearbox	Multemp AC-P	—	—
	Disc brake (lock pin, guide pin)	NIGLUBE RX-2	—	—
	Brake pad clip	Molykote 7439	—	—
	Between front brake pad and shim	Molykote AS-880N	—	—
	Between rear brake pad and shim	WAKO grease V160	—	—
	Brake shoe (parking brake)	Molykote 44MA	—	—
	Front axle AAR	One-Luber GKN-C	—	—
	Front axle AC	Olistamoly 2LN584/Lo	—	—
	Front axle PTJ	NKG302	—	—
	• Front axle EBJ • Rear axle BJ (XV) • Rear axle DOJ (XV) • Rear axle EBJ • Rear axle DOJ	NKG814	—	—
	Rear axle BJ	Raremax LF-G	—	—
	Rear axle DOJ	Raremax LF-G	—	—

8. ADHESIVE

Use the adhesives shown in the table below, or equivalent.

Adhesive	Application point	Recommended materials	Item number	Alternative
Adhesive	Windshield glass, rear quarter glass, rear window glass, rear gate glass and body	Dow Automotive's Adhesive: ESSEX U-400HV or equivalent Glass primer: U-401 and U-402 Painted surface primer: U-413	—	—

9. SEAL MATERIAL

Use the seal material shown in the table below, or equivalent.

Seal material	Application point	Recommended materials	Item number	Alternative
Seal material	• CVT extension case • CVT transmission case • CVT motor case (HEV model) • CVT drive pinion retainer • CVT oil pump chain cover • MT transmission case • MT transfer case	THREE BOND 1215	004403007	DOW CORNING No. 7038
	Transmission oil pan (CVT model)	THREE BOND 1217B	K0877YA020	—
	• Rear differential • Oil pressure switch • PCV valve	THREE BOND 1324	004403042	—
	• Rear differential • Service hole plug	THREE BOND 1105	004403010	DOW CORNING No. 7038
	Steering adjusting screw (electric power steering)	THREE BOND 1111B	—	—
	• Front sealing cover • Rear sealing cover	3M Butyl Tape 8626	—	—
	• Engine oil pan • Separator cover • Camshaft cap • Cylinder block • Rocker cover • Chain cover • Oil pan upper • Cylinder head • Camshaft carrier • Camshaft bearing cap	THREE BOND 1217G	K0877Y0100	—
	Rear differential	THREE BOND 1110F	—	THREE BOND 1110B

PRE-DELIVERY INSPECTION

PI

Page
1. Pre-delivery Inspection 2

1. Pre-delivery Inspection

A: GENERAL DESCRIPTION

The purposes of the pre-delivery inspection (PDI) are as follows.
- Remove the additional parts used for ensuring the vehicle quality during transportation.
- Check the vehicle or parts before delivery for any damage occurred during transportation or storage.
- Check that the vehicle after repair does not have any problems.
- Make sure to provide a complete vehicle to customer.

For above reasons, all SOAs (dealerships) must carry out the PDIs before delivery of vehicle.
Refer to this manual unless otherwise specified.

B: PRE-DELIVERY INSPECTION (PDI) PROCEDURE

Perform the procedures indicated in the table below.
Static checks just after vehicle receipt

Step	Check point
1. Appearance	1. If the vehicle is covered with protective coating, visually check the vehicle body for damage and dents. If the protective coating has been removed, visually check the painted body surfaces in detail for damage or rust. 2. Visually check the glass and light lenses for any damage, cracks or excessive gaps between body sheet metal. 3. Visually check the plated parts for any damage. 4. Check the instrument panel, console and trim for stains or dirt.
2. Tire	1. Check the tires for damage, defective, and dents on wheels. 2. Check the tire air pressure.
3. Fuse installation	If the vehicle is about to be delivered to customer, attach a back-up fuse.
4. Door lock/unlock and open/close operations	1. Using the key, check the door can be locked or unlocked normally. 2. Open and close all doors to check that there are no problems. 3. Operate the power door lock switch to check that all doors and the rear gate lock and unlock normally.
5. Child safety lock	Check the child safety lock system operates normally.
6. Trunk lid open/close operations	1. Operate the trunk lock release lever to check that the trunk lid opens normally. 2. Open and close the trunk lid to check that there are no problems.
7. Rear gate lock/unlock and open/close operation	1. Check if the rear gate can be unlocked normally through the emergency hole. 2. Open and close the rear gate to check that there are no problems. 3. Operate the power door lock switch to check that all doors and the rear gate lock and unlock normally.
8. Operation check of trunk lid release lever	Operate the trunk lid release lever to check that the trunk lock is unlocked normally.
9. Fuel lid opener lock release lever	Operate the fuel lid opener to check that the fuel filler lid can be unlocked normally.
10. Towing hook (eyebolt)	At factory shipment, the towing hook (eyebolt) is installed to the rear bumper. Remove the towing hook (eyebolt), store it in the holder.
11. Accessory	Check that the following accessories are equipped. • Owner's manual • Warranty booklet • Maintenance note • Spare key • Key No. plate • Jack • Tool set • Spare tire or puncture repair kit • Towing hook
12. Front hood lock release	Operate the front hood lock release lever to check that the front hood opens normally.

Step	Check point
13. Battery	Check the battery for any abnormal conditions such as rust or traces of battery fluid leaks. (Including 12 volt auxiliary battery and 12 volt engine restart battery)
14. High voltage battery air intake	Check that no dirt or fluid is adhered or mixed in.
15. Brake fluid	Check the brake fluid amount.
16. Engine oil	Check the engine oil amount.
17. Transmission gear oil	Check that the transmission gear oil level is normal.
18. CVT front differential oil	Check for leakage of CVT front differential oil.
19. Rear differential gear oil	Check for leakage of gear oil from the rear differential.
20. Engine coolant	Check the engine coolant level.
21. Clutch fluid	Check the clutch fluid amount.
22. Window washer fluid	Check the window washer fluid amount.
23. Front hood latch	Check that the front hood is closed normally and locked securely.
24. Keyless entry system	Check that the keyless entry system operates normally.
25. Keyless access	Check that the keyless access function operates normally.
26. Security system	Check that the security system operates normally.
27. Seat	1. Check the seat surfaces for stains or dirt. 2. Check the seat installation conditions and functionality.
28. Seat belt	Check the seat belt installation conditions and functionality.
29. TPMS (U.S. model)	1. Turn the TPMS transmitter power supply to ON. 2. If the display of TPMS warning light does not operate normally, perform the diagnosis by referring to TPMS (Diagnosis).

Checks with the engine running

Step	Check point
30. Grommet installation	Install the grommet on the rear seat to the tie-down hole. (When equipped)
31. Delivery (test) mode	Turn the ignition switch to ON and check that the malfunction indicator light starts blinking.
32. Immobilizer system	1. Check that the engine starts with all keys that are equipped on vehicle. 2. Check that the security indicator light operates normally.
33. Push button start	Using the access key that is equipped on vehicle, operate the push button start function to check engine start and stop operations.
34. Starting condition	Start the engine and check that the engine starts smoothly.
35. Exhaust system	Check that the exhaust noise is normal and no leaks are found.
36. Indicator and warning lights	Check that all indicator lights and warning lights are operating correctly.
37. Heater & ventilation	Check that the heater & ventilation system operates normally.
38. Air conditioner	Check that the air conditioner operates normally.
39. Multi-function display (MFD)	Check that the Multi-Function Display (MFD) function operates normally.
40. Audio	Check the radio and AUX operate normally.
41. Navigation	Check the navigation and AUX operate normally.
42. Front accessory power supply socket	Check that the front accessory power supply socket operates normally.
43. Lighting system	Check that the lighting system operates normally.
44. Illumination control	Check that the illumination control operates normally.
45. Window washer	Check that the window washer system operates normally.
46. Wiper	Check that the wiper system operates normally.
47. Wiper deicer	Check that the wiper deicer operates normally.
48. Power window	Check that the power window operates normally.
49. Sunroof	Check that the sunroof operates normally.
50. Rear defogger	Check that the rear defogger operates normally.
51. Door mirror	Check that the remote control mirror and heated mirror operate normally.
52. Diagnostic trouble code (DTC) check	Check that the diagnostic trouble code (DTC) is not detected.

Dynamic test with the vehicle running

Step	Check point
53. Brake test	Check the foot brake for normal operations.
54. Parking brake	Check the parking brake for normal operations.
55. Shift control	Check that the shift patterns are correct.
56. Cruise control	Check that the cruise control system operates normally.
57. Hybrid system	Check that the hybrid system operates normally.
58. EV mode lamp	Check that the EV mode lamp operates normally.

Checks after dynamic test

Step	Check point
59. Power steering system (electric power steering model)	Check the steering warning light operation.
60. Fluid leakage	Check for fluid/oil leaks.
61. Water leak test	Spray the vehicle with water and check for water leaks.
62. Appearance 2	1. Remove the protective coating (if equipped). 2. Check the body paints for damage and stain. 3. Check the plated parts for damage and rust.

1. APPEARANCE

• If the vehicle is covered with protective coating, visually check the vehicle body for damage and dents.
• When there is no protective coating, check the body paints for damage or stains in detail and repair as necessary.
• Check the window glass, door glass, and lights for any cracks or damage, and replace as necessary.
• Visually check the plated parts, such as the grilles and door knobs, for damage or loss of gloss and replace the parts as necessary.
• Check the instrument panel, console and trim for stains or dirt.

2. TIRE

• Check the tires for damage, defective, and dents on wheels.
• Check the tire size, spare tire and tire air pressure described on the tire air pressure label (driver's side).

3. FUSE INSTALLATION

Fuses for the back-up circuit on initially delivered vehicles are removed to prevent battery discharge. Attach the 20 A fuse as shown in the figure.

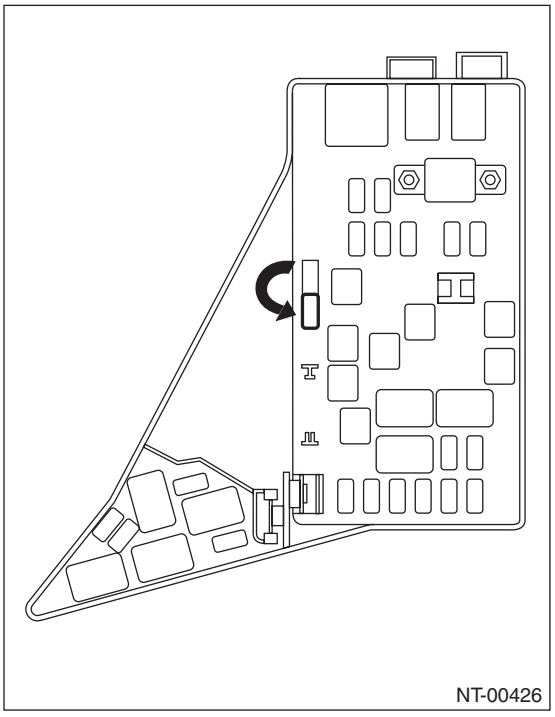

4. LOCK/UNLOCK AND OPEN/CLOSE OPERATION CHECKS OF DOORS

1) Using the key, lock and unlock the door several times to check for normal operation. Open and close the door several times for smooth movement.

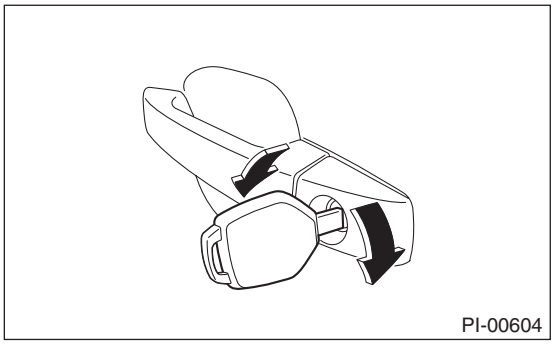

2) Completely close the driver's door, and then check the smooth movement with operating door lock knob from lock to unlock several times. Set the door lock knob (A) to lock position. Then pull the inner remote (B) to ensure that doors will not open.
For other doors, place the door lock knob (A) to lock position and then pull the inner remote (B) to ensure that doors will not open.

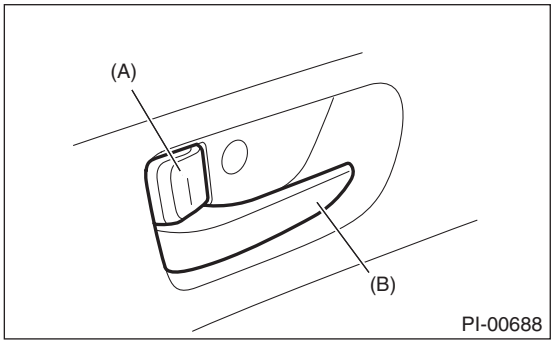

(A) Door lock knob
(B) Inner remote

3) Close all the doors, and then press the lock on power door lock switch at driver's side. Check that all doors (including the rear gate) lock.

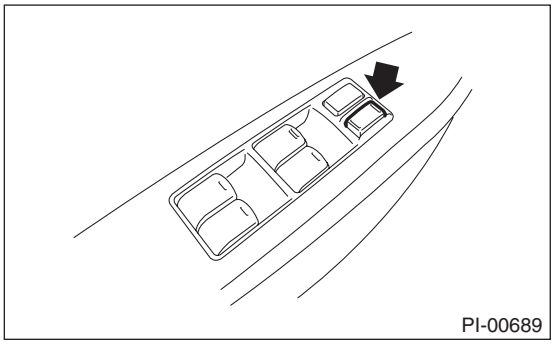

4) Press the driver's side power door lock switch to unlock side. Check that all doors including rear gate are unlocked.

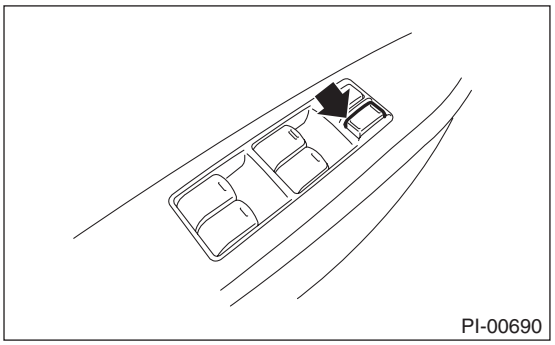

5) Check that the passenger's power door lock switch locks and unlocks normally in the same manner.

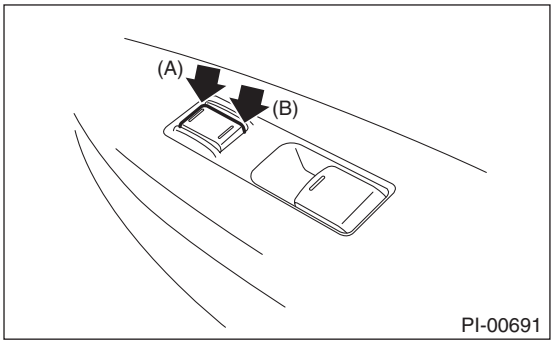

(A) Lock
(B) Unlock

6) Insert the key to ignition switch, and open the driver's side door. Press lock on power door lock. Check that the door is not locked.

5. CHILD SAFETY LOCK

1) Set the child safety lock lever on both rear doors to the lock position.
2) Close the rear doors completely.
3) Check that the lock levers of the rear doors are in the unlock position. Then, pull inner remote of rear doors to ensure that doors will not open.
4) Pull the outer handles to ensure that doors will open.

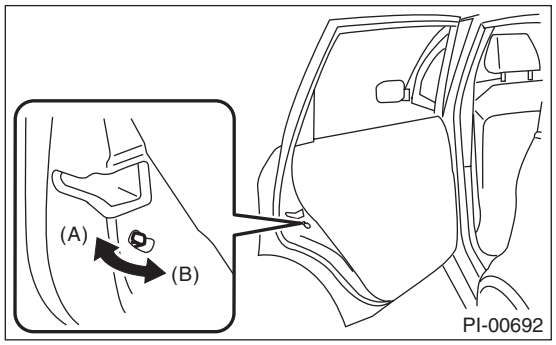

(A) Unlock
(B) Lock

6. TRUNK LID OPEN/CLOSE OPERATIONS

1) Operate the trunk lock release lever to check that the trunk lid opens.
2) Open and close the trunk lid several times for smooth movement.

7. REAR GATE LOCK/UNLOCK AND OPEN/CLOSE OPERATIONS

1) Open and close the rear gate several times for smooth movement.
2) Operate the rear gate emergency release lever to check that the rear gate can be locked and unlocked properly.
(1) Remove the cover inside the rear gate.

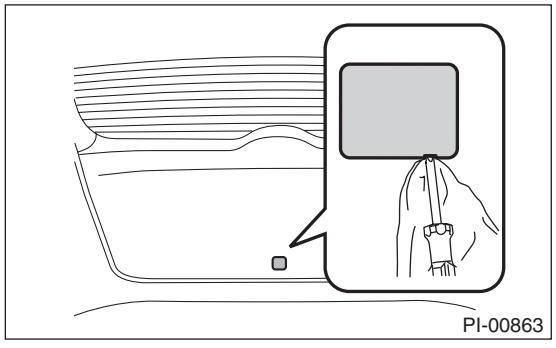

(2) Operate the lever using a tool such as a screwdriver to check that the rear gate is unlocked normally.

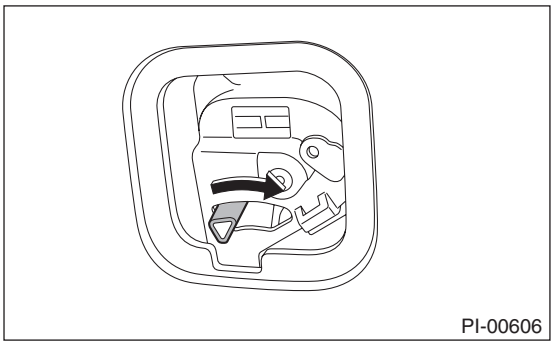

8. OPERATION CHECK OF TRUNK LID RELEASE HANDLE

CAUTION:
Do not check the trunk lid release handle when in the trunk. If the trunk lid release handle is defective, you may be trapped in.
1) Use a flat tip screwdriver. Slide the screwdriver blade from the slit aperture of the lock assembly fully to the end until you hear a click. This places the latch in the locked position.

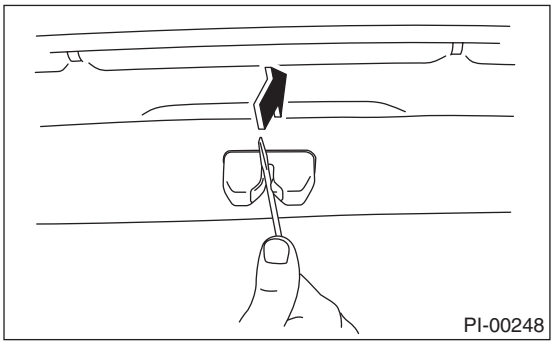

2) Make sure the latch is released by pulling the yellow trunk lid release handle in the direction of arrow.

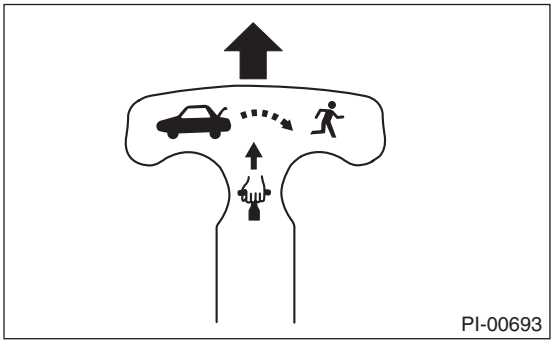

9. FUEL LID OPENER LOCK RELEASE LEVER

Operate the fuel lid lock release lever to check that the fuel lid is unlocked normally. Check that the filler cap is securely closed.

10.TOWING HOOK (EYEBOLT)

NOTE:
At factory shipment, the towing hook (eyebolt) is installed to the rear bumper for securing the vehicle during transportation. Follow the procedure below to store it to the holder in the spare tire or sub-trunk.
1) Remove the towing hook (eyebolt) from the rear bumper.

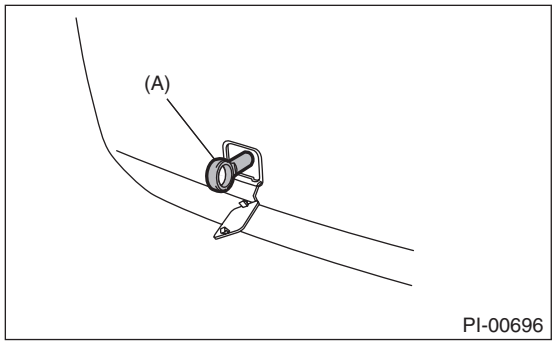

(A) Towing hook (eyebolt)

2) Store the towing hook (eyebolt) to the holder in the spare tire or sub-trunk.
Gasoline engine model

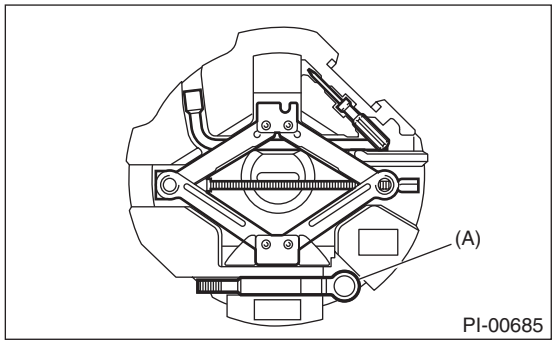

(A) Towing hook (eyebolt)

HEV model

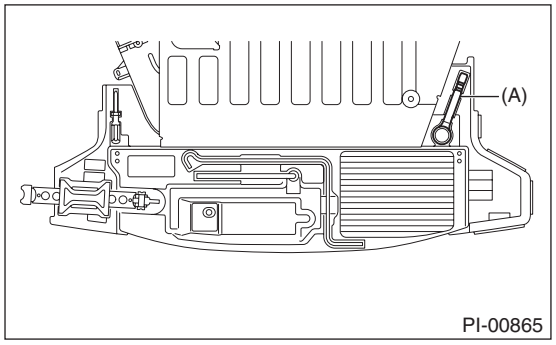

(A) Towing hook (eyebolt)

3) Install the supplied rear hook cover to rear bumper.

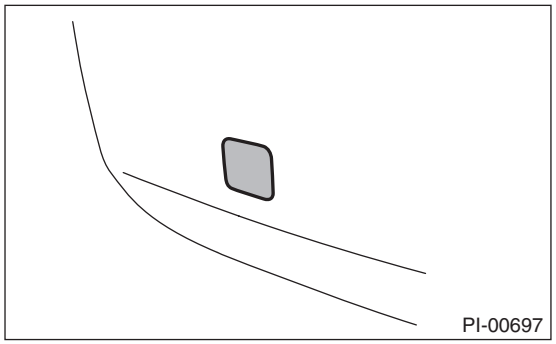

11.ACCESSORY

Check that the following accessories are provided.

- Owner's manual
- Warranty booklet
- Maintenance note
- Spare key
- Key No. plate
- Jack
- Tool set
- Spare tire or puncture repair kit
- Towing hook (eyebolt)

4 door

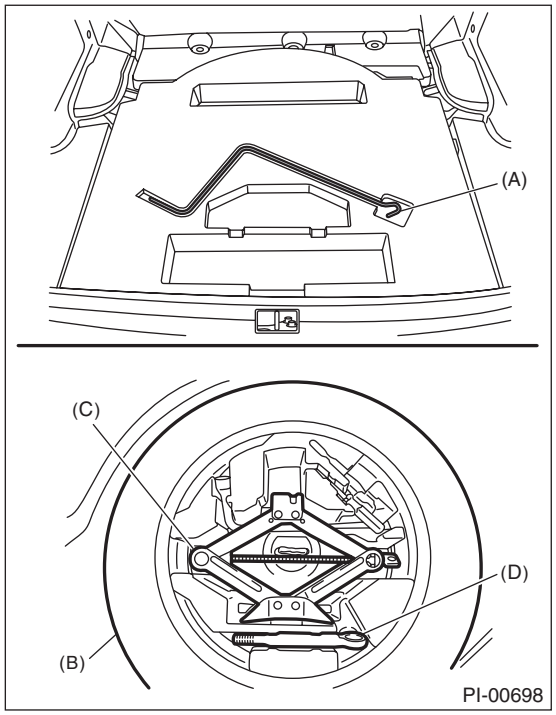

(A) Jack handle
(B) Spare tire
(C) Jack
(D) Towing hook (eyebolt)

5 door

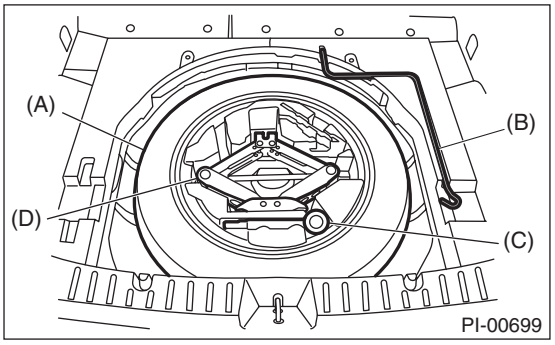

(A) Spare tire
(B) Jack handle
(C) Towing hook (eyebolt)
(D) Jack

5 door (HEV)

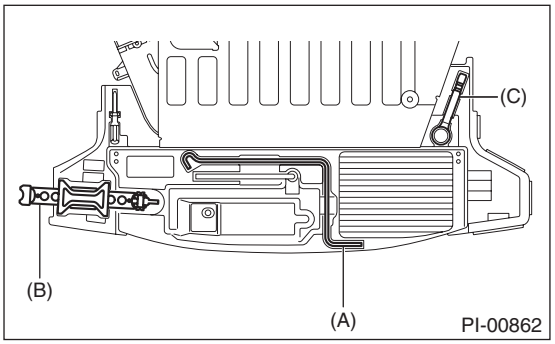

(A) Jack handle
(B) Jack
(C) Towing hook (eyebolt)

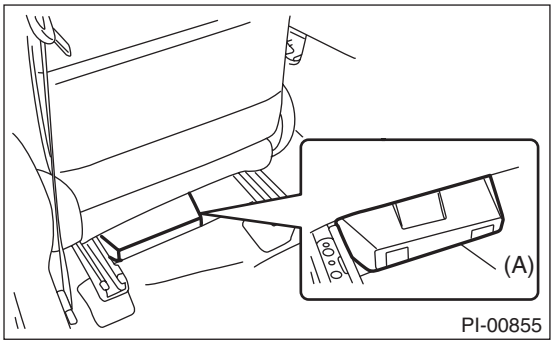

(A) Puncture repair kit (beneath driver's seat)

12.FRONT HOOD LOCK RELEASE

Operate the front hood release lever to check that the front hood is unlocked normally.

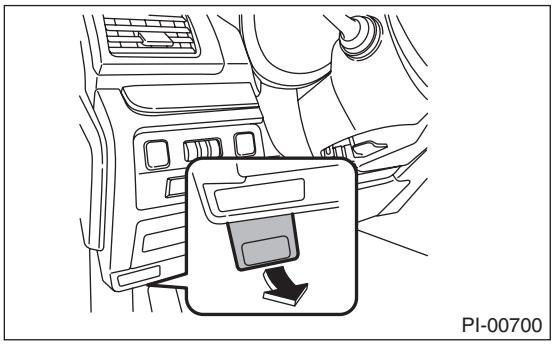

Operate the lever (A) and check that the front hood is opened normally.

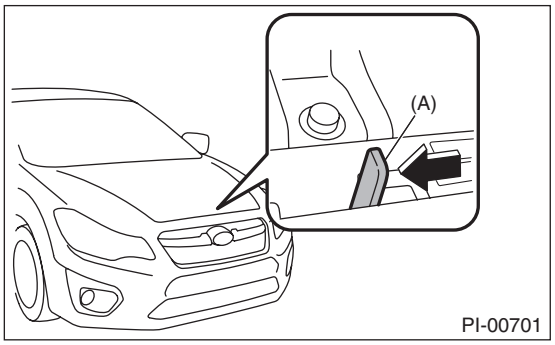

13.BATTERY

Check the battery terminals to make sure that there are no rust or corrosions due to fluid leaks. Check that the battery caps are securely tightened. (Including 12 volt auxiliary battery and 12 volt engine restart battery)

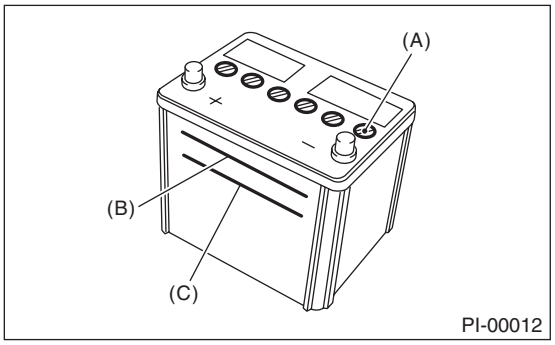

(A) Cap
(B) Upper level
(C) Lower level

14.HIGH VOLTAGE BATTERY AIR INTAKE

Check that the opening is not contaminated or blocked.

15.BRAKE FLUID

Check the brake fluid amount. If the amount is insufficient, carry out a brake line test to identify brake fluid leaks and check the brake operation. After that, refill the brake fluid tank with the specified type of fluid.

CAUTION:
If the brake fluid is spilt over exhaust pipe, wipe it off with cloth to avoid emitting smoke or causing a fire.

16.ENGINE OIL

1) Park the vehicle on a level surface.
2) Remove the oil level gauge and wipe away the oil.
3) Reinsert the oil level gauge all the way. Be sure that the oil level gauge is correctly inserted and properly orientated.
4) Pull out the oil level gauge again, and check both sides of the oil level gauge. Use a lower side to determine the engine oil level. If the engine oil level is below “L” line, add oil to bring the level up to “F” line.
5) Start the engine, and spread the oil in engine room.

6) After turning off the engine, wait a few minutes for the oil to return to the oil pan before checking the oil level.

NOTE:
To prevent overfilling of engine oil, do not add oil above “F” line when the engine is cold.

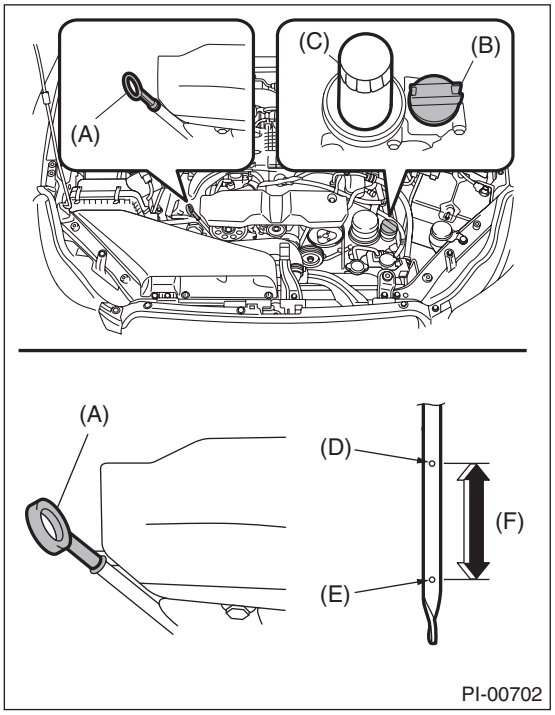

(A) Engine oil level gauge
(B) Engine oil filler cap
(C) Engine oil filter
(D) “F” line
(E) “L” line
(F) Approx. 1 L (1.1 US qt, 0.9 Imp qt)

17.TRANSMISSION GEAR OIL

Check the transmission gear oil amount. If the amount of gear oil is insufficient, check for leaks. Then, add the necessary amount of the specified gear oil. Refer to “5MT” section for transmission gear oil inspection. <Ref. to 5MT-22, INSPECTION, Transmission Gear Oil.>

18.CVT FRONT DIFFERENTIAL OIL

Check for leakage of CVT front differential gear oil.

CAUTION:
If gear oil is spilt over the exhaust pipe, wipe it off with a cloth to avoid emitting smoke or causing a fire.

19.REAR DIFFERENTIAL GEAR OIL

Check for leakage of gear oil from the rear differential.

CAUTION:
If the rear differential gear oil is spilt over exhaust pipe, wipe it off with cloth to avoid emitting smoke or causing a fire.

20.ENGINE COOLANT

Check the coolant amount on the reservoir. If the amount of engine coolant is insufficient, check that no leaks are found. Then, add the necessary amount of coolant with the specified concentration.

CAUTION:
If the coolant is spilt over exhaust pipe, wipe it off with cloth to avoid emitting smoke or causing a fire.

21.CLUTCH FLUID

Check the clutch fluid amount. If the amount of fluid is insufficient, check that no leaks are found. Then, add the necessary amount of specified fluid.

CAUTION:
If any clutch fluid is spilt on the exhaust pipe, wipe it off with a cloth to avoid emitting smoke or causing a fire.

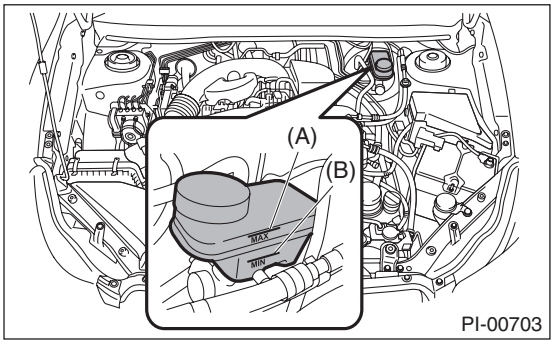

(A) MAX. level
(B) MIN. level

22.WINDOW WASHER FLUID

Check the window washer fluid amount. If the amount of washer fluid is insufficient, check that no leaks are found. Then, add the necessary amount of washer fluid.

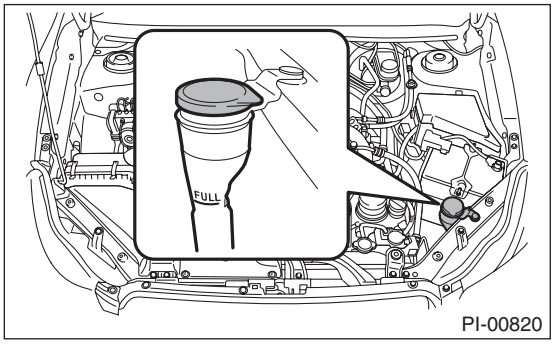

PI-00820

23.FRONT HOOD LATCH

Close the front hood. Check that the front hood is completely latched.

24.KEYLESS ENTRY SYSTEM

Check the keyless entry system operations as follows:

- Fully open all the door windows.
- Remove the key from the ignition switch and close all the doors including rear gate.
- Press the “LOCK/ARM” button momentarily on the keyless transmitter. Check that all the doors become locked, the buzzer sounds once, and the hazard lights flash once.

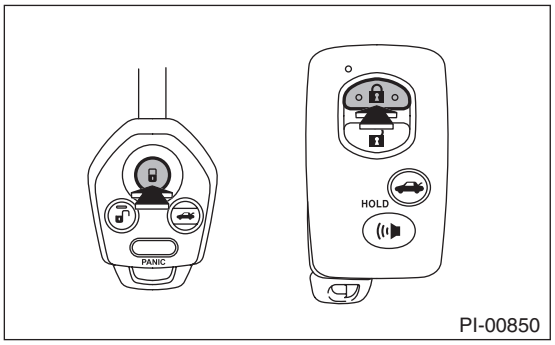

PI-00850

- Press the “UNLOCK/DISARM” button momentarily on the keyless transmitter. Check that the driver’s door is unlocked, the buzzer sounds twice, and the hazard lights flash twice.

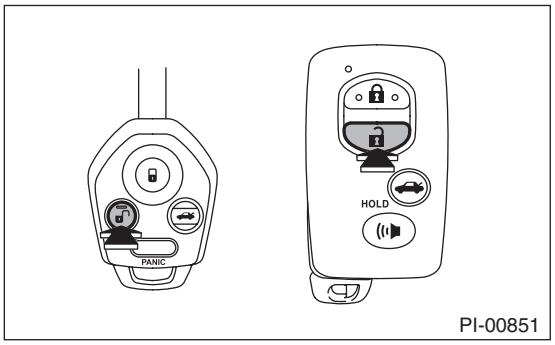

PI-00851

- Within 5 seconds, press the “UNLOCK/DISARM” button momentarily on the keyless transmitter. Check that all doors (including rear gate) are unlocked, the buzzer sounds twice, and the hazard lights flash twice.
- Lock all the doors including rear gate. Check that the buzzer sounds twice, and the hazard lights flash twice, when the rear gate unlock button is pressed to unlock the rear gate. Press the release button and check that the rear gate opens. (Wagon model)
- Check that the buzzer sounds twice, and the hazard lights flash twice, when the trunk lid unlock button is held down to unlock the trunk lid. (Sedan model)

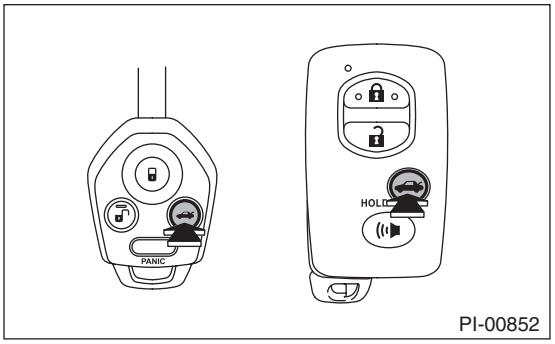

PI-00852

- Press the “PANIC” button of the keyless transmitter. Check that the panic mode (the horn keeps sounding) is initiated. Also, check that this condition continues for 30 seconds or until when any of the buttons on the keyless transmitter are pressed.

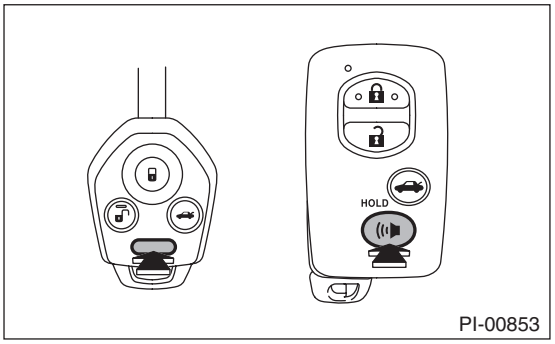

PI-00853

- Press the “LOCK/ARM” button momentarily on the keyless transmitter with one of the doors (including the rear gate) opened. Check that the buzzer sounds 5 times, and the hazard light flashes 5 times to notify the door not being fully closed. Next, close all the doors including rear gate. Check if all doors are locked and buzzer sounds once and the hazard light flashes once.

• With one of the doors open (including the rear gate), press the “LOCK” side of the power door lock switch. Next, close all the doors including rear gate. Check if all doors are locked and buzzer sounds once and the hazard light flashes once.

• Driver’s side

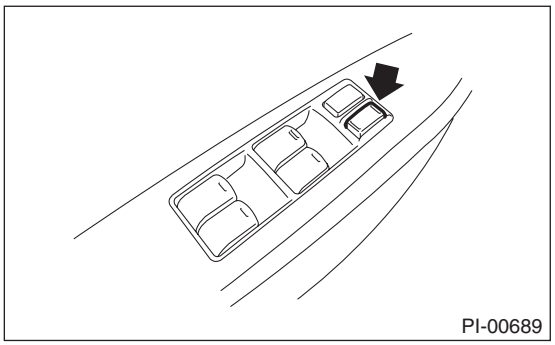
PI-00689

• Passenger’s side

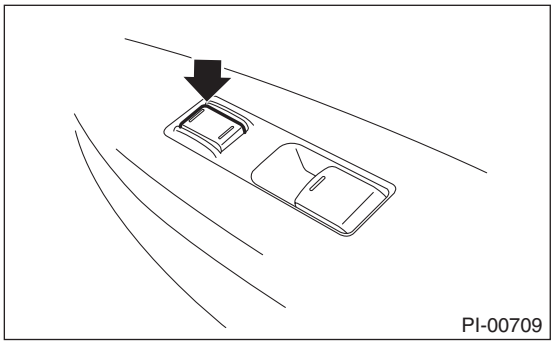
PI-00709

Alarm sound operational check

• The system uses the buzzer and sounds the alarm when the door is locked or unlocked. The alarm sound can be turned OFF. To turn the alarm sound from ON to OFF, close all doors, (with the key not inserted in the key cylinder), hold down the “UNLOCK” side of the power door lock switch and insert the key in the key cylinder. Within 10 seconds, insert and take out the key for 5 times or more, and within 10 seconds after that, open and close the driver’s door. With the door closed, the hazard light will flash 3 times, indicating that the alarm sound has been turned OFF. To turn the alarm sound from OFF to ON, perform this procedure again. The hazard light will flash 3 times, indicating that the alarm has been turned ON.

25.KEYLESS ACCESS FUNCTION

CAUTION:

• Make sure to separate the access keys individually for the inspection.

• Do not leave the separated access keys inside the vehicle.

NOTE:

The following inspections are for the initial setting. When the setting is changed from initial setting, use the Subaru Select Monitor to review each setting and perform inspection. <Ref. to BC(diag)-11, OPERATION, Read Current Data.>

• Check that the room light illuminates, when a person carrying the access key approaches the front door handle of vehicle with all doors locked.

• Check that all doors and rear gate lock and the hazard light blinks, when a person carrying the access key touches the touch sensor (lock) on front door, or presses the rear lock button on rear gate.

NOTE:

• On unlocking, the hazard light blinks twice.

• On locking, the hazard light blinks once.

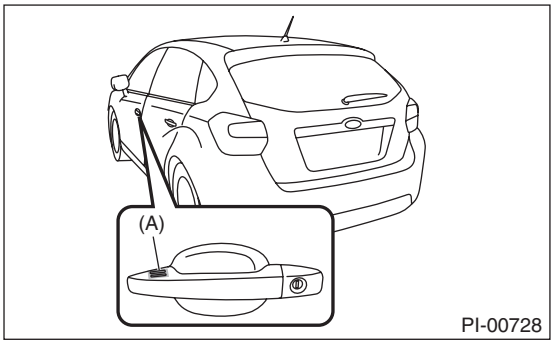

PI-00728

(A) Touch sensor (lock)

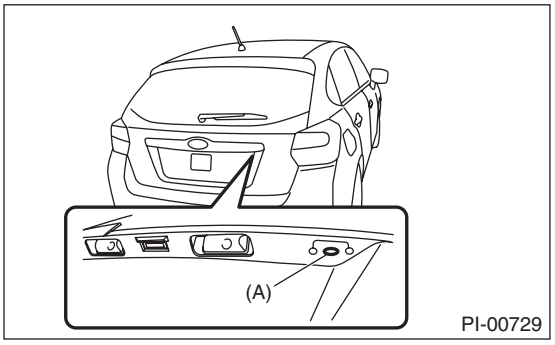

PI-00729

(A) Rear lock button

• Check that the trunk unlocks and the hazard light blinks twice, when a person carrying the access key presses the trunk opener button on trunk.

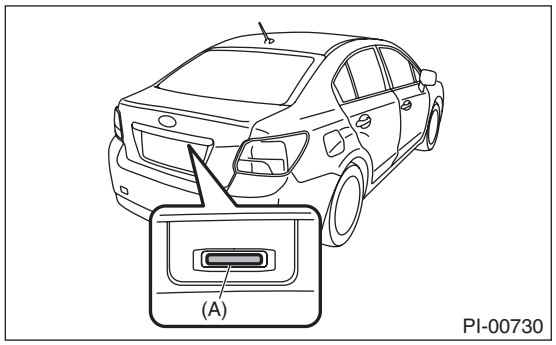

(A) Trunk opener button

• With all doors and rear gate closed, check that all doors and rear gate are automatically locked in 30 seconds after a person carrying the access key holds the front door knob to unlock the doors (by touching the touch sensor (unlock)).
• Operate the access key buttons manually to check that the doors and rear gate lock and unlock normally, and the hazard light blinks.
• Using the mechanical key attached to the access key, check lock and unlock operations.

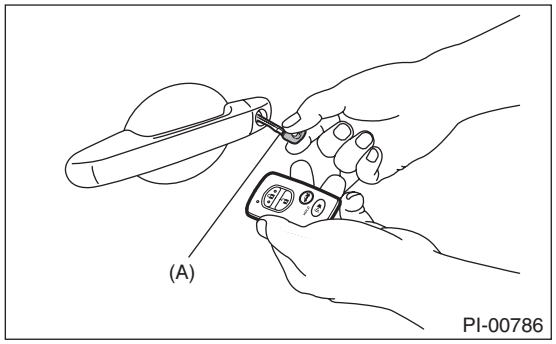

(A) Mechanical key

• Check that the warning buzzer sounds and the door-lock does not operate, when the access key is left in the vehicle and the touch sensor (lock) on door is touched, or the rear lock button on rear gate is pressed.

CAUTION:
The mechanical key must be carried separately from the access key.
• While the access key is left in trunk, check that the warning buzzer sounds when the trunk is closed, and that the trunk unlocks when the trunk opener button on trunk is pressed.

26.SECURITY SYSTEM

• Models without keyless access function

NOTE:
The following inspections are for the initial setting. When the setting is changed from initial setting, use the Subaru Select Monitor to review each setting and perform inspection. <Ref. to BC(diag)-17, OPERATION, Registration Body Integrated Unit.>
1) Fully open all the door windows.
2) Remove the key from the ignition switch and close all the doors including rear gate.
3) Press the “LOCK” button momentarily on the keyless transmitter. All doors are locked, and the security indicator light blinks rapidly for 30 seconds, then slowly twice repeatedly, indicating that the theft alarm is activated.

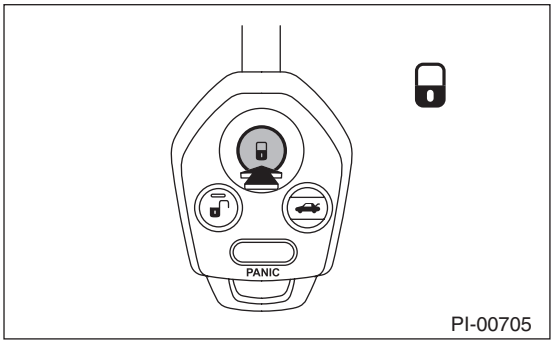

4) Press the “UNLOCK” button momentarily on the keyless transmitter. The driver’s door is unlocked, and the security indicator light blinks, indicating that the theft alarm is deactivated.

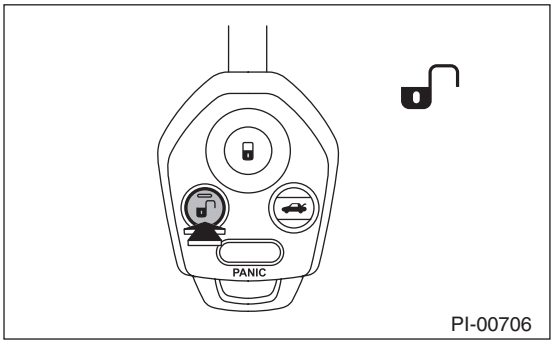

5) Press the “LOCK” button once on the keyless transmitter, while one of all doors (including rear gate) is open. Check that the buzzer sounds 5 times to notify the door not being fully closed. The doors are locked when all doors (including rear gate) are closed, and the security indicator light blinks rapidly for 30 seconds, then slowly twice repeatedly, indicating that the theft alarm is activated.
6) Press the “UNLOCK” button momentarily on the keyless transmitter. The driver’s door is unlocked, and the security indicator light blinks, indicating that the theft alarm is deactivated.

7) Press the “LOCK” side of the power door lock switch, while one of all doors (including rear gate) is open. The doors are locked when all doors (including rear gate) are closed, and the security indicator light blinks rapidly for 30 seconds, then slowly twice repeatedly, indicating that the theft alarm is activated.

- Driver’s side

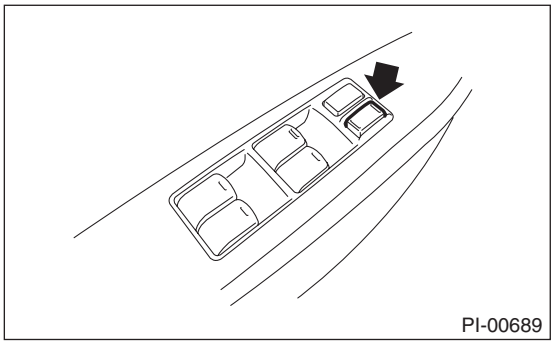
PI-00689

- Passenger’s side

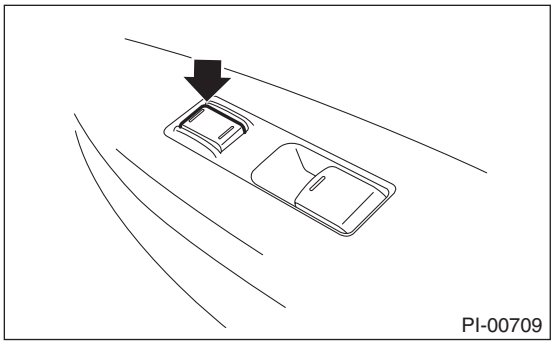
PI-00709

8) Unlock the door using the inner lock knob or the key, and open the door while the security system is activated. Check that the alarm condition (horn sounds continuously, hazard light blinks, and security indicator light illuminates) is initiated. Check that this condition continues until any of the buttons on the keyless transmitter is pressed, or the key is inserted to the ignition switch and turned to IGN ON.

NOTE:
While the door is open, the alarm condition continues for three minutes.

9) On models equipped with an impact sensor, hit the windshield glass with your hand with the theft alarm in the monitoring condition, to check that the alarm condition occurs.

10) When none of above is applicable, perform troubleshooting for the security system.

- **Models with keyless access function**

NOTE:
The following inspections are for the initial setting. When the setting is changed from initial setting, use the Subaru Select Monitor to review each setting and perform inspection. <Ref. to BC(diag)-17, OPERATION, Registration Body Integrated Unit.>

1) Fully open all the door windows.
2) Close all doors and rear gate.
3) Press the “LOCK” button momentarily on the access key. All doors are locked, and the security indicator light blinks rapidly for 30 seconds, then slowly twice repeatedly, indicating that the theft alarm is activated.

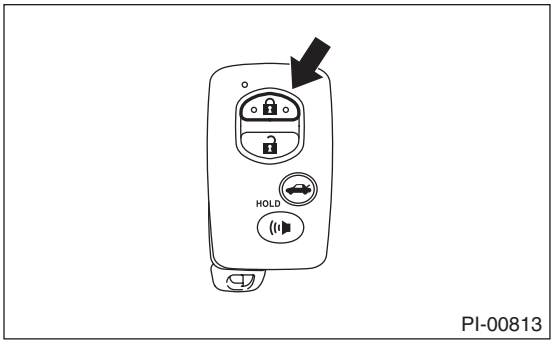

PI-00813

4) Press the “UNLOCK” button momentarily on the access key. The driver’s door is unlocked, and the security indicator light blinks, indicating that the theft alarm is deactivated.

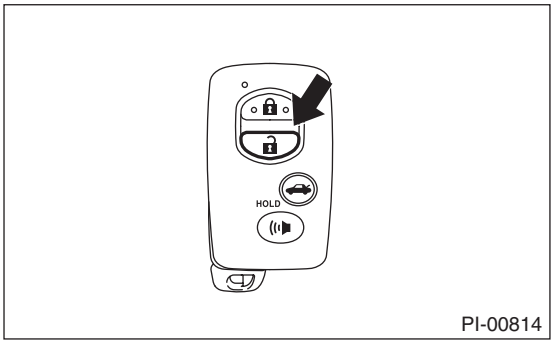

PI-00814

5) Press the “LOCK” button once on the access key while one of all doors (including rear gate) is open. Check that the buzzer sounds 5 times to notify the door not being fully closed. The doors are locked when all doors (including rear gate) are closed, and the security indicator light blinks rapidly for 30 seconds, then slowly twice repeatedly, indicating that the theft alarm is activated.

6) Press the “UNLOCK” button momentarily on the access key. The driver’s door is unlocked, and the security indicator light blinks, indicating that the theft alarm is deactivated.

7) Press the “LOCK” side of the power door lock switch, while one of all doors (including rear gate) is open. The doors are locked when all doors (including rear gate) are closed, and the security indicator light blinks rapidly for 30 seconds, then slowly twice repeatedly, indicating that the theft alarm is activated.

- Driver’s side

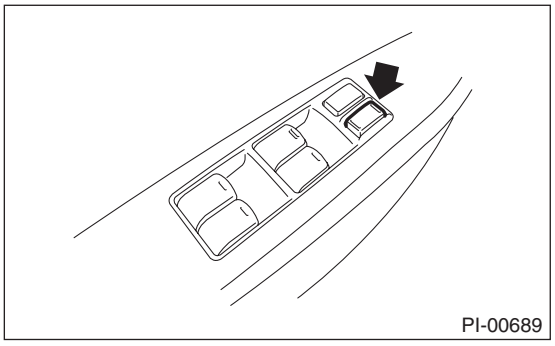

- Passenger’s side

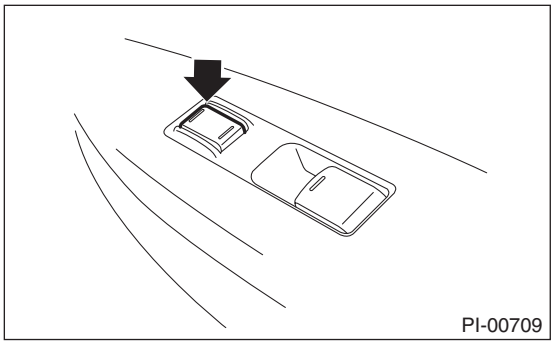

8) Unlock the door using the mechanical key, and open the door while the security system is activated. Check that the alarm condition (horn sounds continuously, hazard light blinks, and security indicator light illuminates) is initiated. Check that this condition continues until any of the buttons on the access key is pressed, or the key is turned to ACC.

NOTE:
While the door is open, the alarm condition continues for three minutes.

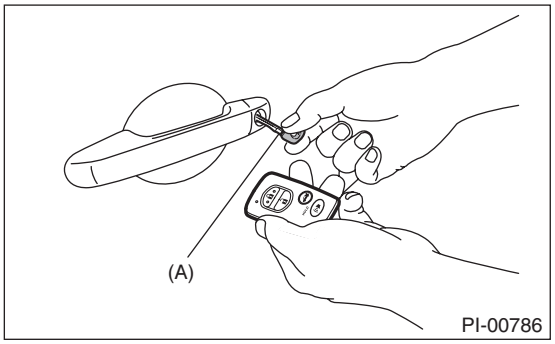

(A) Mechanical key

9) On models equipped with an impact sensor, hit the windshield glass with your hand with the theft alarm in the monitoring condition, to check that the alarm condition occurs.
10) When none of above is applicable, perform troubleshooting for the security system.

27.SEAT

1) Check that each seat provides full functionality in sliding, lifting and reclining. Check all available functions of the rear seat such as armrest and backrest tilt knob. Check that the tag of the rear center headrest can be viewed.
2) Check the passenger’s seat occupant detection system.
(1) Empty the passenger’s seat and turn the ignition switch to ON.
(2) Check that the passenger airbag ON/OFF indicator lights both turn on simultaneously for approximately six seconds, and after turning off for two seconds, only the OFF light illuminates.

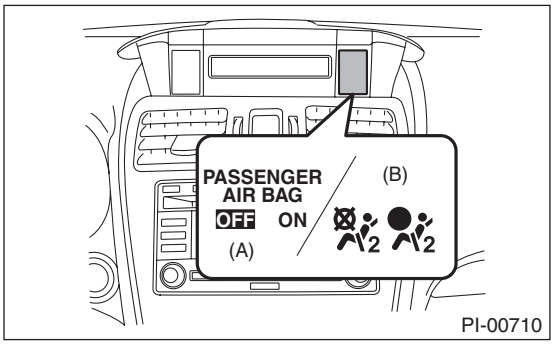

(A) Airbag ON/OFF indicator light (U.S.(U5 and U6) models)
(B) Airbag ON/OFF indicator light (Canada, Mexico (CO) models)

3) With a person weighing approximately 70 kg (155 lb) or more sitting in the passenger’s seat, check whether the ON light of the passenger’s airbag ON/OFF indicator illuminates or not.
4) Have the passenger get out of the passenger’s seat, and check whether the OFF light of the passenger side airbag ON/OFF indicator illuminates.

28.SEAT BELT

1) Pull out the seat belt and then release it. Check that the belt retracts smoothly.
2) Check seat warning system
   (1) Turn the ignition switch to ON without driver's and passenger's seat belts on.
   (2) Check the seat belt warning lights of the driver's and the passenger's blink for approximately six seconds and the buzzer sounds intermittently.
   (3) Then check that the seat belt warning lights illuminate and blink in a cycle of approximately 15 seconds. (If no one is seated on the passenger's seat, the seat belt warning light of the passenger's will not operate.)

29.TPMS (U.S. MODEL)

1) Turn the ignition switch to ON, and check that the TPMS warning light is in a normal operation condition.
- Normal operation (IG ON (Light check))

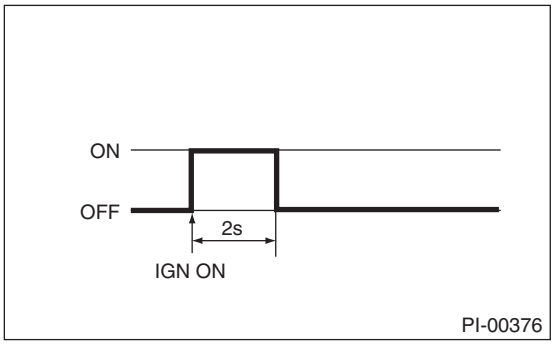

2) If the TPMS warning light display does not operate normally, check and repair the system. <Ref. to TPM(diag)-2, Basic Diagnostic Procedure.>

30.GROMMET INSTALLATION

Install the grommet on the rear seat to the tie-down hole.

CAUTION:
Make sure that the tie-down hole is firmly plugged with the grommet. Otherwise, dust, smell, etc. may come into the passenger compartment indirectly from the rear quarter, via the side sill from the tie-down hole.

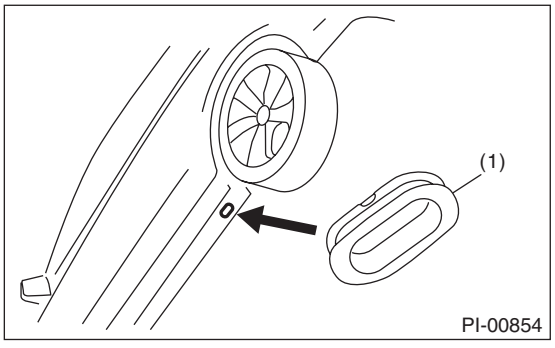

(1) Grommet

31.DELIVERY (TEST) MODE

1) Turn the ignition switch to ON and check that the malfunction indicator light starts blinking.
2) If the light blinks, return the ignition key to LOCK.
3) Remove the D check fuse.

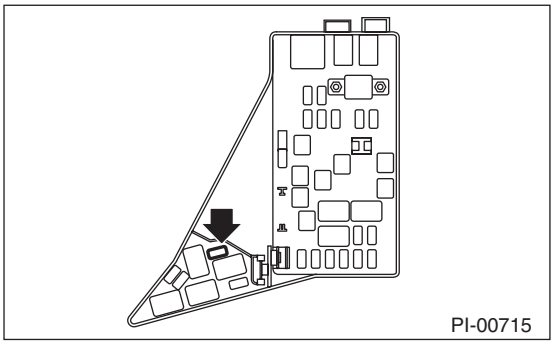

4) Then, turn the ignition key to ON again.
5) Make sure that the malfunction indicator light is off. If the malfunction indicator light blinks, carry out an engine diagnosis.

32.IMMOBILIZER SYSTEM

1) Check that the engine starts with all keys that are equipped on vehicle. Also, when starting the engine, check that the security indicator light goes off.
2) Check that the security indicator light blinks in 60 seconds after turning the ignition switch from ON to ACC or to OFF, or immediately after removing the key. (Models without keyless access function)
3) Check that the security indicator light blinks immediately after turning the ignition switch from ON to OFF, or when the door is opened or closed while the ignition switch is at ON or ACC and the engine is stopped. (Models with keyless access function)

NOTE:
If malfunctions occur, refer to "IMMOBILIZER (DIAGNOSTICS)". <Ref. to IM(diag)-2, Basic Diagnostic Procedure.>

33.PUSH BUTTON START FUNCTION

1) While carrying the access key inside the vehicle and setting the shift lever in P range and the brake pedal OFF, check that the mode switches ACC → IGN ON → IGN OFF repeatedly, every time the push button ignition switch is pressed, and that the indicator light of push button ignition switch illuminates in orange.
2) While carrying the access key inside the vehicle and setting the shift lever in P range and the brake pedal ON, check that the indicator light of push button ignition switch illuminates in green.

NOTE:
When the select lever button is being pressed, the indicator light of push button ignition switch does not illuminate in green, even if the shift position is in P range.
3) While carrying the access key inside the vehicle and setting the shift lever in P range and the brake pedal ON, check that the engine starts when the push button ignition switch is pressed.
4) While the vehicle is stopped, engine is started and shift lever is in P range, check that the engine stops when the push button ignition switch is pressed.
5) While the vehicle is stopped, engine is started and shift lever is in N range, check that the engine stops when the push button ignition switch is pressed and that the mode switches ACC → IGN ON repeatedly every time the push button ignition switch is pressed.

34.STARTING CONDITION

Start the engine and check that the engine starts smoothly. If the battery voltage is low, recharge or replace the battery. If any noises are observed, immediately stop the engine and check and repair the abnormal components.

35.EXHAUST

Listen to the exhaust noise to see if no noises are observed. Check that no leaks are found.

36.INDICATOR AND WARNING LIGHTS

Check that all indicator lights and warning lights are operating correctly.

37.HEATER & VENTILATION

Operate the heater & ventilation system to check for normal airflow outlet control, air inlet control, airflow capacity and heating performance.

38.AIR CONDITIONER

Operate the air conditioner. Check that the A/C compressor operates normally and enough cooling is provided.

NOTE:
To prevent the insufficient lubrication of the air conditioner, operate the air conditioner for five minutes at idling.

39.MULTI-FUNCTION DISPLAY (MFD)

1) Check that the Multi-Function Display (MFD) function operates normally.
2) Check that the rearview camera operates normally.

40.AUDIO

1) Check if the AM/FM radio broadcasting can be heard.
2) Check that all the radio functions work properly and the noise level is normal.
3) Check the CD and AUX for normal operation.
4) Check that the AUX is installed into the console without looseness.
5) Check that the rearview camera operates normally.

41.NAVIGATION SYSTEM

1) Check all display functions for normal operation. (Refer to the operation manual.)
2) Check that the navigation system operates normally.
3) Check the radio, CD (DVD) player and AUX for normal operation.
4) Check that the AUX is installed into the console without looseness.
5) Check that the rearview camera operates normally.

42.FRONT ACCESSORY POWER SUPPLY SOCKET

Check the operation of the front accessory power supply socket.

43.LIGHTING

1) Check the headlight operations. When pulling out the key, check if the headlight illuminates by turning the headlight switch from OFF to ON.
2) Check the stop light operation.
3) Check other lights for normal operations.

44.ILLUMINATION CONTROL

Check that the illumination control operates normally.

45.WINDOW WASHER

Check that the window washer system injects washer fluid to the specified area of the windshield and rear window glass. <Ref. to WW-36, ADJUSTMENT, Front Washer Nozzle.> <Ref. to WW-46, INSPECTING THE SPRAY POSITION, INSPECTION, Rear Washer.>

46.WIPER

Check the front and rear wipers for normal operations.

47.WIPER DEICER

Check that the wiper deicer operates normally.

NOTE:
When an ambient temperature is 5°C or more, wiper deicer operation is cancelled. Press the switch for 3 seconds or more to perform the compulsory operation.

48.POWER WINDOW

• Operate the power window switches one by one to check that each of the power windows goes up and down without noises.
• Check AUTO UP/AUTO DOWN operate properly by operating the power window switch on driver's seat side.

CAUTION:
If battery has been removed, AUTO UP does not operate properly because initialized. In this case, perform the initial setting (reset A) and check AUTO UP operates properly.

NOTE:
Check the power window if the door glass of the driver's seat does not open/close automatically. <Ref. to GW-10, INSPECTION, Power Window System.>

49.SUNROOF

Check that the sunroof operates normally.

50.REAR DEFOGGER

Press the rear defogger switch and check that the light inside the switch is activated for approx. 15 minutes and the rear defogger automatically turns to OFF.

51.DOOR MIRROR

• Check that the remote control mirror operates normally.
• Check that the heated mirror operates normally.

52.DIAGNOSTIC TROUBLE CODE (DTC) CHECK

Read the diagnostic trouble code and check that the diagnostic trouble code is not detected.
If any diagnostic trouble code is detected, clear all.
1) Read Diagnostic Trouble Code

NOTE:
For detailed operation procedures, refer to "PC application help for Subaru Select Monitor".
2) Clear Memory Mode

NOTE:
For detailed operation procedures, refer to "PC application help for Subaru Select Monitor".

53.BRAKE TEST

Check the foot brake for normal operations.

54.PARKING BRAKE

Check the parking brake for normal operations. When pulling the parking brake lever with a force of 200 N (20 kgf, 45 lb), check that the lever stroke of parking brake lever is 7 to 8 notches.

55.SHIFT CONTROL

• CVT

1) Turn the ignition switch to ON.
2) While brake pedal is not depressed, check if the select lever does not move from "P" range.
3) While brake pedal is depressed, check if the select lever moves from "P" range.
4) Set the select lever to other than "P" range.
5) When the ignition switch is turned to OFF, check if the ignition key switch cannot be removed.
6) Set the selector lever to each gear position and check the shifting while driving the vehicle. Operate the paddle shift at manual mode and check the shifting while driving the vehicle.

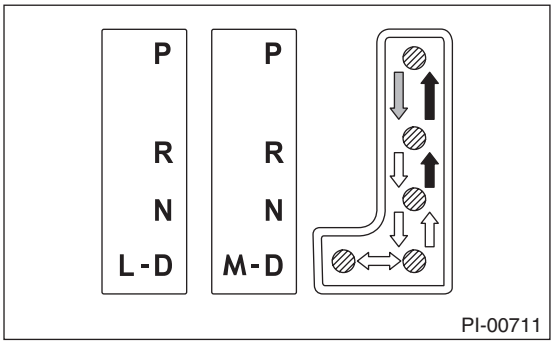

• MT

Check for smooth operation to each position.

56.CRUISE CONTROL

Operate the cruise control system. Check that the system is activated and deactivated correctly. (In the delivery mode, the cruise control does not operate, even when the cruise control switch is pressed.)

57.HYBRID SYSTEM

Operate the hybrid system. Check that the system is activated and deactivated properly.

58.EV MODE LAMP

Check that the EV mode lamp operates normally.

59.POWER STEERING SYSTEM (ELECTRIC POWER STEERING MODEL)

Check that the electric power steering warning light illuminates after the ignition switch is turned ON, and goes off after the engine is started.

60.FLUID LEAKAGE

Check entire areas of the vehicle for any trace of engine coolant/engine oil/transmission fluid leaks.

61.WATER LEAK TEST

Spray the vehicle with water using a hose and check that no water enters the passenger compartment.

- Before performing the water leakage test, remove anything that may obstruct the operation or which must be kept dry.
- Close all the windows and doors securely. Close the front hood, trunk lid and rear gate before starting the test.
- Connect a hose to a tap, and spray water on the vehicle. The rate of water spray must be approx. 20 to 25 L (5.3 — 6.6 US gal, 4.4 — 5.5 Imp gal) per minute.

When spraying water on areas adjacent to the floor and wheel house, increase the pressure. When spraying water on areas other than the floor and wheel house, decrease the pressure. But the force of water must be made strong occasionally by pressing the end of the hose.

NOTE:
Be sure to keep the hose at least 10 cm (3.9 in) away from vehicle.

Check the following areas.

- Front window and body framework mating portion
- Door mating portions
- Glass mating portions
- Rear quarter window mating portions
- Rear window and body framework mating portion
- Around roof drips

If any dampness in the compartments is discovered after the water has been applied, carefully check all the areas that may have possibly contributed to the leak.

62.APPEARANCE 2

1) If protective coating (lap guard) is applied, remove it.

NOTE:

- When removing the lap guard, using steam will make it easier to remove.
- Vehicle left for a extended periods or at low temperatures, spray the vehicle with water heated 50 — 60°C (122 — 140°F) to raise the surface temperature before peeling off the wrap guard. Do not use the water heated to over 60°C (140°F).
- If the adhesive remains exist on the coated surface, soak a flannel rag, etc. with a small amount of coating wax or solvent such as oil benzene and IPA, put the soaked cloth on the remains lightly, and then wipe them off with a flannel rag etc.
- Keep solvent from touching the resin or rubber parts. Do not use coating wax or solvents while the component surface temperature is hot due to hot weather etc.
- If the coated surface is swollen out due to seams or moisture, expose the vehicle to the sunlight for a few hours or heat the seam and swollen portions using a dryer etc.
- Dispose of the peeled wrap guard as burnable industrial garbage.

2) Check the whole vehicle body for flaking paint, damage by transportation, corrosion, dirt, cracks or blisters.

NOTE:

- It is better to determine an inspection pattern in order to avoid missing an area, since the total inspection area is wide.
- Do not repair the body paint unless absolutely necessary. Also, if the vehicle is in need of repair to remove scratches or corroded paint, the repair area must be limited to the minimum. Re-painting and spray painting must be avoided as much as possible.

3) Check each window glass for scratches carefully. Slight damage may be removed by polishing with cerium oxide. (Fill a cup half with cerium oxide, and add warm water to it. Then agitate the content until it turns to wax. Apply this wax to a soft cloth, and polish the glass with it.)

4) Check each portion of the vehicle body and underside components for the formation of rust. If rust is discovered, remove it with sandpaper of #80 to #180 and treat the surface with rust preventive. After this treatment is completed, flush the portion thoroughly, and prepare the surface for repair painting.

5) Check each portion of body and all of the exterior parts for deformation or distortion. Also, check each light lens for cracks.

PERIODIC MAINTENANCE SERVICES

PM

		Page
1.	General Description	2
2.	Schedule	3
3.	Engine Oil	6
4.	Engine Oil Filter	7
5.	Spark Plug	8
6.	V-belt	9
7.	Fuel Line	10
8.	Fuel Filter	11
9.	Air Cleaner Element	12
10.	Cooling System	13
11.	Engine Coolant	14
12.	Clutch System	15
13.	Transmission Gear Oil	16
14.	CVTF	17
15.	Front & Rear Differential Gear Oil	18
16.	Brake Line	19
17.	Brake Fluid	21
18.	Disc Brake Pad and Disc	22
19.	Parking Brake	23
20.	Suspension	24
21.	Wheel Bearing	27
22.	Axle Boots & Joints	28
23.	Tire Inspection and Rotation	29
24.	Steering System (Power Steering)	30
25.	A/C Filter	32

1. General Description

A: GENERAL DESCRIPTION

Be sure to perform periodic maintenance in order to maintain vehicle performance and find problems before they occur.

2. Schedule

A: MAINTENANCE SCHEDULE 1

1. U.S. MODELS

		Maintenance interval [Number of months or km (miles), whichever occurs first]																		
	Months	3	7.5	15	22.5	30	37.5	45	52.5	60	67.5	75	82.5	90	97.5	105	112.5	120	132	Remarks
	× 1,000 km	4.8	12	24	36	48	60	72	84	96	108	120	132	144	156	168	180	192	220	
	× 1,000 miles	3	7.5	15	22.5	30	37.5	45	52.5	60	67.5	75	82.5	90	97.5	105	112.5	120	132	
1	Engine oil		R	R	R	R	R	R	R	R	R	R	R	R	R	R	R	R	R	
2	Engine oil filter		R	R	R	R	R	R	R	R	R	R	R	R	R	R	R	R	R	
3	Spark plug									R								R		
4	Drive belt(s)					I				I				I				I		
5	Fuel line					(I)				(I)				(I)				I		Note (1)
6	Fuel filter											R								Note (1)
7	Air cleaner element					R				R				R				R		Note (2)
8	Cooling system					I				I				I				I		
9	Engine coolant	Replace after the first 11 years or 220,000 km (137,500 miles), and every six years or 120,000 km (75,000 miles) thereafter																		
10	Clutch system			I		I		I		I		I		I		I		I		
11	Transmission gear oil					I				I				I				I		Note (5)
12	CVTF					I				I				I				I		
13	Front & rear differential gear oil					I				I				I				I		Note (5)
14	Brake line			I		I		I		I		I		I		I		I		
15	Brake fluid					R				R				R				R		
16	Disc brake pad and disc			I		I		I		I		I		I		I		I		
17	Parking brake			I		I		I		I		I		I		I		I		
18	Suspension			I		I		I		I		I		I		I		I		
19	Wheel bearing									(I)								(I)		
20	Axle boots and joints			I		I		I		I		I		I		I		I		
21	Tire rotation		P	P	P	P	P	P	P	P	P	P	P	P	P	P	P	P	P	Note (3)
22	Steering system (Power steering)			I		I		I		I		I		I		I		I		
23	A/C filter	Replace every 12 months or 12,000 km (7,500 miles)																		Note (4)

Symbol
R: Replace
I: Inspection
P: Perform
(I): Inspections recommended for vehicle safety

PERIODIC MAINTENANCE SERVICES

NOTE:
1. This inspection is not necessary to observe exhaust gas regulations or is the responsibility of the manufacturer under the current basic EPA regulations that must observed by law.
2. Replace the air cleaner element more frequently than the periodic replacement if the vehicle is being used in an excessively dusty environment.
3. Replace the tires if the tread-wear indicator has cause a bar-shaped cut across the tread. The indicator will appear when the remaining amount of tread is less than 1.6 mm (0.063 in).
4. Replace the A/C filter more frequently than the periodic replacement if the vehicle is being used in an excessively dusty environment.
5. When the vehicle is used under severe condition such as towing trailer or driving on sand, differential gear oil (both front and rear) and transmission gear oil should be replaced more often.

B: MAINTENANCE SCHEDULE 2

Item	Maintenance interval	Repeat short distance driving	Repeat driving on bumpy muddy road	Driving in extremely cold weather	Area where salt or other corrosive substance used, or coastal area	High humidity or mountain area	Repeat towing trailer
Engine oil	Every 3.75 months	R		R			R
	6,000 km						
	3,750 miles						
Engine oil filter	Every 3.75 months	R		R			R
	6,000 km						
	3,750 miles						
Fuel line	Every 7.5 months				I		
	Every 12,000 km						
	Every 7,500 miles						
Transmission gear oil	Every 15 months						R
	Every 24,000 km						
	Every 15,000 miles						
CVTF	Every 40,000 km						R
	Every 24,855 miles						
Front & rear differential gear oil	Every 15 months						R
	Every 24,000 km						
	Every 15,000 miles						
Brake line	Every 7.5 months	I	I		I		I
	Every 12,000 km						
	Every 7,500 miles						
Brake fluid	Every 15 months					R	
	Every 24,000 km						
	Every 15,000 miles						
Disc brake pad and disc	Every 15 months	I	I		I		I
	Every 24,000 km						
	Every 15,000 miles						
Parking brake	Every 15 months	I	I		I		I
	Every 24,000 km						
	Every 15,000 miles						
Suspension	Every 7.5 months		I	I	I		I
	Every 12,000 km						
	Every 7,500 miles						
Axle boots and joints	Every 7.5 months	I	I	I	I		I
	Every 12,000 km						
	Every 7,500 miles						
Steering system (Power steering)	Every 7.5 months	I	I	I	I		I
	Every 12,000 km						
	Every 7,500 miles						

R: Replace
I: Inspection

3. Engine Oil

A: INSPECTION

Refer to “LU” section for engine oil inspection. <Ref. to LU(H4DO(w/o HEV))-12, INSPECTION, Engine Oil.>

B: REPLACEMENT

Refer to “LU” section for engine oil replacement. <Ref. to LU(H4DO(w/o HEV))-13, REPLACEMENT, Engine Oil.>

4. Engine Oil Filter

A: REPLACEMENT

Refer to “LU” section for engine oil filter replacement. <Ref. to LU(H4DO(w/o HEV))-28, Engine Oil Filter.>

5. Spark Plug

A: REPLACEMENT

Refer to “IG” section for spark plug replacement.
<Ref. to IG(H4DO(w/o HEV))-4, Spark Plug.>

6. V-belt

A: INSPECTION

Refer to “ME” section for V-belt inspection. <Ref. to ME(H4DO(w/o HEV))-120, V-belt.>

B: REPLACEMENT

Refer to “ME” section for V-belt replacement. <Ref. to ME(H4DO(w/o HEV))-120, V-belt.>

7. Fuel Line

A: INSPECTION

The fuel line is located mostly internally, so check pipes, areas near pipes, and engine compartment piping for rust, hose damage, loose band, etc. If faulty parts are found, repair or replace them. <Ref. to FU(H4DO(w/o HEV))-165, INSPECTION, Fuel Delivery and Evaporation Lines.> <Ref. to FU(H4DO(HEV))-154, INSPECTION, Fuel Delivery and Evaporation Lines.>

8. Fuel Filter

A: REPLACEMENT

For fuel filter replacement procedure, refer to “FU” section. <Ref. to FU(H4DO(w/o HEV))-154, Fuel Filter.> <Ref. to FU(H4DO(HEV))-138, Fuel Filter.>

B: INSPECTION

Replace if the filter is clogged, or time for replacement has come.

9. Air Cleaner Element

A: REPLACEMENT

Refer to “IN” section for air cleaner element replacement. <Ref. to IN(H4DO(w/o HEV))-4, Air Cleaner Element.> <Ref. to IN(H4DO(HEV))-4, Air Cleaner Element.>

10.Cooling System

A: INSPECTION

1. RADIATOR

Check that there are no engine coolant leaks from the hose connections. Refer to “CO” section for radiator inspection. <Ref. to CO(H4DO(w/o HEV))-86, INSPECTION, Radiator.>

2. RADIATOR CAP

Refer to “CO” section for radiator cap inspection. <Ref. to CO(H4DO(w/o HEV))-88, INSPECTION, Radiator Cap.>

3. COOLING FAN

Check the radiator fan operates using Subaru Select Monitor, when the coolant temperature exceeds the specified value. If it does not operate, check the radiator fan system. <Ref. to CO(H4DO(w/o HEV))-11, INSPECTION, Radiator Fan System.>

4. COOLING SYSTEM

Start the engine, and then inspect that it does not overheat or it is not cooled excessively. If it overheats or it is cooled excessively, check the cooling system.

11.Engine Coolant

A: INSPECTION

CAUTION:
- **Do not use water instead of coolant.**
- **Refer to "RM" section for the recommended engine coolant. <Ref. to RM-4, ENGINE COOLANT, RECOMMENDED MATERIALS, Recommended Materials.>**

1) Park the vehicle on a level surface.
2) Make sure the engine coolant level in the reservoir tank is between "FULL" and "LOW" when the engine is cold.

NOTE:
If the engine coolant level drops, make sure that there are no engine coolant leakage, and add engine coolant to the "FULL" line.

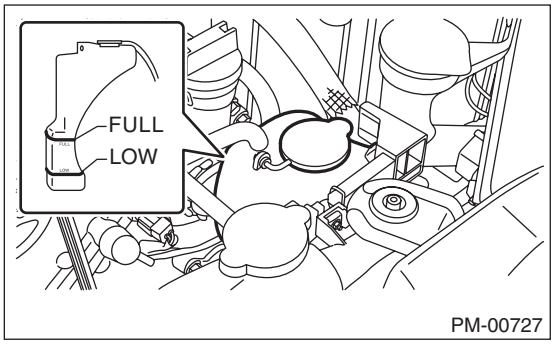

3) Remove the radiator cap and make sure that the radiator is filled with engine coolant up to the filler neck position.

B: REPLACEMENT

Refer to "CO" section for engine coolant replacement. <Ref. to CO(H4DO(w/o HEV))-16, REPLACEMENT, Engine Coolant.>

12.Clutch System

A: INSPECTION AND ADJUSTMENT

Refer to “CL” section for inspection and adjustment of clutch system. <Ref. to CL-25, INSPECTION, Clutch Pedal.> <Ref. to CL-26, ADJUSTMENT, Clutch Pedal.>

13.Transmission Gear Oil

A: INSPECTION

Refer to “5MT” section for transmission gear oil inspection. <Ref. to 5MT-22, INSPECTION, Transmission Gear Oil.>

B: REPLACEMENT

Refer to “5MT” section for transmission gear oil replacement. <Ref. to 5MT-22, REPLACEMENT, Transmission Gear Oil.>

14.CVTF

A: INSPECTION

Refer to “CVT (TR580)” section for CVTF inspection. <Ref. to CVT(TR580)-35, INSPECTION, CVTF.> <Ref. to CVT(TH58A)-41, INSPECTION, CVTF.>

B: REPLACEMENT

Refer to “CVT (TR580)” section for CVTF replacement. <Ref. to CVT(TR580)-36, REPLACEMENT, CVTF.> <Ref. to CVT(TH58A)-43, REPLACEMENT, CVTF.>

15. Front & Rear Differential Gear Oil

A: INSPECTION

1. FRONT DIFFERENTIAL (MT MODEL)

Front differential gear oil of MT model lubricates the transmission and differential together. Refer to “Transmission Gear Oil” for inspection procedures. <Ref. to 5MT-22, INSPECTION, Transmission Gear Oil.>

2. FRONT DIFFERENTIAL (CVT MODEL)

Refer to “CVT (TR580)” or “CVT (TH58A)” section for front differential gear oil inspection of CVT model. <Ref. to CVT(TR580)-39, INSPECTION, Differential Gear Oil.> <Ref. to CVT(TH58A)-45, INSPECTION, Differential Gear Oil.>

3. REAR DIFFERENTIAL

Refer to “DI” section for rear differential gear oil inspection. <Ref. to DI-19, INSPECTION, Differential Gear Oil.>

B: REPLACEMENT

1. FRONT DIFFERENTIAL (MT MODEL)

Front differential gear oil of MT model lubricates the transmission and differential together. Refer to “5MT” section for replacement procedure. <Ref. to 5MT-22, REPLACEMENT, Transmission Gear Oil.>

2. FRONT DIFFERENTIAL (CVT MODEL)

Refer to “CVT (TR580)” or “CVT (TH58A)” section for front differential gear oil replacement. <Ref. to CVT(TR580)-41, REPLACEMENT, Differential Gear Oil.> <Ref. to CVT(TH58A)-47, REPLACEMENT, Differential Gear Oil.>

3. REAR DIFFERENTIAL

Refer to “DI” section for rear differential gear oil replacement. <Ref. to DI-19, REPLACEMENT, Differential Gear Oil.>

16.Brake Line

A: INSPECTION

1. BRAKE LINE

1) Check for scratches, swelling, corrosion, traces of fluid leakage on the brake hoses or pipe joints.
2) Make sure that brake pipes/hoses do not interfere with adjacent parts and there is no loose connector/clamp during driving.
3) Check any trace of fluid leakage, scratches, etc. on master cylinder, wheel cylinder and hydraulic unit.

NOTE:
• When the brake fluid level in the reservoir tank is lower than specified limit, the brake warning light on the combination meter will illuminate.
• Visually check the brake hose for damage. (Use a mirror where it is difficult to see)

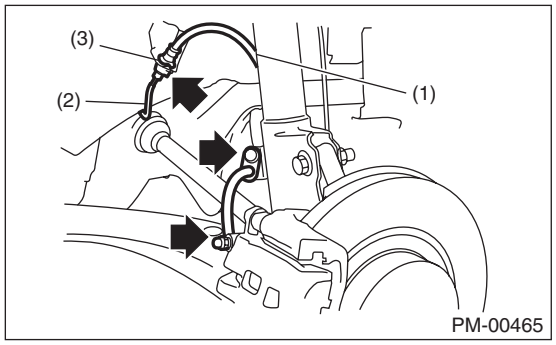

(1) Front brake hose
(2) Front brake pipe
(3) Clamp

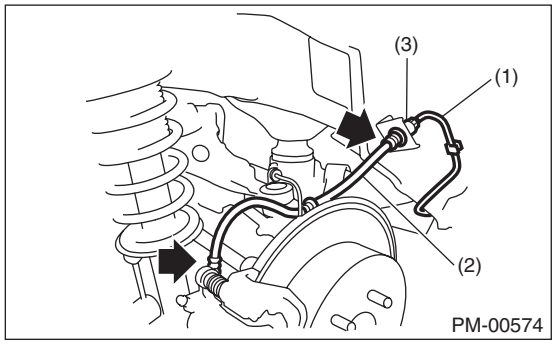

(1) Brake pipe
(2) Rear brake hose
(3) Clamp

2. SERVICE BRAKE

Refer to “BR” section for foot brake inspection. <Ref. to BR-70, INSPECTION, Brake Pedal.>

3. BRAKE SERVO SYSTEM

1) With the engine off, depress the brake pedal several times applying the same pedal force. Check that the travel distance should not change.
2) With the brake pedal depressed, start the engine. Check that the pedal moves slightly toward the floor.
3) With the brake pedal depressed, stop the engine and keep the pedal depressed for 30 seconds. Check that the pedal height does not change.
4) A check valve is built into the brake booster nipple. Disconnect the vacuum hose to inspect function of check valve.
Check that check valve ventilates from booster side to engine side. Also, check that there is no ventilation from engine side to booster side.
• Gasoline engine model

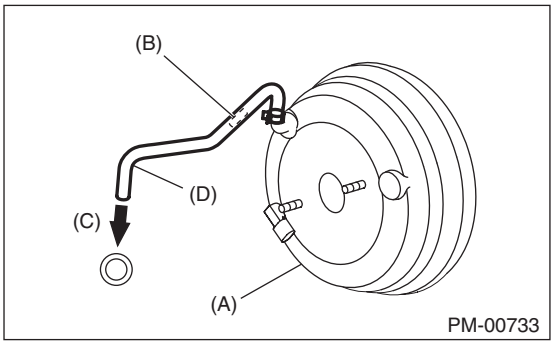

(A) Brake booster
(B) Check valve
(C) Engine side
(D) Vacuum hose

- HEV model

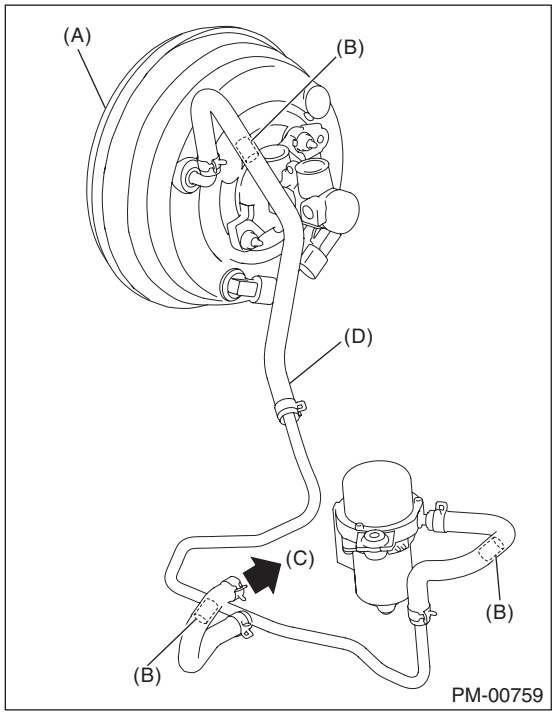

(A) Brake booster
(B) Check valve
(C) Engine side
(D) Vacuum hose and pipe ASSY

5) Check the vacuum hose for cracks or other damage.

CAUTION:
When installing the vacuum hose on the engine and brake booster, do not use soapy water or lubricating oil on their connections.

6) Check that the vacuum hose is securely tightened.

17.Brake Fluid

A: INSPECTION

Refer to “BR” section for brake fluid inspection.
<Ref. to BR-60, INSPECTION, Brake Fluid.>

B: REPLACEMENT

Refer to “BR” section for brake fluid replacement.
<Ref. to BR-60, REPLACEMENT, Brake Fluid.>

18.Disc Brake Pad and Disc

A: INSPECTION

Refer to “BR” section for disc brake pad and disc inspection. <Ref. to BR-20, INSPECTION, Front Brake Pad.> <Ref. to BR-34, INSPECTION, Rear Brake Pad.> <Ref. to BR-22, INSPECTION, Front Disc Rotor.> <Ref. to BR-37, INSPECTION, Rear Disc Rotor.>

19.Parking Brake

A: INSPECTION

Refer to “PB” section for parking brake inspection. <Ref. to PB-20, INSPECTION, Parking Brake Assembly (Rear Disc Brake).>

B: ADJUSTMENT

Refer to “PB” section for parking brake adjustment. <Ref. to PB-21, ADJUSTMENT, Parking Brake Assembly (Rear Disc Brake).>

20.Suspension

A: INSPECTION

1. FRONT SUSPENSION BALL JOINT

1) Lift up the vehicle until front wheels are off ground.
2) Grasp the bottom of tire and move it in and out in axial direction. If movement (B) is observed between the brake disc cover (A) and end of front arm (D), ball joint (C) may be excessively worn.

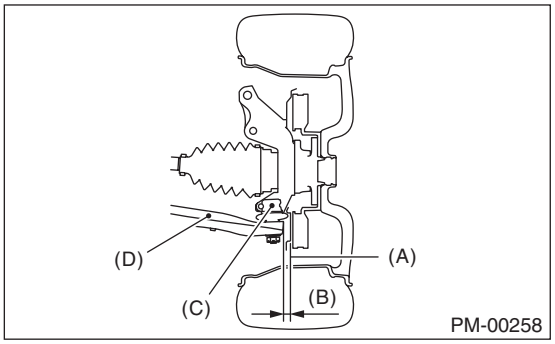

3) Next, grasp the end of front arm (C) and move it up and down. If movement (A) between the housing (D) and front arm (C) boss is observed, ball joint (B) may be excessively worn.

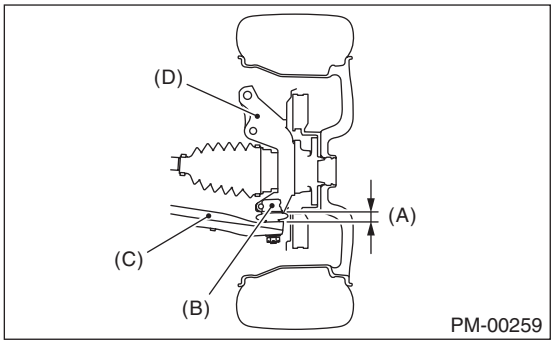

4) If the relative movement is observed in the preceding two steps, remove and inspect the ball joint. If the free play exceeds standard value, replace the ball joint. <Ref. to FS-33, Front Ball Joint.>

5) Damage of dust boot
Visually inspect the ball joint dust boot. Replace if ball joint is damaged.

NOTE:
When the front arm ball joint is removed or replaced, check the toe-in of front wheel. If it is not within the specified value, adjust the toe-in. <Ref. to FS-7, Wheel Alignment.>

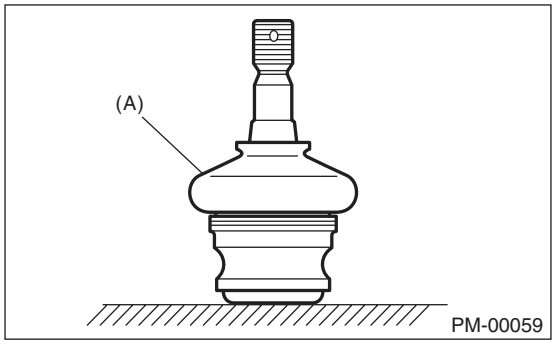

(A) Dust boot

2. REAR SUSPENSION BALL JOINT

1) Lift up the vehicle until rear wheels are off ground.
2) Grasp the bottom of tire and move it in and out in axial direction.
3) If movement is observed between the brake disc cover (A) and end of front lateral link (B), ball joint may be excessively worn.

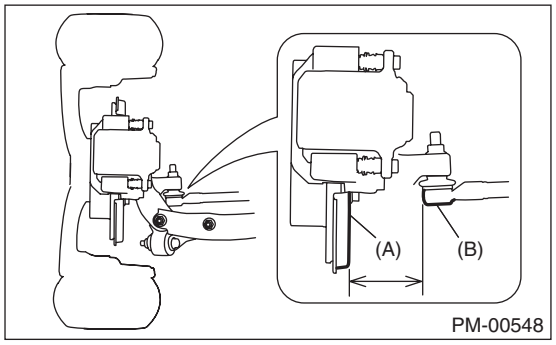

4) Grasp the end of front lateral link (B) and move it up and down. If movement is observed between the housing (C) and front lateral link (B) boss, ball joint may be excessively worn.

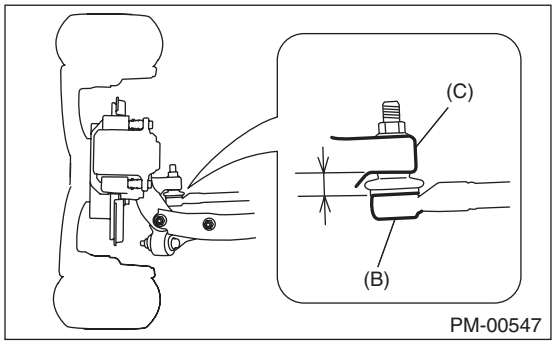

5) If the movement related to the previous two steps is observed, replace the front lateral link. <Ref. to RS-23, Front Lateral Link.>
6) Damage of dust boots
Visually inspect the ball joint dust boots. Replace if front lateral link is damaged.
7) Check the upper arm ball joint (D) and the pillow ball bushing (E) of housing in the same manner.

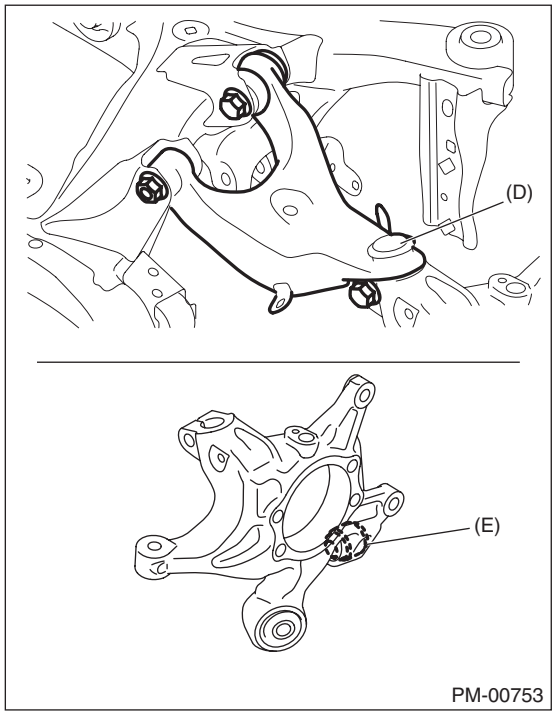

(D) Upper arm ball joint
(E) Pillow ball bushing

3. FRONT, REAR SUSPENSION BUSHING

Apply pressure with tire lever etc, and inspect the bushing for excessive wear or damage. If defective, replace the bushing.

- Front suspension bushing

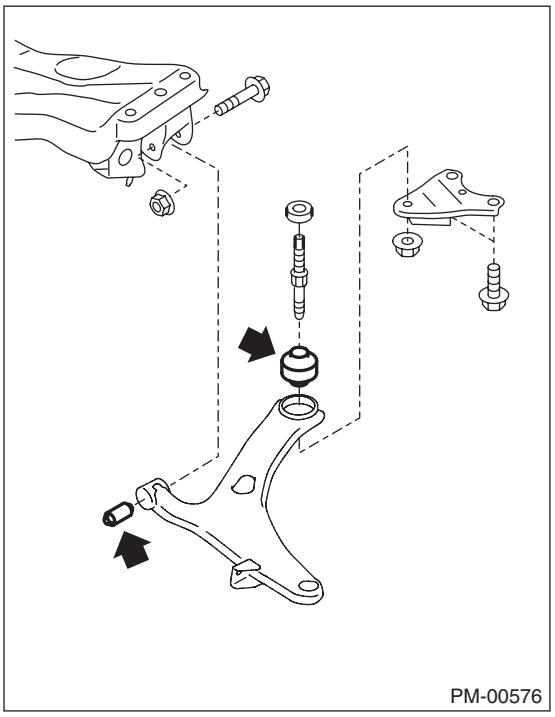

- Rear suspension bushing

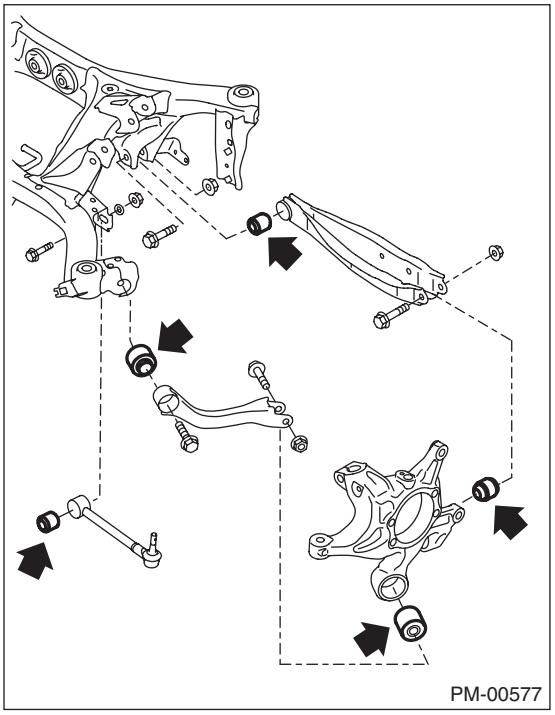

4. WHEEL ARCH HEIGHT

Refer to “FS” section for wheel arch height inspection. <Ref. to FS-8, WHEEL ARCH HEIGHT, INSPECTION, Wheel Alignment.>

5. WHEEL ALIGNMENT

Measure and adjust the front and rear wheel alignment at a time. Refer to “FS” section for measurement and adjustment of wheel alignment. <Ref. to FS-7, INSPECTION, Wheel Alignment.>

6. OIL LEAKAGE OF STRUT AND SHOCK ABSORBER

Visually inspect the front strut and rear shock absorber for oil leakage. Replace the front strut and rear shock absorber if oil leaks excessively.

7. TIGHTNESS OF BOLTS AND NUTS

Check the bolts and nuts for looseness. Retighten the bolts and nuts to specified torque. If the self-locking nuts and bolts are removed, replace them with new parts. <Ref. to FS-2, General Description.> <Ref. to RS-2, General Description.>

8. DAMAGE TO SUSPENSION PARTS

Check the following parts and the fastening portion of the vehicle body for deformation or excessive rusting which impairs the suspension. Thoroughly remove the deposits of the lower spring seat of strut where dust or mud are likely piled up. If necessary, replace the damaged parts with new parts. If minor rust formation, pitting, etc. are noted, remove the rust and take rust prevention measure.

- Front suspension
  - Front arm
  - Crossmember
  - Strut
- Rear suspension
  - Sub frame
  - Front lateral link
  - Rear lateral link
  - Upper arm
  - Trailing link
  - Shock absorber
- In the area where salt is sprayed to melt snow on a road in winter, check suspension parts for damage caused by rust every 12 months after lapse of 60 months. Take rust prevention measures as required.

21.Wheel Bearing

A: INSPECTION

1. FRONT WHEEL BEARING

NOTE:
Inspect the condition of front wheel bearing grease.
1) Jack-up the front side of vehicle.
2) While holding the front wheel by hand, swing it in and out to check bearing free play.
3) Loosen the wheel nuts, and remove the front wheel.
4) If the bearing free play exists in step 2) above, attach a dial gauge to the hub and measure axial play in axial direction.

Service limit:
Straight-ahead position within 0.05 mm (0.0020 in)

5) Remove the bolts and self-locking nuts, and extract the front arm from front crossmember.
6) Remove the transmission-side joint of the front drive shaft from the transmission. <Ref. to DS-17, Front Axle.>
7) While supporting the front drive shaft horizontally with one hand, turn the hub with the other hand to check for noise or binding.
If the hub is noisy or binds, replace the front axle.

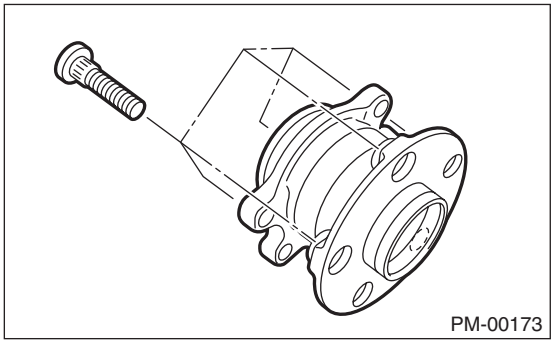
PM-00173

2. REAR WHEEL BEARING

1) Jack-up the rear side of vehicle.
2) While holding the rear wheel by hand, swing it in and out to check bearing free play.
3) Loosen the wheel nuts, and remove the rear wheel.
4) If the bearing free play exists in step 2) above, attach a dial gauge to the hub and measure axial play in axial direction.

Service limit:
Straight-ahead position within 0.05 mm (0.0020 in)

5) Remove the DOJ of rear drive shaft from rear differential. <Ref. to DS-74, Rear Drive Shaft.>
6) While supporting rear drive shaft horizontally with one hand, turn the hub with the other hand to check for noise or binding.
If the hub is noisy or binds, replace the rear axle.

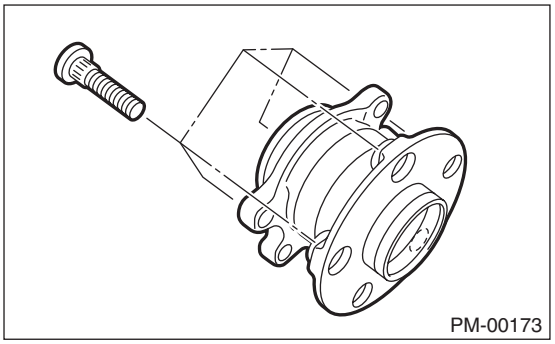
PM-00173

22.Axle Boots & Joints

A: INSPECTION

1. FRONT AND REAR AXLE BOOTS

Inspect the front axle boots (A) and rear axle boots (B) for deformation, damage or failure. If faulty, replace with new part. <Ref. to DS-57, Front Drive Shaft.> <Ref. to DS-74, Rear Drive Shaft.>

- Front

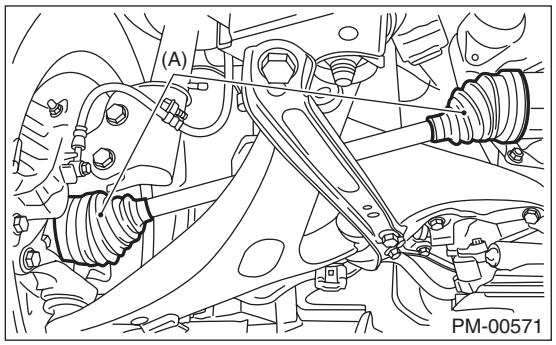

- Rear

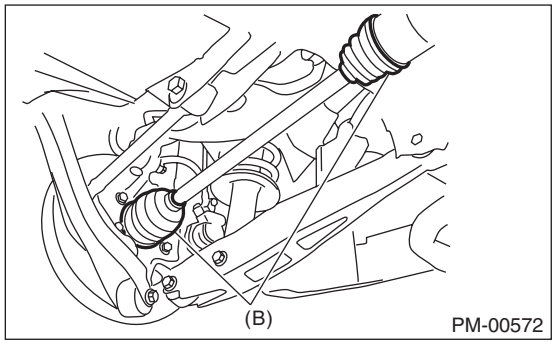

2. PROPELLER SHAFT

Inspect the propeller shaft for damage or failure. If faulty, replace with new part. <Ref. to DS-12, Propeller Shaft.>

23.Tire Inspection and Rotation

A: INSPECTION

Refer to “WT” section for tire inspection and rotation. <Ref. to WT-4, TIRE ROTATION, INSPECTION, Tire and Wheel.>

24.Steering System (Power Steering)

A: INSPECTION

1. STEERING WHEEL

1) Set the steering wheel in a straight-ahead position, and check the wheel spokes to make sure they are correctly set in their specified positions.
2) Lightly turn the steering wheel to the left and right to determine the point where front wheels start to move.
Measure the distance of the movement of steering wheel (periphery).

Steering wheel free play:
0 — 17 mm (0 — 0.67 in)

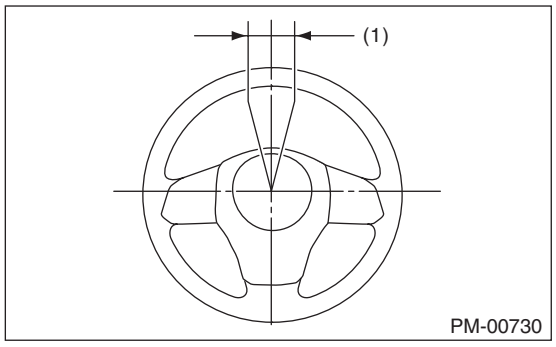

(1) Steering wheel free play

Move the steering wheel vertically toward the shaft to check if there is play in the direction.

Play limit:
0.5 mm (0.020 in)

3) Drive the vehicle and check the following items.
(1) Steering force:
The effort required for steering should be smooth and even at all points, and should not vary.
(2) Pulled to one side:
Steering wheel should not be pulled to one side while driving on a level surface.
(3) Wheel runout:
Steering wheel should not show any sign of runout.
(4) Return status:
Steering wheel should return to its original position after it has been turned and then released.

2. STEERING SHAFT JOINT

When the steering wheel free play is excessive, disconnect the universal joint of steering shaft and check it for any play and yawing torque (at the point of the crossing direction). Also inspect for any damage to sealing or worn serrations. If the joint is loose, retighten the mounting bolts to the specified torque. <Ref. to PS-13, Universal Joint.>

Tightening torque:
24 N·m (2.4 kgf-m, 17.4 ft-lb)

3. GEARBOX

1) Set the steering wheel in the straight position, then rotate it 90° in both the left and right directions. While steering wheel is being rotated, check the looseness of the gearbox.

Tightening torque:
60 N·m (6.1 kgf-m, 44.3 ft-lb)

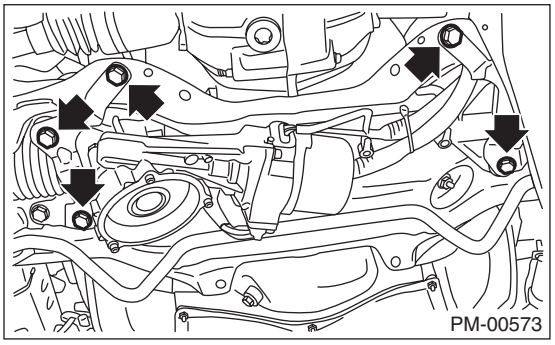

2) Check the boot for damage, cracks or deterioration.
3) With the vehicle stopped on a level surface, quickly turn the steering wheel to the left and right. While steering wheel is being rotated, check the gear backlash. If any noise is noticed, adjust the gear backlash. <Ref. to PS-41, GEARBOX BACKLASH ADJUSTMENT, ADJUSTMENT, Electric Power Steering Gearbox.>

4. TIE-ROD

1) Check the tie-rod and tie-rod ends for bends, scratches or other damage.

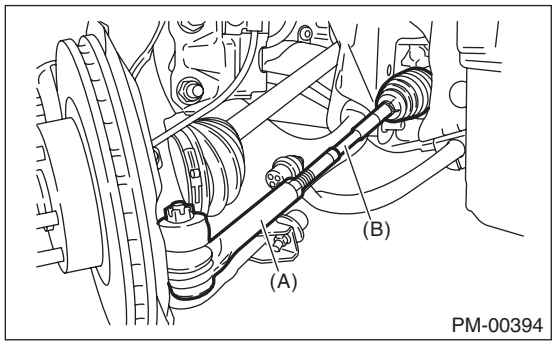

(A) Tie-rod end
(B) Tie-rod

2) Confirm that the connections of knuckle ball joints for play, and then check for damage on dust boots and free play of ball studs. If castle nut is loose, retighten it to the specified torque, then tighten further up to a maximum of 60° until the cotter pin hole is aligned.

Tightening torque:
27 N·m (2.75 kgf-m, 19.9 ft-lb)

3) Check the lock nut on the tie-rod end for tightness. If it is loose, retighten it to the specified torque.

Tightening torque:
85 N·m (8.7 kgf-m, 62.7 ft-lb)

5. GEARBOX BOOTS

Inspect both sides of the gearbox boot as follows, and correct the defects if necessary.
1) The (A) and (B) positions of the gearbox boot are fitted in (A) and (C) grooves of gearbox and the rod.
2) Clips are fitted onto the boot grooves to the positions (A) and (B) of the boot.
3) Check that there is no cracks or holes in the boot.

NOTE:
Rotate (B) position of gearbox boot against the torsion produced by the adjustment of toe-in etc. Apply grease to the groove (C).

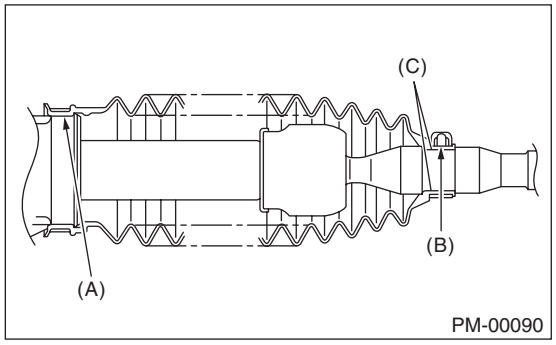

25.A/C Filter

A: REPLACEMENT

Refer to “AC” section for A/C filter replacement.
<Ref. to AC-112, REPLACEMENT, A/C Filter.>

ENGINE 1 SECTION

This service manual has been prepared to provide SUBARU service personnel with the necessary information and data for the correct maintenance and repair of SUBARU vehicles.
This manual includes the procedures for maintenance, disassembling, reassembling, inspection and adjustment of components and diagnostics for guidance of experienced mechanics.
Please peruse and utilize this manual fully to ensure complete repair work for satisfying our customers by keeping their vehicle in optimum condition. When replacement of parts during repair work is needed, be sure to use SUBARU genuine parts.

All information, illustration and specifications contained in this manual are based on the latest product information available at the time of publication approval.

FUEL INJECTION (FUEL SYSTEMS)	FU(H4DO(w/o HEV))
EMISSION CONTROL (AUX. EMISSION CONTROL DEVICES)	EC(H4DO(w/o HEV))
INTAKE (INDUCTION)	IN(H4DO(w/o HEV))
MECHANICAL	ME(H4DO(w/o HEV))
EXHAUST	EX(H4DO(w/o HEV))
COOLING	CO(H4DO(w/o HEV))
LUBRICATION	LU(H4DO(w/o HEV))
SPEED CONTROL SYSTEMS	SP(H4DO(w/o HEV))
IGNITION	IG(H4DO(w/o HEV))
STARTING/CHARGING SYSTEMS	SC(H4DO(w/o HEV))
ENGINE (DIAGNOSTICS)	EN(H4DO w/o HEV)(diag)
GENERAL DESCRIPTION	GD(H4DO w/o HEV)

FUJI HEAVY INDUSTRIES LTD.

FUEL INJECTION (FUEL SYSTEMS)

FU(H4DO(w/o HEV))

		Page
1.	General Description	2
2.	Throttle Body	15
3.	Intake Manifold	20
4.	Engine Wiring Harness	44
5.	Engine Coolant Temperature Sensor	53
6.	Engine Oil Temperature Sensor	55
7.	Crankshaft Position Sensor	57
8.	Crankshaft Position Sensor Plate	62
9.	Camshaft Position Sensor	63
10.	Oil Control Solenoid	69
11.	Knock Sensor	73
12.	Throttle Position Sensor	77
13.	Mass Air Flow and Intake Air Temperature Sensor	78
14.	Manifold Absolute Pressure Sensor	81
15.	Fuel Injector	84
16.	Tumble Generator Valve Assembly	90
17.	Tumble Generator Valve Actuator	95
18.	Front Oxygen (A/F) Sensor	97
19.	Rear Oxygen Sensor	101
20.	Engine Control Module (ECM)	106
21.	Main Relay	109
22.	Fuel Pump Relay	111
23.	Electronic Throttle Control Relay	113
24.	Fuel	116
25.	Fuel Tank Protector	121
26.	Fuel Tank	122
27.	Fuel Filler Pipe	136
28.	Fuel Pump	141
29.	Fuel Level Sensor	146
30.	Fuel Sub Level Sensor	148
31.	Fuel Filter	154
32.	Fuel Delivery and Evaporation Lines	159
33.	Fuel System Trouble in General	166

1. General Description

A: SPECIFICATION

Fuel tank	Capacity	Except for XV model	55 L (14.5 US gal, 12.1 Imp gal)
		XV model	60 L (15.9 US gal, 13.2 Imp gal)
	Location		Under rear seat
Fuel pump	Type		Impeller
	Shutoff discharge pressure		677 kPa (6.9 kg/cm^2, 98.2 psi) or less
	Discharge rate		85 L (22.5 US gal, 18.7 Imp gal)/h or more [12 V at 300 kPa (3.06 kg/cm^2, 43.5 psi)]
Fuel filter			In-tank type

B: COMPONENT

1. INTAKE MANIFOLD 1

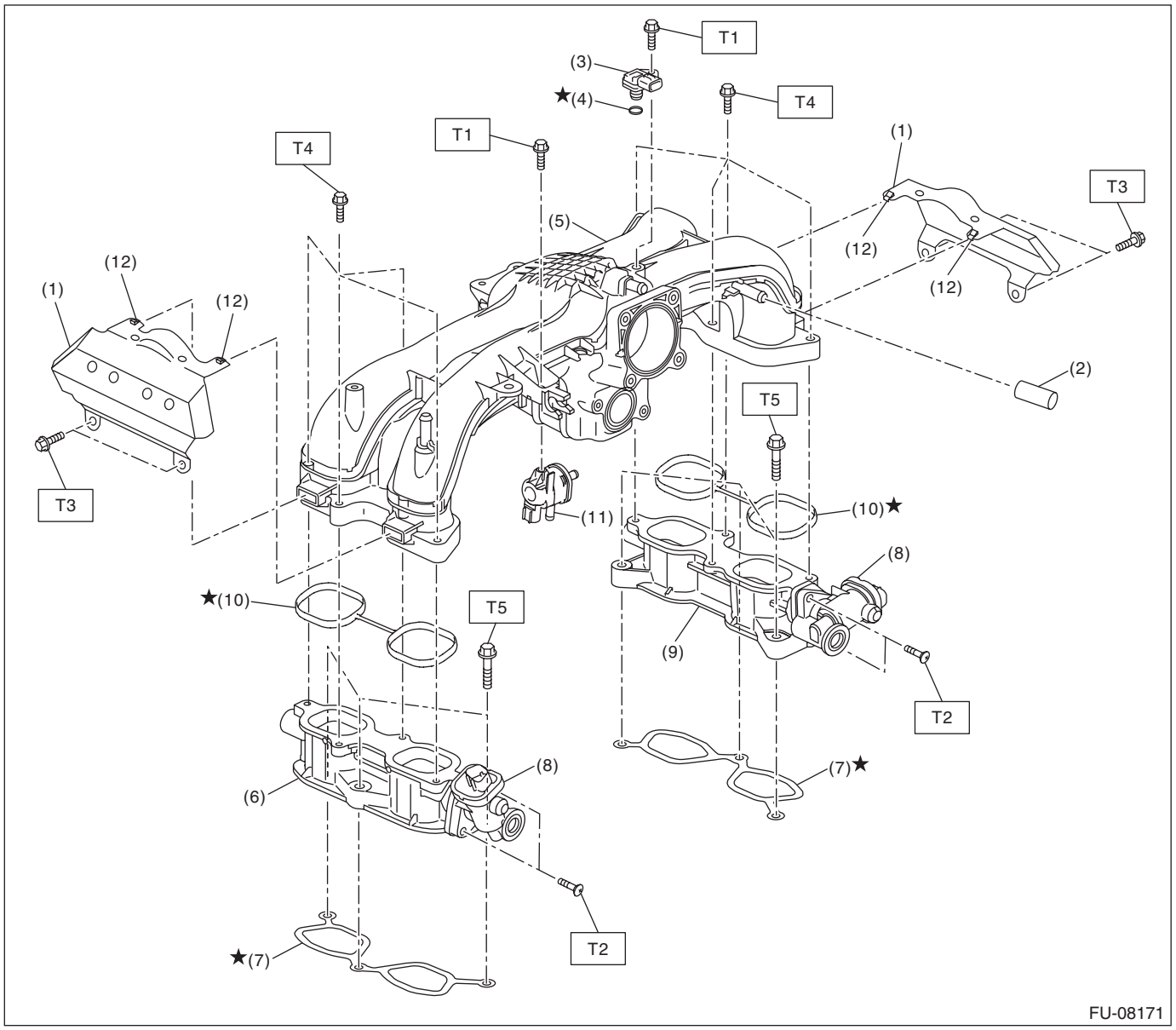

(1)	Intake manifold protector	(7)	Gasket	
(2)	Cap	(8)	Tumble generator valve actuator	
(3)	Manifold absolute pressure sensor	(9)	Tumble generator valve RH	
(4)	O-ring	(10)	Gasket	
(5)	Intake manifold	(11)	Purge control solenoid valve	
(6)	Tumble generator valve LH	(12)	Cushion	

Tightening torque: N·m (kgf-m, ft-lb)
T1: 3.4 (0.3, 2.5)
T2: 6 (0.6, 4.4)
T3: 6.4 (0.7, 4.7)
T4: 8.3 (0.8, 6.1)
T5: 25 (2.5, 18.4)

2. INTAKE MANIFOLD 2

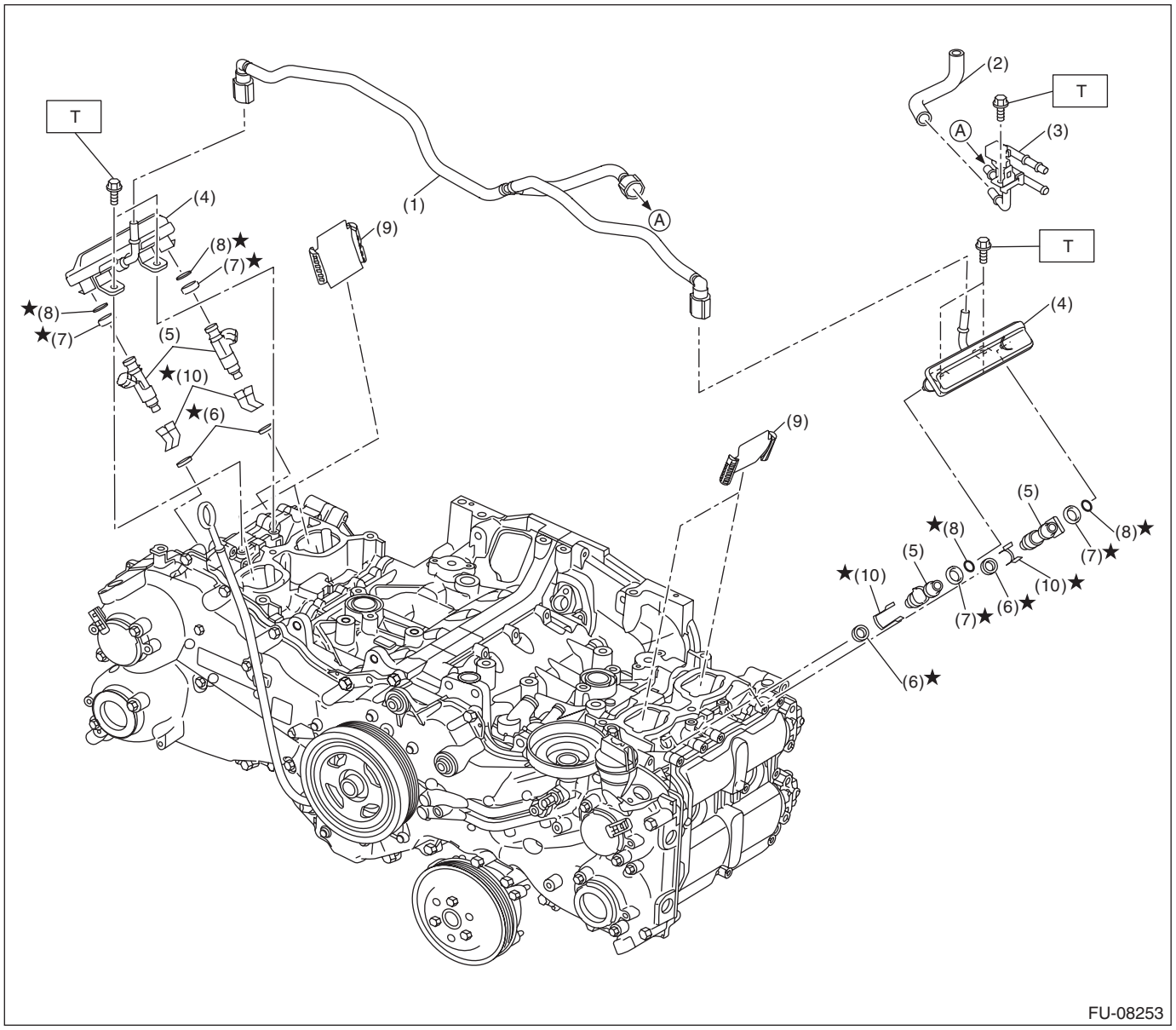

(1) Fuel delivery pipe
(2) Vacuum hose
(3) Fuel pipe A
(4) Fuel pipe B
(5) Fuel injector
(6) Seal ring
(7) Rubber
(8) O-ring
(9) Cylinder head plate
(10) Fuel injector holder

Tightening torque: N·m (kgf-m, ft-lb)
T: 6.4 (0.7, 4.7)

3. THROTTLE BODY

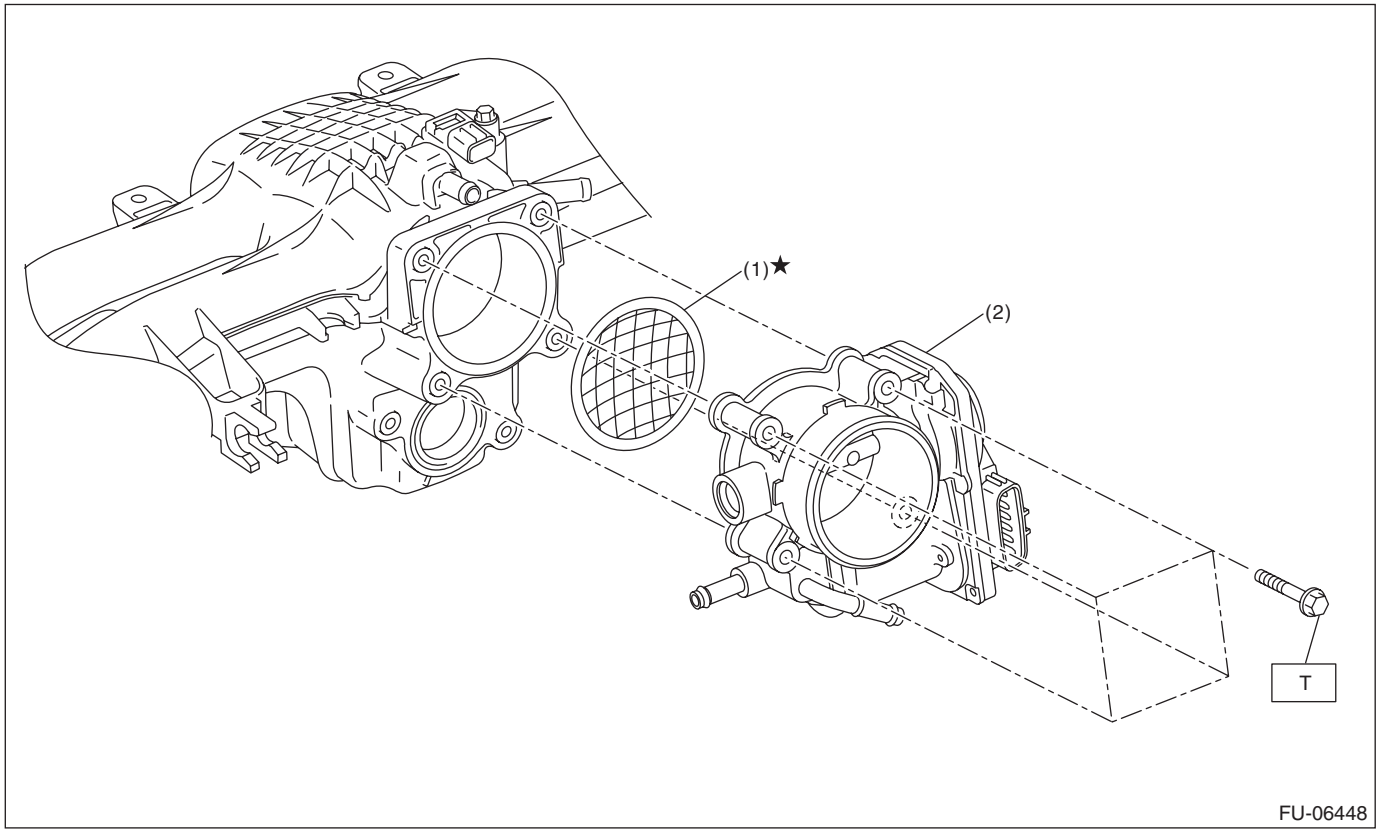

(1) Gasket
(2) Throttle body

Tightening torque: N·m (kgf-m, ft-lb)
T: 8 (0.8, 5.9)

4. CRANKSHAFT POSITION, CAMSHAFT POSITION AND KNOCK SENSORS

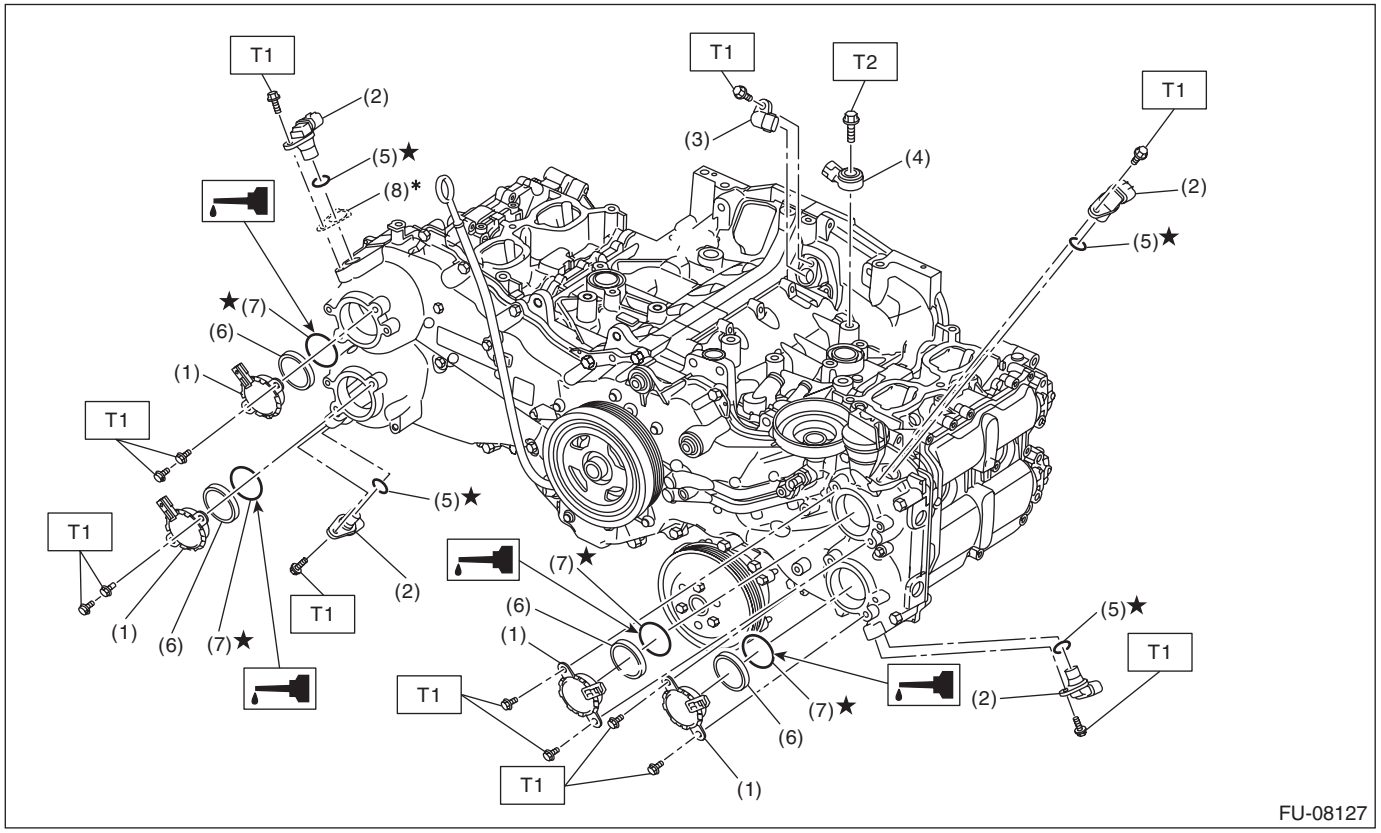

(1) Oil control solenoid
(2) Camshaft position sensor
(3) Crankshaft position sensor
(4) Knock sensor
(5) O-ring
(6) Back-up ring
(7) O-ring
(8) Spacer

* Zero or one spacer for gap adjustment.

Tightening torque: N·m (kgf-m, ft-lb)
T1: 6.4 (0.7, 4.7)
T2: 24 (2.4, 17.7)

5. FUEL TANK

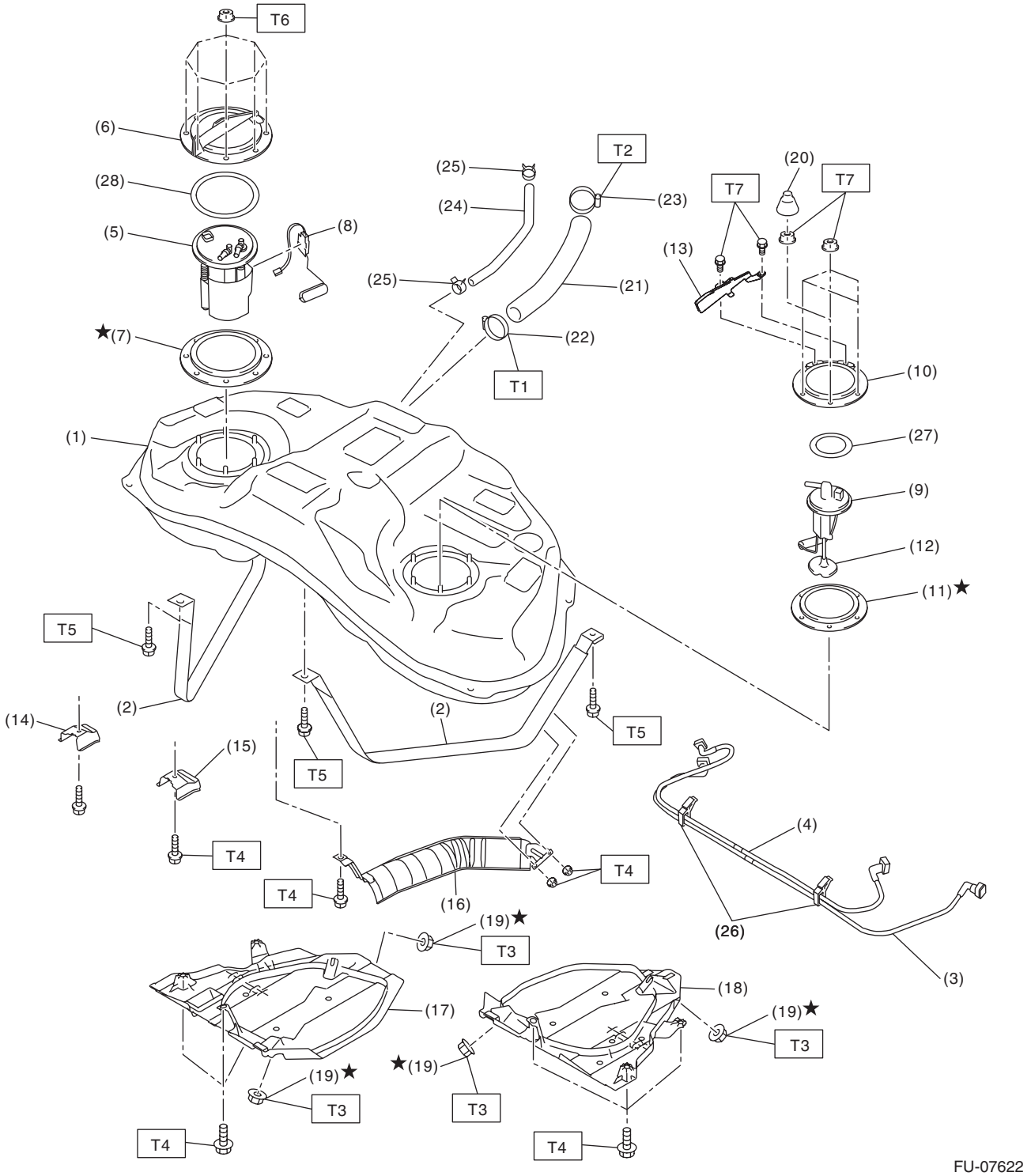
T6
(6)
(28)
(5)
(8)
★(7)
(25)
(24)
(25)
T2
(23)
(21)
(22)
T1
(20)
T7
T7
(13)
(10)
(27)
(9)
(12)
(11)★
(1)
T5
(2)
(14)
(15)
T4
T5
(2)
T5
T4
T4
(16)
(4)
(26)
(3)
(19)★
T3
(17)
(18)
(19)★
T3
★(19)
T3
(19)★
T3
T4
T4
FU-07622

(1) Fuel tank
(2) Fuel tank band
(3) Delivery tube
(4) Jet pump tube
(5) Fuel pump ASSY
(6) Fuel pump upper plate
(7) Fuel pump gasket
(8) Fuel level sensor
(9) Fuel sub level sensor
(10) Fuel sub level sensor upper plate
(11) Fuel sub level sensor gasket
(12) Fuel sub level sensor filter
(13) Fuel sub level sensor protector
(14) Stopper RH
(15) Stopper LH
(16) Heat shield cover
(17) Fuel tank protector RH
(18) Fuel tank protector LH
(19) Self-locking nut
(20) Rubber cap
(21) Fuel filler hose
(22) Clamp
(23) Clamp
(24) Air vent hose
(25) Clip
(26) Tube clamp
(27) Fuel sub level sensor upper plate cushion
(28) Fuel pump upper plate cushion

Tightening torque: N·m (kgf-m, ft-lb)

T1: 2 (0.2, 1.5)
T2: 2.5 (0.3, 1.8)
T3: 9 (0.9, 6.6)
T4: 18 (1.8, 13.3)
T5: 33 (3.4, 24.3)
T6: <Ref. to FU(H4DO(w/o HEV))-144, INSTALLATION, Fuel Pump.>
T7: <Ref. to FU(H4DO(w/o HEV))-151, INSTALLATION, Fuel Sub Level Sensor.>

6. FUEL LINE

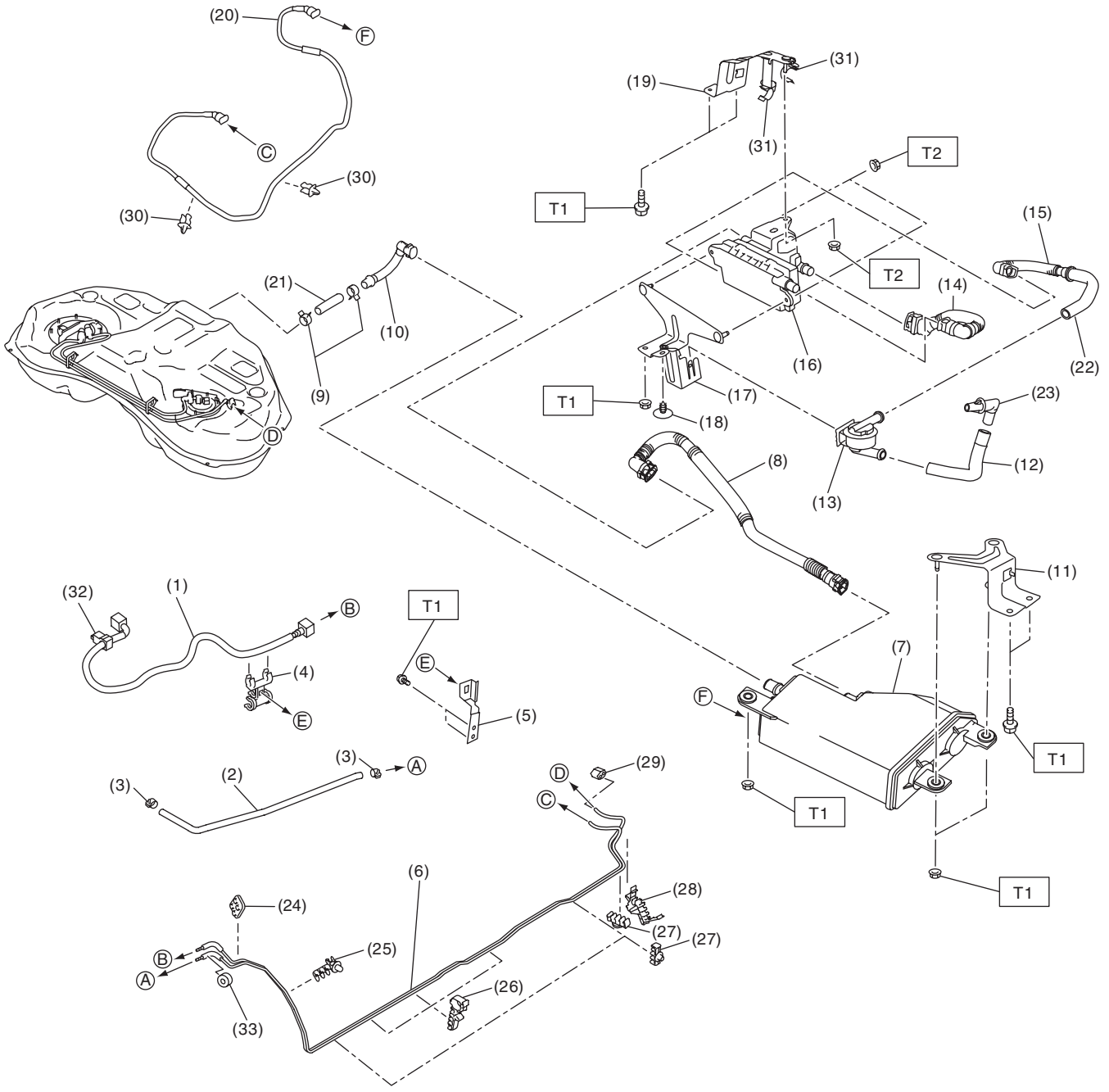

FU-08172

(1) Fuel delivery tube
(2) Evaporation hose
(3) Clip
(4) Hose clamp
(5) Hose clamp bracket
(6) Fuel pipe ASSY
(7) Canister
(8) Drain tube A
(9) Clip
(10) Vent tube
(11) Canister bracket
(12) Intake hose
(13) Drain separator
(14) Drain tube B
(15) Drain tube C
(16) Leak check valve ASSY
(17) Leak check valve bracket A
(18) Clip
(19) Leak check valve bracket B
(20) Purge pipe
(21) Vent hose
(22) Drain hose
(23) Connector
(24) Fuel pipe front grommet
(25) Pipe clamp
(26) Pipe clamp
(27) Pipe clamp
(28) Pipe clamp
(29) Fuel pipe rear grommet
(30) Pipe clamp
(31) Tube clamp
(32) Tube clamp
(33) Bushing

Tightening torque: N·m (kgf-m, ft-lb)
T1: 7.5 (0.8, 5.5)
T2: 18 (1.8, 13.3)

7. FUEL FILLER PIPE

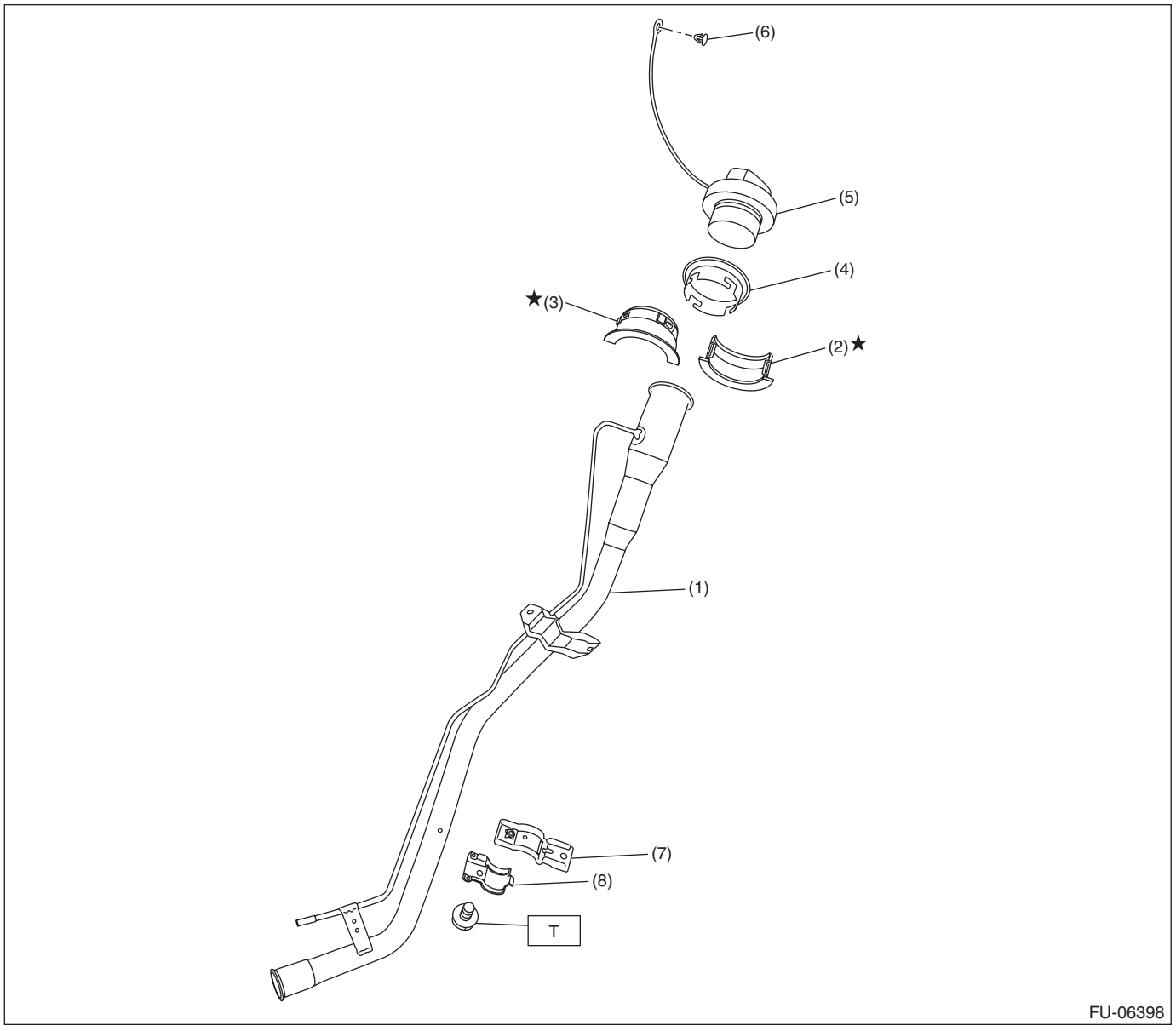

(1) Fuel filler pipe ASSY
(2) Neck holder A
(3) Neck holder B
(4) Fuel filler pipe protector
(5) Fuel filler cap
(6) Clip
(7) Upper bracket
(8) Lower bracket

Tightening torque: N·m (kgf-m, ft-lb)
T: 7.35 (0.7, 5.4)

8. FUEL PUMP

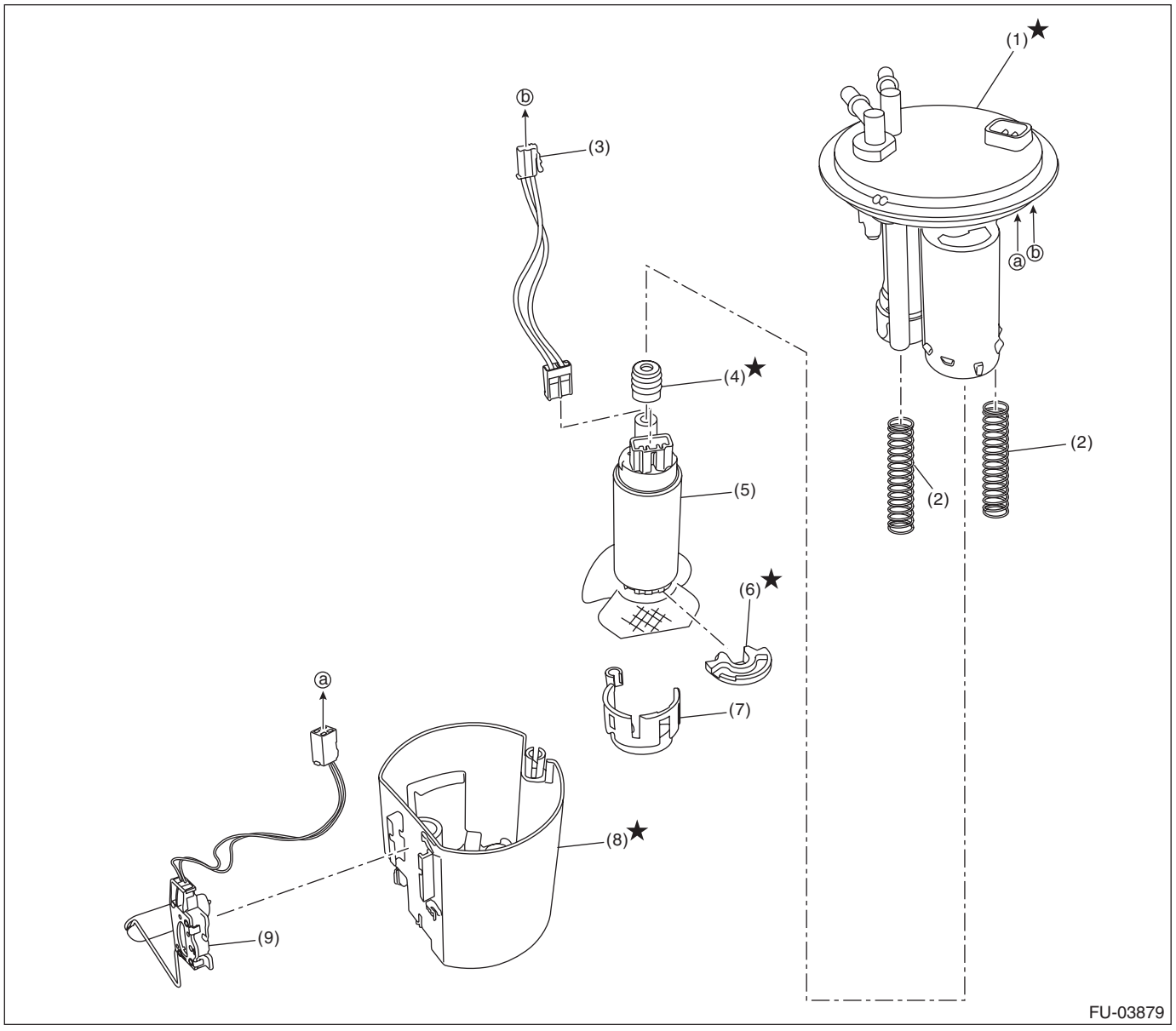

(1) Fuel filter ASSY
(2) Pump module spring
(3) Fuel pump harness
(4) Packing spacer
(5) Fuel pump
(6) Support rubber cushion
(7) Fuel pump holder
(8) Fuel chamber ASSY
(9) Fuel level sensor

C: CAUTION

- Prior to starting work, pay special attention to the following:
  1. Always wear work clothes, a work cap, and protective shoes. Additionally, wear a helmet, protective goggles, etc. if necessary.
  2. Protect the vehicle using a seat cover, fender cover, etc.
  3. Prepare the service tools, clean cloth, containers to catch grease and oil, etc.
- Place “NO OPEN FLAMES” signs near the working area.
- Prepare a container and cloth to prevent scattering of fuels when performing work where fuels can be spilled. If the oil spills, wipe it off immediately to prevent from penetrating into floor or flowing out for environmental protection.
- Vehicle components are extremely hot immediately after driving. Be wary of receiving burns from heated parts.
- When performing a repair, identify the cause of trouble and avoid unnecessary removal, disassembly and replacement.
- Before disconnecting connectors of sensors or units, be sure to disconnect the ground cable from battery.
- Always use the jack-up point when the shop jacks or rigid racks are used to support the vehicle.
- Remove contamination including dirt and corrosion before removal, installation, disassembly or assembly.
- Keep the removed parts in order and protect them from dust and dirt.
- All removed parts, if to be reused, should be reinstalled in the original positions with attention to the correct directions, etc.
- Bolts, nuts and washers should be replaced with new parts as required.
- Follow all government and local regulations concerning disposal of refuse when disposing fuel.
- When the suspension-related components have been removed and installed, be sure to adjust the steering angle sensor. <Ref. to VDC-21, ADJUSTMENT, VDC Control Module and Hydraulic Control Unit (VDC-CM&H/U).>

D: PREPARATION TOOL

1. SPECIAL TOOL

ILLUSTRATION	TOOL NUMBER	DESCRIPTION	REMARKS
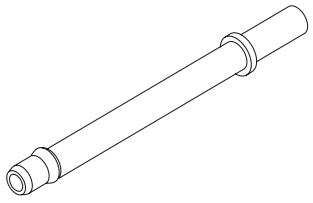 ST18471AA000	18471AA000	FUEL PIPE ADAPTER	Used for draining fuel.
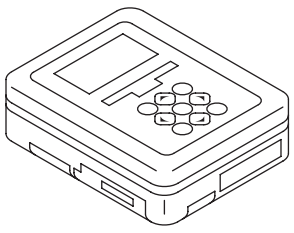 ST1B022XU0	1B022XU0	SUBARU SELECT MONITOR III KIT	Used for draining fuel and each inspection.

2. GENERAL TOOL

TOOL NAME	REMARKS
Circuit tester	Used for measuring resistance and voltage.
Oscilloscope	Used for inspecting the waveform of each sensor.

2. Throttle Body

A: REMOVAL

1) Disconnect the ground cable from battery.

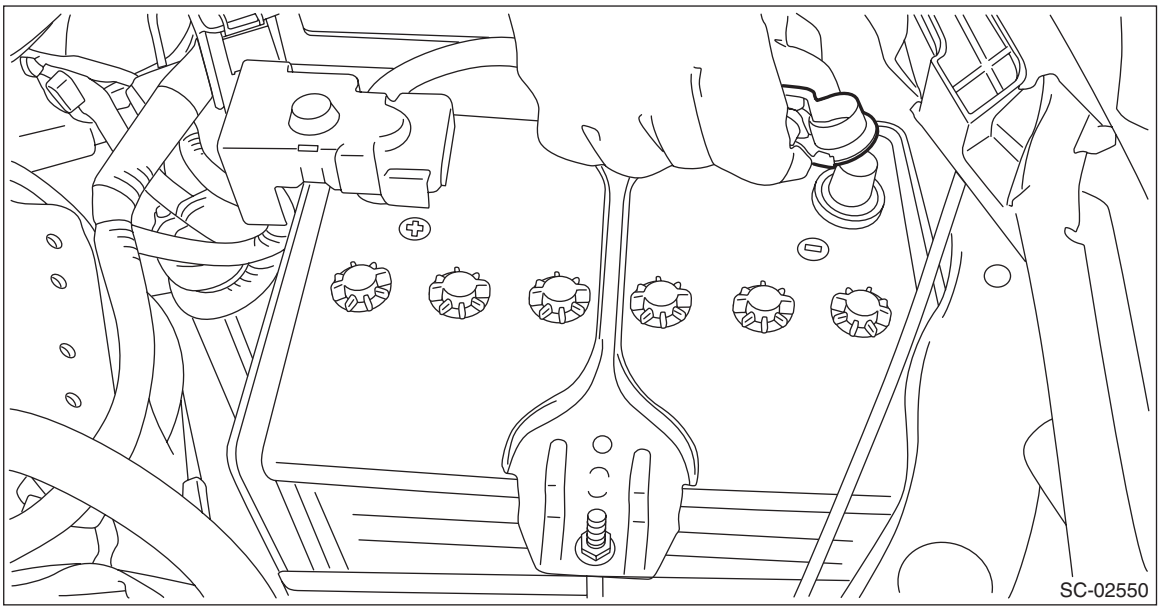

2) Lift up the vehicle.
3) Remove the under cover. <Ref. to EI-29, REMOVAL, Front Under Cover.>
4) Drain approximately 3.0 L (3.2 US qt, 2.6 Imp qt) of coolant. <Ref. to CO(H4DO(w/o HEV))-16, DRAINING OF ENGINE COOLANT, REPLACEMENT, Engine Coolant.>
5) Remove the clip (A) from the air intake boot.
6) Loosen the clamp (B) connecting the air intake boot and air cleaner case (rear).
7) Loosen the clamp (C) which connects the air intake boot and throttle body.

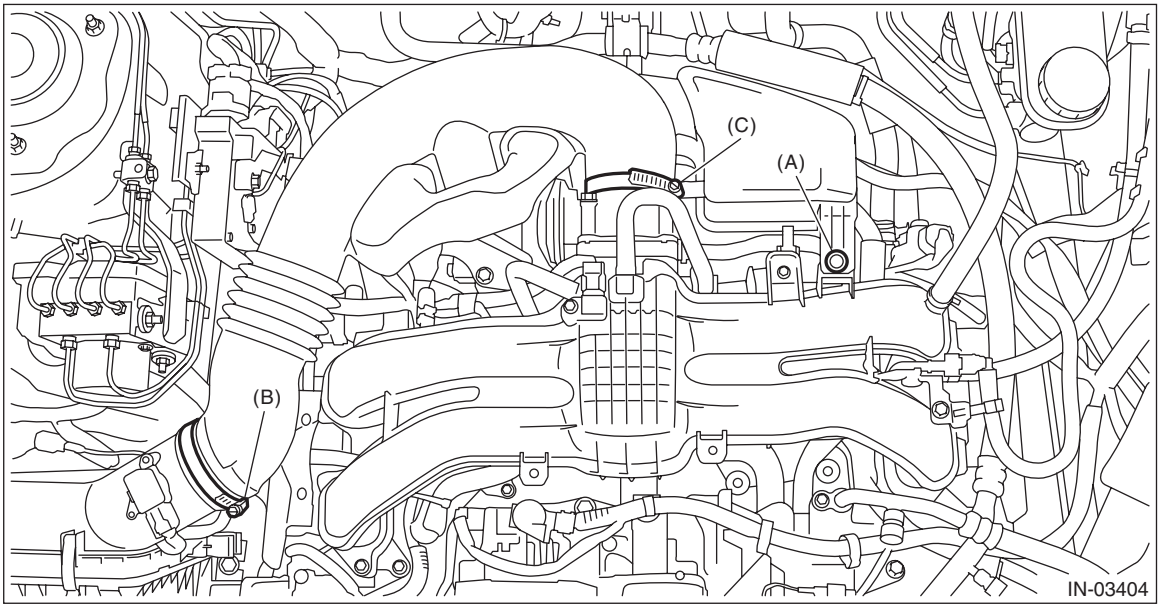

8) Remove the air intake boot from the throttle body, and move it to the left side wheel apron.

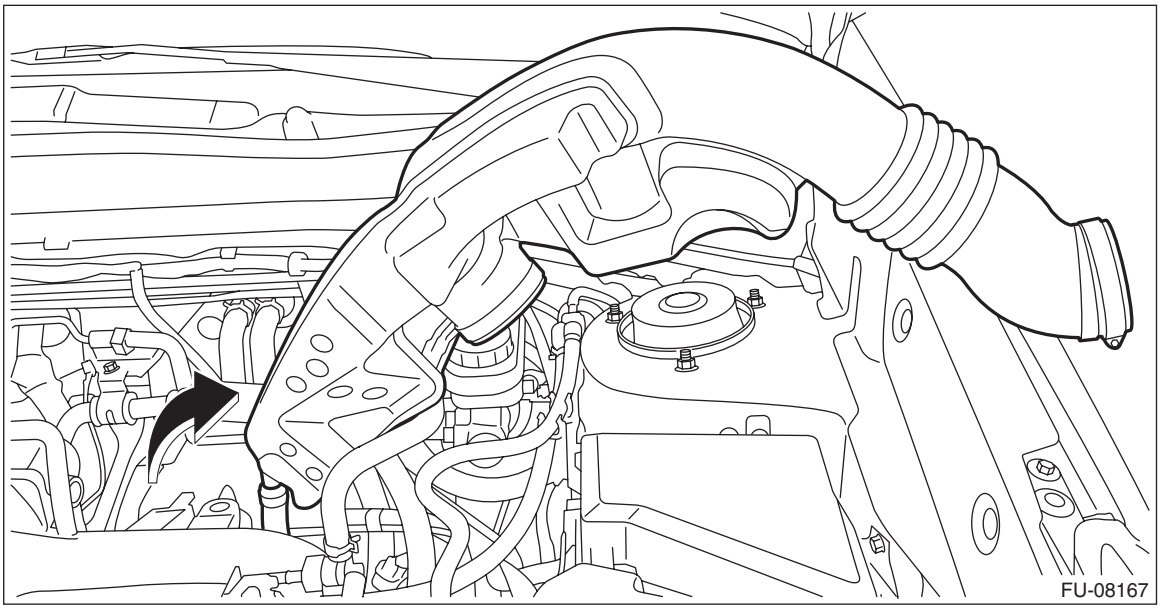

9) Disconnect the connectors (A) from the throttle position sensor.
10) Disconnect the preheater hose (B) from the throttle body.

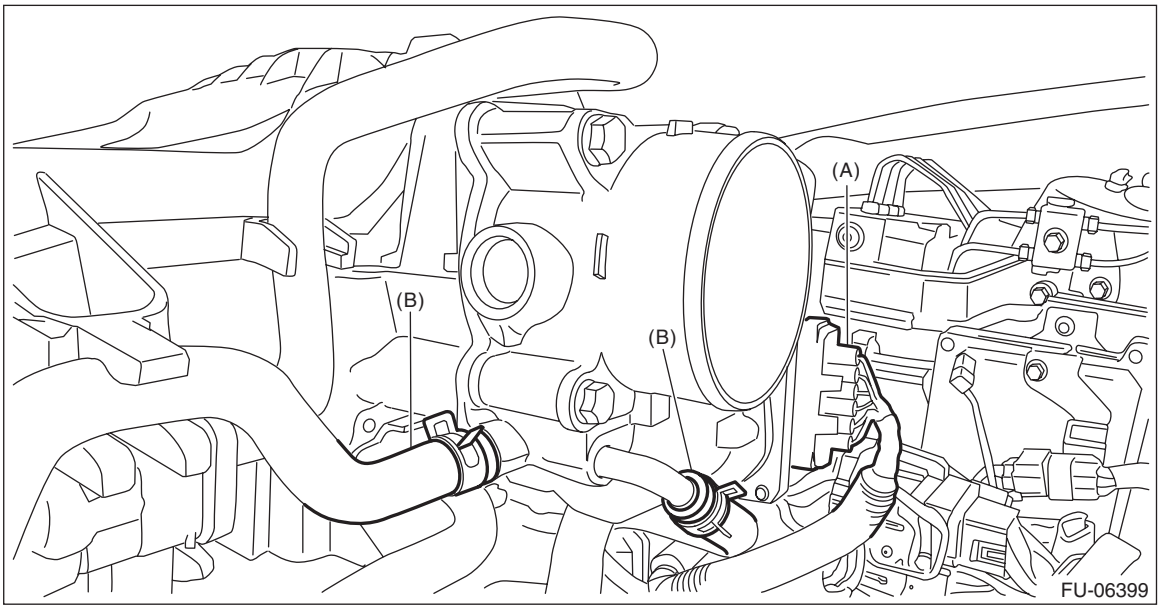

11) Remove the throttle body from the intake manifold.

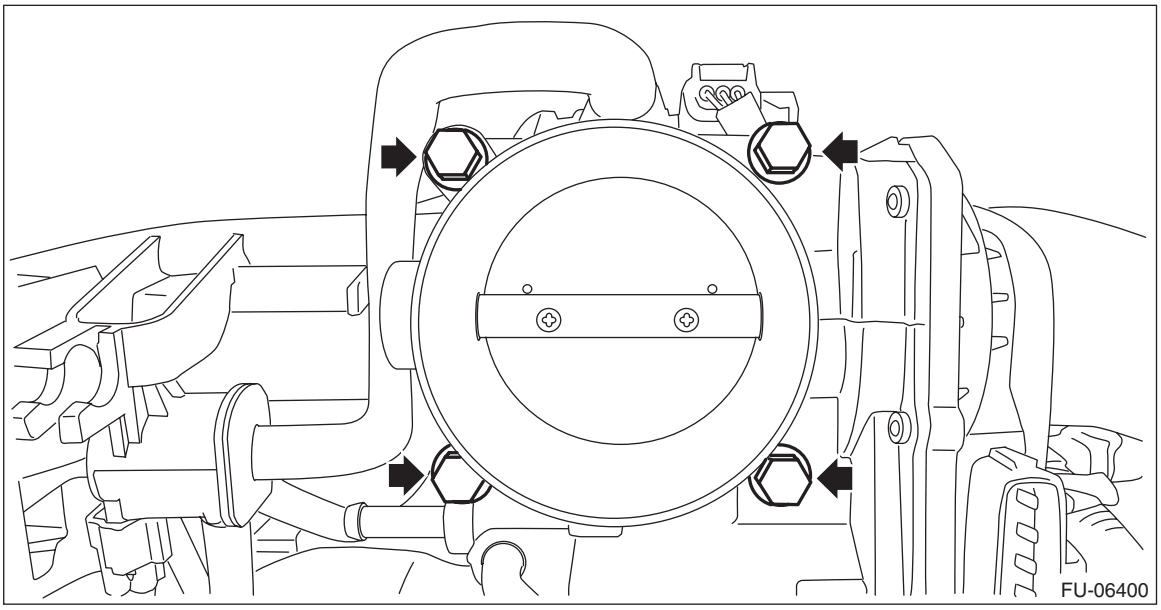

B: INSTALLATION

Install in the reverse order of removal.

NOTE:
Use a new gasket.

Tightening torque:
8 N·m (0.8 kgf-m, 5.9 ft-lb)

C: INSPECTION

1. THROTTLE SENSOR (METHOD WITH CIRCUIT TESTER)

1) Remove the glove box. <Ref. to EI-73, REMOVAL, Glove Box.>
2) Turn the ignition switch to ON. (engine OFF)
3) Measure the voltage between ECM connector terminals.

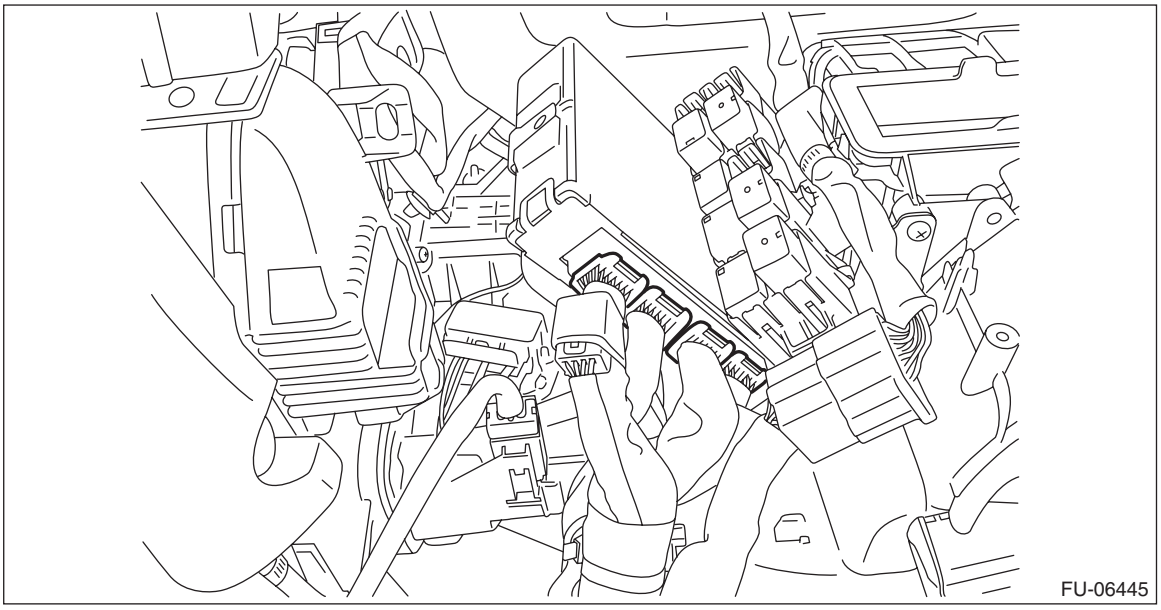

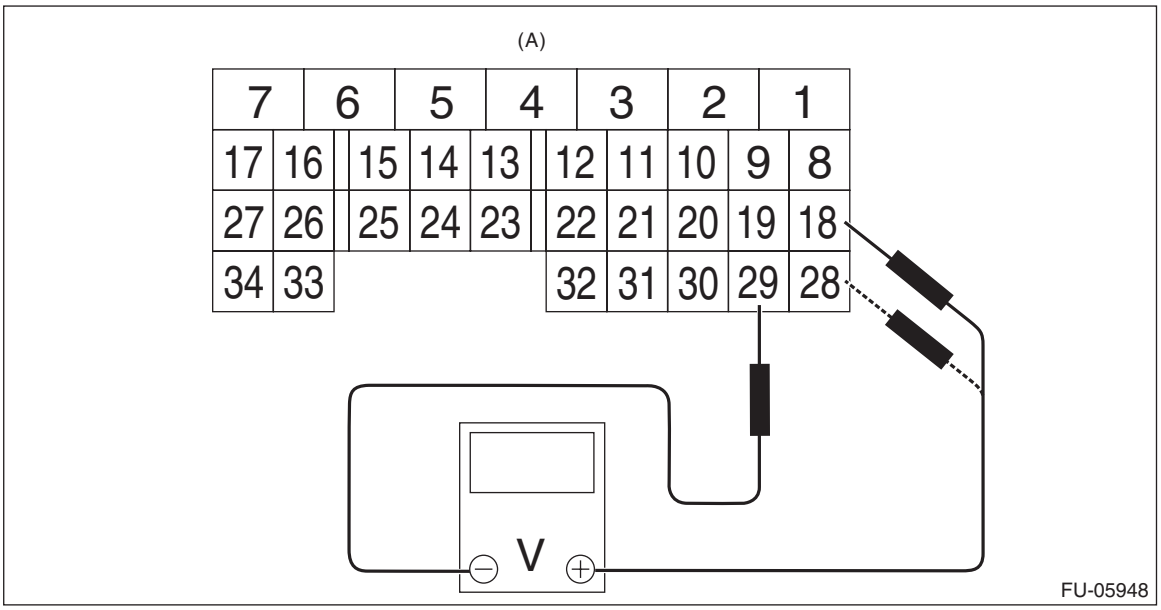

(A) To ECM connector

Throttle sensor	Accelerator pedal	Terminal No.	Standard
Main	Not depressed (full closed)	18 (+) and 29 (–)	Approx. 0.6 V
	Depressed (full opened)		Approx. 4.0 V
Sub	Not depressed (full closed)	28 (+) and 29 (–)	Approx. 1.5 V
	Depressed (full opened)		Approx. 4.2 V

4) After inspection, install the related parts in the reverse order of removal.

2. THROTTLE SENSOR (METHOD WITH SUBARU SELECT MONITOR)

1) Turn the ignition switch to ON. (engine OFF)
2) Read the throttle opening angle signal and voltage of throttle sensor using Subaru Select Monitor. <Ref. to EN(H4DO w/o HEV)(diag)-36, READ CURRENT DATA FOR ENGINE (NORMAL MODE), OPERATION, Subaru Select Monitor.>

Throttle sensor	Throttle opening angle signal	Standard
Main	0.0%	Approx. 0.6 V
	100.0%	Approx. 4.0 V
Sub	0.0%	Approx. 1.5 V
	100.0%	Approx. 4.2 V

3. OTHER INSPECTIONS

1) Check that the throttle body has no deformation, cracks or other damages.
2) Check that the preheater hose has no cracks, damage or loose part.

3. Intake Manifold

A: REMOVAL

1) Release the fuel pressure. <Ref. to FU(H4DO(w/o HEV))-116, RELEASING OF FUEL PRESSURE, PROCEDURE, Fuel.>
2) Disconnect the ground cable from battery.

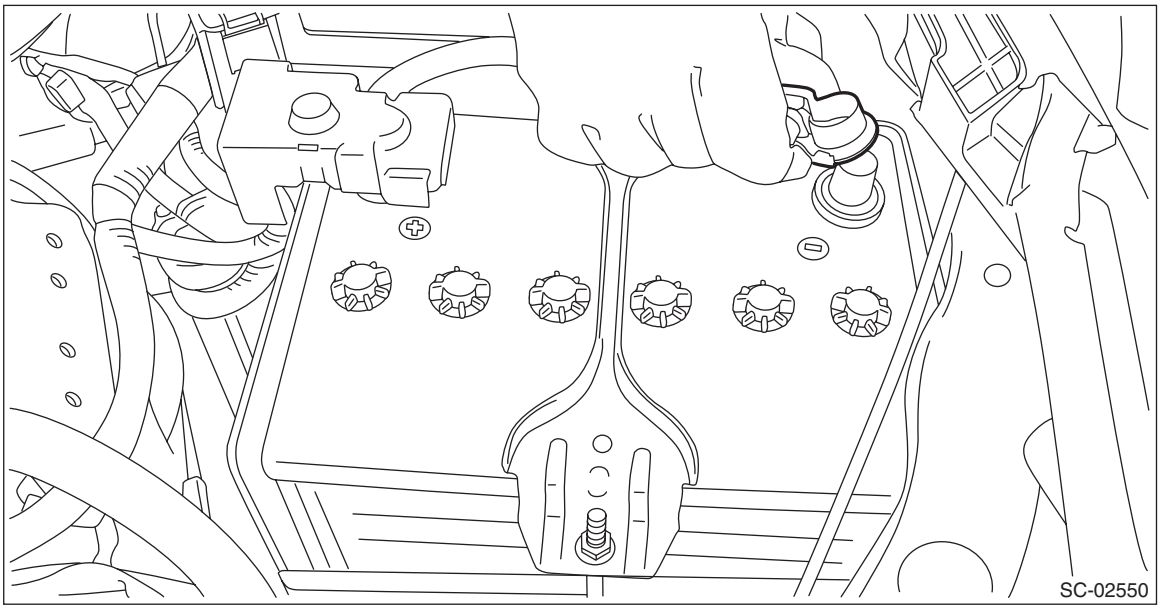

3) Open the fuel filler lid and remove the fuel filler cap.
4) Lift up the vehicle.
5) Remove the under cover. <Ref. to EI-29, REMOVAL, Front Under Cover.>
6) Drain approximately 3.0 L (3.2 US qt, 2.6 Imp qt) of coolant. <Ref. to CO(H4DO(w/o HEV))-16, DRAINING OF ENGINE COOLANT, REPLACEMENT, Engine Coolant.>
7) Remove the clip (A) from the air intake boot.
8) Loosen the clamp (B) connecting the air intake boot and air cleaner case (rear).
9) Loosen the clamp (C) which connects the air intake boot and throttle body.

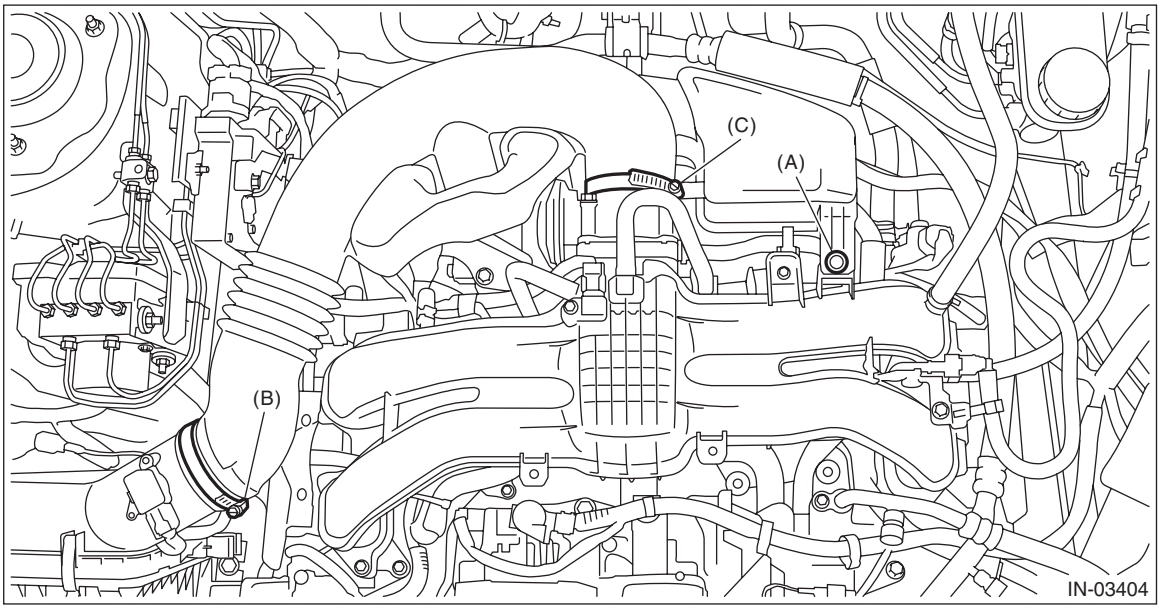

10) Remove the air intake boot from the throttle body, and move it to the left side wheel apron.

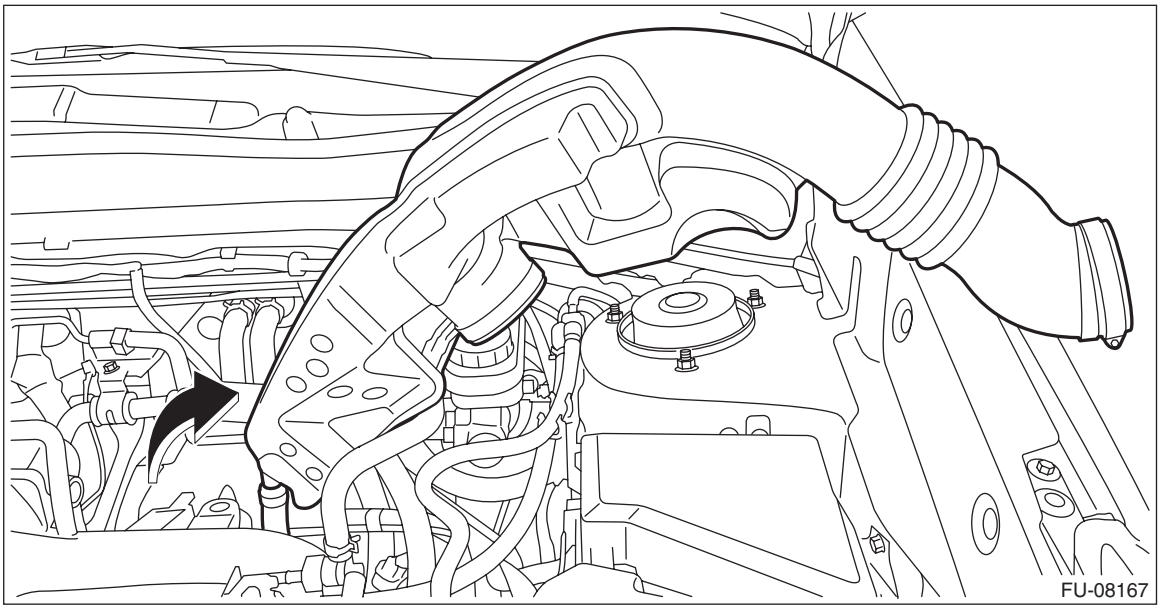

11) Disconnect the preheater hose from throttle body.

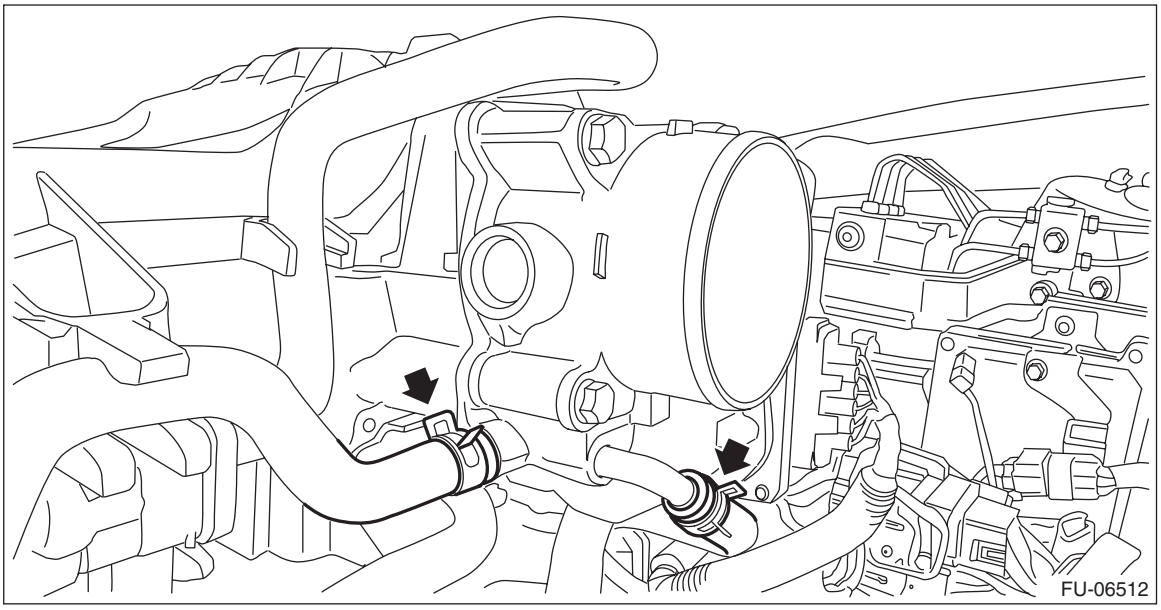

12) Disconnect the connector (A) from the purge control solenoid valve.
13) Loosen the bolt (B) which secures the EGR pipe to the intake manifold.

14) Remove the nut (C) which holds EGR pipe from the water pipe assembly.

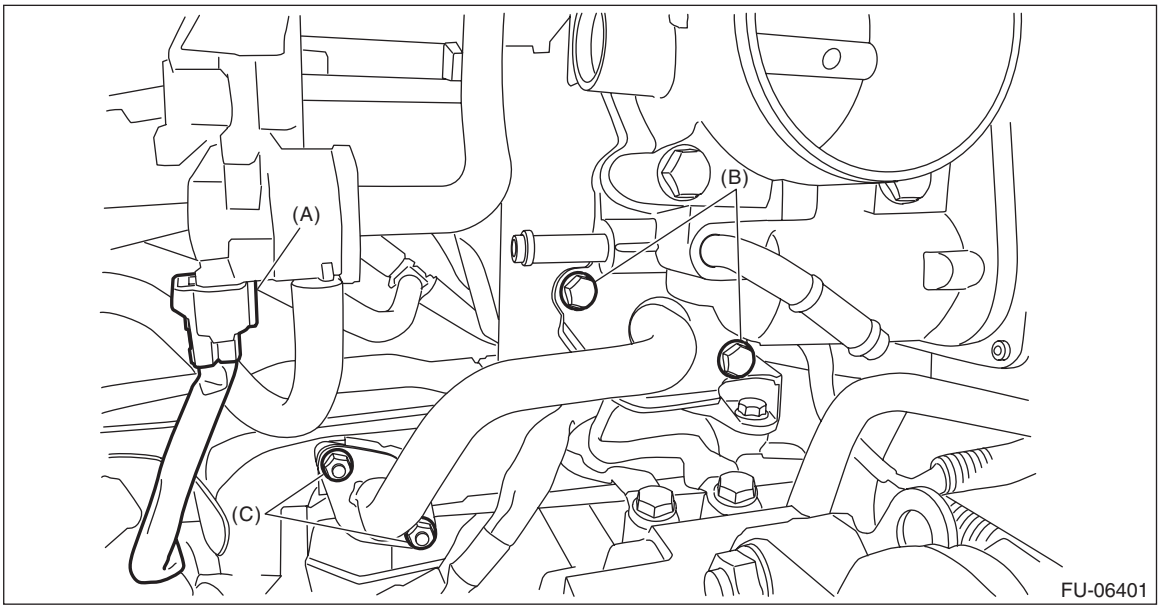

15) Disconnect the PCV hose (A) from intake manifold.
16) Disconnect the connector (B) from manifold absolute pressure sensor.
17) Disconnect the connector (C) from the throttle position sensor.

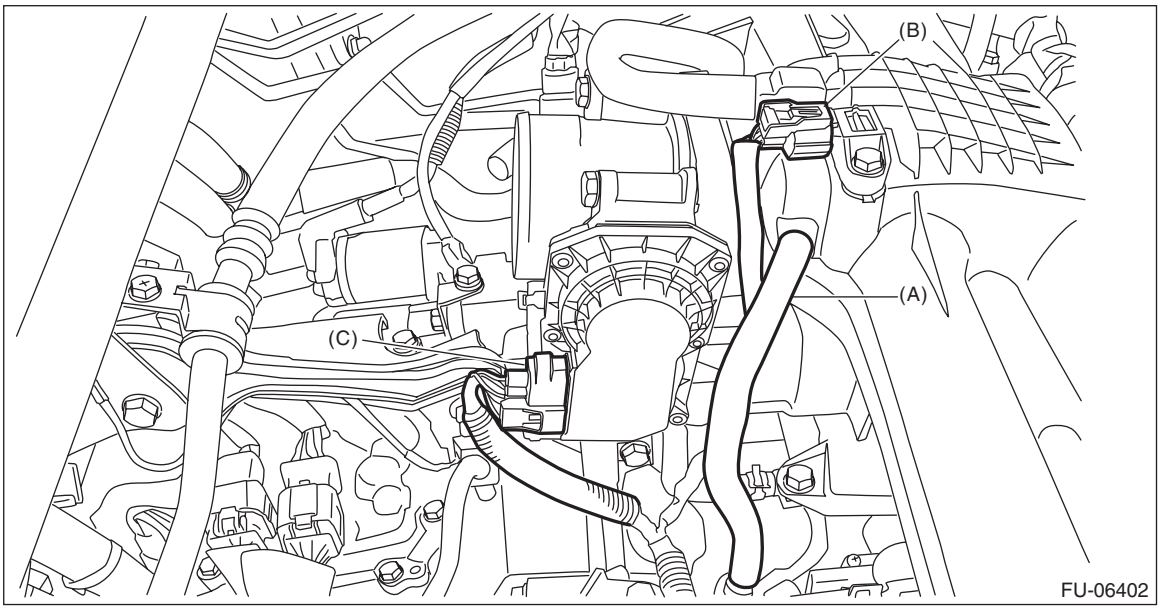

18) Disconnect the brake booster vacuum hose from the intake manifold.

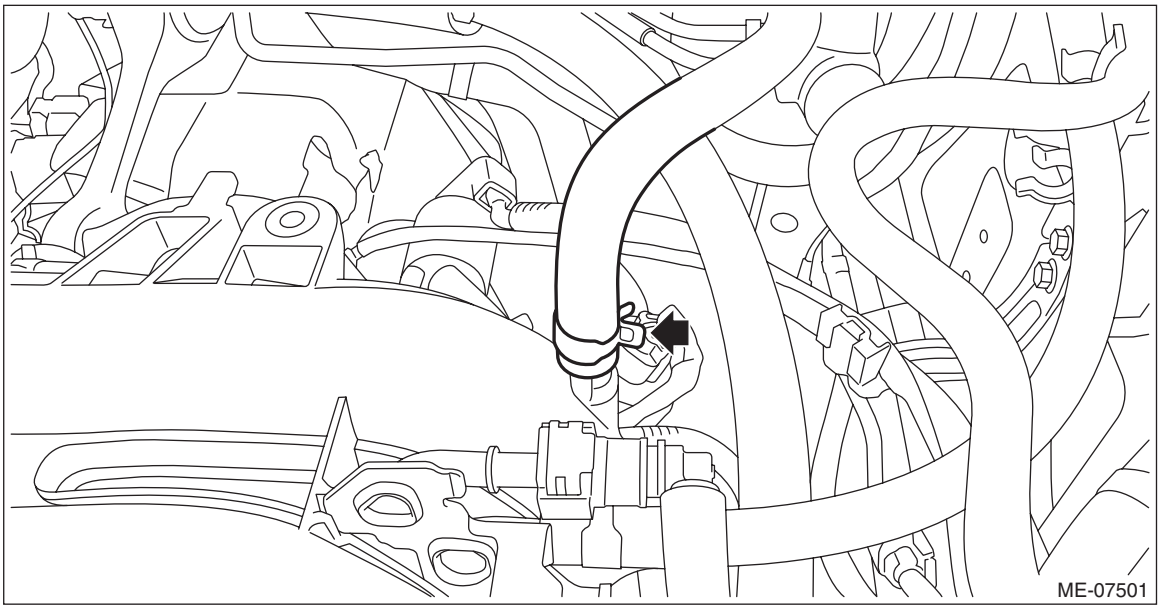

19) Disconnect the connector (A) from the mass air flow and intake air temperature sensor, and remove the clip (B) which holds the mass air flow and intake air temperature sensor harness.

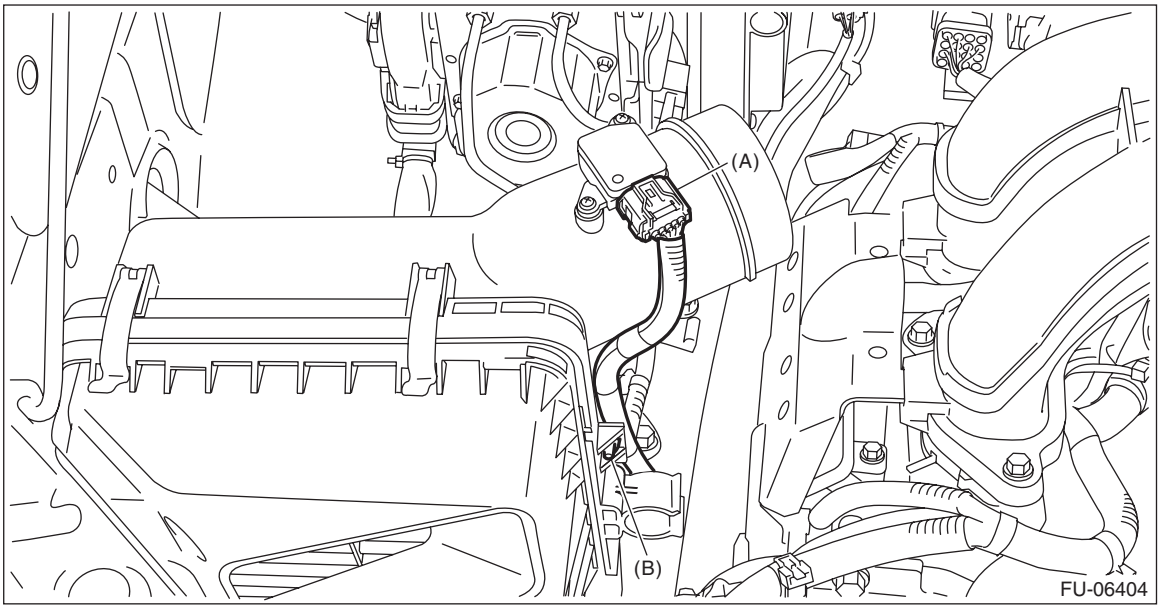

20) Remove the air cleaner case (rear).

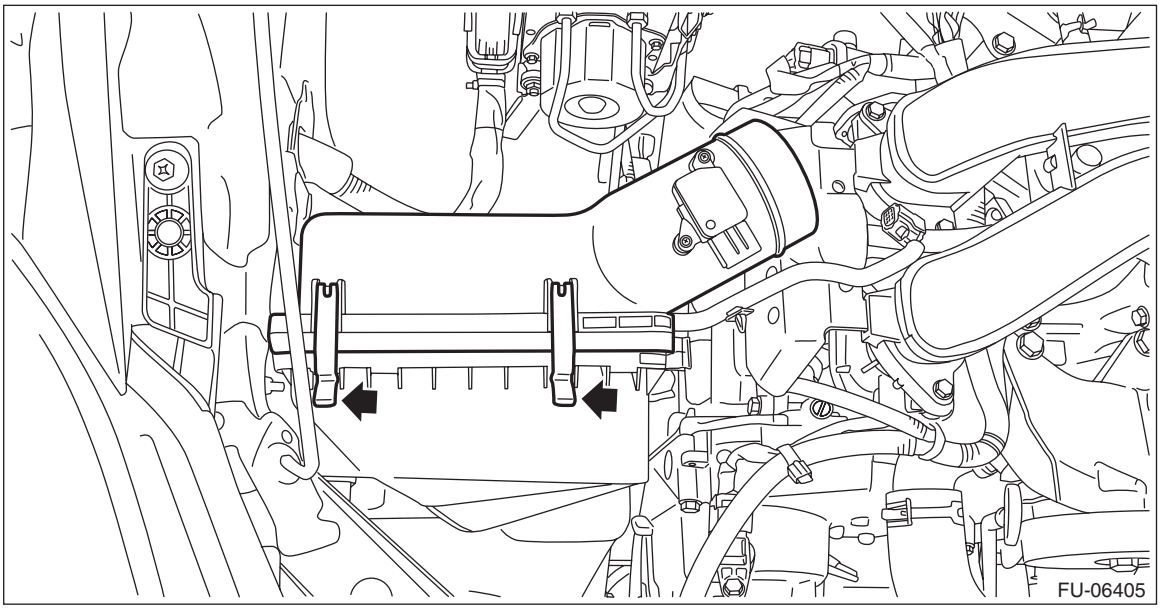

21) Remove the intake manifold protector RH.

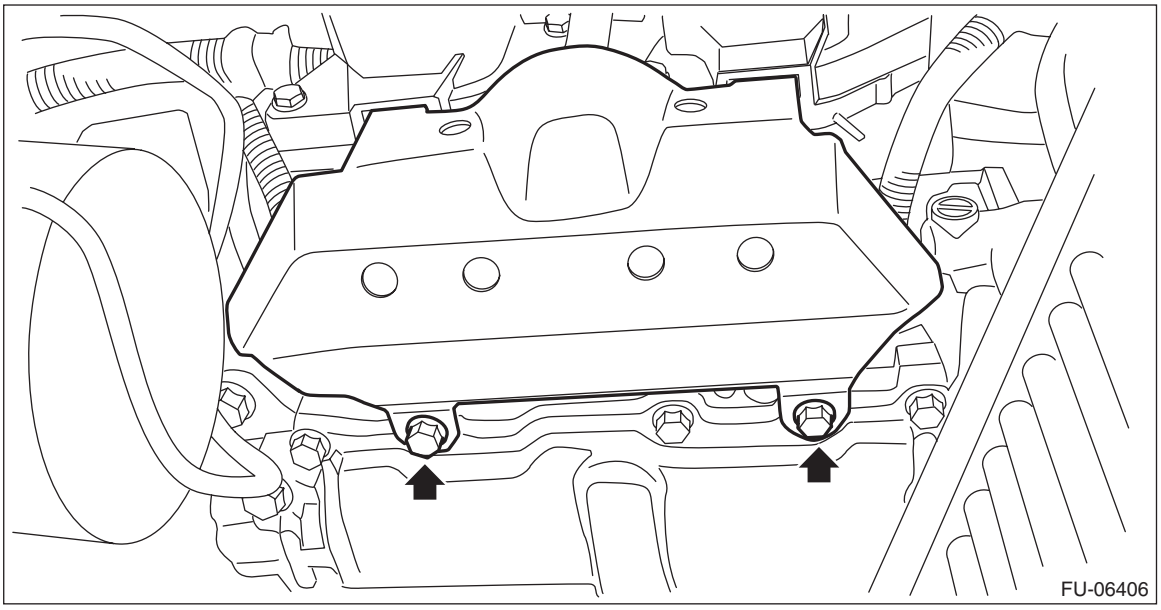

22) Disconnect the fuel delivery pipe from the fuel pipe RH.

CAUTION:
- **Be careful not to spill fuel.**
- **Catch the fuel from the pipes using a container or cloth.**

NOTE:
Disconnect the quick connector as shown in the figure.

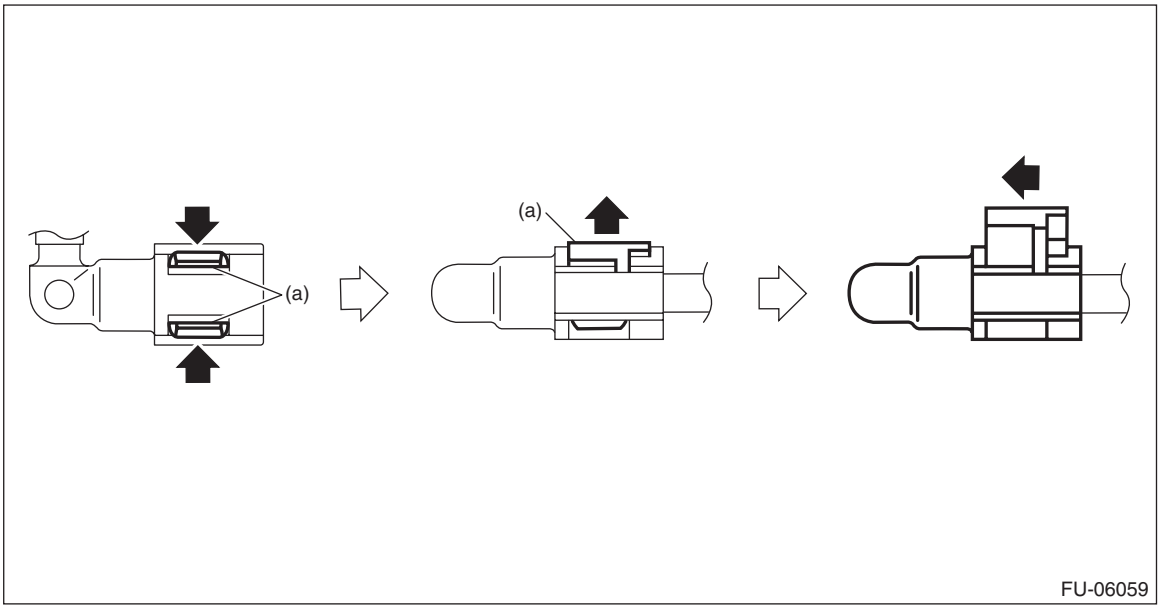

(a) Slider

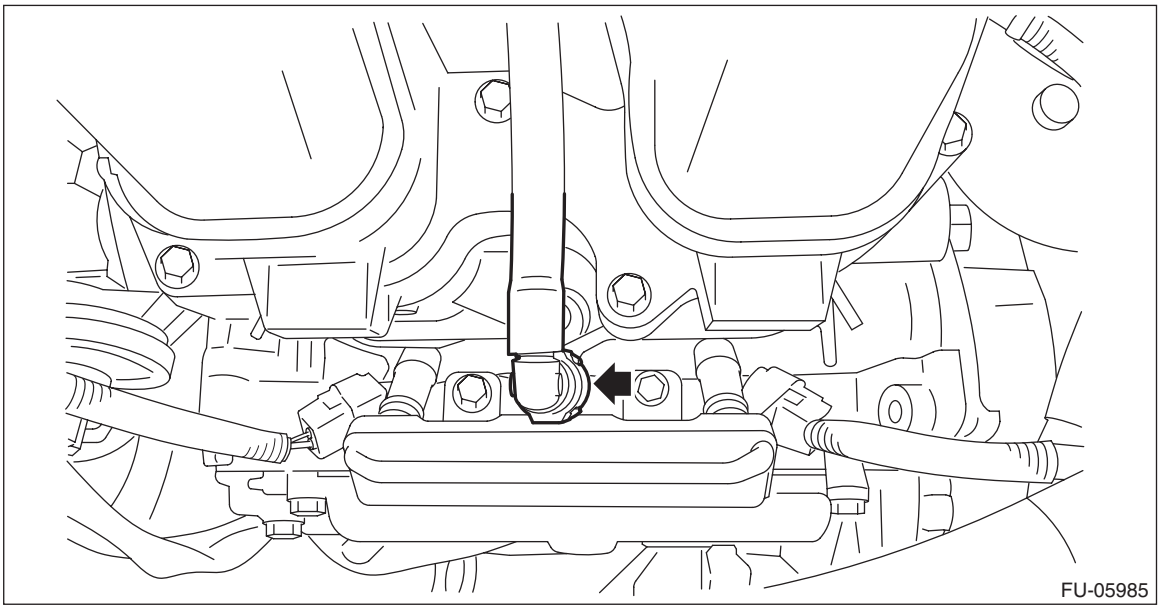

23) Remove the intake manifold protector LH.

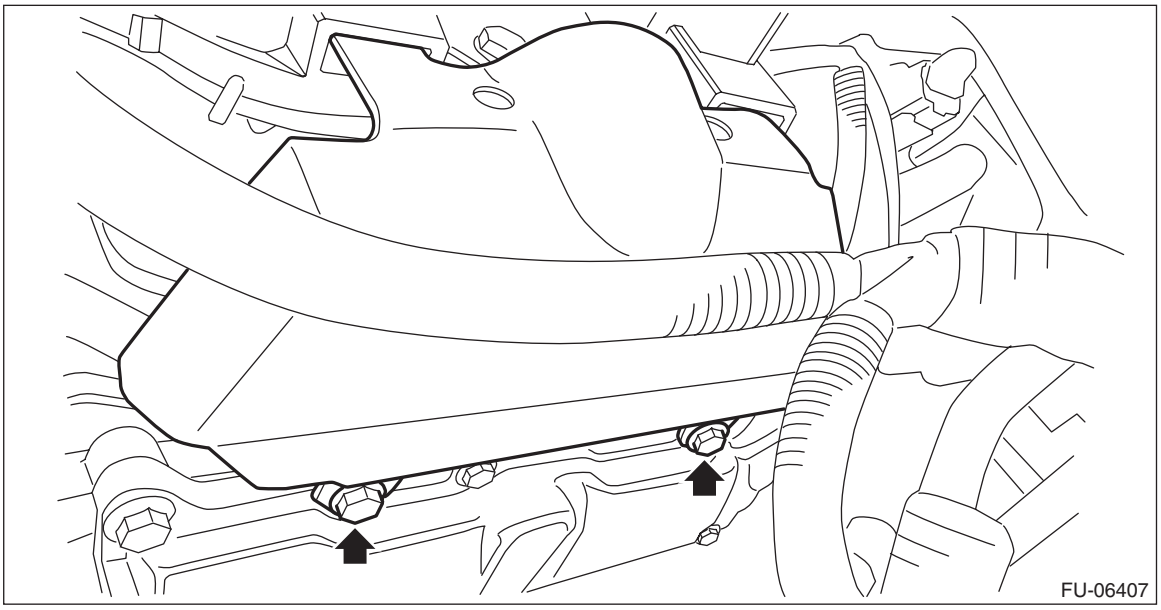

24) Disconnect the fuel delivery pipe from the fuel pipe LH.

CAUTION:
- **Be careful not to spill fuel.**
- **Catch the fuel from the pipes using a container or cloth.**

NOTE:
Disconnect the quick connector as shown in the figure.

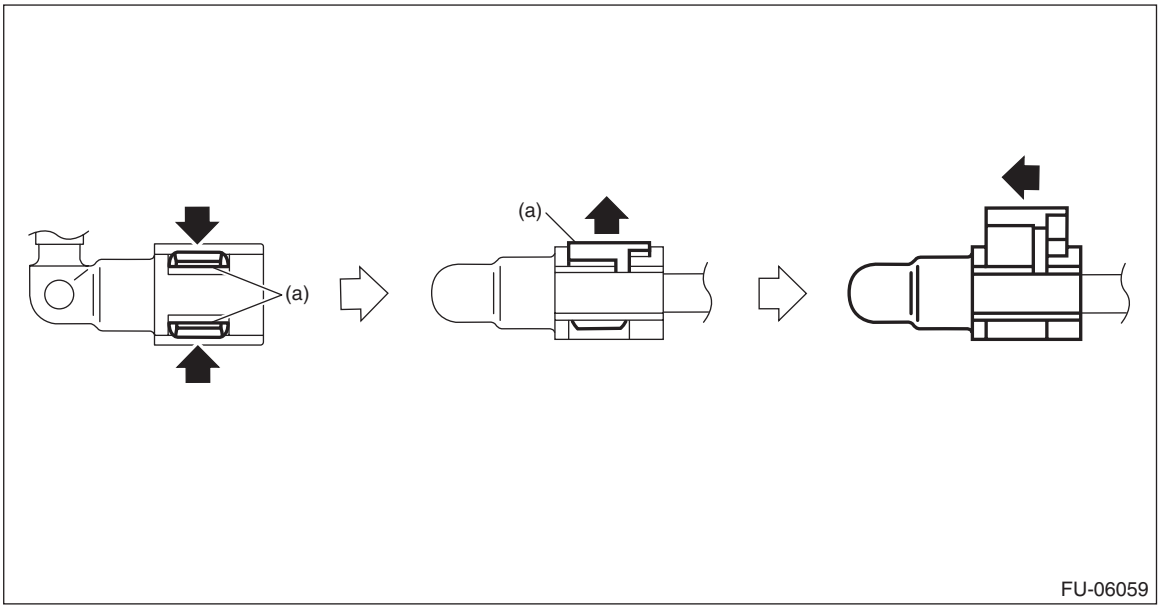

(a) Slider

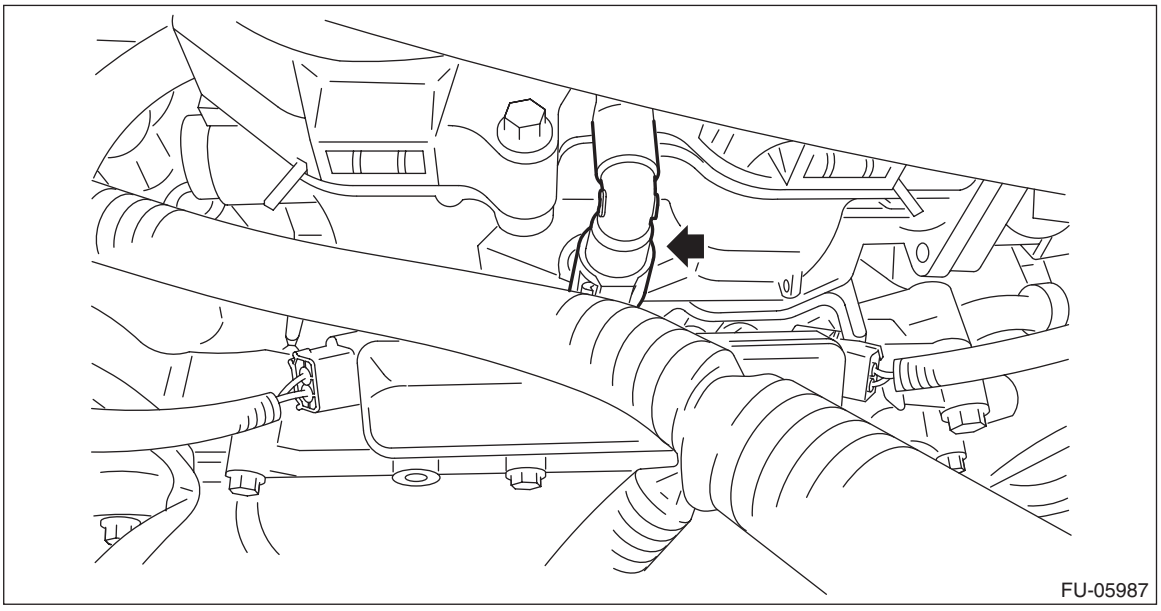

25) Disconnect the fuel delivery tube and evaporation hose.

CAUTION:
- **Be careful not to spill fuel.**
- **Catch the fuel from the tubes using a container or cloth.**
  (1) Disconnect the quick connector on the fuel delivery tube from the fuel pipe assembly, and remove the clip (A) securing the fuel delivery tube.

NOTE:
Disconnect the quick connector as shown in the figure.

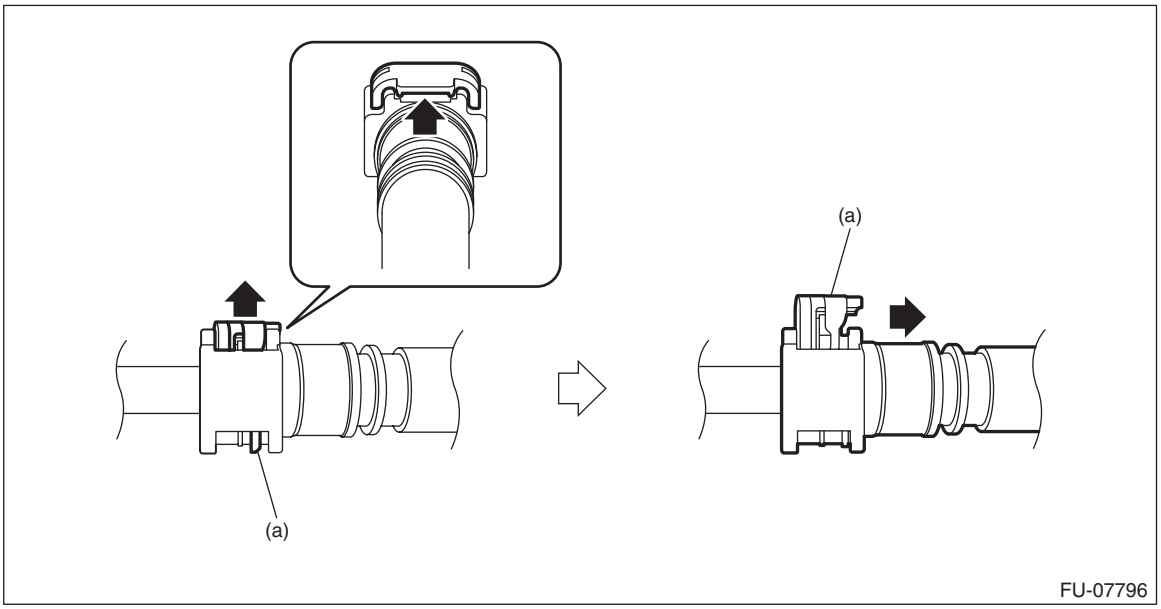

(a) Slider

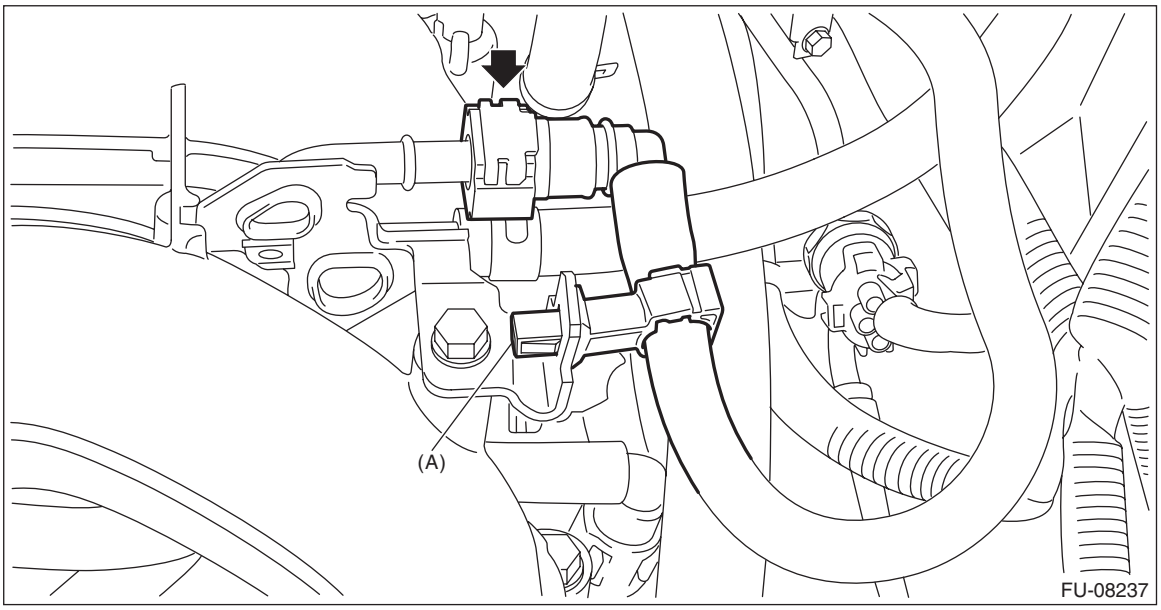

(2) Disconnect the evaporation hose from the fuel pipe assembly.

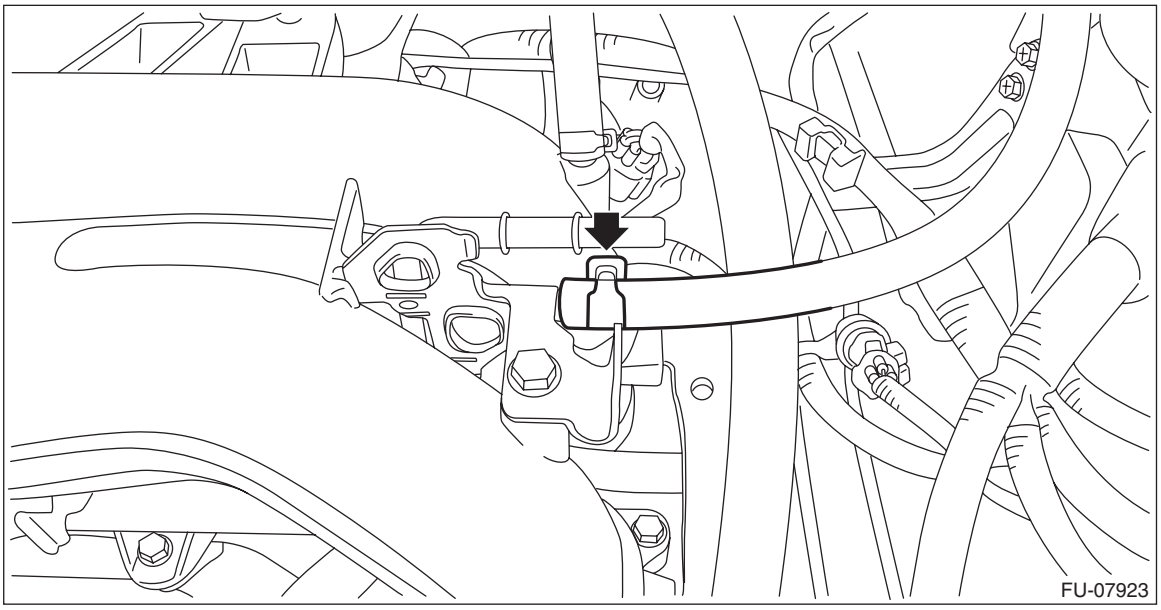

26) Remove the intake manifold from the tumble generator valve assembly.

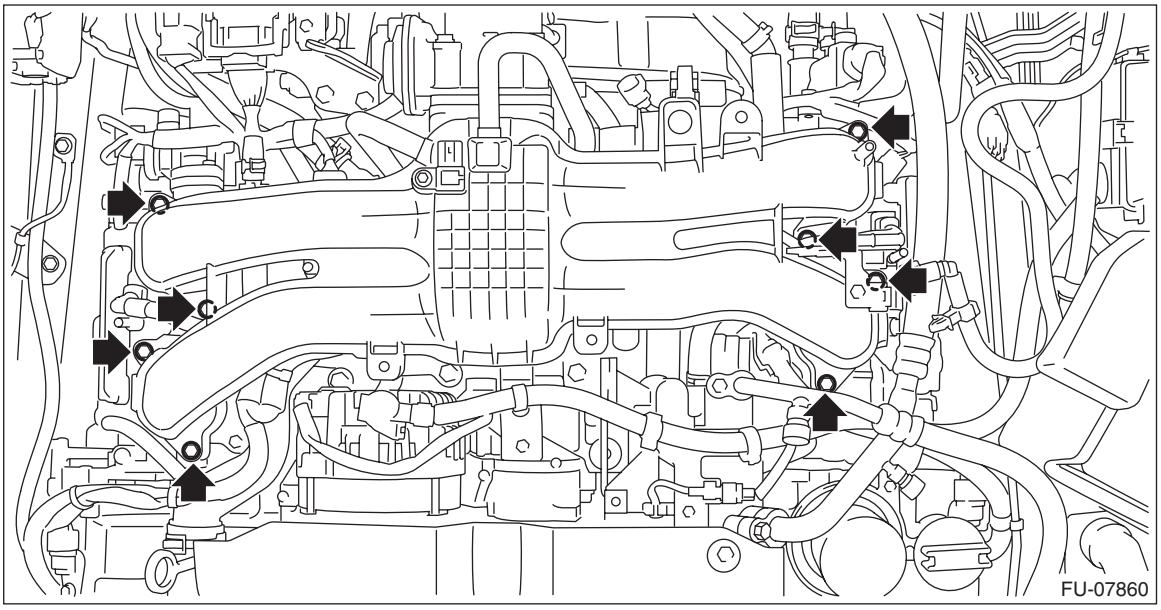

27) Remove the engine wiring harness. <Ref. to FU(H4DO(w/o HEV))-44, REMOVAL, Engine Wiring Harness.>

B: INSTALLATION

1) Install the engine wiring harness. <Ref. to FU(H4DO(w/o HEV))-49, INSTALLATION, Engine Wiring Harness.>
2) Install the intake manifold to the tumble generator valve assembly.

NOTE:
Use a new gasket.

Tightening torque:
8.3 N·m (0.8 kgf-m, 6.1 ft-lb)

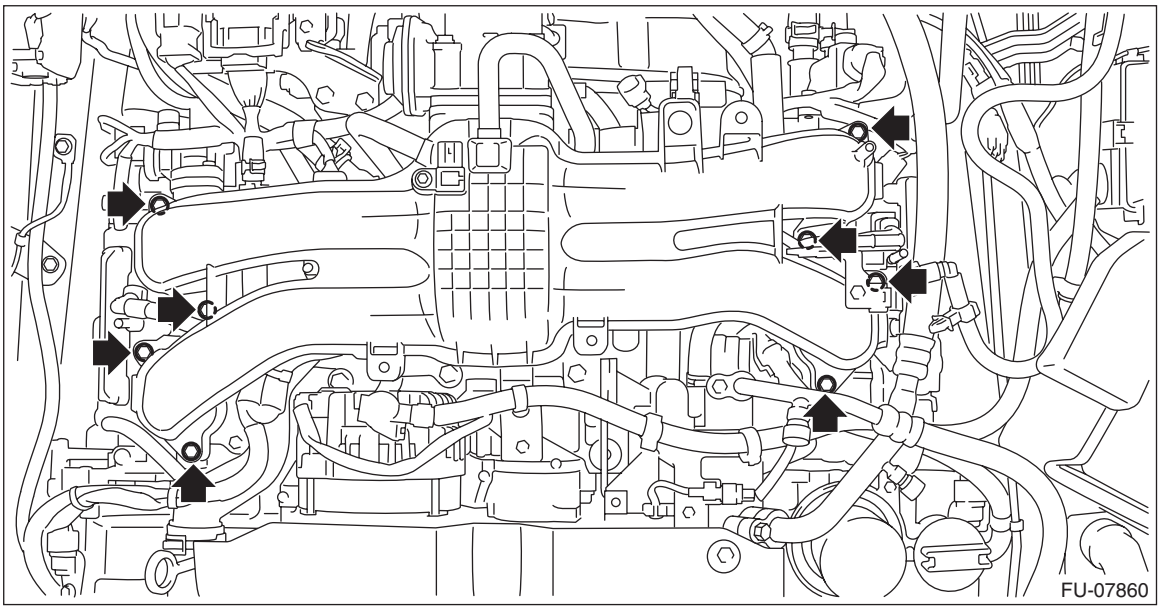

3) Connect the fuel delivery tube and evaporation hose.
(1) Connect the evaporation hose to fuel pipe assembly.

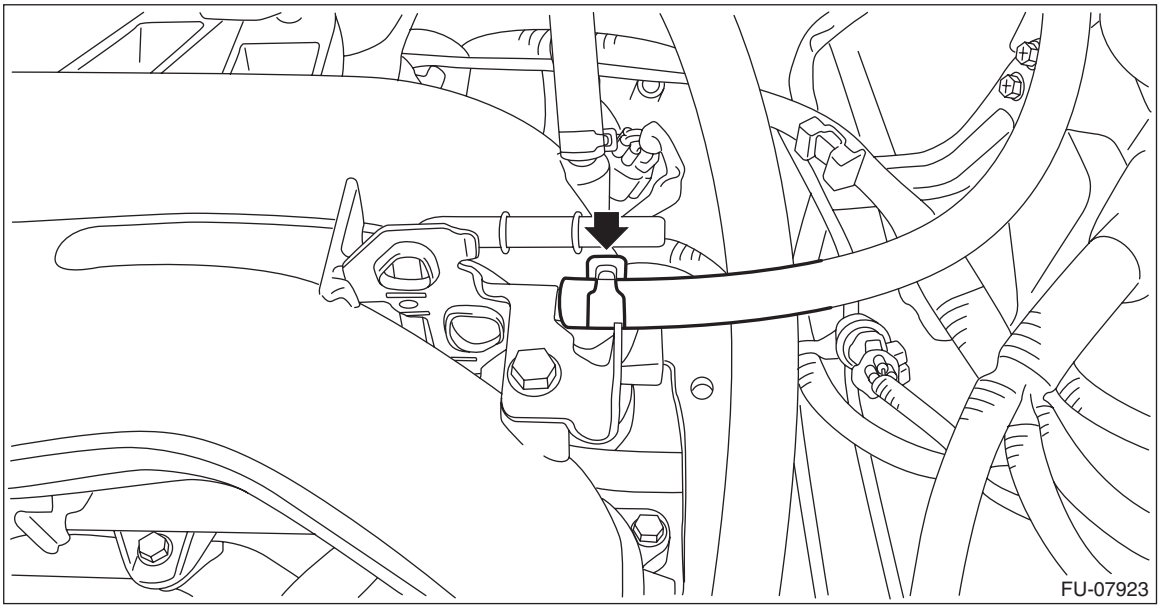

(2) Connect the quick connector of the fuel delivery tube to the fuel pipe assembly, and secure the fuel delivery tube using clip (A).

CAUTION:
• Check that there is no damage or dust on the quick connector. If necessary, clean the seal surface of the pipe.
• When connecting the quick connector, make sure to insert the pipe all the way in before locking the slider.
• When it is difficult to lock the slider, check that the pipe is fully inserted.
• Make sure that the quick connector is securely connected.

NOTE:
Connect the quick connector as shown in the figure.

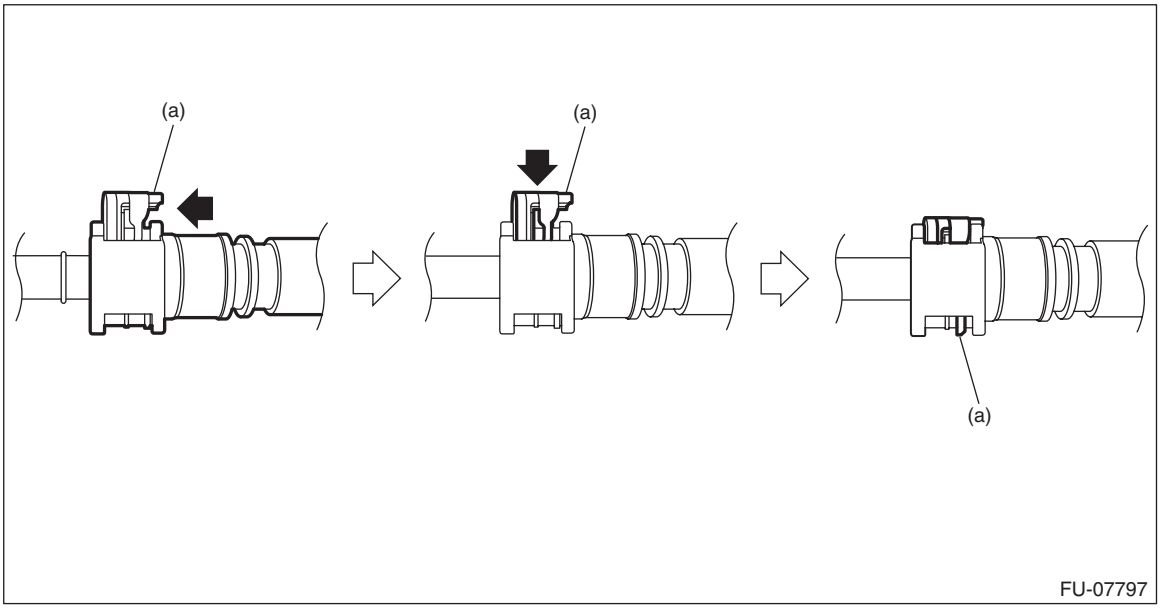

(a) Slider

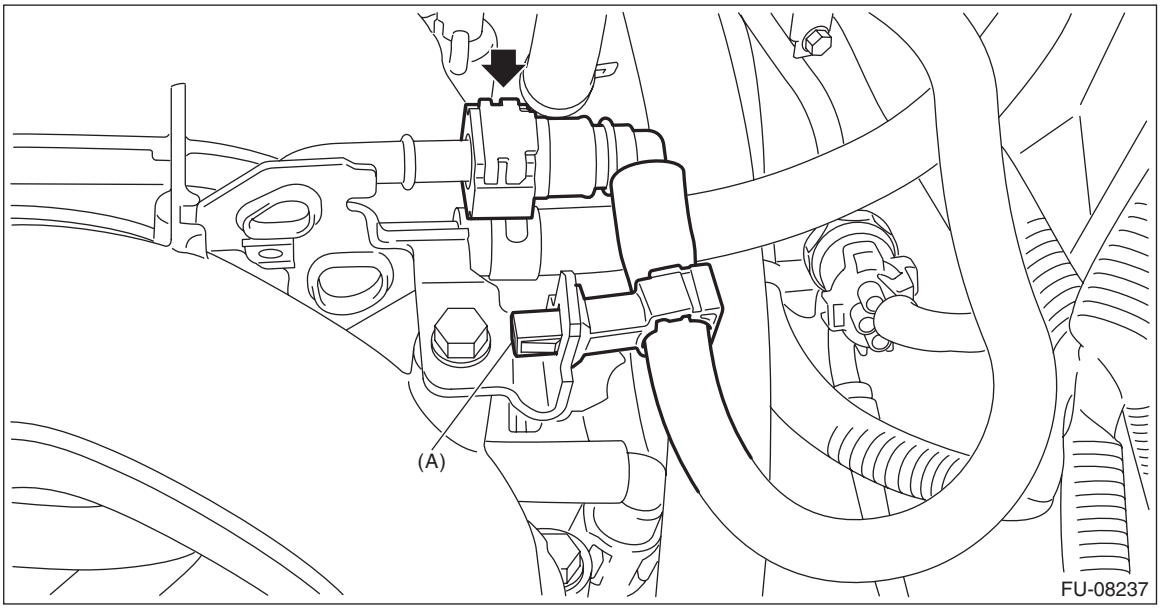

4) Connect the fuel delivery pipe to the fuel pipe LH.

CAUTION:
• Check that there is no damage or dust on the quick connector. If necessary, clean the seal surface of the pipe.
• When connecting the quick connector, make sure to insert the pipe all the way in before locking the slider.
• When it is difficult to lock the slider, check that the pipe is fully inserted.
• Make sure that the quick connector is securely connected.

NOTE:
Connect the quick connector as shown in the figure.

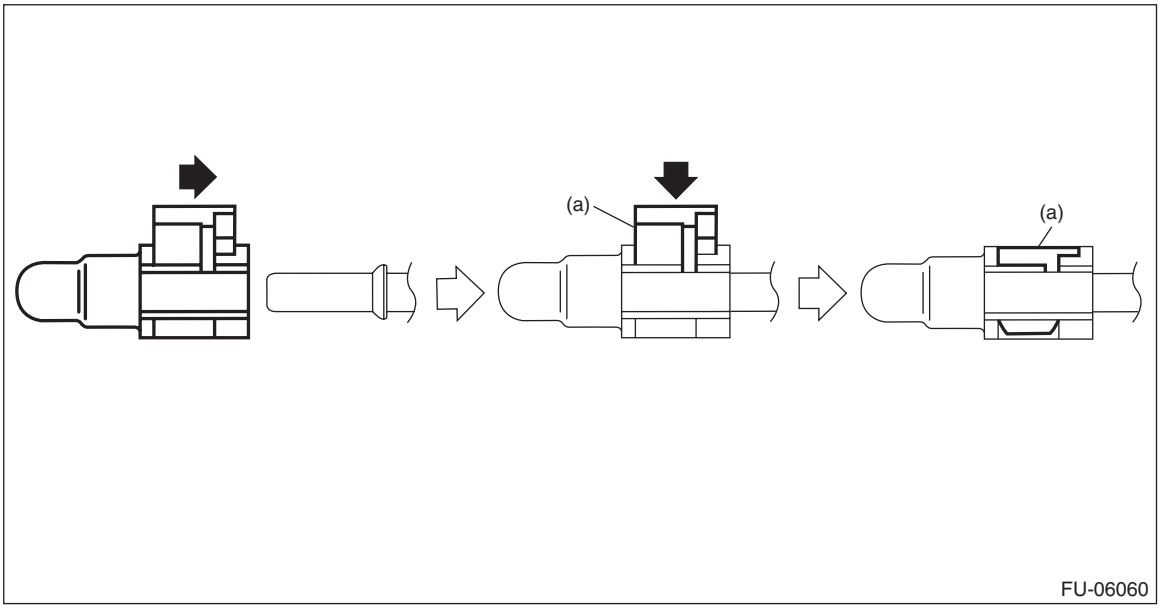

(a) Slider

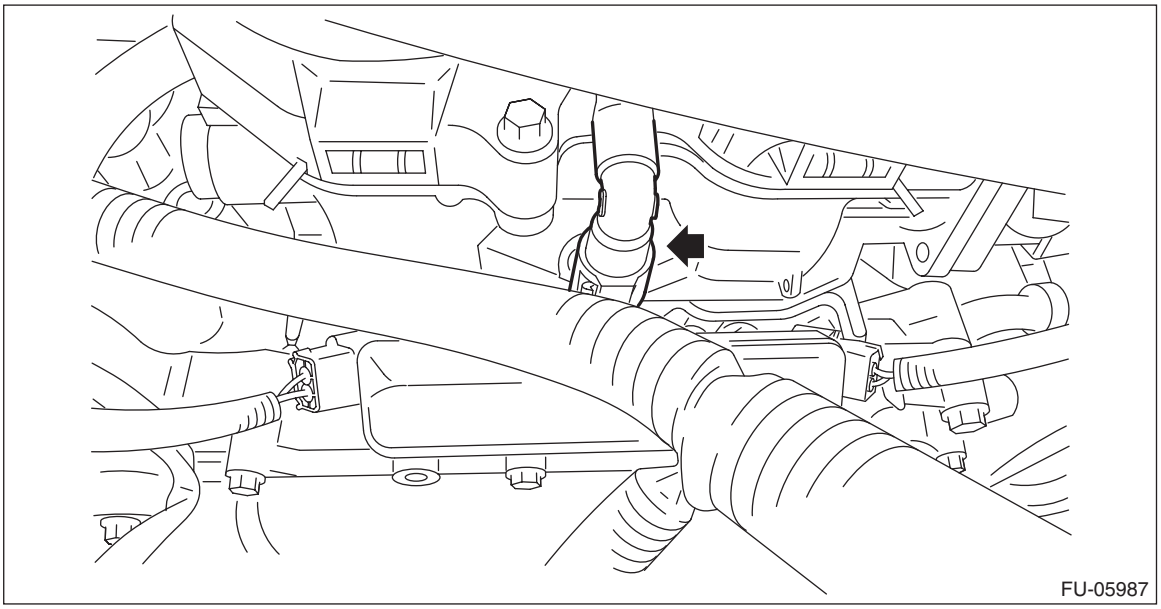

5) Install the intake manifold protector LH.

Tightening torque:
6.4 N·m (0.7 kgf-m, 4.7 ft-lb)

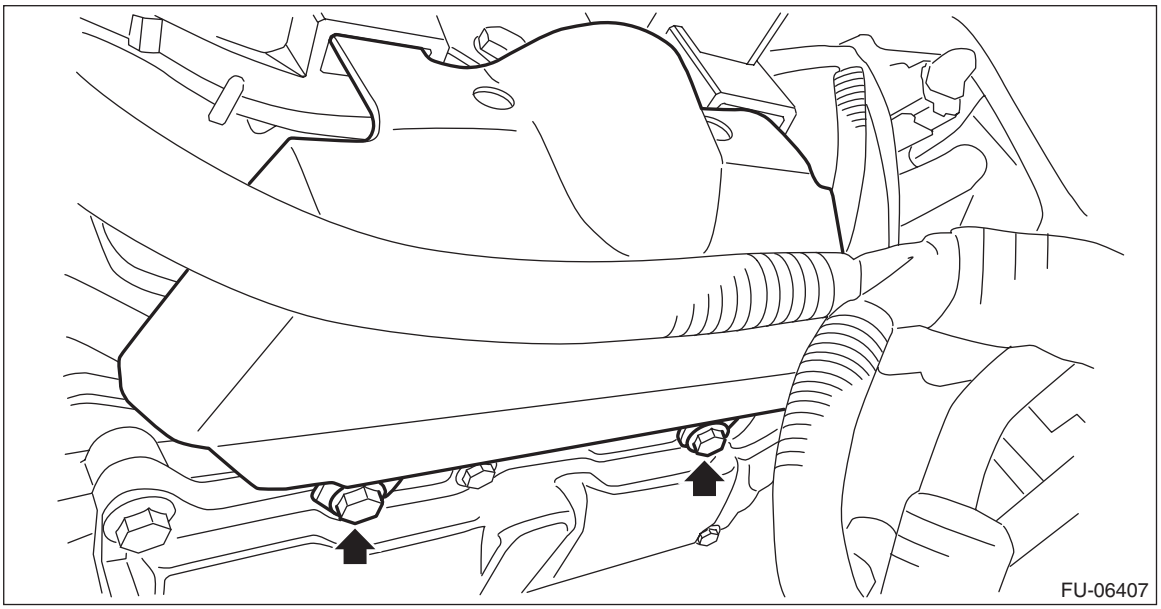

6) Connect the fuel delivery pipe to the fuel pipe RH.

CAUTION:
• Check that there is no damage or dust on the quick connector. If necessary, clean the seal surface of the pipe.
• When connecting the quick connector, make sure to insert the pipe all the way in before locking the slider.
• When it is difficult to lock the slider, check that the pipe is fully inserted.
• Make sure that the quick connector is securely connected.

NOTE:
Connect the quick connector as shown in the figure.

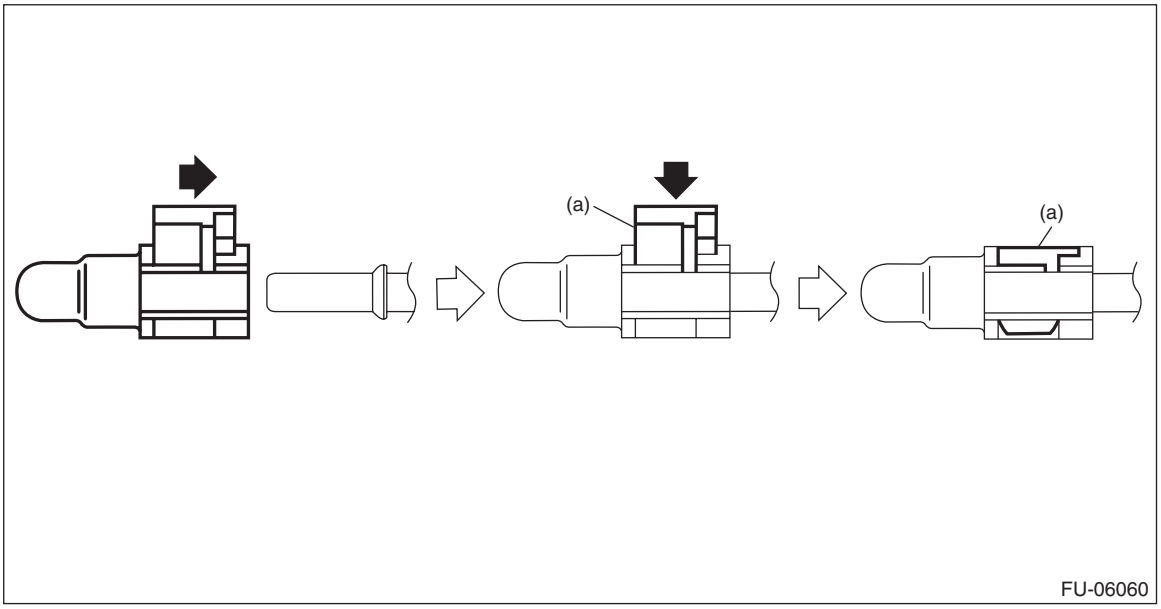

(a) Slider

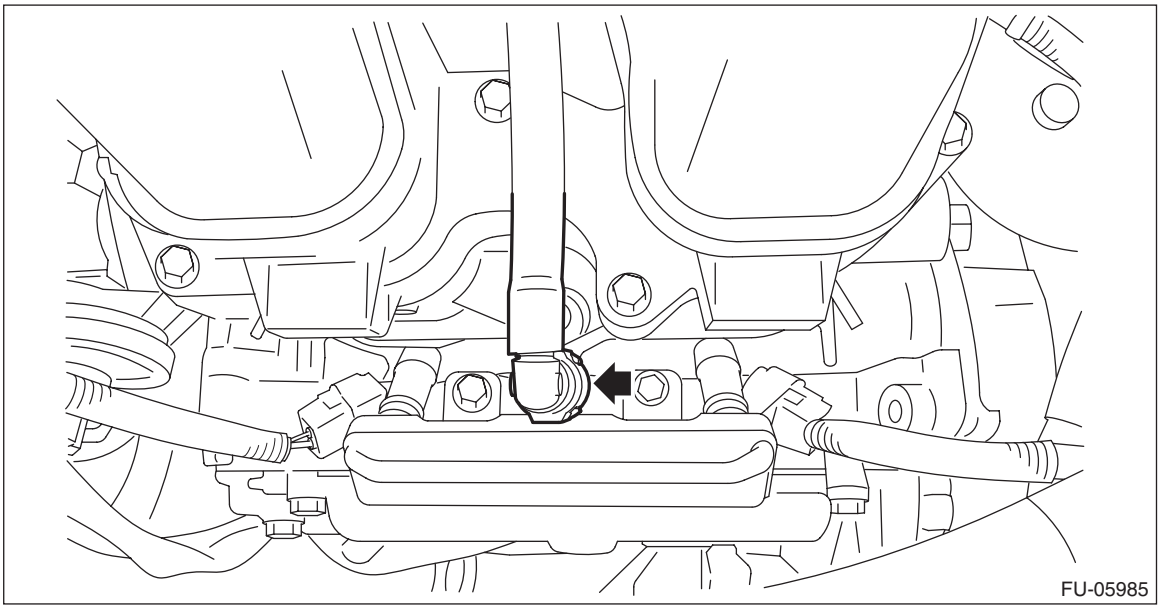

7) Install the intake manifold protector RH.

Tightening torque:
6.4 N·m (0.7 kgf-m, 4.7 ft-lb)

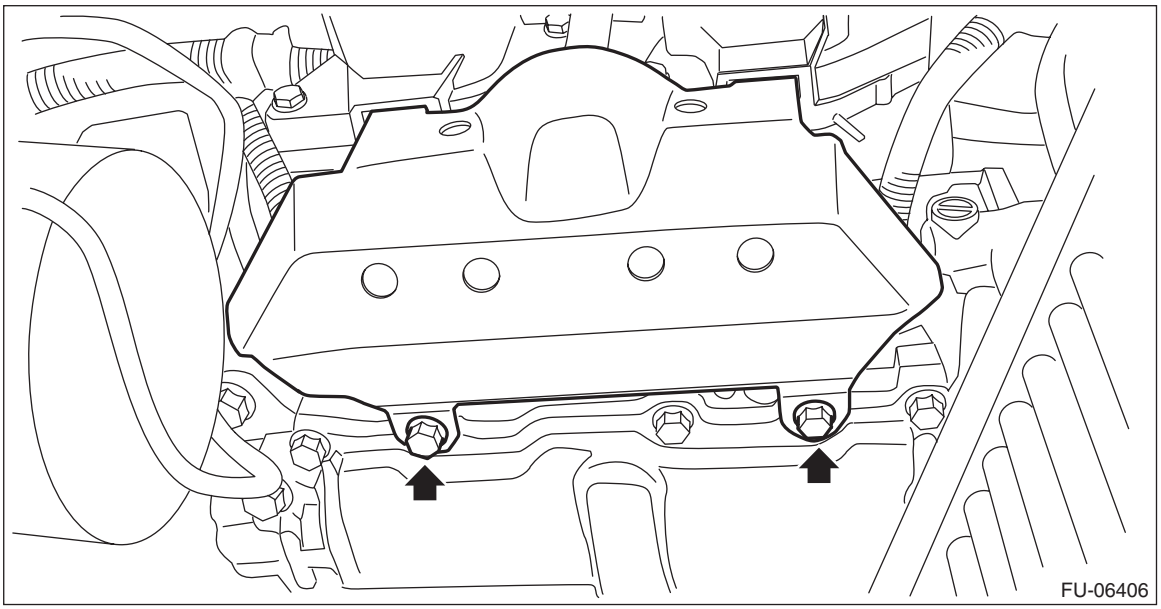

8) Install the air intake case (rear).

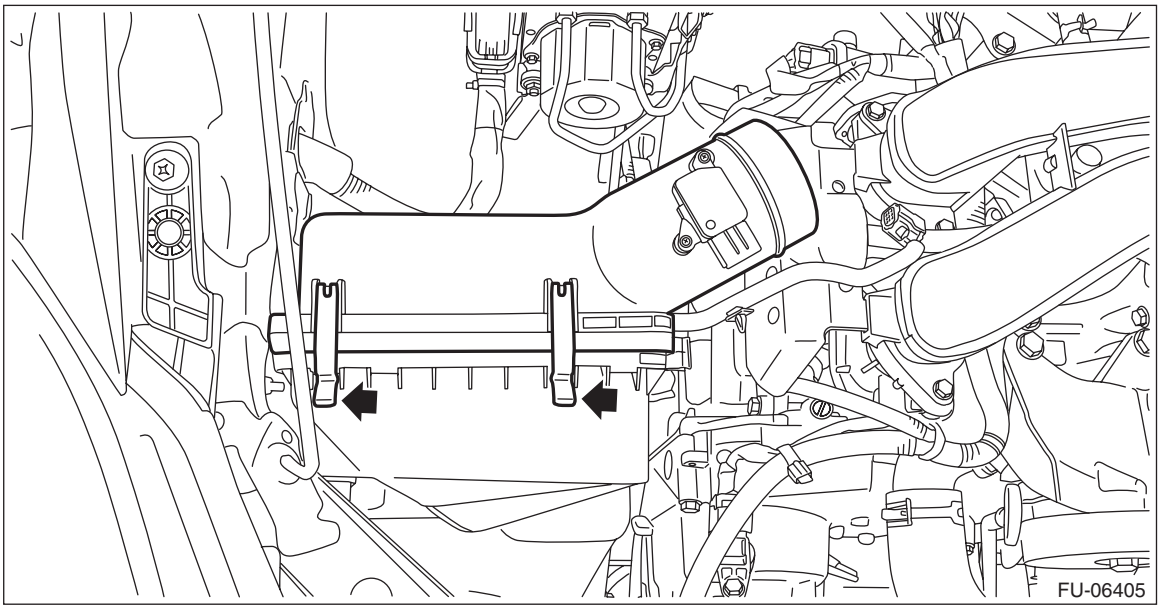

9) Install the clip (B) which secures the air flow and intake air temperature sensor harness, and connect the connector (A) to the air flow and intake air temperature sensor.

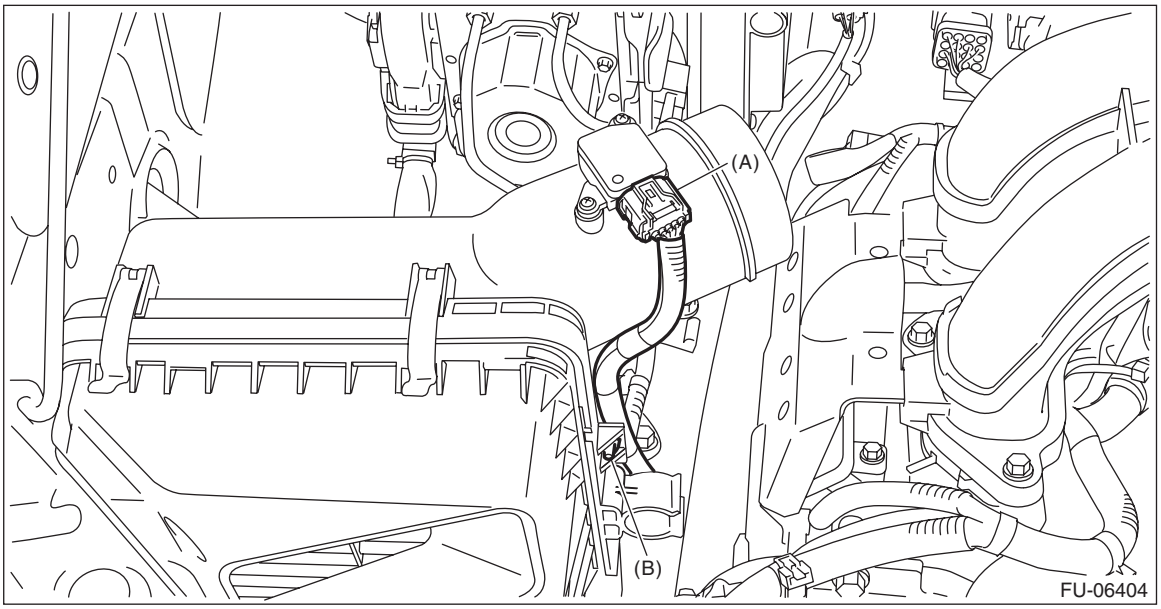

10) Connect the brake booster vacuum hose to the intake manifold.

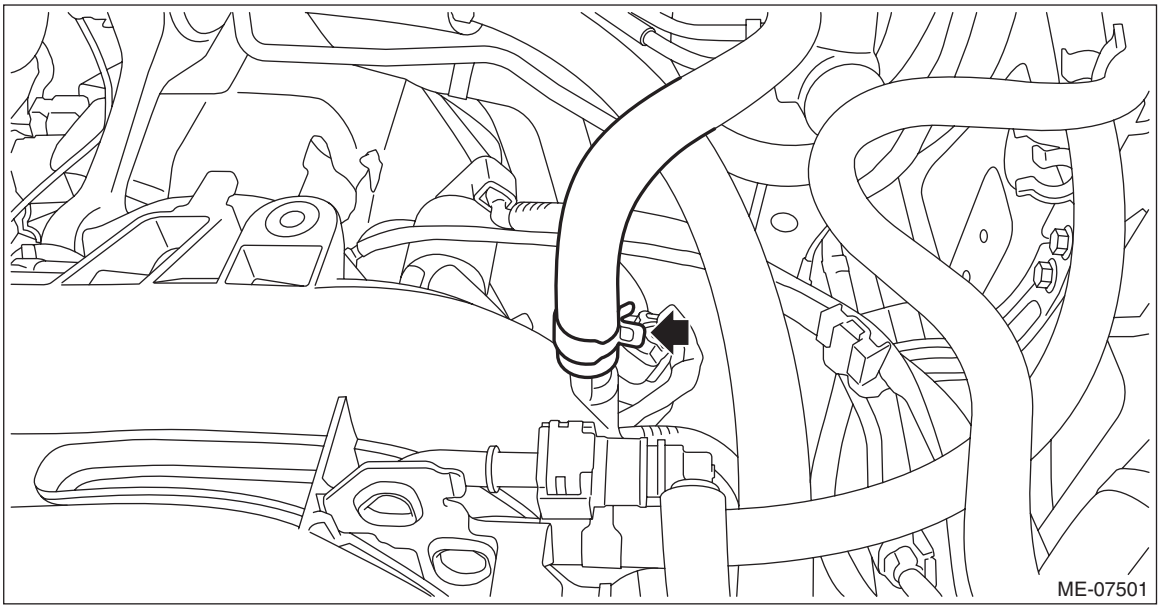

11) Connect the PCV hose (A) to intake manifold.
12) Connect the connector (B) to the manifold absolute pressure sensor.

13) Connect the connector (C) to the throttle position sensor.

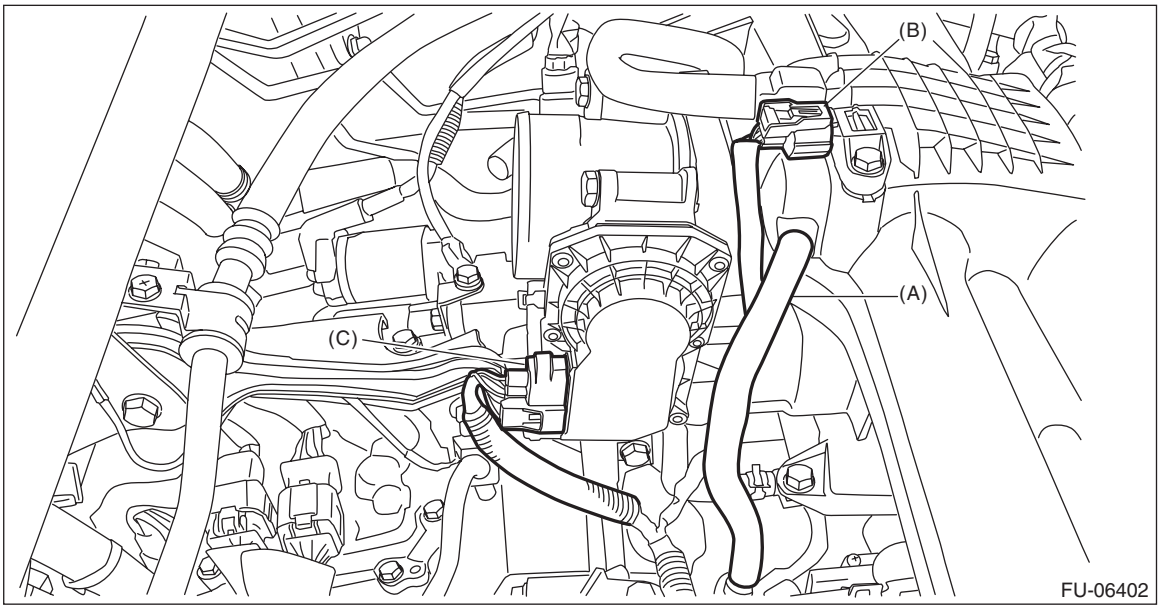

14) Connect the connector (A) to the purge control solenoid valve.
15) Tighten the nut (C) and bolt (B) which hold EGR pipe to the water pipe assembly.

NOTE:
- Use a new gasket.
- Always tighten the EGR pipe at (C) first, and then (B).

Tightening torque:
6.4 N·m (0.7 kgf-m, 4.7 ft-lb)

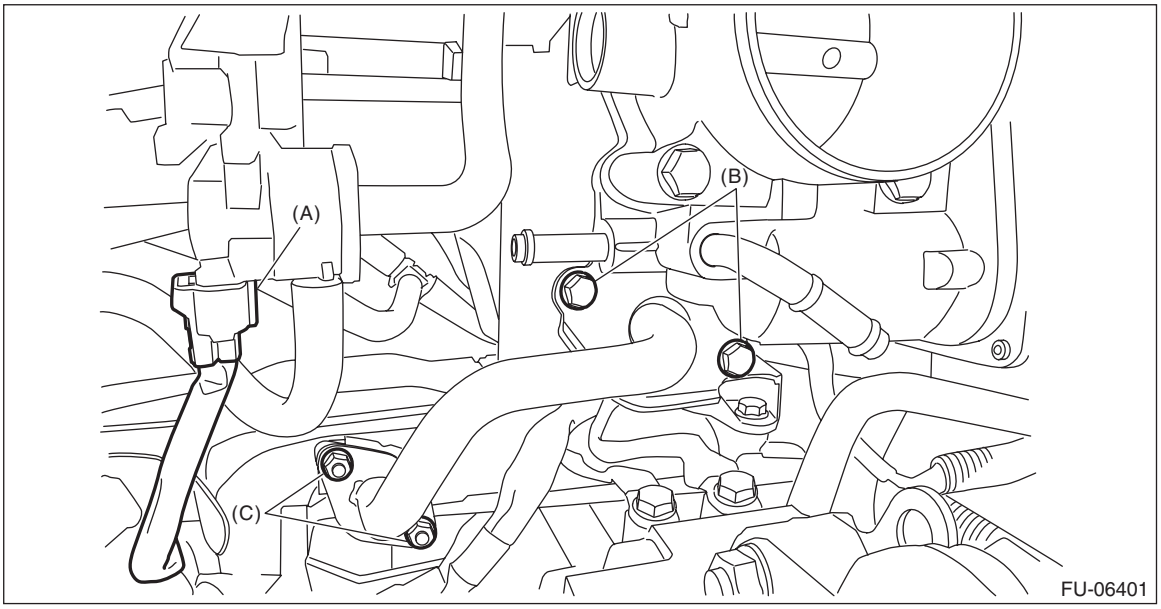

16) Install the preheater hose to the throttle body.

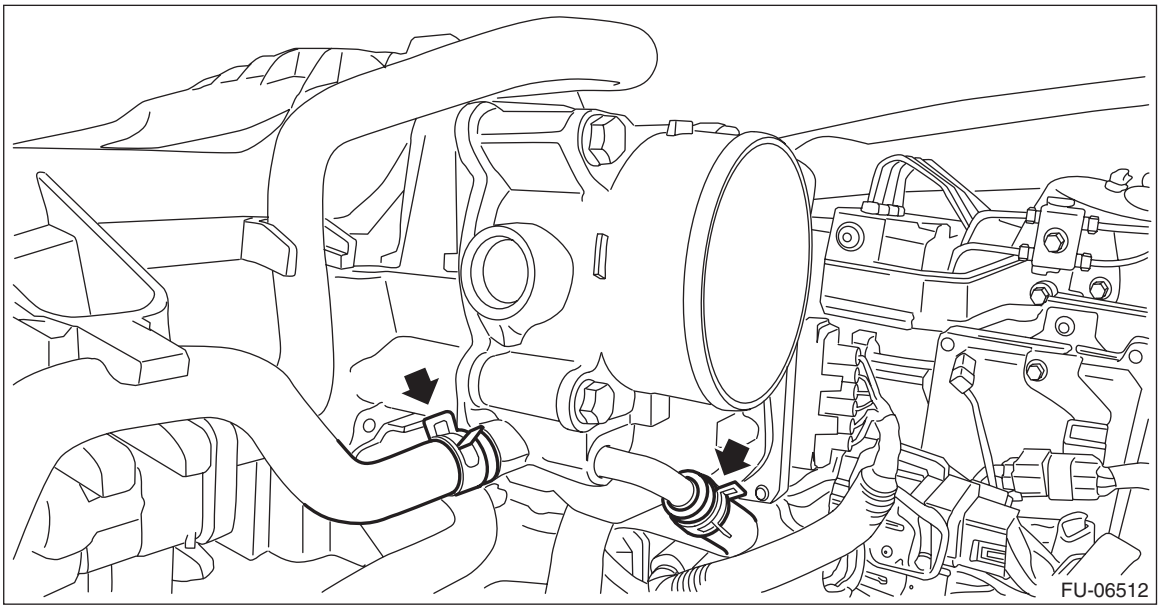

17) Install the air intake boot. <Ref. to IN(H4DO(w/o HEV))-12, INSTALLATION, Air Intake Boot.>
18) Lift up the vehicle.
19) Install the under cover. <Ref. to EI-29, INSTALLATION, Front Under Cover.>
20) Lower the vehicle.
21) Connect the battery ground terminal.

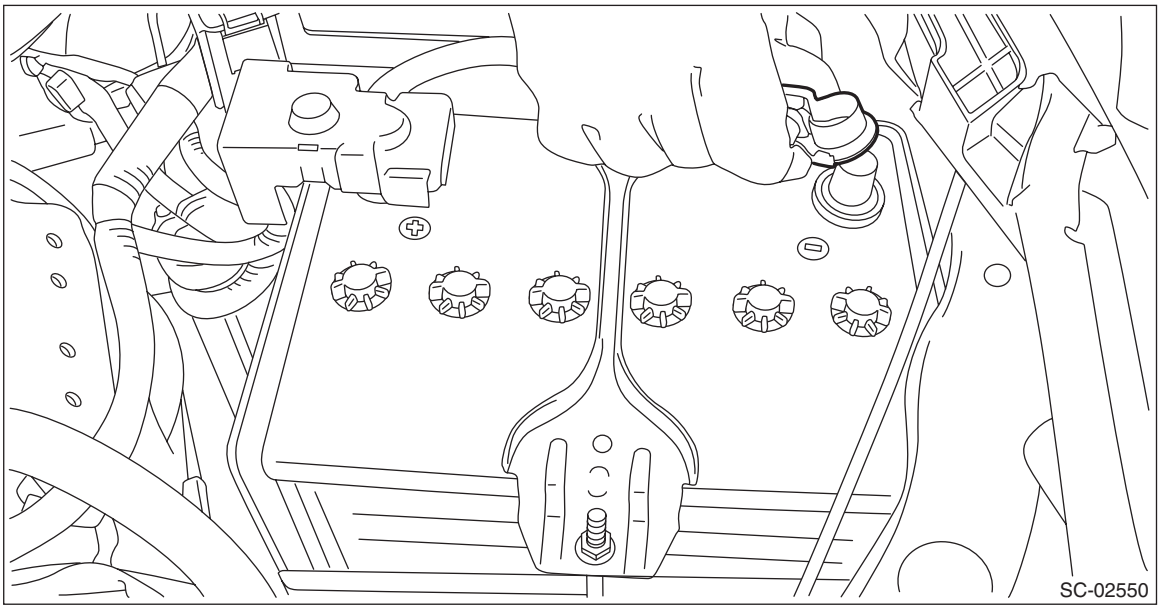

22) Fill engine coolant. <Ref. to CO(H4DO(w/o HEV))-17, FILLING OF ENGINE COOLANT, REPLACEMENT, Engine Coolant.>

C: DISASSEMBLY

1) Remove the throttle body. <Ref. to FU(H4DO(w/o HEV))-15, REMOVAL, Throttle Body.>
2) Remove the purge control solenoid valve. <Ref. to EC(H4DO(w/o HEV))-17, REMOVAL, Purge Control Solenoid Valve.>
3) Remove the manifold absolute pressure sensor. <Ref. to FU(H4DO(w/o HEV))-81, REMOVAL, Manifold Absolute Pressure Sensor.>
4) Remove the EGR pipe from intake manifold.

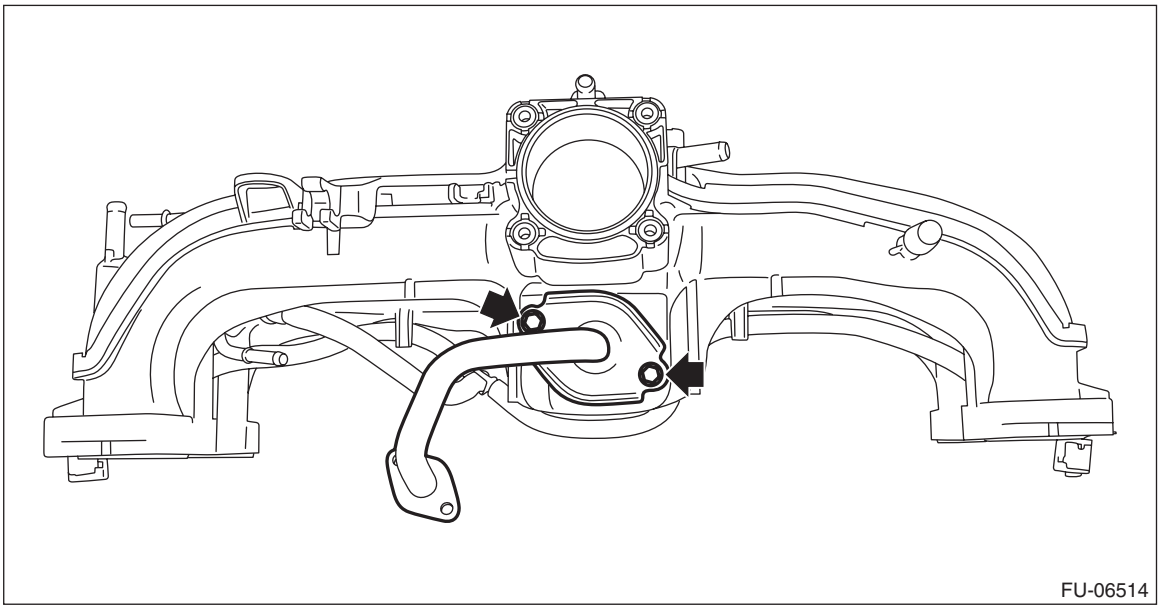

5) Remove the fuel delivery pipe from intake manifold.

NOTE:
Disconnect the quick connector as shown in the figure.

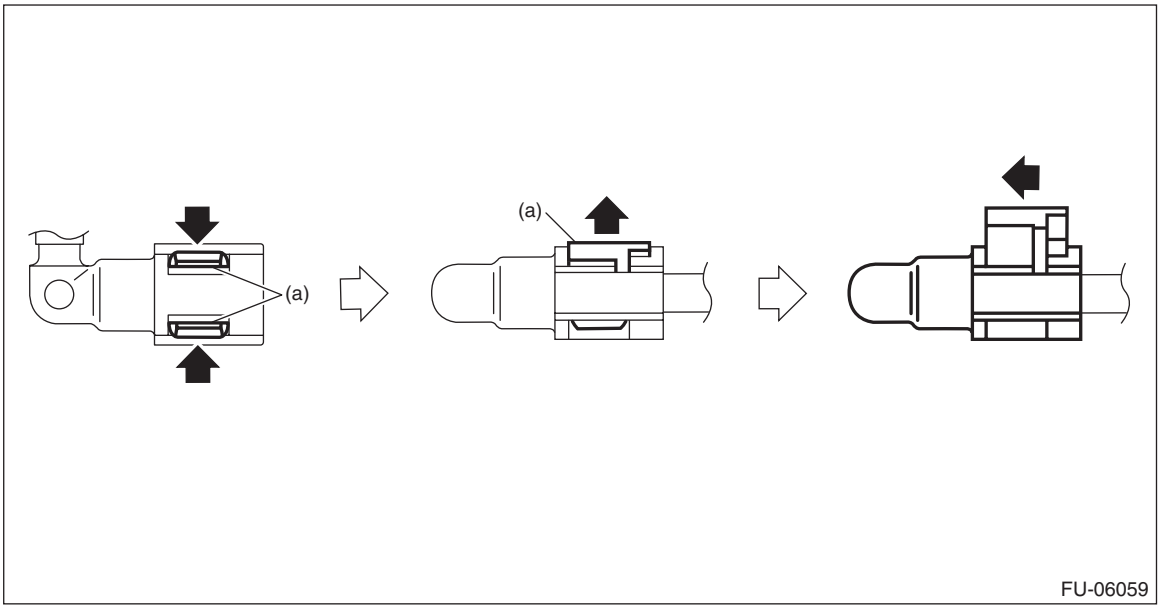

(a) Slider

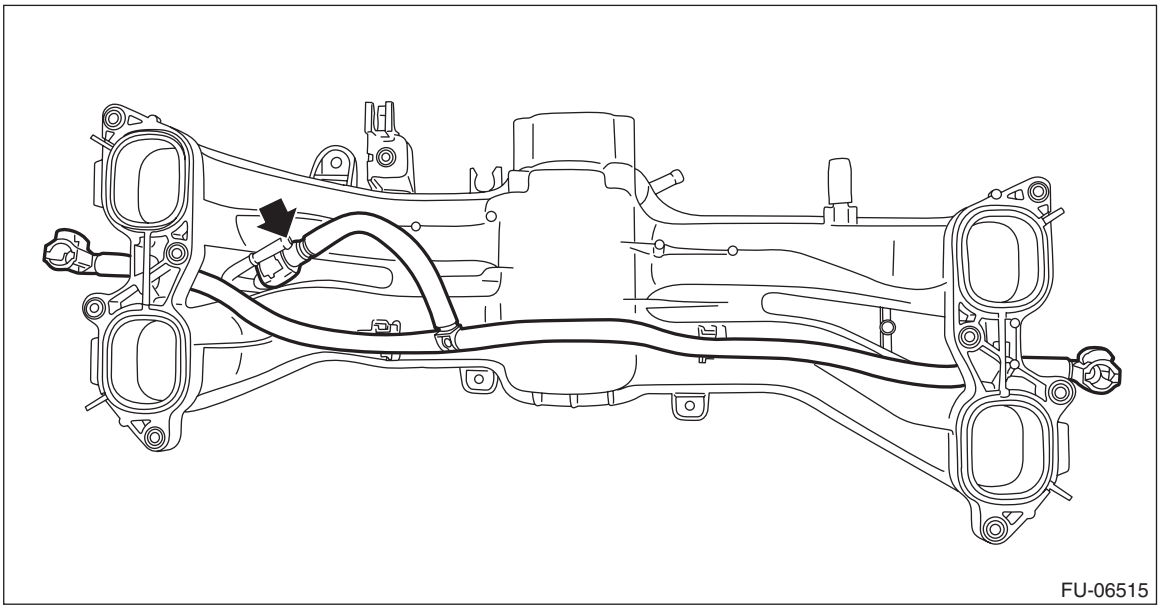

6) Remove the fuel pipe and cap from the intake manifold.

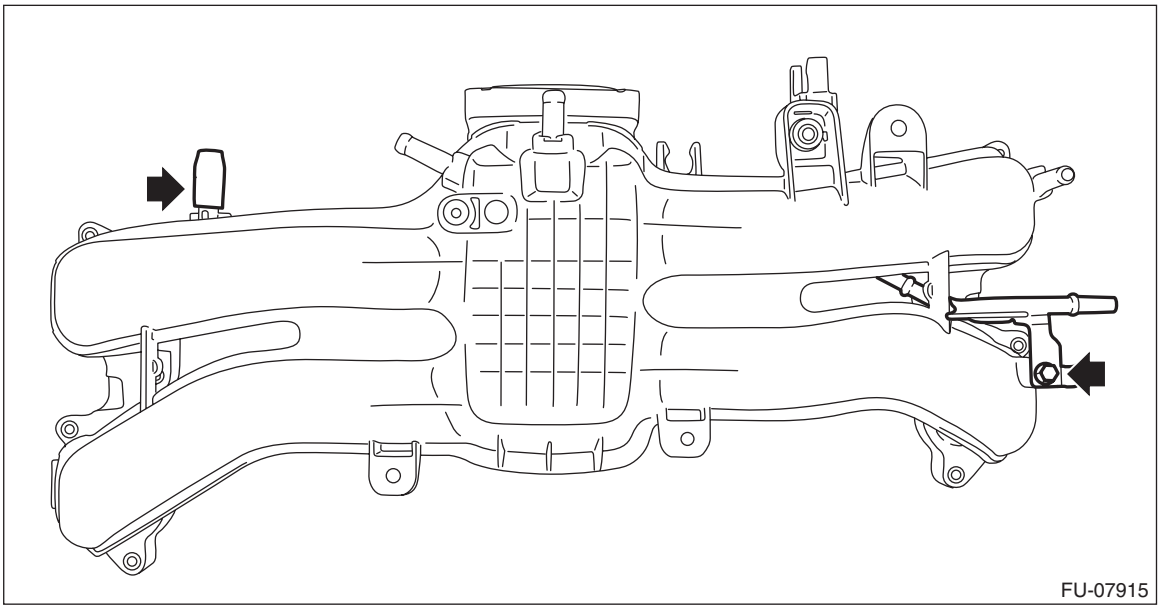

D: ASSEMBLY

1) Install the fuel pipe and cap to the intake manifold.

Tightening torque:
6.4 N·m (0.7 kgf-m, 4.7 ft-lb)

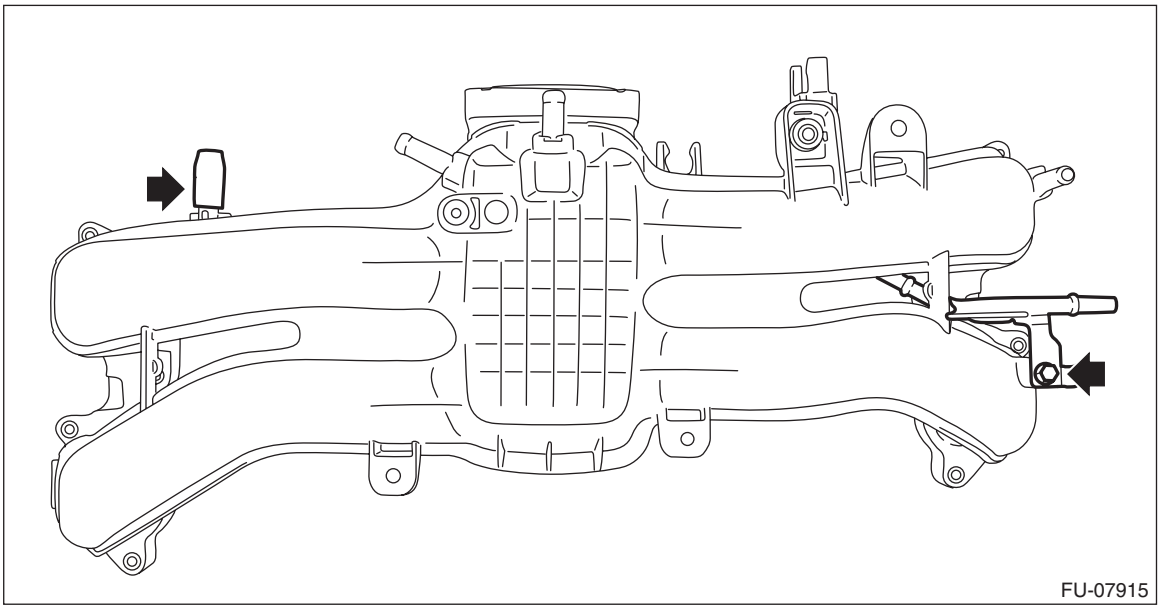

2) Install the fuel delivery pipe to the intake manifold.

CAUTION:
• Check that there is no damage or dust on the quick connector. If necessary, clean the seal surface of the pipe.
• When connecting the quick connector, make sure to insert the pipe all the way in before locking the slider.
• When it is difficult to lock the slider, check that the pipe is fully inserted.
• Make sure that the quick connector is securely connected.

NOTE:
Connect the quick connector as shown in the figure.

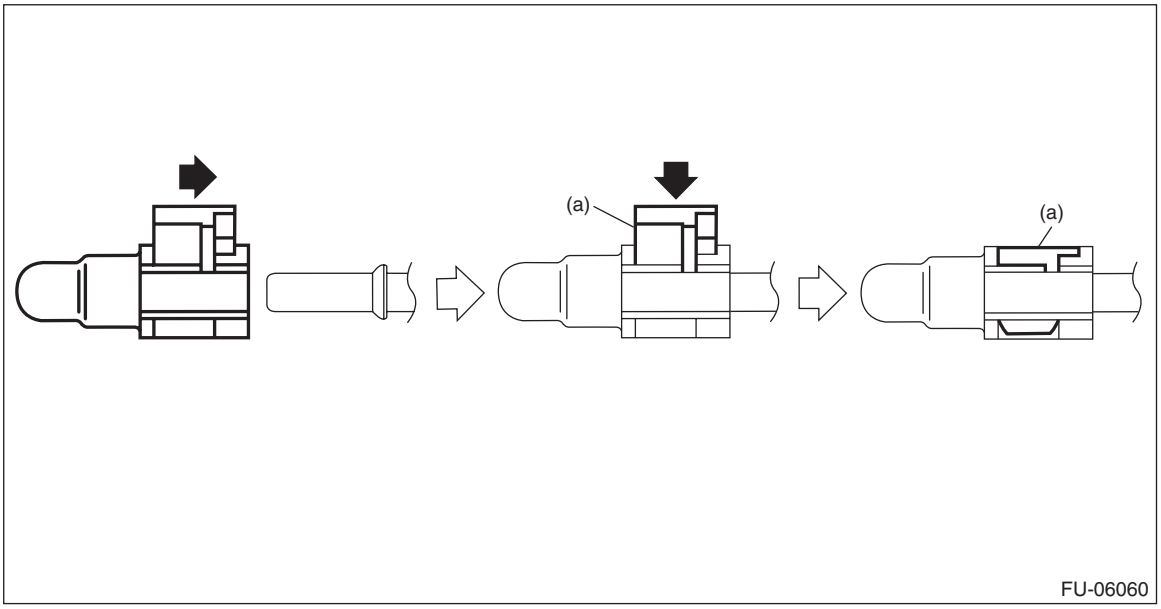

(a) Slider

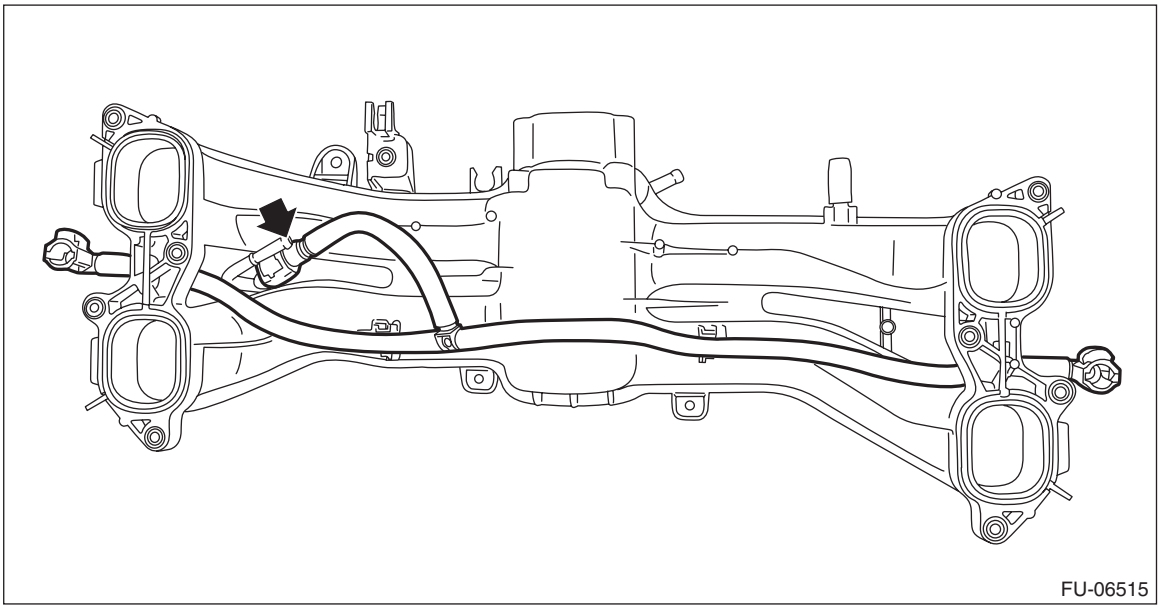

3) Temporarily install the EGR pipe to the intake manifold.

NOTE:
- Use a new gasket.
- Tighten the EGR pipe when installing the intake manifold.

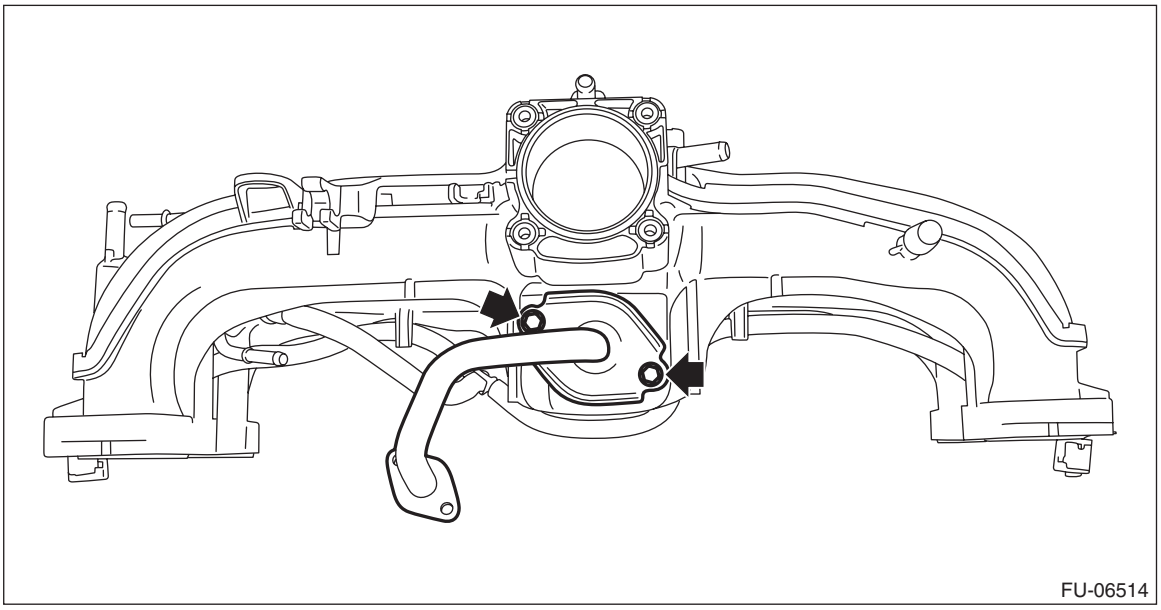

4) Install the manifold absolute pressure sensor. <Ref. to FU(H4DO(w/o HEV))-82, INSTALLATION, Manifold Absolute Pressure Sensor.>
5) Install the purge control solenoid valve. <Ref. to EC(H4DO(w/o HEV))-19, INSTALLATION, Purge Control Solenoid Valve.>
6) Install the throttle body. <Ref. to FU(H4DO(w/o HEV))-17, INSTALLATION, Throttle Body.>

E: INSPECTION

1) Check that the intake manifold and fuel pipe have no deformation, cracks and other damages.
2) Check that the hose has no cracks, damage or loose part.

4. Engine Wiring Harness

A: REMOVAL

1) Release the fuel pressure. <Ref. to FU(H4DO(w/o HEV))-116, RELEASING OF FUEL PRESSURE, PROCEDURE, Fuel.>
2) Disconnect the ground cable from battery.

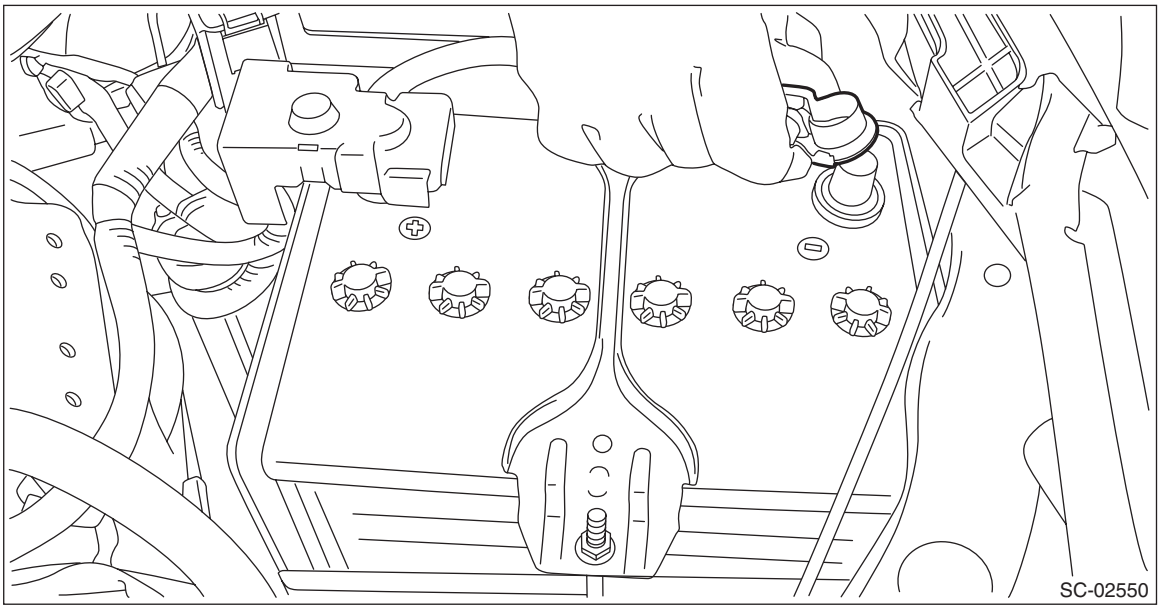

3) Open the fuel filler lid and remove the fuel filler cap.
4) Remove the intake manifold. <Ref. to FU(H4DO(w/o HEV))-20, REMOVAL, Intake Manifold.>

5) Disconnect the connector from the engine.
- Structural diagram 1

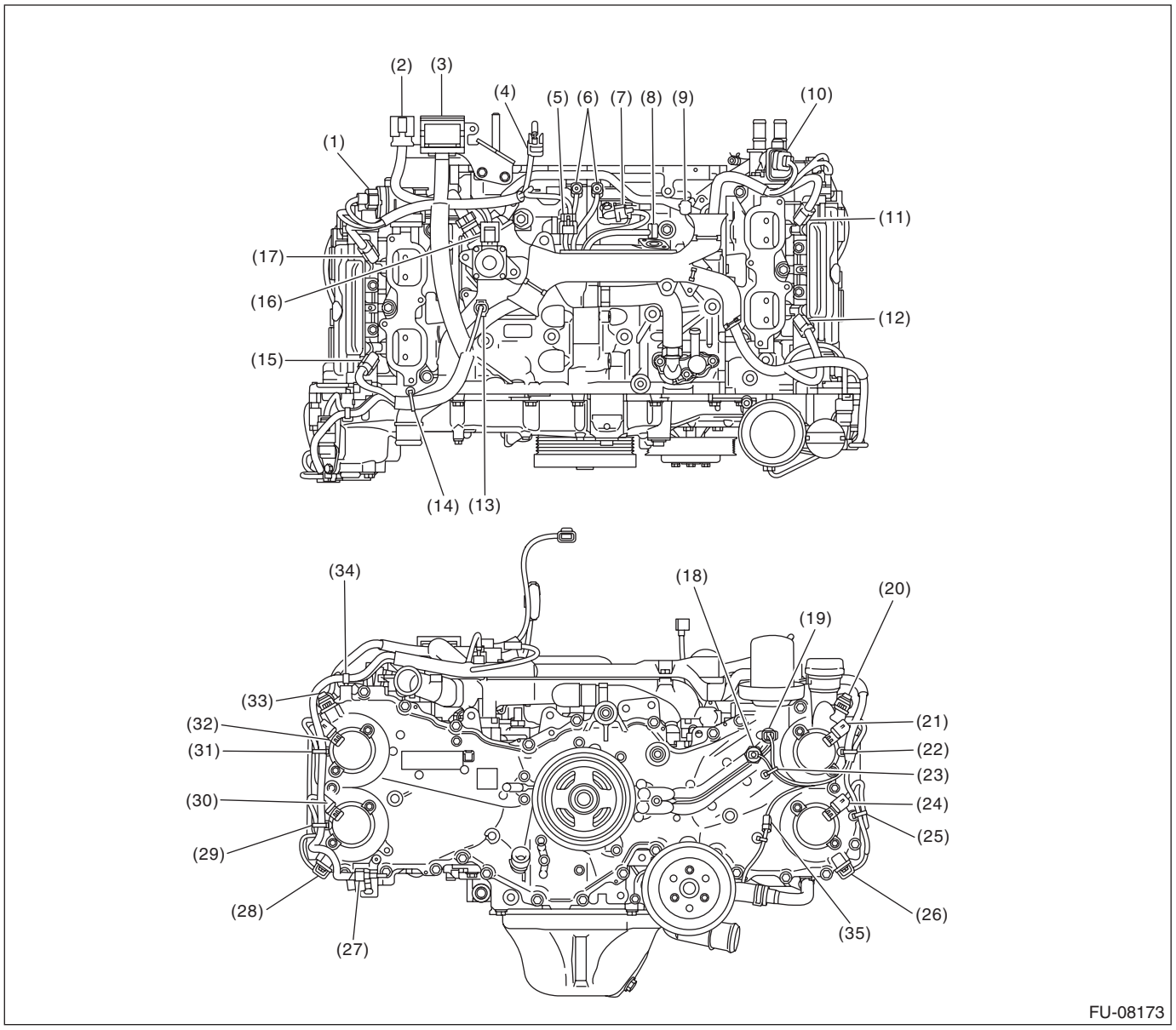

(1) Tumble generator valve actuator RH
(2) Engine harness connector (16P)
(3) Engine harness connector (54P)
(4) Throttle position sensor connector
(5) Manifold absolute pressure sensor connector
(6) Engine ground (2 locations)
(7) Crankshaft position sensor
(8) Knock sensor
(9) Purge control solenoid valve connector
(10) Tumble generator valve actuator LH
(11) Fuel injector (#4)
(12) Fuel injector (#2)
(13) Engine coolant temperature sensor
(14) Remove the clip from the screw hole.
(15) Fuel injector (#1)
(16) EGR valve
(17) Fuel injector (#3)
(18) Oil pressure switch
(19) Engine oil temperature sensor
(20) Intake camshaft position sensor LH
(21) Intake oil control solenoid LH
(22) Remove the clip from the screw hole.
(23) Remove the clip from the screw hole.
(24) Exhaust oil control solenoid LH
(25) Remove the clip from the screw hole.
(26) Exhaust camshaft position sensor LH
(27) Remove the clip from the oval hole.
(28) Exhaust camshaft position sensor RH
(29) Remove the clip from the screw hole.
(30) Exhaust oil control solenoid RH
(31) Remove the clip from the screw hole.
(32) Intake oil control solenoid RH
(33) Intake camshaft position sensor RH
(34) Remove the clip from the screw hole.
(35) Oil level switch connector

- Structural diagram 2

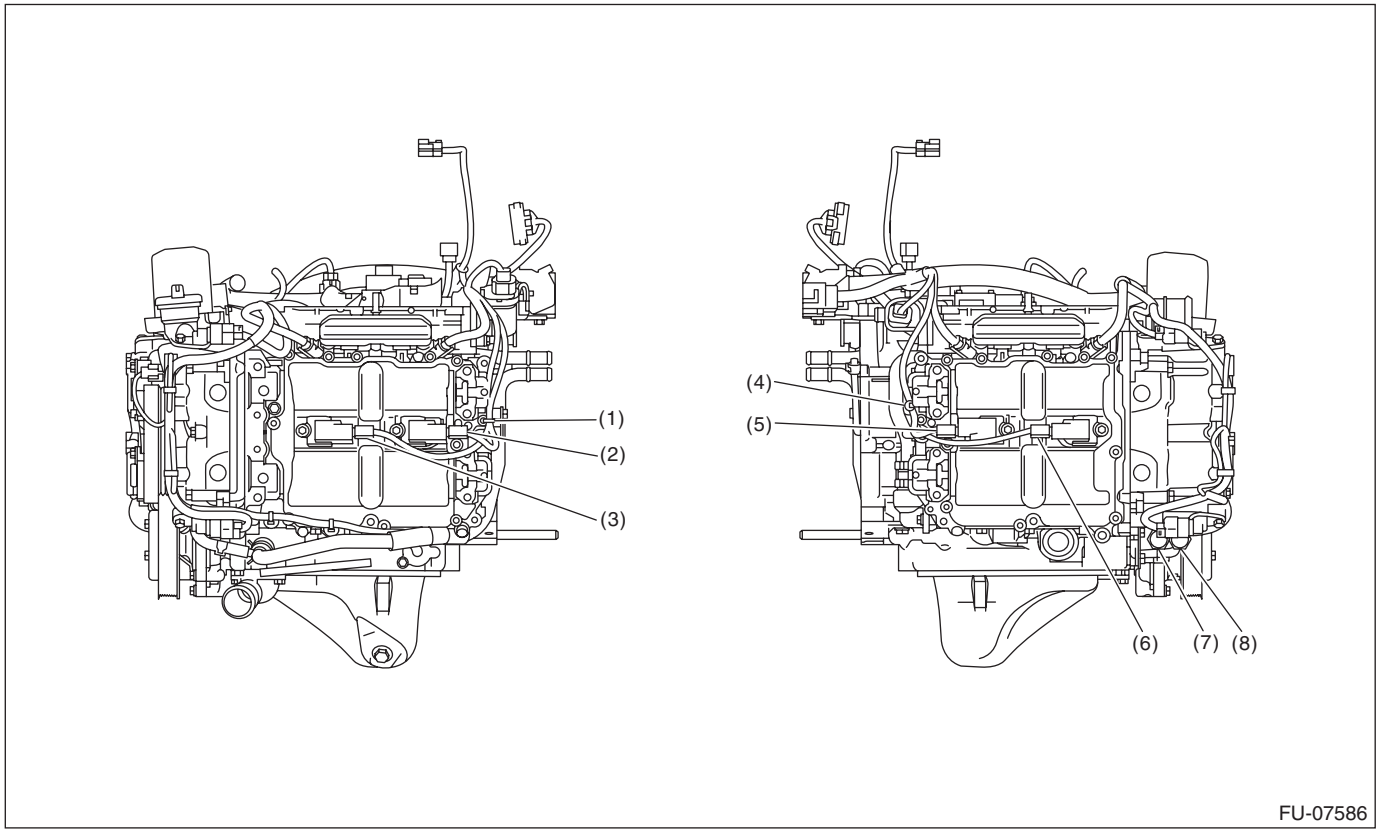

(1) Remove the clip from the screw hole.
(2) Ignition coil No. 4
(3) Ignition coil No. 2
(4) Remove the clip from the screw hole.
(5) Ignition coil No. 3
(6) Ignition coil No. 1
(7) Front oxygen (A/F) sensor
(8) Rear oxygen sensor

6) Remove the engine wiring harness.

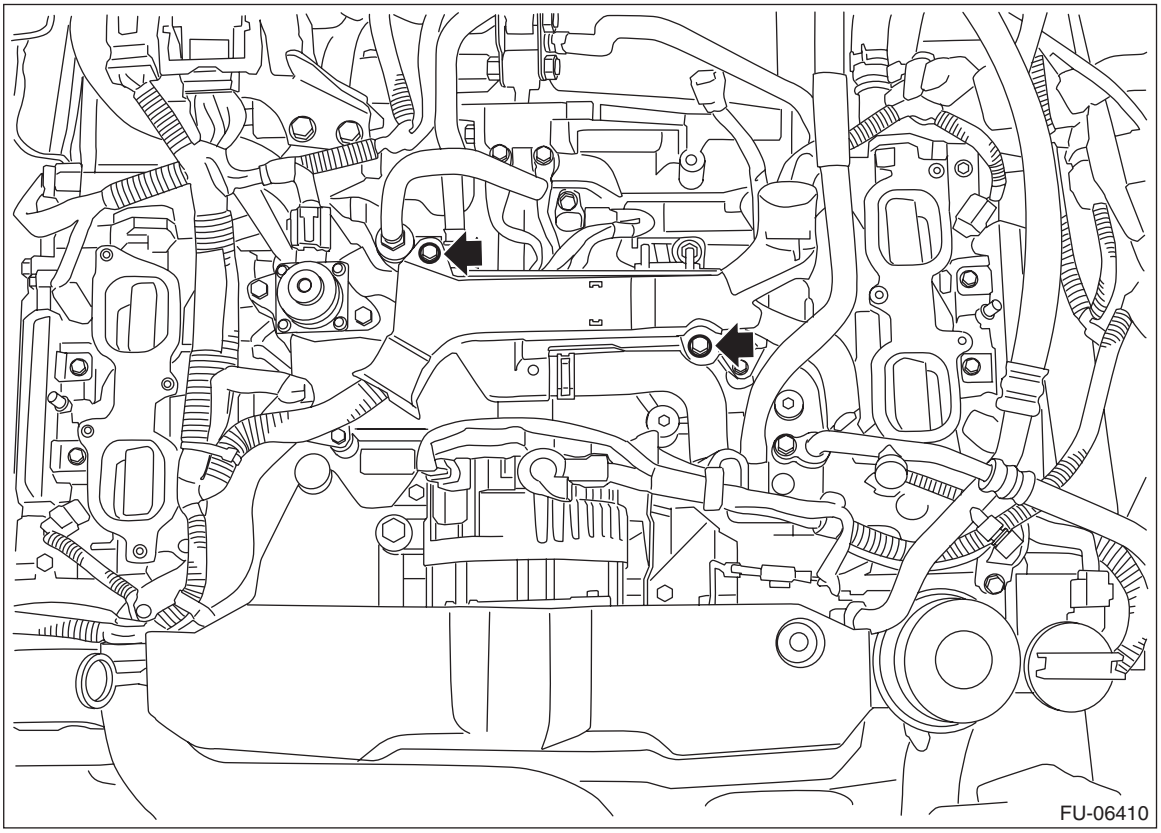

B: INSTALLATION

1) Route the engine wiring harness around the engine and connect connectors.
- Structural diagram 1

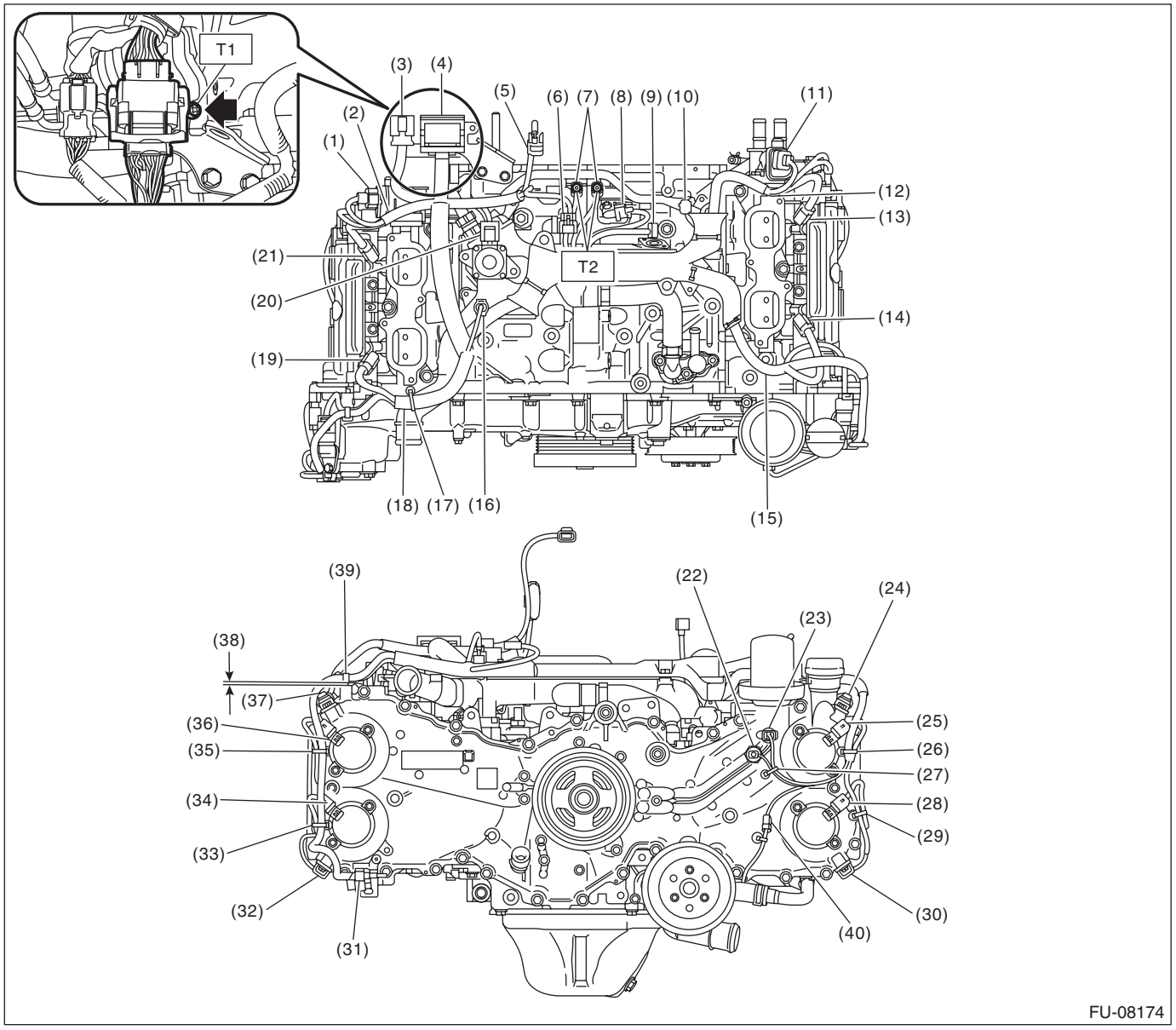

(1) Tumble generator valve actuator RH
(2) Be careful of pinching when installing the intake manifold.
(3) Engine harness connector (16P)
(4) Engine harness connector (54P)
(5) Throttle position sensor connector
(6) Manifold absolute pressure sensor connector
(7) Engine ground (2 locations)
(8) Crankshaft position sensor
(9) Knock sensor
(10) Purge control solenoid valve connector
(11) Tumble generator valve actuator LH
(12) Be careful of pinching when installing the intake manifold.
(13) Fuel injector (#4)
(14) Fuel injector (#2)
(15) Be careful of pinching when installing the intake manifold and A/C bracket.
(16) Engine coolant temperature sensor
(17) Secure the clip to the screw hole.
(18) Be careful of pinching when installing the intake manifold.
(19) Fuel injector (#1)
(20) EGR valve
(21) Fuel injector (#3)
(22) Oil pressure switch
(23) Engine oil temperature sensor
(24) Intake camshaft position sensor LH
(25) Intake oil control solenoid LH
(26) Secure the clip to the screw hole.
(27) Secure the clip to the screw hole.
(28) Exhaust oil control solenoid LH
(29) Secure the clip to the screw hole.
(30) Exhaust camshaft position sensor LH
(31) Secure the clip to the oval hole.
(32) Exhaust camshaft position sensor RH
(33) Secure the clip to the screw hole.
(34) Exhaust oil control solenoid RH
(35) Secure the clip to the screw hole.
(36) Intake oil control solenoid RH
(37) Intake camshaft position sensor RH
(38) Maximum of 0 — 2 mm (0 — 0.079 in) gap is allowed.
(39) Secure the clip to the screw hole.
(40) Oil level switch connector

Tightening torque: N·m (kgf-m, ft-lb)
T1: 7.5 (0.8, 5.5)
T2: 19 (1.9, 14.0)

- Structural diagram 2

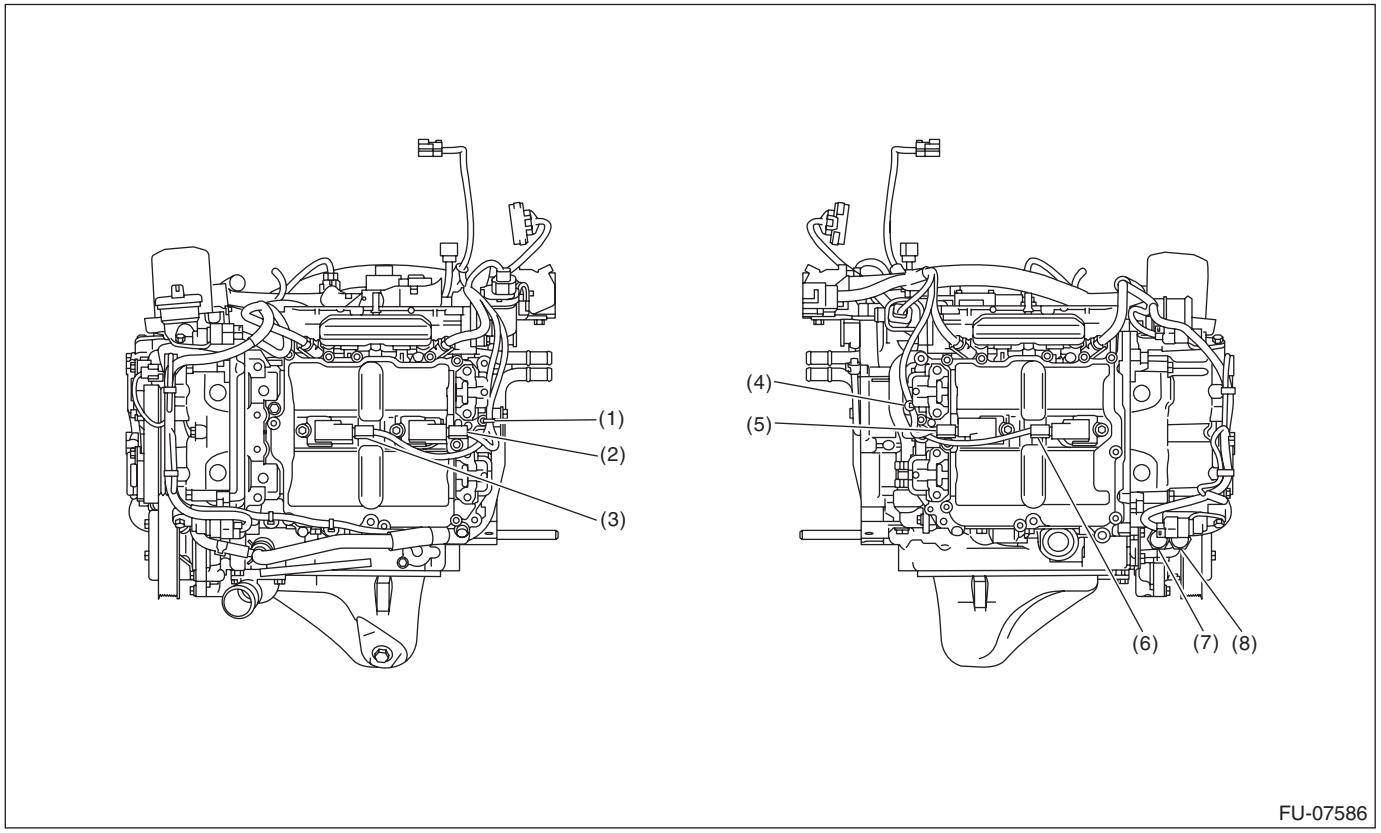

(1) Secure the clip to the screw hole.
(2) Ignition coil No. 4
(3) Ignition coil No. 2
(4) Secure the clip to the screw hole.
(5) Ignition coil No. 3
(6) Ignition coil No. 1
(7) Front oxygen (A/F) sensor
(8) Rear oxygen sensor

2) Install the engine wiring harness.

Tightening torque:
6.4 N·m (0.7 kgf-m, 4.7 ft-lb)

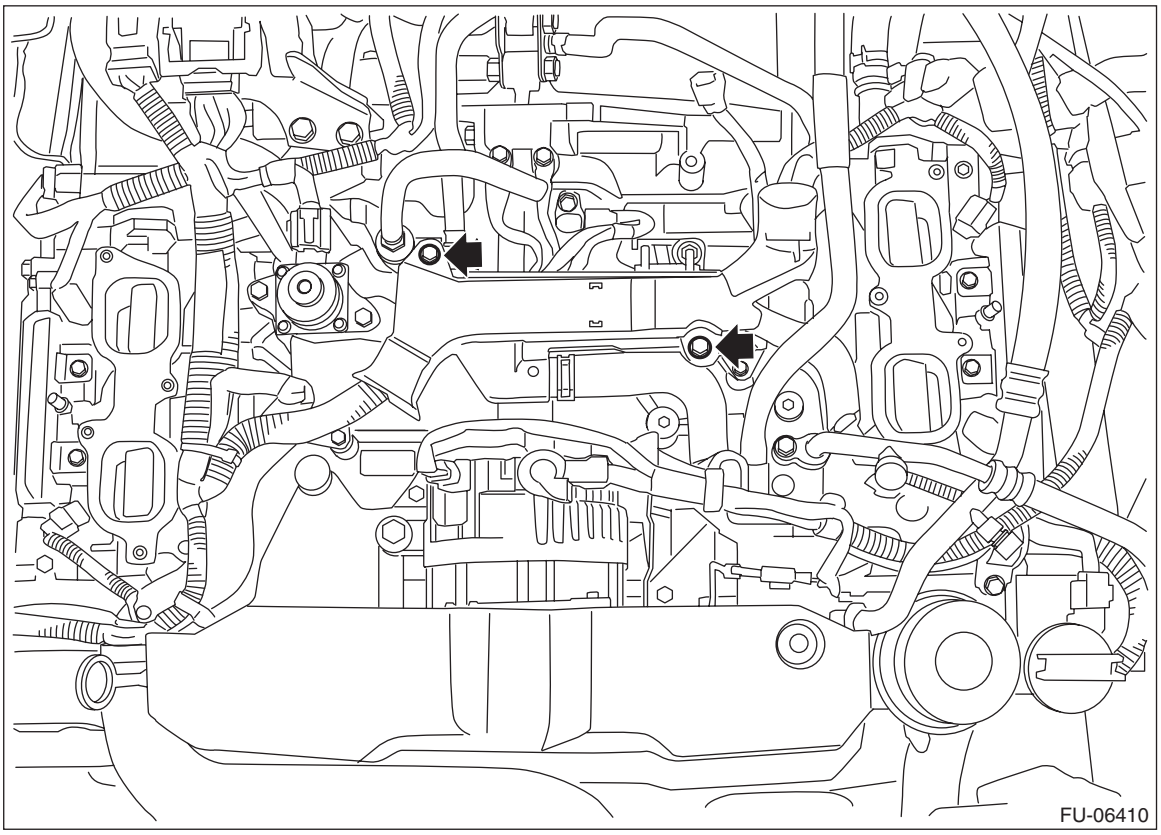

3) Install the intake manifold. <Ref. to FU(H4DO(w/o HEV))-30, INSTALLATION, Intake Manifold.>
4) Connect the battery ground terminal.

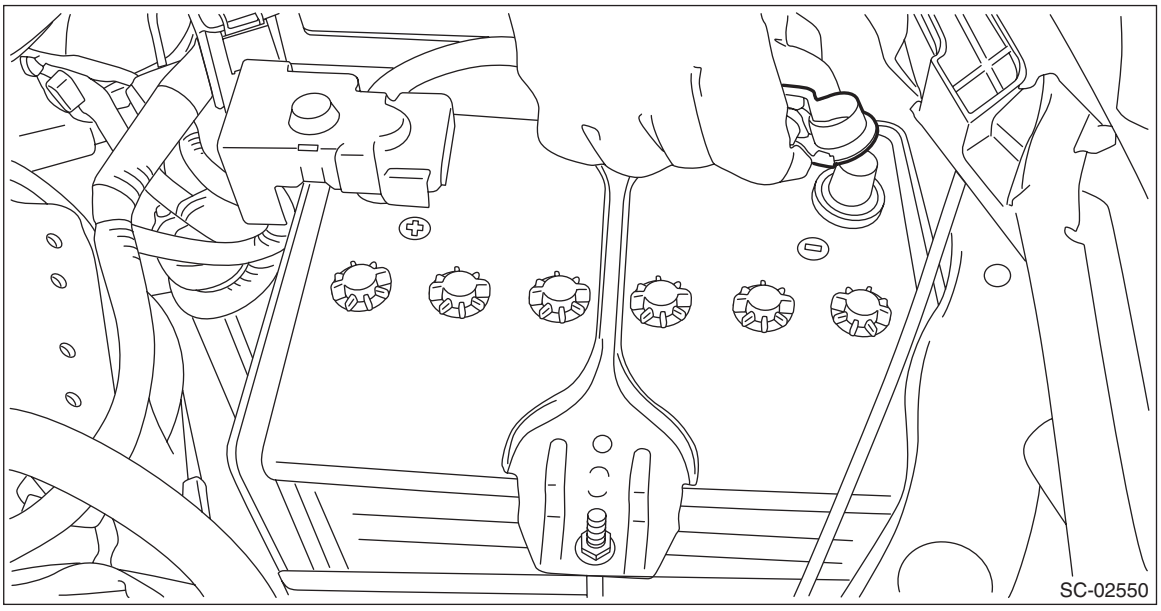

C: INSPECTION

Check that the engine wiring harness does not have deformation, cracks and any other damage.

5. Engine Coolant Temperature Sensor

A: REMOVAL

1) Disconnect the ground cable from battery.

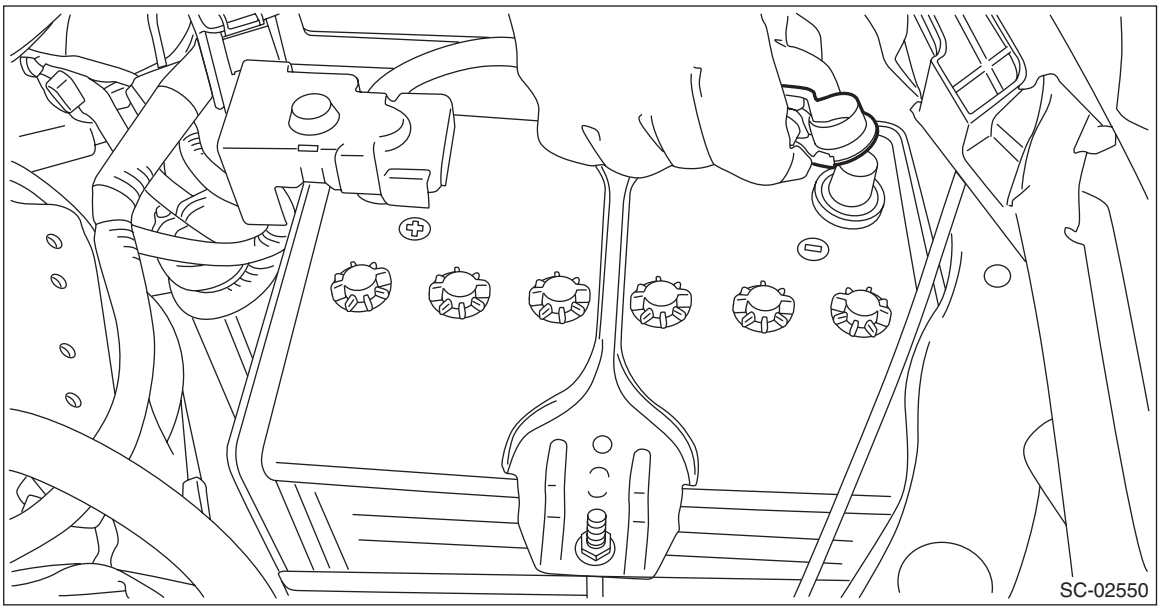

2) Drain engine coolant. <Ref. to CO(H4DO(w/o HEV))-16, DRAINING OF ENGINE COOLANT, REPLACEMENT, Engine Coolant.>
3) Disconnect the connector (A) from the engine coolant temperature sensor, and remove the engine coolant temperature sensor.

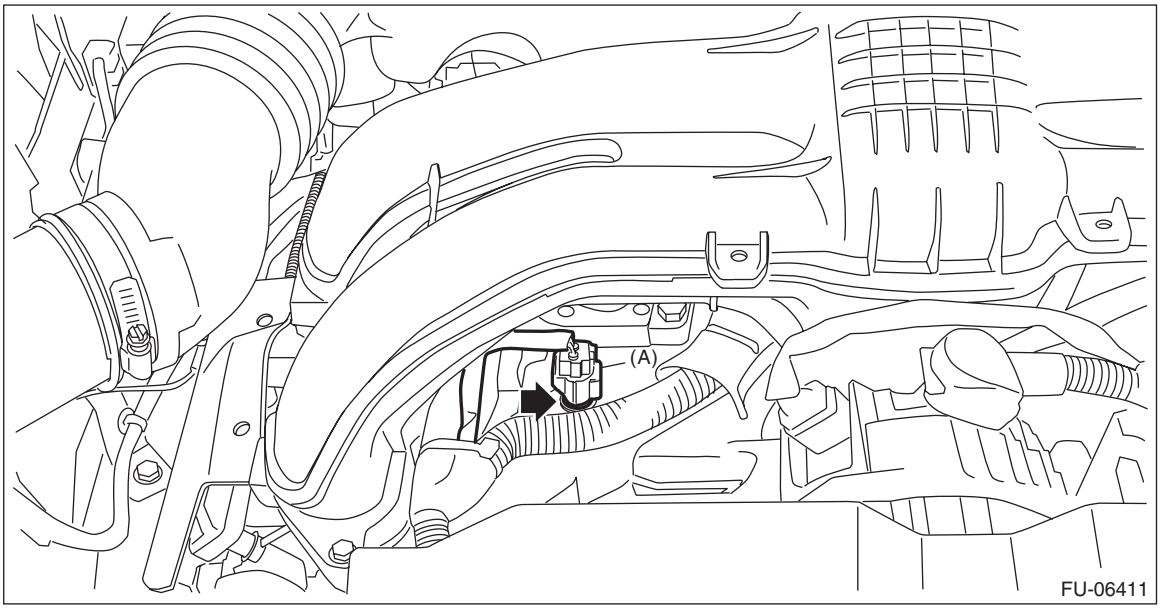

B: INSTALLATION

Install in the reverse order of removal.

NOTE:
Use a new gasket.

Tightening torque:
18 N·m (1.8 kgf-m, 13.3 ft-lb)

C: INSPECTION

1) Check that the engine coolant temperature sensor has no deformation, cracks or other damages.
2) Immerse the engine coolant temperature sensor and a thermometer in water.

CAUTION:
Take care not to allow water to get into the engine coolant temperature sensor connector. Completely remove any water inside.

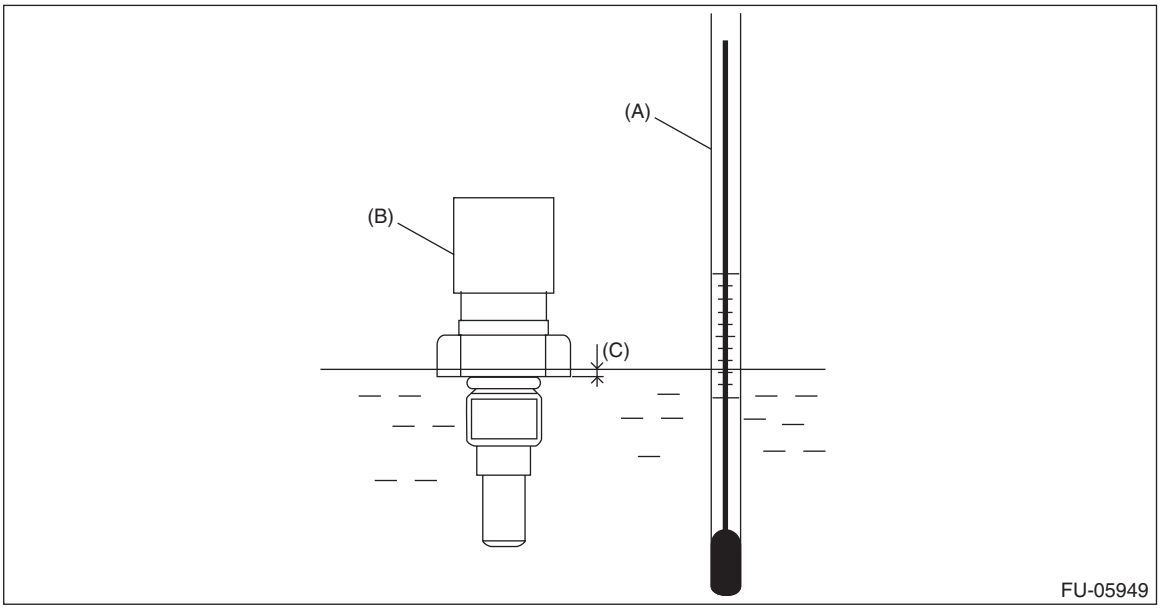

(A) Thermometer
(B) Engine coolant temperature sensor
(C) Hexagonal part height: To approx. $^1/_3$

3) Raise water temperature gradually, measure the resistance between the engine coolant temperature sensor terminals when the temperature is 20°C (68°F) and 80°C (176°F).

NOTE:
Agitate the water for even temperature distribution.

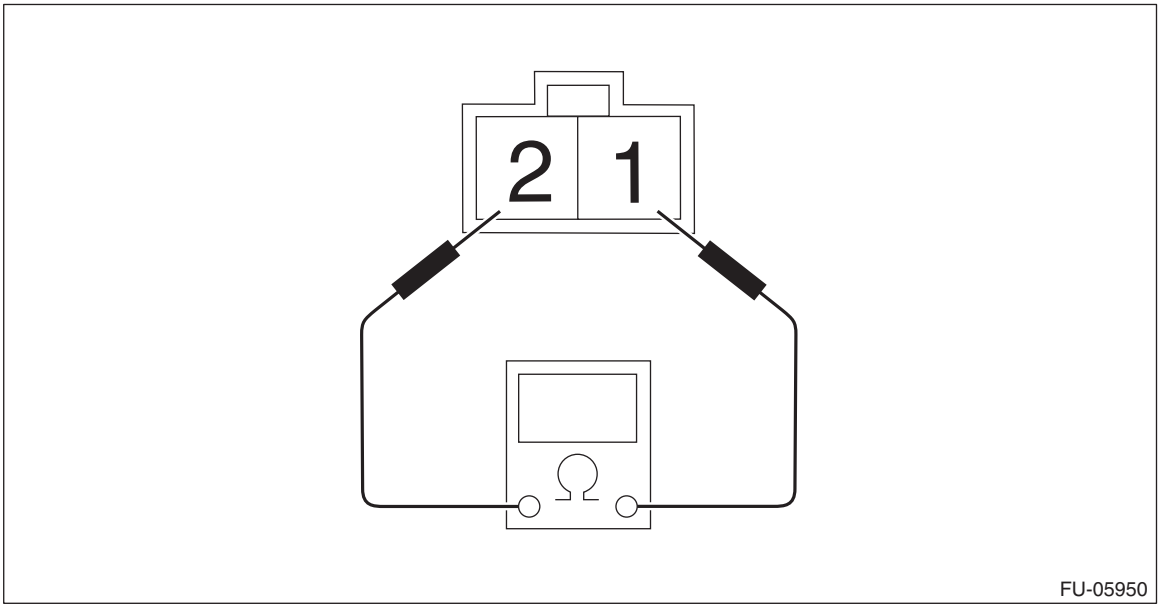

Water temperature	Terminal No.	Standard
20°C (68°F)	1 and 2	Approx. 2.45±0.2 kΩ
80°C (176°F)		Approx. 0.318±0.013 kΩ

6. Engine Oil Temperature Sensor

A: REMOVAL

1) Disconnect the ground cable from battery.

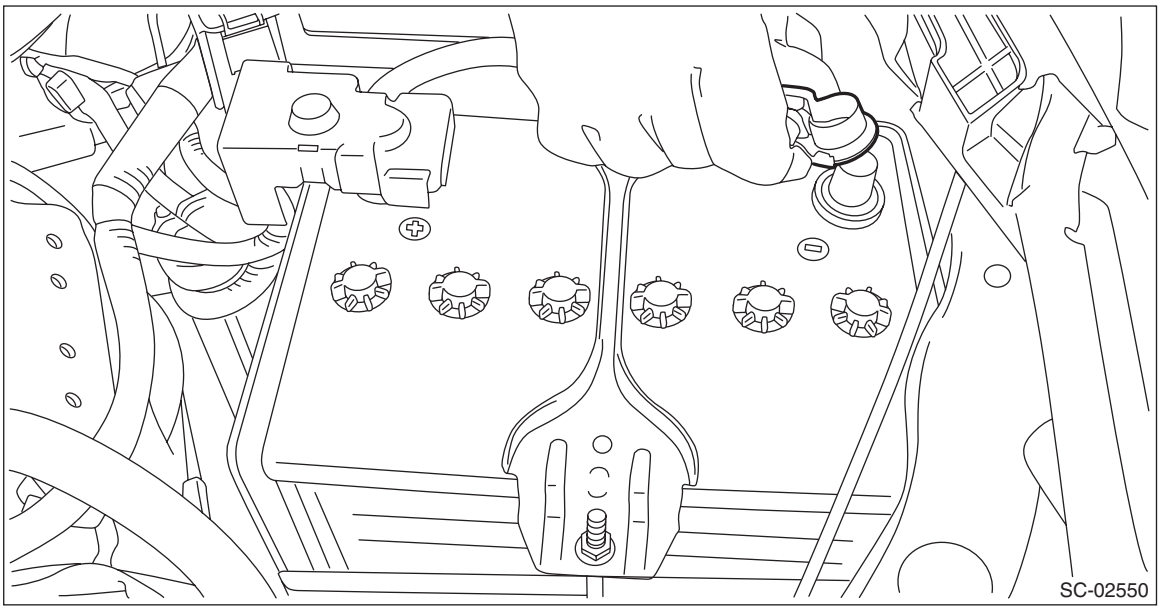

2) Disconnect the connector (A) from the engine oil temperature sensor, and remove the engine coolant temperature sensor from the chain cover.

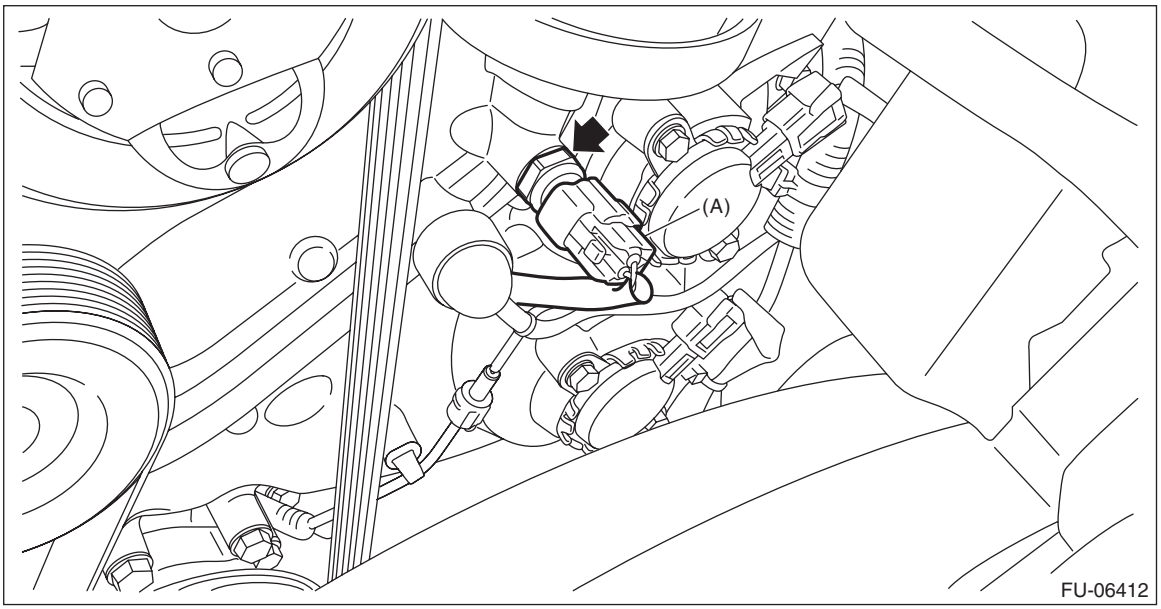

B: INSTALLATION

Install in the reverse order of removal.

NOTE:
Use a new gasket.

Tightening torque:
18 N·m (1.8 kgf-m, 13.3 ft-lb)

C: INSPECTION

1) Check that the engine oil temperature sensor has no deformation, cracks or other damages.
2) Immerse the engine oil temperature sensor and a thermometer in water.

CAUTION:
Take care not to allow water to get into the engine oil temperature sensor connector. Completely remove any water inside.

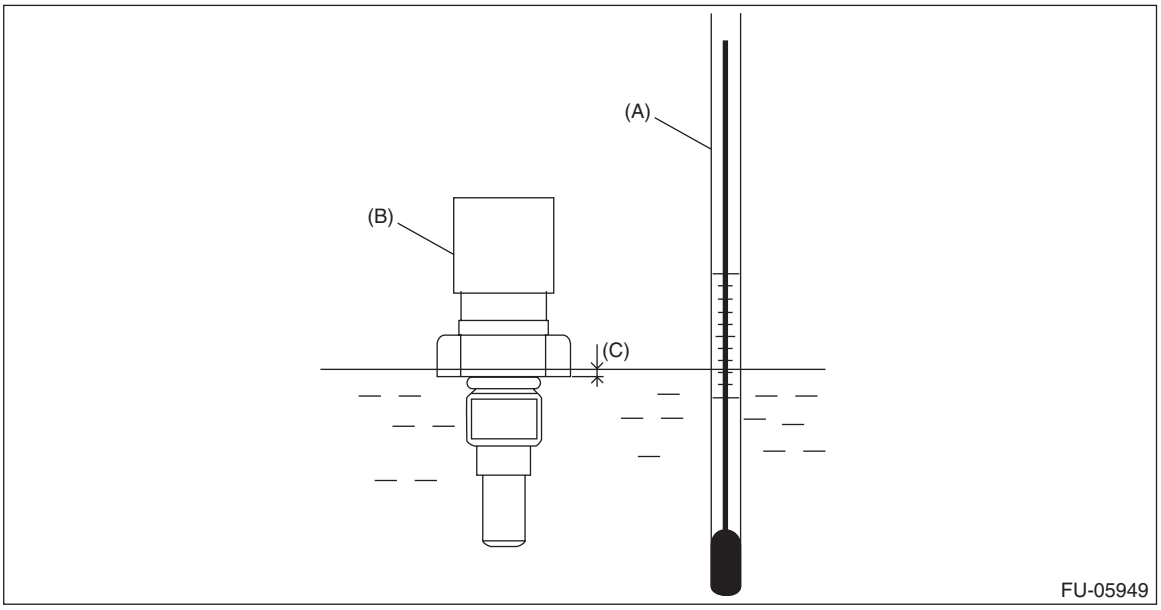

(A) Thermometer
(B) Engine oil temperature sensor
(C) Hexagonal part height: To approx. $^1/_3$

3) Raise water temperature gradually, measure the resistance between the engine oil temperature sensor terminals when the temperature is 20°C (68°F) and 80°C (176°F).

NOTE:
Agitate the water for even temperature distribution.

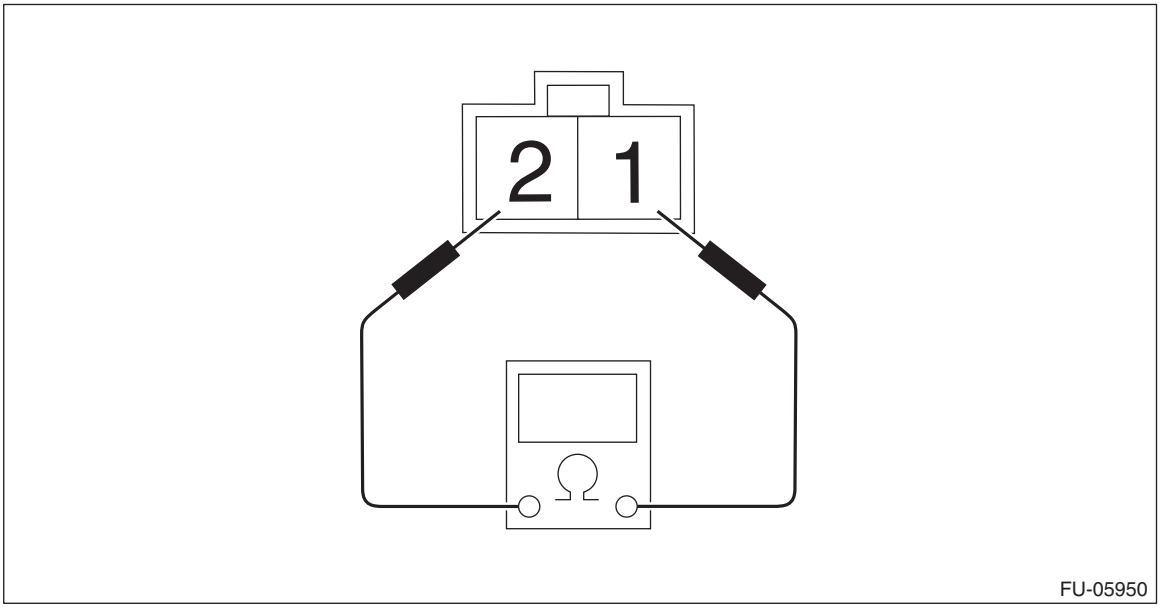

Water temperature	Terminal No.	Standard
20°C (68°F)	1 and 2	Approx. 2.45±0.2 kΩ
80°C (176°F)		Approx. 0.318±0.013 kΩ

7. Crankshaft Position Sensor

A: REMOVAL

1) Disconnect the ground cable from battery.

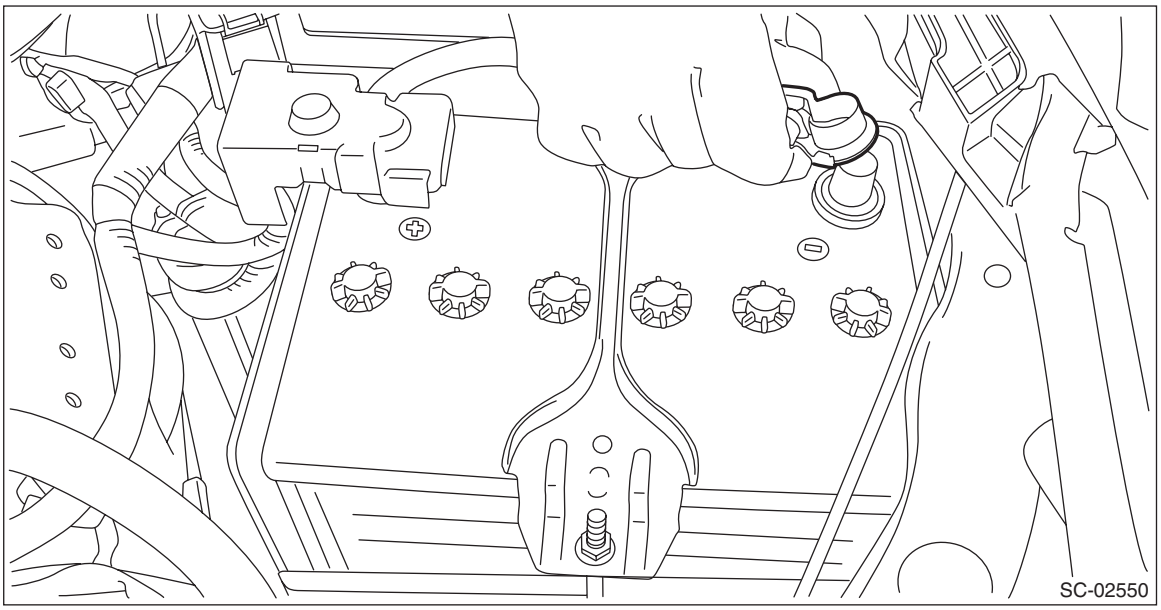

2) Remove the clip (A) from the air intake boot.
3) Loosen the clamp (B) connecting the air intake boot and air cleaner case (rear).
4) Loosen the clamp (C) which connects the air intake boot and throttle body.

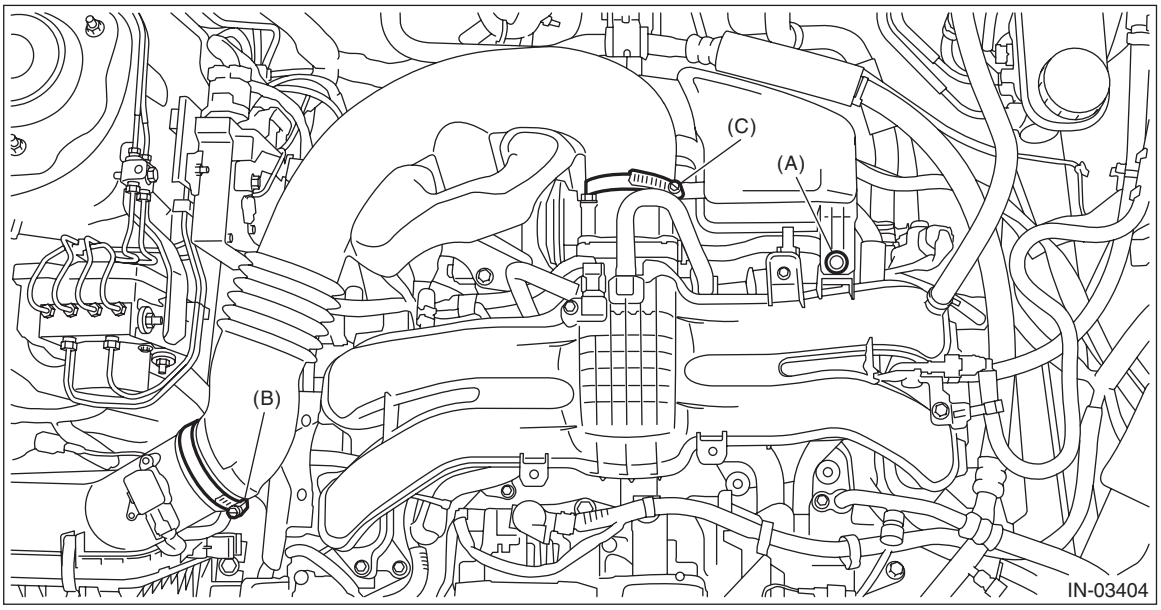

5) Remove the air intake boot from the throttle body, and move it to the left side wheel apron.

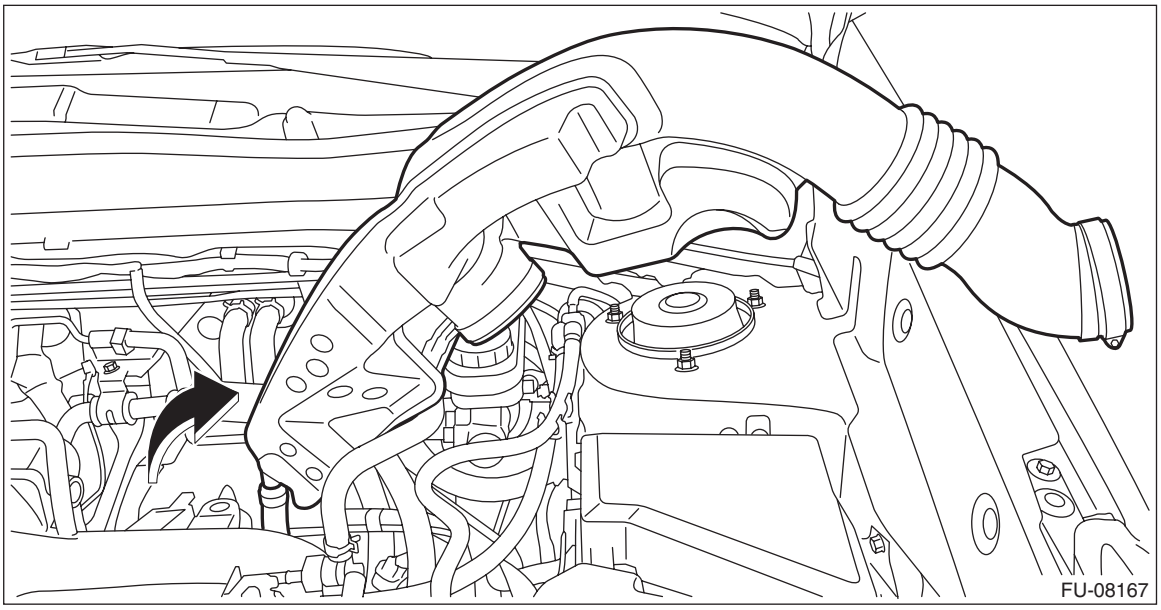

6) Disconnect the connector (A) from the crankshaft position sensor, and remove the crankshaft position sensor from the cylinder block.

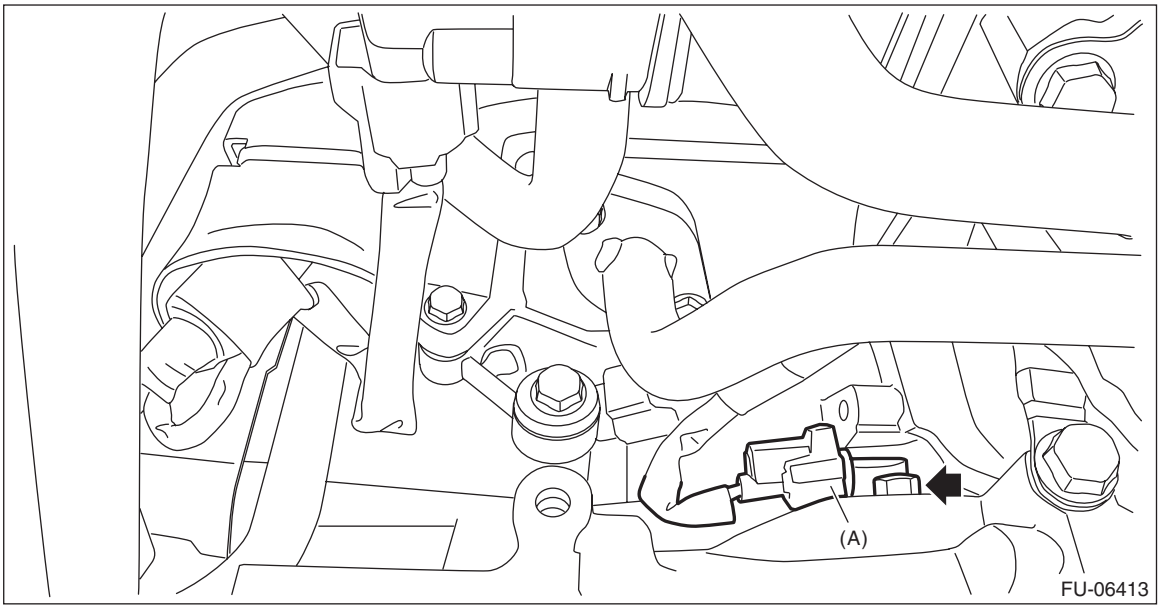

B: INSTALLATION

Install in the reverse order of removal.

Tightening torque:
6.4 N·m (0.7 kgf-m, 4.7 ft-lb)

C: INSPECTION

1. CRANKSHAFT POSITION SENSOR (METHOD WITH CIRCUIT TESTER)

Measure the resistance between crankshaft position sensor terminals.

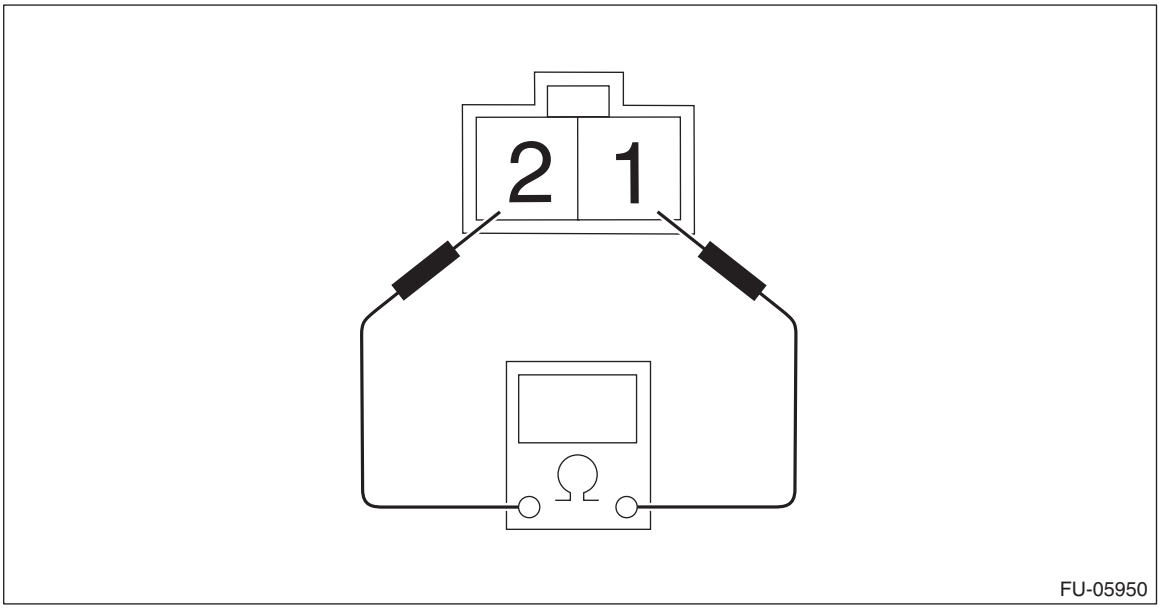

Terminal No.	Standard
1 and 2	2.04±0.204 kΩ

2. CRANKSHAFT POSITION SENSOR (METHOD WITH OSCILLOSCOPE)

1) Prepare an oscilloscope.
2) Remove the glove box. <Ref. to EI-73, REMOVAL, Glove Box.>
3) Connect the probe to ECM connector.

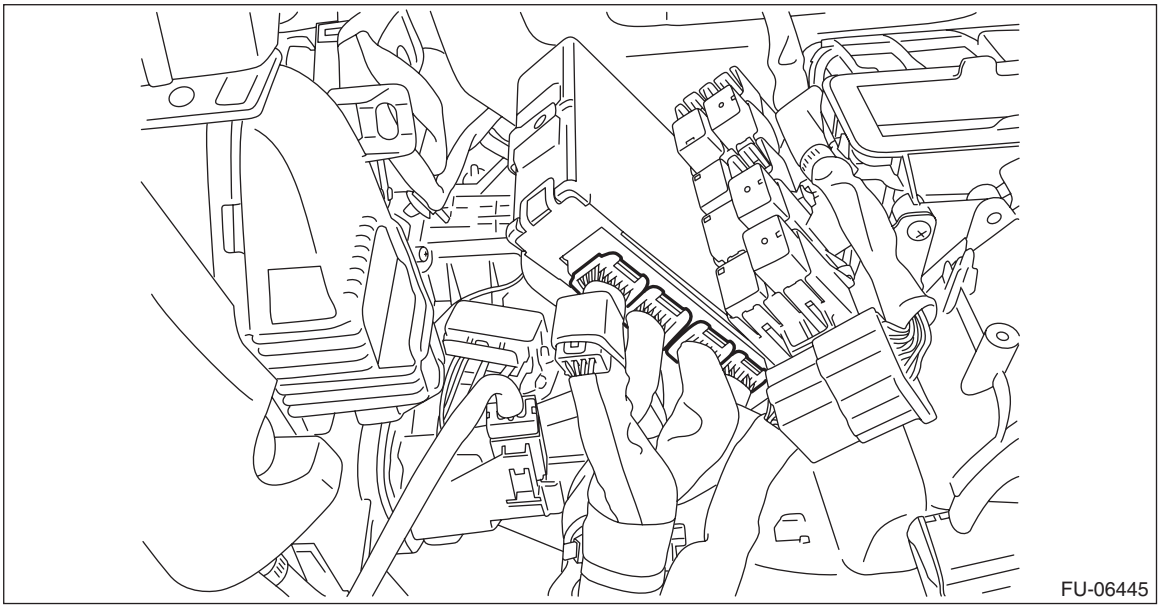
FU-06445

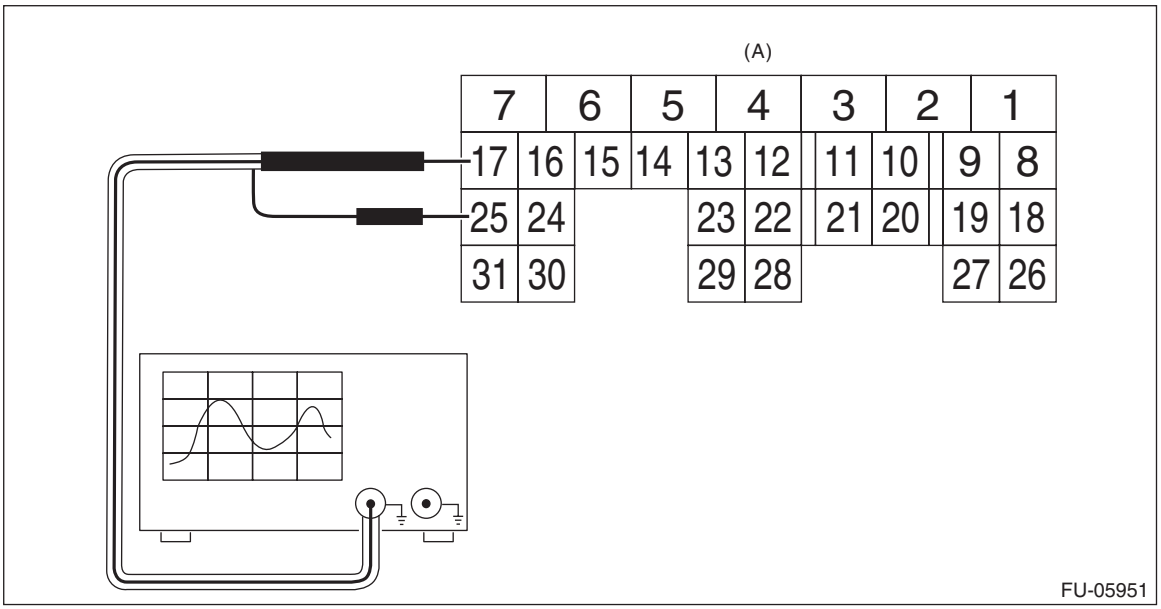

FU-05951

(A) To ECM connector

Terminal No.	Probe
17	+
25	–

4) Start the engine and let it idle.

5) Check the pattern is the same as the waveform and voltage shown below.

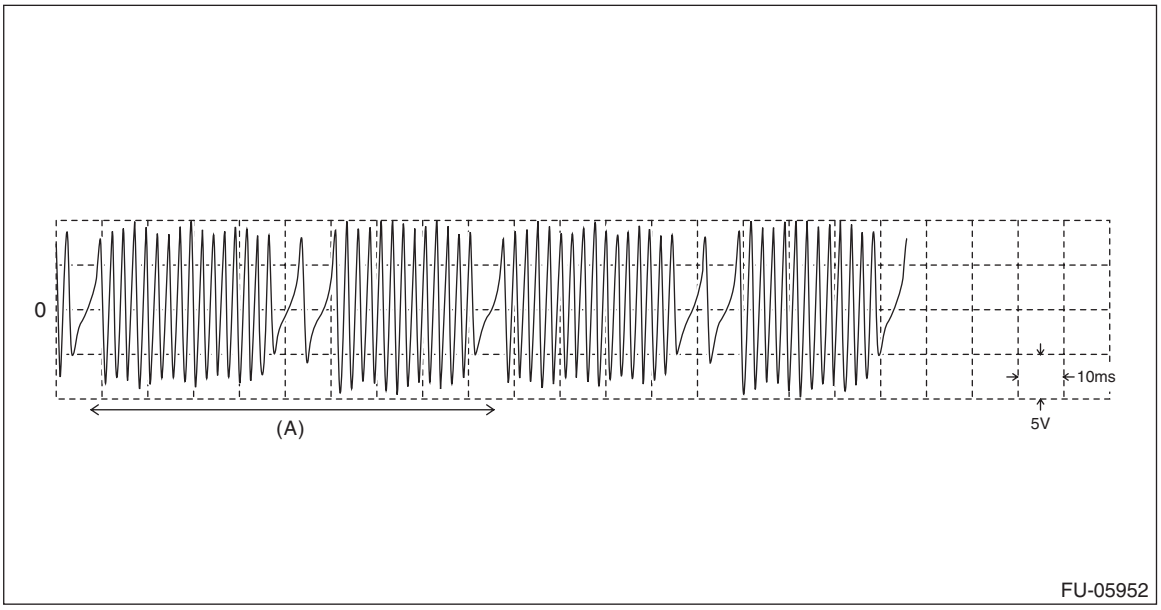

(A) One crankshaft rotation

6) After inspection, install the related parts in the reverse order of removal.

3. OTHER INSPECTIONS

Check that the crankshaft position sensor has no deformation, cracks or other damages.

8. Crankshaft Position Sensor Plate

A: REMOVAL

The crankshaft position sensor plate is tightened together with the drive plate or flywheel; therefore, refer to “Drive Plate” or “Flywheel” for removal procedure. <Ref. to CVT(TR580)-156, REMOVAL, Drive Plate.> <Ref. to CL-12, REMOVAL, Flywheel.>

B: INSTALLATION

The crankshaft position sensor plate is tightened together with the drive plate or flywheel; therefore, refer to “Drive Plate” or “Flywheel” for installation procedure. <Ref. to CVT(TR580)-156, INSTALLATION, Drive Plate.> <Ref. to CL-12, INSTALLATION, Flywheel.>

C: INSPECTION

Check that the crankshaft position sensor plate has no deformation, cracks or other damages.

9. Camshaft Position Sensor

A: REMOVAL

1. INTAKE SIDE

1) Disconnect the ground cable from battery.

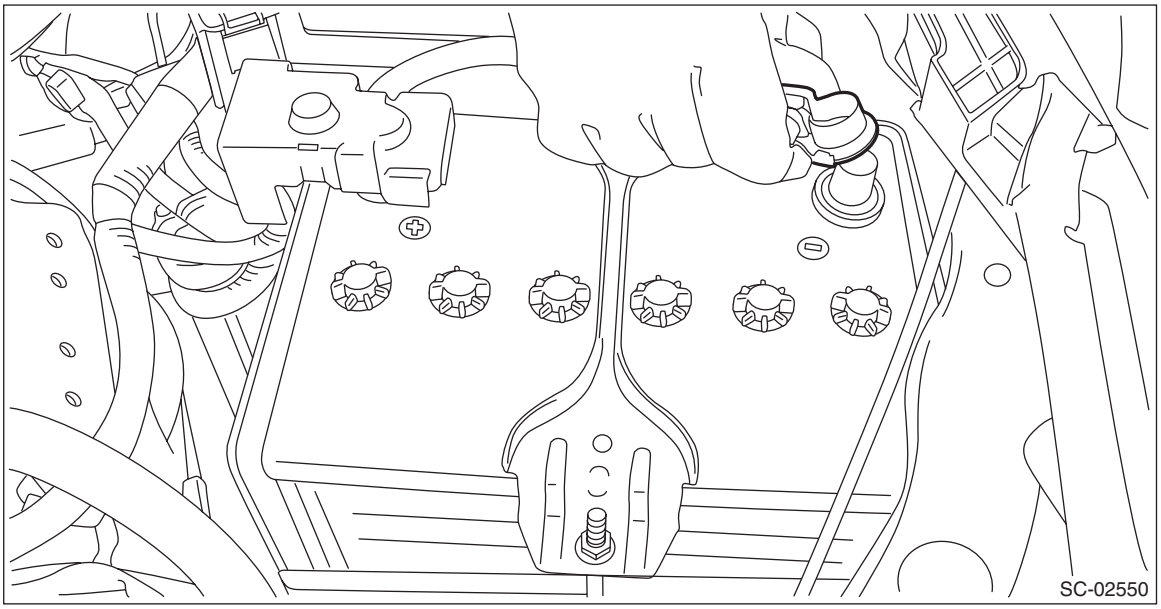

2) Remove the air intake duct. (RH side only) <Ref. to IN(H4DO(w/o HEV))-13, REMOVAL, Air Intake Duct.>
3) Disconnect the connector (A) from the camshaft position sensor, and remove the camshaft position sensor from the chain cover.

- RH side

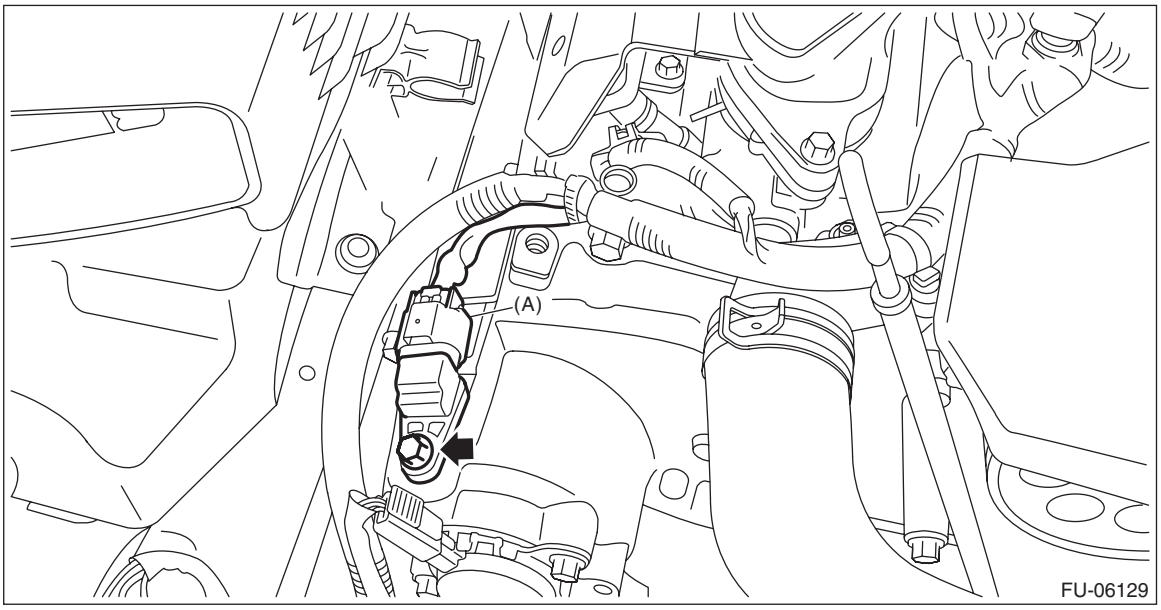

- LH side

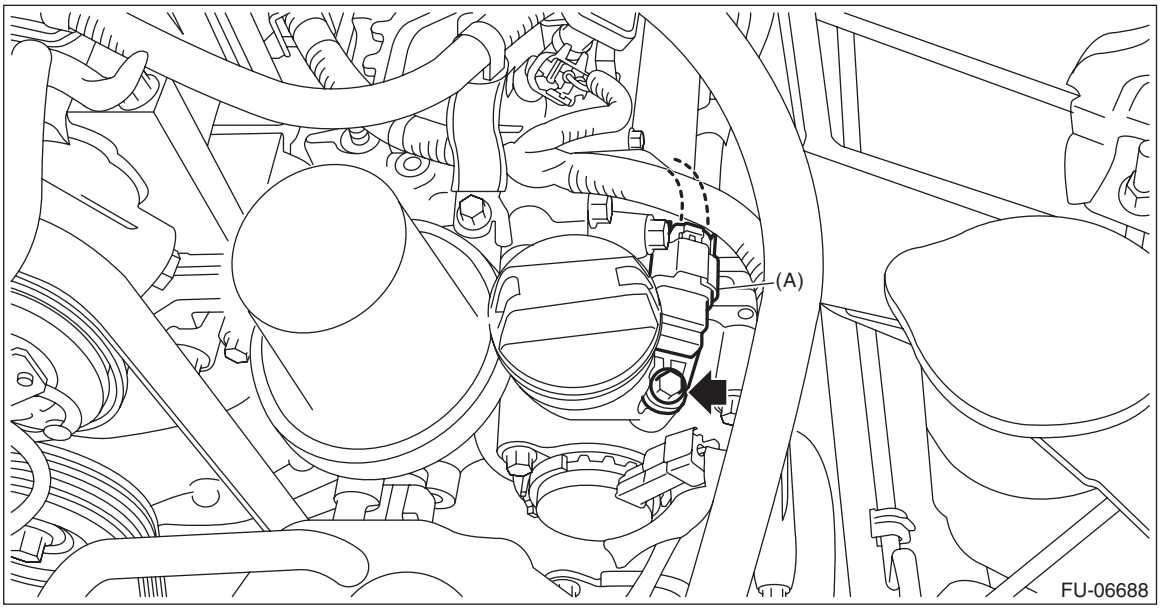

2. EXHAUST SIDE

1) Disconnect the ground cable from battery.

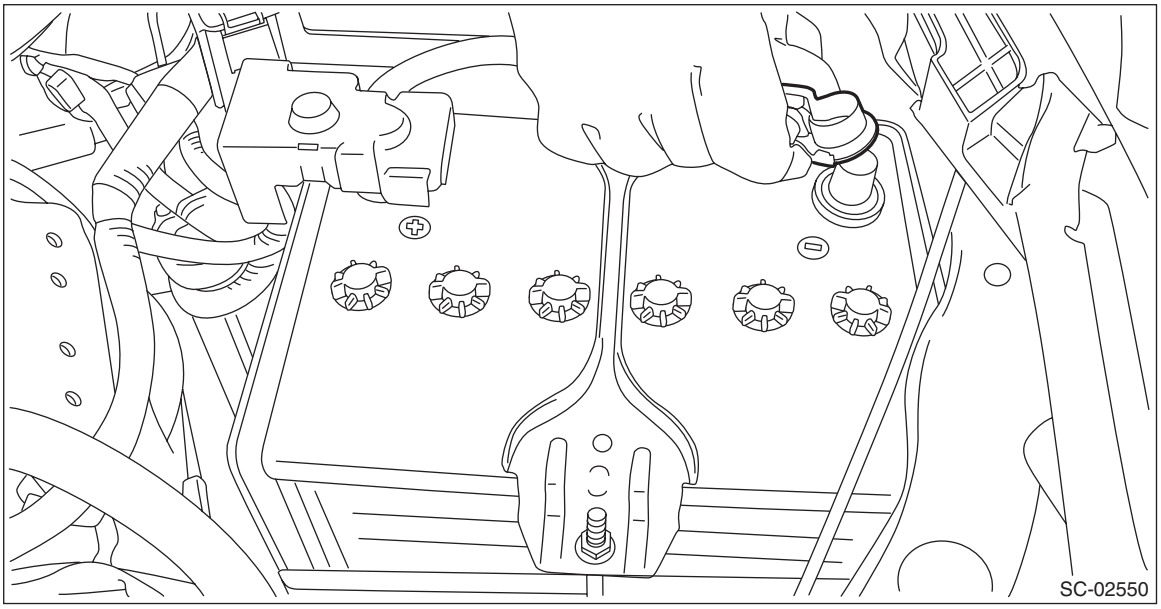

2) Remove the under cover. <Ref. to EI-29, REMOVAL, Front Under Cover.>

3) Disconnect the connector (A) from the camshaft position sensor, and remove the camshaft position sensor from the chain cover.

- RH side

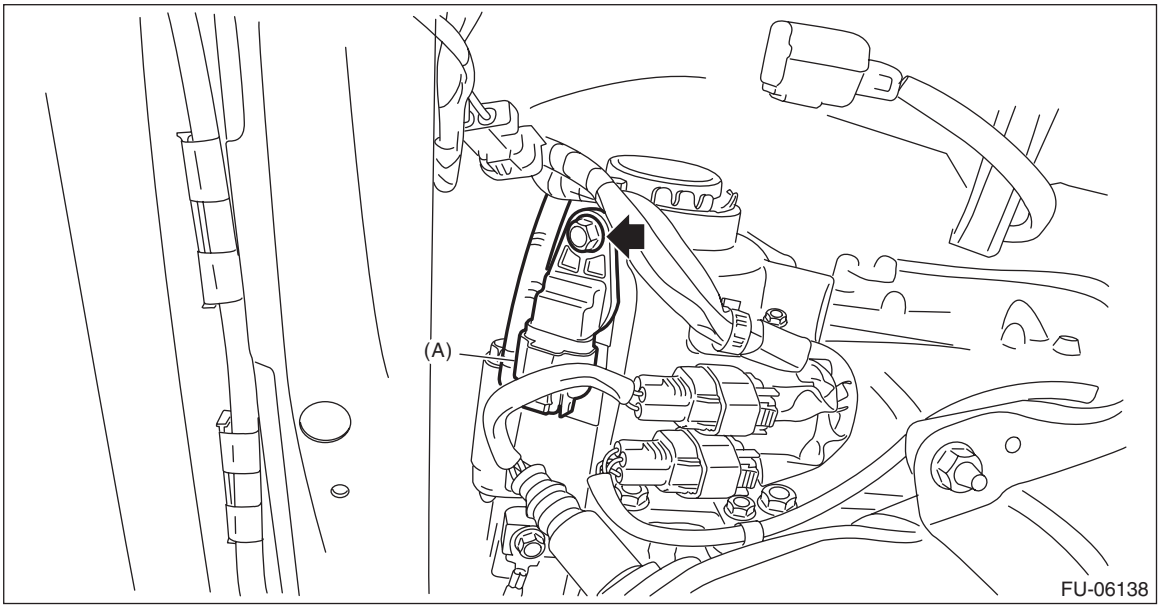

- LH side

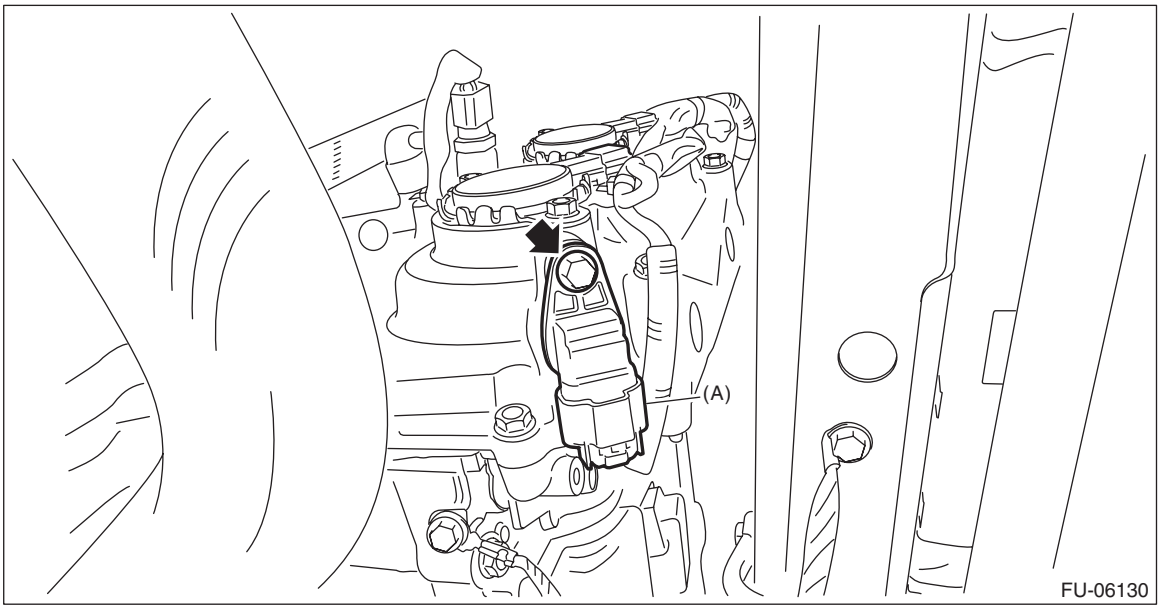

B: INSTALLATION

Install in the reverse order of removal.

NOTE:
- Use new O-rings.
- Apply engine oil to O-ring.

Tightening torque:
6.4 N·m (0.7 kgf-m, 4.7 ft-lb)

C: INSPECTION

1. CAMSHAFT POSITION SENSOR (METHOD WITH OSCILLOSCOPE)

1) Prepare an oscilloscope.
2) Remove the glove box. <Ref. to EI-73, REMOVAL, Glove Box.>
3) Connect the probe to ECM connector.

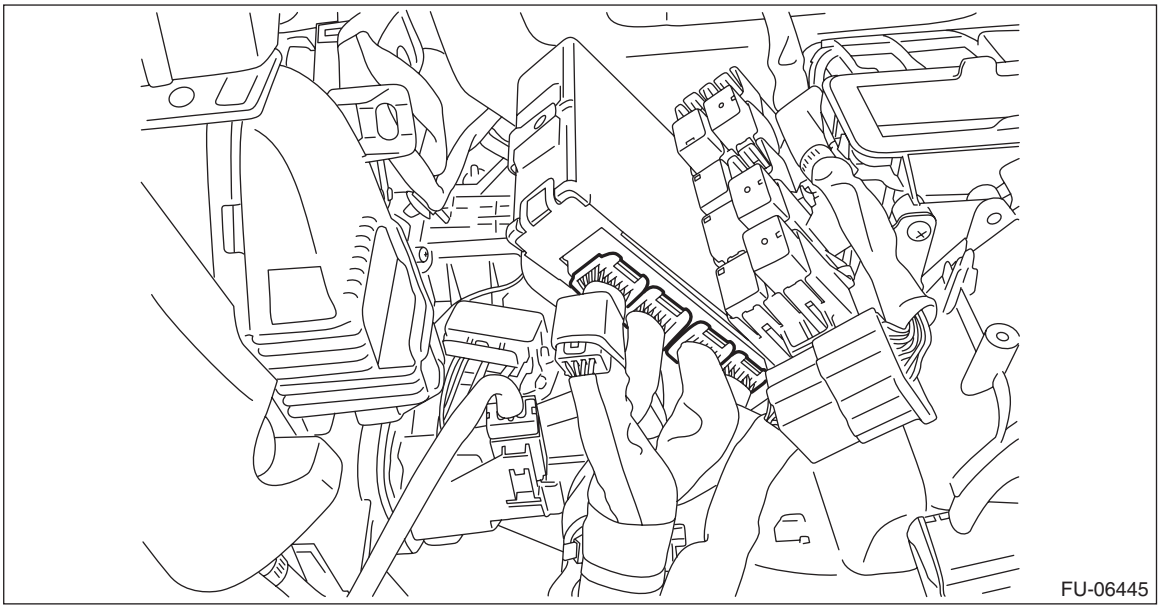

- Intake camshaft position sensor

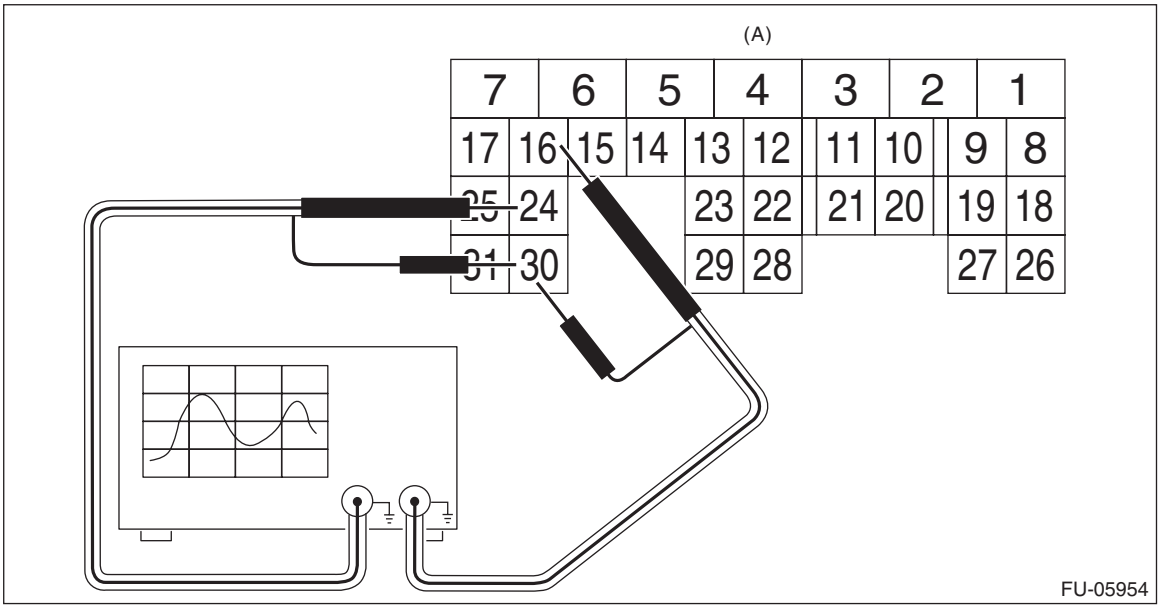

(A) To ECM connector

- Exhaust camshaft position sensor

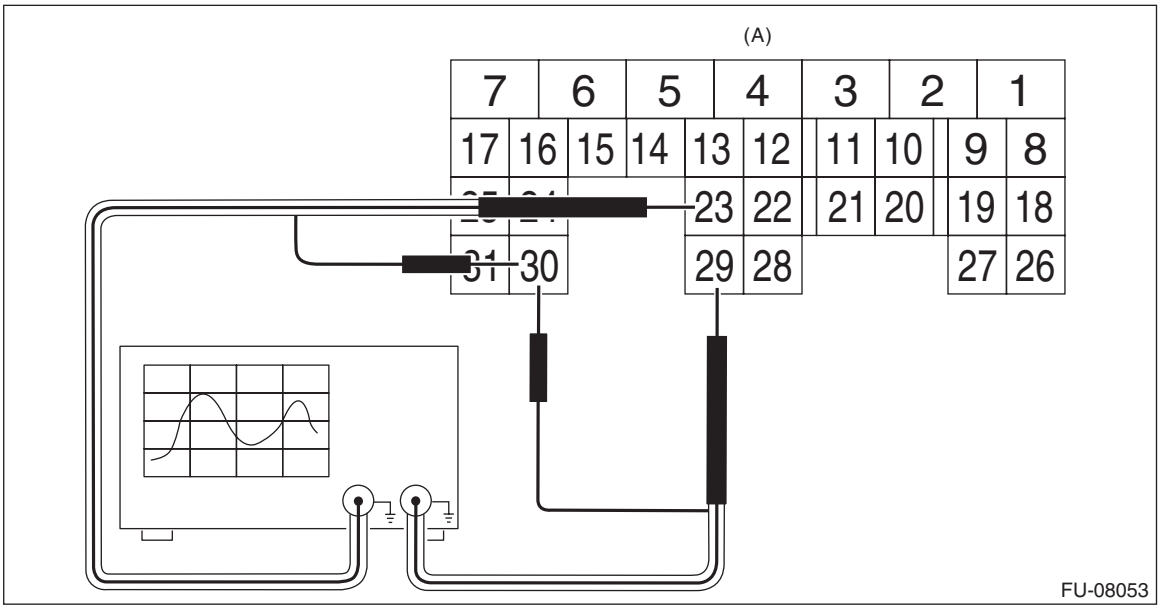

(A) To ECM connector

Camshaft position sensor		Terminal No.	Probe
Intake	RH	24	+
	LH	16	+
Exhaust	RH	23	+
	LH	29	+
RH and LH		30	–

4) Start the engine and let it idle.

5) Check the pattern is the same as the waveform and voltage shown below.

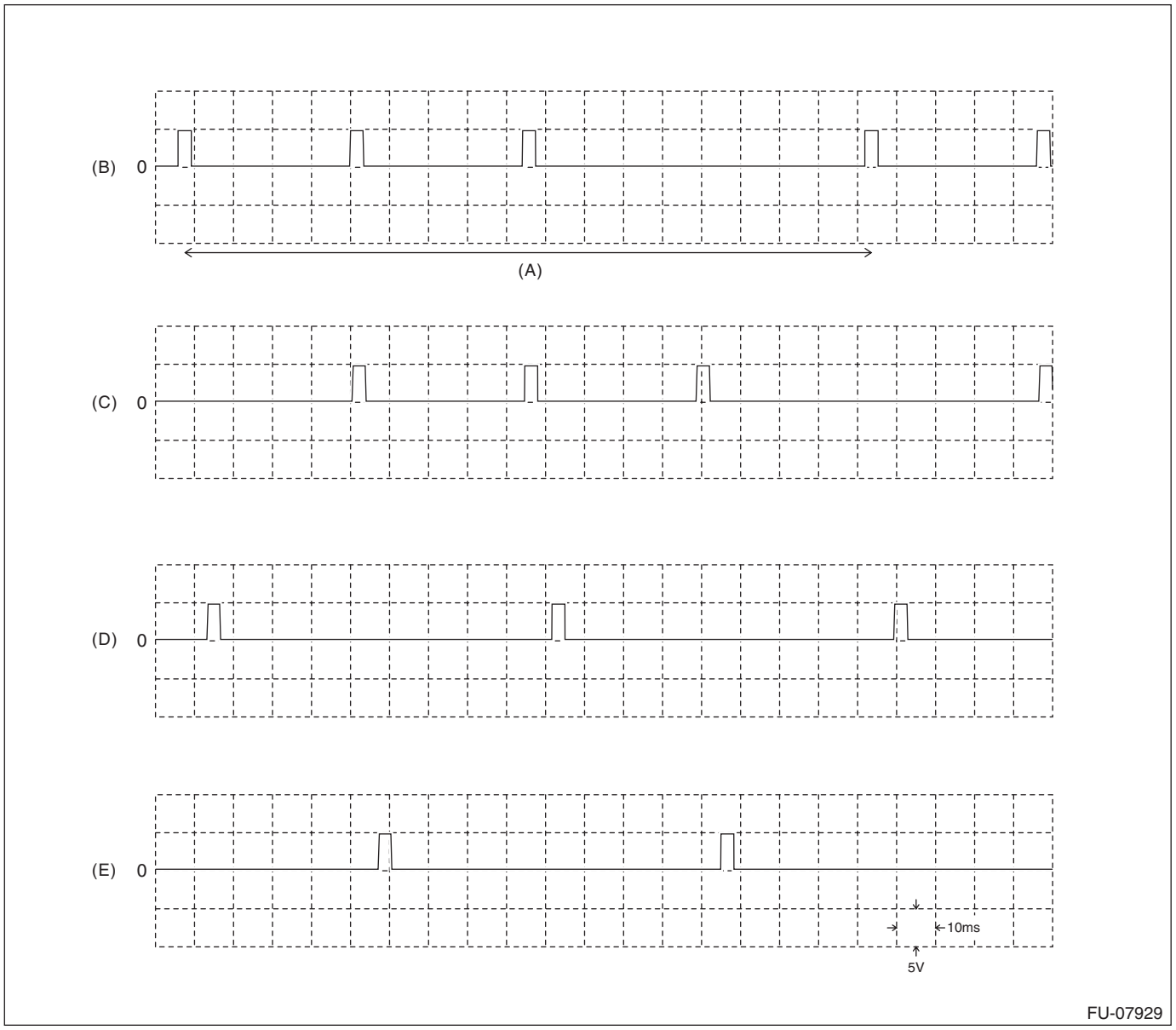

(A) One camshaft rotation
(B) Intake camshaft position sensor RH
(C) Intake camshaft position sensor LH
(D) Exhaust camshaft position sensor RH
(E) Exhaust camshaft position sensor LH

6) After inspection, install the related parts in the reverse order of removal.

2. OTHER INSPECTIONS

Check that the camshaft position sensor has no deformation, cracks or other damages.

10.Oil Control Solenoid

A: REMOVAL

1. INTAKE SIDE

1) Disconnect the ground cable from battery.

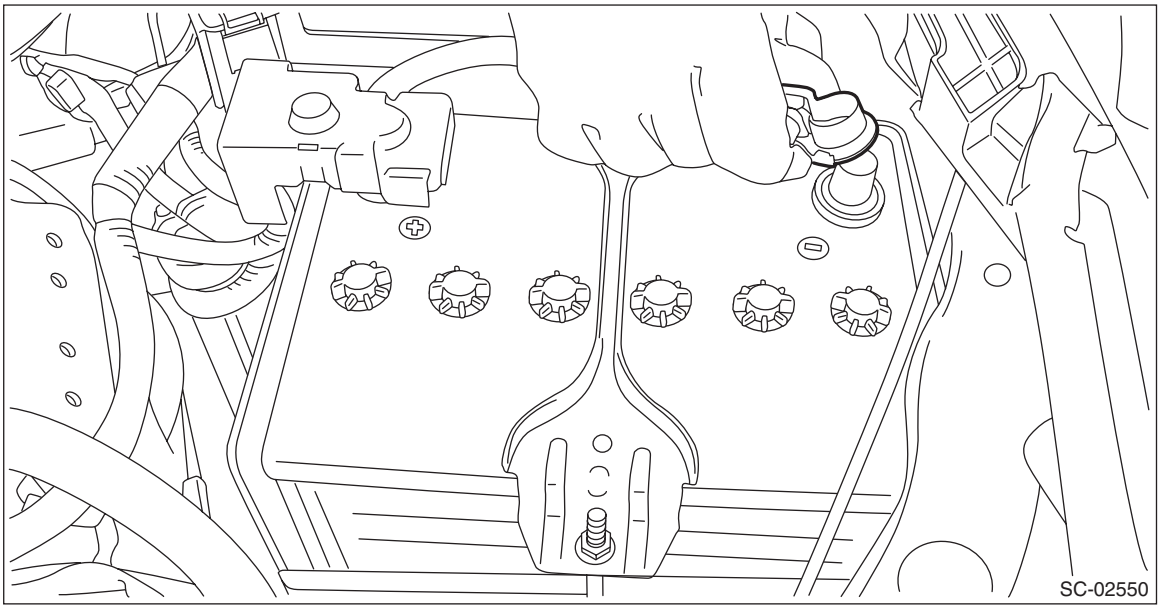

2) Remove the air intake duct. (RH side only) <Ref. to IN(H4DO(w/o HEV))-13, REMOVAL, Air Intake Duct.>
3) Remove the reservoir tank. (LH side only) <Ref. to CO(H4DO(w/o HEV))-97, REMOVAL, Reservoir Tank.>
4) Disconnect the connector (A) from the oil control solenoid, and remove the oil control solenoid from the chain cover.

- RH side

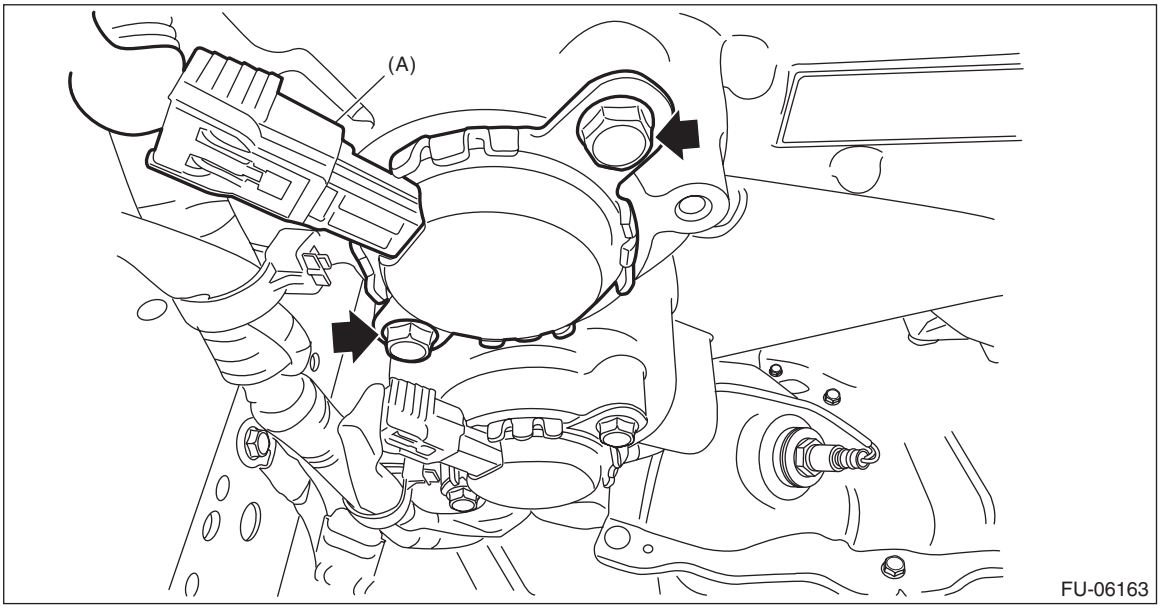

- LH side

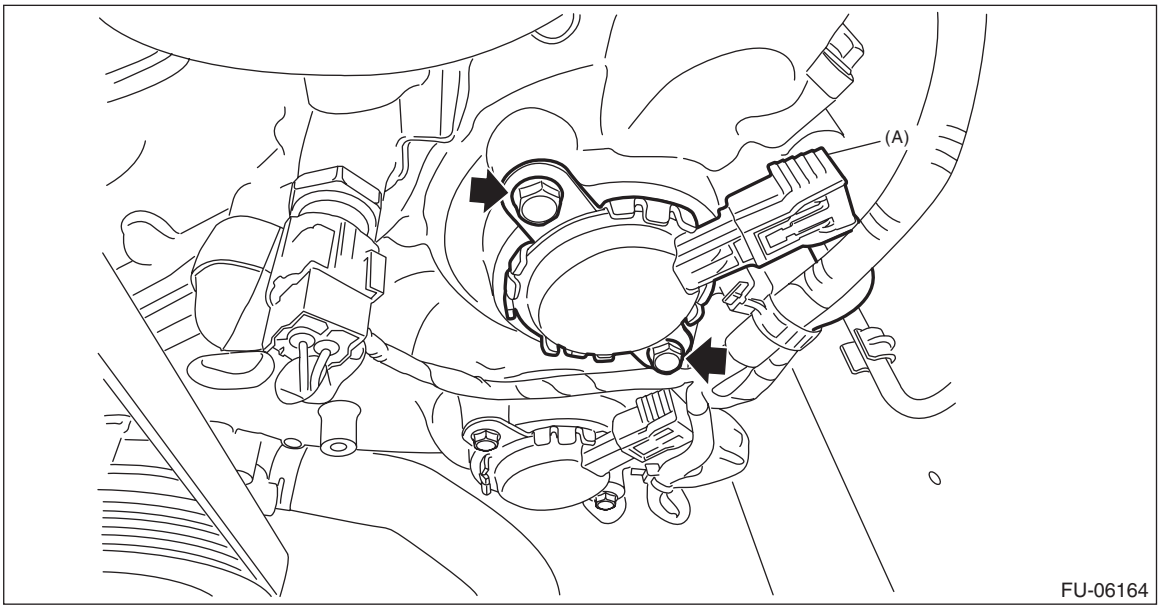

2. EXHAUST SIDE

1) Disconnect the ground cable from battery.

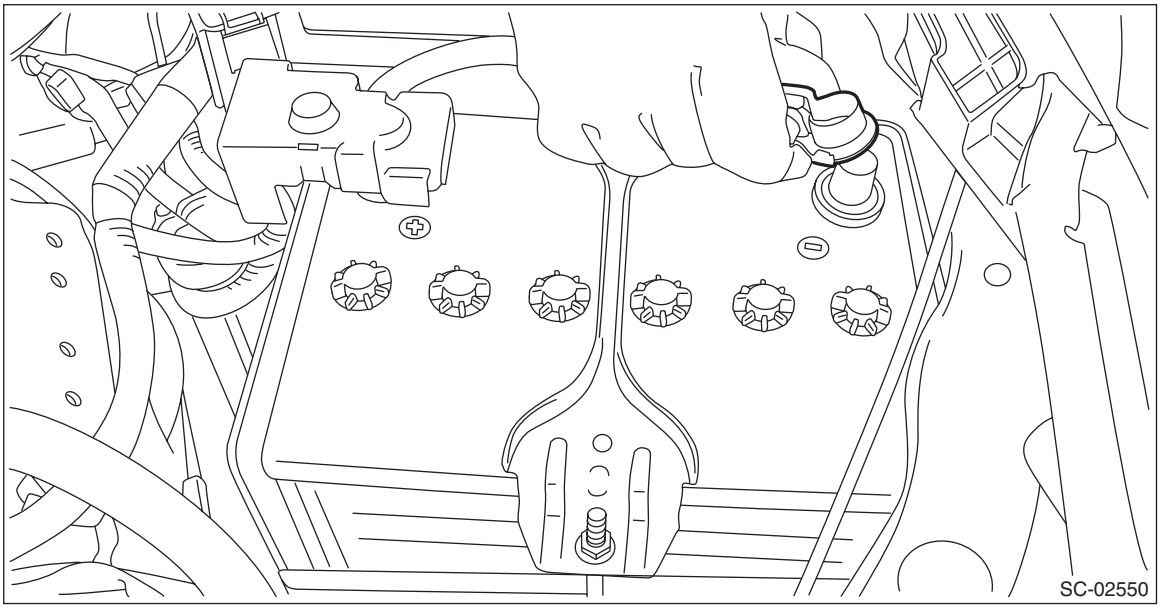

2) Remove the air intake duct. (RH side only) <Ref. to IN(H4DO(w/o HEV))-13, REMOVAL, Air Intake Duct.>
3) Remove the reservoir tank. (LH side only) <Ref. to CO(H4DO(w/o HEV))-97, REMOVAL, Reservoir Tank.>

4) Disconnect the connector (A) from the oil control solenoid, and remove the oil control solenoid from the chain cover.

- RH side

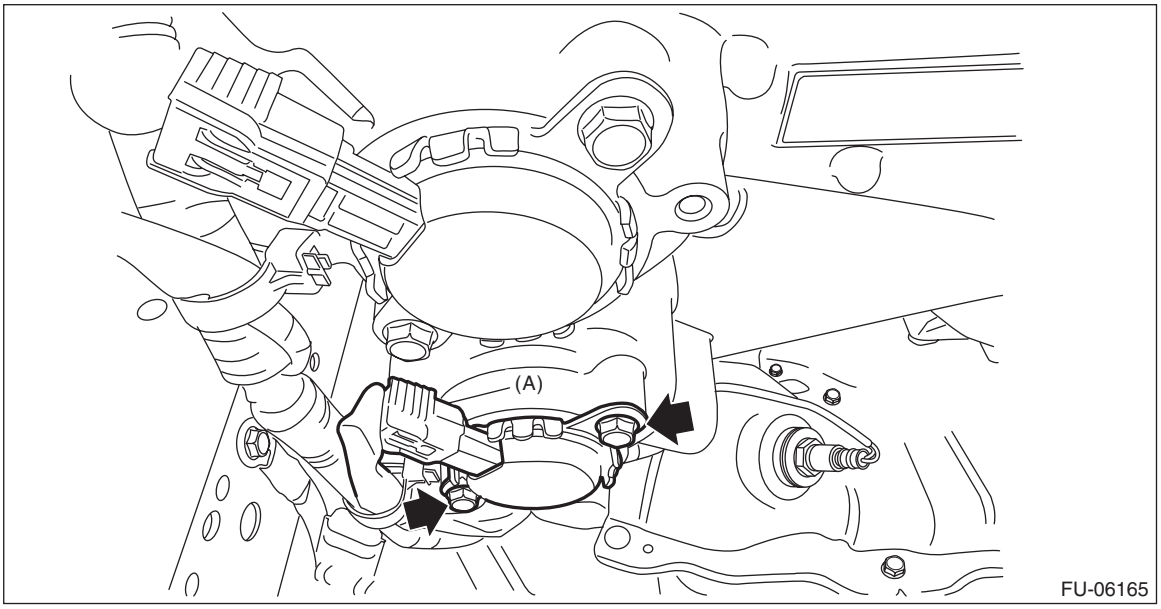

- LH side

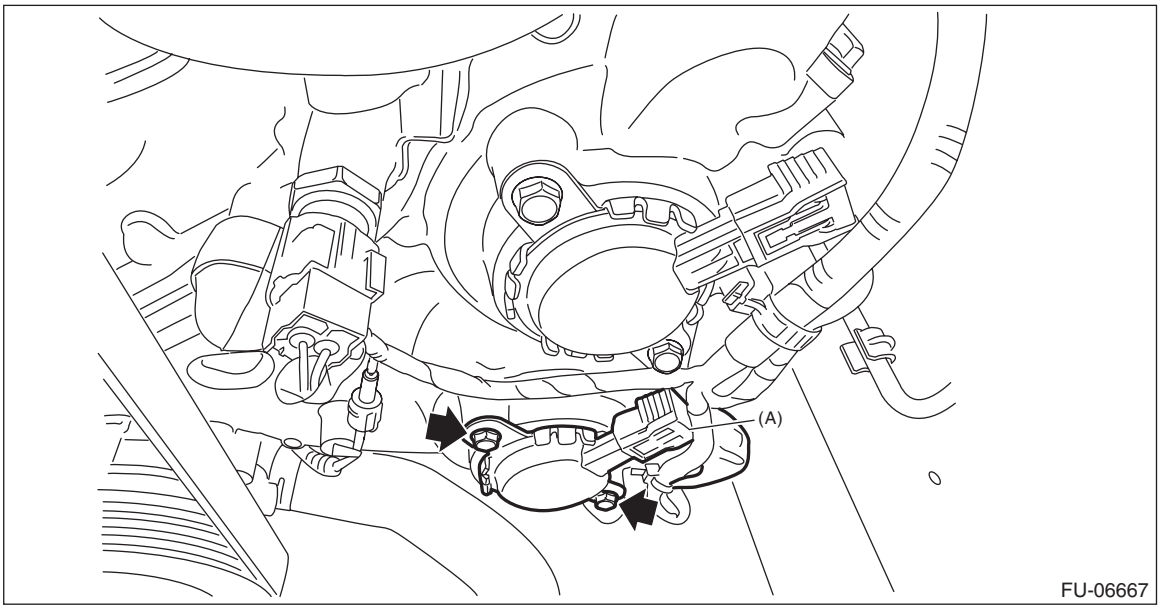

B: INSTALLATION

Install in the reverse order of removal.

NOTE:
- Use new O-rings.
- Apply engine oil to O-ring.

Tightening torque:
6.4 N·m (0.7 kgf-m, 4.7 ft-lb)

C: INSPECTION

1) Check that the oil control solenoid has no deformation, cracks or other damages.
2) Measure the resistance between the oil control solenoid terminals.

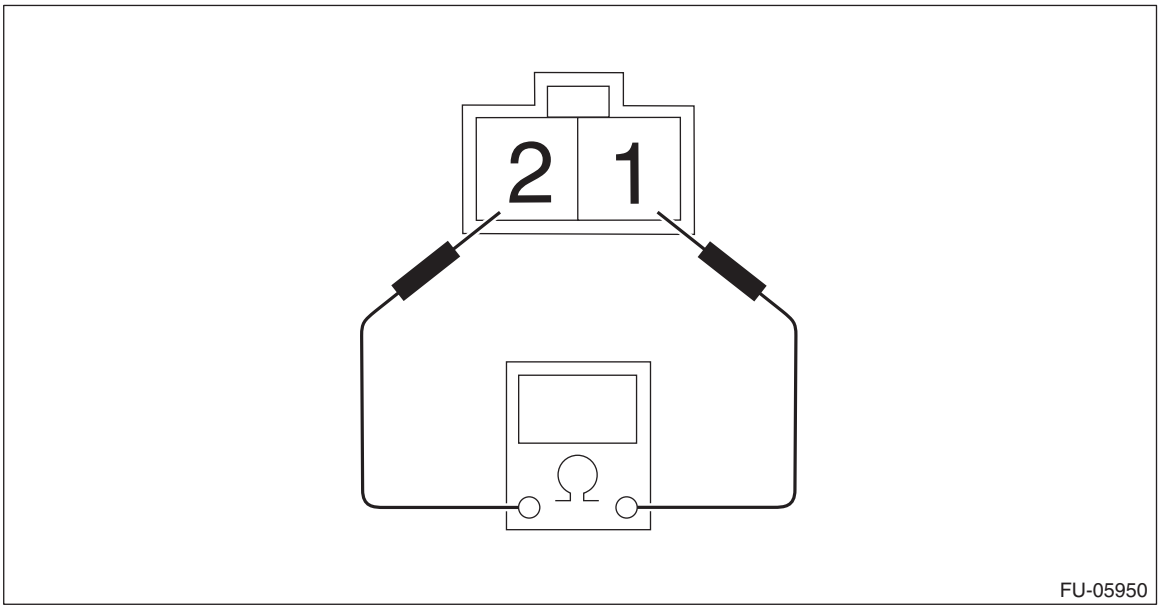

Terminal No.	Standard
1 and 2	7.25±0.4 Ω (when 20°C (68°F))

11.Knock Sensor

A: REMOVAL

1) Disconnect the ground cable from battery.

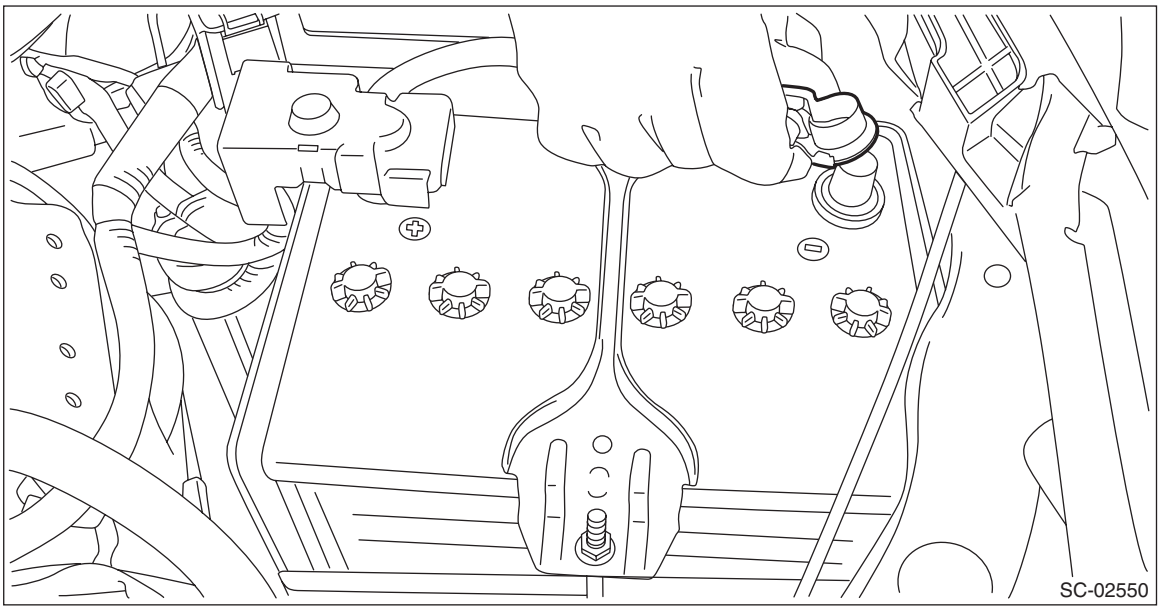

2) Remove the clip (A) from the air intake boot.
3) Loosen the clamp (B) connecting the air intake boot and air cleaner case (rear).
4) Loosen the clamp (C) which connects the air intake boot and throttle body.

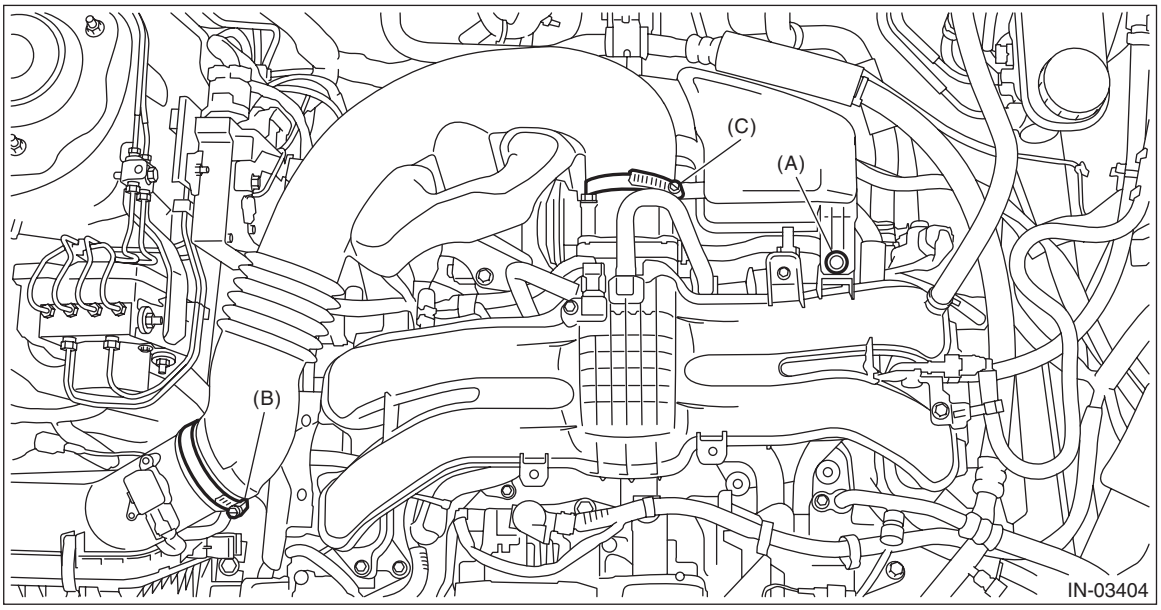

5) Remove the air intake boot from the throttle body, and move it to the left side wheel apron.

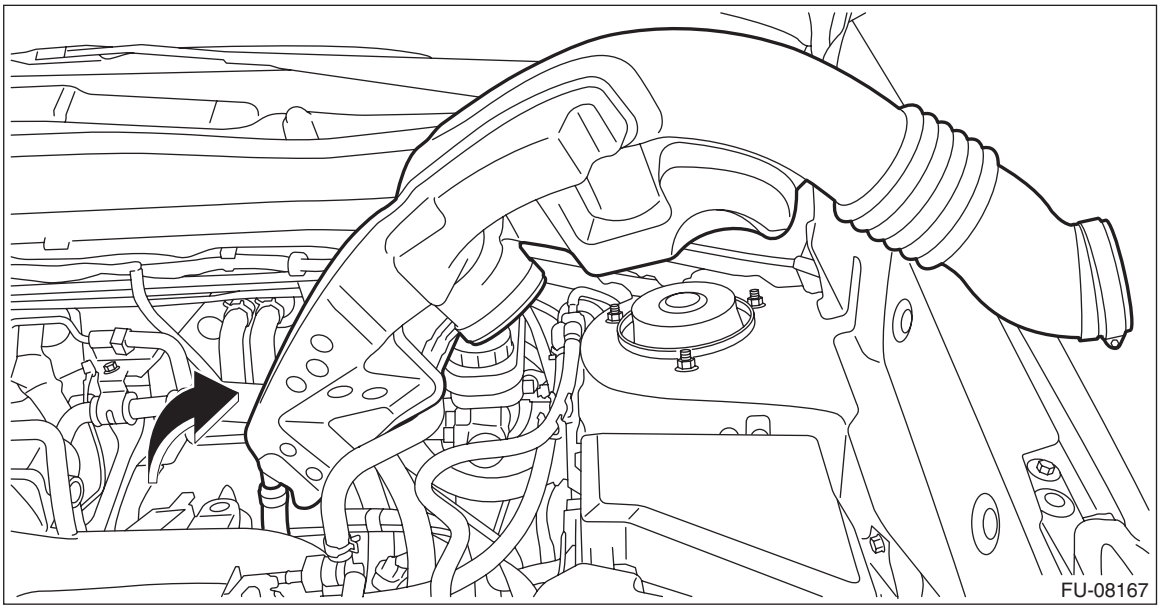

6) Disconnect the connector (A) from the knock sensor, and remove the knock sensor from the cylinder block.

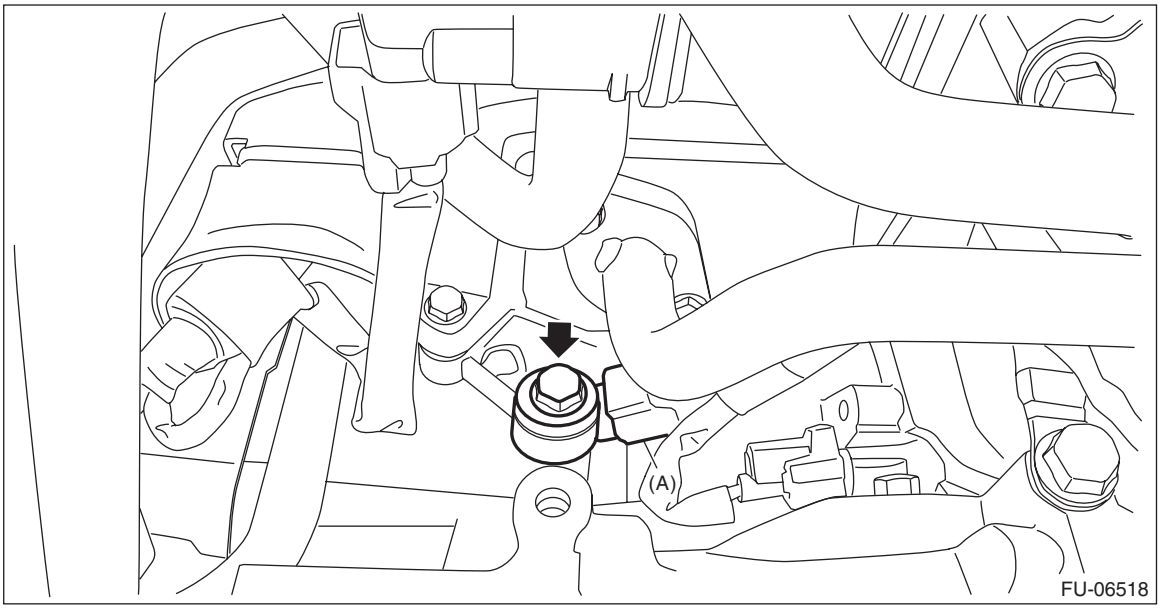

B: INSTALLATION

1) Install the knock sensor to the cylinder block.

NOTE:
The knock sensor should be installed so that the center of the connector is positioned at a 76.5 — 91.5° angle relative to the front of engine.

Tightening torque:
24 N·m (2.4 kgf-m, 17.7 ft-lb)

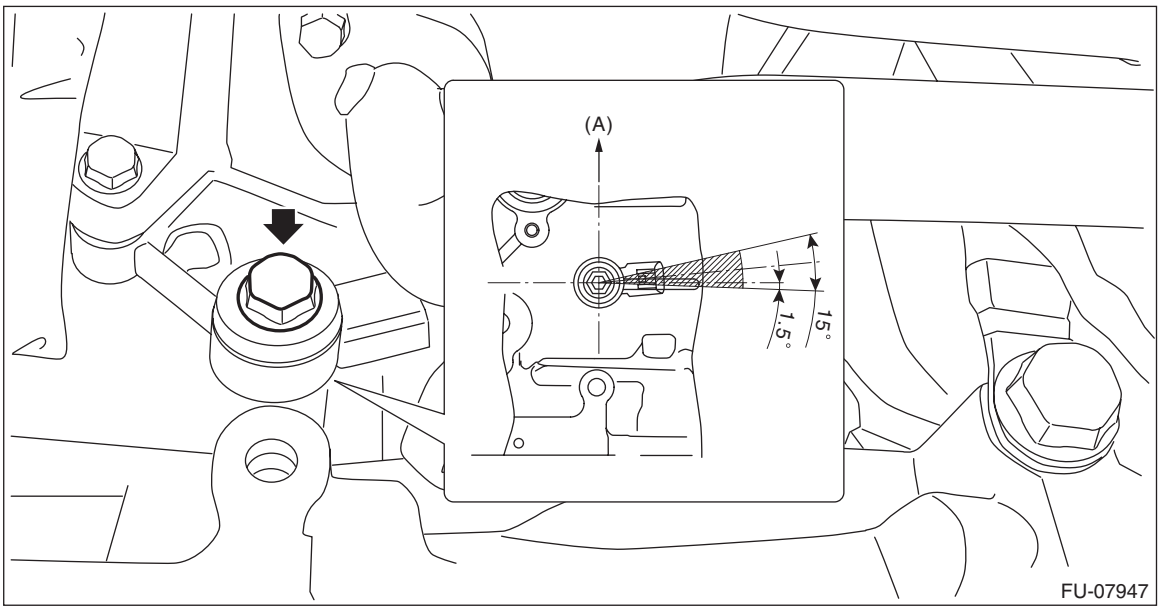

(A) Front of engine

2) Connect the connector to the knock sensor.

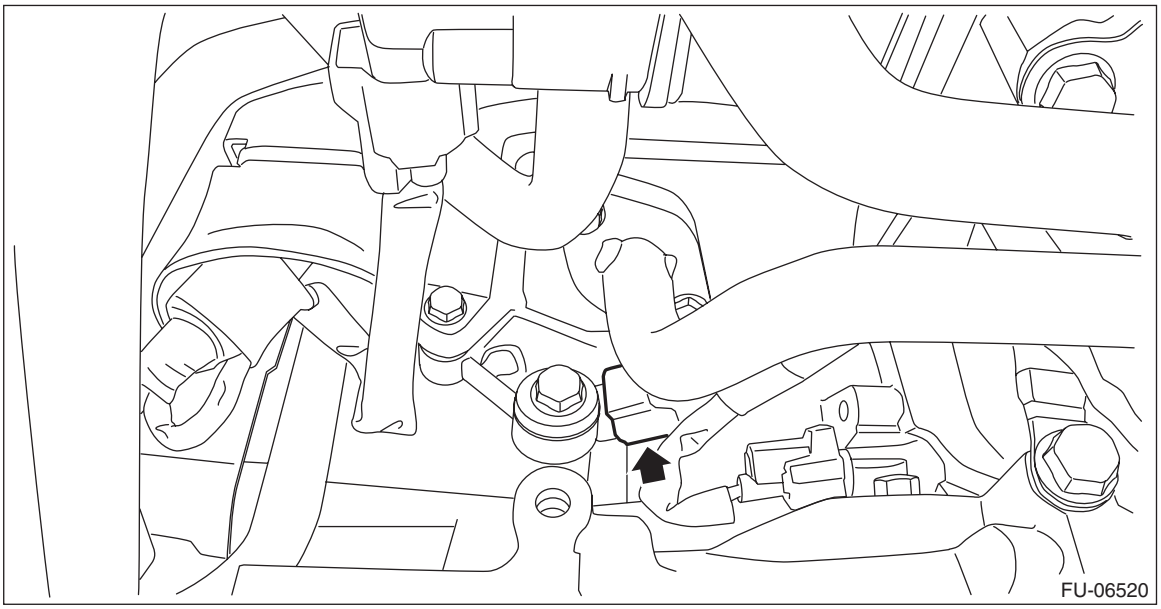

3) Install the air intake boot. <Ref. to IN(H4DO(w/o HEV))-12, INSTALLATION, Air Intake Boot.>

4) Connect the battery ground terminal.

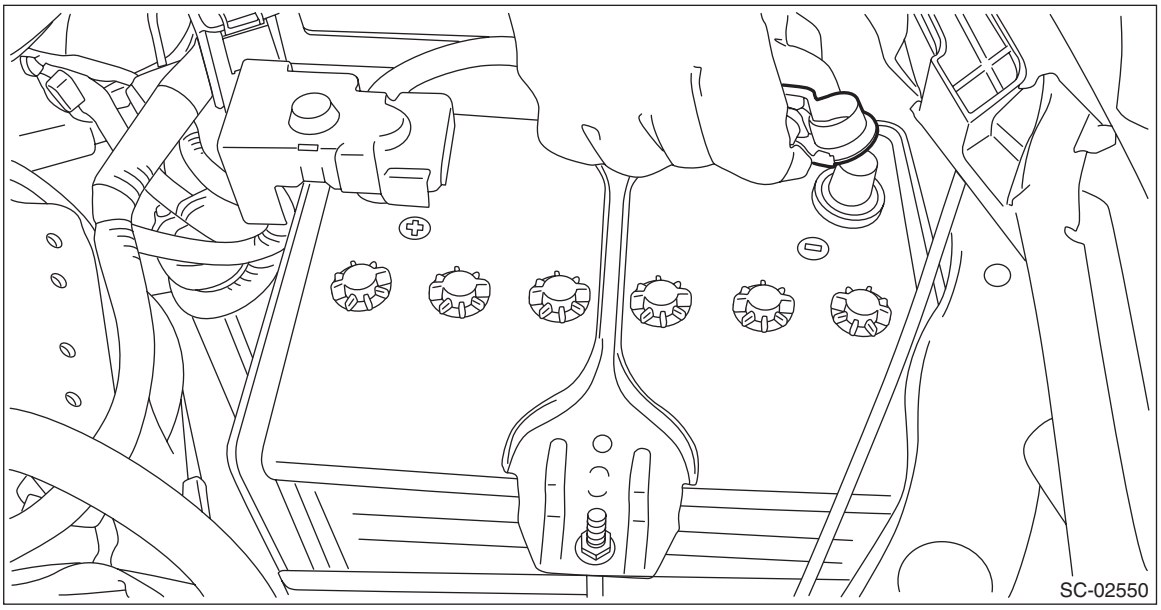

C: INSPECTION

1) Check that the knock sensor has no deformation, cracks or other damages.
2) Measure the resistance between knock sensor terminals.

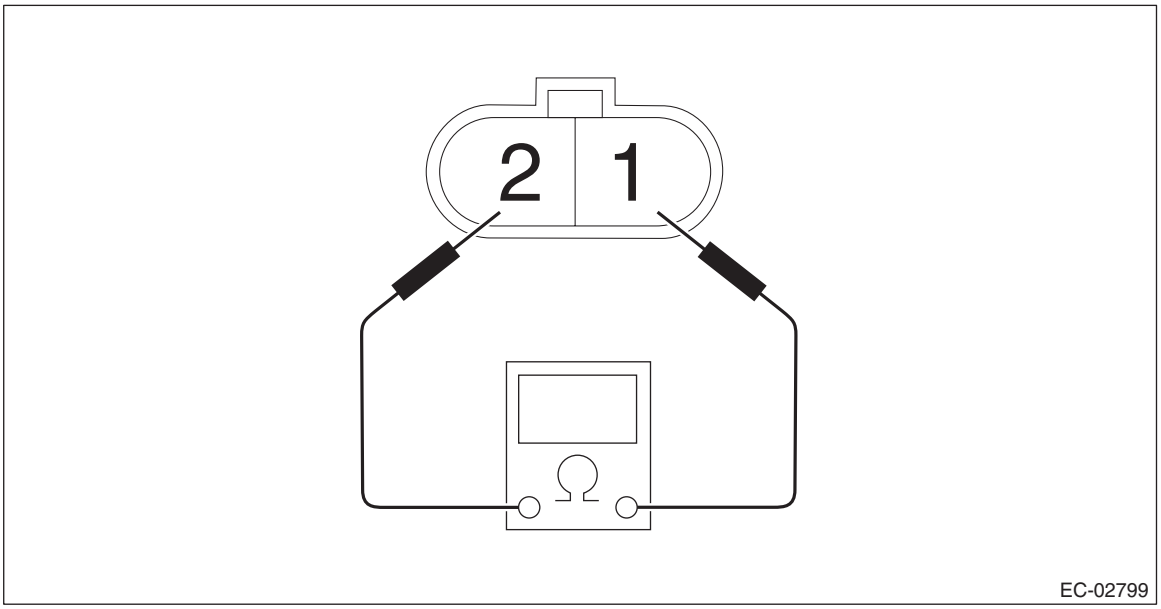

Terminal No.	Standard
1 and 2	560±28 kΩ

12.Throttle Position Sensor

A: SPECIFICATION

Throttle body is a non-disassembled part, so do not remove the throttle position sensor from throttle body. Refer to “Throttle Body” for removal and installation procedure. <Ref. to FU(H4DO(w/o HEV))-15, REMOVAL, Throttle Body.> <Ref. to FU(H4DO(w/o HEV))-17, INSTALLATION, Throttle Body.>

13.Mass Air Flow and Intake Air Temperature Sensor

A: REMOVAL

1) Disconnect the ground cable from battery.

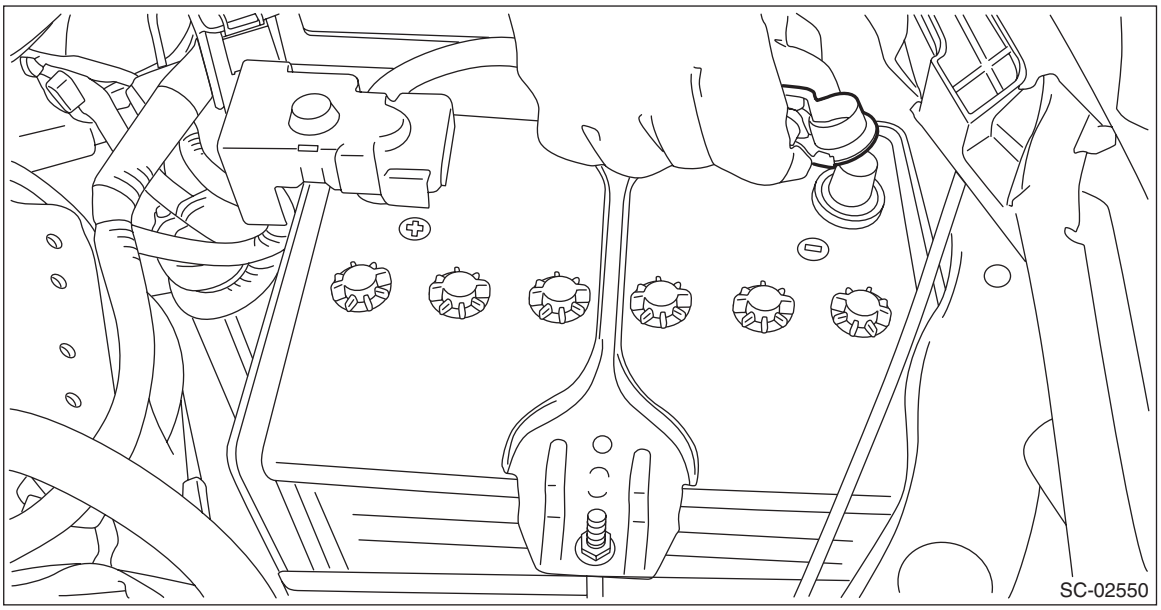

2) Disconnect the connector (A) from the mass air flow and intake air temperature sensor, and remove the mass air flow and intake air temperature sensor.

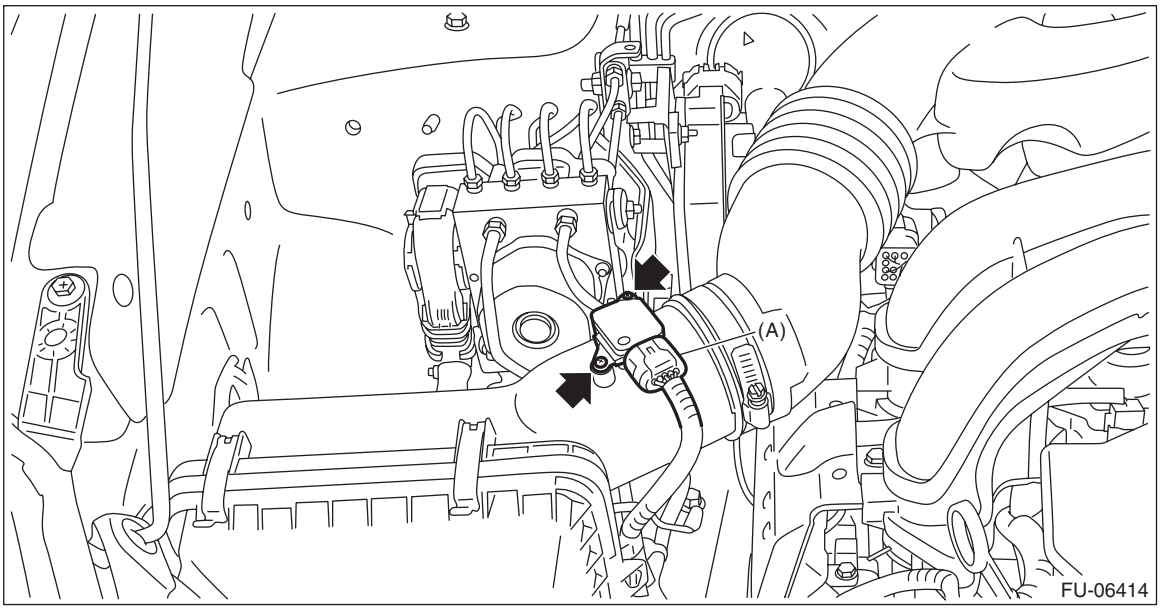

B: INSTALLATION

Install in the reverse order of removal.

Tightening torque:
1 N·m (0.1 kgf-m, 0.7 ft-lb)

C: INSPECTION

1. CHECK THE MASS AIR FLOW SENSOR UNIT

1) Connect the battery positive terminal to terminal No. 3 and the battery ground terminal to terminal No. 4, the circuit tester positive terminal to terminal No. 5 and the circuit tester ground terminal to terminal No. 4.

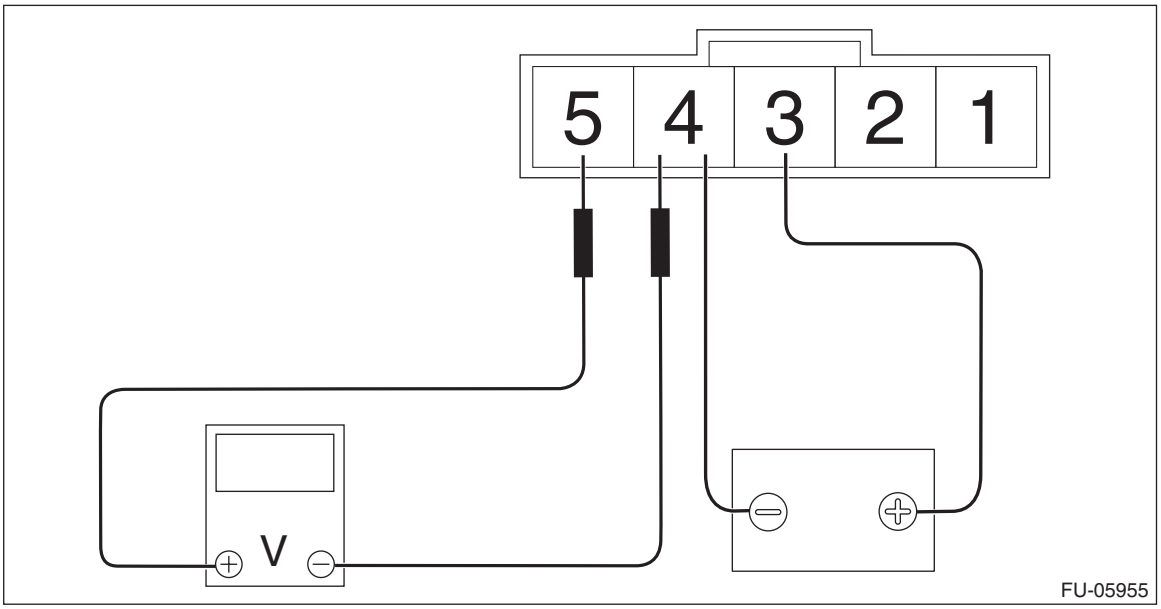

2) Check the voltage changes when air is blown to the mass air flow sensor unit in arrow direction.

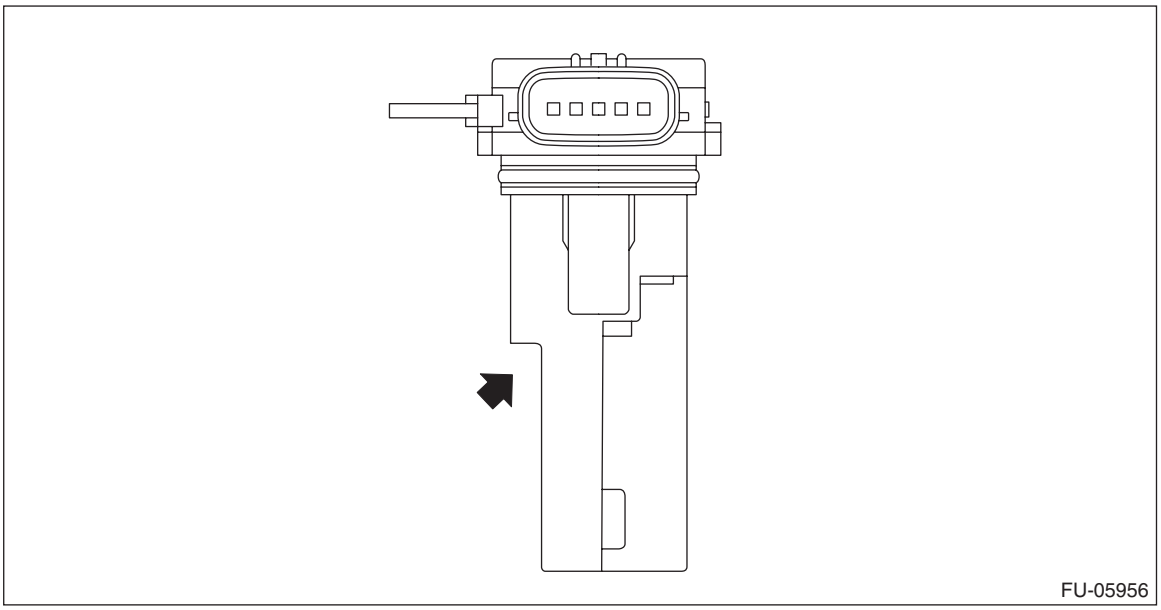

2. CHECK THE INTAKE AIR TEMPERATURE SENSOR UNIT

Measure the resistance between intake air temperature sensor terminals.

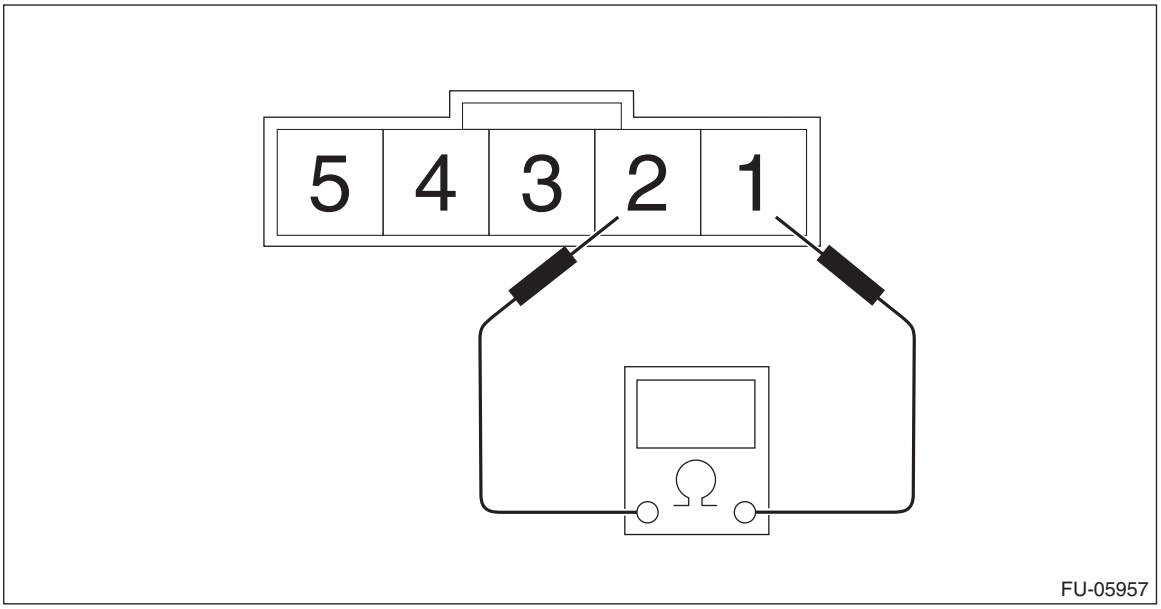

Temperature	Terminal No.	Standard
–20°C (–4°F)	1 and 2	16.0±2.4 kΩ
20°C (68°F)		2.45±0.24 kΩ
60°C (140°F)		0.58±0.087 kΩ

3. OTHER INSPECTIONS

1) Check that the mass air flow and intake air temperature sensor has no deformation, cracks or other damages.
2) Check that the mass air flow and intake air temperature sensor has no dirt.

14.Manifold Absolute Pressure Sensor

A: REMOVAL

1) Disconnect the ground cable from battery.

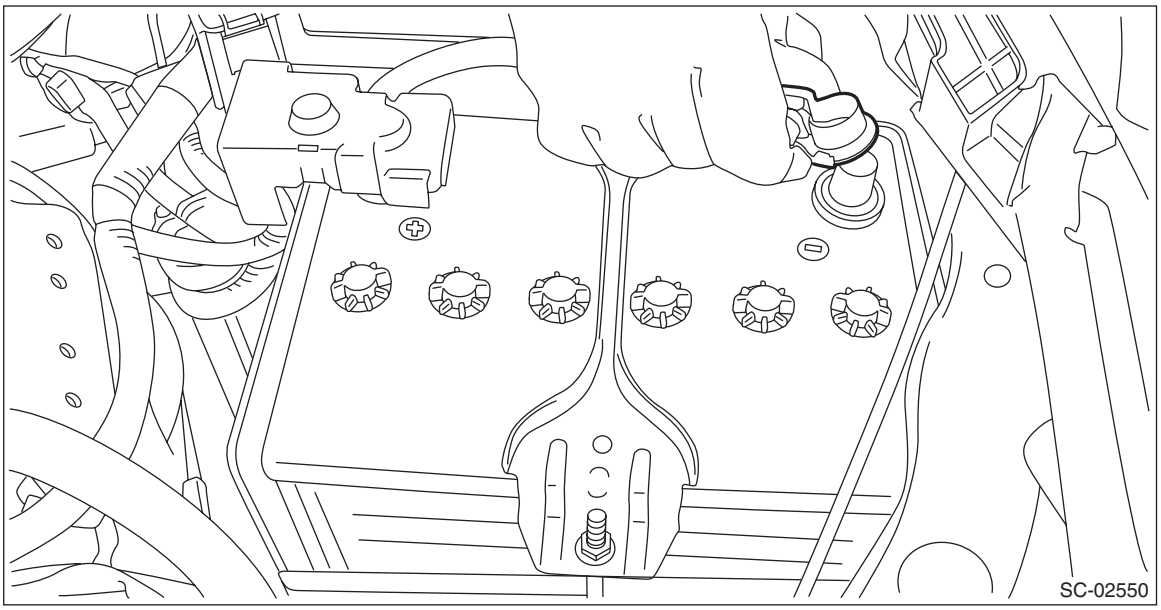

2) Disconnect the connector (A) from the manifold absolute pressure sensor, and remove the manifold absolute pressure sensor from intake manifold.

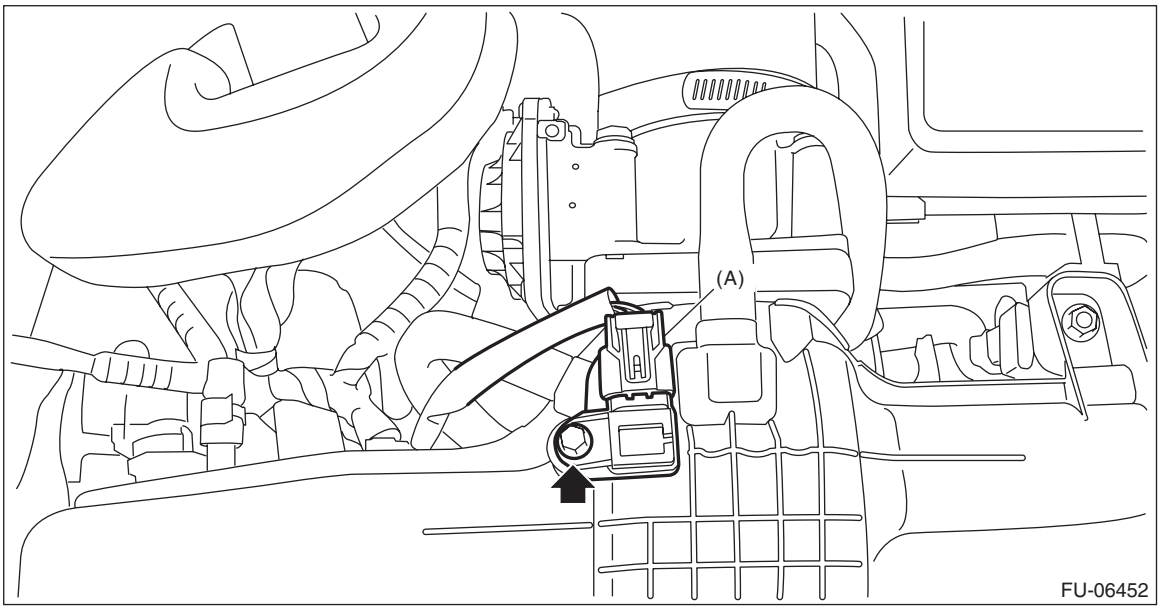

B: INSTALLATION

Install in the reverse order of removal.

NOTE:
Use new O-rings.

Tightening torque:
3.4 N·m (0.3 kgf-m, 2.5 ft-lb)

C: INSPECTION

1) Check that the manifold absolute pressure sensor has no deformation, cracks or other damages.
2) Connect dry-cell battery positive terminal to terminal No. 3 and dry-cell battery ground terminal to terminal No. 1, circuit tester positive terminal to terminal No. 2 and the circuit tester negative terminal to terminal No. 1.

NOTE:
- Use new dry-cell batteries.
- Using circuit tester, check the voltage of a single dry-cell battery is 1.6 V or more. And also check the voltage of three batteries in series is between 4.8 V and 5.2 V.

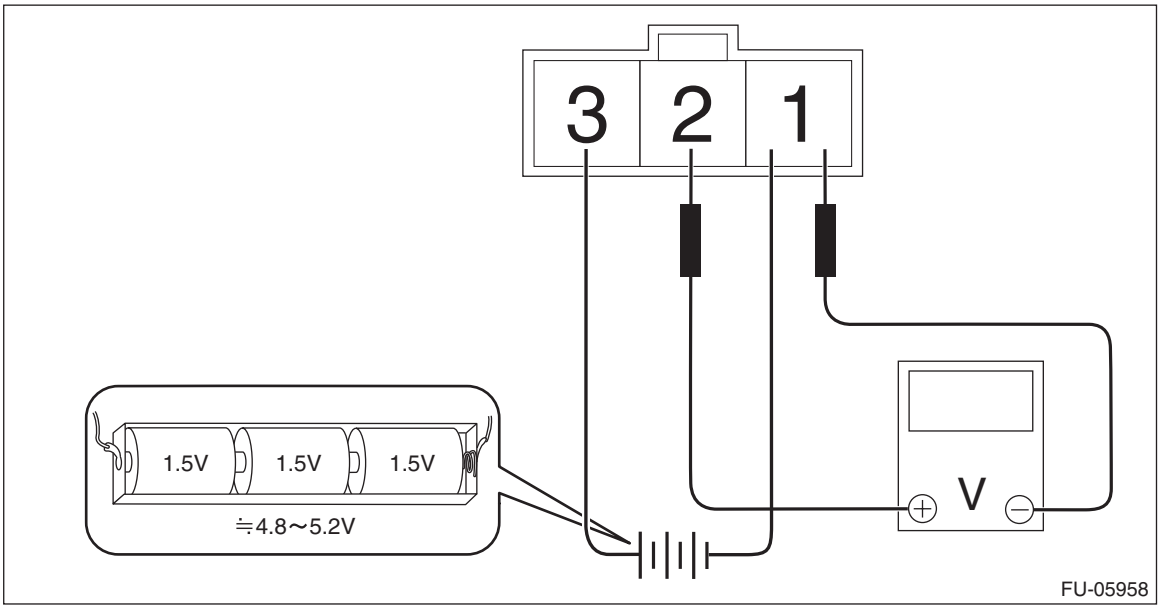

3) Check the voltage at a normal atmospheric pressure.

NOTE:
The atmospheric pressure at higher altitude is lower than normal. Therefore, the voltage is lower than the standard value.

Terminal No.	Standard
2 (+) and 1 (–)	Approx. 4.2 V (when 25°C (77°F))

4) Connect the Mighty Vac to the pressure port (A) of manifold absolute pressure sensor.

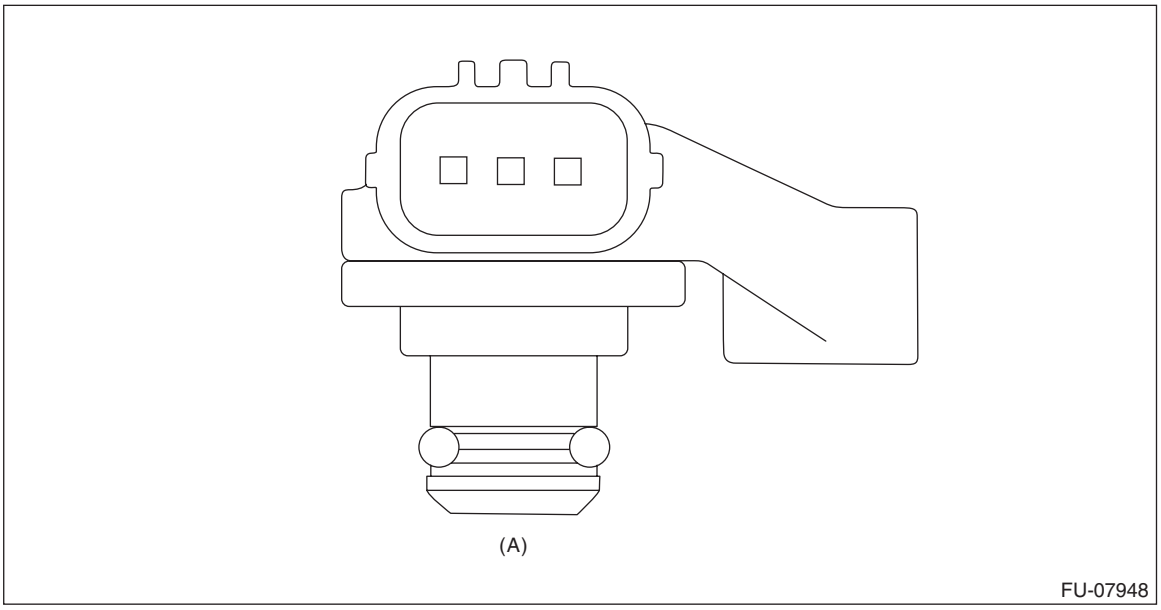

5) Check the voltage when generating vacuum using Mighty Vac.

CAUTION:
Do not apply vacuum of less than –88 kPa (–0.9 kg/cm^2, –12.8 psi). Doing so may damage the manifold absolute pressure sensor.

NOTE:
When vacuum occurs at the pressure port of manifold absolute pressure sensor, the voltage will drop from the value as in step 3).

Pressure	Terminal No.	Standard
–88 kPa (–0.9 kg/cm^2, –12.8 psi)	2 (+) and 1 (–)	Approx. 1 V (when 25°C (77°F))

15.Fuel Injector

A: REMOVAL

1) Release the fuel pressure. <Ref. to FU(H4DO(w/o HEV))-116, RELEASING OF FUEL PRESSURE, PROCEDURE, Fuel.>
2) Disconnect the ground cable from battery.

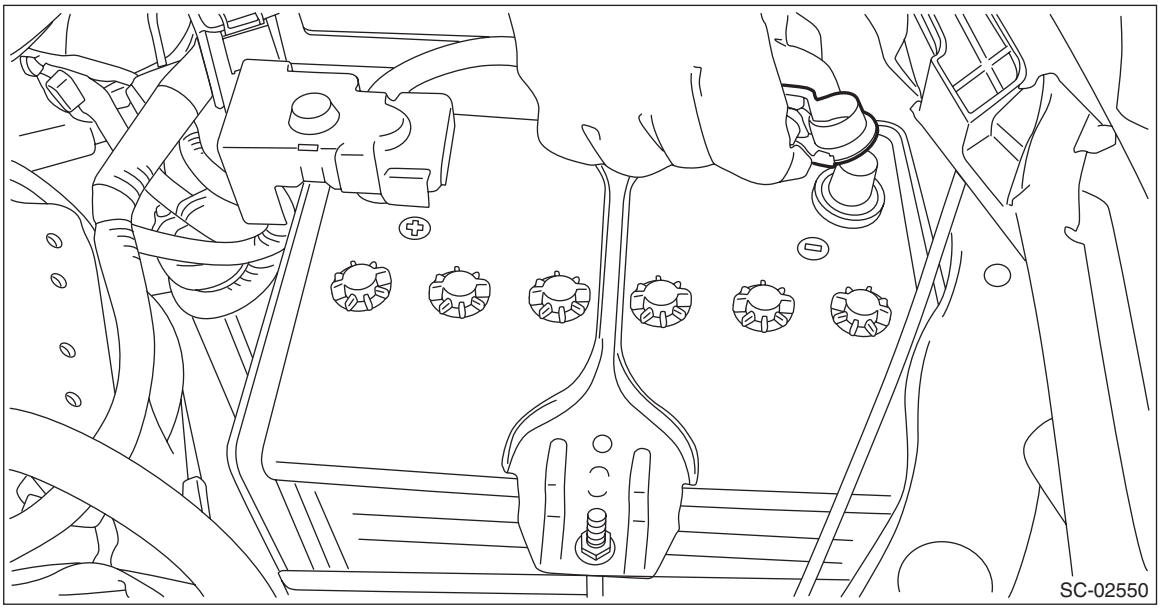

3) Open the fuel filler lid and remove the fuel filler cap.
4) Remove the clip (A) from the air intake boot. (RH side only)
5) Loosen the clamp (B) connecting the air intake boot and air cleaner case (rear). (RH side only)
6) Loosen the clamp (C) which connects the air intake boot and throttle body. (RH side only)

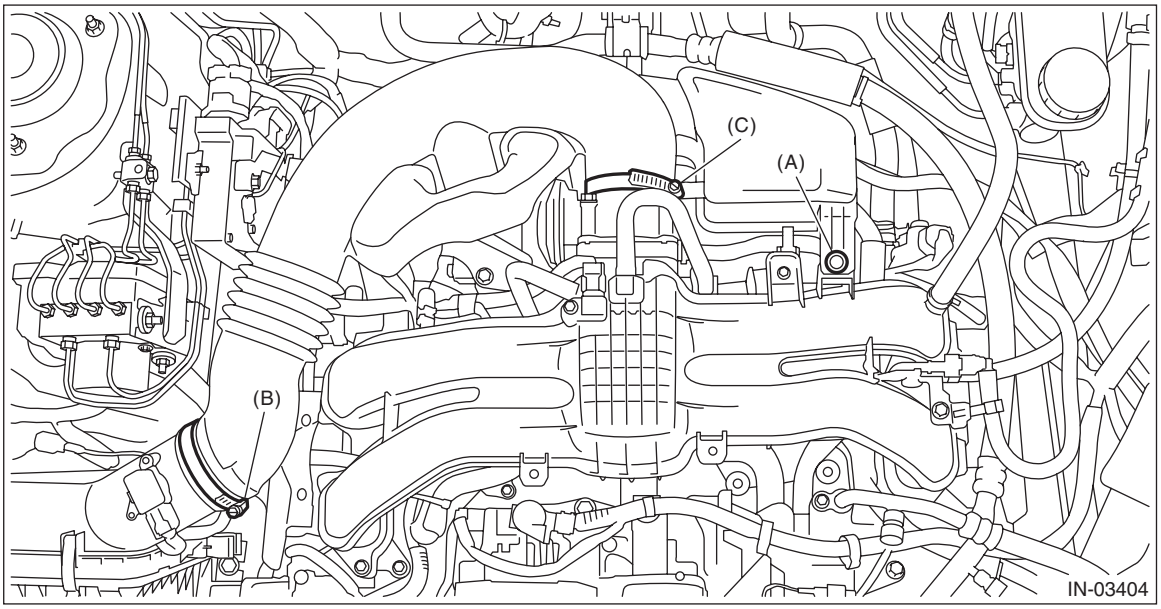

7) Remove the air intake boot from the throttle body, and move it to the left side wheel apron. (RH side only)

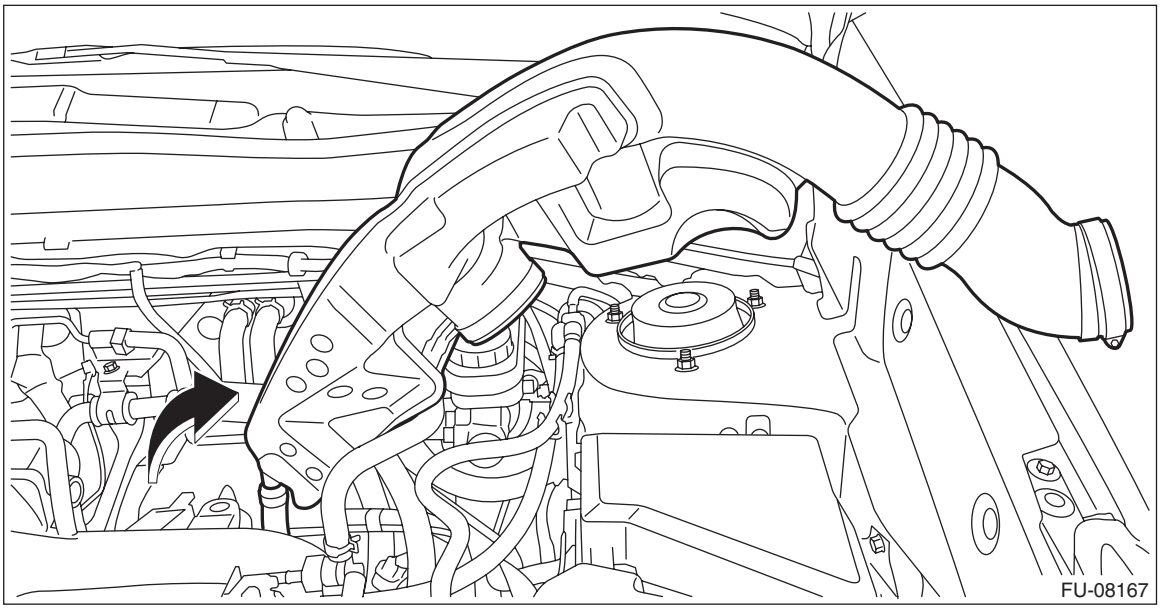

8) Disconnect the connector (A) from the mass air flow and intake air temperature sensor, and remove the clip (B) which holds the mass air flow and intake air temperature sensor harness. (RH side only)

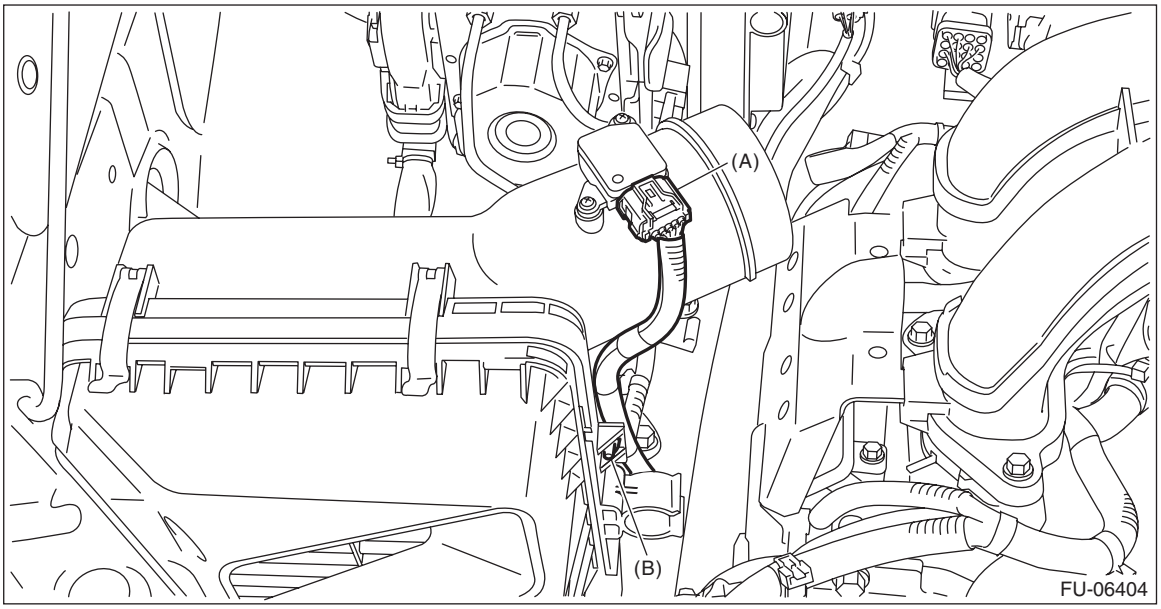

9) Remove the air cleaner case (rear). (RH side only)

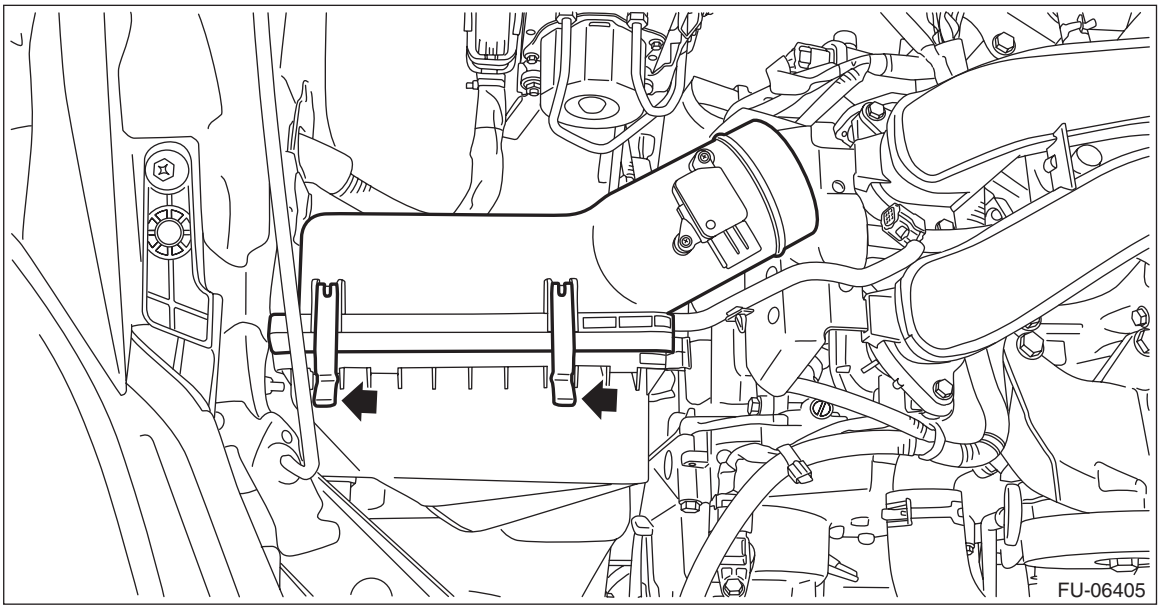

10) Remove the intake manifold protector.

- RH side

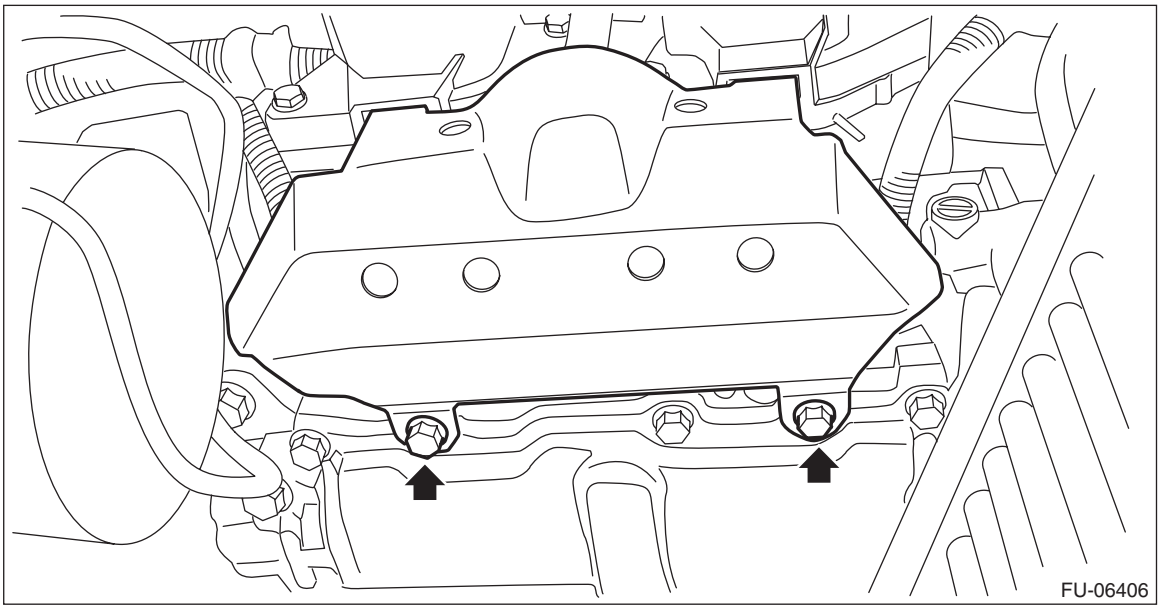

- LH side

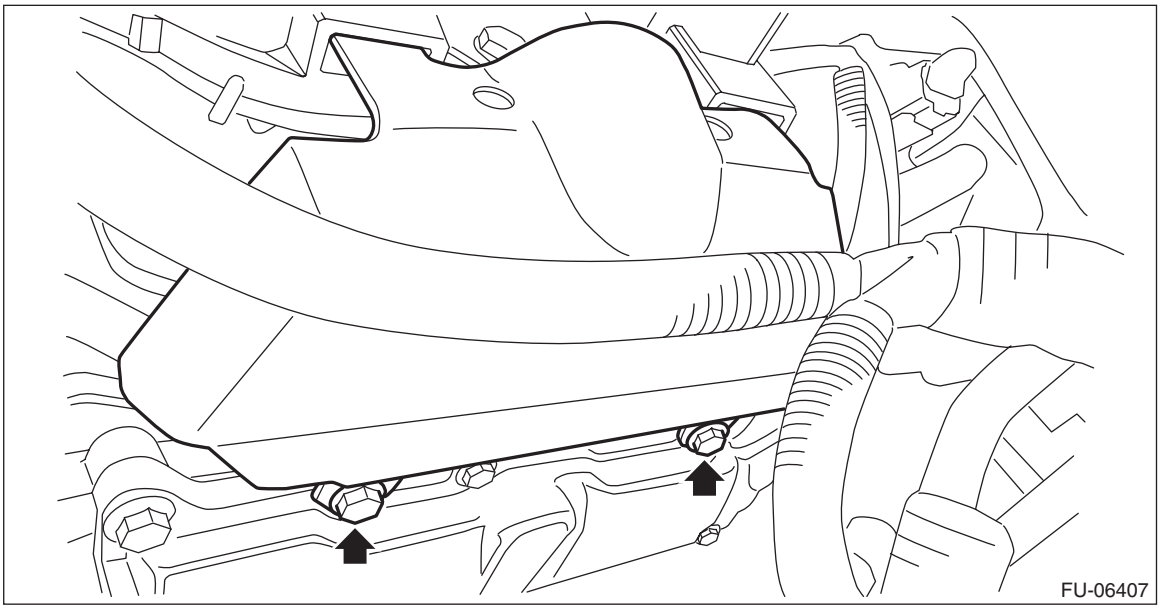

11) Disconnect the connectors (A) from fuel injector.
12) Disconnect the quick connector (B) of the fuel delivery pipe from the fuel pipe.

CAUTION:
- **Be careful not to spill fuel.**
- **Catch the fuel from the pipes using a container or cloth.**

NOTE:
Disconnect the quick connector as shown in the figure.

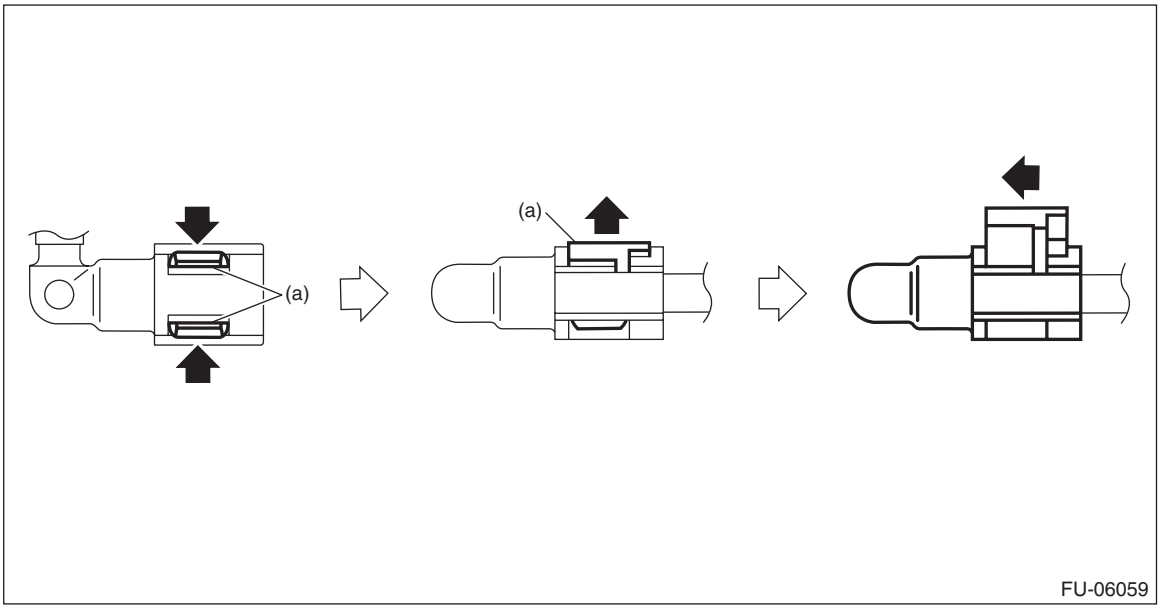

(a) Slider

13) Remove the bolts which hold fuel pipe onto the cam carrier, and remove the fuel pipe together with the fuel injector.

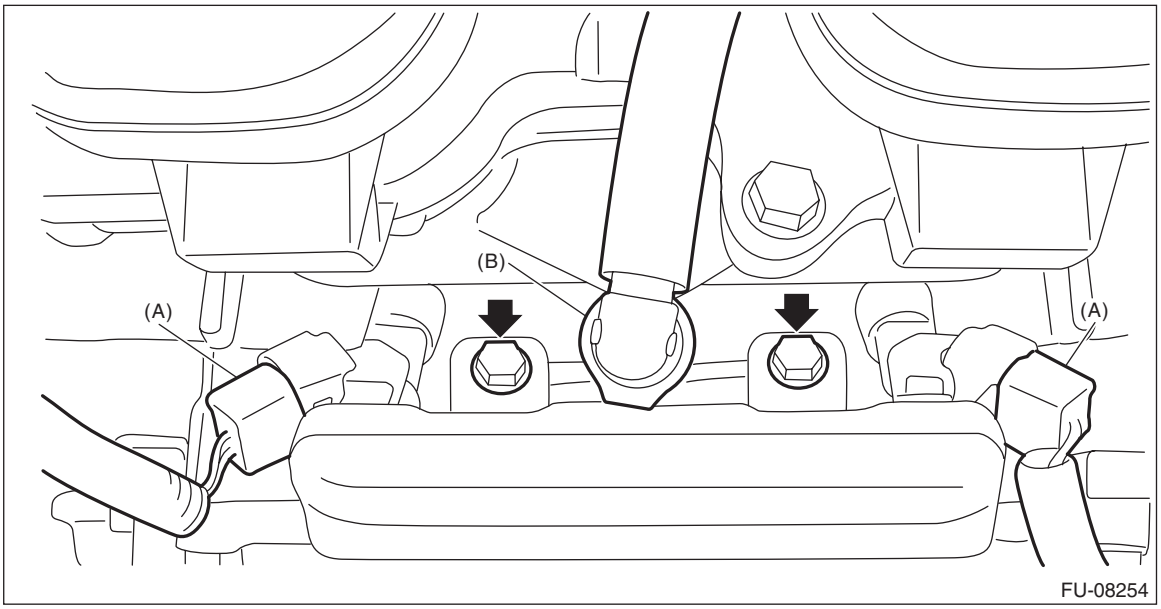

14) Remove the fuel injector from the fuel pipe.
(1) Remove the fuel injector holder from one side of flange section (A) of the fuel pipe.
(2) While holding one side of fuel injector holder (B) you removed in step (1) by finger, remove the other side of fuel injector holder from the flange section (C) of the fuel pipe.

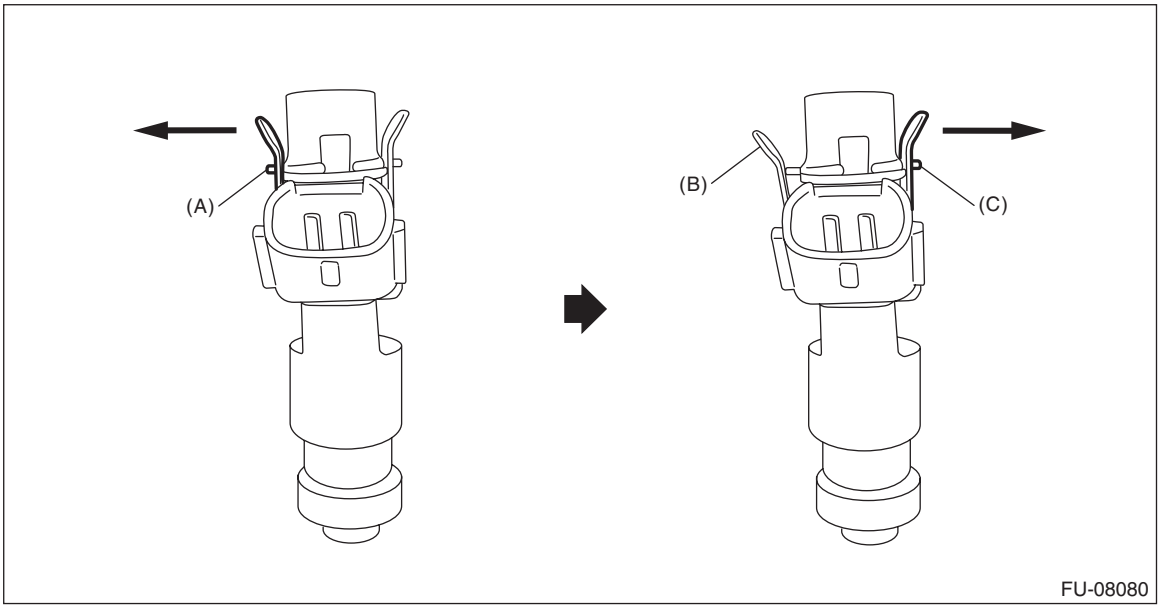

(3) Remove the fuel injector holder from the fuel pipe and fuel injector, and remove the fuel injector from the fuel pipe.
(4) Remove the fuel injector on the LH side in the same manner.

B: INSTALLATION

Install in the reverse order of removal.

NOTE:
- Use new fuel injector holder, O-rings, rubbers and seal rings.
- Install the fuel injector so that the connector joint faces the connector rotation stopper side of the fuel pipe.

- Securely put the flange section of fuel pipe into the groove of fuel injector holder.

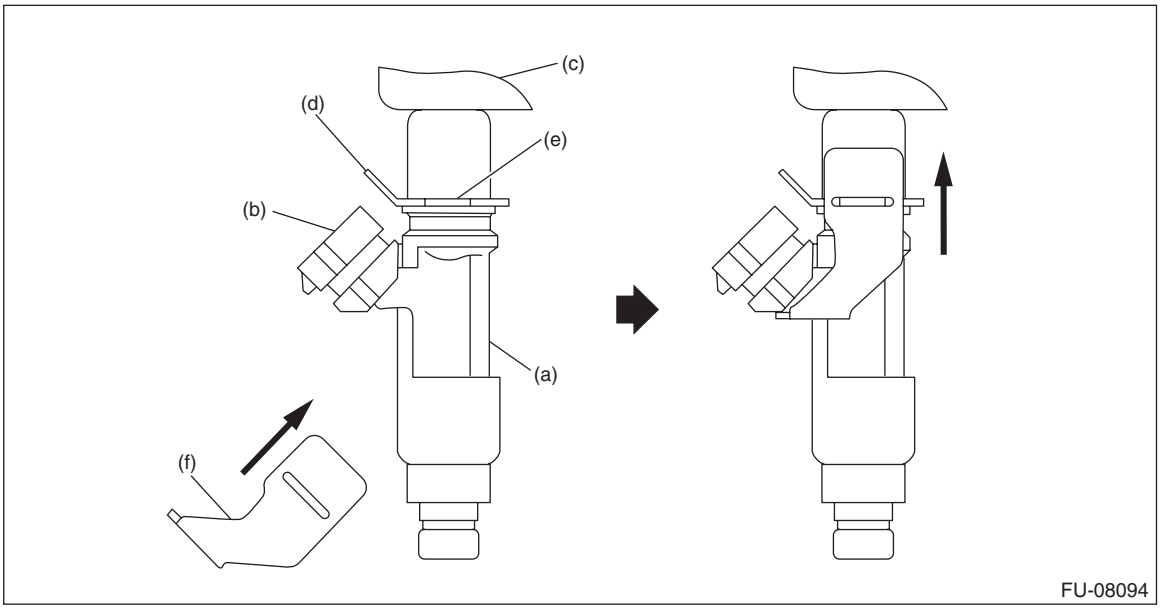

(a)	Fuel injector	(b)	Connector joint	(c)	Fuel pipe
(d)	Connector rotation stopper	(e)	Flange section	(f)	Fuel injector holder

Tightening torque:
6.4 N·m (0.7 kgf-m, 4.7 ft-lb)

C: INSPECTION

1) Check that the fuel injector has no deformation, cracks or other damages.
2) Measure the resistance between fuel injector terminals.

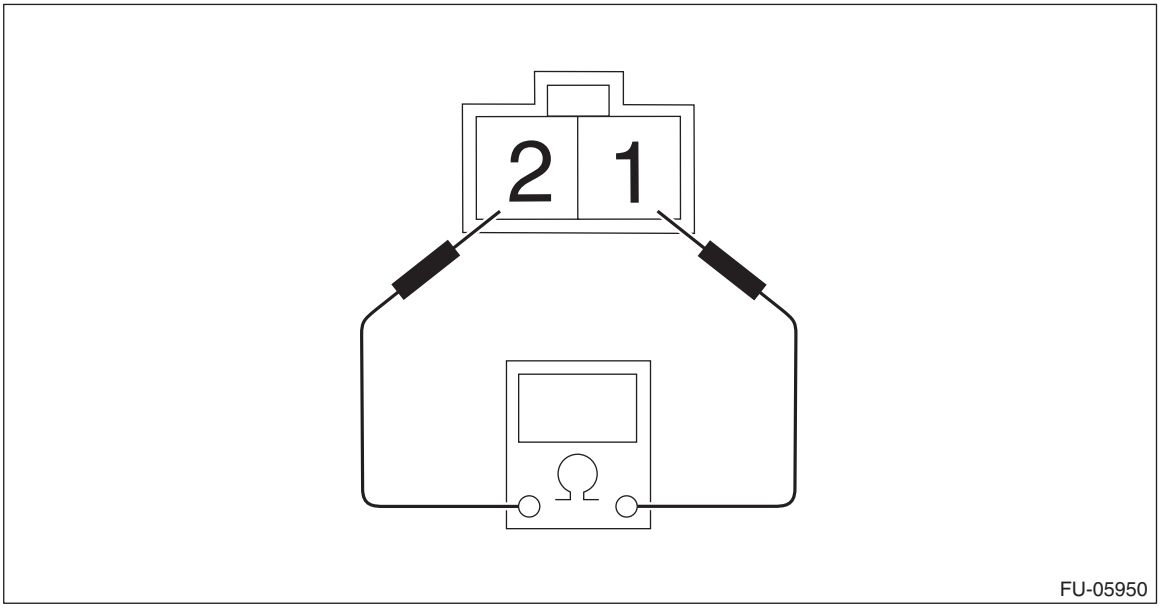

Terminal No.	Standard
1 and 2	Approx. 12.0 Ω (when 20°C (68°F))

16.Tumble Generator Valve Assembly

A: REMOVAL

1) Release the fuel pressure. <Ref. to FU(H4DO(w/o HEV))-116, RELEASING OF FUEL PRESSURE, PROCEDURE, Fuel.>
2) Disconnect the ground cable from battery.

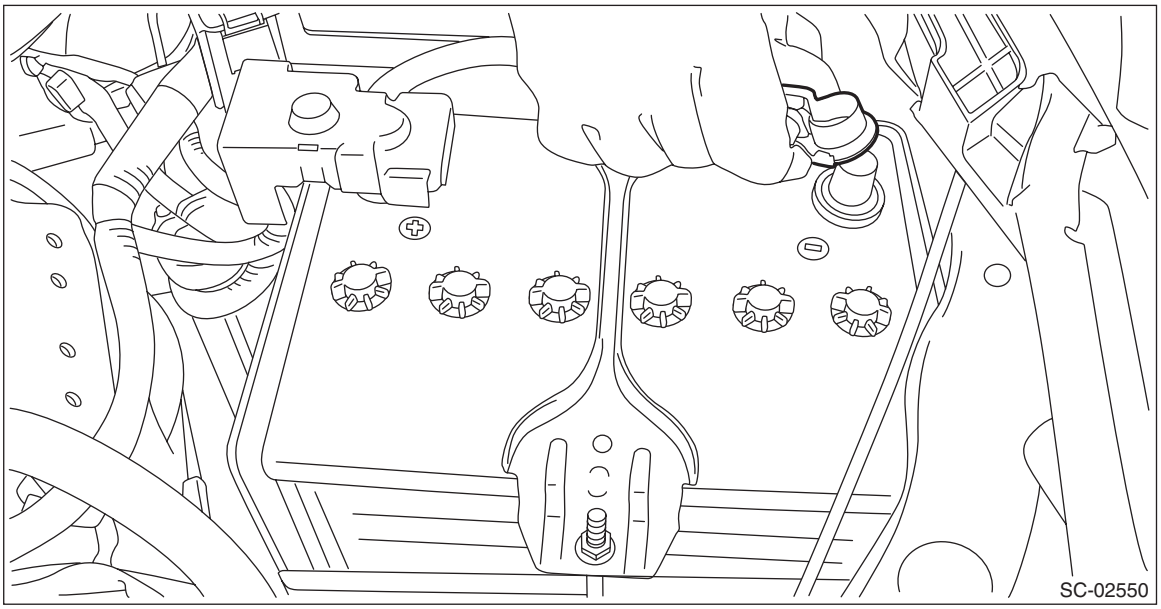

3) Open the fuel filler lid and remove the fuel filler cap.
4) Remove the intake manifold. <Ref. to FU(H4DO(w/o HEV))-20, REMOVAL, Intake Manifold.>
5) Disconnect the connector (A) from the tumble generator valve assembly.
6) Remove the tumble generator valve assembly from the cylinder head.

- RH side

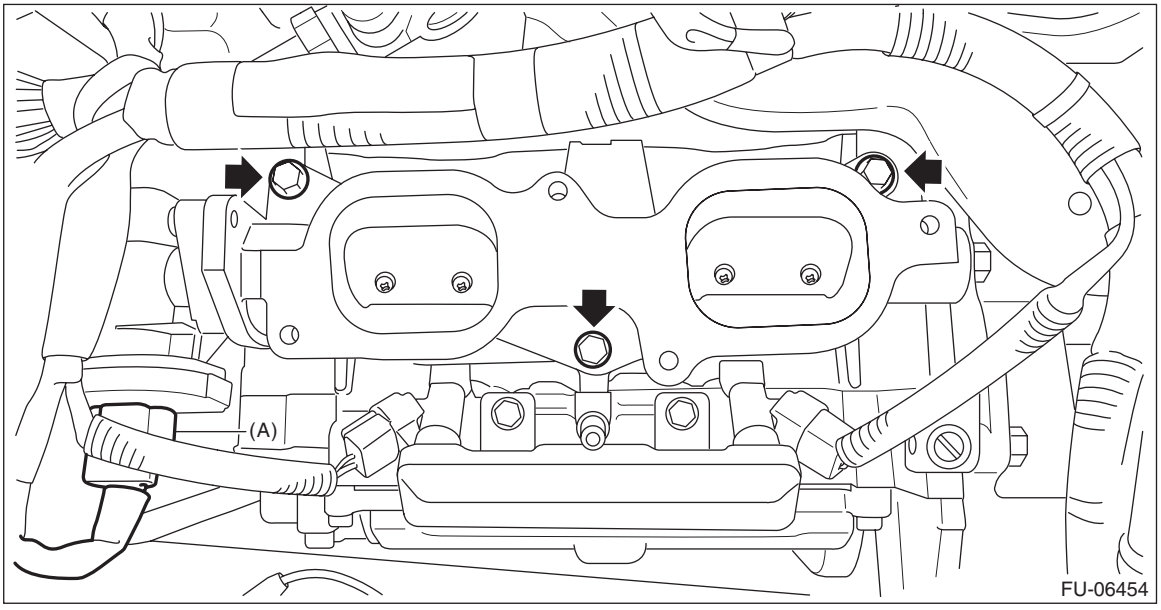

- LH side

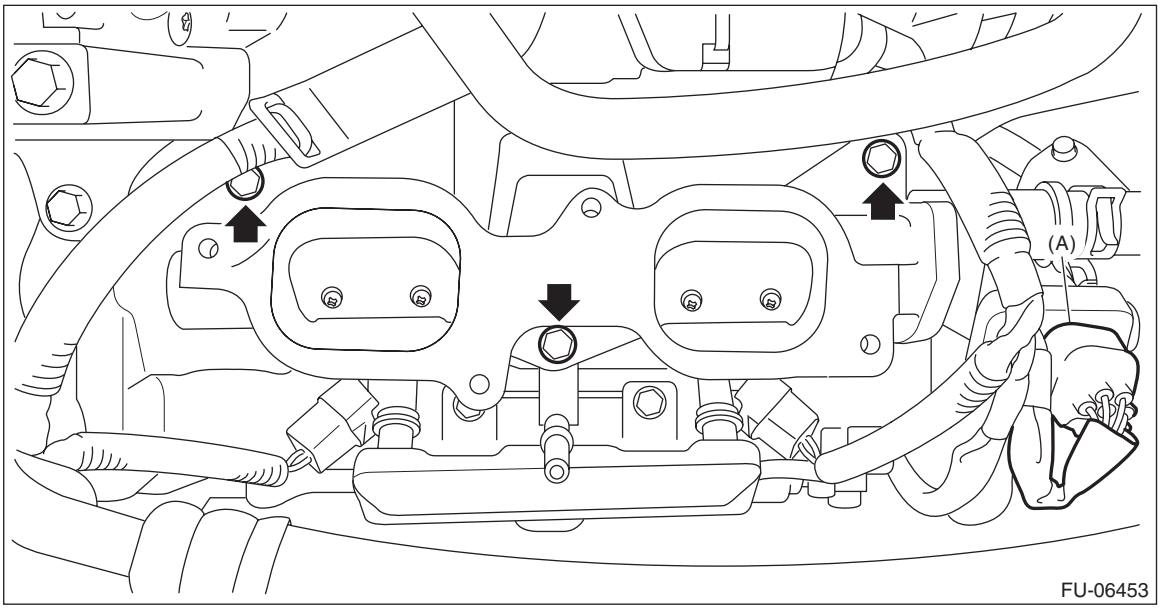

7) Remove the cylinder head plate from cylinder head.

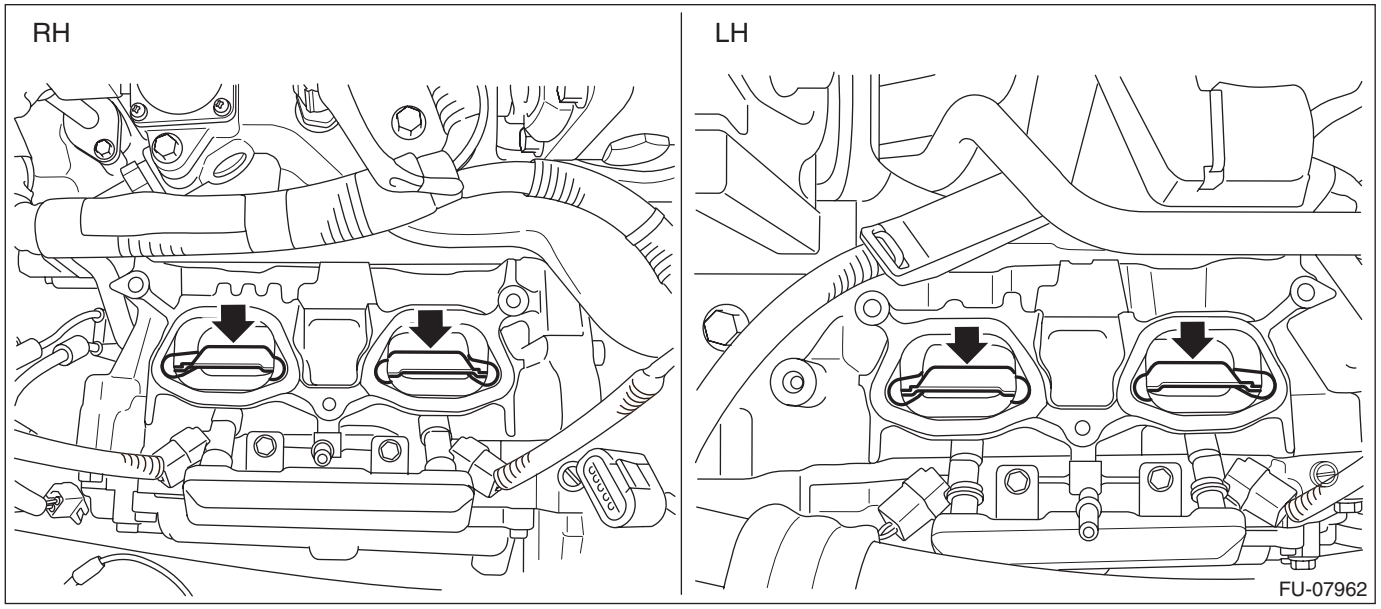

B: INSTALLATION

Install in the reverse order of removal.

NOTE:
Use a new gasket.

Tightening torque:
25 N·m (2.5 kgf-m, 18.4 ft-lb)

C: INSPECTION

1. CHECK MOTOR

1) Connect the battery positive terminal to terminal No. 5 and the battery ground terminal to terminal No. 4, and check that the valve is fully opened on LH side and the valve is fully closed on RH side.

CAUTION:
Do not power the motor for more than 10 seconds.

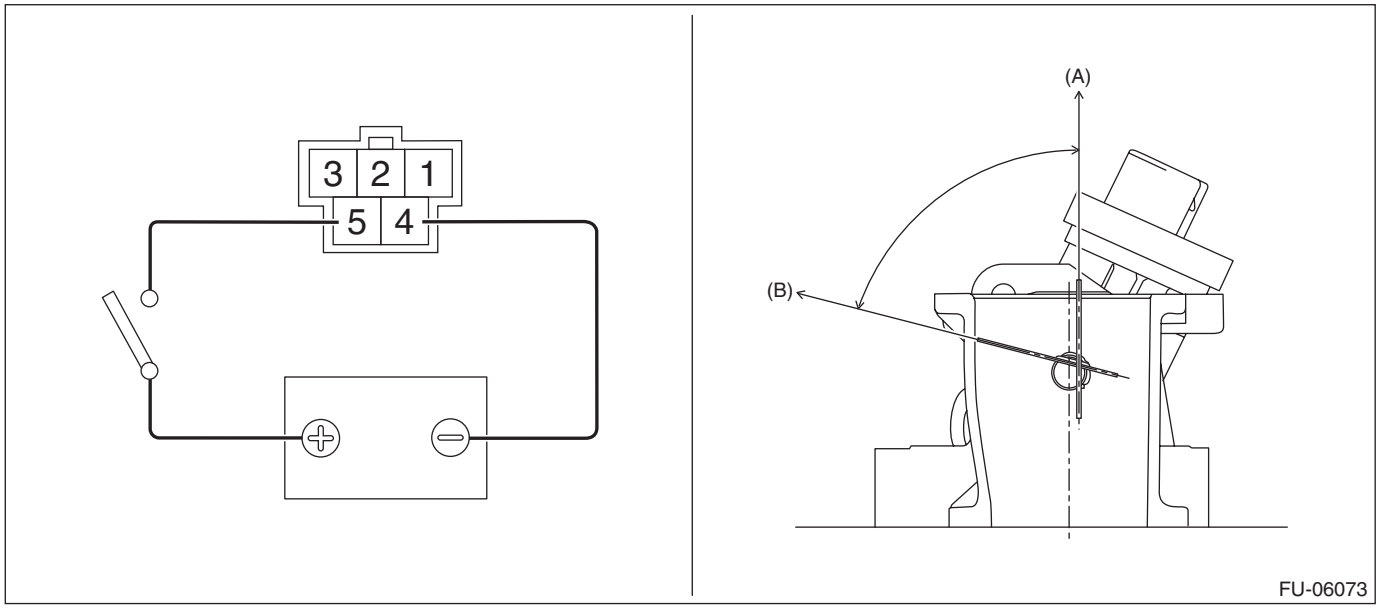

(A) Full open (B) Full closed

2) Connect the battery positive terminal to terminal No. 4 and the battery ground terminal to terminal No. 5, and check that the valve is fully closed on LH side and the valve is fully opened on RH side.

CAUTION:
Do not power the motor for more than 10 seconds.

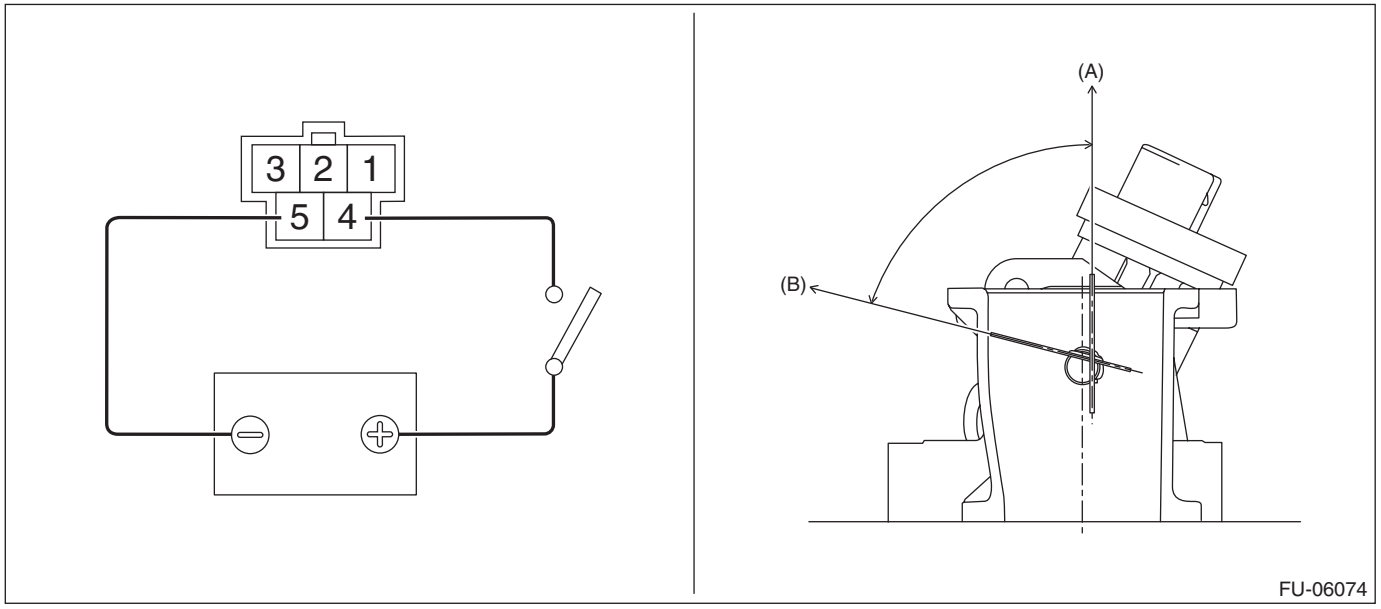

(A) Full open (B) Full closed

2. CHECK SENSORS

1) Connect dry-cell battery positive terminal to terminal No. 3 and dry-cell battery ground terminal to terminal No. 2, and connect the resistance (0.5 — 2 kΩ) between dry-cell battery positive terminal and terminal No. 1.

NOTE:
- Use new dry-cell batteries.
- Using circuit tester, check the voltage of a single dry-cell battery is 1.6 V or more. And also check the voltage of three batteries in series is between 4.8 V and 5.2 V.

2) Connect the circuit tester positive terminal to terminal No. 1, and the circuit tester negative terminal to terminal No. 2.
3) Connect the battery positive terminal to terminal No. 5 and the battery ground terminal to terminal No. 4, and measure the voltages with the valve fully opened on LH side and with the valve fully closed on RH side.

CAUTION:
Do not power the motor for more than 10 seconds.

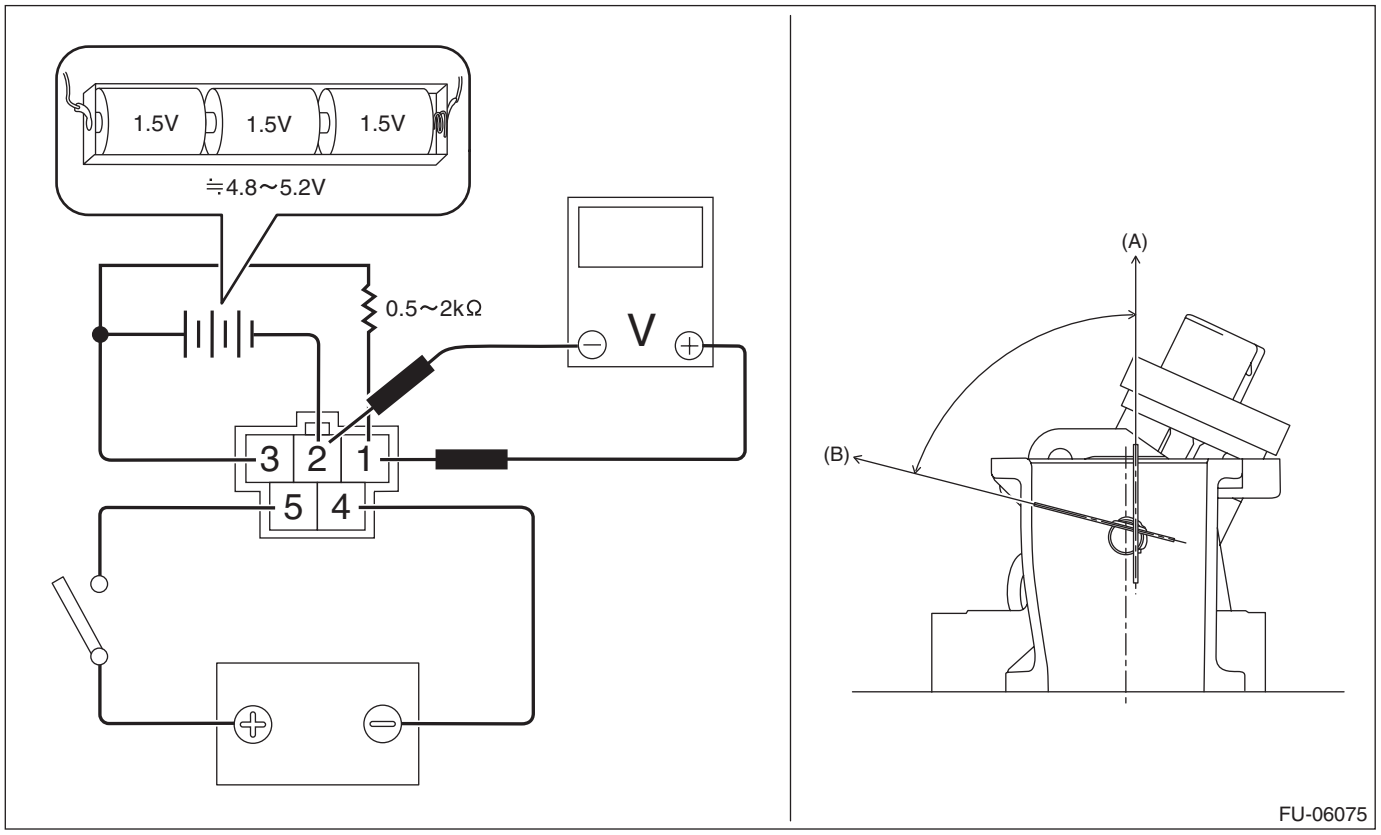

(A) Full open (B) Full closed

Terminal No.	Standard
1 (+) and 2 (–)	LH side: Approx. 5 V (when 25°C (77°F)) RH side: Approx. 0 — 0.5 V (when 25°C (77°F))

4) Connect dry-cell battery positive terminal to terminal No. 3 and dry-cell battery ground terminal to terminal No. 2, and connect the resistance (0.5 — 2 kΩ) between dry-cell battery positive terminal and terminal No. 1.

NOTE:
- Use new dry-cell batteries.
- Using circuit tester, check the voltage of a single dry-cell battery is 1.6 V or more. And also check the voltage of three batteries in series is between 4.8 V and 5.2 V.

5) Connect the circuit tester positive terminal to terminal No. 1, and the circuit tester negative terminal to terminal No. 2.

6) Connect the battery positive terminal to terminal No. 4 and the battery ground terminal to terminal No. 5, and measure the voltages with the valve fully closed on LH side and with the valve fully opened on RH side.

CAUTION:
Do not power the motor for more than 10 seconds.

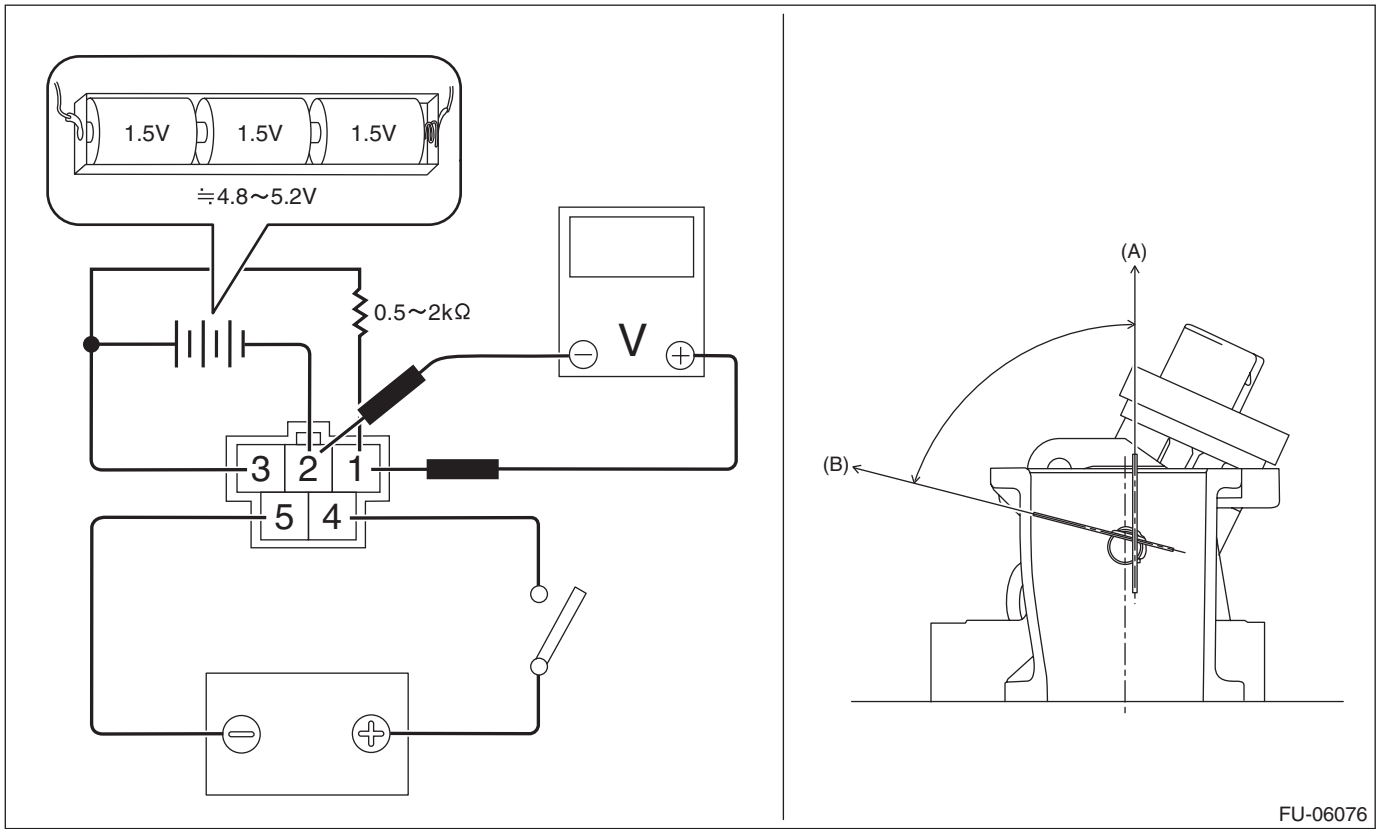

(A) Full open (B) Full closed

Terminal No.	Standard
1 (+) and 2 (–)	LH side: Approx. 0 — 0.5 V (when 25°C (77°F)) RH side: Approx. 5 V (when 25°C (77°F))

3. OTHER INSPECTIONS

1) Check that the tumble generator valve assembly has no deformation, cracks or other damages.
2) Check tumble generator valve assembly for contamination or clogging.

17.Tumble Generator Valve Actuator

A: REMOVAL

1) Disconnect the ground cable from battery.

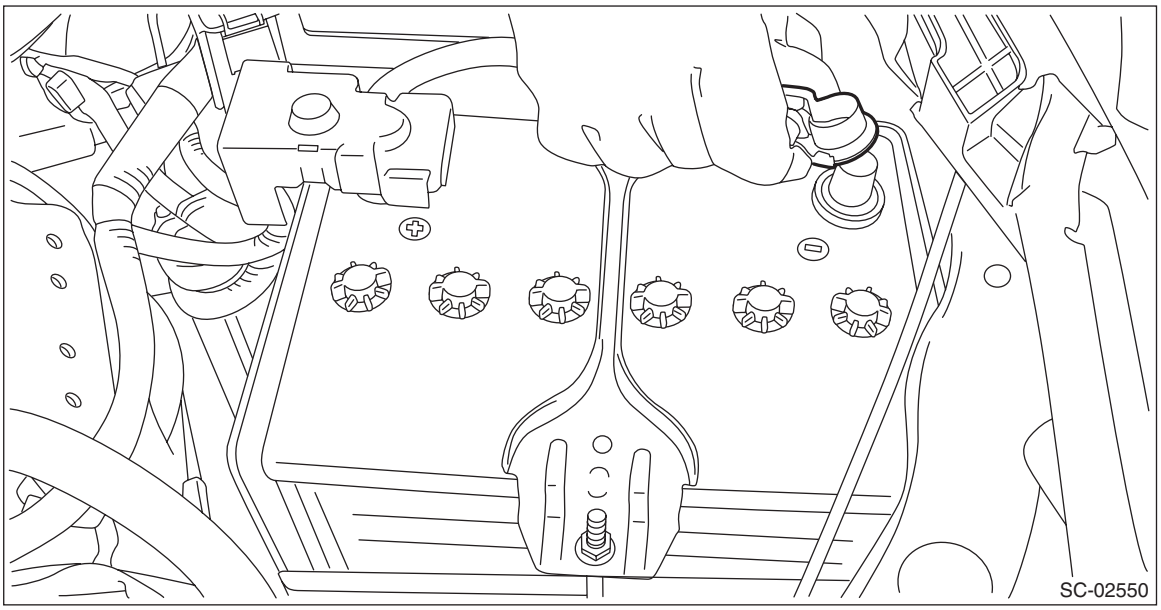

2) Disconnect the connector (A) from tumble generator valve assembly, and remove the tumble generator valve actuator.

- RH side

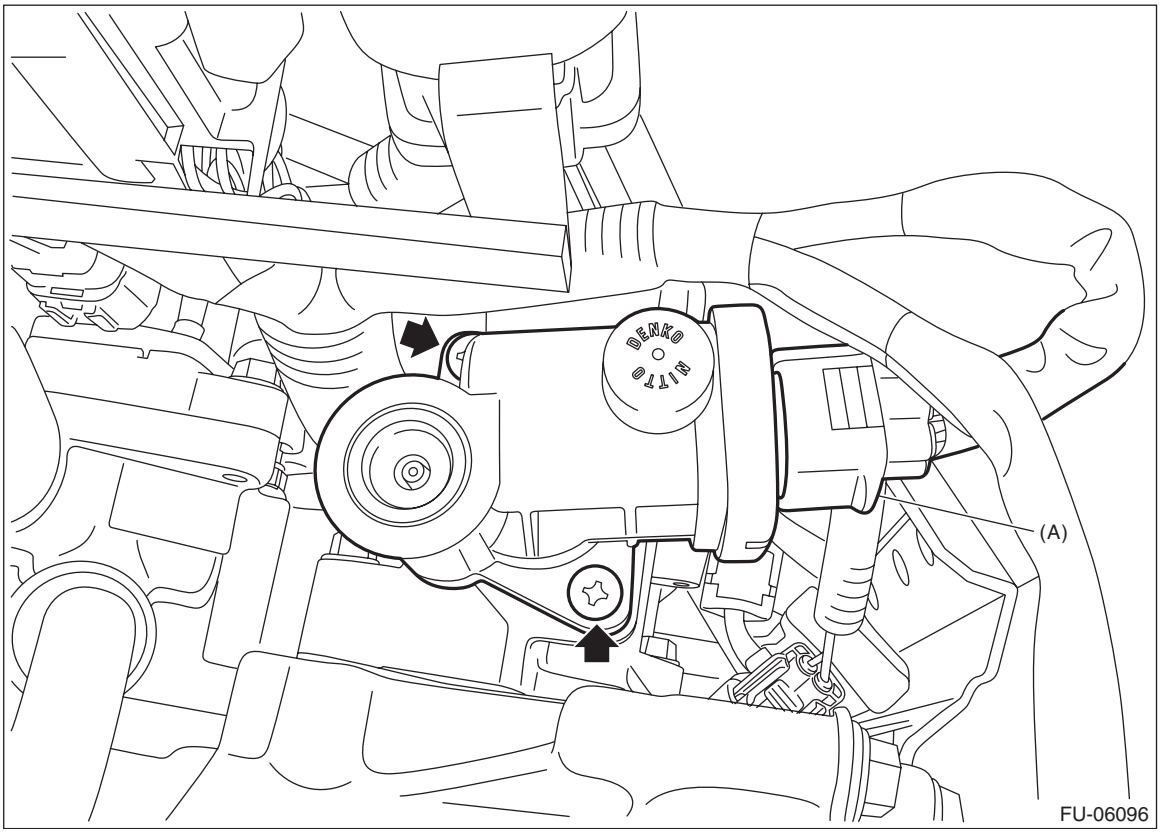

- LH side

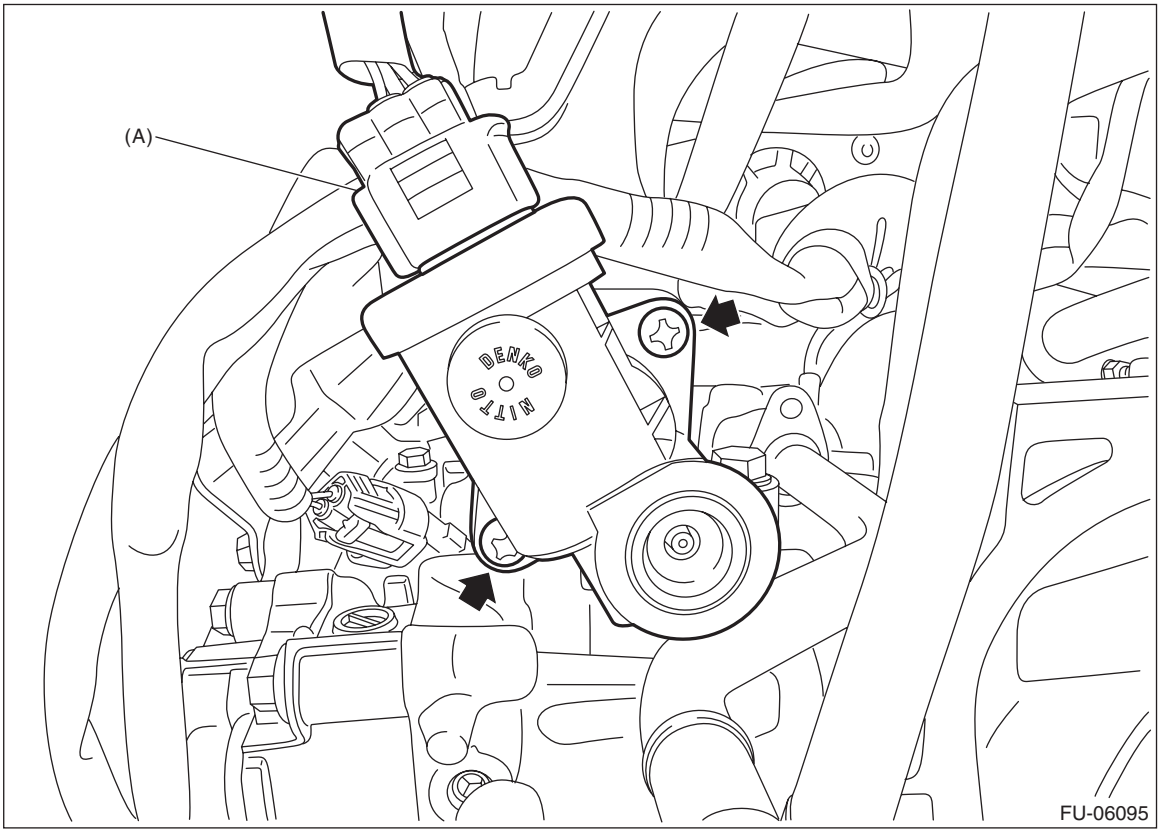

B: INSTALLATION

Install in the reverse order of removal.

NOTE:
Use a new gasket.

Tightening torque:
6 N·m (0.6 kgf-m, 4.4 ft-lb)

C: INSPECTION

1) Check that the tumble generator valve actuator has no deformation, cracks or other damages.
2) Check tumble generator valve actuator for contamination or clogging.

18.Front Oxygen (A/F) Sensor

A: REMOVAL

1) Disconnect the ground cable from battery.

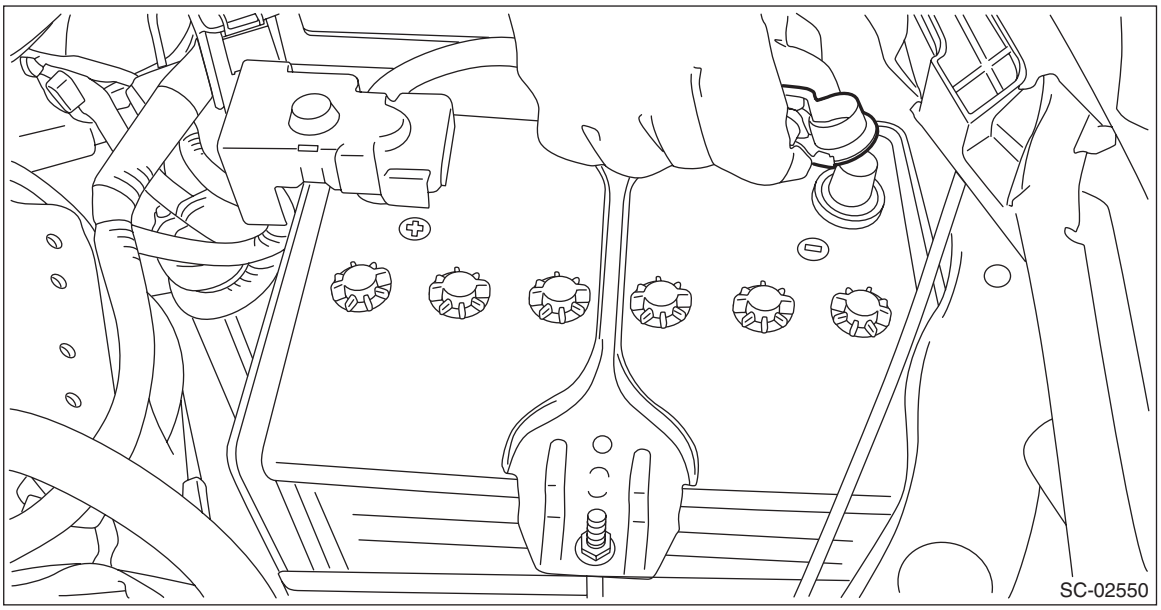

2) Remove the radiator sub fan and fan motor assembly. <Ref. to CO(H4DO(w/o HEV))-93, REMOVAL, Radiator Sub Fan and Fan Motor.>
3) Lift up the vehicle.
4) Remove the under cover. <Ref. to EI-29, REMOVAL, Front Under Cover.>
5) Disconnect the front oxygen (A/F) sensor connector, and remove the clip holding the front oxygen (A/F) sensor harness.

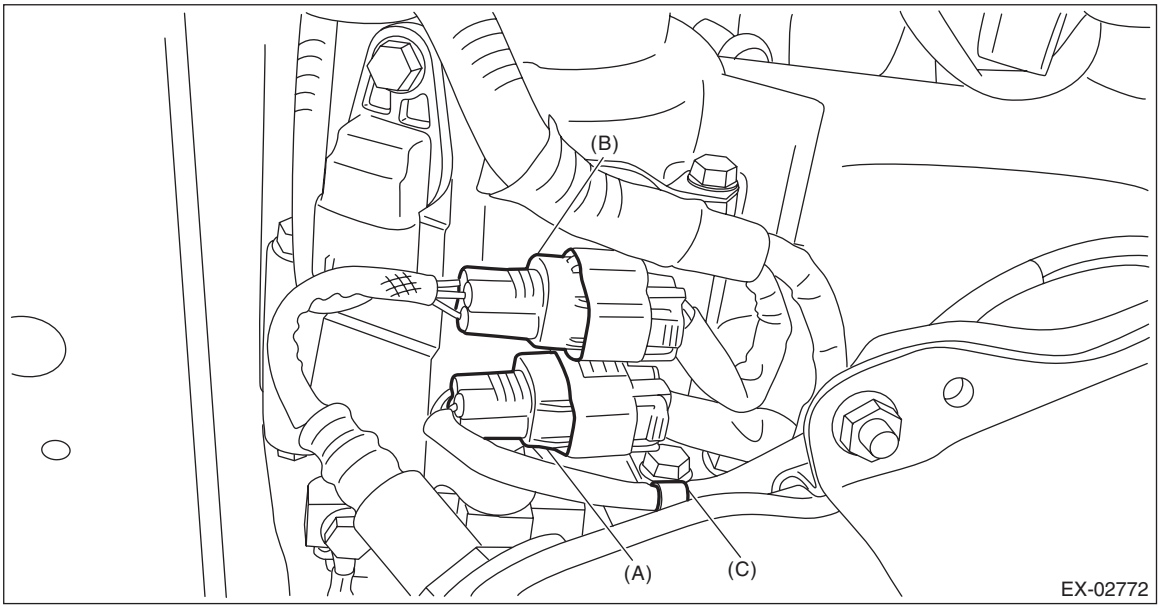

(A) Front oxygen (A/F) sensor connector
(B) Rear oxygen sensor connector
(C) Clip

6) Lower the vehicle.
7) Apply spray-type lubricant to the threaded portion of front oxygen (A/F) sensor, and leave it for one minute or more.
8) Remove the front oxygen (A/F) sensor.

CAUTION:
When removing the front oxygen (A/F) sensor, wait until exhaust pipe cools, otherwise it will damage the exhaust pipe.

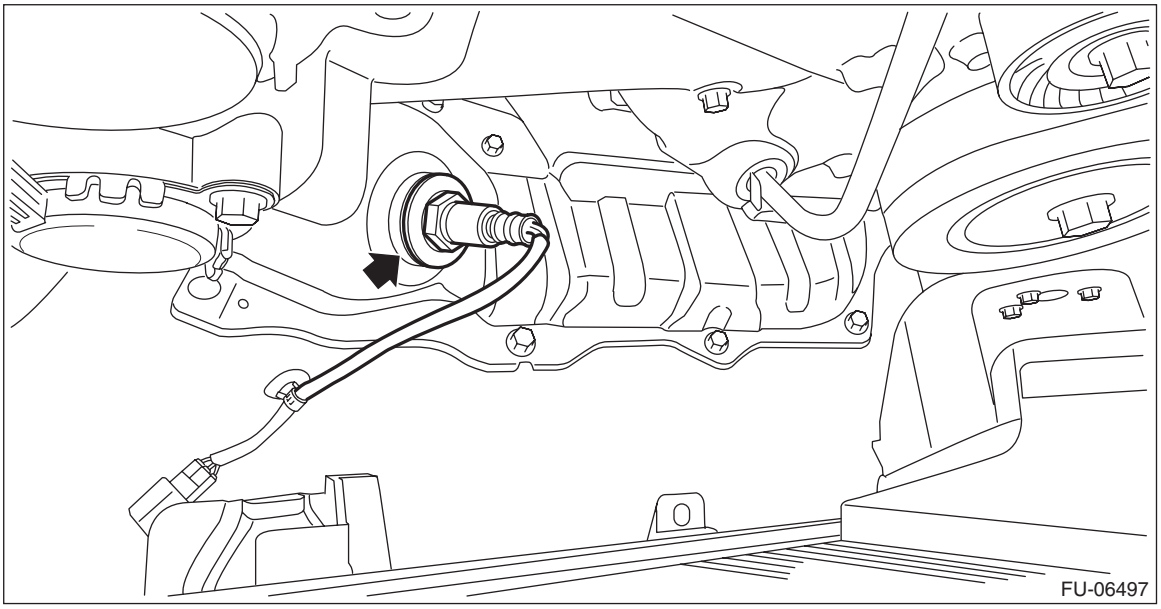

B: INSTALLATION

CAUTION:
If lubricant is spilt over the exhaust pipe, wipe it off with cloth to avoid emission of smoke or causing a fire.
1) Before installing front oxygen (A/F) sensor, apply anti-seize compound only to the threaded portion of front oxygen (A/F) sensor to make the next removal easier.

CAUTION:
Never apply anti-seize compound to the protector of front oxygen (A/F) sensor.

Anti-seize compound:
NEVER-SEEZ NSN, JET LUBE SS-30 or equivalent

2) Install the front oxygen (A/F) sensor.

Tightening torque:
21 N·m (2.1 kgf-m, 15.5 ft-lb)

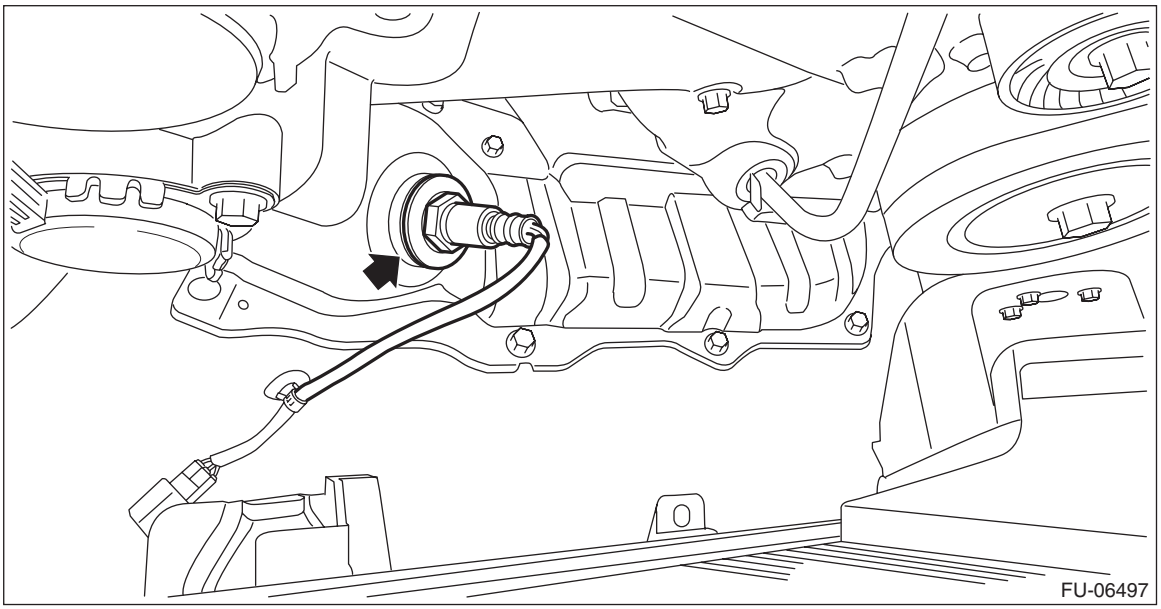

3) Lift up the vehicle.
4) Connect the front oxygen (A/F) sensor connector, and secure the front oxygen (A/F) sensor harness by using the clip.

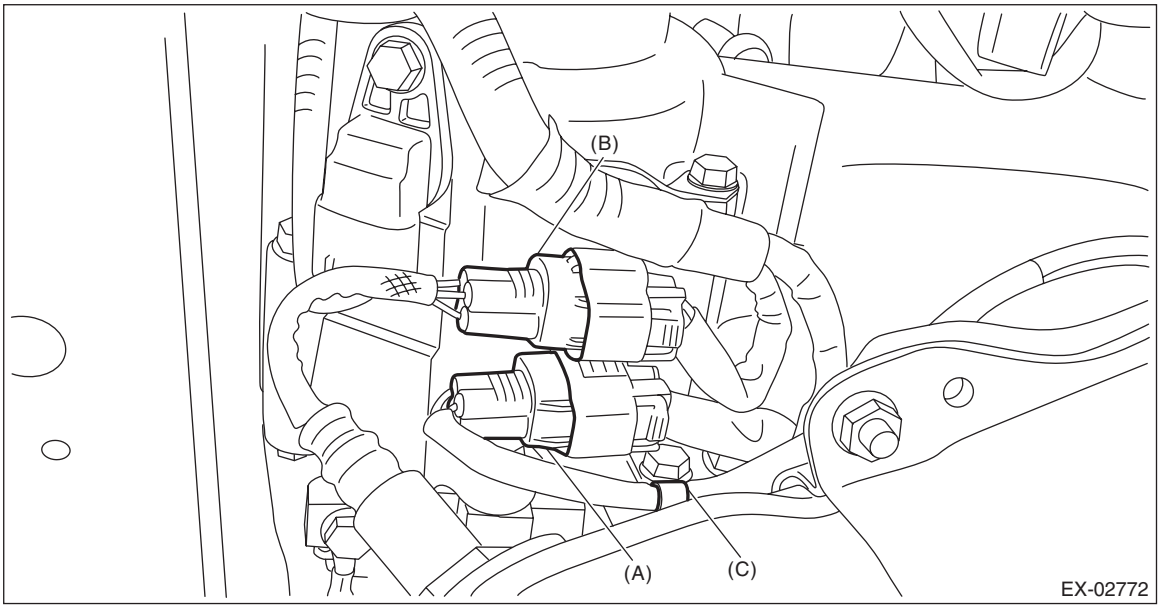

(A) Front oxygen (A/F) sensor connector
(B) Rear oxygen sensor connector
(C) Clip

5) Install the under cover. <Ref. to EI-29, INSTALLATION, Front Under Cover.>
6) Lower the vehicle.
7) Install the radiator sub fan and fan motor assembly. <Ref. to CO(H4DO(w/o HEV))-94, INSTALLATION, Radiator Sub Fan and Fan Motor.>

8) Connect the battery ground terminal.

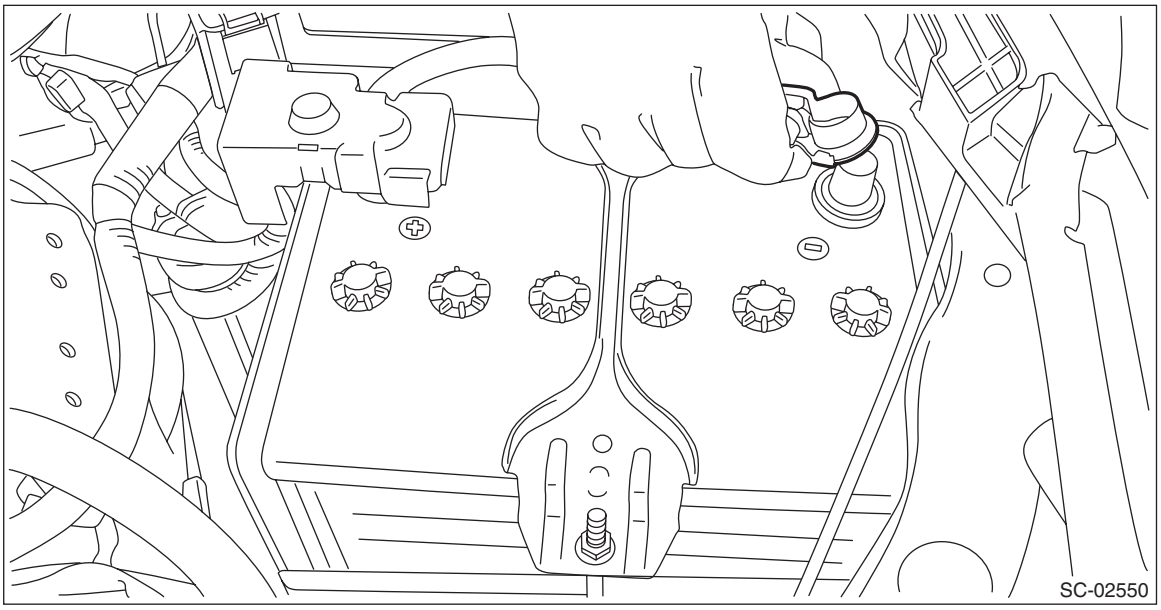

C: INSPECTION

1) Check that the front oxygen (A/F) sensor has no deformation, cracks or other damages.
2) Measure the resistance between front oxygen (A/F) sensor terminals.

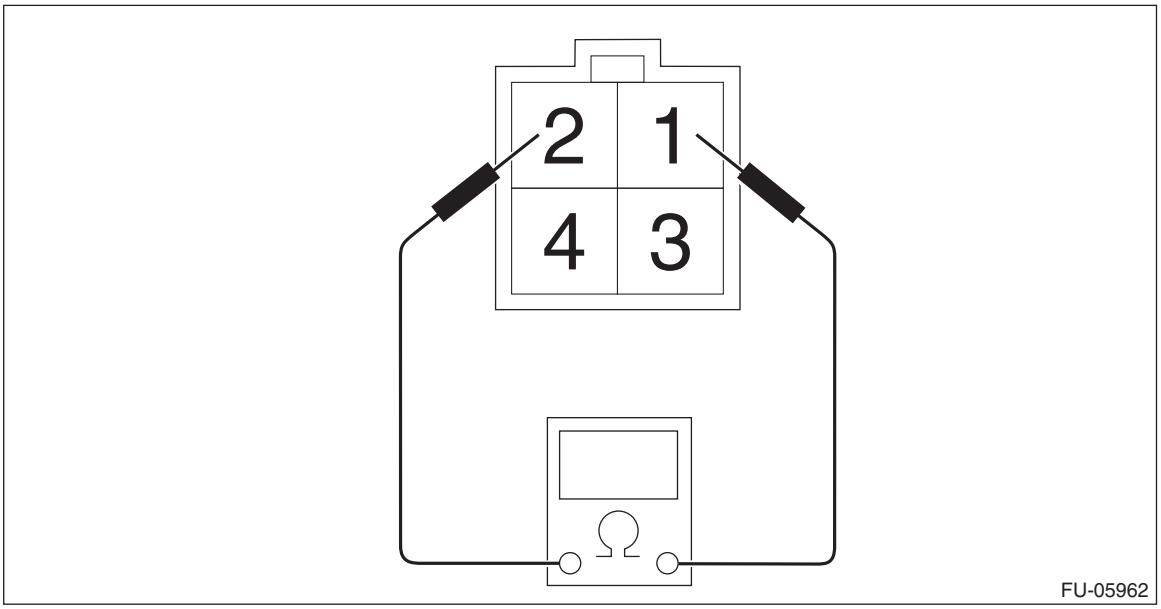

Terminal No.	Standard
1 and 2	$2.2^{+0.45}_{-0.22}$ Ω (when 20°C (68°F))

19.Rear Oxygen Sensor

A: REMOVAL

1) Disconnect the ground cable from battery.

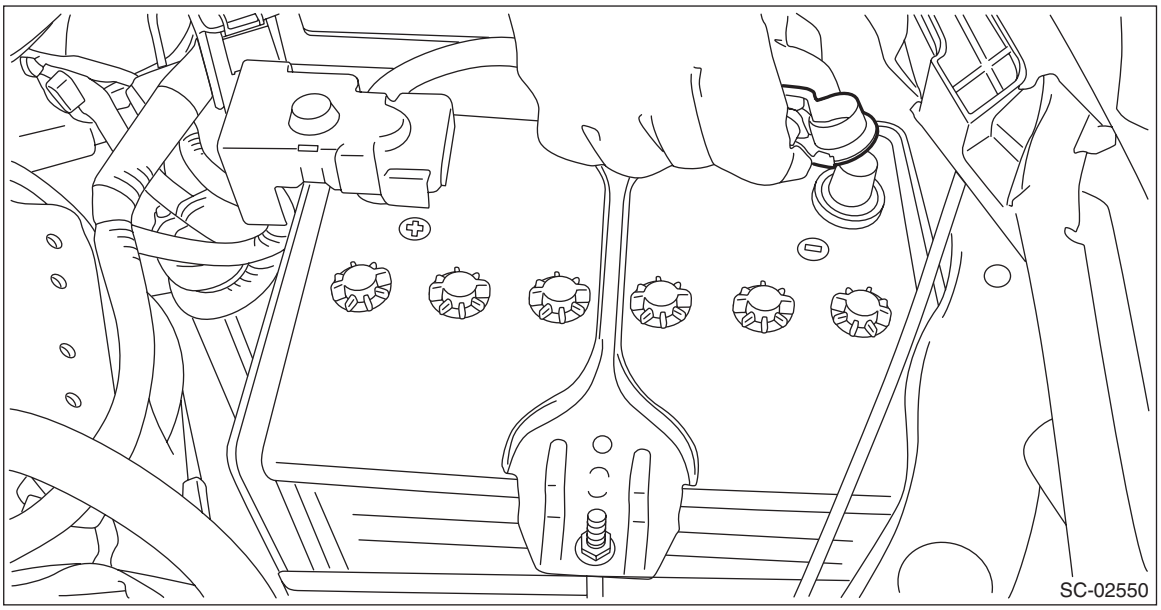

2) Lift up the vehicle.
3) Remove the under cover. <Ref. to EI-29, REMOVAL, Front Under Cover.>
4) Disconnect the rear oxygen sensor connector.

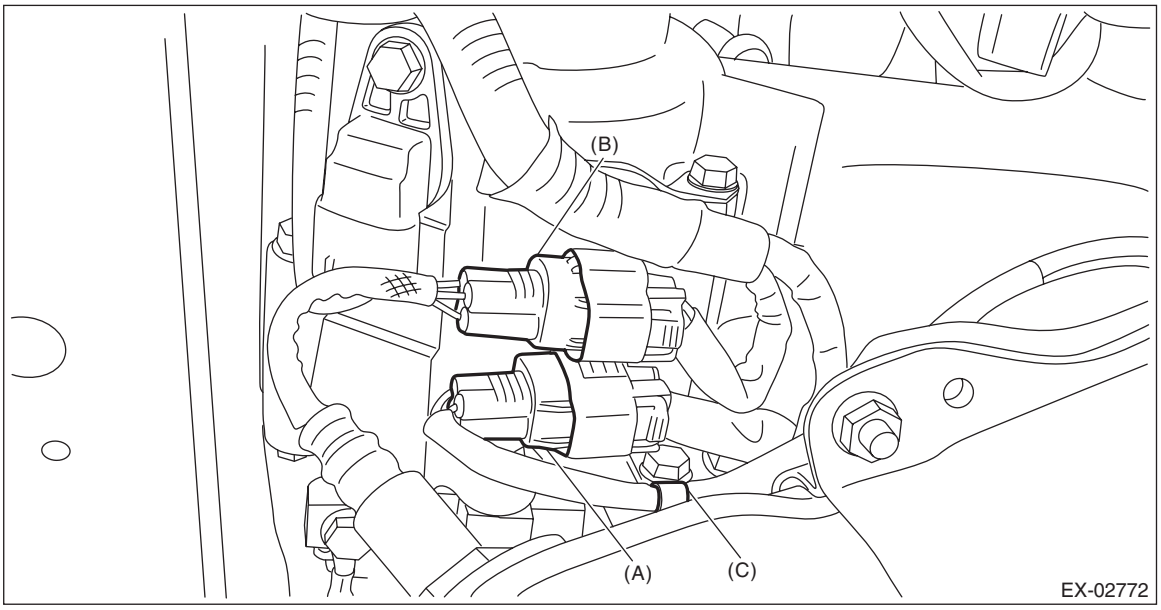

(A) Front oxygen (A/F) sensor connector
(B) Rear oxygen sensor connector
(C) Clip

5) Apply spray-type lubricant to the threaded portion of rear oxygen sensor, and leave it for one minute or more.

6) Remove the rear oxygen sensor.

CAUTION:
When removing the rear oxygen sensor, wait until exhaust pipe cools, otherwise it will damage the exhaust pipe.

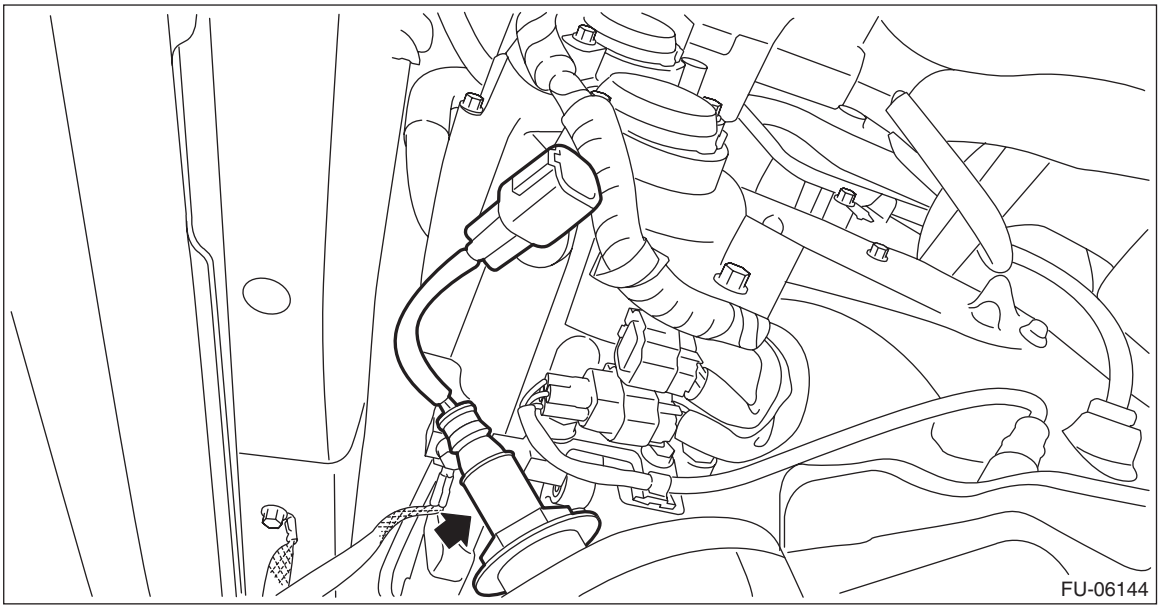

B: INSTALLATION

CAUTION:
If lubricant is spilt over the exhaust pipe, wipe it off with cloth to avoid emission of smoke or causing a fire.

1) Before installing rear oxygen sensor, apply the anti-seize compound only to the threaded portion of rear oxygen sensor to make the next removal easier.

CAUTION:
Never apply anti-seize compound to the protector of rear oxygen sensor.

Anti-seize compound:
NEVER-SEEZ NSN, JET LUBE SS-30 or equivalent

2) Install the rear oxygen sensor.

Tightening torque:
21 N·m (2.1 kgf-m, 15.5 ft-lb)

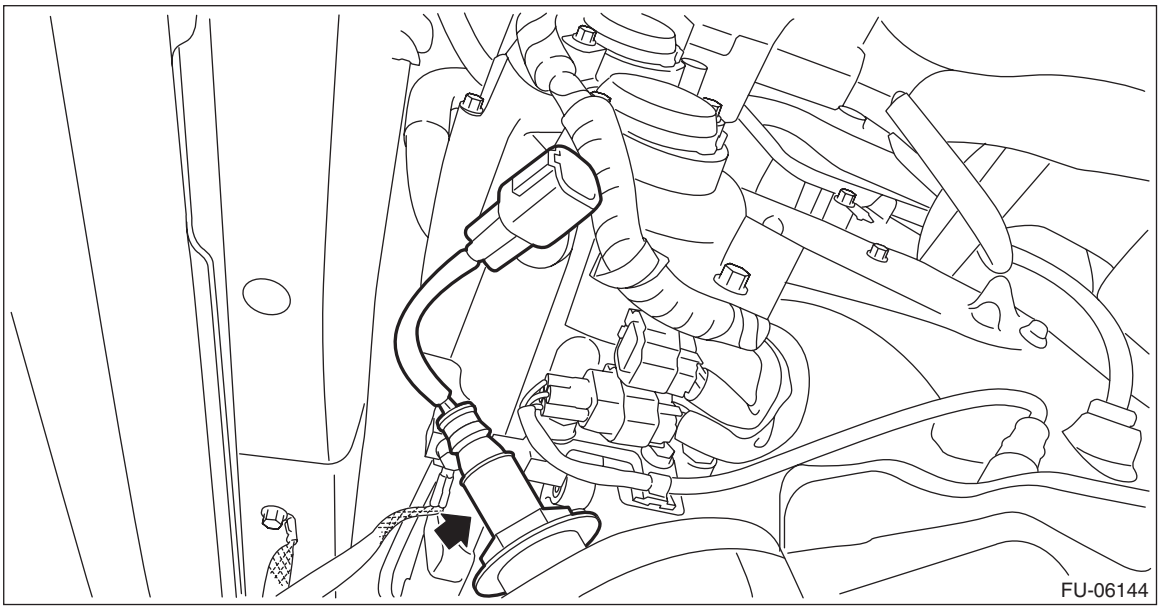

3) Connect the rear oxygen sensor connector.

NOTE:
Be careful not to allow the rear oxygen sensor harness to interfere with the sensor unit and the front oxygen (A/F) sensor harness.

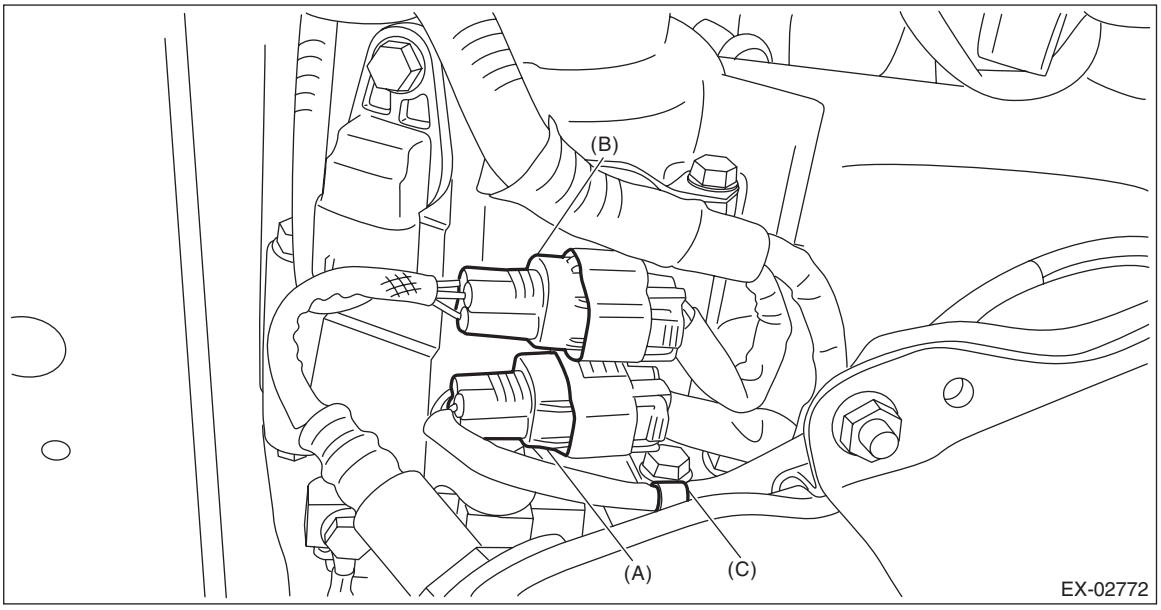

(A) Front oxygen (A/F) sensor connector
(B) Rear oxygen sensor connector
(C) Clip

4) Install the under cover. <Ref. to EI-29, INSTALLATION, Front Under Cover.>
5) Lower the vehicle.

6) Connect the battery ground terminal.

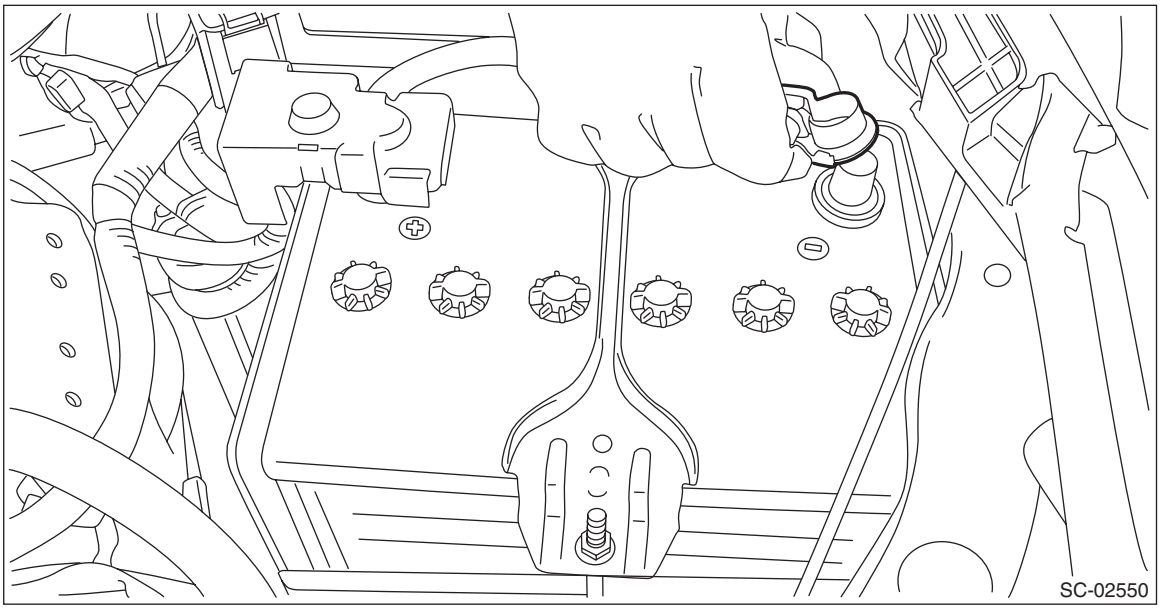

C: INSPECTION

1) Check that the rear oxygen sensor has no deformation, cracks or other damages.
2) Measure the resistance between rear oxygen sensor terminals.

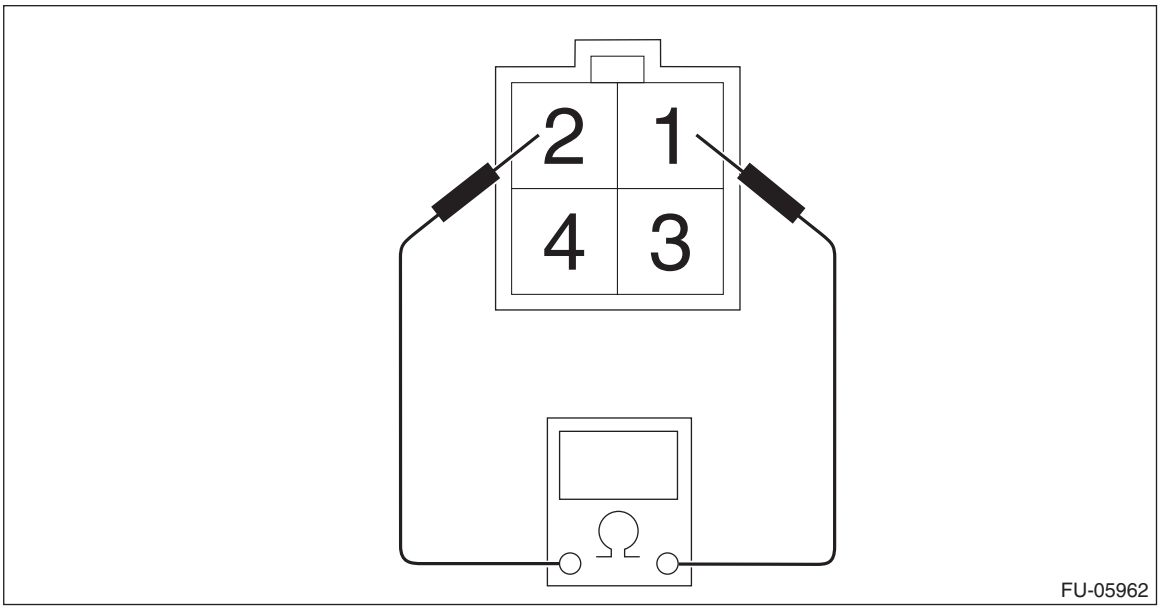

Terminal No.	Standard
1 and 2	$5.6^{+1.7}_{-0.6}$ Ω (when 20°C (68°F))

20.Engine Control Module (ECM)

A: REMOVAL

1) Disconnect the ground cable from battery.

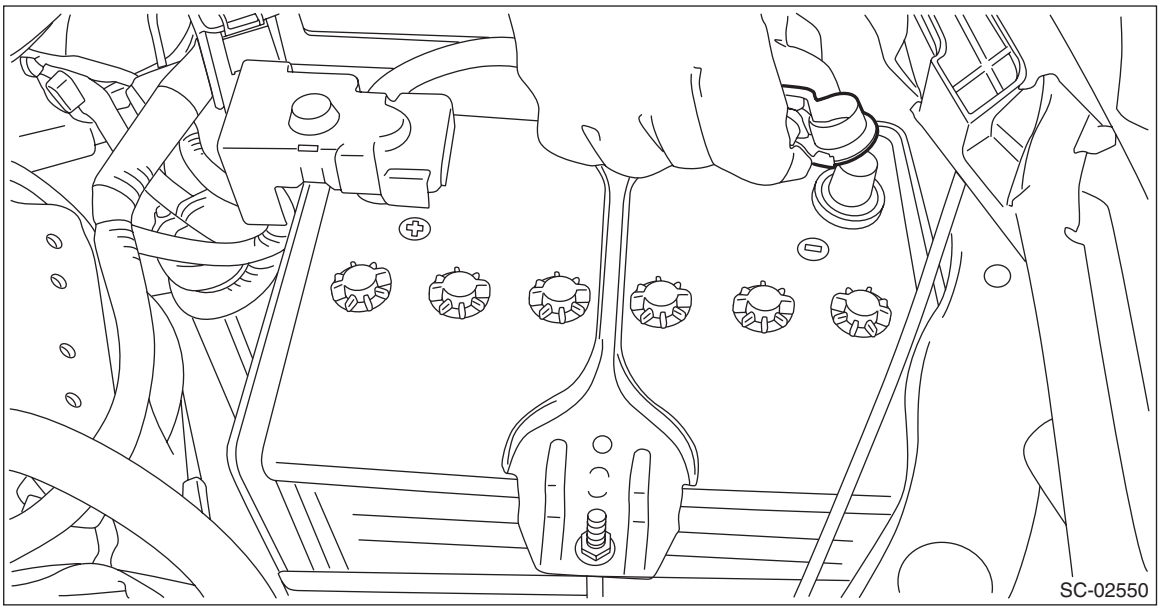

2) Remove the glove box. <Ref. to EI-73, REMOVAL, Glove Box.>
3) Disconnect the connector from ECM.

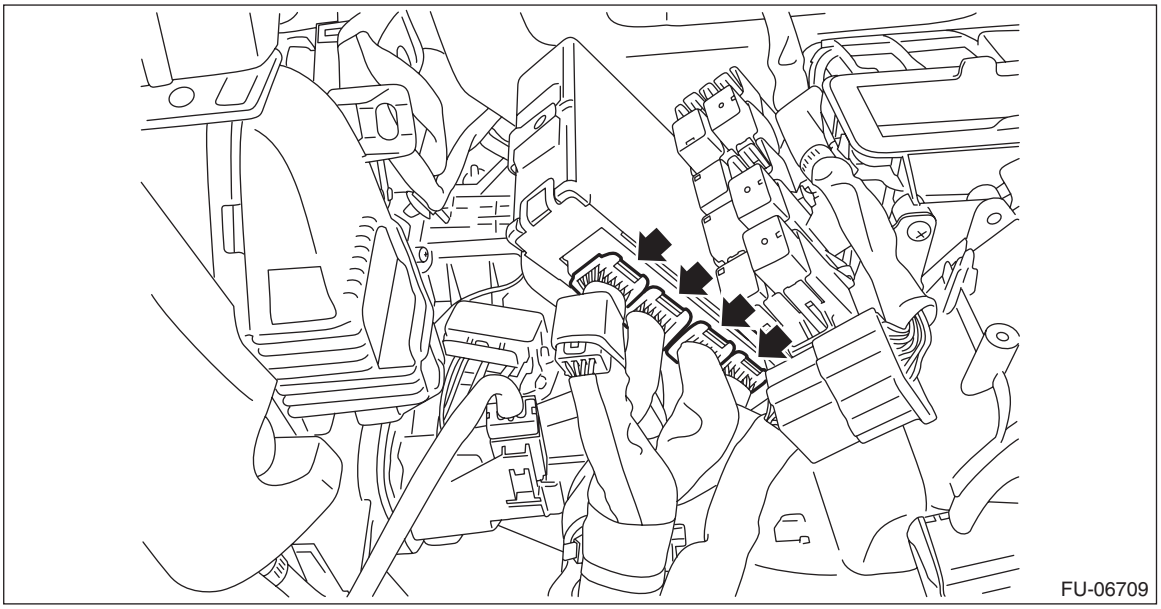

4) Remove the harness clip, and push the tabs to remove the relay block.

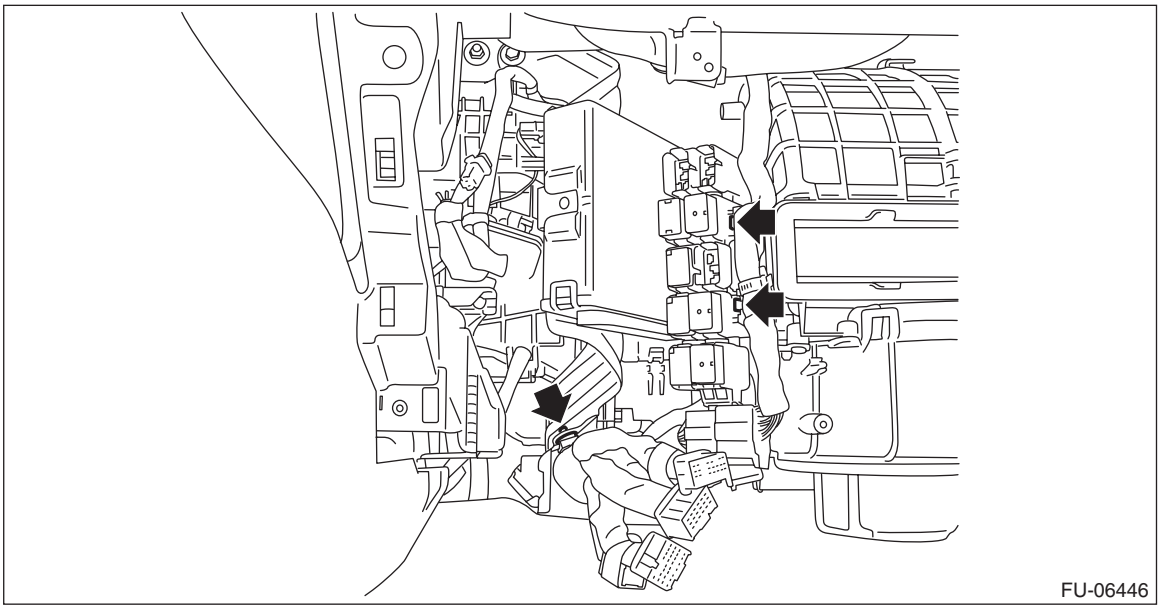

5) Remove the bolts and nuts, and remove the ECM.

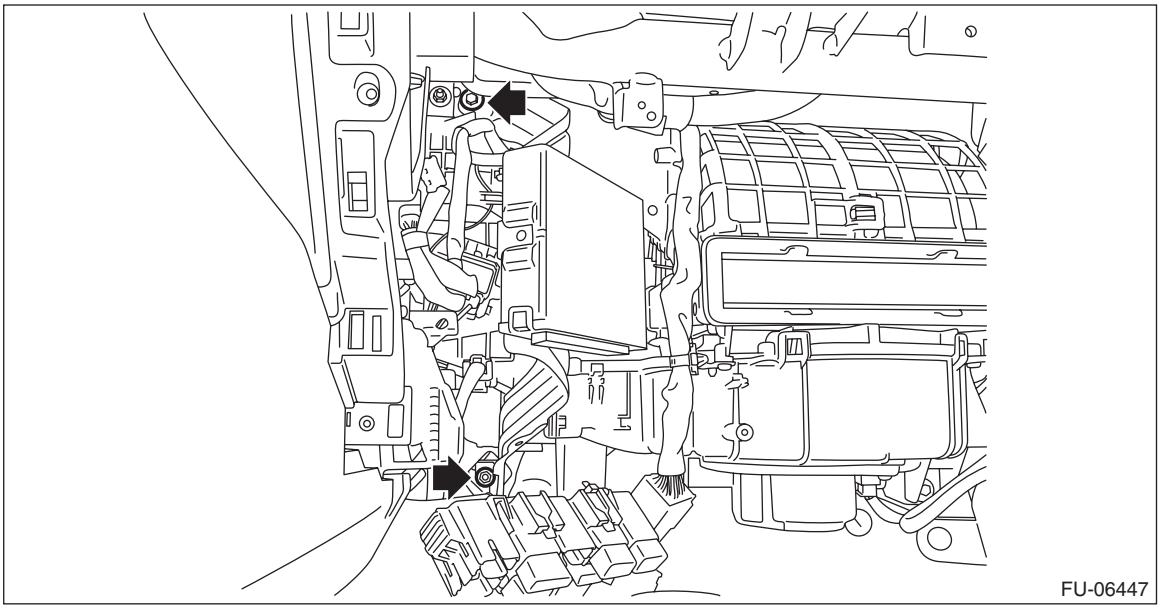

B: INSTALLATION

Install in the reverse order of removal.

CAUTION:
- **When the ECM of model with immobilizer has been replaced, be sure to perform the registration of immobilizer system. (Refer to the "REGISTRATION MANUAL FOR IMMOBILIZER".)**
- **If replacing ECM or the bracket, replace both parts with new parts at a time.**
- **After installing the bracket to ECM, do not separate the bracket.**
- **If the bracket has been installed to ECM in the wrong direction, replace both parts to new parts.**

NOTE:
When replacing the ECM, be careful not to use the wrong spec. ECM to avoid any damage on the fuel injection system.

Tightening torque:
7.5 N·m (0.8 kgf-m, 5.5 ft-lb)

C: INSPECTION

Check that the ECM has no deformation, cracks or other damages.

21.Main Relay

A: REMOVAL

1) Disconnect the ground cable from battery.

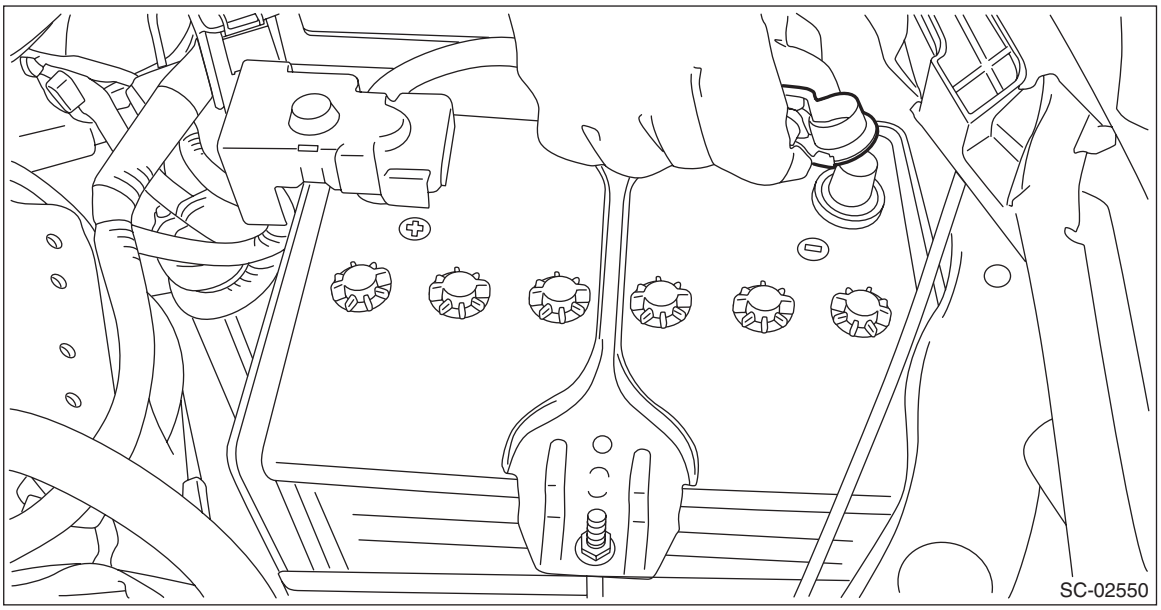

2) Remove the glove box. <Ref. to EI-73, REMOVAL, Glove Box.>
3) Remove the main relay from relay block.

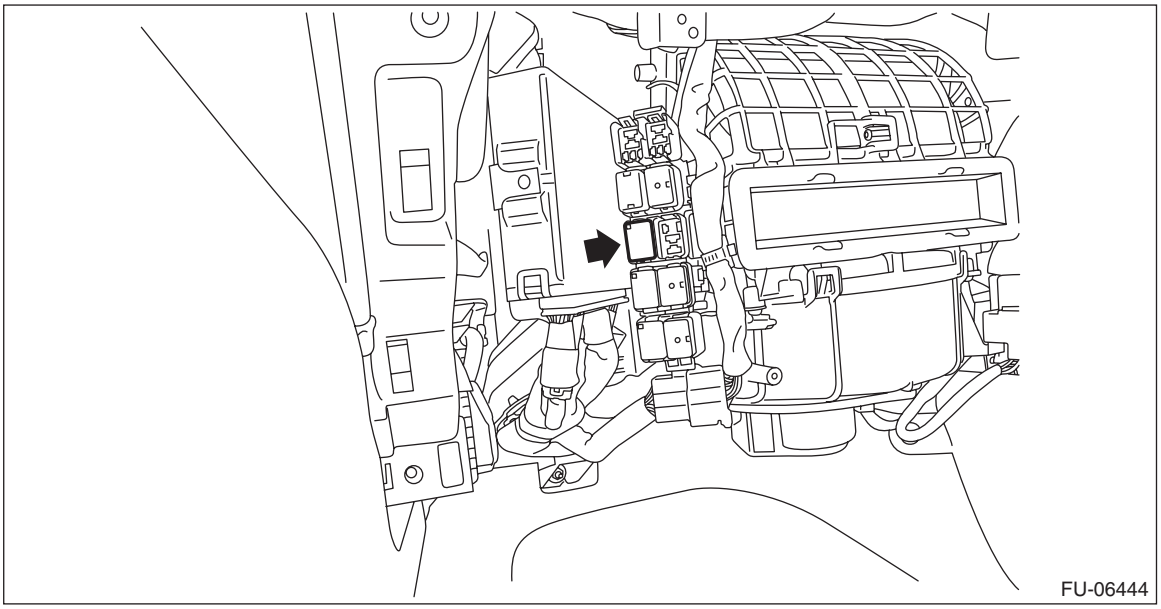

B: INSTALLATION

Install in the reverse order of removal.

C: INSPECTION

1) Check that the main relay has no deformation, cracks or other damages.
2) Measure the resistance between main relay terminals.

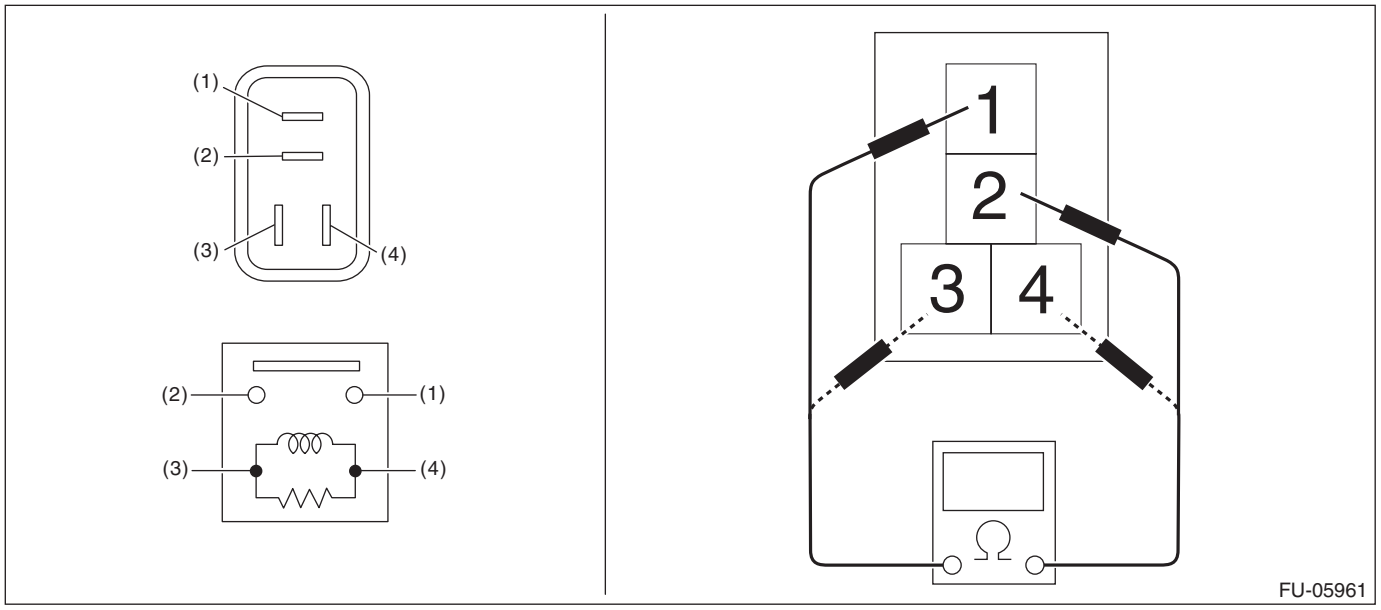

Terminal No.	Standard
1 and 2	1 MΩ or more
3 and 4	130.4 — 230.8 Ω (when 20°C (68°F))

3) Connect battery positive terminal to terminal No. 3 and battery ground terminal to terminal No. 4, and measure the resistance between the main relay terminals.

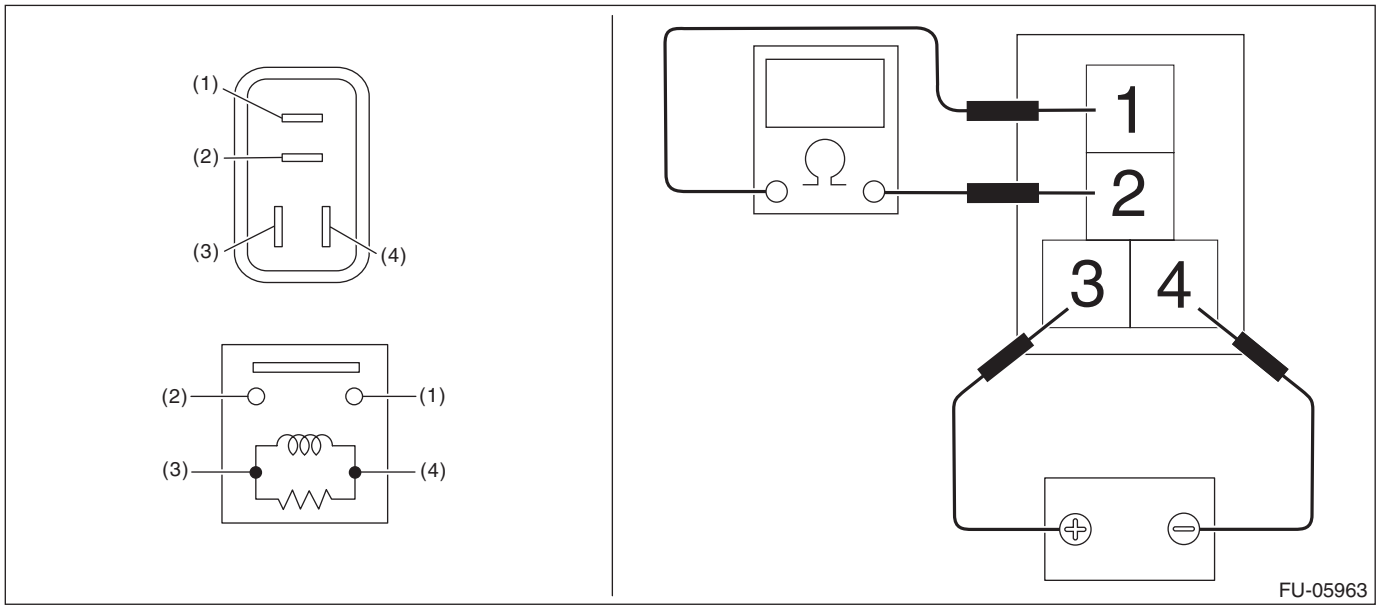

Terminal No.	Standard
1 and 2	Less than 1 Ω

22.Fuel Pump Relay

A: REMOVAL

1) Disconnect the ground cable from battery.

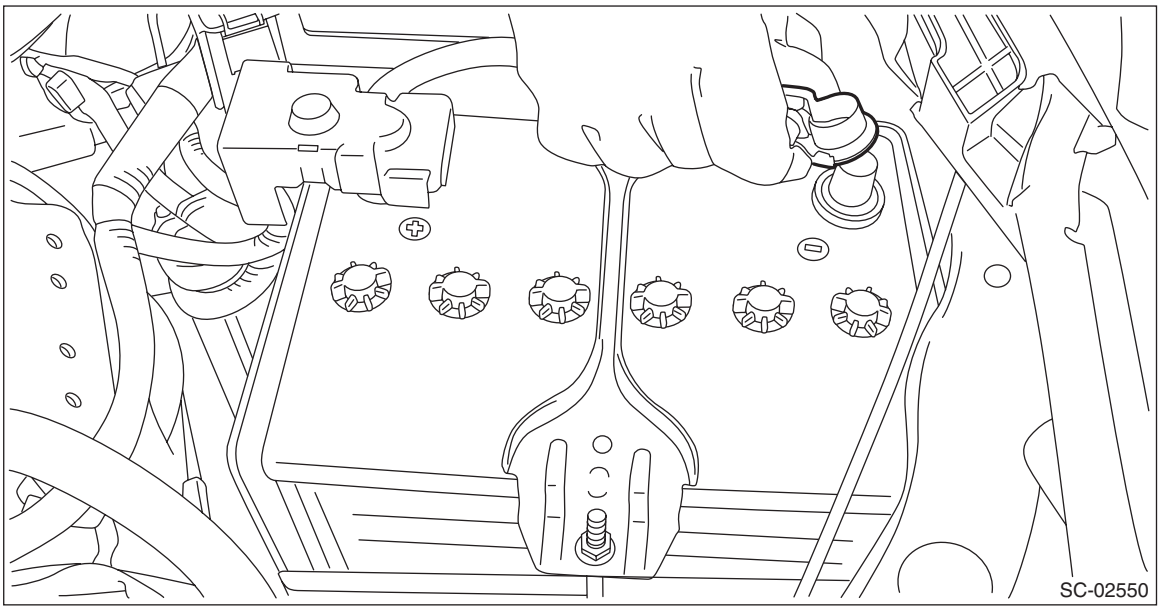

2) Remove the glove box. <Ref. to EI-73, REMOVAL, Glove Box.>
3) Remove the fuel pump relay from relay block.

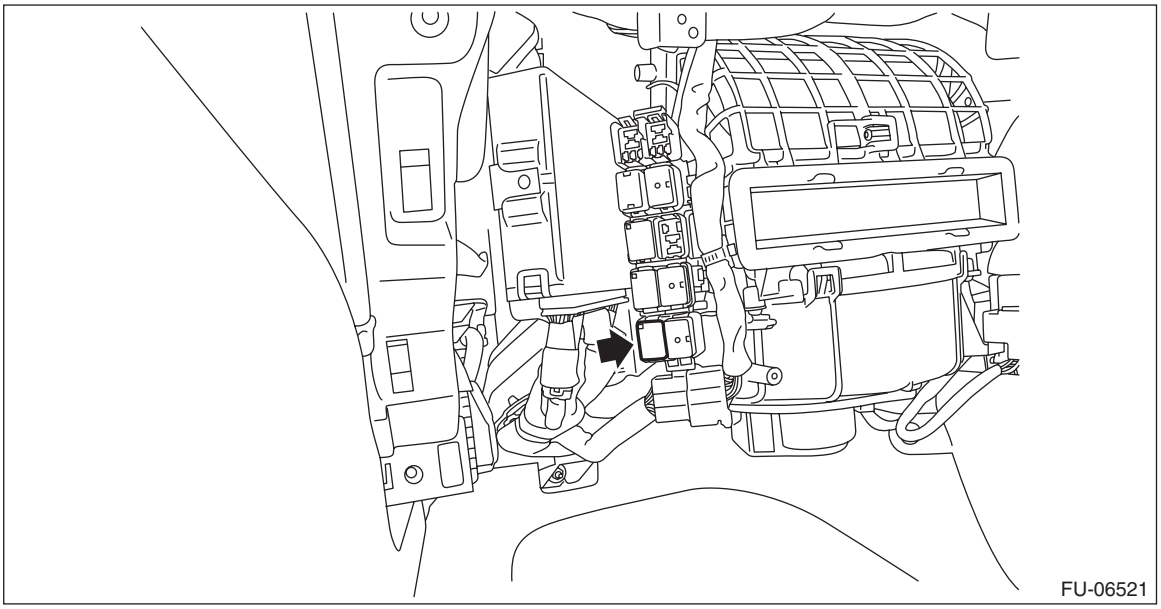

B: INSTALLATION

Install in the reverse order of removal.

C: INSPECTION

1) Check that the fuel pump relay has no deformation, cracks or other damages.
2) Measure the resistance between fuel pump relay terminals.

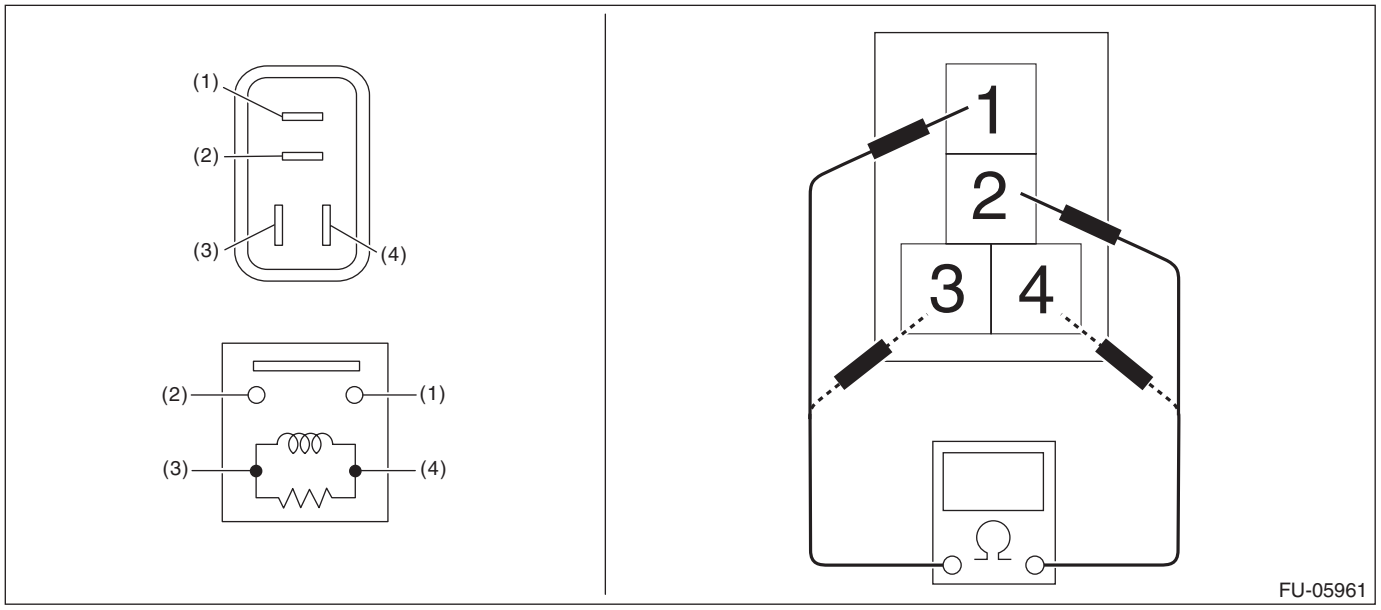

Terminal No.	Standard
1 and 2	1 MΩ or more
3 and 4	93.8 — 136.4 Ω (when 20°C (68°F))

3) Connect battery positive terminal to terminal No. 3 and battery ground terminal to terminal No. 4, and measure the resistance between the fuel pump relay terminals.

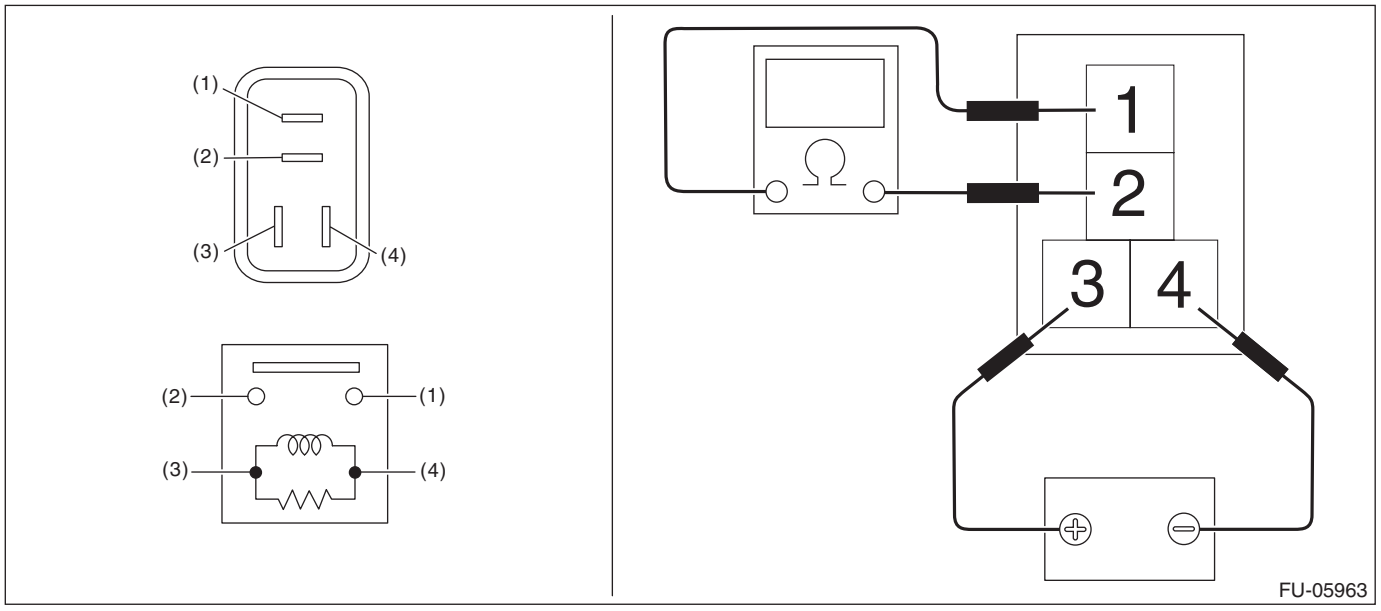

Terminal No.	Standard
1 and 2	Less than 1 Ω

23.Electronic Throttle Control Relay

A: REMOVAL

1) Disconnect the ground cable from battery.

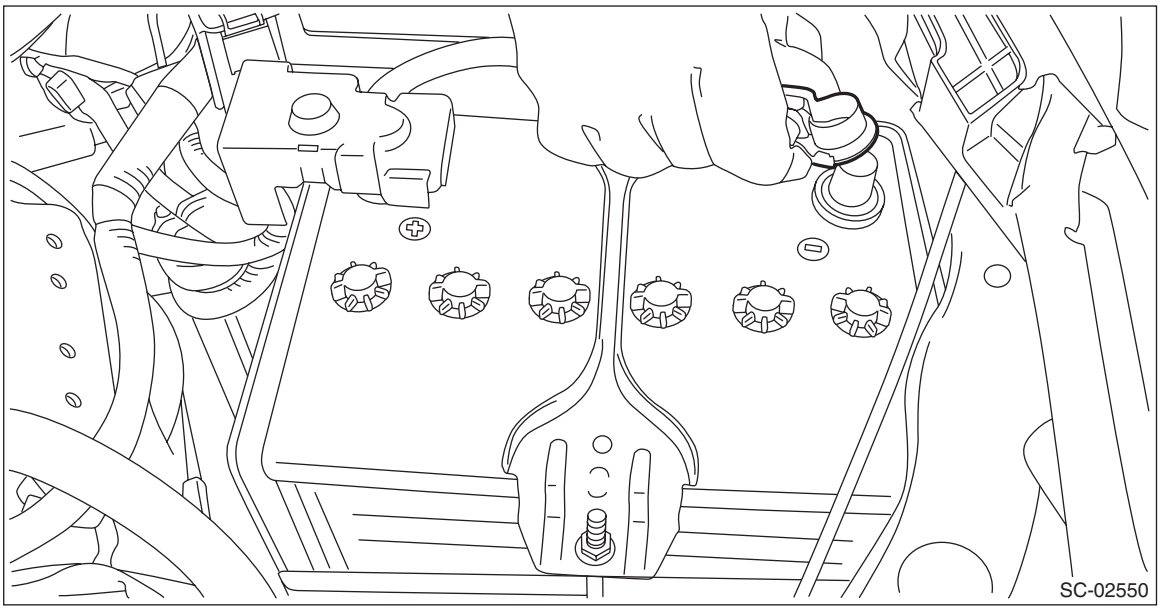

2) Remove the knee airbag module. <Ref. to AB-43, REMOVAL, Knee Airbag Module.>
3) Release the lock and remove the fuse holder from the relay & fuse box.

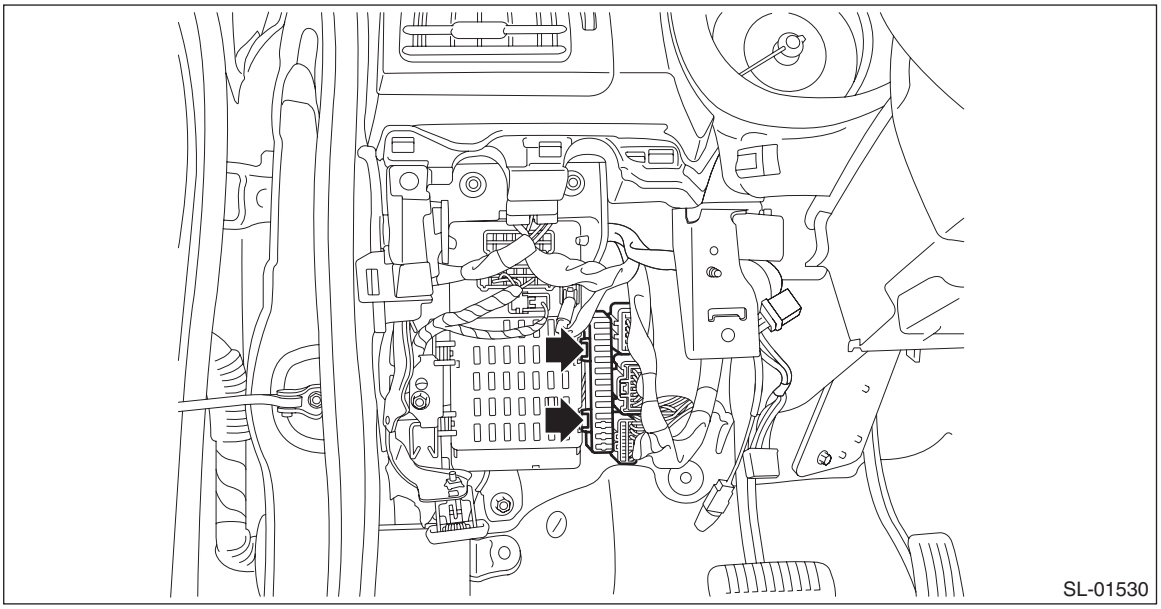

4) Disconnect the connectors from the relay & fuse box.

5) Remove the bolts (A) and nuts (B), and remove the relay & fuse box.

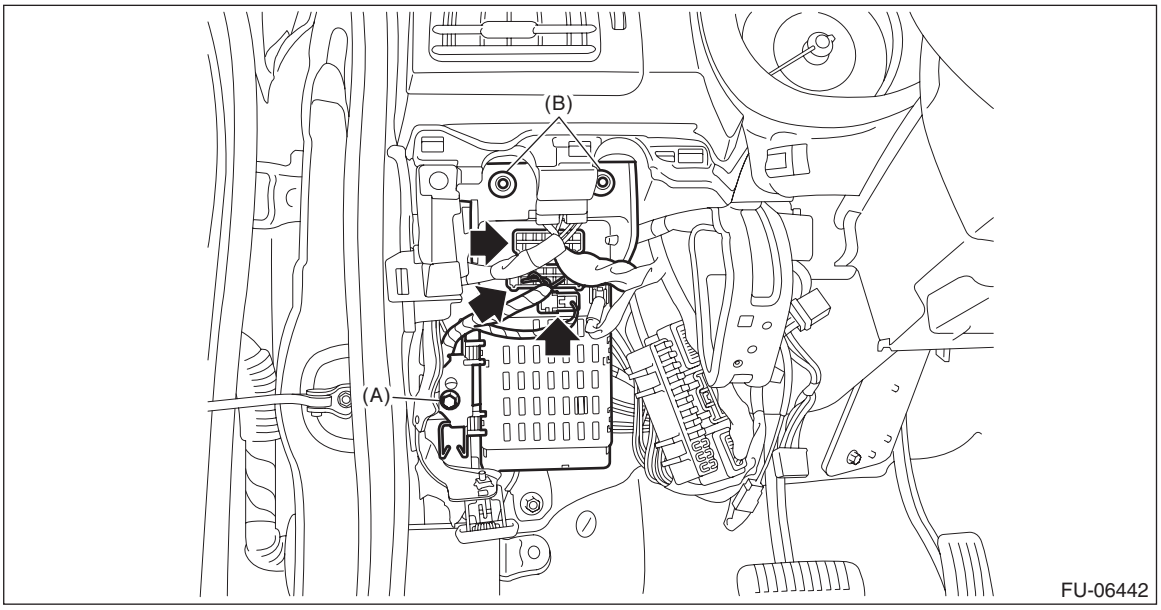

6) Remove the electronic throttle control relay from the relay block on the back side of the fuse block.



B: INSTALLATION

Install in the reverse order of removal.

Tightening torque:
7.5 N·m (0.8 kgf-m, 5.5 ft-lb)

C: INSPECTION

1) Check that the electronic throttle control relay has no deformation, cracks or other damages.
2) Measure the resistance between electronic throttle control relay terminals.

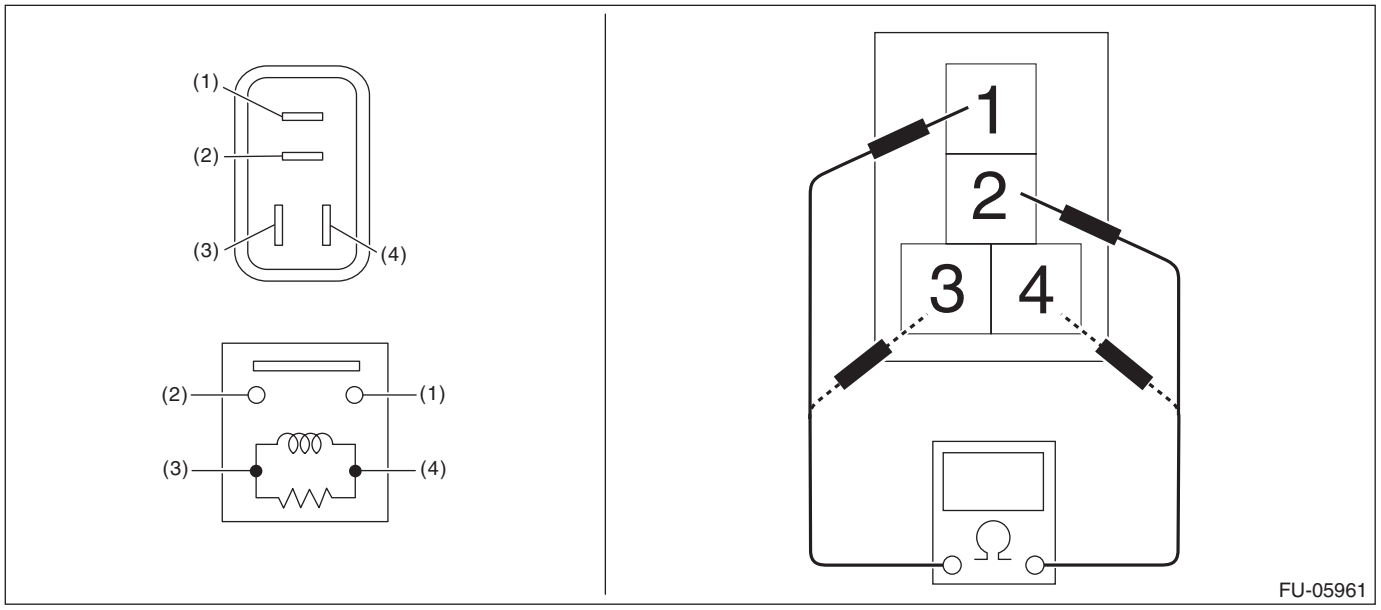

Terminal No.	Standard
1 and 2	1 MΩ or more
3 and 4	93.8 — 136.4 Ω (when 20°C (68°F))

3) Connect battery positive terminal to terminal No. 3 and battery ground terminal to terminal No. 4, and measure the resistance between the electronic throttle control relay terminals.

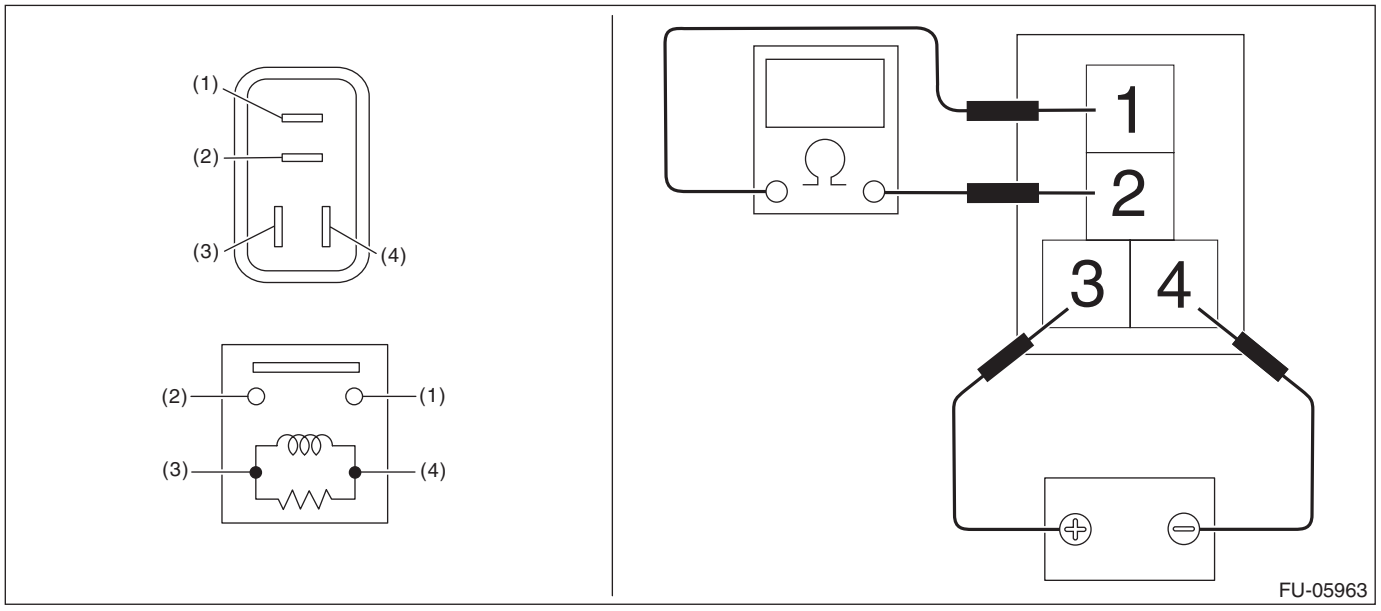

Terminal No.	Standard
1 and 2	Less than 1 Ω

24.Fuel

A: PROCEDURE

1. RELEASING OF FUEL PRESSURE

WARNING:
Place “NO OPEN FLAMES” signs near the working area.

CAUTION:
Be careful not to spill fuel.

1) Remove the fuse of fuel pump from main fuse box.

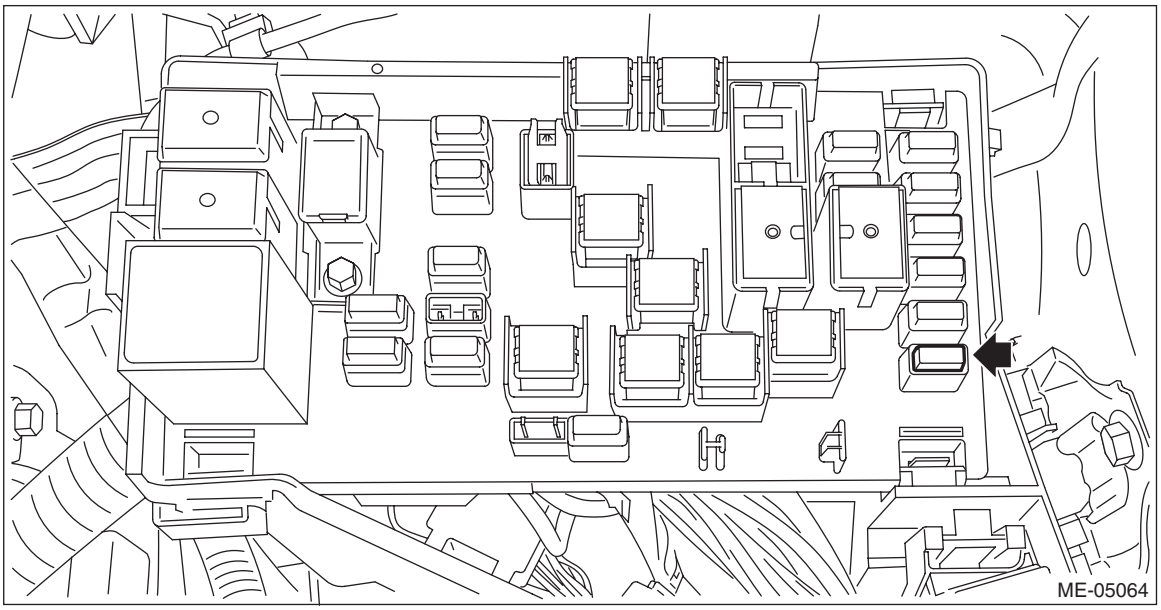

2) Start the engine and run it until it stalls.
3) After the engine stalls, crank it for five more seconds.
4) Turn the ignition switch to OFF.
5) Install the fuse of fuel pump to the main fuse box.

2. DRAINING FUEL (WITH SUBARU SELECT MONITOR)

WARNING:
Place “NO OPEN FLAMES” signs near the working area.

CAUTION:
Be careful not to spill fuel.

NOTE:
• If the fuel pump cannot be driven, refer to the procedures for draining from the fuel filler hose. <Ref. to FU(H4DO(w/o HEV))-119, DRAINING FUEL (THROUGH THE FUEL FILLER HOSE), PROCEDURE, Fuel.>
• Be careful not to let the battery run-out.
• Be aware that the fuel may remain in the fuel tank after draining the fuel.

1) Release the fuel pressure. <Ref. to FU(H4DO(w/o HEV))-116, RELEASING OF FUEL PRESSURE, PROCEDURE, Fuel.>

2) Disconnect the quick connector on the fuel delivery tube from the fuel pipe assembly, and remove the clip (A) securing the fuel delivery tube to the fuel pipe assembly.

CAUTION:
- **Be careful not to spill fuel.**
- **Catch the fuel from the tubes using a container or cloth.**

NOTE:
Disconnect the quick connector as shown in the figure.

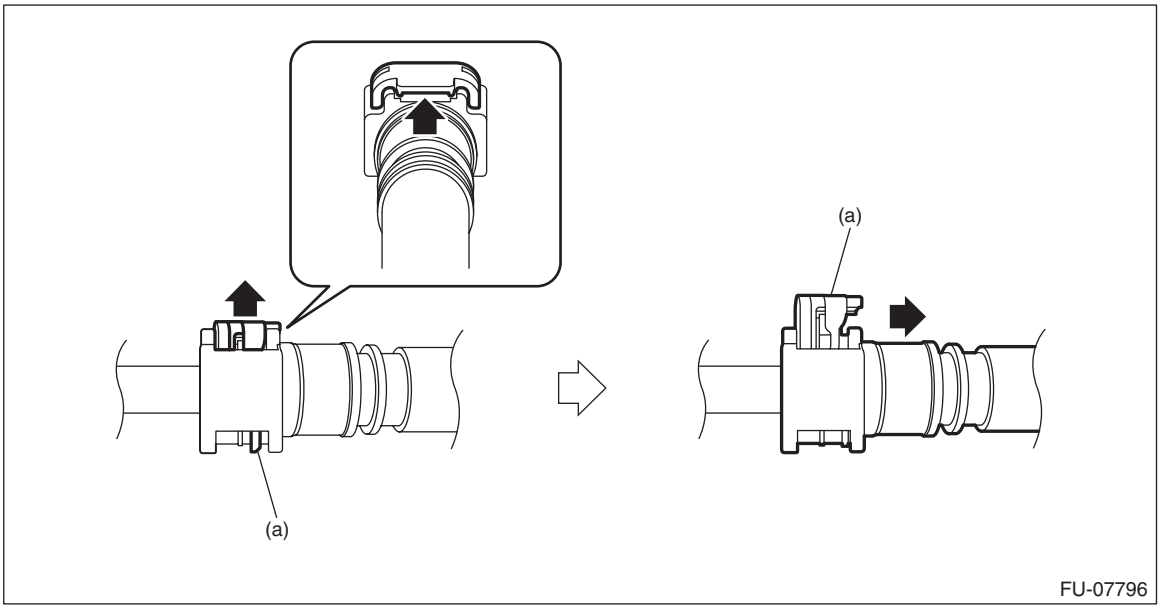

(a) Slider

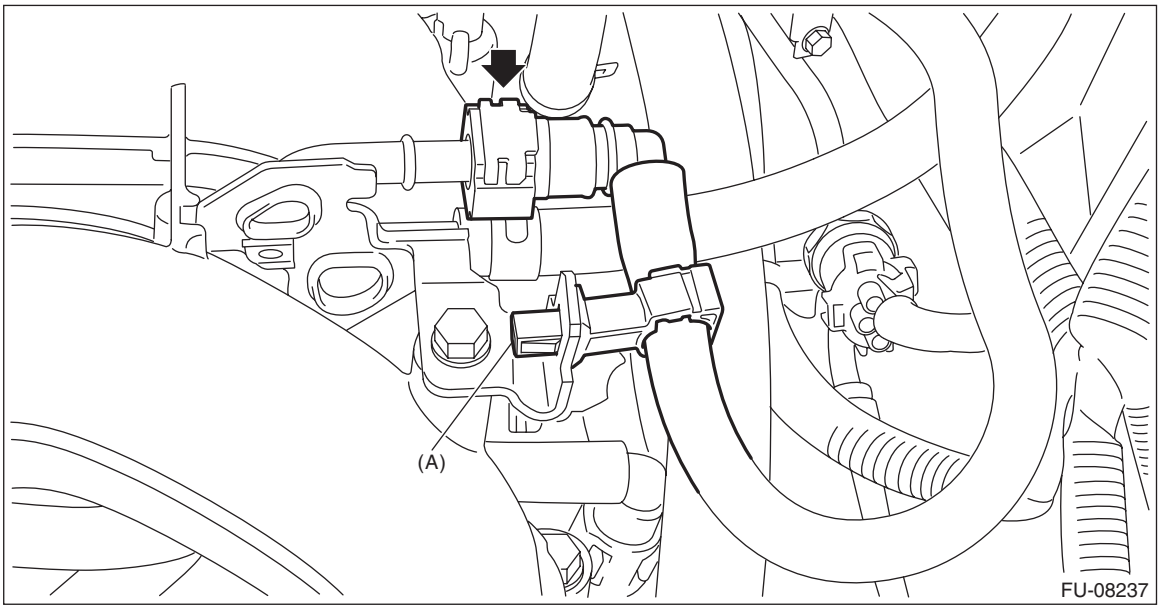

3) Connect ST to the fuel delivery tube.
ST 18471AA000 FUEL PIPE ADAPTER
4) Connect the gasoline proof hose to ST and put the end of the hose in the container.

5) Drive the fuel pump and drain the fuel using Subaru Select Monitor.

CAUTION:
Be careful not to spill fuel.

NOTE:
For detailed operation procedures, refer to “PC application help for Subaru Select Monitor”.
6) Install the related parts in the reverse order after draining the fuel.

CAUTION:
- **Be careful not to spill fuel.**
- **Catch the fuel from the tubes using a container or cloth.**
- **Check that there is no damage or dust on the quick connector. If necessary, clean the seal surface of the pipe.**
- **When connecting the quick connector with slider, make sure to insert the pipe all the way in before locking the slider.**
- **When it is difficult to lock the slider, check that the pipe is fully inserted.**
- **Make sure that the quick connector is securely connected.**

NOTE:
- Disconnect the quick connector on the fuel delivery tube as shown in the figure.

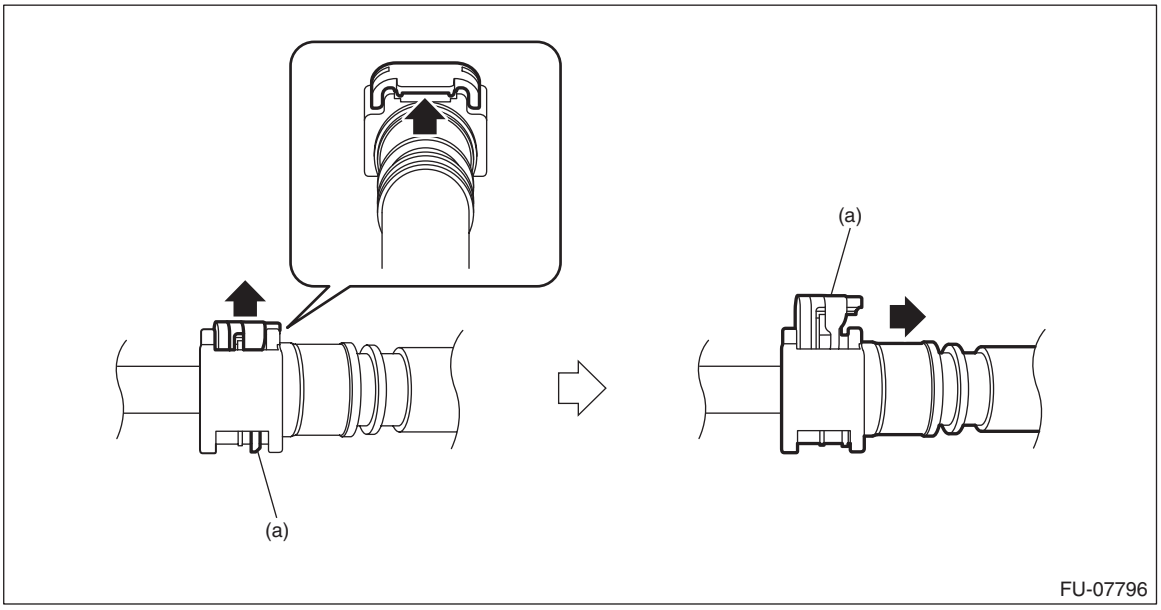

(a) Slider

- Connect the quick connector on the fuel delivery tube as shown in the figure.

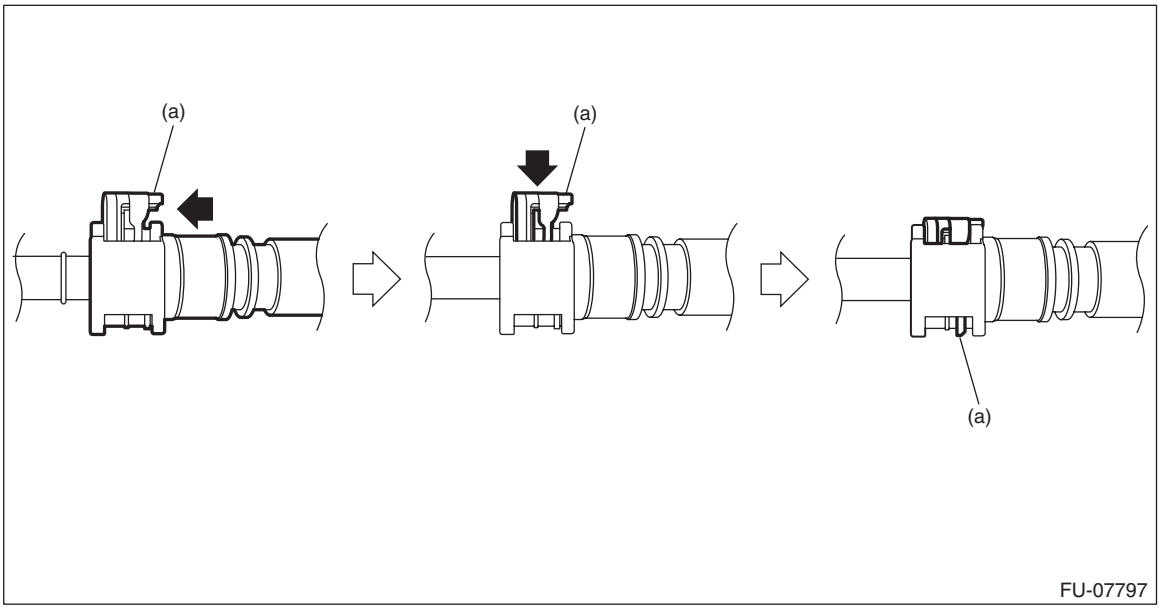

(a) Slider

3. DRAINING FUEL (THROUGH THE FUEL FILLER HOSE)

WARNING:
Place “NO OPEN FLAMES” signs near the working area.

CAUTION:
- **Be careful not to spill fuel.**
- **Fuel may remain in the fuel filler pipe. Drain the fuel from the fuel filler pipe through the fill opening using the gasoline proof pump and the gasoline proof hose (ø10 or less) before the operation.**

NOTE:
Be aware that the fuel may remain in the fuel tank after draining the fuel.
1) Lift up the vehicle.
2) Remove the rear exhaust pipe and muffler. <Ref. to EX(H4DO(w/o HEV))-18, REMOVAL, Rear Exhaust Pipe.> <Ref. to EX(H4DO(w/o HEV))-22, REMOVAL, Muffler.>
3) Open the fuel filler lid and remove the fuel filler cap.
4) Drain the fuel from the fuel filler pipe through the filler opening using the gasoline proof pump and the gasoline proof hose (ø10 or less).

5) Disconnect the fuel filler hose from the fuel filler pipe assembly.

CAUTION:
- **Be careful not to spill fuel.**
- **Catch the fuel from hoses using a container or cloth.**

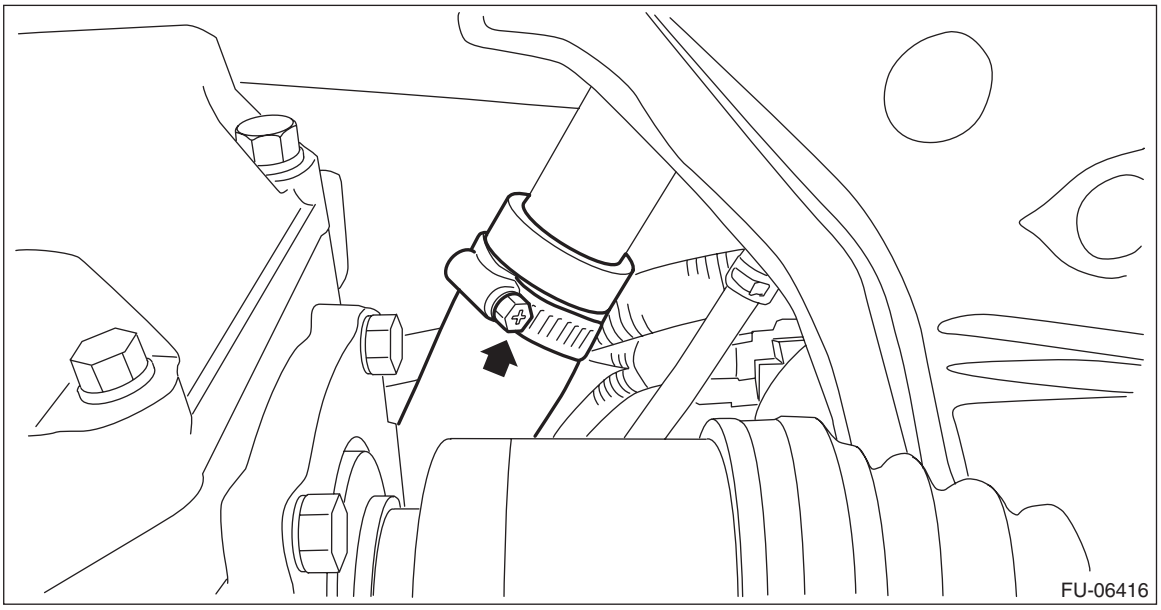

6) Set the container under the vehicle and insert the gasoline proof hose (ø10 or less) into the fuel filler hose to drain the fuel.

CAUTION:
Be careful not to spill fuel.

7) Install the related parts in the reverse order after draining the fuel.

NOTE:
Correctly insert the fuel filler hose to the spool, and then install the clamp as shown.

Tightening torque:
2.5 N·m (0.3 kgf-m, 1.8 ft-lb)

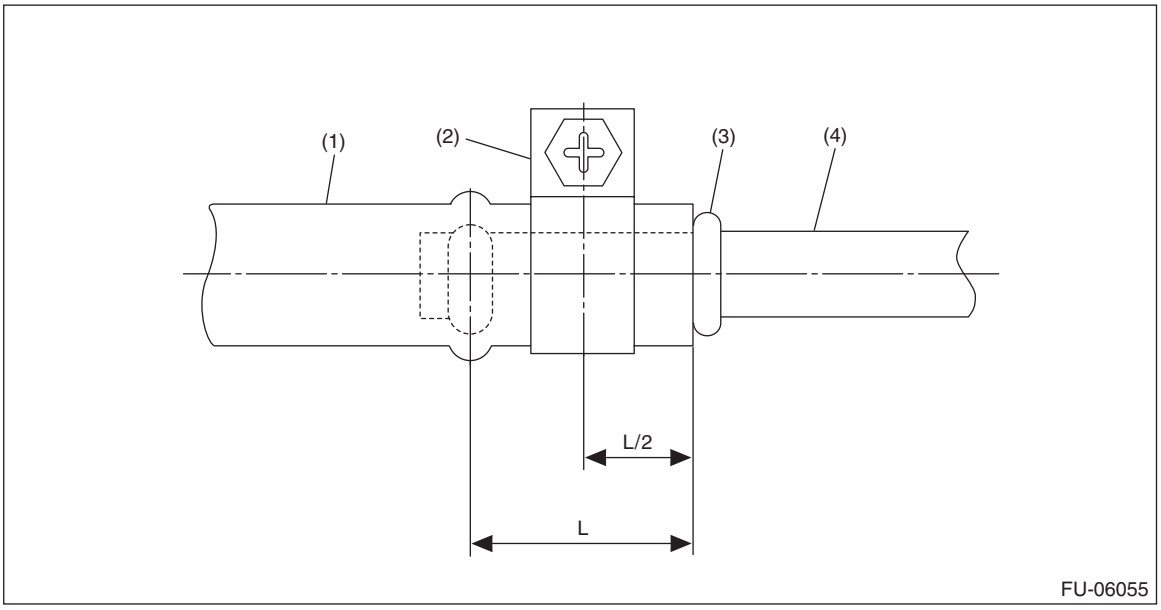

(1) Fuel filler hose
(2) Clamp
(3) Spool
(4) Fuel filler pipe

25.Fuel Tank Protector

A: REMOVAL

1) Lift up the vehicle.
2) Remove the bolt and nuts and remove the fuel tank protector.

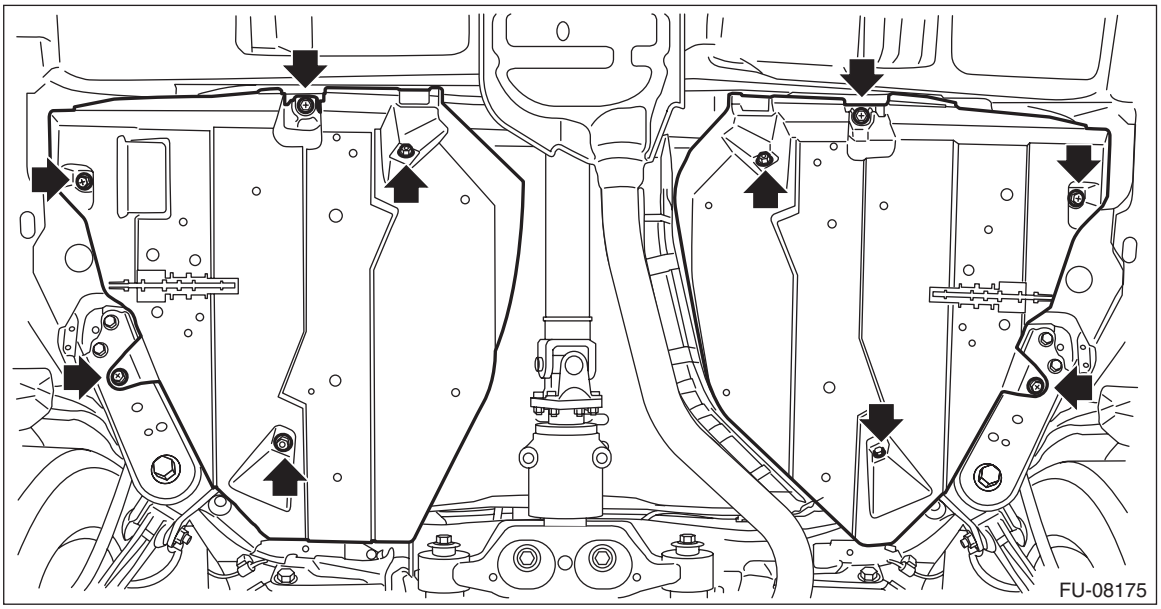

B: INSTALLATION

Install in the reverse order of removal.

NOTE:
Use a new self-locking nut.

Tightening torque:
T1: 9 N·m (0.9 kgf-m, 6.6 ft-lb)
T2: 18 N·m (1.8 kgf-m, 13.3 ft-lb)

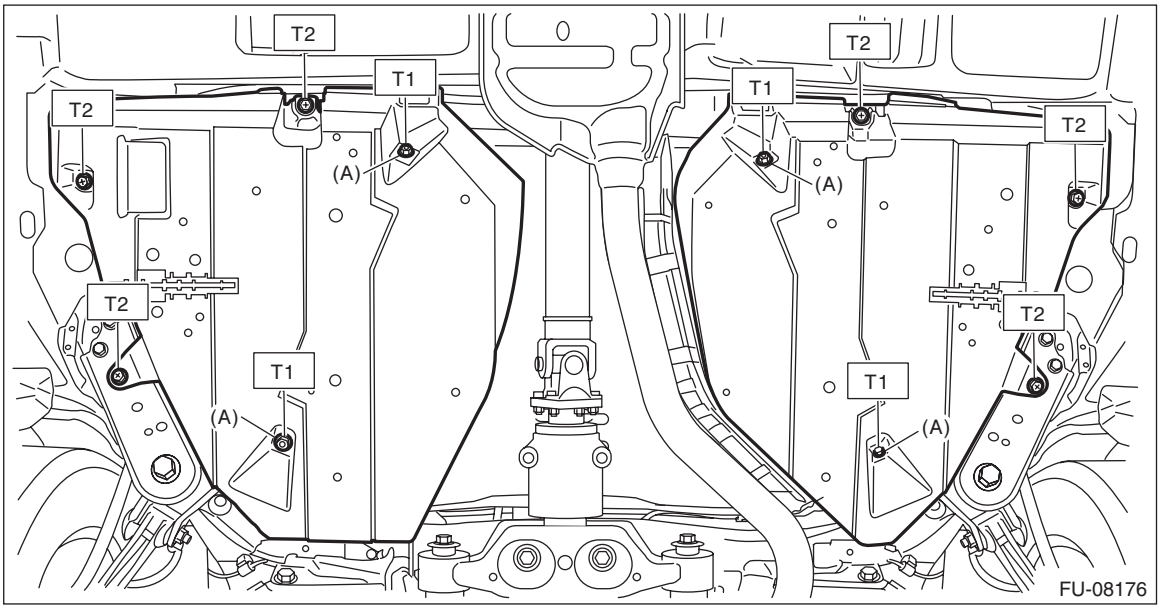

(A) Self-locking nut

26.Fuel Tank

A: REMOVAL

WARNING:
Place “NO OPEN FLAMES” signs near the working area.

CAUTION:
- **Be careful not to spill fuel.**
- **Catch the fuel from the tubes using a container or cloth.**

1) Release the fuel pressure. <Ref. to FU(H4DO(w/o HEV))-116, RELEASING OF FUEL PRESSURE, PROCEDURE, Fuel.>
2) Drain fuel. <Ref. to FU(H4DO(w/o HEV))-116, DRAINING FUEL (WITH SUBARU SELECT MONITOR), PROCEDURE, Fuel.>
3) Disconnect the ground cable from battery.

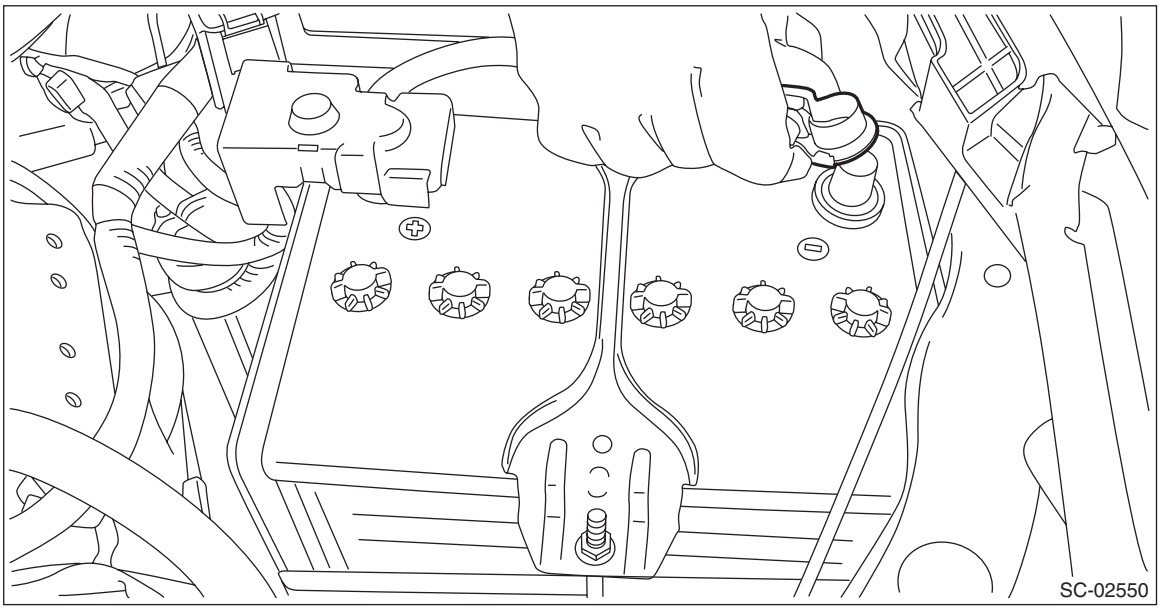

4) Remove the rear seat cushion. <Ref. to SE-23, REMOVAL, Rear Seat.>
5) Remove the service hole cover of fuel pump.

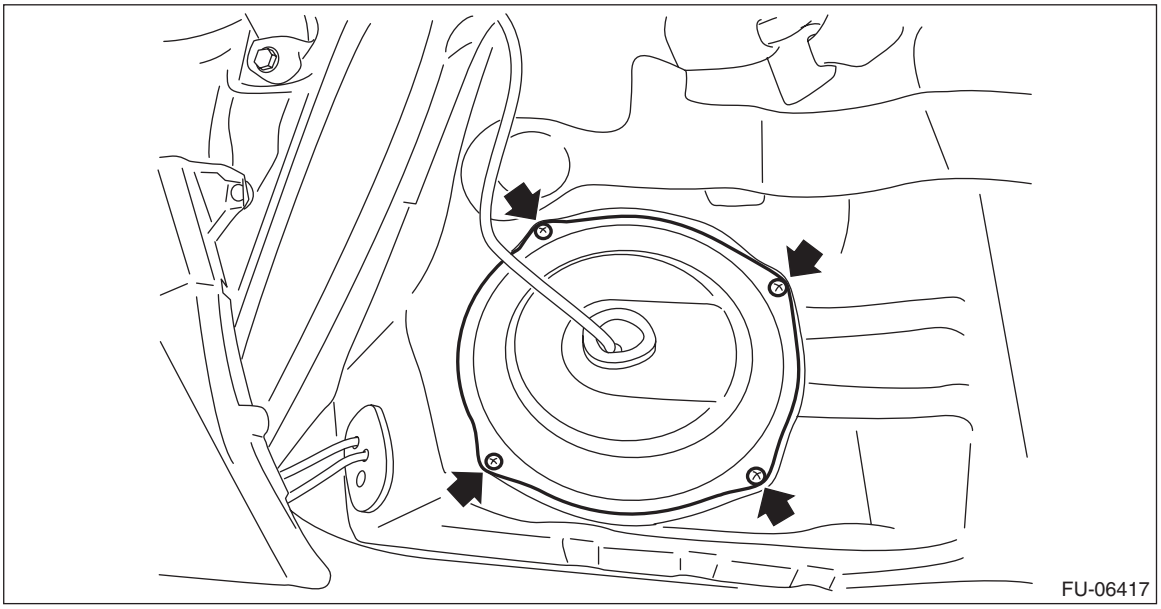

6) Disconnect connectors from the fuel pump, and move aside the service hole cover.

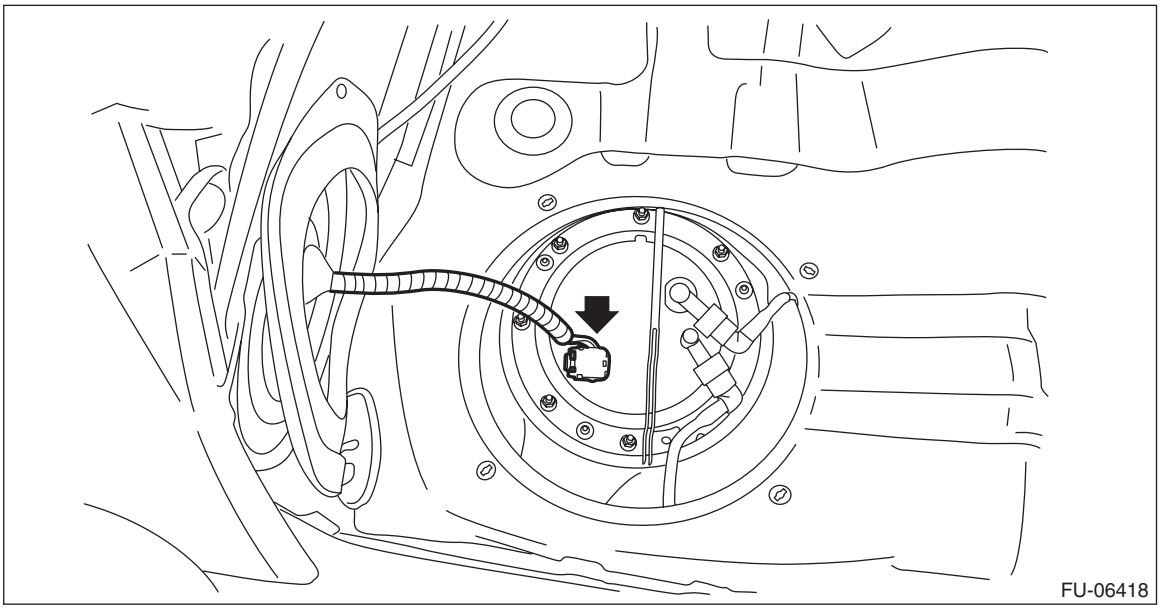

7) Remove the service hole cover of fuel sub level sensor.

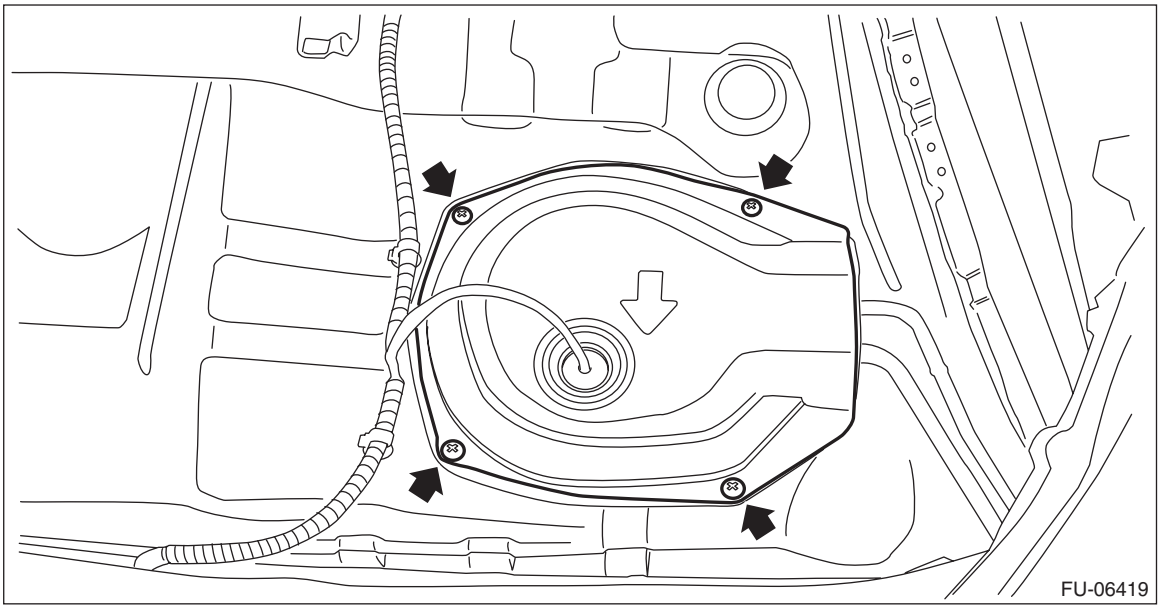

8) Disconnect connectors from the fuel sub level sensor, and move aside the service hole cover.

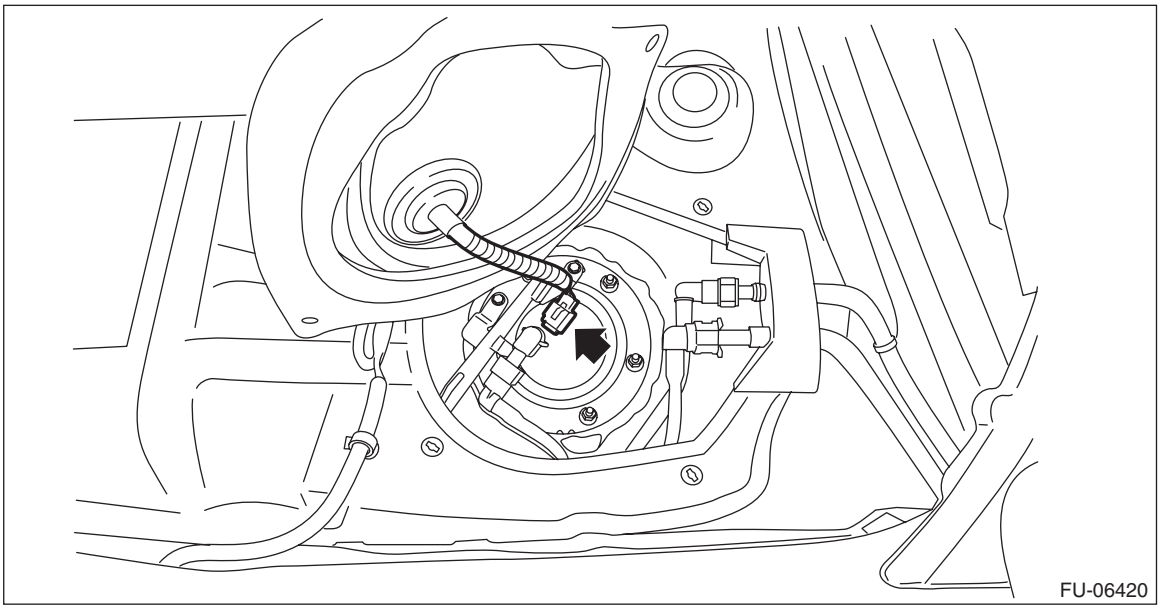

9) Disconnect the quick connector on the fuel delivery tube.

NOTE:
Disconnect the quick connector as shown in the figure.

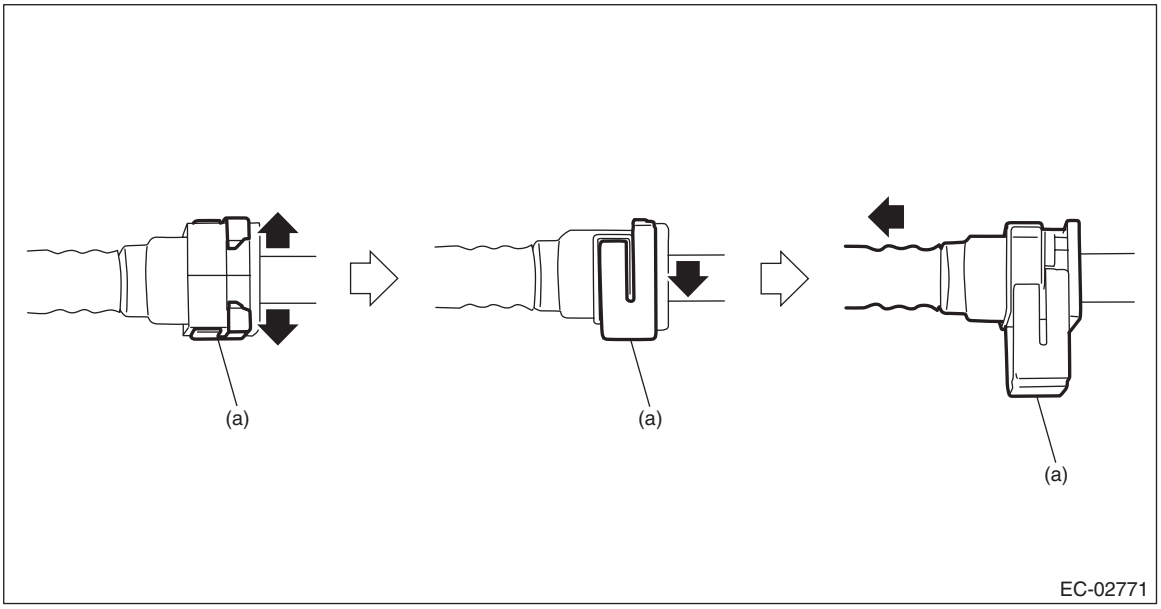

(a) Slider

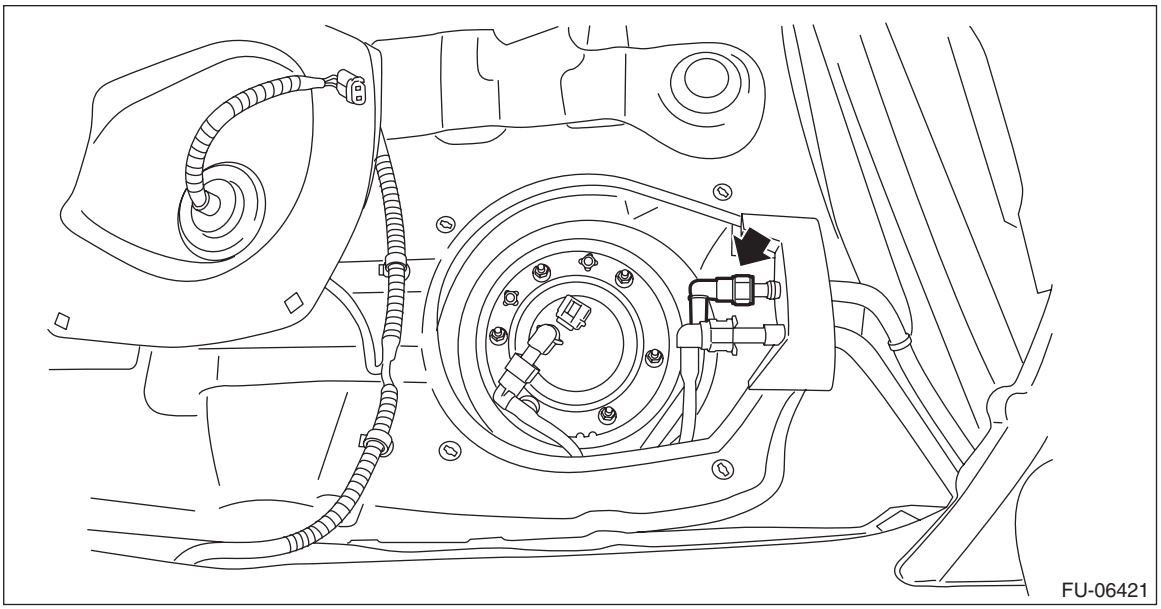

10) Lift up the vehicle.
11) Remove the rear exhaust pipe and muffler. <Ref. to EX(H4DO(w/o HEV))-18, REMOVAL, Rear Exhaust Pipe.> <Ref. to EX(H4DO(w/o HEV))-22, REMOVAL, Muffler.>
12) Remove the rear differential. <Ref. to DI-22, REMOVAL, Rear Differential (T-type).> <Ref. to DI-42, REMOVAL, Rear Differential (VA-type).>
13) Disconnect the fuel filler hose (A) and evaporation hose (B) from the fuel filler pipe assembly.

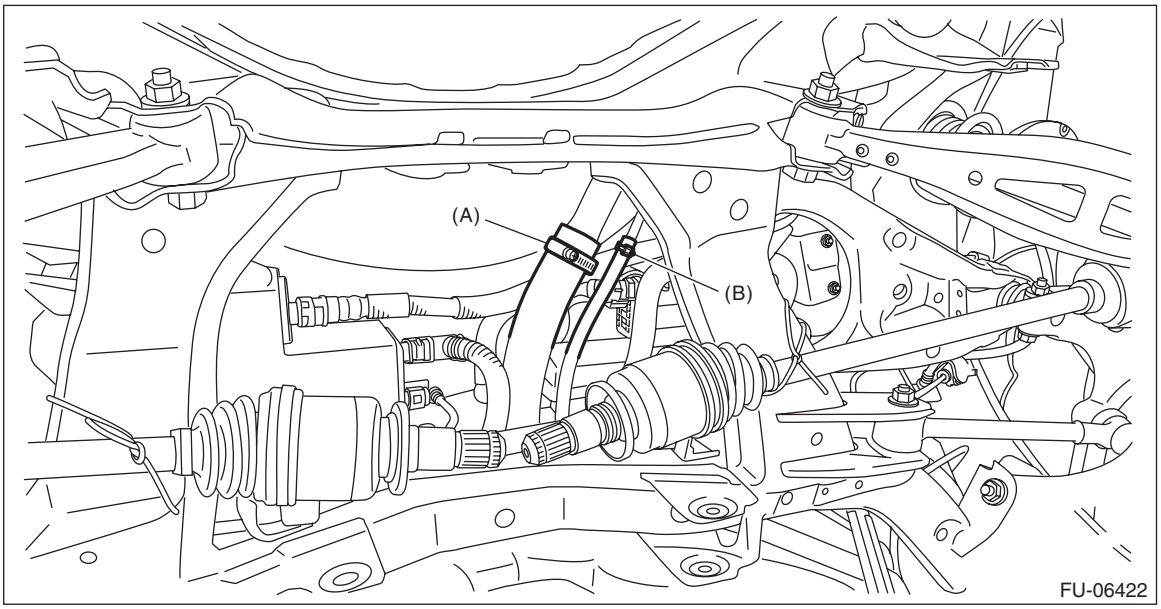

14) Disconnect the vent tube from canister.

NOTE:
Disconnect the quick connector as shown in the figure.

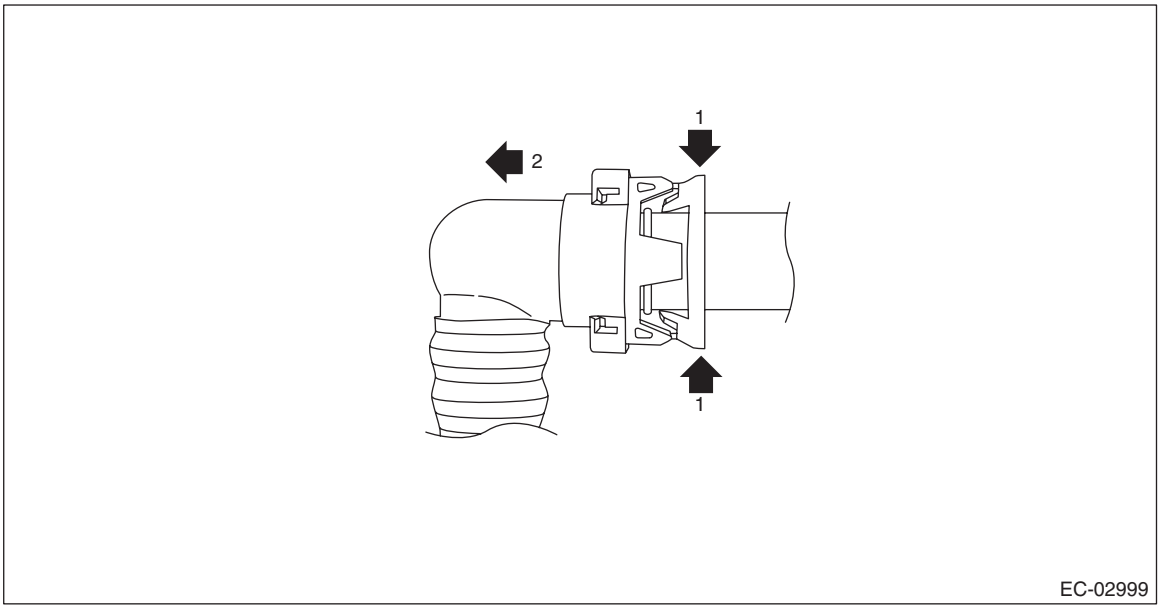

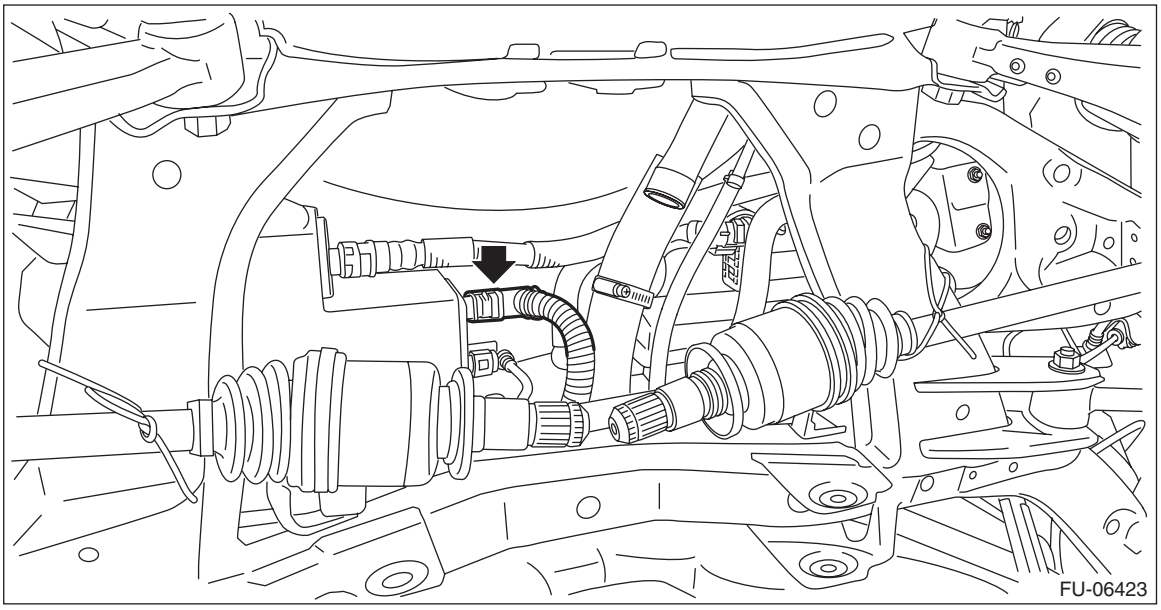

15) Remove the fuel tank protector. <Ref. to FU(H4DO(w/o HEV))-121, REMOVAL, Fuel Tank Protector.>

16) Remove the heat shield cover and stopper.

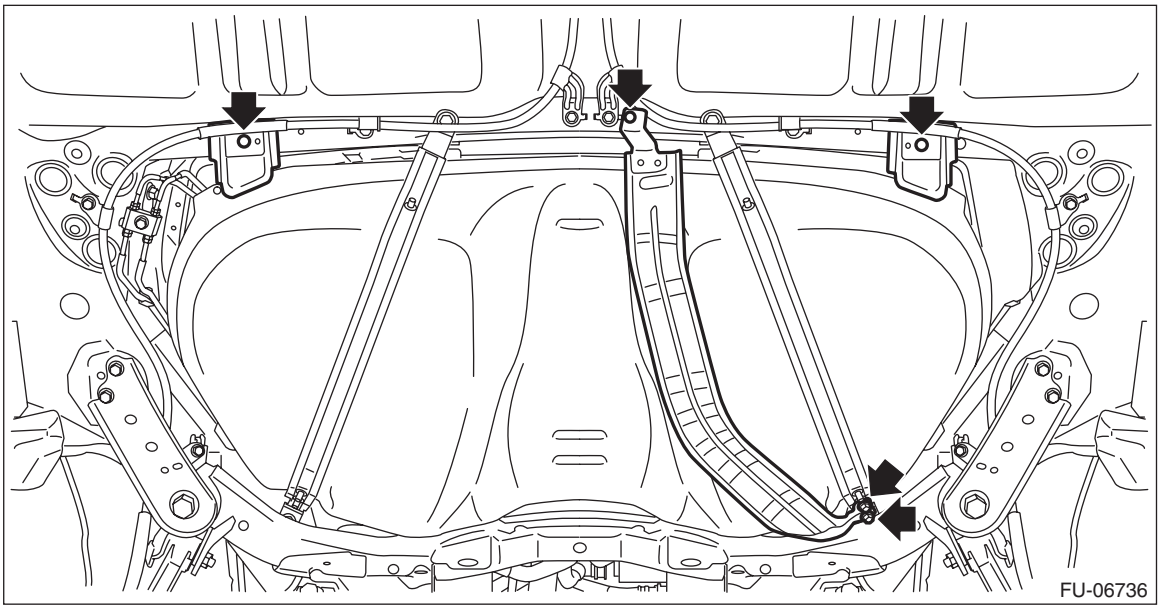

17) Support the fuel tank with a transmission jack, remove the bolts from the fuel tank band, and remove the fuel tank from the vehicle.

WARNING:
- **A helper is required to perform this work.**
- **Fuel may remain in the fuel tank. This will cause the left and right sides to be unbalanced. Be careful not to drop the fuel tank.**

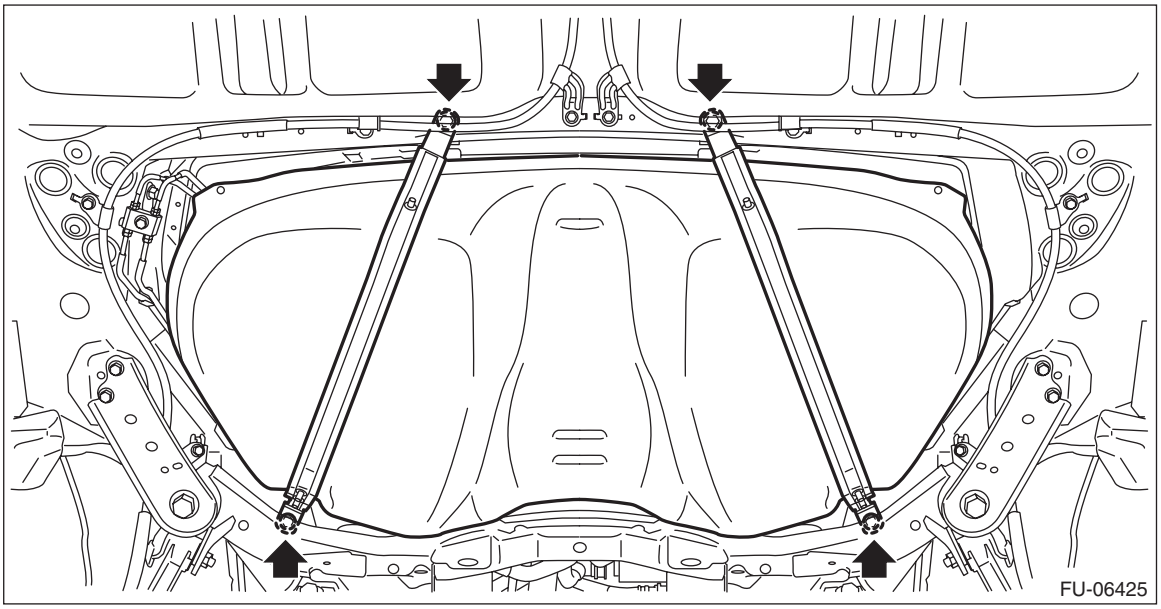

B: INSTALLATION

1) Support the fuel tank with a transmission jack, set the fuel tank in place, and temporarily tighten the bolts of the fuel tank band.

WARNING:
A helper is required to perform this work.

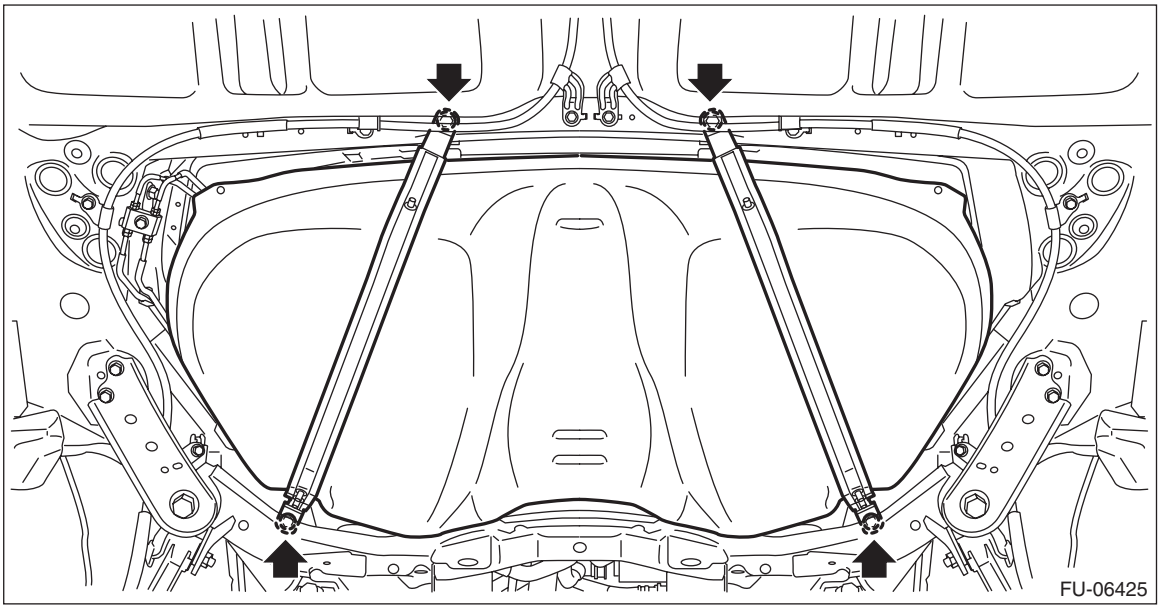

2) Tighten the bolts of the fuel tank band in the order shown in the figure.

Tightening torque:
33 N·m (3.4 kgf-m, 24.3 ft-lb)

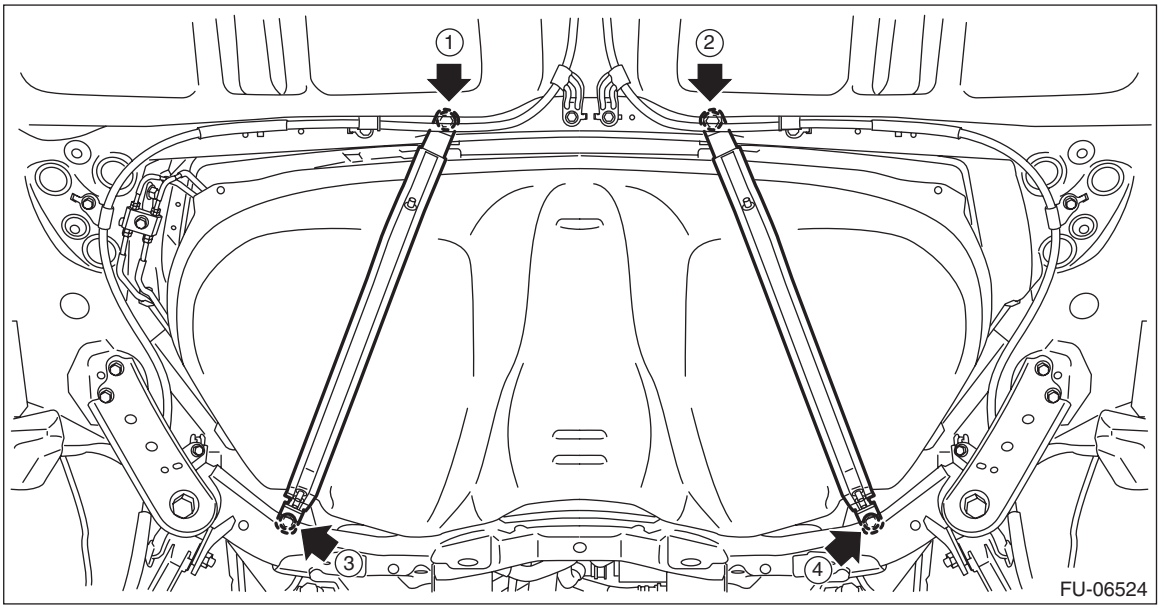

3) Install the heat shield cover and stopper.

Tightening torque:
18 N·m (1.8 kgf-m, 13.3 ft-lb)

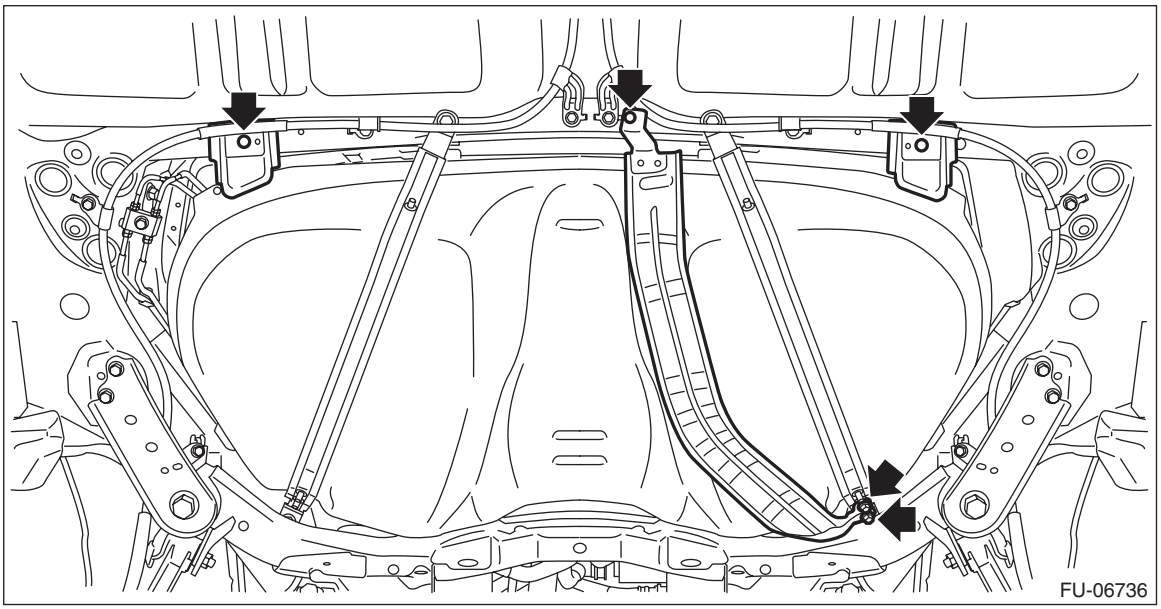

4) Install the fuel tank protector. <Ref. to FU(H4DO(w/o HEV))-121, INSTALLATION, Fuel Tank Protector.>

5) Connect the vent tube to the canister.

CAUTION:
• Check that there is no damage or dust on the quick connector. If necessary, clean the seal surface of the pipe.
• Make sure that the quick connector is securely connected.

NOTE:
Connect the quick connector as shown in the figure.

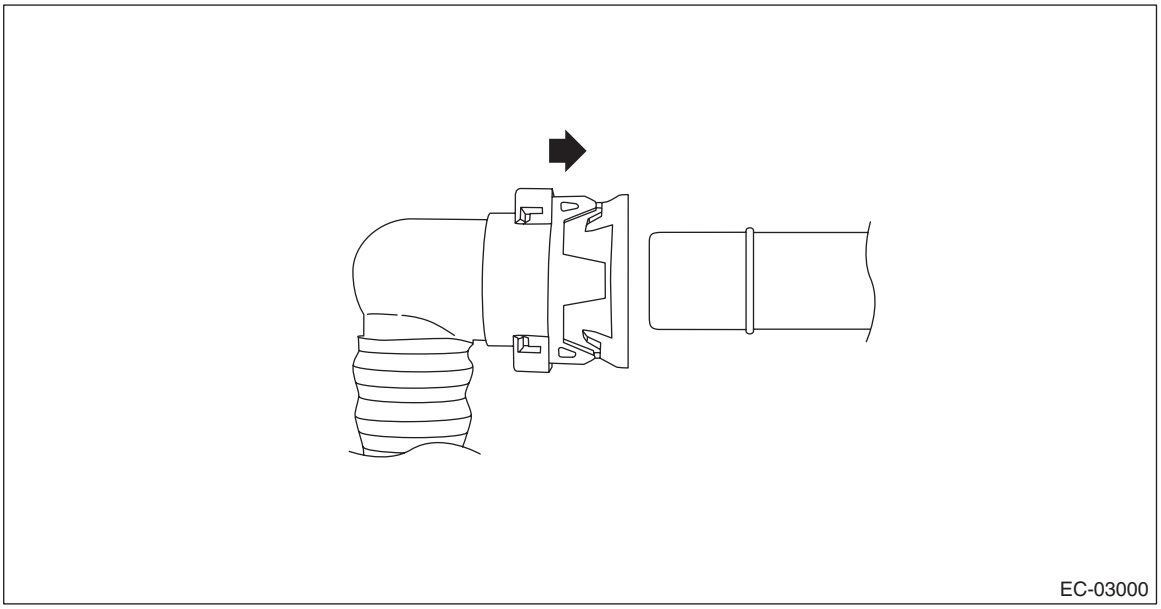

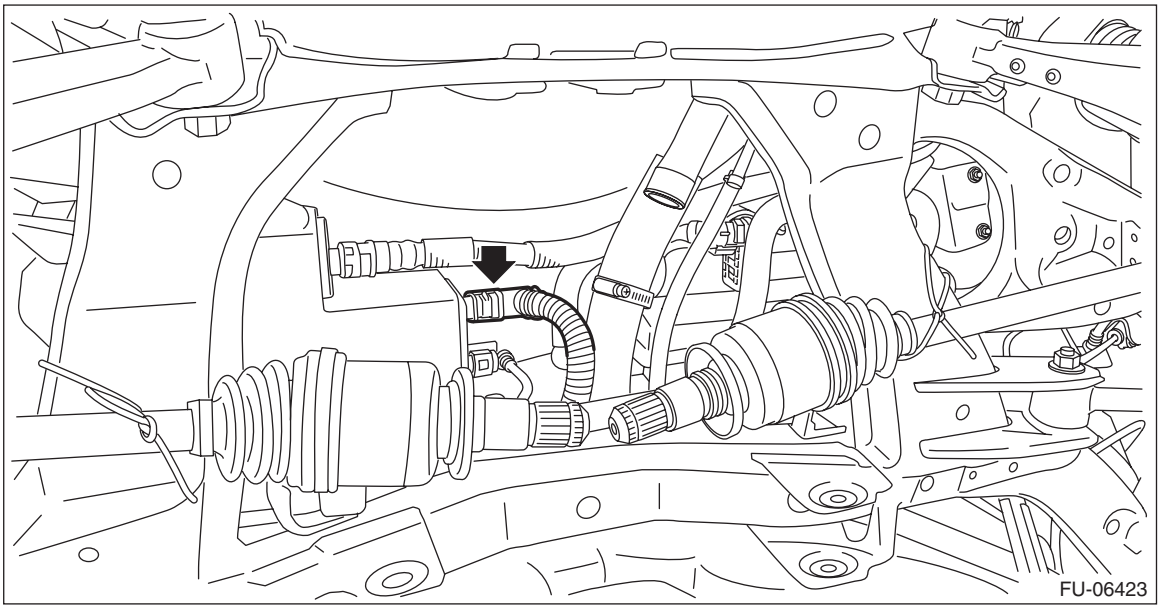

6) Securely insert the fuel filler hose (A) and evaporation hose (B) into the fuel filler pipe assembly until the hose end contacts the spool, then attach the clamp or clip as shown in the figure.

Tightening torque:
2.5 N·m (0.3 kgf-m, 1.8 ft-lb)

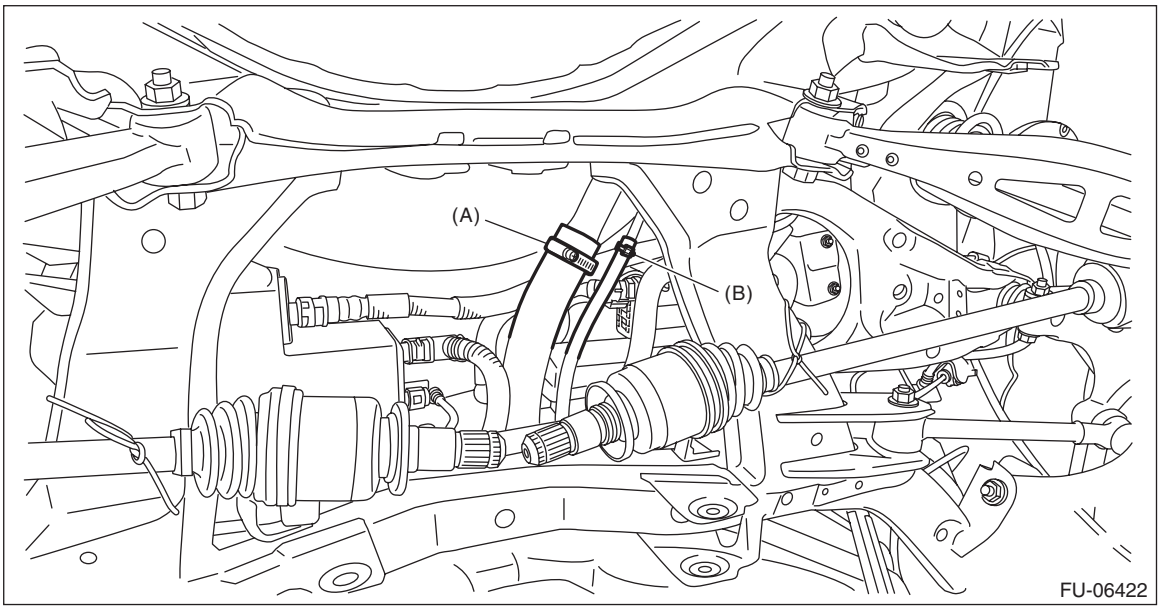

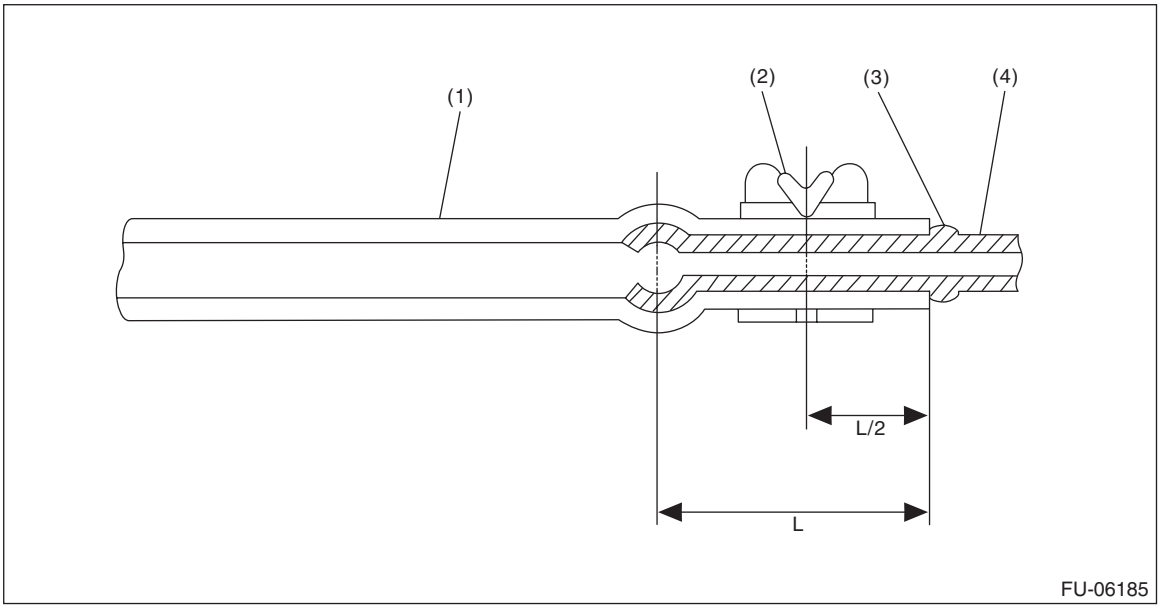

(1) Hose
(2) Clamp or clip
(3) Spool
(4) Pipe

7) Install the rear differential. <Ref. to DI-24, INSTALLATION, Rear Differential (T-type).> <Ref. to DI-42, INSTALLATION, Rear Differential (VA-type).>
8) Install the rear exhaust pipe and muffler. <Ref. to EX(H4DO(w/o HEV))-20, INSTALLATION, Rear Exhaust Pipe.> <Ref. to EX(H4DO(w/o HEV))-25, INSTALLATION, Muffler.>

9) Connect the quick connector of the fuel delivery tube.

CAUTION:
• Check that there is no damage or dust on the quick connector. If necessary, clean the seal surface of the pipe.
• When connecting the quick connector, make sure to insert the pipe all the way in before locking the slider.
• When it is difficult to lock the slider, check that the pipe is fully inserted.
• Make sure that the quick connector is securely connected.

NOTE:
Connect the quick connector as shown in the figure.

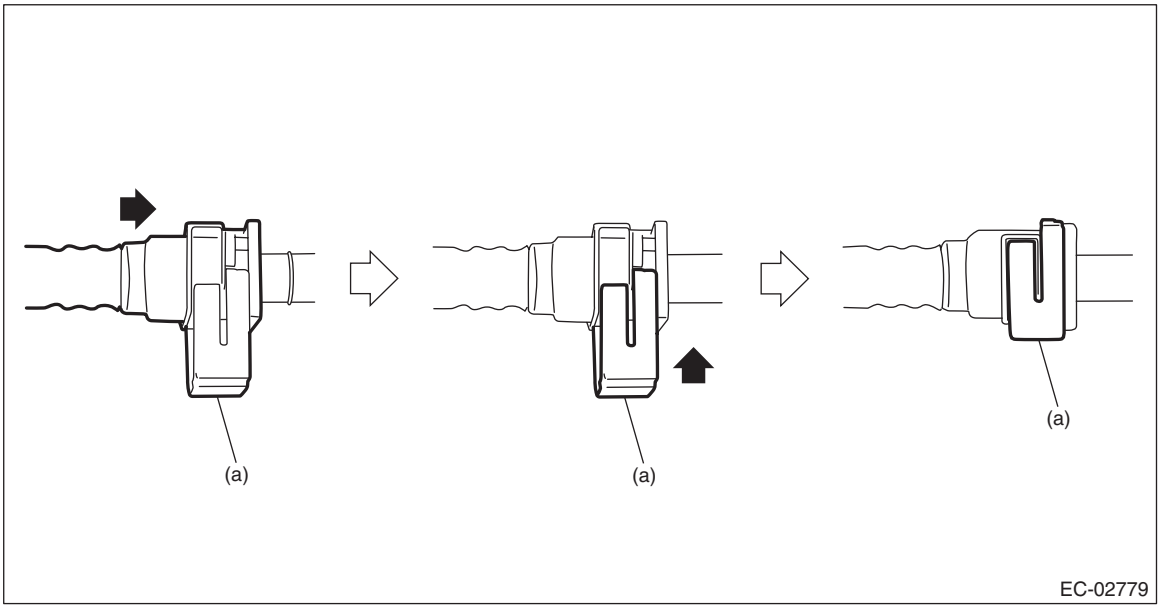

(a) Slider

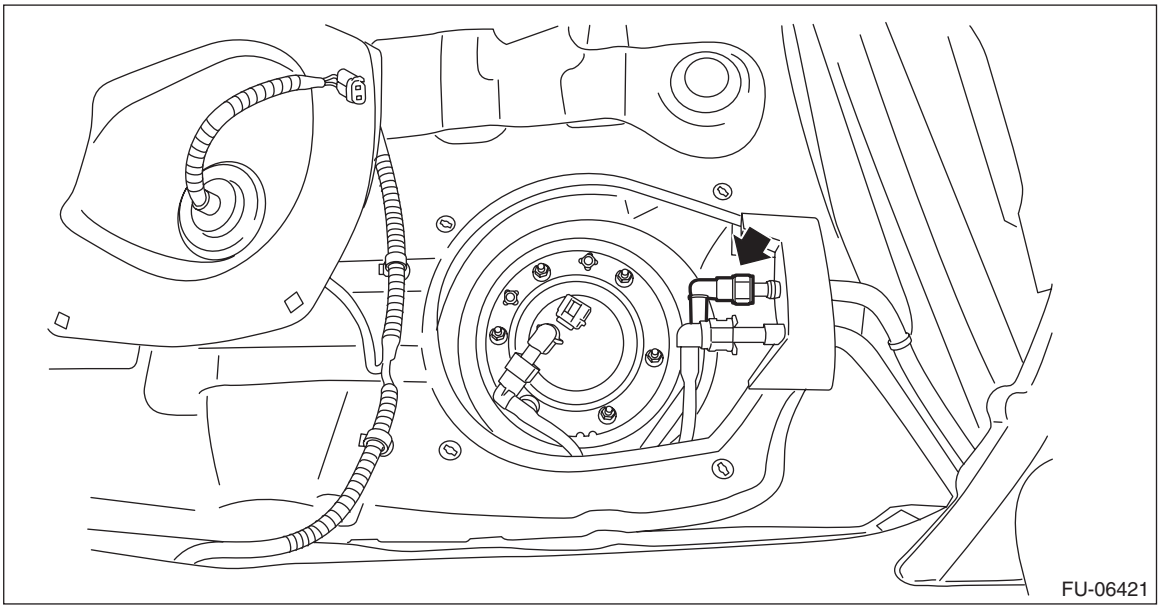

10) Connect the connector to the fuel sub level sensor.

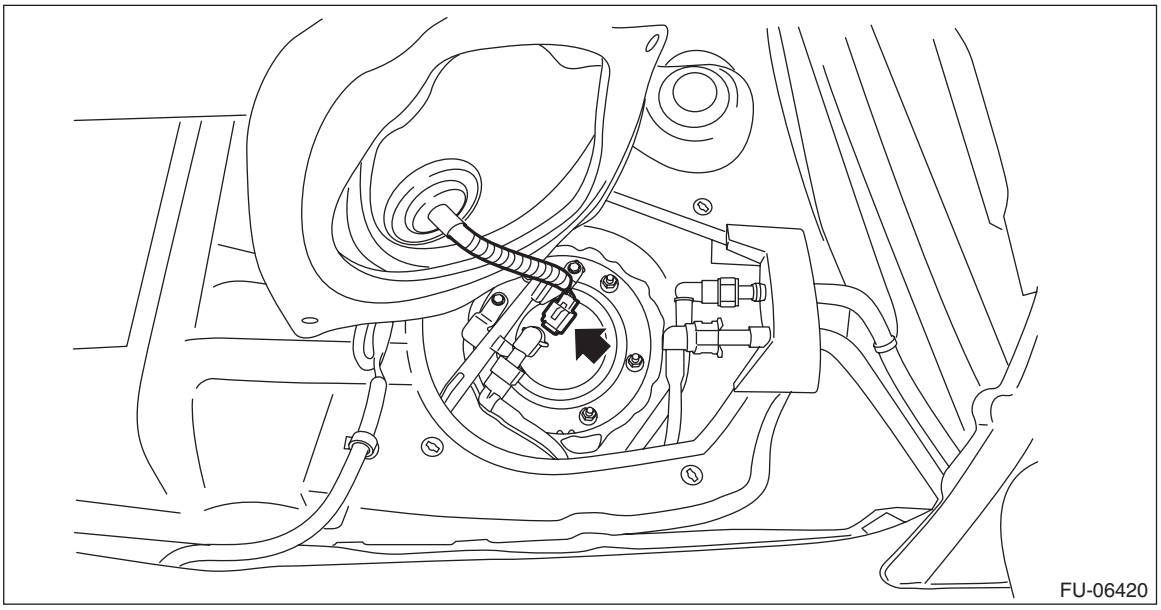

11) Install the service hole cover of fuel sub level sensor.

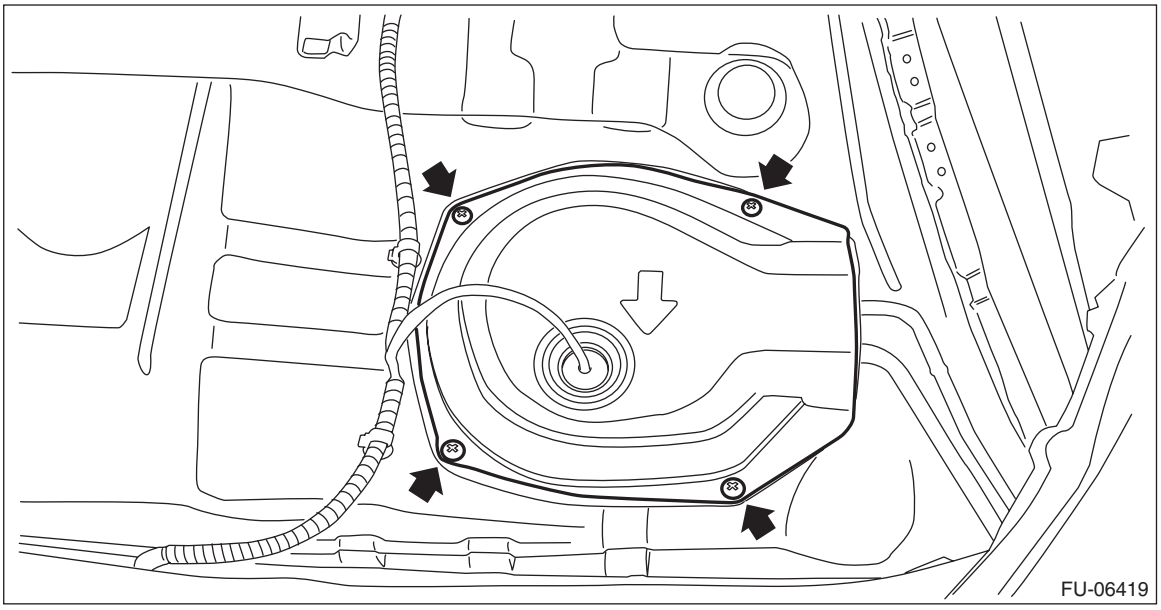

12) Connect the connector to the fuel pump.

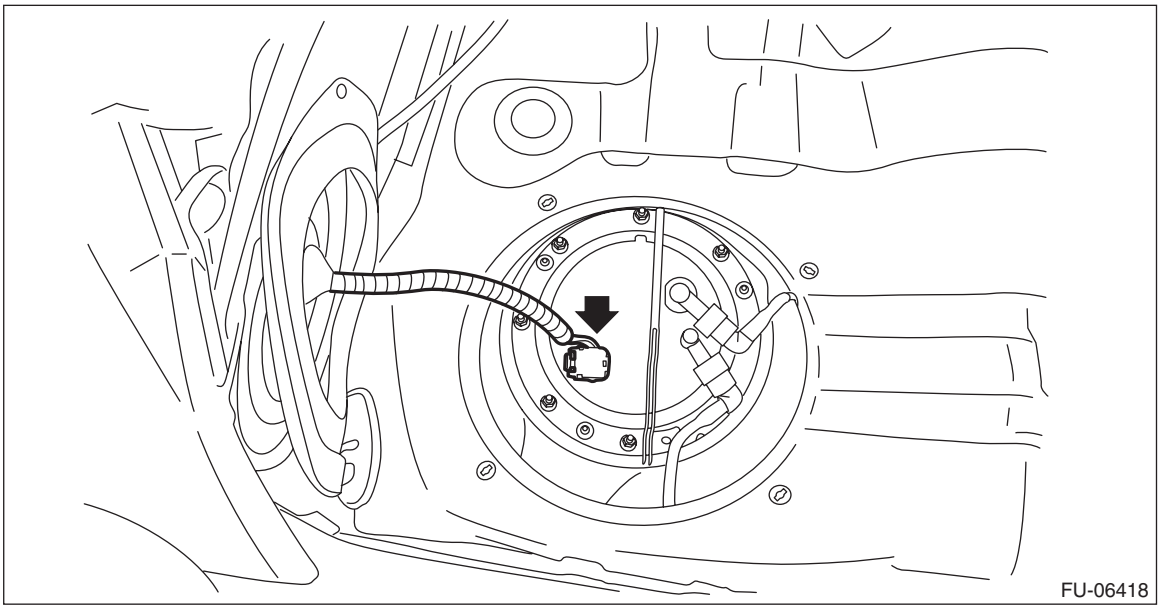

13) Install the service hole cover of fuel pump.

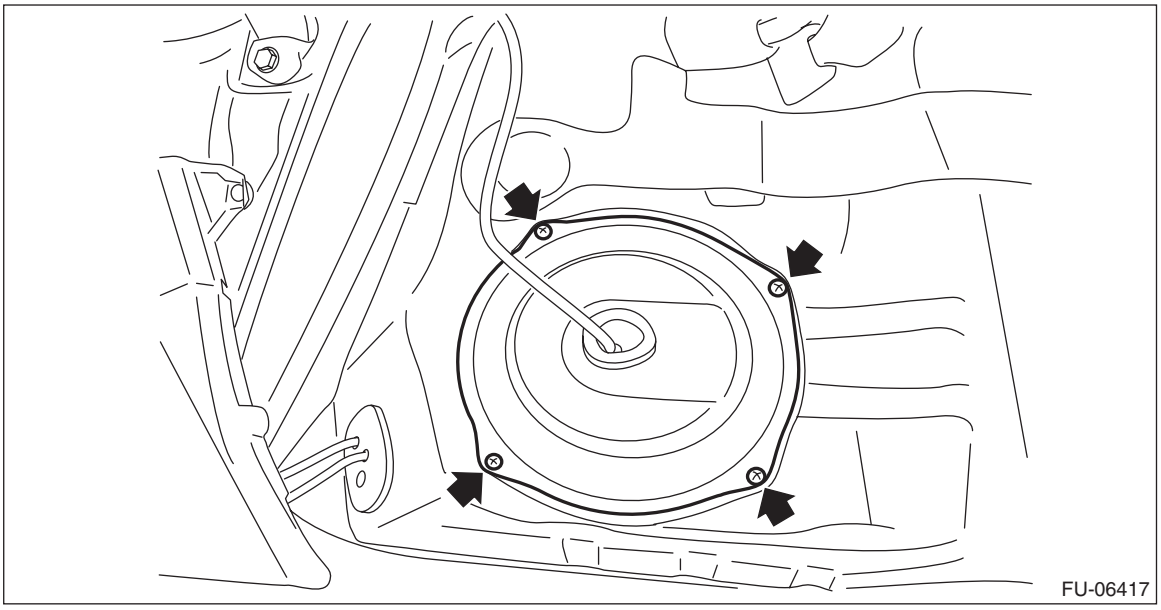

14) Install the rear seat cushion. <Ref. to SE-26, INSTALLATION, Rear Seat.>

15) Connect the battery ground terminal.

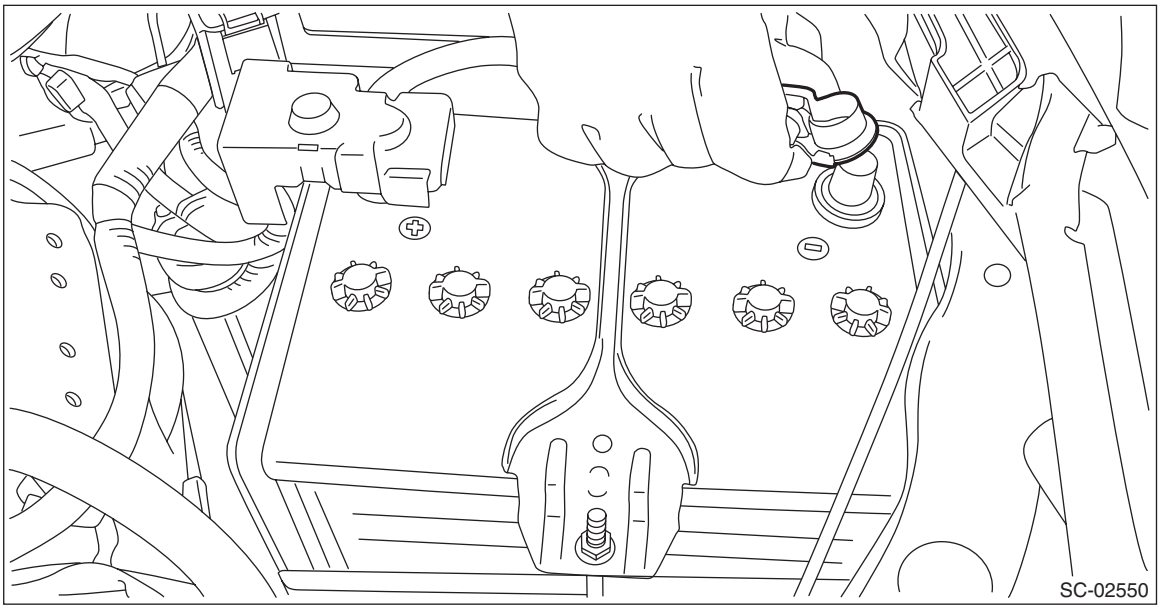

C: INSPECTION

1) Check that the fuel tank and fuel pipe have no deformation, cracks and other damages.
2) Check that the fuel hose and tube have no cracks, damage or loose part.

27.Fuel Filler Pipe

A: REMOVAL

WARNING:
Place “NO OPEN FLAMES” signs near the working area.

CAUTION:
Be careful not to spill fuel.

1) Release the fuel pressure. <Ref. to FU(H4DO(w/o HEV))-116, RELEASING OF FUEL PRESSURE, PROCEDURE, Fuel.>
2) Drain fuel. <Ref. to FU(H4DO(w/o HEV))-116, DRAINING FUEL (WITH SUBARU SELECT MONITOR), PROCEDURE, Fuel.>
3) Disconnect the ground cable from battery.

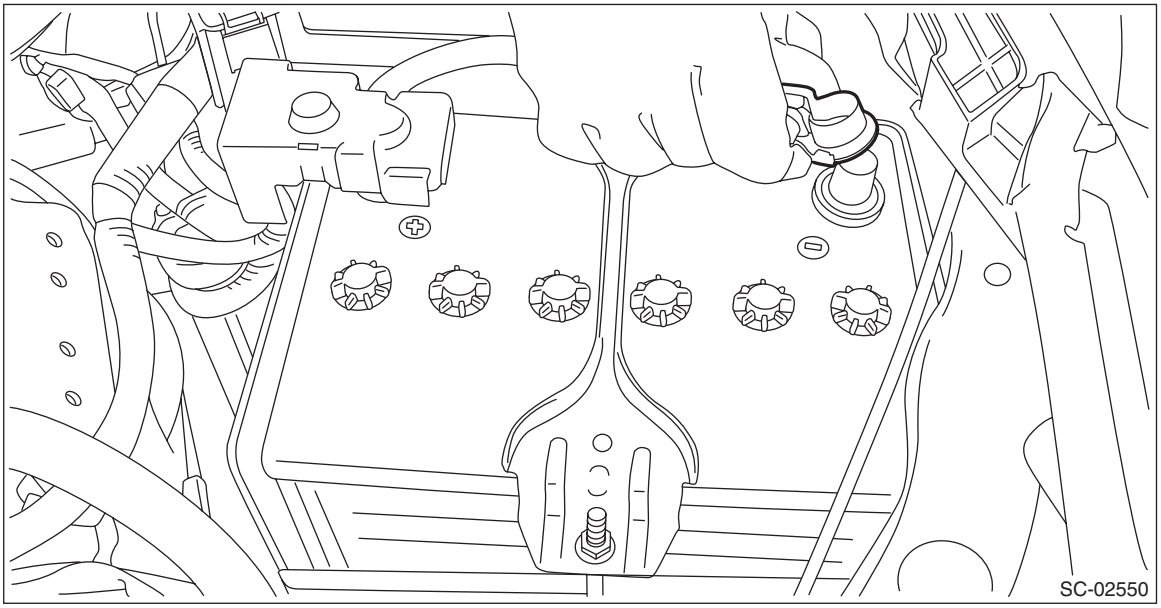

4) Open the fuel filler lid and remove the fuel filler cap.
5) Turn the fuel filler pipe protector in the direction of the arrow to unlock and remove it.

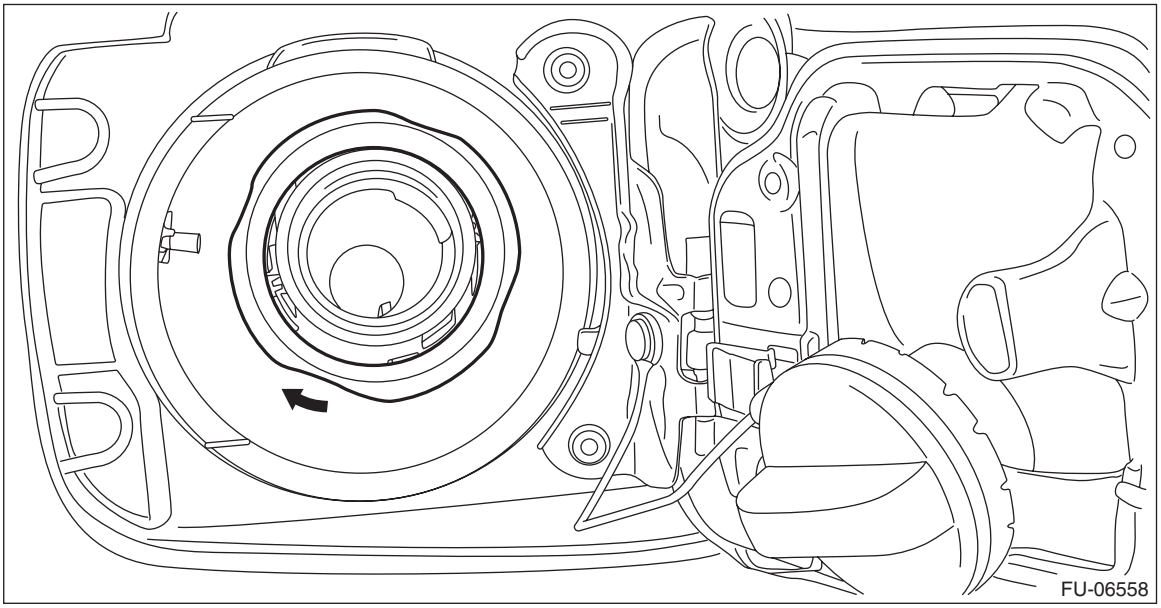

6) Remove the rear sub frame assembly. <Ref. to RS-9, REMOVAL, Rear Sub Frame.>
7) Remove the rear mud guard RH. <Ref. to EI-30, REMOVAL, Mud Guard.>

8) Disconnect the fuel filler hose (A) and evaporation hose (B) from the fuel filler pipe assembly.

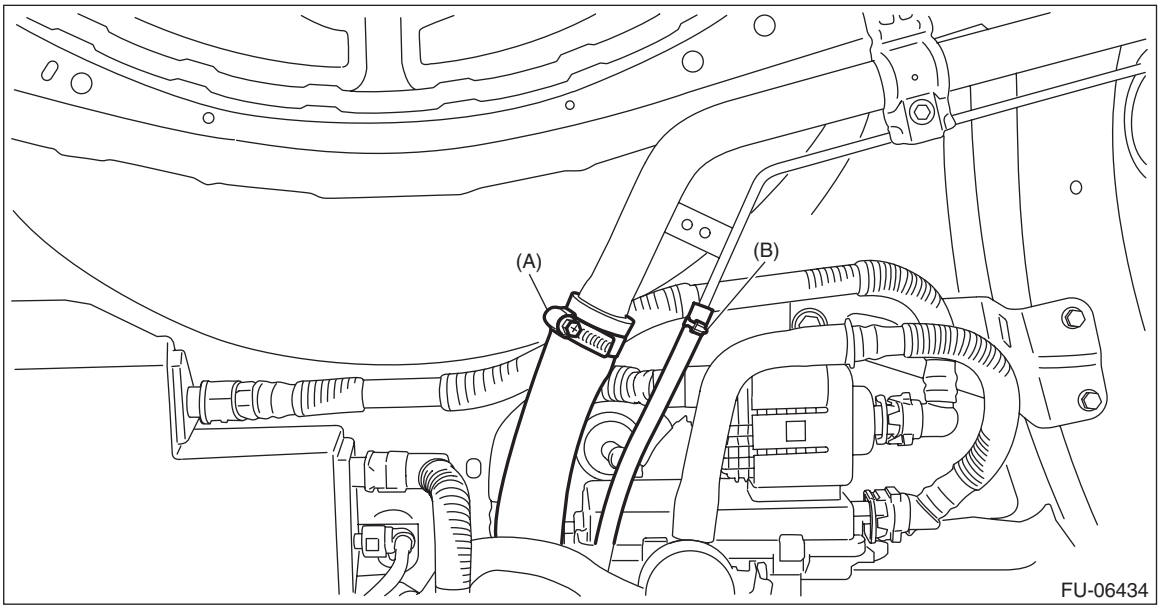

9) Remove the bolts and nuts which secure the fuel filler pipe assembly to the vehicle.

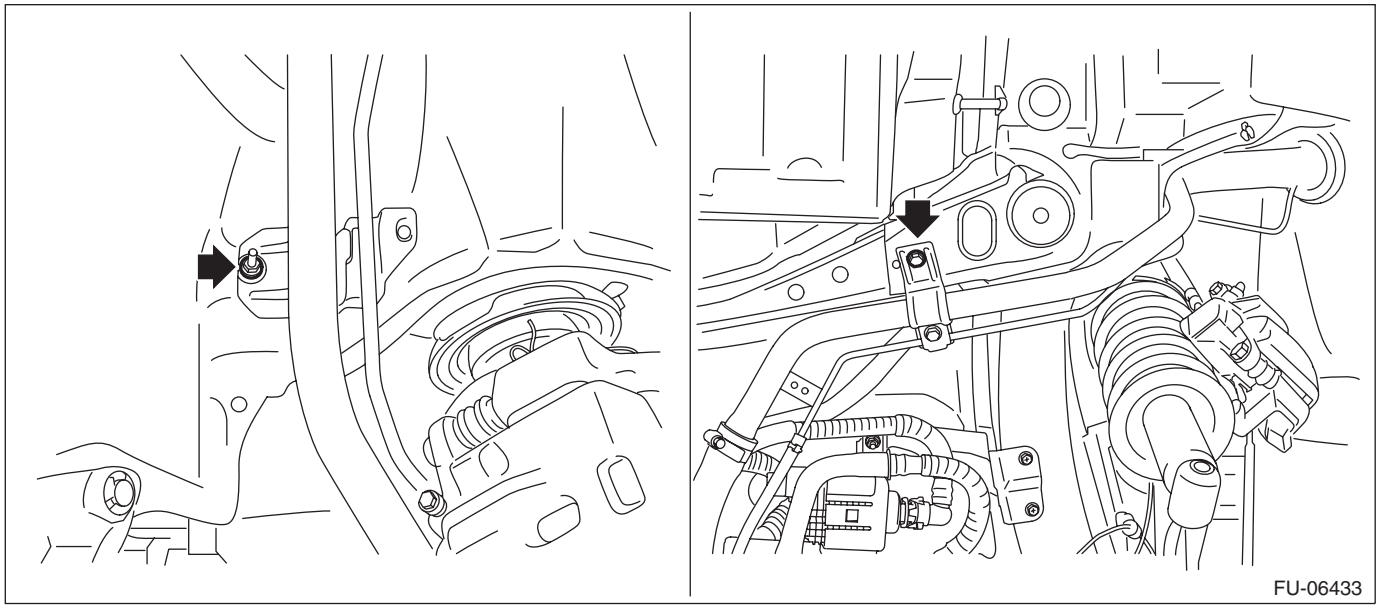

10) Remove the fuel filler pipe assembly from the underside of the vehicle.

B: INSTALLATION

1) Open the fuel filler lid.
2) Insert the fuel filler pipe assembly into the rubber saucer from inside of the rear fender.
3) Install the fuel filler pipe assembly to the vehicle.

Tightening torque:
7.5 N·m (0.8 kgf-m, 5.5 ft-lb)

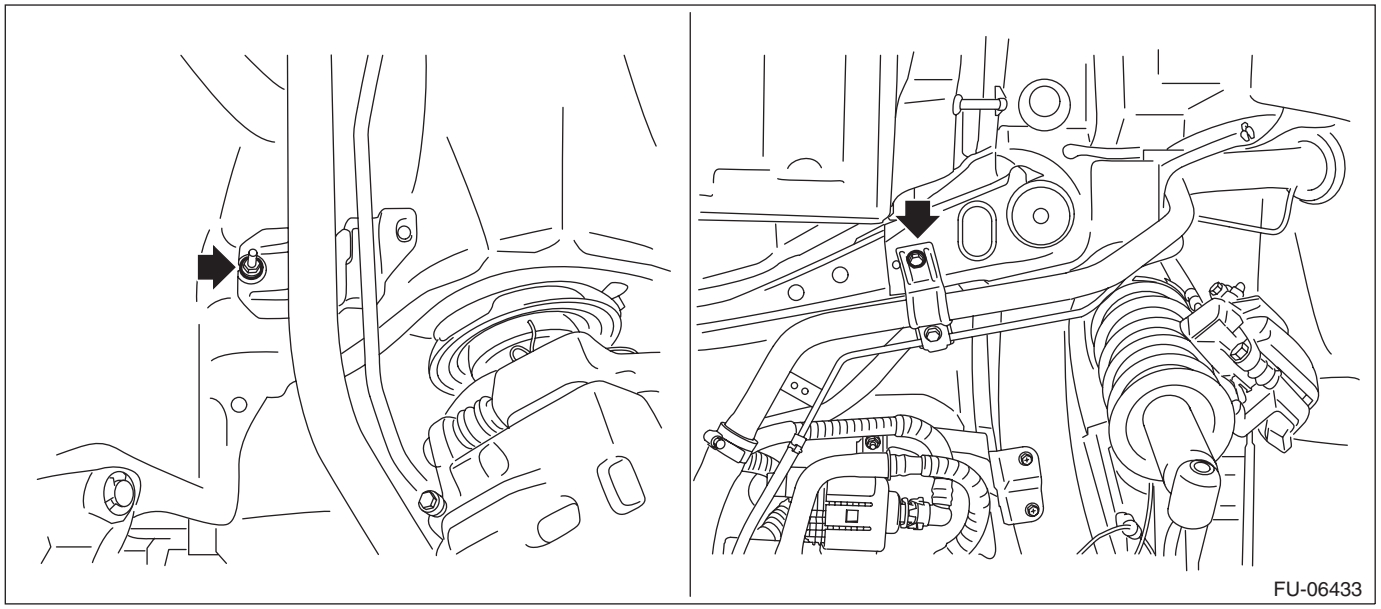

4) Securely insert the fuel filler hose (A) and evaporation hose (B) until the hose end contacts the spool, then attach the clamp or clip as shown in the figure.

Tightening torque:
2.5 N·m (0.3 kgf-m, 1.8 ft-lb)

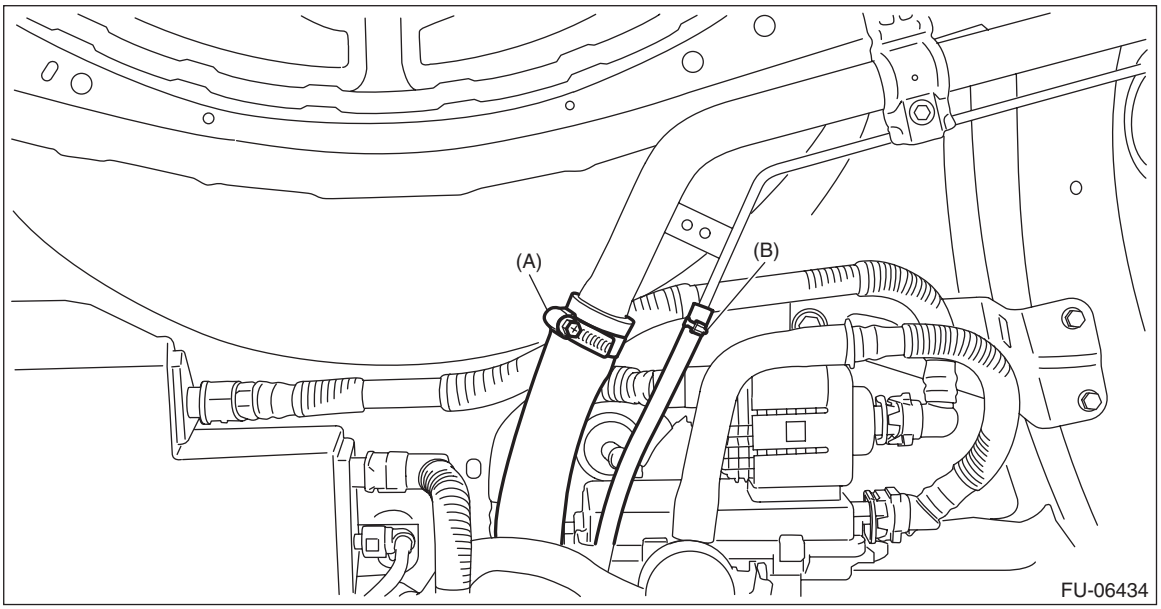

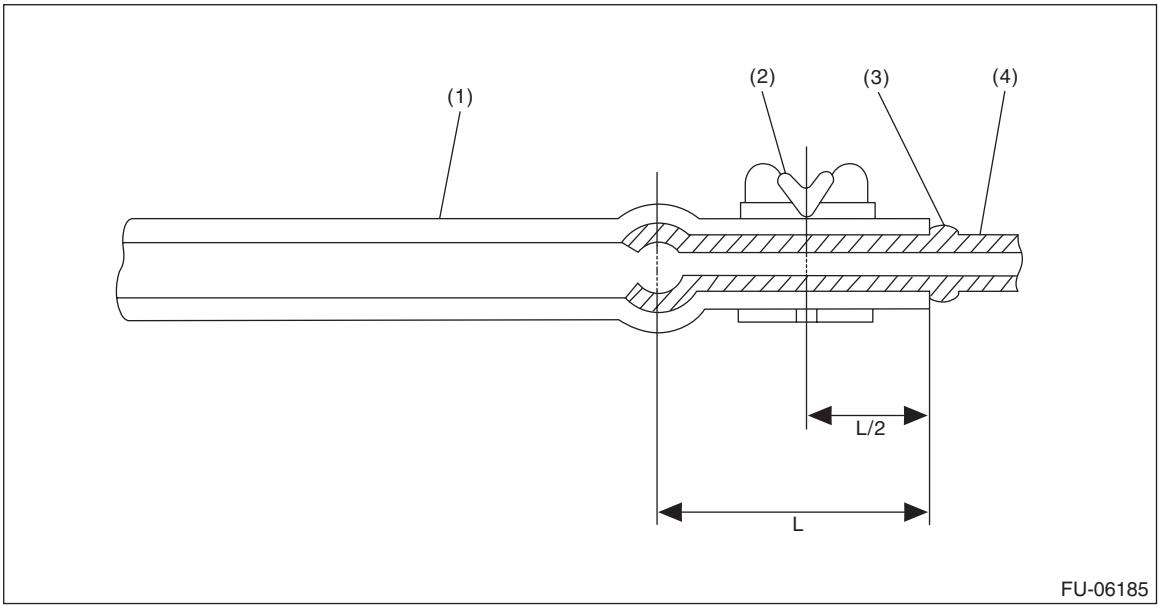

(1) Hose
(2) Clamp or clip
(3) Spool
(4) Pipe

5) Install the rear mud guard RH. <Ref. to EI-30, INSTALLATION, Mud Guard.>
6) Install the rear sub frame assembly. <Ref. to RS-15, INSTALLATION, Rear Sub Frame.>

7) Connect the battery ground terminal.

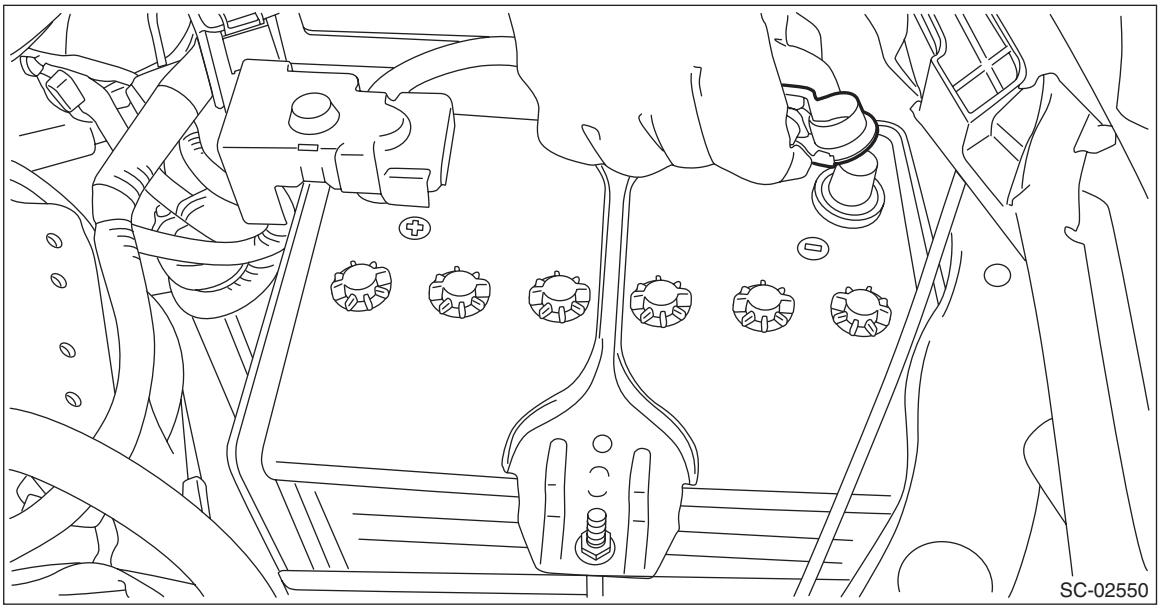

8) Inspect the wheel alignment and adjust if necessary.
9) Perform reinitialization of the auto headlight beam leveler system. (Model with auto headlight beam leveler) <Ref. to LI-18, PROCEDURE, Auto Headlight Beam Leveler System.>
10) Adjust the steering angle sensor. <Ref. to VDC-21, ADJUSTMENT, VDC Control Module and Hydraulic Control Unit (VDCCM&H/U).>

C: INSPECTION

1) Check that the fuel filler pipe assembly has no deformation, cracks or other damages.
2) Check that the fuel hose has no cracks, damage or loose part.

28.Fuel Pump

A: REMOVAL

WARNING:
Place “NO OPEN FLAMES” signs near the working area.

CAUTION:
- **Be careful not to spill fuel.**
- **Catch the fuel from the tubes using a container or cloth.**
- **If the fuel gauge indicates that two thirds or more of the fuel is remaining, be sure to drain fuel before starting work to avoid the fuel to spill.**

NOTE:
Fuel pump assembly consists of fuel pump, fuel filter and fuel level sensor.
1) Release the fuel pressure. <Ref. to FU(H4DO(w/o HEV))-116, RELEASING OF FUEL PRESSURE, PROCEDURE, Fuel.>
2) Drain fuel. <Ref. to FU(H4DO(w/o HEV))-116, DRAINING FUEL (WITH SUBARU SELECT MONITOR), PROCEDURE, Fuel.>
3) Disconnect the ground cable from battery.

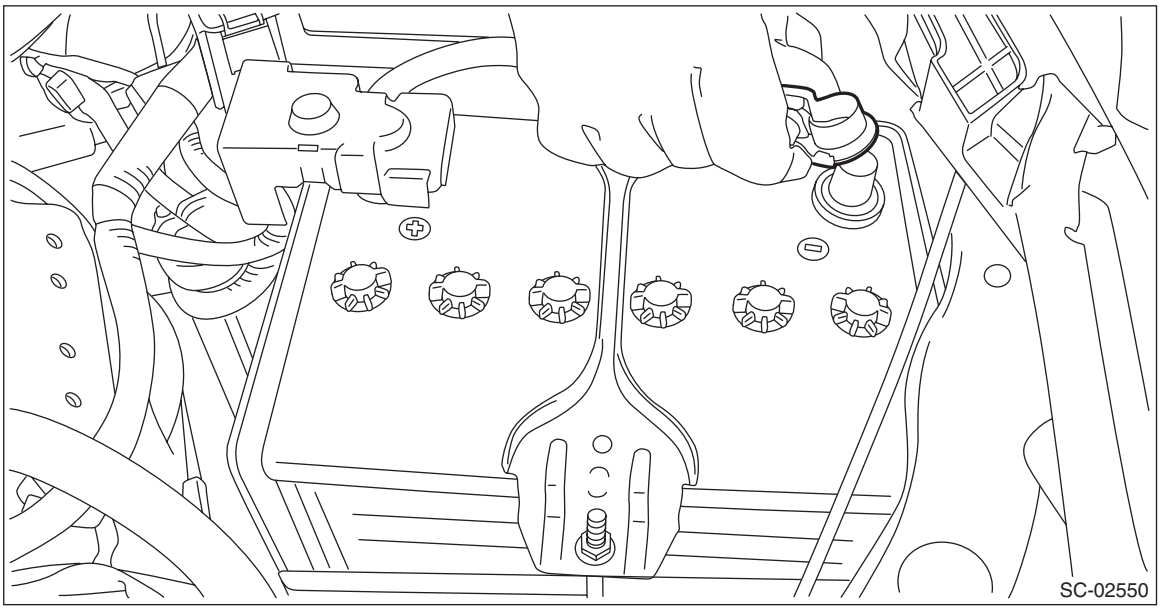

4) Remove the rear seat cushion. <Ref. to SE-23, REMOVAL, Rear Seat.>

5) Remove the service hole cover of fuel pump.

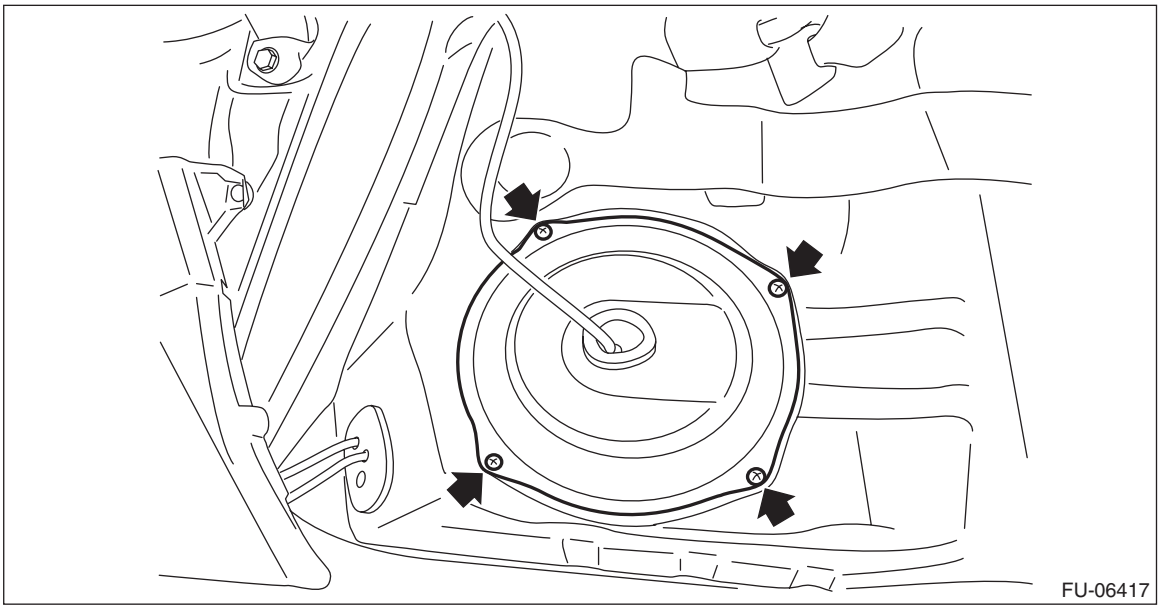

6) Disconnect connectors from the fuel pump, and move aside the service hole cover.

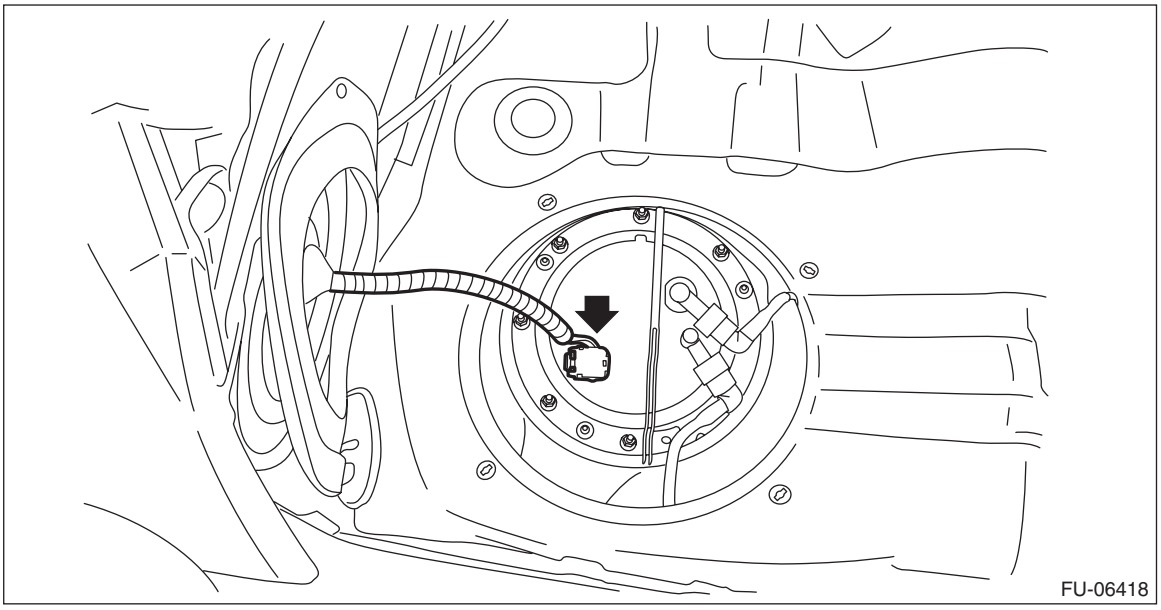

7) Disconnect the quick connector of fuel delivery tube and jet pump tube.

NOTE:
Disconnect the quick connector as shown in the figure.

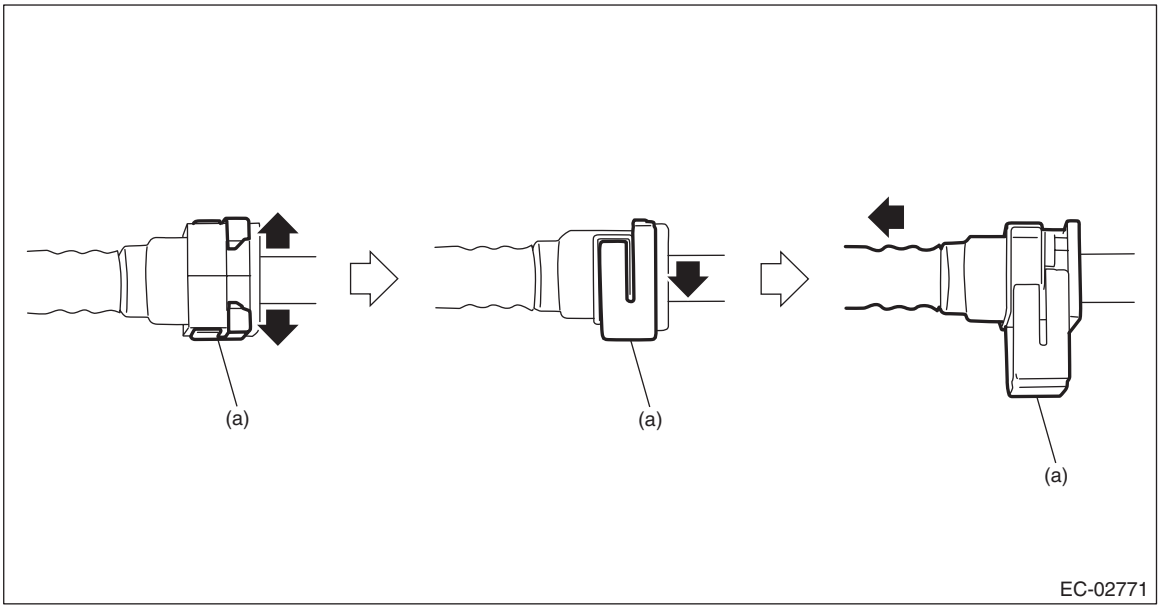

(a) Slider

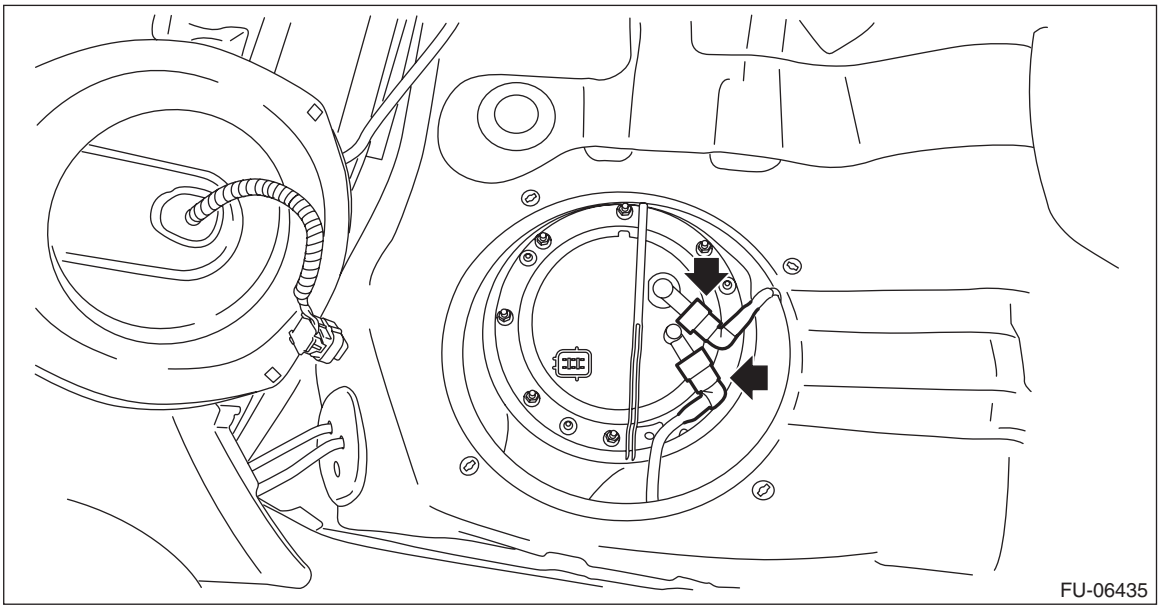

8) Remove the nuts which hold the fuel pump upper plate to the fuel tank.

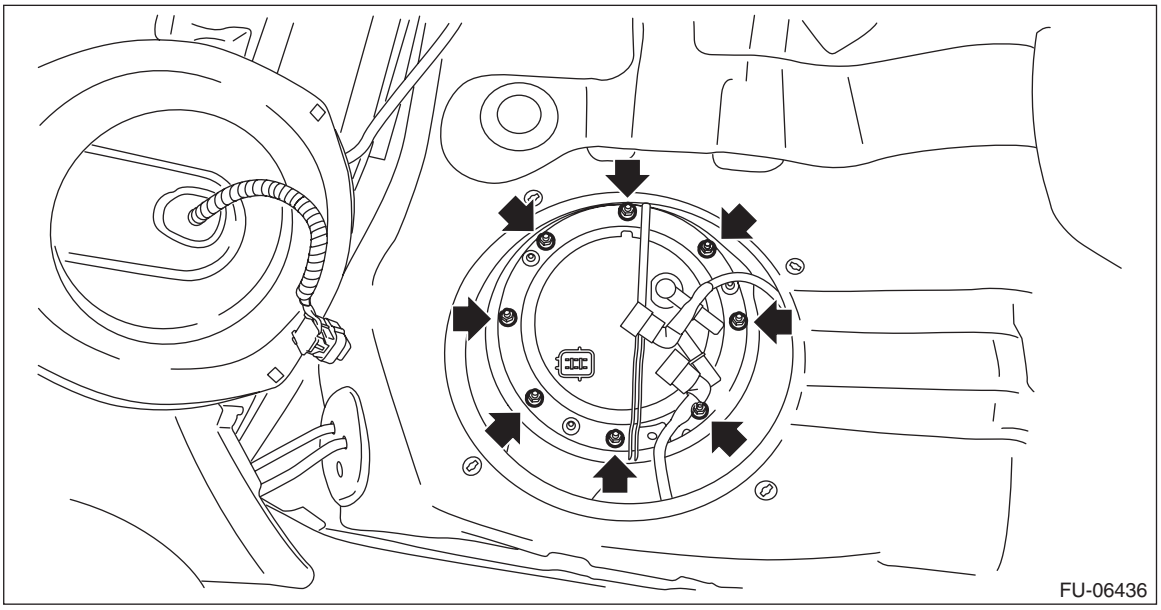

9) Remove the fuel pump assembly from the fuel tank.

B: INSTALLATION

Install in the reverse order of removal while being careful of the following.
- Make sure the sealing portion is free from fuel or foreign matter before installation.
- Align protrusion (A) of the gasket to the position shown in the figure.
- Insert the protrusion (B) of gasket to the fuel pump upper plate. (3 places)
- Align the protrusion (C) of fuel pump assembly with the cutout on the fuel pump upper plate.
- Tighten the nuts to the specified torque in the order as shown in the figure.

NOTE:
Use a new gasket.

Tightening torque:
4.4 N·m (0.4 kgf-m, 3.2 ft-lb)

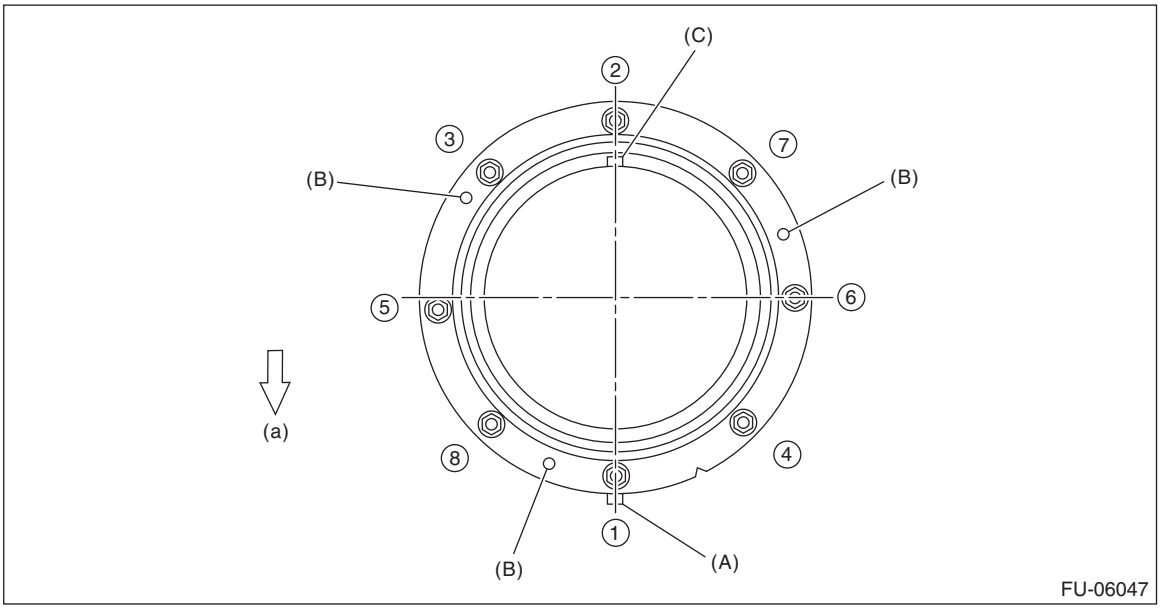

(a) Front side of vehicle

CAUTION:
• Check that there is no damage or dust on the quick connector. If necessary, clean the seal surface of the pipe.
• When connecting the quick connector, make sure to insert the pipe all the way in before locking the slider.
• When it is difficult to lock the slider, check that the pipe is fully inserted.
• Make sure that the quick connector is securely connected.

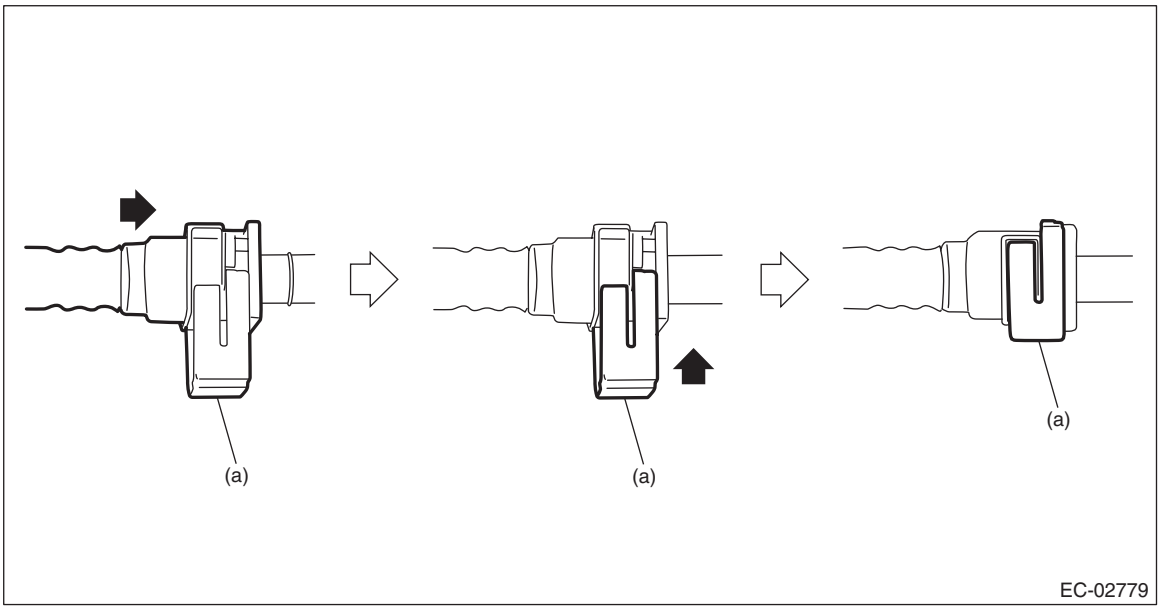

(a) Slider

C: INSPECTION

1) Check that the fuel pump has no deformation, cracks or other damages.
2) Connect the battery positive terminal to terminal No. 5 and the battery ground terminal to terminal No. 6, and inspect the fuel pump operation.

WARNING:
• Wipe off fuel completely.
• Keep the battery as far apart from fuel pump as possible.
• Do not run the fuel pump for a long time under non-load condition.

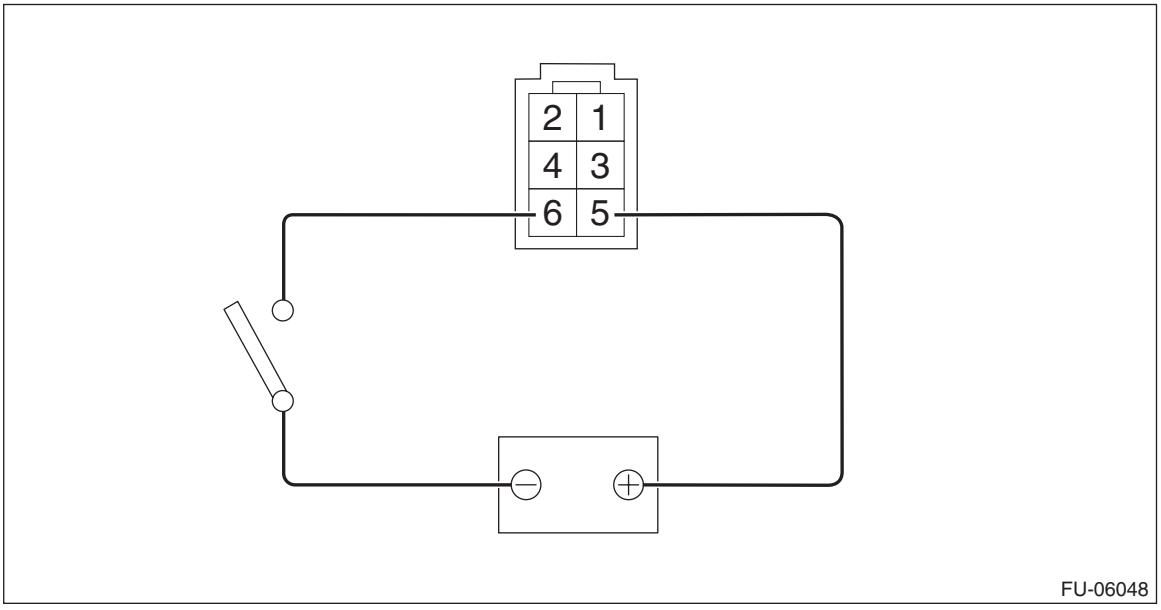

29.Fuel Level Sensor

A: REMOVAL

WARNING:
Place “NO OPEN FLAMES” signs near the working area.

CAUTION:
- **Be careful not to spill fuel.**
- **If the fuel gauge indicates that two thirds or more of the fuel is remaining, be sure to drain fuel before starting work to avoid the fuel to spill.**

NOTE:
The fuel level sensor is built in fuel pump assembly.
1) Remove the fuel pump assembly. <Ref. to FU(H4DO(w/o HEV))-141, REMOVAL, Fuel Pump.>
2) Disconnect the connector (A) from fuel level sensor.
3) Remove the fuel level sensor (B).

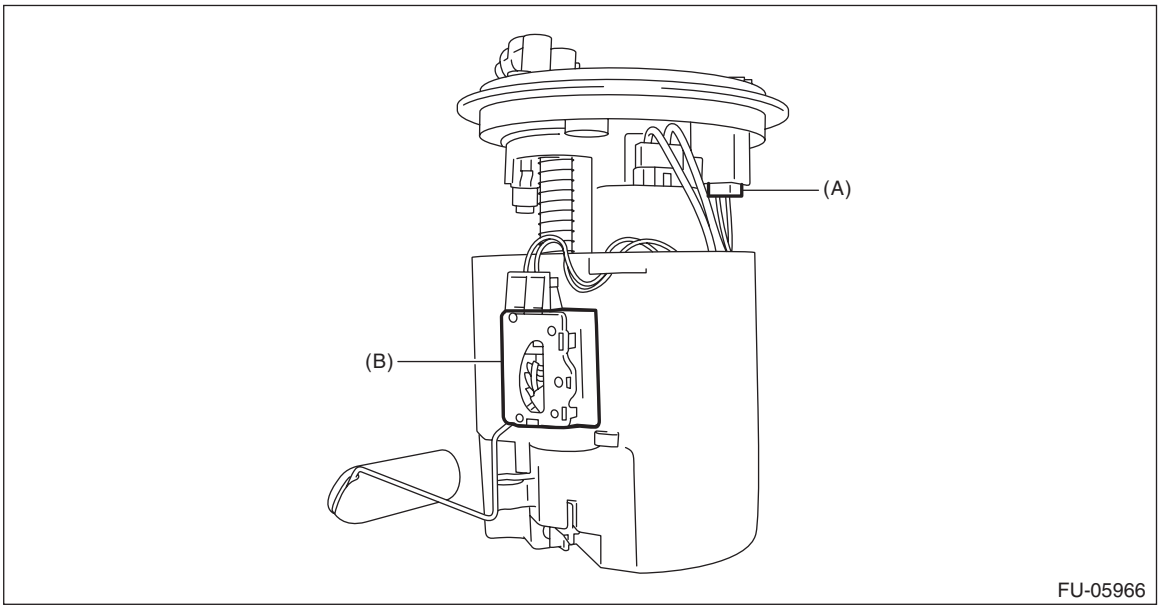

B: INSTALLATION

Install in the reverse order of removal.

C: INSPECTION

1) Check that the fuel level sensor has no damage.
2) Measure the fuel level sensor float position.

NOTE:
When inspecting the fuel level sensor, perform the work with the sensor installed to the fuel pump.

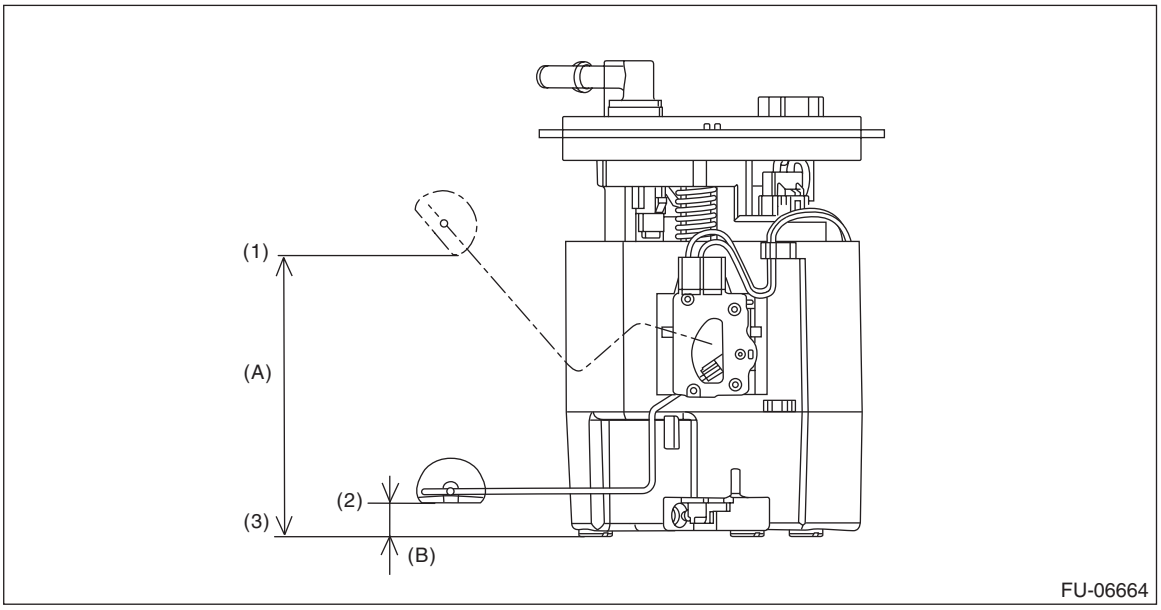

(1) FULL (2) EMPTY (3) Fuel tank seating surface

Float position	Standard
FULL to Fuel tank seating surface (A)	120.9±4 mm (4.759±0.157 in)
EMPTY to Fuel tank seating surface (B)	14.8±4 mm (0.582±0.157 in)

3) Measure the resistance between fuel level sensor terminals.

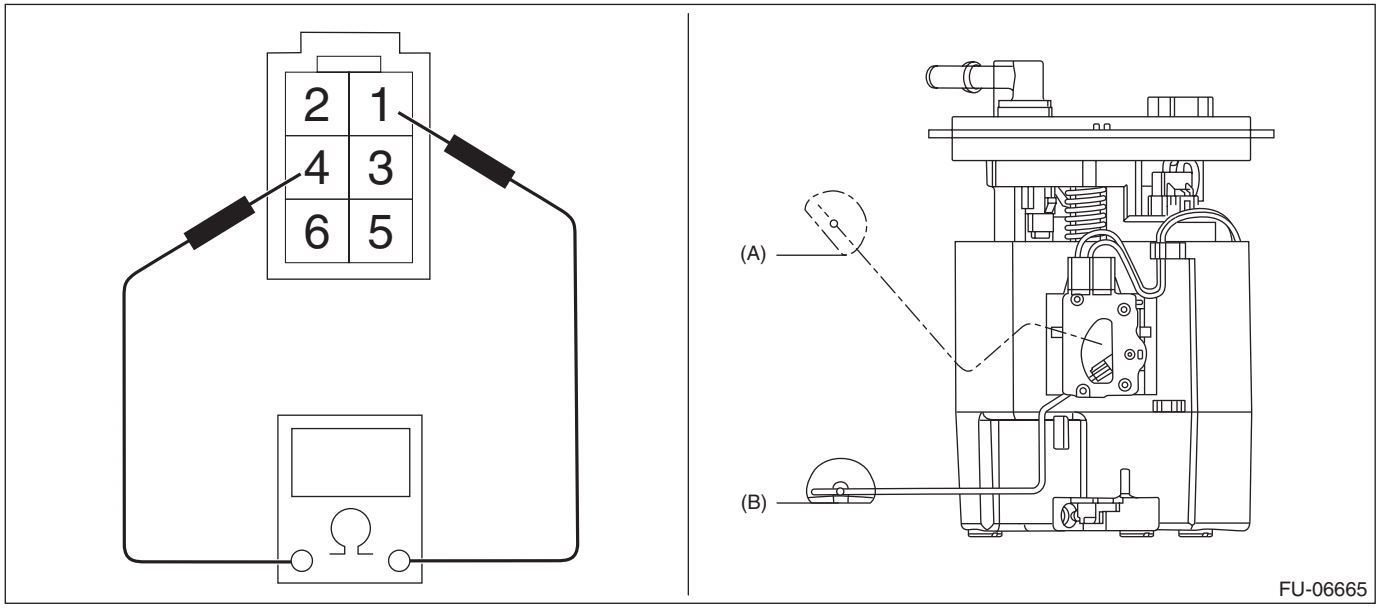

Float position	Terminal No.	Standard
FULL (A)	1 and 4	8.7±1.0 Ω
EMPTY (B)		139.1±2.0 Ω

30.Fuel Sub Level Sensor

A: REMOVAL

WARNING:
Place “NO OPEN FLAMES” signs near the working area.

CAUTION:
- **Be careful not to spill fuel.**
- **Catch the fuel from the tubes using a container or cloth.**
- **If the fuel gauge indicates that two thirds or more of the fuel is remaining, be sure to drain fuel before starting work to avoid the fuel to spill.**

1) Release the fuel pressure. <Ref. to FU(H4DO(w/o HEV))-116, RELEASING OF FUEL PRESSURE, PROCEDURE, Fuel.>
2) Drain fuel. <Ref. to FU(H4DO(w/o HEV))-116, DRAINING FUEL (WITH SUBARU SELECT MONITOR), PROCEDURE, Fuel.>
3) Disconnect the ground cable from battery.

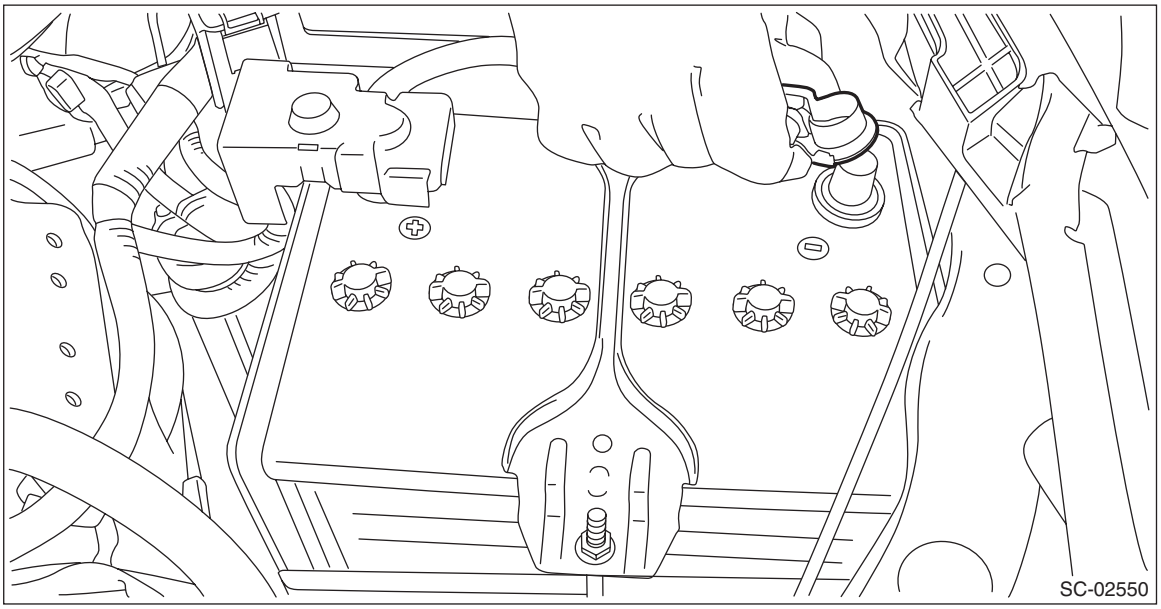

4) Remove the rear seat cushion. <Ref. to SE-23, REMOVAL, Rear Seat.>
5) Remove the service hole cover of fuel sub level sensor.

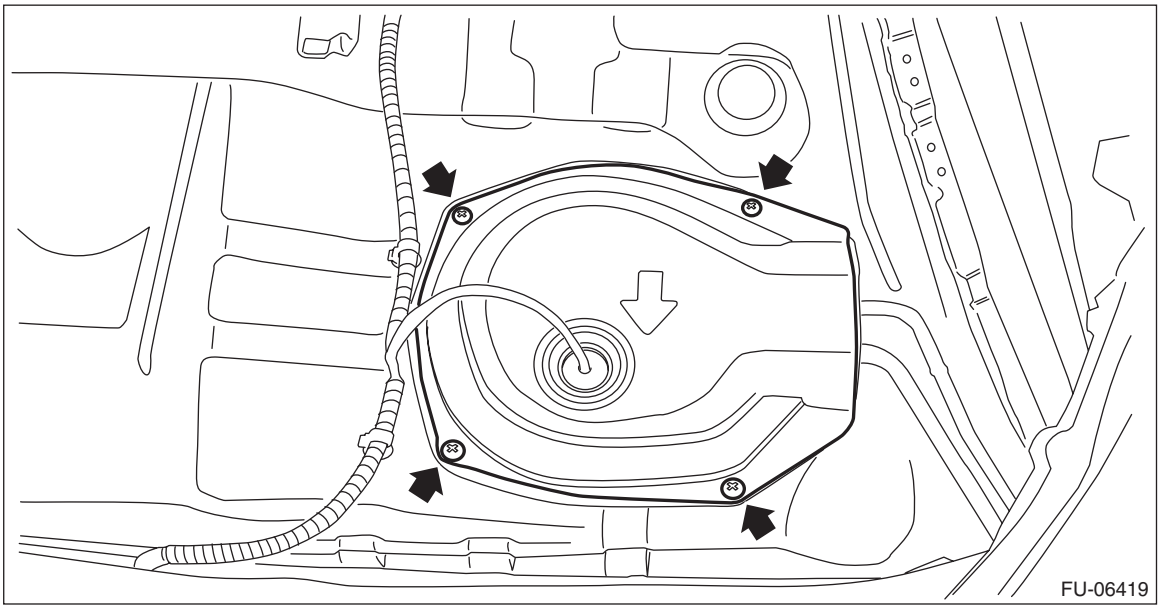

6) Disconnect connectors from the fuel sub level sensor, and move aside the service hole cover.

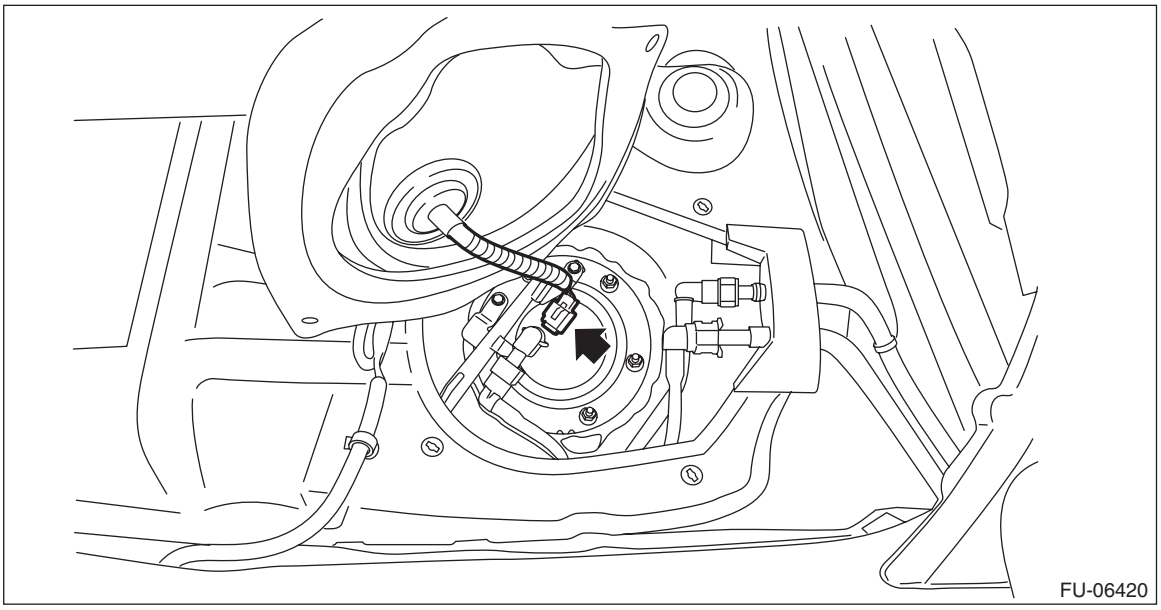

7) Disconnect the quick connector of the jet pump tube.

NOTE:
Disconnect the quick connector as shown in the figure.

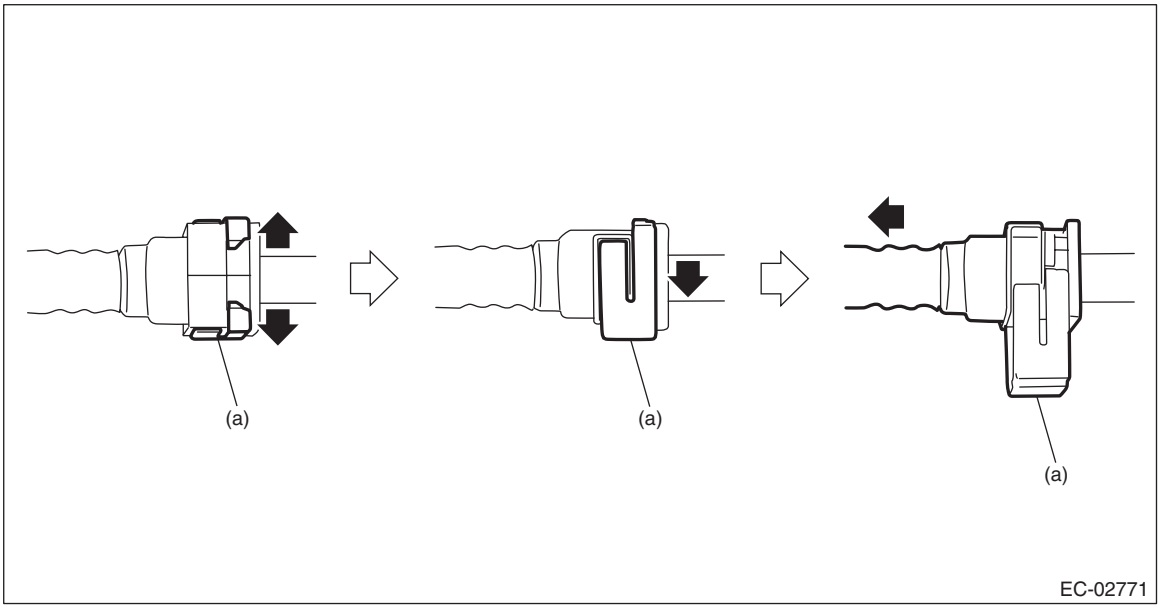

(a) Slider

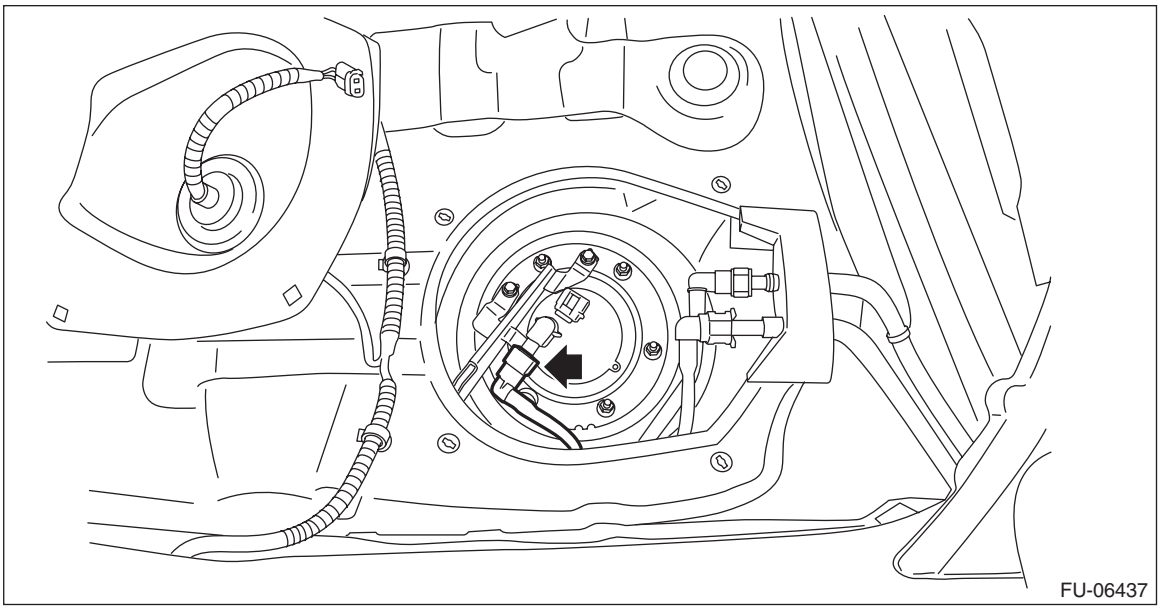

8) Remove the fuel sub level sensor protector, and remove the rubber cap (A) from nut.

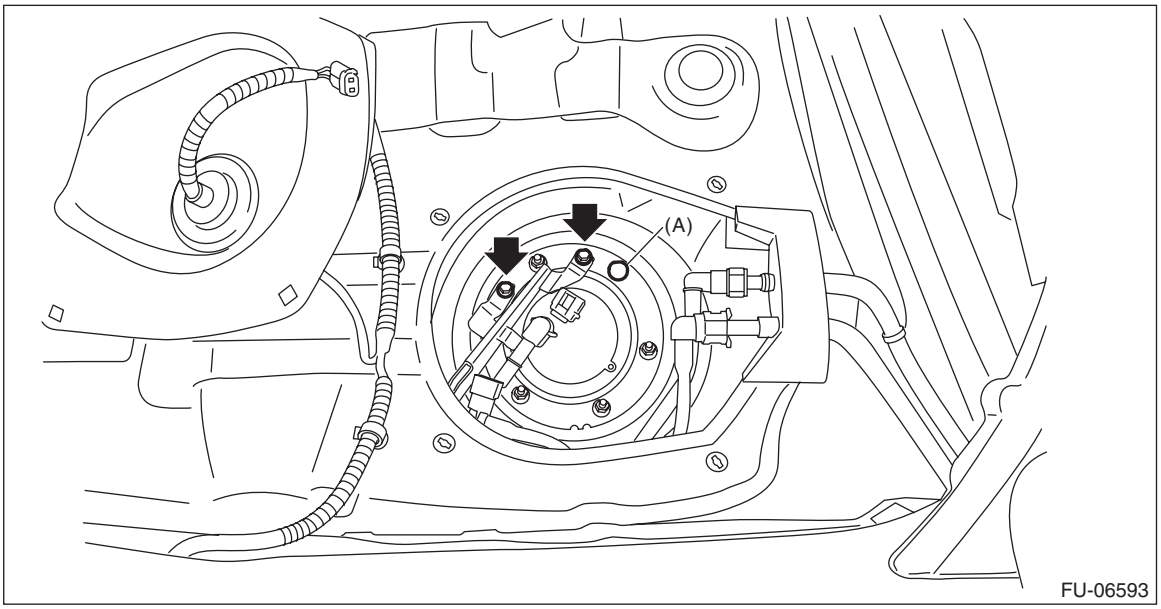

9) Remove the bolts and nuts which hold fuel sub level sensor protector and fuel sub level sensor upper plate to the fuel tank.

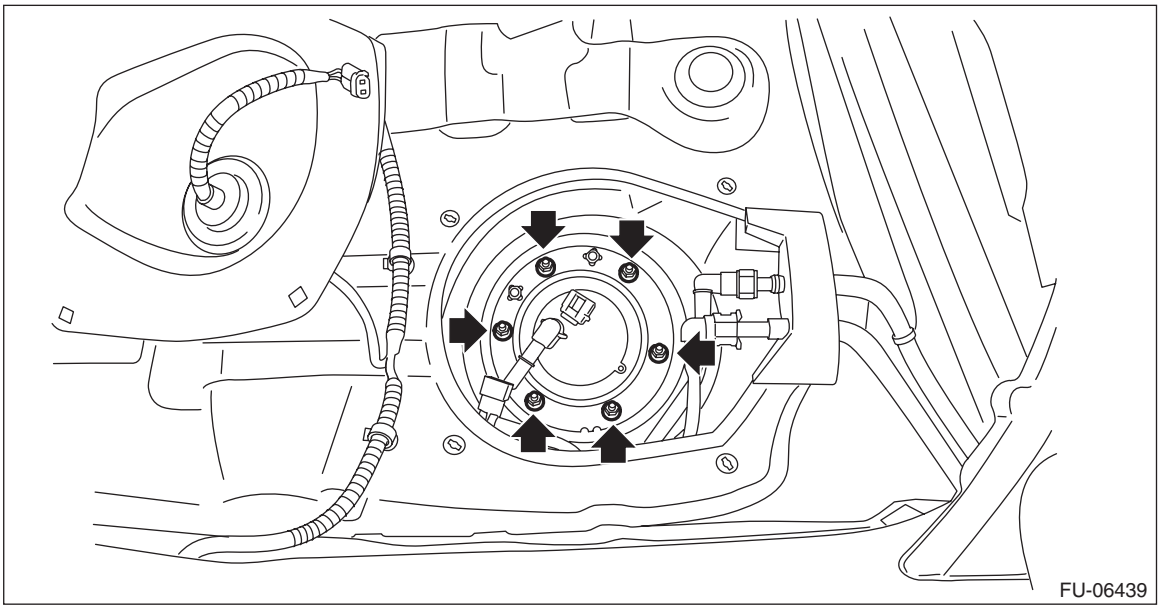

10) Remove the fuel sub level sensor from the fuel tank.

B: INSTALLATION

Install in the reverse order of removal while being careful of the following.
- Make sure the sealing portion is free from fuel or foreign matter before installation.
- Align protrusion (A) of the gasket to the position shown in the figure.
- Align protrusion (B) of the fuel sub level sensor to the cutout in the fuel sub level sensor upper plate.
- Tighten the nuts and bolts to the specified torque in the order as shown in the figure.
- After tightening, install the rubber cap (C) at the position shown in the figure.

NOTE:
- Use a new gasket.
- Do not forget to install rubber cap (C).

Tightening torque:
4.4 N·m (0.4 kgf-m, 3.2 ft-lb)

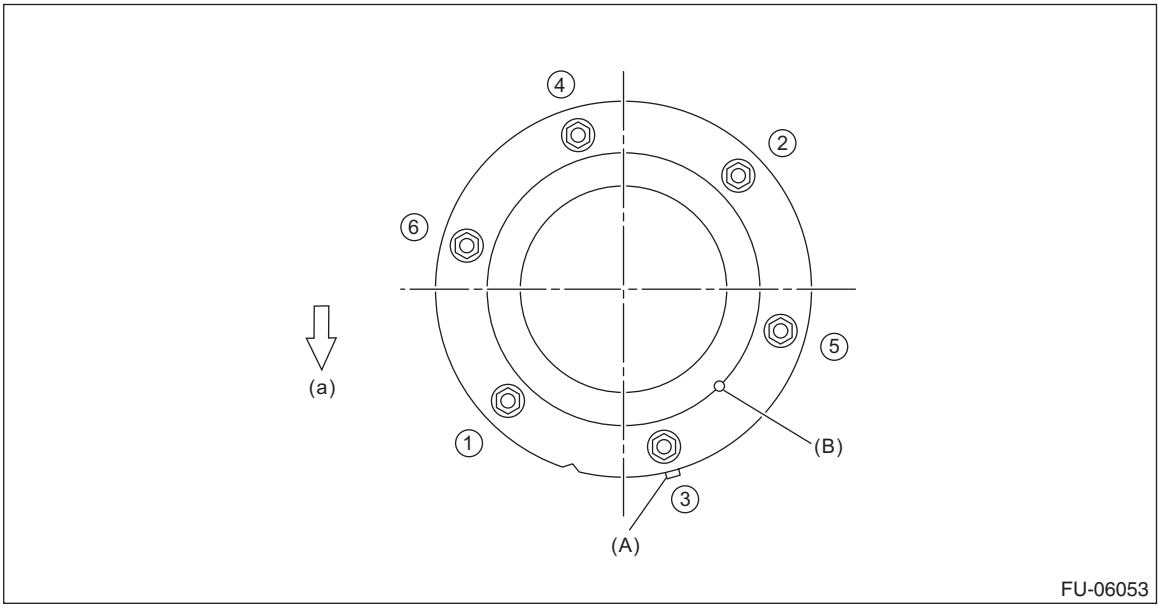

(a) Front side of vehicle

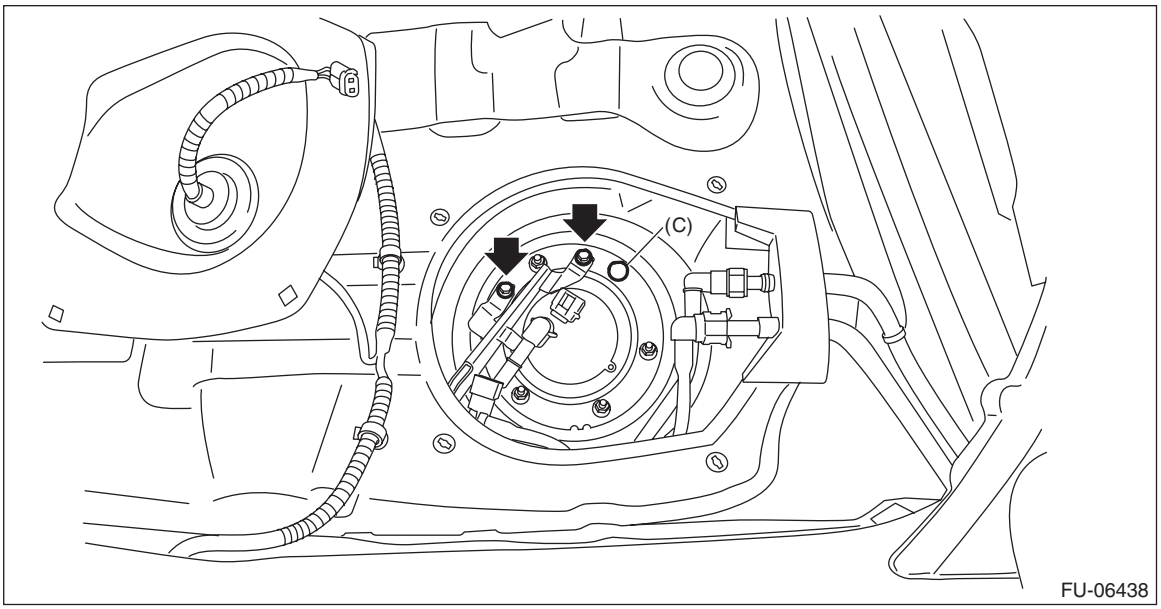

CAUTION:
• Check that there is no damage or dust on the quick connector. If necessary, clean the seal surface of the pipe.
• When connecting the quick connector, make sure to insert the pipe all the way in before locking the slider.
• When it is difficult to lock the slider, check that the pipe is fully inserted.
• Make sure that the quick connector is securely connected.

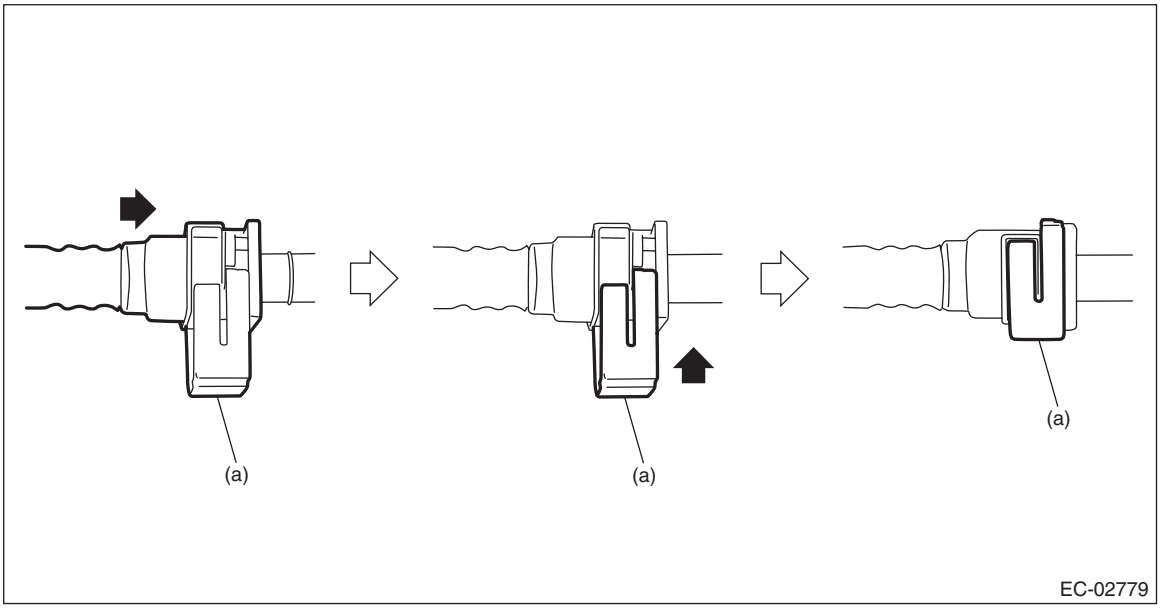

(a) Slider

C: INSPECTION

1) Check that the fuel sub level sensor has no damage.
2) Measure the fuel sub level sensor float position.

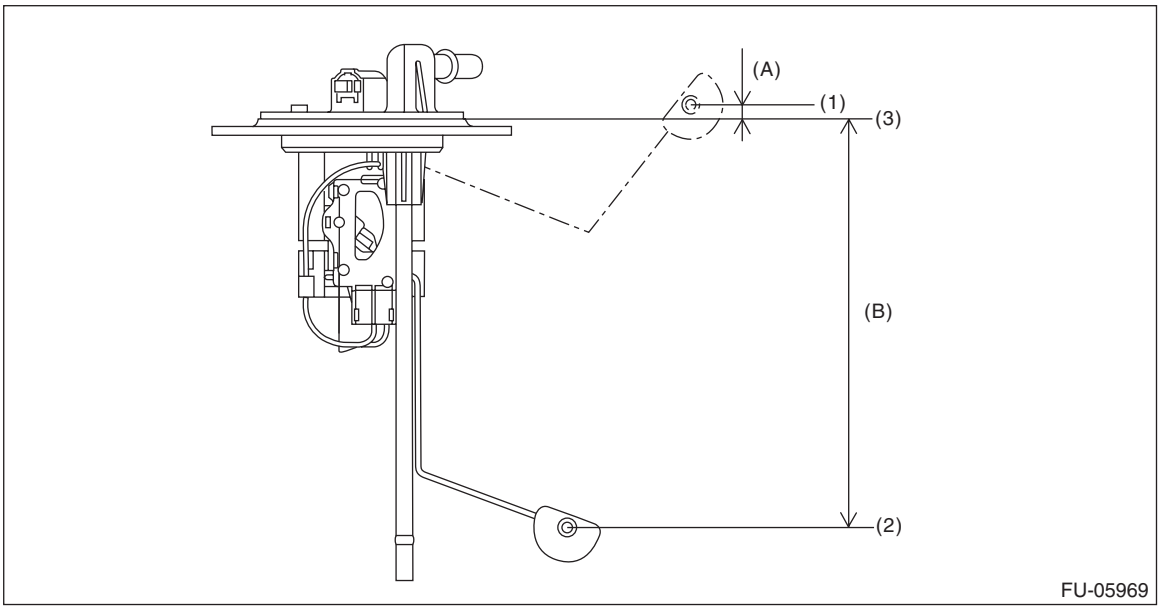

(1) FULL (2) EMPTY (3) Datum points

Float position	Standard
FULL to Datum point (A)	5.31±3.5 mm (0.209±0.138 in)
EMPTY to Datum point (B)	160.6±3.5 mm (6.32±0.138 in)

3) Measure the resistance between fuel sub level sensor terminals.

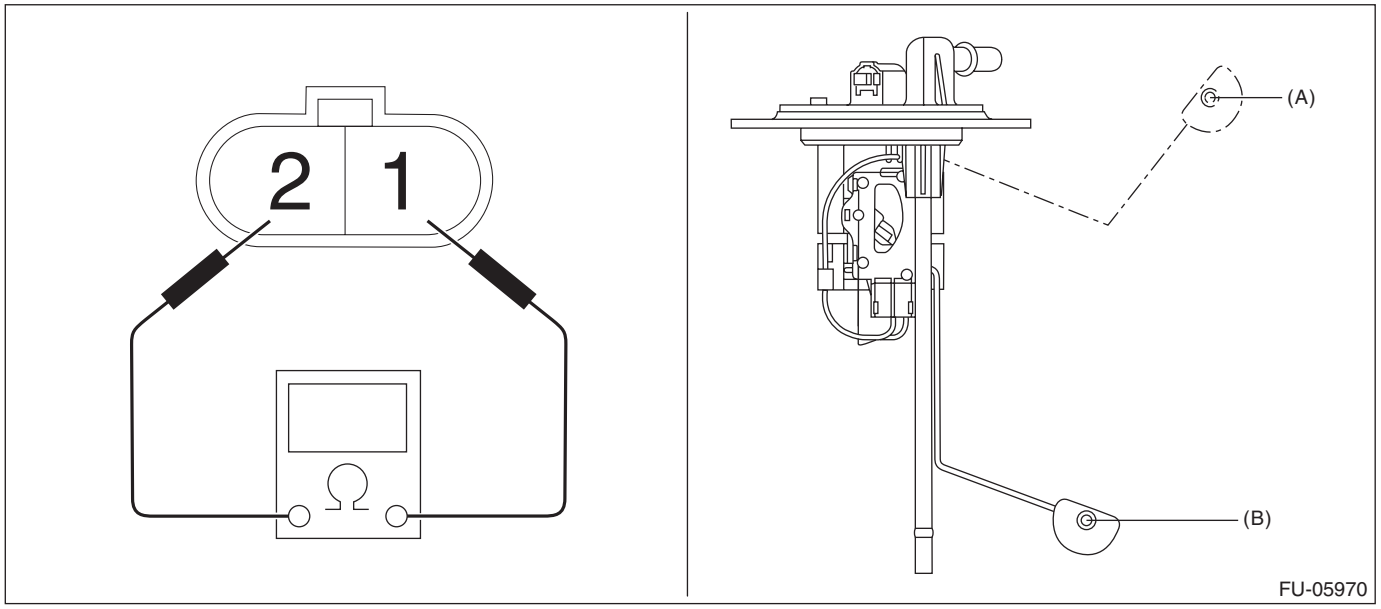

Float position	Terminal No.	Standard
FULL (A)	1 and 2	8.7±1.0 Ω
EMPTY (B)		270.9±4.0 Ω

31.Fuel Filter

A: REMOVAL

WARNING:
Place “NO OPEN FLAMES” signs near the working area.

CAUTION:
- **Be careful not to spill fuel.**
- **If the fuel gauge indicates that two thirds or more of the fuel is remaining, be sure to drain fuel before starting work to avoid the fuel to spill.**
- **Be careful not to drop or apply any impact to the fuel pump during work. This may deteriorate its performance.**

NOTE:
The fuel filter is built in fuel pump assembly.
1) Remove the fuel pump assembly. <Ref. to FU(H4DO(w/o HEV))-141, REMOVAL, Fuel Pump.>
2) Remove the fuel level sensor. <Ref. to FU(H4DO(w/o HEV))-146, REMOVAL, Fuel Level Sensor.>
3) Disconnect the fuel pump connector (A).

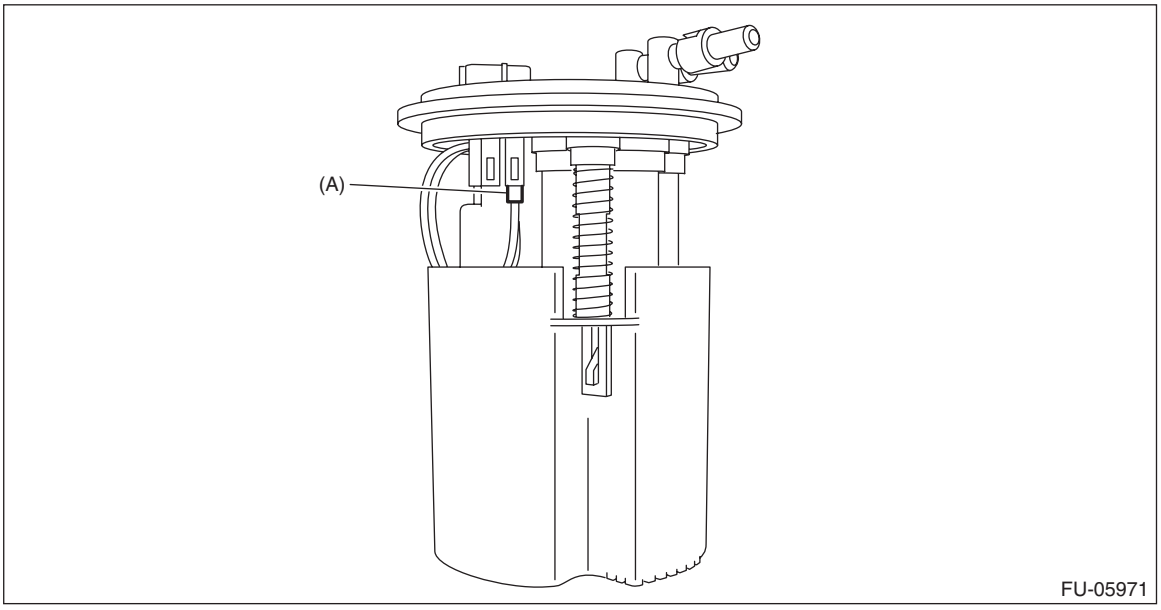

4) Remove the claw connecting the fuel filter assembly and fuel chamber assembly in order to separate the fuel filter assembly and fuel chamber assembly.

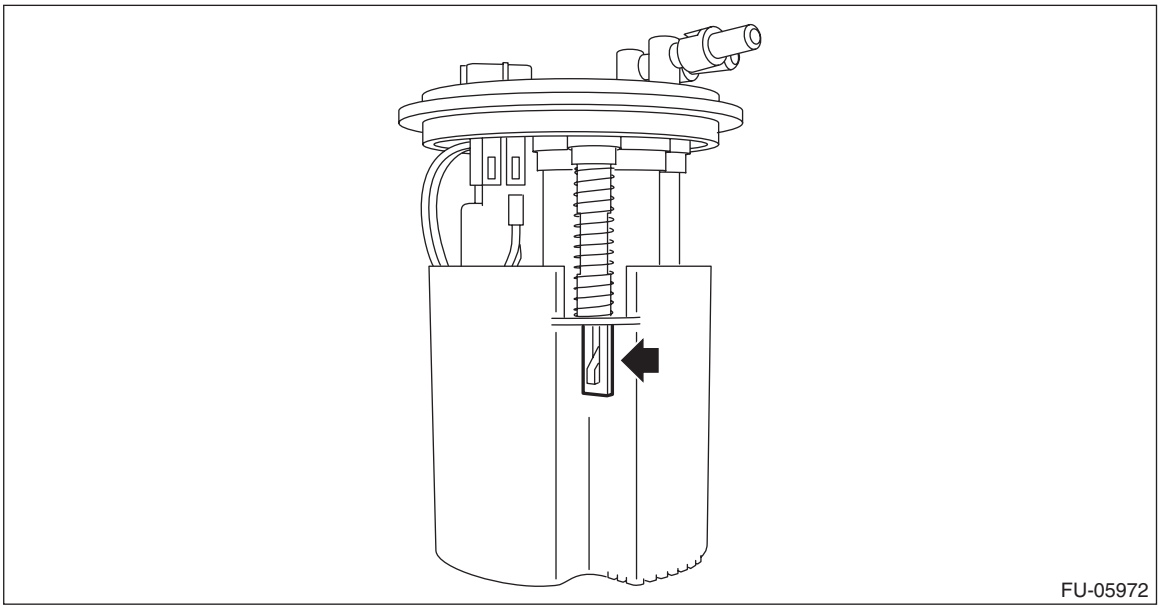

5) Remove the fuel pump holder from the fuel filter assembly.

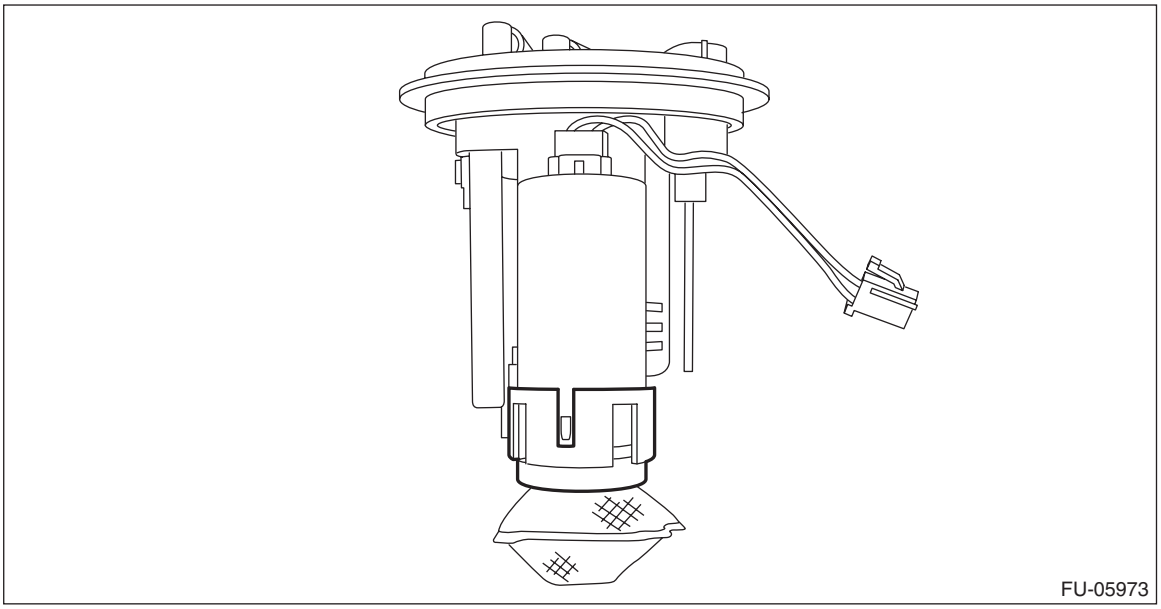

6) Remove the fuel pump from the fuel filter assembly.

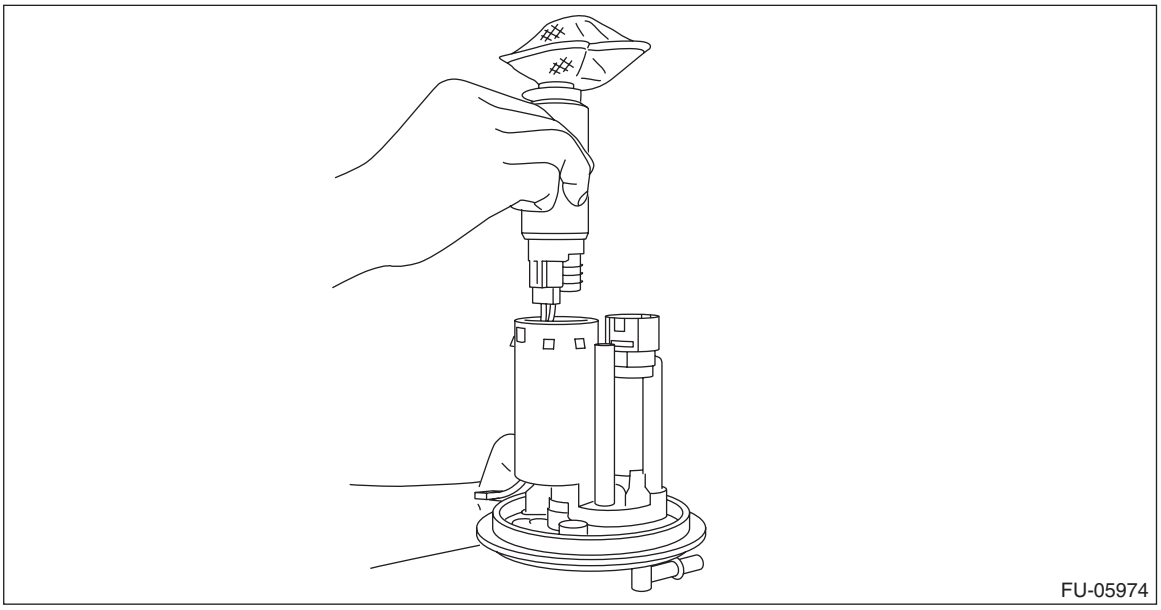
FU-05974

B: INSTALLATION

1) Assemble the packing spacer (A) and support rubber cushion (B) to the fuel pump, and install the fuel pump to the fuel filter assembly.

NOTE:
- Use a new packing spacer.
- Use a new support rubber cushion.
- Apply gasoline to the surface of packing spacer and support rubber cushion.

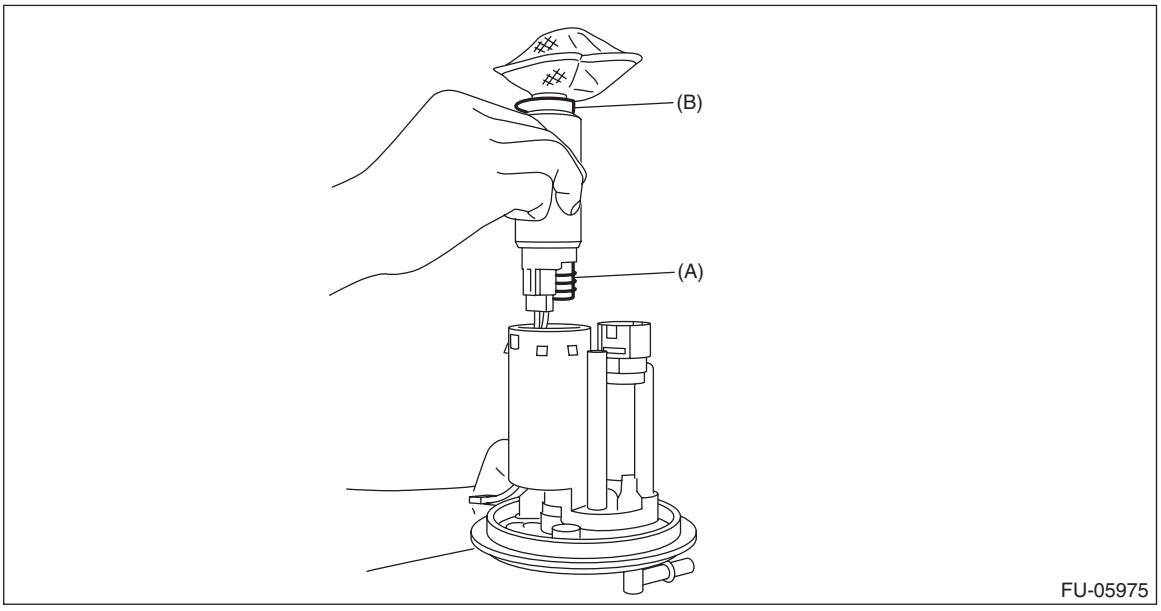

FU-05975

2) Install the fuel pump holder to the fuel filter assembly.

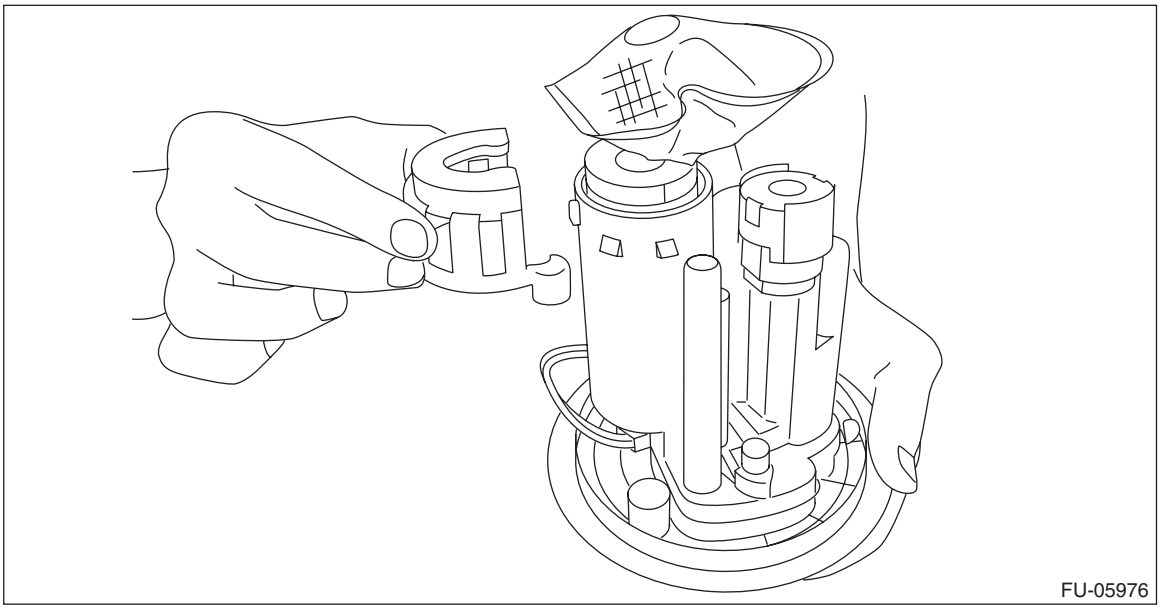

3) Install the pump module spring (A) to fuel filter assembly, and install the fuel chamber assembly (B).

NOTE:
- Use a new fuel chamber assembly.
- Check that the claw connecting the fuel filter assembly and fuel chamber assembly is securely fastened.

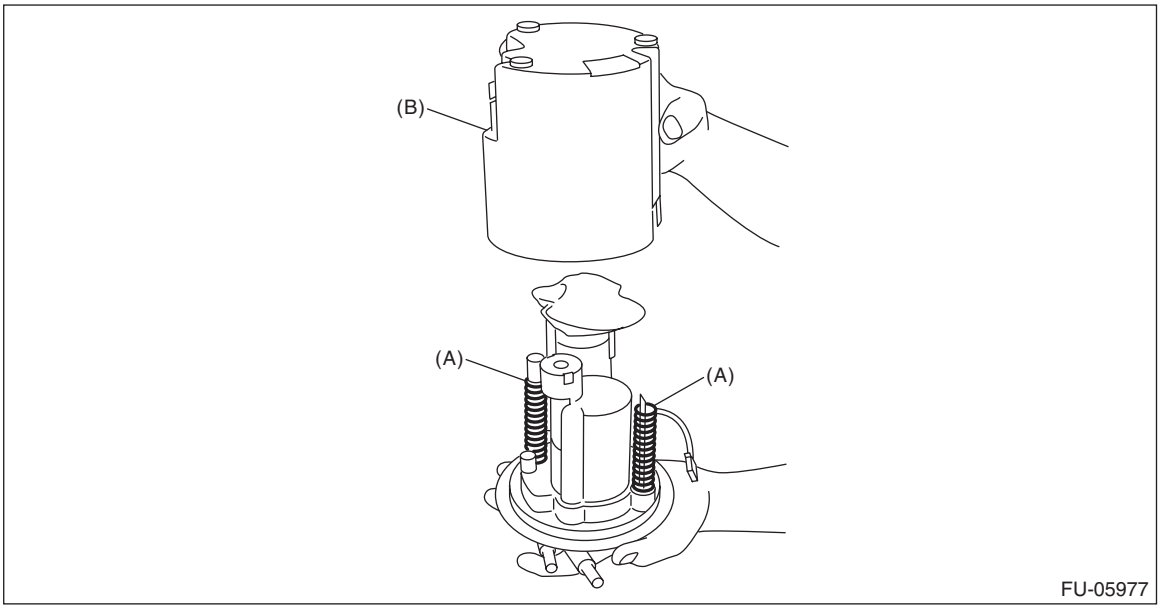

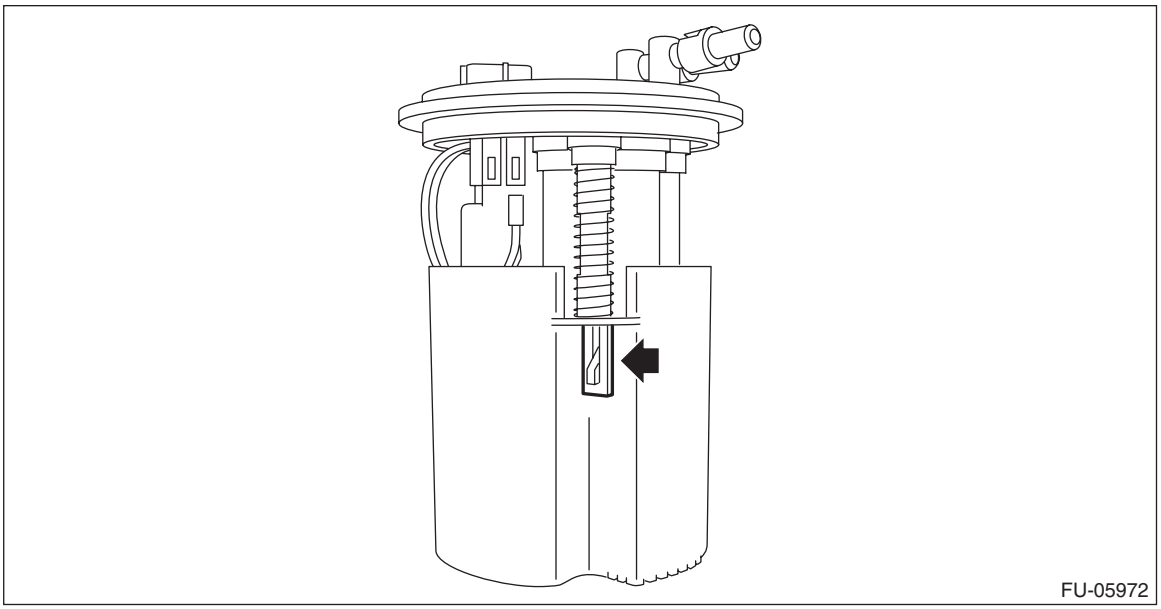

4) Connect the connector (A) of fuel pump.

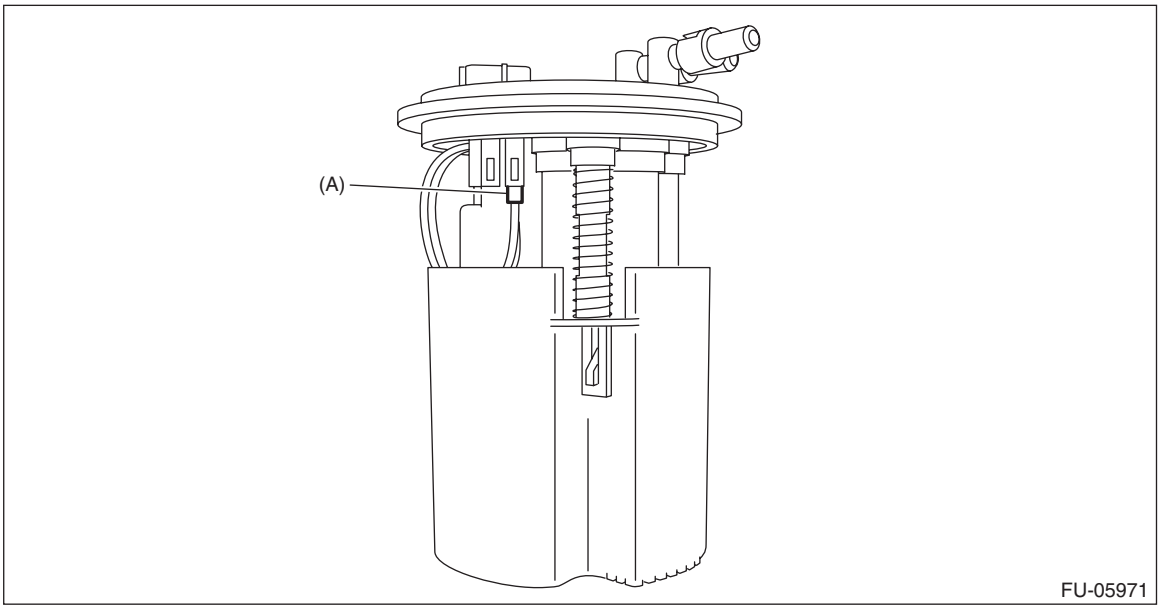

5) Install the fuel level sensor. <Ref. to FU(H4DO(w/o HEV))-146, INSTALLATION, Fuel Level Sensor.>
6) Inspect the fuel level sensor. <Ref. to FU(H4DO(w/o HEV))-147, INSPECTION, Fuel Level Sensor.>
7) Install the fuel pump assembly. <Ref. to FU(H4DO(w/o HEV))-144, INSTALLATION, Fuel Pump.>

32.Fuel Delivery and Evaporation Lines

A: REMOVAL

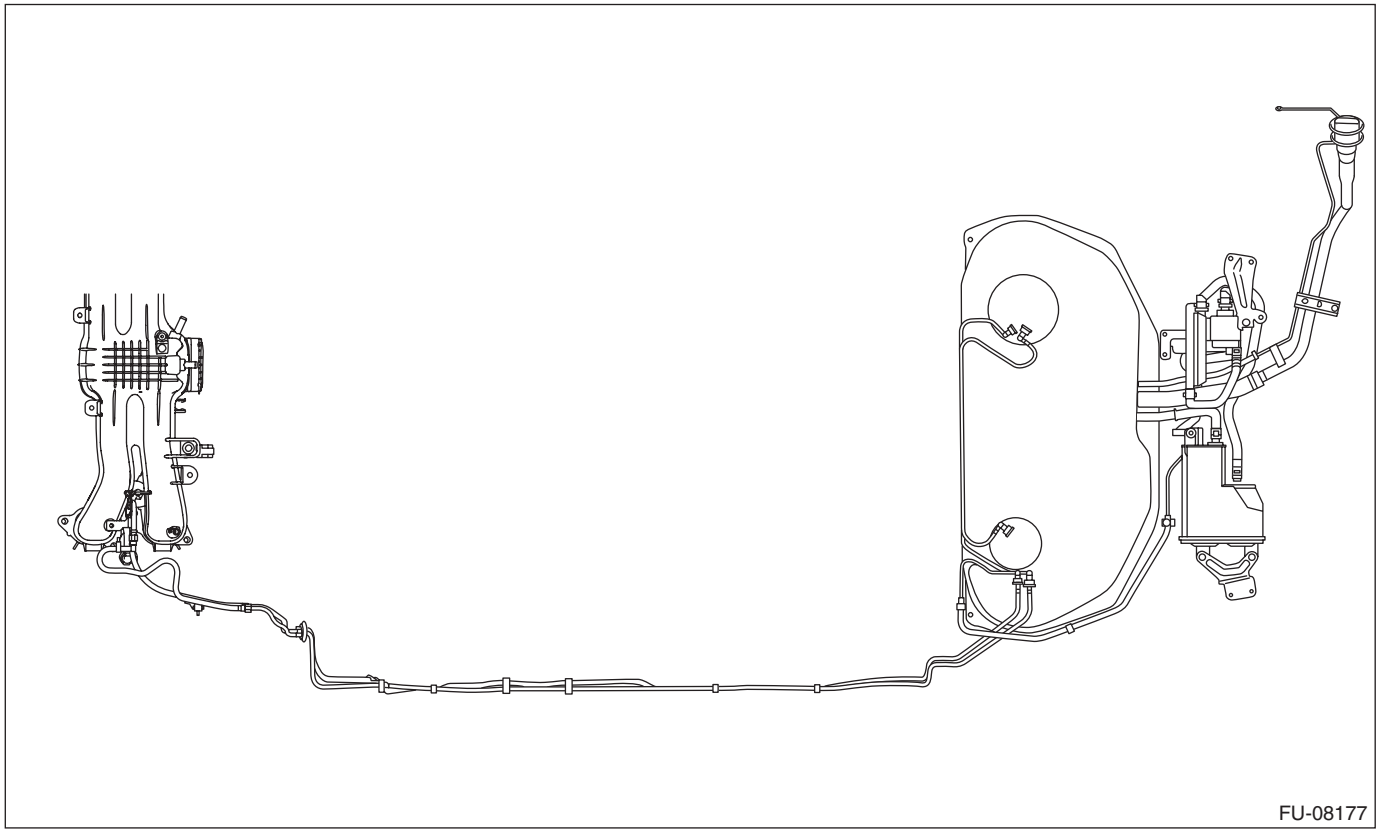

WARNING:
Place “NO OPEN FLAMES” signs near the working area.

CAUTION:
Be careful not to spill fuel.

1) Release the fuel pressure. <Ref. to FU(H4DO(w/o HEV))-116, RELEASING OF FUEL PRESSURE, PROCEDURE, Fuel.>
2) Open the fuel filler lid and remove the fuel filler cap.
3) Remove the floor mat. <Ref. to EI-159, REMOVAL, Floor Mat.>

4) In the engine compartment, disconnect the fuel delivery tube (A) and evaporation hose (B).

CAUTION:
- **Be careful not to spill fuel.**
- **Catch the fuel from the tubes using a container or cloth.**

NOTE:
Disconnect the quick connector as shown in the figure.

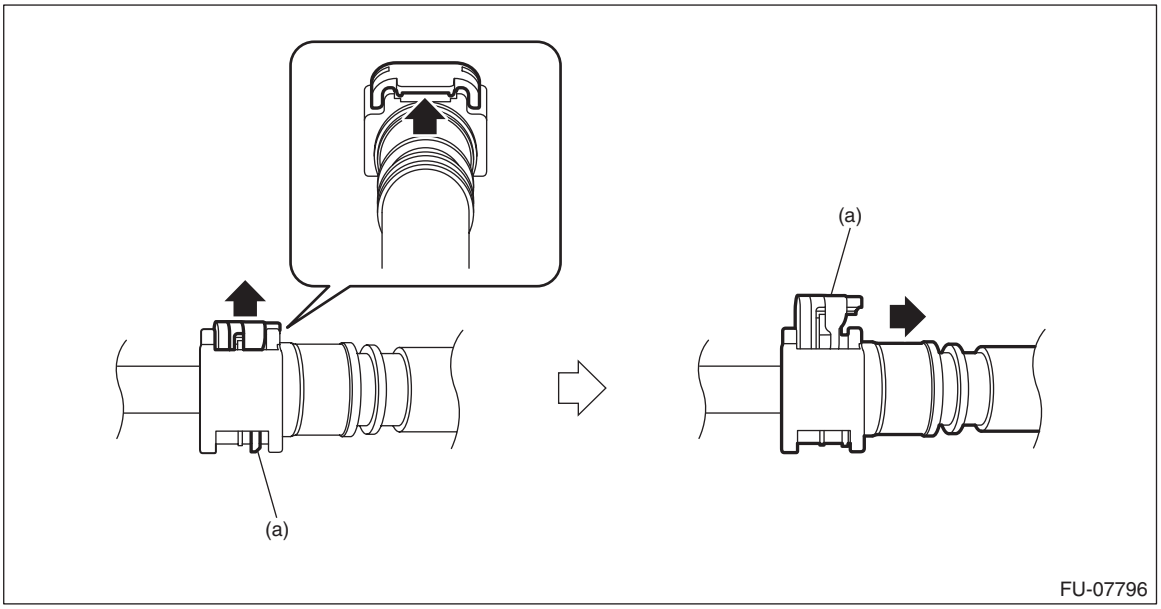

(a) Slider

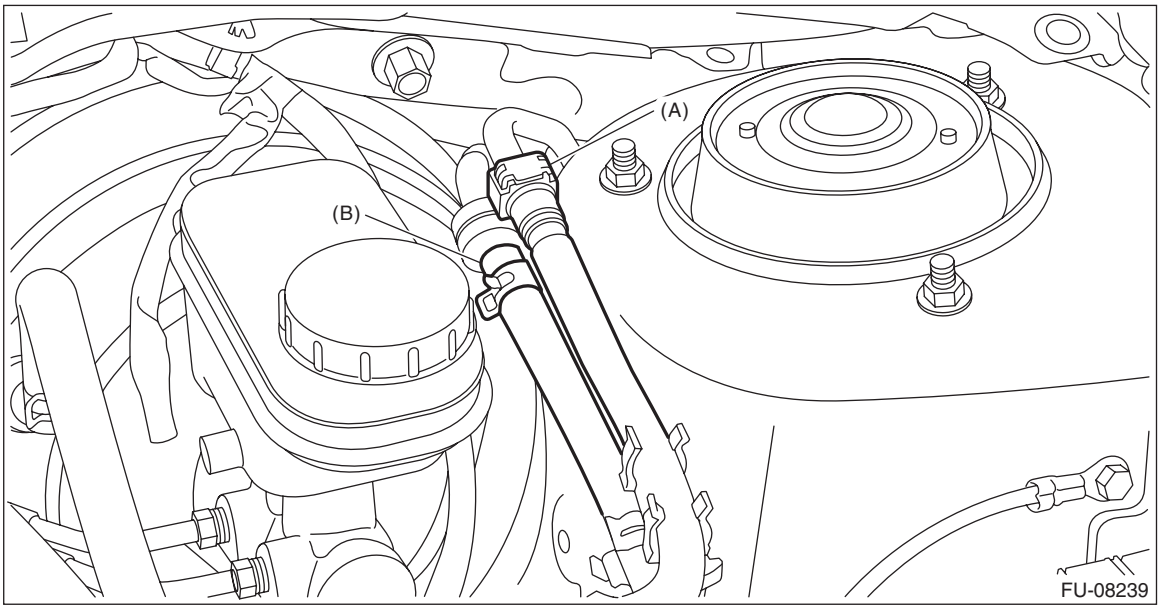

5) Remove the fuel tank. <Ref. to FU(H4DO(w/o HEV))-122, REMOVAL, Fuel Tank.>

6) Disconnect the quick connector, and remove the fuel delivery tube and jet pump tube from the fuel tank.

CAUTION:
- **Be careful not to spill fuel.**
- **Catch the fuel from the tubes using a container or cloth.**

NOTE:
Disconnect the quick connector as shown in the figure.

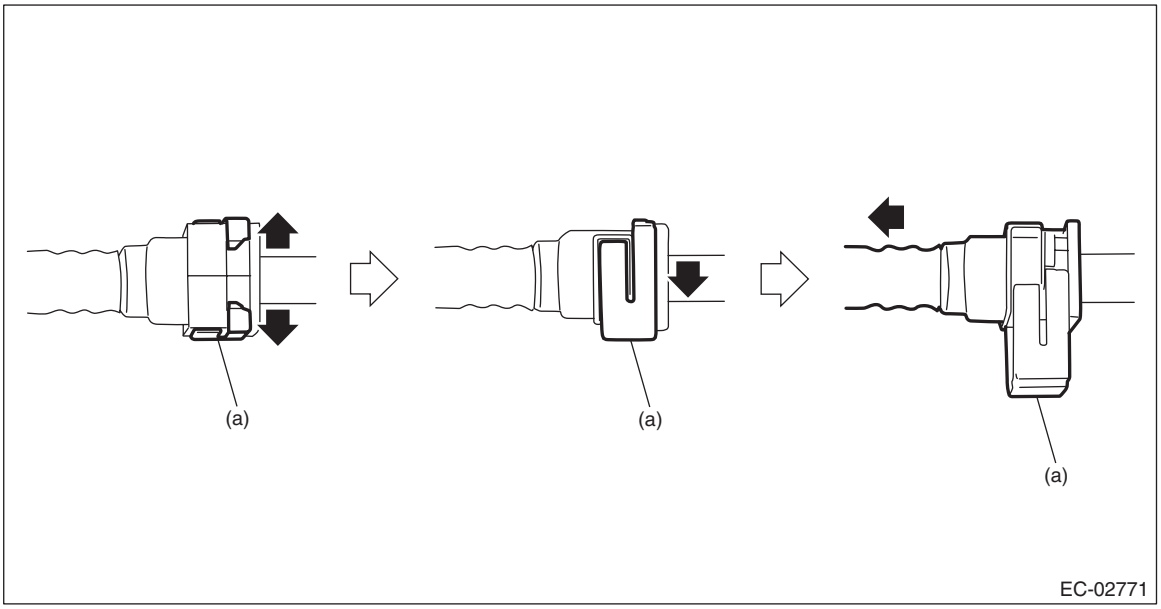

(a) Slider

7) Disconnect the quick connector and remove the purge pipe.

NOTE:
Disconnect the quick connector as shown in the figure.

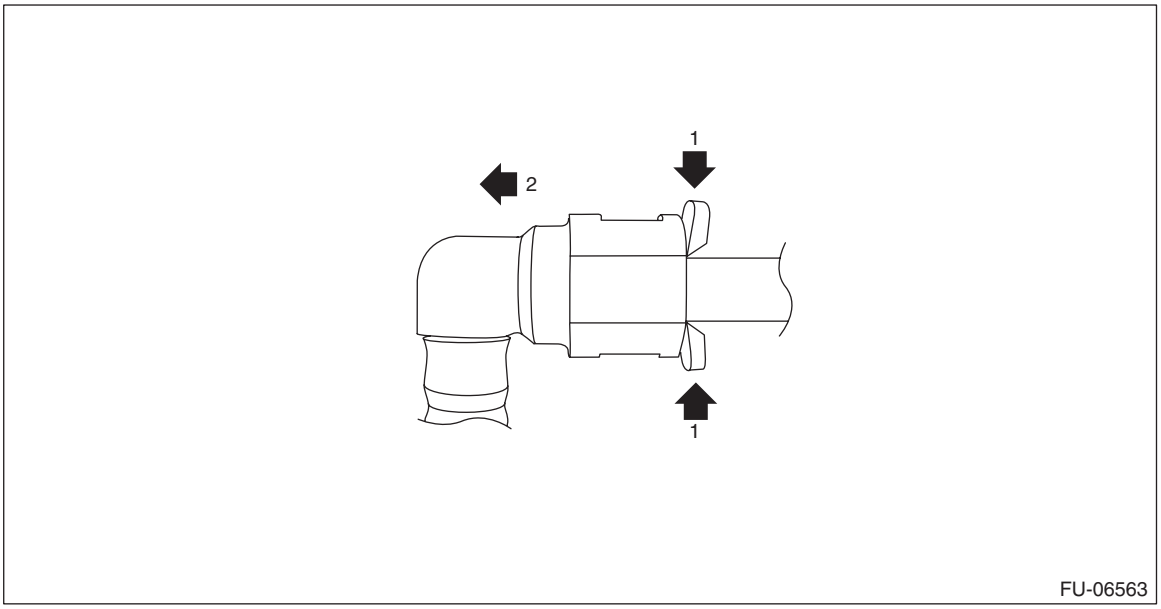

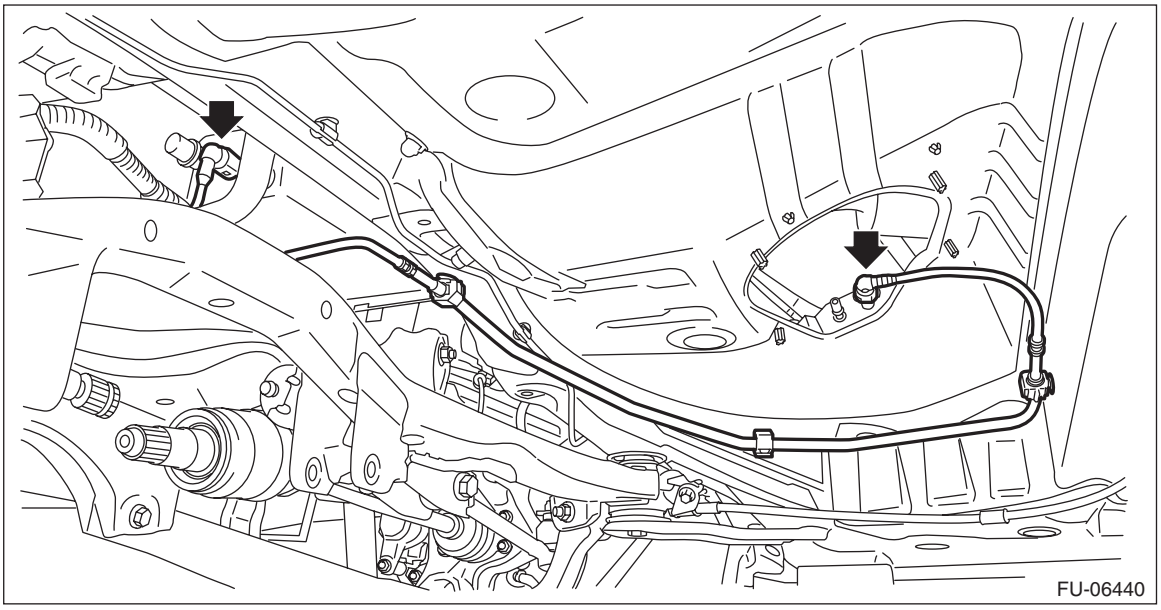

8) Remove the fuel pipe assembly from vehicle.

B: INSTALLATION

Install in the reverse order of removal while being careful of the following.

NOTE:
When connecting the fuel delivery tube (a) and evaporation hose (b), let the bushing (c) contact the quick connector (d) of fuel delivery tube to prevent the clip (e) from contacting the quick connector (d).

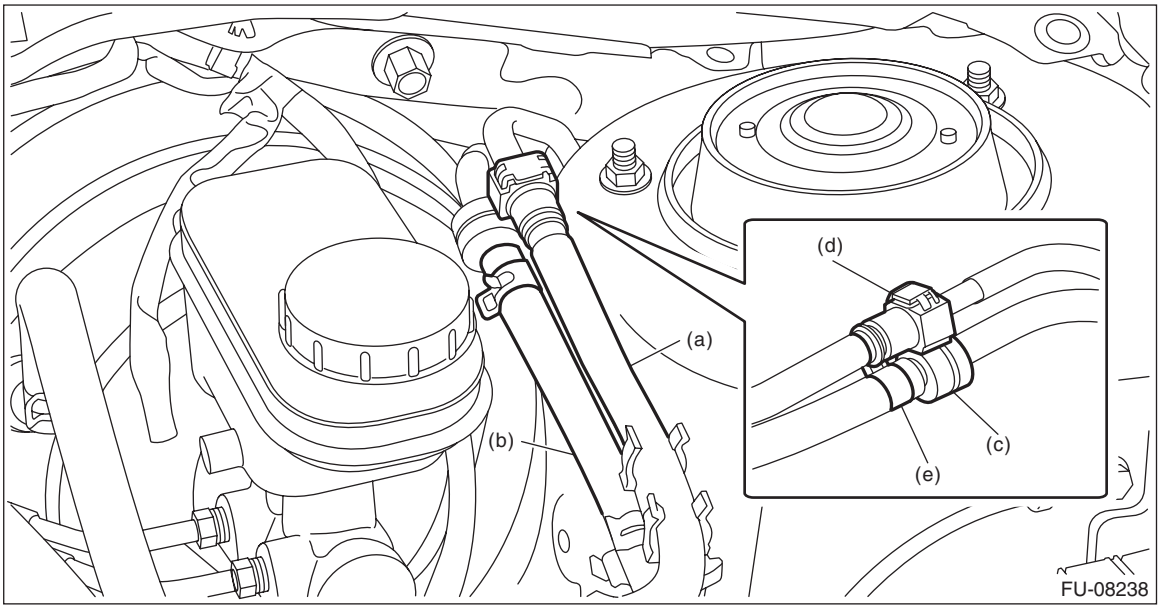

1. CONNECTING THE EVAPORATION LINE QUICK CONNECTOR

Connect the quick connector as shown in the figure.

CAUTION:
• Check that there is no damage or dust on the quick connector. If necessary, clean the seal surface of the pipe.
• Make sure that the quick connector is securely connected.

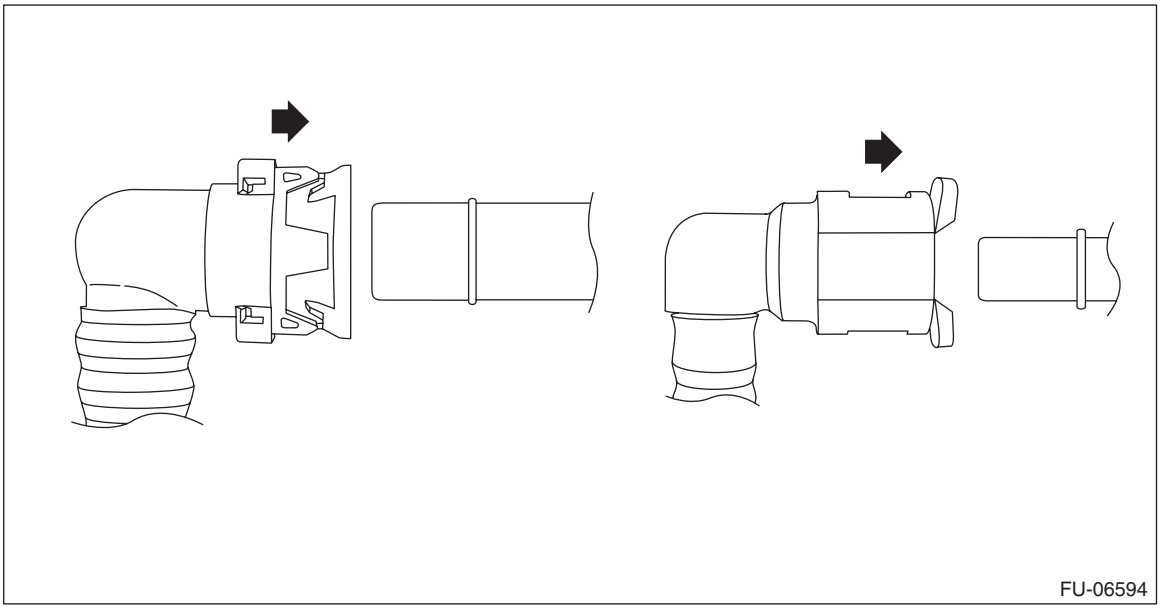

2. CONNECTING THE FUEL LINE QUICK CONNECTOR

Connect the quick connector as shown in the figure.

CAUTION:
• Check that there is no damage or dust on the quick connector. If necessary, clean the seal surface of the pipe.
• When connecting the quick connector, make sure to insert the pipe all the way in before locking the slider.
• When it is difficult to lock the slider, check that the pipe is fully inserted.
• Make sure that the quick connector is securely connected.

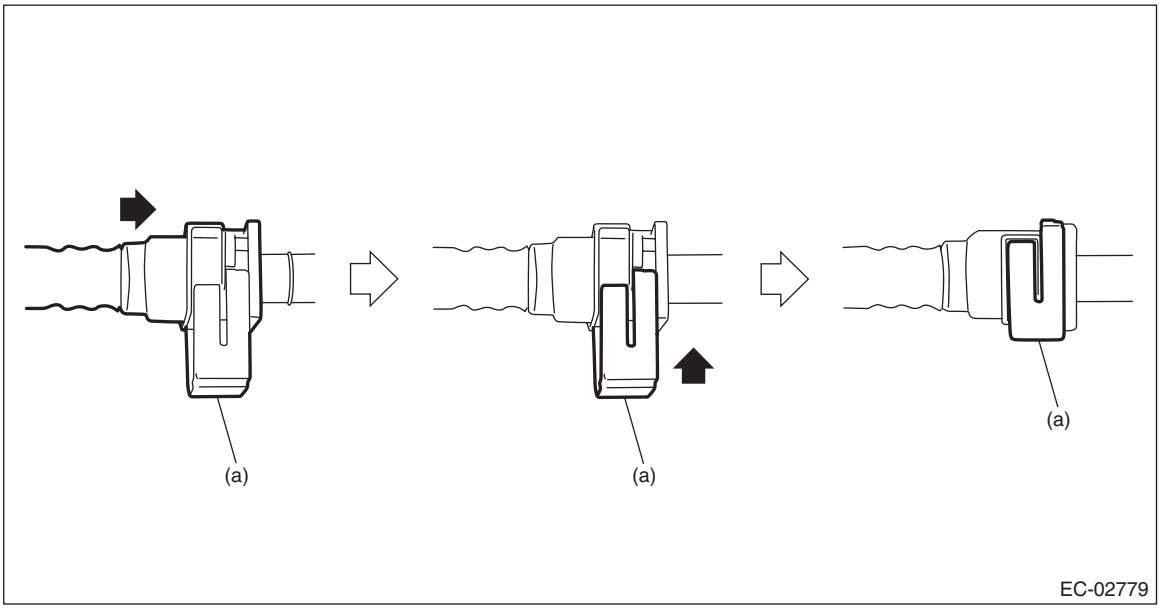

(a) Slider

3. EVAPORATION HOSE CONNECTION

Connect the evaporation hose by inserting it to the pipe until the hose reaches the spool or bump.

NOTE:
If there is no spool nor bump, connect the evaporation hose by inserting it at 28 mm (1.1 in) to the pipe.

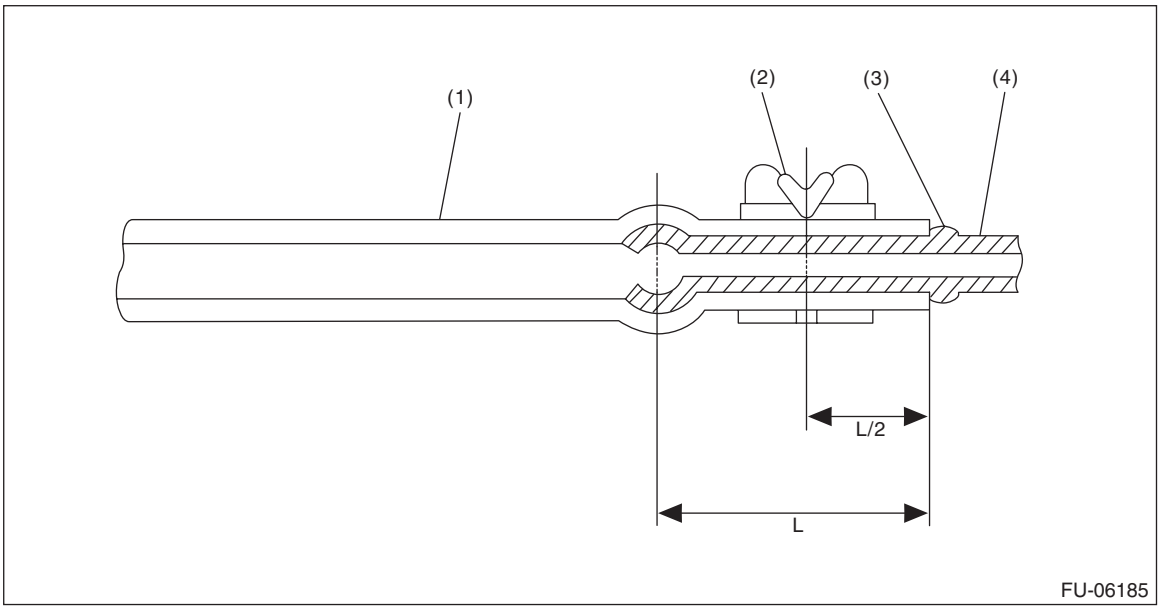

(1) Hose
(2) Clip
(3) Spool or bump
(4) Pipe

C: INSPECTION

1) Check that the fuel pipe has no deformation, cracks or other damages.
2) Check that the hose and tube have no cracks, damage or loose part.

33.Fuel System Trouble in General

A: INSPECTION

Trouble	Possible cause	Corrective action
Insufficient fuel supply to fuel injector	a. Fuel pump does not operate.	
	❍ Defective terminal contact	Inspect contact, especially ground, and tighten it securely.
	❍ Trouble in electromagnetic or electronic circuit parts	Replace the faulty parts.
	b. Decline of fuel pump function	Replace the fuel pump.
	c. Clogged fuel filter	Replace the fuel filter. Clean or replace the fuel tank if necessary.
	d. Clogged or bent fuel line pipe, hose or tube	Clean, correct or replace the fuel line pipe, hose or tube.
	e. Air is mixed in fuel system.	Check the fuel line connections, correct or replace the defective part.
	f. Damaged diaphragm of pressure regulator	Replace the fuel filter assembly.
Leakage or blow out of fuel	a. Loose connections of fuel line pipe, hose or tube	Check the fuel line connections, correct or replace the defective part.
	b. Cracked fuel line pipe, hose or tube	Replace the fuel line pipe, hose or tube.
	c. Cracked fuel tank or defective welding part	Replace the fuel tank.
	d. Clogged or bent fuel line pipe, hose or tube	Clean, correct or replace the fuel line pipe, hose or tube.
Gasoline smell inside of compartment	a. Loose connections of fuel line pipe, hose or tube	Check the fuel line connections, correct or replace the defective part.
	b. Defective gasket of fuel saucer or fuel filler pipe assembly	Correct or replace the gasket.
	c. Defective canister	Replace the canister.
Defective fuel gauge	a. Defective operation of fuel level sensor	Replace the fuel level sensor.
	b. Defective operation of combination meter	Replace the combination meter.
Noise	a. Large operation noise or vibration of fuel pump	Replace the fuel pump.

NOTE:
• When the vehicle is left unattended for an extended period of time, water may accumulate in the fuel tank. Fill fuel fully to prevent the problem.
• In snow-covered areas, mountainous areas, skiing areas, etc. where ambient temperatures drop to 0°C (32°F) or less throughout the winter season, use a water removing agent in the fuel system to prevent freezing fuel system and accumulating water.
• When water is accumulated in fuel filter, fill the water removing agent in the fuel tank.
• Before using water removing agent, follow the cautions noted on the bottle.

EMISSION CONTROL
(AUX. EMISSION CONTROL DEVICES)
EC(H4DO(w/o HEV))

		Page
1.	General Description	2
2.	Front Catalytic Converter	7
3.	Rear Catalytic Converter	8
4.	Canister	9
5.	Purge Control Solenoid Valve	17
6.	EGR Control Valve	22
7.	EGR Pipe	26
8.	Fuel Level Sensor	33
9.	Fuel Sub Level Sensor	34
10.	Drain Filter	35
11.	Leak Check Valve Assembly	36
12.	Drain Separator	55
13.	PCV Hose	57
14.	PCV Valve	58

1. General Description

A: COMPONENT

1. CANISTER, LEAK CHECK VALVE ASSEMBLY AND DRAIN SEPARATOR

For structures of the canister, leak check valve assembly and drain separator, refer to “FU (H4DO (w/o HEV))”. <Ref. to FU(H4DO(w/o HEV))-3, COMPONENT, General Description.>

2. EGR SYSTEM 1

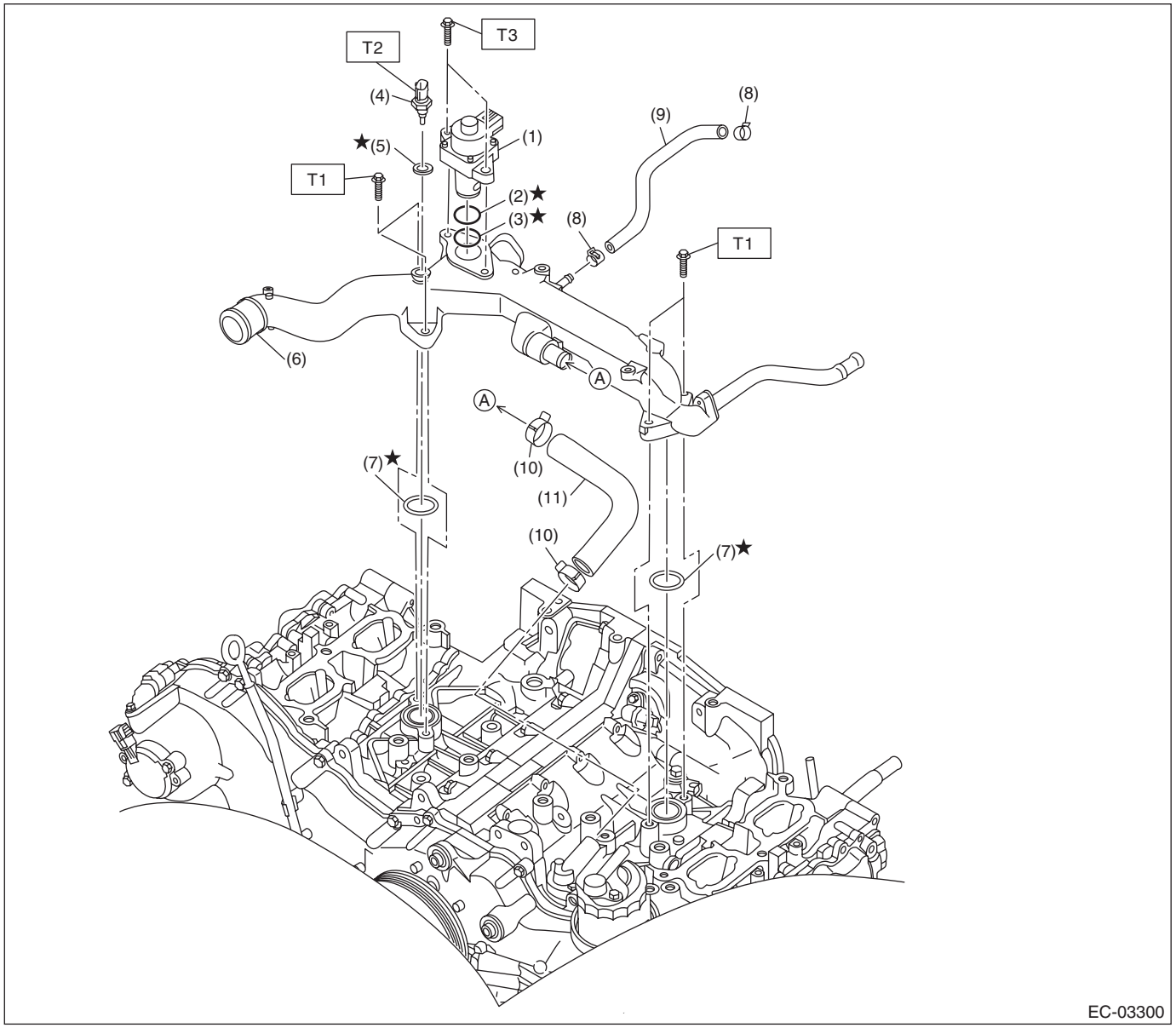

(1)	EGR control valve	(7)	O-ring
(2)	O-ring	(8)	Clip
(3)	Gasket	(9)	Preheater hose A
(4)	Engine coolant temperature sensor	(10)	Clip
(5)	Gasket	(11)	Preheater hose B
(6)	Water pipe ASSY		

Tightening torque: N·m (kgf-m, ft-lb)
T1: 6.4 (0.7, 4.7)
T2: 18 (1.8, 13.3)
T3: 22 (2.2, 16.2)

3. EGR SYSTEM 2

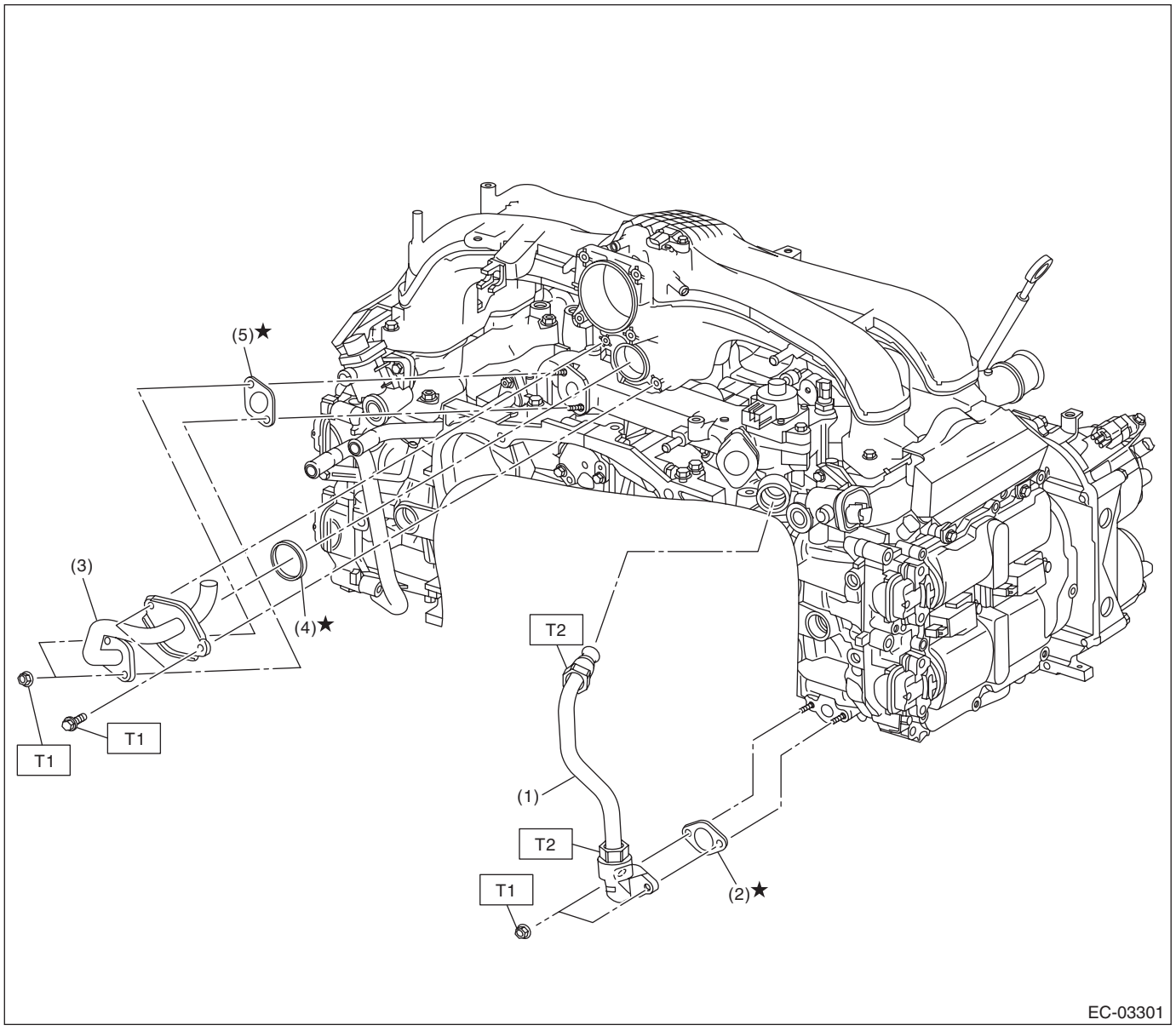

(1) EGR pipe ASSY
(2) Gasket
(3) EGR pipe
(4) Gasket
(5) Gasket

Tightening torque: N·m (kgf-m, ft-lb)

T1: <Ref. to EC(H4DO(w/o HEV))-30, INSTALLATION, EGR Pipe.>

T2: <Ref. to EC(H4DO(w/o HEV))-30, INSTALLATION, EGR Pipe.>

4. PCV SYSTEM 1

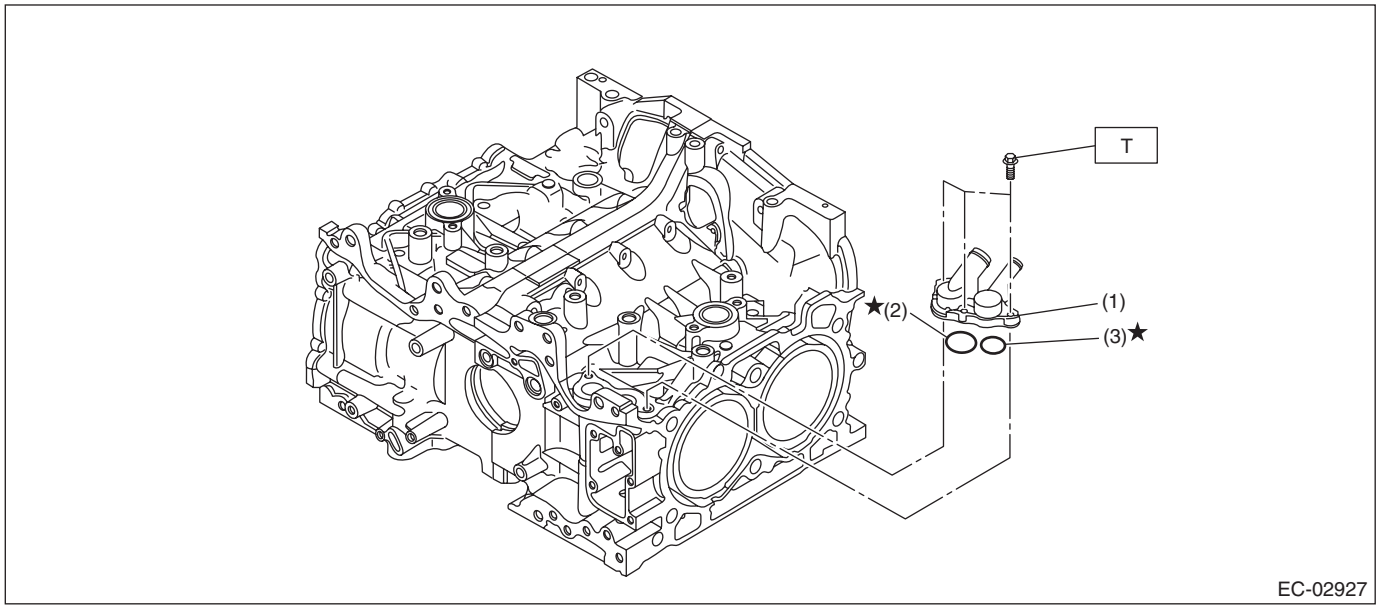

(1) PCV connector
(2) O-ring
(3) O-ring

Tightening torque: N·m (kgf-m, ft-lb)
T: 6.4 (0.7, 4.7)

5. PCV SYSTEM 2

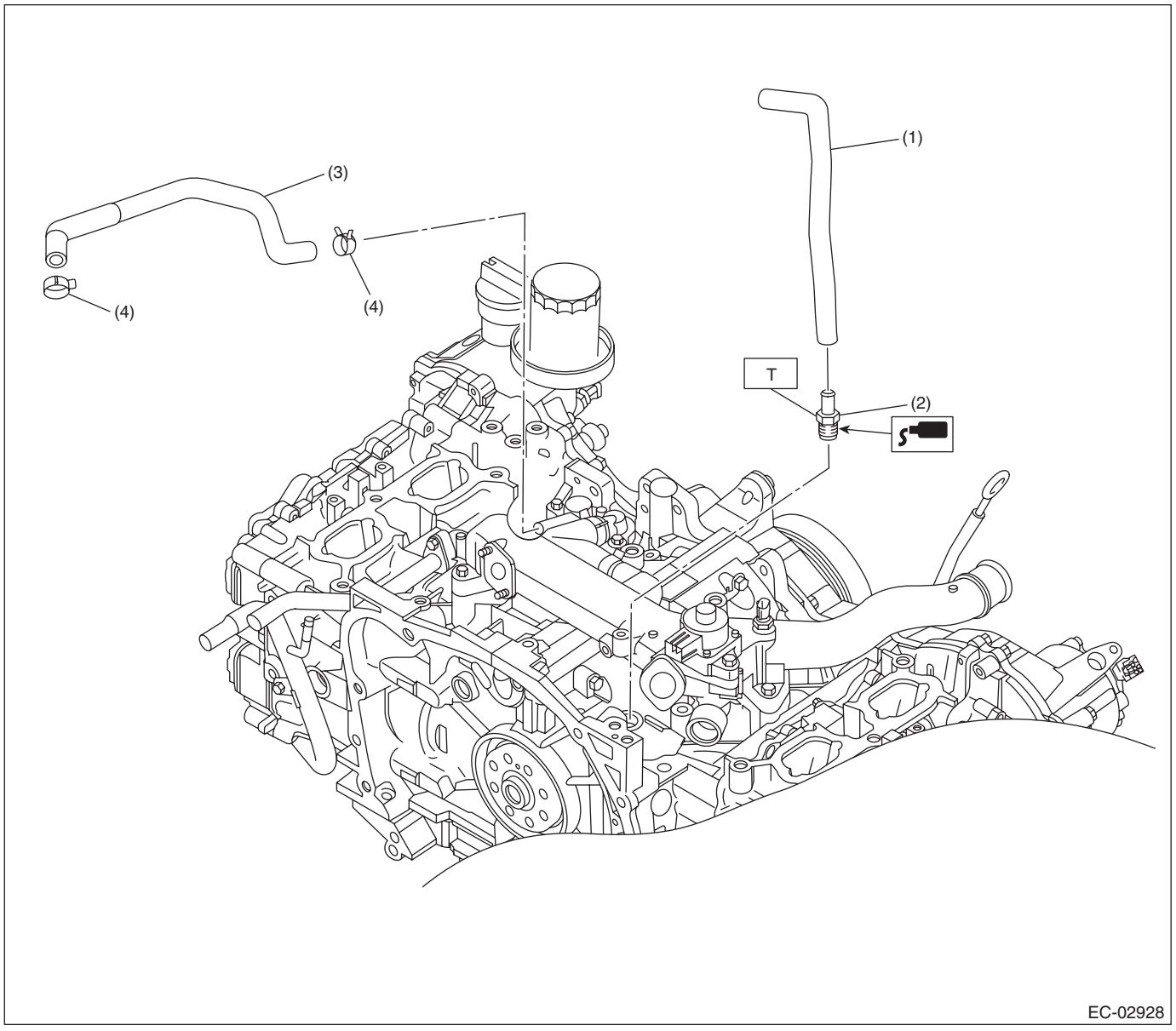

(1) PCV hose A
(2) PCV valve
(3) PCV hose B
(4) Clip

Tightening torque: N·m (kgf-m, ft-lb)
T: 23 (2.3, 17.0)

B: CAUTION

- Prior to starting work, pay special attention to the following:
  1. Always wear work clothes, a work cap, and protective shoes. Additionally, wear a helmet, protective goggles, etc. if necessary.
  2. Protect the vehicle using a seat cover, fender cover, etc.
  3. Prepare the service tools, clean cloth, containers to catch grease and oil, etc.
- Vehicle components are extremely hot immediately after driving. Be wary of receiving burns from heated parts.
- When performing a repair, identify the cause of trouble and avoid unnecessary removal, disassembly and replacement.
- Before disconnecting connectors of sensors or units, be sure to disconnect the ground cable from battery.
- Always use the jack-up point when the shop jacks or rigid racks are used to support the vehicle.
- Remove contamination including dirt and corrosion before removal, installation, disassembly or assembly.
- Keep the removed parts in order and protect them from dust and dirt.
- All removed parts, if to be reused, should be reinstalled in the original positions with attention to the correct directions, etc.
- Bolts, nuts and washers should be replaced with new parts as required.
- Be sure to tighten the fasteners including bolts and nuts to the specified torque.

C: PREPARATION TOOL

1. GENERAL TOOL

TOOL NAME	REMARKS
Circuit tester	Used for measuring resistance and voltage.

2. Front Catalytic Converter

A: REMOVAL

The front catalytic converter is integrated into the front exhaust pipe; therefore, refer to “Front Exhaust Pipe” for the removal procedure. <Ref. to EX(H4DO(w/o HEV))-6, REMOVAL, Front Exhaust Pipe.>

B: INSTALLATION

The front catalytic converter is integrated into the front exhaust pipe; therefore, refer to “Front Exhaust Pipe” for the installation procedure. <Ref. to EX(H4DO(w/o HEV))-8, INSTALLATION, Front Exhaust Pipe.>

C: INSPECTION

1) Check the connections and welded parts for exhaust leaks.
2) Make sure there are no holes or rusting.

3. Rear Catalytic Converter

A: REMOVAL

The rear catalytic converter is integrated into the center exhaust pipe; therefore, refer to “Center Exhaust Pipe” for the removal procedure. <Ref. to EX(H4DO(w/o HEV))-14, REMOVAL, Center Exhaust Pipe.>

B: INSTALLATION

The rear catalytic converter is integrated into the center exhaust pipe; therefore, refer to “Center Exhaust Pipe” for the installation procedure. <Ref. to EX(H4DO(w/o HEV))-15, INSTALLATION, Center Exhaust Pipe.>

C: INSPECTION

1) Check the connections and welded parts for exhaust leaks.
2) Make sure there are no holes or rusting.

4. Canister

A: REMOVAL

1) Lift up the vehicle.
2) Remove the rear exhaust pipe. <Ref. to EX(H4DO(w/o HEV))-18, REMOVAL, Rear Exhaust Pipe.>
3) Remove the propeller shaft. <Ref. to DS-12, REMOVAL, Propeller Shaft.>
4) Support the rear differential with the transmission jack.
5) Remove the self-locking nuts which hold the rear differential to the rear sub frame assembly.

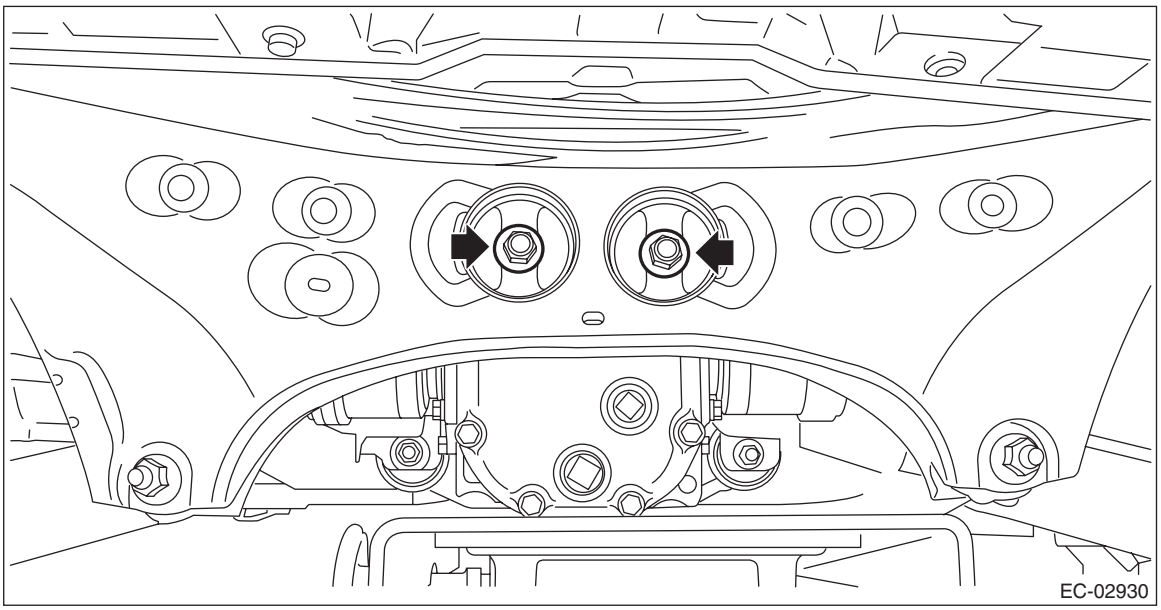

6) Remove the rear differential member from the rear sub frame assembly and the rear differential.

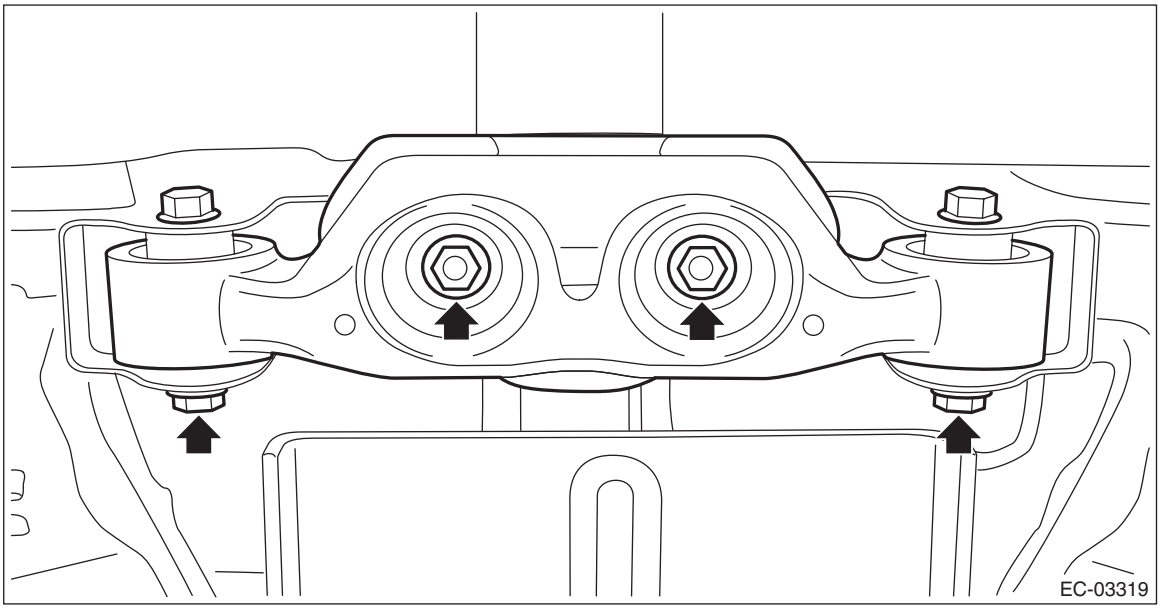

7) Lower the transmission jack gradually until the rear differential is at the position shown in the figure.

NOTE:

• When pulling out the stud bolt from the bushing portion of the rear sub frame assembly, adjust the angle and location of transmission jack and jack stand.

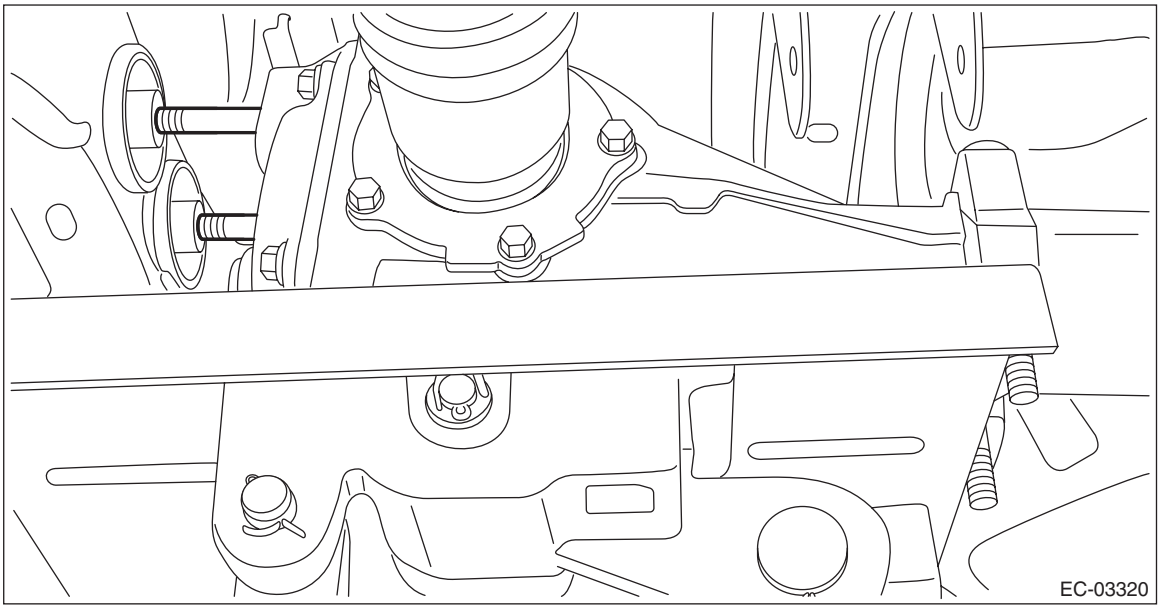

• Do not lower the rear differential excessively. Doing so may add extra load to the drive shaft or cause the falling-off of the drive shaft.

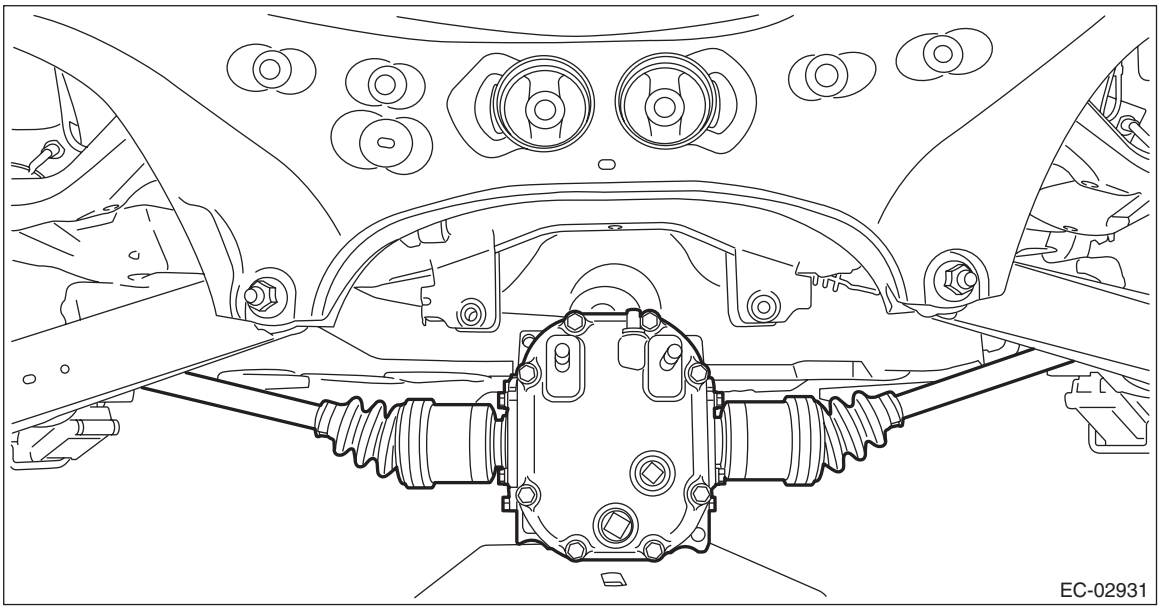

8) Disconnect the drain tube (A), vent tube (B) and purge tube (C) from the canister.

NOTE:
Disconnect the quick connector as shown in the figure.

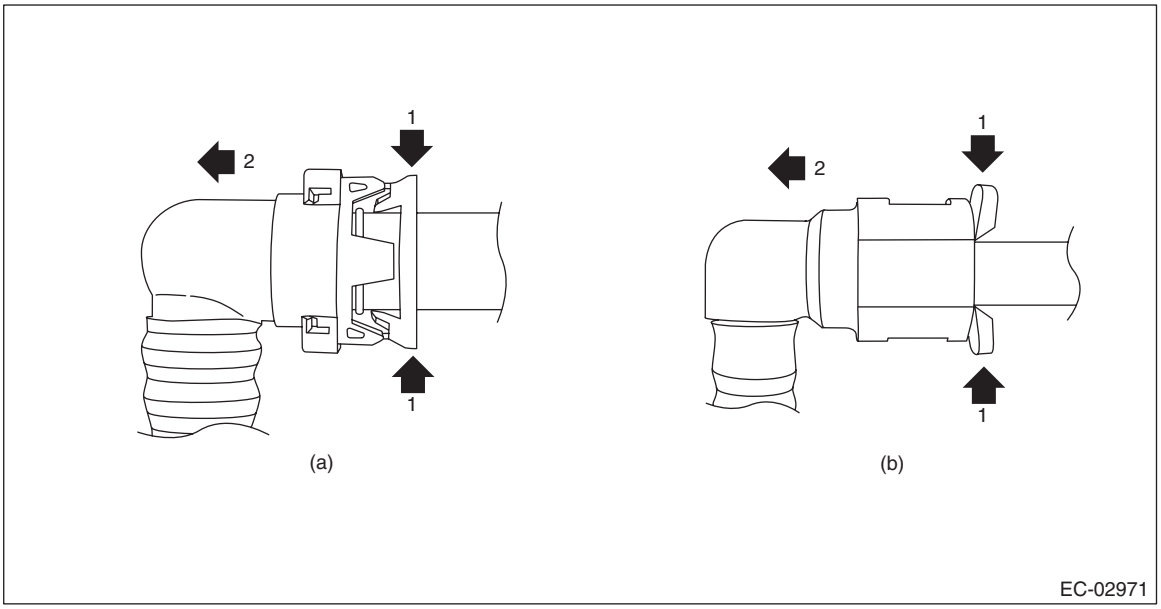

(a) Drain tube and vent tube (b) Purge tube

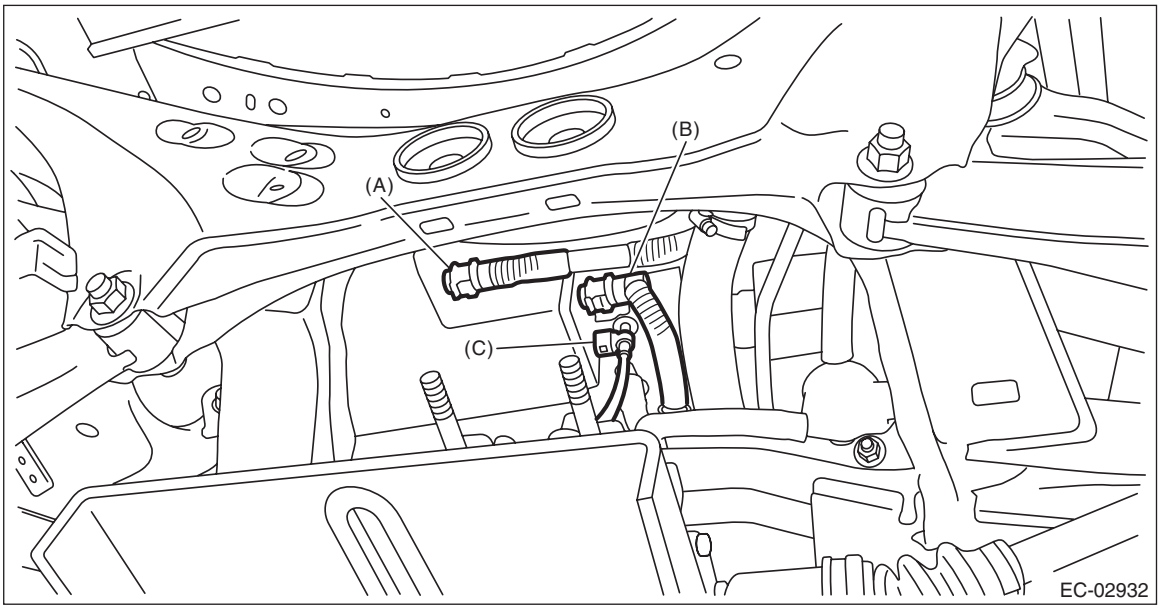

9) Remove the bolts and nuts securing the canister to the vehicle, and remove the canister.

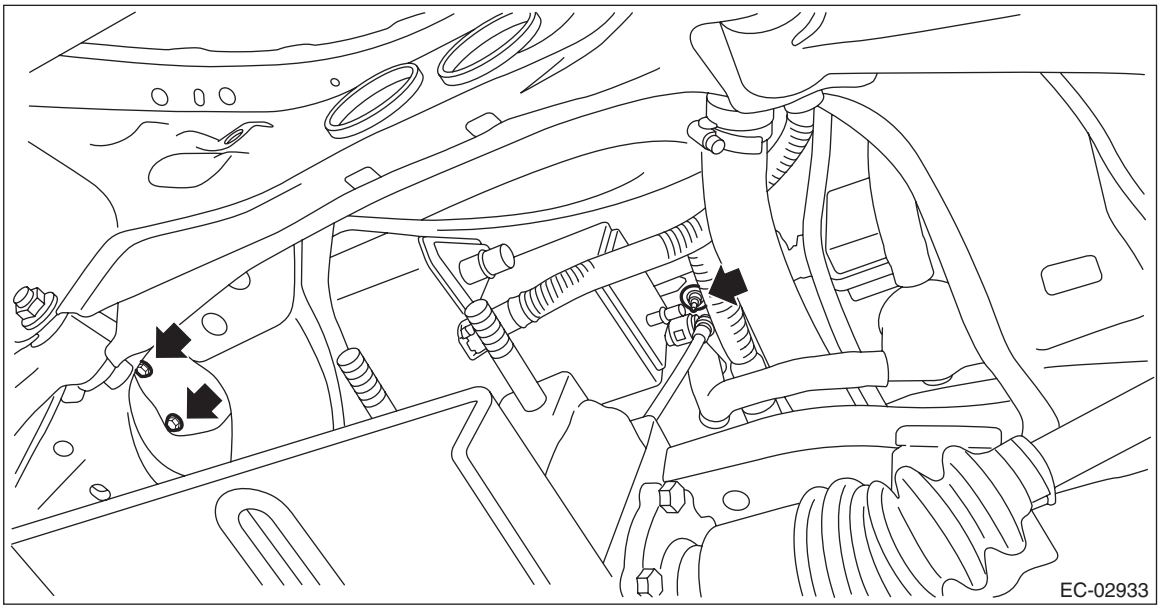

B: INSTALLATION

1) Install the canister to the vehicle using bolts and nuts.

Tightening torque:
7.5 N·m (0.8 kgf-m, 5.5 ft-lb)

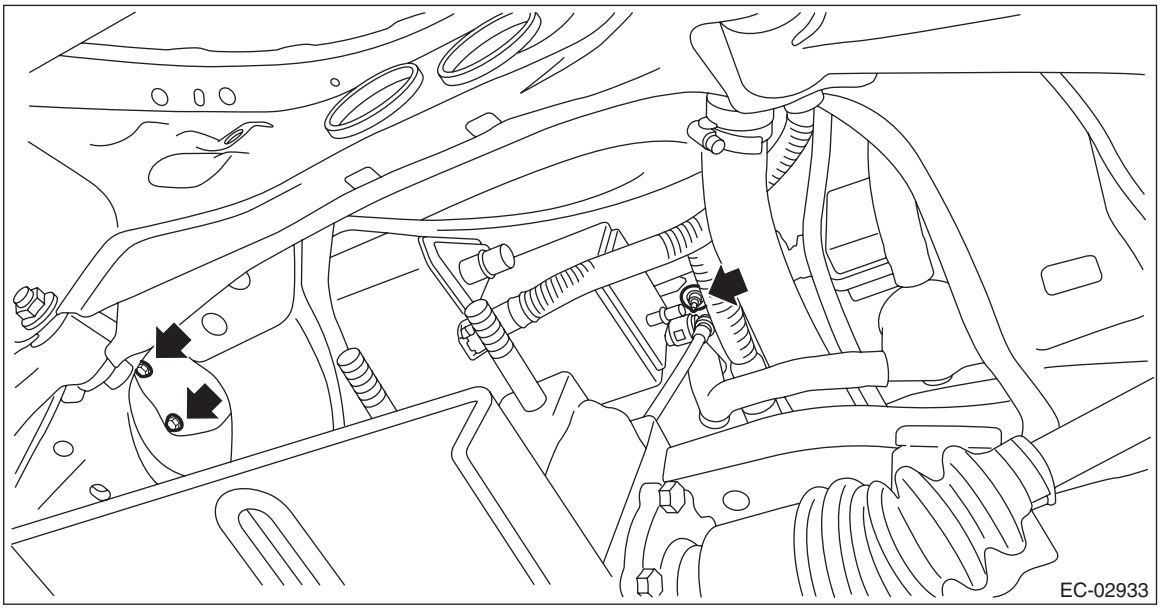

2) Install the drain tube (A), vent tube (B) and purge tube (C) to the canister.

CAUTION:
- **Check that there is no damage or dust on the quick connector. If necessary, clean the seal surface of the pipe.**
- **Make sure that the quick connector is securely connected.**

NOTE:
Install the quick connector as shown in the figure.

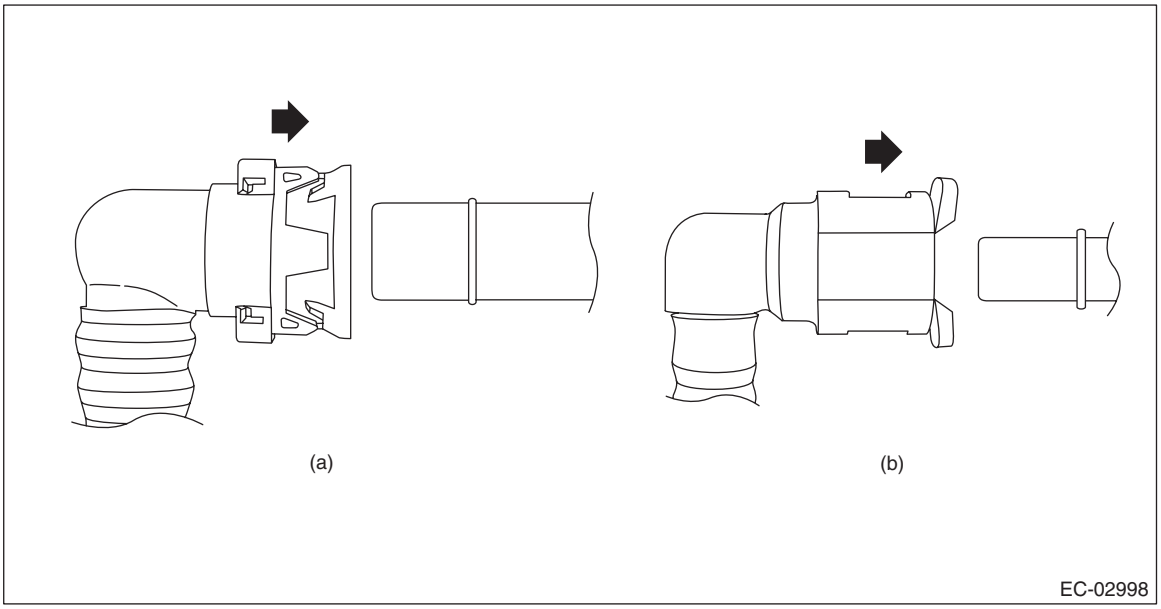

(a) Drain tube and vent tube (b) Purge tube

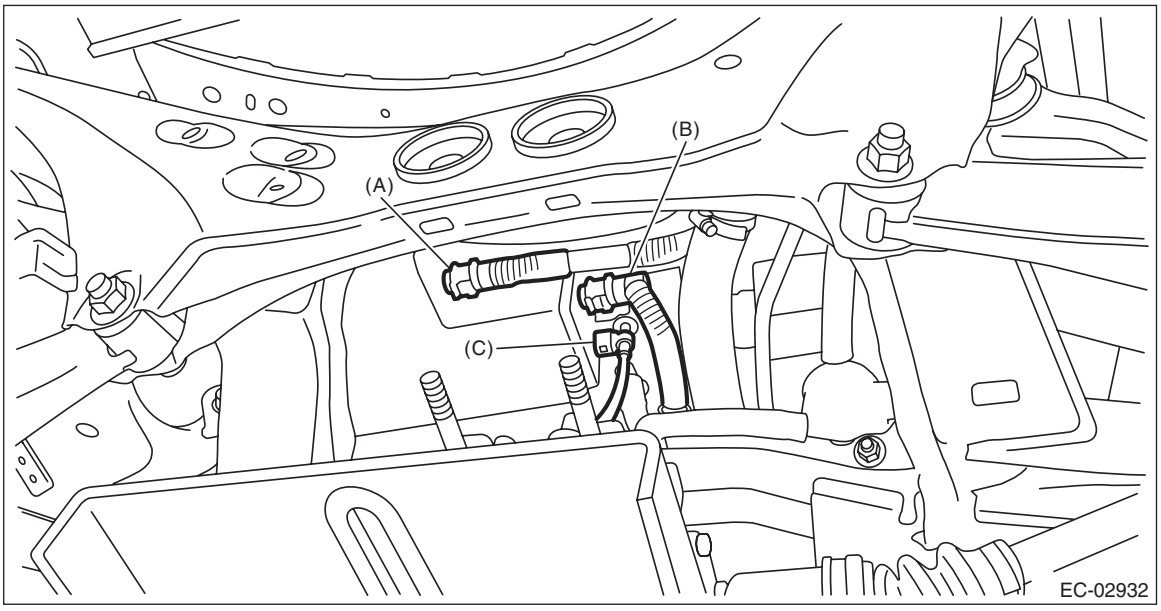

3) Lift up the transmission jack gradually, and set the rear differential to the rear sub frame assembly.

NOTE:
When inserting the stud bolt into the bushing portion of the rear sub frame assembly, adjust the angle and location of transmission jack and jack stand.

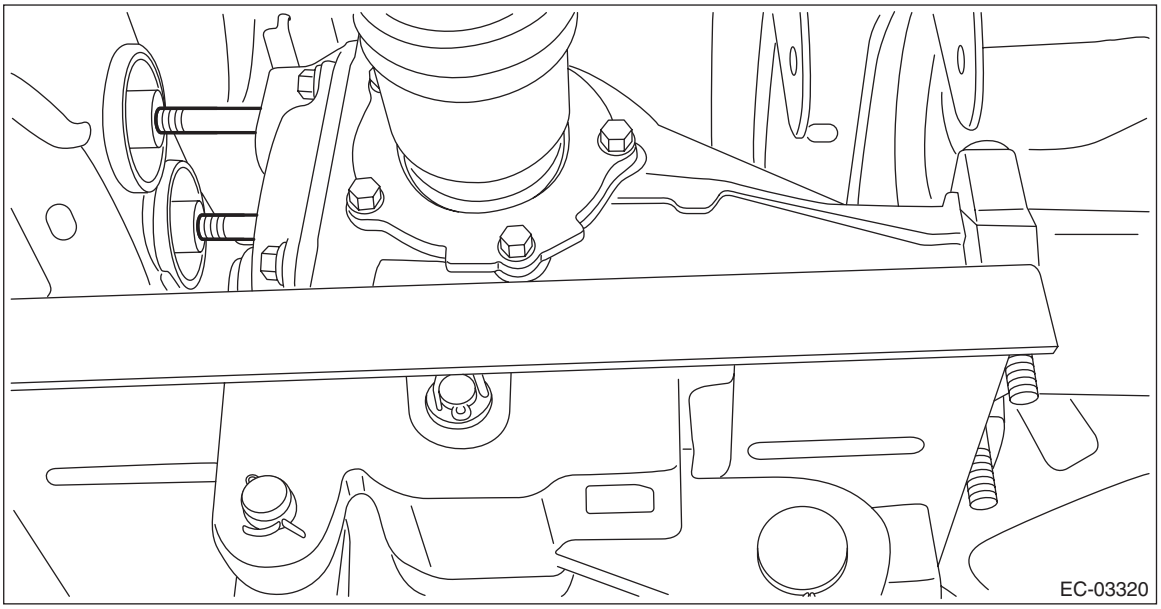

4) Temporarily tighten the self-locking nuts which hold the rear differential to the rear sub frame assembly.

NOTE:
Use a new self-locking nut.

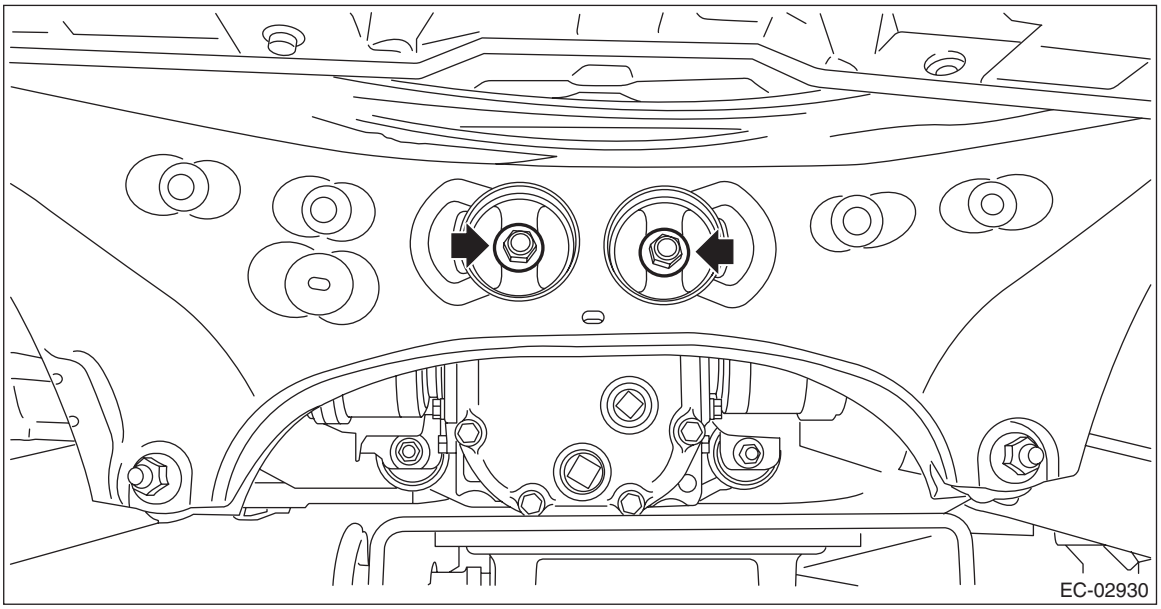

5) Set the rear differential member to the rear sub frame assembly and rear differential, and temporarily tighten the self-lock nuts which secure the rear differential member to the rear sub frame assembly and rear differential.

NOTE:
Use a new self-locking nut.

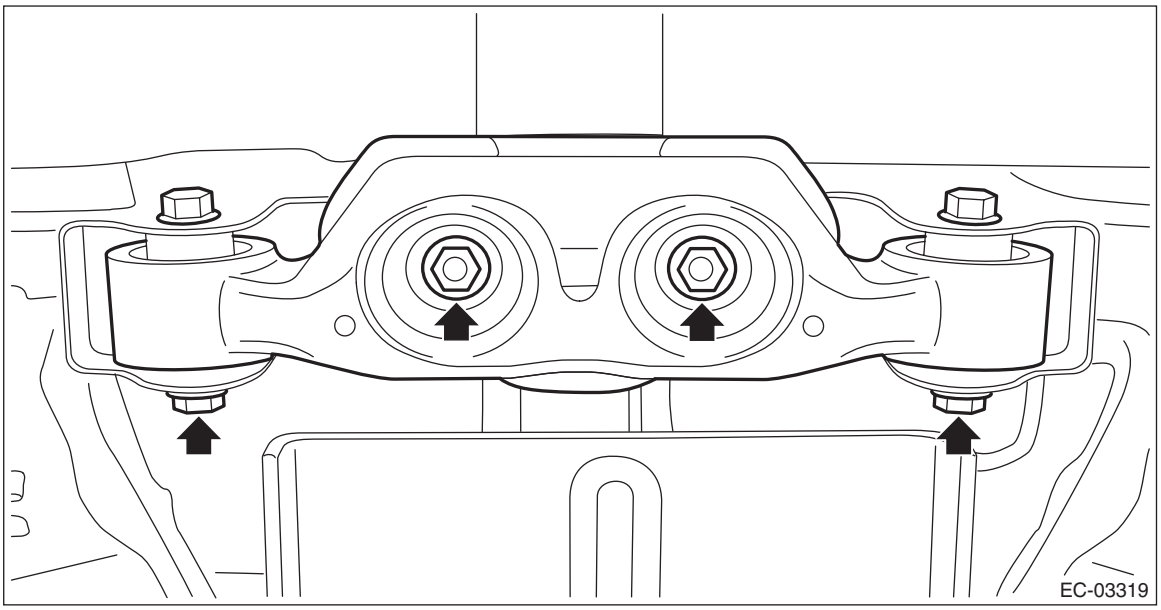

6) Remove the transmission jack from the rear differential.
7) Tighten the self-locking nuts which secure the rear differential member to the rear sub frame assembly and rear differential.

Tightening torque:
T1: 50 N·m (5.1 kgf-m, 36.9 ft-lb)
T2: 110 N·m (11.2 kgf-m, 81.1 ft-lb)

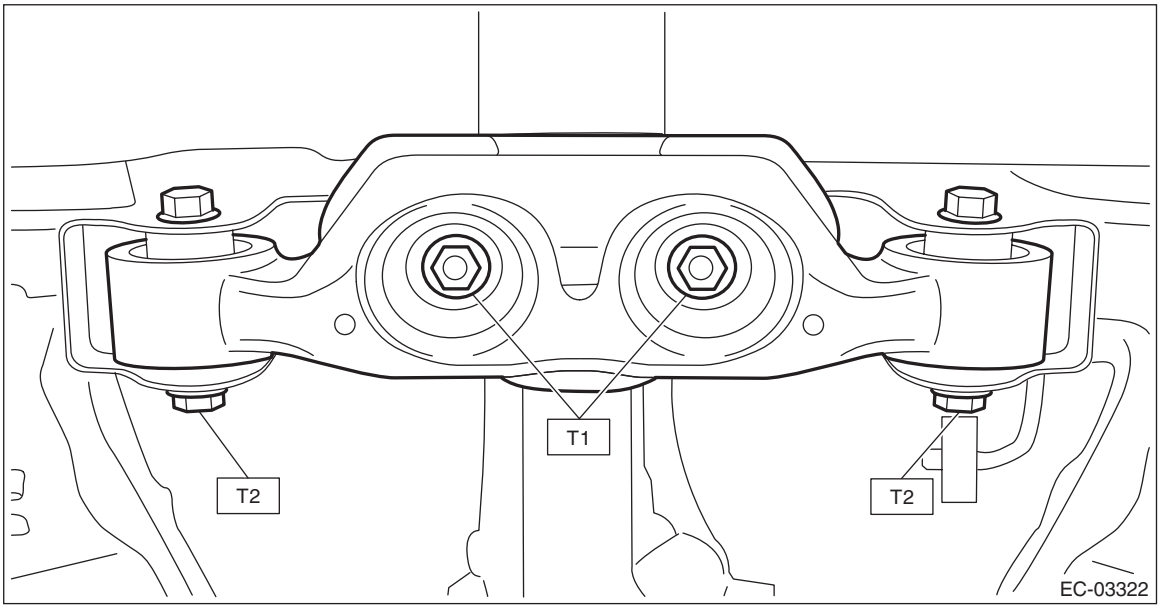

8) Tighten the self-locking nuts which secure the rear differential to the rear sub frame assembly.

Tightening torque:
70 N·m (7.1 kgf-m, 51.6 ft-lb)

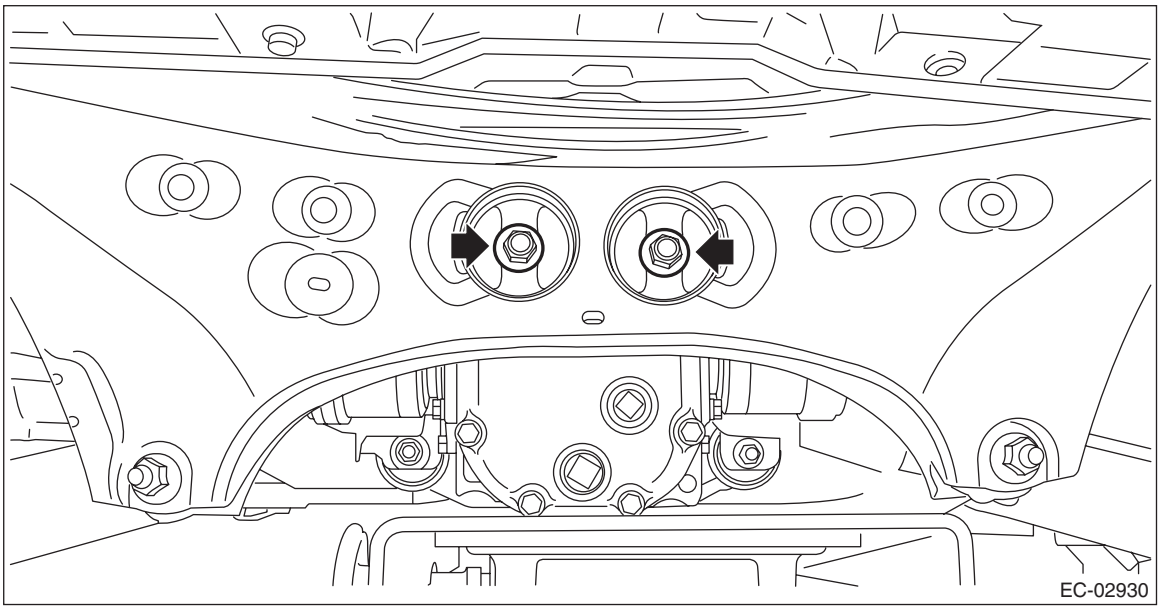

9) Install the propeller shaft. <Ref. to DS-13, INSTALLATION, Propeller Shaft.>
10) Install the rear exhaust pipe. <Ref. to EX(H4DO(w/o HEV))-20, INSTALLATION, Rear Exhaust Pipe.>
11) Lower the vehicle.

C: INSPECTION

1) Check that the canister has no deformation, cracks or other damages.
2) Check that the tube has no cracks, damage or loose part.

5. Purge Control Solenoid Valve

A: REMOVAL

1) Disconnect the ground cable from battery.

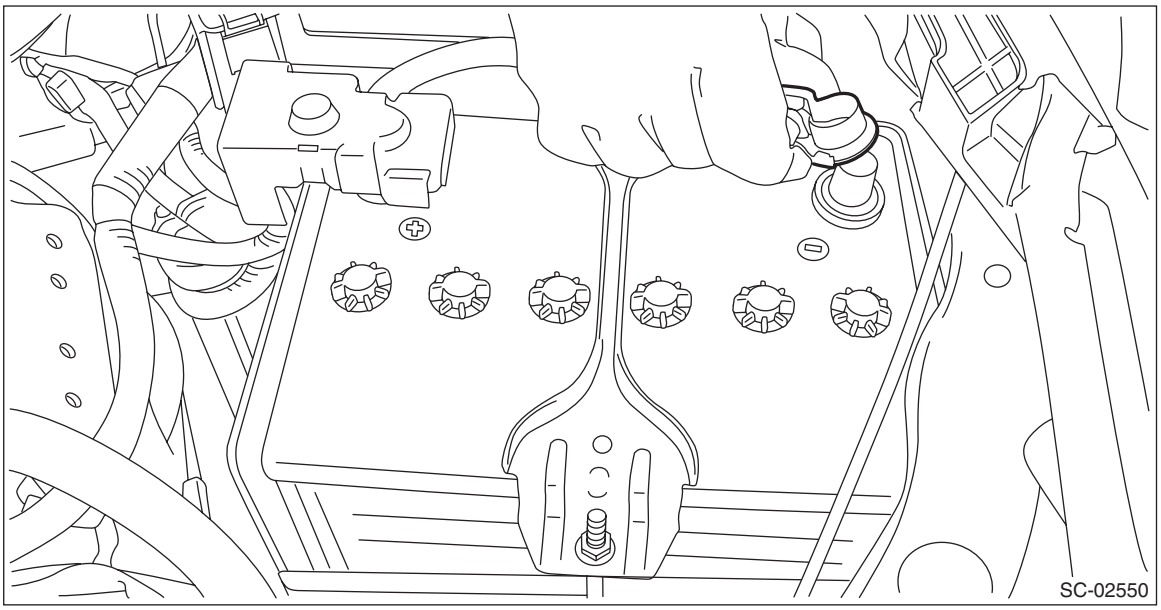

2) Remove the bolt which holds the purge control solenoid valve onto intake manifold.

NOTE:
Hold the purge control solenoid valve unit by hand to prevent it from rotating together.

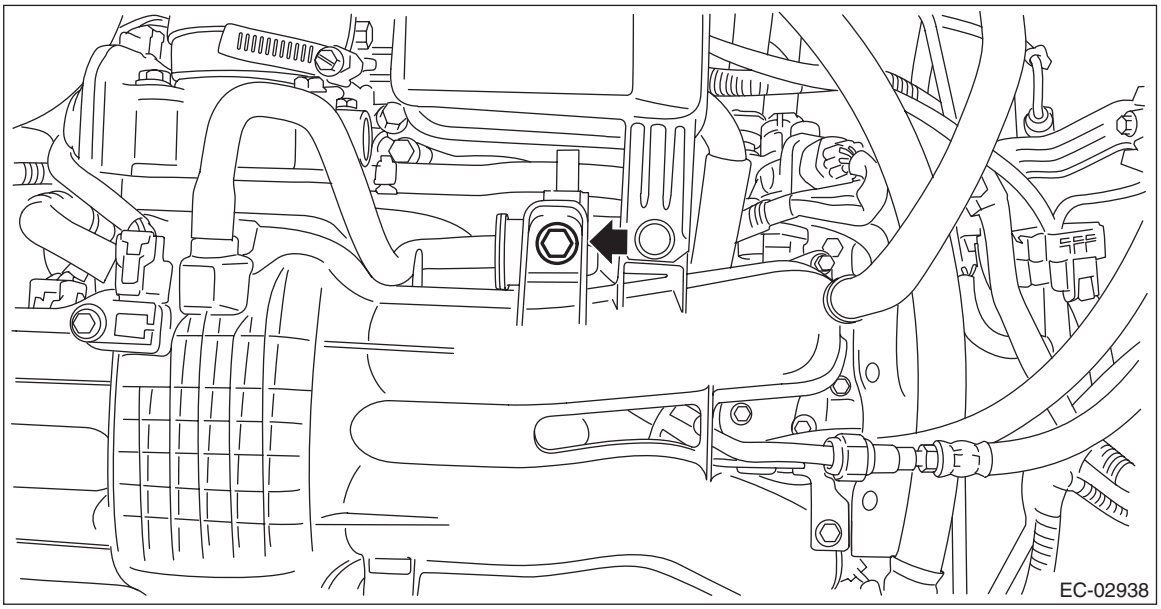

3) Disconnect the vacuum hose from the intake manifold and intake manifold clip (A).

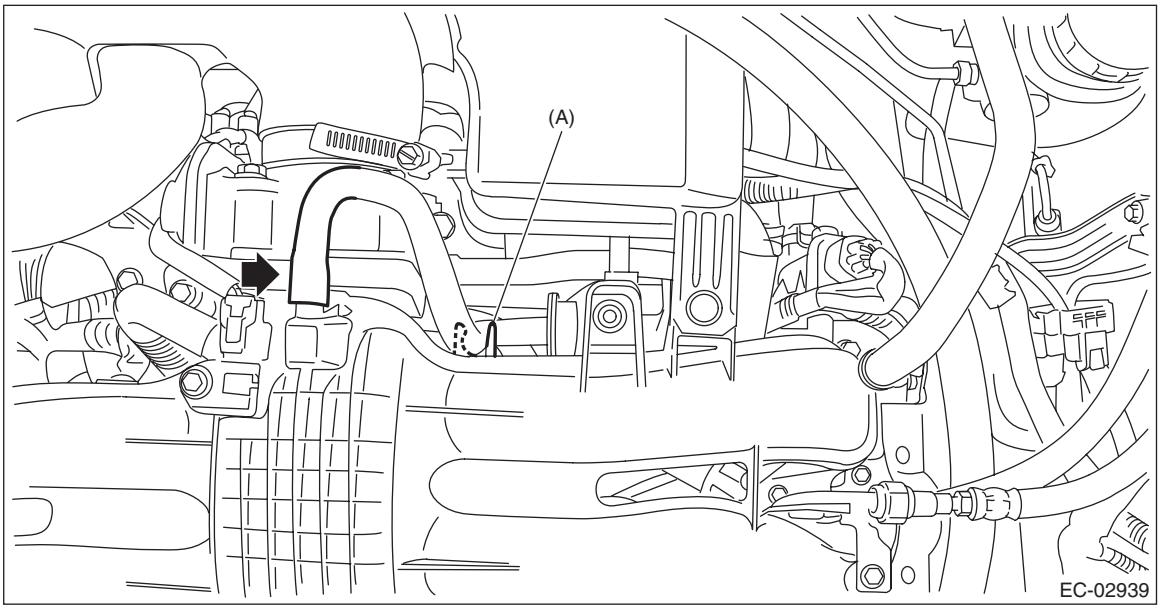

4) Disconnect the vacuum hose (A) and connector (B) from the purge control solenoid valve, and remove the purge control solenoid valve.

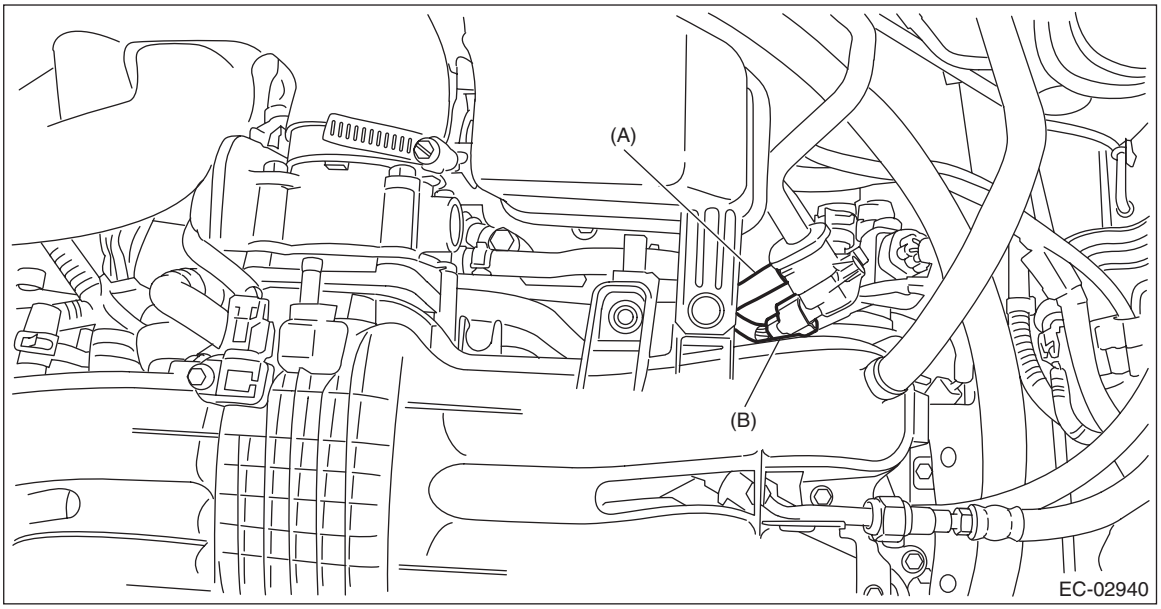

5) Remove the vacuum hose from the purge control solenoid valve.

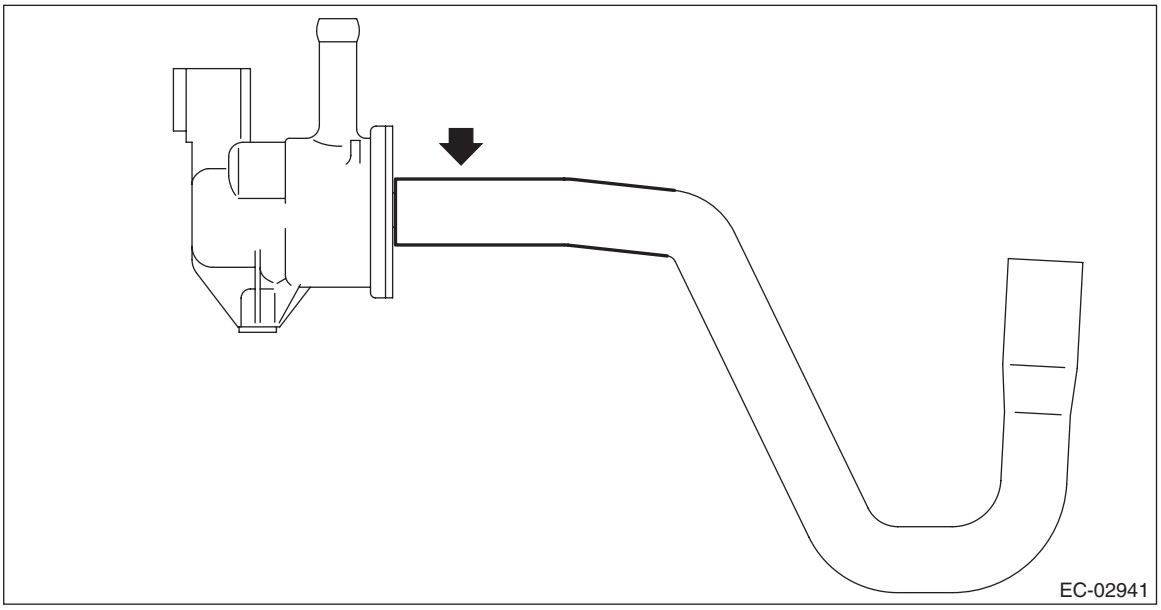

B: INSTALLATION

Install in the reverse order of removal.

NOTE:
- Hold the purge control solenoid valve unit by hand to prevent it from rotating together.
- Connect the vacuum hose as shown in the figure.

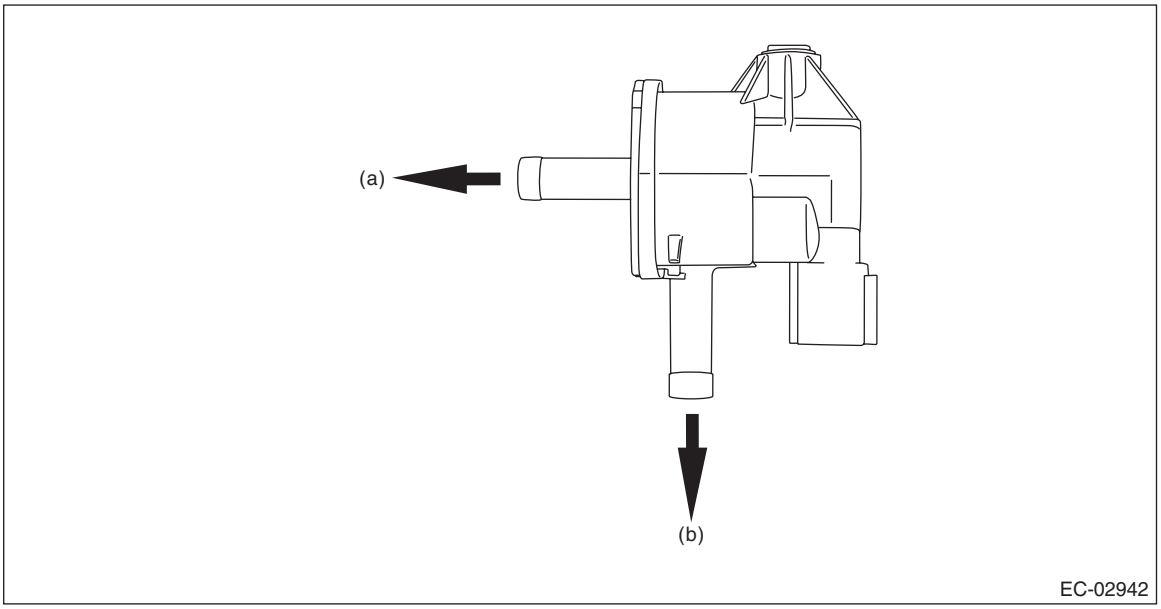

(a) To intake manifold (b) To fuel pipe

- Check that the vacuum hose is securely held to the intake manifold and intake manifold clip (A).

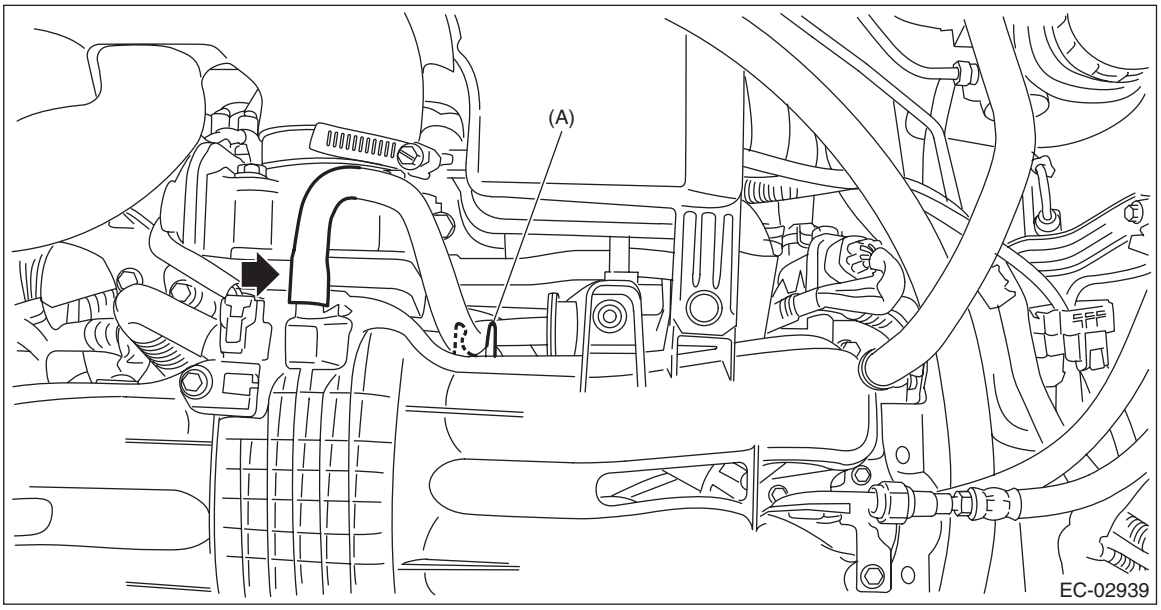

Tightening torque:
3.4 N·m (0.3 kgf-m, 2.5 ft-lb)

C: INSPECTION

1. PURGE CONTROL SOLENOID VALVE

1) Check that the purge control solenoid valve has no deformation, cracks or other damages.
2) Measure the resistance between the purge control solenoid valve terminals.

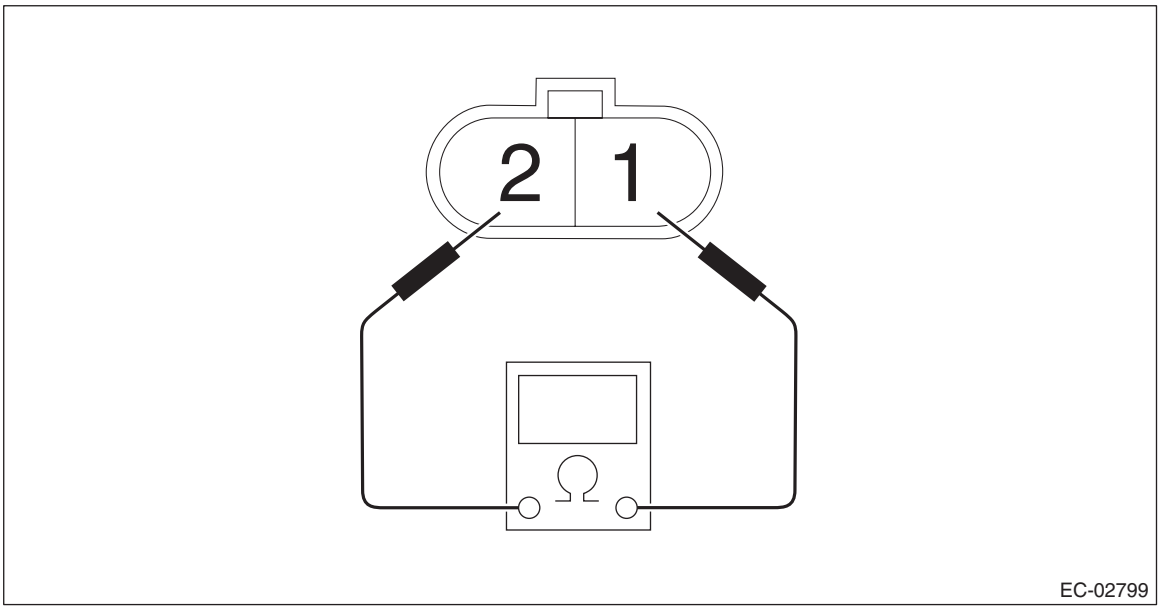

Terminal No.	Standard
1 and 2	24.5±1.5 Ω (20°C (68°F))

3) Check that air does not come out from (B) when air is blown into (A).

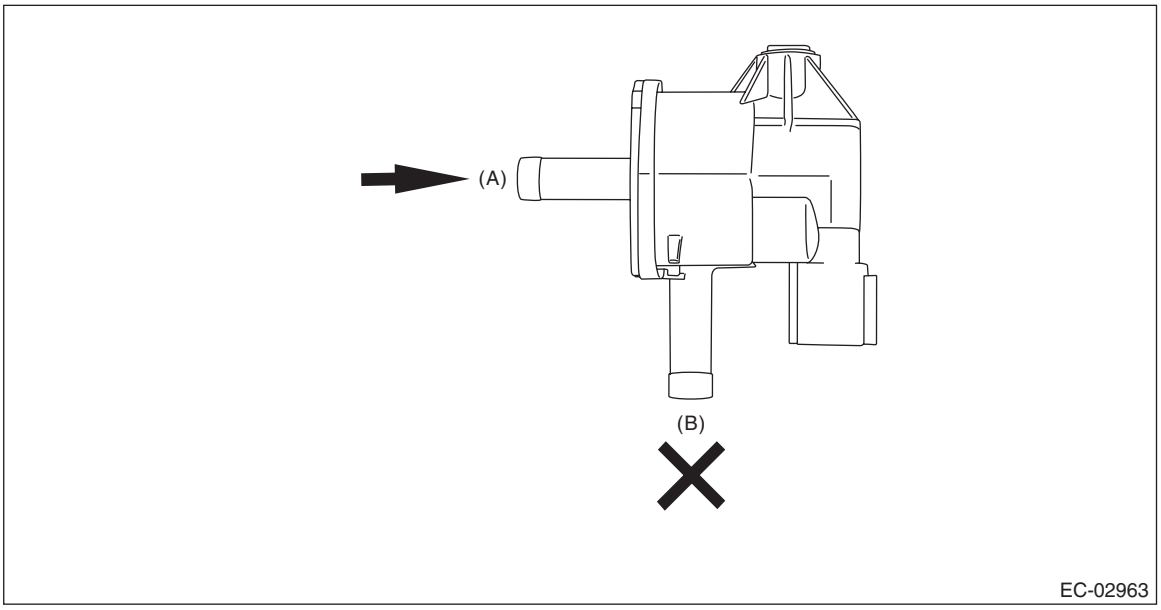

4) Connect the battery positive terminal to the terminal No. 1 and the battery negative terminal to the terminal No. 2. Check that air is discharged from (B), when supplying air to (A).

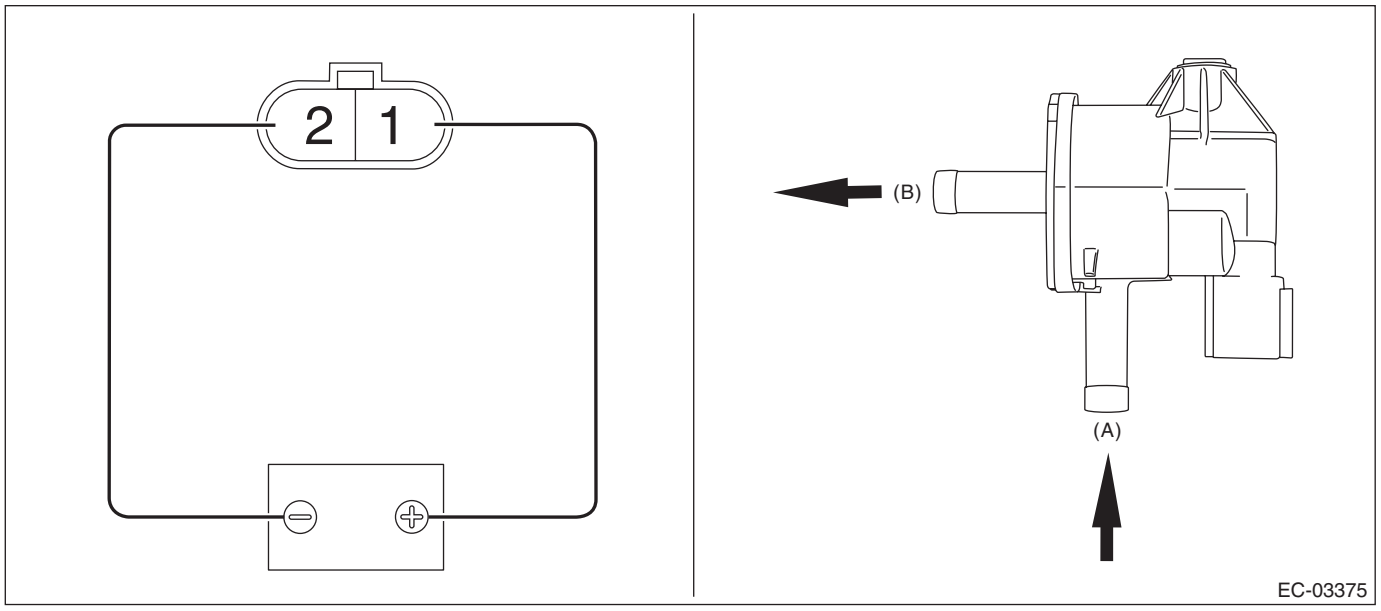

2. OTHER INSPECTIONS

Check the vacuum hose for cracks, damage or looseness.

6. EGR Control Valve

A: REMOVAL

1) Disconnect the ground cable from battery.

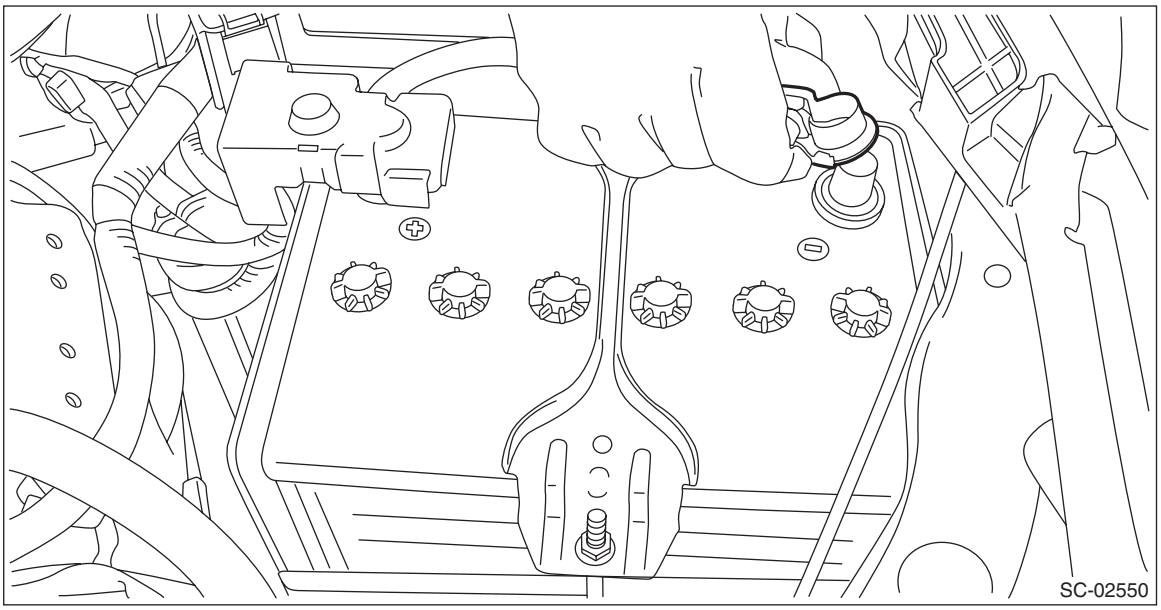

2) Remove the clip (A) from the air intake boot.
3) Loosen the clamp (B) connecting the air intake boot and air cleaner case (rear).
4) Loosen the clamp (C) which connects the air intake boot and throttle body.

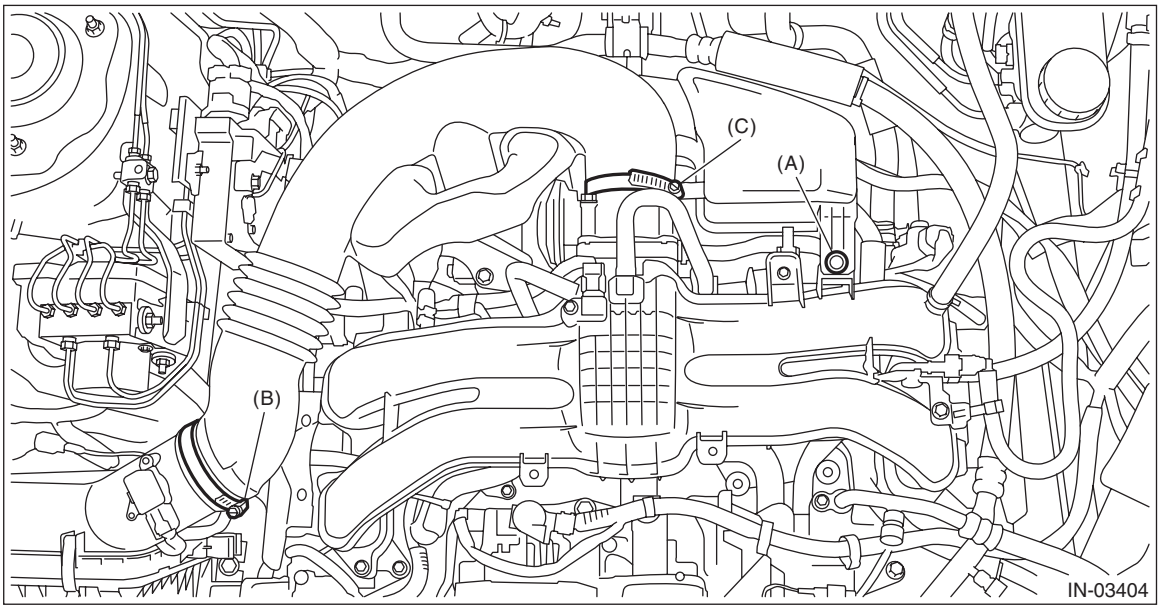

5) Remove the air intake boot from the throttle body, and move the air intake boot to the left side wheel apron.

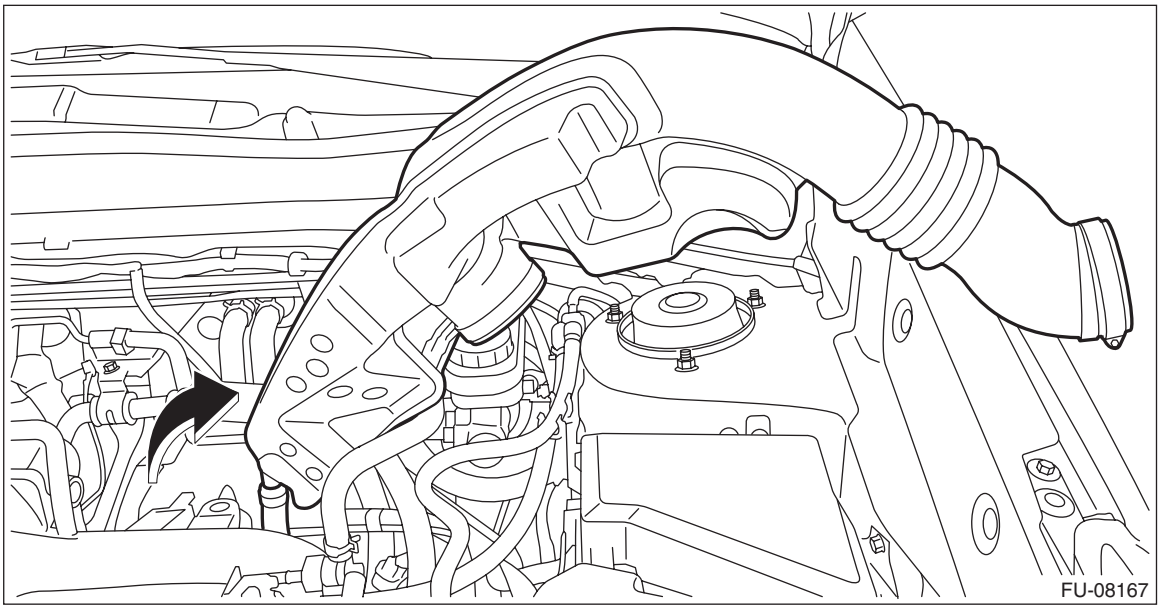

6) Disconnect the connector from the EGR control valve.

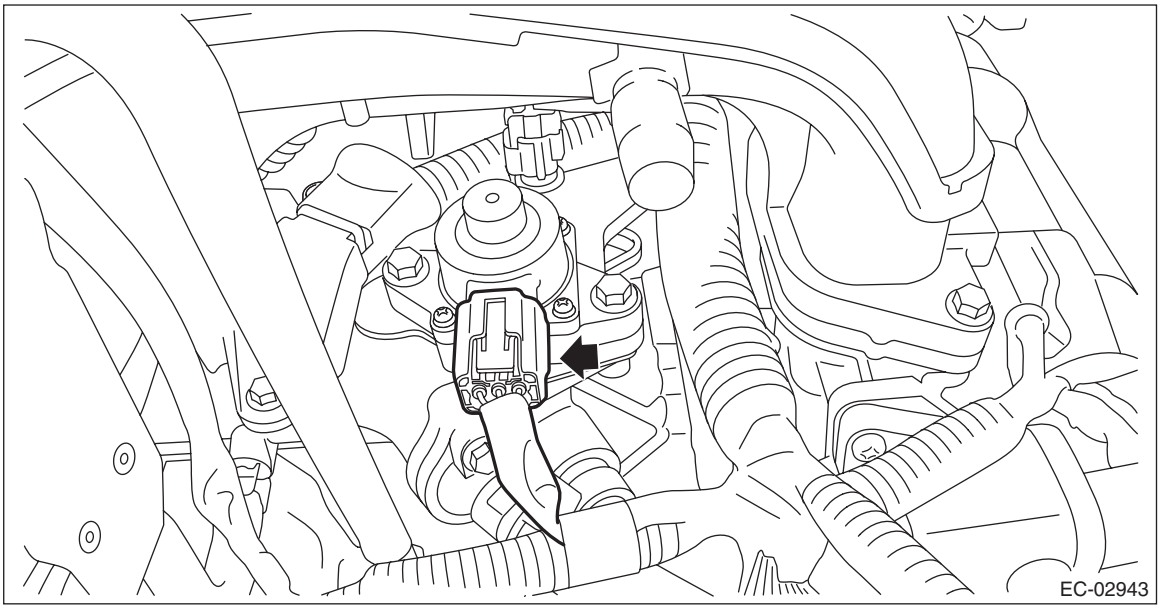

7) Remove the EGR control valve from the water pipe assembly.

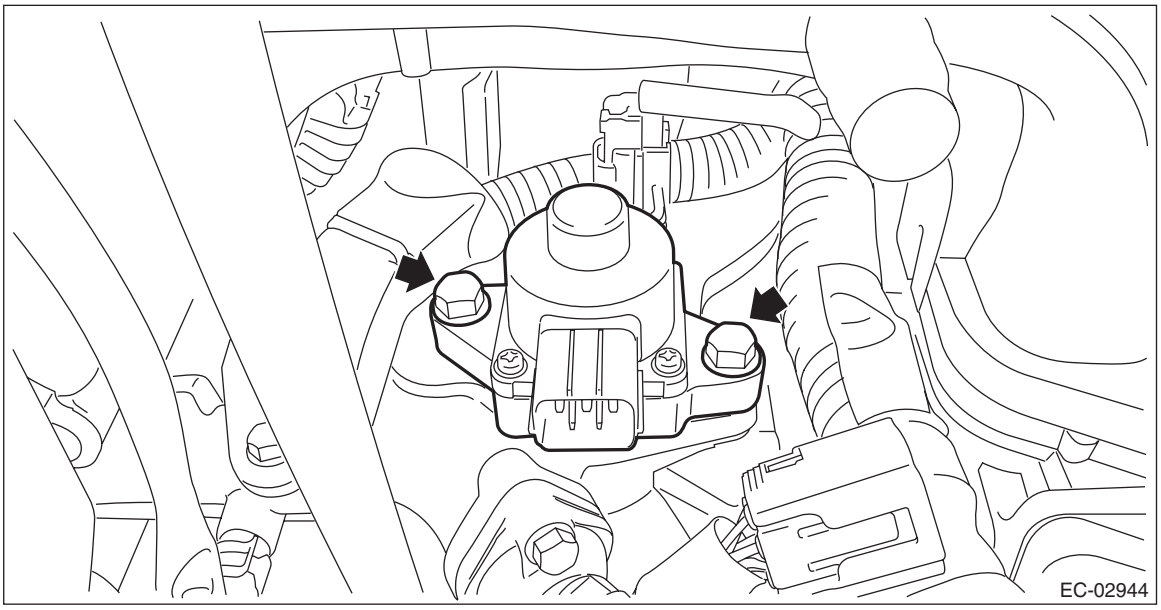

B: INSTALLATION

Install in the reverse order of removal.

NOTE:
Use new O-rings and gaskets.

Tightening torque:
22 N·m (2.2 kgf-m, 16.2 ft-lb)

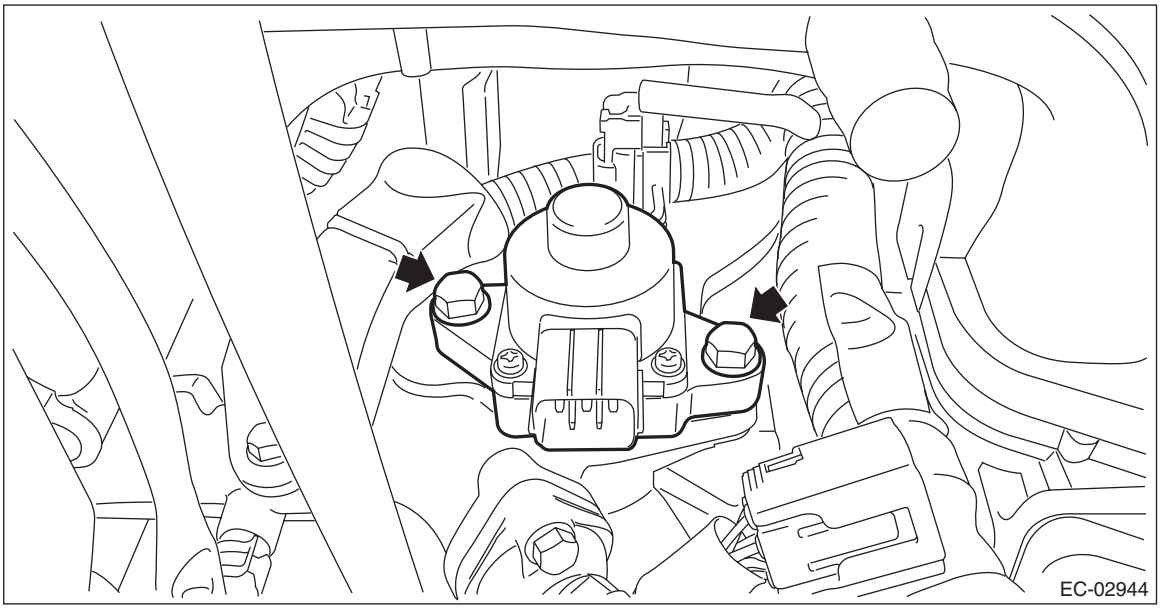

Tightening torque:
3 N·m (0.3 kgf-m, 2.2 ft-lb)

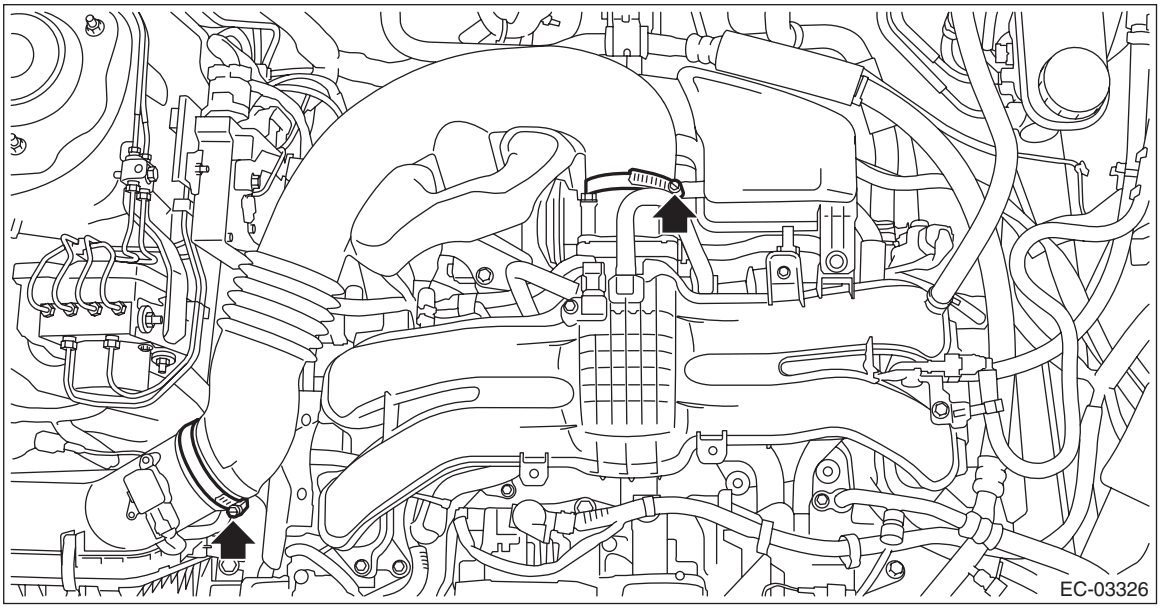

C: INSPECTION

1) Check that the EGR control valve has no deformation, cracks or other damages.
2) Measure the resistance between EGR control valve terminals.

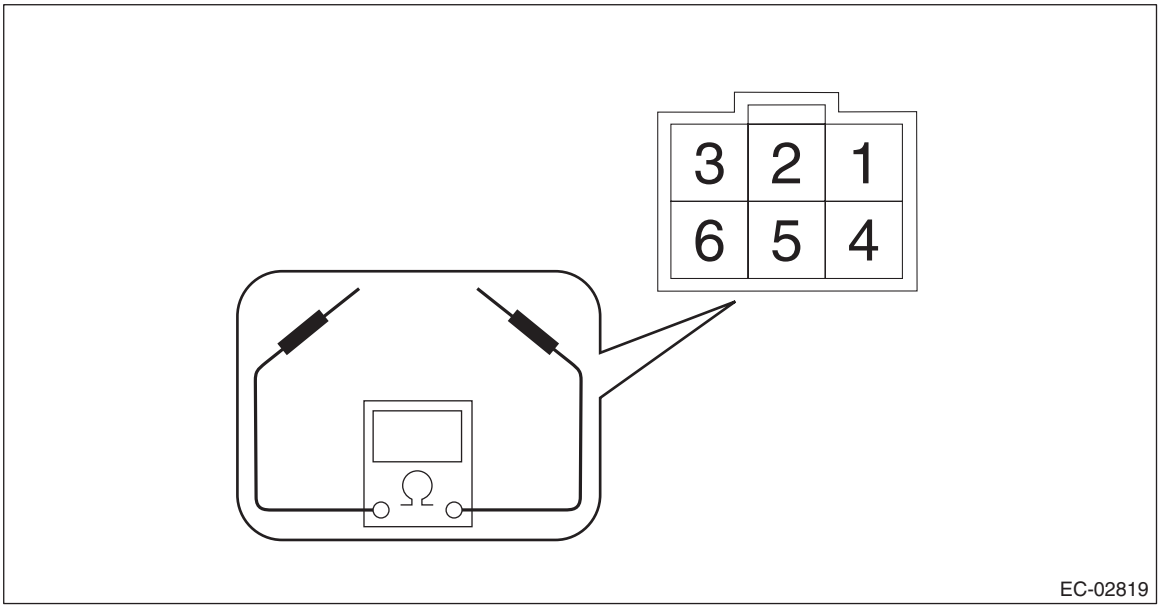

Terminal No.	Standard
2 and 1	22±2 Ω
2 and 3	22±2 Ω
5 and 4	22±2 Ω
5 and 6	22±2 Ω

7. EGR Pipe

A: REMOVAL

1) Disconnect the ground cable from battery.

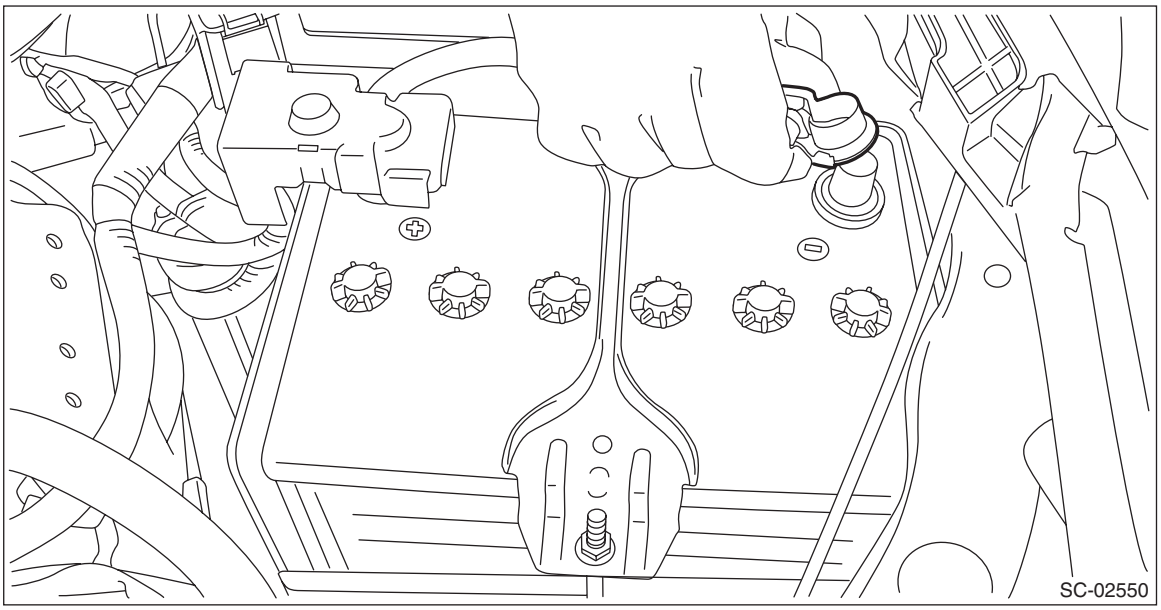

2) Remove the clip (A) from the air intake boot.
3) Loosen the clamp (B) connecting the air intake boot and air cleaner case (rear).
4) Loosen the clamp (C) which connects the air intake boot and throttle body.

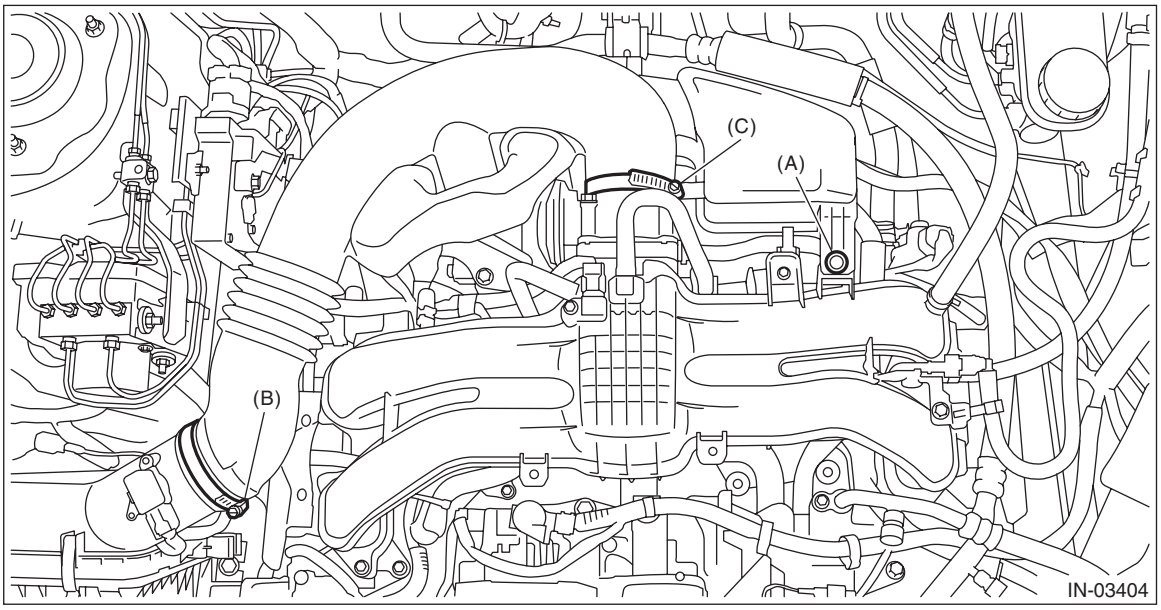

5) Remove the air intake boot from the throttle body, and move the air intake boot to the left side wheel apron.

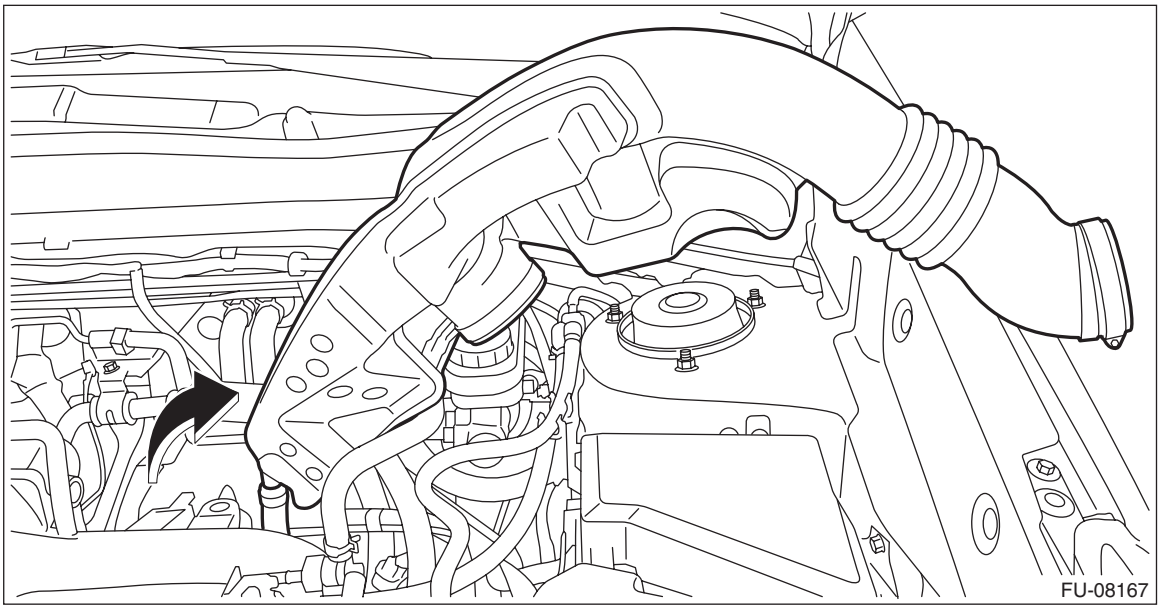

6) Remove the EGR pipe assembly from the water pipe assembly and the cylinder head RH.

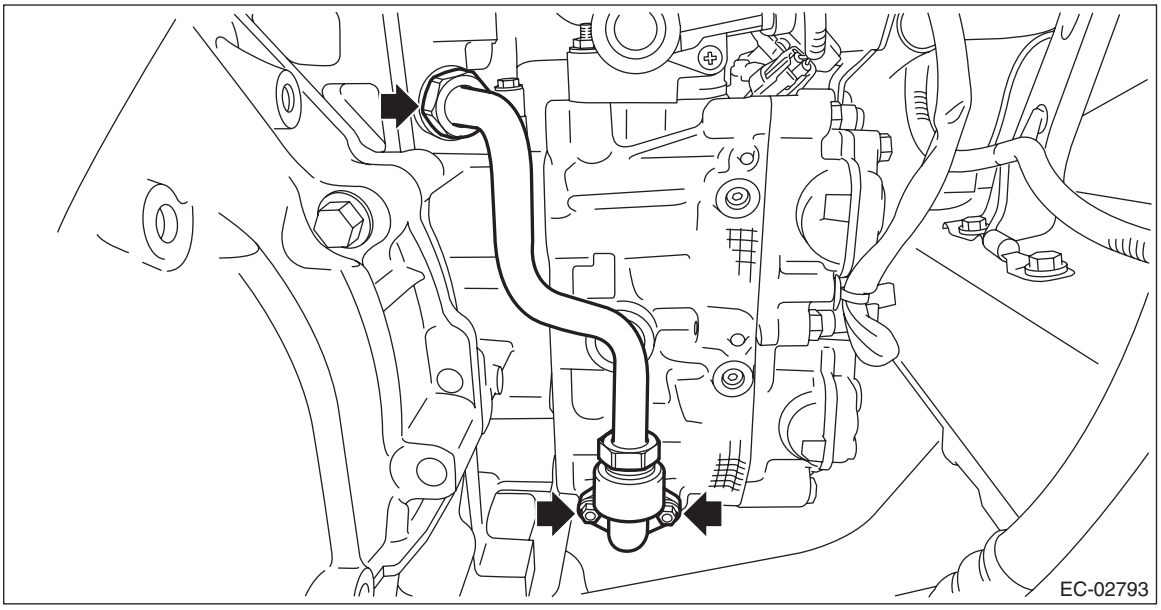

7) Remove the EGR pipe from EGR pipe adapter.

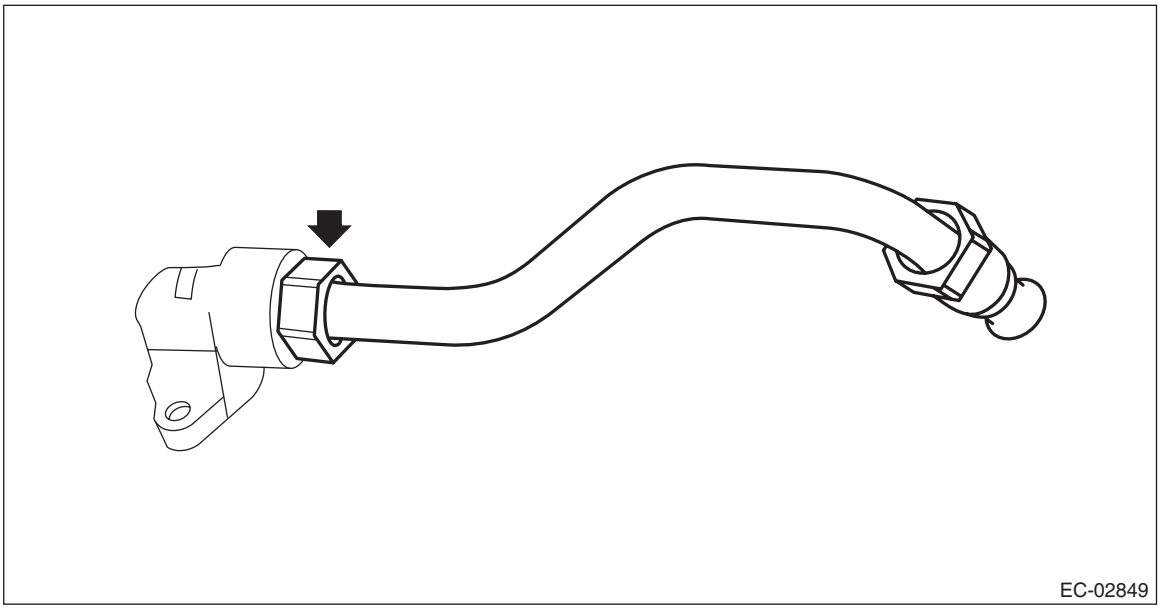

8) Disconnect the connector from the throttle body.

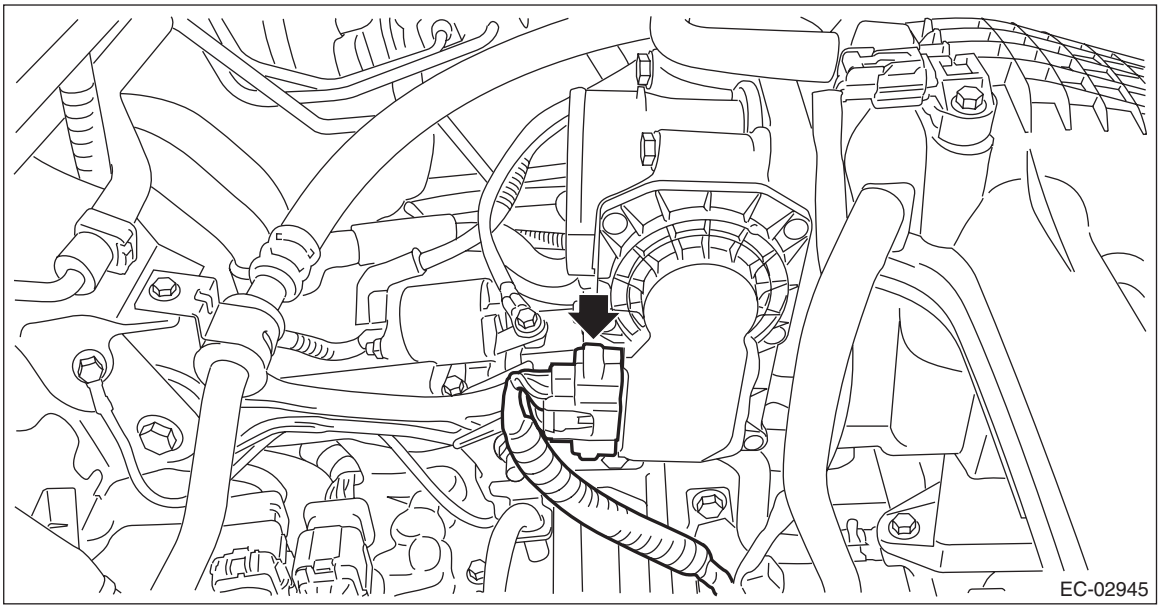

9) Remove the bolts which secure the throttle body to the intake manifold, and tilt the throttle body to the rear side of vehicle.

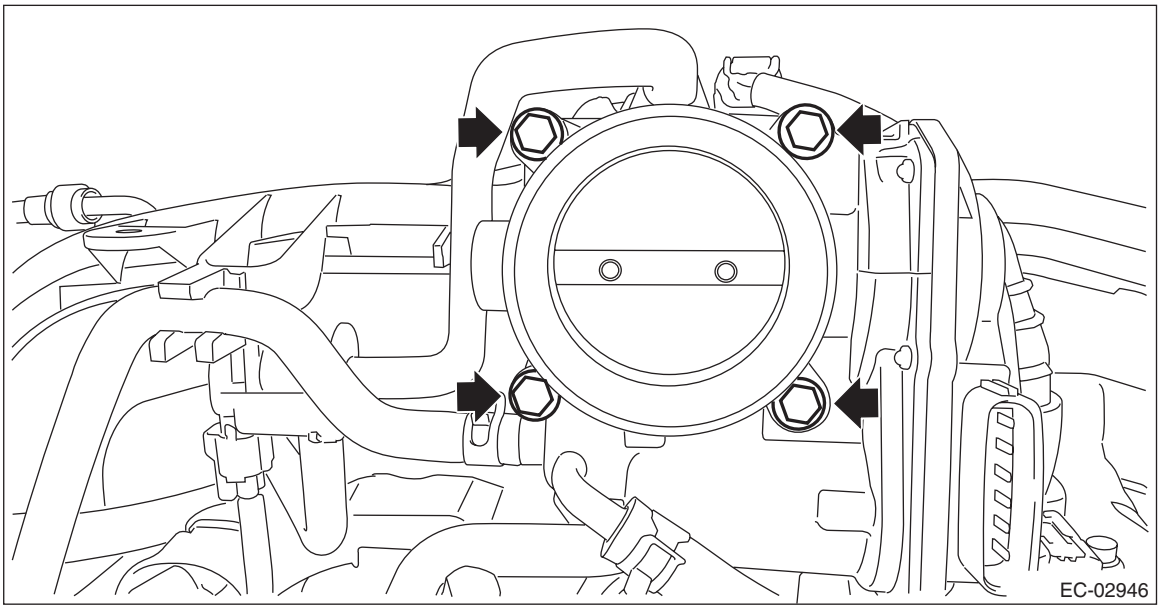

10) Remove the bolts and nuts that hold the EGR pipe to the intake manifold and the water pipe assembly, and remove the EGR pipe.

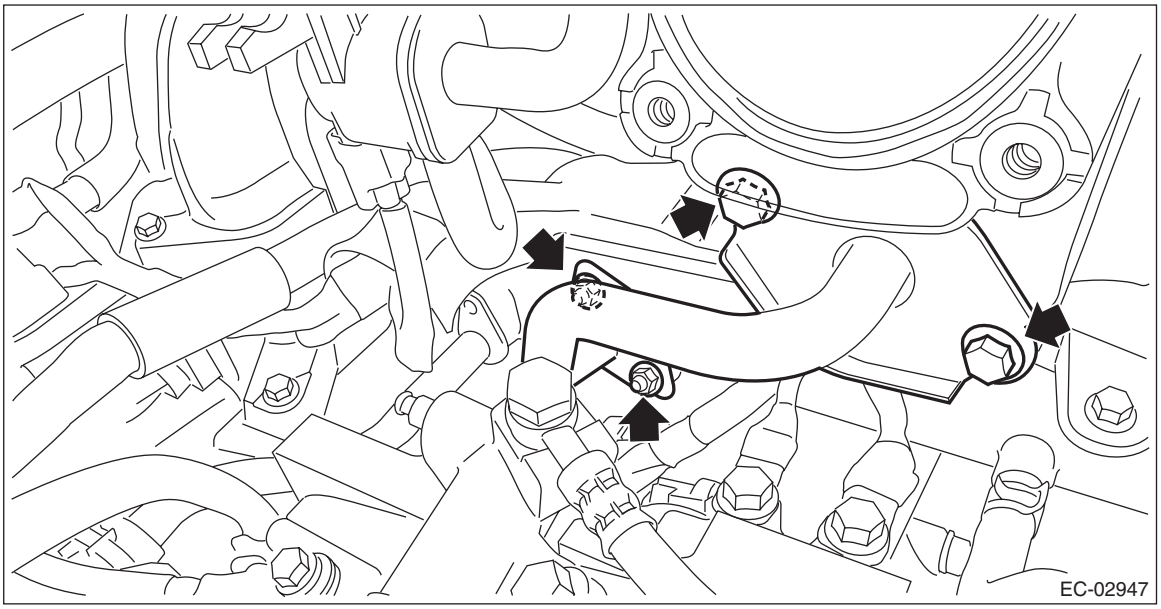

B: INSTALLATION

1) Temporarily install the EGR pipe to the intake manifold and water pipe assembly, and tighten the EGR pipe in numerical order as shown in the figure.

NOTE:
Use a new gasket.

Tightening torque:
6.4 N·m (0.7 kgf-m, 4.7 ft-lb)

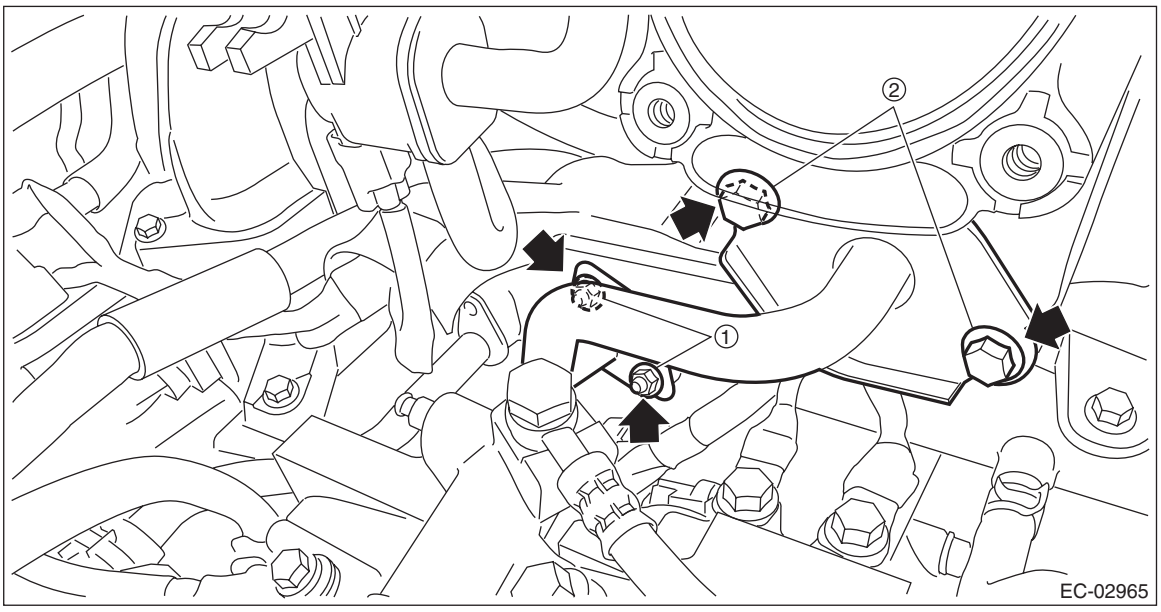

2) Install the throttle body to the intake manifold.

Tightening torque:
8.0 N·m (0.8 kgf-m, 5.9 ft-lb)

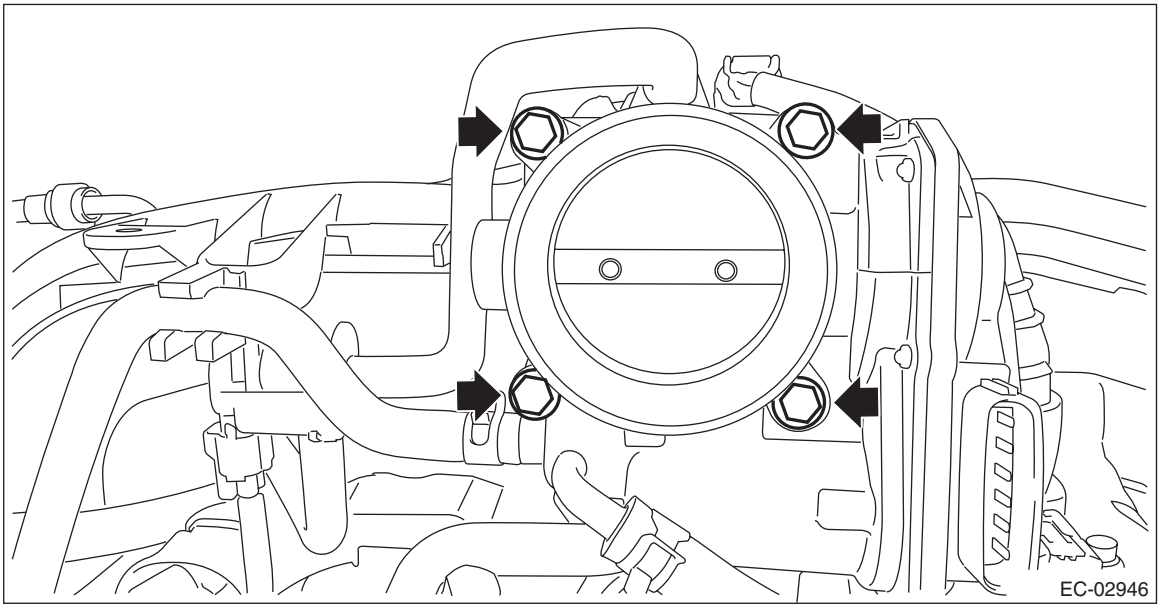

3) Connect the connector to the throttle body.

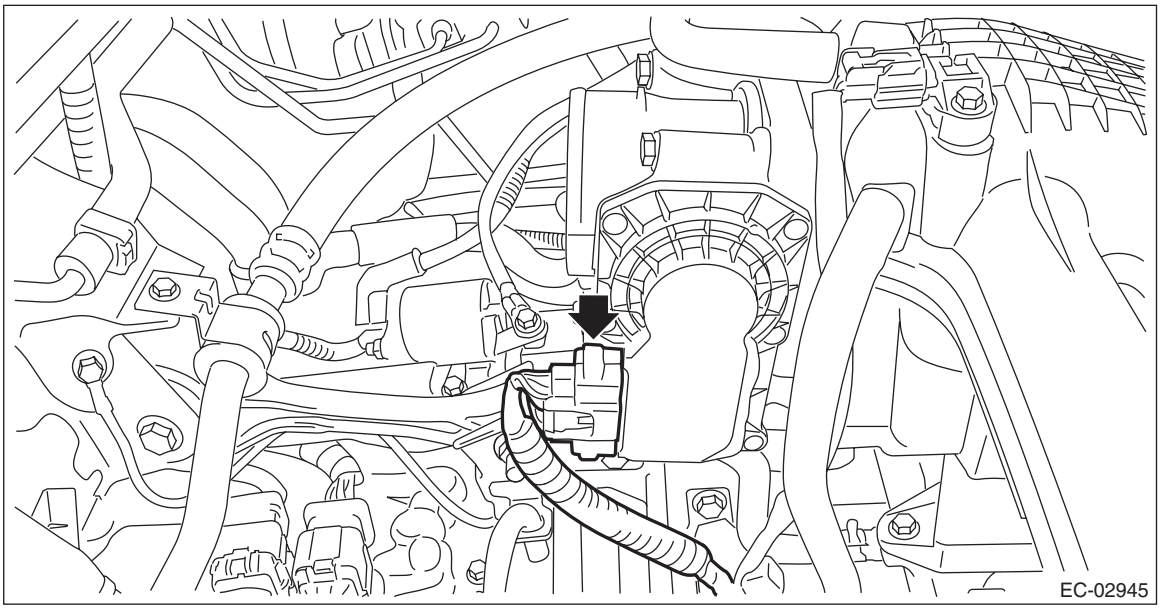

4) Temporarily install the EGR pipe to EGR pipe adapter.

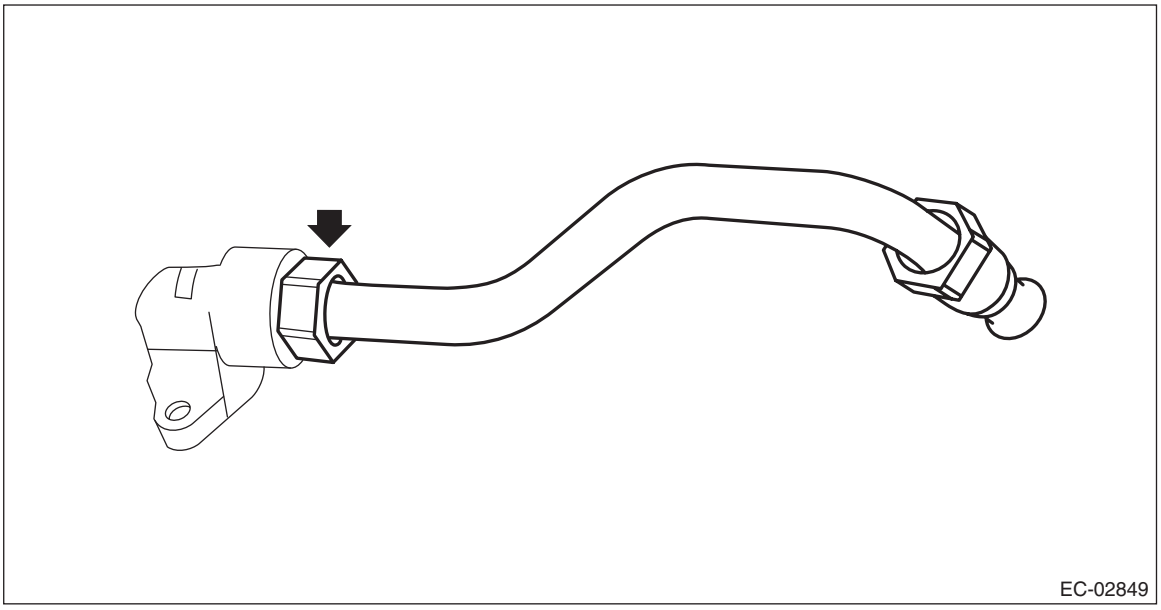

5) Temporarily install the EGR pipe assembly to the water pipe assembly and cylinder head assembly, and tighten the EGR pipe assembly in numerical order as shown in the figure.

Tightening torque:
T1: 6.4 N·m (0.7 kgf-m, 4.7 ft-lb)
T2: 51 N·m (5.2 kgf-m, 37.6 ft-lb)

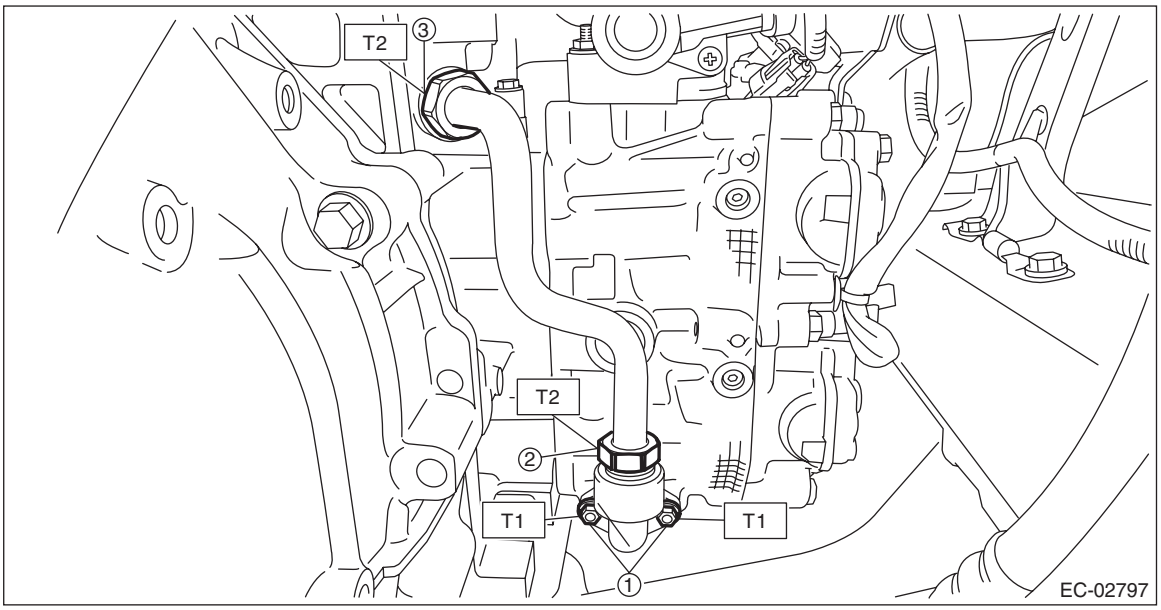

6) Install the air intake boot. <Ref. to IN(H4DO(w/o HEV))-12, INSTALLATION, Air Intake Boot.>
7) Connect the battery ground terminal.

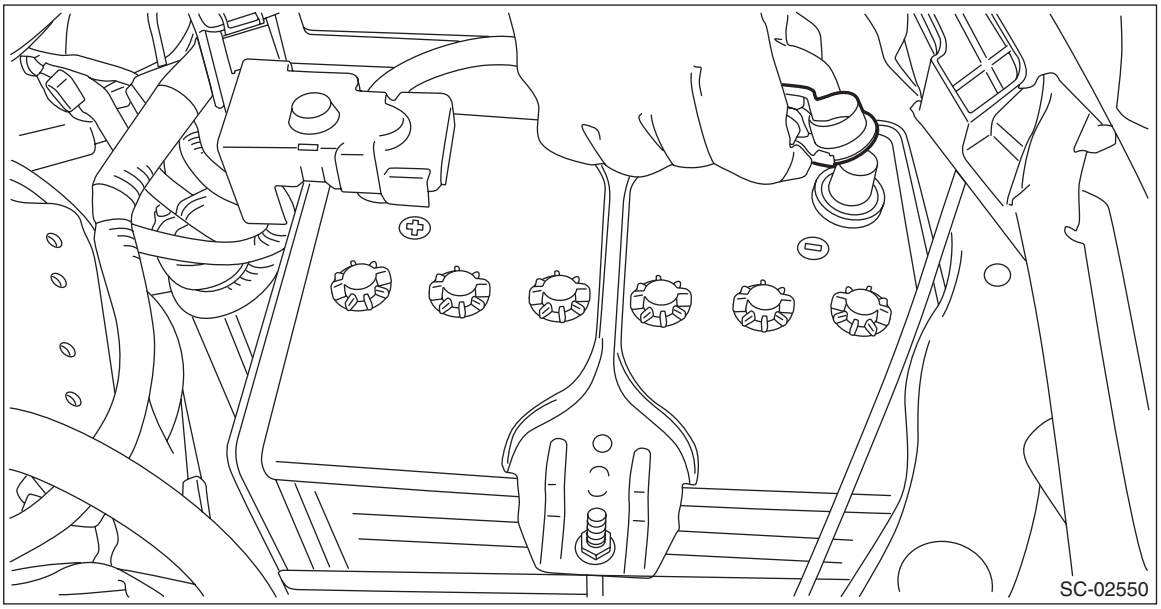

C: INSPECTION

Check that the EGR pipe assembly and EGR pipe have no deformation, cracks or other damages.

8. Fuel Level Sensor

A: REMOVAL

For removal procedures, refer to the “FU (H4DO (w/o HEV))” section. <Ref. to FU(H4DO(w/o HEV))-146, REMOVAL, Fuel Level Sensor.>

B: INSTALLATION

For installation procedures, refer to the “FU (H4DO (w/o HEV))” section. <Ref. to FU(H4DO(w/o HEV))-146, INSTALLATION, Fuel Level Sensor.>

C: INSPECTION

For inspection procedures, refer to the “FU (H4DO (w/o HEV))” section. <Ref. to FU(H4DO(w/o HEV))-147, INSPECTION, Fuel Level Sensor.>

9. Fuel Sub Level Sensor

A: REMOVAL

For removal procedures, refer to the “FU (H4DO (w/o HEV))” section. <Ref. to FU(H4DO(w/o HEV))-148, REMOVAL, Fuel Sub Level Sensor.>

B: INSTALLATION

For installation procedures, refer to the “FU (H4DO (w/o HEV))” section. <Ref. to FU(H4DO(w/o HEV))-151, INSTALLATION, Fuel Sub Level Sensor.>

C: INSPECTION

For inspection procedures, refer to the “FU (H4DO (w/o HEV))” section. <Ref. to FU(H4DO(w/o HEV))-153, INSPECTION, Fuel Sub Level Sensor.>

10.Drain Filter

A: SPECIFICATION

The leak check valve assembly is a non-disassembled part. Do not remove the drain filter from the leak check valve assembly. Refer to “Leak Check Valve Assembly” for removal and installation procedures. <Ref. to EC(H4DO(w/o HEV))-36, REMOVAL, Leak Check Valve Assembly.> <Ref. to EC(H4DO(w/o HEV))-42, INSTALLATION, Leak Check Valve Assembly.>

11.Leak Check Valve Assembly

A: REMOVAL

1) Disconnect the ground cable from battery.

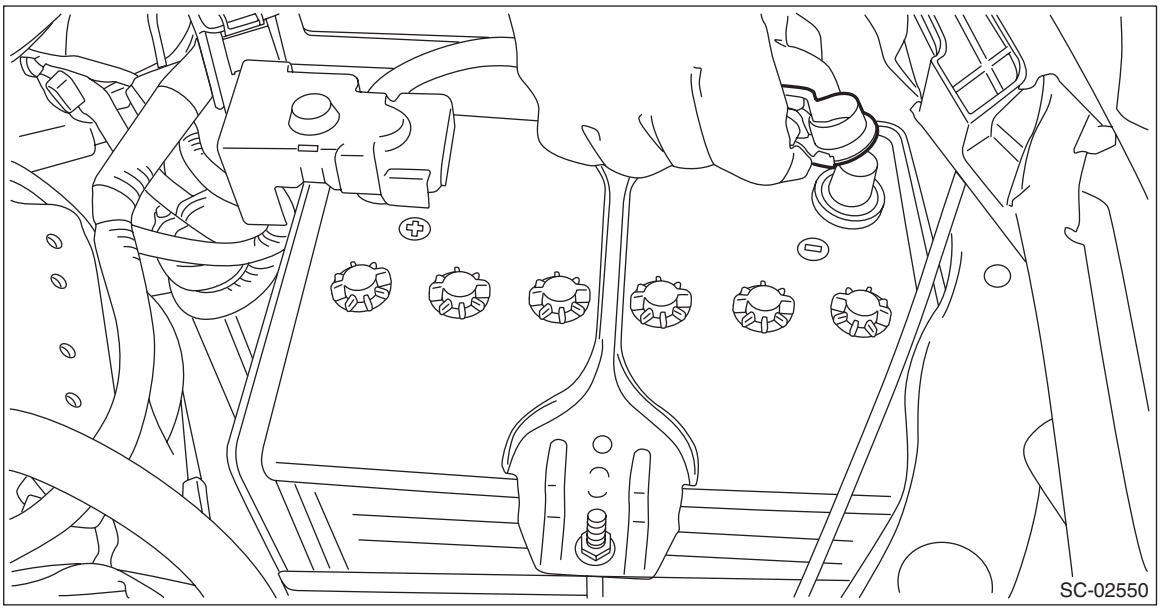

2) Lift up the vehicle.
3) Remove the rear exhaust pipe. <Ref. to EX(H4DO(w/o HEV))-18, REMOVAL, Rear Exhaust Pipe.>
4) Remove the propeller shaft. <Ref. to DS-12, REMOVAL, Propeller Shaft.>
5) Support the rear differential with the transmission jack.
6) Remove the self-locking nuts which hold the rear differential to the rear sub frame assembly.

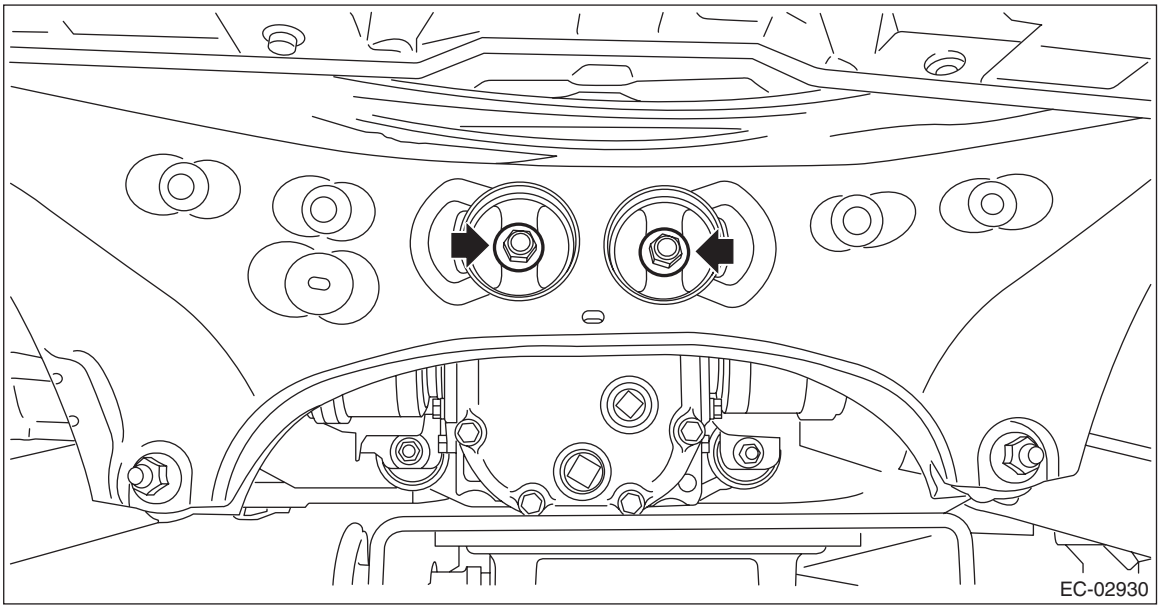

7) Remove the rear differential member from the rear sub frame assembly and the rear differential.

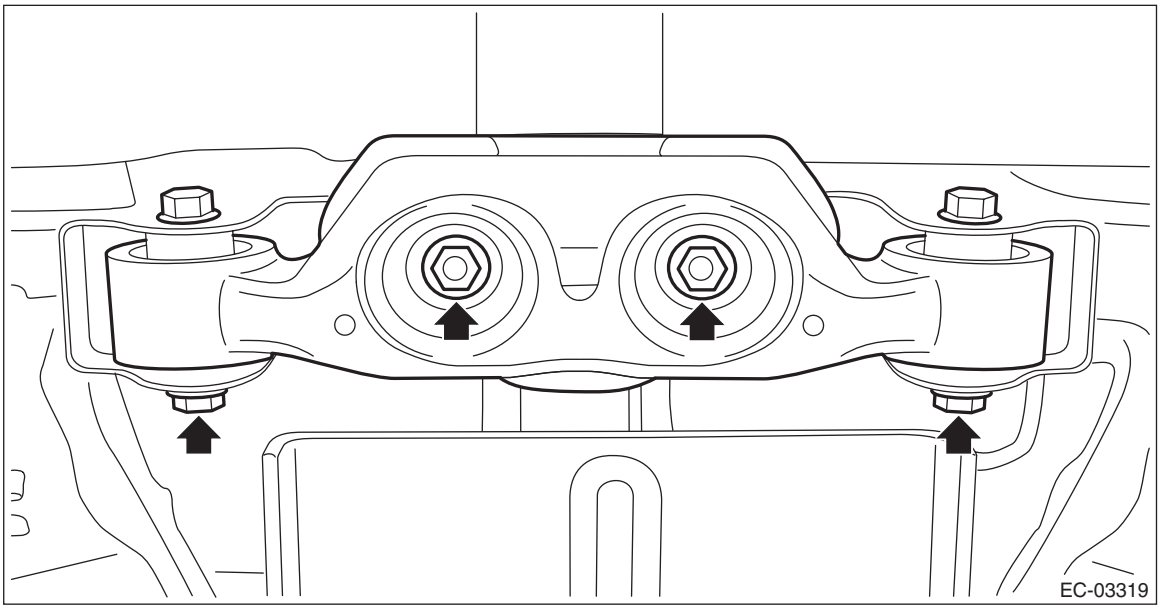

8) Lower the transmission jack gradually until the rear differential is at the position shown in the figure.

NOTE:
• When pulling out the stud bolt from the bushing portion of the rear sub frame assembly, adjust the angle and location of transmission jack and jack stand.

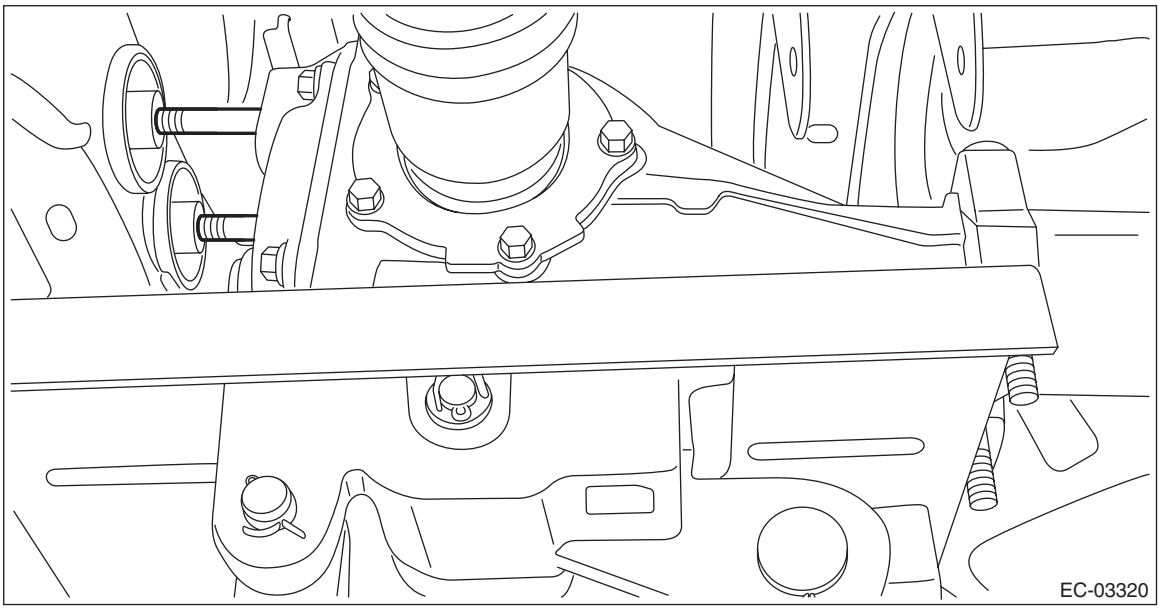

• Do not lower the rear differential excessively. Doing so may add extra load to the drive shaft or cause the falling-off of the drive shaft.

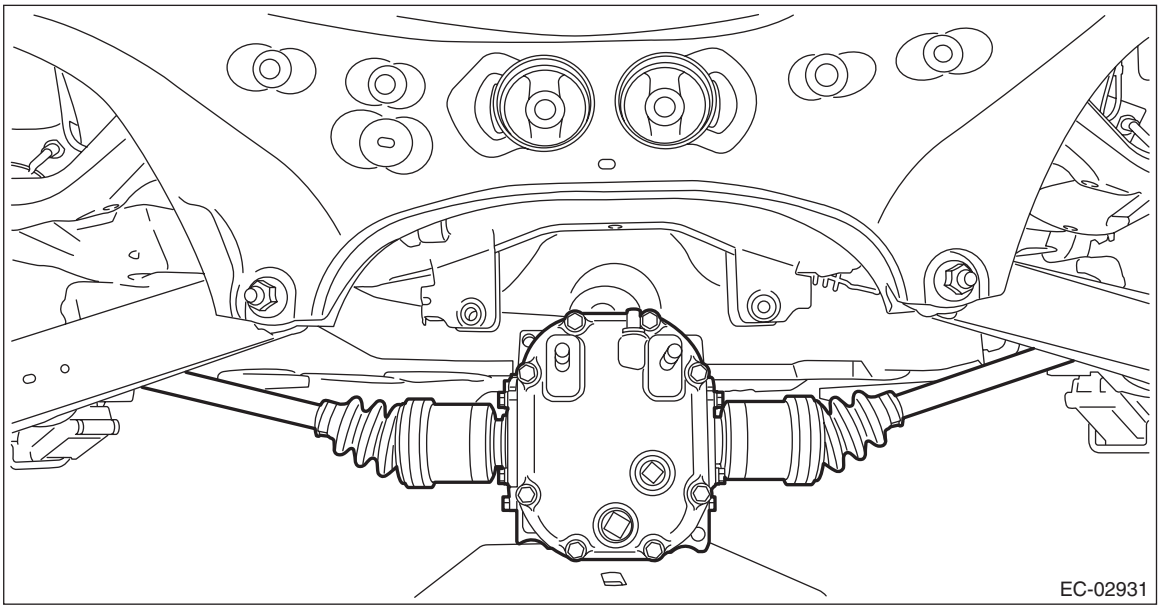

9) Disconnect the drain tube from the canister.

NOTE:
Disconnect the quick connector as shown in the figure.

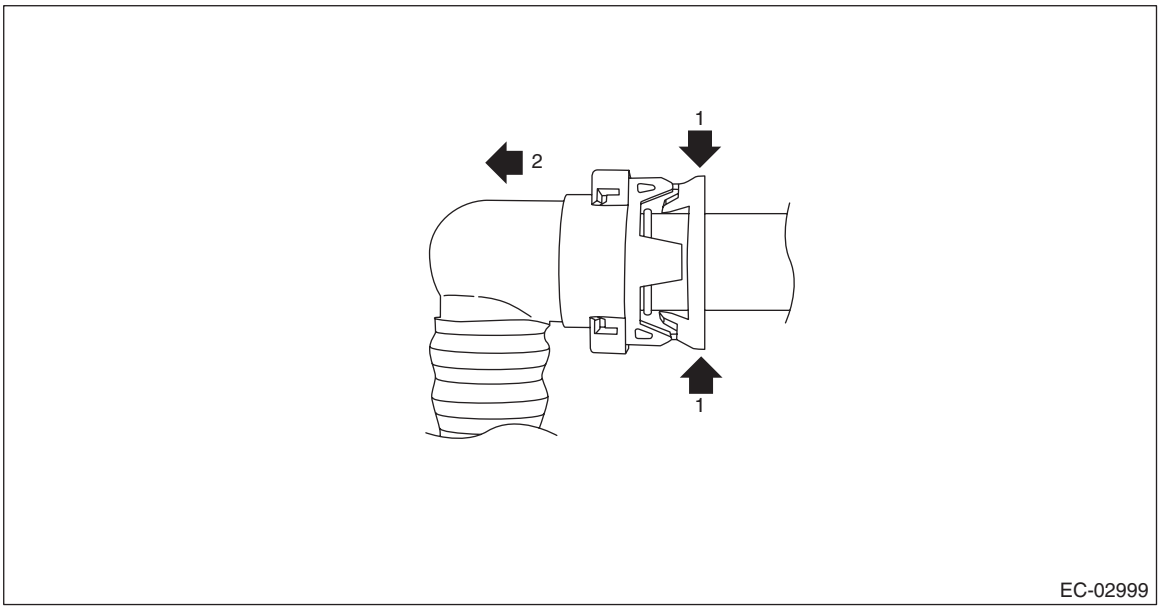

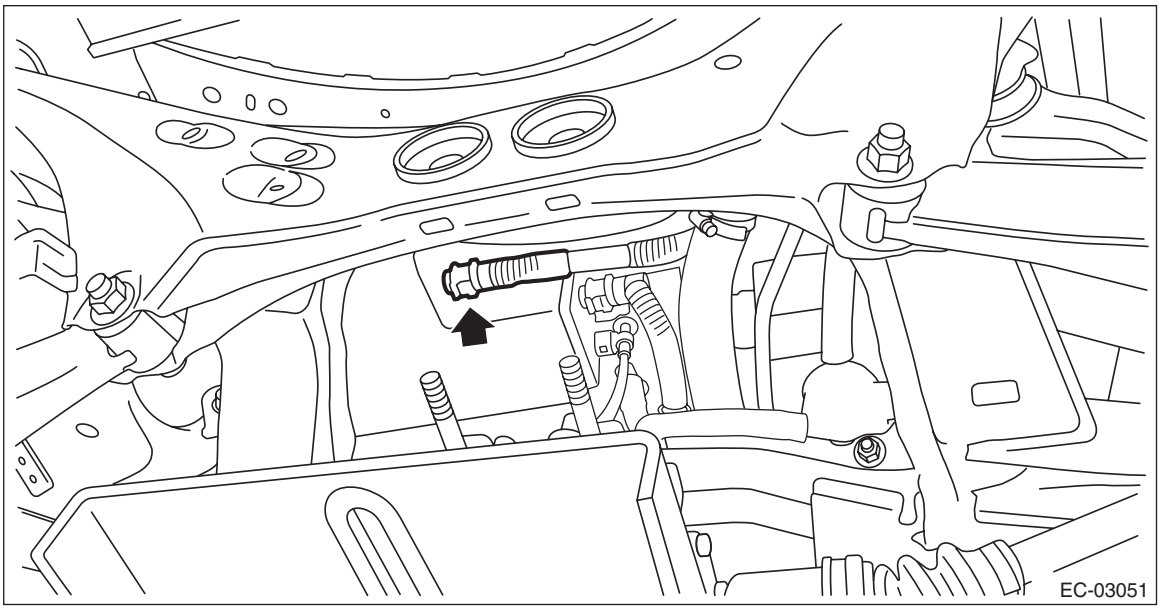

10) Disconnect the fuel filler hose (A) and evaporation hose (B).
11) Disconnect the intake hose (C) from the connector.

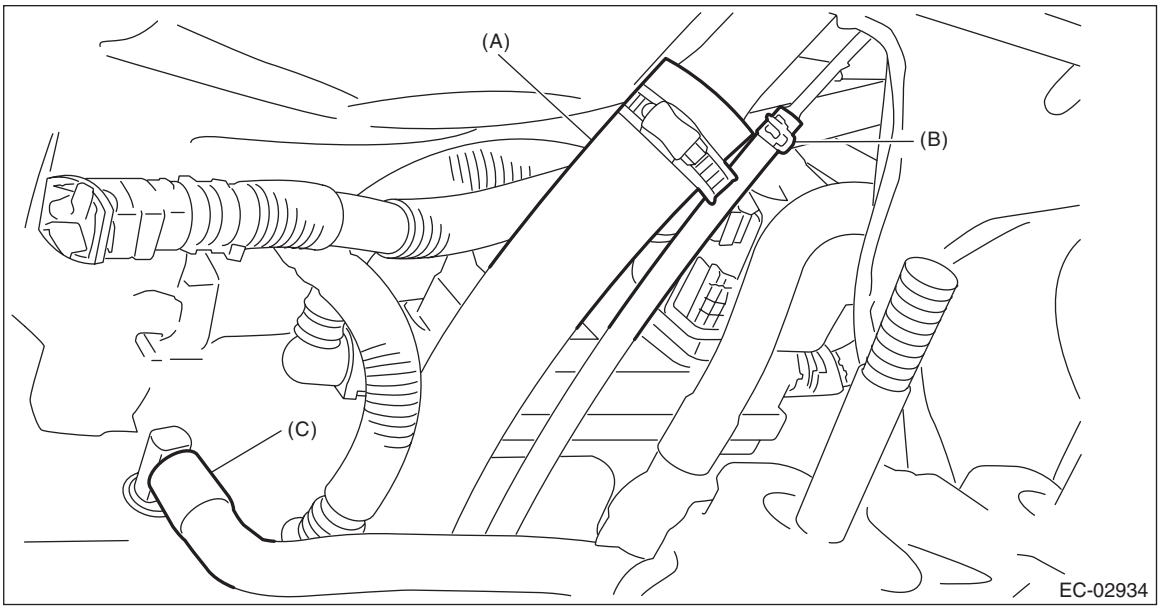

12) Disconnect the connector from the leak check valve assembly.

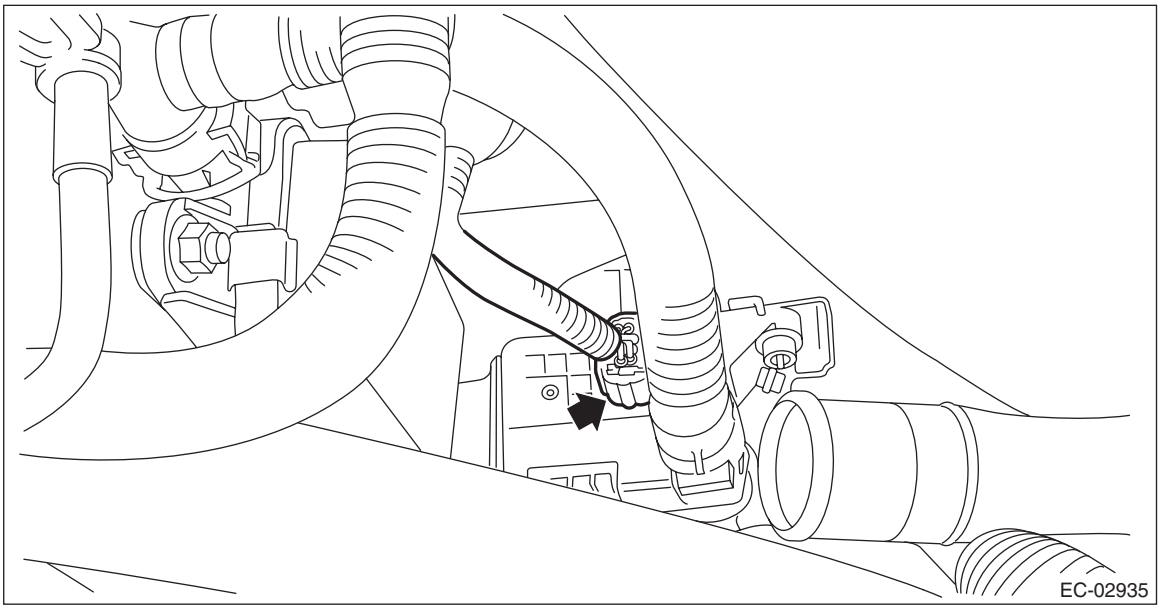

13) Remove the bolt and clip (A) which secure the leak check valve assembly to the vehicle, and remove the leak check valve assembly.

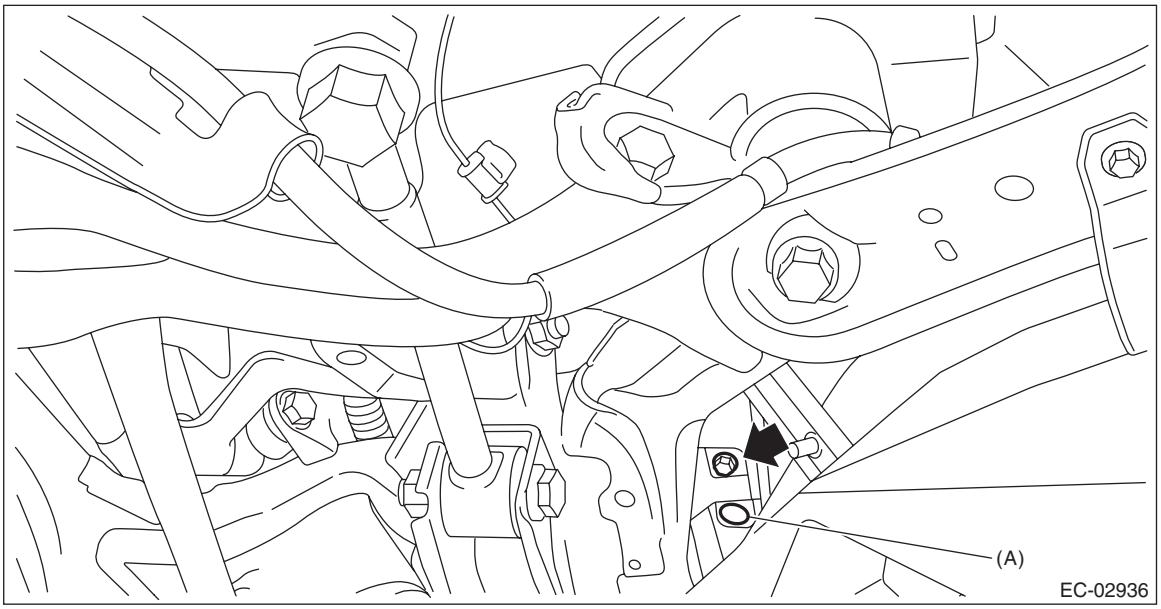

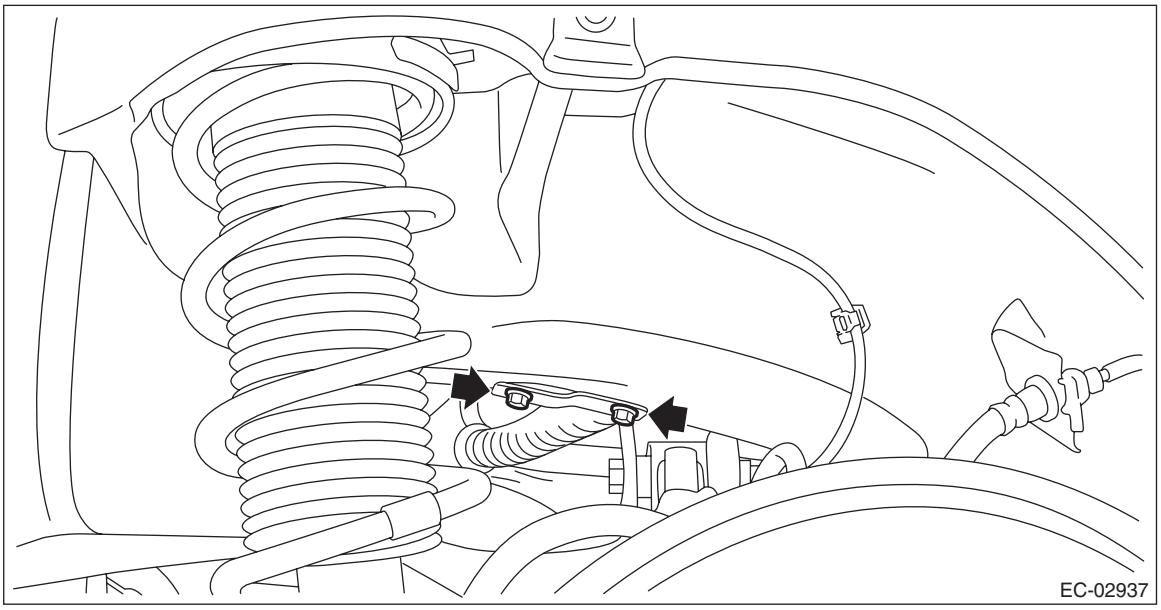

B: INSTALLATION

1) Install the leak check valve assembly to the vehicle with the bolt and clip (A).

Tightening torque:
7.5 N·m (0.8 kgf-m, 5.5 ft-lb)

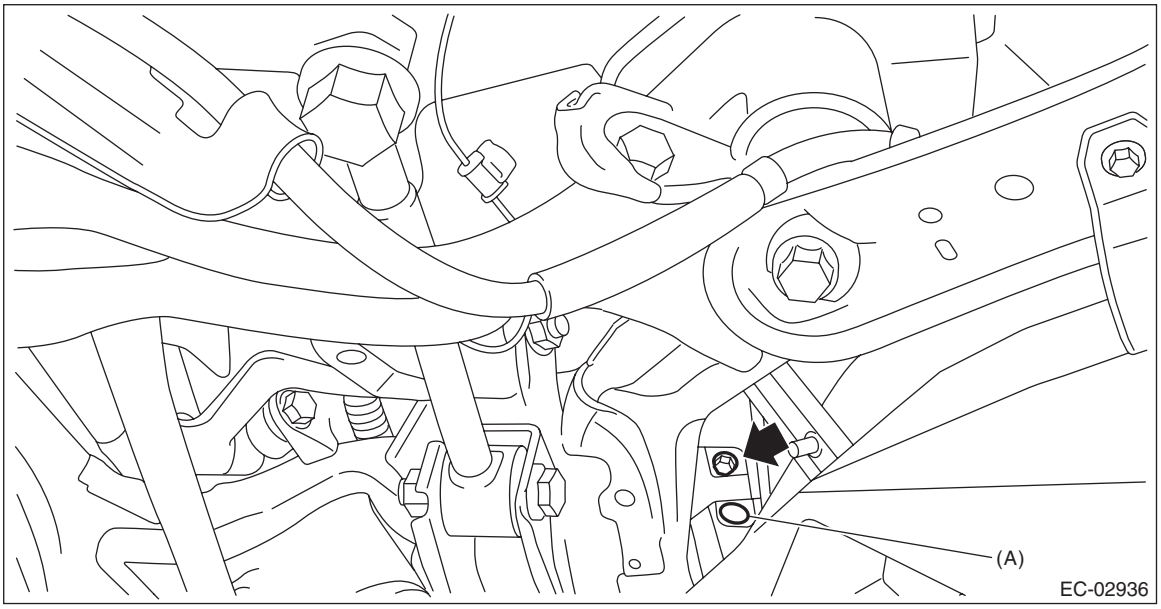

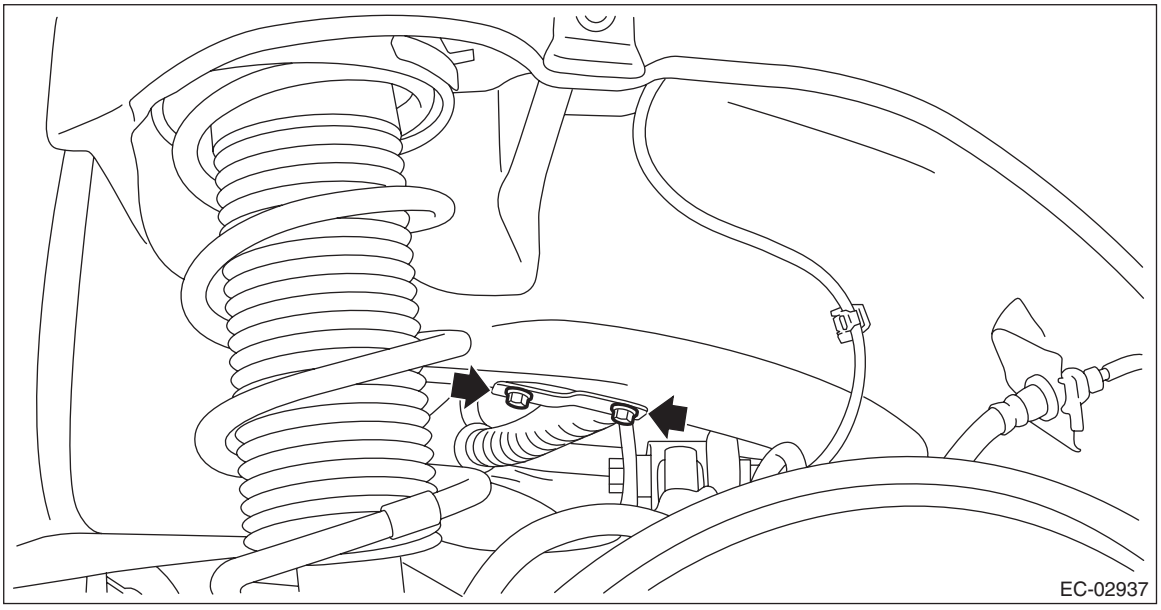

2) Connect the connector to the leak check valve assembly.

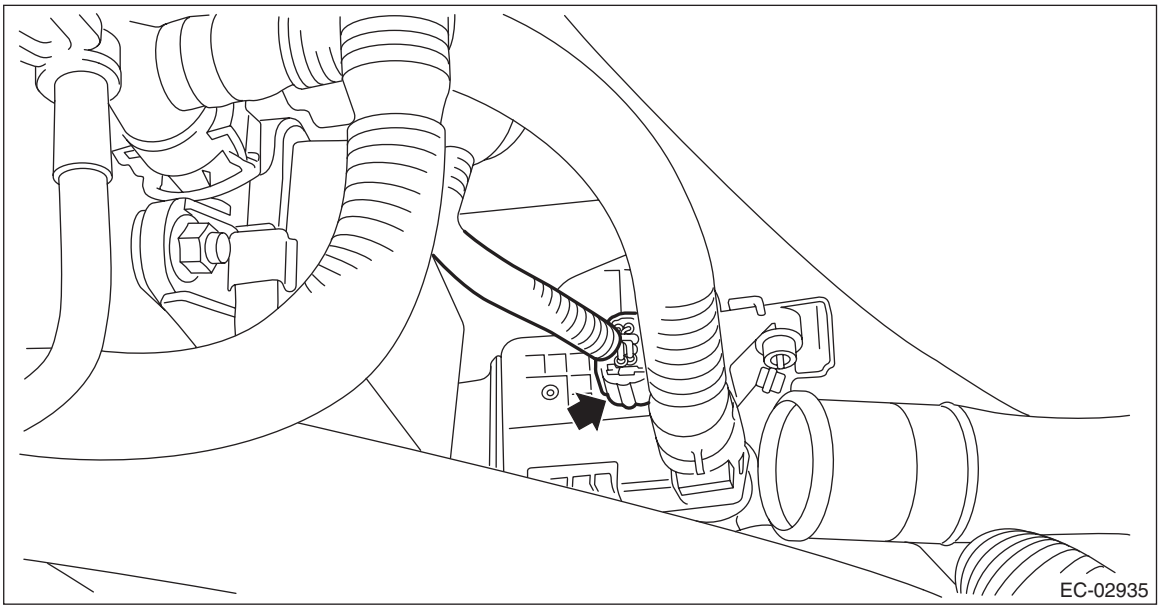

3) Connect the intake hose (C) to the connector.

4) Securely insert the fuel filler hose (A) and evaporation hose (B) until the hose end contacts the spool, then attach the clamp and clip as shown in the figure.

Tightening torque:
2.5 N·m (0.3 kgf-m, 1.8 ft-lb)

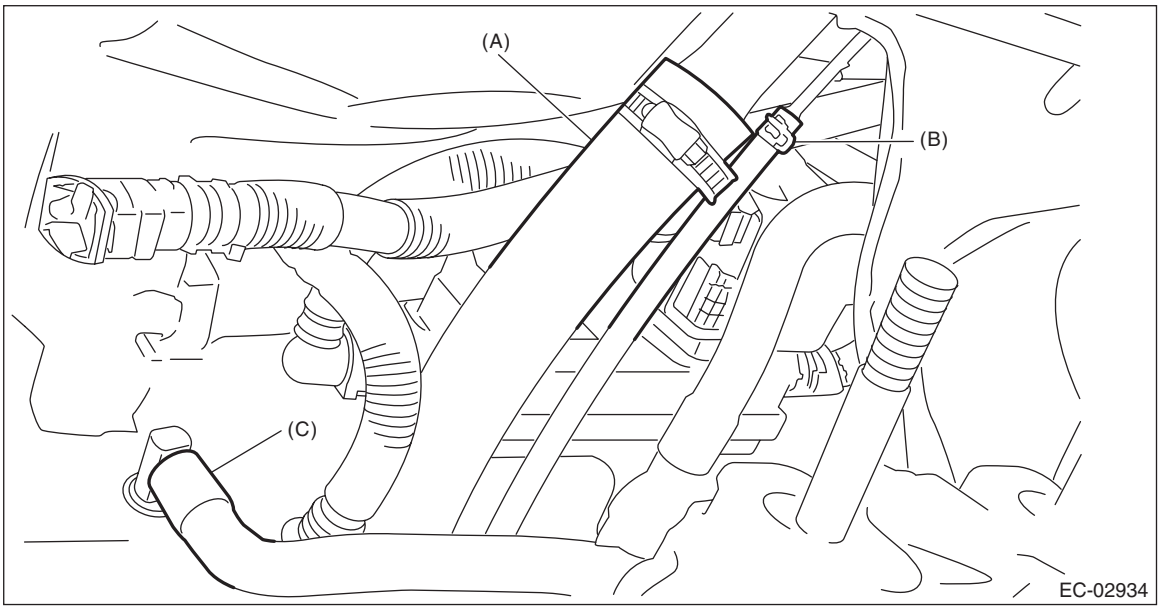

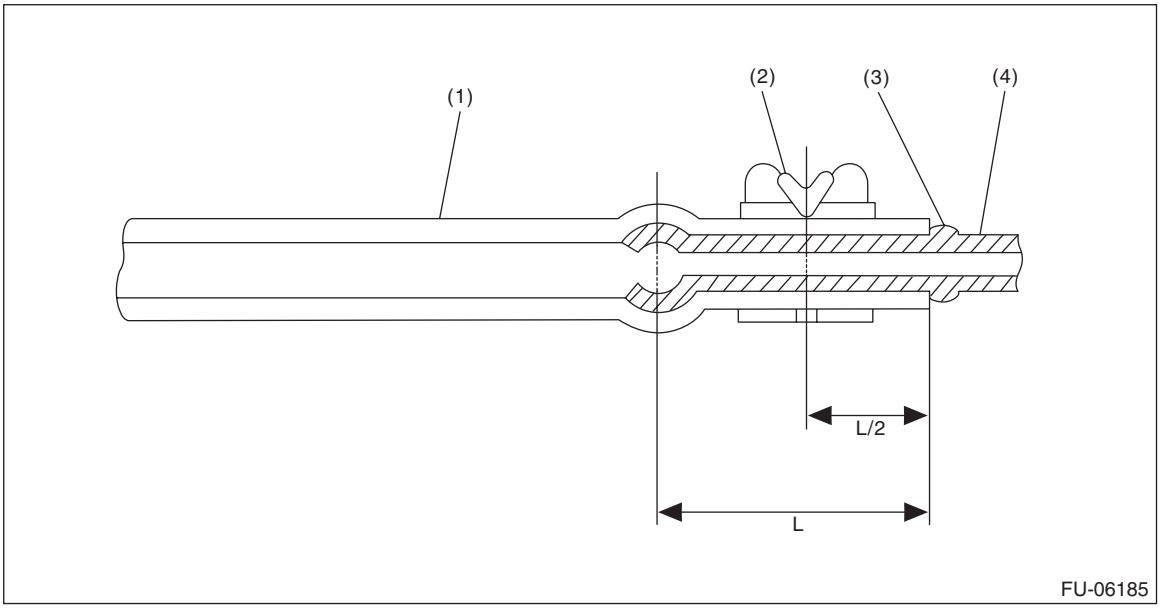

(1) Hose
(2) Clamp and clip
(3) Spool
(4) Pipe

5) Connect the drain tube to the canister.

NOTE:
Connect the quick connector as shown in the figure.

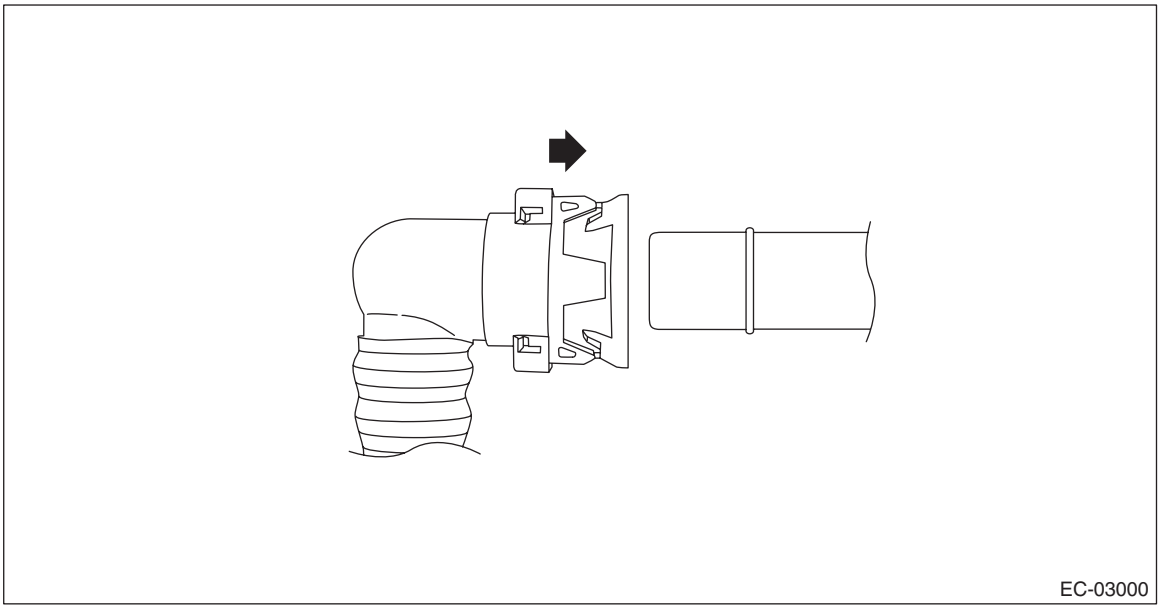

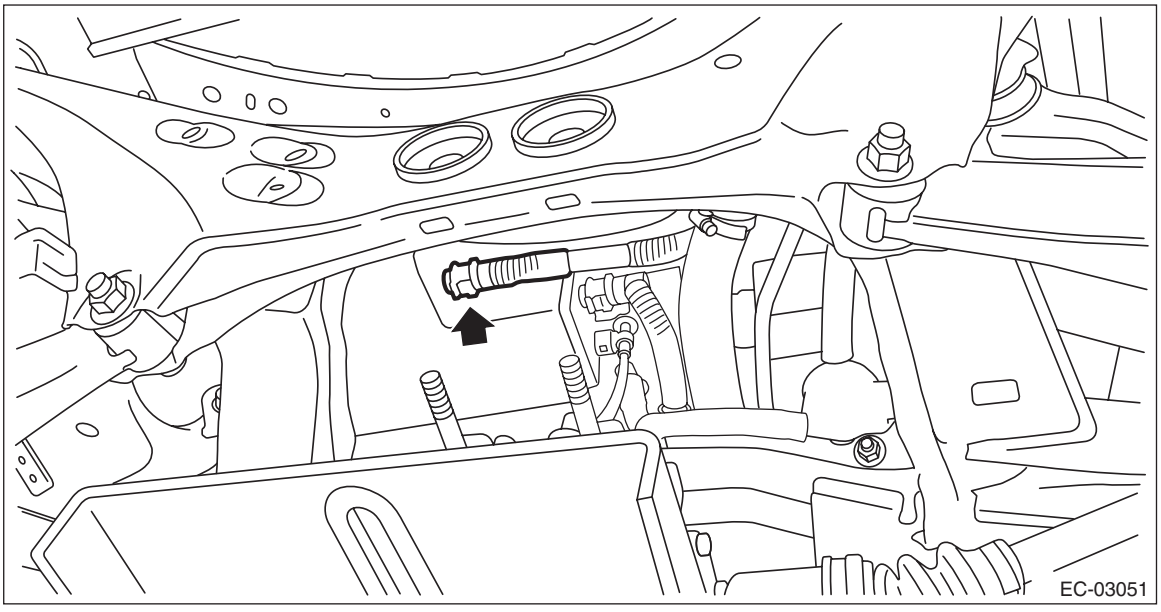

6) Lift up the transmission jack gradually, and set the rear differential to the rear sub frame assembly.

NOTE:
When inserting the stud bolt into the bushing portion of the rear sub frame assembly, adjust the angle and location of transmission jack and jack stand.

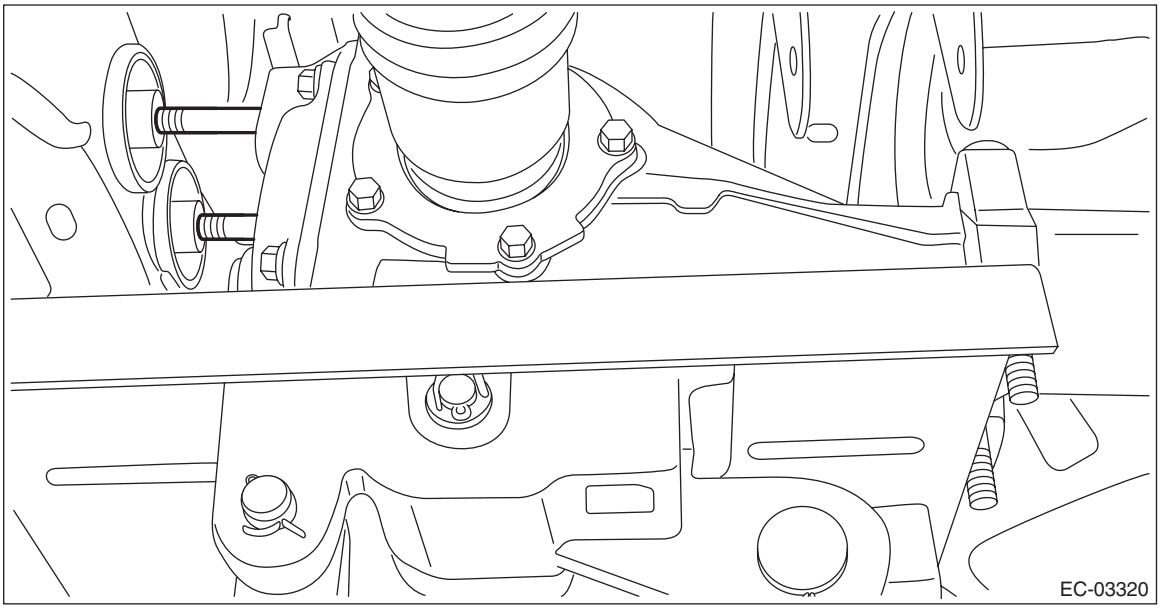

7) Temporarily tighten the self-locking nuts which hold the rear differential to the rear sub frame assembly.

NOTE:
Use a new self-locking nut.

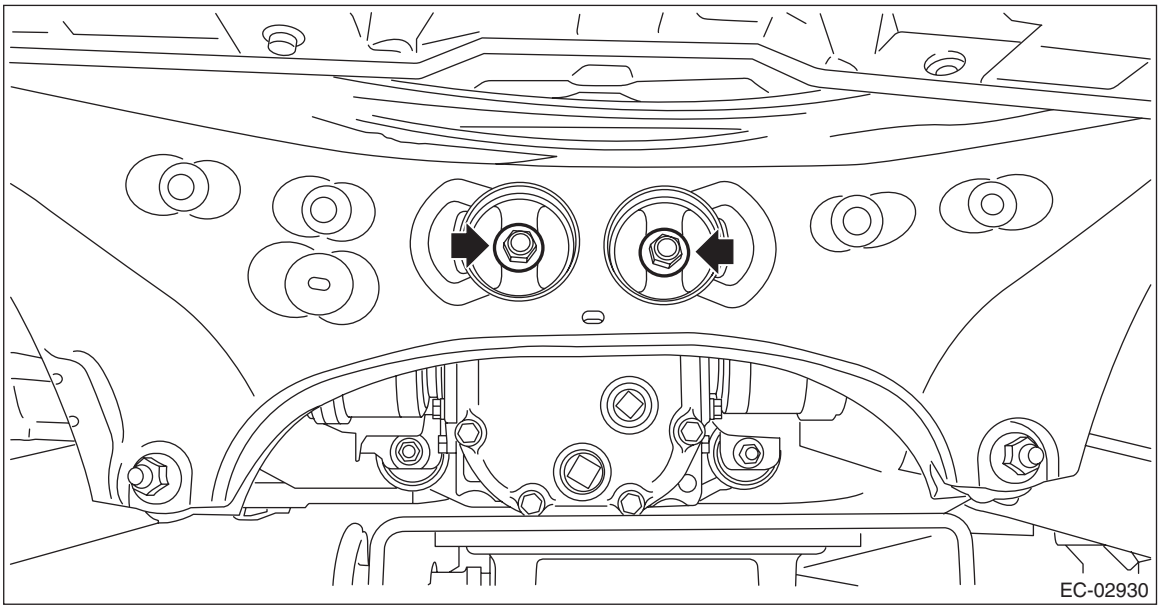

8) Set the rear differential member to the rear sub frame assembly and rear differential, and temporarily tighten the self-lock nuts which secure the rear differential member to the rear sub frame assembly and rear differential.

NOTE:
Use a new self-locking nut.

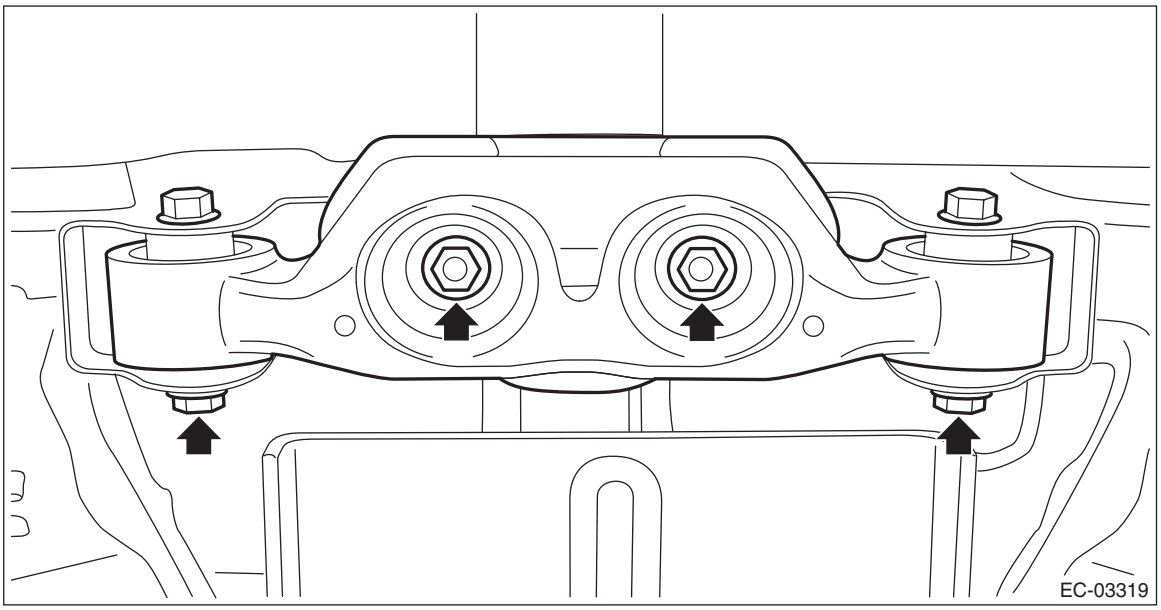

9) Remove the transmission jack from the rear differential.
10) Tighten the self-locking nuts which secure the rear differential member to the rear sub frame assembly and rear differential.

Tightening torque:
T1: 50 N·m (5.1 kgf-m, 36.9 ft-lb)
T2: 110 N·m (11.2 kgf-m, 81.1 ft-lb)

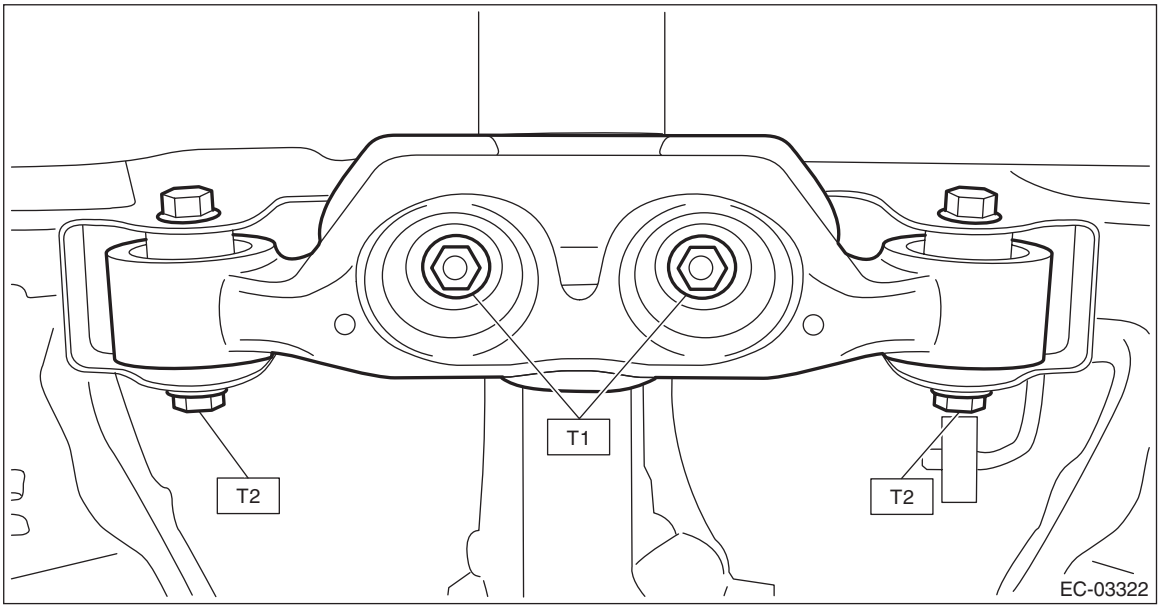

11) Tighten the self-locking nuts which secure the rear differential to the rear sub frame assembly.

Tightening torque:
70 N·m (7.1 kgf-m, 51.6 ft-lb)

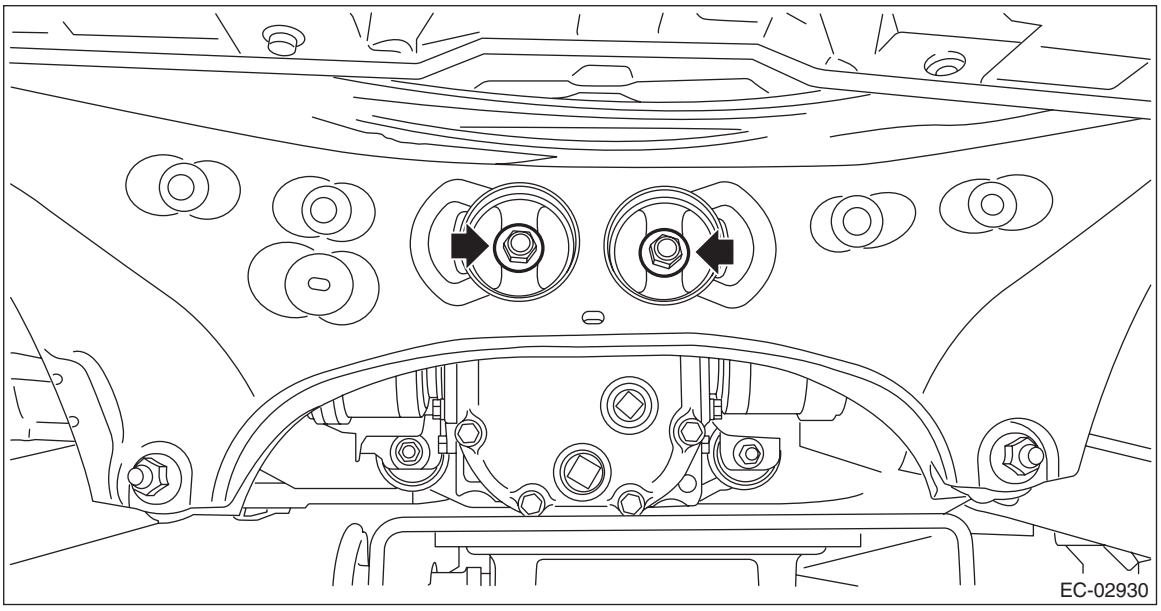

12) Install the propeller shaft. <Ref. to DS-13, INSTALLATION, Propeller Shaft.>
13) Install the rear exhaust pipe. <Ref. to EX(H4DO(w/o HEV))-20, INSTALLATION, Rear Exhaust Pipe.>
14) Lower the vehicle.
15) Connect the battery ground terminal.

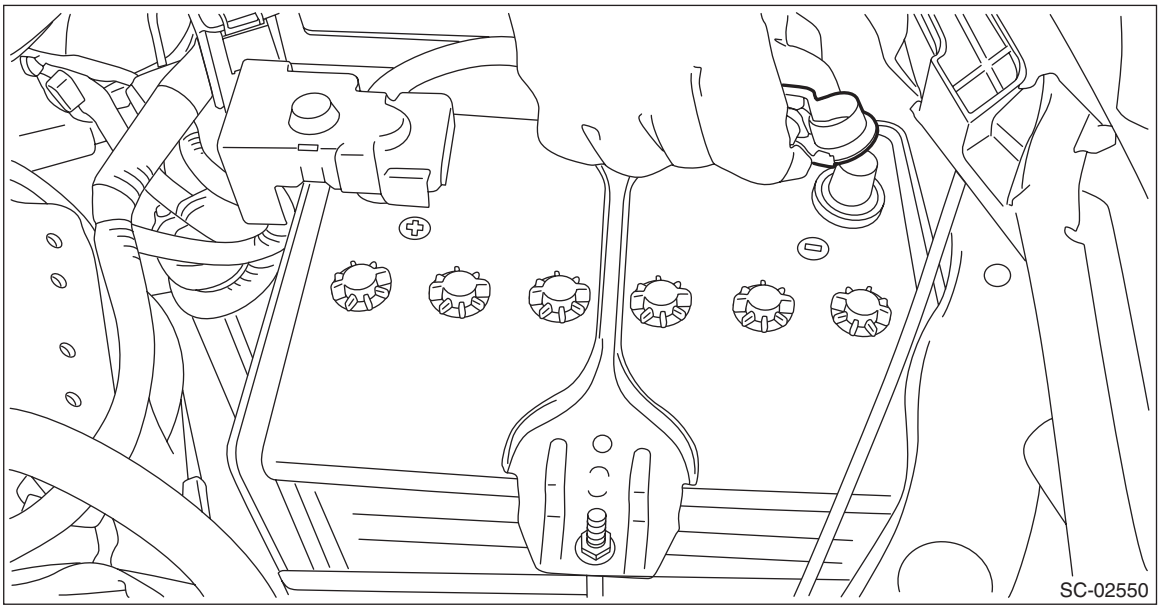

C: DISASSEMBLY

1) Remove the drain separator from the leak check valve assembly. <Ref. to EC(H4DO(w/o HEV))-55, REMOVAL, Drain Separator.>
2) Disconnect the drain tube from the leak check valve assembly.

NOTE:
Disconnect the quick connector as shown in the figure.

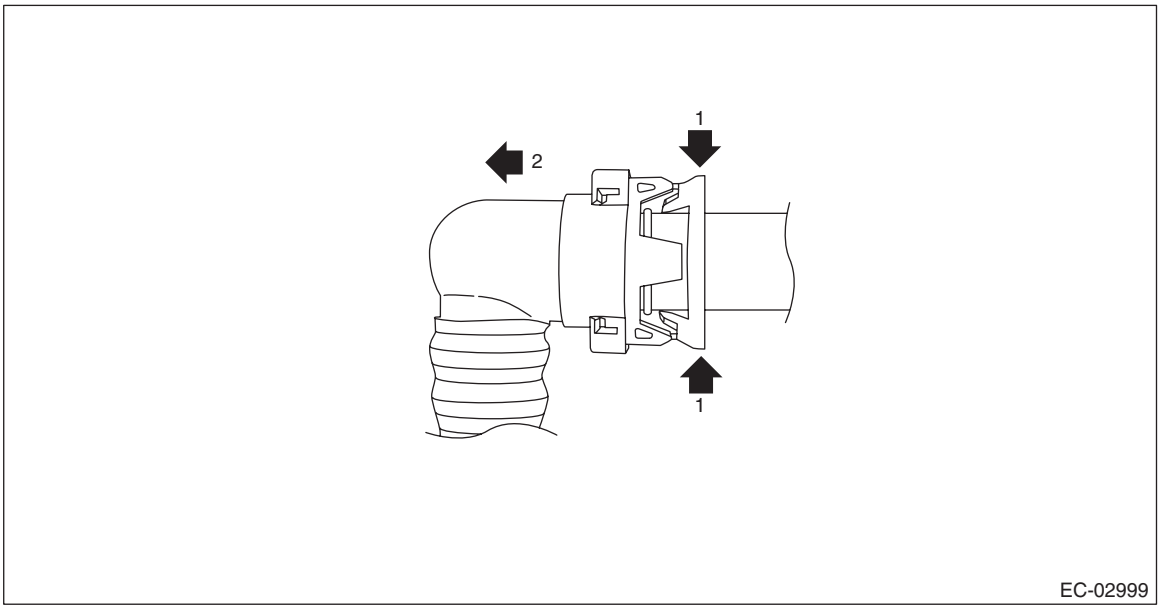

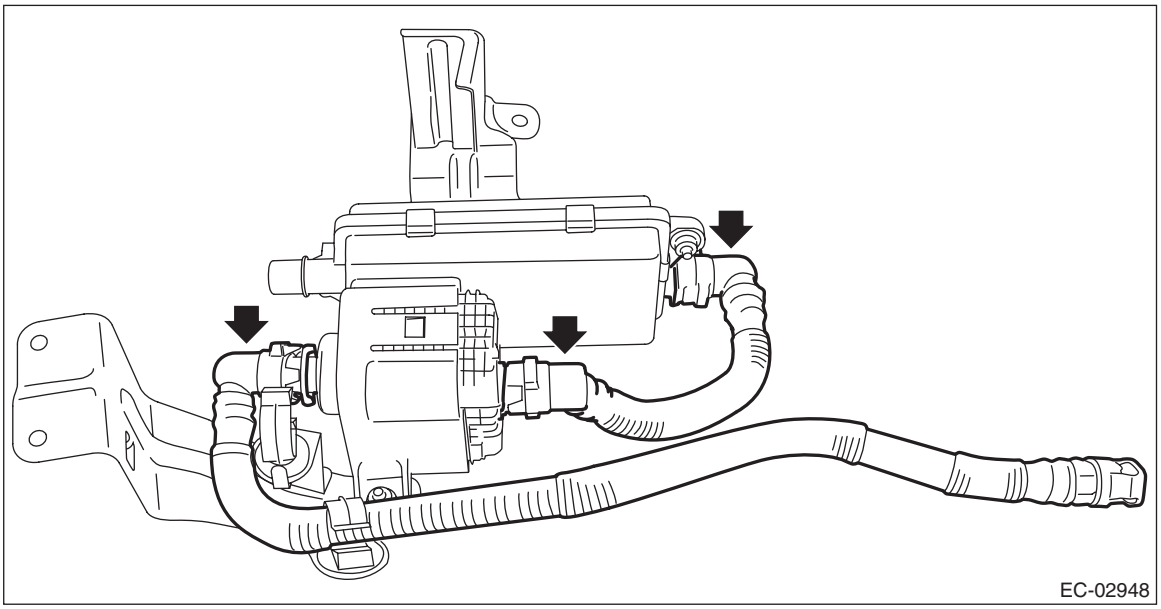

3) Remove the bracket from the leak check valve assembly.

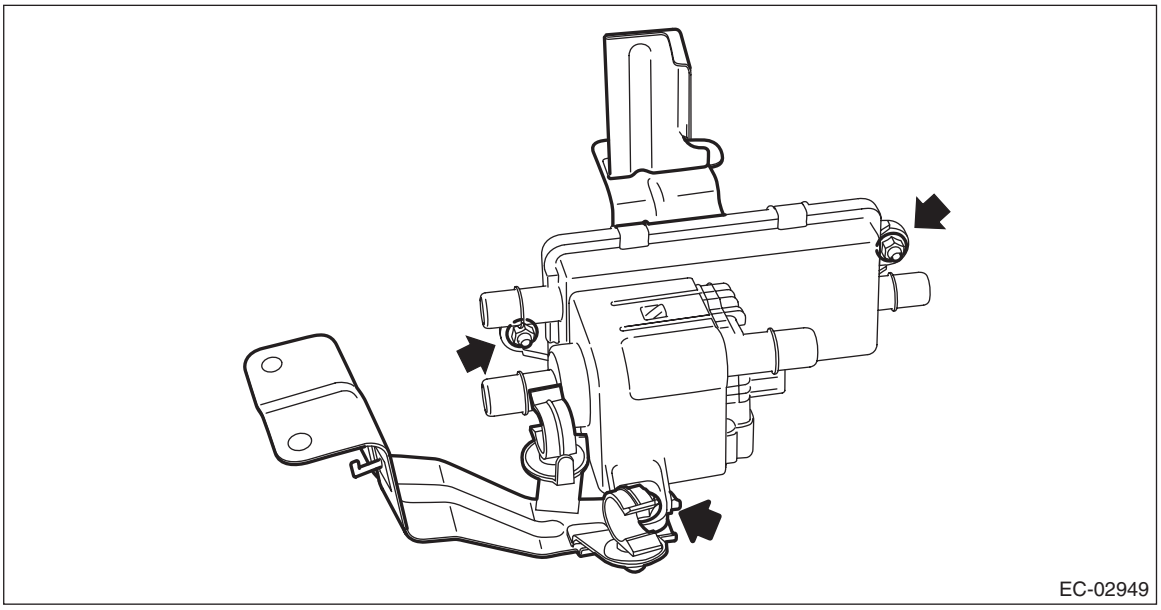

D: ASSEMBLY

1) Install the bracket to the leak check valve assembly.

Tightening torque:
18 N·m (1.8 kgf-m, 13.3 ft-lb)

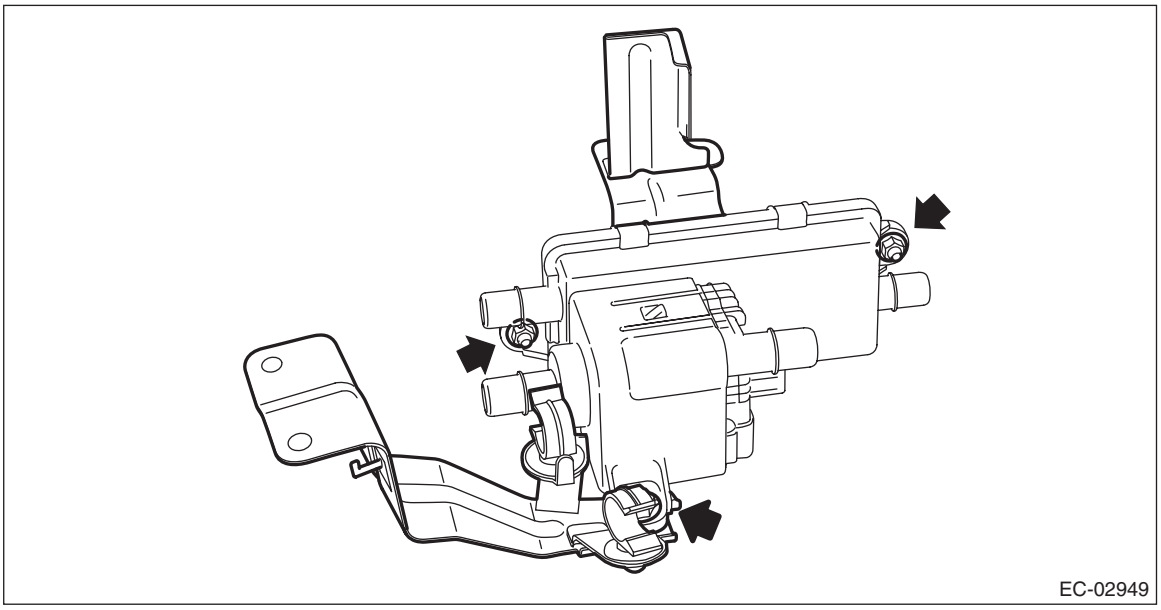

2) Install the drain tube to the leak check valve assembly.

CAUTION:
• Check that there is no damage or dust on the quick connector. If necessary, clean the seal surface of the pipe.
• Make sure that the quick connector is securely connected.

NOTE:
Connect the quick connector as shown in the figure.

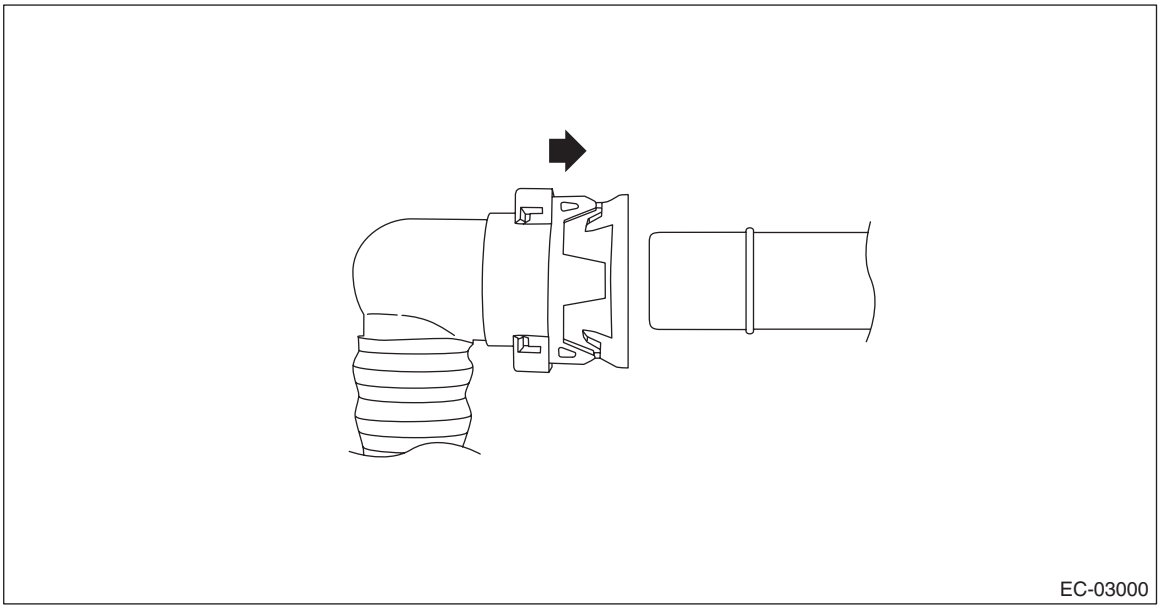
EC-03000

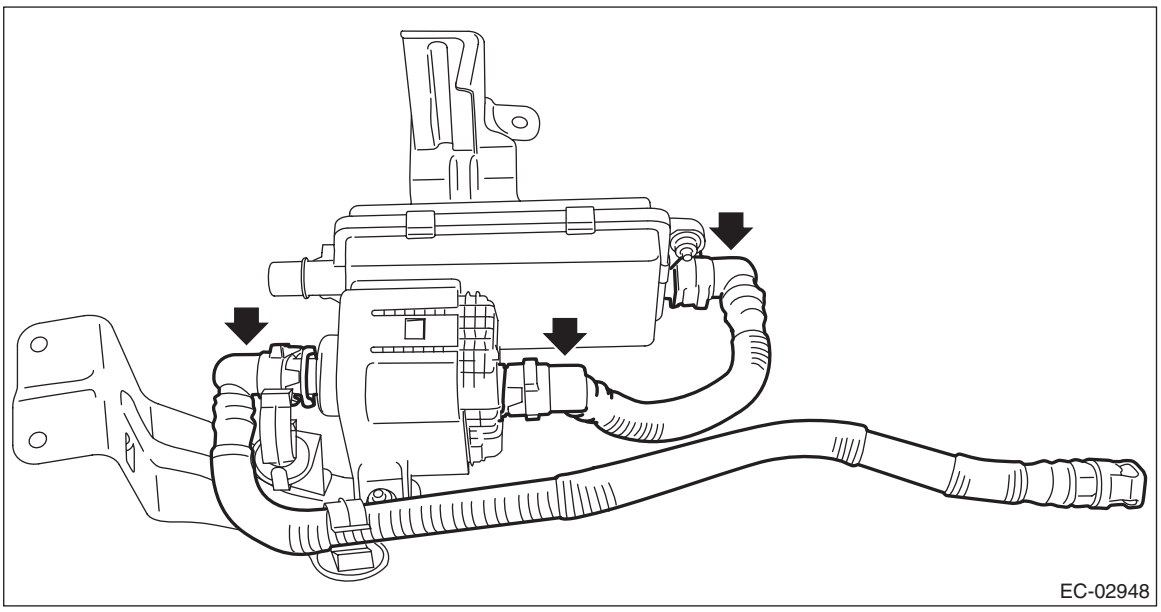
EC-02948

3) Install the drain separator to the leak check valve assembly. <Ref. to EC(H4DO(w/o HEV))-55, INSTALLATION, Drain Separator.>

E: INSPECTION

1. CHECK SWITCHING VALVE

1) Check the resistance between switching valve terminals.

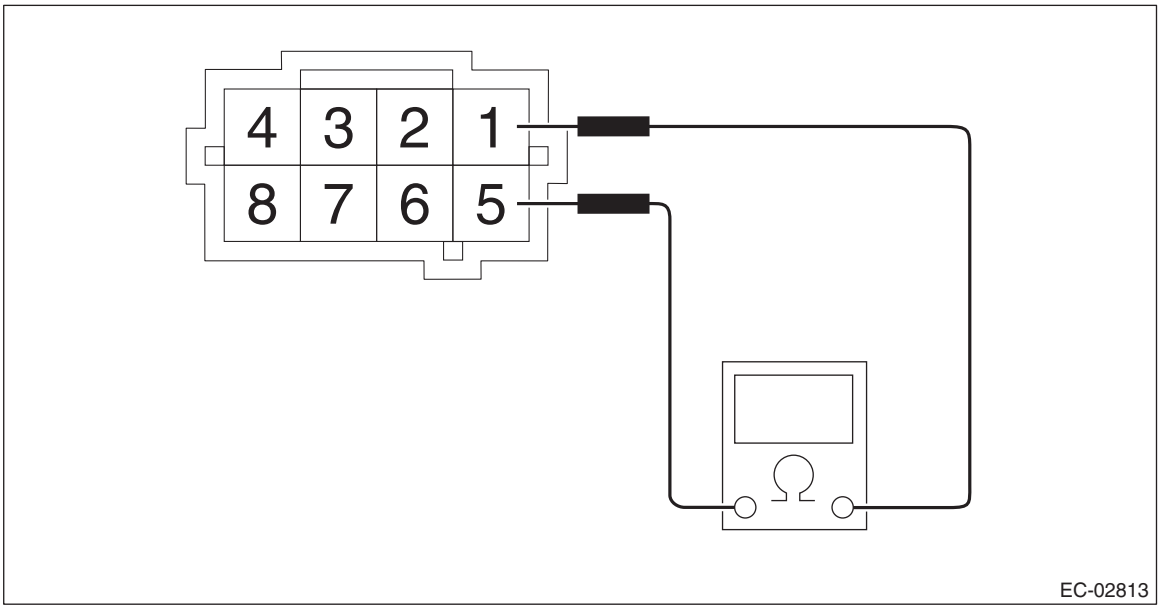

Terminal No.	Standard
1 and 5	27^{+3}_{-2} Ω (when 20°C (68°F))
	31±4 Ω (60°C (140°F))

2) Check that air is discharged from (B) when air is blown into (A).

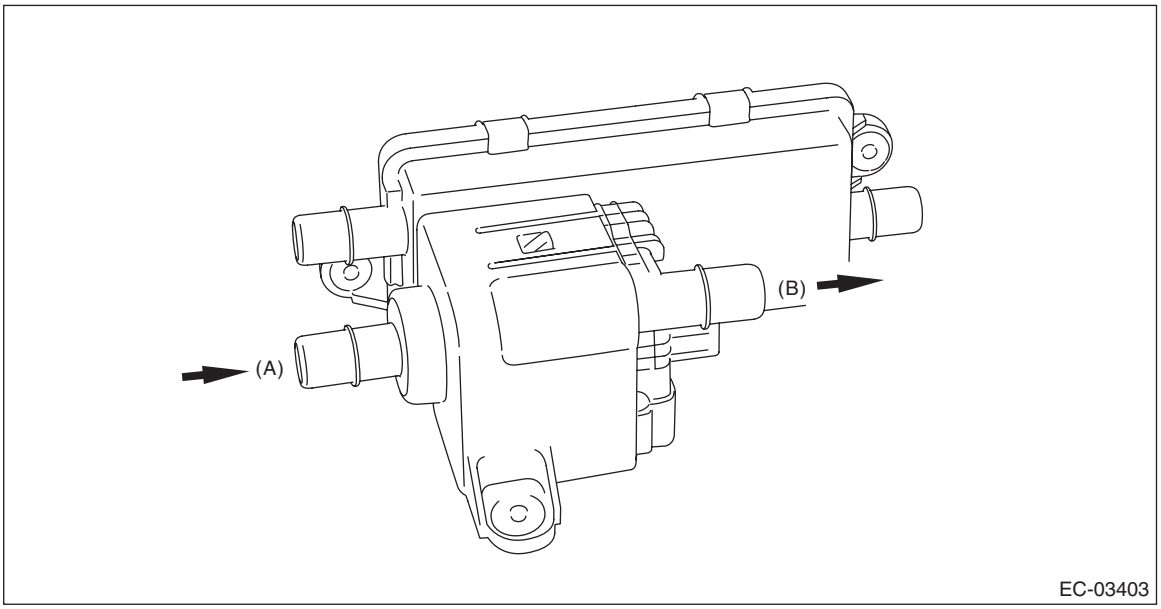

3) Connect the battery positive terminal to the terminal No. 5 and the battery negative terminal to the terminal No. 1. Check that air does not come out from (B) when air is blown into (A).

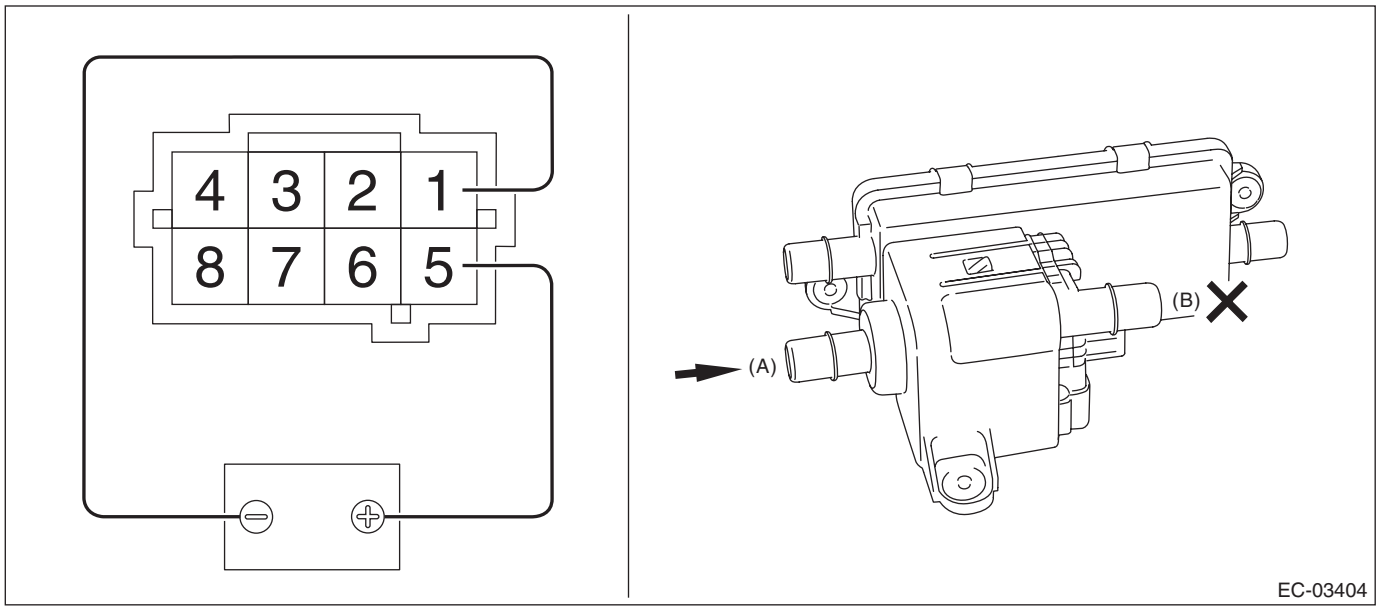

2. CHECK VACUUM PUMP

1) Connect the battery positive terminal to terminal No. 3 and the battery ground terminal to terminal No. 4, and inspect the vacuum pump operation.

CAUTION:
Do not operate the vacuum pump for 5 minutes or more.

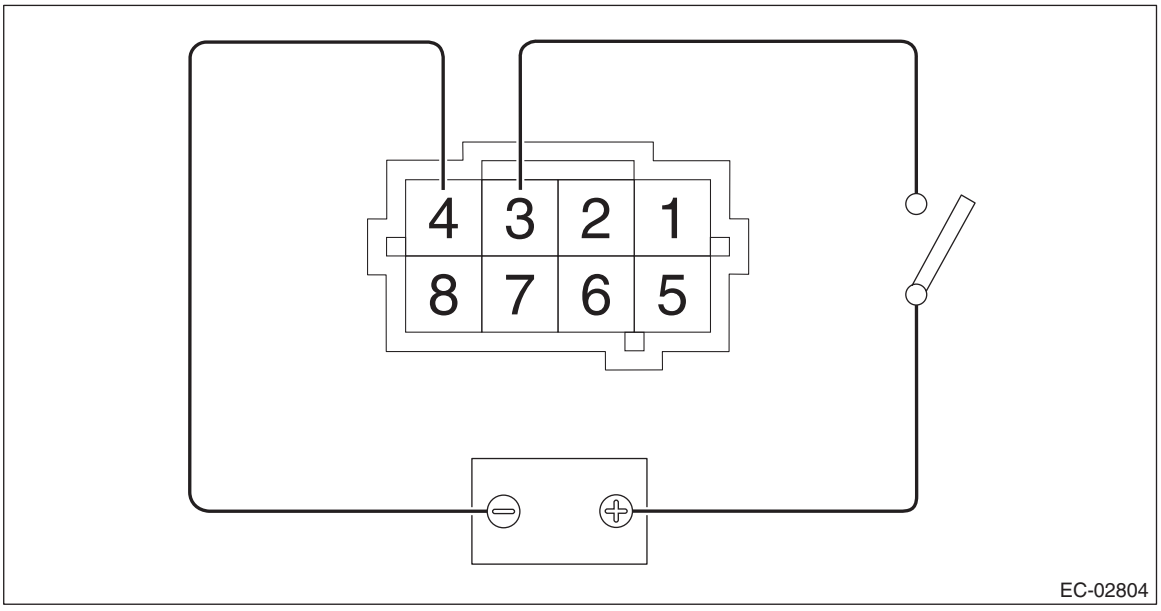

3. CHECK PRESSURE SENSOR

1) Connect dry-cell battery positive terminal to terminal No. 6 and dry-cell battery ground terminal to terminal No. 8, circuit tester positive terminal to terminal No. 7 and the circuit tester negative terminal to terminal No. 8.

NOTE:
- Use new dry-cell batteries.
- Using circuit tester, check the voltage of a single dry-cell battery is 1.6 V or more. And also check the voltage of three batteries in series is between 4.8 V and 5.2 V.

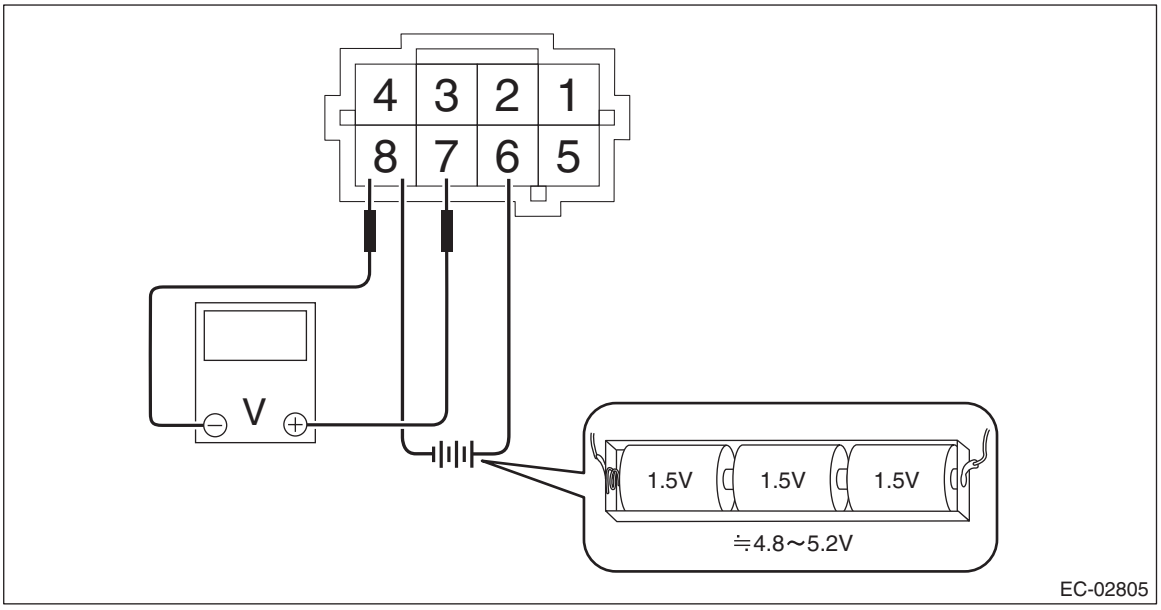

2) Check the voltage at a normal atmospheric pressure.

NOTE:
The atmospheric pressure at higher altitude is lower than normal. Therefore, the voltage is lower than the standard value.

Terminal No.	Standard
7 (+) and 8 (–)	Approx. 3.5 V (when 25°C (77°F))

3) Connect the battery positive terminal to terminal No. 3 and the battery ground terminal to terminal No. 4, and check that there is a voltage drop from the voltage measured in step 2) when the vacuum pump is operated.

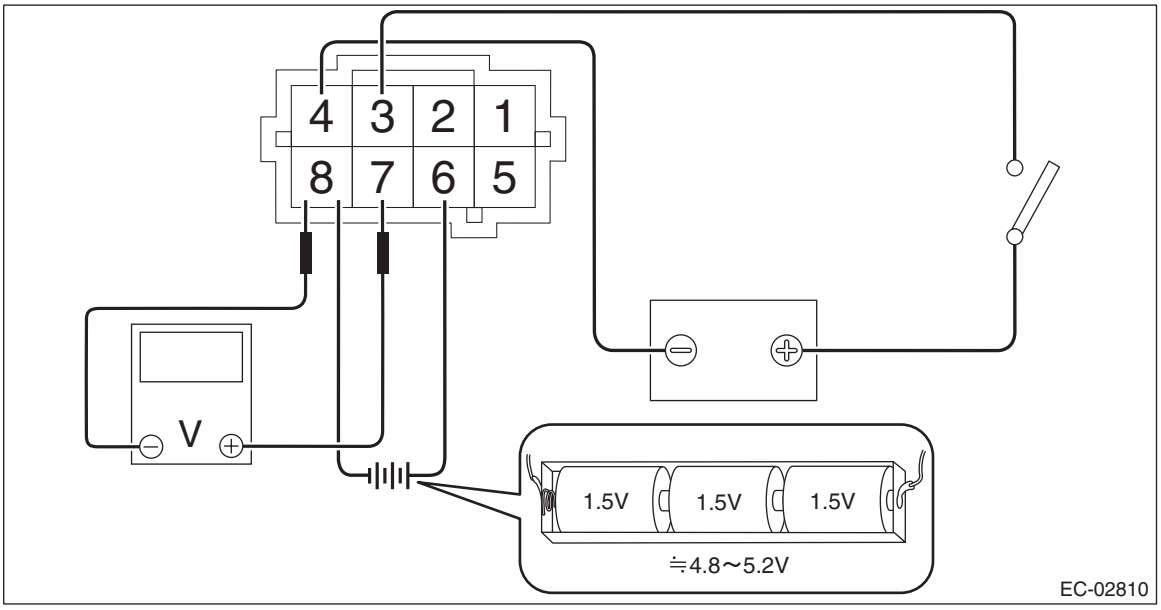

4. OTHER INSPECTIONS

1) Check that the leak check valve assembly has no deformation, cracks or other damages.
2) Check that the tube or hose have no cracks, damage or loose part.

12.Drain Separator

A: REMOVAL

The drain separator is installed to the leak check valve assembly. Refer to “Leak Check Valve Assembly” for removal procedure. <Ref. to EC(H4DO(w/o HEV))-36, REMOVAL, Leak Check Valve Assembly.>

B: INSTALLATION

The drain separator is installed to the leak check valve assembly. Refer to “Leak Check Valve Assembly” for installation procedure. <Ref. to EC(H4DO(w/o HEV))-42, INSTALLATION, Leak Check Valve Assembly.>

C: DISASSEMBLY

1) Disconnect the drain tube (A) from the leak check valve assembly.

NOTE:
Disconnect the quick connector as shown in the figure.

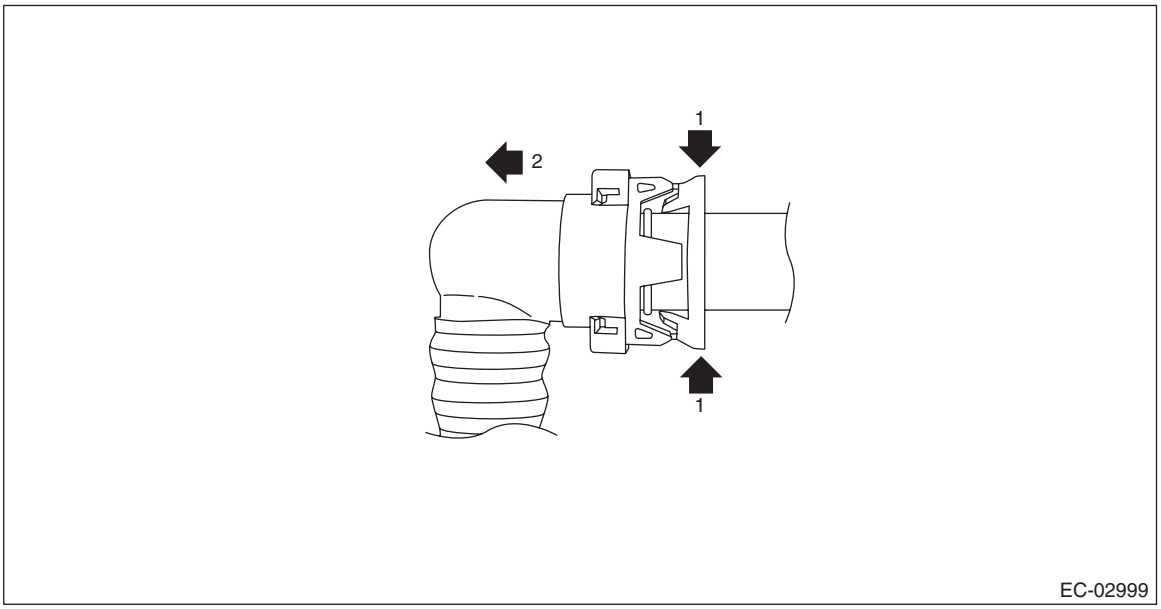

2) Lift up the claw (B) of the drain separator and slide the drain separator in the direction of the arrow (C) to remove the drain separator.

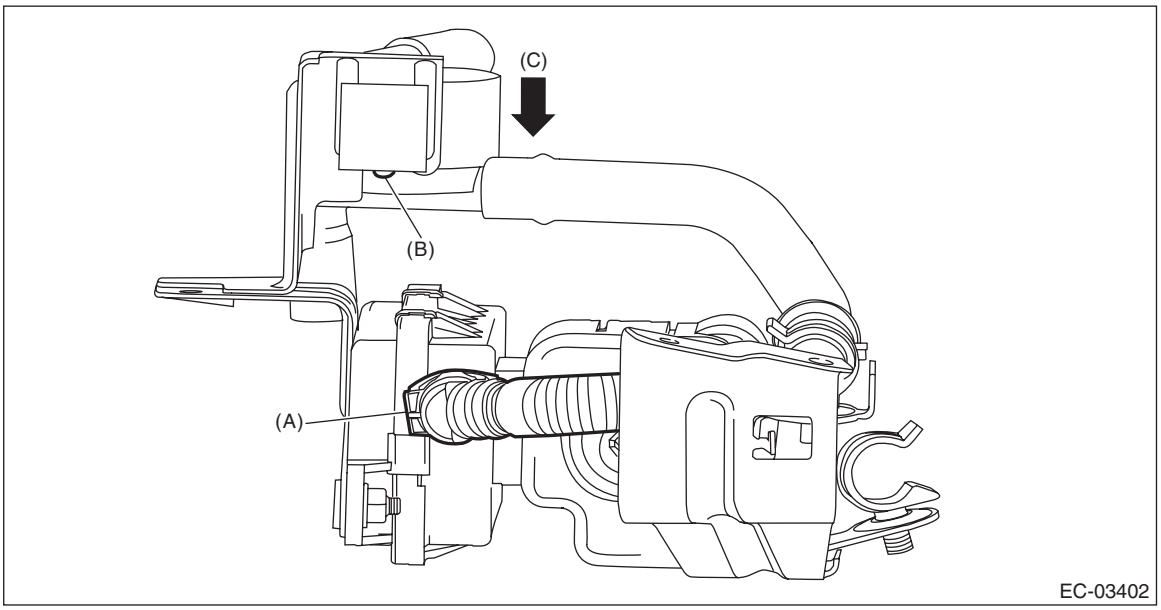

3) Remove the drain hose and drain tube from the drain separator.

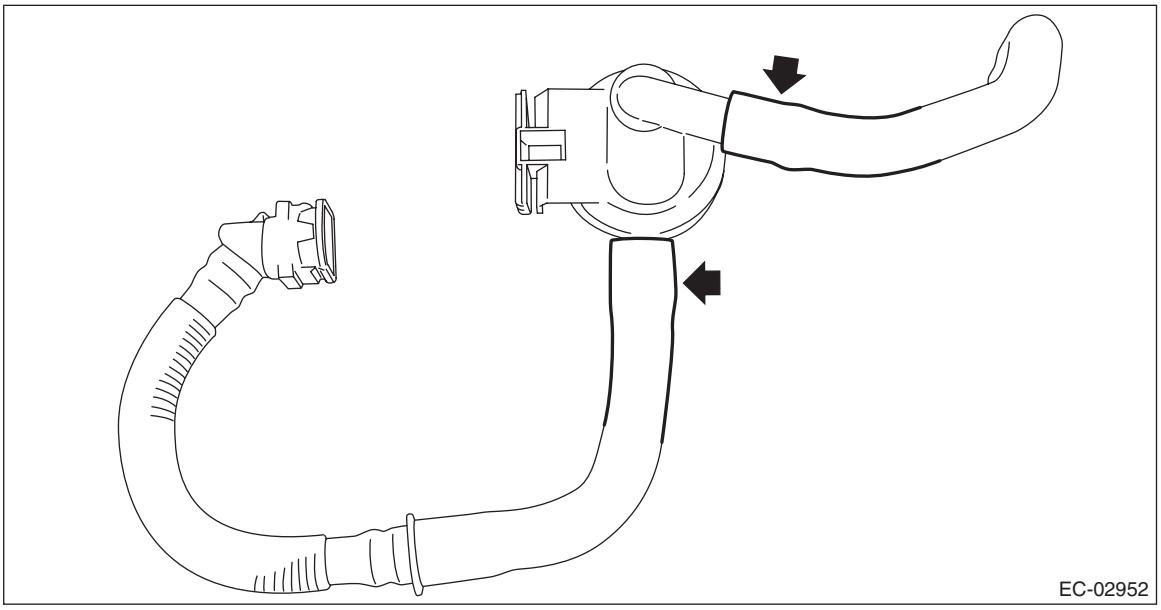

D: ASSEMBLY

Assemble in the reverse order of disassembly.

NOTE:
Connect the quick connector as shown in the figure.

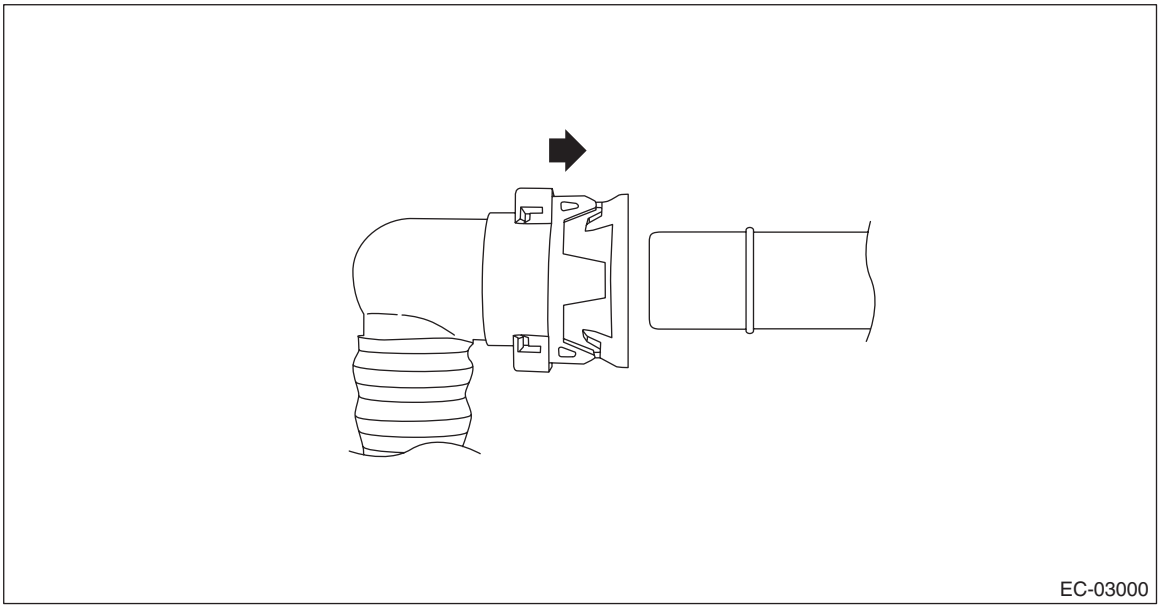

E: INSPECTION

1) Check that the drain separator and drain separator bracket have no deformation, crack, or other damage.
2) Check that the drain hose and drain tube have no crack, damage, or looseness.
3) Check that no foreign substances are clogged in the drain separator.

13.PCV Hose

A: REMOVAL

CAUTION:
Do not remove except when the PCV hose is broken.

1) Disconnect the PCV hose A from the intake manifold and the PCV valve, and then remove the PCV hose A.

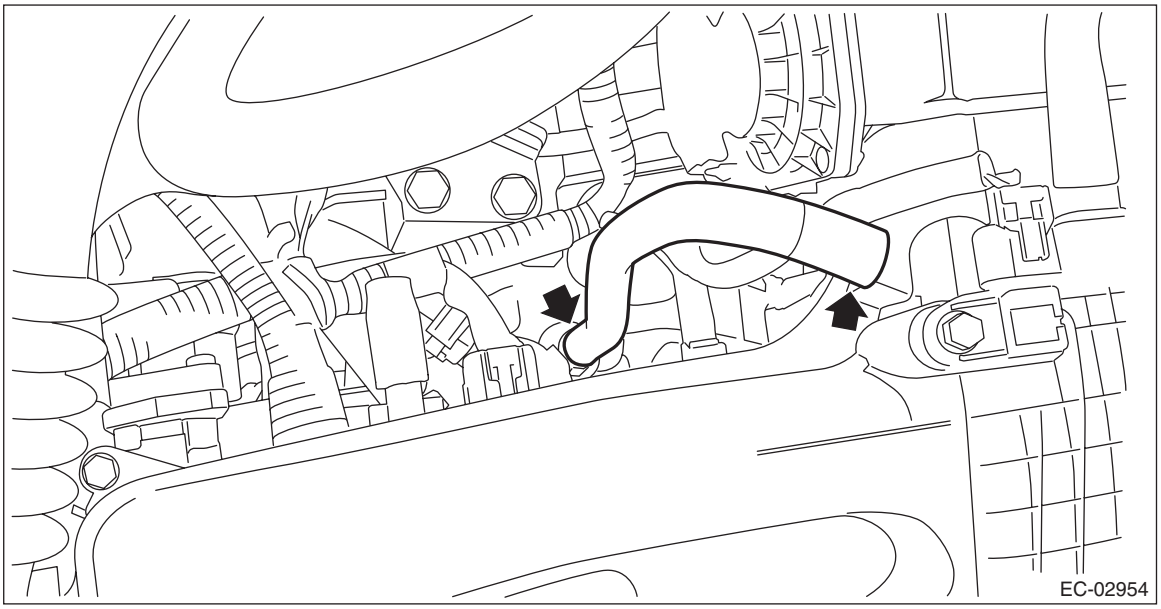

2) Remove the intake manifold. <Ref. to FU(H4DO(w/o HEV))-20, REMOVAL, Intake Manifold.>
3) Remove the PCV hose B from the PCV connector.

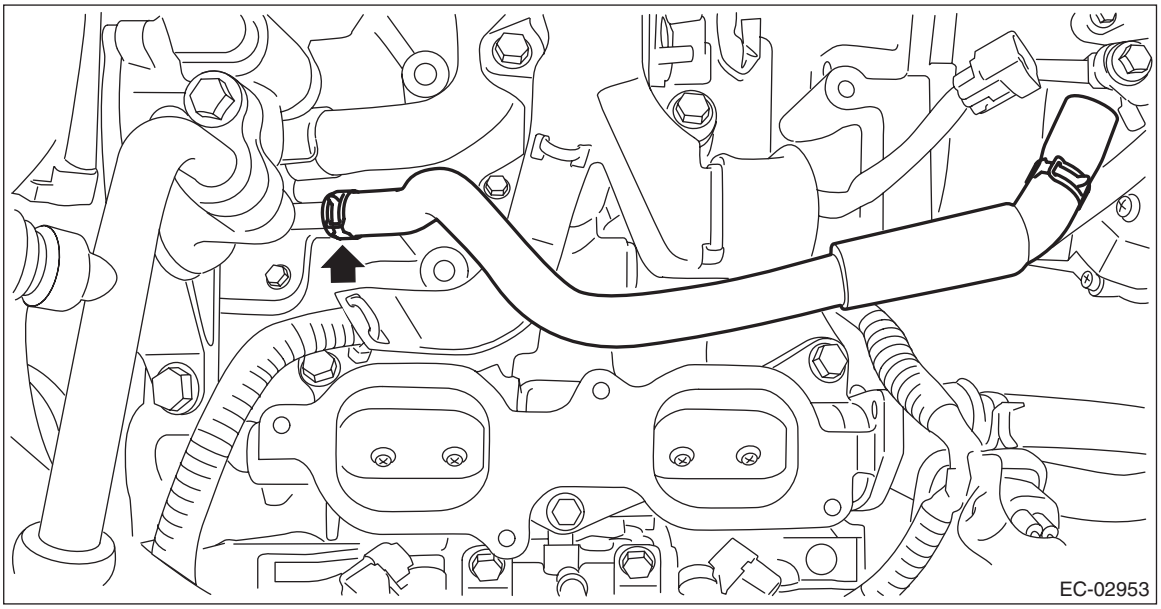

B: INSTALLATION

Install in the reverse order of removal.

C: INSPECTION

Check that the PCV hose has no cracks, damage or loose part.

14.PCV Valve

A: REMOVAL

CAUTION:
Do not remove unless the PCV valve is broken.

1) Disconnect the PCV hose from the intake manifold and the PCV valve, and then remove the PCV hose.

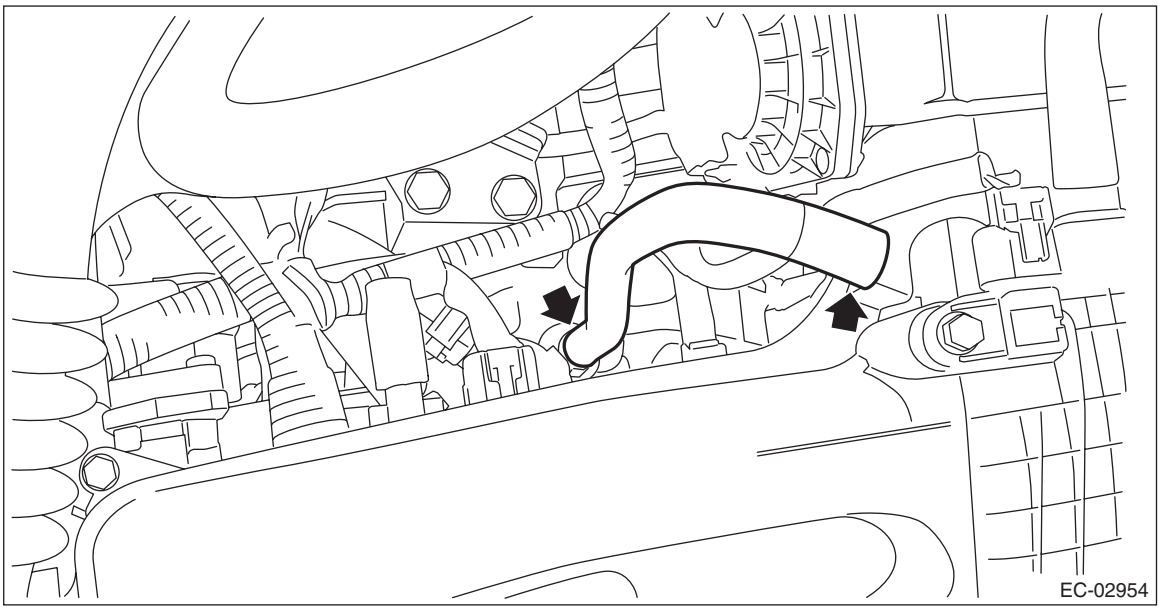

2) Remove the clip (A) holding the air breather hose from the engine hanger. (MT model)
3) Disconnect the connector (B) from manifold absolute pressure sensor. (MT model)
4) Disconnect the connector (C) from the throttle position sensor. (MT model)
5) Disconnect the connector (D) from the EGR control valve. (MT model)

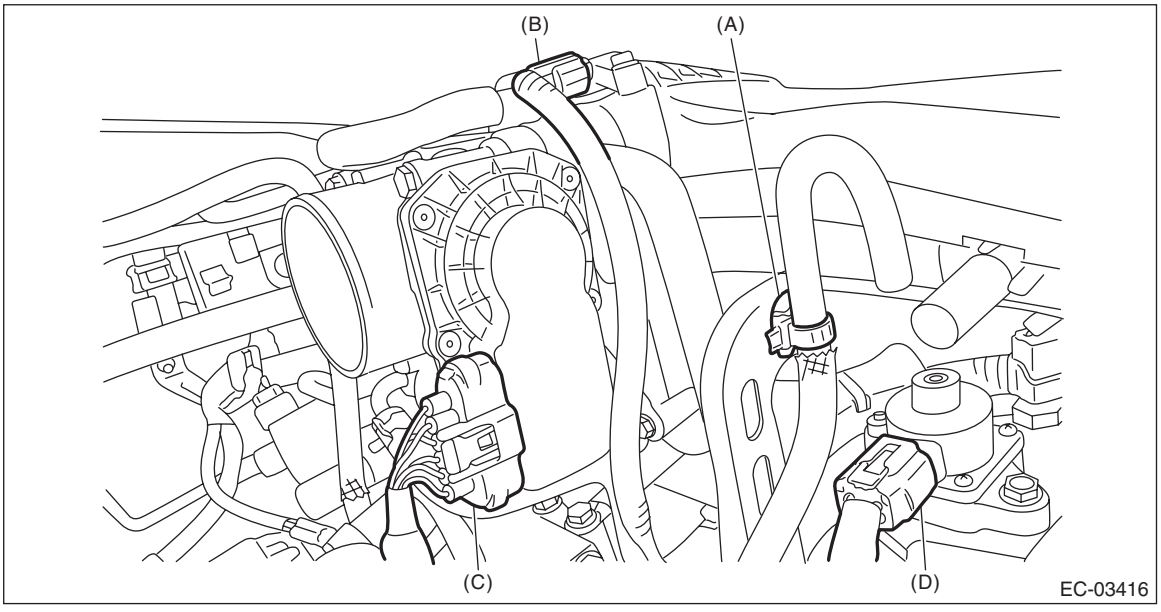

6) Remove the PCV valve from the cylinder block RH.

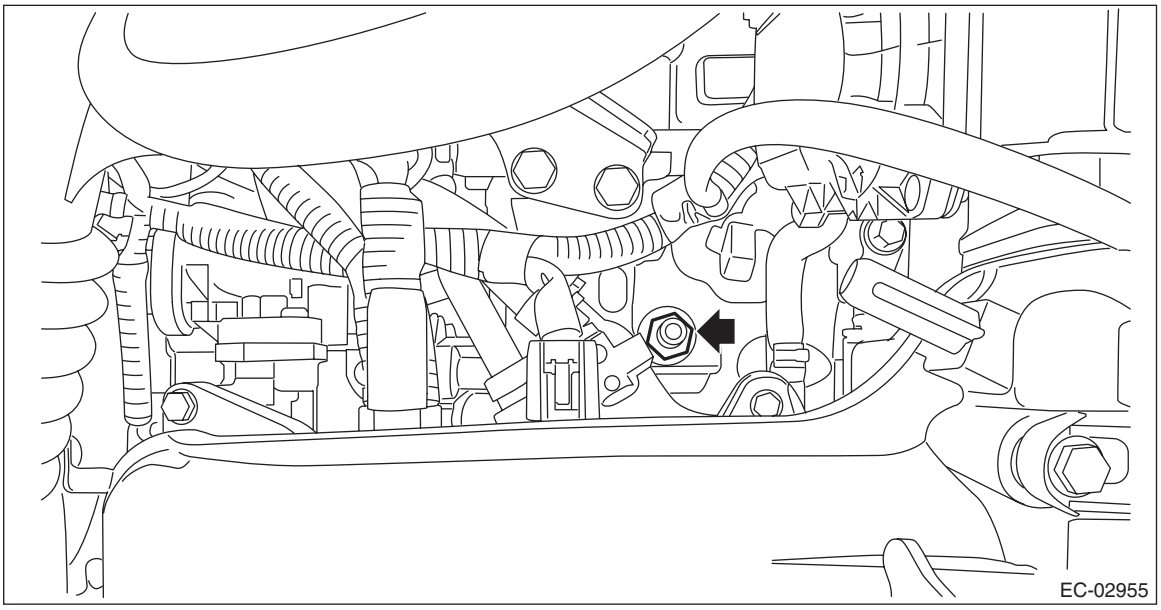

B: INSTALLATION

Install in the reverse order of removal.

NOTE:
Apply liquid gasket to the bolt threads of PCV valve.

Liquid gasket:
THREE BOND 1324 (Part No. 004403042) or equivalent

Tightening torque:
23 N·m (2.3 kgf-m, 17.0 ft-lb)

C: INSPECTION

1. PCV VALVE

1) Check that the PCV valve has no deformation, cracks or other damages.
2) Check that air is discharged from (B) when air is blown into (A).

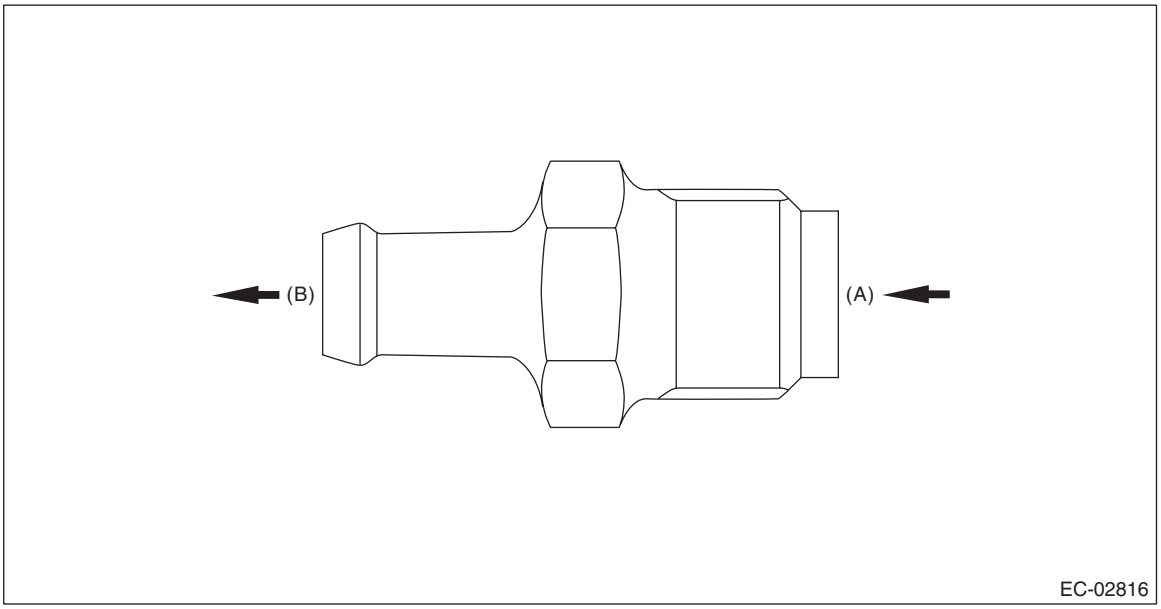

3) Check that air does not come out from (B) when air is blown into (A).

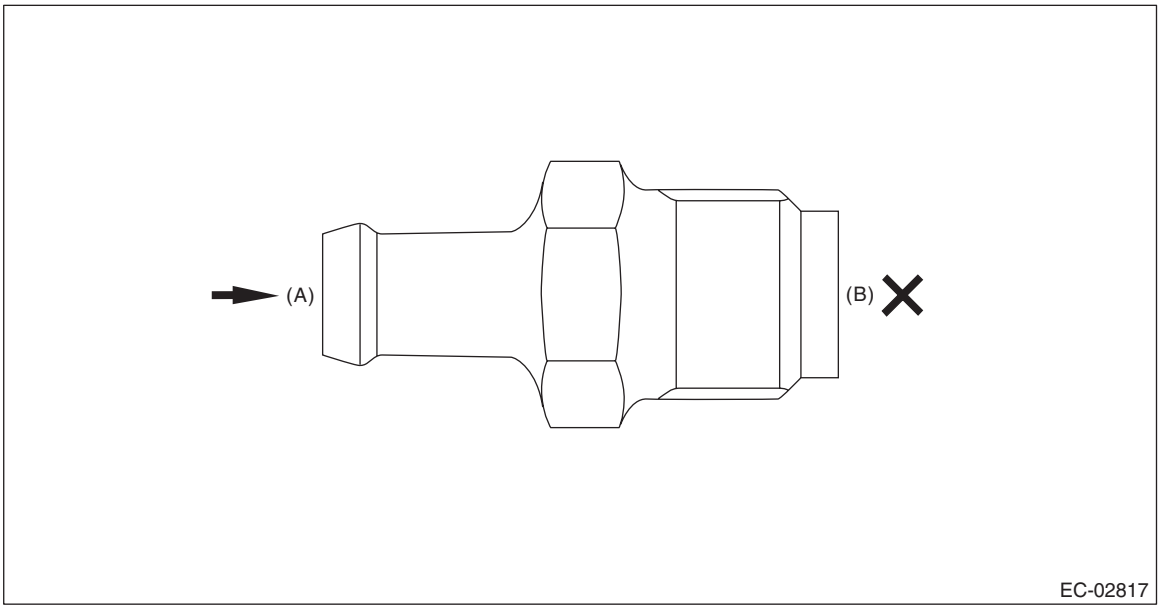

2. OTHER INSPECTIONS

Check that the PCV hose has no cracks, damage or loose part.

INTAKE (INDUCTION)

IN(H4DO(w/o HEV))

Page

1. General Description 2
2. Air Cleaner Element 4
3. Air Cleaner Case 7
4. Air Intake Boot 12
5. Air Intake Duct 13

1. General Description

A: COMPONENT

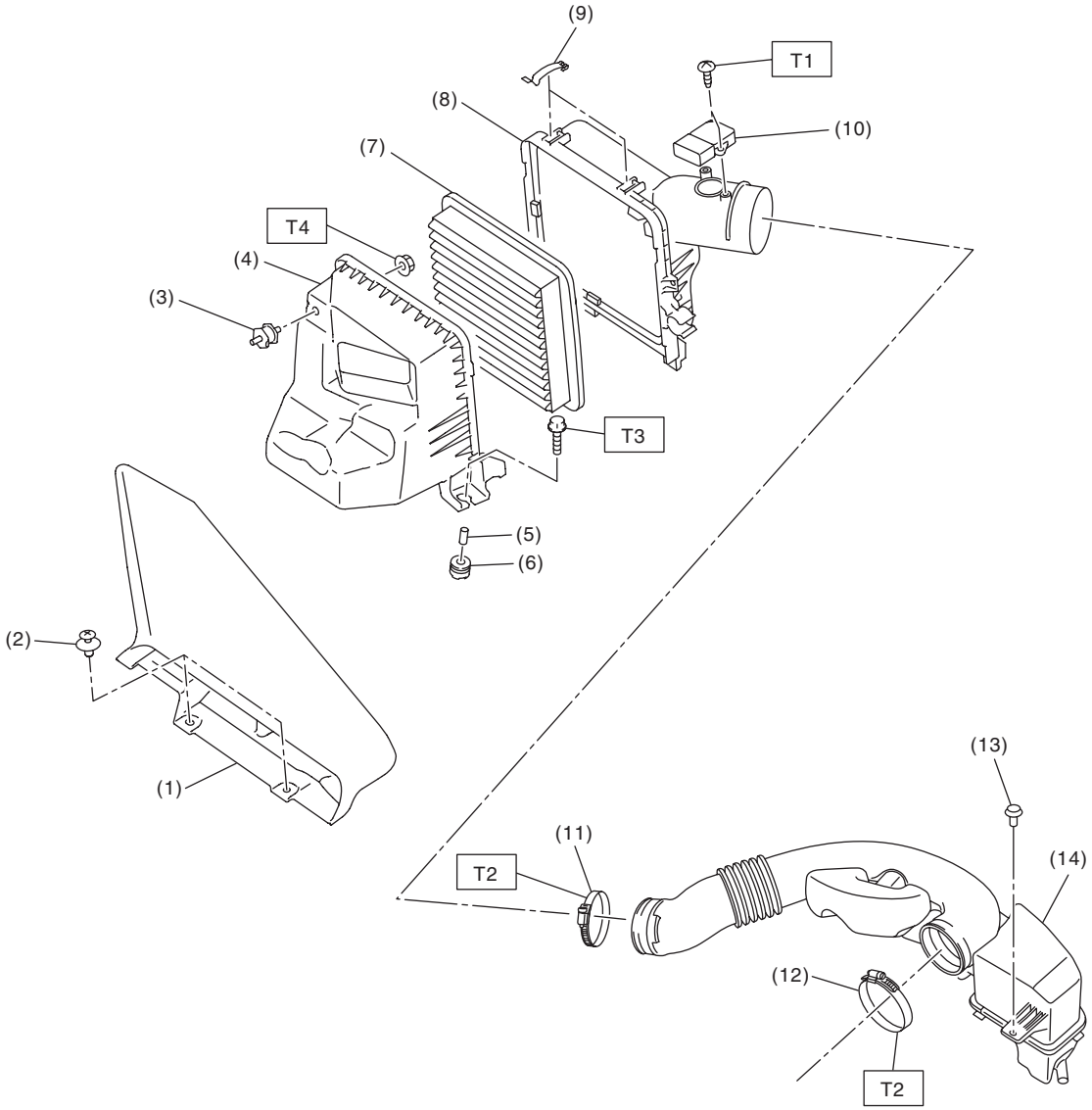

IN-03526

(1)	Air intake duct	(8)	Air cleaner case (rear)	***Tightening torque: N·m (kgf-m, ft-lb)***
(2)	Clip	(9)	Clip	***T1: 1 (0.1, 0.7)***
(3)	Cushion	(10)	Mass air flow and intake air temperature sensor	***T2: 3 (0.3, 2.2)***
(4)	Air cleaner case (front)	(11)	Clamp	***T3: 6 (0.6, 4.4)***
(5)	Spacer	(12)	Clamp	***T4: 7.5 (0.8, 5.5)***
(6)	Cushion	(13)	Clip	
(7)	Air cleaner element	(14)	Air intake boot	

B: CAUTION

- Prior to starting work, pay special attention to the following:
  1. Always wear work clothes, a work cap, and protective shoes. Additionally, wear a helmet, protective goggles, etc. if necessary.
  2. Protect the vehicle using a seat cover, fender cover, etc.
  3. Prepare the service tools, clean cloth, containers to catch grease and oil, etc.
- Vehicle components are extremely hot immediately after driving. Be wary of receiving burns from heated parts.
- When performing a repair, identify the cause of trouble and avoid unnecessary removal, disassembly and replacement.
- Before disconnecting connectors of sensors or units, be sure to disconnect the ground cable from battery.
- Always use the jack-up point when the shop jacks or rigid racks are used to support the vehicle.
- Remove contamination including dirt and corrosion before removal, installation, disassembly or assembly.
- Keep the removed parts in order and protect them from dust and dirt.
- All removed parts, if to be reused, should be reinstalled in the original positions with attention to the correct directions, etc.
- Bolts, nuts and washers should be replaced with new parts as required.
- Be sure to tighten the fasteners including bolts and nuts to the specified torque.

2. Air Cleaner Element

A: REMOVAL

1) Disconnect the ground cable from battery.

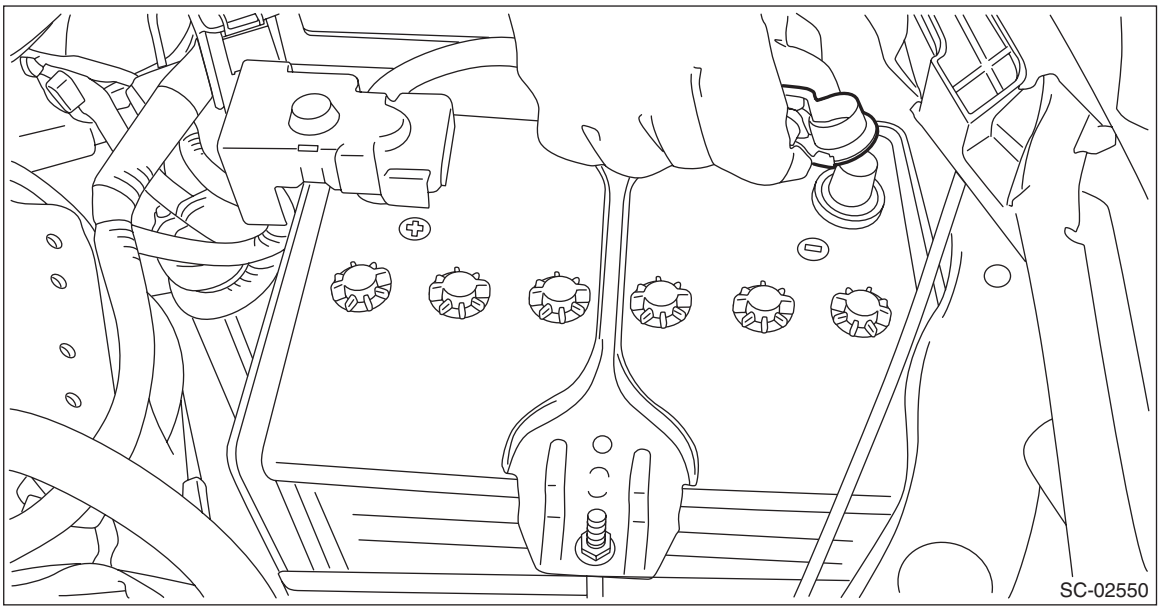

2) Remove the air intake duct. <Ref. to IN(H4DO(w/o HEV))-13, REMOVAL, Air Intake Duct.>
3) Disconnect the connector (A) from the mass air flow and intake air temperature sensor, and remove the clip (B).

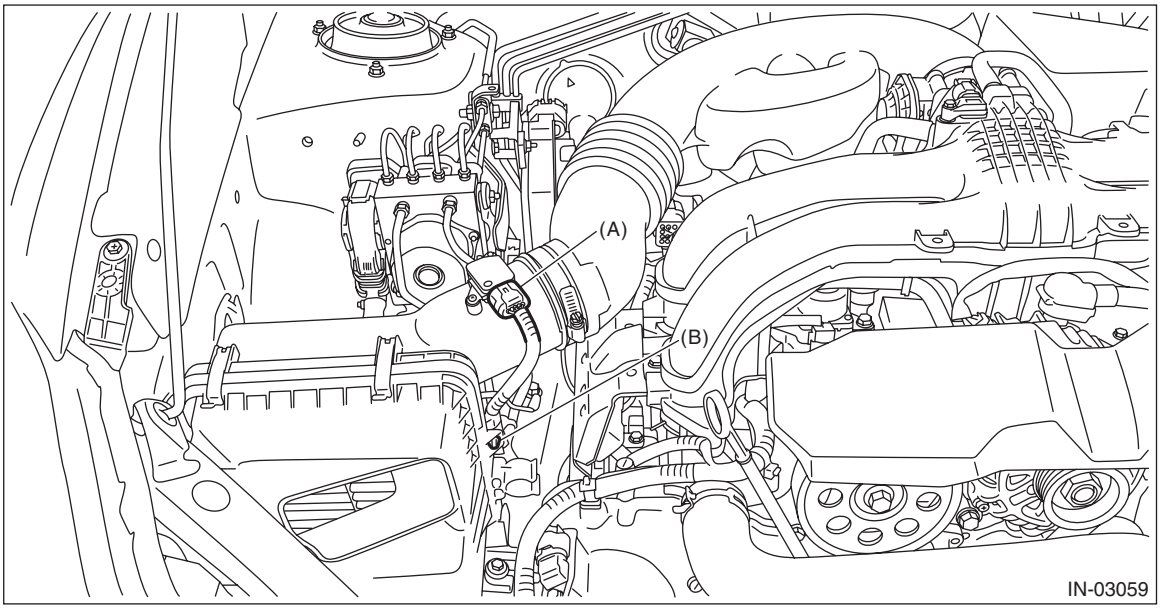

4) Loosen the clamp (A) which secures the air intake boot to the air cleaner case (rear), and then remove the clip (B) from the air cleaner case (front).

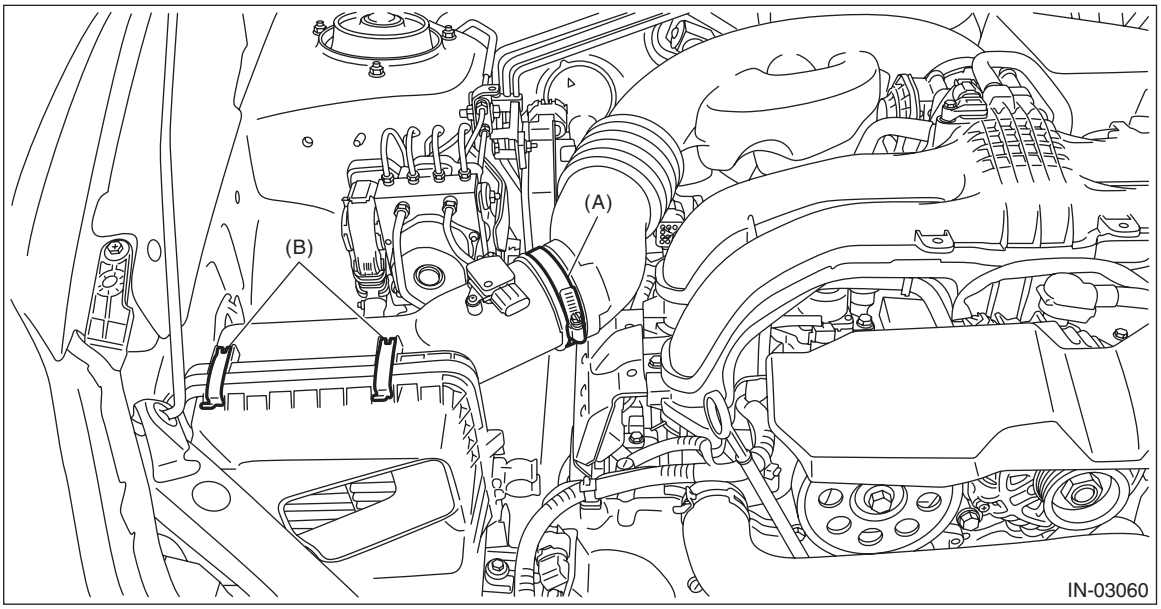

5) Remove the air cleaner case (rear) and air cleaner element.

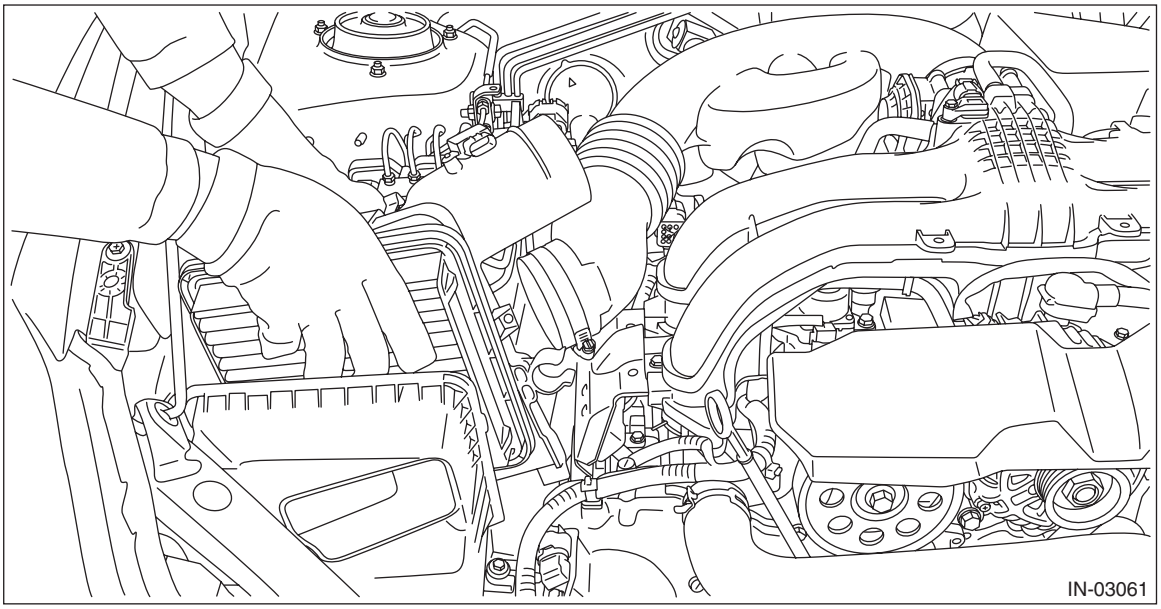

B: INSTALLATION

Install in the reverse order of removal.

CAUTION:
Be sure to use SUBARU genuine air cleaner element depending on the engine type when replacing the air cleaner elements. Using other air cleaner element may affect the engine performance.

NOTE:
- Check that there are no foreign objects in the air cleaner case.
- When installing the air cleaner case (rear), align the protrusion of the air cleaner case (rear) to the hole on the air cleaner case (front) to install.

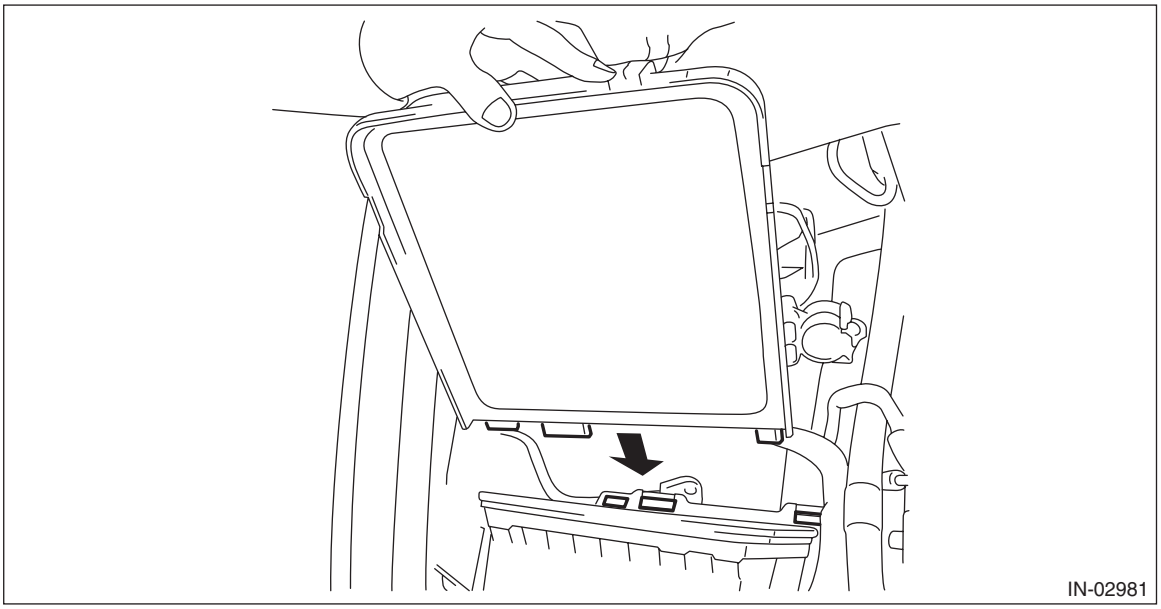

Tightening torque:
3 N·m (0.3 kgf-m, 2.2 ft-lb)

C: INSPECTION

1) Check that the air cleaner element has no deformation, cracks or other damages.
2) Check the air cleaner element for excessive dirt.
3) Replace the air cleaner case (rear) if the HC absorption filter is damaged.

3. Air Cleaner Case

A: REMOVAL

1) Disconnect the ground cable from battery.

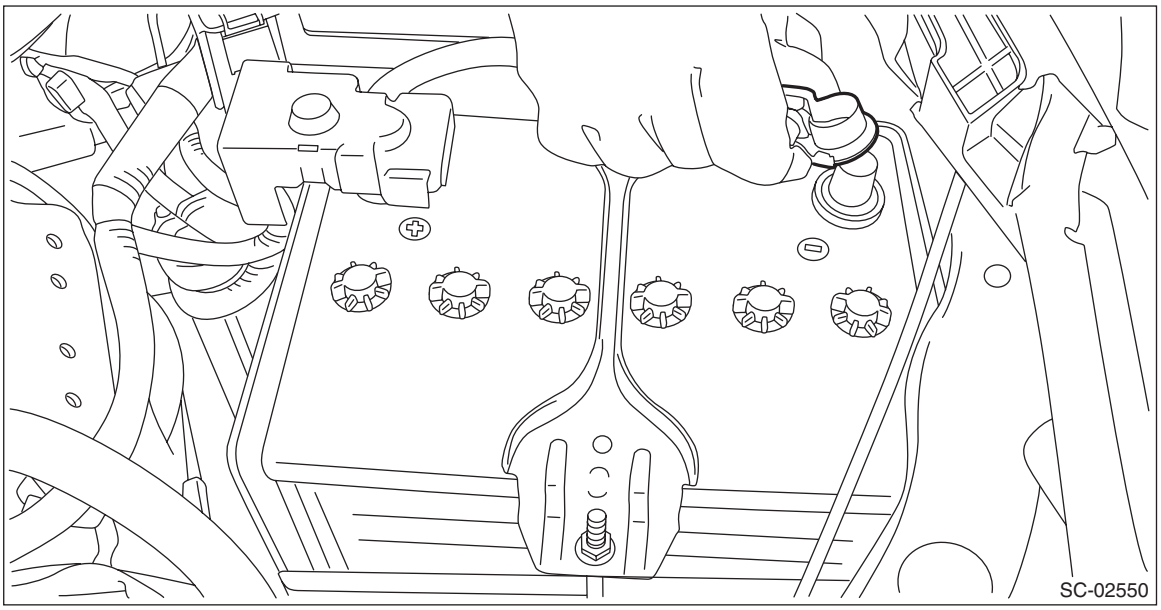

2) Remove the air intake duct. <Ref. to IN(H4DO(w/o HEV))-13, REMOVAL, Air Intake Duct.>
3) Disconnect the connector (A) from the mass air flow and intake air temperature sensor, and remove the clip (B).

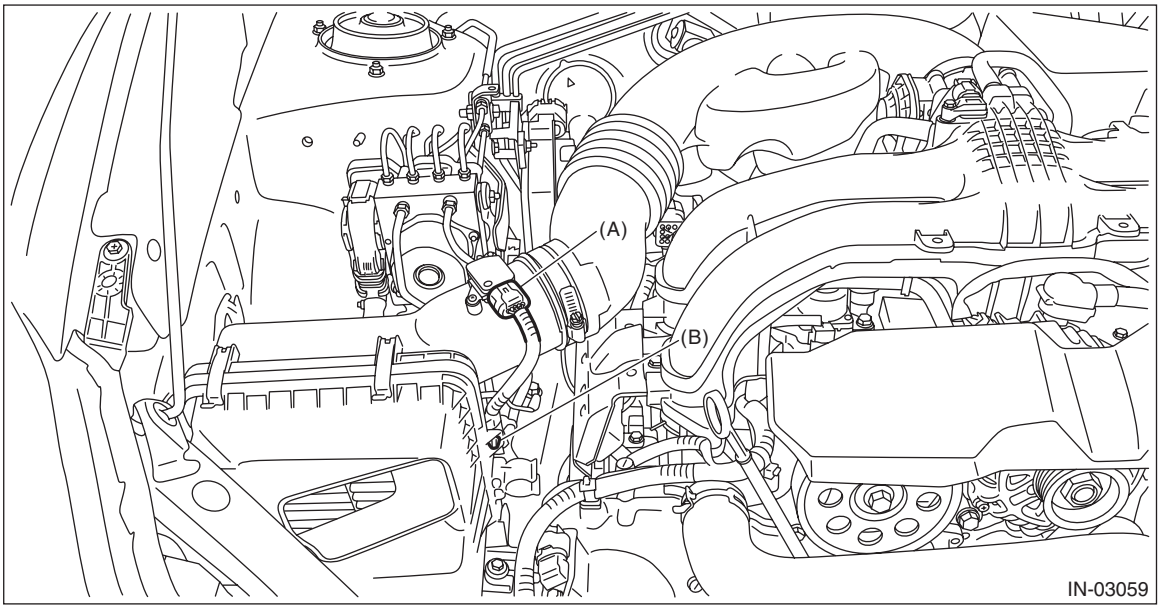

4) Loosen the clamp (A) which secures the air intake boot to the air cleaner case (rear), and then remove the clip (B) from the air cleaner case (front).

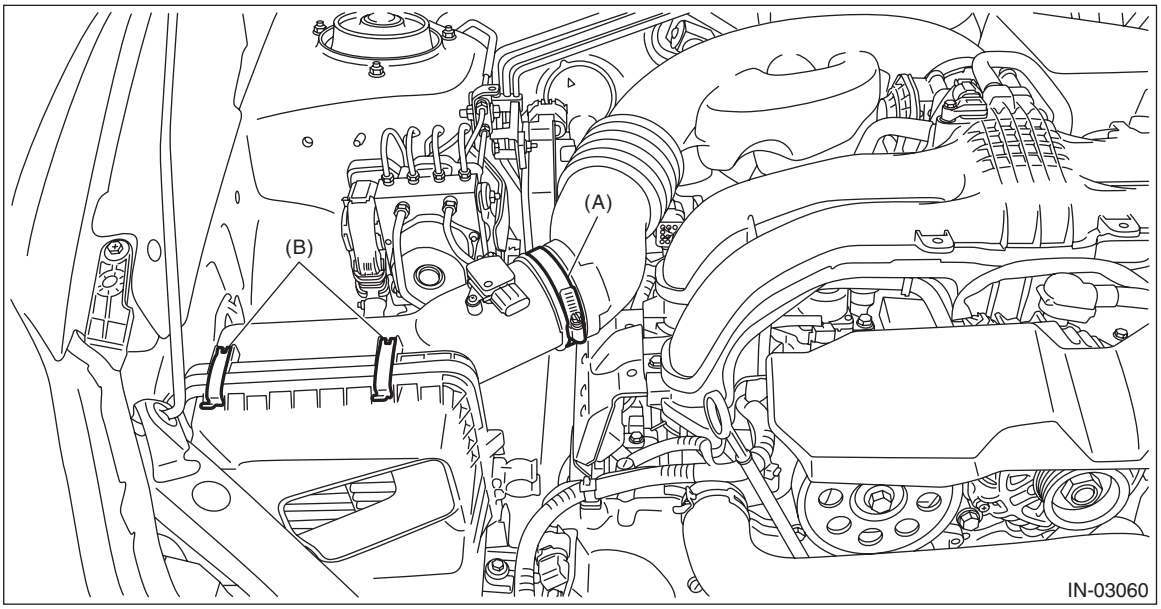

5) Remove the air cleaner case (rear) and air cleaner element.

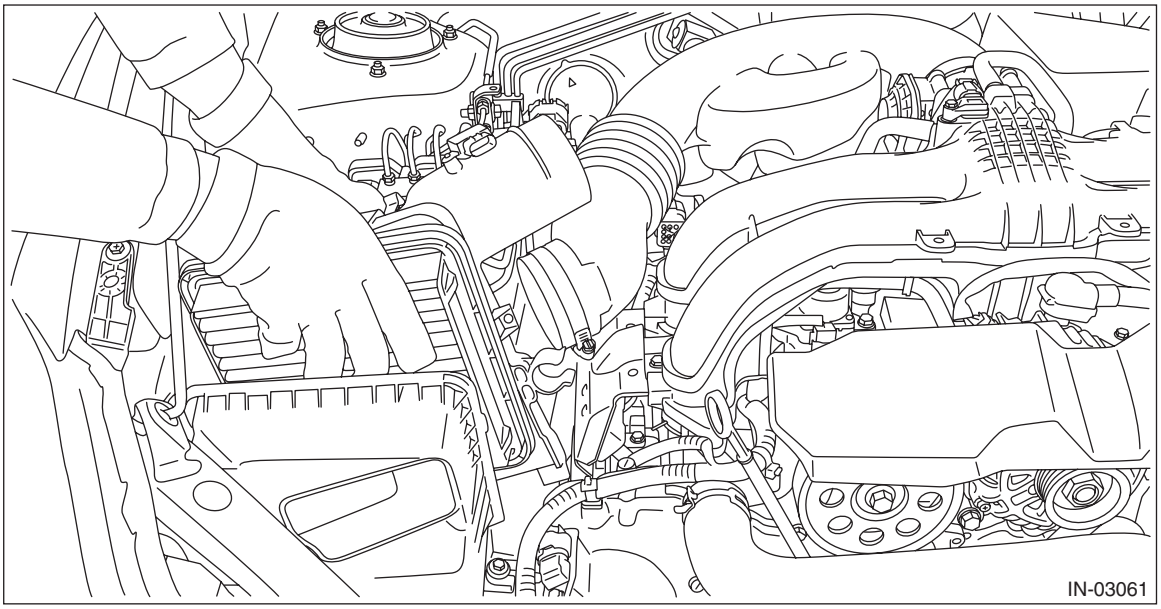

6) Remove the bolt (A) and nut (B) which secure the air cleaner case (front) to the body.

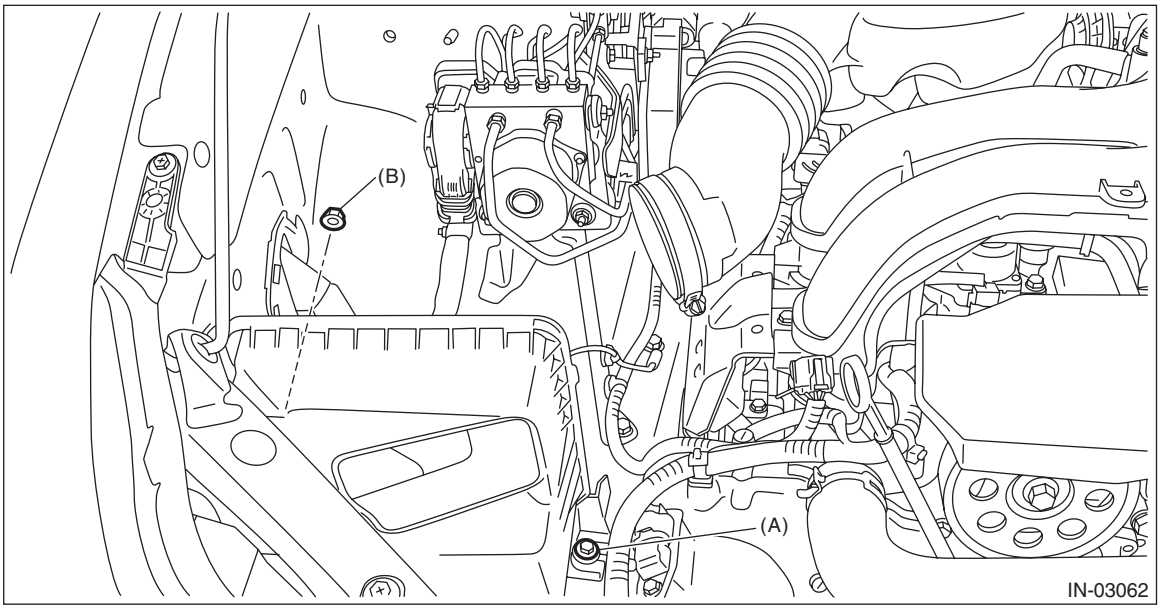

7) Remove the air cleaner case (front).

B: INSTALLATION

1) Install the bolt (A) and nut (B) which secure the air cleaner case (front) to the body.

Tightening torque:
Bolt (A)
6 N·m (0.6 kgf-m, 4.4 ft-lb)
Nut (B)
7.5 N·m (0.8 kgf-m, 5.5 ft-lb)

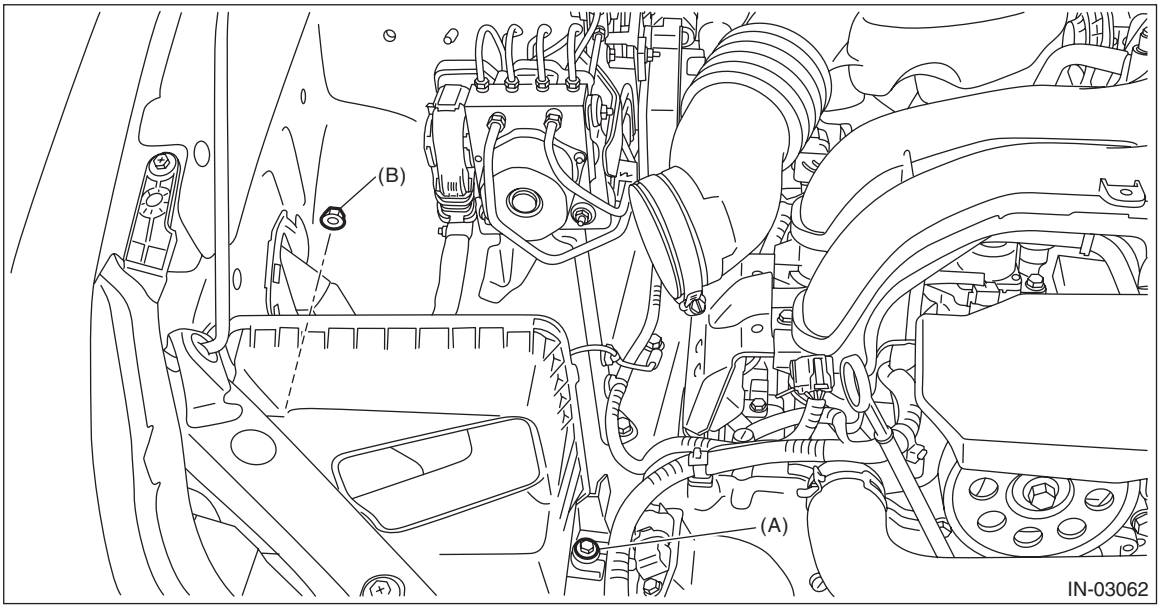

2) Install the air cleaner case (rear) and air cleaner element.

NOTE:
When installing the air cleaner case (rear), align the protrusion of the air cleaner case (rear) to the hole on the air cleaner case (front) to install.

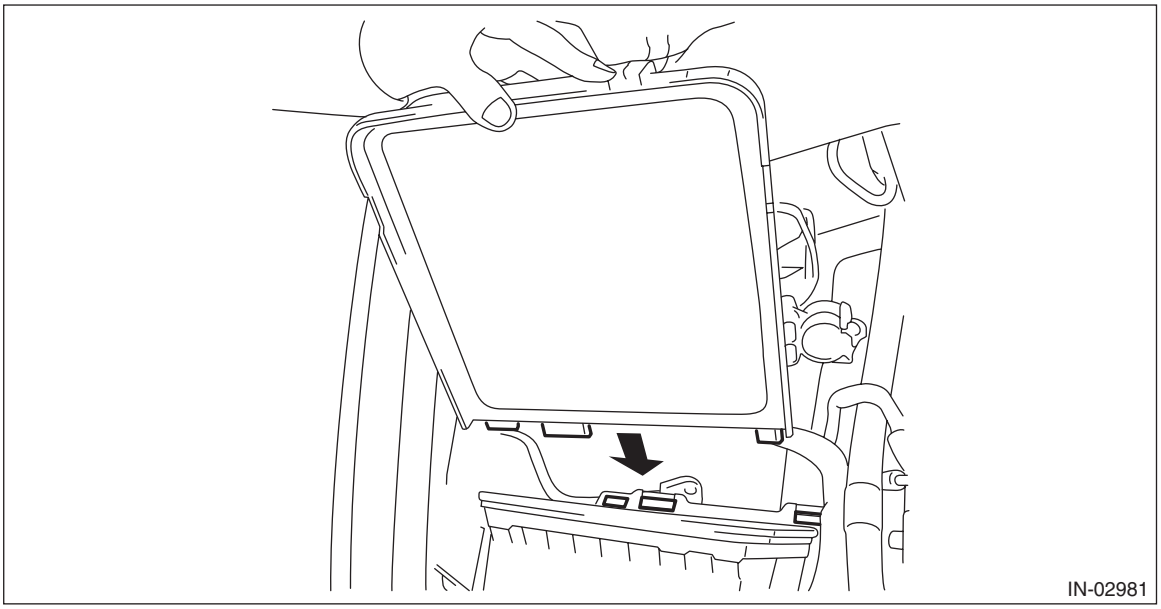

3) Install the clips (B) to the air cleaner case (front), then tighten the clamp (A) that secures the air intake boot to the air cleaner case (rear).

Tightening torque:
Clamp (A)
3 N·m (0.3 kgf-m, 2.2 ft-lb)

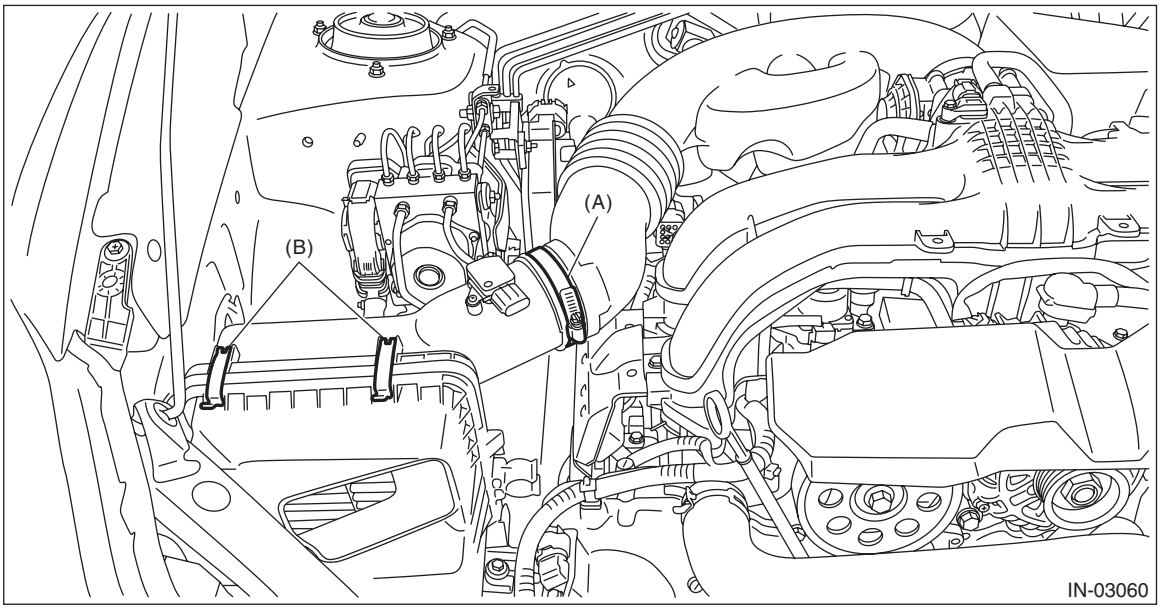

4) Connect the connector (A) to the mass air flow and intake air temperature sensor and secure the harness with clip (B).

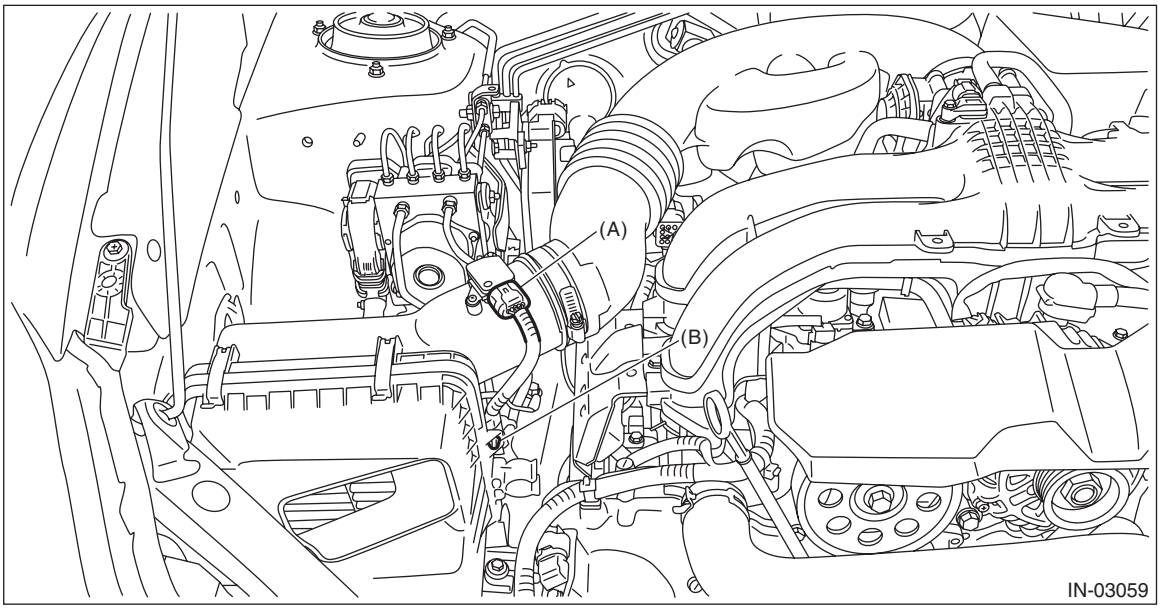

5) Install the air intake duct. <Ref. to IN(H4DO(w/o HEV))-13, INSTALLATION, Air Intake Duct.>
6) Connect the battery ground terminal.

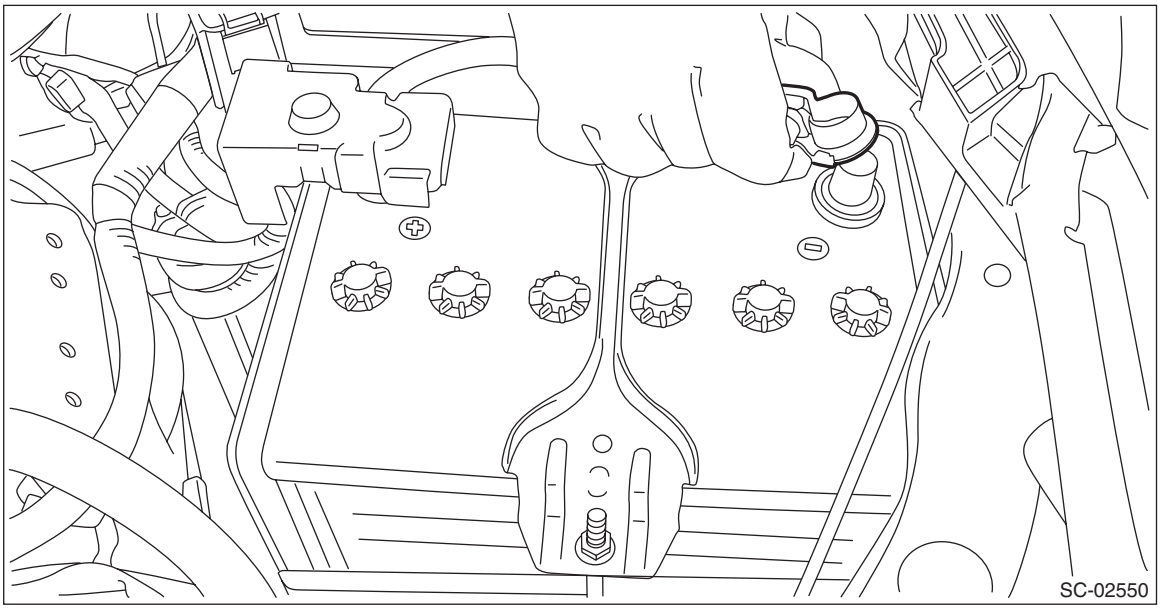

C: INSPECTION

1) Check that the air cleaner case has no deformation, cracks or other damages.
2) Check that the air intake boot has no cracks, damage or loose part.

4. Air Intake Boot

A: REMOVAL

1) Remove the clip (A) from the air intake boot.
2) Loosen the clamp (B) securing the air cleaner case (rear) to the air intake boot.
3) Loosen the clamp (C) which secures the throttle body to the air intake boot.

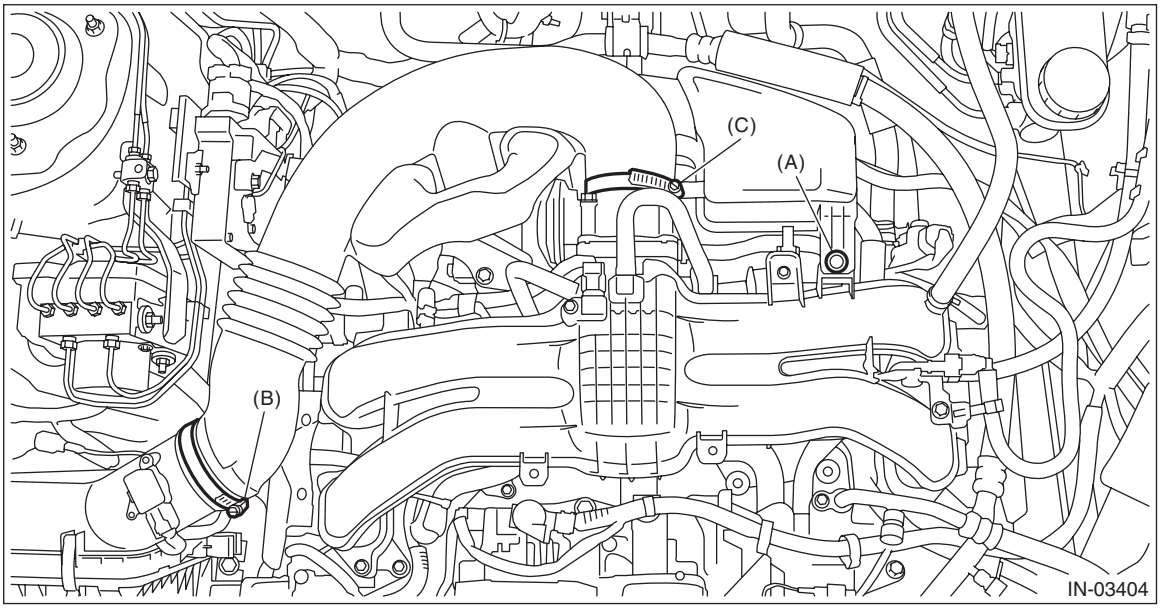

4) Disconnect the PCV hose and remove the air intake boot.

B: INSTALLATION

Install in the reverse order of removal.

Tightening torque:
3 N·m (0.3 kgf-m, 2.2 ft-lb)

C: INSPECTION

1) Check that the air intake boot has no deformation, cracks or other damages.
2) Inspect that no foreign objects are mixed in the air intake boot.

5. Air Intake Duct

A: REMOVAL

1) Remove the clip which secures the air intake duct, and remove the air intake duct.

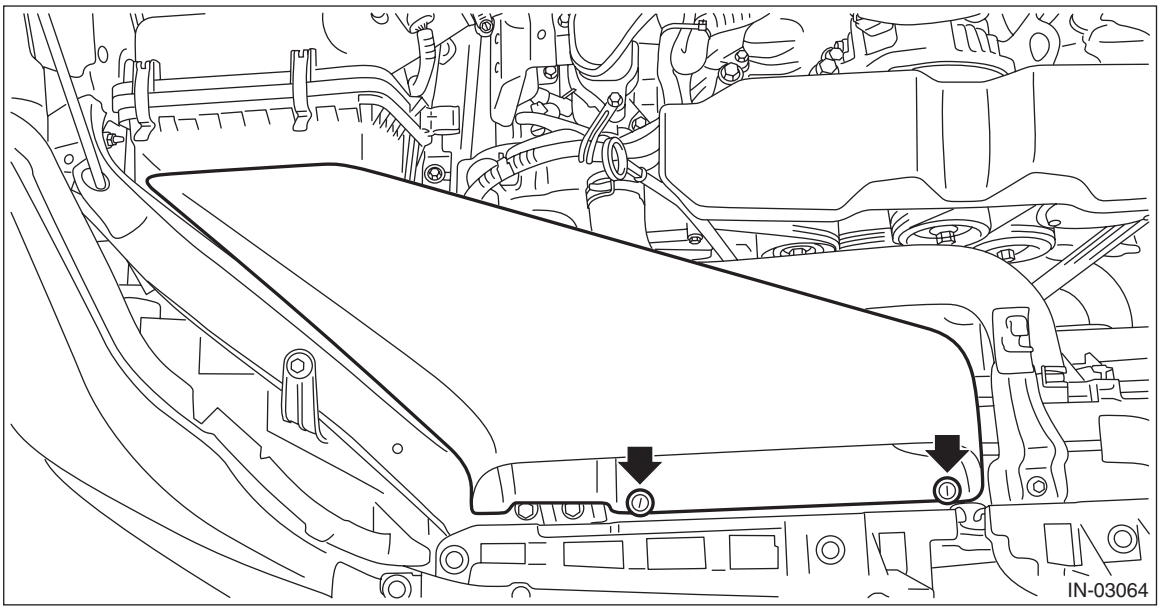

B: INSTALLATION

Install in the reverse order of removal.

C: INSPECTION

1) Check that the air intake duct has no deformation, cracks or other damages.
2) Inspect that no foreign objects are mixed in the air intake duct.

MECHANICAL

ME(H4DO(w/o HEV))

		Page
1.	General Description	2
2.	Compression	26
3.	Idle Speed	28
4.	Ignition Timing	29
5.	Intake Manifold Vacuum	30
6.	Engine Oil Pressure	33
7.	Fuel Pressure	35
8.	Cam Clearance	44
9.	Engine Assembly	55
10.	Engine Mounting	118
11.	Preparation for Overhaul	119
12.	V-belt	120
13.	Crank Pulley	137
14.	Chain Cover	144
15.	Timing Chain Assembly	163
16.	Cam Sprocket	183
17.	Crank Sprocket	190
18.	Rocker Cover	191
19.	Camshaft	208
20.	Cam Carrier	209
21.	Cylinder Head	256
22.	Cylinder Block	299
23.	Intake and Exhaust Valve	414
24.	Piston	415
25.	Connecting Rod	416
26.	Crankshaft	417
27.	Engine Trouble in General	418
28.	Engine Noise	425

1. General Description

A: SPECIFICATION

Engine	Model			2.0 L
	Cylinder arrangement			Horizontally opposed, liquid cooled, 4-cylinder, 4-stroke gasoline engine
	Valve system mechanism			Chain driven, double overhead camshaft, 4-valve/cylinder
	Bore × Stroke mm (in)			84.0 × 90.0 (3.31 × 3.54)
	Displacement cm^3 (cu in)			1,995 (121.73)
	Compression ratio			Gasoline engine model: 10.5
				HEV model: 10.8
	Compression pressure (at 200 — 300 rpm) kPa (kg/cm^2, psi)		Standard	1,050 — 1,400 (11 — 14, 152 — 203)
	Number of piston rings			Compression ring: 2 Oil ring: 1
	Intake valve timing	Open	Max. retard	ATDC 25°
			Min. advance	BTDC 43°
		Close	Max. retard	ABDC 85°
			Min. advance	ABDC 17°
	Exhaust valve timing	Open	Max. retard	ABDC 3°
			Min. advance	BBDC 52°
		Close	Max. retard	ATDC 47°
			Min. advance	BTDC 8°
	Cam clearance mm (in)	Intake	Standard	$0.13^{+0.02}_{-0.03}$ ($0.0051^{+0.0008}_{-0.0012}$)
		Exhaust	Standard	0.22±0.02 (0.0087±0.0008)
	Idle speed (For CVT model, select lever in “P” or “N” range. For MT model, gear shift lever in neutral position.) rpm	No load	Standard	650±100
		A/C ON	Standard	800 — 900±50
	Ignition order			1 → 3 → 2 → 4
	Ignition timing BTDC/rpm		Standard	Gasoline engine model: 16°±10°/650
				HEV model: 10°±10°/650

NOTE:
OS: Oversize US: Undersize

Camshaft	Bending			mm (in)	Limit	0.020 (0.00079)
	Cam lobe height	mm (in)	Intake		Standard	40.34 — 40.44 (1.588 — 1.592)
			Exhaust		Standard	39.66 — 39.76 (1.561 — 1.565)
	Cam base circle diameter			mm (in)	Standard	34.0 (1.339)
	Journal outer diameter			mm (in)	Standard	25.946 — 25.963 (1.0215 — 1.0222)
	Thrust clearance			mm (in)	Standard	0.068 — 0.116 (0.0027 — 0.0047)
	Oil clearance			mm (in)	Standard	0.037 — 0.072 (0.0015 — 0.0028)
Cylinder head	Warpage (mating surface with cylinder block)			mm (in)	Limit	0.020 (0.0008)
	Grinding limit				mm (in)	To 98.4 (3.874)
	Height			mm (in)	Standard	98.5 (3.878)
Valve & valve guide	Valve overall length	mm (in)	Intake			104.95 (4.132)
			Exhaust			96.5 (3.799)
	Valve head edge thickness	mm (in)	Intake		Standard	0.8 — 1.2 (0.031 — 0.047)
			Exhaust		Standard	1.0 — 1.4 (0.039 — 0.055)
	Valve stem outer diameter	mm (in)	Intake		Standard	5.455 — 5.470 (0.2148 — 0.2154)
			Exhaust		Standard	5.445 — 5.460 (0.2144 — 0.2150)
	Valve guide inner diameter			mm (in)	Standard	5.500 — 5.512 (0.2165 — 0.2170)
	Clearance between valve and valve guide	mm (in)	Intake		Standard	0.030 — 0.057 (0.0012 — 0.0022)
			Exhaust		Standard	0.040 — 0.067 (0.0016 — 0.0026)
	Valve guide protrusion amount			mm (in)	Standard	11.4 — 11.8 (0.449 — 0.465)
Valve & valve shim	Valve stem end outer diameter	mm (in)	Intake		Standard	5.455 — 5.470 (0.2148 — 0.2154)
			Exhaust		Standard	5.445 — 5.460 (0.2144 — 0.2150)
	Valve shim inner diameter			mm (in)	Standard	5.500 — 5.560 (0.2165 — 0.2189)
	Clearance between valve and valve shim	mm (in)	Intake		Standard	0.030 — 0.105 (0.0012 — 0.0041)
			Exhaust		Standard	0.040 — 0.115 (0.0016 — 0.0045)
Valve seat	Seating width between valve and valve seat	mm (in)	Intake		Standard	0.8 — 1.6 (0.031 — 0.063)
			Exhaust		Standard	1.1 — 1.7 (0.043 — 0.067)
	Seating angle between valve and valve seat					45°
	Seating position between valve and valve seat					Valve face center
Valve spring	Free length			mm (in)	Standard	Gasoline engine model: 41.06 (1.617)
						HEV model: 41.68 (1.641)
	Tension/spring height	N (kgf, lb)/mm (in)	Set		Standard	182 — 210 (18.56 — 21.41, 40.92 — 47.22)/ 33.0 (1.299)
			Lift		Standard	Gasoline engine model: 552 — 610 (56.29 — 62.20, 124.11 — 137.15)/22.0 (0.866)
						HEV model: 502 — 554 (51.19 — 56.49, 112.87 — 124.56)/22.0 (0.866)
	Squareness				Standard	2.5°, 1.8 mm (0.071 in) or less

Cylinder block & piston	Cylinder block warpage (Mating surface with cylinder head)				mm (in)	Limit	0.025 (0.00098)
	Grinding limit of cylinder block				mm (in)		To 204.9 (8.067)
	Height of cylinder block				mm (in)	Standard	205.0 (8.071)
	Inner diameter of cylinder liner		Cylinder bore size mark A		mm (in)	Standard	84.005 — 84.015 (3.3073 — 3.3077)
			Cylinder bore size mark B			Standard	83.995 — 84.005 (3.3069 — 3.3073)
	Cylindricality of cylinder liner				mm (in)	Limit	0.030 (0.0012)
	Out-of-roundness of cylinder liner				mm (in)	Limit	0.030 (0.0012)
	Piston grade point				mm (in)		38.0 (1.50)
	Piston outer diameter		Standard Size	Grade A	mm (in)	Standard	83.975 — 83.985 (3.3061 — 3.3065)
				Grade B		Standard	83.965 — 83.975 (3.3057 — 3.3061)
			0.25 (0.0098) OS			Standard	84.215 — 84.235 (3.3155 — 3.3163)
			0.50 (0.0197) OS			Standard	84.465 — 84.485 (3.3254 — 3.3262)
	Clearance between cylinder liner and piston				mm (in)	Standard	0.020 — 0.040 (0.00079 — 0.00158)
	Inner diameter of cylinder liner boring limit (diameter)				mm (in)		To 84.505 (3.3270)
Piston and piston pin	Degree of fit						Piston pin must be fitted into position with thumb at 20°C (68°F).
	Clearance between piston and piston pin				mm (in)	Standard	0.004 — 0.008 (0.0002 — 0.0003)
Piston ring	Closed gap	mm (in)	Compression ring	Top ring		Standard	0.20 — 0.35 (0.0079 — 0.0138)
				Second ring		Standard	0.40 — 0.50 (0.0157 — 0.0197)
			Oil ring (Upper rail and lower rail)			Standard	0.20 — 0.50 (0.0079 — 0.0197)
	Clearance between compression ring and piston	mm (in)	Top ring			Standard	0.040 — 0.080 (0.0016 — 0.0031)
			Second ring			Standard	0.030 — 0.070 (0.0012 — 0.0028)
Connecting rod and connecting rod bearing	Bend or twist per 100 mm (3.94 in) in length				mm (in)	Limit	0.10 (0.0039)
	Thrust clearance				mm (in)	Standard	0.070 — 0.330 (0.0028 — 0.0130)
	Connecting rod bearing thickness (at center)	mm (in)	Standard size			Standard	1.492 — 1.508 (0.0587 — 0.0594)
			0.03 (0.0012) US			Standard	1.511 — 1.515 (0.0595 — 0.0596)
			0.05 (0.0020) US			Standard	1.521 — 1.525 (0.0599 — 0.0600)
			0.25 (0.0098) US			Standard	1.621 — 1.625 (0.0638 — 0.0640)
	Oil clearance				mm (in)	Standard	0.017 — 0.047 (0.0007 — 0.0019)
Piston pin & connecting rod bushing	Clearance between piston pin and connecting rod bushing				mm (in)	Standard	0.004 — 0.026 (0.0002 — 0.0010)

Crankshaft and crankshaft bearing	Bending			Limit	0.035 (0.0014)
	Crankshaft pin	Cylindricality mm (in)		Limit	0.006 (0.0002)
		Out-of-roundness mm (in)		Limit	0.005 (0.0002)
		Grinding limit (dia.) mm (in)			To 47.726 (1.8790)
	Crankshaft journal	Cylindricality mm (in)		Limit	0.006 (0.0002)
		Out-of-roundness mm (in)		Limit	0.005 (0.0002)
		Grinding limit (dia.) mm (in)			To 67.735 (2.6667)
	Crankshaft pin outer diameter mm (in)		Standard size	Standard	47.976 — 48.000 (1.8888 — 1.8898)
			0.03 (0.0012) US	Standard	47.946 — 47.970 (1.8876 — 1.8886)
			0.05 (0.0020) US	Standard	47.926 — 47.950 (1.8868 — 1.8878)
			0.25 (0.0098) US	Standard	47.726 — 47.750 (1.8790 — 1.8799)
	Crankshaft journal outer diameter mm (in)		Standard size	Standard	67.985 — 68.009 (2.6766 — 2.6775)
			0.03 (0.0012) US	Standard	67.955 — 67.979 (2.6754 — 2.6763)
			0.05 (0.0020) US	Standard	67.935 — 67.959 (2.6746 — 2.6755)
			0.25 (0.0098) US	Standard	67.735 — 67.759 (2.6667 — 2.6677)
	Crankshaft bearing thickness (at center) mm (in)	#1, #2, #3, #4	Standard size	Standard	2.495 — 2.513 (0.0982 — 0.0989)
			0.03 (0.0012) US	Standard	2.519 — 2.522 (0.0992 — 0.0993)
			0.05 (0.0020) US	Standard	2.529 — 2.532 (0.0996 — 0.0997)
			0.25 (0.0098) US	Standard	2.629 — 2.632 (0.1035 — 0.1036)
		#5	Standard size	Standard	2.493 — 2.511 (0.0981 — 0.0989)
			0.03 (0.0012) US	Standard	2.517 — 2.520 (0.0991 — 0.0992)
			0.05 (0.0020) US	Standard	2.527 — 2.530 (0.0995 — 0.0996)
			0.25 (0.0098) US	Standard	2.627 — 2.630 (0.1034 — 0.1035)
	Thrust clearance mm (in)			Standard	0.130 — 0.308 (0.00512 — 0.01213)
	Oil clearance mm (in)			Standard	0.013 — 0.031 (0.00051 — 0.00122)

B: COMPONENT

1. TIMING CHAIN

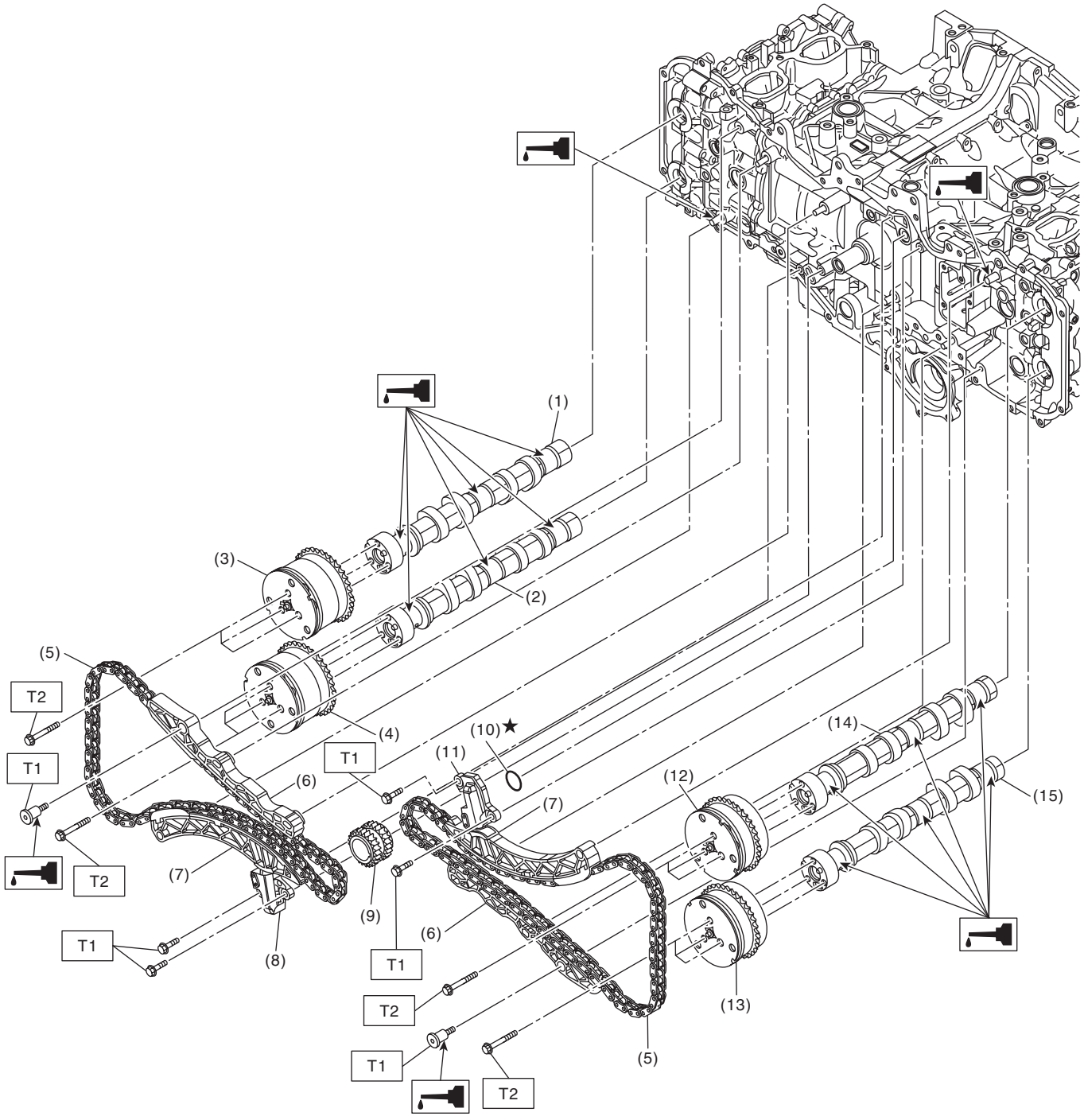

(1) Intake camshaft RH
(2) Exhaust camshaft RH
(3) Intake cam sprocket RH
(4) Exhaust cam sprocket RH
(5) Timing chain
(6) Chain guide
(7) Chain tension lever
(8) Chain tensioner RH
(9) Crank sprocket
(10) O-ring
(11) Chain tensioner LH
(12) Intake cam sprocket LH
(13) Exhaust cam sprocket LH
(14) Intake camshaft LH
(15) Exhaust camshaft LH

Tightening torque: N·m (kgf-m, ft-lb)
T1: 6.4 (0.7, 4.7)
T2: 18 (1.8, 13.3)

2. CHAIN COVER

- Gasoline engine model

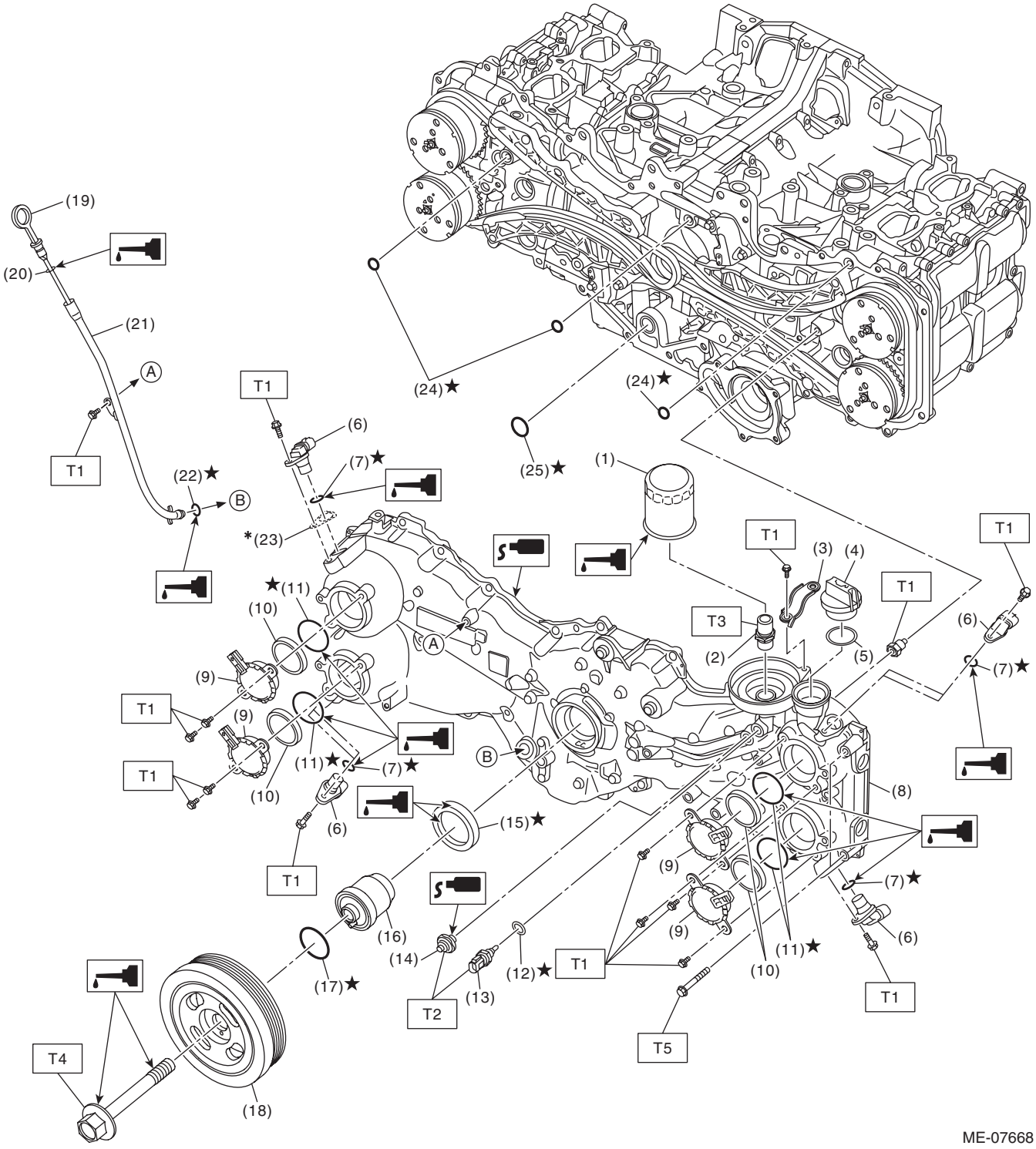

(1) Oil filter
(2) Oil pump union
(3) Generator cord stay
(4) Oil filler cap
(5) Gasket
(6) Camshaft position sensor
(7) O-ring
(8) Chain cover
(9) Oil control solenoid
(10) Back-up ring
(11) O-ring
(12) Gasket
(13) Engine oil temperature sensor
(14) Oil pressure switch
(15) Front oil seal
(16) Crank pulley boss
(17) O-ring
(18) Crank pulley
(19) Oil level gauge
(20) O-ring
(21) Oil level gauge guide
(22) O-ring
(23) Spacer
(24) O-ring
(25) O-ring

* Zero or one spacer for gap adjustment.

Tightening torque: N·m (kgf-m, ft-lb)

T1: 6.4 (0.7, 4.7)
T2: 18 (1.8, 13.3)
T3: 45 (4.6, 33.2)
T4: <Ref. to ME(H4DO(w/o HEV))-138, INSTALLATION, Crank Pulley.>
T5: <Ref. to ME(H4DO(w/o HEV))-151, INSTALLATION, Chain Cover.>

- HEV model

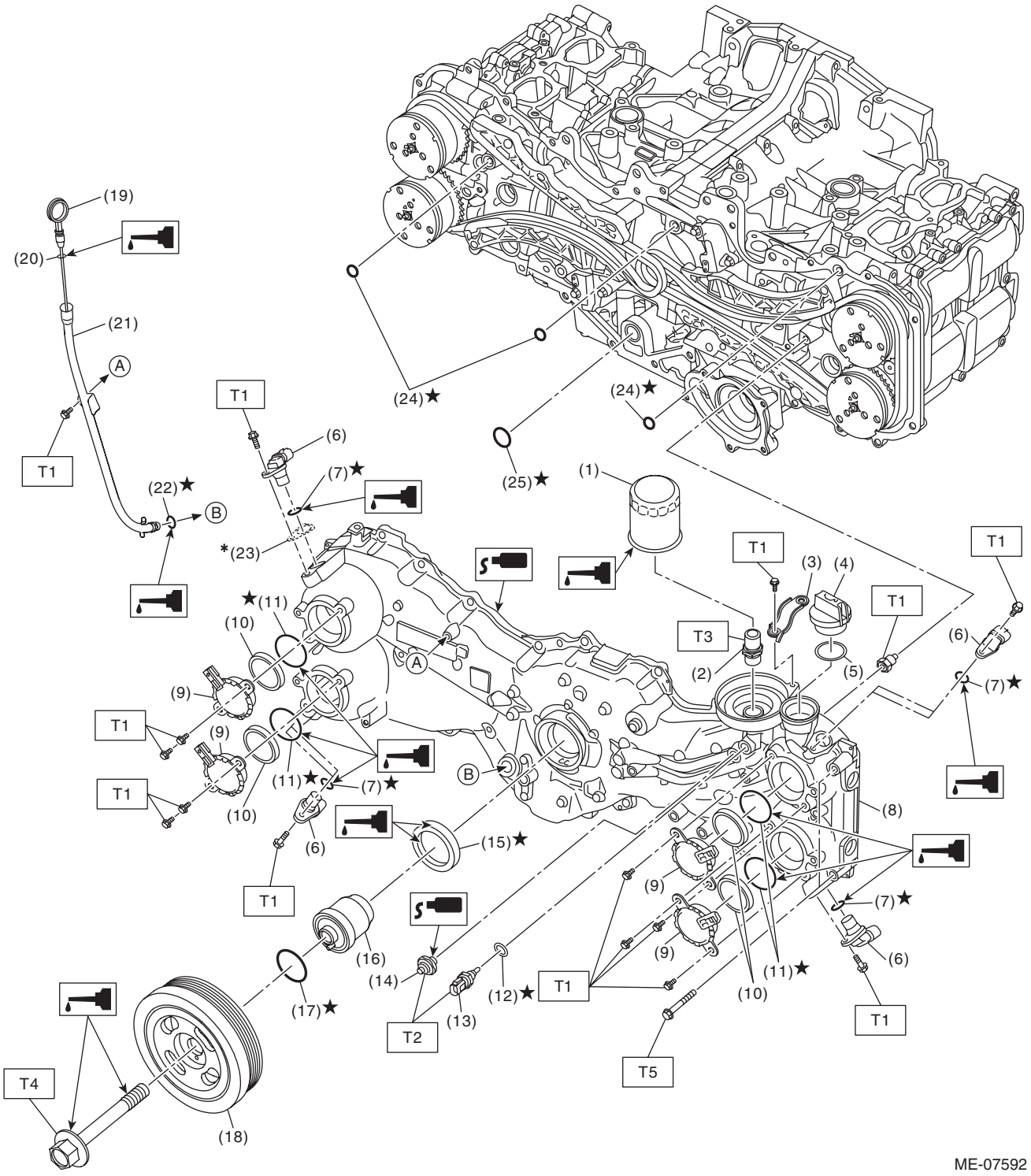
(19)
(20)
(21)
A
T1
(22)★
B
T1
(6)
(7)★
*(23)
(24)★
(24)★
(25)★
(1)
T1
(3)
(4)
T1
T1
T3
(2)
(5)
(6)
(7)★
★(11)
(10)
(9)
T1
(9)
T1
(10)
(11)★
(7)★
A
B
(6)
(15)★
T1
(8)
(9)
(7)★
(9)
(6)
(11)★
(10)
T1
(16)
(14)
(12)★
T1
(13)
T2
(17)★
T5
T4
(18)
ME-07592

(1) Oil filter
(2) Oil pump union
(3) Battery cable stay
(4) Oil filler cap
(5) Gasket
(6) Camshaft position sensor
(7) O-ring
(8) Chain cover
(9) Oil control solenoid
(10) Back-up ring
(11) O-ring
(12) Gasket
(13) Engine oil temperature sensor
(14) Oil pressure switch
(15) Front oil seal
(16) Crank pulley boss
(17) O-ring
(18) Crank pulley
(19) Oil level gauge
(20) O-ring
(21) Oil level gauge guide
(22) O-ring
(23) Spacer
(24) O-ring
(25) O-ring

* Zero or one spacer for gap adjustment.

Tightening torque: N·m (kgf-m, ft-lb)

T1: 6.4 (0.7, 4.7)
T2: 18 (1.8, 13.3)
T3: 45 (4.6, 33.2)
T4: <Ref. to ME(H4DO(w/o HEV))-138, INSTALLATION, Crank Pulley.>
T5: <Ref. to ME(H4DO(w/o HEV))-151, INSTALLATION, Chain Cover.>

3. CYLINDER HEAD AND CAMSHAFT

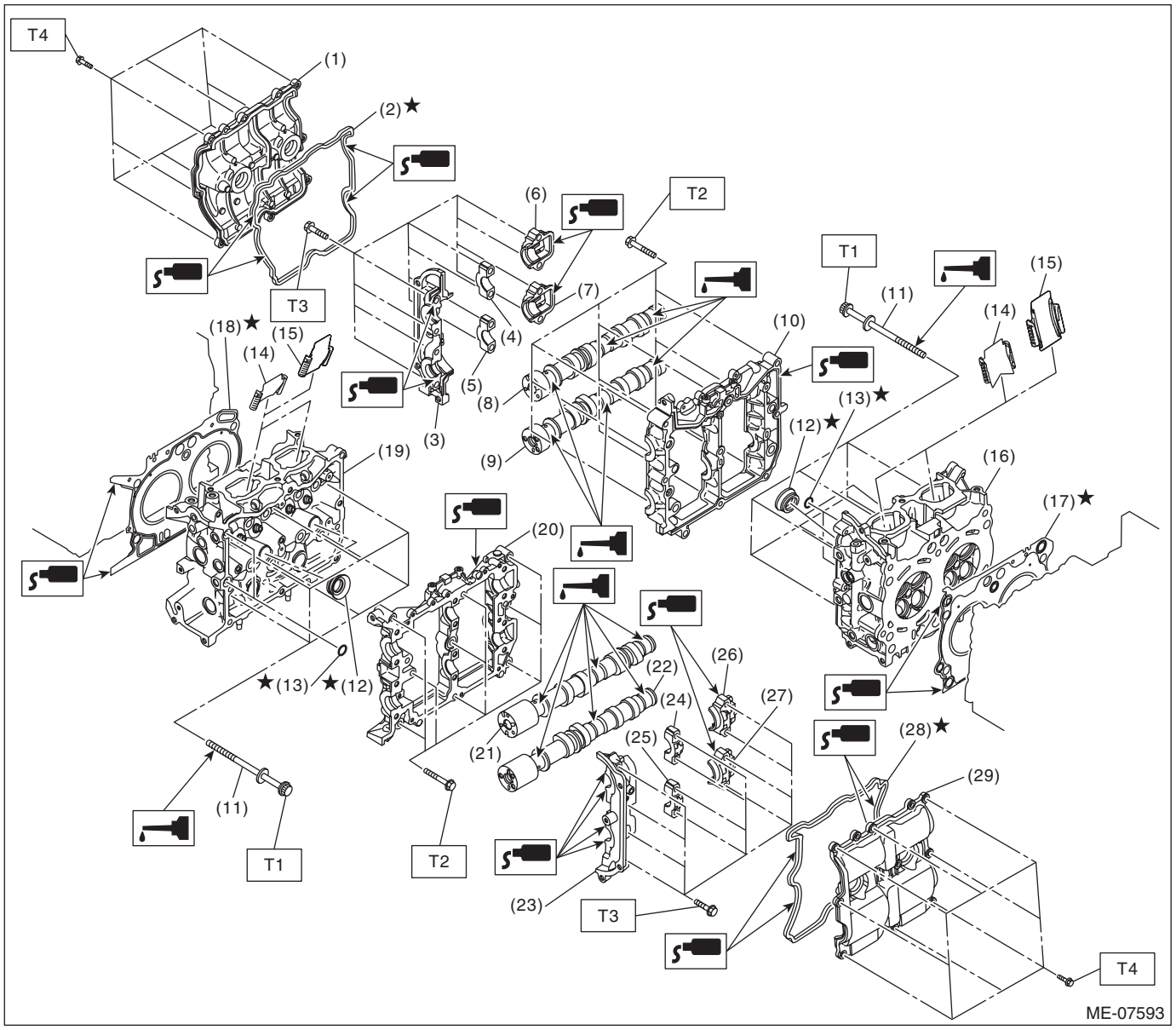

(1) Rocker cover RH
(2) Rocker cover gasket RH
(3) Front camshaft cap RH
(4) Intake center camshaft cap RH
(5) Exhaust center camshaft cap RH
(6) Intake rear camshaft cap RH
(7) Exhaust rear camshaft cap RH
(8) Intake camshaft RH
(9) Exhaust camshaft RH
(10) Cam carrier RH
(11) Cylinder head bolt
(12) Spark plug pipe gasket
(13) O-ring
(14) Cylinder head plate (gasoline engine model)
(15) Cylinder head plate (HEV model)
(16) Cylinder head RH
(17) Cylinder head gasket RH
(18) Cylinder head gasket LH
(19) Cylinder head LH
(20) Cam carrier LH
(21) Intake camshaft LH
(22) Exhaust camshaft LH
(23) Front camshaft cap LH
(24) Intake center camshaft cap LH
(25) Exhaust center camshaft cap LH
(26) Intake rear camshaft cap LH
(27) Exhaust rear camshaft cap LH
(28) Rocker cover gasket LH
(29) Rocker cover LH

Tightening torque: N·m (kgf-m, ft-lb)

T1: ***<Ref. to ME(H4DO(w/o HEV))-259, INSTALLATION, Cylinder Head.>***

T2: ***<Ref. to ME(H4DO(w/o HEV))-220, INSTALLATION, Cam Carrier.>***

T3: ***<Ref. to ME(H4DO(w/o HEV))-244, ASSEMBLY, Cam Carrier.>***

T4: ***<Ref. to ME(H4DO(w/o HEV))-199, INSTALLATION, Rocker Cover.>***

4. VALVE ASSY

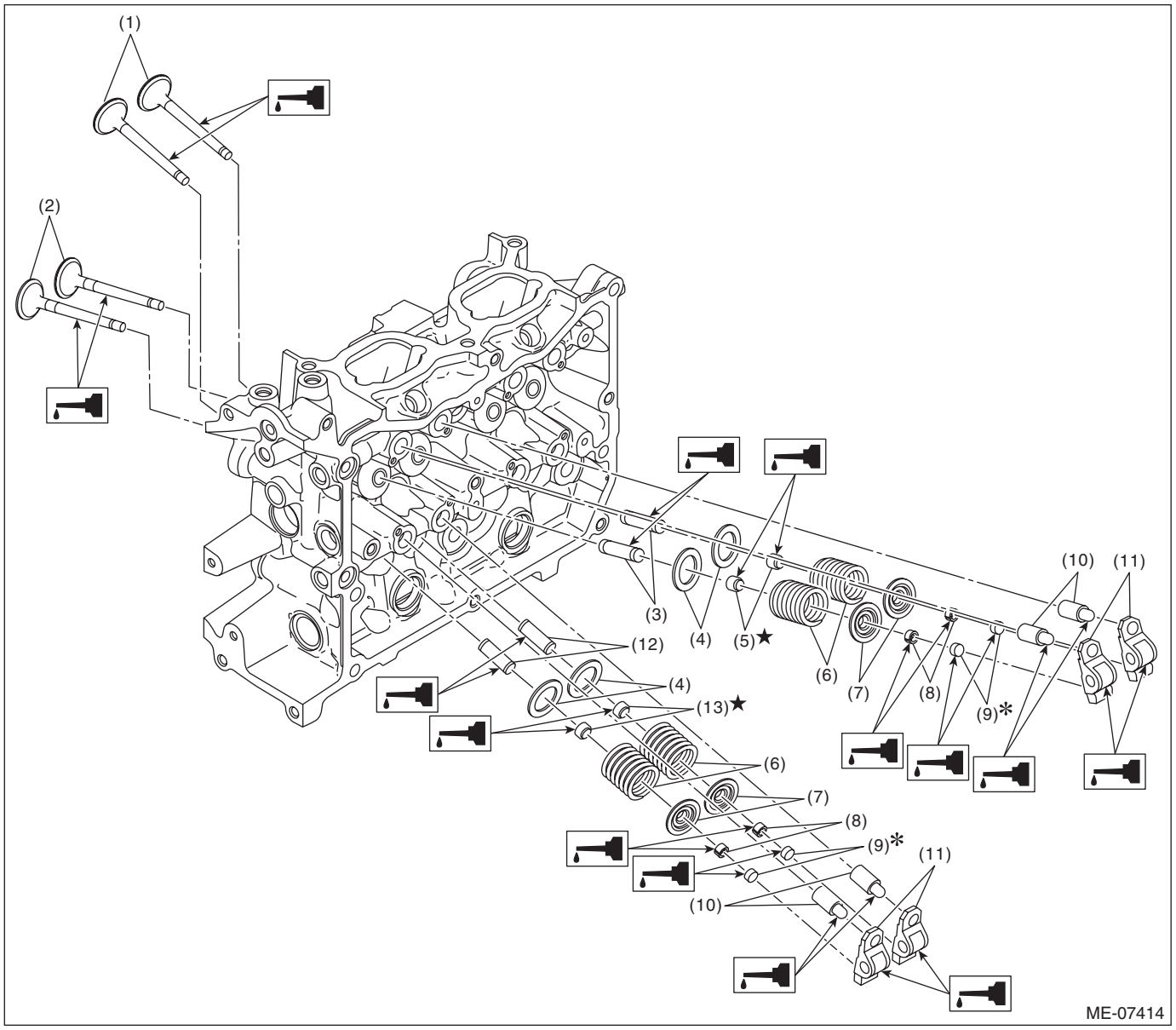

(1) Exhaust valve
(2) Intake valve
(3) Intake valve guide
(4) Valve spring seat
(5) Intake valve oil seal
(6) Valve spring
(7) Valve spring retainer
(8) Valve collet
(9) Valve shim
(10) Roller rocker arm pivot
(11) Roller rocker arm
(12) Exhaust valve guide
(13) Exhaust valve oil seal

5. CYLINDER BLOCK 1

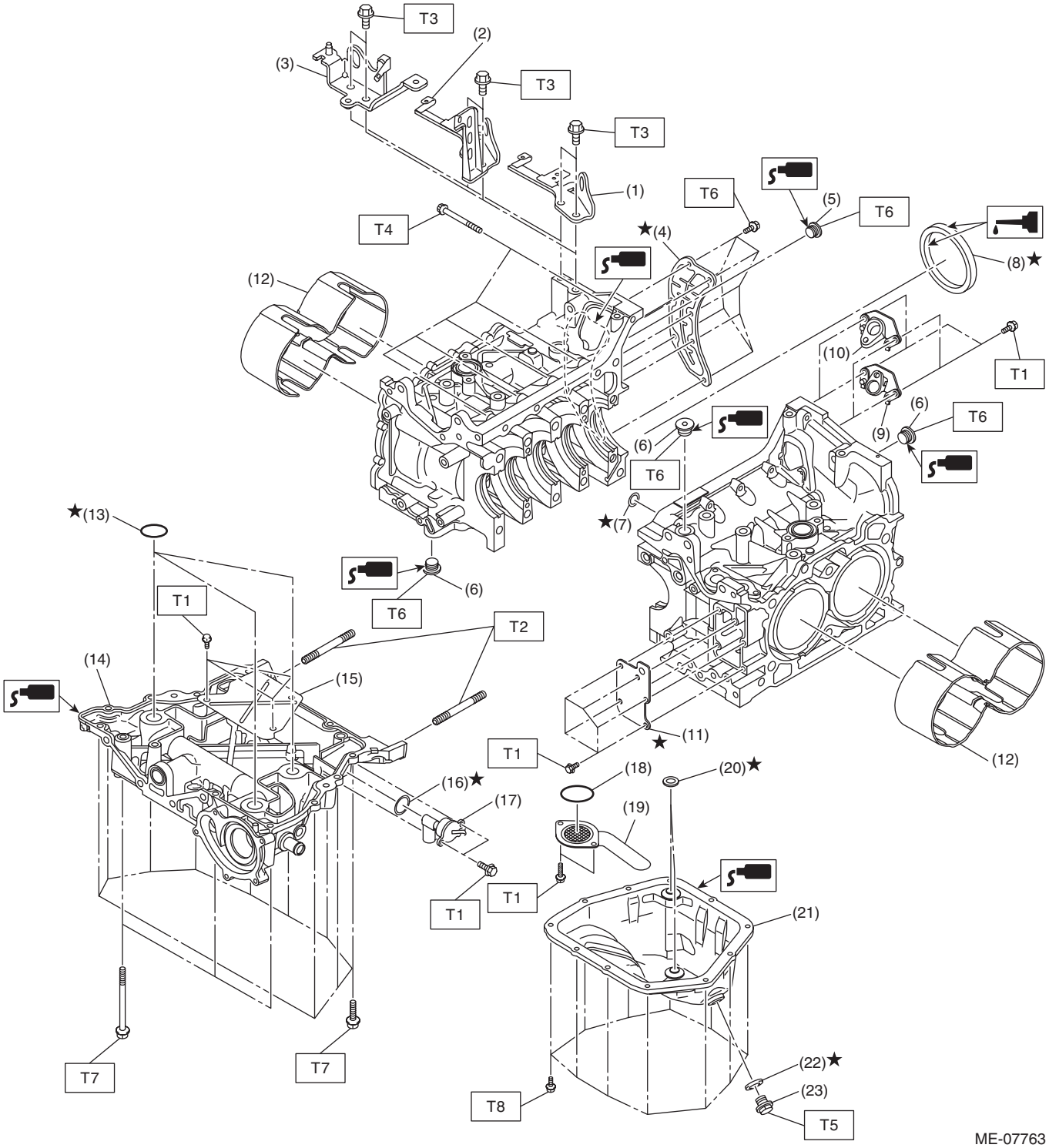

(1)	Engine rear hanger (gasoline engine CVT model)	(12)	Water jacket spacer (XV model)	(23)	Drain plug
(2)	Engine rear hanger (gasoline engine MT model)	(13)	O-ring		
(3)	Engine rear hanger (HEV model)	(14)	Oil pan upper		
(4)	Oil separator cover	(15)	Baffle plate		
(5)	Cylinder block plug	(16)	O-ring		
(6)	Main gallery plug	(17)	Oil level switch		
(7)	O-ring	(18)	O-ring		
(8)	Rear oil seal	(19)	Oil strainer		
(9)	Crankshaft position sensor holder (gasoline engine model)	(20)	Oil pan seal ring		
(10)	Crankshaft position sensor holder (HEV model)	(21)	Oil pan		
(11)	Cylinder block plate	(22)	Drain plug gasket		

Tightening torque: N·m (kgf-m, ft-lb)

- ***T1: 6.4 (0.7, 4.7)***
- ***T2: 10 (1.0, 7.4)***
- ***T3: 21 (2.1, 15.5)***
- ***T4: 25 (2.5, 18.4)***
- ***T5: 41.7 (4.3, 30.8)***
- ***T6: <Ref. to ME(H4DO(w/o HEV))-372, CYLINDER BLOCK, ASSEMBLY, Cylinder Block.>***
- ***T7: <Ref. to ME(H4DO(w/o HEV))-321, INSTALLATION, Cylinder Block.>***
- ***T8: <Ref. to LU(H4DO(w/o HEV))-18, OIL PAN, INSTALLATION, Oil Pan and Strainer.>***

6. CYLINDER BLOCK 2

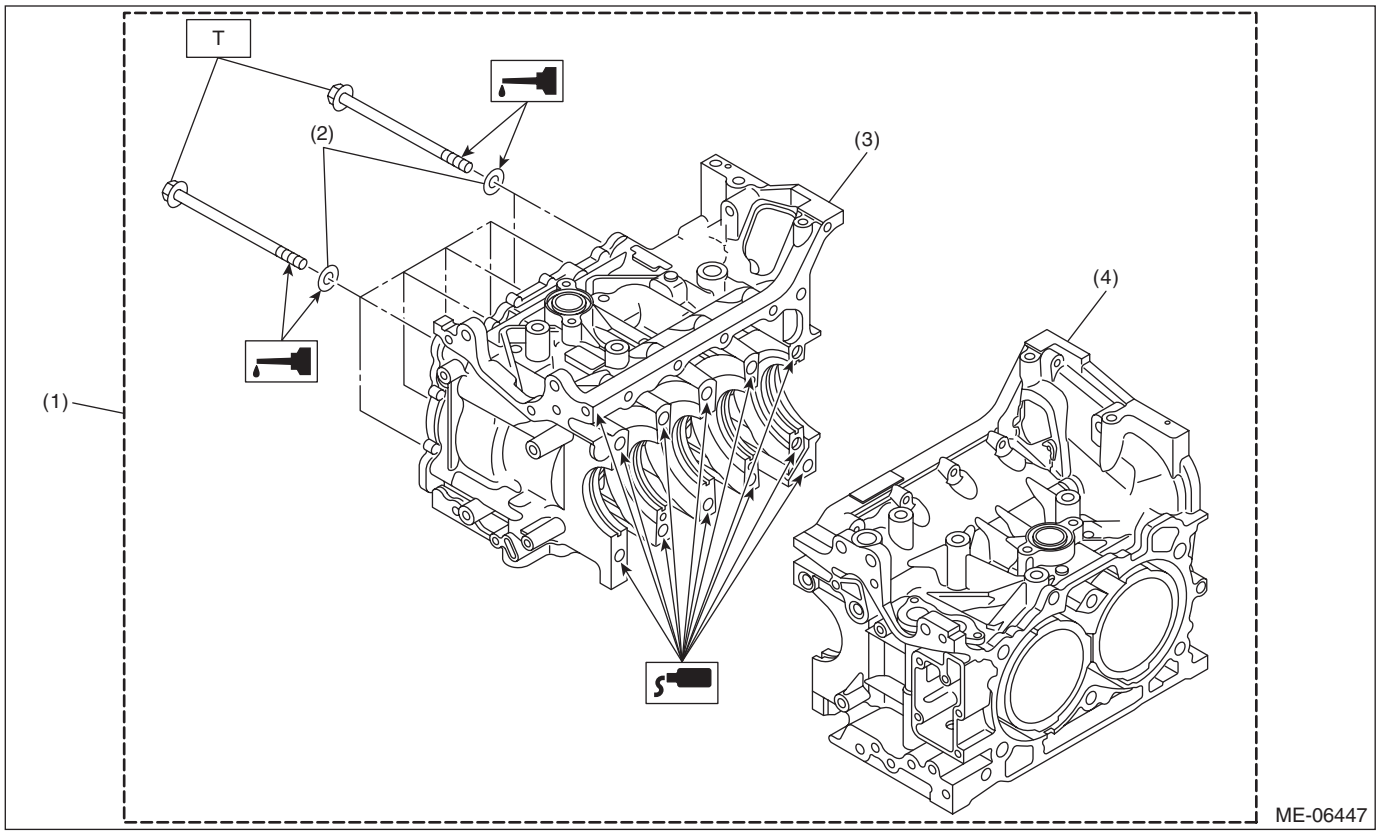

(1)	Cylinder block ASSY	(3)	Cylinder block RH
(2)	Washer	(4)	Cylinder block LH

Tightening torque: N·m (kgf-m, ft-lb)

- ***T: <Ref. to ME(H4DO(w/o HEV))-321, INSTALLATION, Cylinder Block.>***

7. CRANKSHAFT AND PISTON

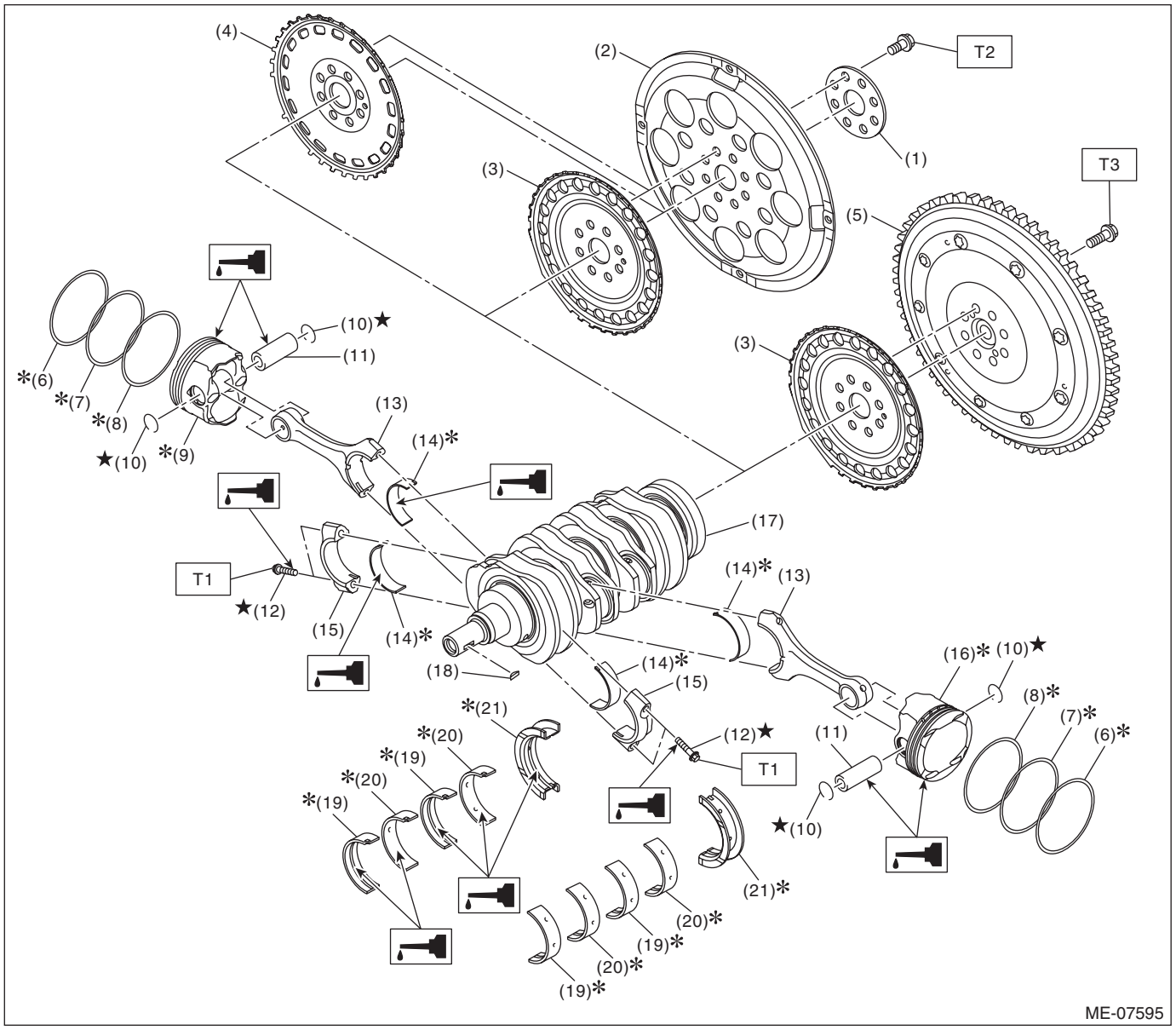

(1) Reinforcement drive plate (CVT model)
(2) Drive plate (CVT model)
(3) Crankshaft position sensor plate (gasoline engine model)
(4) Crankshaft position sensor plate (HEV model)
(5) Flywheel (MT model)
(6) Top ring
(7) Second ring
(8) Oil ring
(9) Piston RH
(10) Circlip
(11) Piston pin
(12) Connecting rod cap bolt
(13) Connecting rod
(14) Connecting rod bearing
(15) Connecting rod cap
(16) Piston LH
(17) Crankshaft
(18) Woodruff key
(19) Crankshaft bearing #1, #3
(20) Crankshaft bearing #2, #4
(21) Crankshaft bearing #5

Tightening torque: N·m (kgf-m, ft-lb)
T1: <Ref. to ME(H4DO(w/o HEV))-321, INSTALLATION, Cylinder Block.>
T2: <Ref. to CVT(TR580)-156, INSTALLATION, Drive Plate.> <Ref. to CVT(TH58A)-173, INSTALLATION, Drive Plate.>
T3: <Ref. to CL-12, INSTALLATION, Flywheel.>

8. ENGINE MOUNTING

- CVT model

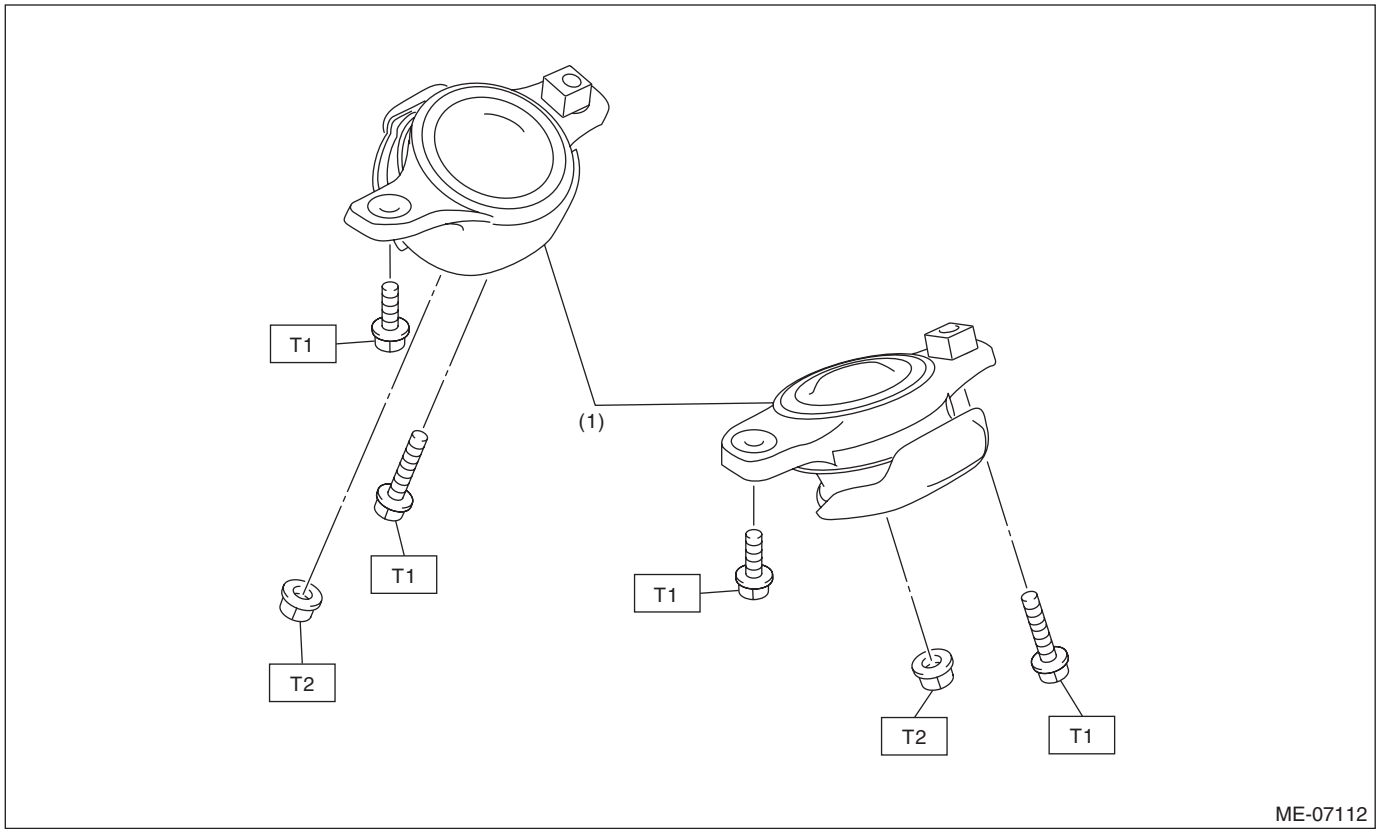

(1) Front cushion rubber

Tightening torque: N·m (kgf-m, ft-lb)
T1: 35 (3.6, 25.8)
T2: 45 (4.6, 33.2)

- MT model

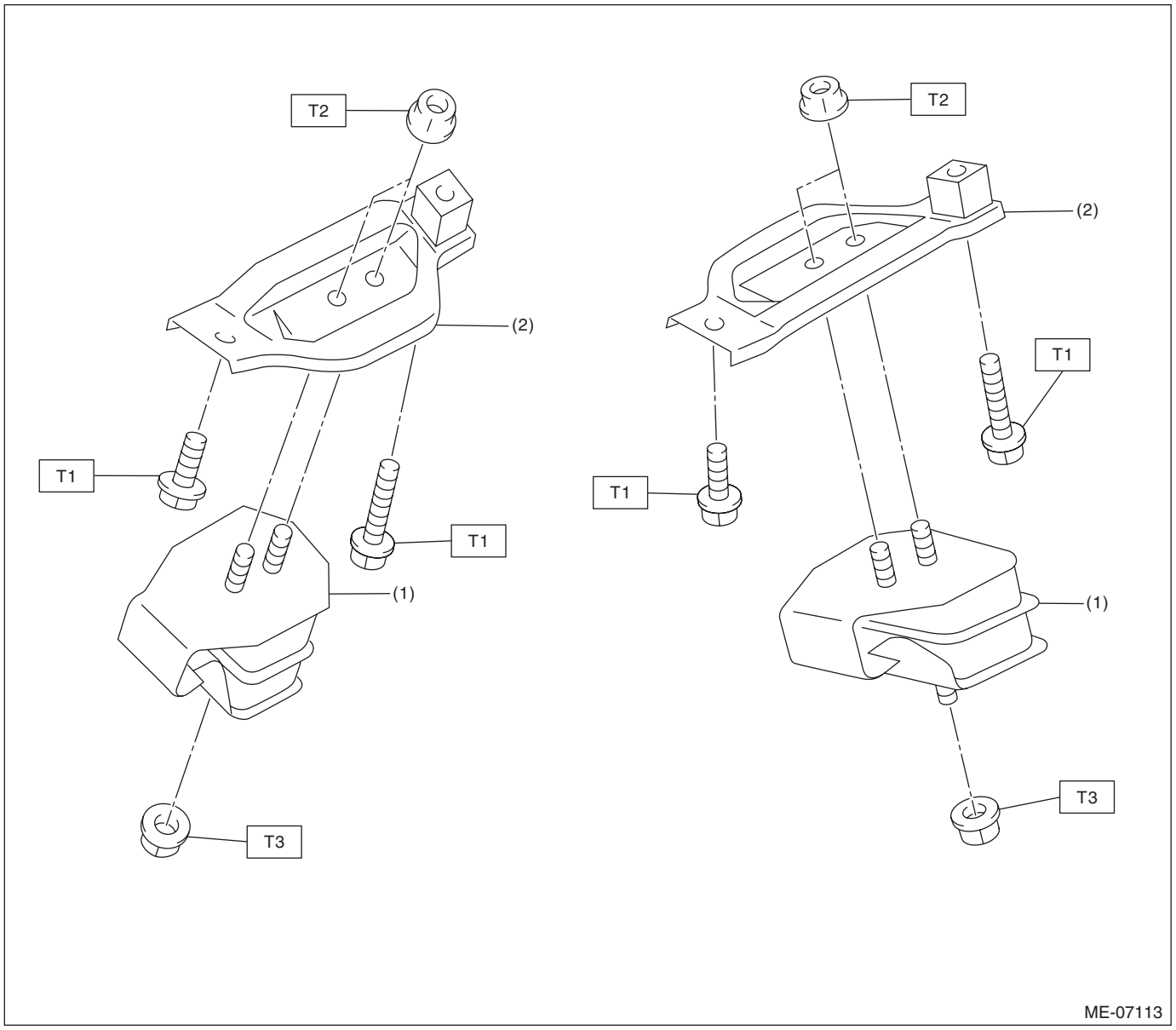

(1) Front cushion rubber

(2) Front engine mounting bracket

Tightening torque: N·m (kgf-m, ft-lb)

T1: 35 (3.6, 25.8)

T2: 42 (4.3, 31.0)

T3: 45 (4.6, 33.2)

C: CAUTION

- Prior to starting work, pay special attention to the following:
  1. Always wear work clothes, a work cap, and protective shoes. Additionally, wear a helmet, protective goggles, etc. if necessary.
  2. Protect the vehicle using a seat cover, fender cover, etc.
  3. Prepare the service tools, clean cloth, containers to catch grease and oil, etc.
- Vehicle components are extremely hot immediately after driving. Be wary of receiving burns from heated parts.
- When performing a repair, identify the cause of trouble and avoid unnecessary removal, disassembly and replacement.
- Before disconnecting connectors of sensors or units, be sure to disconnect the ground cable from battery.
- Always use the jack-up point when the shop jacks or rigid racks are used to support the vehicle.
- Remove or install the engine in an area where chain hoists, lifting devices, etc. are available for ready use. When lifting up the vehicle, make sure to support the vehicle at the jack-up points.
- Be careful not to let any oil or grease contact the clutch disc or flywheel.
- Remove contamination including dirt and corrosion before removal, installation, disassembly or assembly.
- Keep the removed parts in order and protect them from dust and dirt.
- All removed parts, if to be reused, should be reinstalled in the original positions with attention to the correct directions, etc.
- Rotating parts and sliding parts such as piston, bearing and gear should be coated with oil when being assembled.
- Bolts, nuts and washers should be replaced with new parts as required.
- Be sure to tighten the fasteners including bolts and nuts to the specified torque.

D: PREPARATION TOOL

1. SPECIAL TOOL

ILLUSTRATION	TOOL NUMBER	DESCRIPTION	REMARKS
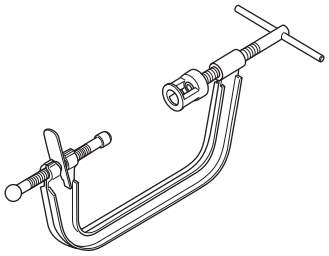 ST0920287002000	0920287002000	REMOVER AND REPLACER	Used for removing and installing valve spring.
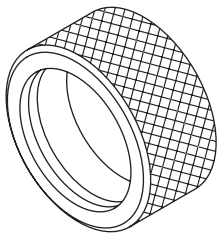 ST-398437700	398437700	OIL SEAL INSTALLER	Used for installing the front oil seal of engine.

ILLUSTRATION	TOOL NUMBER	DESCRIPTION	REMARKS
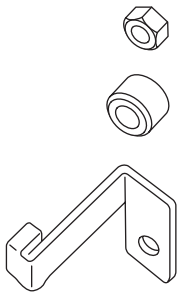 ST-498277200	498277200	STOPPER SET	Used for preventing the torque converter from falling when removing and installing the engine.
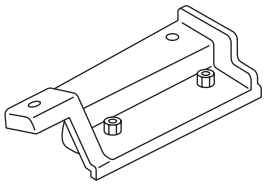 ST-498457000	498457000	ENGINE STAND ADAPTER RH	• Used for disassembling and assembling engine. • Used together with ENGINE STAND (499817100) and ADAPTER (18362AA020).
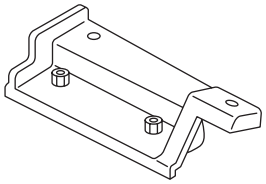 ST-498457100	498457100	ENGINE STAND ADAPTER LH	• Used for disassembling and assembling engine. • Used together with ENGINE STAND (499817100) and ADAPTER (18362AA020).
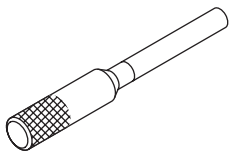 ST-499267300	499267300	STOPPER PIN	Used for removing and installing the V-belt tensioner assembly. (HEV model)
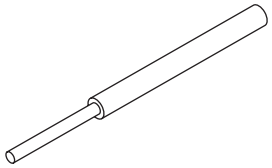 ST-499765700	499765700	VALVE GUIDE REMOVER AND INSTALLER	Used for removing and installing valve guide.

ILLUSTRATION	TOOL NUMBER	DESCRIPTION	REMARKS
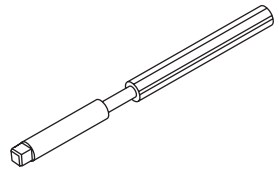 ST-499765900	499765900	VALVE GUIDE REAMER	Used for reaming valve guides.
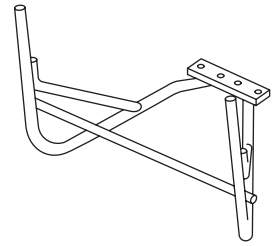 ST-499817100	499817100	ENGINE STAND	• Used for disassembling and assembling engine. • Used together with ADAPTER (18362AA020), ENGINE STAND ADAPTER RH (498457000) and LH (498457100).
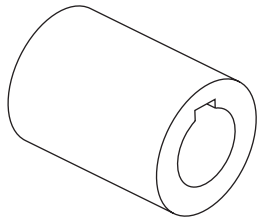 ST18252AA000	18252AA000	CRANKSHAFT SOCKET	Used for rotating crankshaft.
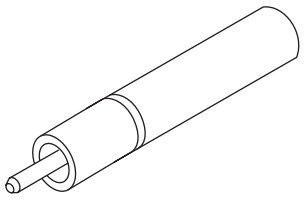 ST18261AA010	18261AA010	VALVE OIL SEAL GUIDE	Used for press-fitting of intake valve guide stem seals and exhaust valve guide stem seals.
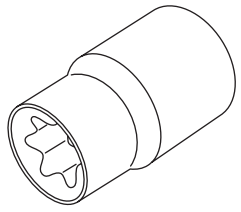 ST18270AA020	18270AA020	SOCKET	Used for removing and installing connecting rod.

ILLUSTRATION	TOOL NUMBER	DESCRIPTION	REMARKS
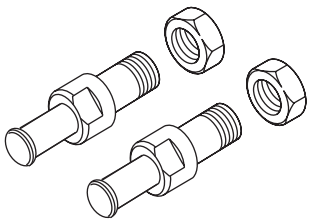 ST18334AA000	18334AA000	PULLEY WRENCH PIN SET	• Used for removing and installing the crank pulley. • Used together with PULLEY WRENCH (18355AA000).
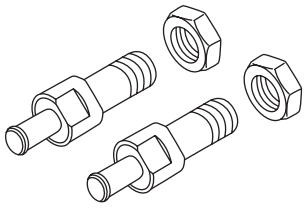 ST18334AA030	18334AA030	PULLEY WRENCH PIN SET	• Used for removing and installing water pump pulley, intake cam sprocket and exhaust cam sprocket. • Used together with PULLEY WRENCH (18355AA000).
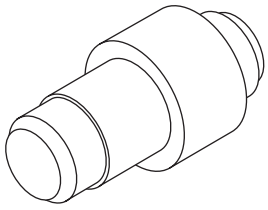 ST18350AA000	18350AA000	CONNECTING ROD BUSHING REMOVER AND INSTALLER	Used for removing and installing the connecting rod bushing at connecting rod small end.
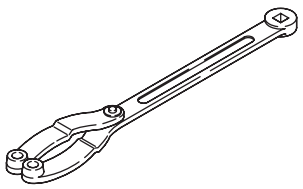 ST18355AA000	18355AA000	PULLEY WRENCH	• Used for removing and installing the crank pulley. • Used for installing and removing the water pump pulley. • Used for removing and installing intake cam sprocket and exhaust cam sprocket. • Used together with PULLEY WRENCH PIN SET (18334AA000) or PULLEY WRENCH PIN SET (18334AA030).
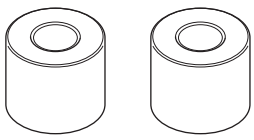 ST18362AA020	18362AA020	ADAPTER	• Used for disassembling and assembling engine. • Used together with STAND (499817100), ENGINE STAND ADAPTER RH (498457000) and LH (498457100). • Bolt used: M10 × 50 (SUBARU genuine Part No.: 010410500)

ILLUSTRATION	TOOL NUMBER	DESCRIPTION	REMARKS
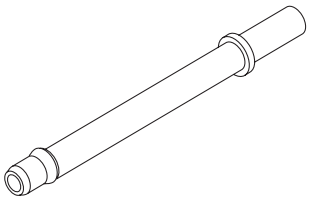 ST18471AA000	18471AA000	FUEL PIPE ADAPTER	Used for inspecting the fuel pressure.
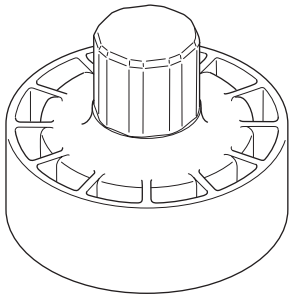 ST18657AA030	18657AA030	OIL SEAL INSTALLER	• Used for installing the rear oil seal of engine. • Used together with OIL SEAL GUIDE (18671AA020).
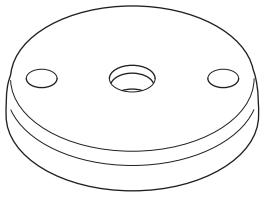 ST18671AA020	18671AA020	OIL SEAL GUIDE	• Used for installing the rear oil seal of engine. • Used together with OIL SEAL INSTALLER (18657AA030).
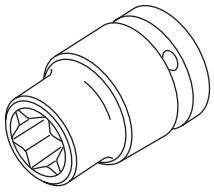 ST18270KA010	18270KA010	SOCKET	Used for installing and removing intake cam sprocket and exhaust cam sprocket.
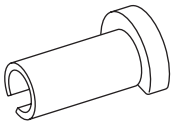 ST42099AE000	42099AE000	QUICK CONNECTOR RELEASE	Used for removing FUEL HOSE (42075AG690). NOTE: FUEL HOSE (42075AG690) is used for checking the fuel pressure.

ILLUSTRATION	TOOL NUMBER	DESCRIPTION	REMARKS
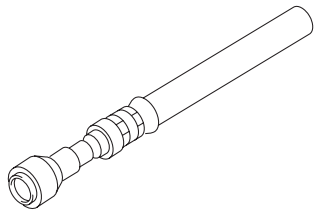 ST42075AG690	42075AG690	FUEL HOSE	Used for inspecting the fuel pressure. NOTE: This is the SUBARU genuine part.
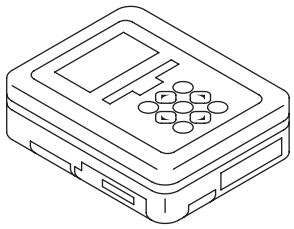 ST1B022XU0	1B022XU0	SUBARU SELECT MONITOR III KIT	Used for various inspections.

2. GENERAL TOOL

TOOL NAME	REMARKS
Compression gauge	Used for measuring compression.
Vacuum gauge	Used for measuring intake manifold vacuum.
Oil pressure gauge	Used for measuring engine oil pressure.
Fuel pressure gauge	Used for measuring fuel pressure.
Piston ring compressor	Used for installing the piston into the cylinder block.
Thickness gauge	Used for various inspections.
Angle gauge	Used for angle tightening.

2. Compression

A: INSPECTION

CAUTION:
After warming-up, engine becomes very hot. Be careful not to burn yourself during measurement.
1) Turn the ignition switch to OFF.
2) Remove the collector cover. (HEV model)
   (1) Pull up the two points at the front of collector cover (A).
   (2) Pull up the two points at the rear of collector cover (B) while moving them rearward.

NOTE:
Be careful not to contact the fuel delivery tube when moving the collector cover rearward.

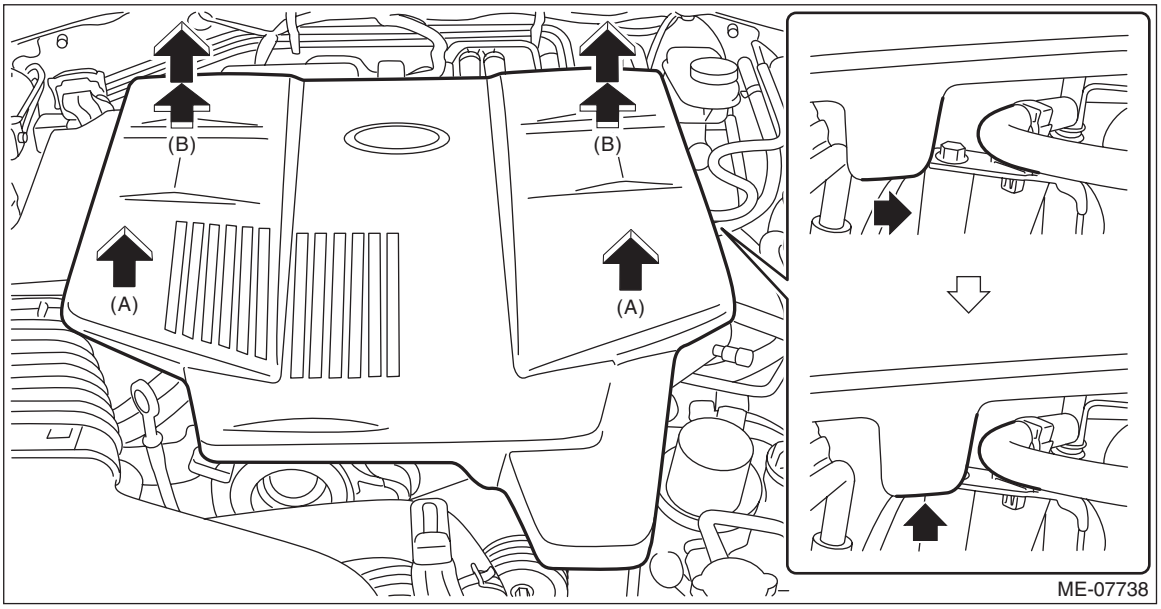

3) After warming-up the engine, turn the ignition switch to OFF.
4) Make sure that the battery (12 volt auxiliary battery) is fully charged.
5) Check the starter motor for satisfactory performance and operation.
6) Remove the fuse of fuel pump from main fuse box.

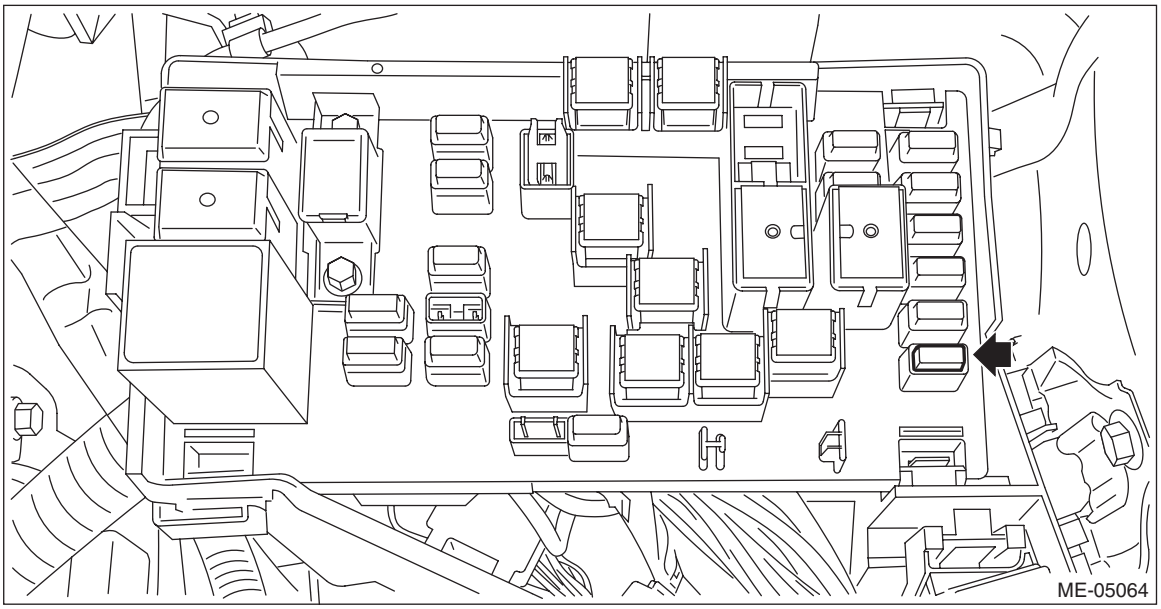

7) Start the engine and run it until it stalls.
8) After the engine stalls, crank it for five more seconds.

9) Turn the ignition switch to OFF.
10) Remove all spark plugs. <Ref. to IG(H4DO(w/o HEV))-4, REMOVAL, Spark Plug.>
11) Install the compression gauge to the spark plug hole.

NOTE:
When using a screw-in type compression gauge, the screw should be less than 25 mm (0.98 in) long.

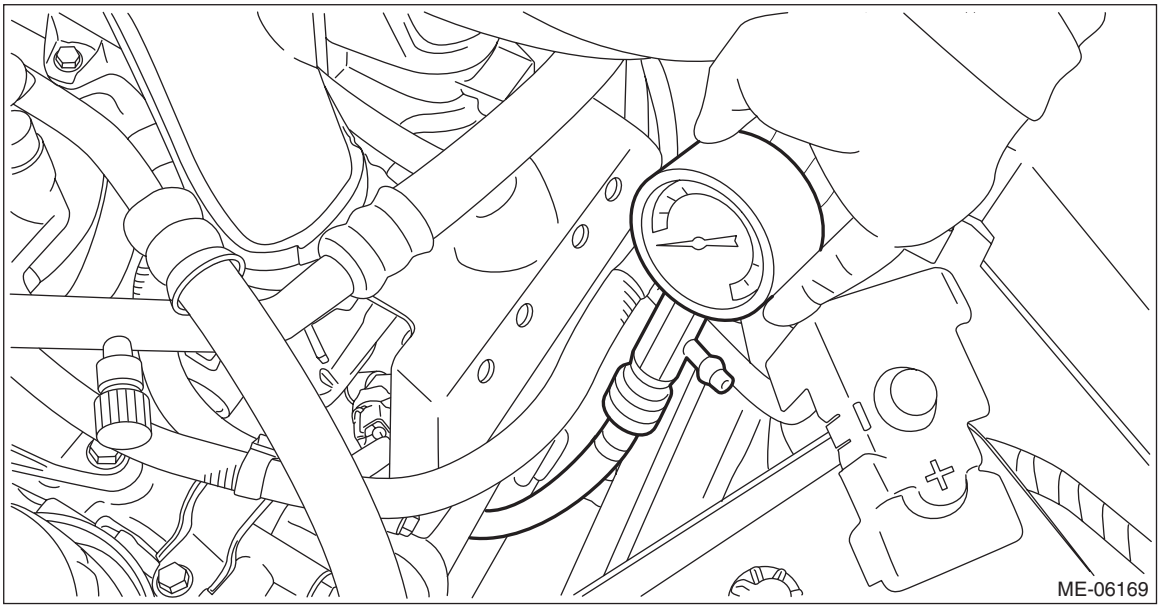

12) Install the 12 volt engine restart battery. (HEV model) <Ref. to SC(H4DO(HEV))-41, 12 VOLT ENGINE RESTART BATTERY, INSTALLATION, Battery.>
13) Connect the battery ground terminal. <Ref. to NT-5, BATTERY, NOTE, Note.>
14) Turn the ignition switch to ON.
15) Fully open the throttle valve.
16) Crank the engine by starter motor and read the value when the needle of the compression gauge becomes stable.

NOTE:
- Perform at least two measurements per cylinder, and make sure that the values are correct.
- If the compression pressure is out of standard, check or adjust the pistons, valves and cylinders.

Compression (fully open throttle):
Standard
1,050 — 1,400 kPa (11 — 14 kg/cm^2, 152 — 203 psi)
Difference between cylinders
100 kPa (1 kg/cm^2, 14 psi), or less

17) After inspection, install the related parts in the reverse order of removal.

3. Idle Speed

A: INSPECTION

1) Before checking the idle speed, check the following item:
   (1) Check the air cleaner element is free from clogging, ignition timing is correct, spark plugs are in good condition, and hoses are connected properly.
   (2) Check the malfunction indicator light does not illuminate.
2) Warm up the engine.
3) Read the engine idle speed using Subaru Select Monitor. <Ref. to EN(H4DO w/o HEV)(diag)-36, READ CURRENT DATA FOR ENGINE (NORMAL MODE), OPERATION, Subaru Select Monitor.> <Ref. to EN(H4DO HEV)(diag)-37, DISPLAY CURRENT ENGINE DATA, OPERATION, Subaru Select Monitor.>

NOTE:
- Idle speed cannot be adjusted manually, because the idle speed is automatically adjusted.
- If idle speed is out of standard, refer to the General Diagnosis Table under “Engine Control System”. <Ref. to EN(H4DO w/o HEV)(diag)-2, Basic Diagnostic Procedure.> <Ref. to EN(H4DO HEV)(diag)-2, Basic Diagnostic Procedure.>

   (1) Check the idle speed when no-loaded. (Headlight, blower fan, rear defroster, radiator fan, A/C and etc. are OFF)

Idle speed (No load, and for CVT model, select lever in “P” or “N” range, for MT model, gear shift lever in neutral position.):

Standard

650±100 rpm

   (2) Check the idle speed when loaded. (Turn the A/C switch to ON and operate the compressor for at least one minute before measurement.)

Idle speed (A/C on, and for CVT model, select lever in “P” or “N” range, for MT model, gear shift lever in neutral position.):

Standard

800 — 900±50 rpm

4. Ignition Timing

A: INSPECTION

CAUTION:
After warming-up, engine becomes very hot. Be careful not to burn yourself at measurement.

1) Before checking the ignition timing, check the following item:
   (1) Check the air cleaner element is free from clogging, spark plugs are in good condition, and hoses are connected properly.
   (2) Check the malfunction indicator light does not illuminate.
2) Warm up the engine.
3) Read the ignition timing using Subaru Select Monitor. <Ref. to EN(H4DO w/o HEV)(diag)-36, READ CURRENT DATA FOR ENGINE (NORMAL MODE), OPERATION, Subaru Select Monitor.> <Ref. to EN(H4DO HEV)(diag)-37, DISPLAY CURRENT ENGINE DATA, OPERATION, Subaru Select Monitor.>

NOTE:
If ignition timing is out of standard, check the ignition control system. Refer to “Engine Control System”. <Ref. to EN(H4DO w/o HEV)(diag)-2, Basic Diagnostic Procedure.> <Ref. to EN(H4DO HEV)(diag)-2, Basic Diagnostic Procedure.>

Ignition timing [BTDC/rpm]:
Standard
16°±10°/650 (gasoline engine model)
10°±10°/650 (HEV model)

5. Intake Manifold Vacuum

A: INSPECTION

1) Turn the ignition switch to OFF.
2) Remove the collector cover. (HEV model)
   (1) Pull up the two points at the front of collector cover (A).
   (2) Pull up the two points at the rear of collector cover (B) while moving them rearward.

NOTE:
Be careful not to contact the fuel delivery tube when moving the collector cover rearward.

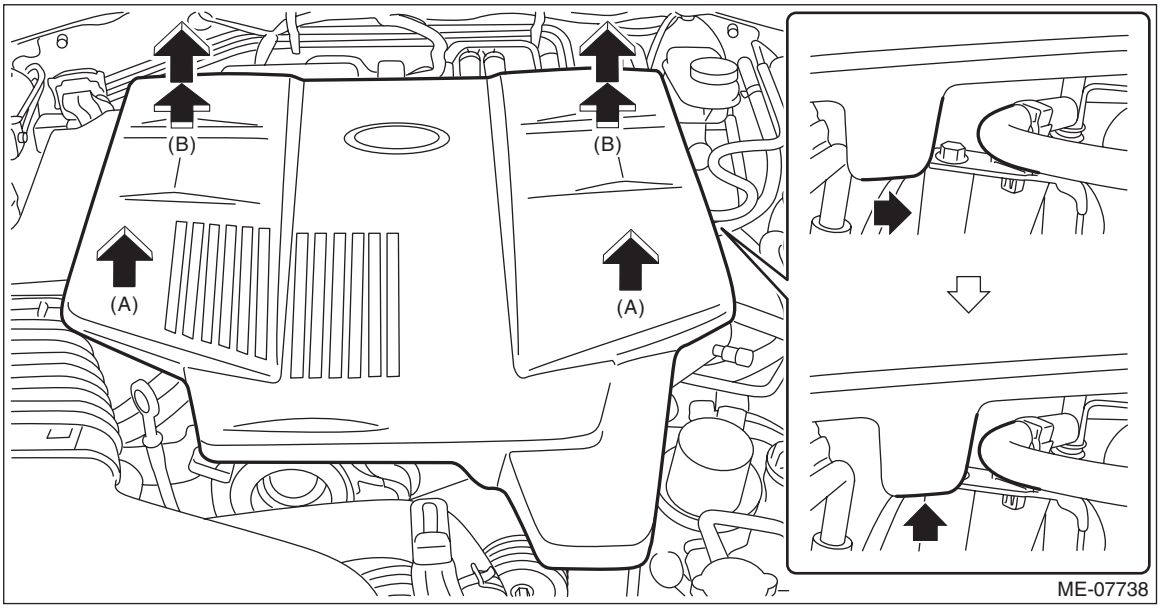

3) Warm up the engine.
4) Install the vacuum gauge. (Gasoline engine model)
   (1) Remove the brake booster vacuum hose from the intake manifold.

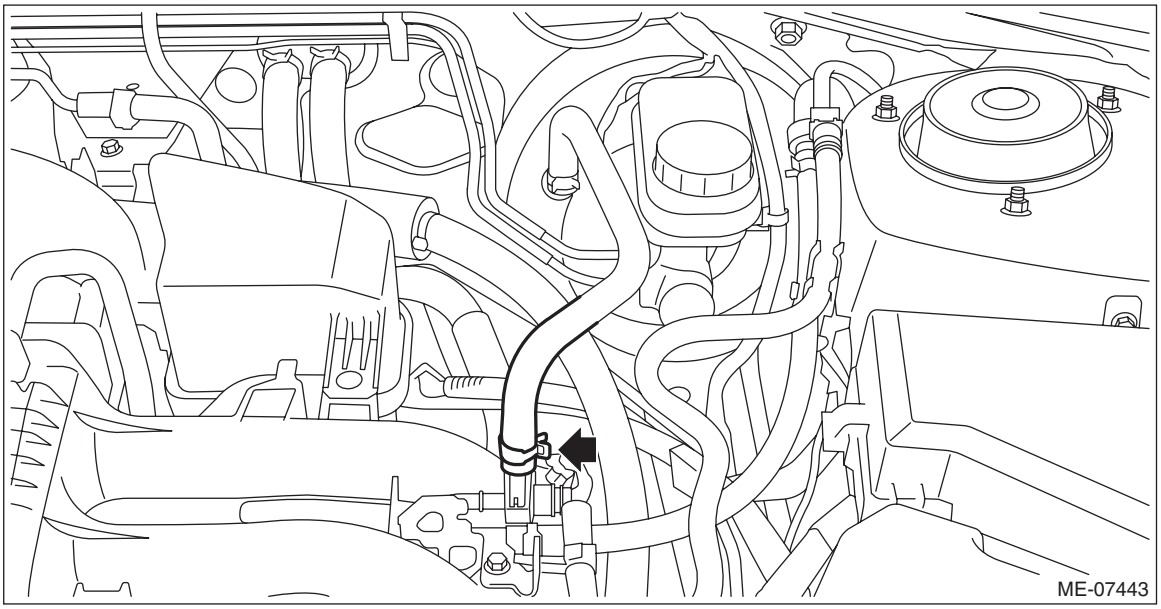

(2) Connect the vacuum gauge to the intake manifold.

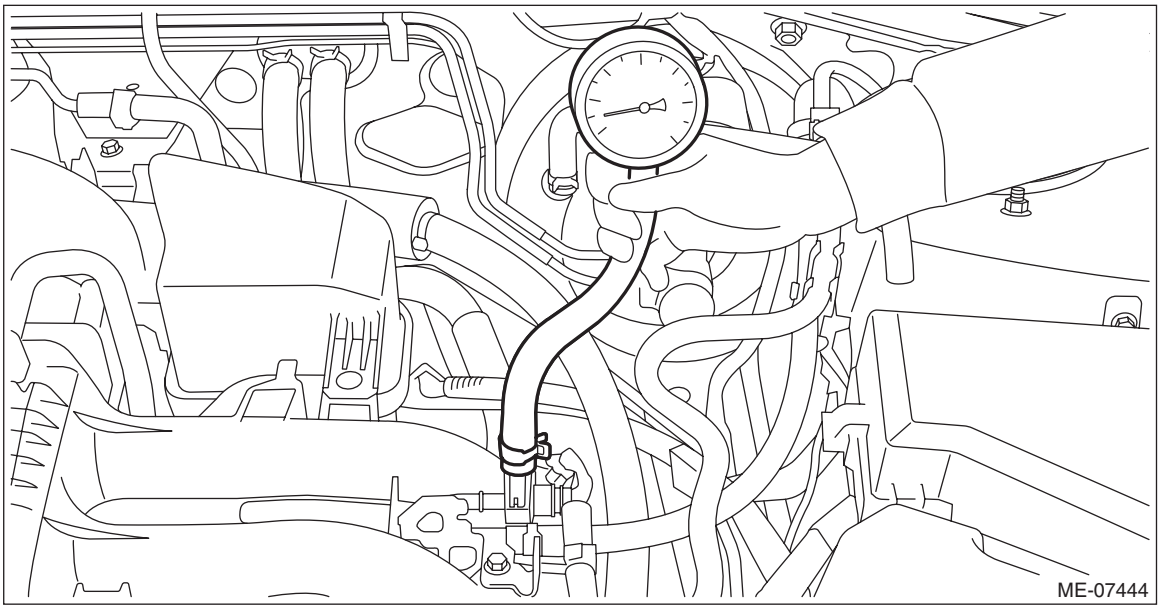

5) Install the vacuum gauge. (HEV model)

(1) Remove the nut (A) which secures purge control solenoid valve to the purge control solenoid valve bracket, and disconnect the vacuum hose (B) from the purge control solenoid valve.

NOTE:
Hold the purge control solenoid valve unit by hand to prevent it from rotating together.

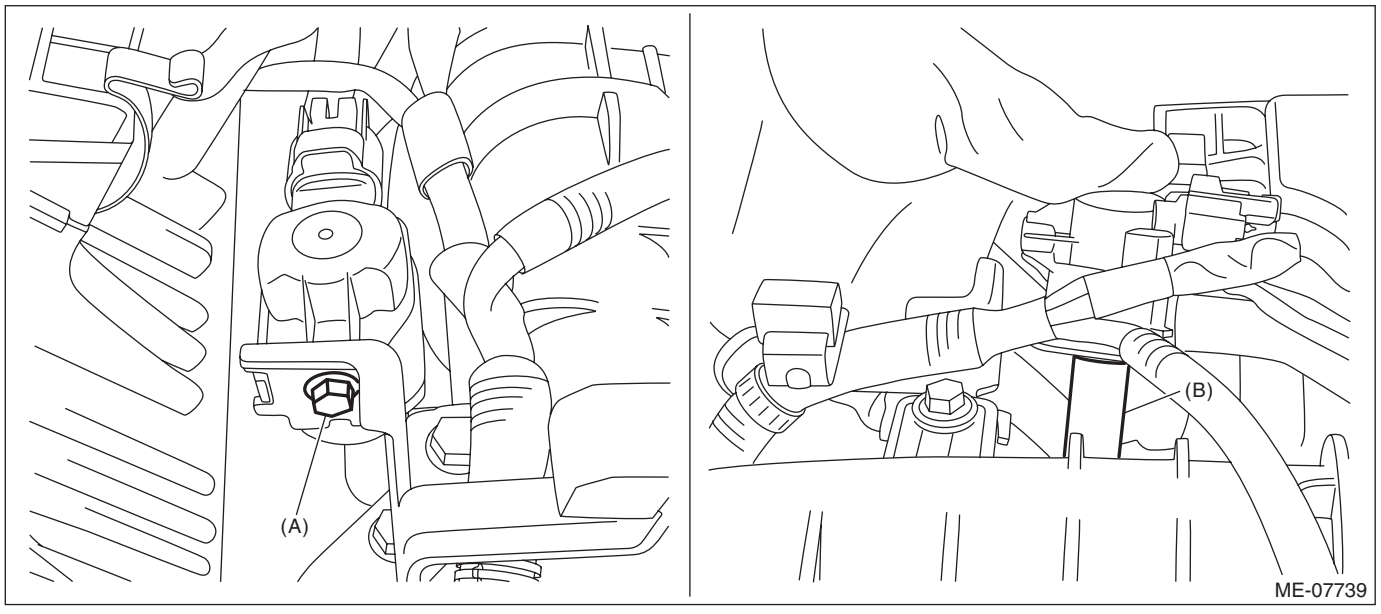

(2) Connect the vacuum gauge to the vacuum hose.

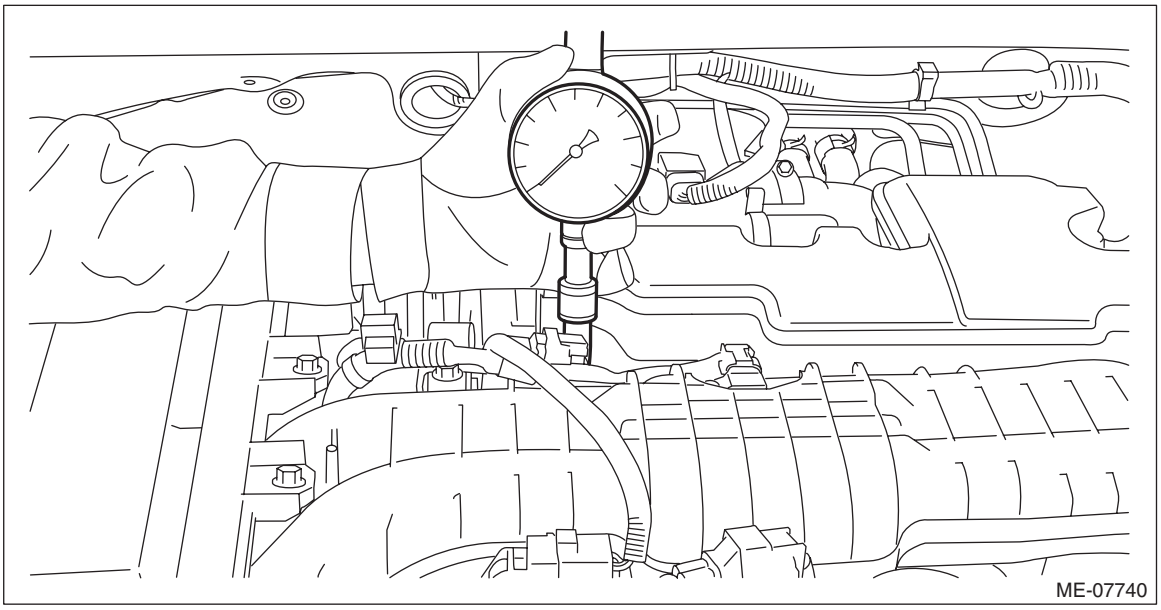

6) Keep the engine at idle speed and read the vacuum gauge indication.

NOTE:
Condition of engine inside can be diagnosed by observing the behavior of the vacuum gauge needle as described in table below.

Intake manifold vacuum (at idling, A/C OFF):
Standard
–60.0 kPa (–450 mmHg, –17.72 inHg) or more

Diagnosis of engine condition by inspection of intake manifold vacuum	
Vacuum gauge needle behavior	Possible engine condition
1. Needle is steady but lower than standard value. This tendency becomes more evident as engine temperature rises.	Leakage around intake manifold gasket, disconnection or damage of vacuum hose
2. Needle intermittently drops to position lower than standard value.	Leakage around cylinder
3. Needle drops suddenly and intermittently from standard value.	Sticky valve
4. When engine speed is gradually increased, needle begins to vibrate rapidly at certain speed, and then vibration increases as engine speed increases.	Weak or broken valve springs
5. Needle vibrates above and below standard value in narrow range.	Defective ignition system

7) After inspection, install the related parts in the reverse order of removal.

NOTE:
When installing the purge control solenoid valve, hold the purge control solenoid valve unit by hand to prevent it from rotating together. (HEV model)

Tightening torque:
6.4 N·m (0.7 kgf-m, 4.7 ft-lb)

6. Engine Oil Pressure

A: INSPECTION

1) Disconnect the ground cable from battery. <Ref. to NT-5, BATTERY, NOTE, Note.>

NOTE:
For the 12 volt engine restart battery of HEV model, disconnect the ground terminal from 12V engine restart battery sensor.

2) Remove the collector cover. (HEV model)
   (1) Pull up the two points at the front of collector cover (A).
   (2) Pull up the two points at the rear of collector cover (B) while moving them rearward.

NOTE:
Be careful not to contact the fuel delivery tube when moving the collector cover rearward.

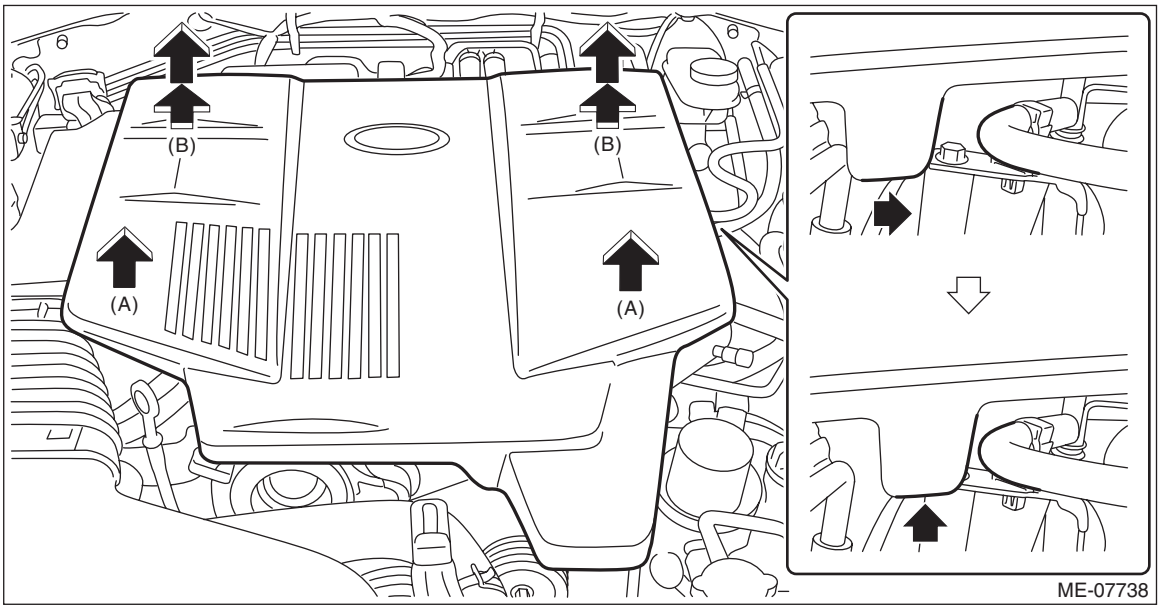

3) Remove the oil pressure switch. <Ref. to LU(H4DO(w/o HEV))-24, REMOVAL, Oil Pressure Switch.>
4) Install the oil pressure gauge to the chain cover.

- Gasoline engine model

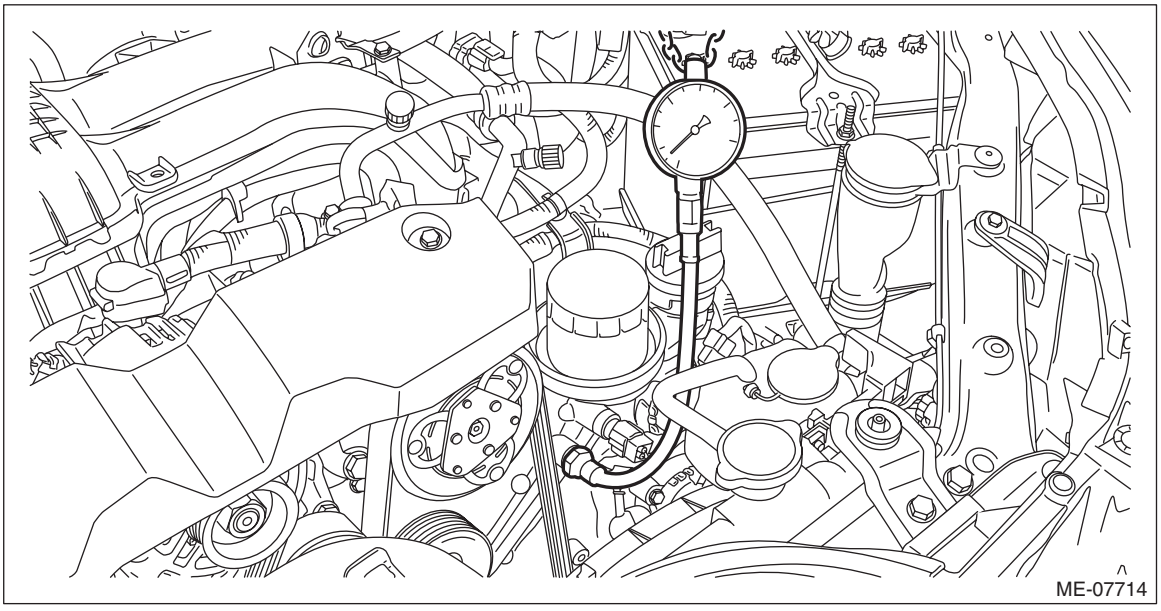

- HEV model

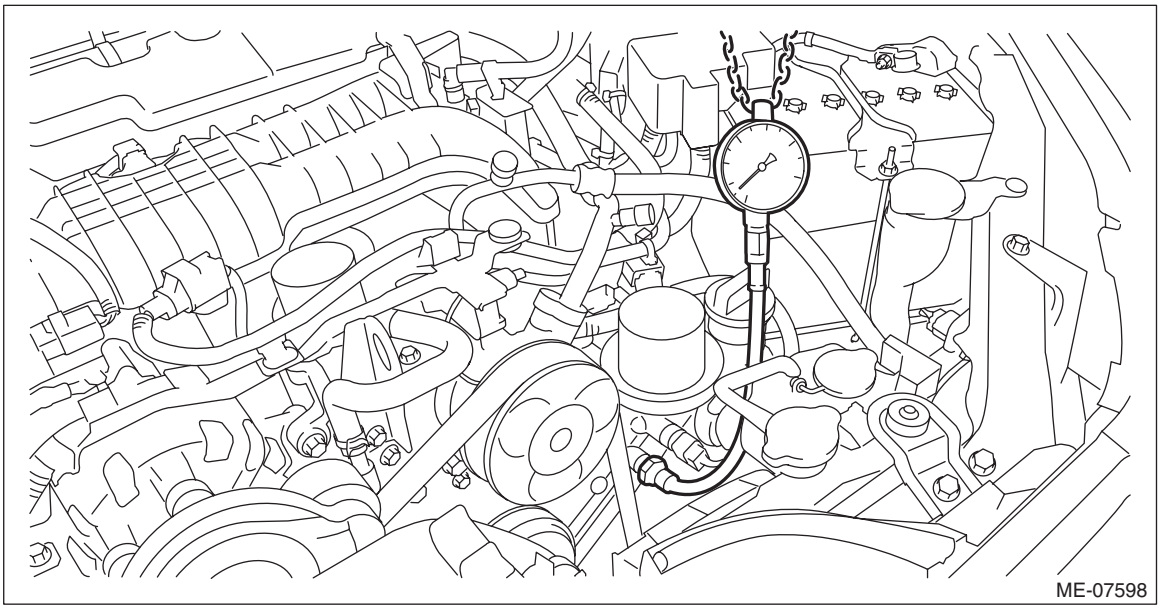

5) Connect the battery ground terminal. <Ref. to NT-5, BATTERY, NOTE, Note.>
6) Start the engine, and check the oil pressure.

NOTE:
- Standard value is based on an engine oil temperature of 80°C (176°F).
- If the oil pressure is out of specification, check oil pump, oil filter and lubrication line. <Ref. to LU(H4DO(w/o HEV))-74, INSPECTION, Engine Lubrication System Trouble in General.>
- If the oil pressure warning light is ON and oil pressure is within standard, check the oil pressure switch. <Ref. to LU(H4DO(w/o HEV))-74, INSPECTION, Engine Lubrication System Trouble in General.>

Engine oil pressure:
Standard
50 kPa (0.5 kg/cm^2, 7 psi) or more (at 600 rpm)
350 kPa (3.6 kg/cm^2, 51 psi) or more (at 6,000 rpm)

7) After inspection, install the related parts in the reverse order of removal.

7. Fuel Pressure

A: INSPECTION

1. GASOLINE ENGINE MODEL

CAUTION:
- **Be careful not to spill fuel.**
- **Catch the fuel from the tubes using a container or cloth.**

1) Release the fuel pressure. <Ref. to FU(H4DO(w/o HEV))-116, RELEASING OF FUEL PRESSURE, PROCEDURE, Fuel.>
2) Open the fuel filler lid and remove the fuel filler cap.
3) Disconnect the fuel delivery tube from the fuel delivery pipe, and connect the fuel pressure gauge.
   (1) Disconnect the quick connector on the fuel delivery tube from the fuel pipe assembly, and remove the clip (A) securing the fuel delivery tube to the fuel pipe assembly.

NOTE:
Disconnect the quick connector as shown in the figure.

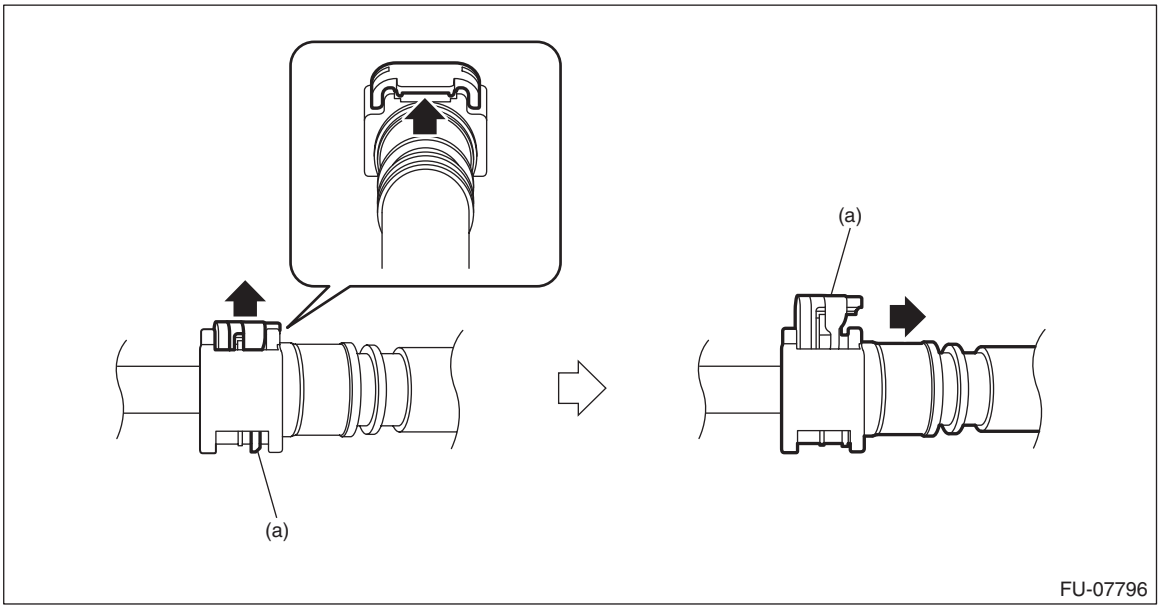

(a) Slider

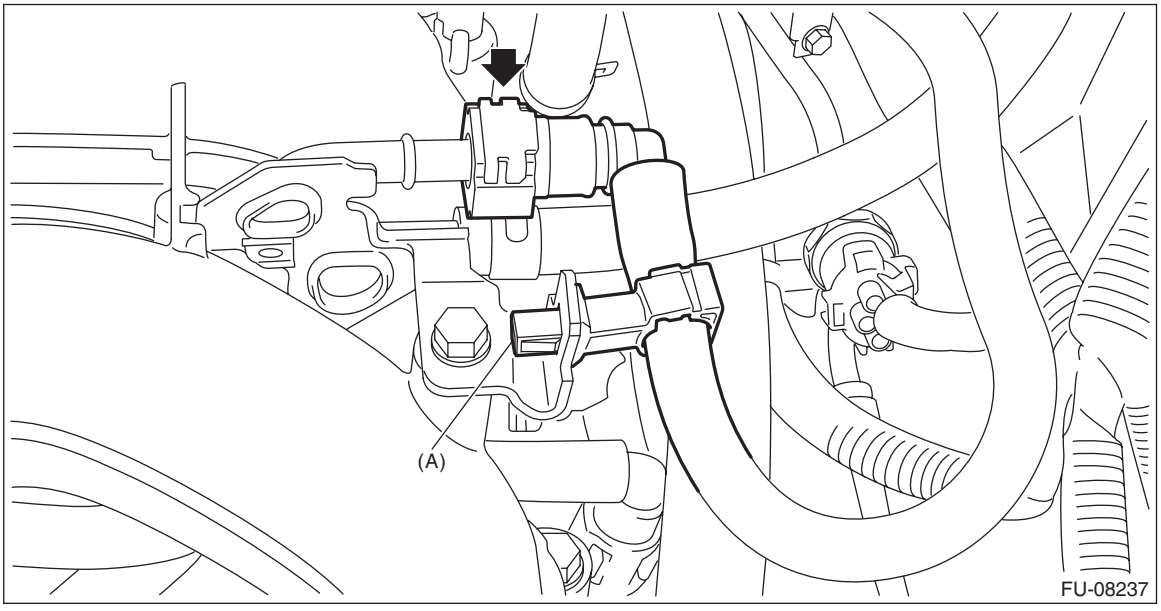

(2) Connect the fuel pressure gauge with ST1 and ST2.

CAUTION:
• Check that there is no damage or dust on the quick connector. If necessary, clean the seal surface of the pipe.
• When connecting the quick connector with slider, make sure to insert the ST2 all the way in before locking the slider.
• When it is difficult to lock the slider, check that the ST2 is fully inserted.
• Make sure that the quick connector is securely connected.

NOTE:
• ST1 is a SUBARU genuine part.
• When connecting the ST2 to the quick connector on the fuel delivery tube, connect as shown in the figure.

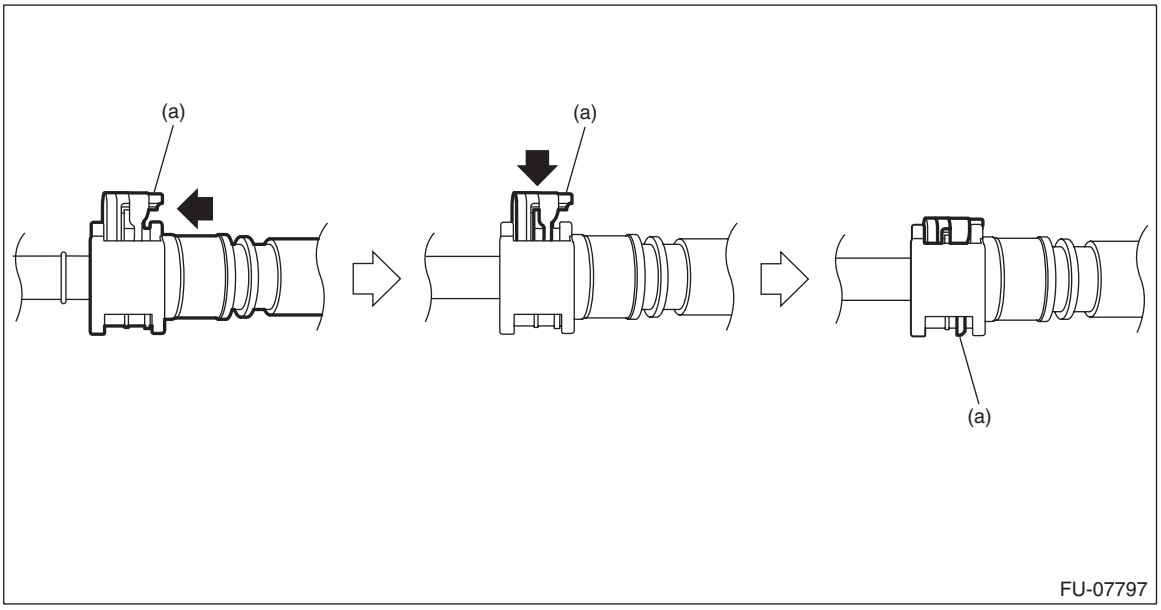

(a) Slider

ST1 42075AG690 FUEL HOSE
ST2 18471AA000 FUEL PIPE ADAPTER

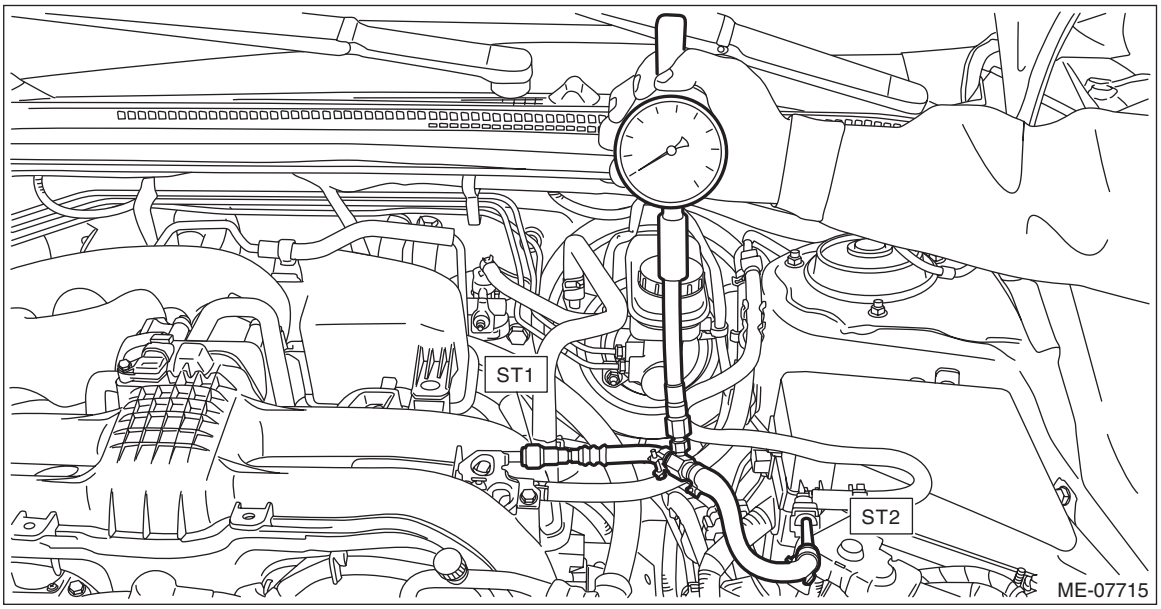

4) Start the engine.

5) Check the fuel pressure after warming up the engine.

NOTE:
• The fuel pressure gauge registers 10 to 20 kPa (0.1 to 0.2 kg/cm^2, 1 to 3 psi) higher than standard values during high-altitude operations.
• Check or replace the fuel pump and fuel delivery line if the fuel pressure is out of the standard.

Fuel pressure:
Standard
340 — 400 kPa (3.5 — 4.1 kg/cm^2, 49 — 58 psi)

6) After inspection, install the related parts in the reverse order of removal.

CAUTION:
• Before removing the fuel pressure gauge, release the fuel pressure.
• Be careful not to spill fuel.
• Catch the fuel from hoses and tubes using a container or cloth.
• Check that there is no damage or dust on the quick connector. If necessary, clean the seal surface of the pipe.
• When connecting the quick connector with slider, make sure to insert the pipe all the way in before locking the slider.
• When it is difficult to lock the slider, check that the pipe is fully inserted.
• Make sure that the quick connector is securely connected.

NOTE:
• When disconnecting the ST1, install the ST2 to the fuel pipe assembly, and press the ST2 in the direction of arrow to disconnect the quick connector on the ST1.
ST1 42075AG690 FUEL HOSE
ST2 42099AE000 QUICK CONNECTOR RELEASE

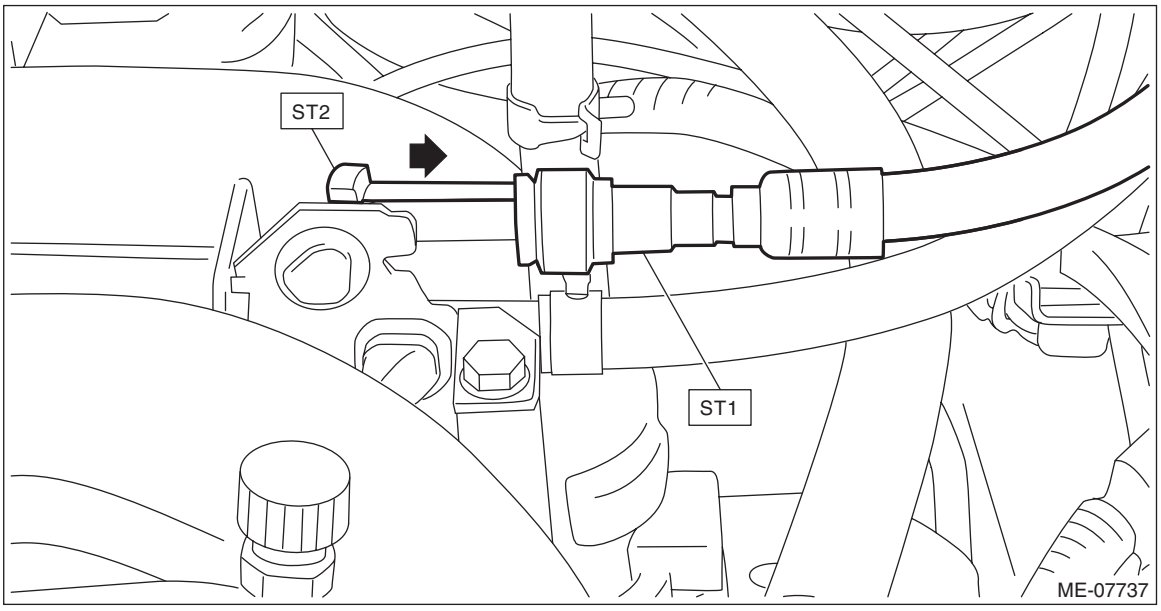

- Disconnect the quick connector on the fuel delivery tube as shown in the figure.

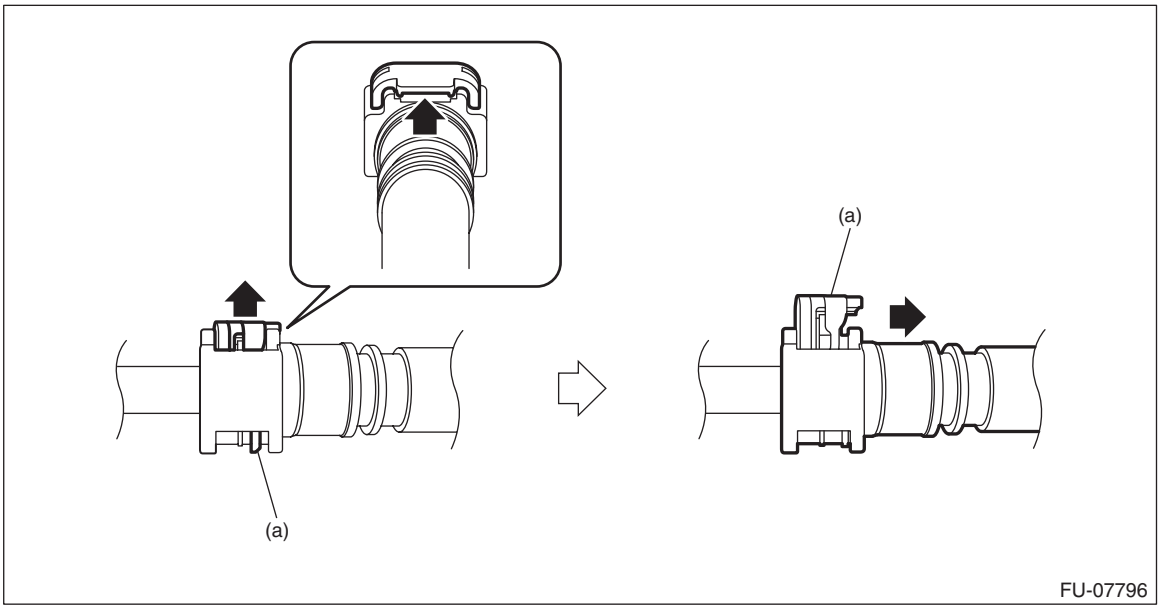

(a) Slider

- Connect the quick connector on the fuel delivery tube as shown in the figure.

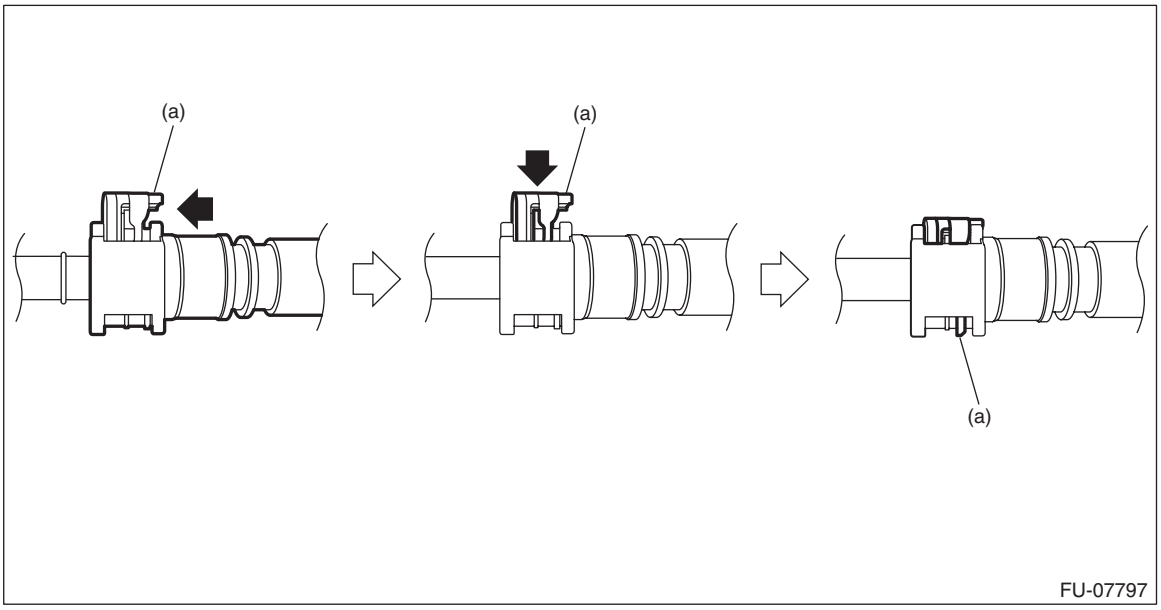

(a) Slider

2. HEV MODEL

CAUTION:
- **Be careful not to spill fuel.**
- **Catch the fuel from the tubes using a container or cloth.**

1) Turn the ignition switch to OFF.
2) Remove the collector cover.
   (1) Pull up the two points at the front of collector cover (A).
   (2) Pull up the two points at the rear of collector cover (B) while moving them rearward.

NOTE:
Be careful not to contact the fuel delivery tube when moving the collector cover rearward.

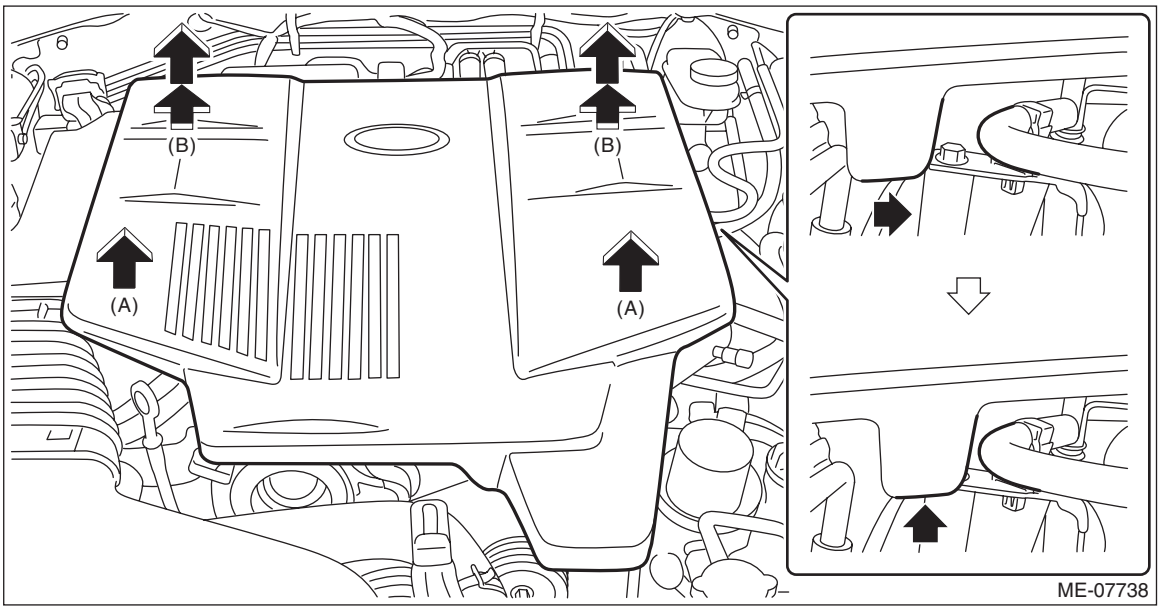

3) Release the fuel pressure. <Ref. to FU(H4DO(HEV))-98, RELEASING OF FUEL PRESSURE, PROCEDURE, Fuel.>
4) Open the fuel filler lid and remove the fuel filler cap.

5) Disconnect the fuel delivery tube from the fuel pipe assembly, and connect the fuel pressure gauge.
(1) Disconnect the quick connector (A) of the fuel delivery tube from the fuel pipe assembly, and remove the fuel delivery tube from the hose clamp (B).

NOTE:
Disconnect the quick connector as shown in the figure.

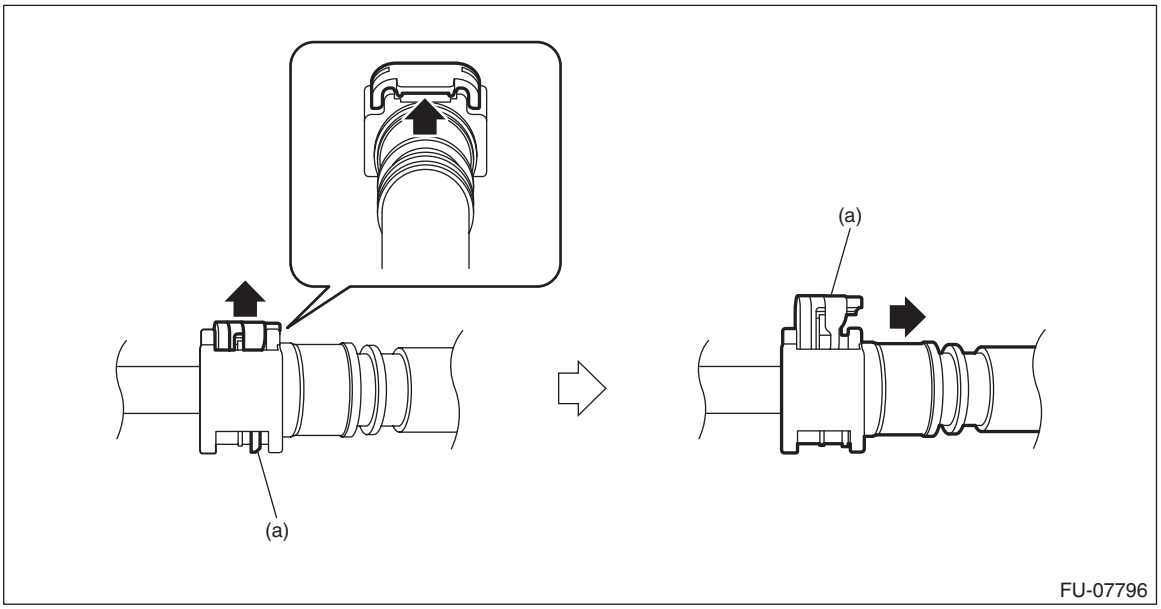

(a) Slider

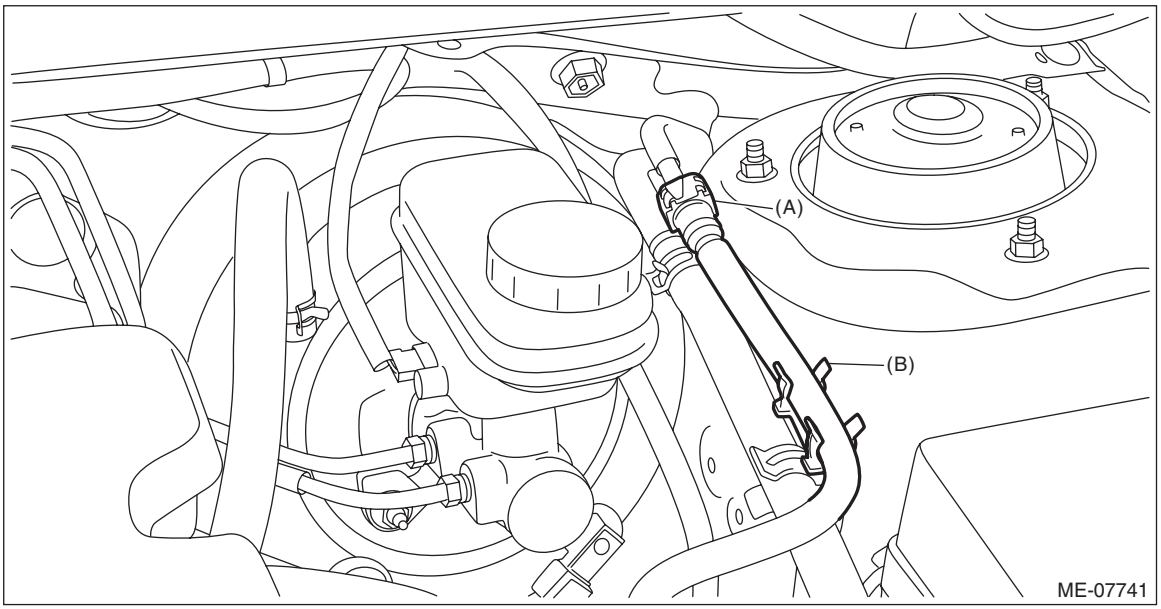

(2) Connect the fuel pressure gauge with ST1 and ST2.

CAUTION:
• Check that there is no damage or dust on the quick connector. If necessary, clean the seal surface of the pipe.
• When connecting the quick connector with slider, make sure to insert the ST2 all the way in before locking the slider.
• When it is difficult to lock the slider, check that the ST2 is fully inserted.
• Make sure that the quick connector is securely connected.

NOTE:
• ST1 is a SUBARU genuine part.
• When connecting the ST2 to the quick connector on the fuel delivery tube, connect as shown in the figure.

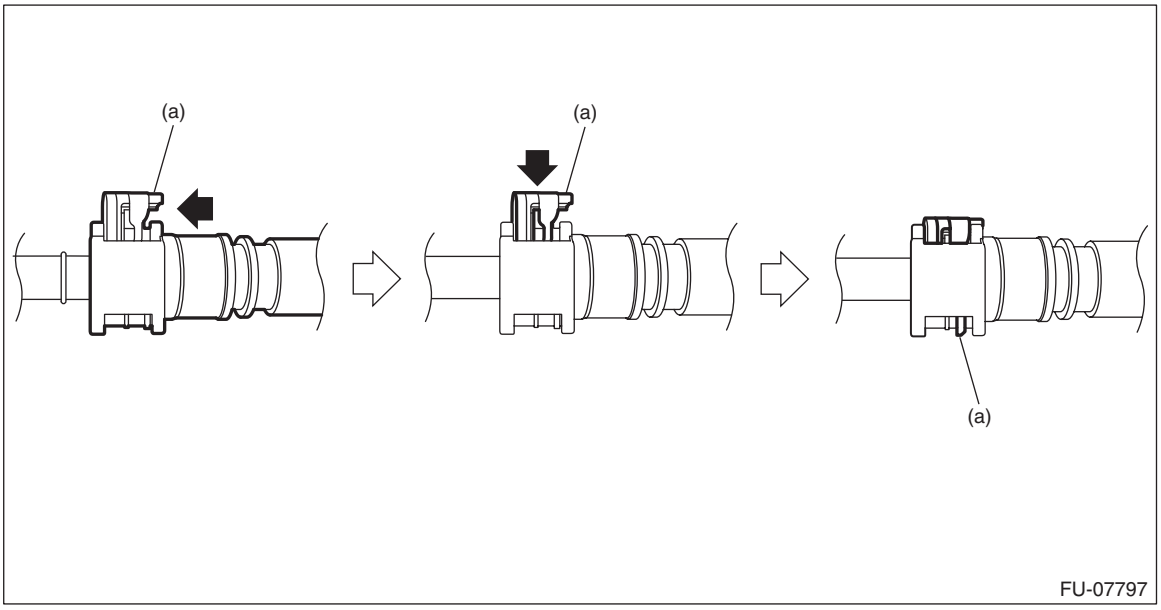

(a) Slider

ST1 42075AG690 FUEL HOSE
ST2 18471AA000 FUEL PIPE ADAPTER

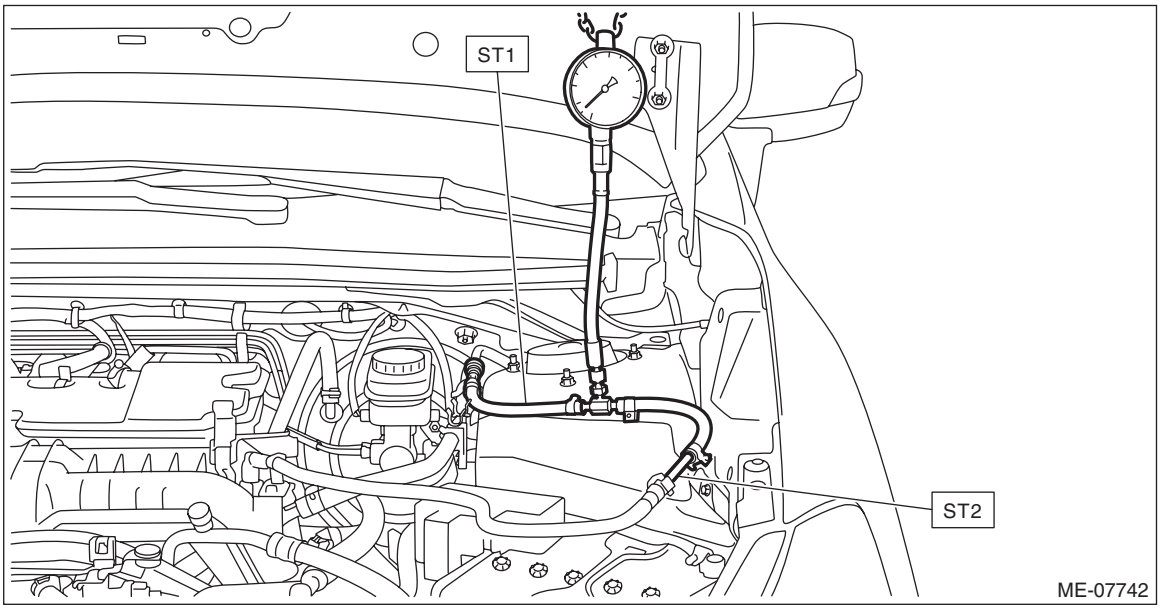

6) Start the engine.

7) Check the fuel pressure after warming up the engine.

NOTE:
• The fuel pressure gauge registers 10 to 20 kPa (0.1 to 0.2 kg/cm^2, 1 to 3 psi) higher than standard values during high-altitude operations.
• Check or replace the fuel pump and fuel delivery line if the fuel pressure is out of the standard.

Fuel pressure:
Standard
340 — 400 kPa (3.5 — 4.1 kg/cm^2, 49 — 58 psi)

8) After inspection, install the related parts in the reverse order of removal.

CAUTION:
• Before removing the fuel pressure gauge, release the fuel pressure.
• Be careful not to spill fuel.
• Catch the fuel from hoses and tubes using a container or cloth.
• Check that there is no damage or dust on the quick connector. If necessary, clean the seal surface of the pipe.
• When connecting the quick connector with slider, make sure to insert the pipe all the way in before locking the slider.
• When it is difficult to lock the slider, check that the pipe is fully inserted.
• Make sure that the quick connector is securely connected.

NOTE:
• When disconnecting the ST1, install the ST2 to the fuel pipe assembly, and press the ST2 in the direction of arrow to disconnect the quick connector on the ST1.
ST1 42075AG690 FUEL HOSE
ST2 42099AE000 QUICK CONNECTOR RELEASE

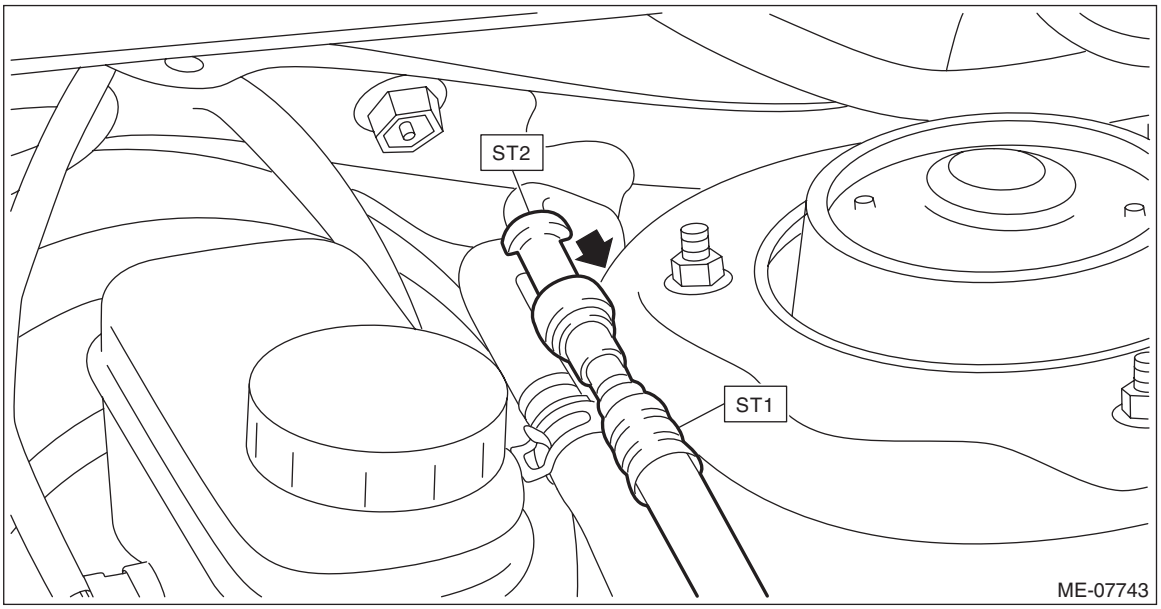

- Disconnect the quick connector on the fuel delivery tube as shown in the figure.

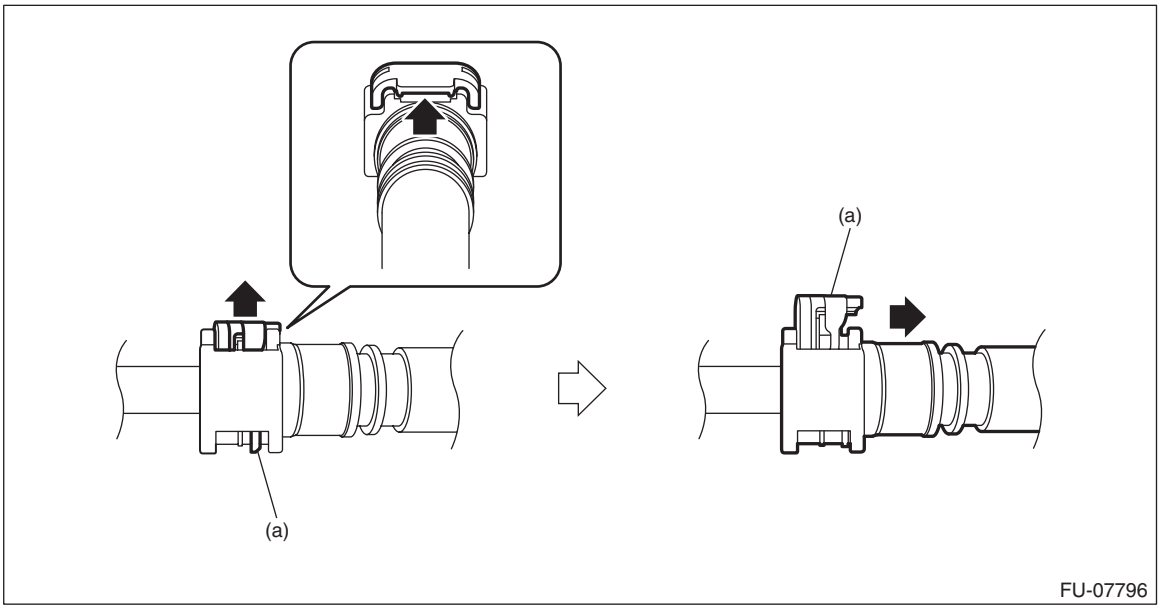

(a) Slider

- Connect the quick connector on the fuel delivery tube as shown in the figure.

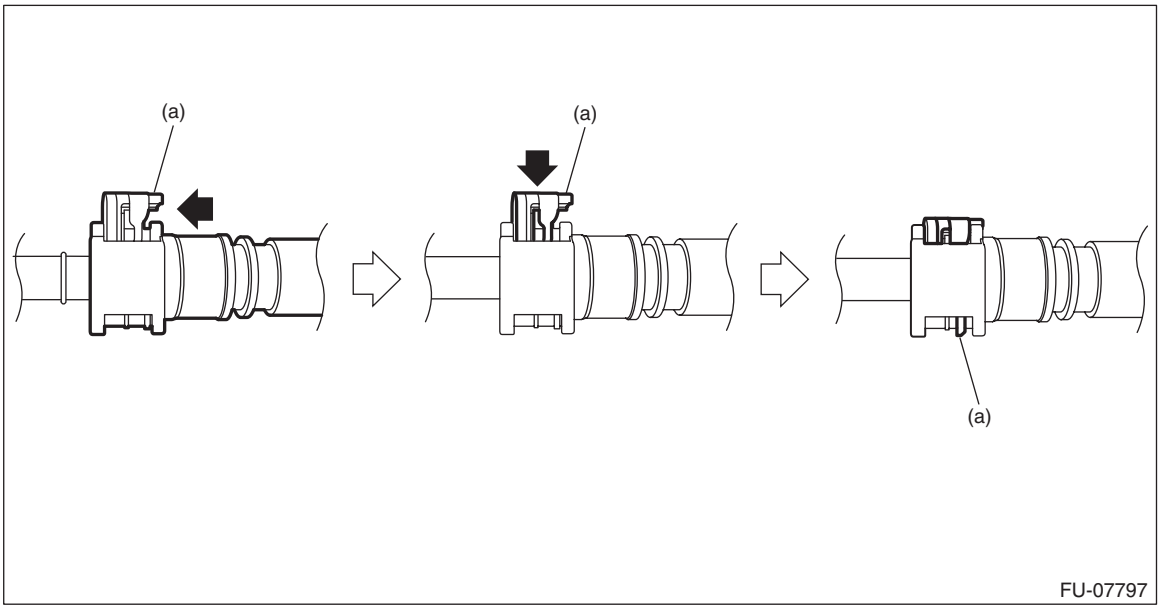

(a) Slider

8. Cam Clearance

A: INSPECTION

1. WHEN TIMING CHAIN ASSEMBLY IS NOT REMOVED

CAUTION:
When working on the vehicle, if engine oil is spilt onto the exhaust pipe, wipe it off with cloth to avoid emission of smoke or causing a fire.

NOTE:
- Inspection of cam clearance should be performed while engine is cold.
- If the engine is removed from vehicle, performing the step 1) and 2) is not necessary.

1) Disconnect the ground cable from battery. <Ref. to NT-5, BATTERY, NOTE, Note.>

NOTE:
For the 12 volt engine restart battery of HEV model, disconnect the ground terminal from 12V engine restart battery sensor.

2) Remove the air intake duct. <Ref. to IN(H4DO(w/o HEV))-13, REMOVAL, Air Intake Duct.> <Ref. to IN(H4DO(HEV))-15, REMOVAL, Air Intake Duct.>

3) When inspecting #1 and #3 cylinders
   (1) Remove the rocker cover RH. <Ref. to ME(H4DO(w/o HEV))-191, ROCKER COVER RH, REMOVAL, Rocker Cover.>

NOTE:
When working on the vehicle, place a suitable container under the vehicle.

   (2) Set #1 cylinder piston to top dead center of compression stroke by rotating the crank pulley clockwise using the socket wrench.

NOTE:
When the timing mark (A) on crank pulley is aligned to the 0° in timing gauge (B) on chain cover as shown in the figure, the #1 cylinder piston is located at TDC of compression stroke if the intake camshaft and exhaust camshaft does not depress the #1 cylinder intake side roller rocker arm (intake valve) and exhaust side roller rocker arm (exhaust valve). If roller rocker arm (valve) is depressed, turn the crank pulley by 360° in order to make #1 cylinder piston at TDC of compression stroke.

- Gasoline engine model

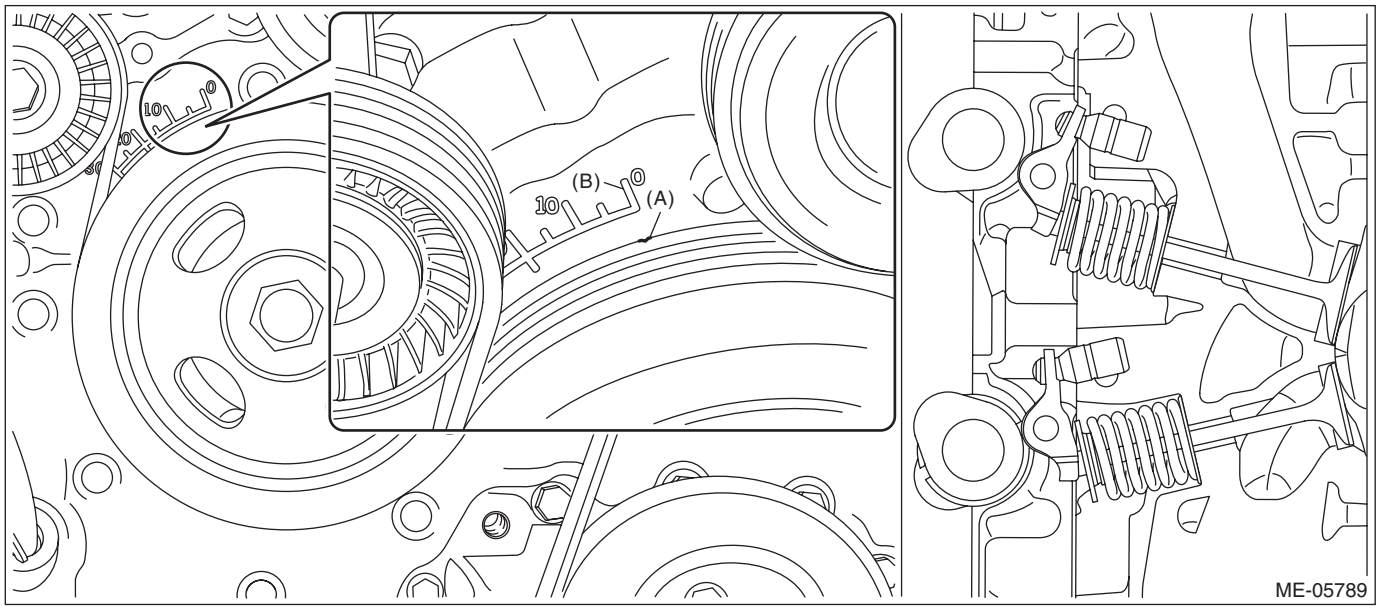

- HEV model

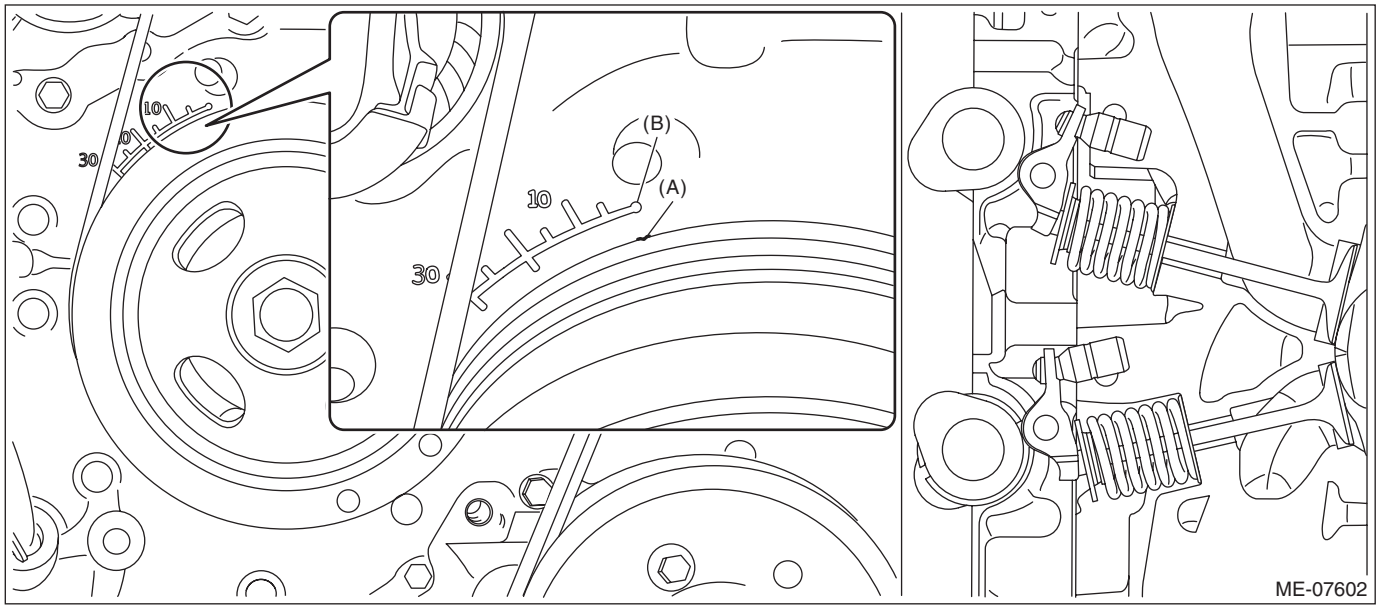

(3) Check the cam clearance for #1 cylinder intake, #1 cylinder exhaust and #3 cylinder exhaust.

NOTE:
- Measure the roller surface of cam base circle and roller rocker arm using thickness gauge (A).
- If the measured value is out of standard, take notes of the value in order to adjust the cam clearance later on.

Cam clearance:
Intake
Standard
$0.13^{+0.02}_{-0.03}$ mm ($0.0051^{+0.0008}_{-0.0012}$ in)
Exhaust
Standard
0.22±0.02 mm (0.0087±0.0008 in)

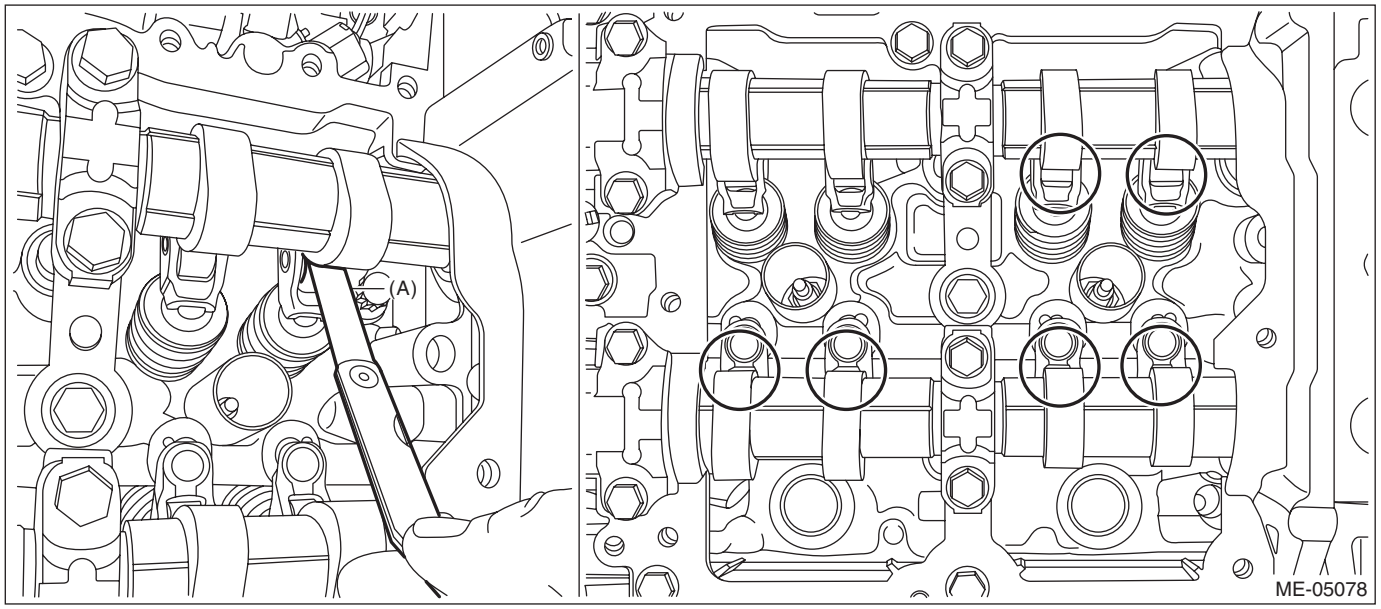

(4) Turn the crank pulley by 360°.

- Gasoline engine model

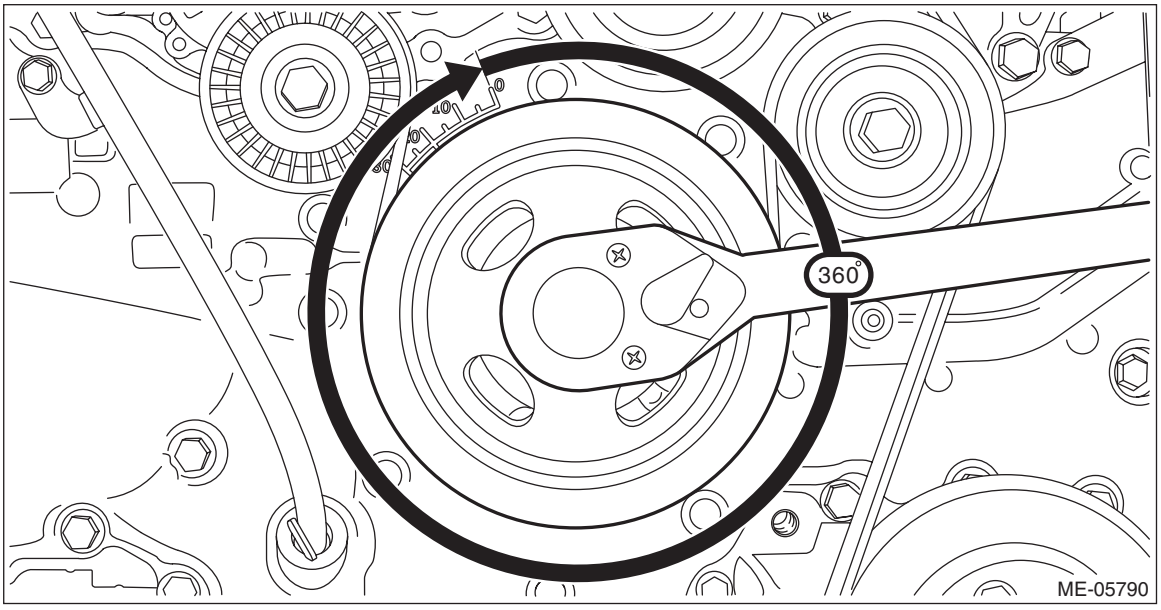

- HEV model

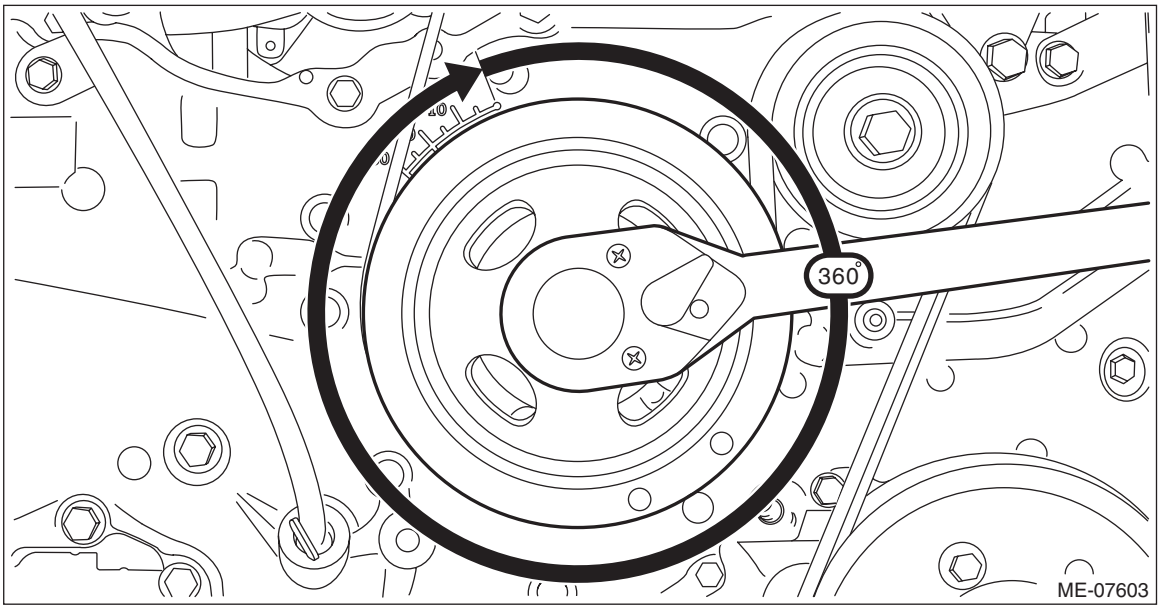

(5) Check the clearance of #3 cylinder intake.

NOTE:

- Measure the roller surface of cam base circle and roller rocker arm using thickness gauge (A).
- If the measured value is out of standard, take notes of the value in order to adjust the cam clearance later on.

Cam clearance:
Standard
$0.13^{+0.02}_{-0.03}$ mm ($0.0051^{+0.0008}_{-0.0012}$ in)

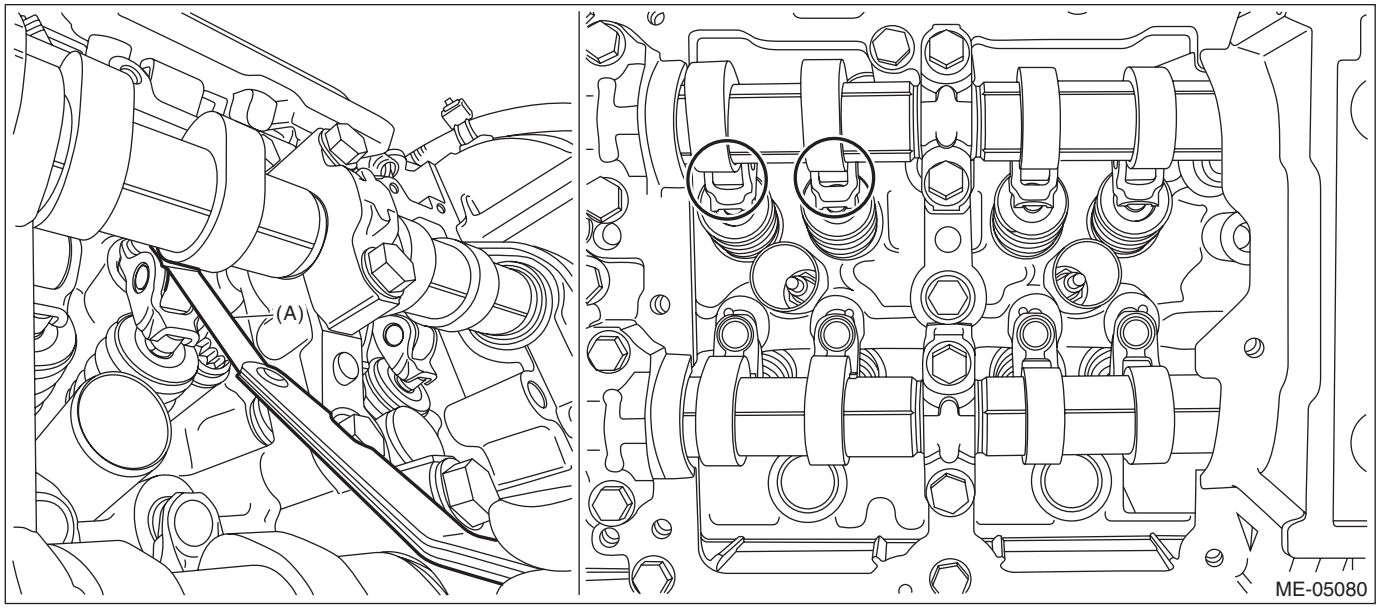

4) When inspecting #2 and #4 cylinders
(1) Remove the rocker cover LH. <Ref. to ME(H4DO(w/o HEV))-195, ROCKER COVER LH, REMOVAL, Rocker Cover.>

NOTE:
When working on the vehicle, place a suitable container under the vehicle.

(2) Set #2 cylinder piston to top dead center of compression stroke by rotating the crank pulley clockwise using the socket wrench.

NOTE:
When the timing mark (A) on crank pulley is aligned to the 0° in timing gauge (B) on chain cover as shown in the figure, the #2 cylinder piston is located at TDC of compression stroke if the intake camshaft and exhaust camshaft does not depress the #2 cylinder intake side roller rocker arm (intake valve) and exhaust side roller rocker arm (exhaust valve). If roller rocker arm (valve) is depressed, turn the crank pulley by 360° in order to make #2 cylinder piston at TDC of compression stroke.

- Gasoline engine model

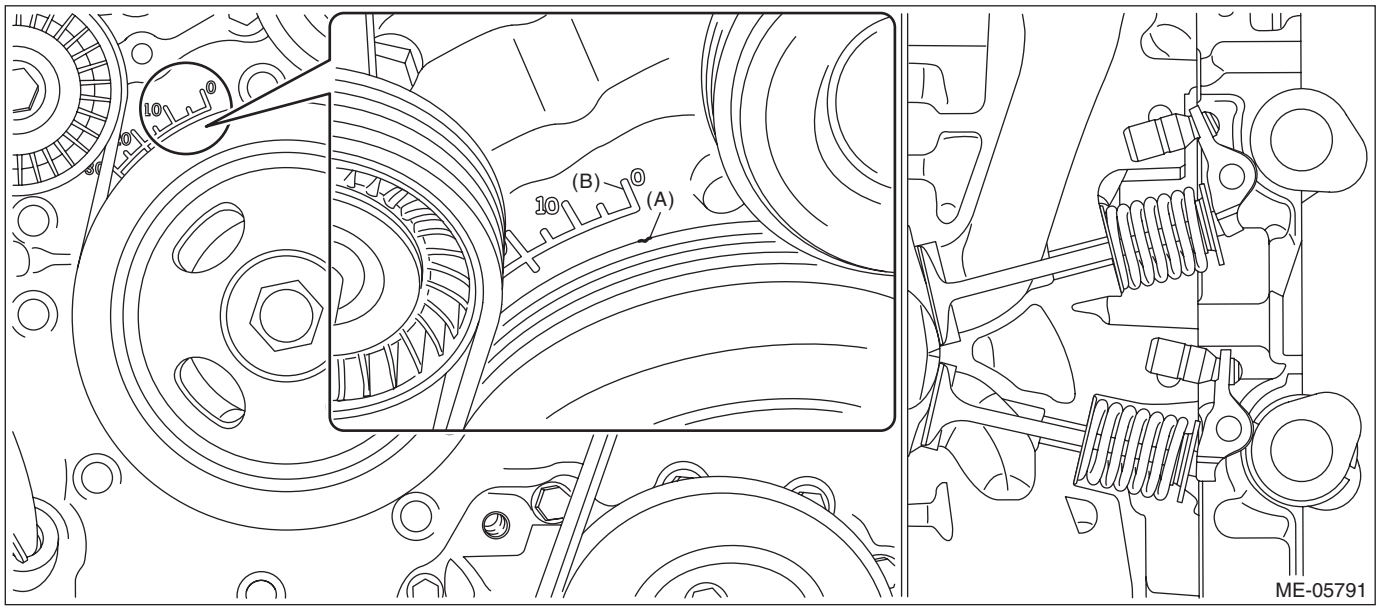

- HEV model

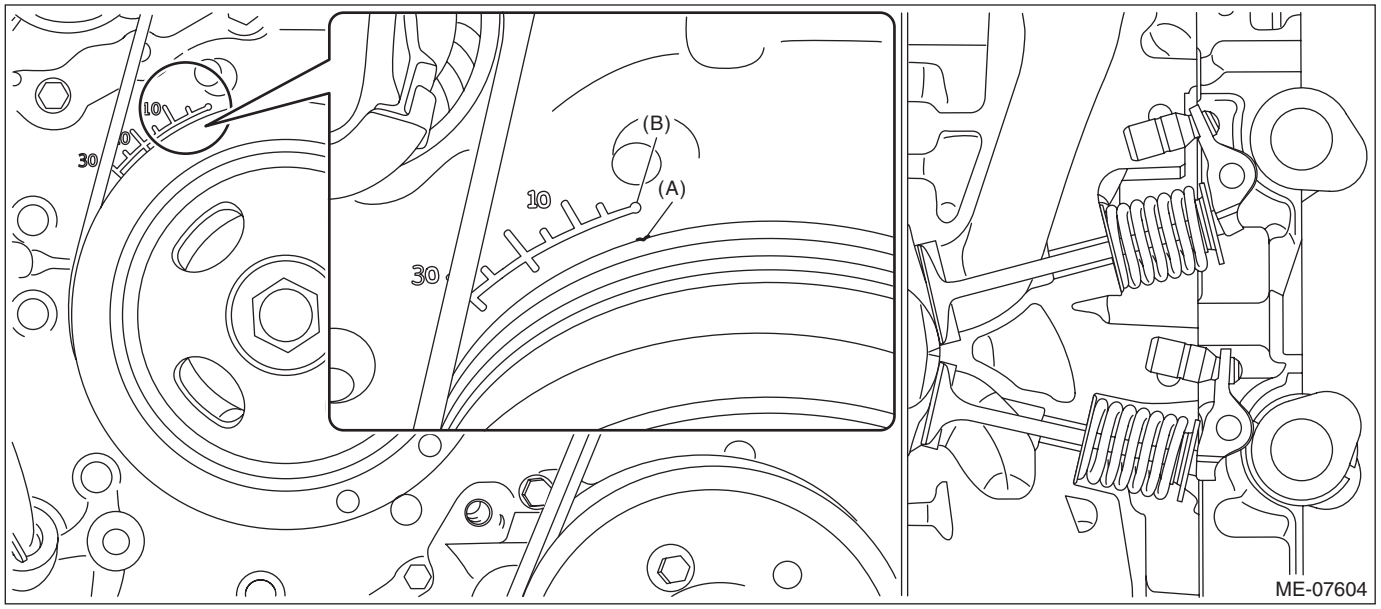

(3) Check the cam clearance for #2 cylinder intake, #2 cylinder exhaust and #4 cylinder exhaust.

NOTE:
- Measure the roller surface of cam base circle and roller rocker arm using thickness gauge (A).
- If the measured value is out of standard, take notes of the value in order to adjust the cam clearance later on.

Cam clearance:
Intake
Standard
$0.13^{+0.02}_{-0.03}$ mm ($0.0051^{+0.0008}_{-0.0012}$ in)
Exhaust
Standard
0.22±0.02 mm (0.0087±0.0008 in)

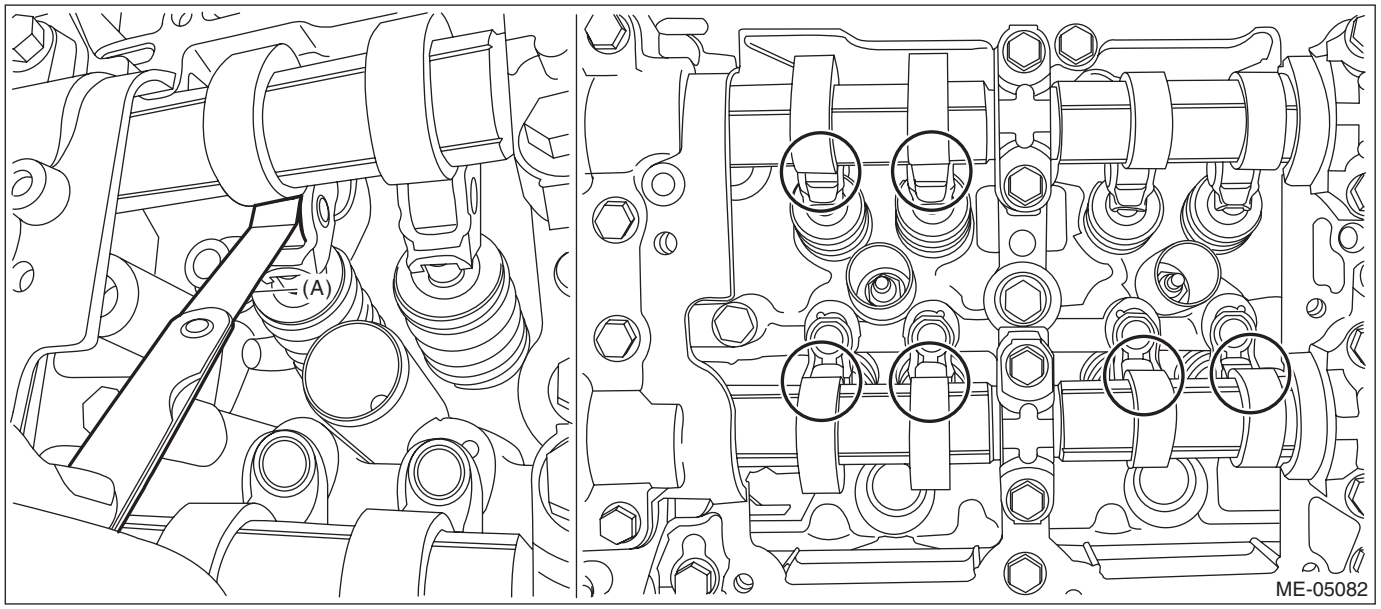

(4) Turn the crank pulley by 360°.

- Gasoline engine model

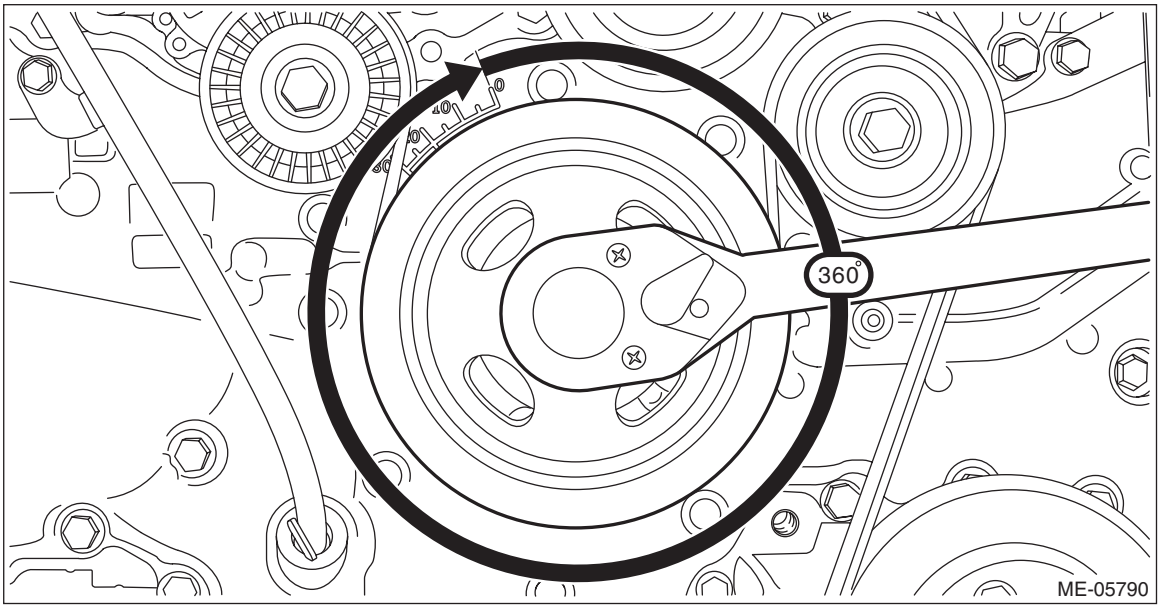

- HEV model

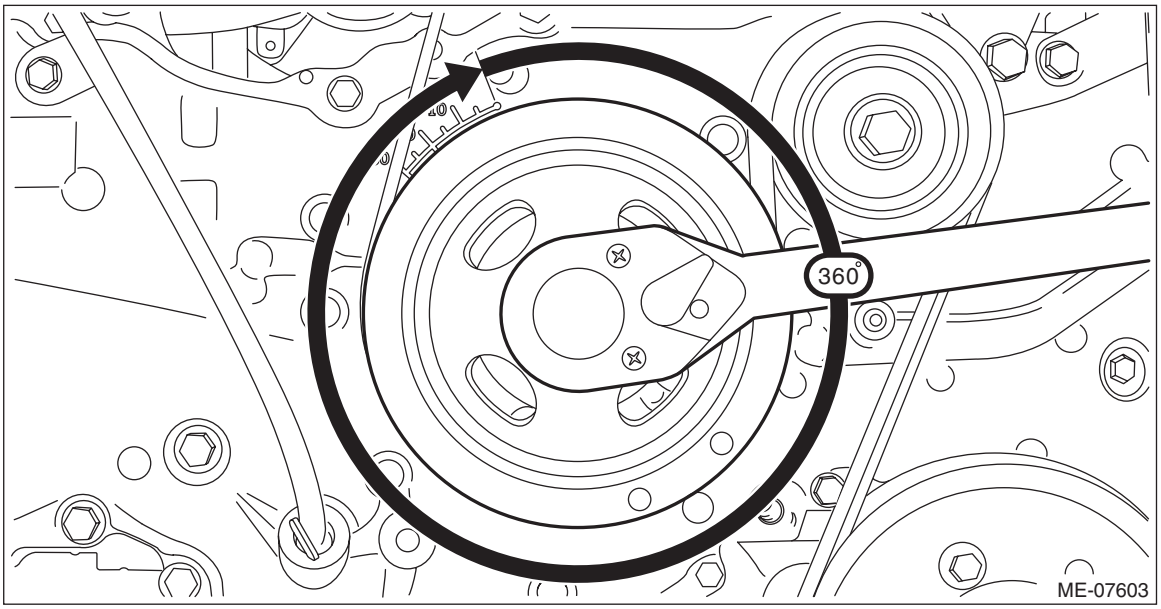

(5) Check the clearance of #4 cylinder intake.

NOTE:
- Measure the roller surface of cam base circle and roller rocker arm using thickness gauge (A).
- If the measured value is out of standard, take notes of the value in order to adjust the cam clearance later on.

Cam clearance:
Standard
$0.13^{+0.02}_{-0.03}$ mm ($0.0051^{+0.0008}_{-0.0012}$ in)

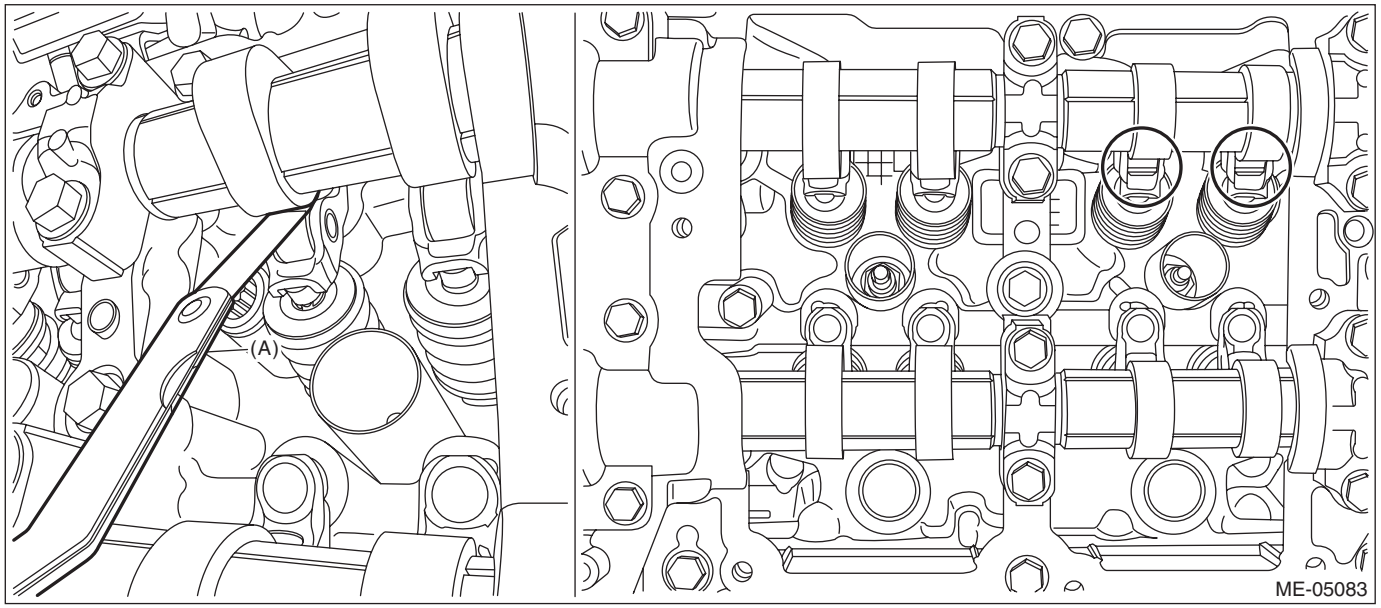

5) If necessary, adjust the cam clearance. <Ref. to ME(H4DO(w/o HEV))-52, ADJUSTMENT, Cam Clearance.>
6) After inspection, install the related parts in the reverse order of removal.

2. WHEN TIMING CHAIN ASSEMBLY IS REMOVED

NOTE:
Inspection of cam clearance should be performed while engine is cold.

1) When inspecting #1 and #3 cylinders
   (1) Remove the rocker cover RH. <Ref. to ME(H4DO(w/o HEV))-191, ROCKER COVER RH, REMOVAL, Rocker Cover.>

NOTE:
When working on the vehicle, place a suitable container under the vehicle.

   (2) Check the #1 and #3 cylinder cam clearance.

CAUTION:
Intake and exhaust camshafts can be independently rotated with the timing chain removed. When the intake valve and exhaust valve lift at the same time, the valve heads contact each other and valve stem may bend. Do not turn it to the outside of range of zero lift (cam base circle position) (in range where it can be turned lightly by hand).

NOTE:
- For cam clearance inspection, adjust the cam base circle position so that the thickness gauge (A) can be inserted easily by hand turning the camshaft (cam sprocket) to be measured.
- Measure the roller surface of cam base circle and roller rocker arm using thickness gauge (A).
- If the measured value is out of standard, take notes of the value in order to adjust the cam clearance later on.

Cam clearance:
Intake
Standard
$0.13^{+0.02}_{-0.03}$ mm ($0.0051^{+0.0008}_{-0.0012}$ in)
Exhaust
Standard
0.22±0.02 mm (0.0087±0.0008 in)

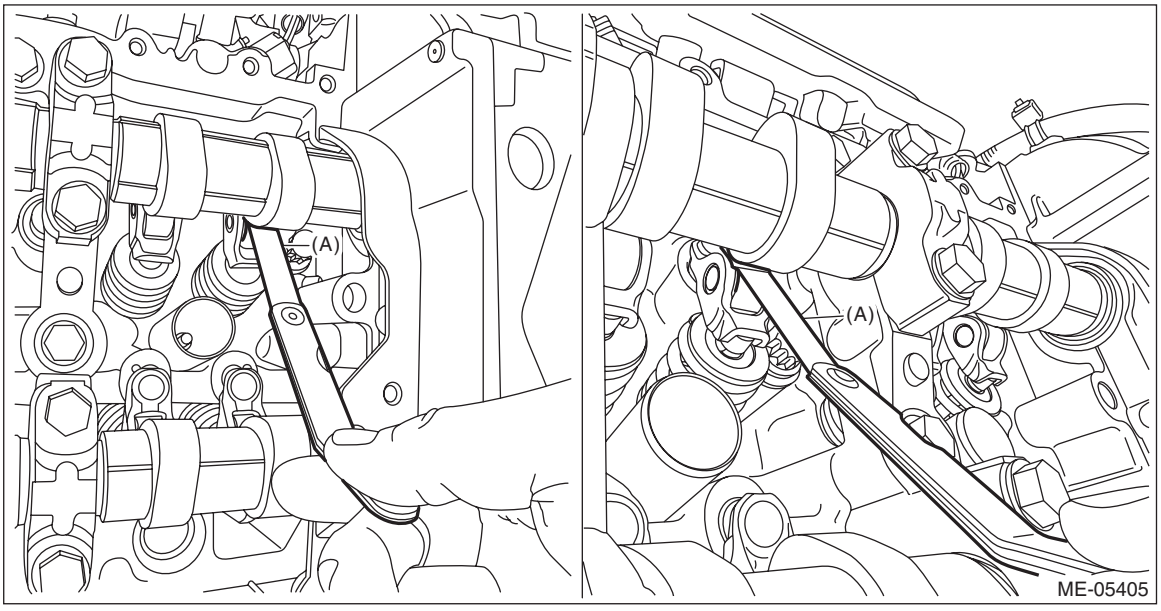

2) When inspecting #2 and #4 cylinders
(1) Remove the rocker cover LH. <Ref. to ME(H4DO(w/o HEV))-195, ROCKER COVER LH, REMOVAL, Rocker Cover.>

NOTE:
When working on the vehicle, place a suitable container under the vehicle.
(2) Check the #2 and #4 cylinder cam clearance.

CAUTION:
Intake and exhaust camshafts can be independently rotated with the timing chain removed. When the intake valve and exhaust valve lift at the same time, the valve heads contact each other and valve stem may bend. Do not turn it to the outside of range of zero lift (cam base circle position) (in range where it can be turned lightly by hand).

NOTE:
• For cam clearance inspection, adjust the cam base circle position so that the thickness gauge (A) can be inserted easily by hand turning the camshaft (cam sprocket) to be measured.
• Measure the roller surface of cam base circle and roller rocker arm using thickness gauge (A).
• If the measured value is out of standard, take notes of the value in order to adjust the cam clearance later on.

Cam clearance:
Intake
Standard
$0.13^{+0.02}_{-0.03}$ mm ($0.0051^{+0.0008}_{-0.0012}$ in)
Exhaust
Standard
0.22±0.02 mm (0.0087±0.0008 in)

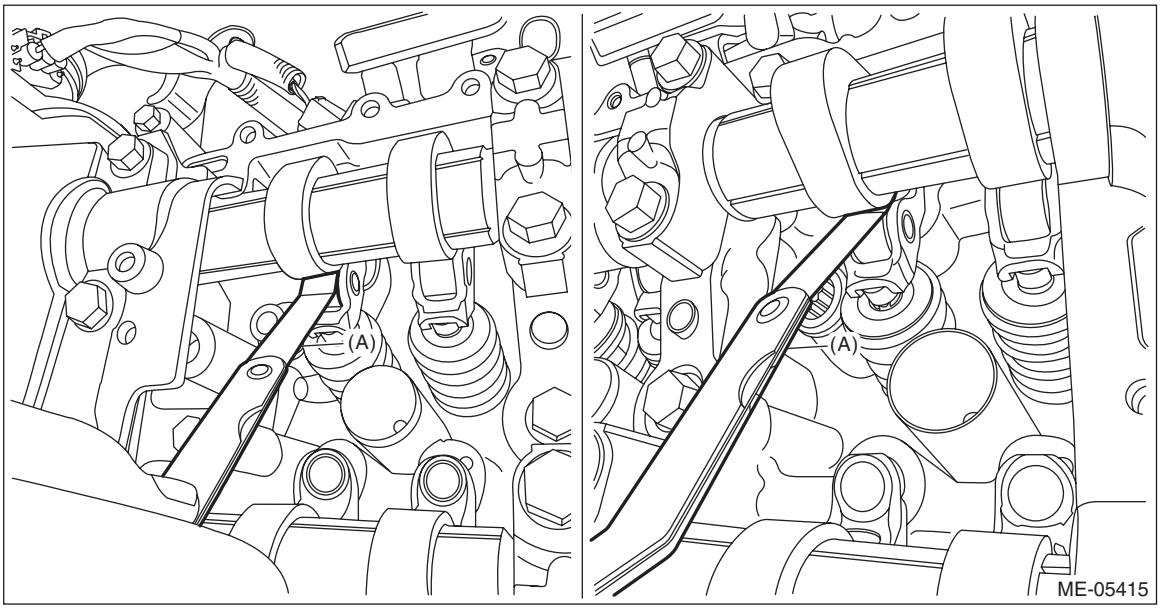

3) If necessary, adjust the cam clearance. <Ref. to ME(H4DO(w/o HEV))-52, ADJUSTMENT, Cam Clearance.>
4) After inspection, install the related parts in the reverse order of removal.

B: ADJUSTMENT

1) Remove the engine from the vehicle. <Ref. to ME(H4DO(w/o HEV))-55, REMOVAL, Engine Assembly.>
2) Remove the chain cover. <Ref. to ME(H4DO(w/o HEV))-144, REMOVAL, Chain Cover.>
3) When adjusting #1 and #3 cylinders
(1) Remove the timing chain RH. <Ref. to ME(H4DO(w/o HEV))-163, TIMING CHAIN RH, REMOVAL, Timing Chain Assembly.>
(2) Remove the cam carrier RH. <Ref. to ME(H4DO(w/o HEV))-209, CAM CARRIER RH, REMOVAL, Cam Carrier.>

(3) Measure the thickness of valve shim using micrometer.

NOTE:
Measurement should be performed at a temperature of 20°C (68°F).

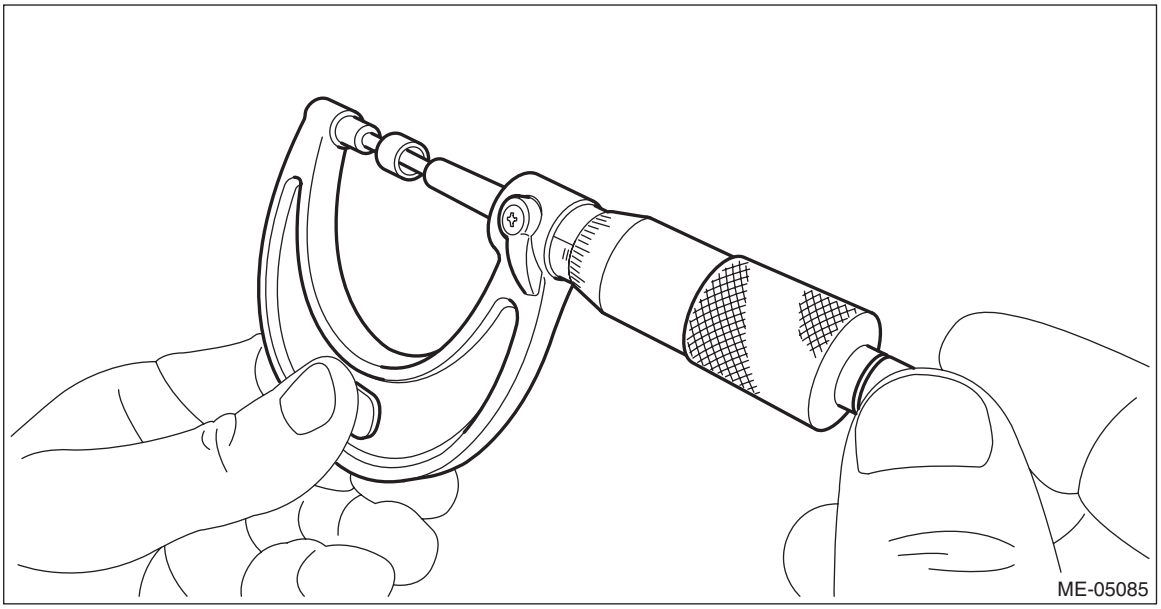

(4) Select a valve shim of suitable thickness using the measured cam clearance and valve shim thickness.

NOTE:
Use a new valve shim.

Intake side: S = T + 1.69 × (V – 0.13 mm (0.0051 in)) Exhaust side: S = T + 1.87 × (V – 0.22 mm (0.0087 in))
S: Valve shim thickness required V: Measured cam clearance T: Current valve shim thickness

(5) Install the cam carrier RH. <Ref. to ME(H4DO(w/o HEV))-220, CAM CARRIER RH, INSTALLATION, Cam Carrier.>

(6) Check all the cam clearance of RH side at this time. If the cam clearance is not within the standard value, repeat the procedure over again from step 2).

NOTE:
When the removing/installing of cam carrier RH has been performed, cam clearance may be outside the standard value. Checking of all cam clearance of RH side is necessary. Refer to INSPECTION of “Cam Clearance” for the cam clearance inspection. <Ref. to ME(H4DO(w/o HEV))-51, WHEN TIMING CHAIN ASSEMBLY IS REMOVED, INSPECTION, Cam Clearance.>

Cam clearance:
Intake
Standard
$0.13^{+0.02}_{-0.03}$ mm ($0.0051^{+0.0008}_{-0.0012}$ in)
Exhaust
Standard
0.22±0.02 mm (0.0087±0.0008 in)

4) When adjusting #2 and #4 cylinders
(1) Remove the timing chain LH. <Ref. to ME(H4DO(w/o HEV))-165, TIMING CHAIN LH, REMOVAL, Timing Chain Assembly.>
(2) Remove the cam carrier LH. <Ref. to ME(H4DO(w/o HEV))-214, CAM CARRIER LH, REMOVAL, Cam Carrier.>
(3) Measure the thickness of valve shim using micrometer.

NOTE:
Measurement should be performed at a temperature of 20°C (68°F).

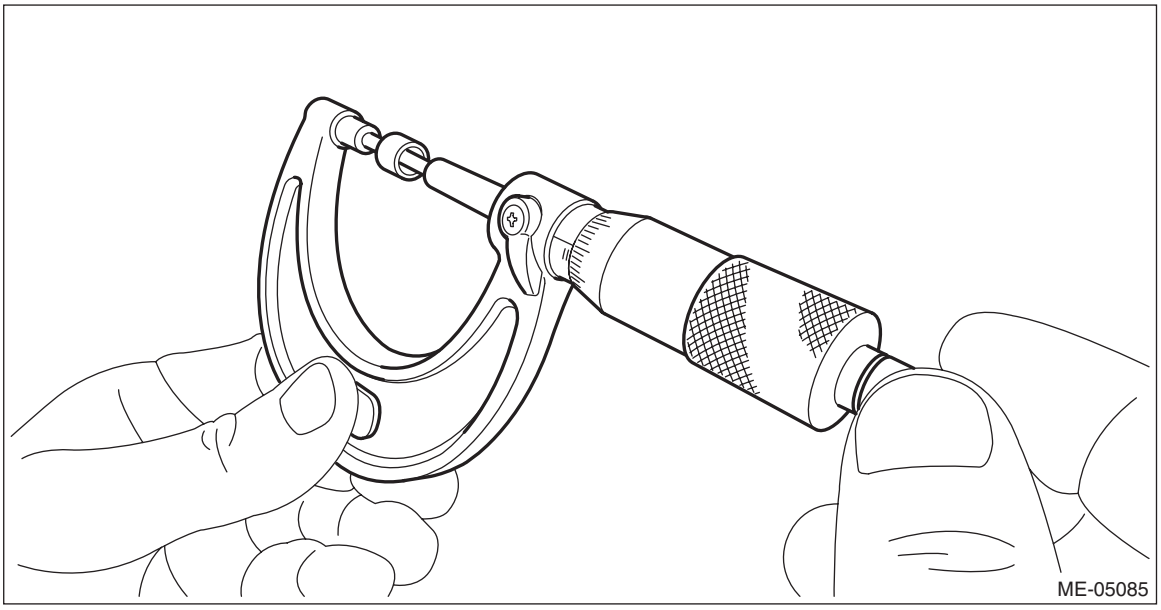

(4) Select a valve shim of suitable thickness using the measured cam clearance and valve shim thickness.

NOTE:
Use a new valve shim.

Intake side: S = T + 1.69 × (V – 0.13 mm (0.0051 in)) Exhaust side: S = T + 1.87 × (V – 0.22 mm (0.0087 in))
S: Valve shim thickness required V: Measured cam clearance T: Current valve shim thickness

(5) Install the cam carrier LH. <Ref. to ME(H4DO(w/o HEV))-231, CAM CARRIER LH, INSTALLATION, Cam Carrier.>
(6) Check all the cam clearance of LH side at this time. If the cam clearance is not within the standard value, repeat the procedure over again from step 2).

NOTE:
When the removing/installing of cam carrier LH has been performed, cam clearance may be outside the standard value. Checking of all cam clearance of LH side is necessary. Refer to INSPECTION of “Cam Clearance” for the cam clearance inspection. <Ref. to ME(H4DO(w/o HEV))-51, WHEN TIMING CHAIN ASSEMBLY IS REMOVED, INSPECTION, Cam Clearance.>

Cam clearance:
Intake
Standard
$0.13^{+0.02}_{-0.03}$ mm ($0.0051^{+0.0008}_{-0.0012}$ in)
Exhaust
Standard
0.22±0.02 mm (0.0087±0.0008 in)

5) After adjustment, install the related parts in the reverse order of removal.

9. Engine Assembly

A: REMOVAL

1. GASOLINE ENGINE MODEL

1) Open the front hood, and make alignment marks (A) on both the front hood and the front hood striker by using a marker pen.

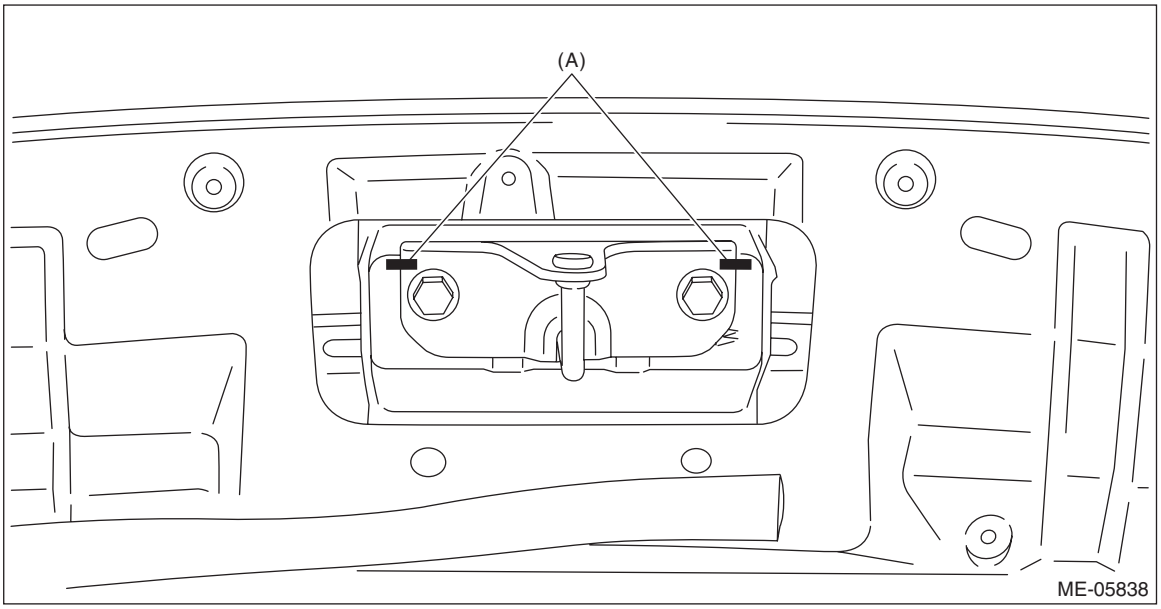

2) Remove the front hood striker from the front hood.

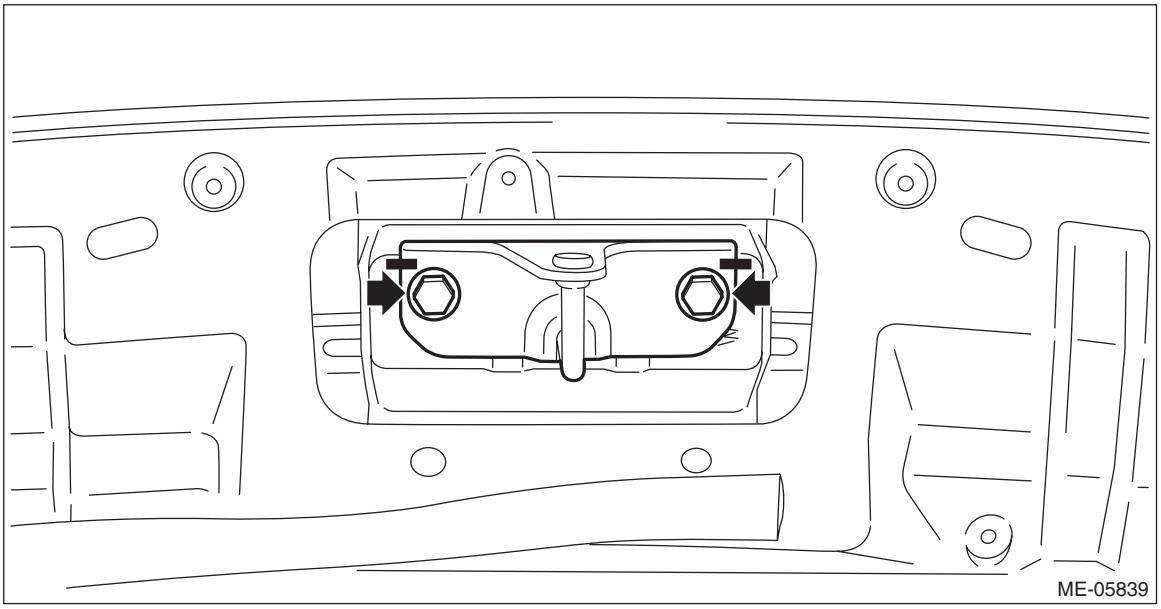

3) Change the front hood stay position from (A) to (B), and completely open the front hood.

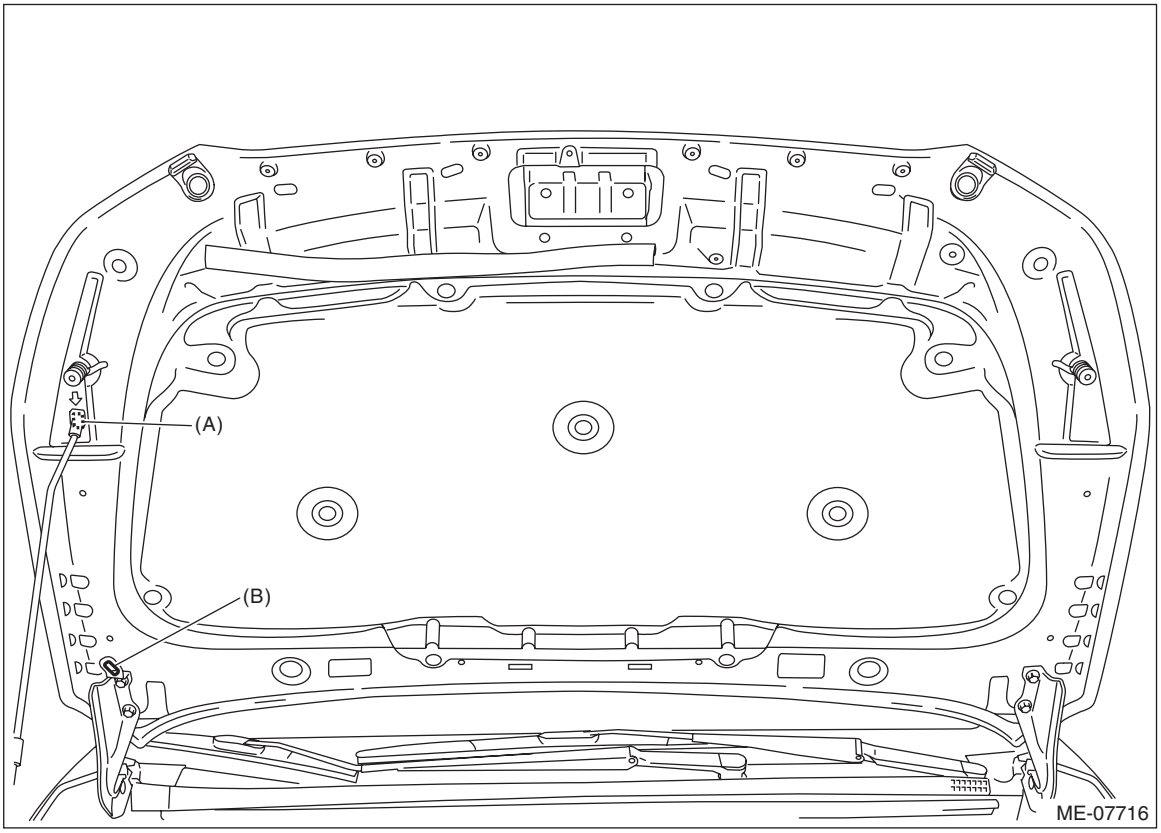

4) Remove the V-belt covers.

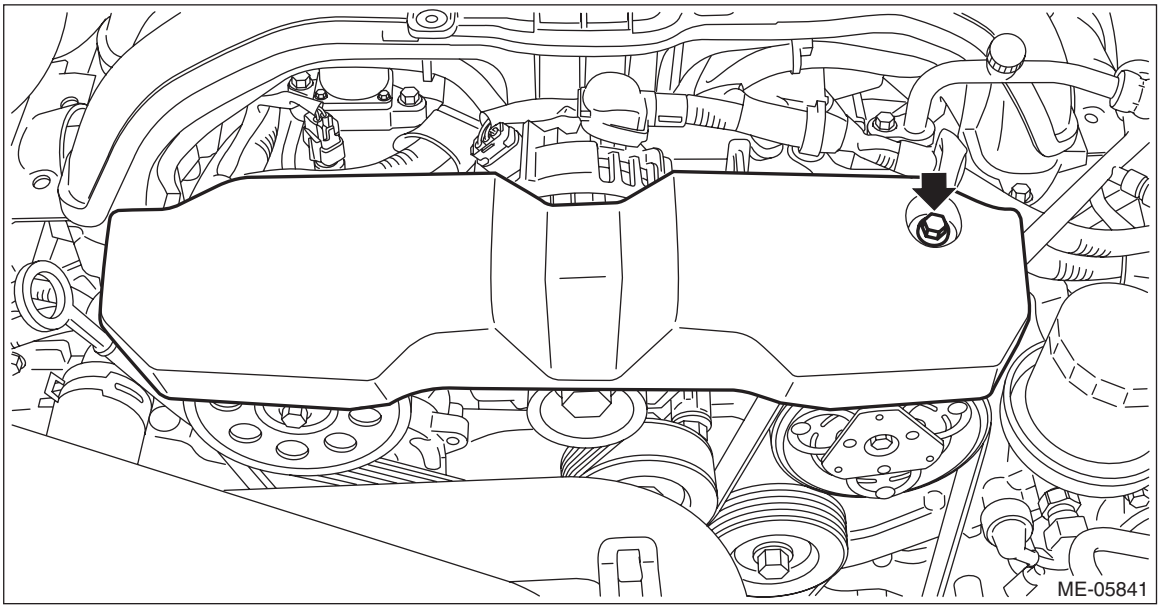

5) Collect the refrigerant from A/C system. <Ref. to AC-28, Refrigerant Recovery Procedure.>
6) Release the fuel pressure. <Ref. to FU(H4DO(w/o HEV))-116, RELEASING OF FUEL PRESSURE, PROCEDURE, Fuel.>

7) Disconnect the ground cable from battery.

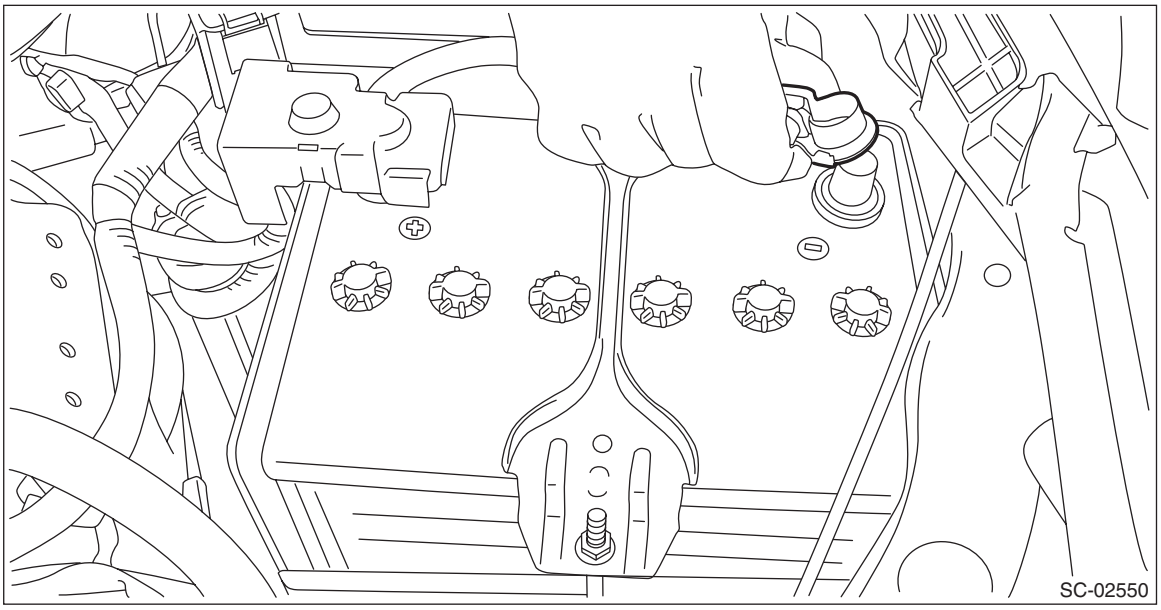

8) Remove the air intake duct. <Ref. to IN(H4DO(w/o HEV))-13, REMOVAL, Air Intake Duct.>
9) Remove the air intake boot. <Ref. to IN(H4DO(w/o HEV))-12, REMOVAL, Air Intake Boot.>
10) Disconnect the connector from the mass air flow and intake air temperature sensor, and remove the clip (A) which holds the mass air flow and intake air temperature sensor harness.

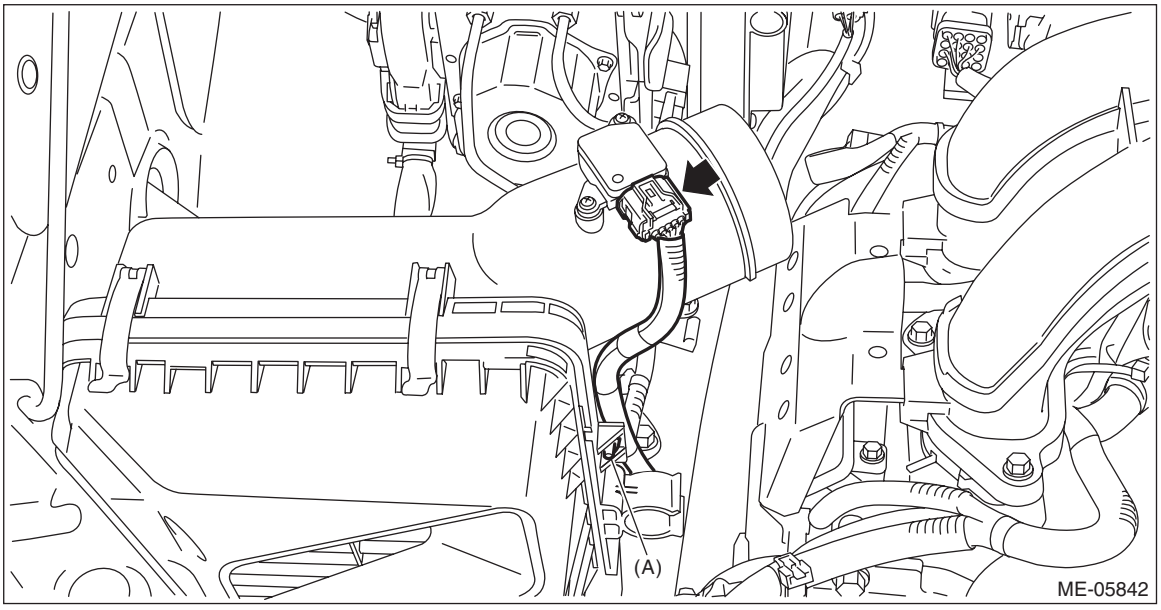

11) Remove the air cleaner case (rear).

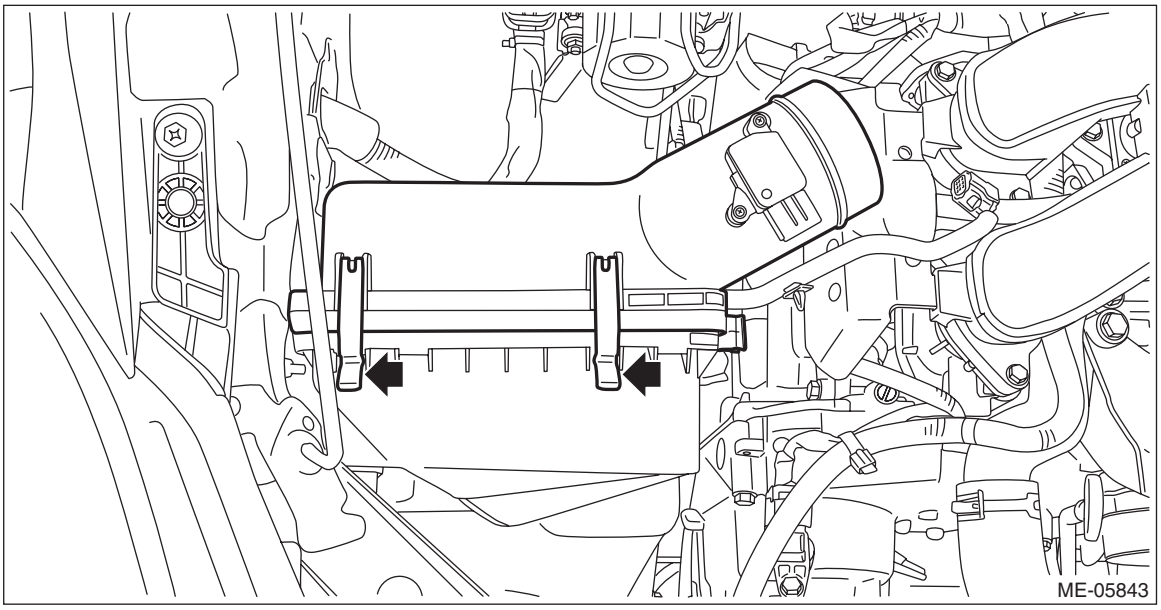

12) Remove the radiator. <Ref. to CO(H4DO(w/o HEV))-78, REMOVAL, Radiator.>
13) Disconnect the brake booster vacuum hose from the intake manifold.

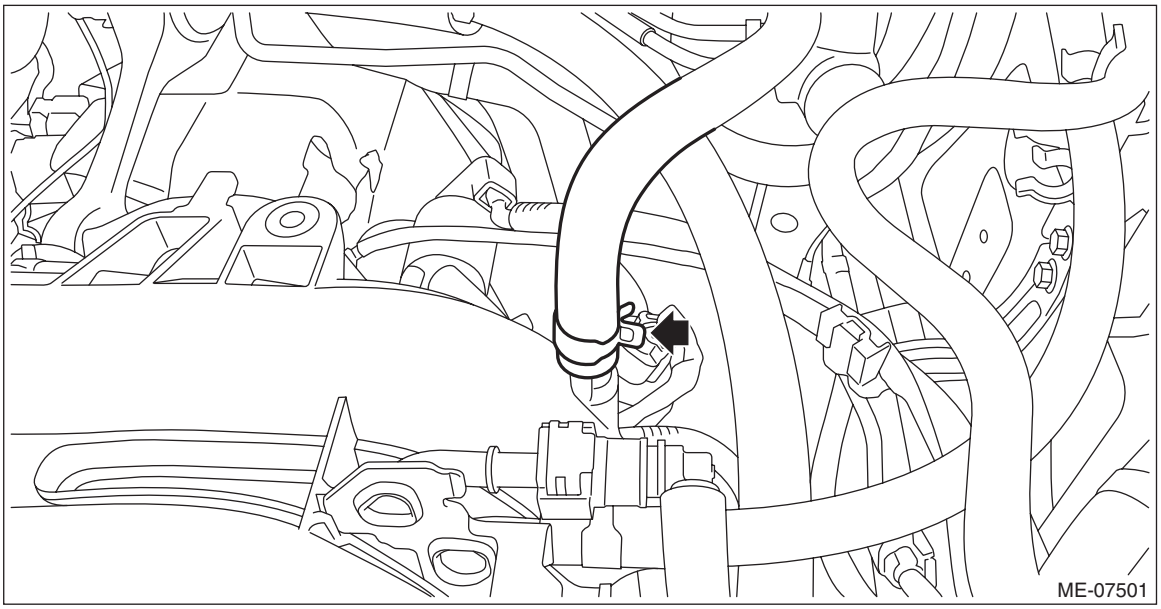

14) Remove the clip holding the air breather hose to the engine rear hanger. (MT model)

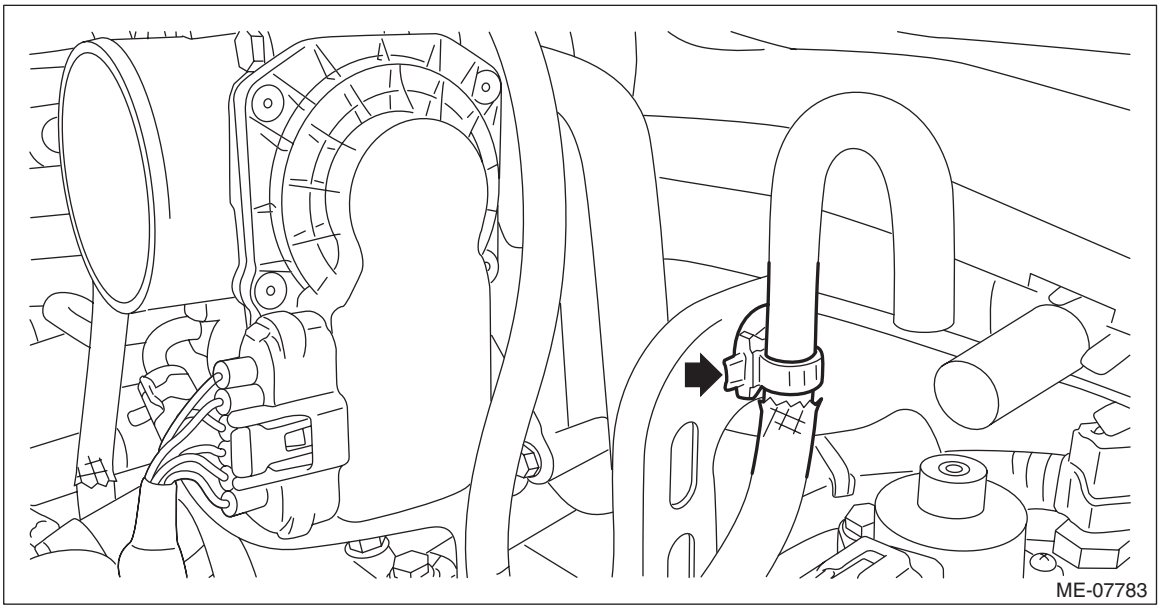

15) Disconnect the engine harness connector.
(1) Remove the bolt securing the bulkhead harness connector bracket.

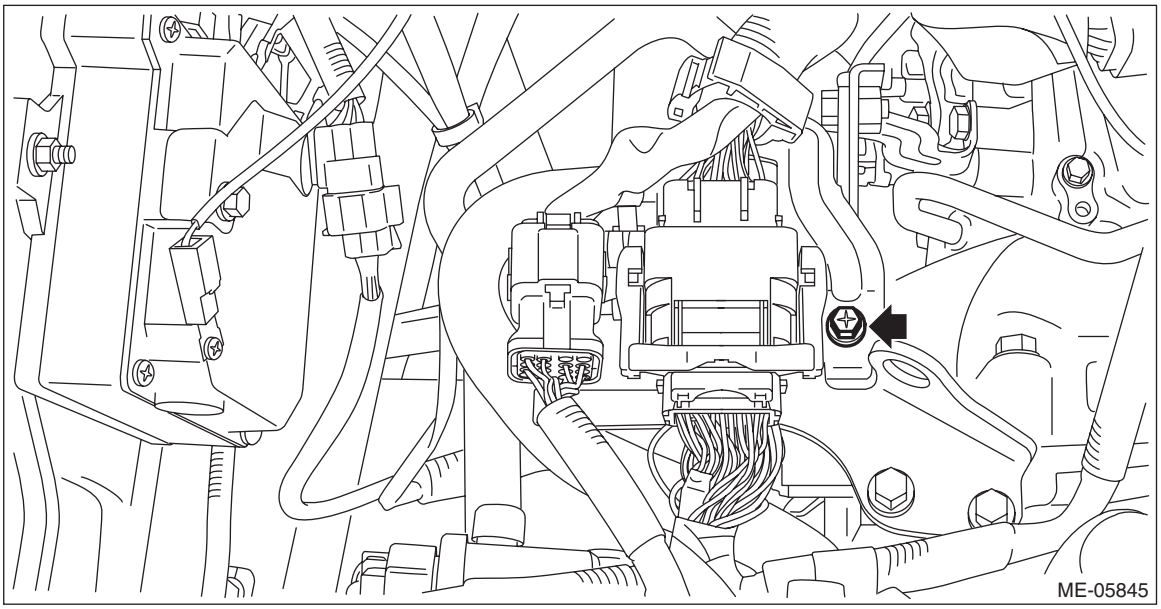

(2) Disconnect the bulkhead harness connector from the engine harness connector (black) and engine harness connector (brown).

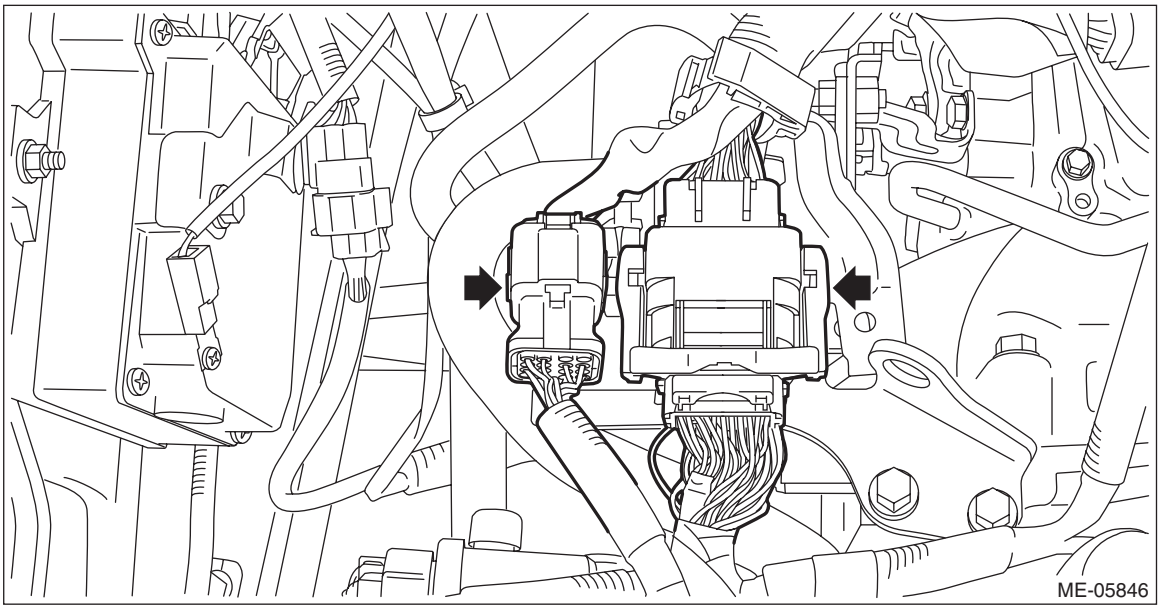

16) Remove the bolts which secure the generator cord stay to the chain cover.

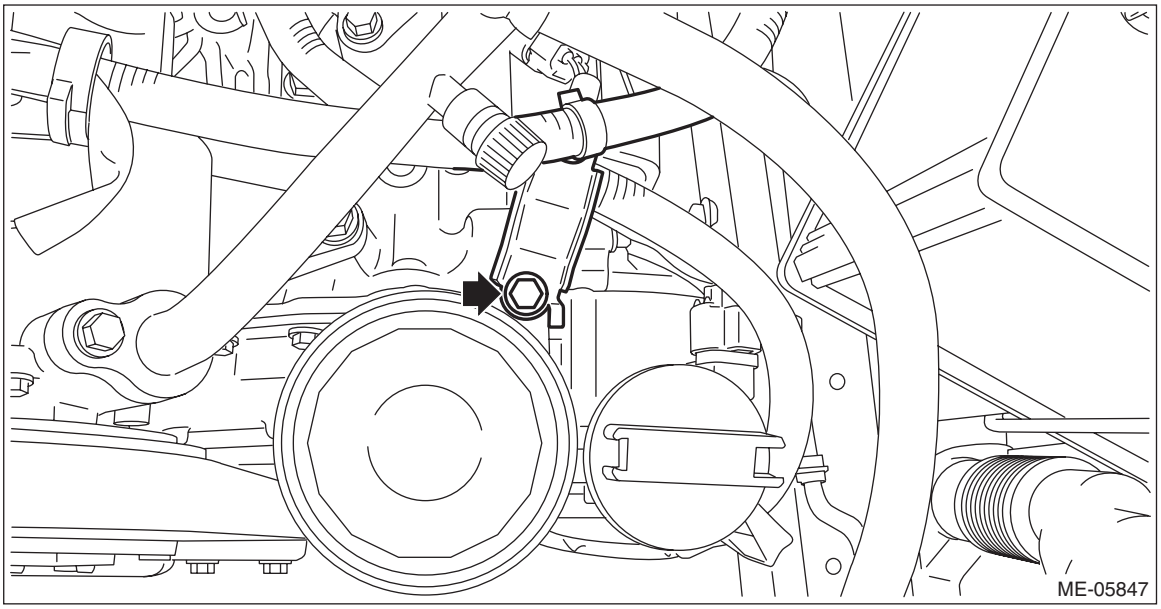

17) Disconnect connector (A) and terminal (B) from the generator, and disconnect connector (C) from A/C compressor.

18) Remove the generator cord from the clip (D) and move the generator cord to the left side wheel apron.

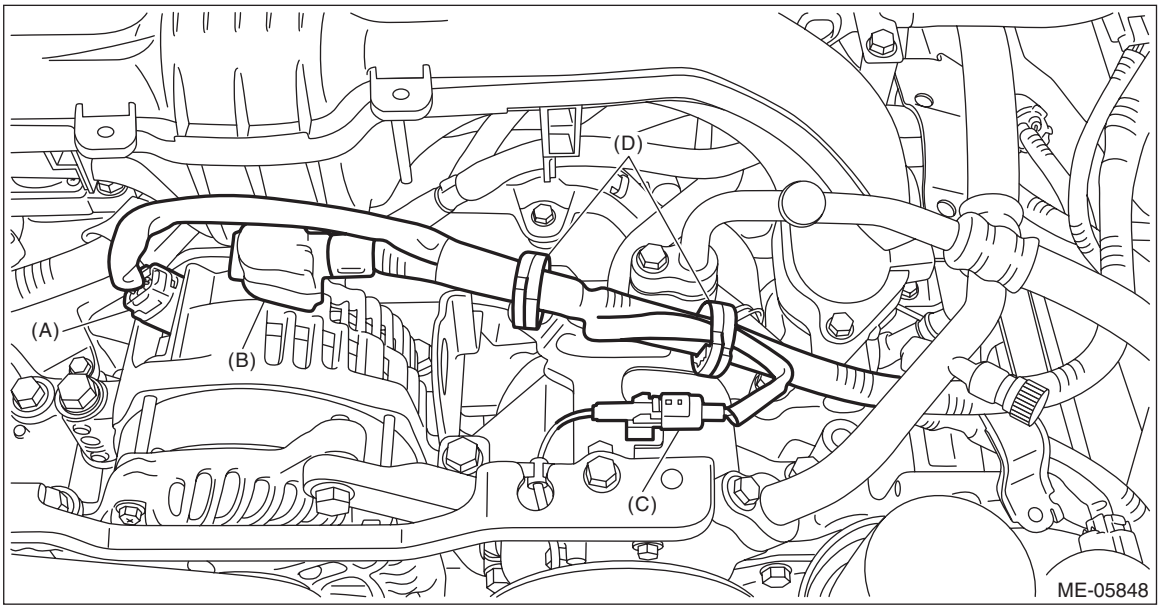

19) Disconnect the following hoses.
(1) A/C pressure hose <Ref. to AC-74, REMOVAL, Hose and Pipe.>
(2) Heater inlet hose and heater outlet hose

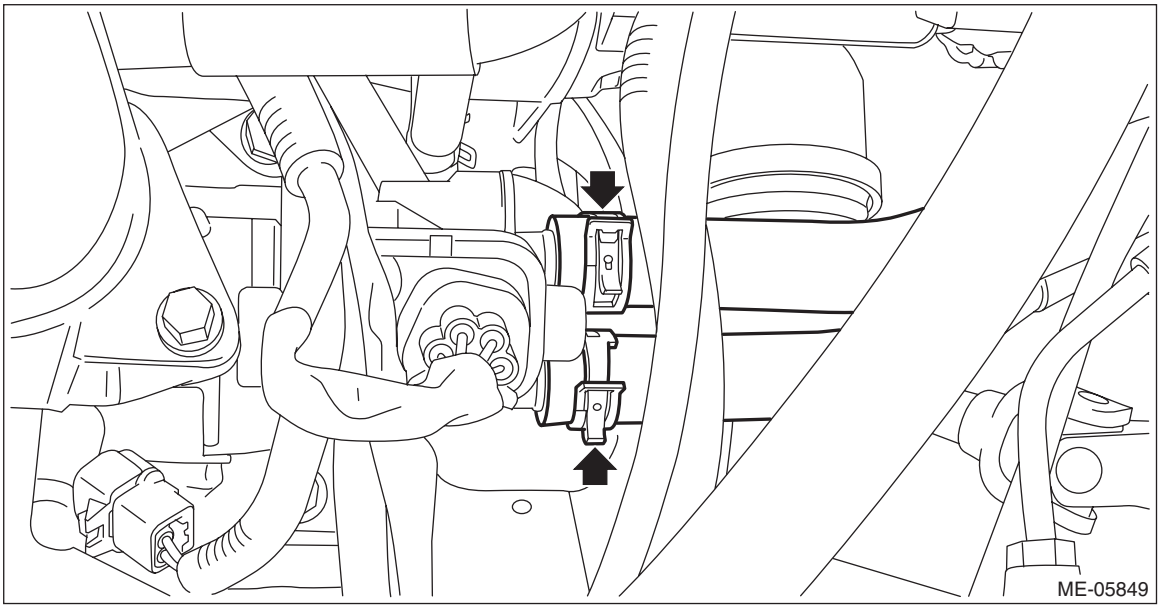

20) Disconnect the water hose from CVTF cooler (with warmer feature). (CVT model)

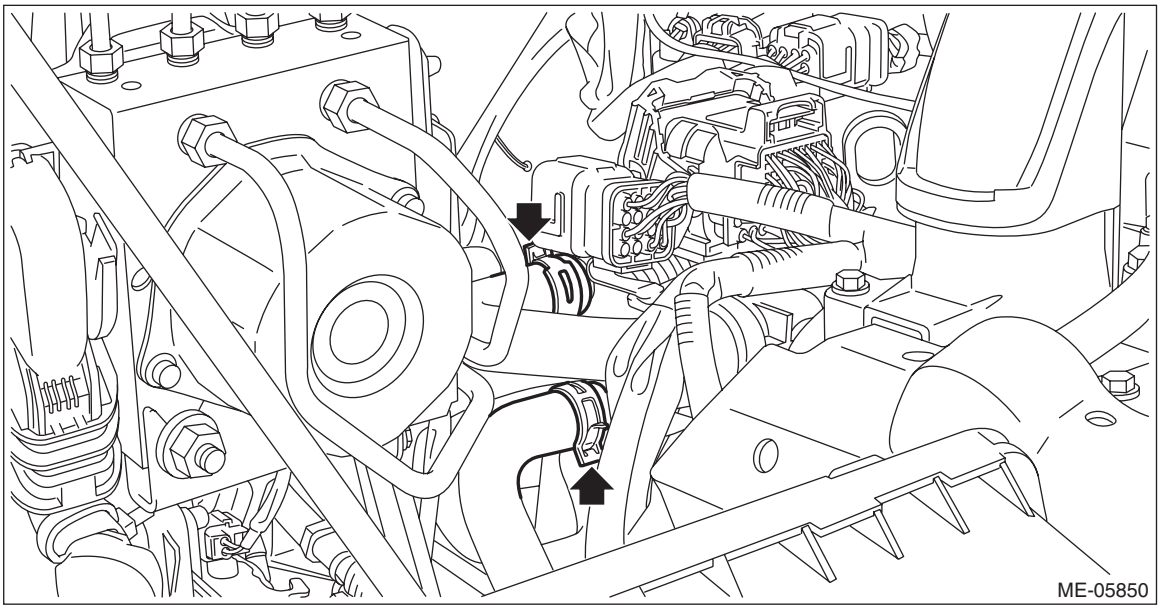

21) Remove the bolt which secures the CVTF cooler (with warmer feature) to the transmission, and move the CVTF cooler (with warmer feature) to the right side of the transmission. (CVT model)

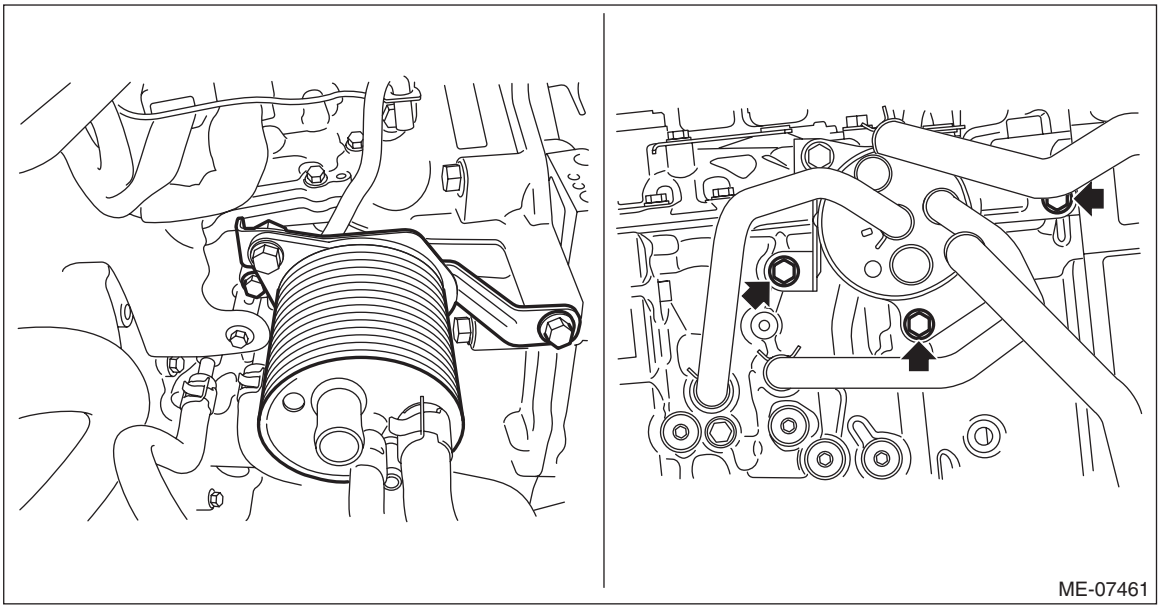

22) Lift up the vehicle.
23) Remove the front exhaust pipe. <Ref. to EX(H4DO(w/o HEV))-6, REMOVAL, Front Exhaust Pipe.>

24) Disconnect the ground cable on the engine side.

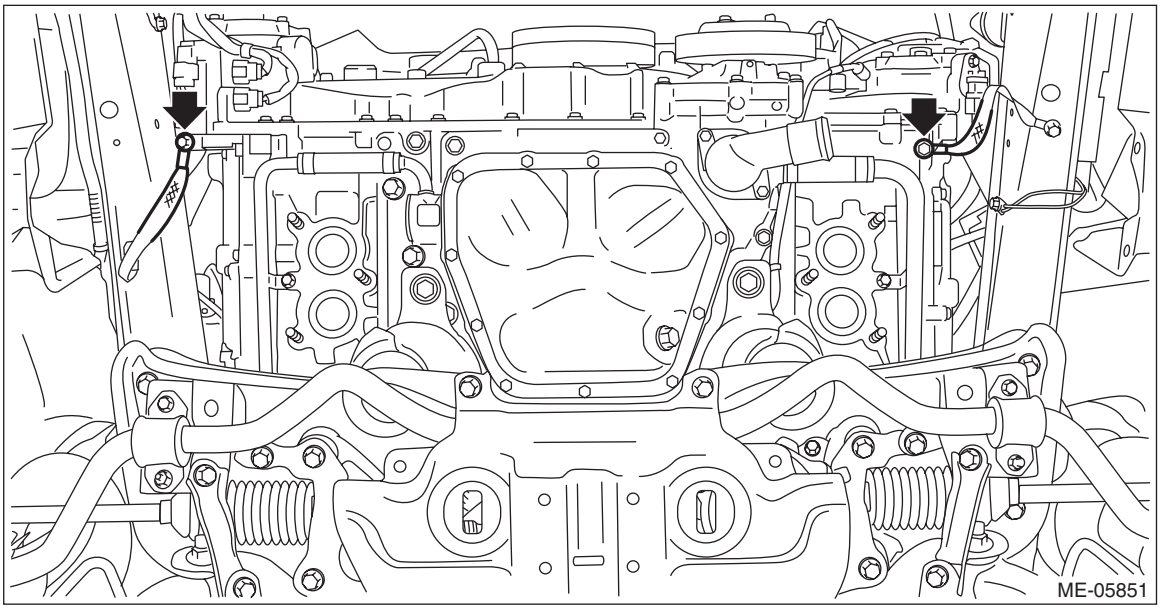

25) Remove the bolts and nuts which hold the lower side of transmission to the engine.

- CVT model

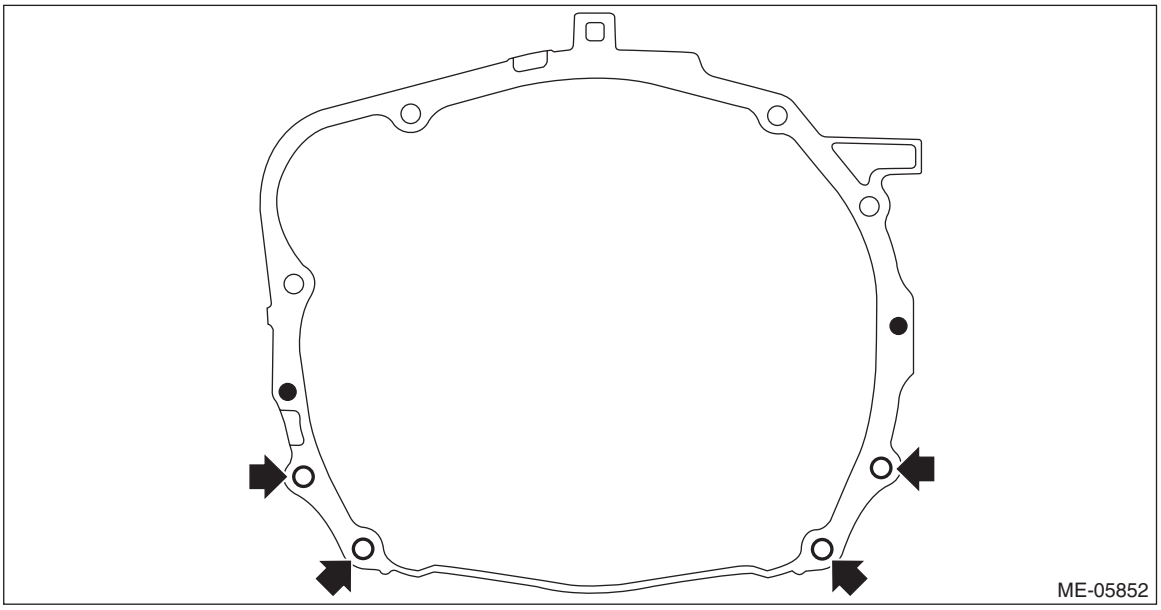

- MT model

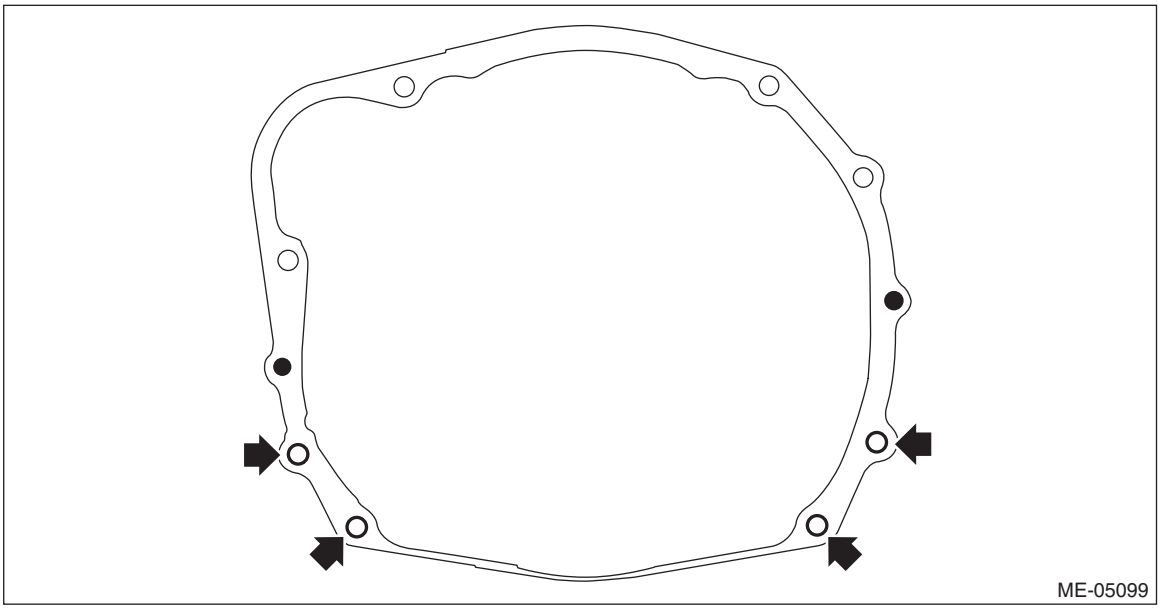

26) Remove the nuts which secure the engine mounting to the front crossmember. (CVT model)

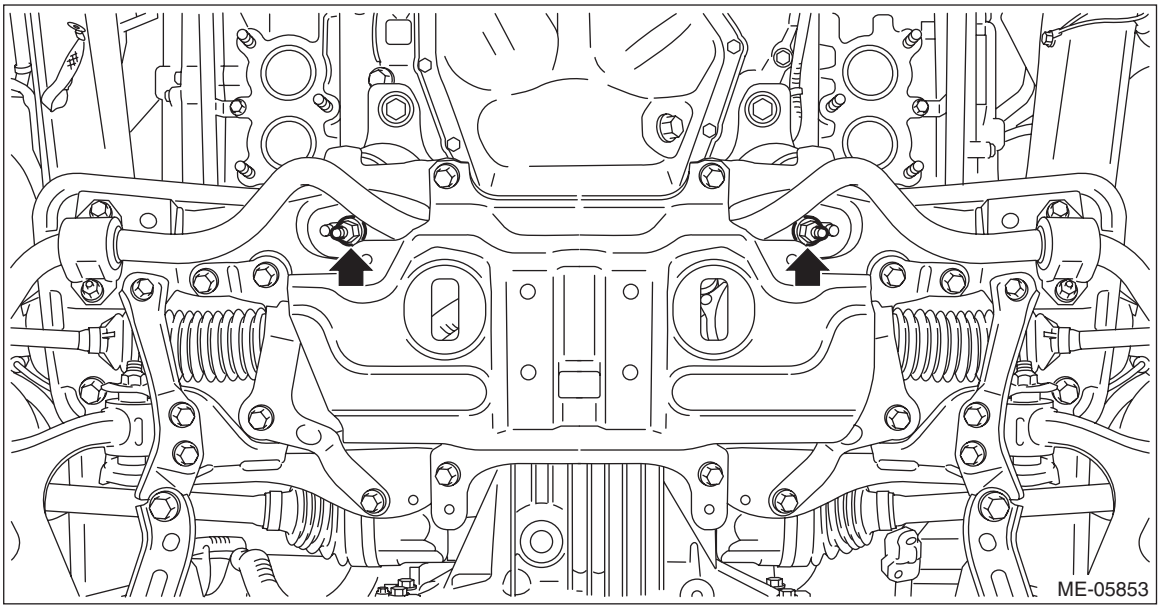

27) Remove the nuts which secure the engine mounting to the front crossmember. (MT model)

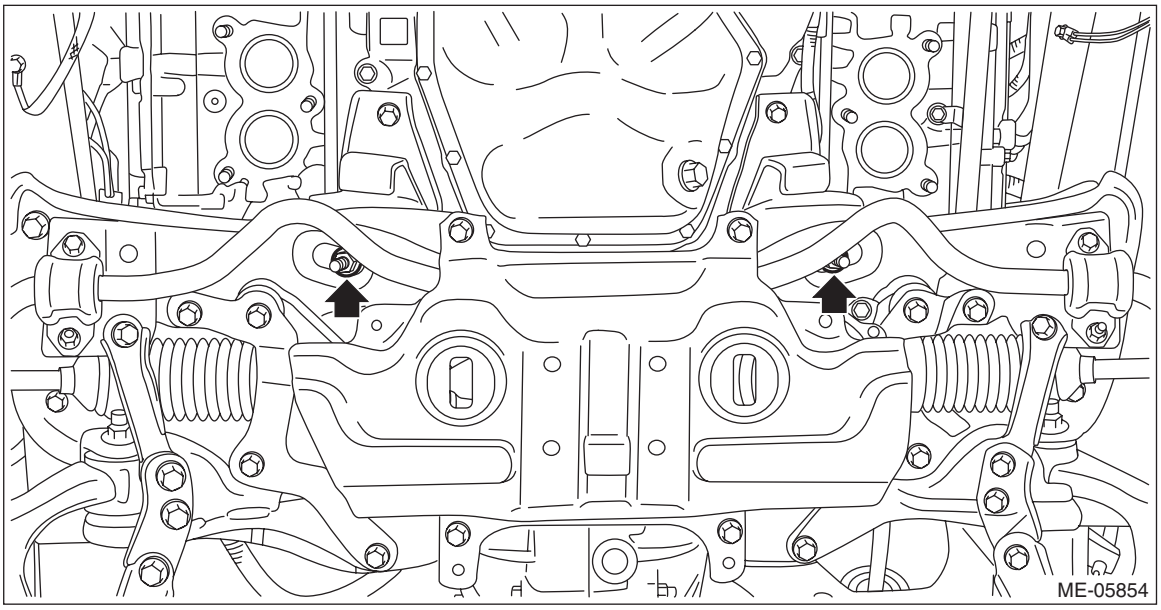

28) Separate the torque converter clutch from the drive plate. (CVT model)
(1) Lower the vehicle.
(2) Remove the service hole plug.
(3) Insert the wrench into the crank pulley bolt and rotate the crank pulley to remove the bolts which hold torque converter clutch to drive plate.

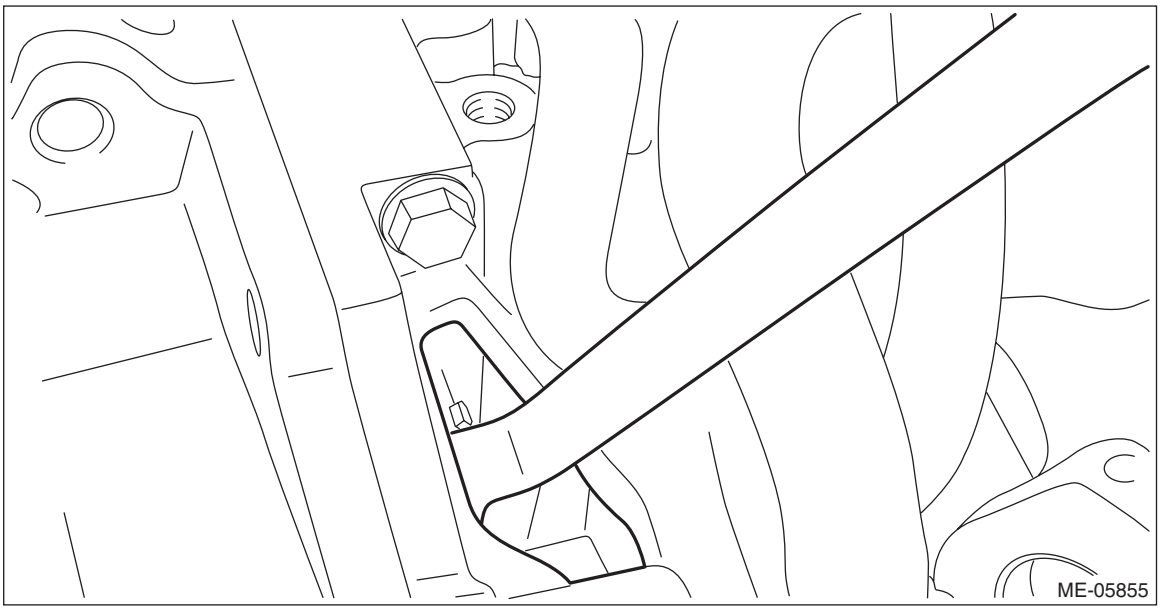

29) Disconnect the bulkhead harness connector from the transmission harness connector (A) and the inhibitor harness connector (B), and disconnect the transmission radio ground terminal (C) from the vehicle body. (CVT model)

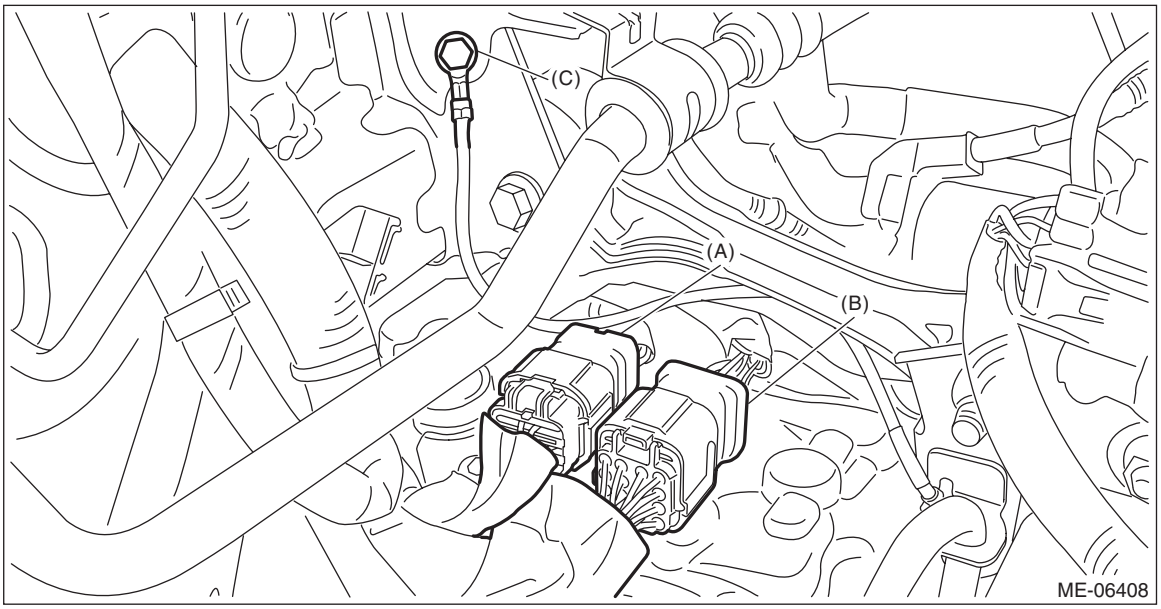

30) Remove the pitching stopper.

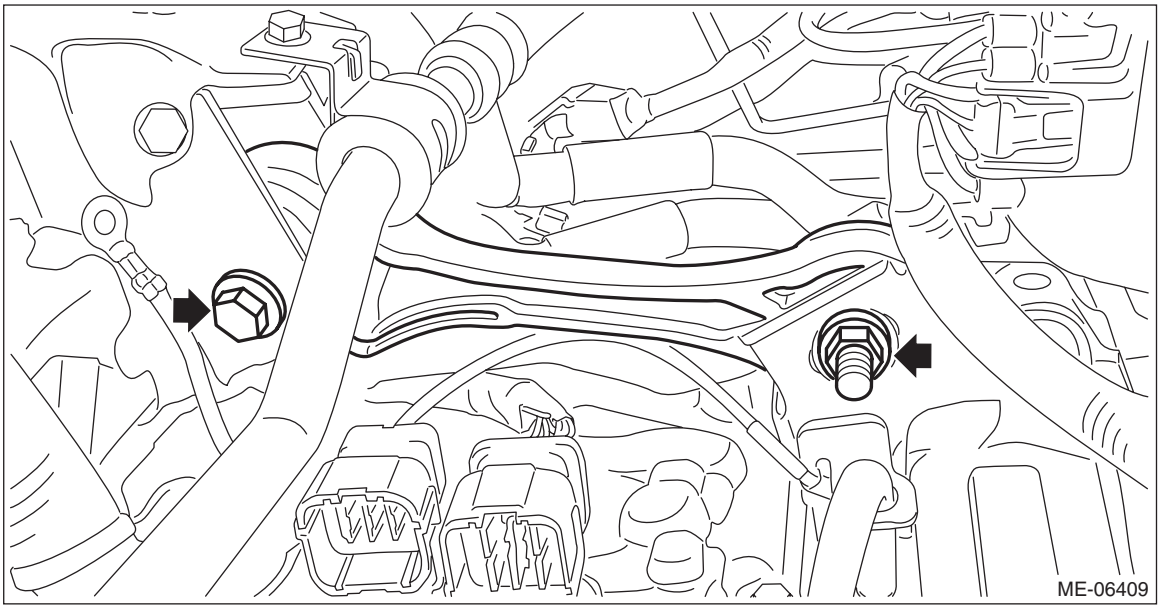

31) Remove the transmission case cover. (CVT model)

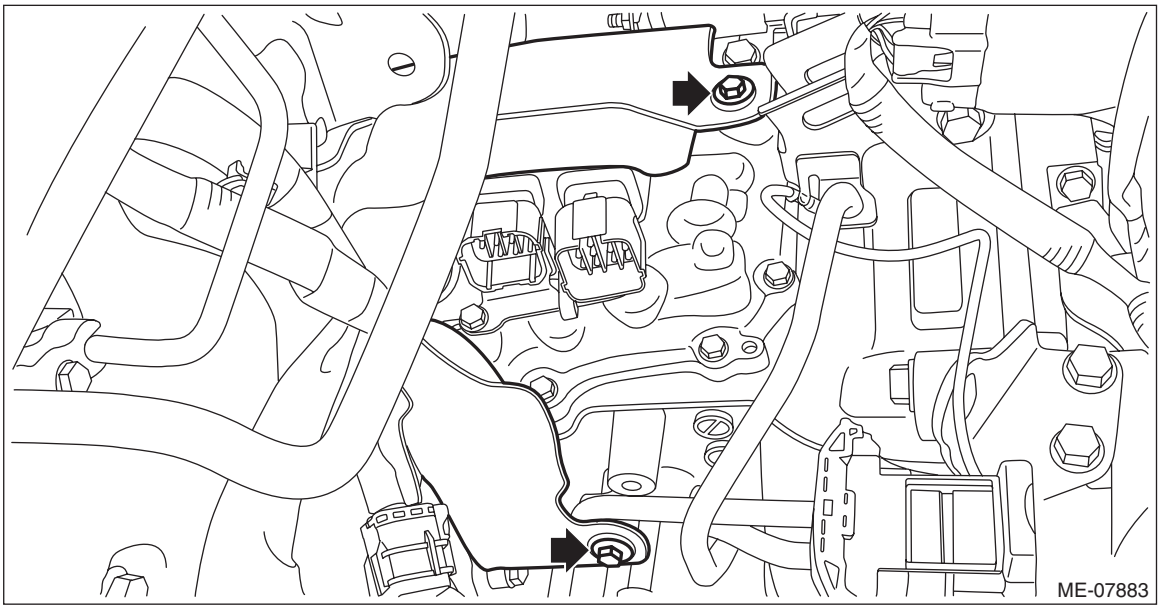

32) Remove the bolt which holds the transmission harness stay. (CVT model)

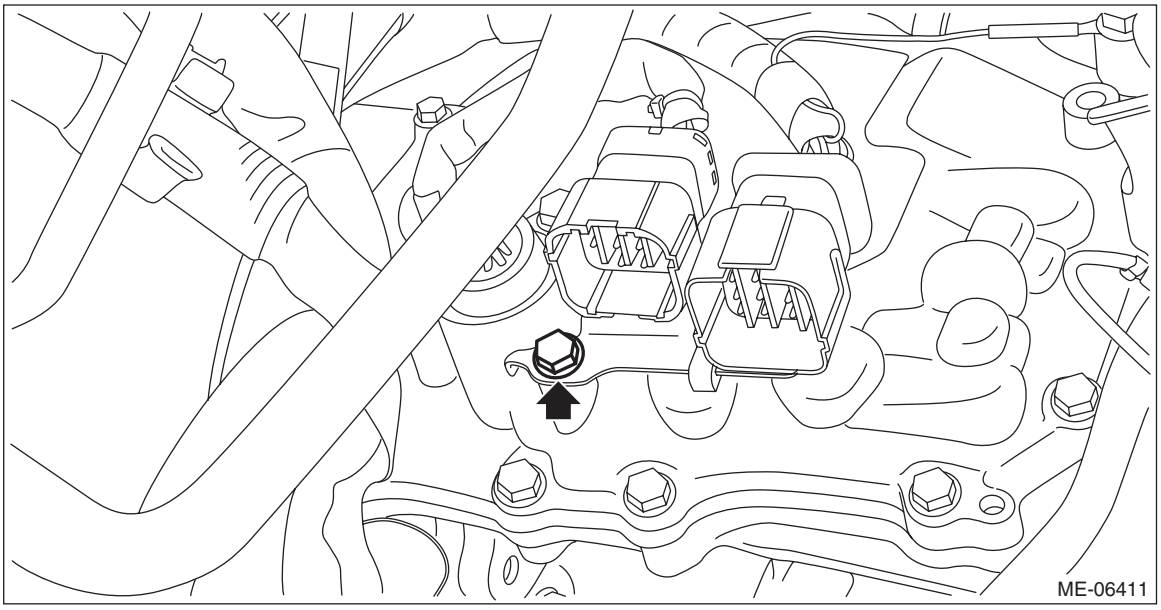

33) Remove the bolt which holds the transmission harness to the control valve body, and turn the transmission harness clockwise till the bolt hole can be seen as shown in the figure, and tighten the bolt to temporary lock the harness. (CVT model)

NOTE:
This procedure is required to prevent the transmission harness from touching the vehicle body during engine removal/installation.

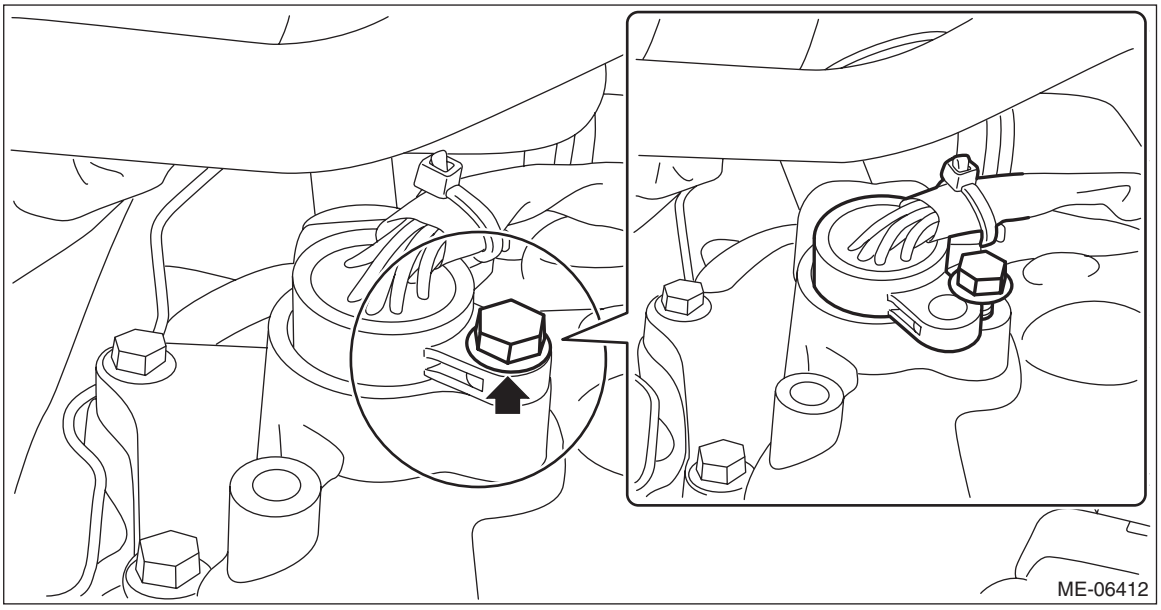

34) Disconnect the fuel delivery tube and evaporation hose.

CAUTION:
- **Be careful not to spill fuel.**
- **Catch the fuel from the tubes using a container or cloth.**

(1) Disconnect the quick connector on the fuel delivery tube from the fuel pipe assembly, and remove the clip (A) securing the fuel delivery tube.

NOTE:
Disconnect the quick connector as shown in the figure.

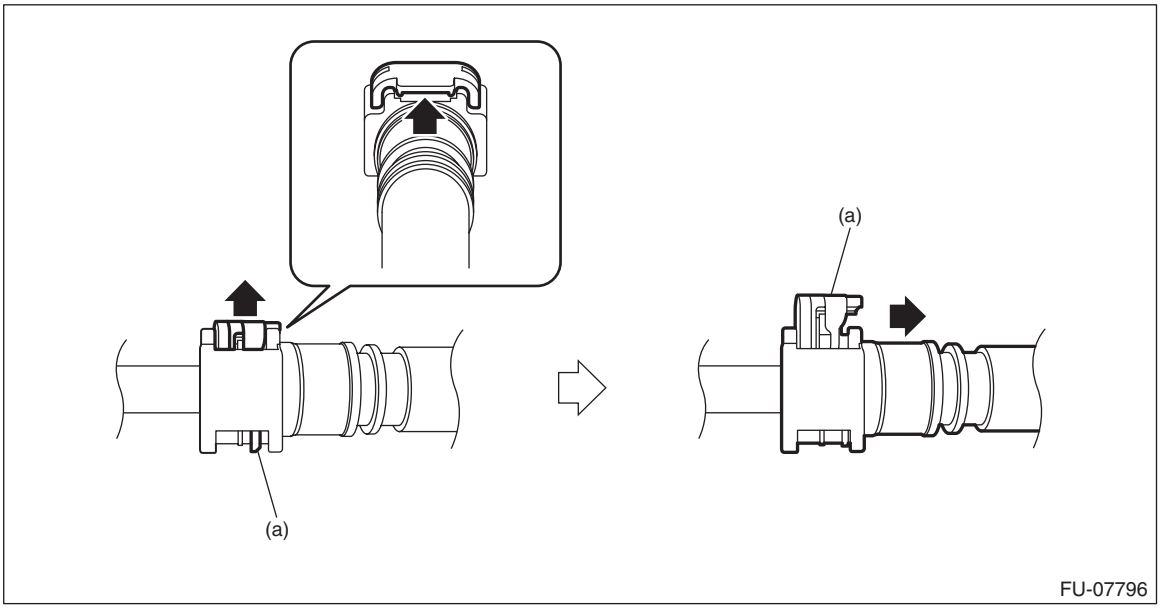

(a) Slider

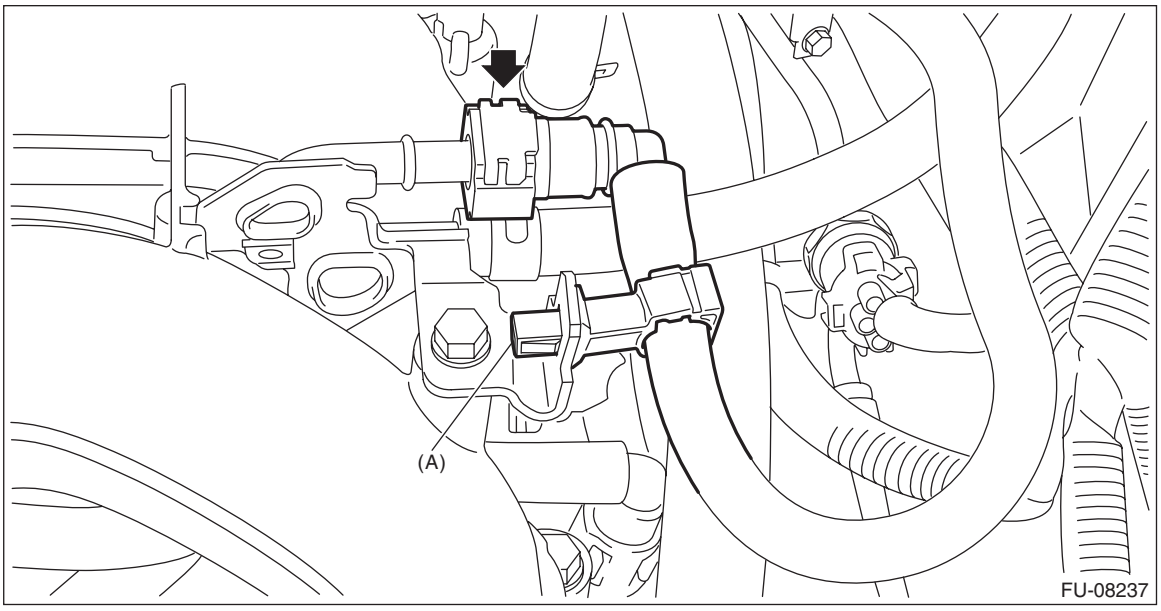

(2) Disconnect the evaporation hose from the fuel pipe assembly.

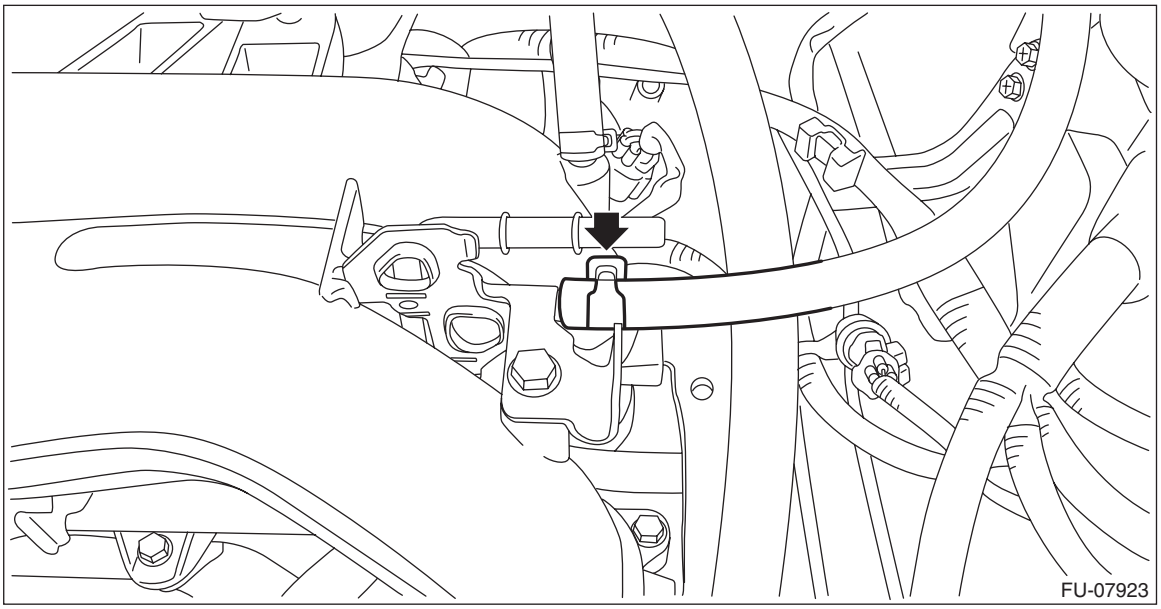

35) Support the engine with a lifting device and wire ropes.

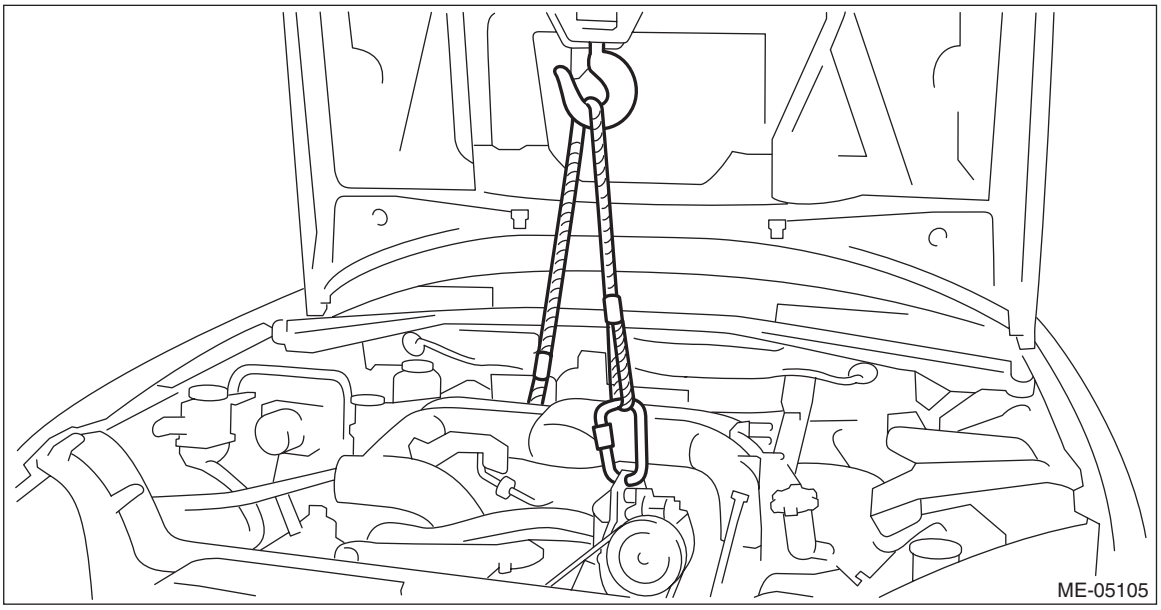

36) Support the transmission with a garage jack.

CAUTION:
Be sure to perform this procedure to prevent the transmission from lowering by its own weight.

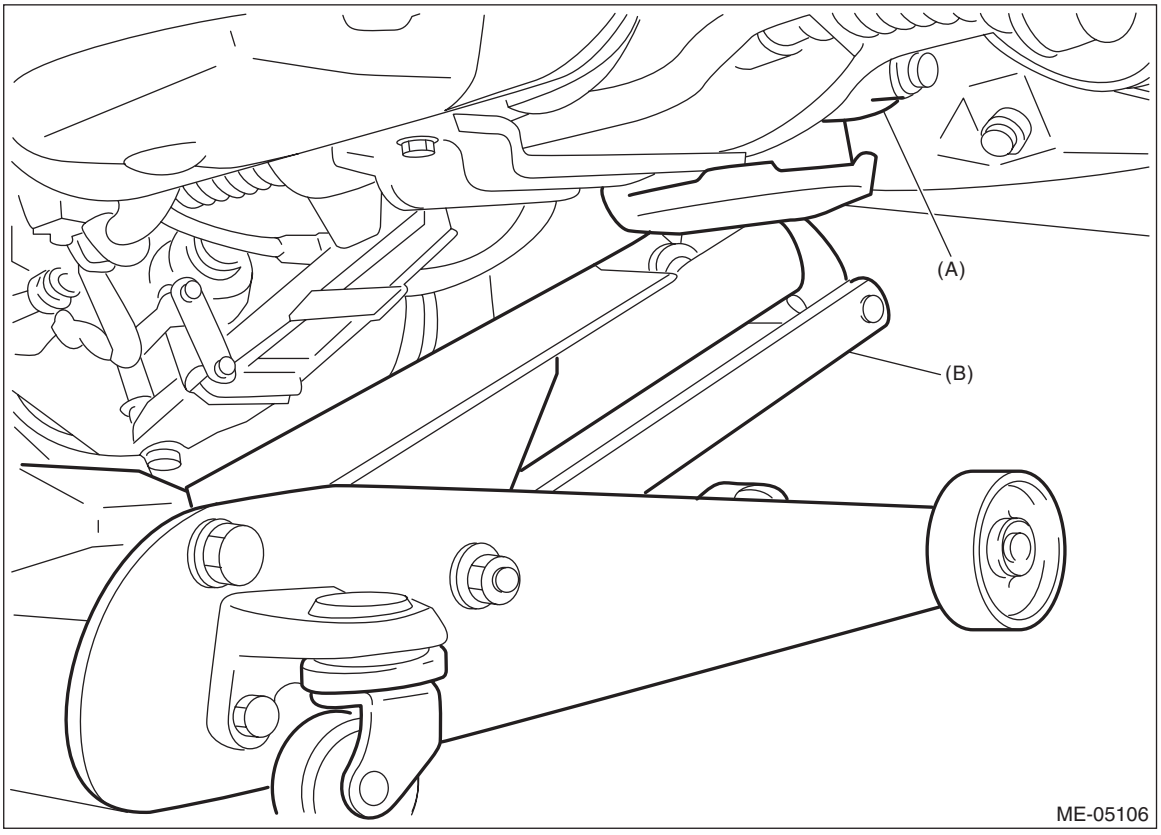

(A) Transmission
(B) Garage jack

37) Separate the engine and transmission.

CAUTION:
Before removing the engine away from transmission, check to be sure no work has been overlooked.

(1) Remove the starter. <Ref. to SC(H4DO(w/o HEV))-9, REMOVAL, Starter.>

(2) Attach the ST to the torque converter clutch case. (CVT model)

ST 498277200 STOPPER SET

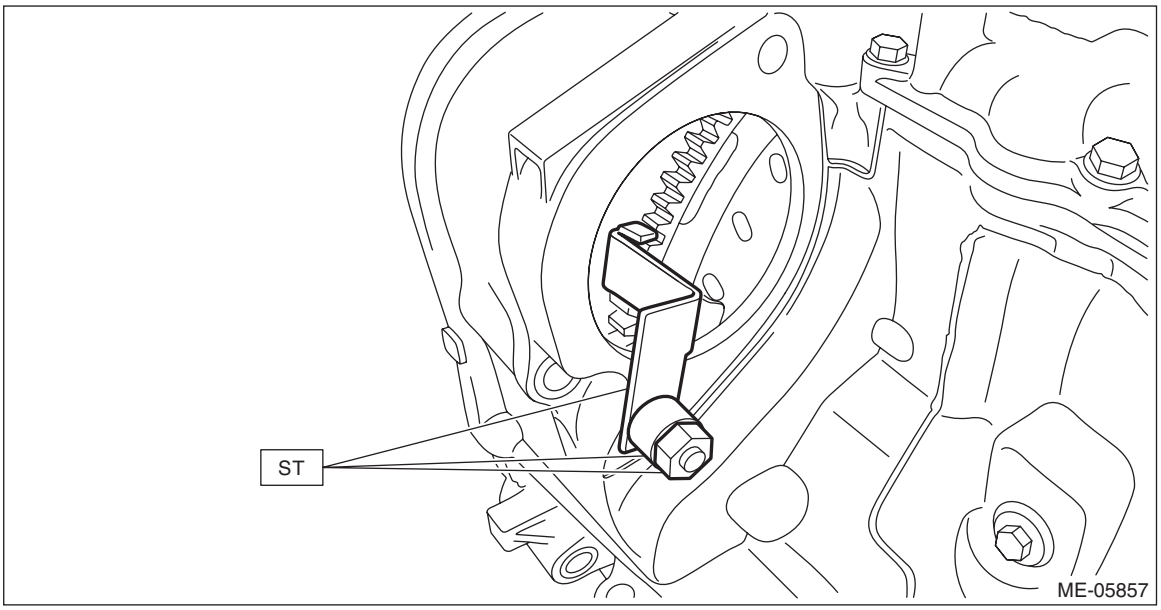

(3) Remove the bolts which hold the upper side of the transmission to the engine.

- CVT model

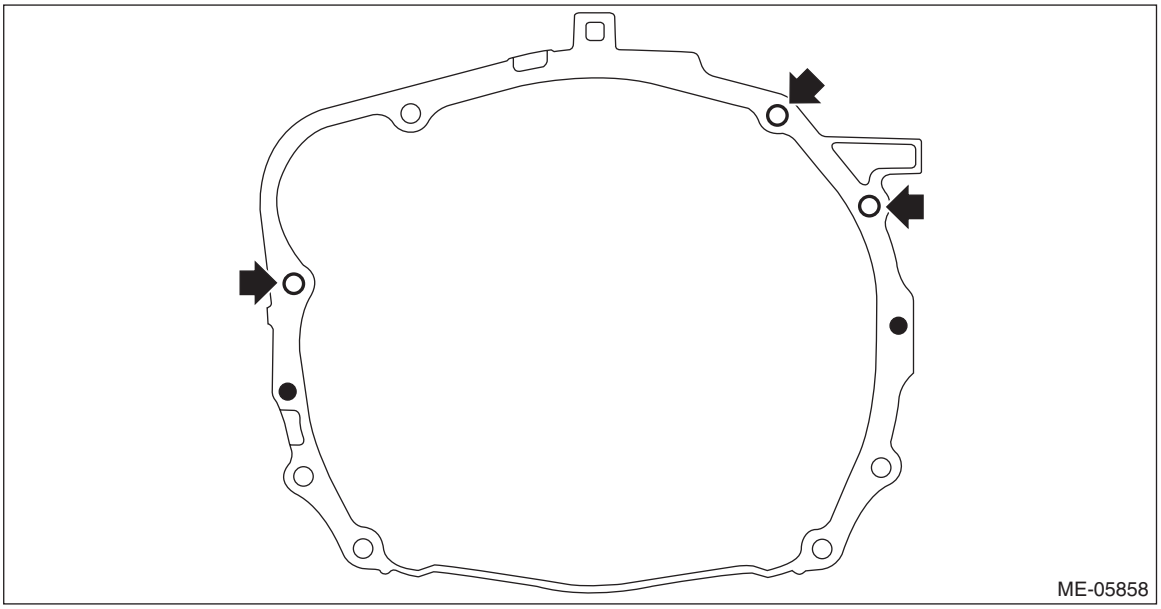

- MT model

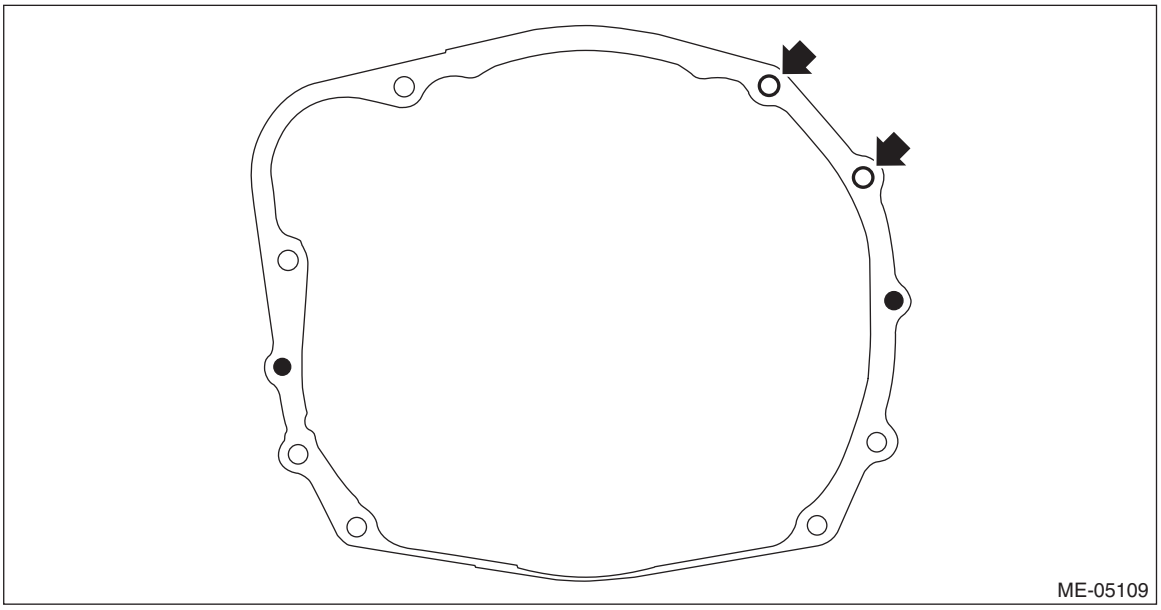

38) Remove the engine from the vehicle.

NOTE:
Be careful not to damage adjacent parts or body panels with crank pulley, oil level gauge, etc.

(1) Slightly raise the engine.
(2) Raise the transmission with garage jack.
(3) Move the engine horizontally until main shaft is withdrawn from clutch cover. (MT model)
(4) Slowly move the engine away from engine compartment.

39) Remove the engine mounting from the engine.

2. HEV MODEL

1) Turn the ignition switch to OFF.
2) Open the front hood, and make alignment marks (A) on both the front hood and the front hood striker by using a marker pen.

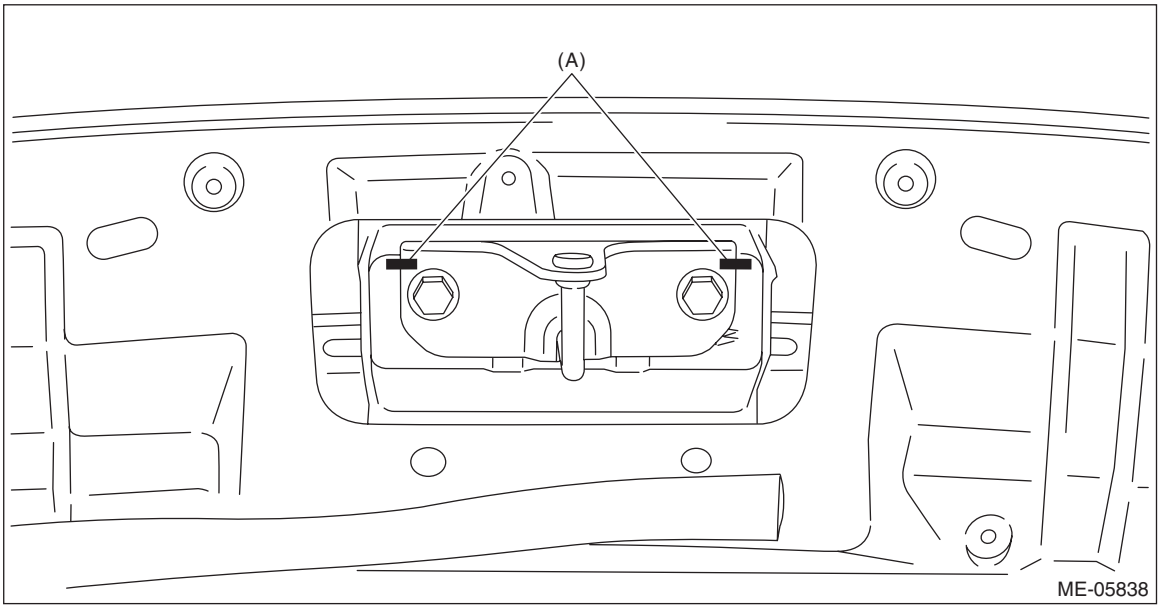

3) Remove the front hood striker from the front hood.

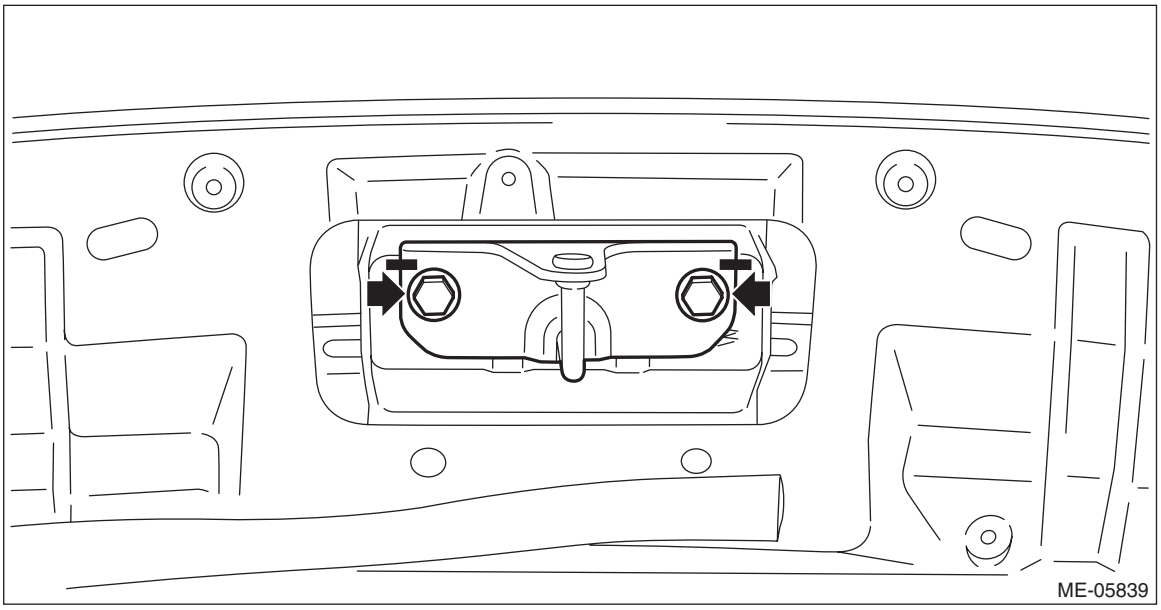

4) Change the front hood stay position from (A) to (B), and completely open the front hood.

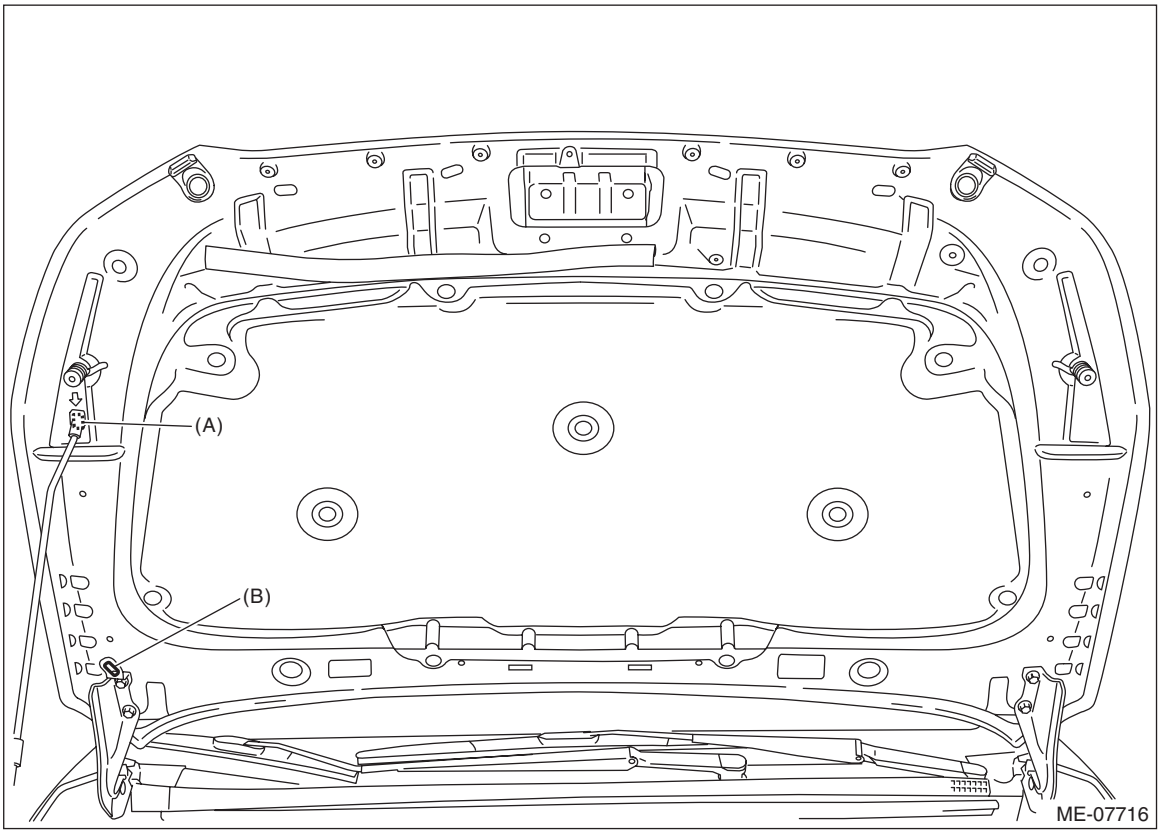

5) Remove the collector cover.
(1) Pull up the two points at the front of collector cover (A).
(2) Pull up the two points at the rear of collector cover (B) while moving them rearward.

NOTE:
Be careful not to contact the fuel delivery tube when moving the collector cover rearward.

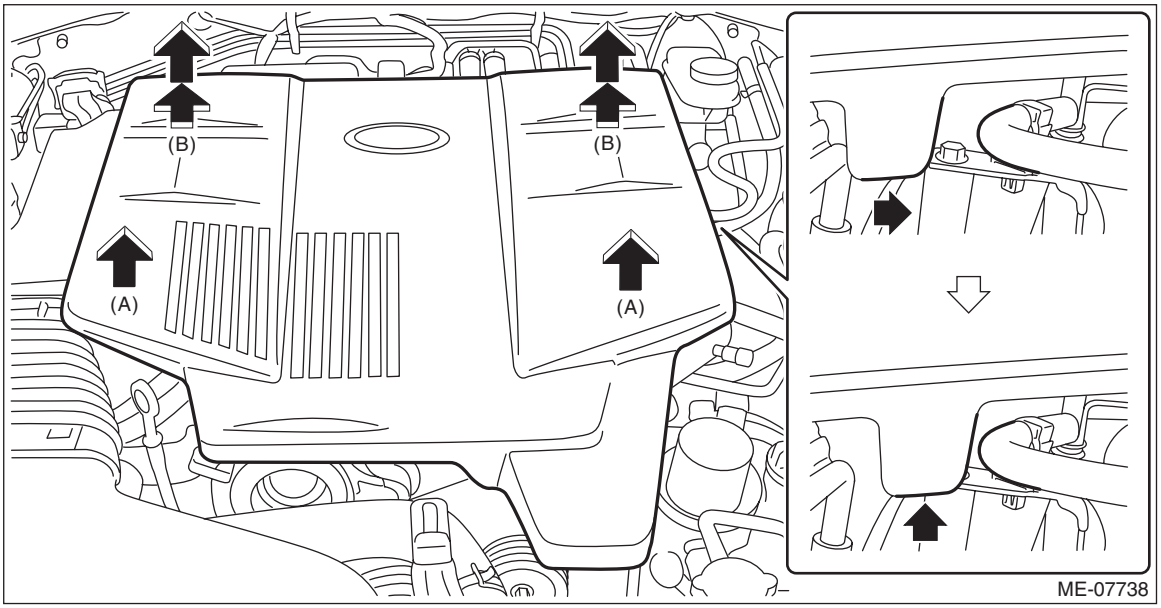

6) Collect the refrigerant from A/C system. <Ref. to AC-28, Refrigerant Recovery Procedure.>
7) Release the fuel pressure. <Ref. to FU(H4DO(HEV))-98, RELEASING OF FUEL PRESSURE, PROCEDURE, Fuel.>
8) Disconnect the ground cable from battery. <Ref. to NT-5, BATTERY, NOTE, Note.>

NOTE:
For the 12 volt engine restart battery, disconnect the ground terminal from 12V engine restart battery sensor.
9) Remove the air intake duct. <Ref. to IN(H4DO(HEV))-15, REMOVAL, Air Intake Duct.>
10) Remove the air cleaner case. <Ref. to IN(H4DO(HEV))-6, REMOVAL, Air Cleaner Case.>
11) Remove the radiator. <Ref. to CO(H4DO(w/o HEV))-78, REMOVAL, Radiator.>
12) Disconnect the bulkhead harness connector from the engine harness connector (black), then remove the engine harness connector (black) from the bracket.

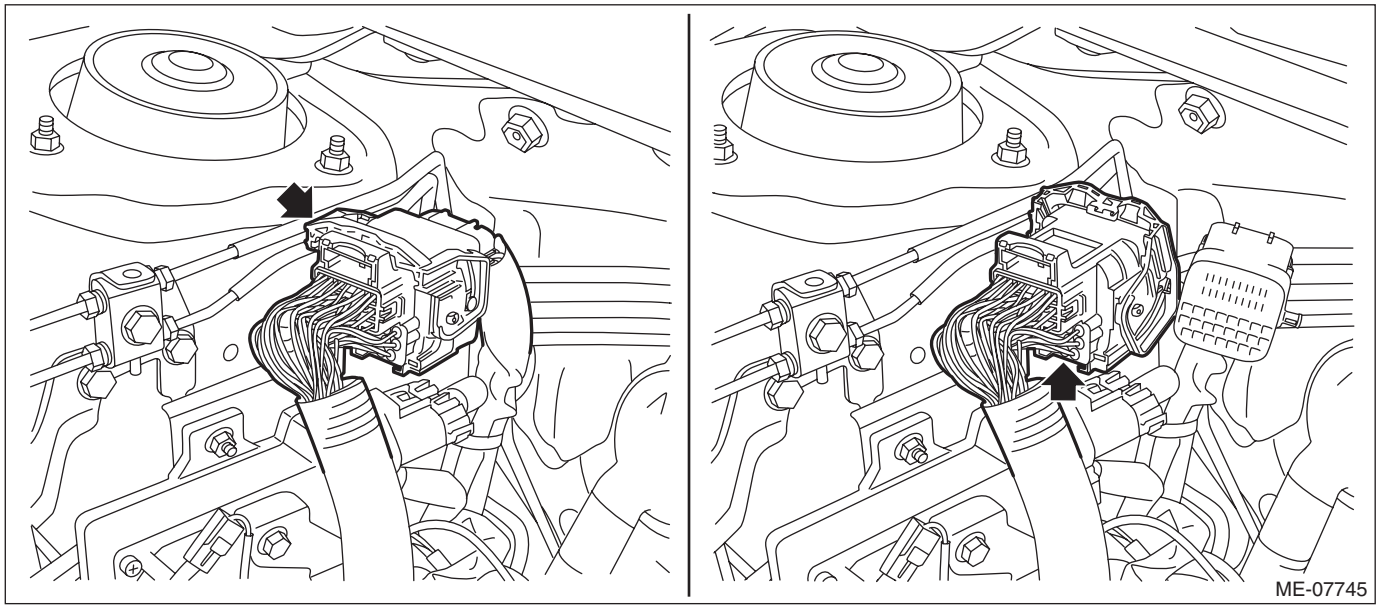

13) Disconnect the connector (A) from the brake vacuum pump, and disconnect the connector (B) from the A/C compressor.
14) Remove the clip (C) and the clip (D) securing the harness to the battery cable assembly, and move the harness to the left side wheel apron.

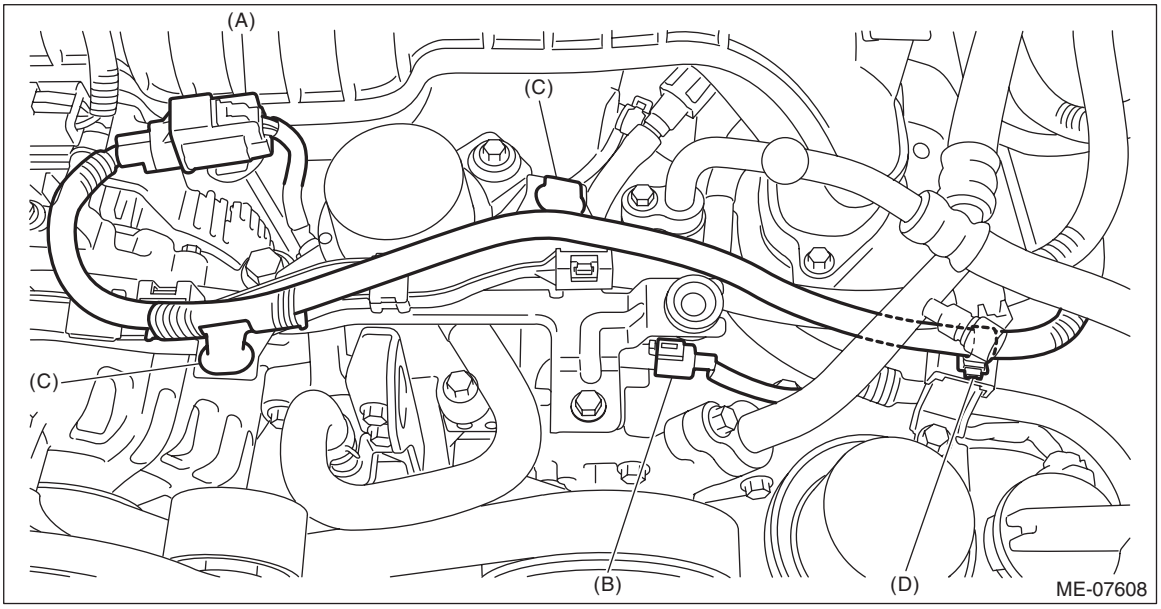

15) Remove the terminal boot from the positive terminal of the 12 volt auxiliary battery.
16) Remove the nuts fastening the battery cable assembly to the slow blow fuse (12 volt auxiliary battery), and remove the battery cable assembly from the main fuse box.

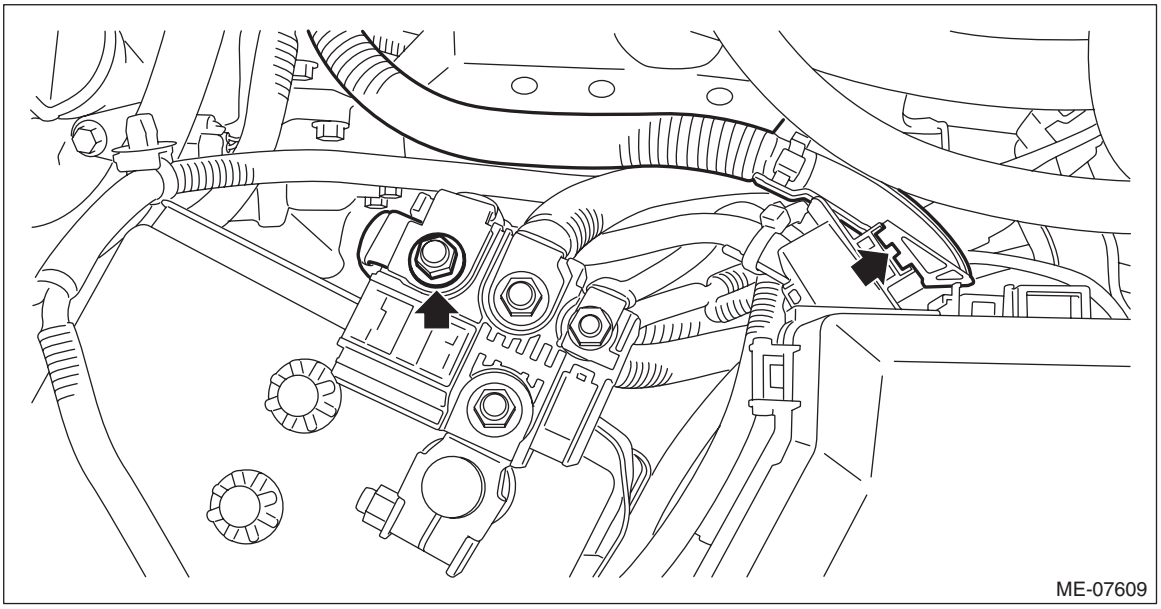

17) Remove the bolt (A) securing the battery cable stay to the chain cover, and remove the clip (B) securing the battery cable assembly to the collector cover bracket.

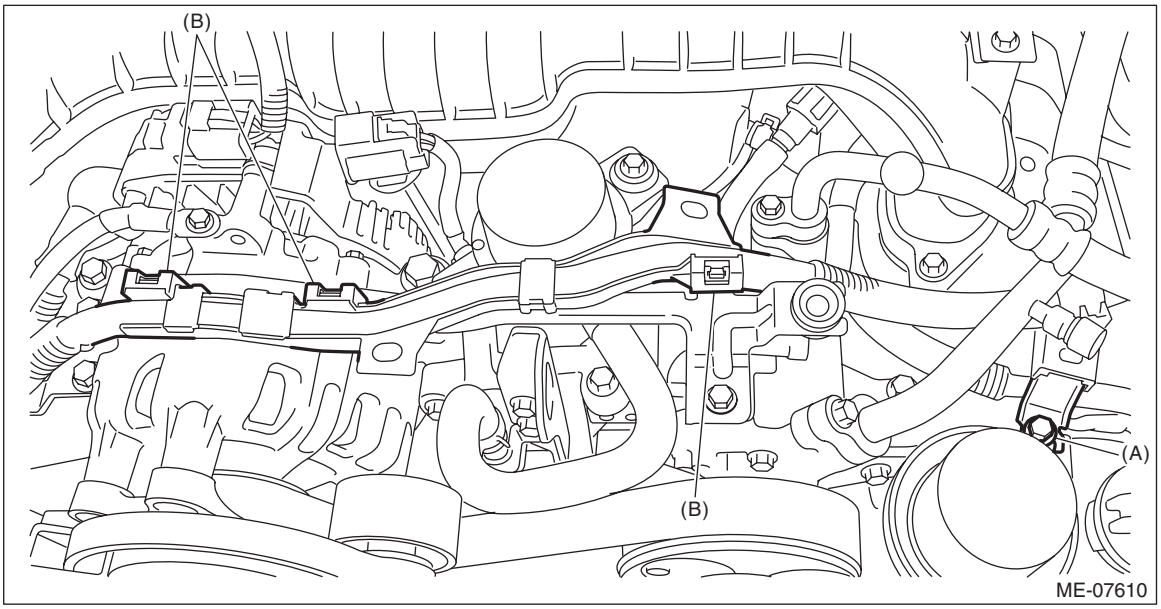

18) Disconnect the terminal (A) and the terminal (B) from ISG.
19) Remove the clip (C) securing the battery cable assembly to the battery cable bracket No. 1, and move the battery cable assembly to the right side wheel apron.

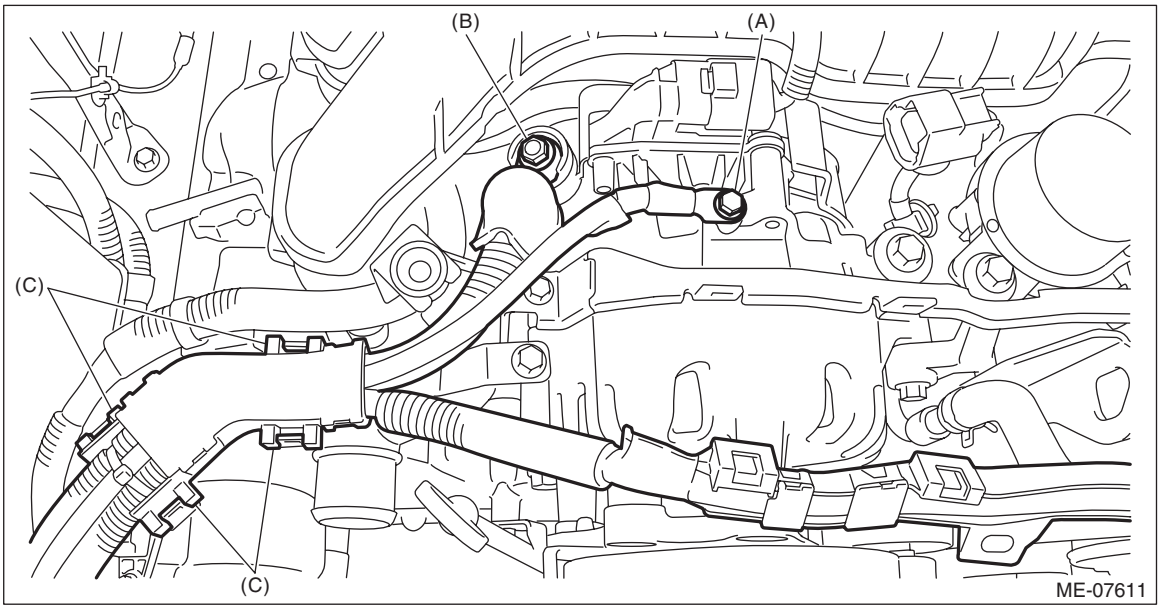

20) Disconnect the A/C pressure hoses from A/C compressor. <Ref. to AC-74, REMOVAL, Hose and Pipe.>
21) Disconnect the heater inlet hose (A) from the water pipe assembly, and disconnect the heater outlet hose (B) from the water pipe LH.
22) Disconnect the brake booster vacuum hose (C) from the brake vacuum pipe.

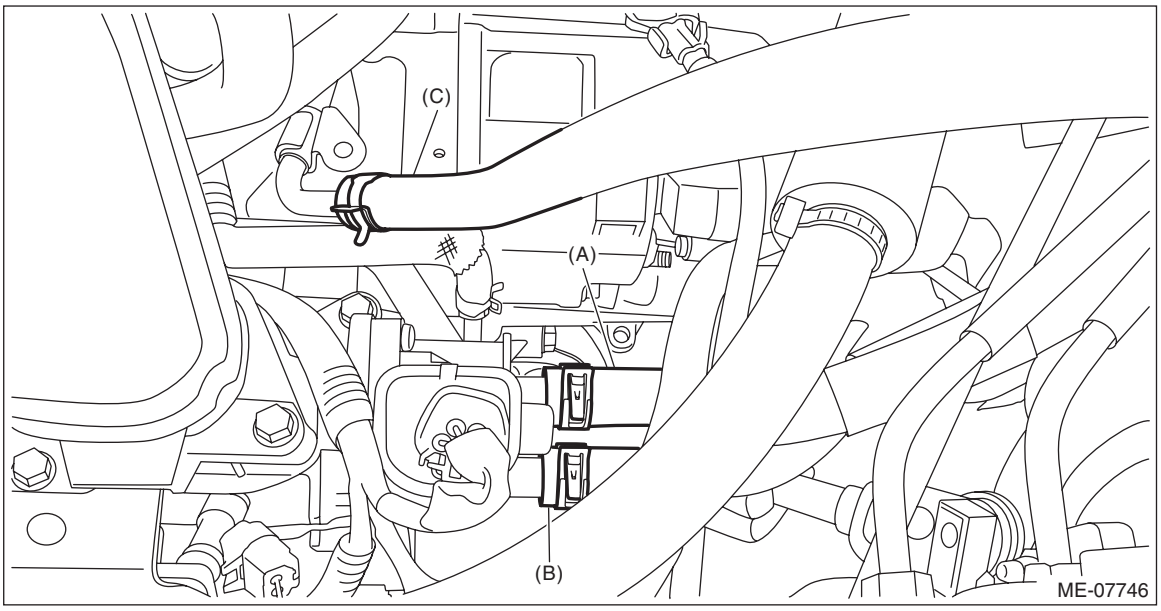

23) Lift up the vehicle.
24) Remove the front exhaust pipe. <Ref. to EX(H4DO(w/o HEV))-6, REMOVAL, Front Exhaust Pipe.>
25) Disconnect the ground cable on the engine side.

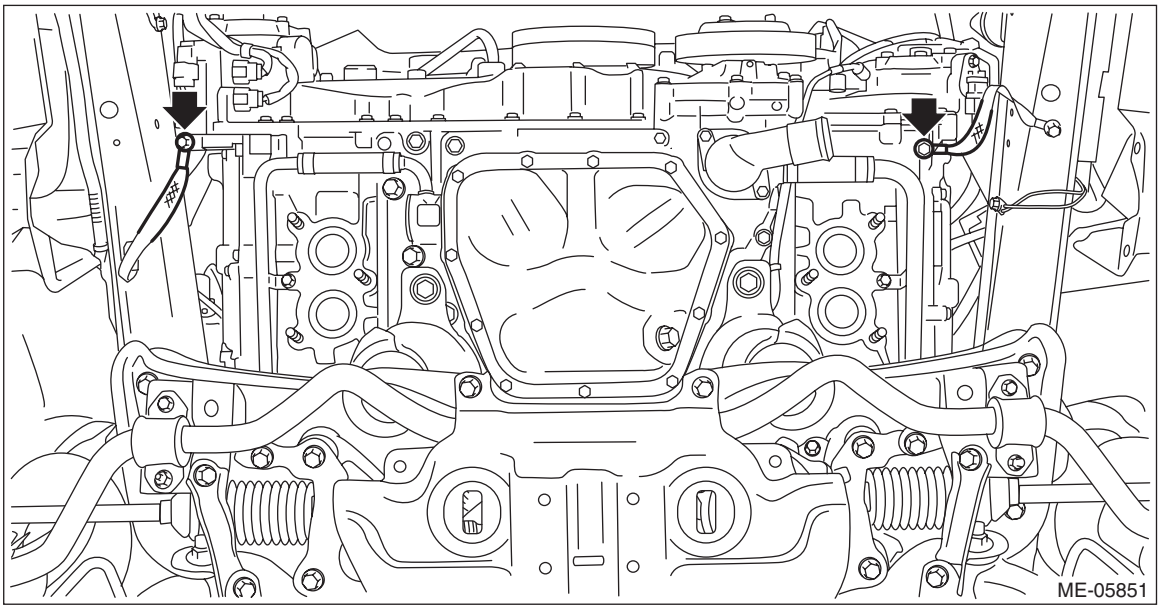

26) Remove the bolts and nuts which hold the lower side of transmission to the engine.

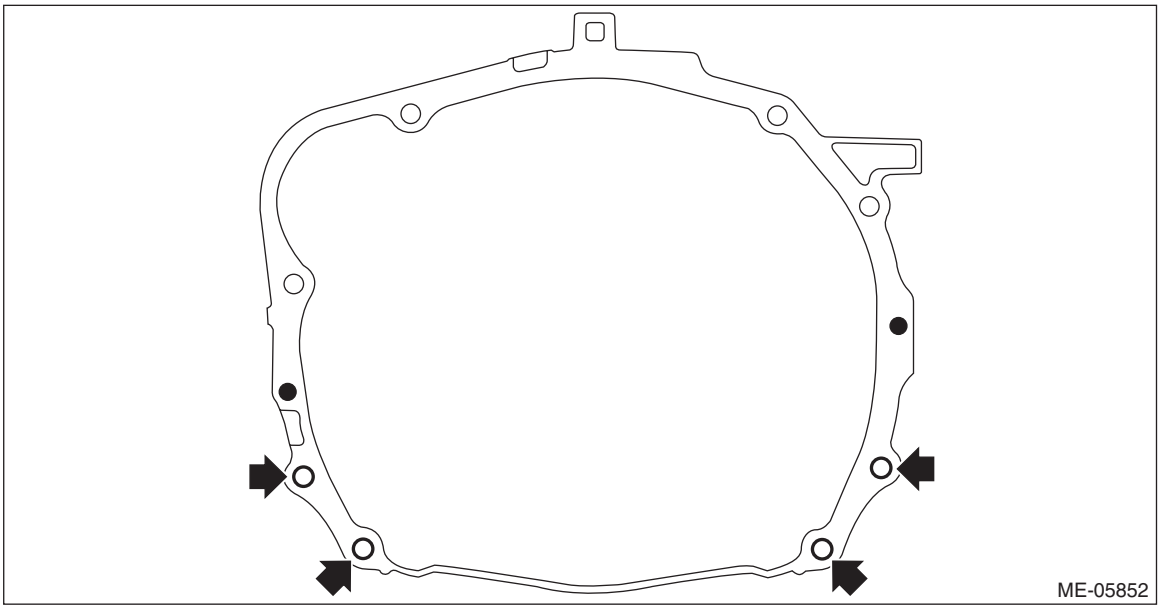

27) Remove the nuts which secure the engine mounting to the front crossmember.

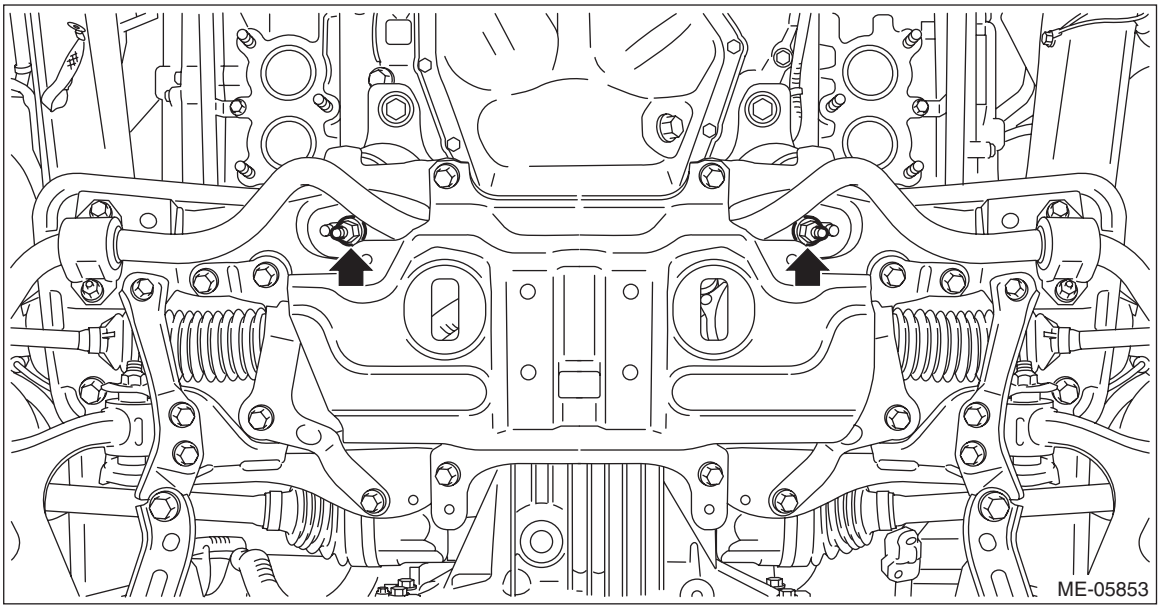

28) Lower the vehicle.

29) Disconnect the transmission radio ground terminal (A) from the vehicle, and remove the pitching stopper.

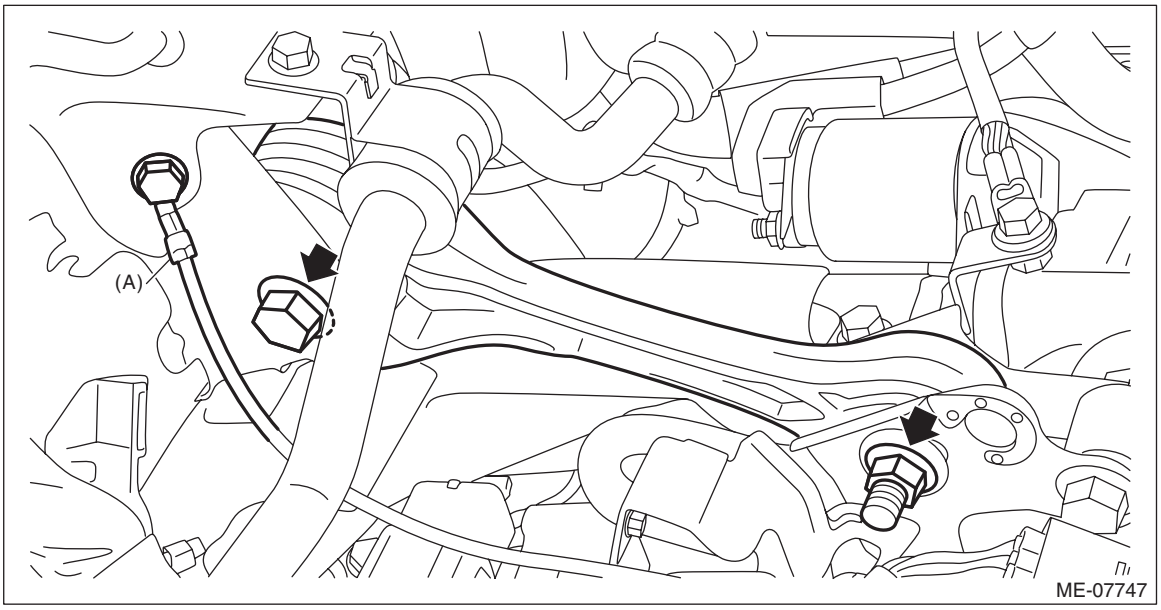

30) Remove the bolt (A) securing the bulkhead harness connector bracket, and disconnect the bulkhead harness connector from the engine harness connector (brown) (B).
31) Disconnect the bulkhead harness connector from the transmission harness connector (C), inhibitor harness connector (D) and drive motor harness connector (E).

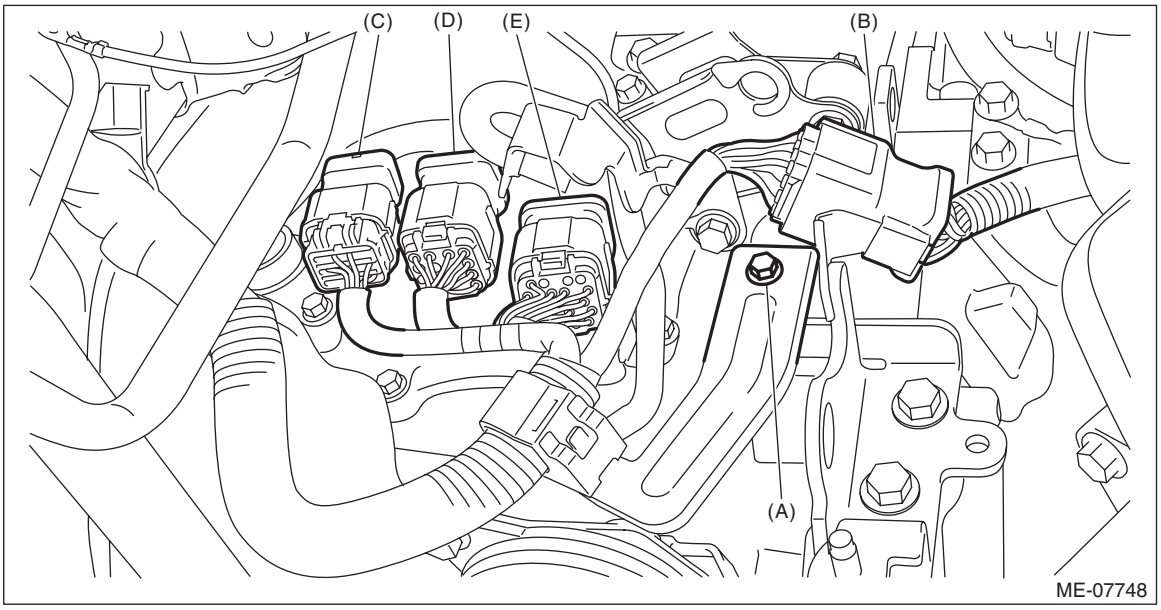

32) Remove the transmission case cover.

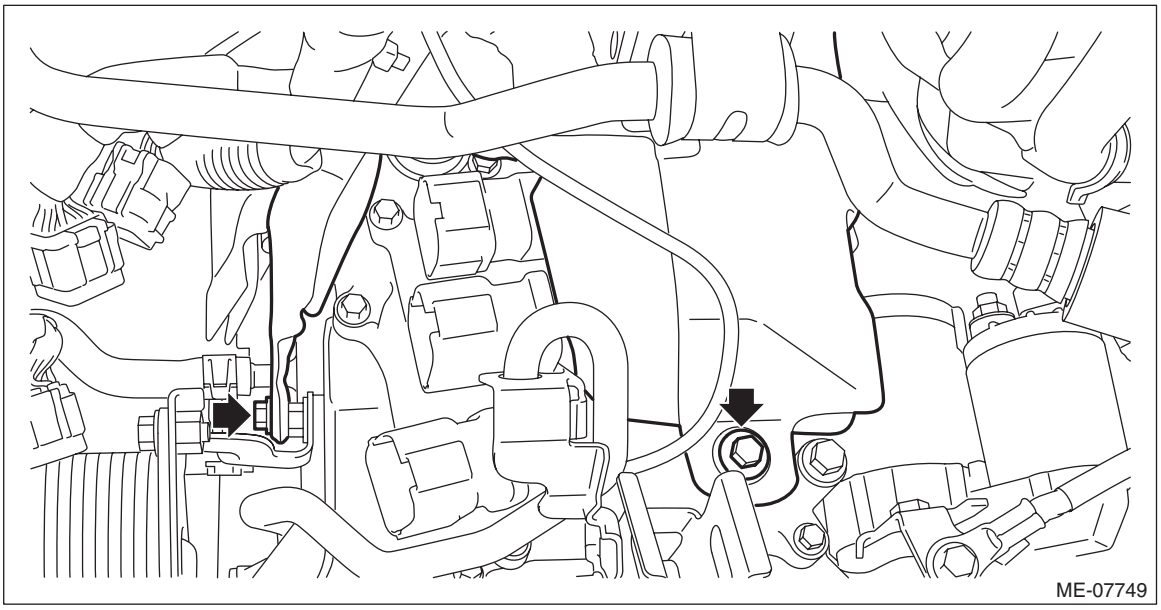

33) Remove the bolt which holds the transmission harness stay.

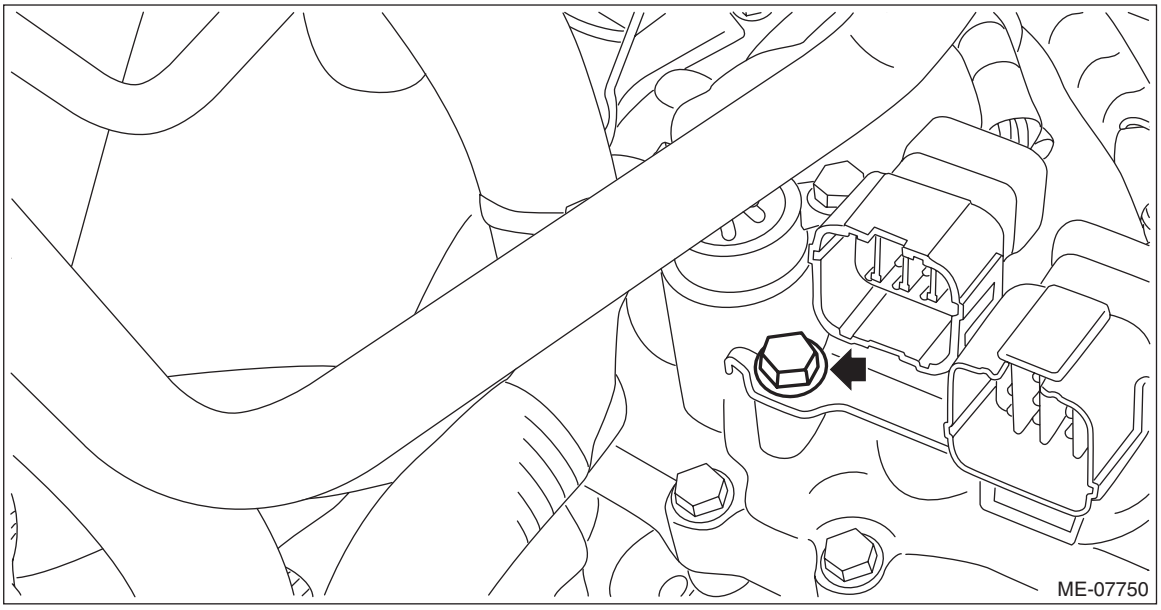

34) Remove the bolt which holds the transmission harness to the control valve body, and turn the transmission harness clockwise till the bolt hole can be seen as shown in the figure, and tighten the bolt to temporary lock the harness.

NOTE:
This procedure is required to prevent the transmission harness from touching the vehicle body during engine removal/installation.

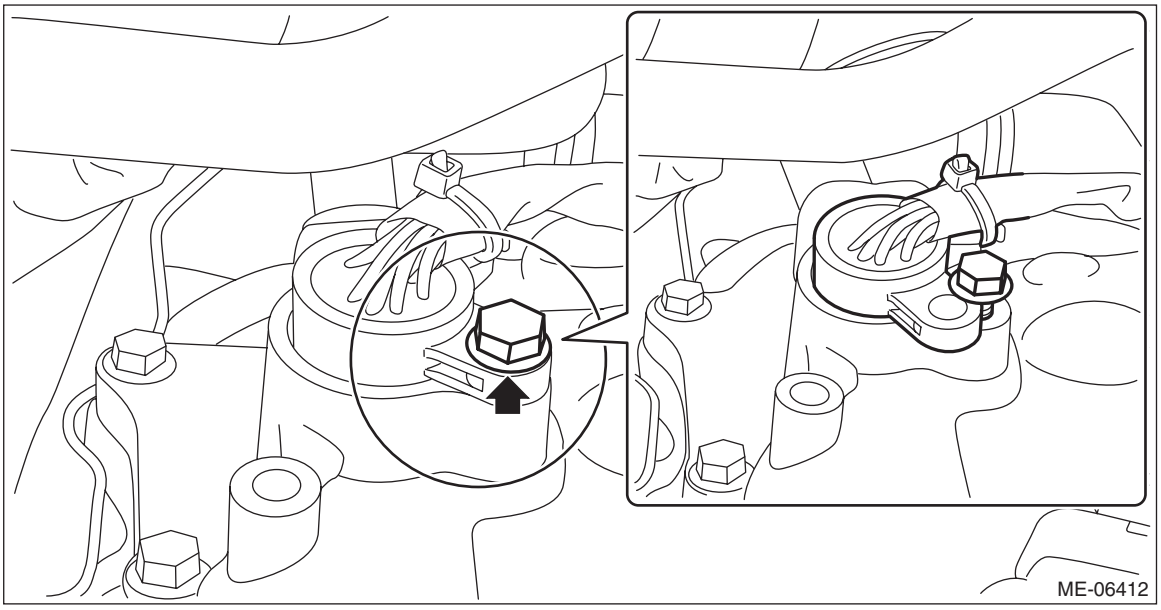

35) Remove the clip (A) securing the engine harness to the purge control solenoid valve bracket, and disconnect the bolt securing the purge control solenoid valve bracket to the intake manifold.

NOTE:
This procedure is required to prevent the wire rope from contacting the purge control solenoid valve during engine removal/installation.

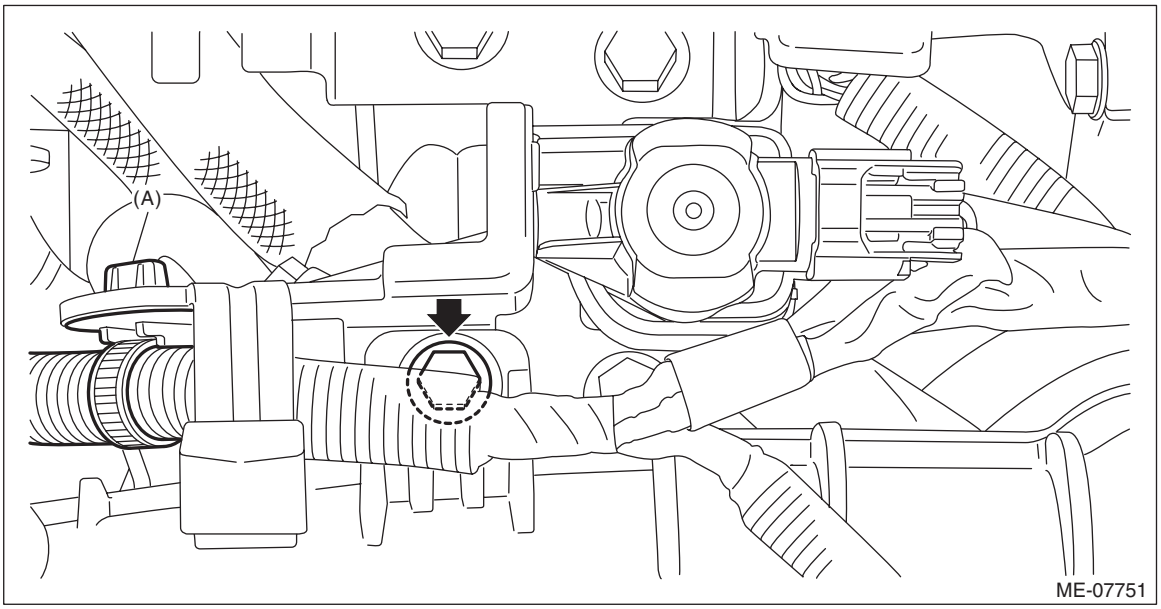

36) Disconnect the engine coolant inlet hose (A) from the EGR cooler, and disconnect the engine coolant outlet hose (B) from the CVTF cooler (with warmer feature).

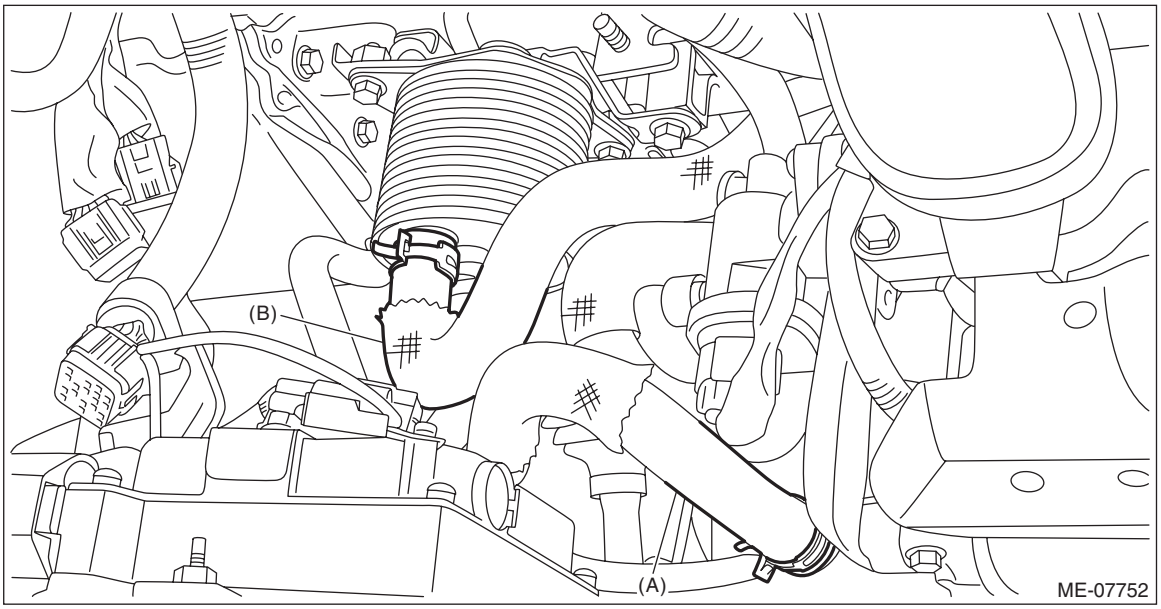

37) Remove the bolt which secures the CVTF cooler (with warmer feature) to the transmission, and move it at the locations that do not interfere operation.

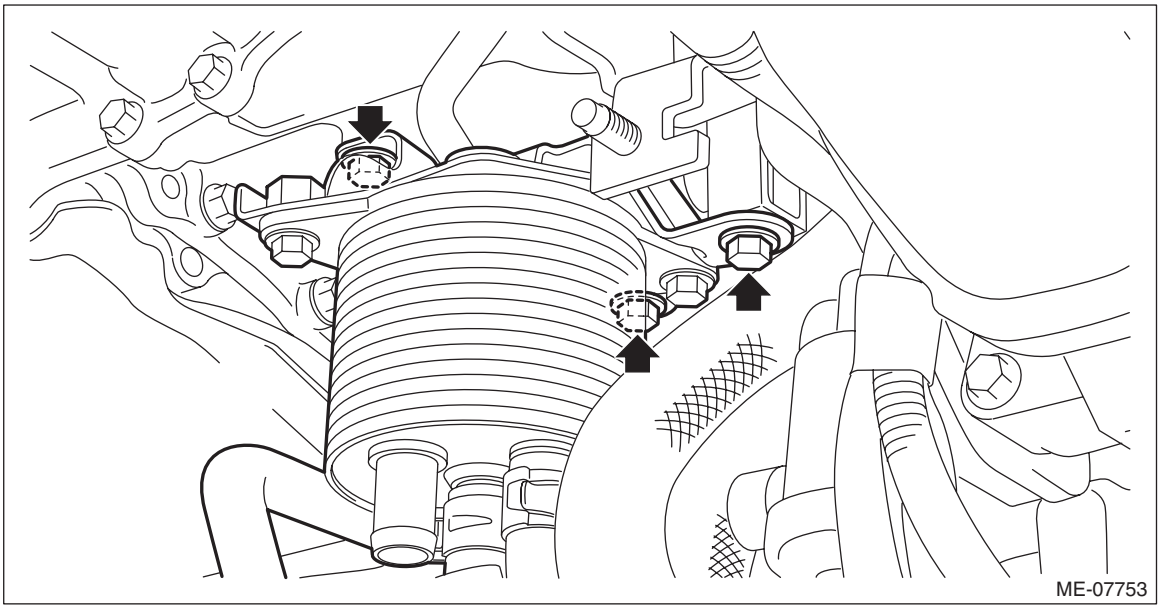

38) Separate the torque converter clutch from the drive plate.
(1) Remove the service hole plug.
(2) Insert the wrench into the crank pulley bolt and rotate the crank pulley to remove the bolts which hold torque converter clutch to drive plate.

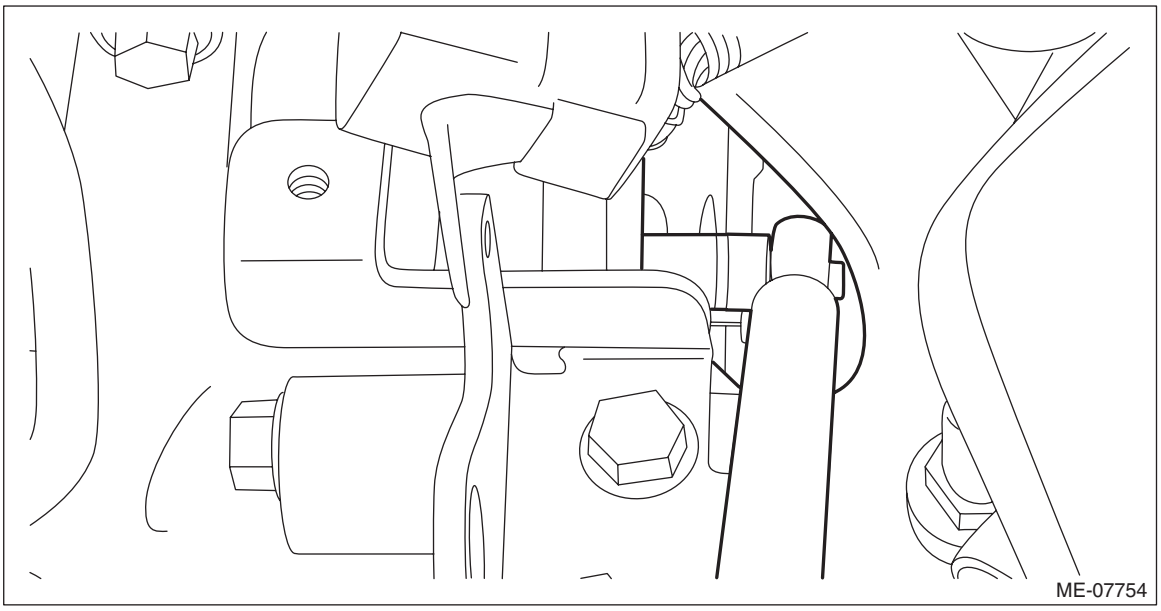

39) Disconnect the fuel delivery tube and evaporation hose.

CAUTION:
- **Be careful not to spill fuel.**
- **Catch the fuel from the tubes using a container or cloth.**

(1) Disconnect the quick connector (A) of the fuel delivery tube from the fuel pipe assembly, and remove the clip (B) securing the fuel delivery tube.

NOTE:
Disconnect the quick connector as shown in the figure.

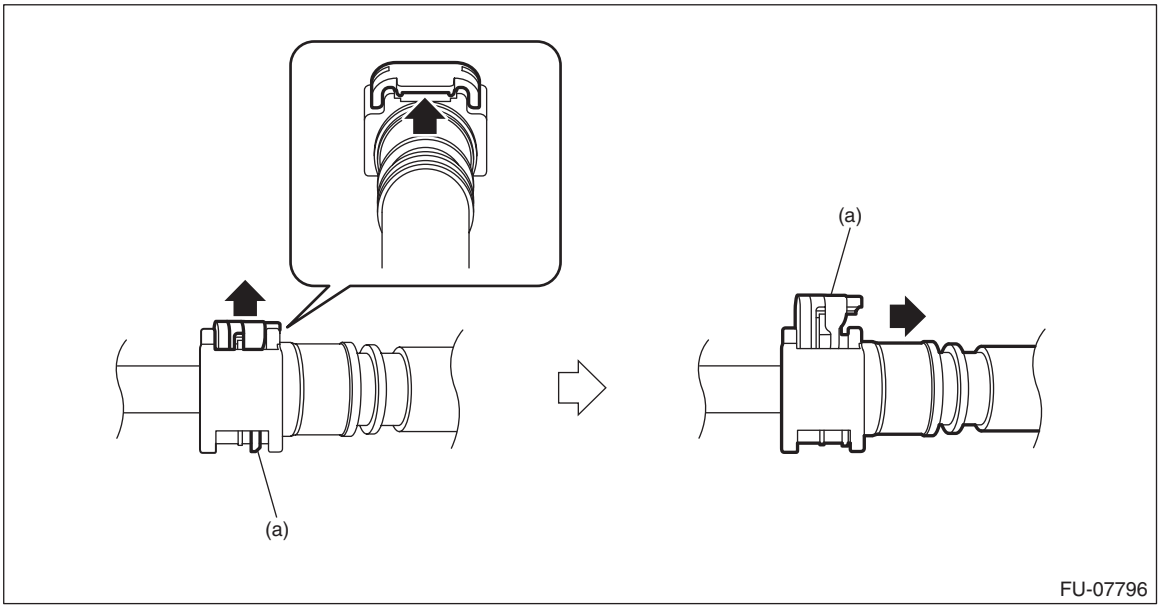

(a) Slider

(2) Disconnect the evaporation hose (C) from the fuel pipe assembly.

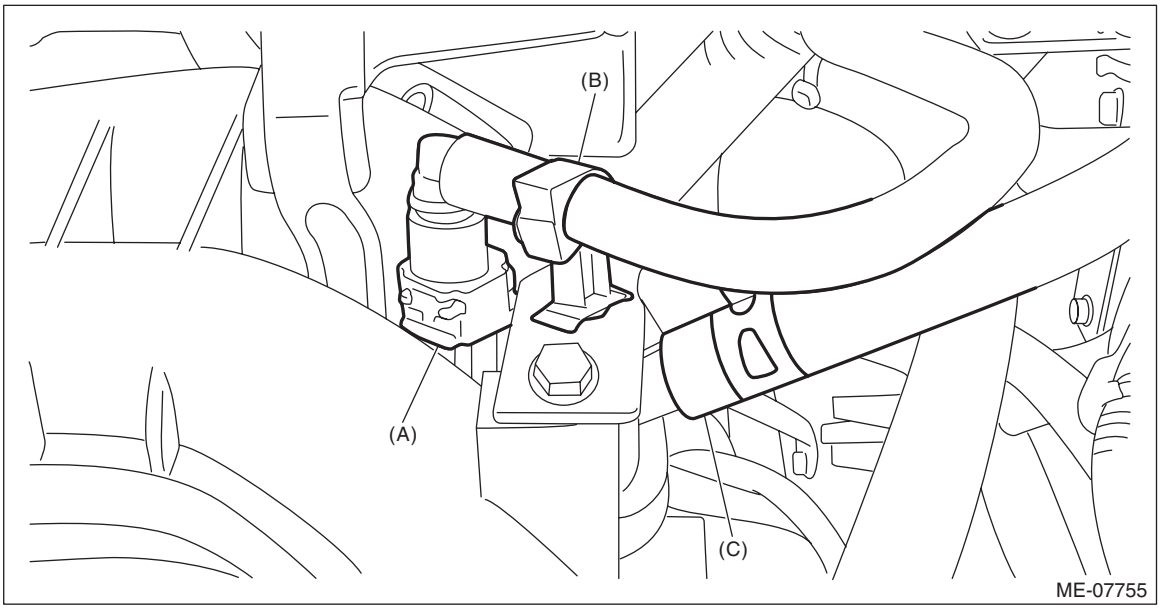

40) Support the engine with a lifting device and wire ropes.

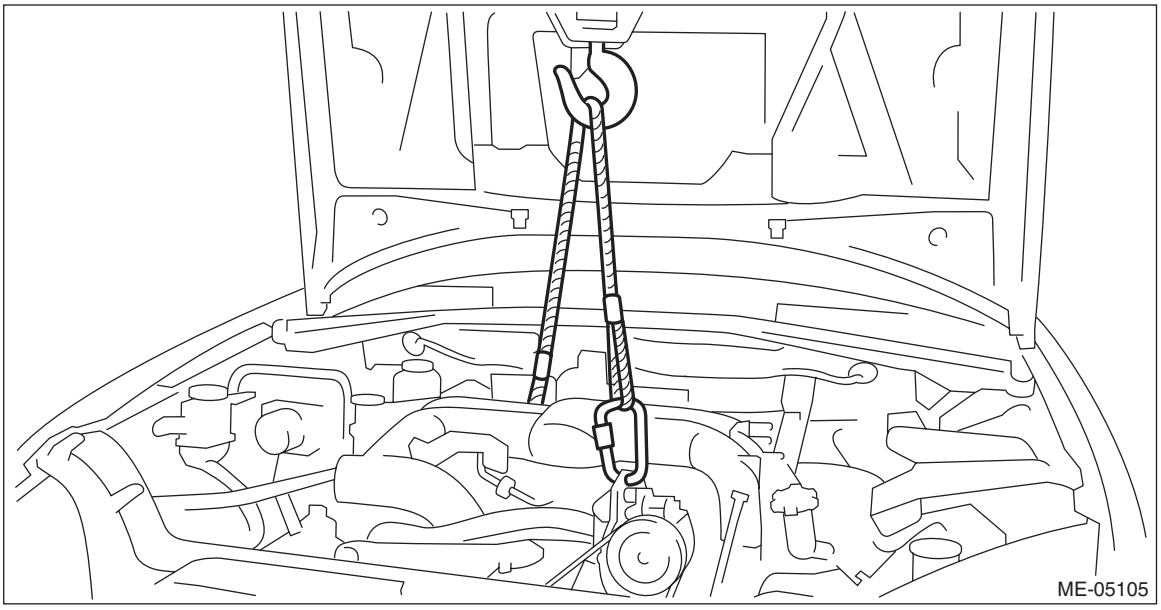

41) Support the transmission with a garage jack.

CAUTION:
Be sure to perform this procedure to prevent the transmission from lowering by its own weight.

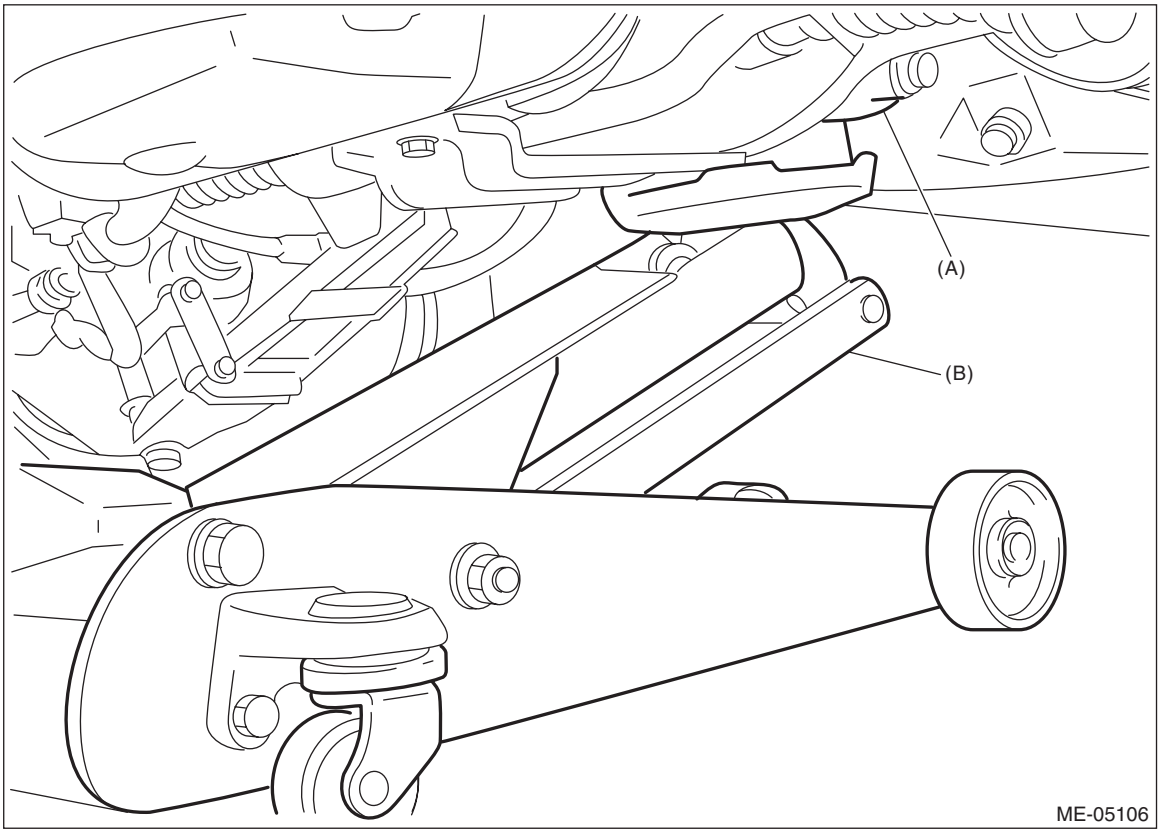

(A) Transmission (B) Garage jack

42) Separate the engine and transmission.

CAUTION:
Before removing the engine away from transmission, check to be sure no work has been overlooked.
(1) Remove the starter. <Ref. to SC(H4DO(HEV))-10, REMOVAL, Starter.>
(2) Attach the ST to the torque converter clutch case.

ST 498277200 STOPPER SET

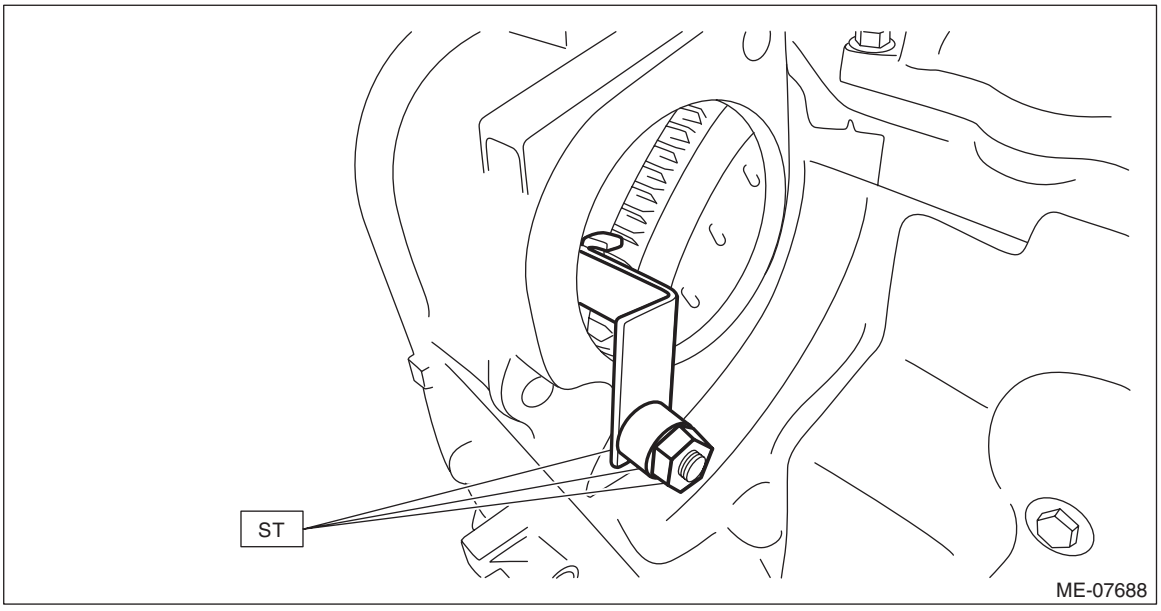

(3) Remove the bolts which hold the upper side of the transmission to the engine.

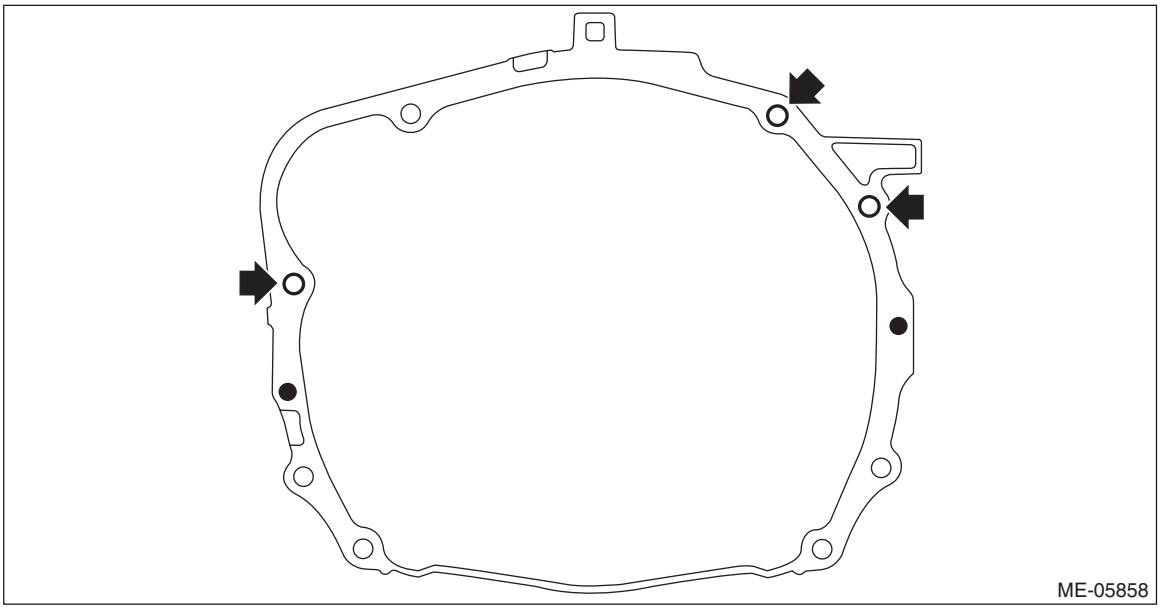

43) Remove the engine from the vehicle.

NOTE:
Be careful not to damage adjacent parts or body panels with crank pulley, oil level gauge, etc.

(1) Slightly raise the engine.
(2) Raise the transmission with garage jack.
(3) Slowly move the engine away from engine compartment.

44) Remove the engine mounting from the engine.

B: INSTALLATION

1. GASOLINE ENGINE MODEL

1) Install the engine mounting onto the engine.

Tightening torque:
35 N·m (3.6 kgf-m, 25.8 ft-lb)

2) Apply a small amount of grease to splines of main shaft. (MT model)

Grease:
NICHIMOLY N-130 or equivalent

3) Position the engine in engine compartment and align it with transmission.

NOTE:
Be careful not to damage adjacent parts or body panels with crank pulley, oil level gauge, etc.

4) Install the bolts which hold upper side of transmission to engine.

Tightening torque:
50 N·m (5.1 kgf-m, 36.9 ft-lb)

- CVT model

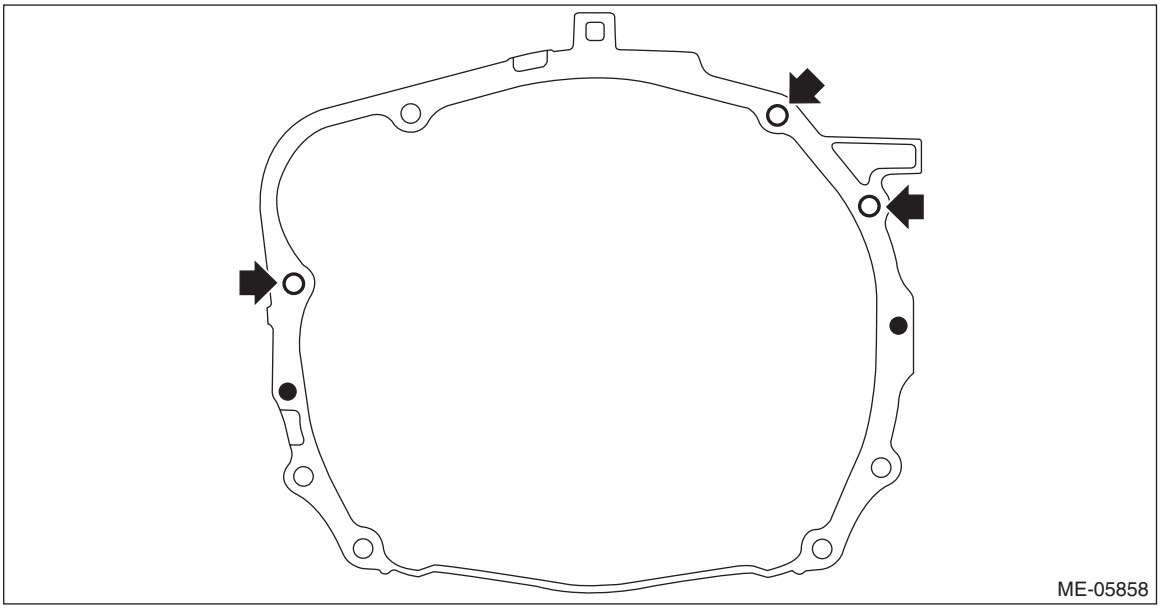

- MT model

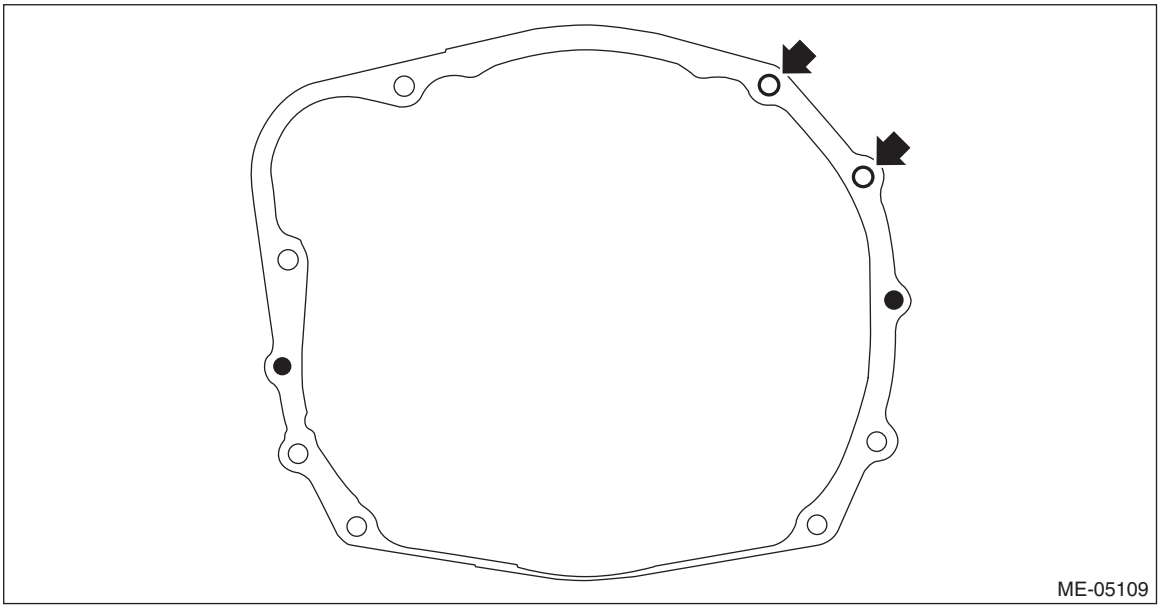

5) Remove the lifting device and wire ropes.

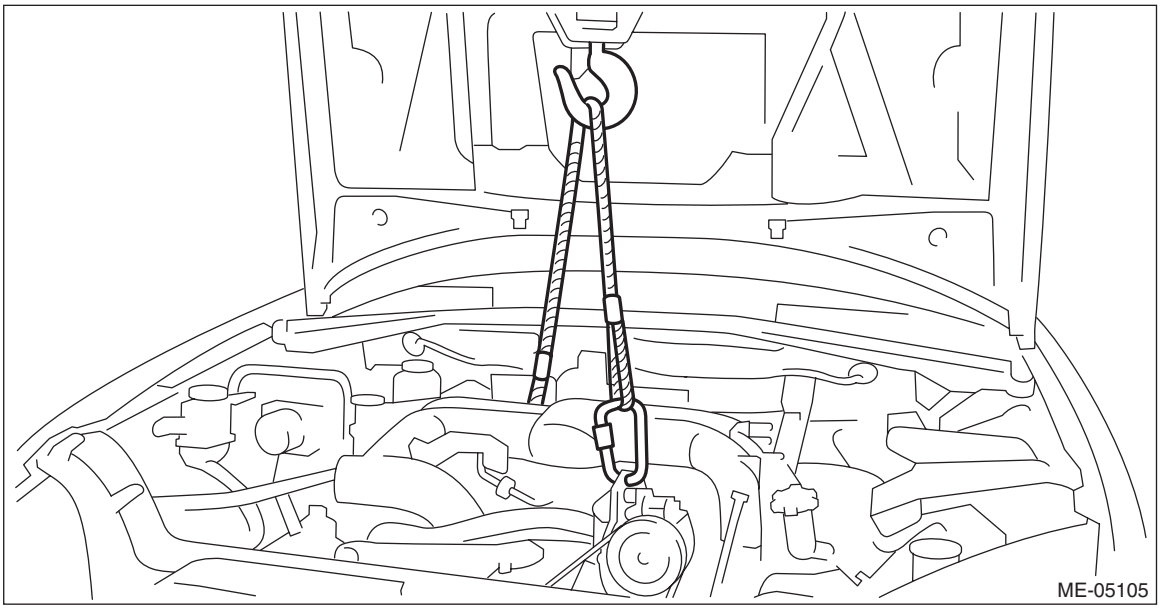

6) Remove the garage jack.
7) Remove the bolt and turn the transmission harness counterclockwise to install the transmission harness to the control valve body. (CVT model)

Tightening torque:
7 N·m (0.7 kgf-m, 5.2 ft-lb)

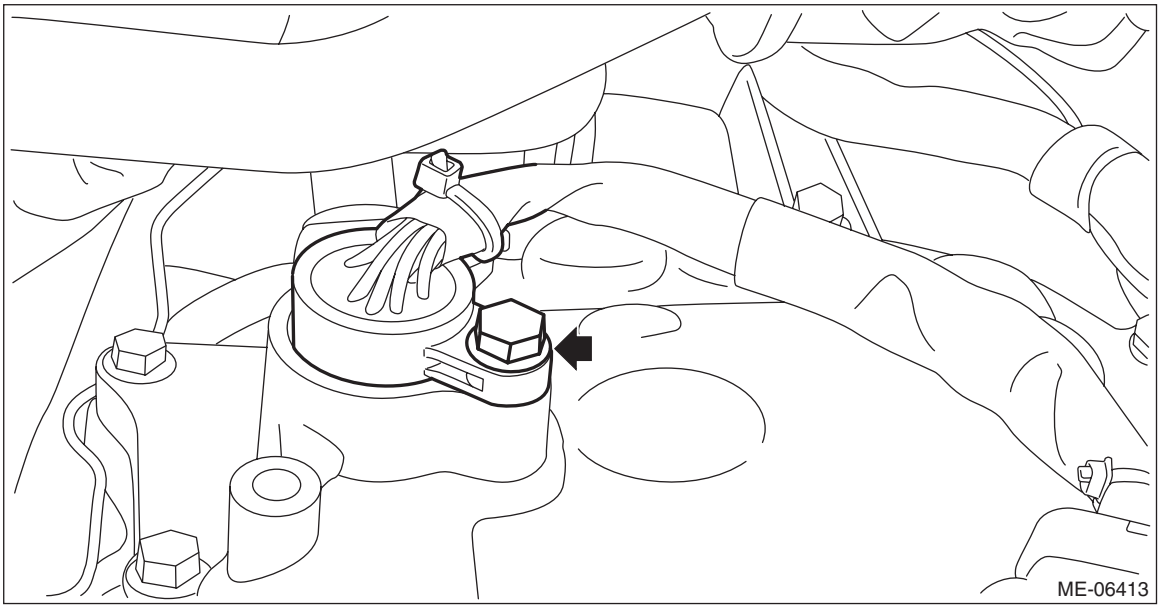

8) Install the bolt which holds the transmission harness stay. (CVT model)

Tightening torque:
7 N·m (0.7 kgf-m, 5.2 ft-lb)

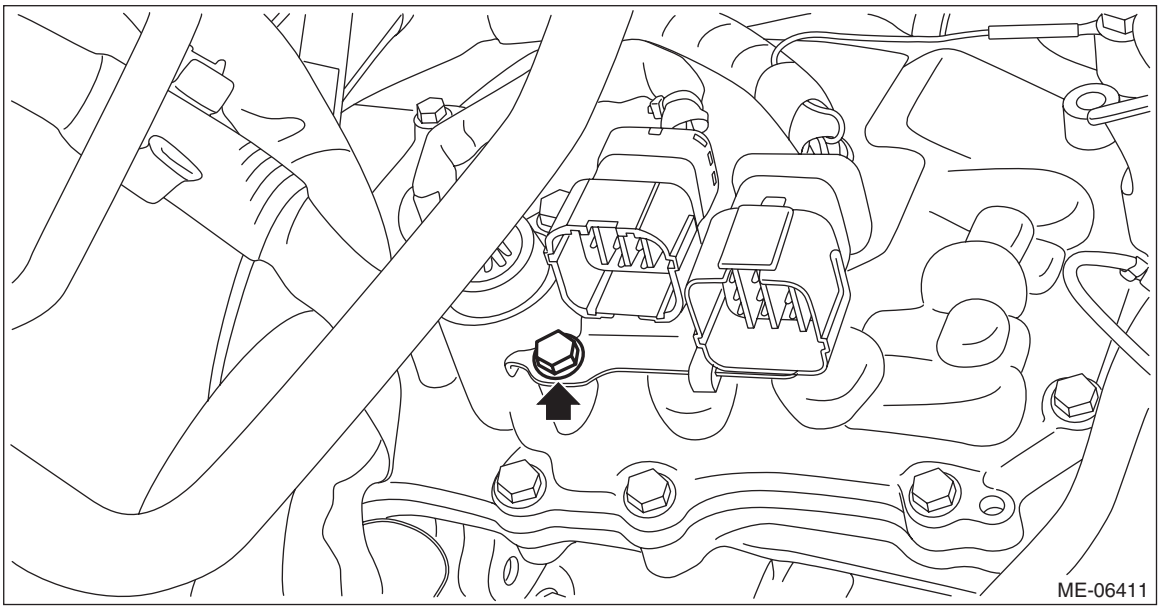

9) Install the transmission case cover. (CVT model)

Tightening torque:
8 N·m (0.8 kgf-m, 5.9 ft-lb)

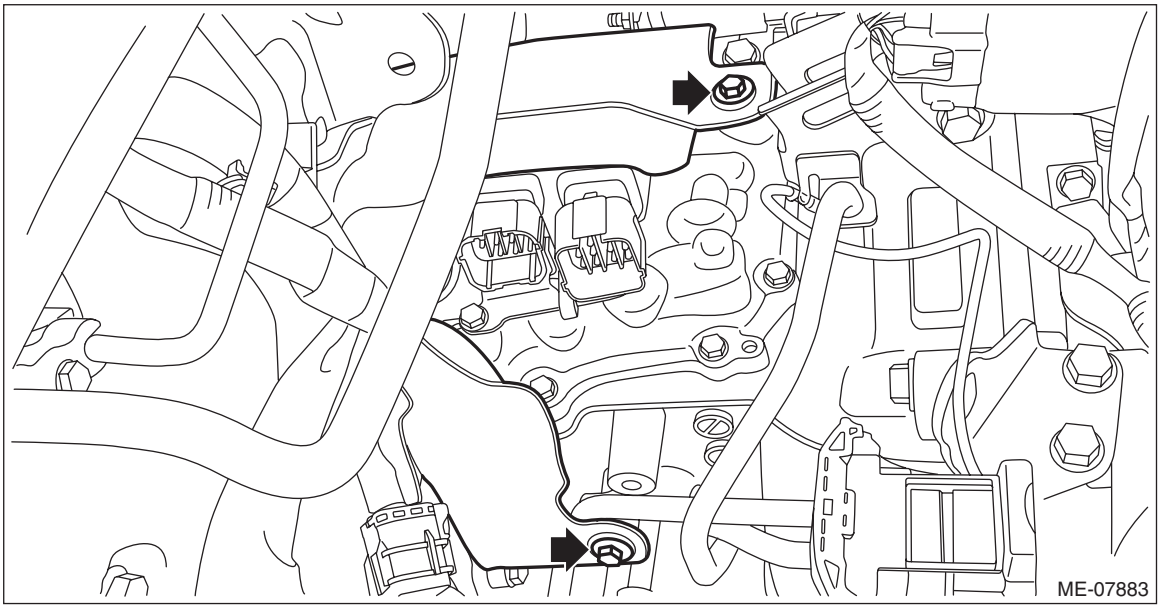

10) Install the pitching stopper.

Tightening torque:
T1: 50 N·m (5.1 kgf-m, 36.9 ft-lb)
T2: 58 N·m (5.9 kgf-m, 42.8 ft-lb)

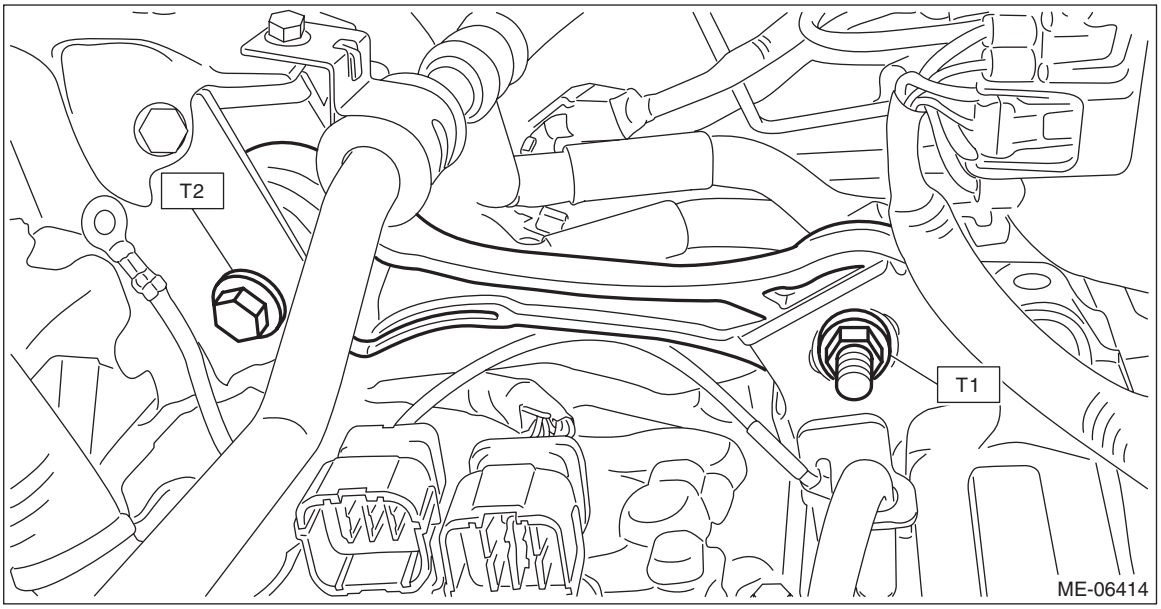

11) Connect the transmission radio ground terminal (C) to the vehicle body, and connect the bulkhead harness connector to the transmission harness connector (A) and the inhibitor harness connector (B). (CVT model)

Tightening torque:
13 N·m (1.3 kgf-m, 9.6 ft-lb)

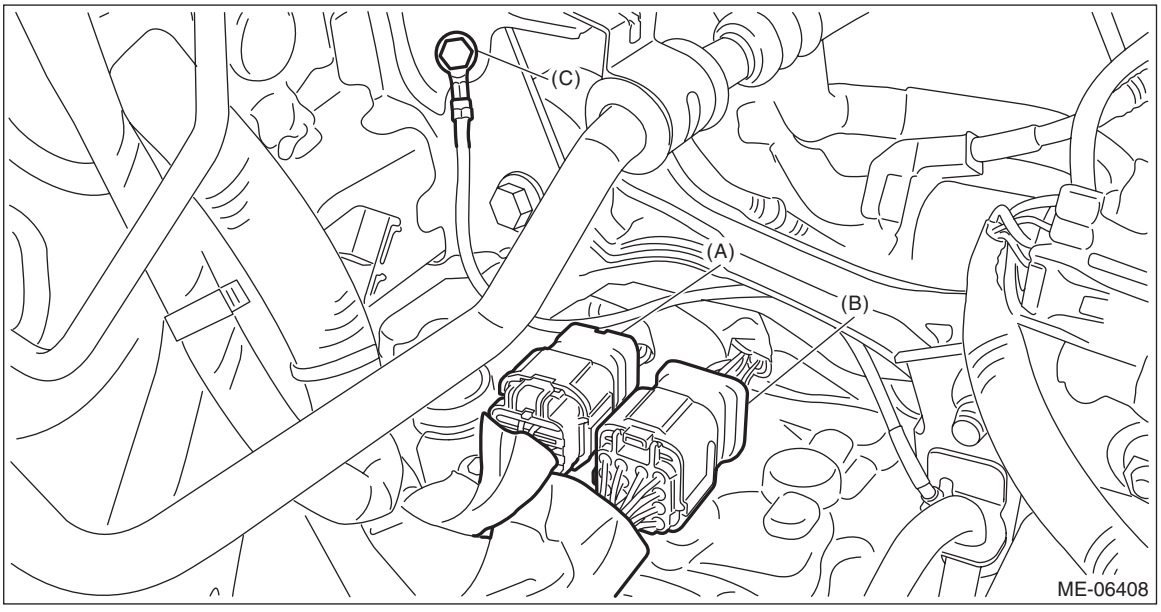

12) Remove the ST from torque converter clutch case. (CVT model)

NOTE:
Be careful not to drop the ST into the torque converter clutch case when removing the ST.
ST 498277200 STOPPER SET

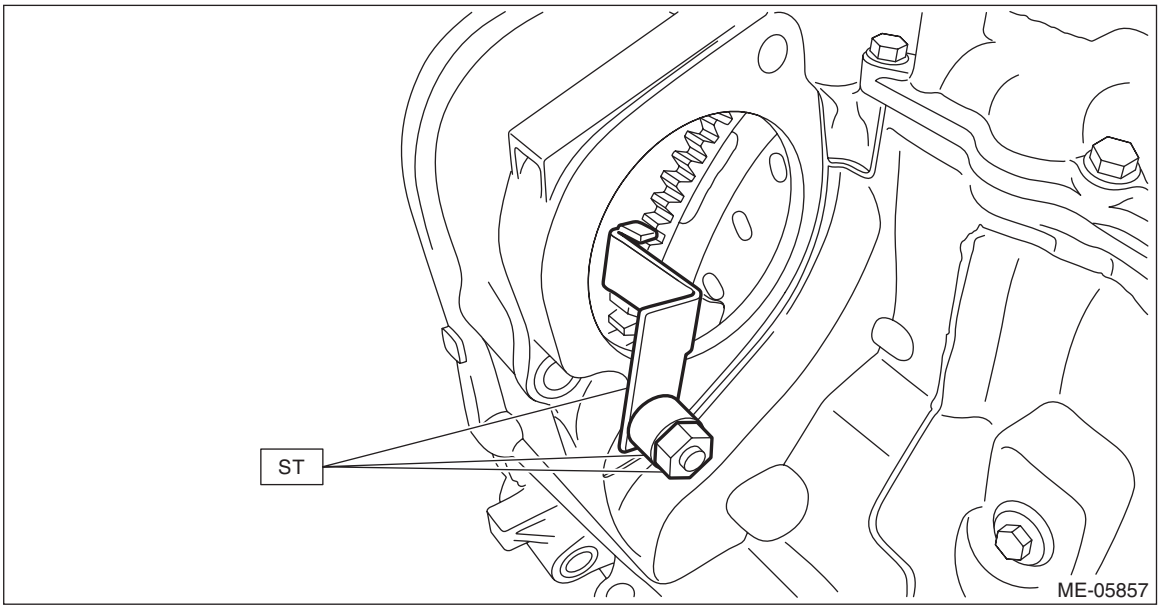

13) Install the starter. <Ref. to SC(H4DO(w/o HEV))-11, INSTALLATION, Starter.>
14) Install the torque converter clutch to drive plate. (CVT model)
(1) Insert the wrench into the crank pulley bolt and rotate the crank pulley to install the bolts which hold torque converter clutch to drive plate.

NOTE:
Be careful not to drop bolts into the torque converter clutch case.

Tightening torque:
25 N·m (2.5 kgf-m, 18.4 ft-lb)

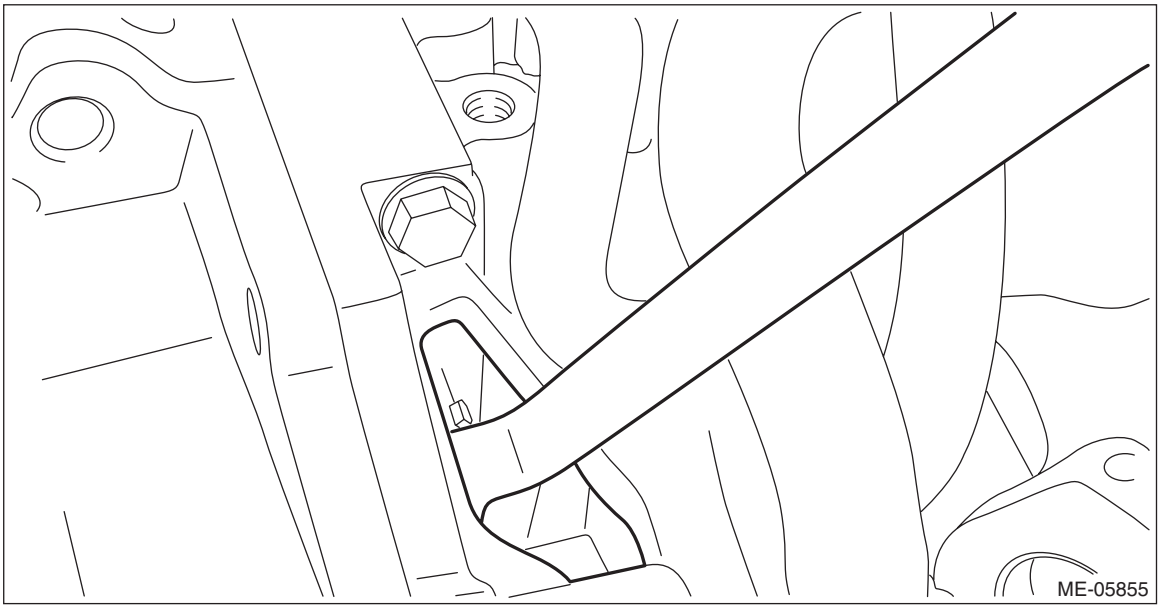

(2) Fit the plug to service hole.
15) Lift up the vehicle.

16) Install the bolts and nuts which hold lower side of the transmission to engine.

Tightening torque:
50 N·m (5.1 kgf-m, 36.9 ft-lb)

- CVT model

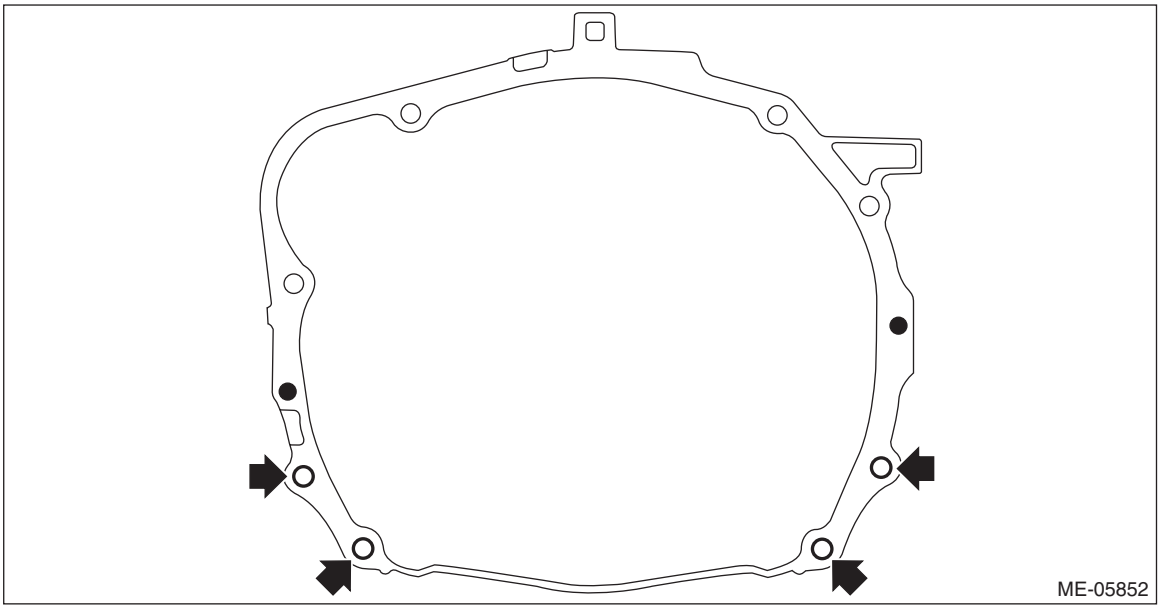

- MT model

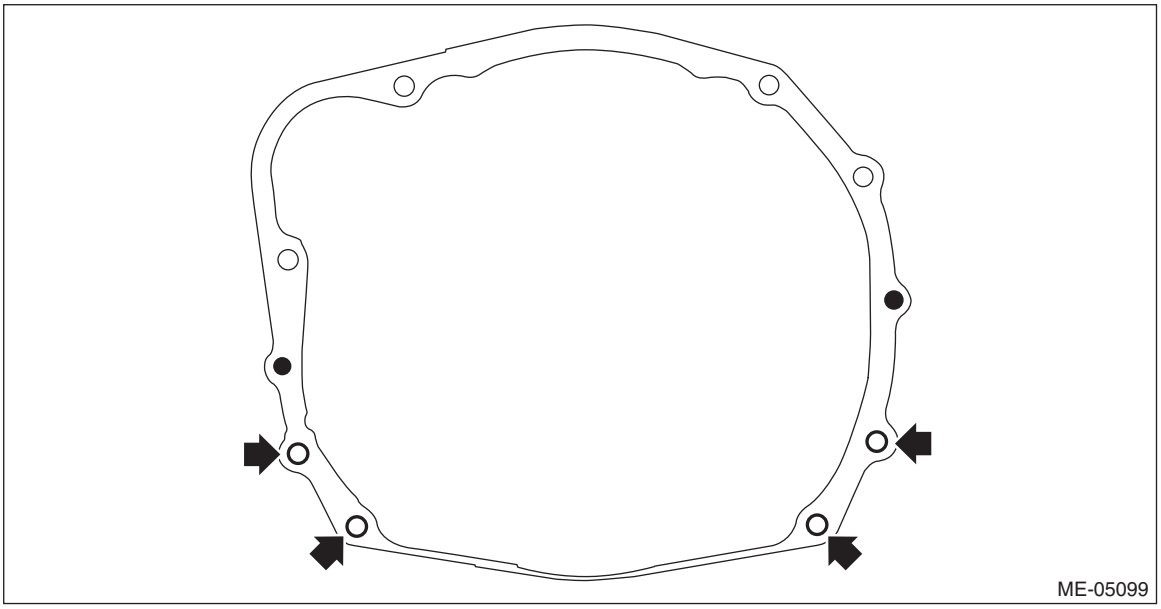

17) Install the nuts which hold the engine mounting to the crossmember. (CVT model)

NOTE:
Make sure that locators (A) of the engine mounting are securely inserted.

Tightening torque:
45 N·m (4.6 kgf-m, 33.2 ft-lb)

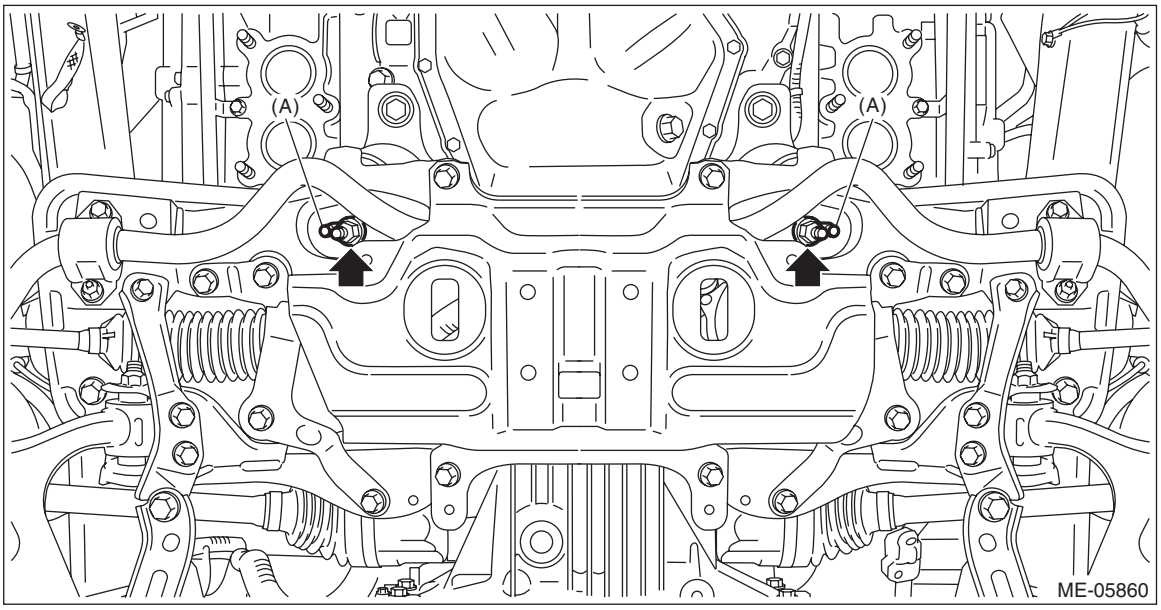

18) Install the nuts which hold the engine mounting to the crossmember. (MT model)

Tightening torque:
45 N·m (4.6 kgf-m, 33.2 ft-lb)

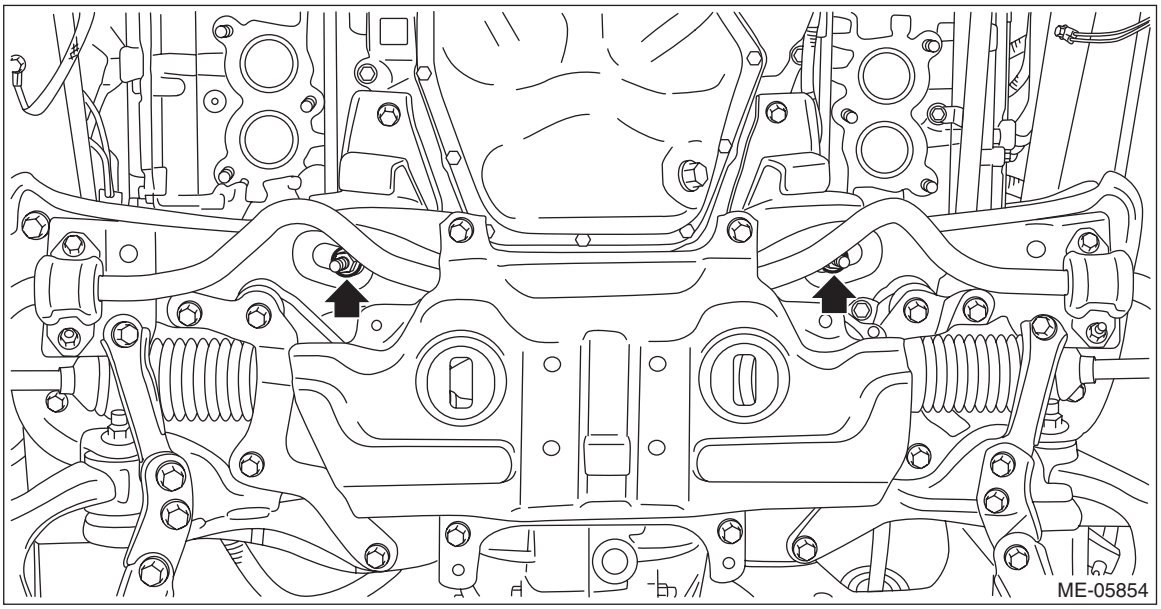

19) Connect the ground cable.

Tightening torque:
7.5 N·m (0.8 kgf-m, 5.5 ft-lb)

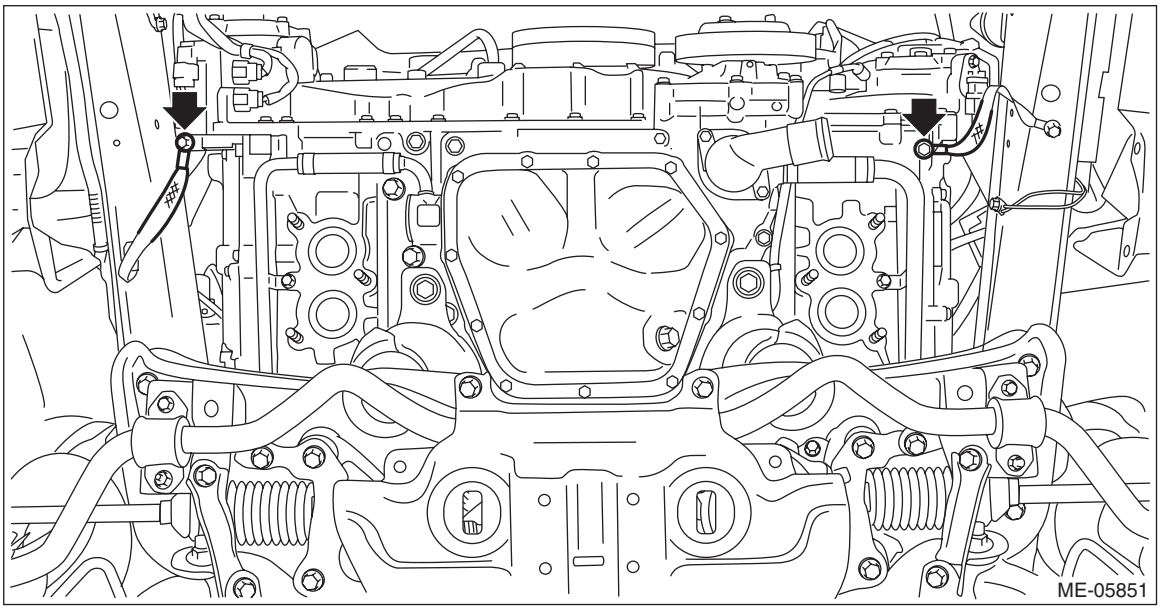

20) Install the front exhaust pipe. <Ref. to EX(H4DO(w/o HEV))-8, INSTALLATION, Front Exhaust Pipe.>
21) Lower the vehicle.
22) Install the CVTF cooler (with warmer feature) to the transmission. (CVT model)

Tightening torque:
23 N·m (2.3 kgf-m, 17.0 ft-lb)

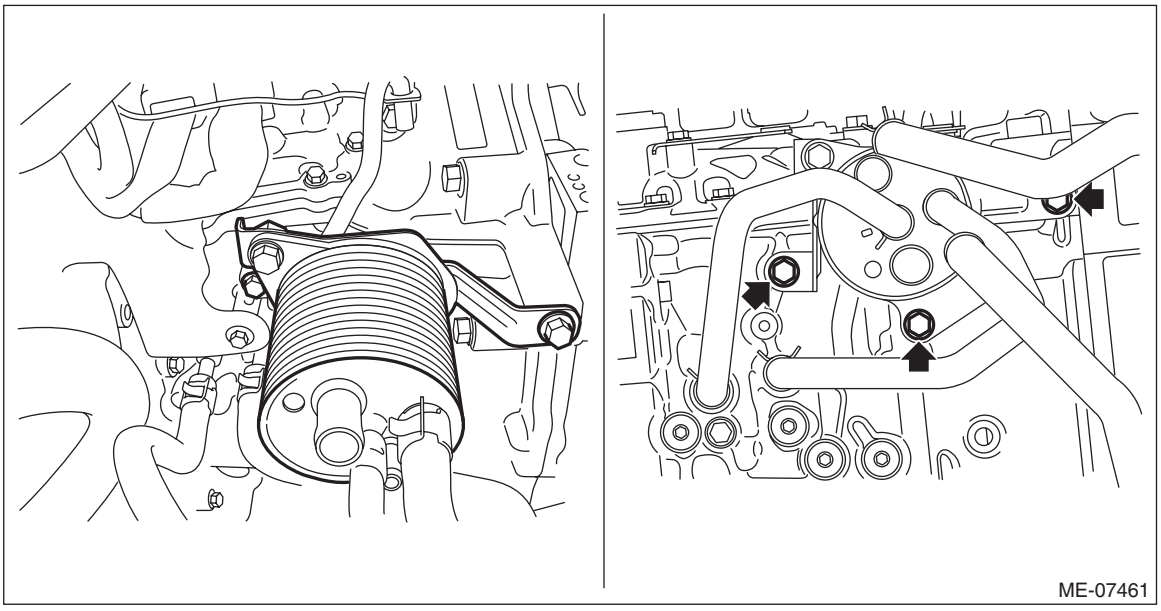

23) Connect the water hose to the CVTF cooler (with warmer feature). (CVT model)

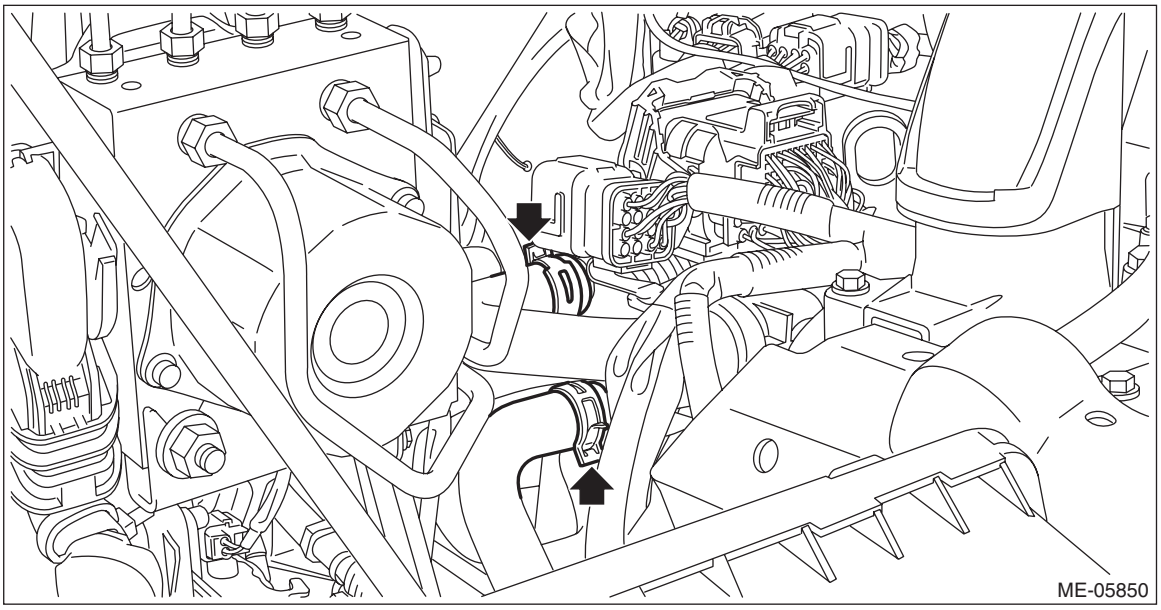

24) Connect the fuel delivery tube and evaporation hose.
(1) Connect the evaporation hose to fuel pipe assembly.

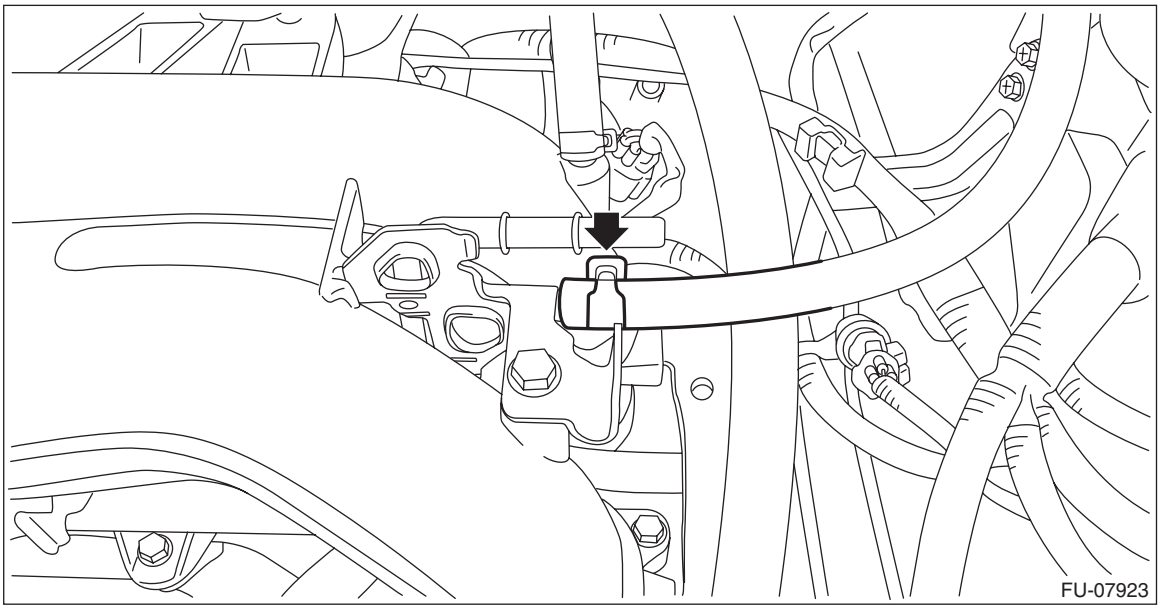

(2) Connect the quick connector on the fuel delivery tube to the fuel pipe assembly, and fix the fuel delivery tube using clip (A).

CAUTION:
• Check that there is no damage or dust on the quick connector. If necessary, clean the seal surface of the pipe.
• When connecting the quick connector, make sure to insert the pipe all the way in before locking the slider.
• When it is difficult to lock the slider, check that the pipe is fully inserted.
• Make sure that the quick connector is securely connected.

NOTE:
Connect the quick connector as shown in the figure.

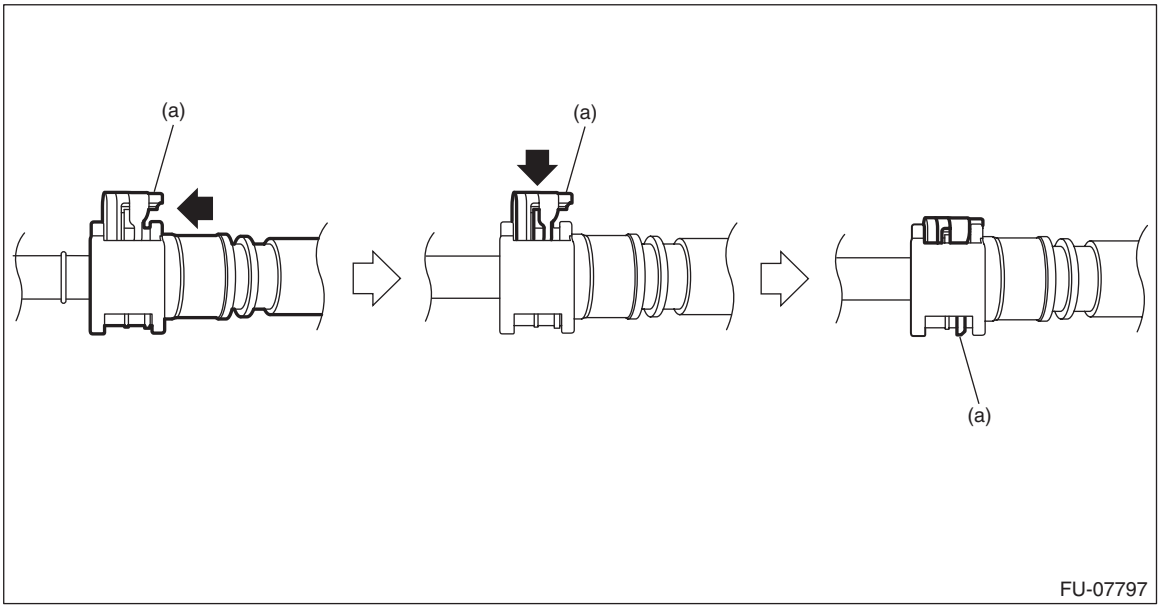

(a) Slider

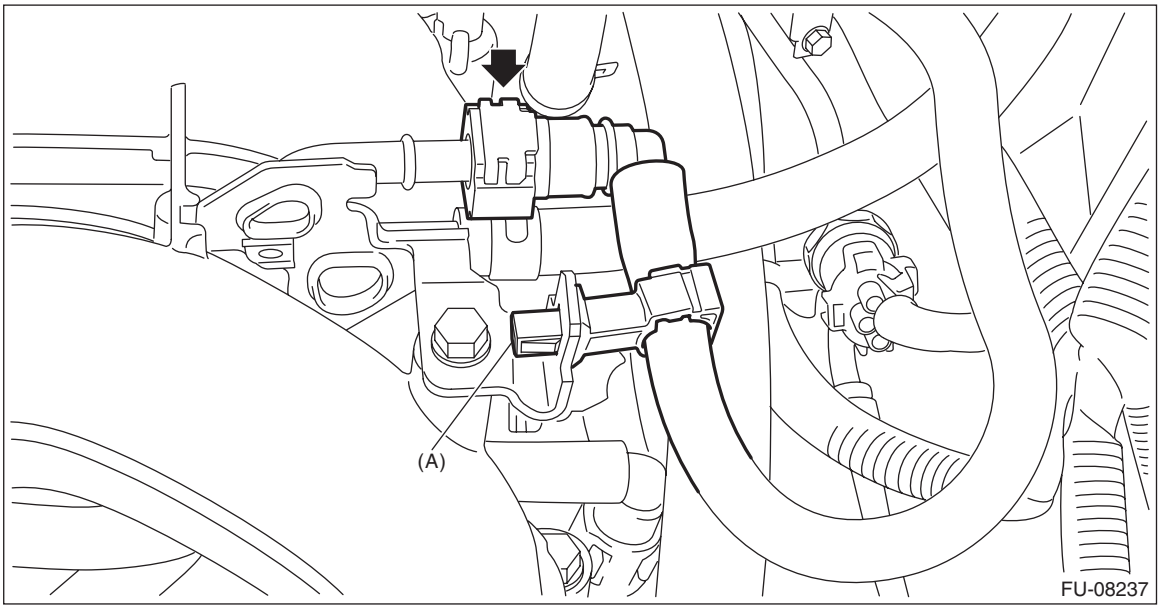

25) Connect the following hoses.
(1) Heater inlet hose and heater outlet hose

NOTE:
Be careful not to mix up the heater inlet hose and the heater outlet hose when connecting them.

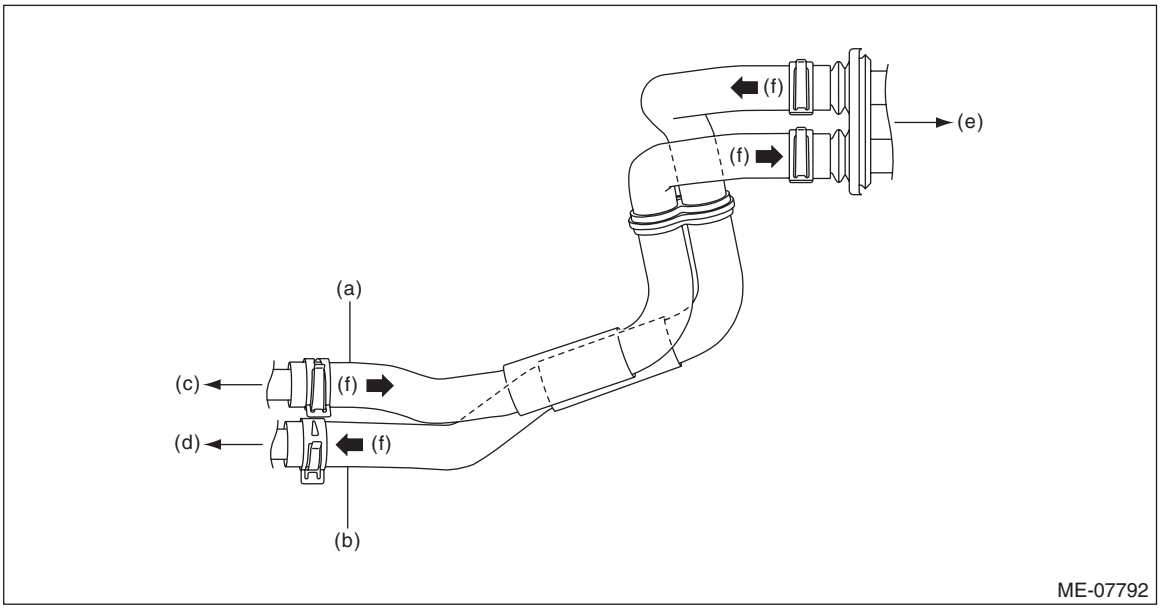

(a)	Heater inlet hose	(c)	To water pipe ASSY	(e)	To heater core ASSY
(b)	Heater outlet hose	(d)	To water pipe LH	(f)	Engine coolant flow

(2) Brake booster vacuum hose
(3) A/C pressure hose <Ref. to AC-77, INSTALLATION, Hose and Pipe.>
26) Place the generator code and install the generator cord to the clip (D).
27) Connect connector (A) and terminal (B) to the generator, and connect connector (C) to A/C compressor.

Tightening torque:
15 N·m (1.5 kgf-m, 11.1 ft-lb)

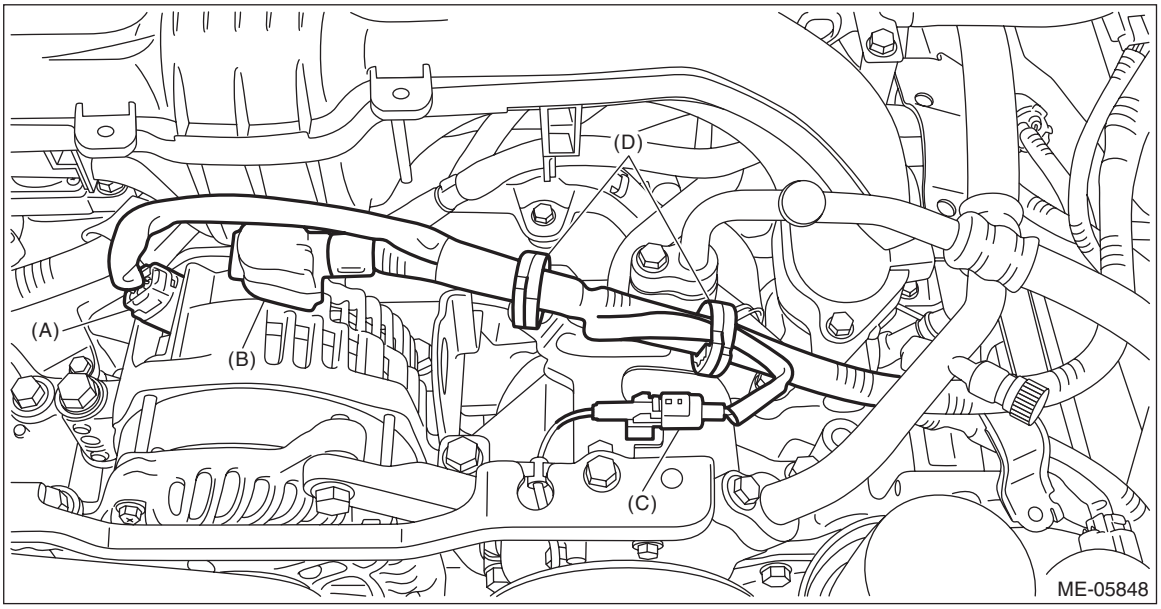

28) Install the generator cord stay to the chain cover.

NOTE:
Install the generator cord stay so that the folded end (a) touches the chain cover boss.

Tightening torque:
6.4 N·m (0.7 kgf-m, 4.7 ft-lb)

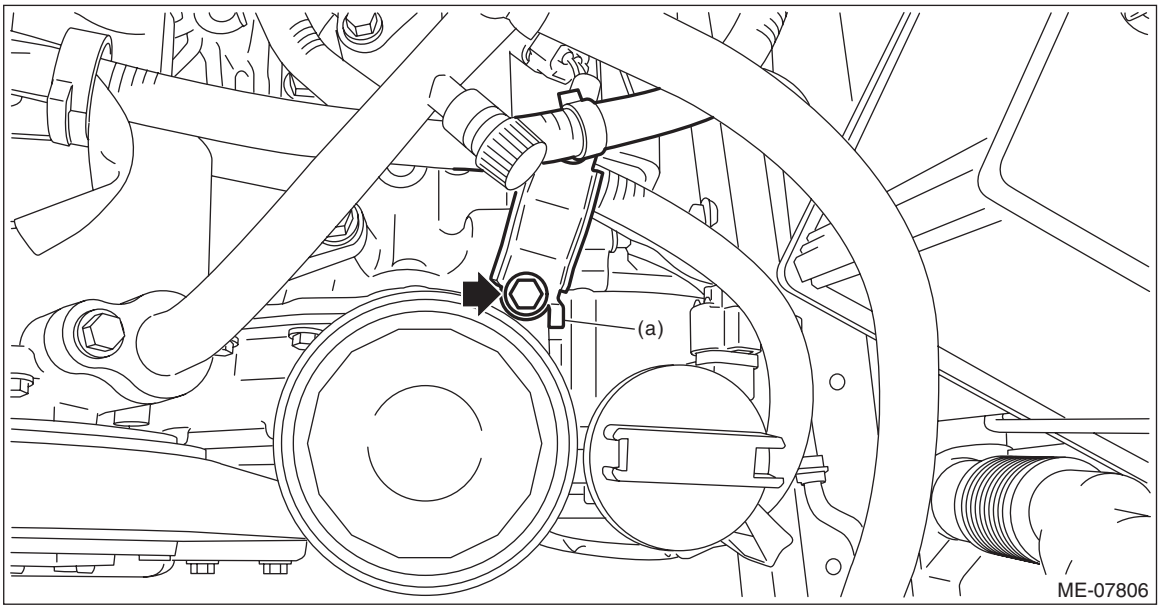

29) Connect the engine harness connector.
(1) Connect the bulkhead harness connector to the engine harness connector (black) and engine harness connector (brown).

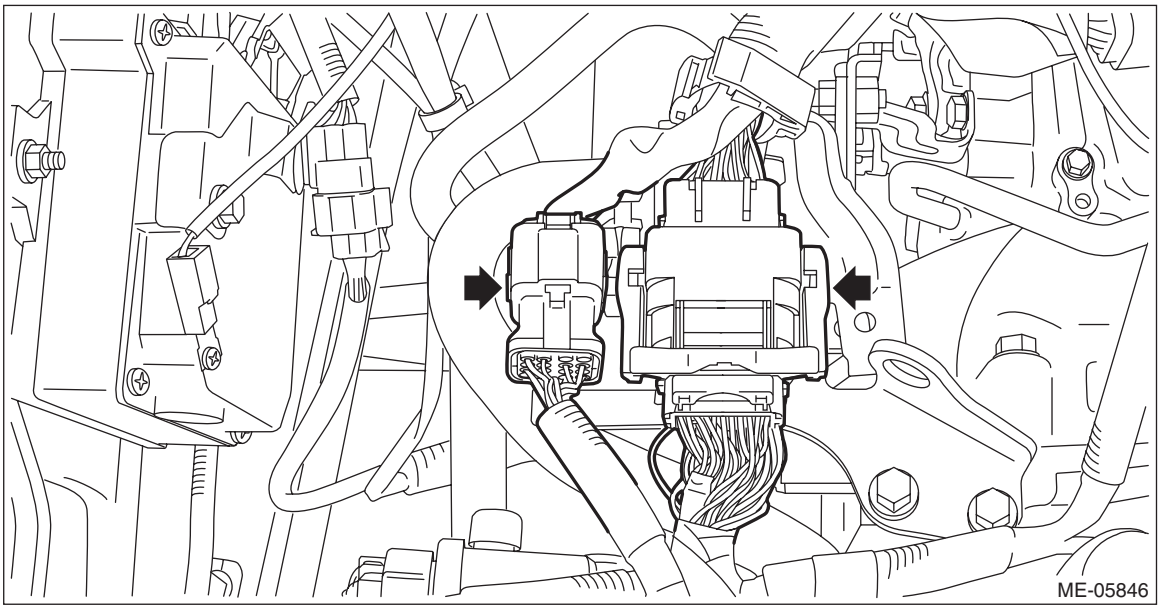

(2) Install the bolt which secures the bulkhead harness connector bracket.

Tightening torque:
7.5 N·m (0.8 kgf-m, 5.5 ft-lb)

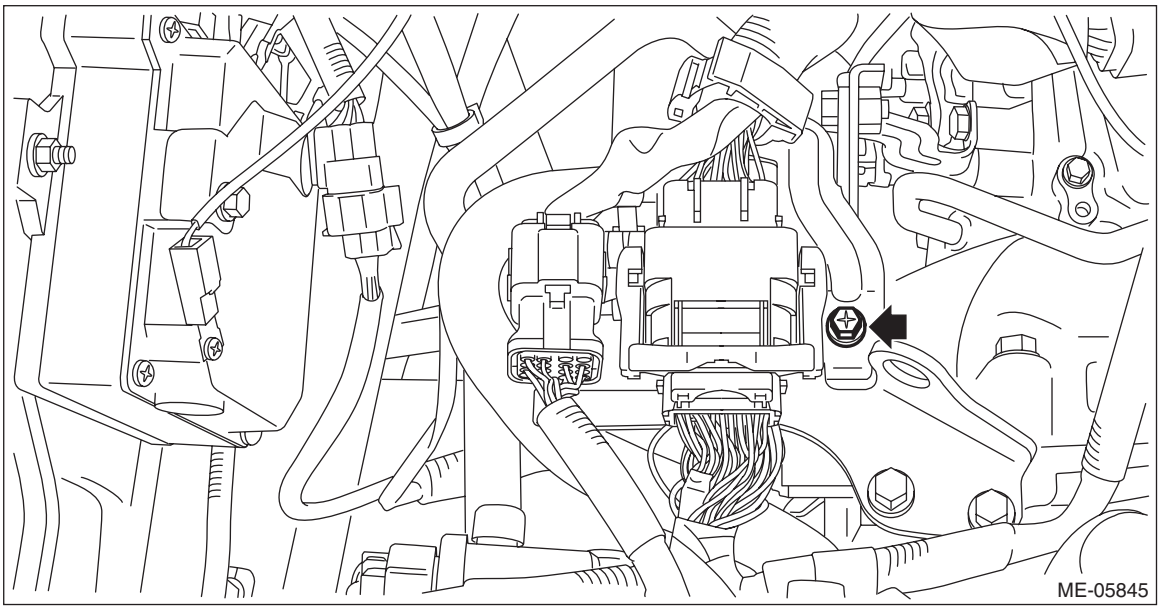

30) Secure the air breather hose to the engine rear hanger using clip. (MT model)

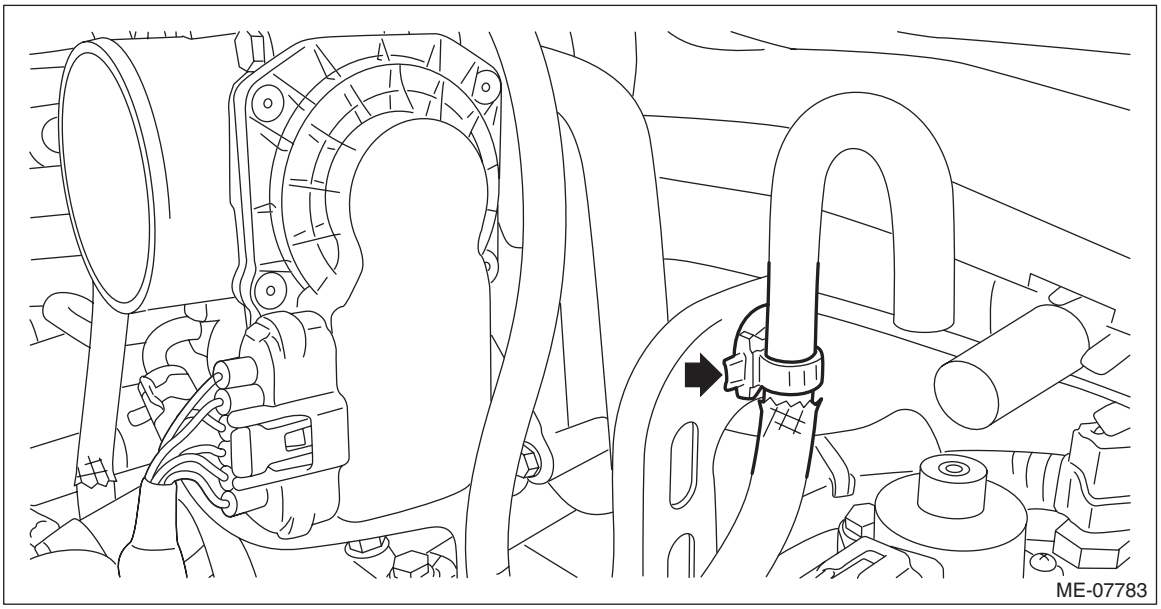

31) Install the radiator. <Ref. to CO(H4DO(w/o HEV))-82, INSTALLATION, Radiator.>

32) Install the air intake case (rear).

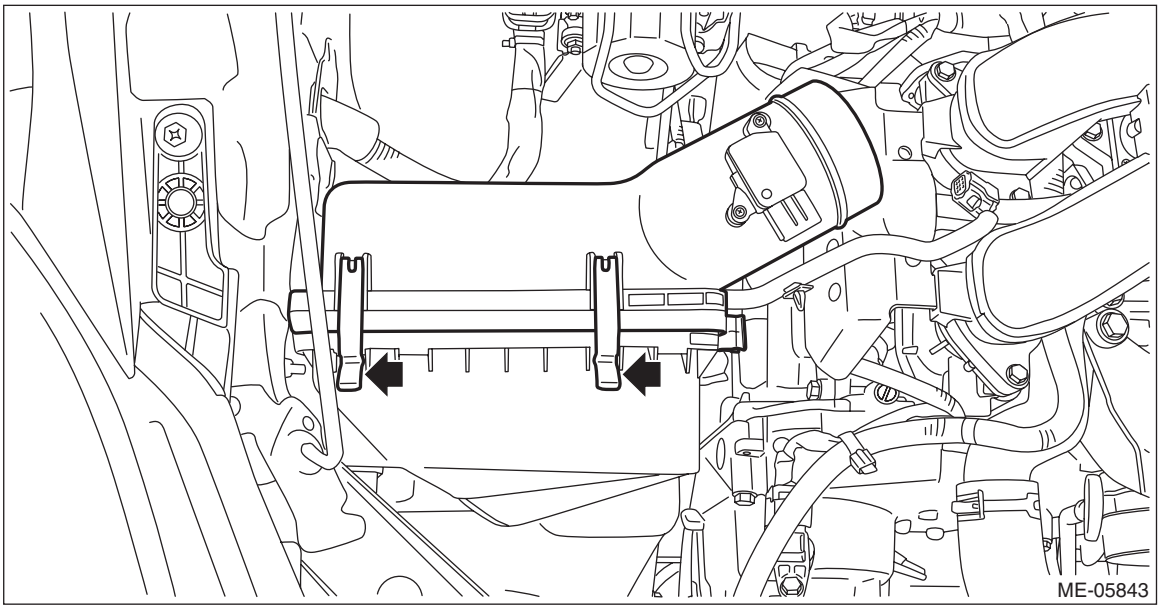

33) Install the clip (A) which secures the air flow and intake air temperature sensor harness, and connect the connector to the air flow and intake air temperature sensor.

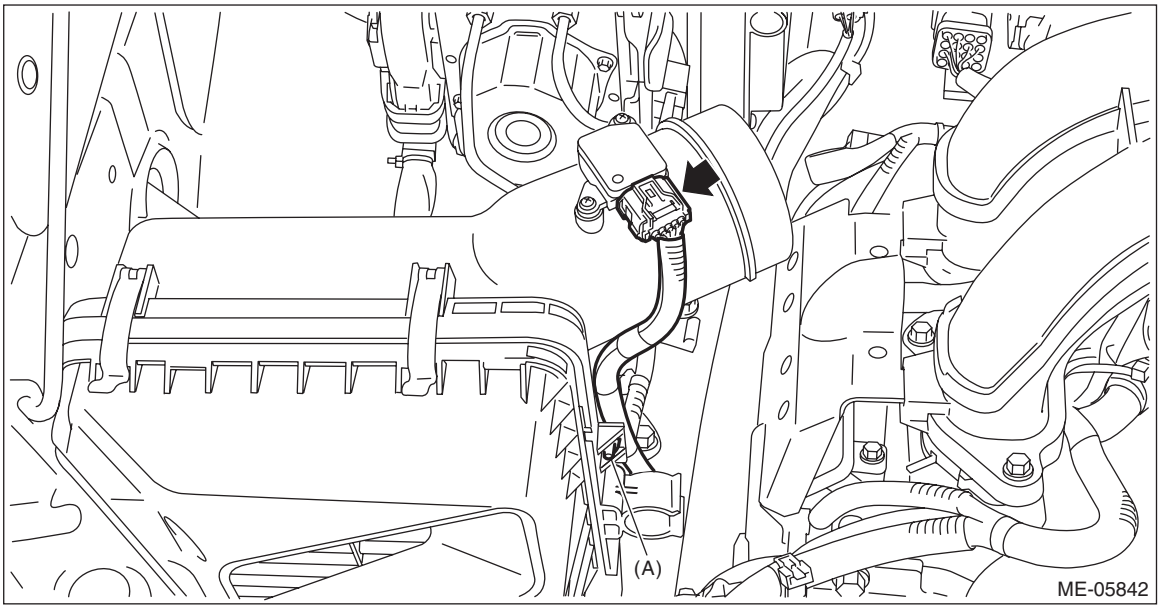

34) Install the air intake boot. <Ref. to IN(H4DO(w/o HEV))-12, INSTALLATION, Air Intake Boot.>
35) Install the air intake duct. <Ref. to IN(H4DO(w/o HEV))-13, INSTALLATION, Air Intake Duct.>

36) Connect the battery ground terminal.

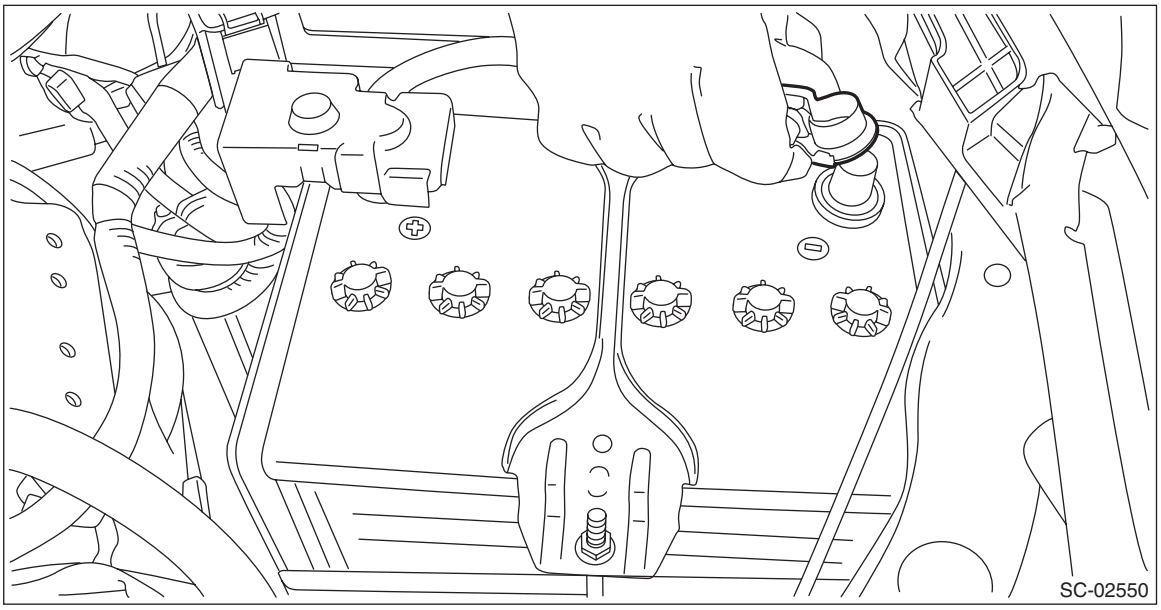

37) Fill engine coolant. <Ref. to CO(H4DO(w/o HEV))-17, FILLING OF ENGINE COOLANT, REPLACEMENT, Engine Coolant.>
38) Check the CVTF level and replenish it if necessary. (CVT model) <Ref. to CVT(TR580)-35, ADJUSTMENT, CVTF.>
39) Charge the A/C system with refrigerant. <Ref. to AC-30, PROCEDURE, Refrigerant Charging Procedure.>
40) Install the V-belt cover.

Tightening torque:
6.4 N·m (0.7 kgf-m, 4.7 ft-lb)

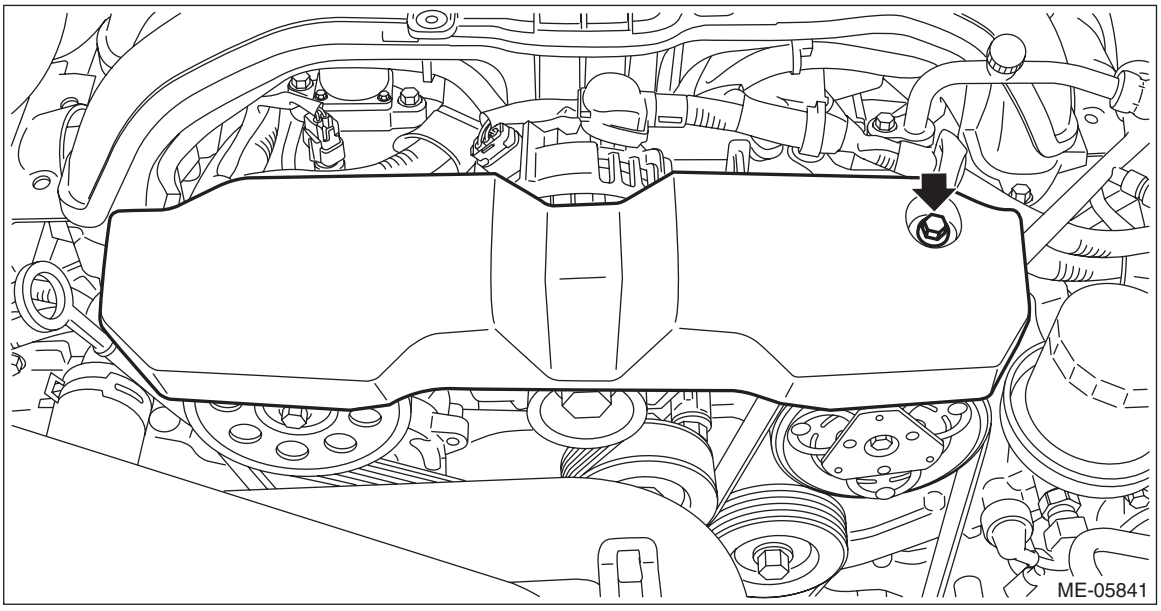

41) Change the front hood stay position from (B) to (A).

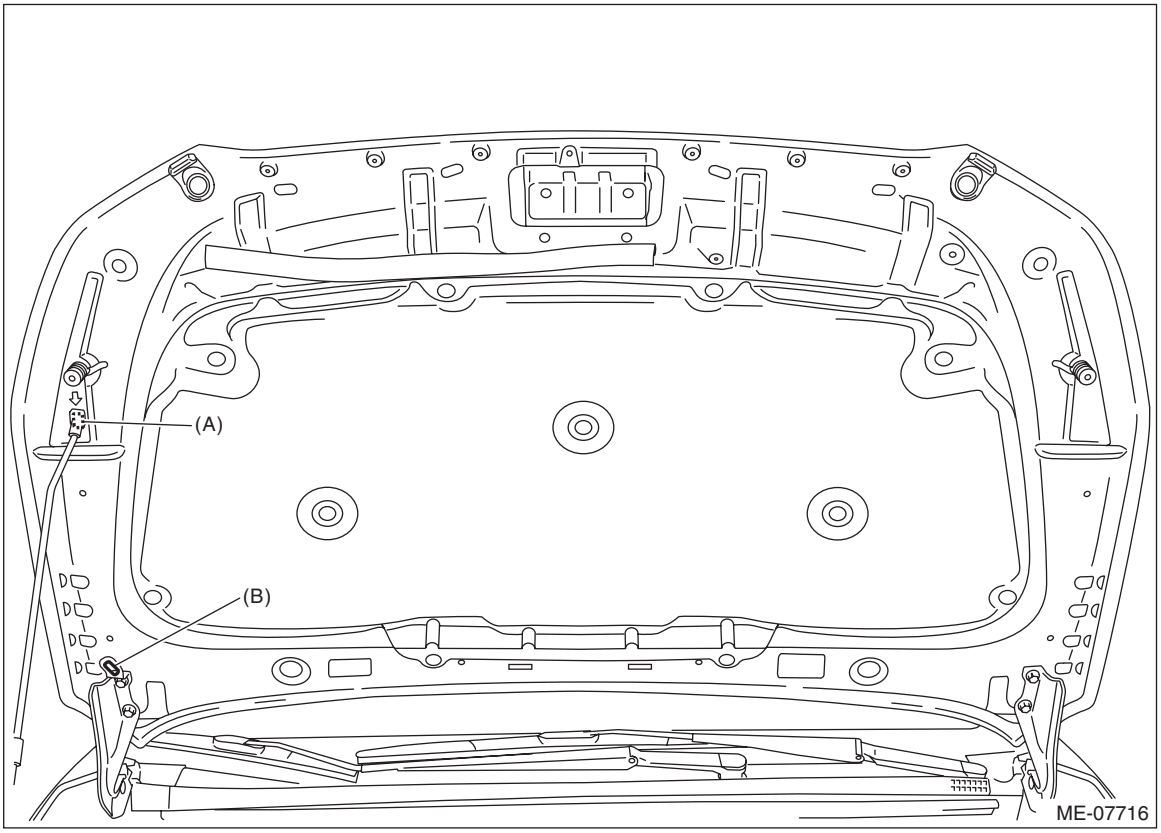

42) Install the front hood striker to the front hood by aligning the alignment marks (A), and close the front hood.

Tightening torque:
33 N·m (3.4 kgf-m, 24.3 ft-lb)

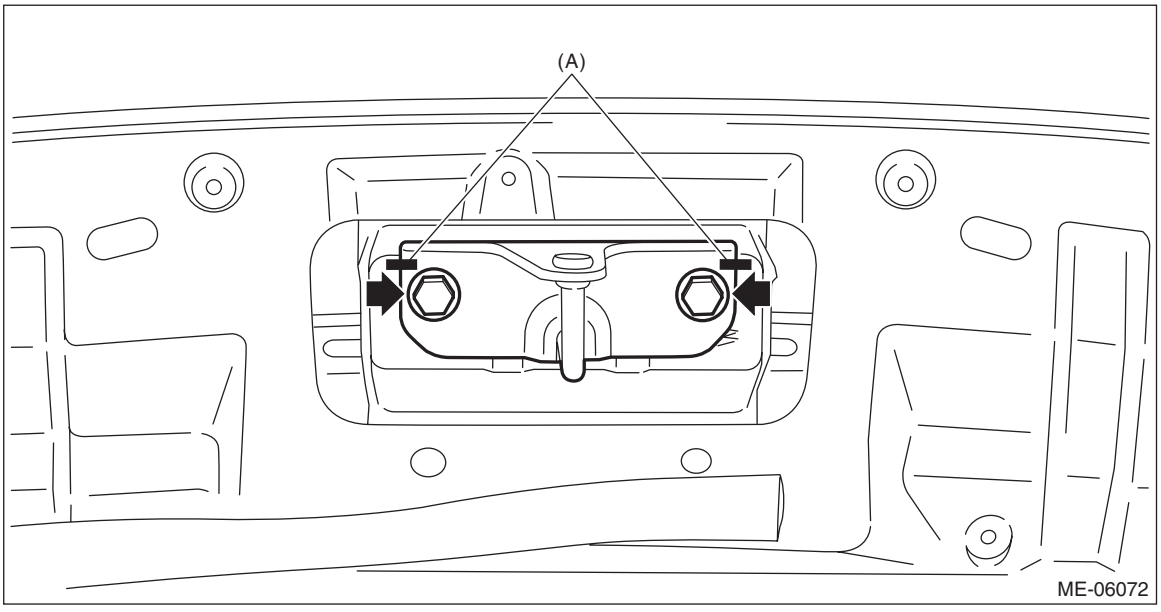

2. HEV MODEL

1) Install the engine mounting onto the engine.

Tightening torque:
35 N·m (3.6 kgf-m, 25.8 ft-lb)

2) Position the engine in engine compartment and align it with transmission.

NOTE:
Be careful not to damage adjacent parts or body panels with crank pulley, oil level gauge, etc.

3) Install the bolts which hold upper side of transmission to engine.

Tightening torque:
50 N·m (5.1 kgf-m, 36.9 ft-lb)

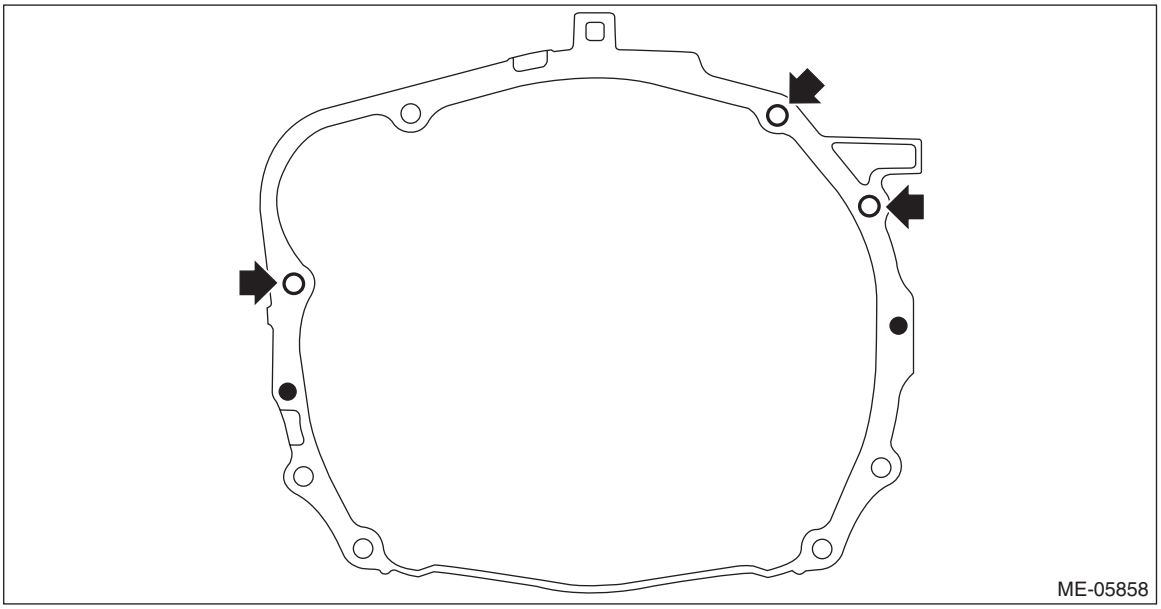

4) Remove the lifting device and wire ropes.

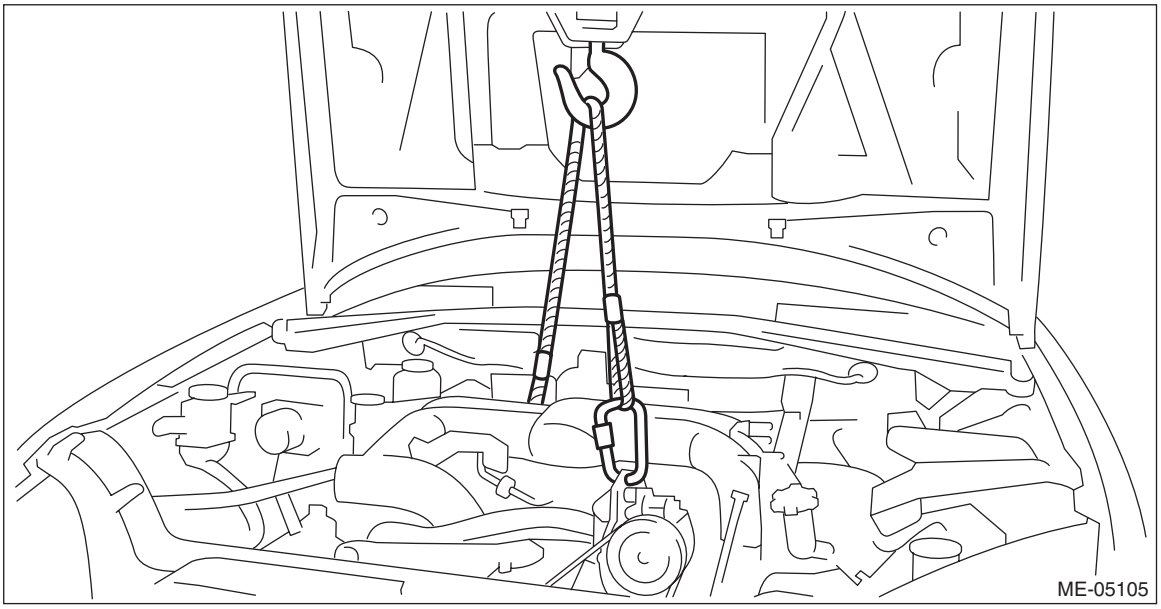

5) Remove the garage jack.

6) Connect the fuel delivery tube and evaporation hose.
(1) Connect the evaporation hose (C) to fuel pipe assembly.
(2) Connect the quick connector (A) of the fuel delivery tube to the fuel pipe assembly, and secure the fuel delivery tube using clip (B).

CAUTION:
• Check that there is no damage or dust on the quick connector. If necessary, clean the seal surface of the pipe.
• When connecting the quick connector, make sure to insert the pipe all the way in before locking the slider.
• When it is difficult to lock the slider, check that the pipe is fully inserted.
• Make sure that the quick connector is securely connected.

NOTE:
Connect the quick connector as shown in the figure.

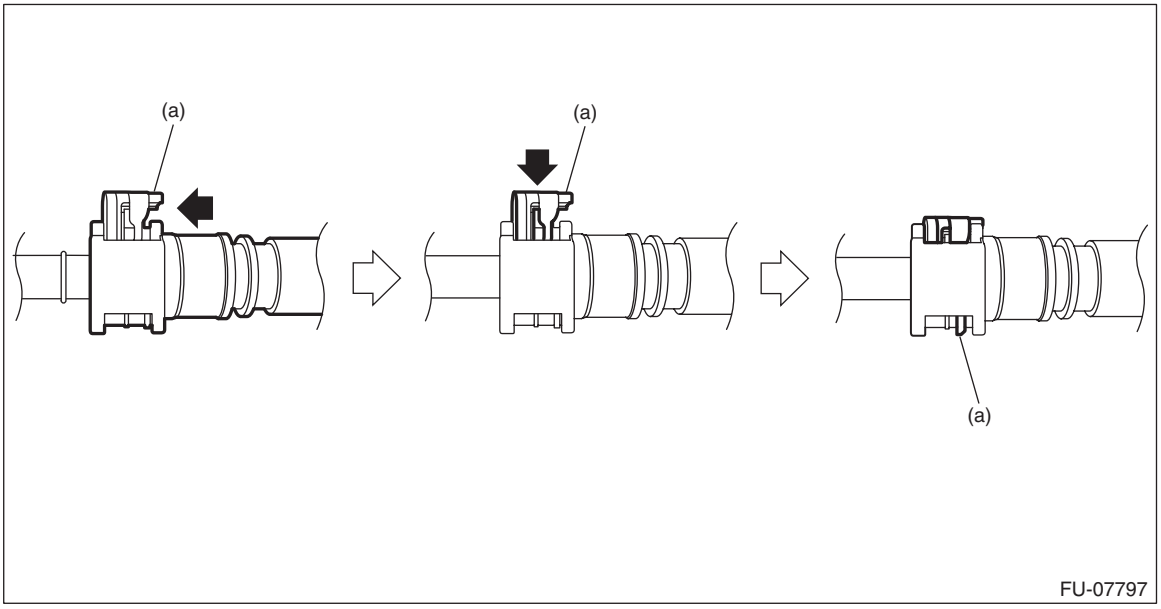

(a) Slider

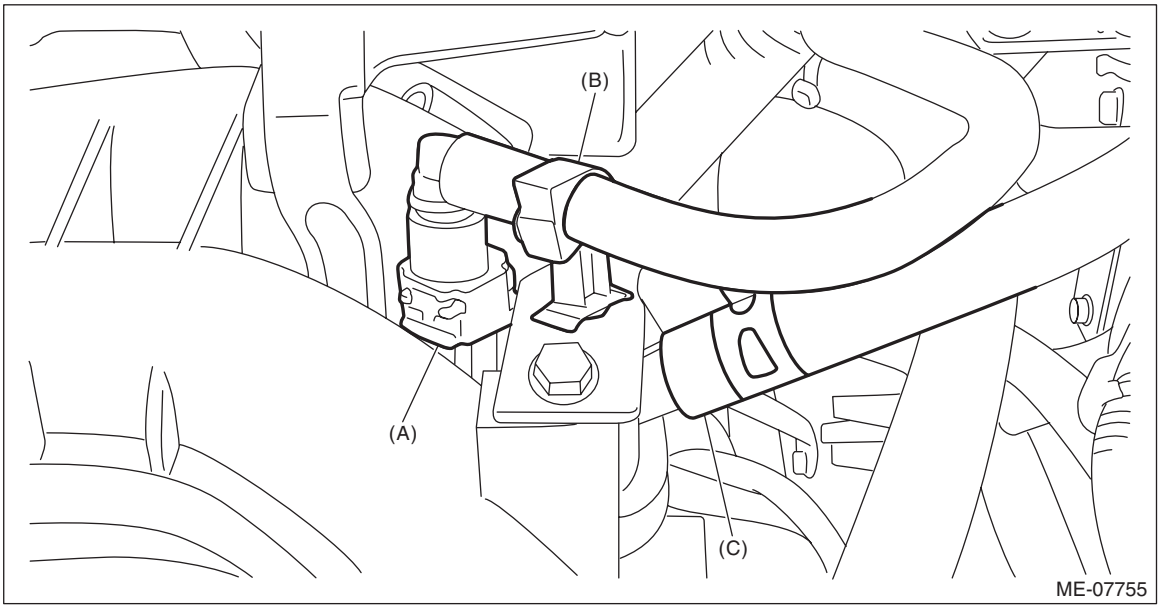

7) Remove the ST from torque converter clutch case.

NOTE:
Be careful not to drop the ST into the torque converter clutch case when removing the ST.
ST 498277200 STOPPER SET

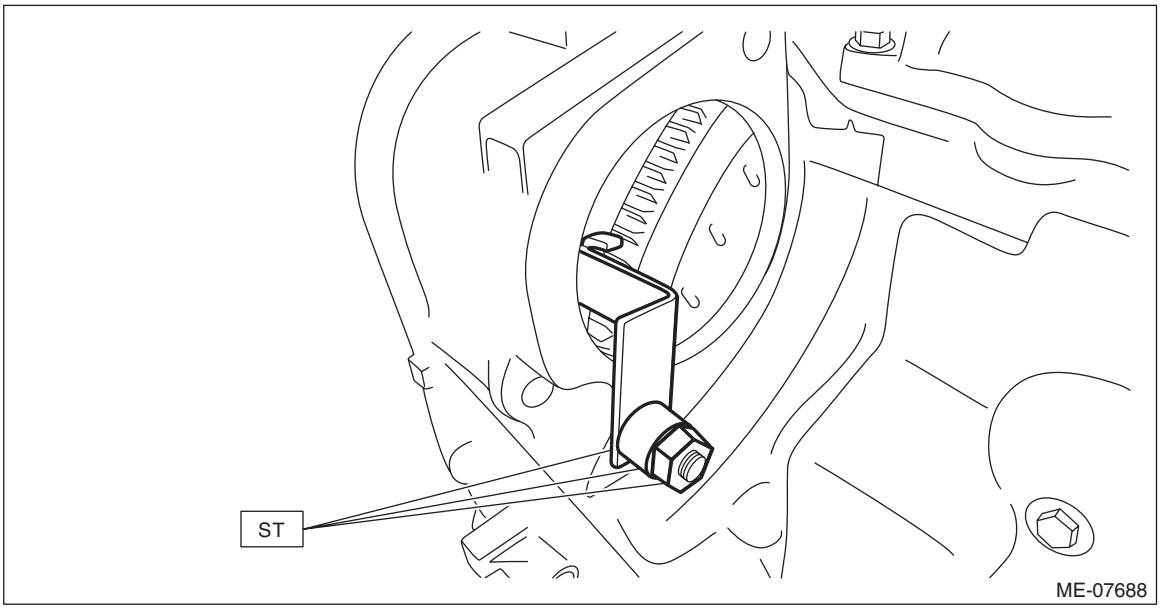

8) Install the torque converter clutch to drive plate.
(1) Insert the wrench into the crank pulley bolt and rotate the crank pulley to install the bolts which hold torque converter clutch to drive plate.

NOTE:
Be careful not to drop bolts into the torque converter clutch case.

Tightening torque:
25 N·m (2.5 kgf-m, 18.4 ft-lb)

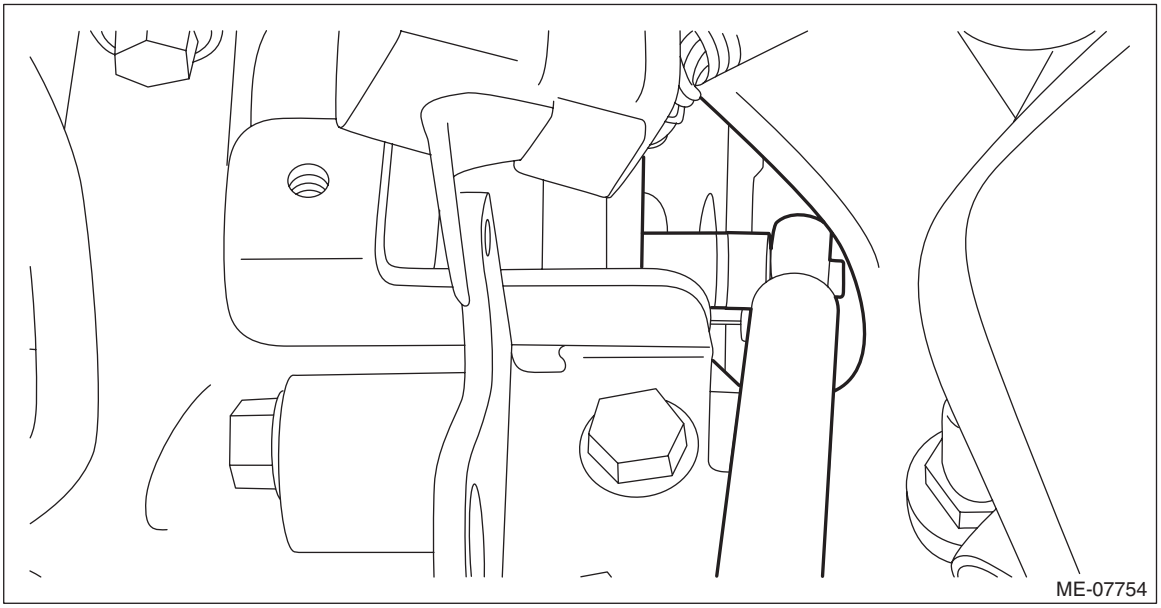

(2) Fit the plug to service hole.

9) Install the starter. <Ref. to SC(H4DO(HEV))-11, INSTALLATION, Starter.>
10) Set the CVTF cooler (with warmer feature) to the transmission, and install the bolts which secure the CVTF cooler (with warmer feature) to the transmission.

Tightening torque:
23 N·m (2.3 kgf-m, 17.0 ft-lb)

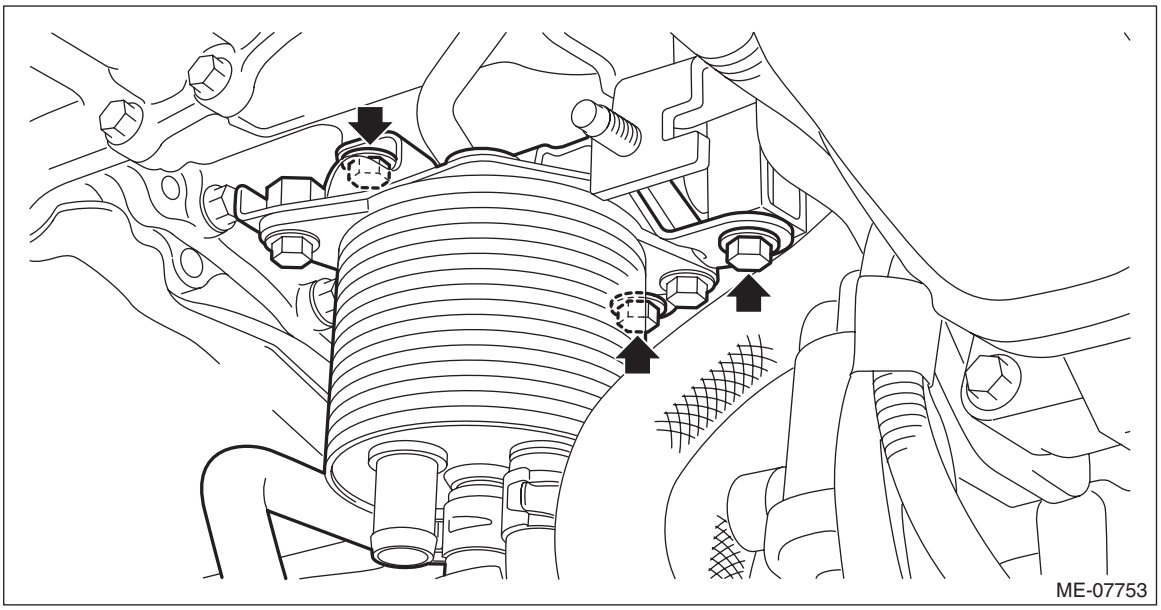

11) Connect the engine coolant inlet hose (A) to the EGR cooler, and connect the engine coolant outlet hose (B) to the CVTF cooler (with warmer feature).

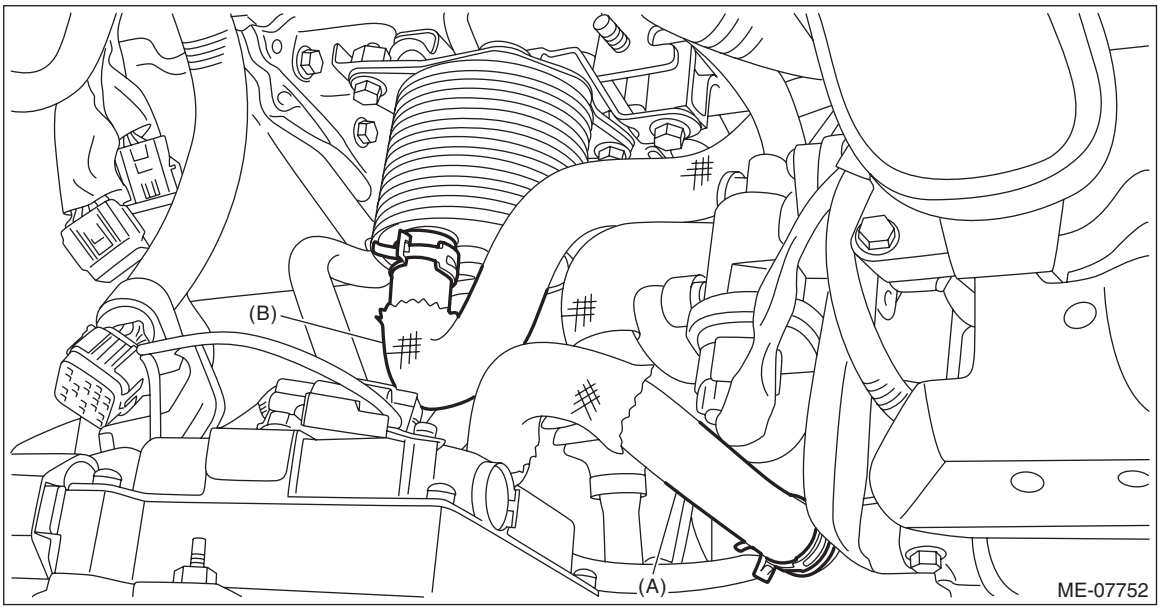

12) Install the bolts which secure the purge control solenoid valve bracket to the intake manifold, and secure the engine harness to the purge control solenoid valve bracket with the clip (A).

Tightening torque:
6.4 N·m (0.7 kgf-m, 4.7 ft-lb)

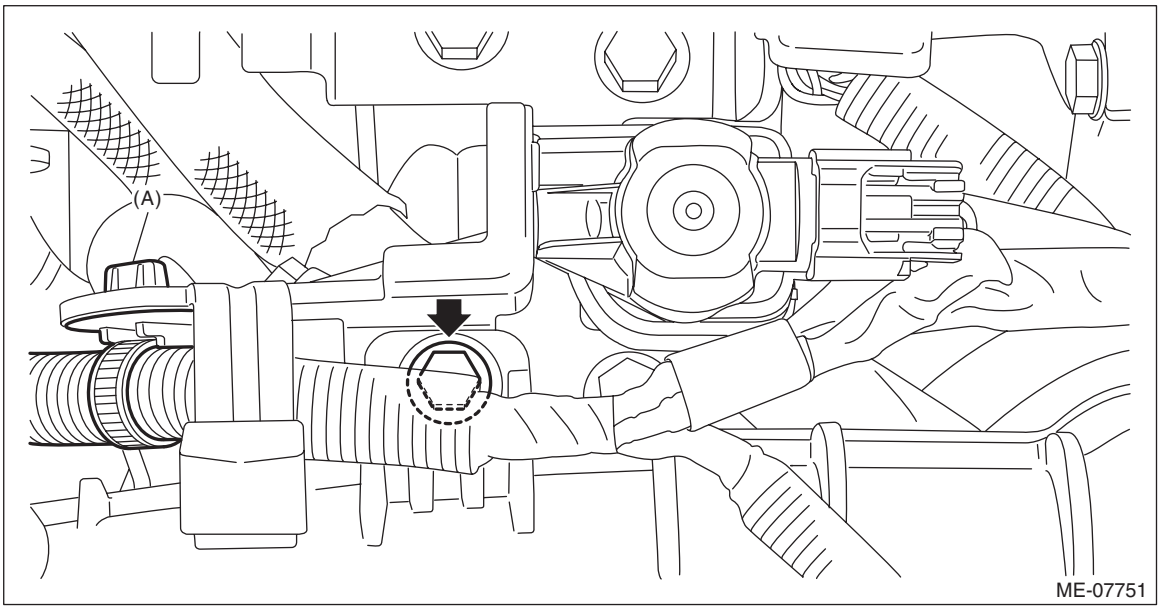

13) Remove the bolt and turn the transmission harness counterclockwise to install the transmission harness to the control valve body.

Tightening torque:
7 N·m (0.7 kgf-m, 5.2 ft-lb)

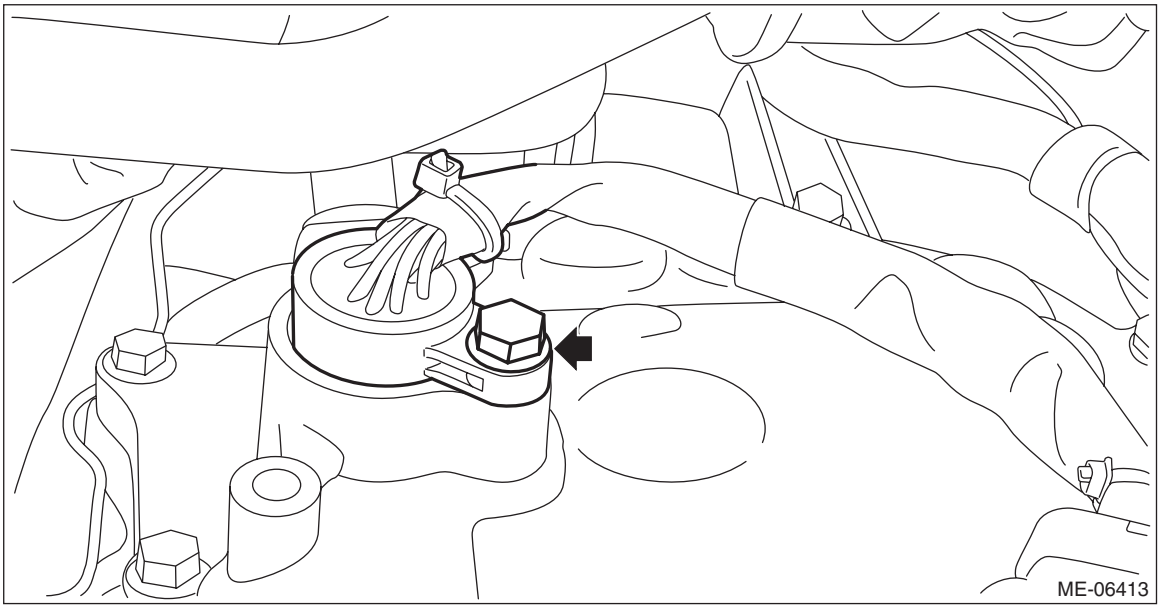

14) Install the bolt which holds the transmission harness stay.

Tightening torque:
7 N·m (0.7 kgf-m, 5.2 ft-lb)

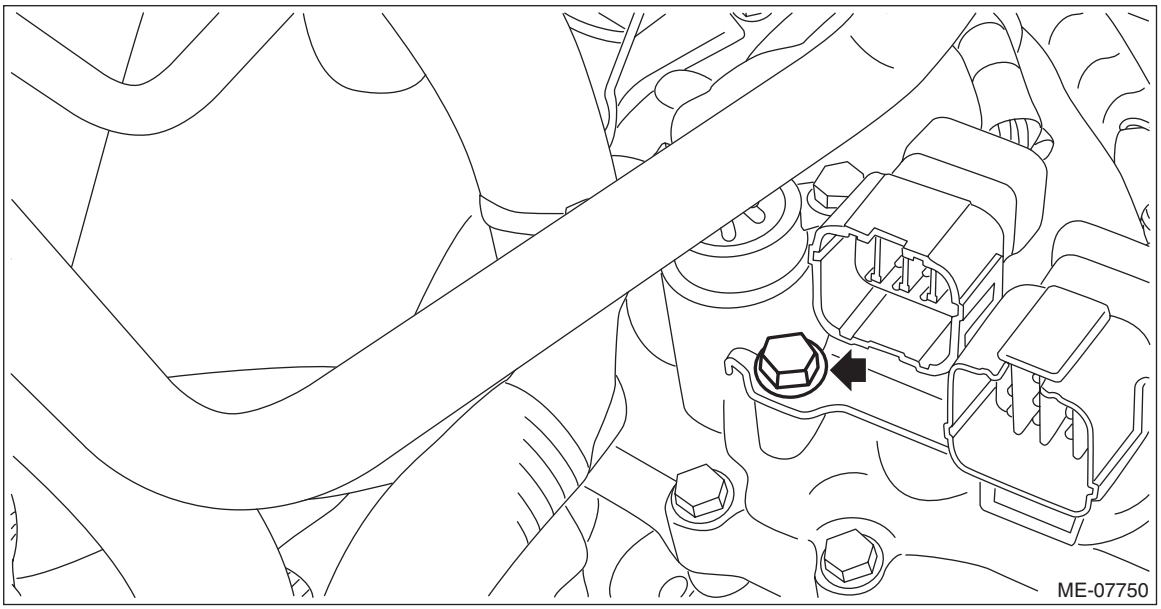

15) Install the transmission case cover.

Tightening torque:
8 N·m (0.8 kgf-m, 5.9 ft-lb)

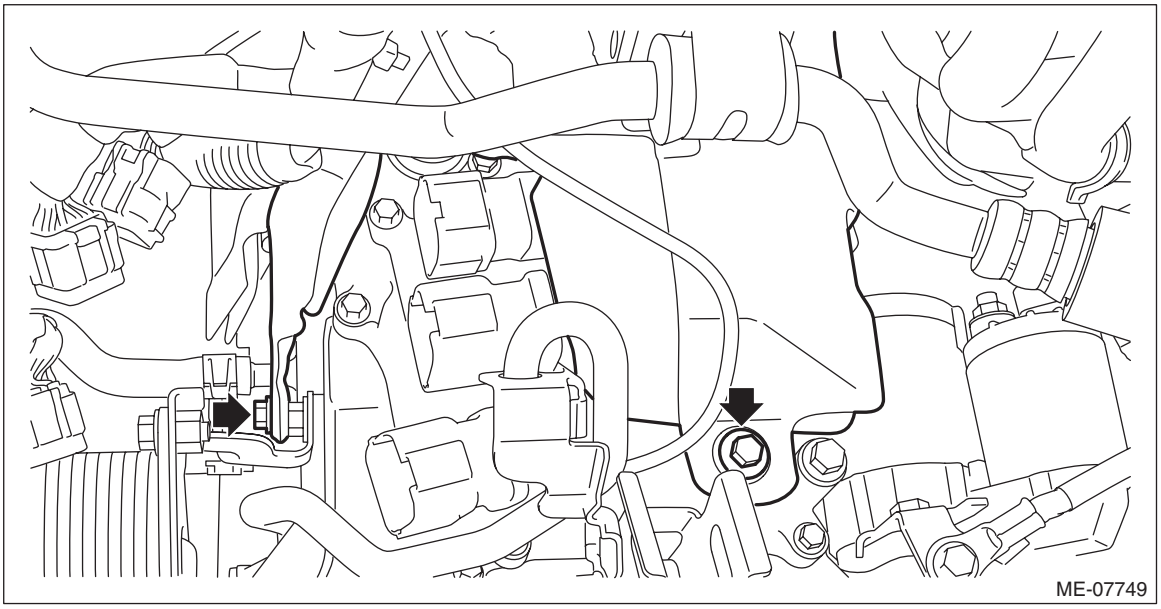

16) Connect the bulkhead harness connector to the transmission harness connector (C), inhibitor harness connector (D) and drive motor harness connector (E).
17) Connect the bulkhead harness connector to the engine harness connector (brown) (B), and install the bolt (A) securing the bulkhead harness connector bracket.

Tightening torque:
7.5 N·m (0.8 kgf-m, 5.5 ft-lb)

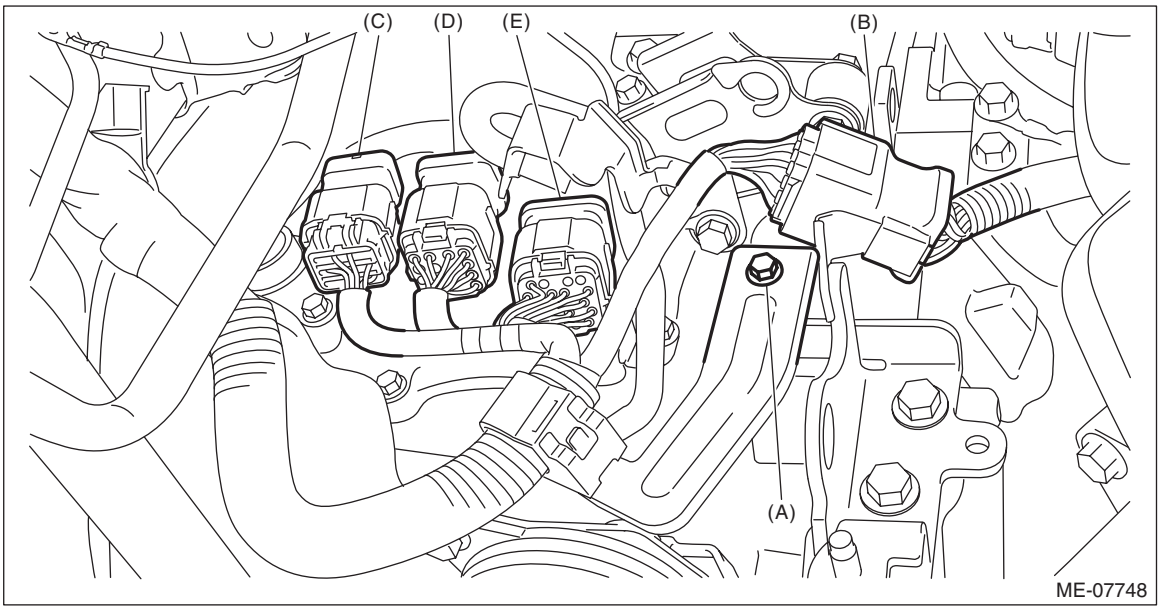

18) Install the pitching stopper, and connect the transmission radio ground terminal (A) to the vehicle.

Tightening torque:
T1: 13 N·m (1.3 kgf-m, 9.6 ft-lb)
T2: 50 N·m (5.1 kgf-m, 36.9 ft-lb)
T3: 58 N·m (5.9 kgf-m, 42.8 ft-lb)

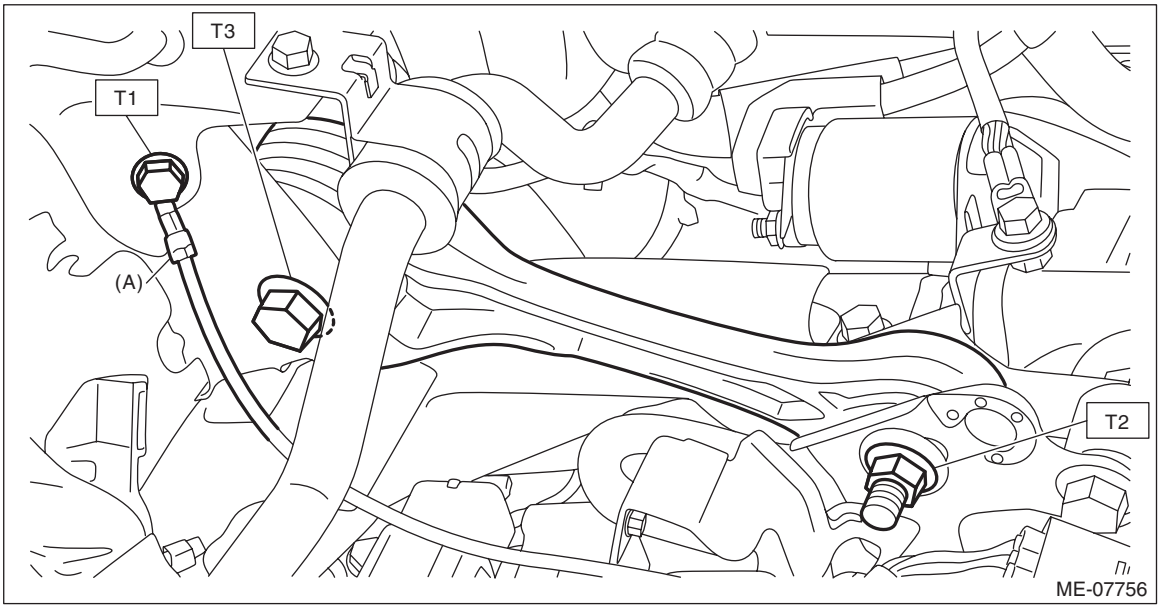

19) Lift up the vehicle.
20) Install the nuts which hold the engine mounting to the crossmember.

NOTE:
Make sure that locators (A) of the engine mounting are securely inserted.

Tightening torque:
45 N·m (4.6 kgf-m, 33.2 ft-lb)

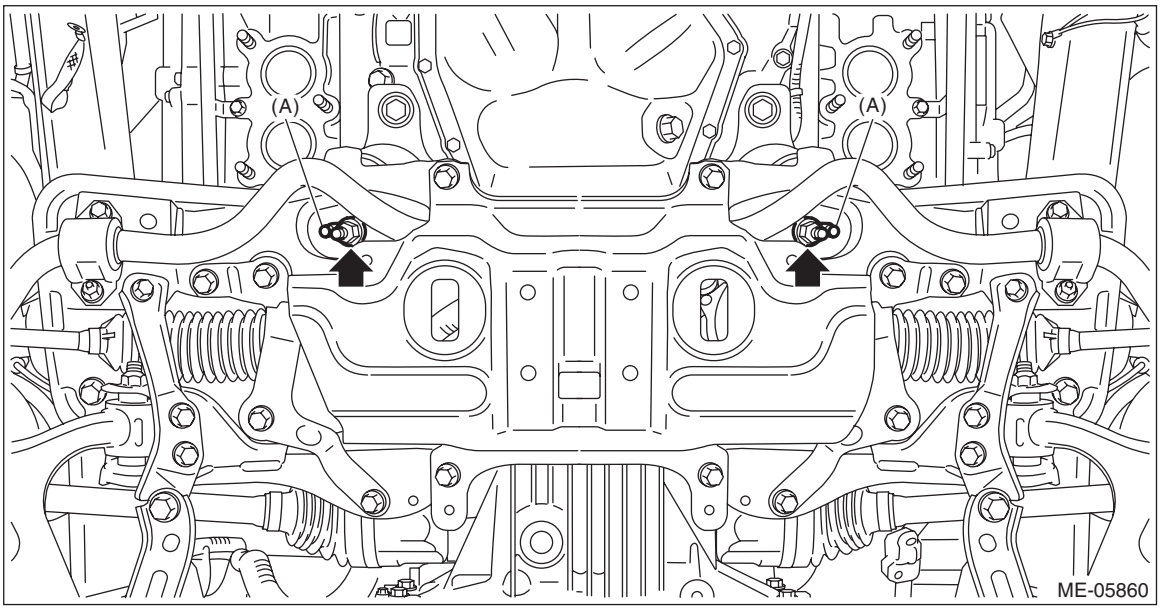

21) Install the bolts and nuts which hold lower side of the transmission to engine.

Tightening torque:
50 N·m (5.1 kgf-m, 36.9 ft-lb)

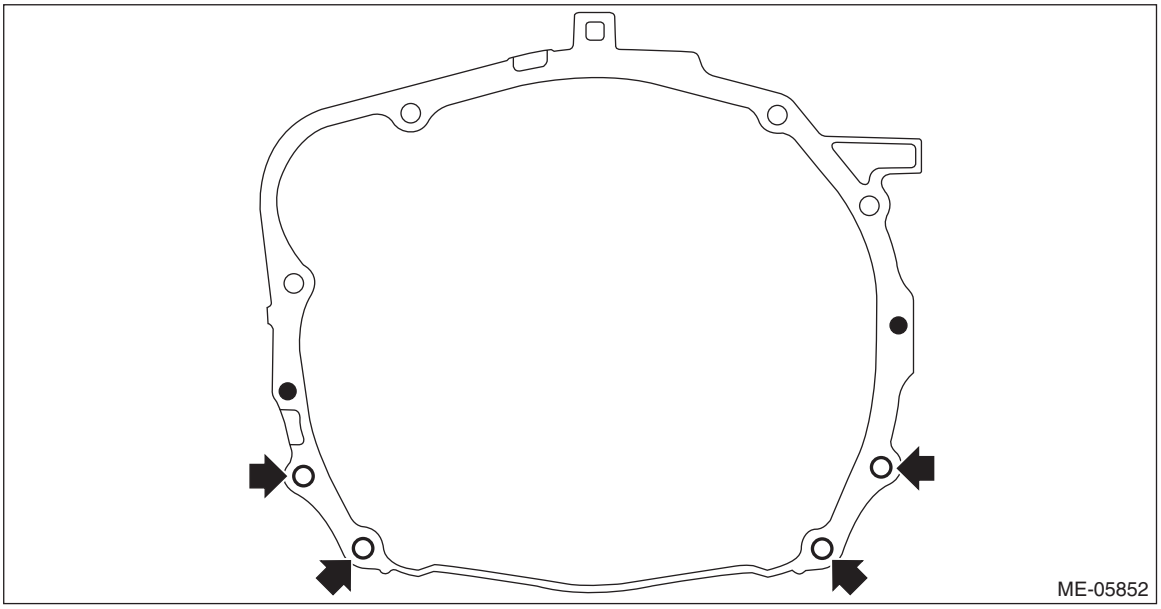

22) Connect the ground cable.

Tightening torque:
7.5 N·m (0.8 kgf-m, 5.5 ft-lb)

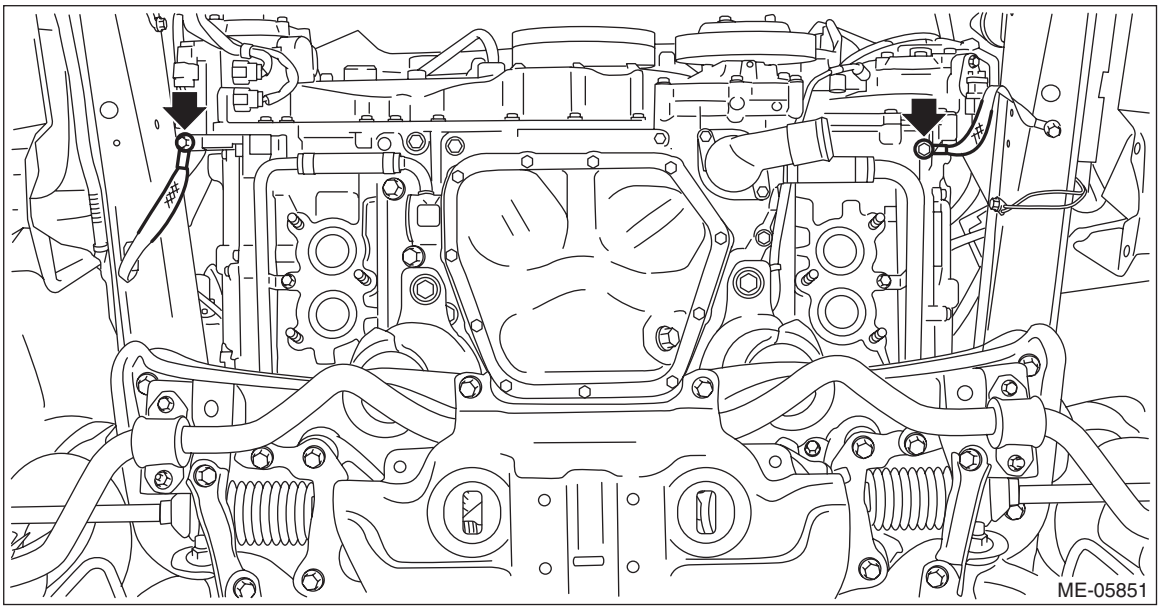

23) Install the front exhaust pipe. <Ref. to EX(H4DO(w/o HEV))-8, INSTALLATION, Front Exhaust Pipe.>
24) Lower the vehicle.
25) Connect the brake booster vacuum hose (C) to the brake vacuum pipe.

26) Connect the heater inlet hose (A) to the water pipe assembly, and connect the heater outlet hose (B) to the water pipe LH.

NOTE:
Be careful not to mix up the heater inlet hose and the heater outlet hose when connecting them.

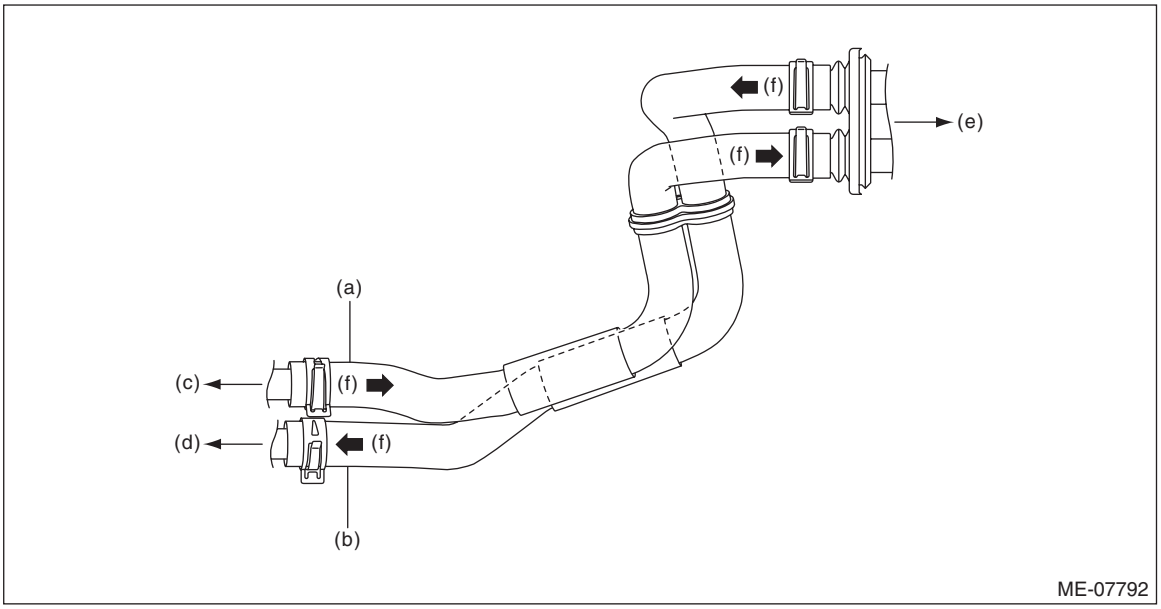

(a) Heater inlet hose
(b) Heater outlet hose
(c) To water pipe ASSY
(d) To water pipe LH
(e) To heater core ASSY
(f) Engine coolant flow

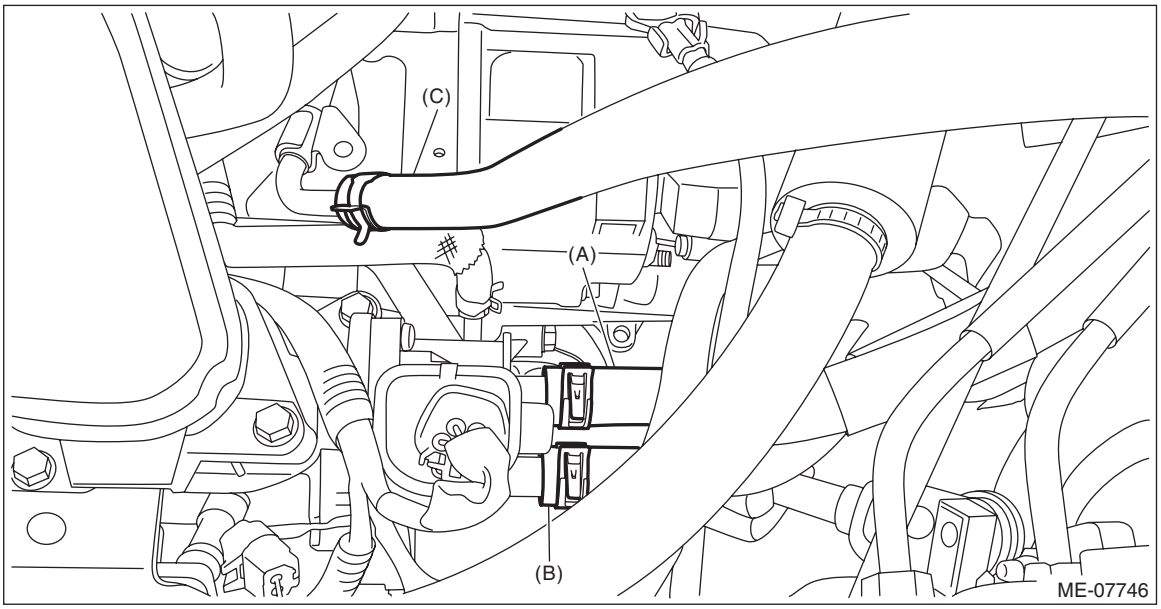

27) Connect the A/C pressure hose to A/C compressor. <Ref. to AC-74, REMOVAL, Hose and Pipe.>
28) Set the battery cable assembly, and secure the battery cable assembly to the battery cable bracket No. 1 with the clip (C).
29) Connect the terminal (A) and the terminal (B) to ISG.

Tightening torque:
T1: 7.5 N·m (0.8 kgf-m, 5.5 ft-lb)
T2: 15.5 N·m (1.6 kgf-m, 11.4 ft-lb)

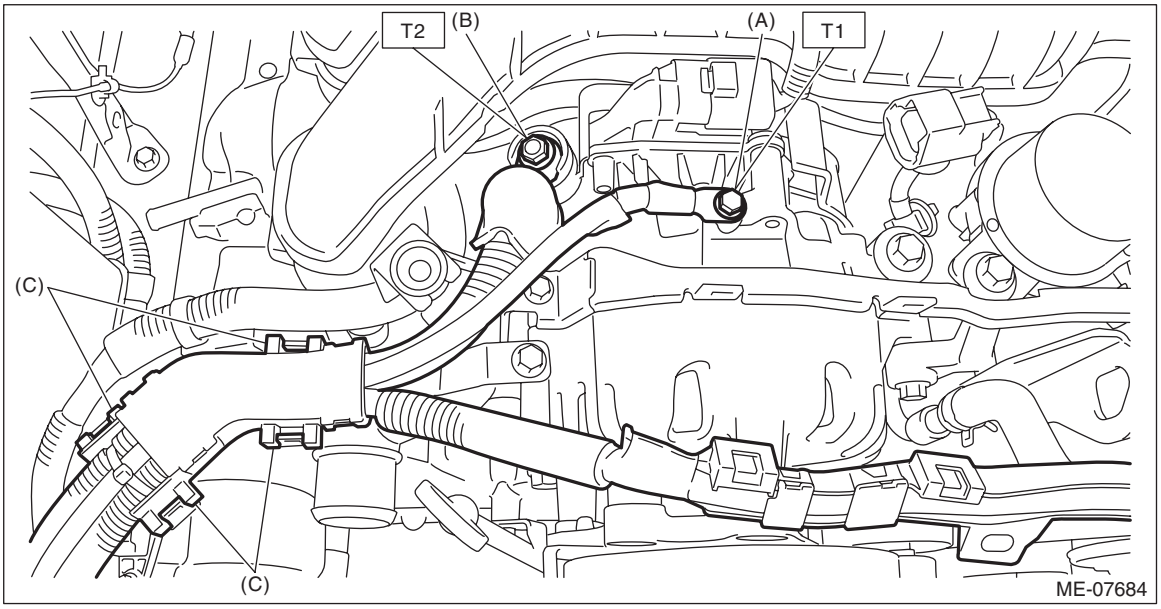

30) Secure the battery cable assembly to the collector cover bracket with the clip (B), and install the bolt (A) which secures the battery cable stay to the chain cover.

NOTE:
When installing the battery cable stay, install it by fitting the folded end (a) of the battery cable stay to the chain cover boss.

Tightening torque:
6.4 N·m (0.7 kgf-m, 4.7 ft-lb)

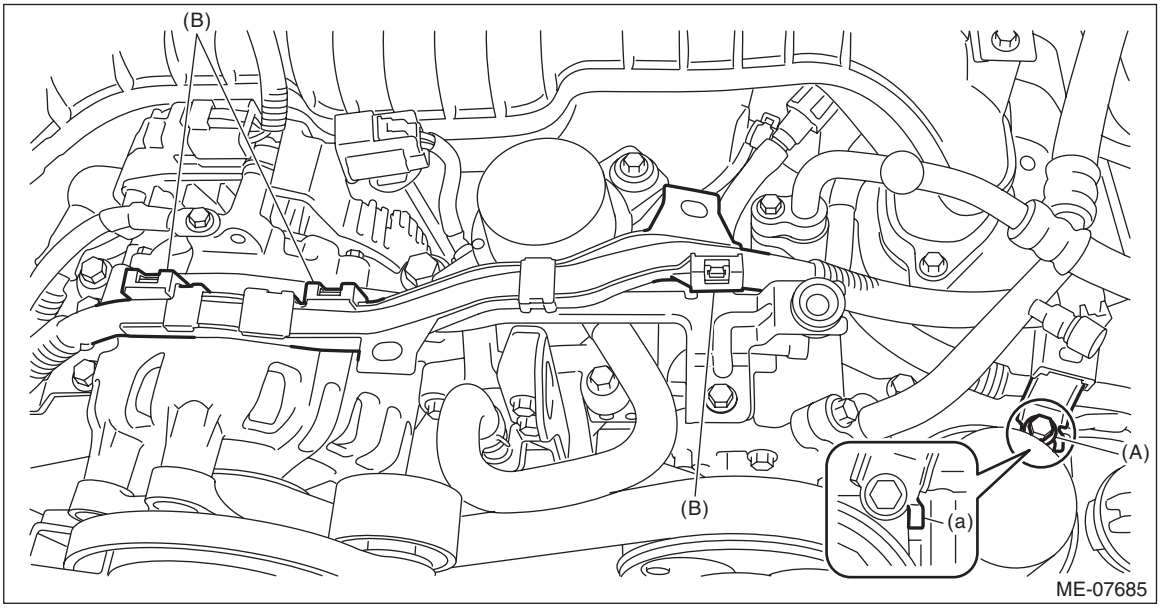

31) Install the battery cable assembly to the main fuse box, and install the nut which secures the battery cable assembly to the slow blow fuse (12 volt auxiliary battery).

Tightening torque:
7.5 N·m (0.8 kgf-m, 5.5 ft-lb)

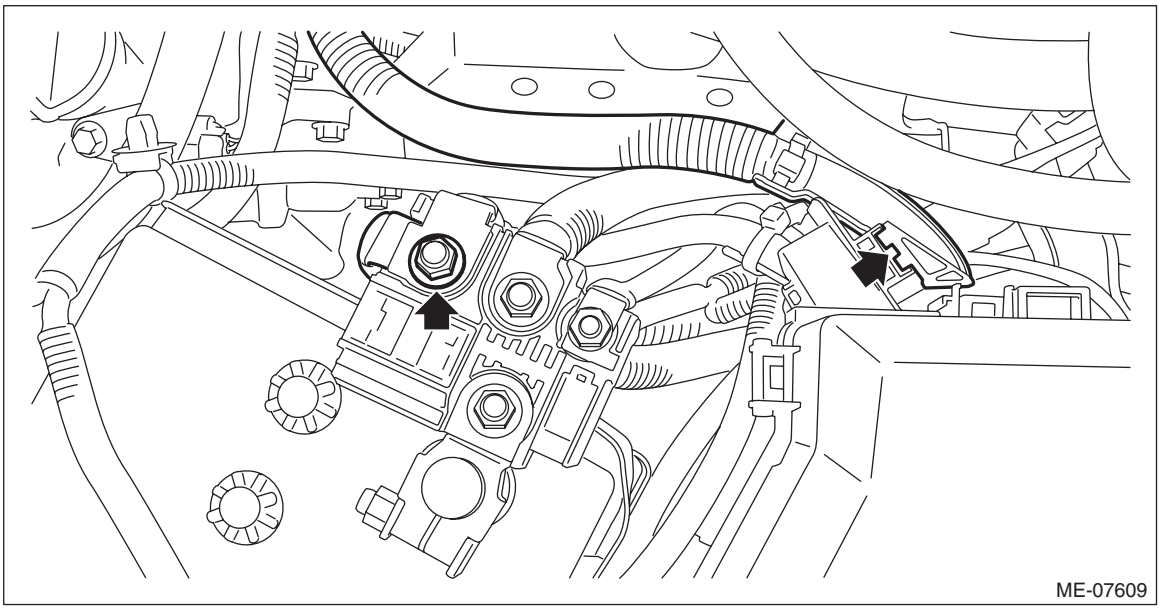

32) Install the terminal boot to the positive terminal of the 12 volt auxiliary battery.
33) Set the harness, and secure the harness to the battery cable assembly with the clip (C) and the clip (D).
34) Connect the connector (A) to the brake vacuum pump, and connect the connector (B) to the A/C compressor.

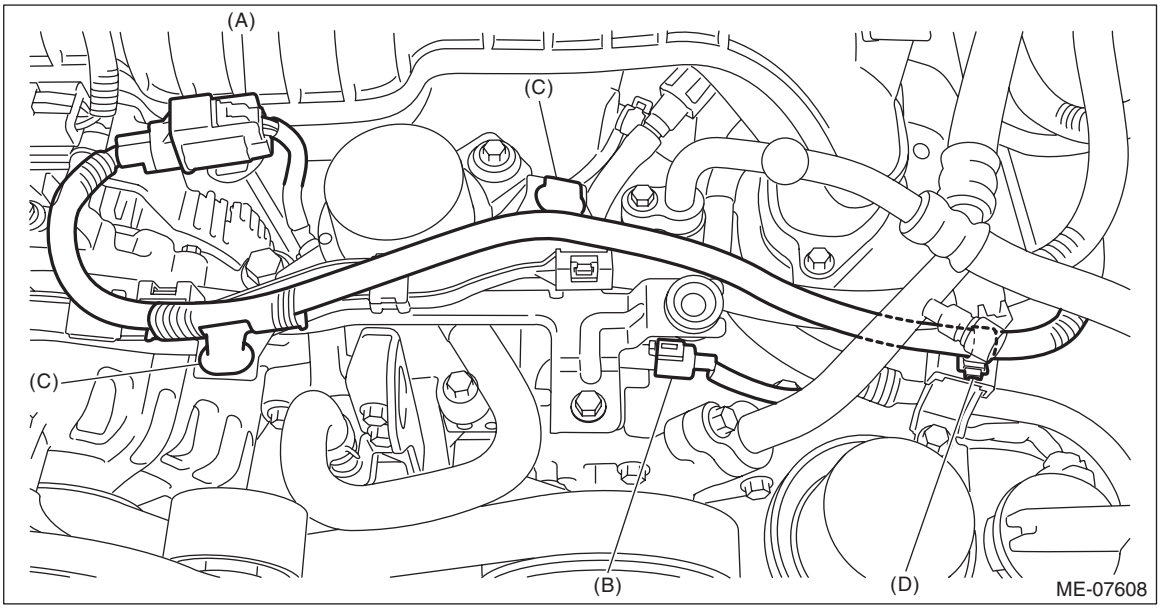

35) Install the engine harness connector (black) to bracket, then connect the bulkhead harness connector to the engine harness connector (black).

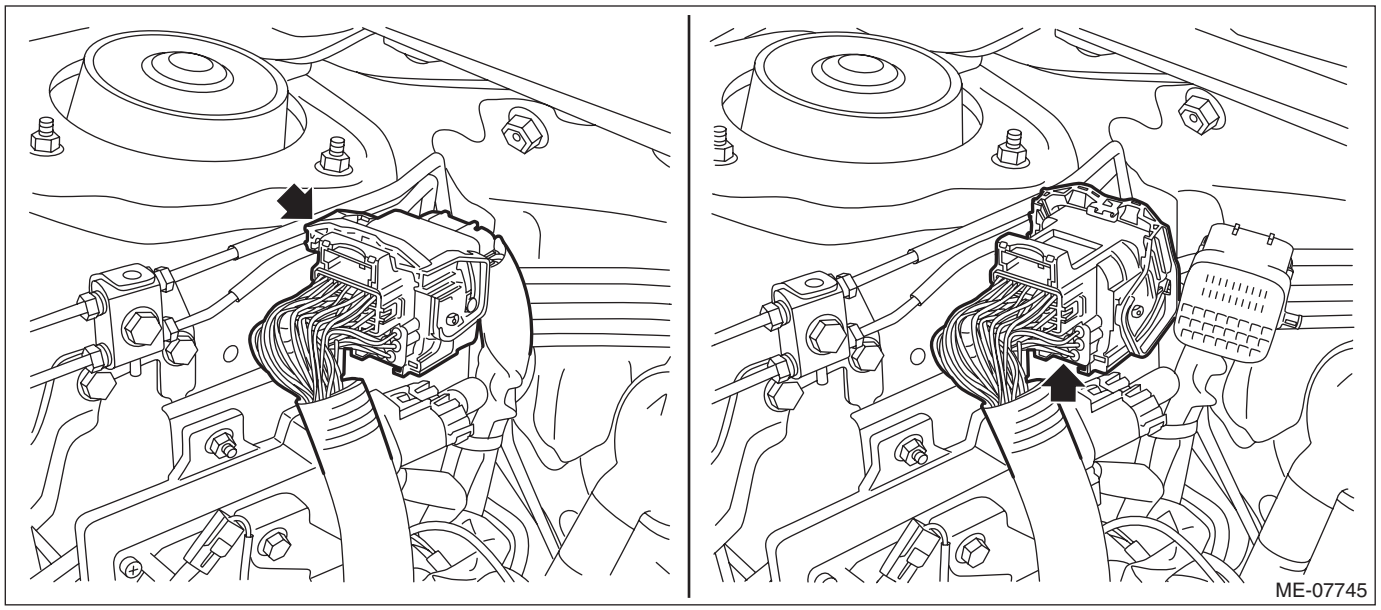

36) Install the radiator. <Ref. to CO(H4DO(w/o HEV))-82, INSTALLATION, Radiator.>
37) Install the air cleaner case. <Ref. to IN(H4DO(HEV))-8, INSTALLATION, Air Cleaner Case.>
38) Install the air intake duct. <Ref. to IN(H4DO(HEV))-15, INSTALLATION, Air Intake Duct.>
39) Connect the battery ground terminal. <Ref. to NT-5, BATTERY, NOTE, Note.>
40) Fill engine coolant. <Ref. to CO(H4DO(w/o HEV))-17, FILLING OF ENGINE COOLANT, REPLACEMENT, Engine Coolant.>
41) Charge the A/C system with refrigerant. <Ref. to AC-30, PROCEDURE, Refrigerant Charging Procedure.>
42) Install the collector cover.

43) Change the front hood stay position from (B) to (A).

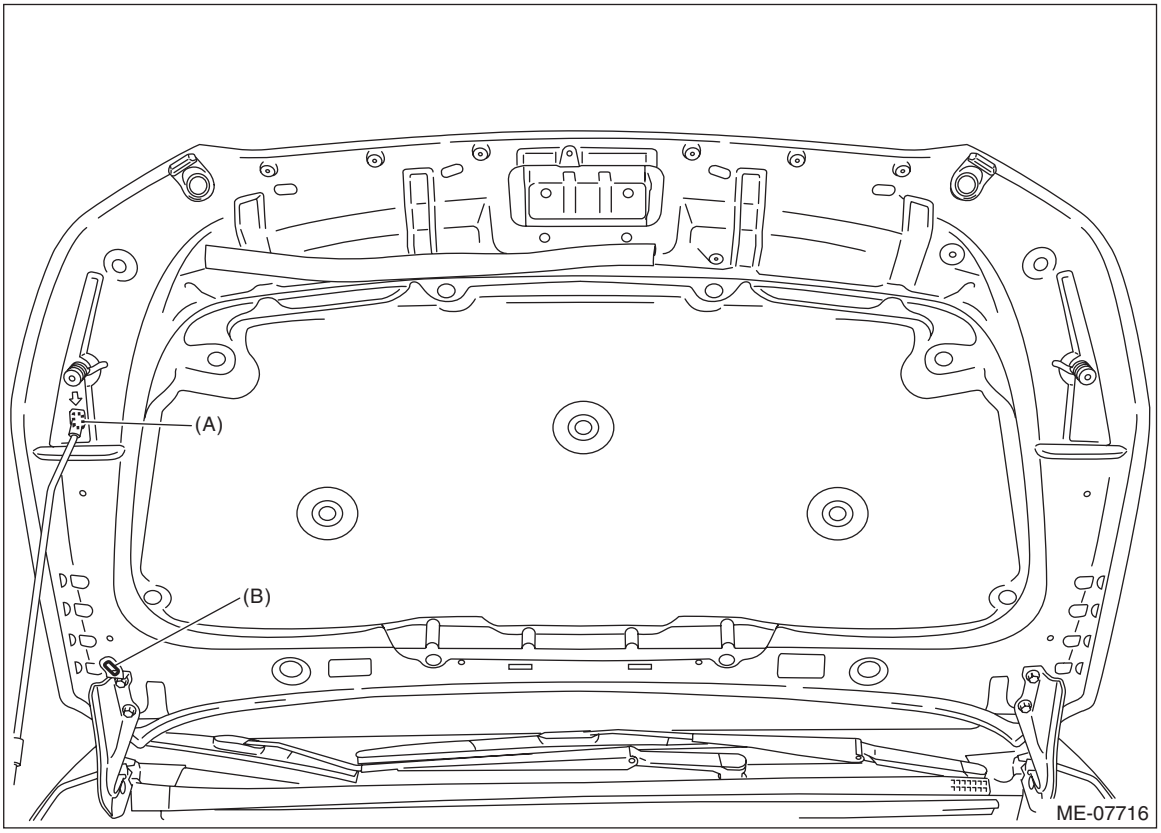

44) Install the front hood striker to the front hood by aligning the alignment marks (A), and close the front hood.

Tightening torque:
33 N·m (3.4 kgf-m, 24.3 ft-lb)

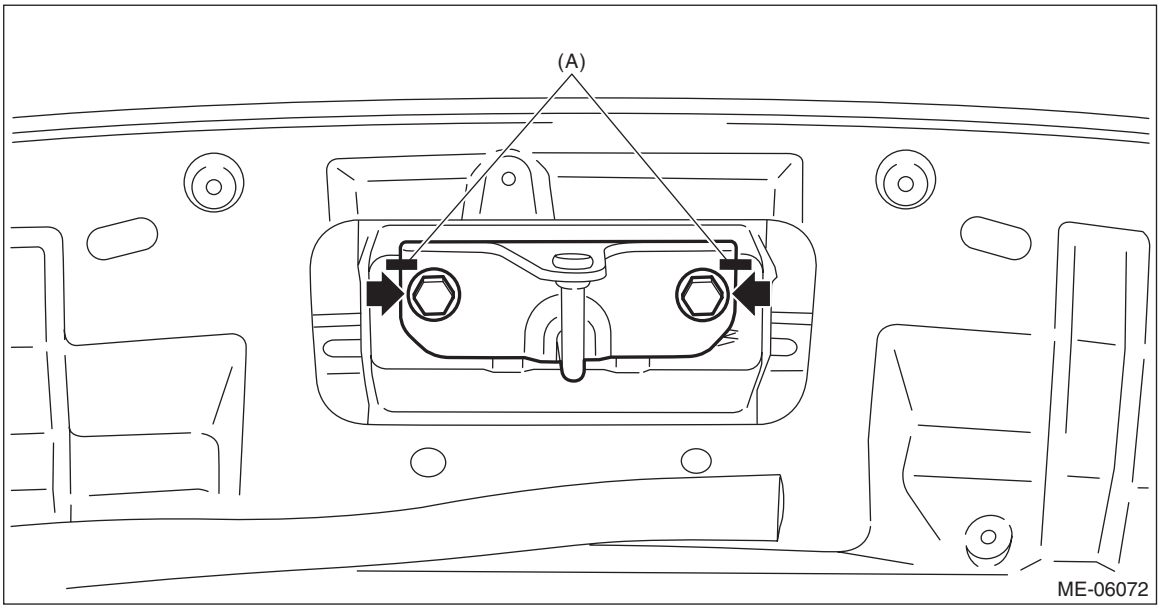

C: INSPECTION

1) Check that pipes, hoses, connectors and clamps are installed firmly.
2) Check the engine coolant is at specified level.
3) Check CVTF is at the specified level. (CVT model)
4) Start the engine and check for exhaust gas, engine coolant, leaks of fuel, etc. Also check for noise and vibrations.

10.Engine Mounting

A: REMOVAL

1) Remove the front crossmember. <Ref. to FS-18, REMOVAL, Front Crossmember.>
2) Remove the engine mounting from the engine.

B: INSTALLATION

Install in the reverse order of removal.

Tightening torque:
35 N·m (3.6 kgf-m, 25.8 ft-lb)

C: INSPECTION

Make sure that there are no cracks or other damages.

11.Preparation for Overhaul

A: PROCEDURE

1) After removing the engine from the vehicle body, attach the ST to the engine as shown in the figure.

NOTE:
When using a commercially sold engine stand, follow the instructions of engine stand used.

Tightening torque:
35 N·m (3.6 kgf-m, 25.8 ft-lb)

ST1 498457000 ENGINE STAND ADAPTER RH
ST2 498457100 ENGINE STAND ADAPTER LH
ST3 18362AA020 ADAPTER
ST4 499817100 ENGINE STAND

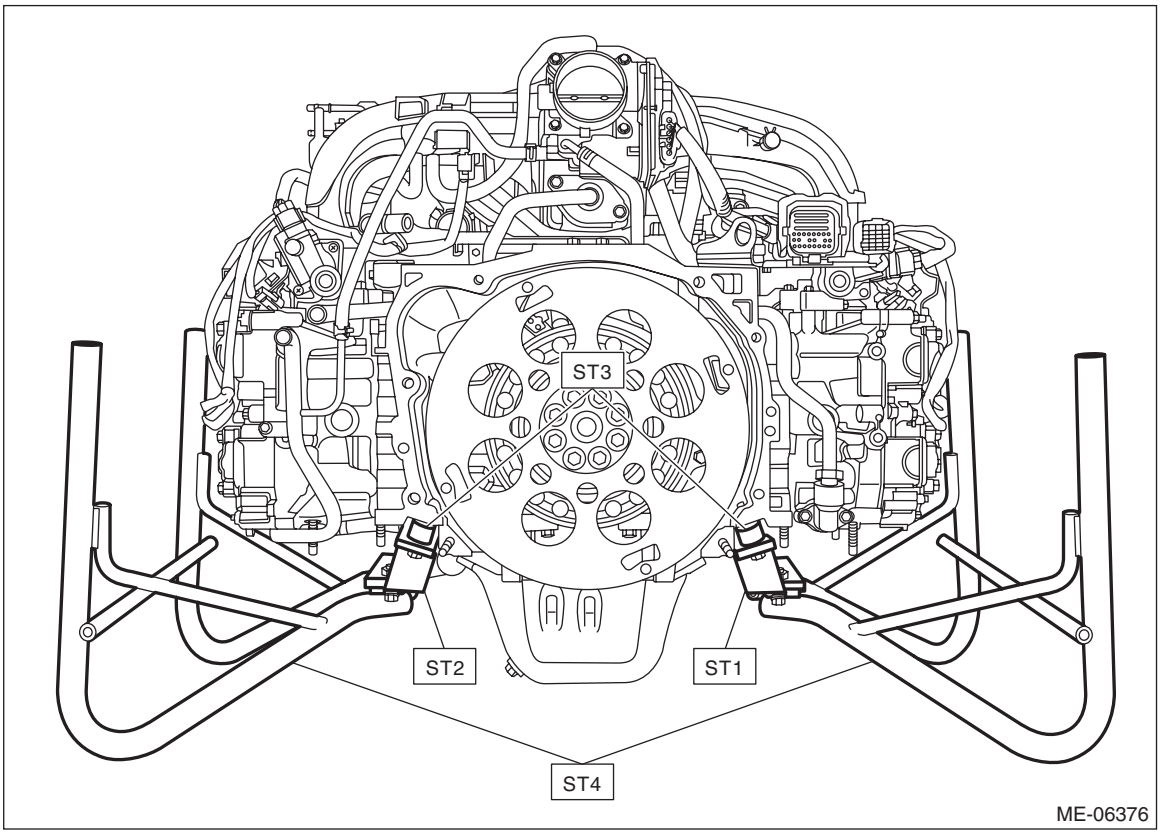

2) In this section the procedures described under each index are all connected and stated in order. The procedure for overhauling of the engine will be completed when you go through all steps in the process. Therefore, in this section, to conduct the particular procedure within the flow of a section, you need to go back and conduct the procedure described previously in order to do that particular procedure.

12.V-belt

A: REMOVAL

NOTE:
When replacing a single part, perform the work with the engine assembly installed to body.

1. GASOLINE ENGINE MODEL

- **V-belt**

1) When working on the vehicle

NOTE:
When working on the vehicle, perform the following steps also.

(1) Remove the V-belt covers.

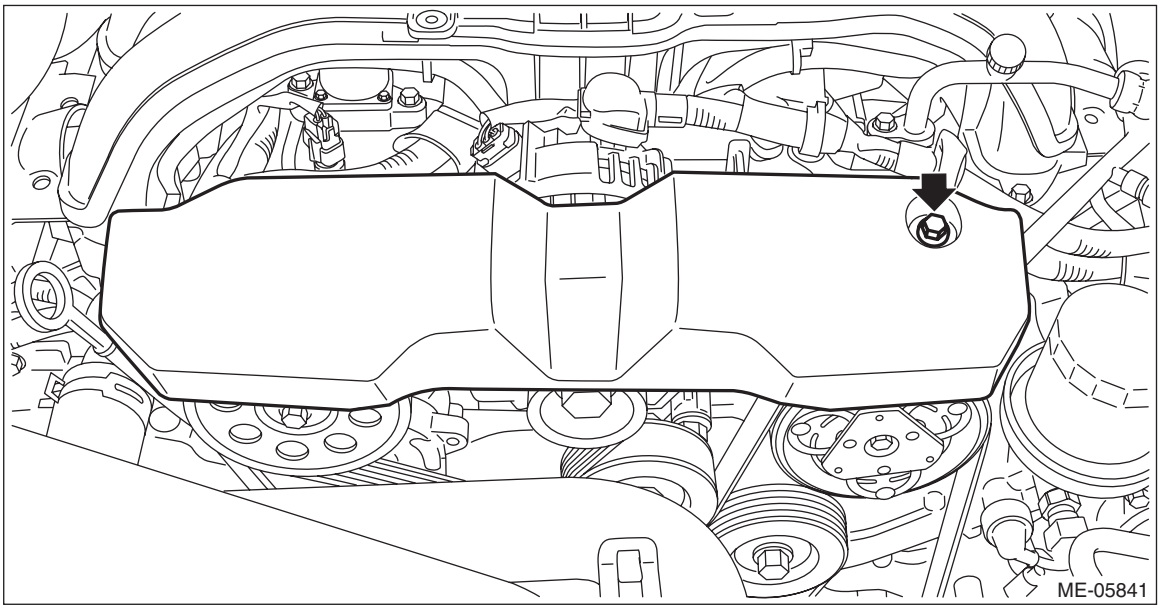

(2) Remove the air intake duct. <Ref. to IN(H4DO(w/o HEV))-13, REMOVAL, Air Intake Duct.>

2) Attach the tool to the V-belt tensioner assembly, and rotate the tool clockwise to loosen and remove the V-belt.

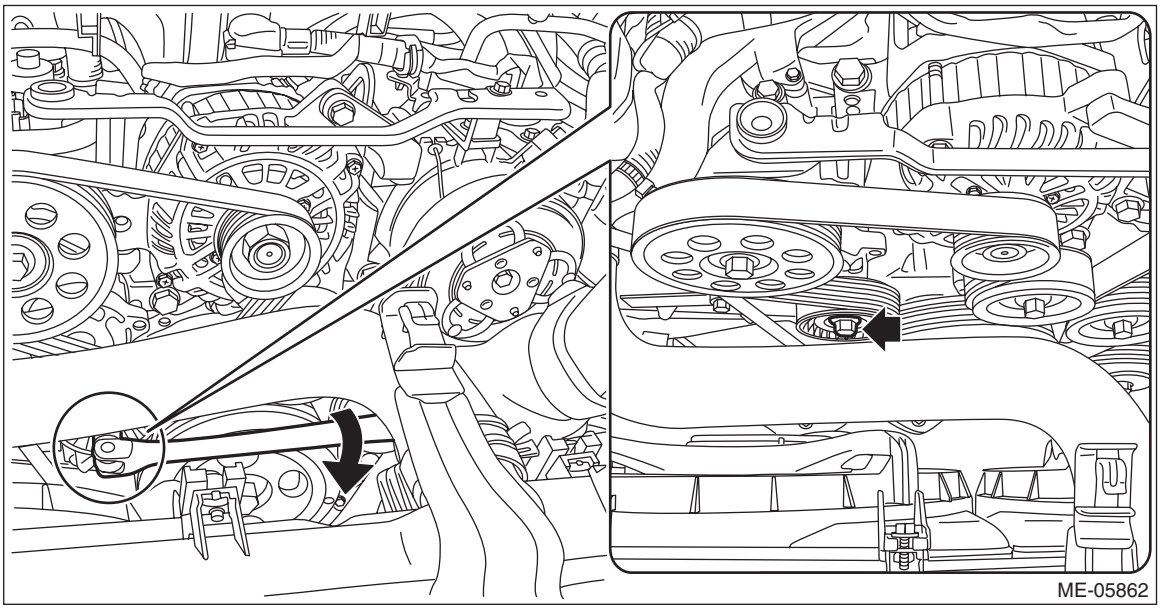

- **V-belt tensioner assembly and idler pulley**

1) Remove the V-belts.
2) Remove the cap from V-belt tensioner assembly.

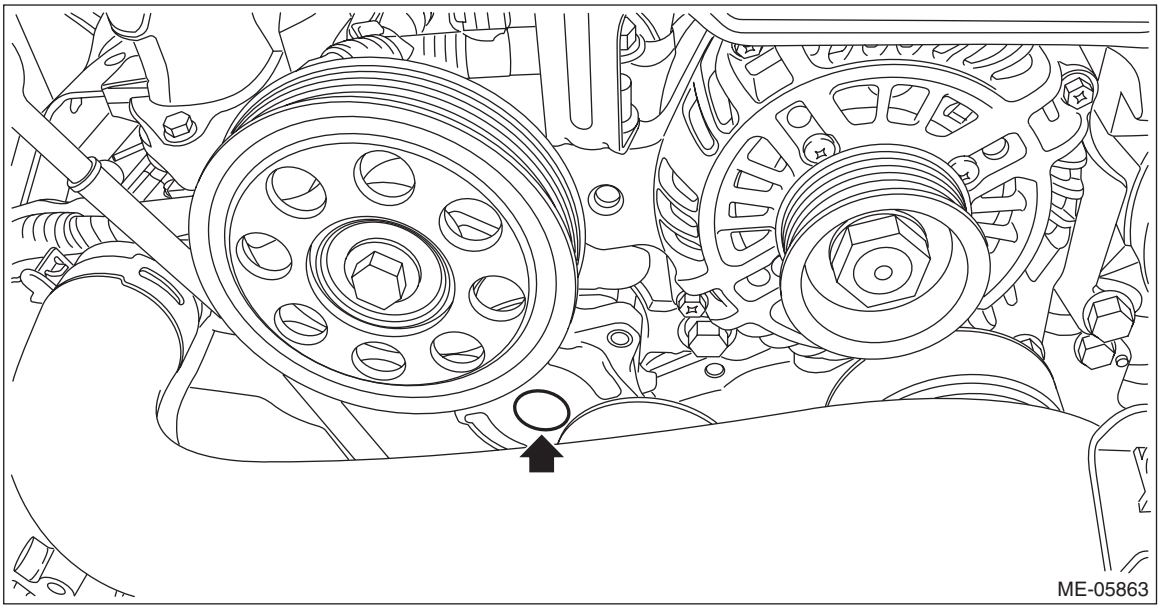

3) Remove the bolt securing the V-belt tensioner assembly to the generator bracket, and remove the V-belt tensioner assembly.

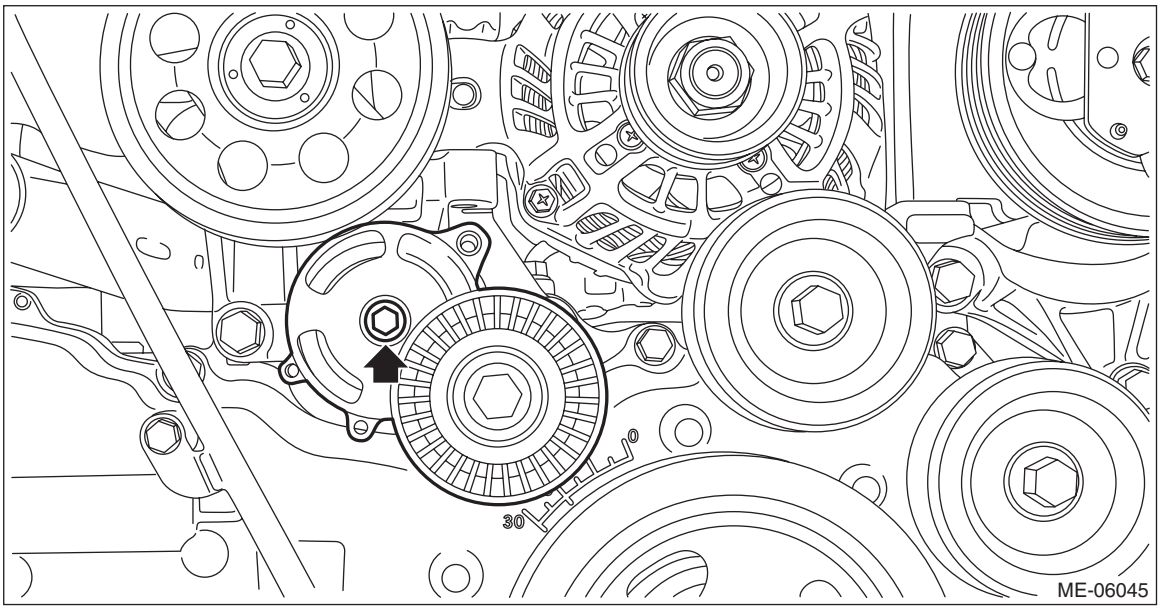

4) Remove the bolts which secure the idler pulley to the generator bracket and chain cover, and remove the idler pulley.

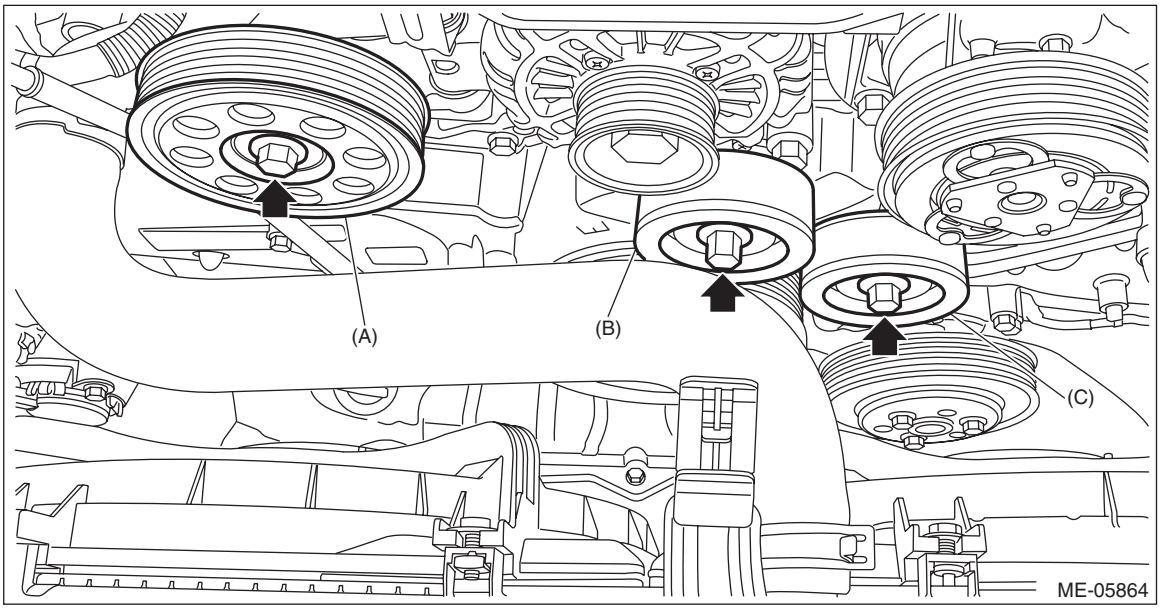

(A) Idler pulley A (B) Idler pulley B (C) Idler pulley C

2. HEV MODEL

- **V-belt tensioner assembly and V-belt**

1) When working on the vehicle

NOTE:
When working on the vehicle, perform the following steps also.
(1) Turn the ignition switch to OFF.
(2) Remove the collector cover.
1. Pull up the two points at the front of collector cover (A).
2. Pull up the two points at the rear of collector cover (B) while moving them rearward.

NOTE:
Be careful not to contact the fuel delivery tube when moving the collector cover rearward.

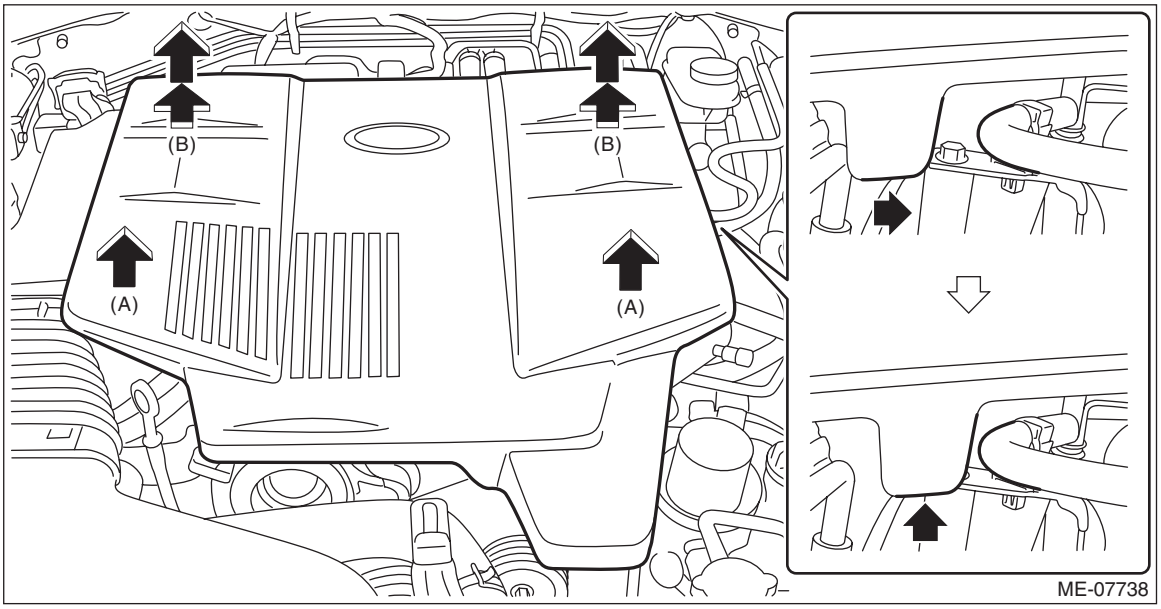

2) Prepare for removing the V-belt tensioner assembly. (The V-belt is not damaged.)
(1) Set the tool on the arm lever No. 1, turn the tool counterclockwise until the protrusion (A) of the arm lever No. 1 moves to the position shown in the figure, and insert the ST into the stopper pin hole (B) on the arm lever No. 2.

ST 499267300 STOPPER PIN

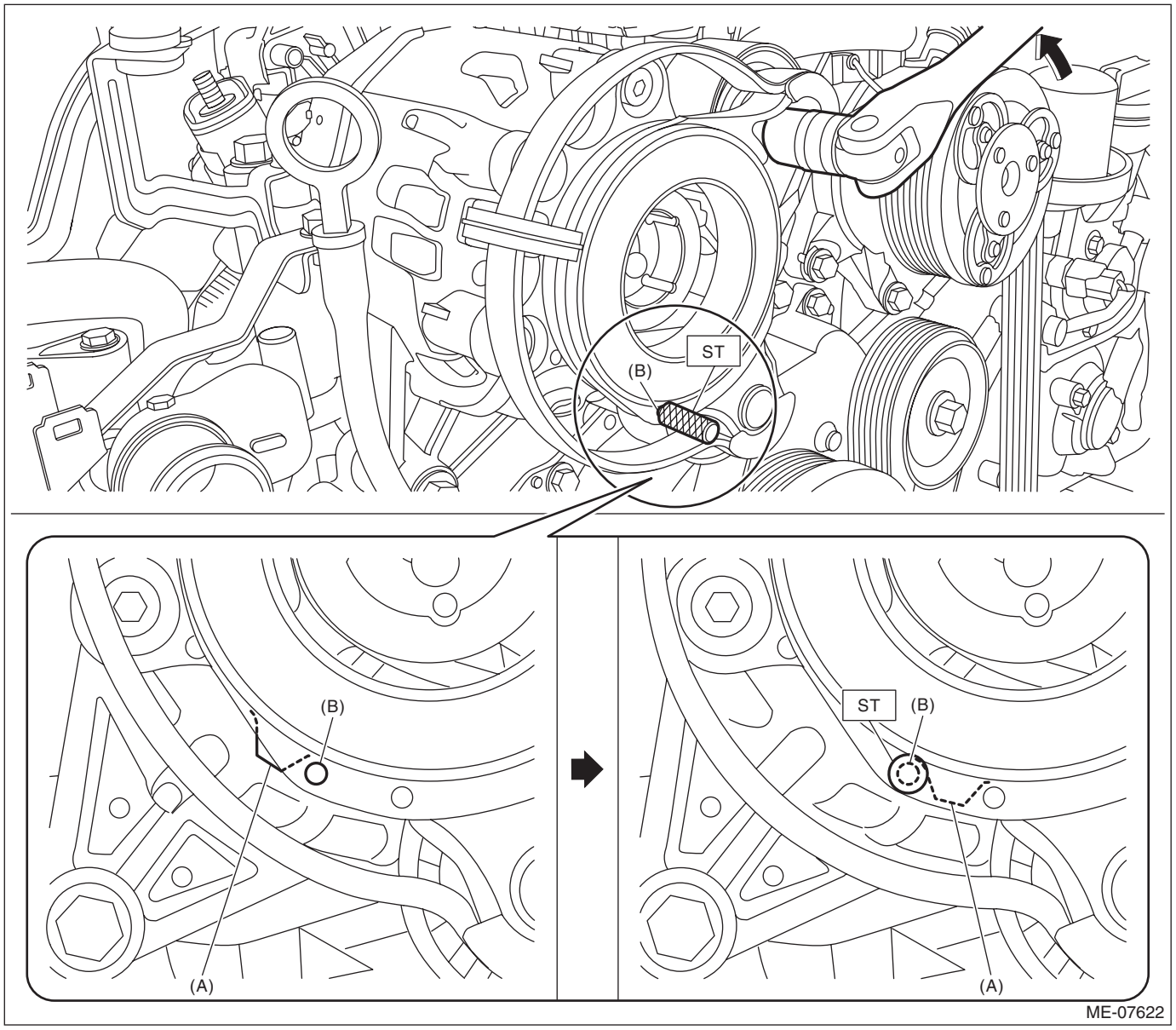

3) Prepare for removing the V-belt tensioner assembly. (The V-belt is damaged.)

NOTE:
This operation requires 2 pieces of ST: STOPPER PIN (499267300).

(1) Turn the arm lever until the stopper pin hole (A) of the arm lever No. 2 is aligned with the stopper pin hole (B) of the housing, and insert the ST through the stopper pin hole (A) of the arm lever No. 2 into the end of the stopper pin hole (B) of the housing.

CAUTION:
Be sure to insert the ST into the end of the stopper pin hole (B) of the housing. If the ST is not inserted to the end, the ST may accidentally come off in the next procedure, resulting in an injury.

ST 499267300 STOPPER PIN

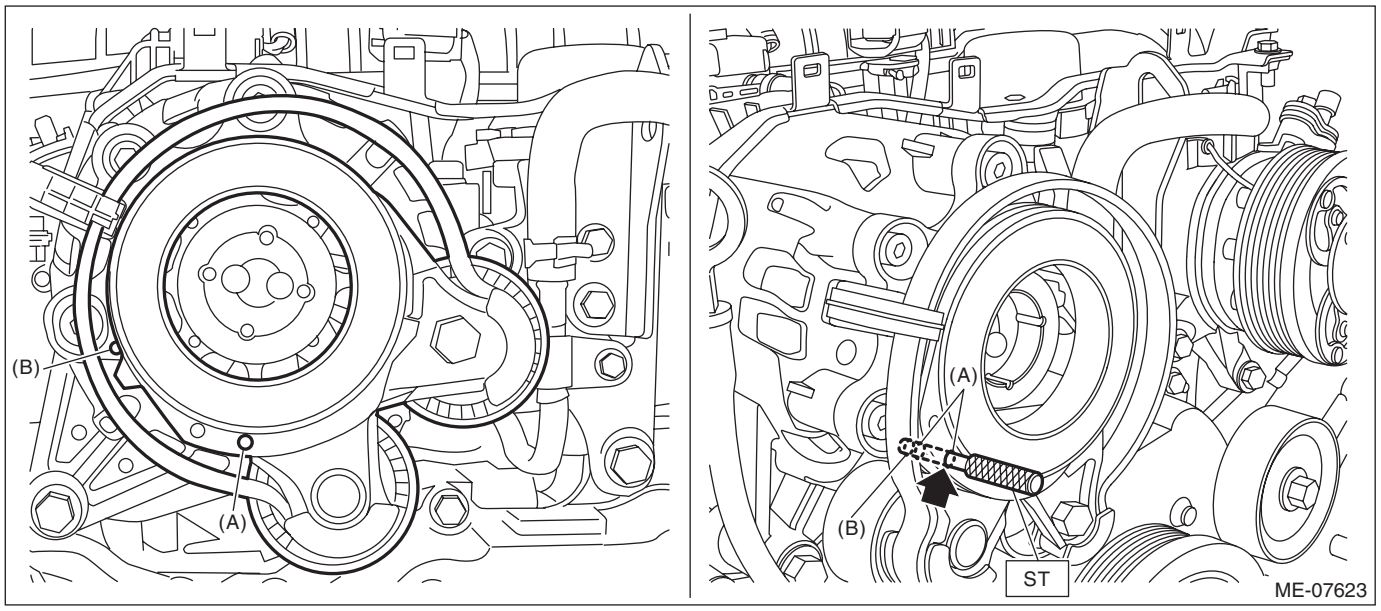

(2) Set the tool on the arm lever No. 1, turn the tool counterclockwise until the protrusion (A) of the arm lever No. 1 moves to the position shown in the figure, and insert the ST into the stopper pin hole (B) on the arm lever No. 2.

ST 499267300 STOPPER PIN

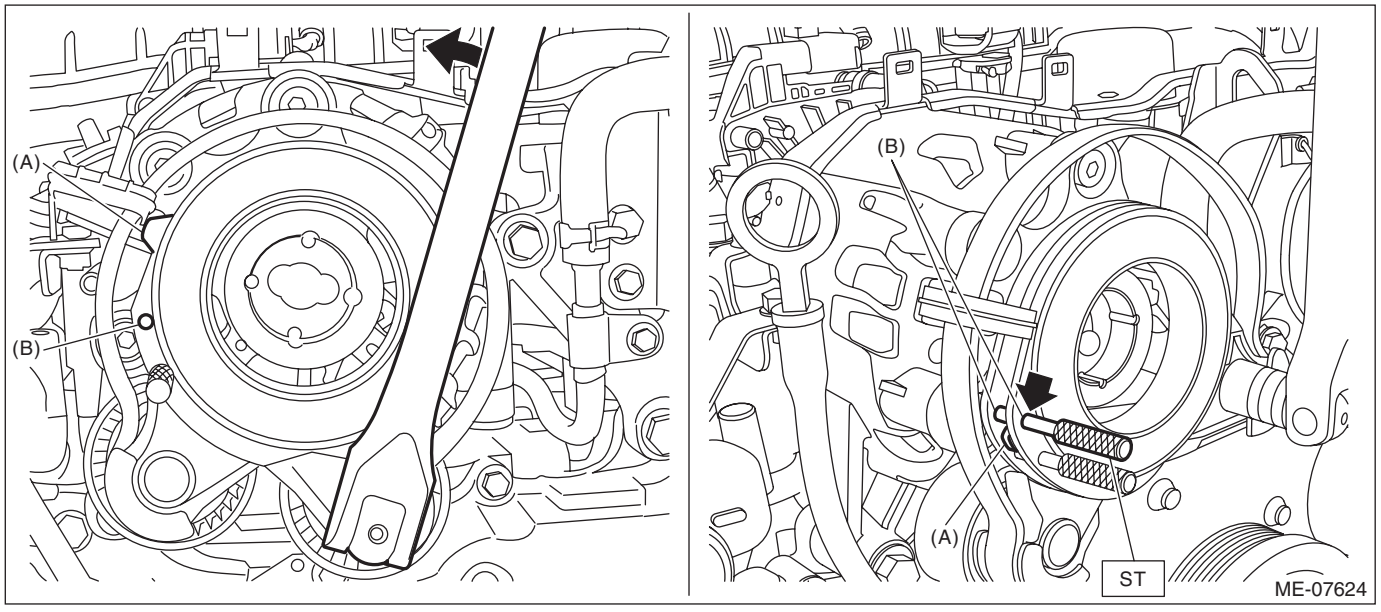

(3) Remove the ST inserted in procedure (1).
ST 499267300 STOPPER PIN

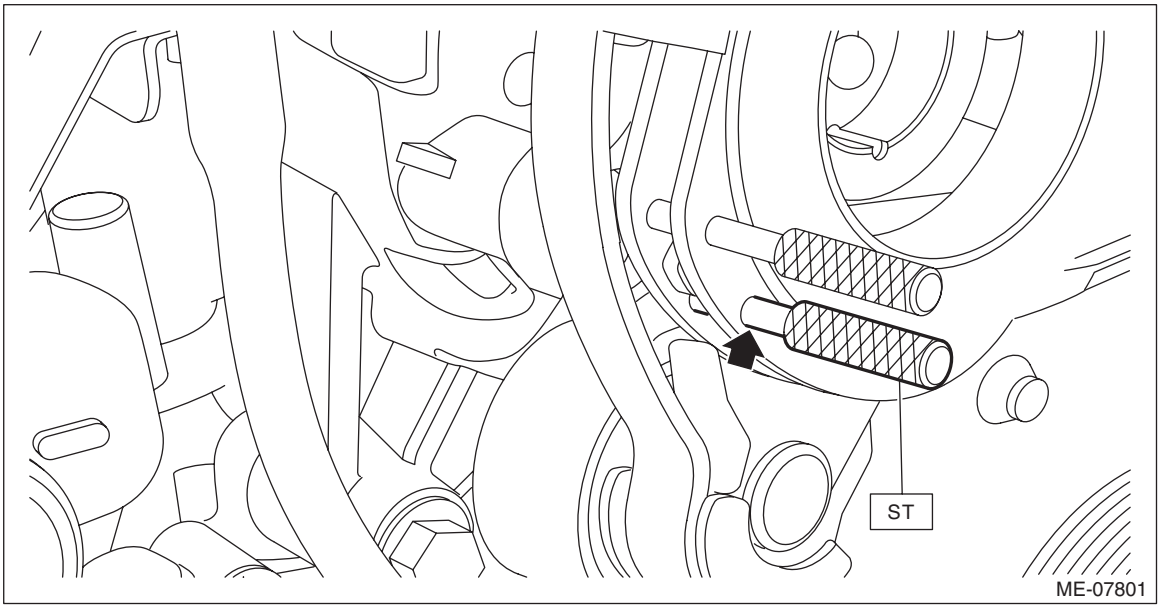

4) Remove the V-belt tensioner assembly and remove the V-belt.

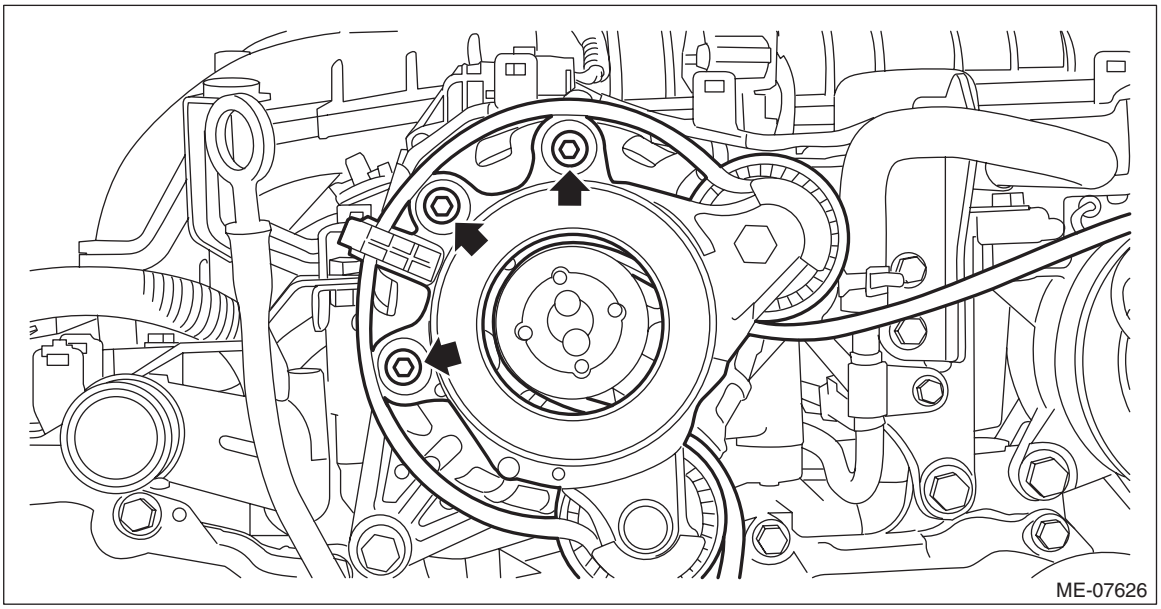

5) The V-belt tensioner assembly is replaced.

NOTE:
- When replacing the V-belt tensioner assembly, also perform the following steps.
- This procedure is required to prepare 1 more piece of ST: STOPPER PIN (499267300).

(1) Using a bolt (M8) of suitable length, secure the V-belt tensioner assembly on a vise.

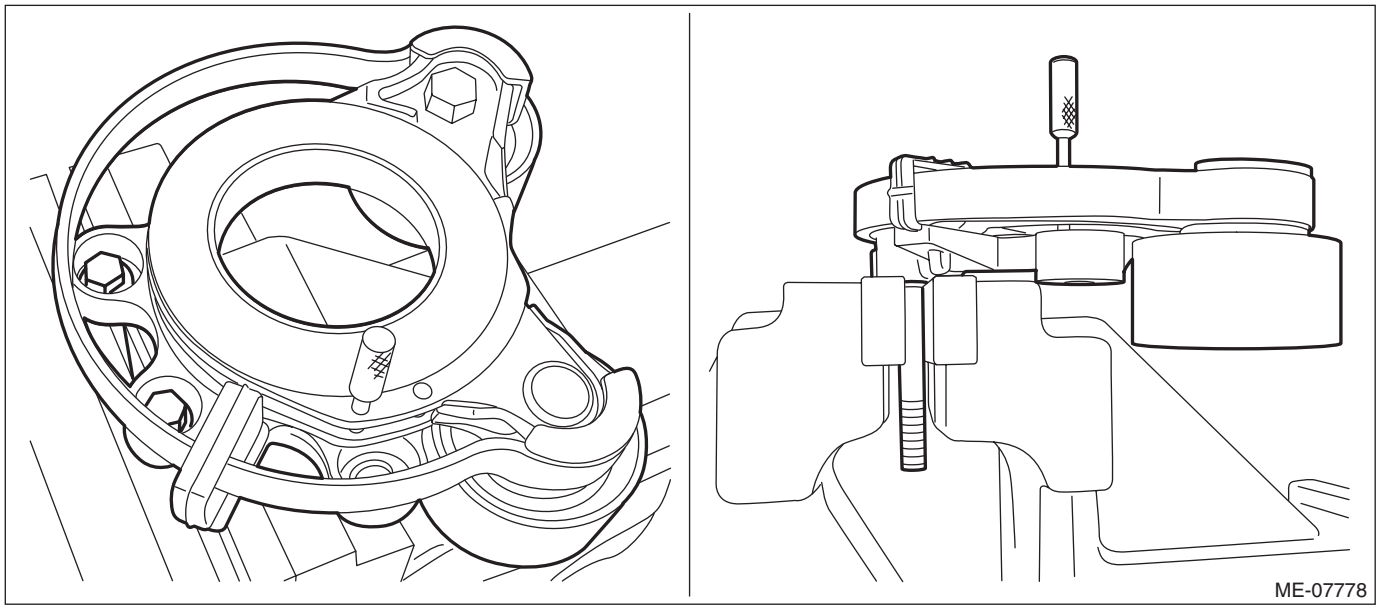

(2) Turn the arm lever until the stopper pin hole (A) of the arm lever No. 2 is aligned with the stopper pin hole (B) of the housing, and insert the ST through the stopper pin hole (A) of the arm lever No. 2 into the end of the stopper pin hole (B) of the housing.

CAUTION:
Be sure to insert the ST into the end of the stopper pin hole (B) of the housing. If the ST is not inserted to the end, the ST may accidentally come off in the next procedure, resulting in an injury.

ST 499267300 STOPPER PIN

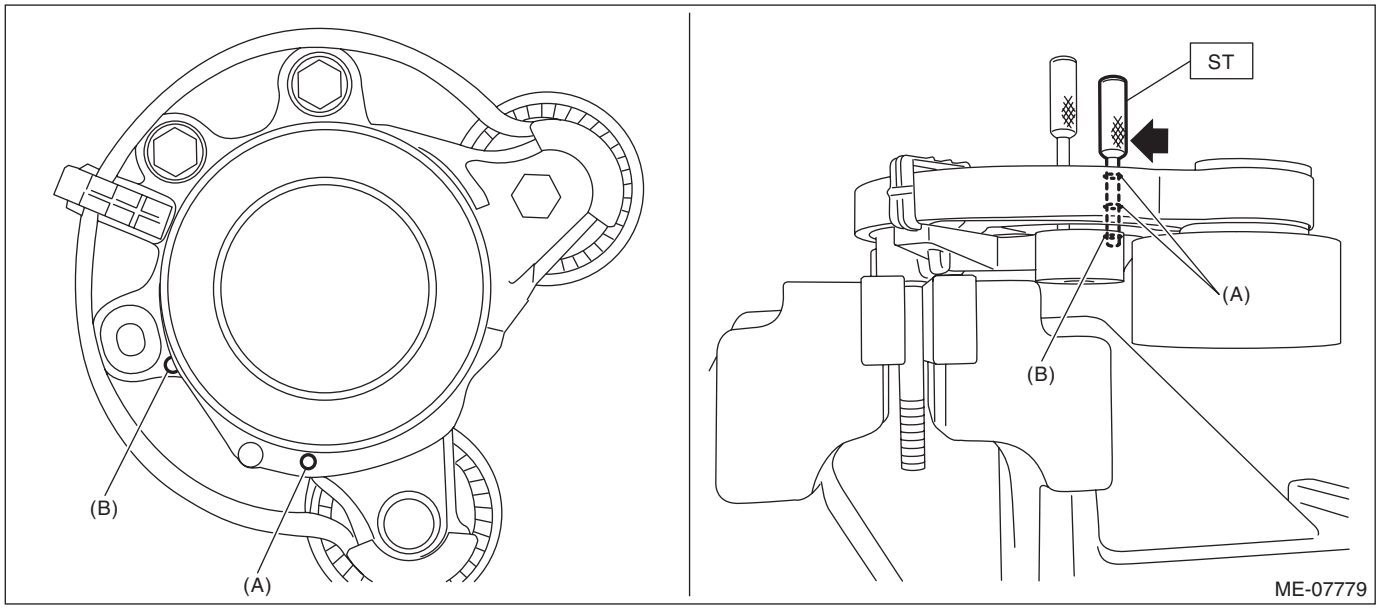

(3) Set the tool on the arm lever No. 1, turn the tool counterclockwise a little, remove the ST (A) from the arm lever No. 2, and remove the ST (B) inserted in step (2).

ST 499267300 STOPPER PIN

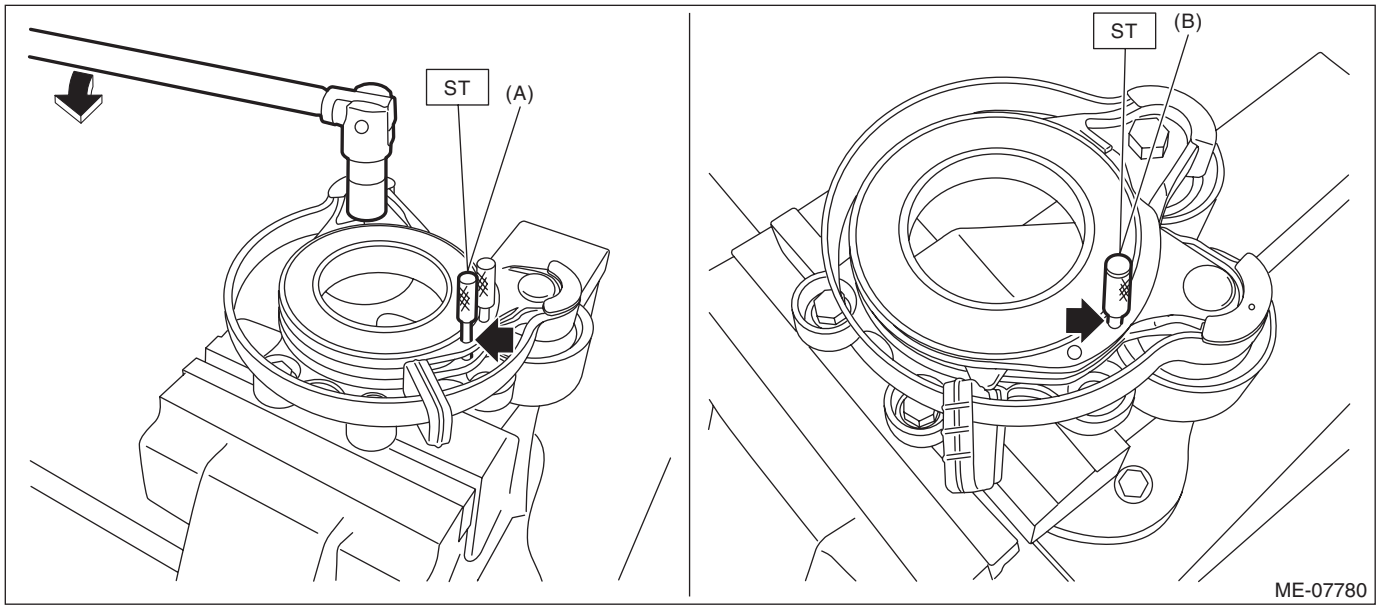

- **Idler pulley**

1) Loosen the V-belt, and remove the V-belt from the idler pulley.

NOTE:
- Refer to “V-belt tensioner assembly and V-belt” for the loosening procedure of V-belt.
- It is not necessary to remove the V-belt tensioner assembly and the V-belt from ISG.

2) Remove the bolts which secure the idler pulley to the chain cover, and remove the idler pulley.

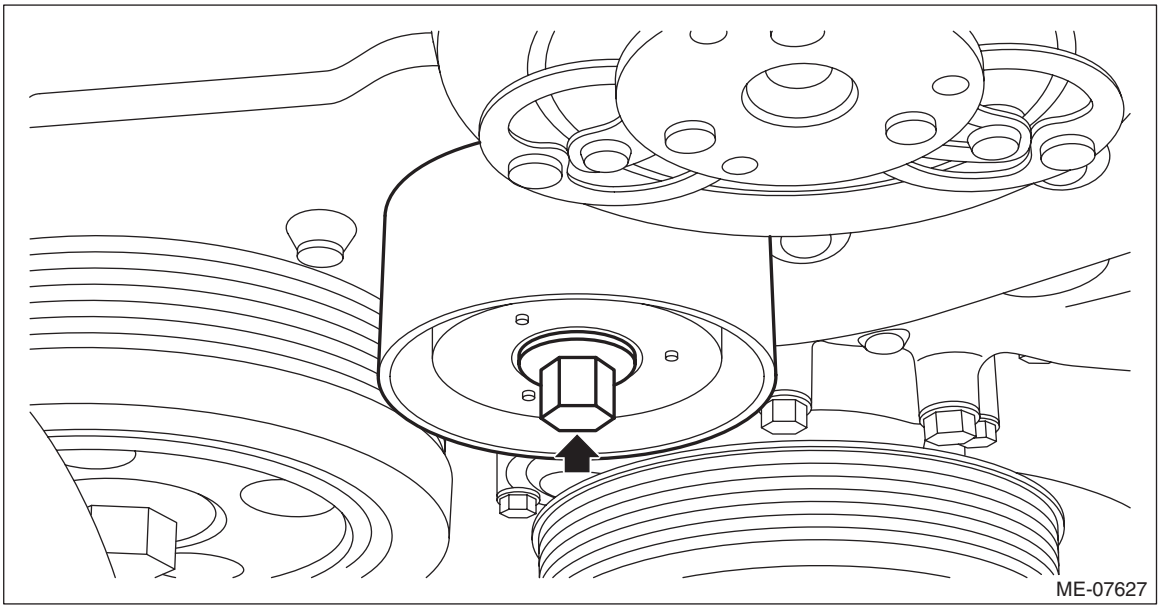

B: INSTALLATION

1. GASOLINE ENGINE MODEL

- **V-belt**

Install in the reverse order of removal.

CAUTION:
- **When reusing the V-belt, wipe off dust and water with cloth.**
- **Do not use the V-belt if there is any oil, grease or coolant on the belt.**
- **Be careful not to rub the V-belt end surface with bare hands; exposed core may cause injury.**
- **Wipe off any dust, oil and water on the groove of each pulley with cloth.**

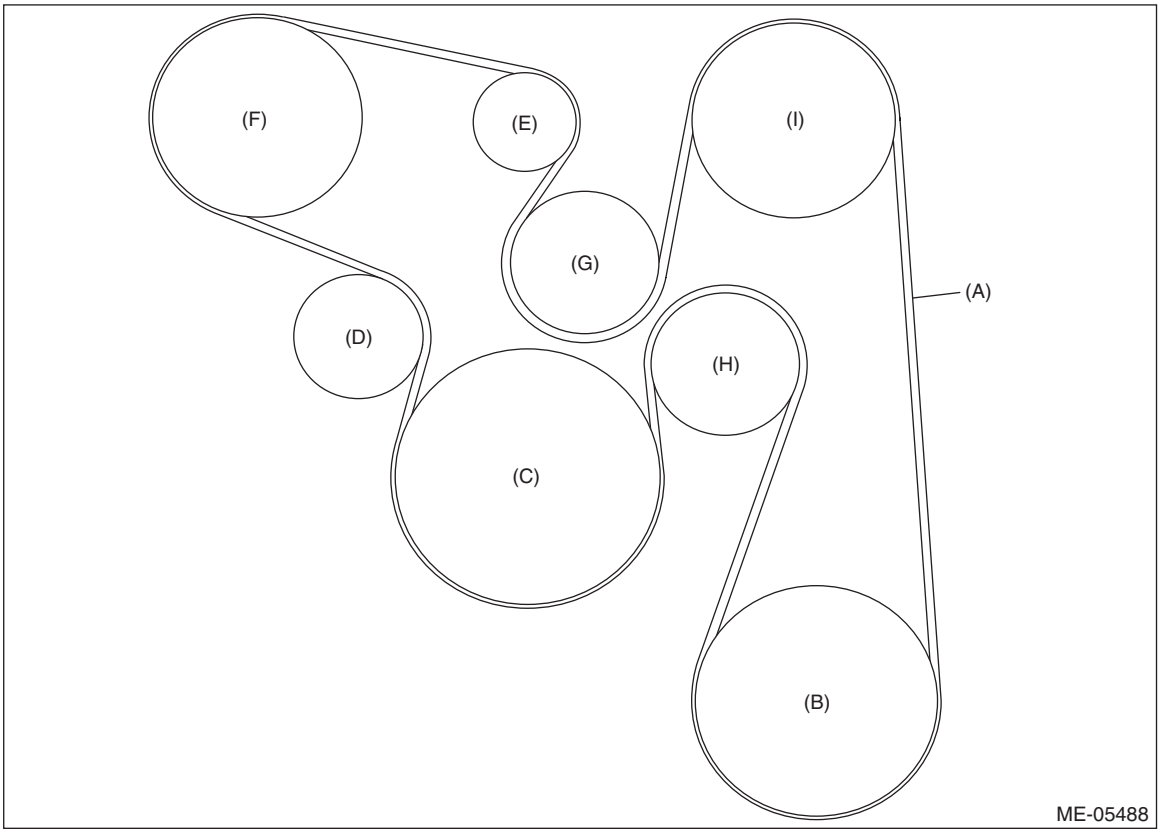

(A)	V-belt	(D)	V-belt tensioner ASSY	(G)	Idler pulley B
(B)	Water pump pulley	(E)	Generator pulley	(H)	Idler pulley C
(C)	Crank pulley	(F)	Idler pulley A	(I)	A/C compressor pulley

Tightening torque:
6.4 N·m (0.7 kgf-m, 4.7 ft-lb)

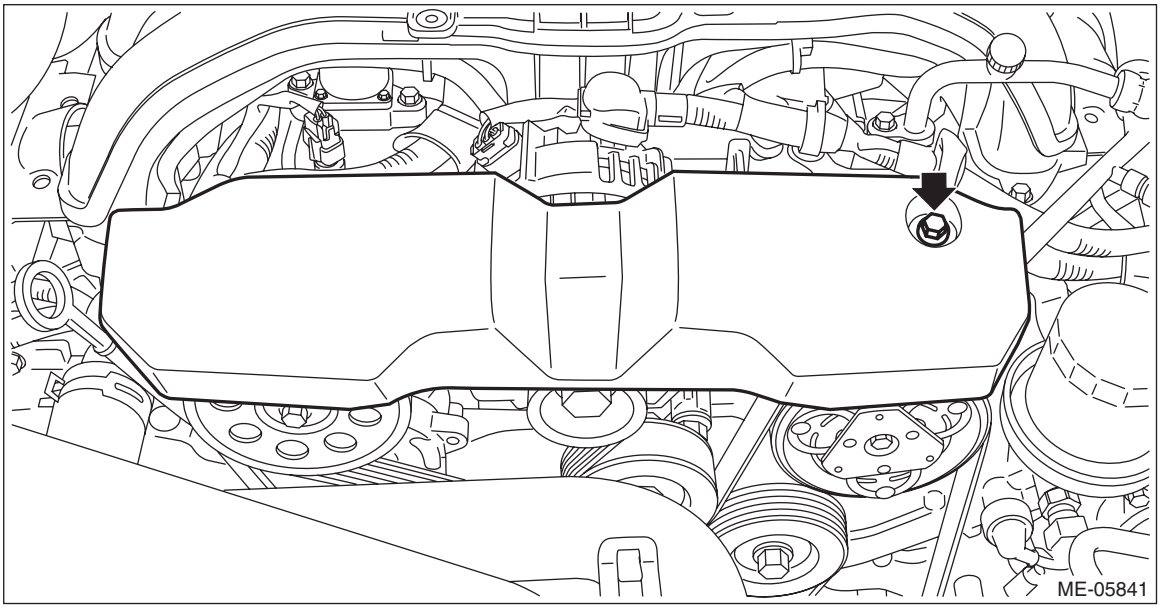

- **V-belt tensioner assembly and idler pulley**

1) Install the idler pulley to the generator bracket and chain cover.

NOTE:
When installing the idler pulley, be careful of the idler pulley cover direction.

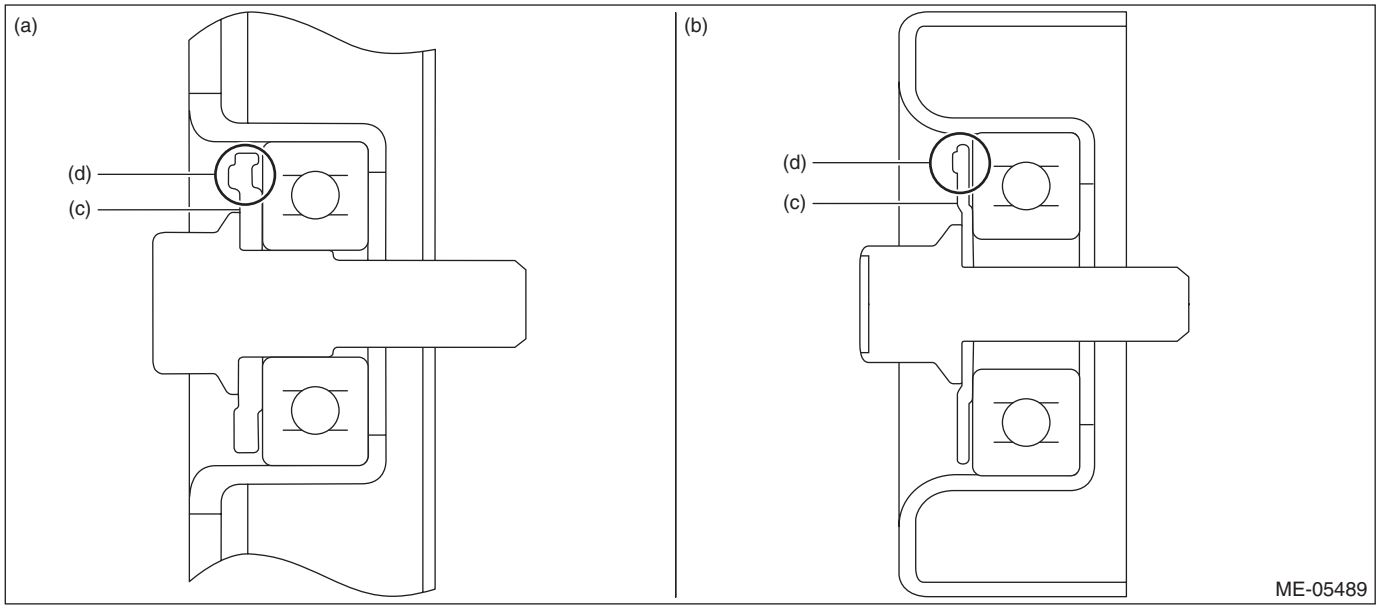

(a) Generator bracket part
(b) Chain cover part
(c) Idler pulley cover
(d) Protrusion (3 places)

Tightening torque:
T1: 25 N·m (2.5 kgf-m, 18.4 ft-lb)
T2: 36 N·m (3.7 kgf-m, 26.6 ft-lb)

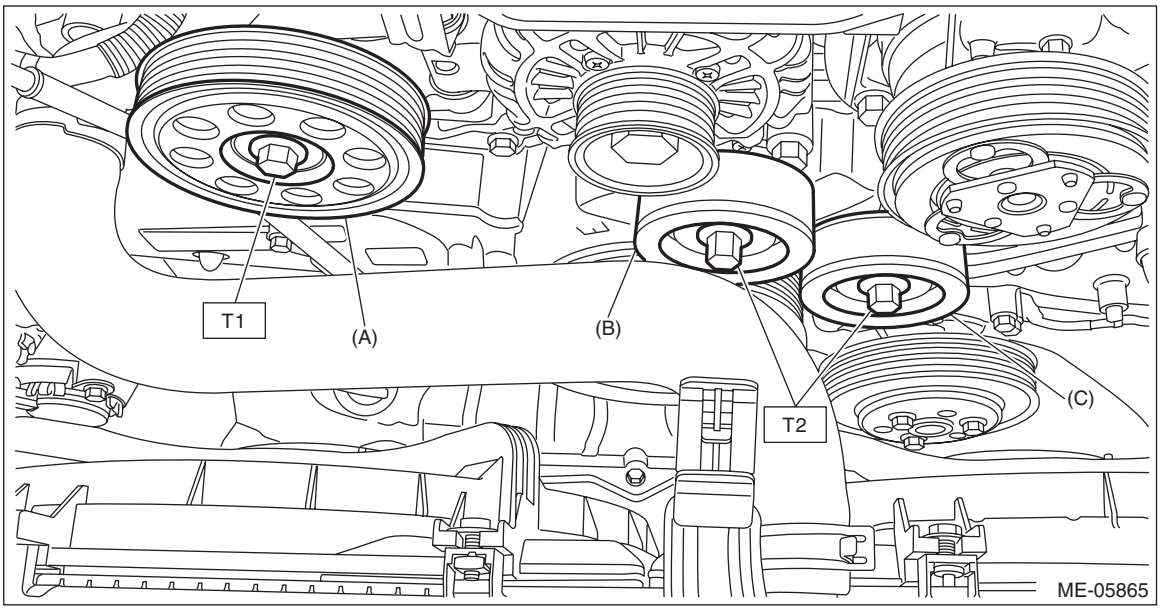

(A) Idler pulley A (B) Idler pulley B (C) Idler pulley C

2) Install the V-belt tensioner assembly onto the generator bracket.

NOTE:
When installing the V-belt tensioner assembly, insert the protrusion of V-belt tensioner assembly into the hole for preventing rotation at the generator bracket.

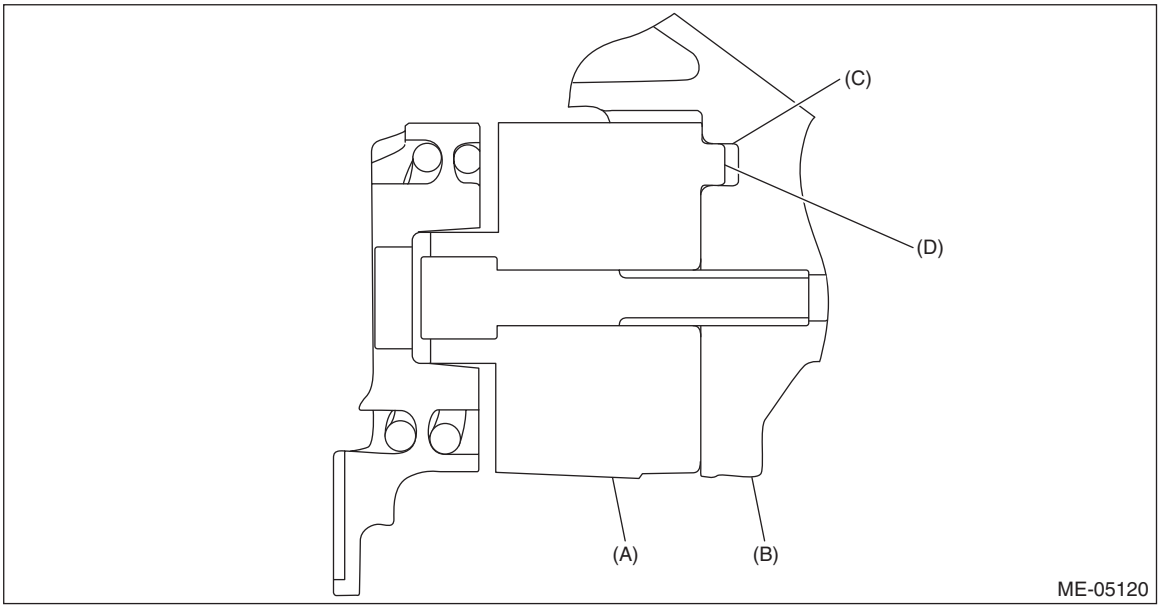

(A) V-belt tensioner ASSY (C) Hole to prevent rotation (D) Protrusion portion
(B) Generator bracket

Tightening torque:
25 N·m (2.5 kgf-m, 18.4 ft-lb)

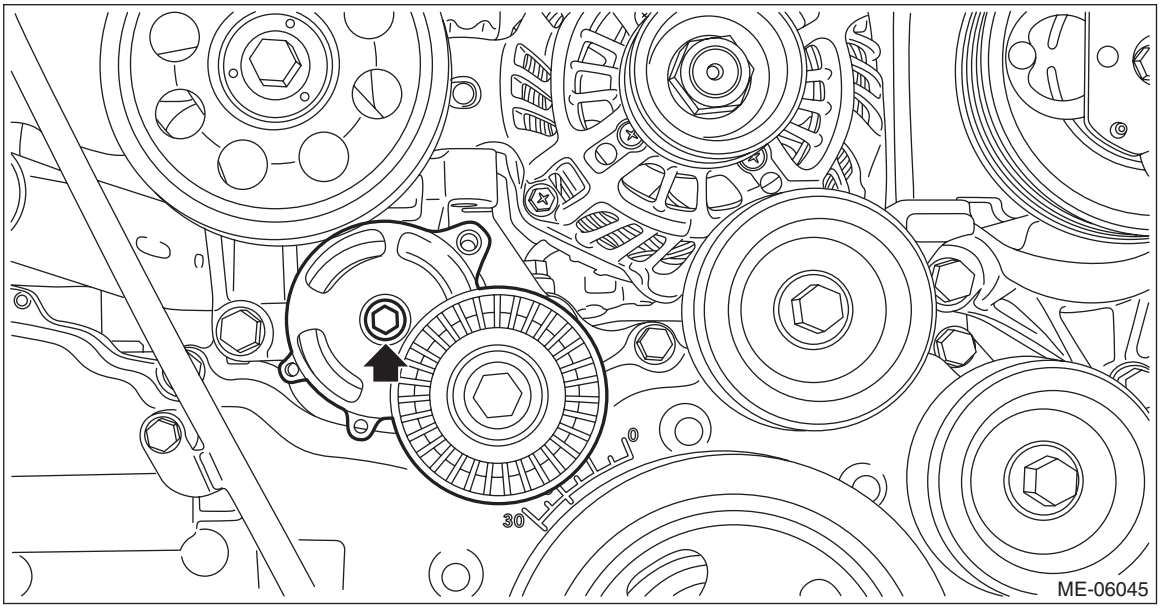

3) Install the cap to the V-belt tensioner assembly.

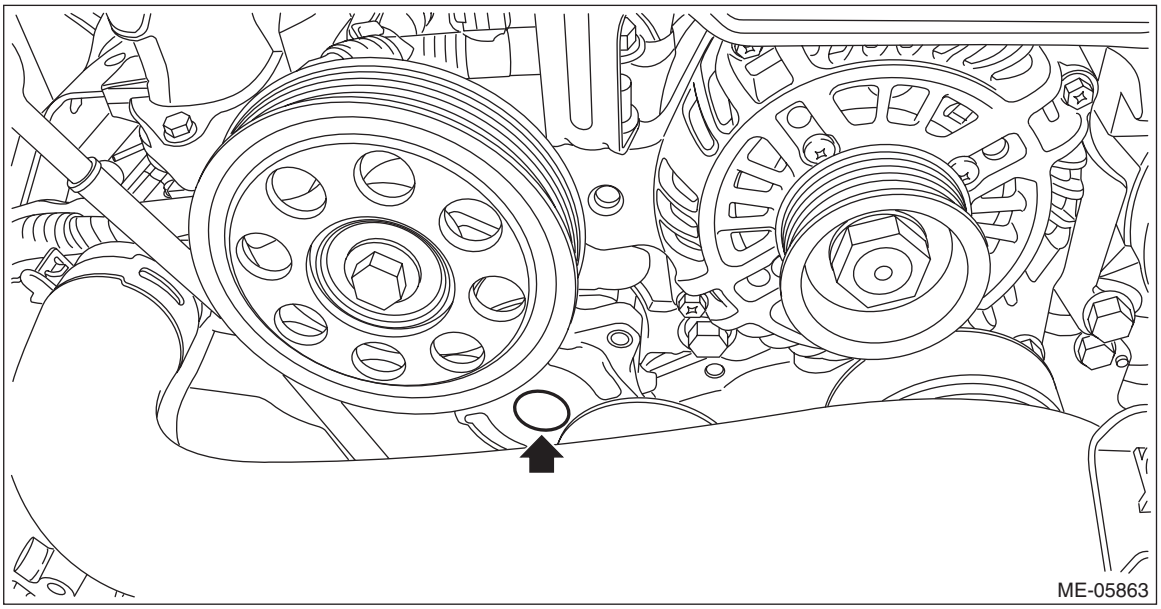

4) Install the V-belts.

2. HEV MODEL

• V-belt tensioner assembly and V-belt

1) Set the V-belt as shown in the figure.

CAUTION:
- **When reusing the V-belt, wipe off dust and water with cloth.**
- **Do not use the V-belt if there is any oil, grease or coolant on the belt.**
- **Be careful not to rub the V-belt end surface with bare hands; exposed core may cause injury.**
- **Wipe off any dust, oil and water on the groove of each pulley with cloth.**

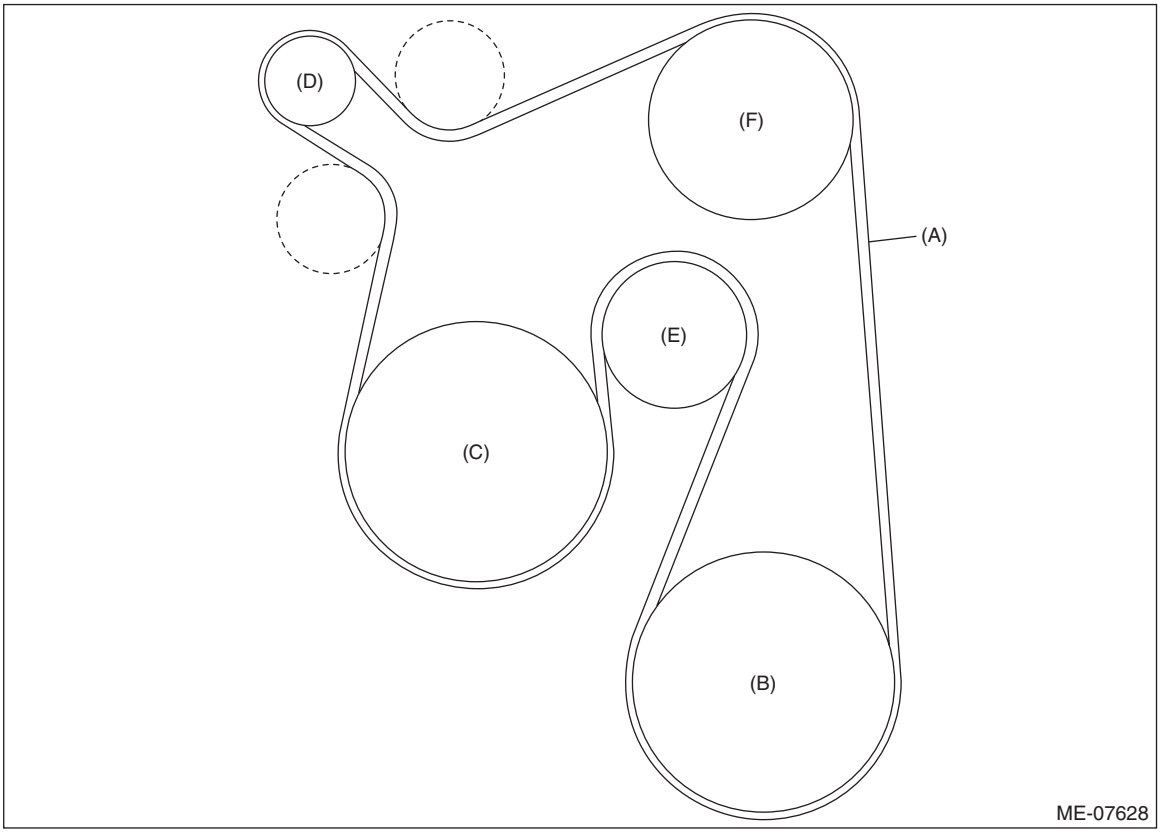

(A) V-belt
(B) Water pump pulley
(C) Crank pulley
(D) ISG pulley
(E) Idler pulley
(F) A/C compressor pulley

2) Set the V-belt tensioner assembly in the position shown in the figure, and temporarily tighten the bolts that hold the V-belt tensioner assembly.
3) Tighten the bolts which hold the V-belt tensioner assembly in the numerical order shown in the figure.

Tightening torque:
25 N·m (2.5 kgf-m, 18.4 ft-lb)

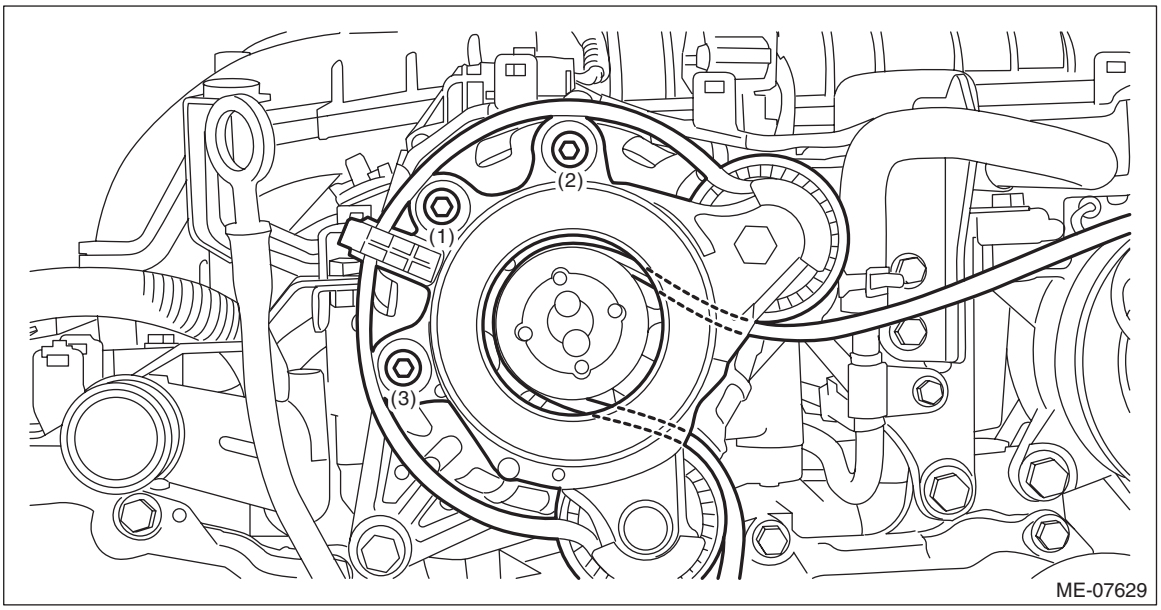

4) Set the tool on the arm lever No. 1, turn the tool counterclockwise a little, and remove the ST from the arm lever No. 2.

NOTE:
Before removing the ST, check that the V-belt ribs are securely placed on the rib grooves for each pulley.

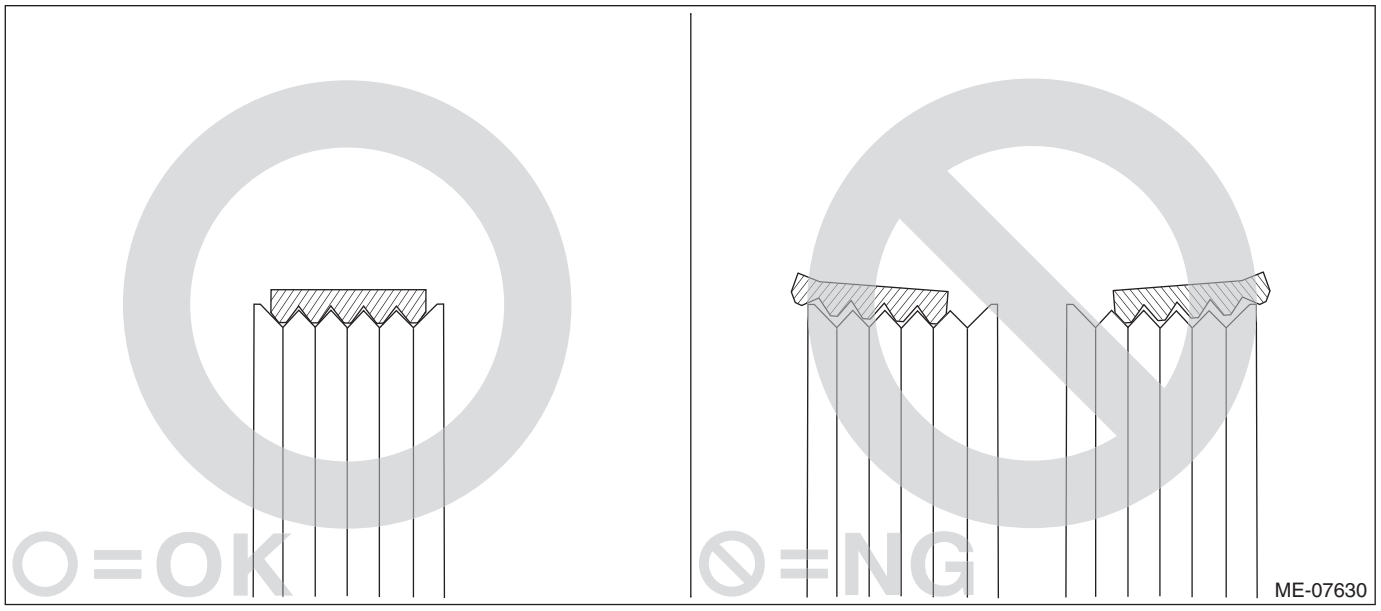

ST 499267300 STOPPER PIN

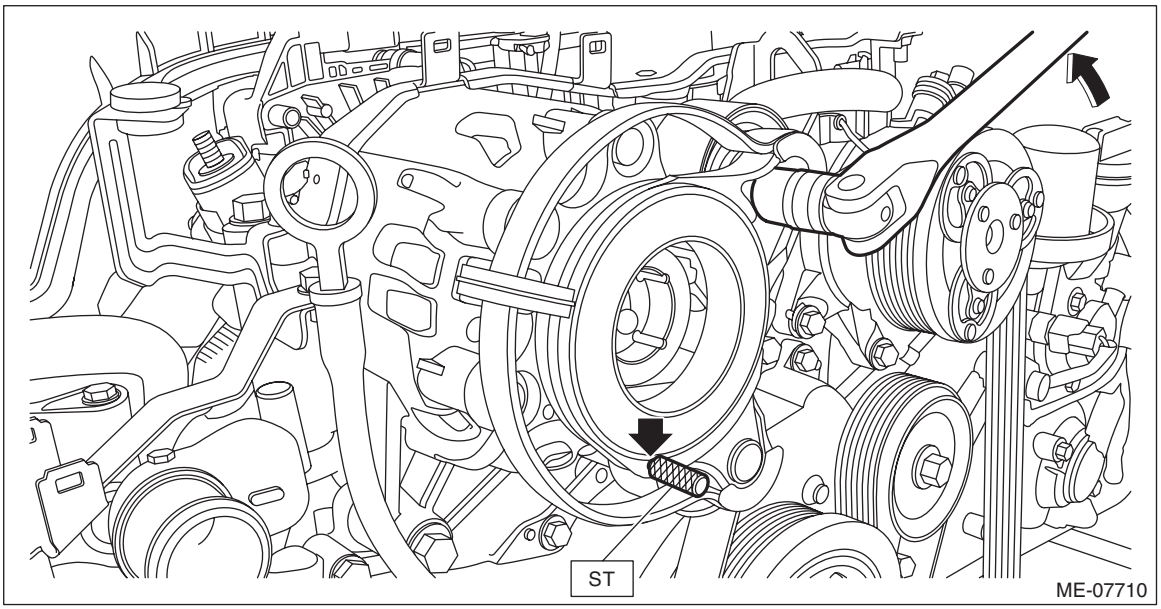

5) When working on the vehicle

NOTE:
When working on the vehicle, perform the following steps also.

(1) Install the collector cover.

• **Idler pulley**

Install in the reverse order of removal.

NOTE:
When installing the idler pulley, be careful of the idler pulley cover direction.

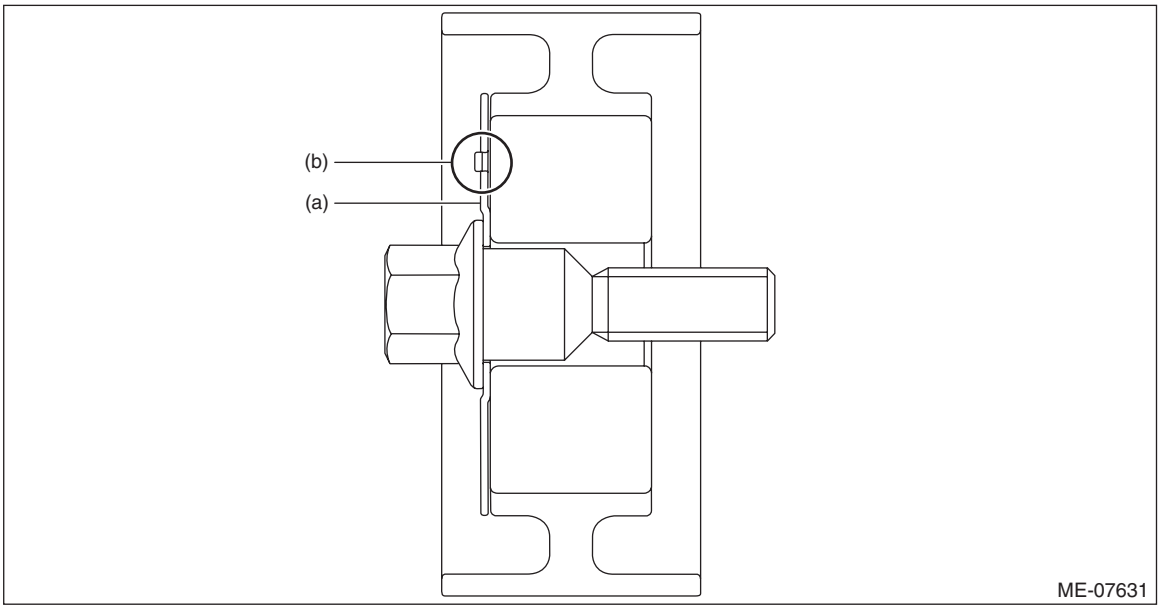

(a) Idler pulley cover (b) Protrusion (3 places)

Tightening torque:
36 N·m (3.7 kgf-m, 26.6 ft-lb)

C: INSPECTION

1) Check the V-belt for cracks, tear or wear.
2) Check the V-belt tensioner assembly and idler pulley for deformation, cracks or other damages.
3) Check that the V-belt ribs are securely placed on the rib grooves for each pulley.

• Gasoline engine model

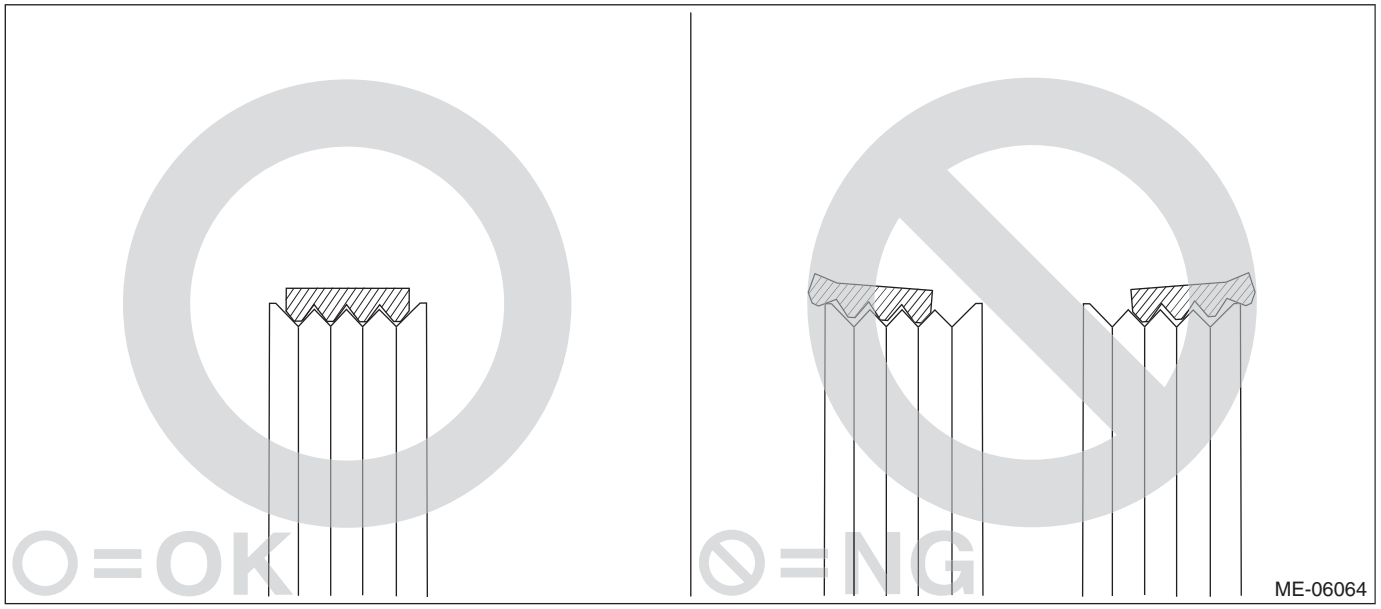

- HEV model

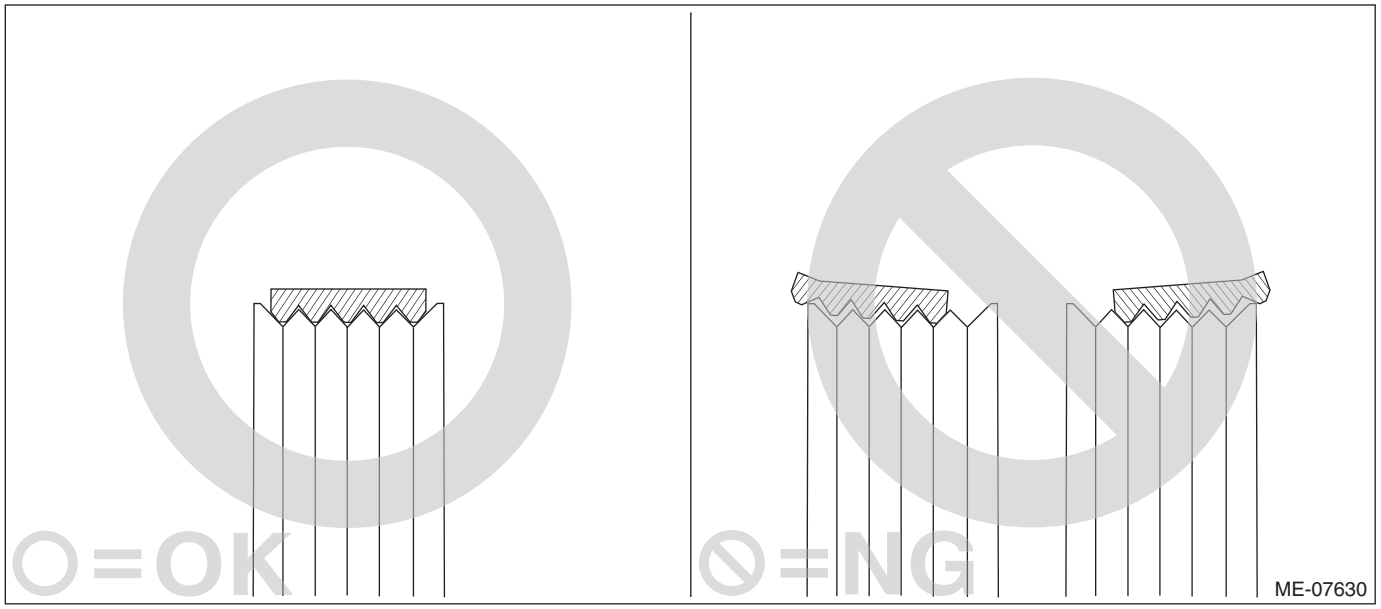

4) Check that the V-belt tensioner assembly (C) moves in the direction of arrow (D), when the V-belt (A) is pushed and released by the area indicated by the arrow (B). (Gasoline engine model)

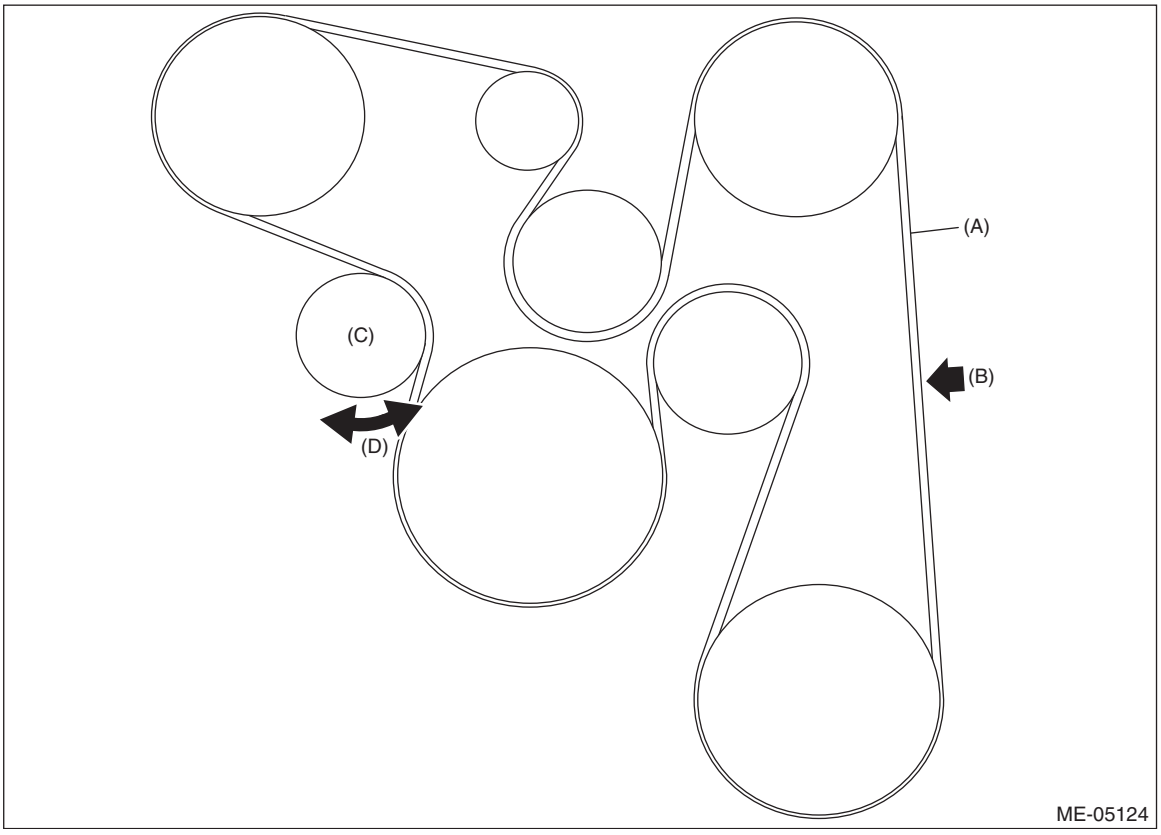

5) Start the engine and confirm that the V-belt rotates smoothly and no abnormal noise is emitted.

13.Crank Pulley

A: REMOVAL

NOTE:
When replacing a single part, perform the work with the engine assembly installed to body.
1) When working on the vehicle

NOTE:
When working on the vehicle, perform the following steps also.
(1) Remove the radiator main fan & fan motor assembly and radiator sub fan & fan motor assembly. <Ref. to CO(H4DO(w/o HEV))-89, REMOVAL, Radiator Main Fan and Fan Motor.> <Ref. to CO(H4DO(w/o HEV))-93, REMOVAL, Radiator Sub Fan and Fan Motor.>
2) Remove the V-belts. <Ref. to ME(H4DO(w/o HEV))-120, REMOVAL, V-belt.>
3) Use the ST to lock the crank pulley, and remove the crank pulley bolt.

NOTE:
To prevent damaging ST1, attach the ST2 onto the ST1 as shown.
ST1 18355AA000 PULLEY WRENCH
ST2 18334AA000 PULLEY WRENCH PIN SET

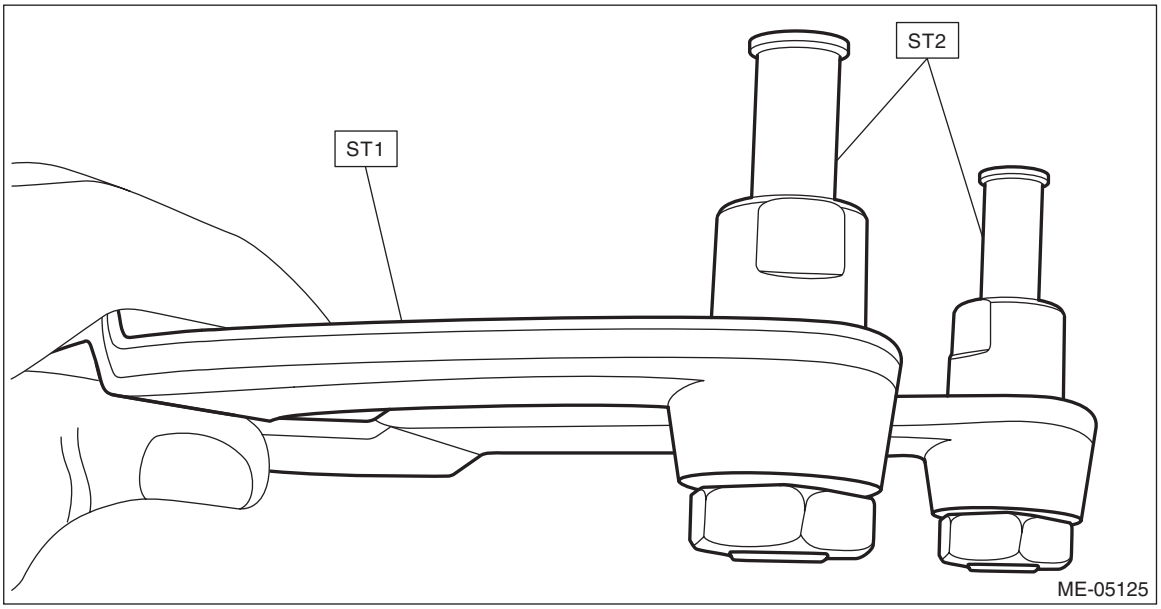

ST1 18355AA000 PULLEY WRENCH
ST2 18334AA000 PULLEY WRENCH PIN SET

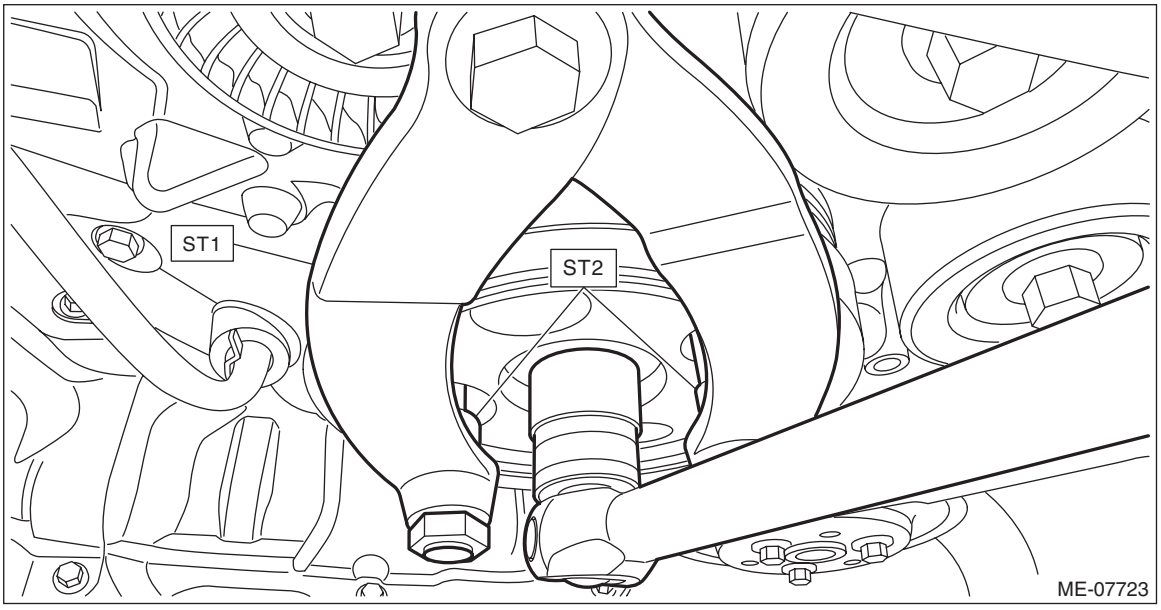

4) Remove the crank pulley.

B: INSTALLATION

1) Clean the crankshaft thread using compressed air.
2) Apply engine oil to the crank pulley bolt seat and thread.
3) Install the crank pulley.
   (1) Install the crank pulley to the crank pulley boss.

NOTE:
- Use new O-rings.
- Install the crank pulley by aligning the crank pulley knock hole (A) and crank pulley boss knock pin (B).

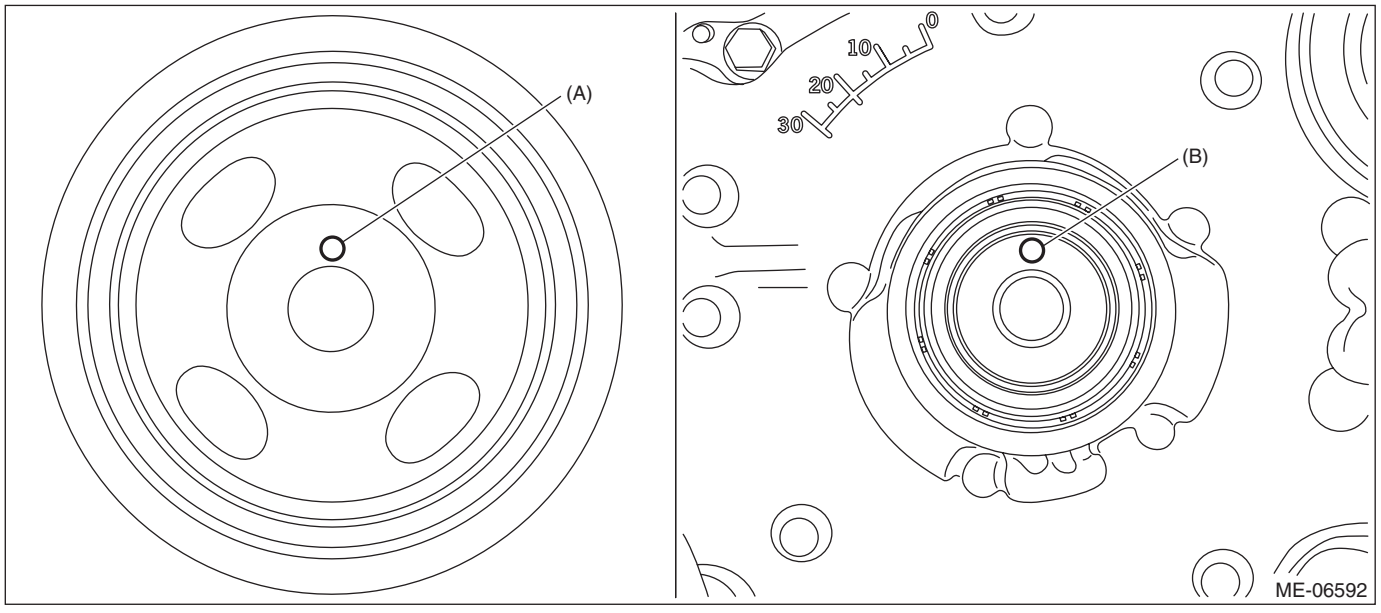

(2) Use the ST to lock the crank pulley, and temporarily tighten the crank pulley bolt.

NOTE:
To prevent damaging ST1, attach the ST2 onto the ST1 as shown.
ST1 18355AA000 PULLEY WRENCH
ST2 18334AA000 PULLEY WRENCH PIN SET

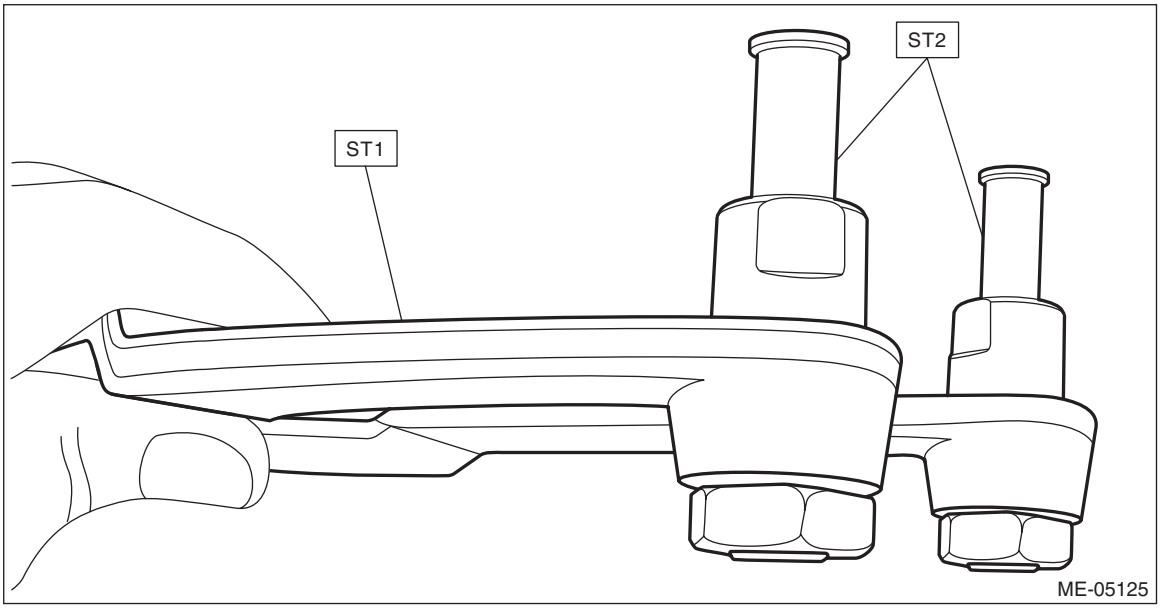

ST1 18355AA000 PULLEY WRENCH
ST2 18334AA000 PULLEY WRENCH PIN SET

Tightening torque:
60 N·m (6.1 kgf-m, 44.3 ft-lb)

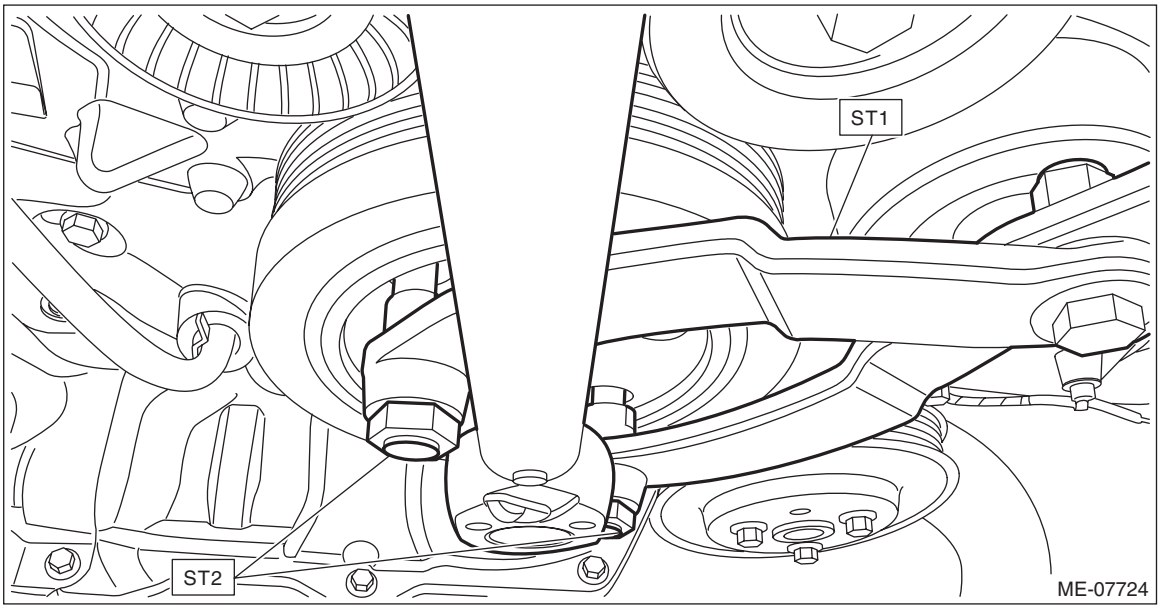

(3) Draw reference lines (A) and (B) using a marker to set the socket to the crank pulley bolt as shown in the figure.

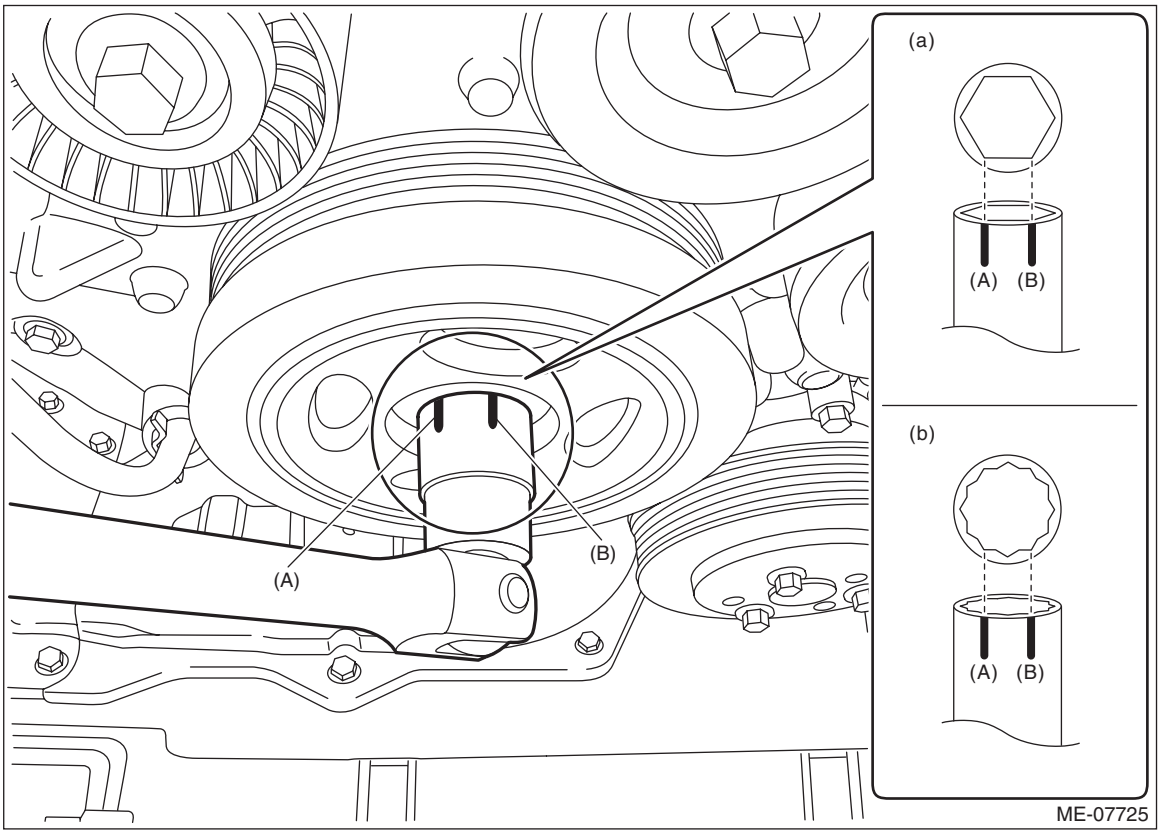

(a) When using 6-point socket (b) When using 12-point socket

(4) Draw reference lines (A) and (B) on the crank pulley bolt using a marker as shown in the figure.

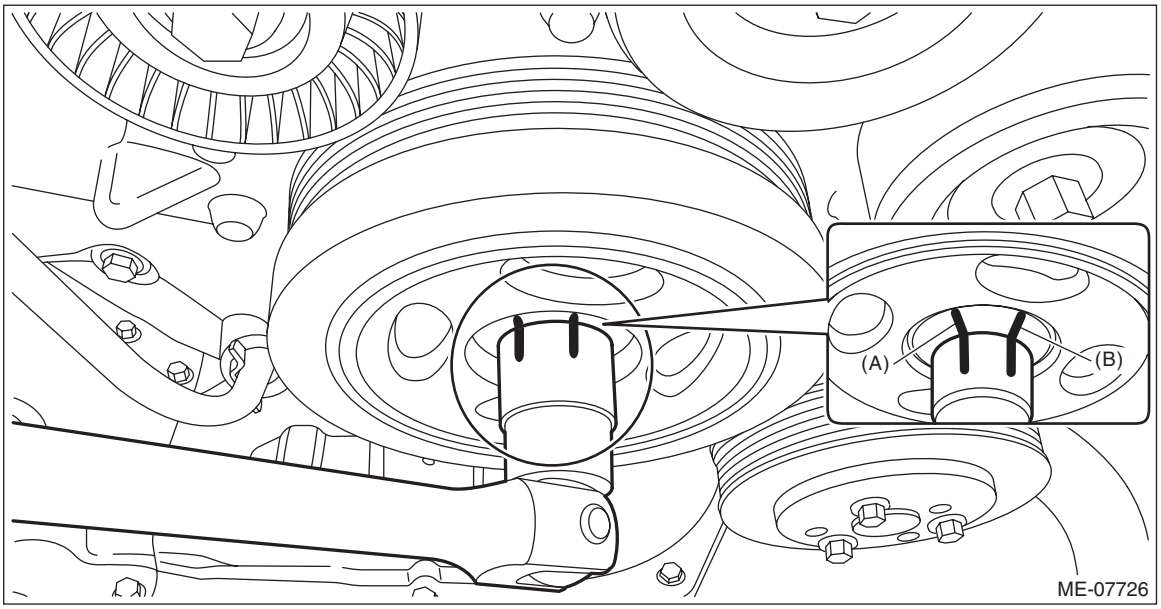

(5) Draw end line (C) on crank pulley using a marker at the same position as reference line (B) drawn on the crank pulley bolt in step (4).

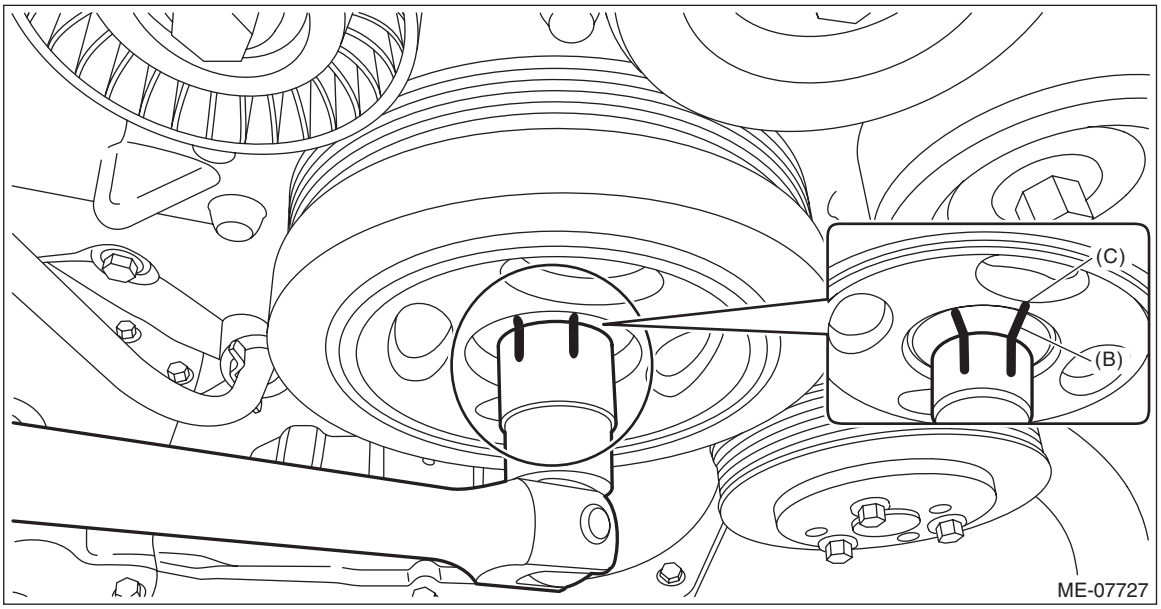

(6) Use the ST to lock the crank pulley, and tighten the crank pulley bolt to the angle where reference line (A) and end line (C) are aligned.

NOTE:
It should be approx. 60° when reference line (A) and end line (C) are aligned.
ST1 18355AA000 PULLEY WRENCH
ST2 18334AA000 PULLEY WRENCH PIN SET

Tightening angle:
60°±5°

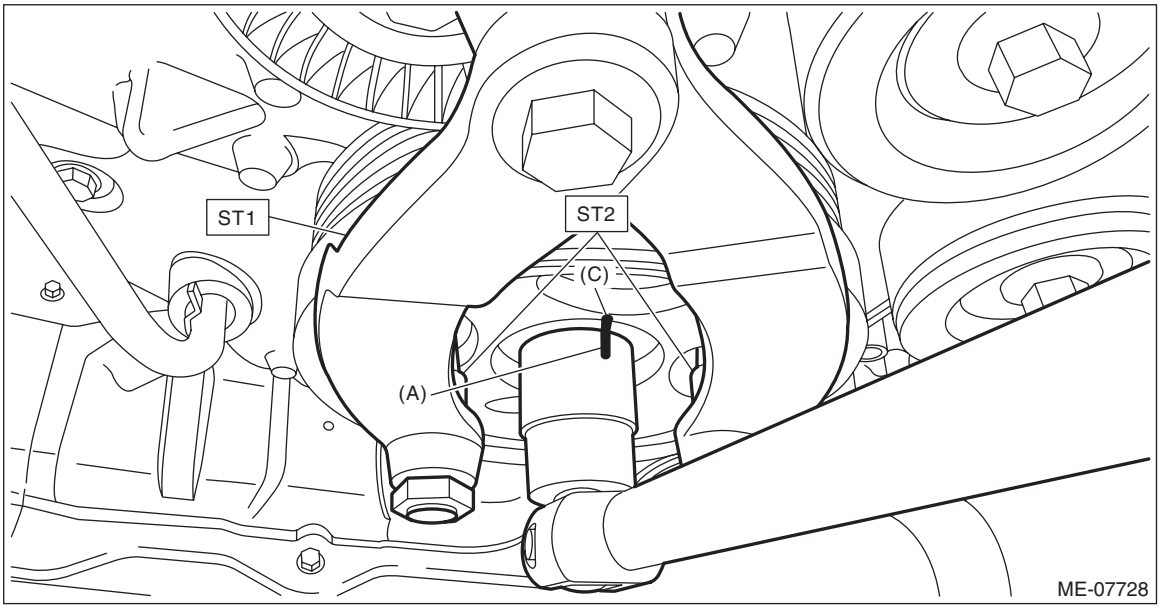

4) Install the V-belts. <Ref. to ME(H4DO(w/o HEV))-128, INSTALLATION, V-belt.>
5) When working on the vehicle

NOTE:
When working on the vehicle, perform the following steps also.

(1) Install the radiator main fan & fan motor assembly and radiator sub fan & fan motor assembly. <Ref. to CO(H4DO(w/o HEV))-90, INSTALLATION, Radiator Main Fan and Fan Motor.> <Ref. to CO(H4DO(w/o HEV))-94, INSTALLATION, Radiator Sub Fan and Fan Motor.>

C: INSPECTION

1) Check that the crank pulley and crank pulley boss have no deformation, cracks or other damages.
2) Inspect for oil leakage from the front oil seal. If there is an oil leak, replace the front oil seal with a new part according to the following procedures.
(1) Remove the crank pulley. <Ref. to ME(H4DO(w/o HEV))-137, REMOVAL, Crank Pulley.>
(2) Remove the crank pulley boss from the chain cover.

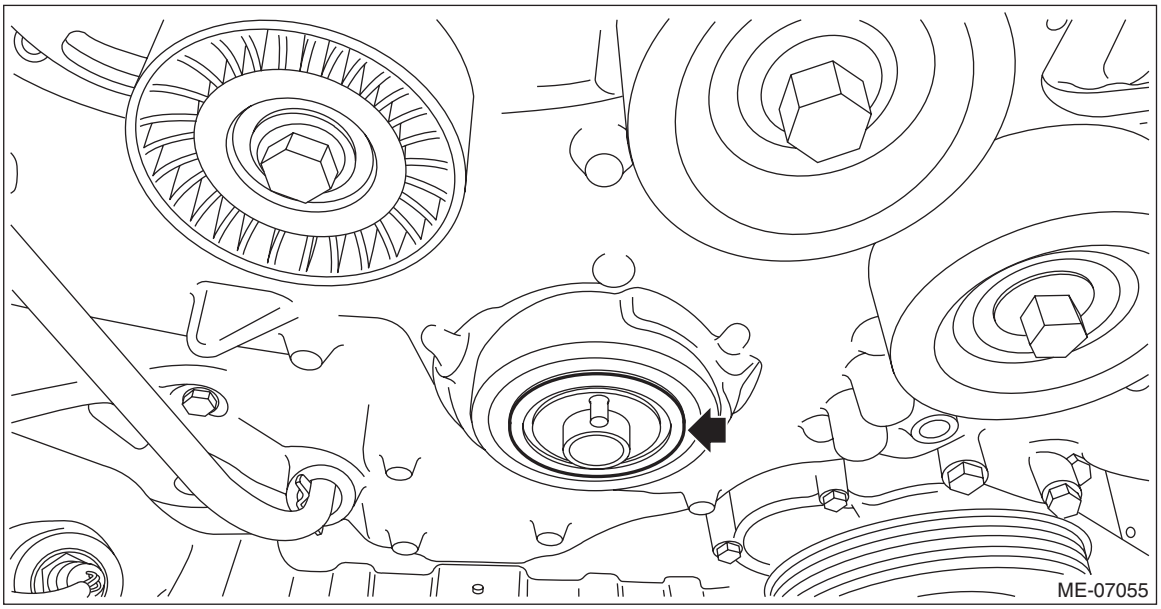

(3) Remove the front oil seal from the chain cover.

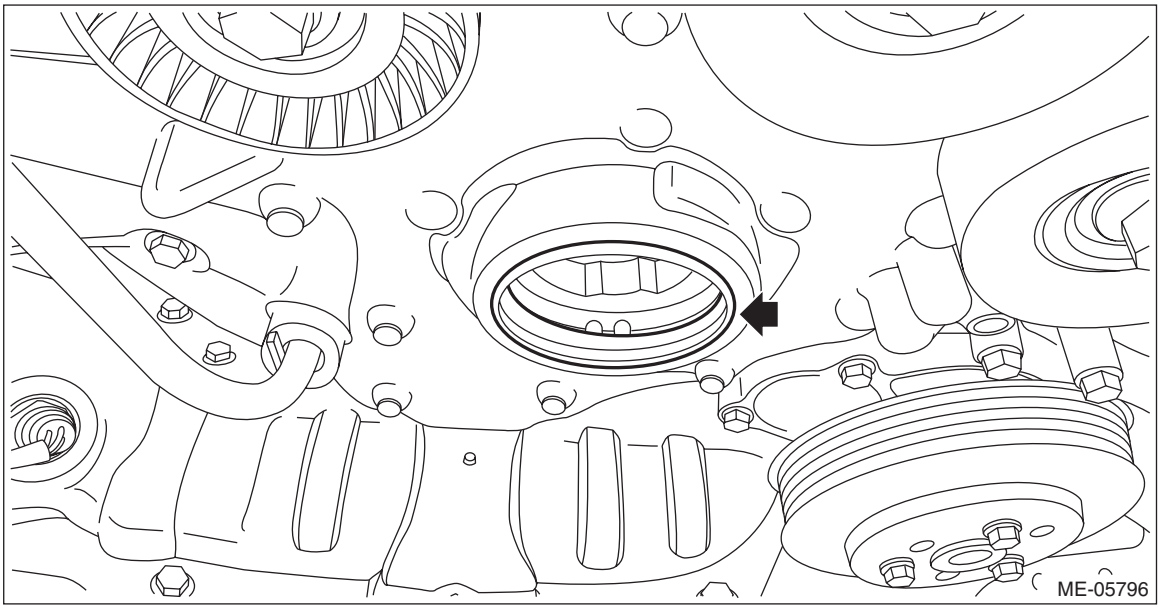

(4) Apply a light coat of engine oil to the front oil seal inner periphery and outer periphery, and install the front oil seal to the chain cover using ST.

NOTE:
When tapping the front oil seal in, protect the radiator fin with cardboards etc. so as not to damage the radiator fin by the plastic hammer.
ST 398437700 OIL SEAL INSTALLER

Front oil seal press-fit position:
1^{+0}_{-1} mm ($0.0039^{+0}_{-0.0039}$ in) position from chain cover end face

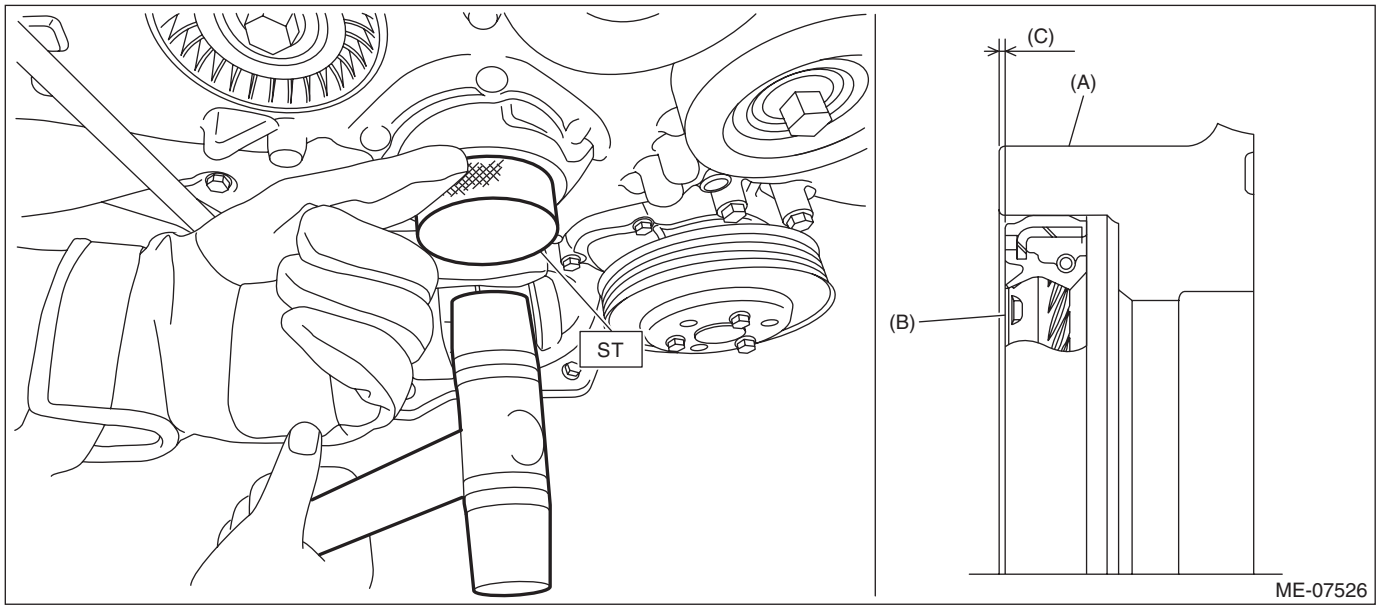

(A) Chain cover (B) Oil seal (C) Front oil seal press-fit position (1^{+0}_{-1} mm ($0.0039^{+0}_{-0.0039}$ in) position from chain cover end face)

3) Install in the reverse order of removal after replacement.

14.Chain Cover

A: REMOVAL

NOTE:
When replacing a single part, perform the work with the engine assembly installed to body.
1) When working on the vehicle

NOTE:
When working on the vehicle, perform the following steps also.
(1) Remove the radiator. <Ref. to CO(H4DO(w/o HEV))-78, REMOVAL, Radiator.>
(2) Remove the front exhaust pipe. <Ref. to EX(H4DO(w/o HEV))-6, REMOVAL, Front Exhaust Pipe.>
(3) Remove the bolts which secure the generator cord stay to the chain cover. (Gasoline engine model)

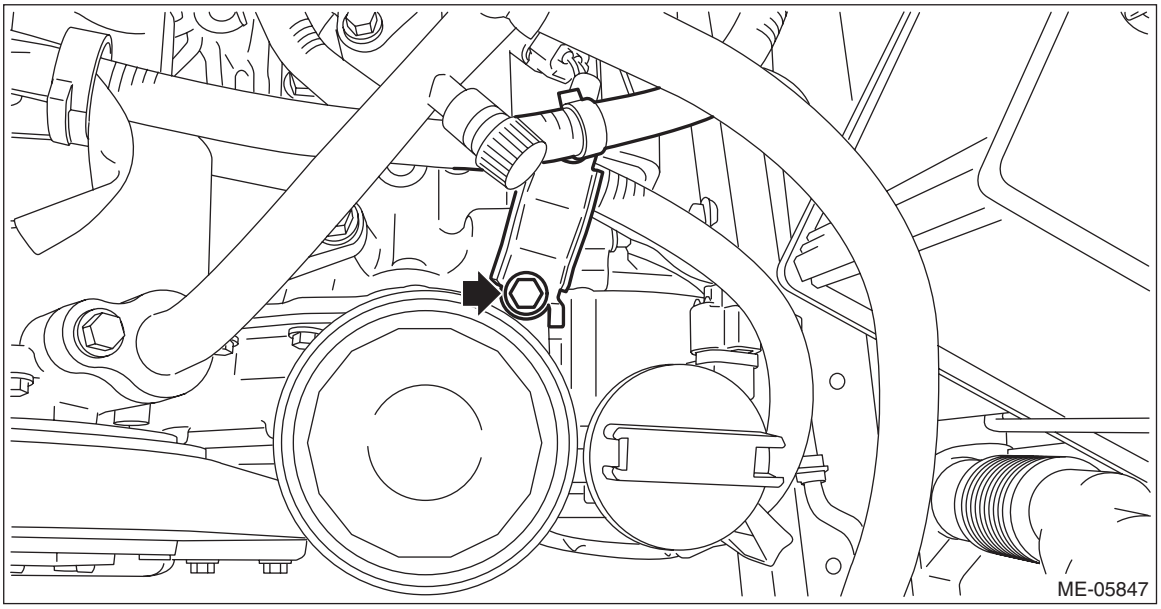

2) Remove the ISG. (HEV model) <Ref. to SC(H4DO(HEV))-31, REMOVAL, Integrated Starter Generator (ISG).>

NOTE:
When working on the vehicle, move the battery cable assembly at the locations that do not interfere operation after the ISG is removed.

3) Remove the generator bracket. (Gasoline engine electric power steering model)
(1) Remove the V-belts. <Ref. to ME(H4DO(w/o HEV))-120, GASOLINE ENGINE MODEL, REMOVAL, V-belt.>
(2) Remove the generator. <Ref. to SC(H4DO(w/o HEV))-33, REMOVAL, Generator.>
(3) Remove the generator bracket from the engine.

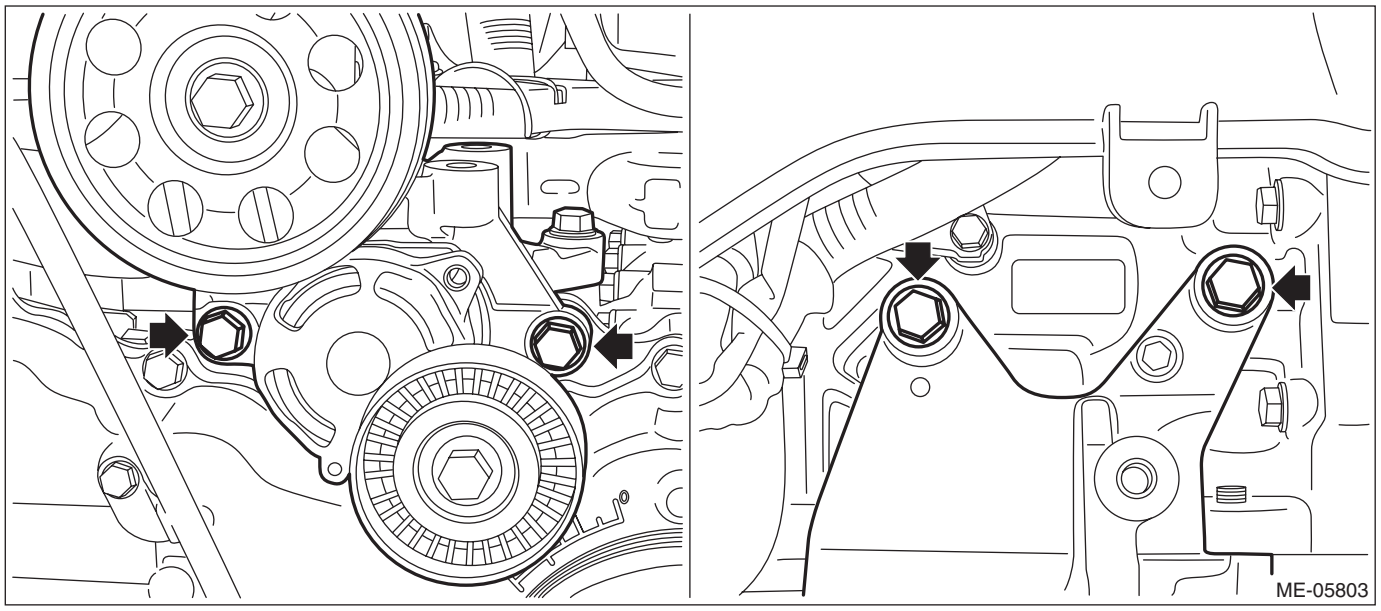

4) Drain the engine oil. <Ref. to LU(H4DO(w/o HEV))-13, REPLACEMENT, Engine Oil.>
5) Remove the water pump pulley. <Ref. to CO(H4DO(w/o HEV))-21, WATER PUMP, REMOVAL, Water Pump.>
6) Remove the crank pulley. <Ref. to ME(H4DO(w/o HEV))-137, REMOVAL, Crank Pulley.>
7) Disconnect the connector (A) from the exhaust camshaft position sensor RH, and remove the engine harness stay from the chain cover.

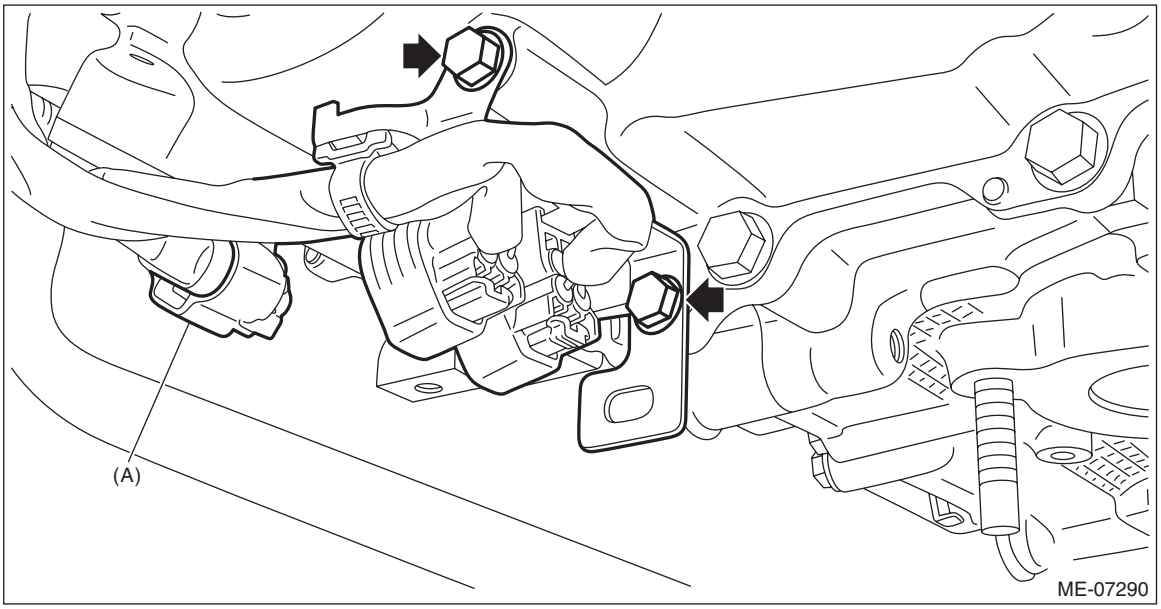

8) Disconnect the connector (A) from the intake oil control solenoid RH, connector (B) from the exhaust oil control solenoid RH, and the connector (C) from the intake camshaft position sensor RH, and then remove the clips (D) (gasoline engine model) and the clips (E) which secure the engine harness.

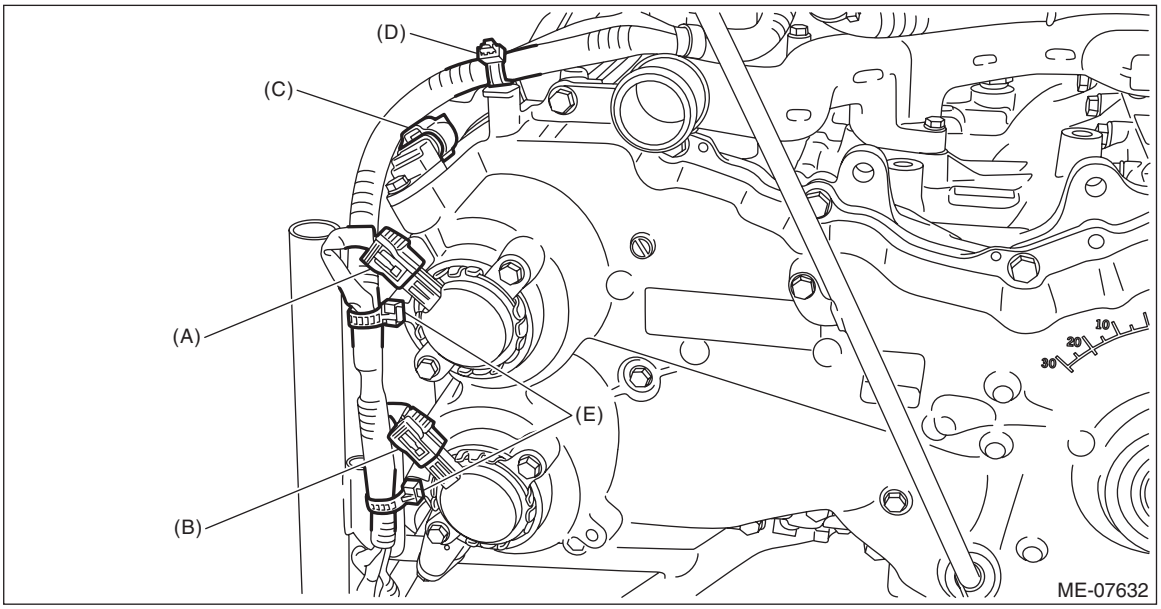

9) Disconnect the connectors from the oil level switch, and remove the clip (A) which secure the oil level switch harness.

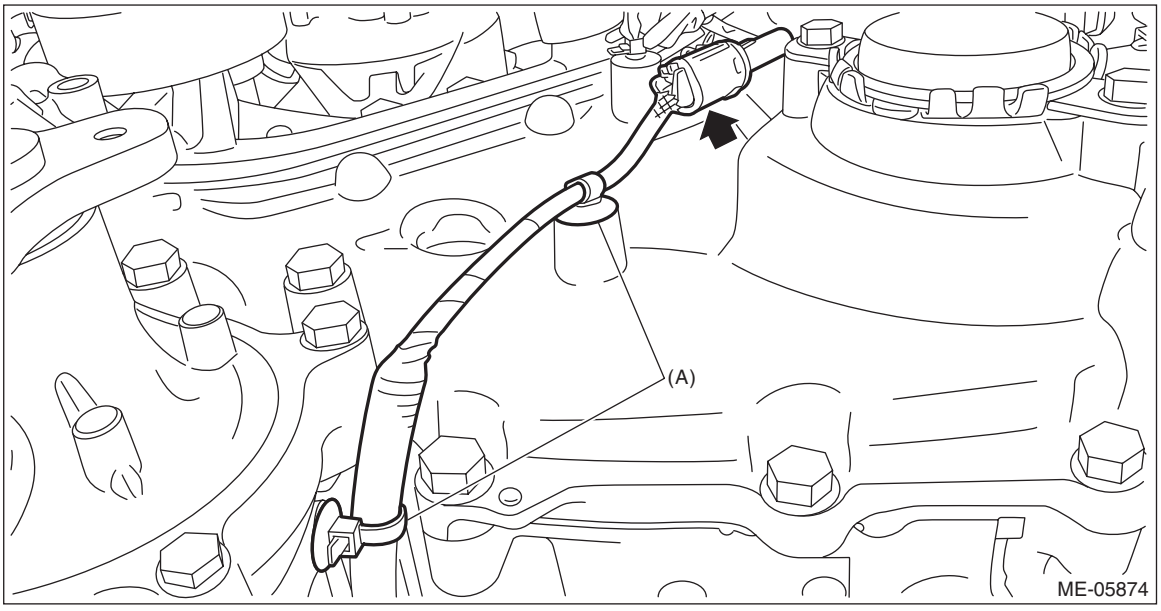

10) Remove the rubber cap from the oil pressure switch.

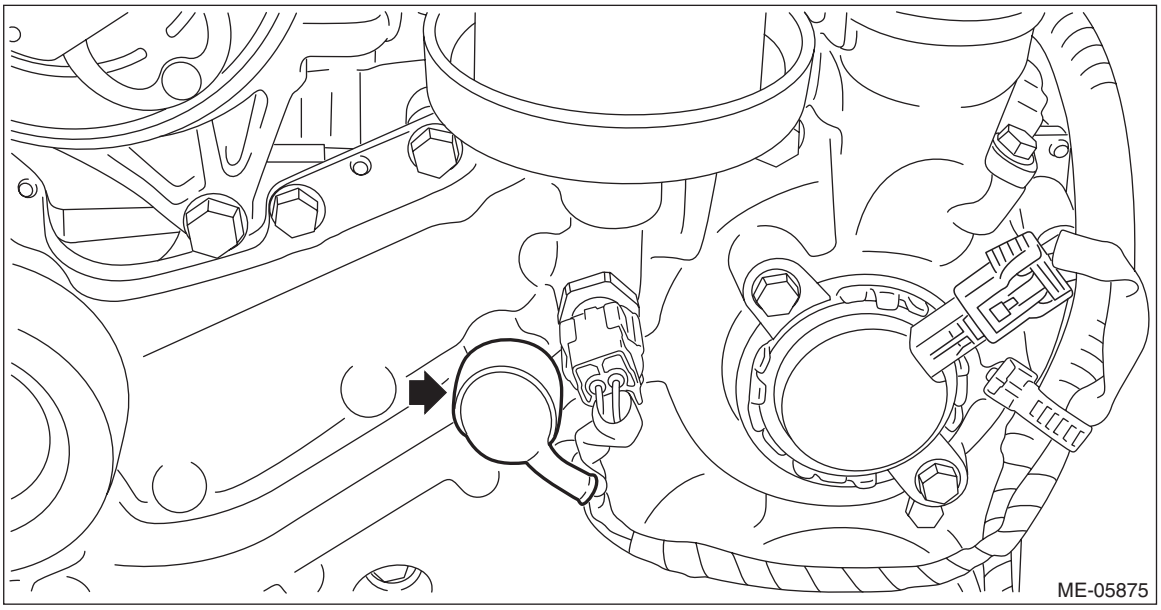

11) Disconnect the terminal (A) from the oil pressure switch, connector (B) from the engine oil temperature sensor, connector (C) from the intake oil control solenoid LH, connector (D) from the exhaust oil control solenoid LH, connector (E) from the intake camshaft position sensor LH, and connector (F) from the exhaust camshaft position sensor LH, and remove the clips (G) and (H) which secure the engine harness.

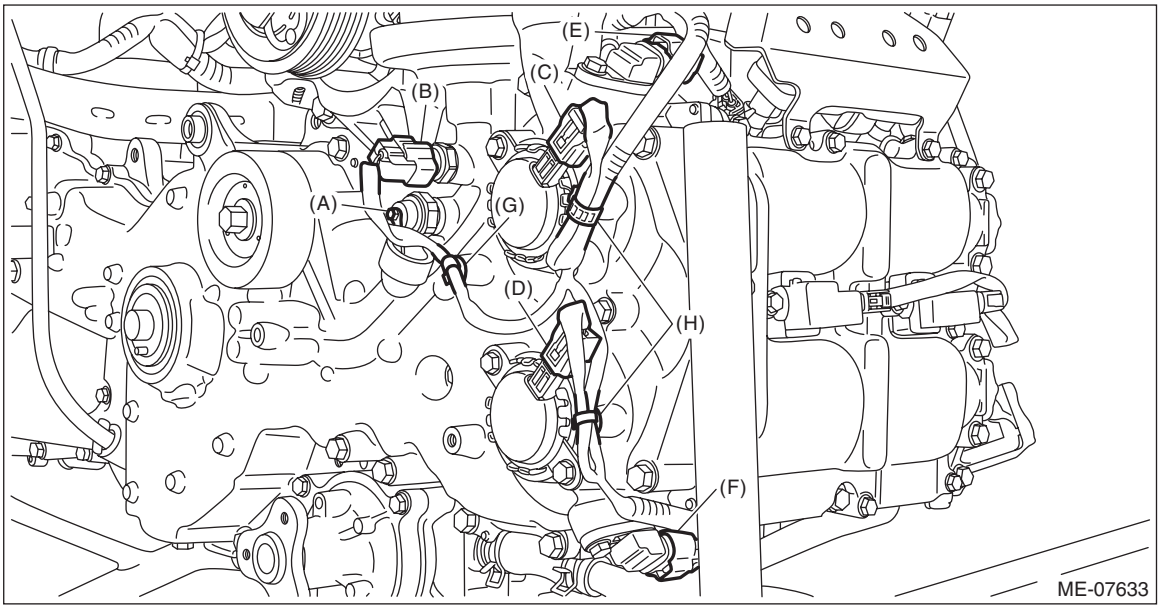

12) Pull out the oil level gauge (A), and remove the oil level gauge guide (B), crank pulley boss (C), and idler pulley (D).

- Gasoline engine model

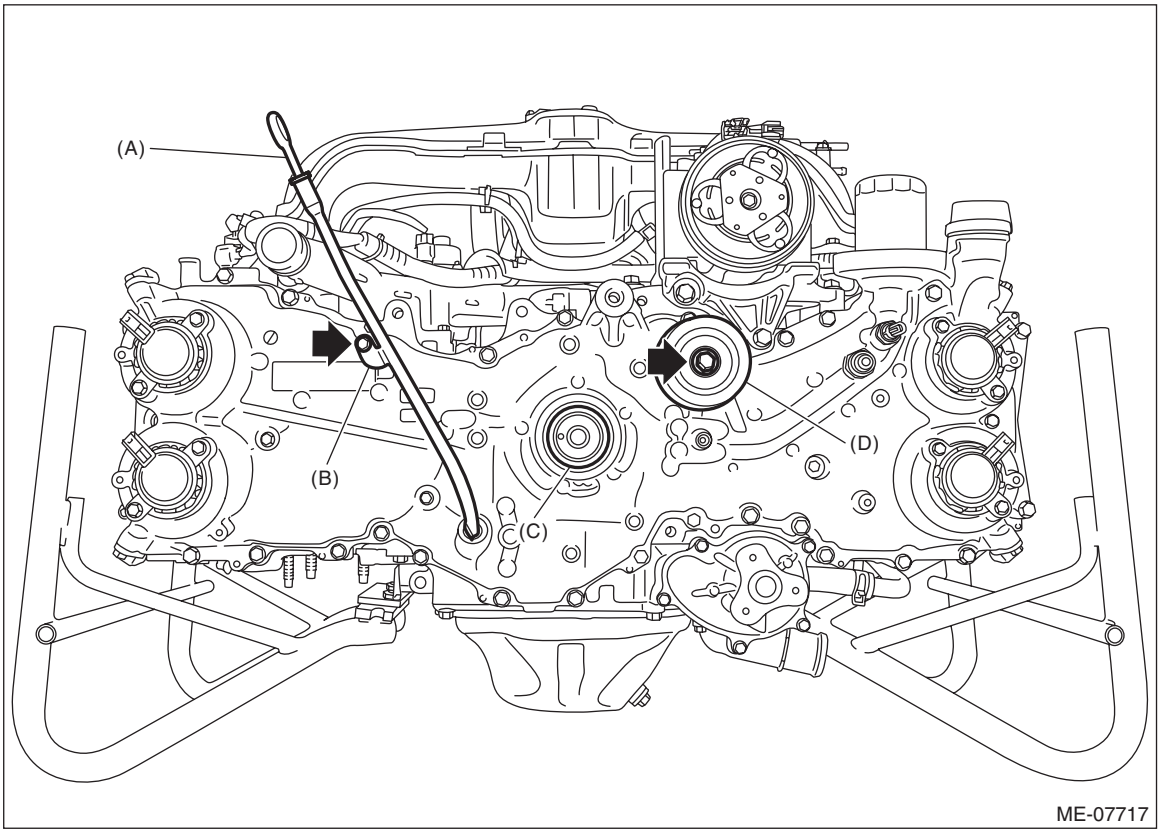

- HEV model

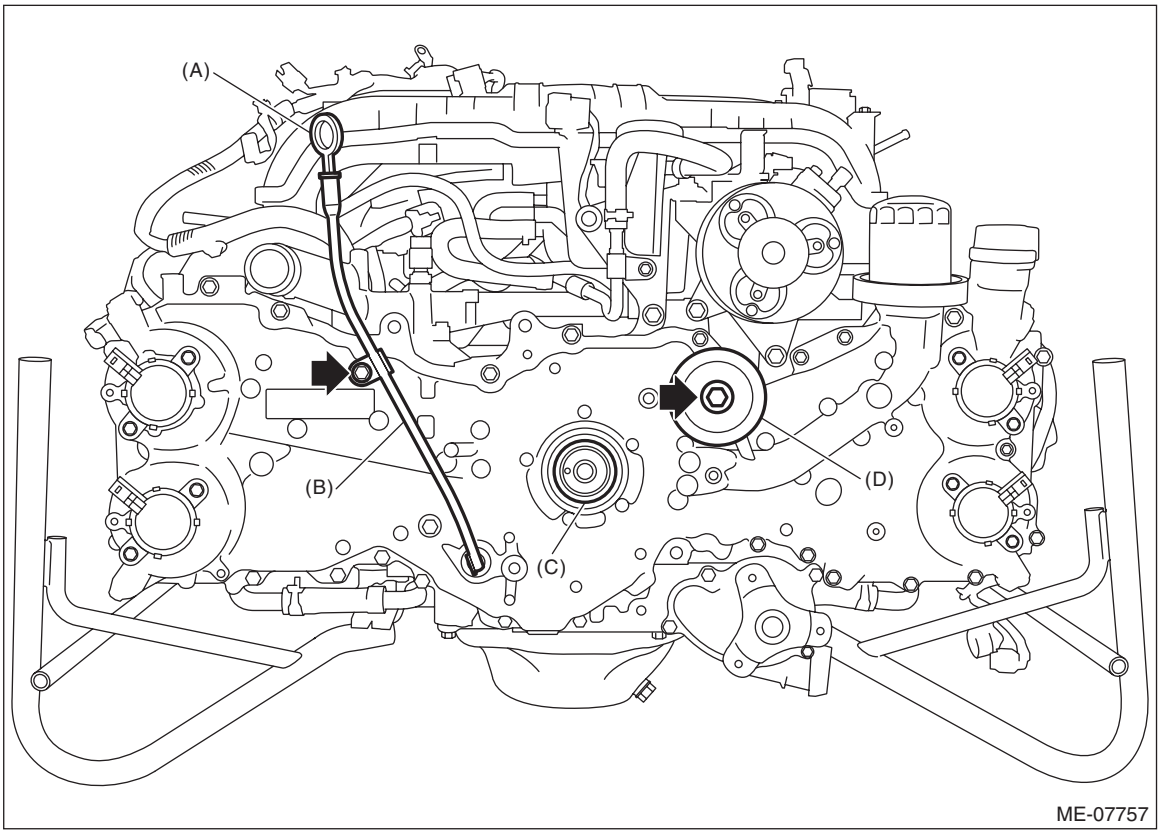

13) Remove the chain cover.

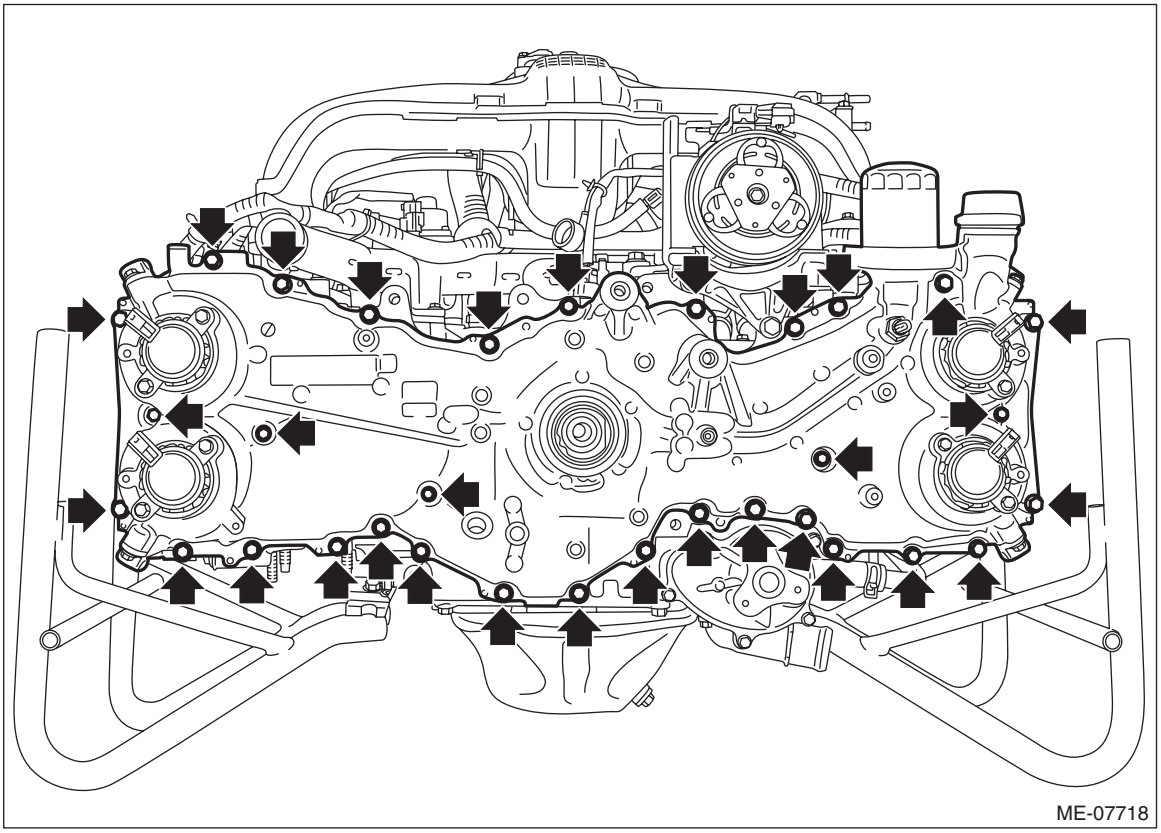

14) Expand the area shown in the figure using a crowbar or a similar tool wrapped in tape for protection, and remove the chain cover from the engine.

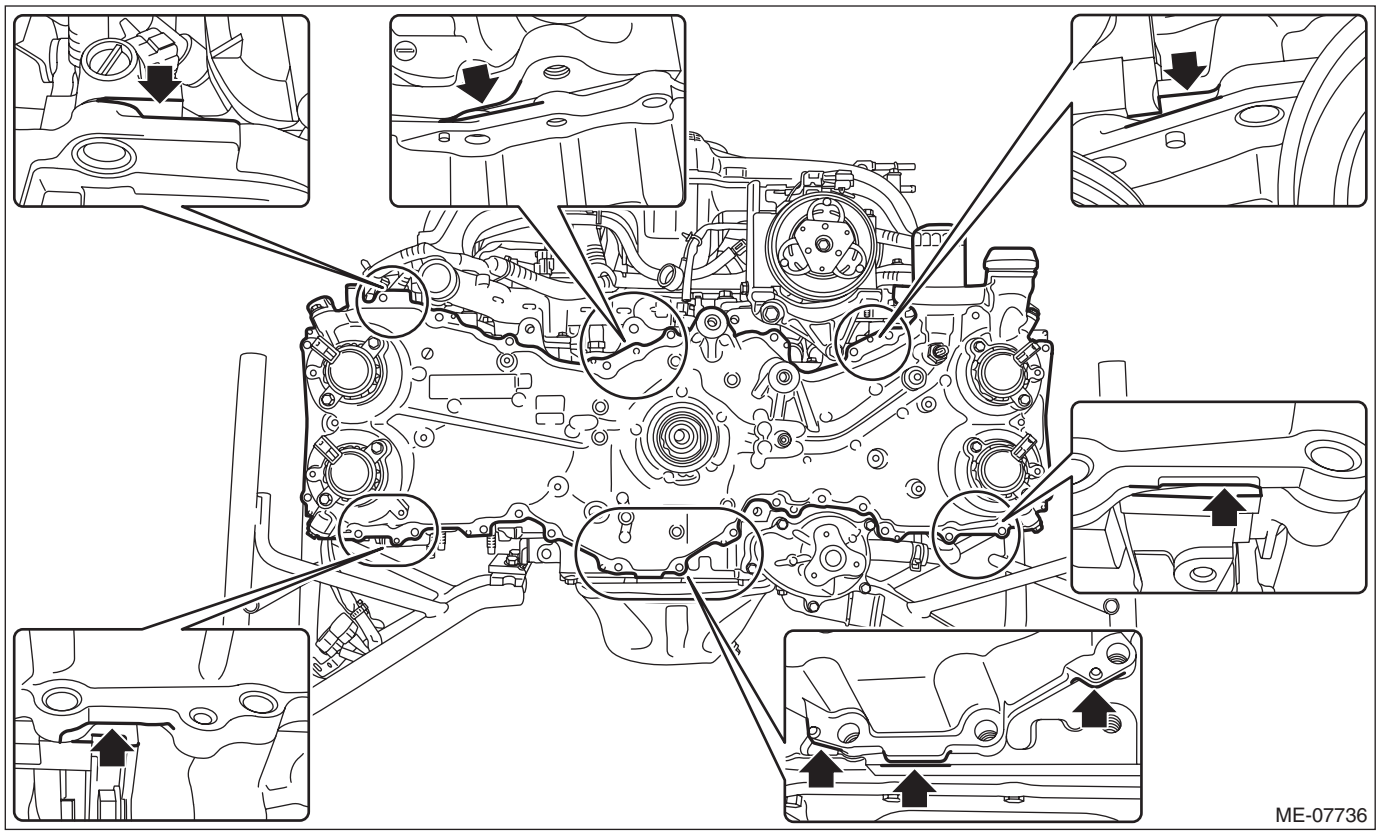

15) Remove the O-rings from cylinder head RH, cylinder head LH, cylinder block LH and oil pan upper.

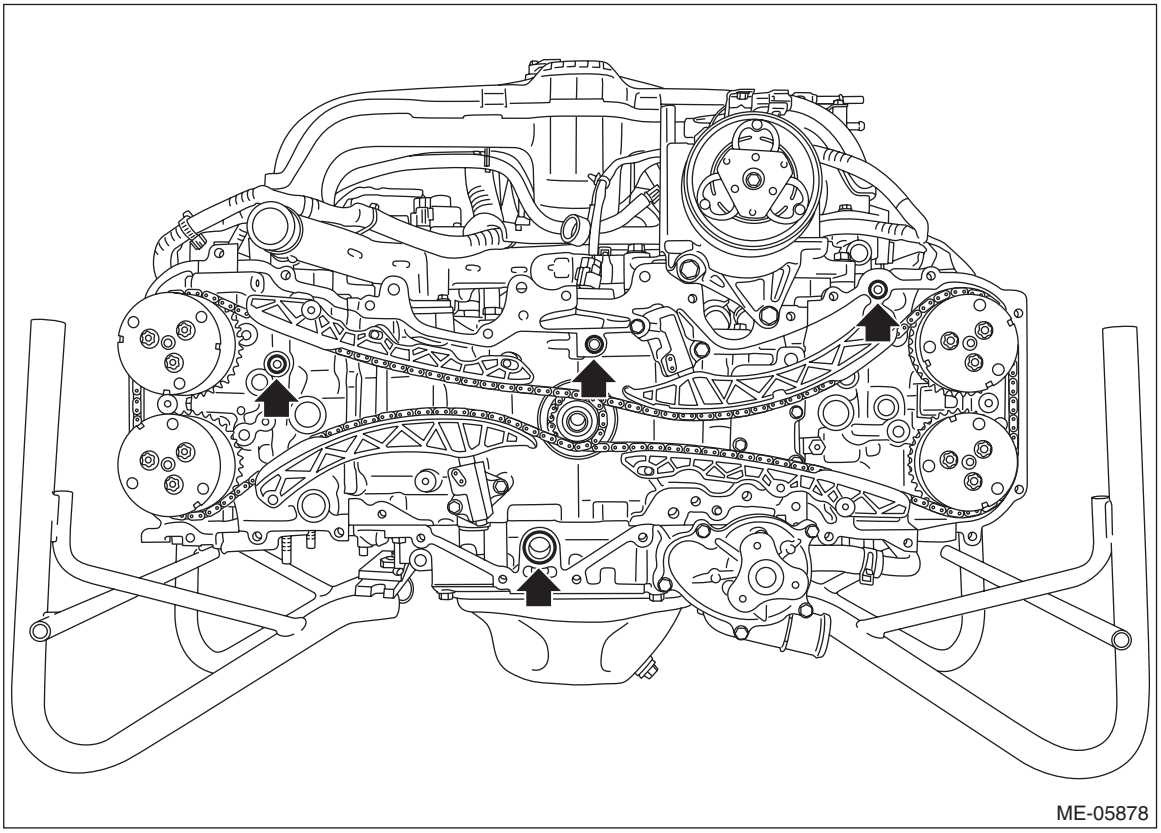

16) Remove the front oil seal from the chain cover.

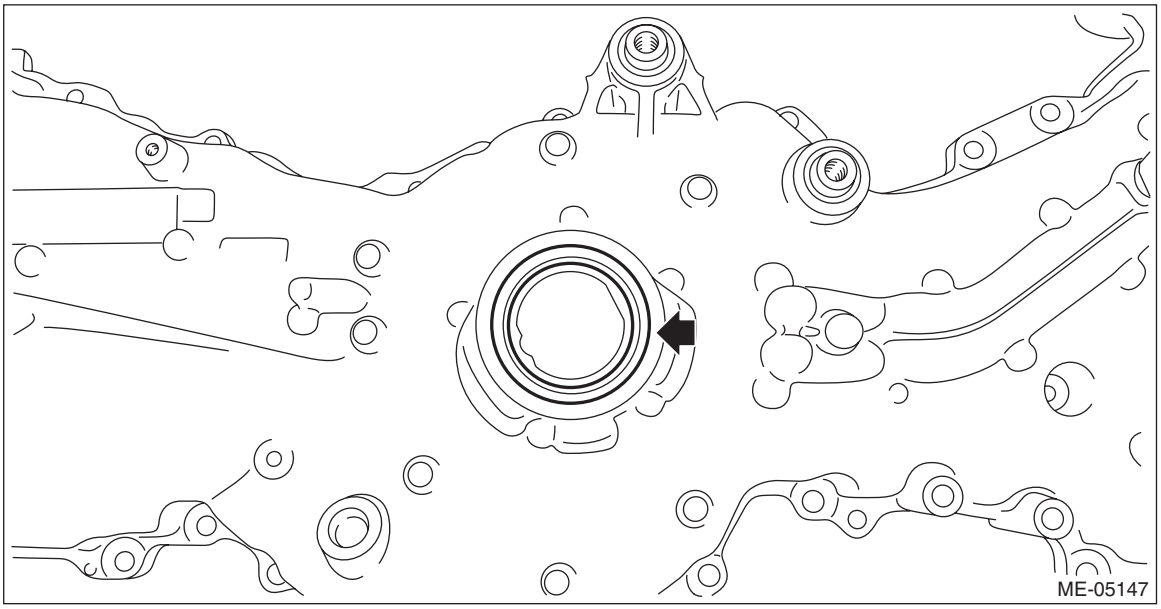

17) Remove the liquid gasket from the chain cover and engine unit.

B: INSTALLATION

1) Apply a light coat of engine oil to the front oil seal inner periphery and outer periphery, and install the front oil seal using ST.
ST 398437700 OIL SEAL INSTALLER

Front oil seal press-fit position:
1^{+0}_{-1} mm ($0.0039^{+0}_{-0.0039}$ in) position from chain cover end face

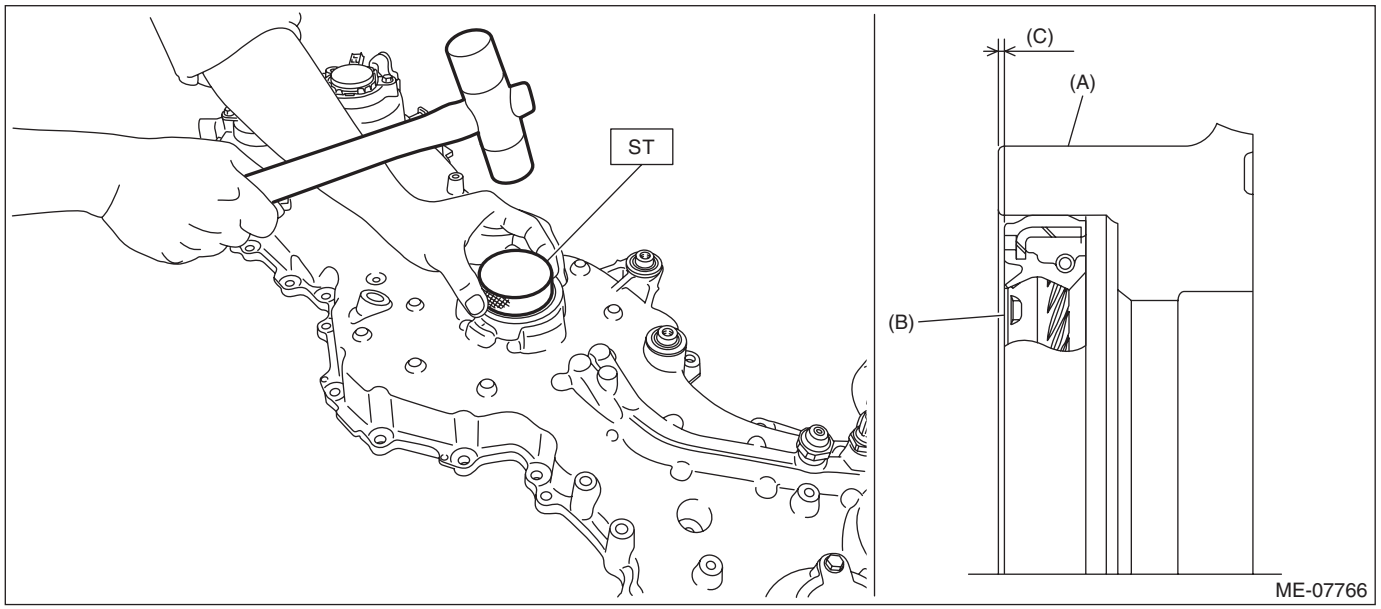

(A) Chain cover (B) Oil seal (C) Front oil seal press-fit position (1^{+0}_{-1} mm ($0.0039^{+0}_{-0.0039}$ in) position from chain cover end face)

2) Install the O-rings to cylinder head RH, cylinder head LH, cylinder block LH and oil pan upper.

NOTE:
- Use new O-rings.
- Apply a coat of engine oil to the O-rings.

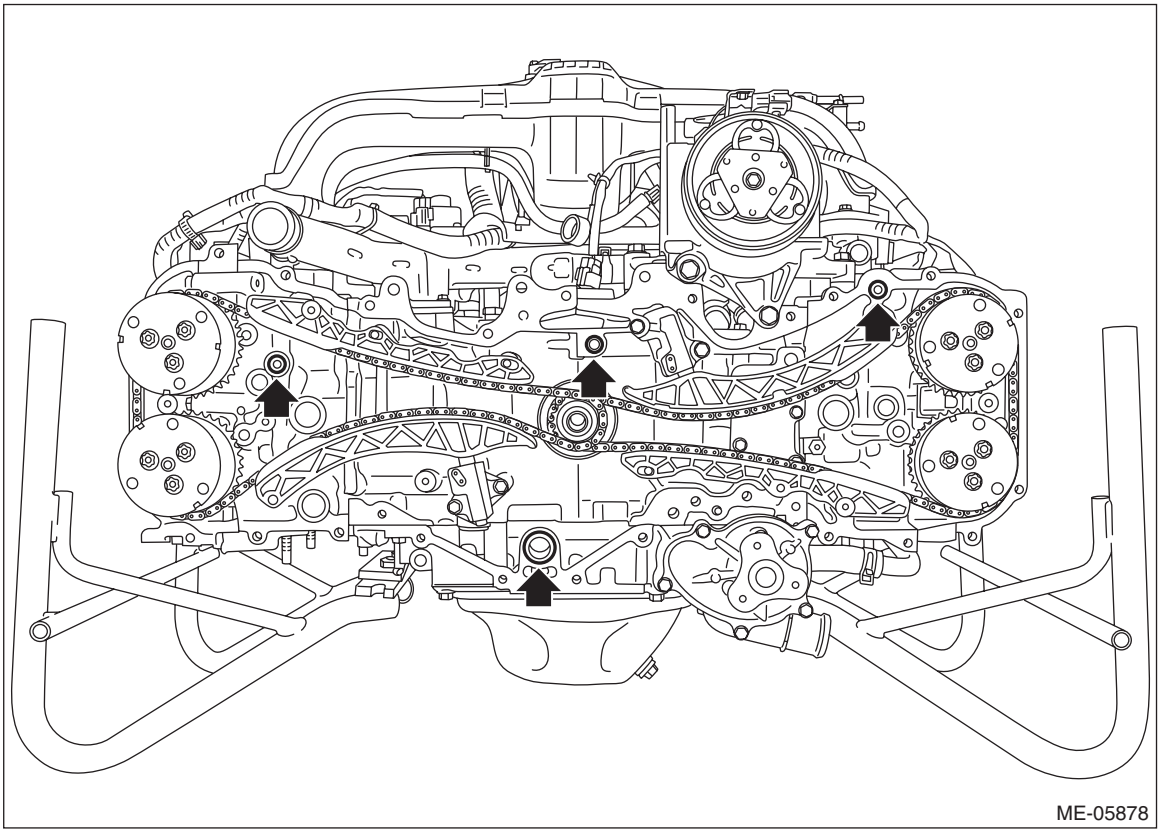

3) Apply liquid gasket if there are gaps between front camshaft cap and cam carrier (A), cam carrier and cylinder head (B), and cylinder head and cylinder block (C) as shown in the figure.

Liquid gasket:
THREE BOND 1217G (Part No. K0877Y0100) or equivalent

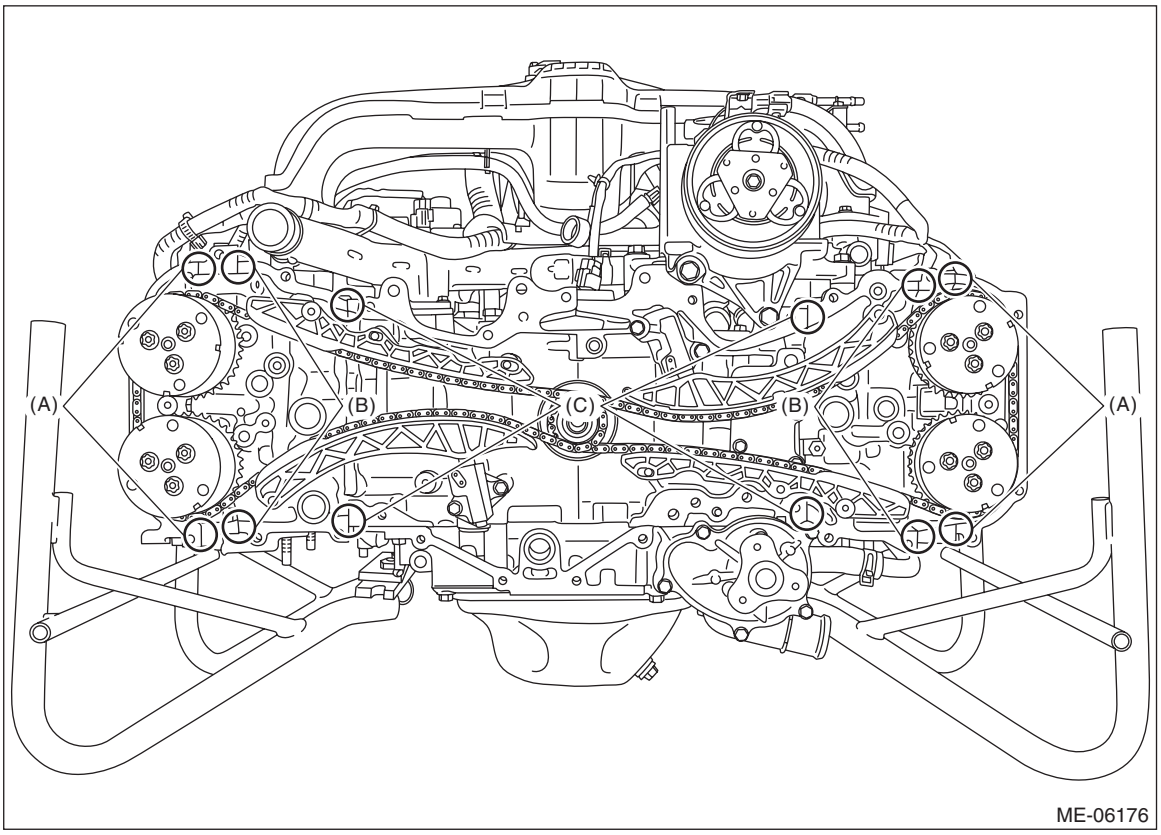

4) Apply liquid gasket to the chain cover mating surface and center boss (5 places) as shown in the figure.

NOTE:
- Before applying liquid gasket, degrease the old liquid gasket seal surface of the engine and chain cover.
- Install within 5 min. after applying liquid gasket.

Liquid gasket:
THREE BOND 1217G (Part No. K0877Y0100) or equivalent

Liquid gasket applying diameter:
4±0.5 mm (0.1575±0.0197 in)

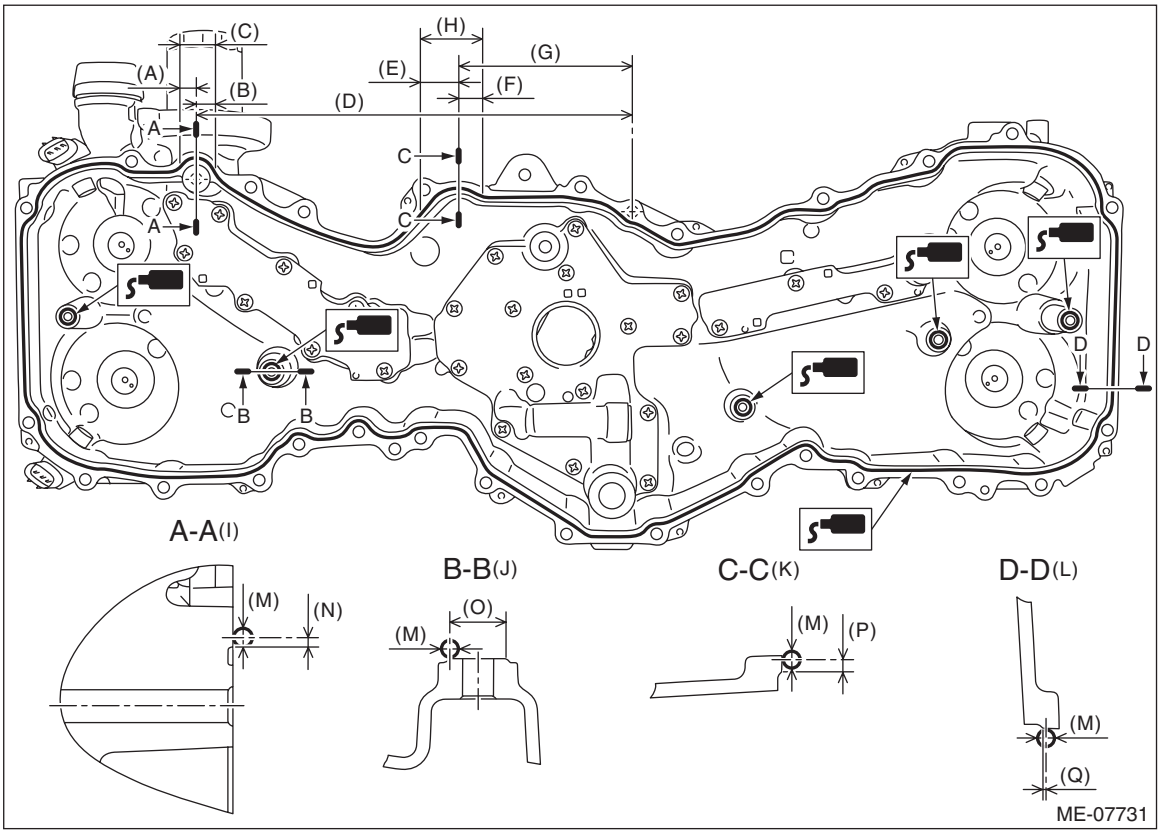

(A)	14.5 mm (0.5709 in)	(G)	127 mm (5.0000 in)	(M)	ϕ4±0.5 mm (0.1575±0.0197 in)
(B)	17.5 mm (0.6890 in)	(H)	Range B	(N)	2 mm (0.0787 in)
(C)	Range A	(I)	Liquid gasket applying position of mating surfaces of range A	(O)	ϕ12 mm (0.4724 in)
(D)	316.2 mm (12.4488 in)	(J)	Liquid gasket applying position of center boss (5 places)	(P)	2.5 mm (0.0984 in)
(E)	24.5 mm (0.9646 in)	(K)	Liquid gasket applying position of mating surfaces of range B	(Q)	0.5 mm (0.0197 in)
(F)	18.5 mm (0.7283 in)	(L)	Liquid gasket applying position of mating surfaces other than range A and range B		

5) Set the chain cover, and tighten the bolts in numerical order as shown in the figure.

Tightening torque:
T1: 10 N·m (1.0 kgf-m, 7.4 ft-lb)
T2: 25 N·m (2.5 kgf-m, 18.4 ft-lb)

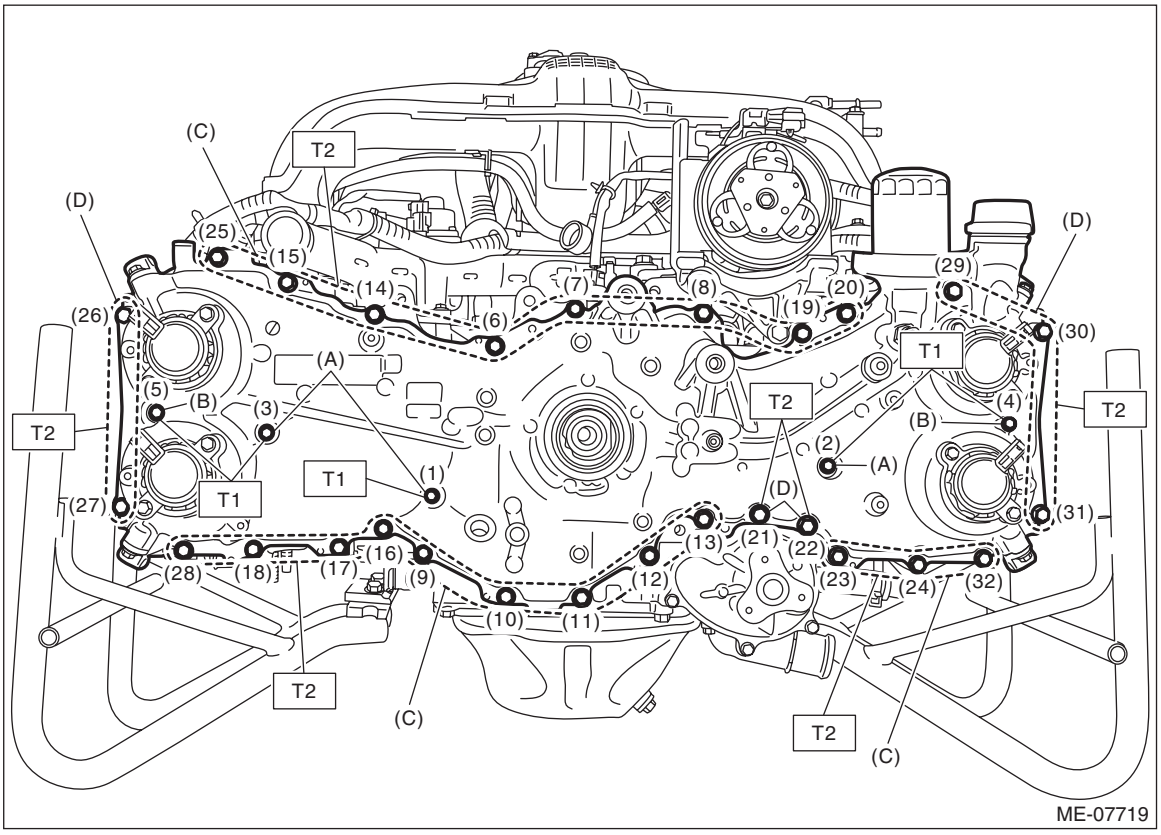

(A) M6 × 20
(B) M6 × 50
(C) M8 × 25
(D) M8 × 60

6) Install the idler pulley (D), crank pulley boss (C) and oil level gauge guide (B), and insert the oil level gauge (A).

NOTE:
- When installing the idler pulley, be careful of the idler pulley cover direction.

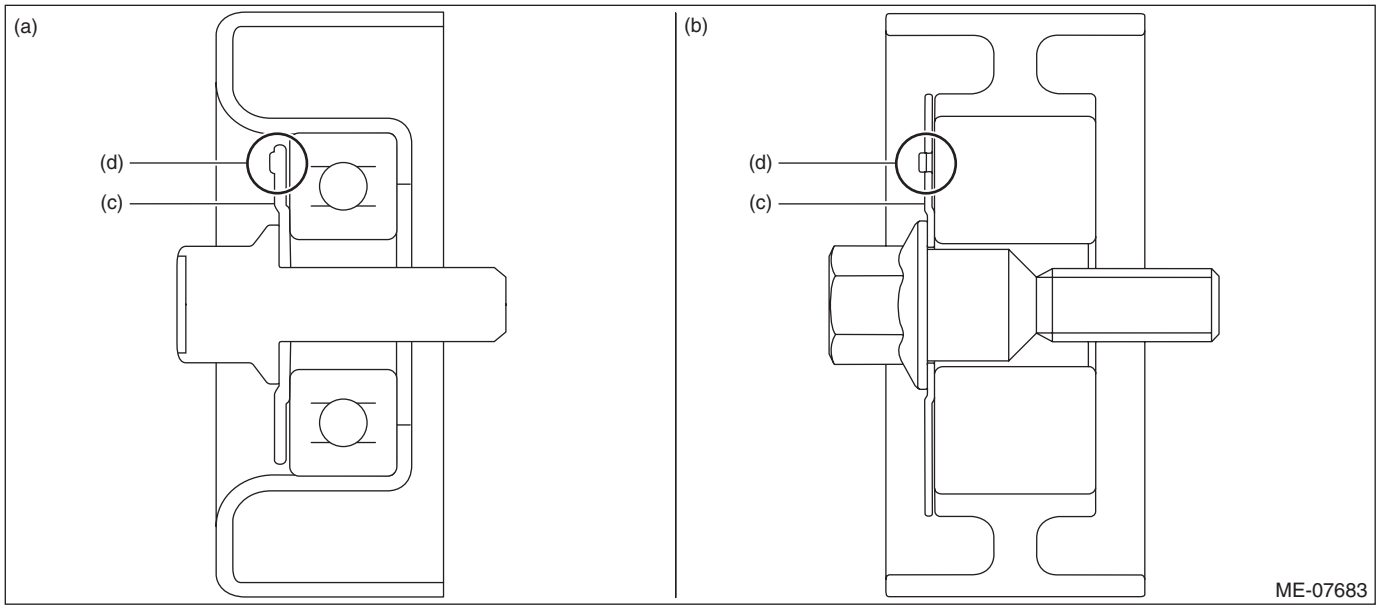

(a) Gasoline engine model
(b) HEV model
(c) Idler pulley cover
(d) Protrusion (3 places)

- Use a new O-ring to the oil level gauge guide.
- Apply a light coat of engine oil to the O-rings of the oil level gauge guide and the oil level gauge.

Tightening torque:
T1: 6.4 N·m (0.7 kgf-m, 4.7 ft-lb)
T2: 36 N·m (3.7 kgf-m, 26.6 ft-lb)
- Gasoline engine model

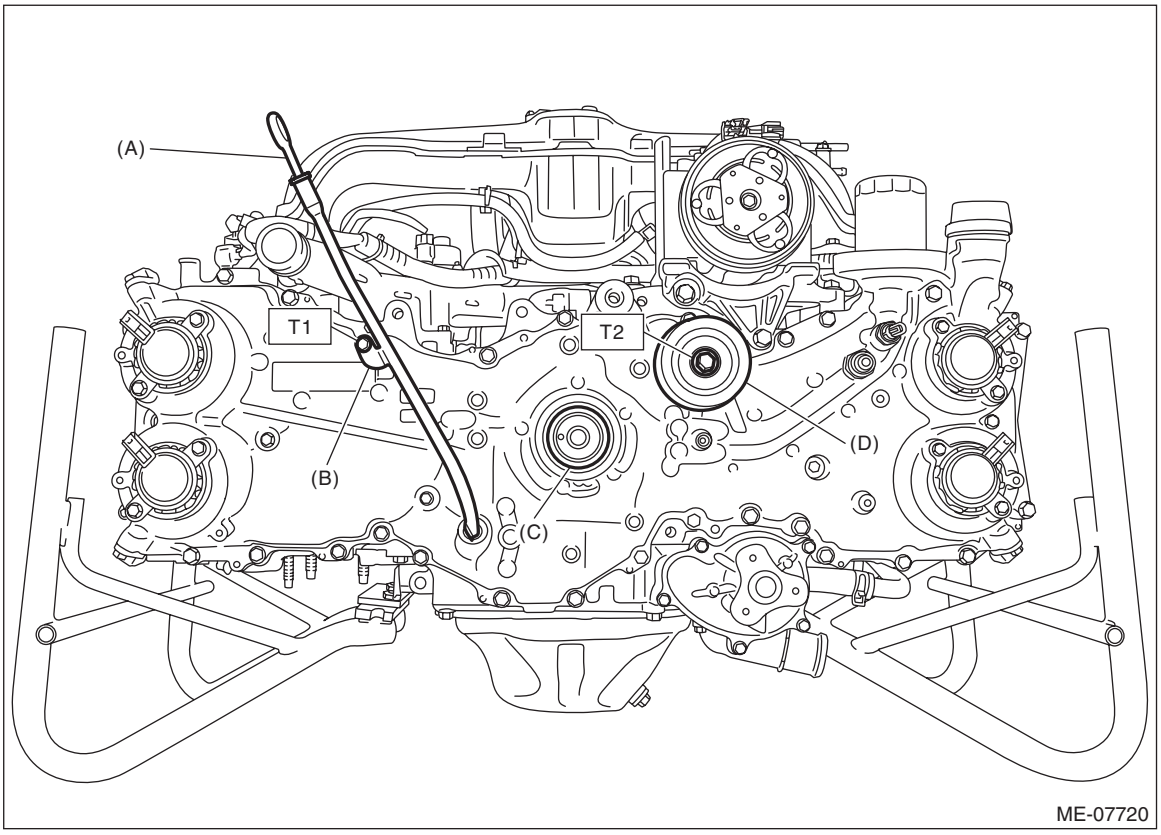

- HEV model

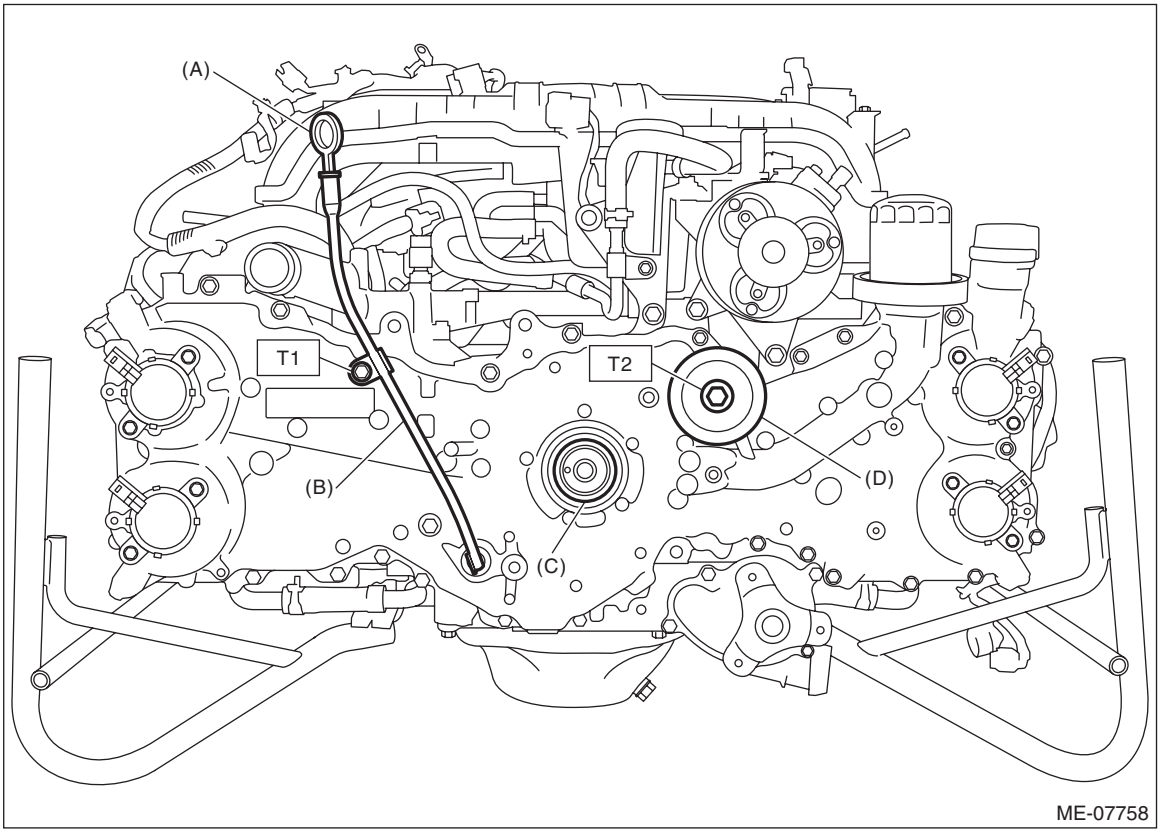

7) Connect the terminal (A) to the oil pressure switch, connector (B) to the engine oil temperature sensor, connector (C) to the intake oil control solenoid LH, connector (D) to the exhaust oil control solenoid LH, connector (E) to the intake camshaft position sensor LH, and connector (F) to the exhaust camshaft position sensor LH, and secure the engine harness with the clips (G) and (H).

NOTE:
The oil pressure switch harness must be positioned toward the left lower side of the vehicle within the range of 90°.

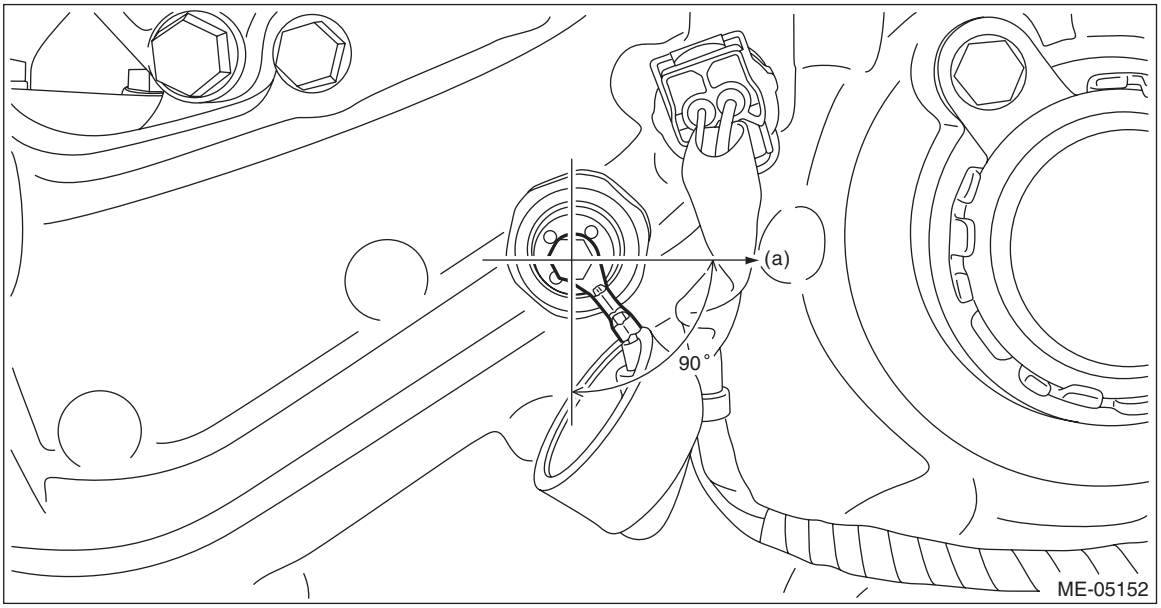

(a) Left side of vehicle

Tightening torque:
1.5 N·m (0.2 kgf-m, 1.1 ft-lb)

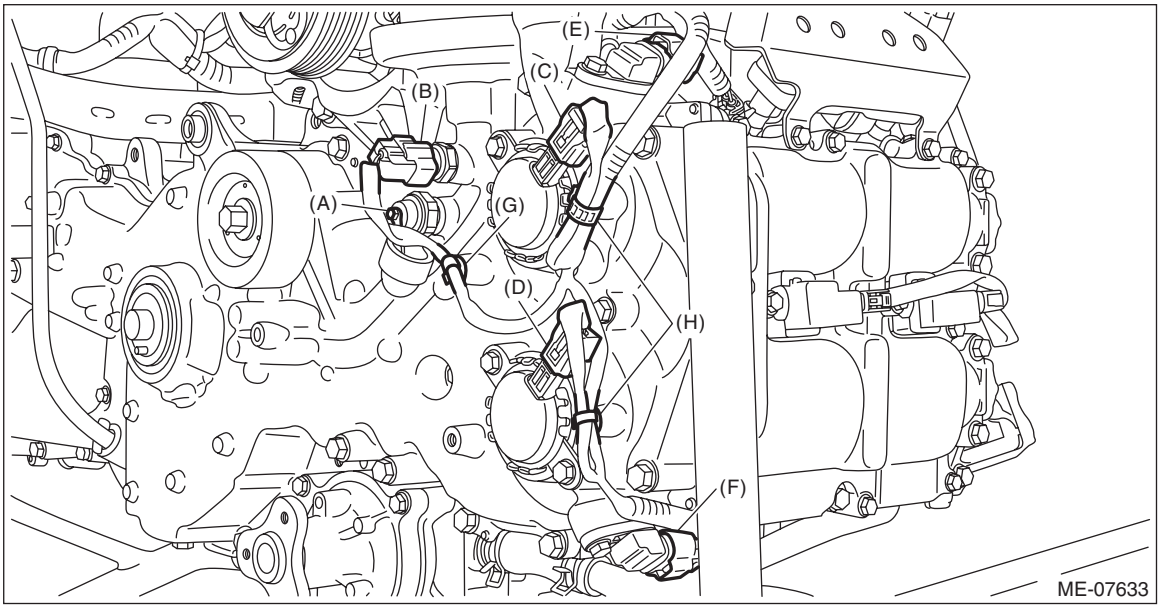

8) Attach the rubber cap to the oil pressure switch.

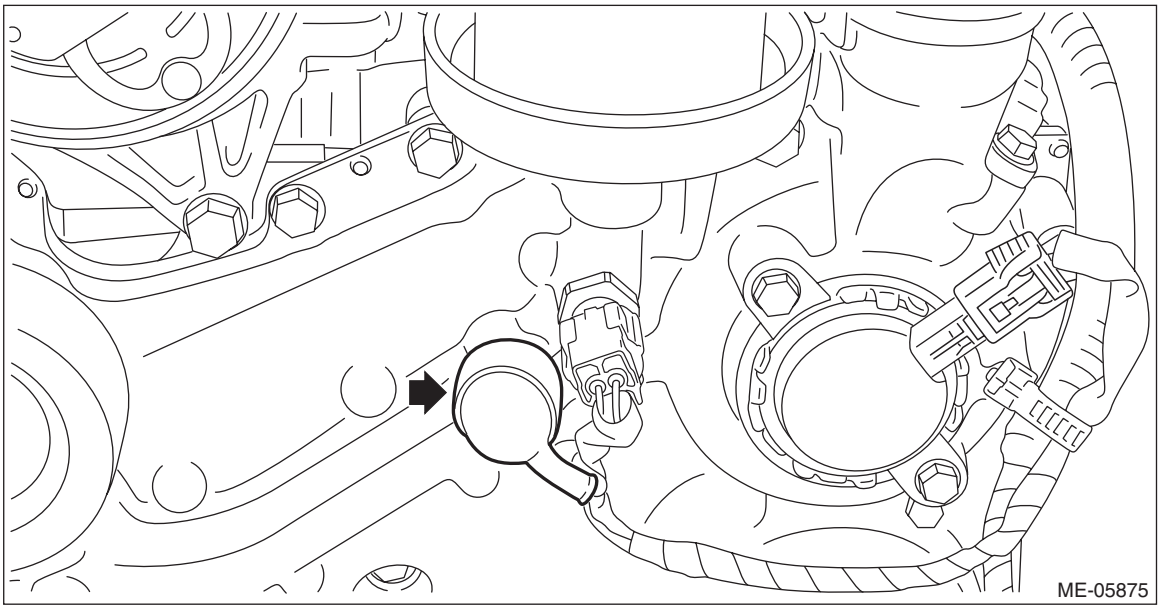

9) Secure the oil level switch harness with clips (A), and connect the connectors to the oil level switch.

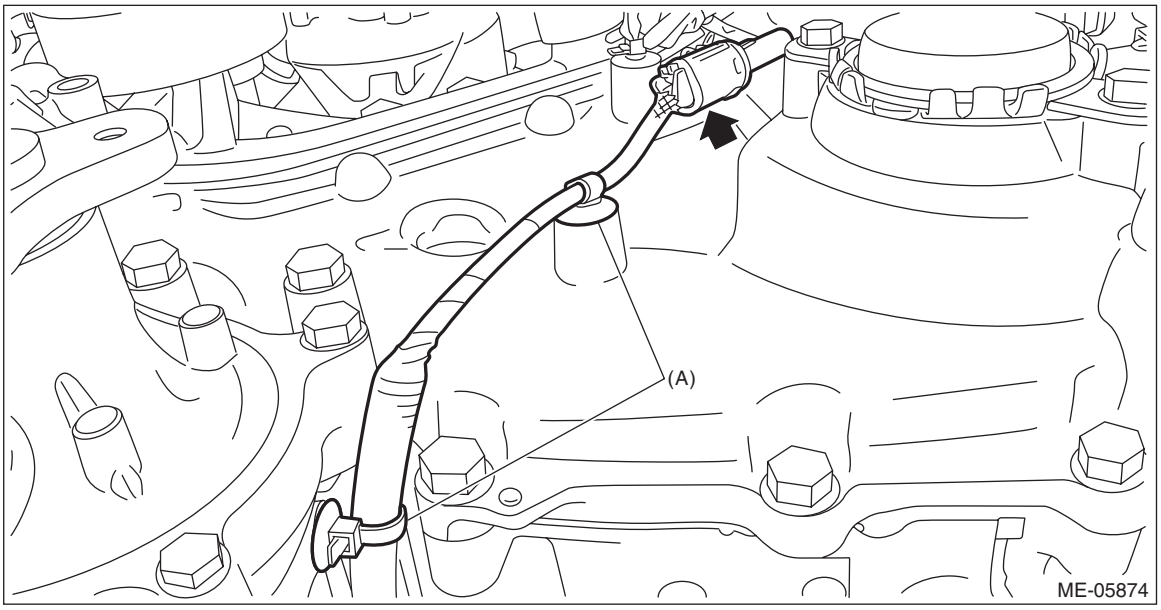

10) Connect the connector (A) to the intake oil control solenoid RH, connector (B) to the exhaust oil control solenoid RH, and connector (C) to the intake camshaft position sensor RH, and then secure the engine harness with the clips (D) (gasoline engine model) and the clips (E).

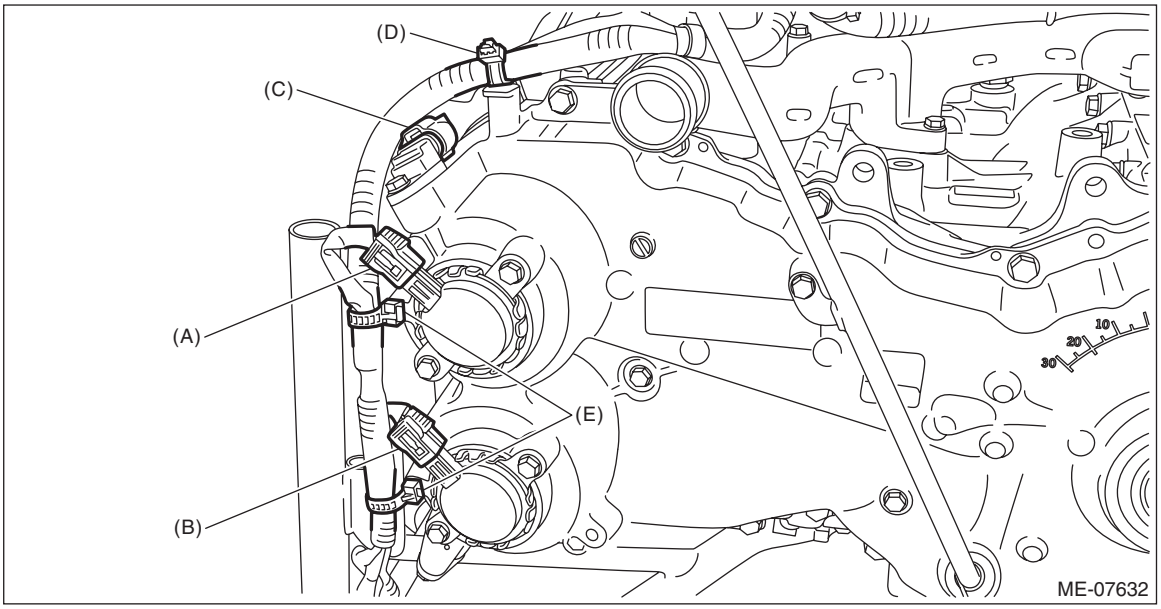

11) Connect the connector (A) to the exhaust camshaft position sensor RH, and install the engine harness stay to the chain cover.

Tightening torque:
6.4 N·m (0.7 kgf-m, 4.7 ft-lb)

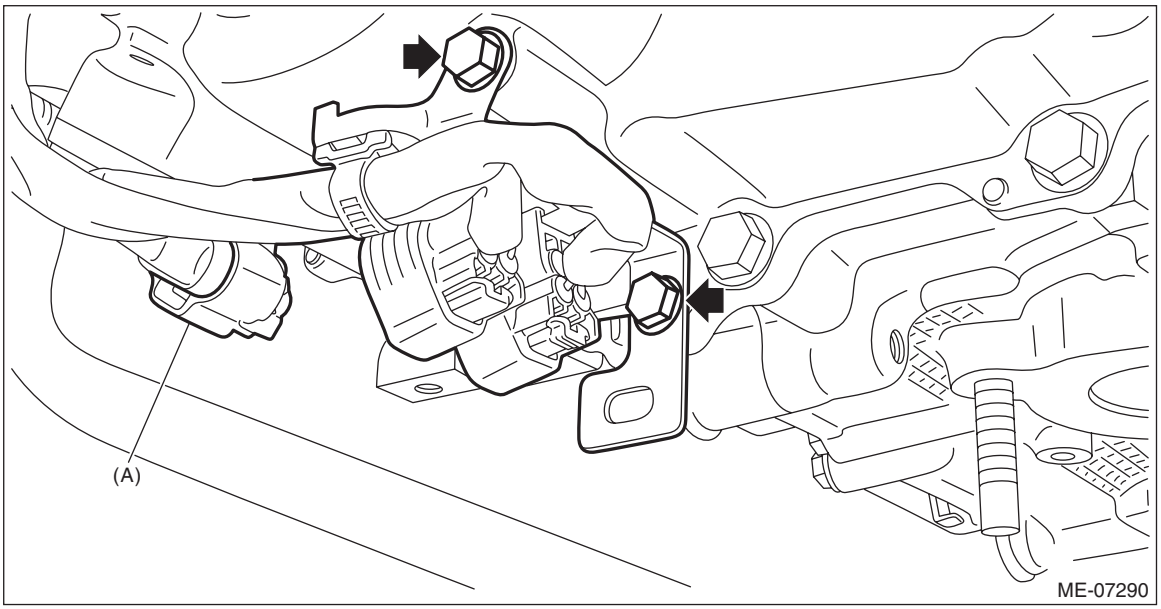

12) Install the crank pulley. <Ref. to ME(H4DO(w/o HEV))-138, INSTALLATION, Crank Pulley.>
13) Install the water pump pulley. <Ref. to CO(H4DO(w/o HEV))-22, WATER PUMP, INSTALLATION, Water Pump.>
14) Fill engine oil. <Ref. to LU(H4DO(w/o HEV))-13, REPLACEMENT, Engine Oil.>
15) Install the generator bracket. (Gasoline engine electric power steering model)
(1) Set the generator bracket to the engine, and tighten the bolts in numerical order as shown in the figure.

Tightening torque:
36 N·m (3.7 kgf-m, 26.6 ft-lb)

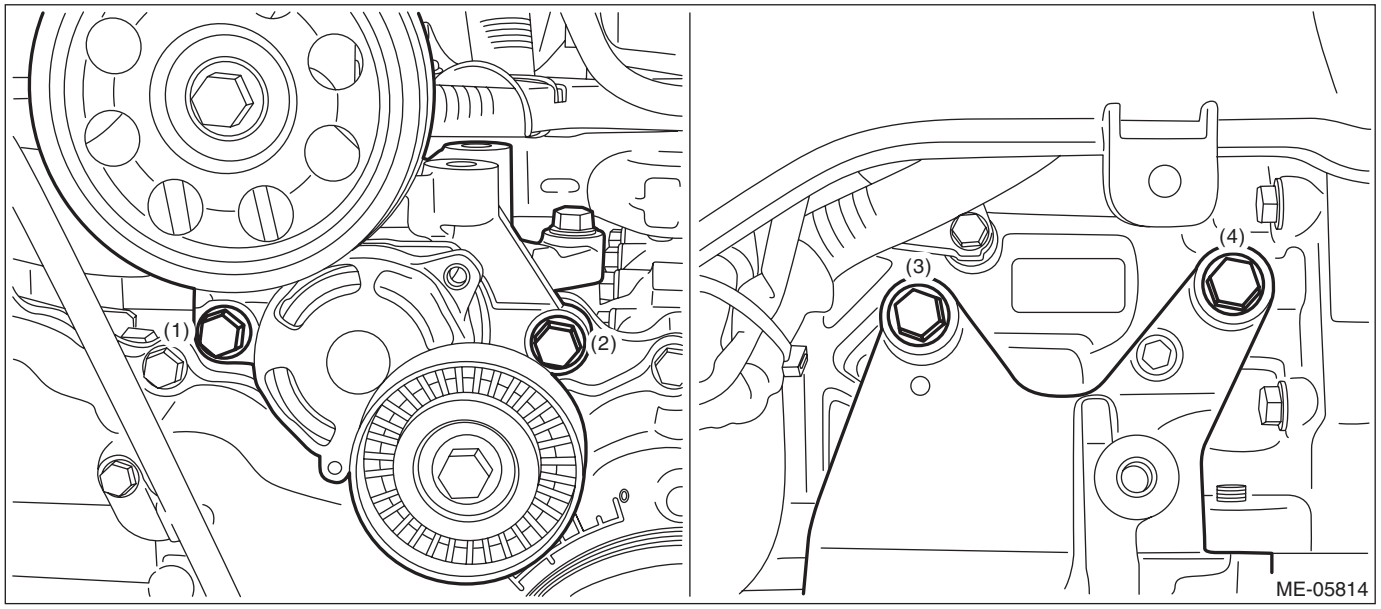

(2) Install the generator. <Ref. to SC(H4DO(w/o HEV))-36, INSTALLATION, Generator.>
(3) Install the V-belts. <Ref. to ME(H4DO(w/o HEV))-128, GASOLINE ENGINE MODEL, INSTALLATION, V-belt.>

16) Install the ISG. (HEV model) <Ref. to SC(H4DO(HEV))-34, INSTALLATION, Integrated Starter Generator (ISG).>
17) When working on the vehicle

NOTE:
When working on the vehicle, perform the following steps also.
(1) Install the radiator. <Ref. to CO(H4DO(w/o HEV))-82, INSTALLATION, Radiator.>
(2) Install the front exhaust pipe. <Ref. to EX(H4DO(w/o HEV))-8, INSTALLATION, Front Exhaust Pipe.>
(3) Install the generator cord stay to the chain cover. (Gasoline engine model)

NOTE:
Install the generator cord stay so that the folded end (a) touches the chain cover boss.

Tightening torque:
6.4 N·m (0.7 kgf-m, 4.7 ft-lb)

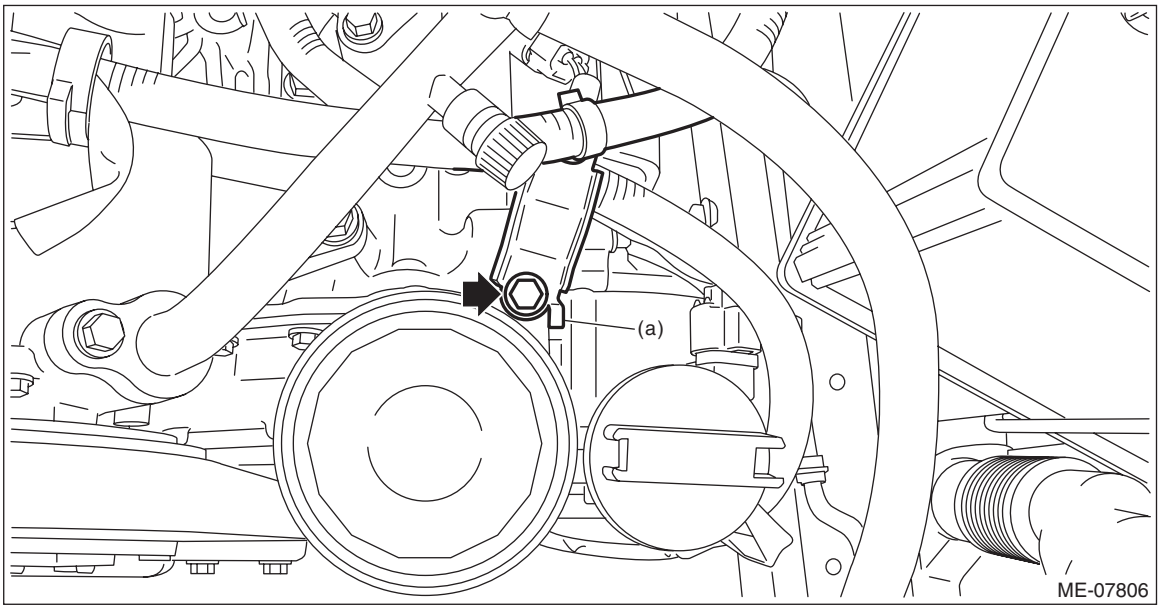

C: DISASSEMBLY

1) Remove the oil filler cap.

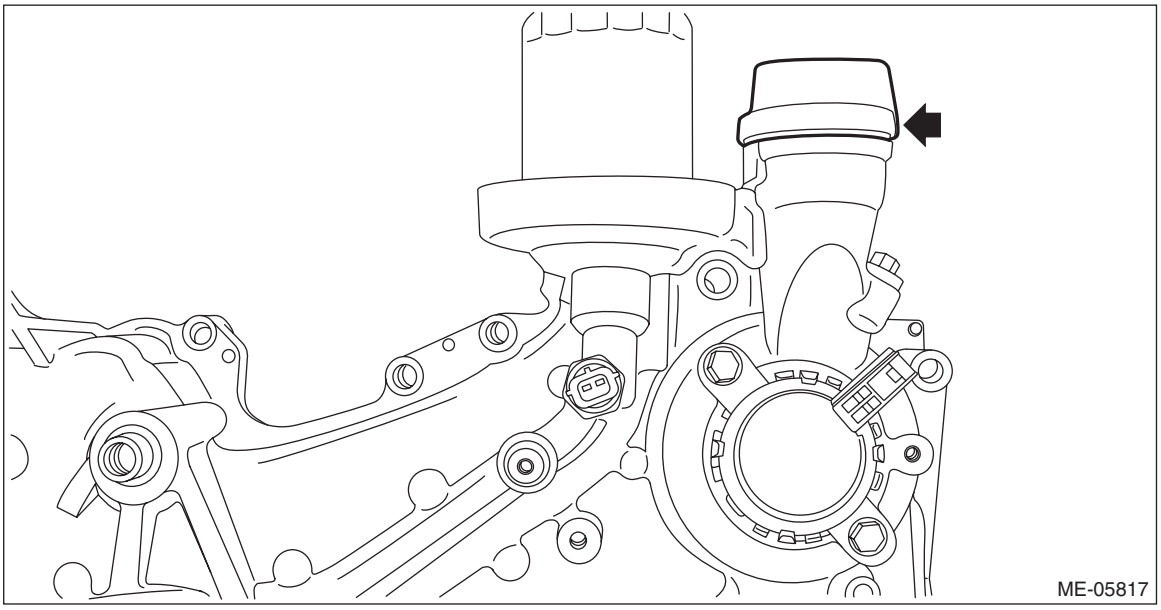

2) Remove the engine oil filter and the oil pump union. <Ref. to LU(H4DO(w/o HEV))-28, REMOVAL, Engine Oil Filter.>

3) Remove the oil pressure switch. <Ref. to LU(H4DO(w/o HEV))-24, REMOVAL, Oil Pressure Switch.>
4) Remove the engine oil temperature sensor. <Ref. to FU(H4DO(w/o HEV))-55, REMOVAL, Engine Oil Temperature Sensor.> <Ref. to FU(H4DO(HEV))-44, REMOVAL, Engine Oil Temperature Sensor.>
5) Remove the oil control solenoid. <Ref. to FU(H4DO(w/o HEV))-69, REMOVAL, Oil Control Solenoid.> <Ref. to FU(H4DO(HEV))-57, REMOVAL, Oil Control Solenoid.>
6) Remove the camshaft position sensor. <Ref. to FU(H4DO(w/o HEV))-63, REMOVAL, Camshaft Position Sensor.> <Ref. to FU(H4DO(HEV))-52, REMOVAL, Camshaft Position Sensor.>

D: ASSEMBLY

1) Install the camshaft position sensor. <Ref. to FU(H4DO(w/o HEV))-65, INSTALLATION, Camshaft Position Sensor.> <Ref. to FU(H4DO(HEV))-53, INSTALLATION, Camshaft Position Sensor.>
2) Install the oil control solenoid. <Ref. to FU(H4DO(w/o HEV))-72, INSTALLATION, Oil Control Solenoid.> <Ref. to FU(H4DO(HEV))-59, INSTALLATION, Oil Control Solenoid.>
3) Install the engine oil temperature sensor. <Ref. to FU(H4DO(w/o HEV))-55, INSTALLATION, Engine Oil Temperature Sensor.> <Ref. to FU(H4DO(HEV))-44, INSTALLATION, Engine Oil Temperature Sensor.>
4) Install the oil pressure switch. <Ref. to LU(H4DO(w/o HEV))-26, INSTALLATION, Oil Pressure Switch.>
5) Install the engine oil filter and the oil pump union. <Ref. to LU(H4DO(w/o HEV))-29, INSTALLATION, Engine Oil Filter.>
6) Install the oil filler cap.

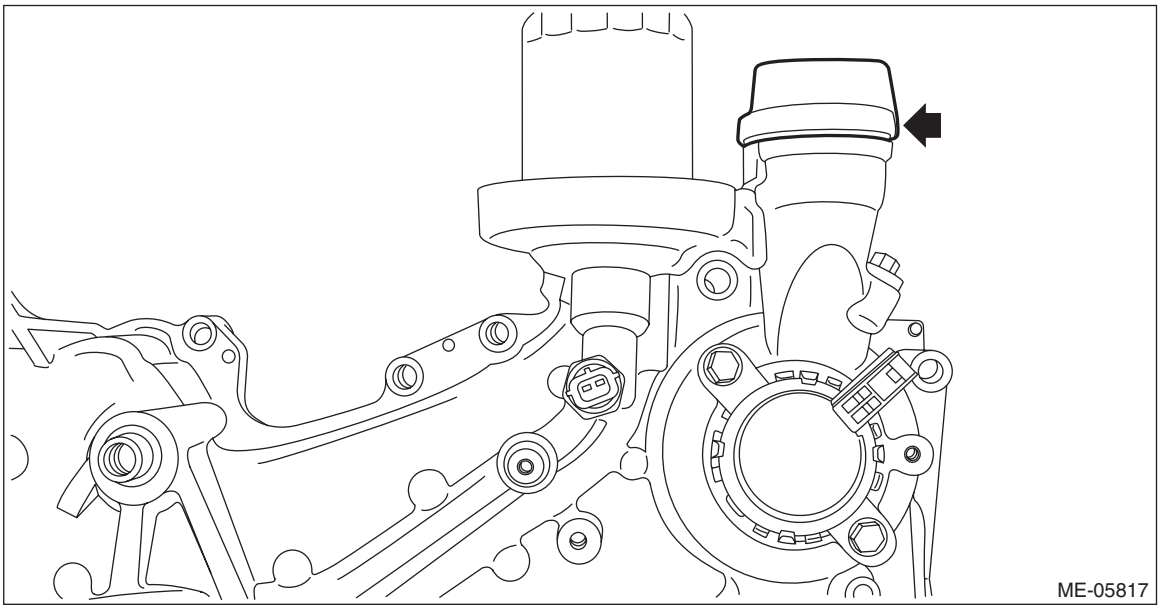

E: INSPECTION

Check that the chain cover does not have deformation, cracks and any other damage.

15.Timing Chain Assembly

A: REMOVAL

1. TIMING CHAIN RH

NOTE:
When replacing a single part, perform the work with the engine assembly installed to body.
1) Remove the chain cover. <Ref. to ME(H4DO(w/o HEV))-144, REMOVAL, Chain Cover.>
2) Using ST and by turning the crankshaft, align the alignment marks of crank sprocket, intake cam sprocket RH and exhaust cam sprocket RH to the positions as shown in the figure.

NOTE:
If the alignment marks are aligned to the positions as shown in the figure, the crankshaft key is located at six o'clock position.
ST 18252AA000 CRANKSHAFT SOCKET

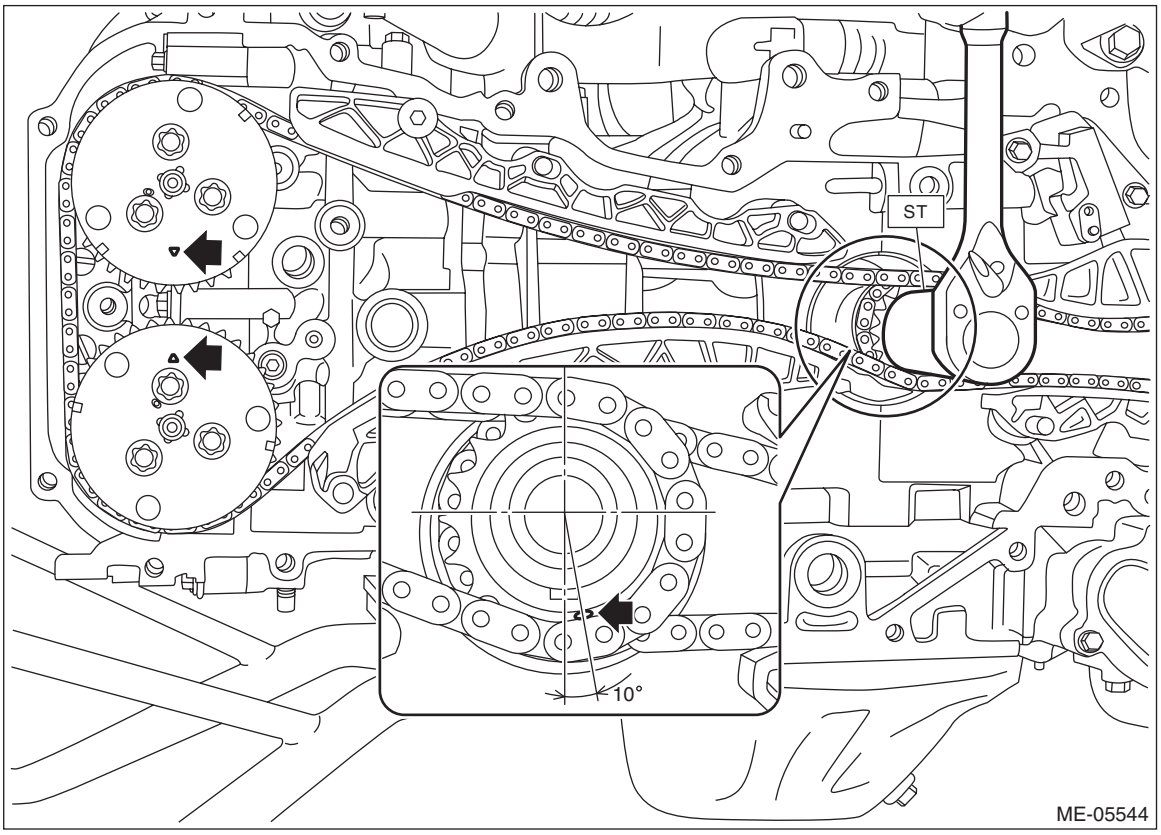

3) Push down the chain lever tensioner RH, and with a 2.5 mm (0.98 in) dia. stopper pin or a 2.5 mm (0.98 in) dia. hex wrench inserted into the stopper pin hole in the chain tensioner RH, secure the plunger (A).

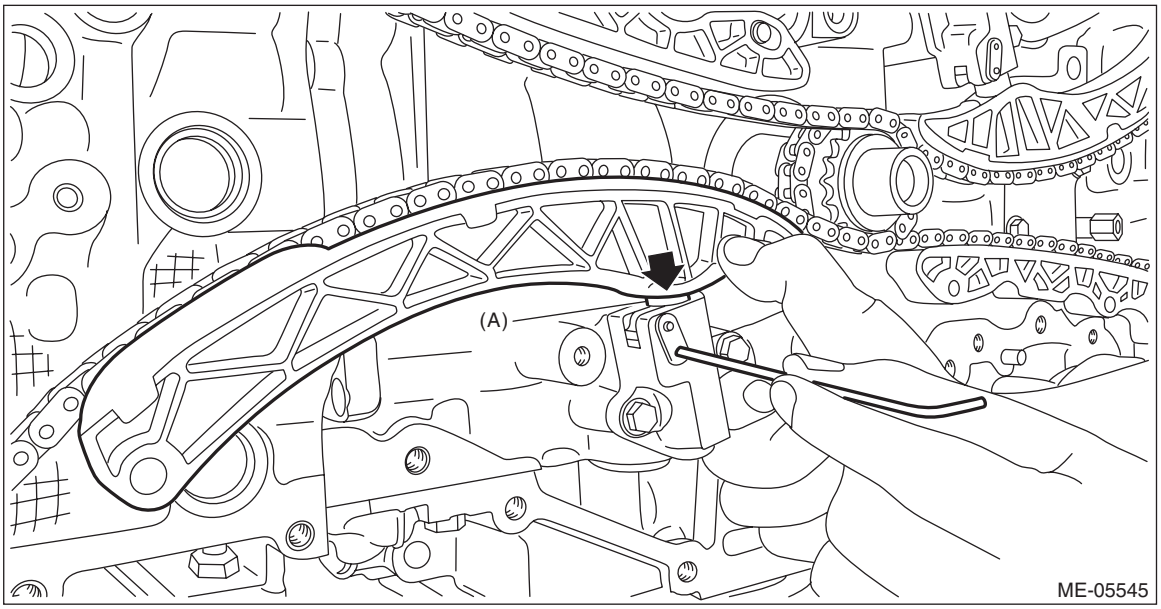

4) Remove the chain tensioner RH, and remove the chain tensioner lever RH (A).

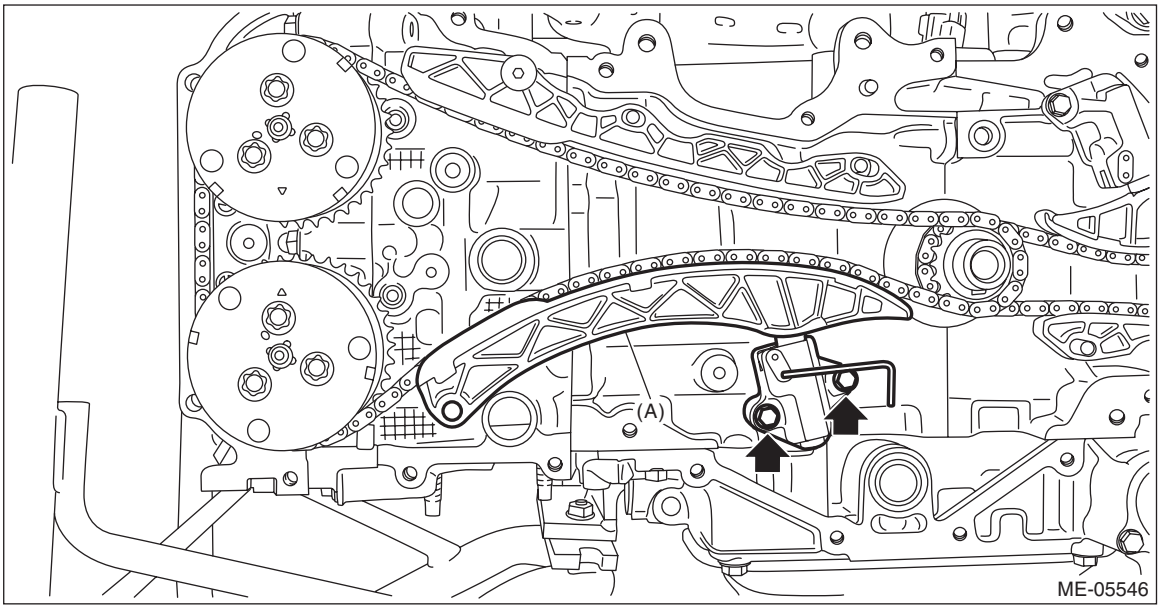

5) Remove the chain guide RH, and remove the timing chain RH (A).

CAUTION:

• If the timing chain RH is not installed, the intake camshaft RH and exhaust camshaft RH are kept at zero-lift position. All cams on the camshaft are not pressing down the roller rocker arm (intake valve and exhaust valve). (Under this condition, all valves remain unlifted.)

• Intake camshaft RH and exhaust camshaft RH can be independently rotated with the timing chain RH removed. When the intake valve and exhaust valve lift at the same time, the valve heads contact each other and valve stem may bend. Do not turn it to the outside of range of zero-lift (in range where it can be turned lightly by hand).

NOTE:
To avoid mixing with LH side, keep the removed part in order.

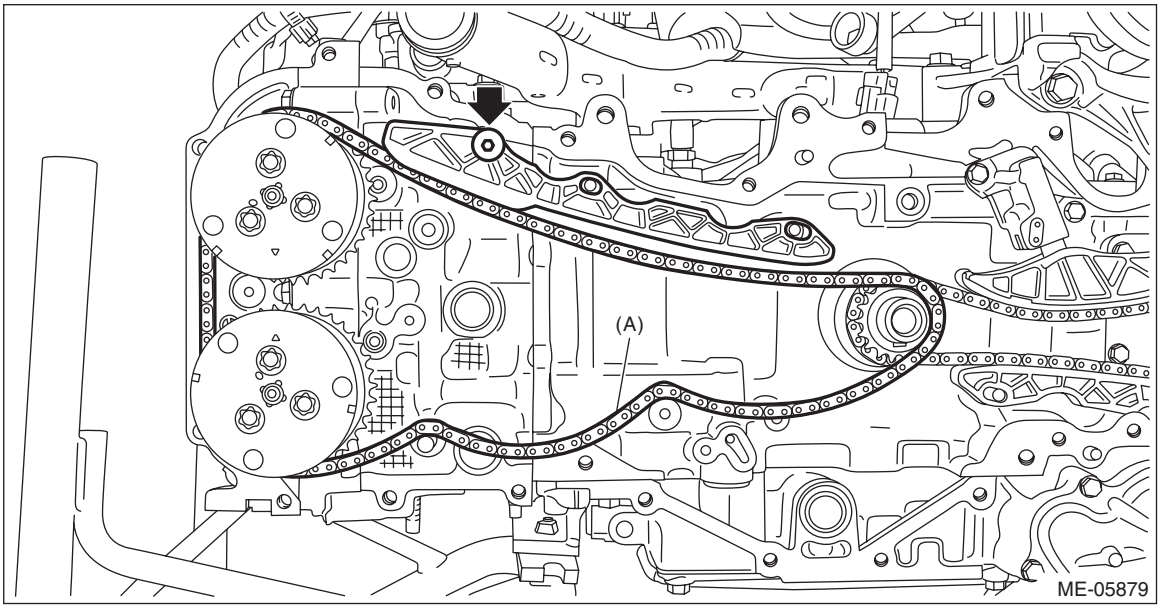

2. TIMING CHAIN LH

1) Remove the timing chain RH. <Ref. to ME(H4DO(w/o HEV))-163, TIMING CHAIN RH, REMOVAL, Timing Chain Assembly.>
2) Using ST and by turning the crankshaft, align the alignment marks of crankshaft key, intake cam sprocket LH and exhaust cam sprocket LH to the positions as shown in the figure.
ST 18252AA000 CRANKSHAFT SOCKET

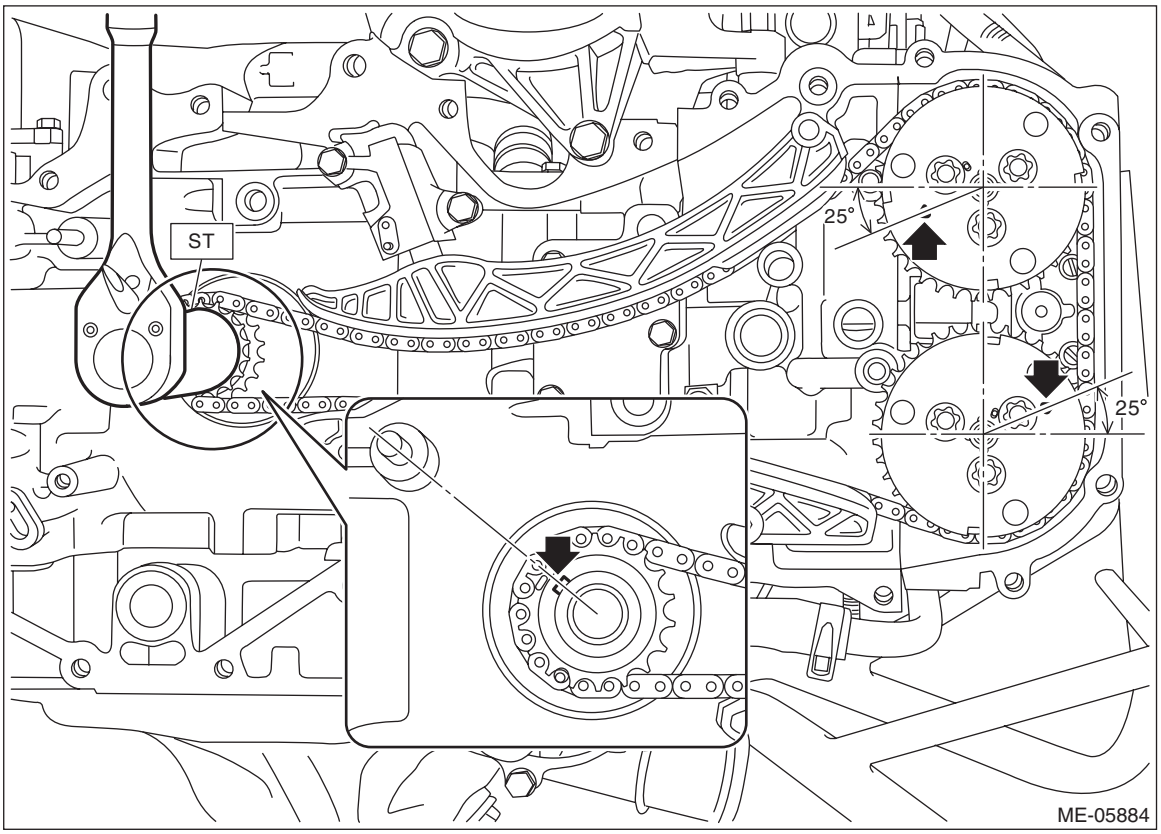

3) Push down the chain lever tensioner LH, and with a 1.3 mm (0.05 in) dia. stopper pin or a 1.3 mm (0.05 in) dia. hex wrench inserted into the stopper pin hole in the chain tensioner LH, secure the plunger (A).

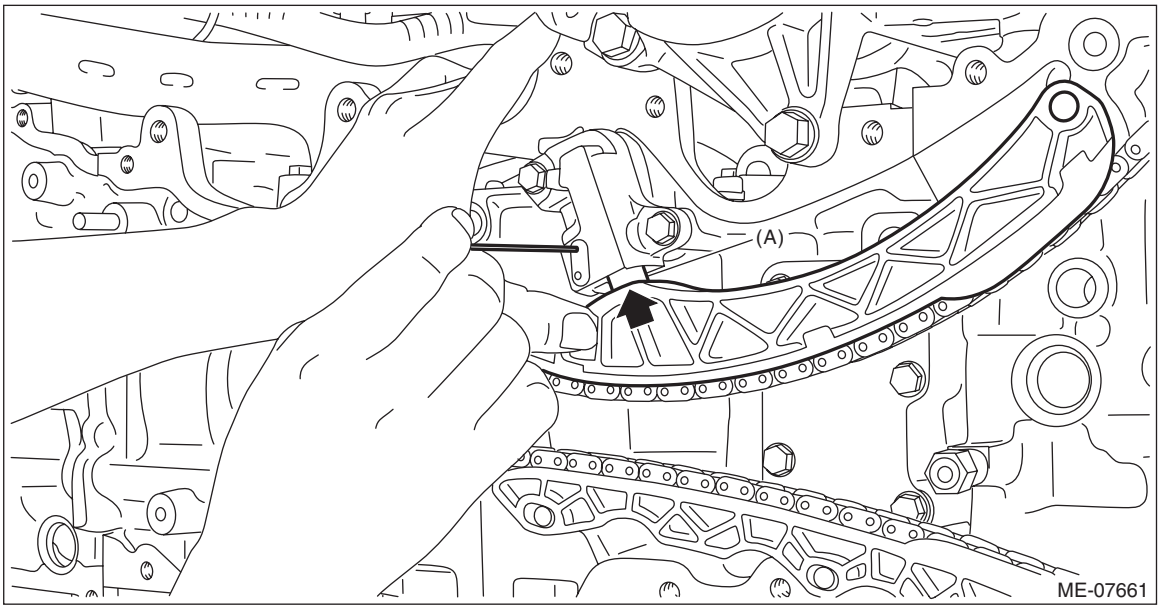

4) Remove the chain tensioner LH, and remove the chain tensioner lever LH (A).

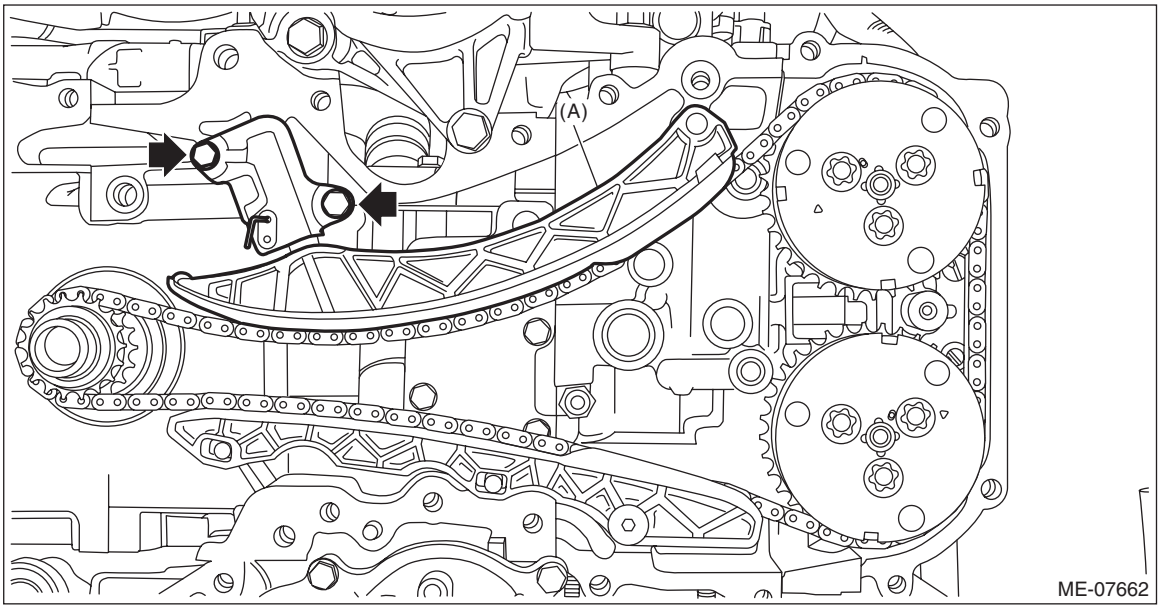

5) Remove the O-ring from the cylinder block LH.

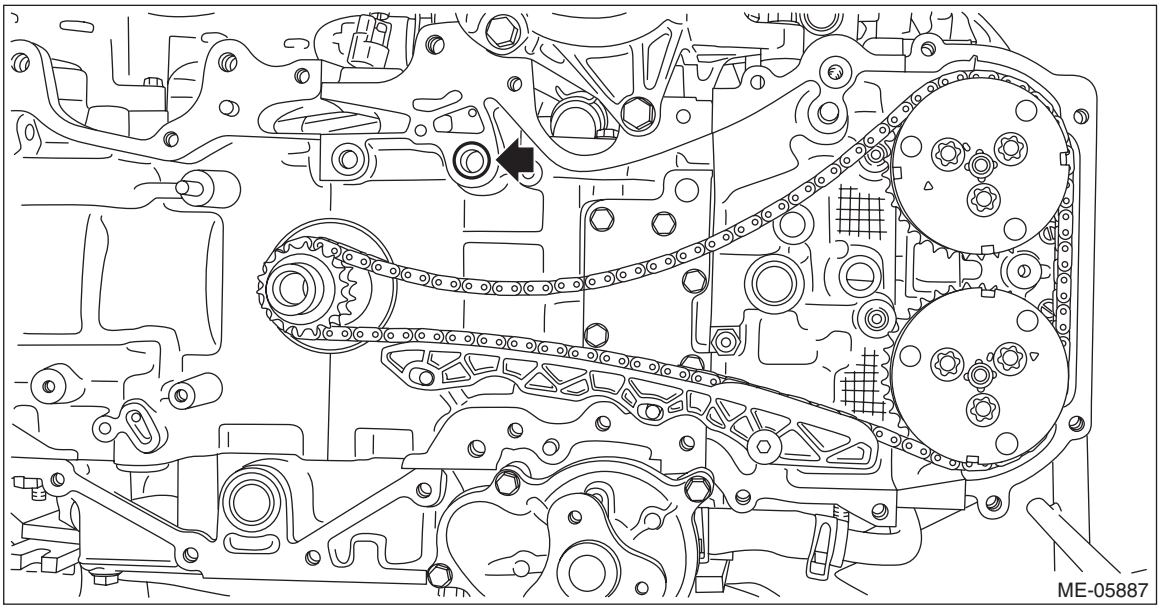

6) Remove the chain guide LH, and remove the timing chain LH (A).

CAUTION:
• If the timing chain LH is not installed, the exhaust camshaft LH is kept at zero-lift position. All cams on the exhaust camshaft LH are not pressing down the roller rocker arm (exhaust valve). (Under this condition, exhaust valves remain unlifted.)
• Intake camshaft LH is kept at lift position. All cams on the intake camshaft LH are pressing down the roller rocker arm (intake valve). (Under this condition, intake valves remain lifted.)
• Intake camshaft LH and exhaust camshaft RH can be independently rotated with the timing chain LH removed. When the exhaust camshaft LH is turned, the valve heads contact each other and valve stem may bend as described in above. Do not turn the exhaust camshaft LH to the outside of range of zero-lift (in range where it can be turned lightly by hand).
• #1 piston and #4 piston are located near TDC. If the intake camshaft LH is turned, the valve and the piston may contact and valve stem may bend. Do not turn the intake camshaft LH at this time.

NOTE:
To avoid mixing with RH side, keep the removed part in order.

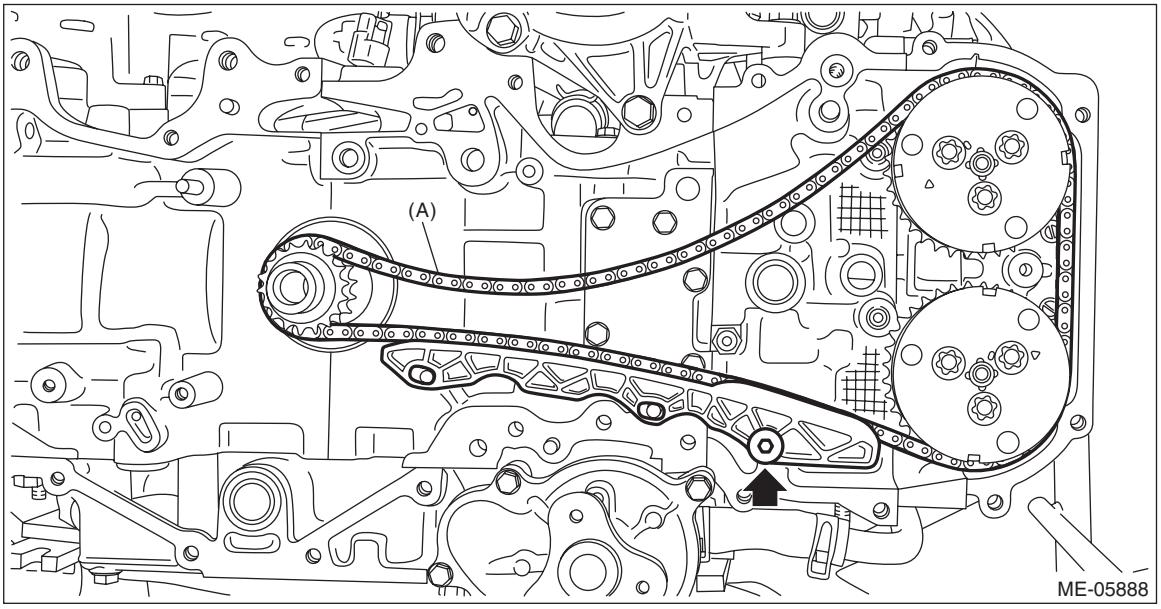

7) Using ST and by turning the crankshaft approximately 200° clockwise, align the alignment marks of crank sprocket to the positions as shown in the figure.

CAUTION:
• This procedure is required to prevent the valve and piston contacting with each other, by moving the all pistons to the middle of the cylinders.
• Never turn counterclockwise because the valve and piston may contact. Counterclockwise turn is allowed only when adjusting precisely the alignment marks, after turning the crank sprocket alignment mark clockwise near the position as shown in the figure.

ST 18252AA000 CRANKSHAFT SOCKET

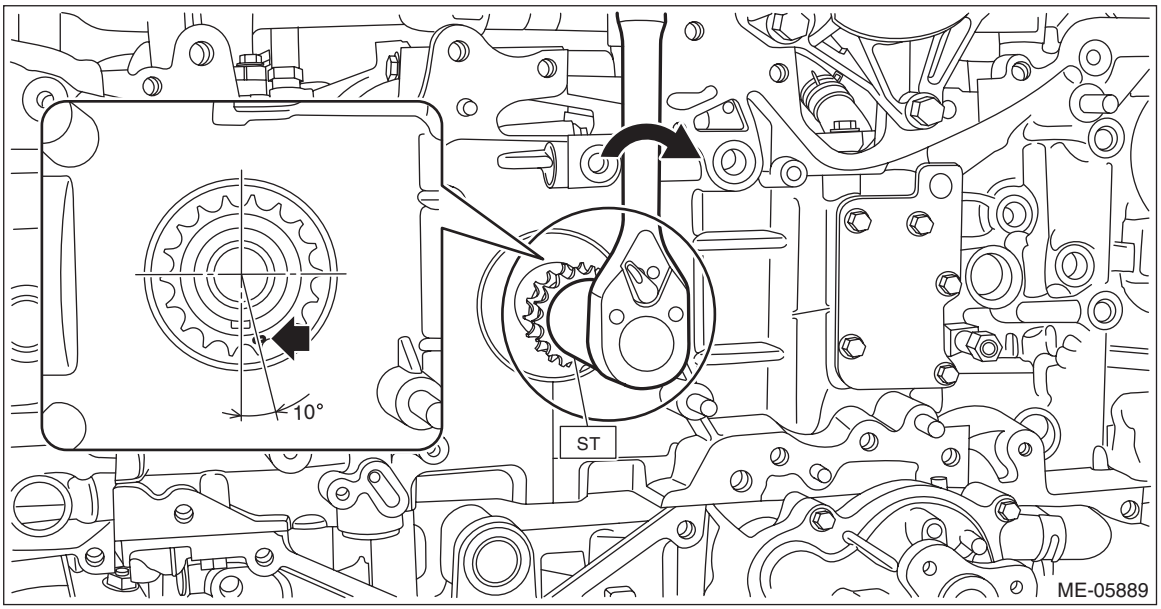

8) Using ST and by turning the intake cam sprocket LH approximately 180°, align the alignment marks of intake cam sprocket LH to the positions (zero-lift position) as shown in the figure.

CAUTION:
After this work, when the intake valve and exhaust valve lift at the same time, the valve heads contact each other and valve stem may bend. Do not turn the intake camshaft LH and exhaust camshaft LH to the outside of range of zero-lift (in range where it can be turned lightly by hand).

ST1 18355AA000 PULLEY WRENCH
ST2 18334AA030 PULLEY WRENCH PIN SET

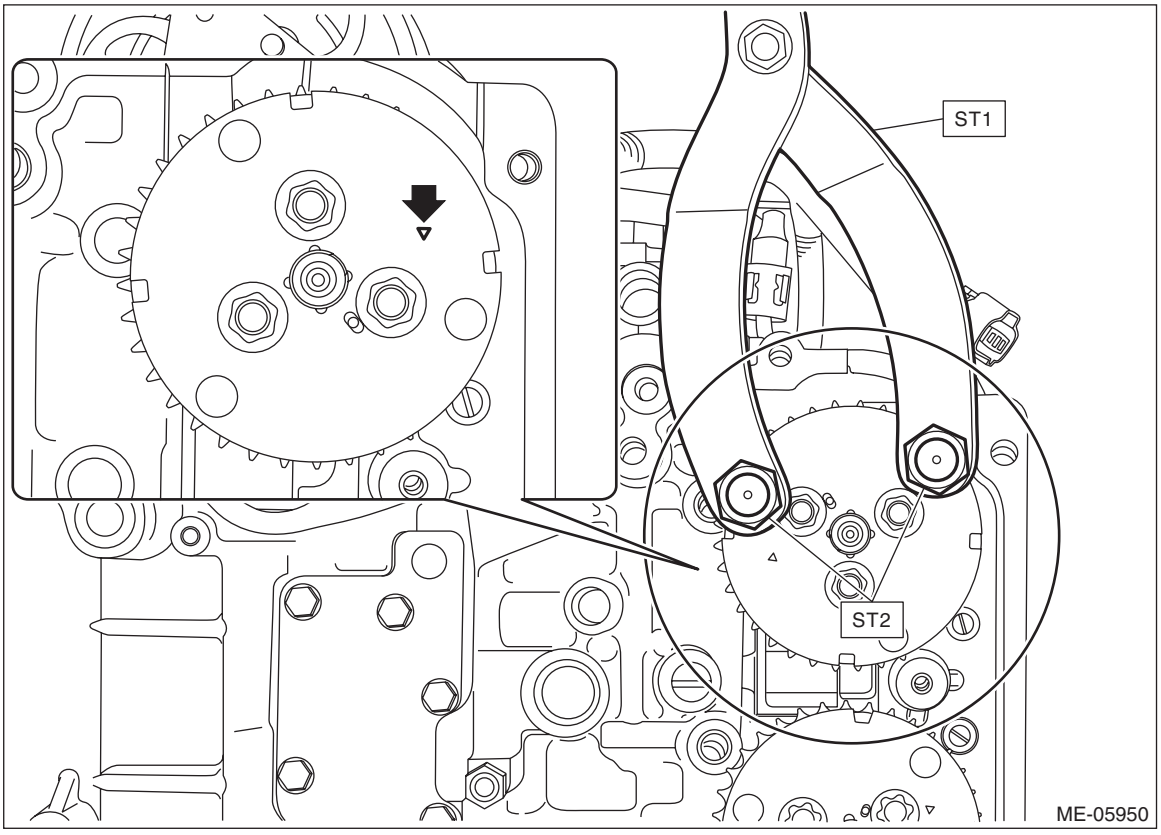

B: INSTALLATION

1. TIMING CHAIN LH

NOTE:
- Be careful that the foreign matter is not into or onto the assembled component during installation.
- Apply engine oil to all component parts of the timing chain.

1) Prepare to attach the chain tensioner LH.
   (1) Move the link plate (A) in the direction of arrow to press in the plunger (B).

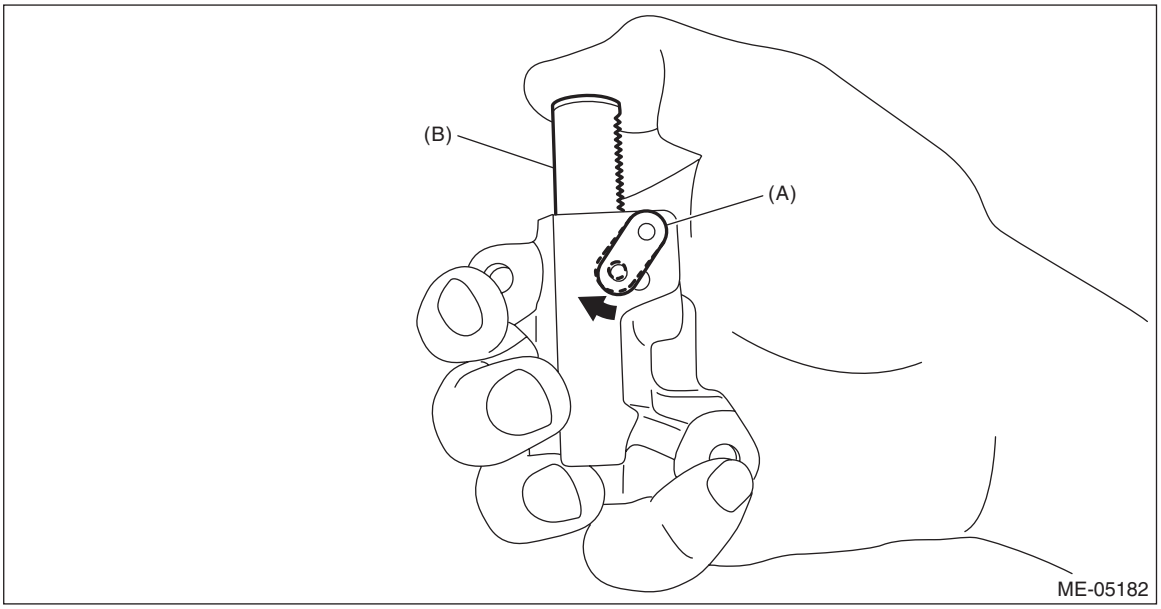

   (2) With a 1.3 mm (0.05 in) dia. stopper pin or a 1.3 mm (0.05 in) (nominal) dia. hex wrench inserted into the stopper pin hole, secure the plunger.

NOTE:
If the stopper pin hole on the link plate and the stopper pin hole on the chain tensioner are not aligned, check that the first notch of plunger rack (A) is engaged with the stopper tooth (B). If not engaged, retract the plunger a little so that the first notch of plunger rack (A) is engaged with the stopper tooth (B).

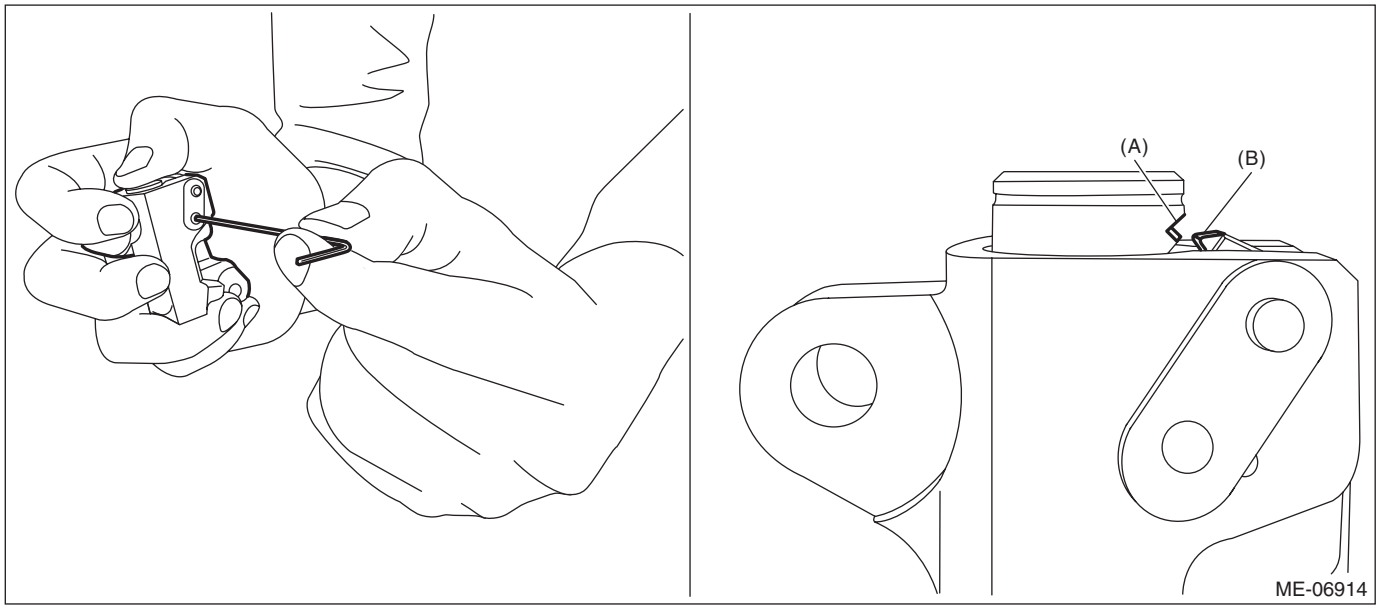

2) Check that the crank sprocket is located at the position sown in the figure. If not aligned, using ST turn the crankshaft to align the crank sprocket alignment mark to the position shown in the figure.

NOTE:
This procedure is required to prevent the valve and piston contacting with each other in the next step.
ST 18252AA000 CRANKSHAFT SOCKET

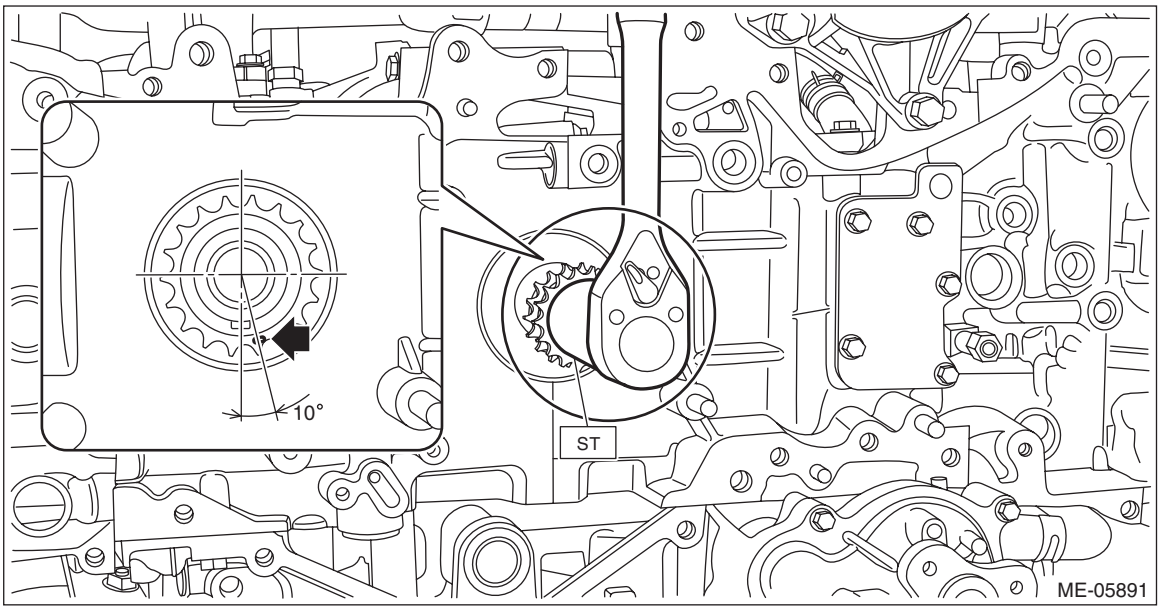

3) Using ST and by turning the intake cam sprocket LH, align the alignment marks to the positions as shown in the figure.

CAUTION:
When the intake valve and exhaust valve lift at the same time, the valve heads contact each other and valve stem may bend. Do not turn the exhaust camshaft LH.
ST1 18355AA000 PULLEY WRENCH
ST2 18334AA030 PULLEY WRENCH PIN SET

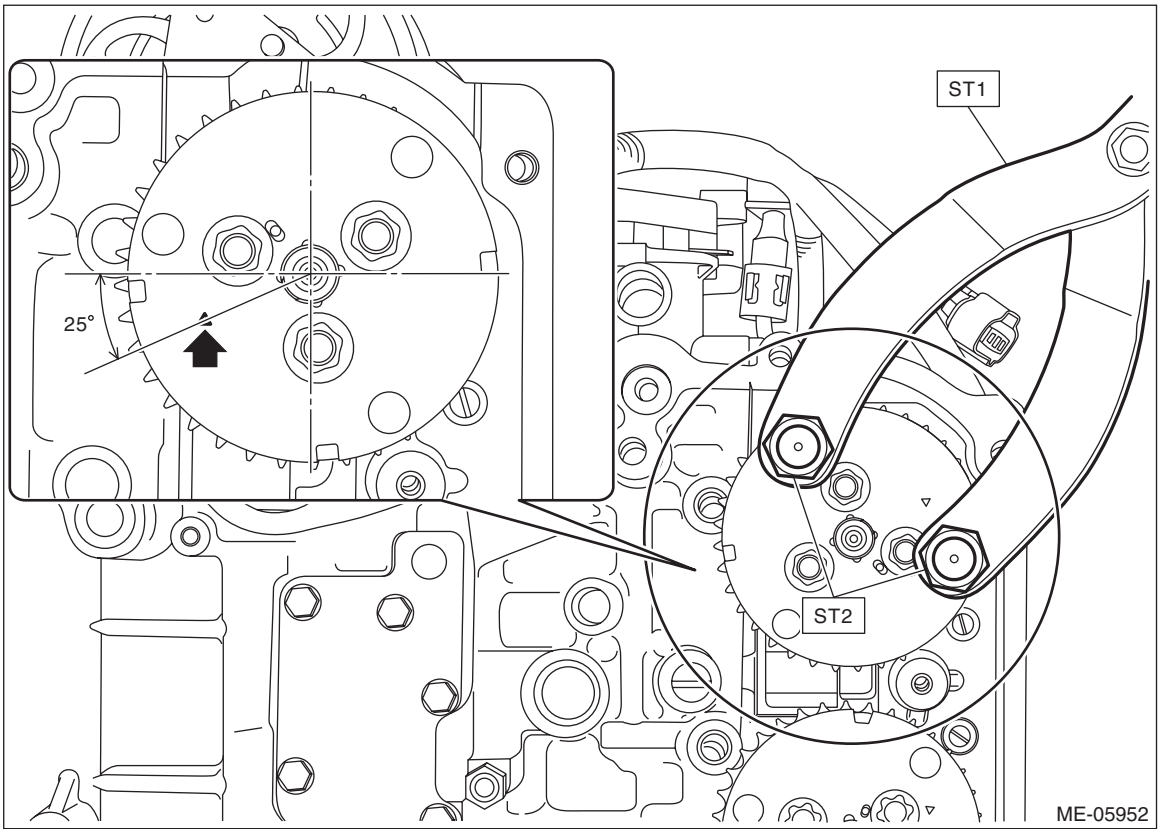

4) Using ST and by turning the crankshaft approximately 200° counterclockwise, align the alignment marks of crankshaft key to the positions as shown in the figure.

CAUTION:
Never turn clockwise because the valve and piston may contact. Clockwise turn is allowed only when adjusting the key position precisely, after turning the crankshaft counterclockwise to bring the key near the position as shown in the figure.

ST 18252AA000 CRANKSHAFT SOCKET

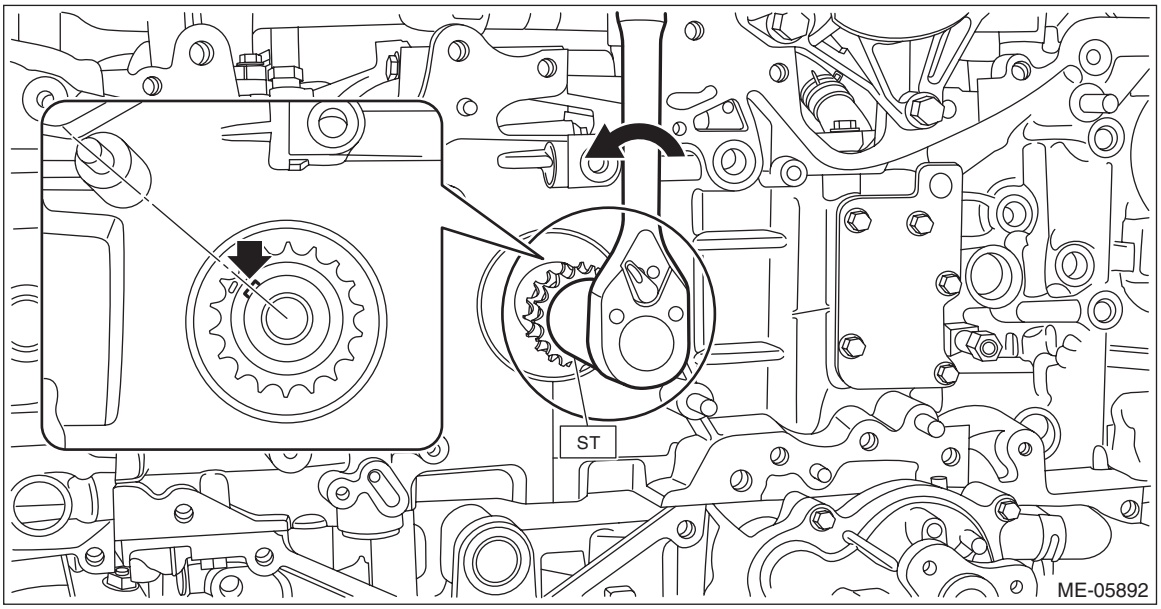

5) Align the alignment mark of exhaust cam sprocket LH to the position shown in the figure.

CAUTION:
To prevent valve damage, turn the exhaust cam sprocket LH only within the range of zero-lift (in range where it can be turned lightly by hand).

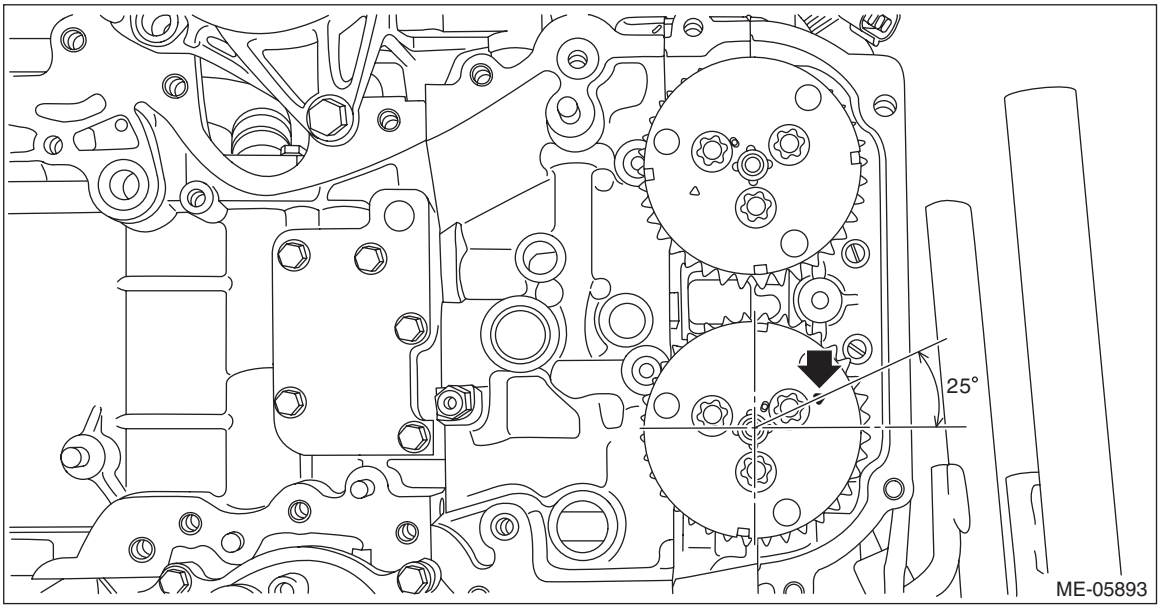

6) Install the timing chain LH and the timing chain guide LH.
   (1) Match the timing chain mark (blue) to the alignment mark of the crank sprocket.
   (2) Match the timing chain mark (pink) to the timing mark position of the intake cam sprocket LH.
   (3) Match the timing chain mark (pink) to the timing mark position of the exhaust cam sprocket LH.
   (4) Install timing chain guide LH.

Tightening torque:
6.4 N·m (0.7 kgf-m, 4.7 ft-lb)

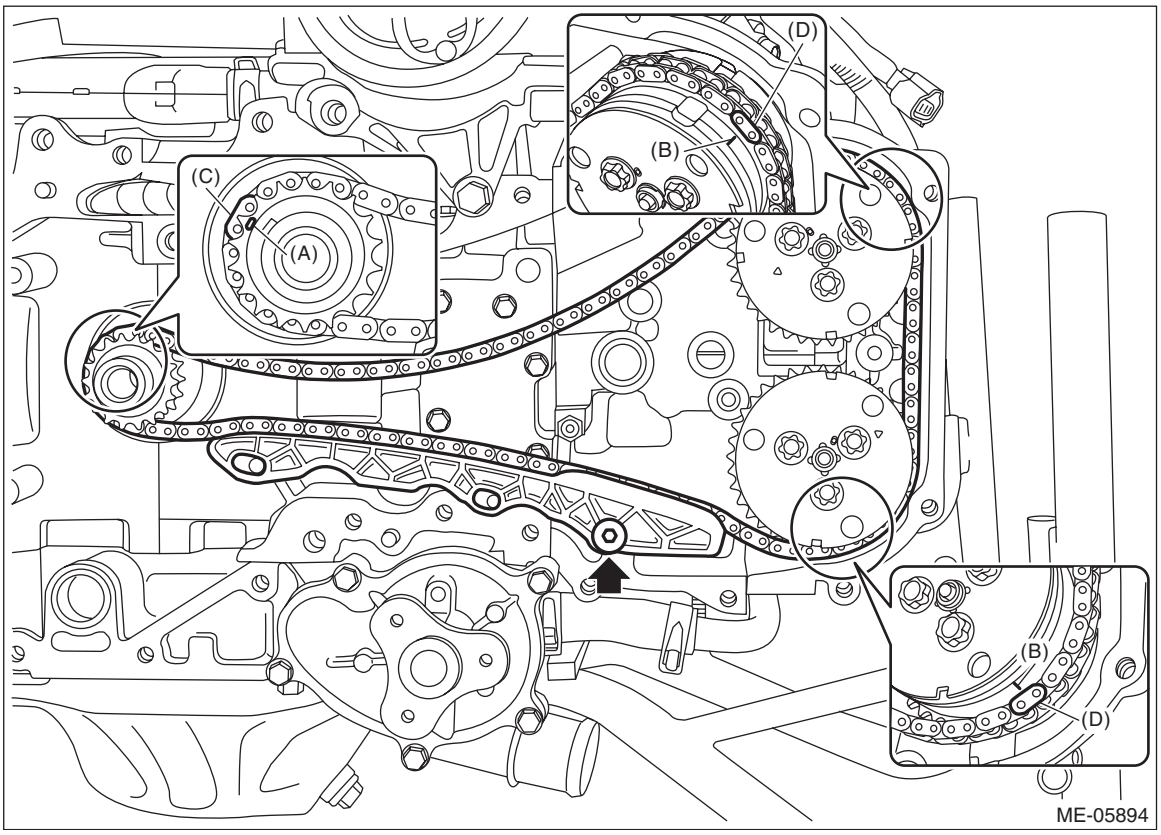

(A) Alignment mark
(B) Timing mark
(C) Blue
(D) Pink

7) Install O-rings to the cylinder block LH.

NOTE:
Use new O-rings.

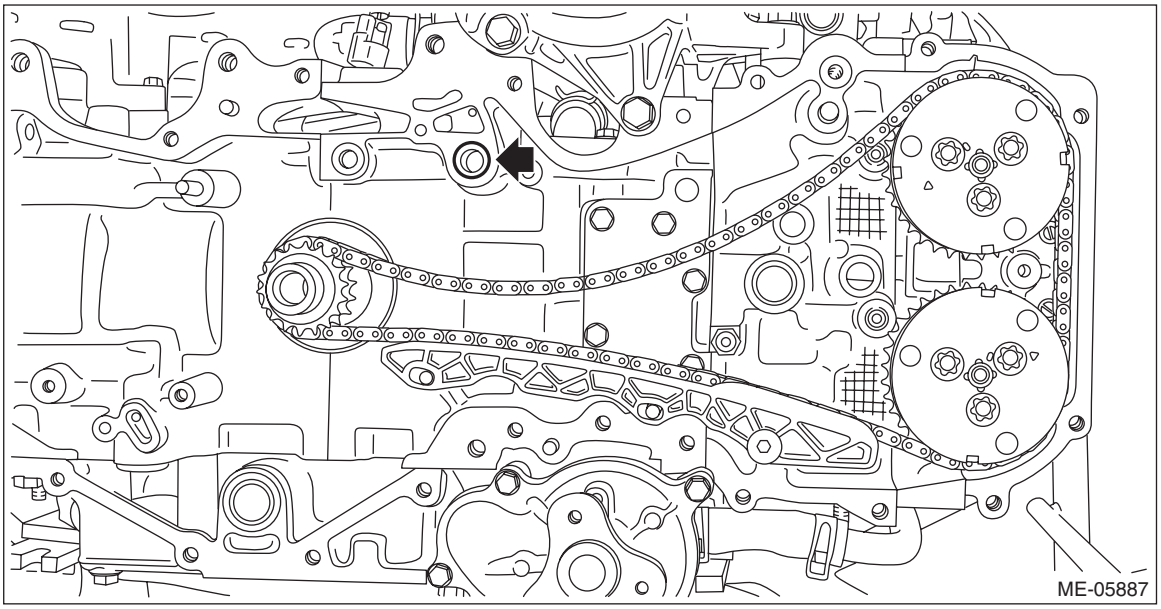

8) Install the chain tensioner lever LH (A) and chain tensioner LH.

Tightening torque:
6.4 N·m (0.7 kgf-m, 4.7 ft-lb)

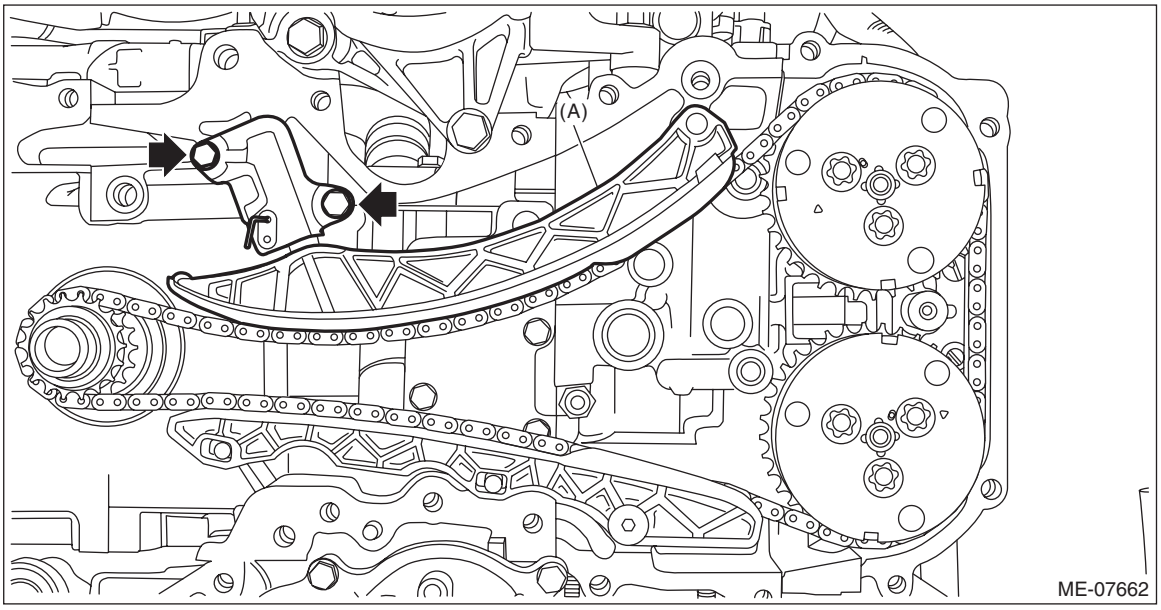

9) Pull out the stopper pin from the chain tensioner LH.

CAUTION:
Confirm the following before pulling out the stopper pin.
- **Matching of the timing chain mark (blue) to the alignment mark of the crank sprocket.**
- **Matching of the timing chain mark (pink) to the timing mark position of the intake cam sprocket LH.**
- **Matching of the timing chain mark (pink) to the timing mark position of the exhaust cam sprocket LH.**

NOTE:
If the stopper pin cannot be removed, lift the chain tension lever LH to remove as shown in the figure.

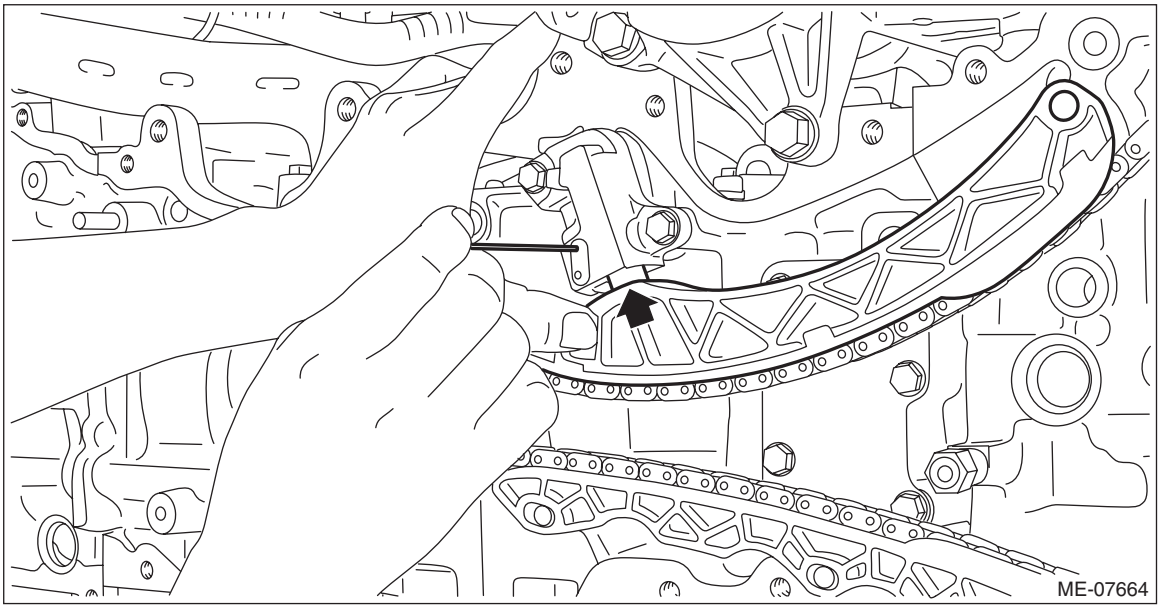

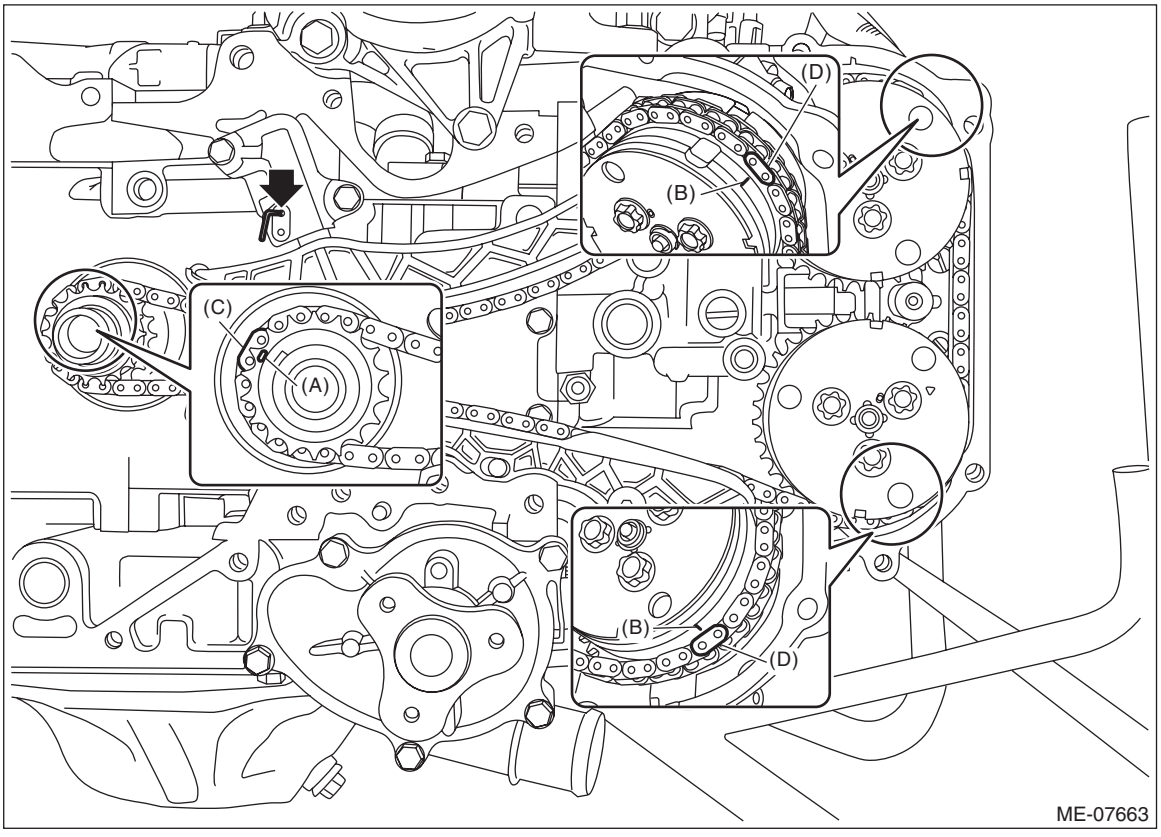

(A) Alignment mark
(B) Timing mark
(C) Blue
(D) Pink

10) Using the ST, turn the crankshaft clockwise, and make sure that there are no abnormal conditions.

CAUTION:
Always make sure to perform this confirmation.
ST 18252AA000 CRANKSHAFT SOCKET

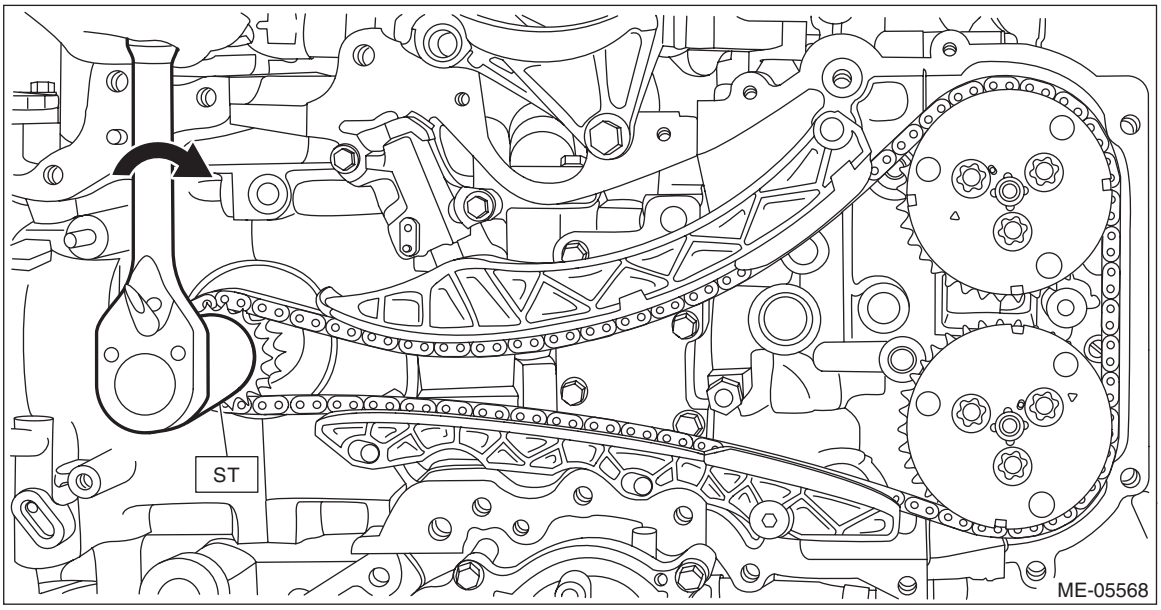

11) Using ST and by turning the crankshaft, align the alignment marks of crank sprocket, intake cam sprocket LH and exhaust cam sprocket LH to the positions as shown in the figure.

NOTE:
If the alignment marks are aligned to the positions as shown in the figure, the crankshaft key is located at six o'clock position.
ST 18252AA000 CRANKSHAFT SOCKET

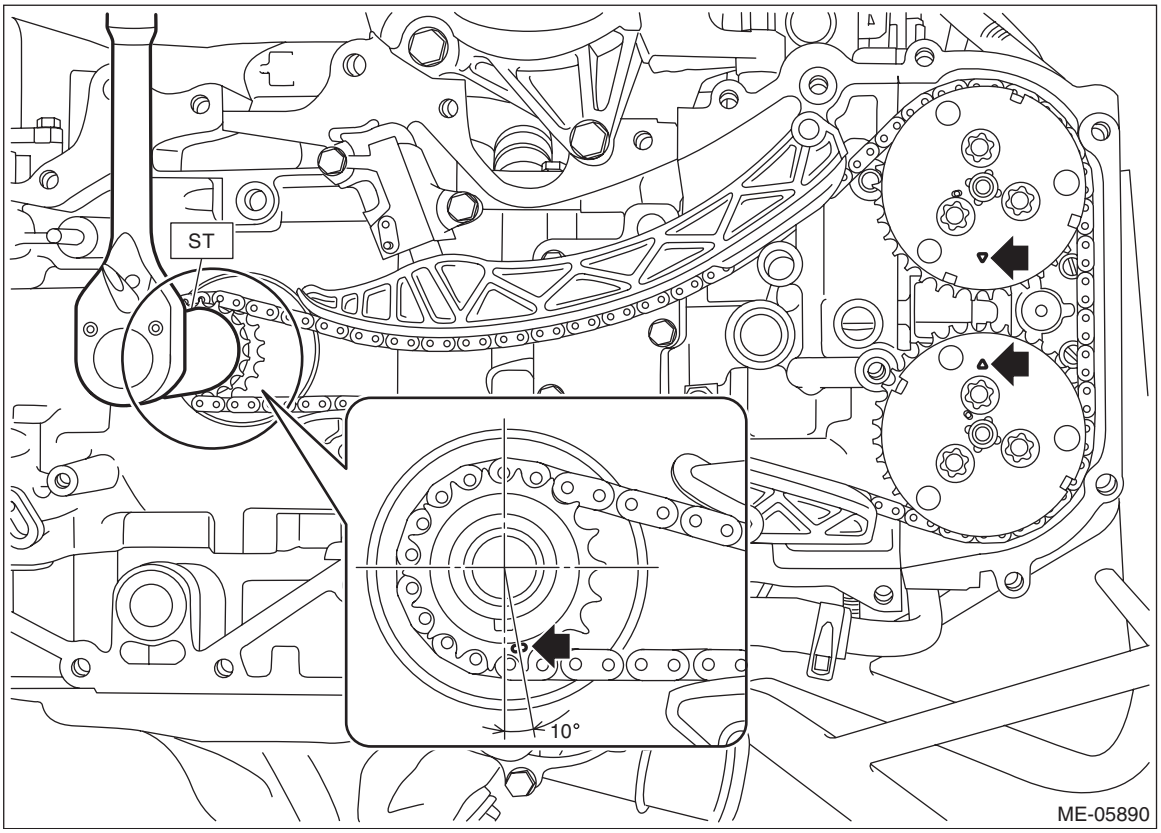

12) Install the timing chain RH. <Ref. to ME(H4DO(w/o HEV))-177, TIMING CHAIN RH, INSTALLATION, Timing Chain Assembly.>

2. TIMING CHAIN RH

NOTE:
- Be careful that the foreign matter is not into or onto the assembled component during installation.
- Apply engine oil to all component parts of the timing chain.

1) Install timing chain LH. <Ref. to ME(H4DO(w/o HEV))-170, TIMING CHAIN LH, INSTALLATION, Timing Chain Assembly.>
2) Prepare to attach the chain tensioner RH.
   (1) Move the link plate (A) in the direction of arrow to press in the plunger (B).

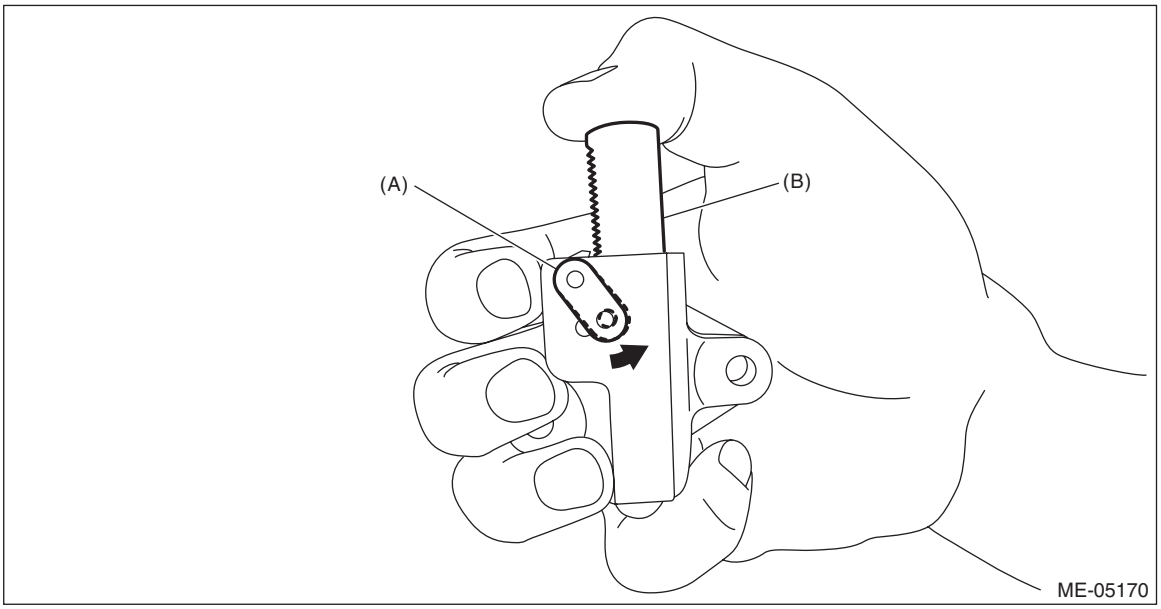

   (2) With a 2.5 mm (0.98 in) dia. stopper pin or a 2.5 mm (0.98 in) (nominal) dia. hex wrench inserted into the stopper pin hole, secure the plunger.

NOTE:
If the stopper pin hole on the link plate and the stopper pin hole on the chain tensioner are not aligned, check that the first notch of plunger rack (A) is engaged with the stopper tooth (B). If not engaged, retract the plunger a little so that the first notch of plunger rack (A) is engaged with the stopper tooth (B).

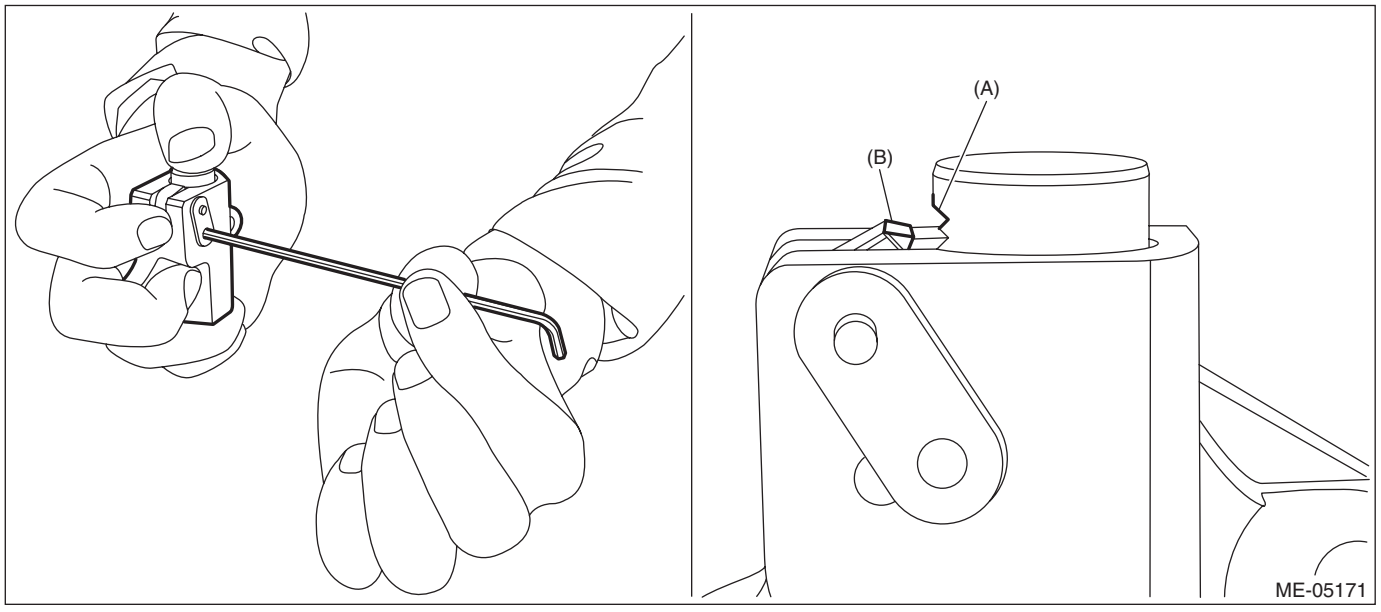

3) Make sure that the alignment marks of the crank sprocket, intake cam sprocket LH and exhaust cam sprocket LH are aligned to the positions as shown in the figure.

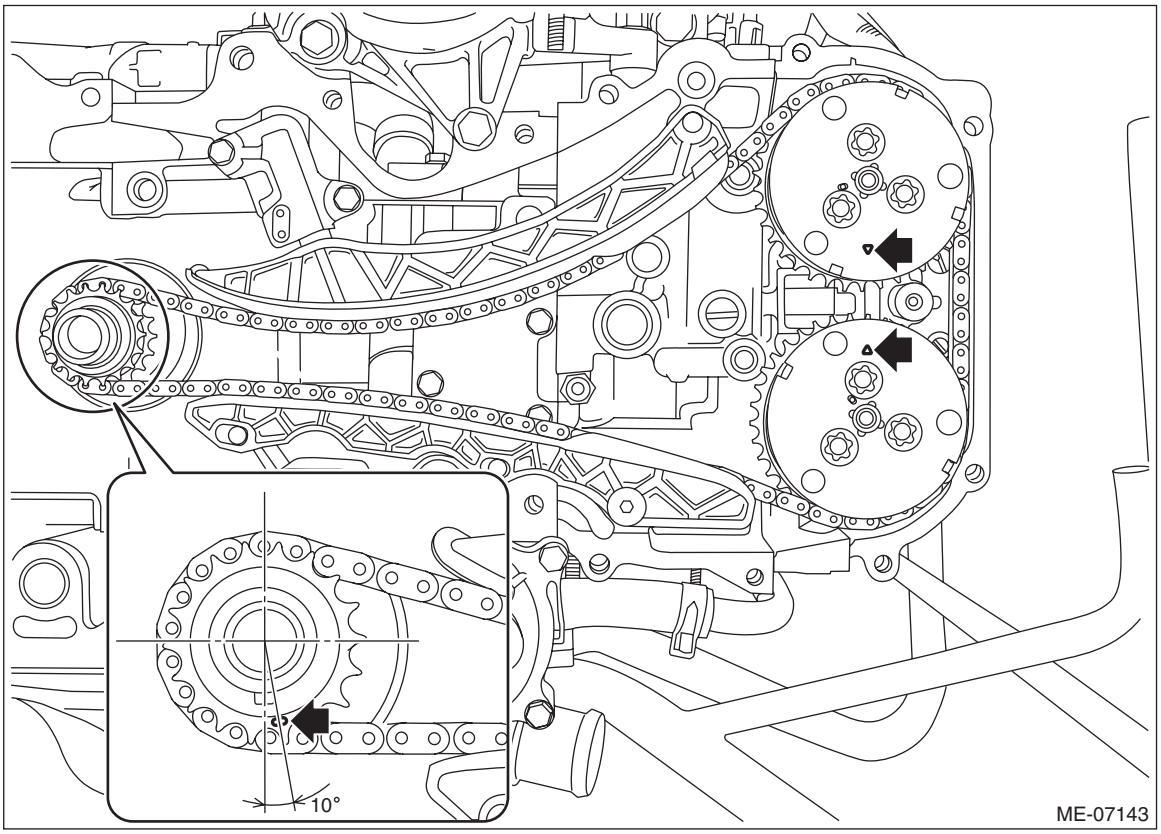

4) Align the alignment marks of intake cam sprocket RH and exhaust cam sprocket RH to the positions as shown in the figure.

CAUTION:
To prevent valve damage, turn the intake cam sprocket RH and exhaust cam sprocket RH only within the range of zero-lift (in range where it can be turned lightly by hand).

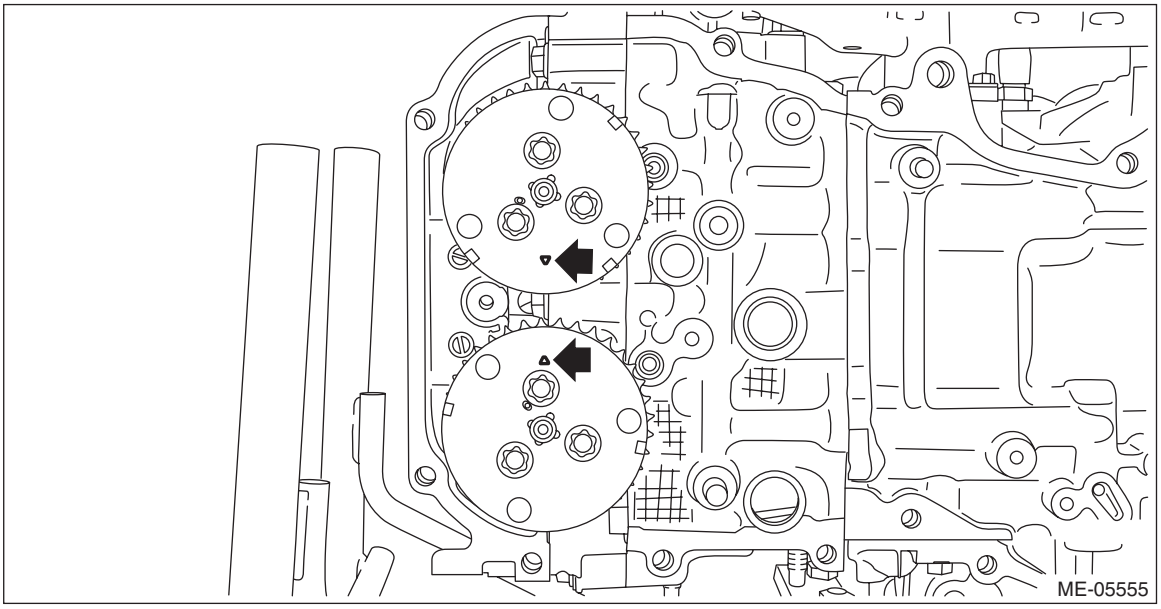

5) Install the timing chain RH and the timing chain guide RH.
(1) Match the timing chain mark (blue) to the alignment mark of the crank sprocket.
(2) Match the timing chain mark (pink) to the timing mark position of the intake cam sprocket RH.
(3) Match the timing chain mark (pink) to the timing mark position of the exhaust cam sprocket RH.

(4) Install the timing chain guide RH.

Tightening torque:
6.4 N·m (0.7 kgf-m, 4.7 ft-lb)

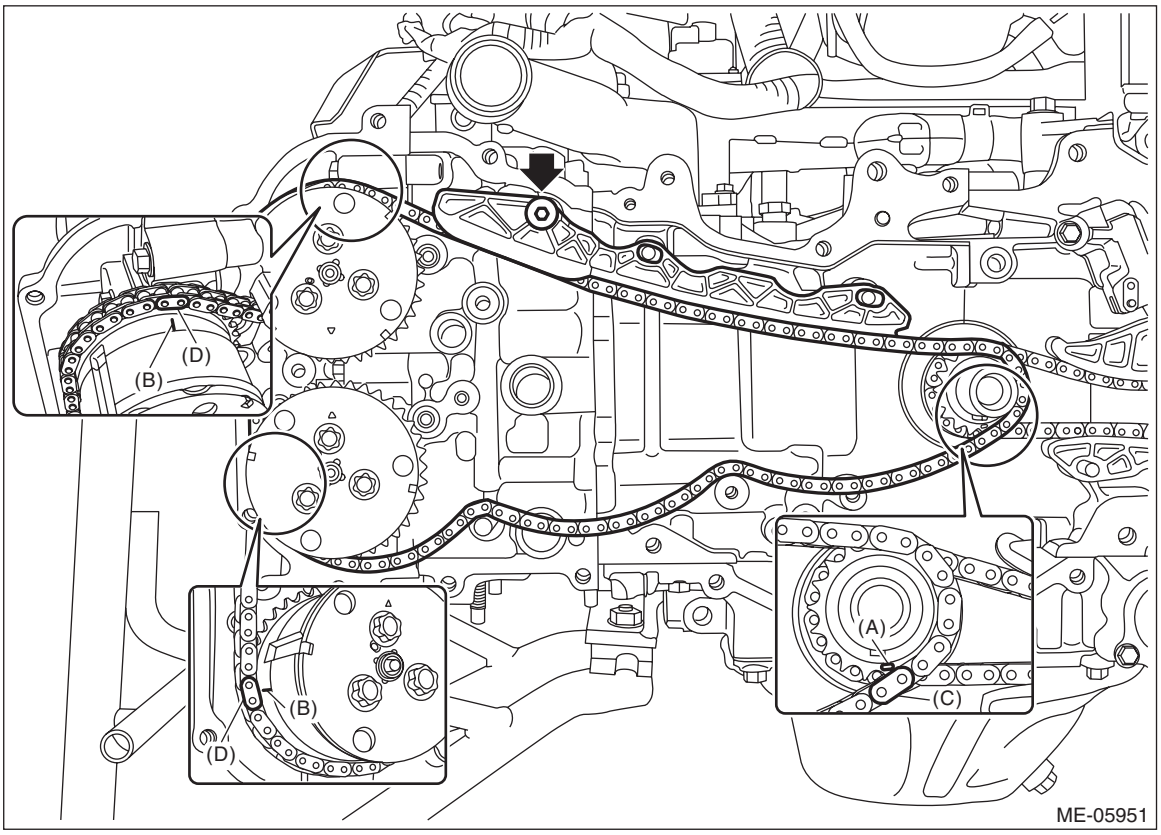

(A) Alignment mark
(B) Timing mark
(C) Blue
(D) Pink

6) Install the chain tensioner lever RH (A) and chain tensioner RH.

Tightening torque:
6.4 N·m (0.7 kgf-m, 4.7 ft-lb)

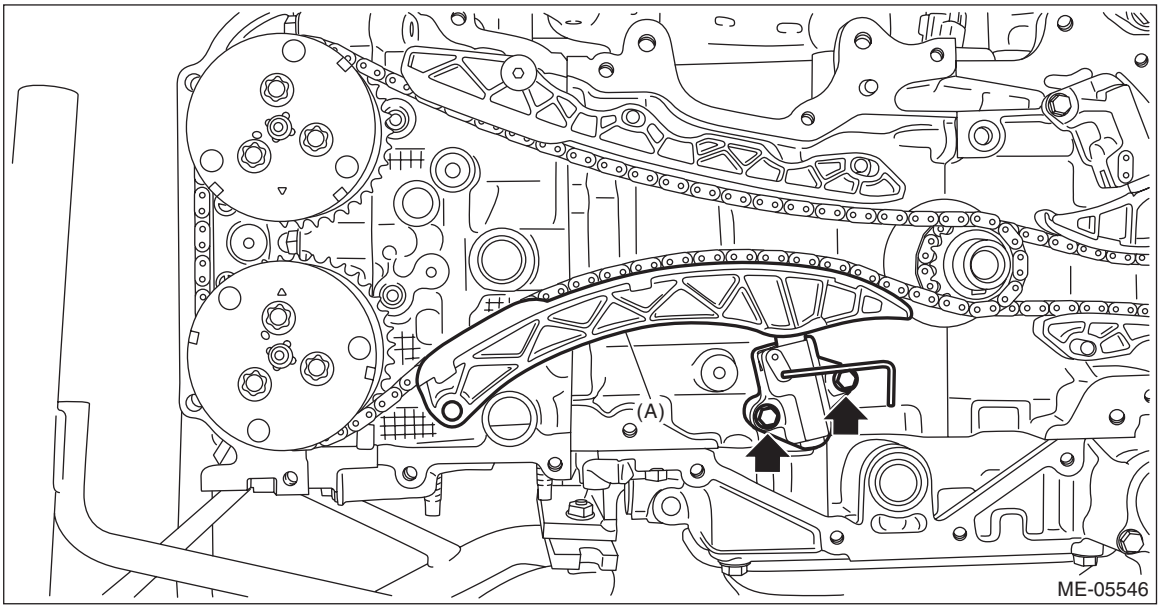

7) Pull out the stopper pin from the chain tensioner RH.

CAUTION:
Confirm the following before pulling out the stopper pin.
- **Matching of the timing chain mark (blue) to the alignment mark of the crank sprocket.**
- **Matching of the timing chain mark (pink) to the timing mark position of the intake cam sprocket RH.**
- **Matching of the timing chain mark (pink) to the timing mark position of the exhaust cam sprocket RH.**

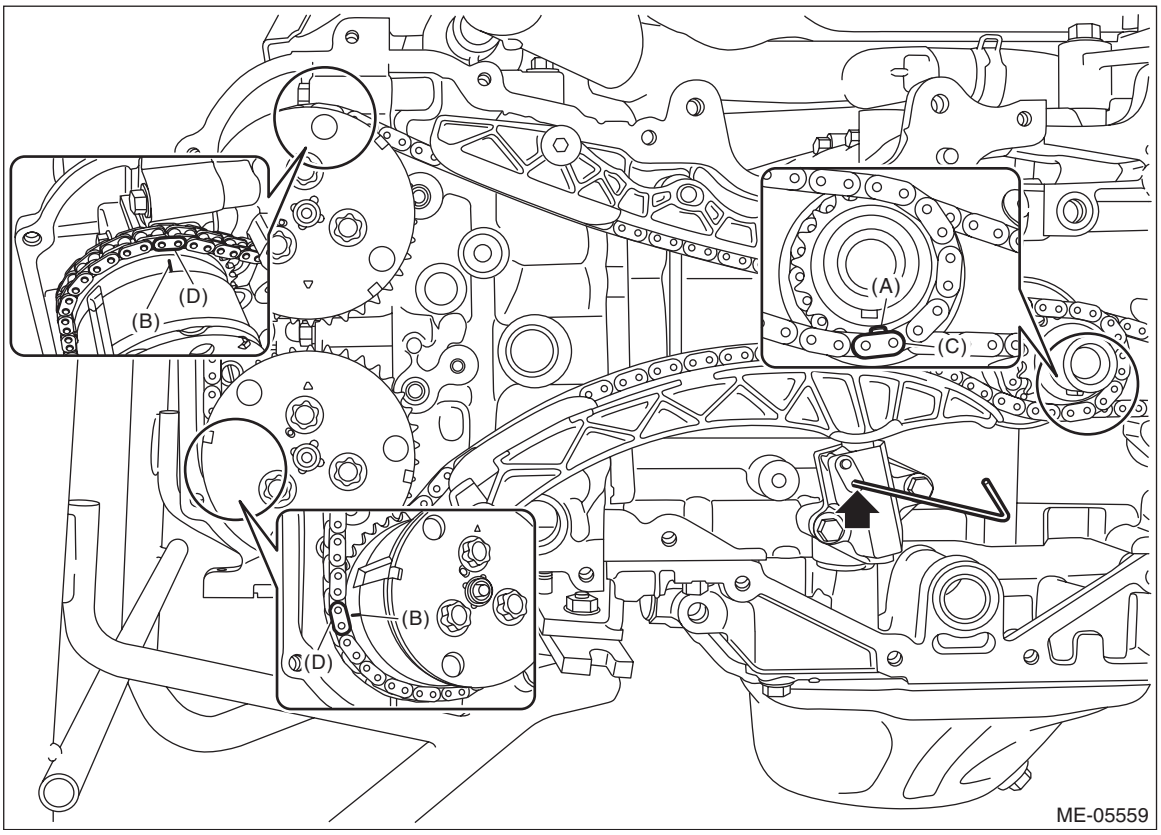

(A) Alignment mark
(B) Timing mark
(C) Blue
(D) Pink

8) Make sure that the alignment marks of the cam sprocket and crank sprocket are aligned to the positions as shown in the figure.

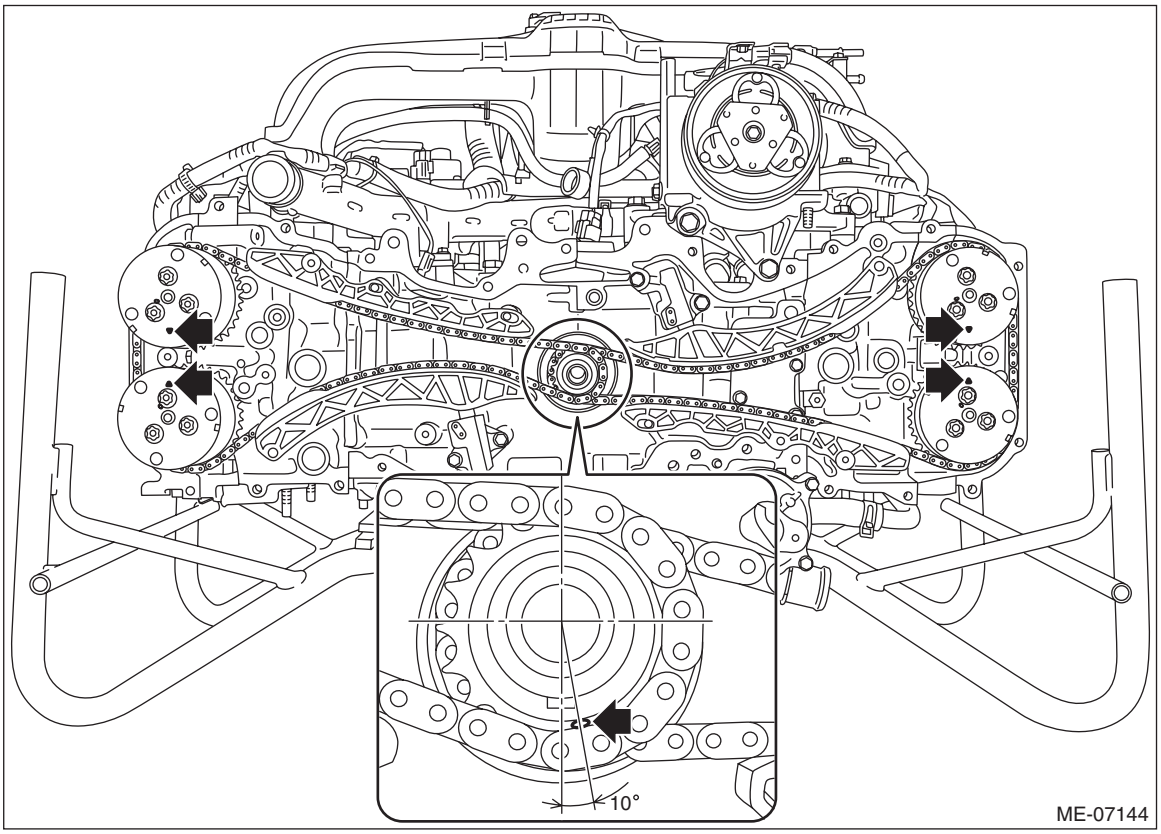

9) Using the ST, turn the crankshaft clockwise, and make sure that there are no abnormal conditions.

CAUTION:
Always make sure to perform this confirmation.
ST 18252AA000 CRANKSHAFT SOCKET

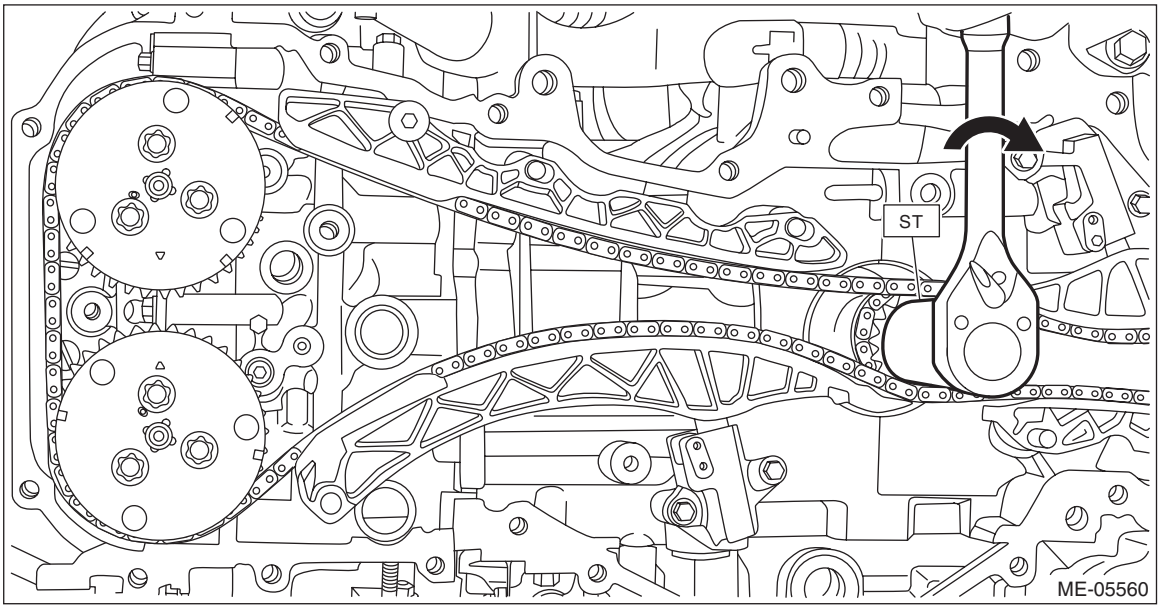

10) Install the chain cover. <Ref. to ME(H4DO(w/o HEV))-151, INSTALLATION, Chain Cover.>

C: INSPECTION

1) Check the timing chain, chain guide, chain tensioner lever and chain tensioner for deformation, cracks or other damages.
2) Check the chain guide and chain tensioner lever for abnormal wear.

16.Cam Sprocket

A: REMOVAL

1. CAM SPROCKET RH

NOTE:
When replacing a single part, perform the work with the engine assembly installed to body.

• Intake cam sprocket RH

1) Remove the chain cover. <Ref. to ME(H4DO(w/o HEV))-144, REMOVAL, Chain Cover.>
2) Remove the timing chain RH. <Ref. to ME(H4DO(w/o HEV))-163, TIMING CHAIN RH, REMOVAL, Timing Chain Assembly.>
3) Hold the intake cam sprocket RH using the ST1 and ST2, and remove the bolts using the ST3.
ST1 18355AA000 PULLEY WRENCH
ST2 18334AA030 PULLEY WRENCH PIN SET
ST3 18270KA010 SOCKET

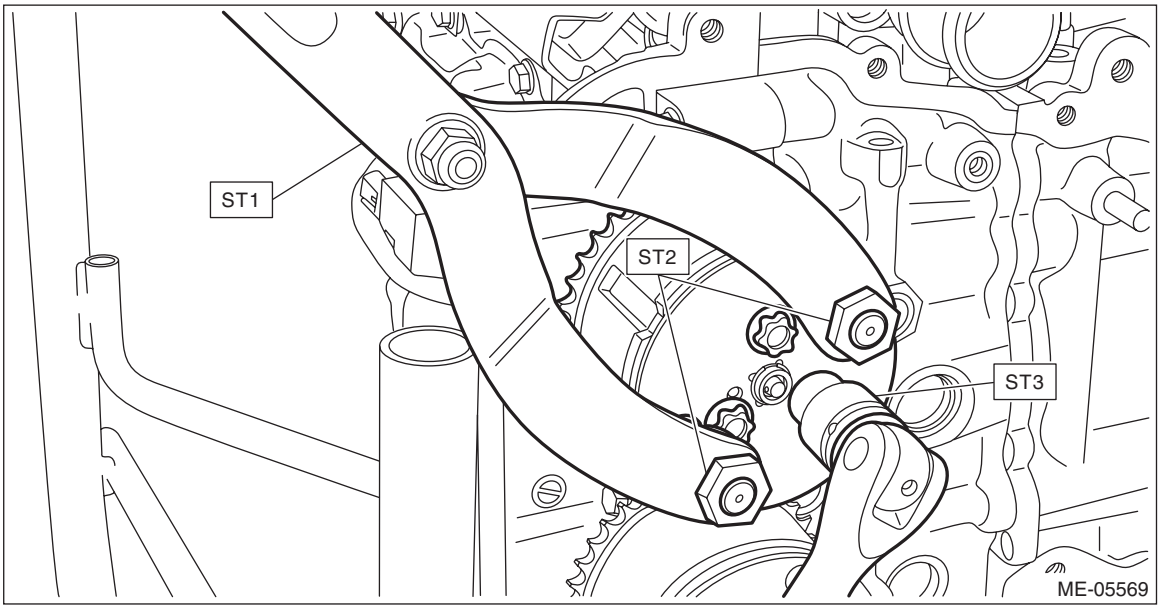

4) Remove the intake cam sprocket RH.

• Exhaust cam sprocket RH

1) Remove the chain cover. <Ref. to ME(H4DO(w/o HEV))-144, REMOVAL, Chain Cover.>
2) Remove the timing chain RH. <Ref. to ME(H4DO(w/o HEV))-163, TIMING CHAIN RH, REMOVAL, Timing Chain Assembly.>

3) Hold the exhaust cam sprocket RH using the ST1 and ST2, and remove the bolts using the ST3.
ST1 18355AA000 PULLEY WRENCH
ST2 18334AA030 PULLEY WRENCH PIN SET
ST3 18270KA010 SOCKET

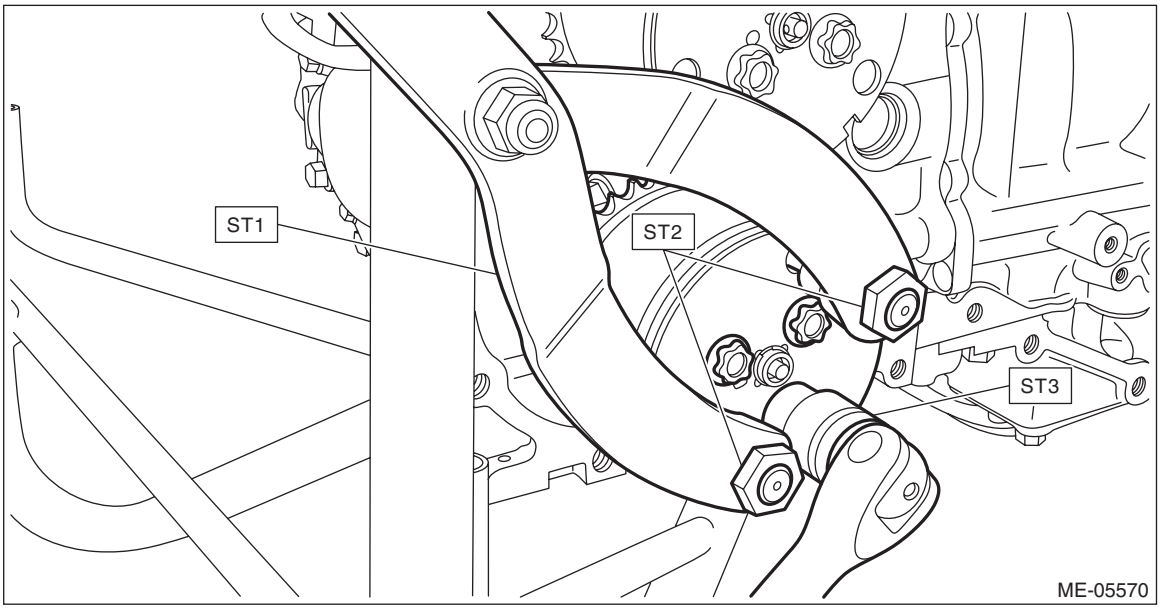

4) Remove the exhaust cam sprocket RH.

2. CAM SPROCKET LH

NOTE:
When replacing a single part, perform the work with the engine assembly installed to body.

- **Intake cam sprocket LH**

1) Remove the chain cover. <Ref. to ME(H4DO(w/o HEV))-144, REMOVAL, Chain Cover.>
2) Remove the timing chain LH. <Ref. to ME(H4DO(w/o HEV))-165, TIMING CHAIN LH, REMOVAL, Timing Chain Assembly.>
3) Hold the intake cam sprocket LH using the ST1 and ST2, and remove the bolts using the ST3.
ST1 18355AA000 PULLEY WRENCH
ST2 18334AA030 PULLEY WRENCH PIN SET
ST3 18270KA010 SOCKET

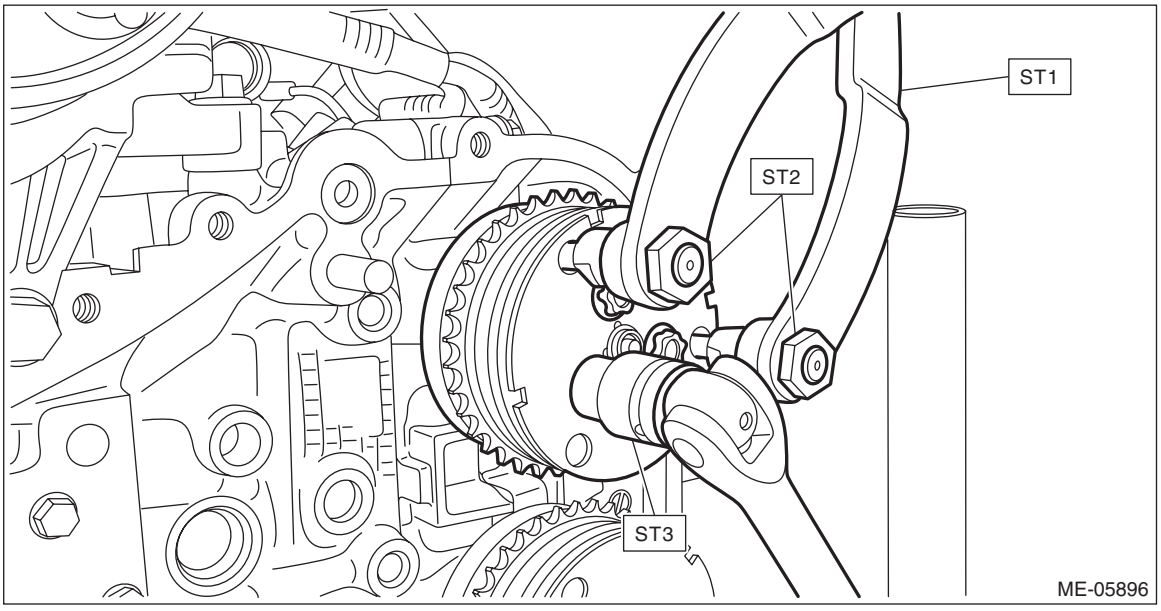

4) Remove the intake cam sprocket LH.

- **Exhaust cam sprocket LH**

1) Remove the chain cover. <Ref. to ME(H4DO(w/o HEV))-144, REMOVAL, Chain Cover.>
2) Remove the timing chain LH. <Ref. to ME(H4DO(w/o HEV))-165, TIMING CHAIN LH, REMOVAL, Timing Chain Assembly.>
3) Hold the exhaust cam sprocket LH using the ST1 and ST2, and remove the bolts using the ST3.
ST1 18355AA000 PULLEY WRENCH
ST2 18334AA030 PULLEY WRENCH PIN SET
ST3 18270KA010 SOCKET

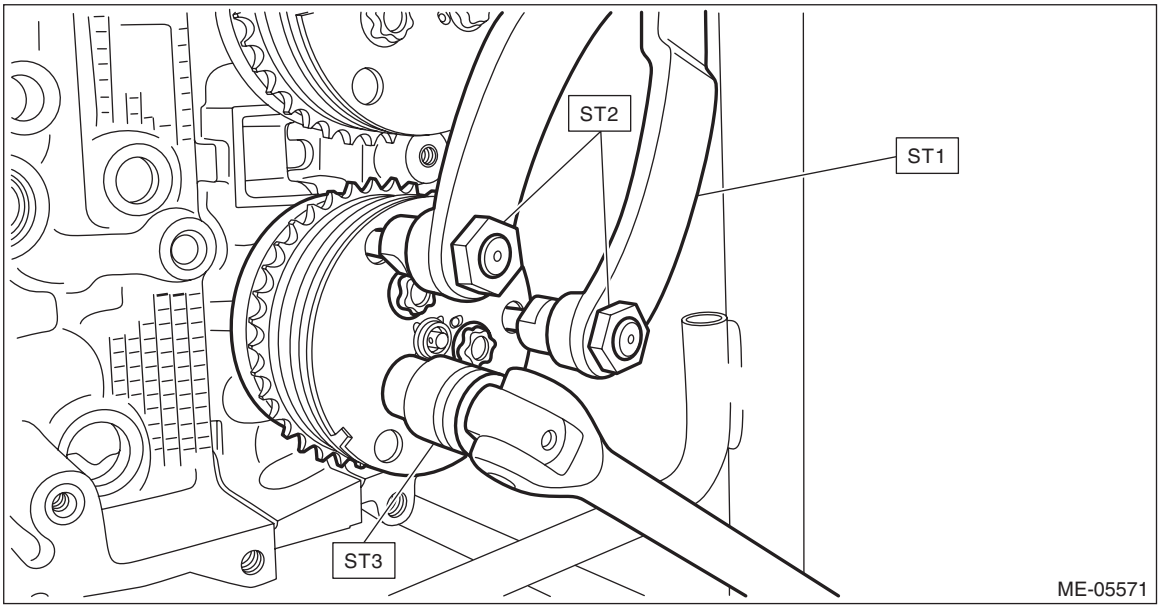

4) Remove the exhaust cam sprocket LH.

B: INSTALLATION

1. CAM SPROCKET RH

• Intake cam sprocket RH

1) Install the intake cam sprocket RH by aligning the knock hole (A) of intake cam sprocket RH and the knock pin (B) of intake camshaft RH.

NOTE:
Before installation, check that there is no foreign matter on the intake cam sprocket RH and intake camshaft RH.

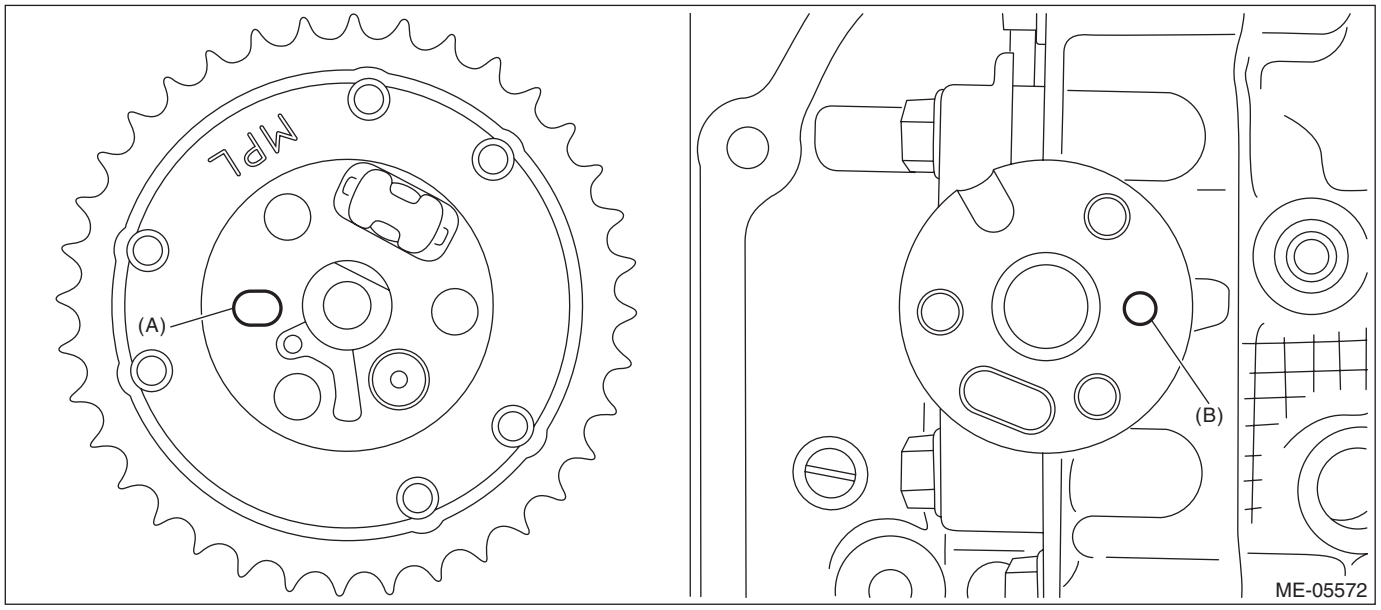

2) Hold the intake cam sprocket RH using the ST1 and ST2, and install the bolts using the ST3.
ST1 18355AA000 PULLEY WRENCH
ST2 18334AA030 PULLEY WRENCH PIN SET
ST3 18270KA010 SOCKET

Tightening torque:
18 N·m (1.8 kgf-m, 13.3 ft-lb)

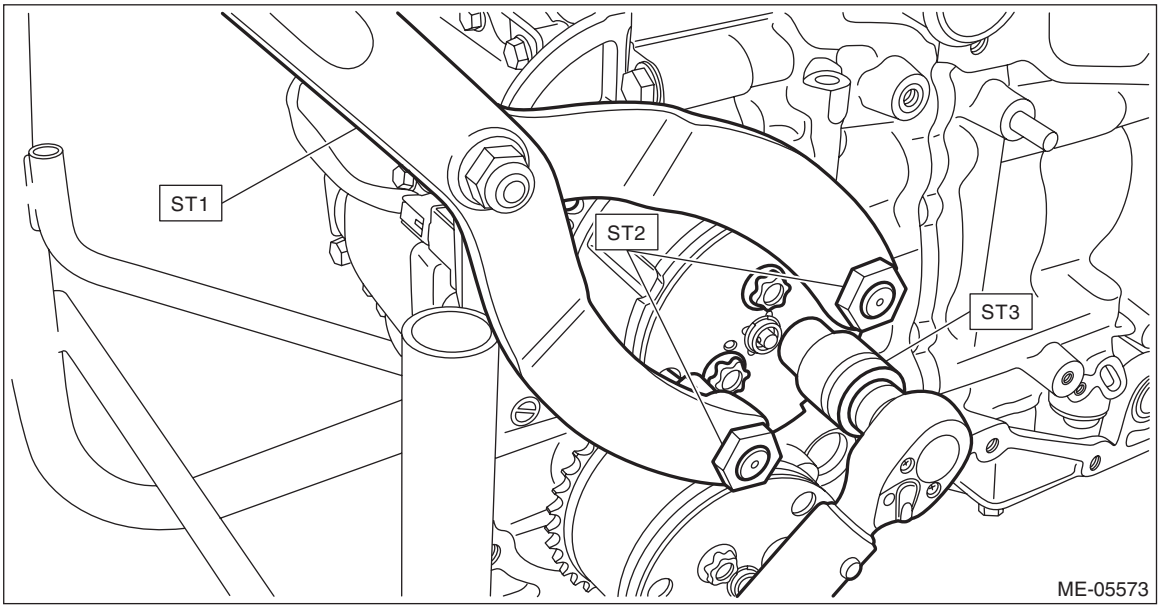

3) Install the timing chain RH. <Ref. to ME(H4DO(w/o HEV))-177, TIMING CHAIN RH, INSTALLATION, Timing Chain Assembly.>

4) Install the chain cover. <Ref. to ME(H4DO(w/o HEV))-151, INSTALLATION, Chain Cover.>

- **Exhaust cam sprocket RH**

1) Install the exhaust cam sprocket RH by aligning the knock hole (A) of exhaust cam sprocket RH and the knock pin (B) of exhaust camshaft RH.

NOTE:
Before installation, check that there is no foreign matter on the exhaust cam sprocket RH and exhaust camshaft RH.

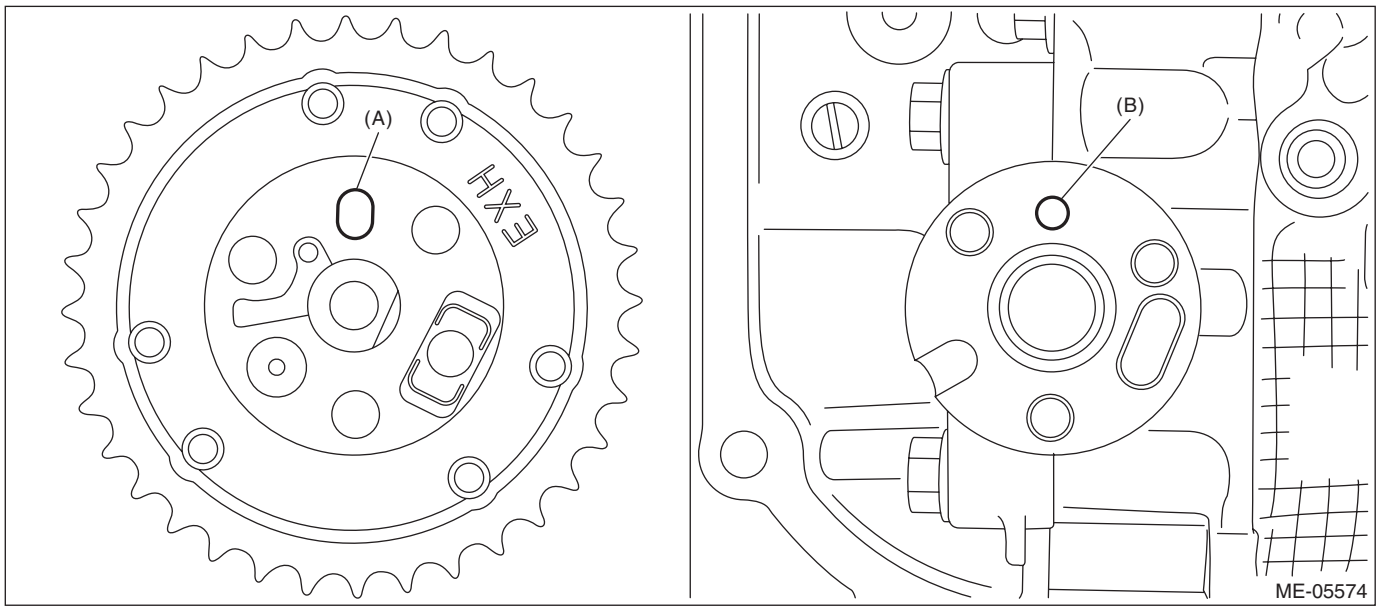

2) Hold the exhaust cam sprocket RH using ST1 and ST2, and install the bolts using ST3.
ST1 18355AA000 PULLEY WRENCH
ST2 18334AA030 PULLEY WRENCH PIN SET
ST3 18270KA010 SOCKET

Tightening torque:
18 N·m (1.8 kgf-m, 13.3 ft-lb)

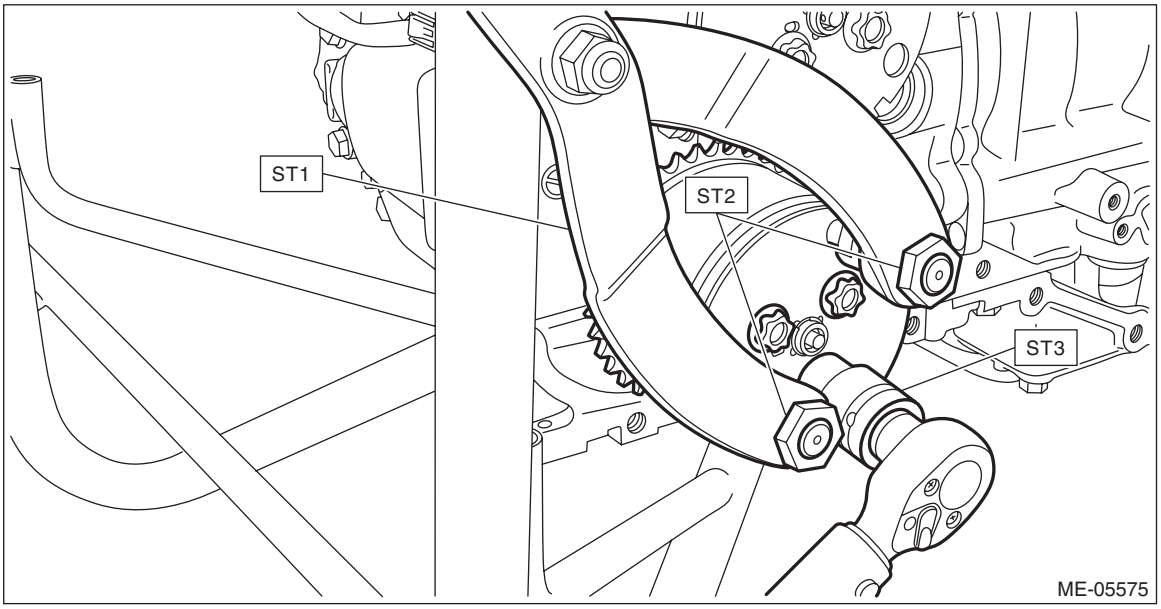

3) Install the timing chain RH. <Ref. to ME(H4DO(w/o HEV))-177, TIMING CHAIN RH, INSTALLATION, Timing Chain Assembly.>
4) Install the chain cover. <Ref. to ME(H4DO(w/o HEV))-151, INSTALLATION, Chain Cover.>

2. CAM SPROCKET LH

• Intake cam sprocket LH

1) Install the intake cam sprocket LH by aligning the knock hole (A) of intake cam sprocket LH and the knock pin (B) of intake camshaft LH.

NOTE:
Before installation, check that there is no foreign matter on the intake cam sprocket LH and intake camshaft LH.

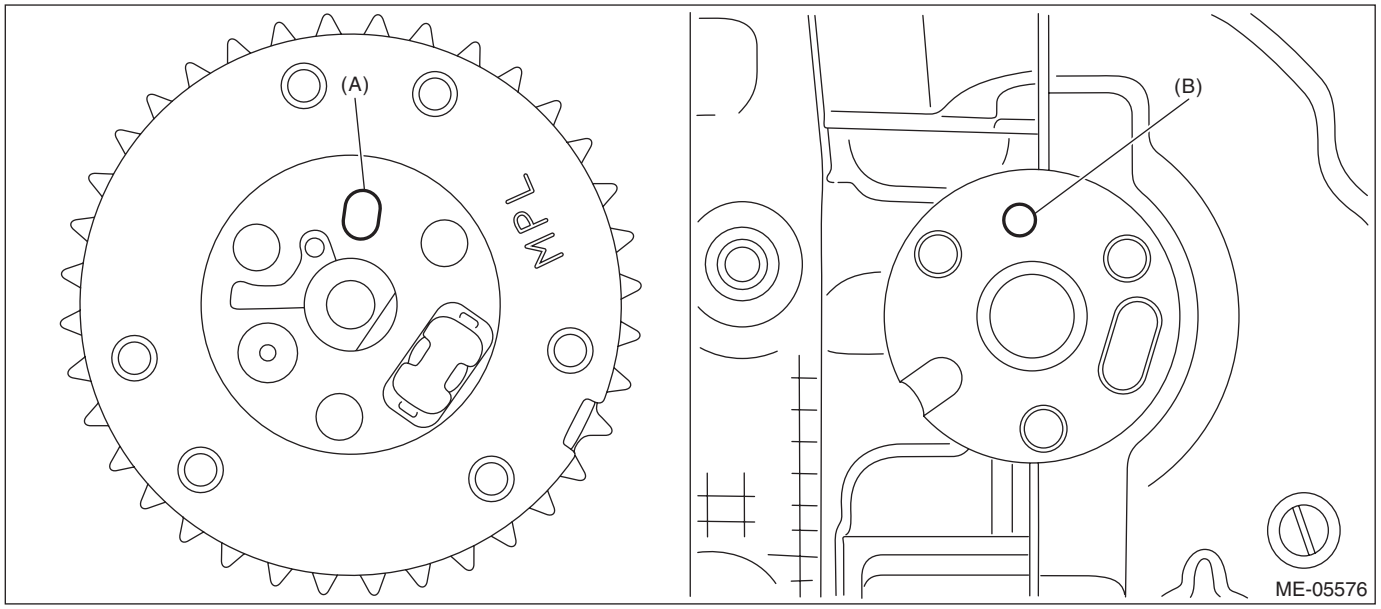

2) Hold the intake cam sprocket LH using the ST1 and ST2, and install the bolts using the ST3.
ST1 18355AA000 PULLEY WRENCH
ST2 18334AA030 PULLEY WRENCH PIN SET
ST3 18270KA010 SOCKET

Tightening torque:
18 N·m (1.8 kgf-m, 13.3 ft-lb)

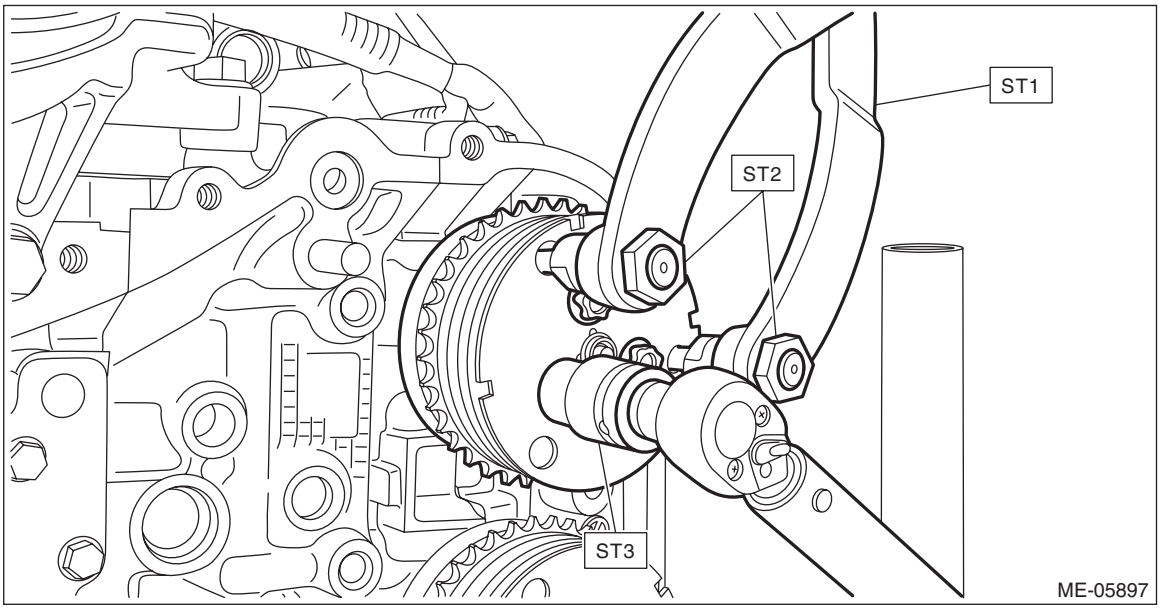

3) Install timing chain LH. <Ref. to ME(H4DO(w/o HEV))-170, TIMING CHAIN LH, INSTALLATION, Timing Chain Assembly.>
4) Install the chain cover. <Ref. to ME(H4DO(w/o HEV))-151, INSTALLATION, Chain Cover.>

- **Exhaust cam sprocket LH**

1) Install the exhaust cam sprocket LH by aligning the knock hole (A) of exhaust cam sprocket LH and the knock pin (B) of exhaust camshaft LH.

NOTE:
Before installation, check that there is no foreign matter on the exhaust cam sprocket LH and exhaust camshaft LH.

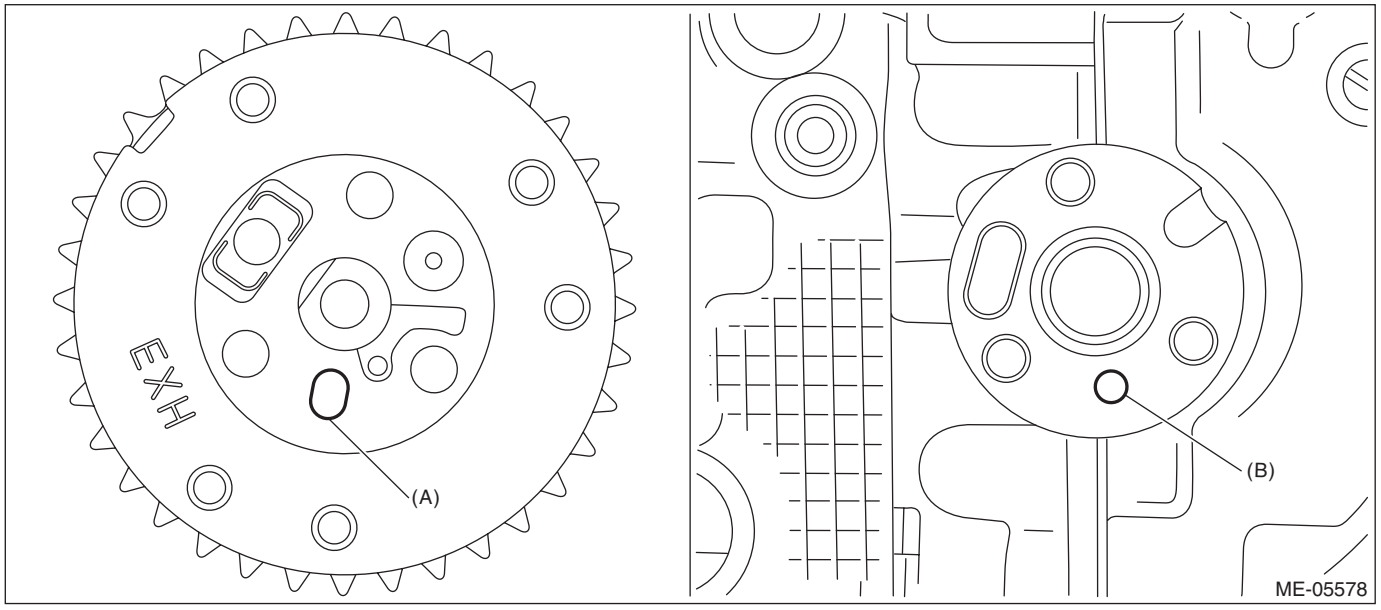

2) Hold the exhaust cam sprocket LH using the ST1 and ST2, and install the bolts using the ST3.

ST1 18355AA000 PULLEY WRENCH
ST2 18334AA030 PULLEY WRENCH PIN SET
ST3 18270KA010 SOCKET

Tightening torque:
18 N·m (1.8 kgf-m, 13.3 ft-lb)

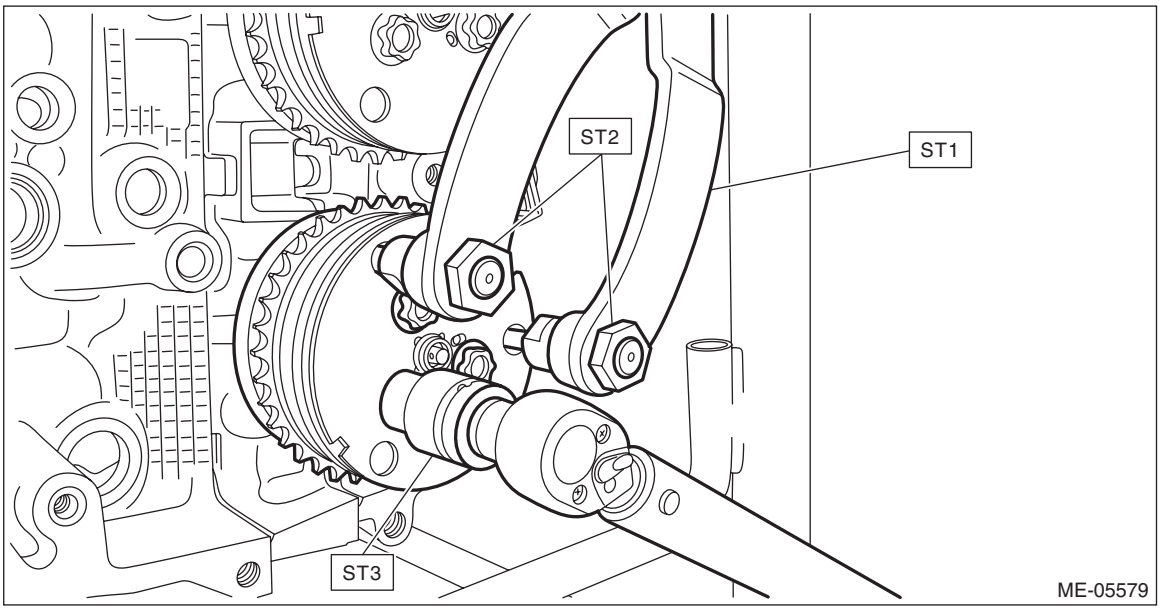

3) Install timing chain LH. <Ref. to ME(H4DO(w/o HEV))-170, TIMING CHAIN LH, INSTALLATION, Timing Chain Assembly.>
4) Install the chain cover. <Ref. to ME(H4DO(w/o HEV))-151, INSTALLATION, Chain Cover.>

C: INSPECTION

Check the cam sprocket teeth for abnormal wear and scratches.

17.Crank Sprocket

A: REMOVAL

NOTE:
When replacing a single part, perform the work with the engine assembly installed to body.
1) Remove the chain cover. <Ref. to ME(H4DO(w/o HEV))-144, REMOVAL, Chain Cover.>
2) Remove the timing chain. <Ref. to ME(H4DO(w/o HEV))-163, REMOVAL, Timing Chain Assembly.>
3) Remove the crank sprocket.

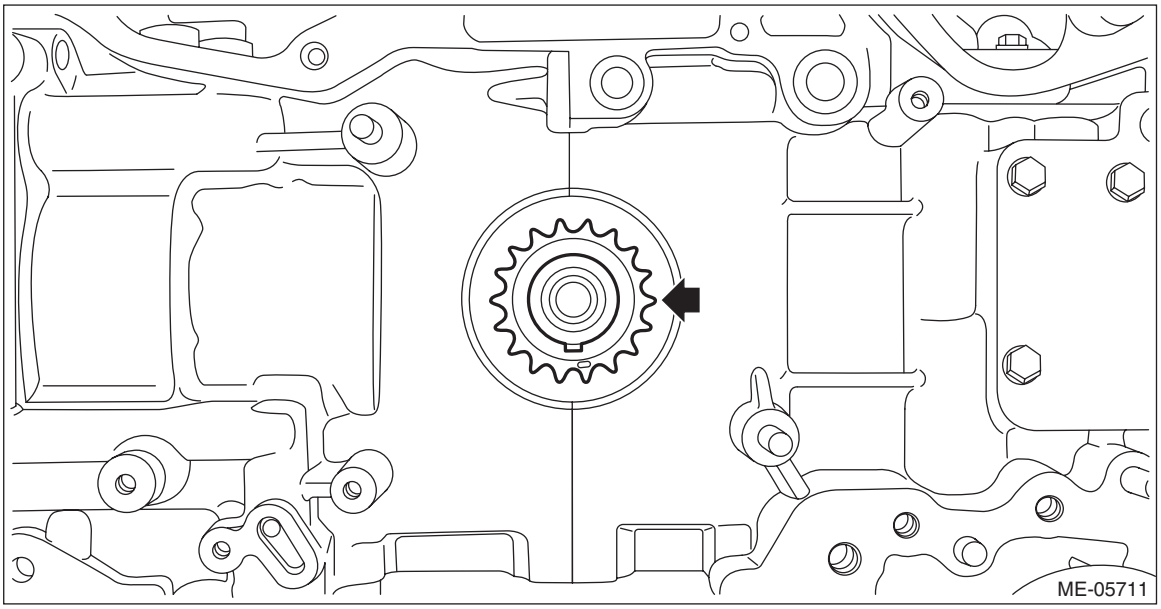

B: INSTALLATION

1) Install the crank sprocket.

NOTE:
The direction of installation is not specified for the crank sprocket.

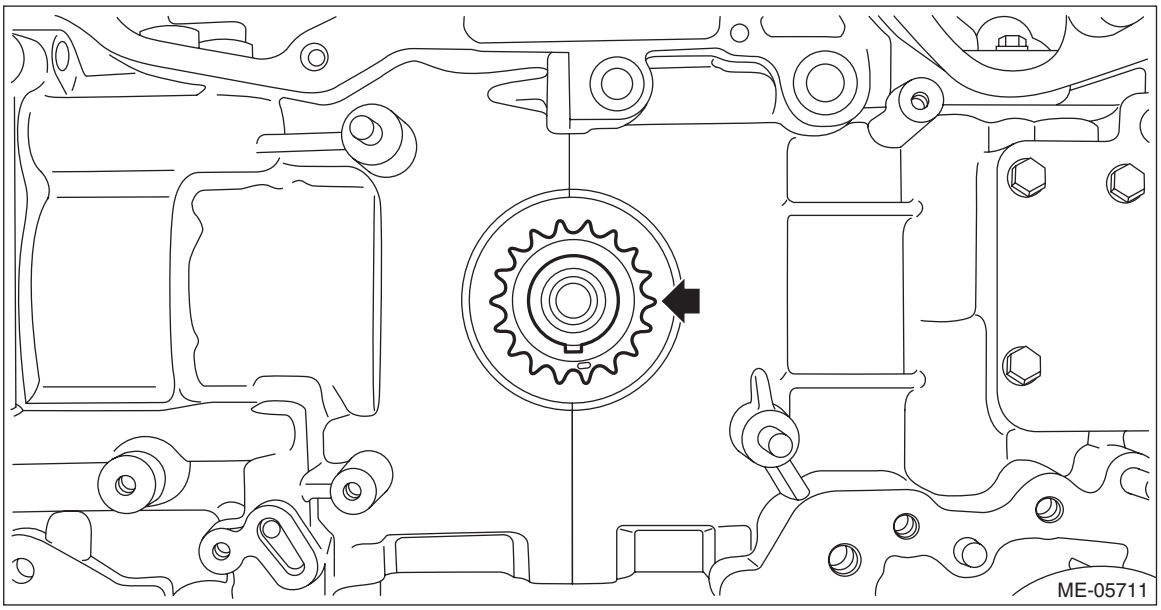

2) Install the timing chain. <Ref. to ME(H4DO(w/o HEV))-170, INSTALLATION, Timing Chain Assembly.>
3) Install the chain cover. <Ref. to ME(H4DO(w/o HEV))-151, INSTALLATION, Chain Cover.>

C: INSPECTION

1) Check the crank sprocket teeth for abnormal wear and scratches.
2) Make sure there is no free play between crank sprocket and key.

18.Rocker Cover

A: REMOVAL

1. ROCKER COVER RH

NOTE:
When replacing a single part, perform the work with the engine assembly installed to body.
1) When working on the vehicle

NOTE:
When working on the vehicle, perform the following steps also.

(1) Remove the air cleaner case. (Gasoline engine model) <Ref. to IN(H4DO(w/o HEV))-7, REMOVAL, Air Cleaner Case.>

(2) Remove the clip (A) from the air intake boot, and loosen the clamp (B) securing the air intake boot to the throttle body. (Gasoline engine model)

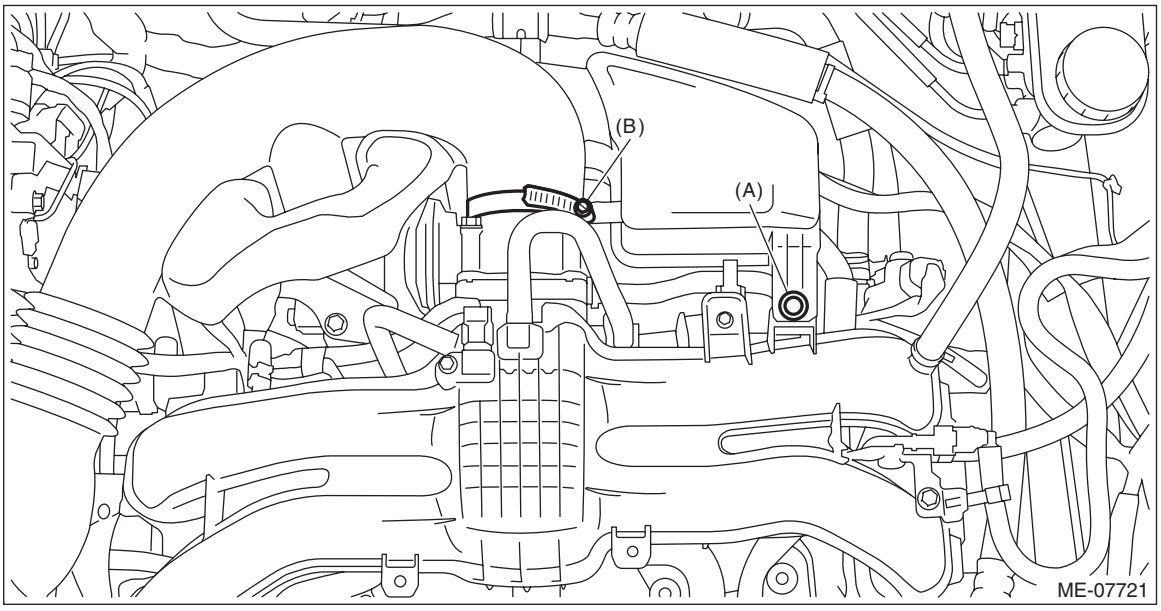

(3) Remove the air intake boot from the throttle body, and move it to the left side wheel apron. (Gasoline engine model)

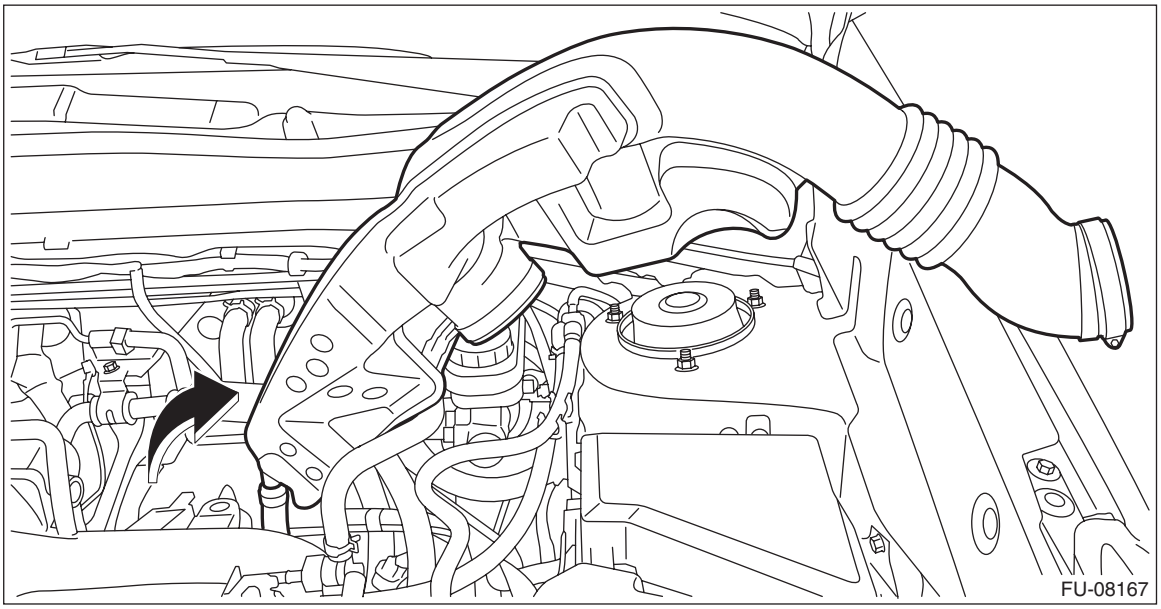

(4) Remove the intake duct. (HEV model) <Ref. to IN(H4DO(HEV))-16, REMOVAL, Intake Duct.>

(5) Remove the 12 volt engine restart battery. (HEV model) <Ref. to SC(H4DO(HEV))-39, 12 VOLT ENGINE RESTART BATTERY, REMOVAL, Battery.>
(6) Remove the battery cable assembly from the battery cable bracket No. 2, and remove the battery cable bracket No. 2 from the vehicle. (HEV model)

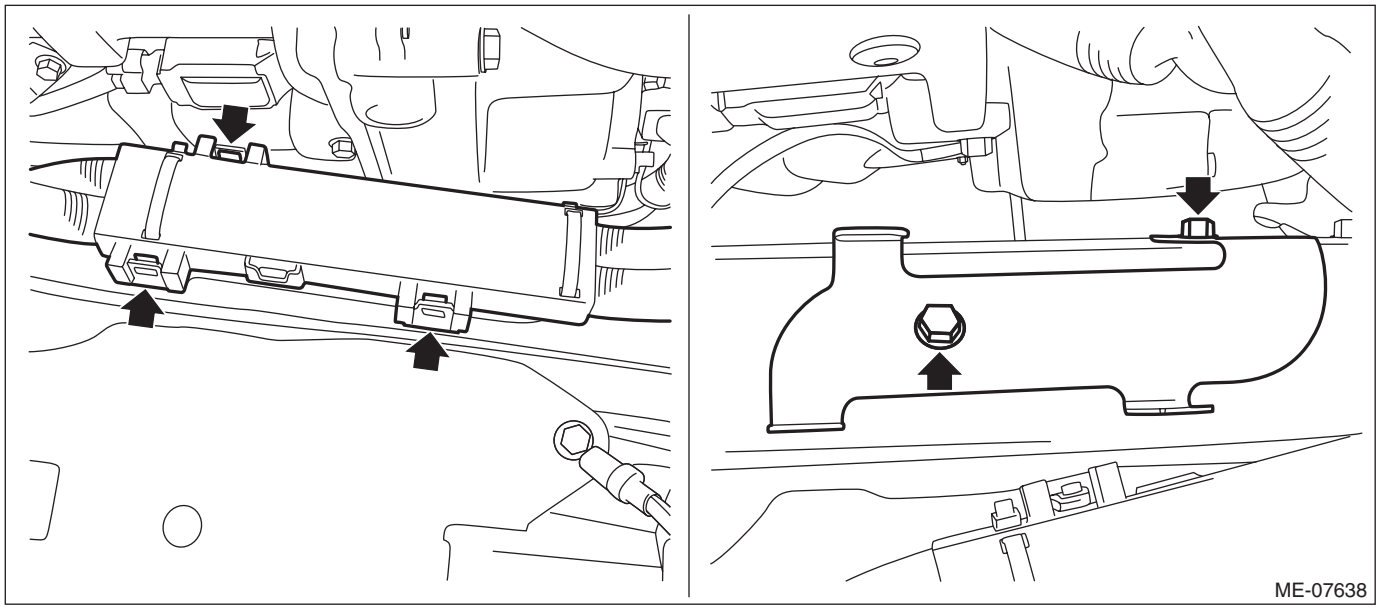

(7) Remove the front exhaust pipe. <Ref. to EX(H4DO(w/o HEV))-6, REMOVAL, Front Exhaust Pipe.>
2) Remove the #1 ignition coil and the #3 ignition coil. <Ref. to IG(H4DO(w/o HEV))-11, REMOVAL, Ignition Coil.>
3) Remove the intake manifold protector RH.

- Gasoline engine model

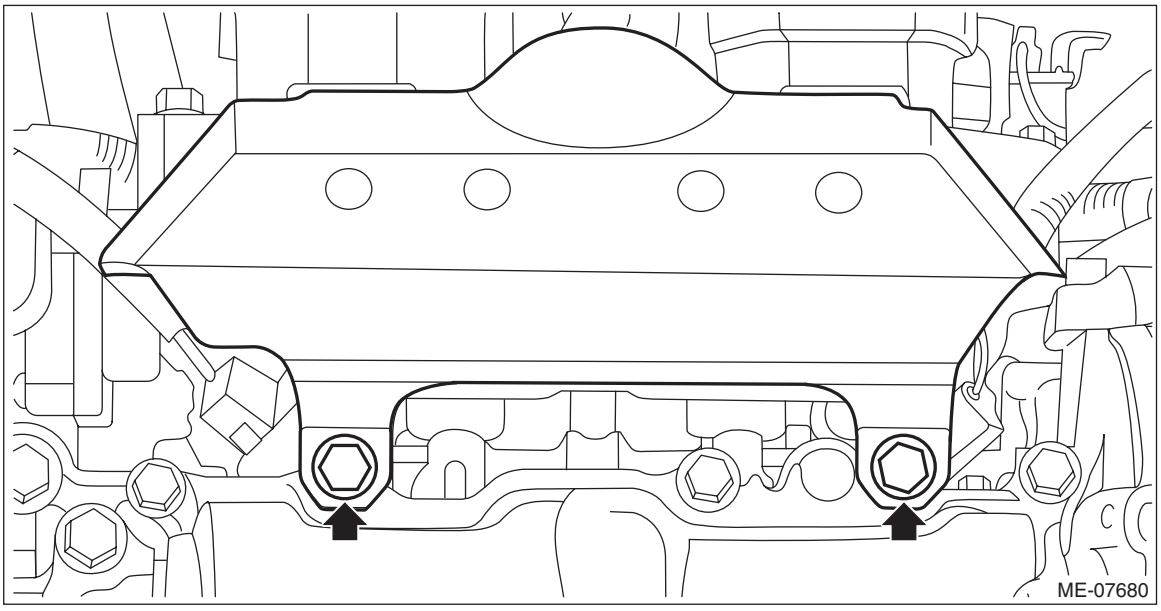

- HEV model

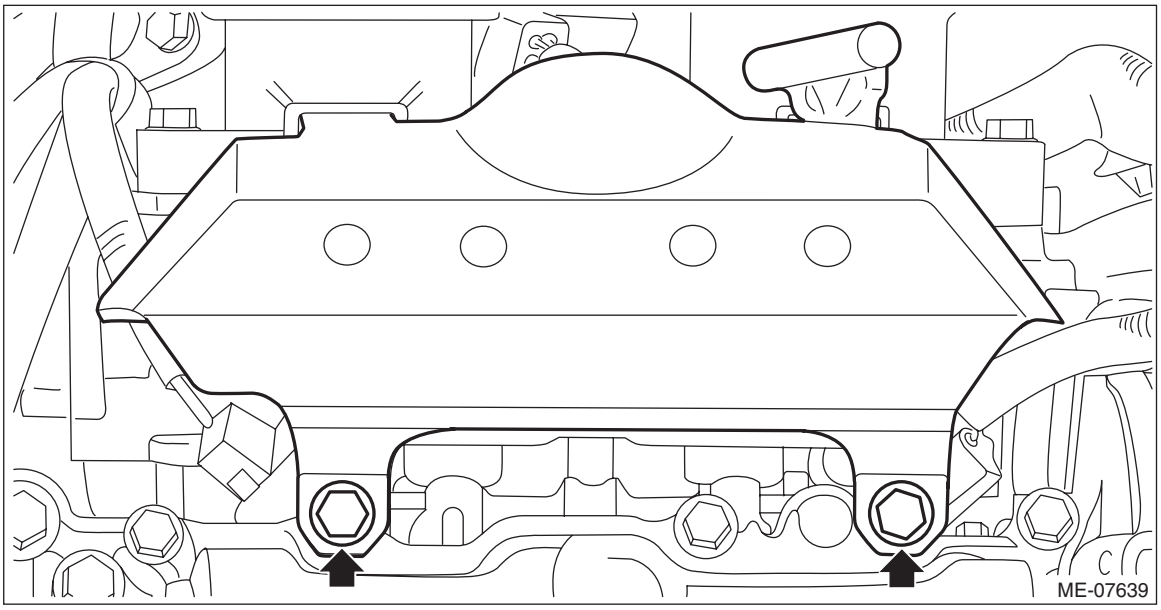

4) Remove the rocker cover RH.

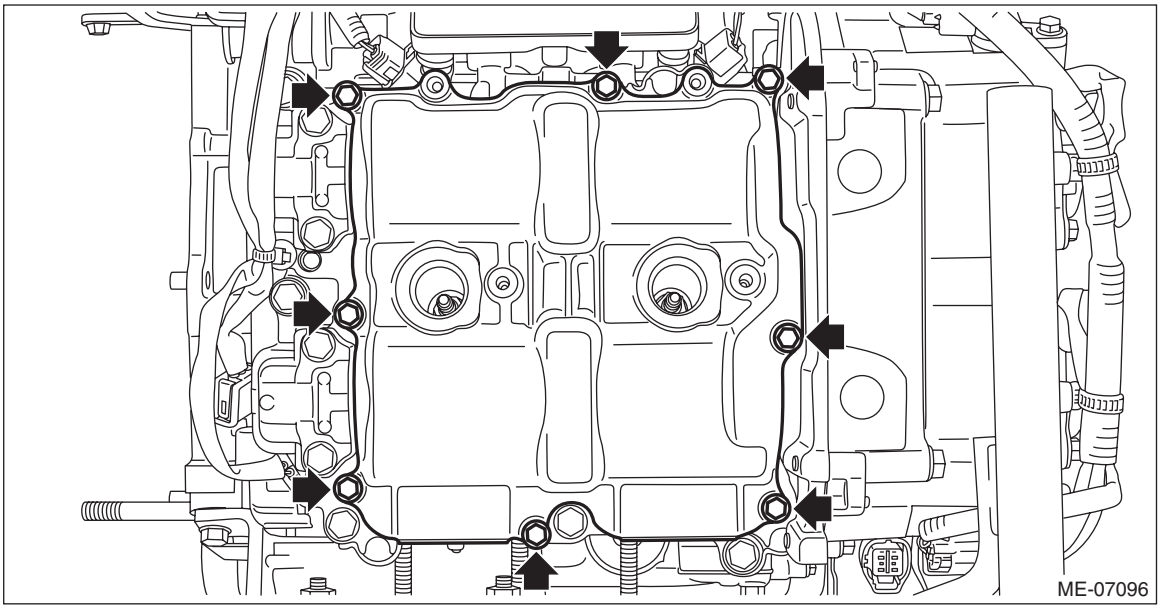

5) Remove the rocker cover gasket RH, #1 spark plug pipe gasket and #3 spark plug pipe gasket, and remove the liquid gasket.

CAUTION:
• When removing the liquid gasket from engine unit using scraper, use special care not to damage the cam lobe of camshaft RH.
• If the cam lobe of camshaft RH interferes, turn the crankshaft to the position where the scraper does not touch.

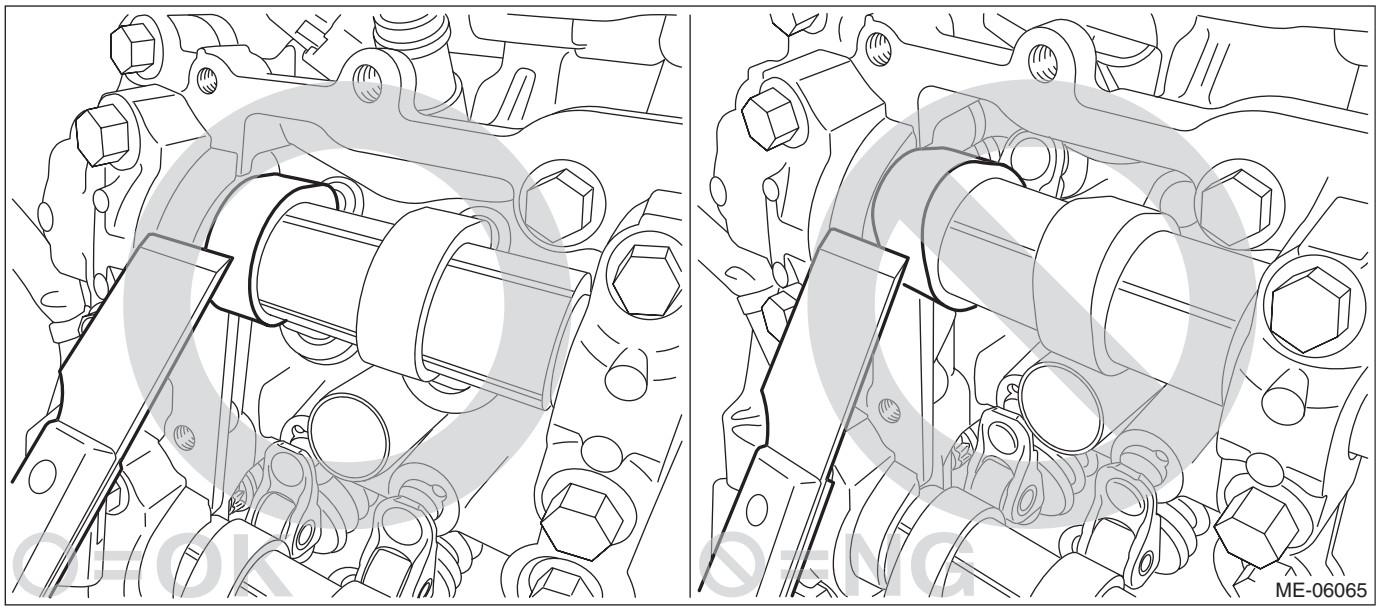

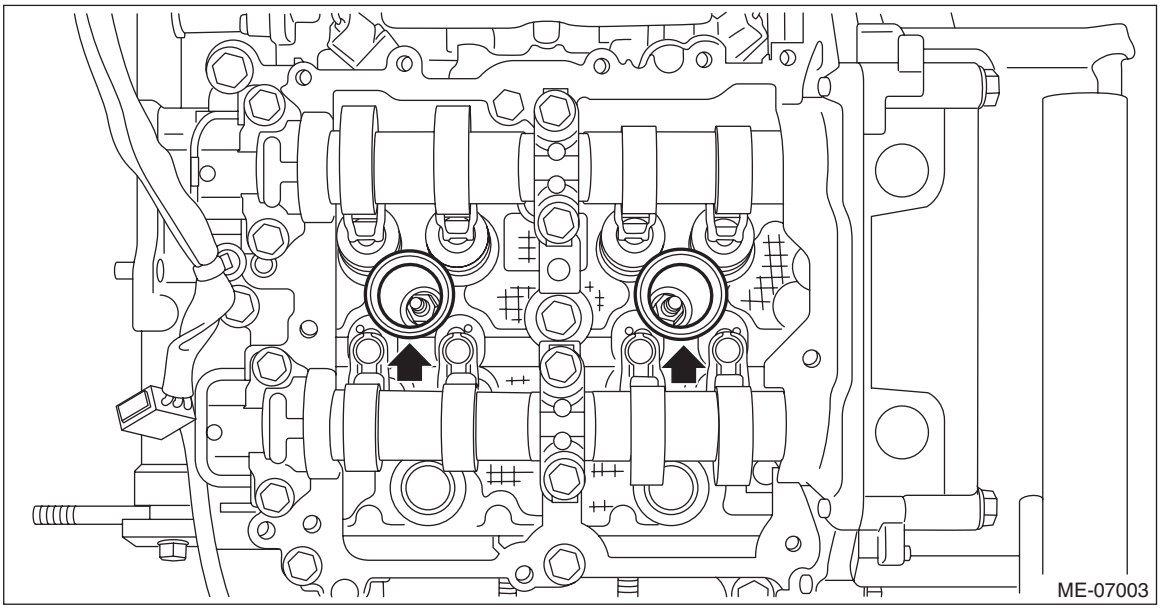

2. ROCKER COVER LH

NOTE:
When replacing a single part, perform the work with the engine assembly installed to body.
1) When working on the vehicle

NOTE:
When working on the vehicle, perform the following steps also.

(1) Remove the V-belt covers. (Gasoline engine model)

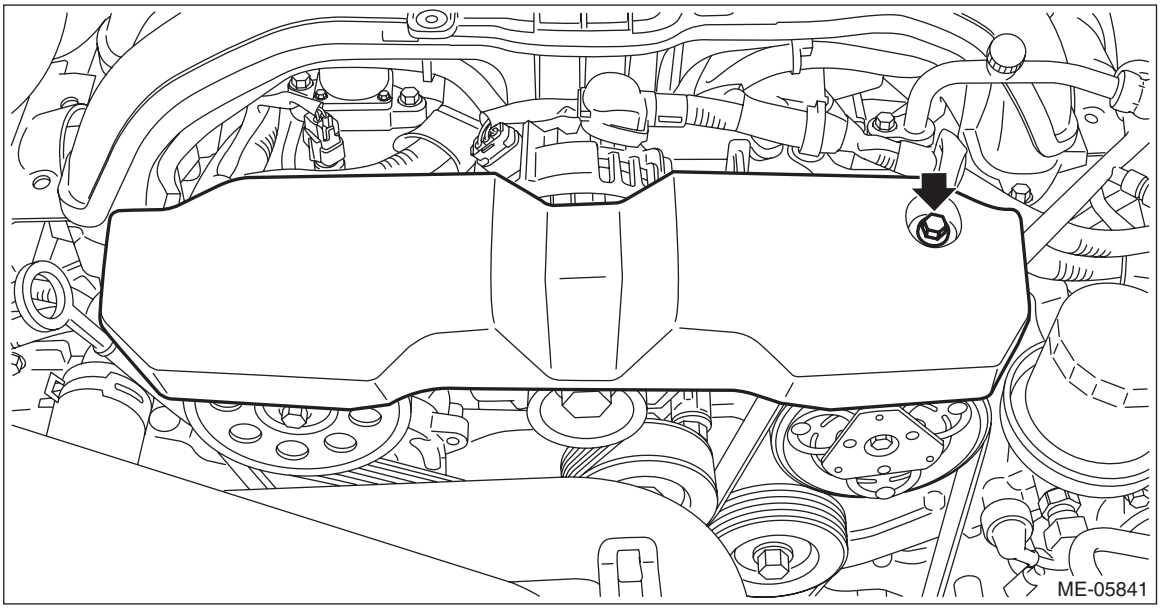

(2) Remove the battery. (Gasoline engine model) <Ref. to SC(H4DO(w/o HEV))-55, REMOVAL, Battery.>

(3) Turn the ignition switch to OFF. (HEV model)

(4) Remove the collector cover. (HEV model)

1. Pull up the two points at the front of collector cover (A).
2. Pull up the two points at the rear of collector cover (B) while moving them rearward.

NOTE:
Be careful not to contact the fuel delivery tube when moving the collector cover rearward.

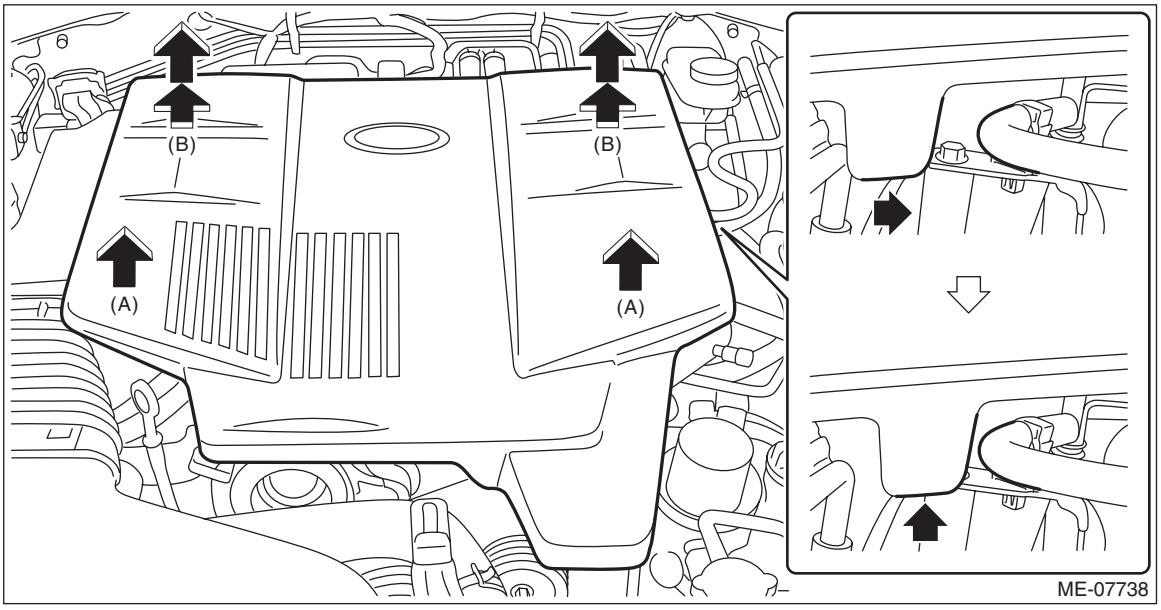

(5) Remove the 12 volt auxiliary battery. (HEV model) <Ref. to SC(H4DO(HEV))-38, 12 VOLT AUXILIARY BATTERY, REMOVAL, Battery.>

(6) Remove the air intake duct. <Ref. to IN(H4DO(w/o HEV))-13, REMOVAL, Air Intake Duct.> <Ref. to IN(H4DO(HEV))-15, REMOVAL, Air Intake Duct.>
(7) Align the timing mark (A) of crank pulley to the timing gauge (B) 0° of chain cover as shown in the figure, and turn the crankshaft by 180° clockwise from that position.

NOTE:
This procedure is required to prevent the rocker cover LH and the cam lobe of camshaft LH contacting with each other when removing the rocker cover LH.

- Gasoline engine model

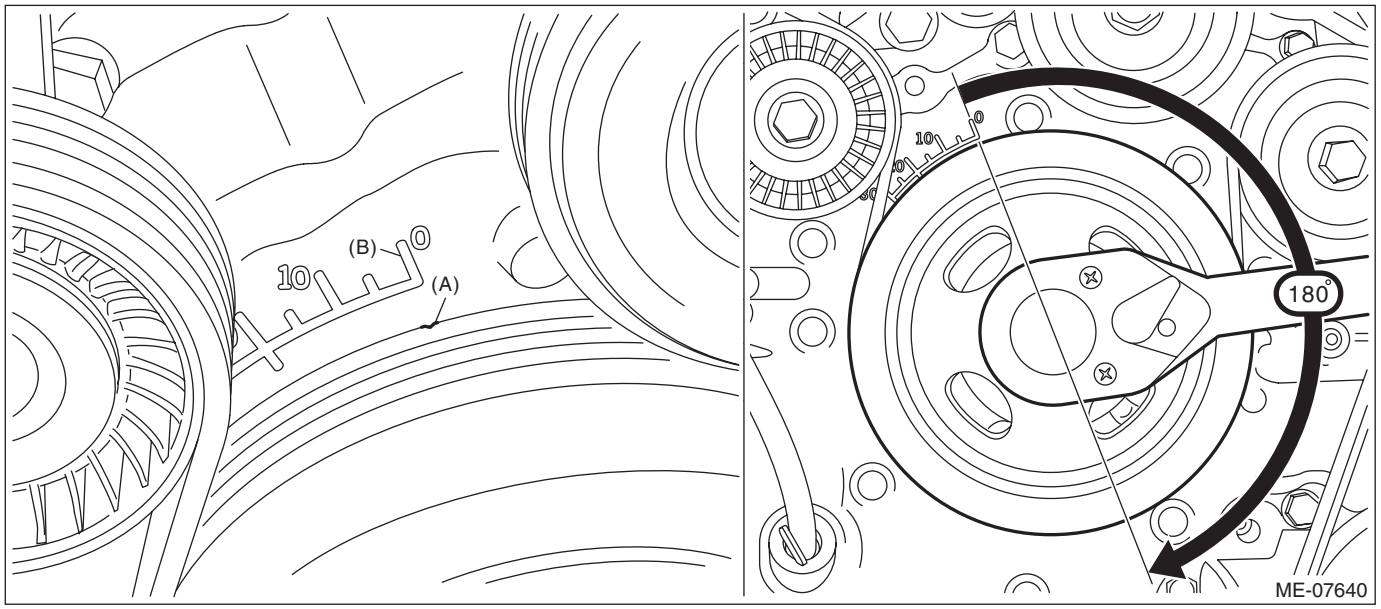

- HEV model

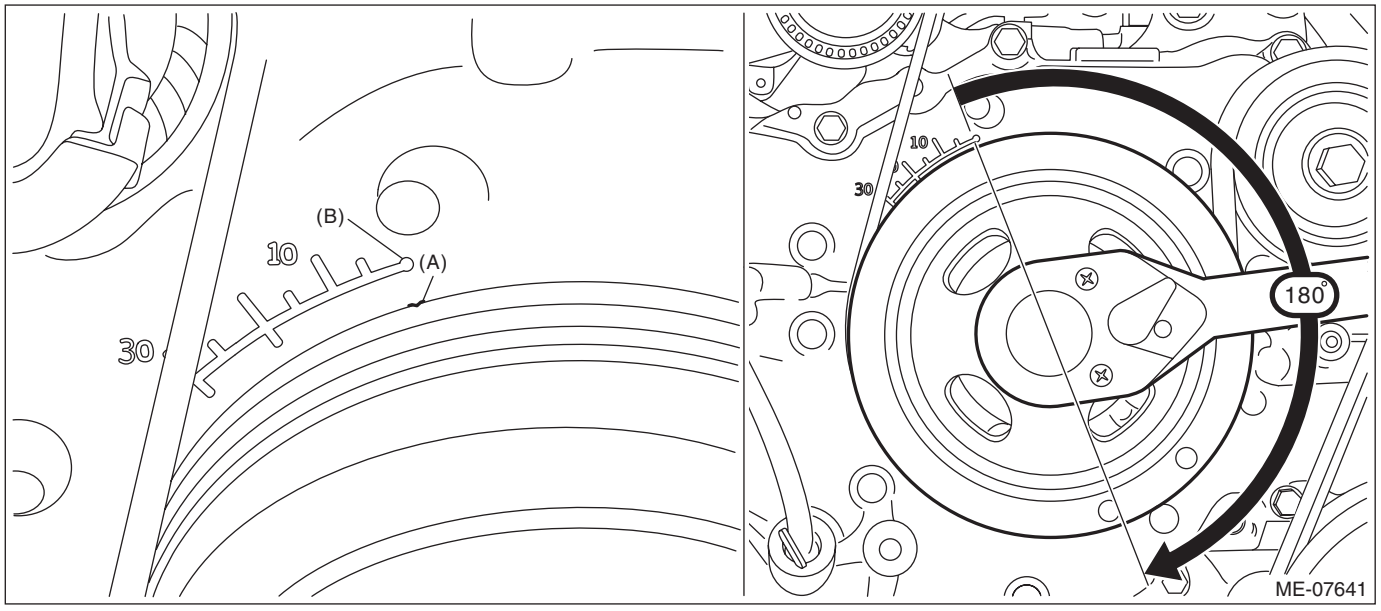

2) Remove the #2 ignition coil and the #4 ignition coil. <Ref. to IG(H4DO(w/o HEV))-11, REMOVAL, Ignition Coil.>

3) Remove the intake manifold protector LH.

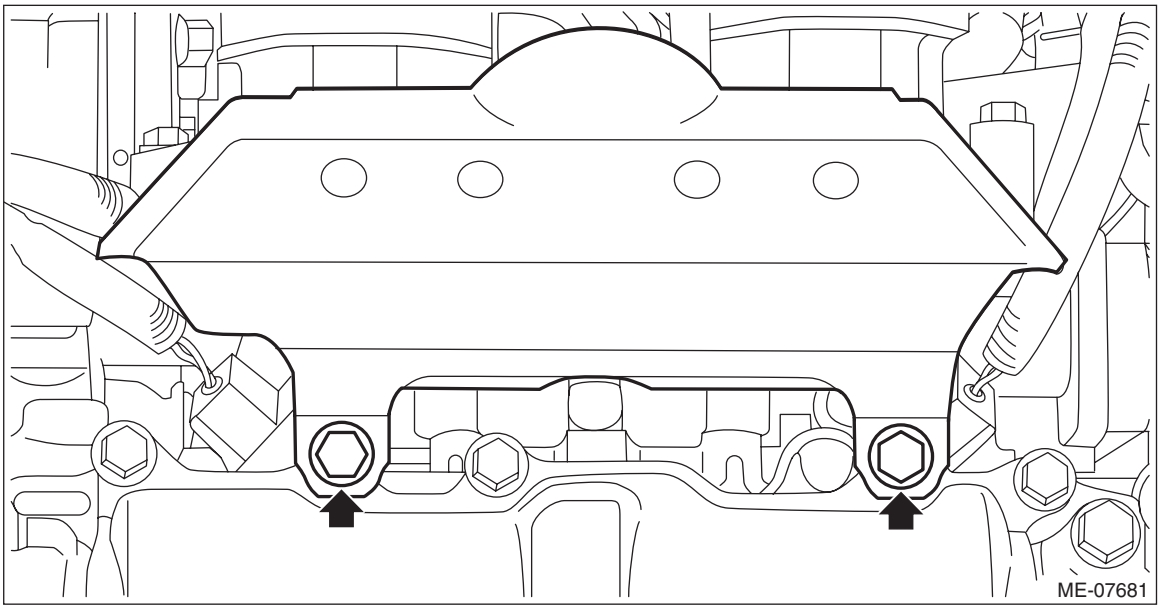

4) Remove the rocker cover LH.

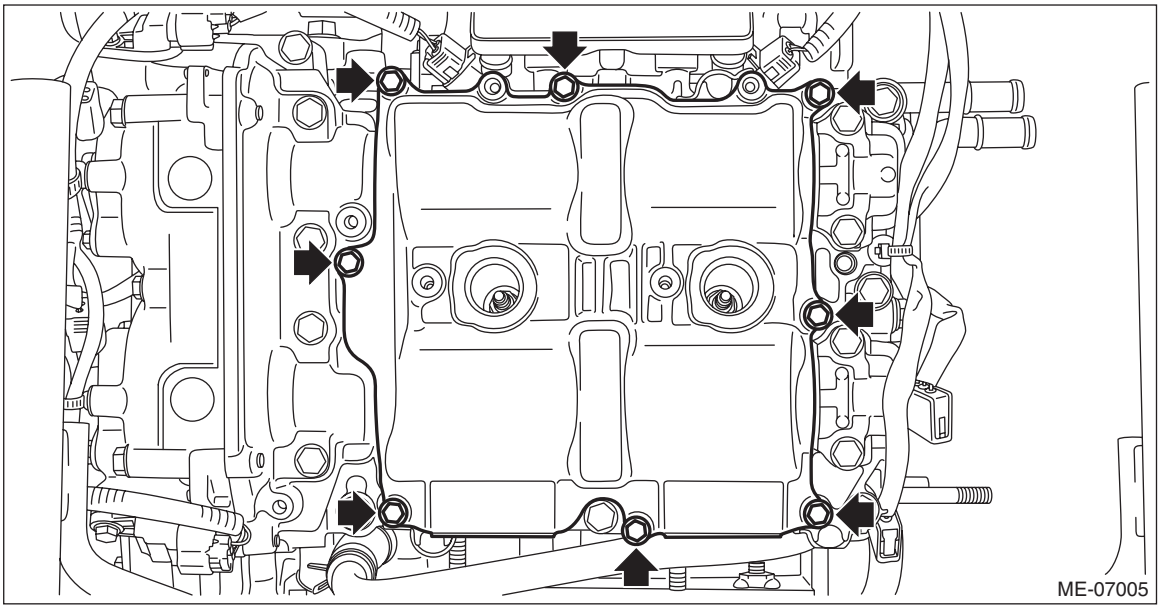

5) Remove the rocker cover gasket LH, #2 spark plug pipe gasket and #4 spark plug pipe gasket, and remove the liquid gasket.

CAUTION:
• When removing the liquid gasket from engine unit using scraper, use special care not to damage the cam lobe of camshaft LH.
• If the cam lobe of camshaft LH interferes, turn the crankshaft to the position where the scraper does not touch.

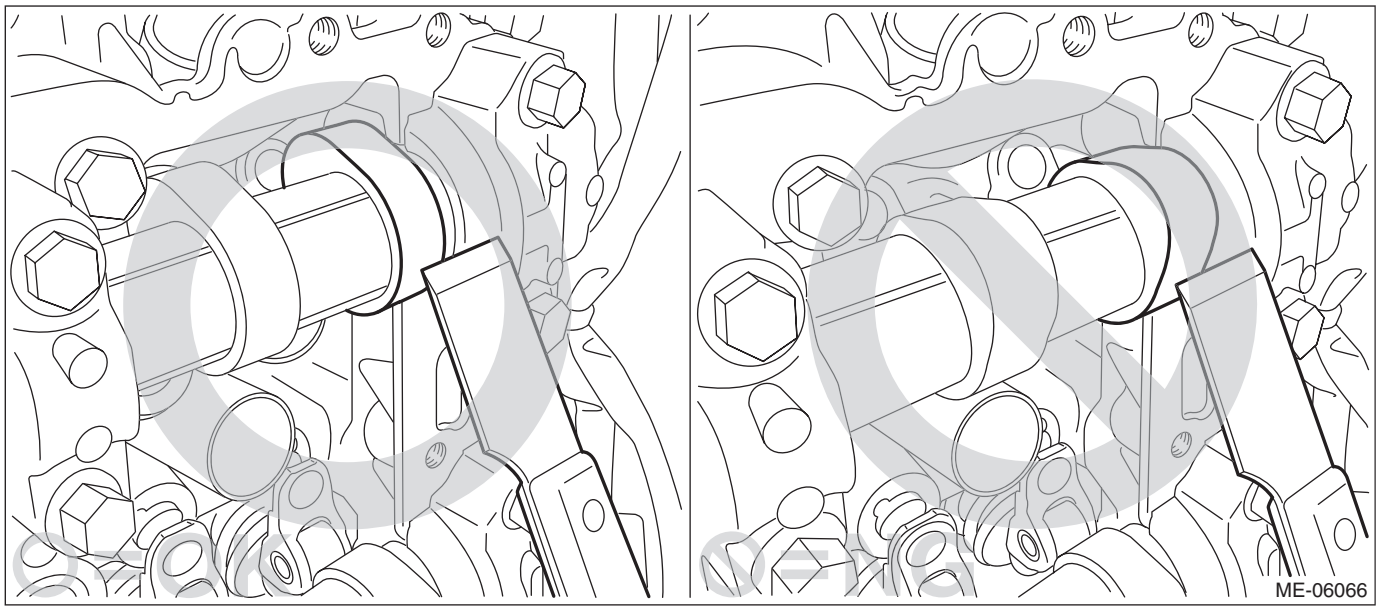

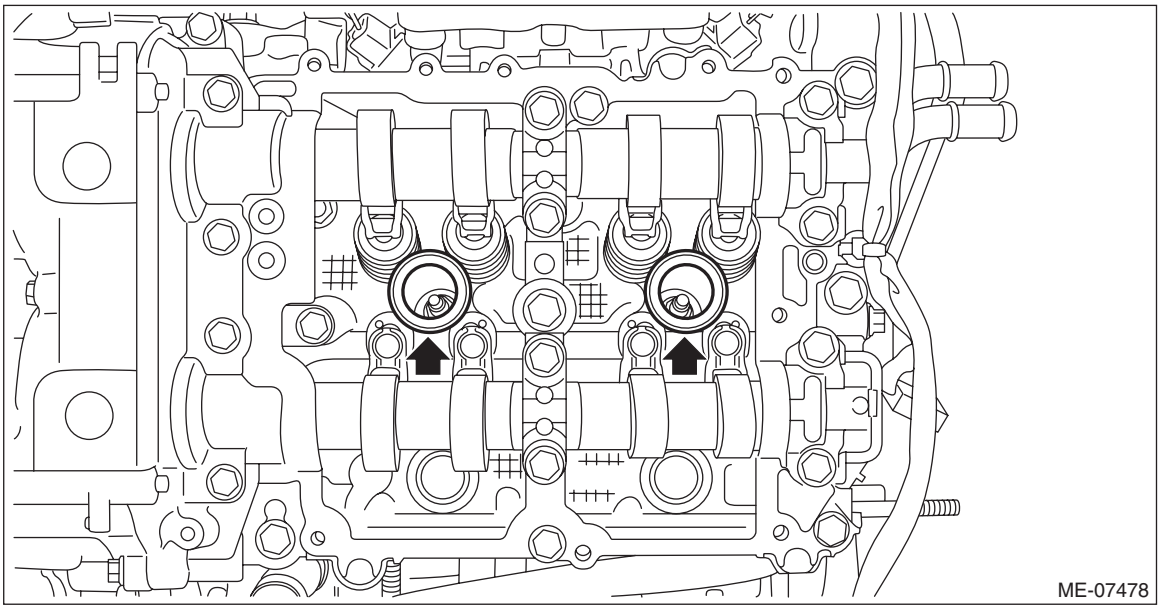

B: INSTALLATION

1. ROCKER COVER RH

1) Install the #1 spark plug pipe gasket and #3 spark plug pipe gasket to the #1 spark plug pipe and #3 spark plug pipe.

NOTE:
- Use a new #1 spark plug pipe gasket and #3 spark plug pipe gasket.
- Apply a light coat of engine oil to the #1 spark plug pipe gasket and #3 spark plug pipe gasket, and insert them onto the spark plug pipe edge (A).

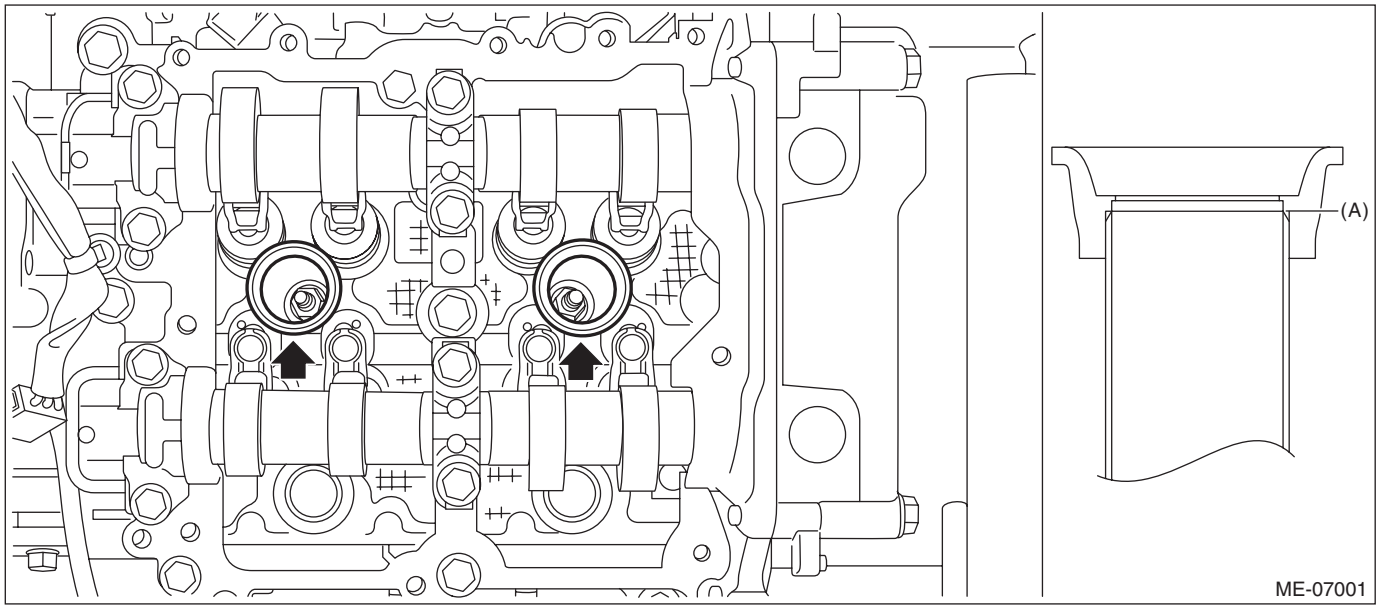

2) Install the rocker cover gasket RH to the rocker cover RH.

NOTE:
Use a new rocker cover gasket RH.

3) Apply liquid gasket to the mating surface of rocker cover RH as shown in the figure.

NOTE:
- Before applying liquid gasket, degrease the old liquid gasket seal surface of the engine.
- Be careful not to allow liquid gasket to be squeezed out from rocker cover RH.
- Install within 5 min. after applying liquid gasket.

Liquid gasket:
THREE BOND 1217G (Part No. K0877Y0100) or equivalent

Liquid gasket applying diameter:
3.5±0.5 mm (0.1378±0.0197 in)

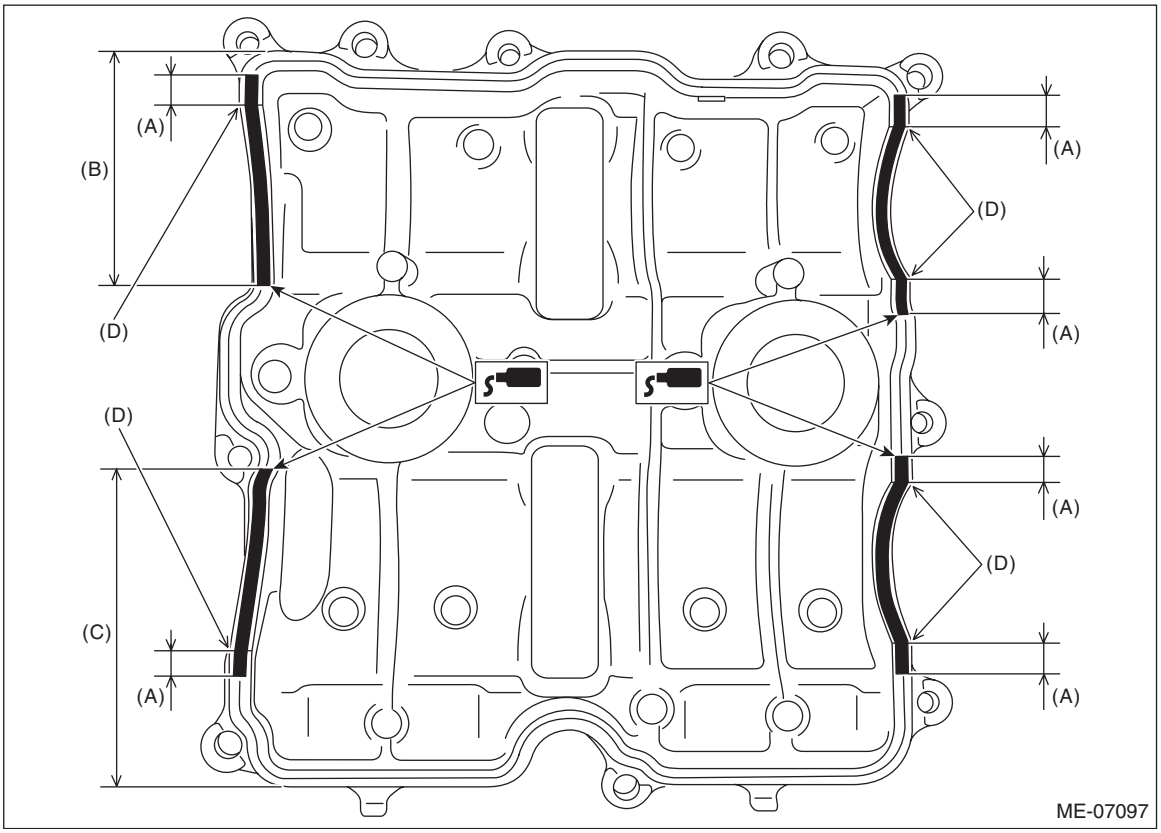

(A) 10 mm (0.394 in) or more
(B) 68 mm (2.677 in) or more
(C) 89 mm (3.504 in) or more
(D) Arch starting point

4) Set the rocker cover RH, and tighten the bolts in numerical order as shown in the figure.

Tightening torque:
6.4 N·m (0.7 kgf-m, 4.7 ft-lb)

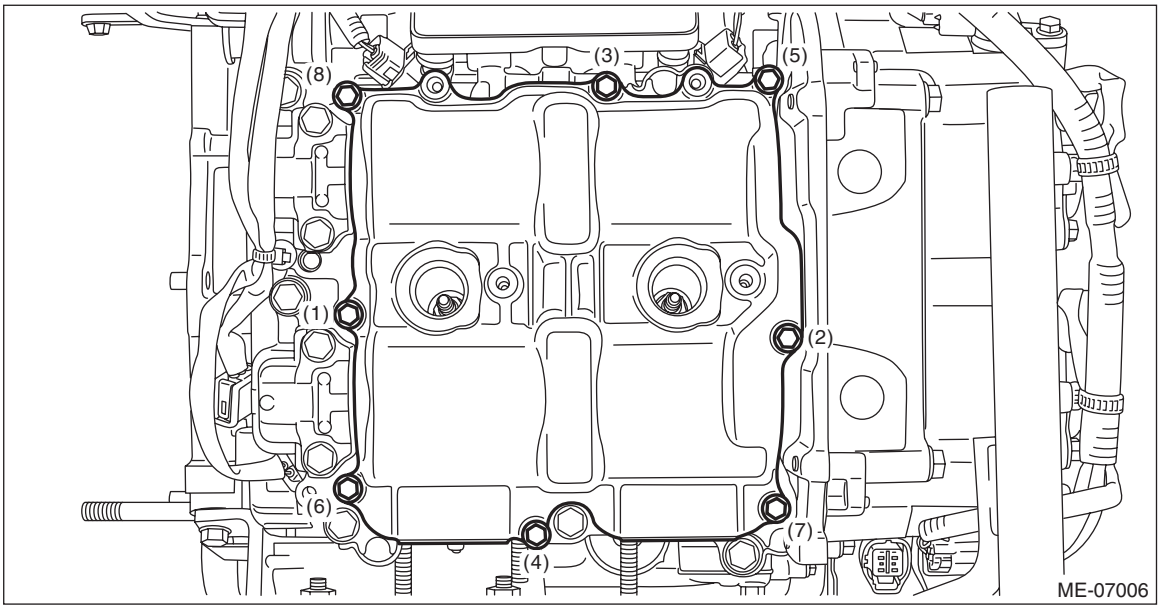

5) Install the intake manifold protector RH.

Tightening torque:
6.4 N·m (0.7 kgf-m, 4.7 ft-lb)

- Gasoline engine model

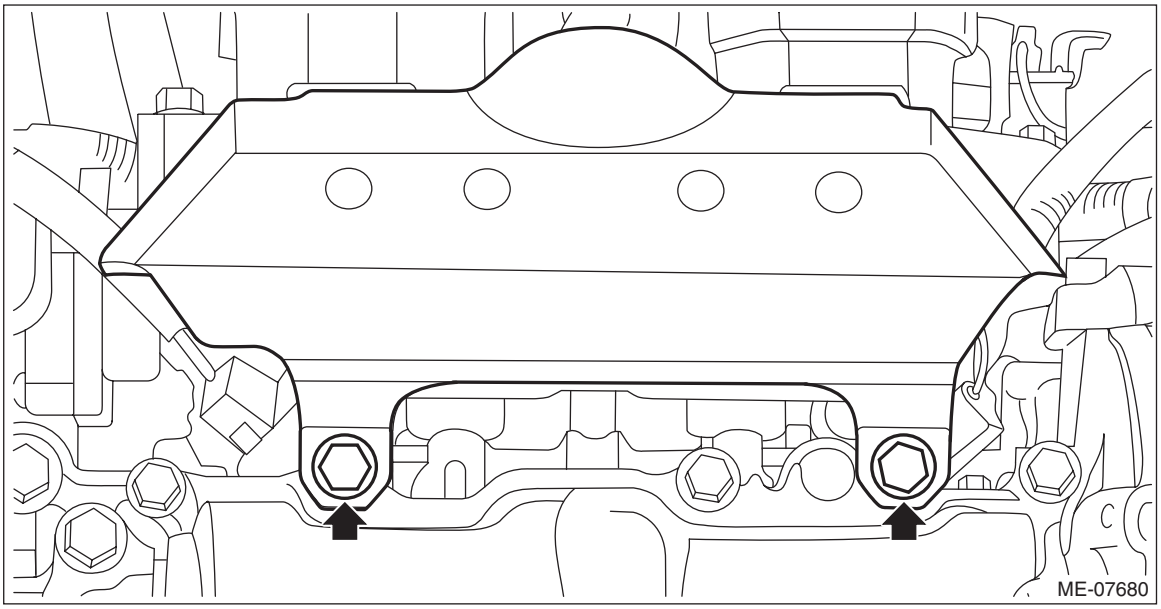

- HEV model

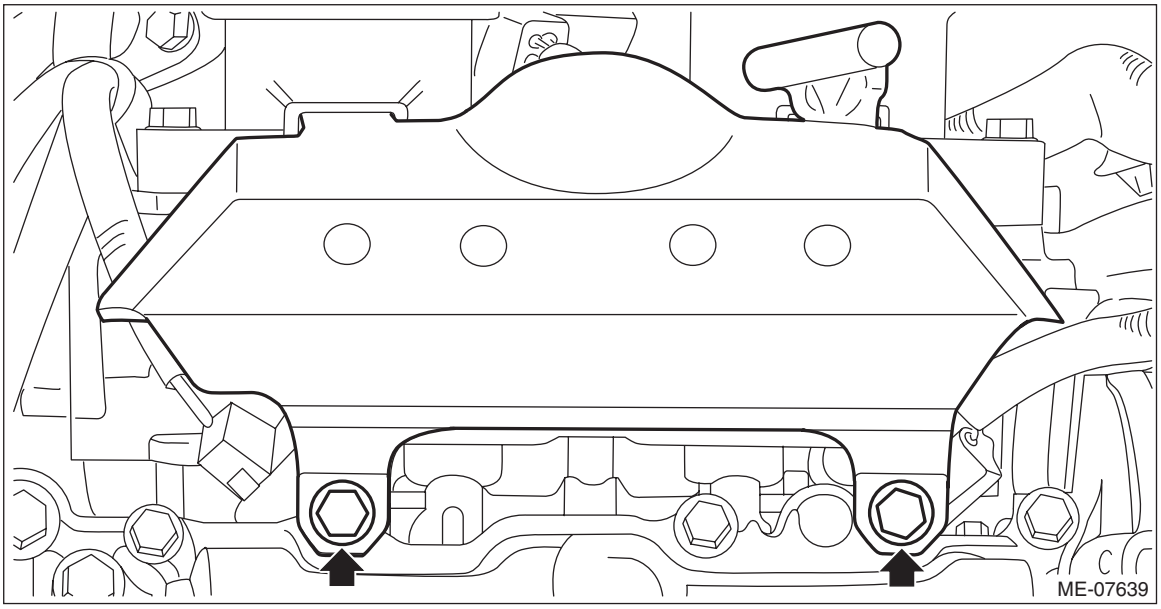

6) Install the #1 ignition coil and the #3 ignition coil. <Ref. to IG(H4DO(w/o HEV))-11, INSTALLATION, Ignition Coil.>
7) When working on the vehicle

NOTE:
When working on the vehicle, perform the following steps also.
(1) Install the front exhaust pipe. <Ref. to EX(H4DO(w/o HEV))-8, INSTALLATION, Front Exhaust Pipe.>
(2) Install the air intake boot. (Gasoline engine model) <Ref. to IN(H4DO(w/o HEV))-12, INSTALLATION, Air Intake Boot.>
(3) Install the air cleaner case. (Gasoline engine model) <Ref. to IN(H4DO(w/o HEV))-9, INSTALLATION, Air Cleaner Case.>
(4) Install the battery cable bracket No. 2 to the vehicle, and install the battery cable assembly to battery cable bracket No. 2. (HEV model)

Tightening torque:
7.5 N·m (0.8 kgf-m, 5.5 ft-lb)

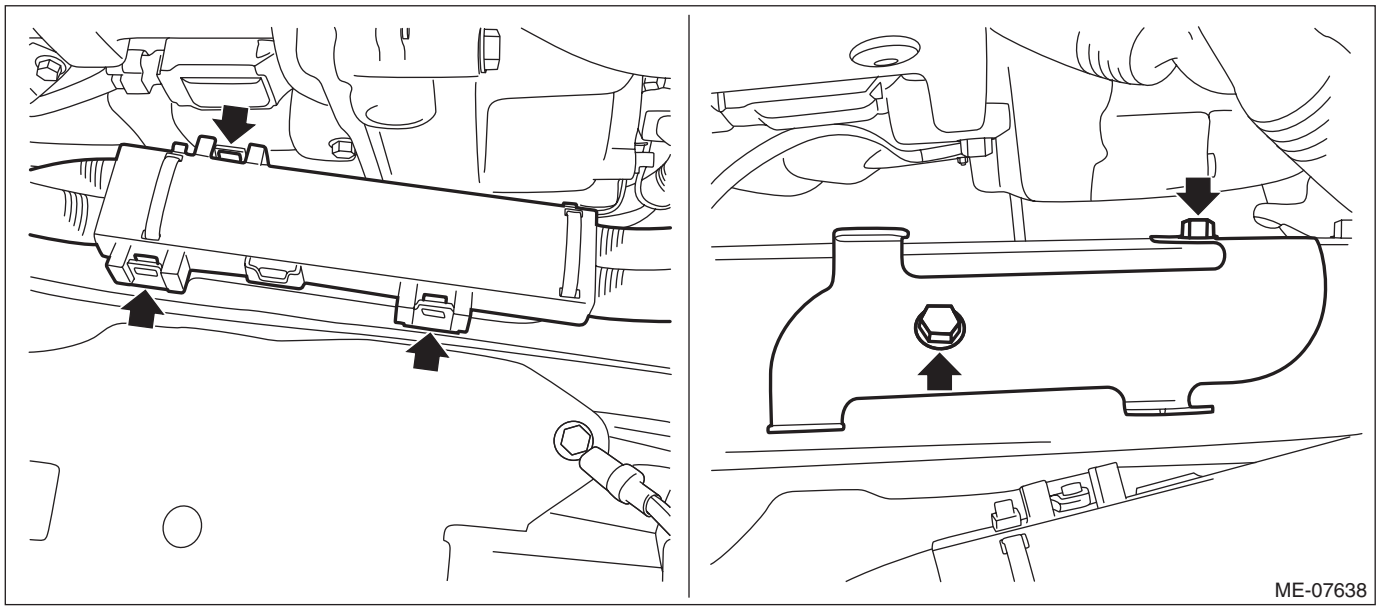

(5) Install the 12 volt engine restart battery. (HEV model) <Ref. to SC(H4DO(HEV))-41, 12 VOLT ENGINE RESTART BATTERY, INSTALLATION, Battery.>
(6) Install the intake duct. (HEV model) <Ref. to IN(H4DO(HEV))-17, INSTALLATION, Intake Duct.>

2. ROCKER COVER LH

1) When working on the vehicle

NOTE:
When working on the vehicle, perform the following steps also.

(1) Align the timing mark (A) of crank pulley to the timing gauge (B) of chain cover as shown in the figure, and turn the crankshaft by 180° clockwise from that position.

NOTE:
This procedure is required to prevent the rocker cover LH and the cam lobe of camshaft LH contacting with each other when installing the rocker cover LH.

- Gasoline engine model

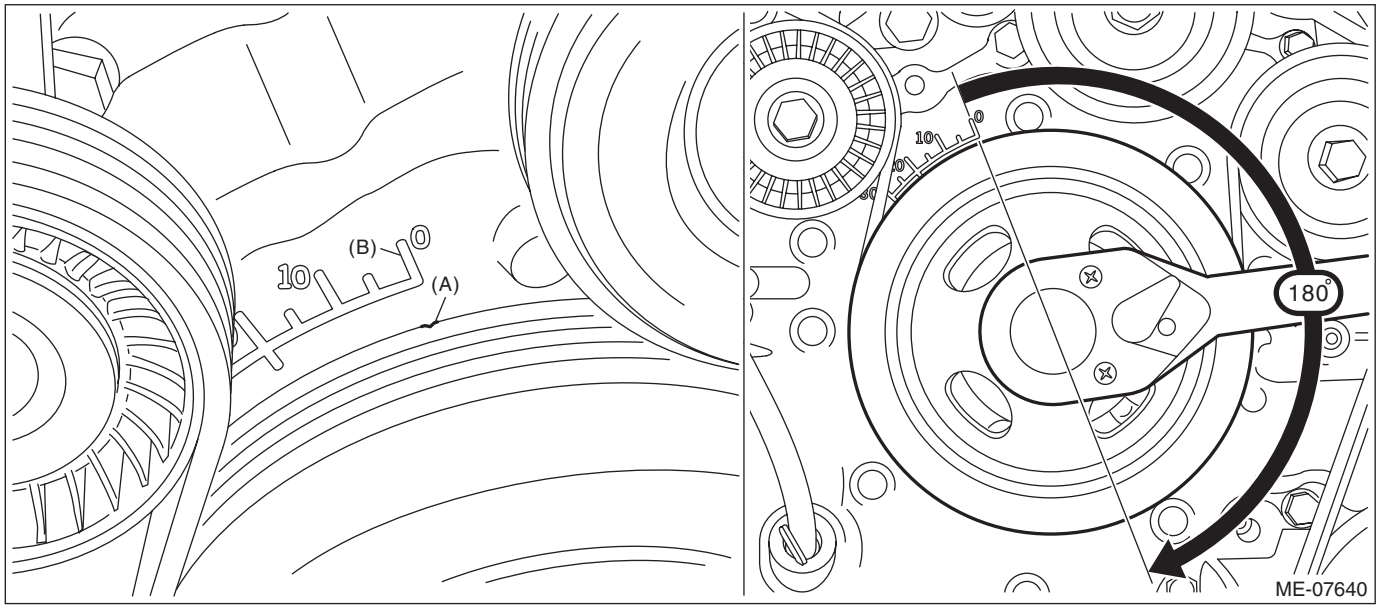

- HEV model

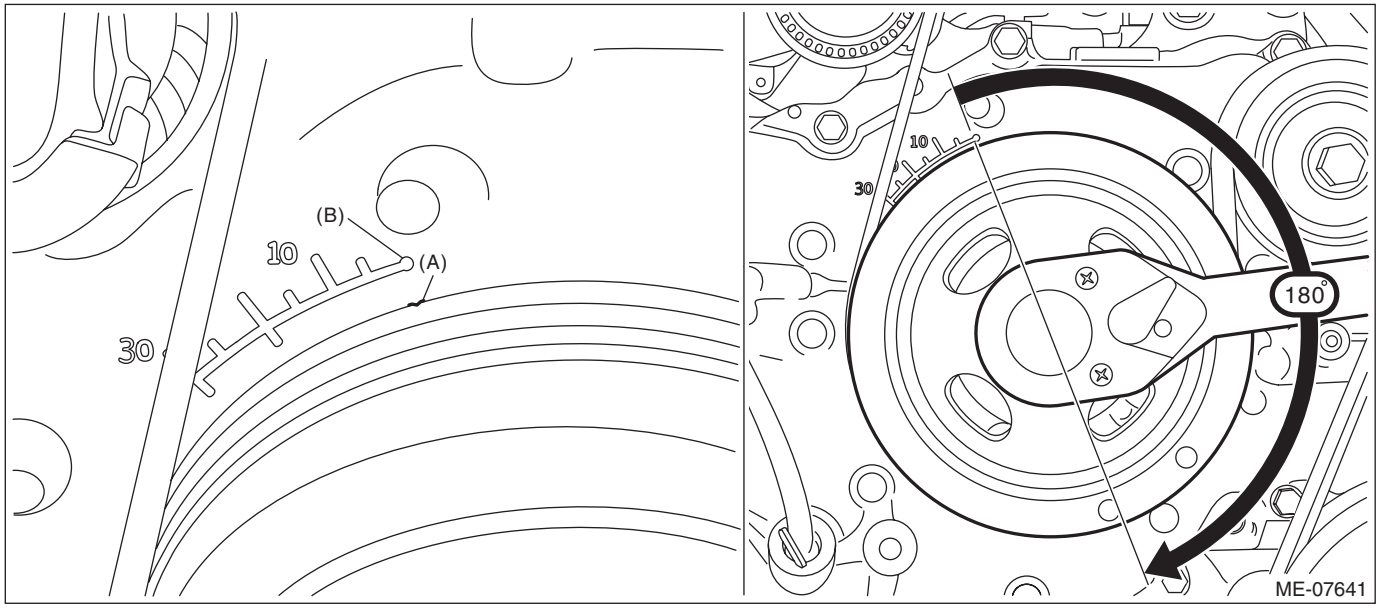

2) Install the #2 spark plug pipe gasket and #4 spark plug pipe gasket to the #2 spark plug pipe and #4 spark plug pipe.

NOTE:
- Use a new #2 spark plug pipe gasket and #4 spark plug pipe gasket.
- Apply a light coat of engine oil to the #2 spark plug pipe gasket and #4 spark plug pipe gasket, and insert them onto the spark plug pipe edge (A).

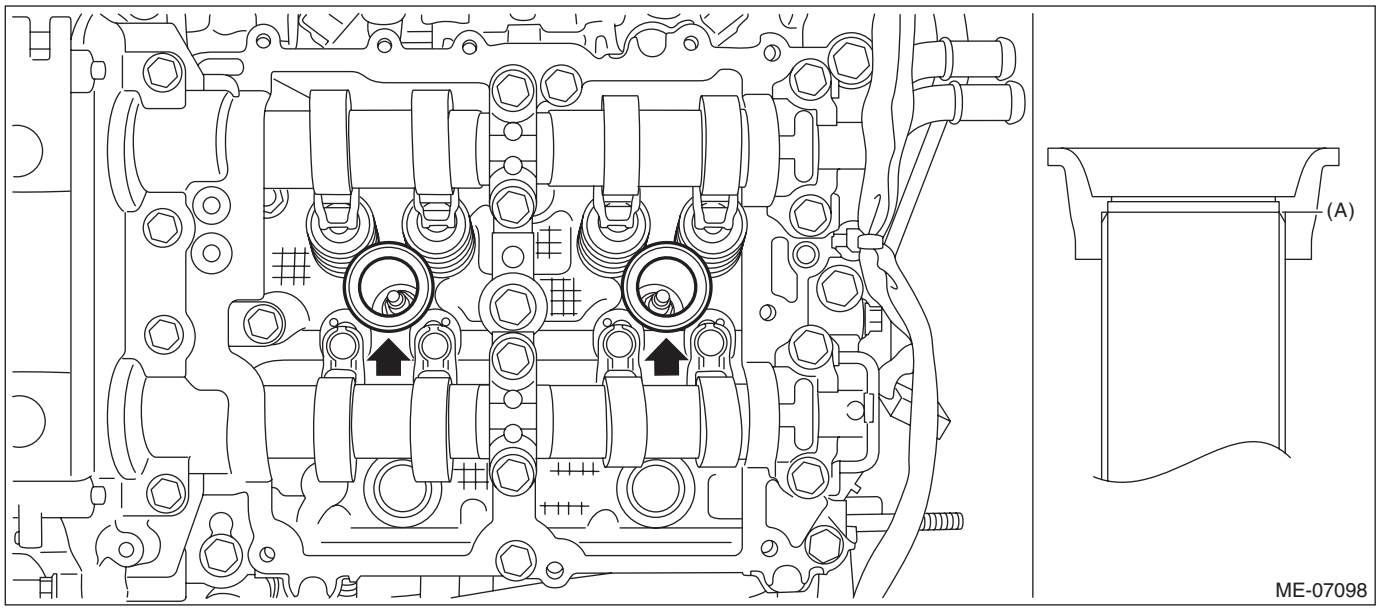

3) Install the rocker cover gasket LH to the rocker cover LH.

NOTE:
Use a new rocker cover gasket LH.

4) Apply liquid gasket to the mating surface of rocker cover LH as shown in the figure.

NOTE:
- Before applying liquid gasket, degrease the old liquid gasket seal surface of the engine.
- Be careful not to allow liquid gasket to be squeezed out from rocker cover LH.
- Install within 5 min. after applying liquid gasket.

Liquid gasket:
THREE BOND 1217G (Part No. K0877Y0100) or equivalent

Liquid gasket applying diameter:
3.5±0.5 mm (0.1378±0.0197 in)

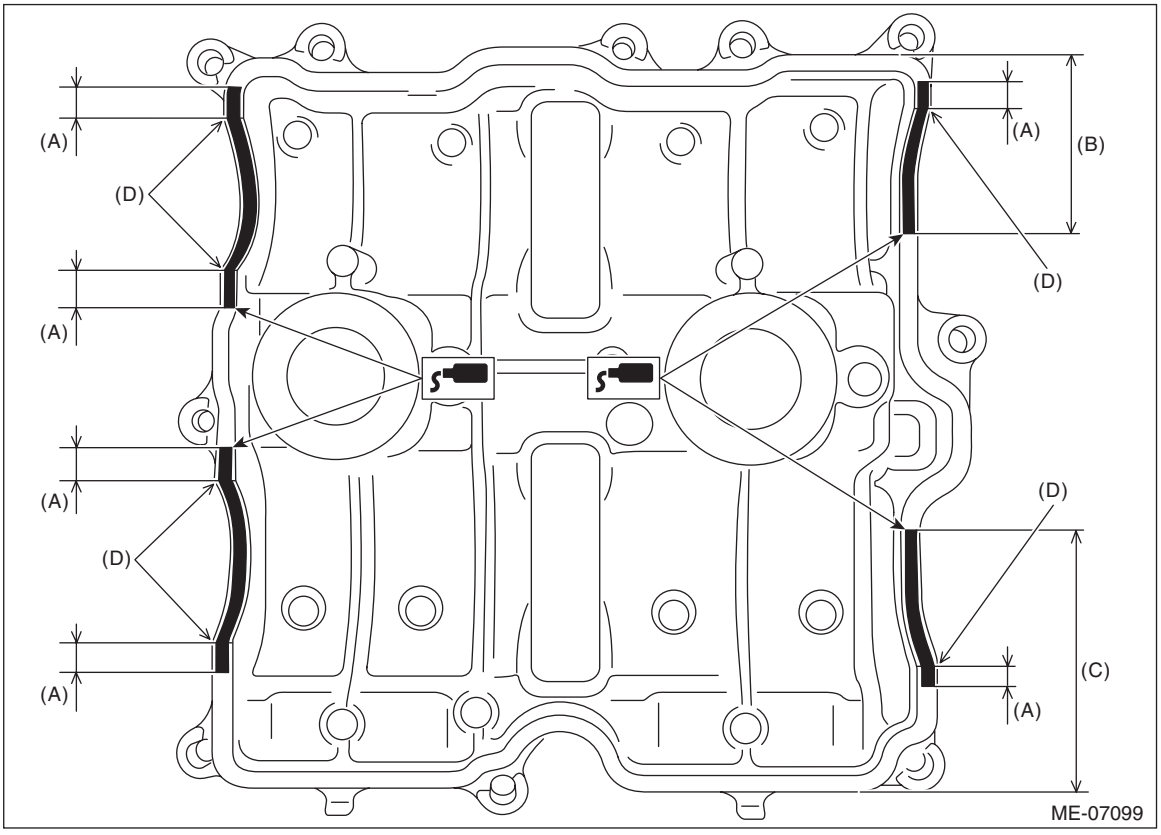

(A) 10 mm (0.394 in) or more
(B) 51 mm (2.008 in) or more
(C) 73 mm (2.874 in) or more
(D) Arch starting point

5) Set the rocker cover LH, and tighten the bolts in numerical order as shown in the figure.

Tightening torque:
6.4 N·m (0.7 kgf-m, 4.7 ft-lb)

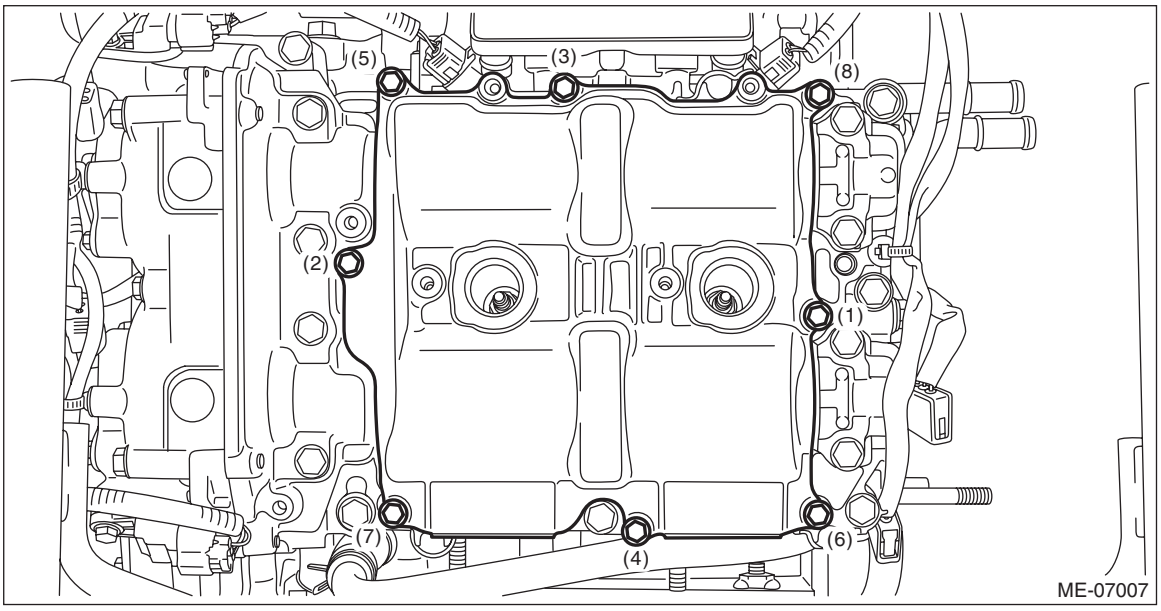

6) Install the intake manifold protector LH.

Tightening torque:
6.4 N·m (0.7 kgf-m, 4.7 ft-lb)

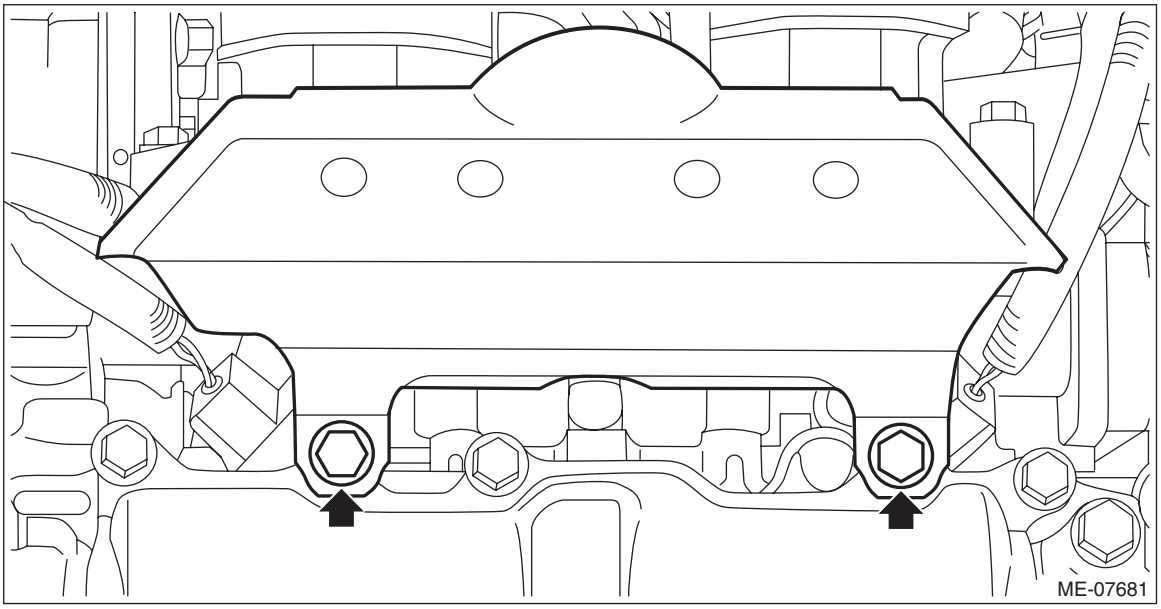

7) Install the #2 ignition coil and the #4 ignition coil. <Ref. to IG(H4DO(w/o HEV))-11, INSTALLATION, Ignition Coil.>
8) When working on the vehicle

NOTE:
When working on the vehicle, perform the following steps also.
(1) Install the air intake duct. <Ref. to IN(H4DO(w/o HEV))-13, INSTALLATION, Air Intake Duct.> <Ref. to IN(H4DO(HEV))-15, INSTALLATION, Air Intake Duct.>
(2) Install the battery. (Gasoline engine model) <Ref. to SC(H4DO(w/o HEV))-55, INSTALLATION, Battery.>
(3) Install the V-belt cover. (Gasoline engine model)

Tightening torque:
6.4 N·m (0.7 kgf-m, 4.7 ft-lb)

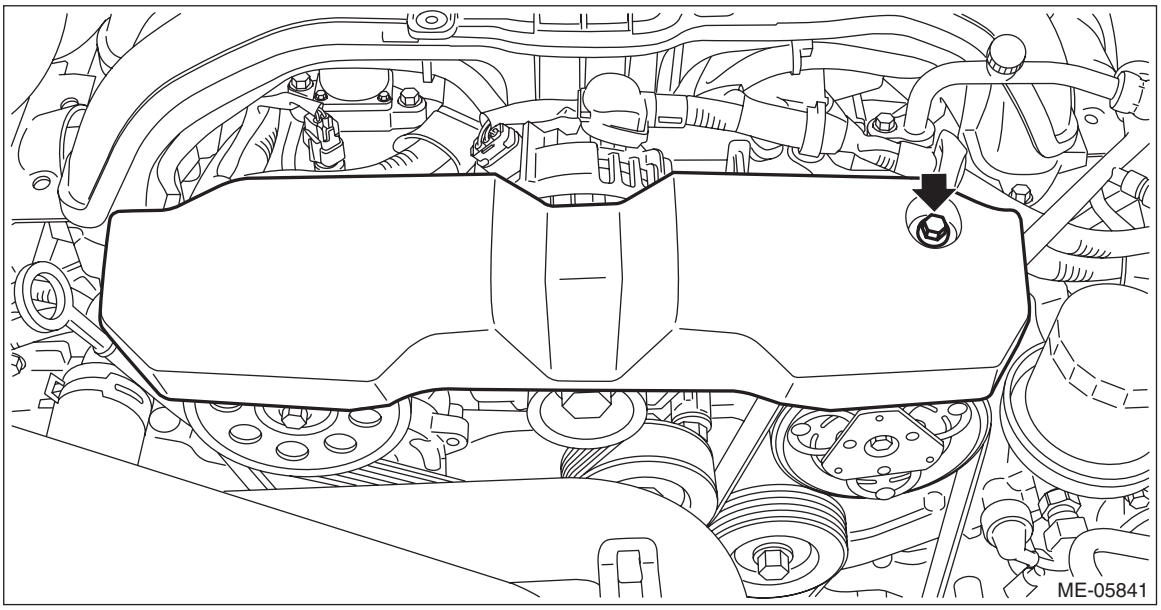

(4) Install the 12 volt auxiliary battery. (HEV model) <Ref. to SC(H4DO(HEV))-40, 12 VOLT AUXILIARY BATTERY, INSTALLATION, Battery.>
(5) Install the collector cover. (HEV model)

C: INSPECTION

Check that the rocker cover does not have deformation, cracks and any other damage.

19.Camshaft

A: REMOVAL

1. CAMSHAFT RH

The camshaft RH and cam carrier are designed as removing as a unit. Refer to “Cam Carrier” for removal procedures of camshaft RH. <Ref. to ME(H4DO(w/o HEV))-209, CAM CARRIER RH, REMOVAL, Cam Carrier.> <Ref. to ME(H4DO(w/o HEV))-241, CAM CARRIER RH, DISASSEMBLY, Cam Carrier.>

2. CAMSHAFT LH

The camshaft LH and cam carrier are designed as removing as a unit. Refer to “Cam Carrier” for removal procedures of camshaft LH. <Ref. to ME(H4DO(w/o HEV))-214, CAM CARRIER LH, REMOVAL, Cam Carrier.> <Ref. to ME(H4DO(w/o HEV))-243, CAM CARRIER LH, DISASSEMBLY, Cam Carrier.>

B: INSTALLATION

1. CAMSHAFT RH

The camshaft RH and cam carrier are designed as installing as a unit. Refer to “Cam Carrier” for installation procedures of camshaft RH. <Ref. to ME(H4DO(w/o HEV))-244, CAM CARRIER RH, ASSEMBLY, Cam Carrier.> <Ref. to ME(H4DO(w/o HEV))-220, CAM CARRIER RH, INSTALLATION, Cam Carrier.>

2. CAMSHAFT LH

The camshaft LH and cam carrier are designed as installing as a unit. Refer to “Cam Carrier” for installation procedures of camshaft LH. <Ref. to ME(H4DO(w/o HEV))-247, CAM CARRIER LH, ASSEMBLY, Cam Carrier.> <Ref. to ME(H4DO(w/o HEV))-231, CAM CARRIER LH, INSTALLATION, Cam Carrier.>

20.Cam Carrier

A: REMOVAL

1. CAM CARRIER RH

1) Remove the engine from the vehicle. <Ref. to ME(H4DO(w/o HEV))-55, REMOVAL, Engine Assembly.>
2) Remove the chain cover. <Ref. to ME(H4DO(w/o HEV))-144, REMOVAL, Chain Cover.>
3) Remove the timing chain RH. <Ref. to ME(H4DO(w/o HEV))-163, TIMING CHAIN RH, REMOVAL, Timing Chain Assembly.>
4) Remove the cam sprocket RH. <Ref. to ME(H4DO(w/o HEV))-183, CAM SPROCKET RH, REMOVAL, Cam Sprocket.>

NOTE:
This procedure is required only when disassembling the cam carrier RH.
5) Remove the rocker cover RH. <Ref. to ME(H4DO(w/o HEV))-191, ROCKER COVER RH, REMOVAL, Rocker Cover.>
6) Remove the clip holding the engine harness from cam carrier RH.

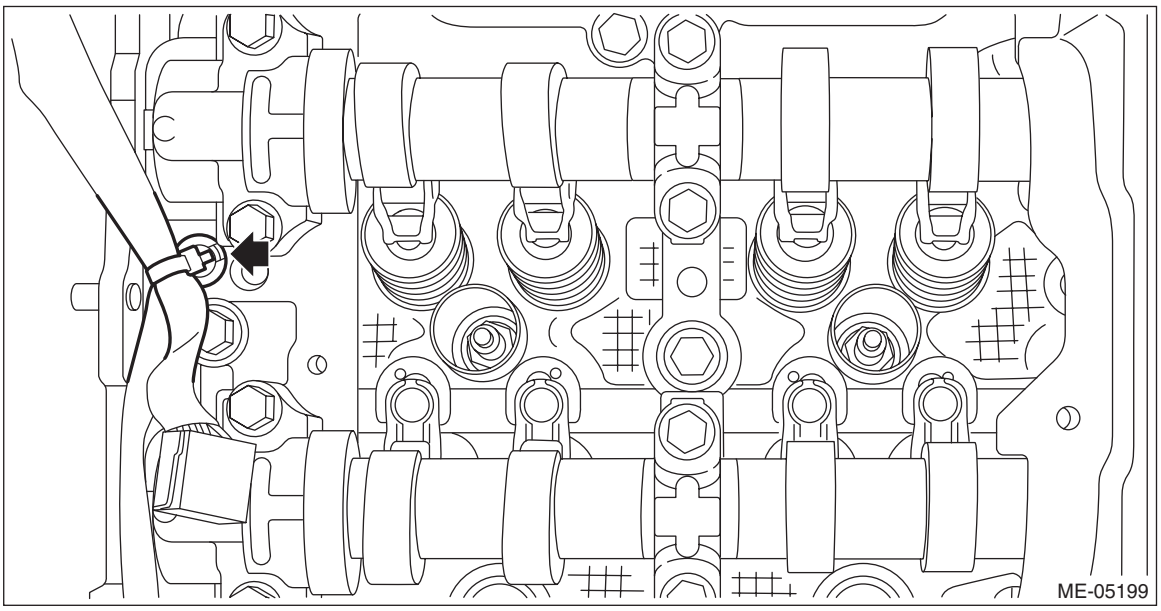

7) Disconnect the engine coolant inlet hose from the EGR cooler. (HEV model)

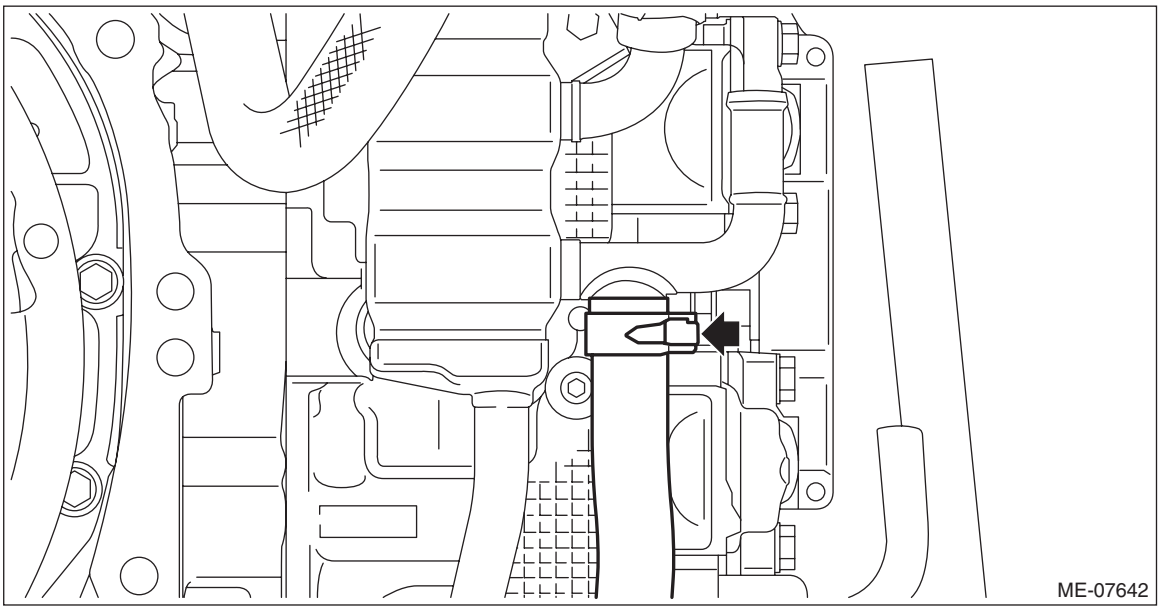

8) Disconnect the water pipe hose from oil pan upper, and remove the water pipe assembly RH. (CVT model)

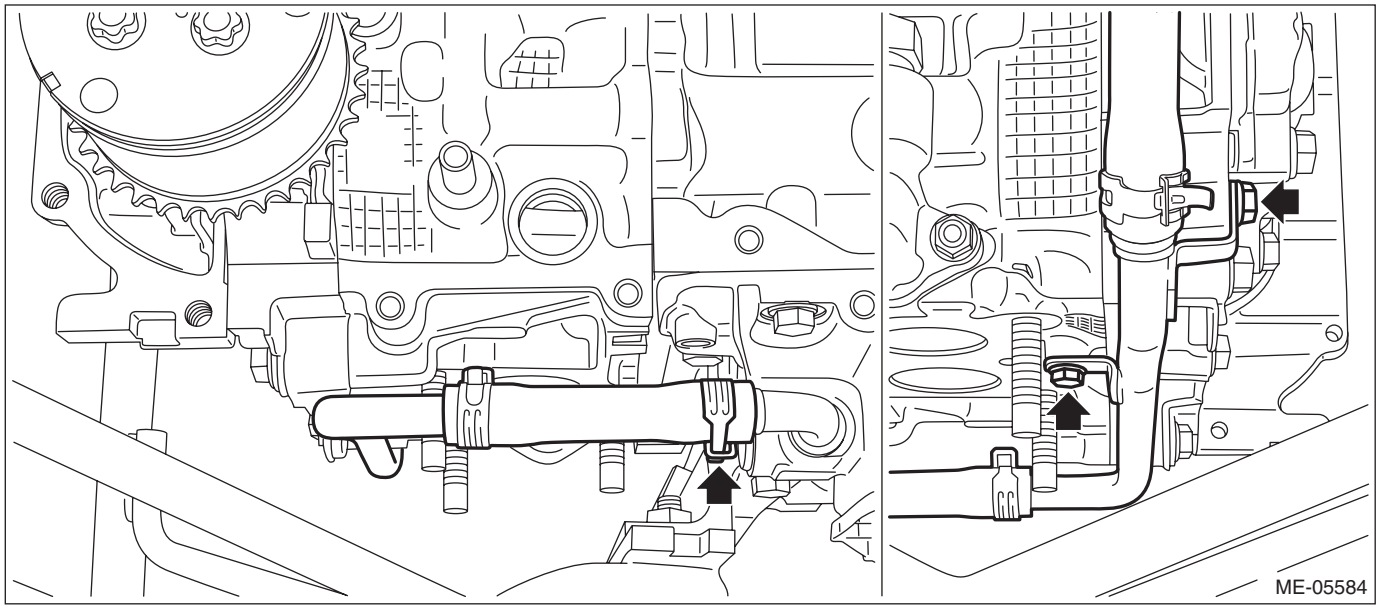

9) Remove the fuel pipe RH and the fuel injector RH.
(1) Disconnect the connector from fuel injector RH.

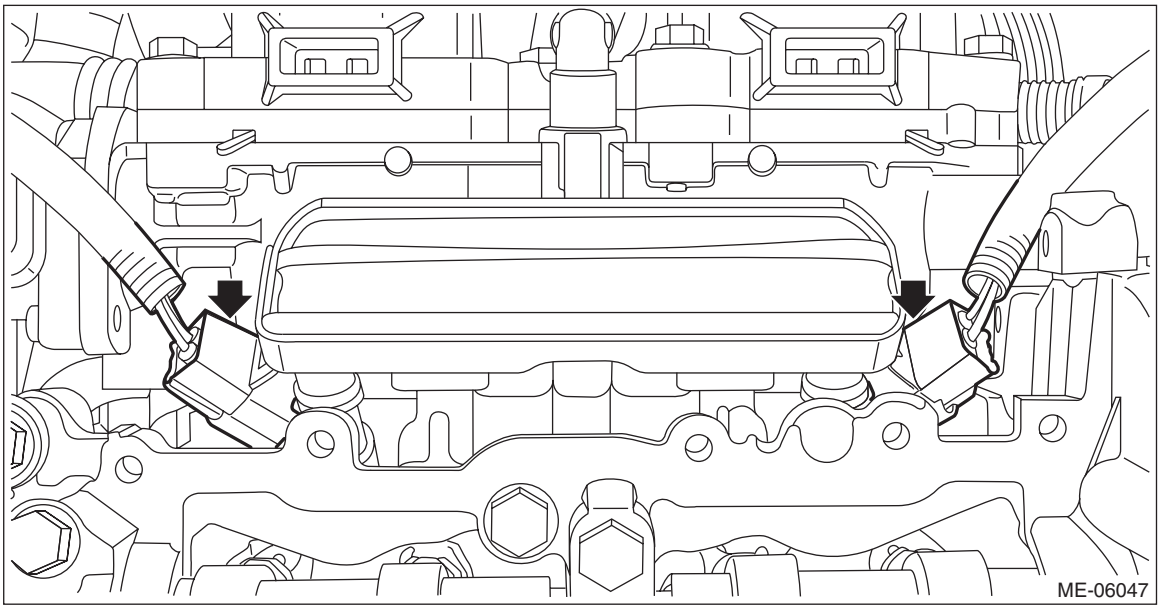

(2) Disconnect the quick connector from fuel pipe RH.

NOTE:
Disconnect the quick connector as shown in the figure.

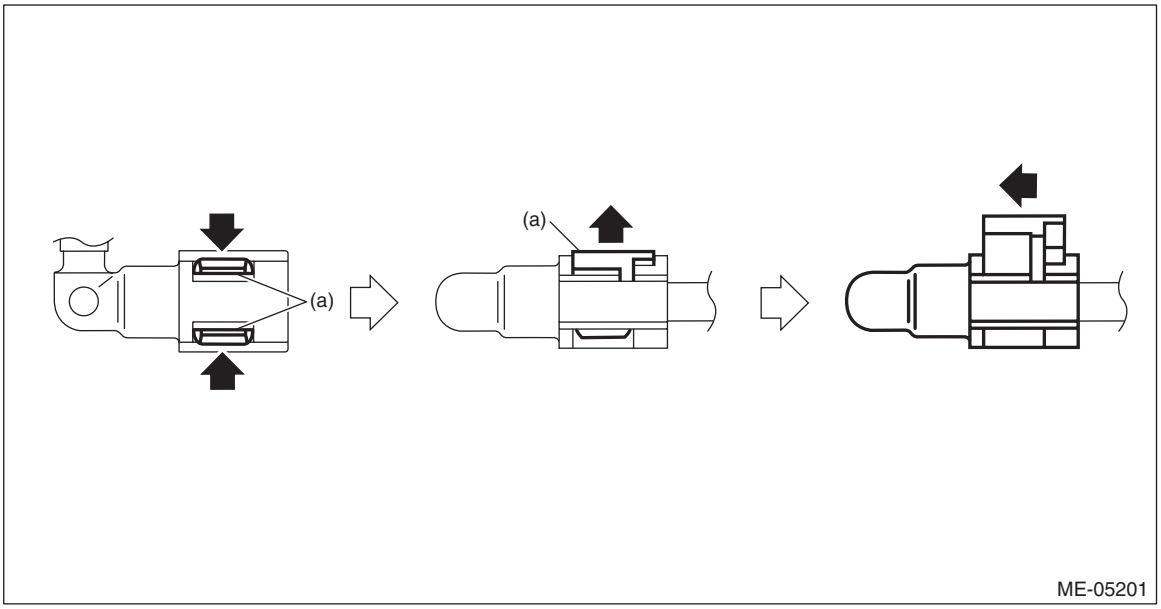

(a) Slider

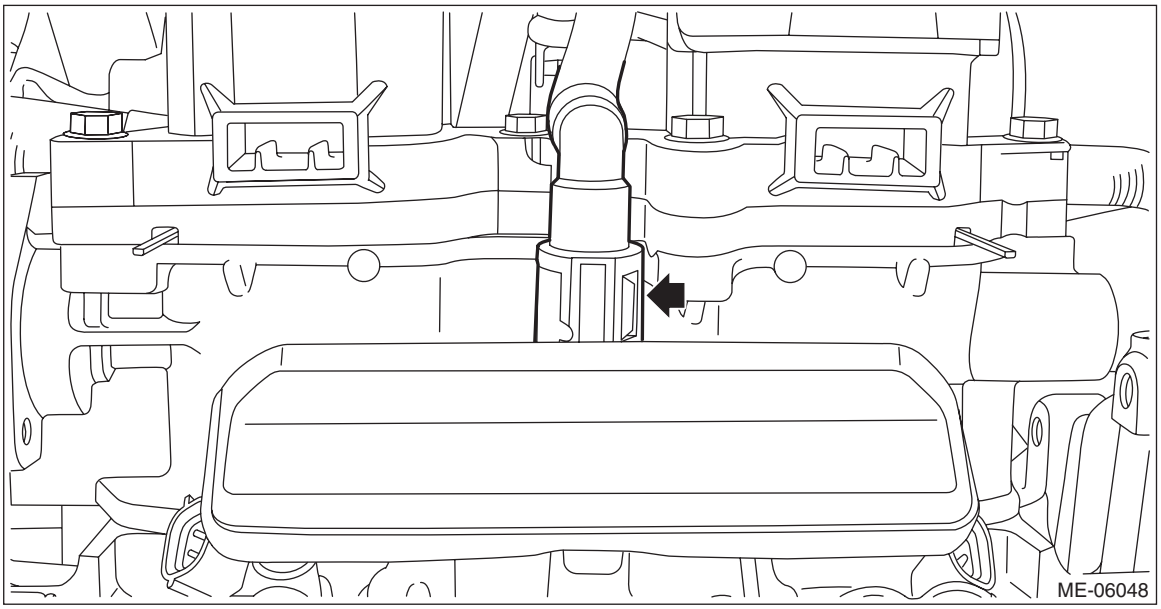

(3) Remove the bolts securing the fuel pipe RH, and remove the fuel pipe RH and the fuel injector RH.

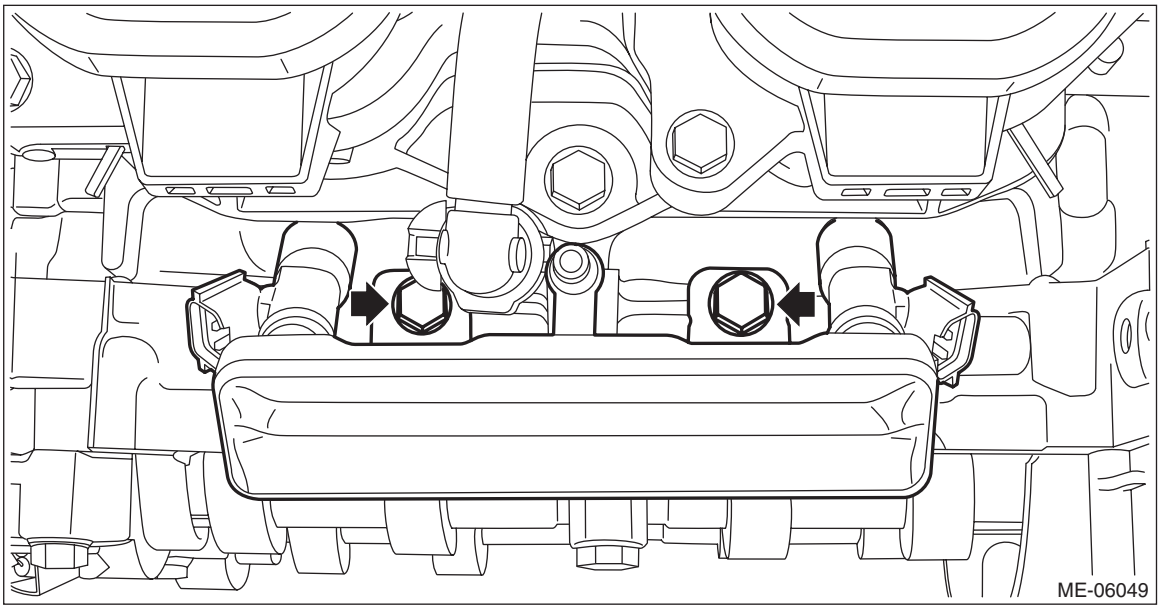

10) Insert the steel rods into ST, and set the engine so that the camshaft RH is facing up.

CAUTION:
• If the engine is standing on one side without inserting the steel rod into ST, engine may lose balance and fall down. Be sure to insert the steel rod into ST to extend the length.
• Use the steel rod with enough strength.
• Be careful not to pinch the engine harness with ST.

ST 499817100 ENGINE STAND

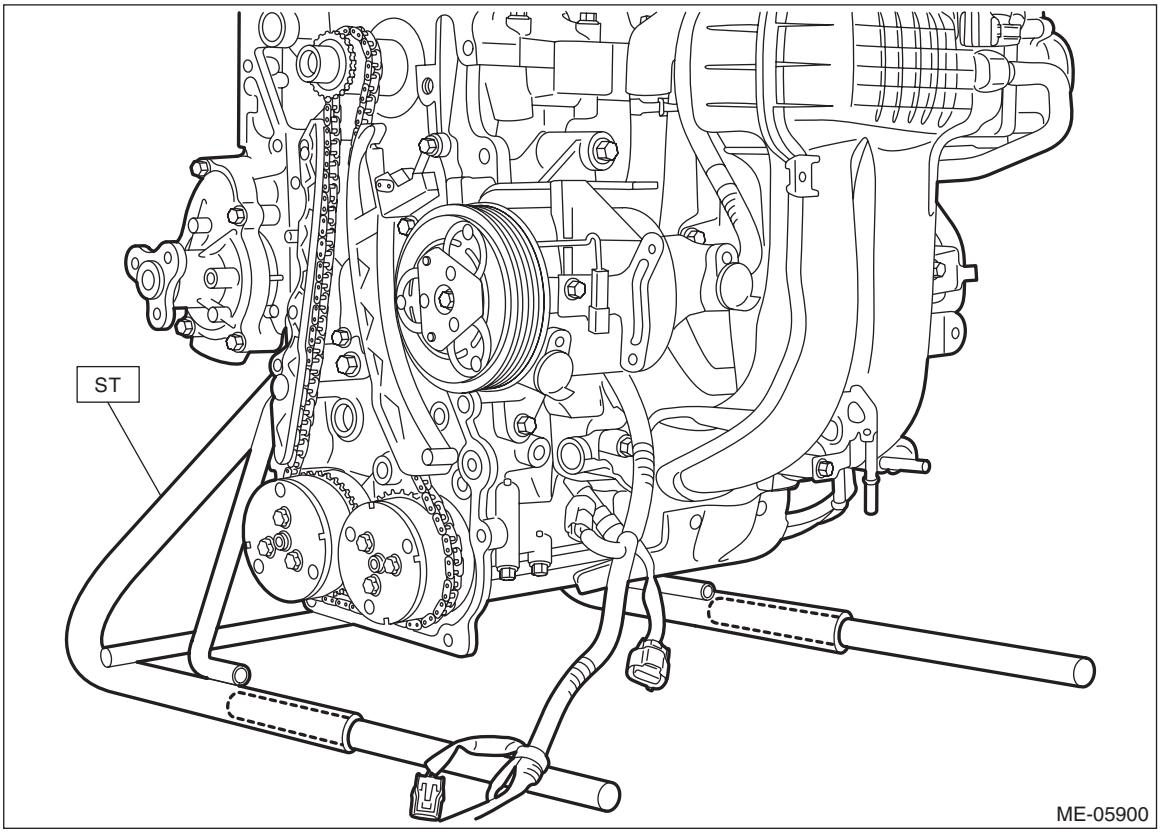

11) Loosen the bolts holding the cam carrier RH equally, a little at a time in numerical sequence as shown in the figure and remove the cam carrier RH.

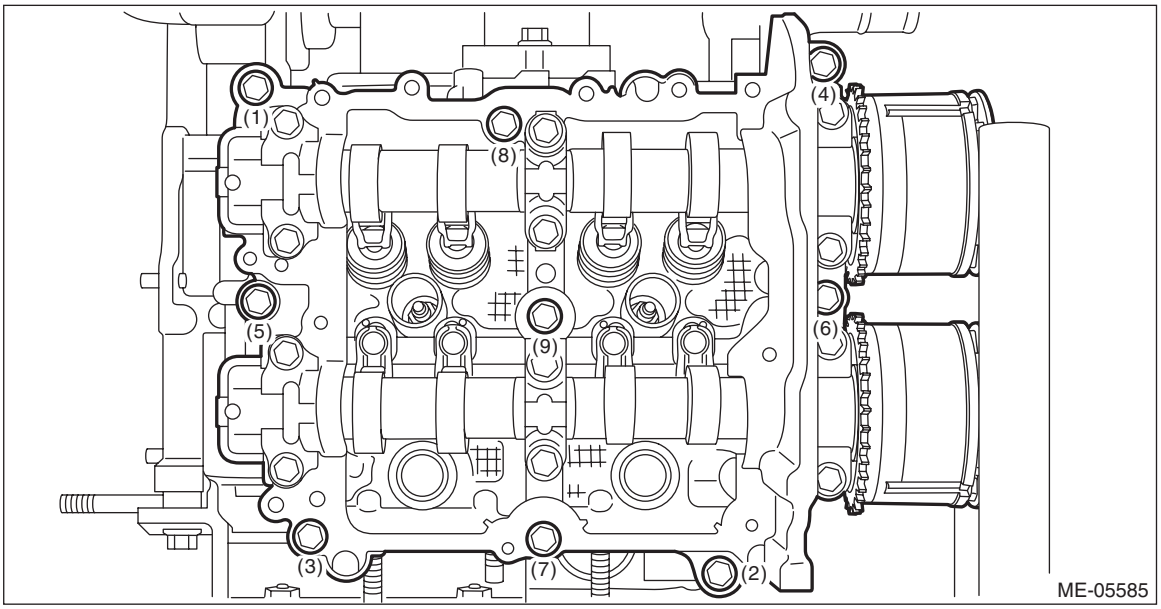

12) Remove the O-ring and the roller rocker arm from cylinder head RH.

NOTE:
Be careful not to confuse the roller rocker arms.

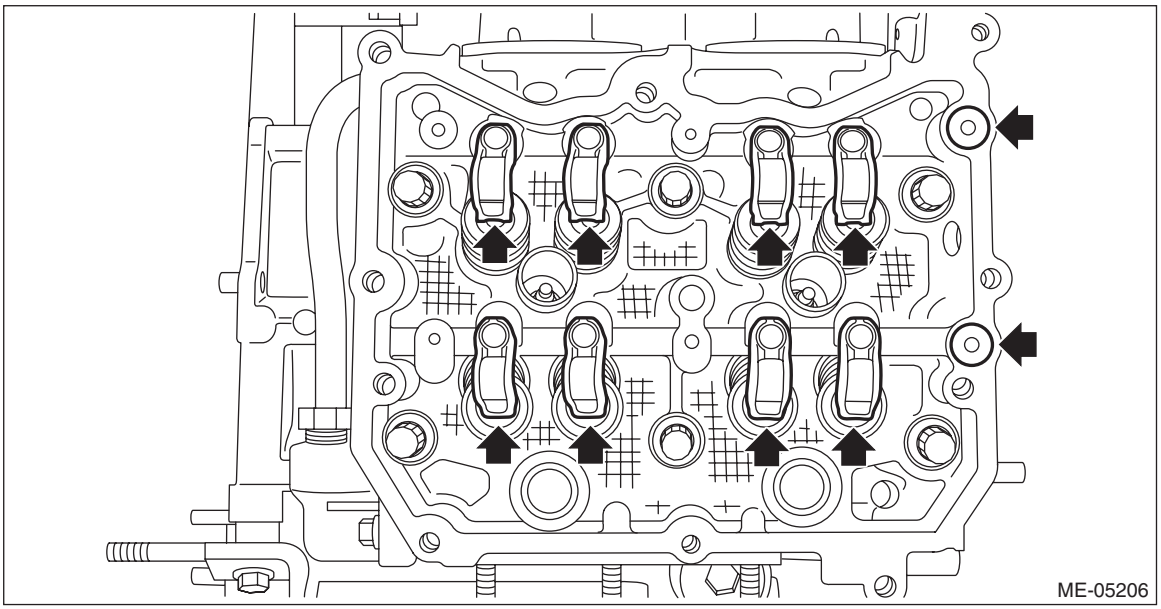

13) Remove the valve shim and the roller rocker arm pivot from cylinder head RH.

NOTE:
Be careful not to confuse the valve shim and the roller rocker arm pivot.

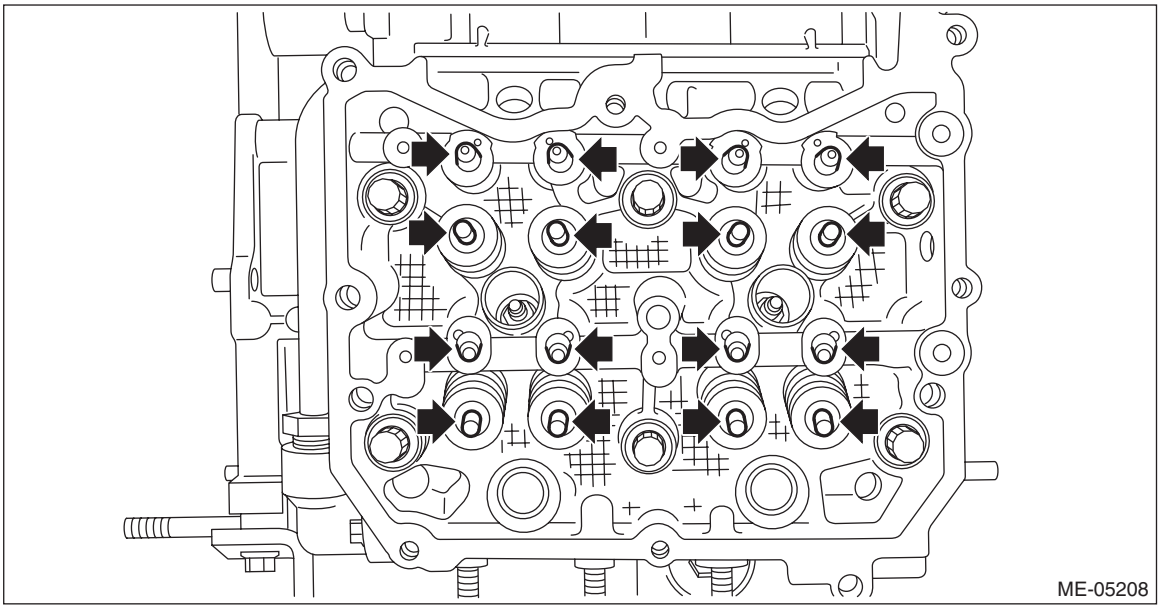

14) Remove the liquid gasket from cam carrier RH and cylinder head RH.

2. CAM CARRIER LH

1) Remove the engine from the vehicle. <Ref. to ME(H4DO(w/o HEV))-55, REMOVAL, Engine Assembly.>
2) Remove the chain cover. <Ref. to ME(H4DO(w/o HEV))-144, REMOVAL, Chain Cover.>
3) Remove the timing chain LH. <Ref. to ME(H4DO(w/o HEV))-165, TIMING CHAIN LH, REMOVAL, Timing Chain Assembly.>
4) Remove the cam sprocket LH. <Ref. to ME(H4DO(w/o HEV))-184, CAM SPROCKET LH, REMOVAL, Cam Sprocket.>

NOTE:
This procedure is required only when disassembling the cam carrier LH.
5) Remove the rocker cover LH. <Ref. to ME(H4DO(w/o HEV))-195, ROCKER COVER LH, REMOVAL, Rocker Cover.>
6) Remove the clip holding the engine harness from cam carrier LH.

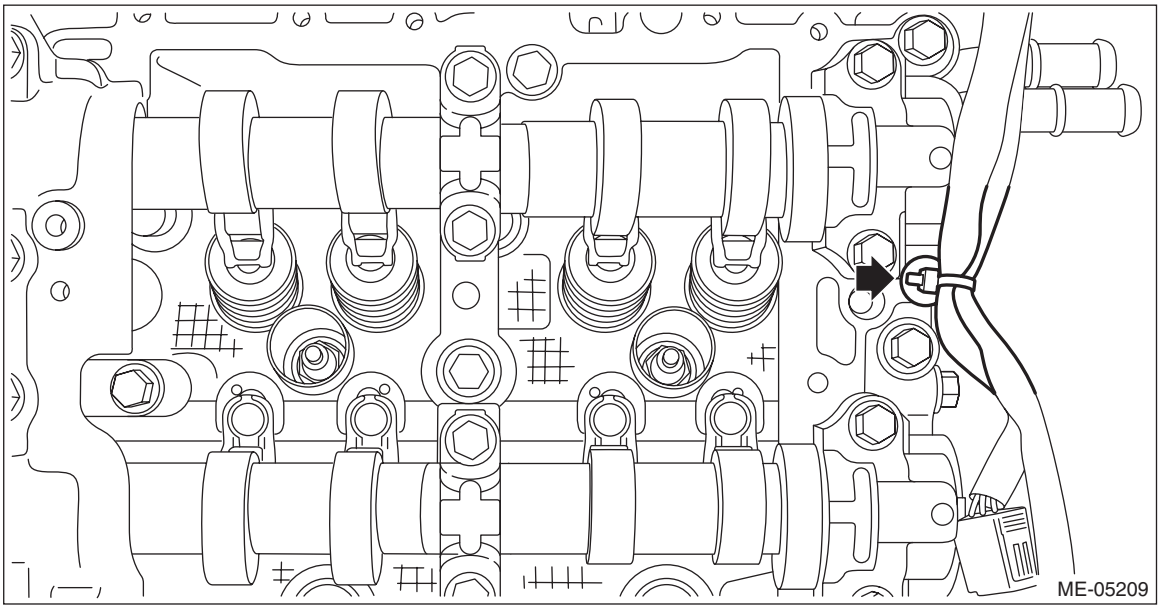

7) Disconnect the preheater hose (A) from the water pipe assembly LH, and remove the water pipe assembly LH.
8) Disconnect the water pipe hose (B) from the oil pan upper.

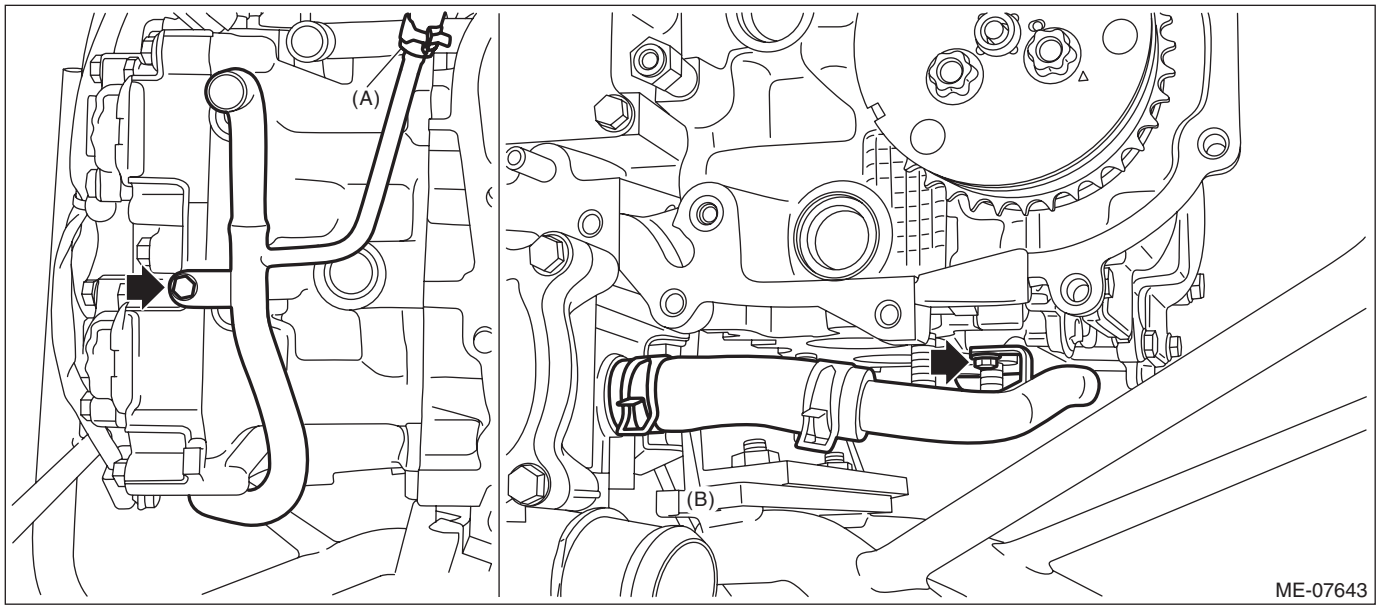

9) Remove the fuel pipe LH and the fuel injector LH.
(1) Disconnect the connector from fuel injector LH.

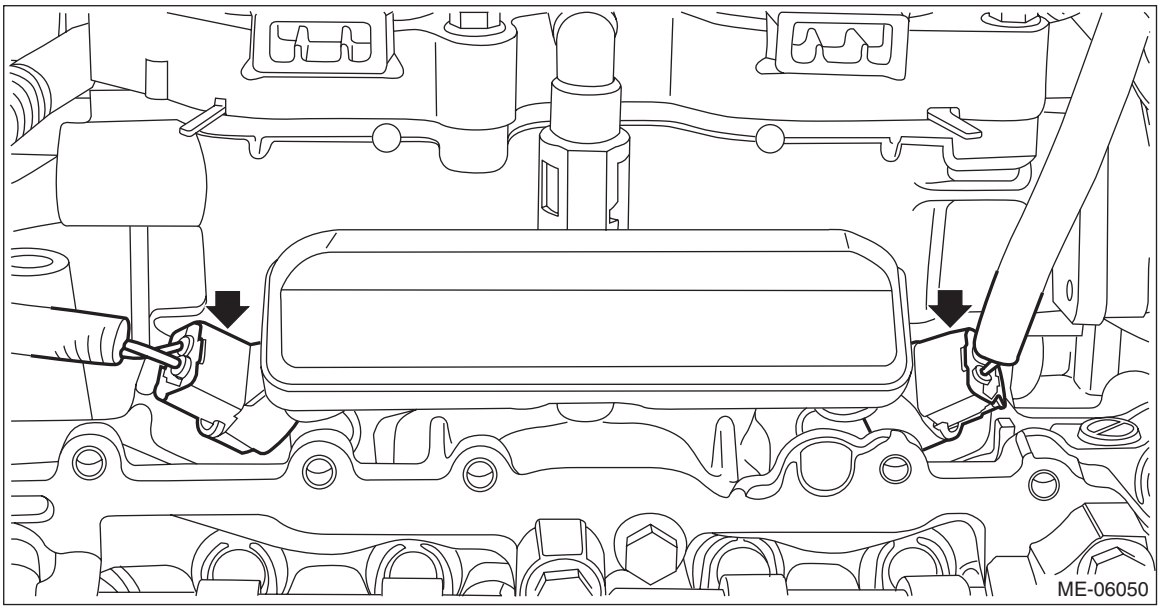

(2) Disconnect the quick connector from fuel pipe LH.

NOTE:
Disconnect the quick connector as shown in the figure.

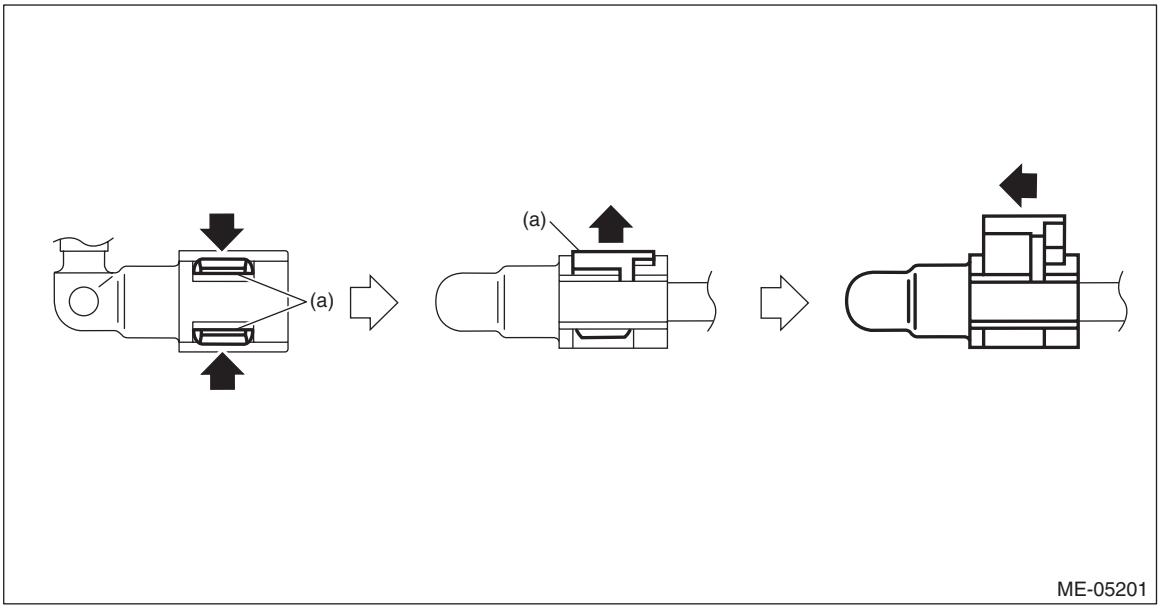

(a) Slider

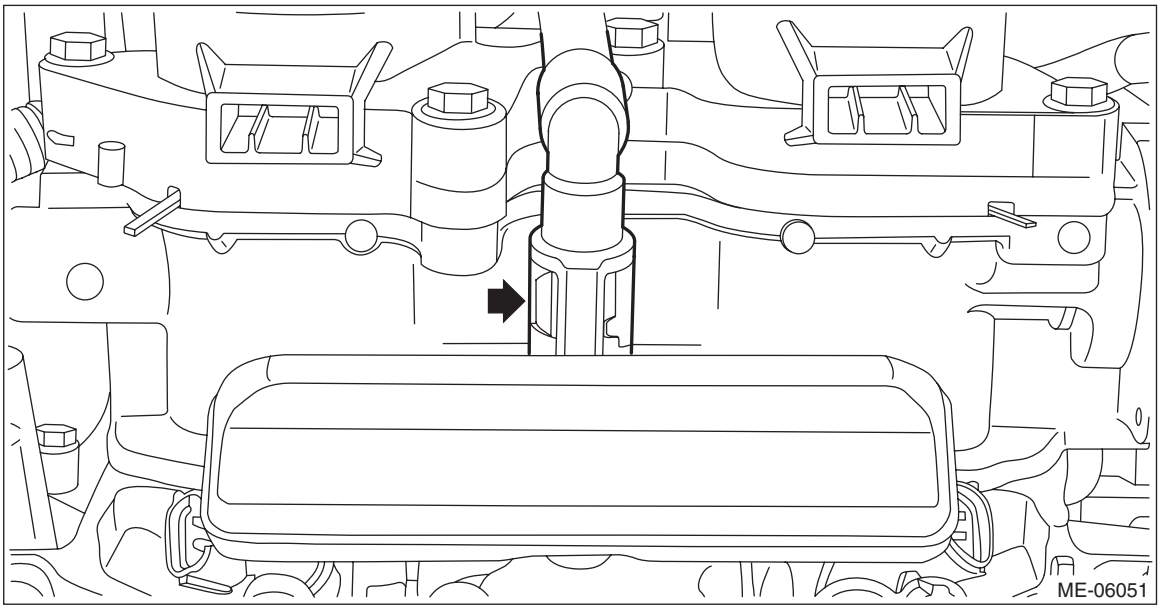

(3) Remove the bolts securing the fuel pipe LH, and remove the fuel pipe LH and the fuel injector LH.

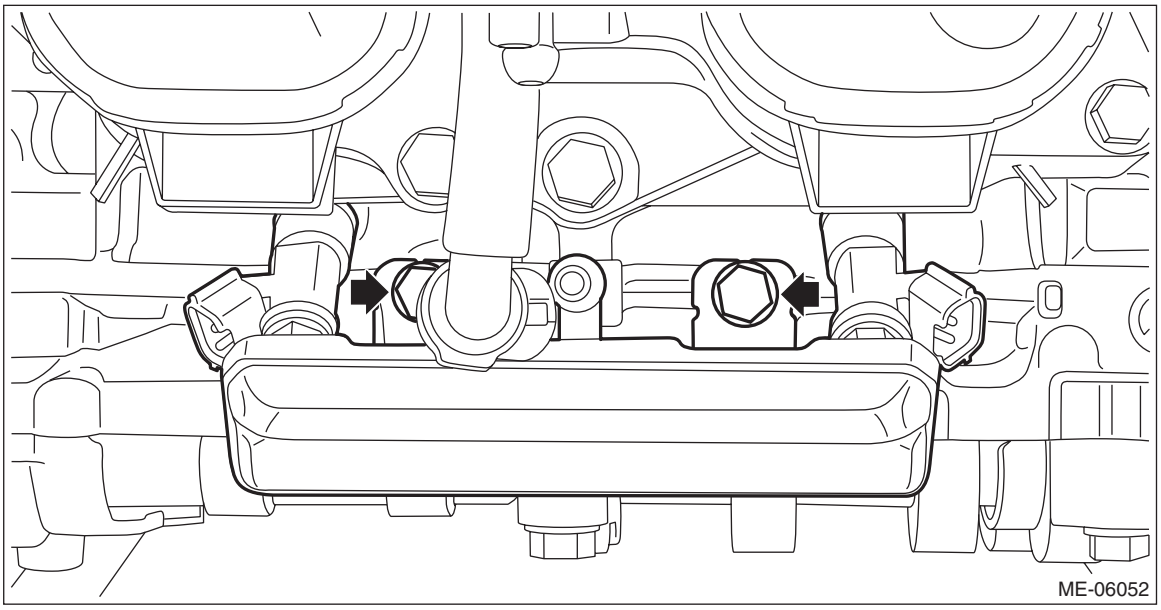

10) Insert the steel rods into ST, and set the engine so that the camshaft LH is facing up.

CAUTION:
• If the engine is standing on one side without inserting the steel rod into ST, engine may lose balance and fall down. Be sure to insert the steel rod into ST to extend the length.
• Use the steel rod with enough strength.
• Be careful not to pinch the engine harness with ST.

ST 499817100 ENGINE STAND

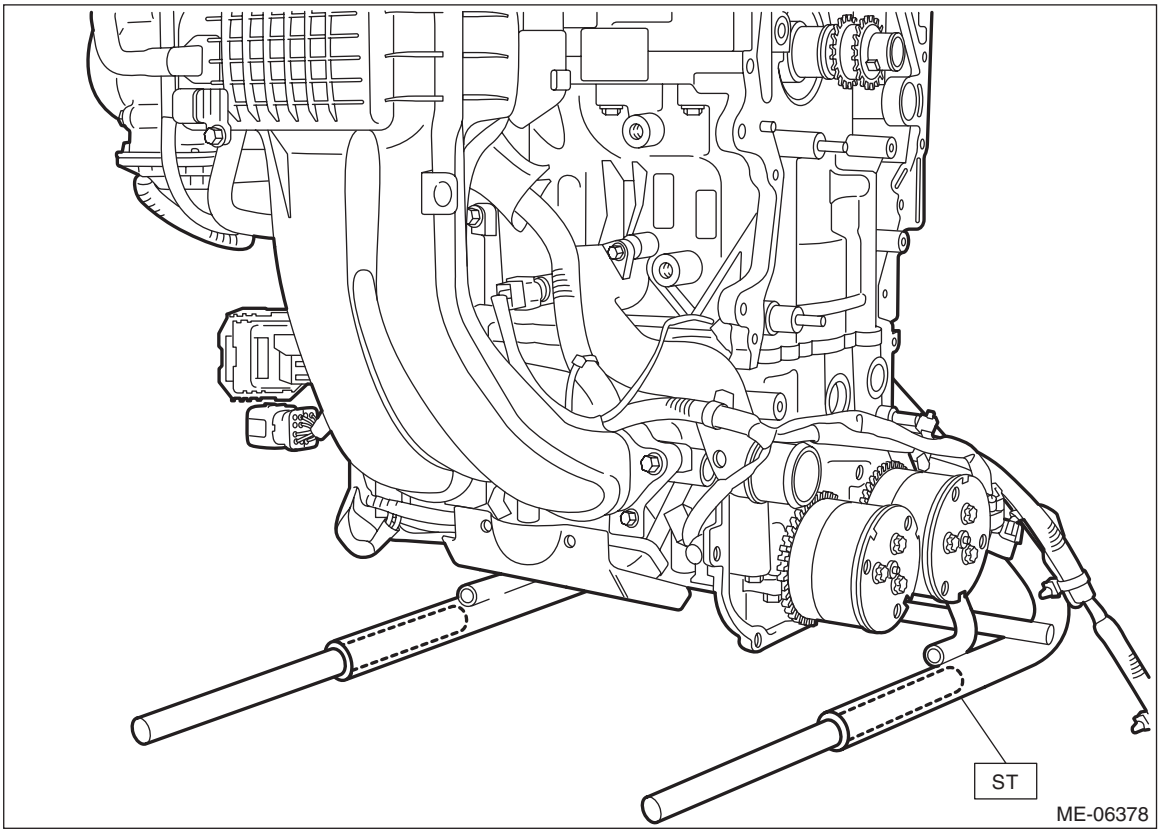

11) Loosen the bolts holding the cam carrier LH equally, a little at a time in numerical sequence as shown in the figure and remove the cam carrier LH.

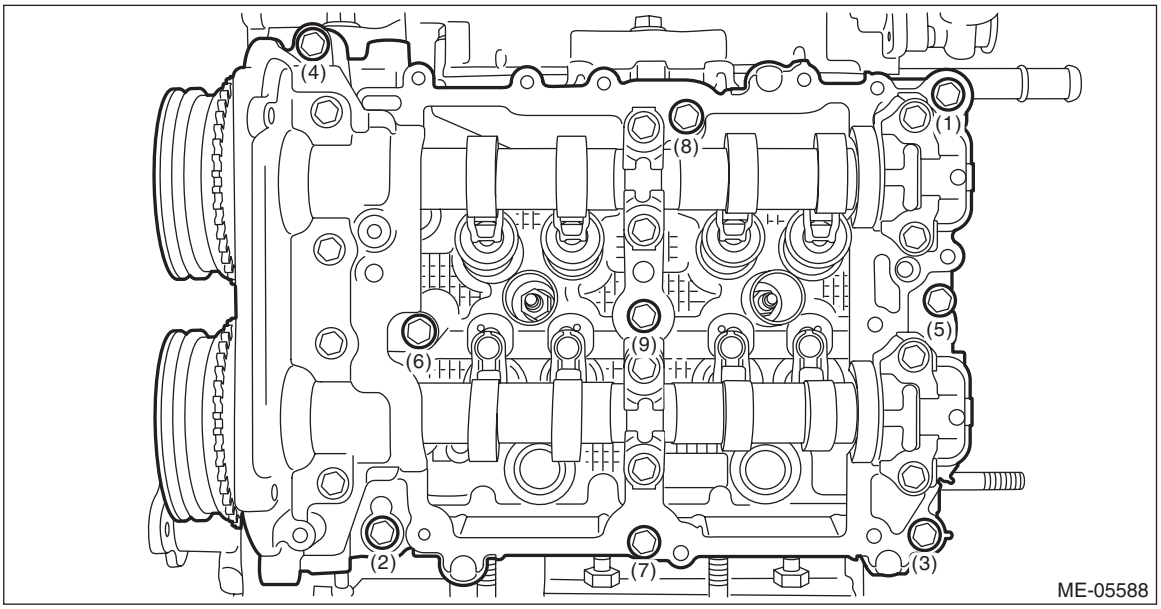

12) Remove the O-ring and the roller rocker arm from cylinder head LH.

NOTE:
Be careful not to confuse the roller rocker arms.

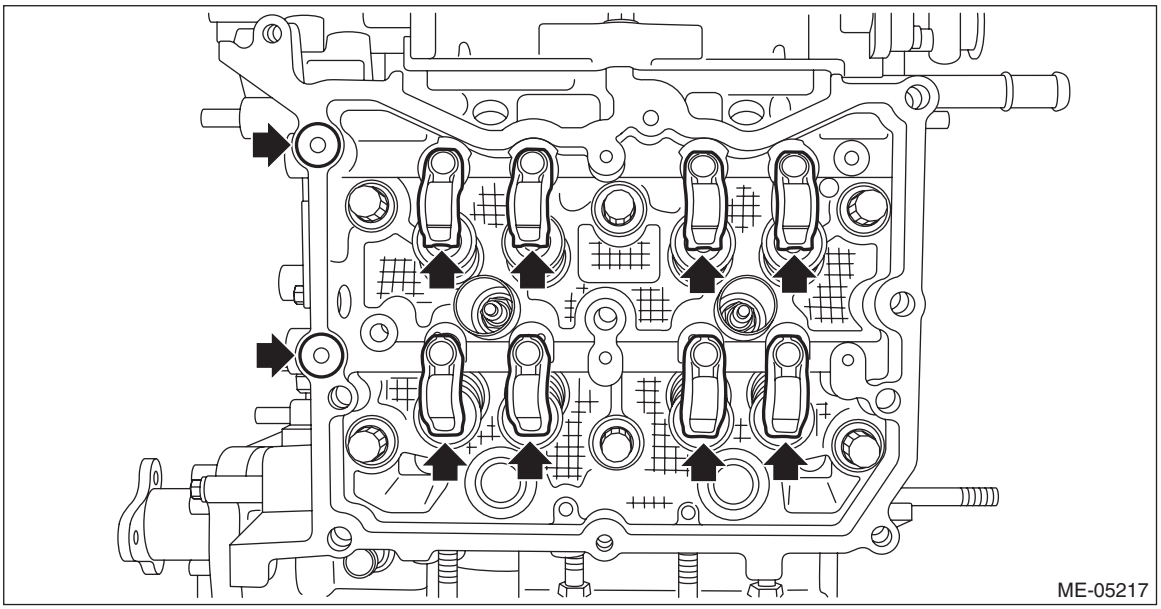

13) Remove the valve shim and the roller rocker arm pivot from cylinder head LH.

NOTE:
Be careful not to confuse the valve shim and the roller rocker arm pivot.

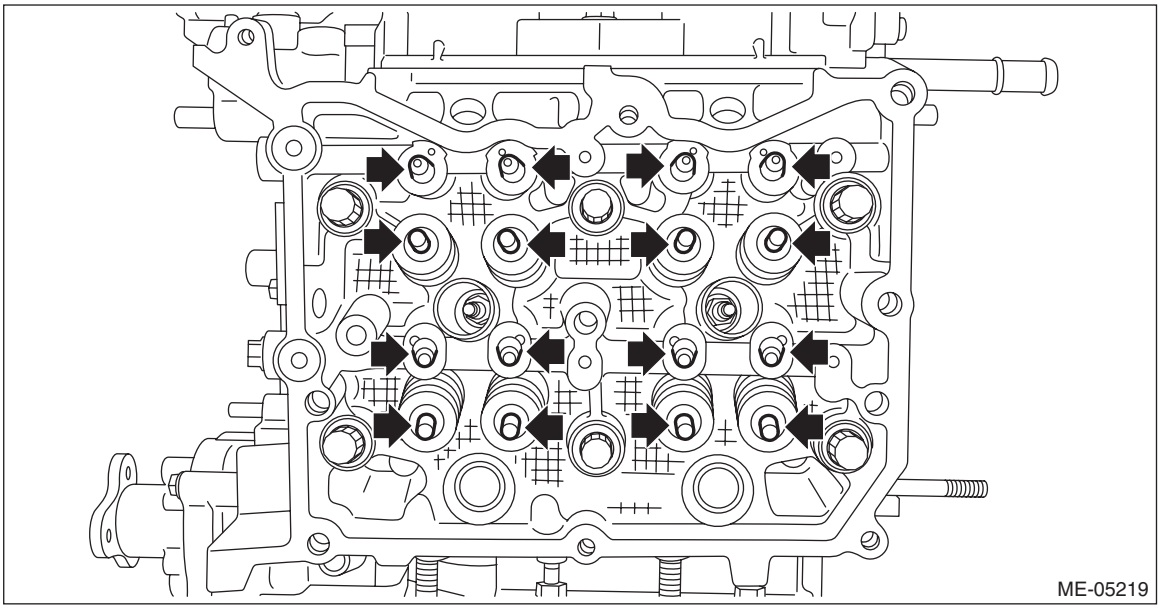

14) Remove the liquid gasket from cam carrier LH and cylinder head LH.

B: INSTALLATION

1. CAM CARRIER RH

1) Insert the steel rods into ST, and set the engine so that the camshaft RH is facing up.

CAUTION:
• If the engine is standing on one side without inserting the steel rod into ST, engine may lose balance and fall down. Be sure to insert the steel rod into ST to extend the length.
• Use the steel rod with enough strength.
• Be careful not to pinch the engine harness with ST.

ST 499817100 ENGINE STAND

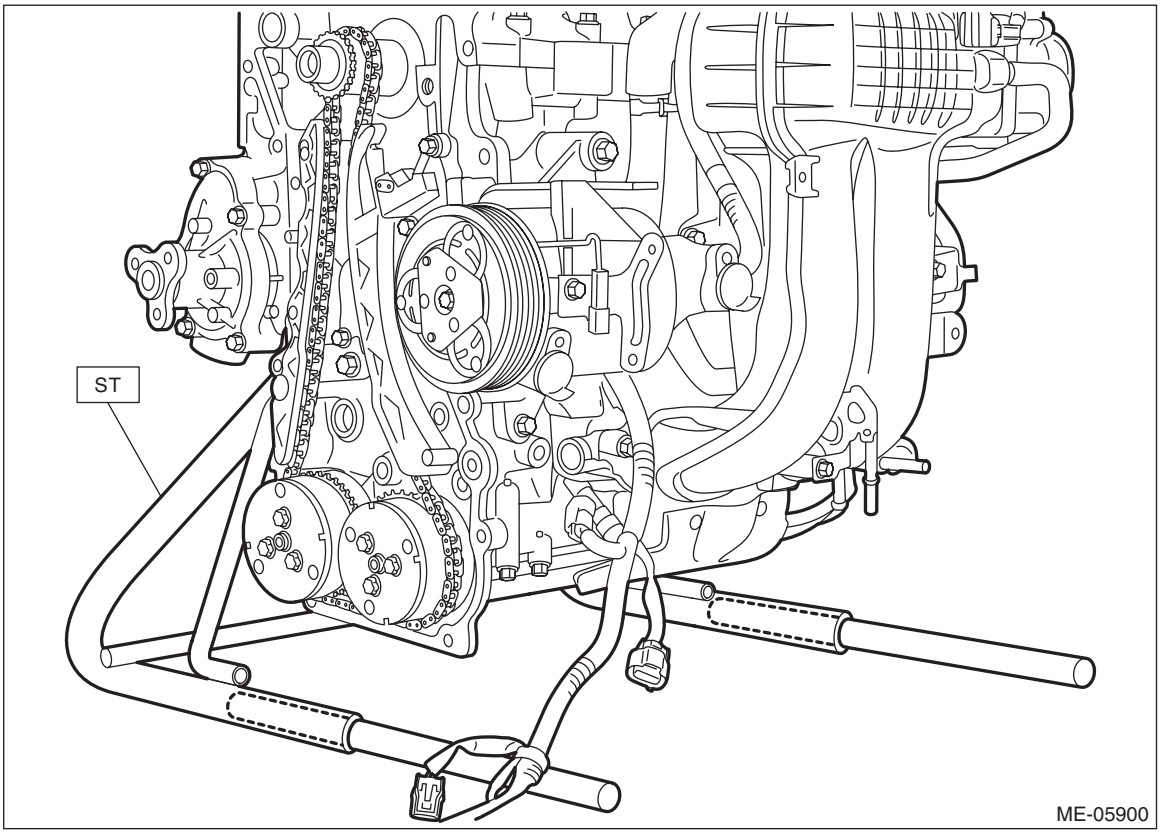

2) Apply engine oil to the valve shim and the roller rocker arm pivot, and install the valve shim and the roller rocker arm pivot to the cylinder head RH.

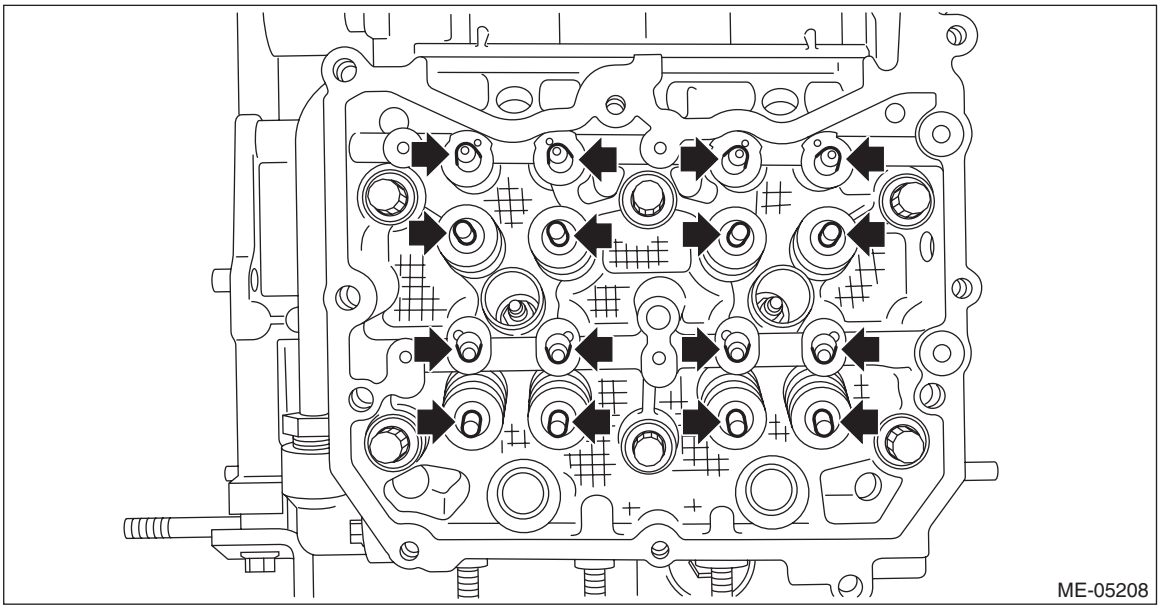

3) Apply engine oil to the O-ring and the roller rocker arm, and install the O-ring and the roller rocker arm to the cylinder head RH.

NOTE:
Use new O-rings.

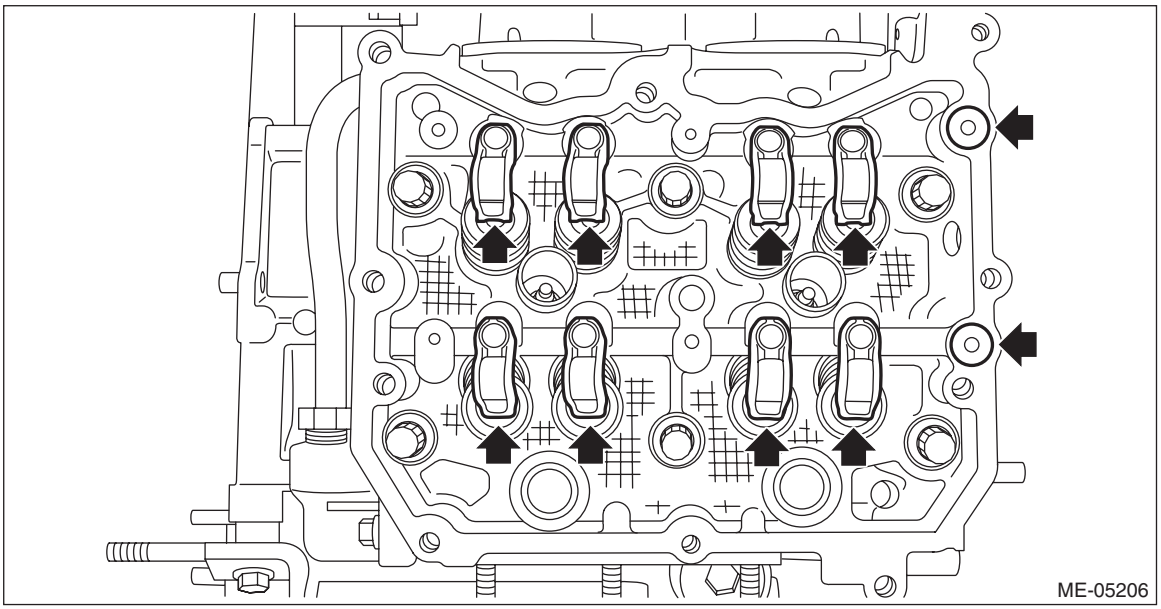

4) Apply liquid gasket to the mating surface of cam carrier RH as shown in the figure.

NOTE:
- Before applying liquid gasket, degrease the old liquid gasket seal surface of the cylinder head RH and cam carrier RH.
- Install within 5 min. after applying liquid gasket.

Liquid gasket:
THREE BOND 1217G (Part No. 0877Y0100) or equivalent

Liquid gasket applying diameter:
3±0.5 mm (0.1181±0.0197 in)

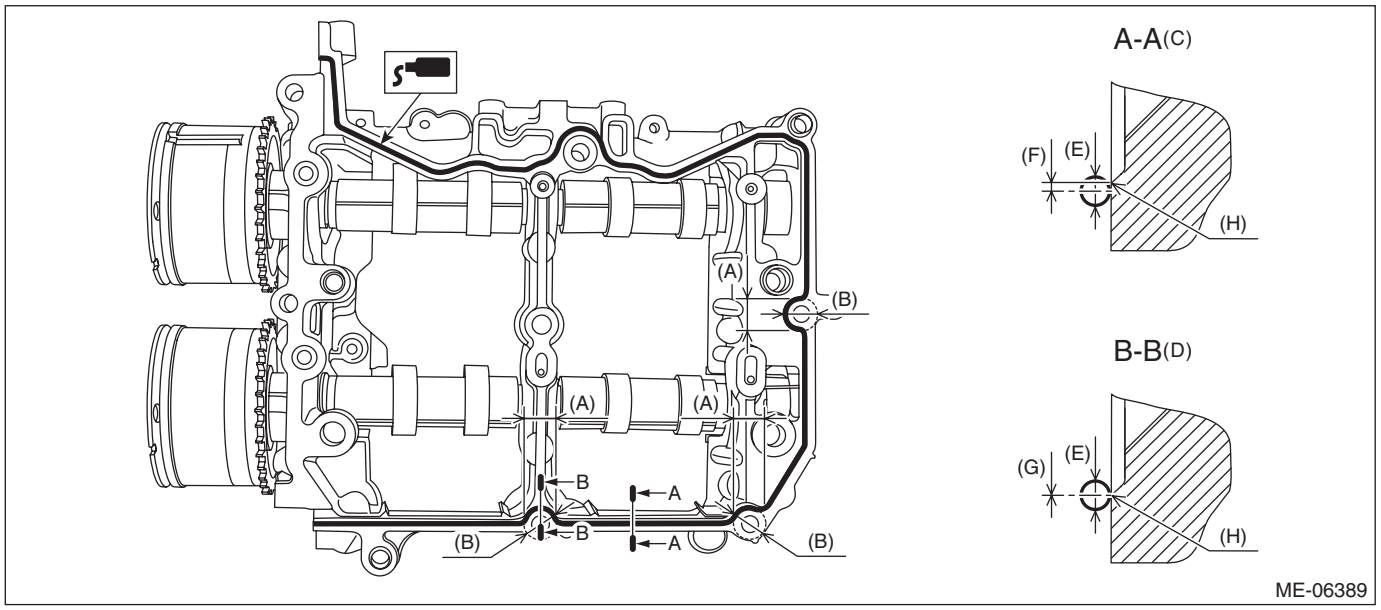

(A)	Range A	(D)	Liquid gasket applying position of mating surfaces of range A	(G)	0±0.5 mm (0±0.0197 in)
(B)	ϕ18 mm (0.7087 in)	(E)	ϕ3±0.5 mm (0.1181±0.0197 in)	(H)	Chamfer edge
(C)	Liquid gasket applying position of mating surfaces other than range A	(F)	1 mm (0.0394 in) or less		

5) Install the cam carrier RH to the cylinder head RH.
   (1) Mount the cam carrier RH, then tighten all bolts with a torque of 18 N·m (1.8 kgf-m, 13.3 ft-lb) in numerical order as shown in the figure.

NOTE:
Set the intake camshaft RH and the exhaust camshaft RH to the zero-lift position.

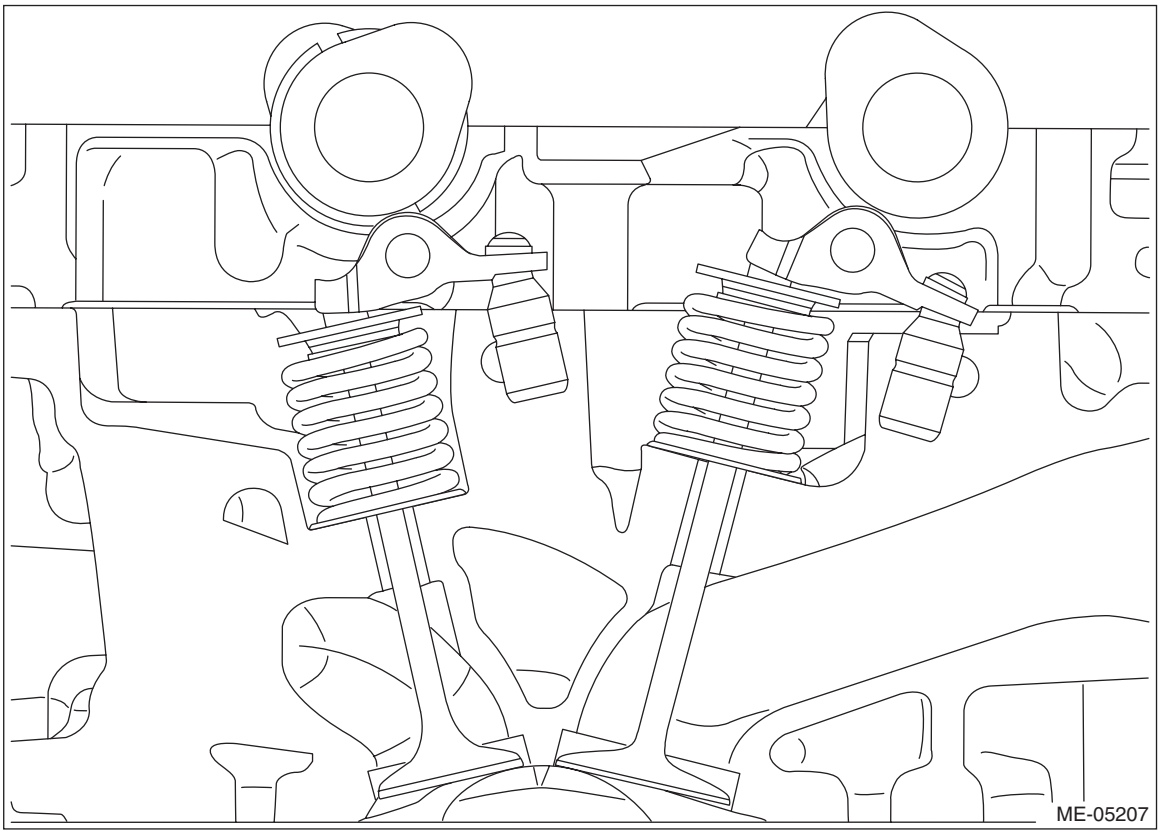

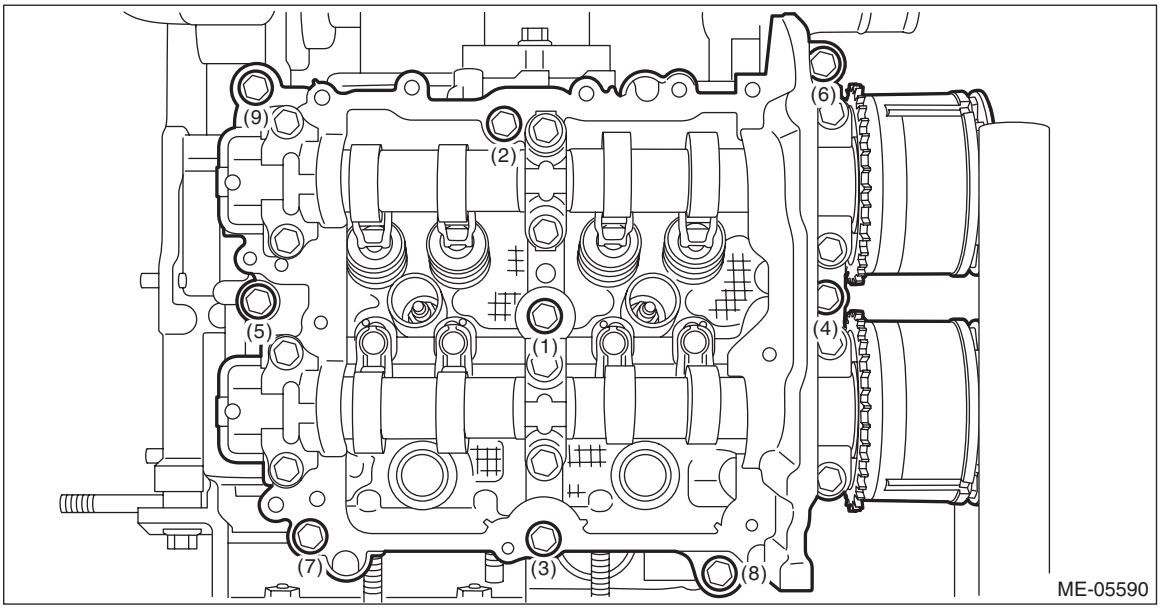

(2) Loosen the bolts (3 places) by 180° in numerical order as shown in the figure.

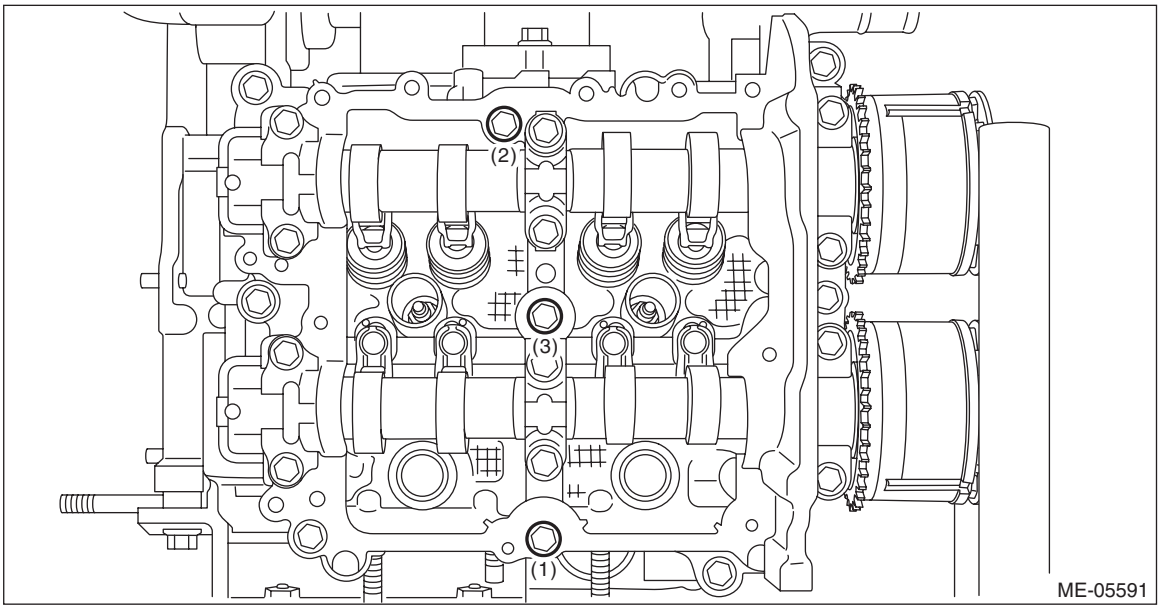

(3) Tighten the bolts (3 places) with a torque of 18 N·m (1.8 kgf-m, 13.3 ft-lb) in numerical order as shown in the figure.

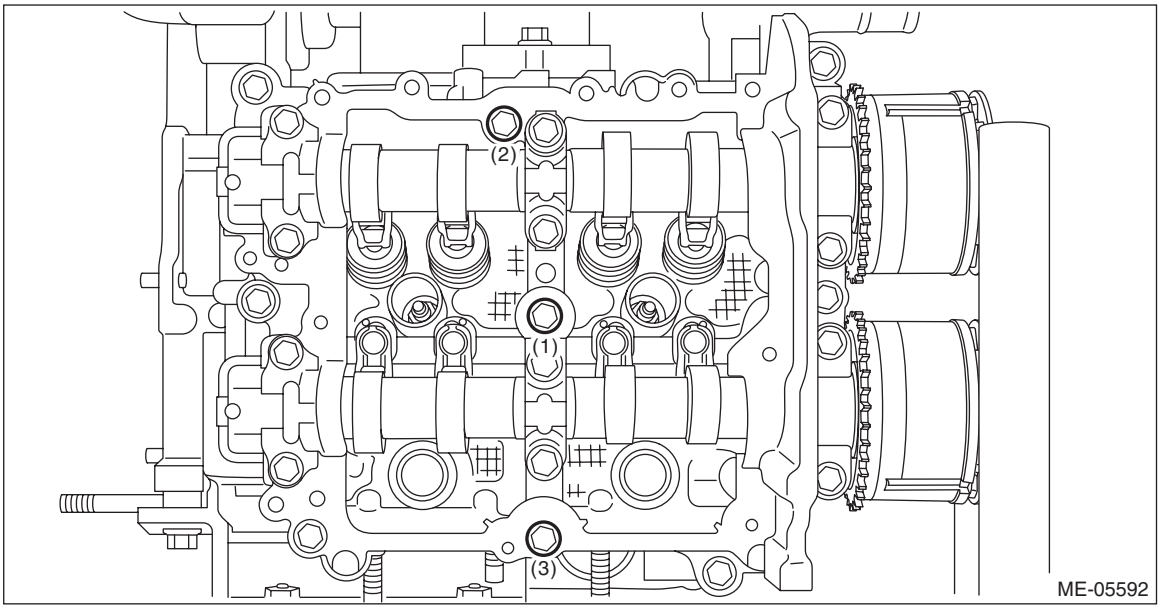

(4) Loosen the bolts (3 places) by 180° in numerical order as shown in the figure.

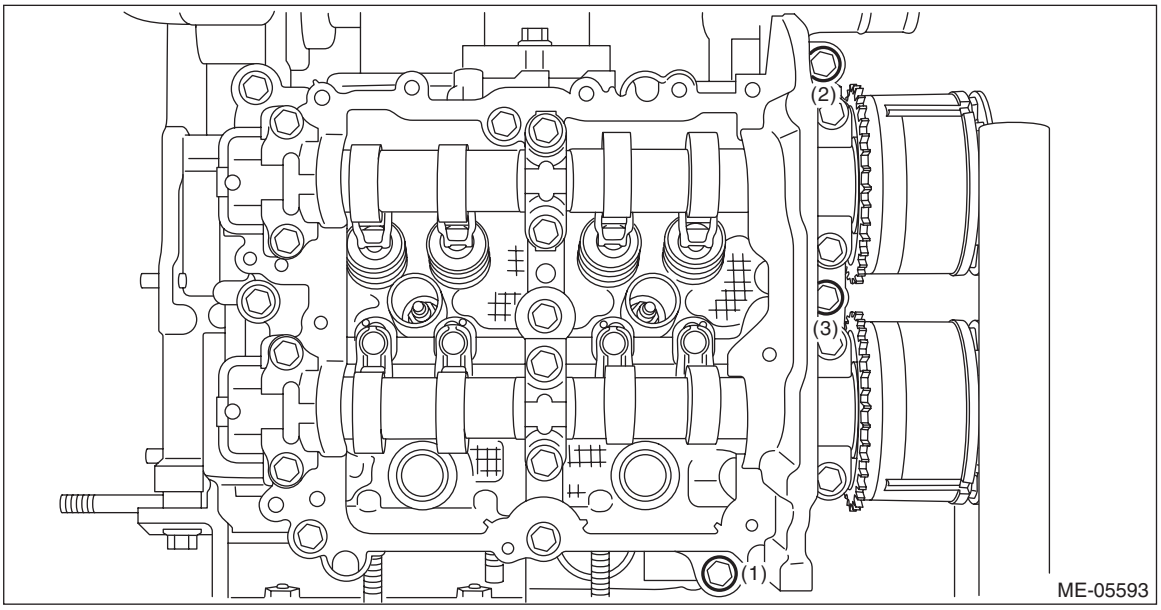

(5) Tighten the bolts (3 places) with a torque of 18 N·m (1.8 kgf-m, 13.3 ft-lb) in numerical order as shown in the figure.

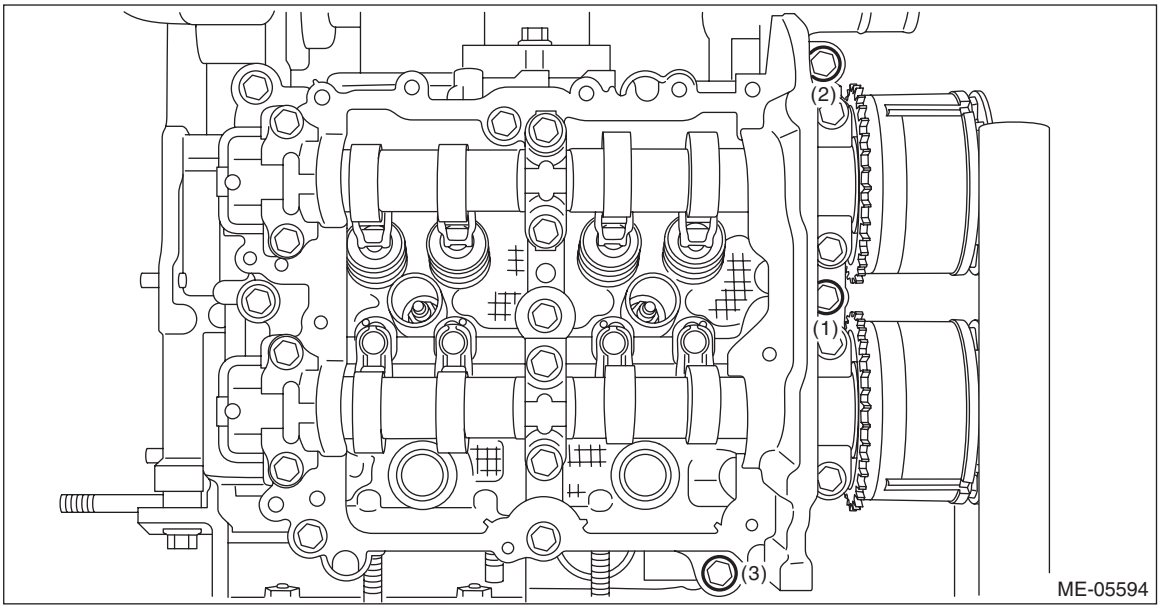

(6) Loosen the bolts (3 places) by 180° in numerical order as shown in the figure.

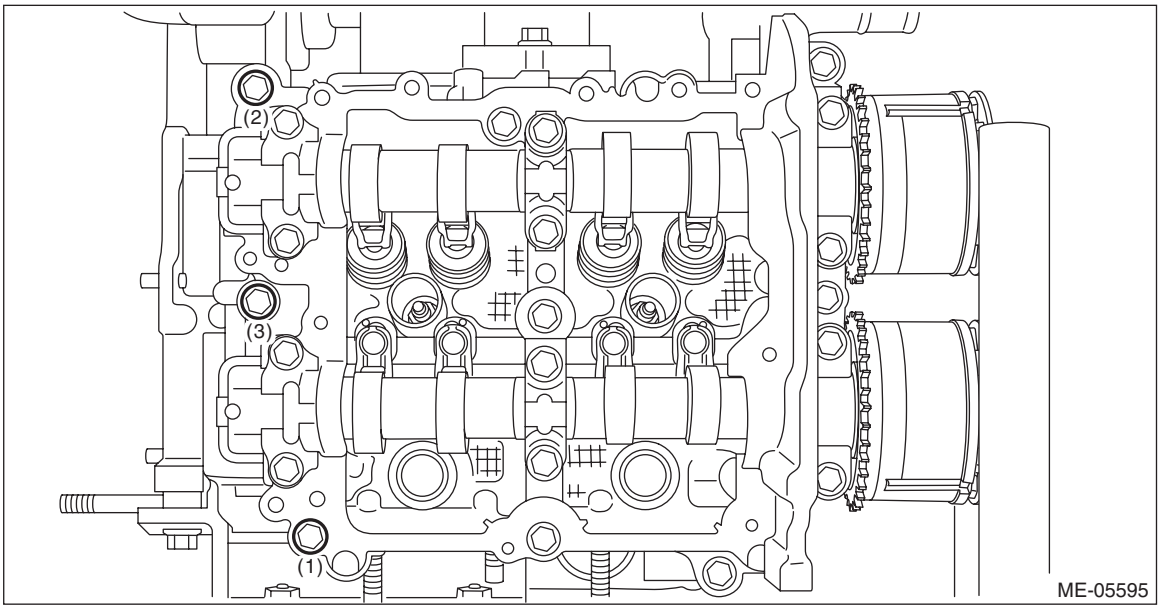

(7) Tighten the bolts (3 places) with a torque of 18 N·m (1.8 kgf-m, 13.3 ft-lb) in numerical order as shown in the figure.

NOTE:
After tightening, if the liquid gasket is squeezed out onto the seal surface of the chain cover, completely remove any squeezed-out liquid gasket.

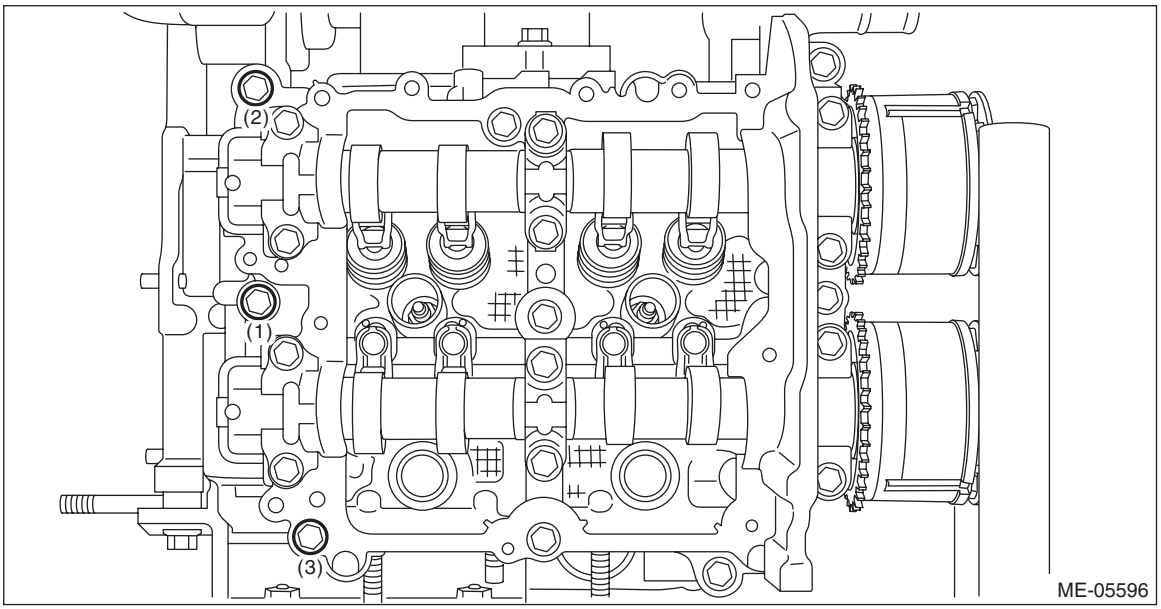

6) Set the part so that the intake manifold is on the upper side.
7) Install the cam sprocket RH. <Ref. to ME(H4DO(w/o HEV))-186, CAM SPROCKET RH, INSTALLATION, Cam Sprocket.>

NOTE:
This procedure is required only when the cam carrier RH is removed for disassembly.
8) Check the cam clearance. <Ref. to ME(H4DO(w/o HEV))-51, WHEN TIMING CHAIN ASSEMBLY IS REMOVED, INSPECTION, Cam Clearance.>
9) Install the timing chain RH. <Ref. to ME(H4DO(w/o HEV))-177, TIMING CHAIN RH, INSTALLATION, Timing Chain Assembly.>
10) Install the fuel pipe RH and the fuel injector RH.
(1) Install the fuel pipe RH and the fuel injector RH, and install the bolts which secure the fuel pipe RH.

NOTE:
• Use new O-rings, rubbers, seal rings, and fuel injector holder.
• Refer to “Fuel Injector” for removal and installation procedure of fuel injector holder. <Ref. to FU(H4DO(HEV))-70, REMOVAL, Fuel Injector.> <Ref. to FU(H4DO(HEV))-72, INSTALLATION, Fuel Injector.>

Tightening torque:
6.4 N·m (0.7 kgf-m, 4.7 ft-lb)

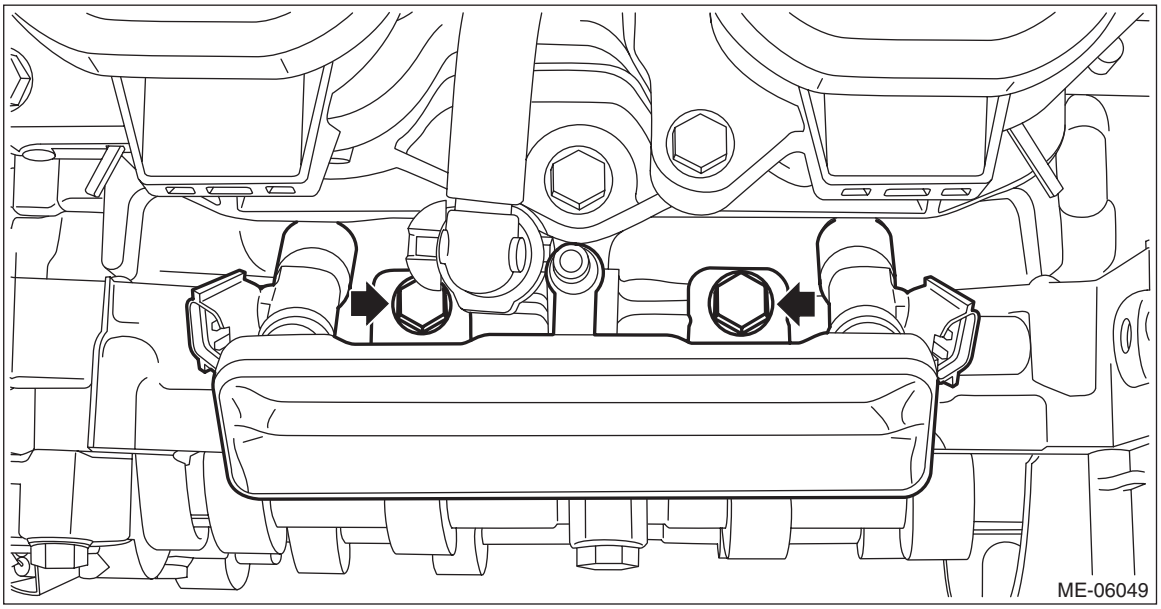

(2) Connect the quick connector to the fuel pipe RH.

CAUTION:
• Check that there is no damage or dust on the quick connector. If necessary, clean the seal surface of the pipe.
• When connecting the quick connector, make sure to insert the pipe all the way in before locking the slider.
• When it is difficult to lock the slider, check that the pipe is fully inserted.
• Make sure that the quick connector is securely connected.

NOTE:
Connect the quick connector as shown in the figure.

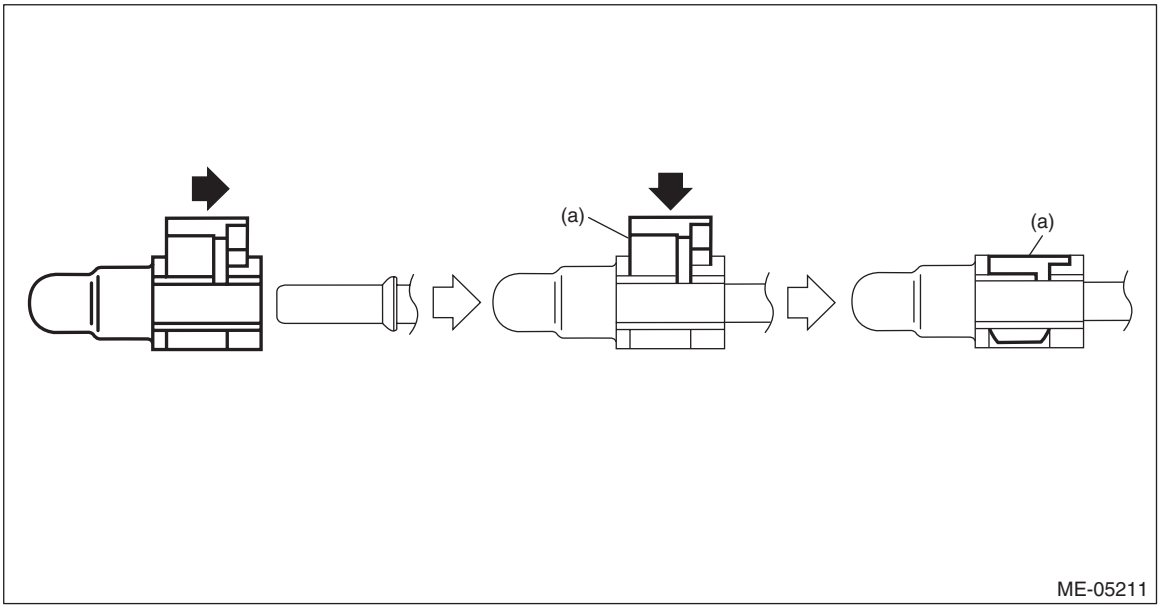

(a) Slider

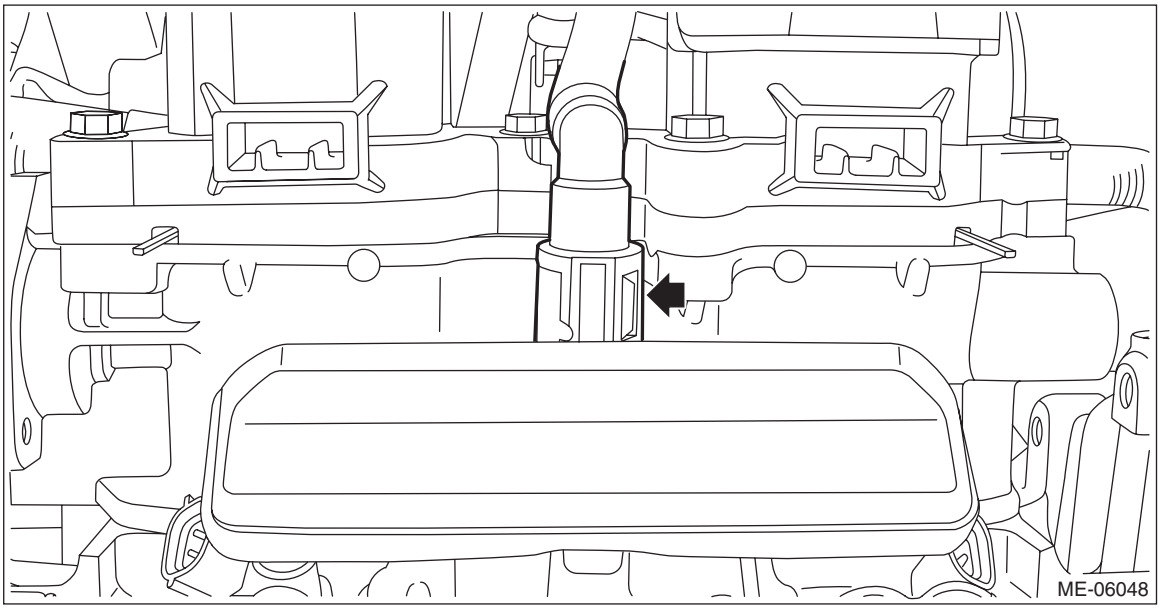

(3) Connect the connectors to the fuel injector RH.

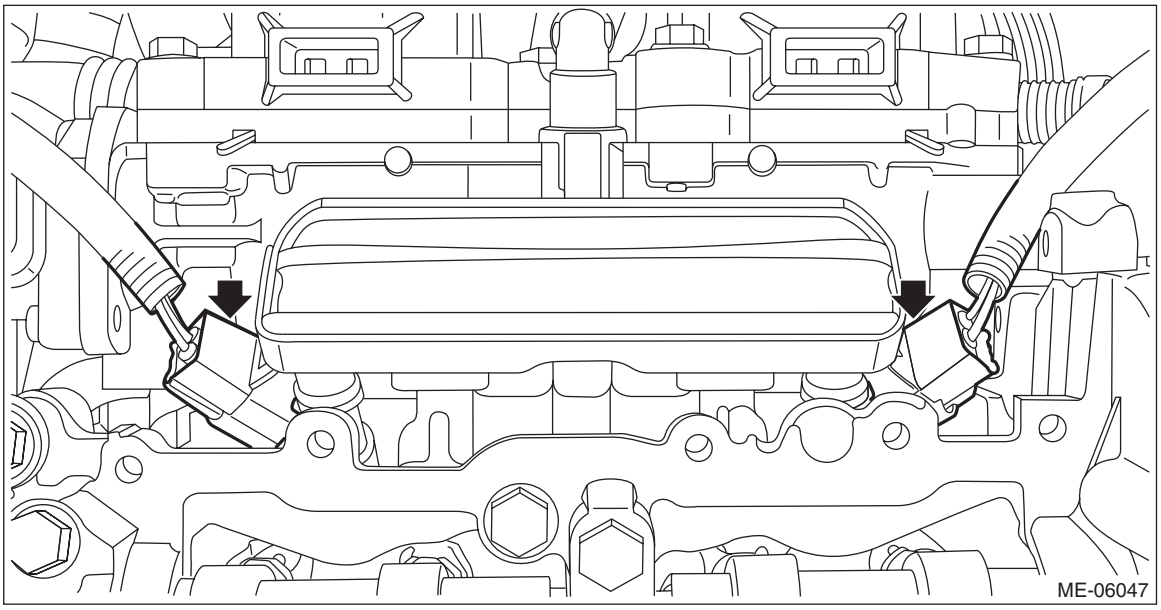

11) Connect the water pipe hose to the oil pan upper, and install the water pipe assembly RH. (CVT model)

Tightening torque:
6.4 N·m (0.7 kgf-m, 4.7 ft-lb)

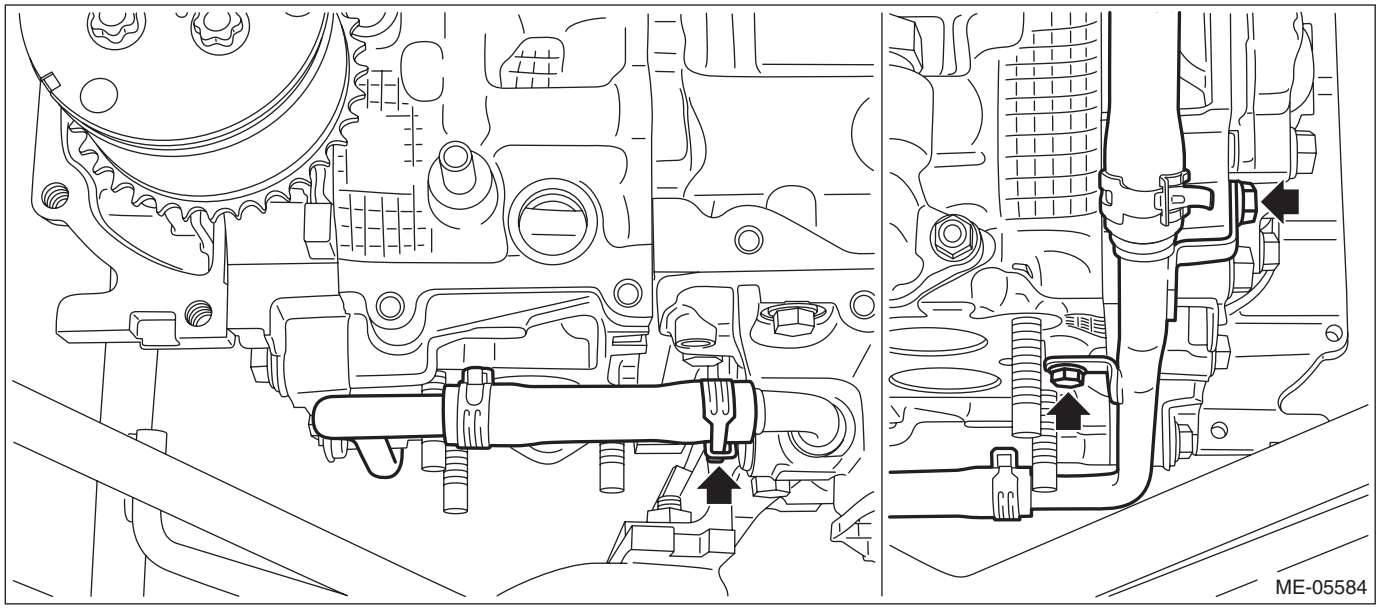

12) Connect the engine coolant inlet hose to the EGR cooler. (HEV model)

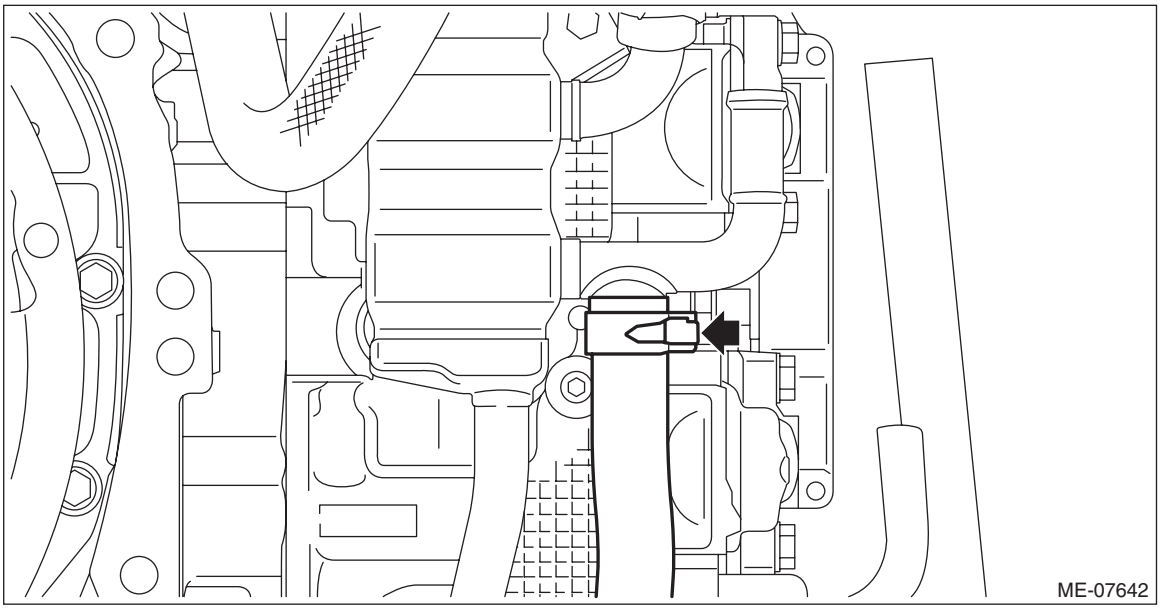

13) Secure the engine harness to the cam carrier RH with a clip.

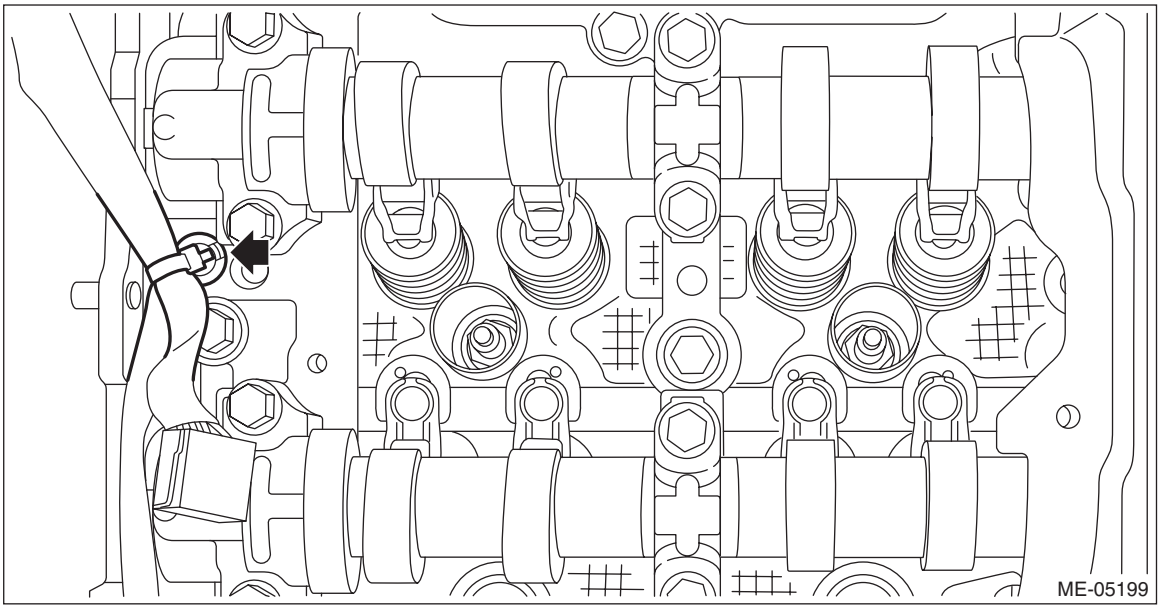

14) Install the rocker cover RH. <Ref. to ME(H4DO(w/o HEV))-199, ROCKER COVER RH, INSTALLATION, Rocker Cover.>
15) Install the chain cover. <Ref. to ME(H4DO(w/o HEV))-151, INSTALLATION, Chain Cover.>
16) Install the engine to the vehicle. <Ref. to ME(H4DO(w/o HEV))-86, INSTALLATION, Engine Assembly.>

2. CAM CARRIER LH

1) Insert the steel rods into ST, and set the engine so that the camshaft LH is facing up.

CAUTION:
• If the engine is standing on one side without inserting the steel rod into ST, engine may lose balance and fall down. Be sure to insert the steel rod into ST to extend the length.
• Use the steel rod with enough strength.
• Be careful not to pinch the engine harness with ST.

ST 499817100 ENGINE STAND

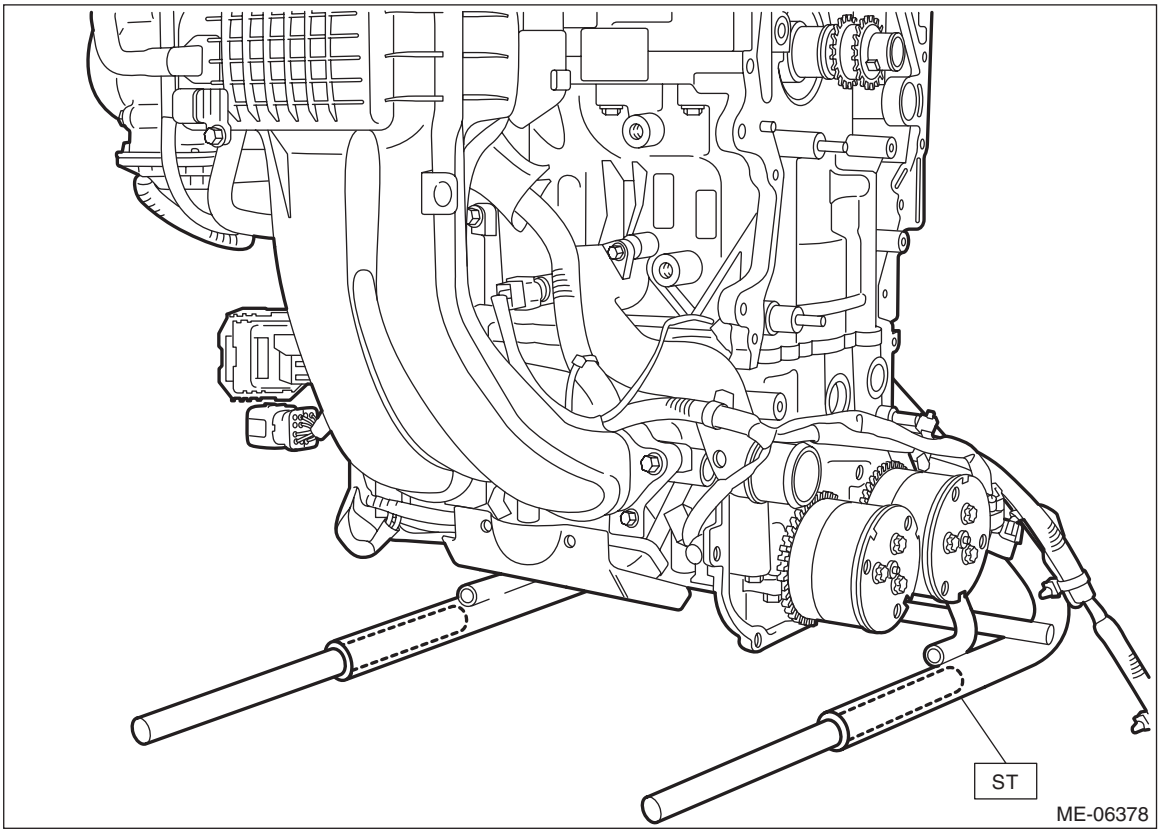

2) Apply engine oil to the valve shim and the roller rocker arm pivot, and install the valve shim and the roller rocker arm pivot to the cylinder head LH.

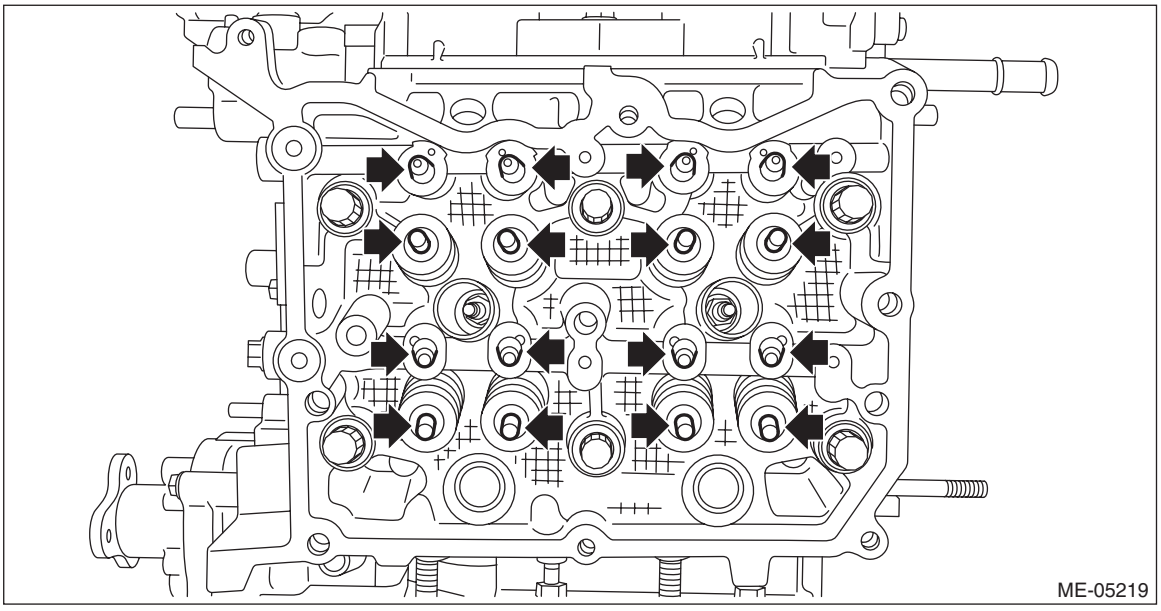

3) Apply engine oil to the O-ring and the roller rocker arm, and install the O-ring and the roller rocker arm to the cylinder head LH.

NOTE:
Use new O-rings.

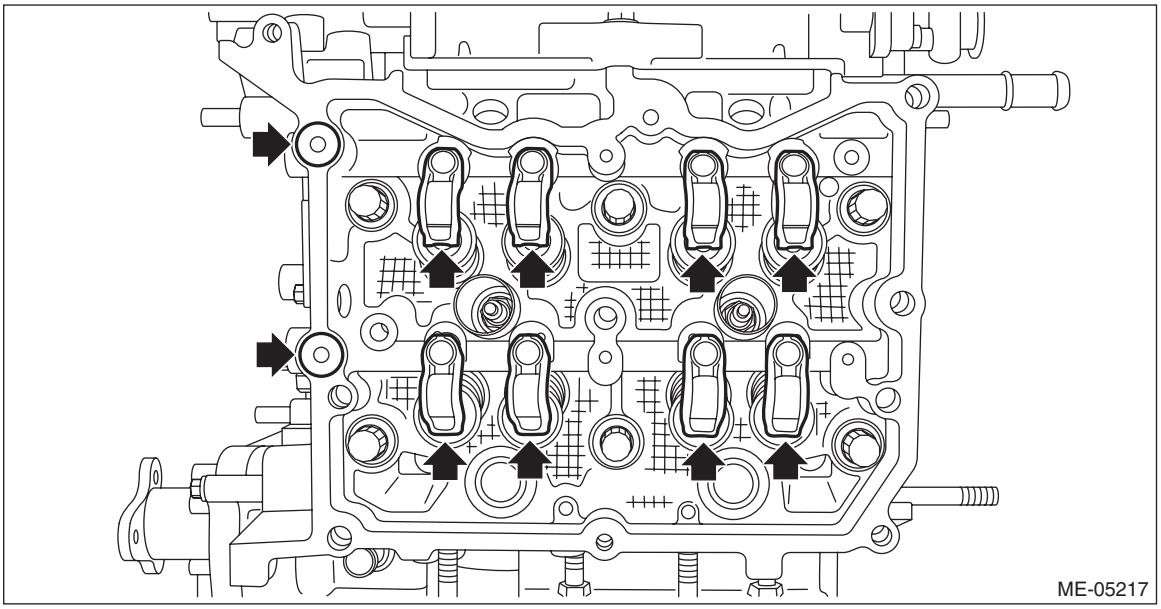

4) Apply liquid gasket to the mating surface of cam carrier LH as shown in the figure.

NOTE:
- Before applying liquid gasket, degrease the old liquid gasket seal surface of the cylinder head LH and cam carrier LH.
- Install within 5 min. after applying liquid gasket.

Liquid gasket:
THREE BOND 1217G (Part No. 0877Y0100) or equivalent

Liquid gasket applying diameter:
3±0.5 mm (0.1181±0.0197 in)

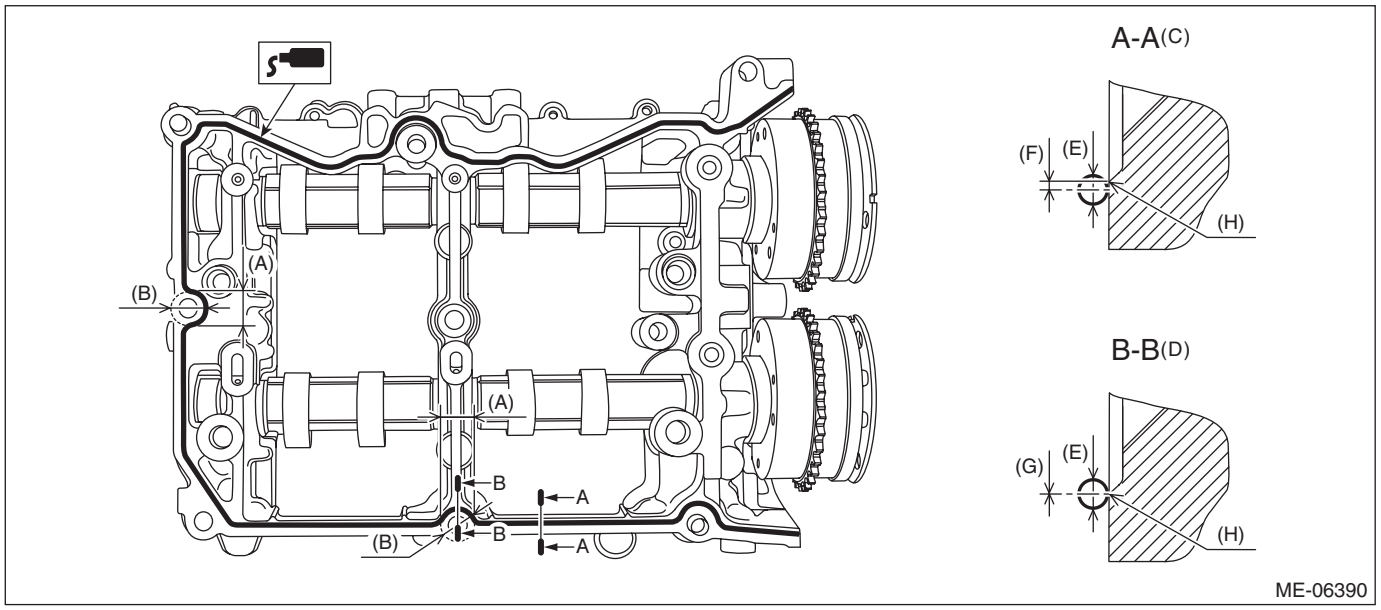

(A)	Range A	(D)	Liquid gasket applying position of mating surfaces of range A	(G)	0±0.5 mm (0±0.0197 in)
(B)	ϕ18 mm (0.7087 in)	(E)	ϕ3±0.5 mm (0.1181±0.0197 in)	(H)	Chamfer edge
(C)	Liquid gasket applying position of mating surfaces other than range A	(F)	1 mm (0.0394 in) or less		

5) Install the cam carrier LH to the cylinder head LH.
   (1) Mount the cam carrier LH, then tighten all bolts with a torque of 18 N·m (1.8 kgf-m, 13.3 ft-lb) in numerical order as shown in the figure.

NOTE:
Set the intake camshaft LH and the exhaust camshaft LH to the zero-lift position.

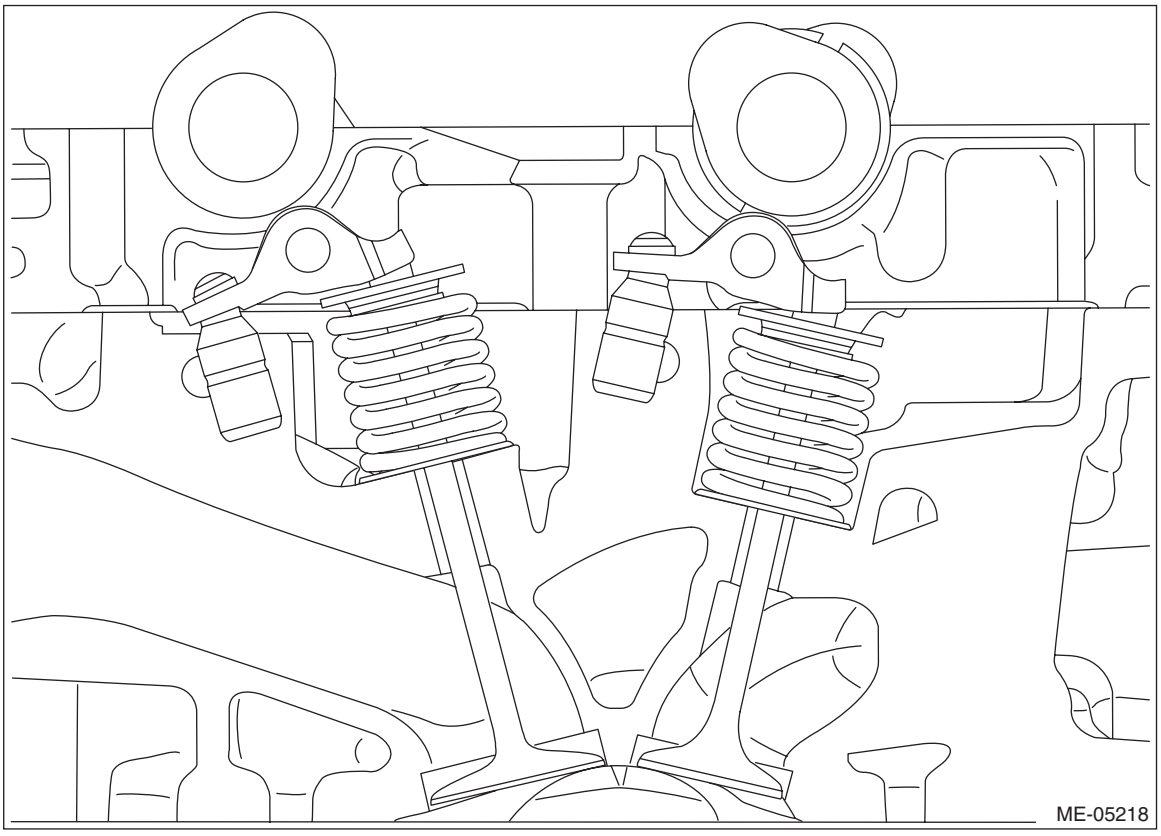

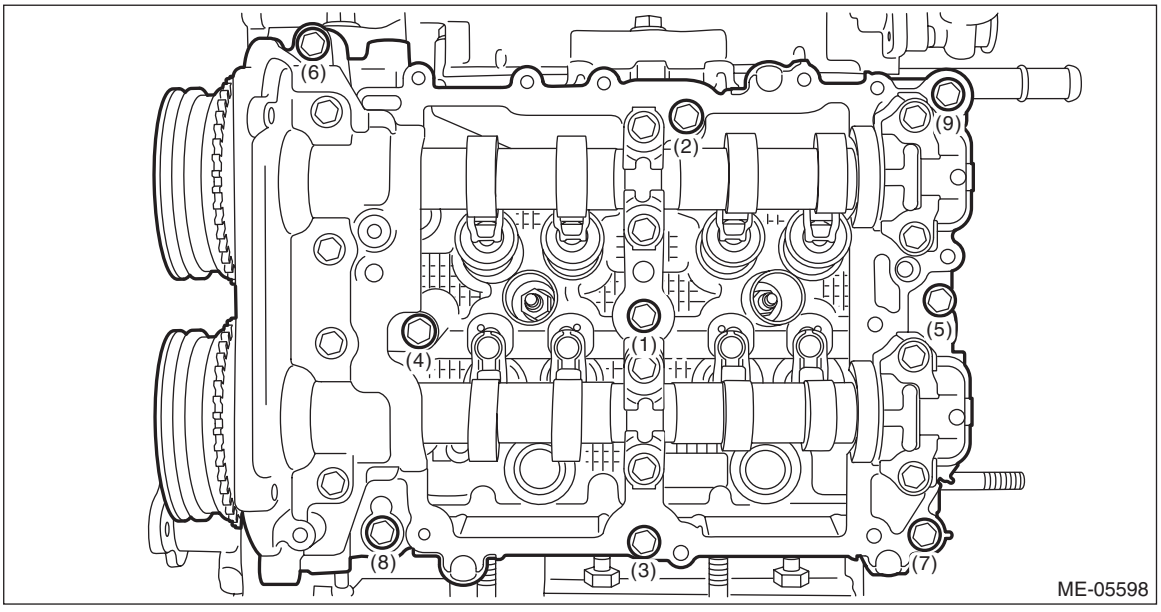

(2) Loosen the bolts (3 places) by 180° in numerical order as shown in the figure.

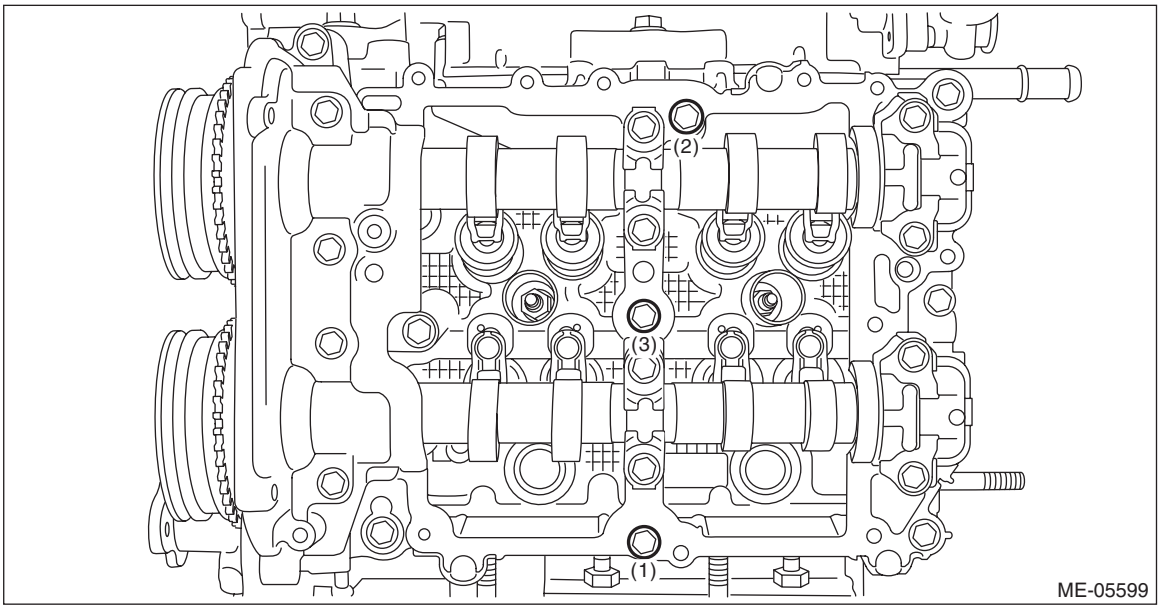

(3) Tighten the bolts (3 places) with a torque of 18 N·m (1.8 kgf-m, 13.3 ft-lb) in numerical order as shown in the figure.

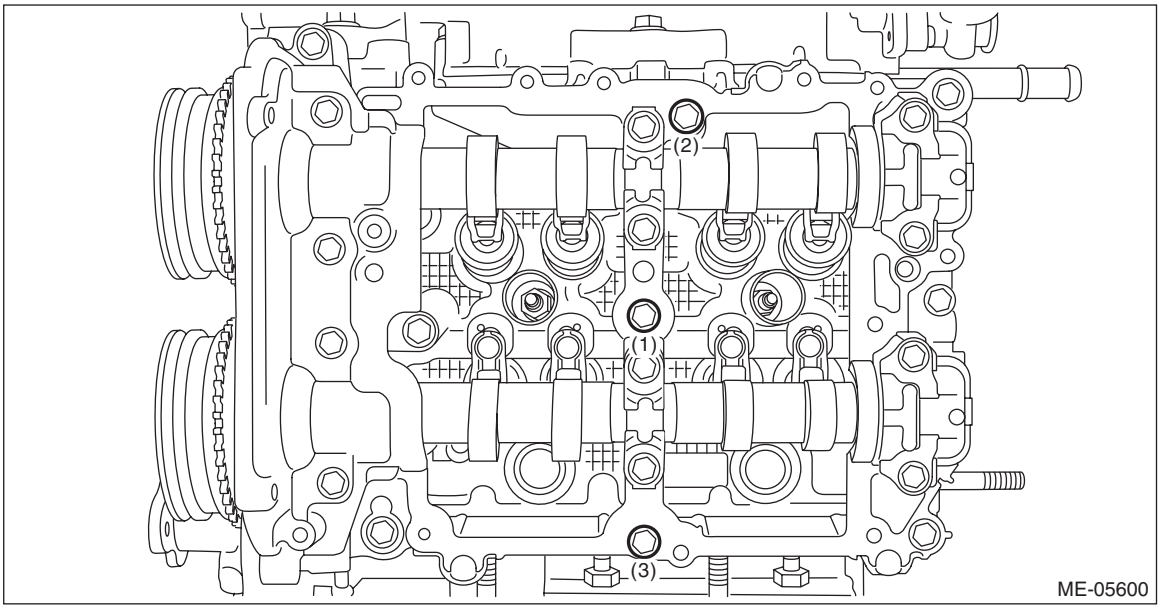

(4) Loosen the bolts (3 places) by 180° in numerical order as shown in the figure.

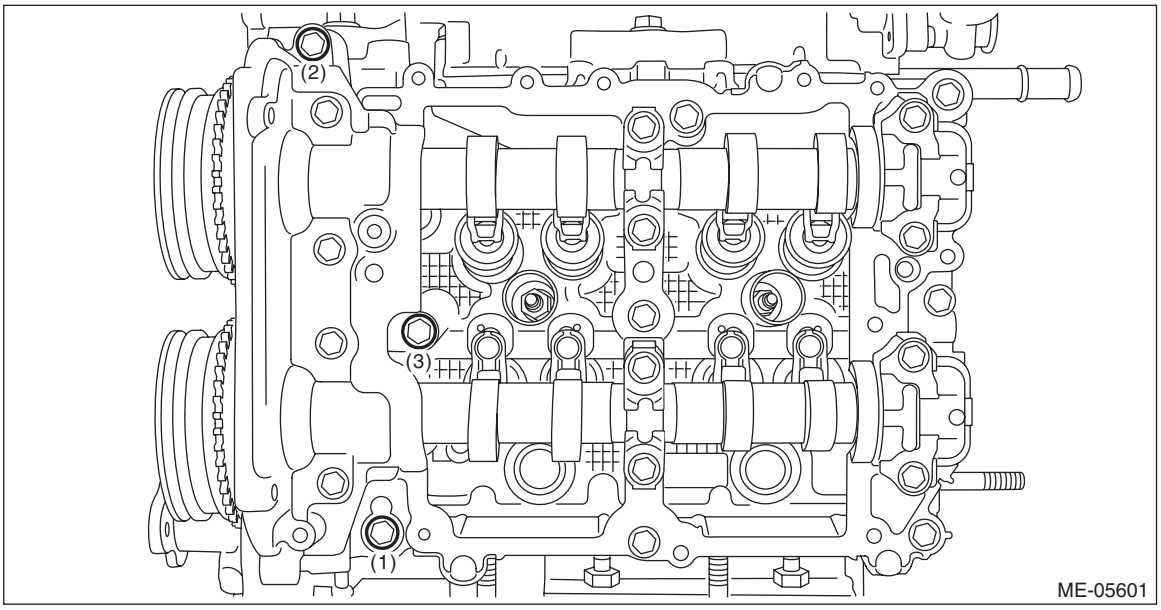

(5) Tighten the bolts (3 places) with a torque of 18 N·m (1.8 kgf-m, 13.3 ft-lb) in numerical order as shown in the figure.

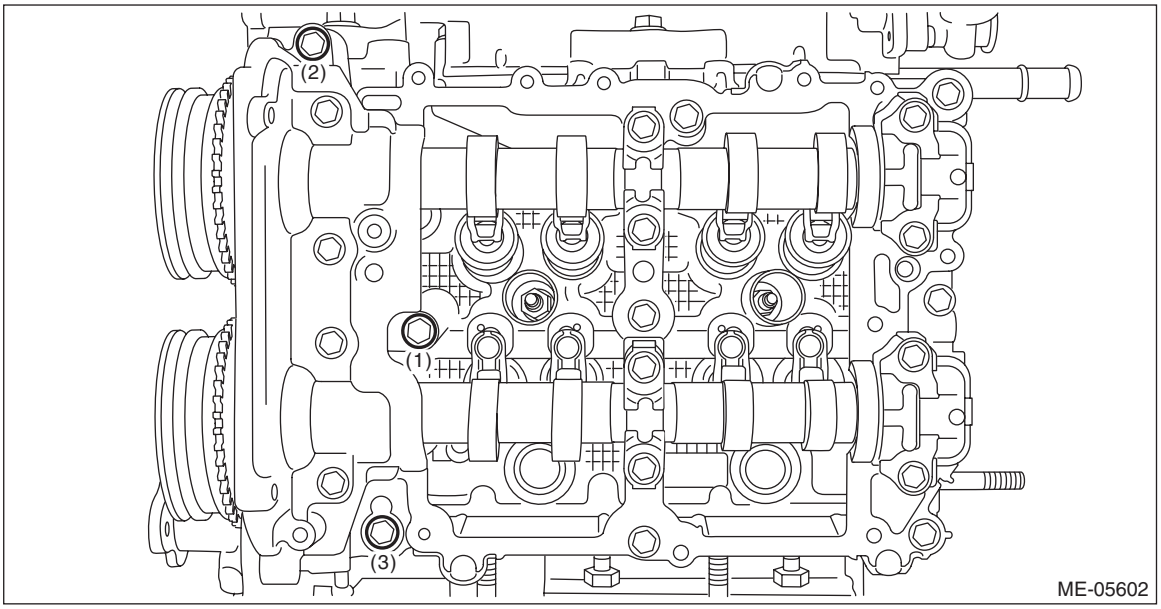

(6) Loosen the bolts (3 places) by 180° in numerical order as shown in the figure.

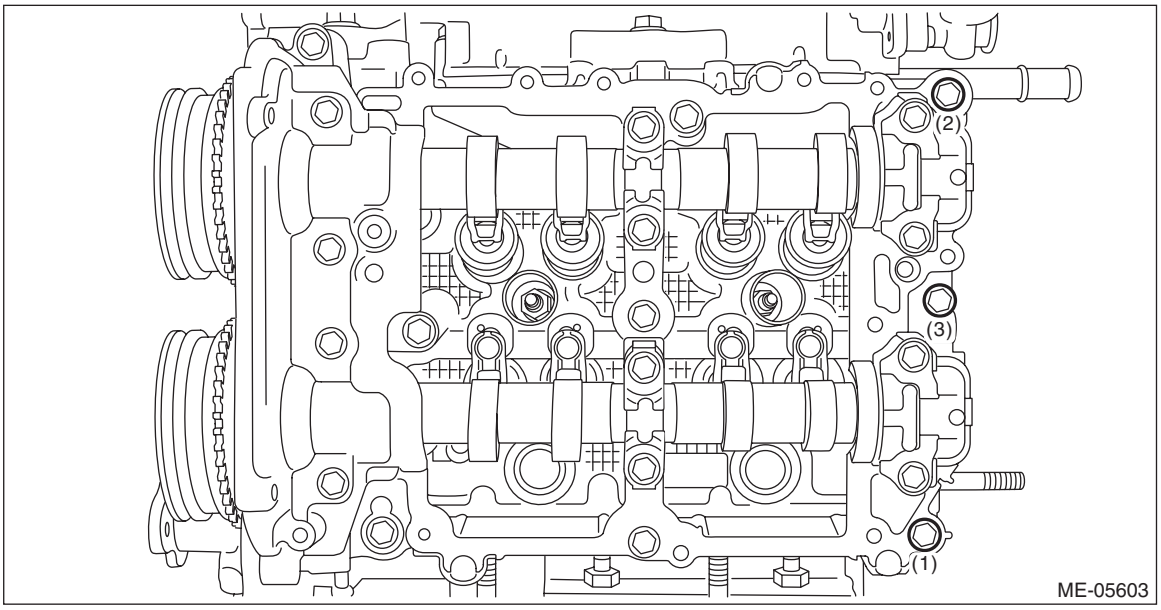

(7) Tighten the bolts (3 places) with a torque of 18 N·m (1.8 kgf-m, 13.3 ft-lb) in numerical order as shown in the figure.

NOTE:
After tightening, if the liquid gasket is squeezed out onto the seal surface of the chain cover, completely remove any squeezed-out liquid gasket.

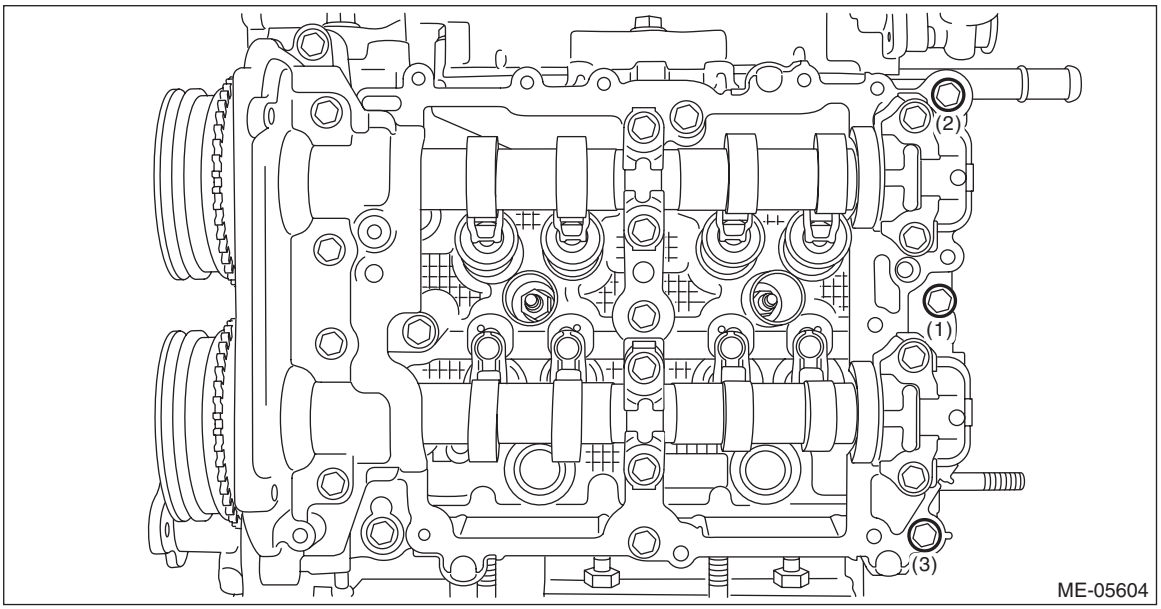

6) Set the part so that the intake manifold is on the upper side.
7) Install the cam sprocket LH. <Ref. to ME(H4DO(w/o HEV))-188, CAM SPROCKET LH, INSTALLATION, Cam Sprocket.>

NOTE:
This procedure is required only when the cam carrier LH is removed for disassembly.
8) Check the cam clearance. <Ref. to ME(H4DO(w/o HEV))-51, WHEN TIMING CHAIN ASSEMBLY IS REMOVED, INSPECTION, Cam Clearance.>
9) Install timing chain LH. <Ref. to ME(H4DO(w/o HEV))-170, TIMING CHAIN LH, INSTALLATION, Timing Chain Assembly.>
10) Install the fuel pipe LH and the fuel injector LH.
(1) Install the fuel pipe LH and the fuel injector LH, and install the bolts which secure the fuel pipe LH.
- Use new O-rings, rubbers, seal rings, and fuel injector holder.
- Refer to “Fuel Injector” for removal and installation procedure of fuel injector holder. <Ref. to FU(H4DO(HEV))-70, REMOVAL, Fuel Injector.> <Ref. to FU(H4DO(HEV))-72, INSTALLATION, Fuel Injector.>

Tightening torque:
6.4 N·m (0.7 kgf-m, 4.7 ft-lb)

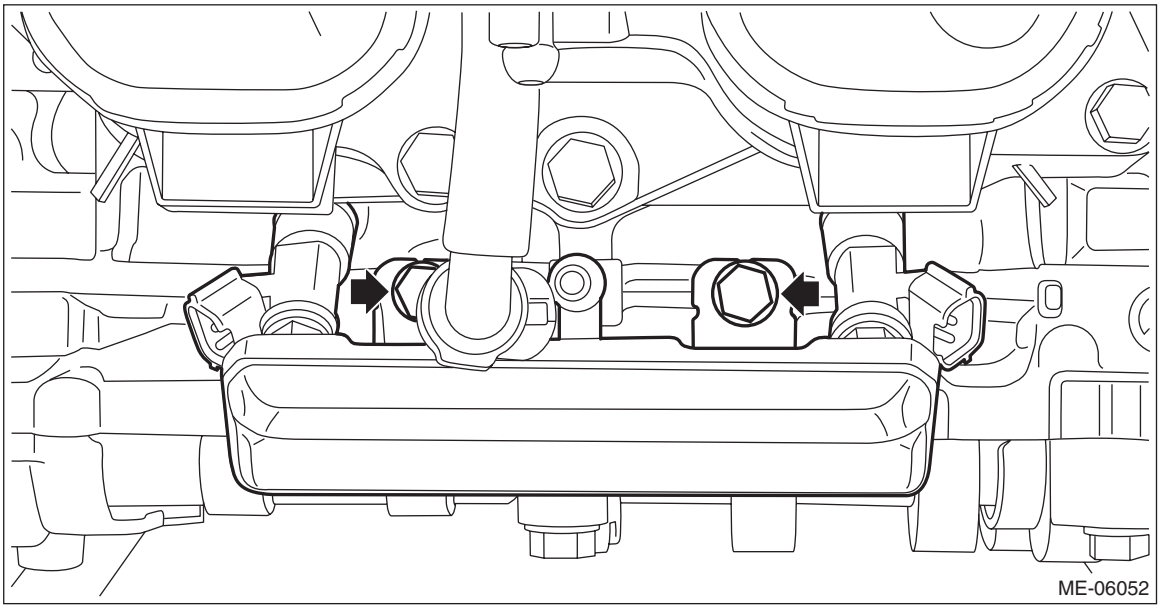

(2) Connect the quick connector to the fuel pipe LH.

CAUTION:
• Check that there is no damage or dust on the quick connector. If necessary, clean the seal surface of the pipe.
• When connecting the quick connector, make sure to insert the pipe all the way in before locking the slider.
• When it is difficult to lock the slider, check that the pipe is fully inserted.
• Make sure that the quick connector is securely connected.

NOTE:
Connect the quick connector as shown in the figure.

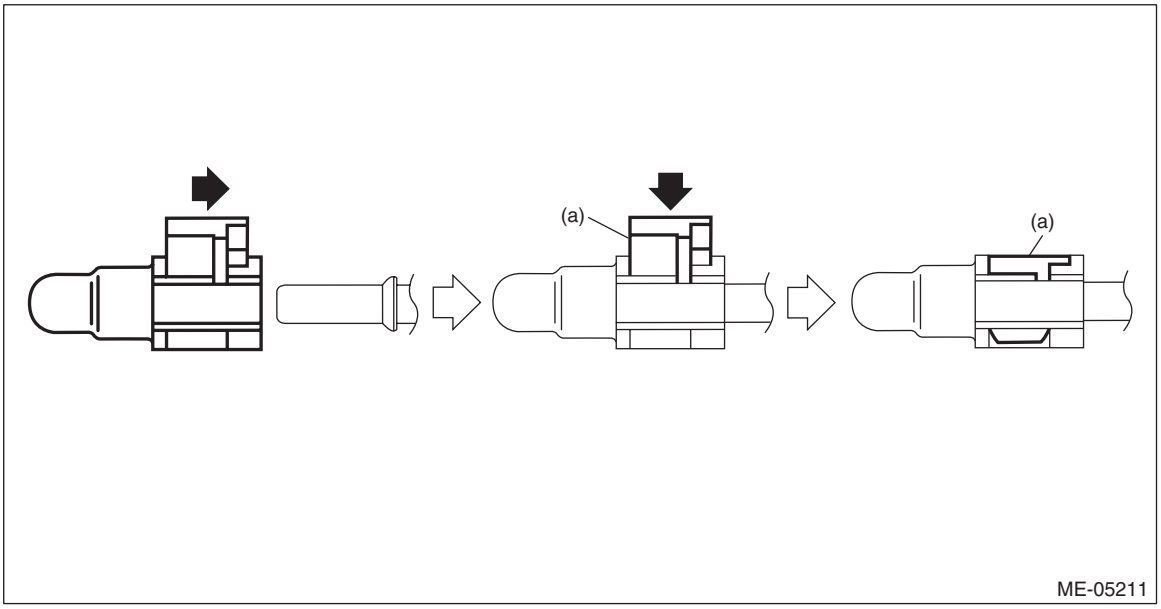

(a) Slider

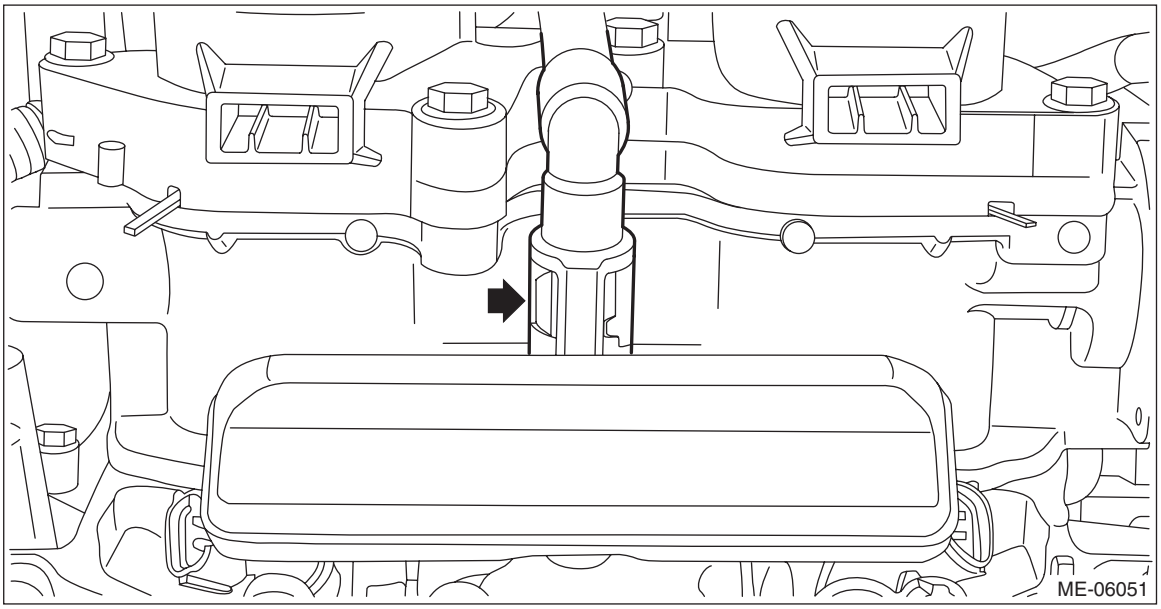

(3) Connect the connectors to the fuel injector LH.

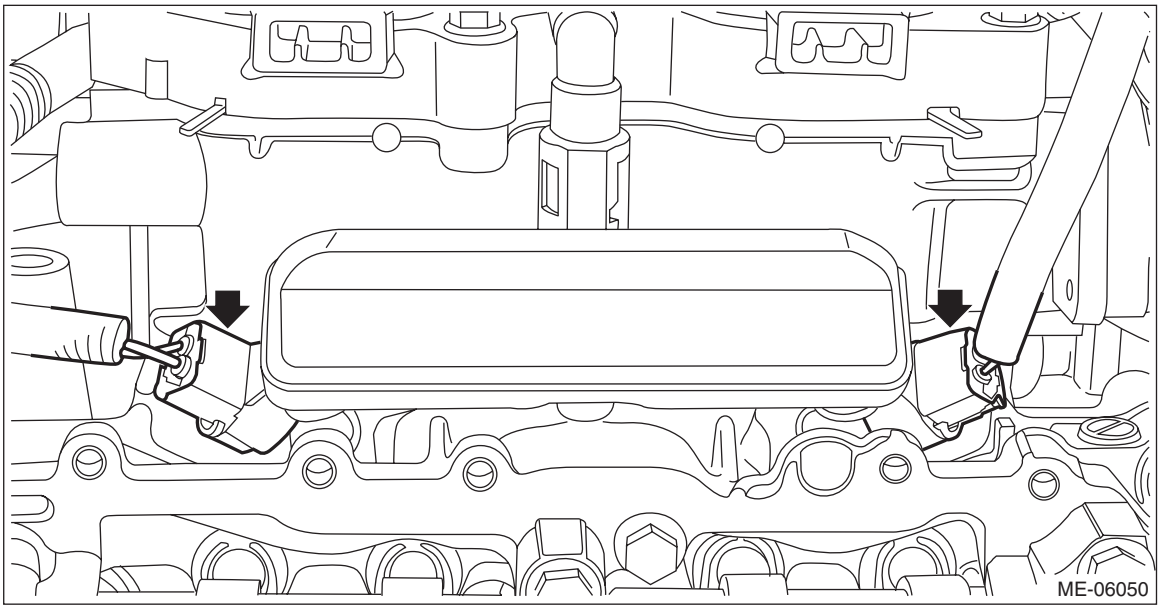

11) Connect the water pipe hose (B) to the oil pan upper, and install the water pipe assembly LH.

Tightening torque:
6.4 N·m (0.7 kgf-m, 4.7 ft-lb)

12) Connect the preheater hose (A) to the water pipe assembly LH.

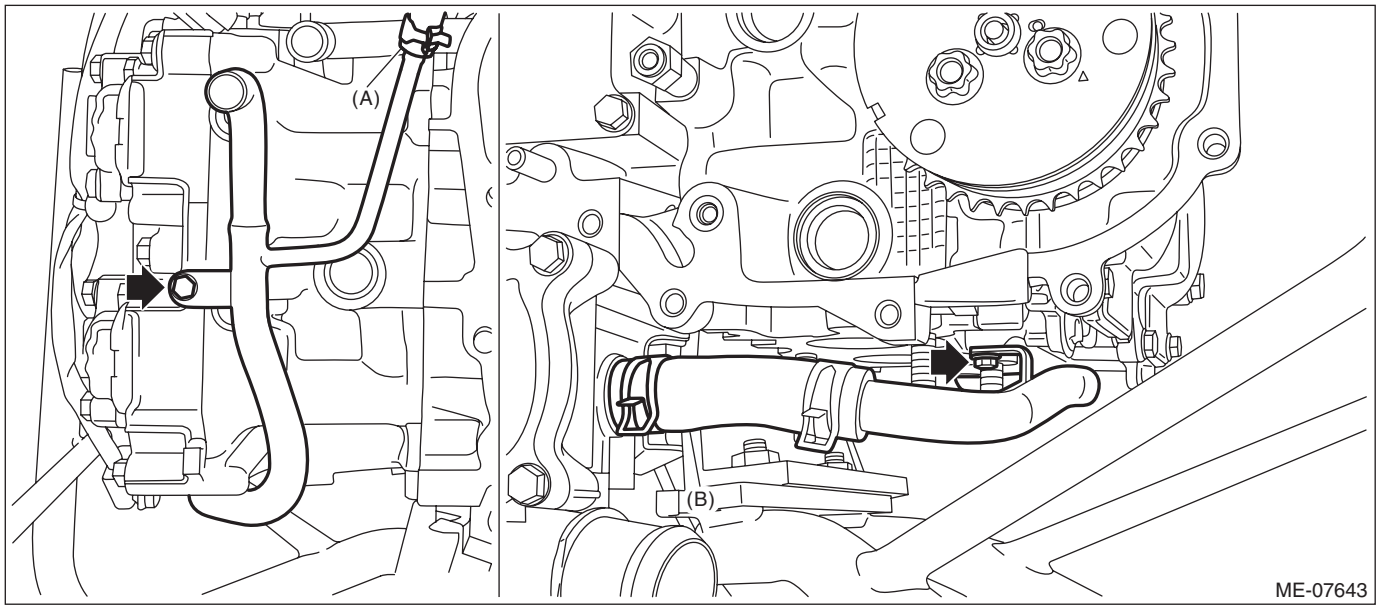

13) Secure the engine harness to the cam carrier LH with a clip.

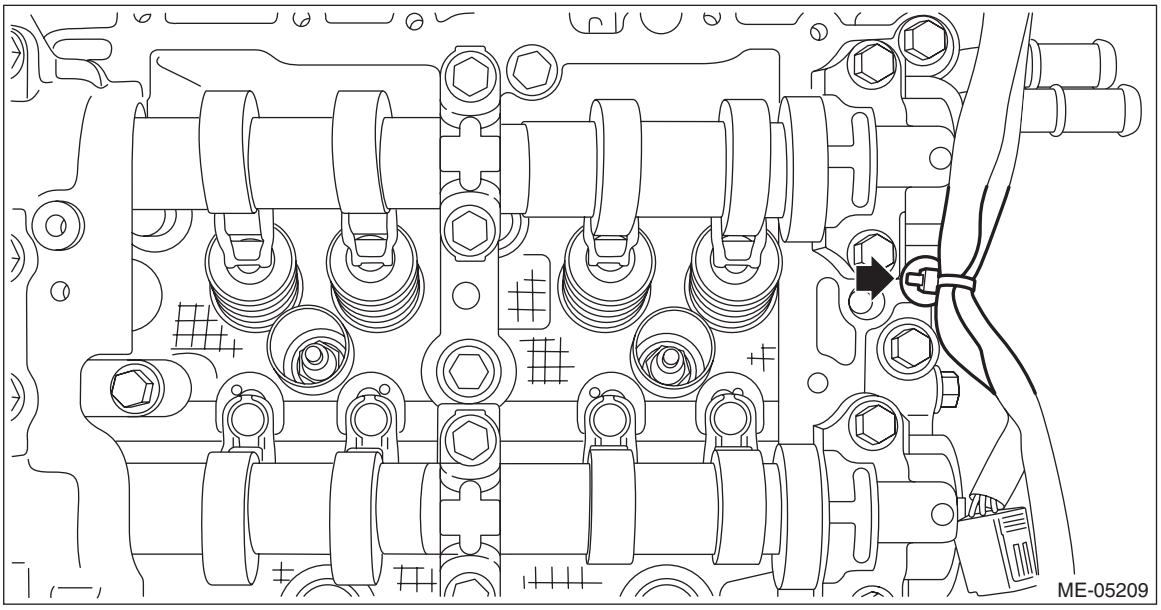

14) Install the rocker cover LH. <Ref. to ME(H4DO(w/o HEV))-203, ROCKER COVER LH, INSTALLATION, Rocker Cover.>
15) Install the chain cover. <Ref. to ME(H4DO(w/o HEV))-151, INSTALLATION, Chain Cover.>
16) Install the engine to the vehicle. <Ref. to ME(H4DO(w/o HEV))-86, INSTALLATION, Engine Assembly.>

C: DISASSEMBLY

1. CAM CARRIER RH

1) Loosen the bolts (front camshaft cap RH, intake center camshaft cap RH, intake rear camshaft cap RH, exhaust center camshaft cap RH, and exhaust rear camshaft cap RH) equally, a little at a time in numerical sequence as shown in the figure, and remove each camshaft cap.

NOTE:
Arrange camshaft caps in order so that they can be installed in their original positions.

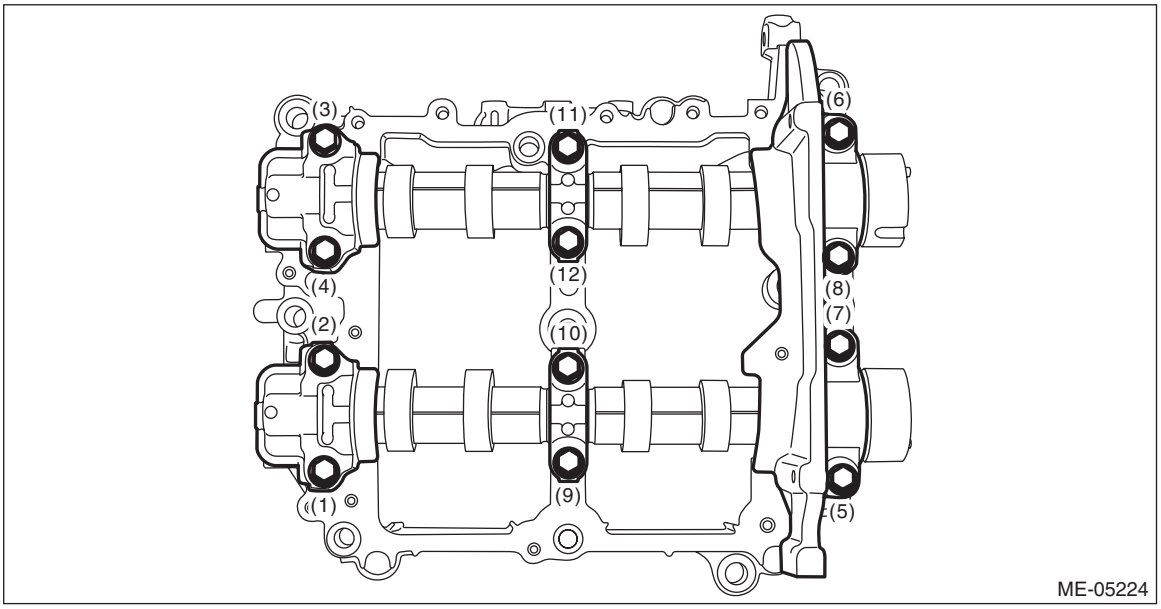

2) Remove the intake camshaft RH and the exhaust camshaft RH from cam carrier RH.

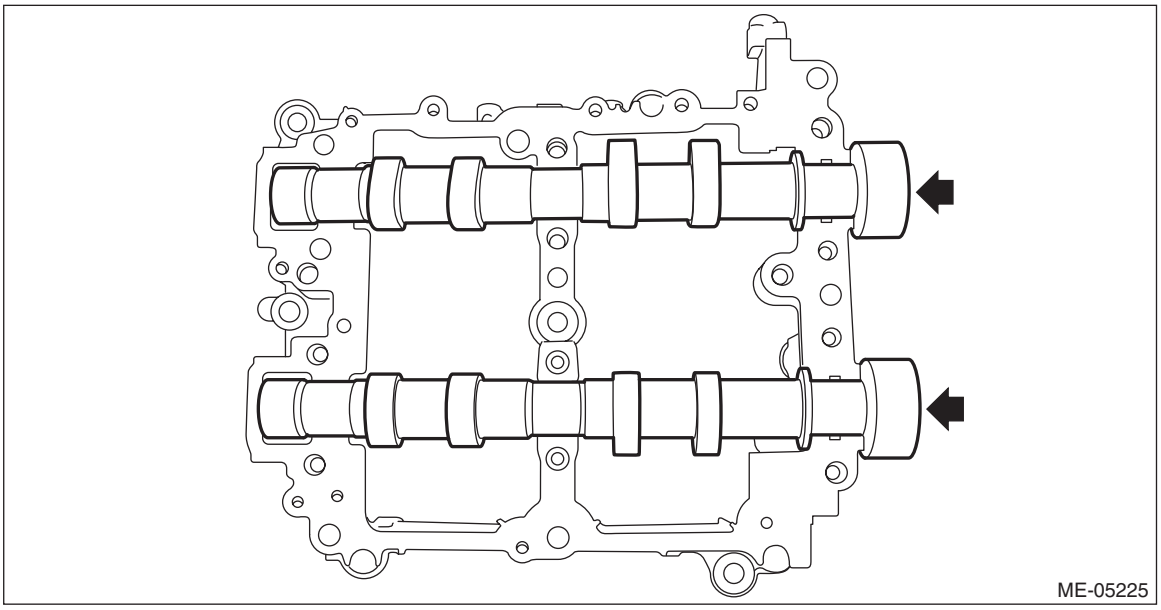

3) Remove the filter from cam carrier RH.

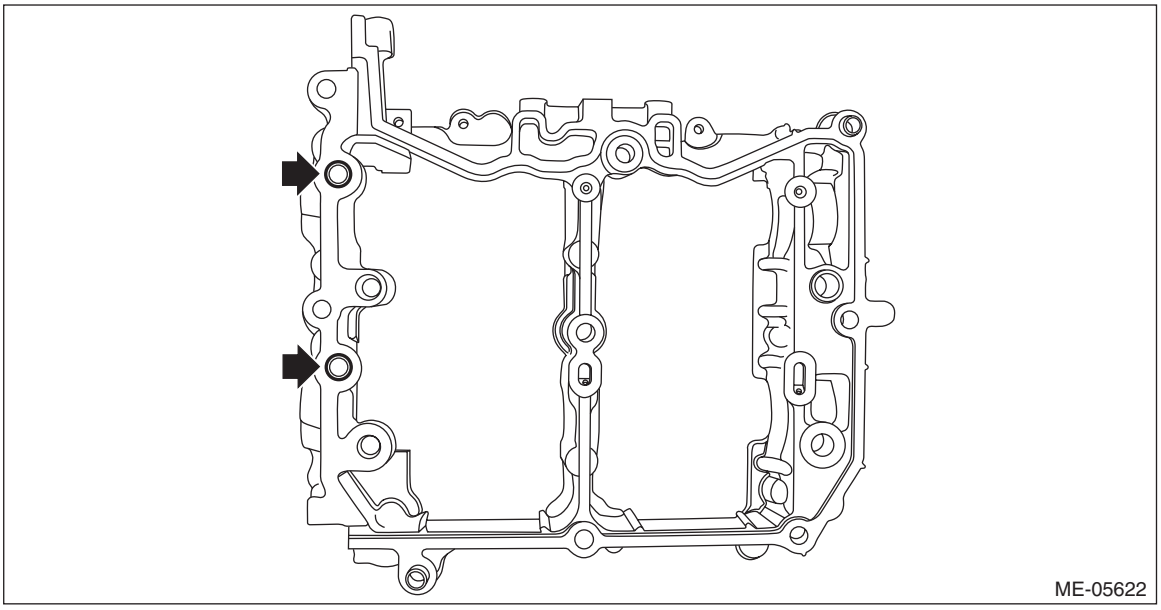

4) Remove the liquid gasket from cam carrier RH and front camshaft cap RH, intake rear camshaft cap RH and exhaust rear camshaft cap RH.

2. CAM CARRIER LH

1) Loosen the bolts (front camshaft cap LH, intake center camshaft cap LH, intake rear camshaft cap LH, exhaust center camshaft cap LH and exhaust rear camshaft cap LH) equally, a little at a time in numerical sequence as shown in the figure, and remove each camshaft cap.

NOTE:
Arrange camshaft caps in order so that they can be installed in their original positions.

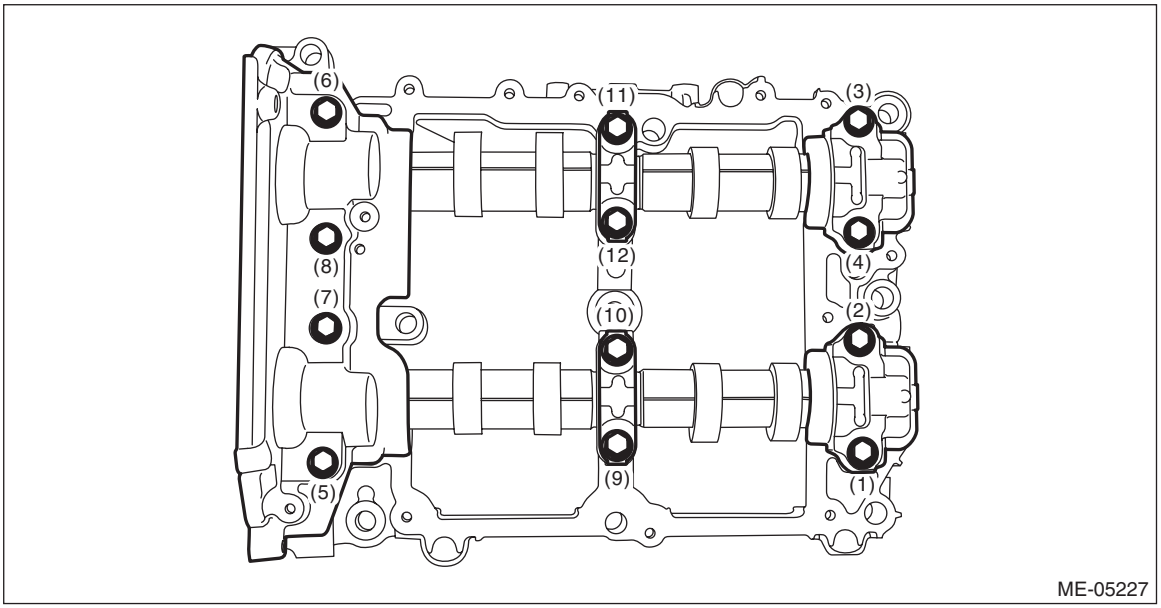

2) Remove the intake camshaft LH and the exhaust camshaft LH from cam carrier LH.

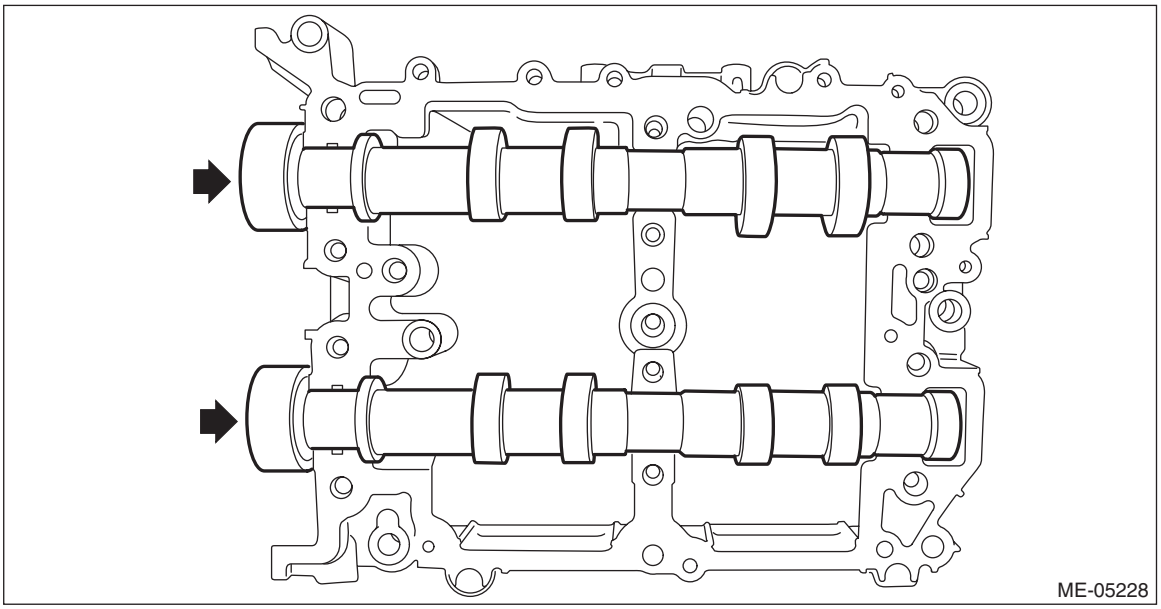

3) Remove the filter from cam carrier LH.

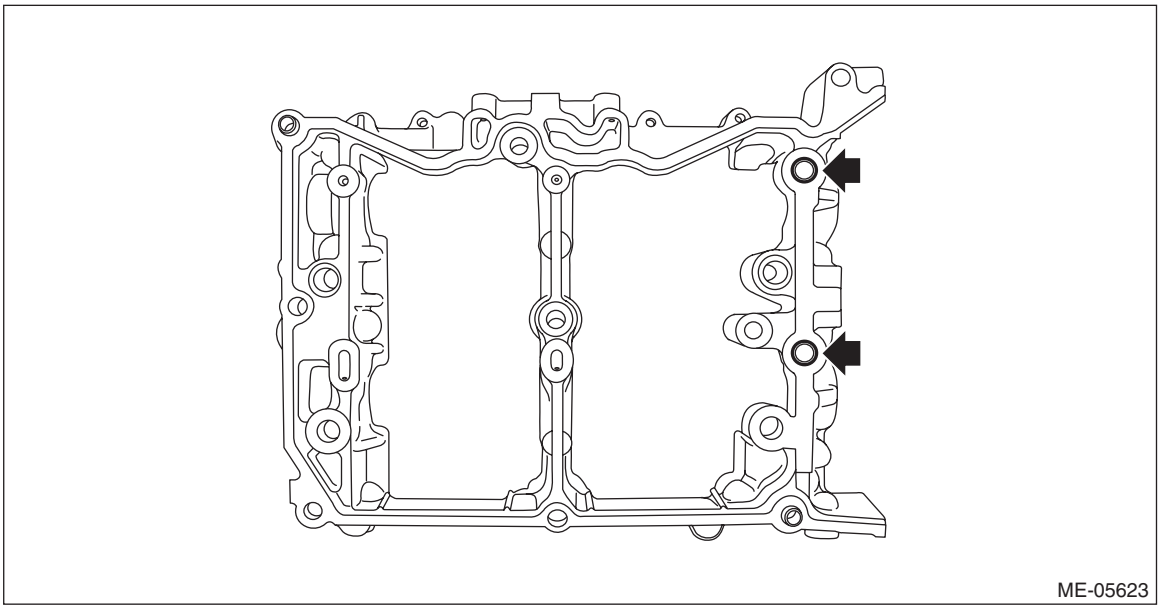

4) Remove the liquid gasket from cam carrier LH and front camshaft cap LH, intake rear camshaft cap LH and exhaust rear camshaft cap LH.

D: ASSEMBLY

1. CAM CARRIER RH

1) Install the filter to the cam carrier RH.

NOTE:
Use a new filter.

Filter insert position:
Cam carrier RH end face $0^{+0}_{-0.5}$ mm ($^{+0}_{-0.0197}$ in) position

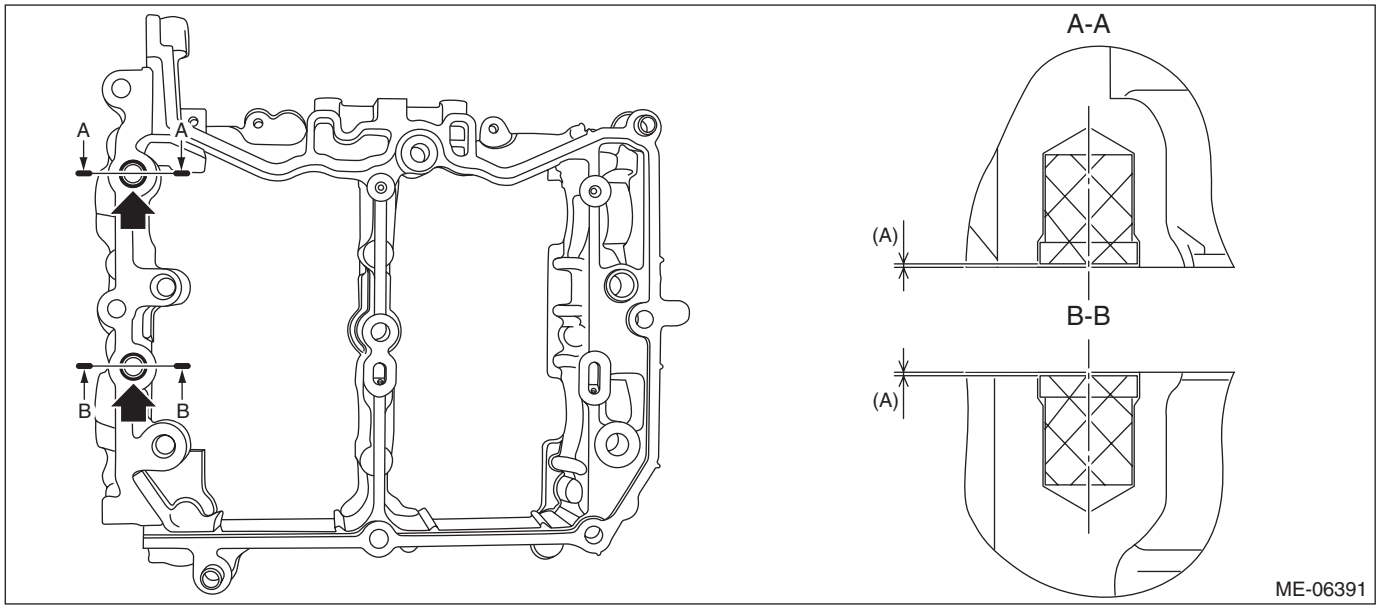

(A) 0 — 0.5 mm (0 — 0.0197 in)

2) Set the intake camshaft RH and the exhaust camshaft RH to the cam carrier RH.

NOTE:
Apply engine oil to the journals of cam carrier RH before setting the intake camshaft RH and exhaust camshaft RH.

3) Install the front camshaft cap RH, intake center camshaft cap RH, intake rear camshaft cap RH, exhaust center camshaft cap RH and exhaust rear camshaft cap RH.

(1) Apply liquid gasket to the mating surface of front camshaft cap RH, intake rear camshaft cap RH and exhaust rear camshaft cap RH as shown in the figure.

CAUTION:

- **Do not apply liquid gasket excessively. Applying excessively may cause excess gasket to flow toward camshaft journal, resulting in engine seizure.**
- **Do not apply liquid gasket excessively to the intake center camshaft cap RH and exhaust center camshaft cap RH.**

NOTE:

- Before applying liquid gasket, degrease the old liquid gasket seal surface of the front camshaft cap RH, intake rear camshaft cap RH, exhaust rear camshaft cap RH, and cam carrier RH.
- Install within 5 min. after applying liquid gasket.

Liquid gasket:
THREE BOND 1217G (Part No. 0877Y0100) or equivalent

Liquid gasket applying diameter:
Mating surfaces other than range A
2±0.5 mm (0.0787±0.0197 in)
Mating surfaces of range A
3.5±0.5 mm (0.1378±0.0197 in)

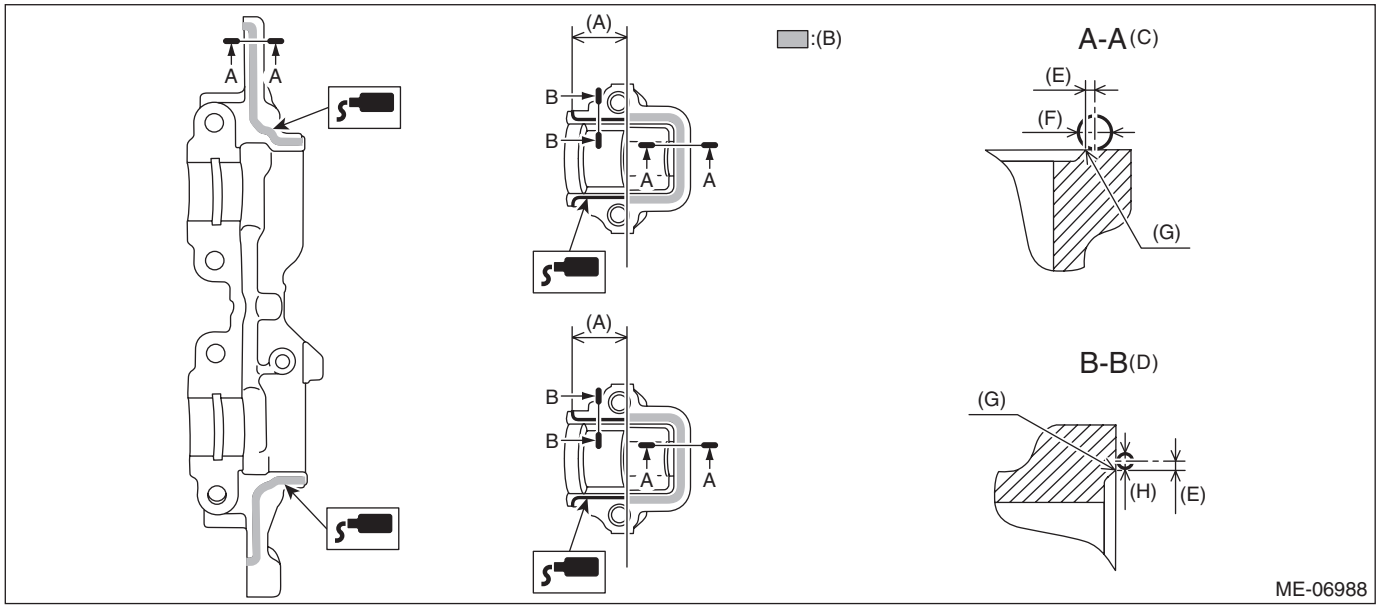

(A)	28.5 mm (1.122 in)	(D)	Liquid gasket applying position of mating surfaces other than range A	(G)	Chamfer edge
(B)	Range A	(E)	1 mm (0.0394 in) or less	(H)	ϕ2±0.5 mm (0.0787±0.0197 in)
(C)	Liquid gasket applying position of mating surfaces of range A	(F)	ϕ3.5±0.5 mm (0.1378±0.0197 in)		

(2) Apply engine oil to the journals of each camshaft cap before setting the camshaft cap.
(3) Tighten the bolts which secure front camshaft cap RH, intake center camshaft cap RH, intake rear camshaft cap RH, exhaust center camshaft cap RH and exhaust rear camshaft cap RH in numerical order as shown in the figure.

Tightening torque:
18 N·m (1.8 kgf-m, 13.3 ft-lb)

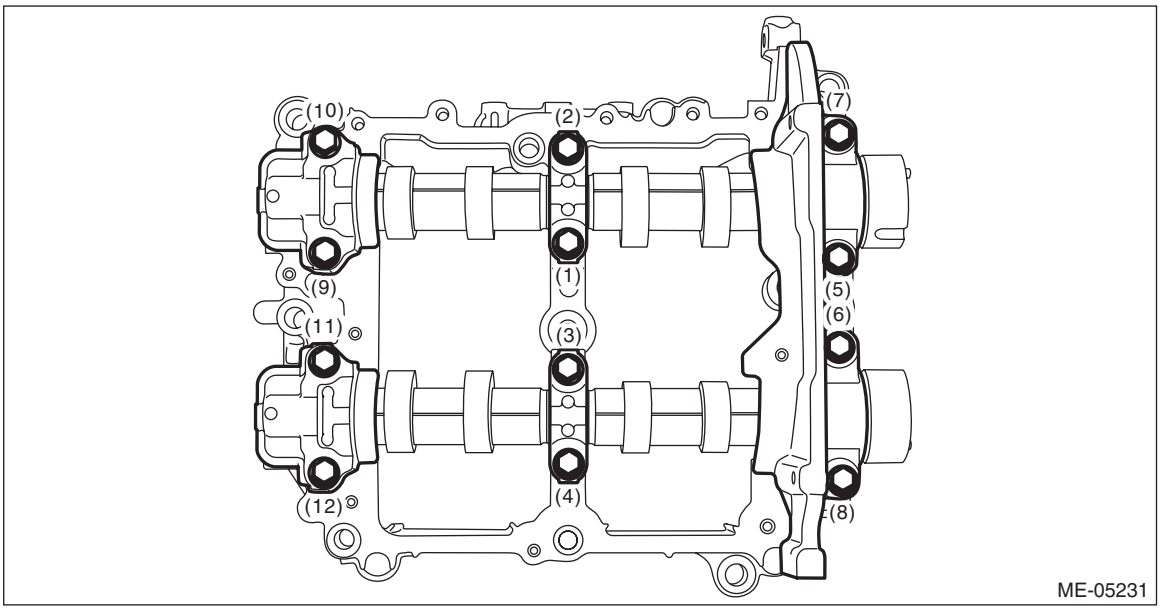

2. CAM CARRIER LH

1) Install the filter to the cam carrier LH.

NOTE:
Use a new filter.

Filter insert position:
Cam carrier LH end face $0^{+0}_{-0.5}$ mm ($^{+0}_{-0.0197}$ in) position

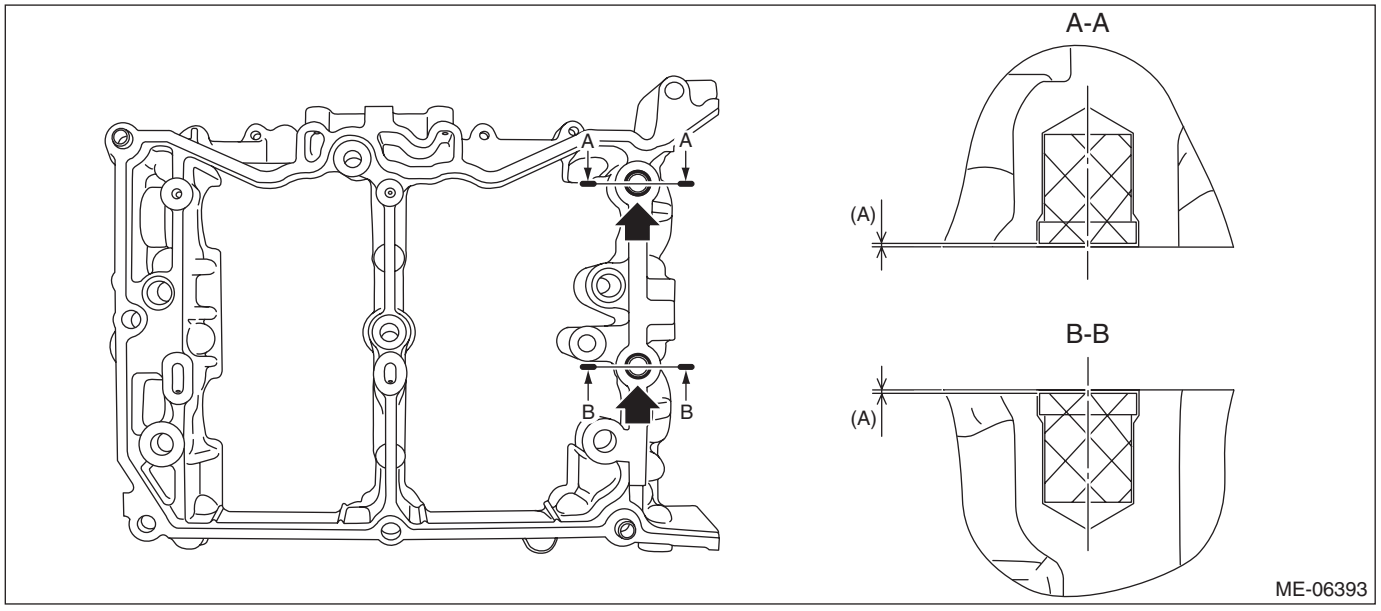

(A) 0 — 0.5 mm (0 — 0.0197 in)

2) Set the intake camshaft LH and the exhaust camshaft LH to the cam carrier LH.

NOTE:
Apply engine oil to the journals of cam carrier LH before setting the intake camshaft LH and exhaust camshaft LH.

3) Install the front camshaft cap LH, intake center camshaft cap LH, intake rear camshaft cap LH, exhaust center camshaft cap LH and exhaust rear camshaft cap LH.

(1) Apply liquid gasket to the mating surface of front camshaft cap LH, intake rear camshaft cap LH and exhaust rear camshaft cap LH as shown in the figure.

CAUTION:

- **Do not apply liquid gasket excessively. Applying excessively may cause excess gasket to flow toward camshaft journal, resulting in engine seizure.**
- **Do not apply liquid gasket excessively to the intake center camshaft cap LH and exhaust center camshaft cap LH.**

NOTE:

- Before applying liquid gasket, degrease the old liquid gasket seal surface of the front camshaft cap LH, intake rear camshaft cap LH, exhaust rear camshaft cap LH, and cam carrier LH.
- Install within 5 min. after applying liquid gasket.

Liquid gasket:
THREE BOND 1217G (Part No. 0877Y0100) or equivalent

Liquid gasket applying diameter:
Mating surfaces other than ranges A, B and C
2±0.5 mm (0.0787±0.0197 in)
Mating surfaces of ranges A and C
3.5±0.5 mm (0.1378±0.0197 in)
Mating surfaces of range B
$3^{+0.5}{}_{-0}$ mm ($0.1181^{+0.0197}{}_{-0}$ in)

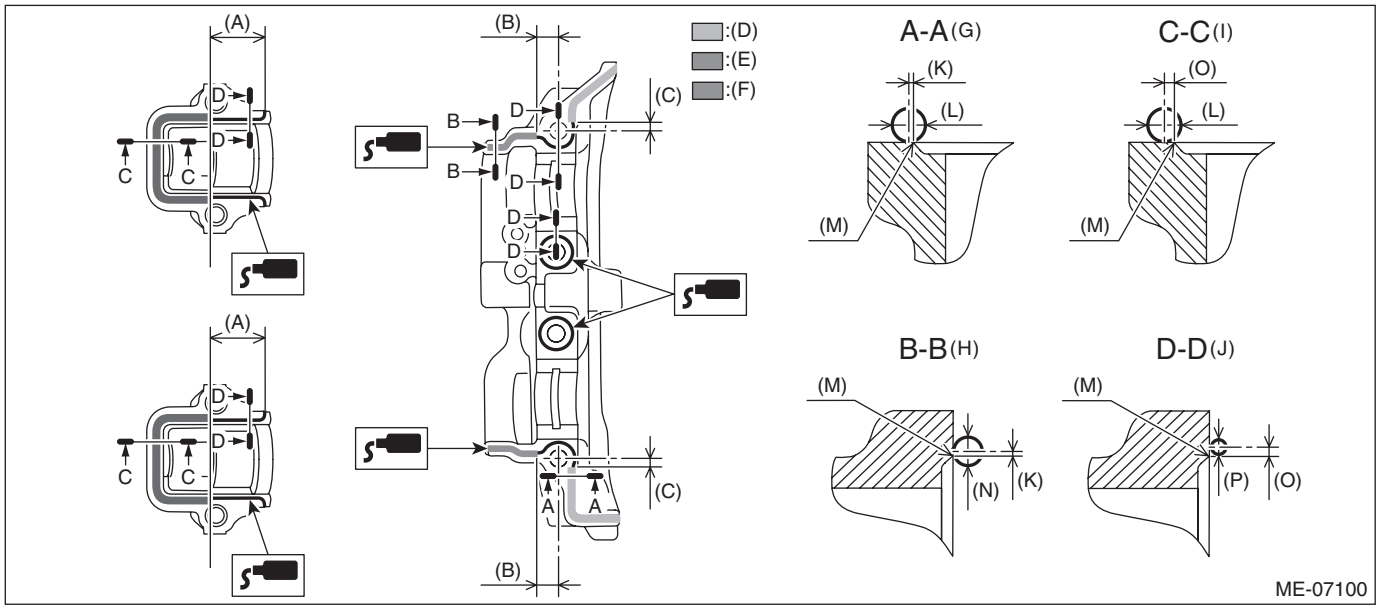

(A)	28.5 mm (1.122 in)	(G)	Liquid gasket applying position of mating surfaces of range A	(M)	Chamfer edge
(B)	11.6 mm (0.4567 in)	(H)	Liquid gasket applying position of mating surfaces of range B	(N)	$\phi 3^{+0.5}{}_{-0}$ mm ($^{+0.0197}{}_{-0}$ in)
(C)	5.1 mm (0.2008 in)	(I)	Liquid gasket applying position of mating surfaces of range C	(O)	1 mm (0.0394 in) or less
(D)	Range A	(J)	Liquid gasket applying position of mating surfaces other than range A, range B and range C	(P)	ϕ2±0.5 mm (0.0787±0.0197 in)
(E)	Range B	(K)	0.5 mm (0.0197 in)		
(F)	Range C	(L)	ϕ3.5±0.5 mm (0.1378±0.0197 in)		

(2) Apply engine oil to the journals of each camshaft cap before setting the camshaft cap.
(3) Tighten the bolts which secure front camshaft cap LH, intake center camshaft cap LH, intake rear camshaft cap LH, exhaust center camshaft cap LH and exhaust rear camshaft cap LH in numerical order as shown in the figure.

Tightening torque:
18 N·m (1.8 kgf-m, 13.3 ft-lb)

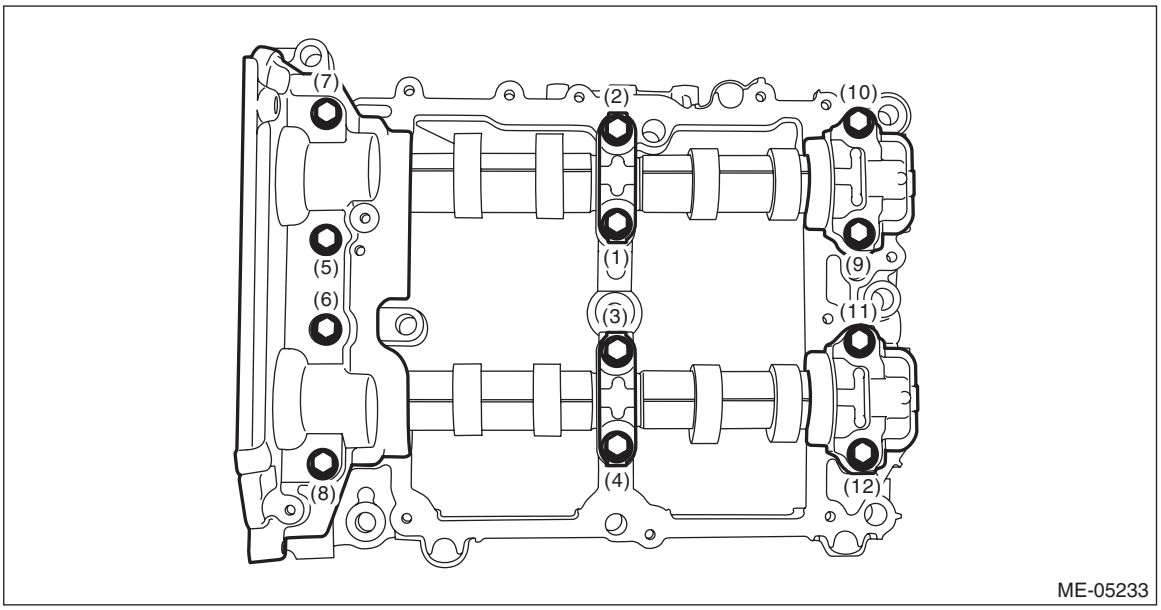

E: INSPECTION

1) Visually check the cam carrier filter, and if clogging is found, replace with a new part.

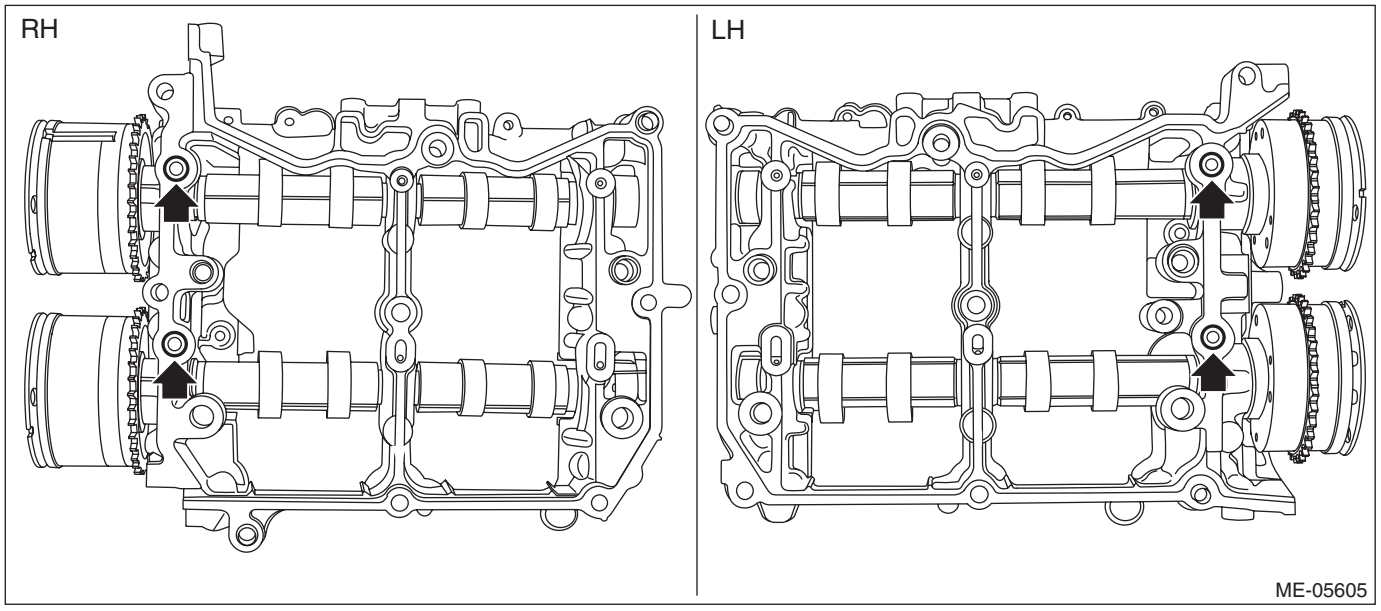

2) Check the camshaft journals for damage and wear. Replace the camshaft if faulty.
3) Check the cam face condition of camshaft, and remove the minor faults by grinding with oil stone. Replace the camshaft if uneven wear is found.

4) Using a dial gauge, check the camshaft bend. If it exceeds the limit, replace the camshaft.

NOTE:
Measurement should be performed at a temperature of 20°C (68°F).

Camshaft bend:
Limit
0.020 mm (0.00079 in)

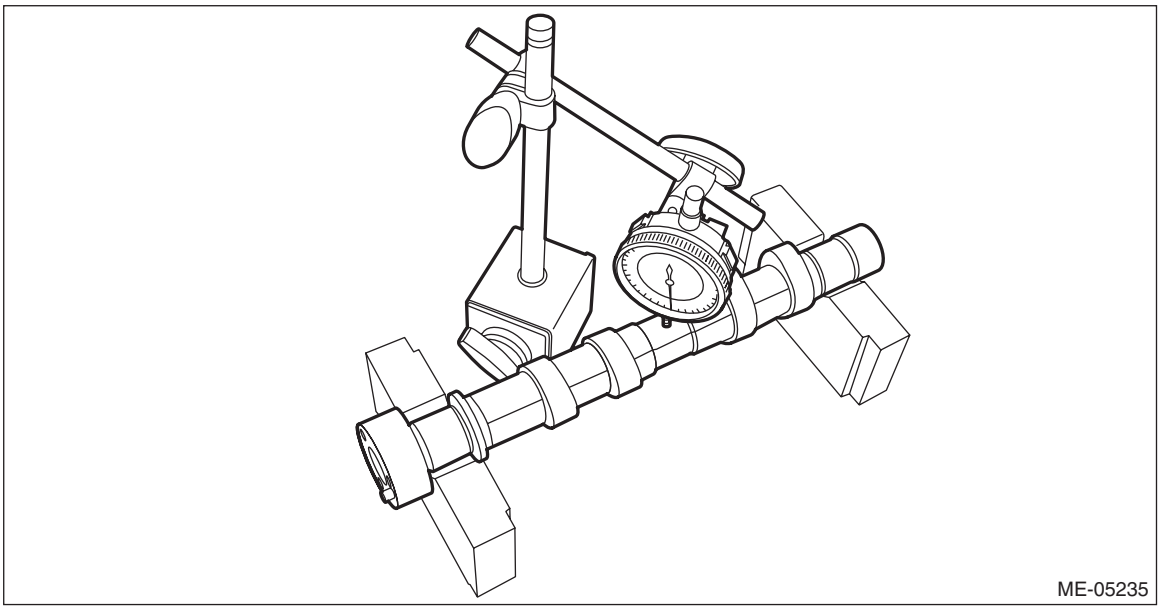

5) Check the cam lobe height “H” and cam base circle diameter “A” of camshaft as shown in the figure, using micrometer. If it is not within the standard, replace the camshaft.

NOTE:
Measurement should be performed at a temperature of 20°C (68°F).

Camshaft cam lobe overall height H:
Intake
Standard
40.34 — 40.44 mm (1.588 — 1.592 in)
Exhaust
Standard
39.66 — 39.76 mm (1.561 — 1.565 in)

Camshaft cam base circle diameter A:
Standard
34.0 mm (1.339 in)

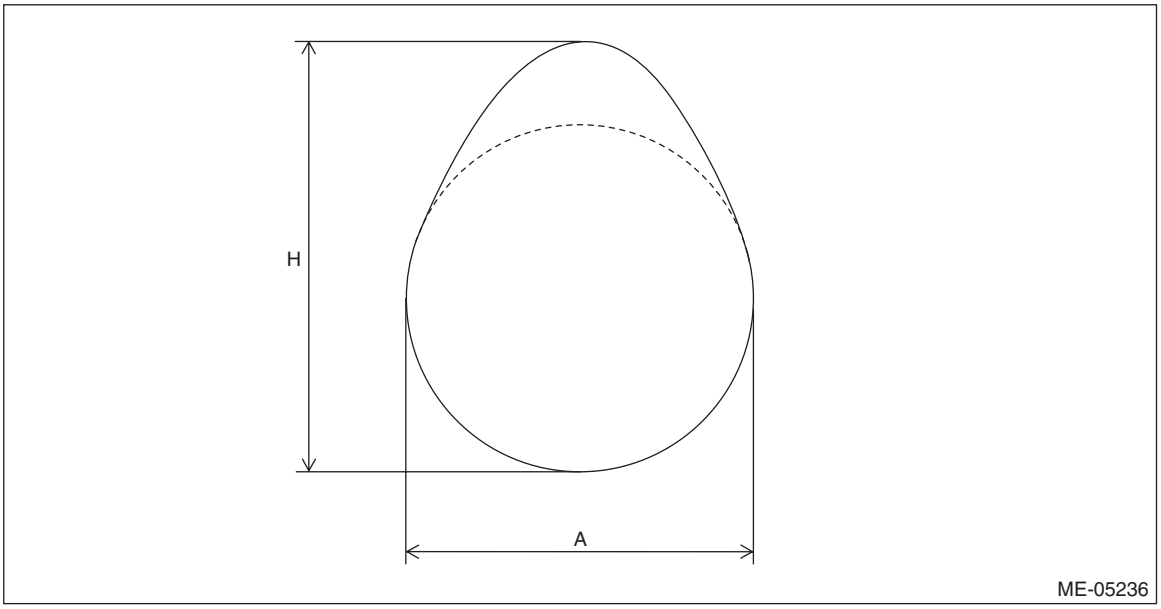

6) Check the camshaft journal outer diameter using micrometer. If it is not within the standard, replace the camshaft.

NOTE:
- Measurement should be performed at a temperature of 20°C (68°F).
- Measure outer diameter of each journal at several points, and read the value of most worn location.

Camshaft journal outer diameter:
Standard
25.946 — 25.963 mm (1.0215 — 1.0222 in)

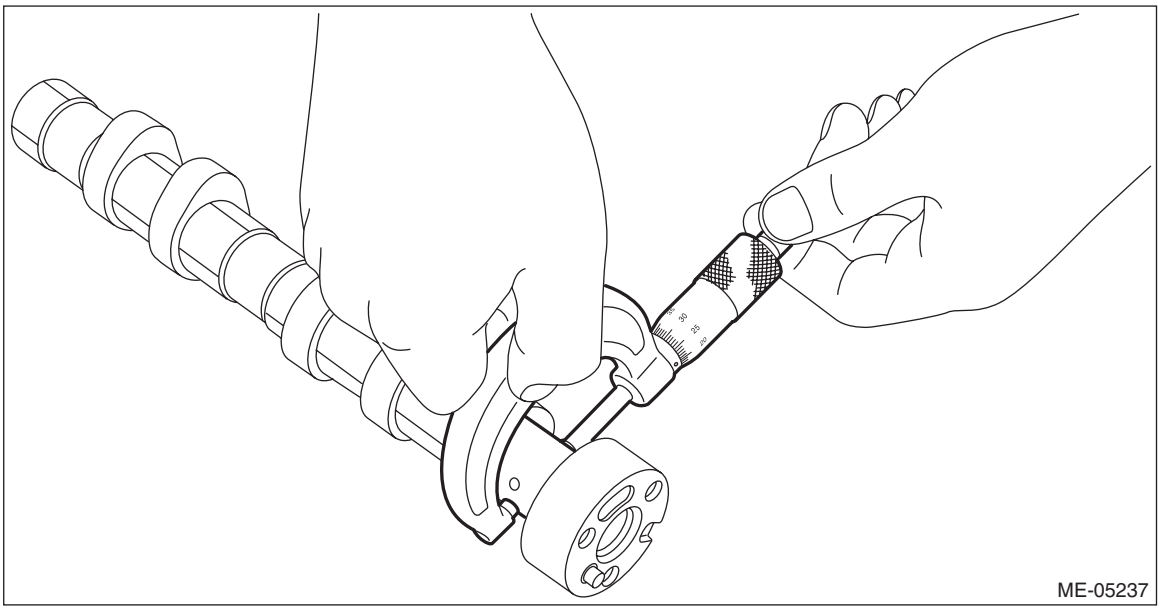

7) Using a dial gauge, check the thrust clearance of the camshaft. If it is not within the standard or if uneven wear is found, replace each camshaft cap and cam carrier as a set. If necessary replace the camshaft.

NOTE:
- Measurement should be performed at a temperature of 20°C (68°F).
- Set the dial gauge at end surface of camshaft.

Camshaft thrust clearance:
Standard
0.068 — 0.116 mm (0.0027 — 0.0047 in)

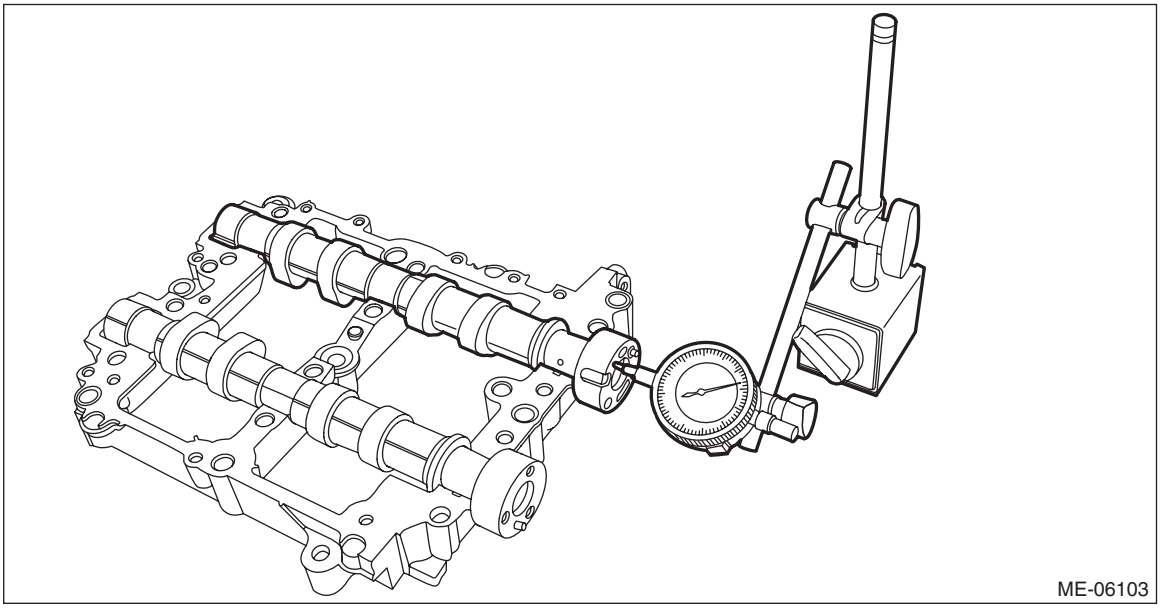

8) Check the oil clearance on the camshaft using a plastigauge.

NOTE:
Measurement should be performed at a temperature of 20°C (68°F).

(1) Remove the liquid gasket from cam carrier and front camshaft cap, intake rear camshaft cap and exhaust rear camshaft cap.
(2) Clean each camshaft cap and cam carrier journals.
(3) Set the camshaft to the cam carrier.
(4) Place a plastigauge across the camshaft journals of each camshaft and set the camshaft caps.
(5) Tighten the bolts which secure front camshaft cap, intake center camshaft cap, intake rear camshaft cap, exhaust center camshaft cap and exhaust rear camshaft cap in numerical order as shown in the figure.

Tightening torque:
18 N·m (1.8 kgf-m, 13.3 ft-lb)

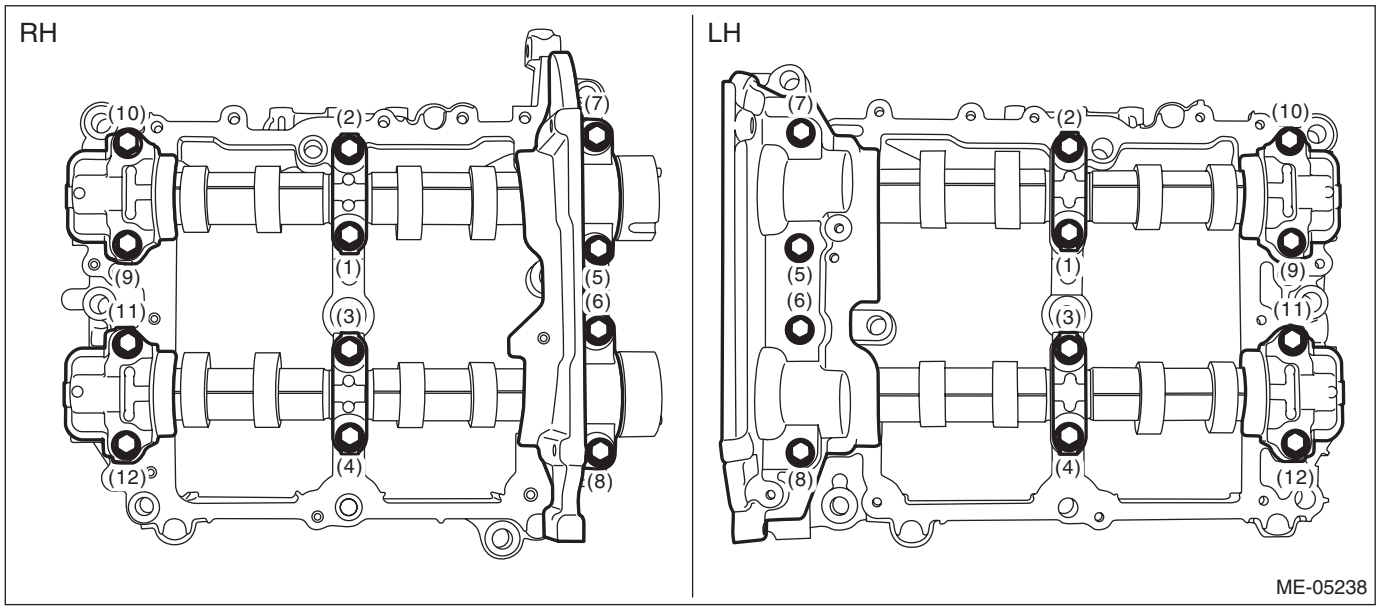

(6) Loosen the bolts (front camshaft cap, intake center camshaft cap, intake rear camshaft cap, exhaust center camshaft cap and exhaust rear camshaft cap) equally, a little at a time in numerical sequence as shown in the figure, and remove each camshaft cap.

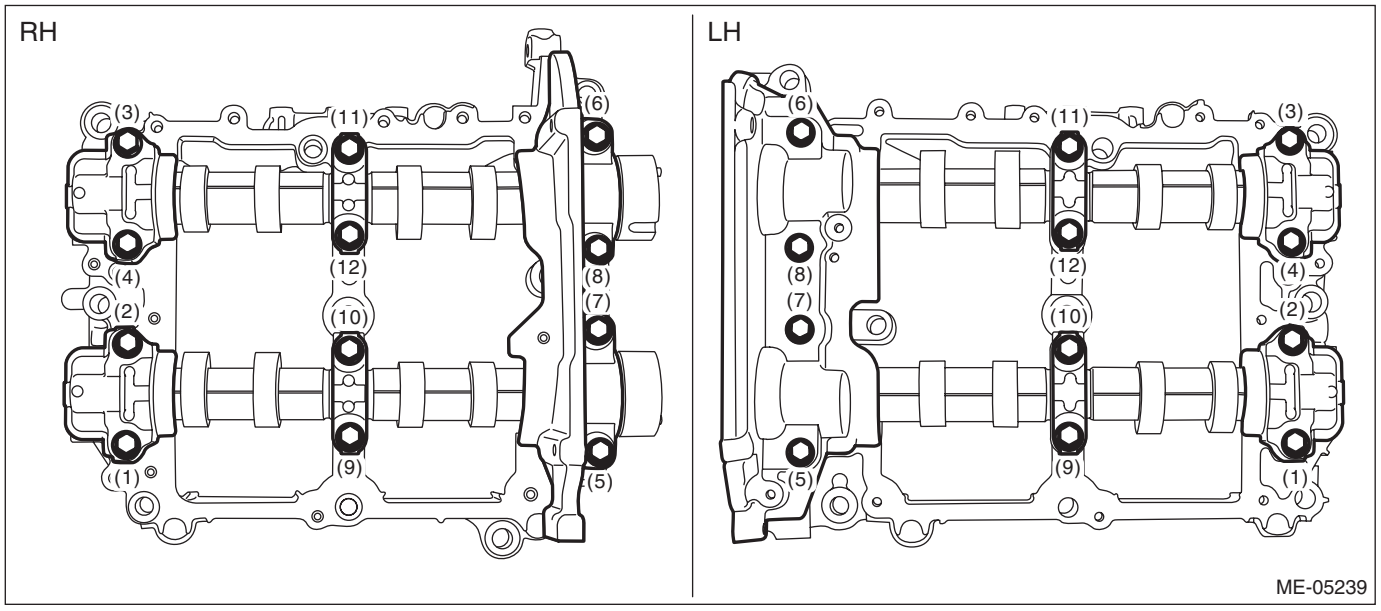

(7) Determine camshaft oil clearance by matching the widest point of plastigauge on each journal against scale printed on a package of plastigauge. If it is not within the standard, replace each camshaft cap and cam carrier as a set. If necessary replace the camshaft.

Camshaft oil clearance:
Standard
0.037 — 0.072 mm (0.0015 — 0.0028 in)

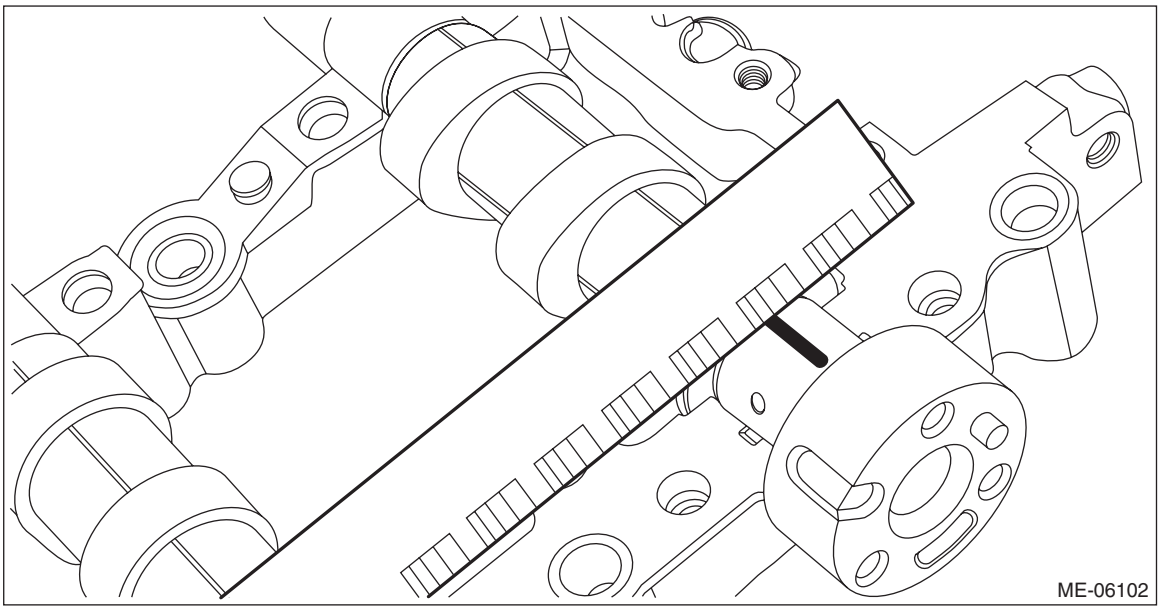

(8) Completely remove the plastigauge.

21.Cylinder Head

A: REMOVAL

1. CYLINDER HEAD RH

1) Remove the engine from the vehicle. <Ref. to ME(H4DO(w/o HEV))-55, REMOVAL, Engine Assembly.>
2) Remove the intake manifold. <Ref. to FU(H4DO(w/o HEV))-20, REMOVAL, Intake Manifold.> <Ref. to FU(H4DO(HEV))-20, REMOVAL, Intake Manifold.>
3) Remove the engine wiring harness. <Ref. to FU(H4DO(w/o HEV))-44, REMOVAL, Engine Wiring Harness.> <Ref. to FU(H4DO(HEV))-34, REMOVAL, Engine Wiring Harness.>
4) Remove the tumble generator valve assembly RH. <Ref. to FU(H4DO(w/o HEV))-90, REMOVAL, Tumble Generator Valve Assembly.> <Ref. to FU(H4DO(HEV))-74, REMOVAL, Tumble Generator Valve Assembly.>
5) Remove the chain cover. <Ref. to ME(H4DO(w/o HEV))-144, REMOVAL, Chain Cover.>
6) Remove the rocker cover RH. <Ref. to ME(H4DO(w/o HEV))-191, ROCKER COVER RH, REMOVAL, Rocker Cover.>
7) Remove the cam carrier RH. <Ref. to ME(H4DO(w/o HEV))-209, CAM CARRIER RH, REMOVAL, Cam Carrier.>
8) Remove the EGR pipe assembly from the water pipe assembly and the cylinder block RH. (Gasoline engine model)

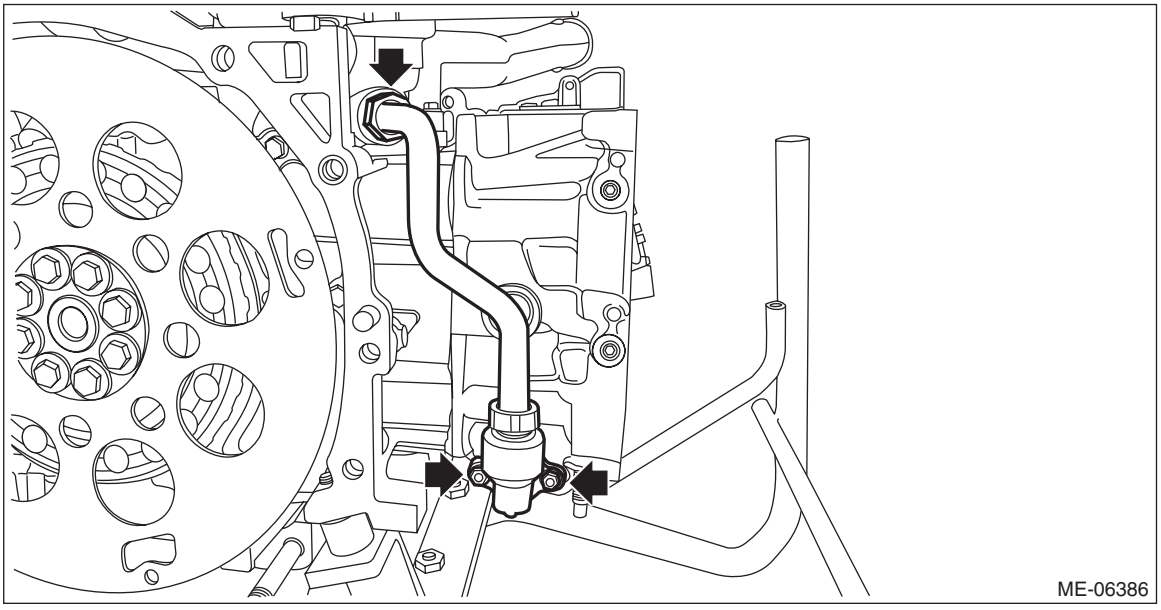

9) Disconnect the engine coolant outlet hose from the EGR cooler, and remove the EGR cooler from the cylinder block RH. (HEV model)

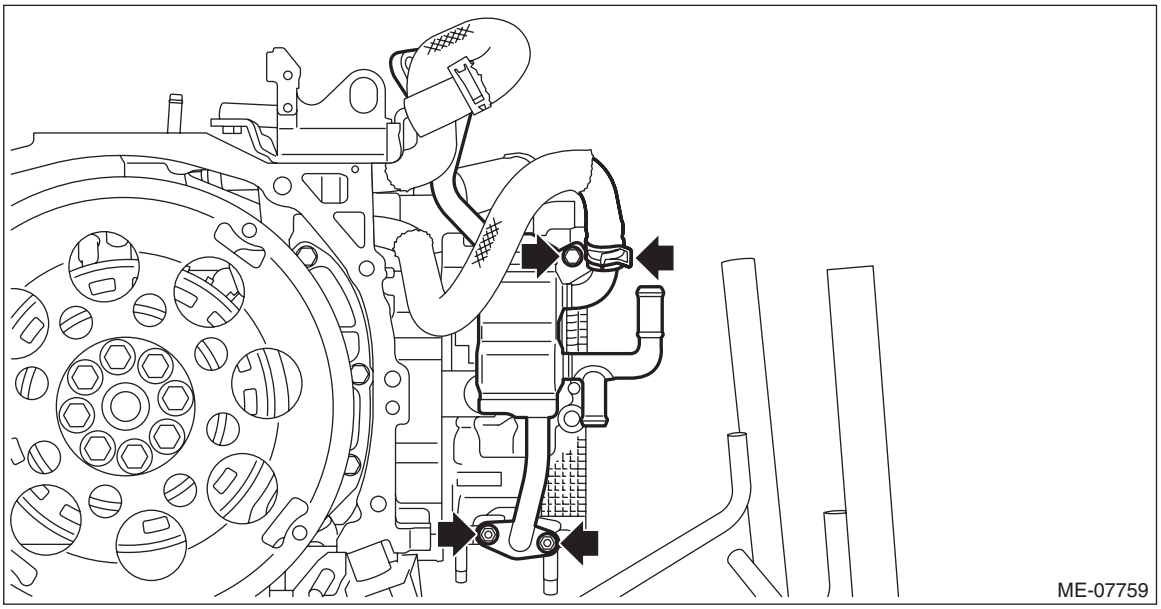

10) Loosen the bolts holding the cylinder head RH equally, a little at a time in numerical sequence as shown in the figure, and while leaving the cylinder head bolts (1) and (4) engaged by three or four threads, remove the other cylinder head bolts.

NOTE:
Leaving the cylinder head bolts (1) and (4) engaged by three or four threads prevents the cylinder head RH from falling.

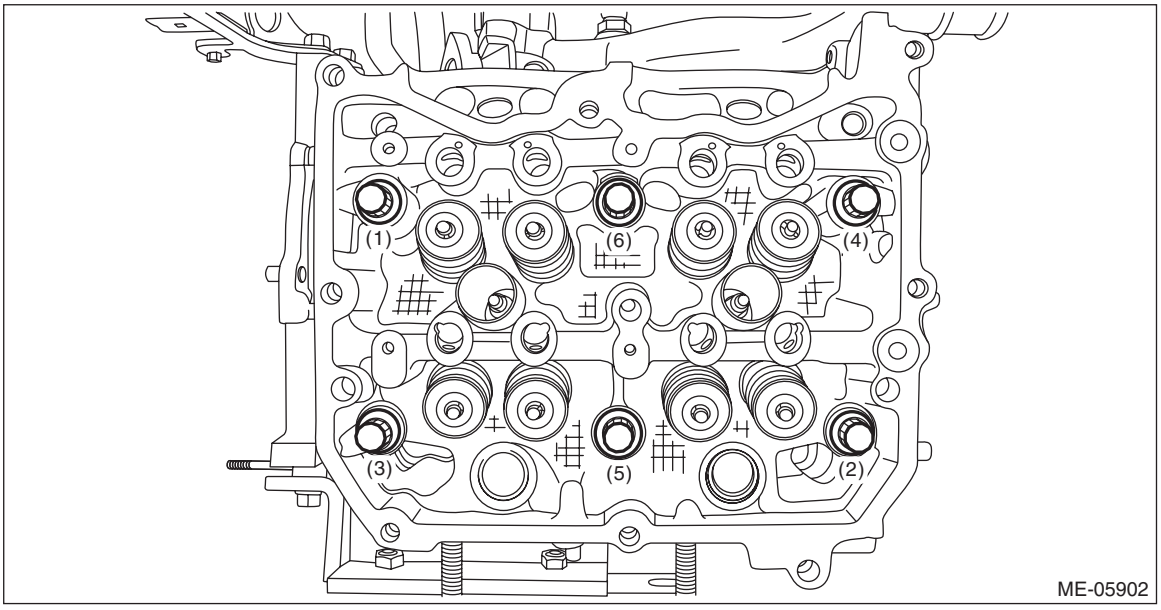

11) While tapping the cylinder head RH with a plastic hammer, separate it from cylinder block RH.
12) Remove the bolts (1) and (4) to remove cylinder head RH.
13) Remove the cylinder head gasket RH.

CAUTION:
Be careful not to scratch the mating surface of cylinder head and cylinder block.
14) Remove the liquid gasket from cylinder head RH and cam carrier RH.

2. CYLINDER HEAD LH

1) Remove the engine from the vehicle. <Ref. to ME(H4DO(w/o HEV))-55, REMOVAL, Engine Assembly.>
2) Remove the intake manifold. <Ref. to FU(H4DO(w/o HEV))-20, REMOVAL, Intake Manifold.> <Ref. to FU(H4DO(HEV))-20, REMOVAL, Intake Manifold.>
3) Remove the engine wiring harness. <Ref. to FU(H4DO(w/o HEV))-44, REMOVAL, Engine Wiring Harness.> <Ref. to FU(H4DO(HEV))-34, REMOVAL, Engine Wiring Harness.>
4) Remove the tumble generator valve assembly LH. <Ref. to FU(H4DO(w/o HEV))-90, REMOVAL, Tumble Generator Valve Assembly.> <Ref. to FU(H4DO(HEV))-74, REMOVAL, Tumble Generator Valve Assembly.>
5) Remove the chain cover. <Ref. to ME(H4DO(w/o HEV))-144, REMOVAL, Chain Cover.>
6) Remove the rocker cover LH. <Ref. to ME(H4DO(w/o HEV))-195, ROCKER COVER LH, REMOVAL, Rocker Cover.>
7) Remove the cam carrier LH. <Ref. to ME(H4DO(w/o HEV))-214, CAM CARRIER LH, REMOVAL, Cam Carrier.>
8) Remove the A/C compressor. <Ref. to AC-54, REMOVAL, Compressor.>
9) Loosen the bolts holding the cylinder head LH equally, a little at a time in numerical sequence as shown in the figure, and while leaving the cylinder head bolts (1) and (4) engaged by three or four threads, remove the other cylinder head bolts.

NOTE:
Leaving the cylinder head bolts (1) and (4) engaged by three or four threads prevents the cylinder head LH from falling.

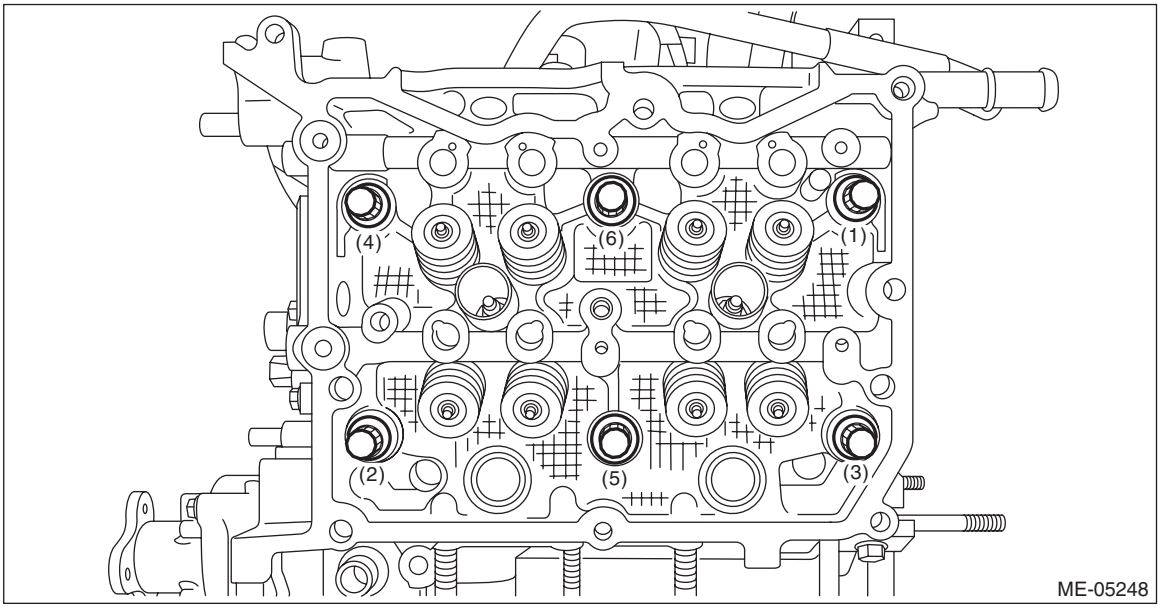

10) While tapping the cylinder head LH with a plastic hammer, separate it from cylinder block LH.
11) Remove the cylinder head bolts (1) and (4) to remove cylinder head LH.
12) Remove the cylinder head gasket LH.

CAUTION:
Be careful not to scratch the mating surface of cylinder head and cylinder block.
13) Remove the liquid gasket from cylinder head LH and cam carrier LH.

B: INSTALLATION

1. CYLINDER HEAD RH

1) Clean the bolt holes in the cylinder block RH.

CAUTION:
To avoid erroneous tightening of the bolts, clean out the bolt holes sufficiently by blowing with compressed air to eliminate engine coolant etc.

2) Apply liquid gasket to both sides of the cylinder head gasket RH as shown in the figure.

NOTE:
- Use a new cylinder head gasket RH.
- Before applying liquid gasket, degrease the mating surface of cylinder blocks RH and cylinder head RH.
- Install within 5 min. after applying liquid gasket.

Liquid gasket:
THREE BOND 1217G (Part No. 0877Y0100) or equivalent

Liquid gasket applying diameter:
3±1 mm (0.1181±0.0394 in)

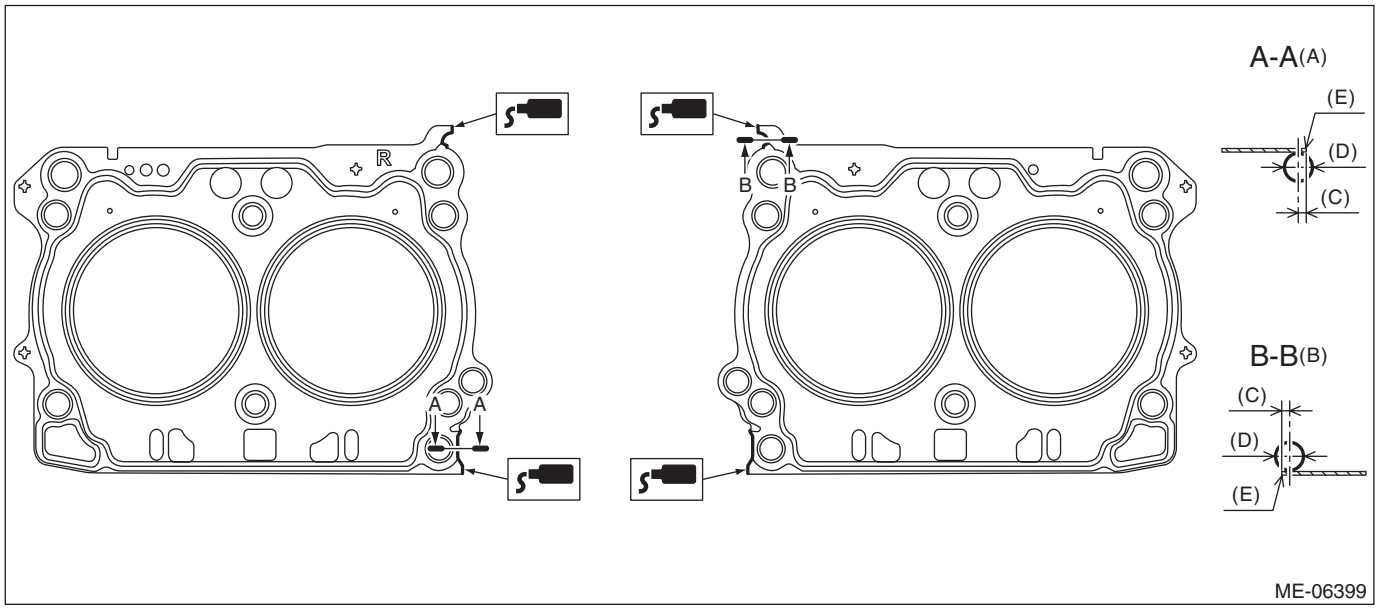

(A)	Liquid gasket applying position to the cylinder head side	(C)	1 mm (0.0394 in) or less	(E)	Cylinder head gasket edge
(B)	Liquid gasket applying position to the cylinder block side	(D)	ϕ3±1 mm (0.1181±0.0394 in)		

3) Attach the cylinder head gasket RH.

NOTE:
Check that liquid gasket RH is squeezed out from the cylinder head gasket.
4) Install the cylinder head RH to the cylinder block RH.

CAUTION:
Be careful not to scratch the mating surface of cylinder head RH and cylinder block RH.

(1) Clean the cylinder head bolt threads and apply sufficient engine oil to the washer and cylinder head bolts threads.

(2) Mount the cylinder head RH onto the cylinder block RH, and tighten all bolts with a torque of 29 N·m (3.0 kgf-m, 21.4 ft-lb) in numerical order as shown in the figure.

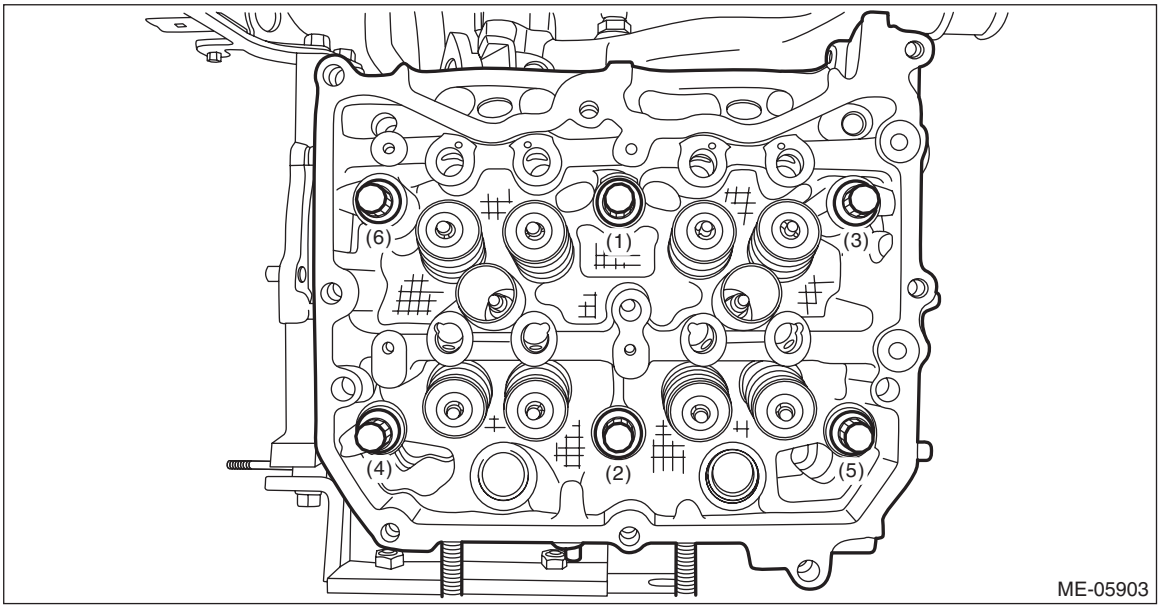

(3) Tighten all cylinder head bolts further with a torque of 100 N·m (10.2 kgf-m, 73.8 ft-lb) in numerical order as shown in the figure.

CAUTION:
If the bolt makes stick-slip sound during tightening, repeat the procedure from step 1). In that case, the cylinder head gasket RH can be reused. But it is necessary to remove liquid gasket completely from cylinder block RH, cylinder head RH and cylinder head gasket RH and re-apply to them.

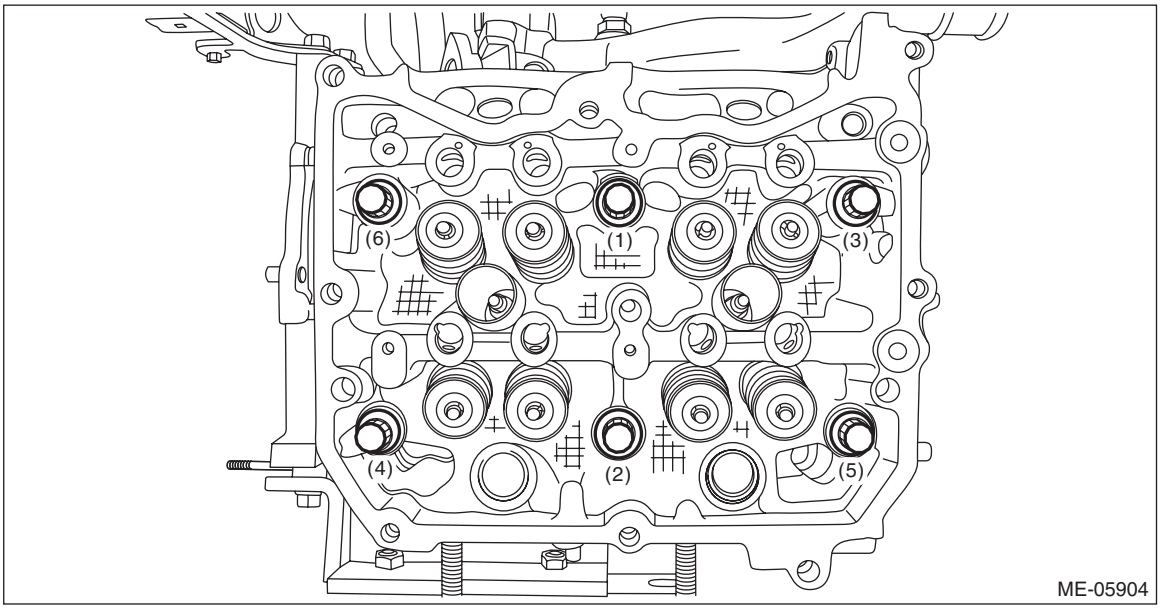

(4) Loosen all cylinder head bolts 180° in numerical order as shown in the figure, and then loosen all cylinder head bolts 180° further in numerical order as shown in the figure.

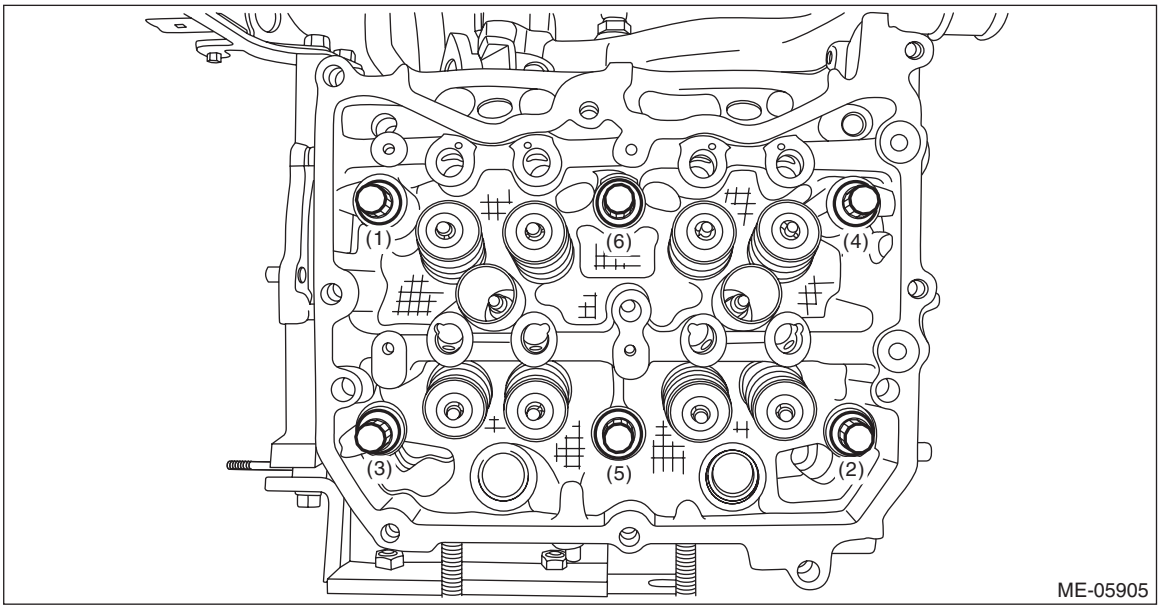

(5) Tighten all cylinder head bolts with a torque of 42 N·m (4.3 kgf-m, 31.0 ft-lb) in numerical order as shown in the figure.

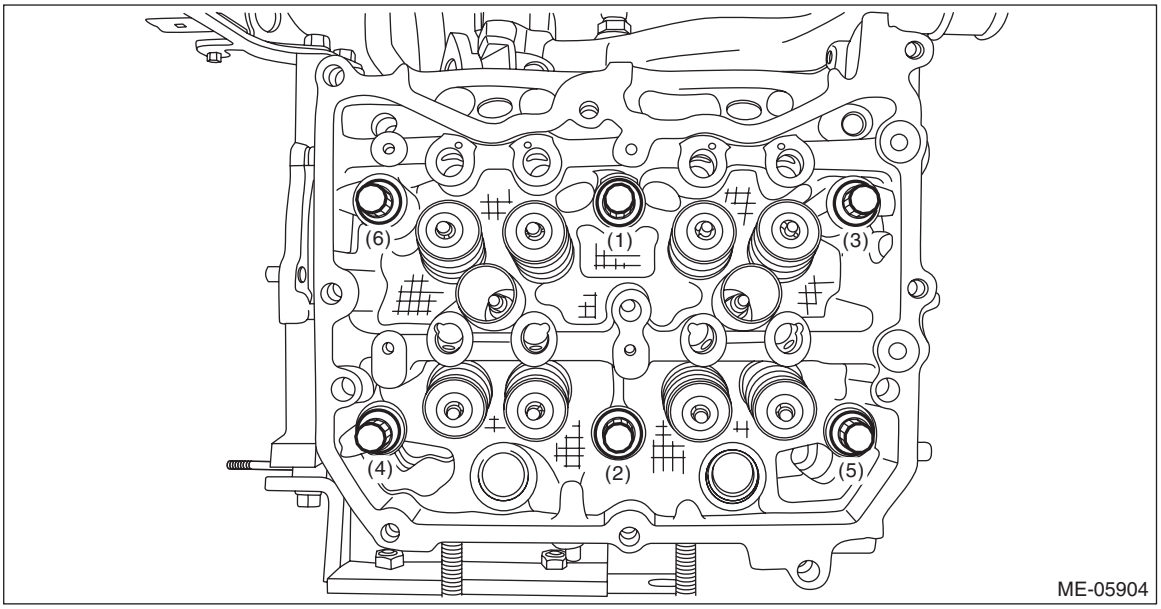

(6) Using angle gauge, tighten all cylinder head bolts with specified angle in numerical order as shown in the figure.

ST 499817100 ENGINE STAND

Tightening angle:
80°±2°

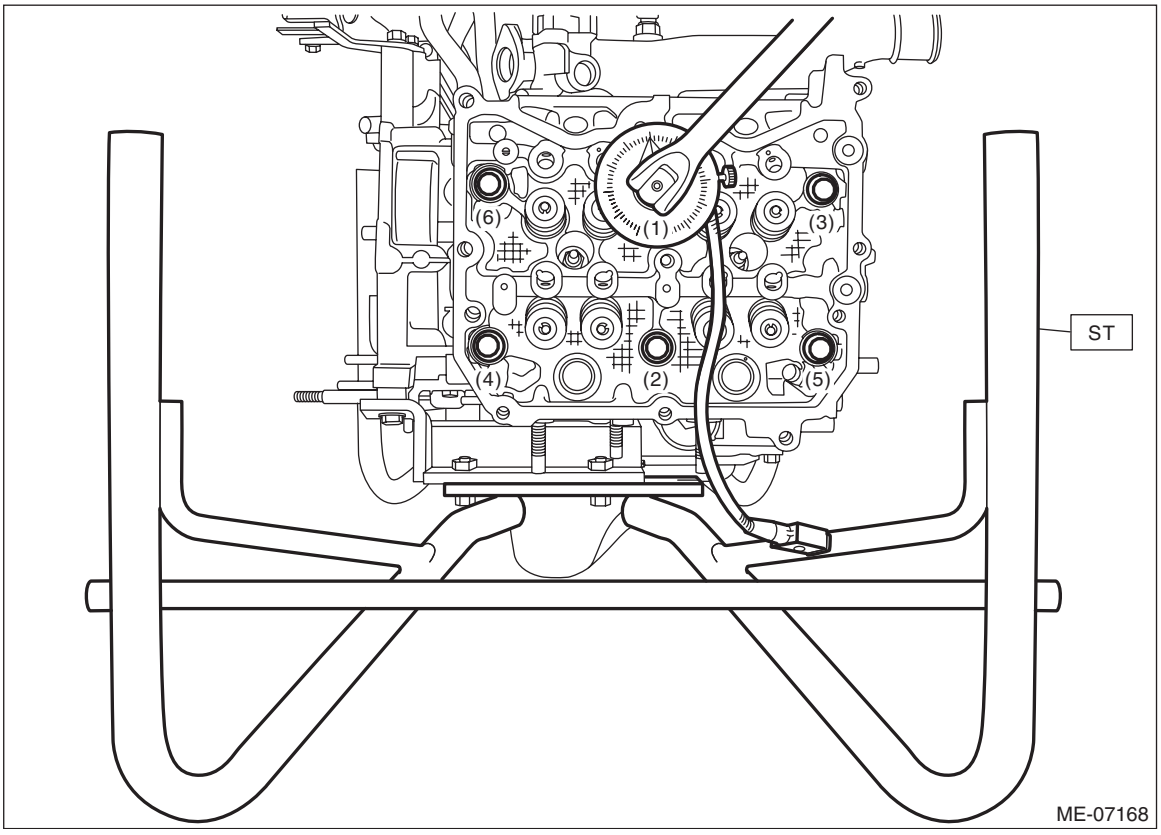

(7) Using angle gauge, tighten the cylinder head bolts (2 places) with specified angle in numerical order as shown in the figure.

ST 499817100 ENGINE STAND

Tightening angle:

75°±2°

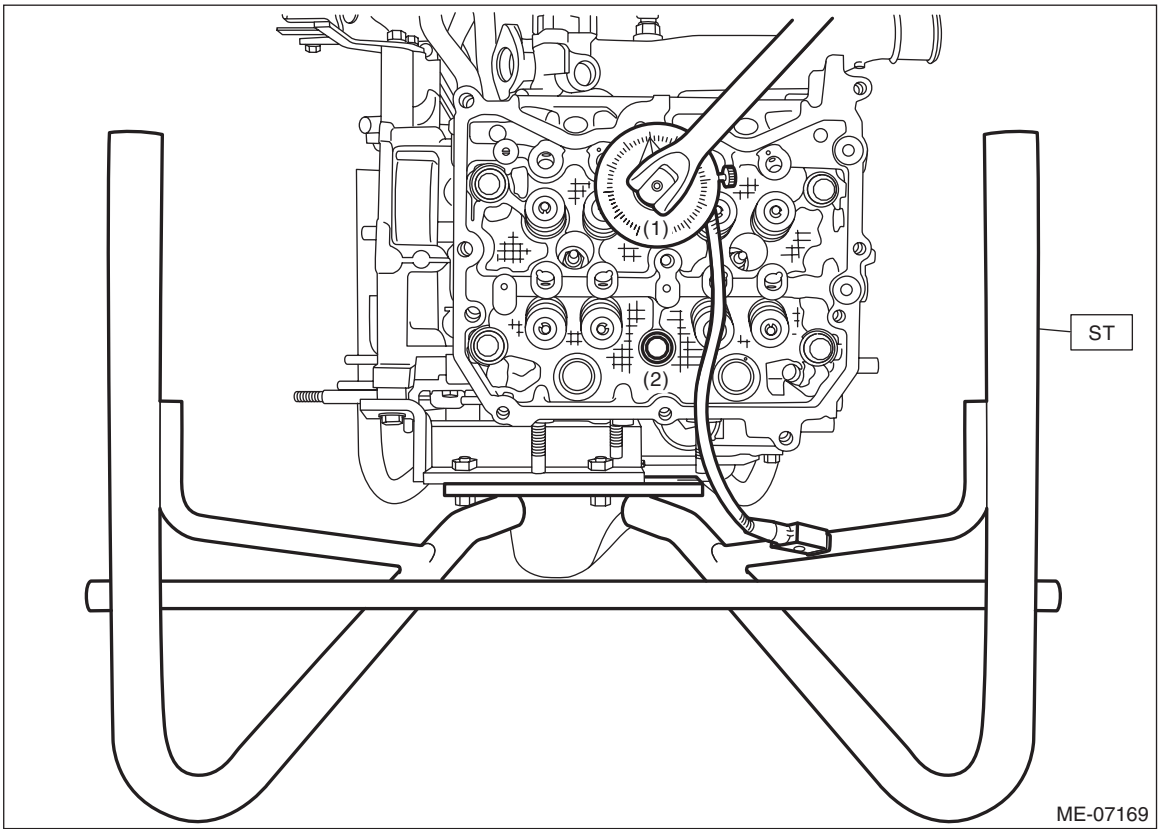

(8) Using angle gauge, tighten the cylinder head bolts (4 places) with specified angle in numerical order as shown in the figure.

NOTE:
After tightening, if the liquid gasket is squeezed out onto the seal surface of the chain cover, completely remove any squeezed-out liquid gasket.
ST 499817100 ENGINE STAND

Tightening angle:
30°±2°

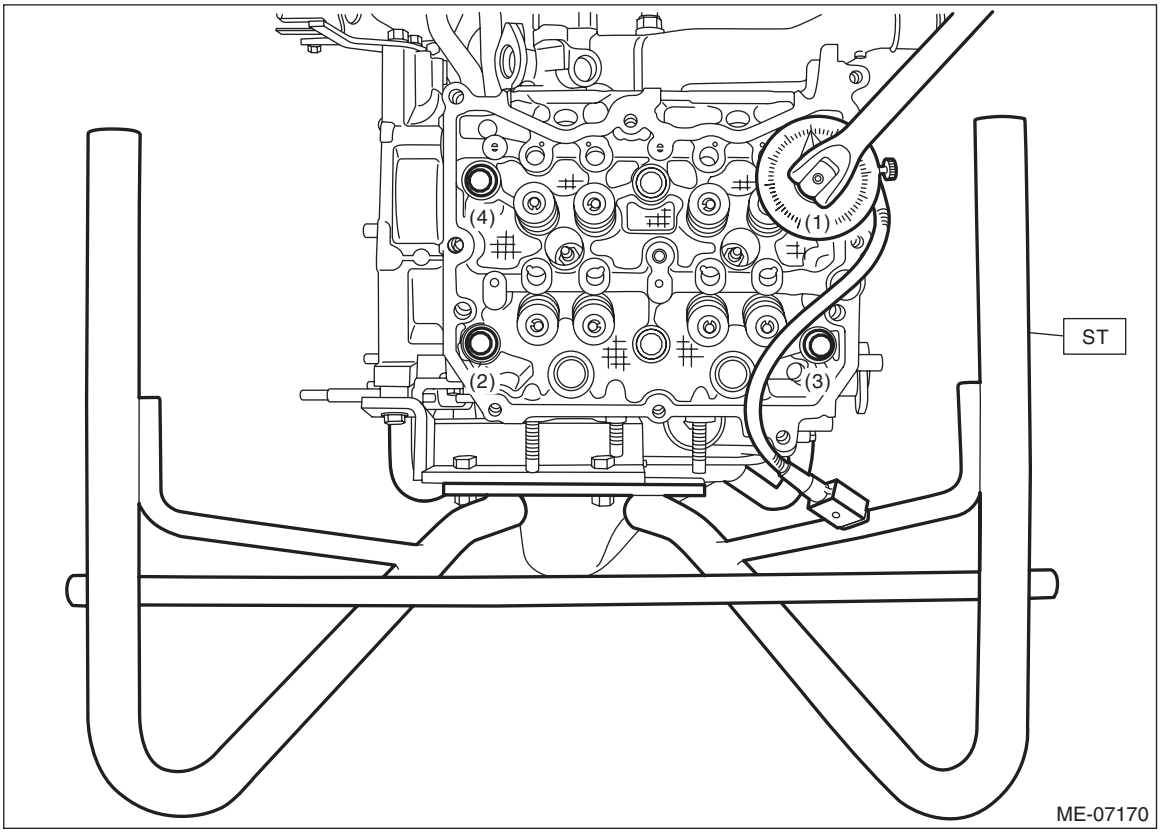

5) Install the EGR pipe assembly to the water pipe assembly and the cylinder block RH. (Gasoline engine model)

NOTE:
Use a new gasket.

Tightening torque:
T1: 6.4 N·m (0.7 kgf-m, 4.7 ft-lb)
T2: 51 N·m (5.2 kgf-m, 37.6 ft-lb)

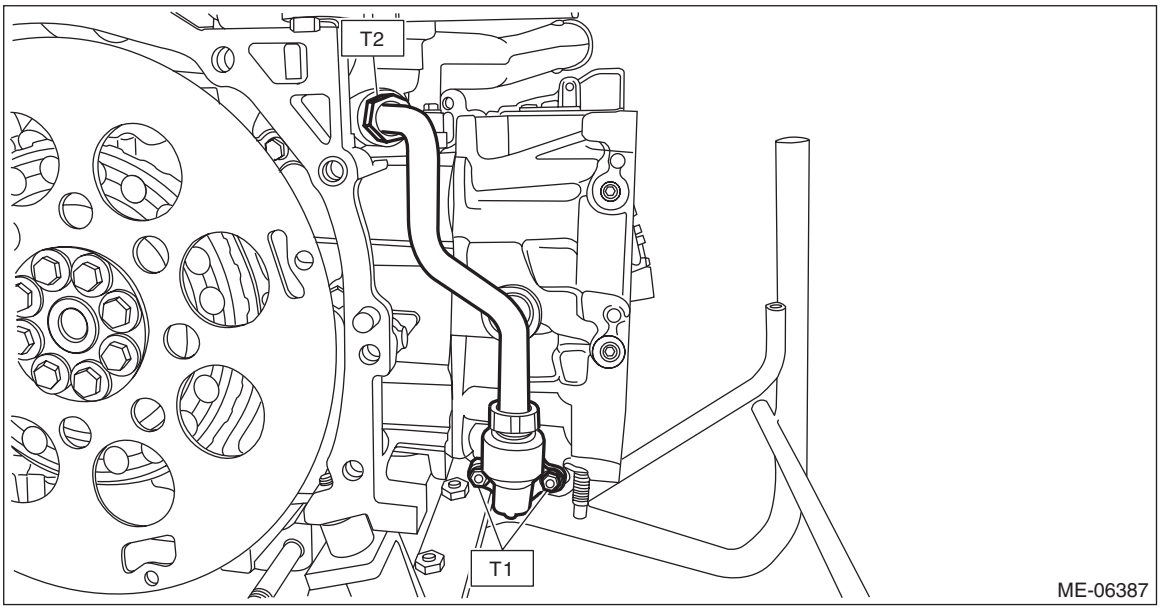

6) Install the EGR cooler to the cylinder head RH. (HEV model)
(1) Set the EGR cooler to the cylinder head RH, and temporarily tighten the bolt and nut which secures the EGR cooler to the cylinder head RH.

NOTE:
Use a new gasket.
(2) Tighten the bolts and nuts which secure the EGR cooler to the cylinder head RH in numerical order as shown in the figure, and connect the engine coolant outlet hose to the EGR cooler.

Tightening torque:
T1: 6.4 N·m (0.7 kgf-m, 4.7 ft-lb)
T2: 9 N·m (0.9 kgf-m, 6.6 ft-lb)

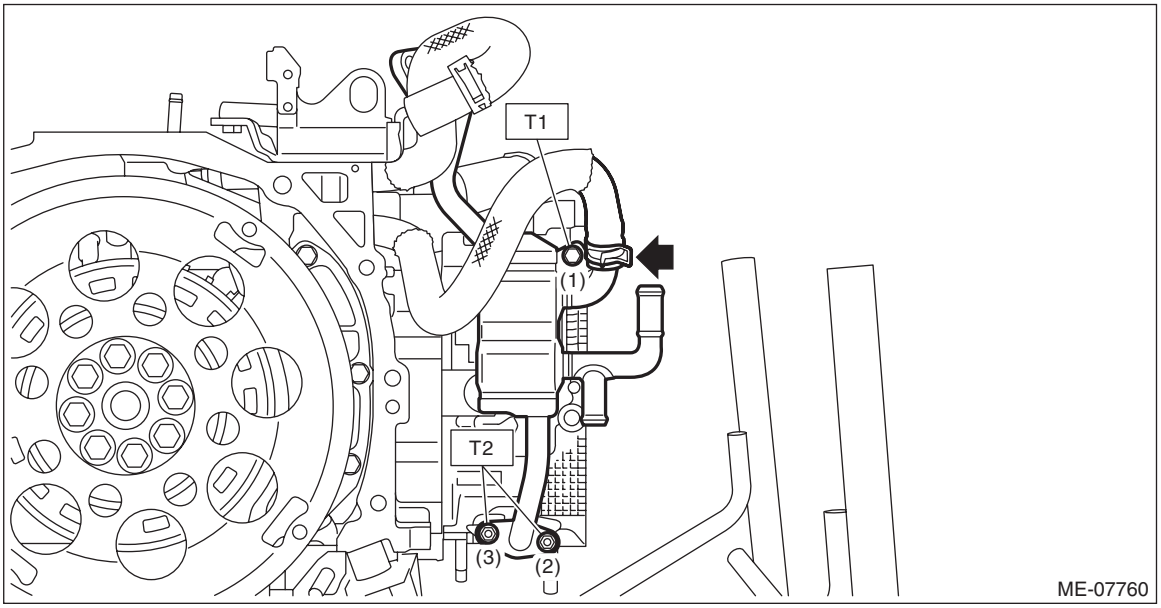

7) Install the cam carrier RH. <Ref. to ME(H4DO(w/o HEV))-220, CAM CARRIER RH, INSTALLATION, Cam Carrier.>
8) Install the rocker cover RH. <Ref. to ME(H4DO(w/o HEV))-199, ROCKER COVER RH, INSTALLATION, Rocker Cover.>
9) Install the chain cover. <Ref. to ME(H4DO(w/o HEV))-151, INSTALLATION, Chain Cover.>
10) Install the tumble generator valve assembly RH. <Ref. to FU(H4DO(w/o HEV))-91, INSTALLATION, Tumble Generator Valve Assembly.> <Ref. to FU(H4DO(HEV))-75, INSTALLATION, Tumble Generator Valve Assembly.>
11) Install the engine wiring harness. <Ref. to FU(H4DO(w/o HEV))-49, INSTALLATION, Engine Wiring Harness.> <Ref. to FU(H4DO(HEV))-37, INSTALLATION, Engine Wiring Harness.>
12) Install the intake manifold. <Ref. to FU(H4DO(w/o HEV))-30, INSTALLATION, Intake Manifold.> <Ref. to FU(H4DO(HEV))-26, INSTALLATION, Intake Manifold.>
13) Install the engine to the vehicle. <Ref. to ME(H4DO(w/o HEV))-86, INSTALLATION, Engine Assembly.>

2. CYLINDER HEAD LH

1) Clean the bolt holes in the cylinder block LH.

CAUTION:
To avoid erroneous tightening of the bolts, clean out the bolt holes sufficiently by blowing with compressed air to eliminate engine coolant etc.
2) Apply liquid gasket to both sides of the cylinder head gasket LH as shown in the figure.

NOTE:
- Use a new cylinder head gasket LH.
- Before applying liquid gasket, degrease the mating surface of cylinder blocks LH and cylinder head LH.
- Install within 5 min. after applying liquid gasket.

Liquid gasket:
THREE BOND 1217G (Part No. 0877Y0100) or equivalent

Liquid gasket applying diameter:
3±1 mm (0.1181±0.0394 in)

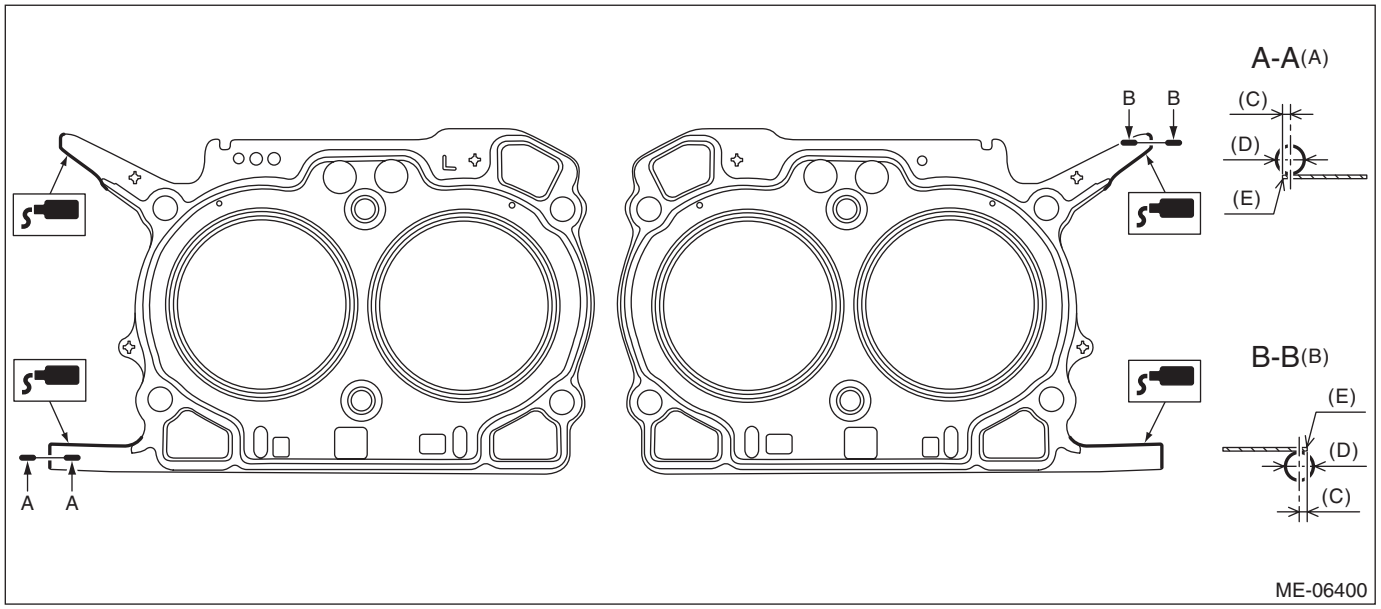

(A)	Liquid gasket applying position to the cylinder head side	(C)	1 mm (0.0394 in) or less	(E)	Cylinder head gasket edge
(B)	Liquid gasket applying position to the cylinder block side	(D)	ϕ3±1 mm (0.1181±0.0394 in)		

3) Attach the cylinder head gasket LH.

NOTE:
Check that liquid gasket is squeezed out from the cylinder head gasket LH.
4) Install the cylinder head LH to the cylinder block LH.

CAUTION:
Be careful not to scratch the mating surface of cylinder head LH and cylinder block LH.

(1) Clean the cylinder head bolt threads and apply sufficient engine oil to the washer and cylinder head bolts threads.

(2) Mount the cylinder head LH onto the cylinder block LH, then tighten all bolts with a torque of 29 N·m (3.0 kgf-m, 21.4 ft-lb) in numerical order as shown in the figure.

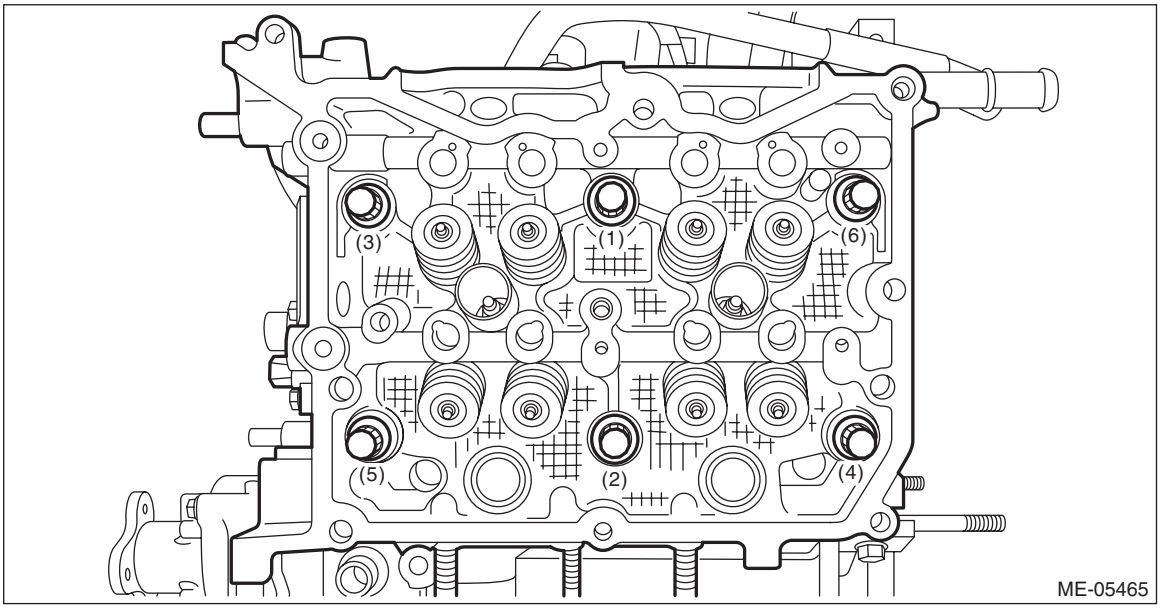

(3) Tighten all cylinder head bolts further with a torque of 100 N·m (10.2 kgf-m, 73.8 ft-lb) in numerical order as shown in the figure.

CAUTION:
If the bolt makes stick-slip sound during tightening, repeat the procedure from step 1). In that case, the cylinder head gasket LH can be reused. But it is necessary to remove liquid gasket completely from cylinder block LH, cylinder head LH and cylinder head gasket LH and re-apply to them.

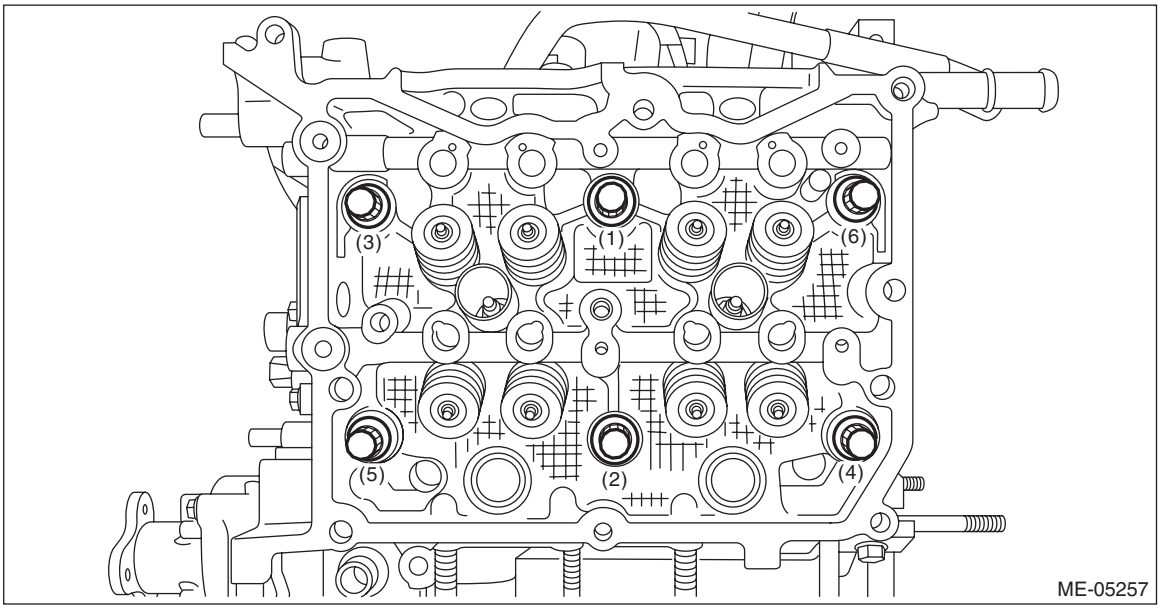

(4) Loosen all cylinder head bolts 180° in numerical order as shown in the figure, and then loosen all cylinder head bolts 180° further in numerical order as shown in the figure.

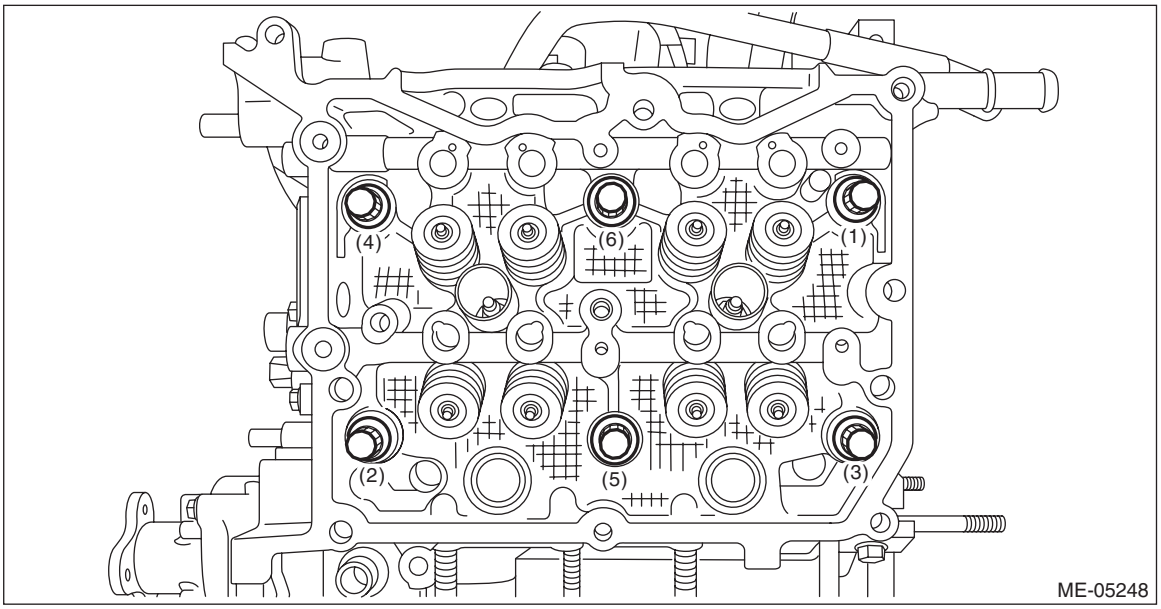

(5) Tighten all cylinder head bolts with a torque of 42 N·m (4.3 kgf-m, 31.0 ft-lb) in numerical order as shown in the figure.

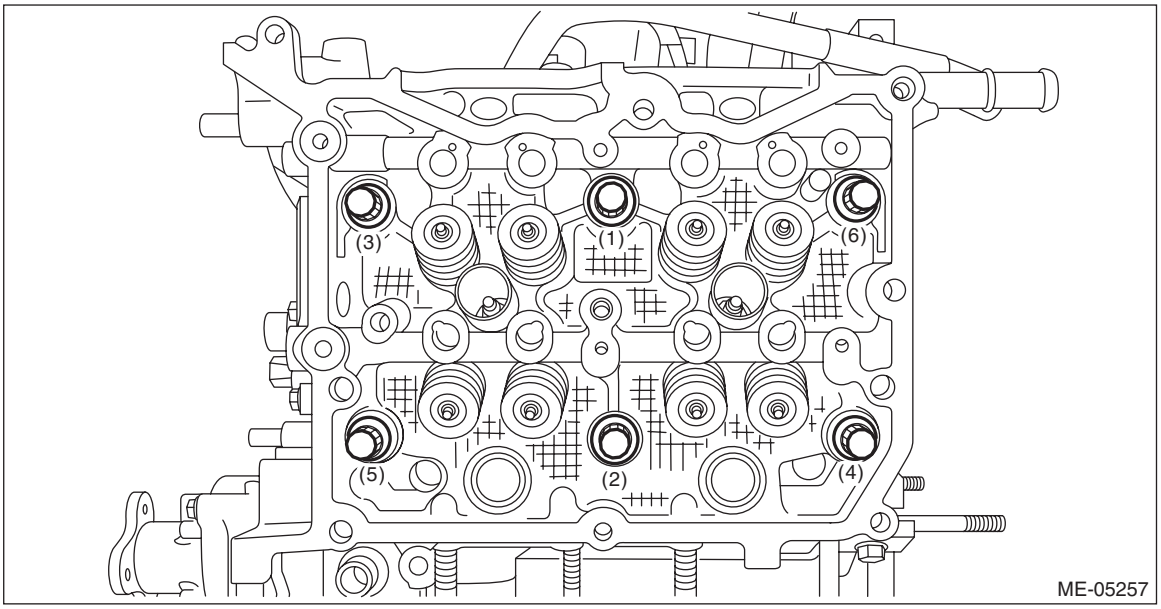

(6) Using angle gauge, tighten all cylinder head bolts with specified angle in numerical order as shown in the figure.

ST 499817100 ENGINE STAND

Tightening angle:
80°±2°

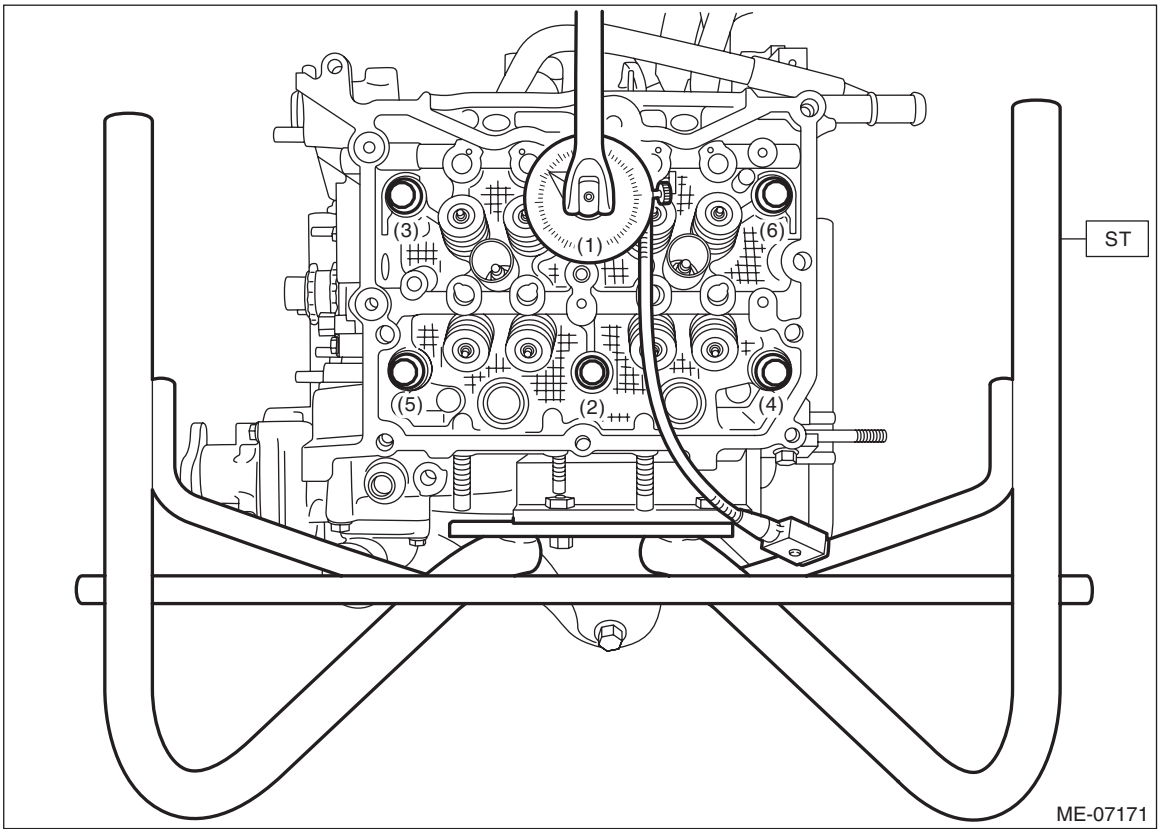

(7) Using angle gauge, tighten the cylinder head bolts (2 places) with specified angle in numerical order as shown in the figure.

ST 499817100 ENGINE STAND

Tightening angle:
75°±2°

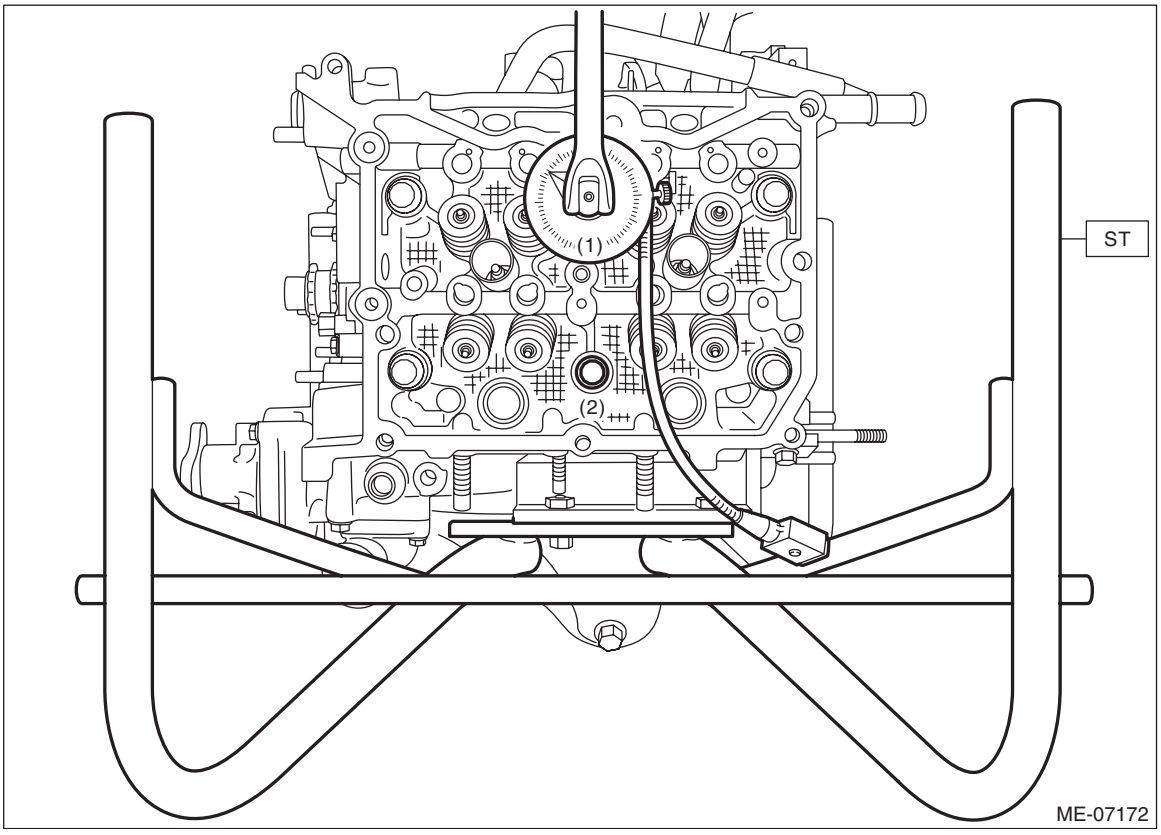

(8) Using angle gauge, tighten the cylinder head bolts (4 places) with specified angle in numerical order as shown in the figure.

NOTE:
After tightening, if the liquid gasket is squeezed out onto the seal surface of the chain cover, completely remove any squeezed-out liquid gasket.
ST 499817100 ENGINE STAND

Tightening angle:
30°±2°

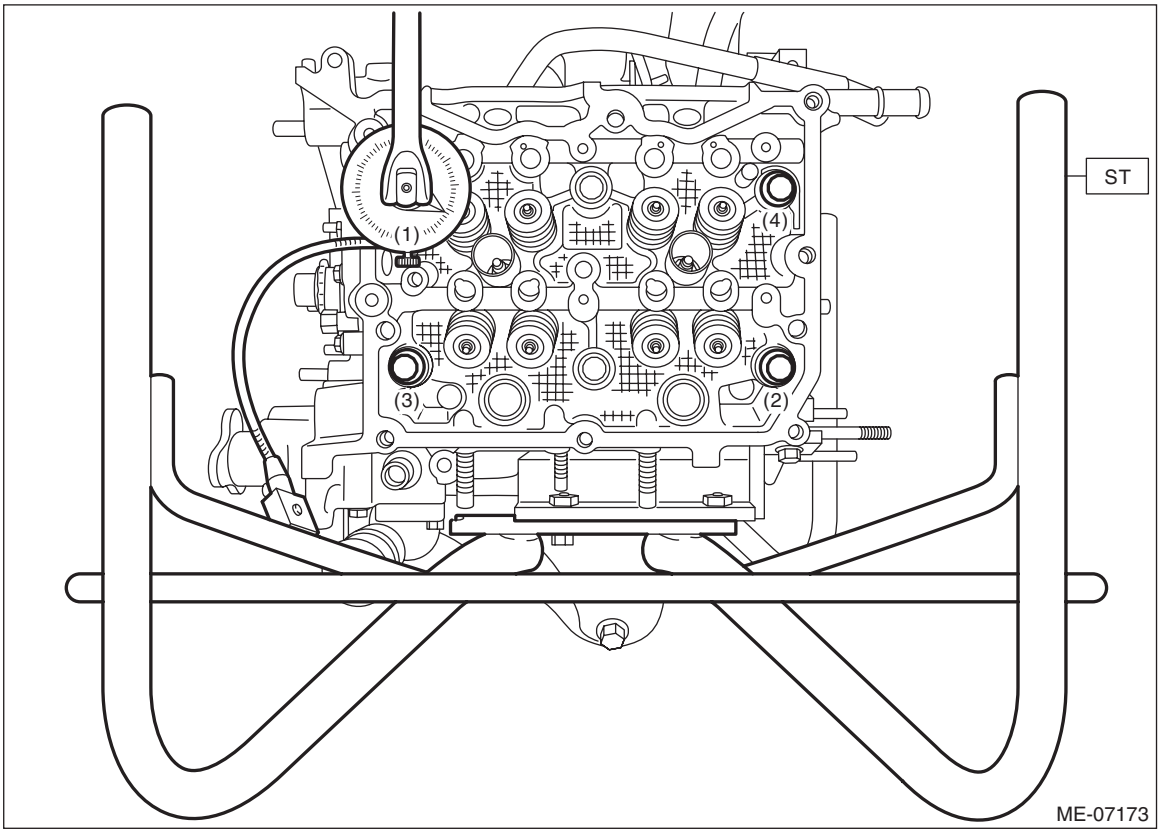

5) Install the A/C compressor. <Ref. to AC-58, INSTALLATION, Compressor.>
6) Install the cam carrier LH. <Ref. to ME(H4DO(w/o HEV))-231, CAM CARRIER LH, INSTALLATION, Cam Carrier.>
7) Install the rocker cover LH. <Ref. to ME(H4DO(w/o HEV))-203, ROCKER COVER LH, INSTALLATION, Rocker Cover.>
8) Install the chain cover. <Ref. to ME(H4DO(w/o HEV))-151, INSTALLATION, Chain Cover.>
9) Install the tumble generator valve assembly LH. <Ref. to FU(H4DO(w/o HEV))-91, INSTALLATION, Tumble Generator Valve Assembly.> <Ref. to FU(H4DO(HEV))-75, INSTALLATION, Tumble Generator Valve Assembly.>
10) Install the engine wiring harness. <Ref. to FU(H4DO(w/o HEV))-49, INSTALLATION, Engine Wiring Harness.> <Ref. to FU(H4DO(HEV))-37, INSTALLATION, Engine Wiring Harness.>
11) Install the intake manifold. <Ref. to FU(H4DO(w/o HEV))-30, INSTALLATION, Intake Manifold.> <Ref. to FU(H4DO(HEV))-26, INSTALLATION, Intake Manifold.>
12) Install the engine to the vehicle. <Ref. to ME(H4DO(w/o HEV))-86, INSTALLATION, Engine Assembly.>

C: DISASSEMBLY

1) Remove the chain cover securing bolt from the cylinder head LH.

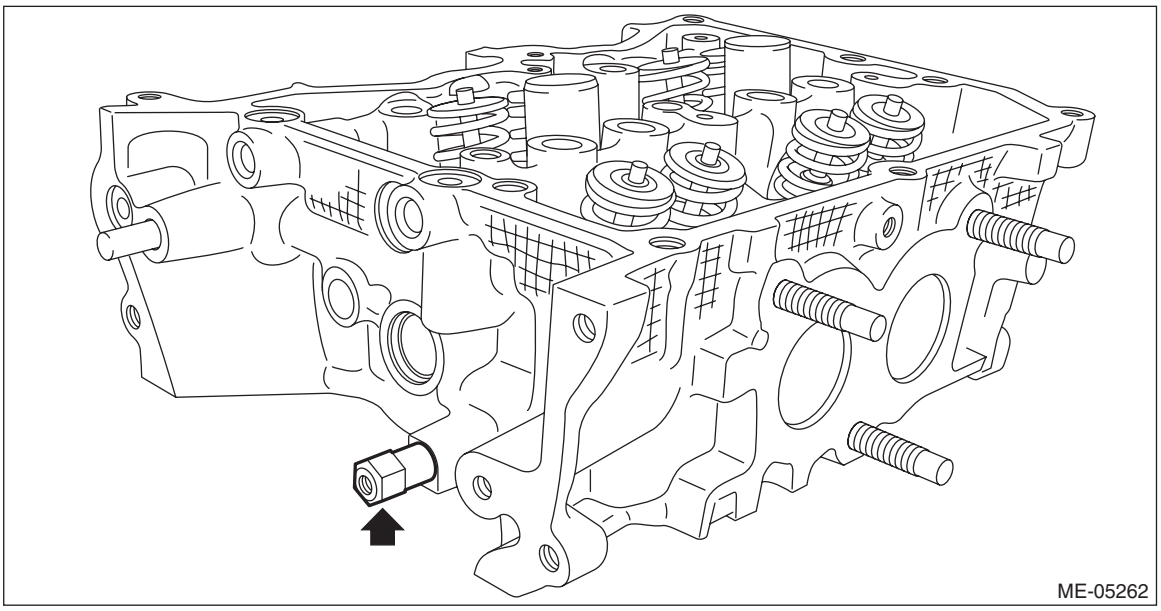

2) Remove the stud bolts from the cylinder head.

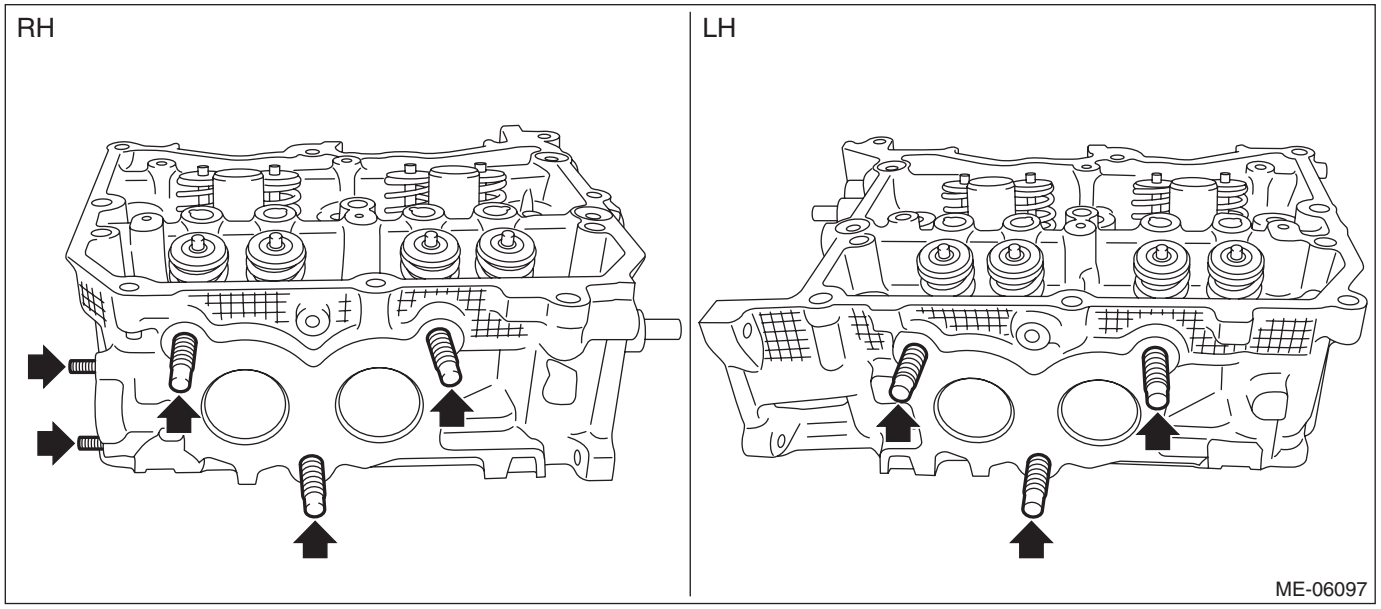

3) Remove the valve collet, valve, valve spring retainer, valve spring and valve spring seat from the cylinder head RH.

CAUTION:
During work, place a waste cloth, etc. to avoid scratching the mating surface of the cylinder head RH.

NOTE:
- Mark each part to prevent confusion.
- Keep all the removed parts in order for re-installing in their original positions.

(1) Compress the valve spring and remove the valve collet using ST.

ST 0920287002000 REMOVER AND REPLACER

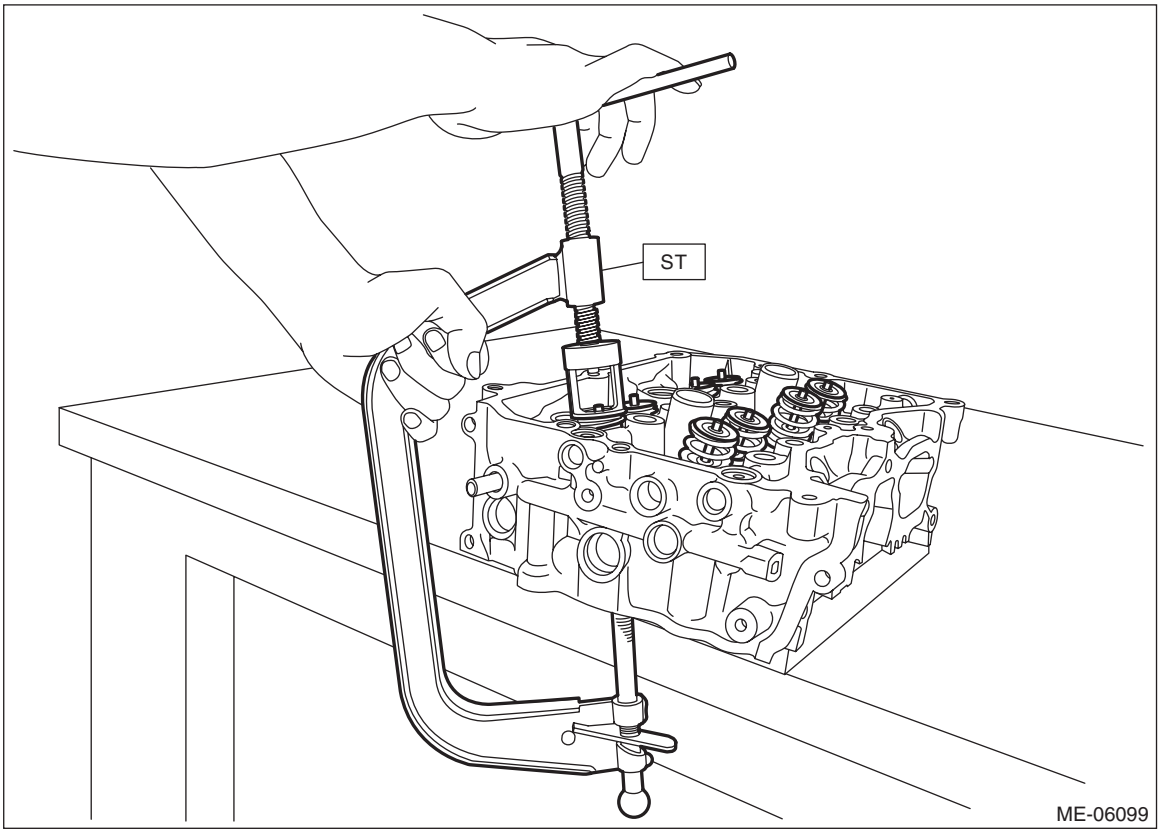

(2) Remove valve, valve spring retainer, valve spring and valve spring seat.

4) Remove the valve collet, valve, valve spring retainer, valve spring and valve spring seat from the cylinder head LH.
5) Remove the valve oil seals from valve guides of cylinder head RH.

CAUTION:
• During work, place a waste cloth, etc. to avoid scratching the mating surface of the cylinder head RH.
• Use special care not to damage the cylinder head RH and guide during work.

NOTE:
For removal of valve guide, refer to INSPECTION. <Ref. to ME(H4DO(w/o HEV))-280, VALVE & VALVE GUIDE, INSPECTION, Cylinder Head.>

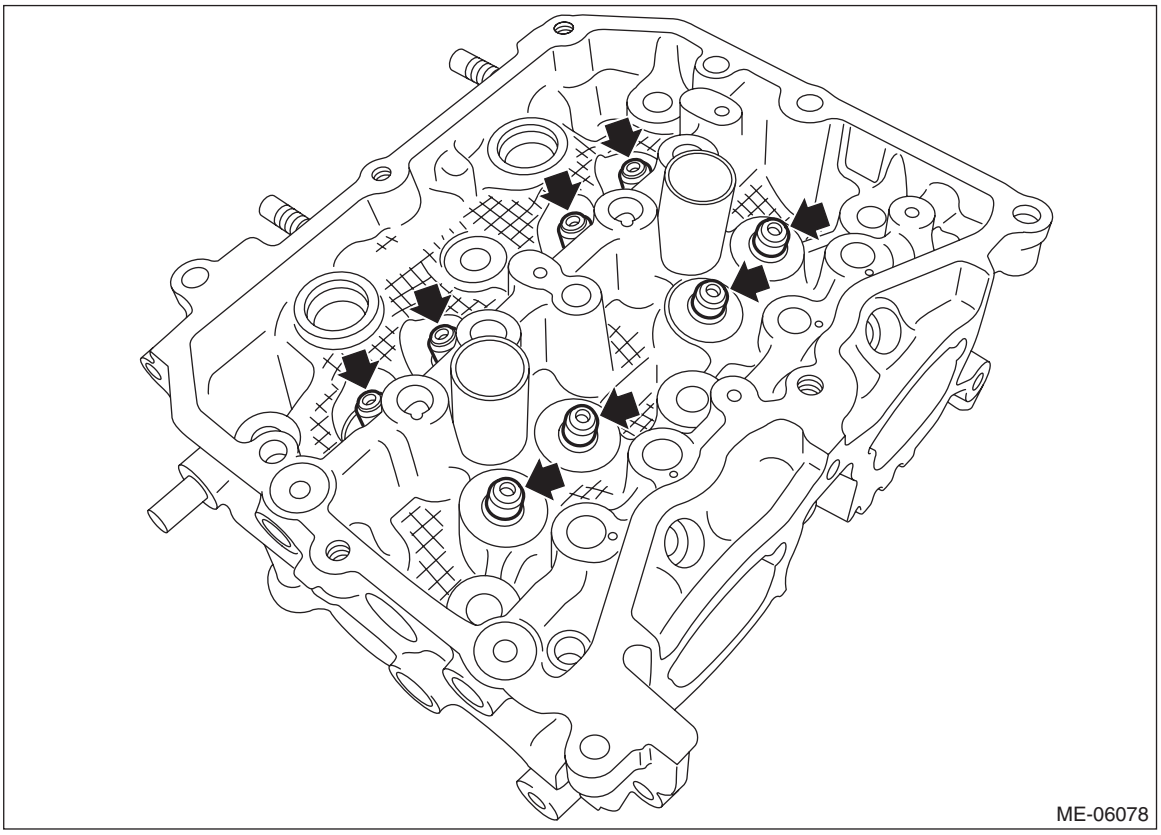

6) For cylinder head LH, remove the valve oil seal in the same manner.

D: ASSEMBLY

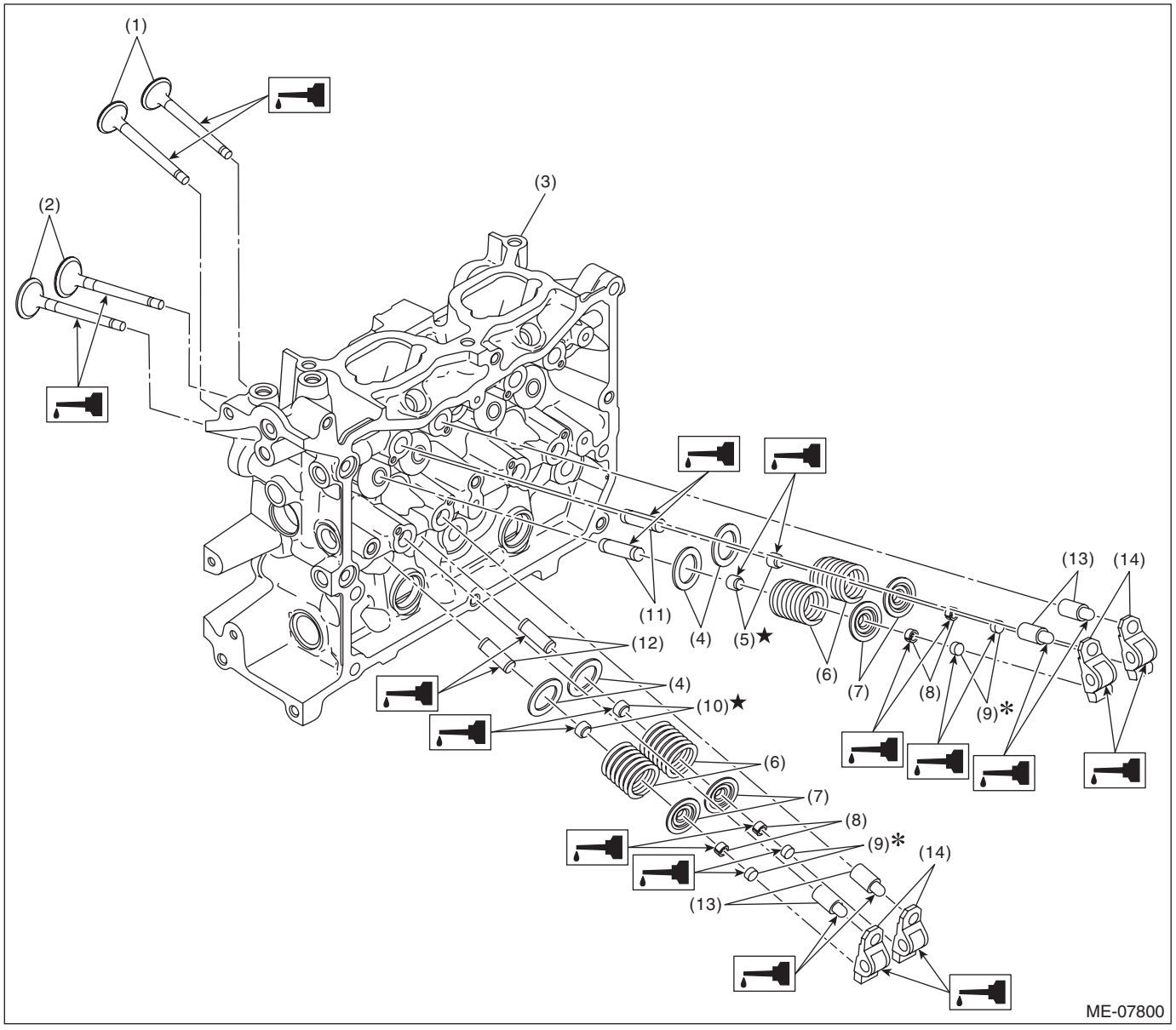

(1) Exhaust valve
(2) Intake valve
(3) Cylinder head
(4) Valve spring seat
(5) Intake valve oil seal
(6) Valve spring
(7) Valve spring retainer
(8) Valve collet
(9) Valve shim
(10) Exhaust valve oil seal
(11) Intake valve guide
(12) Exhaust valve guide
(13) Roller rocker arm pivot
(14) Roller rocker arm

1) Using the ST, install the valve oil seals to valve guides of cylinder head RH.

CAUTION:
• During work, place a waste cloth, etc. to avoid scratching the mating surface of the cylinder head RH.
• Use special care not to damage the cylinder head RH and guide during work.
• When installing the valve oil seal, press the ST with hands to install it and never drive the ST with a plastic hammer, otherwise the valve oil seal can be damaged.

NOTE:
- Use a new valve oil seal.
- Apply engine oil to valve oil seal before installing.
- The intake valve oil seals and exhaust valve oil seals are distinguished by their colors.

Identification colors:
Intake [Gray]
Exhaust [Green]

- For installation of valve guide, refer to INSPECTION. <Ref. to ME(H4DO(w/o HEV))-280, VALVE & VALVE GUIDE, INSPECTION, Cylinder Head.>

ST 18261AA010 VALVE OIL SEAL GUIDE

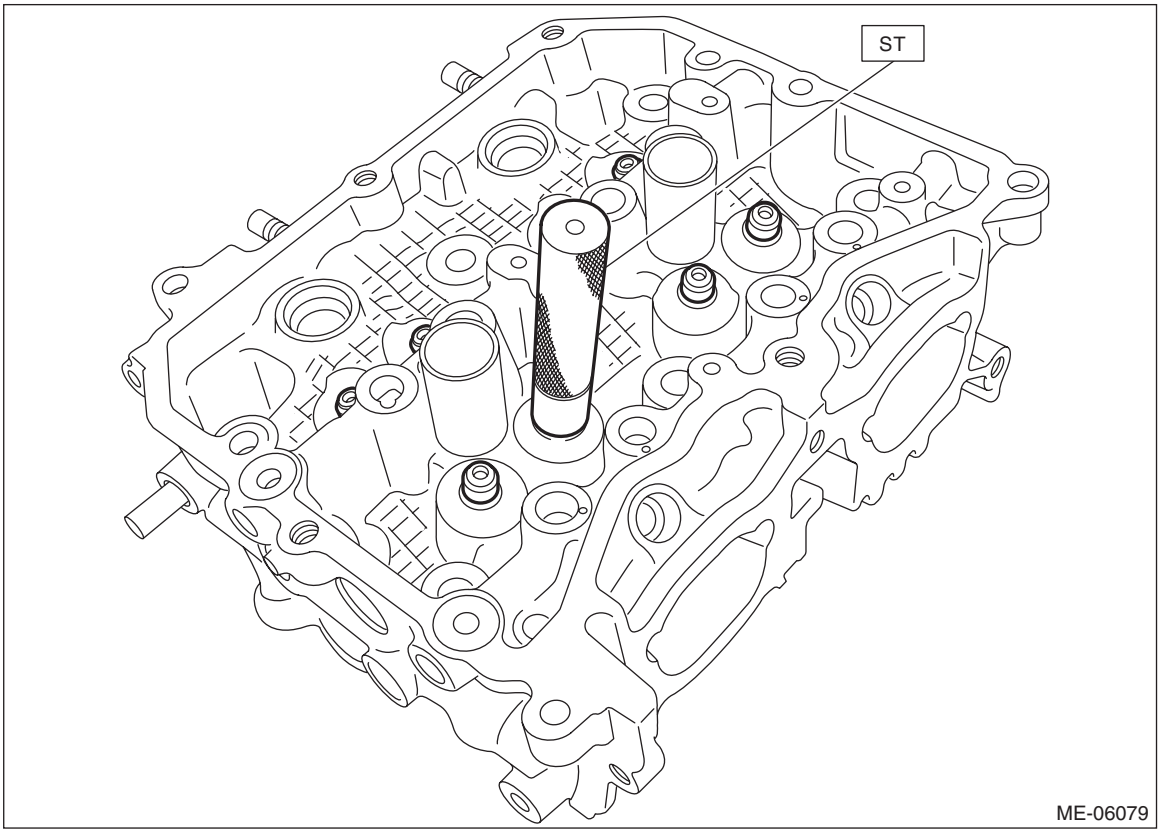

2) For cylinder head LH, install the valve oil seal in the same manner.
3) Install the valve spring seat, valve spring, valve spring retainer, valve and valve collet to the cylinder head RH.

CAUTION:
During work, place a waste cloth, etc. to avoid scratching the mating surface of the cylinder head RH.

(1) Set the valve spring seat, valve spring and valve spring retainer onto the cylinder head RH.

NOTE:
Be sure to install the valve spring with its close-coiled end facing the cylinder head side.

(2) Coat the valve stem of each valve with engine oil and insert the valve into valve guide.

NOTE:
When inserting the valve into valve guide, use special care not to damage the oil seal lip.

(3) Compress the valve spring and install the valve collet using ST.
ST 0920287002000 REMOVER AND REPLACER

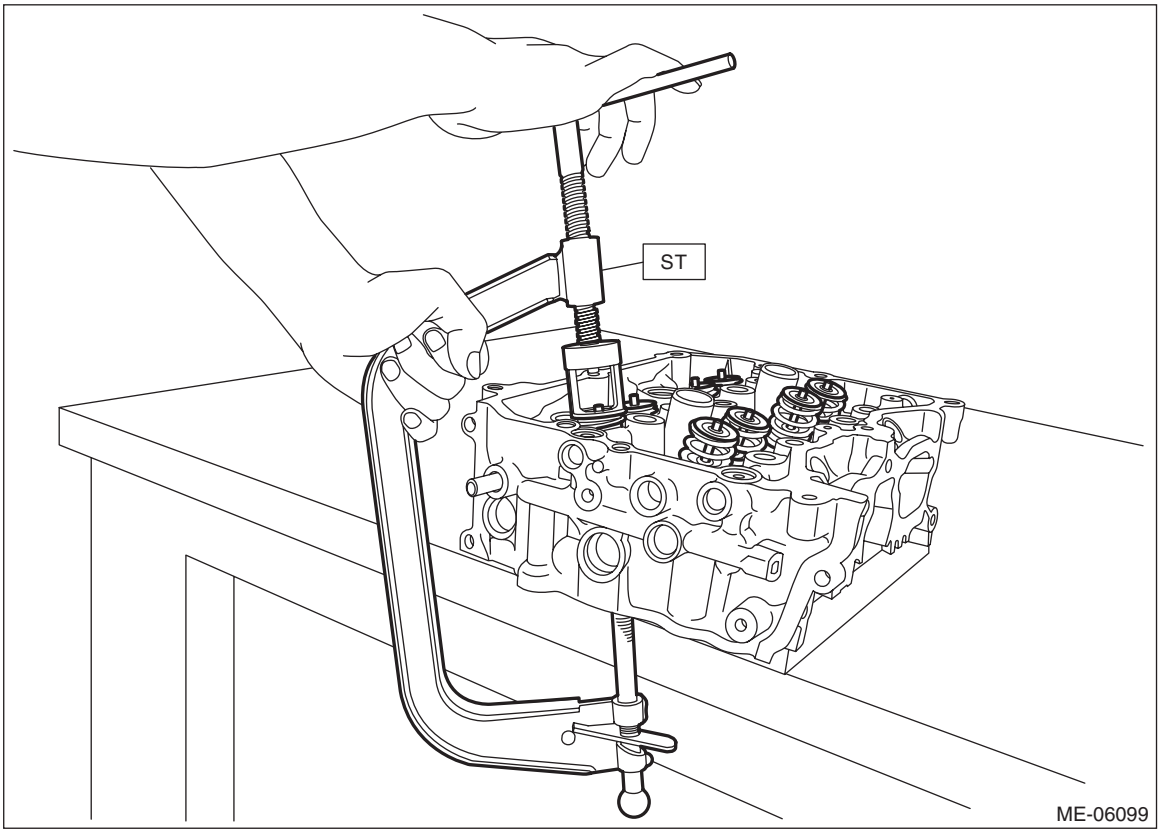

4) Install the valve spring seat, valve spring, valve spring retainer, valve and valve collet to the cylinder head LH.
5) Lightly tap the valve spring retainer with a plastic hammer, and make sure that the valve collet is securely attached.
6) Install the stud bolts onto cylinder heads.

Tightening torque:
T1: 6.4 N·m (0.7 kgf-m, 4.7 ft-lb)
T2: 18 N·m (1.8 kgf-m, 13.3 ft-lb)

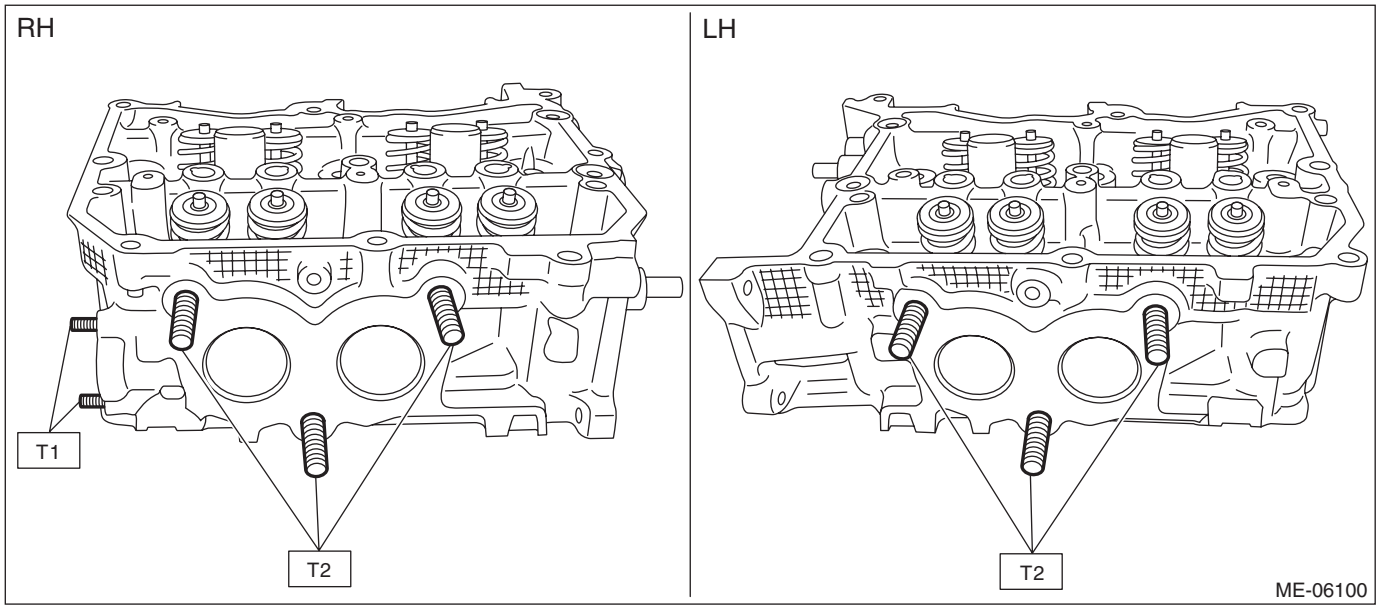

7) Install the chain cover securing bolt to the cylinder head LH.

Tightening torque:
6.4 N·m (0.7 kgf-m, 4.7 ft-lb)

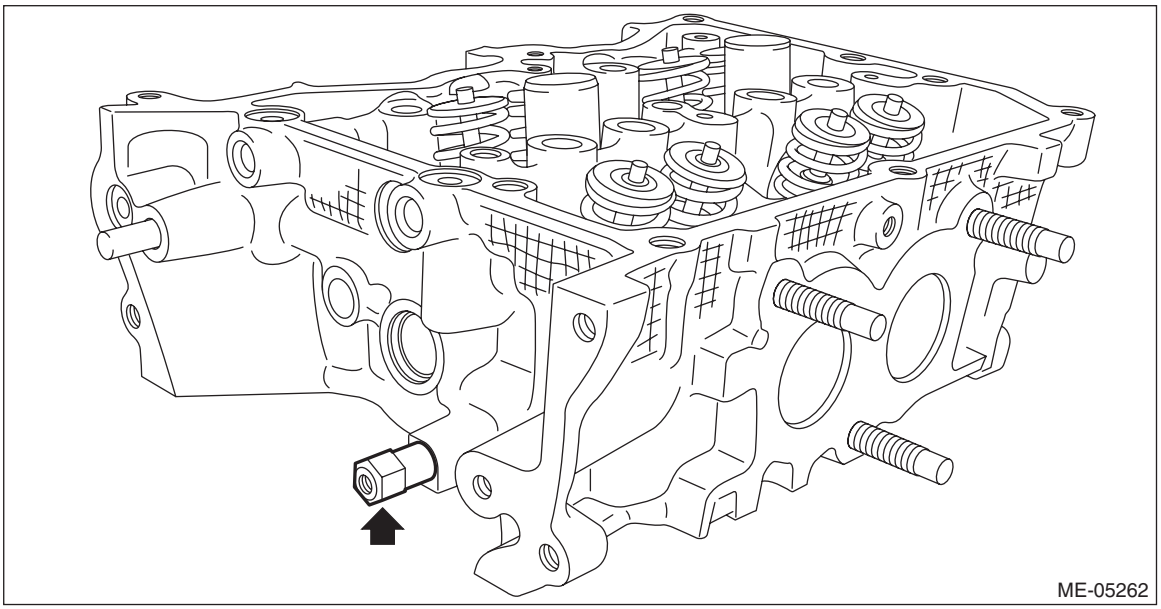

E: INSPECTION

1. CYLINDER HEAD

1) Visually inspect to make sure that there are no cracks, scratches or other damage.
2) Use liquid penetrant tester on the important sections to check for fissures.
3) Check that there are no marks of gas leaking or water leaking on gasket attachment surface.
4) Check the warping of the cylinder head mating surface that mates with cylinder block at the locations shown in the figure using a straight edge (A) and thickness gauge (B). If it exceeds the limit, correct the surface by grinding it with a surface grinder or replace the cylinder head.

NOTE:
- Measurement should be performed at a temperature of 20°C (68°F).
- If there is warpage on the cylinder head mating surface, the cylinder head bolt tightening torque and angle tightening may be improper. When installing the cylinder head, make sure that tightening torque and angle tightening work is performed precisely according to the operation procedures.
- When the cylinder head is replaced, lap each valve. Refer to “VALVE SEAT” for lapping. <Ref. to ME(H4DO(w/o HEV))-290, VALVE SEAT, INSPECTION, Cylinder Head.>

Cylinder head warpage:
Limit
0.020 mm (0.0008 in)

Cylinder head grinding limit:
To 98.4 mm (3.874 in)

Cylinder head height:
Standard
98.5 mm (3.878 in)

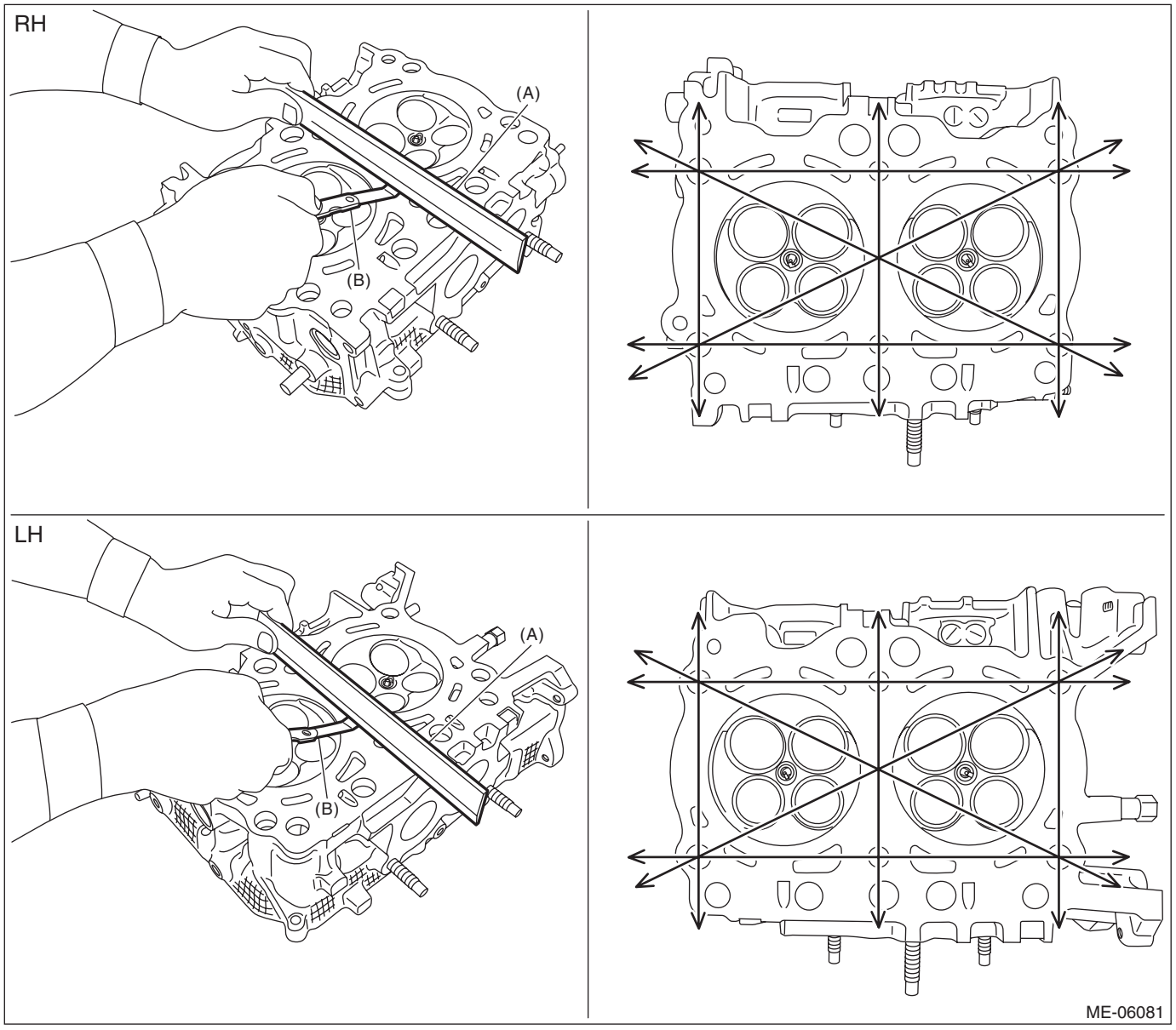

2. VALVE & VALVE GUIDE

1) Check the valve flange and stem for damage, wear or deformation.
2) Measure the thickness “H” of valve head edge as shown in the figure using a caliper gauge. If it is not within the standard, replace the valve.

NOTE:
- It is possible to differentiate between the intake valve and the exhaust valve by their overall length.

Valve overall length:
Intake
104.95 mm (4.132 in)
Exhaust
96.5 mm (3.799 in)

- When the valve is replaced, lap the valve. Refer to “VALVE SEAT” for lapping. <Ref. to ME(H4DO(w/o HEV))-290, VALVE SEAT, INSPECTION, Cylinder Head.>

Valve head edge thickness H:
Intake (A)
Standard
0.8 — 1.2 mm (0.031 — 0.047 in)
Exhaust (B)
Standard
1.0 — 1.4 mm (0.039 — 0.055 in)

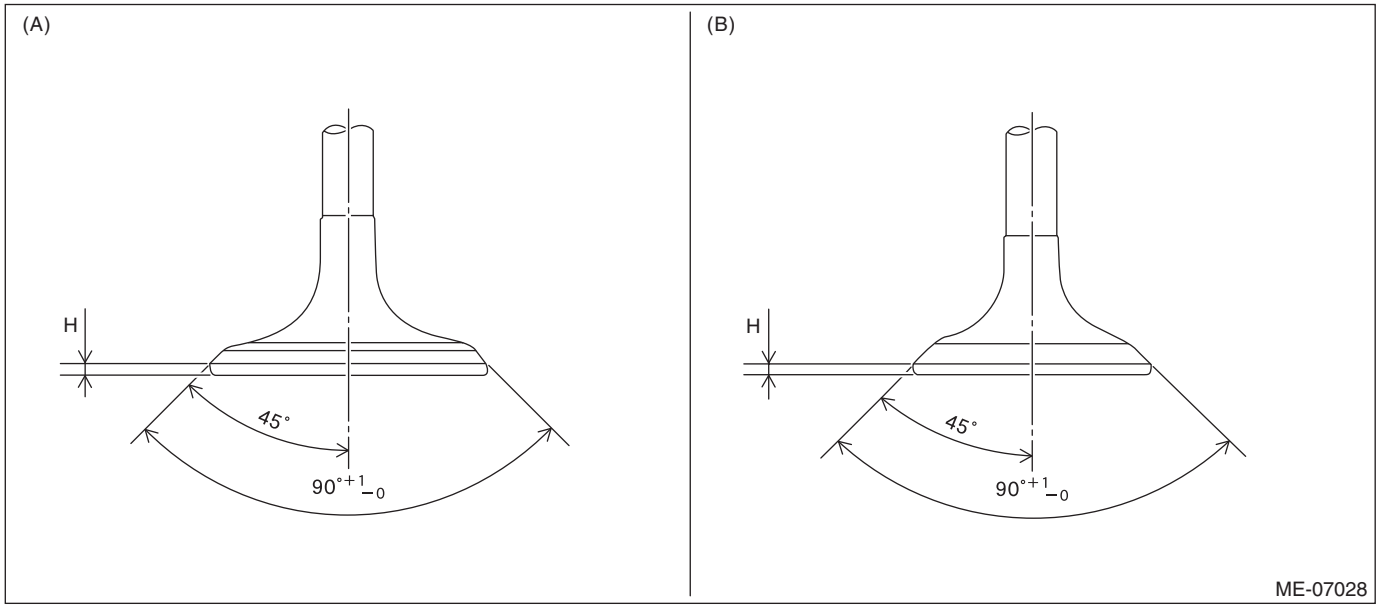

3) Check the clearance between valve and valve guide. Check the clearance between valve and valve guide by measuring the outer diameter of valve stem and the inner diameter of valve guide respectively.

(1) Measure the outer diameter of valve stem with a micrometer. If it is not within the standard, replace the valve.

NOTE:
- Measurement should be performed at a temperature of 20°C (68°F).
- Measure the outer diameter of the valve stem at the six locations as shown in the figure, and read the value of most worn location.
- When the valve is replaced, lap the valve. Refer to “VALVE SEAT” for lapping. <Ref. to ME(H4DO(w/o HEV))-290, VALVE SEAT, INSPECTION, Cylinder Head.>

Valve stem outer diameter:

Intake

Standard

5.455 — 5.470 mm (0.2148 — 0.2154 in)

Exhaust

Standard

5.445 — 5.460 mm (0.2144 — 0.2150 in)

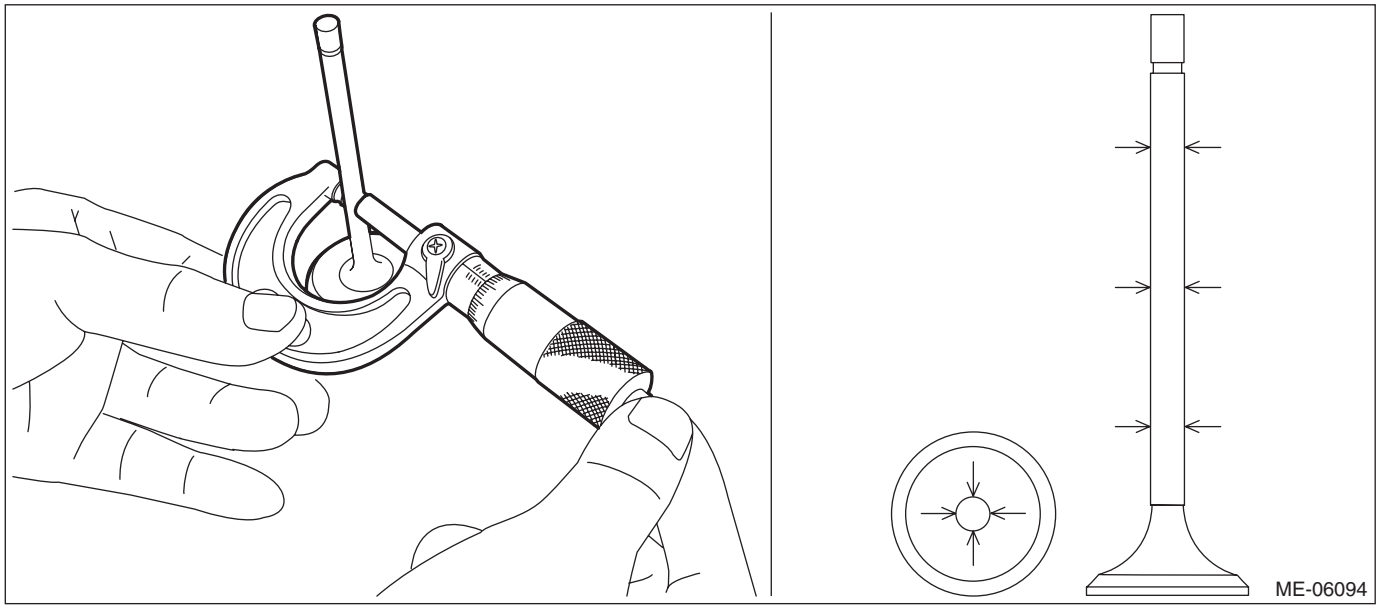

(2) Using a caliper gauge, measure the inner diameter of valve guide. If it is not within the standard, replace the valve guide. For replacement procedure, refer to step 4).

NOTE:
- Measurement should be performed at a temperature of 20°C (68°F).
- Measure the inner diameter of the valve guide at the six locations as shown in the figure, and read the value of most worn location.

Valve guide inner diameter:
Standard
5.500 — 5.512 mm (0.2165 — 0.2170 in)

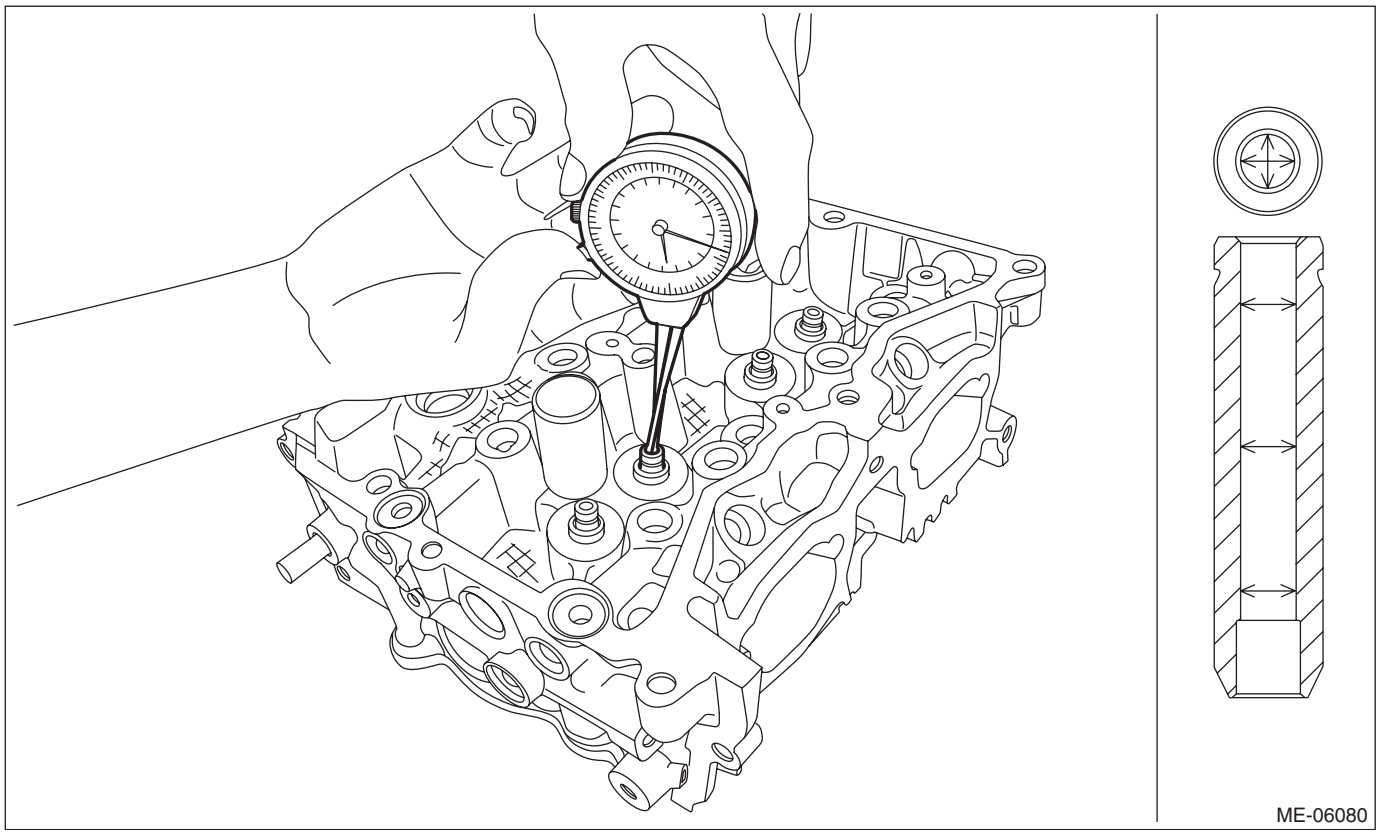

(3) Calculate the clearance between valve and valve guide.

Clearance between valve and valve guide:
Intake
Standard
0.030 — 0.057 mm (0.0012 — 0.0022 in)
Exhaust
Standard
0.040 — 0.067 mm (0.0016 — 0.0026 in)

4) If the clearance between valve and valve guide exceeds the standard, replace the valve or valve guide, whichever shows the greater amount of wear or damage. For replacement procedure of valve guide, refer to the following.

NOTE:
When the valve is replaced, lap the valve. Refer to “VALVE SEAT” for lapping. <Ref. to ME(H4DO(w/o HEV))-290, VALVE SEAT, INSPECTION, Cylinder Head.>

(1) Insert ST into the valve guide with the combustion chamber upward and remove the valve guide using plastic hammer.

CAUTION:
- **Place a wood board wrapped with a waste cloth to stabilize the cylinder head before work.**
- **Use special care not to damage the cylinder head during work.**
- **Always strike the ST vertically with a plastic hammer. Otherwise, the ST can be damaged.**

ST 499765700 VALVE GUIDE REMOVER AND INSTALLER

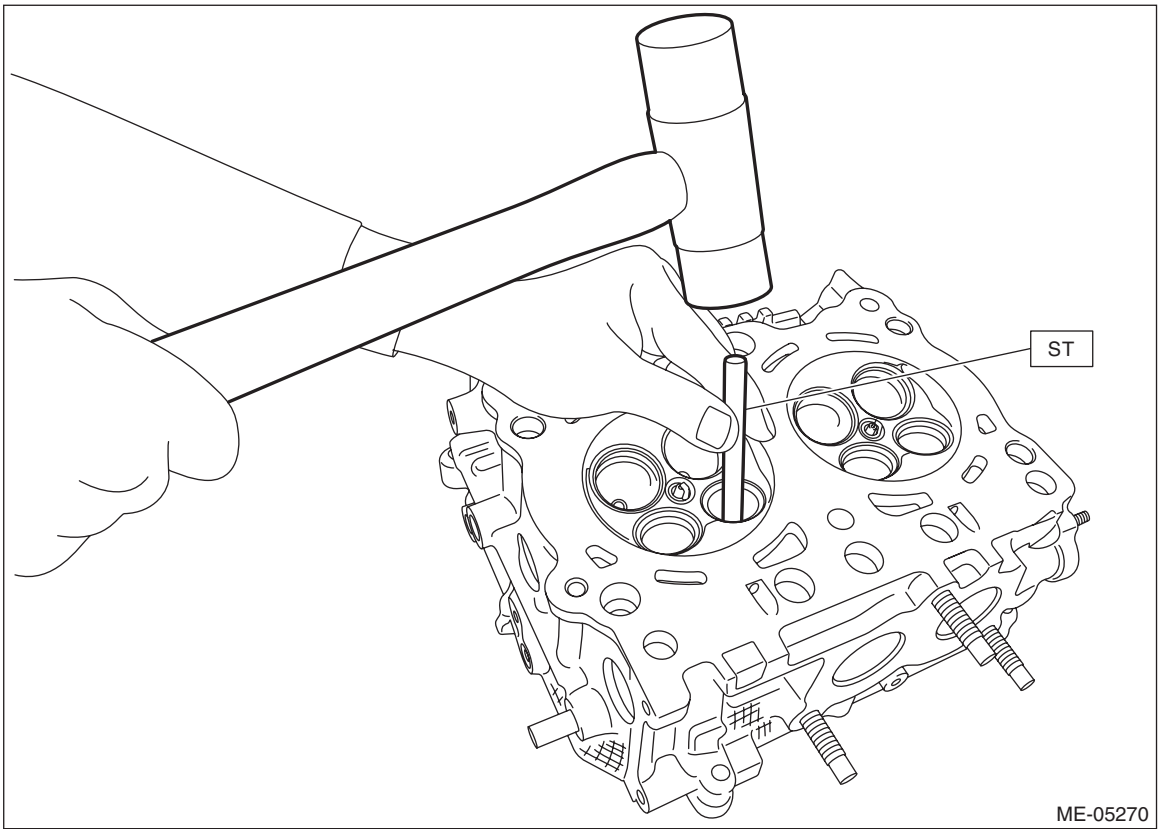

(2) Before installing the valve guide, make sure that neither scratches nor damages exist on the inner surface of valve guide installation holes of cylinder head.
(3) Draw a reference line (A) for insert on the valve guide using a marker as shown in the figure.

NOTE:
- Use a new valve guide.
- A reference line for insert is used as a guide when tapping-in the valve guide.

Valve guide inserting reference line position L:
15 mm (0.5906 in)

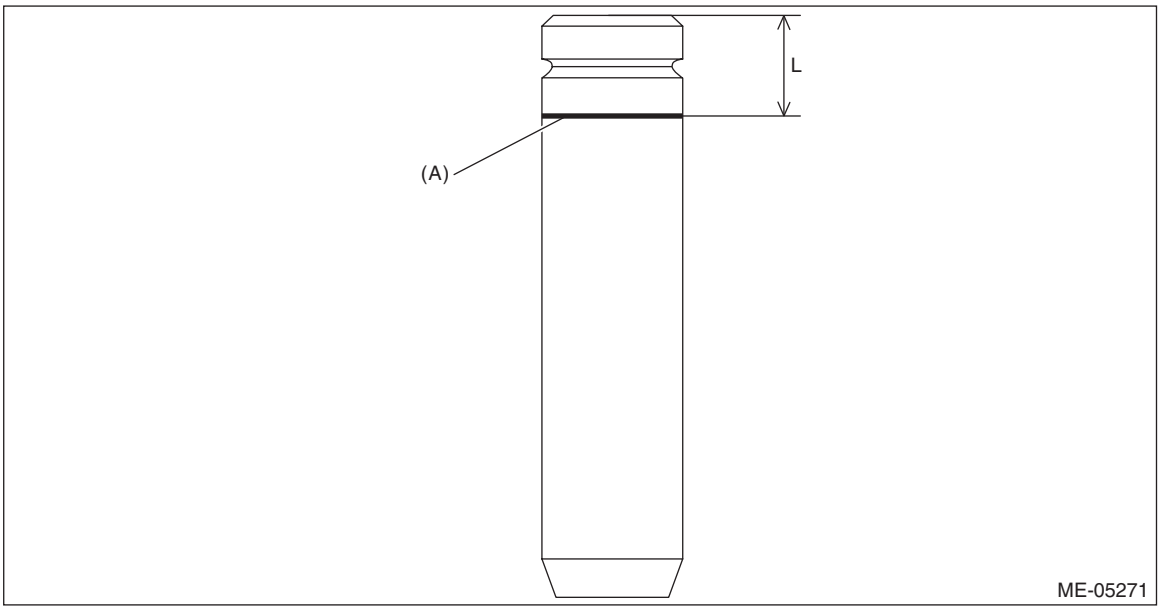

(4) Apply a enough coat of engine oil to the valve guide, and set the valve guide on the cylinder head with the combustion chamber downward.
(5) Insert the ST into the valve guide, and tap-in the valve guide to the reference line (A) for insert using plastic hammer.

CAUTION:
- **During work, place a waste cloth, etc. to avoid scratching the mating surface of the cylinder head.**
- **Use special care not to damage the cylinder head during work.**
- **Always strike the ST vertically with a plastic hammer. Otherwise, the ST can be damaged.**

ST 499765700 VALVE GUIDE REMOVER AND INSTALLER

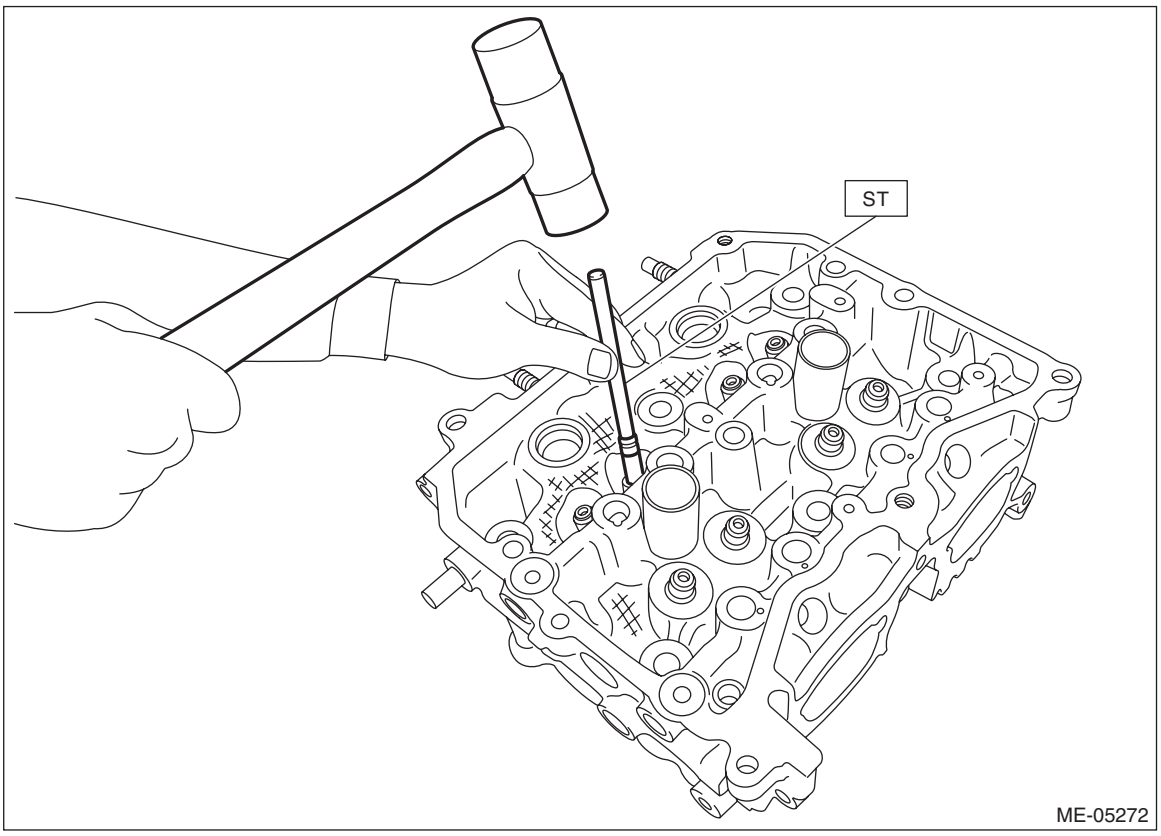

(6) Measure the valve guide protrusion amount “L” as shown in the figure using a caliper gauge. Insert the ST into the valve guide again, and tap-in the valve guide so that it is positioned within standard by referring to the measured value using plastic hammer.

CAUTION:
- **During work, place a waste cloth, etc. to avoid scratching the mating surface of the cylinder head.**
- **Use special care not to damage the cylinder head during work.**
- **Always strike the ST vertically with a plastic hammer. Otherwise, the ST can be damaged.**

NOTE:
Be careful not to tap-in excessively by repeating the steps of Tapping-in → Measurement → Tapping-in → Measurement … when installing the valve guide.

ST 499765700 VALVE GUIDE REMOVER AND INSTALLER

Valve guide protrusion amount L:
Standard
11.4 — 11.8 mm (0.449 — 0.465 in)

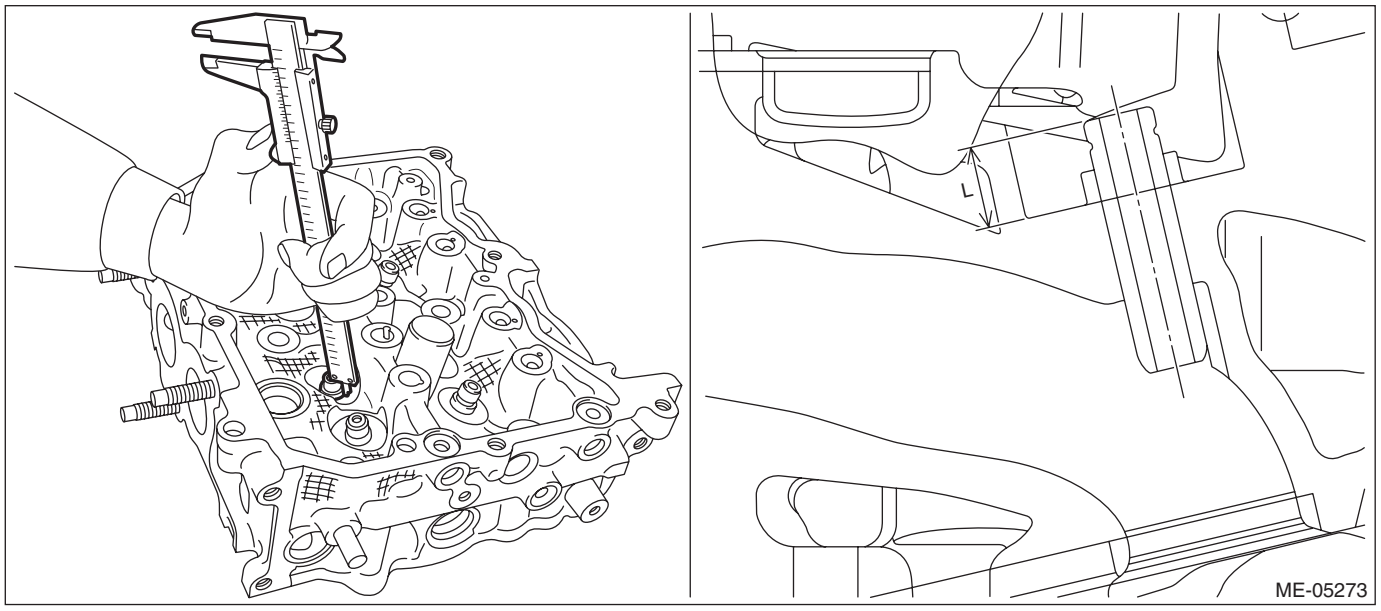

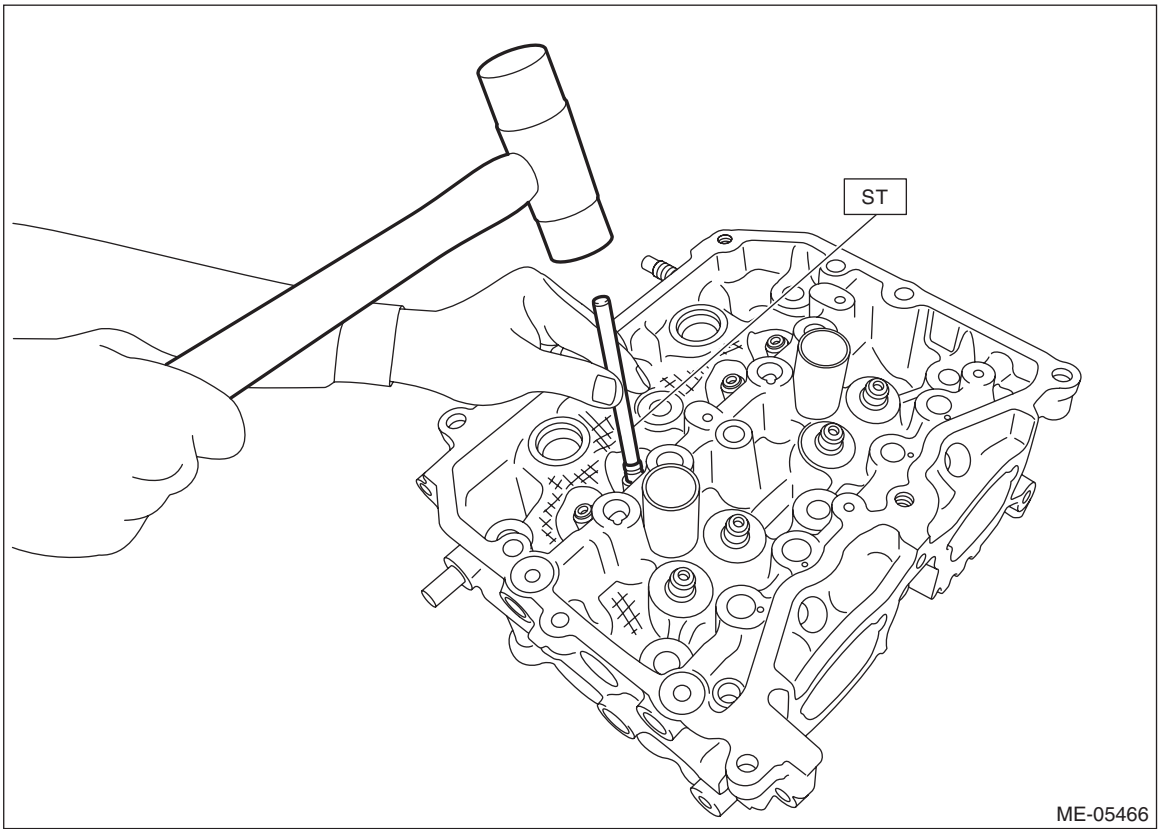

(7) Ream the inside of valve guide with the combustion chamber upward using the ST. Put the ST in valve guide, and rotate the ST slowly clockwise while pushing it lightly. Bring the ST back while rotating it clockwise.

CAUTION:
- **Place a wood board wrapped with a waste cloth to stabilize the cylinder head before work.**
- **Use special care not to damage the cylinder head during work.**

NOTE:
- Apply engine oil to the ST.
- If the inner surface of valve guide is damaged, the edge of ST should be slightly ground with oil stone.
- If the inner surface of valve guide becomes lustrous and the ST does not chip, use a new ST or remedy the ST.

ST 499765900 VALVE GUIDE REAMER

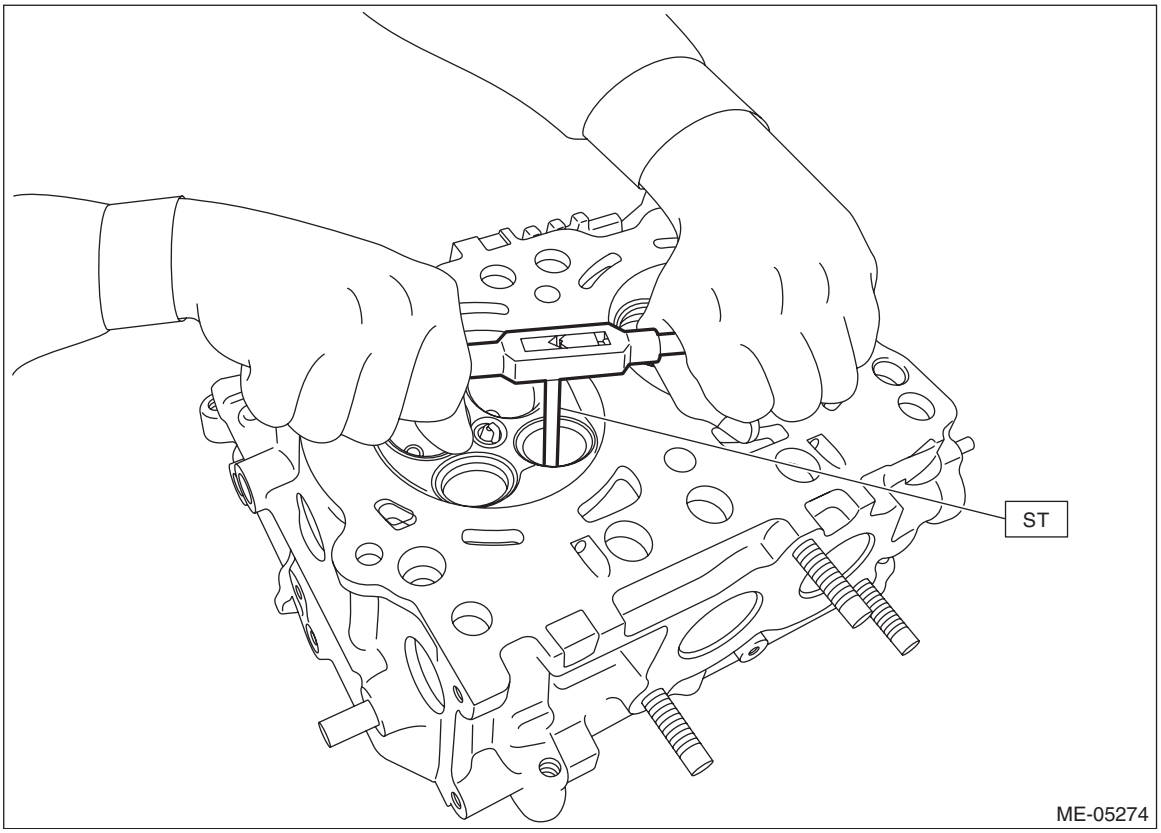

(8) After reaming, clean the valve guide to remove chips.
(9) Check the seating width between valve and valve seat. <Ref. to ME(H4DO(w/o HEV))-290, VALVE SEAT, INSPECTION, Cylinder Head.>

3. VALVE & VALVE SHIM

1) Visually check the valve shim for damage.
2) Check the clearance between valve and valve shim. Check the clearance between valve and valve shim by measuring the outer diameter of valve stem end and the inner diameter of valve shim respectively.
   (1) Measure the outer diameter of valve stem end with a micrometer. If it is not within the standard, replace the valve.

NOTE:
- Measurement should be performed at a temperature of 20°C (68°F).
- Measure the outer diameter of the valve stem end at the two locations as shown in the figure, and read the value of most worn location.
- When the valve is replaced, lap the valve. Refer to “VALVE SEAT” for lapping. <Ref. to ME(H4DO(w/o HEV))-290, VALVE SEAT, INSPECTION, Cylinder Head.>

Valve stem end outer diameter:
Intake
Standard
5.455 — 5.470 mm (0.2148 — 0.2154 in)
Exhaust
Standard
5.445 — 5.460 mm (0.2144 — 0.2150 in)

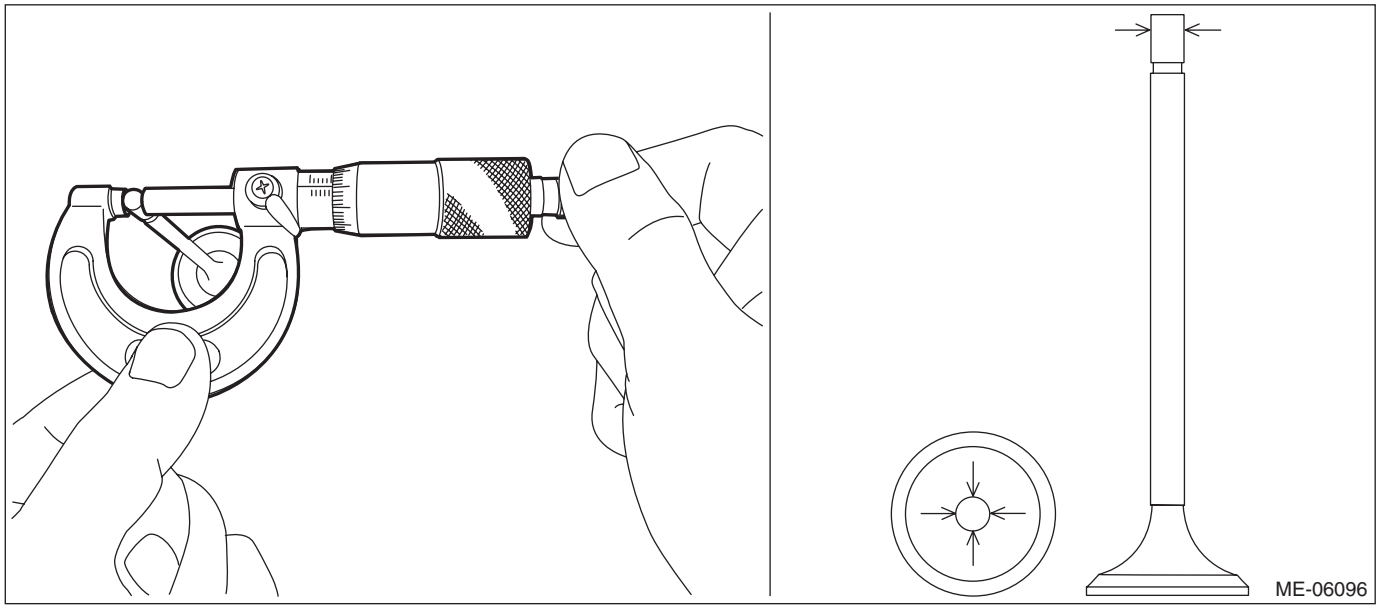

(2) Using a caliper gauge, measure the inner diameter of valve shim. If it is not within the standard, replace the valve shim.

NOTE:
• Measurement should be performed at a temperature of 20°C (68°F).
• Measure the inner diameter of the valve shim at the two locations as shown in the figure, and read the value of most worn location.
• If the valve shim has to be replaced, check the cam clearance and replace with the suitable valve shim. <Ref. to ME(H4DO(w/o HEV))-51, WHEN TIMING CHAIN ASSEMBLY IS REMOVED, INSPECTION, Cam Clearance.>

Valve shim inner diameter:
Standard
5.500 — 5.560 mm (0.2165 — 0.2189 in)

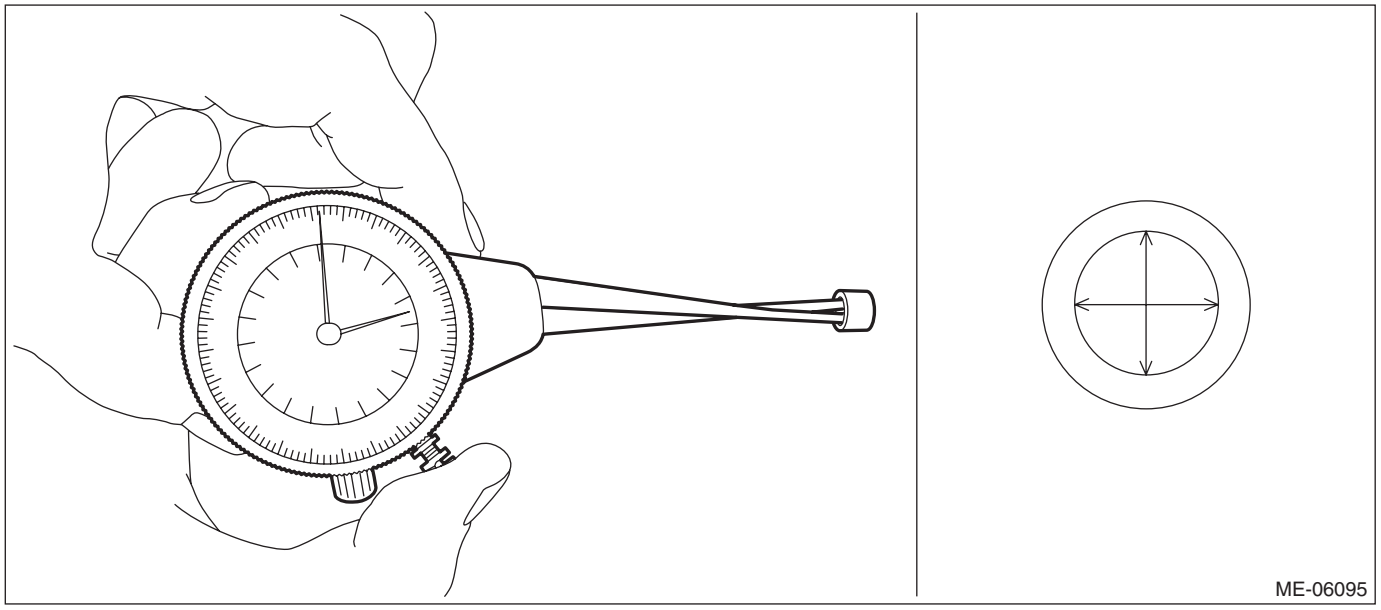

(3) Calculate the clearance between valve and valve shim. If the clearance exceeds the standard, replace the valve or valve shim, whichever shows the greater amount of wear or damage.

NOTE:
• When the valve is replaced, lap the valve. Refer to “VALVE SEAT” for lapping. <Ref. to ME(H4DO(w/o HEV))-290, VALVE SEAT, INSPECTION, Cylinder Head.>
• If the valve shim has to be replaced, check the cam clearance and replace with the suitable valve shim. <Ref. to ME(H4DO(w/o HEV))-51, WHEN TIMING CHAIN ASSEMBLY IS REMOVED, INSPECTION, Cam Clearance.>

Clearance between valve and valve shim:
Intake
Standard
0.030 — 0.105 mm (0.0012 — 0.0041 in)
Exhaust
Standard
0.040 — 0.115 mm (0.0016 — 0.0045 in)

4. VALVE SEAT

1) Check the valve seat for damage and deformation.
2) Check the seating width and seating position between valve and valve seat for the intake valve seat and exhaust valve seat.
   (1) Clean the valve and valve seat.
   (2) Coat the stem (A) of the valve lightly with engine oil and apply red dye evenly on the valve face (B).

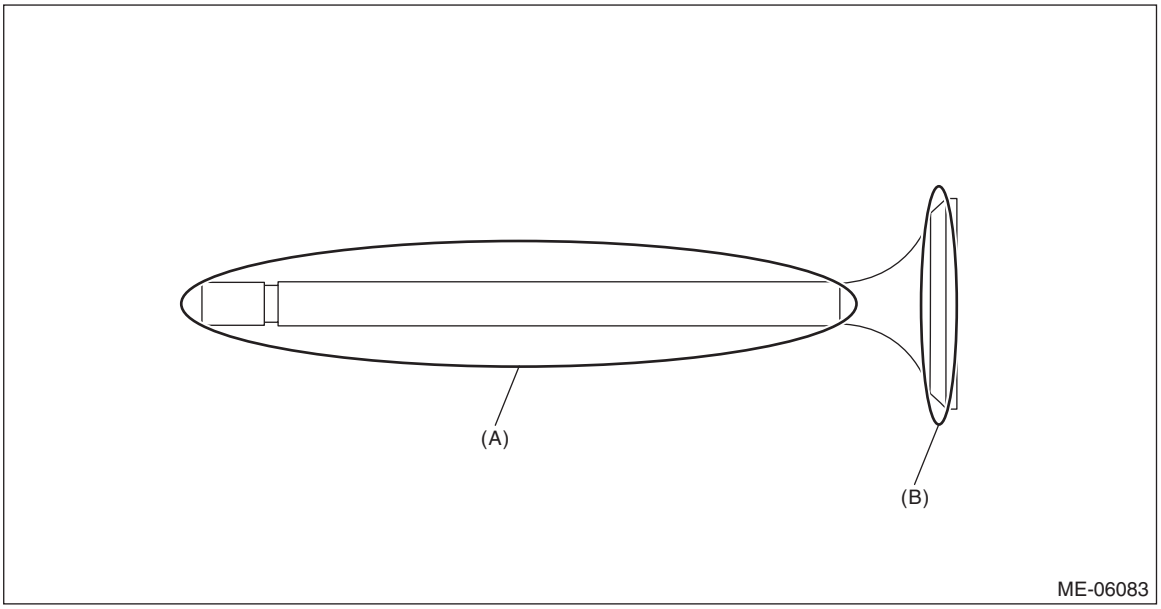

   (3) Using the valve lapper, slowly insert the valve with red dye applied into the valve guide. Lightly press the valve against the valve seat without turning the valve, and then slowly pull out the valve.
   (4) Check the seating width “W” of valve seat as shown in the figure, using a caliper gauge. Check the seating width “W” between valve and valve seat by measuring the width of red dye on the seating surface of valve seat. If the seating width “W” between valve and valve seat is out of the standard, correct the seating surface of valve seat using the valve seat cutter. For correcting procedures of the valve seat seating surface, refer to step 3).

NOTE:
• When the red dye does not appear seamlessly on the valve seat seating surface, lap the valve. For lapping procedure, refer to step 4).
• When the red dye does not appear seamlessly on the valve seat seating surface even after lapping the valve, correct the valve seat seating surface using the valve seat cutter. For correcting procedures of the valve seat seating surface, refer to step 3).

Seating width W between valve and valve seat:
Intake
Standard
0.8 — 1.6 mm (0.031 — 0.063 in)
Exhaust
Standard
1.1 — 1.7 mm (0.043 — 0.067 in)

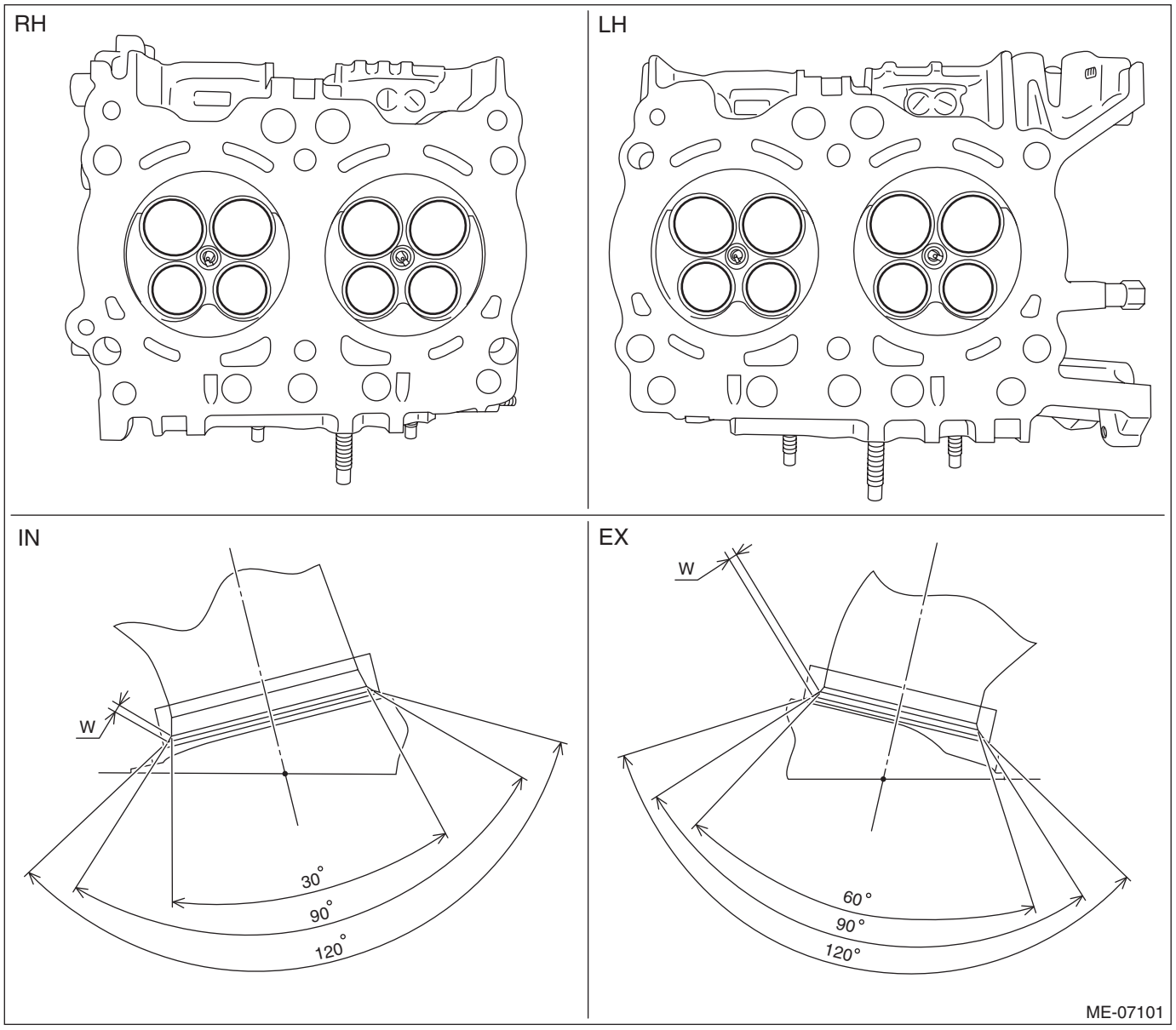

(5) Wipe off the red dye on the valve and valve seat completely.

(6) Coat the stem (A) of the valve lightly with engine oil and apply red dye evenly on the seating surface (B) between valve and valve seat.

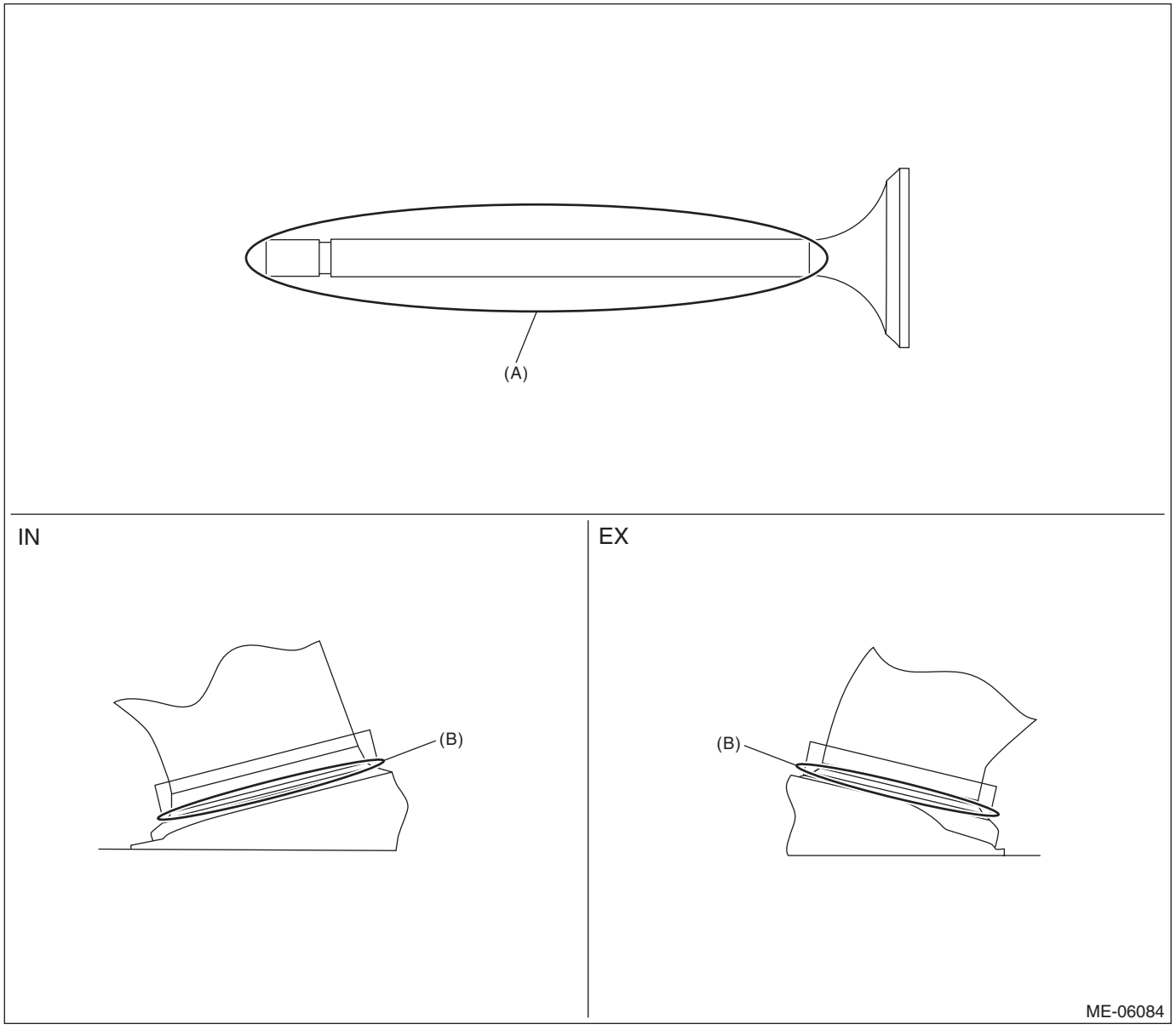

(7) Using the valve lapper, slowly insert the valve into the valve guide. Lightly press the valve against the valve seat without turning the valve, and then slowly pull out the valve.

(8) Check the seating position between valve and valve seat. Check the seating position between valve and valve seat by checking the position of red dye on the valve face. If the seating position between valve and valve seat is not at the center of valve face, correct the seating surface of valve seat using the valve seat cutter. For correcting procedures of the valve seat seating surface, refer to step 3).

Seating position between valve and valve seat:
Valve face center

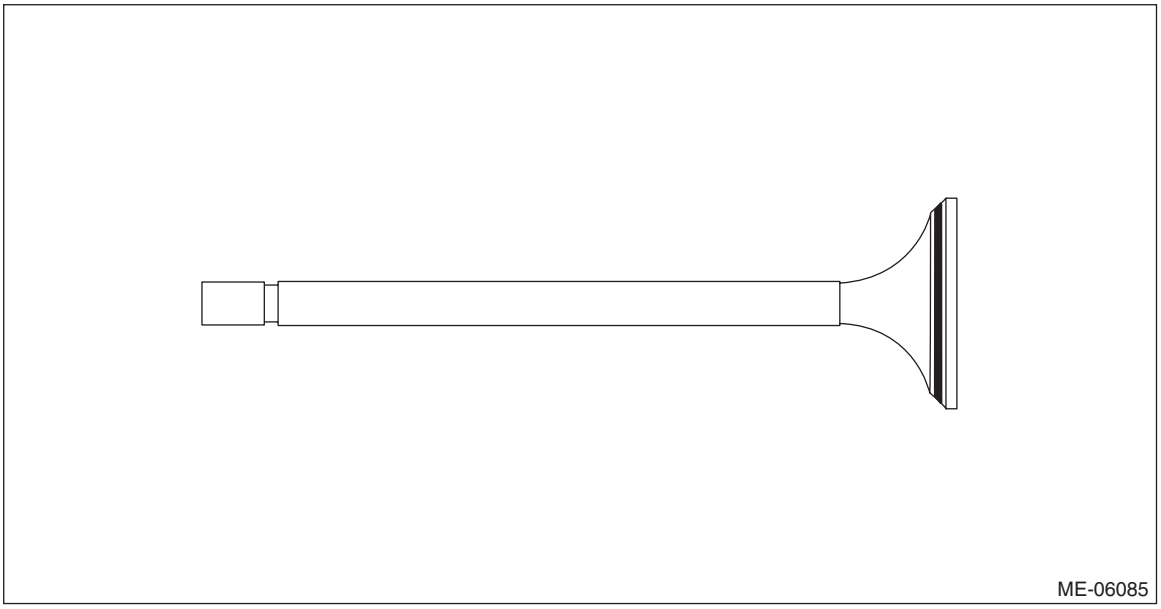

(9) After inspection, wipe off the red dye completely.

3) When correcting the seating surfaces of valve seat
(1) Correct the seating angle between valve and valve seat using the 45° valve seat cutter.

NOTE:
• Grind the seating surface so that the seating width between valve and valve seat becomes slightly larger than the standard value.
• Gradually reduce pressure at the end of grinding process in order to avoid creating a gap on the valve seat correcting surface.

Seating angle between valve and valve seat:
45°

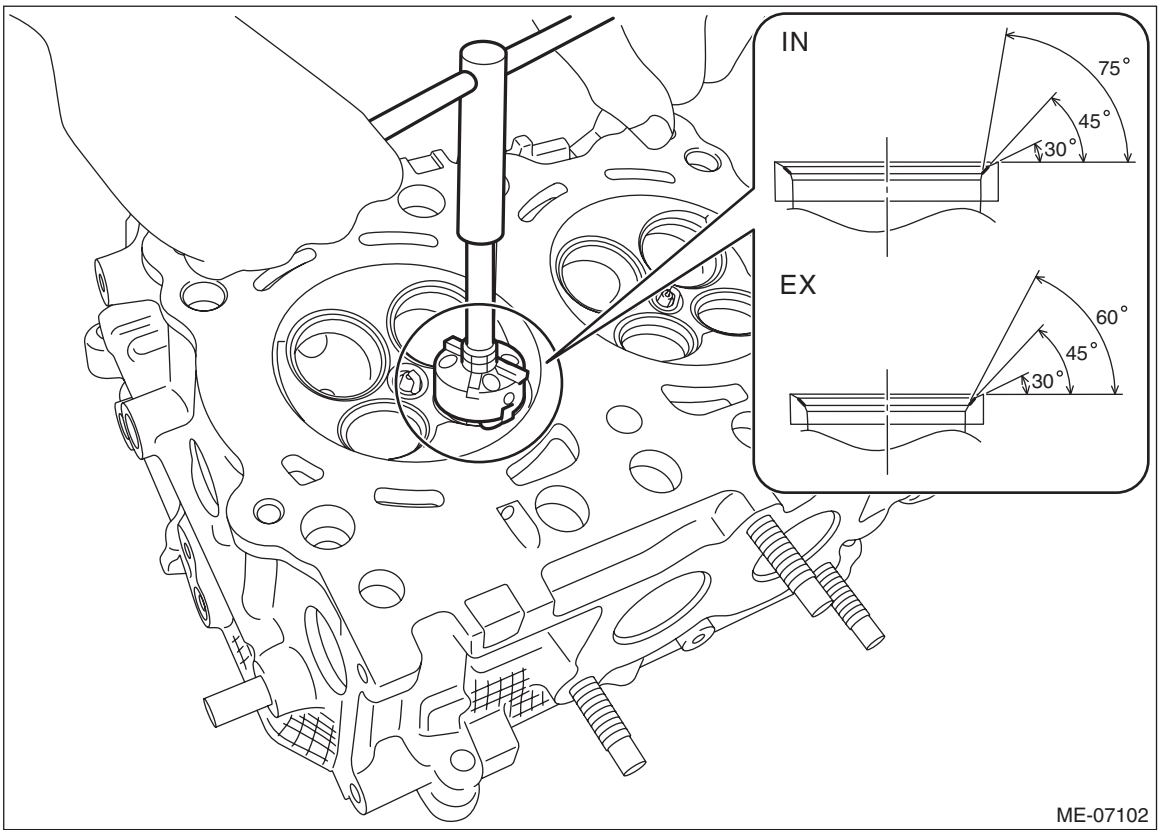

(2) Lap the valve. For lapping procedure of the valve, refer to step 4).
(3) Check the seating position between valve and valve seat. For inspection of the seating position between valve and valve seat, refer to step 2).

NOTE:
This procedure is necessary to select a seat cutter to be used in step (4).

(4) Using a seat cutter, correct the valve seat so that the seating width between valve and valve seat becomes the standard value.

NOTE:
- Select a proper valve seat cutter according to the following table.

Seating position between valve and valve seat	Seat cutter selection
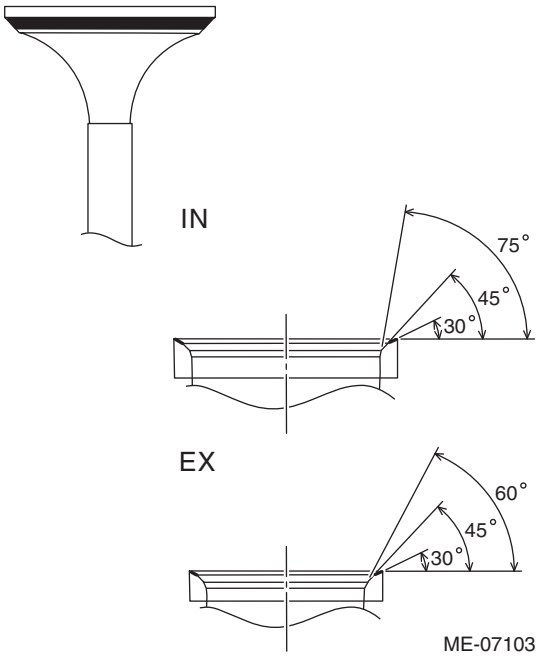	When the seating position of valve face is high, grind the surface using the 30° seat cutter until seating width between valve and valve seat becomes the standard value.
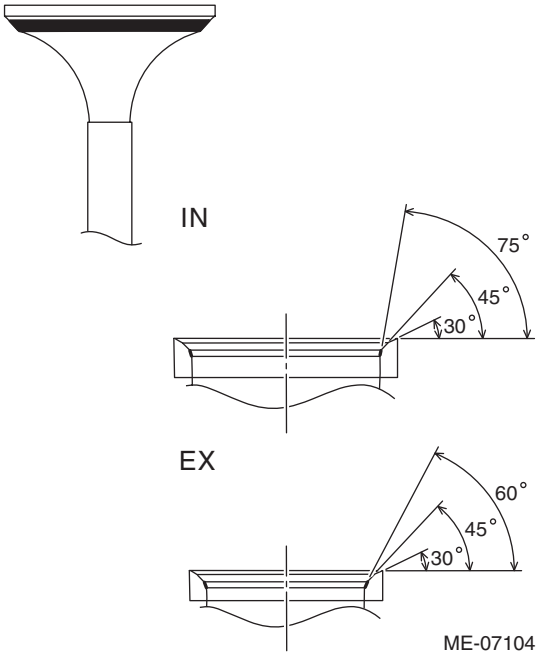	When the seating position of valve face is low, grind the surface using the 75° (IN) or 60° (EX) seat cutter until seating width between valve and valve seat becomes the standard value.

Seating position between valve and valve seat	Seat cutter selection
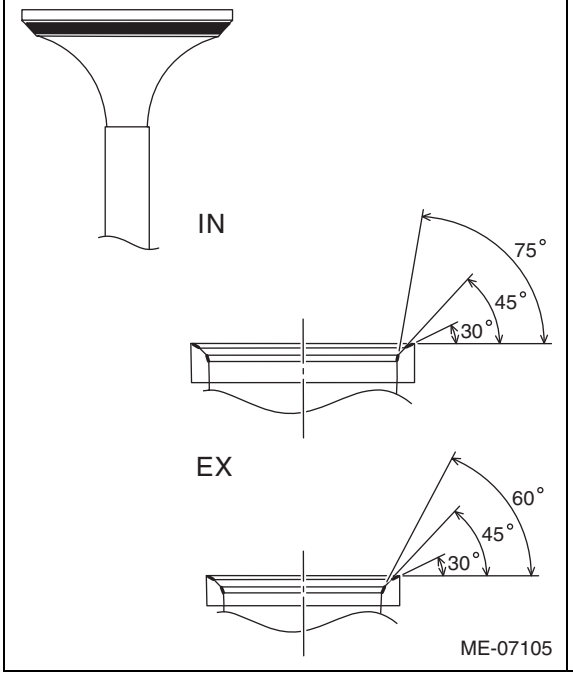	When the seating position of valve face is at center, grind the surface evenly using the 30° and 75° (IN) or 60° (EX) seat cutters until seating width between valve and valve seat becomes the standard value.

• Gradually reduce pressure at the end of grinding process in order to avoid creating a gap on the valve seat correcting surface.

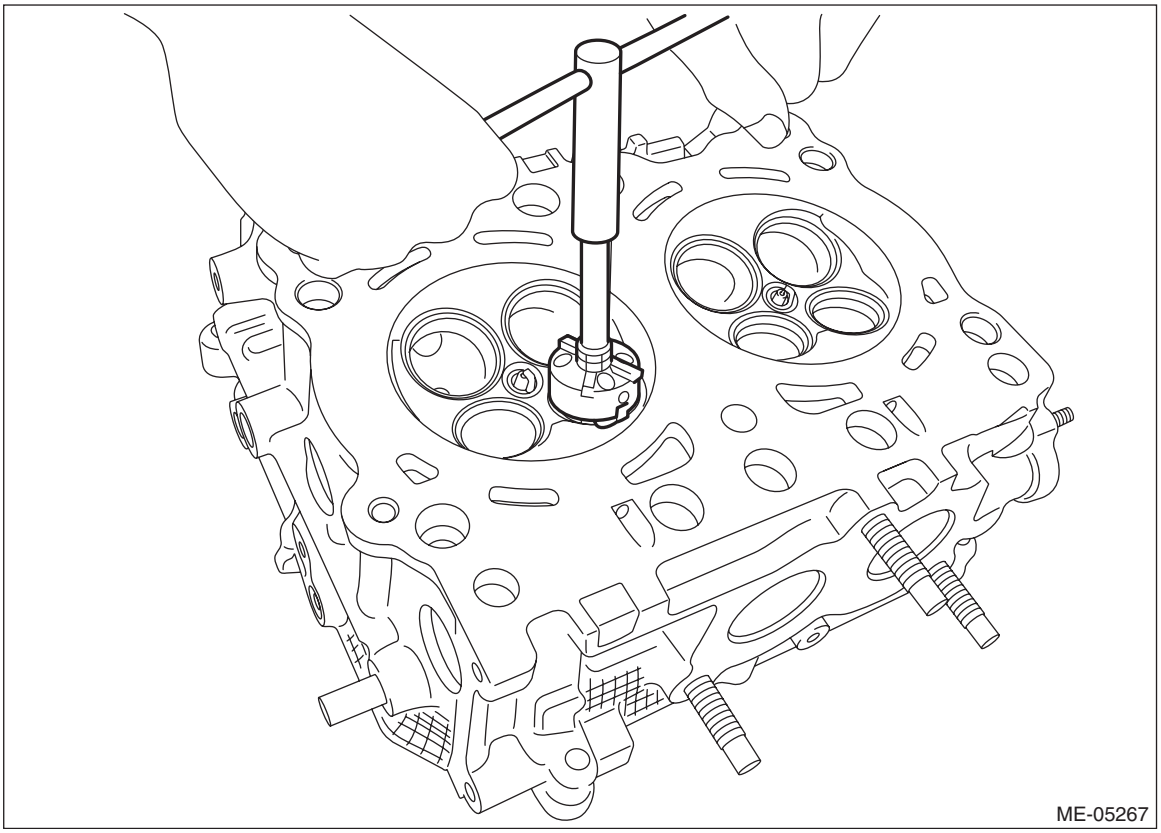

(5) Lap the valve. For lapping procedure of the valve, refer to step 4).

4) When lapping the valve

(1) Coat the stem (A) of the valve lightly with engine oil and put a small amount of valve compound evenly on the valve face (B).

NOTE:

- Be careful not to put the valve compound more than necessary.
- To avoid damaging the valve guide and valve stem, be careful not to let the valve compound contact the valve stem.

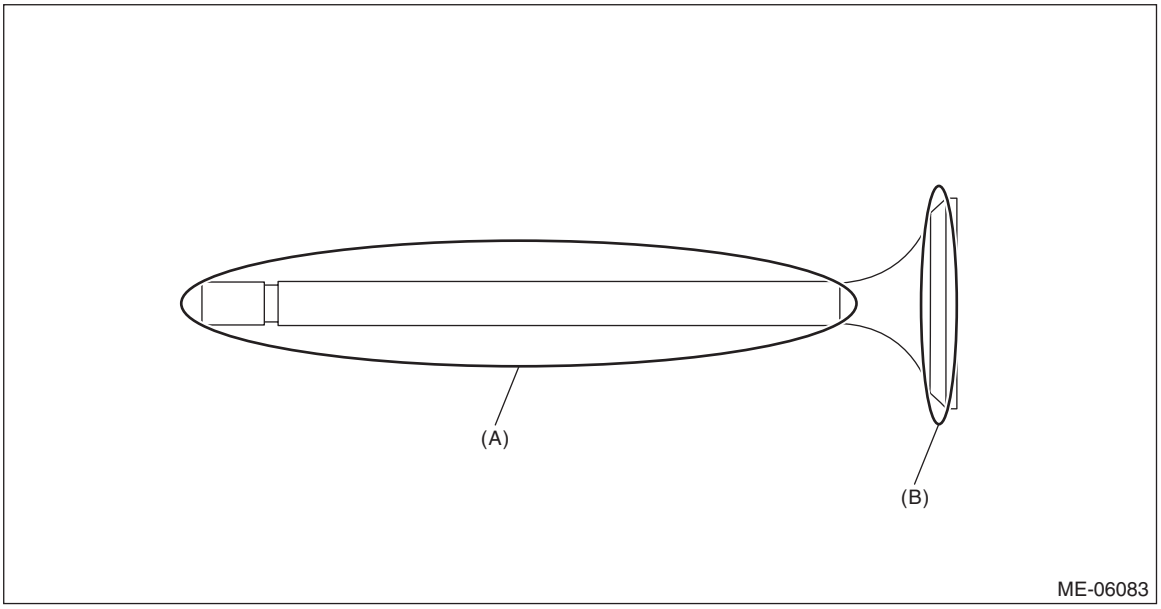

(2) Using the valve lapper, slowly insert the valve with the valve compound applied into the valve guide, and lap the seating surface between valve and valve seat. First, lift the valve and strike it against the valve seat twice, and then slightly turn the valve once. Repeat these steps as one set.

NOTE:

- To prevent the seating width between valve and valve seat from exceeding the standard value, be careful not to keep turning the valve while pressing it against the valve seat during lapping.
- Be careful not to lift the valve too far during lapping in order to prevent the valve from coming off the valve guide.

(3) Wipe off the valve compound on the valve and valve seat completely after lapping.

NOTE:

Be careful not to leave any valve compound in order to avoid malfunction.

(4) Check the seating width and seating position between valve and valve seat.

5. VALVE SPRING

1) Check the valve spring for damage and deformation.
2) Using a caliper gauge, valve spring tester, surface plate and try square, check the valve spring free length, tension/spring height and squareness. If it is not within the standard, replace the valve spring.

NOTE:
- Measurement should be performed at a temperature of 20°C (68°F).
- To check the squareness of the valve spring, stand the valve spring on a surface plate and check its deflection at the top of the valve spring using a try square.

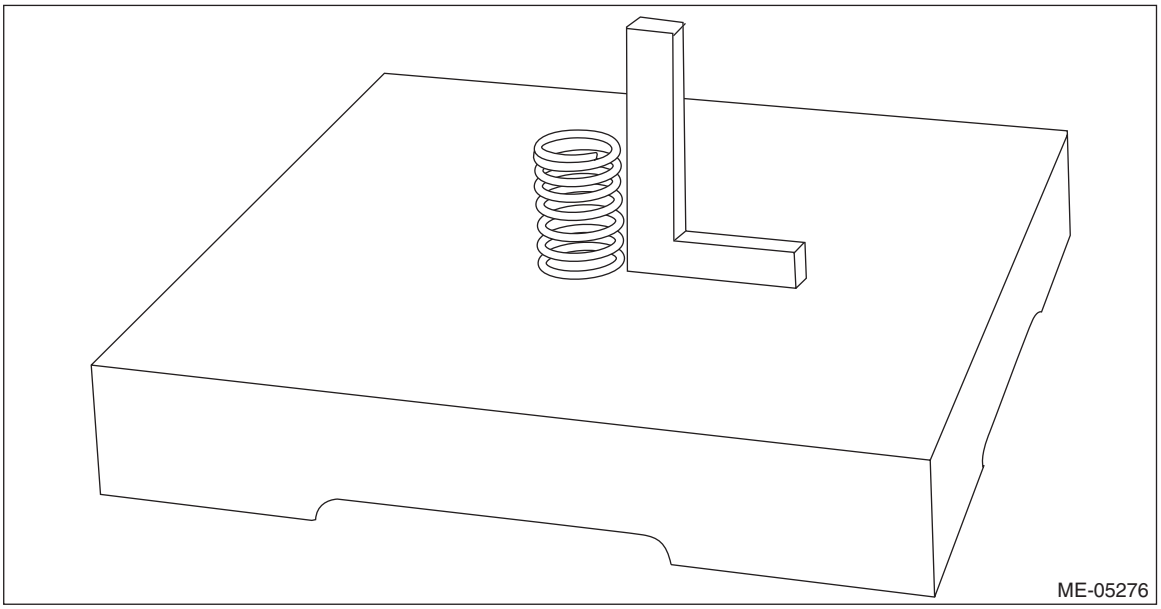

Valve spring free length:

Gasoline engine model
Standard
41.06 mm (1.617 in)

HEV model
Standard
41.68 mm (1.641 in)

Valve spring tension/spring height:

Gasoline engine model
Set
Standard
182 — 210 N (18.56 — 21.41 kgf, 40.92 — 47.22 lbf)/33.0 mm (1.299 in)
Lift
Standard
552 — 610 N (56.29 — 62.20 kgf, 124.11 — 137.15 lbf)/22.0 mm (0.866 in)

HEV model
Set
Standard
182 — 210 N (18.56 — 21.41 kgf, 40.92 — 47.22 lbf)/33.0 mm (1.299 in)
Lift
Standard
502 — 554 N (51.19 — 56.49 kgf, 112.87 — 124.56 lbf)/22.0 mm (0.866 in)

Valve spring squareness:
Standard
2.5°, 1.8 mm (0.071 in) or less

22.Cylinder Block

A: REMOVAL

1) Remove the engine from the vehicle. <Ref. to ME(H4DO(w/o HEV))-55, REMOVAL, Engine Assembly.>
2) Remove the intake manifold. <Ref. to FU(H4DO(w/o HEV))-20, REMOVAL, Intake Manifold.> <Ref. to FU(H4DO(HEV))-20, REMOVAL, Intake Manifold.>
3) Remove the engine wiring harness. <Ref. to FU(H4DO(w/o HEV))-44, REMOVAL, Engine Wiring Harness.> <Ref. to FU(H4DO(HEV))-34, REMOVAL, Engine Wiring Harness.>
4) Remove the tumble generator valve assembly. <Ref. to FU(H4DO(w/o HEV))-90, REMOVAL, Tumble Generator Valve Assembly.> <Ref. to FU(H4DO(HEV))-74, REMOVAL, Tumble Generator Valve Assembly.>
5) Remove the chain cover. <Ref. to ME(H4DO(w/o HEV))-144, REMOVAL, Chain Cover.>
6) Remove the rocker cover. <Ref. to ME(H4DO(w/o HEV))-191, REMOVAL, Rocker Cover.>
7) Remove the cam carrier. <Ref. to ME(H4DO(w/o HEV))-209, REMOVAL, Cam Carrier.>
8) Remove the cylinder head. <Ref. to ME(H4DO(w/o HEV))-256, REMOVAL, Cylinder Head.>
9) Remove the crank sprocket. <Ref. to ME(H4DO(w/o HEV))-190, REMOVAL, Crank Sprocket.>
10) Remove the engine rear hanger from cylinder block RH.

- Gasoline engine CVT model

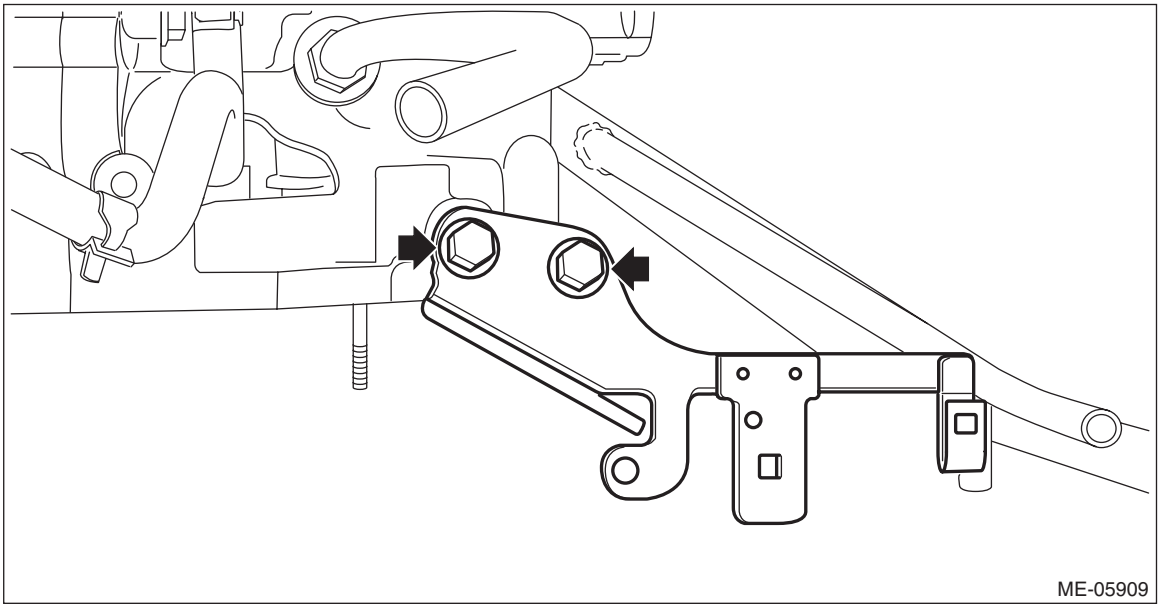

- Gasoline engine MT model

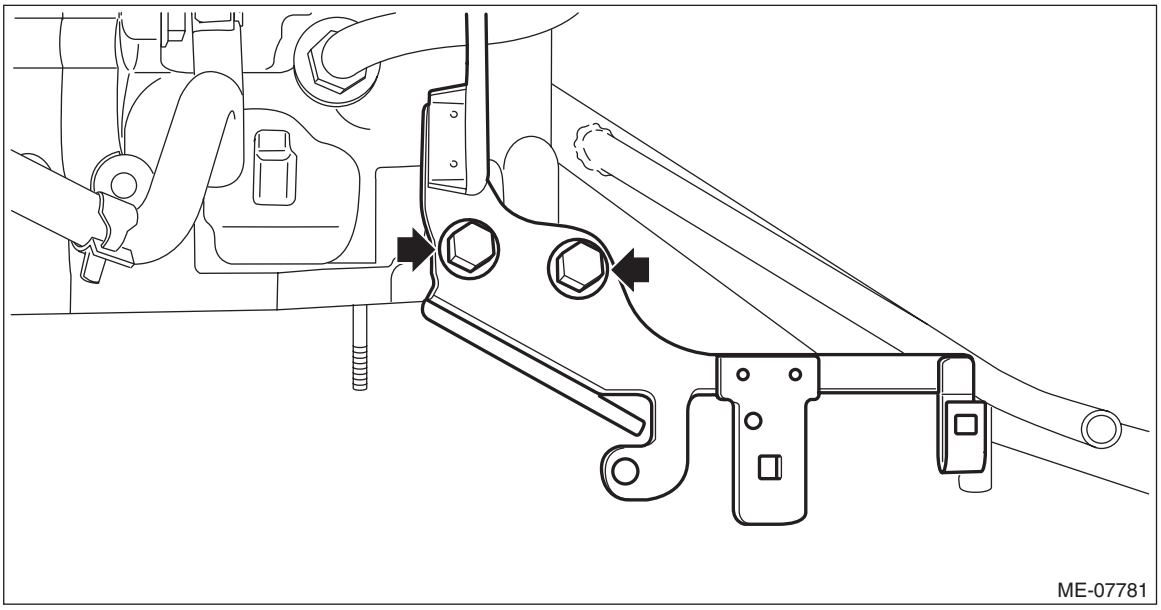

- HEV model

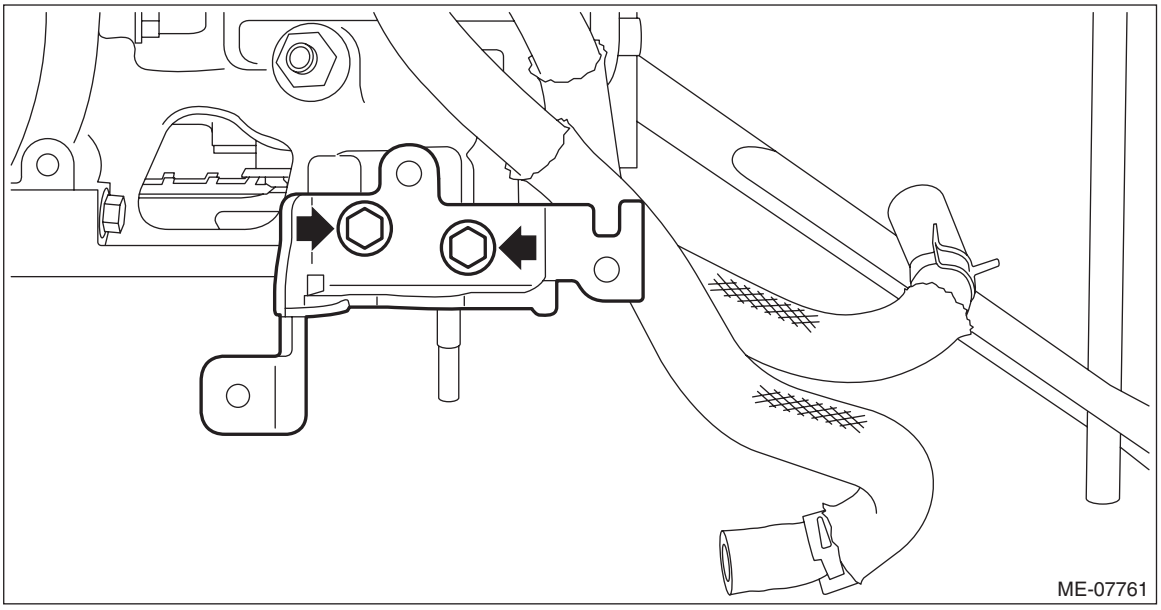

11) Remove the bolts securing the water pipe assembly and PCV connector to the cylinder block, and remove the water pipe assembly, PCV connector and brake vacuum pipe (HEV model) as a set from cylinder block.

- Gasoline engine model

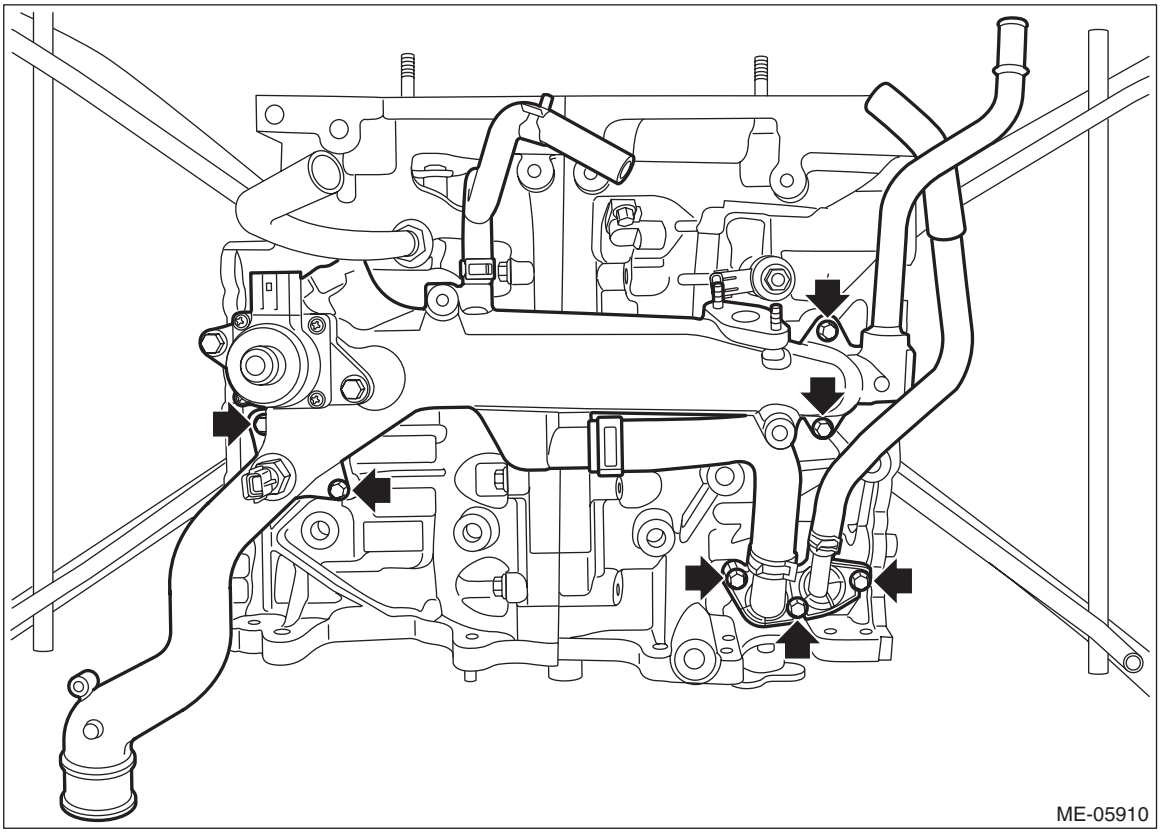

- HEV model

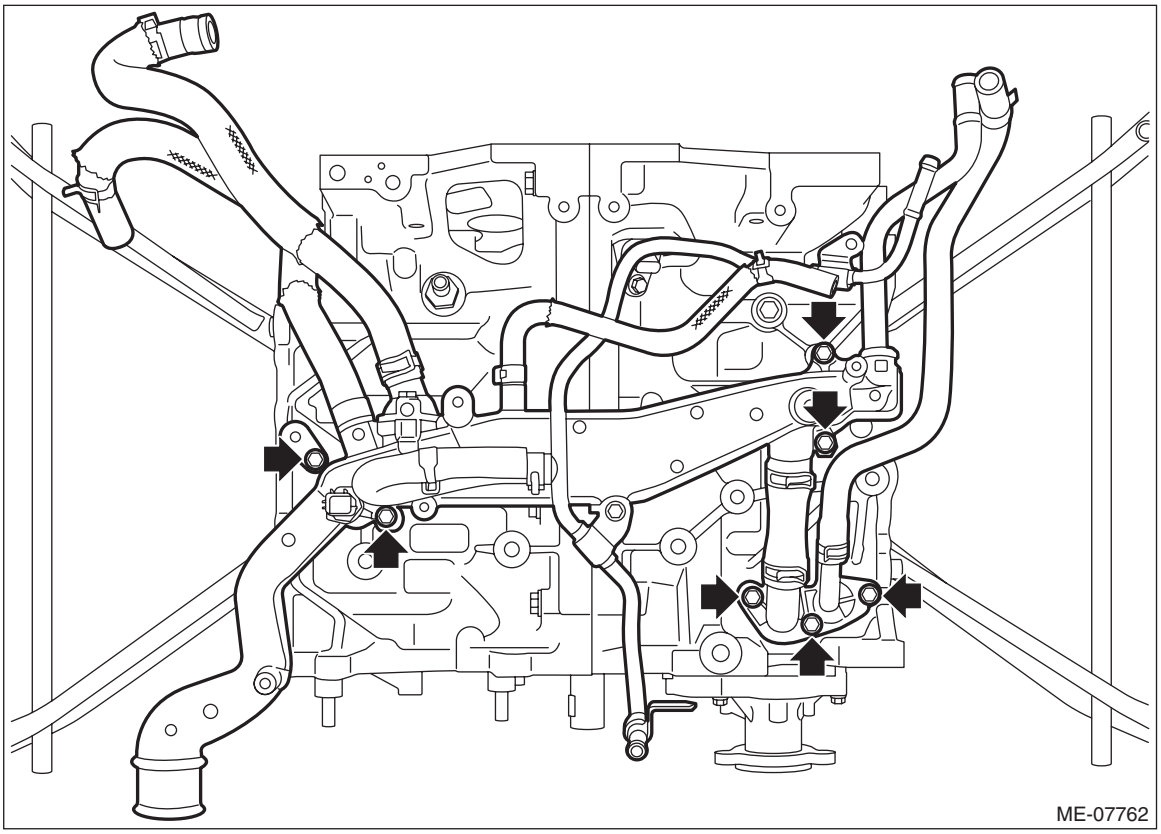

12) Remove the O-ring from the cylinder block and PCV connector.

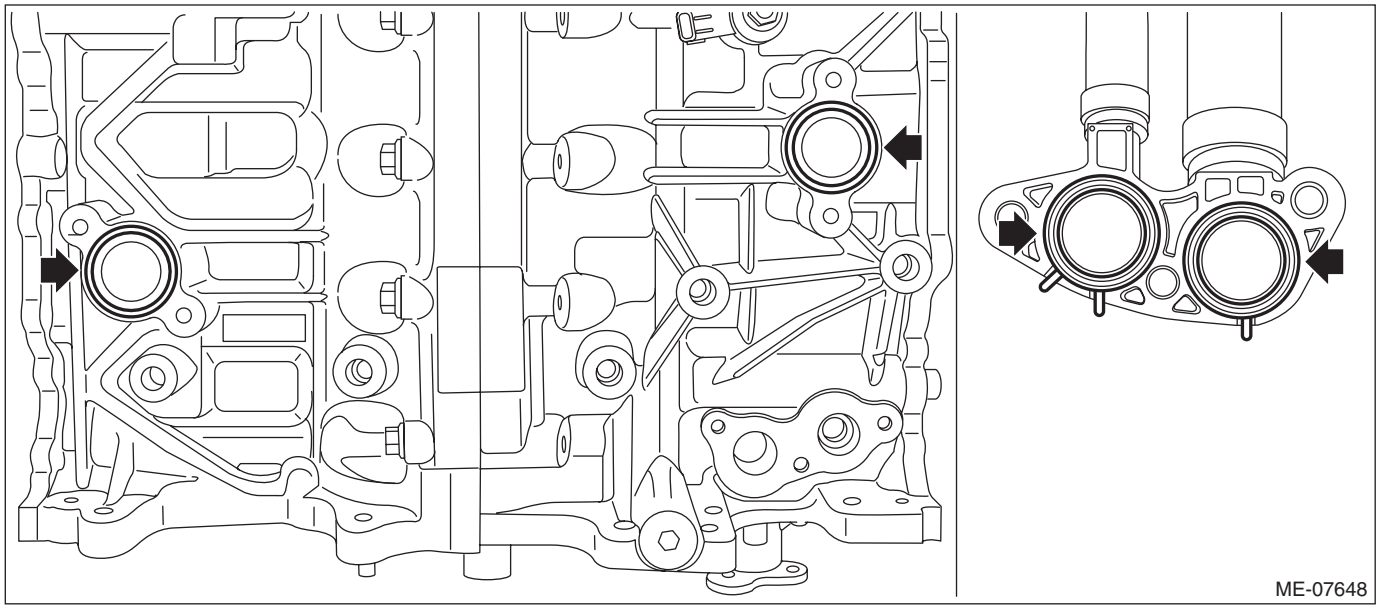

13) Remove the knock sensor from cylinder block LH.

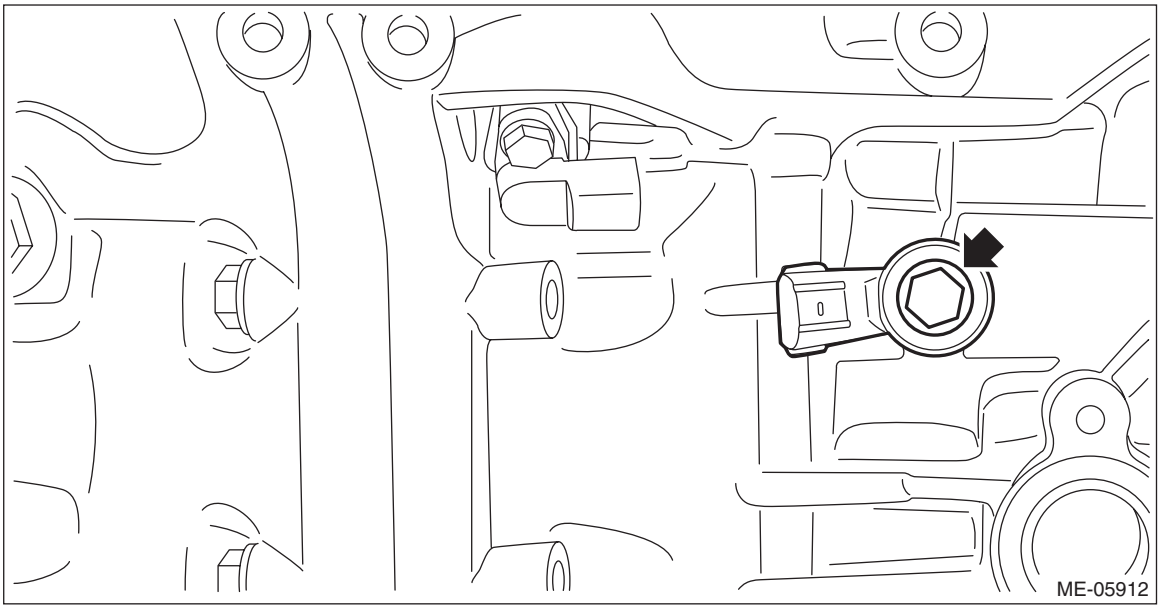

14) Remove the PCV hose from the PCV valve. (Gasoline engine model)

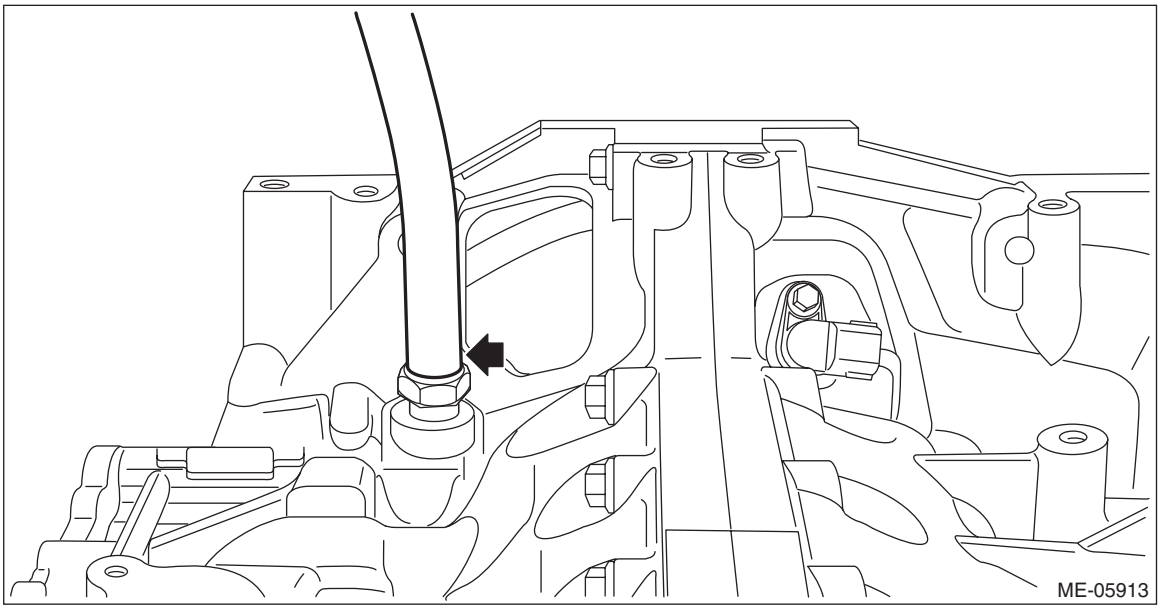

15) Remove the PCV valve from the cylinder block RH.

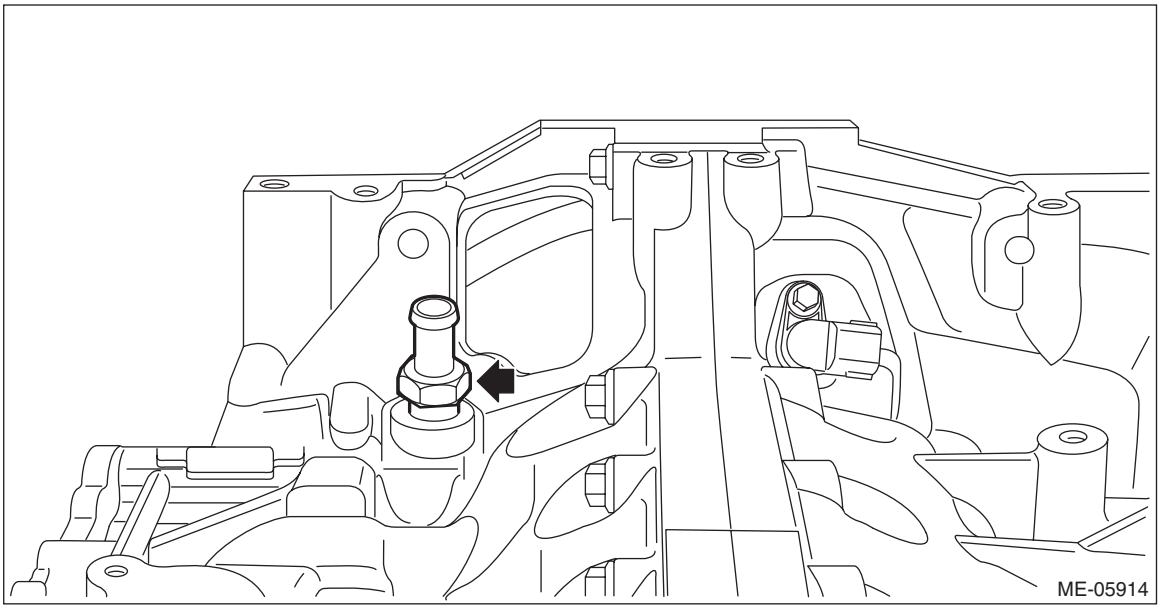

16) Remove the crankshaft position sensor plate with drive plate. (CVT model) <Ref. to CVT(TR580)-156, REMOVAL, Drive Plate.> <Ref. to CVT(TH58A)-173, REMOVAL, Drive Plate.>
17) Remove the clutch disc and cover. (MT model) <Ref. to CL-9, REMOVAL, Clutch Disc and Cover.>
18) Remove the crankshaft position sensor plate with flywheel. (MT model) <Ref. to CL-12, REMOVAL, Flywheel.>

19) Remove the bolts securing the crankshaft position sensor holder from the cylinder block LH, and remove the crankshaft position sensor with crankshaft position sensor holder.

- Gasoline engine model

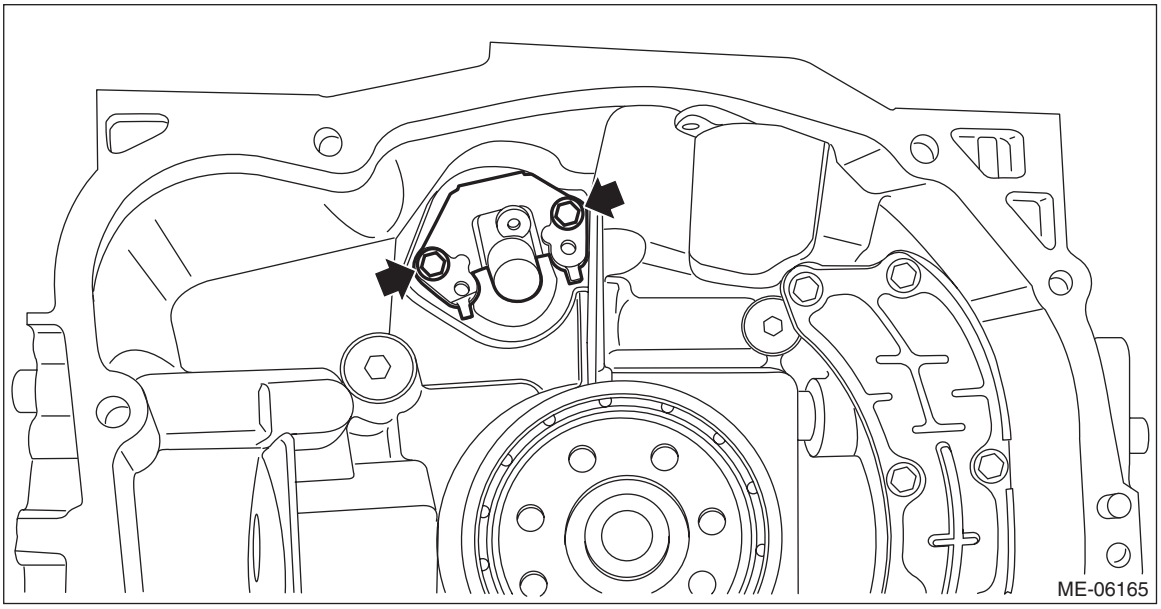

- HEV model

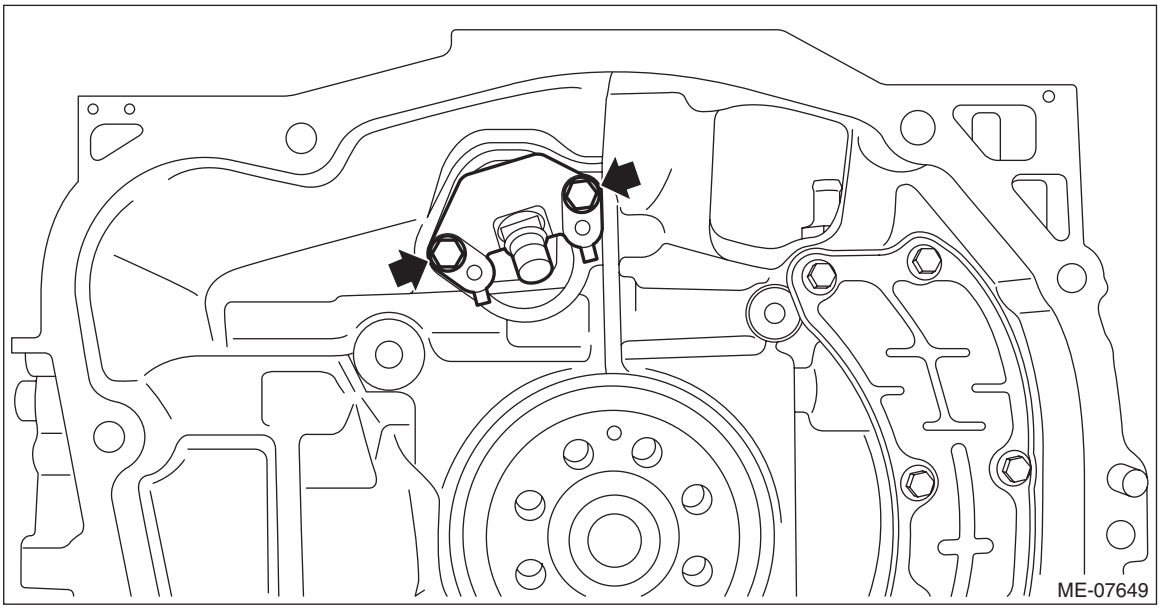

20) Remove the water jacket spacer from the cylinder block RH and cylinder block LH. (XV model)

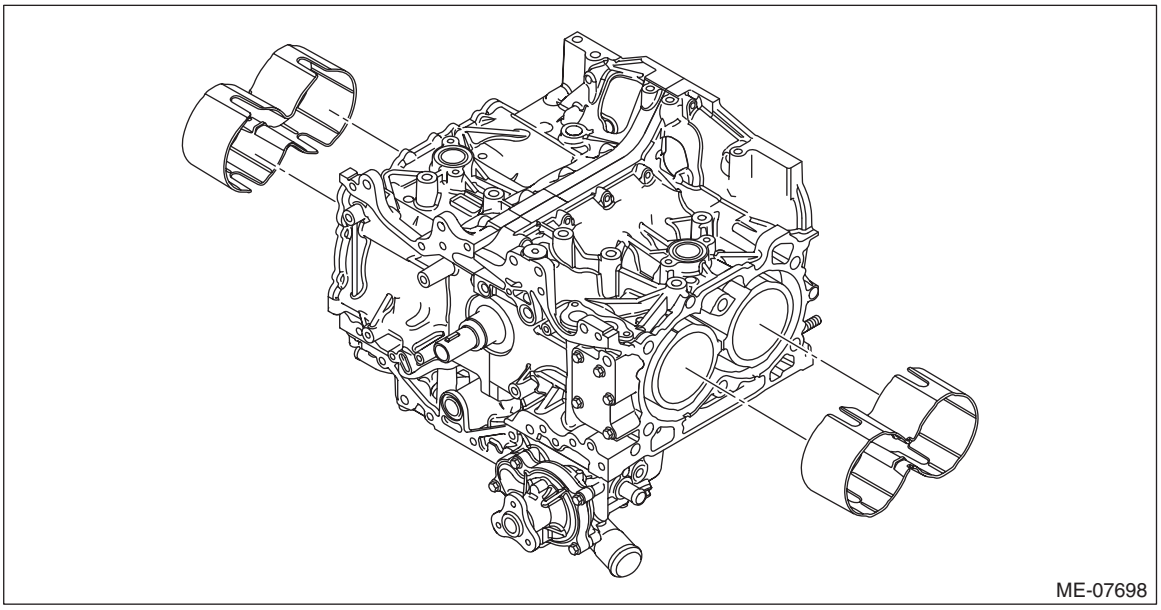

21) Set the cylinder block so that the oil pan is on the upper side, remove the ST1, ST2, ST3 and ST4 from cylinder block and oil pan upper.

ST1	498457000	ENGINE STAND ADAPTER RH
ST2	498457100	ENGINE STAND ADAPTER LH
ST3	18362AA020	ADAPTER
ST4	499817100	ENGINE STAND

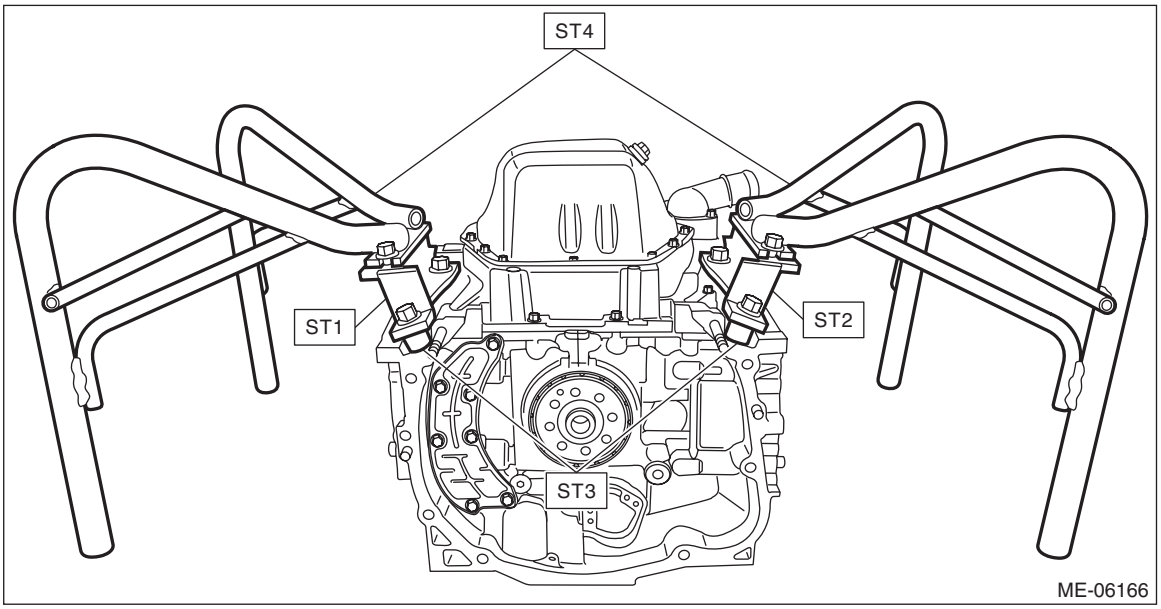

22) Remove the thermostat cover from oil pan upper, and then remove the thermostat.

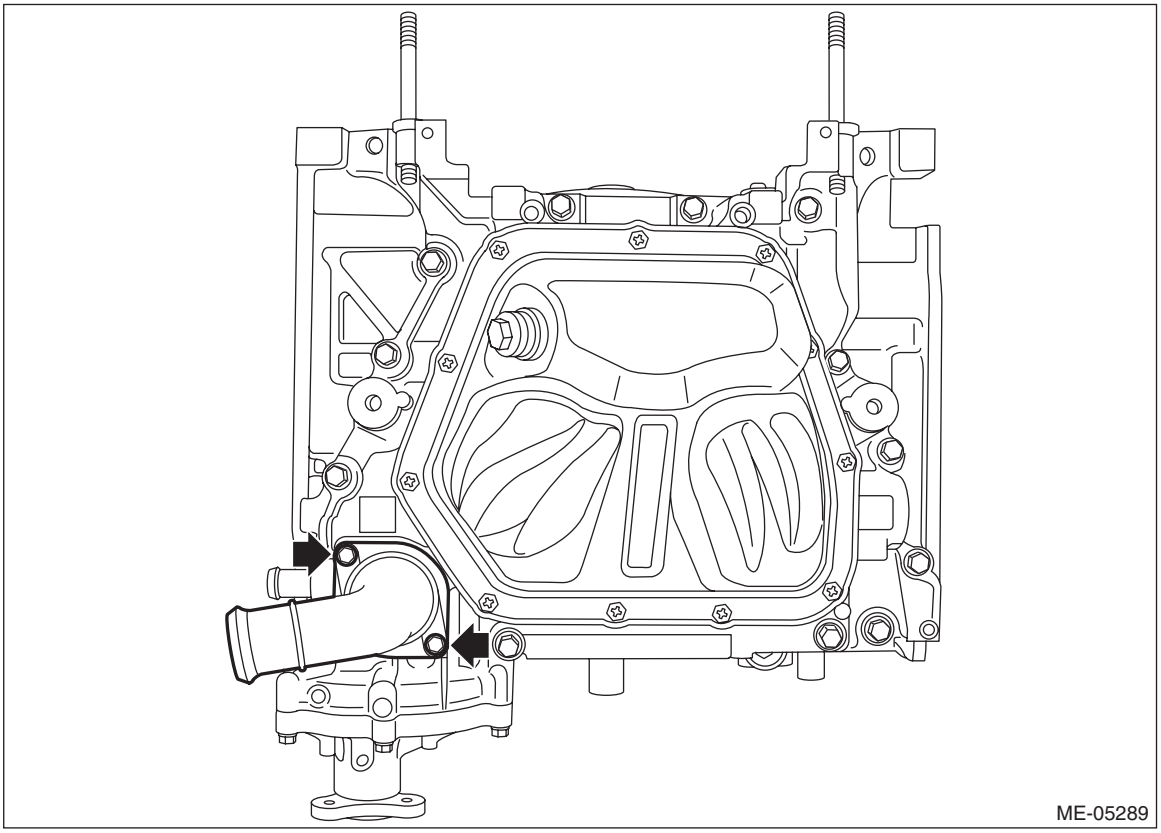

23) Remove the oil pan upper with oil pan from cylinder block.

NOTE:
Pry the points shown in the figure with a crowbar wrapped by protective tape, and then remove the oil pan upper.

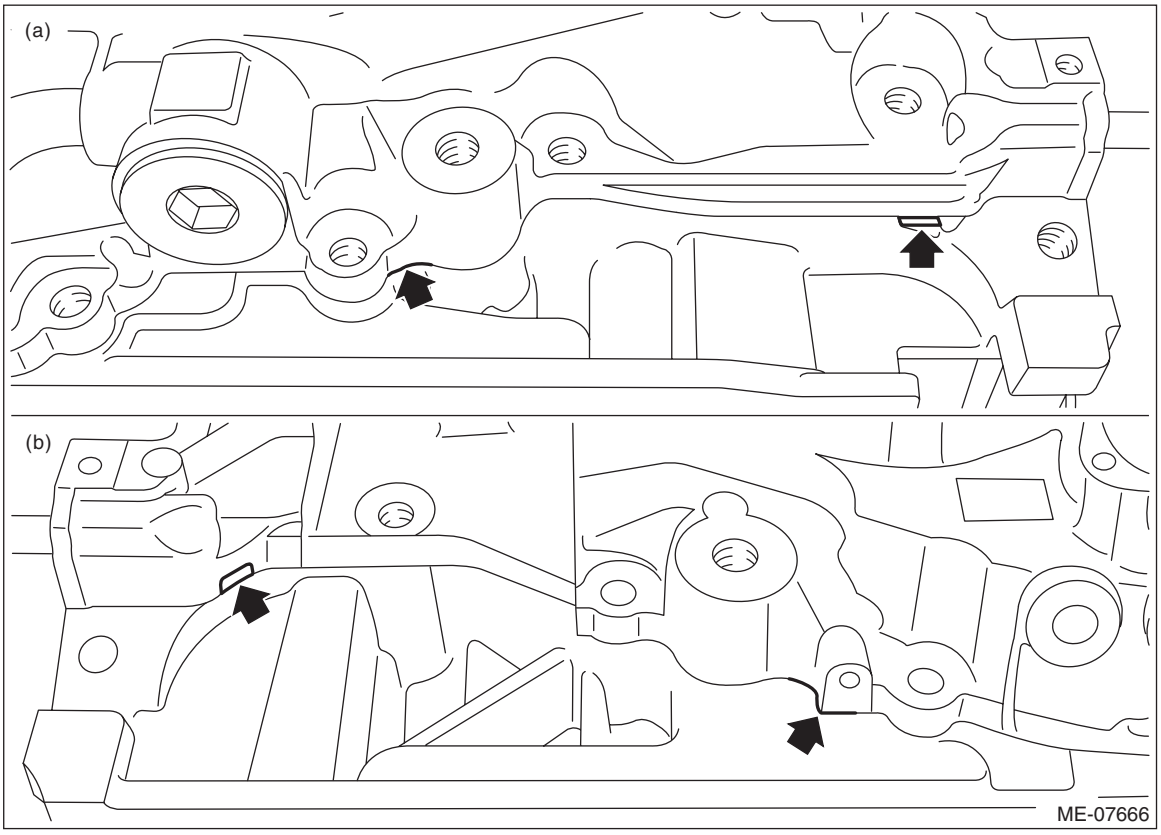

(a) RH side (b) LH side

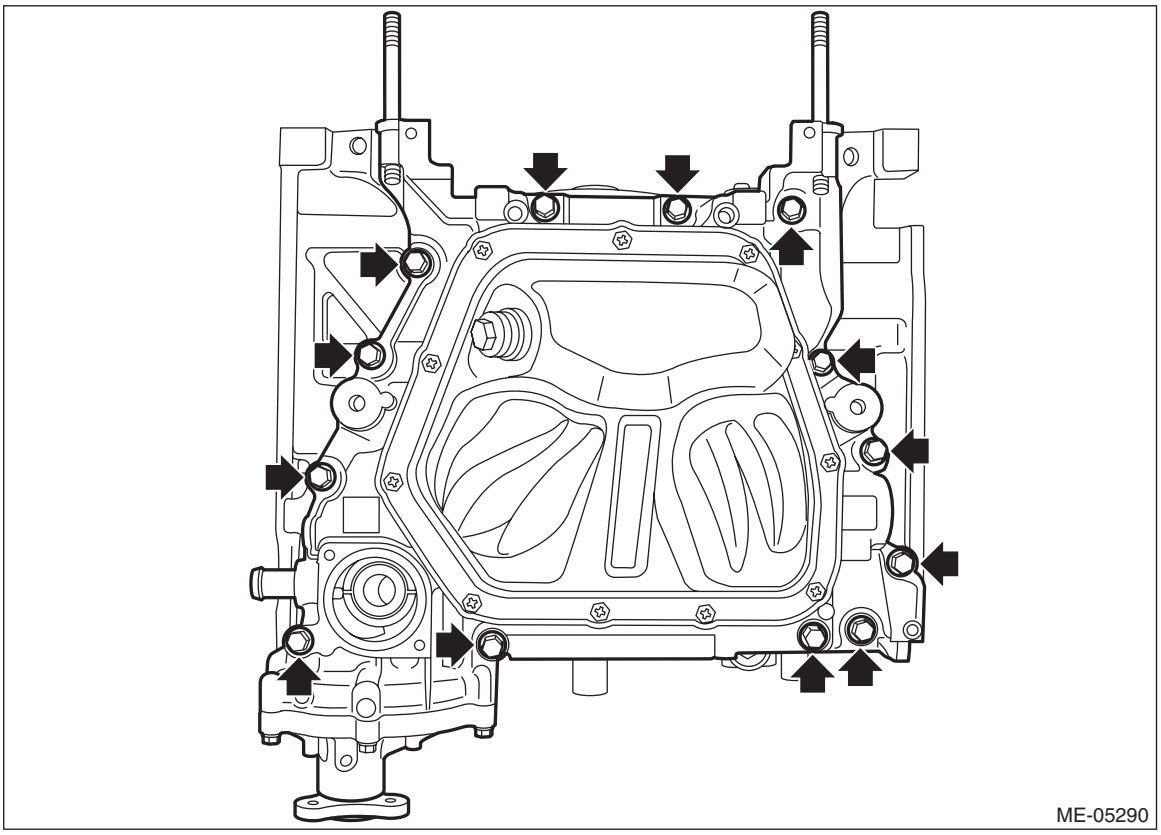

24) Remove the O-ring from the cylinder block.

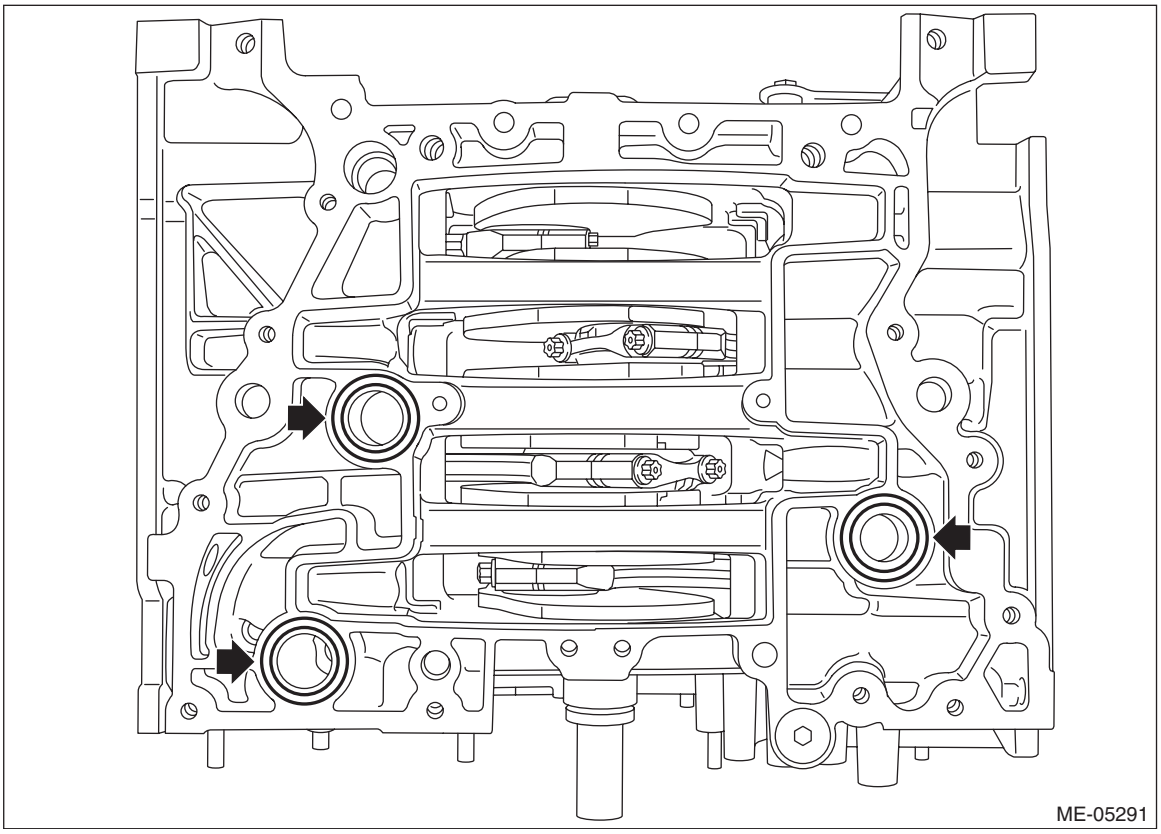

25) Install a bolt of suitable length (M10 × P1.25) at the locations shown in the figure.

NOTE:
• This procedure is required to prevent the knock pin damage when the cylinder block is raised in the next step.
• Use the same length of bolt for the four bolts.

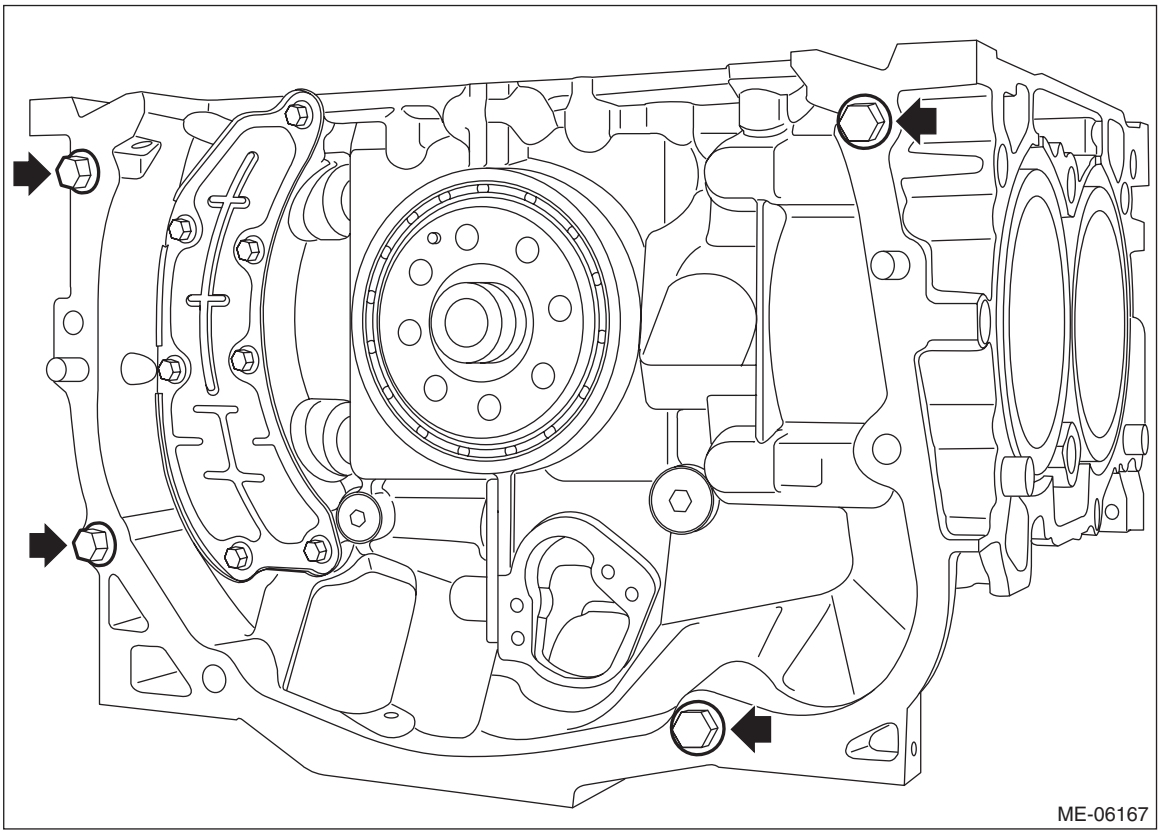

26) Raise the cylinder block so that the rear oil seal is on the lower side.

27) Remove the #1 and #4 connecting rod caps and pistons from the cylinder block.

NOTE:
Mark each connecting rod cap and piston with a cylinder number.

(1) Turn the crankshaft so that the #1 connecting rod cap (A) and #4 connecting rod cap (B) is located at the position shown in the figure using ST.

ST 18252AA000 CRANKSHAFT SOCKET

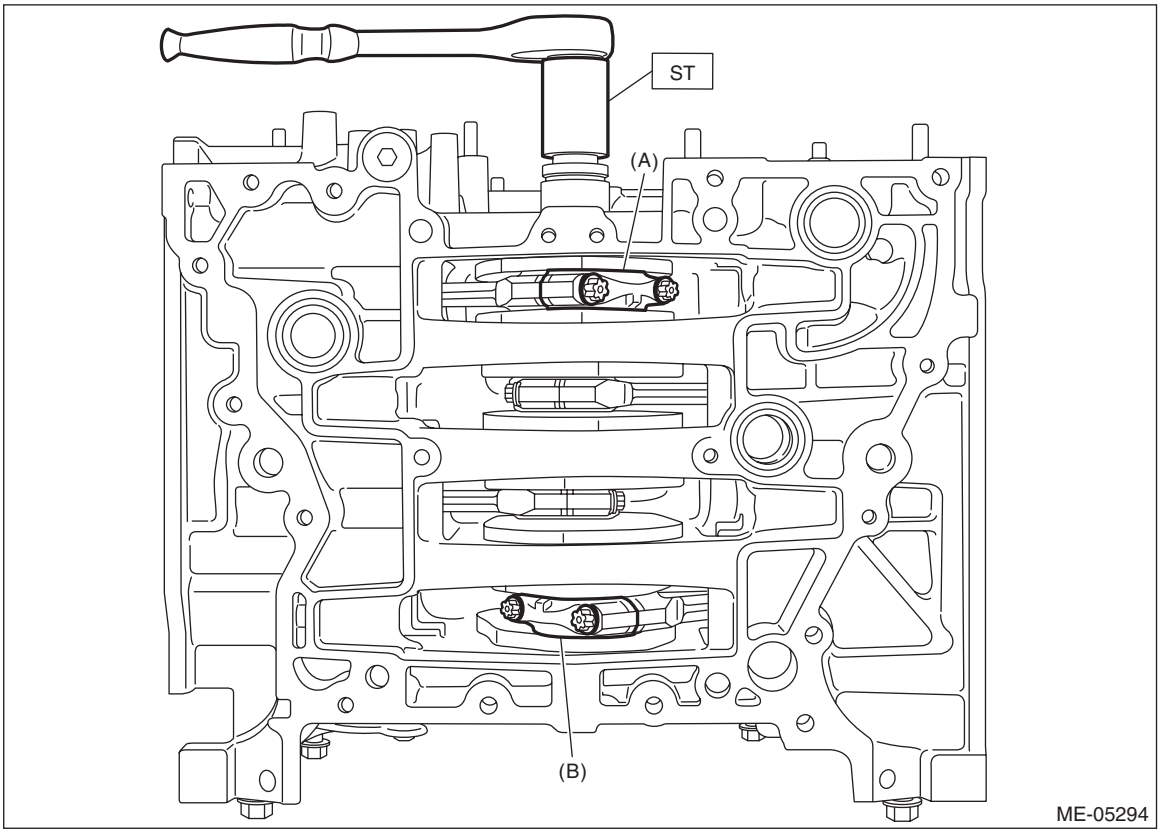

(2) Using ST, loosen the #1 connecting rod cap bolt, and remove the #1 connecting rod cap bolt and #1 connecting rod cap.

ST 18270AA020 SOCKET

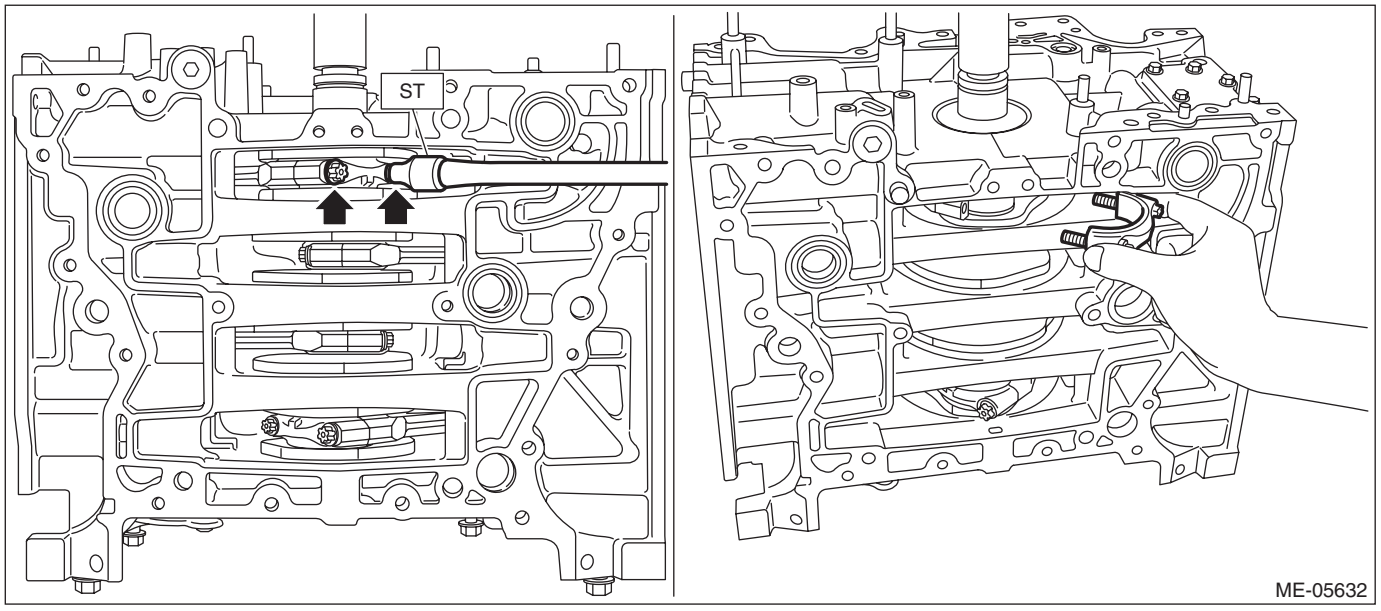

(3) Using ST, loosen the #4 connecting rod cap bolt, and remove the #4 connecting rod cap bolt and #4 connecting rod cap.

ST 18270AA020 SOCKET

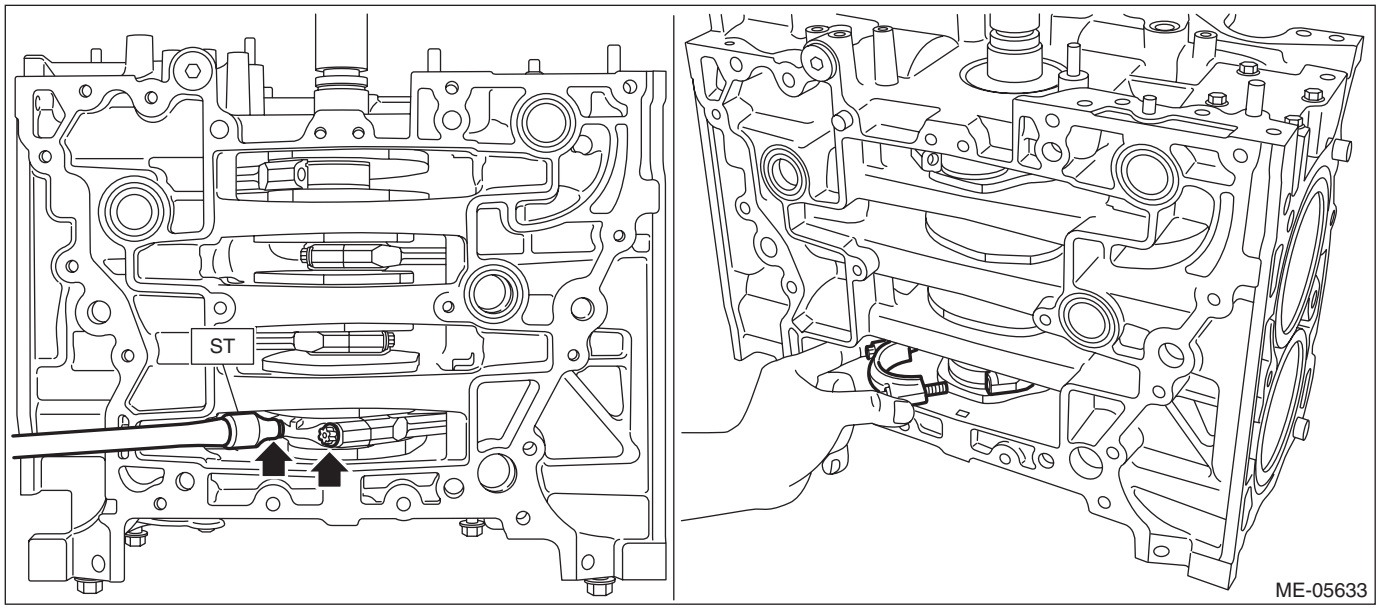

(4) Using the ST, turn the crankshaft counterclockwise and separate the positions of the #1 pin (A) of crankshaft and the large end (B) of #1 connecting rod.

ST 18252AA000 CRANKSHAFT SOCKET

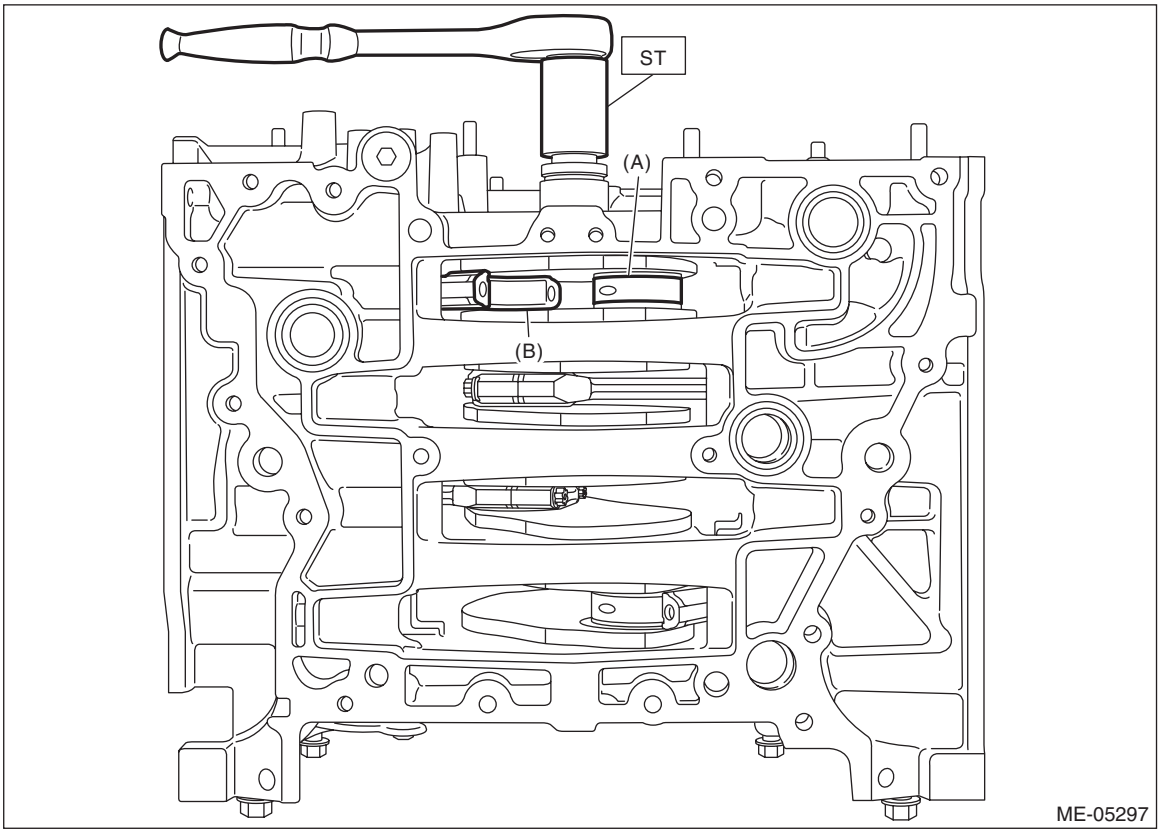

(5) Push the #1 connecting rod in the direction of the arrow, and remove the #1 piston with #1 connecting rod from the cylinder block.

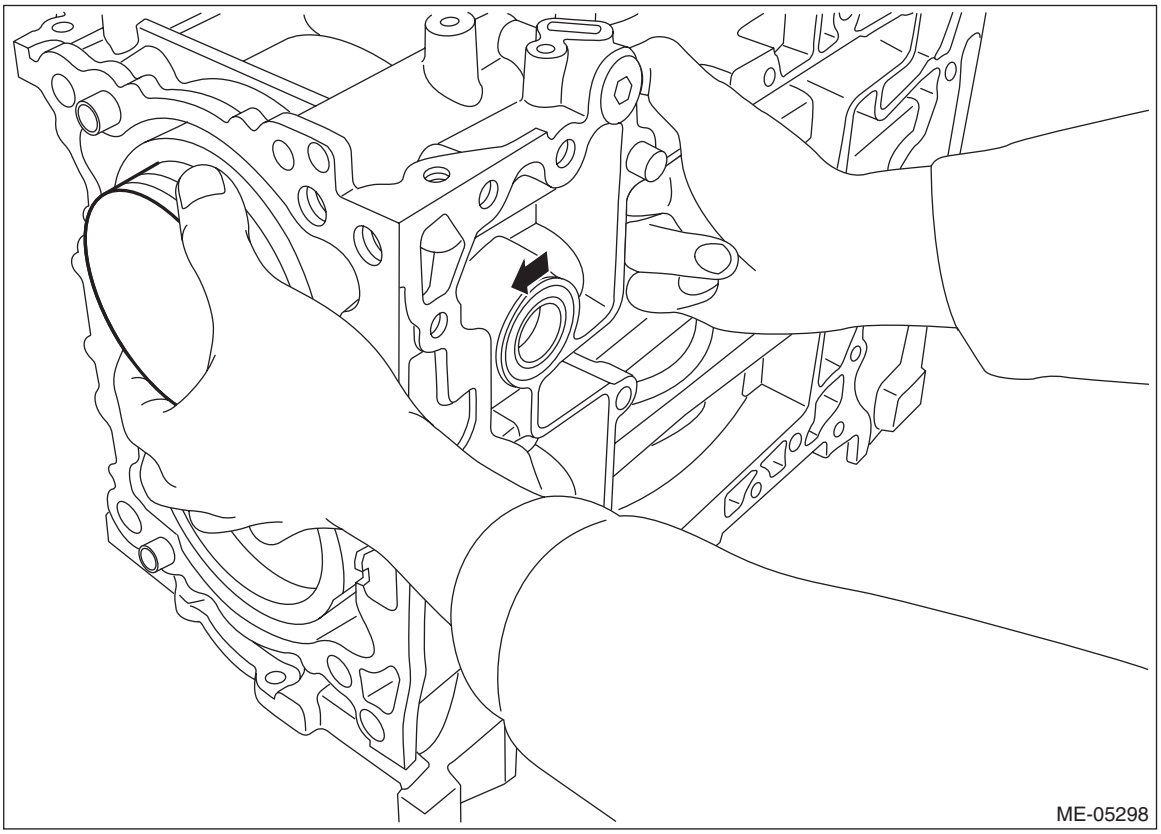

(6) Using the ST, turn the crankshaft clockwise and separate the positions of the #4 pin (A) of crankshaft and the large end (B) of #4 connecting rod.

ST 18252AA000 CRANKSHAFT SOCKET

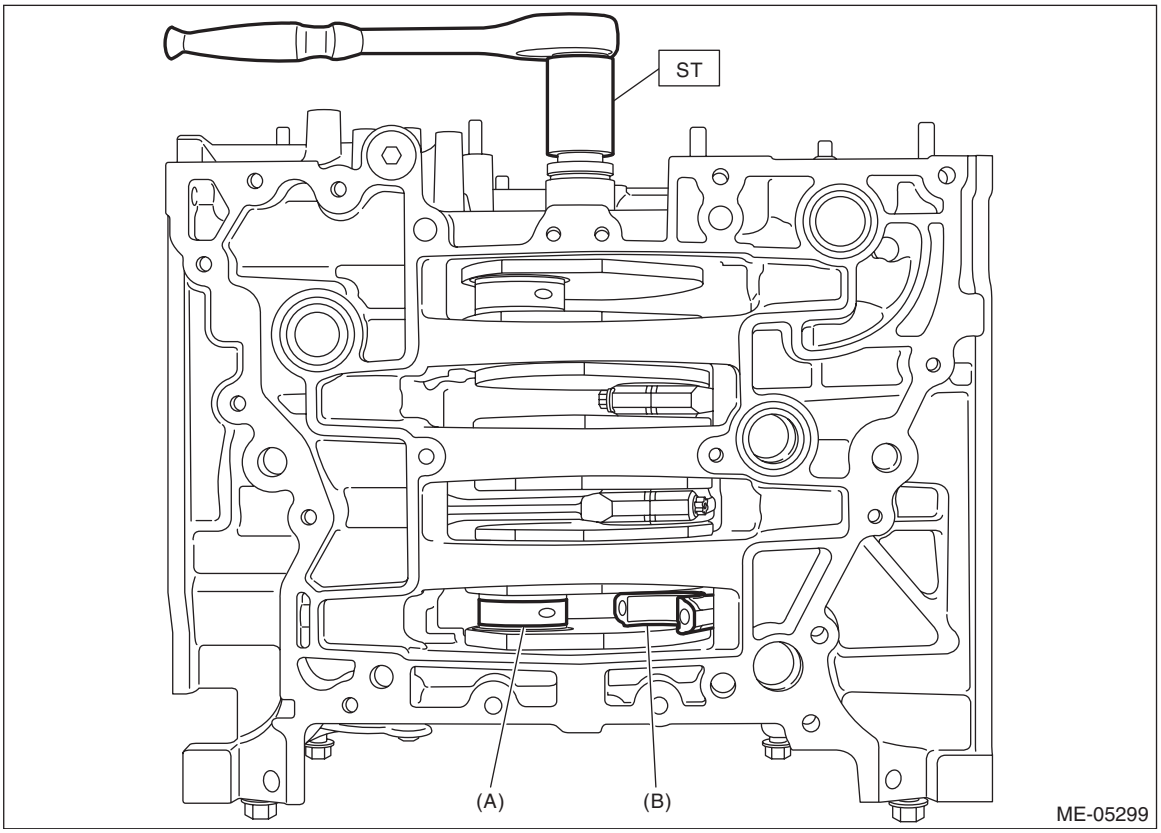

(7) Push the #4 connecting rod in the direction of the arrow, and remove the #4 piston with #4 connecting rod from the cylinder block.

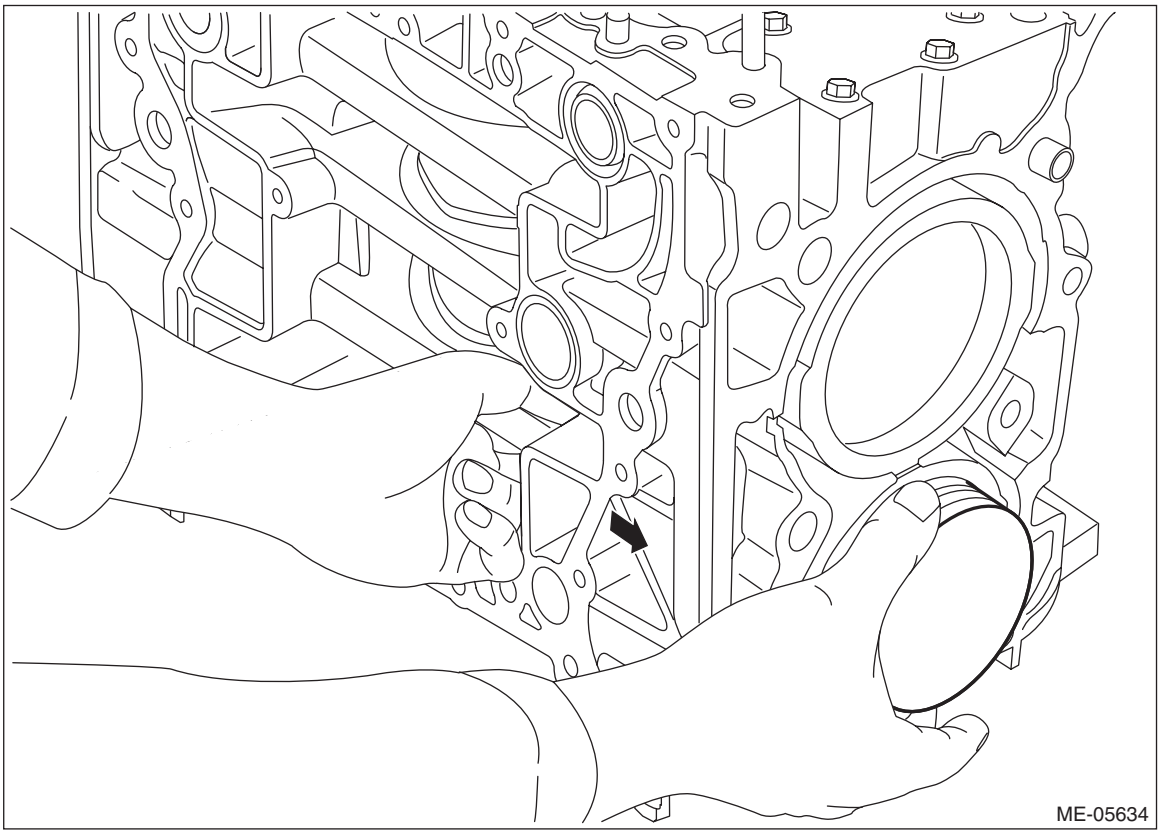

28) Remove the #2 and #3 connecting rod caps and pistons from the cylinder block.

NOTE:
Mark each connecting rod cap and piston with a cylinder number.

(1) Turn the crankshaft so that the #2 connecting rod cap (A) and #3 connecting rod cap (B) is located at the position shown in the figure using ST.

ST 18252AA000 CRANKSHAFT SOCKET

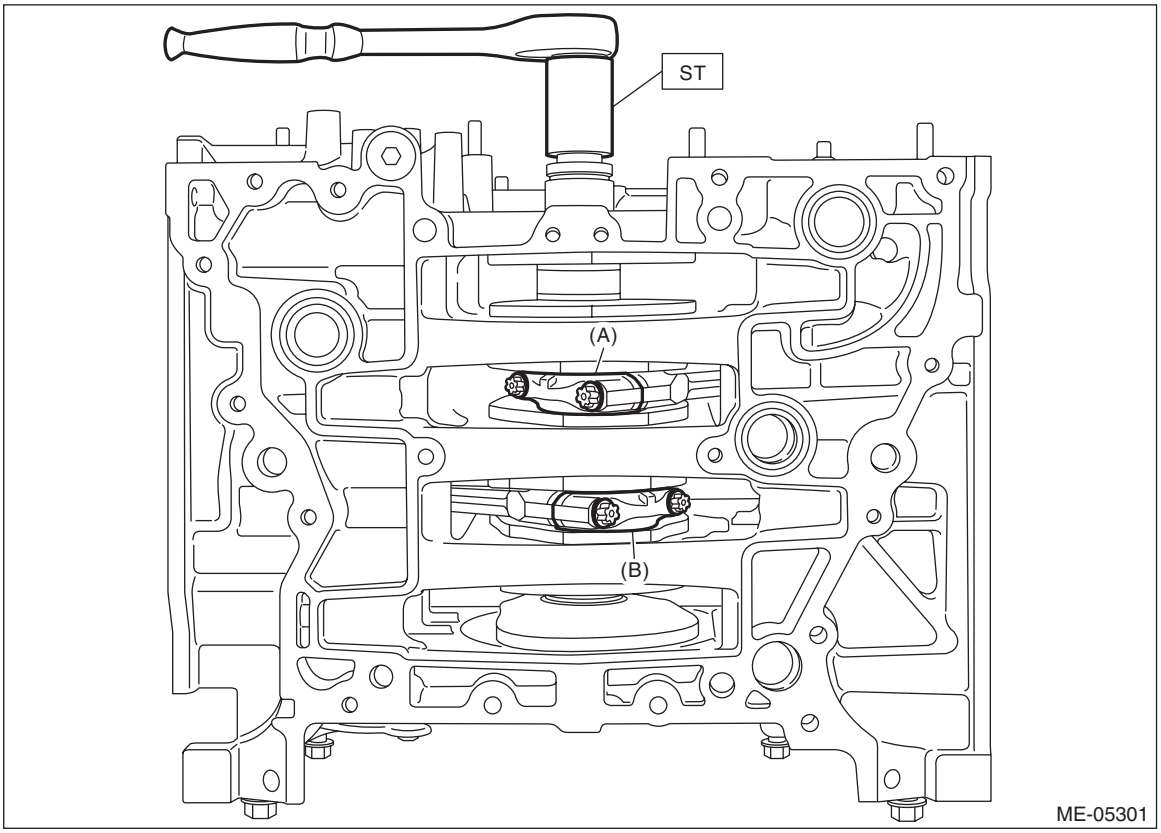

(2) Using ST, loosen the #2 connecting rod cap bolt, and remove the #2 connecting rod cap bolt and #2 connecting rod cap.

ST 18270AA020 SOCKET

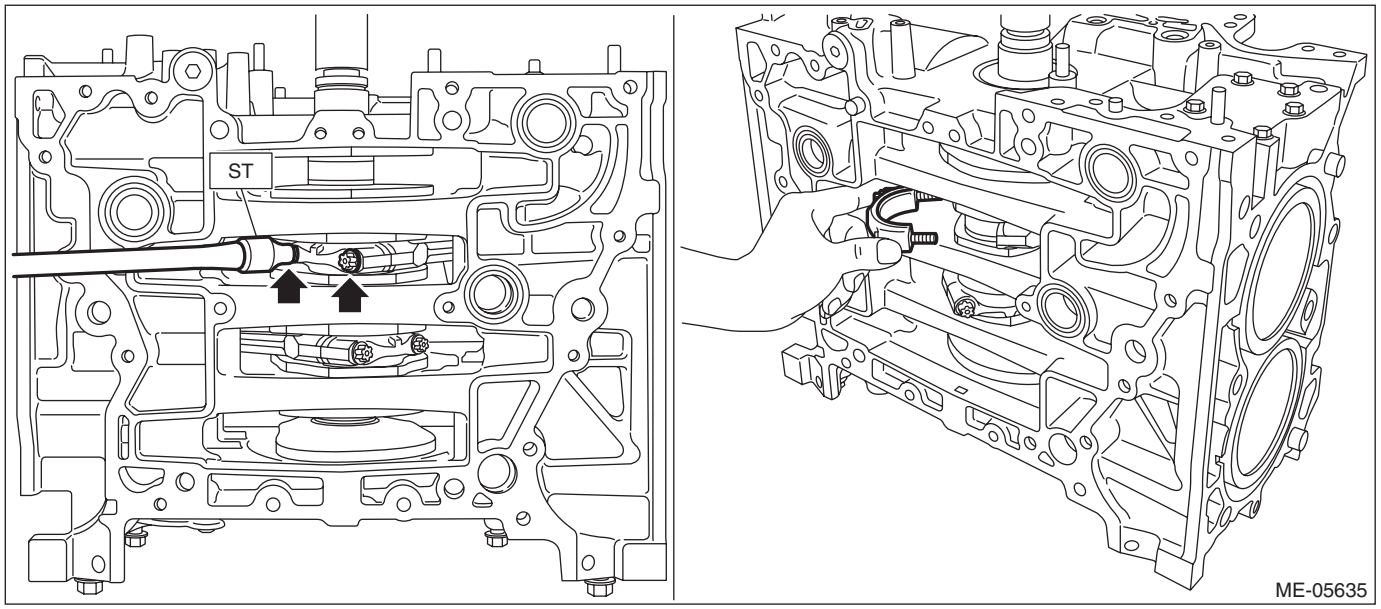

(3) Using ST, loosen the #3 connecting rod cap bolt, and remove the #3 connecting rod cap bolt and #3 connecting rod cap.

ST 18270AA020 SOCKET

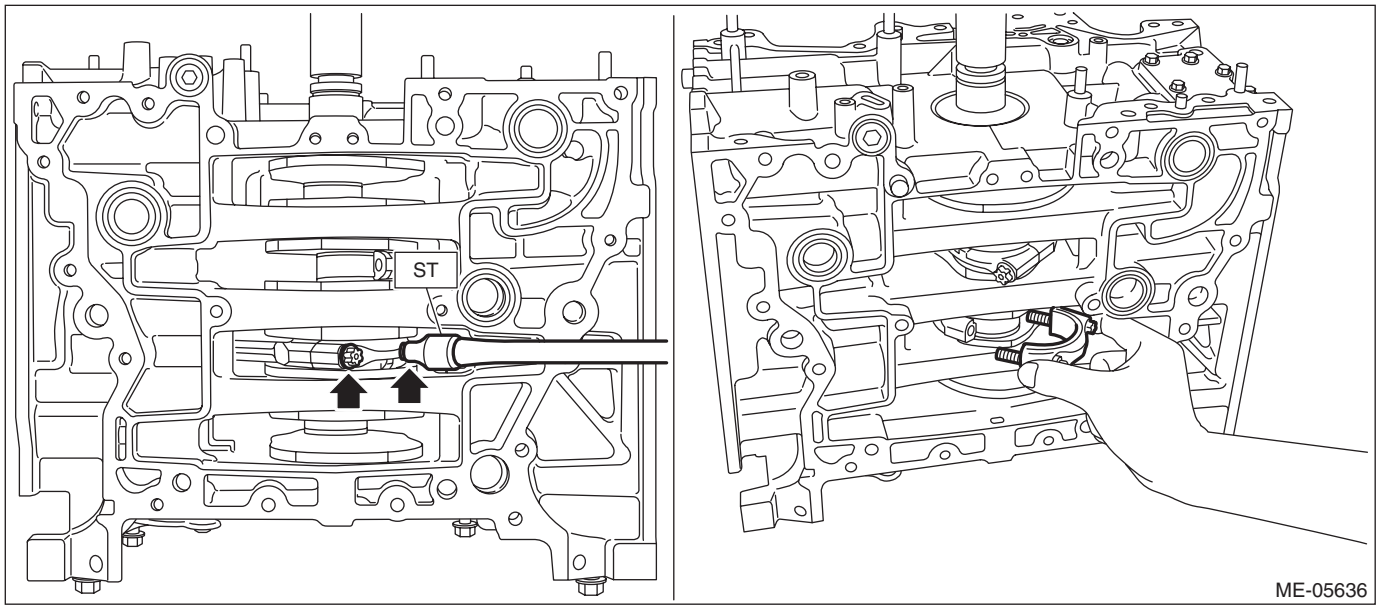

(4) Using the ST, turn the crankshaft clockwise and separate the positions of the #2 pin (A) of crankshaft and the large end (B) of #2 connecting rod.

ST 18252AA000 CRANKSHAFT SOCKET

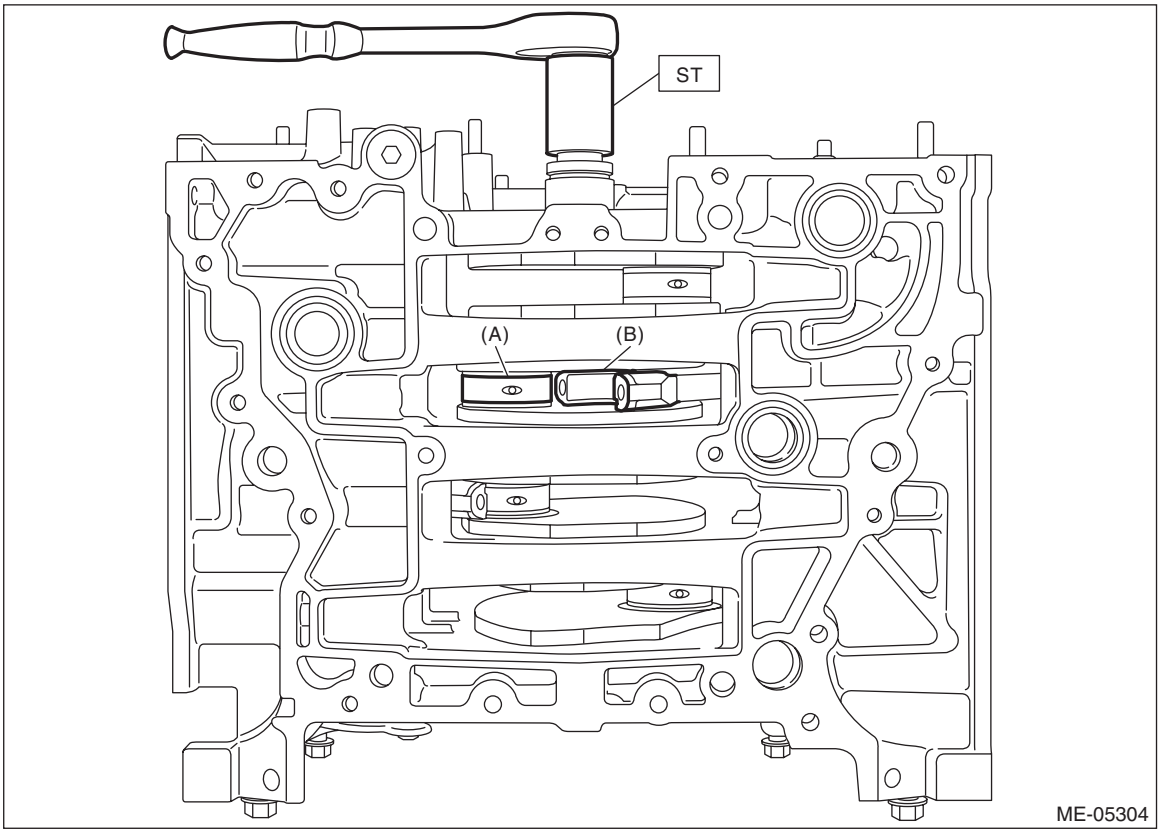

(5) Push the #2 connecting rod in the direction of the arrow, and remove the #2 piston with #2 connecting rod from the cylinder block.

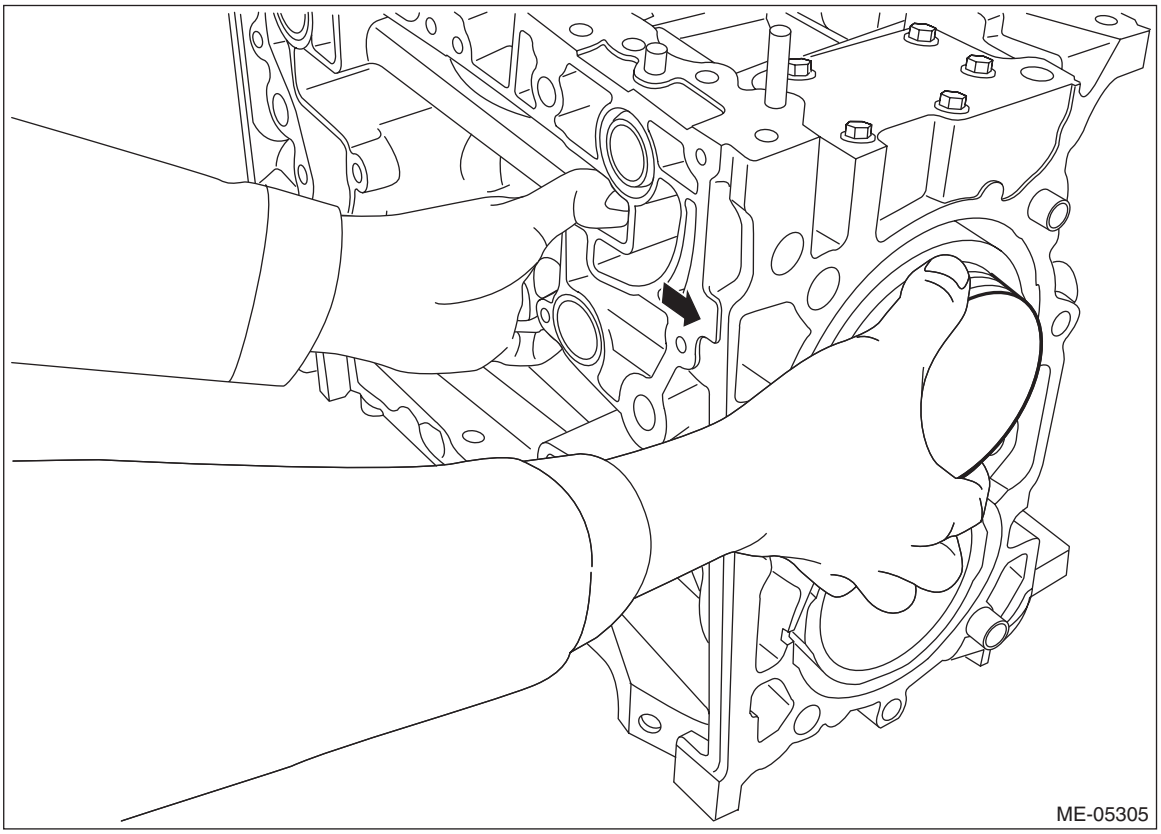

(6) Using the ST, turn the crankshaft counterclockwise and separate the positions of the #3 pin (A) of crankshaft and the large end (B) of #3 connecting rod.

ST 18252AA000 CRANKSHAFT SOCKET

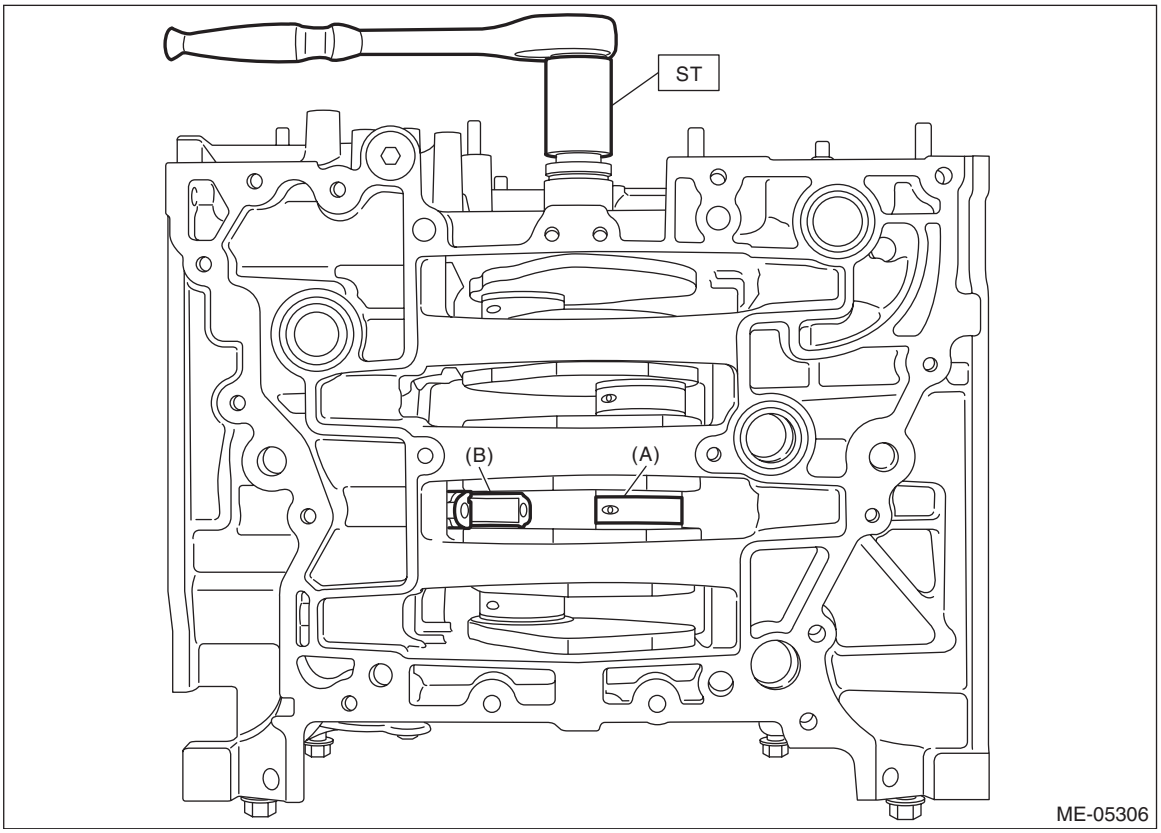

(7) Push the #3 connecting rod in the direction of the arrow, and remove the #3 piston with #3 connecting rod from the cylinder block.

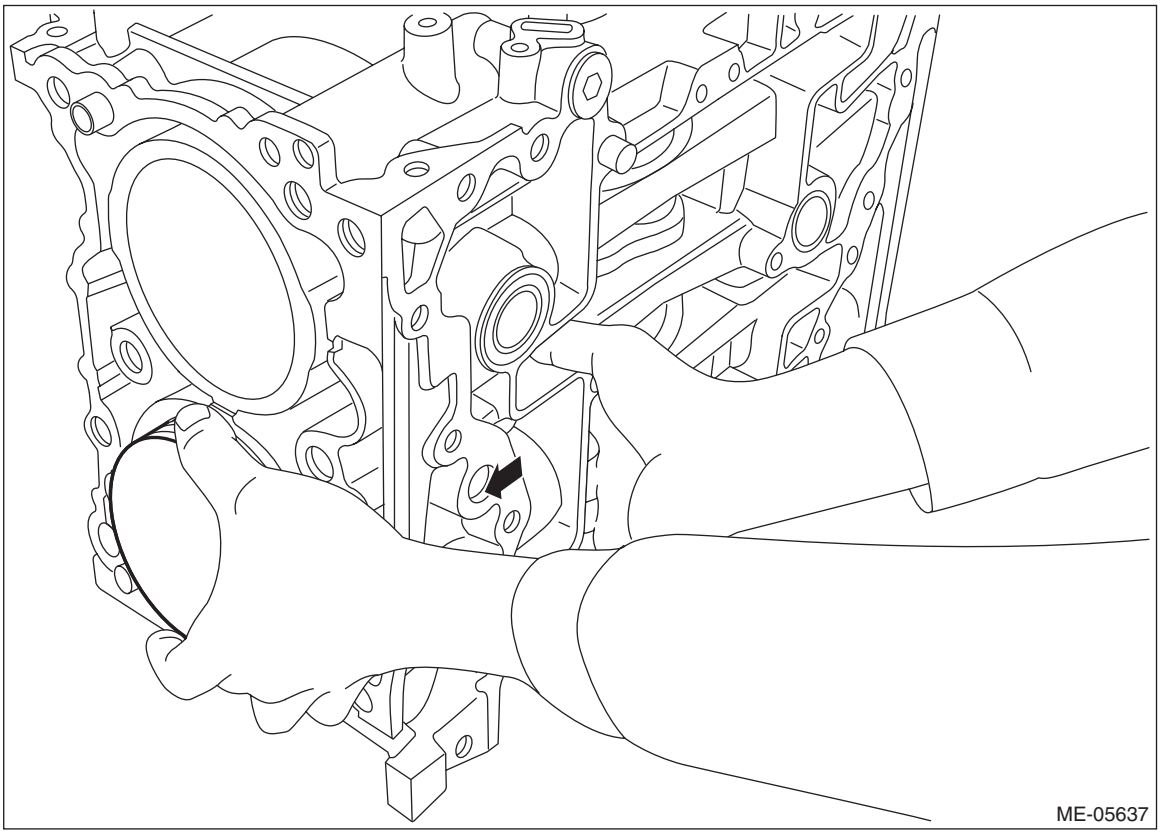

29) Set the cylinder block so that the oil pan side faces upward, and remove the mounting bolts attached to the locations shown in the figure.

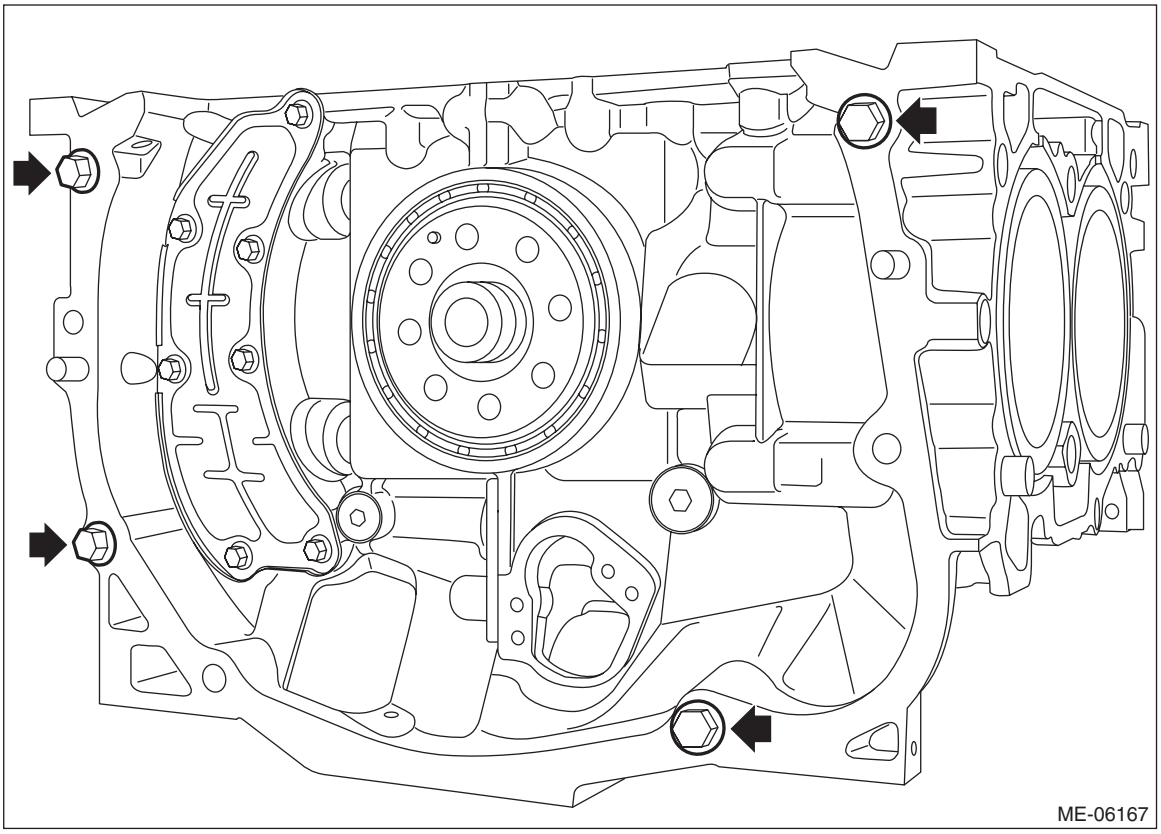

30) Set the part so that the cylinder block RH is on the upper side, and separate the cylinder block.

CAUTION:
• Place a wood board wrapped with a waste cloth to prevent the knock pin damage and to stabilize the cylinder block before work.
• Be careful not to scratch the mating surface of cylinder block during work.

(1) Remove the bolt shown in the figure.

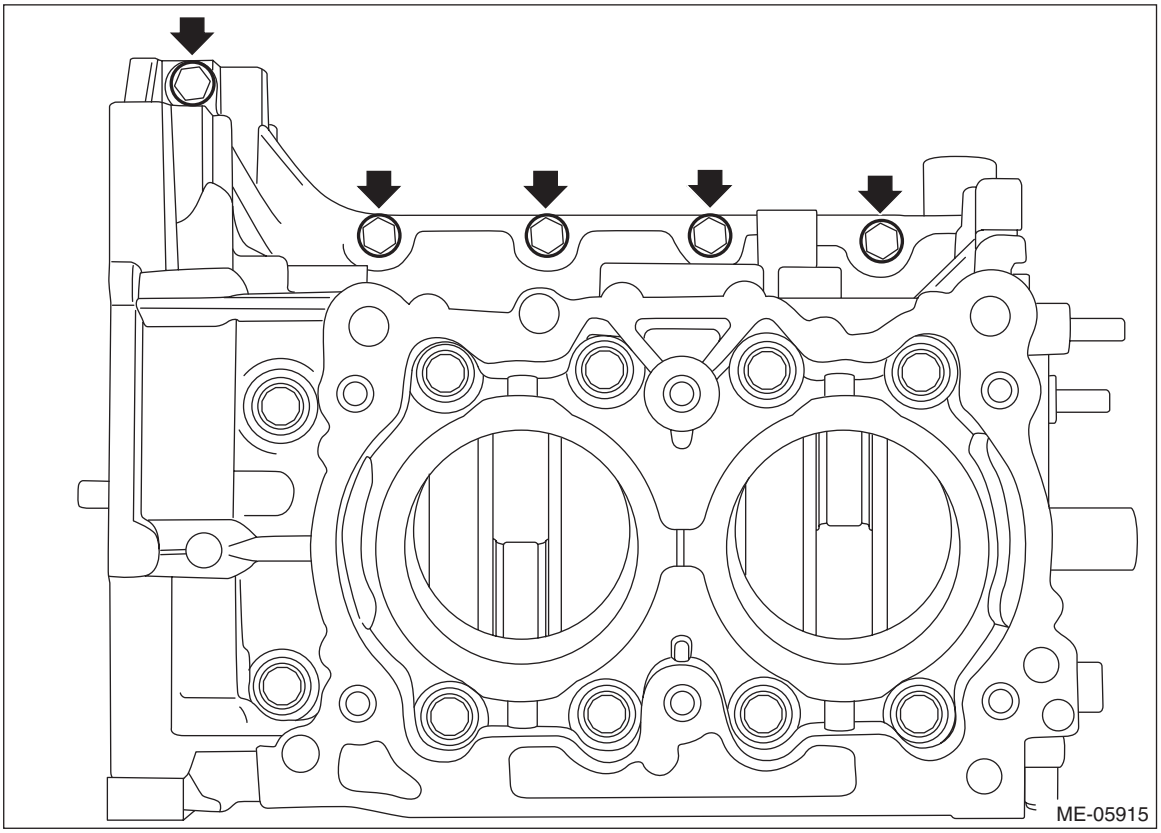

(2) Loosen the cylinder block mounting bolts in numerical order as shown in the figure, and separate the cylinder block RH and LH.

NOTE:
Lift the cylinder block RH slightly, and confirm that the crankshaft is remaining in the cylinder block LH. If the cylinder block RH is lifted carelessly when separating, the crankshaft may stick to cylinder block RH, then fall off.

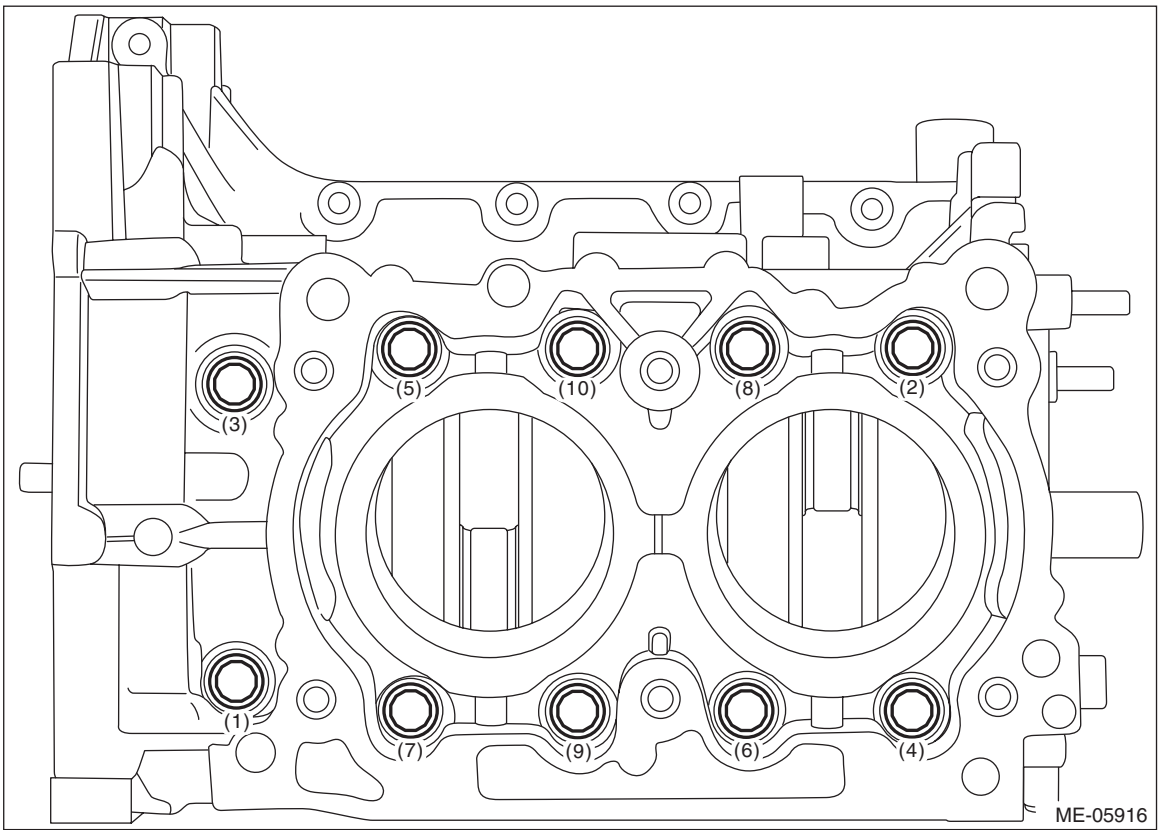

31) Remove the crankshaft from cylinder block LH, and remove the rear oil seal.

32) Remove the O-ring from the cylinder block LH.

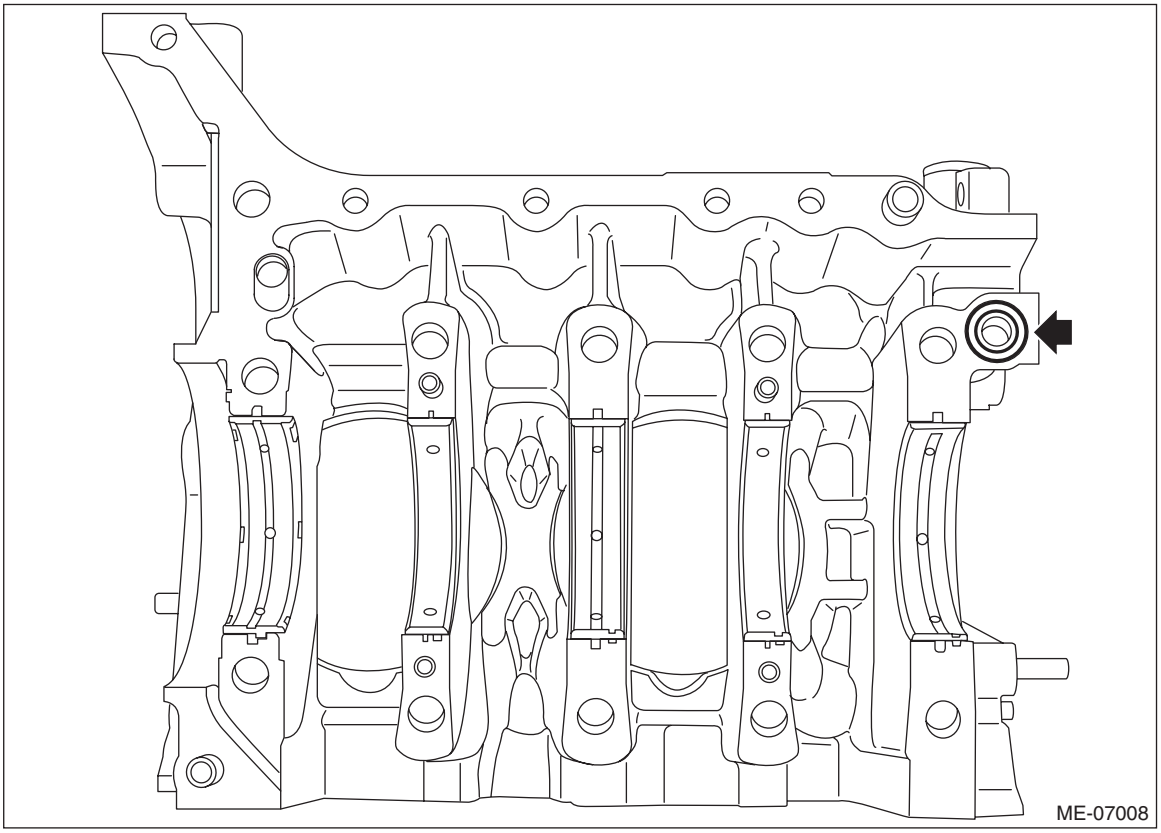

33) Remove the crankshaft bearings from the cylinder block.

NOTE:
- Be careful not to confuse the crankshaft bearing combination.
- Press the bearing at the end opposite to locking lip (A).

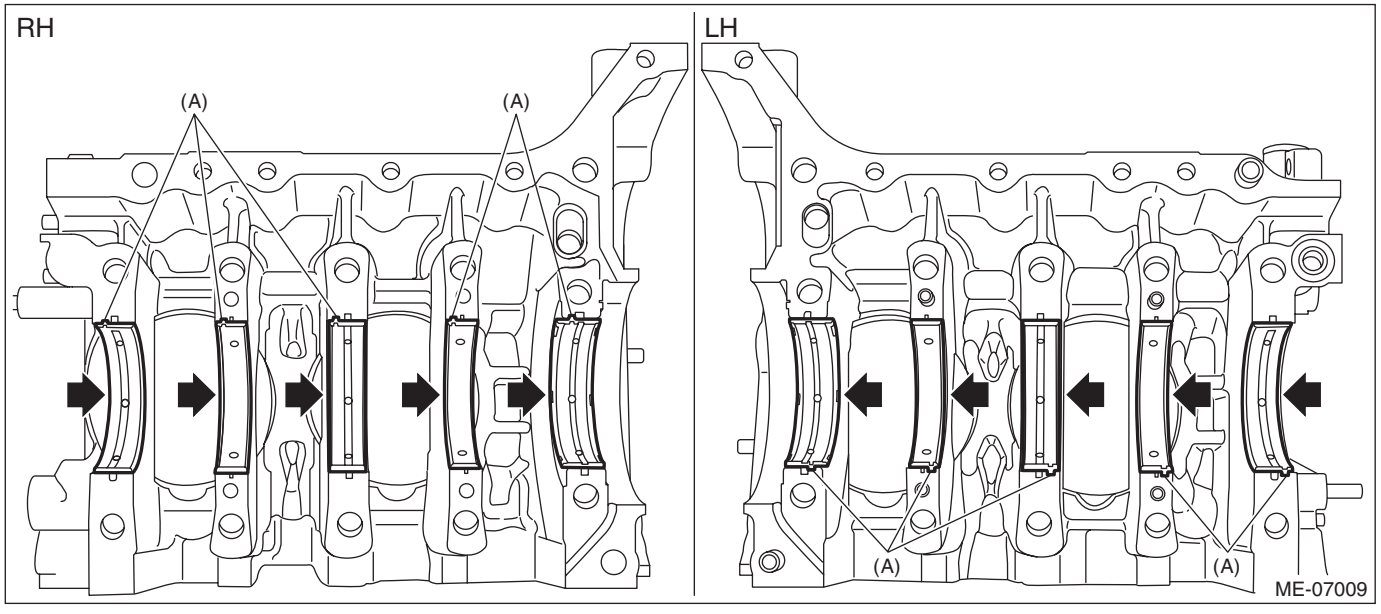

34) Remove the liquid gasket from cylinder block.

B: INSTALLATION

1) Apply engine oil to the crankshaft bearing, and install the crankshaft bearing to the cylinder block.

CAUTION:
• Place a wood board wrapped with a waste cloth to prevent the knock pin damage and to stabilize the cylinder block before work.
• Be careful not to scratch the mating surface of cylinder block during work.

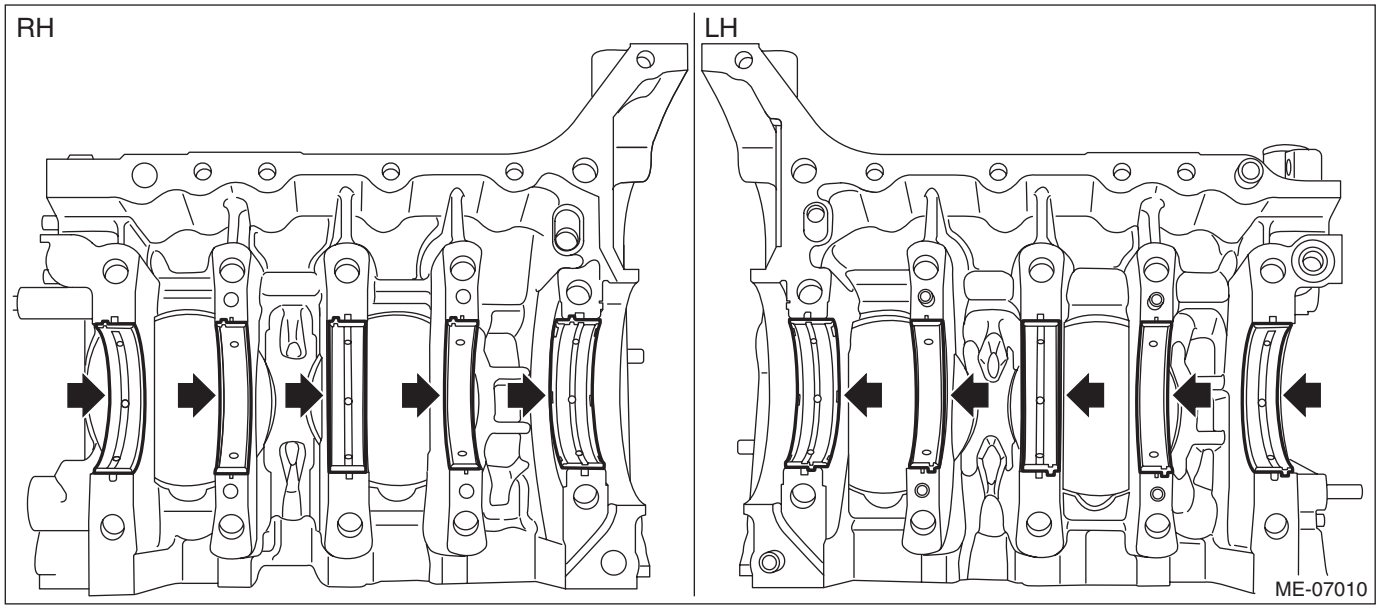

2) Install O-rings to the cylinder block LH.

NOTE:
Use new O-rings.

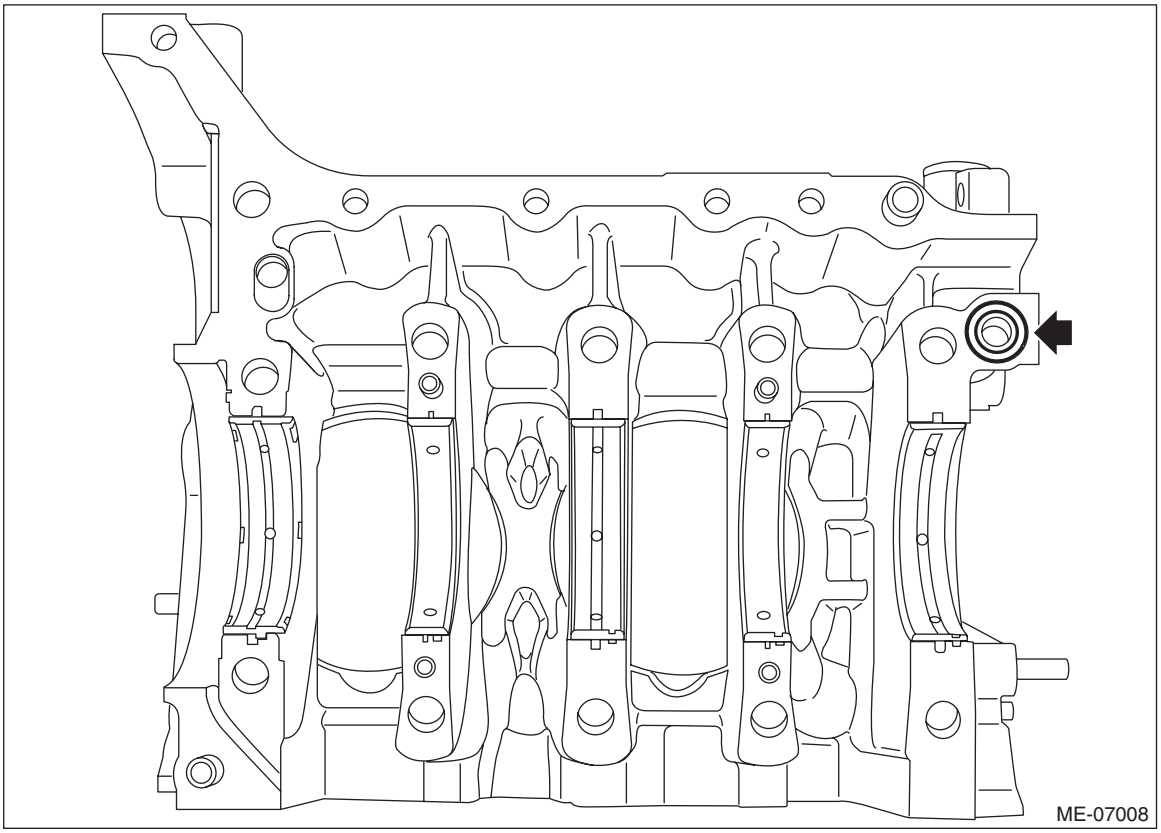

3) Apply engine oil to the crankshaft journal, and set the crankshaft to cylinder block LH.

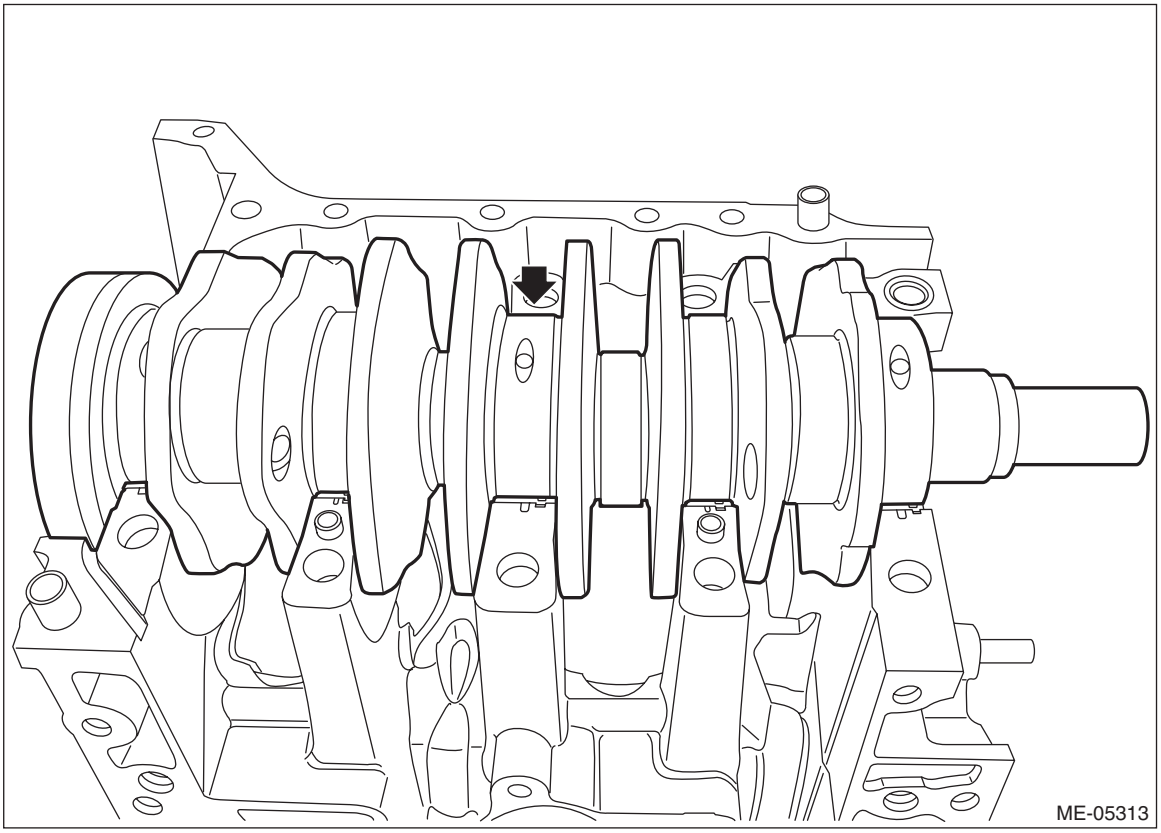

4) Apply liquid gasket to the mating surface of cylinder block RH as shown in the figure.

CAUTION:
Do not let the liquid gasket overflow to the oil passage and crankshaft bearing portions, because the engine seizure may result.

NOTE:
• Before applying liquid gasket, degrease the old liquid gasket seal surface of the cylinder block RH and cylinder block LH.
• Install within 5 min. after applying liquid gasket.

Liquid gasket:
THREE BOND 1217G (Part No. K0877Y0100) or equivalent

Liquid gasket applying diameter:
Mating surfaces other than ranges A and B
1±0.5 mm (0.0394±0.0197 in)
Mating surfaces of ranges A and B
4±0.5 mm (0.1575±0.0197 in)

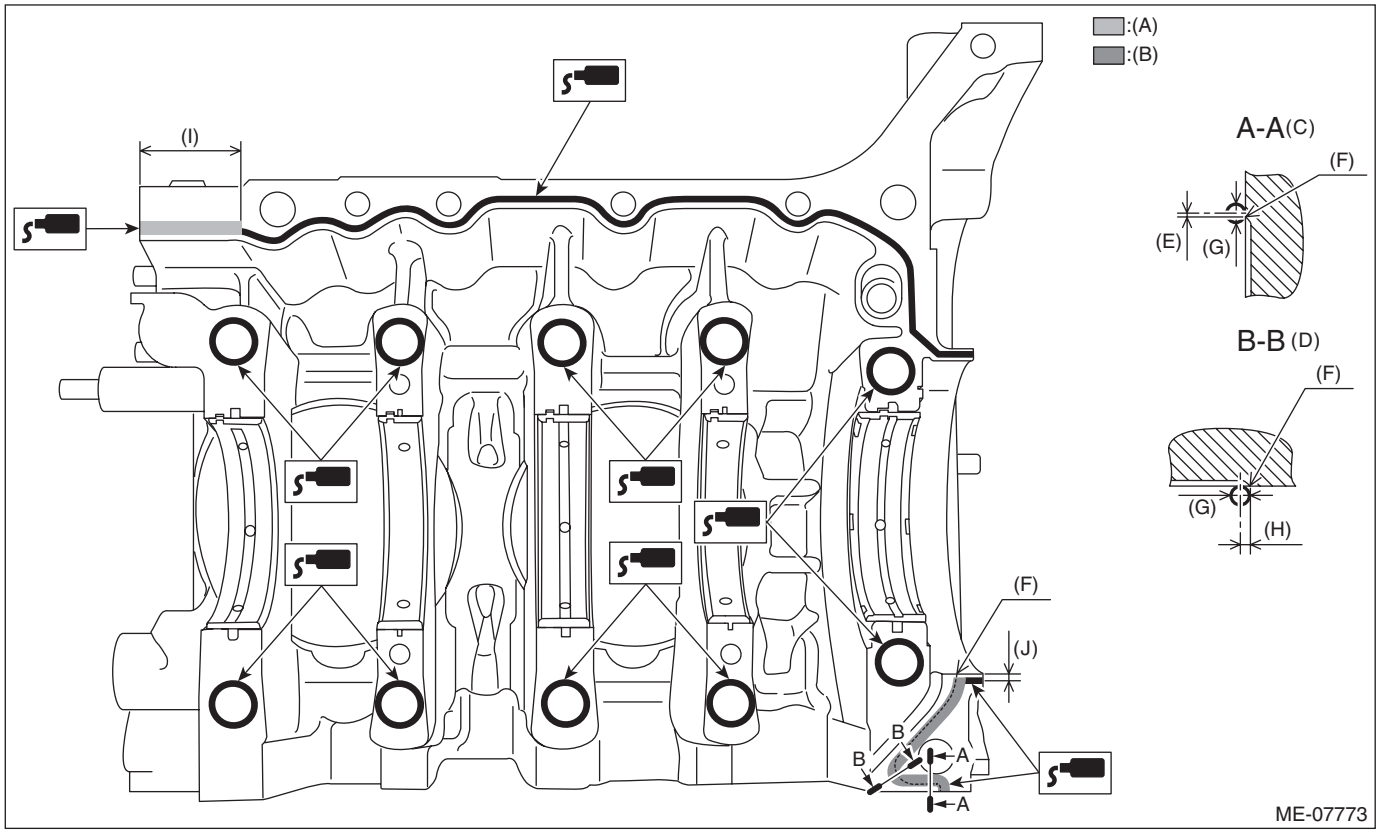

(A)	Range A	(E)	1 mm (0.0394 in) or less	(I)	36 mm (1.4173 in)
(B)	Range B	(F)	Chamfer edge	(J)	2.5 mm (0.0984 in)
(C)	Liquid gasket applying position of mating surfaces (other than the edge) of range B	(G)	ϕ4±0.5 mm (0.1575±0.0197 in)		
(D)	Liquid gasket applying position of mating surfaces (the edge) of range B	(H)	2 mm (0.0787 in)		

5) Install the cylinder block RH to the cylinder block LH.

6) Join the cylinder blocks.
(1) Apply a coat of engine oil to the washers and cylinder block mounting bolt threads.

NOTE:
To prevent mixture of engine oil into the water jacket, do not apply a large amount.
(2) Install the cylinder head bolt at the locations shown in the figure.

NOTE:
This procedure is required to tighten the cylinder block mounting bolts with specified angle using ST.

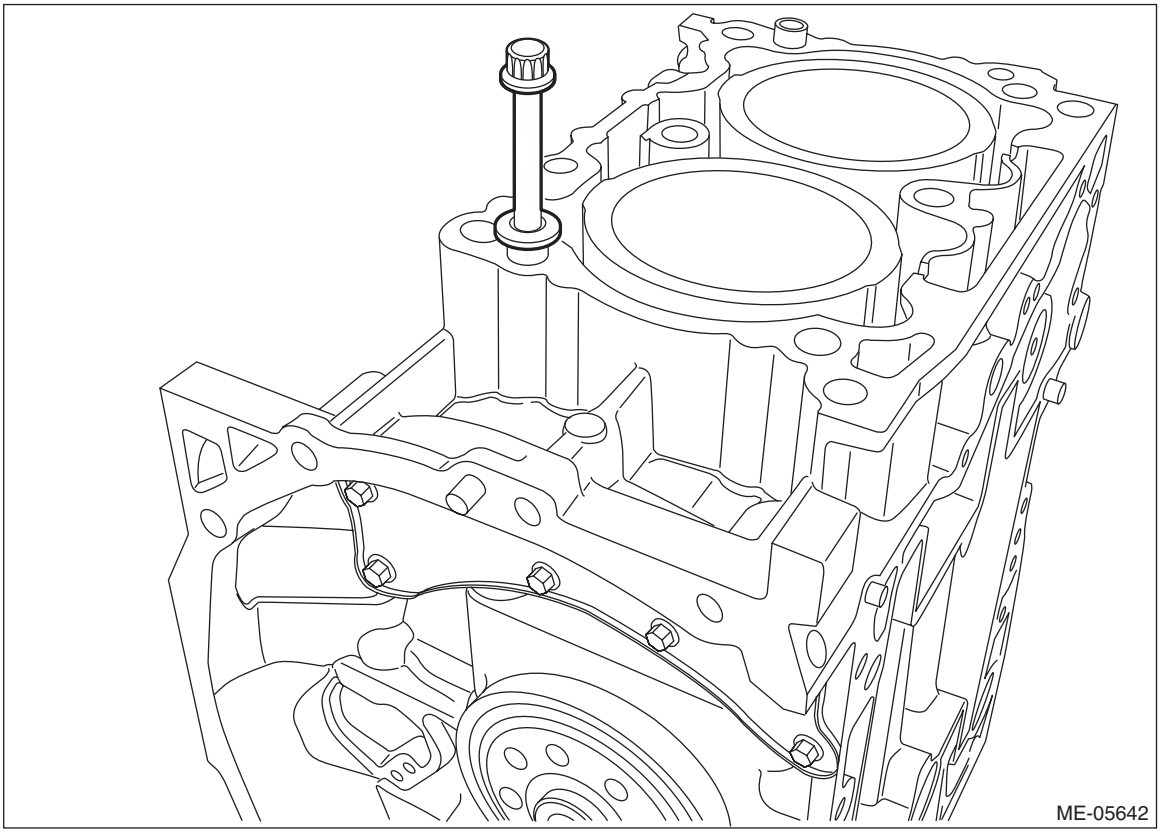

(3) Tighten all mounting bolts with a torque of 35 N·m (3.6 kgf-m, 25.8 ft-lb) in numerical order as shown in the figure.

CAUTION:
When tightening the mounting bolts with specified torque, hold the cylinder block LH while not holding the cylinder block RH to ensure the joint accuracy of the cylinder block.

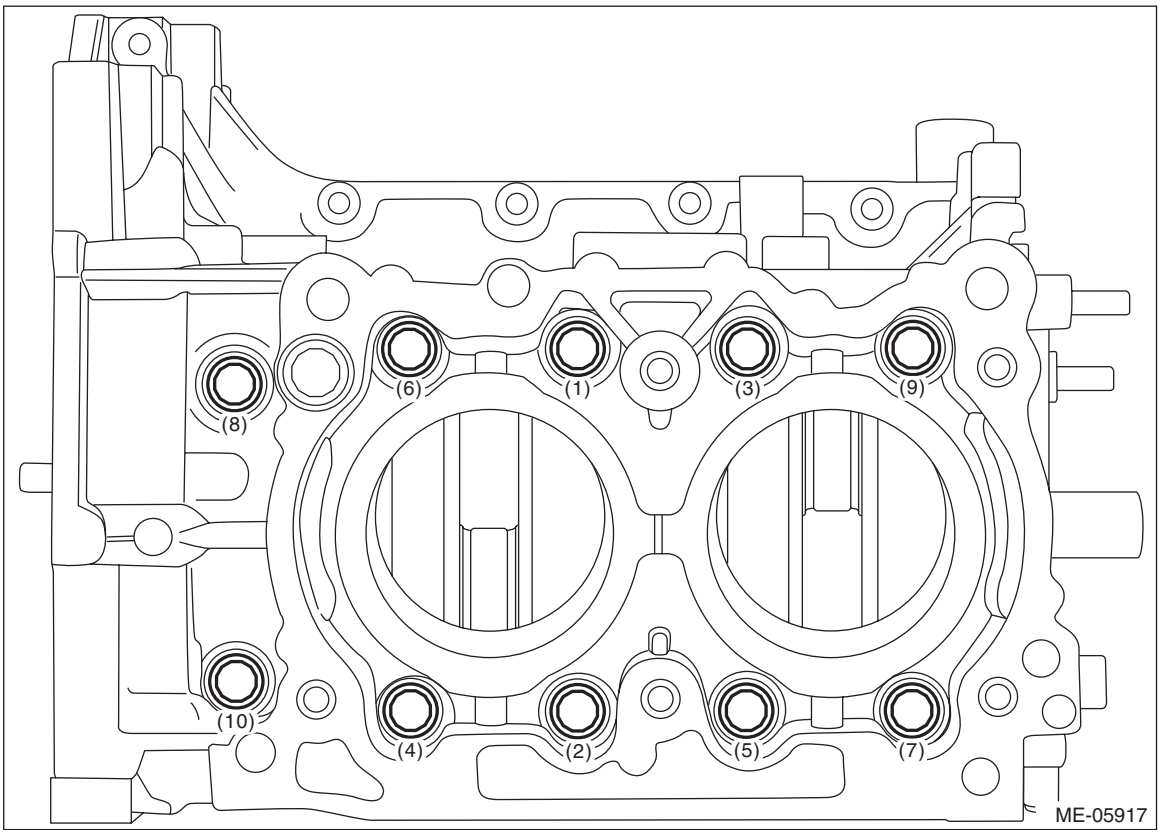

(4) Loosen all mounting bolts by 180° in numerical order as shown in the figure.

CAUTION:
When loosening the mounting bolts, hold the cylinder block LH while not holding the cylinder block RH to ensure the joint accuracy of the cylinder block.

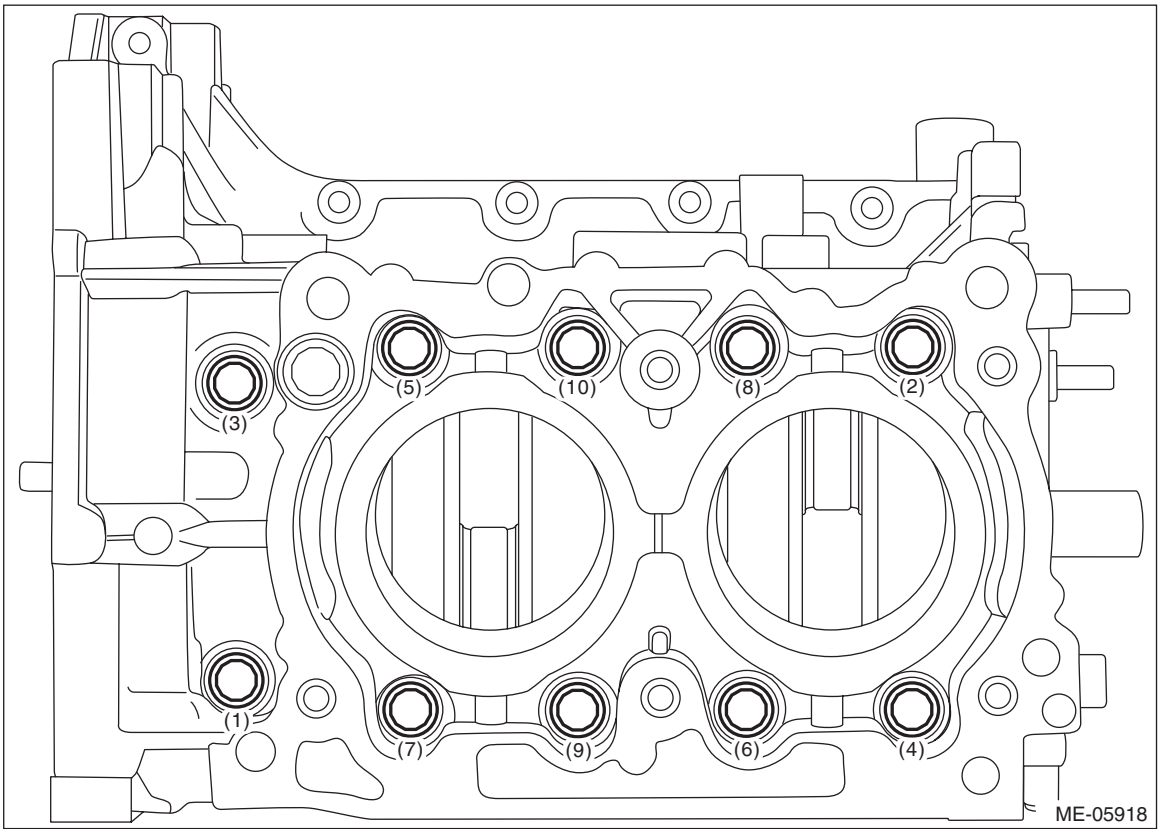

(5) Tighten all mounting bolts with a torque of 35 N·m (3.6 kgf-m, 25.8 ft-lb) in numerical order as shown in the figure.

CAUTION:
When tightening the mounting bolts with specified torque, hold the cylinder block LH while not holding the cylinder block RH to ensure the joint accuracy of the cylinder block.

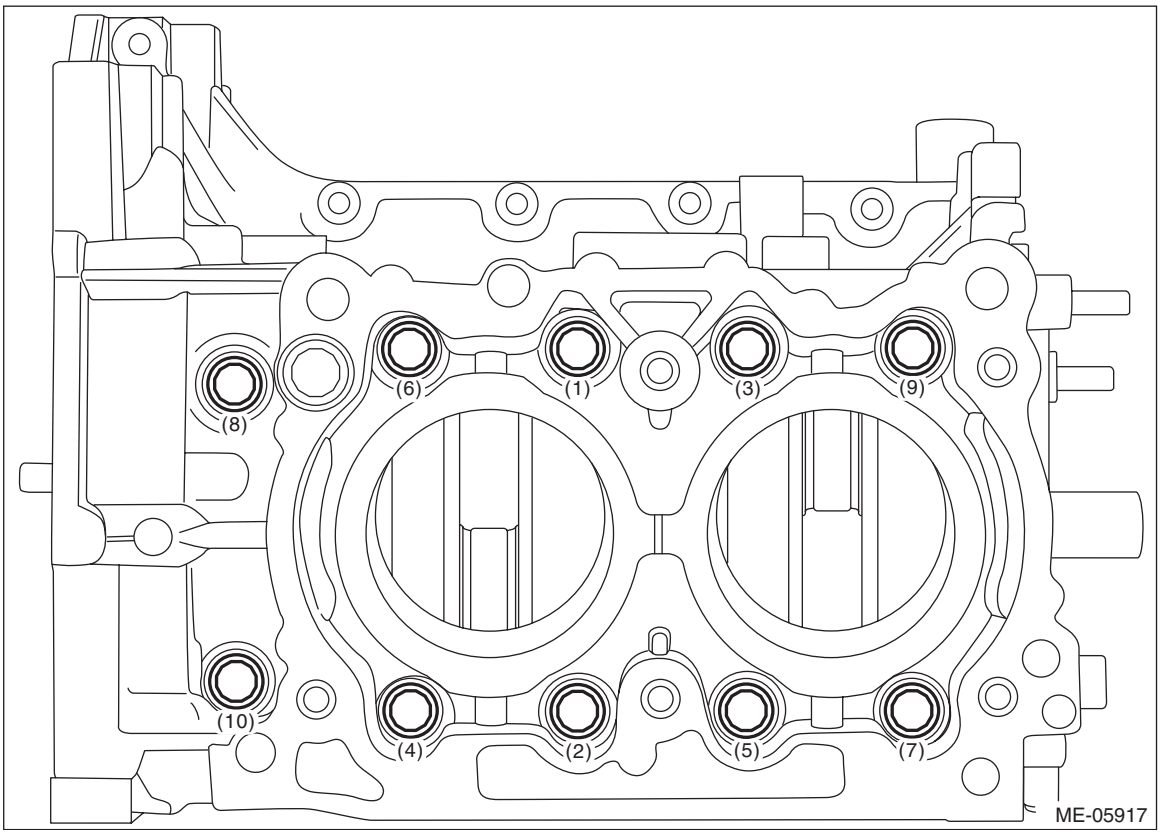

(6) Loosen the mounting bolts (4 places) by 180° in numerical order as shown in the figure.

CAUTION:
When loosening the mounting bolts, hold the cylinder block LH while not holding the cylinder block RH to ensure the joint accuracy of the cylinder block.

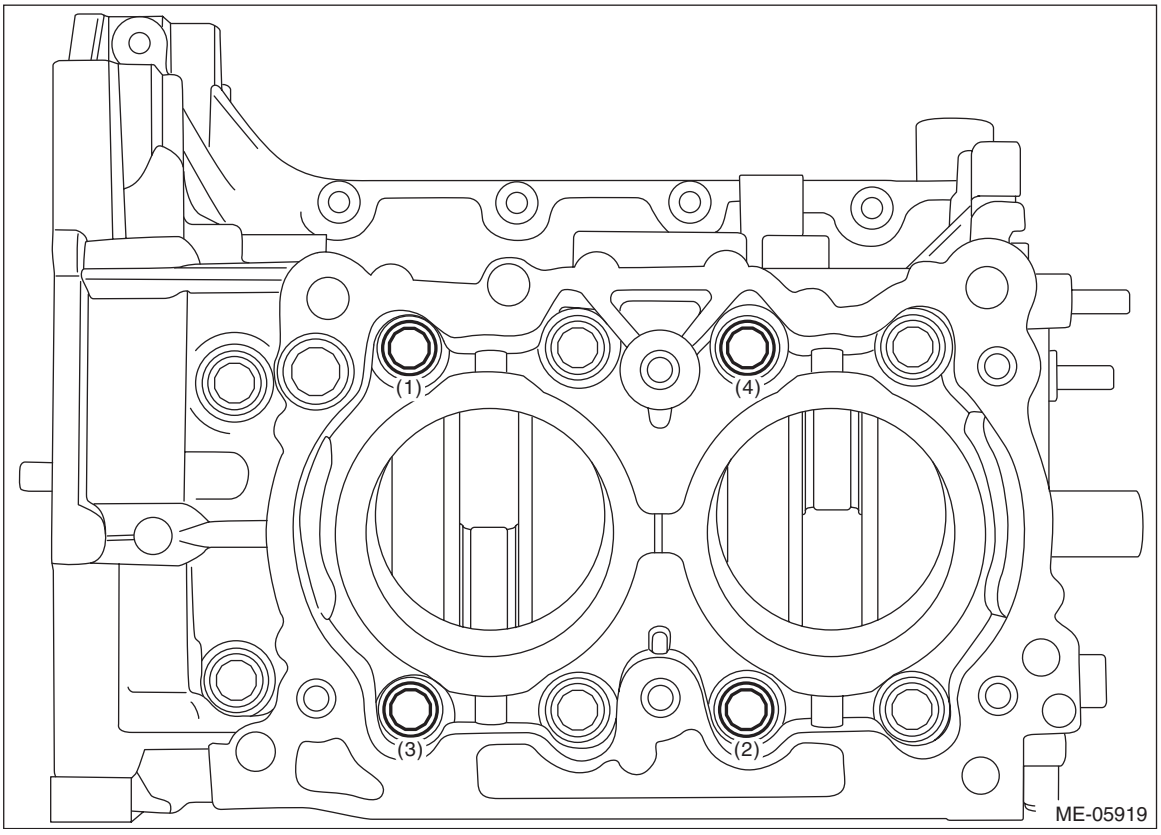

(7) Tighten the mounting bolts (4 places) with a torque of 17 N·m (1.7 kgf-m, 12.5 ft-lb) in numerical order as shown in the figure.

CAUTION:
When tightening the mounting bolts with specified torque, hold the cylinder block LH while not holding the cylinder block RH to ensure the joint accuracy of the cylinder block.

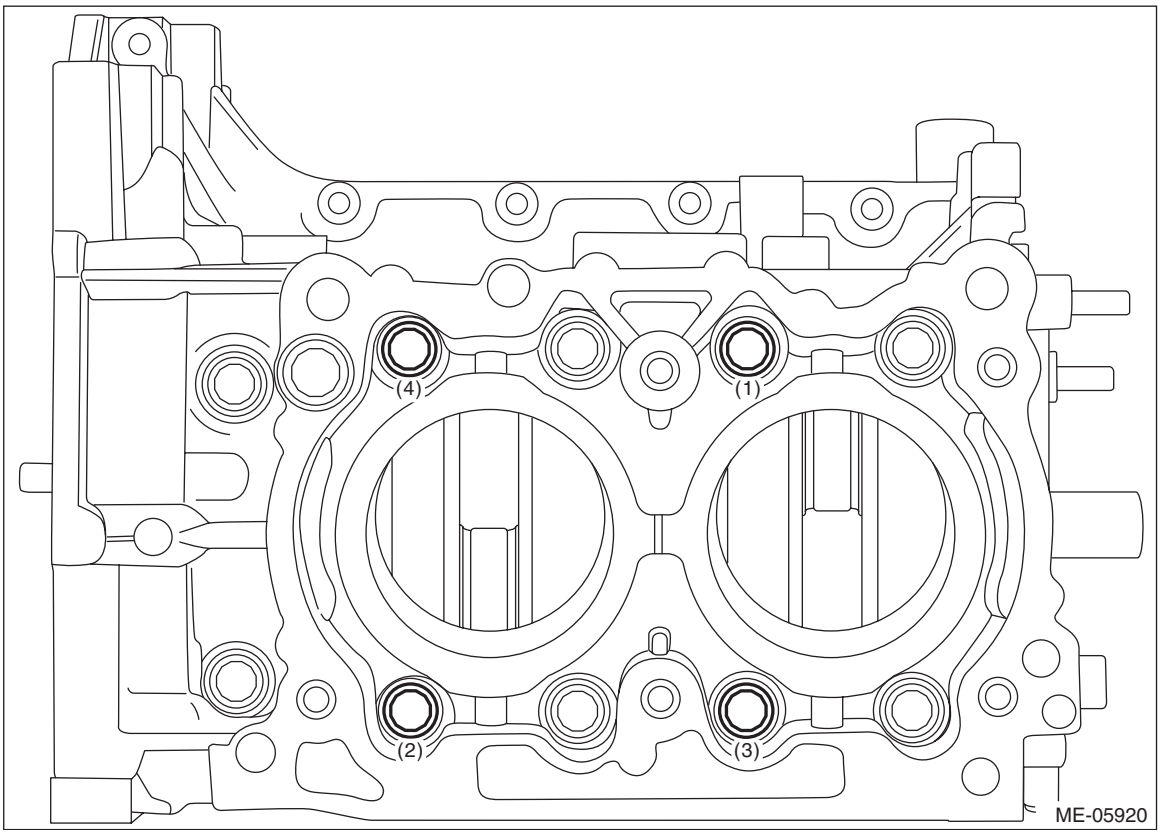

(8) Using angle gauge, tighten the mounting bolts (4 places) with specified angle in numerical order as shown in the figure.

CAUTION:
When tightening the mounting bolts with specified angle, hold the cylinder block LH while not holding the cylinder block RH to ensure the joint accuracy of the cylinder block.

Tightening angle:
60°±2°

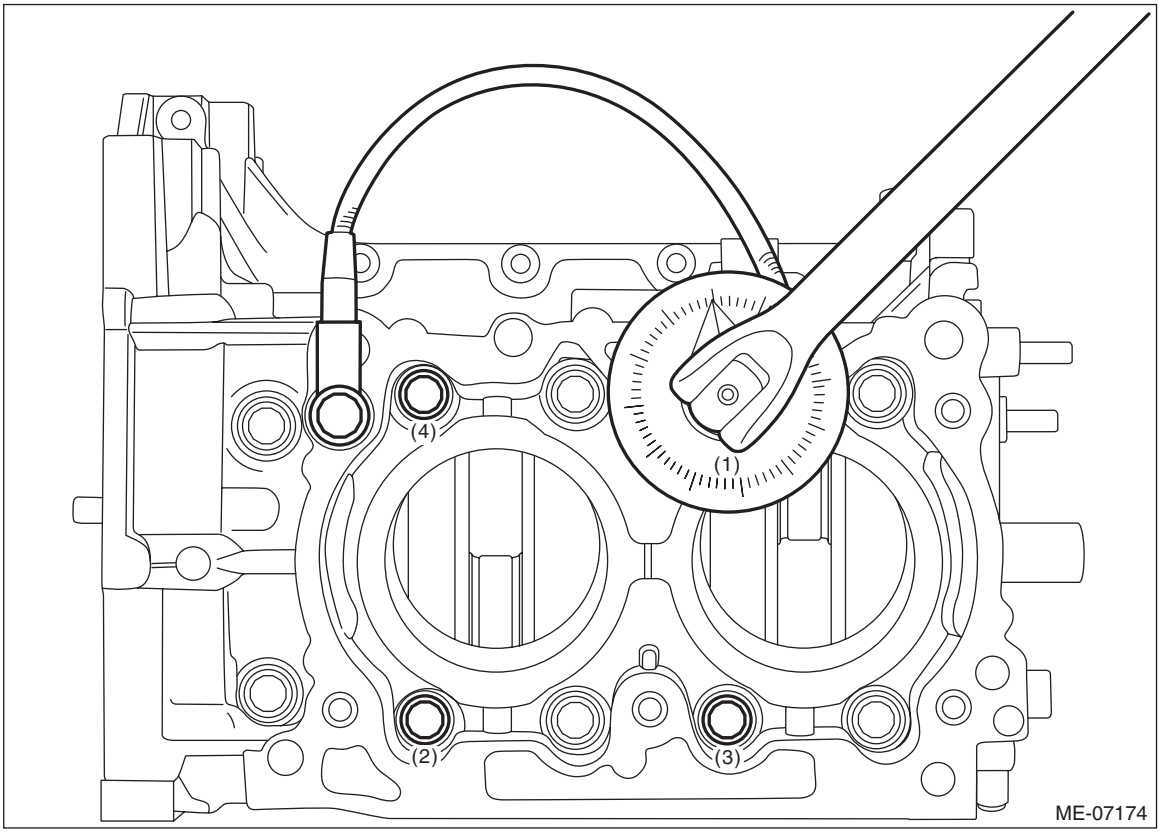

(9) Loosen the mounting bolts (6 places) by 180° in numerical order as shown in the figure.

CAUTION:
When loosening the mounting bolts, hold the cylinder block LH while not holding the cylinder block RH to ensure the joint accuracy of the cylinder block.

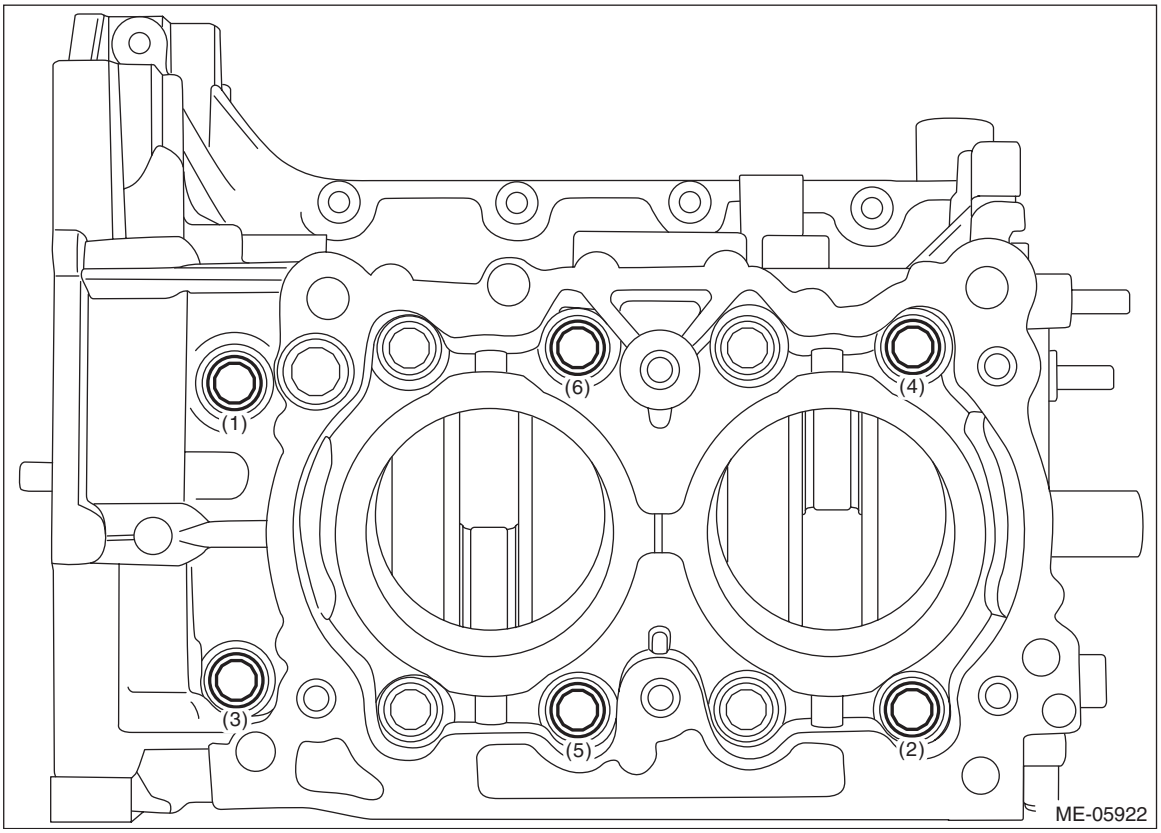

(10) Tighten the mounting bolts (6 places) with a torque of 17 N·m (1.7 kgf-m, 12.5 ft-lb) in numerical order as shown in the figure.

CAUTION:
When tightening the mounting bolts with specified torque, hold the cylinder block LH while not holding the cylinder block RH to ensure the joint accuracy of the cylinder block.

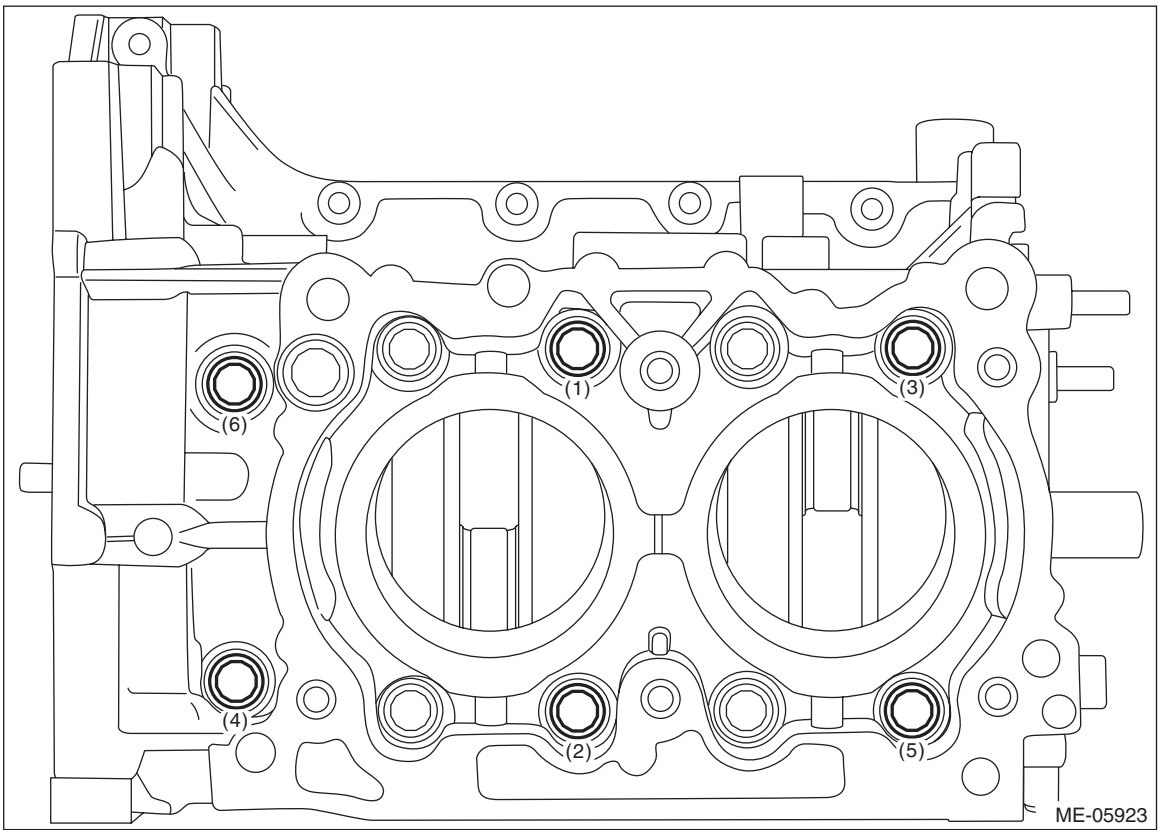

(11) Using angle gauge, tighten the mounting bolts (6 places) with specified angle in numerical order as shown in the figure.

CAUTION:
When tightening the mounting bolts with specified angle, hold the cylinder block LH while not holding the cylinder block RH to ensure the joint accuracy of the cylinder block.

Tightening angle:
60°±2°

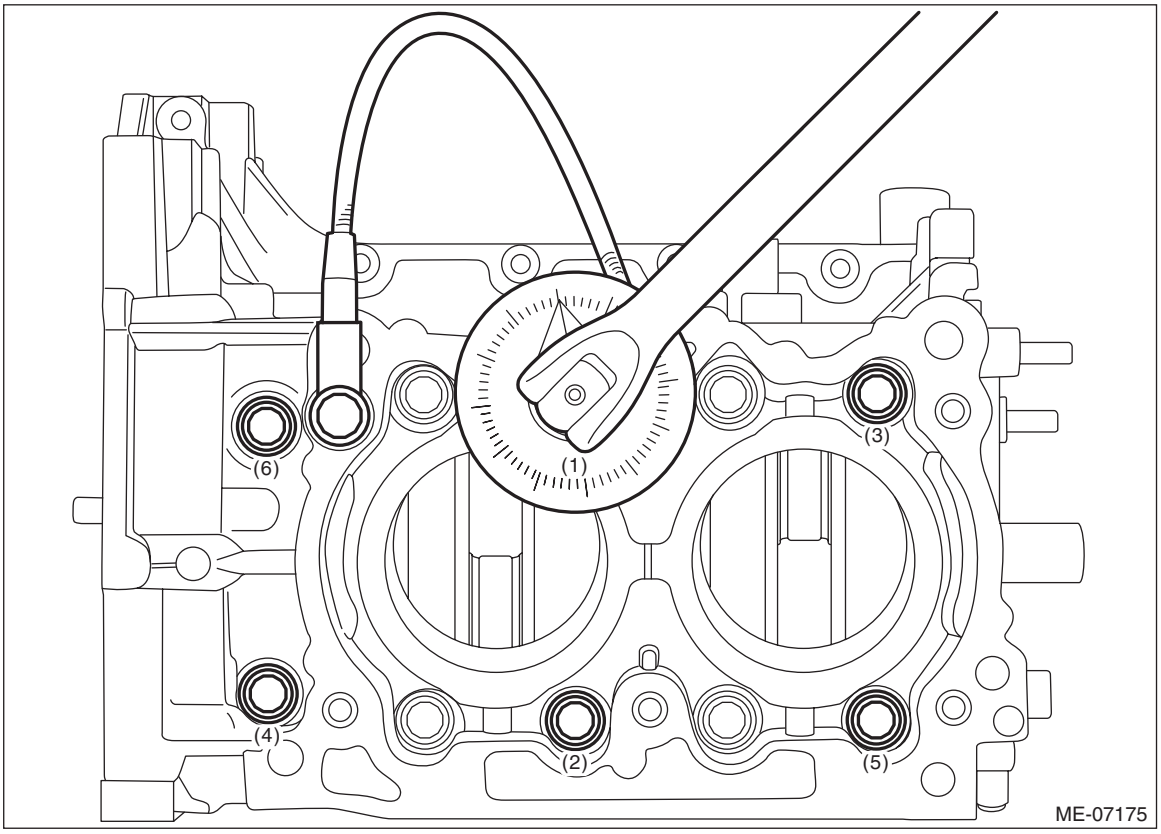

(12) Remove the cylinder head bolt attached at the locations shown in the figure.

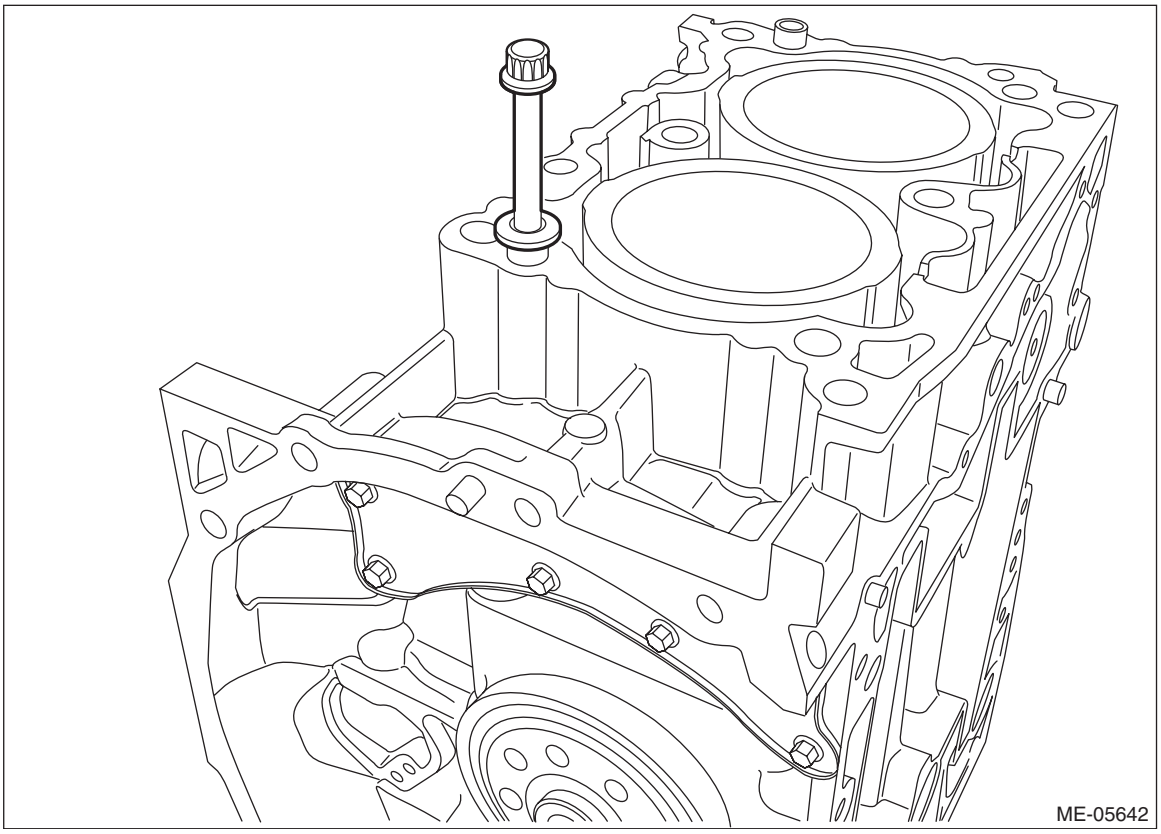

(13) Install the bolt shown in the figure.

NOTE:
After tightening, if the liquid gasket is squeezed out in the seal surface area of the chain cover and oil pan upper, completely remove any liquid gasket that is squeezed out. Any liquid gasket on the chamfer area, however, should not be removed.

Tightening torque:
25 N·m (2.5 kgf-m, 18.4 ft-lb)

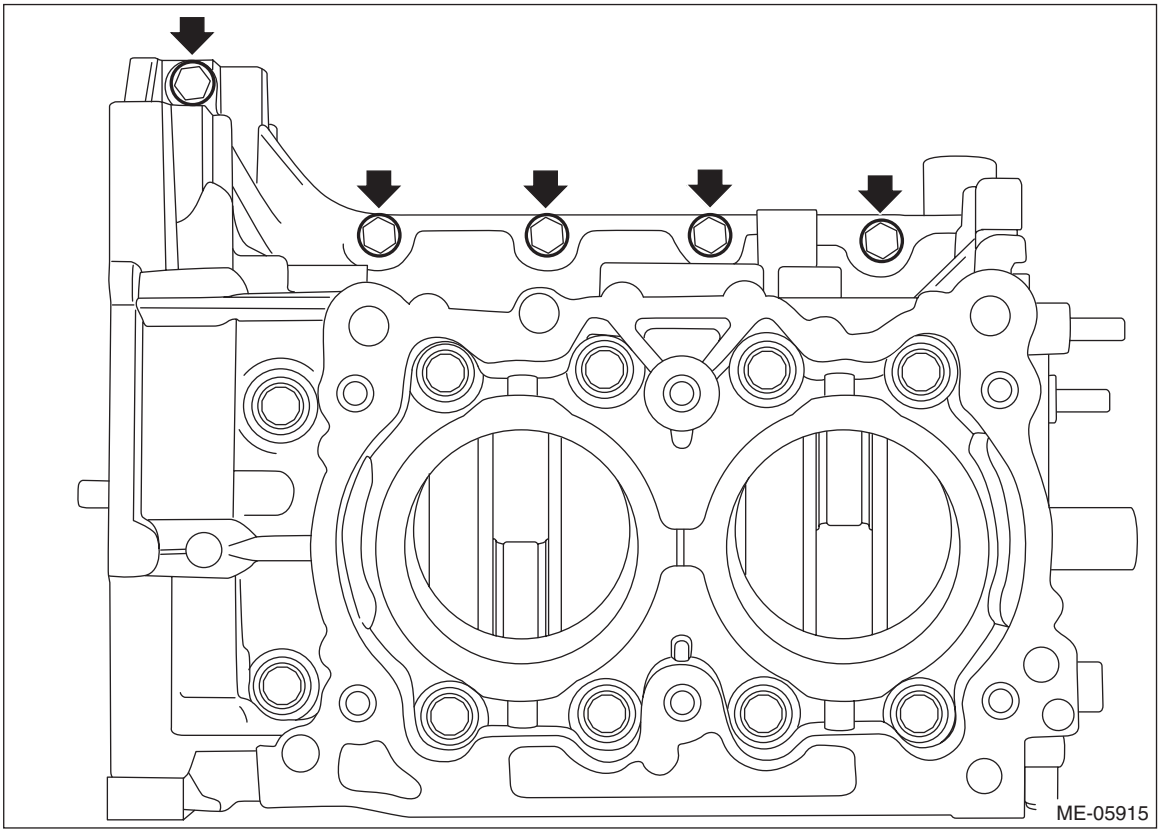

7) Set the part so that the oil pan side of cylinder block is on the upper side.

8) Apply a coat of engine oil to the oil seal inner periphery and outer periphery, and install the rear oil seal using ST1 and ST2.

NOTE:
Use a new rear oil seal.
ST1 18671AA020 OIL SEAL GUIDE
ST2 18657AA030 OIL SEAL INSTALLER

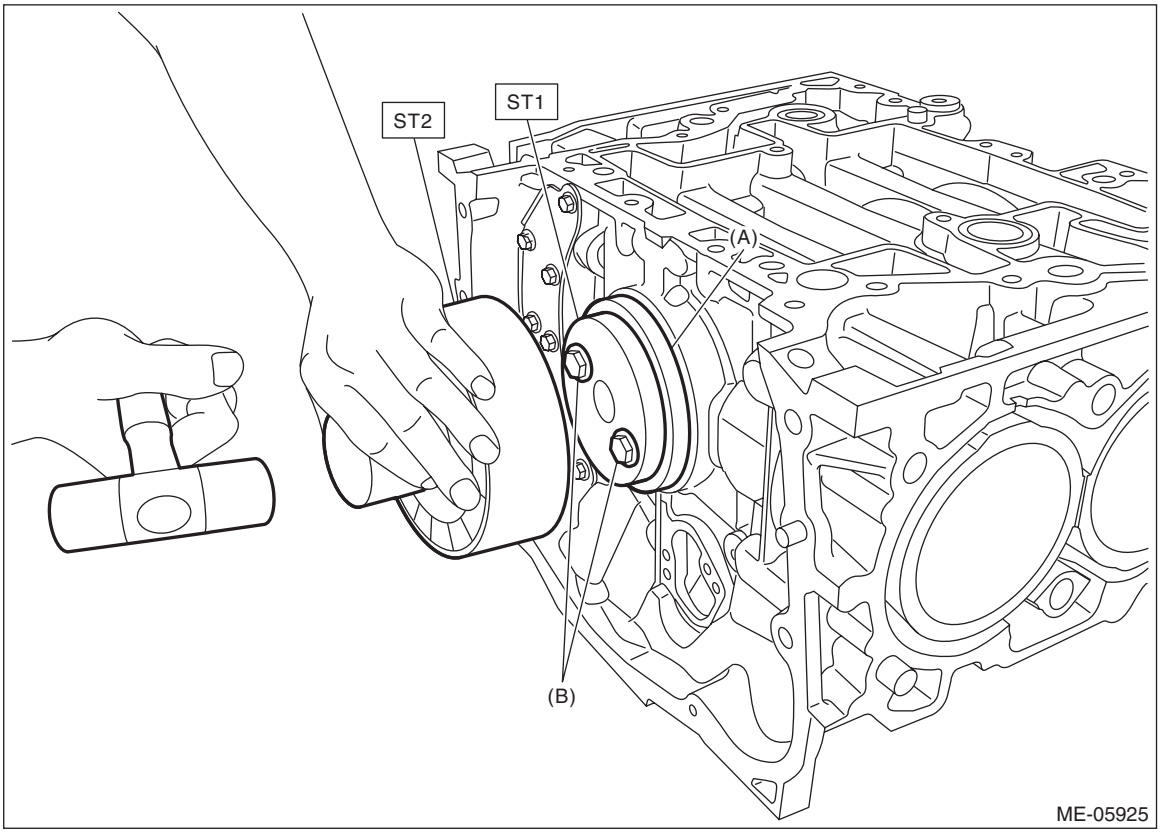

(A) Rear oil seal
(B) Drive plate or flywheel mounting bolt

9) Install a bolt of suitable length (M10 × P1.25) at the locations shown in the figure.

NOTE:
• This procedure is required to prevent the knock pin damage when the cylinder block is raised in the next step.
• Use the same length of bolt for the four bolts.

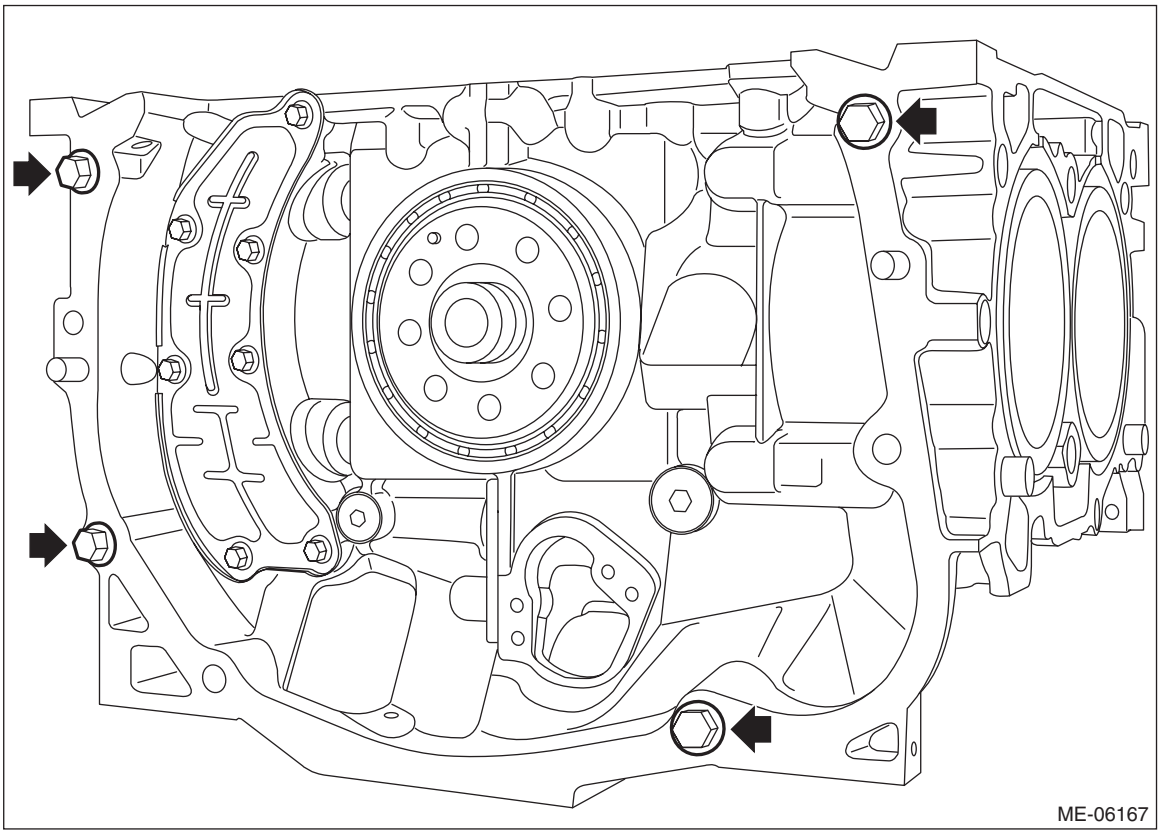

10) Raise the cylinder block so that the rear oil seal is on the lower side.
11) Adjust the positions of piston ring gap for each piston.

NOTE:
Check that the piston ring mark of compression ring faces the top side of the piston.
(1) Set the ring gap of the top ring to the position (A) in the figure.
• Gasoline engine model

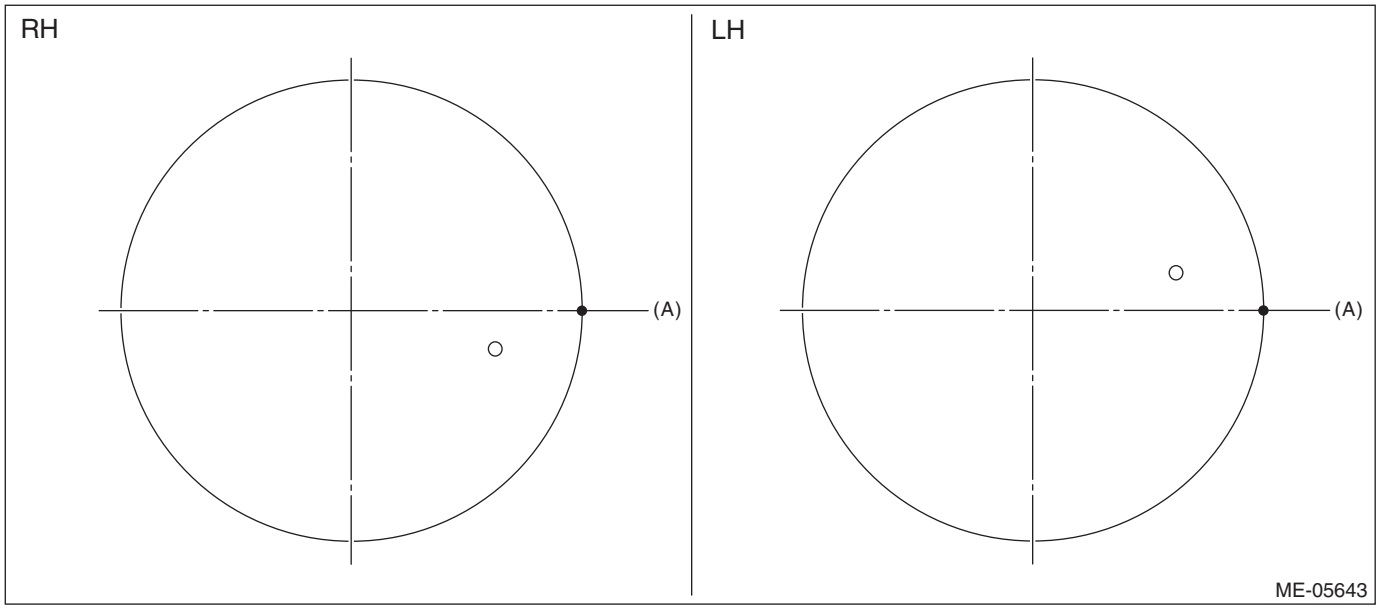

- HEV model

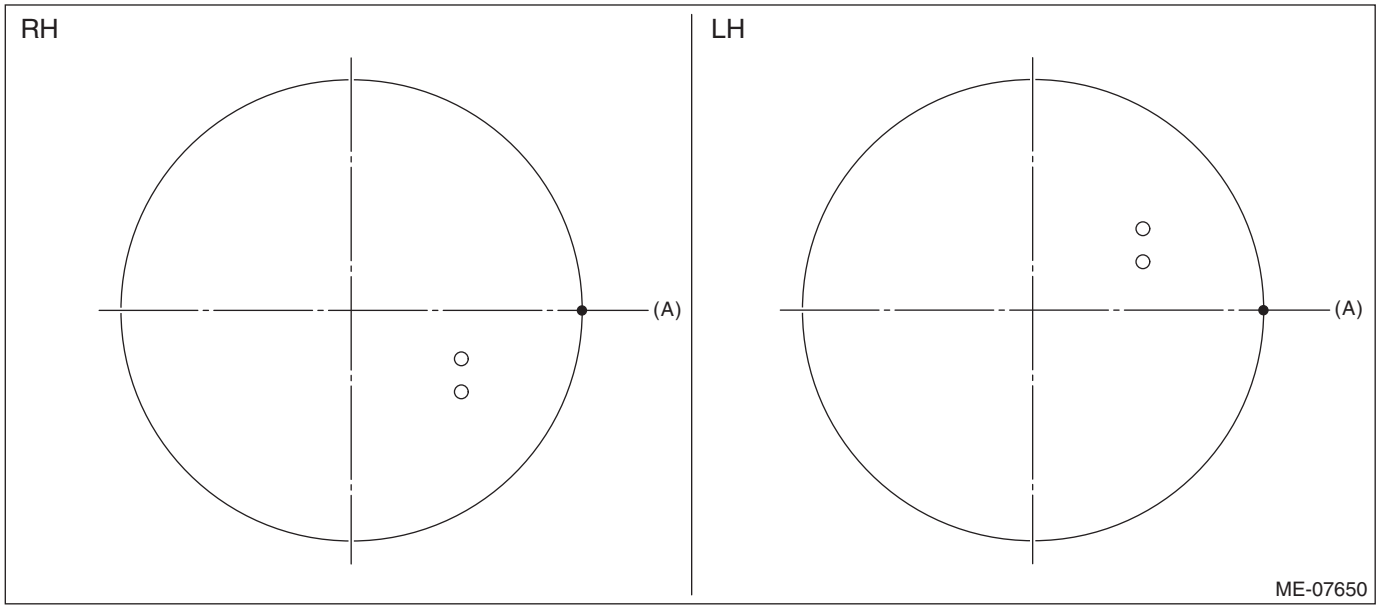

(2) Position the ring gap of second ring at (B) in the figure on the 180° opposite direction of (A).

- Gasoline engine model

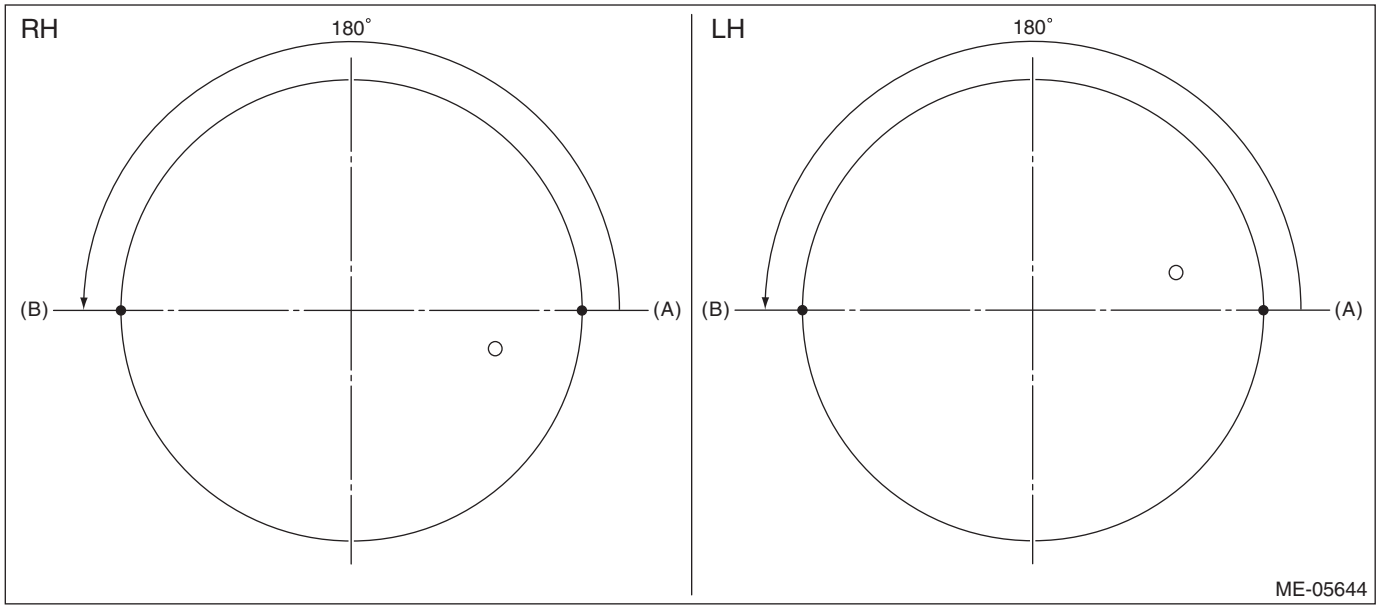

- HEV model

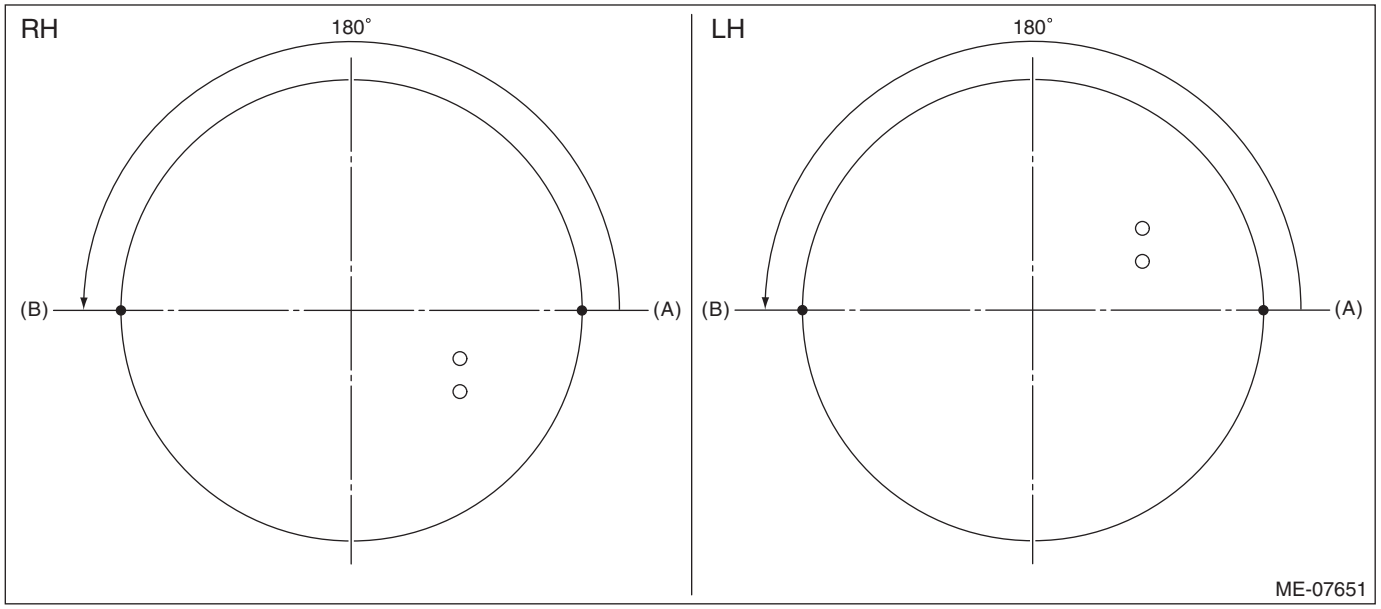

(3) Set the ring gap of the upper rail to the position (C) in the figure.

- Gasoline engine model

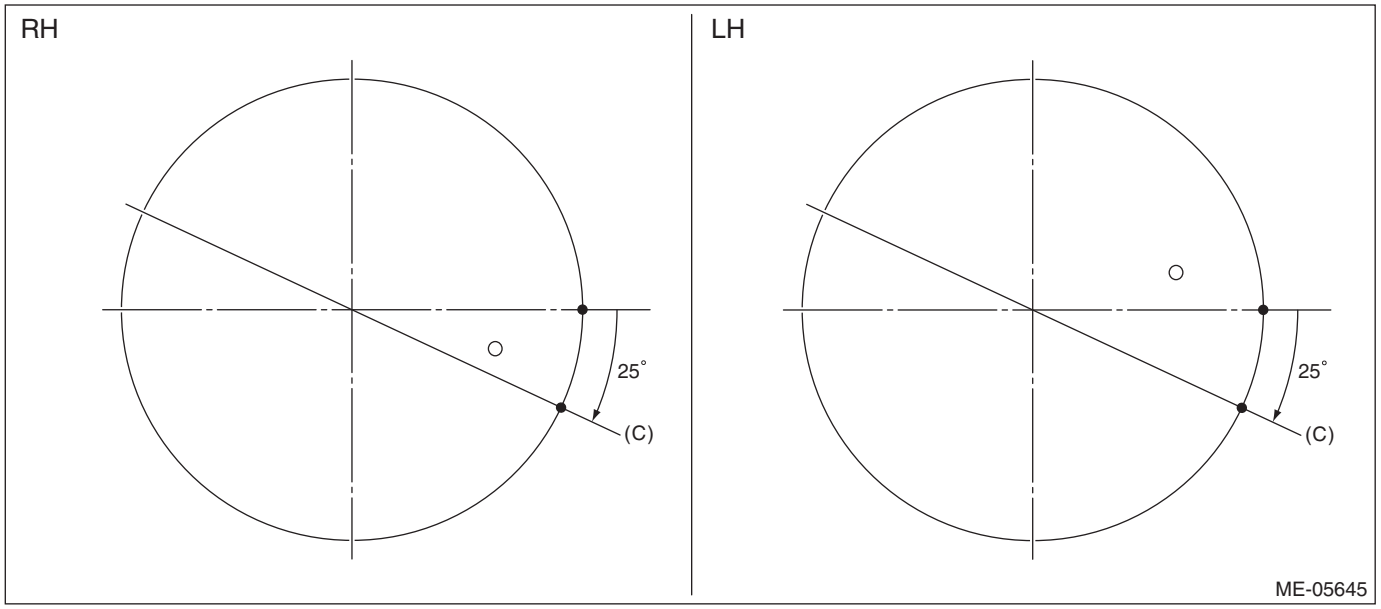

- HEV model

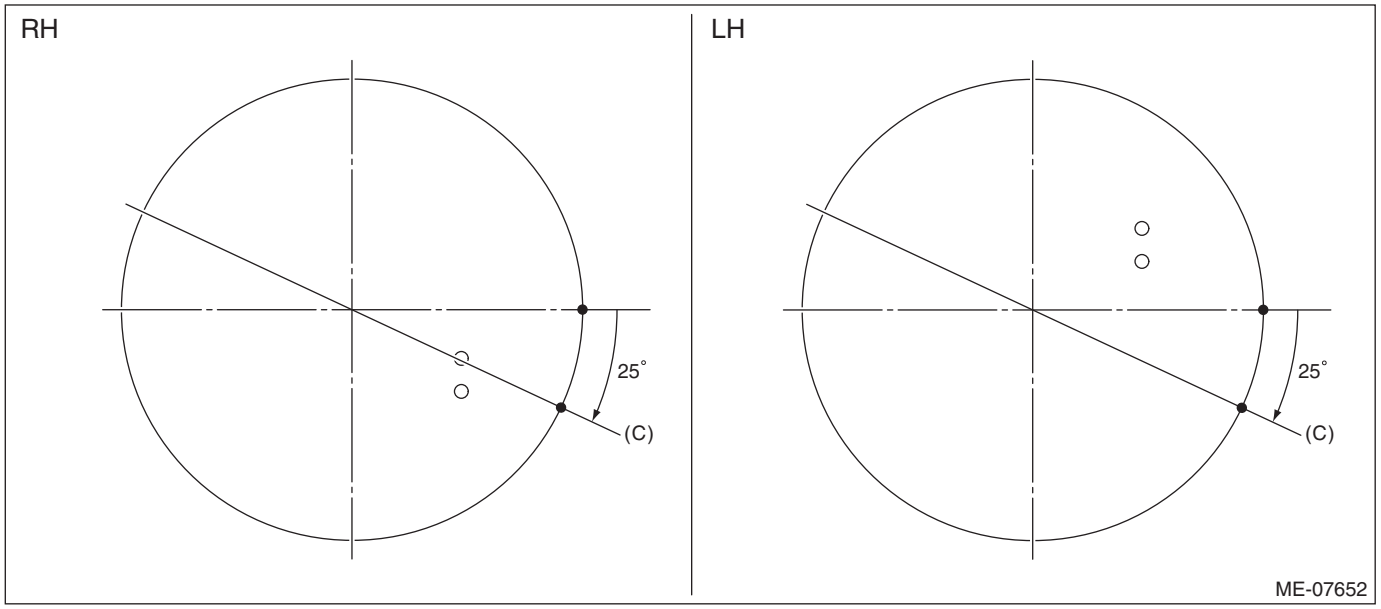

(4) Align the upper rail spin stopper (E) to the side hole (D) on the piston.

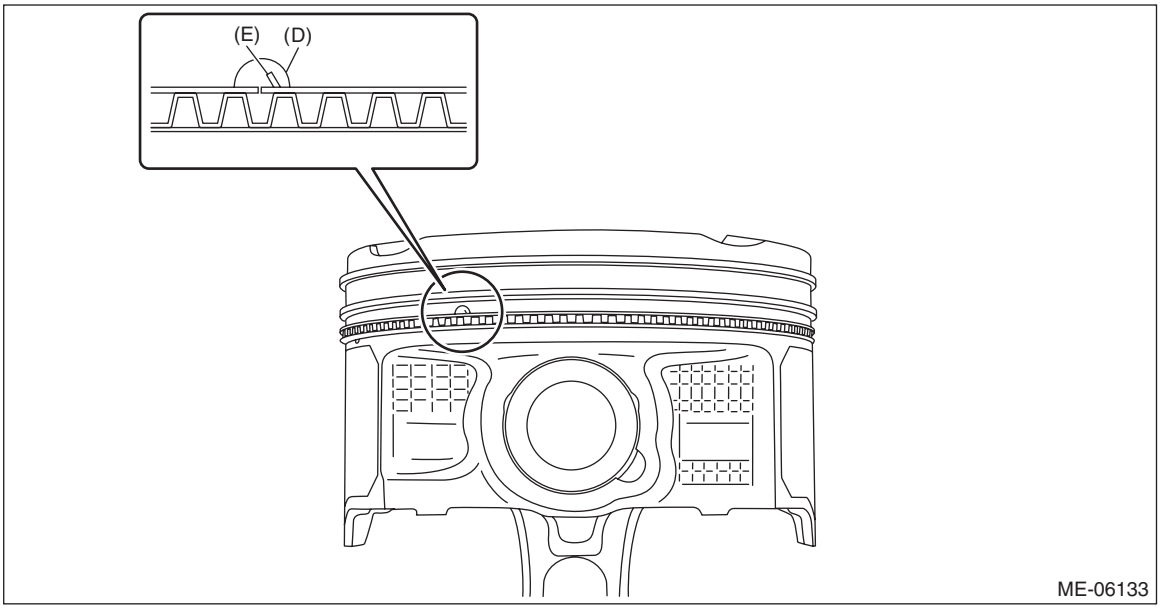

(5) Position the ring gap of expander at (F) in the figure on the 180° opposite direction of (C).

- Gasoline engine model

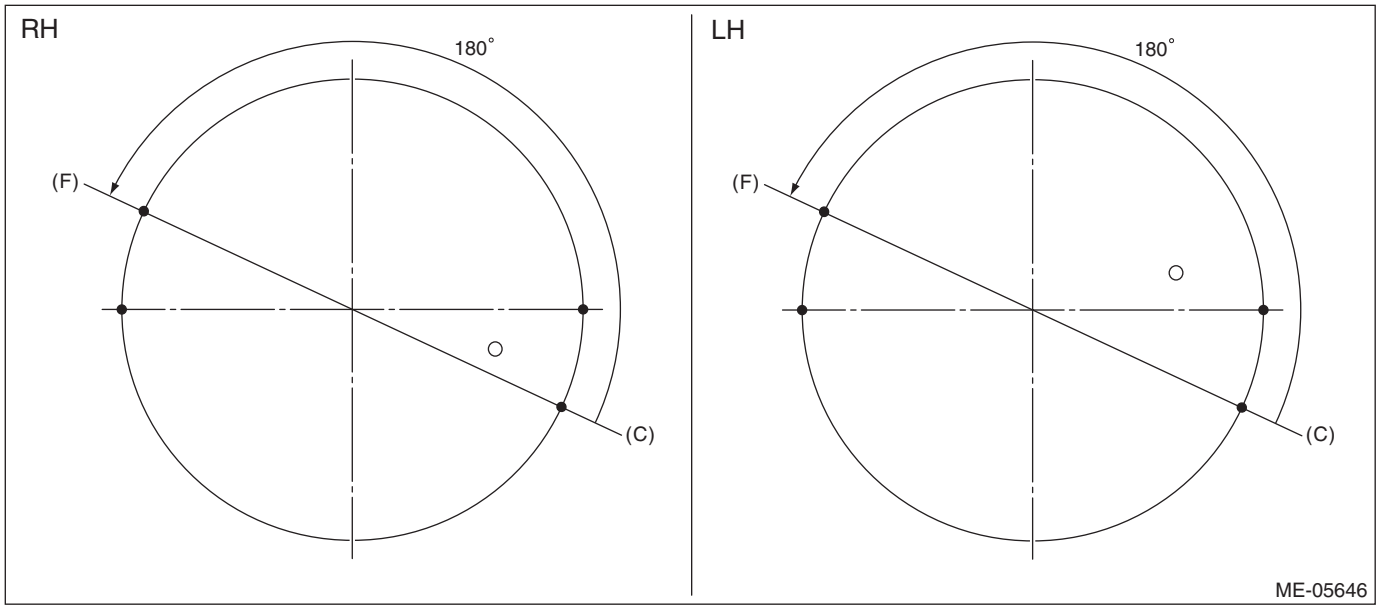

- HEV model

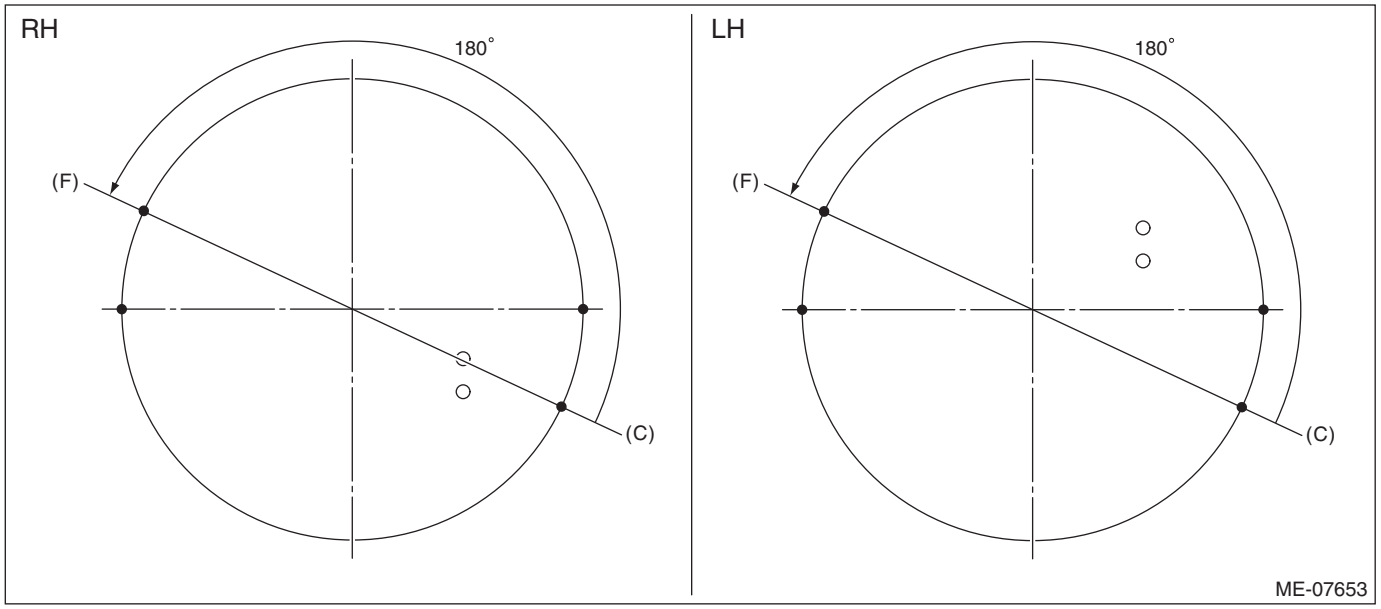

(6) Set the ring gap of lower rail at position (G), located 120° clockwise from (C) in the figure.

- Gasoline engine model

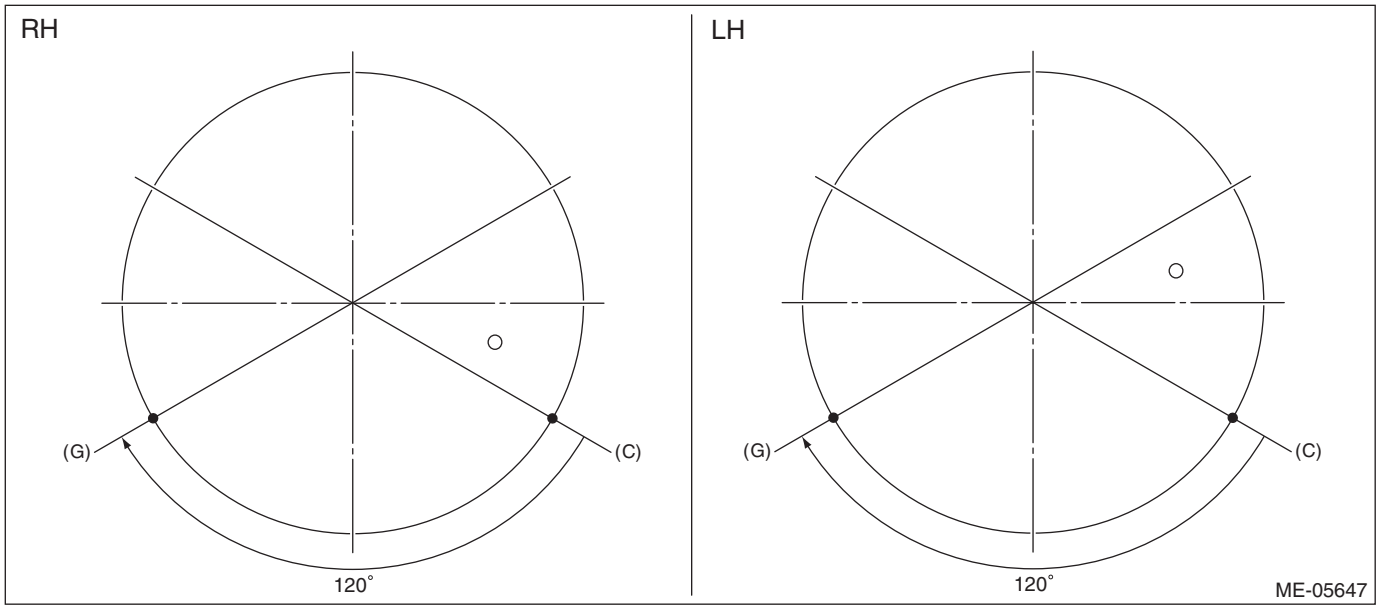

- HEV model

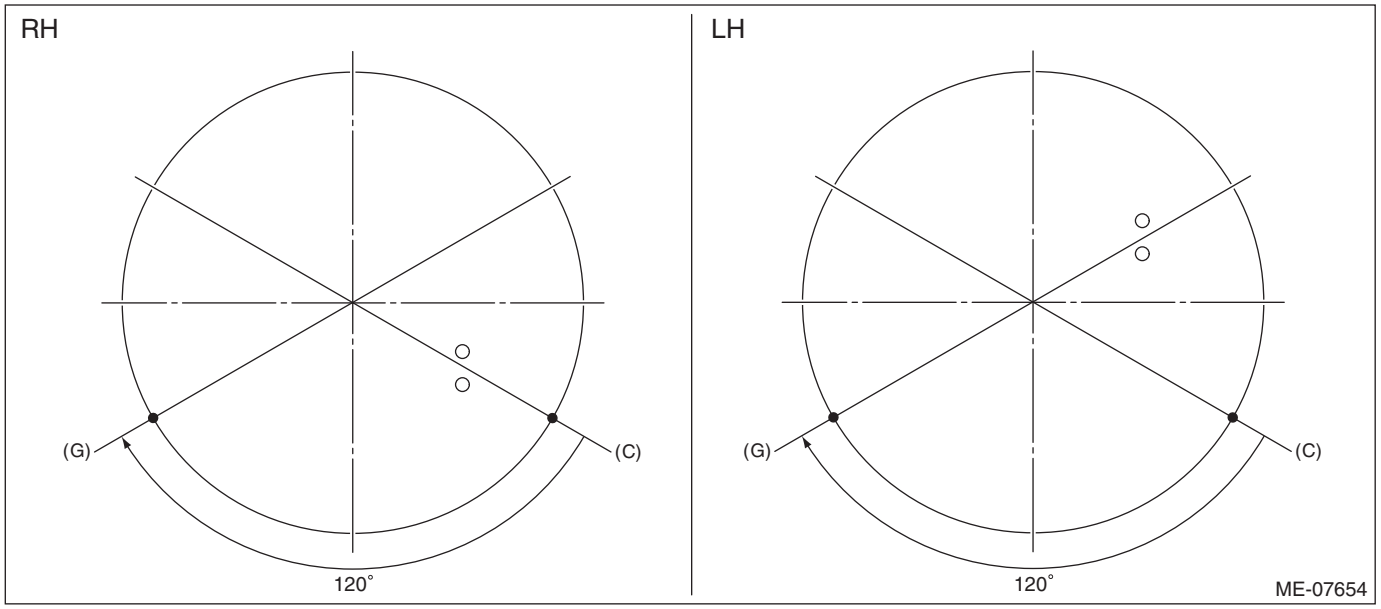

(7) Check that the positions of piston ring gap are properly adjusted.

NOTE:
When checking the positions of piston ring gap, also check that the piston ring gaps are not positioned within the range of piston skirt extended line.

12) Install the piston and connecting rod to the cylinder block.
(1) Apply engine oil to the outer circumference of each piston, crankshaft pin, and in the cylinder block.
(2) Turn the crankshaft so that the #1 pin (A) of crankshaft is positioned at TDC using ST.

ST 18252AA000 CRANKSHAFT SOCKET

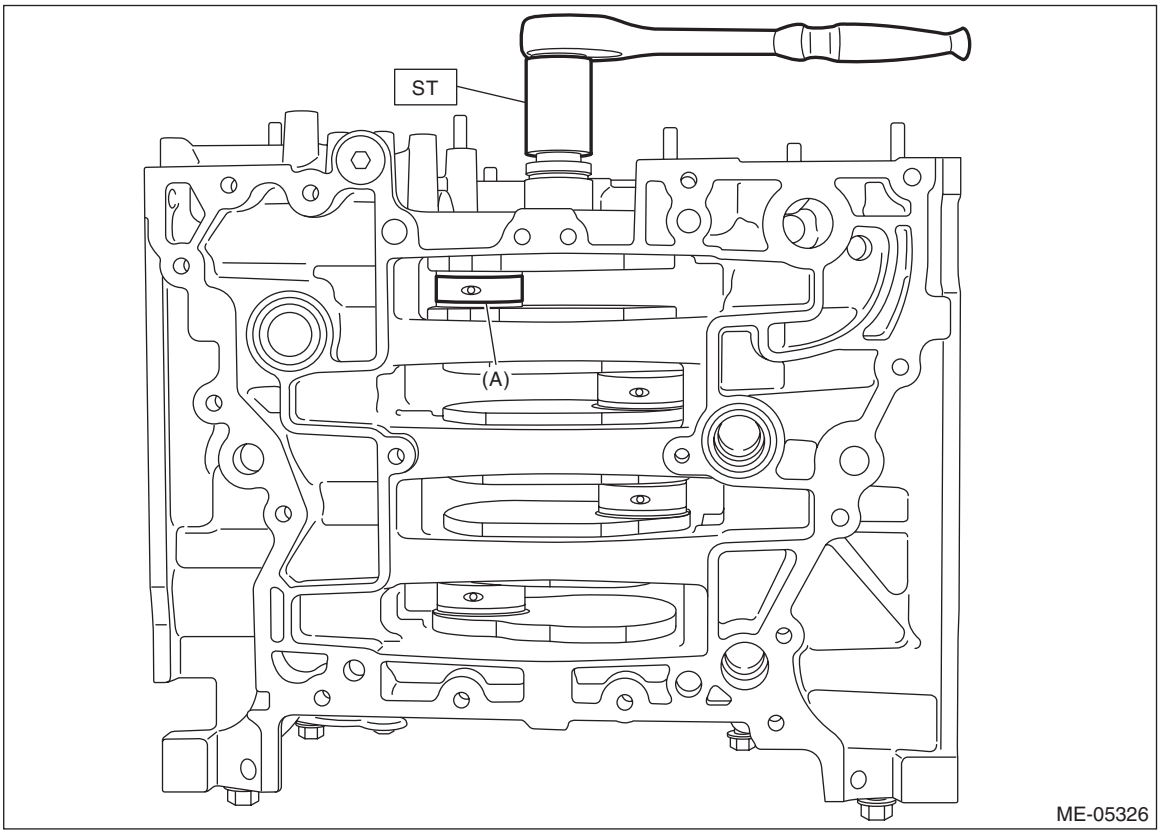

(3) Compress the piston ring using piston ring compressor, and insert the #1 connecting rod with #1 piston into cylinder block.

CAUTION:
• Be careful not to damage the cylinder liner and #1 pin of crankshaft by the #1 connecting rod large end.
• Be careful not to apply strong impact when inserting to prevent connecting rod bearing from falling off.

NOTE:
• Face the piston front mark (round mark) towards the front of the engine.

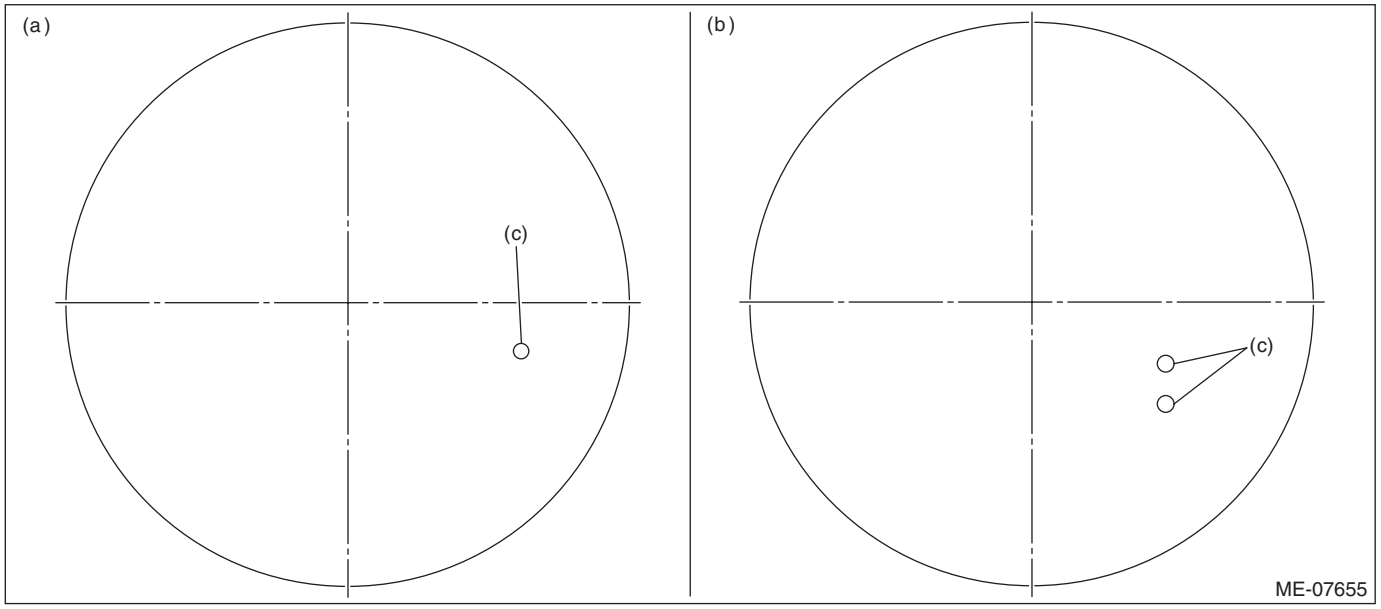

(a) Gasoline engine model (b) HEV model (c) Front mark

- Insert while lightly tapping the crown of the piston with the handle of a plastic hammer.

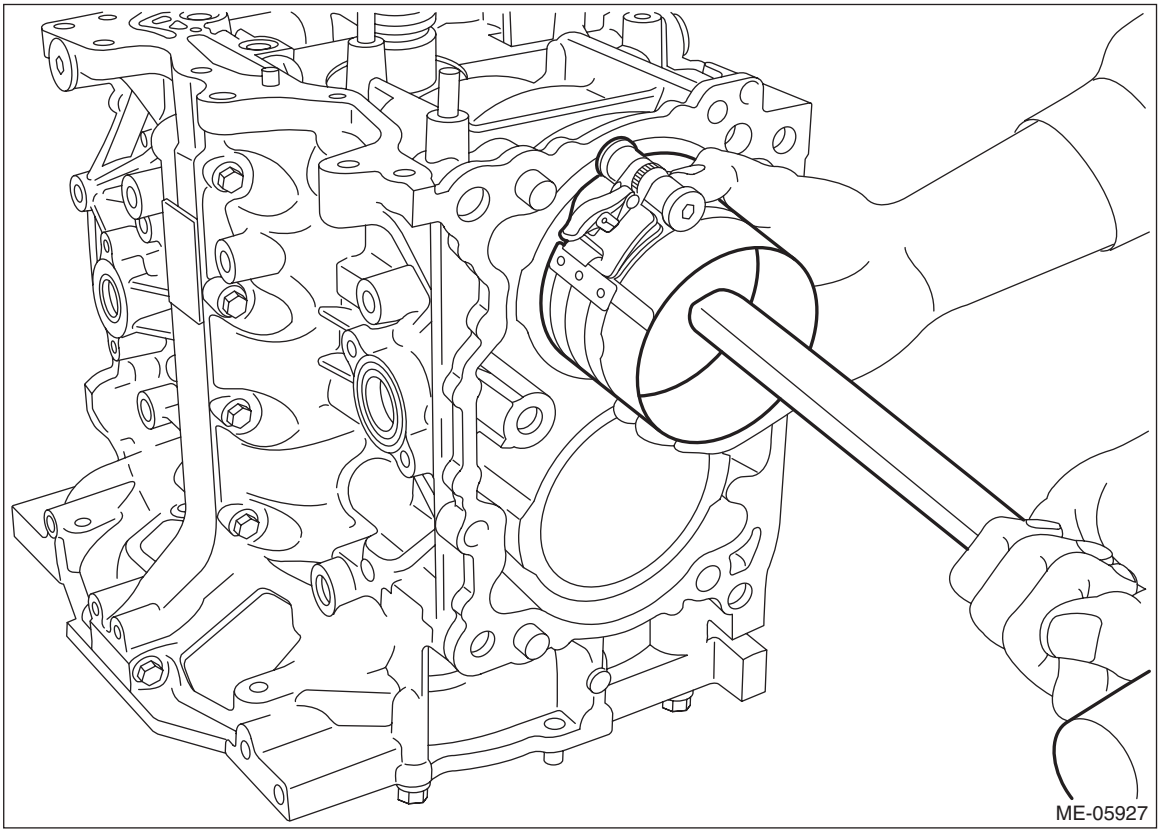

(4) Turn the crankshaft counterclockwise so that the #1 pin of crankshaft and the large end (A) of #1 connecting rod are positioned as shown in the figure using ST, while pressing the #1 piston crown, and then set the #1 connecting rod cap and #1 connecting rod cap bolt.

NOTE:
- Each connecting rod has its own mating cap. Make sure that they are assembled correctly by checking their matching symbol.
- Use a new connecting rod cap bolt.
- Apply a coat of engine oil to the #1 connecting rod cap seat and the connecting rod cap bolt threads.

ST 18252AA000 CRANKSHAFT SOCKET

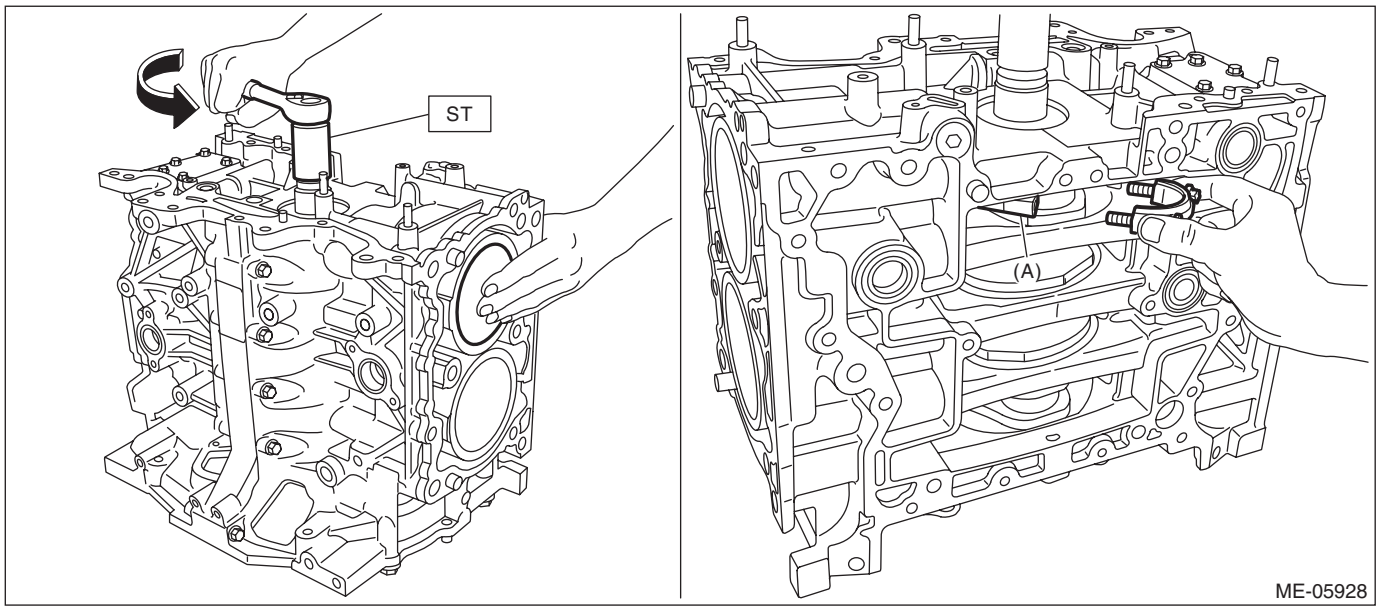

(5) Using ST, tighten the #1 connecting rod cap bolts to 10 N·m (1.0 kgf-m, 7.4 ft-lb) in numerical order as shown in the figure, then retighten the bolts to 22 N·m (2.2 kgf-m, 16.2 ft-lb) in numerical order as shown in the figure.

ST 18270AA020 SOCKET

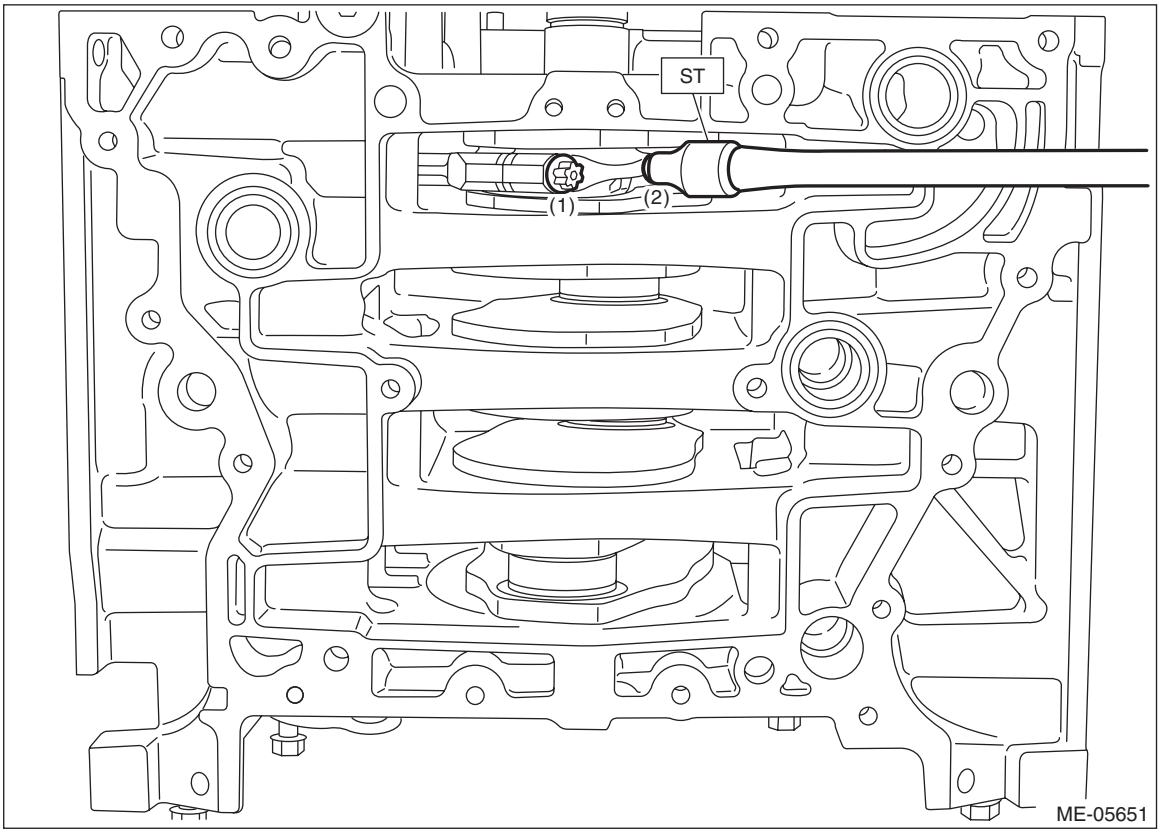

(6) Turn the crankshaft clockwise so that the #2 pin (A) of crankshaft is positioned at TDC using ST.

ST 18252AA000 CRANKSHAFT SOCKET

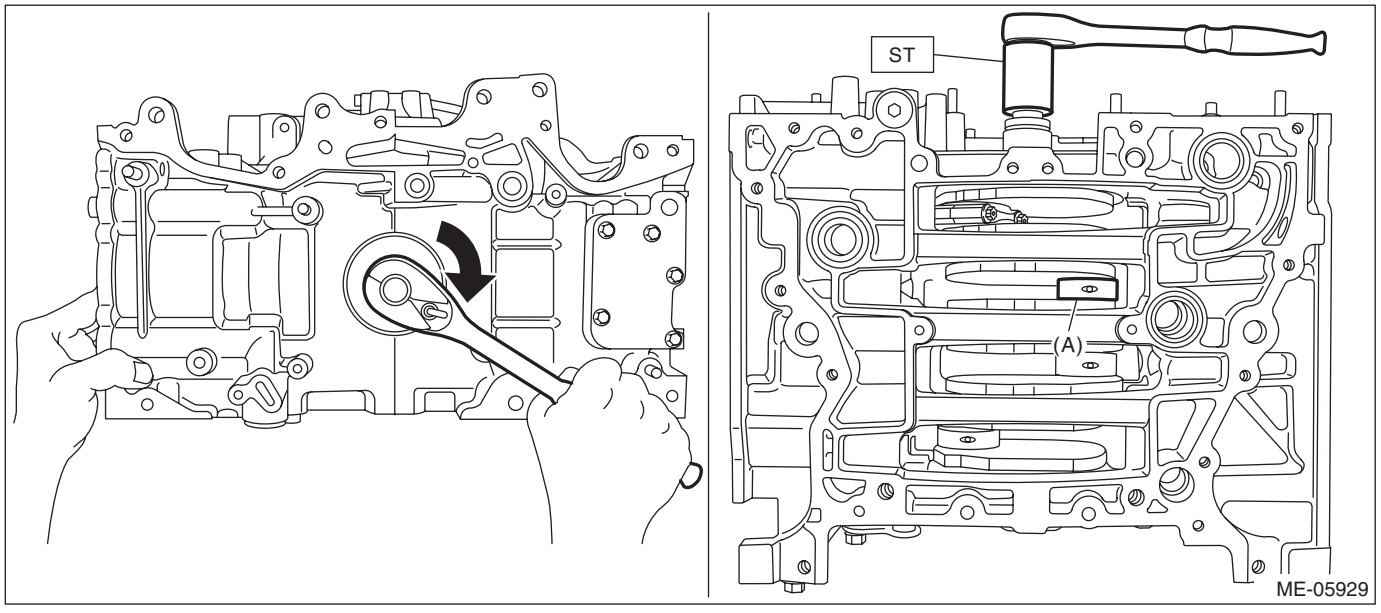

(7) Compress the piston ring using piston ring compressor, and insert the #2 connecting rod with #2 piston into cylinder block.

CAUTION:
• Be careful not to damage the cylinder liner and #2 pin of crankshaft by the #2 connecting rod large end.
• Be careful not to apply strong impact when inserting to prevent connecting rod bearing from falling off.

NOTE:
• Face the piston front mark (round mark) towards the front of the engine.

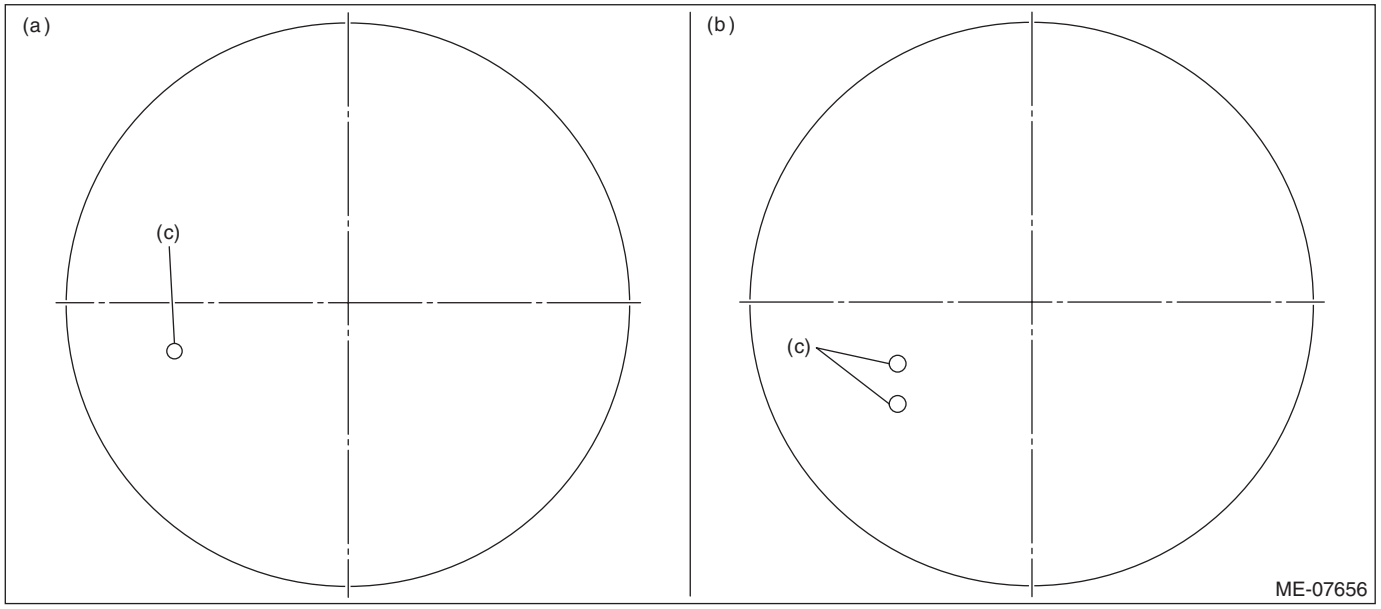

(a) Gasoline engine model (b) HEV model (c) Front mark

- Insert while lightly tapping the crown of the piston with the handle of a plastic hammer.

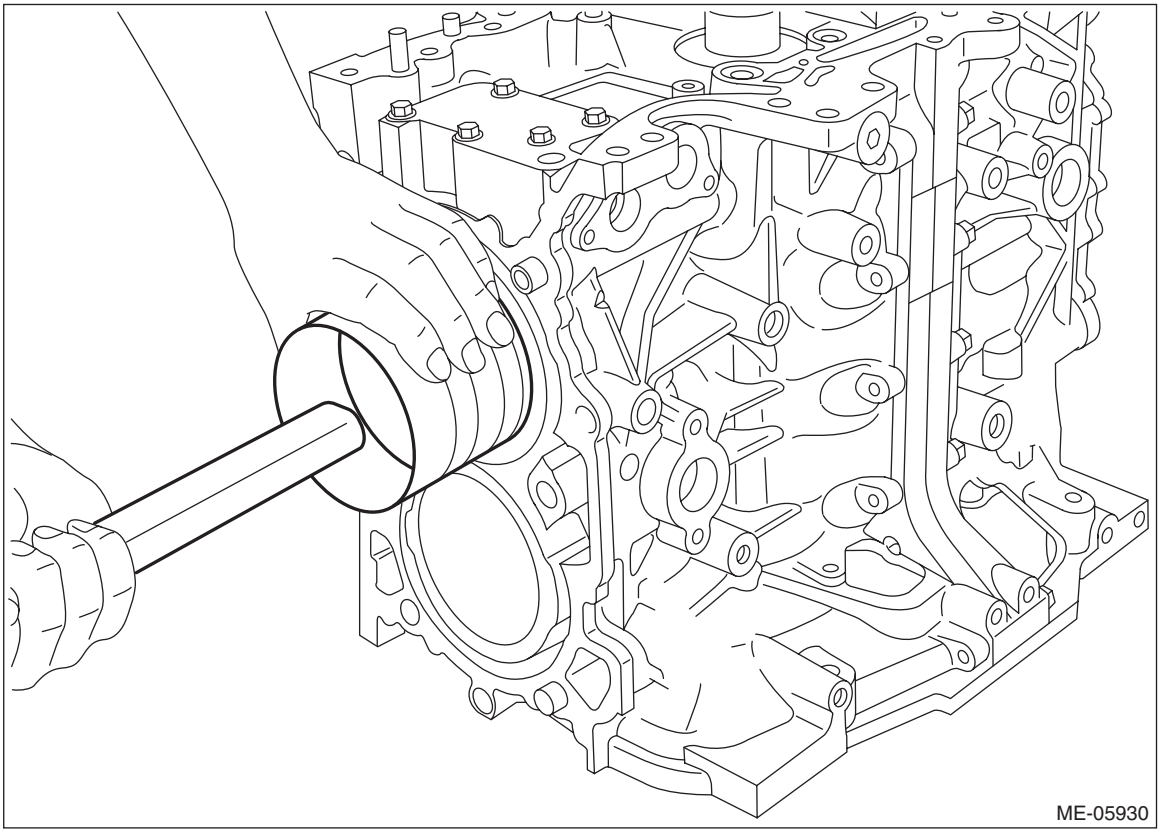

(8) Turn the crankshaft clockwise so that the #2 pin of crankshaft and the large end (A) of #2 connecting rod are positioned as shown in the figure using ST, while pressing the #2 piston crown, and then set the #2 connecting rod cap and #2 connecting rod cap bolt.

NOTE:
- Each connecting rod has its own mating cap. Make sure that they are assembled correctly by checking their matching symbol.
- Use a new connecting rod cap bolt.
- Apply a coat of engine oil to the #2 connecting rod cap seat and the connecting rod cap bolt threads.

ST 18252AA000 CRANKSHAFT SOCKET

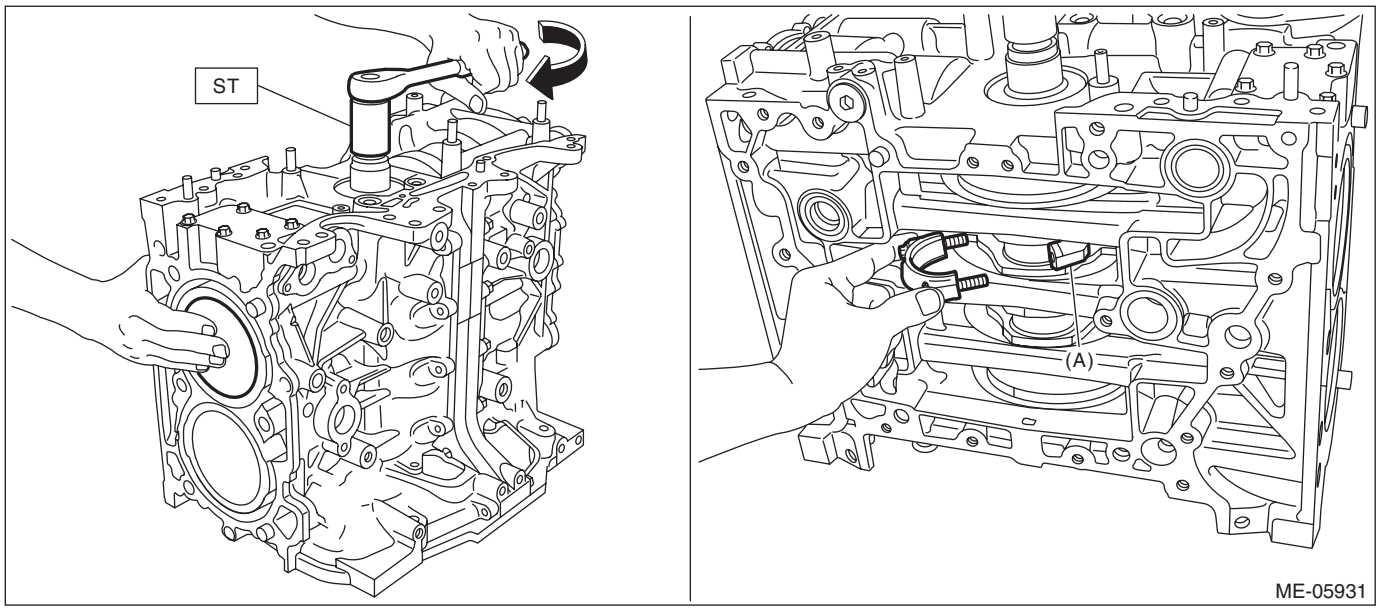

(9) Using ST, tighten the #2 connecting rod cap bolts to 10 N·m (1.0 kgf-m, 7.4 ft-lb) in numerical order as shown in the figure, then retighten the bolts to 22 N·m (2.2 kgf-m, 16.2 ft-lb) in numerical order as shown in the figure.

ST 18270AA020 SOCKET

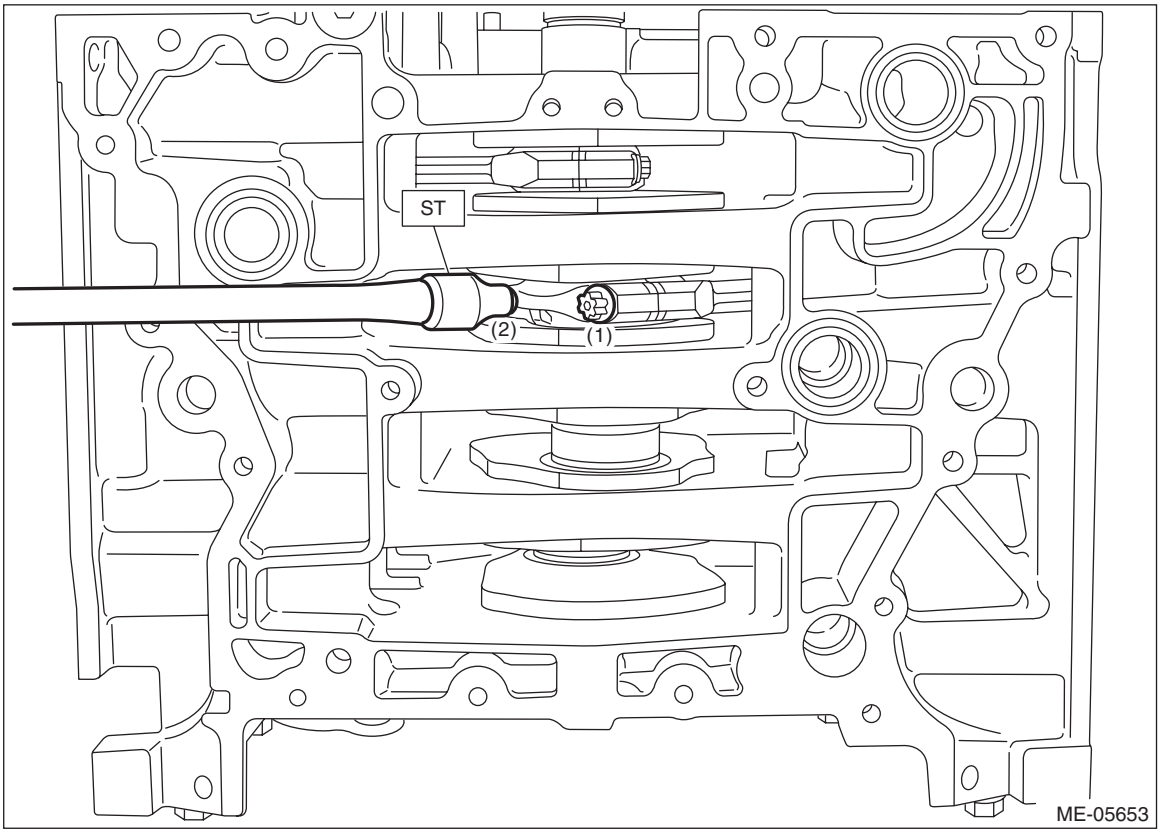

(10) Turn the crankshaft clockwise so that the #3 pin (A) of crankshaft is positioned at TDC using ST.

ST 18252AA000 CRANKSHAFT SOCKET

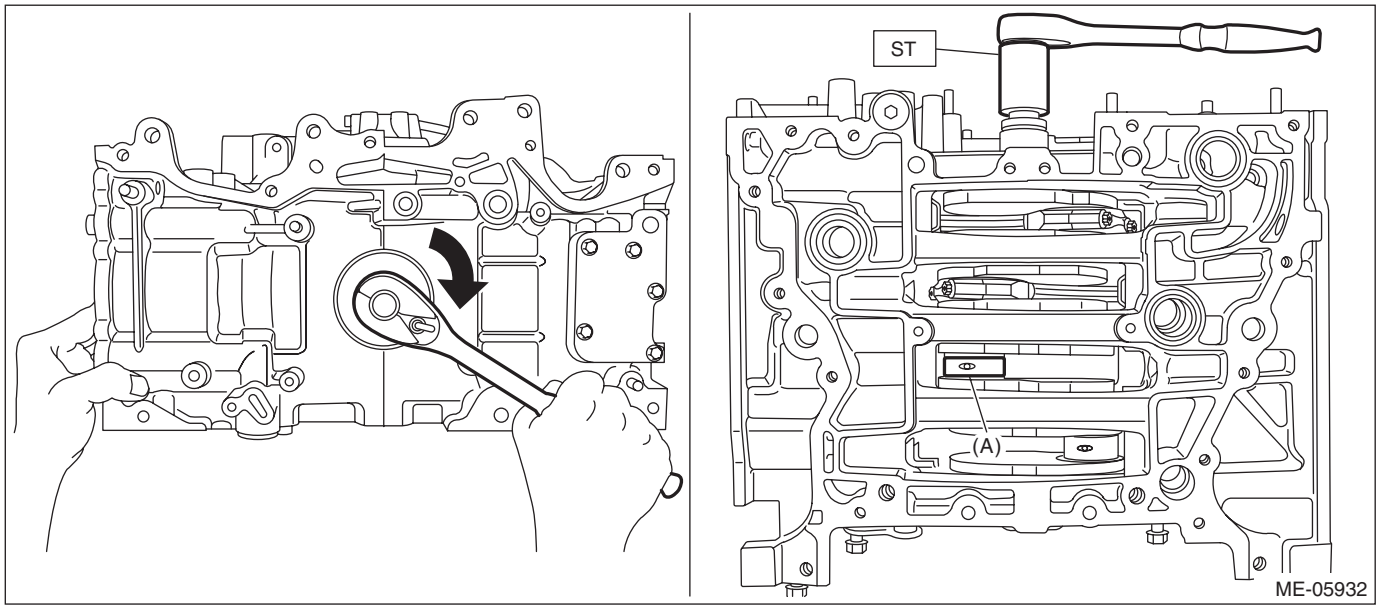

(11) Compress the piston ring using piston ring compressor, and insert the #3 connecting rod with #3 piston into cylinder block.

CAUTION:
• Be careful not to damage the cylinder liner and #3 pin of crankshaft by the #3 connecting rod large end.
• Be careful not to apply strong impact when inserting to prevent connecting rod bearing from falling off.

NOTE:
• Face the piston front mark (round mark) towards the front of the engine.

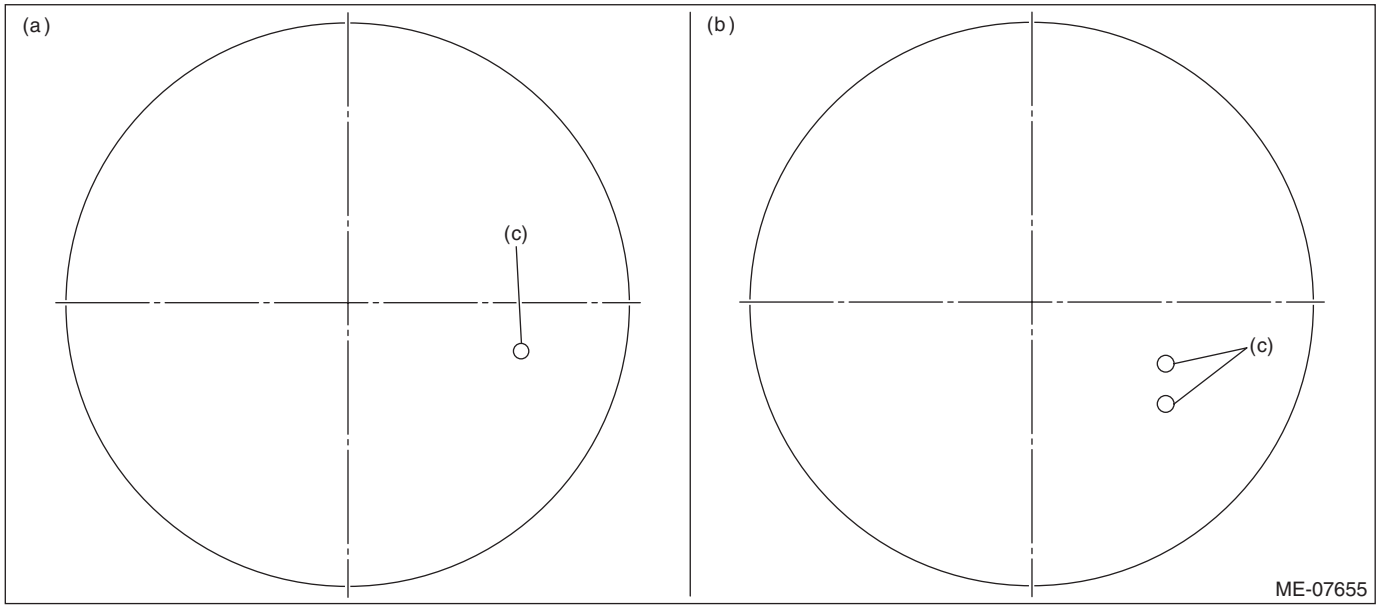

(a) Gasoline engine model (b) HEV model (c) Front mark

• Insert while lightly tapping the crown of the piston with the handle of a plastic hammer.

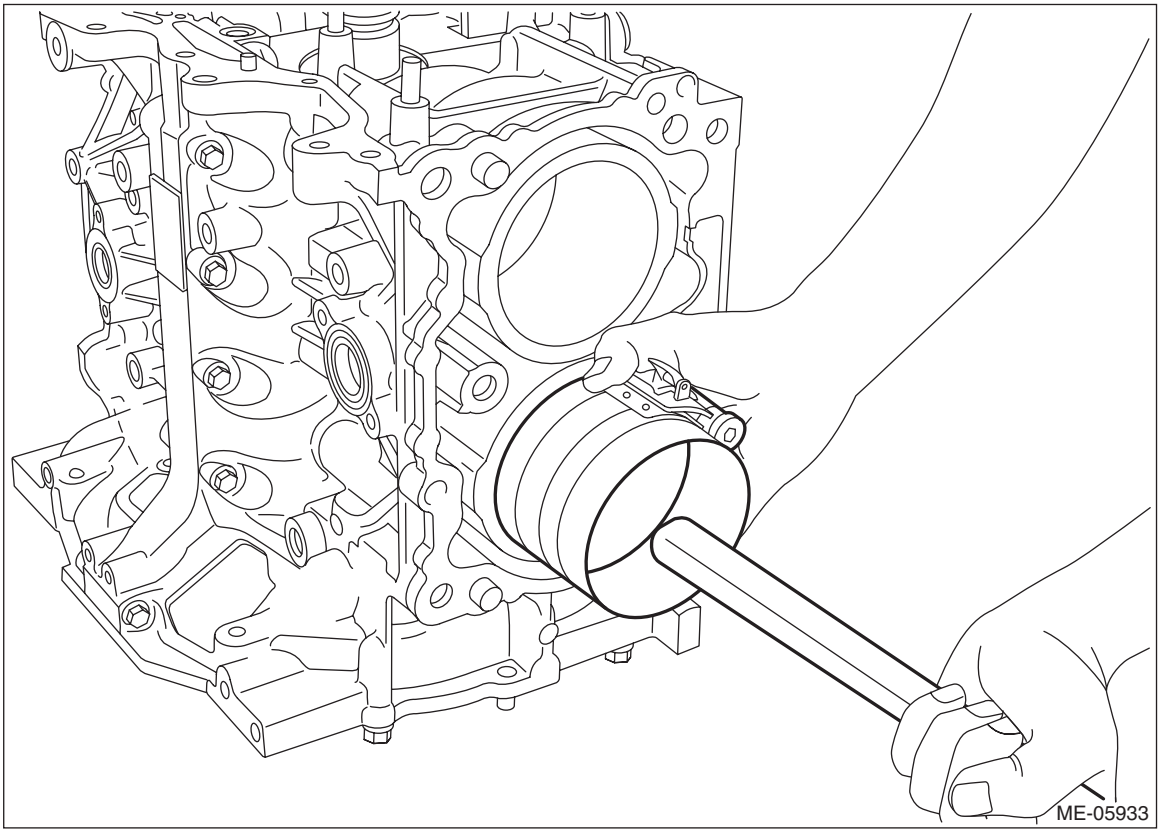

(12) Turn the crankshaft counterclockwise so that the #3 pin of crankshaft and the large end (A) of #3 connecting rod are positioned as shown in the figure using ST, while pressing the #3 piston crown, and then set the #3 connecting rod cap and #3 connecting rod cap bolt.

NOTE:
• Each connecting rod has its own mating cap. Make sure that they are assembled correctly by checking their matching symbol.
• Use a new connecting rod cap bolt.
• Apply a coat of engine oil to the #3 connecting rod cap seat and the connecting rod cap bolt threads.
ST 18252AA000 CRANKSHAFT SOCKET

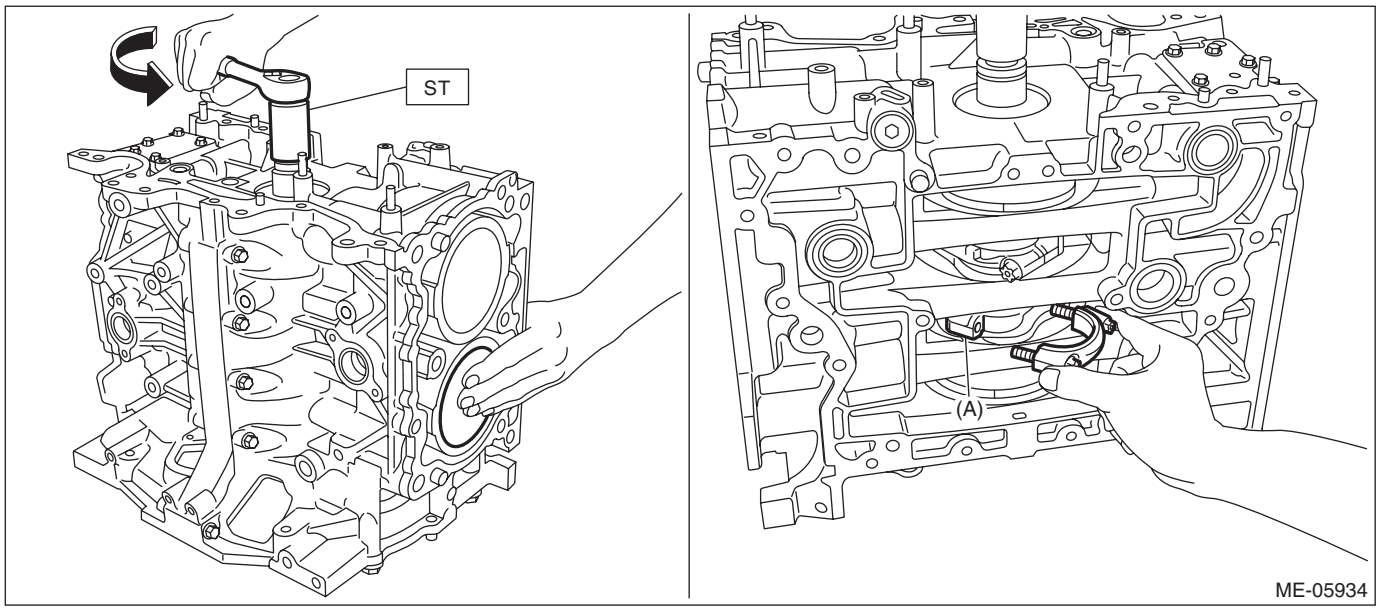

(13) Using ST, tighten the #3 connecting rod cap bolts to 10 N·m (1.0 kgf-m, 7.4 ft-lb) in numerical order as shown in the figure, then retighten the bolts to 22 N·m (2.2 kgf-m, 16.2 ft-lb) in numerical order as shown in the figure.

ST 18270AA020 SOCKET

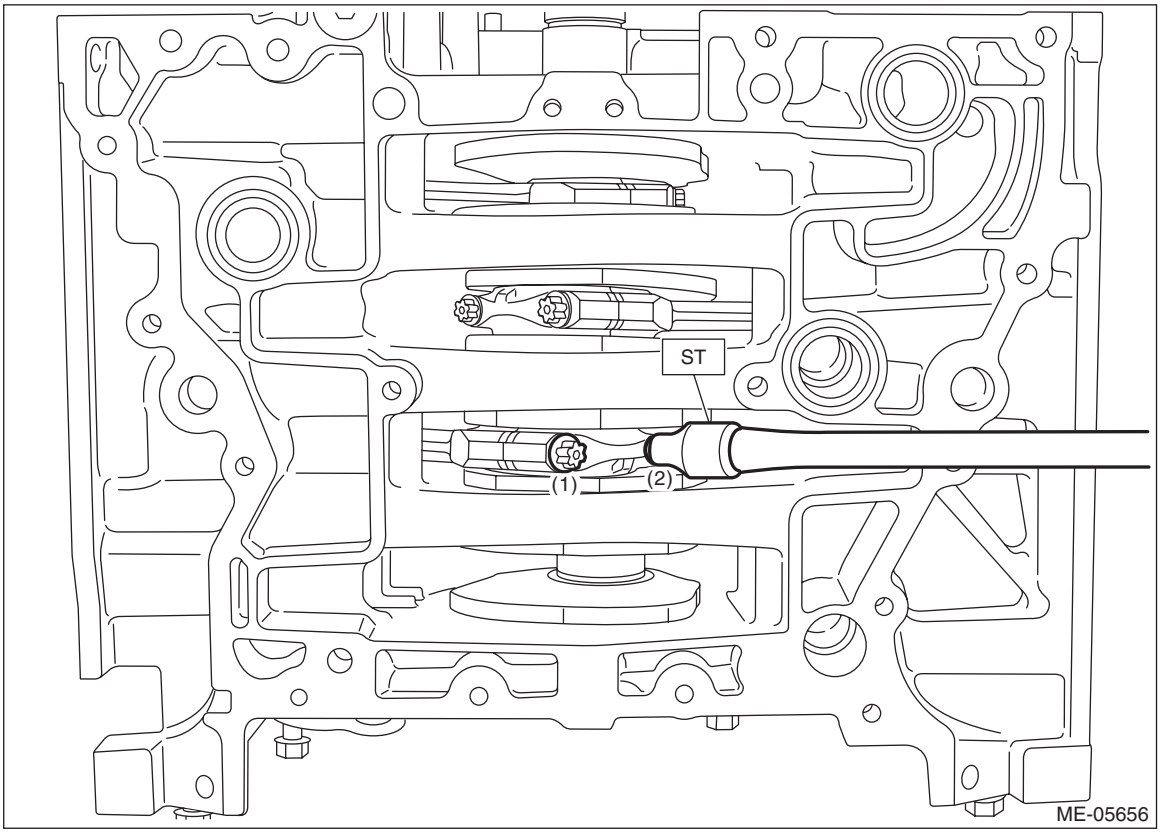

(14) Turn the crankshaft clockwise so that the #4 pin (A) of crankshaft is positioned at TDC using ST.

ST 18252AA000 CRANKSHAFT SOCKET

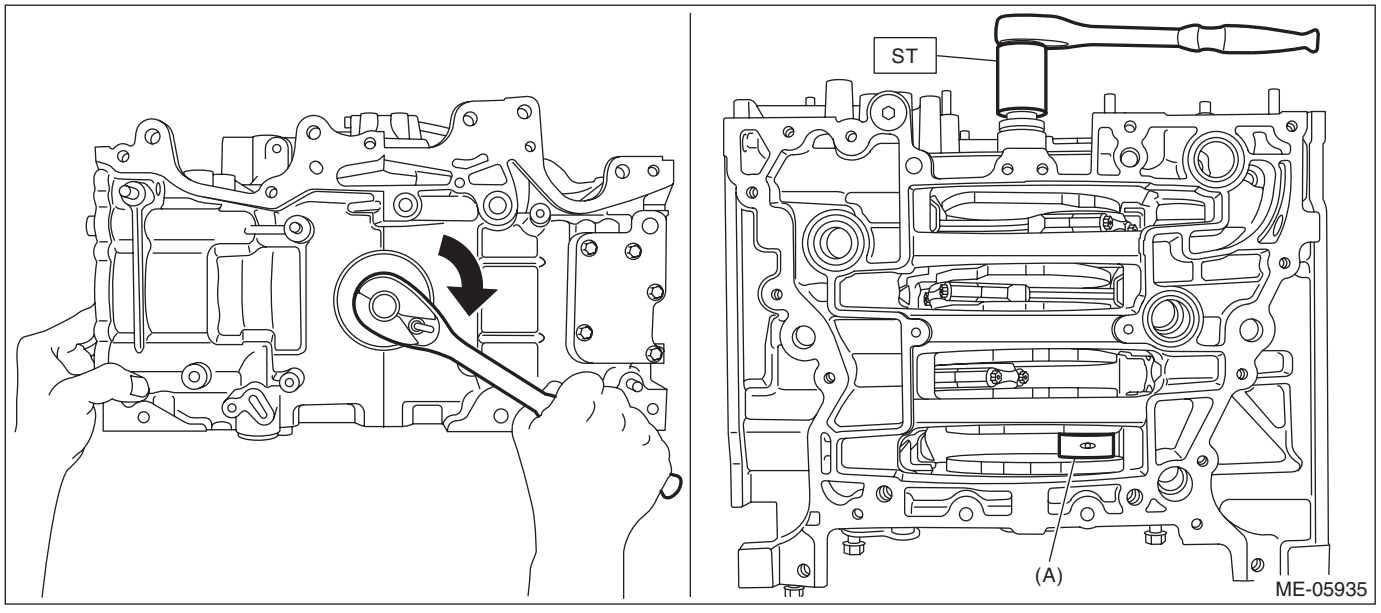

(15) Compress the piston ring using piston ring compressor, and insert the #4 connecting rod with #4 piston into cylinder block.

CAUTION:
• Be careful not to damage the cylinder liner and #4 pin of crankshaft by the #4 connecting rod large end.
• Be careful not to apply strong impact when inserting to prevent connecting rod bearing from falling off.

NOTE:
• Face the piston front mark (round mark) towards the front of the engine.

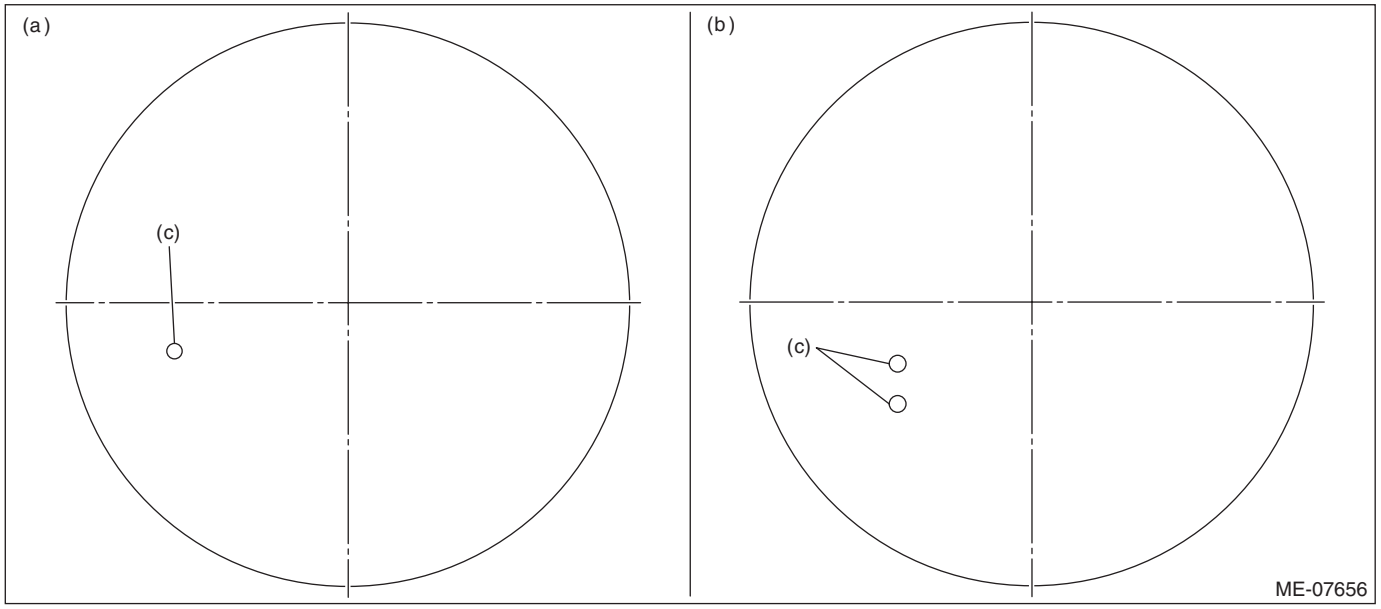

(a) Gasoline engine model (b) HEV model (c) Front mark

- Insert while lightly tapping the crown of the piston with the handle of a plastic hammer.

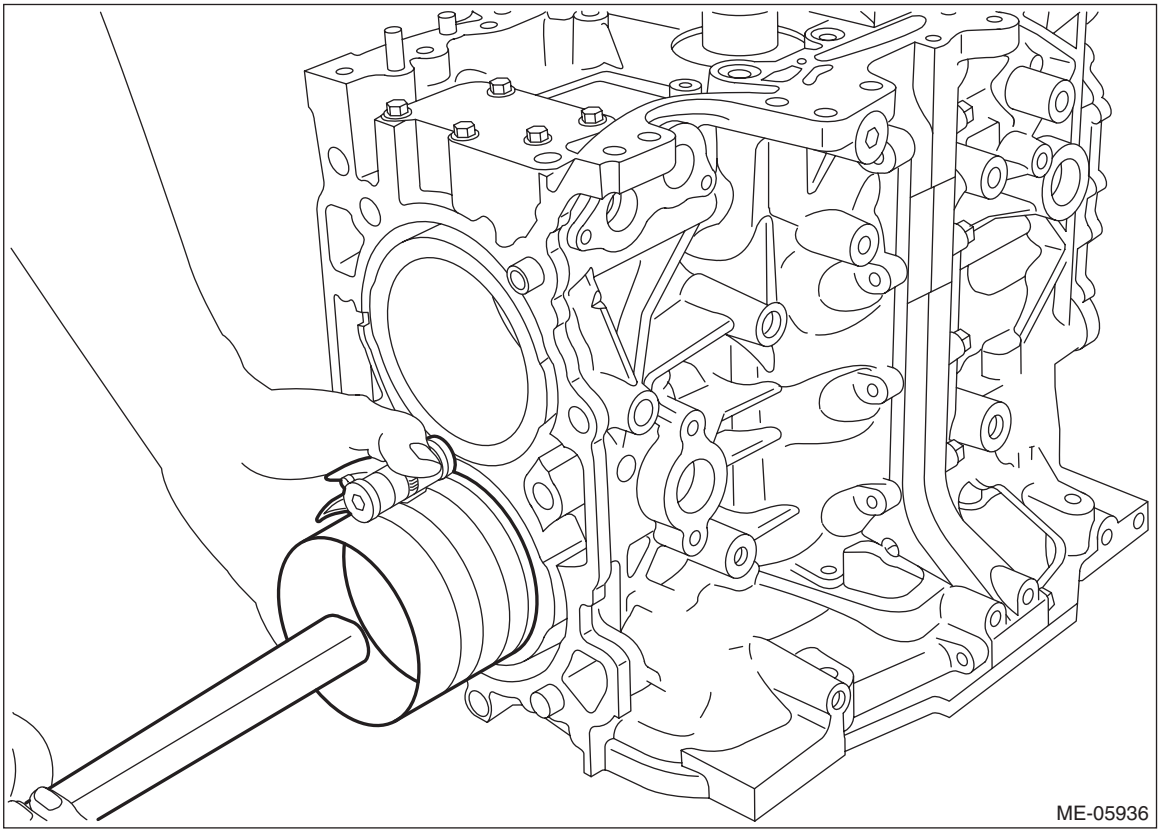

(16) Turn the crankshaft clockwise so that the #4 pin of crankshaft and the large end (A) of #4 connecting rod are positioned as shown in the figure using ST, while pressing the #4 piston crown, and then set the #4 connecting rod cap and #4 connecting rod cap bolt.

NOTE:
- Each connecting rod has its own mating cap. Make sure that they are assembled correctly by checking their matching symbol.
- Use a new connecting rod cap bolt.
- Apply a coat of engine oil to the #4 connecting rod cap seat and the connecting rod cap bolt threads.

ST 18252AA000 CRANKSHAFT SOCKET

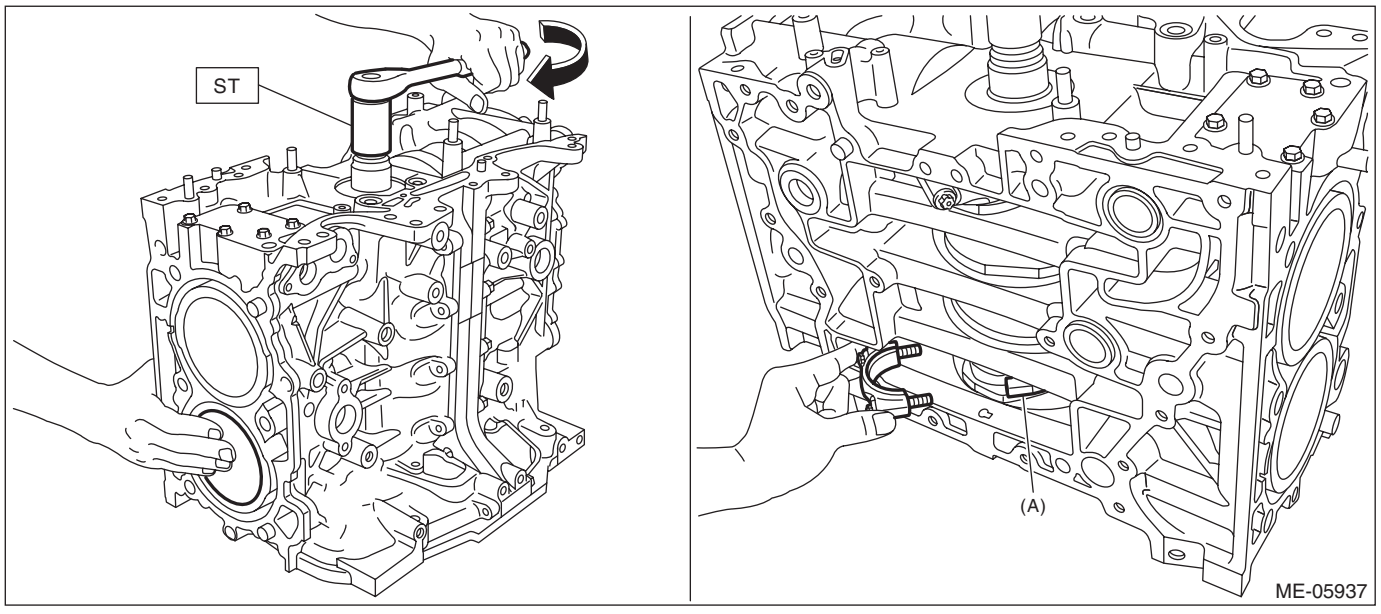

(17) Using ST, tighten the #4 connecting rod cap bolts to 10 N·m (1.0 kgf-m, 7.4 ft-lb) in numerical order as shown in the figure, then retighten the bolts to 22 N·m (2.2 kgf-m, 16.2 ft-lb) in numerical order as shown in the figure.

ST 18270AA020 SOCKET

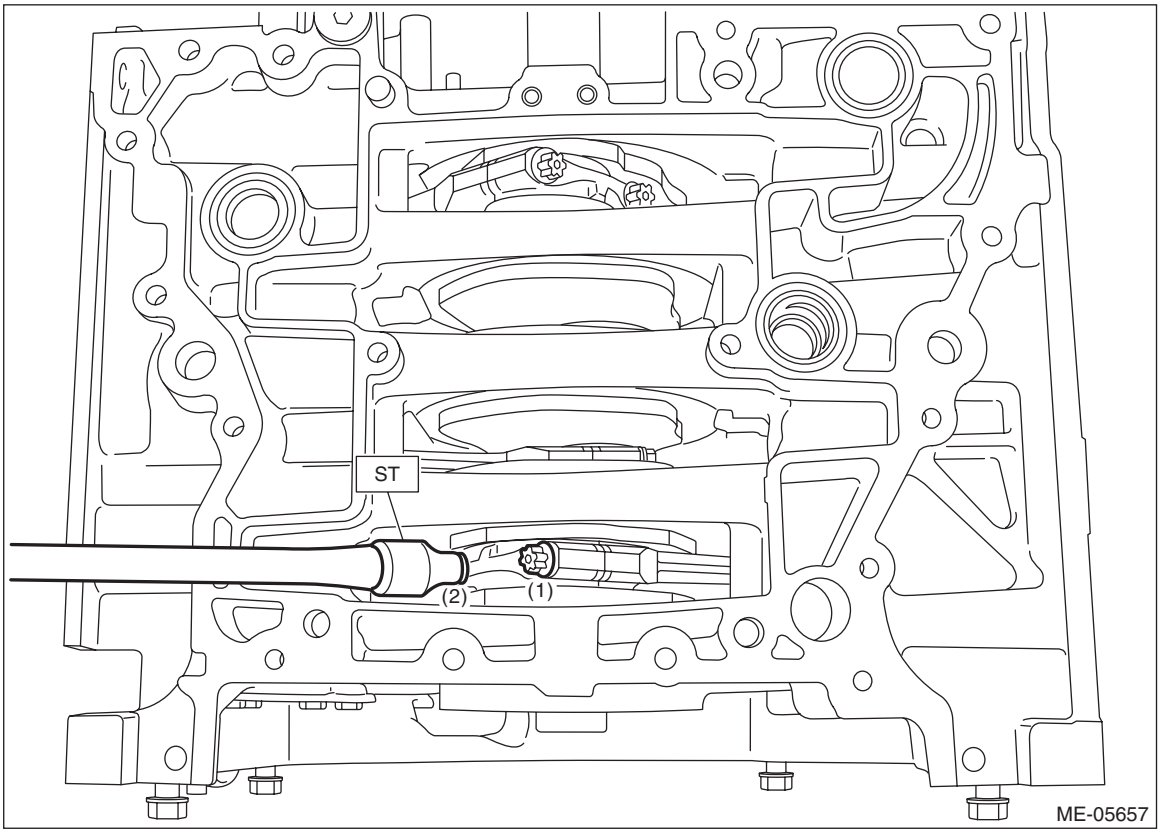

(18) Install the cam carrier mounting bolts at the locations shown in the figure.

NOTE:
This procedure is required to tighten the connecting rod cap bolts with specified angle using ST.

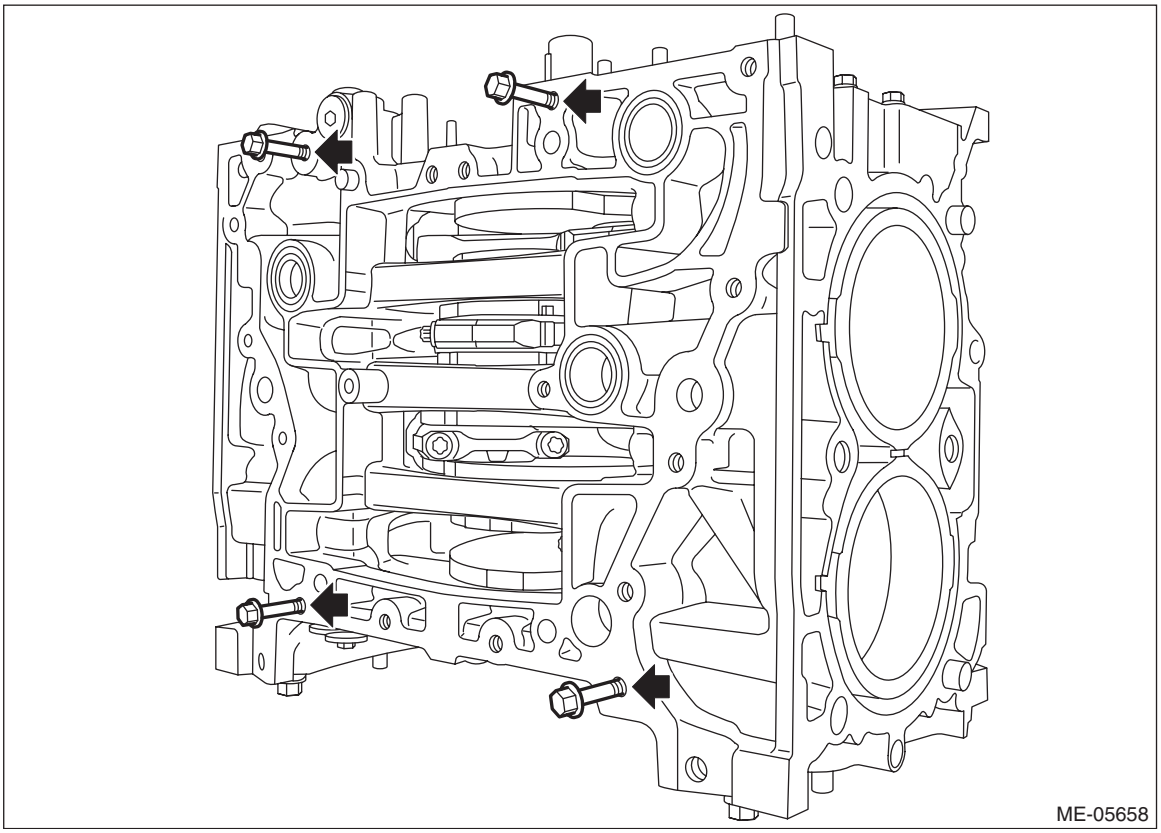

(19) Turn the crankshaft so that the #1 connecting rod cap (A) and #4 connecting rod cap (B) is located at the position shown in the figure using ST.

ST 18252AA000 CRANKSHAFT SOCKET

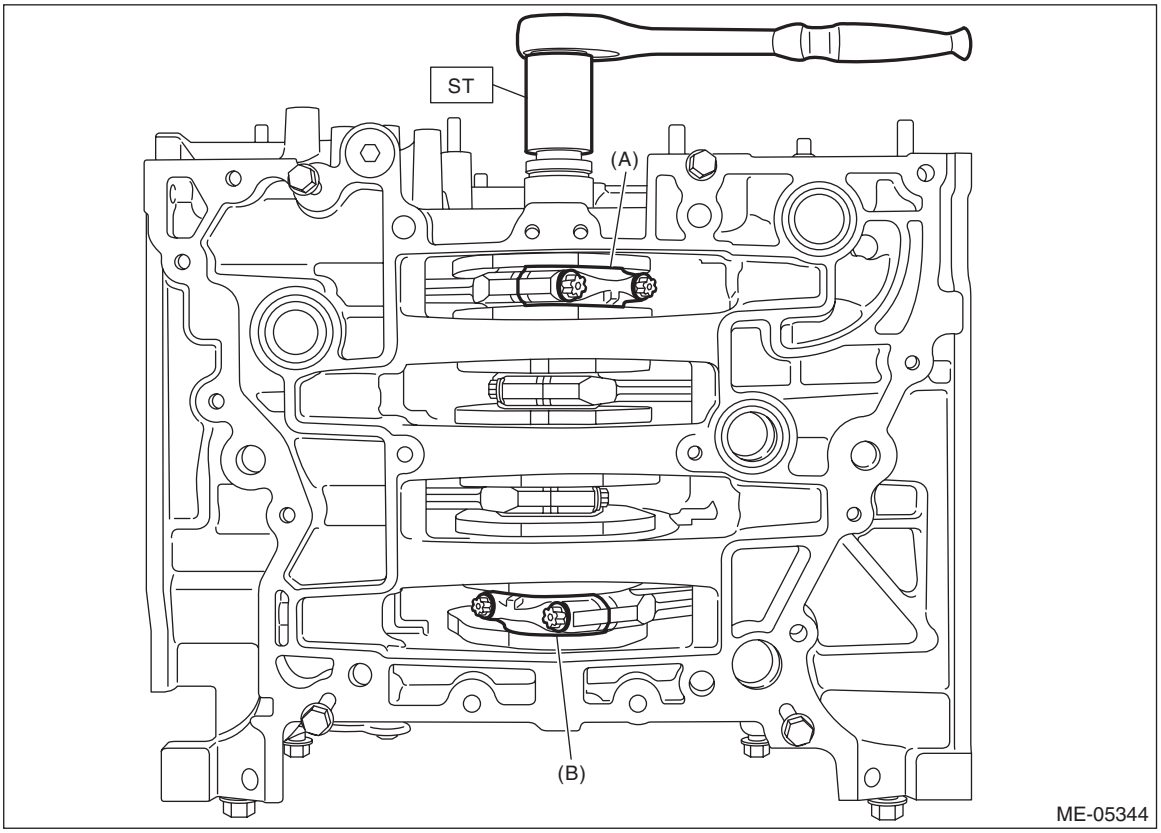

(20) Using ST and angle gauge, tighten the #1 connecting rod cap bolts and #4 connecting rod cap bolts with specified angle in numerical order as shown in the figure.

ST 18270AA020 SOCKET

Tightening angle:

137°+3° –2°

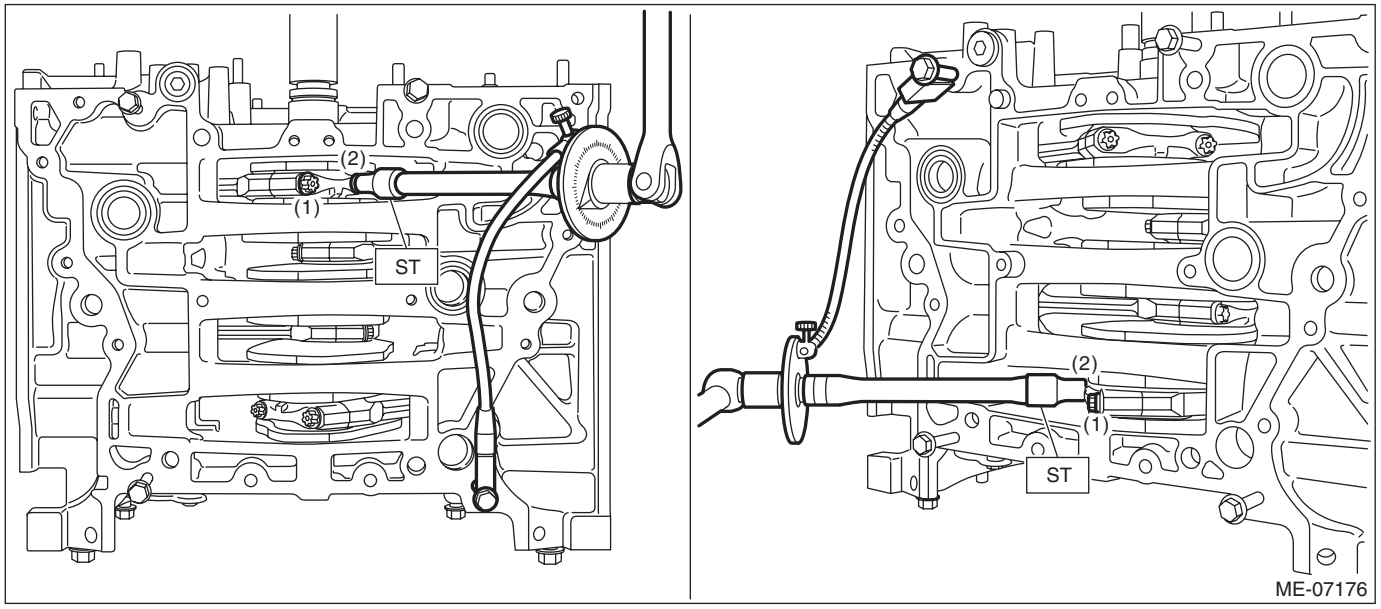

(21) Turn the crankshaft so that the #2 connecting rod cap (A) and #3 connecting rod cap (B) is located at the position shown in the figure using ST.

ST 18252AA000 CRANKSHAFT SOCKET

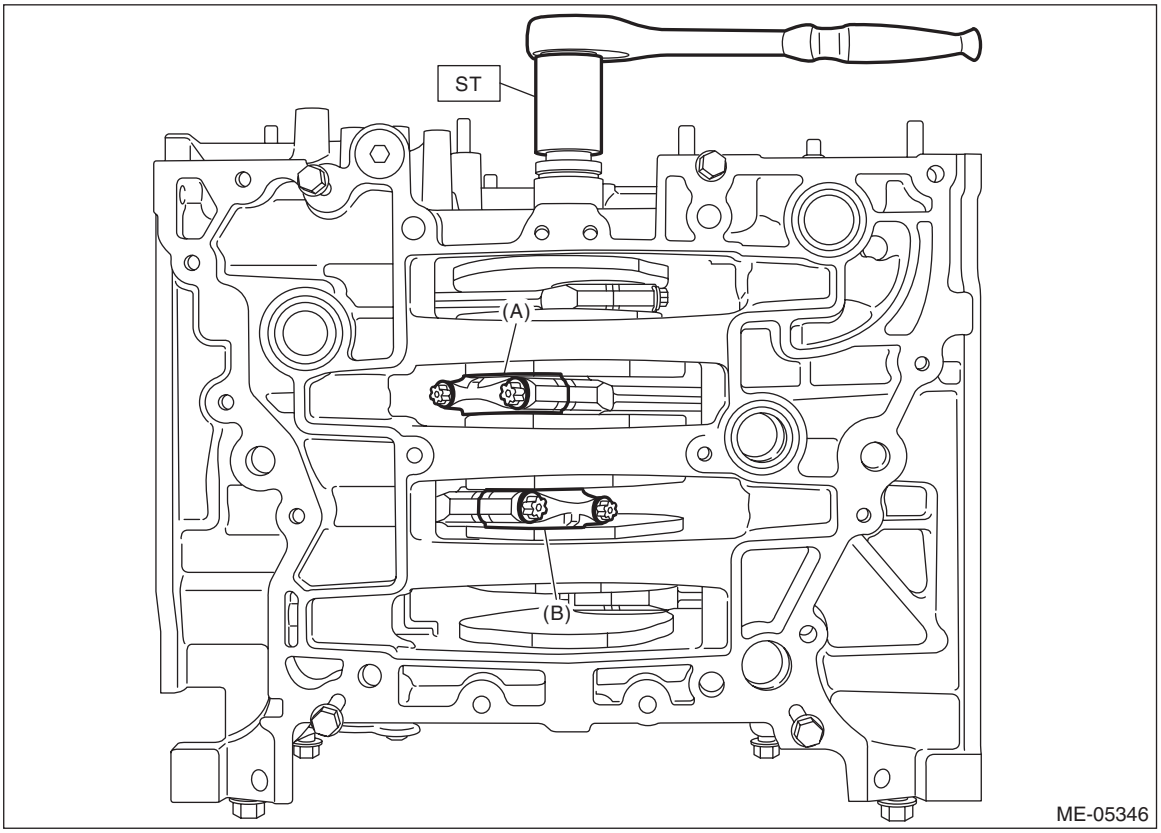

(22) Using ST and angle gauge, tighten the #2 connecting rod cap bolts and #3 connecting rod cap bolts with specified angle in numerical order as shown in the figure.

ST 18270AA020 SOCKET

Tightening angle:

137°+3° –2°

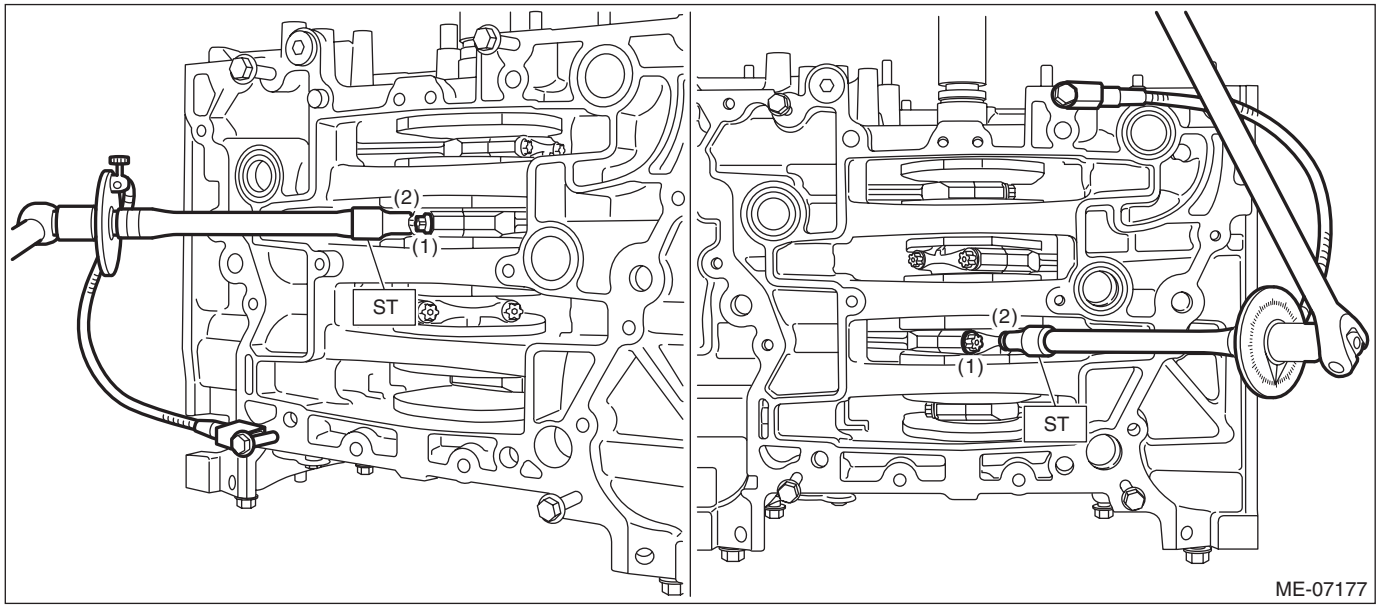

(23) Remove the cam carrier mounting bolts attached at the locations shown in the figure.

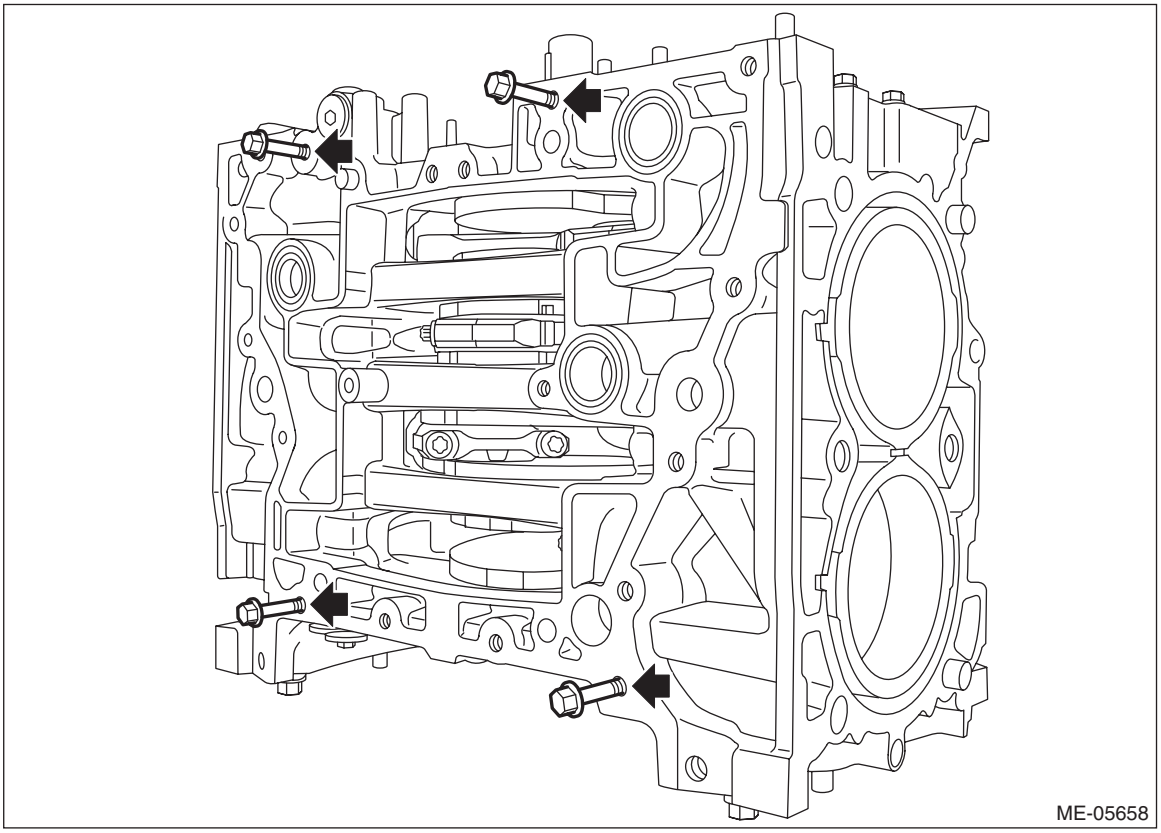

13) Set the cylinder block so that the oil pan side faces upward, and remove the mounting bolts attached to the locations shown in the figure.

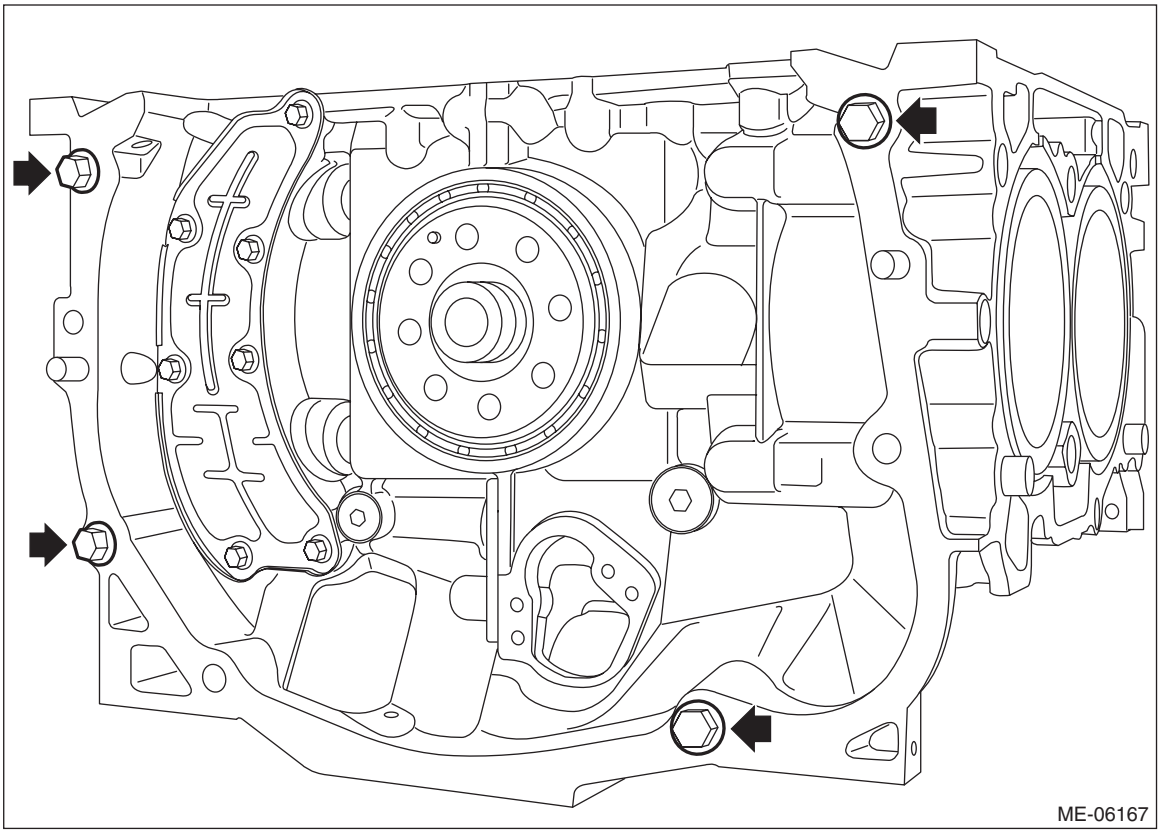

14) Install the oil pan upper with oil pan to the cylinder block.
(1) Apply liquid gasket to the mating surface of oil pan upper as shown in the figure.

NOTE:
• Before applying liquid gasket, degrease the old liquid gasket seal surface of the cylinder block and the oil pan upper.
• Install within 5 min. after applying liquid gasket.
• Apply liquid gasket 1.5 mm (0.0591 in) outside from the chamfer surface. However, application of liquid gasket on the chamfer surface around the bolt hole is allowed.

Liquid gasket:
THREE BOND 1217G (Part No. 0877Y0100) or equivalent

Liquid gasket applying diameter:
5±1 mm (0.1969±0.0394 in)

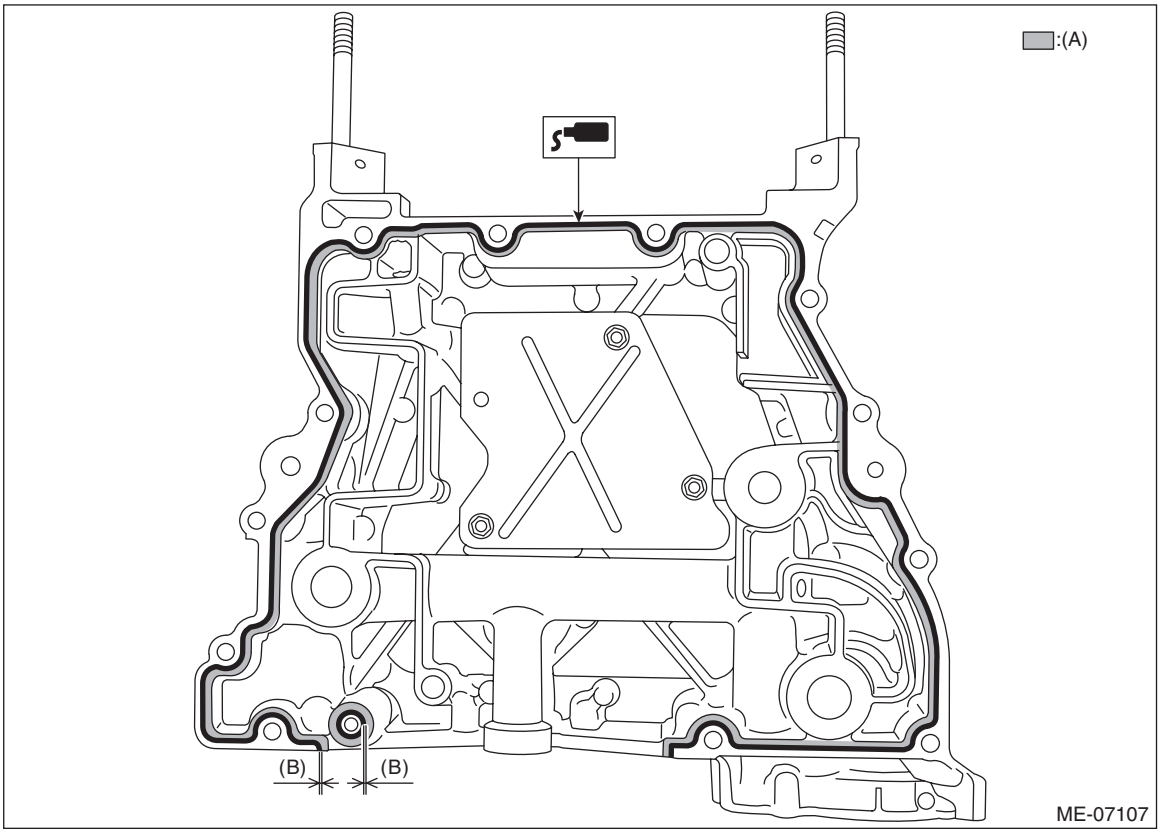

(A) Chamfer surface (B) 1.5 mm (0.0591 in)

(2) Install the O-ring to the cylinder block.

NOTE:
Use new O-rings.

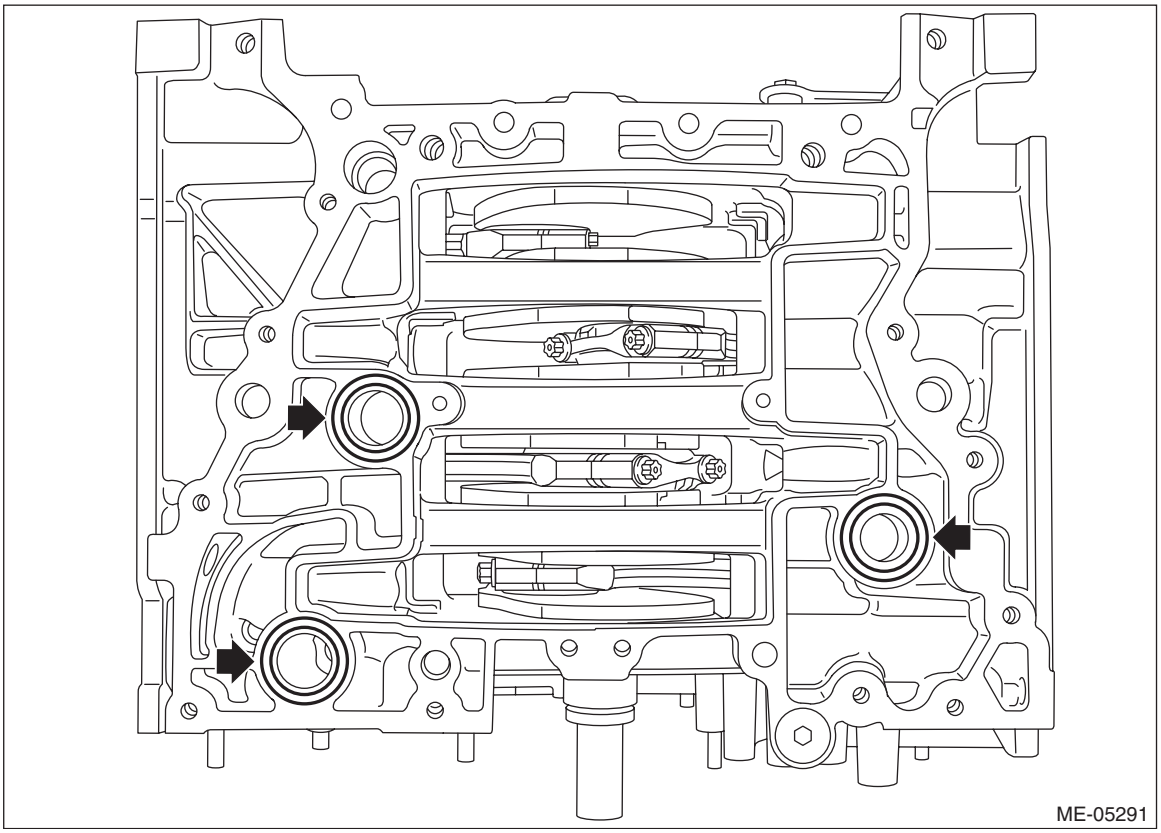

(3) Set the oil pan with oil pan upper to the cylinder block, and tighten the bolts in numerical order as shown in the figure.

NOTE:
After tightening, if the liquid gasket is squeezed out onto the seal surface of the chain cover, completely remove any squeezed-out liquid gasket.

Tightening torque:
18 N·m (1.8 kgf-m, 13.3 ft-lb)

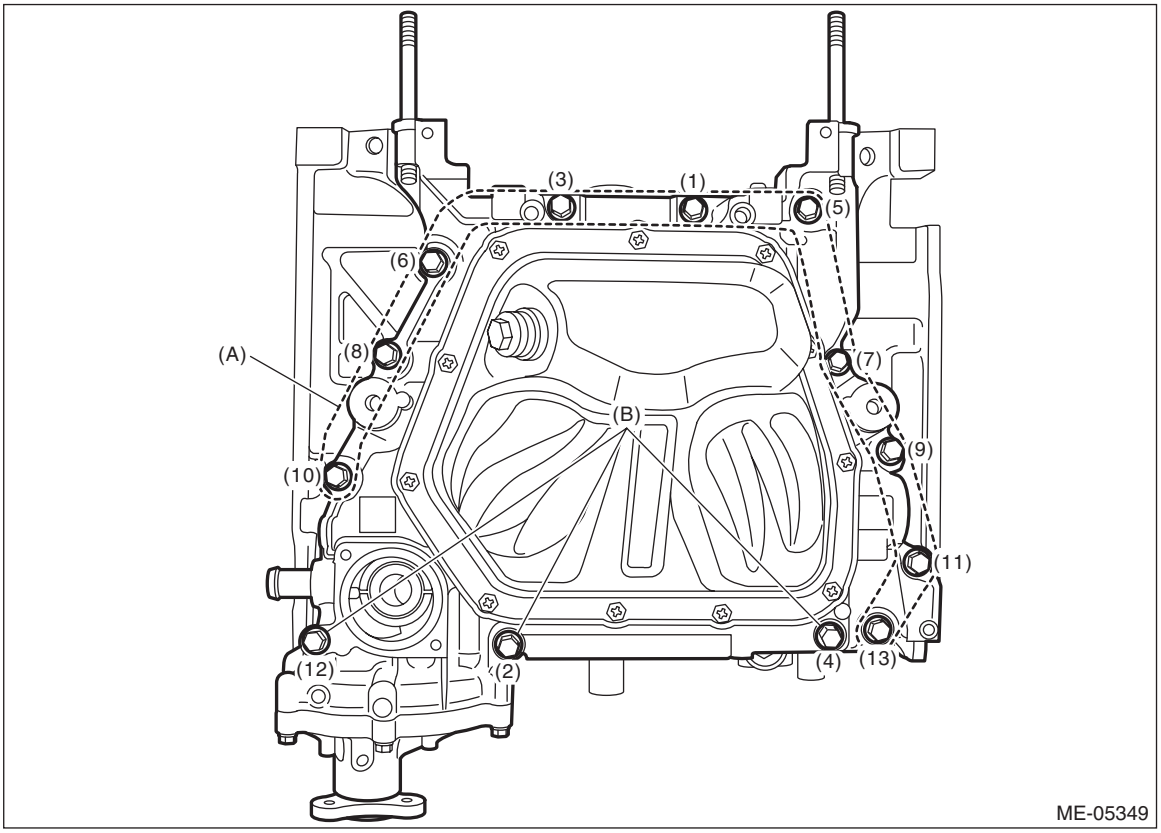

(A) M8 × 25 (B) M8 × 75

15) Set the thermostat to the oil pan upper, and install the thermostat cover.

NOTE:
Use a new gasket.

Tightening torque:
6.4 N·m (0.7 kgf-m, 4.7 ft-lb)

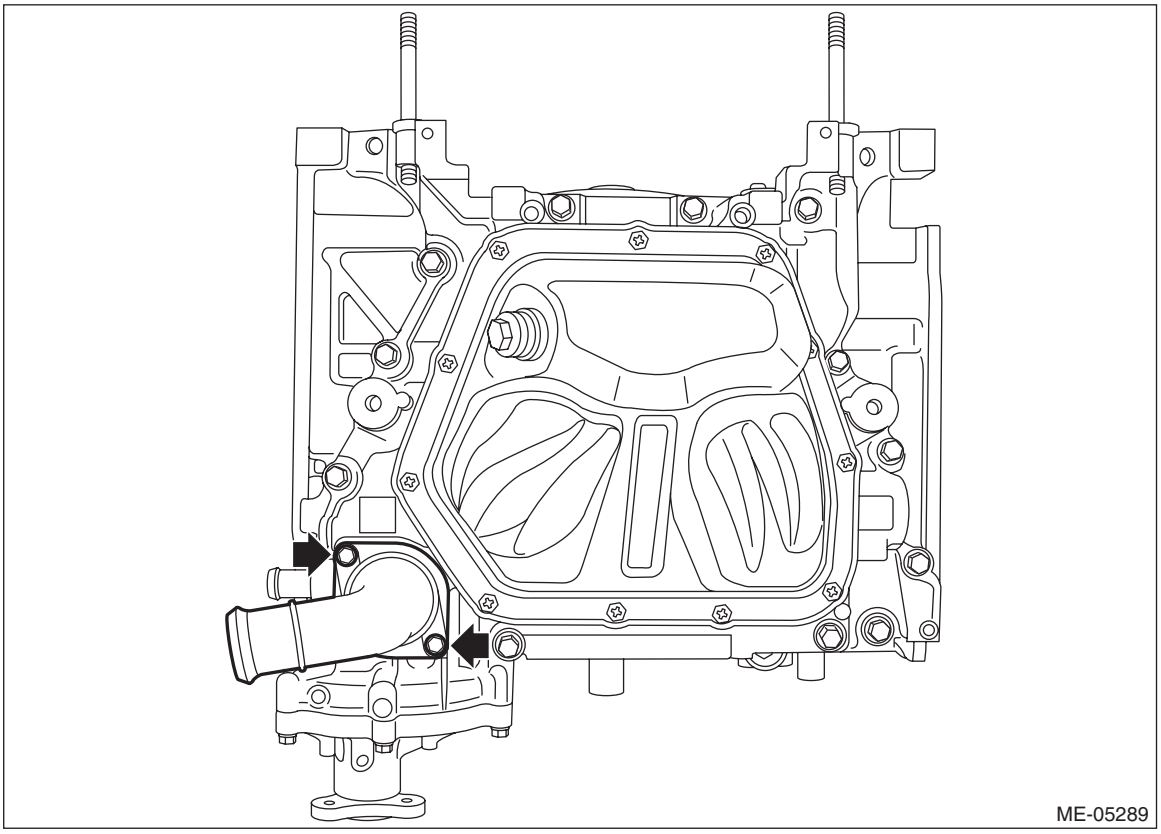

16) Install the ST1, ST2, ST3 and ST4 to the cylinder block and oil pan upper.

ST1	498457000	ENGINE STAND ADAPTER RH
ST2	498457100	ENGINE STAND ADAPTER LH
ST3	18362AA020	ADAPTER
ST4	499817100	ENGINE STAND

Tightening torque:
35 N·m (3.6 kgf-m, 25.8 ft-lb)

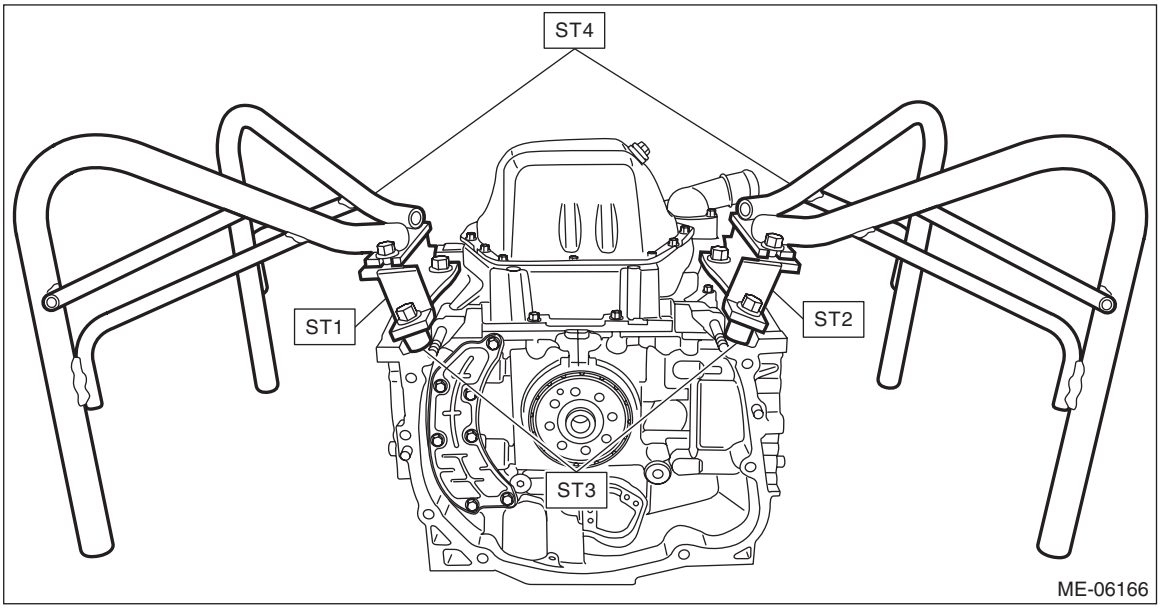

17) Install the water jacket spacer to the cylinder block RH and cylinder block LH. (XV model)

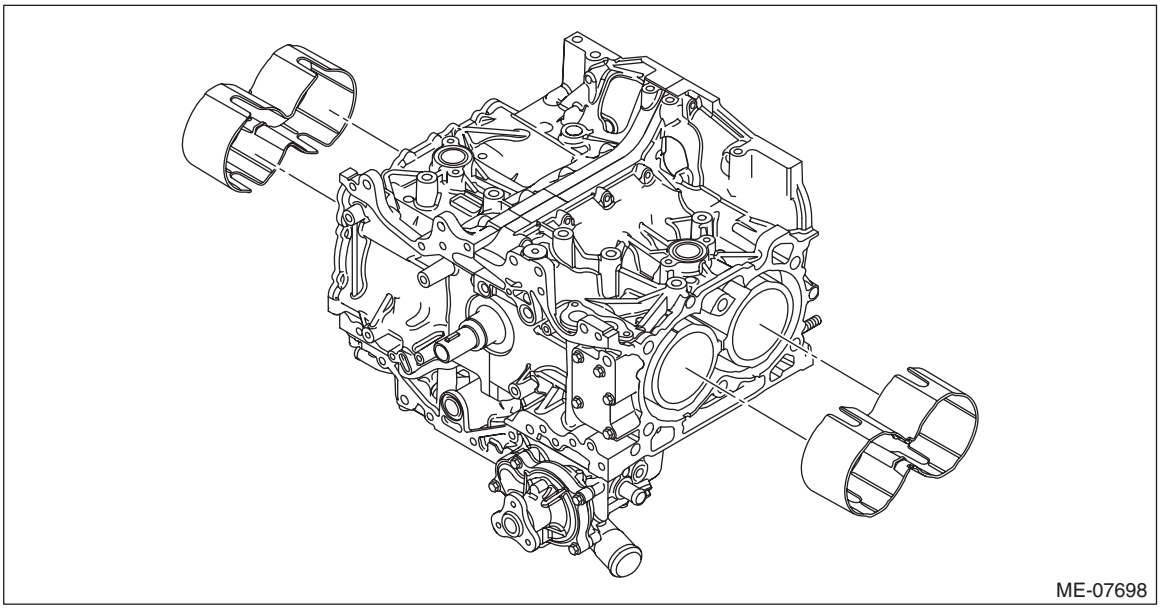

18) Install the crankshaft position sensor with crankshaft position sensor holder to the cylinder block LH.

Tightening torque:
6.4 N·m (0.7 kgf-m, 4.7 ft-lb)

- Gasoline engine model

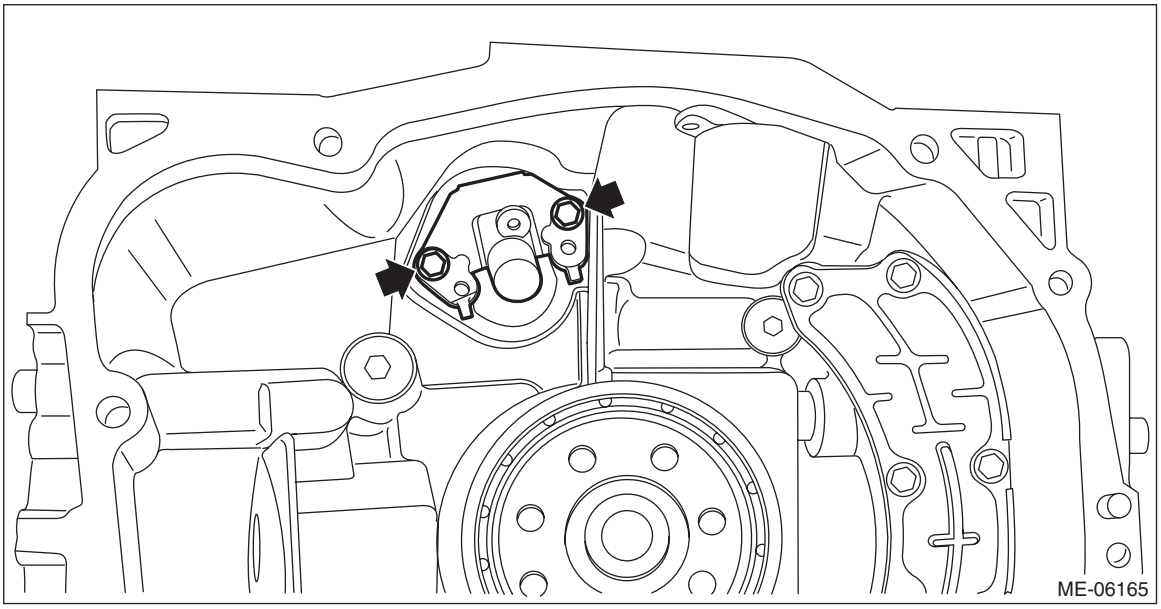

- HEV model

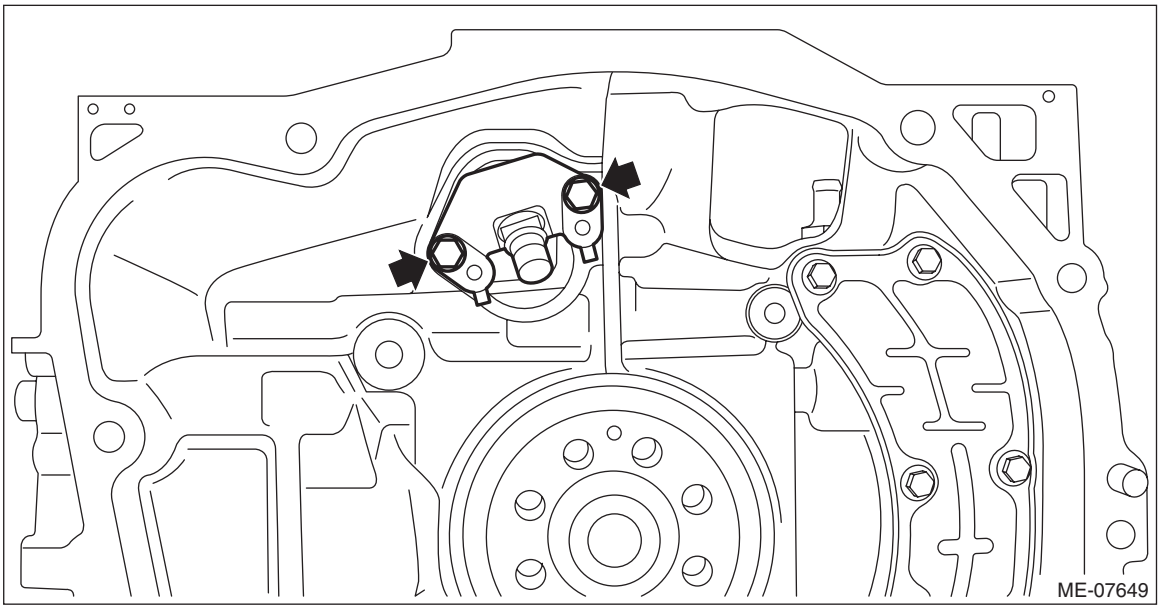

19) Install the crankshaft position sensor plate with drive plate. (CVT model) <Ref. to CVT(TR580)-156, INSTALLATION, Drive Plate.> <Ref. to CVT(TH58A)-173, INSTALLATION, Drive Plate.>
20) Install the crankshaft position sensor plate with flywheel. (MT model) <Ref. to CL-12, INSTALLATION, Flywheel.>
21) Install the clutch disc and cover. (MT model) <Ref. to CL-9, INSTALLATION, Clutch Disc and Cover.>
22) Install the PCV valve onto the cylinder block RH.

NOTE:
Apply liquid gasket to the bolt threads of PCV valve.

Liquid gasket:
THREE BOND 1324 (Part No. 004403042) or equivalent

Tightening torque:
23 N·m (2.3 kgf-m, 17.0 ft-lb)

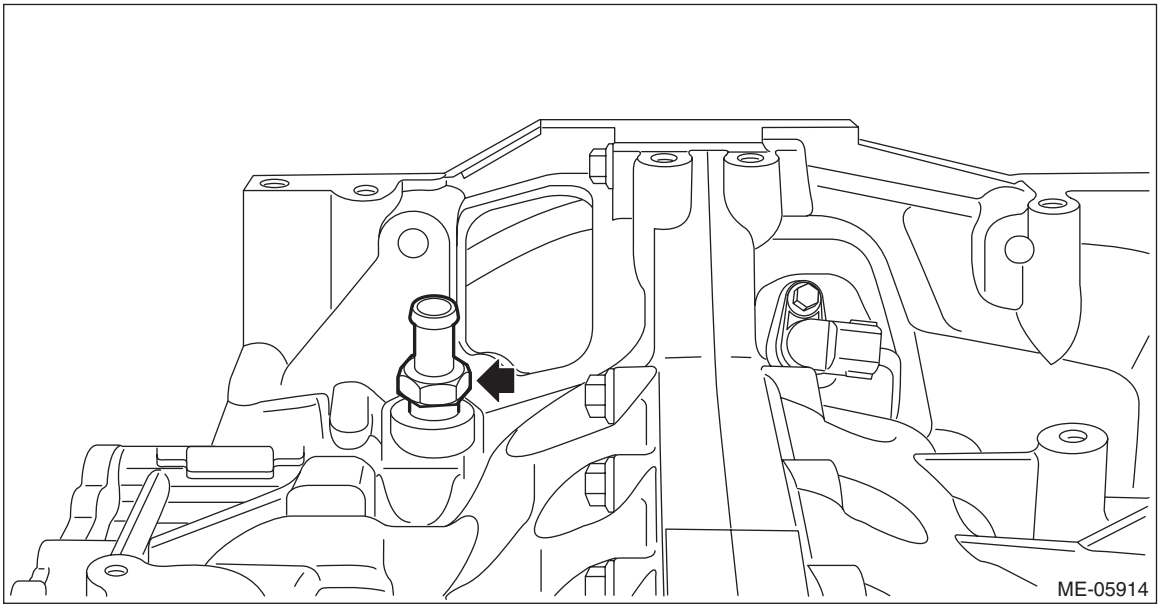

23) Install the PCV hose to the PCV valve. (Gasoline engine model)

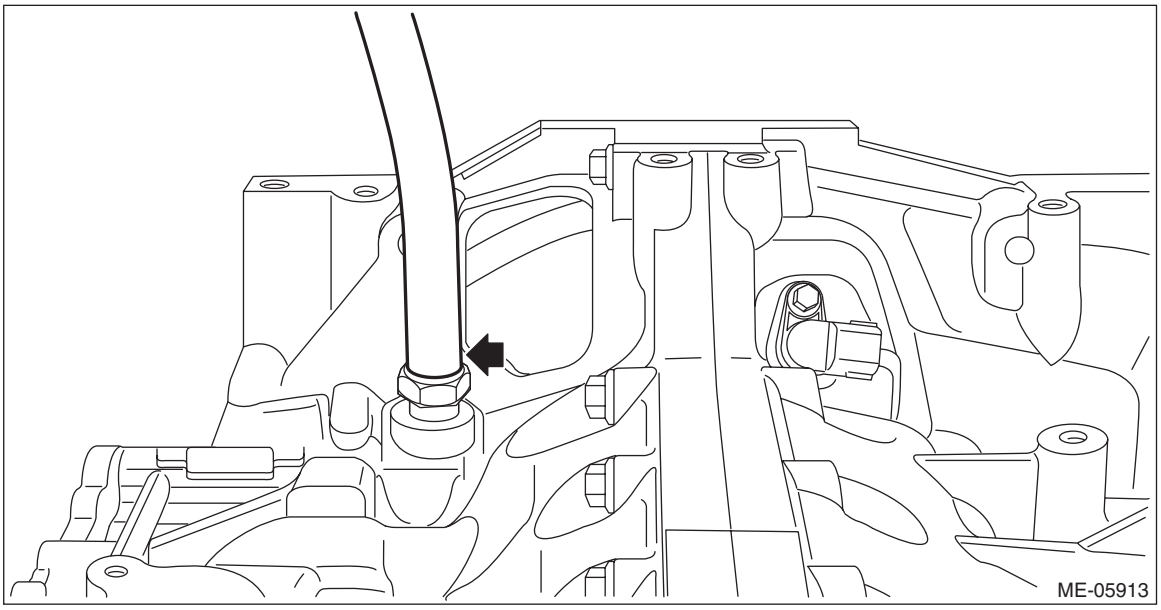

24) Install the knock sensor to the cylinder block LH.

NOTE:
Knock sensor must be positioned toward engine front so that the connector center position is within the range of 76.5 — 91.5° (shaded area).

Tightening torque:
24 N·m (2.4 kgf-m, 17.7 ft-lb)

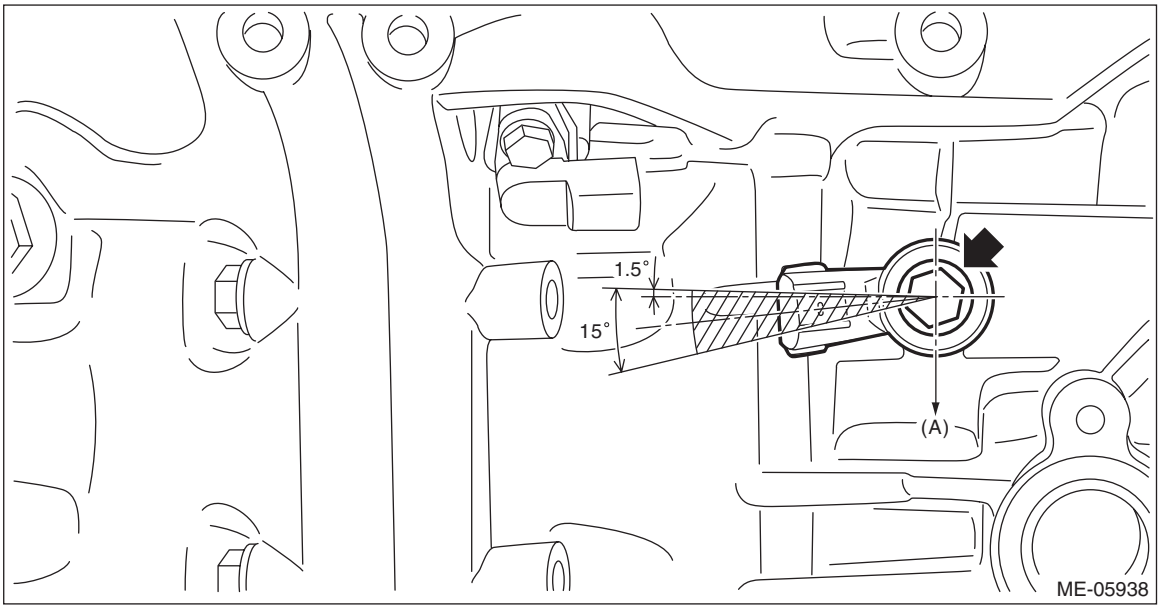

(A) Front of engine

25) Install the O-ring to the cylinder block and PCV connector.

NOTE:
Use new O-rings.

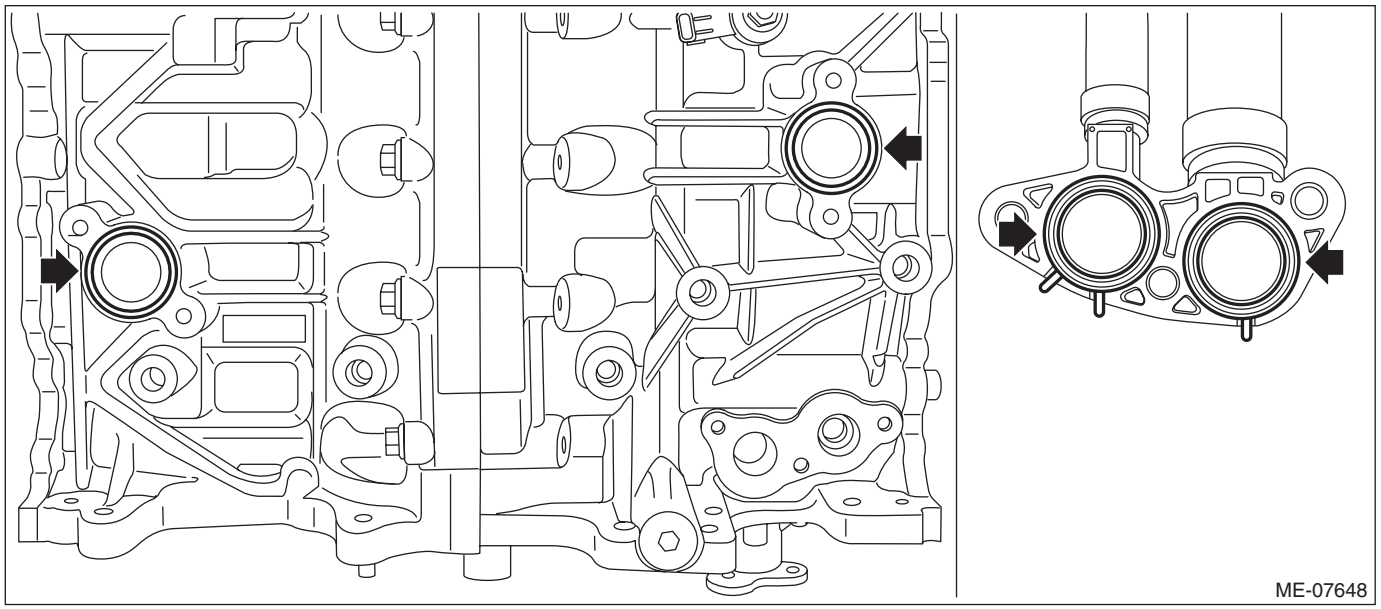

26) Set the water pipe assembly, PCV connector and brake vacuum pipe (HEV model) to the cylinder block, and install the bolts which secure the water pipe assembly and PCV connector to the cylinder block.

Tightening torque:
6.4 N·m (0.7 kgf-m, 4.7 ft-lb)

- Gasoline engine model

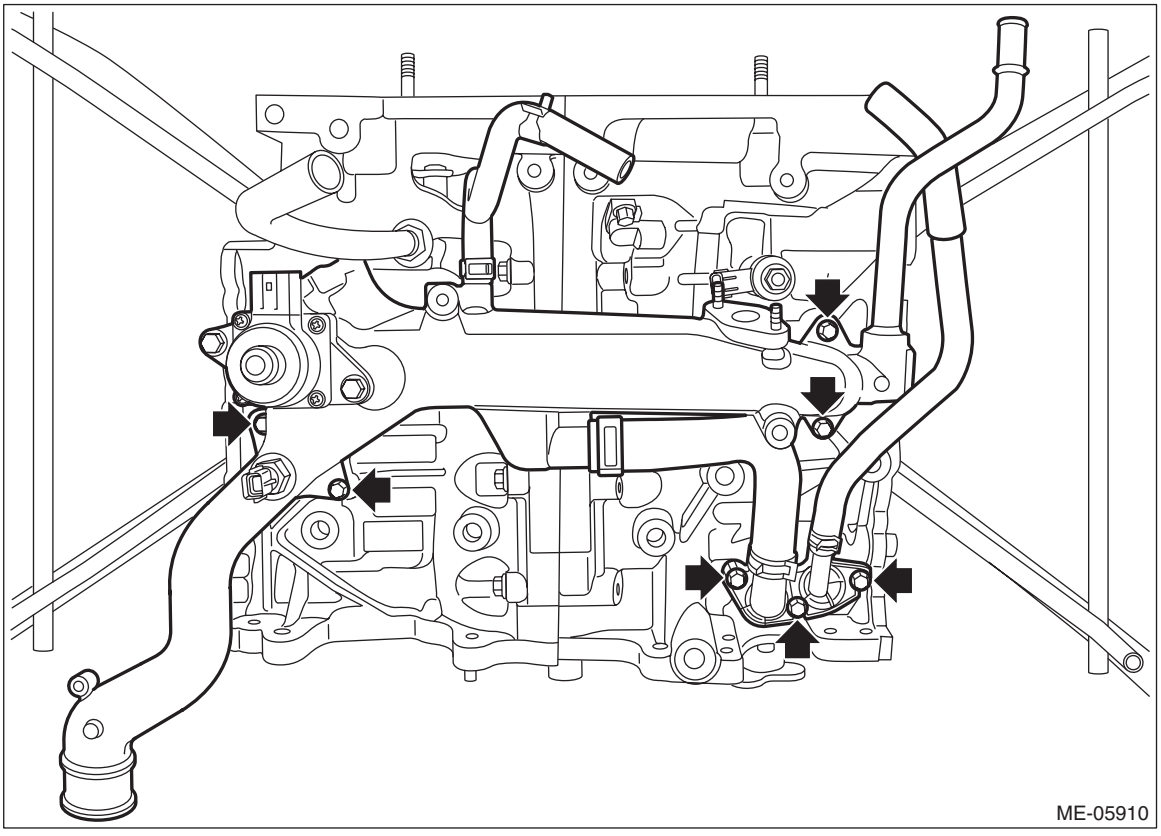

- HEV model

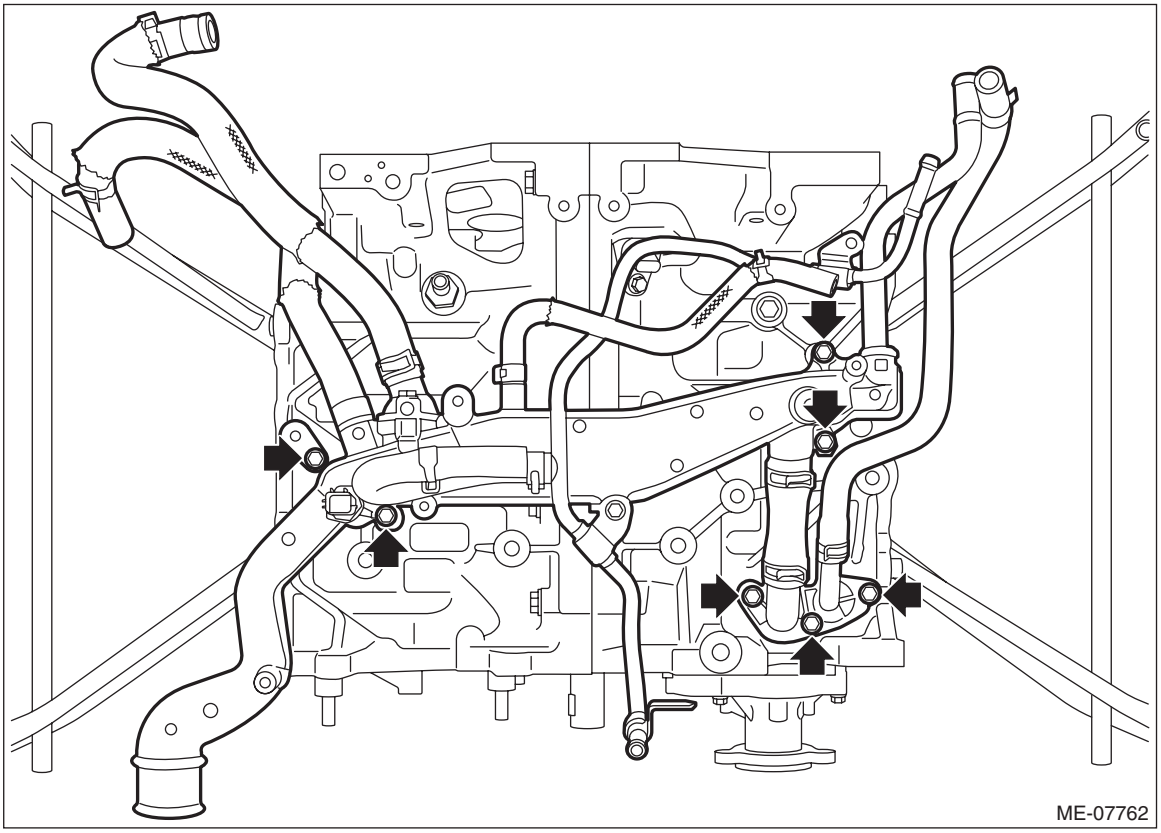

27) Install the engine rear hanger to the cylinder block RH. (Gasoline engine model)

Tightening torque:
21 N·m (2.1 kgf-m, 15.5 ft-lb)

- Gasoline engine CVT model

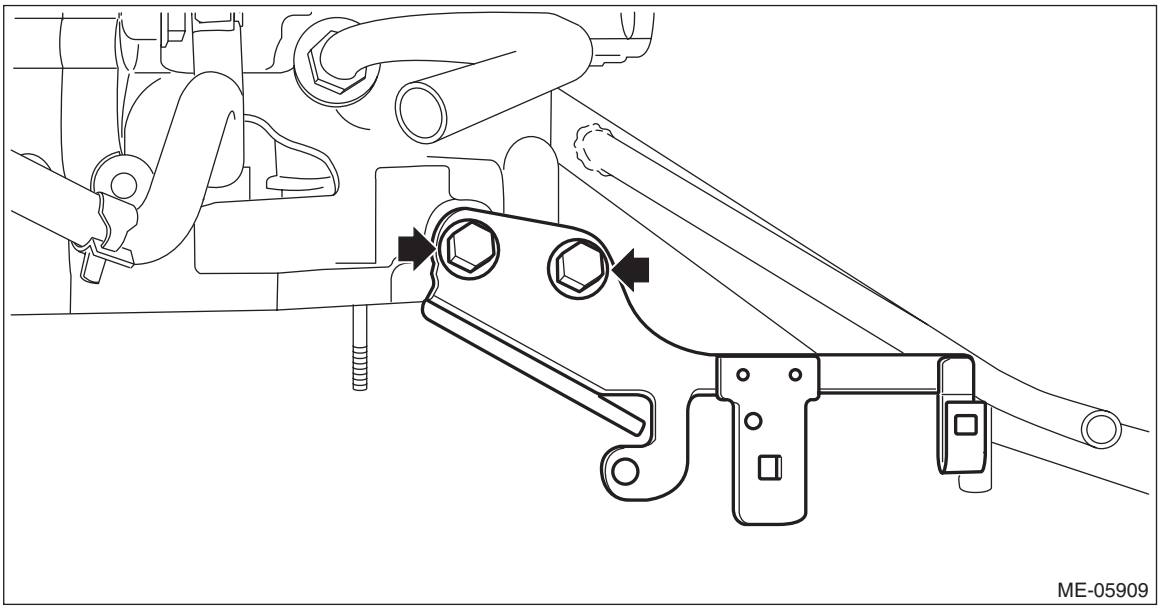

- Gasoline engine MT model

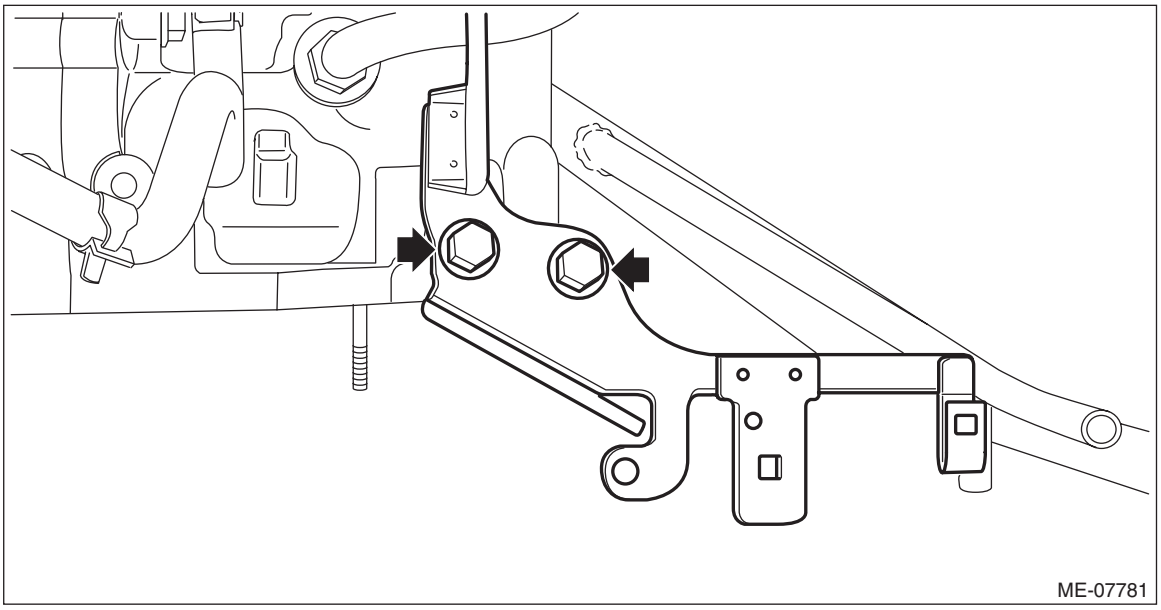

- HEV model

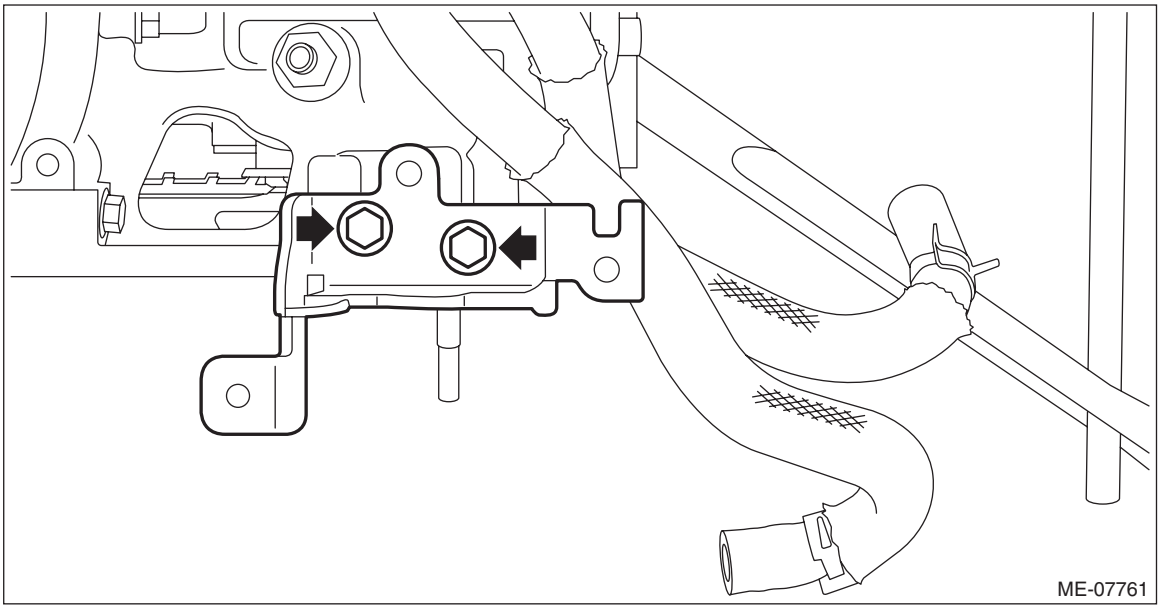

28) Install the crank sprocket. <Ref. to ME(H4DO(w/o HEV))-190, INSTALLATION, Crank Sprocket.>
29) Install the cylinder head. <Ref. to ME(H4DO(w/o HEV))-259, INSTALLATION, Cylinder Head.>
30) Install the cam carrier. <Ref. to ME(H4DO(w/o HEV))-220, INSTALLATION, Cam Carrier.>
31) Install the rocker cover. <Ref. to ME(H4DO(w/o HEV))-199, INSTALLATION, Rocker Cover.>
32) Install the chain cover. <Ref. to ME(H4DO(w/o HEV))-151, INSTALLATION, Chain Cover.>
33) Install the tumble generator valve assembly. <Ref. to FU(H4DO(w/o HEV))-91, INSTALLATION, Tumble Generator Valve Assembly.> <Ref. to FU(H4DO(HEV))-75, INSTALLATION, Tumble Generator Valve Assembly.>
34) Install the engine wiring harness. <Ref. to FU(H4DO(w/o HEV))-49, INSTALLATION, Engine Wiring Harness.> <Ref. to FU(H4DO(HEV))-37, INSTALLATION, Engine Wiring Harness.>
35) Install the intake manifold. <Ref. to FU(H4DO(w/o HEV))-30, INSTALLATION, Intake Manifold.> <Ref. to FU(H4DO(HEV))-26, INSTALLATION, Intake Manifold.>
36) Install the engine to the vehicle. <Ref. to ME(H4DO(w/o HEV))-86, INSTALLATION, Engine Assembly.>

C: DISASSEMBLY

1. CYLINDER BLOCK

1) Remove the oil separator cover from cylinder block RH.

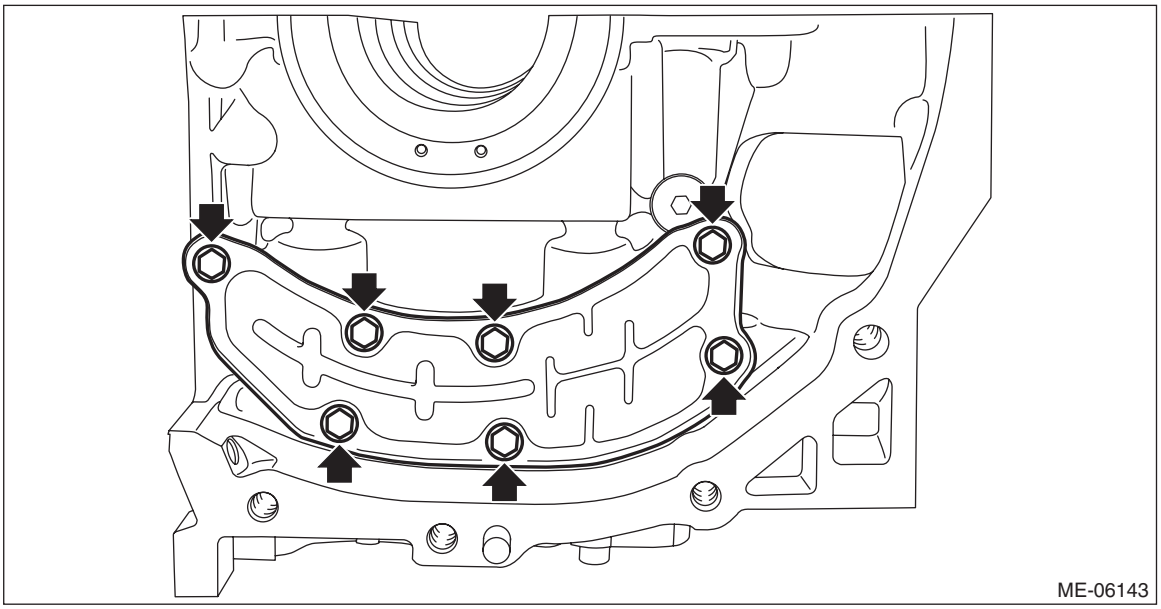

2) Remove the liquid gasket from cylinder block RH.
3) Remove the cylinder block plug (A) and the main gallery plug (B) from cylinder block RH.

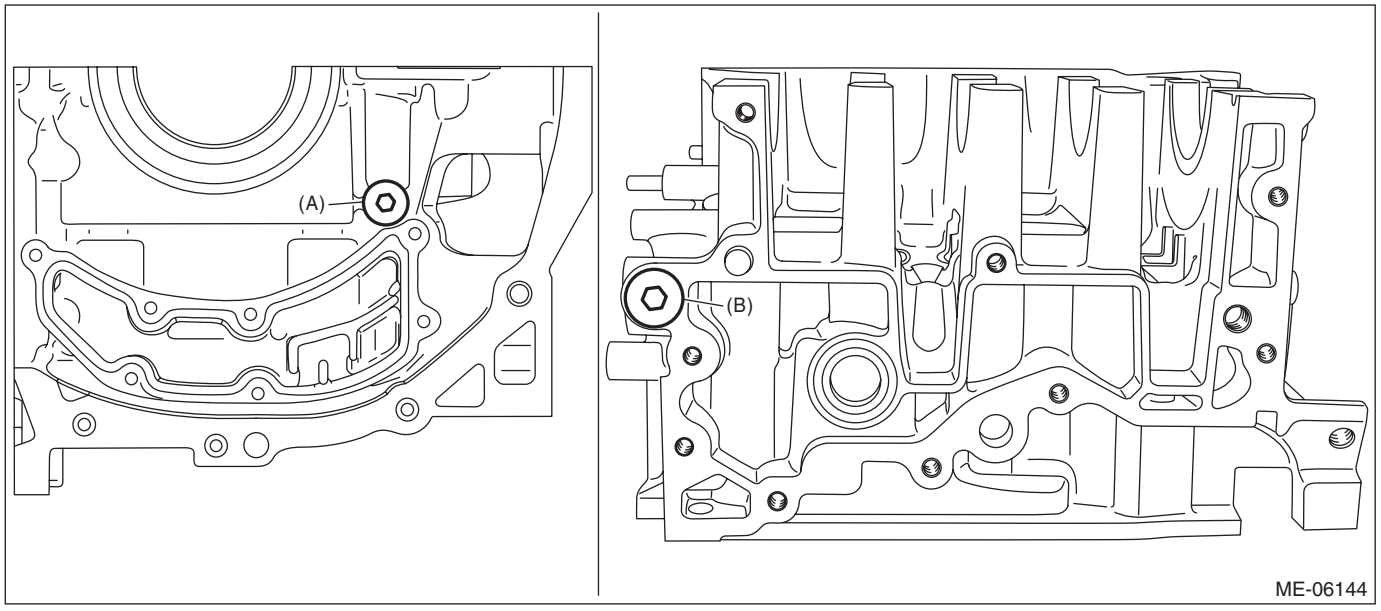

4) Remove the liquid gasket from the thread holes of the cylinder block RH, and from the threaded portions of cylinder block plug and main gallery plug.

5) Remove the cylinder block plate from cylinder block LH.

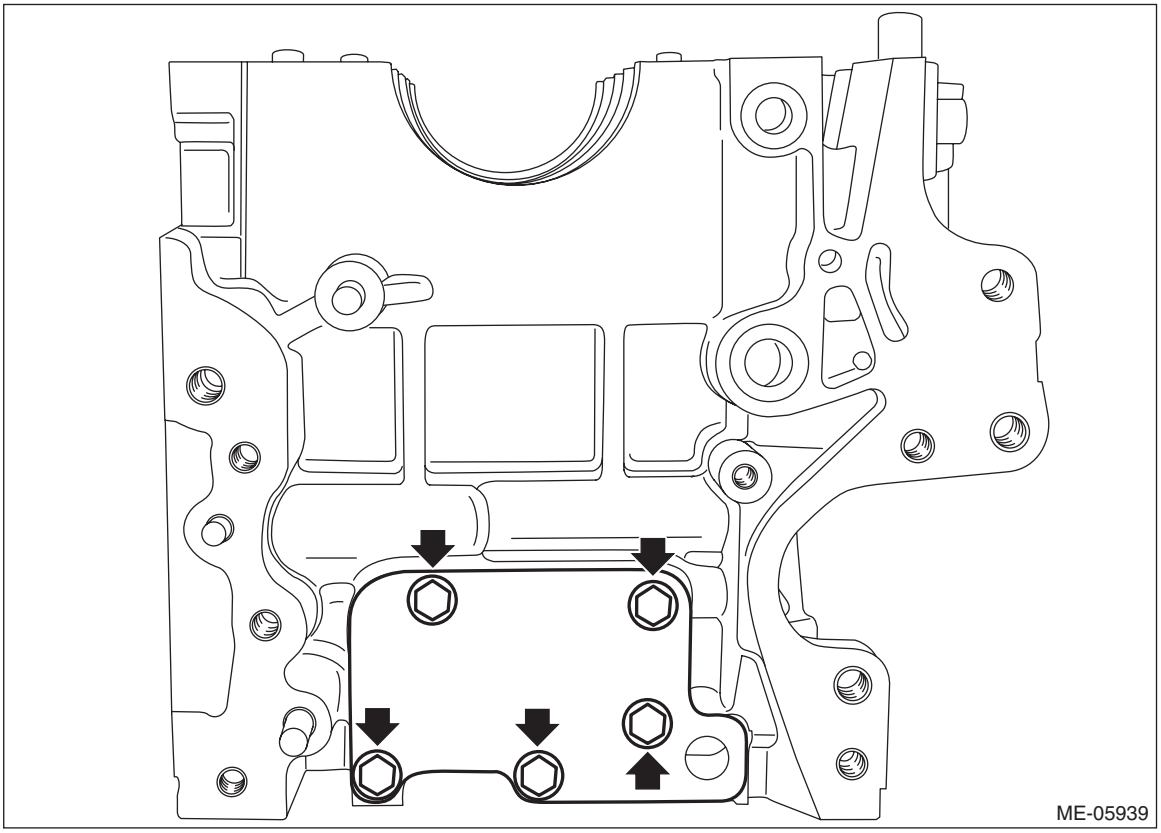

6) Remove the main gallery plug from cylinder block LH.

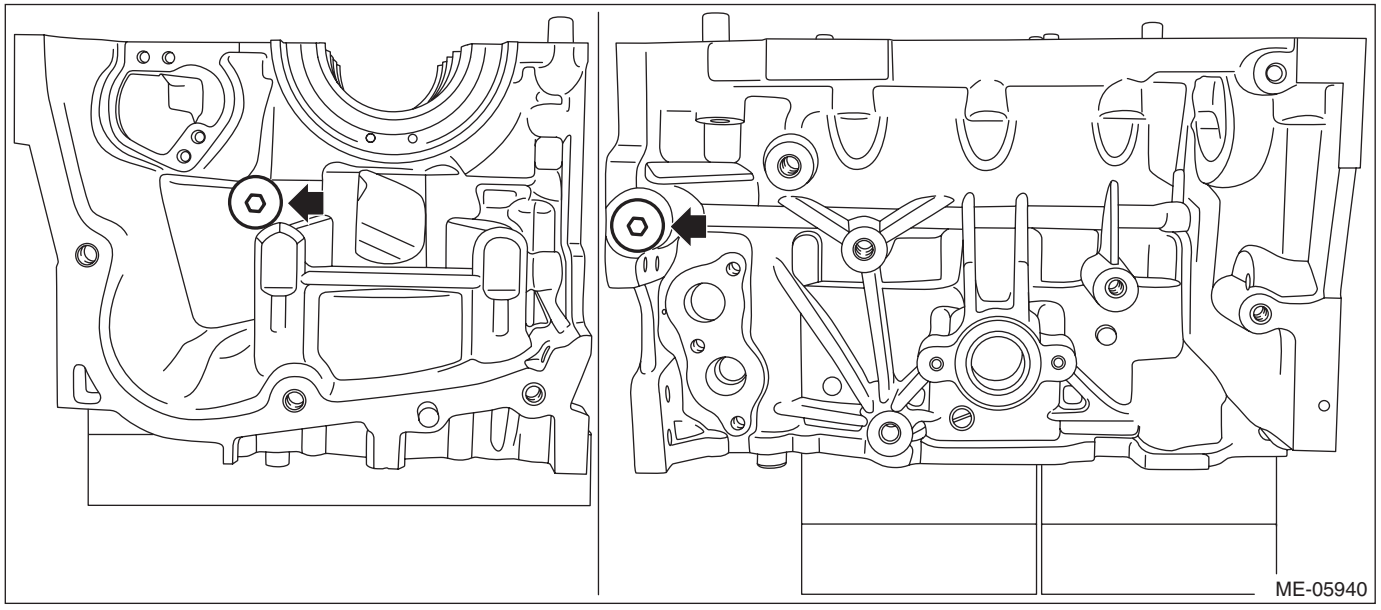

7) Remove the liquid gasket from the thread holes of the cylinder block LH and main gallery plug.

2. PISTON AND CONNECTING ROD

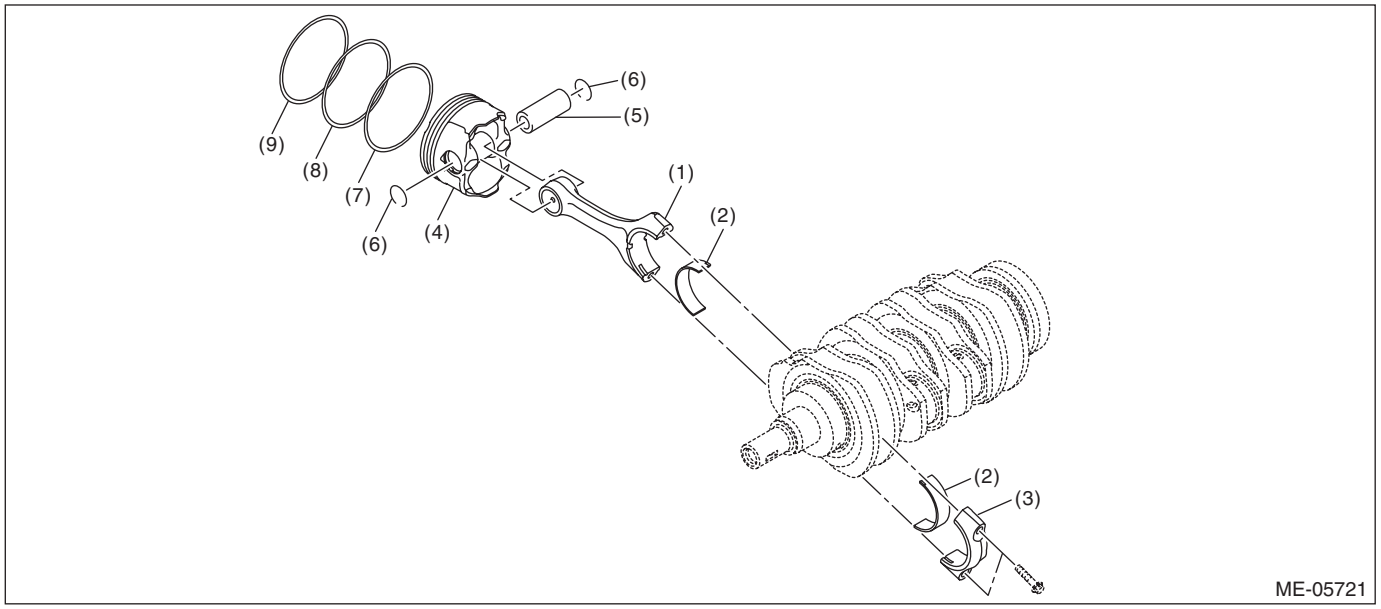

(1)	Connecting rod	(4)	Piston	(7)	Oil ring
(2)	Connecting rod bearing	(5)	Piston pin	(8)	Second ring
(3)	Connecting rod cap	(6)	Circlip	(9)	Top ring

NOTE:
To prevent confusion of various parts, mark each part.
1) Remove the connecting rod bearing from connecting rod and connecting rod cap.
2) Remove the piston rings from the piston.

NOTE:
Arrange the piston rings in order so that they can be installed in their original positions without confusion.
(1) Remove the compression rings in the order of top ring and second ring, using piston ring expander.
(2) Remove the oil rings in the order of upper rail, lower rail and expander by hand.

3) Remove the circlip on one end from the piston using a flat tip screwdriver.

NOTE:
Be careful not damage the piston and piston pin, by wrapping the tip of flat tip screwdriver with tape.
4) Remove the piston pin from piston, and remove the connecting rod from piston.
5) Remove the circlip on other end from the piston using a flat tip screwdriver.

NOTE:
Be careful not damage the piston and piston pin, by wrapping the tip of flat tip screwdriver with tape.

D: ASSEMBLY

1. CYLINDER BLOCK

1) Apply liquid gasket to the threaded portion of the main gallery plug, and install the main gallery plug to the cylinder block LH.

NOTE:
Before applying liquid gasket, degrease the thread holes of the cylinder block LH and main gallery plug.

Liquid gasket:
THREE BOND 1105 (Part No. 004403010) or equivalent

Tightening torque:
37 N·m (3.8 kgf-m, 27.3 ft-lb)

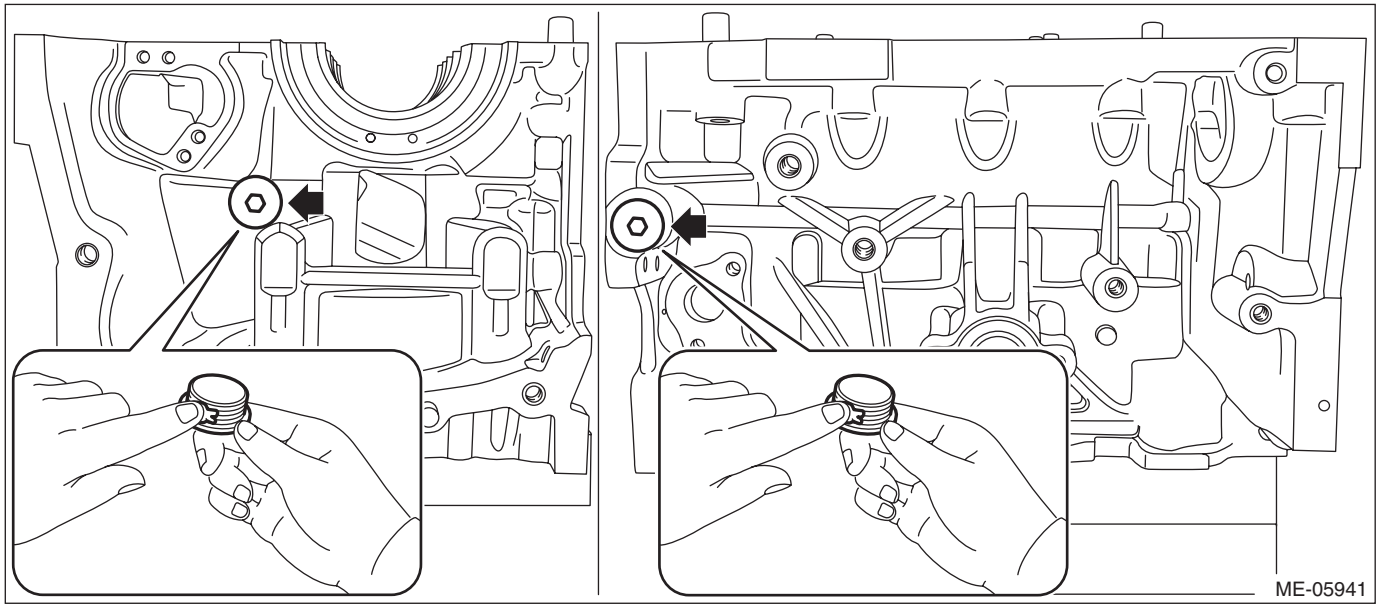

2) Install the cylinder block plate onto cylinder block LH.

Tightening torque:
6.4 N·m (0.7 kgf-m, 4.7 ft-lb)

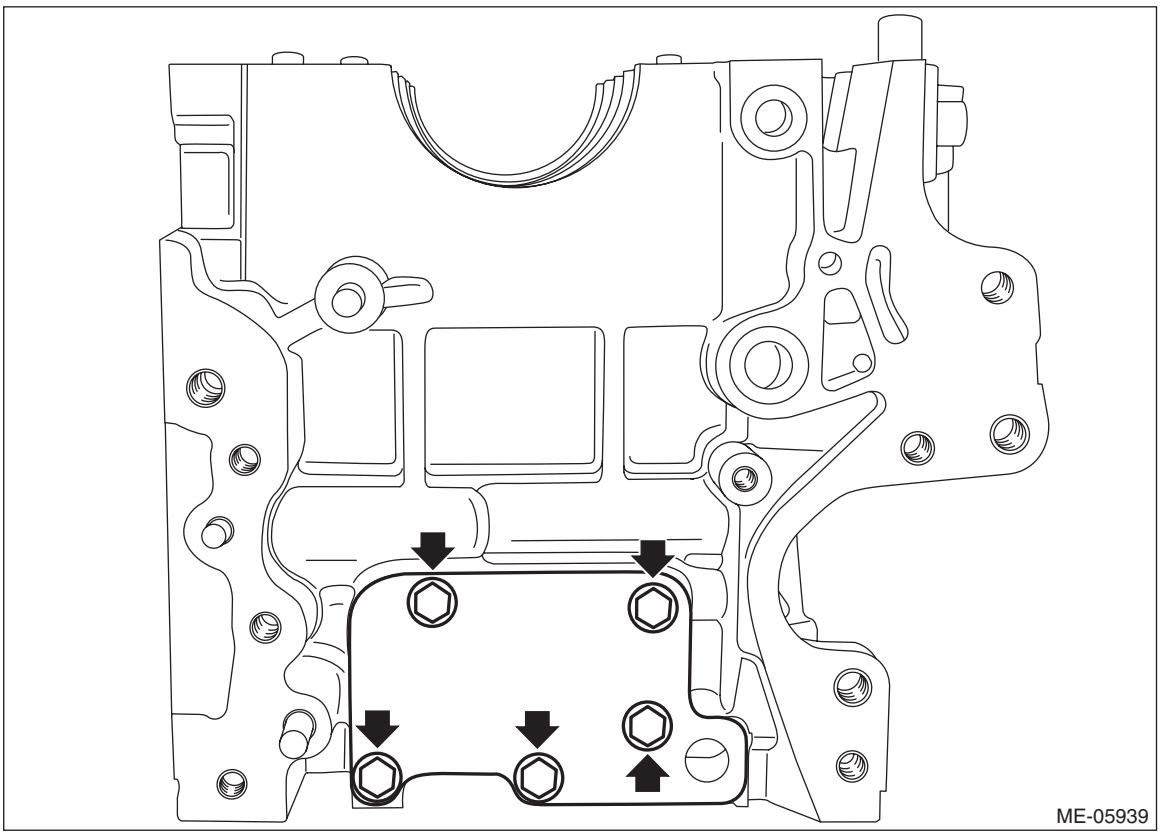

3) Apply liquid gasket to the threaded portions of cylinder block plug and main gallery plug, and install the cylinder block plug (A) and main gallery plug (B) to cylinder block RH.

NOTE:
Before applying liquid gasket, degrease the thread holes of the cylinder block RH, and the threaded portions of cylinder block plug and main gallery plug.

Liquid gasket:
THREE BOND 1105 (Part No. 004403010) or equivalent

Tightening torque:
T1: 16 N·m (1.6 kgf-m, 11.8 ft-lb)
T2: 37 N·m (3.8 kgf-m, 27.3 ft-lb)

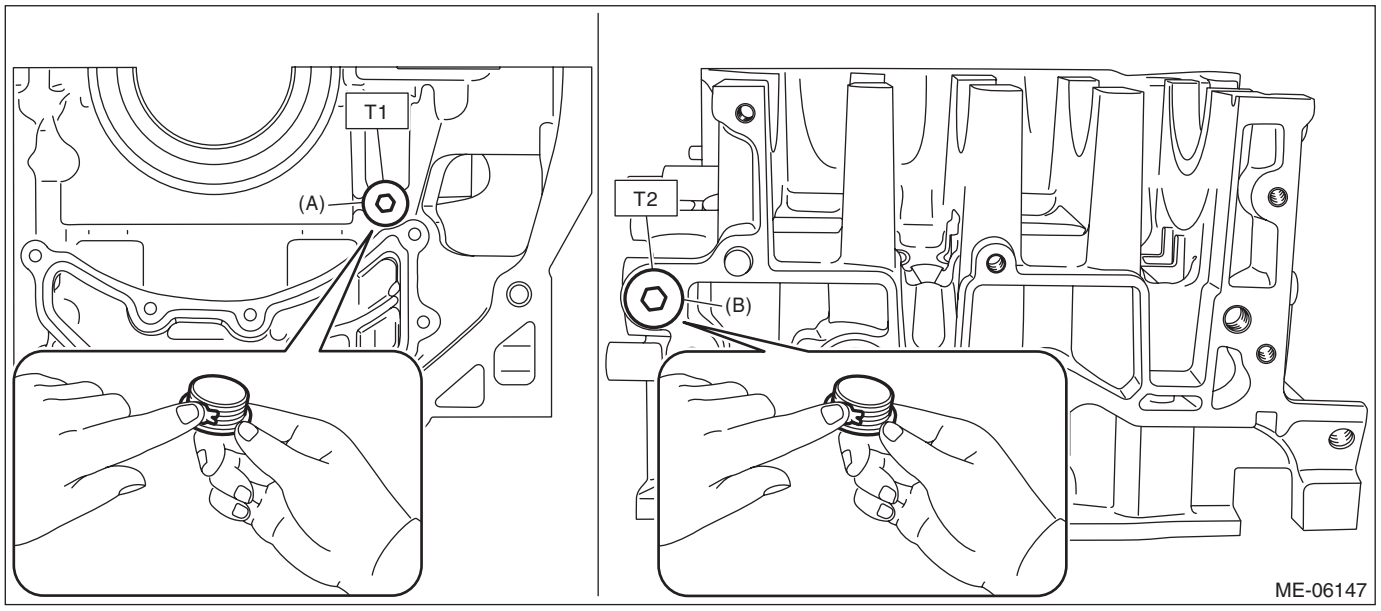

4) Install the oil separator cover to the cylinder block RH.
(1) Apply liquid gasket to the mating surfaces of oil separator cover.

NOTE:
- Use new oil separator cover.
- Before applying liquid gasket, degrease the old liquid gasket seal surface of cylinder block RH.
- Install within 5 min. after applying liquid gasket.

Liquid gasket:
Mating surface
THREE BOND 1217G (Part No. K0877Y0100) or equivalent

Liquid gasket applying diameter:
4±1 mm (0.1772±0.0197 in)

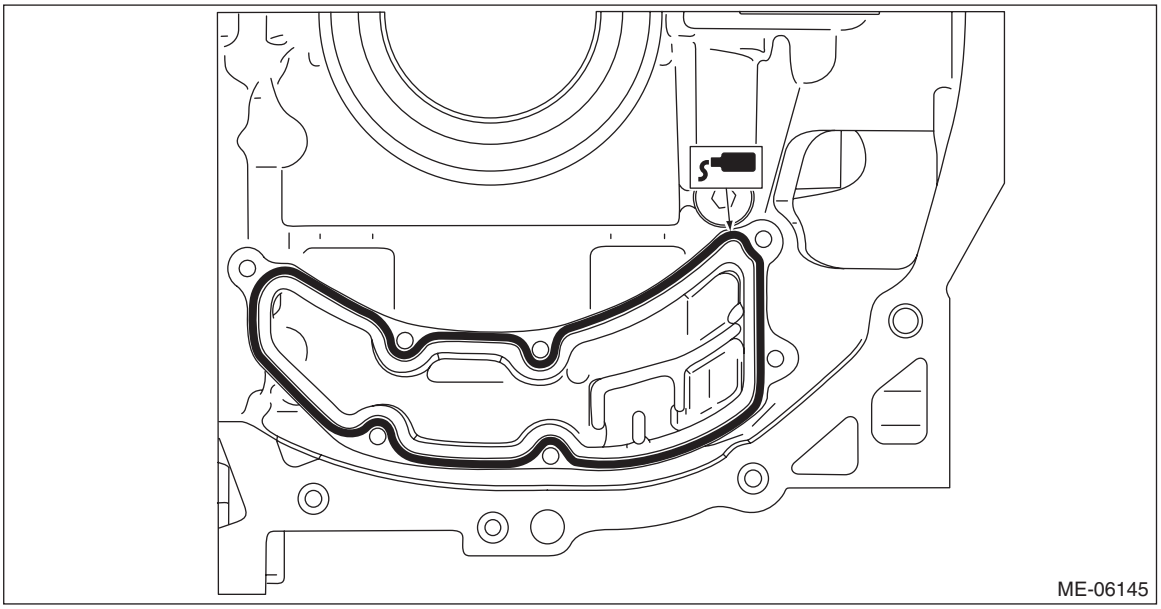

(2) Install the oil separator cover to the cylinder block RH, and tighten the oil separator cover bolts in numerical order as shown in the figure.

Tightening torque:
6.4 N·m (0.7 kgf-m, 4.7 ft-lb)

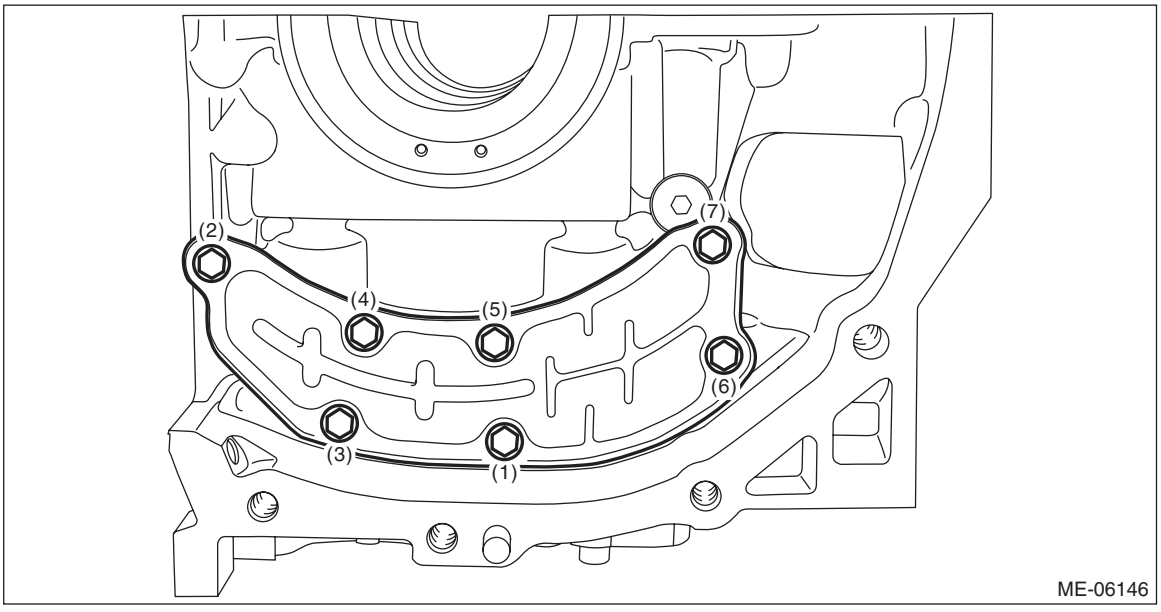

2. PISTON AND CONNECTING ROD

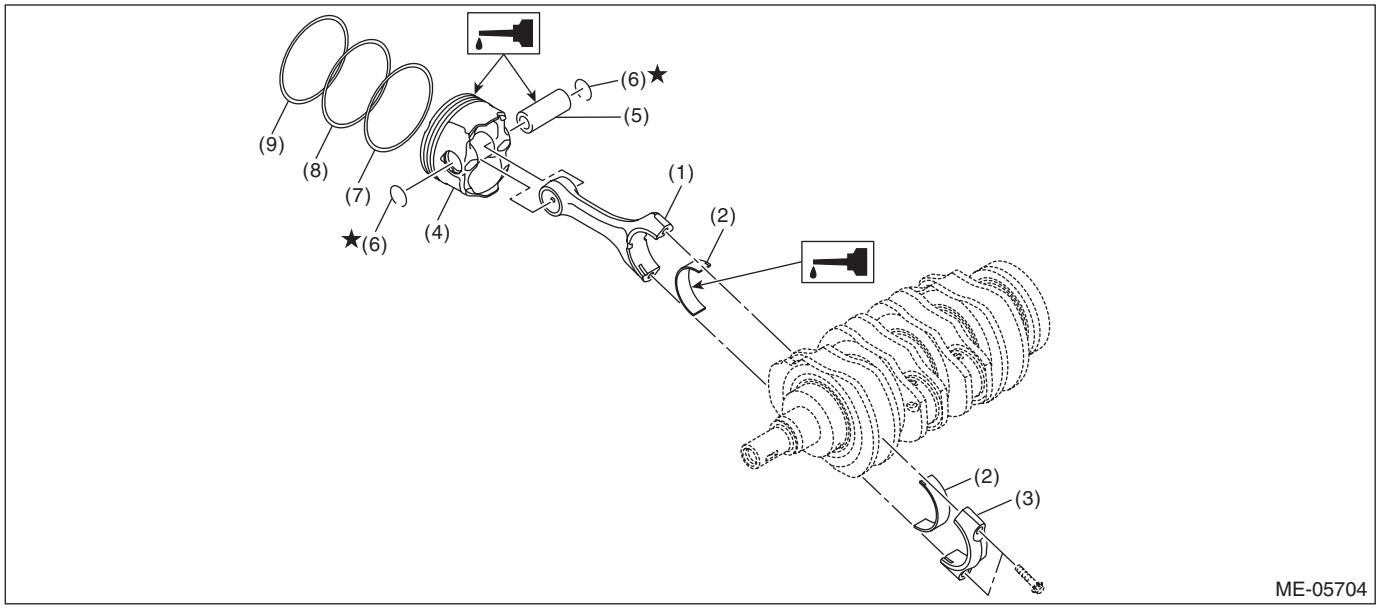

(1)	Connecting rod	(4)	Piston	(7)	Oil ring
(2)	Connecting rod bearing	(5)	Piston pin	(8)	Second ring
(3)	Connecting rod cap	(6)	Circlip	(9)	Top ring

1) Install the connecting rod bearing to the connecting rod and connecting rod cap.
2) Install the circlip on one end of the piston using a flat tip screwdriver.

NOTE:
- Be careful not damage the piston, by wrapping the tip of flat tip screwdriver with tape.
- Make sure the circlip is firmly inserted into the circlip groove.
- After installing the circlip, rotate the circlip so that its end part (a) and the cutout portion of circlip groove (b) do not match.

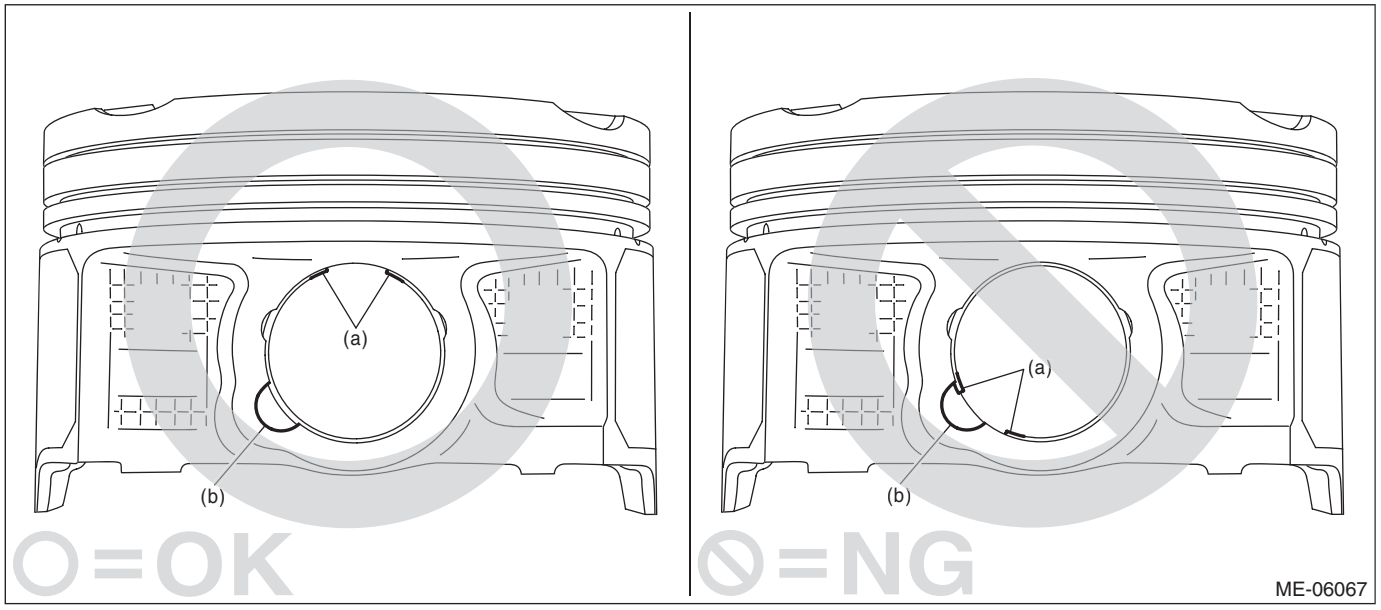

3) Set the piston to the connecting rod.

NOTE:
Align the front mark of piston and the connecting rod direction correctly as shown in the figure.

- Gasoline engine model

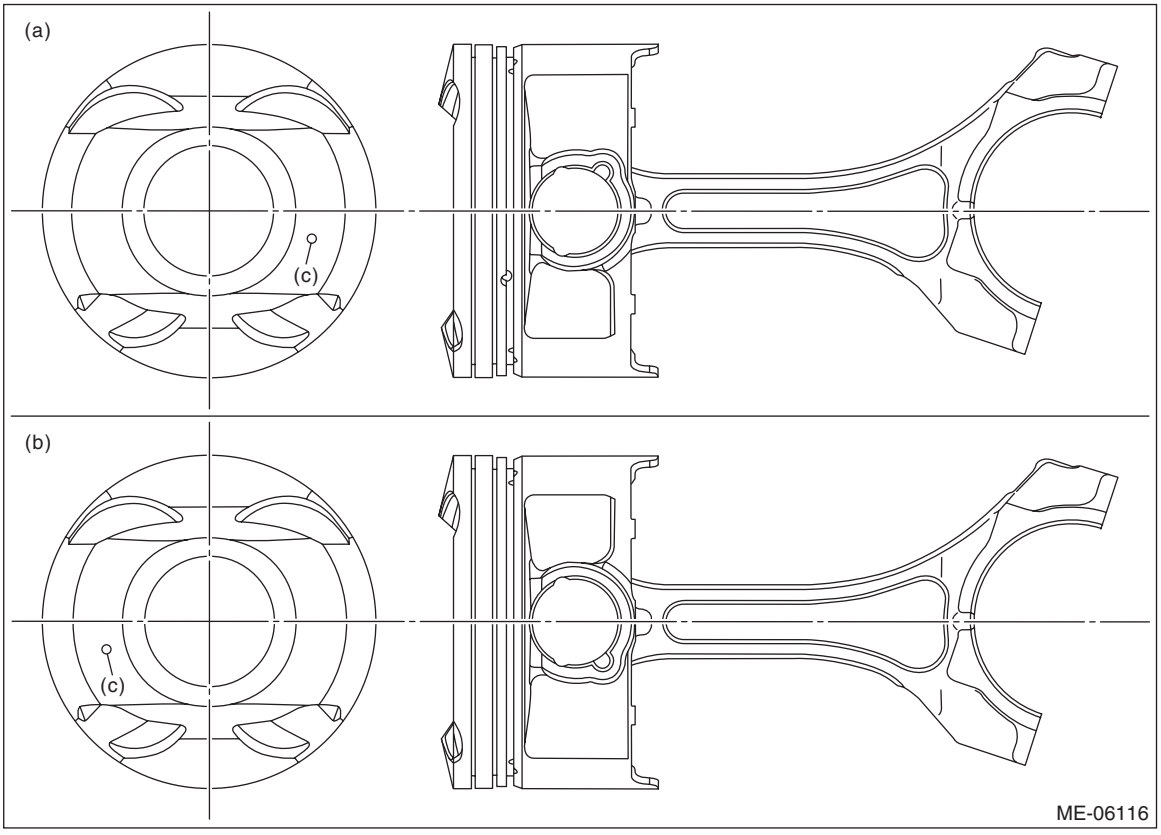

(a) RH side (#1 and #3) (b) LH side (#2 and #4) (c) Front mark

- HEV model

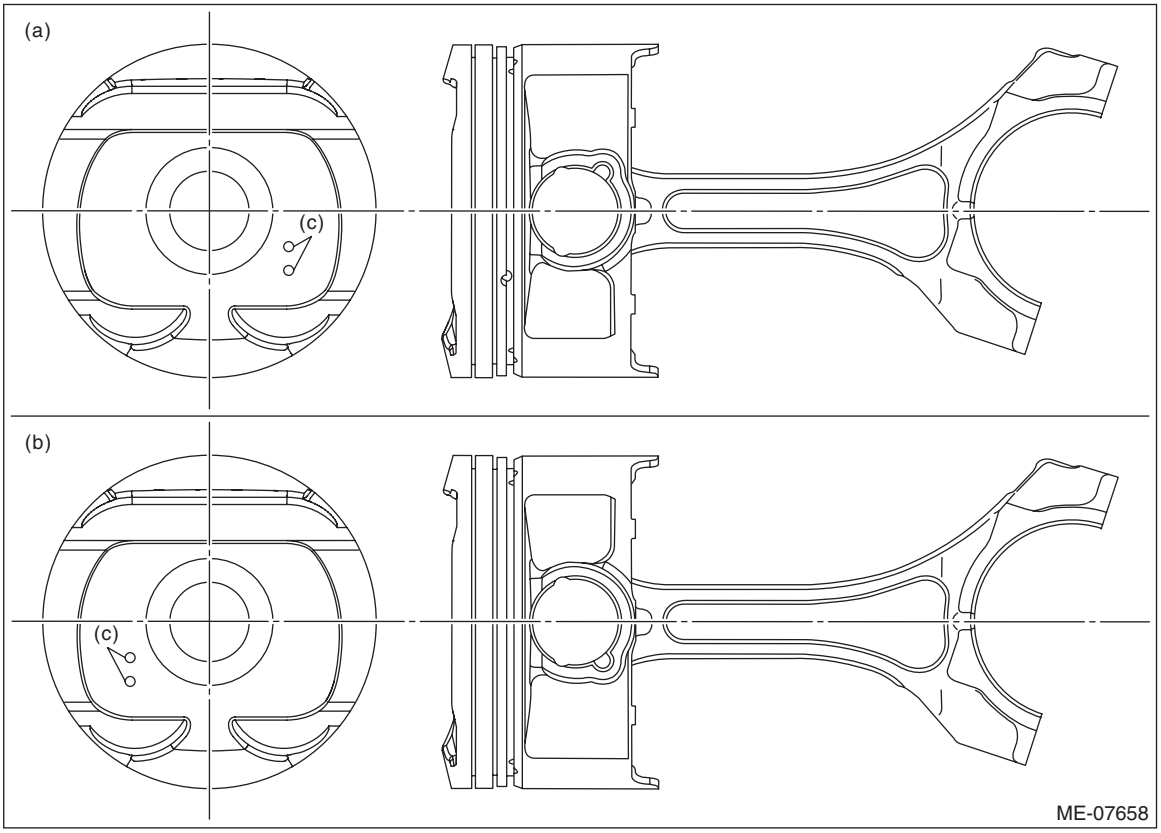

(a) RH side (#1 and #3) (b) LH side (#2 and #4) (c) Front mark

4) Apply engine oil to the piston pin, and attach the piston pin.
5) Install the circlip on the piston using a flat tip screwdriver.

NOTE:
- Be careful not damage the piston and piston pin, by wrapping the tip of flat tip screwdriver with tape.
- Make sure the circlip is firmly inserted into the circlip groove.
- After installing the circlip, rotate the circlip so that its end part (a) and the cutout portion of circlip groove (b) do not match.

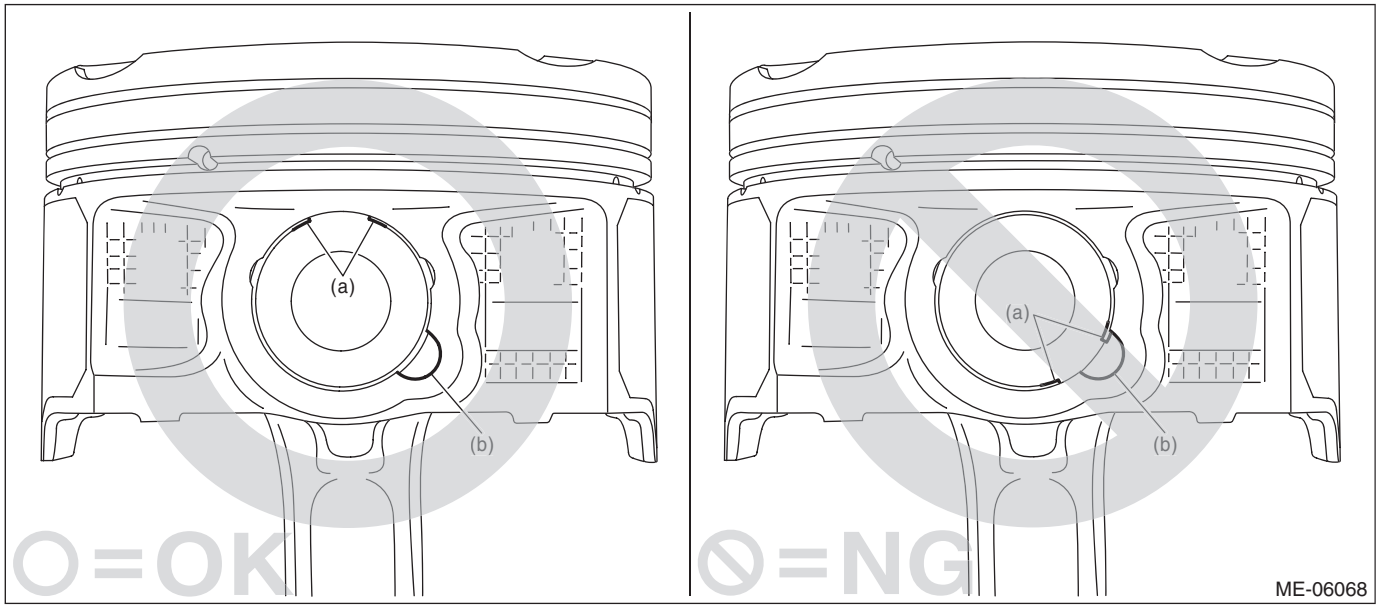

6) Install the piston rings onto the piston.
(1) Install the oil rings in the order of expander, lower rail and upper rail by hand.

NOTE:
Oil ring consists of the upper rail, expander and lower rail.

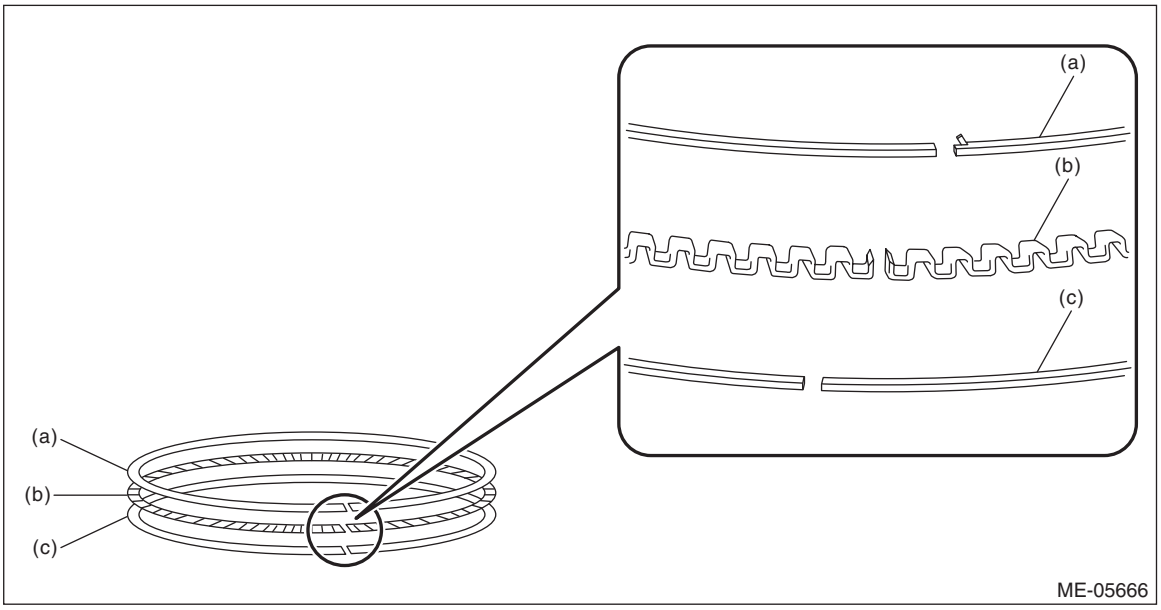

(a) Upper rail (b) Expander (c) Lower rail

(2) Install the compression rings in the order of second ring and top ring, using piston ring expander.

NOTE:
Install so that the compression ring mark faces the top side of the piston.

E: INSPECTION

1. CYLINDER BLOCK & PISTON

1) Visually inspect to make sure that there are no cracks, scratches or other damage.
2) Use liquid penetrant tester on the important sections to check for fissures.
3) Check that there are no traces of gas leaking or water leaking on the gasket attachment surface.
4) Check the oil passages for clogging.
5) Check for warpage of mating surfaces of the cylinder block that contacts cylinder head using a straight edge and thickness gauge. If it exceeds the limit, correct the surface by grinding it with a surface grinder or replace the cylinder block.

NOTE:
Measurement should be performed at a temperature of 20°C (68°F).

Cylinder block warpage:
Limit
0.025 mm (0.00098 in)

Grinding limit of cylinder block :
To 204.9 mm (8.067 in)

Height of cylinder block:
Standard
205.0 mm (8.071 in)

6) Using a cylinder bore gauge, check the cylindricality and out-of-roundness of cylinder liner. If it is not within the standard, perform reboring (including honing), or replace the cylinder block and piston as a set. For reboring and honing procedure, refer to step 8).

NOTE:
- Measure the cylinder liner with cylinder blocks separated (into cylinder block RH and cylinder block LH).
- Measurement should be performed at a temperature of 20°C (68°F).
- Write down all measurement values as the values are used in the next procedure.
- Measure the inner diameter of each cylinder liner in both the thrust and piston pin directions at the heights as shown in the figure.

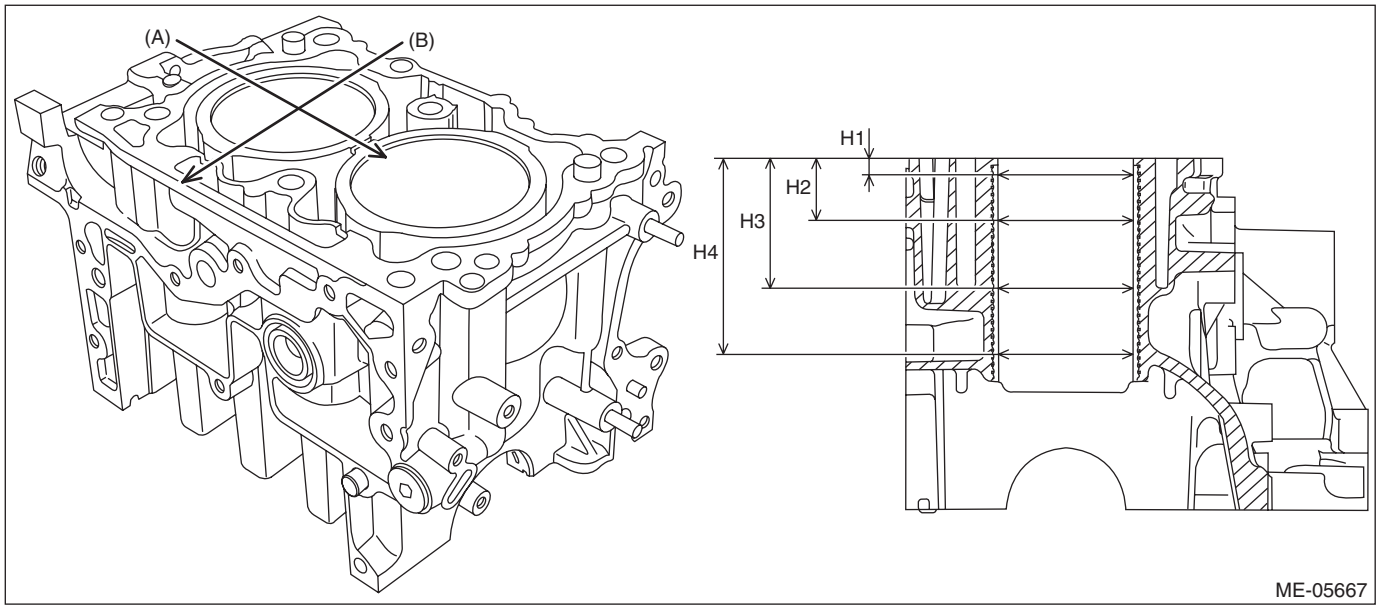

(A) Piston pin direction
(B) Thrust direction
H1: 10 mm (0.3937 in)
H2: 45 mm (1.7717 in)
H3: 80 mm (3.1496 in)
H4: 105 mm (4.1339 in)

- Calculate the cylindricality of cylinder liner by using the following formula.

Calculation formula
C = The larger value between the calculation values C' and C'' C' = (D(a)–D(b))/2 C'' = (D(c)–D(d))/2
C: Cylindricality of cylinder liner D(a): The largest value of all the values obtained by measuring the cylinder liner inner diameter in the direction of the piston pin D(b): The smallest value of all the values obtained by measuring the cylinder liner inner diameter in the direction of the piston pin D(c): The largest value of all the values obtained by measuring the cylinder liner inner diameter in the thrust direction D(d): The smallest value of all the values obtained by measuring the cylinder liner inner diameter in the thrust direction

- Calculate the out-of-roundness of cylinder liner at each measurement height by using the following formula.

Calculation formula
R = (D(e)–D(f))/2
R: Out-of-roundness of cylinder liner D(e): The larger value between the measurement values in the piston pin direction and in the thrust direction of cylinder liner inner diameter D(f): The smaller value between the measurement values in the piston pin direction and in the thrust direction of cylinder liner inner diameter

Cylindricality of cylinder liner:
Limit
0.030 mm (0.0012 in)

Out-of-roundness of cylinder liner:
Limit
0.030 mm (0.0012 in)

7) Check the clearance between cylinder liner and piston. Check the clearance between cylinder liner and piston by measuring the inner diameter of cylinder liner and the outer diameter of piston respectively.

(1) Measure the inner diameter of cylinder liner. If it is not within the standard, perform reboring (including honing), or replace the cylinder block and piston as a set. For reboring and honing procedure, refer to step 8).

NOTE:
- Measure the cylinder liner with cylinder blocks separated (into cylinder block RH and cylinder block LH).
- Measurement should be performed at a temperature of 20°C (68°F).
- The cylinder bore size mark is stamped on the upper face of the cylinder block.

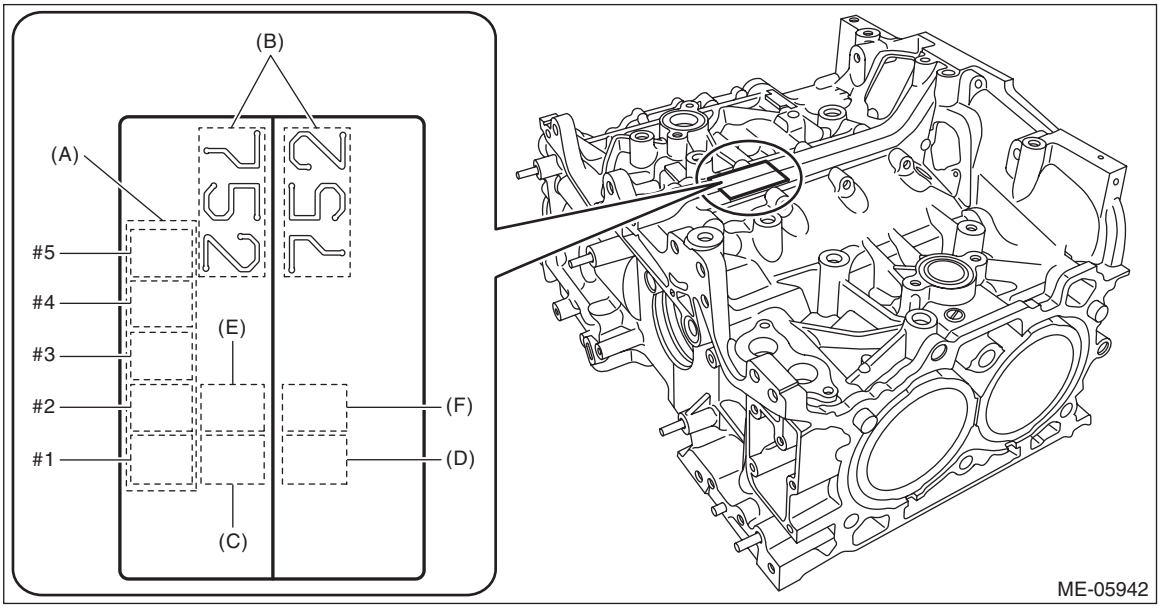

(A) Main journal size mark
(B) Cylinder block (RH) – (LH) combination mark
(C) #1 cylinder bore size mark
(D) #2 cylinder bore size mark
(E) #3 cylinder bore size mark
(F) #4 cylinder bore size mark

• Measure the inner diameter of each cylinder liner in both the thrust and piston pin directions at the heights as shown in the figure and read the value of the most worn location.

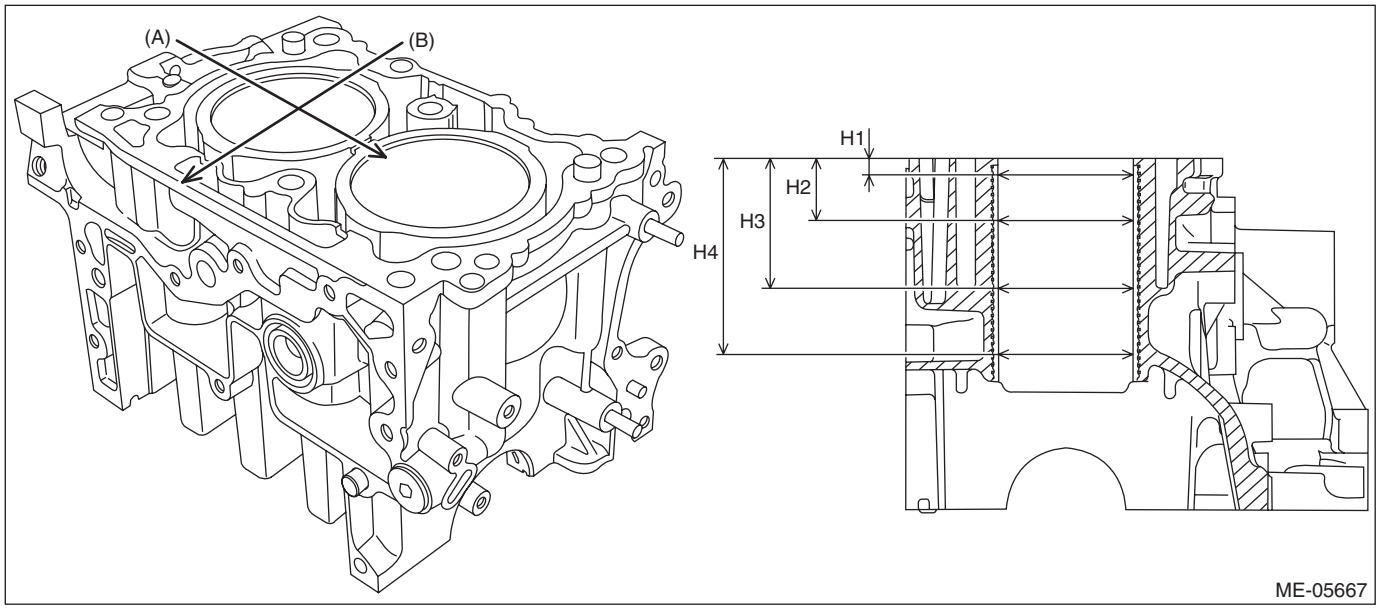

(A) Piston pin direction (B) Thrust direction

H1: 10 mm (0.3937 in) H2: 45 mm (1.7717 in) H3: 80 mm (3.1496 in)
H4: 105 mm (4.1339 in)

Inner diameter of cylinder liner:
Cylinder bore size mark A
Standard
84.005 — 84.015 mm (3.3073 — 3.3077 in)
Cylinder bore size mark B
Standard
83.995 — 84.005 mm (3.3069 — 3.3073 in)

(2) Check the outer diameter of piston with a micrometer. If it is not within the standard, replace the piston.

NOTE:
- Measurement should be performed at a temperature of 20°C (68°F).
- Measure the outer diameter of each piston in thrust direction at the height as shown in the figure.
- Standard sized pistons are classified into two grades, “A” and “B”. These grades should be used as guide lines in selecting a standard piston.
- The grade can be judged by the stamp of cylinder bore size mark on the upper face of the cylinder block.

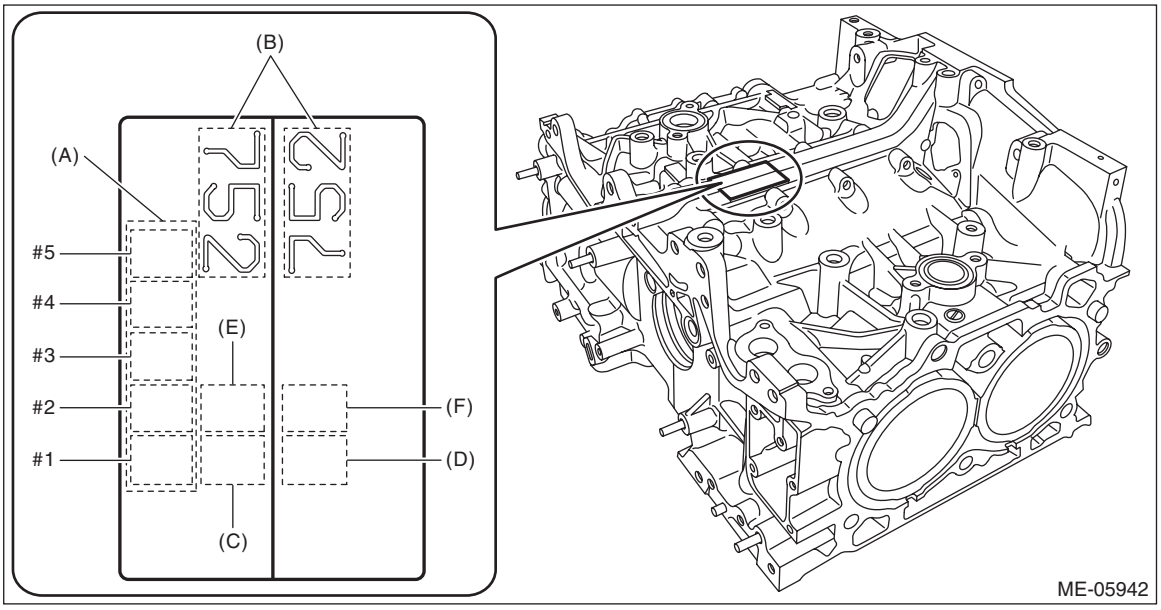

(A) Main journal size mark
(B) Cylinder block (RH) – (LH) combination mark
(C) #1 cylinder bore size mark
(D) #2 cylinder bore size mark
(E) #3 cylinder bore size mark
(F) #4 cylinder bore size mark

• If the piston is replaced, check the clearance between cylinder liner and piston in the step (3), and select a suitable sized piston.

Piston grade point H:
38.0 mm (1.50 in)

Piston outer diameter:
Standard size (grade A = cylinder bore size mark A)
Standard
83.975 — 83.985 mm (3.3061 — 3.3065 in)
Standard size (grade B = cylinder bore size mark B)
Standard
83.965 — 83.975 mm (3.3057 — 3.3061 in)

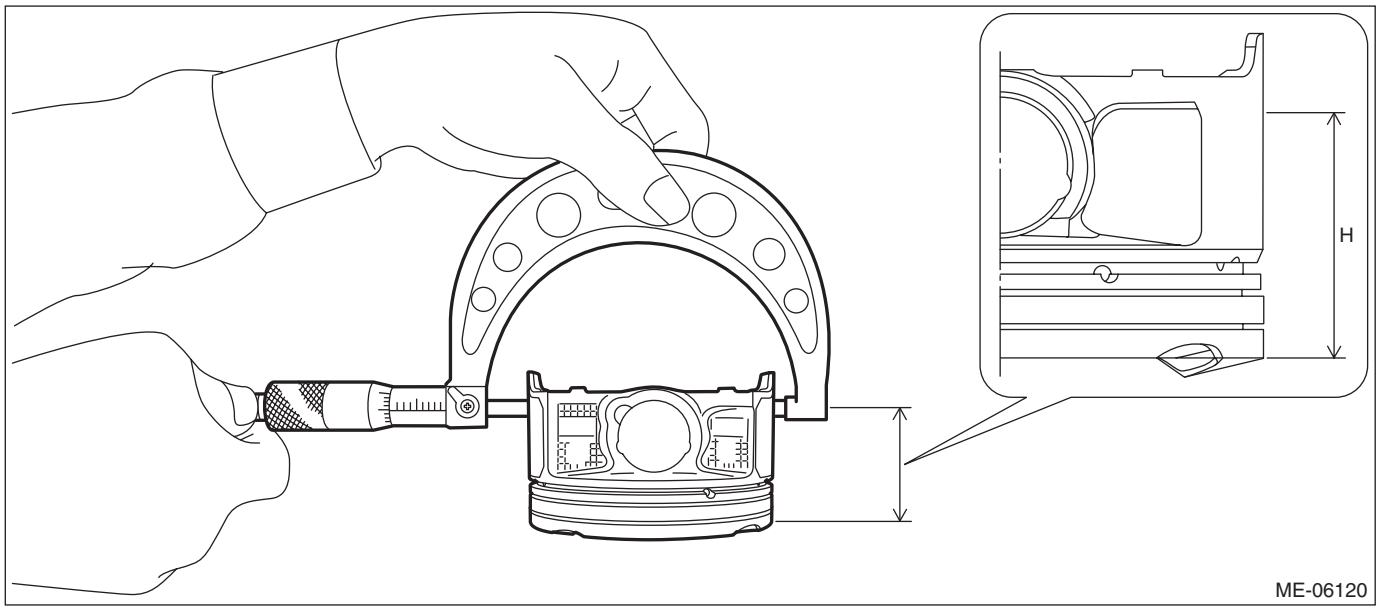

(3) Calculate the clearance between cylinder liner and piston. If it is not within the standard, perform reboring (including honing), or replace the cylinder block and piston as a set. For reboring and honing procedure, refer to step 8).

NOTE:
The clearance between cylinder liner and piston is decided by matching the cylinder block bore size mark and the grade of piston outer diameter (grade A or B).

Clearance between cylinder liner and piston:
Standard
0.020 — 0.040 mm (0.00079 — 0.00158 in)

8) Reboring and honing
(1) If any of the cylindricality, out-of-roundness, inner diameter or clearance between cylinder liner and piston is out of standard or if there is any damage on the cylinder liner, perform reboring (including honing).

CAUTION:
When any of the cylinder liner needs reboring, all other cylinder liners must be rebored at the same time, and replaced with proper size pistons.

Oversize piston outer diameter:
0.25 mm (0.0098 in) oversize
Standard
84.215 — 84.235 mm (3.3155 — 3.3163 in)
0.50 mm (0.0197 in) oversize
Standard
84.465 — 84.485 mm (3.3254 — 3.3262 in)
(2) If the inner diameter of cylinder liner exceeds the limit after reboring (including honing), replace the cylinder block and piston as a set.

NOTE:
• Immediately after reboring (including honing), the inner diameter of cylinder liner may differ from its real diameter due to temperature rise. Thus, when measuring the inner diameter of cylinder liner, wait until the temperature has cooled to 20°C (68°F).
• For the measurement of the inner diameter of cylinder liner, refer to step 7).

Inner diameter of cylinder liner boring limit (diameter):
To 84.505 mm (3.3270 in)

2. PISTON AND PISTON PIN

1) Check the piston and piston pin for wear or crack.
2) Check the snap ring for distortion or wear.
3) Check the piston ring groove for damage.
4) Check the circlip groove (A) for burr.

NOTE:
If the burr is found, remove the burr from groove.

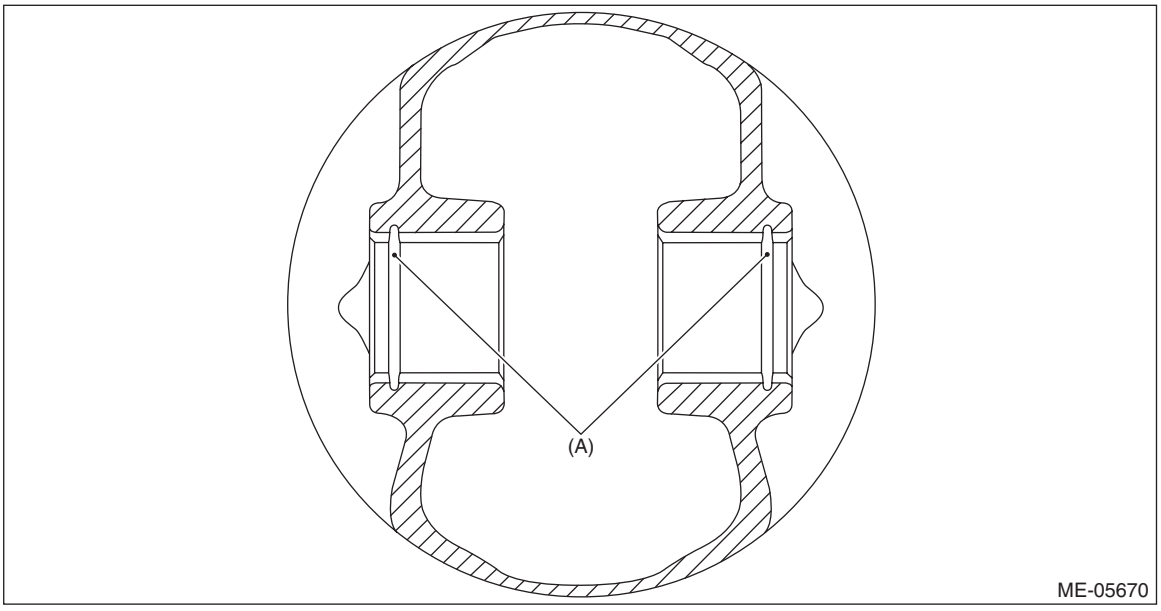

5) Check that the piston pin can be inserted into the piston with a thumb at 20°C (68°F).

6) Check the clearance between piston and piston pin. Check the clearance between piston and piston pin by measuring the inner diameter of piston pin hole and the outer diameter of piston pin respectively.

(1) Using a caliper gauge, measure the inner diameter of piston pin hole.

NOTE:
- Measurement should be performed at a temperature of 20°C (68°F).
- Measure the inner diameter of the piston pin hole at the four locations as shown in the figure, and read the value of most worn location.
- Record the measured value.

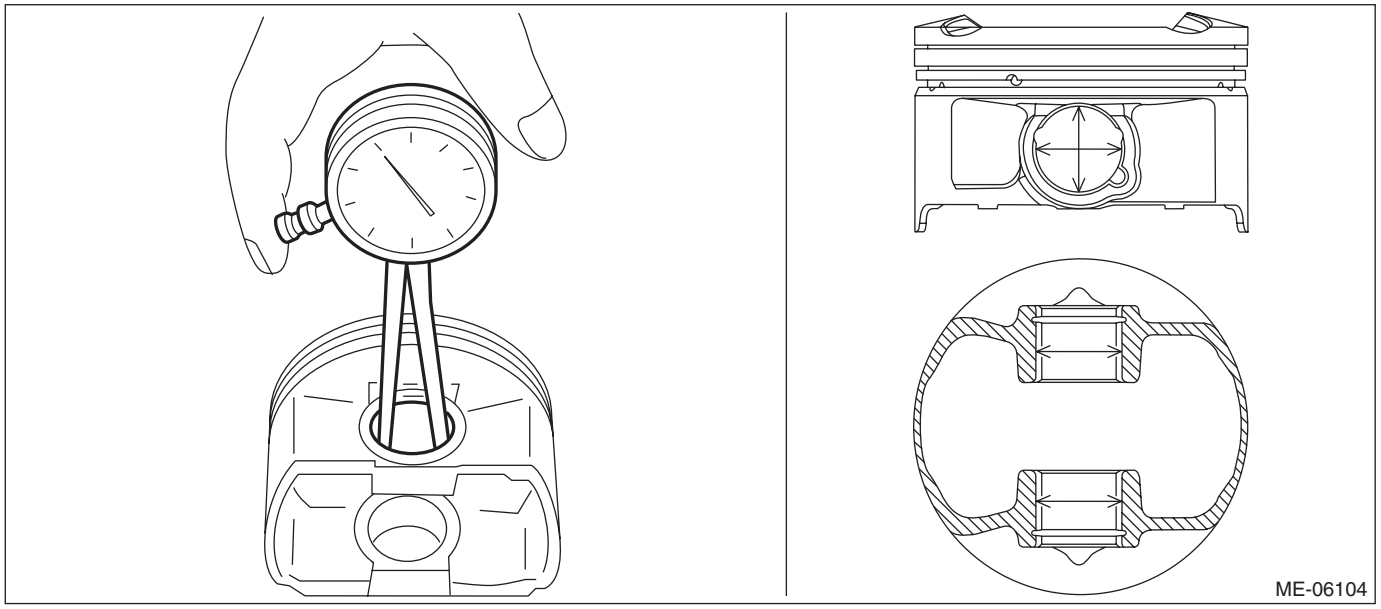

(2) Measure the outer diameter of piston pin with a micrometer.

NOTE:
- Measurement should be performed at a temperature of 20°C (68°F).
- Measure the outer diameter of the piston pin at the four locations as shown in the figure, and read the value of most worn location.
- Record the measured value.

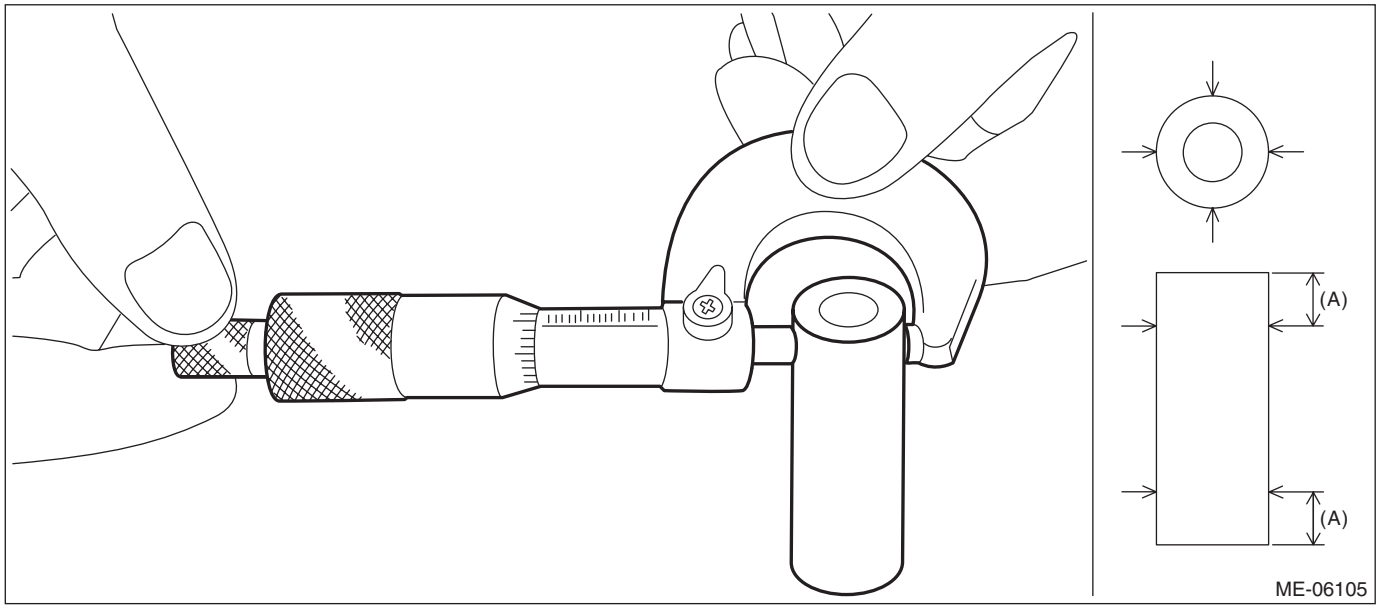

(A) 10 mm (0.394 in)

(3) Calculate the clearance between piston and piston pin. If it is not within the standard, replace the piston and piston pin as a set.

Clearance between piston and piston pin:
Standard
0.004 — 0.008 mm (0.0002 — 0.0003 in)

3. PISTON RING

1) Make sure the piston ring is not broken or damaged.
2) Using a cylindrical guide, insert the piston ring into the cylinder liner so that they are perpendicular to the cylinder wall, and check the piston ring gap using a thickness gauge. If it is not within the standard, replace the piston ring.

NOTE:
- Measurement should be performed at a temperature of 20°C (68°F).
- Use piston ring with same size as piston when replacing piston ring.

Piston ring gap:
Compression ring (top ring)
Standard
0.20 — 0.35 mm (0.0079 — 0.0138 in)
Compression ring (second ring)
Standard
0.40 — 0.50 mm (0.0157 — 0.0197 in)
Oil ring (upper rail and lower rail)
Standard
0.20 — 0.50 mm (0.0079 — 0.0197 in)

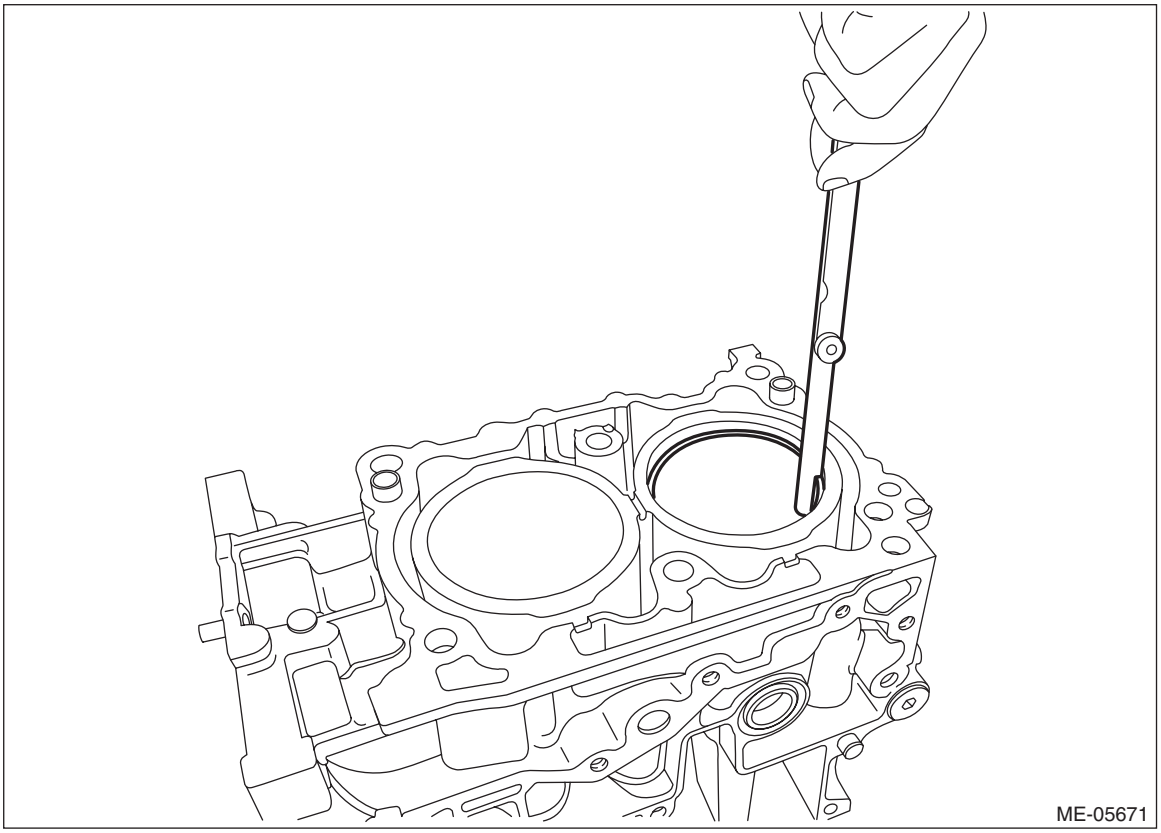

3) Fit the compression ring straight into the piston ring groove, then check the clearance between compression ring and piston with a thickness gauge. If it is not within the standard, replace the compression ring.

NOTE:
- Measurement should be performed at a temperature of 20°C (68°F).
- Before inspecting the clearance, clean the piston ring groove and compression ring.
- Use compression ring with same size as piston when replacing compression ring.

Clearance between compression ring and piston:
Top ring
Standard
0.040 — 0.080 mm (0.0016 — 0.0031 in)
Second ring
Standard
0.030 — 0.070 mm (0.0012 — 0.0028 in)

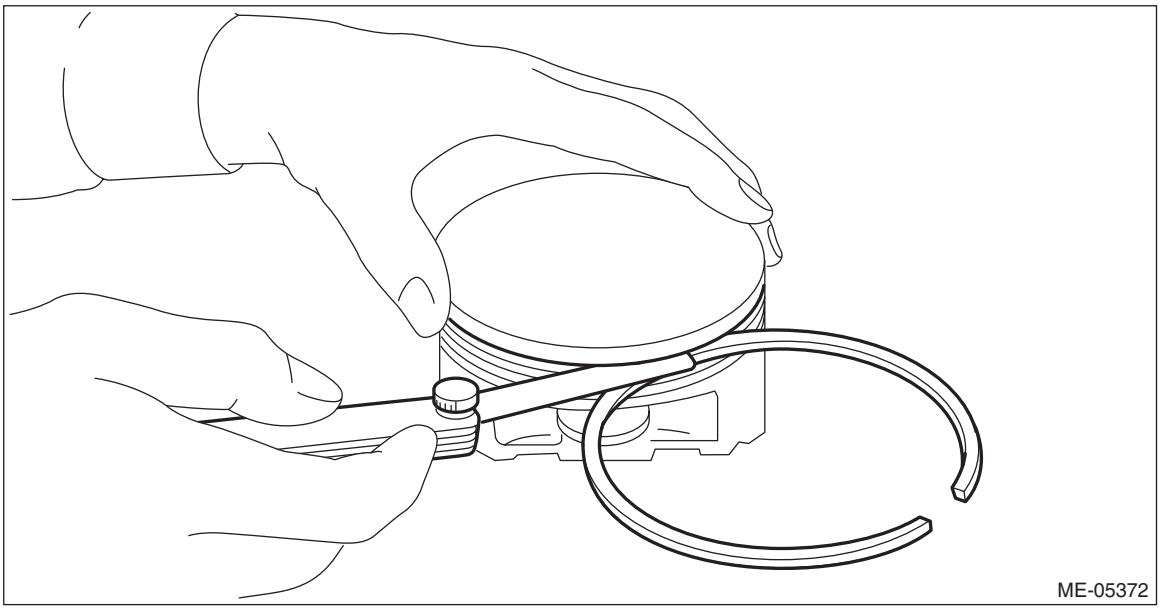

4. CONNECTING ROD AND CONNECTING ROD BEARING

1) Check for bend or twist using a connecting rod aligner. If it exceeds the limit, replace the connecting rod.

NOTE:
Measurement should be performed at a temperature of 20°C (68°F).

Bend or twist per 100 mm (3.94 in) in length:
Limit
0.10 mm (0.0039 in)

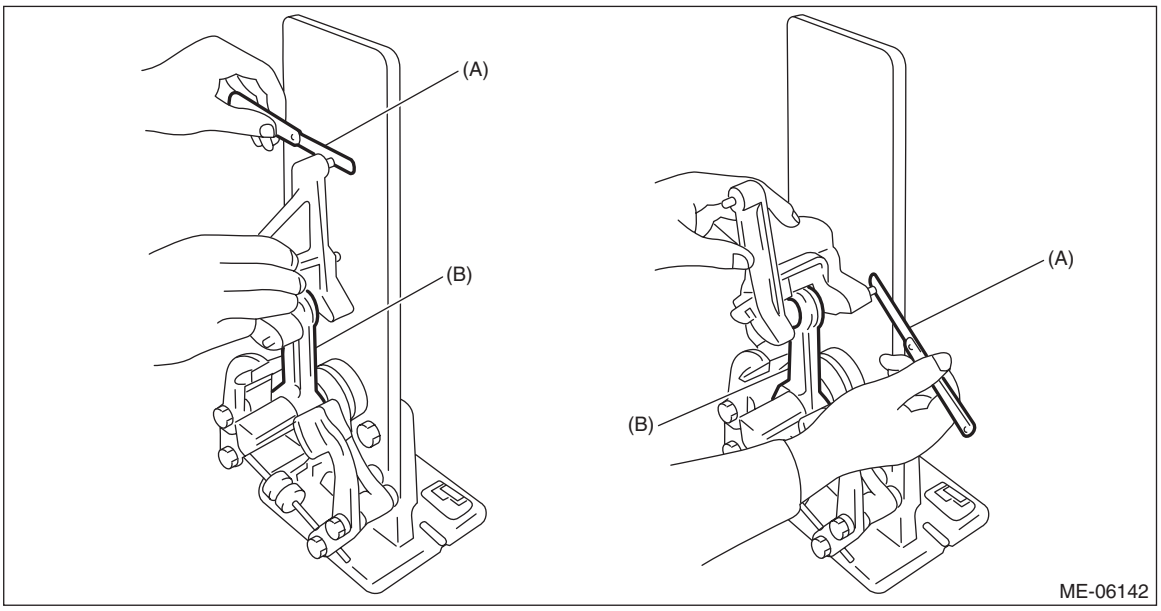

(A) Thickness gauge (B) Connecting rod

2) Check that the large or small end thrust surface of each connecting rod is not damaged.
3) Check each connecting rod bearing for scar, peeling, seizure, melting or wear, etc.
4) Check the thrust clearance of each connecting rod using a thickness gauge.

NOTE:
Measurement should be performed at a temperature of 20°C (68°F).

(1) Clean the #1 connecting rod bearing and the #1 pin of crankshaft, and apply engine oil to the #1 pin of crankshaft.
(2) Set the #1 connecting rod bearing to the #1 connecting rod and #1 connecting rod cap.
(3) Set the #1 connecting rod, #1 connecting rod cap and #1 connecting rod cap bolt to the #1 pin of crankshaft.

NOTE:
• Each connecting rod has its own mating cap. Make sure that they are assembled correctly by checking their matching symbol.
• Use a new connecting rod cap bolt.
• Apply a coat of engine oil to the #1 connecting rod cap bolt thread.

(4) Using ST, tighten the #1 connecting rod cap bolts to 10 N·m (1.0 kgf-m, 7.4 ft-lb) in numerical order as shown in the figure, then retighten the bolts to 22 N·m (2.2 kgf-m, 16.2 ft-lb) in numerical order as shown in the figure.

CAUTION:
- **Make sure to hold the crankshaft securely during work.**
- **When holding the crankshaft, be careful not to damage the crankshaft.**

ST 18270AA020 SOCKET

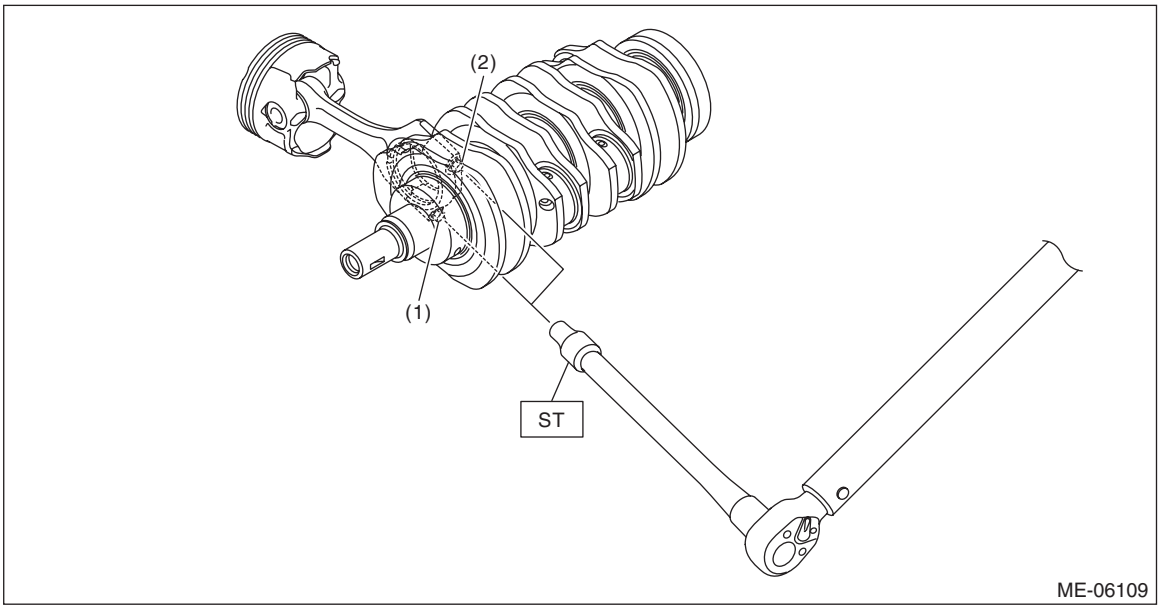

(5) Using ST and angle gauge, tighten the #1 connecting rod cap bolts with specified angle in numerical order as shown in the figure.

CAUTION:
- **Make sure to hold the crankshaft securely during work.**
- **When holding the crankshaft, be careful not to damage the crankshaft.**

ST 18270AA020 SOCKET

Tightening angle:
137°$^{+3°}_{-2°}$

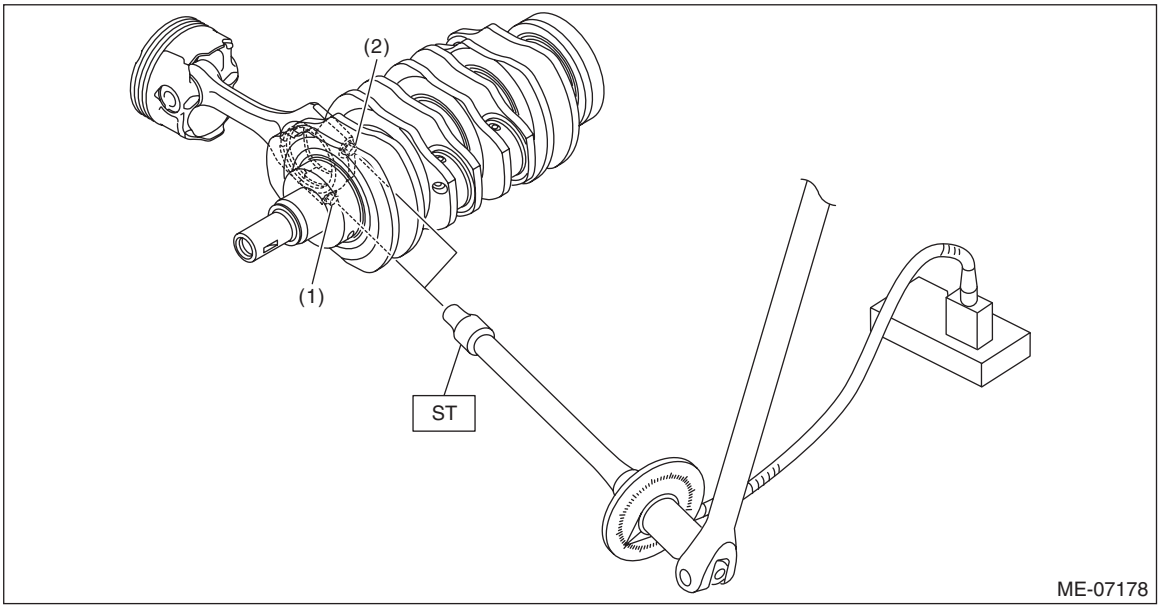

(6) In the same manner, install the #2, #3 and #4 connecting rods.

(7) Check the thrust clearance of each connecting rod using a thickness gauge. If it is not within the standard, replace the connecting rod.

NOTE:
Measure the thrust clearance of each connecting rod at several points, and replace the connecting rod if there is uneven wear.

Connecting rod thrust clearance:
Standard
0.070 — 0.330 mm (0.0028 — 0.0130 in)

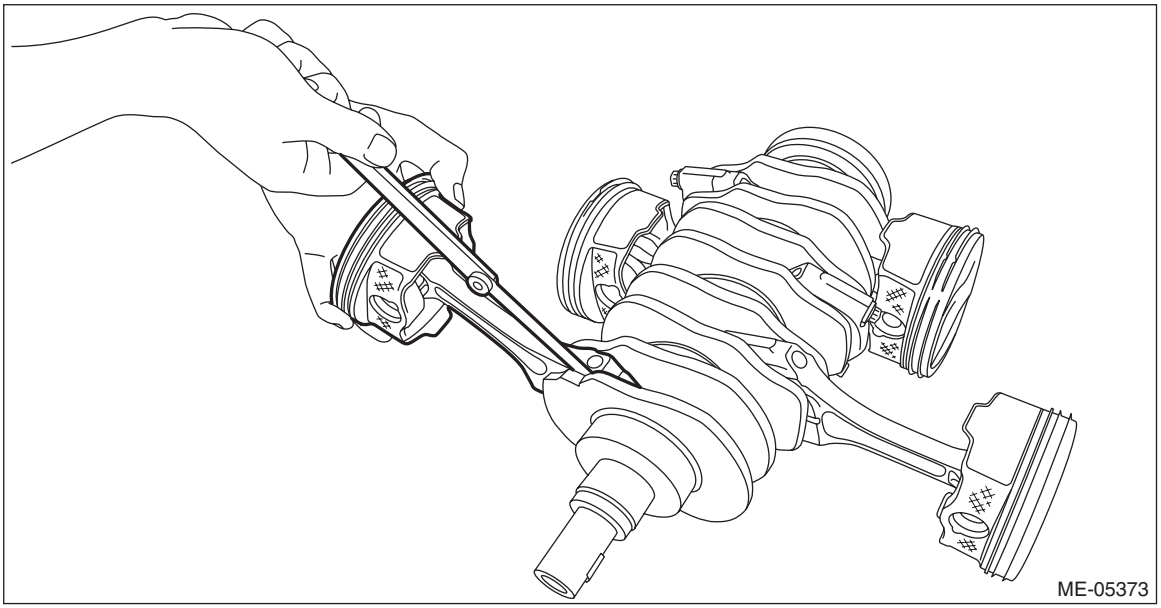

5) Check the oil clearance on each connecting rod bearing using plastigauge.

NOTE:
Measurement should be performed at a temperature of 20°C (68°F).

(1) Clean the #1 connecting rod bearing and the #1 pin of crankshaft.
(2) Set the #1 connecting rod bearing to the #1 connecting rod and #1 connecting rod cap.
(3) Place a plastigauge across the #1 pin of crankshaft, and set the #1 connecting rod, #1 connecting rod cap and #1 connecting rod cap bolt to the #1 pin of crankshaft.

NOTE:
• Each connecting rod has its own mating cap. Make sure that they are assembled correctly by checking their matching symbol.
• Use a new connecting rod cap bolt.
• Apply a coat of engine oil to the #1 connecting rod cap bolt thread.

(4) Using ST, tighten the #1 connecting rod cap bolts to 10 N·m (1.0 kgf-m, 7.4 ft-lb) in numerical order as shown in the figure, then retighten the bolts to 22 N·m (2.2 kgf-m, 16.2 ft-lb) in numerical order as shown in the figure.

CAUTION:
- **Make sure to hold the crankshaft securely during work.**
- **When holding the crankshaft, be careful not to damage the crankshaft.**
- **During tightening, be careful not to move the #1 connecting rod and the #1 connecting rod cap.**

ST 18270AA020 SOCKET

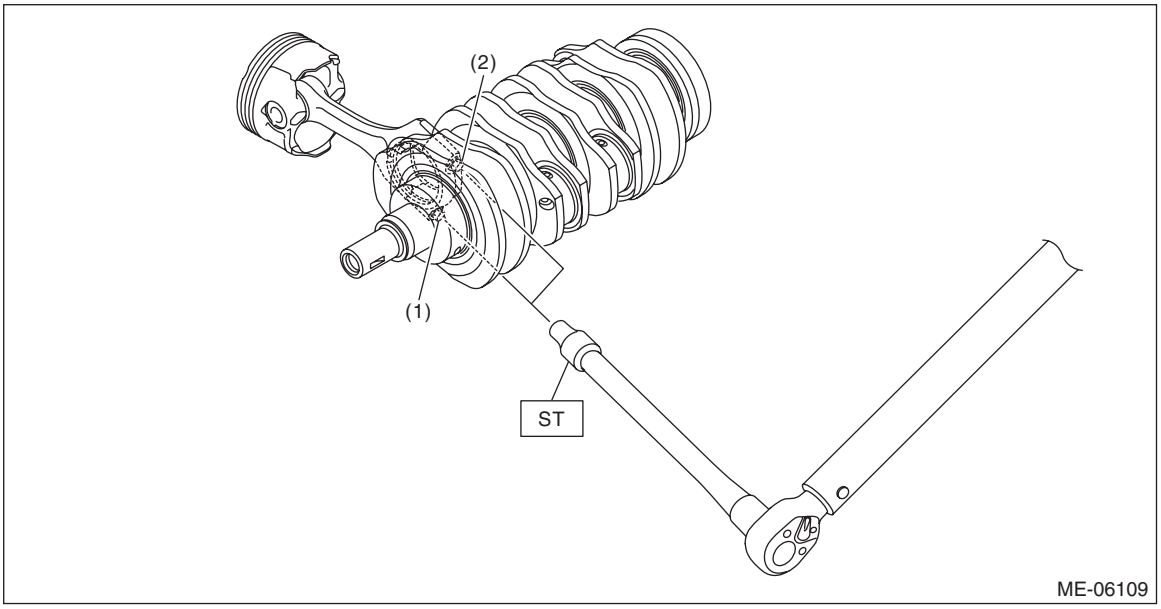

(5) Using ST and angle gauge, tighten the #1 connecting rod cap bolts with specified angle in numerical order as shown in the figure.

CAUTION:
- **Make sure to hold the crankshaft securely during work.**
- **When holding the crankshaft, be careful not to damage the crankshaft.**
- **During tightening, be careful not to move the #1 connecting rod and the #1 connecting rod cap.**

ST 18270AA020 SOCKET

Tightening angle:

$137^{\circ}{}^{+3^{\circ}}_{-2^{\circ}}$

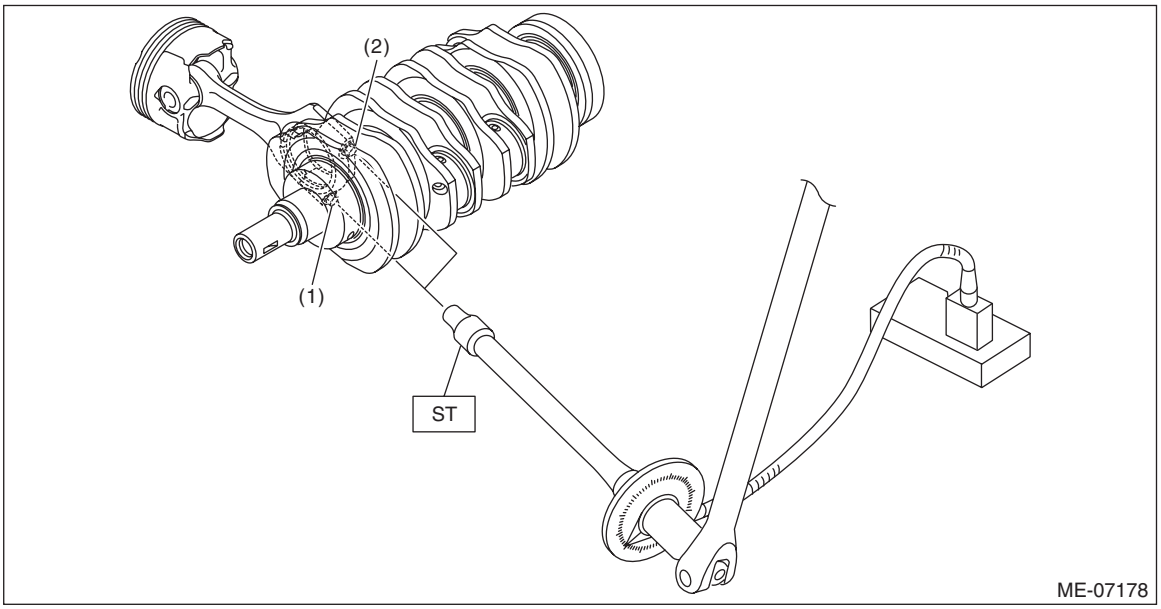

(6) Using ST, loosen the #1 connecting rod cap bolt, and remove the #1 connecting rod cap bolt and #1 connecting rod cap.

CAUTION:
- **Make sure to hold the crankshaft securely during work.**
- **When holding the crankshaft, be careful not to damage the crankshaft.**
- **During removal, be careful not to move the #1 connecting rod and the #1 connecting rod cap.**

ST 18270AA020 SOCKET

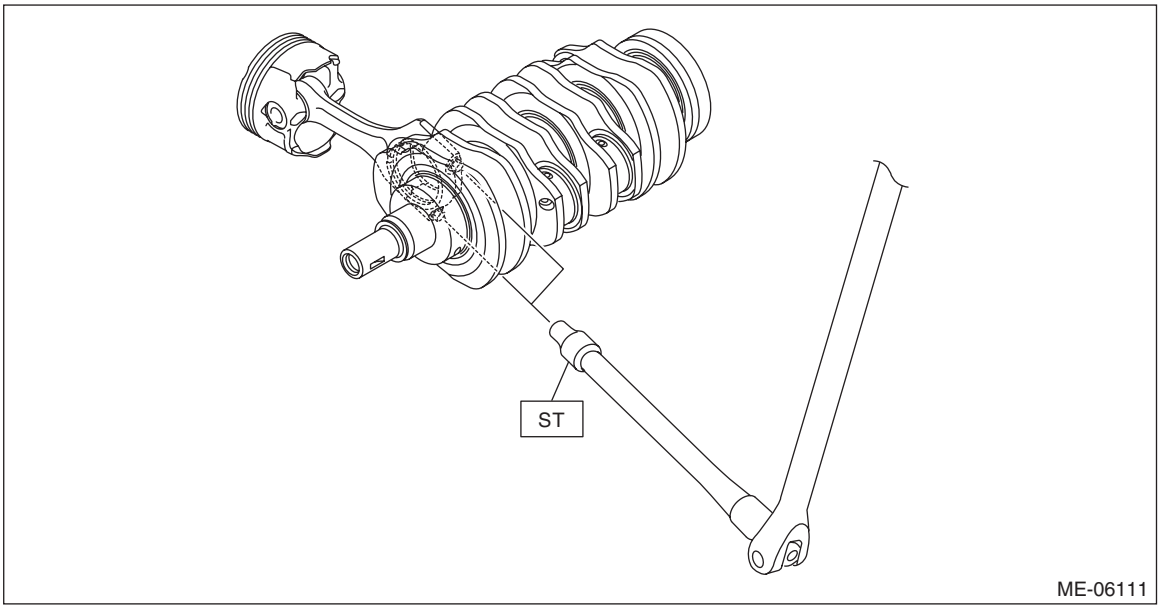

(7) Determine oil clearance of the #1 connecting rod bearing by matching the widest point of the plastigauge on #1 pin of crankshaft against scale printed on a package of the plastigauge. If it is not within the standard, replace the #1 connecting rod bearing.

NOTE:
Measure the outer diameter of crankshaft pin using micrometer, and select the suitable size connecting rod bearing when replacing the connecting rod bearing.

Unit: mm (in)

Bearing	Connecting rod bearing thickness (at center)	Crankshaft pin outer diameter
	Standard	Standard
Standard size	1.492 — 1.508 (0.0587 — 0.0594)	47.976 — 48.000 (1.8888 — 1.8898)
0.03 (0.0012) Undersize	1.511 — 1.515 (0.0595 — 0.0596)	47.946 — 47.970 (1.8876 — 1.8886)
0.05 (0.0020) Undersize	1.521 — 1.525 (0.0599 — 0.0600)	47.926 — 47.950 (1.8868 — 1.8878)
0.25 (0.0098) Undersize	1.621 — 1.625 (0.0638 — 0.0640)	47.726 — 47.750 (1.8790 — 1.8799)

Connecting rod bearing oil clearance:
Standard
0.017 — 0.047 mm (0.0007 — 0.0019 in)

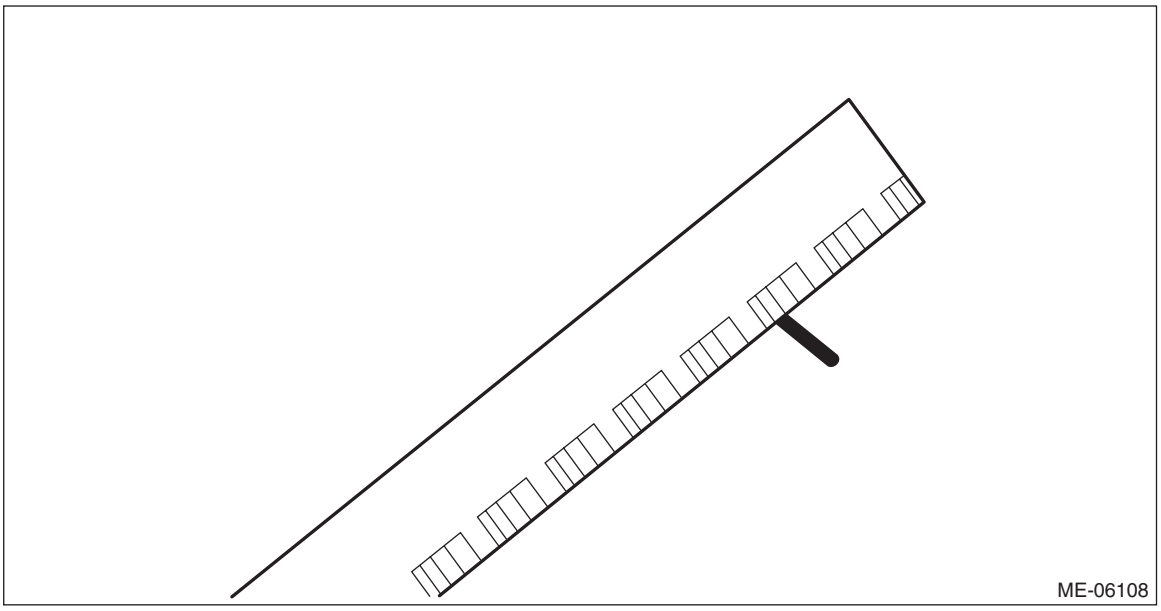

(8) Completely remove the plastigauge.
(9) In the same manner, check oil clearance of the #2, #3 and #4 connecting rod bearings.

5. PISTON PIN & CONNECTING ROD BUSHING

1) Check that the connecting rod bushing is not damaged.
2) Check the clearance between piston pin and connecting rod bushing. Check the clearance between piston pin and connecting rod bushing by measuring the outer diameter of piston pin and the inner diameter of connecting rod bushing respectively.
(1) Measure the outer diameter of piston pin with a micrometer.

NOTE:
- Measurement should be performed at a temperature of 20°C (68°F).
- Measure the outer diameter of the piston pin at the two locations as shown in the figure, and read the value of most worn location.
- Record the measured value.

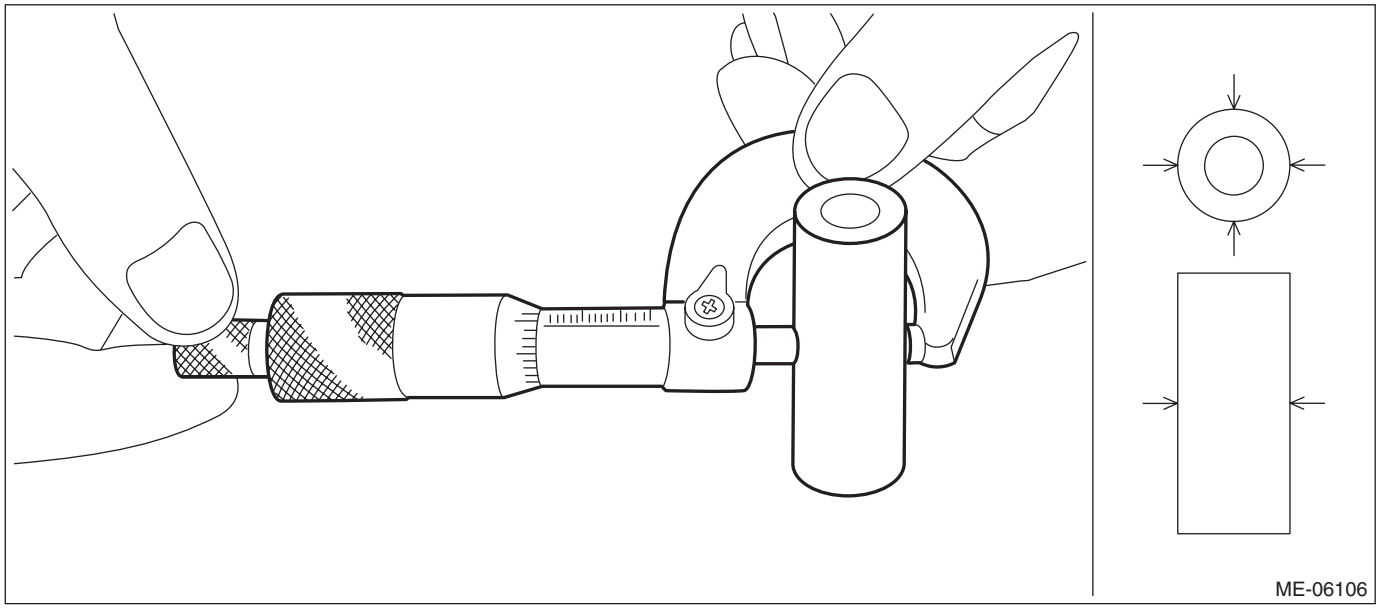

(2) Using a caliper gauge, measure the inner diameter of connecting rod bushing.

NOTE:
- Measurement should be performed at a temperature of 20°C (68°F).
- Measure the inner diameter of the connecting rod bushing at the two locations as shown in the figure, and read the value of most worn location.
- Record the measured value.

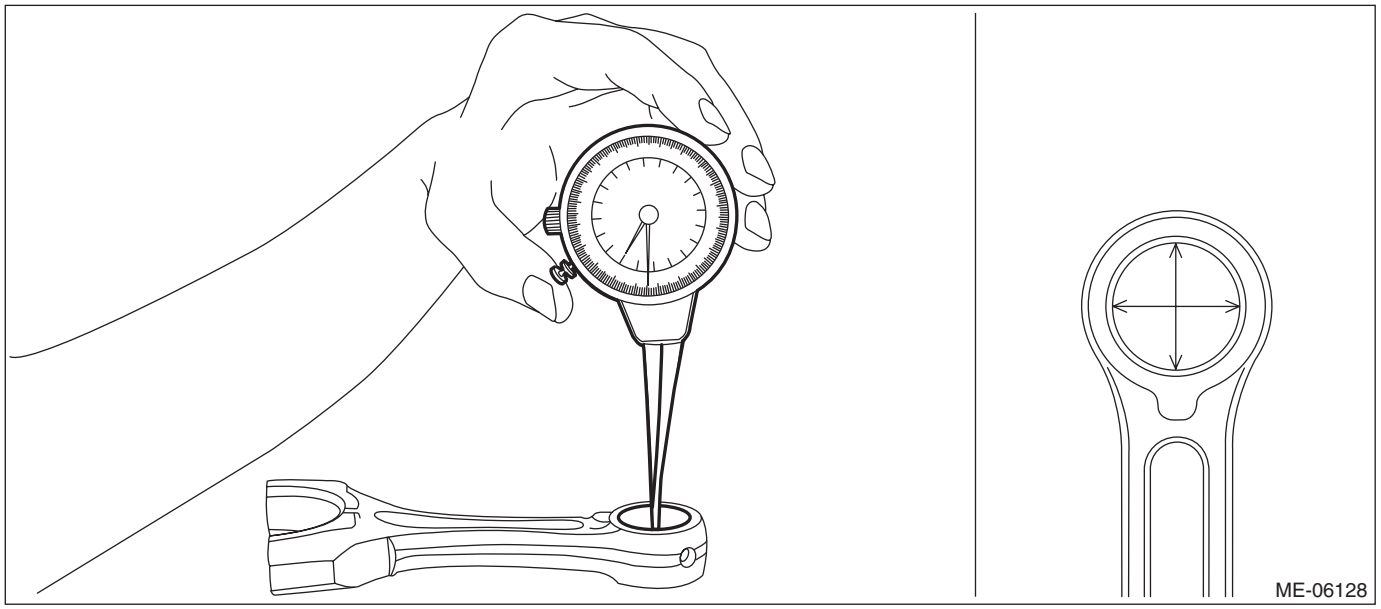

(3) Calculate the clearance between piston pin and connecting rod bushing.

Clearance between piston pin and connecting rod bushing:
Standard
0.004 — 0.026 mm (0.0002 — 0.0010 in)

3) If the clearance between piston pin and connecting rod bushing is not within the standard, replace the connecting rod bushing and piston pin as a set. For replacement procedure of connecting rod bushing, refer to the following.

(1) Using the ST and a press, pull out the connecting rod bushing from the small end of the connecting rod.

NOTE:
The direction of ST for pulling out and for press fitting is different. Therefore, attention must be paid to the direction of usage for ST.
ST 18350AA000 CONNECTING ROD BUSHING REMOVER AND INSTALLER

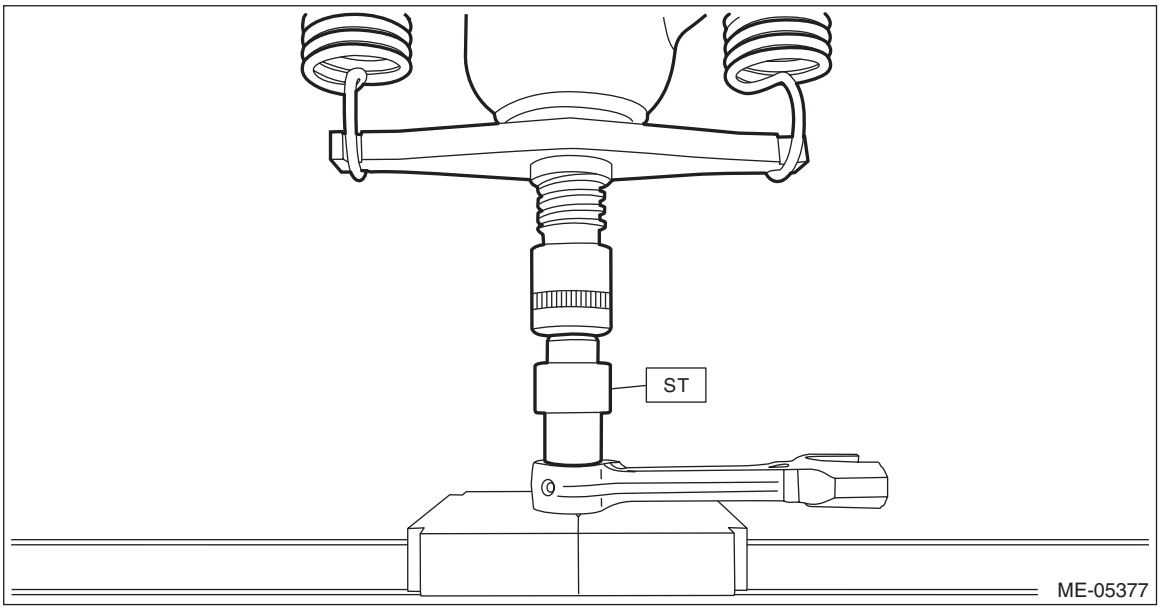

(2) Press the connecting rod bushing with ST and the press, after applying engine oil on the periphery of connecting rod bushing.

NOTE:
- Clinch area of the connecting rod bushing is as shown in the figure.

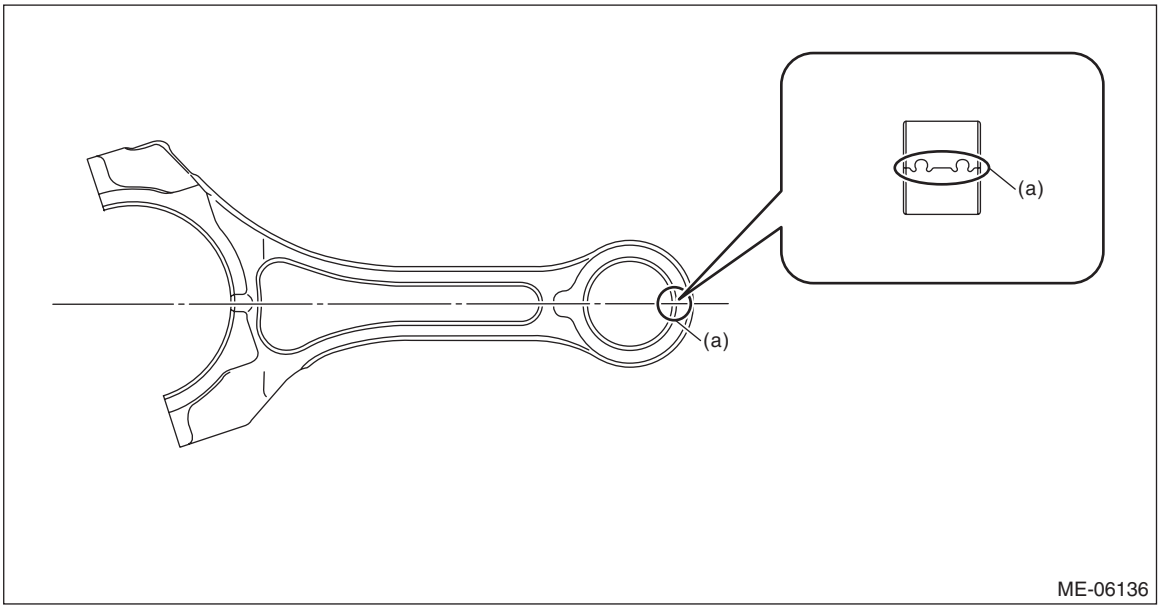

(a) Clinch area of connecting rod bushing

• The direction of ST for pulling out and for press fitting is different. Therefore, attention must be paid to the direction of usage for ST.

ST 18350AA000 CONNECTING ROD BUSHING REMOVER AND INSTALLER

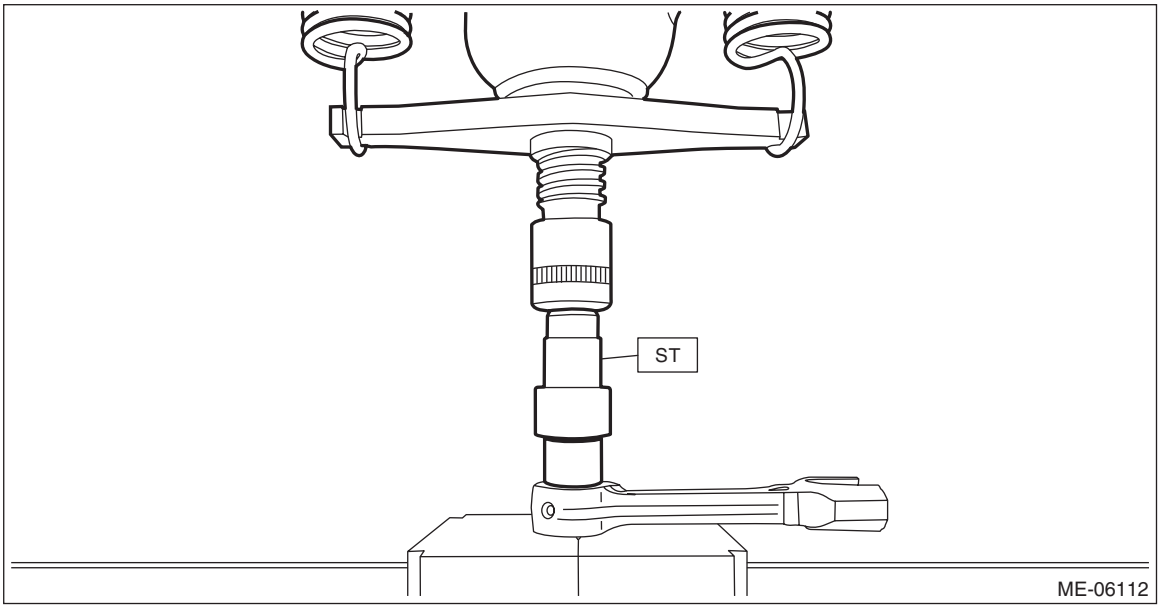

(3) Make two 3 mm (0.12 in) holes in the pressed connecting rod bushing by aligning with the pre-manufactured holes provided on the small end of the connecting rod.

(4) Using a reamer, ream the inside surface of the connecting rod bushing. Insert the reamer in the connecting rod bushing, and turn slowly clockwise while pushing lightly. Bring the reamer back while rotating it clockwise.

NOTE:
• Use a reamer with a diameter of ϕ22.
• Apply engine oil to the reamer.
• If the inner surface of connecting rod bushing is damaged, the edge of reamer should be slightly ground with oil stone.
• If the inner surface of connecting rod bushing becomes lustrous and the reamer does not chip, use a new reamer or remedy the reamer.

(5) After completion of reaming, clean the connecting rod bushing to remove chips.

6. CRANKSHAFT AND CRANKSHAFT BEARING

1) Clean the crankshaft completely, and check it for cracks using liquid penetrant tester.
2) Using a dial gauge, check the crankshaft bend. If it exceeds the limit, grind to correct the crankshaft journal or replace the crankshaft.

NOTE:
• Measurement should be performed at a temperature of 20°C (68°F).
• If a suitable V-block is not available, using just the #1 and #5 crankshaft bearings on cylinder block, position the crankshaft on cylinder block. Then, measure the crankshaft bend using a dial gauge.
• When grinding to correct the crankshaft journal, refer to step 3).

Crankshaft bend:
Limit
0.035 mm (0.0014 in)

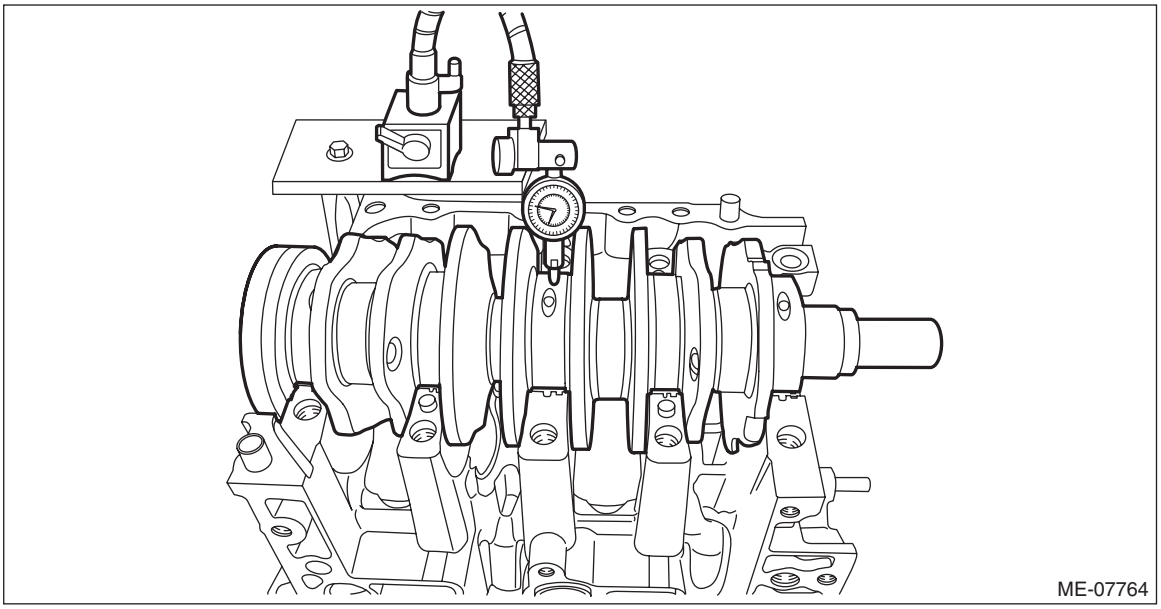

3) Using a micrometer, check the outer diameter of crankshaft pin, outer diameter of journal, cylindricality, and out-of-roundness. If it is not within the standard, replace the connecting rod bearing or crankshaft bearing, and grind to correct the crankshaft pin or journal or replace the crankshaft as required.

NOTE:
• Measurement should be performed at a temperature of 20°C (68°F).
• Select the suitable size connecting rod bearing or crankshaft bearing when replacing the connecting rod bearing or crankshaft bearing.
• When grinding to correct the crankshaft pin or journal, finish them to the suitable outer diameter as shown in the table below according to the undersize bearing to be used.

Unit: mm (in)

Bearing	Connecting rod bearing thickness (at center)	Crankshaft pin outer diameter	Crankshaft bearing thickness (at center)		Crankshaft journal outer diameter	
			#1, #2, #3, #4	#5	#1, #2, #3, #4	#5
	Standard	Standard	Standard	Standard	Standard	Standard
Standard size	1.492 — 1.508 (0.0587 — 0.0594)	47.976 — 48.000 (1.8888 — 1.8898)	2.495 — 2.513 (0.0982 — 0.0989)	2.493 — 2.511 (0.0981 — 0.0989)	67.985 — 68.009 (2.6766 — 2.6775)	67.985 — 68.009 (2.6766 — 2.6775)
0.03 (0.0012) Undersize	1.511 — 1.515 (0.0595 — 0.0596)	47.946 — 47.970 (1.8876 — 1.8886)	2.519 — 2.522 (0.0992 — 0.0993)	2.517 — 2.520 (0.0991 — 0.0992)	67.955 — 67.979 (2.6754 — 2.6763)	67.955 — 67.979 (2.6754 — 2.6763)
0.05 (0.0020) Undersize	1.521 — 1.525 (0.0599 — 0.0600)	47.926 — 47.950 (1.8868 — 1.8878)	2.529 — 2.532 (0.0996 — 0.0997)	2.527 — 2.530 (0.0995 — 0.0996)	67.935 — 67.959 (2.6746 — 2.6755)	67.935 — 67.959 (2.6746 — 2.6755)
0.25 (0.0098) Undersize	1.621 — 1.625 (0.0638 — 0.0640)	47.726 — 47.750 (1.8790 — 1.8799)	2.629 — 2.632 (0.1035 — 0.1036)	2.627 — 2.630 (0.1034 — 0.1035)	67.735 — 67.759 (2.6667 — 2.6677)	67.735 — 67.759 (2.6667 — 2.6677)

Crankshaft pin:
Cylindricality
Limit
0.006 mm (0.0002 in)
Out-of-roundness
Limit
0.005 mm (0.0002 in)
Grinding limit (dia.)
To 47.726 mm (1.8790 in)

Crankshaft journal:
Cylindricality
Limit
0.006 mm (0.0002 in)
Out-of-roundness
Limit
0.005 mm (0.0002 in)
Grinding limit (dia.)
To 67.735 mm (2.6667 in)

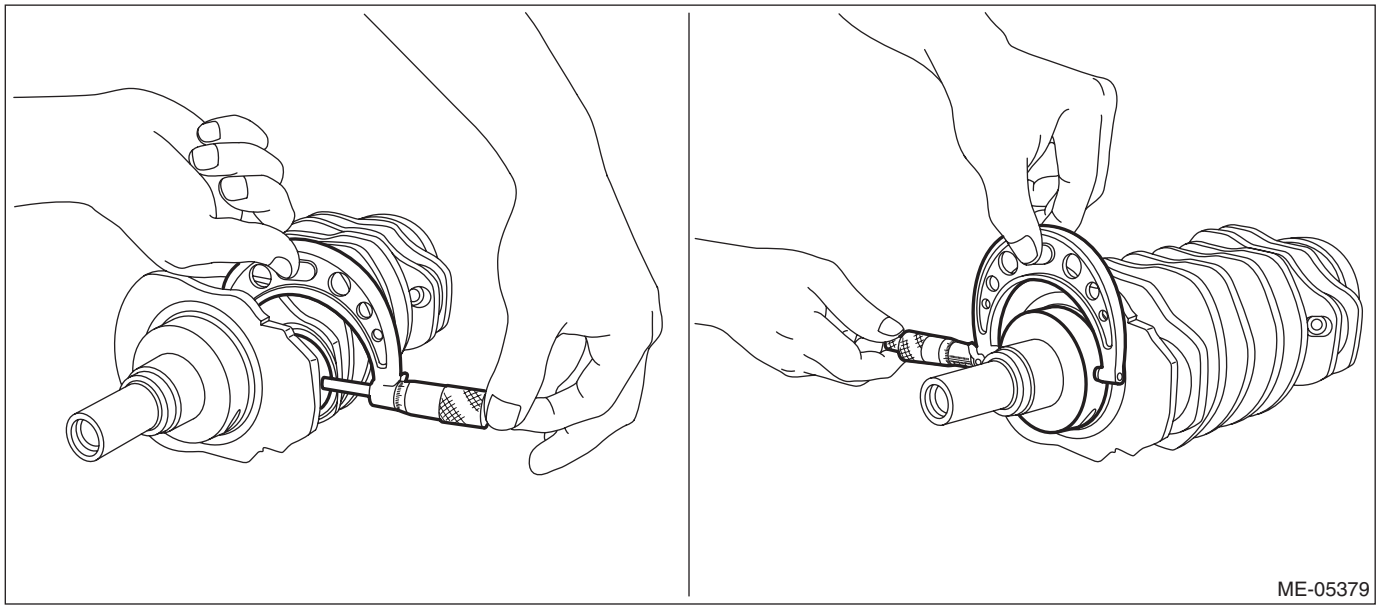

4) Inspect the crankshaft bearing for scar, peeling, seizure, melting or wear, etc.

5) Use a thickness gauge to check the thrust clearance of crankshaft at thrust of #5 crankshaft bearing. If it is not within the standard, replace the #5 crankshaft bearing.

NOTE:
- Measurement should be performed at a temperature of 20°C (68°F).
- Set all the crankshaft bearings onto the cylinder block, then mount the crankshaft on the cylinder block, and use a thickness gauge to measure the thrust clearance of crankshaft.
- Select the #5 crankshaft bearing of suitable size by referring to step 3) when replacing #5 crankshaft bearing.

Crankshaft thrust clearance:
Standard
0.130 — 0.308 mm (0.00512 — 0.01213 in)

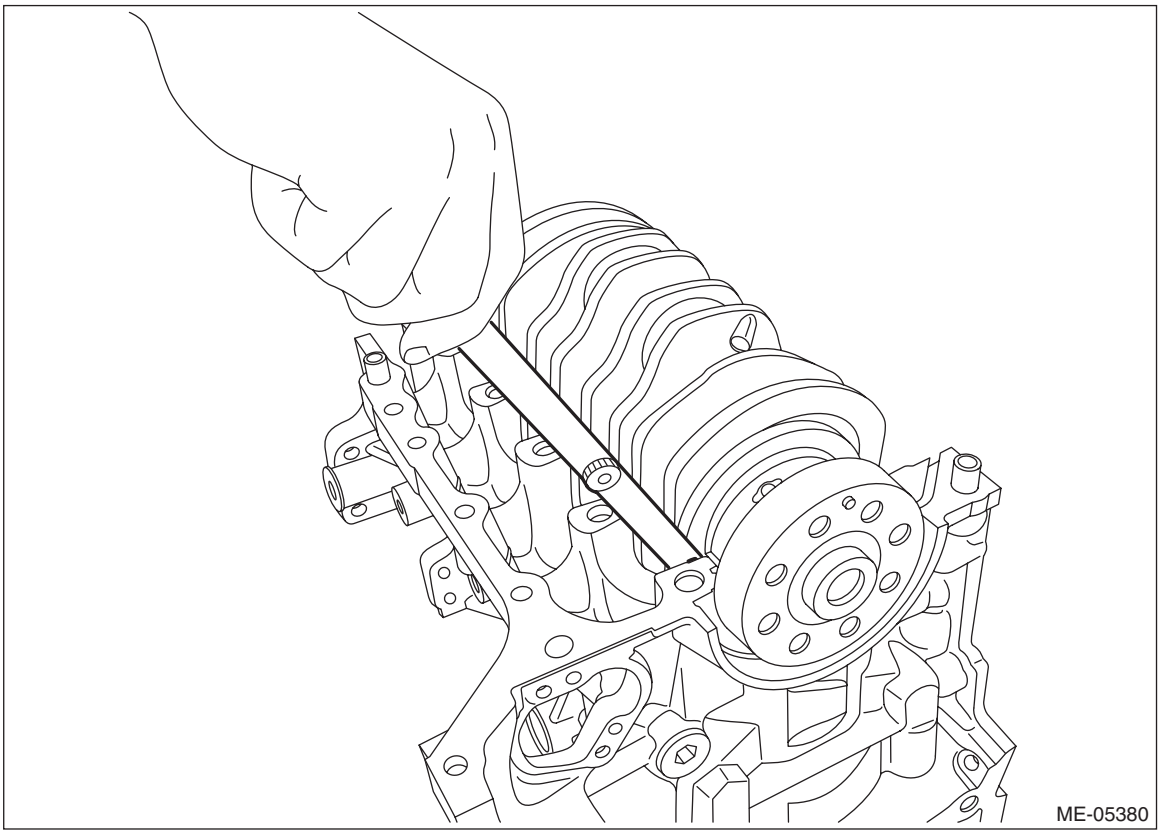

6) Check the oil clearance on each crankshaft bearing using plastigauge.

NOTE:
Measurement should be performed at a temperature of 20°C (68°F).

(1) Remove the liquid gasket from cylinder block.
(2) Clean each crankshaft bearing and crankshaft journal.
(3) Set each crankshaft bearing to the cylinder block.

CAUTION:
• Place a wood board wrapped with a waste cloth to prevent the knock pin damage and to stabilize the cylinder block before work.
• Be careful not to scratch the mating surface of cylinder block during work.

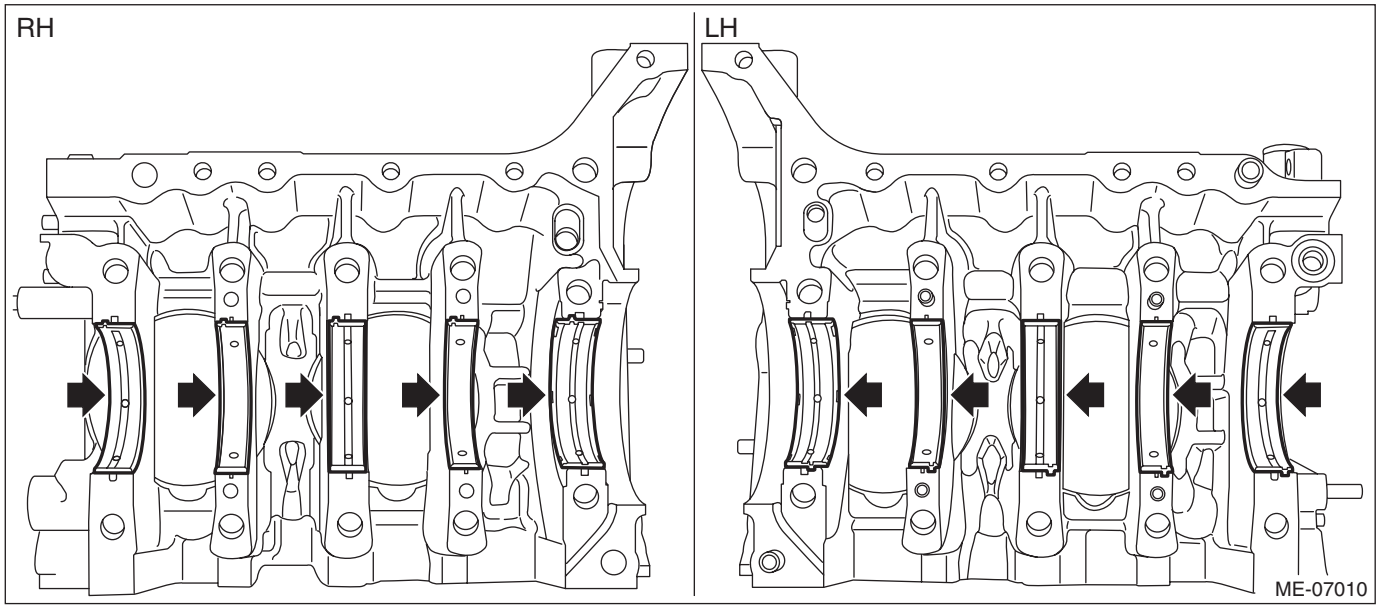

(4) Set the crankshaft to the cylinder block LH.

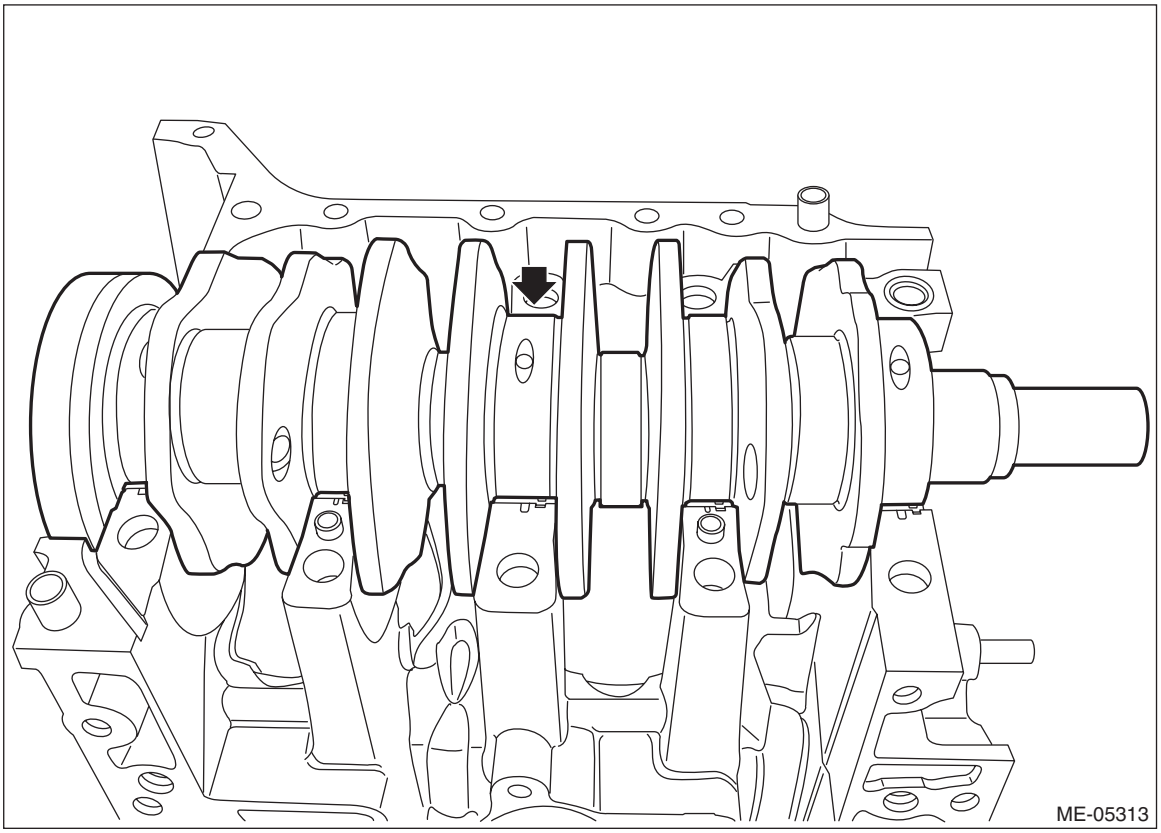

(5) Place a plastigauge across the crankshaft journals and set the cylinder block RH to the cylinder block LH.

(6) Apply a coat of engine oil to the washers and cylinder block mounting bolt threads.

NOTE:
To prevent mixture of engine oil into the water jacket, do not apply a large amount.

(7) Install the cylinder head bolt at the locations shown in the figure.

NOTE:
This procedure is required to tighten the cylinder block mounting bolts with specified angle using ST.

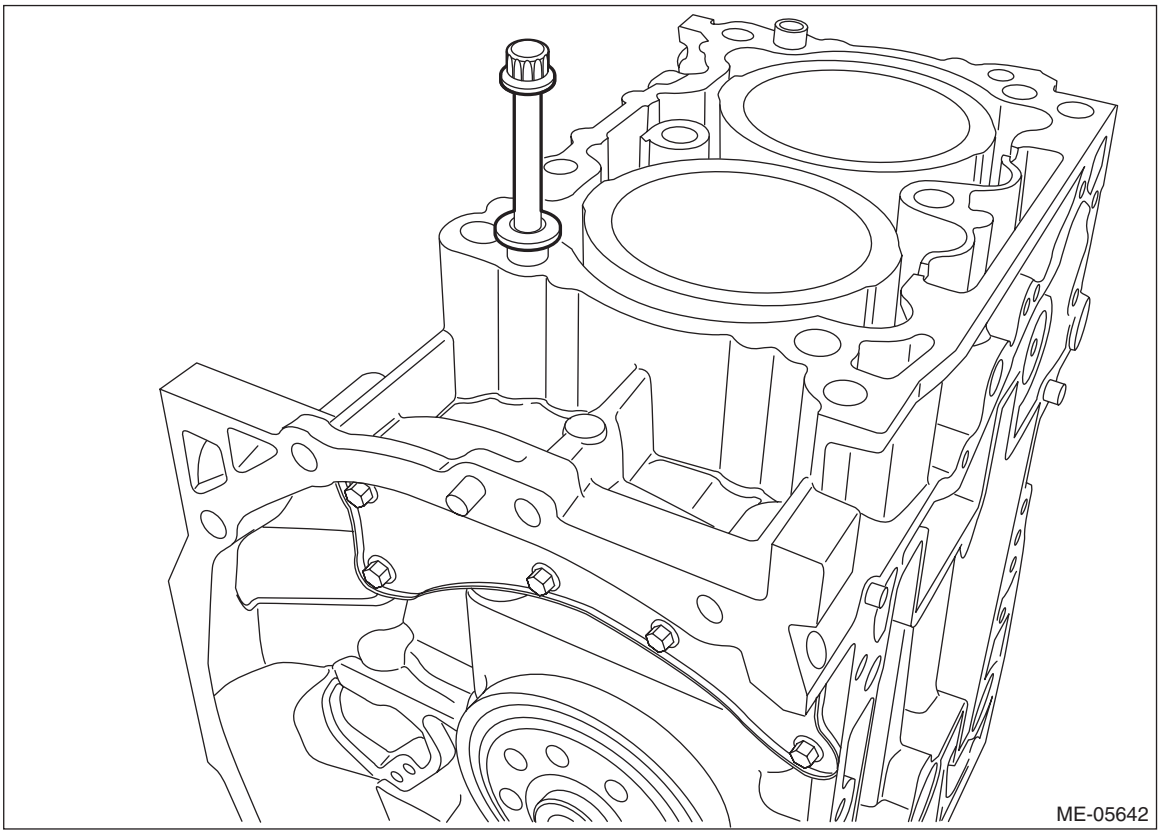

(8) Tighten all mounting bolts with a torque of 35 N·m (3.6 kgf-m, 25.8 ft-lb) in numerical order as shown in the figure.

CAUTION:
When tightening the mounting bolts with specified torque, hold the cylinder block LH while not holding the cylinder block RH to ensure the joint accuracy of the cylinder block.

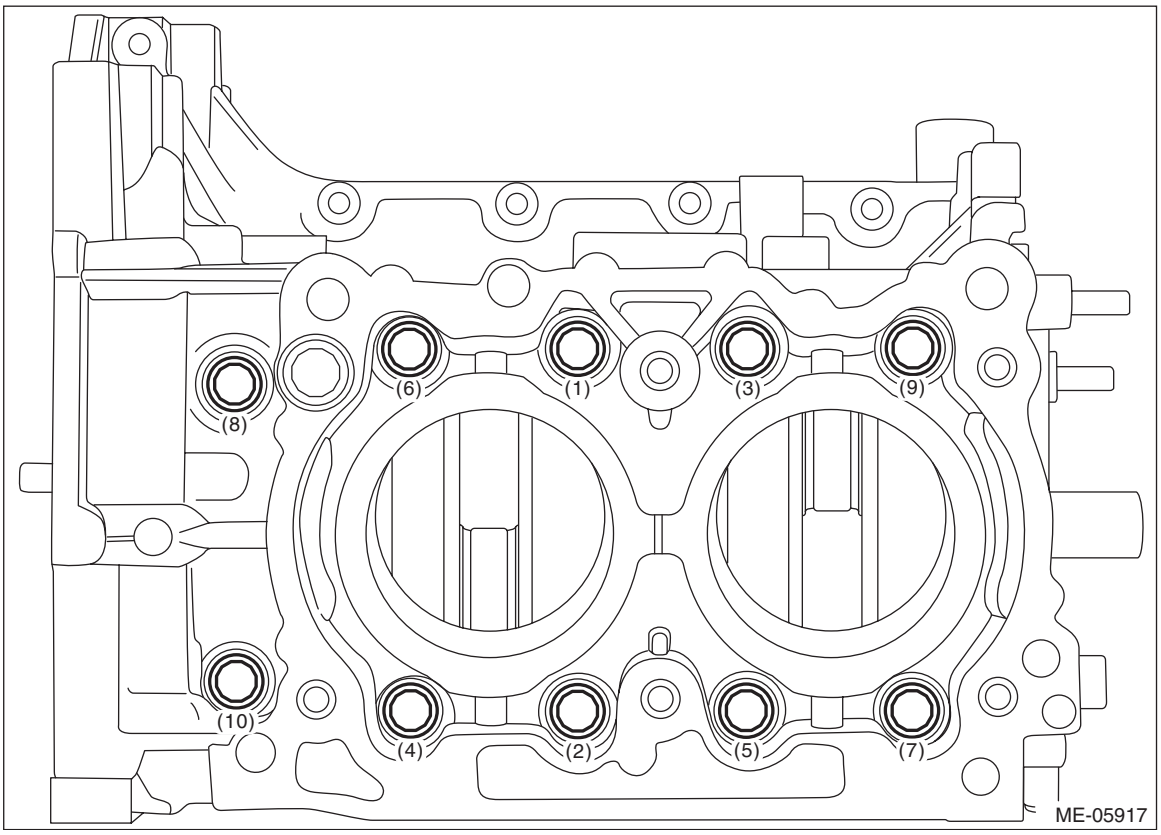

(9) Loosen all mounting bolts by 180° in numerical order as shown in the figure.

CAUTION:
When loosening the mounting bolts, hold the cylinder block LH while not holding the cylinder block RH to ensure the joint accuracy of the cylinder block.

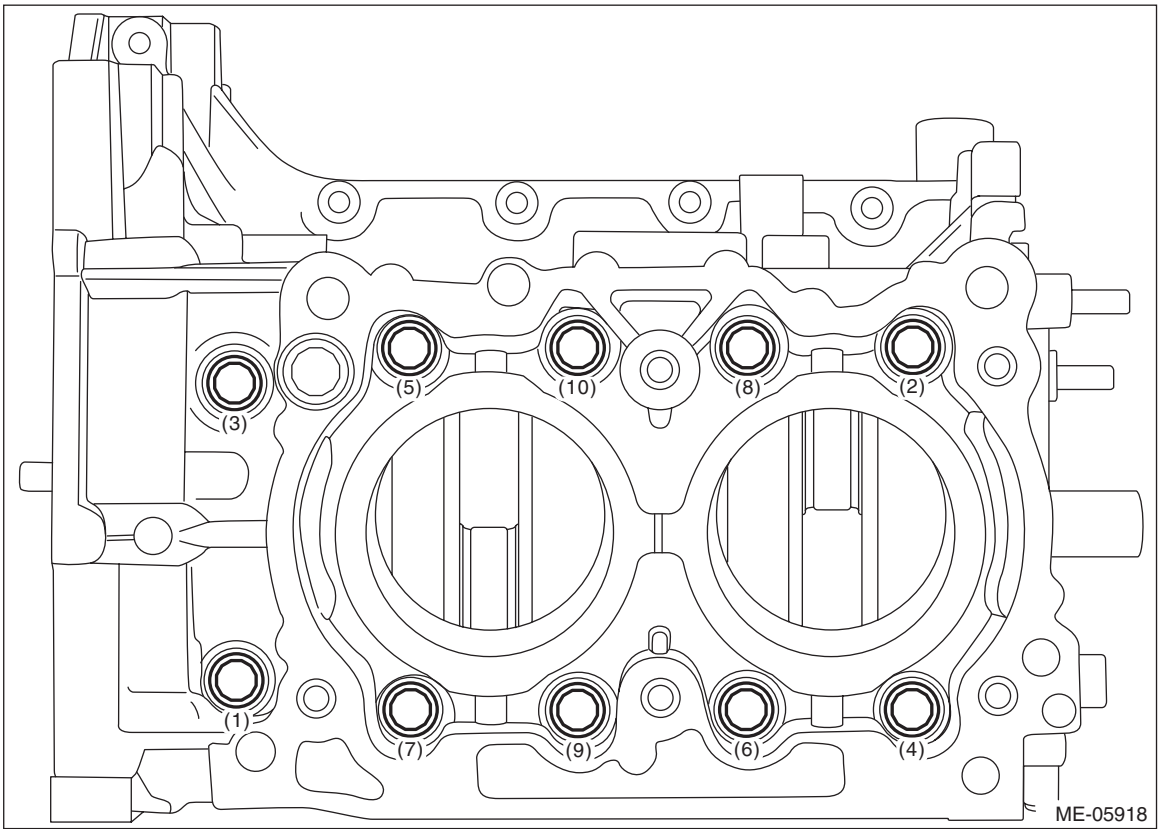

(10) Tighten all mounting bolts with a torque of 35 N·m (3.6 kgf-m, 25.8 ft-lb) in numerical order as shown in the figure.

CAUTION:
When tightening the mounting bolts with specified torque, hold the cylinder block LH while not holding the cylinder block RH to ensure the joint accuracy of the cylinder block.

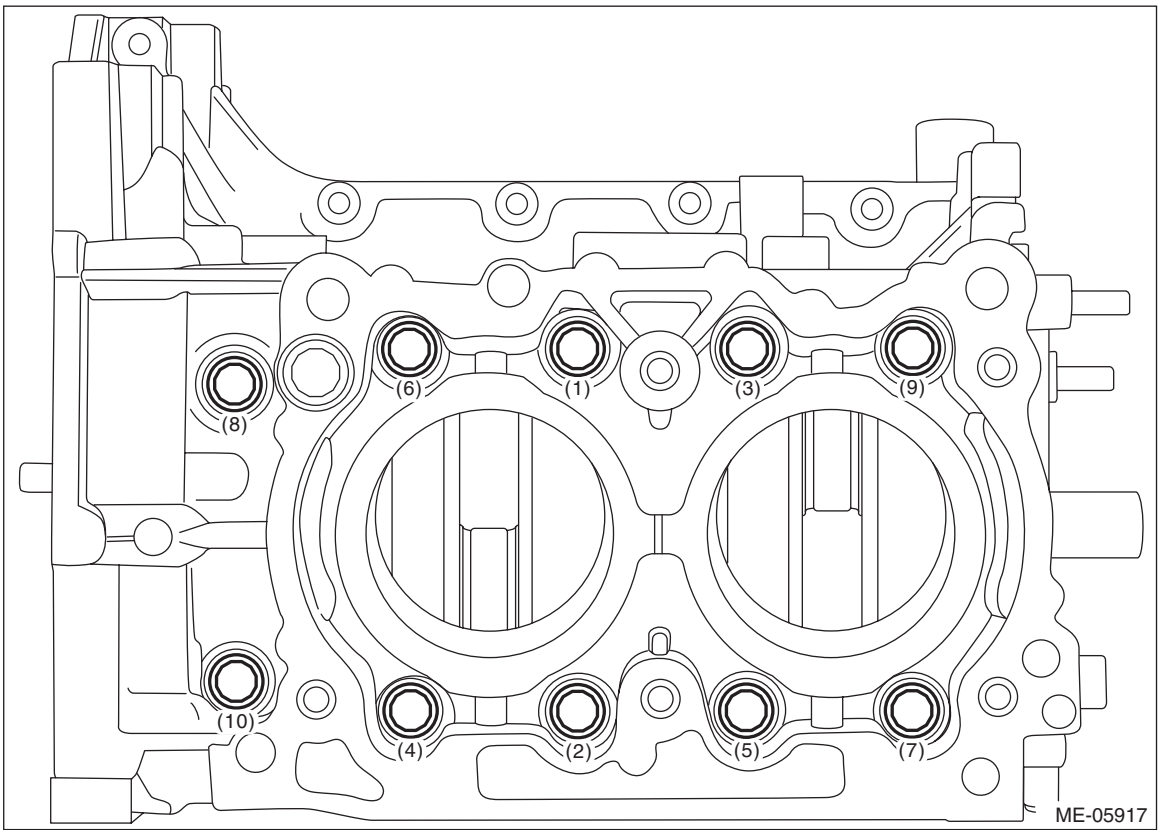

(11) Loosen the mounting bolts (4 places) by 180° in numerical order as shown in the figure.

CAUTION:
When loosening the mounting bolts, hold the cylinder block LH while not holding the cylinder block RH to ensure the joint accuracy of the cylinder block.

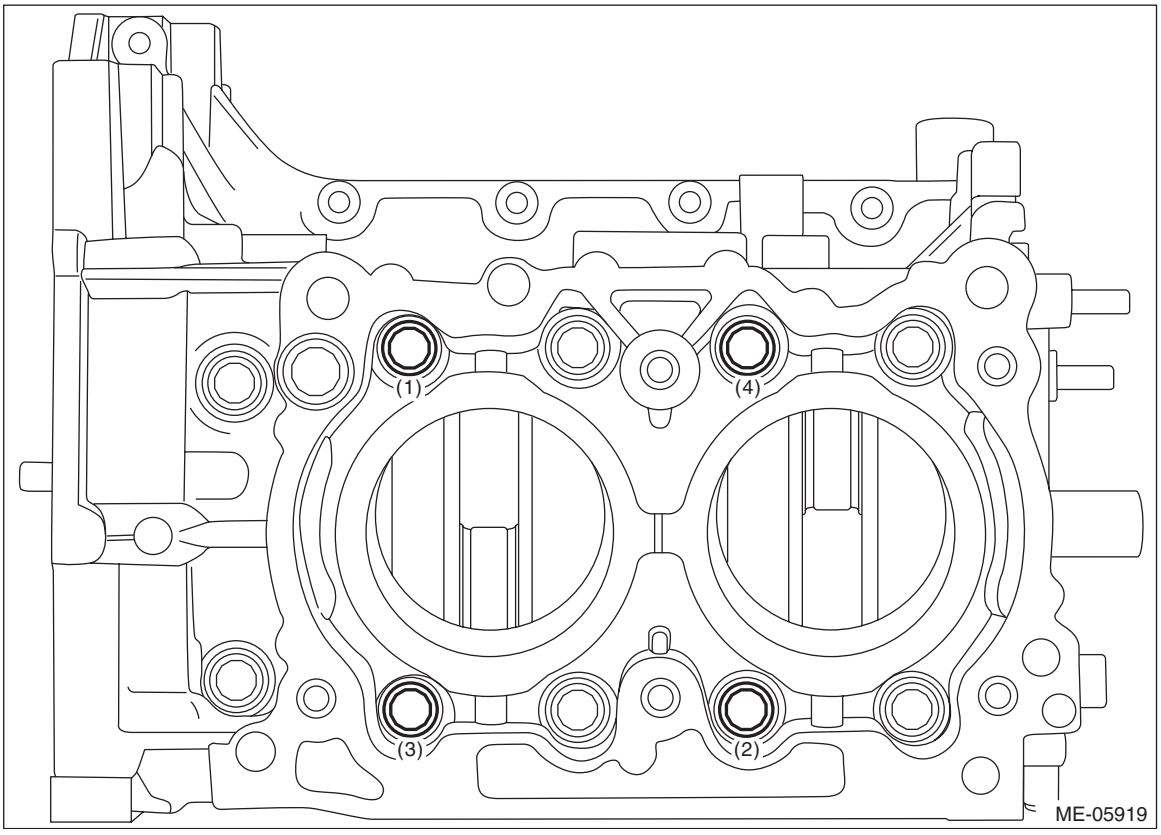

(12) Tighten the mounting bolts (4 places) with a torque of 17 N·m (1.7 kgf-m, 12.5 ft-lb) in numerical order as shown in the figure.

CAUTION:
When tightening the mounting bolts with specified torque, hold the cylinder block LH while not holding the cylinder block RH to ensure the joint accuracy of the cylinder block.

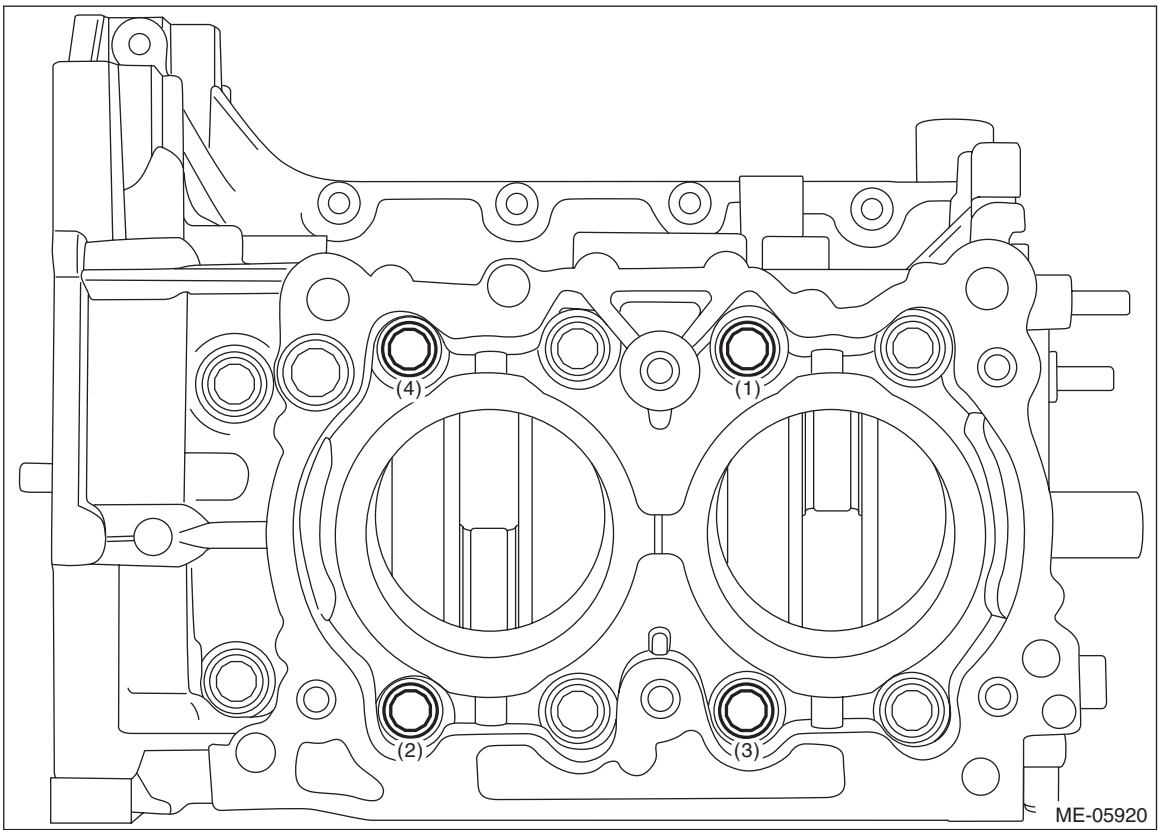

(13) Using angle gauge, tighten the mounting bolts (4 places) with specified angle in numerical order as shown in the figure.

CAUTION:
When tightening the mounting bolts with specified angle, hold the cylinder block LH while not holding the cylinder block RH to ensure the joint accuracy of the cylinder block.

Tightening angle:
60°±2°

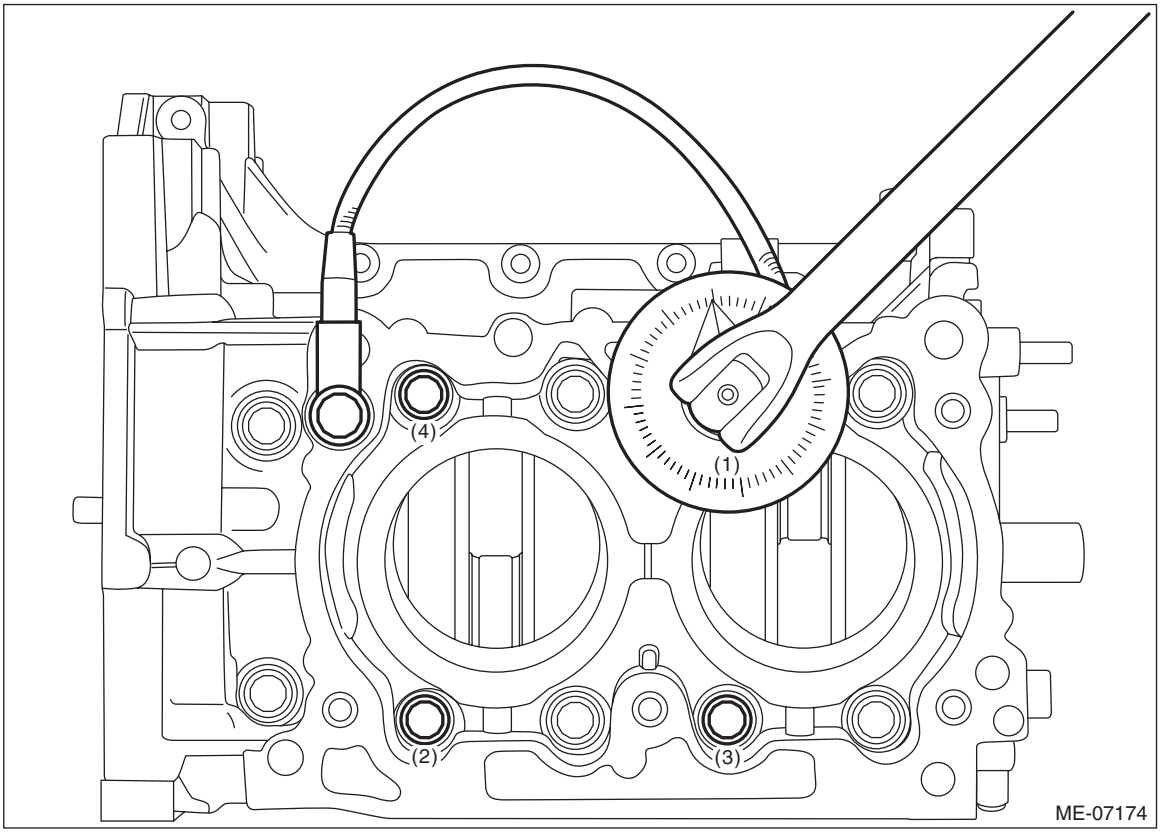

(14) Loosen the mounting bolts (6 places) by 180° in numerical order as shown in the figure.

CAUTION:
When loosening the mounting bolts, hold the cylinder block LH while not holding the cylinder block RH to ensure the joint accuracy of the cylinder block.

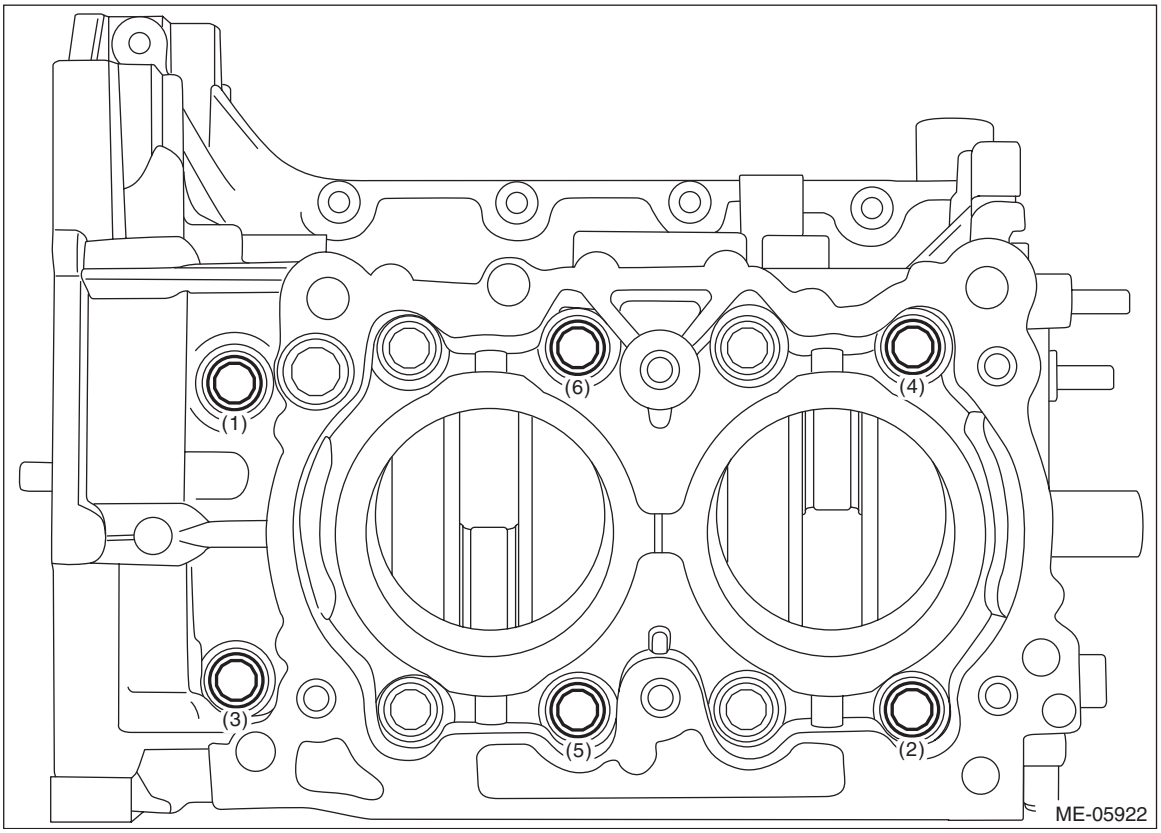

(15) Tighten the mounting bolts (6 places) with a torque of 17 N·m (1.7 kgf-m, 12.5 ft-lb) in numerical order as shown in the figure.

CAUTION:
When tightening the mounting bolts with specified torque, hold the cylinder block LH while not holding the cylinder block RH to ensure the joint accuracy of the cylinder block.

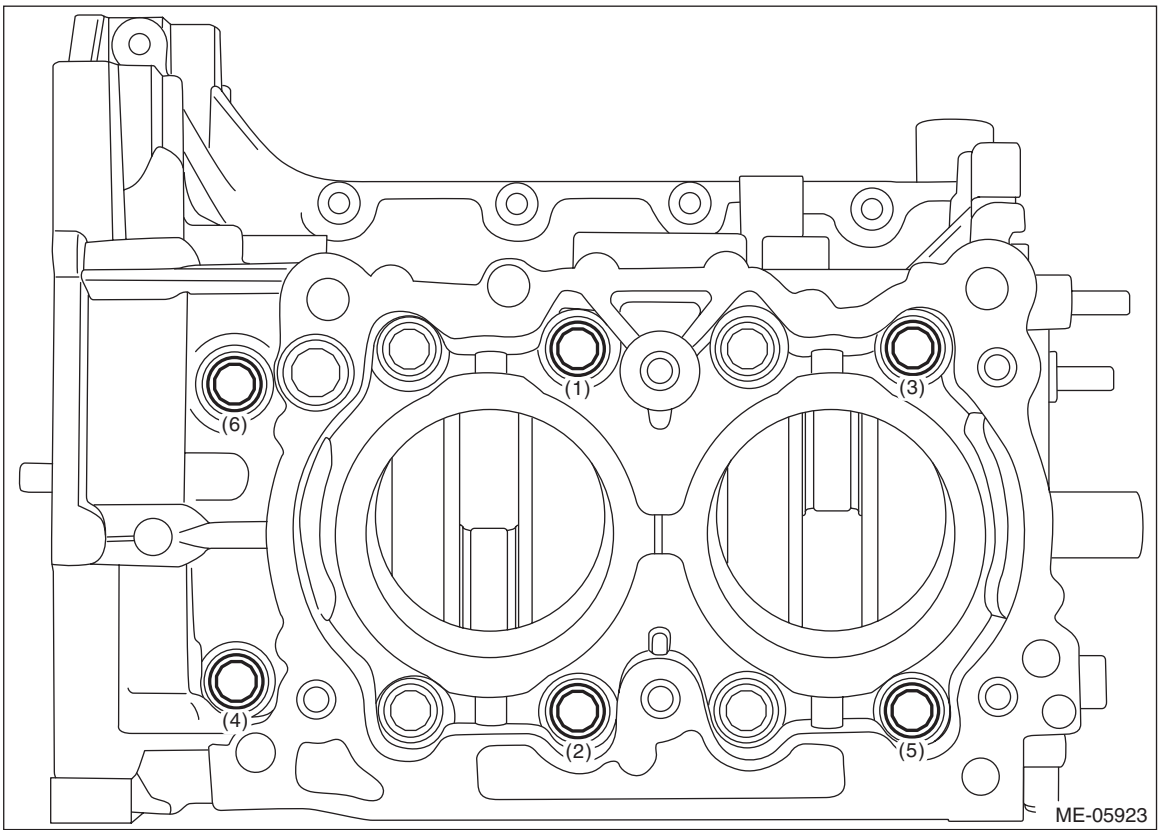

(16) Using angle gauge, tighten the mounting bolts (6 places) with specified angle in numerical order as shown in the figure.

CAUTION:
When tightening the mounting bolts with specified angle, hold the cylinder block LH while not holding the cylinder block RH to ensure the joint accuracy of the cylinder block.

Tightening angle:
60°±2°

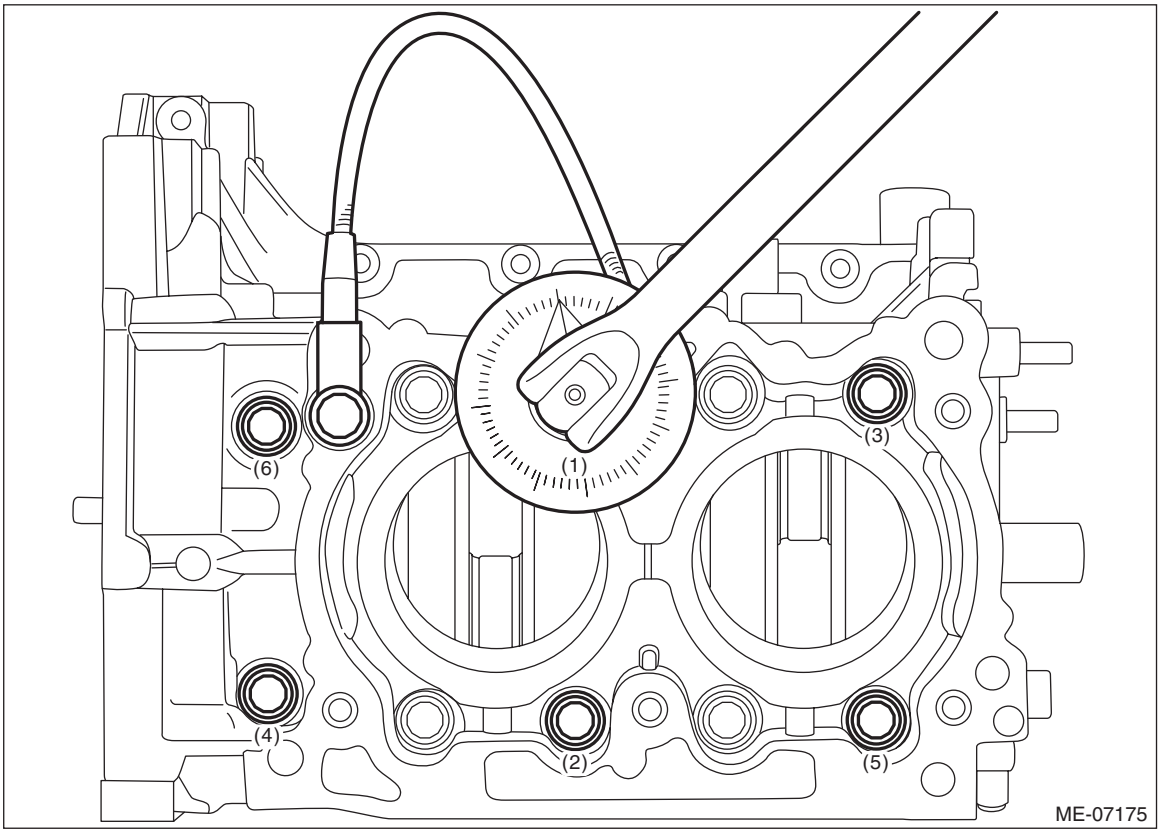

(17) Remove the cylinder head bolt attached at the locations shown in the figure.

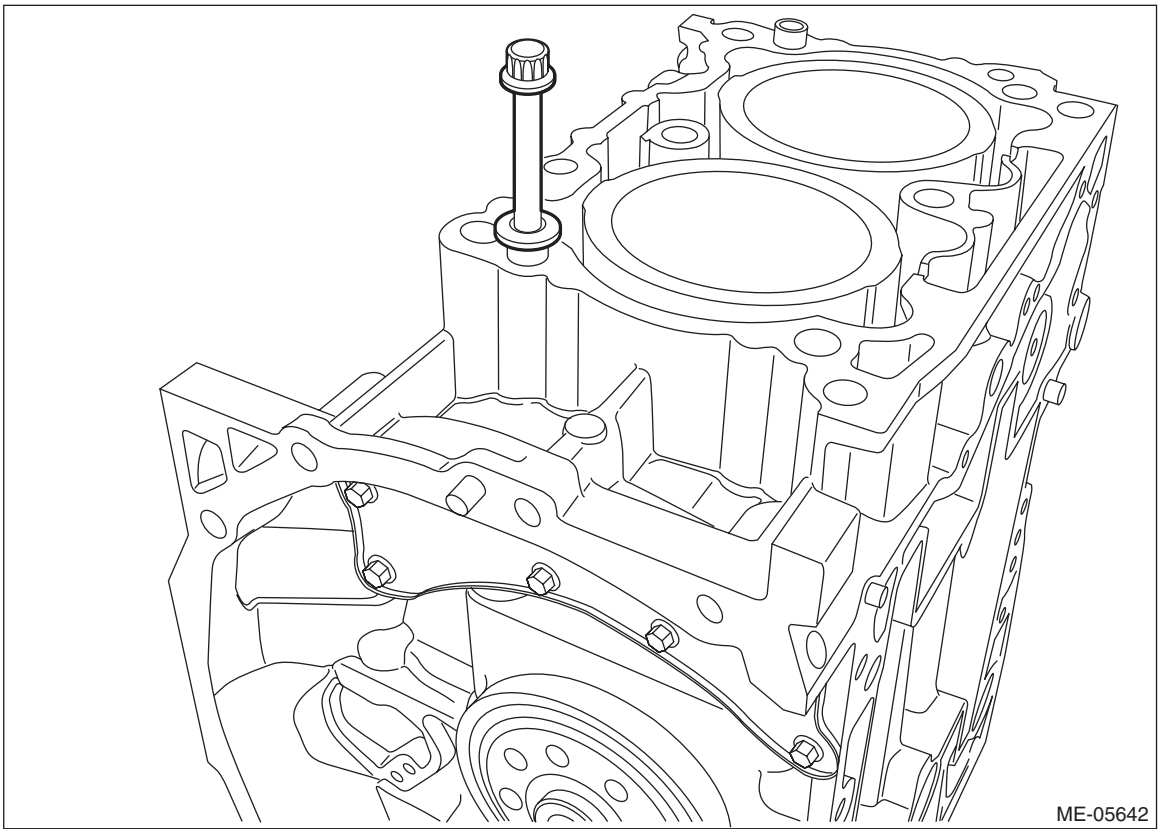

(18) Loosen the cylinder block mounting bolts in numerical order as shown in the figure, and separate the cylinder block RH and LH.

NOTE:
Lift the cylinder block RH slightly, and confirm that the crankshaft is remaining in the cylinder block LH. If the cylinder block RH is lifted carelessly when separating, the crankshaft may stick to cylinder block RH, then fall off.

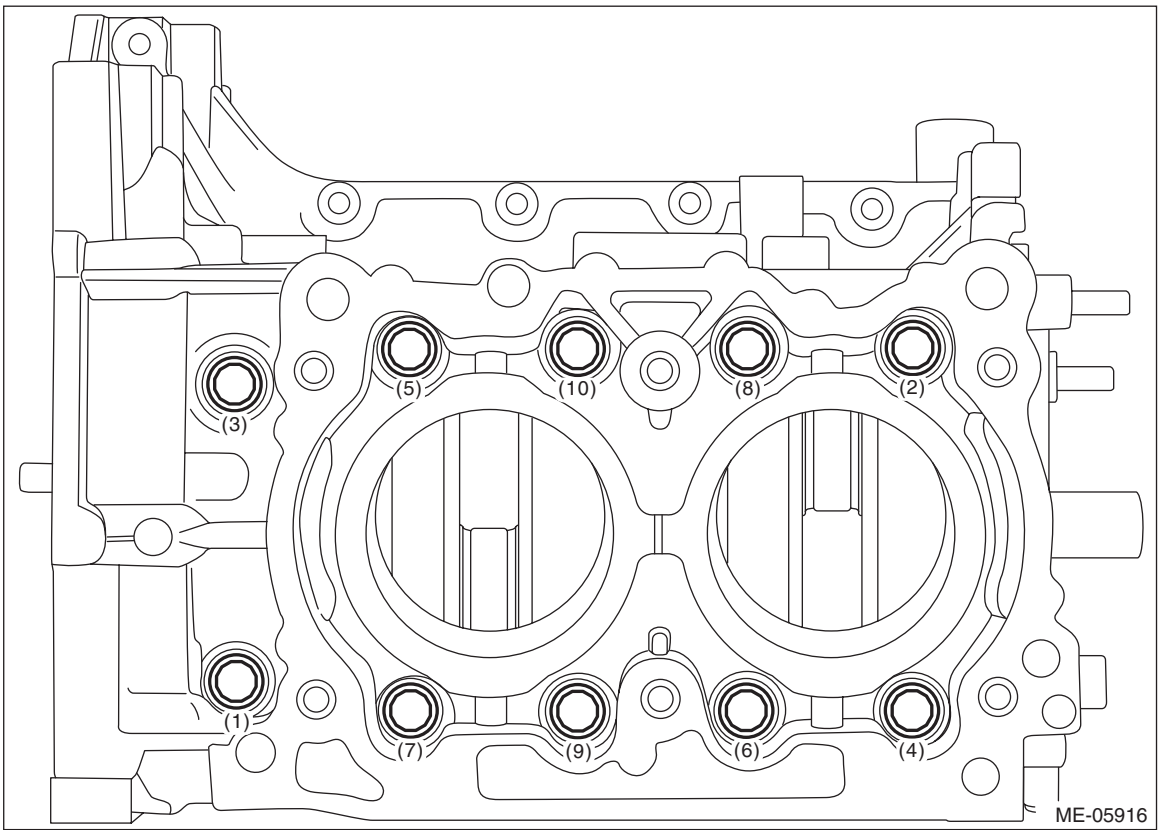

(19) Determine the crankshaft oil clearance by matching the widest point of the plastigauge on each journal against scale printed on a package of the plastigauge. If it is not within the standard, replace the crankshaft bearing, and grind to correct the crankshaft journal or replace the crankshaft as required.

NOTE:
- Select the crankshaft bearing of suitable size by referring to step 3) when replacing crankshaft bearing.
- When grinding to correct the crankshaft journal, finish it to the suitable outer diameter by referring to step 3) according to the undersize bearing to be used.

Crankshaft oil clearance:
Standard
0.013 — 0.031 mm (0.00051 — 0.00122 in)

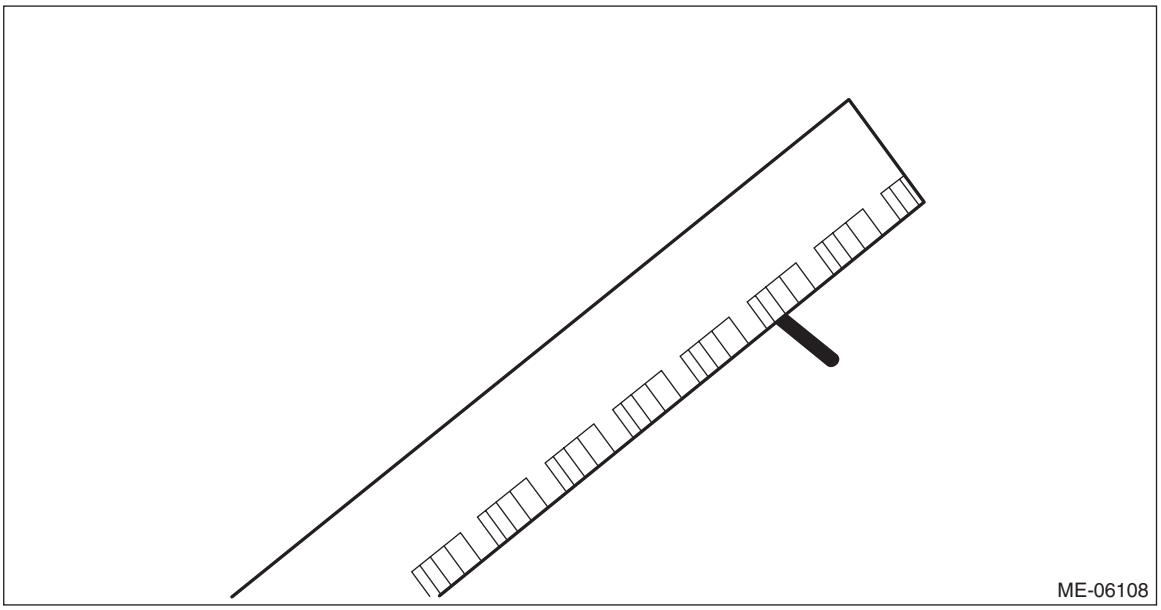

(20) Completely remove the plastigauge.

23.Intake and Exhaust Valve

A: SPECIFICATION

Refer to “Cylinder Head” for removal and installation procedures of the intake and exhaust valves. <Ref. to ME(H4DO(w/o HEV))-256, REMOVAL, Cylinder Head.> <Ref. to ME(H4DO(w/o HEV))-259, INSTALLATION, Cylinder Head.>

24.Piston

A: SPECIFICATION

Refer to “Cylinder Block” for removal and installation procedures of pistons. <Ref. to ME(H4DO(w/o HEV))-299, REMOVAL, Cylinder Block.> <Ref. to ME(H4DO(w/o HEV))-321, INSTALLATION, Cylinder Block.>

25.Connecting Rod

A: SPECIFICATION

Refer to “Cylinder Block” for removal and installation procedures of connecting rod.
<Ref. to ME(H4DO(w/o HEV))-299, REMOVAL, Cylinder Block.> <Ref. to ME(H4DO(w/o HEV))-321, INSTALLATION, Cylinder Block.>

26.Crankshaft

A: SPECIFICATION

Refer to “Cylinder Block” for removal and installation procedures of the crankshaft. <Ref. to ME(H4DO(w/o HEV))-299, REMOVAL, Cylinder Block.> <Ref. to ME(H4DO(w/o HEV))-321, INSTALLATION, Cylinder Block.>

27.Engine Trouble in General

A: INSPECTION

NOTE:
The “RANK” shown in the chart shows the possibilities of the cause of trouble in order from “Very often” to “Rarely”.
A — Very often
B — Sometimes
C — Rarely

Symptoms	Problem parts etc.	Possible cause	RANK
1. Engine does not start.			
1) Starter does not turn.	Starter	Defective battery-to-starter harness	B
		Defective starter switch	C
		Defective inhibitor switch	C
		Defective starter	B
	Battery	Improper connection of terminal	A
		Run-down battery	A
		Defective charging system	B
	Friction	Seizure of crankshaft and connecting rod bearing	C
		Seized camshaft	C
		Seized or stuck piston and cylinder	C
	Immobilizer system <Ref. to IM(diag)-2, Basic Diagnostic Procedure.>		A
2) Initial combustion does not occur.	Starter	Defective starter	C
	Engine control system <Ref. to EN(H4DO w/o HEV)(diag)-2, Basic Diagnostic Procedure.> <Ref. to EN(H4DO HEV)(diag)-2, Basic Diagnostic Procedure.>		A
	Fuel line	Defective fuel pump and relay	A
		Clogged fuel line	C
		Lack of fuel or insufficient fuel	B
	Timing chain	Trouble	B
		Defective timing	B
	Compression	Incorrect cam clearance	C
		Loosened spark plug or defective gasket	C
		Loosened cylinder head bolt or defective cylinder head gasket	C
		Improper valve sealing	C
		Defective valve stem	C
		Worn or broken valve spring	B
		Worn or stuck piston rings, cylinder liner and piston	C
		Incorrect valve timing	B
		Improper engine oil (low viscosity)	B

Symptoms	Problem parts etc.	Possible cause	RANK
3) Initial combustion occurs.	Engine control system <Ref. to EN(H4DO w/o HEV)(diag)-2, Basic Diagnostic Procedure.> <Ref. to EN(H4DO HEV)(diag)-2, Basic Diagnostic Procedure.>		A
	Intake system	Defective intake manifold gasket	B
		Defective throttle body gasket	B
	Fuel line	Defective fuel pump and relay	C
		Clogged fuel line	C
		Lack of fuel or insufficient fuel	B
	Timing chain	Trouble	B
		Defective timing	B
	Compression	Incorrect cam clearance	C
		Loosened spark plug or defective gasket	C
		Loosened cylinder head bolt or defective cylinder head gasket	C
		Improper valve sealing	C
		Defective valve stem	C
		Worn or broken valve spring	B
		Worn or stuck piston rings, cylinder liner and piston	C
		Incorrect valve timing	B
		Improper engine oil (low viscosity)	B
4) Engine stalls after initial combustion.	Engine control system <Ref. to EN(H4DO w/o HEV)(diag)-2, Basic Diagnostic Procedure.> <Ref. to EN(H4DO HEV)(diag)-2, Basic Diagnostic Procedure.>		A
	Intake system	Loosened or cracked intake duct	B
		Loosened or cracked PCV hose	C
		Loosened or cracked vacuum hose	C
		Defective intake manifold gasket	B
		Defective throttle body gasket	B
		Dirty air cleaner element	C
	Fuel line	Clogged fuel line	C
		Lack of fuel or insufficient fuel	B
	Timing chain	Trouble	B
		Defective timing	B
	Compression	Incorrect cam clearance	C
		Loosened spark plug or defective gasket	C
		Loosened cylinder head bolt or defective cylinder head gasket	C
		Improper valve sealing	C
		Defective valve stem	C
		Worn or broken valve spring	B
		Worn or stuck piston rings, cylinder and piston	C
		Incorrect valve timing	B
		Improper engine oil (low viscosity)	B

Symptoms	Problem parts etc.	Possible cause	RANK
2. Rough idle and engine stall	Engine control system <Ref. to EN(H4DO w/o HEV)(diag)-2, Basic Diagnostic Procedure.> <Ref. to EN(H4DO HEV)(diag)-2, Basic Diagnostic Procedure.>		A
	Intake system	Loosened or cracked intake duct	A
		Loosened or cracked PCV hose	A
		Loosened or cracked vacuum hose	A
		Defective intake manifold gasket	B
		Defective throttle body gasket	B
		Defective PCV valve	C
		Loosened oil filler cap	B
		Dirty air cleaner element	C
	Fuel line	Defective fuel pump and relay	C
		Clogged fuel line	C
		Lack of fuel or insufficient fuel	B
	Timing chain	Defective timing	C
	Compression	Incorrect cam clearance	B
		Loosened spark plug or defective gasket	B
		Loosened cylinder head bolt or defective cylinder head gasket	B
		Improper valve sealing	B
		Defective valve stem	C
		Worn or broken valve spring	B
		Worn or stuck piston rings, cylinder and piston	B
		Incorrect valve timing	A
		Improper engine oil (low viscosity)	B
	Lubrication system	Incorrect oil pressure	B
		Defective rocker cover gasket	C
	Cooling system	Over-heating	C
	Other	Evaporative emission control system malfunction	A
		Stuck or damaged throttle valve	B

Symptoms	Problem parts etc.	Possible cause	RANK
3. Low output, hesitation and poor acceleration	Engine control system <Ref. to EN(H4DO w/o HEV)(diag)-2, Basic Diagnostic Procedure.> <Ref. to EN(H4DO HEV)(diag)-2, Basic Diagnostic Procedure.>		A
	Intake system	Loosened or cracked intake duct	A
		Loosened or cracked PCV hose	A
		Loosened or cracked vacuum hose	B
		Defective intake manifold gasket	B
		Defective throttle body gasket	B
		Defective PCV valve	B
		Loosened oil filler cap	B
		Dirty air cleaner element	A
	Fuel line	Defective fuel pump and relay	B
		Clogged fuel line	B
		Lack of fuel or insufficient fuel	C
	Timing chain	Defective timing	B
	Compression	Incorrect cam clearance	B
		Loosened spark plug or defective gasket	B
		Loosened cylinder head bolt or defective cylinder head gasket	B
		Improper valve sealing	B
		Defective valve stem	C
		Worn or broken valve spring	B
		Worn or stuck piston rings, cylinder and piston	C
		Incorrect valve timing	A
		Improper engine oil (low viscosity)	B
	Lubrication system	Incorrect oil pressure	B
	Cooling system	Over-heating	C
		Over-cooling	C
	Other	Evaporative emission control system malfunction	A

Symptoms	Problem parts etc.	Possible cause	RANK
4. Surging	Engine control system <Ref. to EN(H4DO w/o HEV)(diag)-2, Basic Diagnostic Procedure.> <Ref. to EN(H4DO HEV)(diag)-2, Basic Diagnostic Procedure.>		A
	Intake system	Loosened or cracked intake duct	A
		Loosened or cracked PCV hose	A
		Loosened or cracked vacuum hose	A
		Defective intake manifold gasket	B
		Defective throttle body gasket	B
		Defective PCV valve	B
		Loosened oil filler cap	B
		Dirty air cleaner element	B
	Fuel line	Defective fuel pump and relay	B
		Clogged fuel line	B
		Lack of fuel or insufficient fuel	C
	Timing chain	Defective timing	B
	Compression	Incorrect cam clearance	B
		Loosened spark plug or defective gasket	C
		Loosened cylinder head bolt or defective cylinder head gasket	C
		Improper valve sealing	C
		Defective valve stem	C
		Worn or broken valve spring	C
		Worn or stuck piston rings, cylinder and piston	C
		Incorrect valve timing	A
		Improper engine oil (low viscosity)	B
	Cooling system	Over-heating	B
	Other	Evaporative emission control system malfunction	C
5. Engine does not return to idle	Engine control system <Ref. to EN(H4DO w/o HEV)(diag)-2, Basic Diagnostic Procedure.> <Ref. to EN(H4DO HEV)(diag)-2, Basic Diagnostic Procedure.>		A
	Intake system	Loosened or cracked vacuum hose	A
	Other	Stuck or damaged throttle valve	A
6. Dieseling (run-on)	Engine control system <Ref. to EN(H4DO w/o HEV)(diag)-2, Basic Diagnostic Procedure.> <Ref. to EN(H4DO HEV)(diag)-2, Basic Diagnostic Procedure.>		A
	Cooling system	Over-heating	B
	Other	Evaporative emission control system malfunction	B

Symptoms	Problem parts etc.	Possible cause	RANK
7. After burning in exhaust system	Engine control system <Ref. to EN(H4DO w/o HEV)(diag)-2, Basic Diagnostic Procedure.> <Ref. to EN(H4DO HEV)(diag)-2, Basic Diagnostic Procedure.>		A
	Intake system	Loosened or cracked intake duct	C
		Loosened or cracked PCV hose	C
		Loosened or cracked vacuum hose	B
		Defective PCV valve	B
		Loosened oil filler cap	C
	Timing chain	Defective timing	B
	Compression	Incorrect cam clearance	B
		Loosened spark plug or defective gasket	C
		Loosened cylinder head bolt or defective cylinder head gasket	C
		Improper valve sealing	B
		Defective valve stem	C
		Worn or broken valve spring	C
		Worn or stuck piston rings, cylinder and piston	C
		Incorrect valve timing	A
	Lubrication system	Incorrect oil pressure	C
	Cooling system	Over-cooling	C
	Other	Evaporative emission control system malfunction	C
8. Knocking	Engine control system <Ref. to EN(H4DO w/o HEV)(diag)-2, Basic Diagnostic Procedure.> <Ref. to EN(H4DO HEV)(diag)-2, Basic Diagnostic Procedure.>		A
	Intake system	Loosened oil filler cap	B
	Timing chain	Defective timing	B
	Compression	Incorrect cam clearance	C
		Incorrect valve timing	B
	Cooling system	Over-heating	A
9. Excessive engine oil consumption	Intake system	Loosened or cracked PCV hose	A
		Defective PCV valve	B
		Loosened oil filler cap	C
	Compression	Defective valve stem	A
		Worn or stuck piston rings, cylinder and piston	A
	Lubrication system	Loosened chain cover attaching bolts and defective gasket	B
		Defective oil filter gasket	B
		Defective crankshaft oil seal	B
		Defective rocker cover gasket	B
		Loosened oil drain plug or defective gasket	B
		Loosened oil pan mounting bolt or defective oil pan	B

Symptoms	Problem parts etc.	Possible cause	RANK
10. Excessive fuel consumption	Engine control system <Ref. to EN(H4DO w/o HEV)(diag)-2, Basic Diagnostic Procedure.> <Ref. to EN(H4DO HEV)(diag)-2, Basic Diagnostic Procedure.>		A
	Intake system	Dirty air cleaner element	A
	Timing chain	Defective timing	B
	Compression	Incorrect cam clearance	B
		Loosened spark plug or defective gasket	C
		Loosened cylinder head bolt or defective cylinder gasket	C
		Improper valve sealing	B
		Defective valve stem	C
		Worn or broken valve spring	C
		Worn or stuck piston rings, cylinder and piston	B
		Incorrect valve timing	B
	Lubrication system	Incorrect oil pressure	C
	Cooling system	Over-cooling	C

28.Engine Noise

A: INSPECTION

Type of sound	Condition	Possible cause
Regular clicking sound	Sound increases as engine speed increases.	• Valve mechanism is defective • Incorrect cam clearance • Worn camshaft • Broken valve spring • Defective valve shim
Heavy and dull clank	Oil pressure is low.	• Worn crankshaft bearing • Worn connecting rod bearing
	Oil pressure is normal.	• Loosened flywheel mounting bolt • Damaged engine mounting
High-pitched clank	Sound is noticeable when accelerating with an overload condition.	• Ignition timing advanced • Accumulation of carbon inside combustion chamber • Wrong heat range of spark plug • Improper octane value gasoline
Clank when engine speed is between 1,000 and 2,000 rpm	Sound is reduced when the fuel injector connector of the noisy cylinder is disconnected.*	• Worn crankshaft bearing • Worn connecting rod bearing
Knocking sound when engine is operating under idling speed and engine is warm	Sound is reduced when the fuel injector connector of the noisy cylinder is disconnected.*	• Worn cylinder liner and piston ring • Broken or stuck piston ring • Worn piston pin and piton pin hole of piston
	Sound is not reduced if each fuel injector connector is disconnected in turn.*	• Unusually worn valve rocker • Unusually worn valve shim • Worn cam sprocket • Worn journal of cam carrier and camshaft cap
Squeaky sound	—	• Insufficient generator lubrication
Rubbing sound	—	• Poor contact of generator brush and rotor
Gear scream when starting engine	—	• Defective ignition starter switch • Worn gear and starter pinion
Sound like polishing glass with a dry cloth	—	• Defective V-belt tensioner assembly (loose V-belt) • Defective water pump shaft
Hissing sound	—	• Insufficient compression • Air leakage in air intake system, hose, connection or manifold
Timing chain noise	—	• Loose timing chain • Timing chain contacting with adjacent part
Valve noise	—	• Incorrect cam clearance

* When disconnecting the fuel injector connector, the malfunction indicator light illuminates and DTC is stored in ECM memory. Therefore, perform the Clear Memory Mode <Ref. to EN(H4DO w/o HEV)(diag)-59, OPERATION, Clear Memory Mode.> <Ref. to EN(H4DO HEV)(diag)-63, OPERATION, Clear Memory Mode.> and Inspection Mode <Ref. to EN(H4DO w/o HEV)(diag)-44, PROCEDURE, Inspection Mode.> <Ref. to EN(H4DO HEV)(diag)-47, PROCEDURE, Inspection Mode.> after connecting the fuel injector connector.

EXHAUST

EX(H4DO(w/o HEV))

Page

1. General Description 2
2. Front Exhaust Pipe 6
3. Center Exhaust Pipe 14
4. Rear Exhaust Pipe 18
5. Muffler 22

1. General Description

A: COMPONENT

1. FRONT EXHAUST PIPE AND CENTER EXHAUST PIPE

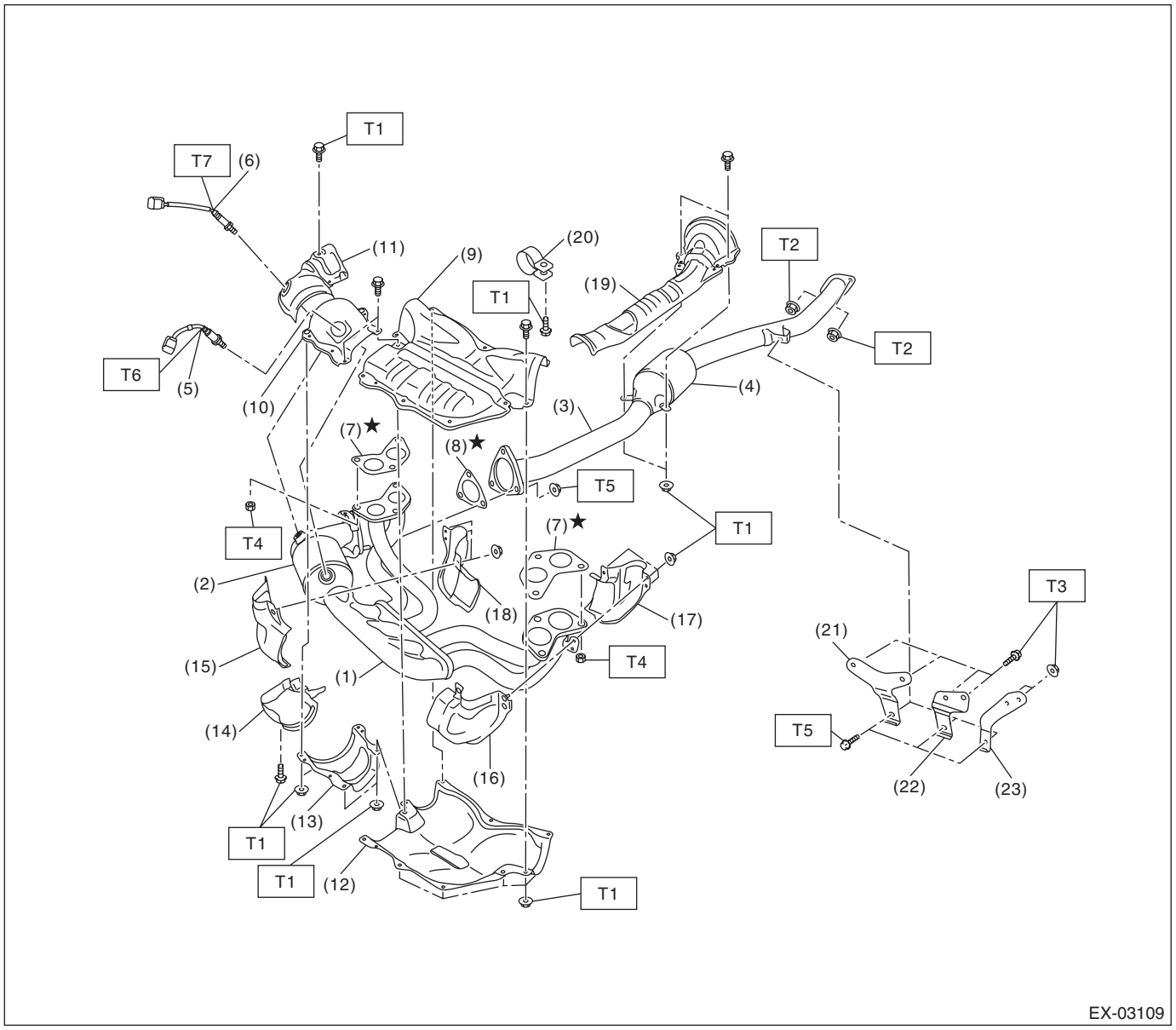

(1)	Front exhaust pipe	(12)	Front exhaust pipe lower cover	(23)	Hanger bracket (MT model)
(2)	Front catalytic converter	(13)	Front catalytic converter lower cover LH		
(3)	Center exhaust pipe	(14)	Front catalytic converter lower cover RH		
(4)	Rear catalytic converter	(15)	Front exhaust pipe side cover RH (front)		
(5)	Front oxygen (A/F) sensor	(16)	Front exhaust pipe side cover LH (front)		
(6)	Rear oxygen sensor	(17)	Front exhaust pipe side cover LH (rear)		
(7)	Gasket	(18)	Front exhaust pipe side cover RH (rear)		
(8)	Gasket	(19)	Center exhaust pipe upper cover		
(9)	Front exhaust pipe upper cover	(20)	Band		
(10)	Front catalytic converter upper cover LH	(21)	Hanger bracket (HEV model)		
(11)	Front catalytic converter upper cover RH	(22)	Hanger bracket (gasoline engine CVT model)		

Tightening torque: N·m (kgf-m, ft-lb)

T1: 13 (1.3, 9.6)

T2: 18 (1.8, 13.3)

T3: 23 (2.3, 17.0)

T4: 30 (3.1, 22.1)

T5: 35 (3.6, 25.8)

T6: <Ref. to FU(H4DO(w/o HEV))-98, INSTALLATION, Front Oxygen (A/F) Sensor.> <Ref. to FU(H4DO(HEV))-80, INSTALLATION, Front Oxygen (A/F) Sensor.>

T7: <Ref. to FU(H4DO(w/o HEV))-102, INSTALLATION, Rear Oxygen Sensor.> <Ref. to FU(H4DO(HEV))-83, INSTALLATION, Rear Oxygen Sensor.>

2. REAR EXHAUST PIPE AND MUFFLER

- 4 door model

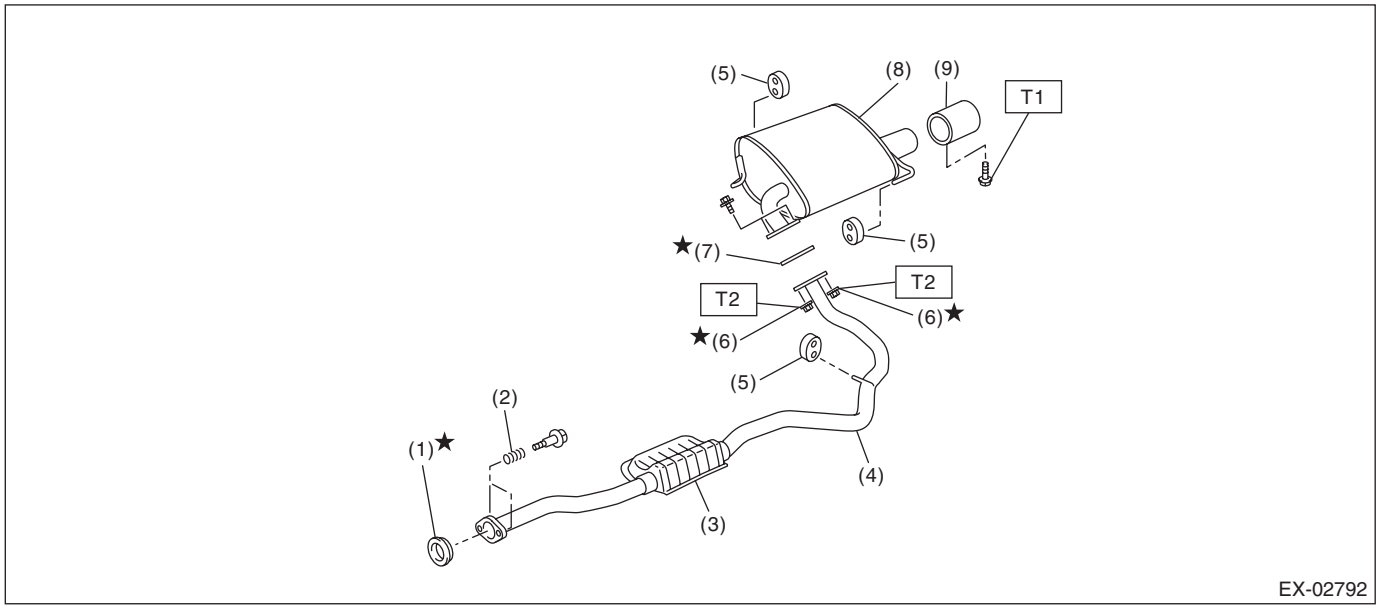

(1)	Gasket	(6)	Self-locking nut		
(2)	Spring	(7)	Gasket		
(3)	Chamber	(8)	Muffler		
(4)	Rear exhaust pipe	(9)	Muffler cutter (models with muffler cutter)		
(5)	Cushion rubber				

Tightening torque: N·m (kgf-m, ft-lb)

T1: 7.5 (0.8, 5.5)

T2: 48 (4.9, 35.4)

- 5 door model

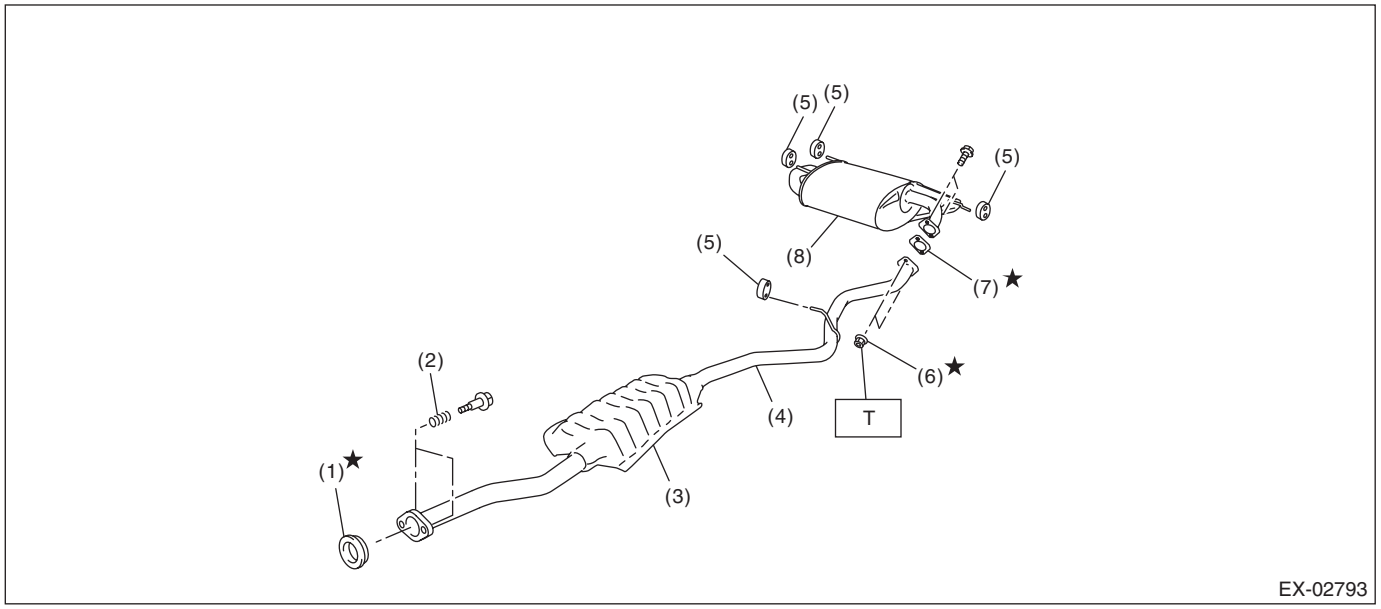

(1) Gasket
(2) Spring
(3) Chamber
(4) Rear exhaust pipe
(5) Cushion rubber
(6) Self-locking nut
(7) Gasket
(8) Muffler

Tightening torque: N·m (kgf-m, ft-lb)
T: 48 (4.9, 35.4)

3. HEAT SHIELD COVER

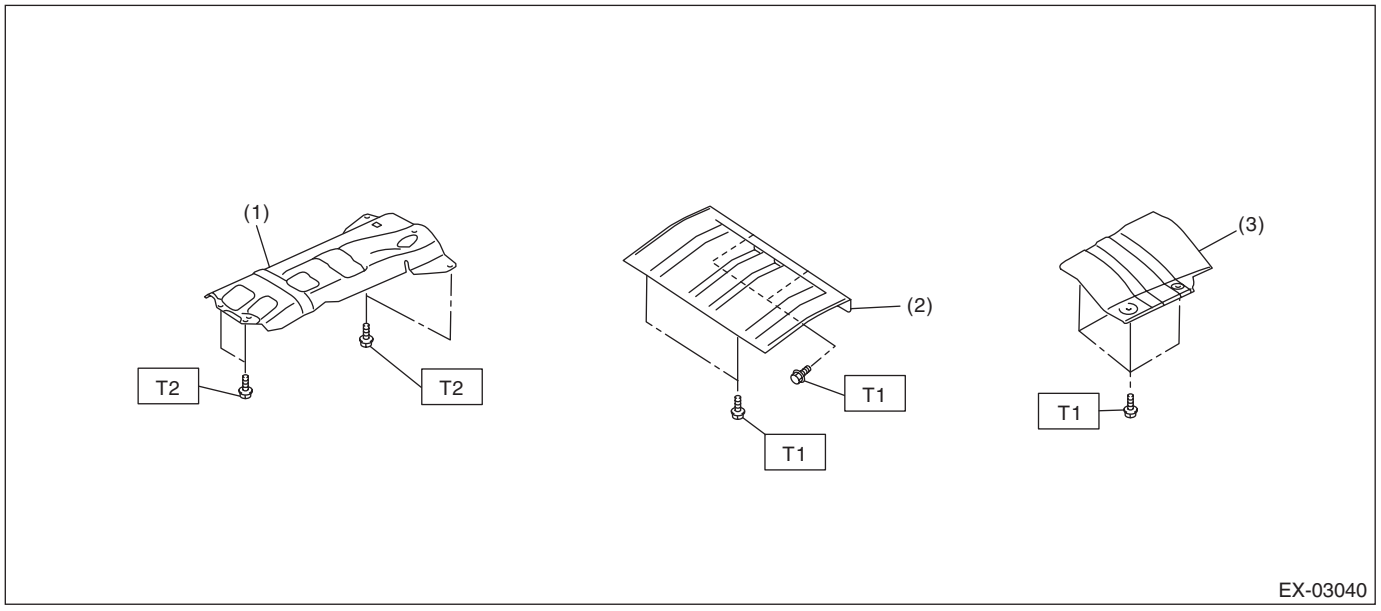

(1) Center exhaust cover
(2) Rear exhaust cover (5 door model)
(3) Rear exhaust cover (4 door model)

Tightening torque: N·m (kgf-m, ft-lb)
T1: 10 (1.0, 7.4)
T2: 18 (1.8, 13.3)

B: CAUTION

- Prior to starting work, pay special attention to the following:
  1. Always wear work clothes, a work cap, and protective shoes. Additionally, wear a helmet, protective goggles, etc. if necessary.
  2. Protect the vehicle using a seat cover, fender cover, etc.
  3. Prepare the service tools, clean cloth, containers to catch grease and oil, etc.
- Vehicle components are extremely hot immediately after driving. Be wary of receiving burns from heated parts.
- When performing a repair, identify the cause of trouble and avoid unnecessary removal, disassembly and replacement.
- Before disconnecting connectors of sensors or units, be sure to disconnect the ground cable from battery.
- Always use the jack-up point when the shop jacks or rigid racks are used to support the vehicle.
- Remove contamination including dirt and corrosion before removal, installation, disassembly or assembly.
- Keep the removed parts in order and protect them from dust and dirt.
- All removed parts, if to be reused, should be reinstalled in the original positions with attention to the correct directions, etc.
- Bolts, nuts and washers should be replaced with new parts as required.
- Be sure to tighten the fasteners including bolts and nuts to the specified torque.
- If any grease adheres to the exhaust pipe, wipe it off. Otherwise a fire may happen.

2. Front Exhaust Pipe

A: REMOVAL

CAUTION:
Vehicle components are extremely hot after driving. Be wary of receiving burns from heated parts.
1) Disconnect the ground cable from battery. <Ref. to NT-5, BATTERY, NOTE, Note.>

NOTE:
For the 12 volt engine restart battery of HEV model, disconnect the ground terminal from 12V engine restart battery sensor.
2) Lift up the vehicle.
3) Remove the under cover. <Ref. to EI-29, REMOVAL, Front Under Cover.>
4) Disconnect the front oxygen (A/F) sensor connector (A) and rear oxygen sensor connector (B) and remove the clip (C) fastening the harness.

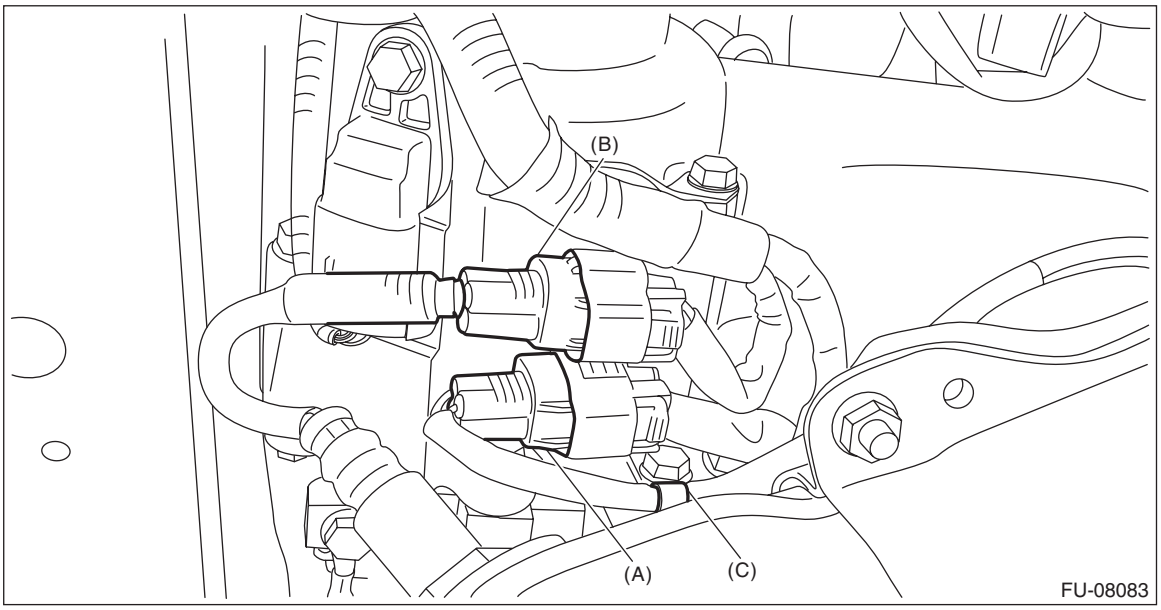

5) Remove the bolts, springs, and nuts securing the rear exhaust pipe to the center exhaust pipe.

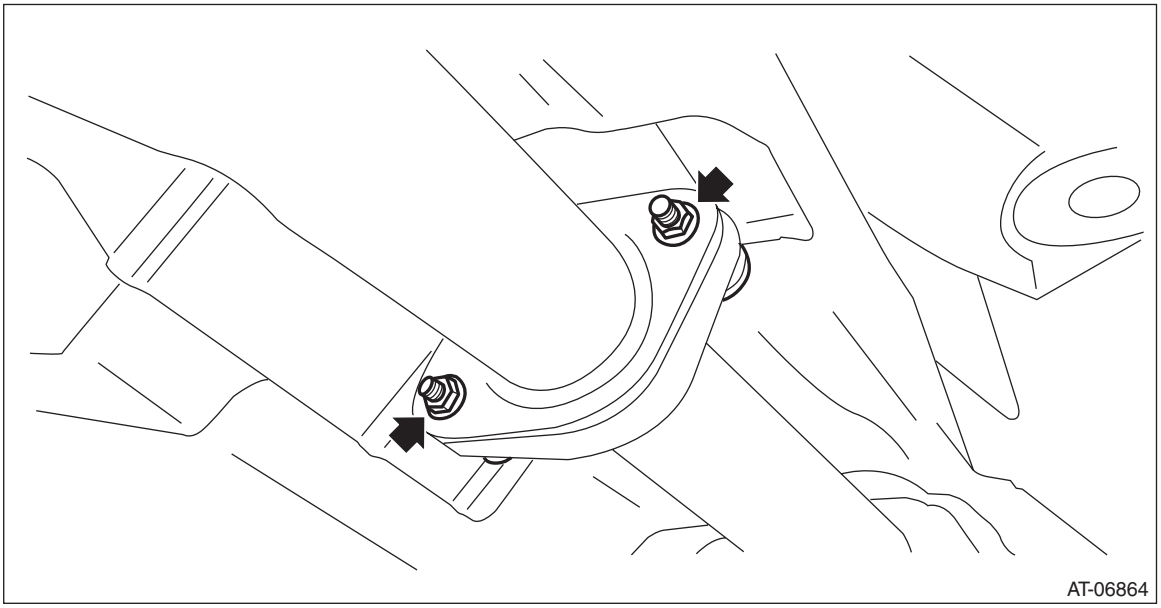

6) Remove the bolt which holds center exhaust pipe to hanger bracket.

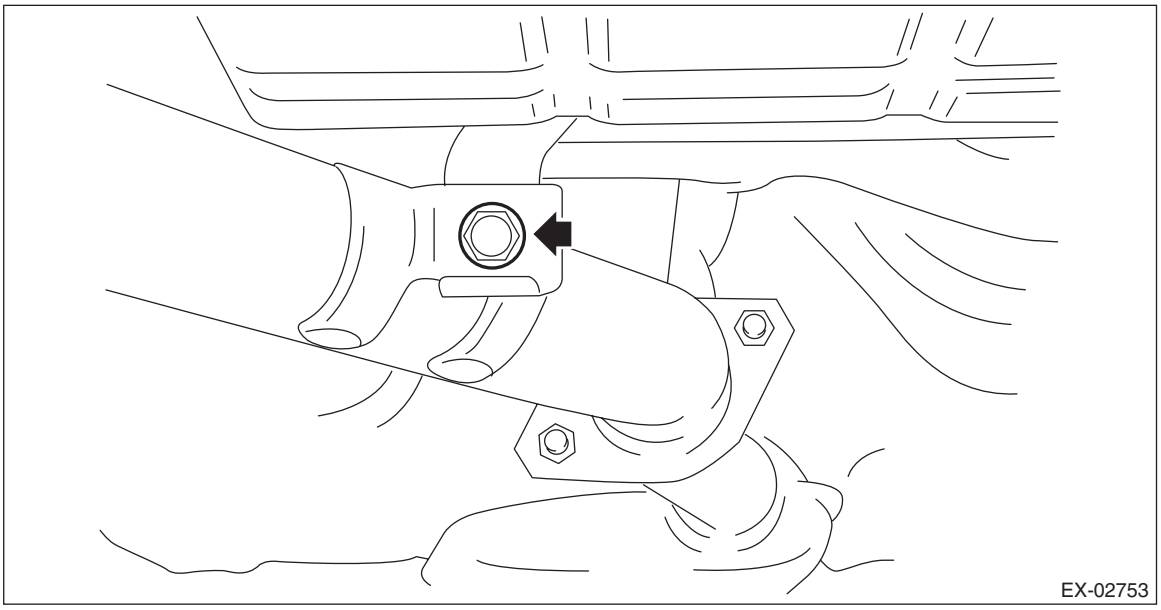

7) Remove the front exhaust pipe and center exhaust pipe from vehicle as a unit.

CAUTION:
• The front exhaust pipe and center exhaust pipe assembly are very heavy. Be careful not to drop the exhaust pipes when removing.
• After removing the front exhaust pipe and center exhaust pipe assembly, do not pull the rear exhaust pipe with excessive force.

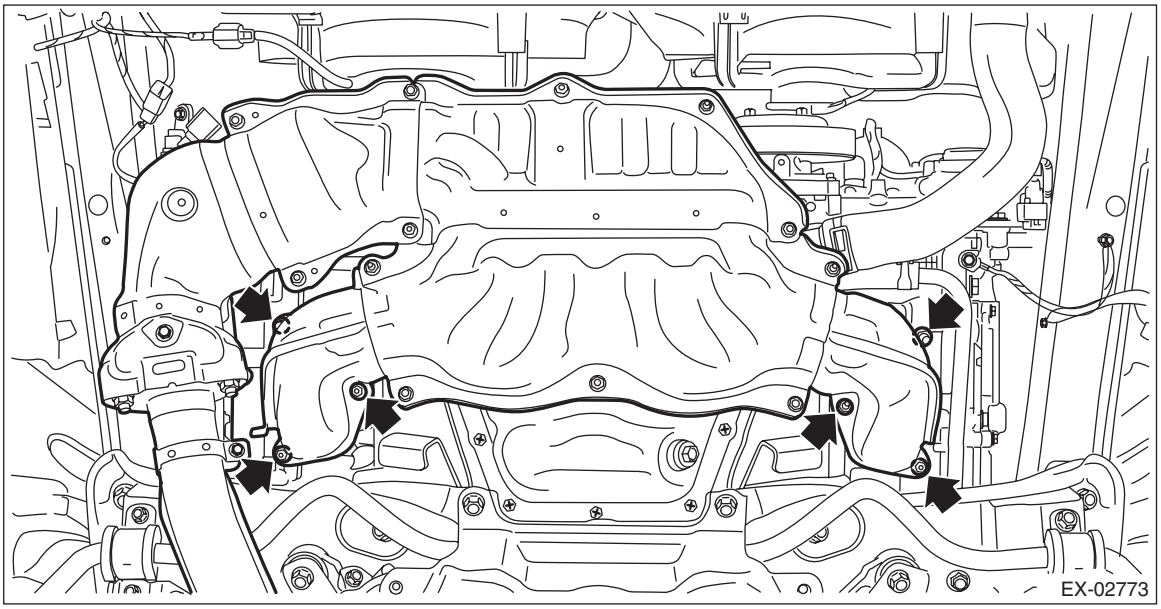

B: INSTALLATION

1) Set the front exhaust pip and center exhaust pipe to the vehicle, and temporally tighten the nuts which secure the front exhaust pipe to cylinder head.

NOTE:
Use a new gasket.

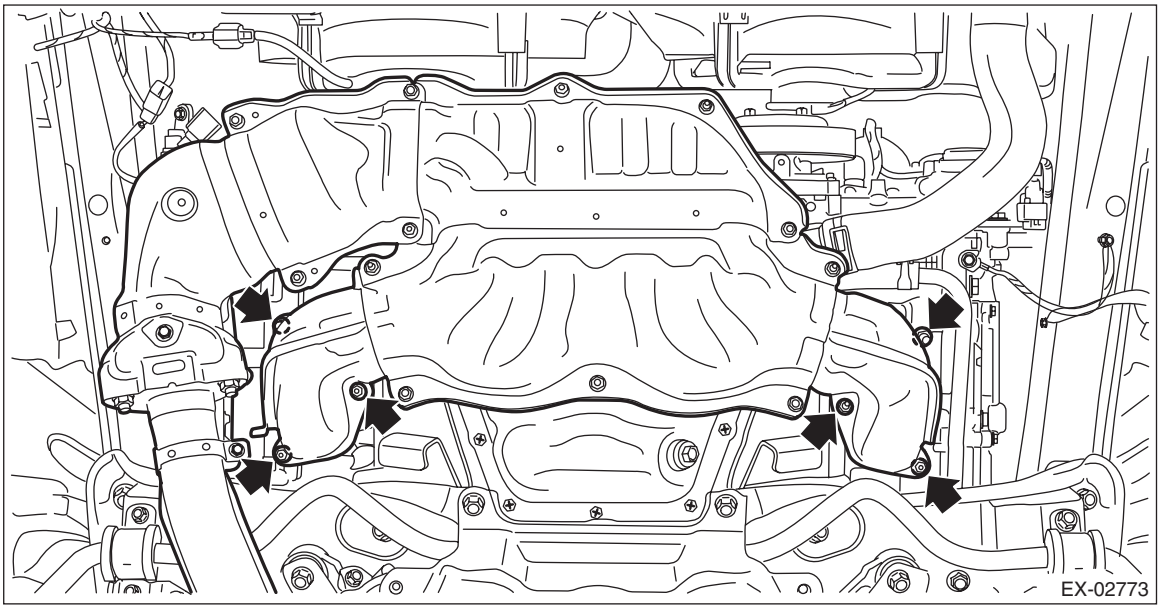

2) Install the bolts, springs, and nuts which secure the rear exhaust pipe to the center exhaust pipe.

NOTE:
Use a new gasket.

Tightening torque:
18 N·m (1.8 kgf-m, 13.3 ft-lb)

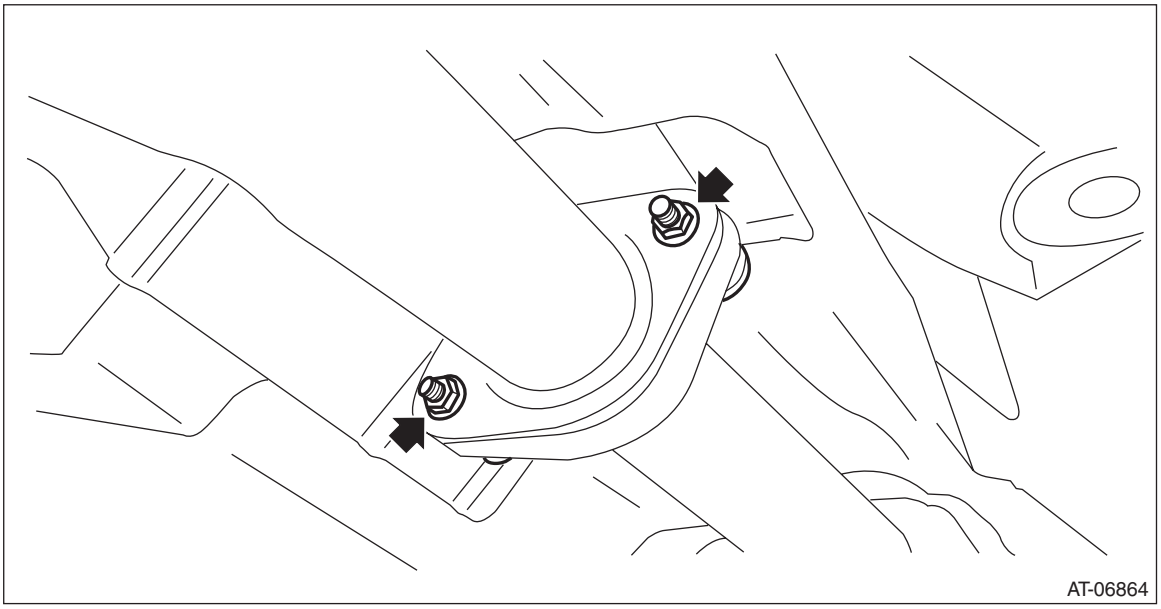

3) Tighten the bolts which secure the center exhaust pipe to the hanger bracket.

Tightening torque:
35 N·m (3.6 kgf-m, 25.8 ft-lb)

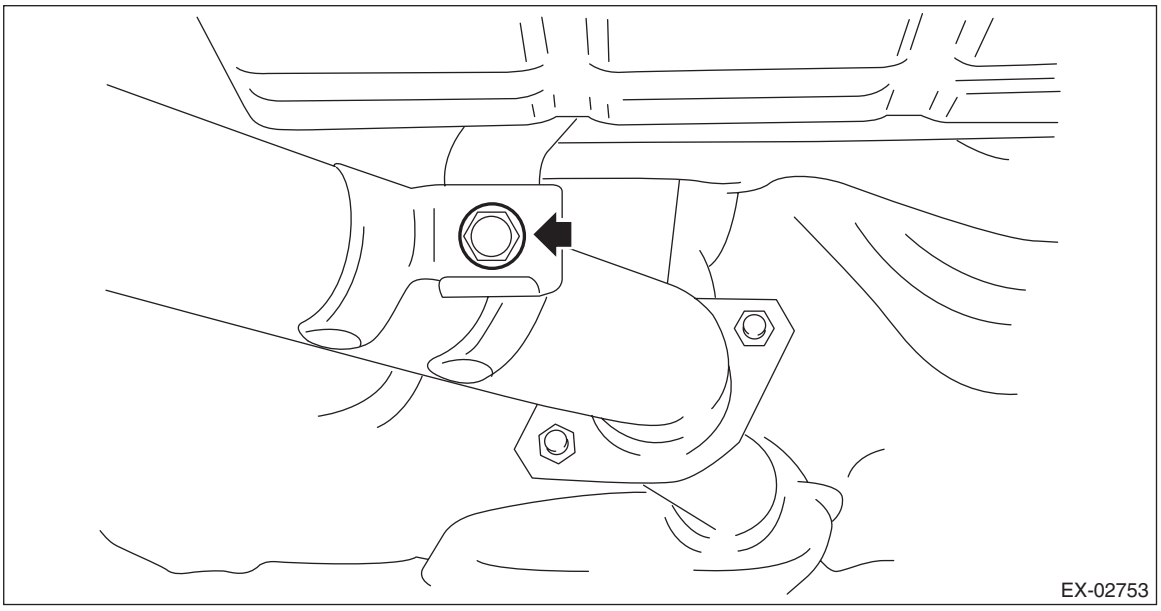

4) Tighten the nuts which hold front exhaust pipe to cylinder heads.

Tightening torque:
30 N·m (3.1 kgf-m, 22.1 ft-lb)

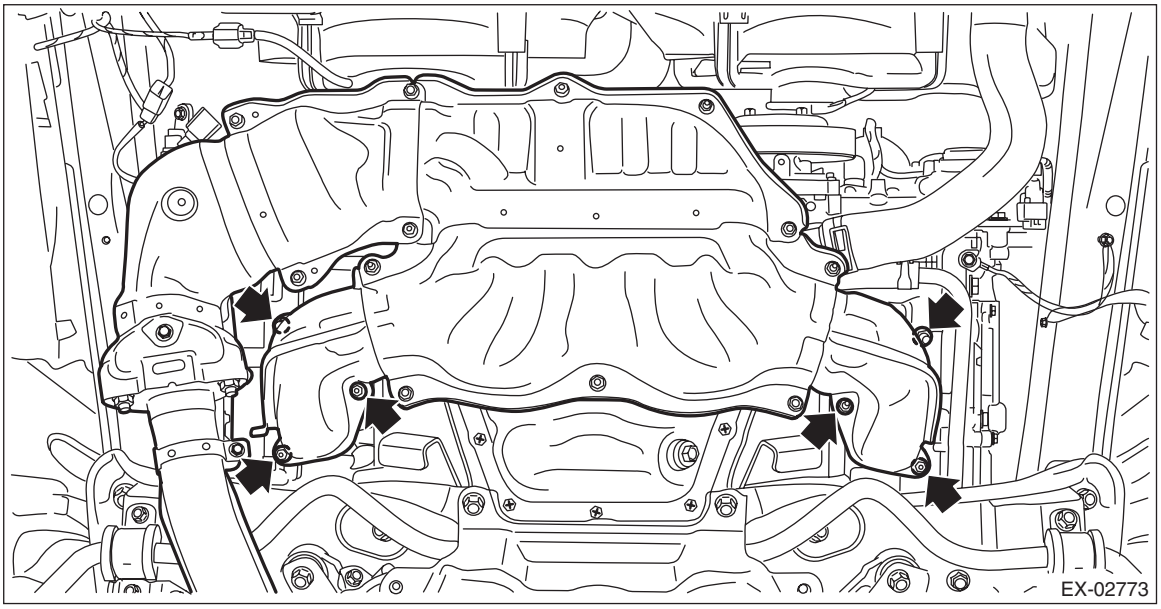

5) Connect the front oxygen (A/F) sensor connector (A) and rear oxygen sensor connector (B), and fasten the harness with the clip (C).

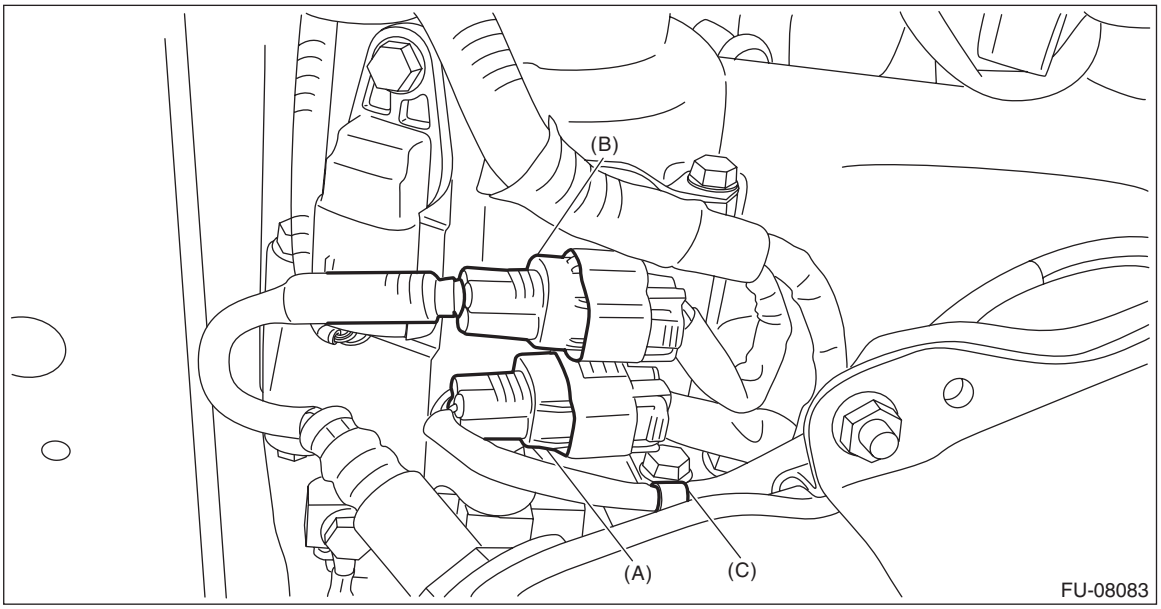

6) Install the under cover. <Ref. to EI-29, INSTALLATION, Front Under Cover.>
7) Lower the vehicle.
8) Connect the battery ground terminal. <Ref. to NT-5, BATTERY, NOTE, Note.>

C: DISASSEMBLY

1) Remove the front oxygen (A/F) sensor and rear oxygen sensor from front exhaust pipe. <Ref. to FU(H4DO(w/o HEV))-97, REMOVAL, Front Oxygen (A/F) Sensor.> <Ref. to FU(H4DO(w/o HEV))-101, REMOVAL, Rear Oxygen Sensor.> <Ref. to FU(H4DO(HEV))-79, REMOVAL, Front Oxygen (A/F) Sensor.> <Ref. to FU(H4DO(HEV))-82, REMOVAL, Rear Oxygen Sensor.>
2) Remove the center exhaust pipe from the front exhaust pipe.

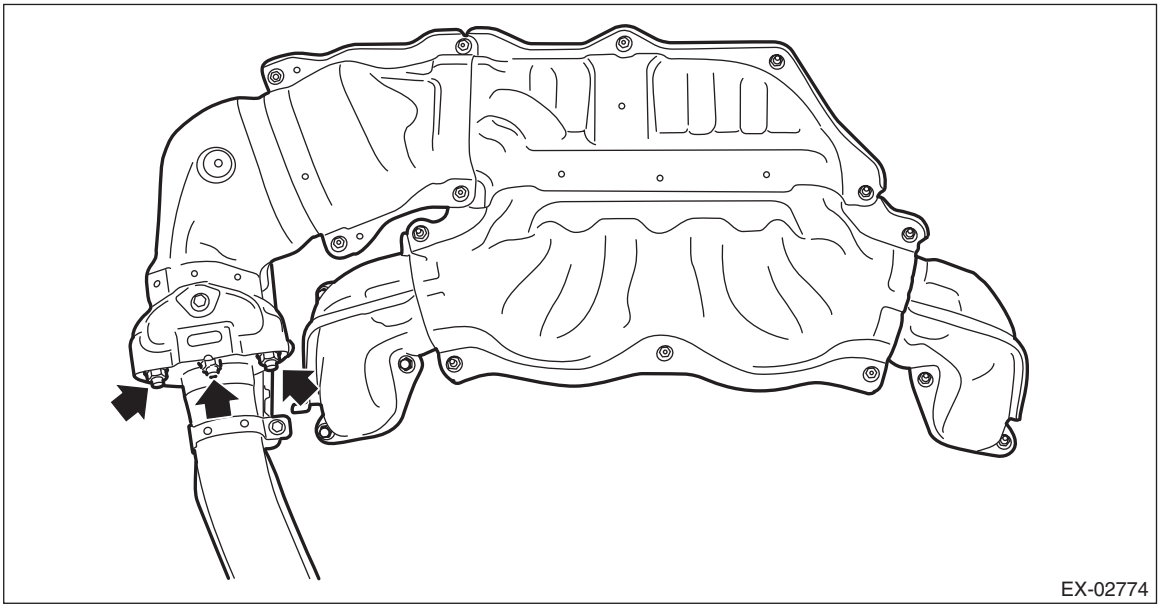

3) Remove each cover from the front exhaust pipe.

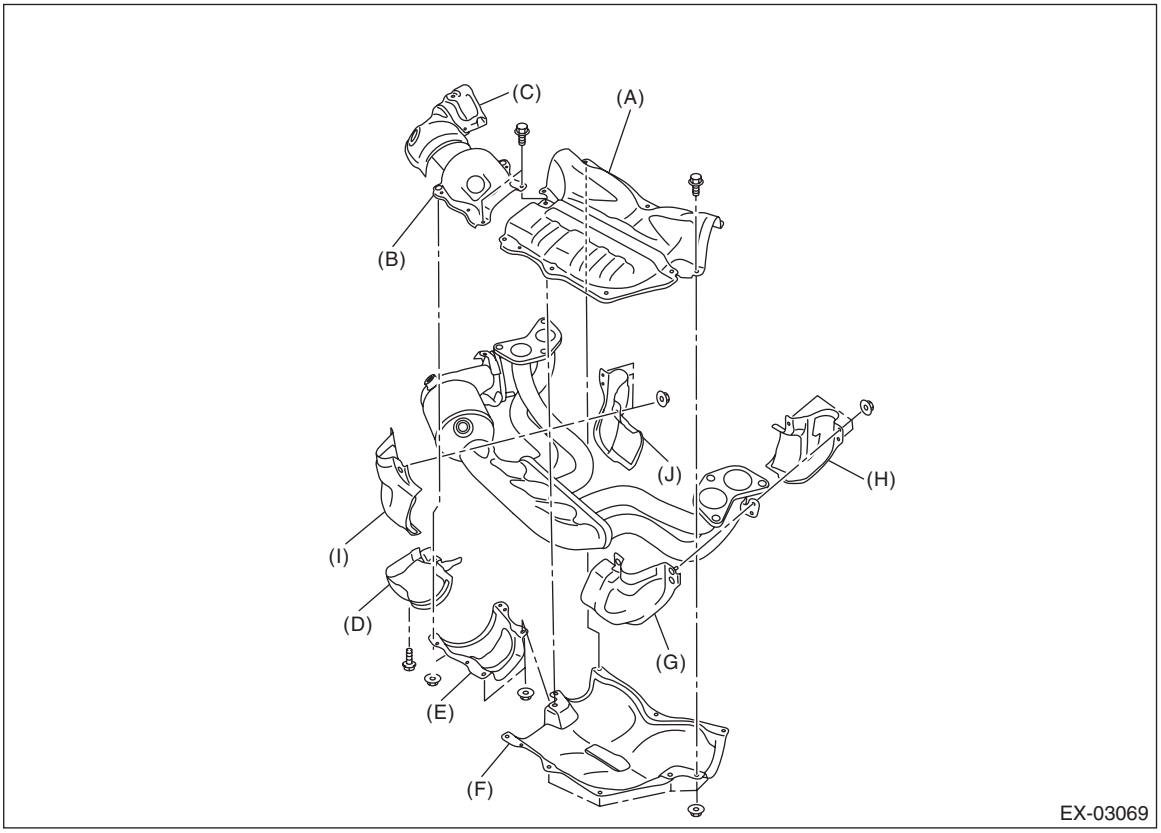

(A) Front exhaust pipe upper cover
(B) Front catalytic converter upper cover LH
(C) Front catalytic converter upper cover RH
(D) Front catalytic converter lower cover RH
(E) Front catalytic converter lower cover LH
(F) Front exhaust pipe lower cover
(G) Front exhaust pipe side cover LH (front)
(H) Front exhaust pipe side cover LH (rear)
(I) Front exhaust pipe side cover RH (front)
(J) Front exhaust pipe side cover RH (rear)

D: ASSEMBLY

1) Install each cover to the front exhaust pipe.

Tightening torque:
13 N·m (1.3 kgf-m, 9.6 ft-lb)

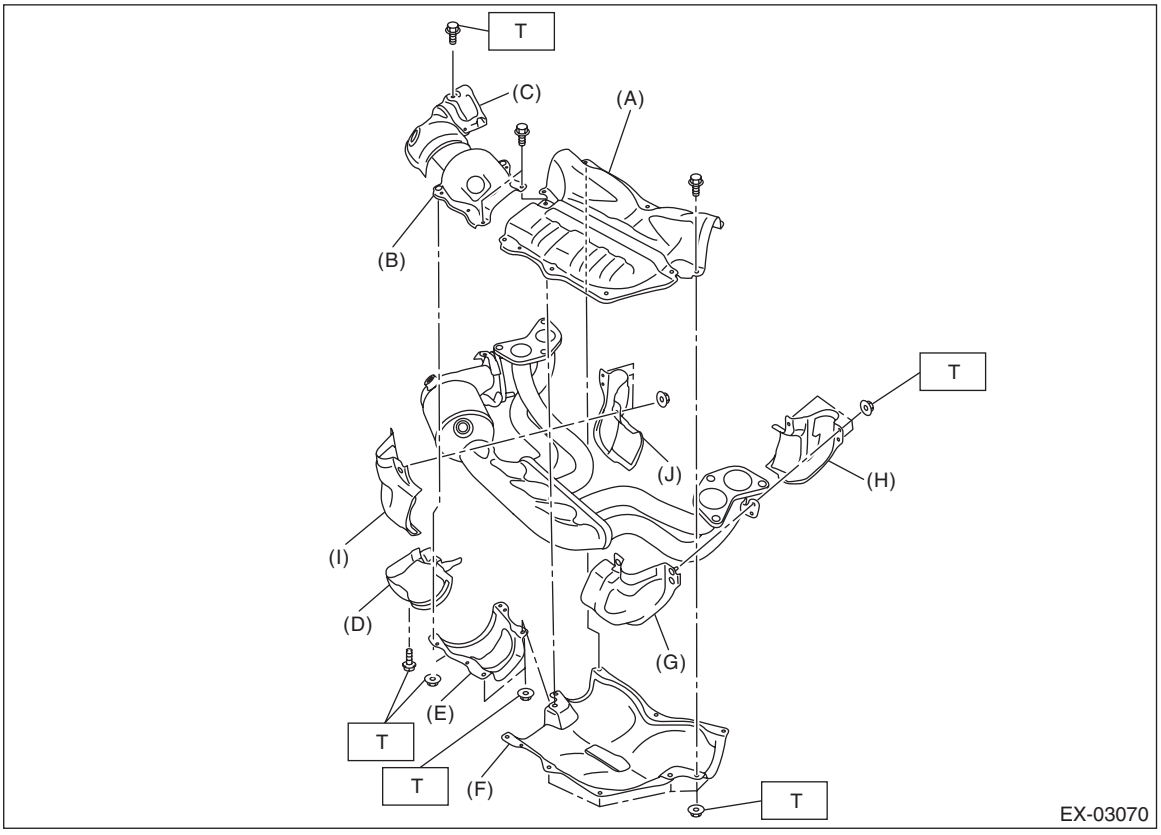

(A)	Front exhaust pipe upper cover	(E)	Front catalytic converter lower cover LH	(H)	Front exhaust pipe side cover LH (rear)
(B)	Front catalytic converter upper cover LH	(F)	Front exhaust pipe lower cover	(I)	Front exhaust pipe side cover RH (front)
(C)	Front catalytic converter upper cover RH	(G)	Front exhaust pipe side cover LH (front)	(J)	Front exhaust pipe side cover RH (rear)
(D)	Front catalytic converter lower cover RH				

2) Install the center exhaust pipe to front exhaust pipe.

NOTE:
Use a new gasket.

Tightening torque:
35 N·m (3.6 kgf-m, 25.8 ft-lb)

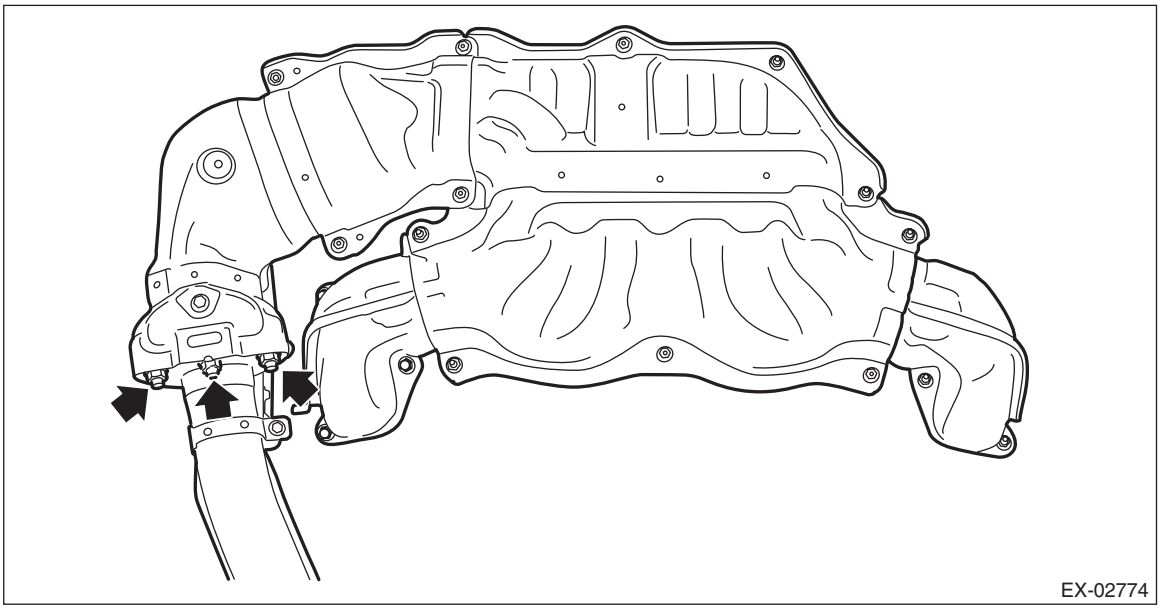

3) Install the front oxygen (A/F) sensor and rear oxygen sensor to the front exhaust pipe. <Ref. to FU(H4DO(w/o HEV))-98, INSTALLATION, Front Oxygen (A/F) Sensor.> <Ref. to FU(H4DO(w/o HEV))-102, INSTALLATION, Rear Oxygen Sensor.> <Ref. to FU(H4DO(HEV))-80, INSTALLATION, Front Oxygen (A/F) Sensor.> <Ref. to FU(H4DO(HEV))-83, INSTALLATION, Rear Oxygen Sensor.>

E: INSPECTION

1) Check the connections and welded parts for exhaust leaks.
2) Make sure there are no holes or rusting.

3. Center Exhaust Pipe

A: REMOVAL

CAUTION:
Vehicle components are extremely hot after driving. Be wary of receiving burns from heated parts.
1) Turn the ignition switch to OFF.
2) Lift up the vehicle.
3) Remove the bolts, springs, and nuts securing the rear exhaust pipe to the center exhaust pipe.

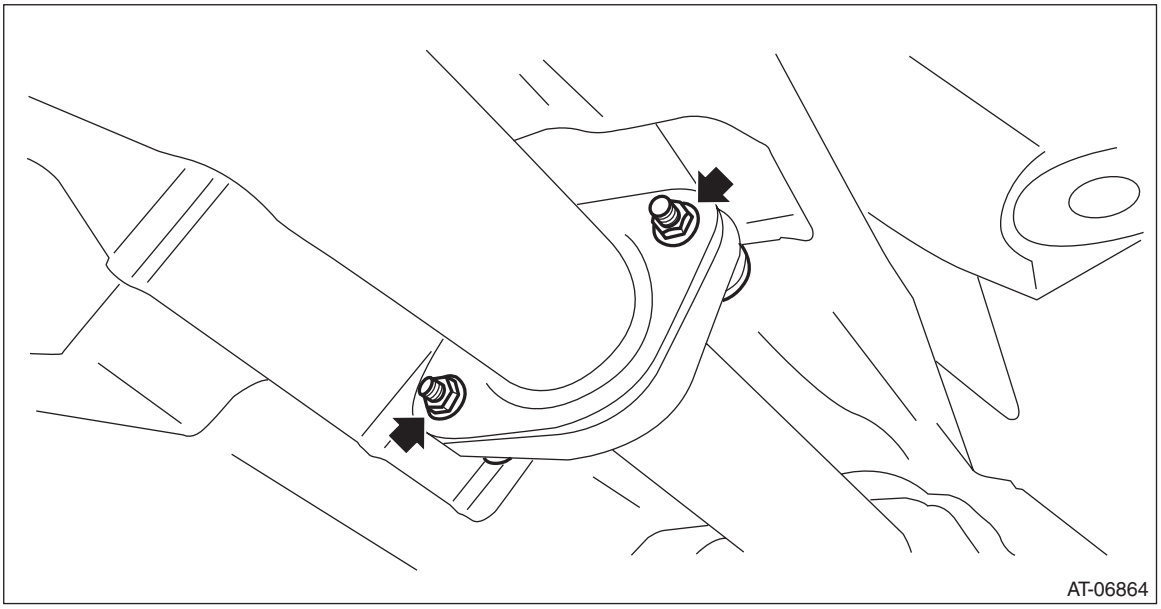

4) Remove the bolt which holds center exhaust pipe to hanger bracket.

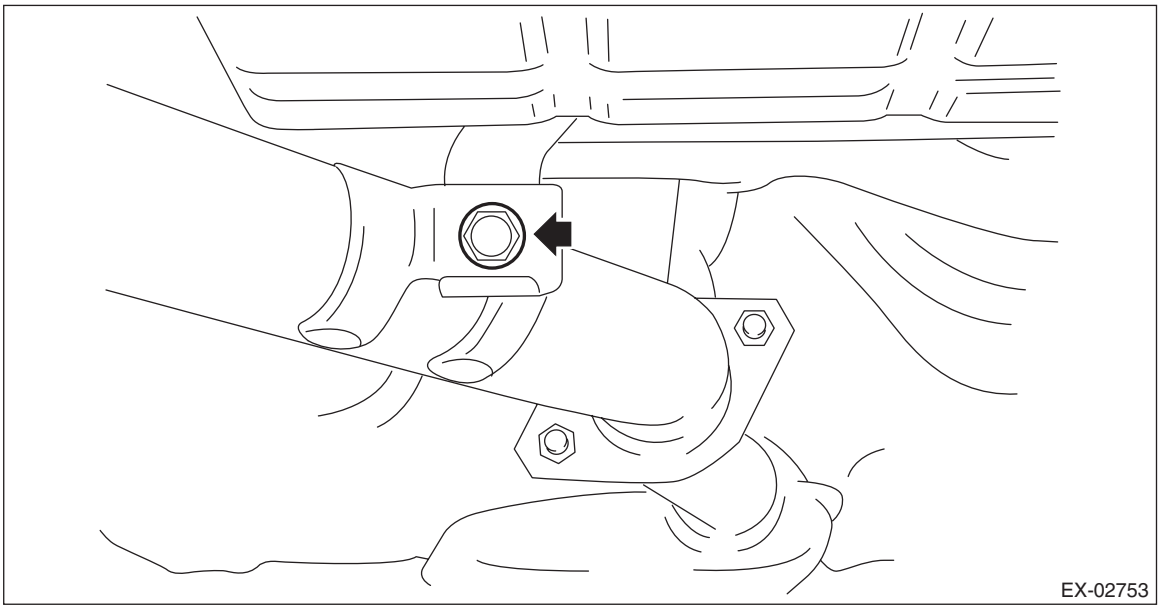

5) Remove the center exhaust pipe from the front exhaust pipe.

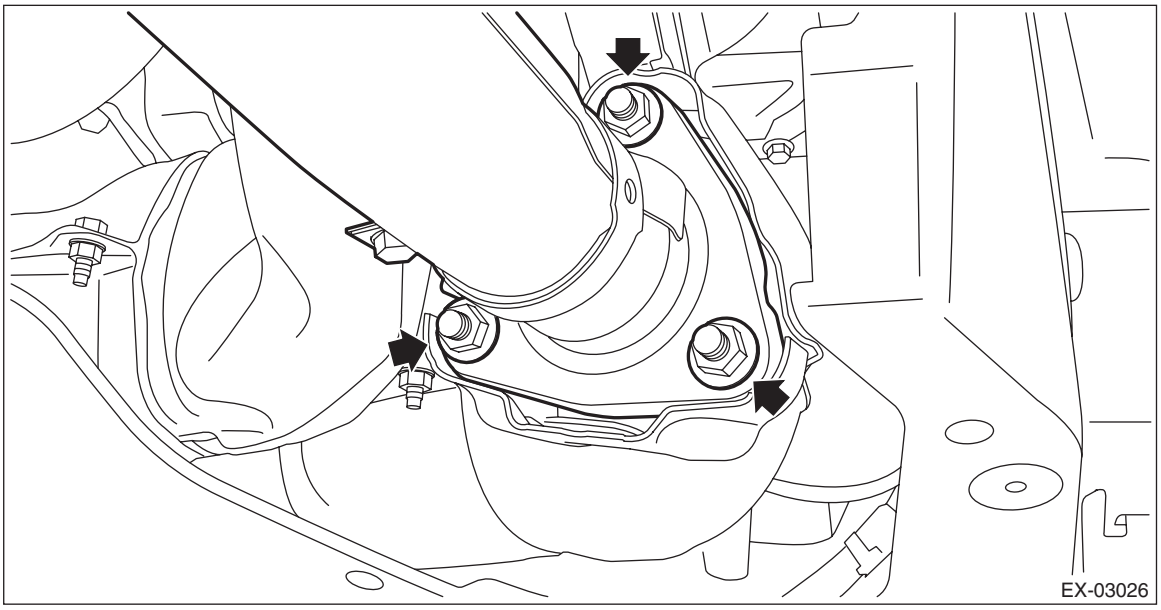

6) Remove the center exhaust pipe upper cover from the center exhaust pipe.

B: INSTALLATION

1) Install the center exhaust pipe upper cover to the center exhaust pipe.

Tightening torque:
13 N·m (1.3 kgf-m, 9.6 ft-lb)

2) Temporarily tighten the nuts which secure the center exhaust pipe to the front exhaust pipe.

NOTE:
Use a new gasket.

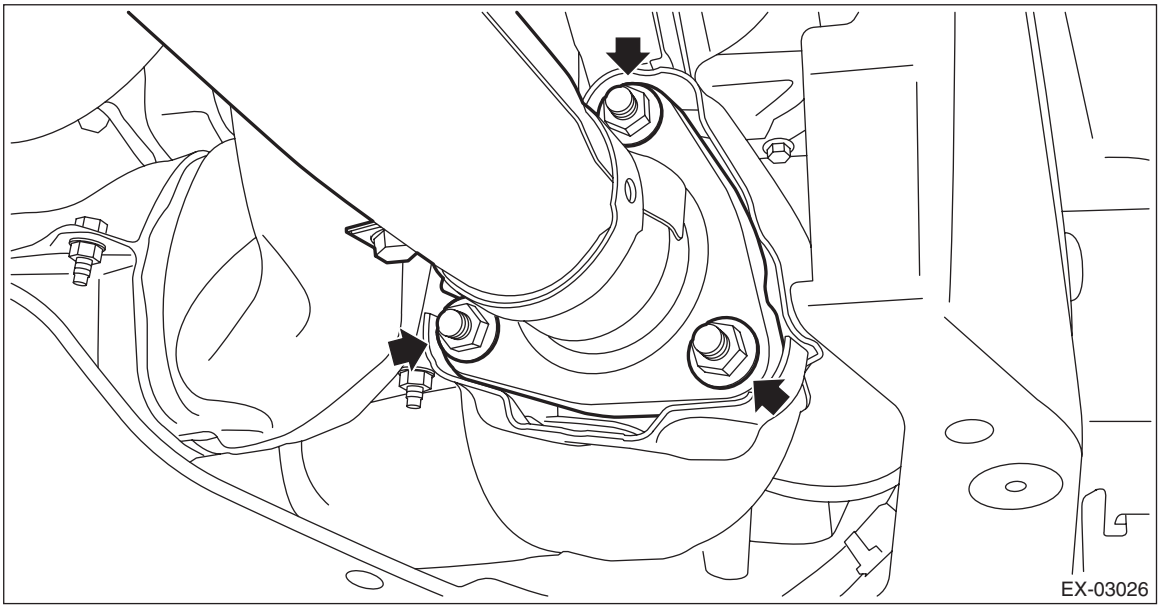

3) Install the bolts, springs, and nuts which secure the rear exhaust pipe to the center exhaust pipe.

NOTE:
Use a new gasket.

Tightening torque:
18 N·m (1.8 kgf-m, 13.3 ft-lb)

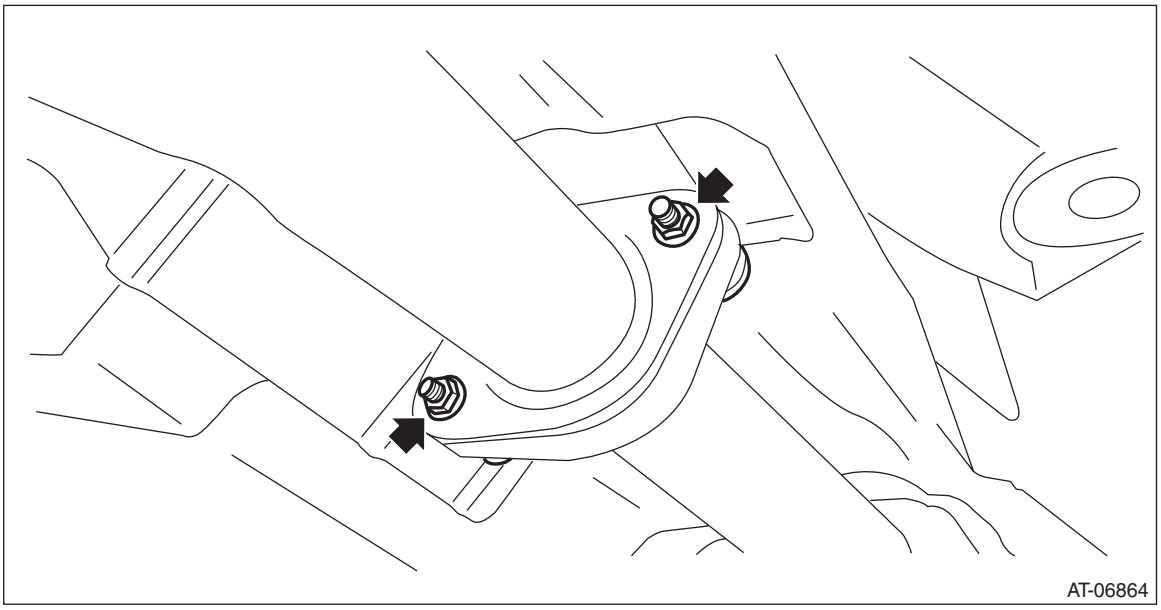

4) Tighten the bolts which secure the center exhaust pipe to the hanger bracket.

Tightening torque:
35 N·m (3.6 kgf-m, 25.8 ft-lb)

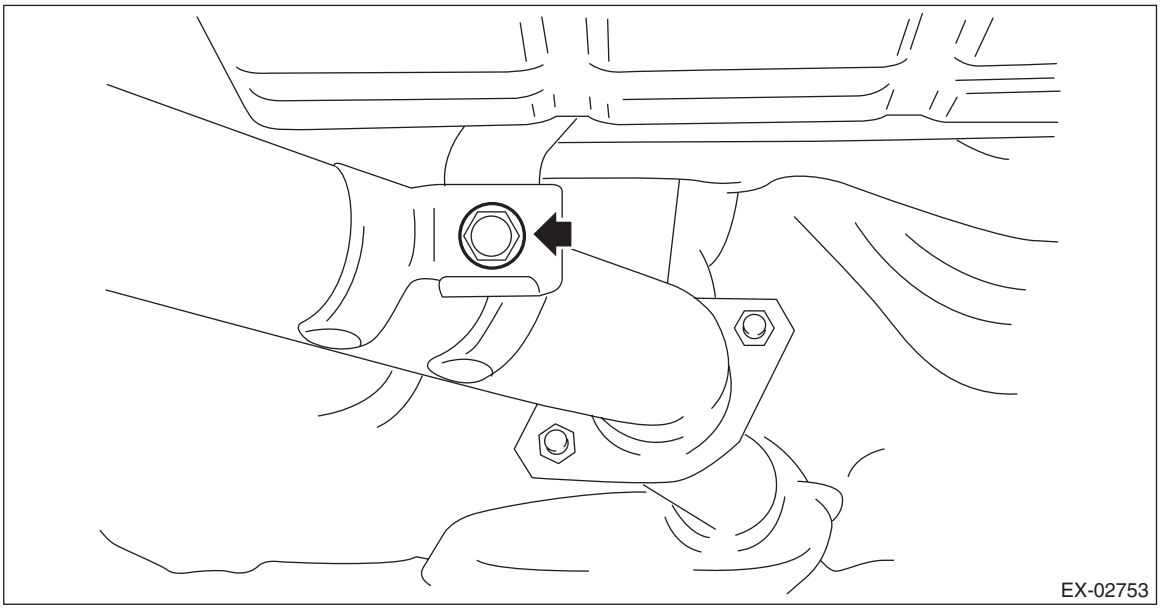

5) Tighten the nuts which secure the center exhaust pipe to the front exhaust pipe.

Tightening torque:
35 N·m (3.6 kgf-m, 25.8 ft-lb)

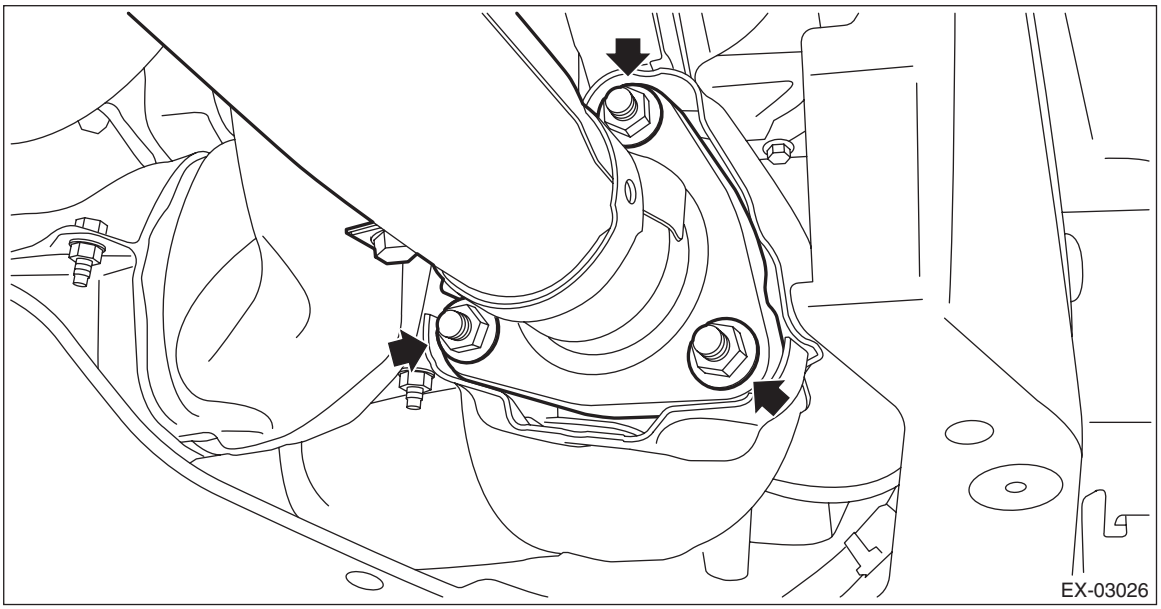

C: INSPECTION

1) Check the connections and welded parts for exhaust leaks.
2) Make sure there are no holes or rusting.

4. Rear Exhaust Pipe

A: REMOVAL

CAUTION:
Vehicle components are extremely hot after driving. Be wary of receiving burns from heated parts.
1) Turn the ignition switch to OFF.
2) Lift up the vehicle.
3) Remove the bolts, springs, and nuts securing the center exhaust pipe to the rear exhaust pipe.

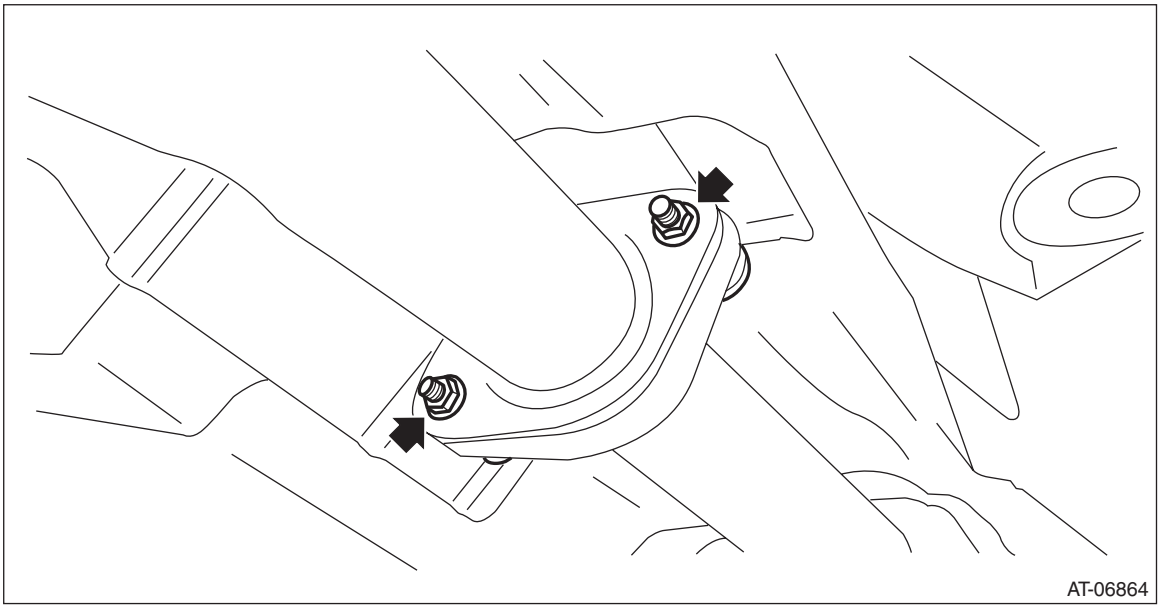

4) Remove the bolts and self-locking nuts securing the mufflers to the rear exhaust pipes.

CAUTION:
Be careful not to drop the rear exhaust pipe.
- 4 door model

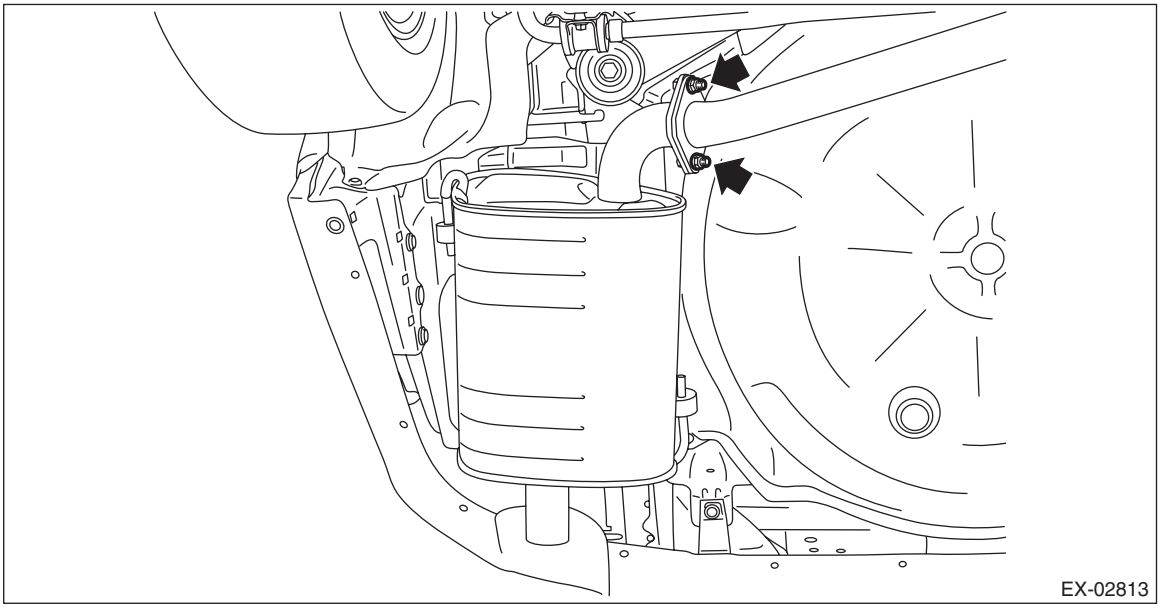

- 5 door model

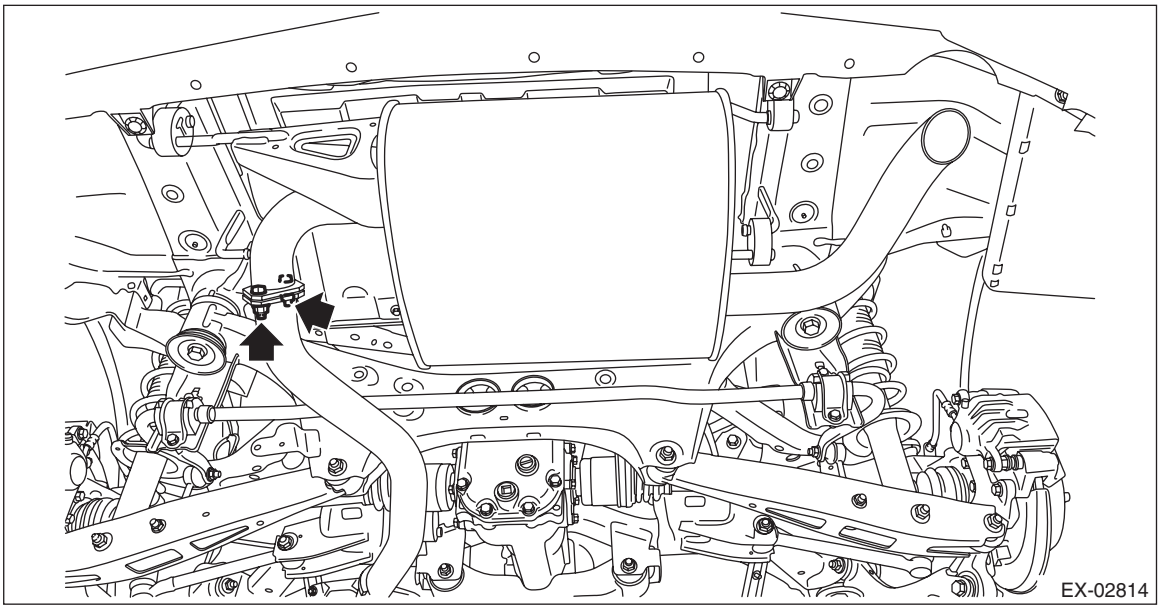

5) Apply a coat of spray type lubricant to the mating area of cushion rubber.
6) Remove the rear exhaust pipe from the cushion rubber.

CAUTION:
Be careful not to let the muffler contact the rear bumper.

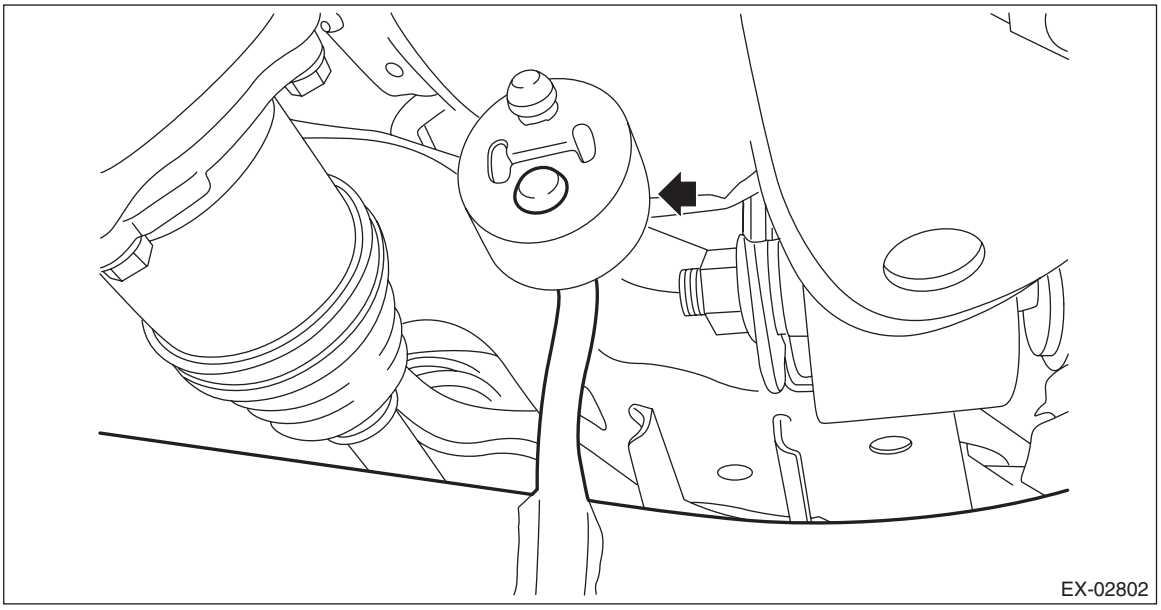

B: INSTALLATION

1) Apply a coat of spray type lubricant to the mating area of cushion rubber.
2) Install the rear exhaust pipe to cushion rubber.

NOTE:
After assembling, degrease the lubricant which was applied to the cushion rubber while removing/installing.

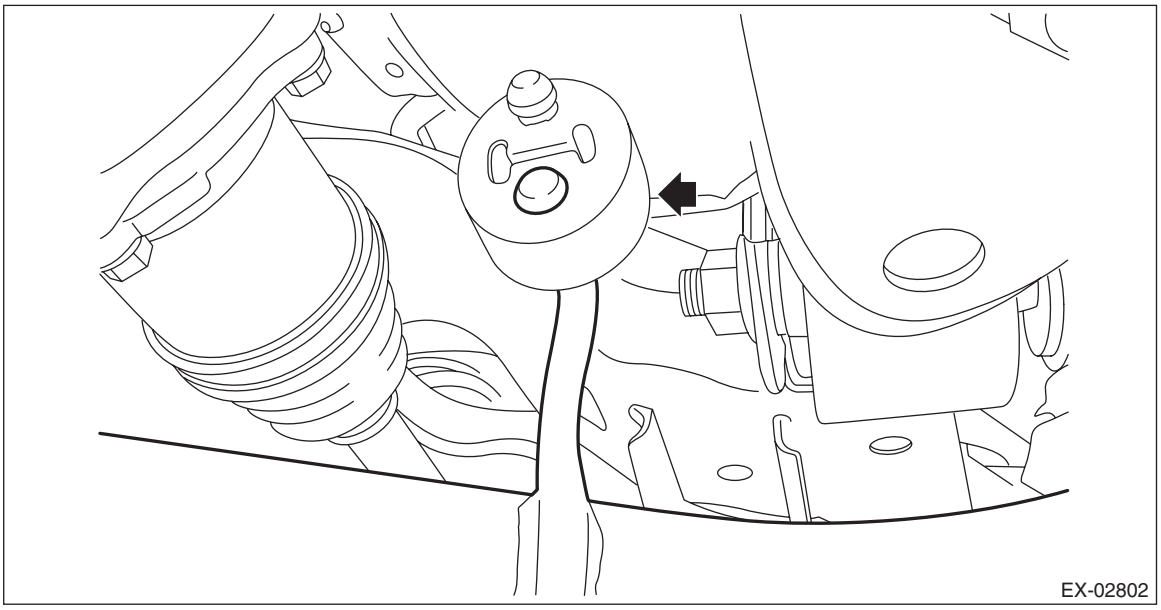

3) Install the bolts and self-locking nuts which secure the muffler to the rear exhaust pipe.

NOTE:
Use a new gasket and self-locking nut.

Tightening torque:
48 N·m (4.9 kgf-m, 35.4 ft-lb)

- 4 door model

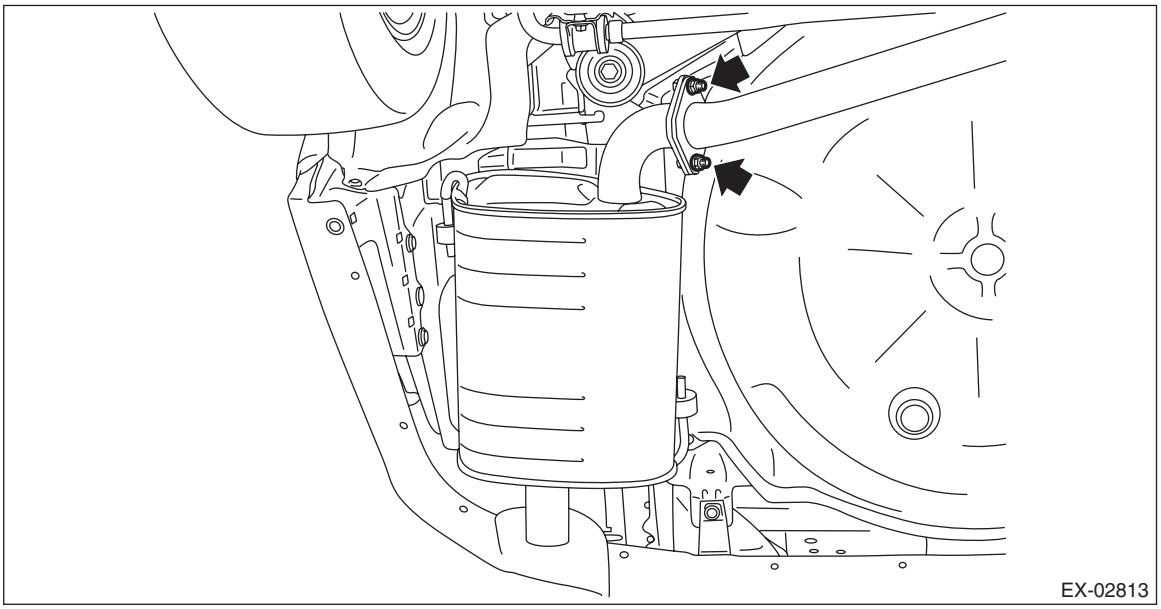

- 5 door model

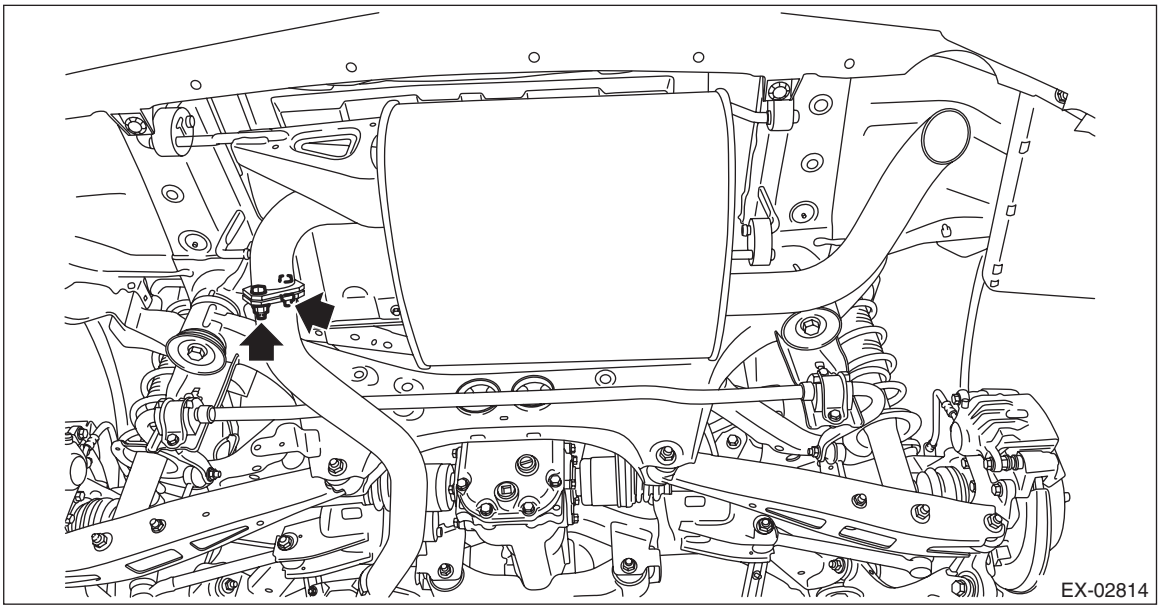

4) Install the bolts, springs, and nuts which secure the center exhaust pipe to the rear exhaust pipe.

NOTE:
Use a new gasket.

Tightening torque:
18 N·m (1.8 kgf-m, 13.3 ft-lb)

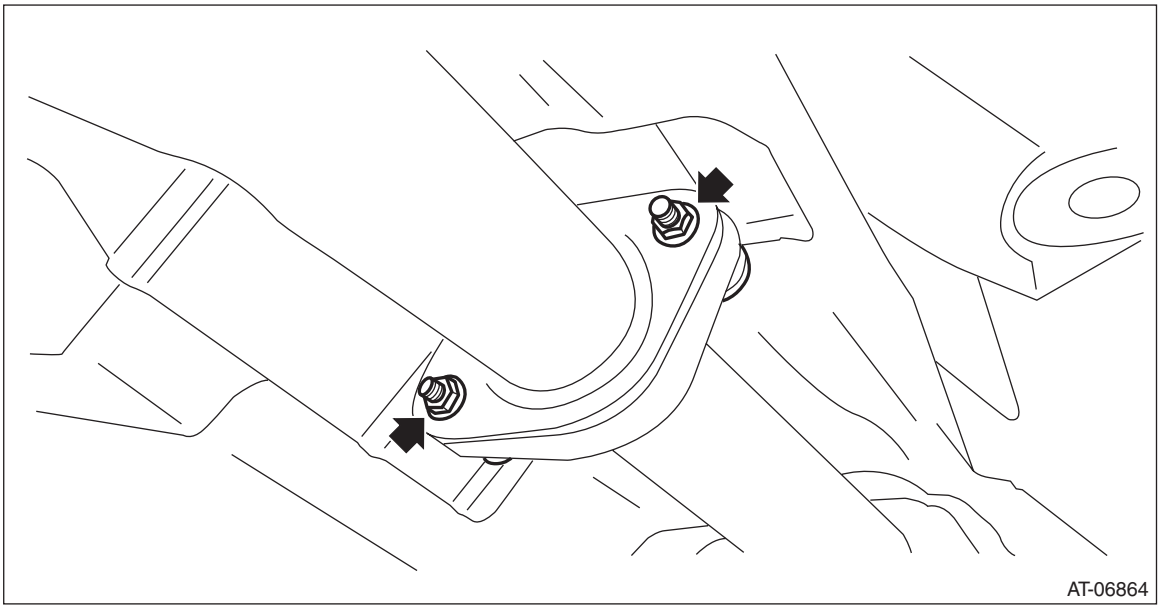

5) Lower the vehicle.

C: INSPECTION

1) Check the connections and welded parts for exhaust leaks.
2) Make sure there are no holes or rusting.
3) Check the cushion rubber for wear or crack.

5. Muffler

A: REMOVAL

CAUTION:
Vehicle components are extremely hot after driving. Be wary of receiving burns from heated parts.
1) Turn the ignition switch to OFF.
2) Lift up the vehicle.
3) Remove the bolts and self-locking nuts which secure the rear exhaust pipe to the muffler.
- 4 door model

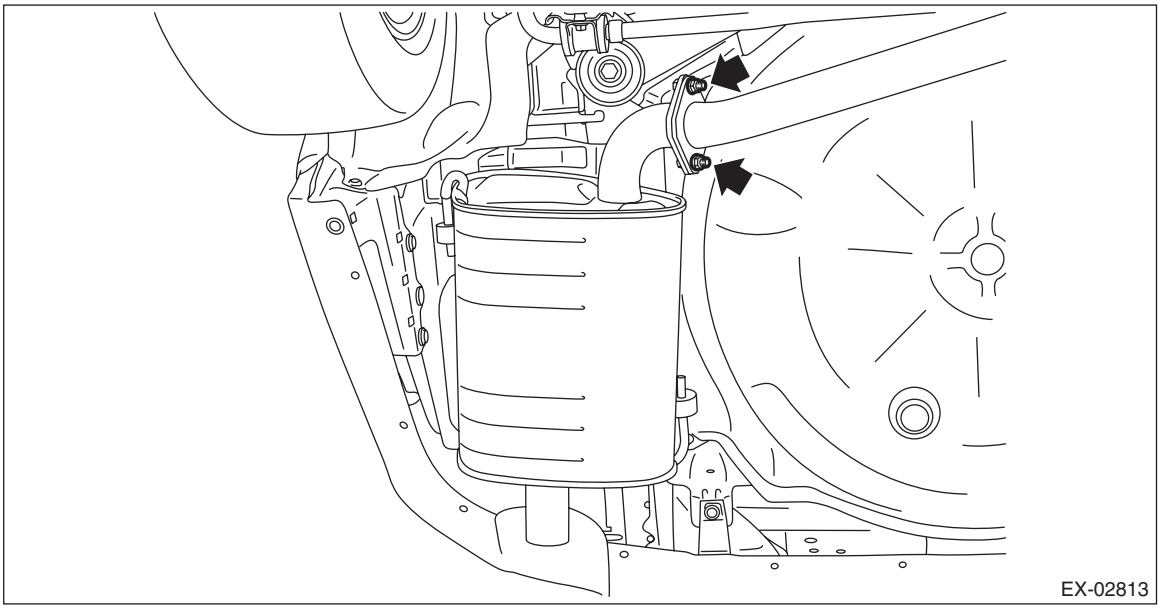

- 5 door model

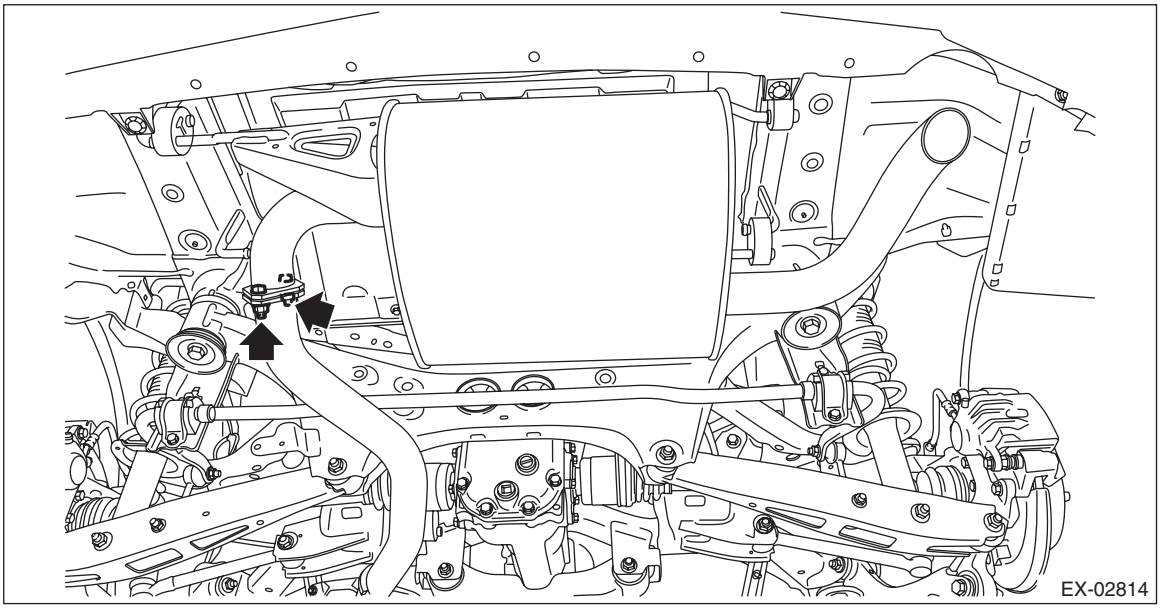

4) Apply a coat of spray type lubricant to the mating area of cushion rubber.

5) Remove the muffler from the cushion rubber.

CAUTION:
Be careful not to drop the muffler during removal.

- 4 door model

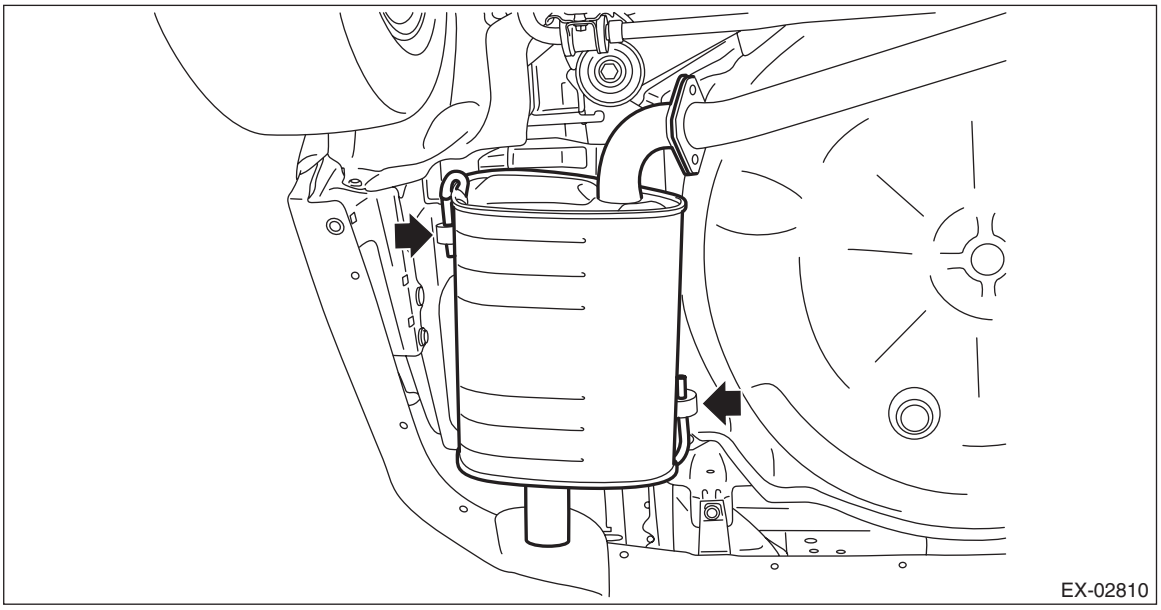

- 5 door model

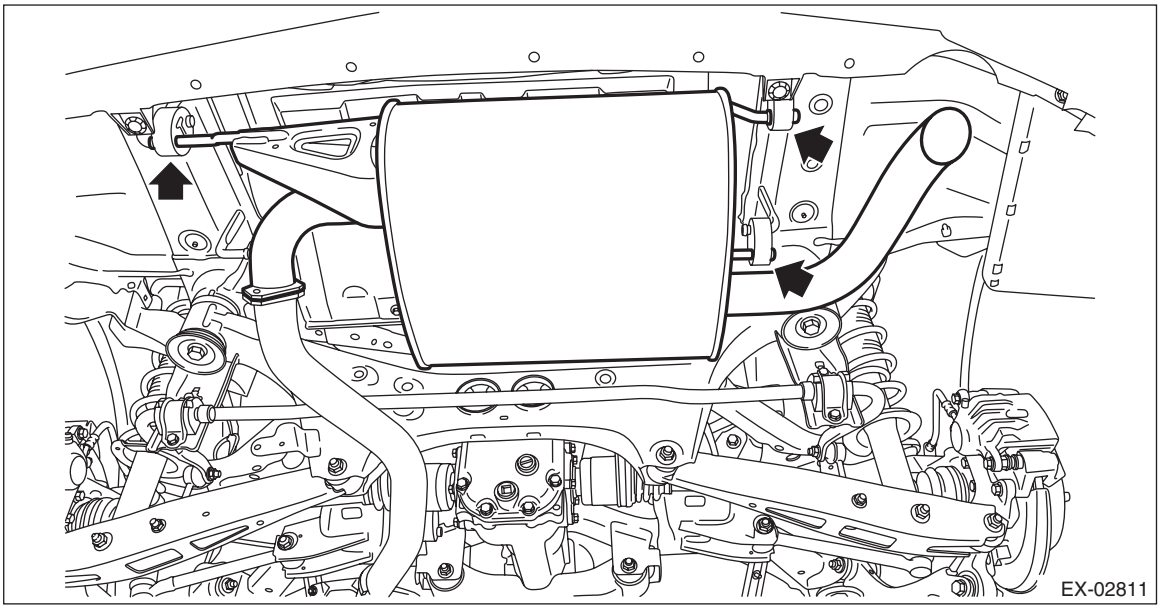

6) Remove the heat shield cover from the vehicle.
- 4 door model

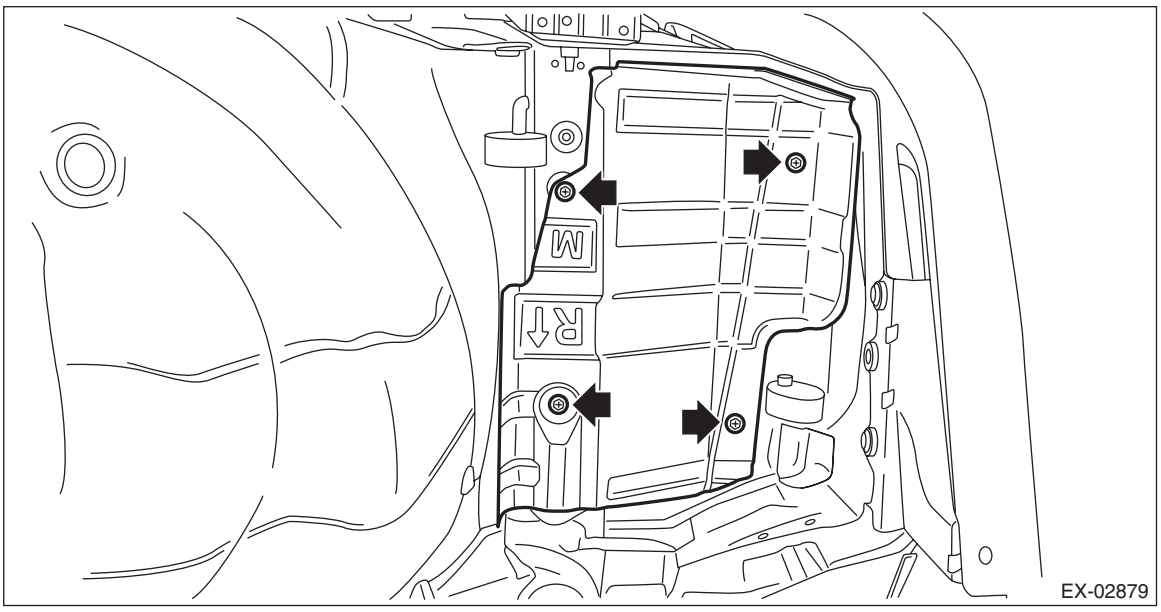

- 5 door model

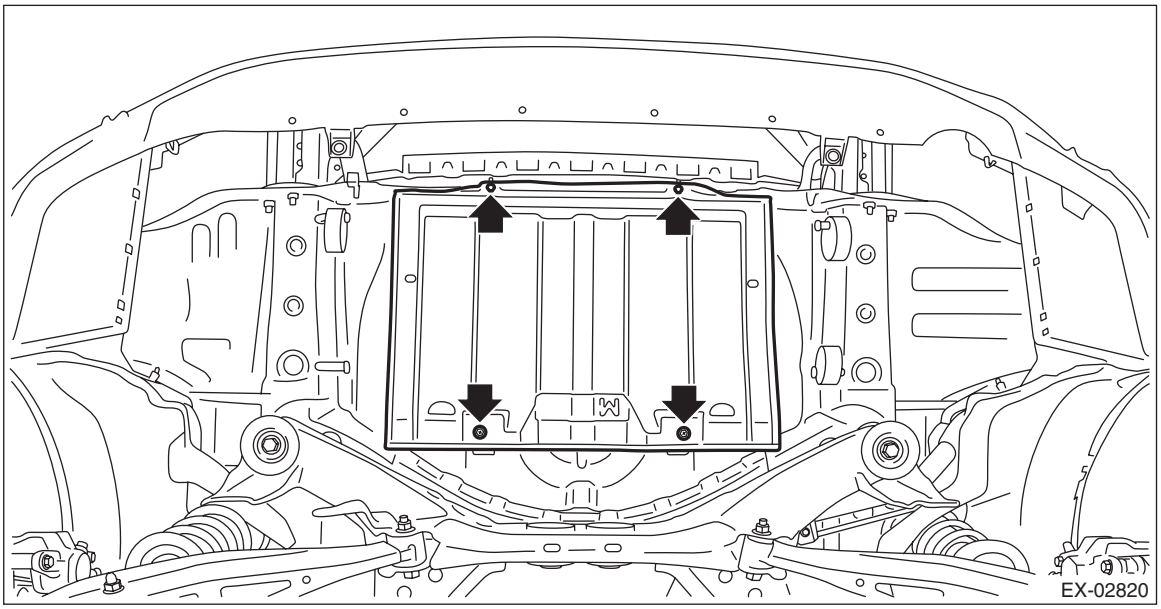

B: INSTALLATION

Install in the reverse order of removal.

NOTE:
- Use a new gasket and self-locking nut.
- After assembling, degrease the lubricant which was applied to the cushion rubber while removing/installing.

Tightening torque:
10 N·m (1.0 kgf-m, 7.4 ft-lb)

- 4 door model

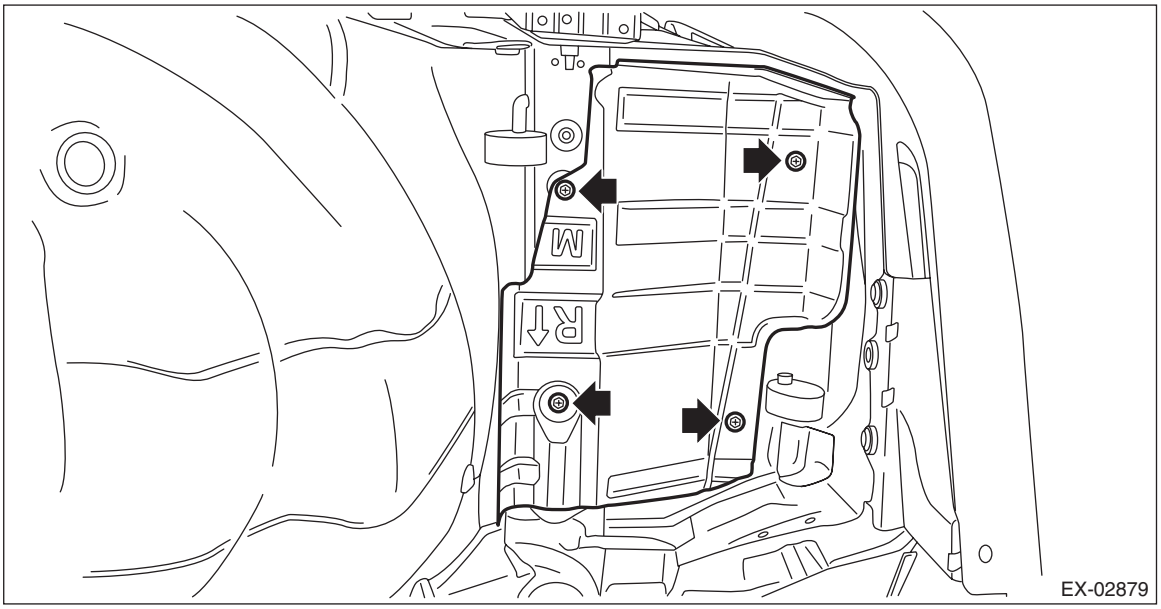

- 5 door model

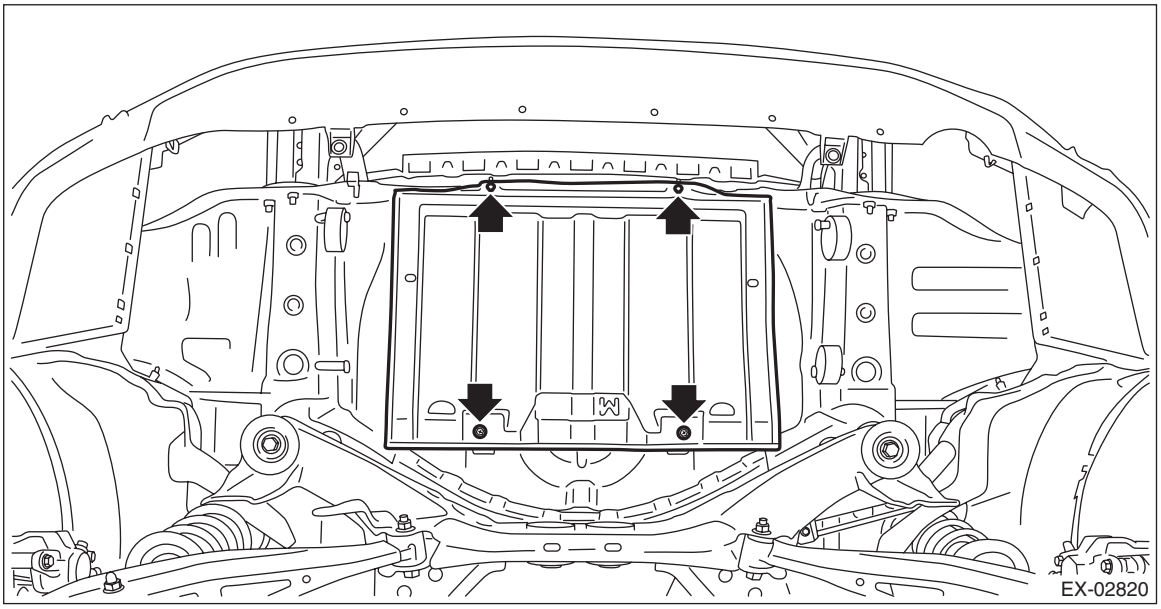

Tightening torque:
48 N·m (4.9 kgf-m, 35.4 ft-lb)

- 4 door model

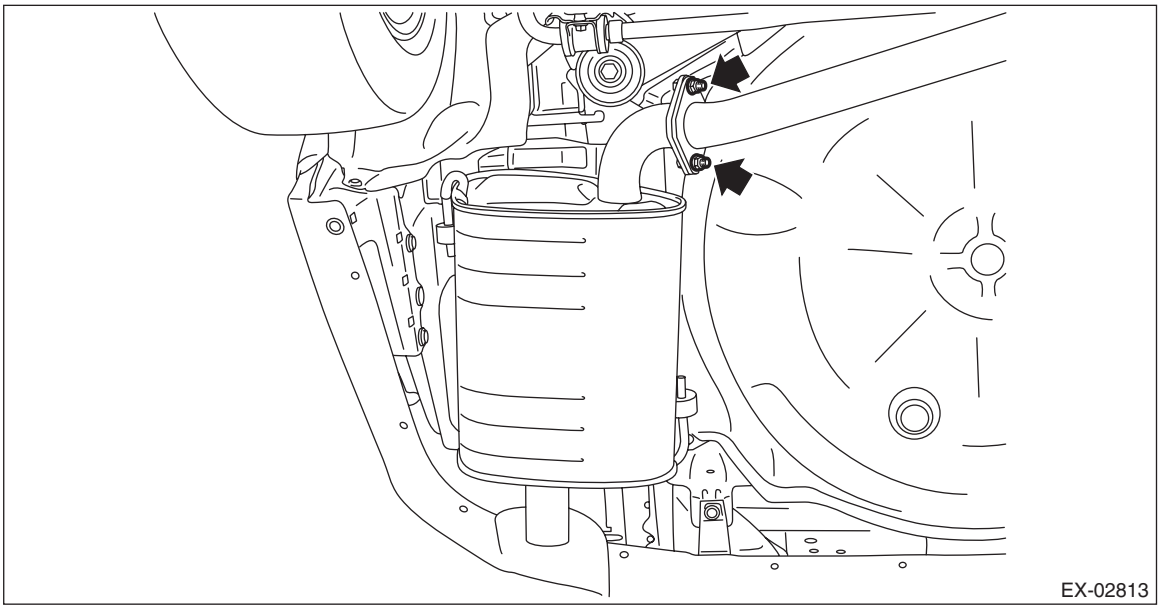

- 5 door model

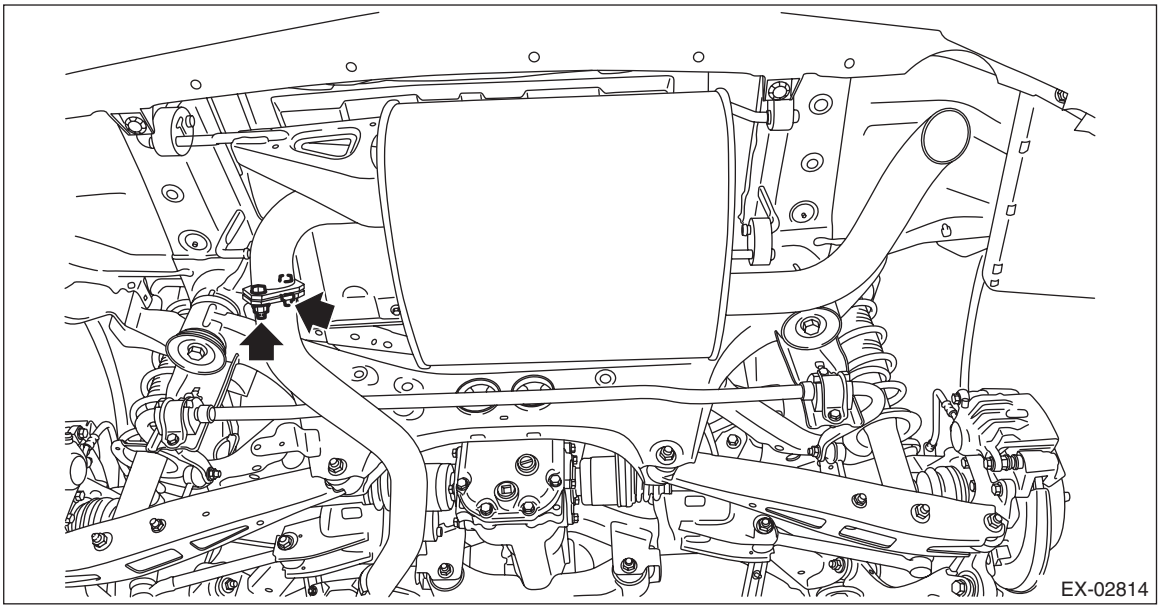

C: INSPECTION

1) Check the connections and welded parts for exhaust leaks.
2) Make sure there are no holes or rusting.
3) Check the cushion rubber for wear or crack.

COOLING

CO(H4DO(w/o HEV))

		Page
1.	General Description	2
2.	Radiator Fan System	10
3.	Engine Coolant	16
4.	Water Pump	19
5.	Water Pipe Assembly	24
6.	Thermostat	64
7.	Radiator	78
8.	Radiator Cap	88
9.	Radiator Main Fan and Fan Motor	89
10.	Radiator Sub Fan and Fan Motor	93
11.	Reservoir Tank	97
12.	Engine Cooling System Trouble in General	98

1. General Description

A: SPECIFICATION

Cooling system					Electric fan + Forced engine coolant circulation system
Total engine coolant capacity L (US qt, Imp qt)		Except for XV model	CVT model		Approx. 8.2 (8.7, 7.2)
			MT model		Approx. 7.8 (8.2, 6.9)
		XV model	Gasoline engine model	CVT model	Approx. 8.0 (8.5, 7.0)
				MT model	Approx. 7.6 (8.0, 6.7)
			HEV model		Approx. 8.2 (8.7, 7.2)
Water pump	Type				Centrifugal impeller type
	Discharge performance	Discharge rate L (US gal, Imp gal)/min			230 (60.8, 50.6)
		Pump speed — Discharge pressure			6,600 rpm — 211.0 kPa (22 mAq)
		Engine coolant temperature			80°C (176°F)
	Impeller diameter mm (in)				60 (2.36)
	Number of impeller vanes				7
	Pump pulley diameter mm (in)	Gasoline engine model			130 (5.12)
		HEV model			143 (5.63)
Thermostat	Type				Wax pellet type
	Starting temperature to open	Engine side			87 — 91°C (189 — 196°F)
		CVTF cooler (with warmer feature) side			48 — 52°C (118 — 126°F)
	Fully opens	Engine side			98°C (208°F)
		CVTF cooler (with warmer feature) side			63°C (145°F)
	Valve lift mm (in)	Engine side			8.0 (0.315) or more
		CVTF cooler (with warmer feature) side			6.0 (0.236) or more
	Valve opening size mm (in)	Engine side			32 (1.26)
		CVTF cooler (with warmer feature) side			22 (0.87)
Radiator fan	Motor input	Main fan W			120
		Sub fan W			120
	Fan diameter / Blade	Main fan			318.5 mm (12.54 in)/9
		Sub fan			318.5 mm (12.54 in)/11
Radiator	Type				Down flow, pressure type
	Core dimensions	Width × Height × Thickness mm (in)			687.4 × 340 × 16 (27.06 × 13.39 × 0.63)
	Pressure range in which cap valve is open kPa (kg/cm^2, psi)		Positive pressure side	Standard	93 — 123 (0.95 — 1.25, 14 — 18)
				Limit	83 (0.85, 12)
			Negative pressure side	Standard	–1.0 to –4.9 or less (–0.01 — –0.05, –0.1 — –0.7)
	Fins				Corrugated fin type
Reservoir tank	Capacity L (US qt, Imp qt)				0.45 (0.48, 0.40)

	Recommended materials	Item number	Alternative
Coolant	SUBARU SUPER COOLANT (concentrated type)	—	—
	SUBARU SUPER COOLANT (diluted type)	K0670Y0001	
Water for dilution	Distilled water	—	Soft water or tap water
Cooling system protective agent	Cooling system conditioner	SOA345001	—

B: COMPONENT

1. WATER PUMP

- Gasoline engine model

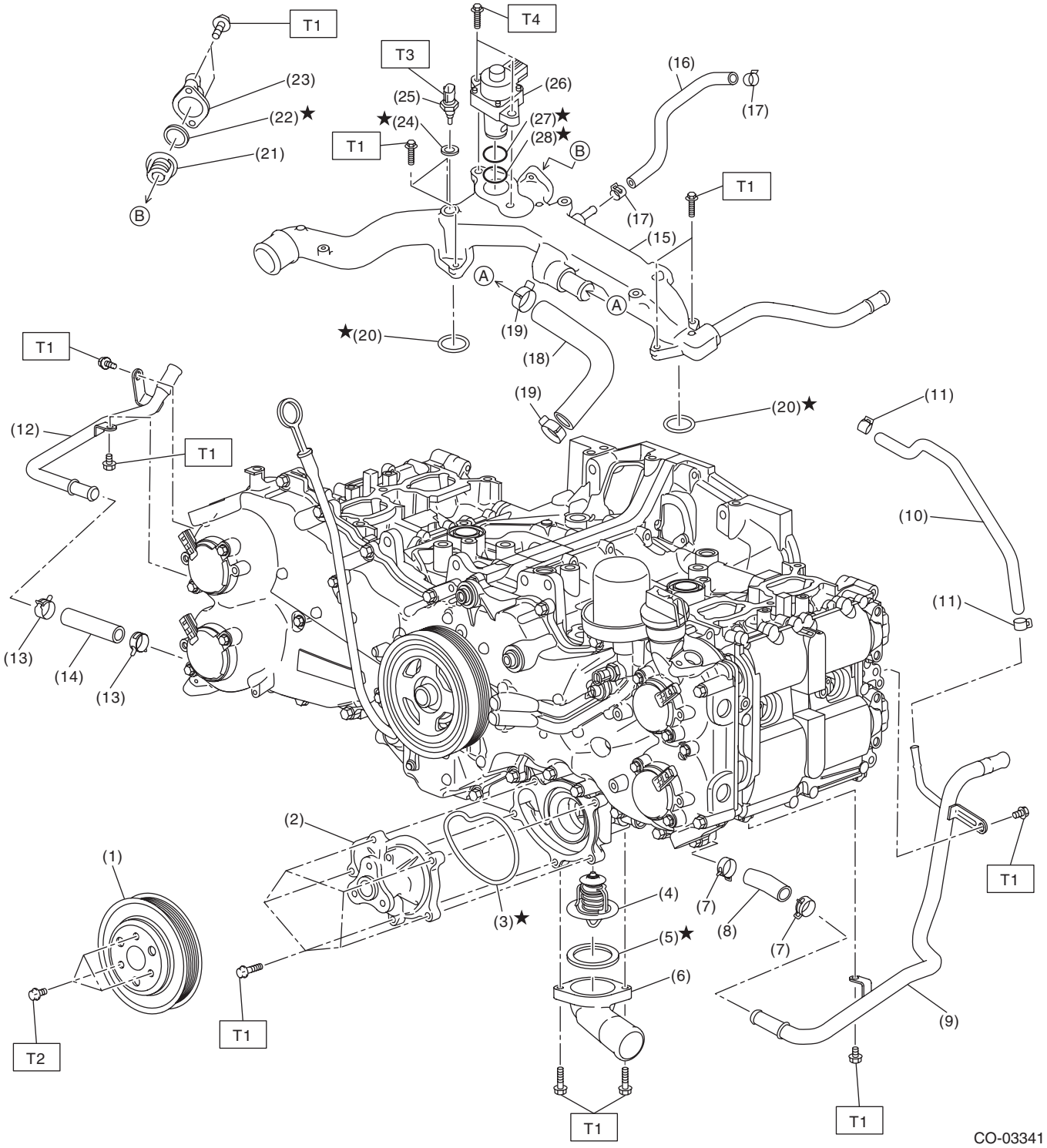

(1) Water pump pulley
(2) Water pump ASSY
(3) Gasket
(4) Thermostat (engine side)
(5) Gasket (engine side)
(6) Thermostat cover (engine side)
(7) Clip
(8) Water pipe hose LH
(9) Water pipe LH
(10) Preheater hose
(11) Clip
(12) Water pipe RH (CVT model)
(13) Clip (CVT model)
(14) Water pipe hose RH (CVT model)
(15) Water pipe ASSY
(16) Preheater hose A
(17) Clip
(18) Preheater hose B
(19) Clip
(20) O-ring
(21) Thermostat (CVTF cooler (with warmer feature) side)
(22) Gasket (CVTF cooler (with warmer feature) side)
(23) Thermostat cover (CVTF cooler (with warmer feature) side)
(24) Gasket
(25) Engine coolant temperature sensor
(26) EGR control valve
(27) O-ring
(28) Gasket

Tightening torque: N·m (kgf-m, ft-lb)

T1: 6.4 (0.7, 4.7)
T2: 14 (1.4, 10.3)
T3: 18 (1.8, 13.3)
T4: 22 (2.2, 16.2)

- HEV model

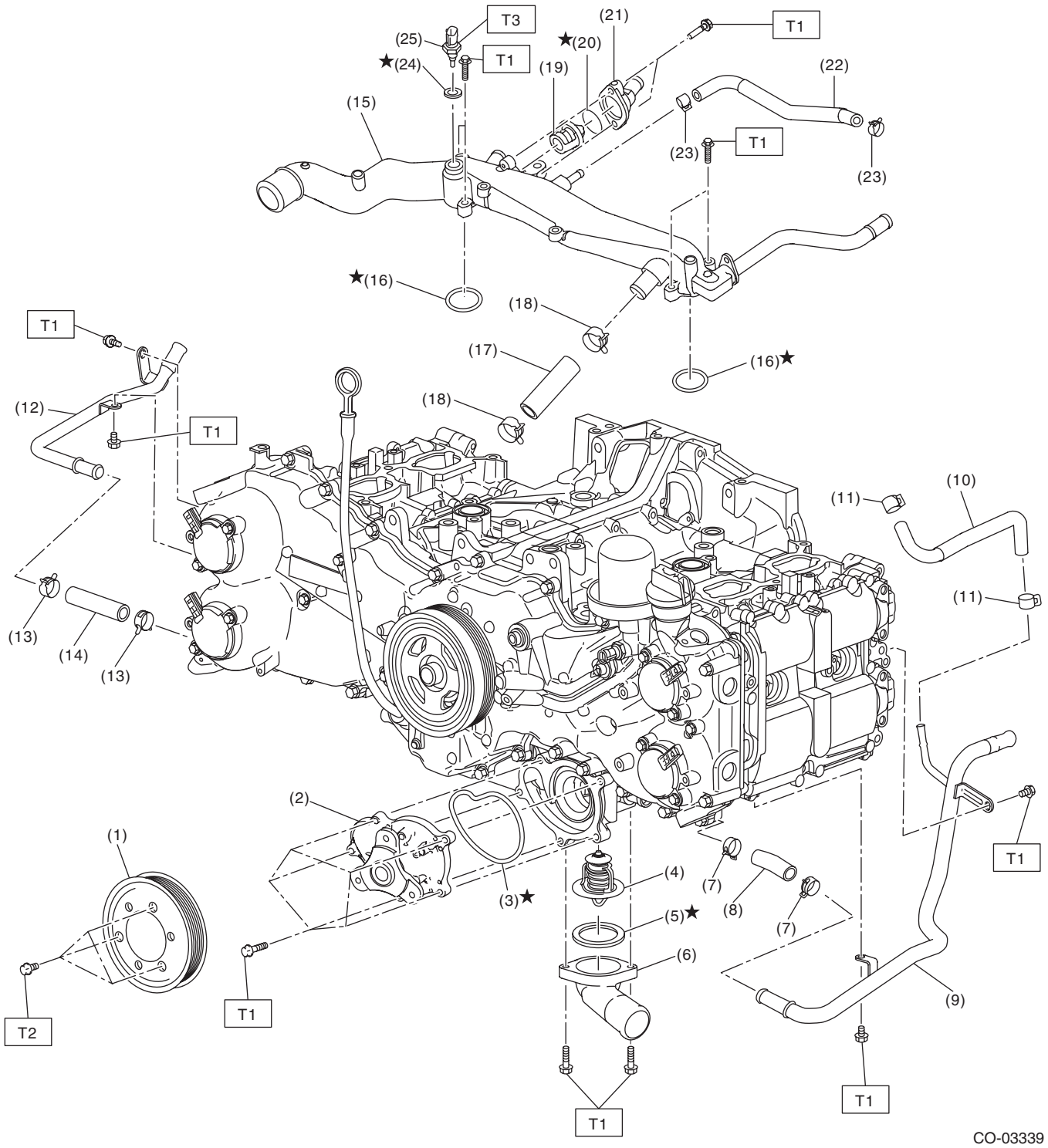
T3
(25)
T1
★(24)
(21)
T1
★(20)
(19)
(22)
(15)
(23)
T1
(23)
★(16)
(18)
T1
(17)
(16)★
(18)
(12)
T1
(10)
(11)
(11)
(13)
(14)
(13)
(2)
(1)
(4)
(7)
T1
(3)★
(8)
(5)★
(7)
(6)
(9)
T2
T1
T1
T1
CO-03339

(1) Water pump pulley
(2) Water pump ASSY
(3) Gasket
(4) Thermostat (engine side)
(5) Gasket (engine side)
(6) Thermostat cover (engine side)
(7) Clip
(8) Water pipe hose LH
(9) Water pipe LH
(10) Preheater hose
(11) Clip
(12) Water pipe RH
(13) Clip
(14) Water pipe hose RH
(15) Water pipe ASSY
(16) O-ring
(17) Preheater hose B
(18) Clip
(19) Thermostat (CVTF cooler (with warmer feature) side)
(20) Gasket (CVTF cooler (with warmer feature) side)
(21) Thermostat cover (CVTF cooler (with warmer feature) side)
(22) Preheater hose A
(23) Clip
(24) Gasket
(25) Engine coolant temperature sensor

Tightening torque: N·m (kgf-m, ft-lb)

T1: 6.4 (0.7, 4.7)
T2: 14 (1.4, 10.3)
T3: 18 (1.8, 13.3)

2. RADIATOR & RADIATOR FAN

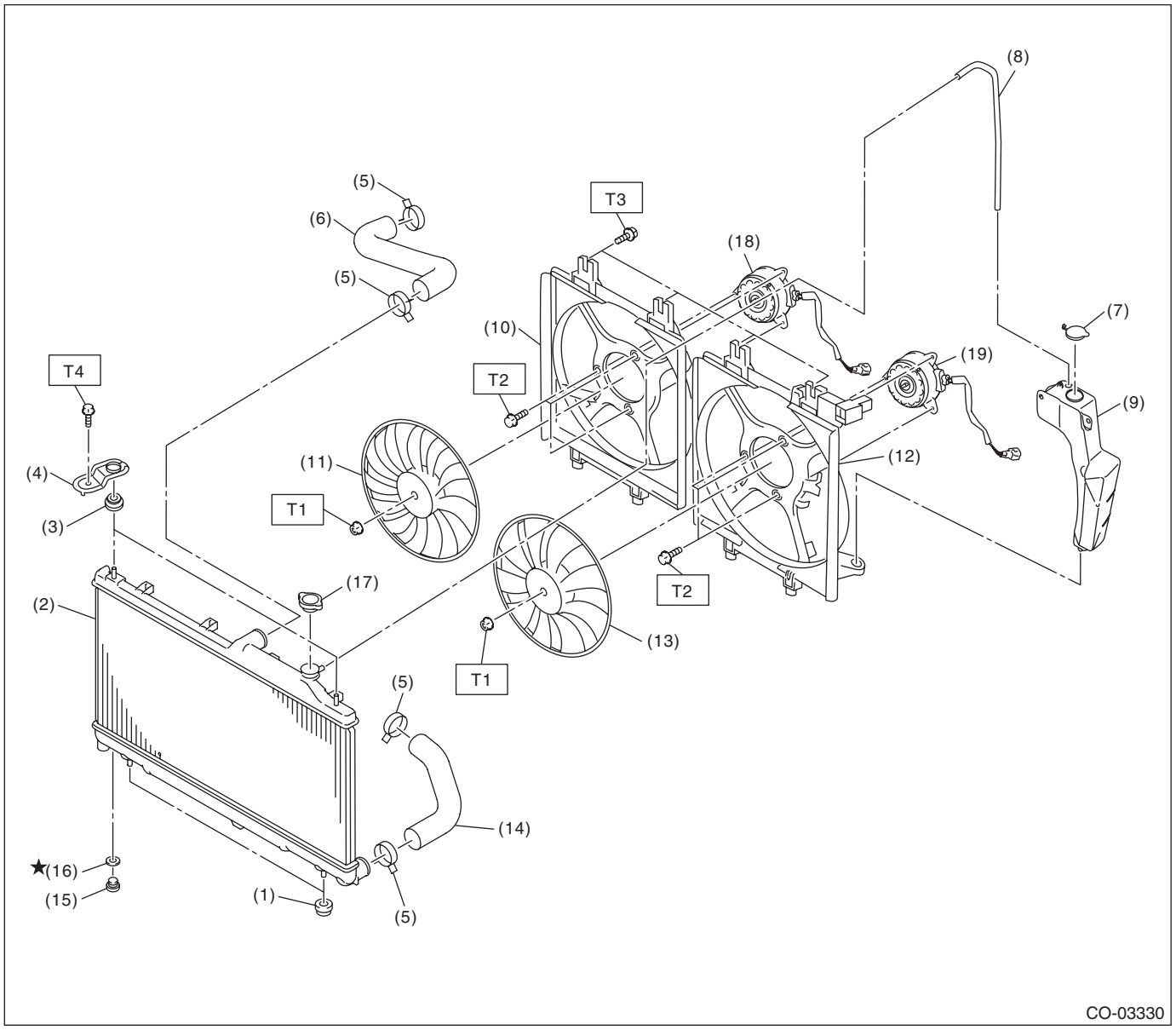

(1) Radiator lower cushion
(2) Radiator
(3) Radiator upper cushion
(4) Radiator upper bracket
(5) Clip
(6) Radiator inlet hose
(7) Engine coolant reservoir tank cap
(8) Over flow hose
(9) Engine coolant reservoir tank
(10) Radiator sub fan shroud
(11) Radiator sub fan
(12) Radiator main fan shroud
(13) Radiator main fan
(14) Radiator outlet hose
(15) Radiator drain plug
(16) O-ring
(17) Radiator cap
(18) Sub fan motor
(19) Main fan motor

Tightening torque: N·m (kgf-m, ft-lb)
T1: 3.4 (0.3, 2.5)
T2: 4.41 (0.45, 3.25)
T3: 7.5 (0.8, 5.5)
T4: 12 (1.2, 8.9)

C: CAUTION

- Prior to starting work, pay special attention to the following:
  1. Always wear work clothes, a work cap, and protective shoes. Additionally, wear a helmet, protective goggles, etc. if necessary.
  2. Protect the vehicle using a seat cover, fender cover, etc.
  3. Prepare the service tools, clean cloth, containers to catch grease and oil, etc.
- Prepare a container and cloth to prevent scattering of engine coolant when performing work where engine coolant can be spilled. If the oil spills, wipe it off immediately to prevent from penetrating into floor or flowing out for environmental protection.
- Vehicle components are extremely hot immediately after driving. Be wary of receiving burns from heated parts.
- When performing a repair, identify the cause of trouble and avoid unnecessary removal, disassembly and replacement.
- Before disconnecting connectors of sensors or units, be sure to disconnect the ground cable from battery.
- Always use the jack-up point when the shop jacks or rigid racks are used to support the vehicle.
- Remove contamination including dirt and corrosion before removal, installation, disassembly or assembly.
- Keep the removed parts in order and protect them from dust and dirt.
- All removed parts, if to be reused, should be reinstalled in the original positions with attention to the correct directions, etc.
- Bolts, nuts and washers should be replaced with new parts as required.
- Be sure to tighten the fasteners including bolts and nuts to the specified torque.
- Follow all government and local regulations concerning disposal of refuse when disposing engine coolant.

D: PREPARATION TOOL

1. SPECIAL TOOL

ILLUSTRATION	TOOL NUMBER	DESCRIPTION	REMARKS
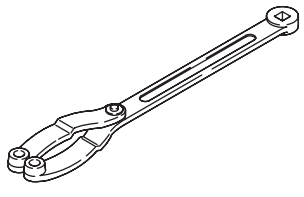 ST18355AA000	18355AA000	PULLEY WRENCH	Used for removing and installing water pump pulley.
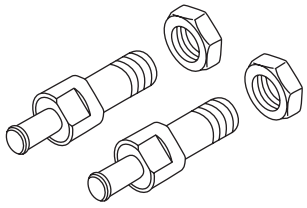 ST18334AA030	18334AA030	PULLEY WRENCH PIN SET	Used for removing and installing water pump pulley.
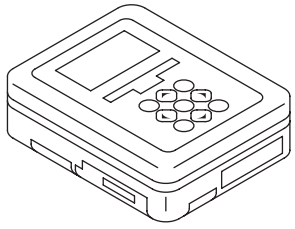 ST1B022XU0	1B022XU0	SUBARU SELECT MONITOR III KIT	Used for troubleshooting the electrical system.

2. GENERAL TOOL

TOOL NAME	REMARKS
Circuit tester	Used for measuring resistance and voltage.
Radiator cap tester	Used for checking radiator and radiator cap.

2. Radiator Fan System

A: WIRING DIAGRAM

Radiator fan system <Ref. to WI(w/o HEV)-120, WIRING DIAGRAM, Radiator Fan System.> <Ref. to WI(HEV)-184, WIRING DIAGRAM, Radiator Fan System.>

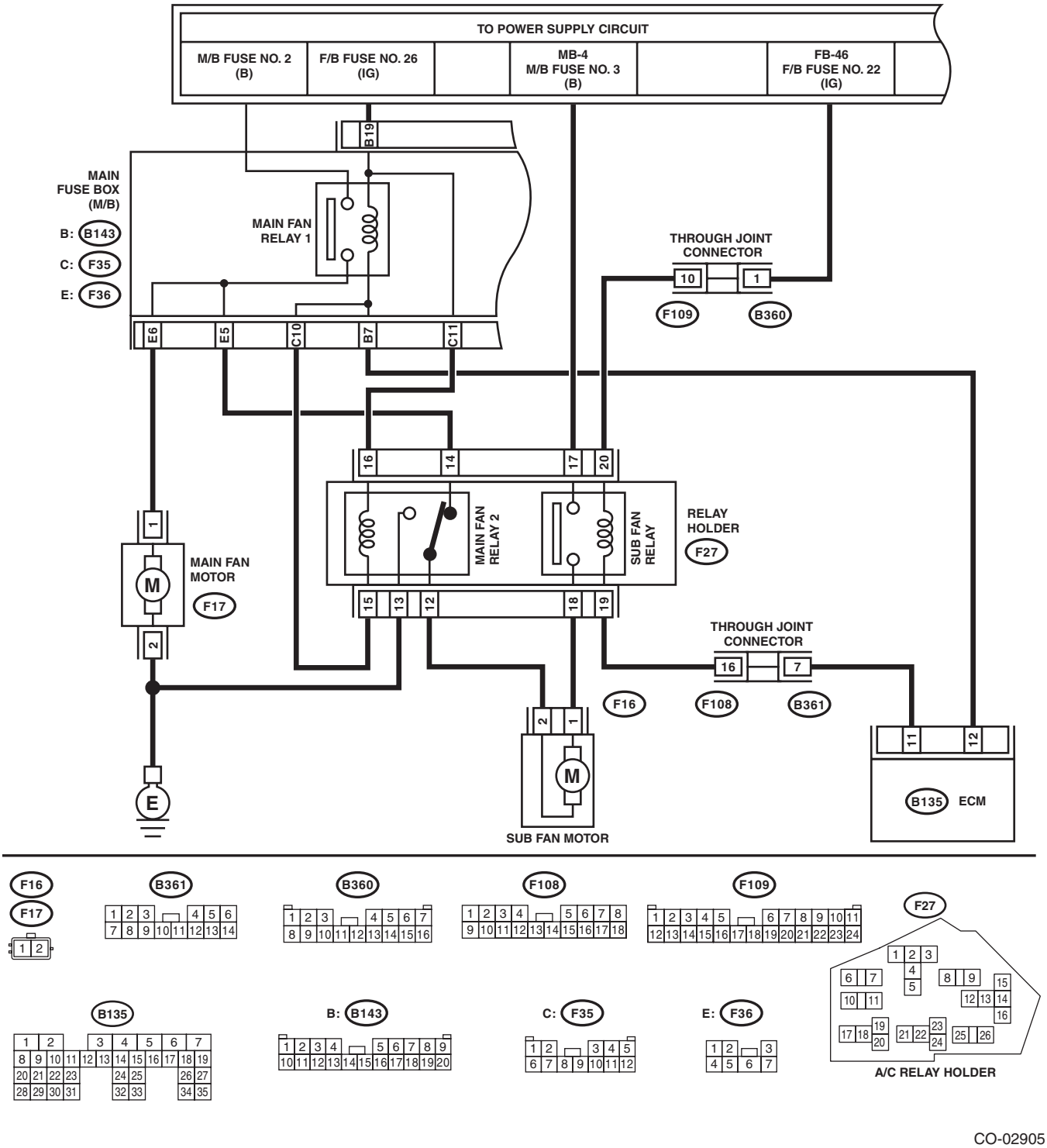

CO-02905

B: INSPECTION

OPERATING CONDITION:

Vehicle speed	A/C compressor load	Engine coolant temperature		
		Increase: 98°C (208°F) or less Decrease: 96°C (205°F) or less	Increase: 99 — 101°C (210 — 214°F) Decrease: 97 — 98°C (207 — 208°F)	Increase: 102°C (216°F) or more Decrease: 99°C (210°F) or more
		Radiator fan operation	Radiator fan operation	Radiator fan operation
During acceleration: 19 km/h (12 MPH) or less During deceleration: 10 km/h (6 MPH) or less	OFF	OFF	Low-Speed	High-Speed
	Low	Low-Speed	Low-Speed	High-Speed
	High	High-Speed	High-Speed	High-Speed
During acceleration: 20 — 69 km/h (12 — 43 MPH) During deceleration: 11 — 64 km/h (7 — 40 MPH)	OFF	OFF	Low-Speed	High-Speed
	Low	High-Speed	High-Speed	High-Speed
	High	High-Speed	High-Speed	High-Speed
During acceleration: 70 — 134 km/h (43 — 83 MPH) During deceleration: 65 — 129 km/h (40 — 80 MPH)	OFF	OFF	Low-Speed	High-Speed
	Low	OFF	Low-Speed	High-Speed
	High	Low-Speed	High-Speed	High-Speed
During acceleration: 135 km/h (84 MPH) or more During deceleration: 130 km/h (81 MPH) or more	OFF	OFF	OFF	High-Speed
	Low	OFF	Low-Speed	High-Speed
	High	OFF	Low-Speed	High-Speed

DIAGNOSIS:

Radiator main fan and radiator sub fan do not rotate under the above operating conditions.

	Step	Check	Yes	No
1	**CHECK OPERATION OF RADIATOR FAN.** 1) Install the delivery (test) mode fuse. 2) Turn the ignition switch to ON. 3) Perform the compulsory operation check for the radiator fan relay using Subaru Select Monitor. NOTE: • When performing the compulsory operation check for the radiator fan relay using the Subaru Select Monitor, the radiator main fan and radiator sub fan will repeat low speed revolution → high speed revolution → OFF in this order. • Subaru Select Monitor For detailed operation procedures, refer to “PC application help for Subaru Select Monitor”.	Do the radiator main fans and radiator sub fans rotate at low speed?	Go to step **2**.	Go to step **3**.
2	**CHECK OPERATION OF RADIATOR FAN.** 1) Install the delivery (test) mode fuse. 2) Turn the ignition switch to ON. 3) Perform the compulsory operation check for the radiator fan relay using Subaru Select Monitor. NOTE: • When performing the compulsory operation check for the radiator fan relay using the Subaru Select Monitor, the radiator main fan and radiator sub fan will repeat low speed revolution → high speed revolution → OFF in this order. • Subaru Select Monitor For detailed operation procedures, refer to “PC application help for Subaru Select Monitor”.	Do the radiator main fans and radiator sub fans rotate at high speed?	Radiator main fan system is normal.	Go to step **27**.

	Step	Check	Yes	No
3	**CHECK POWER SUPPLY TO SUB FAN RELAY.** 1) Turn the ignition switch to OFF. 2) Remove the sub fan relay from the relay holder. 3) Measure the voltage between the sub fan relay terminal and chassis ground. ***Connector & terminal*** ***(F27) No. 17 (+) — Chassis ground (–):***	Is the voltage 10 V or more?	Go to step **4**.	Go to step **5**.
4	**CHECK POWER SUPPLY TO SUB FAN RELAY.** 1) Turn the ignition switch to ON. 2) Measure the voltage between the sub fan relay terminal and chassis ground. ***Connector & terminal*** ***(F27) No. 20 (+) — Chassis ground (–):***	Is the voltage 10 V or more?	Go to step **7**.	Go to step **6**.
5	**CHECK FUSE.** 1) Turn the ignition switch to OFF. 2) Remove the fuse No. 3. 3) Check the condition of fuse.	Is the fuse blown out?	Replace the fuse.	Repair the power supply line.
6	**CHECK FUSE.** 1) Turn the ignition switch to OFF. 2) Remove the fuse No. 22. 3) Check the condition of fuse.	Is the fuse blown out?	Replace the fuse.	Repair the power supply line.
7	**CHECK SUB FAN RELAY.** 1) Turn the ignition switch to OFF. 2) Measure the resistance between sub fan relay terminals. ***Terminals*** ***No. 17 — No. 18:***	Is the resistance 1 MΩ or more?	Go to step **8**.	Replace the sub fan relay. <Ref. to AC-35, Relay and Fuse.>
8	**CHECK SUB FAN RELAY.** 1) Connect the battery to terminals No. 20 and No. 19 of the sub fan relay. 2) Measure the resistance between sub fan relay terminals. ***Terminals*** ***No. 17 — No. 18:***	Is the resistance less than 1 Ω?	Go to step **9**.	Replace the sub fan relay. <Ref. to AC-35, Relay and Fuse.>
9	**CHECK HARNESS BETWEEN SUB FAN RELAY TERMINAL AND SUB FAN MOTOR CONNECTOR.** 1) Disconnect the connector from the sub fan motor. 2) Measure the resistance of harness between the sub fan relay terminal and sub fan motor connector. ***Connector & terminal*** ***(F16) No. 1 — (F27) No. 18:***	Is the resistance less than 1 Ω?	Go to step **10**.	Repair the open circuit of harness between sub fan relay terminal and sub fan motor connector.
10	**CHECK HARNESS BETWEEN SUB FAN MOTOR CONNECTOR AND MAIN FAN RELAY 2 CONNECTOR.** 1) Remove main fan relay 2 from the relay holder. 2) Measure the resistance of harness between sub fan motor connector and main fan relay 2 connector. ***Connector & terminal*** ***(F16) No. 2 — (F27) No. 12:***	Is the resistance less than 1 Ω?	Go to step **11**.	Repair the open circuit of the harness between sub fan motor connector and main fan relay 2 connector.

	Step	Check	Yes	No
11	**CHECK FOR POOR CONTACT.** Check poor contact of sub fan motor connector.	Is there poor contact of the sub fan motor connector?	Repair the poor contact of sub fan motor connector.	Go to step **12**.
12	**CHECK SUB FAN MOTOR.** Connect the battery positive (+) terminal to terminal No. 1 of the sub fan motor, and the ground (–) terminal to terminal No. 2.	Does the radiator sub fan rotate?	Go to step **13**.	Replace the sub fan motor. <Ref. to CO(H4DO(w/o HEV))-93, Radiator Sub Fan and Fan Motor.>
13	**CHECK MAIN FAN RELAY 2.** Measure the resistance of main fan relay 2. ***Terminals*** ***No. 14 — No. 12:***	Is the resistance less than 1 Ω?	Go to step **14**.	Replace the main fan relay 2. <Ref. to AC-35, Relay and Fuse.>
14	**CHECK HARNESS BETWEEN MAIN FAN RELAY 2 AND MAIN FAN MOTOR CONNECTOR.** 1) Disconnect the connector from the main fan motor. 2) Measure the resistance of the harness between main fan relay 2 terminal and main fan motor connector. ***Connector & terminal*** ***(F17) No. 1 — (F27) No. 14:***	Is the resistance less than 1 Ω?	Go to step **15**.	Repair the open circuit of the harness between main fan relay 2 terminal and main fan motor connector.
15	**CHECK GROUND CIRCUIT OF MAIN FAN MOTOR.** Measure the resistance between main fan motor connector and chassis ground. ***Connector & terminal*** ***(F17) No. 2 — Chassis ground:***	Is the resistance less than 5 Ω?	Go to step **16**.	Repair the open circuit of the harness between main fan motor connector and chassis ground.
16	**CHECK FOR POOR CONTACT.** Check poor contact of main fan motor connector.	Is there poor contact of the main fan motor connector?	Repair the poor contact of main fan motor connector.	Go to step **17**.
17	**CHECK MAIN FAN MOTOR.** Connect the battery positive (+) terminal to terminal No. 1 of the main fan motor, and the ground (–) terminal to terminal No. 2.	Does the radiator main fan rotate?	Go to step **18**.	Replace the main fan motor. <Ref. to CO(H4DO(w/o HEV))-89, Radiator Main Fan and Fan Motor.>
18	**CHECK HARNESS BETWEEN SUB FAN RELAY AND ECM.** 1) Disconnect the connector from ECM. 2) Measure the resistance between the sub fan relay terminal and ECM connector. ***Connector & terminal*** ***(B135) No. 11 — (F27) No. 19:***	Is the resistance less than 1 Ω?	Go to step **19**.	Repair the open circuit of harness between sub fan relay terminal and ECM.
19	**CHECK FOR POOR CONTACT.** Check for poor contact of ECM connector.	Is there poor contact of ECM connector?	Repair the poor contact of ECM connector.	Check the DTC. Repair the trouble cause. <Ref. to EN(H4DO w/o HEV)(diag)-43, Read Diagnostic Trouble Code (DTC).> <Ref. to EN(H4DO HEV)(diag)-46, Read Diagnostic Trouble Code (DTC).>

	Step	Check	Yes	No
20	**CHECK MAIN FAN RELAY 1.** 1) Turn the ignition switch to OFF. 2) Remove main fan relay 1 from the main fuse box. 3) Measure the resistance between terminals of main fan relay 1 switch.	Is the resistance 1 MΩ or more?	Go to step **21**.	Replace the main fan relay 1. <Ref. to AC-35, Relay and Fuse.>
21	**CHECK MAIN FAN RELAY 1.** 1) Connect the main fan relay 1 coil side terminal to the battery. 2) Measure the resistance between terminals of main fan relay 1 switch.	Is the resistance less than 1 Ω?	Go to step **22**.	Replace the main fan relay 1. <Ref. to AC-35, Relay and Fuse.>
22	**CHECK HARNESS BETWEEN MAIN FAN RELAY 1 AND MAIN FAN MOTOR CONNECTOR.** 1) Disconnect the connector from the main fan motor. 2) Measure the resistance of the harness between main fan relay 1 terminal and main fan motor connector. ***Connector & terminal*** ***(F17) No. 1 — (F36) No. 6:***	Is the resistance less than 1 Ω?	Go to step **23**.	Repair the open circuit of the harness between main fan relay 1 terminal and main fan motor connector.
23	**CHECK HARNESS BETWEEN MAIN FAN RELAY 1 AND ECM.** 1) Disconnect the connector from ECM. 2) Measure the resistance between main fan relay 1 terminal and ECM connector. ***Connector & terminal*** ***(B135) No. 12 — (B143) No. 7:***	Is the resistance less than 1 Ω?	Go to step **24**.	Repair the open circuit of the harness between main fan relay 1 terminal and ECM.
24	**CHECK HARNESS BETWEEN MAIN FAN RELAY 2 AND ECM.** Measure the resistance between main fan relay 2 terminal and ECM connector. ***Connector & terminal*** ***(B135) No. 12 — (F27) No. 15:***	Is the resistance less than 1 Ω?	Go to step **25**.	Repair the open circuit of the harness between main fan relay 2 terminal and ECM.
25	**CHECK FUSE.** 1) Turn the ignition switch to OFF. 2) Remove the fuse No. 2 and No. 26. 3) Check the condition of fuse.	Is the fuse blown out?	Replace the fuse.	Go to step **26**.
26	**CHECK FOR POOR CONTACT.** Check for poor contact of ECM connector.	Is there poor contact of ECM connector?	Repair the poor contact of ECM connector.	Repair the power supply circuit to the main fuse box.
27	**CHECK OPERATION OF RADIATOR FAN.** If the both fans do not rotate at high speed in the condition of step 2, check whether the radiator sub fan is rotating.	Does the radiator sub fan rotate?	Go to step **20**.	Go to step **28**.
28	**CHECK GROUND CIRCUIT OF MAIN FAN RELAY 2.** 1) Remove the main fan relay 2 from A/C relay holder. 2) Measure the resistance between main fan relay 2 terminal and chassis ground. ***Connector & terminal*** ***(F27) No. 13 — Chassis ground:***	Is the resistance less than 1 Ω?	Go to step **29**.	Repair the open circuit of harness between main fan relay 2 and chassis ground.

	Step	Check	Yes	No
29	**CHECK POWER SUPPLY TO MAIN FAN RELAY 2.** 1) Turn the ignition switch to ON. 2) Measure the voltage between main fan relay 2 terminal and chassis ground. ***Connector & terminal*** ***(F27) No. 16 (+) — Chassis ground (–):***	Is the voltage 10 V or more?	Go to step **30**.	Repair the power supply line.
30	**CHECK MAIN FAN RELAY 2.** 1) Turn the ignition switch to OFF. 2) Remove the main fan relay 2. 3) Measure the resistance of main fan relay 2. ***Terminals*** ***(F27) No. 12 — (F27) No. 13:***	Is the resistance 1 MΩ or more?	Go to step **31**.	Replace the main fan relay 2. <Ref. to AC-35, Relay and Fuse.>
31	**CHECK MAIN FAN RELAY 2.** 1) Connect the battery to terminals No. 16 and No. 15 of the main fan relay 2. 2) Measure the resistance of main fan relay 2. ***Terminals*** ***(F27) No. 12 — (F27) No. 13:***	Is the resistance less than 1 Ω?	Go to step **23**.	Replace the main fan relay 2. <Ref. to AC-35, Relay and Fuse.>

3. Engine Coolant

A: INSPECTION

NOTE:
When adding the engine coolant, always use SUBARU Super Coolant.
1) Park the vehicle on a level surface.
2) Turn the ignition switch to OFF.
3) Check the engine coolant amount, and if the coolant level is low, check for the coolant leakage, and then add the engine coolant.
   (1) Make sure the engine coolant level in the reservoir tank is between “FULL” and “LOW” with the engine in a cold condition.
   (2) Open the radiator cap and make sure that the radiator is filled with the engine coolant up to its filler neck position.

B: REPLACEMENT

1. DRAINING OF ENGINE COOLANT

1) Turn the ignition switch to OFF.
2) Lift up the vehicle.
3) Remove the under cover. <Ref. to EI-29, REMOVAL, Front Under Cover.>
4) Remove the drain plug to drain engine coolant into container.

NOTE:
Remove the radiator cap so that engine coolant will drain faster.

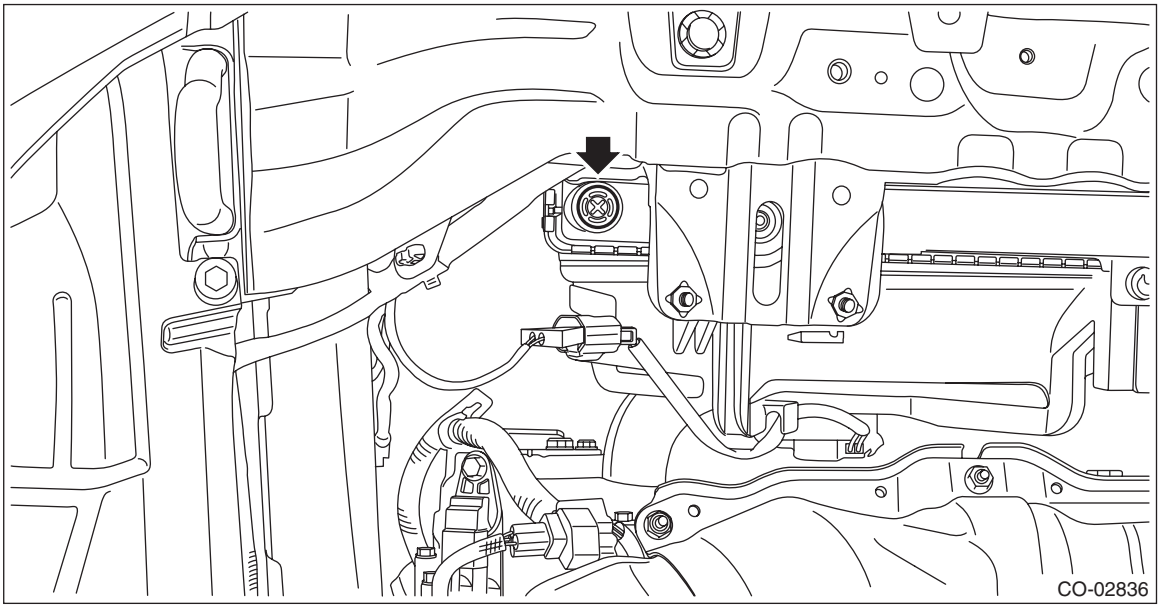

5) Install the drain plug.

NOTE:
Use new O-rings.
6) Install the under cover. <Ref. to EI-29, INSTALLATION, Front Under Cover.>

2. FILLING OF ENGINE COOLANT

1) Pour cooling system conditioner through the filler neck.

Cooling system protective agent:
Refer to "SPECIFICATION" for cooling system protective agent. <Ref. to CO(H4DO(w/o HEV))-2, SPECIFICATION, General Description.>

2) Pour engine coolant into the radiator up to the filler neck position.

Recommended engine coolant:
Refer to "SPECIFICATION" for recommended engine coolant. <Ref. to CO(H4DO(w/o HEV))-2, SPECIFICATION, General Description.>

Engine coolant level:
Refer to "SPECIFICATION" for engine coolant level. <Ref. to CO(H4DO(w/o HEV))-2, SPECIFICATION, General Description.>

Engine coolant concentration:
Refer to "ADJUSTMENT" for the recommended engine coolant concentration. <Ref. to CO(H4DO(w/o HEV))-18, ADJUSTMENT, Engine Coolant.>

NOTE:
The SUBARU Super Coolant contains anti-freeze and anti-rust agents, and is especially made for Subaru engines with an aluminum cylinder block. Be sure to use SUBARU Super Coolant, since other coolant may cause corrosion.

3) Fill engine coolant into the reservoir tank up to "FULL" level.

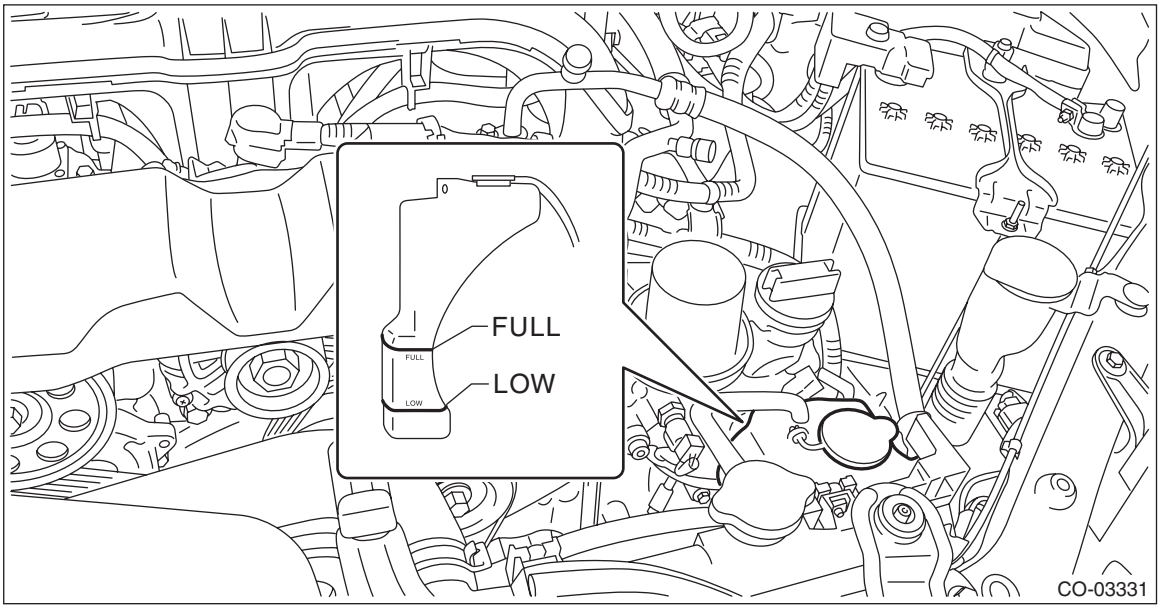

4) Close the radiator cap and start the engine. Race 5 to 6 times at 3,000 rpm or less, then stop the engine. (Complete this operation within 40 seconds.)
5) Wait for one minute after the engine stops (ignition OFF), and open the radiator cap. If the engine coolant level drops, add engine coolant into radiator up to the filler neck position.
6) Perform the procedures 4) and 5) again.
7) Attach the radiator cap and reservoir tank cap properly.
8) Start the engine and operate the heater at maximum hot position and the blower speed setting to "LO".
9) Run the engine at 3,000 rpm or less until radiator fan starts and stops.

NOTE:
Be careful with the engine coolant temperature to prevent overheating.

10) Stop the engine (ignition OFF) and wait until the engine coolant temperature lowers to 30°C (86°F) or less.
11) Open the radiator cap. If the engine coolant level drops, add engine coolant into the radiator up to the filler neck position and the reservoir tank to "FULL" level.

12) Attach the radiator cap and reservoir tank cap properly.
13) Set the heater setting to maximum hot position and the blower speed setting to “LO” and start the engine. Perform racing at 3,000 rpm or less. If the flowing sound is heard from heater core at this time, perform the procedures from 9) again.

C: ADJUSTMENT

1. PROCEDURE TO ADJUST THE SUBARU SUPER COOLANT CONCENTRATION

CAUTION:
Use the SUBARU Super Coolant with a 50 — 60% concentration in order to obtain maximum anti-freeze and anti-rust performance.
To adjust the concentration of SUBARU Super Coolant according to temperature, find the proper SUBARU Super Coolant concentration in the table, and add dilution water to the SUBARU Super Coolant (concentrated type) until it reaches the proper dilution.

Relationship of SUBARU Super Coolant concentration and freezing temperature			
SUBARU Super Coolant concentration	50%	55%	60%
Freezing temperature	–36°C (–33°F)	–41°C (–42°F)	–50°C (–58°F)

Engine coolant and diluting water:
Refer to “SPECIFICATION” for recommended engine coolant and diluting water. <Ref. to CO(H4DO(w/o HEV))-2, SPECIFICATION, General Description.>

4. Water Pump

A: REMOVAL

1. WATER PUMP PULLEY

1) Disconnect the ground cable from battery. <Ref. to NT-5, BATTERY, NOTE, Note.>

NOTE:
For the 12 volt engine restart battery of HEV model, disconnect the ground terminal from 12V engine restart battery sensor.

2) Remove the V-belt covers. (Gasoline engine model)

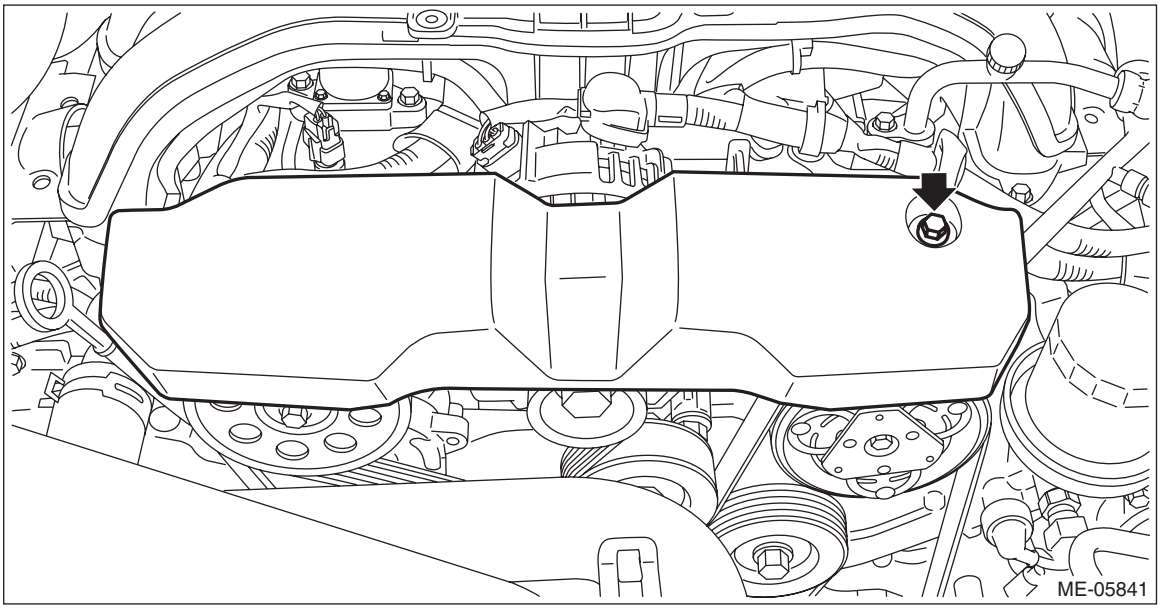

3) Remove the collector cover. (HEV model)
   (1) Pull up the two points at the front of collector cover (A).
   (2) Pull up the two points at the rear of collector cover (B) while moving them rearward.

NOTE:
Be careful not to contact the fuel delivery tube when moving the collector cover rearward.

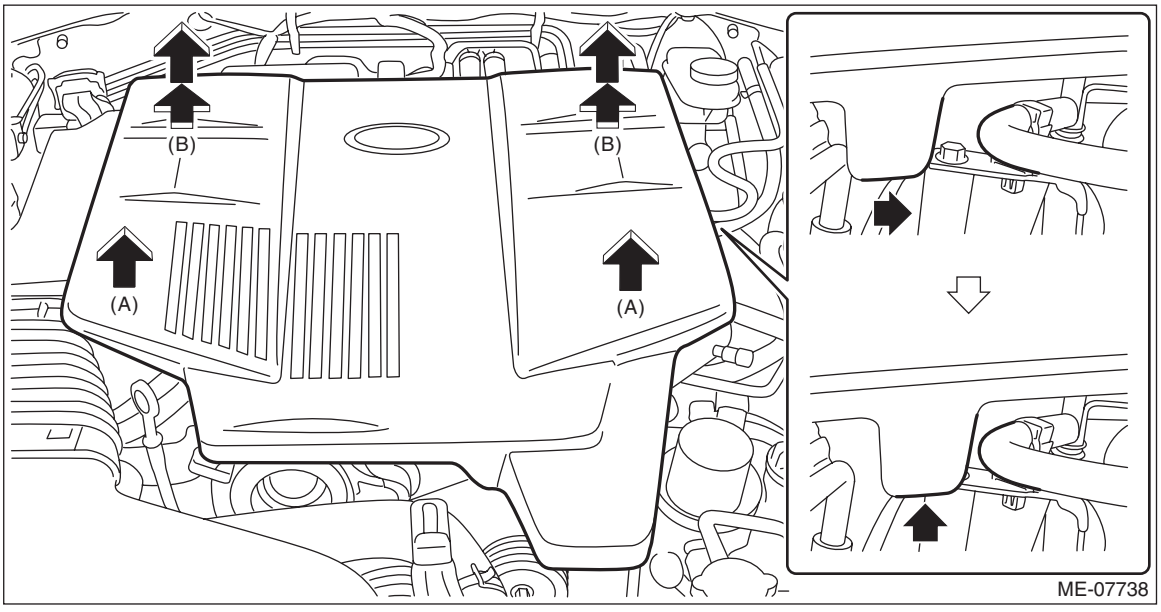

4) Remove the V-belts. (Gasoline engine model) <Ref. to ME(H4DO(w/o HEV))-120, GASOLINE ENGINE MODEL, REMOVAL, V-belt.>

5) Loosen the V-belt, and remove the V-belt from the water pump pulley. (HEV model) <Ref. to ME(H4DO(w/o HEV))-122, HEV MODEL, REMOVAL, V-belt.>

NOTE:
It is not necessary to remove the V-belt tensioner assembly and the V-belt from ISG.

6) Remove the radiator main fan & fan motor assembly. <Ref. to CO(H4DO(w/o HEV))-89, REMOVAL, Radiator Main Fan and Fan Motor.>
7) Lift up the vehicle.
8) Remove the under cover. <Ref. to EI-29, REMOVAL, Front Under Cover.>
9) Remove the water pump pulley using the ST.
ST1 18355AA000 PULLEY WRENCH
ST2 18334AA030 PULLEY WRENCH PIN SET

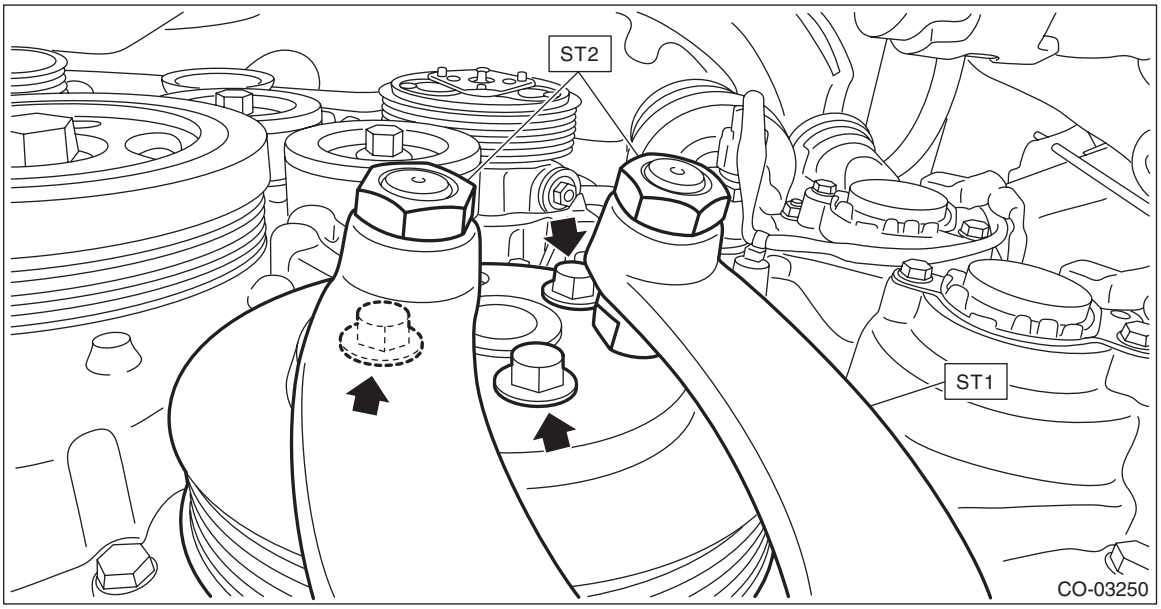

2. WATER PUMP

1) Drain engine coolant. <Ref. to CO(H4DO(w/o HEV))-16, DRAINING OF ENGINE COOLANT, REPLACEMENT, Engine Coolant.>
2) Remove the water pump pulley. <Ref. to CO(H4DO(w/o HEV))-19, WATER PUMP PULLEY, REMOVAL, Water Pump.>
3) Remove the front exhaust pipe. <Ref. to EX(H4DO(w/o HEV))-6, REMOVAL, Front Exhaust Pipe.>
4) Remove the water pump from the oil pan upper.

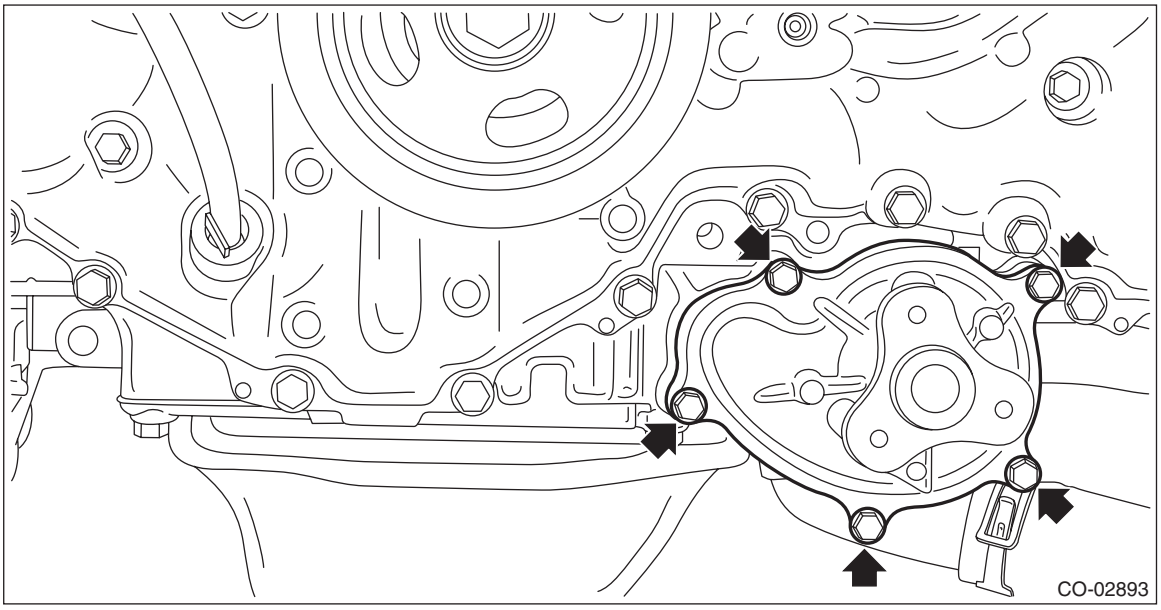

B: INSTALLATION

1. WATER PUMP PULLEY

1) Using the ST, install the water pump pulley.
ST1 18355AA000 PULLEY WRENCH
ST2 18334AA030 PULLEY WRENCH PIN SET

Tightening torque:
14 N·m (1.4 kgf-m, 10.3 ft-lb)

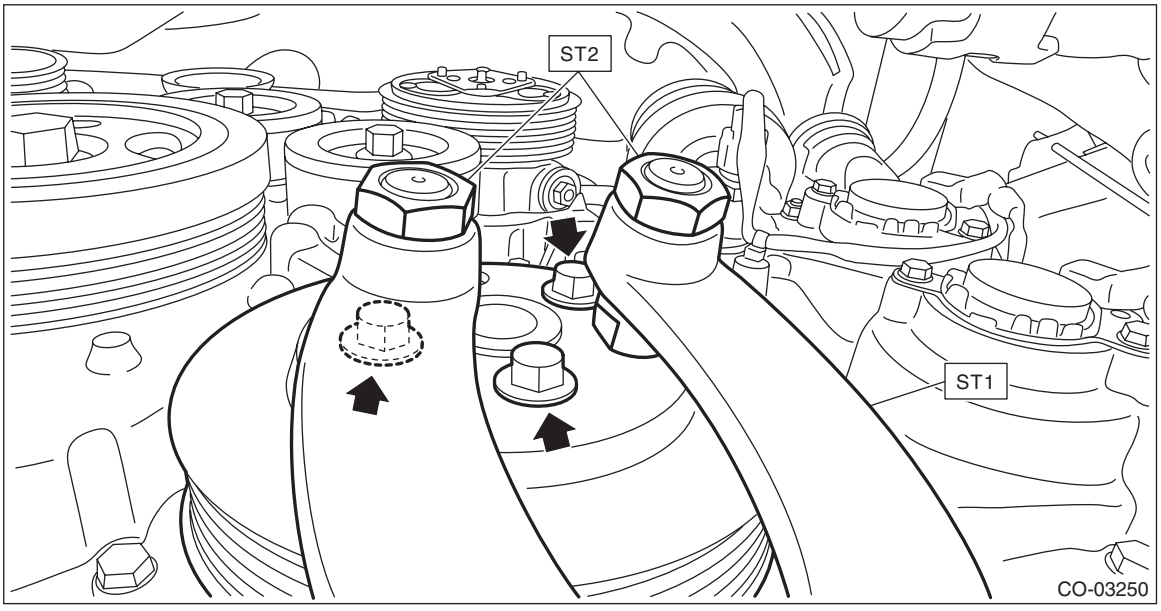

2) Install the under cover. <Ref. to EI-29, INSTALLATION, Front Under Cover.>
3) Lower the vehicle.
4) Install the radiator main fan & fan motor assembly. <Ref. to CO(H4DO(w/o HEV))-90, INSTALLATION, Radiator Main Fan and Fan Motor.>
5) Install the V-belts. <Ref. to ME(H4DO(w/o HEV))-128, INSTALLATION, V-belt.>
6) Install the V-belt cover. (Gasoline engine model)

Tightening torque:
6.4 N·m (0.7 kgf-m, 4.7 ft-lb)

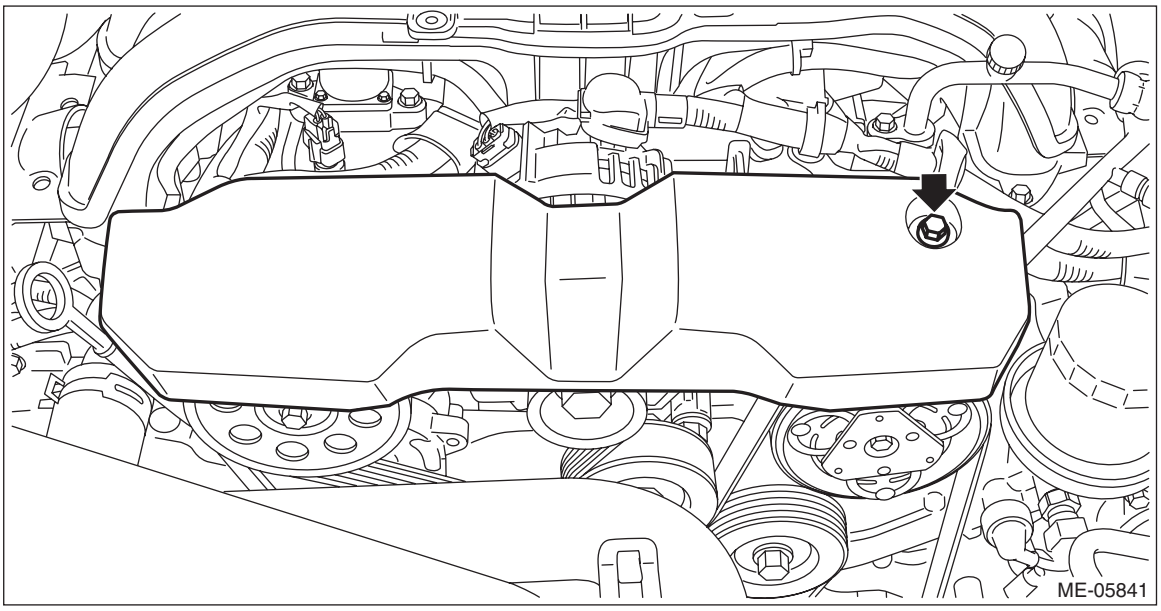

7) Install the collector cover. (HEV model)
8) Connect the battery ground terminal. <Ref. to NT-5, BATTERY, NOTE, Note.>

2. WATER PUMP

1) Install the water pump to oil pan upper.

NOTE:
Use a new gasket.

Tightening torque:
6.4 N·m (0.7 kgf-m, 4.7 ft-lb)

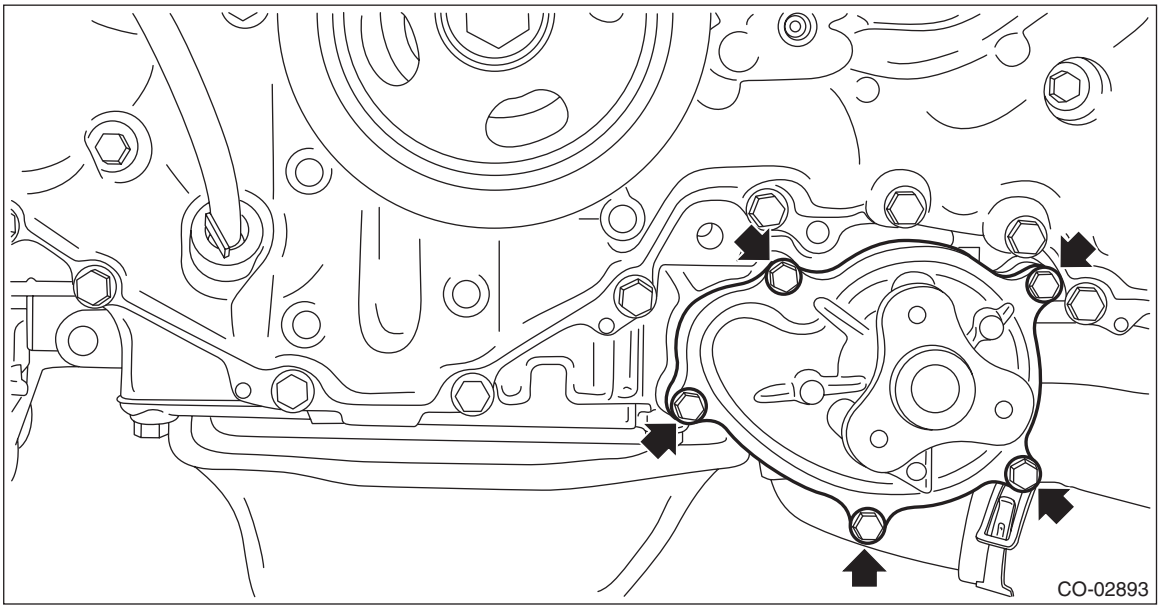

2) Install the front exhaust pipe. <Ref. to EX(H4DO(w/o HEV))-8, INSTALLATION, Front Exhaust Pipe.>
3) Install the water pump pulley. <Ref. to CO(H4DO(w/o HEV))-21, WATER PUMP PULLEY, INSTALLATION, Water Pump.>
4) Fill engine coolant. <Ref. to CO(H4DO(w/o HEV))-17, FILLING OF ENGINE COOLANT, REPLACEMENT, Engine Coolant.>

C: INSPECTION

1) Check the water pump bearing for smooth rotation.
2) Check the water pump pulley for abnormalities.
3) Make sure the impeller is not abnormally deformed or damaged.

5. Water Pipe Assembly

A: REMOVAL

1. WATER PIPE ASSEMBLY RH

NOTE:
Water pipe assembly RH is installed to CVT model.
1) Disconnect the ground cable from battery. <Ref. to NT-5, BATTERY, NOTE, Note.>

NOTE:
For the 12 volt engine restart battery of HEV model, disconnect the ground terminal from 12V engine restart battery sensor.
2) Drain engine coolant. <Ref. to CO(H4DO(w/o HEV))-16, DRAINING OF ENGINE COOLANT, REPLACEMENT, Engine Coolant.>
3) Remove the front exhaust pipe. <Ref. to EX(H4DO(w/o HEV))-6, REMOVAL, Front Exhaust Pipe.>
4) Disconnect the water hose (A) from the water pipe assembly RH, and remove the bolt (B) securing the water pipe assembly RH to the cam carrier RH.

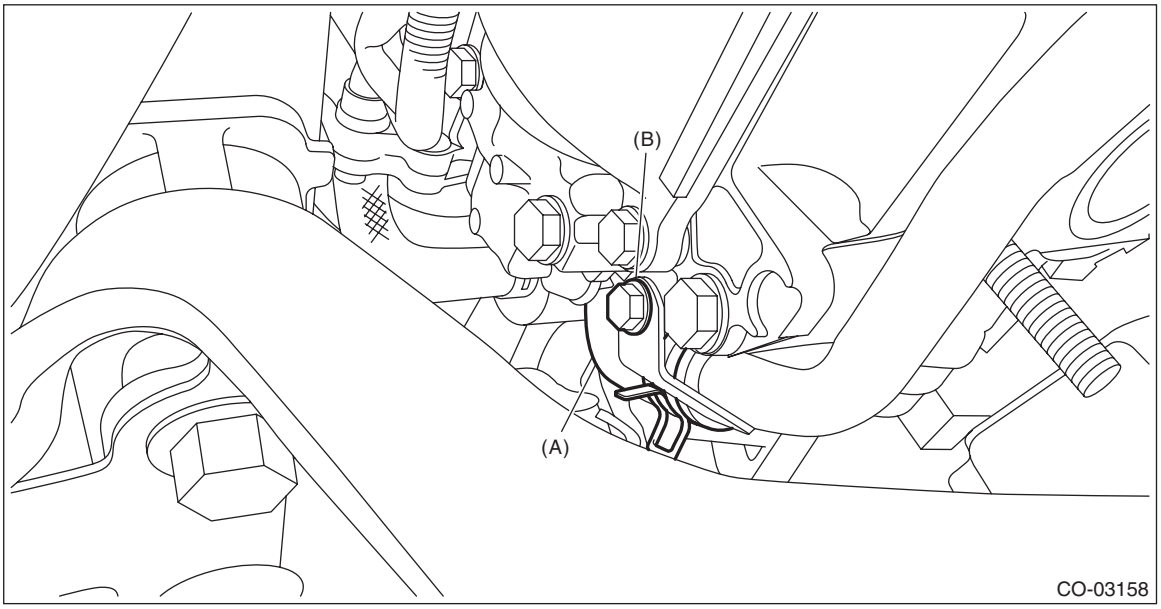

5) Remove the bolt (A) which secures the water pipe assembly RH to the cylinder head RH.
6) Disconnect the water pipe hose RH (B) from oil pan upper, and remove the water pipe assembly RH.

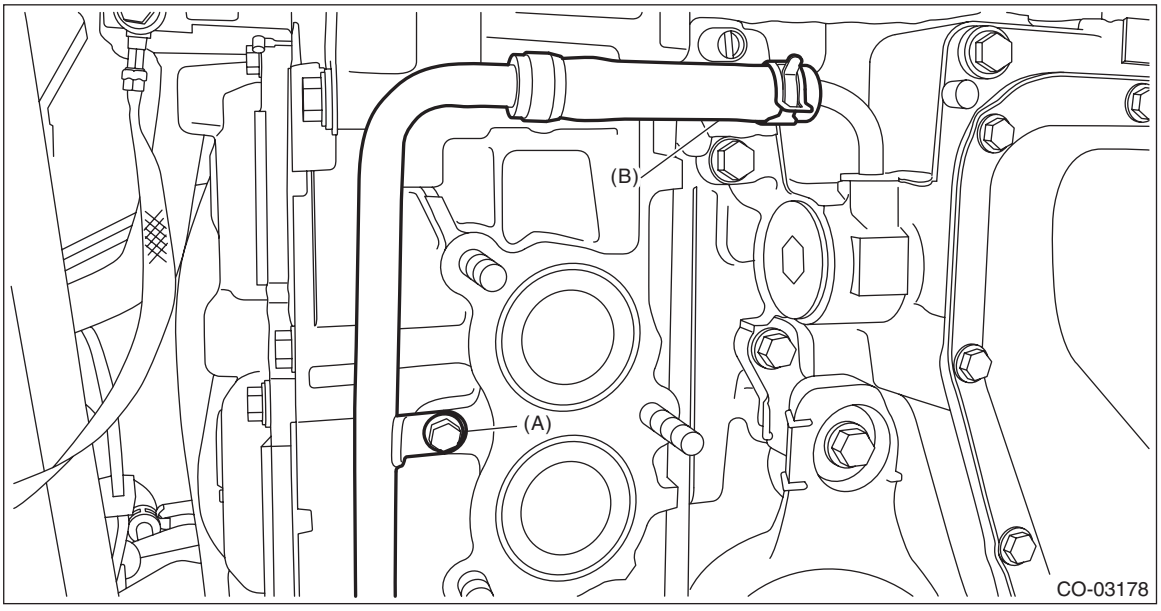

2. WATER PIPE ASSEMBLY LH

• Gasoline engine model

1) Open the front hood, and make alignment marks (A) on both the front hood and the front hood striker by using a marker pen.

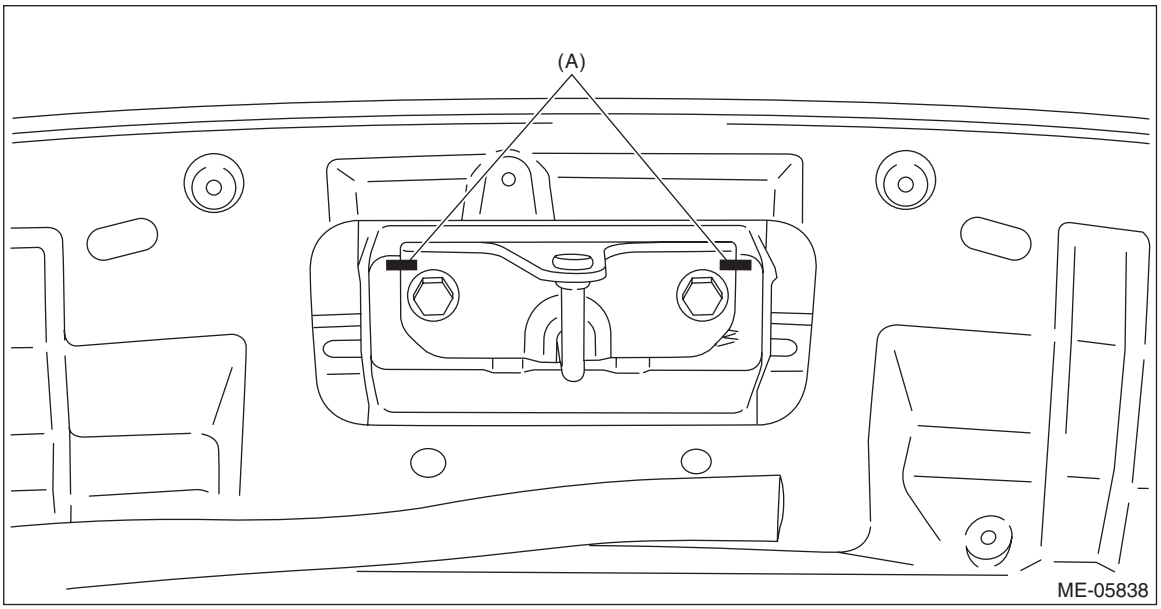

2) Remove the front hood striker from the front hood.

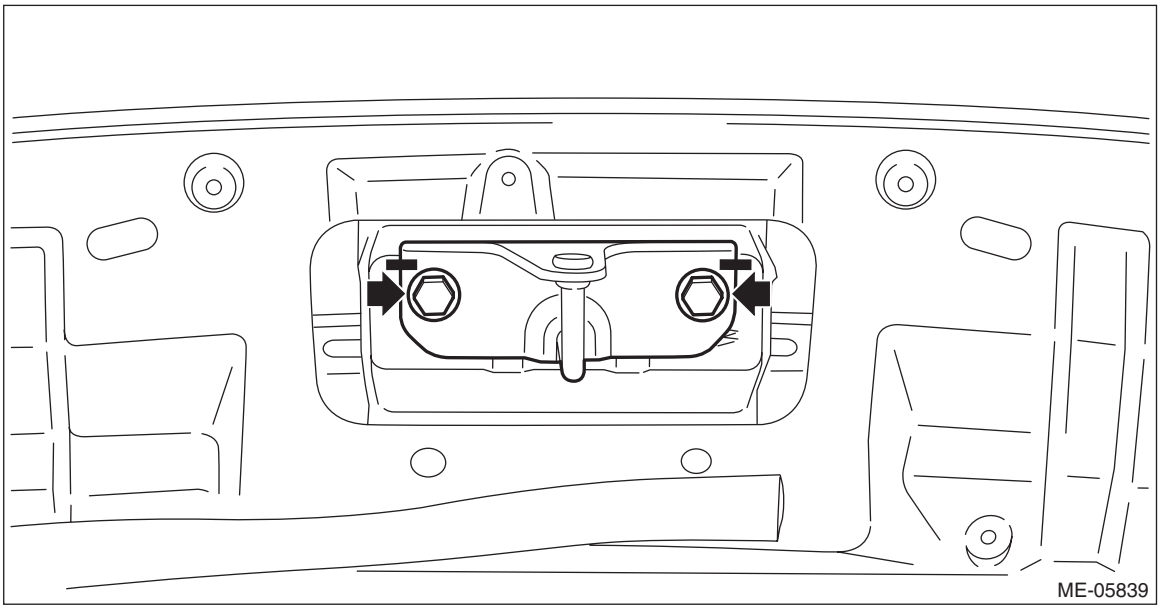

3) Change the front hood stay position from (A) to (B), and completely open the front hood.

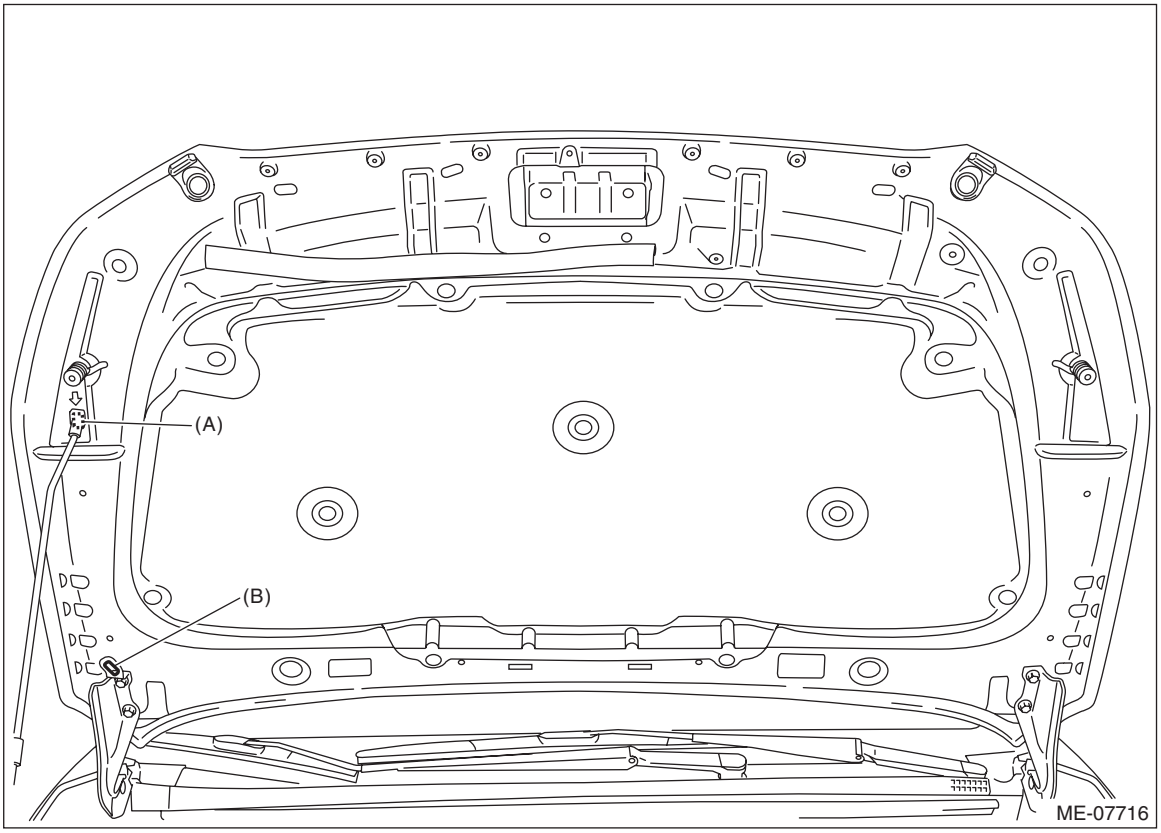

4) Disconnect the ground cable from battery.

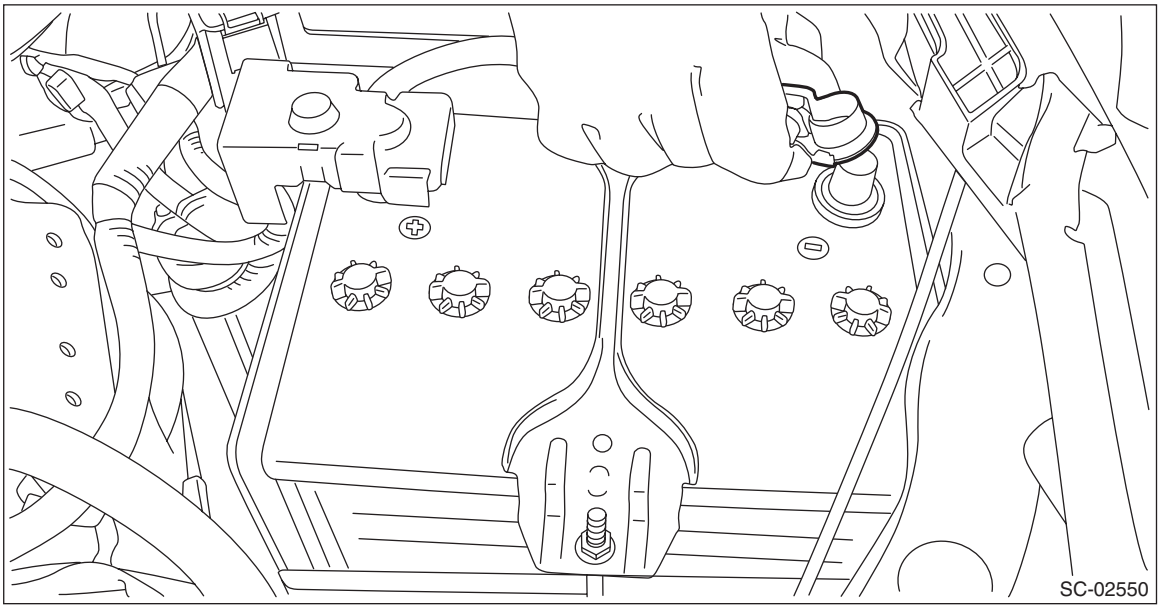

5) Remove the V-belt covers.

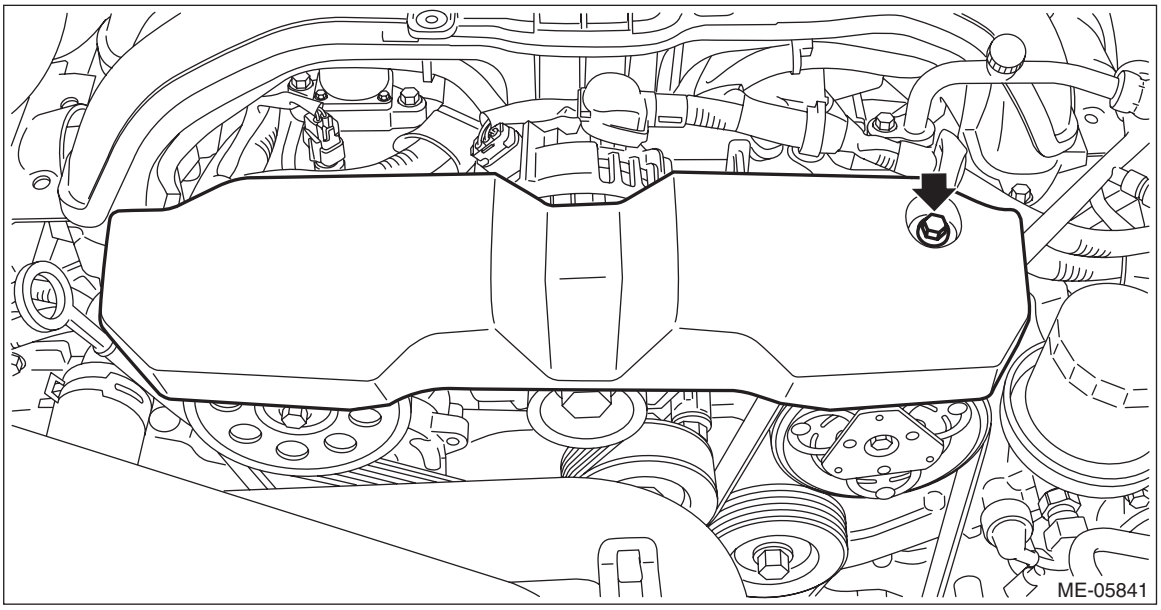

6) Remove the air intake duct. <Ref. to IN(H4DO(w/o HEV))-13, REMOVAL, Air Intake Duct.>
7) Remove the clip (A) from the air intake boot.
8) Loosen the clamp (B) securing the air cleaner case (rear) to the air intake boot.
9) Loosen the clamp (C) which secures the throttle body to the air intake boot.

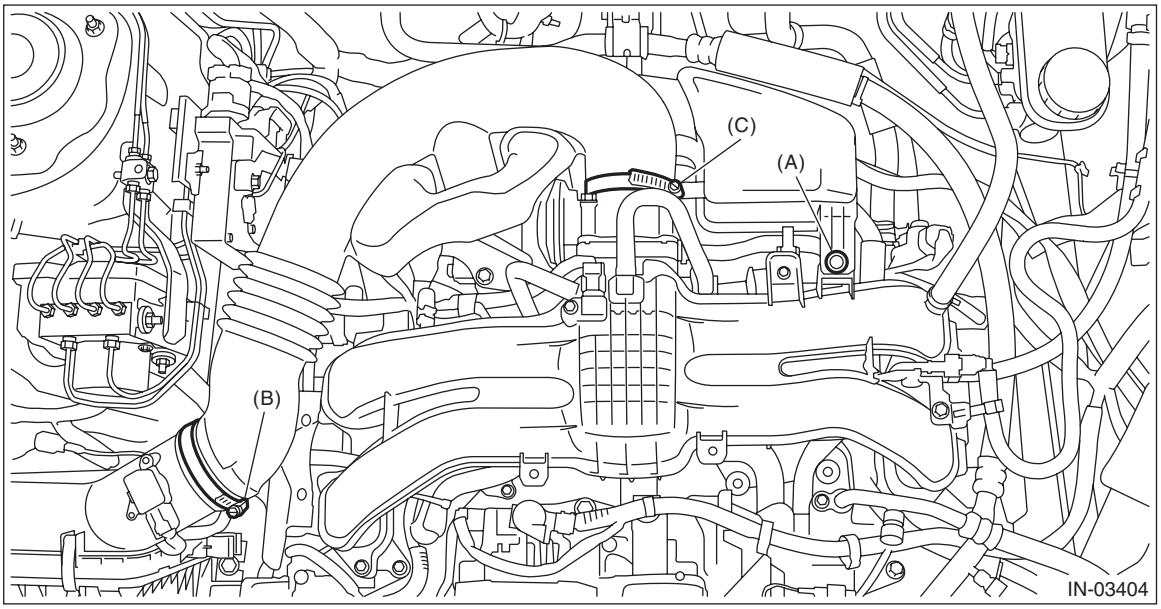

10) Remove the air intake boot from the throttle body, and move it to the left side wheel apron.

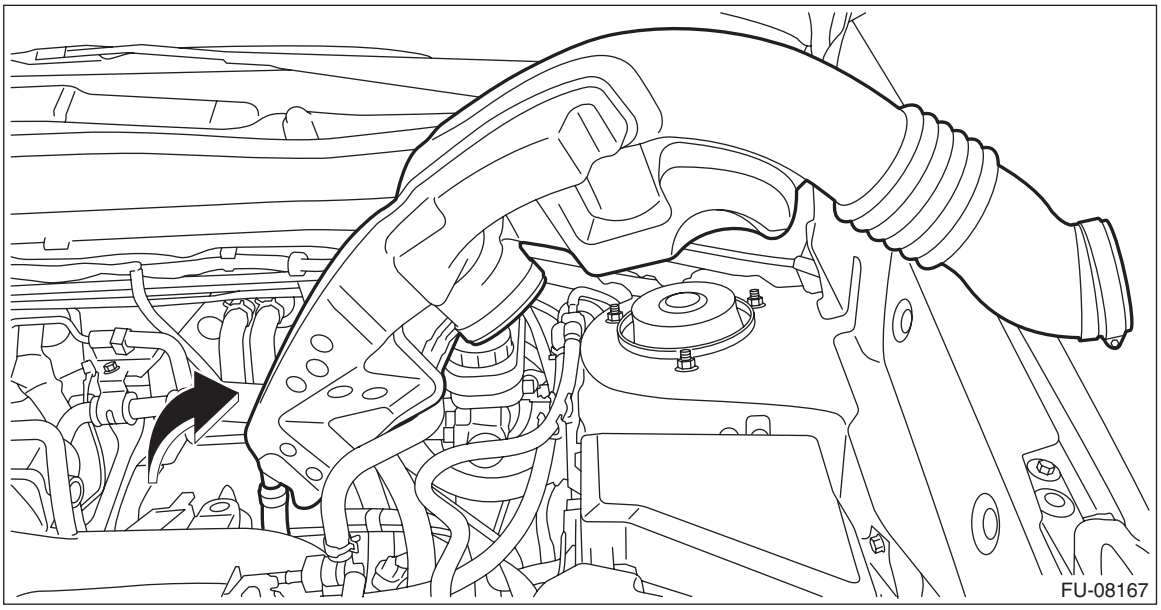

11) Disconnect the connector from the mass air flow and intake air temperature sensor, and remove the clip (A) which holds the mass air flow and intake air temperature sensor harness.

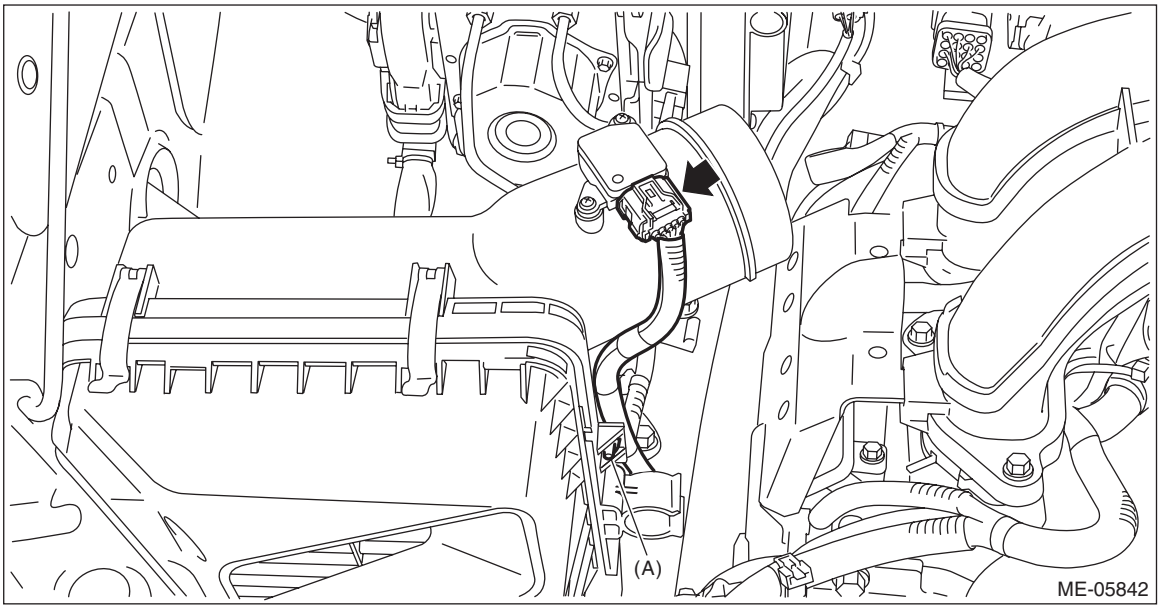

12) Remove the air cleaner case (rear).

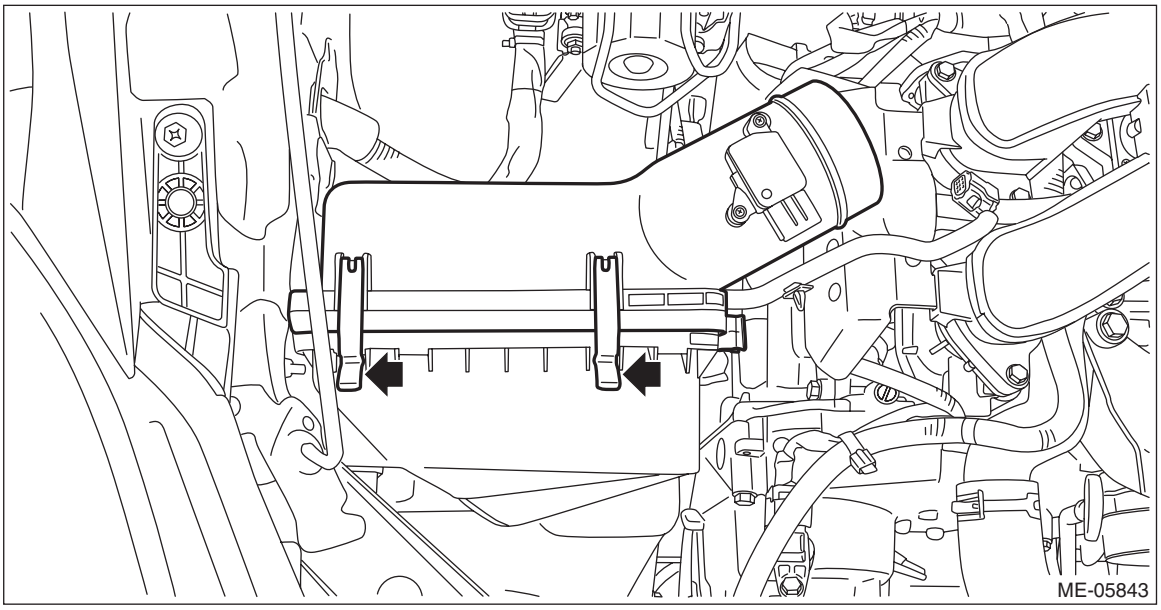

13) Drain engine coolant. <Ref. to CO(H4DO(w/o HEV))-16, DRAINING OF ENGINE COOLANT, REPLACEMENT, Engine Coolant.>

14) Disconnect the preheater hose (A) and the heater outlet hose (B) from the water pipe assembly LH.

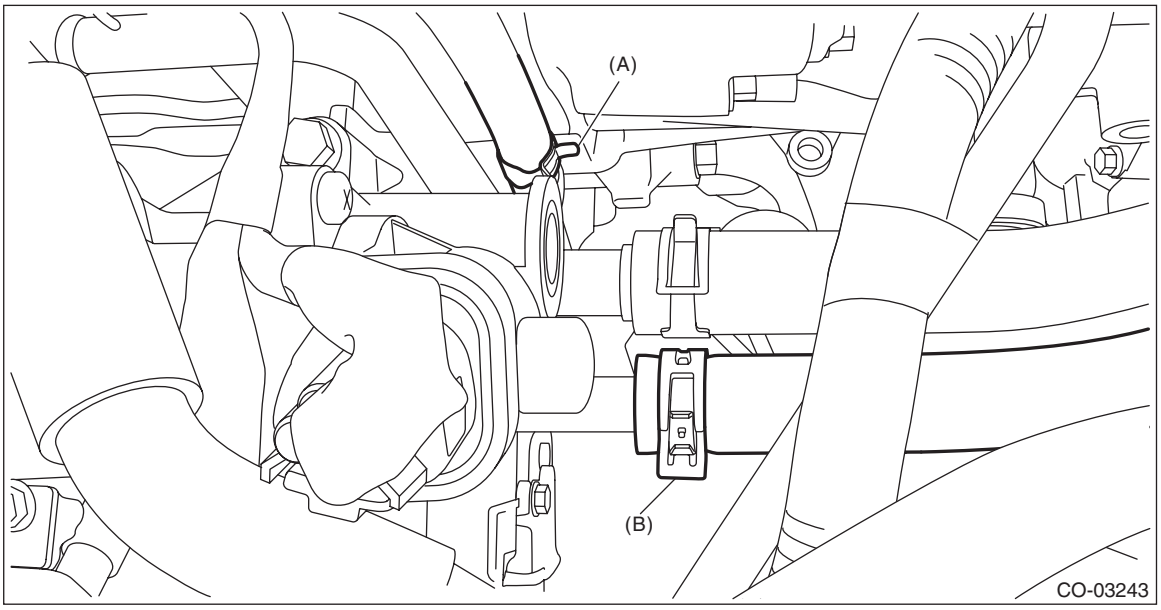

15) Remove the bolt which holds the water pipe assembly LH from the cylinder head LH.

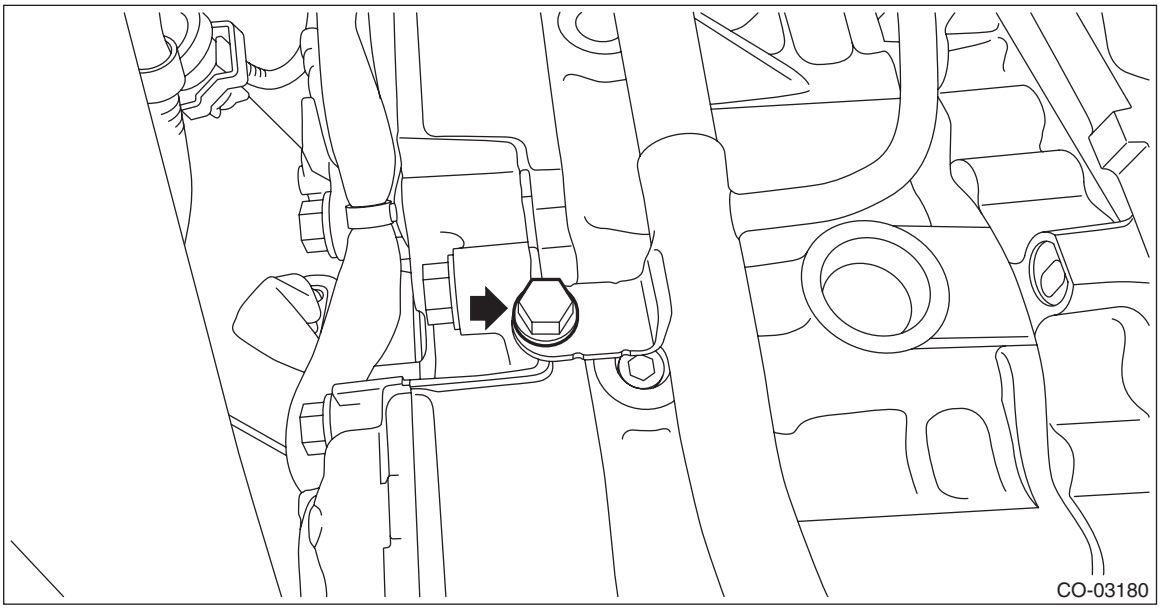

16) Remove the clip holding the air breather hose to the engine rear hanger. (MT model)

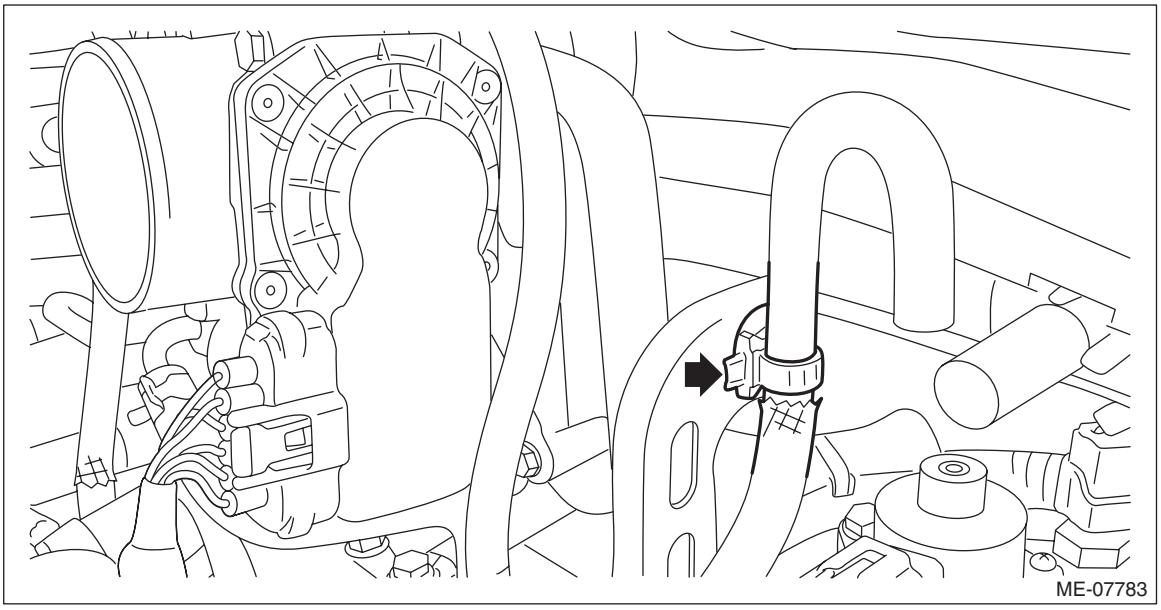

17) Lift up the vehicle.
18) Remove the front exhaust pipe. <Ref. to EX(H4DO(w/o HEV))-6, REMOVAL, Front Exhaust Pipe.>

19) Remove the nuts which secure the engine mounting to the front crossmember. (CVT model)

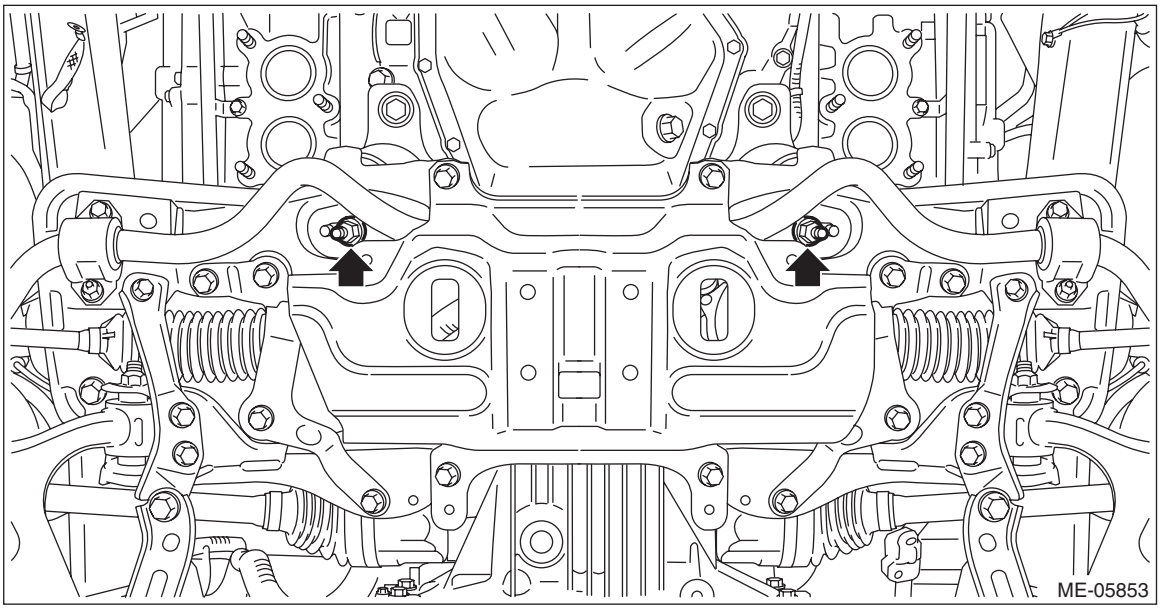

20) Remove the nuts which secure the engine mounting to the front crossmember. (MT model)

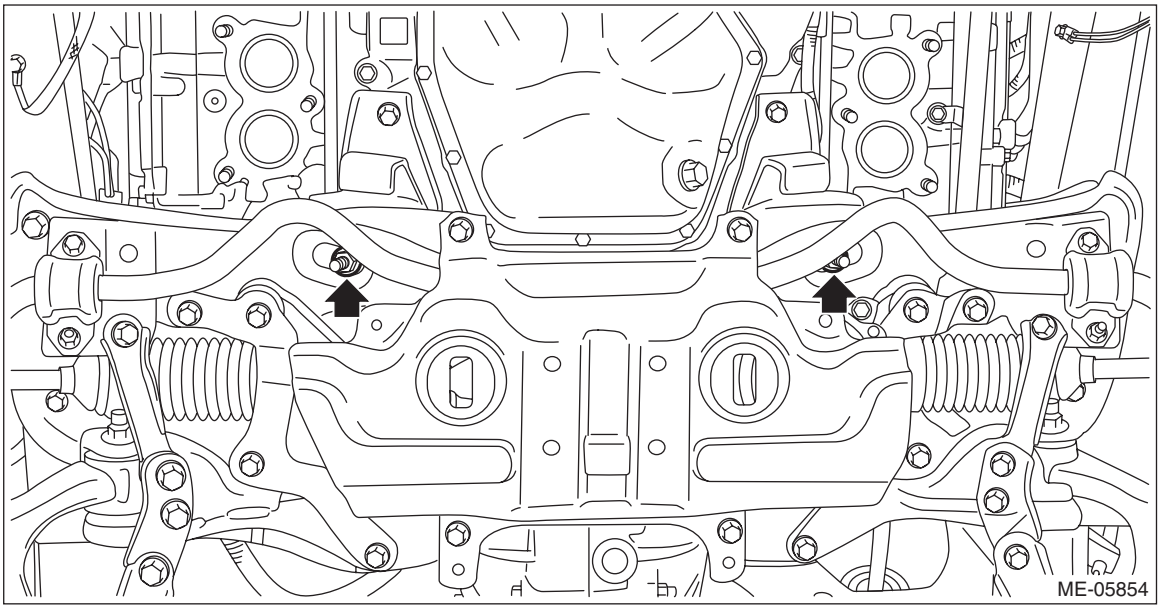

21) Lower the vehicle.

22) Disconnect the bulkhead harness connector from the transmission harness connector (A) and the inhibitor harness connector (B), and disconnect the transmission radio ground terminal (C) from the vehicle body. (CVT model)

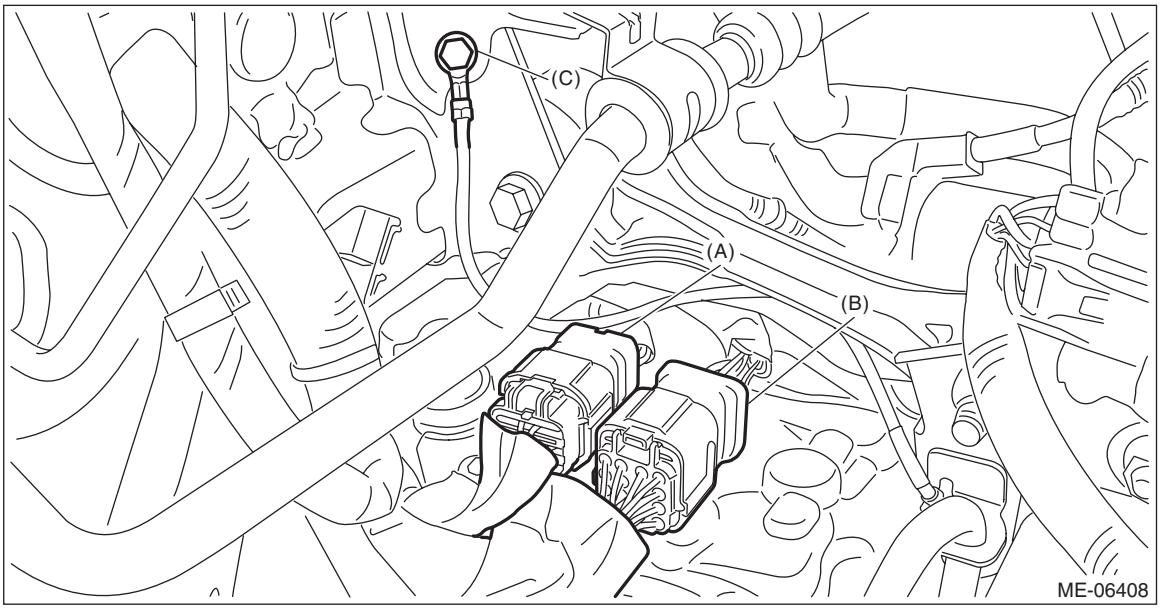

23) Remove the pitching stopper.

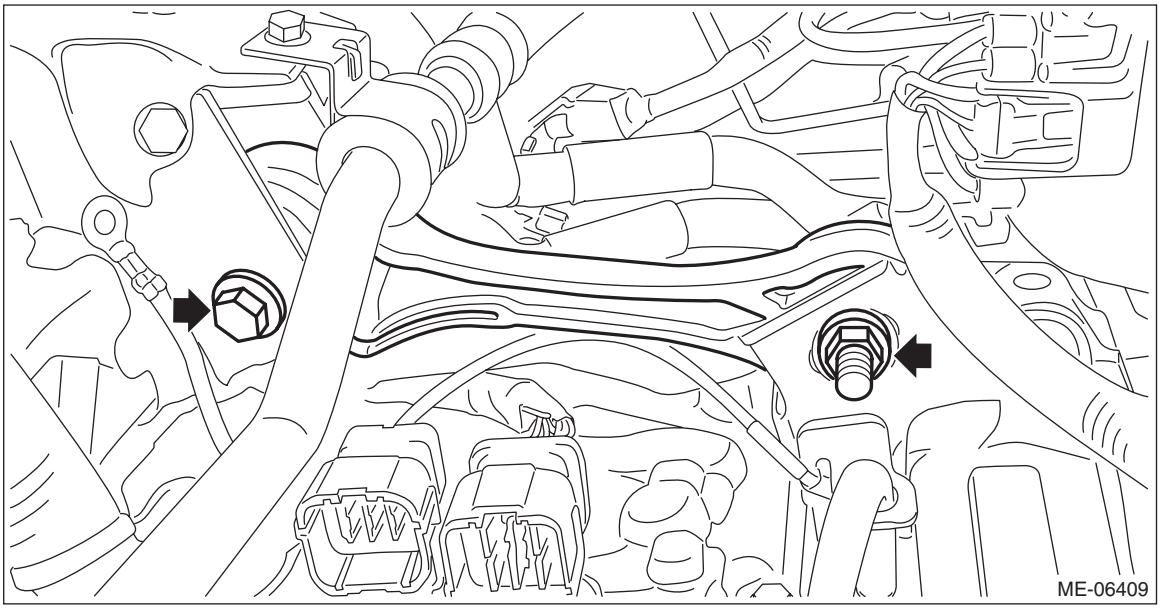

24) Remove the transmission case cover. (CVT model)

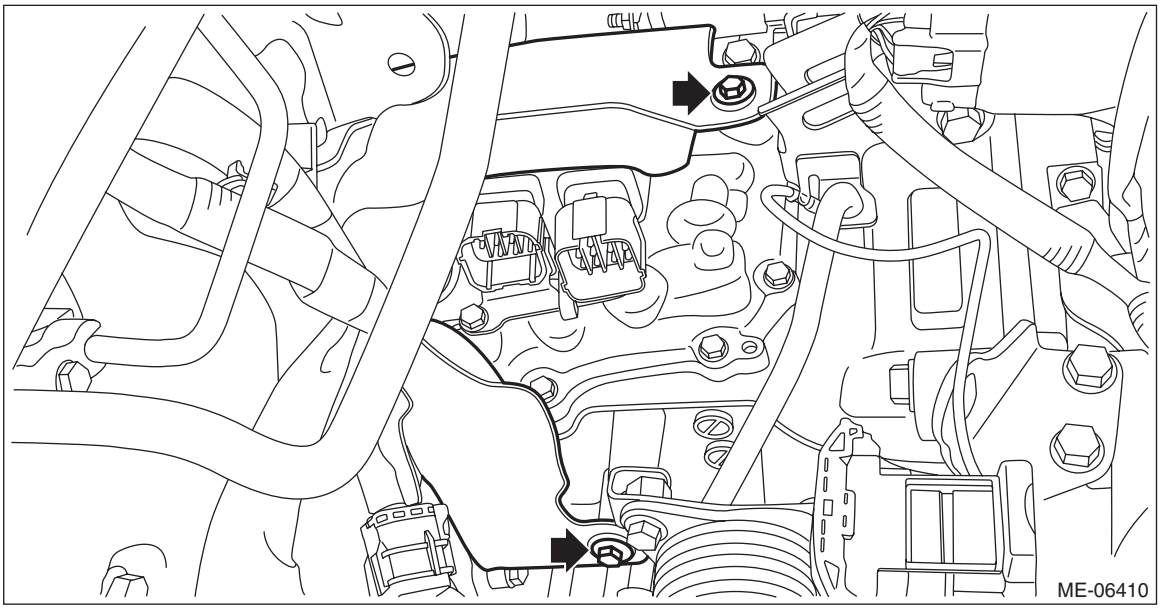

25) Remove the bolt which holds the transmission harness stay. (CVT model)

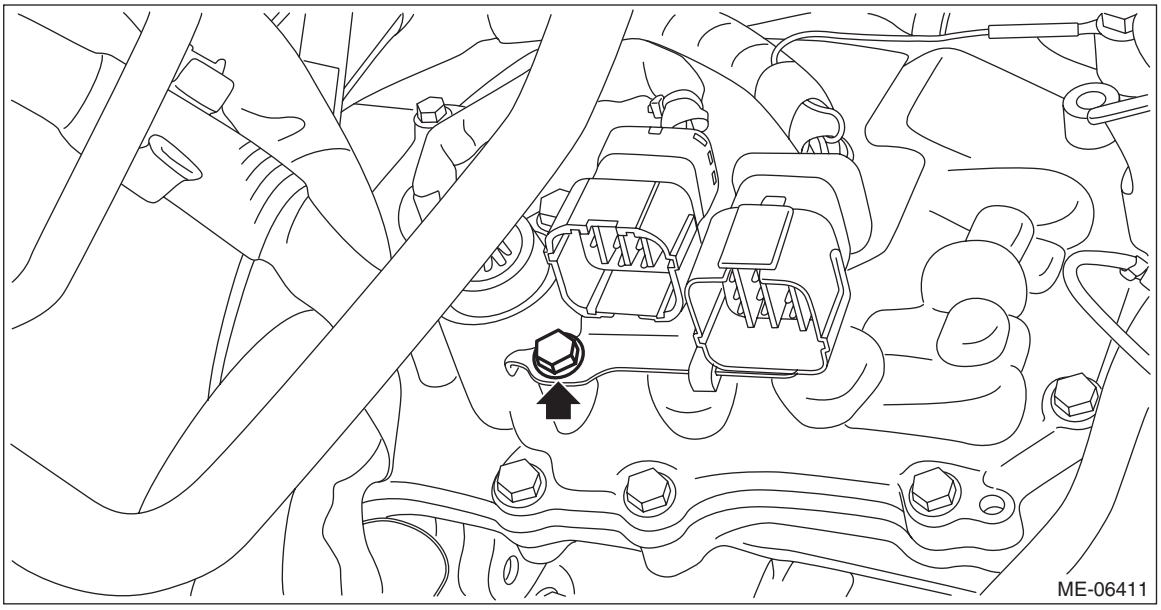

26) Remove the bolt which holds the transmission harness to the control valve body, and turn the transmission harness clockwise till the bolt hole can be seen as shown in the figure, and tighten the bolt to temporary lock the harness. (CVT model)

NOTE:
This procedure is required to prevent the transmission harness from touching the vehicle body during engine lift-up.

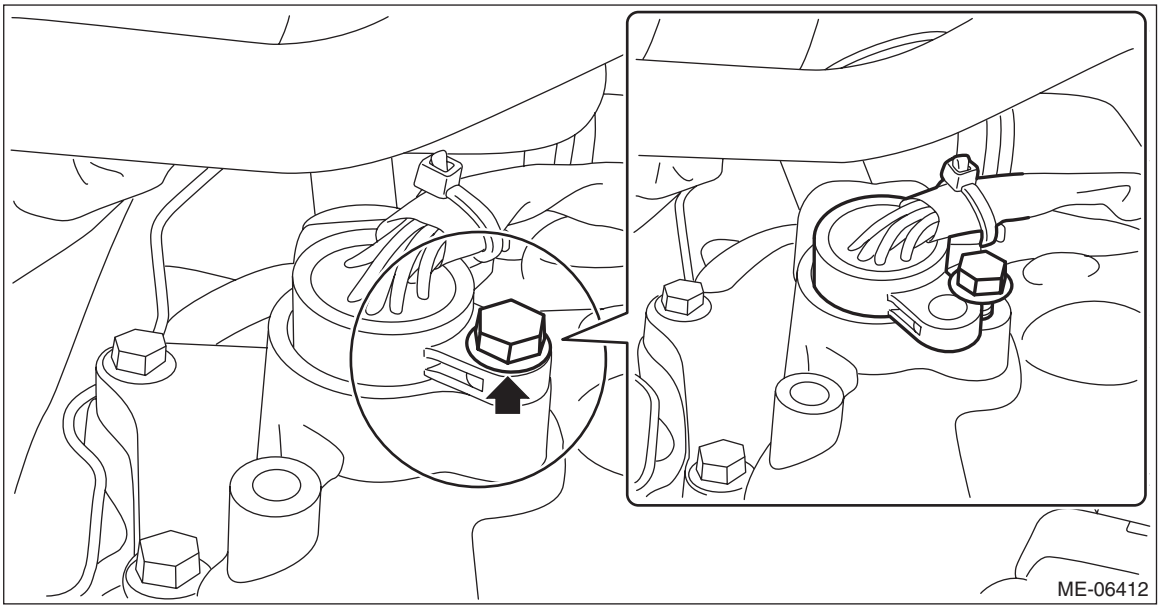

27) Lift up the engine with a lifting device and wire ropes.

CAUTION:
When lifting up the engine, pay attention to the clearance of each part and be careful not to lift the engine too much, in order to prevent damaging the vehicle.

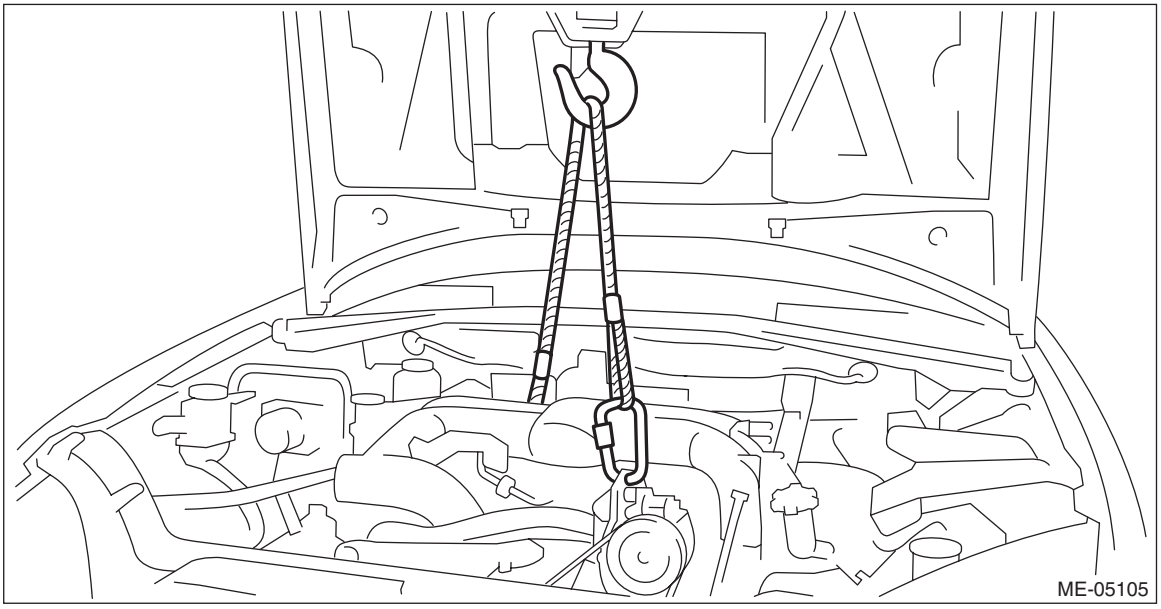

28) Remove the bolt (A) which secures the water pipe assembly LH to the cylinder head LH.

29) Disconnect the water pipe hose LH (B) from oil pan upper, and remove the water pipe assembly LH.

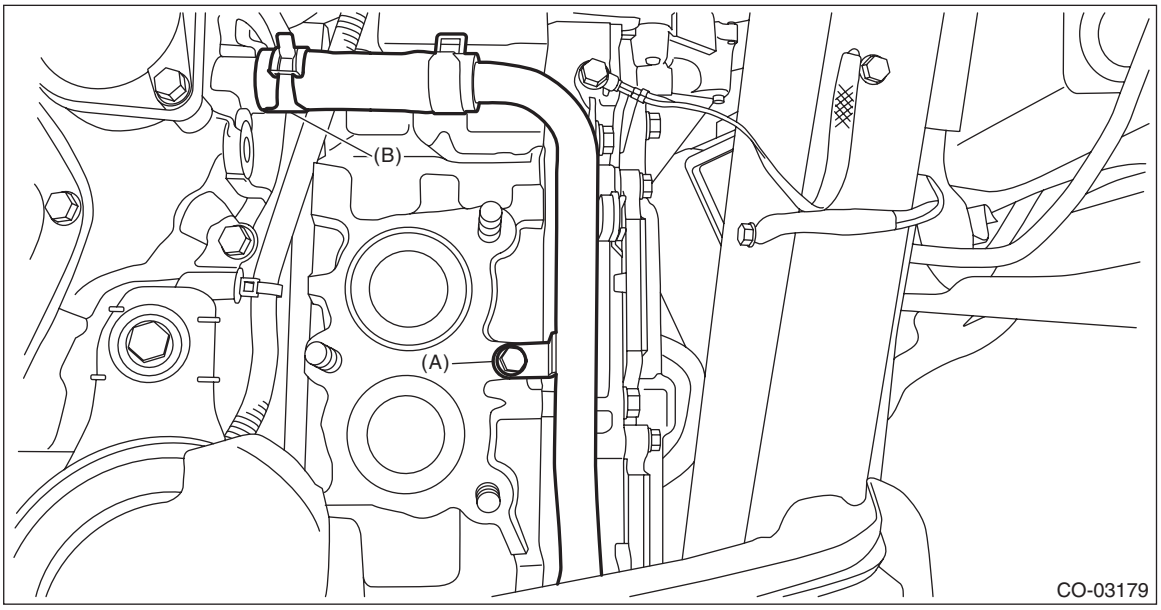

- **HEV model**

1) Turn the ignition switch to OFF.
2) Open the front hood, and make alignment marks (A) on both the front hood and the front hood striker by using a marker pen.

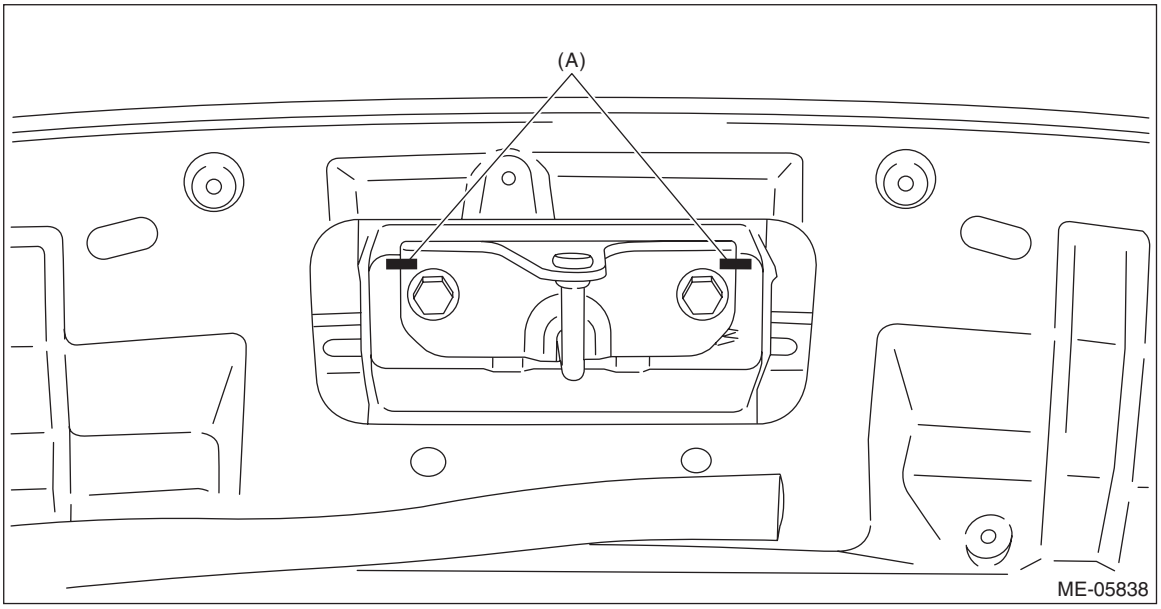

3) Remove the front hood striker from the front hood.

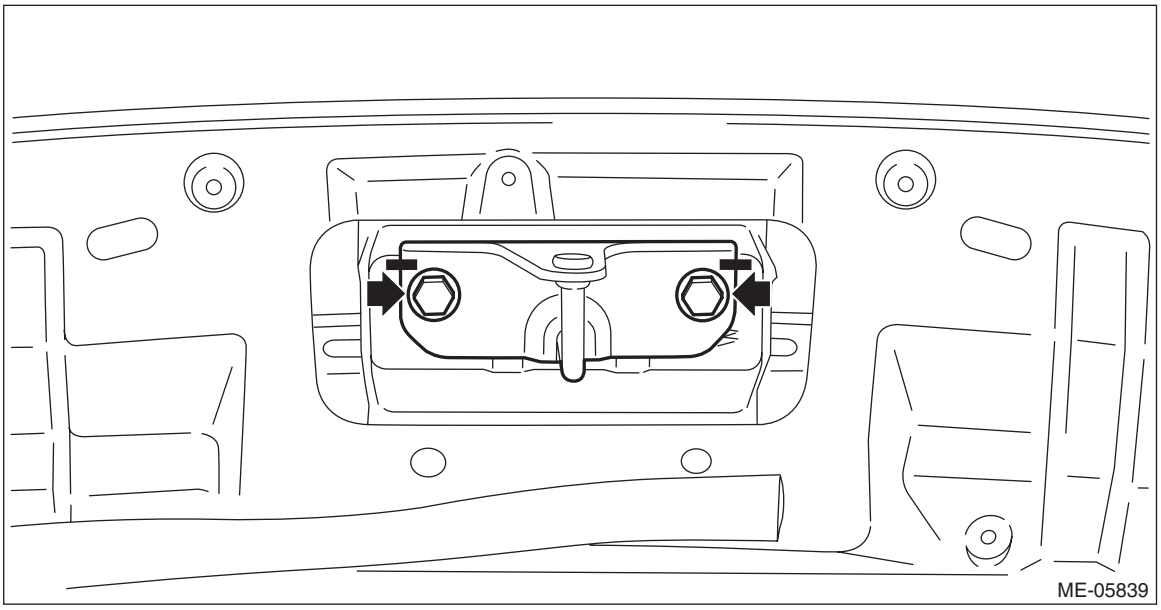

4) Change the front hood stay position from (A) to (B), and completely open the front hood.

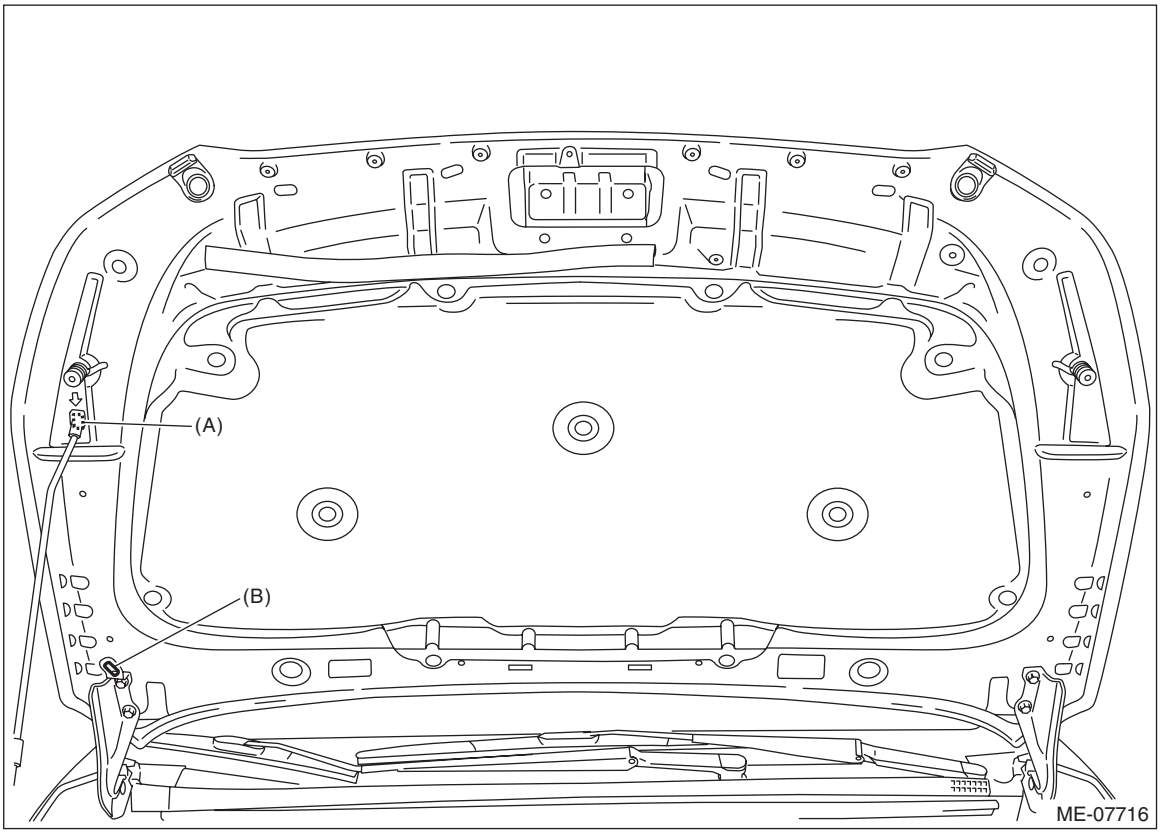

5) Disconnect the ground cable from battery. <Ref. to NT-5, BATTERY, NOTE, Note.>

NOTE:
For the 12 volt engine restart battery, disconnect the ground terminal from 12V engine restart battery sensor.

6) Remove the collector cover.
(1) Pull up the two points at the front of collector cover (A).
(2) Pull up the two points at the rear of collector cover (B) while moving them rearward.

NOTE:
Be careful not to contact the fuel delivery tube when moving the collector cover rearward.

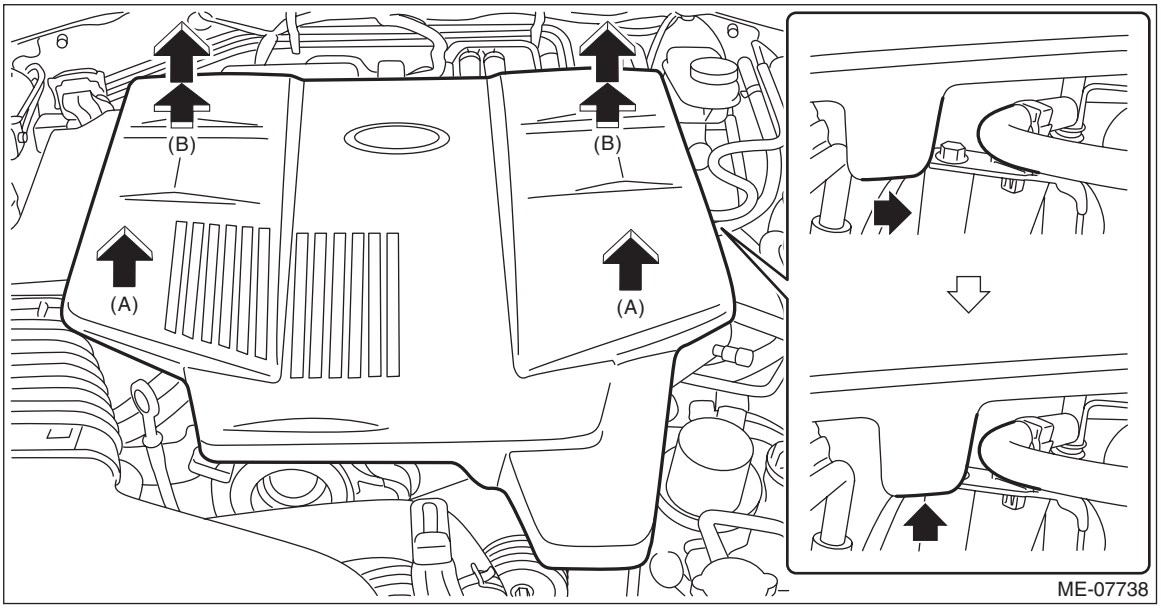

7) Remove the air intake duct. <Ref. to IN(H4DO(HEV))-15, REMOVAL, Air Intake Duct.>
8) Remove the air cleaner case. <Ref. to IN(H4DO(HEV))-6, REMOVAL, Air Cleaner Case.>
9) Drain engine coolant. <Ref. to CO(H4DO(w/o HEV))-16, DRAINING OF ENGINE COOLANT, REPLACEMENT, Engine Coolant.>
10) Disconnect the connector (A) from the brake vacuum pump, and disconnect the connector (B) from the A/C compressor.
11) Remove the clip (C) and the clip (D) securing the harness to the battery cable assembly, and move the harness to the left side wheel apron.

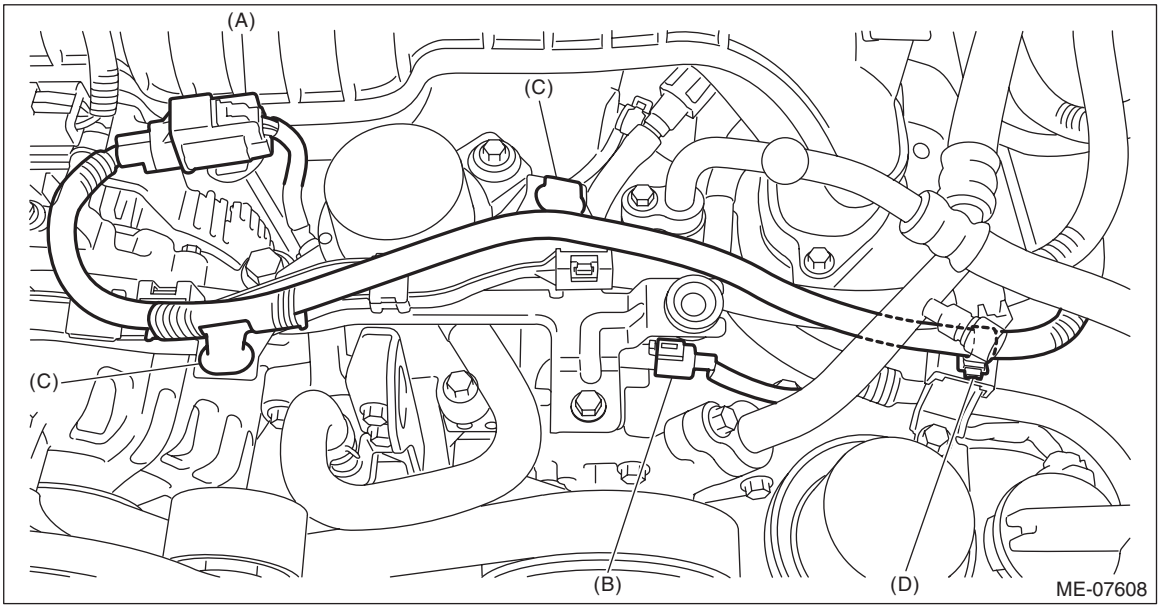

12) Remove the terminal boot from the positive terminal of the 12 volt auxiliary battery.

13) Remove the nuts fastening the battery cable assembly to the slow blow fuse (12 volt auxiliary battery), and remove the battery cable assembly from the main fuse box.

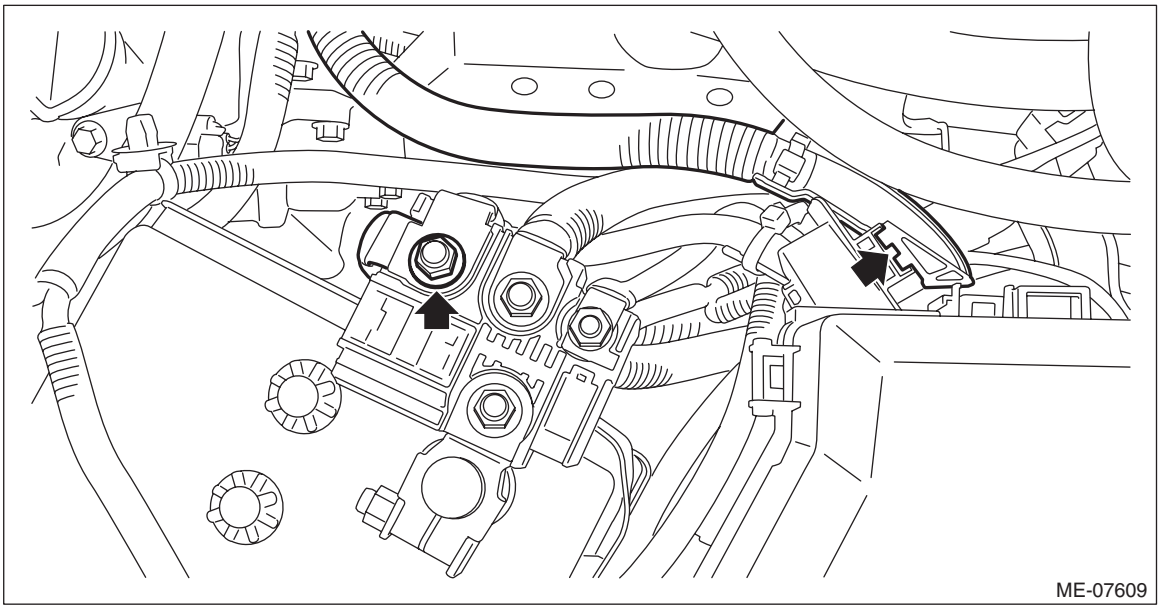

14) Remove the bolt (A) securing the battery cable stay to the chain cover, and remove the clip (B) securing the battery cable assembly to the collector cover bracket.

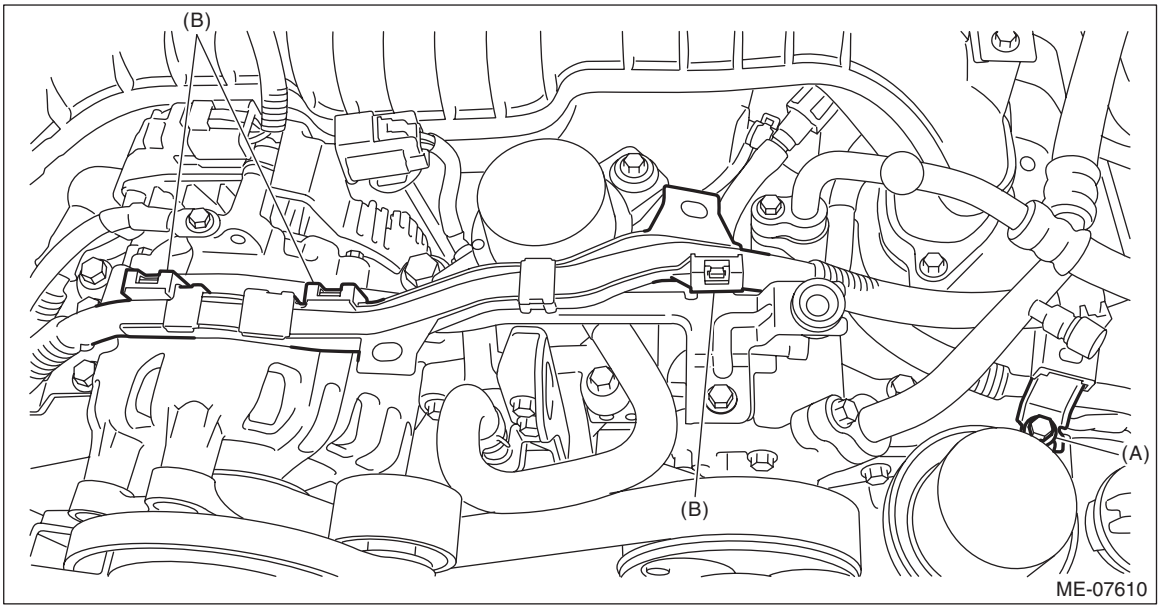

15) Disconnect the terminal (A) and the terminal (B) from ISG.

16) Remove the clip (C) securing the battery cable assembly to the battery cable bracket No. 1, and move the battery cable assembly to the right side wheel apron.

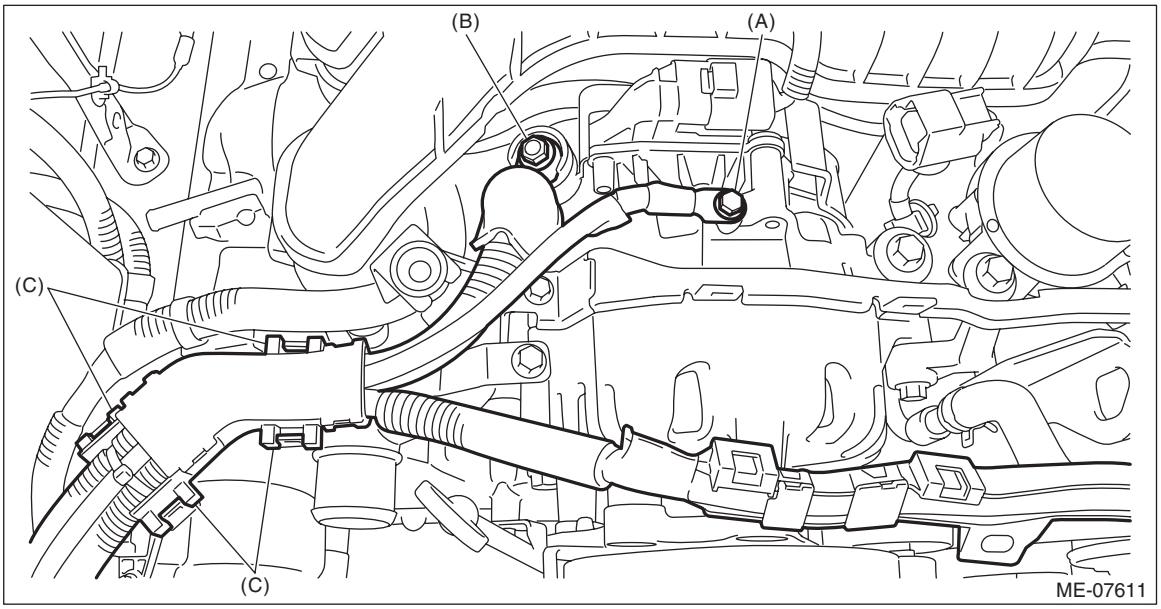

17) Disconnect the preheater hose (A) and the heater outlet hose (B) from the water pipe assembly LH.

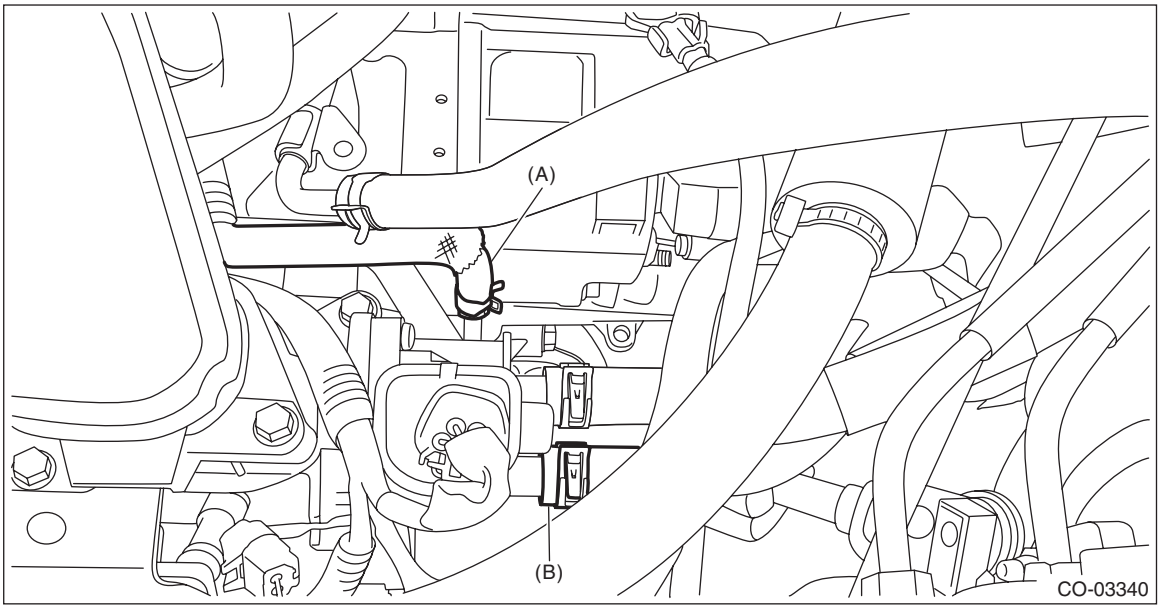

18) Remove the bolt which holds the water pipe assembly LH from the cylinder head LH.

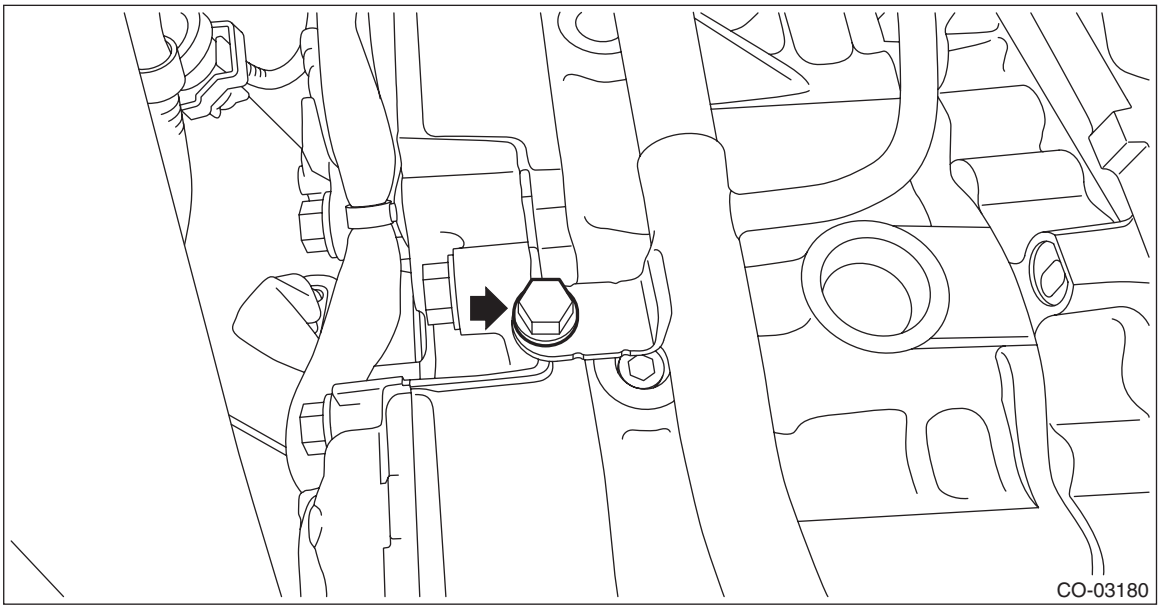

19) Lift up the vehicle.
20) Remove the front exhaust pipe. <Ref. to EX(H4DO(w/o HEV))-6, REMOVAL, Front Exhaust Pipe.>
21) Remove the nuts which secure the engine mounting to the front crossmember.

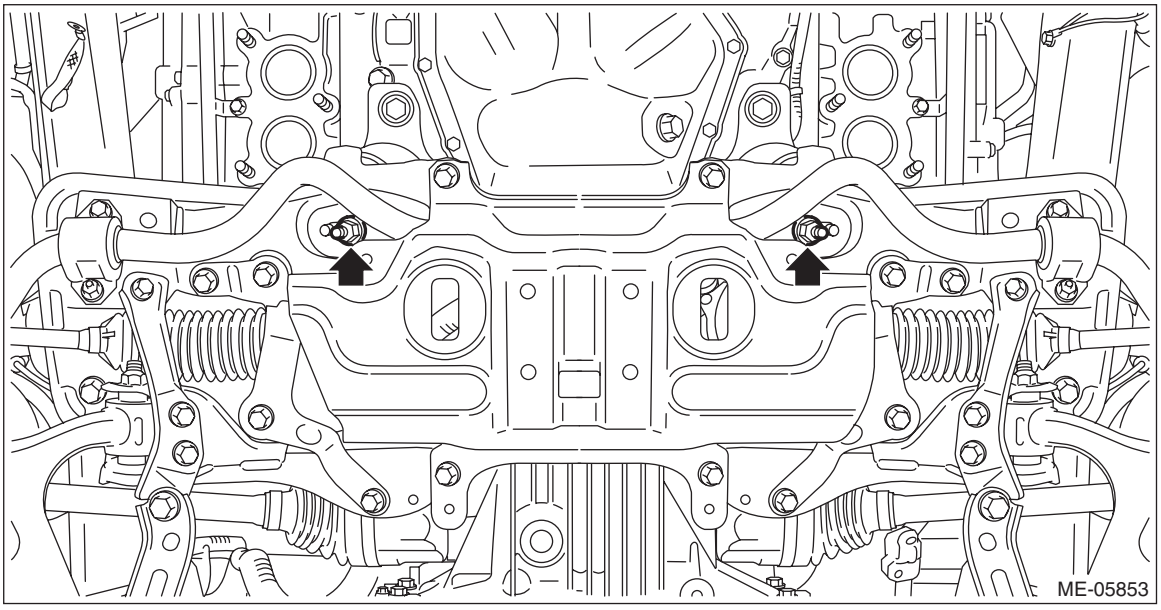

22) Lower the vehicle.

23) Disconnect the transmission radio ground terminal (A) from the vehicle, and remove the pitching stopper.

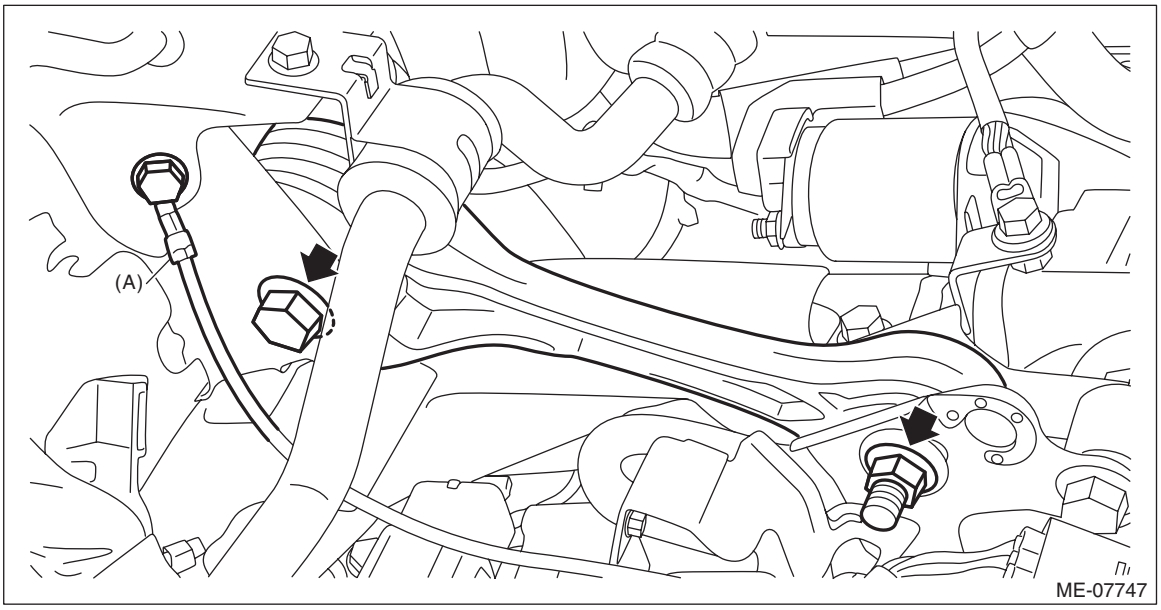

24) Remove the bolt (A) securing the bulkhead harness connector bracket, and disconnect the bulkhead harness connector from the engine harness connector (brown) (B).
25) Disconnect the bulkhead harness connector from the transmission harness connector (C), inhibitor harness connector (D) and drive motor harness connector (E).

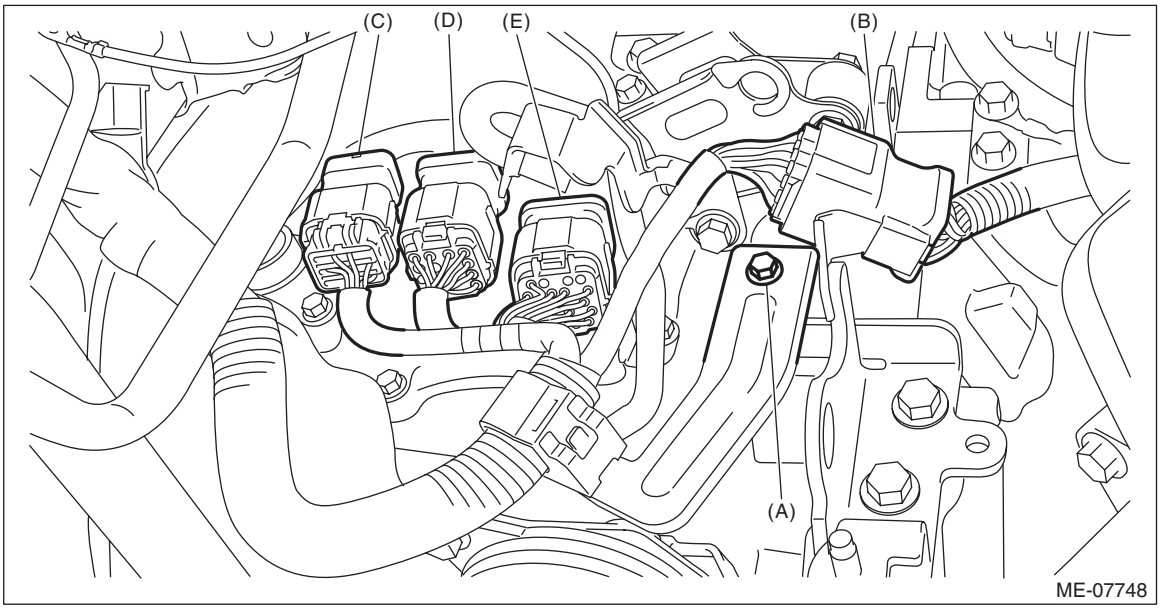

26) Remove the transmission case cover.

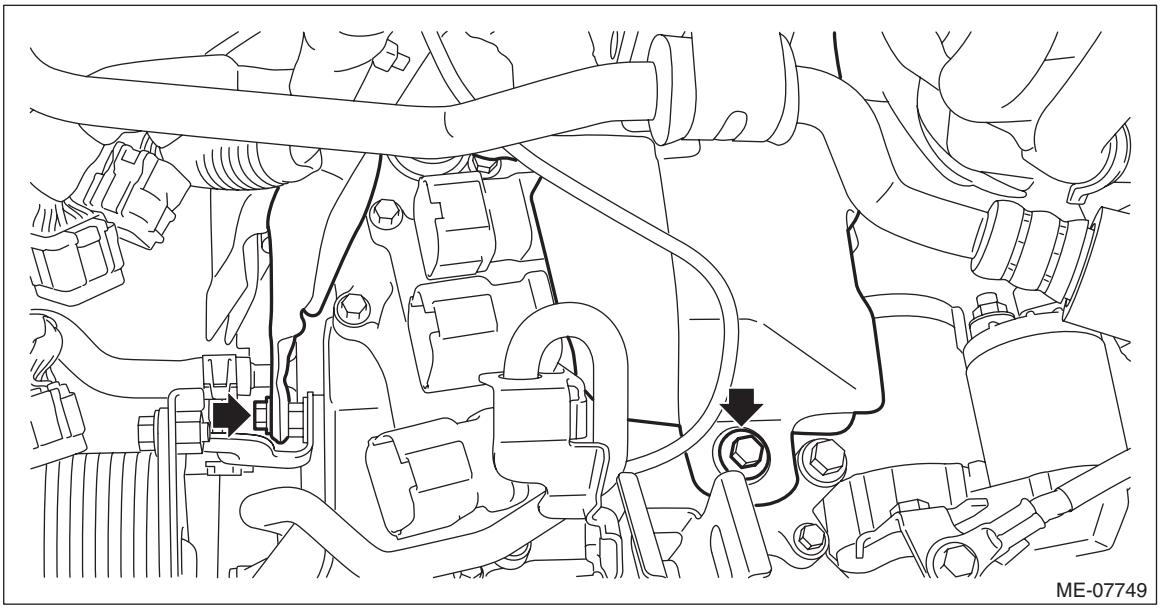

27) Remove the bolt which holds the transmission harness stay.

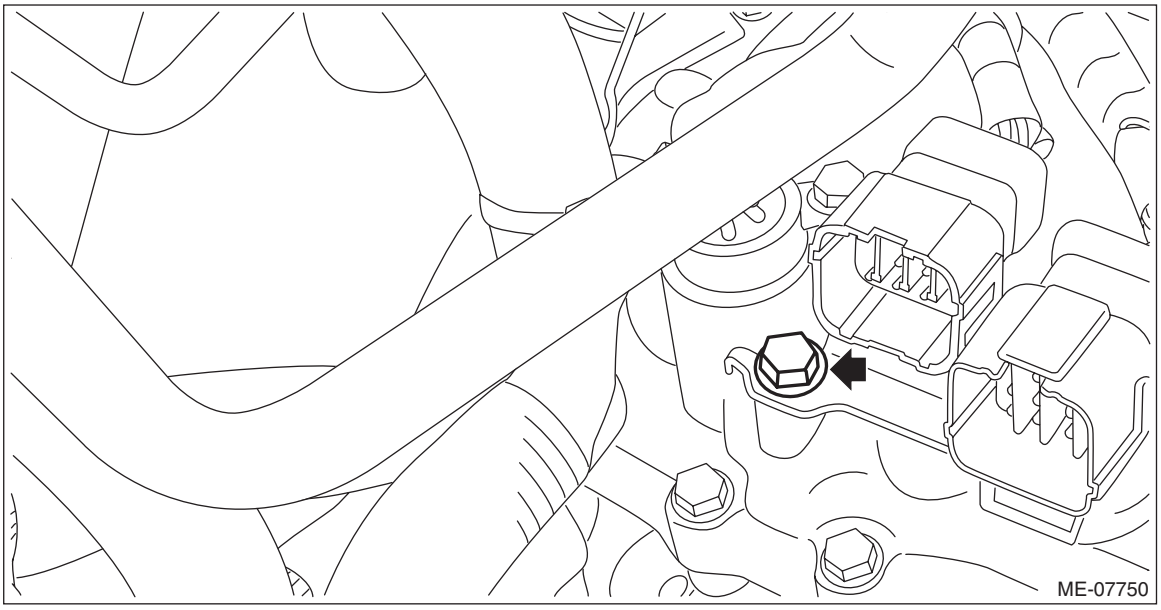

28) Remove the bolt which holds the transmission harness to the control valve body, and turn the transmission harness clockwise till the bolt hole can be seen as shown in the figure, and tighten the bolt to temporary lock the harness.

NOTE:
This procedure is required to prevent the transmission harness from touching the vehicle body during engine lift-up.

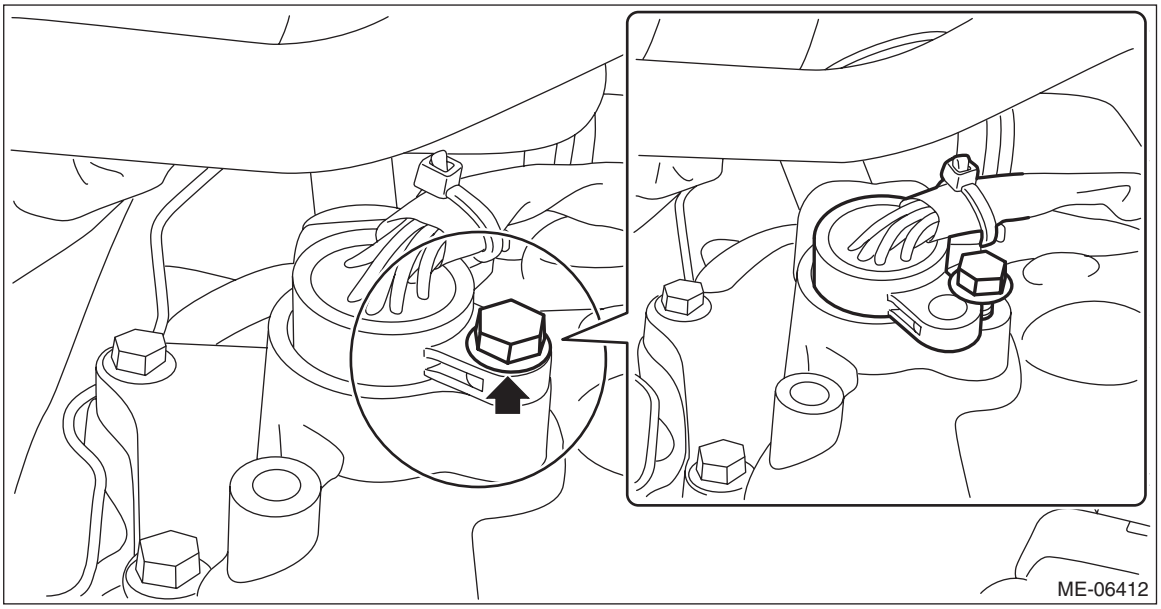

29) Remove the clip (A) securing the engine harness to the purge control solenoid valve bracket, and disconnect the bolt securing the purge control solenoid valve bracket to the intake manifold.

NOTE:
This operation is required to prevent the wire rope from contacting the purge control solenoid valve while lifting the engine.

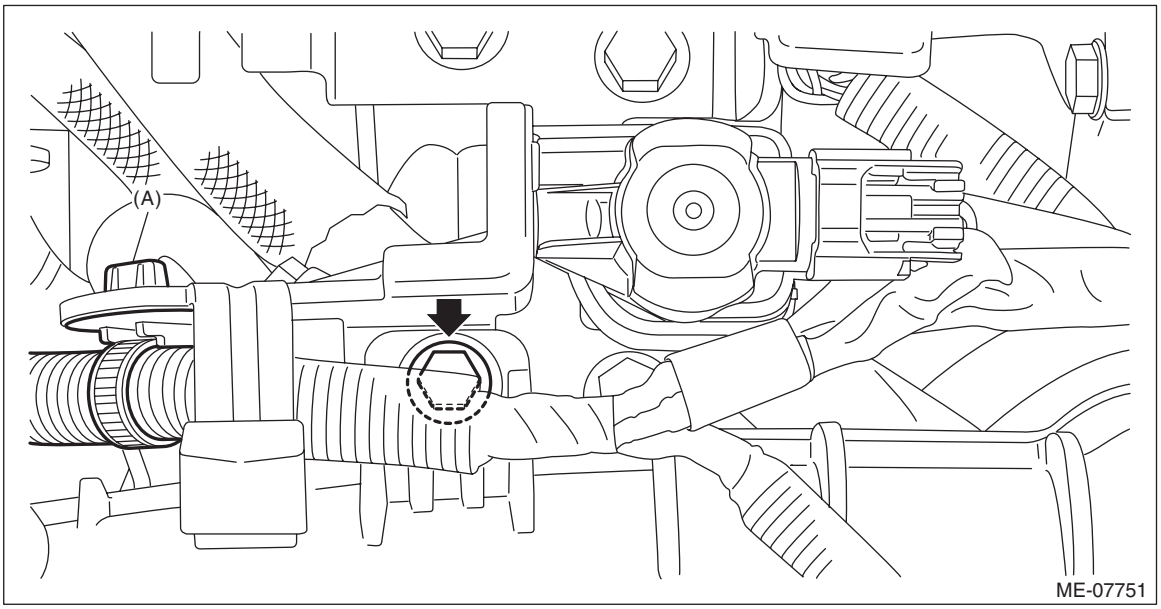

30) Lift up the engine with a lifting device and wire ropes.

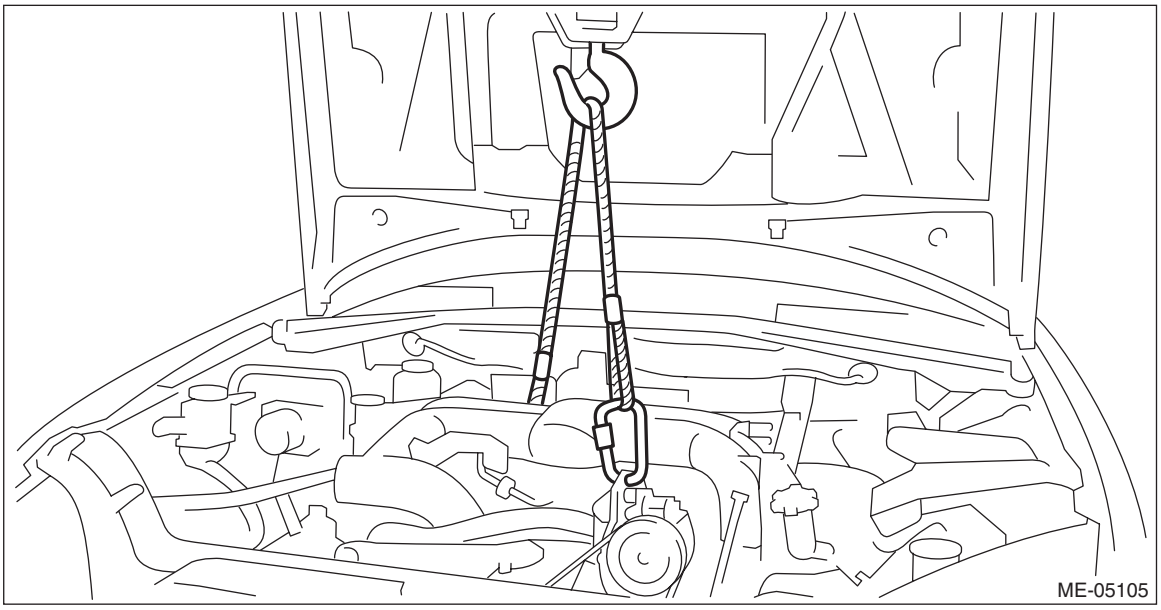

31) Remove the bolt (A) which secures the water pipe assembly LH to the cylinder head LH.
32) Disconnect the water pipe hose LH (B) from oil pan upper, and remove the water pipe assembly LH.

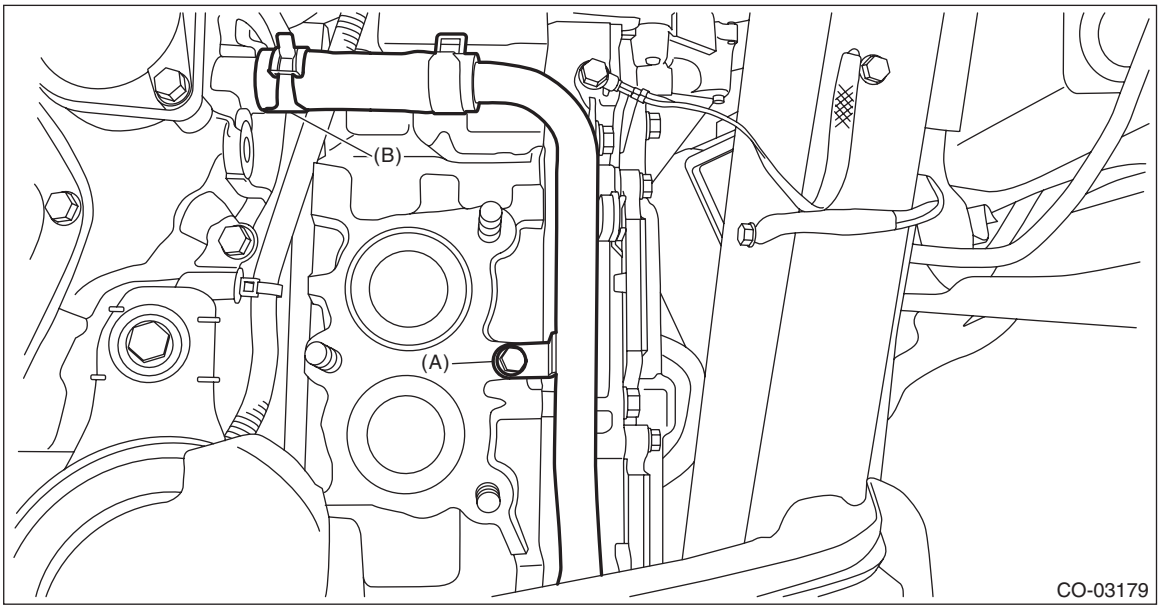

B: INSTALLATION

1. WATER PIPE ASSEMBLY RH

1) Set the water pipe assembly RH on the engine, and connect the water pipe hose RH (B) to the oil pan upper.
2) Secure the water pipe assembly RH to the cylinder head RH with bolt (A).

Tightening torque:
6.4 N·m (0.7 kgf-m, 4.7 ft-lb)

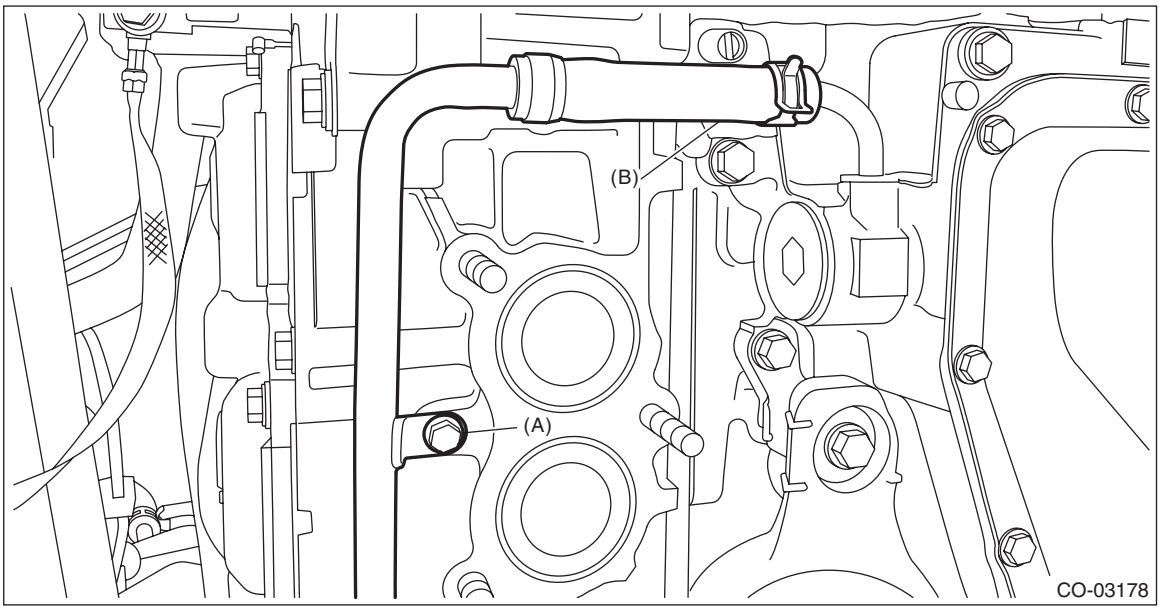

3) Install the bolt (B) which secures the water pipe assembly RH to the cam carrier RH.

Tightening torque:
6.4 N·m (0.7 kgf-m, 4.7 ft-lb)

4) Connect the water hose (A) to the water pipe assembly RH.

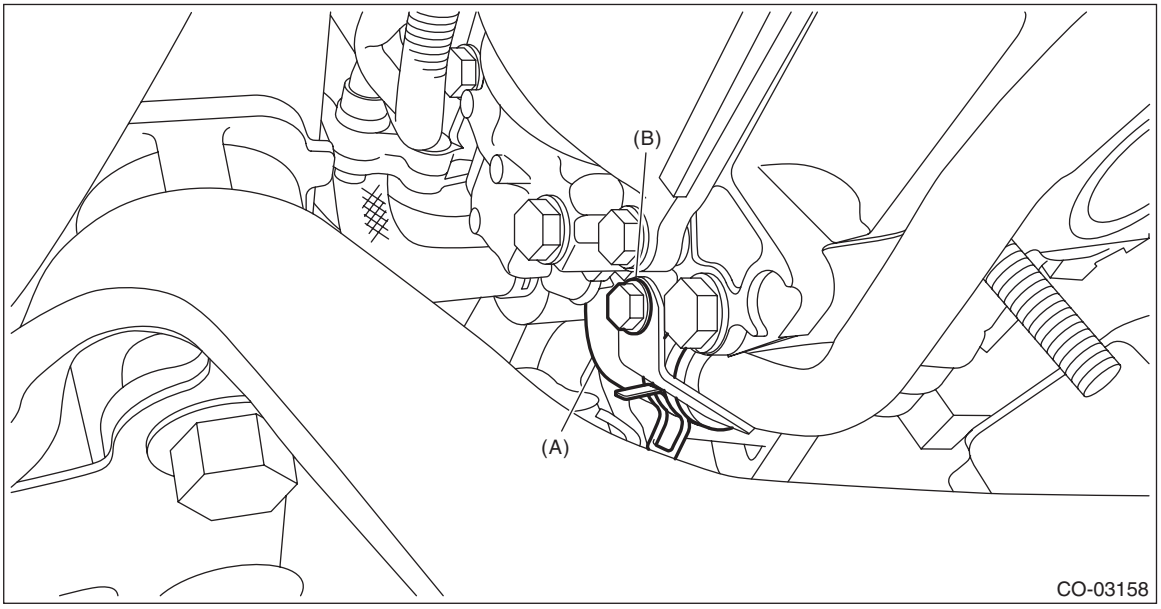

5) Install the front exhaust pipe. <Ref. to EX(H4DO(w/o HEV))-8, INSTALLATION, Front Exhaust Pipe.>
6) Connect the battery ground terminal. <Ref. to NT-5, BATTERY, NOTE, Note.>
7) Fill engine coolant. <Ref. to CO(H4DO(w/o HEV))-17, FILLING OF ENGINE COOLANT, REPLACEMENT, Engine Coolant.>

2. WATER PIPE ASSEMBLY LH

• Gasoline engine model

1) Set the water pipe assembly LH on the engine, and connect the water pipe hose LH (B) to the oil pan upper.
2) Secure the water pipe assembly LH to the cylinder head LH with bolt (A).

Tightening torque:
6.4 N·m (0.7 kgf-m, 4.7 ft-lb)

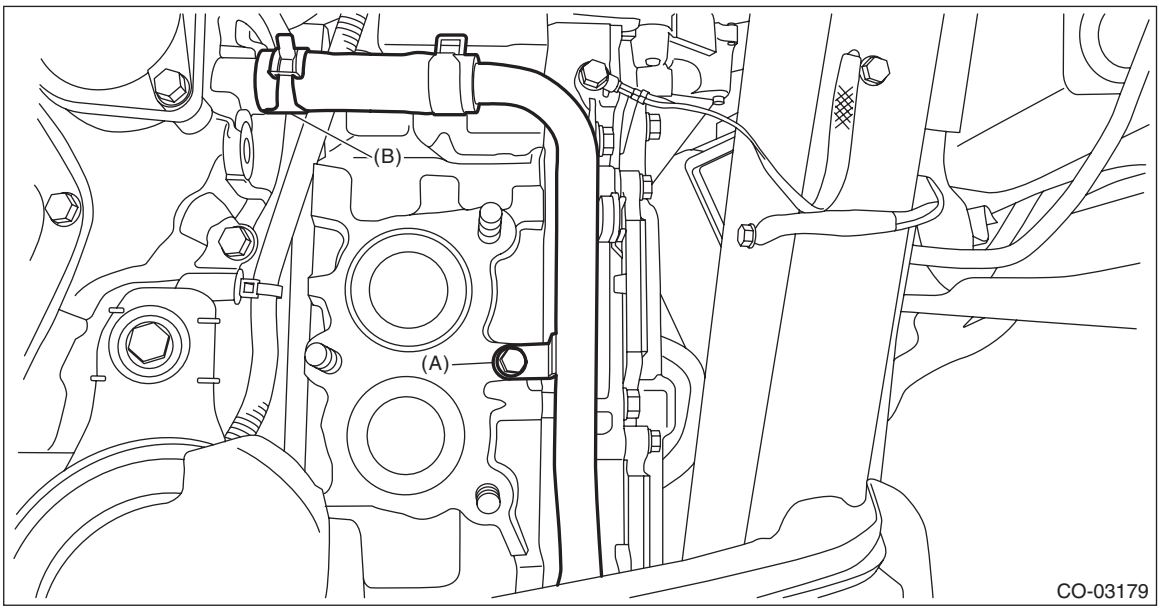

3) Lower the engine and remove the lifting device and wire ropes.

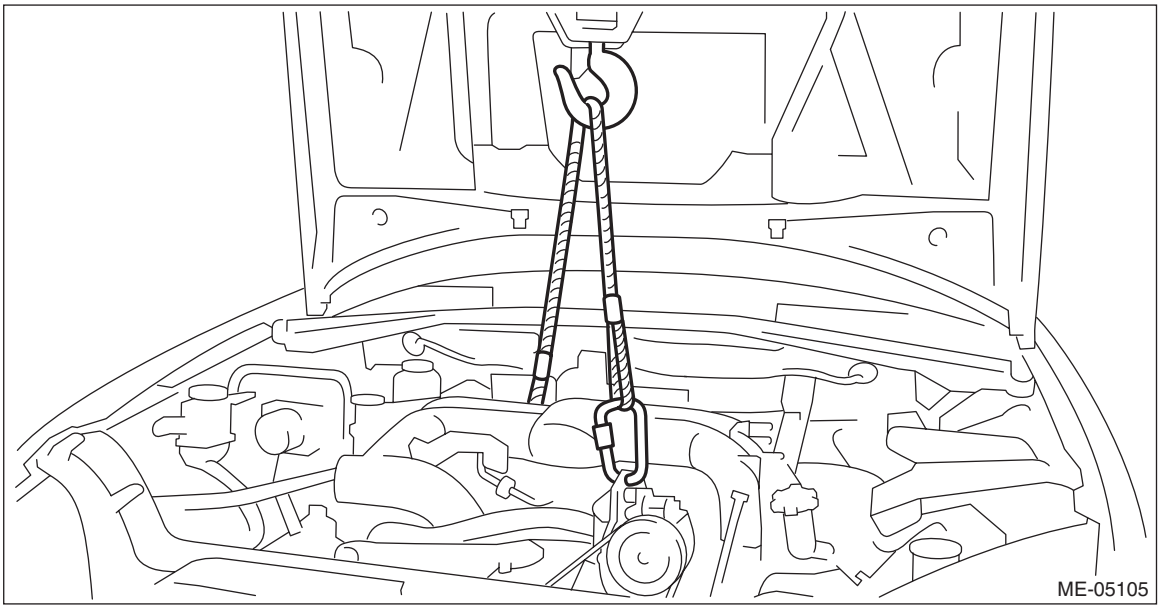

4) Remove the bolt and turn the transmission harness counterclockwise to install the transmission harness to the control valve body. (CVT model)

Tightening torque:
7 N·m (0.7 kgf-m, 5.2 ft-lb)

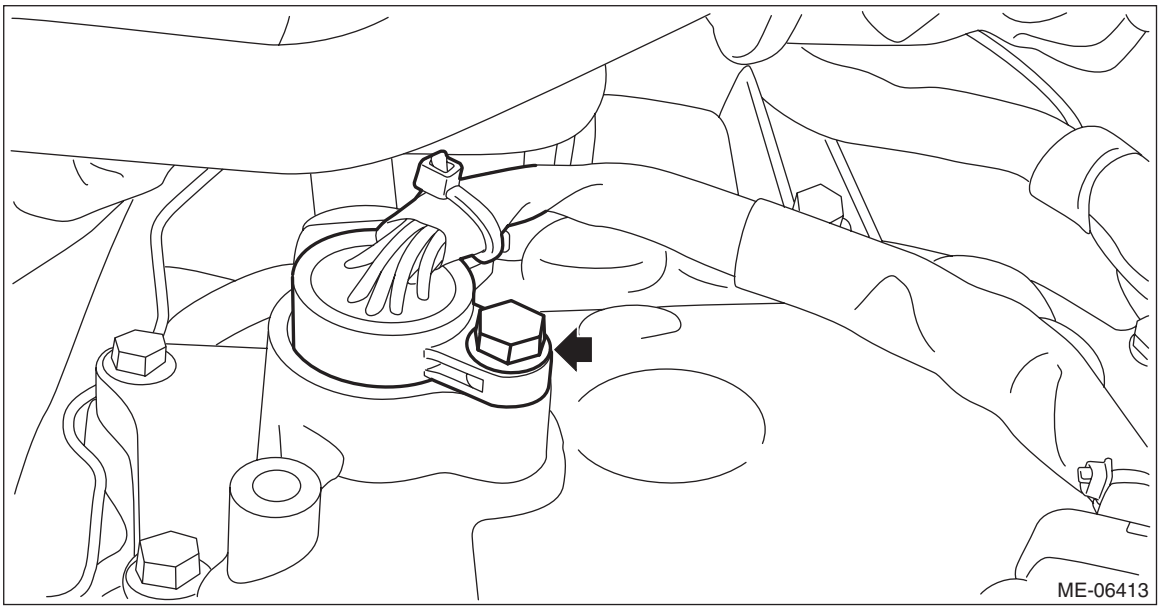

5) Install the bolt which holds the transmission harness stay. (CVT model)

Tightening torque:
7 N·m (0.7 kgf-m, 5.2 ft-lb)

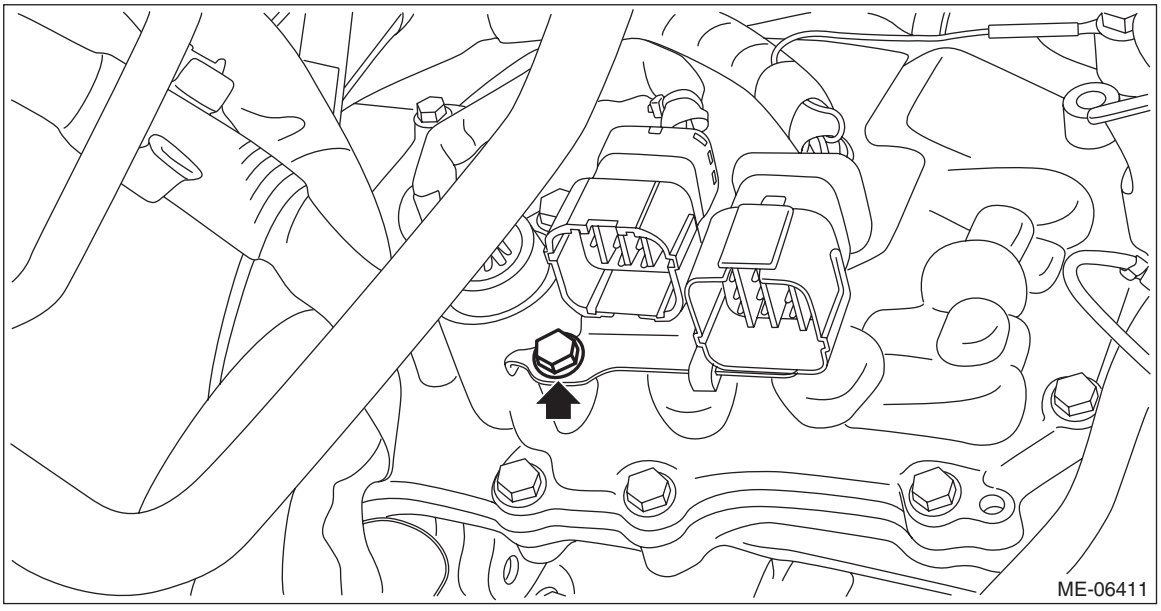

6) Install the transmission case cover. (CVT model)

Tightening torque:
8 N·m (0.8 kgf-m, 5.9 ft-lb)

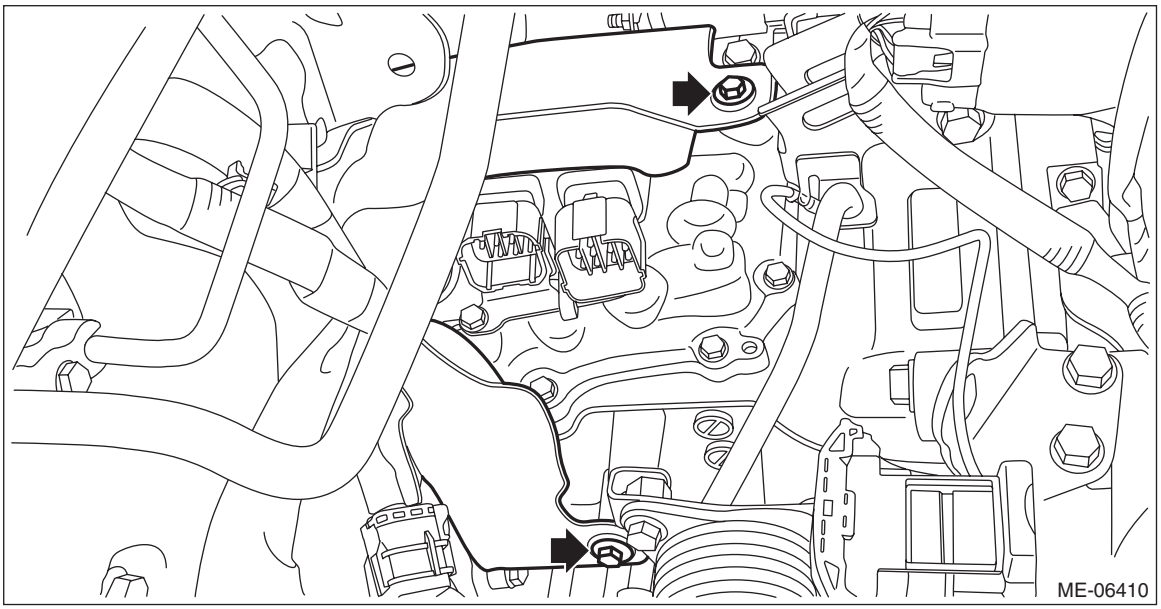

7) Install the pitching stopper.

Tightening torque:
T1: 50 N·m (5.1 kgf-m, 36.9 ft-lb)
T2: 58 N·m (5.9 kgf-m, 42.8 ft-lb)

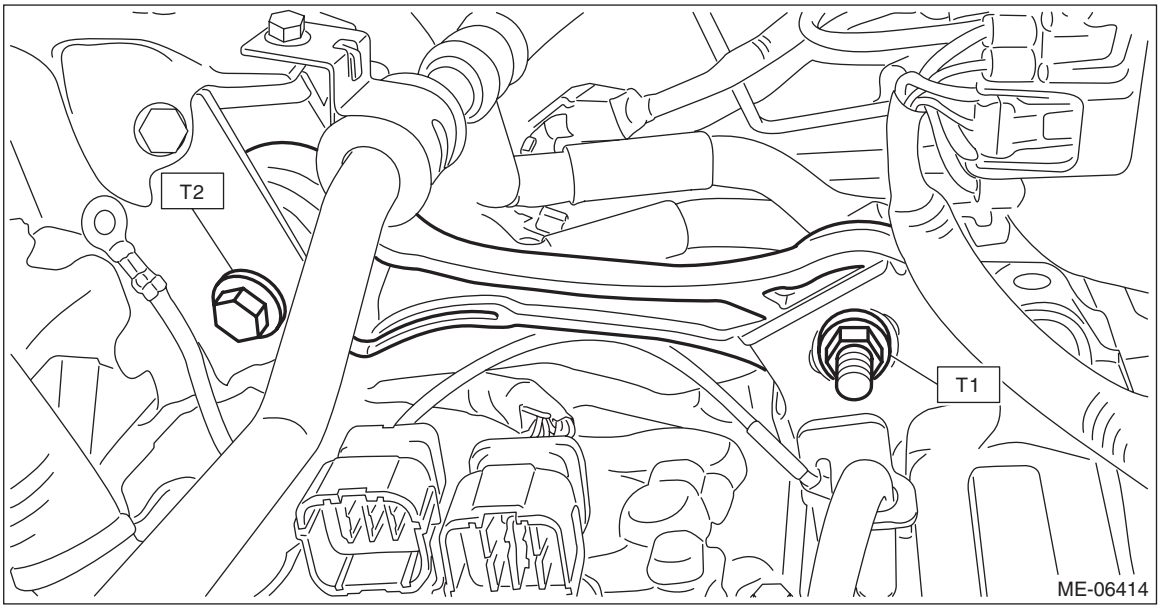

8) Connect the transmission radio ground terminal (C) to the vehicle body, and connect the bulkhead harness connector to the transmission harness connector (A) and the inhibitor harness connector (B). (CVT model)

Tightening torque:
13 N·m (1.3 kgf-m, 9.6 ft-lb)

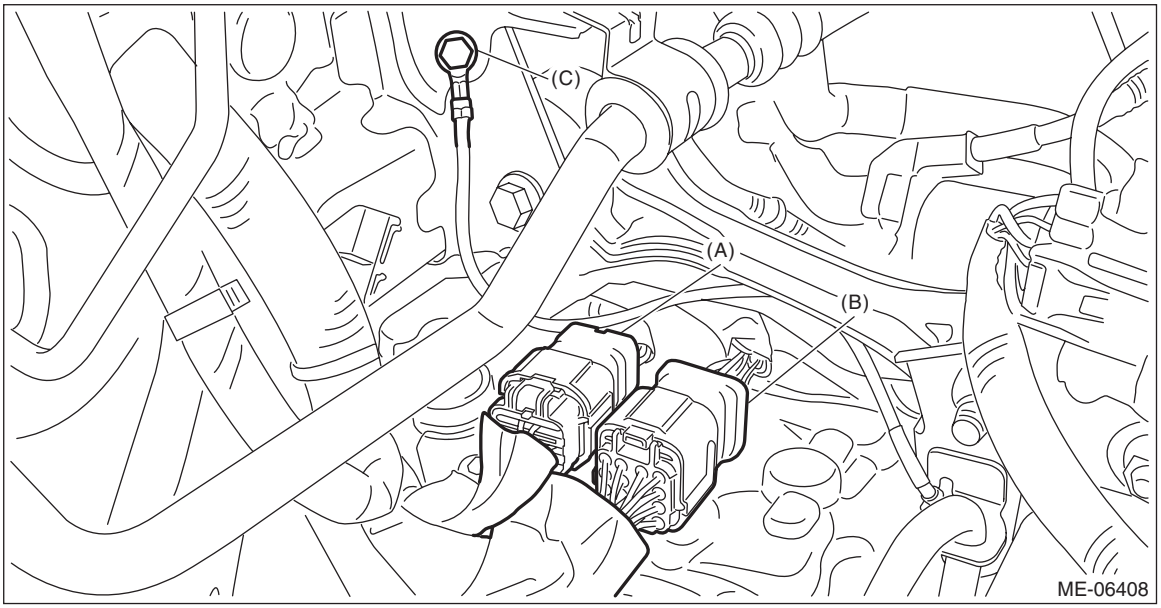

9) Lift up the vehicle.
10) Install the nuts which hold the engine mounting to the crossmember. (CVT model)

NOTE:
Make sure that locators (A) of the engine mounting are securely inserted.

Tightening torque:
45 N·m (4.6 kgf-m, 33.2 ft-lb)

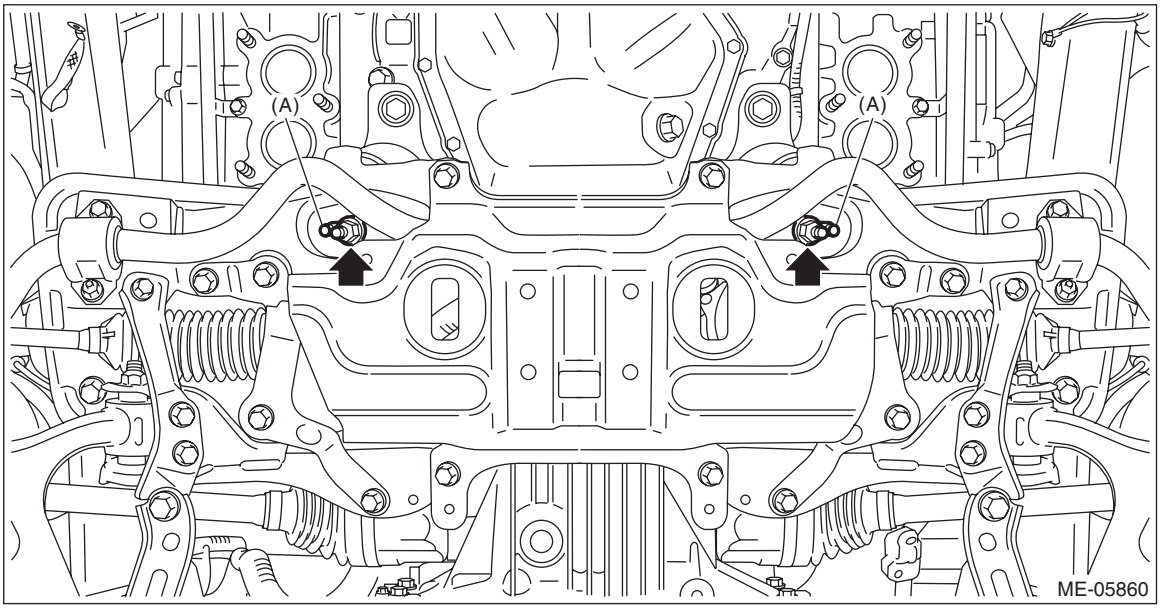

11) Install the nuts which hold the engine mounting to the crossmember. (MT model)

Tightening torque:
45 N·m (4.6 kgf-m, 33.2 ft-lb)

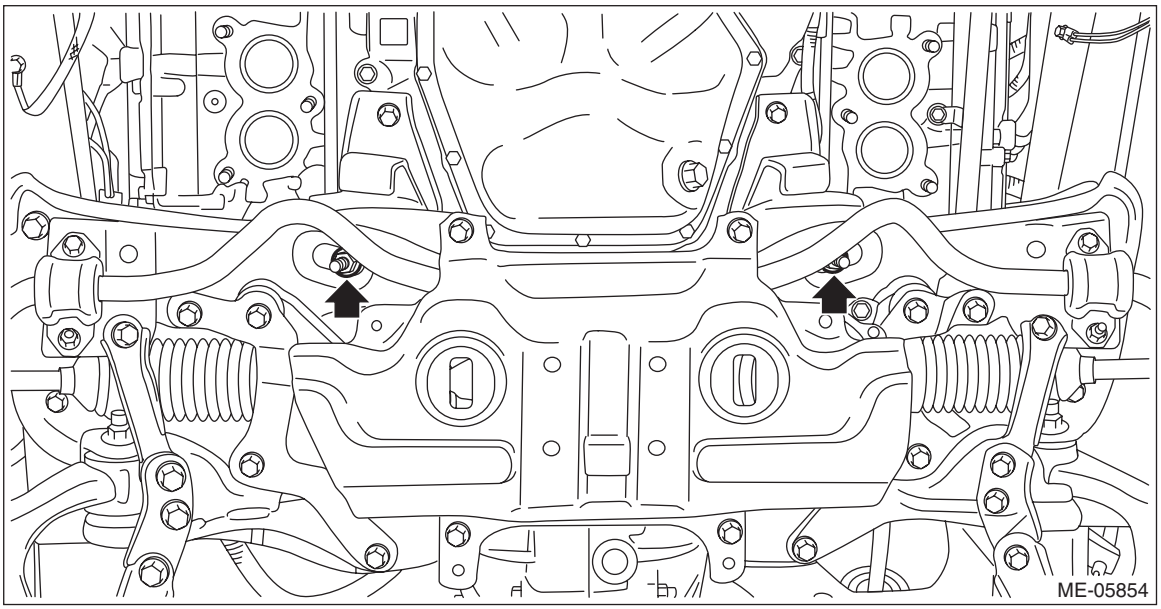

12) Install the front exhaust pipe. <Ref. to EX(H4DO(w/o HEV))-6, REMOVAL, Front Exhaust Pipe.>
13) Lower the vehicle.
14) Secure the air breather hose to the engine rear hanger using clip. (MT model)

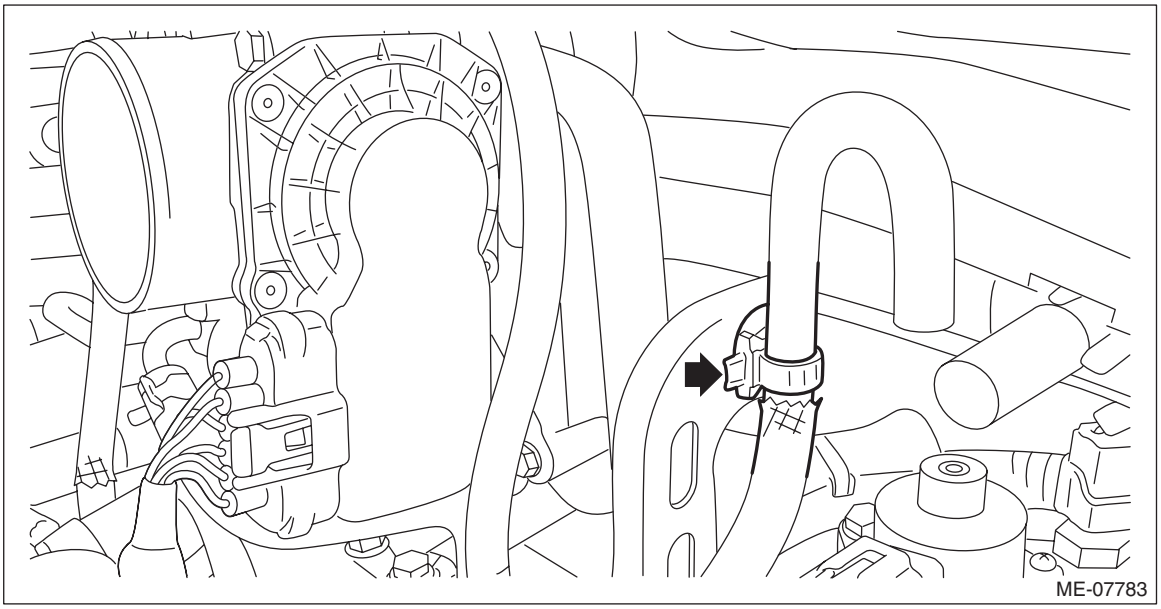

15) Install the bolt which secures the water pipe assembly LH to the cylinder head LH.

Tightening torque:
6.4 N·m (0.7 kgf-m, 4.7 ft-lb)

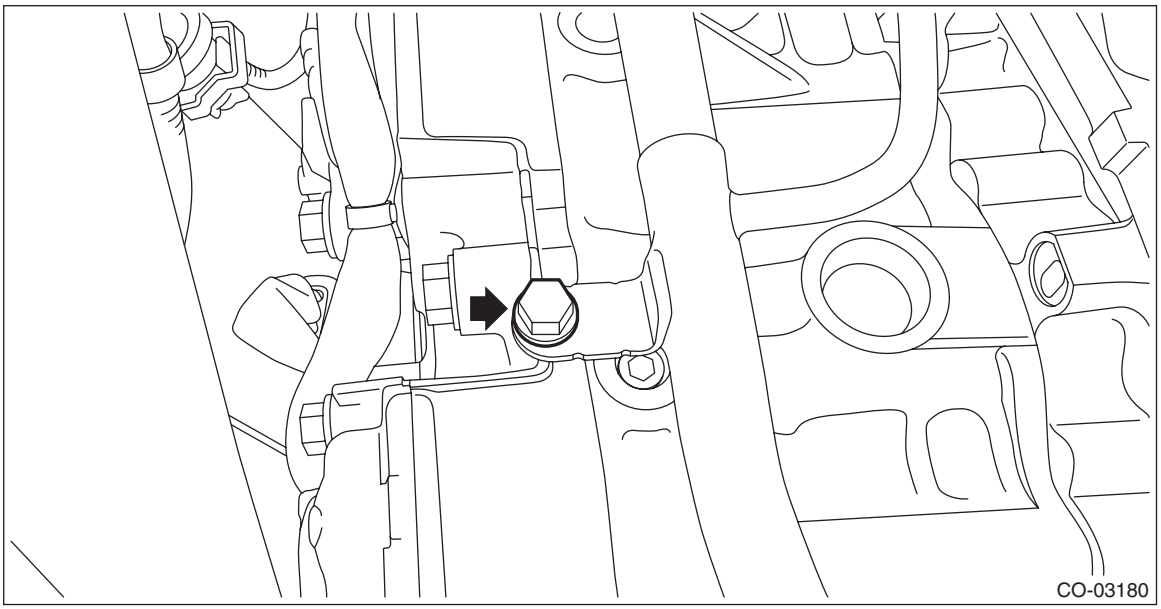

16) Connect the preheater hose (A) and the heater outlet hose (B) to the water pipe assembly LH.

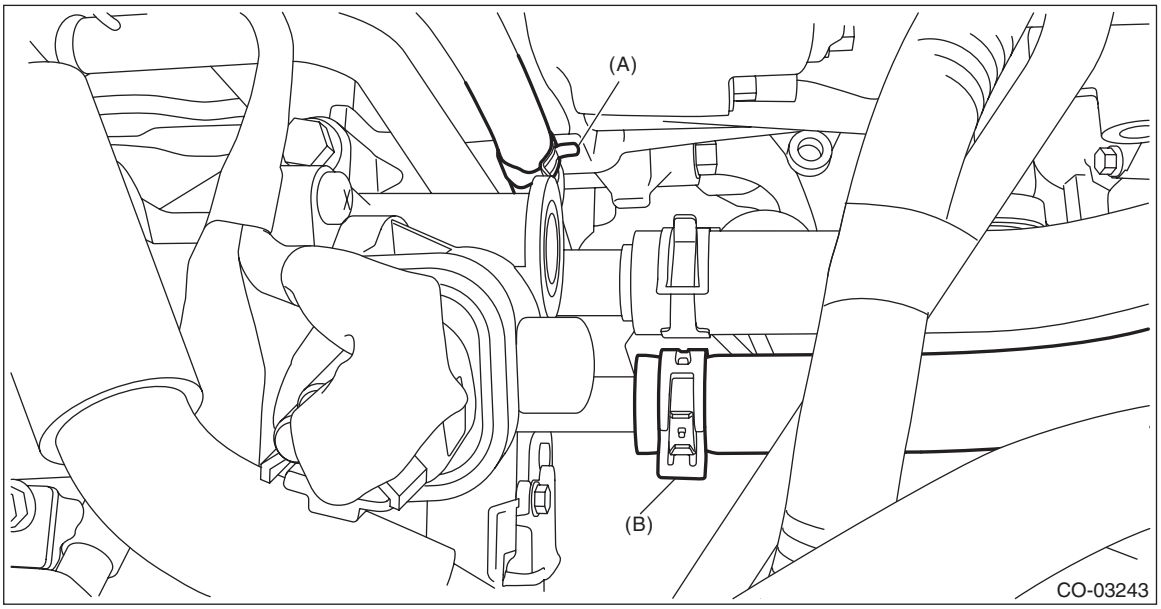

17) Install the air intake case (rear).

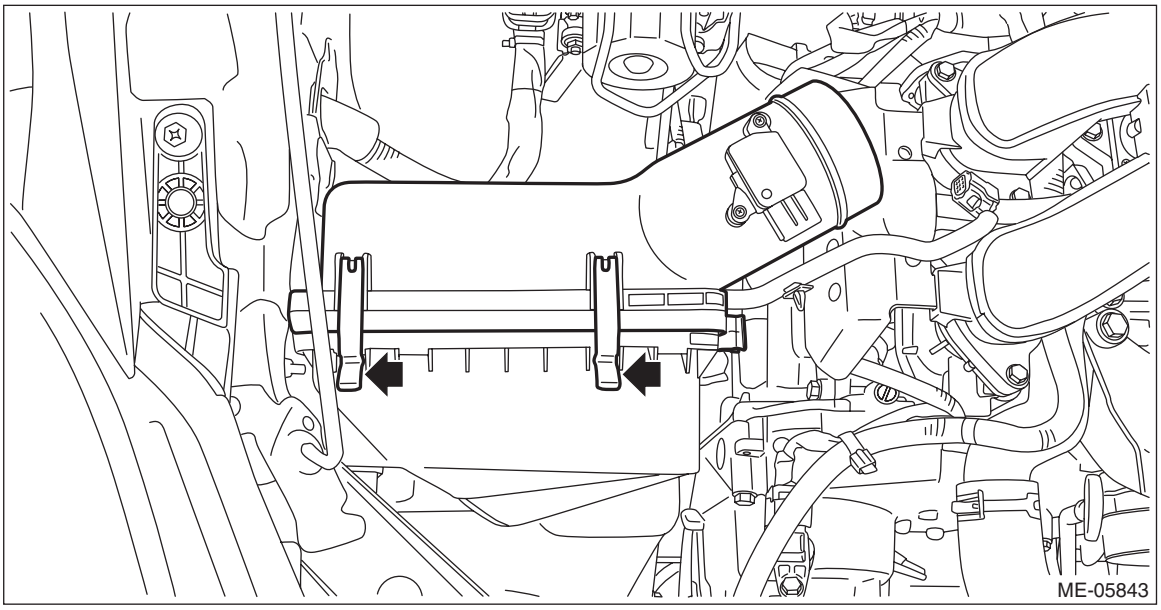

18) Install the clip (A) which secures the air flow and intake air temperature sensor harness, and connect the connector to the air flow and intake air temperature sensor.

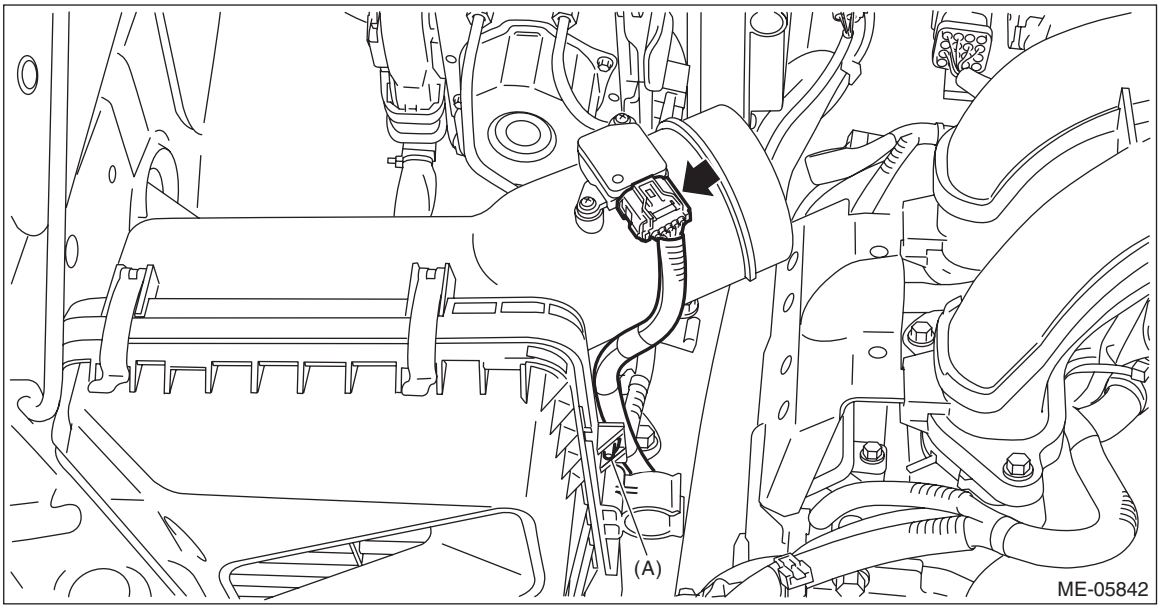

19) Install the air intake boot. <Ref. to IN(H4DO(w/o HEV))-12, INSTALLATION, Air Intake Boot.>
20) Install the air intake duct. <Ref. to IN(H4DO(w/o HEV))-13, INSTALLATION, Air Intake Duct.>

21) Install the V-belt cover.

Tightening torque:
6.4 N·m (0.7 kgf-m, 4.7 ft-lb)

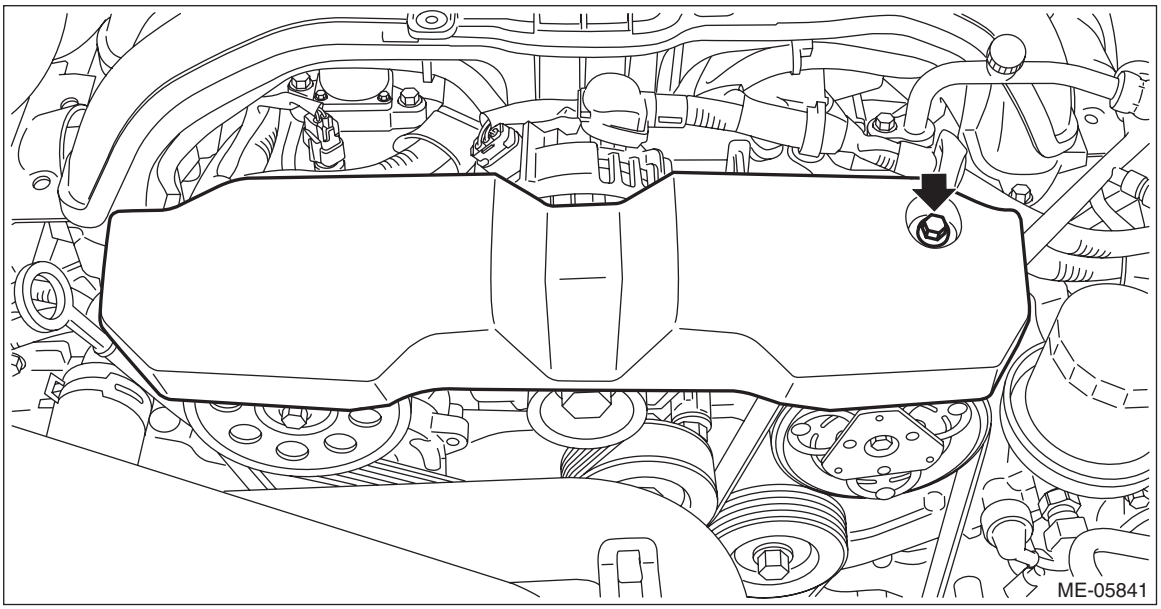

22) Connect the battery ground terminal.

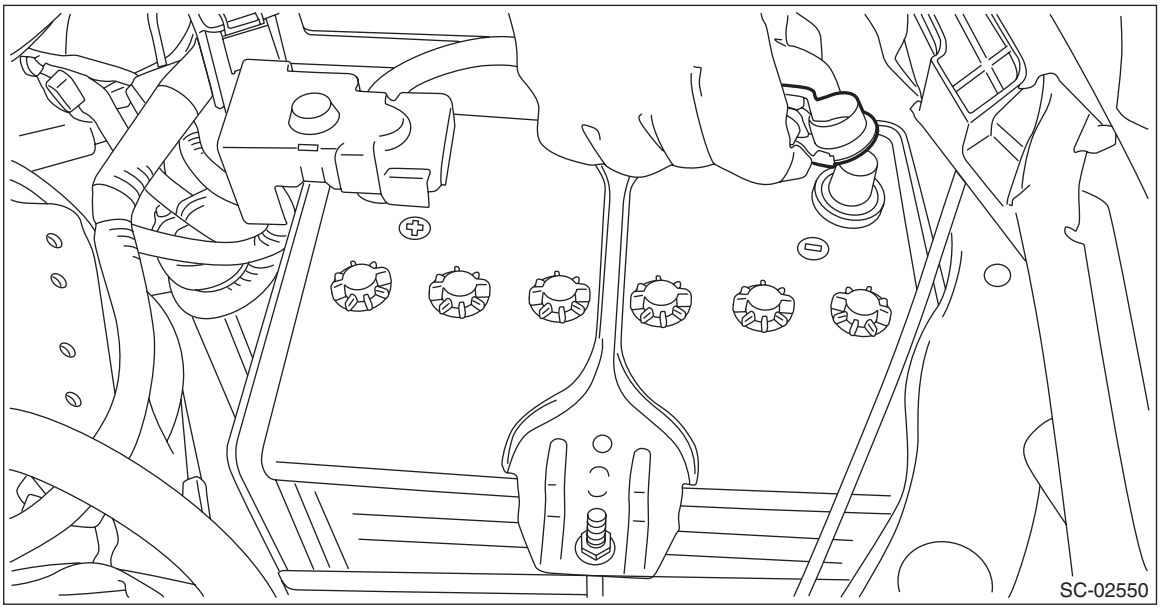

23) Fill engine coolant. <Ref. to CO(H4DO(w/o HEV))-17, FILLING OF ENGINE COOLANT, REPLACEMENT, Engine Coolant.>

24) Change the front hood stay position from (B) to (A).

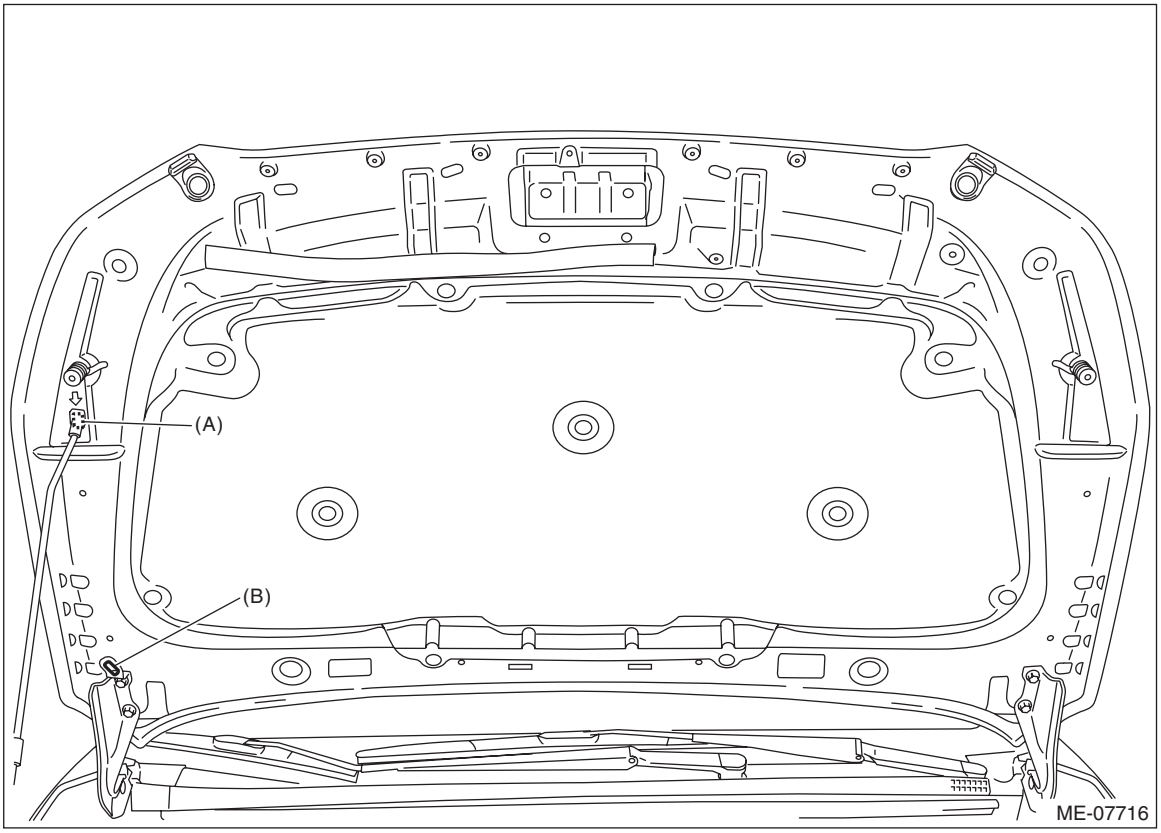

25) Install the front hood striker to the front hood by aligning the alignment marks (A), and close the front hood.

Tightening torque:
33 N·m (3.4 kgf-m, 24.3 ft-lb)

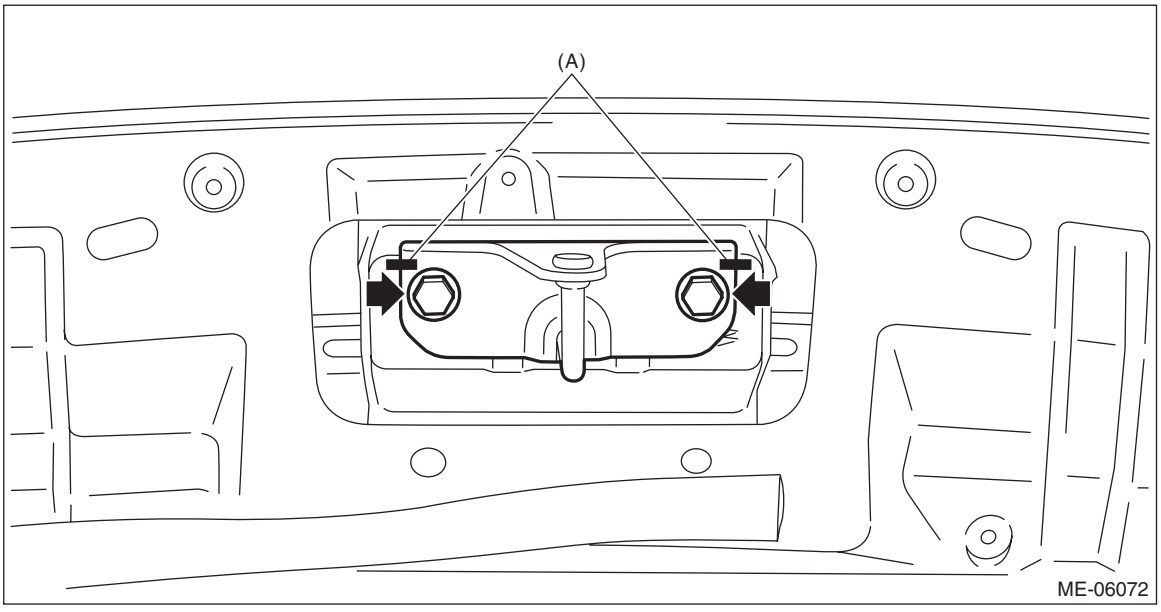

• **HEV model**

1) Set the water pipe assembly LH on the engine, and connect the water pipe hose LH (B) to the oil pan upper.
2) Secure the water pipe assembly LH to the cylinder head LH with bolt (A).

Tightening torque:
6.4 N·m (0.7 kgf-m, 4.7 ft-lb)

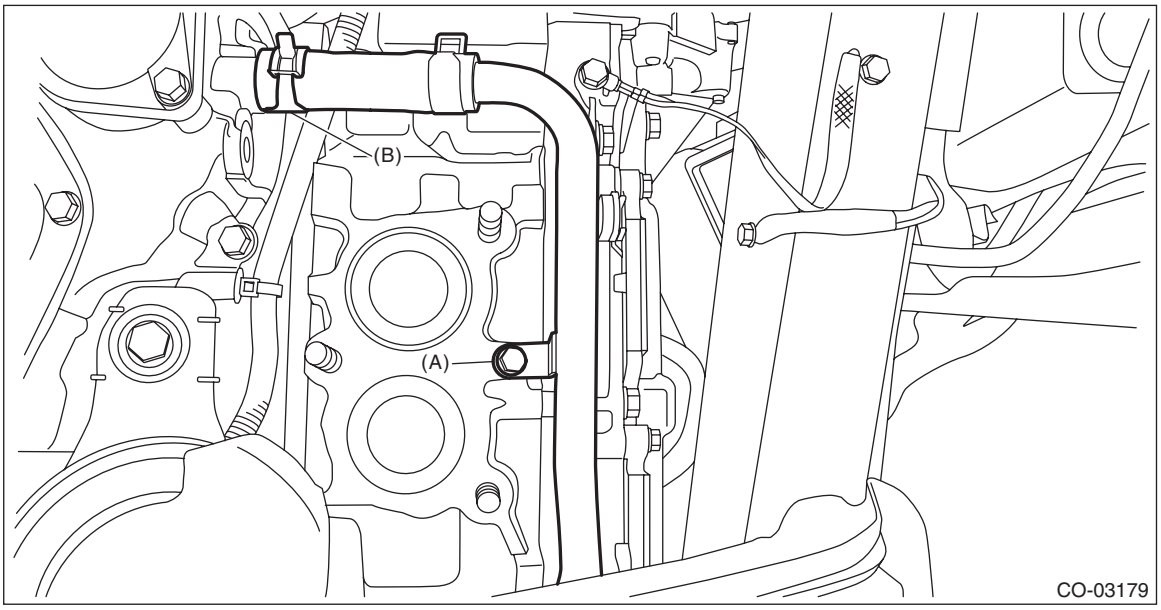

3) Remove the lifting device and wire ropes.

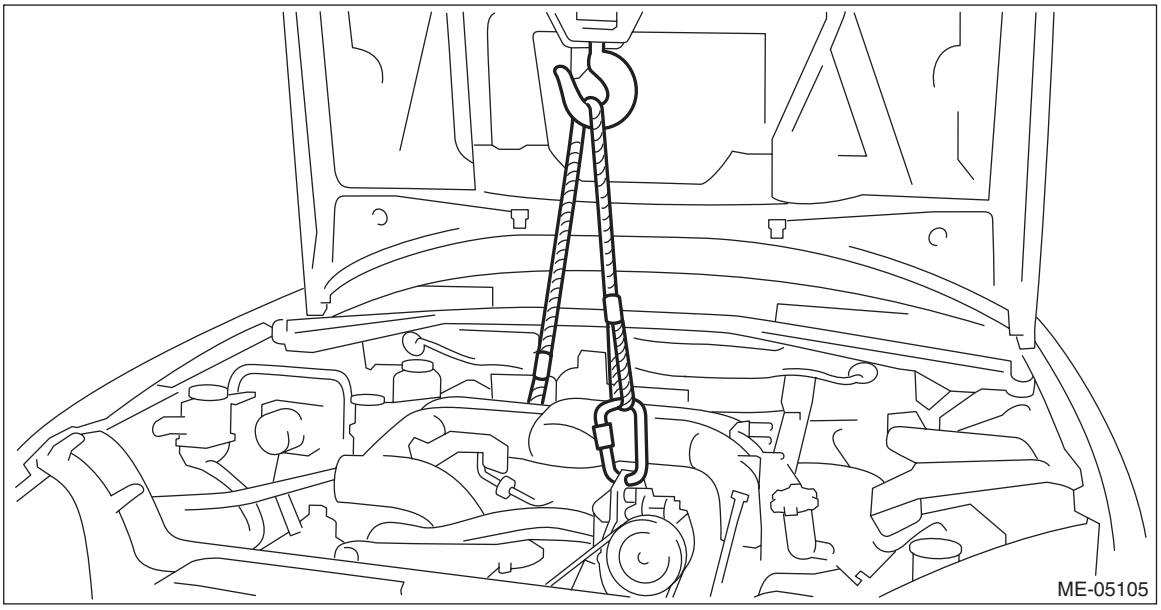

4) Install the bolts which secure the purge control solenoid valve bracket to the intake manifold, and secure the engine harness to the purge control solenoid valve bracket with the clip (A).

Tightening torque:
6.4 N·m (0.7 kgf-m, 4.7 ft-lb)

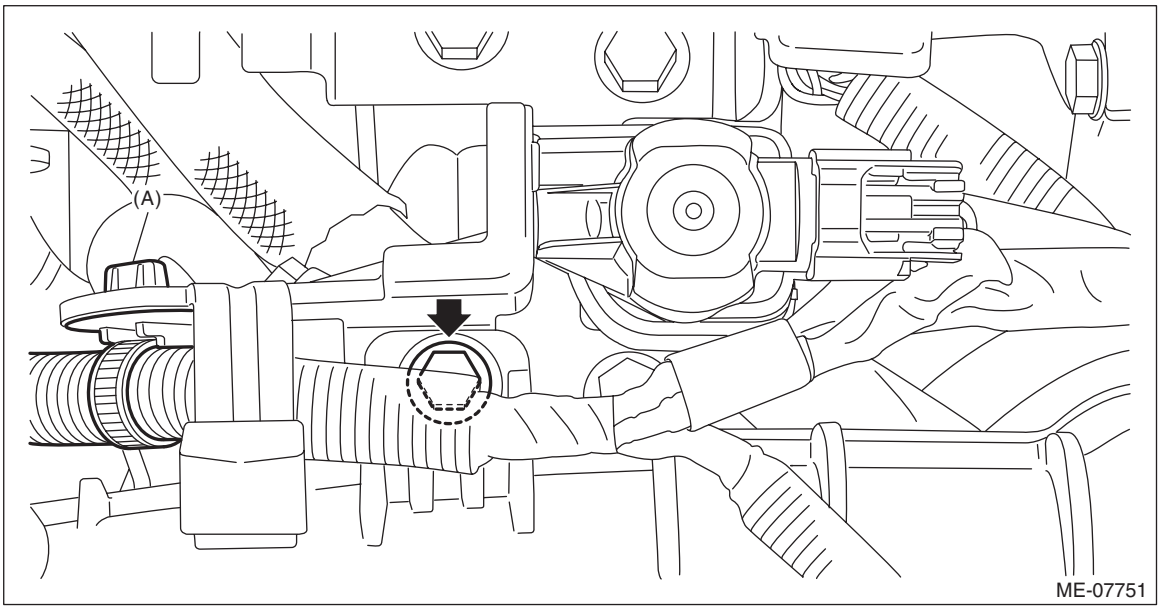

5) Remove the bolt and turn the transmission harness counterclockwise to install the transmission harness to the control valve body.

Tightening torque:
7 N·m (0.7 kgf-m, 5.2 ft-lb)

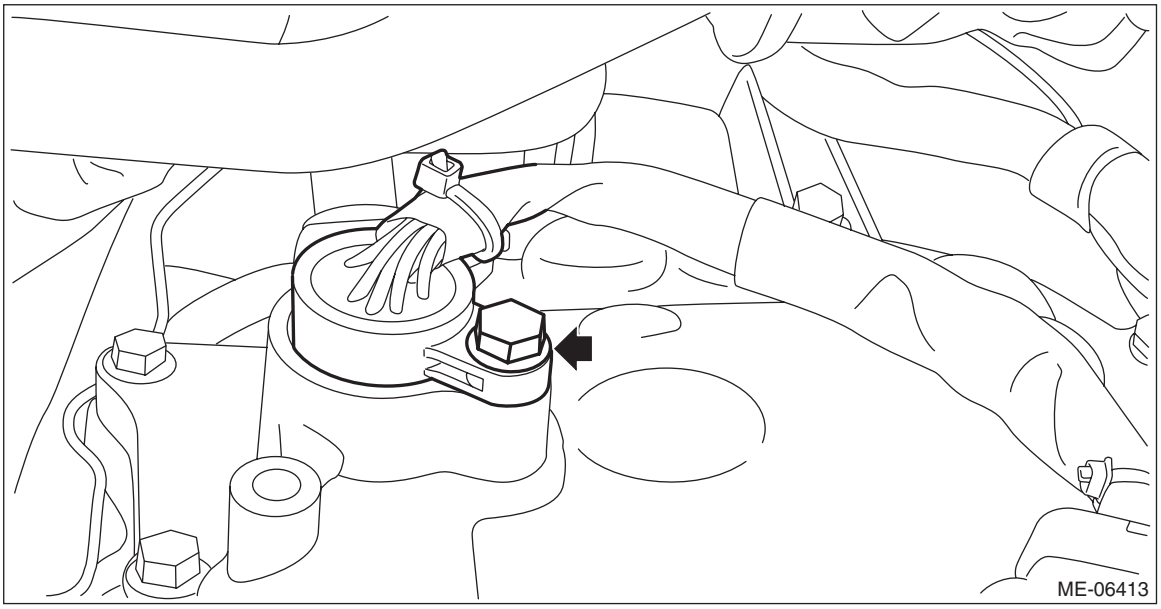

6) Install the bolt which holds the transmission harness stay.

Tightening torque:
7 N·m (0.7 kgf-m, 5.2 ft-lb)

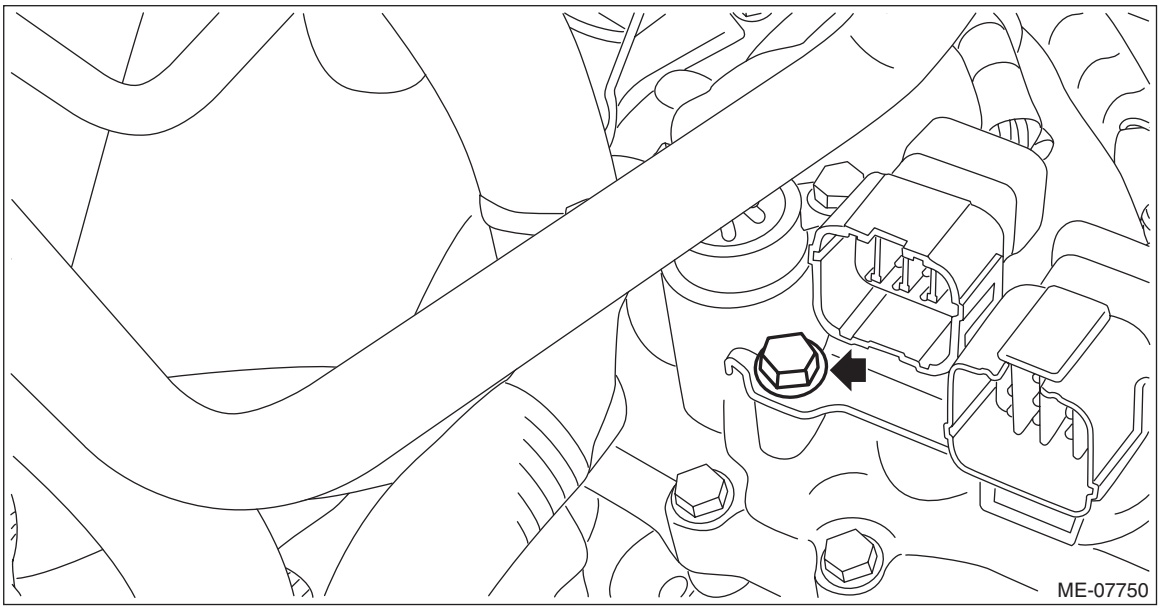

7) Install the transmission case cover.

Tightening torque:
8 N·m (0.8 kgf-m, 5.9 ft-lb)

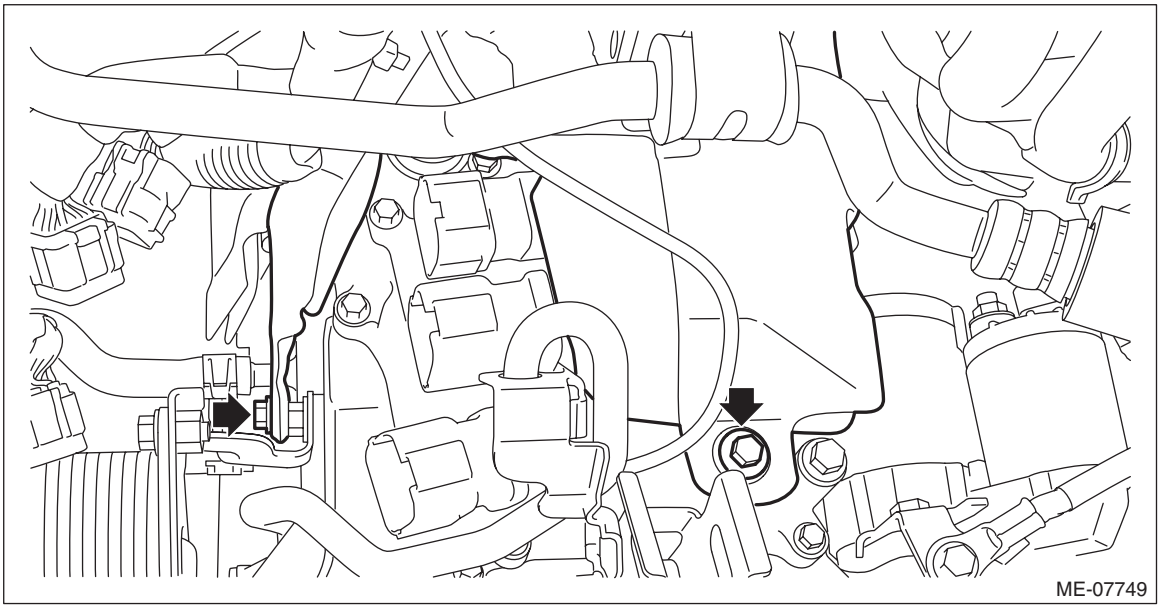

8) Connect the bulkhead harness connector to the transmission harness connector (C), inhibitor harness connector (D) and drive motor harness connector (E).
9) Connect the bulkhead harness connector to the engine harness connector (brown) (B), and install the bolt (A) securing the bulkhead harness connector bracket.

Tightening torque:
7.5 N·m (0.8 kgf-m, 5.5 ft-lb)

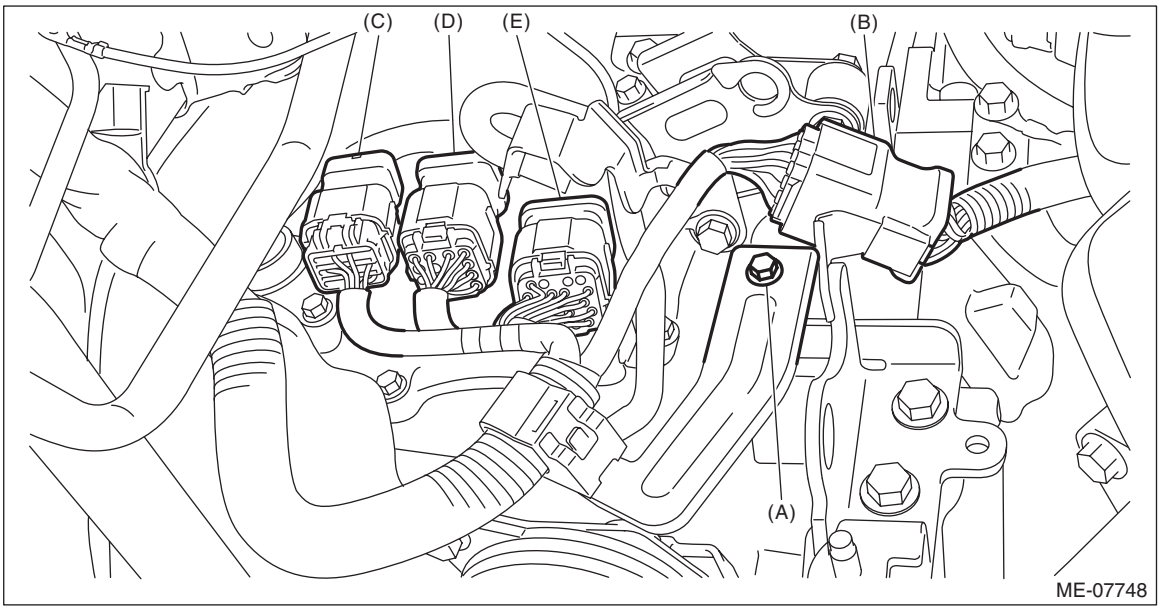

10) Install the pitching stopper, and connect the transmission radio ground terminal (A) to the vehicle.

Tightening torque:
T1: 13 N·m (1.3 kgf-m, 9.6 ft-lb)
T2: 50 N·m (5.1 kgf-m, 36.9 ft-lb)
T3: 58 N·m (5.9 kgf-m, 42.8 ft-lb)

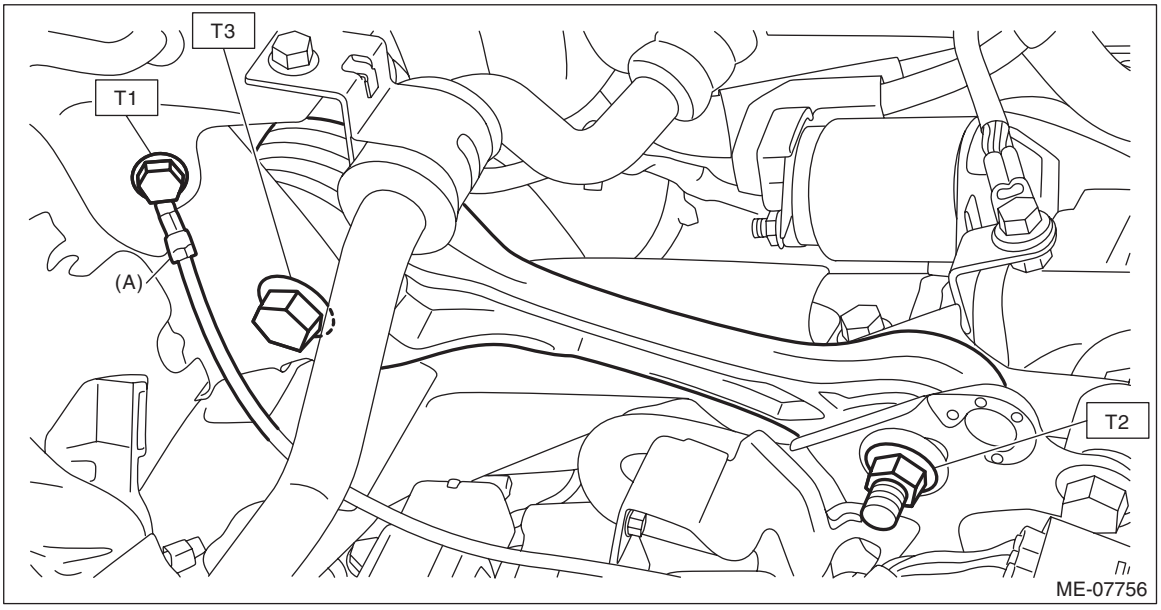

11) Lift up the vehicle.

12) Install the nuts which hold the engine mounting to the crossmember.

NOTE:
Make sure that locators (A) of the engine mounting are securely inserted.

Tightening torque:
45 N·m (4.6 kgf-m, 33.2 ft-lb)

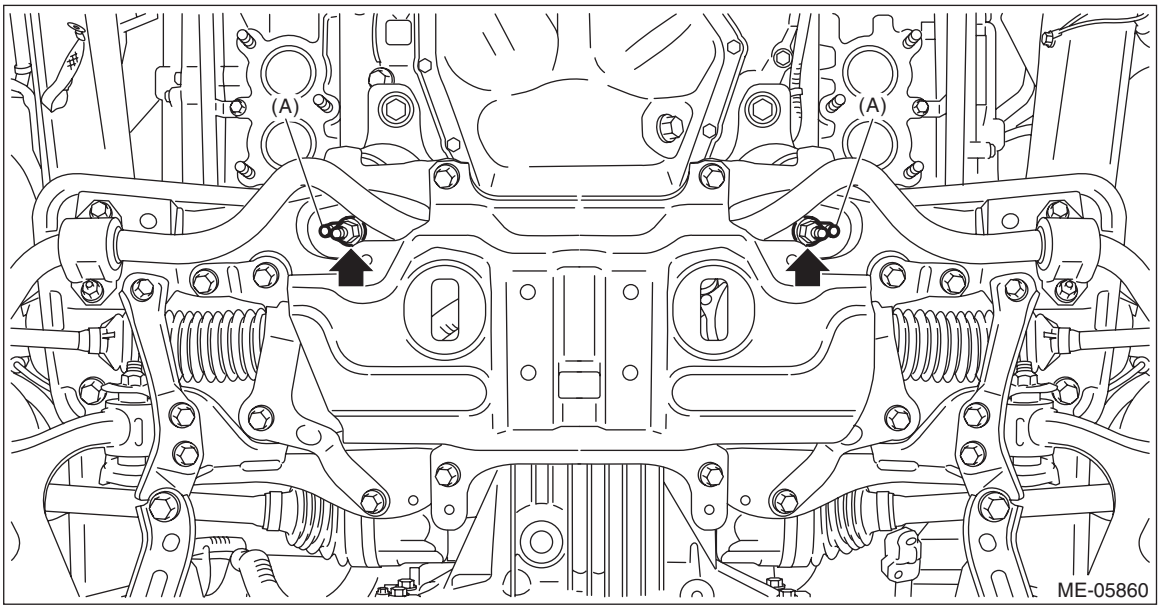

13) Install the front exhaust pipe. <Ref. to EX(H4DO(w/o HEV))-8, INSTALLATION, Front Exhaust Pipe.>
14) Lower the vehicle.
15) Install the bolt which secures the water pipe assembly LH to the cylinder head LH.

Tightening torque:
6.4 N·m (0.7 kgf-m, 4.7 ft-lb)

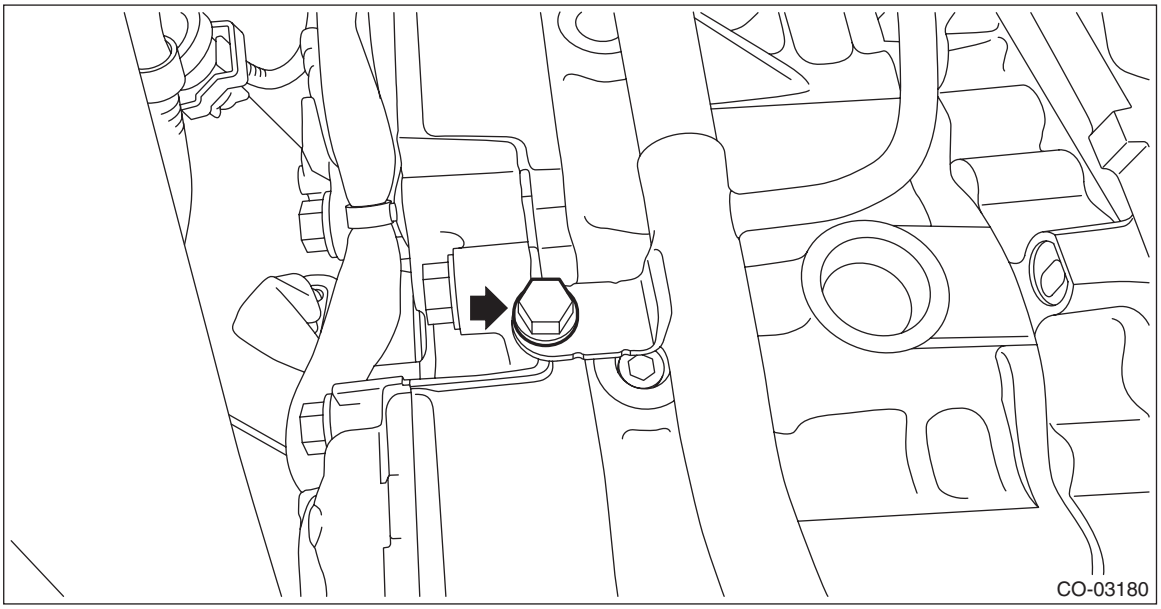

16) Connect the preheater hose (A) and the heater outlet hose (B) to the water pipe assembly LH.

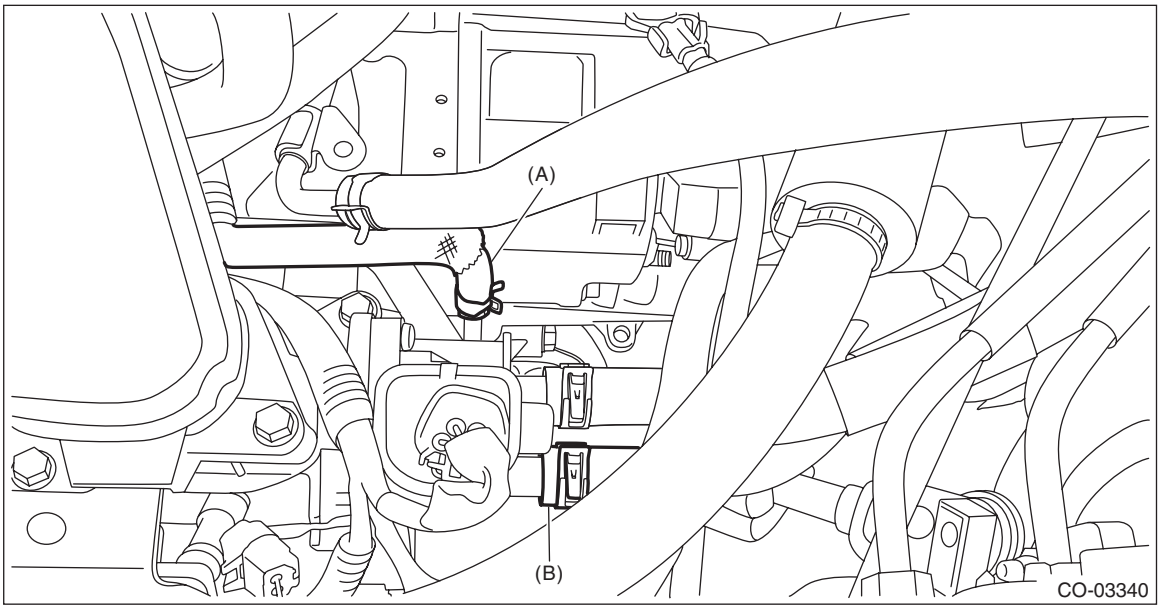

17) Set the battery cable assembly, and install the clip (C) which secures the battery cable assembly to the battery cable bracket No. 1.
18) Connect the terminal (A) and the terminal (B) to ISG.

Tightening torque:
T1: 7.5 N·m (0.8 kgf-m, 5.5 ft-lb)
T2: 15.5 N·m (1.6 kgf-m, 11.4 ft-lb)

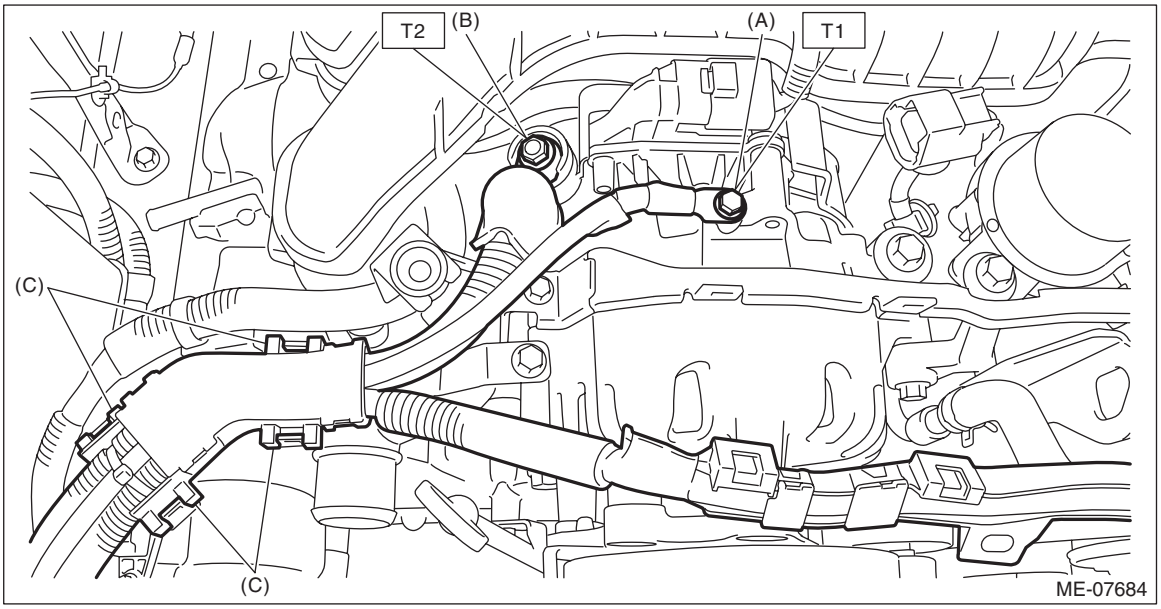

19) Secure the battery cable assembly to the collector cover bracket with the clip (B), and install the bolt (A) which secures the battery cable stay to the chain cover.

NOTE:
When installing the battery cable stay, install it by fitting the folded end (a) of the battery cable stay to the chain cover boss.

Tightening torque:
6.4 N·m (0.7 kgf-m, 4.7 ft-lb)

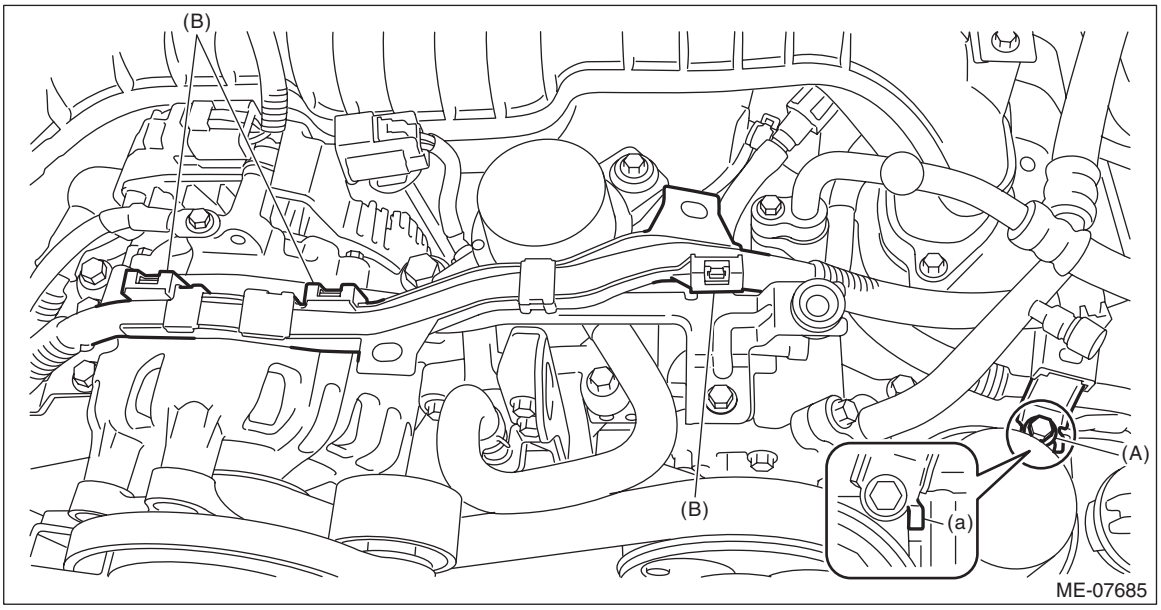

20) Install the battery cable assembly to the main fuse box, and install the nut which secures the battery cable assembly to the slow blow fuse (12 volt auxiliary battery).

Tightening torque:
7.5 N·m (0.8 kgf-m, 5.5 ft-lb)

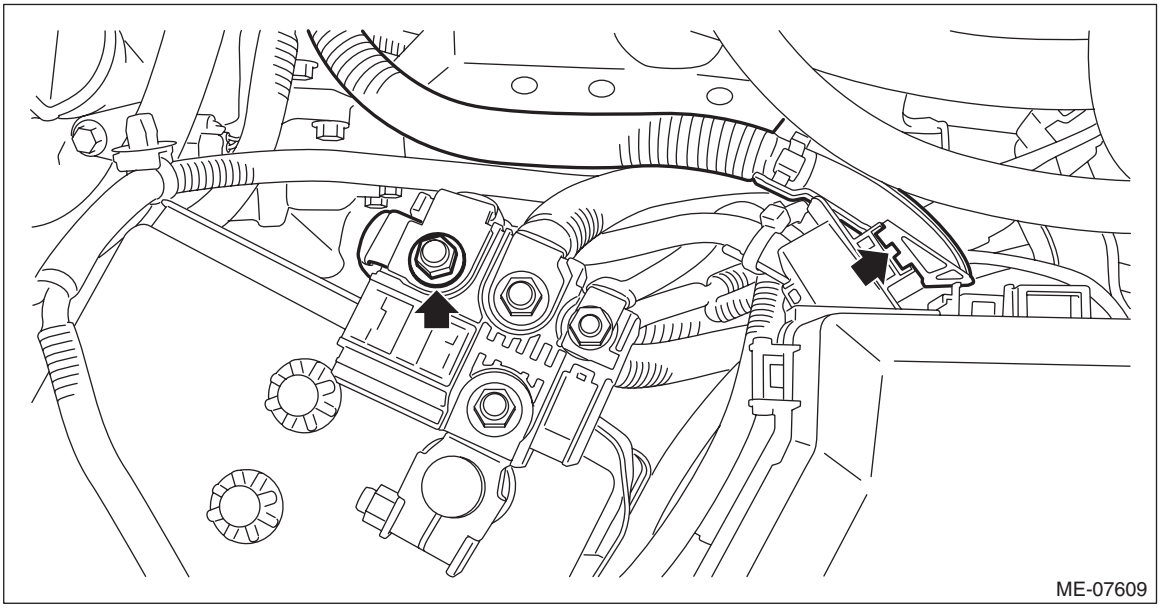

21) Install the terminal boot to the positive terminal of the 12 volt auxiliary battery.
22) Set the harness, and secure the harness to the battery cable assembly with the clip (C) and the clip (D).

23) Connect the connector (A) to the brake vacuum pump, and connect the connector (B) to the A/C compressor.

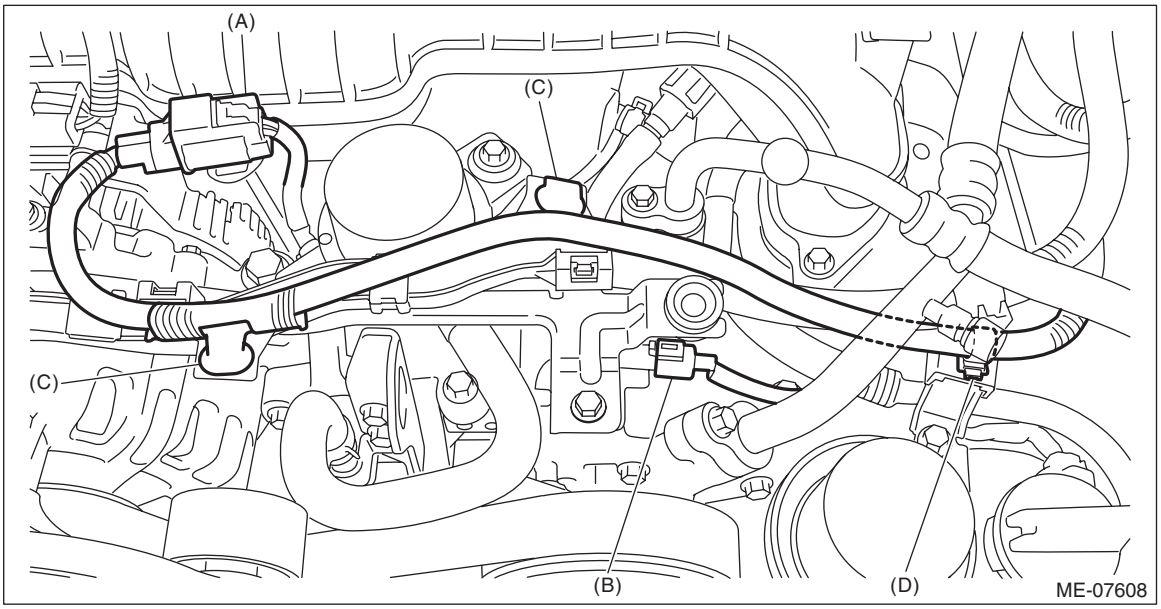

24) Install the air cleaner case. <Ref. to IN(H4DO(HEV))-8, INSTALLATION, Air Cleaner Case.>
25) Install the air intake duct. <Ref. to IN(H4DO(HEV))-15, INSTALLATION, Air Intake Duct.>
26) Fill engine coolant. <Ref. to CO(H4DO(w/o HEV))-17, FILLING OF ENGINE COOLANT, REPLACEMENT, Engine Coolant.>
27) Install the collector cover.
28) Connect the battery ground terminal. <Ref. to NT-5, BATTERY, NOTE, Note.>
29) Change the front hood stay position from (B) to (A).

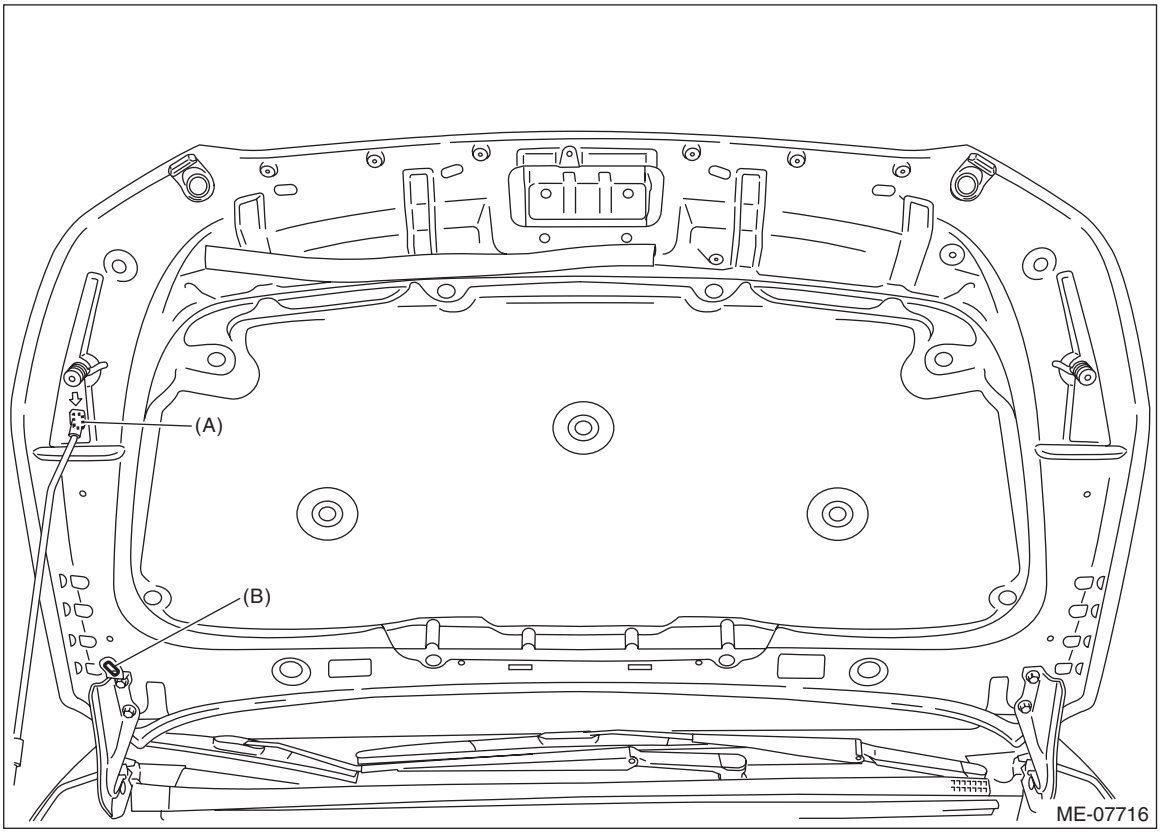

30) Install the front hood striker to the front hood by aligning the alignment marks (A), and close the front hood.

Tightening torque:
33 N·m (3.4 kgf-m, 24.3 ft-lb)

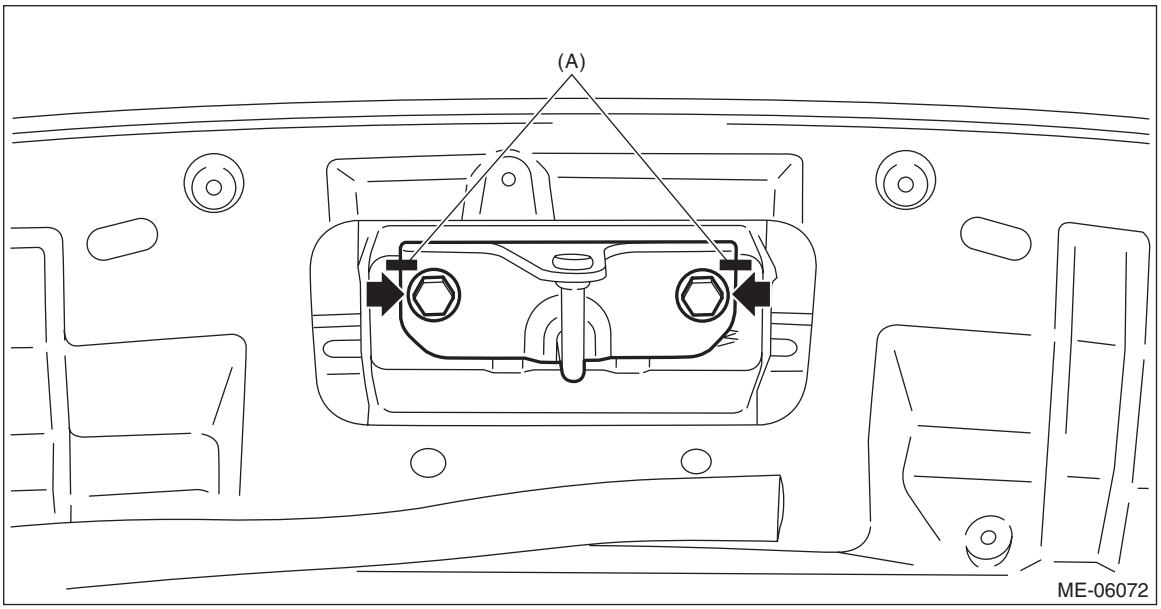

C: INSPECTION

1) Check that the water pipe assembly has no deformation, cracks or other damages.
2) Check that the hose has no cracks, damage or loose part.

6. Thermostat

A: REMOVAL

1. ENGINE SIDE

1) Disconnect the ground cable from battery. <Ref. to NT-5, BATTERY, NOTE, Note.>

NOTE:
For the 12 volt engine restart battery of HEV model, disconnect the ground terminal from 12V engine restart battery sensor.
2) Lift up the vehicle.
3) Remove the under cover. <Ref. to EI-29, REMOVAL, Front Under Cover.>
4) Drain engine coolant. <Ref. to CO(H4DO(w/o HEV))-16, DRAINING OF ENGINE COOLANT, REPLACEMENT, Engine Coolant.>
5) Remove the front exhaust pipe. <Ref. to EX(H4DO(w/o HEV))-6, REMOVAL, Front Exhaust Pipe.>
6) Disconnect the radiator outlet hose from thermostat cover.

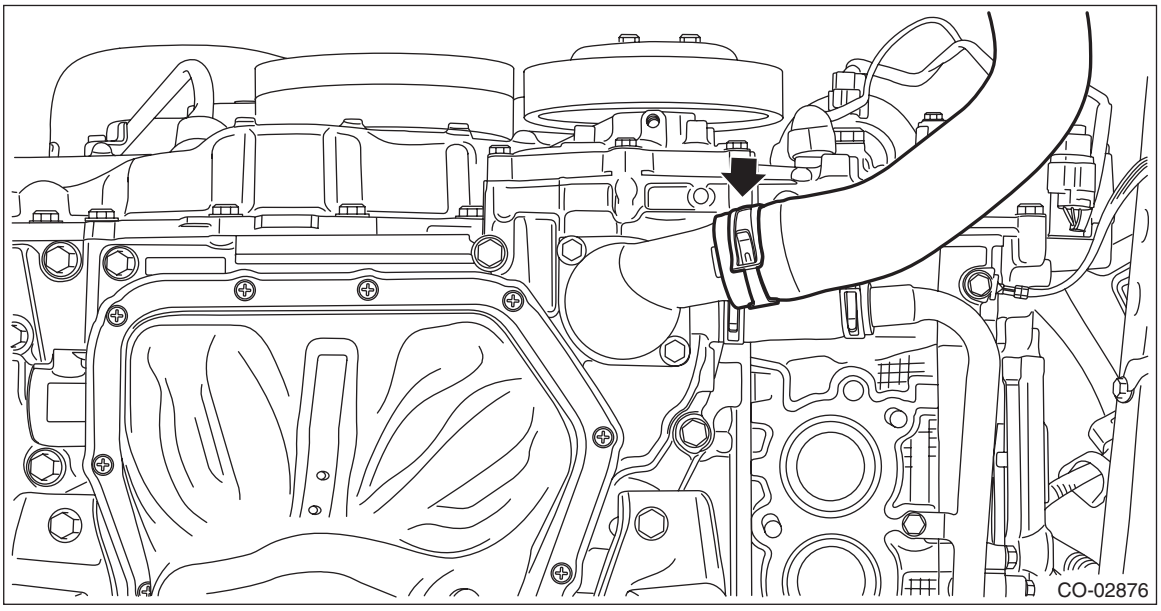

7) Remove the thermostat cover, and then remove the thermostat.

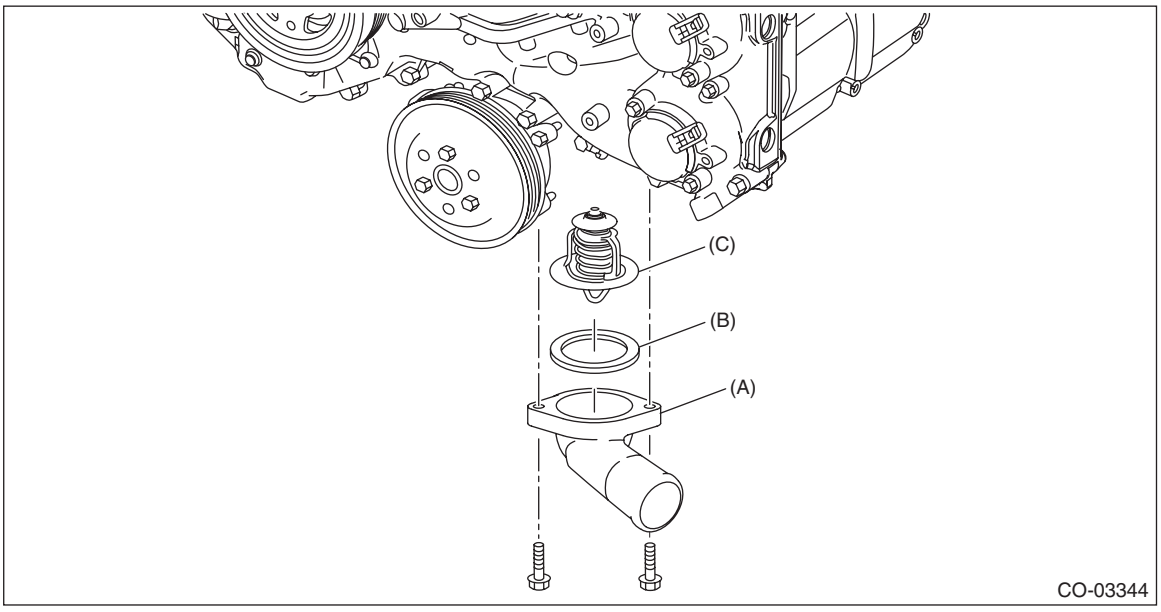

(A) Thermostat cover (B) Gasket (C) Thermostat

8) Remove the gasket from thermostat.

2. CVTF COOLER (WITH WARMER FEATURE) SIDE

• Gasoline engine model

1) Disconnect the ground cable from battery.

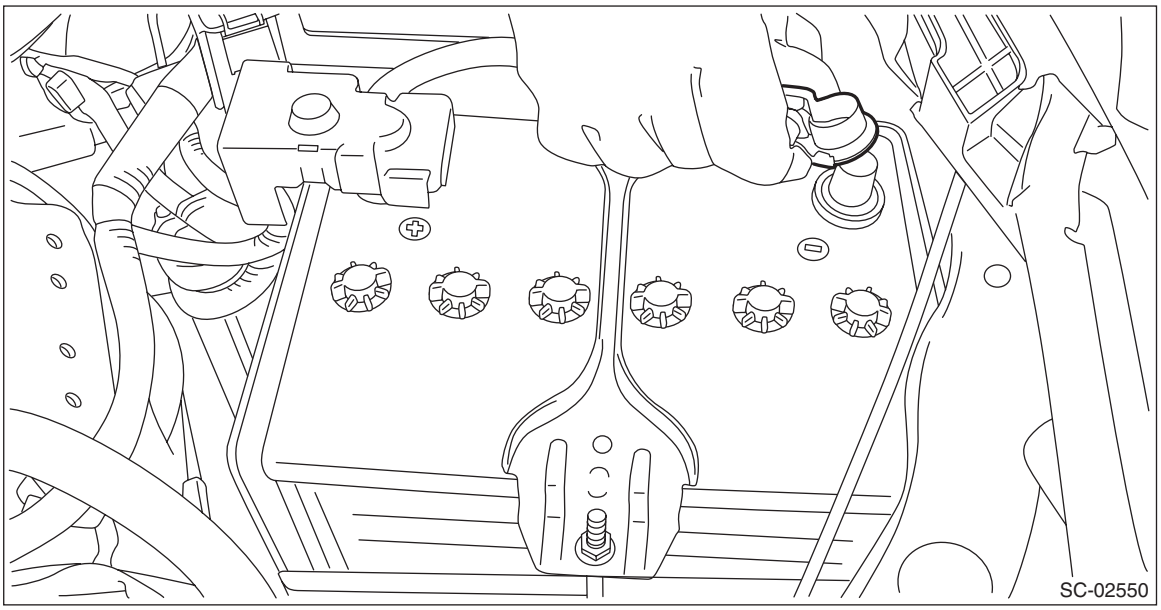

2) Lift up the vehicle.
3) Remove the under cover. <Ref. to EI-29, REMOVAL, Front Under Cover.>
4) Drain engine coolant. <Ref. to CO(H4DO(w/o HEV))-16, DRAINING OF ENGINE COOLANT, REPLACEMENT, Engine Coolant.>
5) Lower the vehicle.
6) Remove the clip (A) from the air intake boot.
7) Loosen the clamp (B) securing the air cleaner case (rear) to the air intake boot.
8) Loosen the clamp (C) which secures the throttle body to the air intake boot.

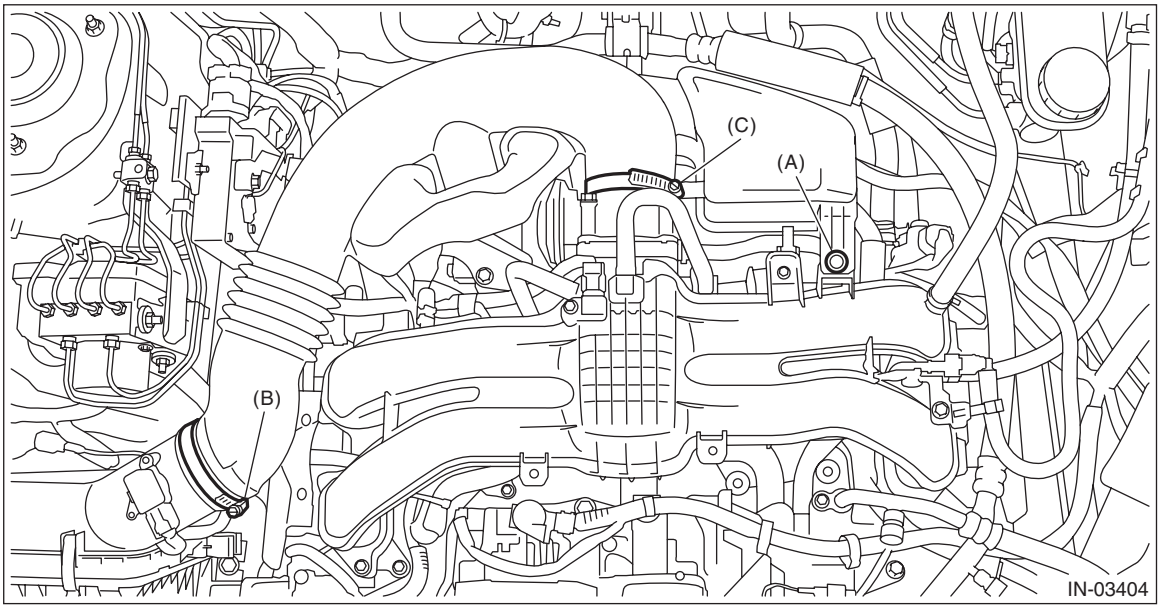

9) Remove the air intake boot from the throttle body, and move it to the left side wheel apron.

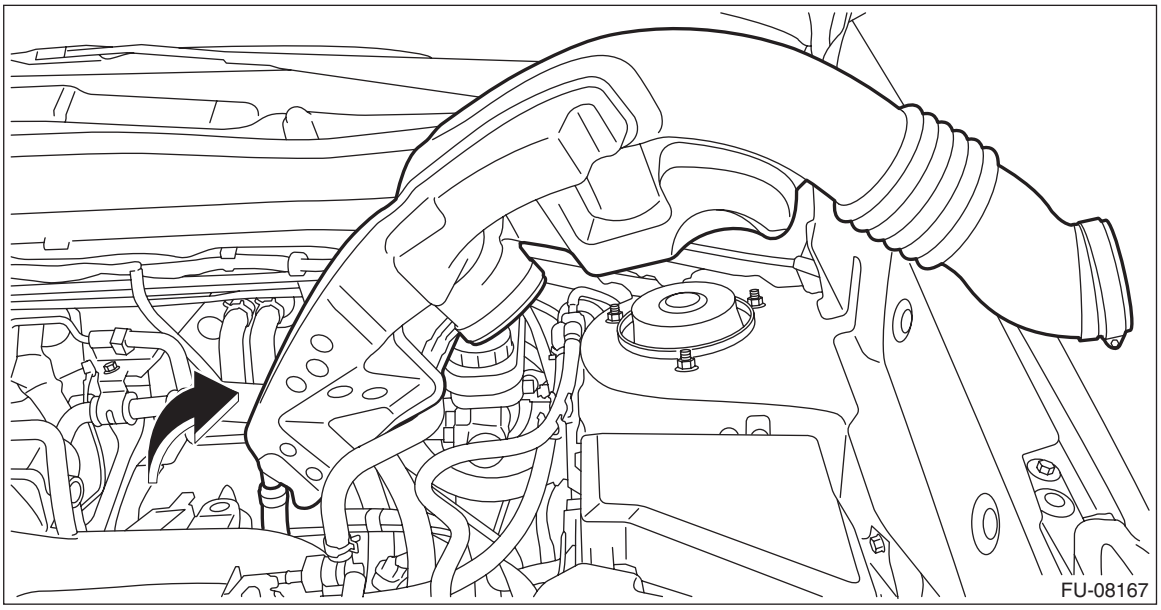

10) Disconnect the engine harness connector.
(1) Remove the bolt securing the bulkhead harness connector bracket.

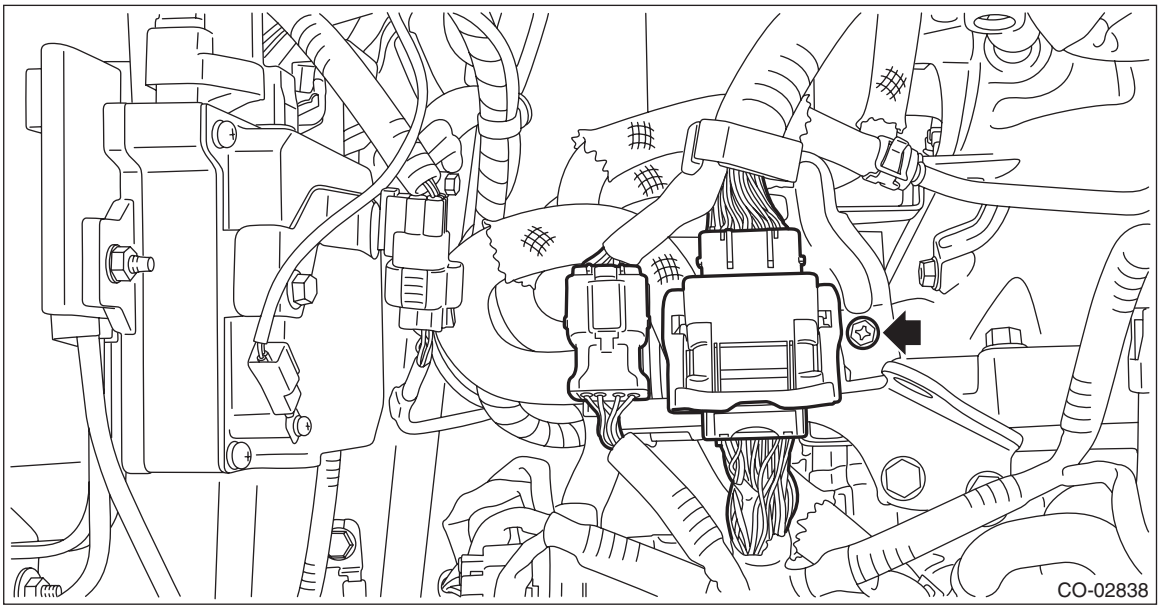

(2) Disconnect the bulkhead harness connector from the engine harness connector (black) and engine harness connector (brown).

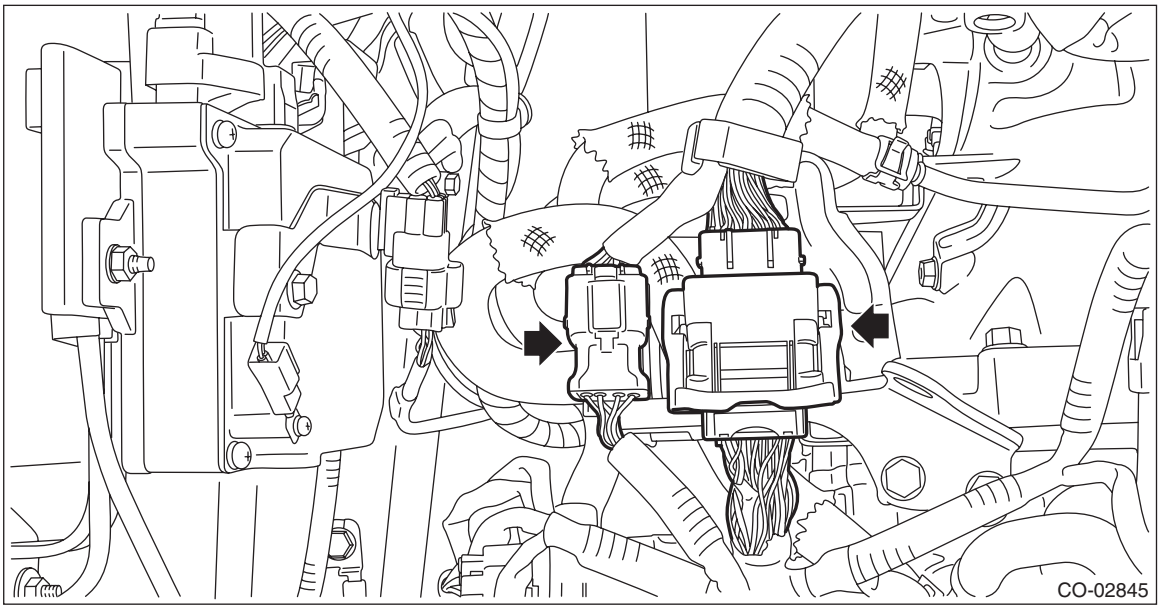

11) Disconnect the connector (A) from manifold absolute pressure sensor.
12) Disconnect the connector (B) from the throttle position sensor.
13) Disconnect the connector (C) from the EGR control valve.

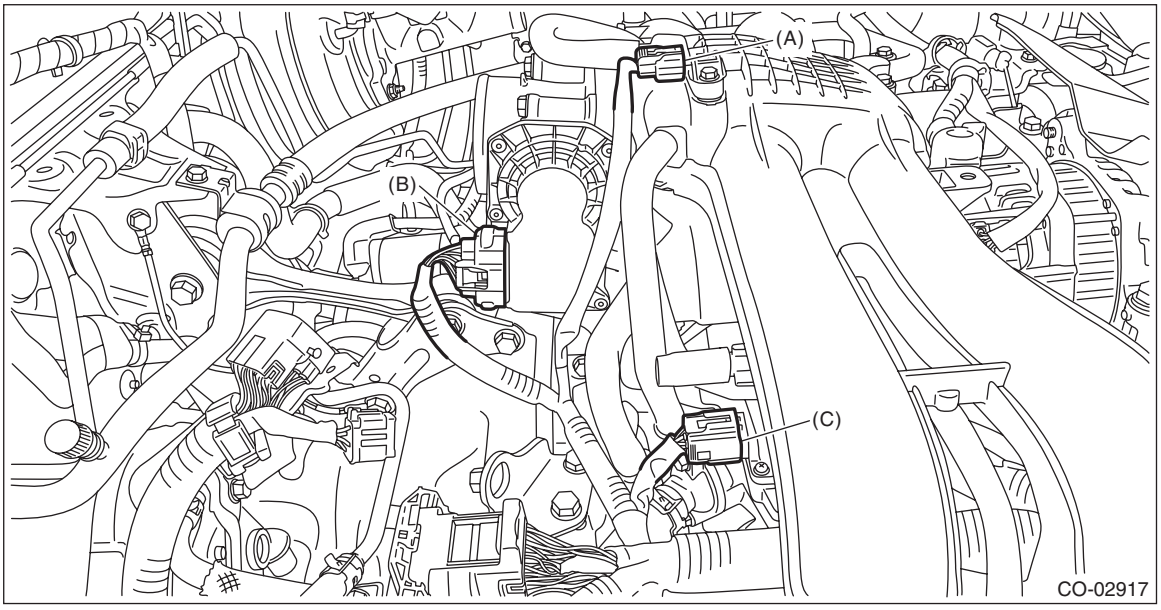

14) Remove the bolt securing the engine hanger from the cylinder block RH, and move the hanger to the right side wheel apron.

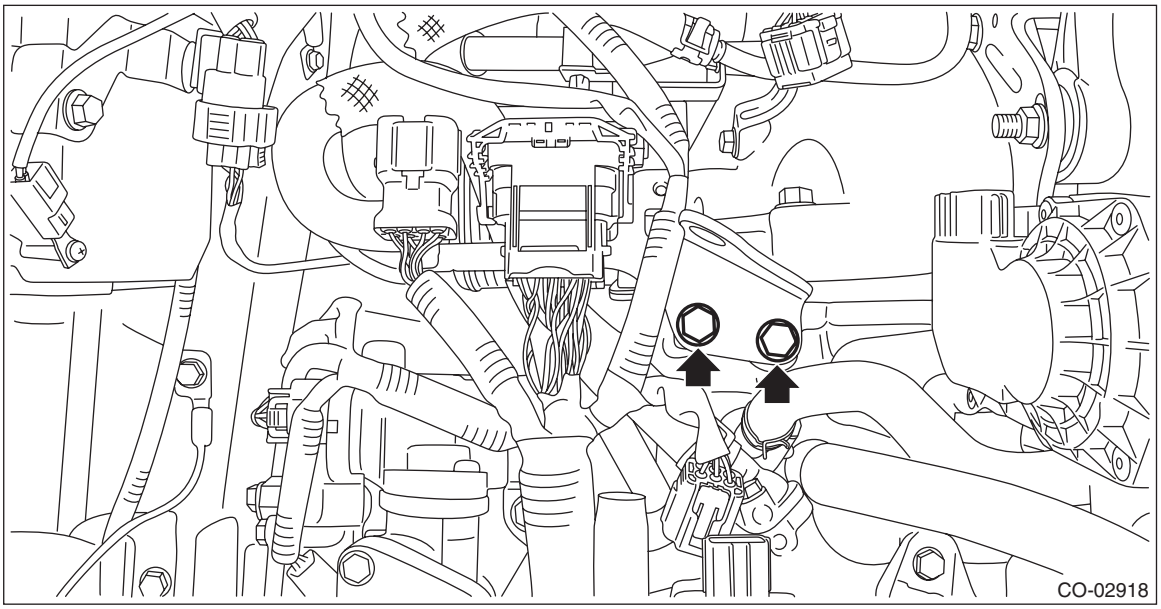

15) Disconnect the engine coolant outlet hose from the thermostat cover.

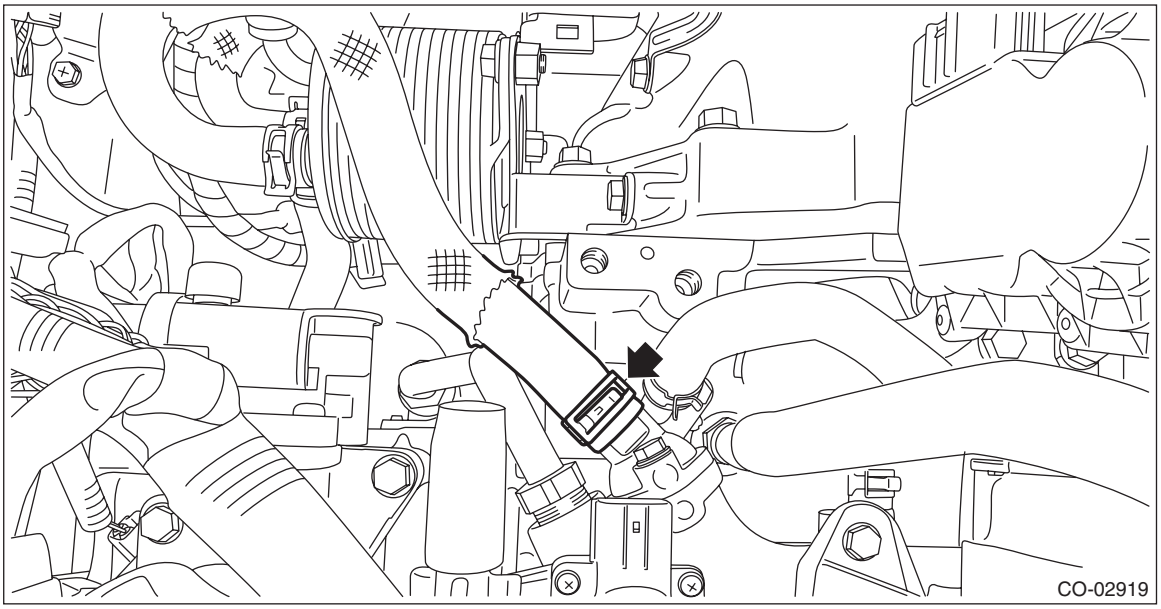

16) Remove the thermostat cover, and then remove the thermostat.

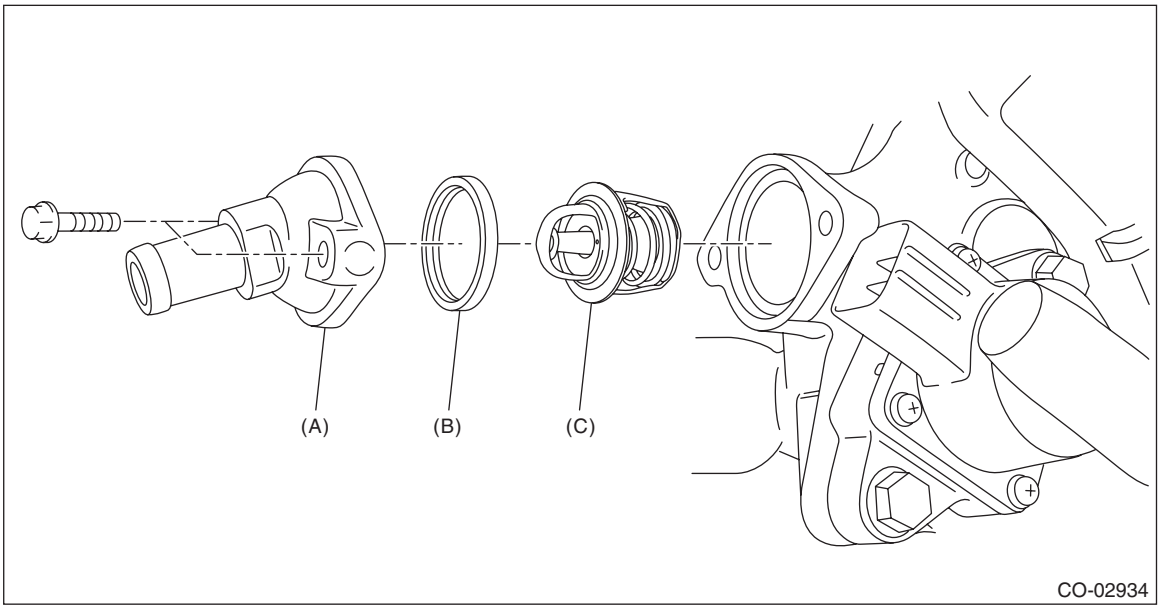

(A) Thermostat cover (B) Gasket (C) Thermostat

17) Remove the gasket from thermostat.

- **HEV model**

1) Disconnect the ground cable from battery. <Ref. to NT-5, BATTERY, NOTE, Note.>

NOTE:
For the 12 volt engine restart battery, disconnect the ground terminal from 12V engine restart battery sensor.

2) Remove the collector cover.
   (1) Pull up the two points at the front of collector cover (A).
   (2) Pull up the two points at the rear of collector cover (B) while moving them rearward.

NOTE:
Be careful not to contact the fuel delivery tube when moving the collector cover rearward.

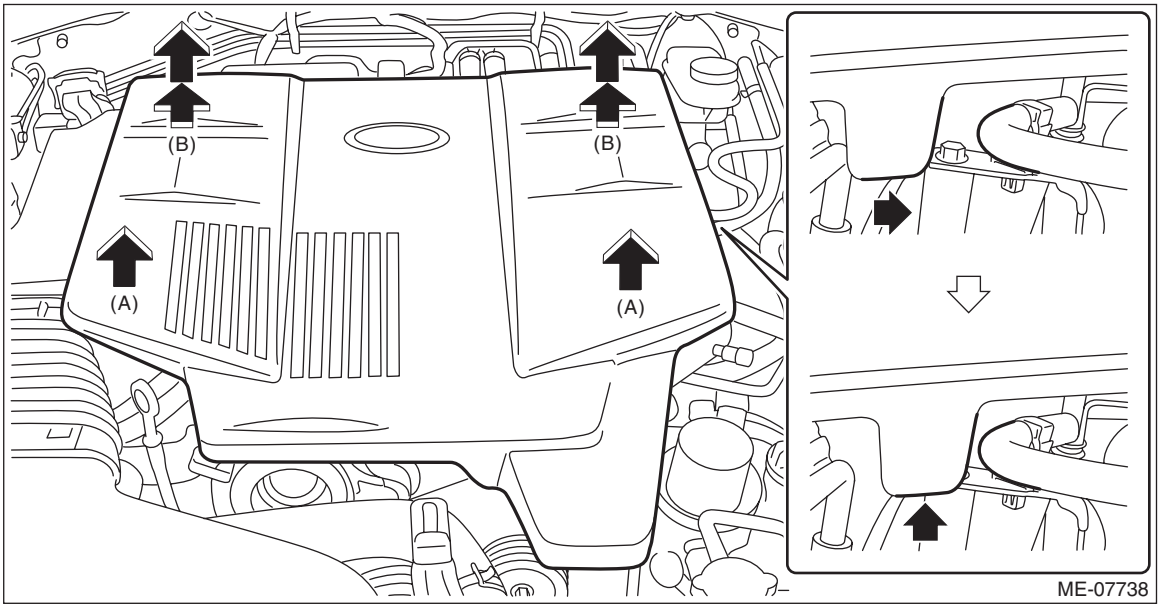

3) Lift up the vehicle.
4) Remove the under cover. <Ref. to EI-29, REMOVAL, Front Under Cover.>

5) Drain engine coolant. <Ref. to CO(H4DO(w/o HEV))-16, DRAINING OF ENGINE COOLANT, REPLACEMENT, Engine Coolant.>
6) Lower the vehicle.
7) Remove the intake manifold. <Ref. to FU(H4DO(HEV))-20, REMOVAL, Intake Manifold.>
8) Disconnect the engine coolant outlet hose from the thermostat cover.

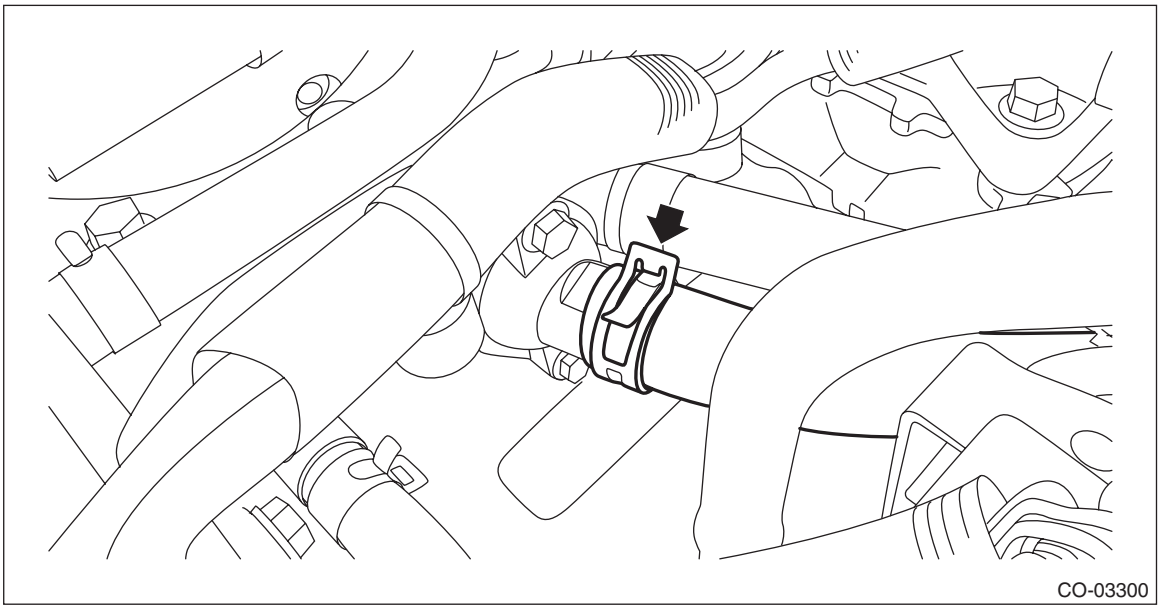
CO-03300

9) Remove the thermostat cover, and then remove the thermostat.

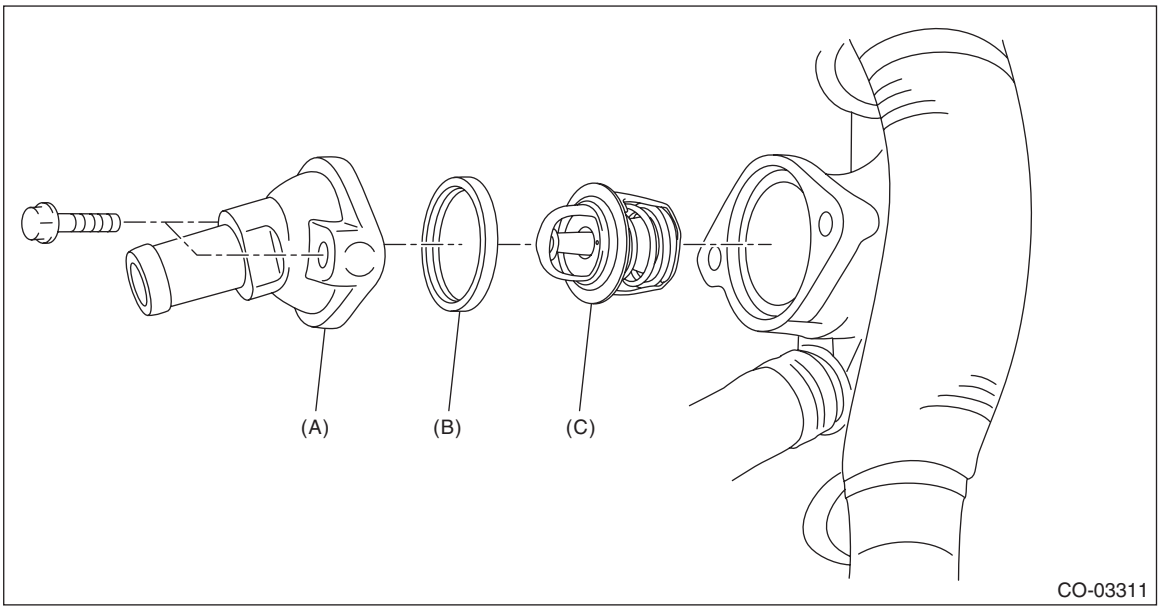

CO-03311

(A) Thermostat cover (B) Gasket (C) Thermostat

10) Remove the gasket from thermostat.

B: INSTALLATION

1. ENGINE SIDE

1) Install a gasket to thermostat.

NOTE:
Use a new gasket.

2) Install the thermostat and thermostat cover.

Tightening torque:
6.4 N·m (0.7 kgf-m, 4.7 ft-lb)

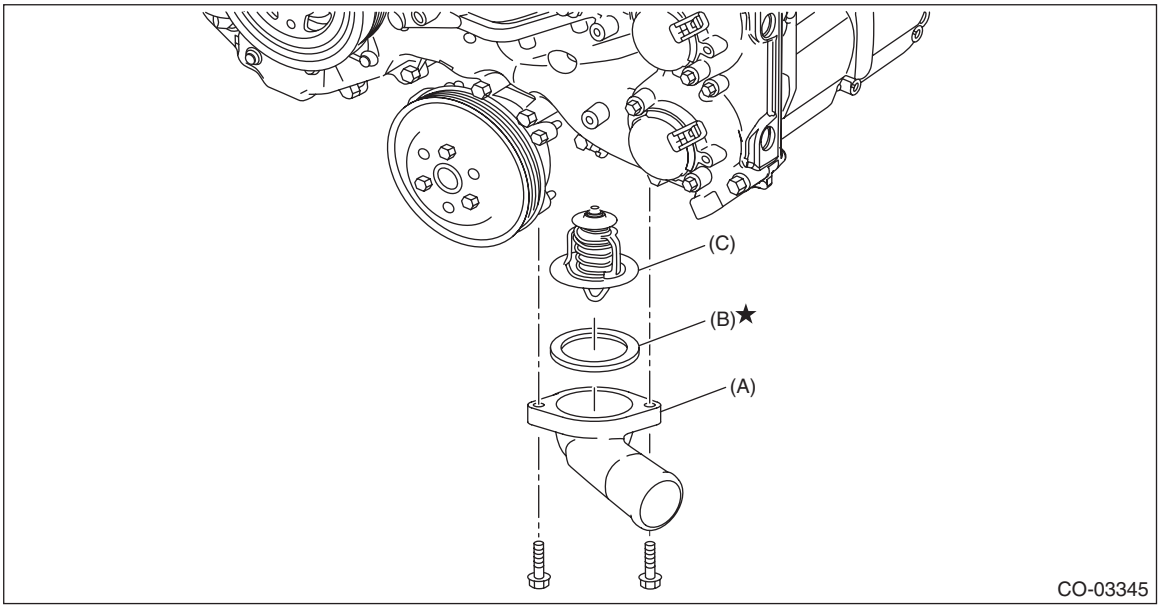

(A) Thermostat cover (B) Gasket (C) Thermostat

3) Connect the radiator outlet hose to thermostat cover.

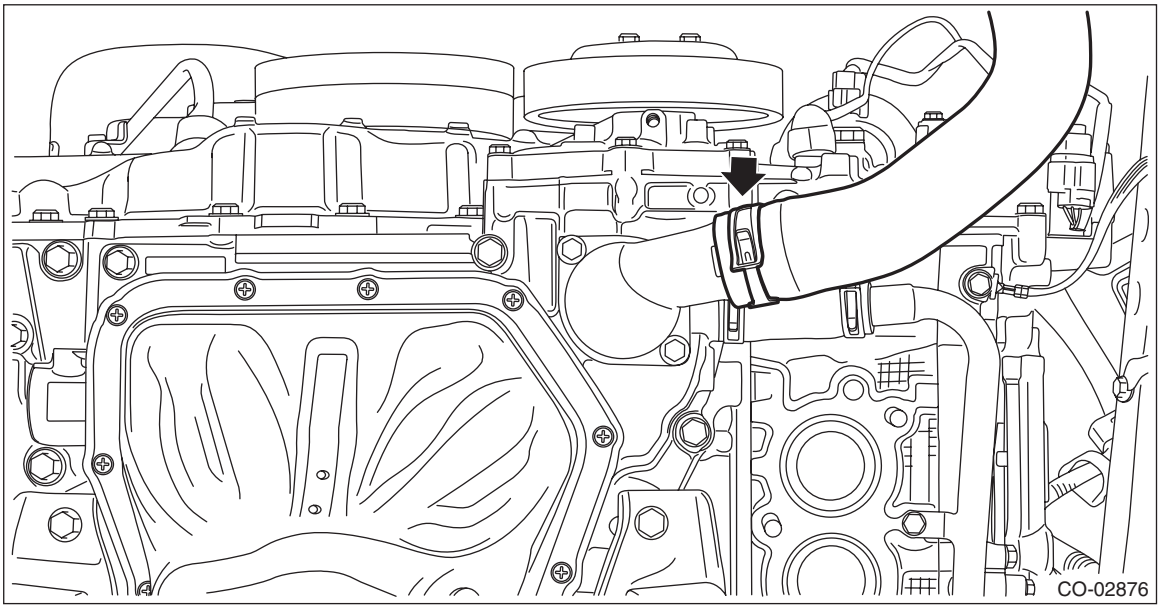

4) Install the front exhaust pipe. <Ref. to EX(H4DO(w/o HEV))-8, INSTALLATION, Front Exhaust Pipe.>
5) Install the under cover. <Ref. to EI-29, INSTALLATION, Front Under Cover.>
6) Lower the vehicle.
7) Connect the battery ground terminal. <Ref. to NT-5, BATTERY, NOTE, Note.>

8) Fill engine coolant. <Ref. to CO(H4DO(w/o HEV))-17, FILLING OF ENGINE COOLANT, REPLACEMENT, Engine Coolant.>

2. CVTF COOLER (WITH WARMER FEATURE) SIDE

• Gasoline engine model

1) Install a gasket to thermostat.

NOTE:
Use a new gasket.

2) Install the thermostat and thermostat cover.

NOTE:
Install the parts with the air vent hole facing upward.

Tightening torque:
6.4 N·m (0.7 kgf-m, 4.7 ft-lb)

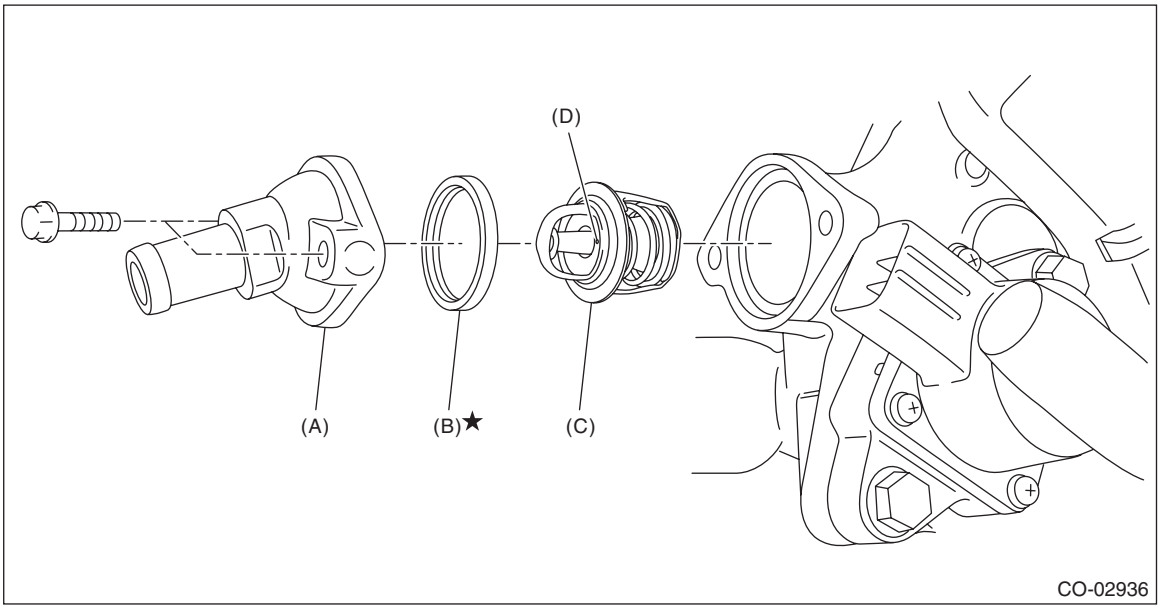

(A) Thermostat cover
(B) Gasket
(C) Thermostat
(D) Air vent hole

3) Connect the engine coolant outlet hose to the thermostat cover.

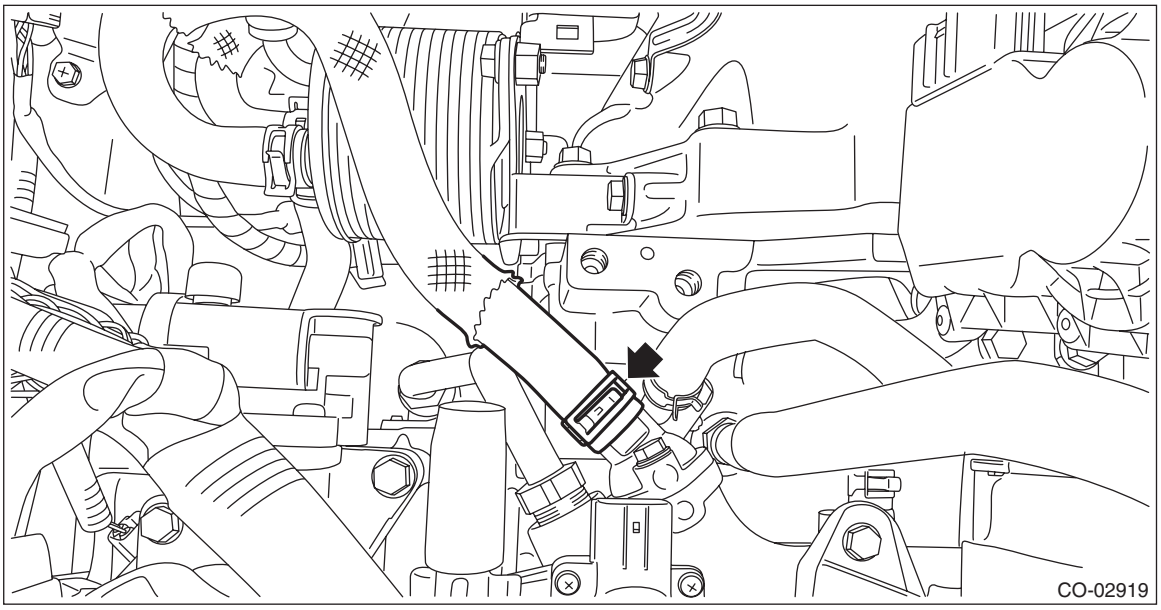

4) Install the engine hanger to the cylinder block RH.

Tightening torque:
21 N·m (2.1 kgf-m, 15.5 ft-lb)

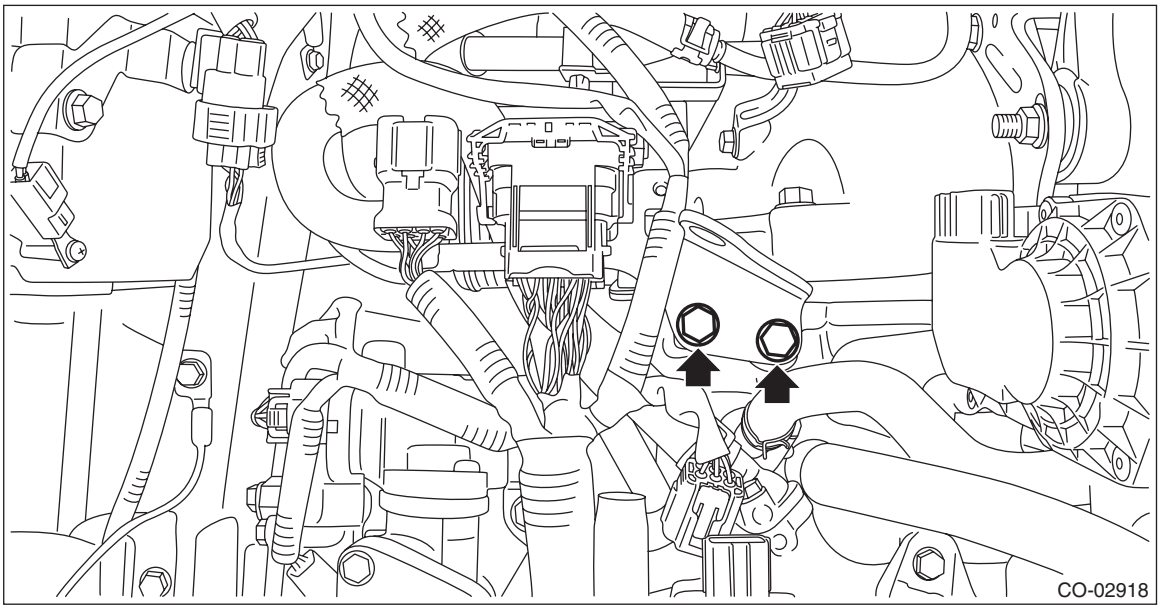

5) Connect the connector (A) to the manifold absolute pressure sensor.
6) Connect the connector (B) to the throttle position sensor.
7) Connect the connector (C) to the EGR control valve.

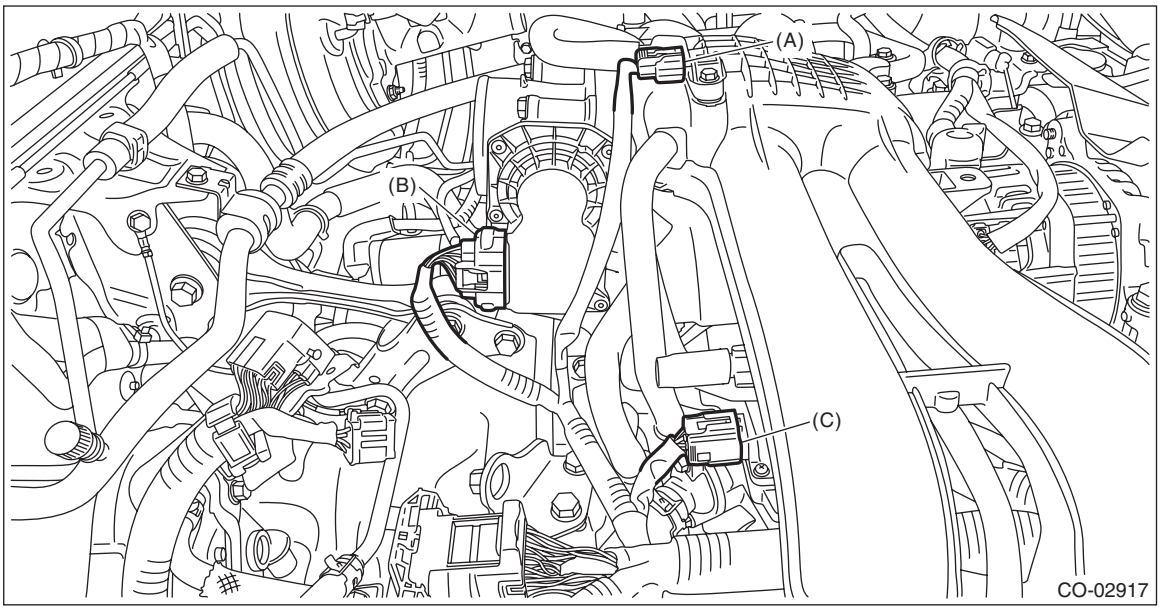

8) Connect the engine harness connector.
   (1) Connect the bulkhead harness connector to the engine harness connector (black) and engine harness connector (brown).

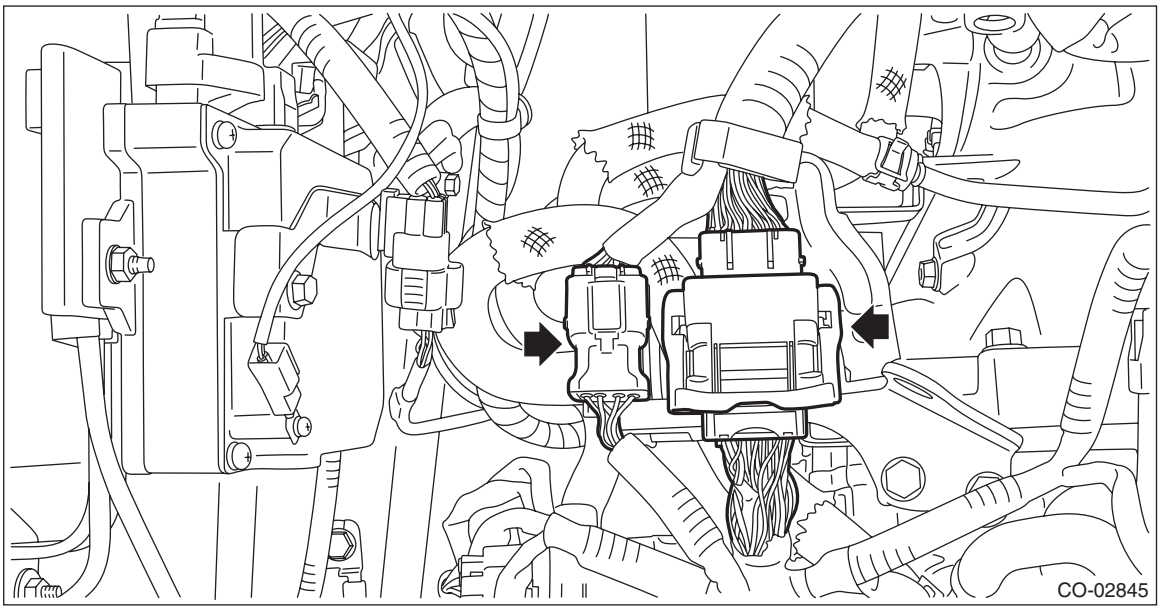

(2) Install the bolt which secures the bulkhead harness connector bracket.

Tightening torque:
7.5 N·m (0.8 kgf-m, 5.5 ft-lb)

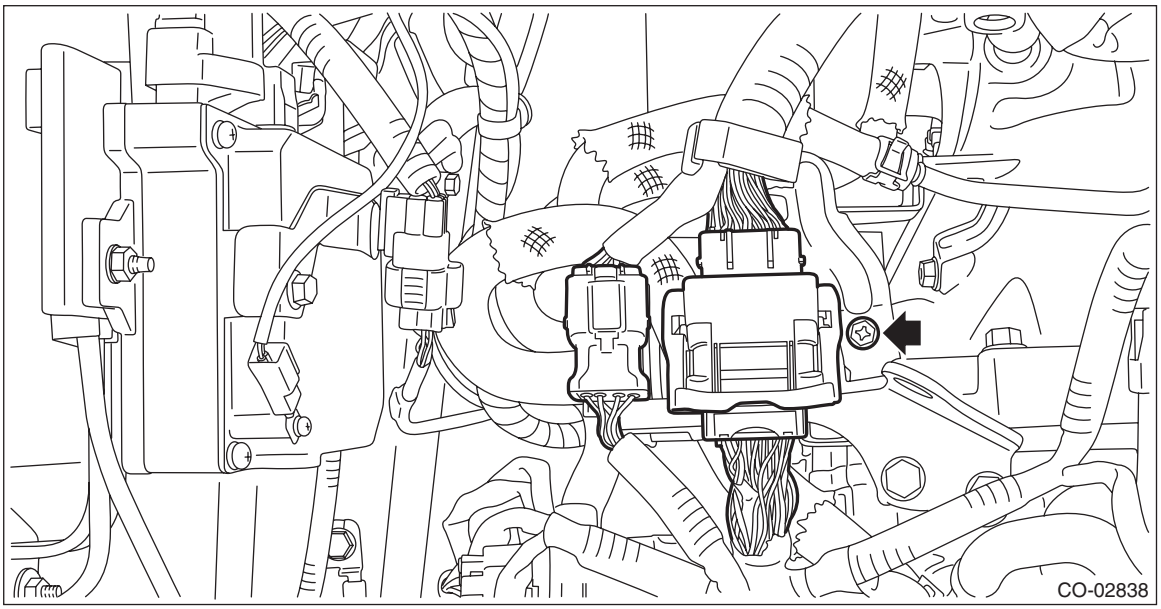

9) Install the air intake boot. <Ref. to IN(H4DO(w/o HEV))-12, INSTALLATION, Air Intake Boot.>
10) Lift up the vehicle.
11) Install the under cover. <Ref. to EI-29, INSTALLATION, Front Under Cover.>
12) Lower the vehicle.
13) Connect the battery ground terminal.

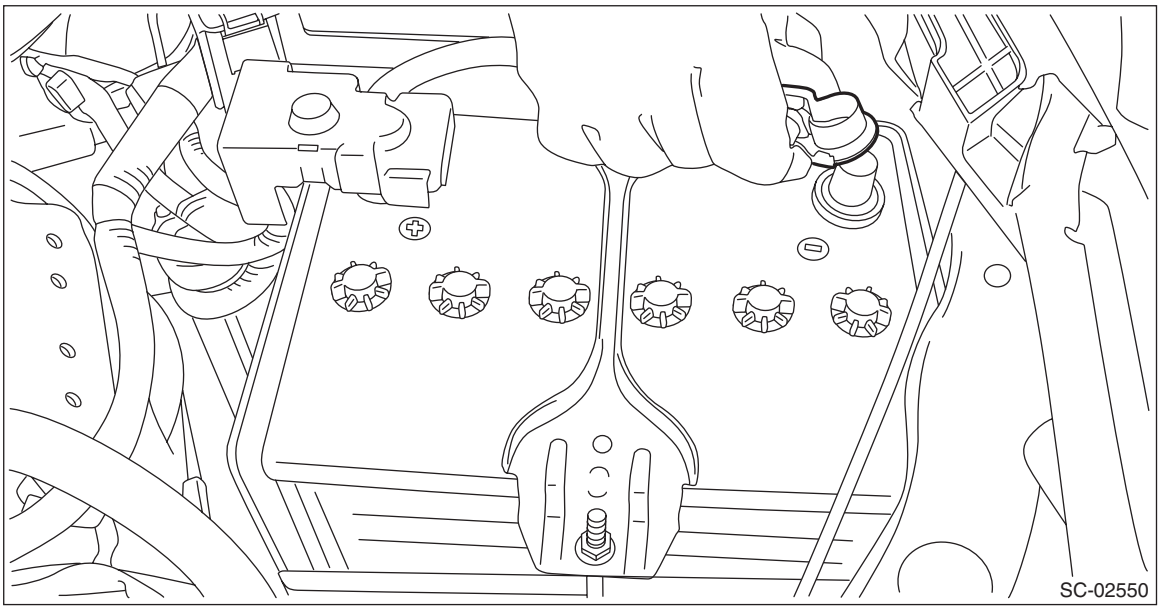

14) Fill engine coolant. <Ref. to CO(H4DO(w/o HEV))-17, FILLING OF ENGINE COOLANT, REPLACEMENT, Engine Coolant.>

- **HEV model**

1) Install a gasket to thermostat.

NOTE:
Use a new gasket.

2) Install the thermostat and thermostat cover.

NOTE:
Install the parts with the air vent hole facing upward.

Tightening torque:
6.4 N·m (0.7 kgf-m, 4.7 ft-lb)

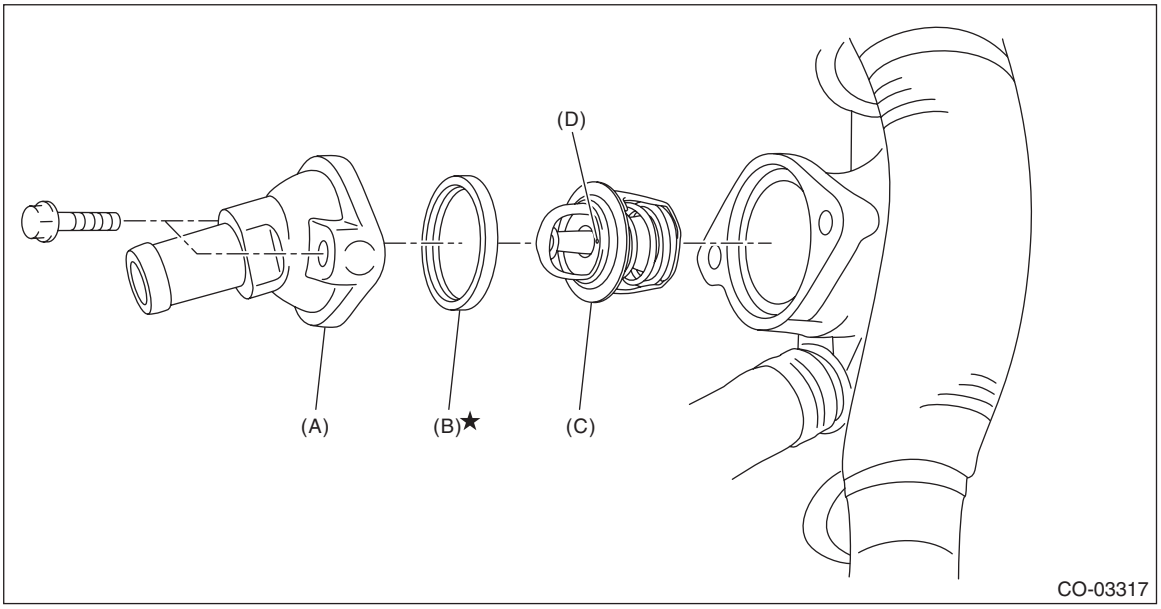

(A) Thermostat cover (B) Gasket (C) Thermostat
(D) Air vent hole

3) Connect the engine coolant outlet hose to the thermostat cover.

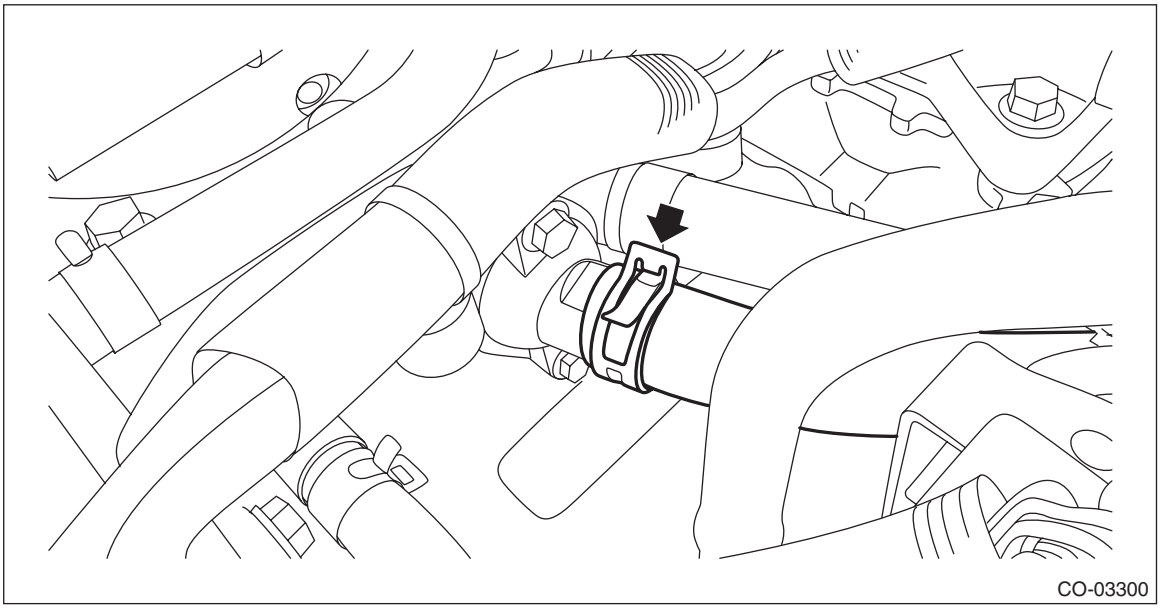

4) Install the intake manifold. <Ref. to FU(H4DO(HEV))-26, INSTALLATION, Intake Manifold.>
5) Install the collector cover.
6) Lift up the vehicle.

7) Install the under cover. <Ref. to EI-29, INSTALLATION, Front Under Cover.>
8) Lower the vehicle.
9) Connect the battery ground terminal. <Ref. to NT-5, BATTERY, NOTE, Note.>
10) Fill engine coolant. <Ref. to CO(H4DO(w/o HEV))-17, FILLING OF ENGINE COOLANT, REPLACEMENT, Engine Coolant.>

C: INSPECTION

1) Check that the thermostat does not have deformation, cracks or damage.
2) Check that the thermostat valve closes completely at an ambient temperature.
3) Immerse the thermostat and a thermometer in water. Raise water temperature gradually, and check the temperature and valve lift when the valve begins to open and when the valve is fully opened. Replace the thermostat if faulty.

NOTE:
- During the test, agitate the water for even temperature distribution.
- Leave the thermostat in the boiling water for five minutes or more before measuring the valve lift.
- Hold the thermostat with a wire or the like to avoid contacting with container bottom.

Starting temperature to open:
Engine side
87 — 91°C (189 — 196°F)
CVTF cooler (with warmer feature) side
48 — 52°C (118 — 126°F)

Full open temperature:
Engine side
98°C (208°F)
CVTF cooler (with warmer feature) side
63°C (145°F)

Total valve lift:
Engine side
8.0 mm (0.315 in) or more
CVTF cooler (with warmer feature) side
6.0 mm (0.236 in) or more

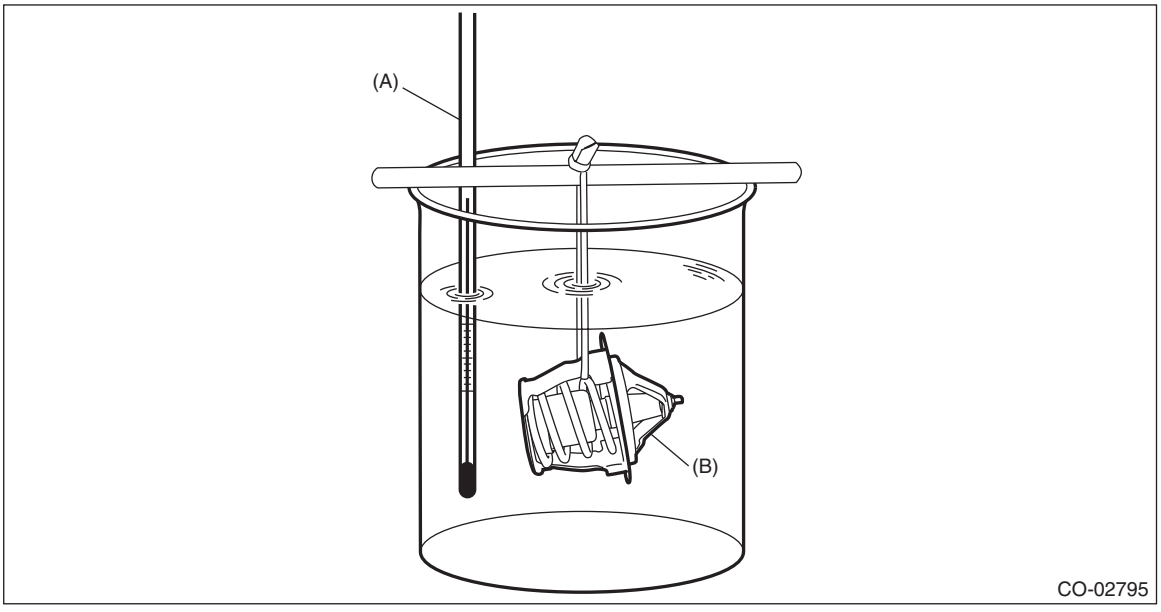

(A) Thermometer (B) Thermostat

7. Radiator

A: REMOVAL

CAUTION:
The radiator is pressurized when the engine and radiator are hot. Wait until engine and radiator cool down before working on the radiator.

1) Disconnect the ground cable from battery. <Ref. to NT-5, BATTERY, NOTE, Note.>

NOTE:
For the 12 volt engine restart battery of HEV model, disconnect the ground terminal from 12V engine restart battery sensor.

2) Remove the V-belt covers. (Gasoline engine model)

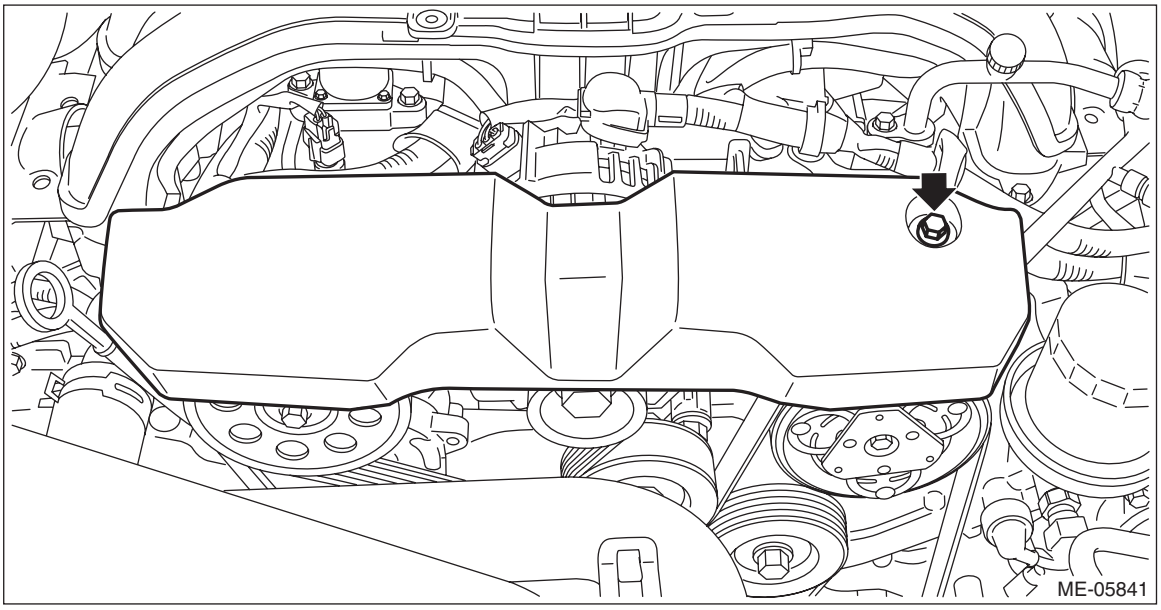

3) Remove the collector cover. (HEV model)
   (1) Pull up the two points at the front of collector cover (A).
   (2) Pull up the two points at the rear of collector cover (B) while moving them rearward.

NOTE:
Be careful not to contact the fuel delivery tube when moving the collector cover rearward.

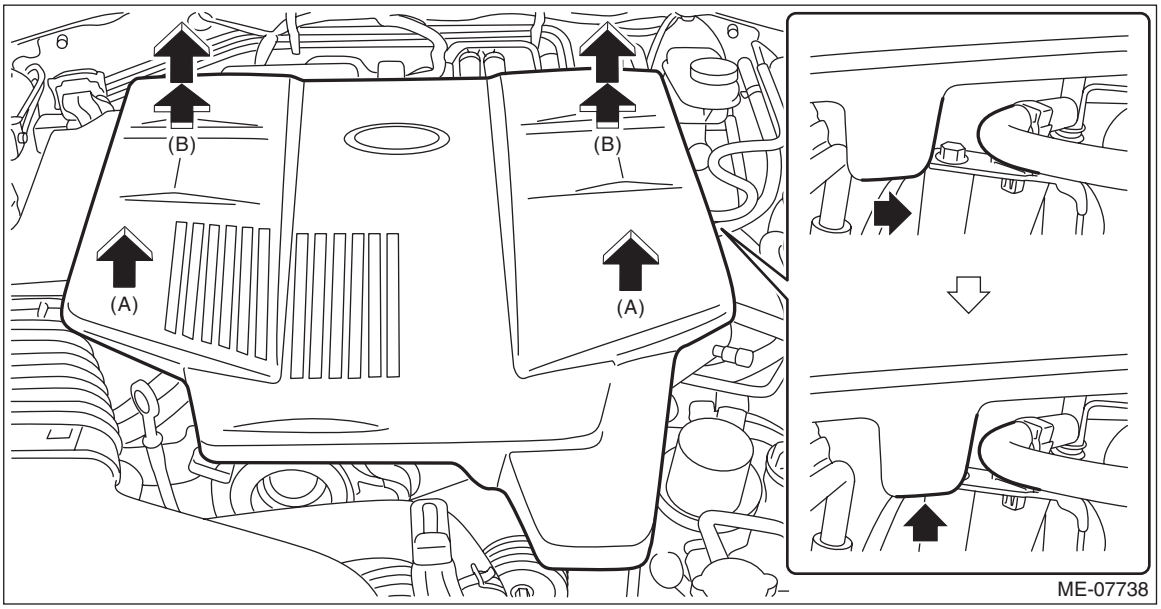

4) Remove the grille bracket.

NOTE:
Remove the ten clips.

5) Remove the bolts, and remove the bracket - plate (A).

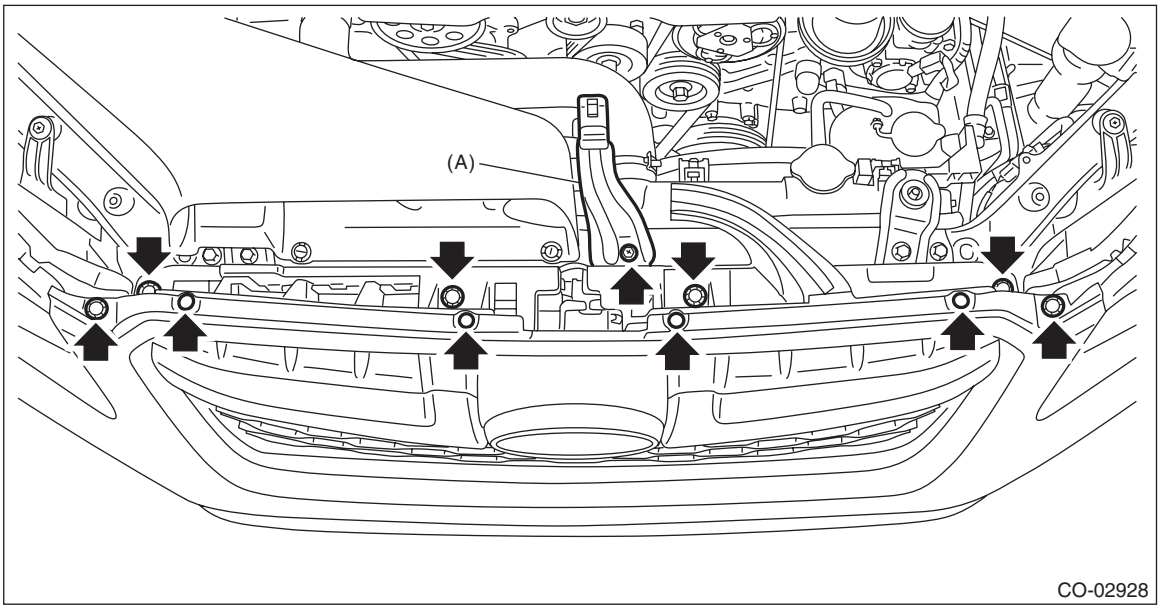

6) Lift up the vehicle.
7) Remove the under cover. <Ref. to EI-29, REMOVAL, Front Under Cover.>
8) Drain engine coolant. <Ref. to CO(H4DO(w/o HEV))-16, DRAINING OF ENGINE COOLANT, REPLACEMENT, Engine Coolant.>
9) Disconnect the radiator outlet hose from thermostat cover.

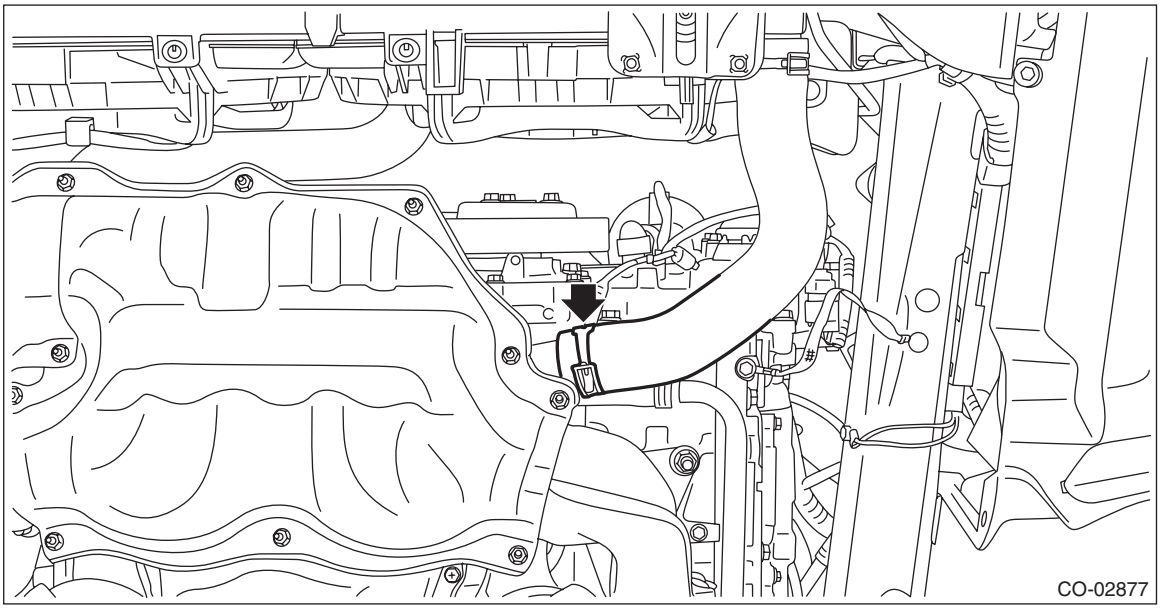

10) Lower the vehicle.
11) Remove the air intake duct. <Ref. to IN(H4DO(w/o HEV))-13, REMOVAL, Air Intake Duct.> <Ref. to IN(H4DO(HEV))-15, REMOVAL, Air Intake Duct.>
12) Remove the air intake boot No. 1. (HEV model) <Ref. to IN(H4DO(HEV))-10, AIR INTAKE BOOT NO. 1, REMOVAL, Air Intake Boot.>
13) Remove the reservoir tank. <Ref. to CO(H4DO(w/o HEV))-97, REMOVAL, Reservoir Tank.>

14) Disconnect the connector (A) from the main fan motor assembly and the connector (B) from the sub fan motor assembly.

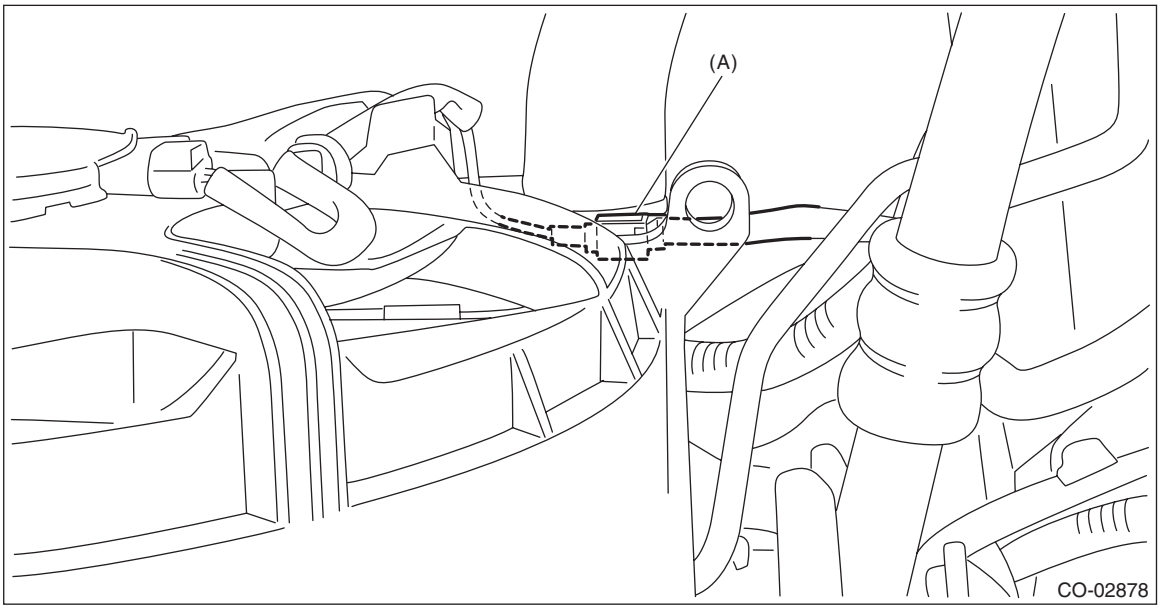

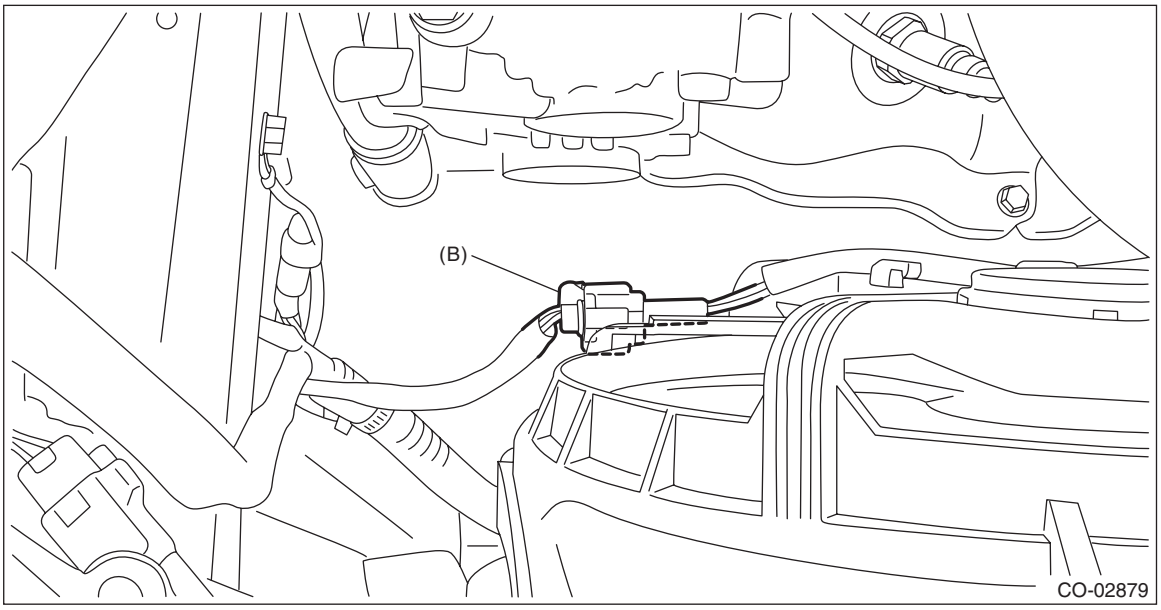

15) Disconnect the radiator inlet hose from the water pipe assembly.

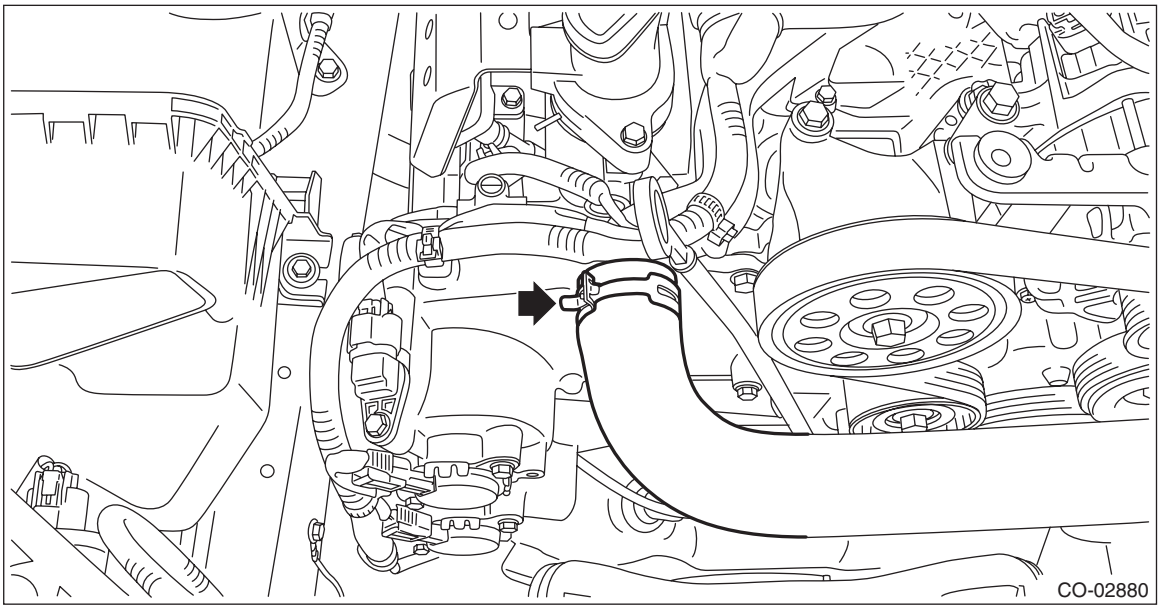

16) Remove the radiator upper brackets.

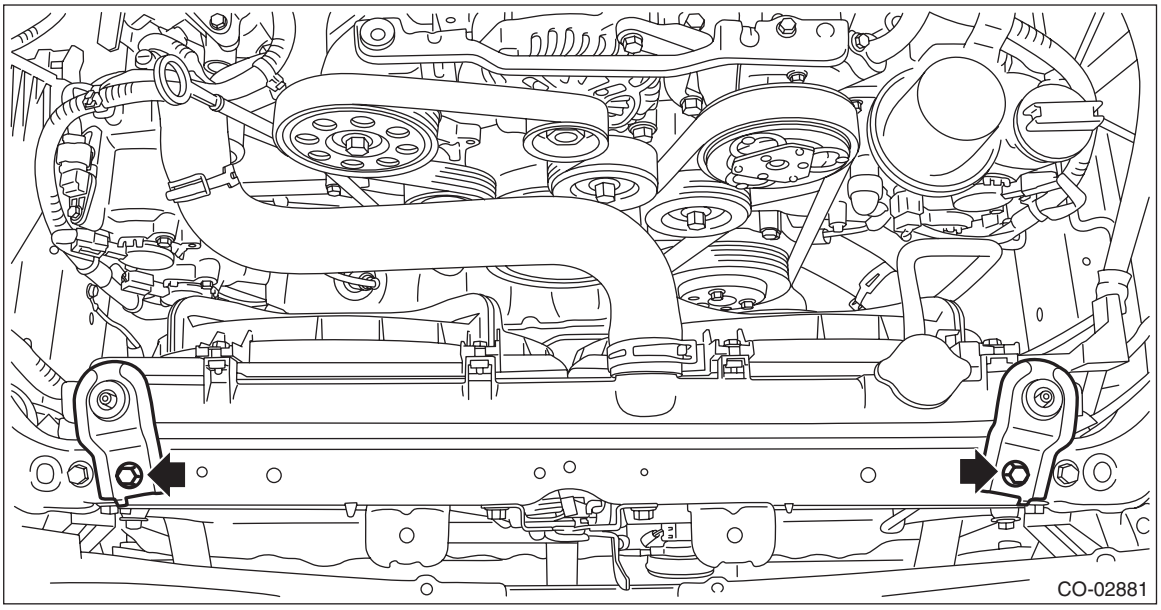

17) Remove the radiator from vehicle.

18) Remove the radiator lower cushion from the radiator lower bracket.

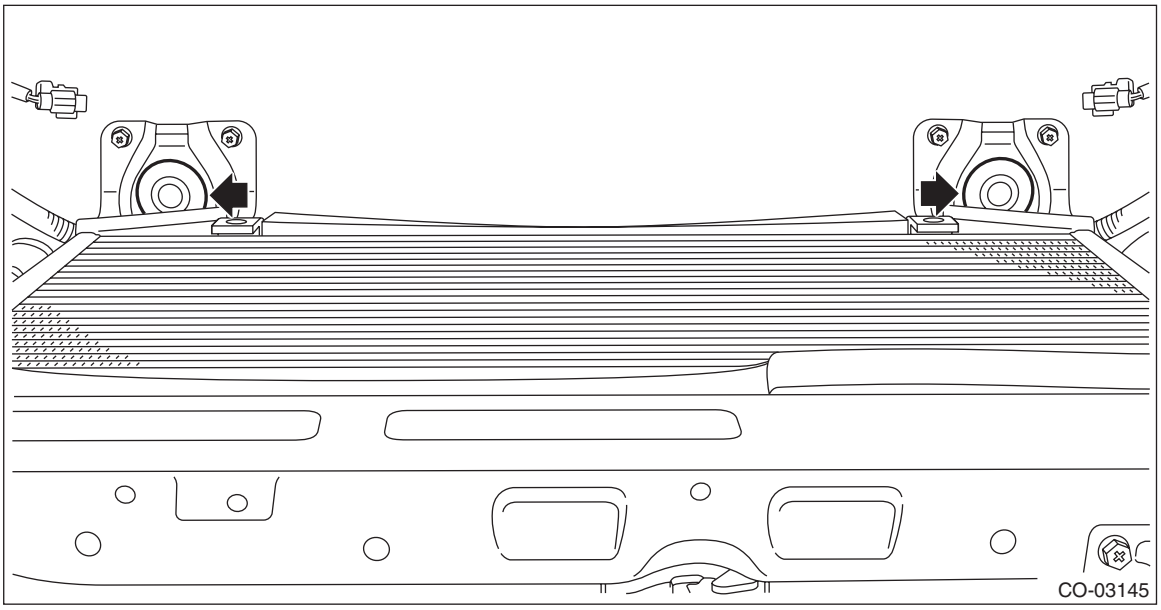

B: INSTALLATION

1) Attach the radiator lower cushion to the radiator lower bracket.

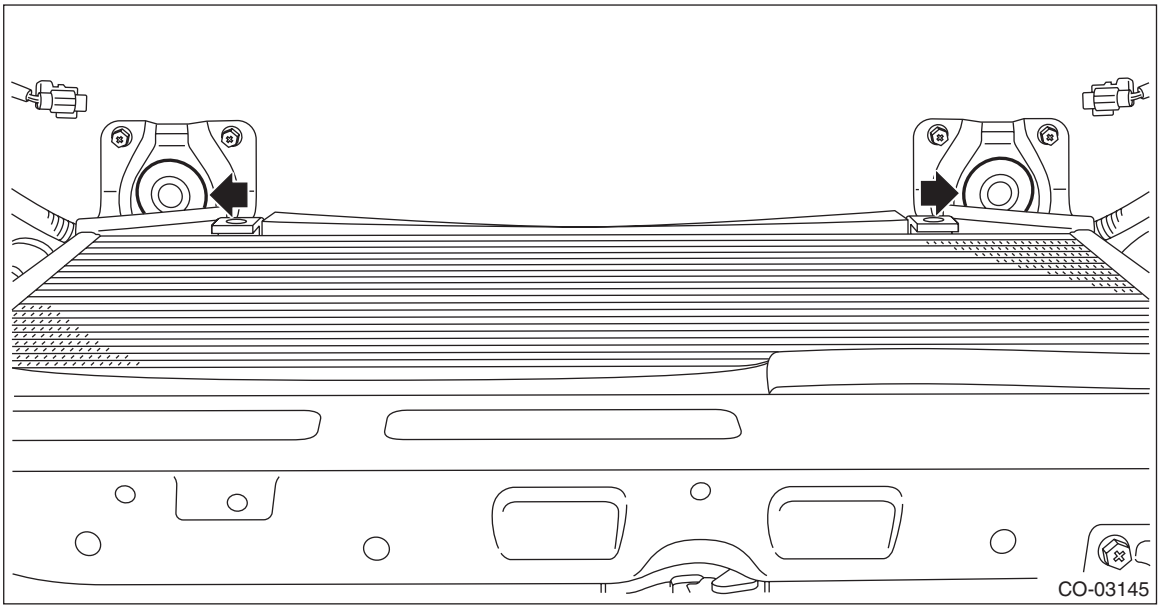

2) Install the radiator to vehicle.

NOTE:
Make pins on the lower side of radiator be fitted into the radiator lower cushions.

3) Install the radiator upper brackets.

Tightening torque:
12 N·m (1.2 kgf-m, 8.9 ft-lb)

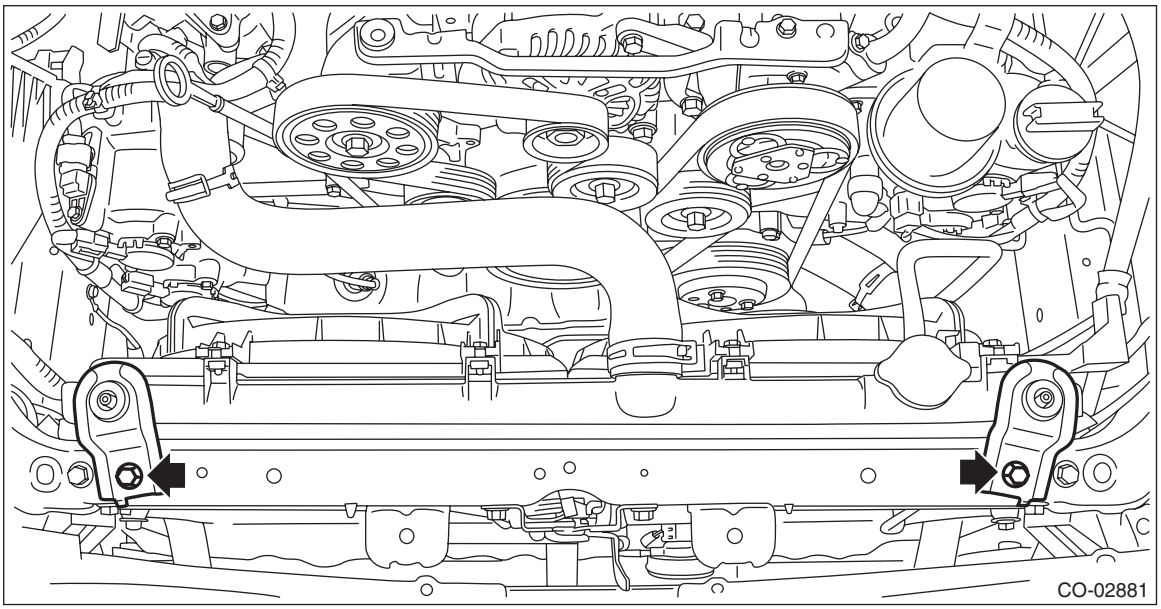

4) Connect the radiator inlet hose to the water pipe assembly.

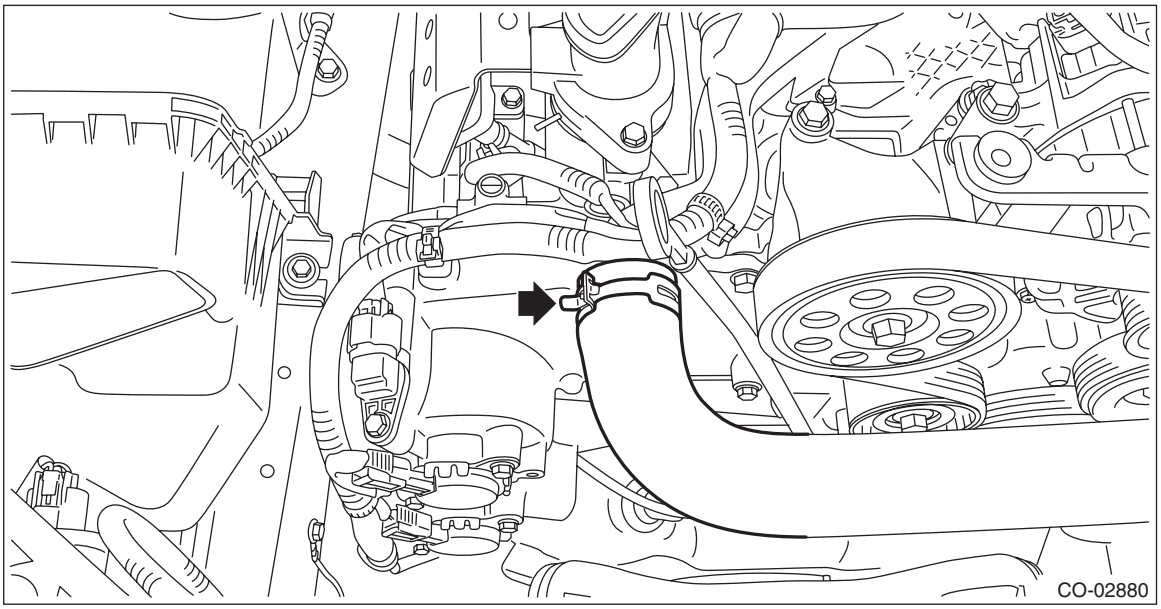

5) Connect the connector (A) to the main fan motor assembly and the connector (B) to the sub fan motor assembly.

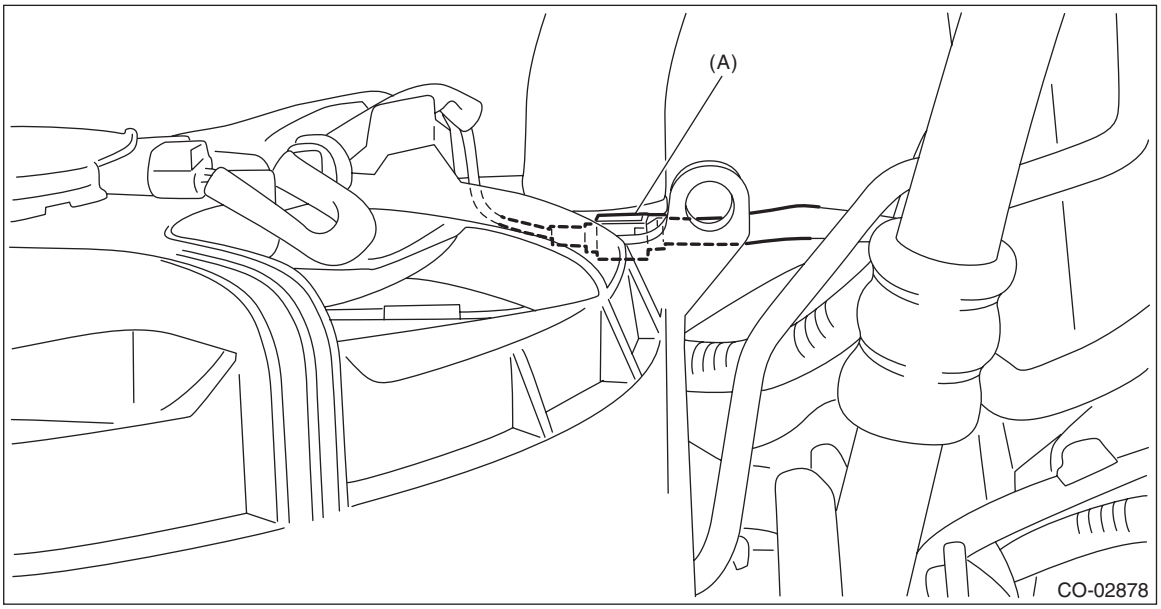

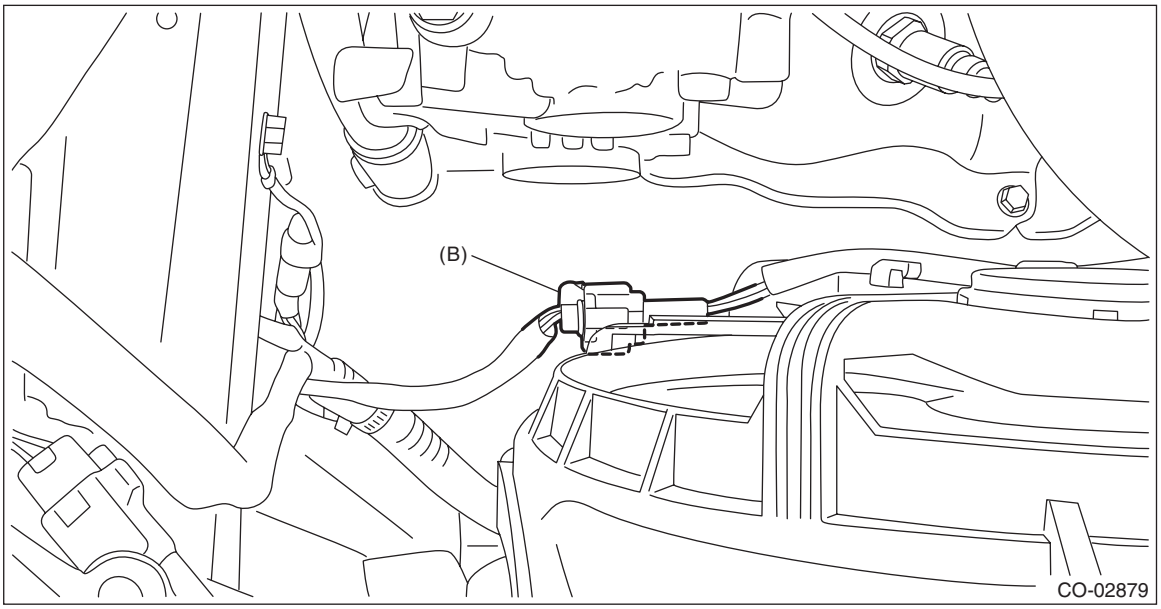

6) Install the reservoir tank. <Ref. to CO(H4DO(w/o HEV))-97, INSTALLATION, Reservoir Tank.>
7) Install the air intake boot No. 1. (HEV model) <Ref. to IN(H4DO(HEV))-13, AIR INTAKE BOOT NO. 1, INSTALLATION, Air Intake Boot.>
8) Install the air intake duct. <Ref. to IN(H4DO(w/o HEV))-13, INSTALLATION, Air Intake Duct.> <Ref. to IN(H4DO(HEV))-15, INSTALLATION, Air Intake Duct.>
9) Lift up the vehicle.

10) Connect the radiator outlet hose to thermostat cover.

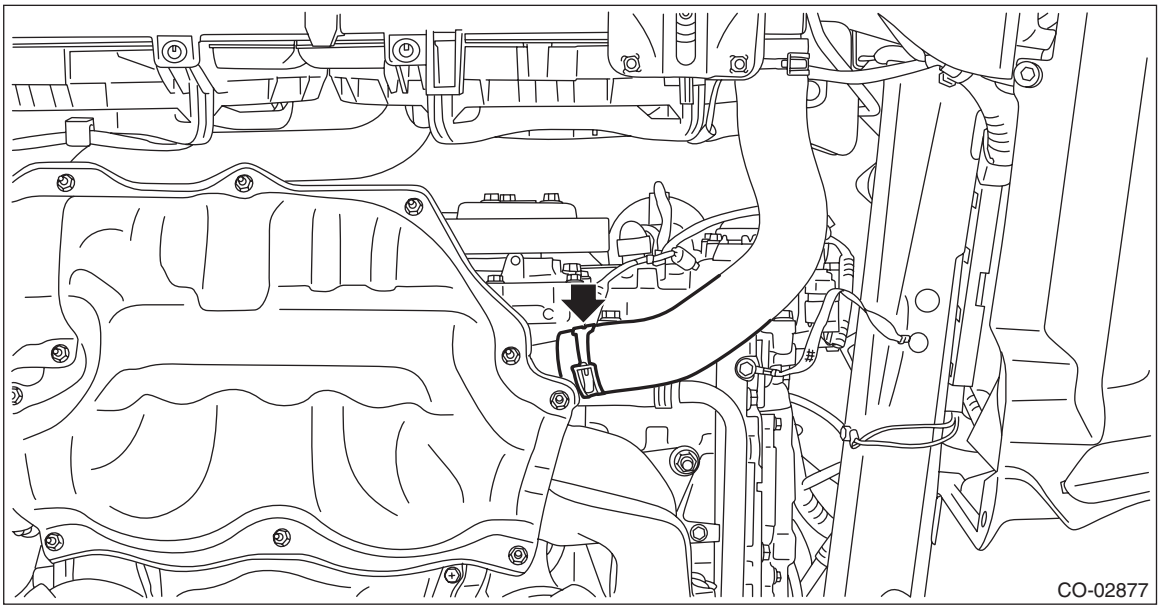

11) Install the under cover. <Ref. to EI-29, INSTALLATION, Front Under Cover.>
12) Lower the vehicle.
13) Attach the bracket - plate (A).

Tightening torque:
7.5 N·m (0.8 kgf-m, 5.5 ft-lb)

14) Attach the grille bracket.

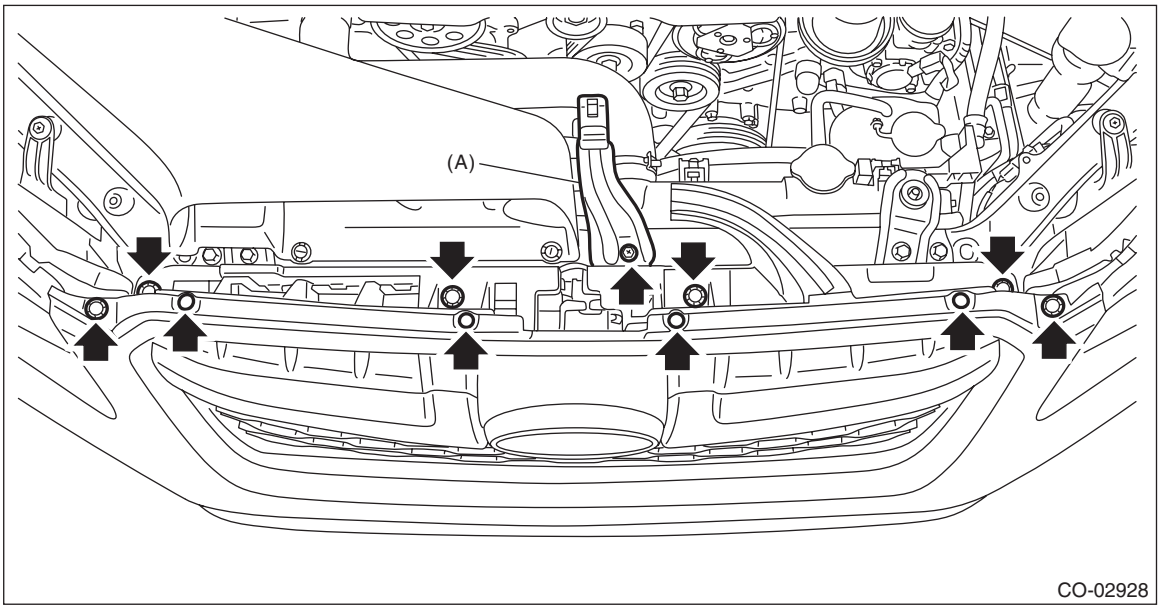

15) Install the V-belt cover. (Gasoline engine model)

Tightening torque:
6.4 N·m (0.7 kgf-m, 4.7 ft-lb)

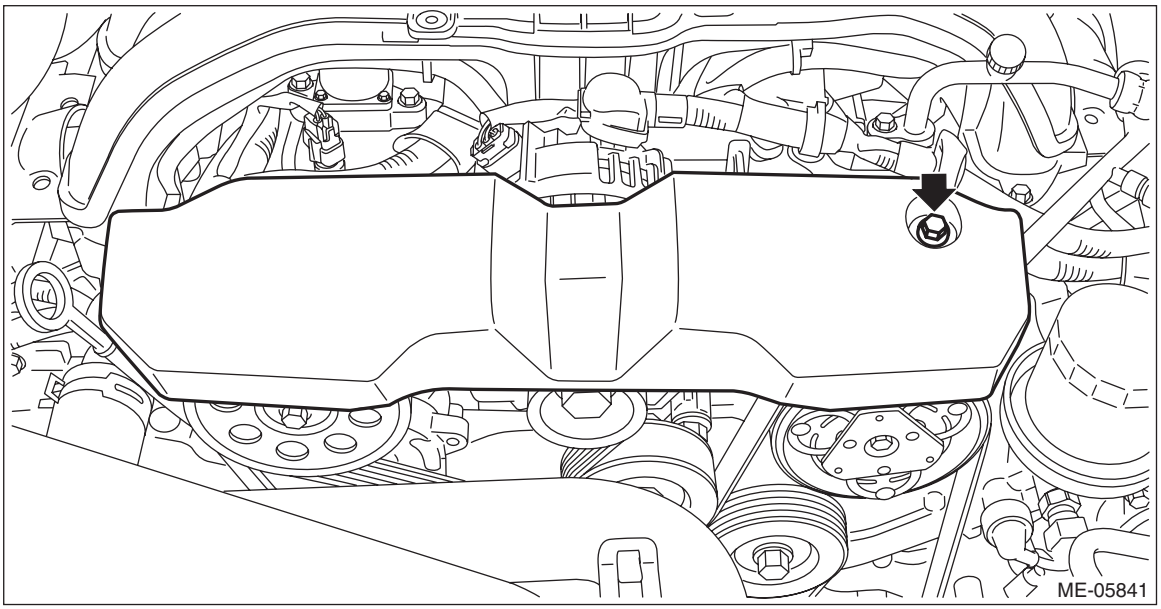

16) Install the collector cover. (HEV model)
17) Connect the battery ground terminal. <Ref. to NT-5, BATTERY, NOTE, Note.>
18) Fill engine coolant. <Ref. to CO(H4DO(w/o HEV))-17, FILLING OF ENGINE COOLANT, REPLACEMENT, Engine Coolant.>

C: INSPECTION

1) Check that the radiator does not have deformation, cracks or damage.
2) Check that the hose has no cracks, damage or loose part.
3) Remove the radiator cap, fill the radiator with engine coolant, and then install the radiator cap tester to the filler neck of radiator.

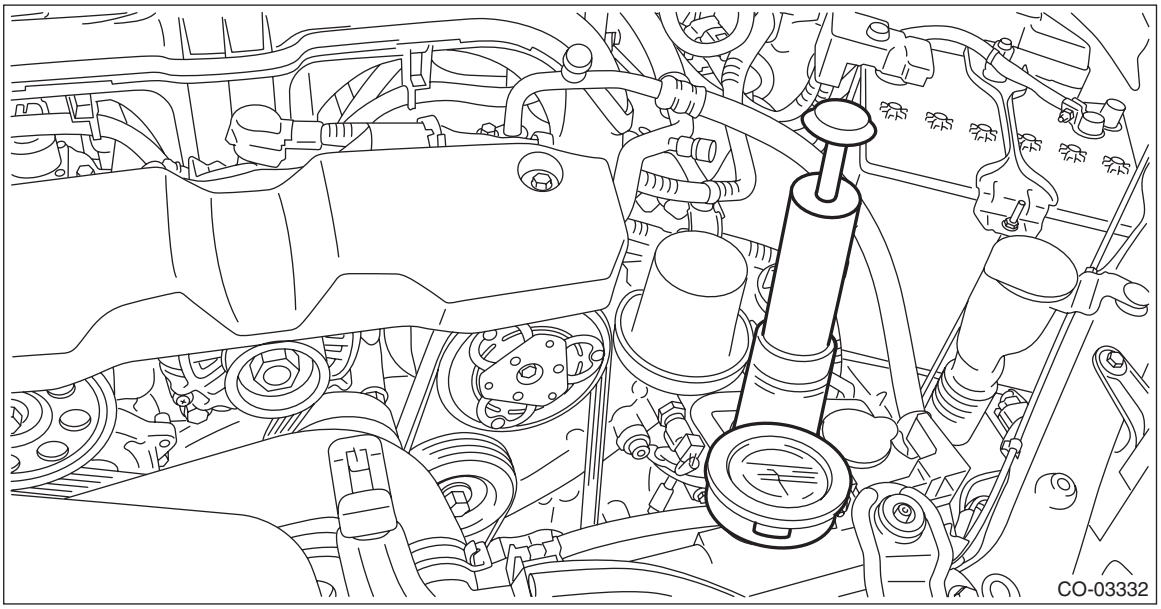

4) Apply a pressure of 157 kPa (1.6 kg/cm^2, 23 psi) to the radiator, and check the following items.

CAUTION:
- **Engine should be turned off.**
- **Wipe engine coolant from check points in advance.**
- **Be careful not to deform the filler neck of radiator when installing and removing the radiator cap tester.**
- **Be careful of engine coolant from spurting out when removing the radiator cap tester.**
- Leakage from the radiator or its vicinity
- Leakage from the hose or its connections

8. Radiator Cap

A: INSPECTION

1) Check that the radiator cap does not have deformation, cracks or damage.
2) Attach the radiator cap tester to radiator cap.

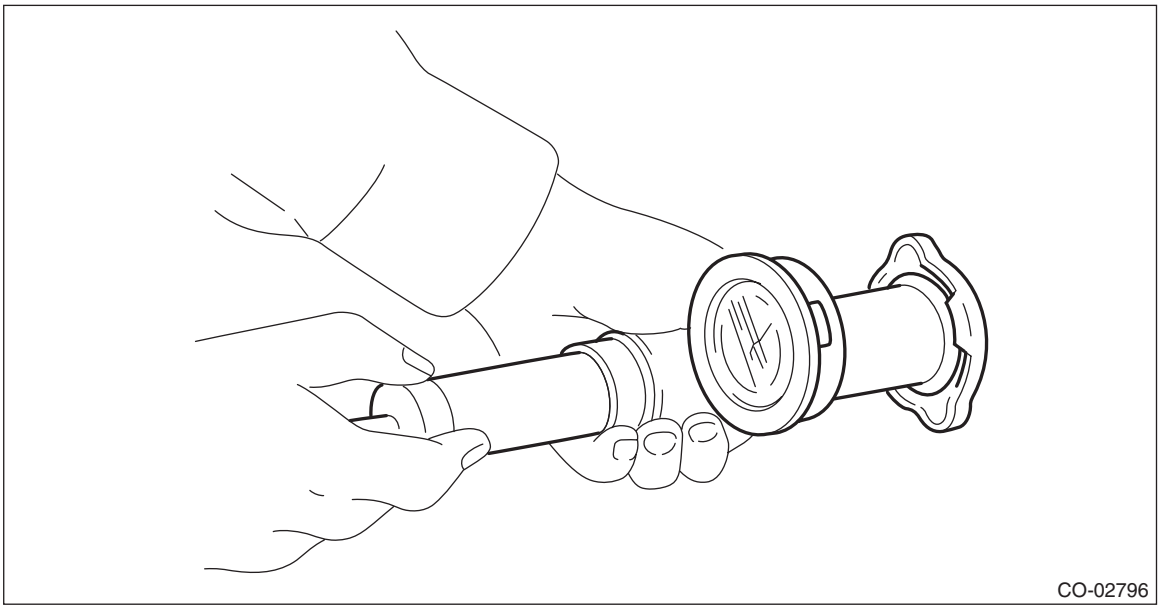

3) Increase pressure until the radiator cap tester gauge needle stops. Radiator cap is functioning properly if it holds the service limit pressure for 5 — 6 seconds. Replace the radiator cap if its valve opens at less than the service limit.

CAUTION:
Be sure to remove foreign matter and rust from the cap in advance. Otherwise, results of pressure test will be incorrect.

Standard:
93 — 123 kPa (0.95 — 1.25 kg/cm^2, 14 — 18 psi)

Service limit:
83 kPa (0.85 kg/cm^2, 12 psi)

9. Radiator Main Fan and Fan Motor

A: REMOVAL

1) Disconnect the ground cable from battery. <Ref. to NT-5, BATTERY, NOTE, Note.>

NOTE:
For the 12 volt engine restart battery of HEV model, disconnect the ground terminal from 12V engine restart battery sensor.

2) Remove the collector cover. (HEV model)
   (1) Pull up the two points at the front of collector cover (A).
   (2) Pull up the two points at the rear of collector cover (B) while moving them rearward.

NOTE:
Be careful not to contact the fuel delivery tube when moving the collector cover rearward.

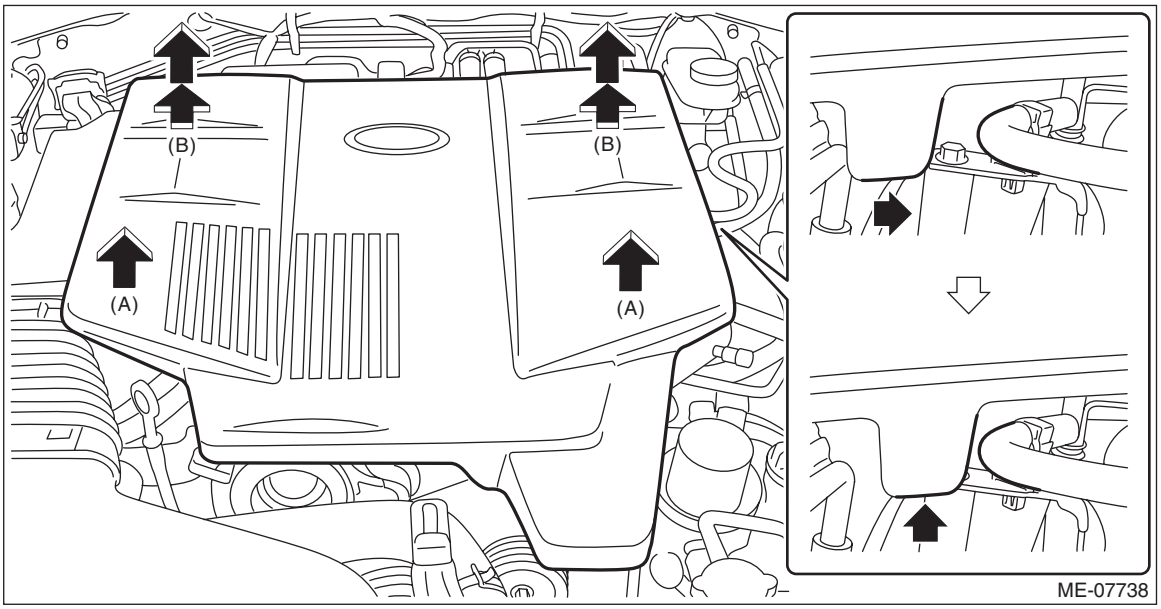

3) Remove the reservoir tank. <Ref. to CO(H4DO(w/o HEV))-97, REMOVAL, Reservoir Tank.>
4) Disconnect the connector from the main fan motor assembly.

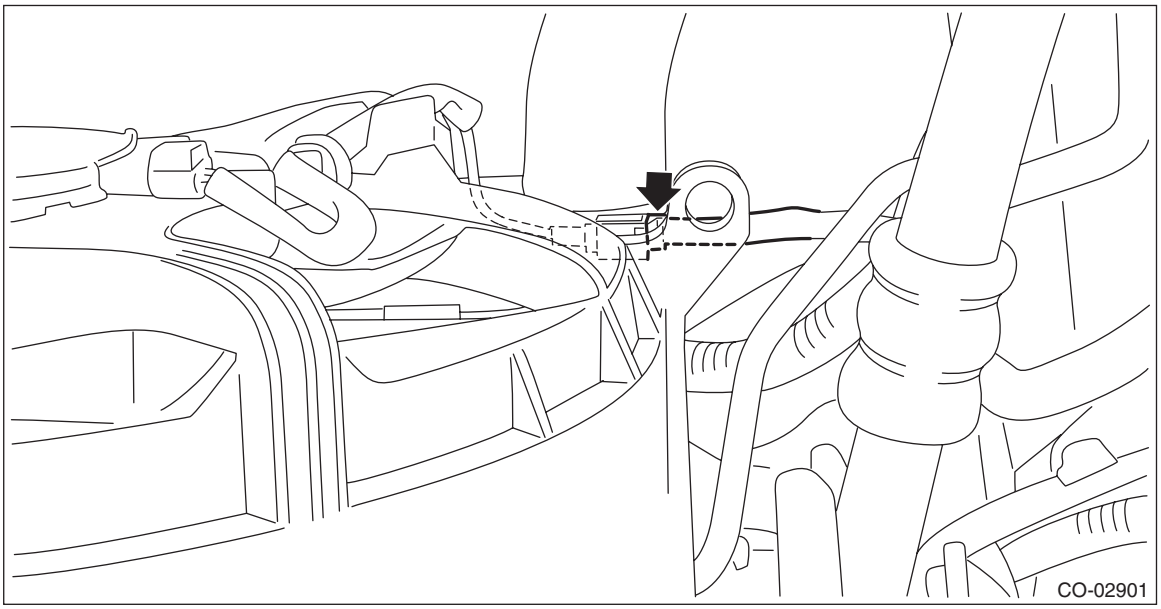

5) Remove the bolts which hold the radiator main fan shroud onto the radiator.

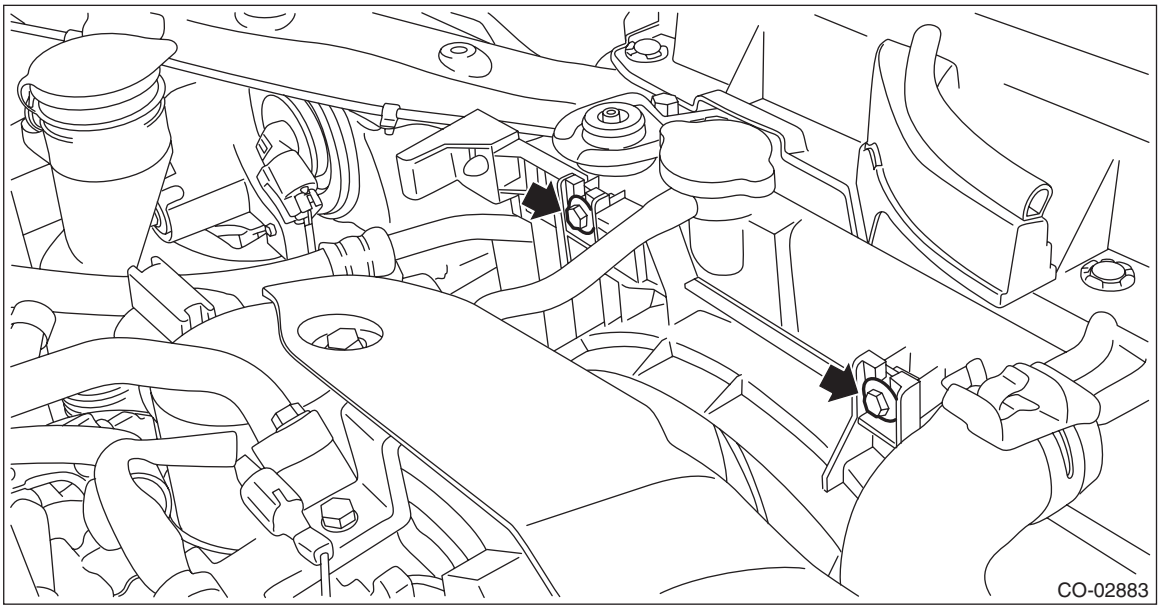

6) Remove the radiator main fan and fan motor from the vehicle.

B: INSTALLATION

Install in the reverse order of removal.

CAUTION:
Confirm that the radiator hose is securely connected.

NOTE:
If the installation of the radiator main fan and fan motor is difficult, attempt installation after loosening the bolts which hold the radiator sub fan shroud to the radiator.

Tightening torque:
7.5 N·m (0.8 kgf-m, 5.5 ft-lb)

C: DISASSEMBLY

1) Remove the clip which holds the main fan motor connector onto the radiator main fan shroud.
2) Disconnect the radiator main fan from the main fan motor.

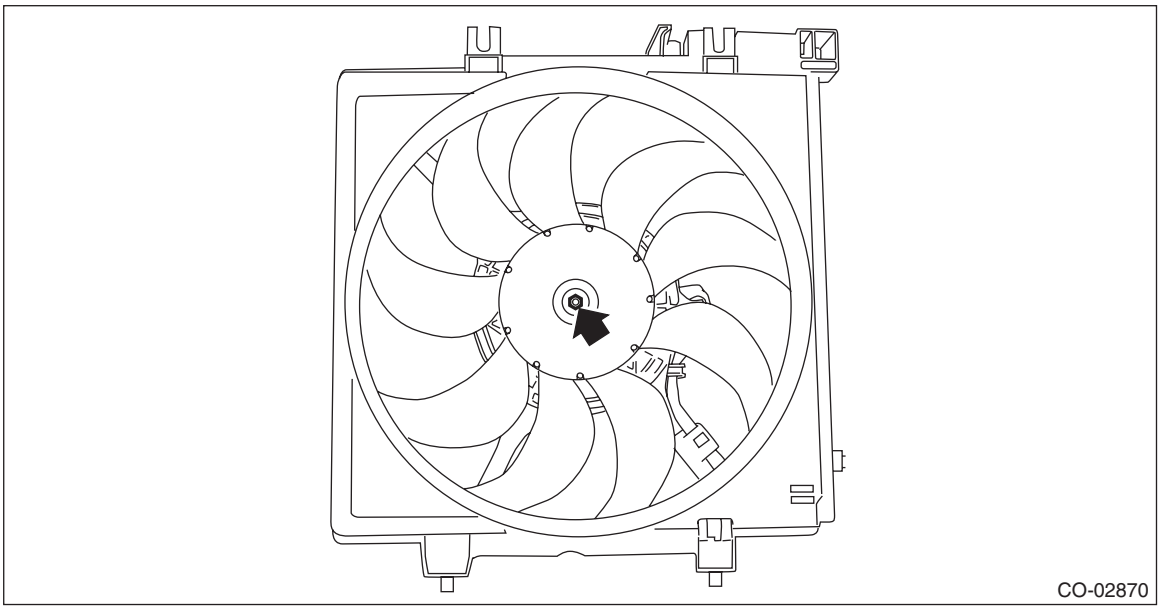

3) Disconnect the main fan motor from the radiator main fan shroud.

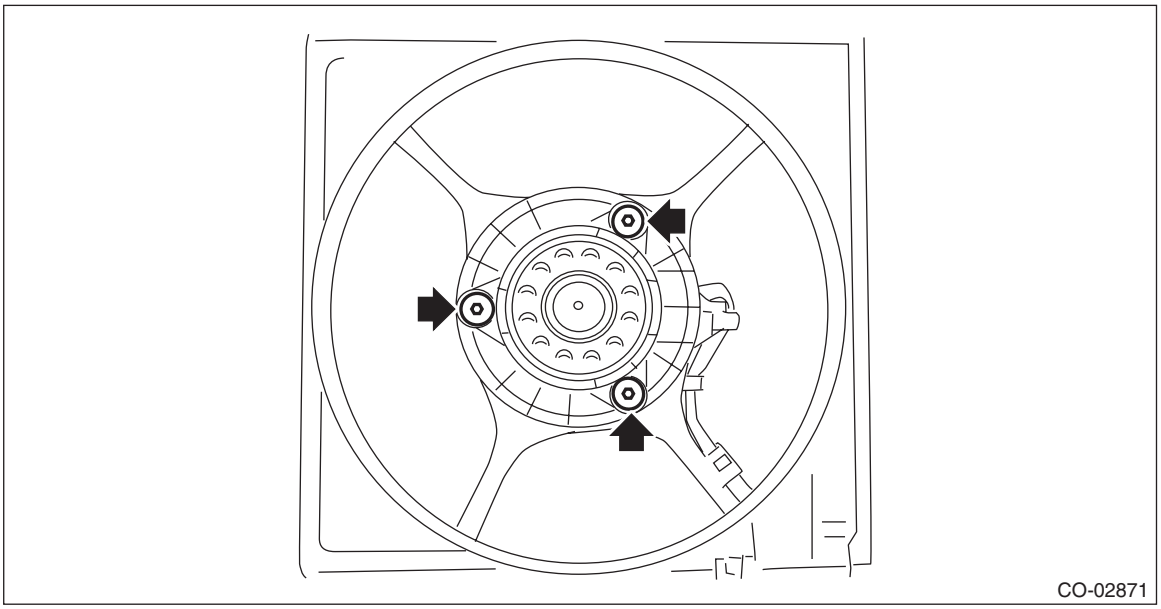

D: ASSEMBLY

Assemble in the reverse order of disassembly.

Tightening torque:
4.41 N·m (0.45 kgf-m, 3.25 ft-lb)

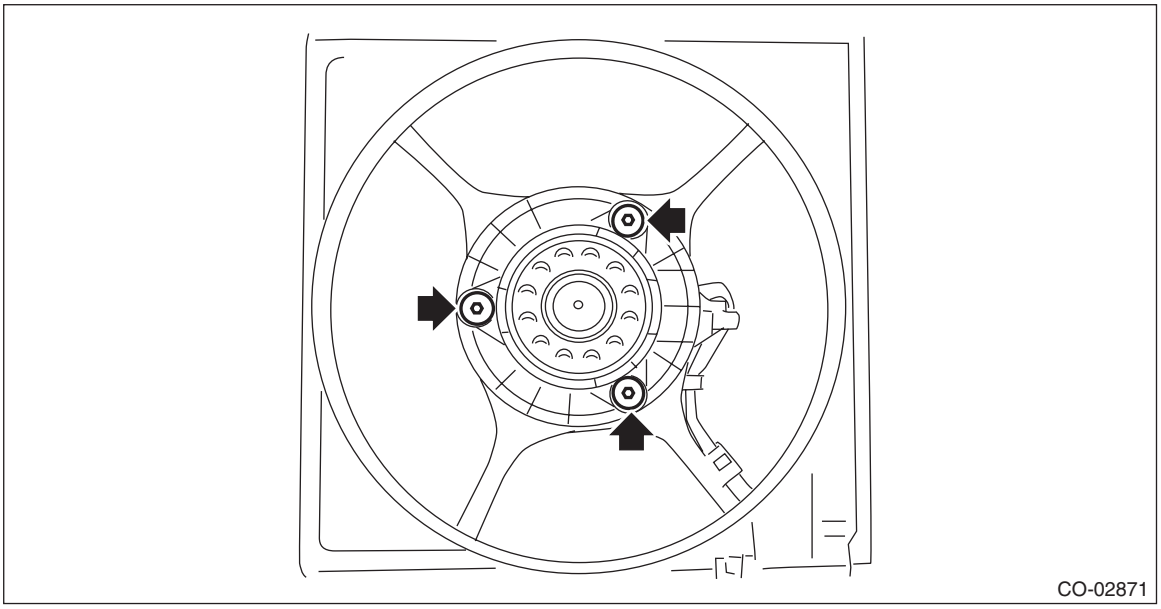

Tightening torque:
3.4 N·m (0.3 kgf-m, 2.5 ft-lb)

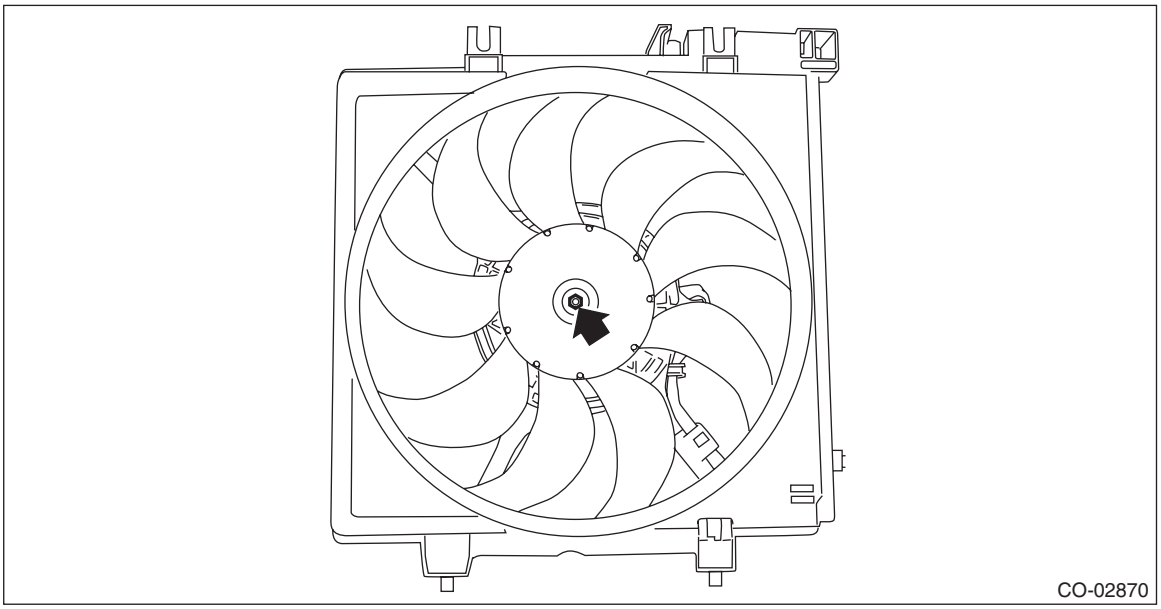

E: INSPECTION

Check that the radiator main fan, radiator main fan shroud and main fan motor assembly do not have deformation, cracks or damage.

10.Radiator Sub Fan and Fan Motor

A: REMOVAL

1) Disconnect the ground cable from battery. <Ref. to NT-5, BATTERY, NOTE, Note.>

NOTE:
For the 12 volt engine restart battery of HEV model, disconnect the ground terminal from 12V engine restart battery sensor.

2) Remove the collector cover. (HEV model)
   (1) Pull up the two points at the front of collector cover (A).
   (2) Pull up the two points at the rear of collector cover (B) while moving them rearward.

NOTE:
Be careful not to contact the fuel delivery tube when moving the collector cover rearward.

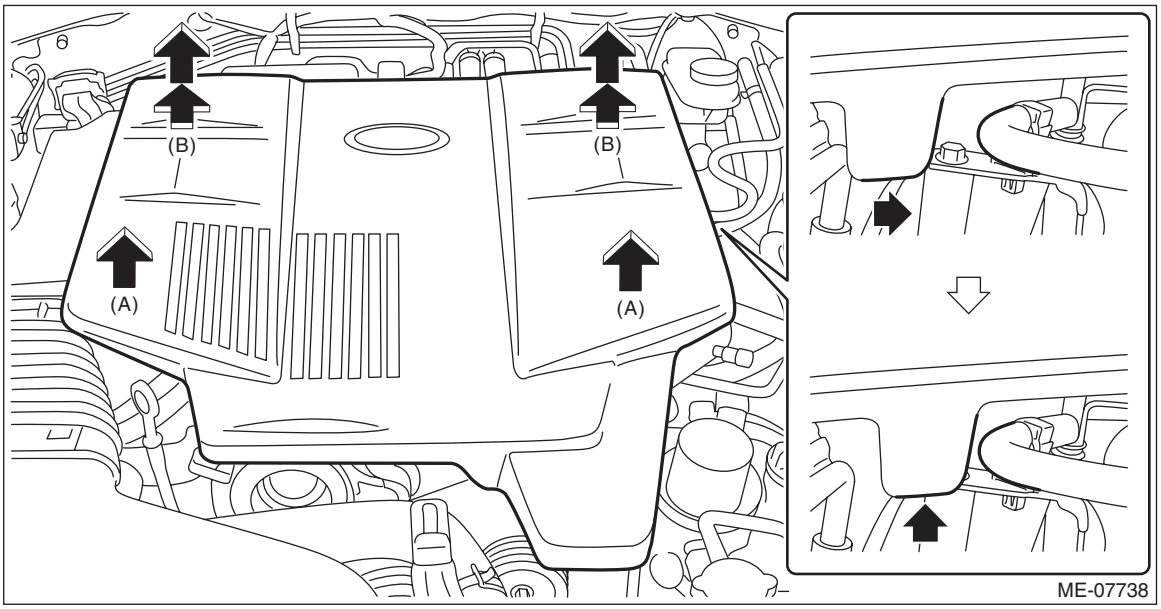

3) Remove the air intake duct. <Ref. to IN(H4DO(w/o HEV))-13, REMOVAL, Air Intake Duct.> <Ref. to IN(H4DO(HEV))-15, REMOVAL, Air Intake Duct.>

4) Disconnect the connector from the sub fan motor assembly.

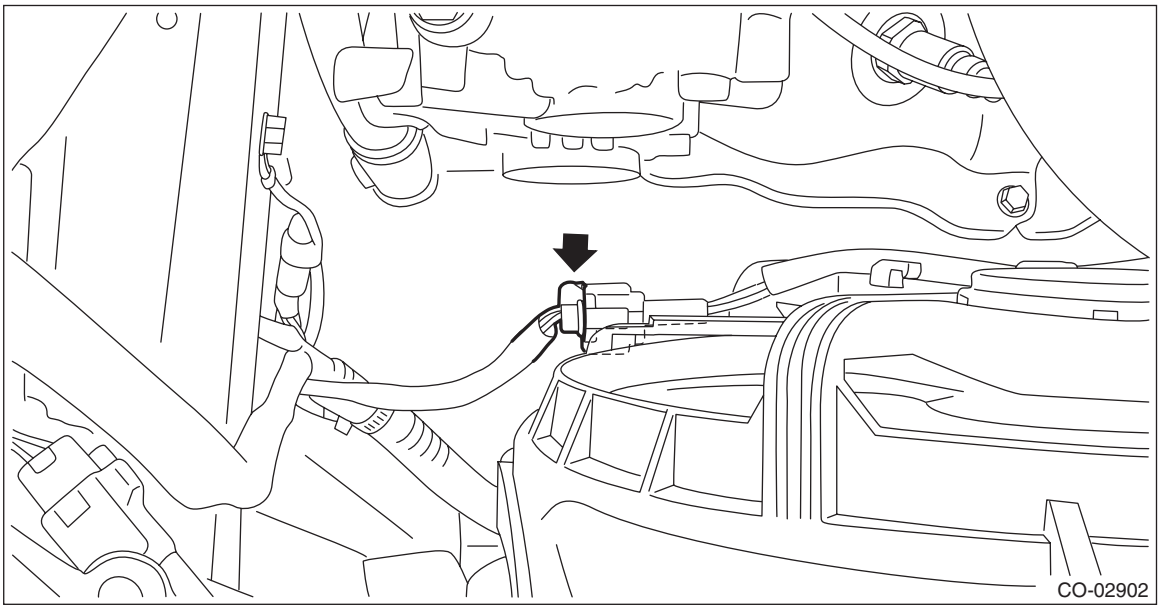

5) Remove the bolts which hold the radiator sub fan shroud onto the radiator.

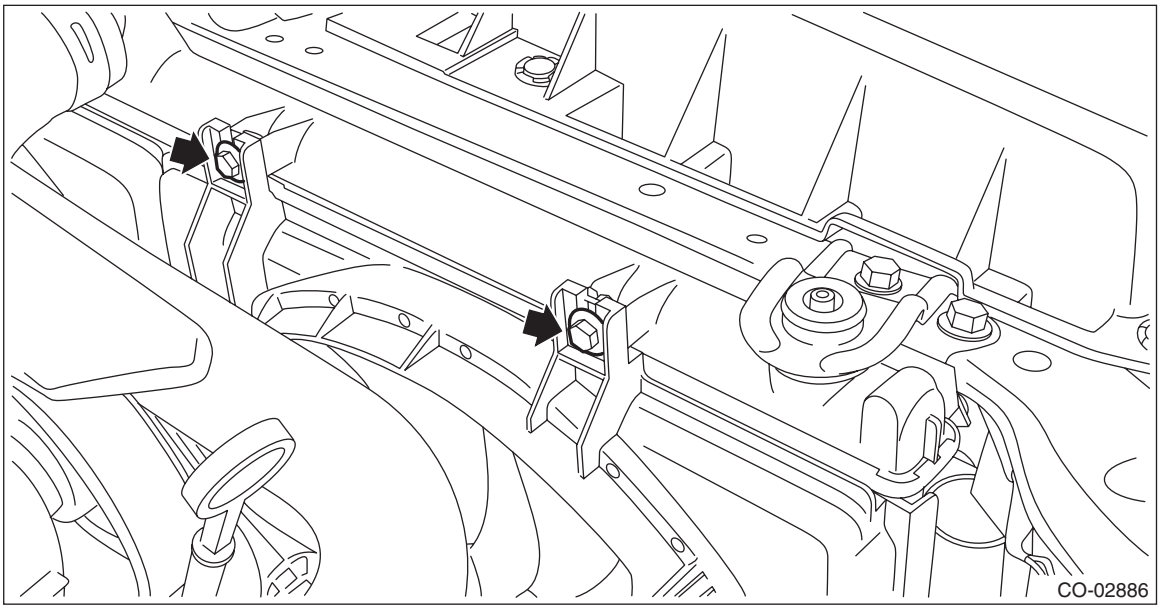

6) Remove the radiator sub fan and fan motor from vehicle.

B: INSTALLATION

CAUTION:
Confirm that the radiator hose is securely connected.
Install in the reverse order of removal.

Tightening torque:
7.5 N·m (0.8 kgf-m, 5.5 ft-lb)

C: DISASSEMBLY

1) Remove the clip which holds the sub fan motor connector onto the radiator sub fan shroud.
2) Disconnect the radiator sub fan from the sub fan motor.

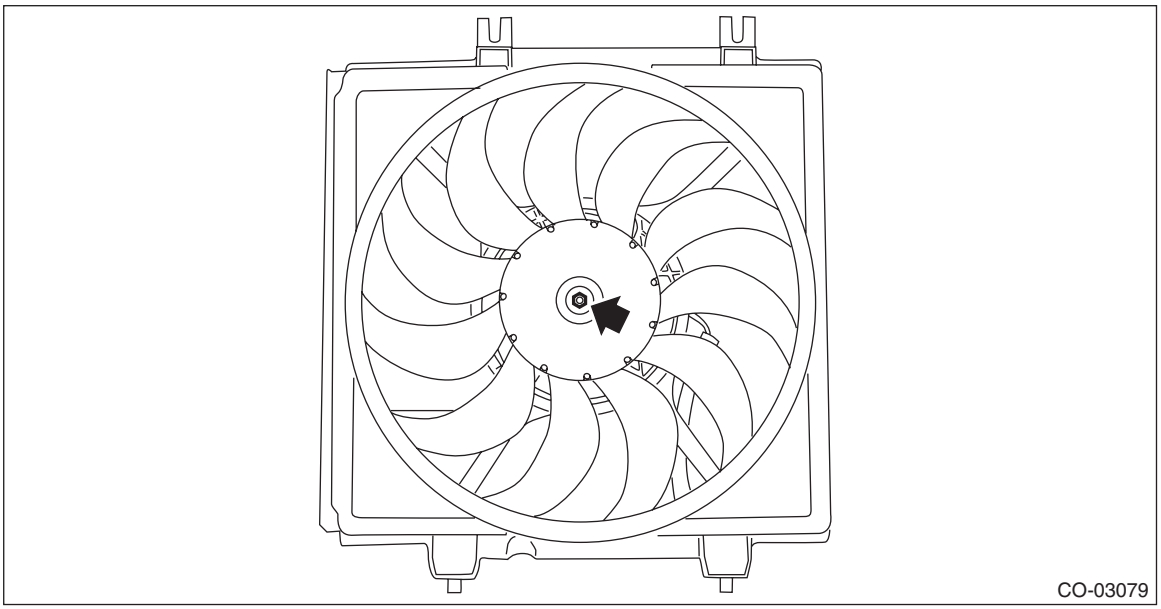

3) Disconnect the sub fan motor from the radiator sub fan shroud.

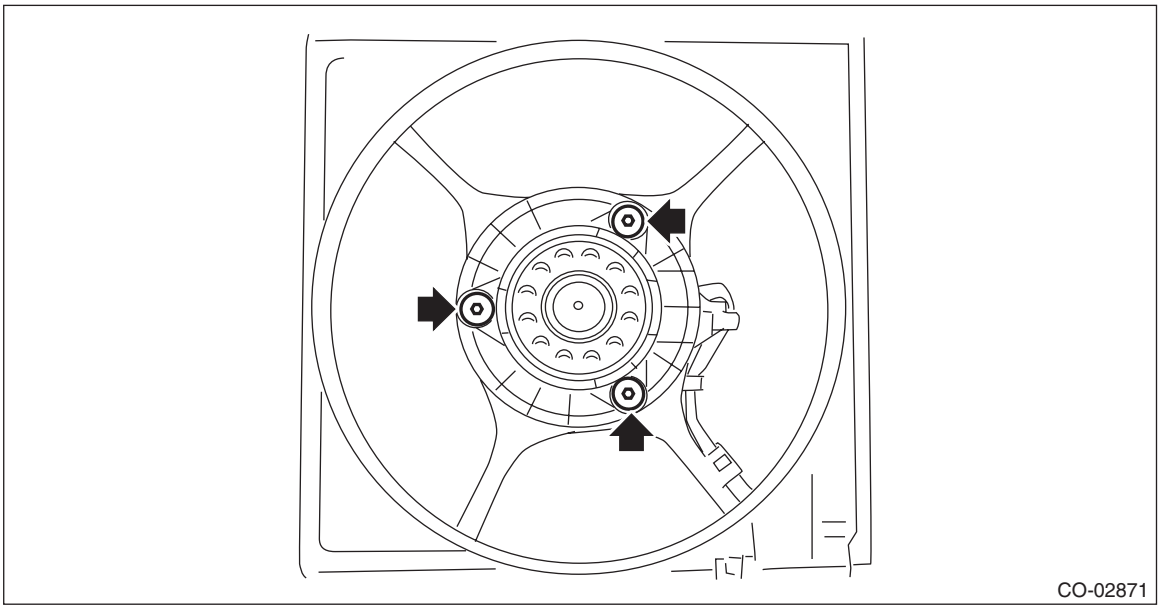

D: ASSEMBLY

Assemble in the reverse order of disassembly.

Tightening torque:
4.41 N·m (0.45 kgf-m, 3.25 ft-lb)

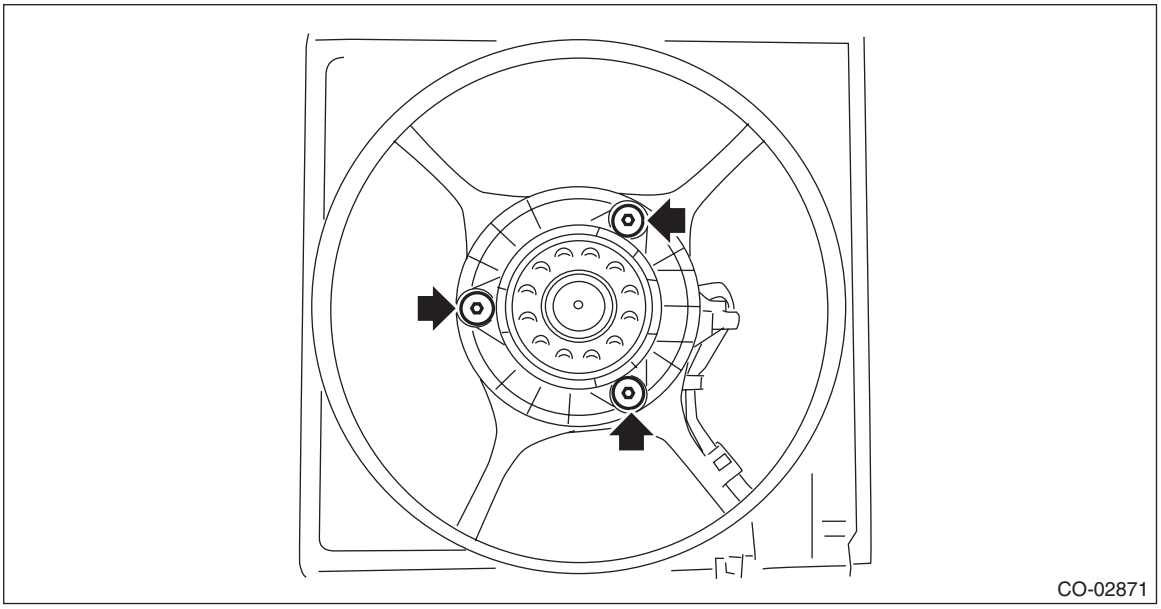

Tightening torque:
3.4 N·m (0.3 kgf-m, 2.5 ft-lb)

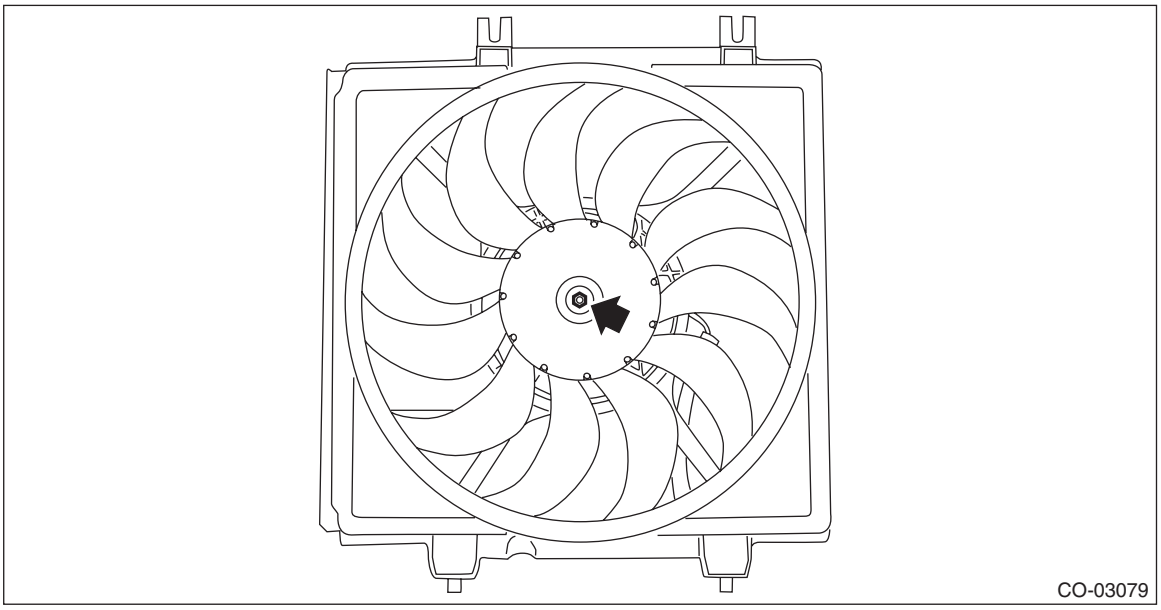

E: INSPECTION

Check that the radiator sub fan, radiator sub fan shroud and sub fan motor assembly do not have deformation, cracks or damage.

11.Reservoir Tank

A: REMOVAL

1) Disconnect the over flow hose (A) connected to the radiator filler neck from the reservoir tank.
2) Pull out the reservoir tank to the arrow direction while pushing the claw (B).

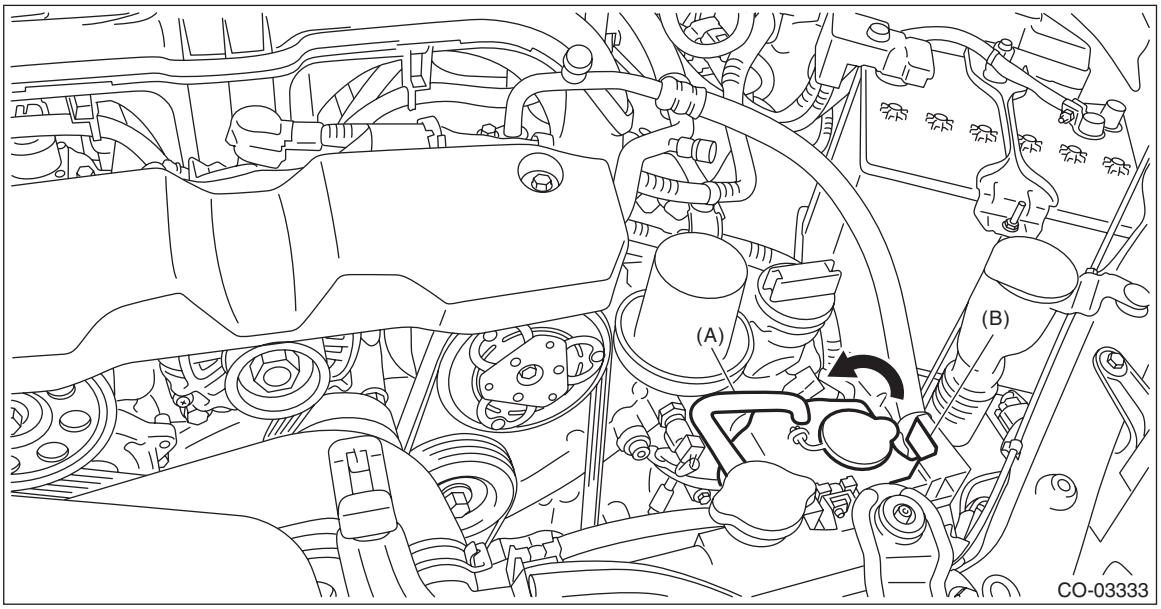

B: INSTALLATION

Install in the reverse order of removal.

C: INSPECTION

1) Check that the reservoir tank does not have deformation, cracks or damage.
2) Make sure the over flow hoses are not cracked, damaged or loose.
3) Make sure the engine coolant level is between “FULL” and “LOW”.

12.Engine Cooling System Trouble in General

A: INSPECTION

Trouble	Possible cause	Corrective action
Over-heating	a. Insufficient engine coolant	Replenish engine coolant, inspect for leakage, and repair it if necessary.
	b. Defective thermostat	Replace.
	c. Malfunction of water pump	Replace.
	d. Clogged engine coolant passage	Clean.
	e. Improper ignition timing	Inspect and repair ignition control system. <Ref. to EN(H4DO w/o HEV)(diag)-2, Basic Diagnostic Procedure.> <Ref. to EN(H4DO HEV)(diag)-2, Basic Diagnostic Procedure.>
	f. Clogged or leaking radiator	Clean, repair or replace.
	g. Defective radiator cap	Replace.
	h. Improper engine oil in engine coolant	Replace the engine coolant. If ineffective, check, repair or replace engine components.
	i. Air/fuel mixture ratio too lean	Inspect and repair the fuel injection system. <Ref. to EN(H4DO w/o HEV)(diag)-2, Basic Diagnostic Procedure.> <Ref. to EN(H4DO HEV)(diag)-2, Basic Diagnostic Procedure.>
	j. Excessive back pressure in exhaust system	Clean or replace.
	k. Insufficient clearance between piston and cylinder	Adjust or replace.
	l. Slipping clutch	Repair or replace.
	m. Dragging brake	Adjust.
	n. Malfunction of radiator fan	Inspect the radiator fan relay, engine coolant temperature sensor or fan motor and replace them.
Over-cooling	a. Ambient temperature extremely low	Partly cover radiator front area.
	b. Defective thermostat	Replace.
Engine coolant leaks	a. Loosened or damaged connecting units on hoses	Repair or replace.
	b. Leakage from water pump	Replace.
	c. Leakage from water pipe	Repair or replace.
	d. Leakage around cylinder head gasket	Retighten cylinder head bolts or replace cylinder head gasket.
	e. Damaged or cracked cylinder head and cylinder block	Repair or replace.
	f. Damaged or cracked thermostat cover	Repair or replace.
	g. Leakage from radiator	Repair or replace.
Noise	a. Defective radiator fan	Replace.
	b. Defective water pump bearing	Replace water pump.
	c. Defective water pump mechanical seal	Replace water pump.

LUBRICATION

LU(H4DO(w/o HEV))

Page

1. General Description 2
2. Oil Pressure System 8
3. Engine Oil 12
4. Oil Pump 15
5. Oil Pan and Strainer 16
6. Oil Pressure Switch 24
7. Engine Oil Filter 28
8. Oil Level Switch 30
9. Engine Lubrication System Trouble in General 74

1. General Description

A: SPECIFICATION

Lubrication method					Forced lubrication
Oil pump	Pump type				Trochoid type
	Number of teeth	Inner rotor			11
		Outer rotor			12
	Outer rotor diameter × Thickness			mm (in)	77 × 12 (3.03 × 0.47)
	Performance (Oil temperature 120°C (248°F))	600 rpm	Discharge pressure	kPa (kg/cm^2, psi)	30 (0.3, 4.3)
			Discharge rate	L (US qt, Imp qt)/min	6 (6.3, 5.3) or more
		6,000 rpm	Discharge pressure	kPa (kg/cm^2, psi)	260 (2.7, 37.7)
			Discharge rate	L (US qt, Imp qt)/min	47 (49.7, 41.4) or more
	Relief valve working pressure (2-step relief)	1st opening pressure		kPa (kg/cm^2, psi)	150 (1.5, 21.7)
		Main opening pressure		kPa (kg/cm^2, psi)	570 (5.8, 82.6)
Oil filter	Filter type				Full-flow filter type
	Filtration area cm^2 (sq in)		Outer diameter: 68 mm (2.68 in) (black)		1,300 (202)
			Outer diameter: 67.4 mm (2.65 in) (blue)		867 (134.3)
	By-pass valve opening pressure			kPa (kg/cm^2, psi)	160 (1.6, 23.2)
	Outer diameter × Width mm (in)		Outer diameter: 68 mm (2.68 in) (black)		68 × 85 (2.68 × 3.35)
			Outer diameter: 67.4 mm (2.65 in) (blue)		67.4 × 87.1 (2.65 × 3.43)
	Installation screw specifications				M 20 × 1.5
Oil pressure switch	Type				Immersed contact point type
	Operating voltage				12 V
	Warning light operating pressure			kPa (kg/cm^2, psi)	14.7 (0.1, 2.1)
	Proof pressure			kPa (kg/cm^2, psi)	981 (10, 142.2)
Engine oil	Total capacity (at overhaul)			L (US qt, Imp qt)	5.7 (6.0, 5.0)
	When replacing engine oil and oil filter			L (US qt, Imp qt)	4.8 (5.1, 4.2)
	When replacing engine oil only			L (US qt, Imp qt)	4.6 (4.9, 4.0)

Specified oil:

CAUTION:
- **Use 0W-20 (synthetic oil).**
- **It is acceptable to fill an engine with oil of another brand when replacing the oil, but make sure to use the following engine oil specified by Subaru.**

NOTE:
The proper viscosity oil helps the engine maintain its ideal temperature, and cranking speed increased by reducing viscosity friction in hot condition.

Engine oil standard		SAE viscosity No.
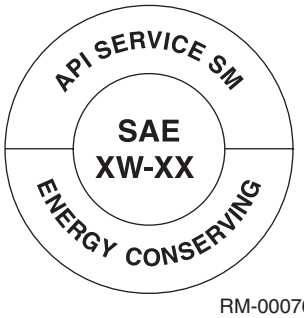 RM-00076 Those with the API standard SM "Energy Conserving" or SN "Resource Conserving" logo.	or	 RM-00002 Those with the ILSAC standard GF-4 or GF-5 "starburst mark" displayed on top of the container.	0W-20 (synthetic oil)

B: COMPONENT

1. OIL PAN AND STRAINER

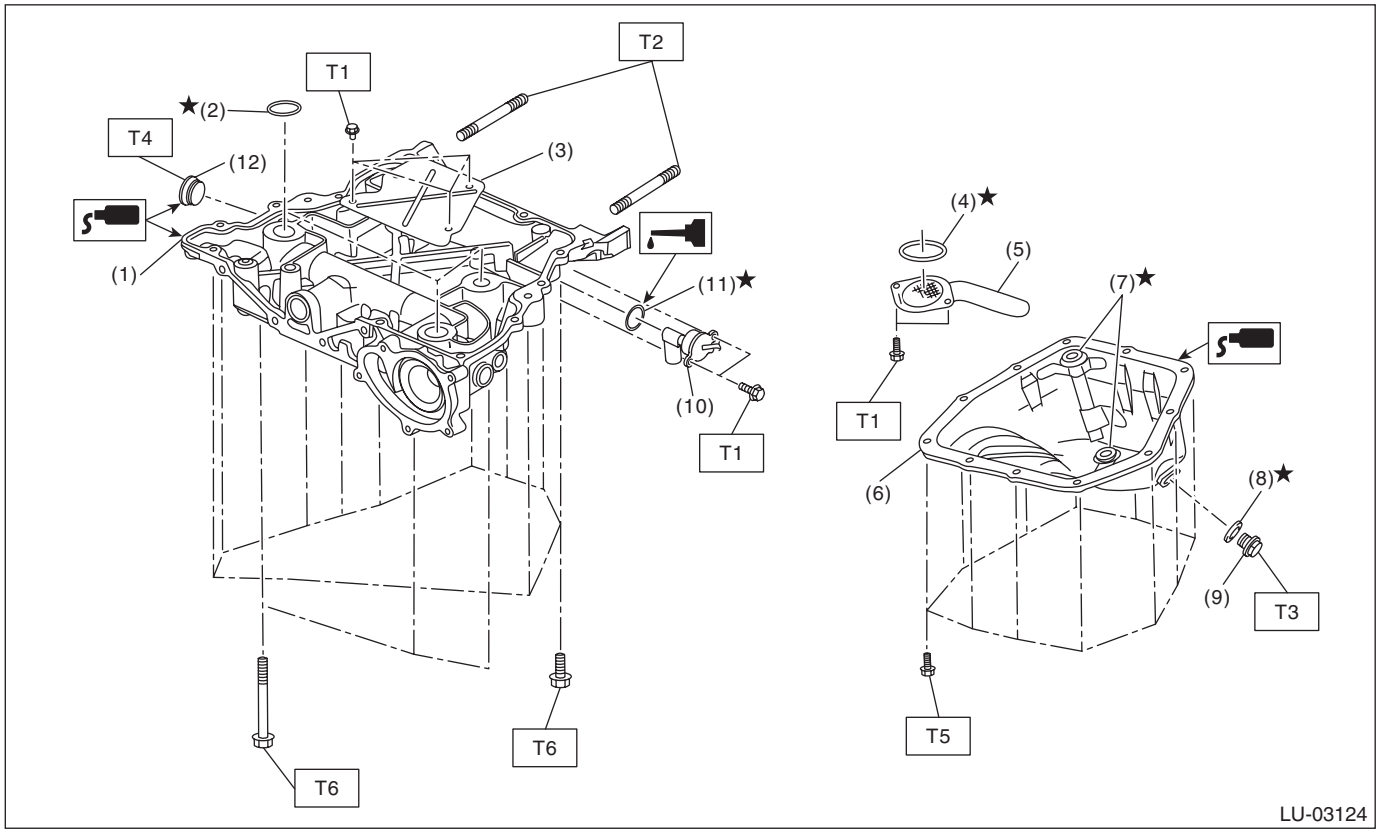

(1) Oil pan upper
(2) O-ring
(3) Baffle plate
(4) O-ring
(5) Oil strainer
(6) Oil pan
(7) Oil pan seal ring
(8) Drain plug gasket
(9) Drain plug
(10) Oil level switch
(11) O-ring
(12) Plug

Tightening torque: N·m (kgf-m, ft-lb)

T1: 6.4 (0.7, 4.7)
T2: 10 (1.0, 7.4)
T3: 41.7 (4.3, 30.8)
T4: 90 (9.2, 66.4)
T5: <Ref. to LU(H4DO(w/o HEV))-18, OIL PAN, INSTALLATION, Oil Pan and Strainer.>
T6: <Ref. to LU(H4DO(w/o HEV))-20, OIL PAN UPPER, INSTALLATION, Oil Pan and Strainer.>

2. OIL FILTER AND OIL LEVEL GAUGE

- Gasoline engine model

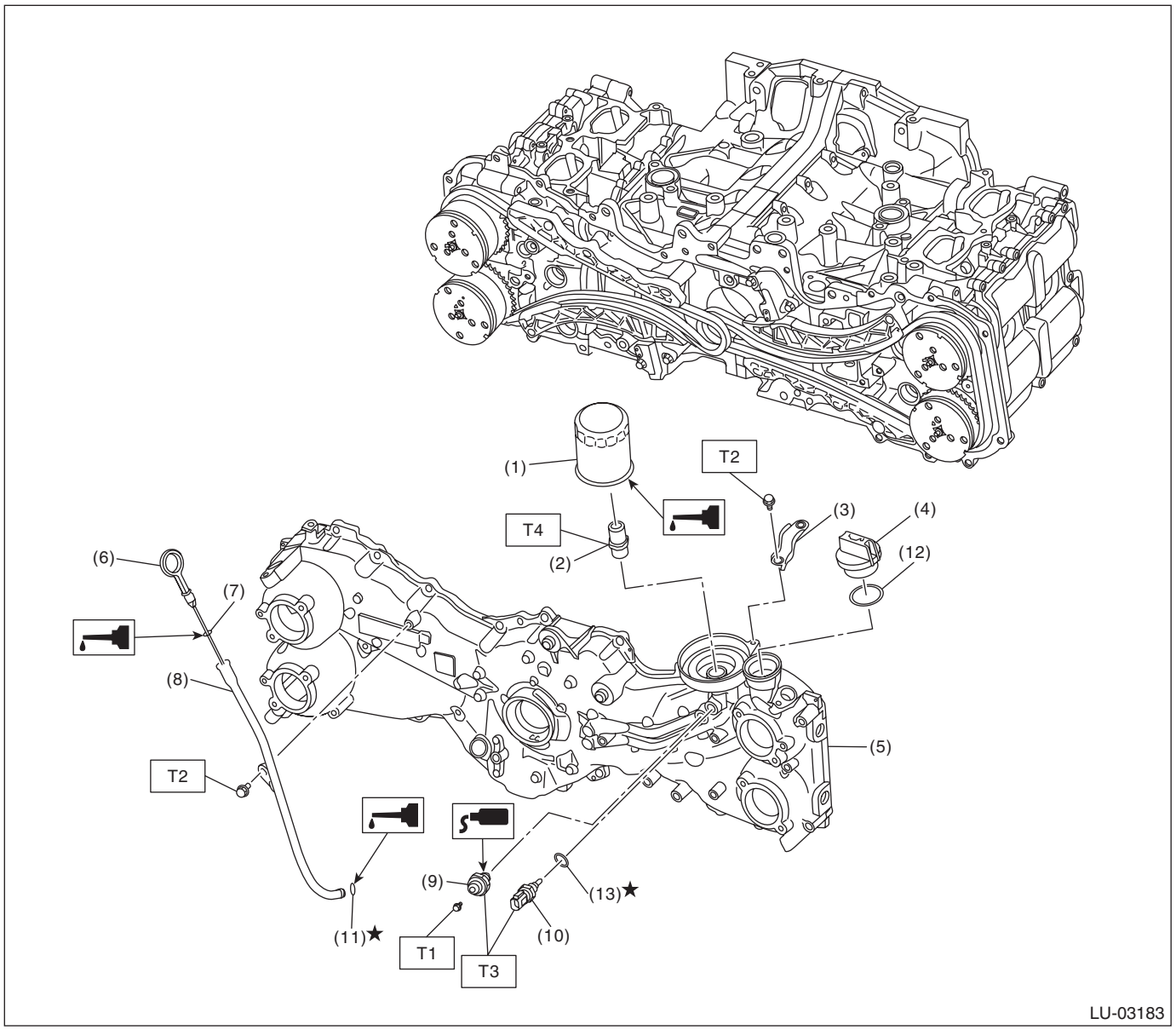

(1)	Oil filter	(8)	Oil level gauge guide
(2)	Oil pump union	(9)	Oil pressure switch
(3)	Generator cord stay	(10)	Engine oil temperature sensor
(4)	Oil filler cap	(11)	O-ring
(5)	Chain cover	(12)	O-ring
(6)	Oil level gauge	(13)	Gasket
(7)	O-ring		

Tightening torque: N·m (kgf-m, ft-lb)

T1: 1.5 (0.2, 1.1)

T2: 6.4 (0.7, 4.7)

T3: 18 (1.8, 13.3)

T4: 45 (4.6, 33.2)

- HEV model

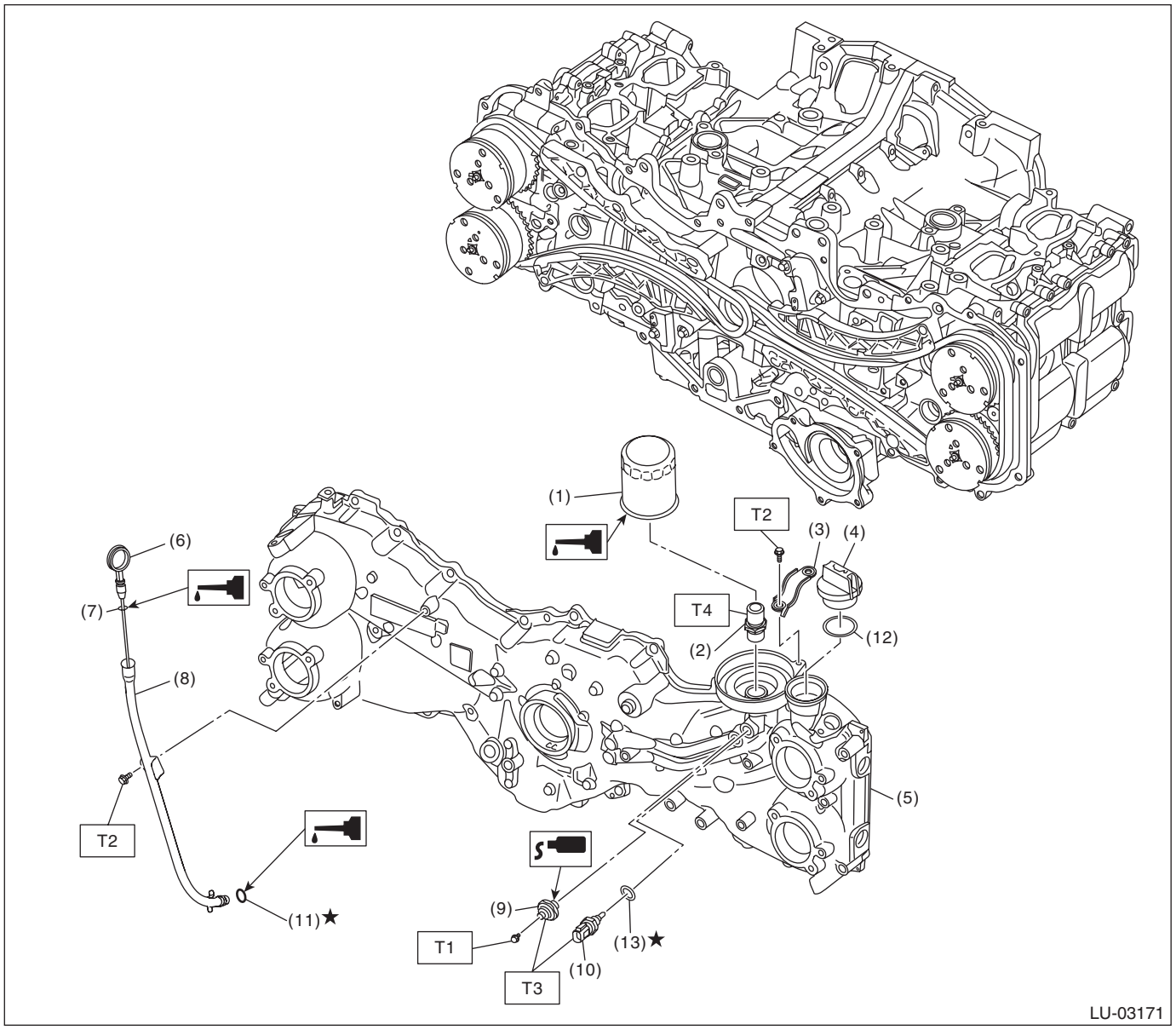

(1)	Oil filter	(8)	Oil level gauge guide	
(2)	Oil pump union	(9)	Oil pressure switch	
(3)	Battery cable stay	(10)	Engine oil temperature sensor	
(4)	Oil filler cap	(11)	O-ring	
(5)	Chain cover	(12)	O-ring	
(6)	Oil level gauge	(13)	Gasket	
(7)	O-ring			

Tightening torque: N·m (kgf-m, ft-lb)
T1: 1.5 (0.2, 1.1)
T2: 6.4 (0.7, 4.7)
T3: 18 (1.8, 13.3)
T4: 45 (4.6, 33.2)

C: CAUTION

- Prior to starting work, pay special attention to the following:
  1. Always wear work clothes, a work cap, and protective shoes. Additionally, wear a helmet, protective goggles, etc. if necessary.
  2. Protect the vehicle using a seat cover, fender cover, etc.
  3. Prepare the service tools, clean cloth, containers to catch grease and oil, etc.
- Prepare a container and cloth when performing work which oil possibly spills. If oil spills, wipe it off immediately to prevent from penetrating into floor or flowing out for environmental protection.
- Vehicle components are extremely hot immediately after driving. Be wary of receiving burns from heated parts.
- When performing a repair, identify the cause of trouble and avoid unnecessary removal, disassembly and replacement.
- Before disconnecting connectors of sensors or units, be sure to disconnect the ground cable from battery.
- Always use the jack-up point when the shop jacks or rigid racks are used to support the vehicle.
- Remove contamination including dirt and corrosion before removal, installation, disassembly or assembly.
- Keep the removed parts in order and protect them from dust and dirt.
- All removed parts, if to be reused, should be reinstalled in the original positions with attention to the correct directions, etc.
- Bolts, nuts and washers should be replaced with new parts as required.
- Be sure to tighten the fasteners including bolts and nuts to the specified torque.
- If the engine oil is spilt over exhaust pipe or the under cover, wipe it off with cloth to avoid emitting smoke or causing a fire.
- Follow all government and local regulations concerning disposal of refuse when disposing of oil.

D: PREPARATION TOOL

1. SPECIAL TOOL

ILLUSTRATION	TOOL NUMBER	DESCRIPTION	REMARKS
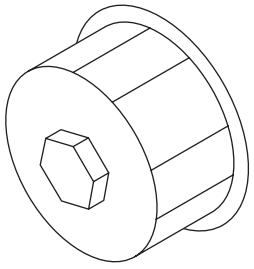 ST18332AA000	18332AA000	OIL FILTER WRENCH	Used for removing and installing oil filter (black). (Outer diameter: 68 mm (2.68 in)).

2. GENERAL TOOL

TOOL NAME	REMARKS
Oil filter wrench (65/67 mm 14 Flutes)	Used for removing and installing oil filter (Blue). (outer diameter: 67.4 mm (2.65 in))
Circuit tester	Used for measuring resistance and voltage.

2. Oil Pressure System

A: WIRING DIAGRAM

Oil pressure warning system <Ref. to WI(w/o HEV)-114, WIRING DIAGRAM, Oil Pressure Warning Light System.> <Ref. to WI(HEV)-174, WIRING DIAGRAM, Oil Pressure Warning Light System.>

- Gasoline engine model

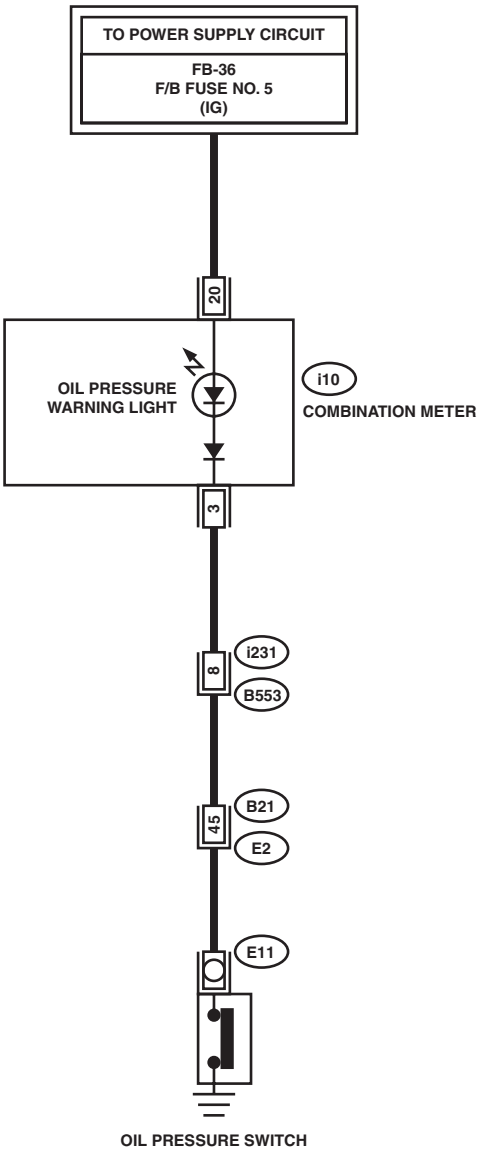

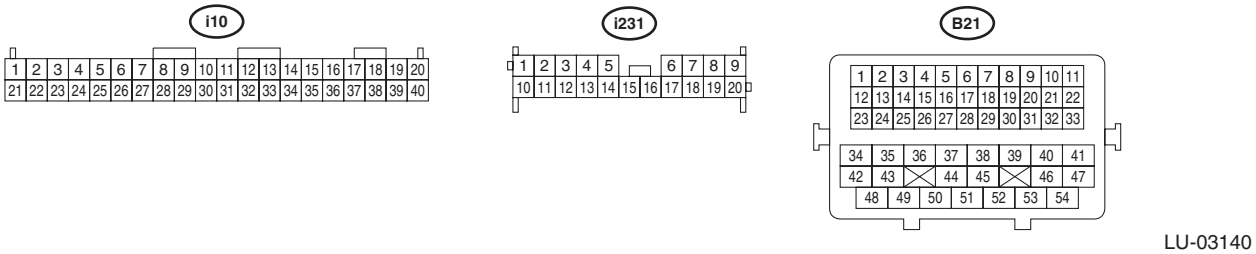

LU-03140

- HEV model

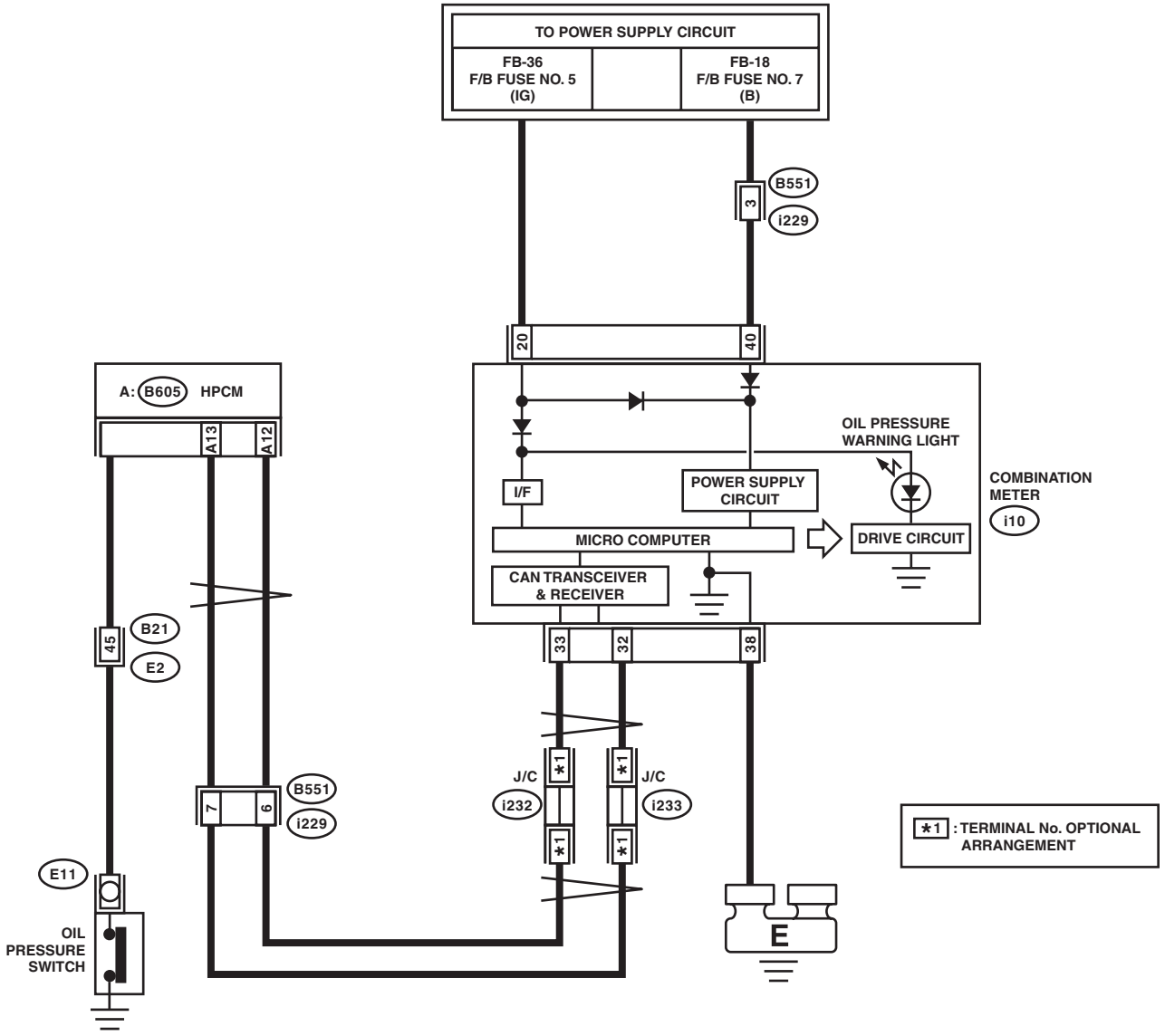

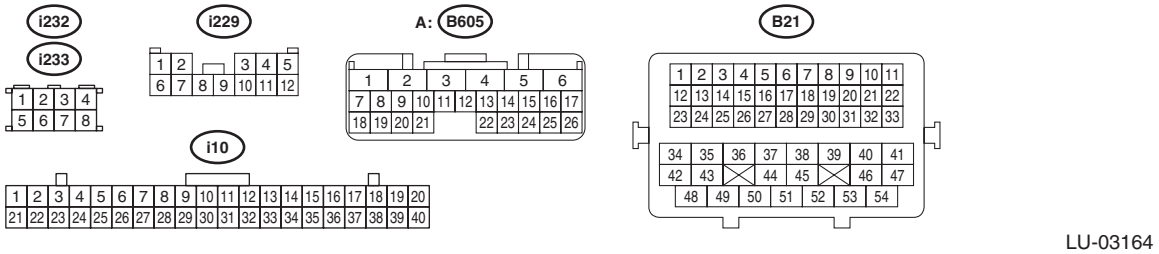

LU-03164

B: INSPECTION

1. GASOLINE ENGINE MODEL

	Step	Check	Yes	No
1	**CHECK COMBINATION METER.** 1) Turn the ignition switch to ON. (engine OFF) 2) Check the warning light in the combination meter.	Does the warning light illuminate?	Go to step **2**.	Repair or replace the combination meter. <Ref. to IDI-10, INSPECTION, Combination Meter System.>
2	**CHECK POWER SUPPLY TO OIL PRESSURE SWITCH.** 1) Turn the ignition switch to OFF. 2) Disconnect the terminal from oil pressure switch. 3) Turn the ignition switch to ON. 4) Measure the voltage between oil pressure switch harness terminal and chassis ground. ***Terminals*** ***(E11) No. 1 (+) — Chassis ground (–):***	Is the voltage 10 V or more?	Replace the oil pressure switch. <Ref. to LU(H4DO(w/o HEV))-24, Oil Pressure Switch.>	Go to step **3**.
3	**CHECK COMBINATION METER.** 1) Turn the ignition switch to OFF. 2) Remove the combination meter. 3) Measure the resistance of combination meter. ***Terminals*** ***No. 20 — No. 3:***	Is the resistance less than 10 Ω?	Repair the harness and connector. NOTE: In this case, repair the following item: • Open circuit of harness between combination meter and oil pressure switch • Poor contact of combination meter connector • Poor contact of oil pressure switch terminal • Poor contact of coupling connector	Repair or replace the combination meter. <Ref. to IDI-10, INSPECTION, Combination Meter System.>

2. HEV MODEL

	Step	Check	Yes	No
1	**CHECK DTC.**	Is DTC of engine, HEV and CAN communication line displayed? <Ref. to HEV(diag)-23, Read Diagnostic Trouble Code (DTC).> <Ref. to IDI(diag)-14, Read Diagnostic Trouble Code (DTC).> <Ref. to LAN(w/o HEV)(diag)-23, Read Diagnostic Trouble Code (DTC).>	Check the appropriate DTC using the "List of Diagnostic Trouble Code (DTC)". <Ref. to HEV(diag)-74, List of Diagnostic Trouble Code (DTC).> <Ref. to IDI(diag)-23, List of Diagnostic Trouble Code (DTC).> <Ref. to LAN(w/o HEV)(diag)-50, List of Diagnostic Trouble Code (DTC).>	Go to step **2**.
2	**CHECK COMBINATION METER.** 1) Turn the ignition switch to ON. (engine OFF) 2) Check the warning light in the combination meter.	Does the warning light illuminate?	Go to step **3**.	Repair or replace the combination meter. <Ref. to IDI-10, INSPECTION, Combination Meter System.>
3	**CHECK POWER SUPPLY TO OIL PRESSURE SWITCH.** 1) Turn the ignition switch to OFF. 2) Disconnect the terminal from oil pressure switch. 3) Turn the ignition switch to ON. 4) Measure the voltage between oil pressure switch harness terminal and chassis ground. ***Terminals*** ***(E11) No. 1 (+) — Chassis ground (–):***	Is the voltage 10 V or more?	Replace the oil pressure switch. <Ref. to LU(H4DO(w/o HEV))-24, Oil Pressure Switch.>	Go to step **4**.
4	**CHECK COMBINATION METER.** Perform the self-diagnosis of combination meter to check if there are any faults in the combination meter. <Ref. to IDI-7, OPERATION, Combination Meter System.>	Is combination meter OK?	Repair the harness and connector. NOTE: In this case, repair the following item: • Open circuit of harness between hybrid powertrain control module and oil pressure switch • Poor contact of oil pressure switch terminal • Poor contact of coupling connector	Replace the combination meter. <Ref. to IDI-16, REMOVAL, Combination Meter.>

3. Engine Oil

A: INSPECTION

CAUTION:
If the engine oil is spilt over exhaust pipe or the under cover, wipe it off with cloth to avoid emitting smoke or causing a fire.

1) Park the vehicle on a level surface.
2) Turn the ignition switch to OFF.
3) Remove the oil level gauge and wipe away the oil.
4) Reinsert the oil level gauge all the way. Be sure that the oil level gauge is correctly inserted and properly orientated.
5) Pull out the oil level gauge again, and check both sides of the oil level gauge. Use a lower side to determine the engine oil level. If the engine oil level is below “L” line, check for oil leakage from engine and add oil to bring the level up to “F” line.
6) Start the engine to circulate the oil in engine.
7) After turning off the engine (ignition OFF), wait a few minutes for the oil to return to the oil pan before checking the level.

NOTE:
- To prevent overfilling of engine oil, do not add oil above “F” line when the engine is cold.
- As the oil level gauge is used for daily maintenance, “F” line and “L” line is set assuming that the engine is cold.

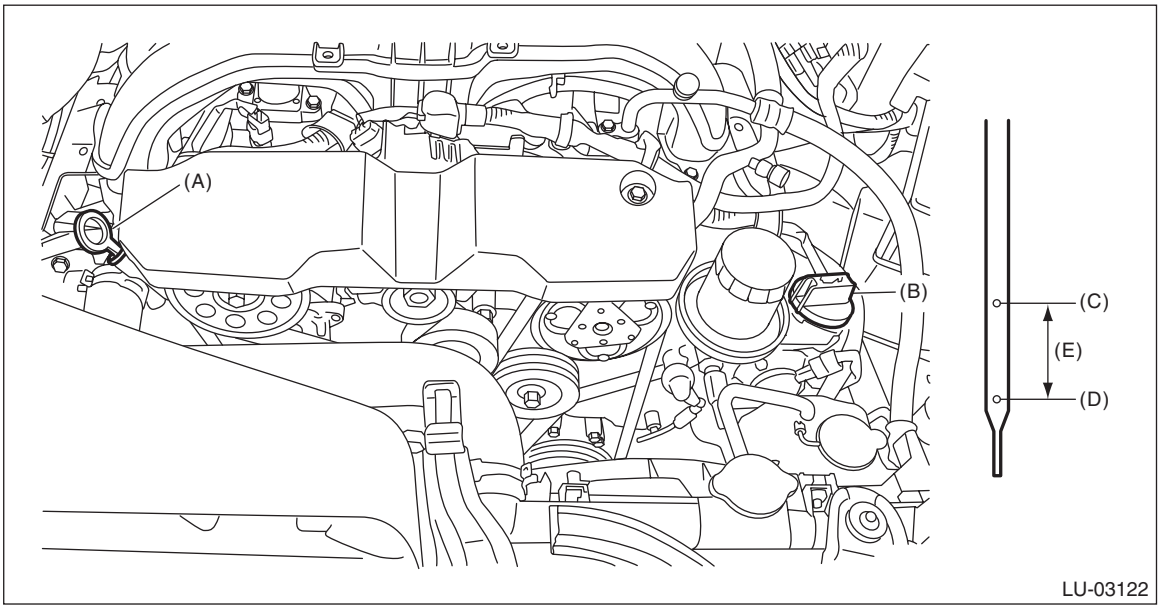

(A) Oil level gauge
(B) Oil filler cap
(C) “F” line
(D) “L” line
(E) Approx. 1.0 L (1.1 US qt, 0.9 Imp qt)

B: REPLACEMENT

CAUTION:
If the engine oil is spilt over exhaust pipe or the under cover, wipe it off with cloth to avoid emitting smoke or causing a fire.

1) Turn the ignition switch to OFF.
2) Open the oil filler cap for quick draining of engine oil.
3) Lift up the vehicle.
4) Drain engine oil by loosening the drain plug.

NOTE:
Prepare the container for draining of engine oil.

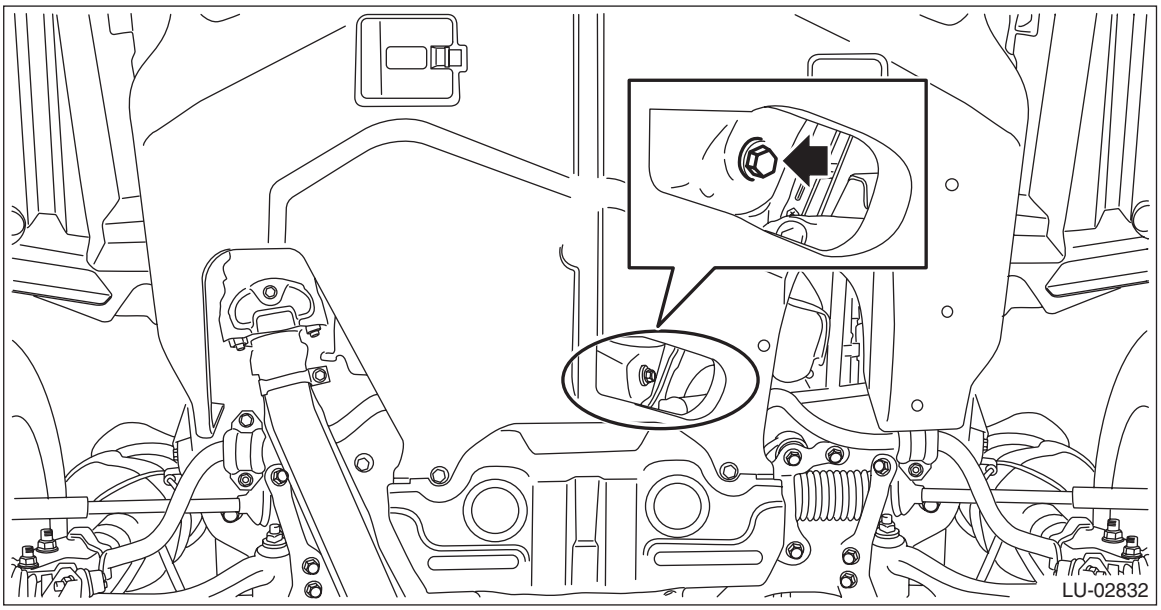

5) After draining the engine oil, tighten the engine oil drain plug.

NOTE:
Use a new drain plug gasket.

Tightening torque:
41.7 N·m (4.3 kgf-m, 30.8 ft-lb)

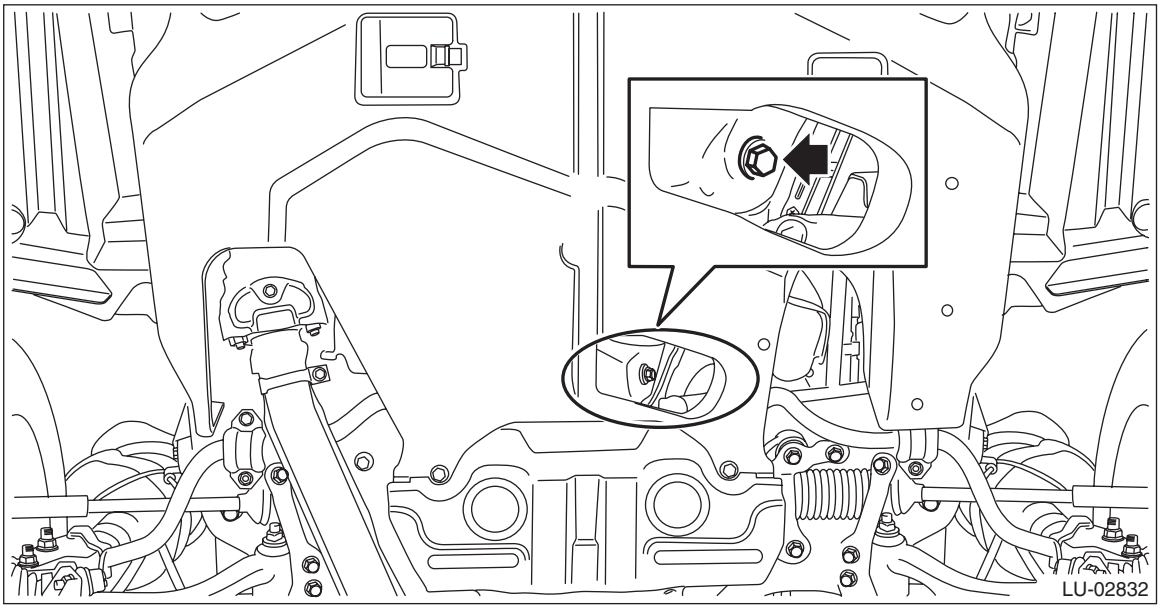

6) Lower the vehicle.

7) Select engine oil of adequate quality and viscosity and fill it through the chain cover to the “F” line on the oil level gauge. Make sure that the vehicle is parked on a level surface when checking oil level.

Recommended oil:

Refer to “SPECIFICATION” for recommended oil. <Ref. to LU(H4DO(w/o HEV))-2, SPECIFICATION, General Description.>

Engine oil capacity:

Refer to “SPECIFICATION” for engine oil capacity. <Ref. to LU(H4DO(w/o HEV))-2, SPECIFICATION, General Description.>

8) Close the oil filler cap.

9) Start the engine to circulate the oil in engine.

10) Stop the engine (ignition OFF) and pull out the oil level gauge again, and check both sides of the oil level gauge. Use a lower side to check the engine oil level. If necessary, add engine oil up to the “F” line on oil level gauge.

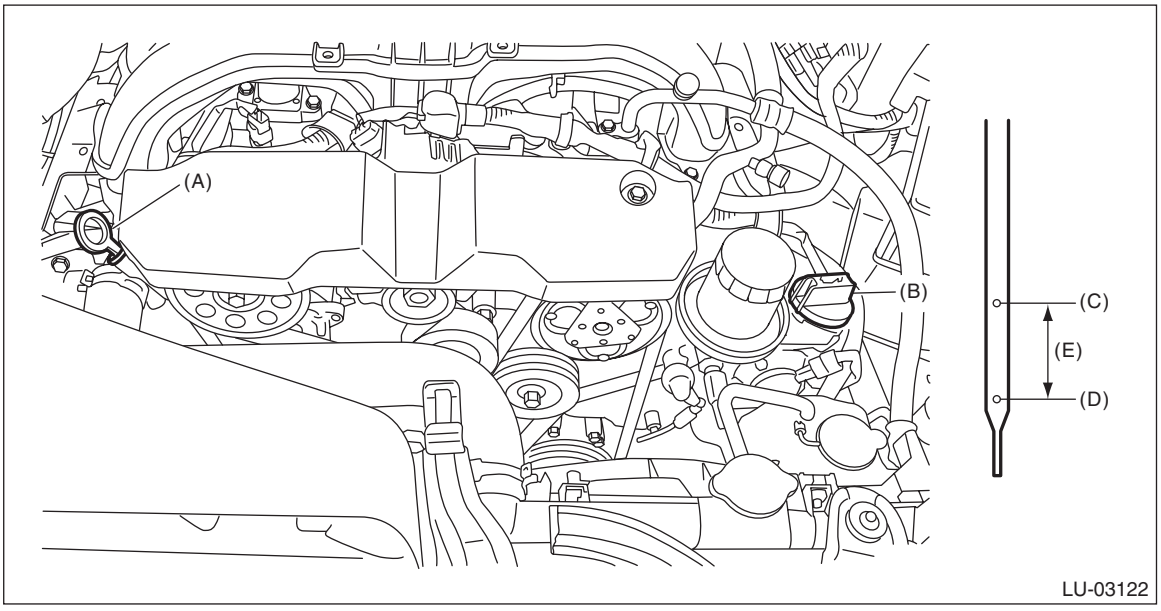

(A) Oil level gauge
(B) Oil filler cap
(C) “F” line
(D) “L” line
(E) Approx. 1.0 L (1.1 US qt, 0.9 Imp qt)

4. Oil Pump

A: SPECIFICATION

The oil pump cannot be disassembled.
Refer to “Chain Cover” for removal and installation procedures. <Ref. to ME(H4DO(w/o HEV))-144, REMOVAL, Chain Cover.> <Ref. to ME(H4DO(w/o HEV))-151, INSTALLATION, Chain Cover.>

5. Oil Pan and Strainer

A: REMOVAL

1. OIL PAN

1) Disconnect the ground cable from battery. <Ref. to NT-5, BATTERY, NOTE, Note.>

NOTE:
For the 12 volt engine restart battery of HEV model, disconnect the ground terminal from 12V engine restart battery sensor.
2) Lift up the vehicle.
3) Remove the under cover. <Ref. to EI-29, REMOVAL, Front Under Cover.>
4) Drain the engine oil. <Ref. to LU(H4DO(w/o HEV))-13, REPLACEMENT, Engine Oil.>
5) Remove the front exhaust pipe. <Ref. to EX(H4DO(w/o HEV))-6, REMOVAL, Front Exhaust Pipe.>
6) Remove the bolts which secure oil pan to oil pan upper.

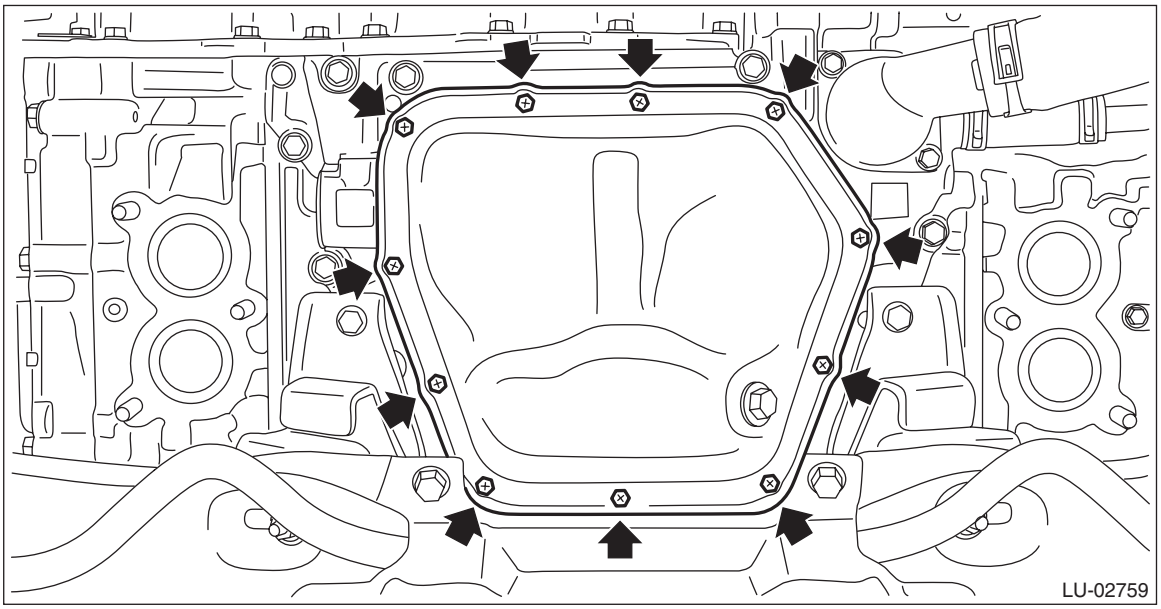

7) Insert an oil pan cutter blade into the gap between oil pan upper and oil pan, and remove the oil pan.

CAUTION:
Do not use a screwdriver or similar tool in place of oil pan cutter.

2. OIL PAN UPPER

1) Remove the engine from the vehicle. <Ref. to ME(H4DO(w/o HEV))-55, REMOVAL, Engine Assembly.>
2) Remove the water pump. <Ref. to CO(H4DO(w/o HEV))-19, REMOVAL, Water Pump.>
3) Remove the thermostat cover. <Ref. to CO(H4DO(w/o HEV))-64, REMOVAL, Thermostat.>
4) Remove the water pipe assembly. <Ref. to CO(H4DO(w/o HEV))-24, REMOVAL, Water Pipe Assembly.>
5) Remove the chain cover. <Ref. to ME(H4DO(w/o HEV))-144, REMOVAL, Chain Cover.>
6) Remove the oil pan. <Ref. to LU(H4DO(w/o HEV))-16, OIL PAN, REMOVAL, Oil Pan and Strainer.>
7) Remove clip (A) from the oil pan upper, and remove the oil level switch.

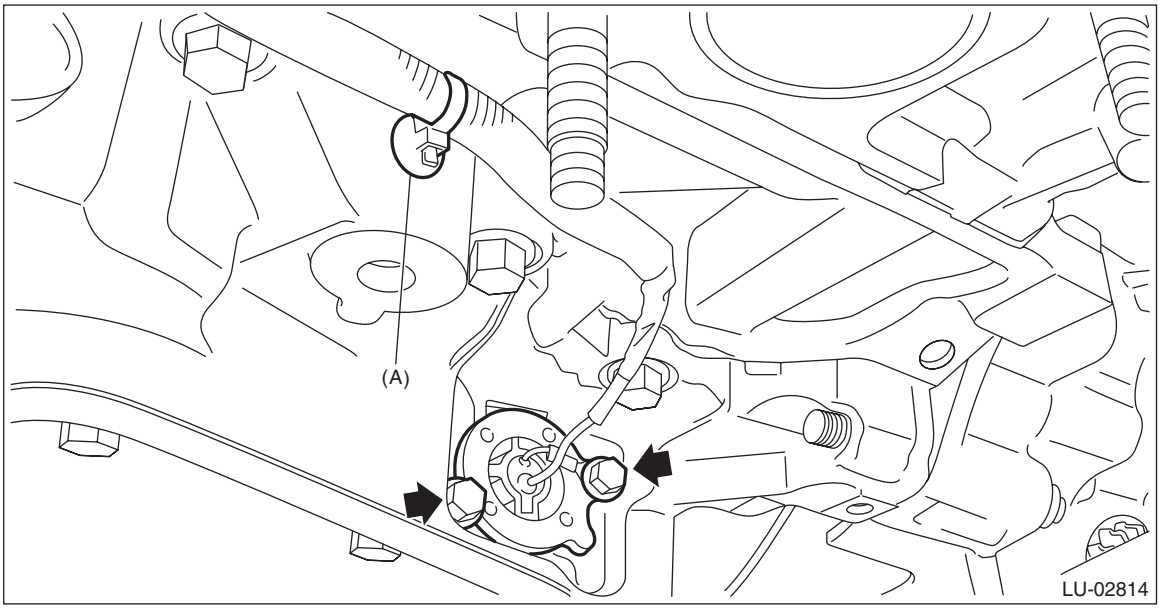

8) Remove the bolts which secure oil pan upper to cylinder block, and remove the oil pan upper.

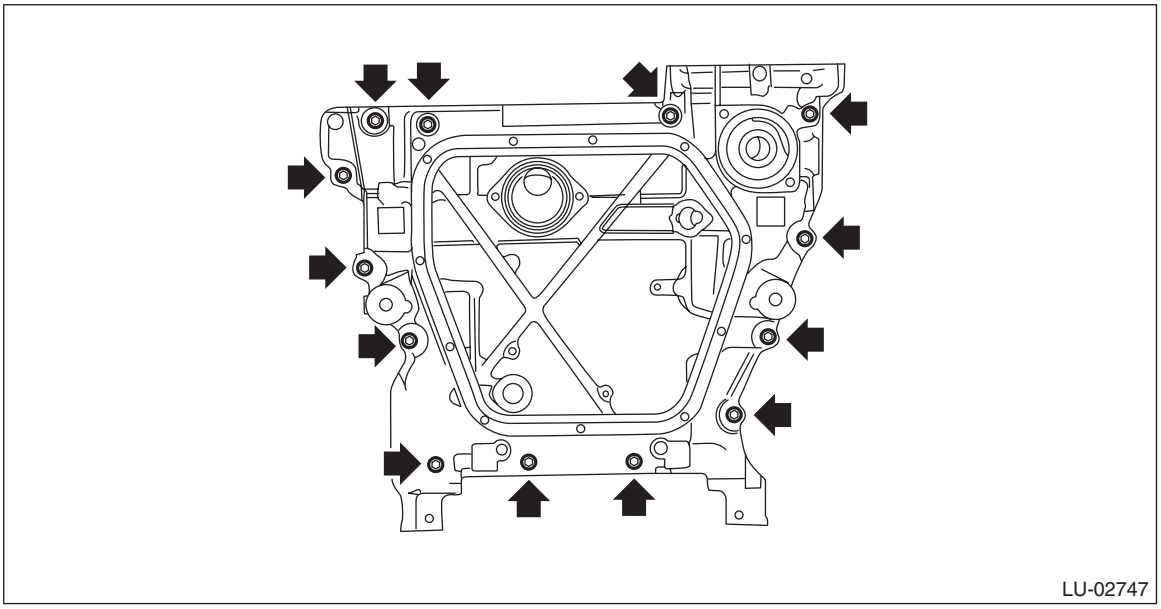

9) Remove the baffle plate from the oil pan upper.
10) Remove the oil strainer from the oil pan upper.
11) Remove stud bolts from the oil pan upper.

12) Remove the plug from the oil pan upper.

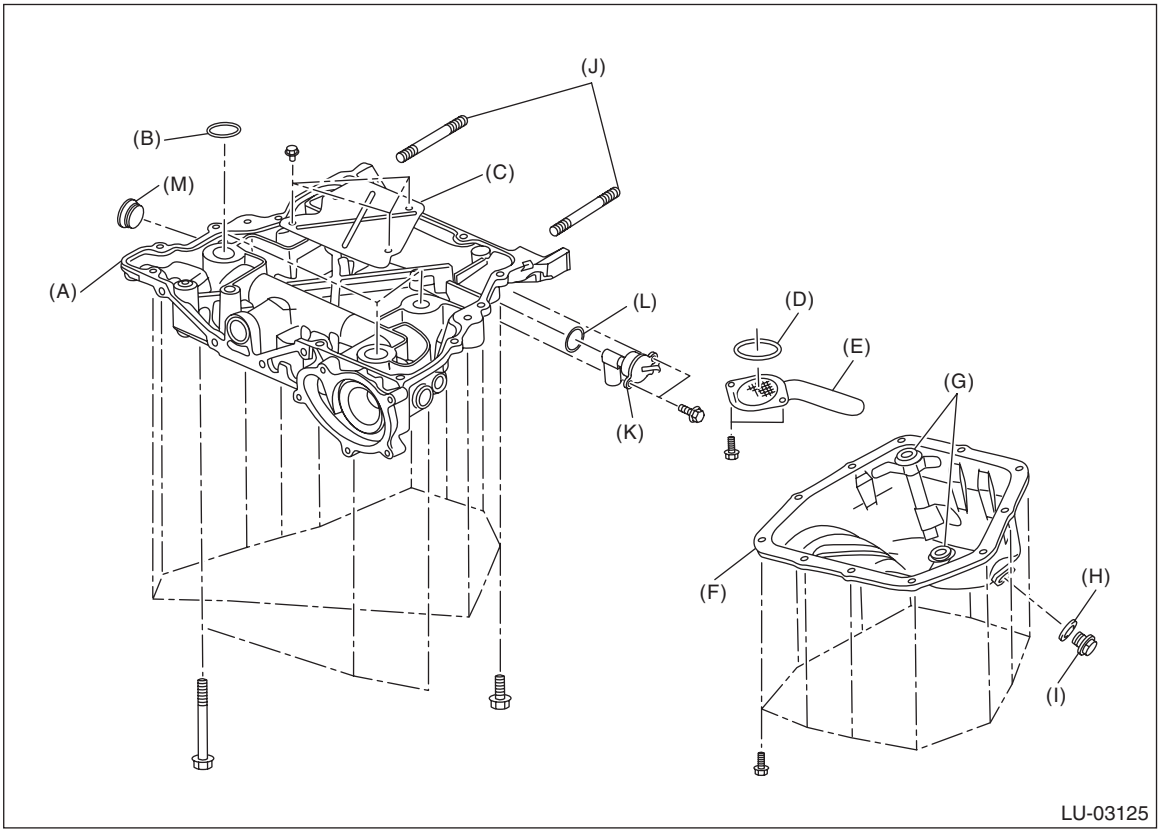

(A)	Oil pan upper	(B)	O-ring	(C)	Baffle plate
(D)	O-ring	(E)	Oil strainer	(F)	Oil pan
(G)	Oil pan seal ring	(H)	Drain plug gasket	(I)	Drain plug
(J)	Stud bolt	(K)	Oil level switch	(L)	O-ring
(M)	Plug				

B: INSTALLATION

1. OIL PAN

NOTE:
- Before installing the oil pan, wipe and clean the mating surface of oil pan and oil pan upper.
- Use a new oil pan seal ring.

1) Apply liquid gasket to the mating surfaces of oil pan upper, and install the oil pan.

NOTE:
Install within 5 min. after applying liquid gasket.

Liquid gasket:
THREE BOND 1217G (Part No. K0877Y0100) or equivalent

Liquid gasket applying diameter:
5±1 mm (0.1969±0.0394 in)

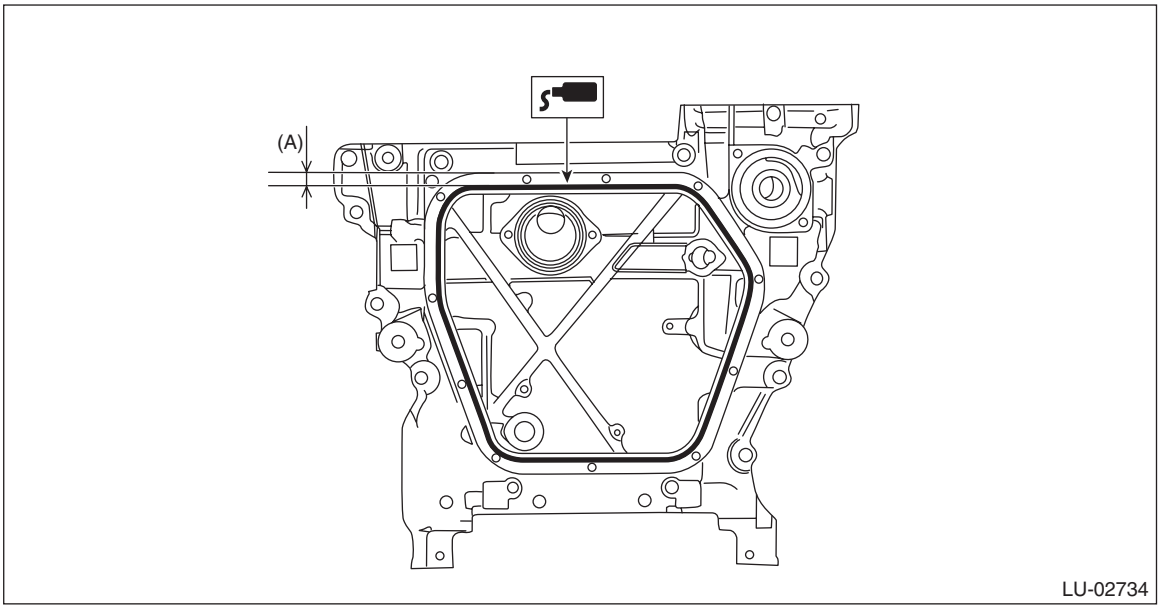

(A) 7.5 mm (0.295 in)

2) Tighten the bolts to install the oil pan to the oil pan upper in the numerical order.

Tightening torque:
6.4 N·m (0.7 kgf-m, 4.7 ft-lb)

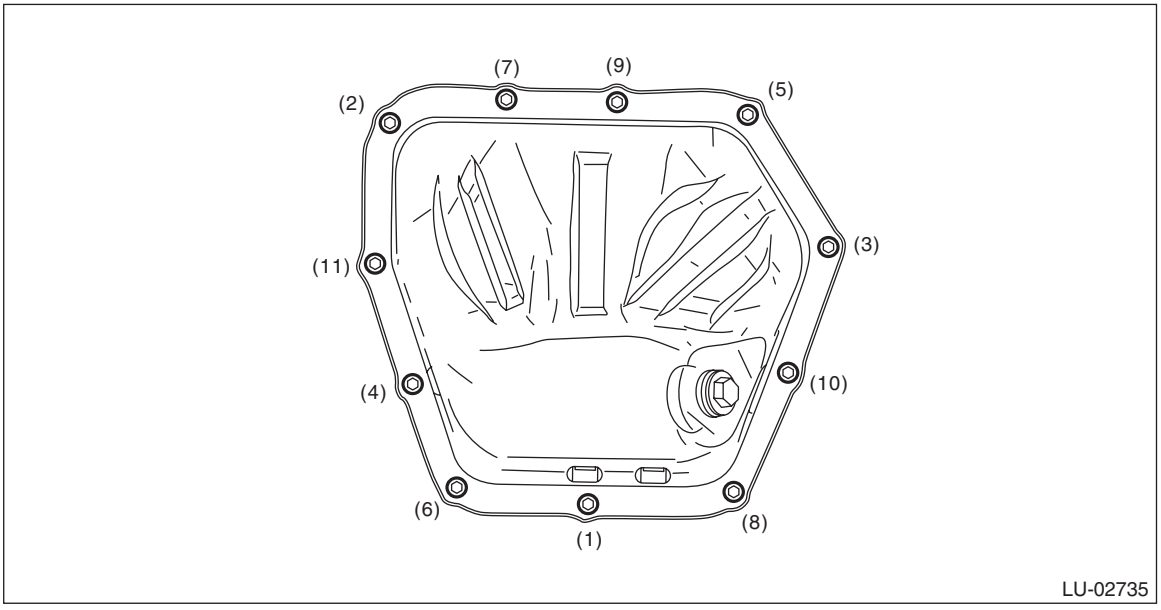

3) Install the front exhaust pipe. <Ref. to EX(H4DO(w/o HEV))-8, INSTALLATION, Front Exhaust Pipe.>
4) Install the under cover. <Ref. to EI-29, INSTALLATION, Front Under Cover.>
5) Lower the vehicle.
6) Connect the battery ground terminal. <Ref. to NT-5, BATTERY, NOTE, Note.>
7) Refill the engine oil. <Ref. to LU(H4DO(w/o HEV))-13, REPLACEMENT, Engine Oil.>

2. OIL PAN UPPER

NOTE:
Before installing the oil pan upper, clean the mating surface of oil pan upper and cylinder block.
1) Apply liquid gasket to the plug threads.

Liquid gasket:
THREE BOND 2411 or equivalent
2) Attach the plug to the oil pan upper.
3) Attach the stud bolts to the oil pan upper.
4) Attach the oil strainer to the oil pan upper.

NOTE:
Use new O-rings.
5) Attach the baffle plate to the oil pan upper.

Tightening torque:
T1: 6.4 N·m (0.7 kgf-m, 4.7 ft-lb)
T2: 10 N·m (1.0 kgf-m, 7.4 ft-lb)
T3: 18 N·m (1.8 kgf-m, 13.3 ft-lb)
T4: 41.7 N·m (4.3 kgf-m, 30.8 ft-lb)
T5: 90 N·m (9.2 kgf-m, 66.4 ft-lb)

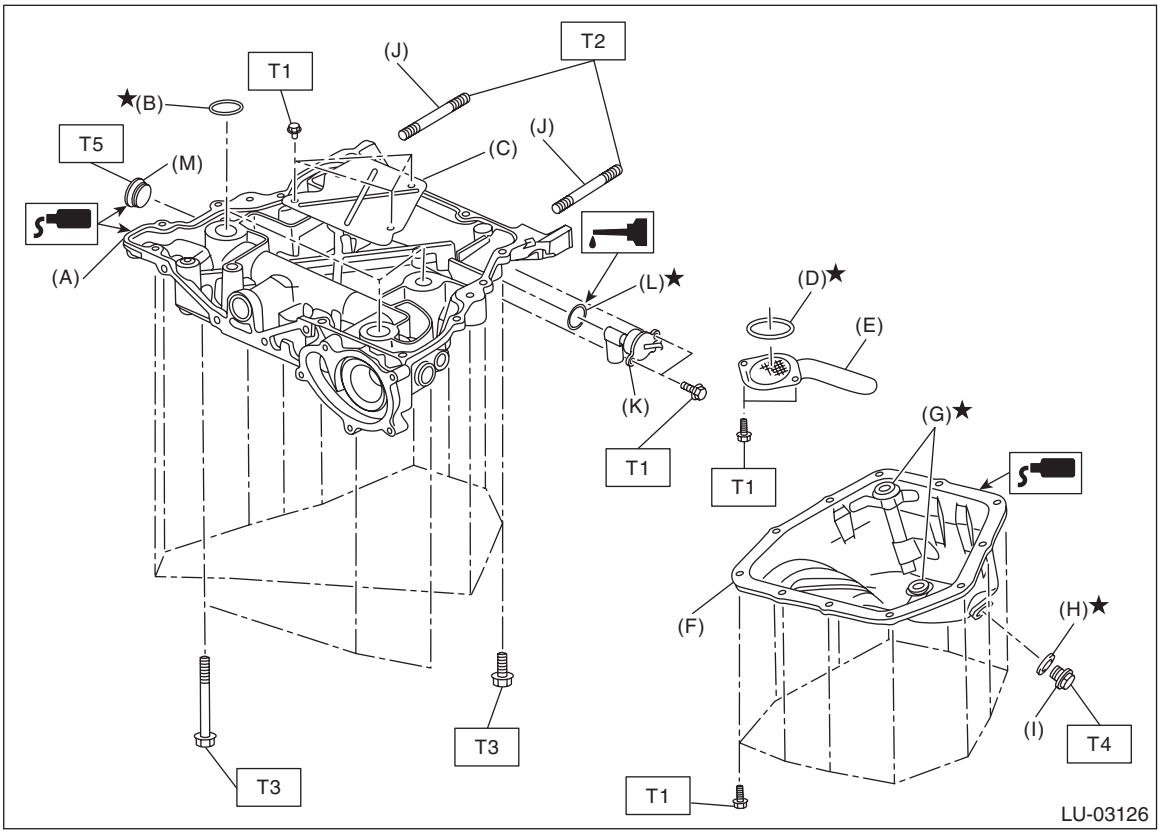

(A)	Oil pan upper	(B)	O-ring	(C)	Baffle plate
(D)	O-ring	(E)	Oil strainer	(F)	Oil pan
(G)	Oil pan seal ring	(H)	Drain plug gasket	(I)	Drain plug
(J)	Stud bolt	(K)	Oil level switch	(L)	O-ring
(M)	Plug				

6) Apply liquid gasket to the mating surface of the oil pan upper as shown in the figure, and install the oil pan upper to the cylinder block.

CAUTION:
Be careful not to apply any liquid gasket to the O-ring.

NOTE:
- Use new O-rings.
- Install within 5 min. after applying liquid gasket.
- Apply liquid gasket 1.5 mm (0.0591 in) outside from the chamfer surface. However, application of liquid gasket on the chamfer surface around the bolt hole is allowed.

Liquid gasket:
THREE BOND 1217G (Part No. K0877Y0100) or equivalent

Liquid gasket applying diameter:
5±1 mm (0.1969±0.0394 in)

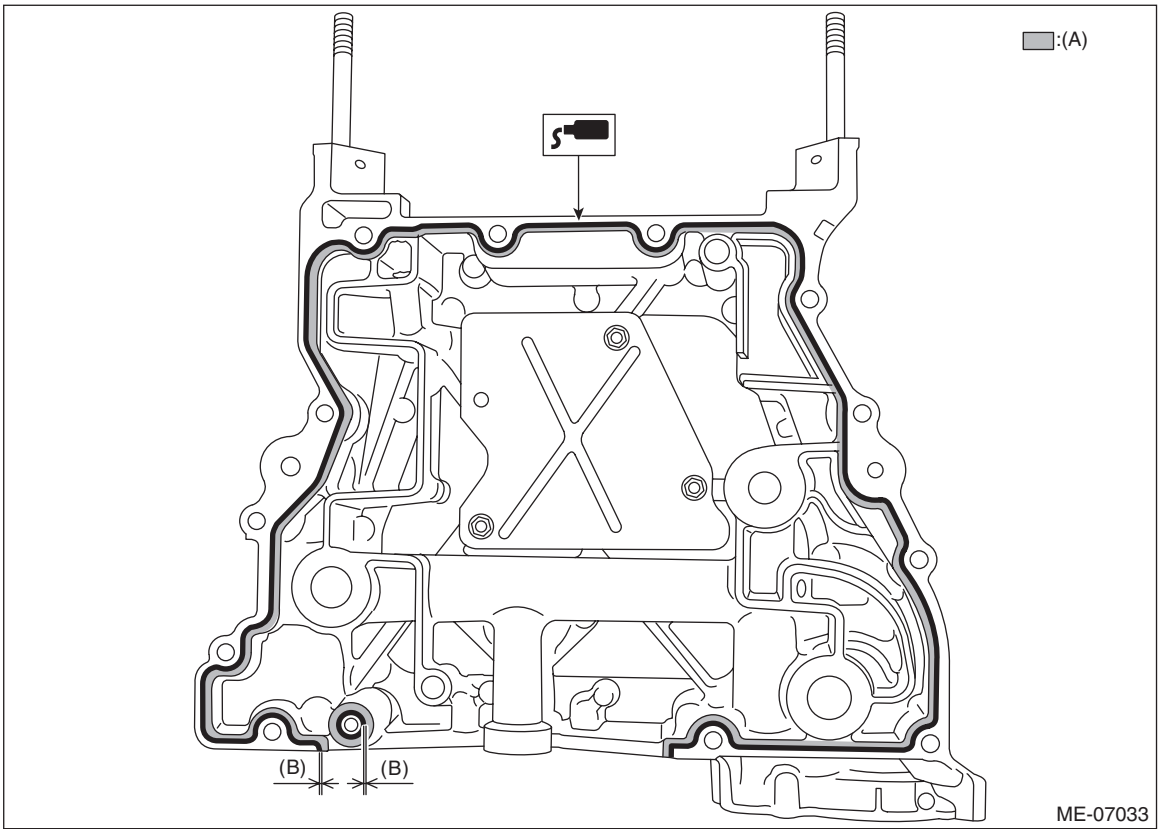

(A) Chamfer surface (B) 1.5 mm (0.0591 in)

7) Set the oil pan upper to the cylinder block, and tighten the bolts in numerical order as shown in the figure.

NOTE:
After tightening, if the liquid gasket is squeezed out onto the seal surface of the chain cover, completely remove any squeezed-out liquid gasket.

Tightening torque:
18 N·m (1.8 kgf-m, 13.3 ft-lb)

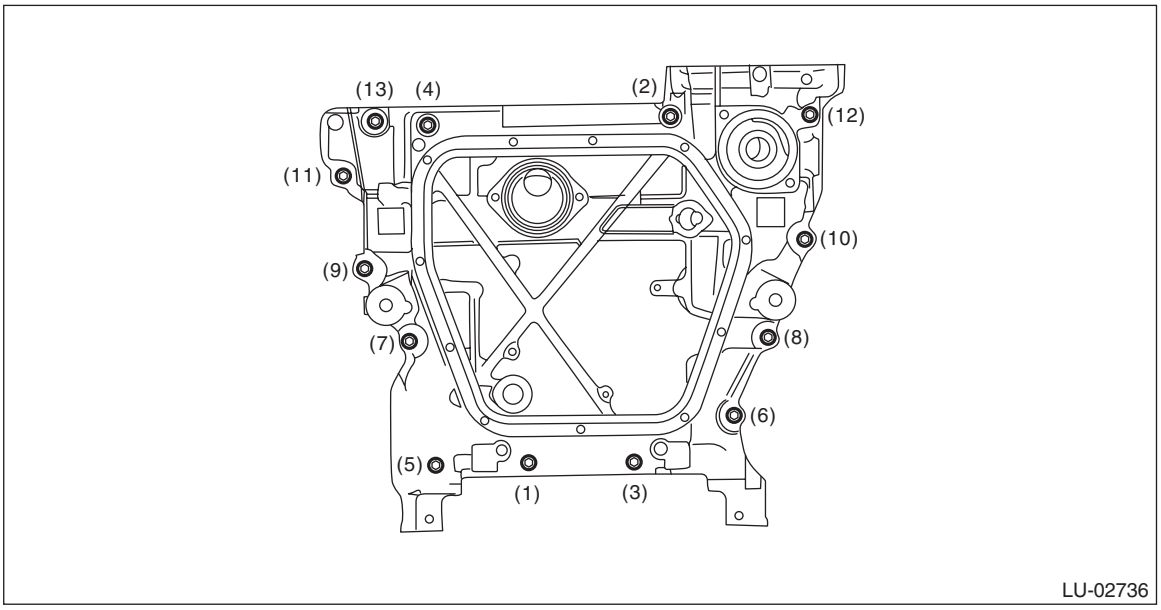

8) Install the oil level switch on the oil pan upper, and secure the harness with clips (A).

NOTE:
- Use new O-rings.
- Apply a coat of engine oil to the O-rings.

Tightening torque:
6.4 N·m (0.7 kgf-m, 4.7 ft-lb)

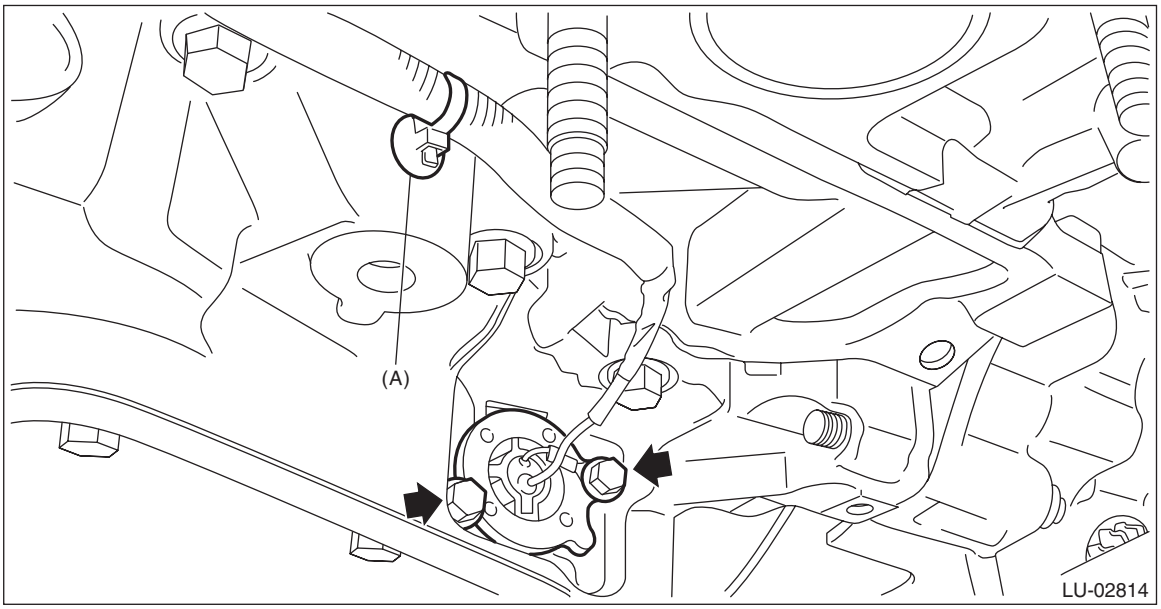

9) Install the oil pan. <Ref. to LU(H4DO(w/o HEV))-18, OIL PAN, INSTALLATION, Oil Pan and Strainer.>
10) Install the chain cover. <Ref. to ME(H4DO(w/o HEV))-151, INSTALLATION, Chain Cover.>
11) Install the water pipe assembly. <Ref. to CO(H4DO(w/o HEV))-45, INSTALLATION, Water Pipe Assembly.>

12) Install the thermostat cover. <Ref. to CO(H4DO(w/o HEV))-71, INSTALLATION, Thermostat.>
13) Install the water pump. <Ref. to CO(H4DO(w/o HEV))-21, INSTALLATION, Water Pump.>
14) Lower the vehicle.
15) Install the engine to the vehicle. <Ref. to ME(H4DO(w/o HEV))-86, INSTALLATION, Engine Assembly.>
16) Refill the engine oil. <Ref. to LU(H4DO(w/o HEV))-13, REPLACEMENT, Engine Oil.>

C: INSPECTION

Check that the oil pan, oil pan upper, oil strainer and baffle plate do not have deformation, cracks or damage.

6. Oil Pressure Switch

A: REMOVAL

CAUTION:
If the engine oil is spilt over exhaust pipe or the under cover, wipe it off with cloth to avoid emitting smoke or causing a fire.

1) Disconnect the ground cable from battery. <Ref. to NT-5, BATTERY, NOTE, Note.>

NOTE:
For the 12 volt engine restart battery of HEV model, disconnect the ground terminal from 12V engine restart battery sensor.

2) Remove the collector cover. (HEV model)
   (1) Pull up the two points at the front of collector cover (A).
   (2) Pull up the two points at the rear of collector cover (B) while moving them rearward.

NOTE:
Be careful not to contact the fuel delivery tube when moving the collector cover rearward.

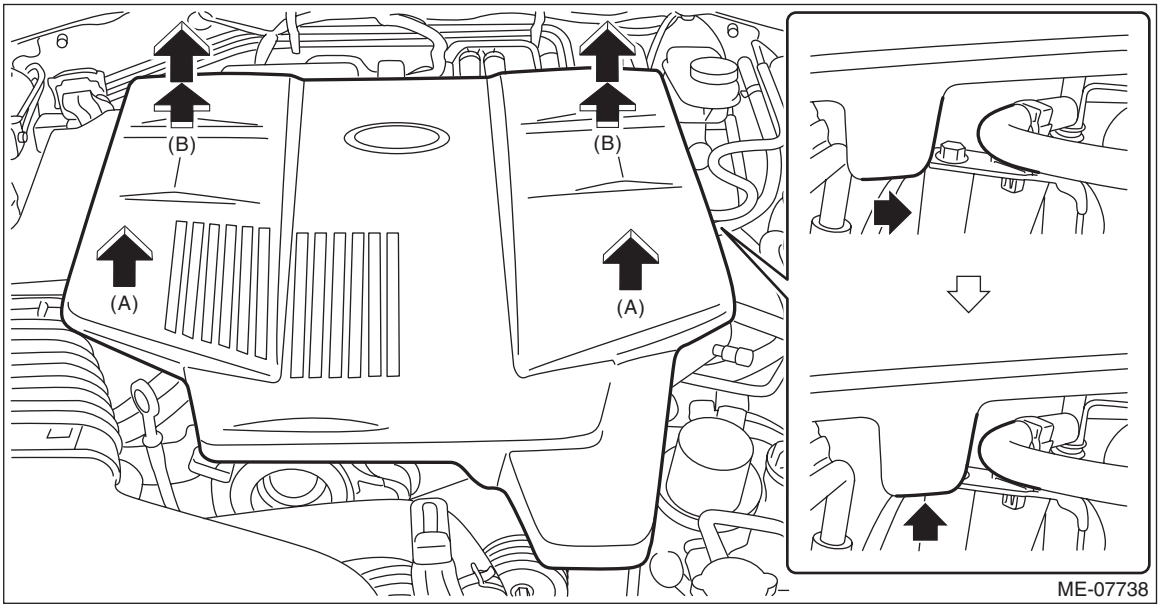

3) Remove the rubber cap.

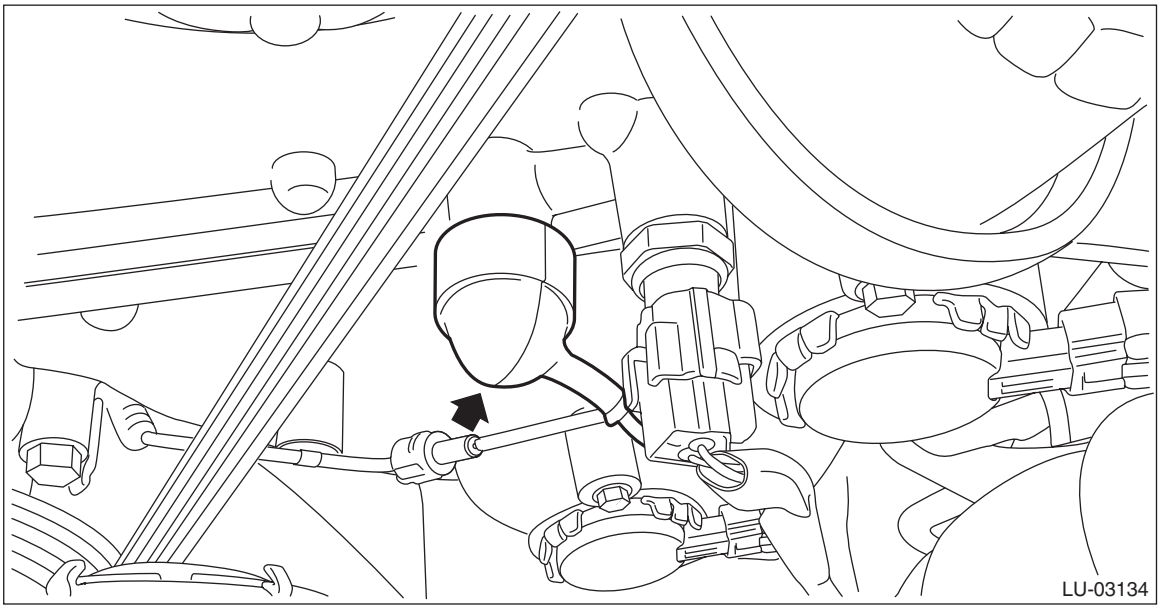

4) Disconnect the terminal from oil pressure switch.

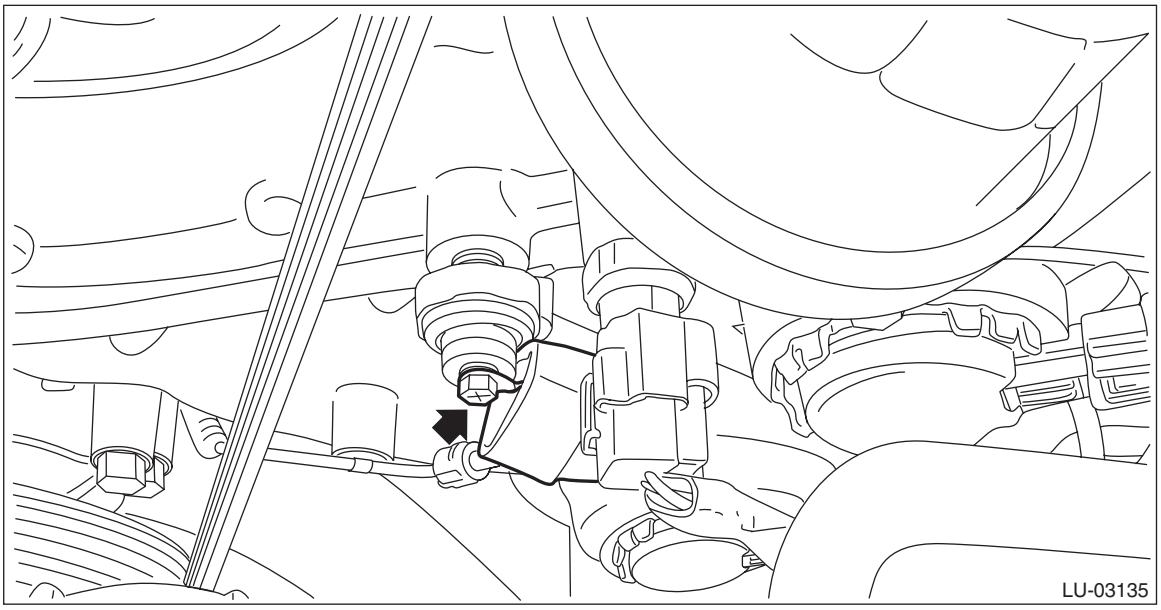

5) Remove the oil pressure switch.

CAUTION:
Catch the engine oil using cloth to prevent it from splashing.

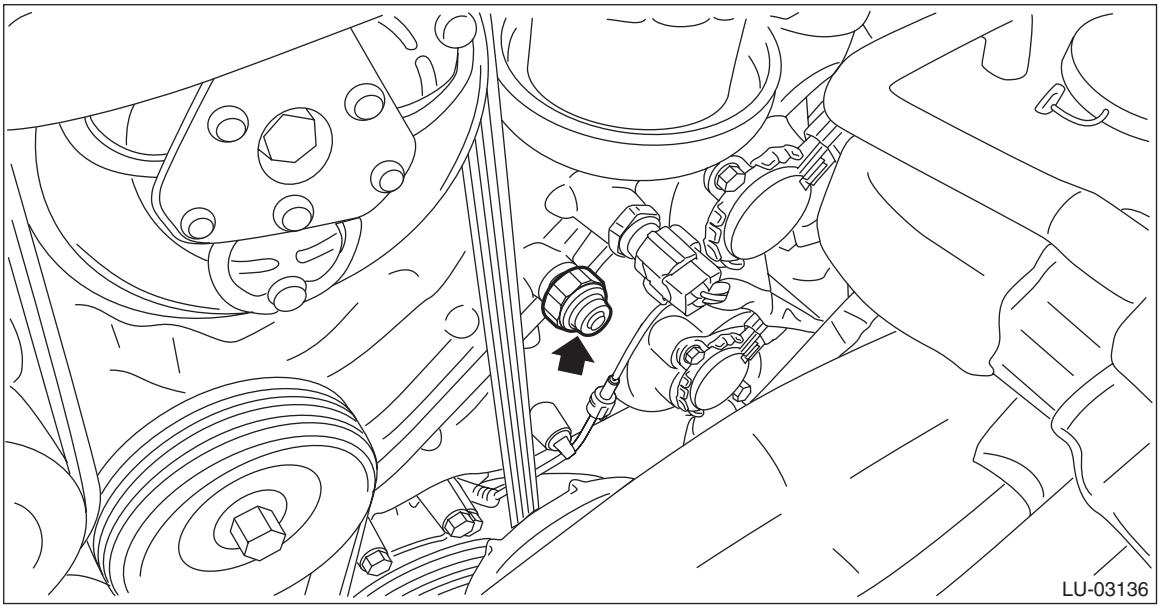

B: INSTALLATION

1) Apply liquid gasket to the oil pressure switch threads.

Liquid gasket:
THREE BOND 1324 (Part No. 004403042) or equivalent

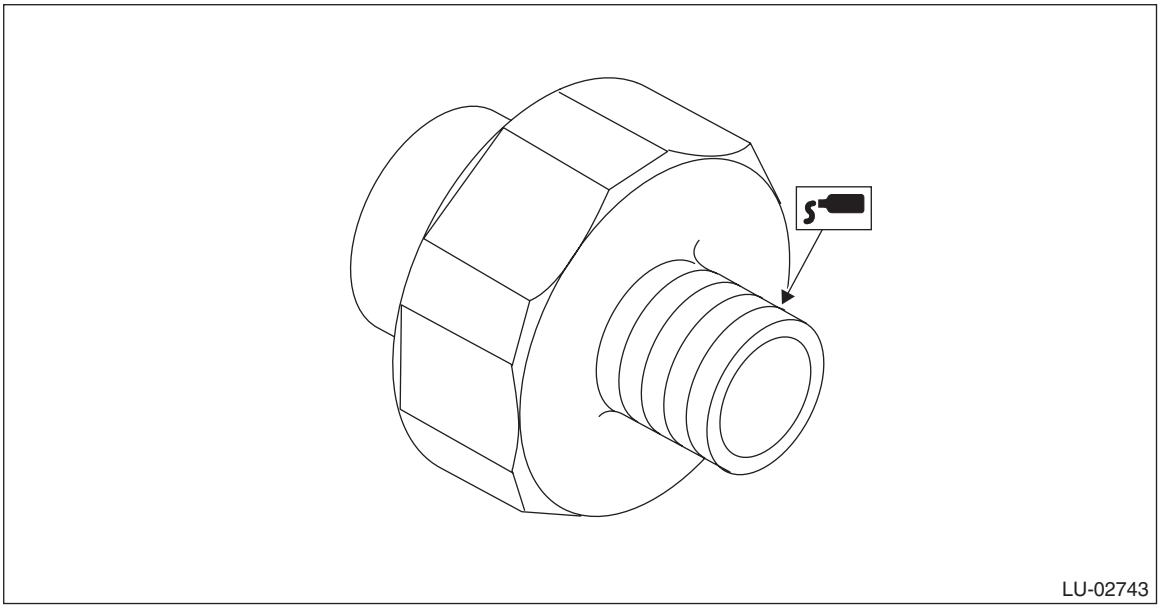

2) Install the oil pressure switch to the chain cover.

Tightening torque:
18 N·m (1.8 kgf-m, 13.3 ft-lb)

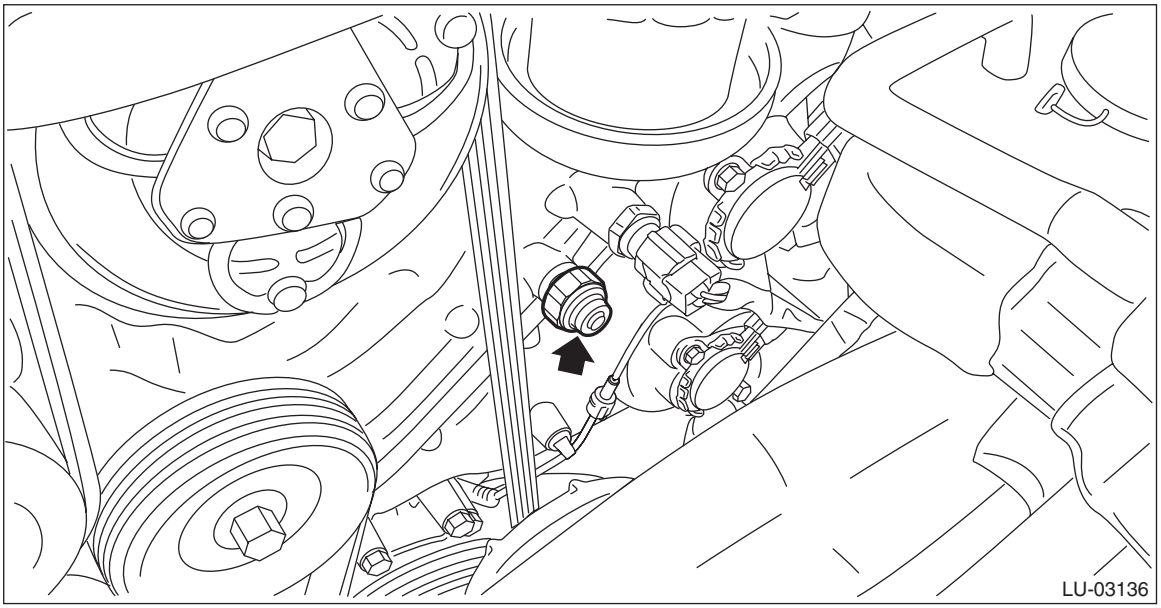

3) Connect the terminal to the oil pressure switch.

NOTE:
The oil pressure switch harness must be tightened within the range of a 90° angle as shown below.

Tightening torque:
1.5 N·m (0.2 kgf-m, 1.1 ft-lb)

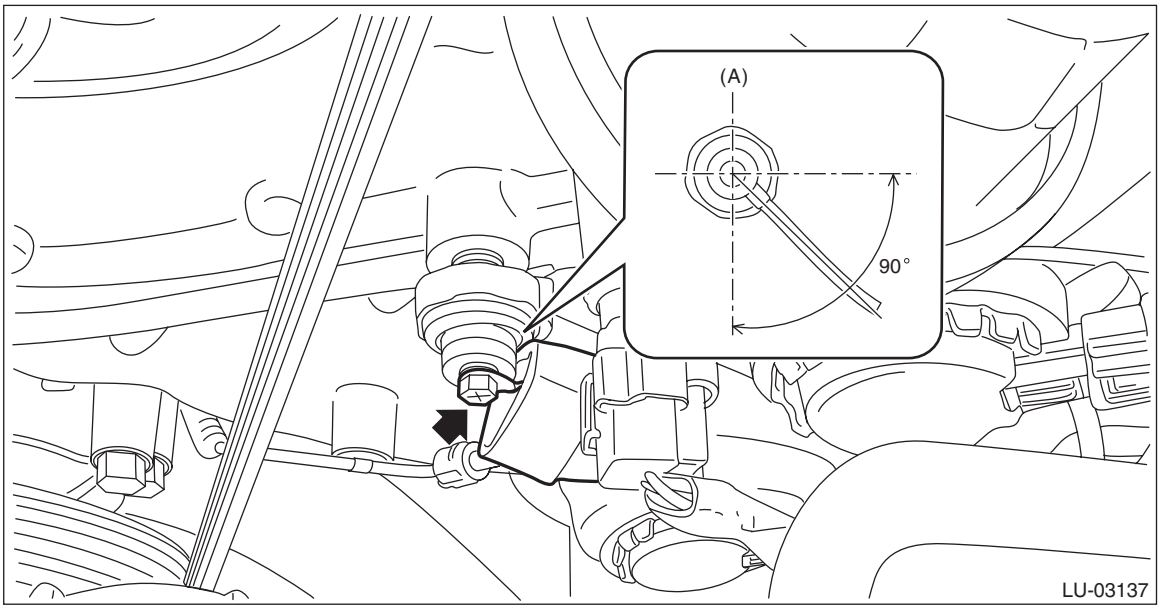

(A) Upper side of the engine

4) Attach the rubber cap.

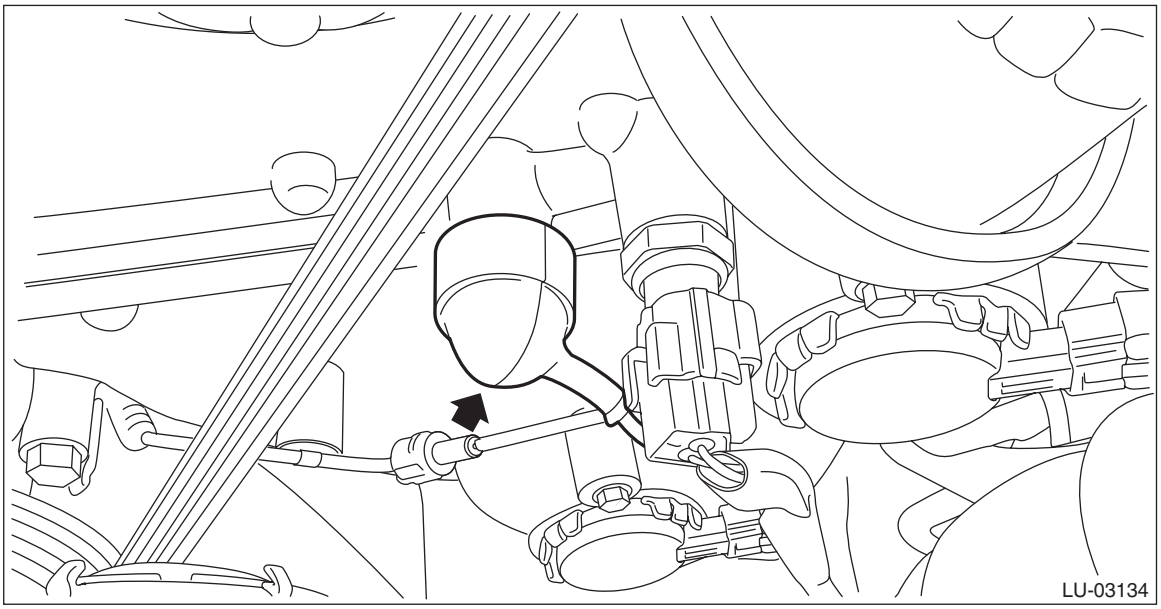

5) Install the collector cover. (HEV model)
6) Connect the battery ground terminal. <Ref. to NT-5, BATTERY, NOTE, Note.>

C: INSPECTION

1) Check that the oil pressure switch does not have deformation, cracks or damage.
2) Check that there are no oil leaks or oil oozing from the oil pressure switch installation portion.

7. Engine Oil Filter

A: REMOVAL

CAUTION:
If the engine oil is spilt over exhaust pipe or the under cover, wipe it off with cloth to avoid emitting smoke or causing a fire.

1. OIL FILTER

1) Turn the ignition switch to OFF.
2) Remove the oil filter.

NOTE:
Clean off water or dust from the oil element mating surface using air.
- Oil filter (black)

Remove the oil filter using ST.
ST 18332AA000 OIL FILTER WRENCH (outer diameter: 68 mm (2.68 in) for oil filter)
- Oil filter (blue)

Remove using a general tool (65/67 mm 14 Flutes).

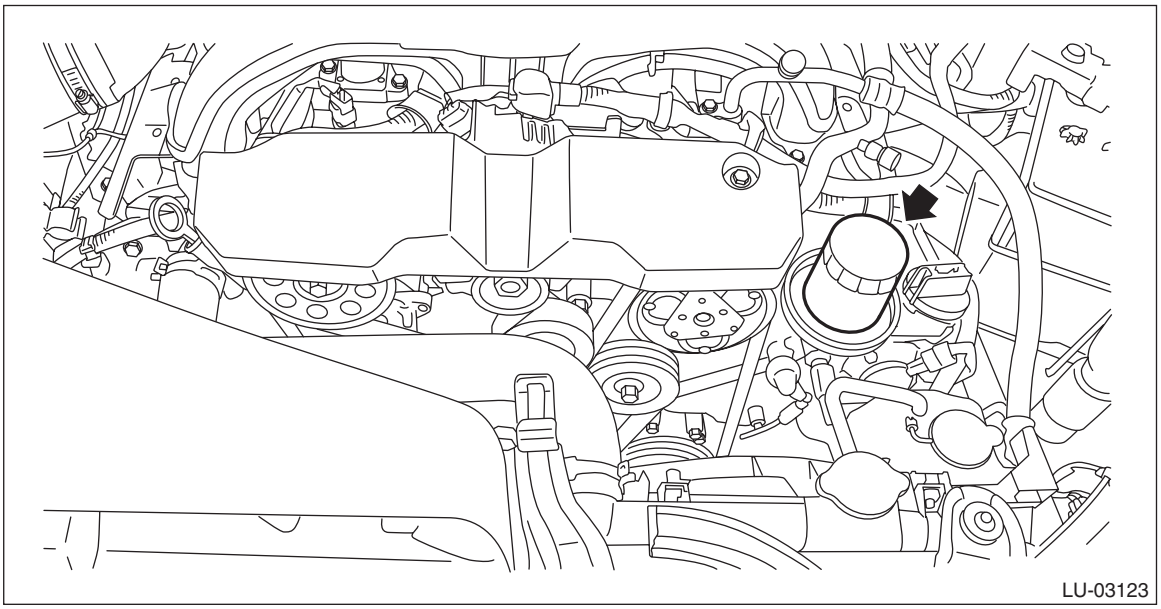

2. OIL PUMP UNION

1) Remove the oil filter. <Ref. to LU(H4DO(w/o HEV))-28, OIL FILTER, REMOVAL, Engine Oil Filter.>
2) Remove the oil pump union from the chain cover.

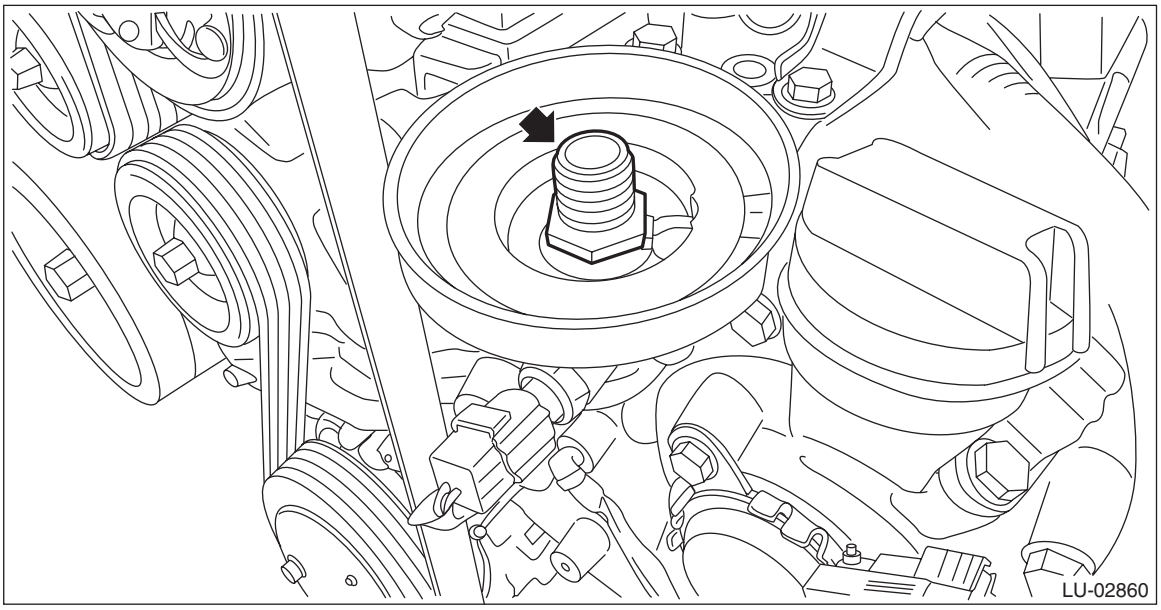

B: INSTALLATION

1. OIL FILTER

CAUTION:
Do not tighten excessively, or oil may leak.
1) Clean the oil filter installing surface on the chain cover.
2) Obtain a new oil filter and apply a thin coat of engine oil to the seal rubber.
3) Install the oil filter by turning it by hand, being careful not to damage the seal rubber of the oil filter.
• Tighten the oil filter (Black) with an outer diameter of 68 mm (2.68 in) (approx. 1 rotation) after the seal rubber of the oil filter comes in contact with chain cover. When using a torque wrench, tighten to 14 N·m (1.4 kgf-m, 10.3 ft-lb).
• Tighten the oil filter (Blue) with an outer diameter of 67.4 mm (2.65 in) (approx. 7/8 rotation) after the seal rubber of the oil filter comes in contact with chain cover. When using a torque wrench, tighten to 12 N·m (1.2 kgf-m, 8.9 ft-lb).
4) After installing, check the engine oil level and replenish it if necessary. <Ref. to LU(H4DO(w/o HEV))-12, INSPECTION, Engine Oil.>

2. OIL PUMP UNION

Install in the reverse order of removal.

Tightening torque:
45 N·m (4.6 kgf-m, 33.2 ft-lb)

C: INSPECTION

1) After installing the oil filter, run the engine and check for oil leakage.

NOTE:
The filter element and filter case are permanently jointed; therefore, interior cleaning is not necessary.
2) Check the engine oil level. <Ref. to LU(H4DO(w/o HEV))-12, INSPECTION, Engine Oil.>

8. Oil Level Switch

A: REMOVAL

1. GASOLINE ENGINE MODEL

1) Open the front hood, and make alignment marks (A) on the front hood striker and the front hood using a marker pen.

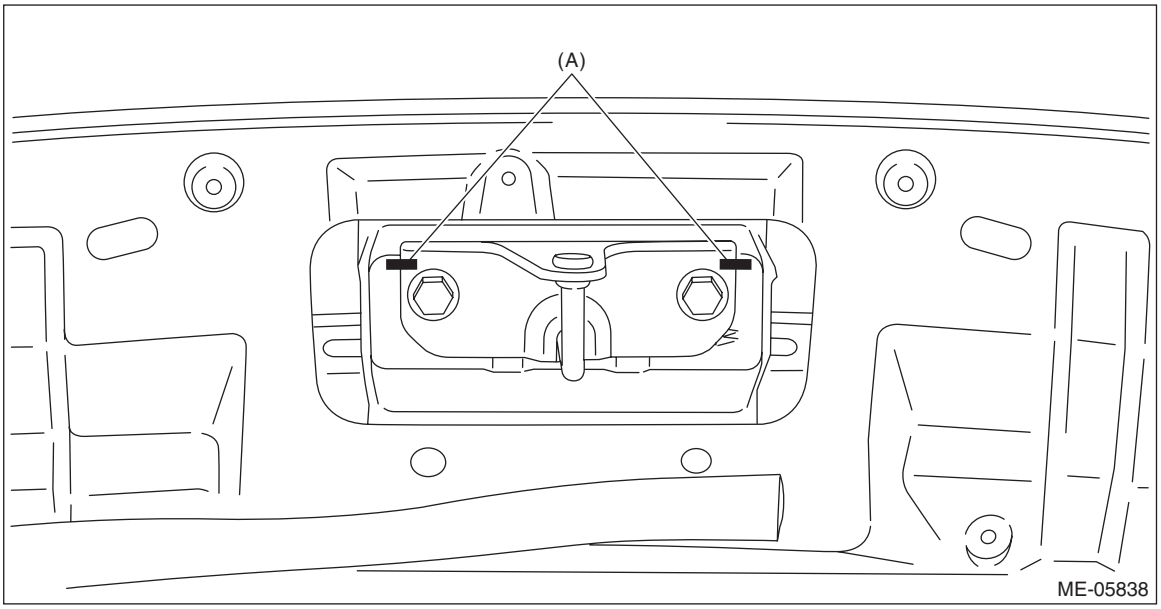

2) Remove the front hood striker from the front hood.

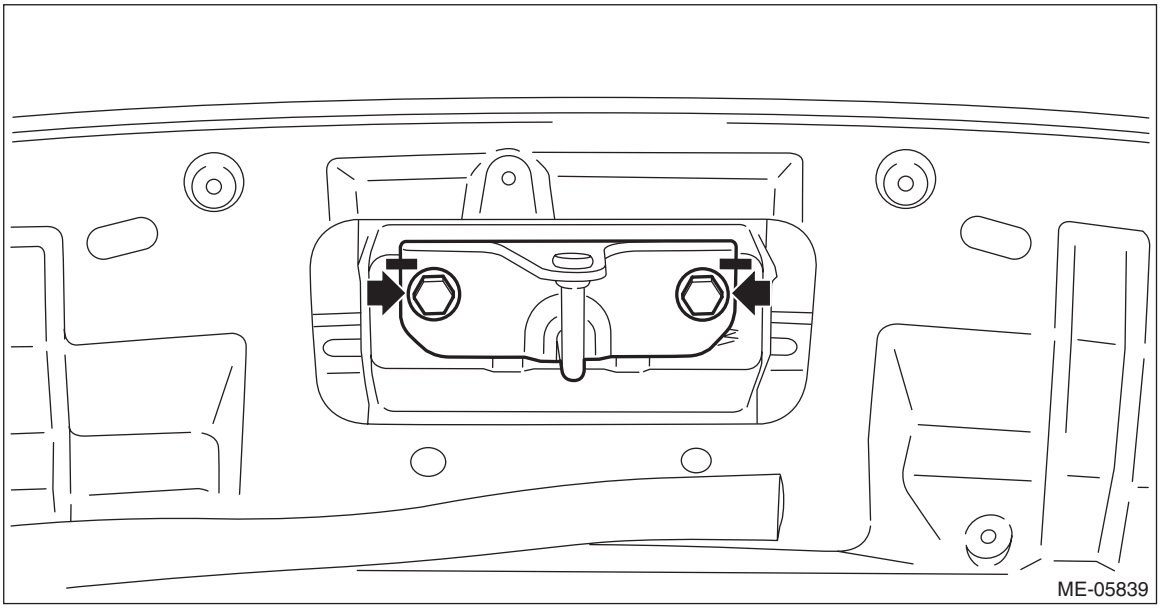

3) Change the front hood stay position from (A) to (B), and completely open the front hood.

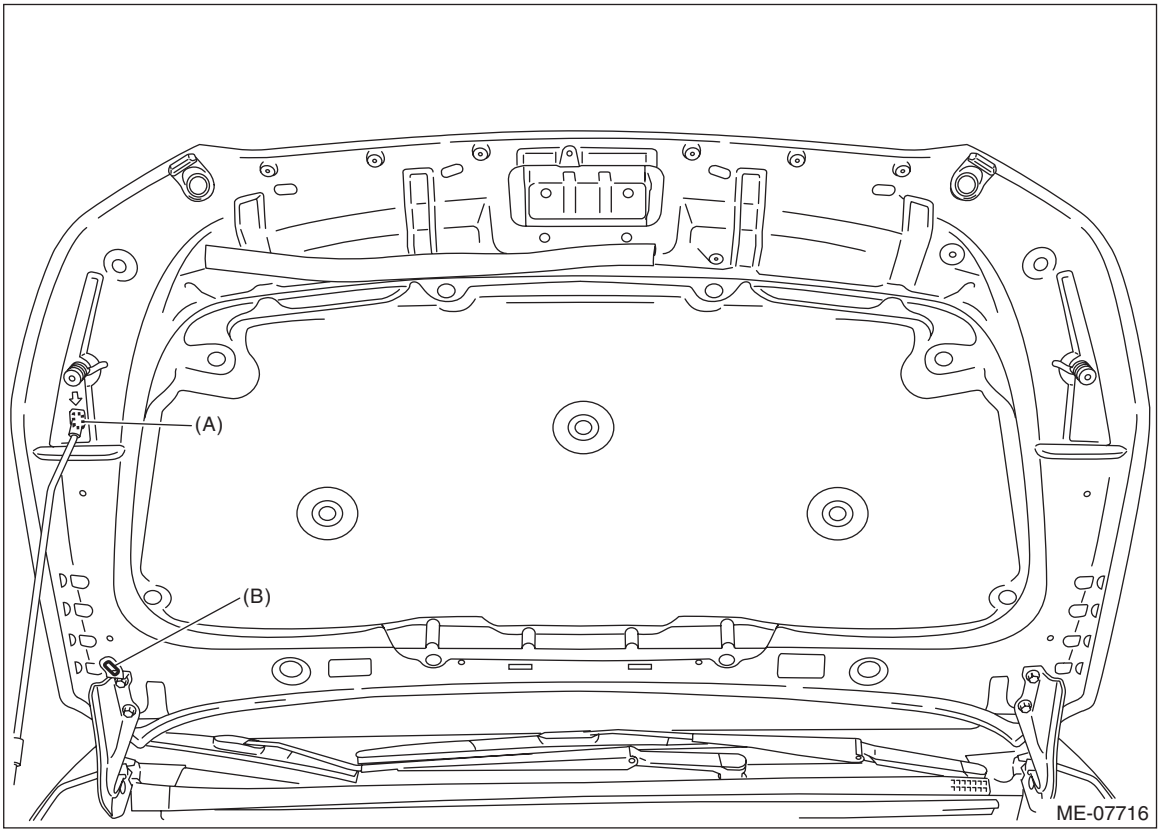

4) Disconnect the ground cable from battery.

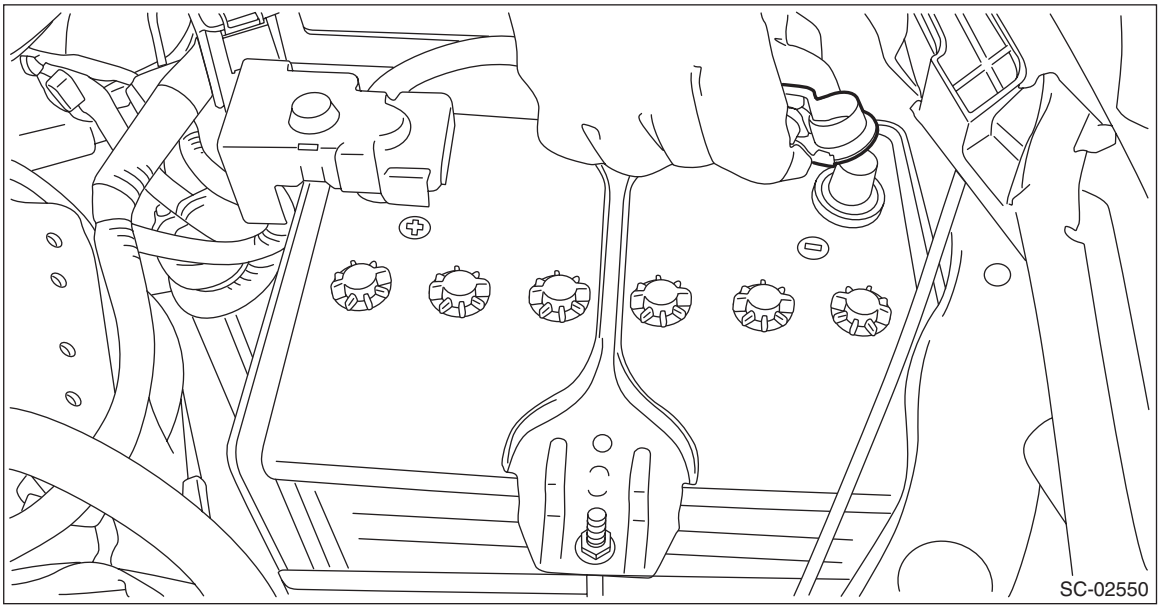

5) Remove the V-belt covers.

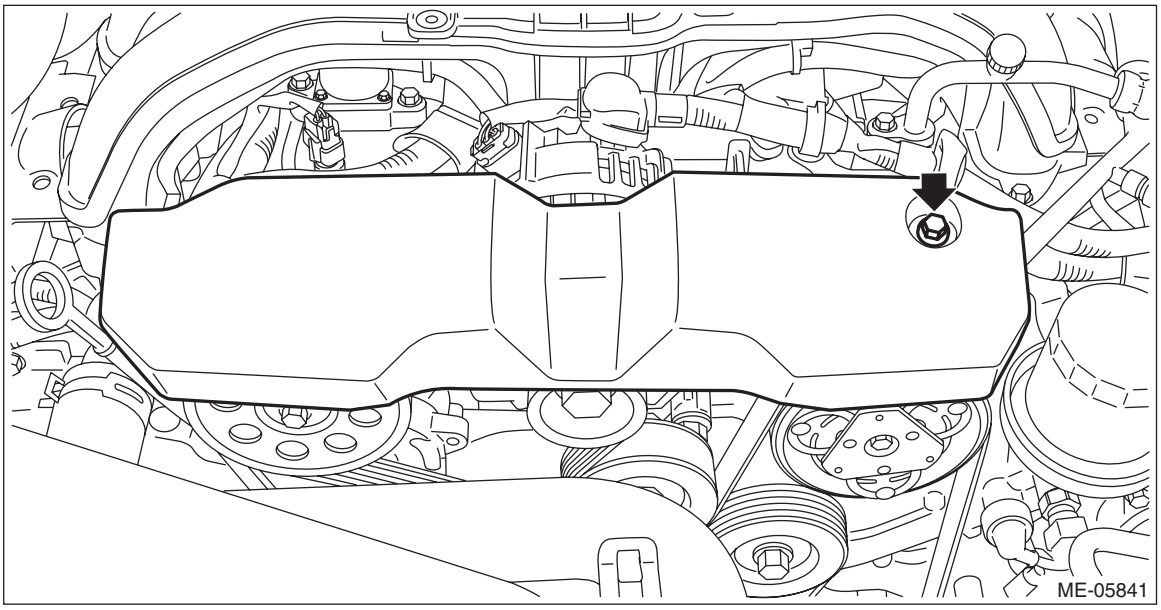

6) Remove the air intake duct. <Ref. to IN(H4DO(w/o HEV))-13, REMOVAL, Air Intake Duct.>
7) Remove the clip (A) from the air intake boot.
8) Loosen the clamp (B) securing the air cleaner case (rear) to the air intake boot.
9) Loosen the clamp (C) which secures the throttle body to the air intake boot.

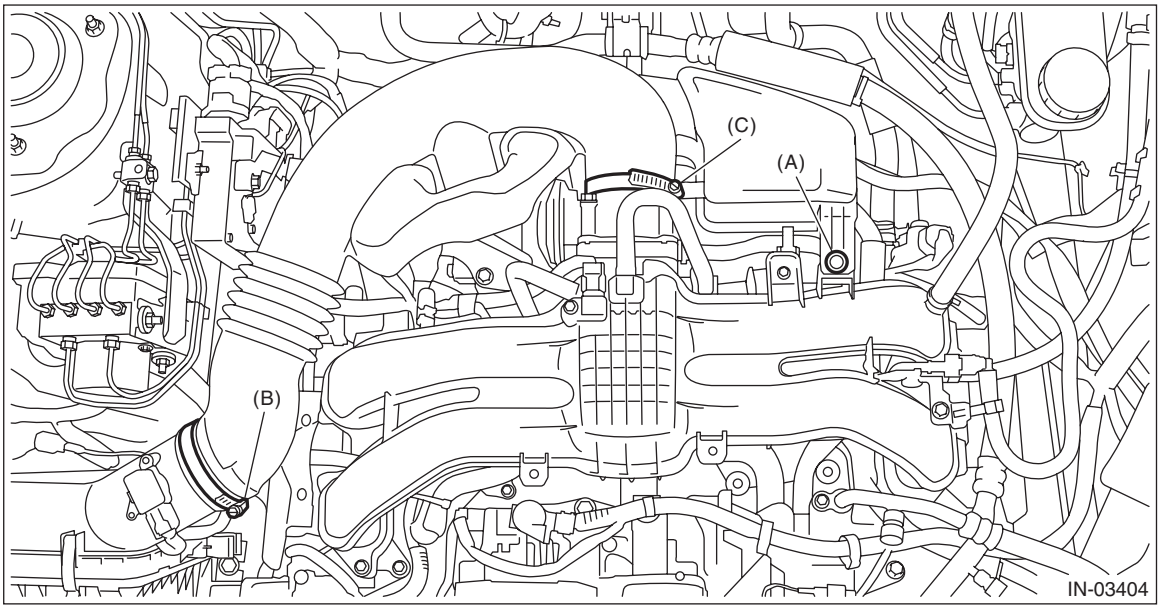

10) Remove the air intake boot from the throttle body, and move it to the left side wheel apron.

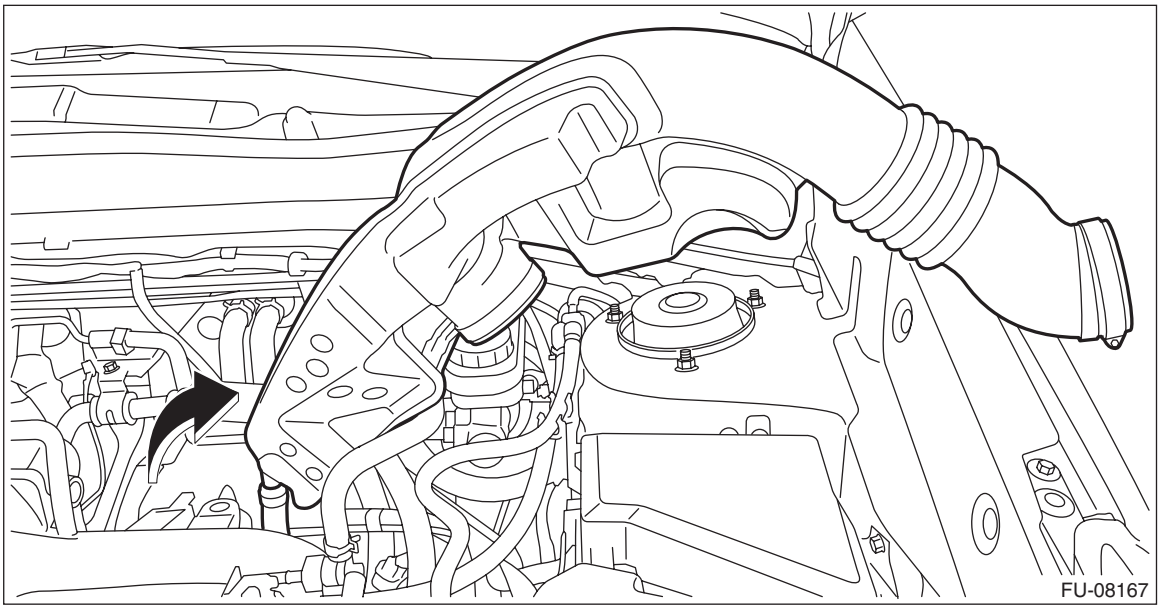

11) Disconnect the connector from the mass air flow and intake air temperature sensor, and remove the clip (A) which holds the mass air flow and intake air temperature sensor harness.

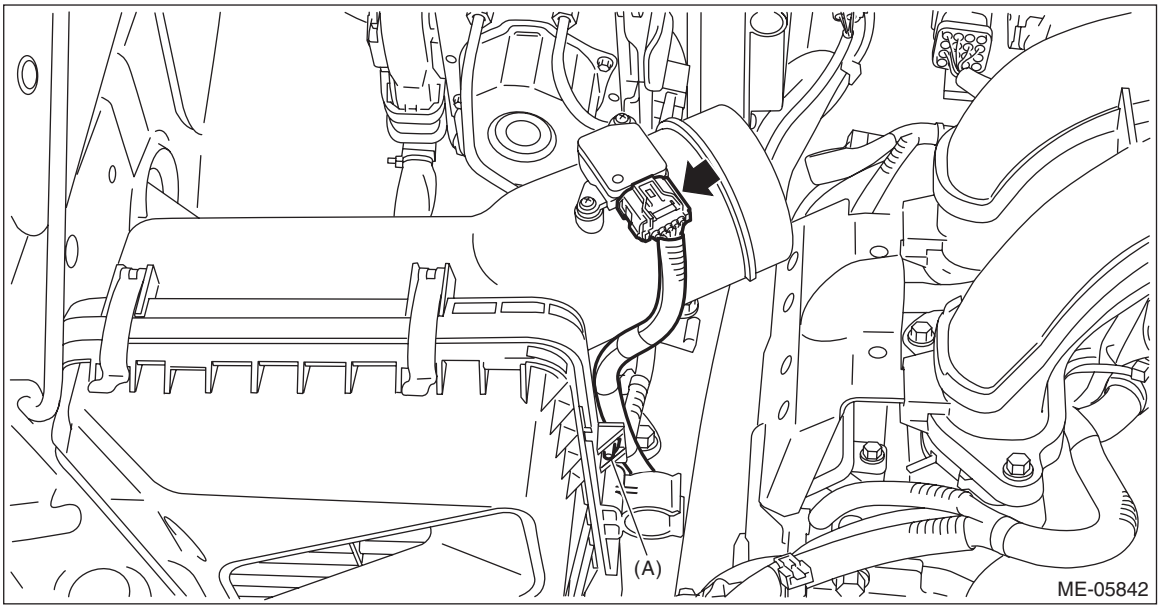

12) Remove the air cleaner case (rear).

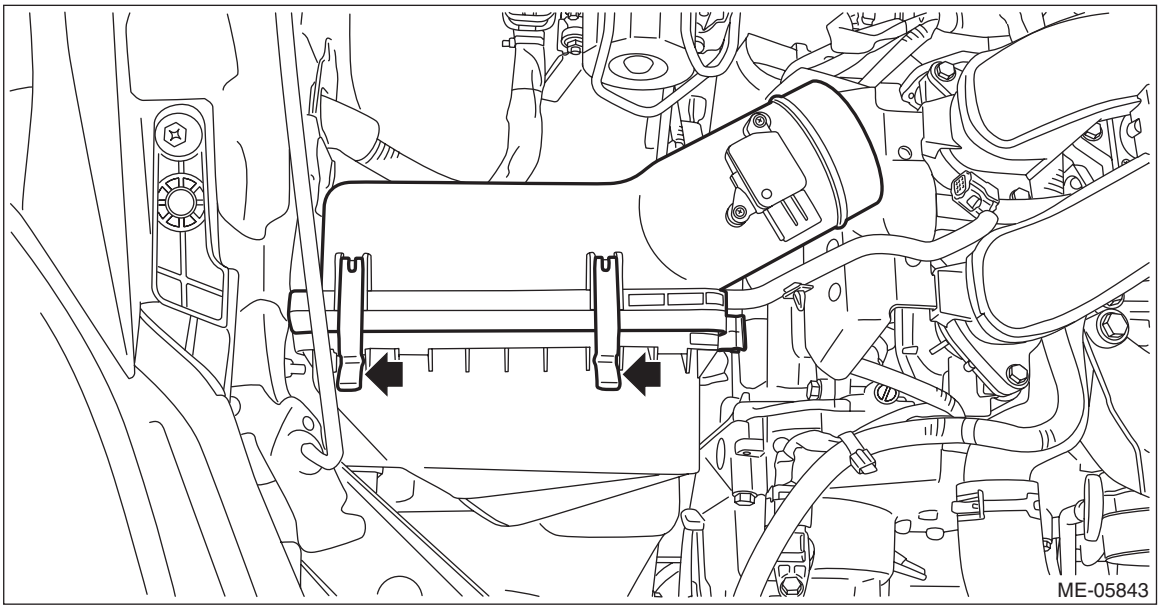

13) Remove the clip holding the air breather hose to the engine rear hanger. (MT model)

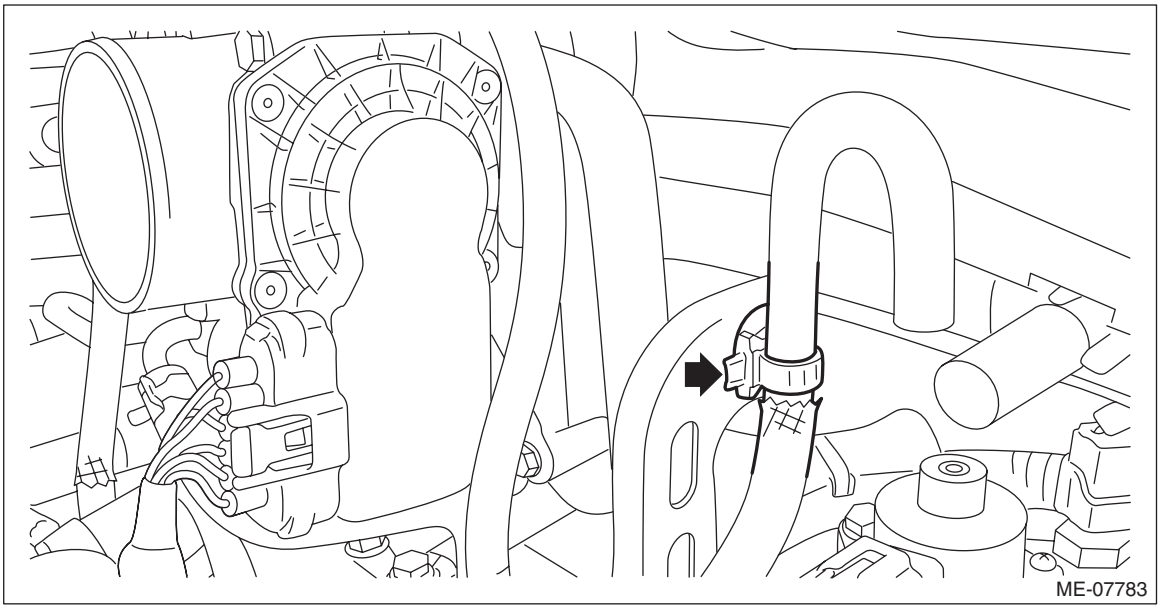

14) Lift up the vehicle.
15) Remove the under cover. <Ref. to EI-29, REMOVAL, Front Under Cover.>
16) Drain the engine oil. <Ref. to LU(H4DO(w/o HEV))-13, REPLACEMENT, Engine Oil.>
17) Remove the front exhaust pipe. <Ref. to EX(H4DO(w/o HEV))-6, REMOVAL, Front Exhaust Pipe.>

18) Disconnect the oil level switch connector from the engine harness, and remove the clip (A) securing the harness.

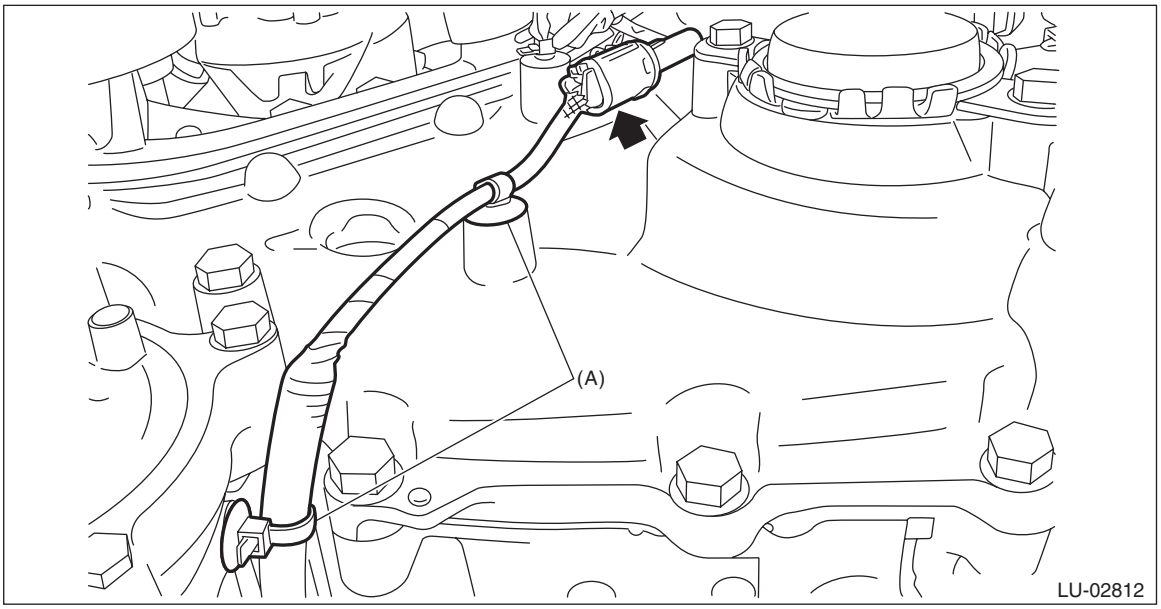

19) Remove the nuts which secure the engine mounting to the front crossmember. (CVT model)

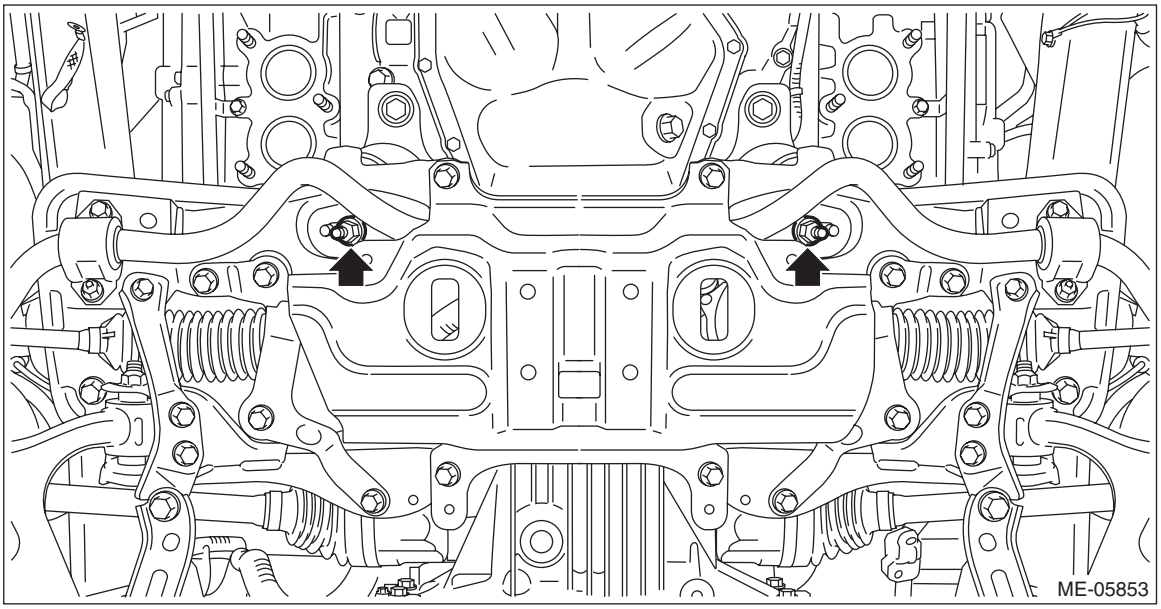

20) Remove the nuts which secure the engine mounting to the front crossmember. (MT model)

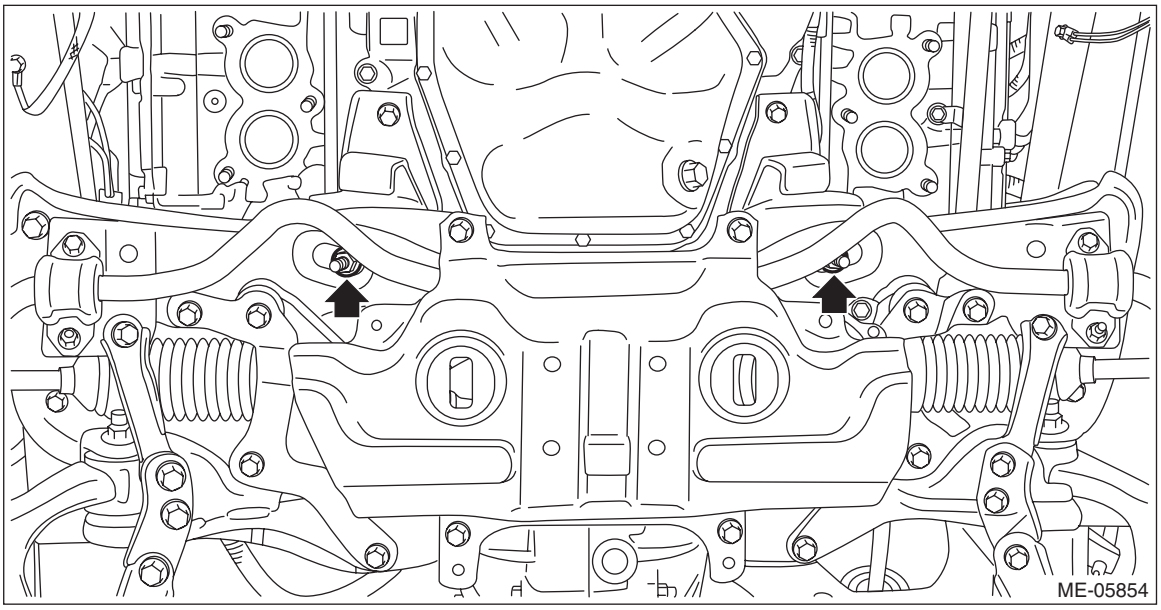

21) Remove the electric power steering gearbox. <Ref. to PS-27, REMOVAL, Electric Power Steering Gearbox.>
22) Remove the front drive shaft LH. <Ref. to DS-57, REMOVAL, Front Drive Shaft.>
23) Lower the vehicle.
24) Disconnect the bulkhead harness connector from the transmission harness connector (A) and the inhibitor harness connector (B), and disconnect the transmission radio ground terminal (C) from the vehicle body. (CVT model)

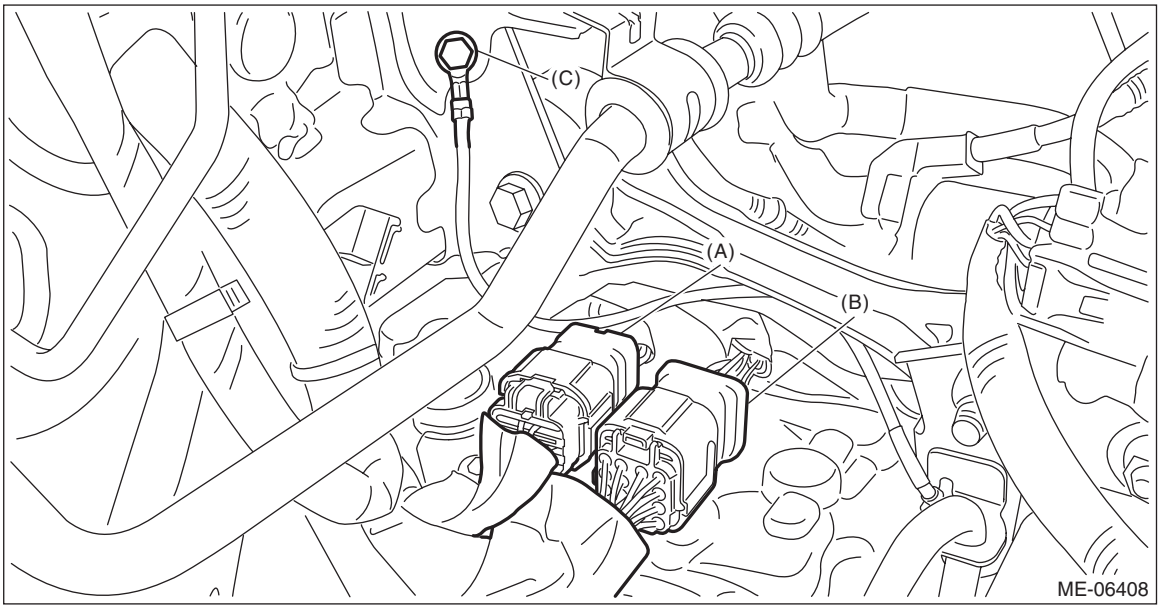

25) Remove the pitching stopper.

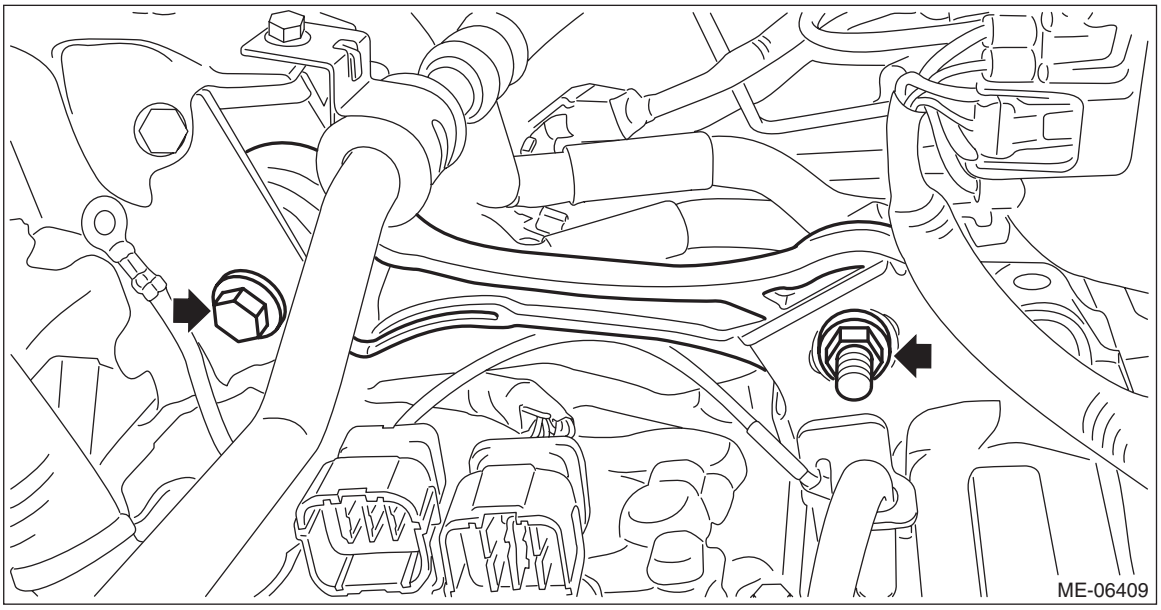

26) Remove the transmission cover. (CVT model)

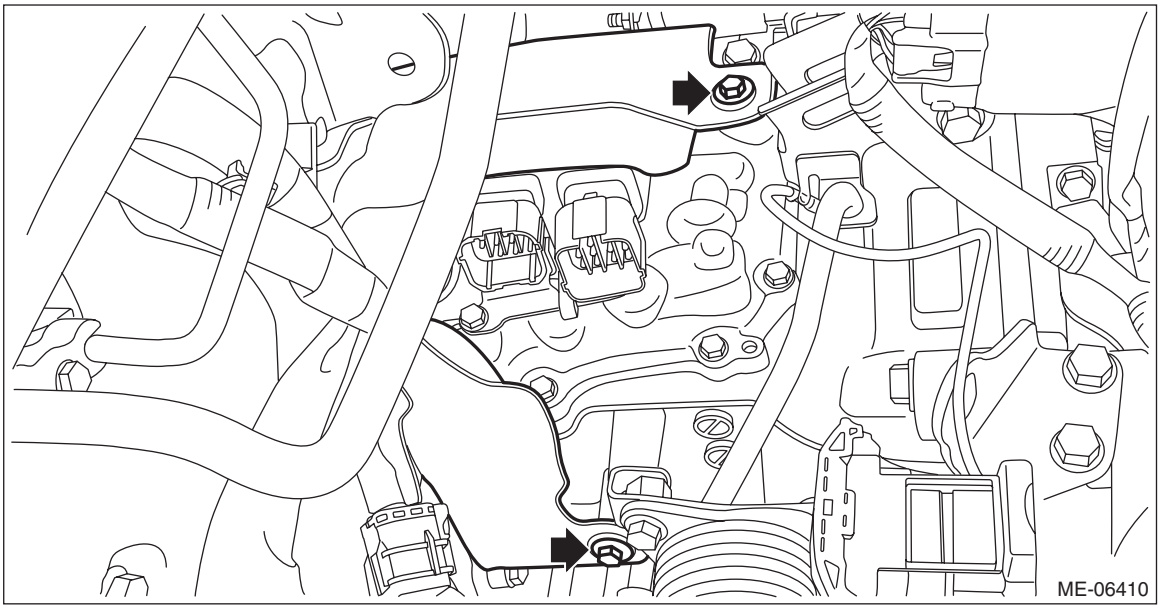

27) Remove the bolt which holds the transmission harness stay. (CVT model)

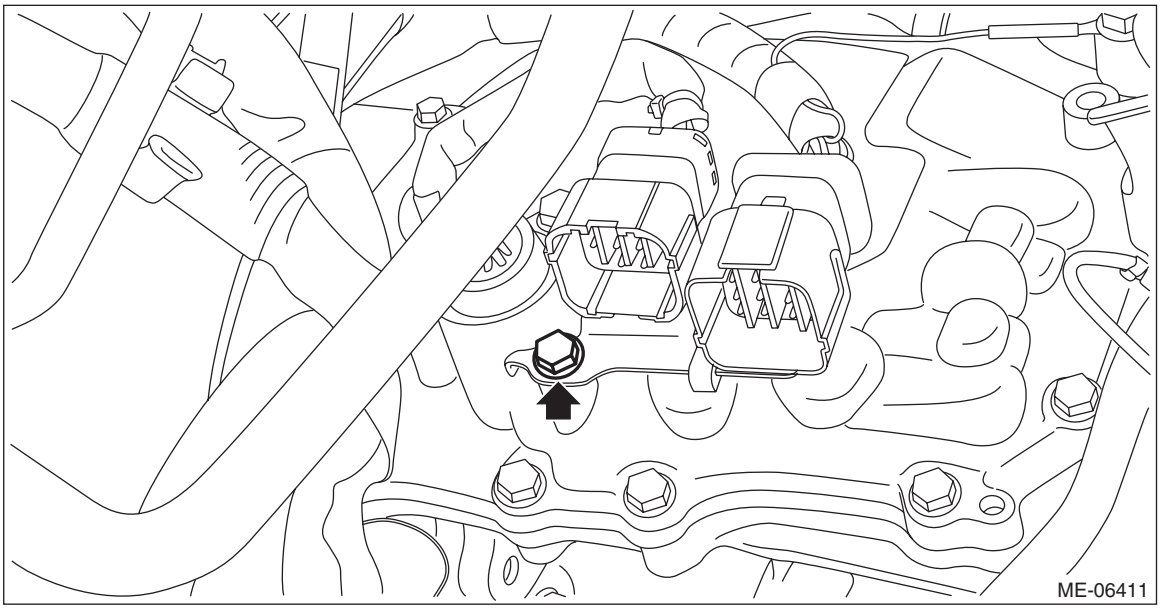

28) Remove the bolt which holds the transmission harness to the control valve body, and turn the transmission harness clockwise till the bolt hole can be seen as shown in the figure, and tighten the bolt to temporary lock the harness. (CVT model)

NOTE:
This procedure is required to prevent the transmission harness from touching the vehicle body during engine removal/installation.

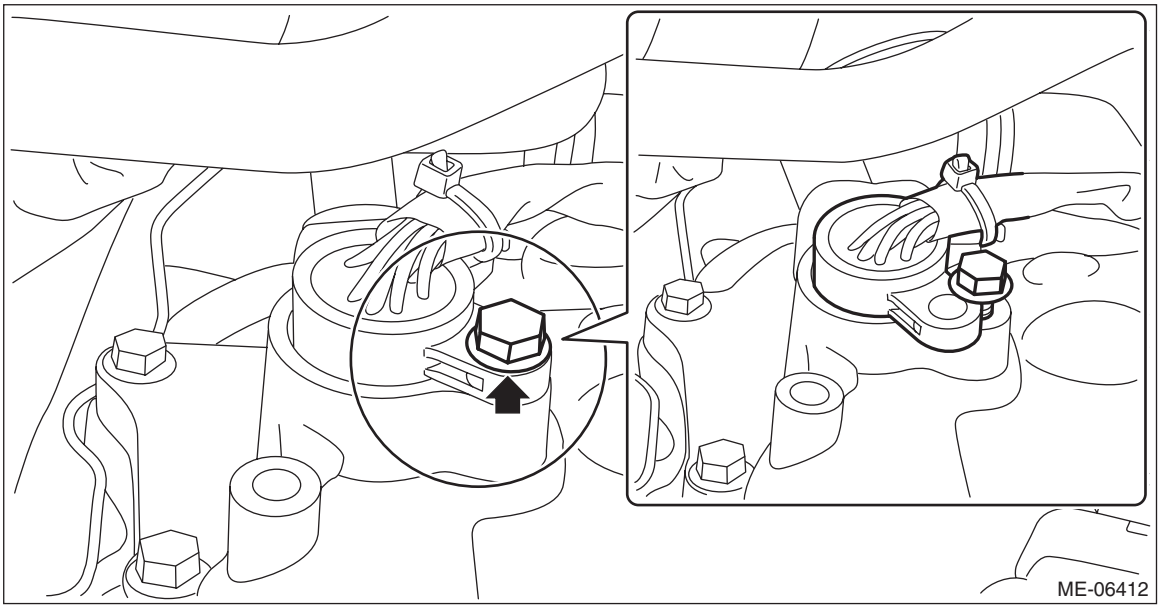

29) Lift up the engine with a lifting device and wire ropes.

CAUTION:
When lifting up the engine, pay attention to the clearance of each part and be careful not to lift the engine too much, in order to prevent damaging the vehicle.

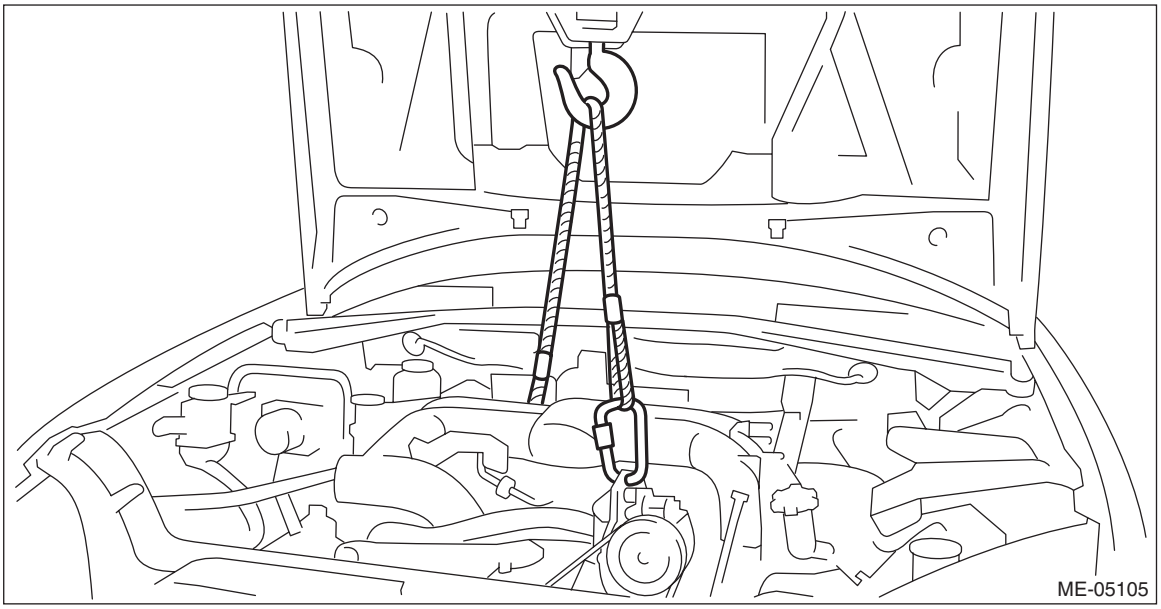

30) Remove the engine mounting LH from the engine.

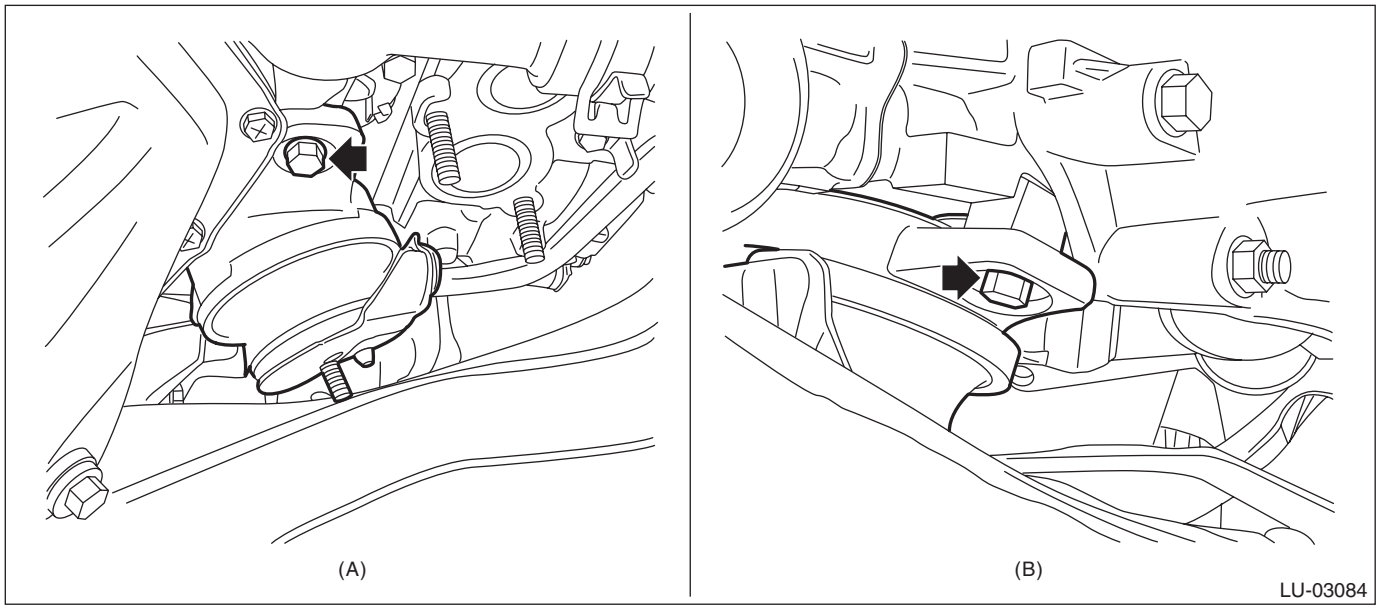

(A) Front side (B) Rear side

31) Remove clip (A) from the oil pan upper, and remove the oil level switch.

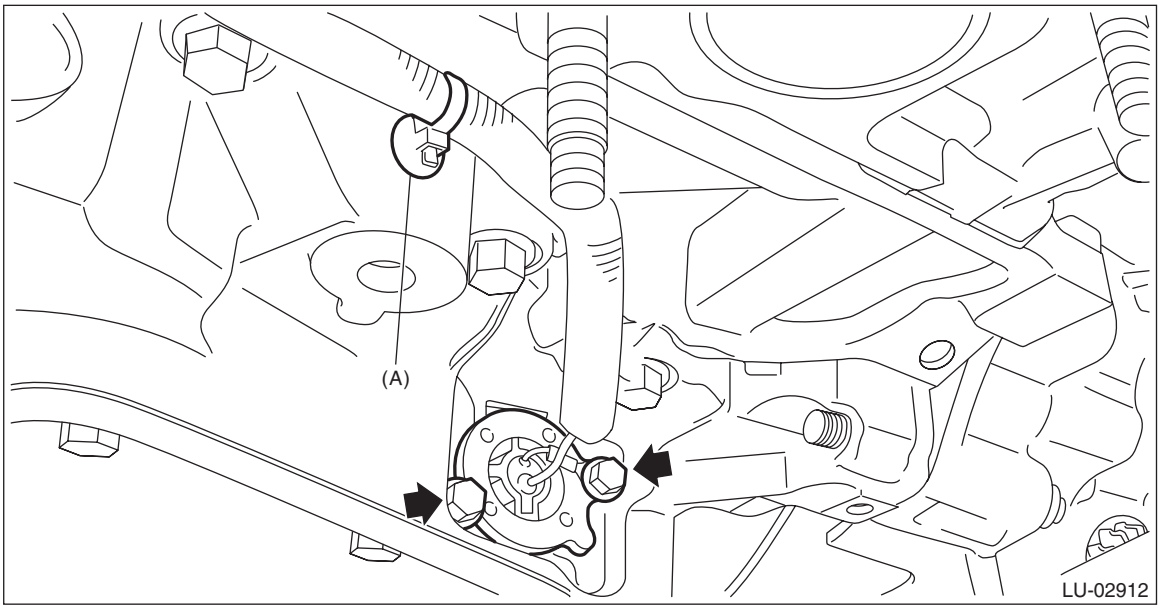

2. HEV MODEL

1) Turn the ignition switch to OFF.
2) Open the front hood, and make alignment marks (A) on the front hood striker and the front hood using a marker pen.

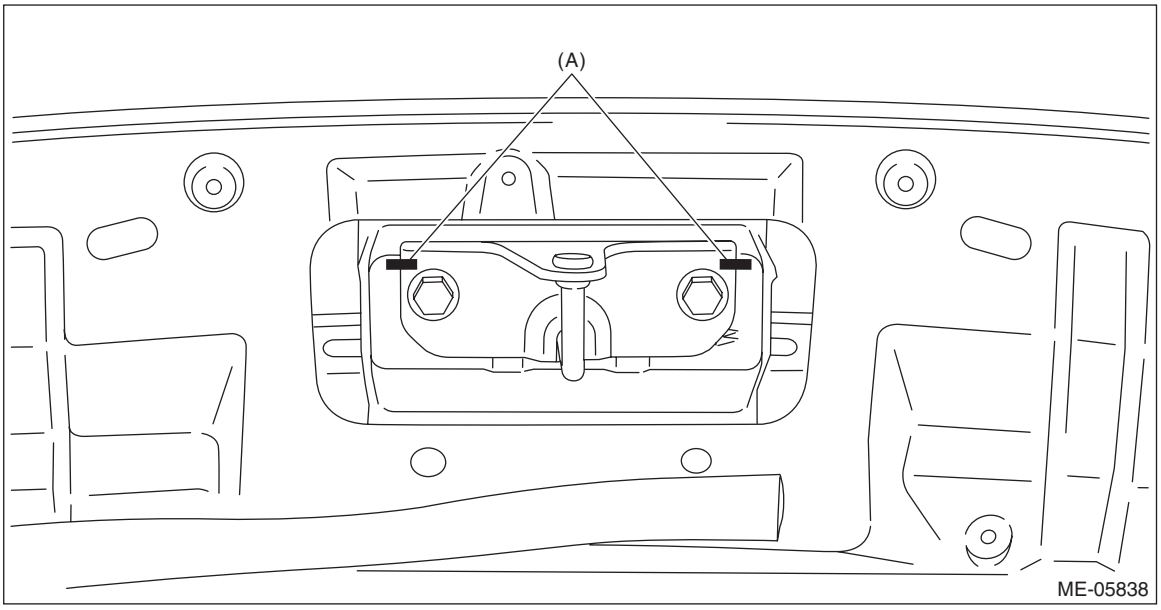

3) Remove the front hood striker from the front hood.

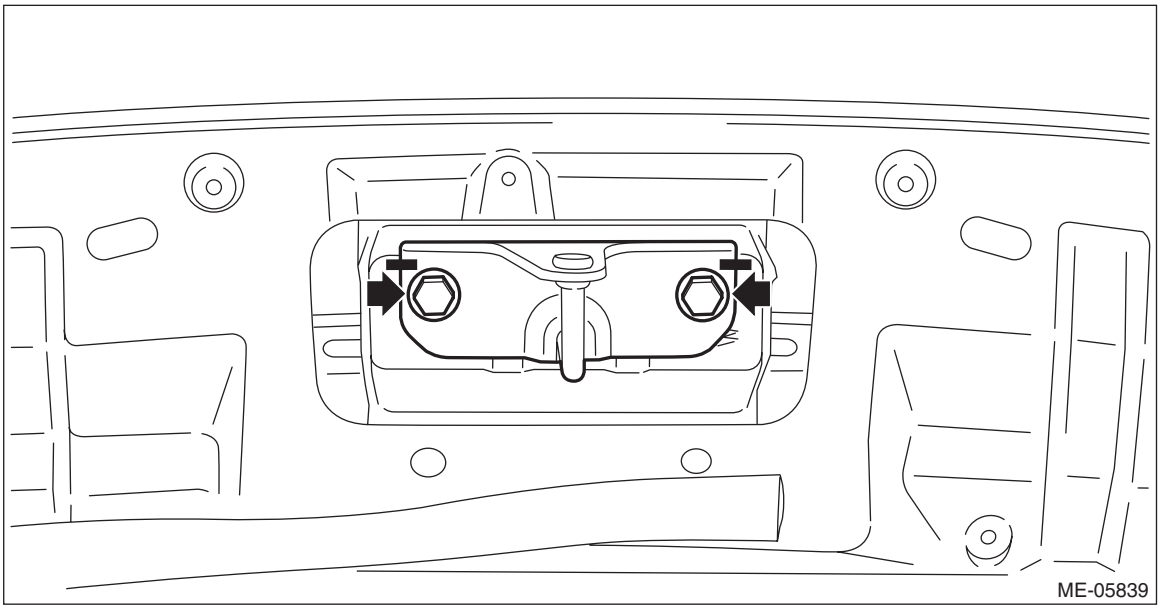

4) Change the front hood stay position from (A) to (B), and completely open the front hood.

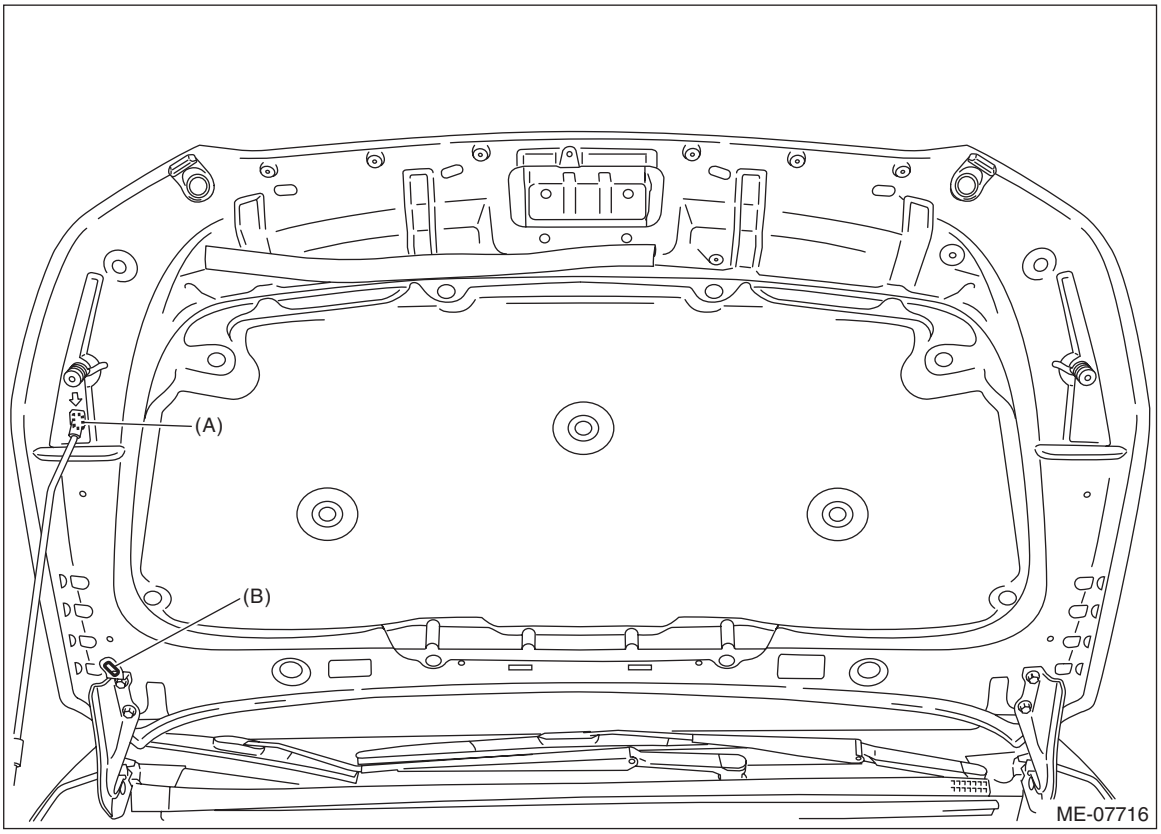

5) Disconnect the ground cable from battery. <Ref. to NT-5, BATTERY, NOTE, Note.>

NOTE:
For the 12 volt engine restart battery, disconnect the ground terminal from 12V engine restart battery sensor.

6) Remove the collector cover.
(1) Pull up the two points at the front of collector cover (A).
(2) Pull up the two points at the rear of collector cover (B) while moving them rearward.

NOTE:
Be careful not to contact the fuel delivery tube when moving the collector cover rearward.

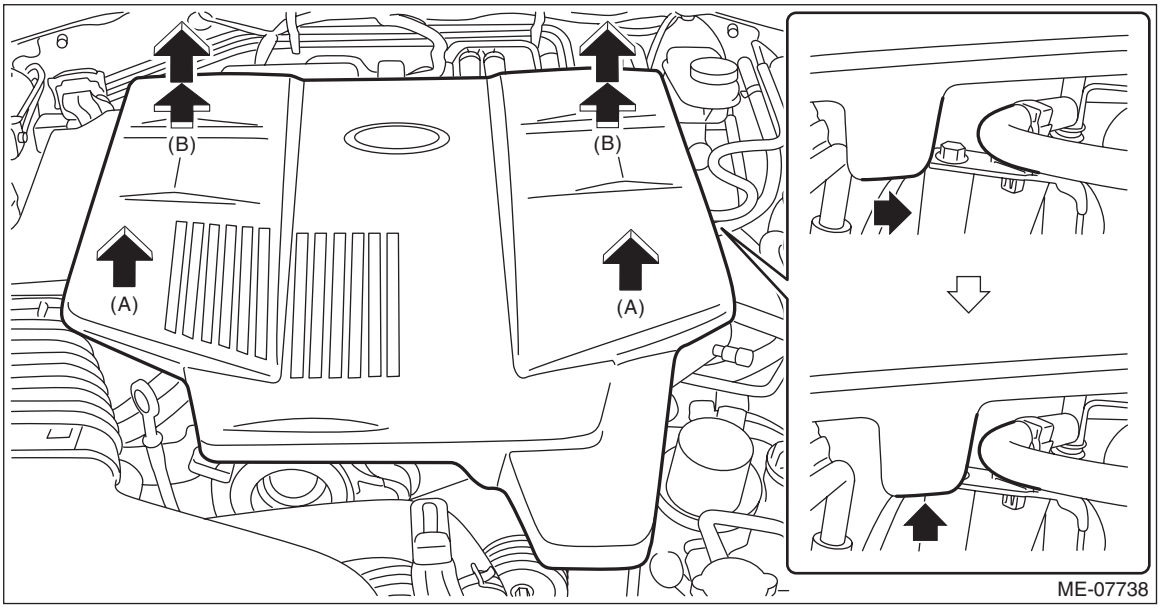

7) Remove the air intake duct. <Ref. to IN(H4DO(HEV))-15, REMOVAL, Air Intake Duct.>
8) Remove the air cleaner case. <Ref. to IN(H4DO(HEV))-6, REMOVAL, Air Cleaner Case.>
9) Disconnect the connector (A) from the brake vacuum pump, and disconnect the connector (B) from the A/C compressor.
10) Remove the clip (C) and the clip (D) securing the harness to the battery cable assembly, and move the harness to the left side wheel apron.

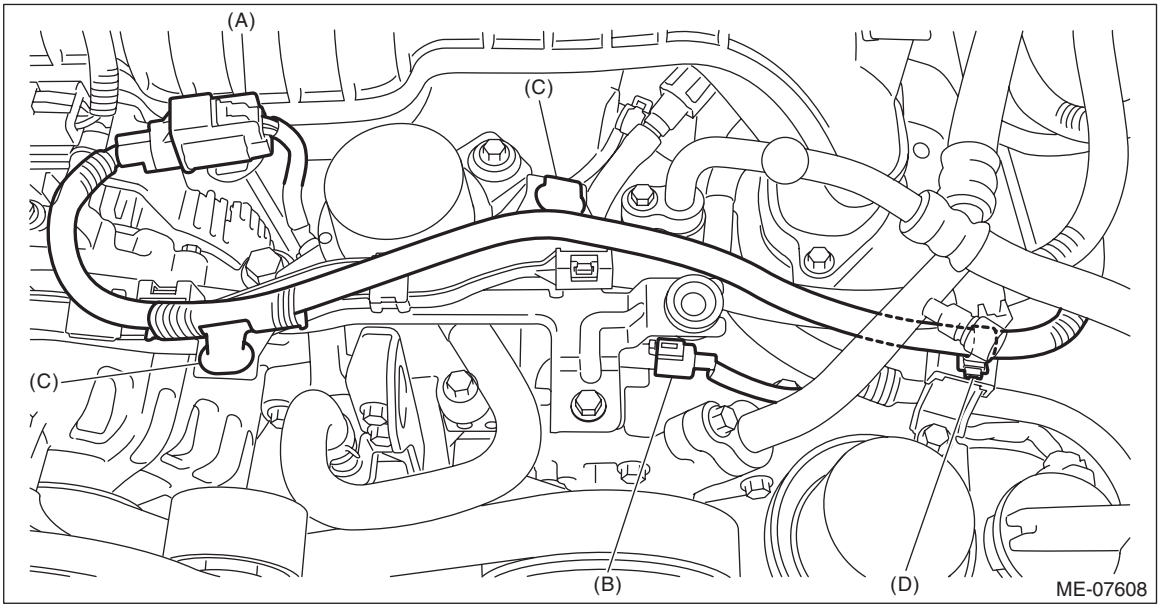

11) Remove the terminal boot from the positive terminal of the 12 volt auxiliary battery.

12) Remove the nuts fastening the battery cable assembly to the slow blow fuse (12 volt auxiliary battery), and remove the battery cable assembly from the main fuse box.

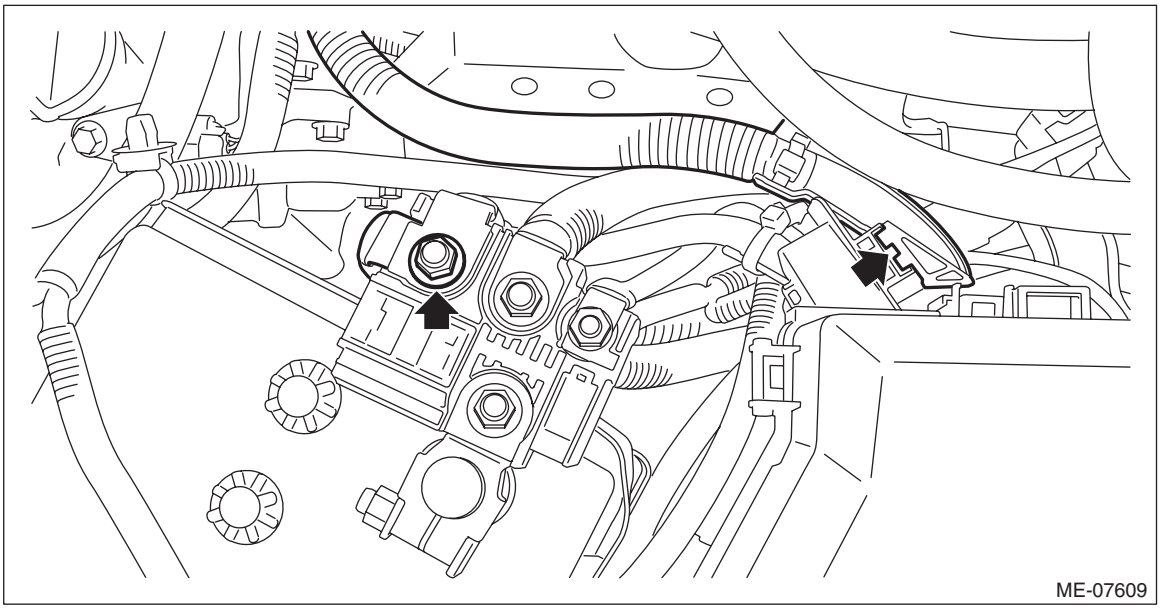

13) Remove the bolt (A) securing the battery cable stay to the chain cover, and remove the clip (B) securing the battery cable assembly to the collector cover bracket.

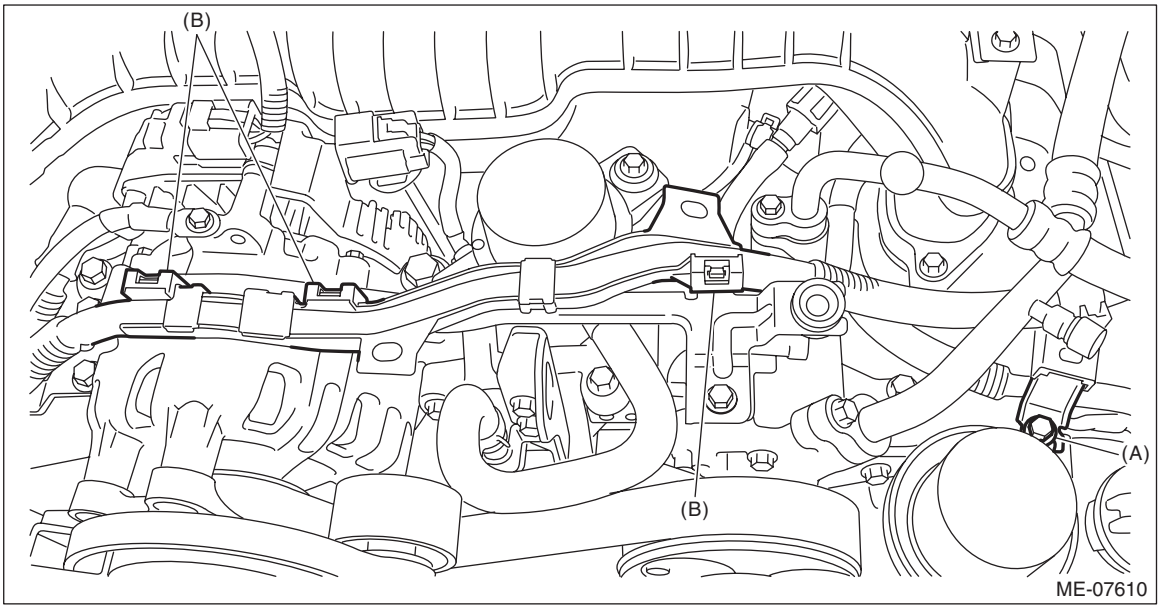

14) Disconnect the terminal (A) and the terminal (B) from ISG.

15) Remove the clip (C) securing the battery cable assembly to the battery cable bracket No. 1, and move the battery cable assembly to the right side wheel apron.

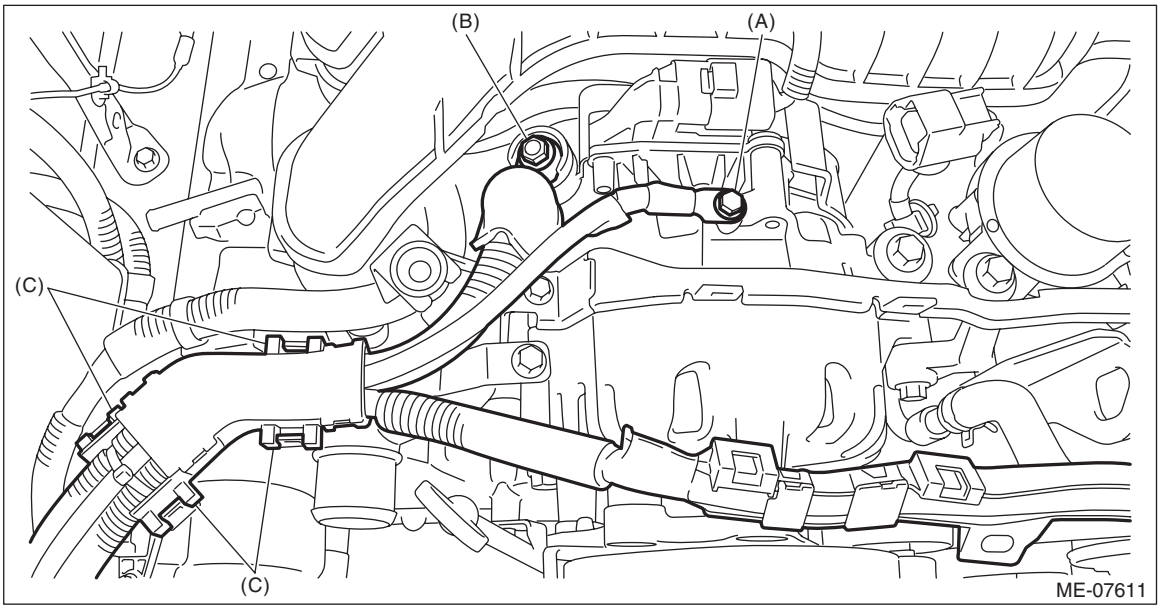

16) Lift up the vehicle.
17) Remove the under cover. <Ref. to EI-29, REMOVAL, Front Under Cover.>
18) Drain the engine oil. <Ref. to LU(H4DO(w/o HEV))-13, REPLACEMENT, Engine Oil.>
19) Remove the front exhaust pipe. <Ref. to EX(H4DO(w/o HEV))-6, REMOVAL, Front Exhaust Pipe.>
20) Disconnect the oil level switch connector from the engine harness, and remove the clip (A) securing the harness.

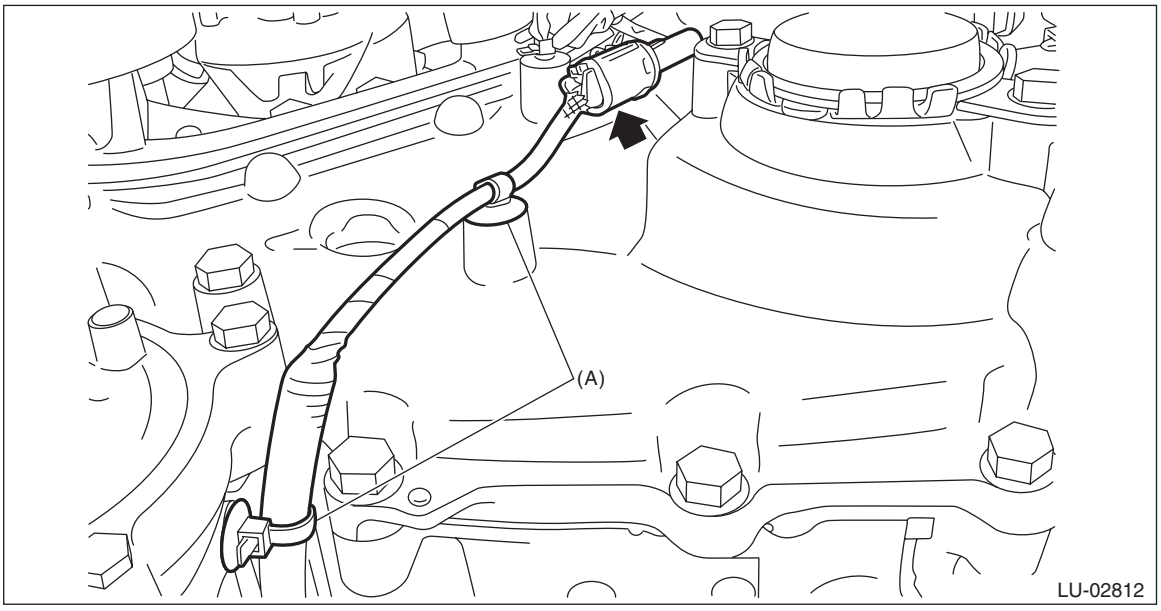

21) Remove the nuts which secure the engine mounting to the front crossmember.

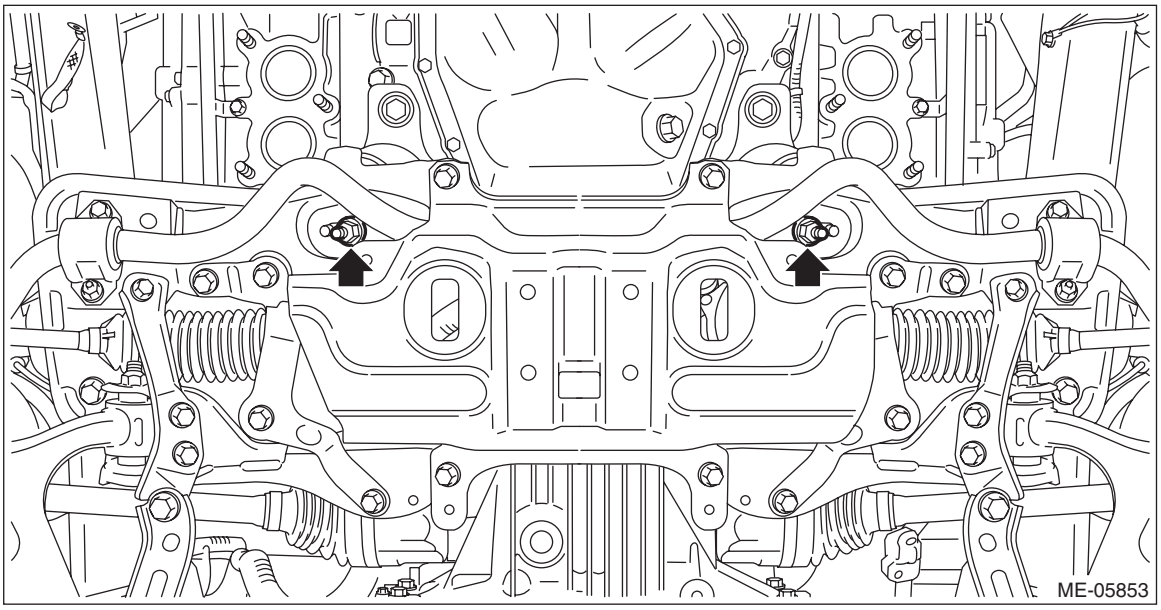

22) Remove the electric power steering gearbox. <Ref. to PS-27, REMOVAL, Electric Power Steering Gearbox.>
23) Remove the front drive shaft LH. <Ref. to DS-57, REMOVAL, Front Drive Shaft.>
24) Lower the vehicle.
25) Disconnect the transmission radio ground terminal (A) from the vehicle, and remove the pitching stopper.

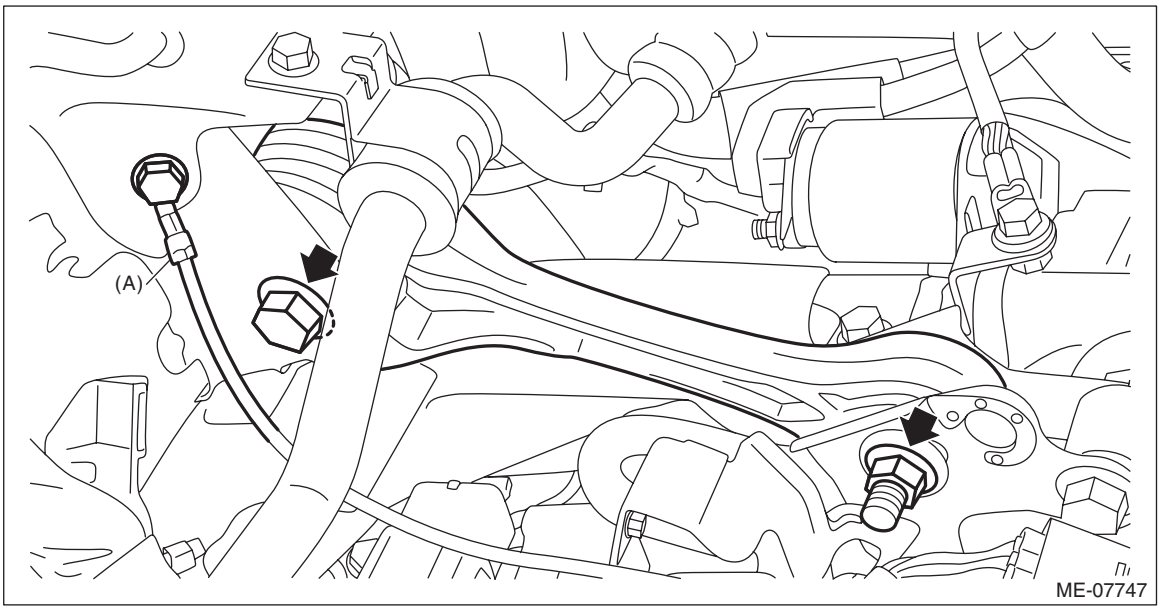

26) Remove the bolt (A) securing the bulkhead harness connector bracket, and disconnect the bulkhead harness connector from the engine harness connector (brown) (B).

27) Disconnect the bulkhead harness connector from the transmission harness connector (C), inhibitor harness connector (D) and drive motor harness connector (E).

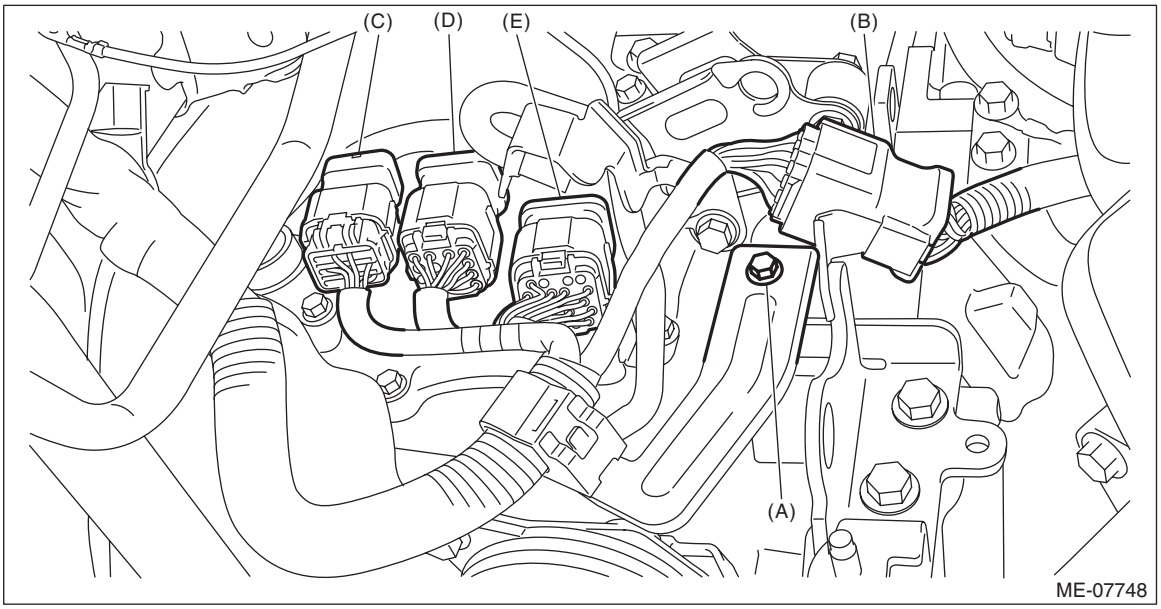

28) Remove the transmission case cover.

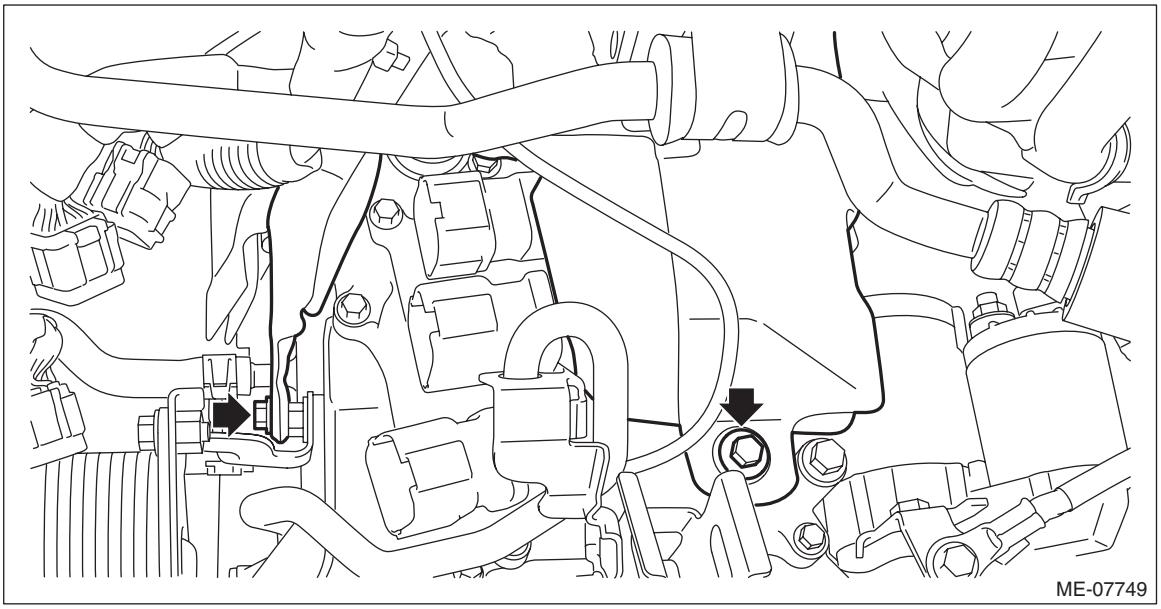

29) Remove the bolt which holds the transmission harness stay.

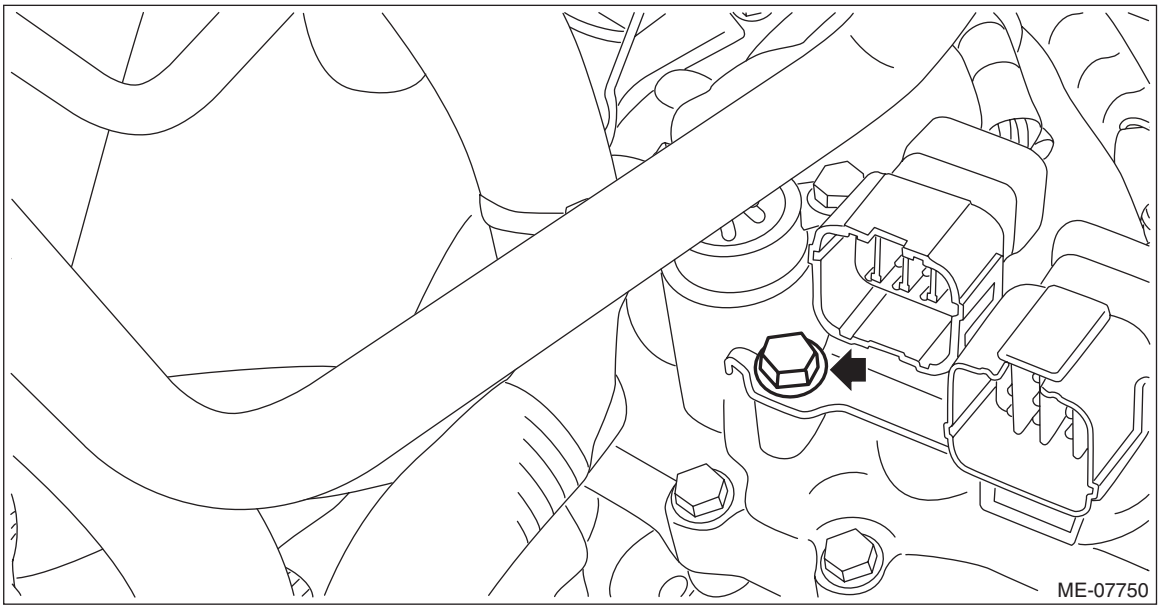

30) Remove the bolt which holds the transmission harness to the control valve body, and turn the transmission harness clockwise till the bolt hole can be seen as shown in the figure, and tighten the bolt to temporary lock the harness. (CVT model)

NOTE:
This procedure is required to prevent the transmission harness from touching the vehicle body during engine removal/installation.

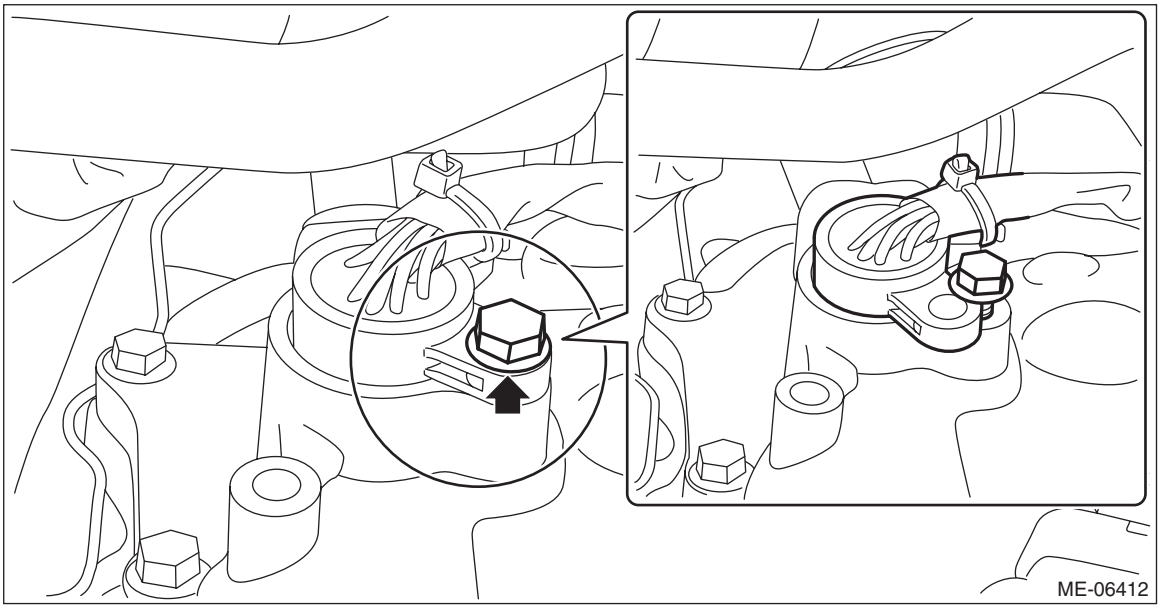

31) Remove the clip (A) securing the engine harness to the purge control solenoid valve bracket, and disconnect the bolt securing the purge control solenoid valve bracket to the intake manifold.

NOTE:
This operation is required to prevent the wire rope from contacting the purge control solenoid valve while lifting the engine.

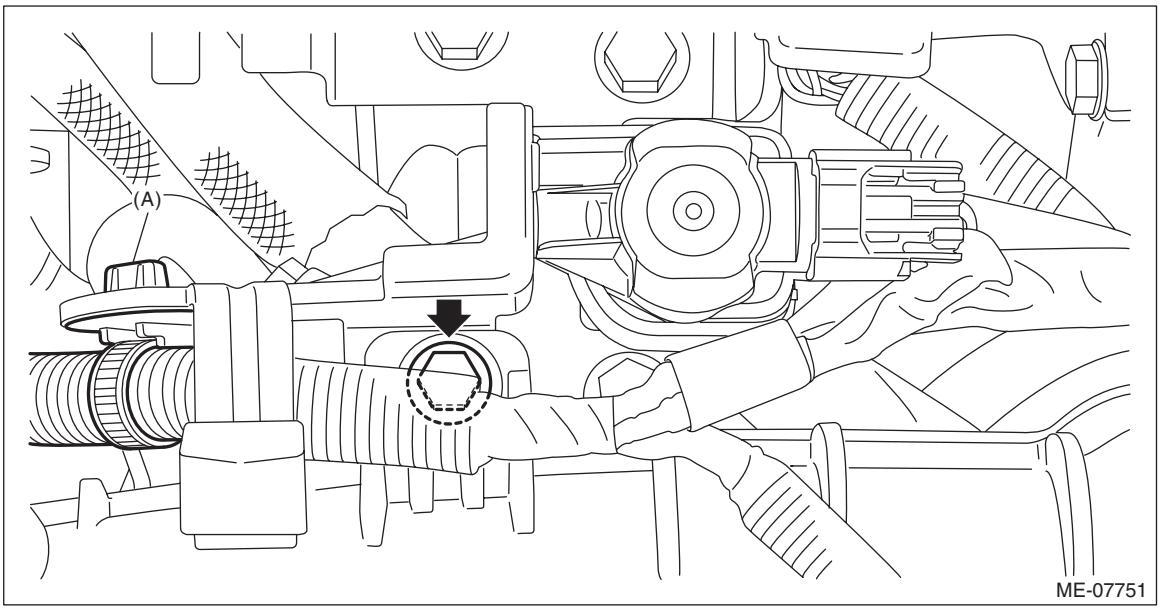

32) Lift up the engine with a lifting device and wire ropes.

CAUTION:
When lifting up the engine, pay attention to the clearance of each part and be careful not to lift the engine too much, in order to prevent damaging the vehicle.

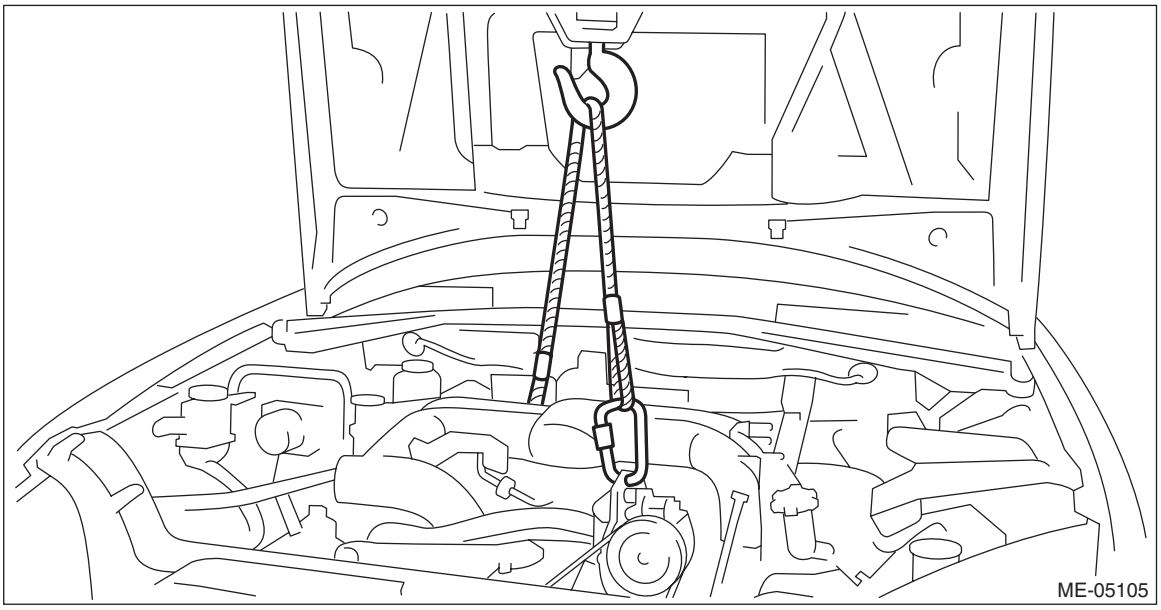

33) Remove the engine mounting LH from the engine.

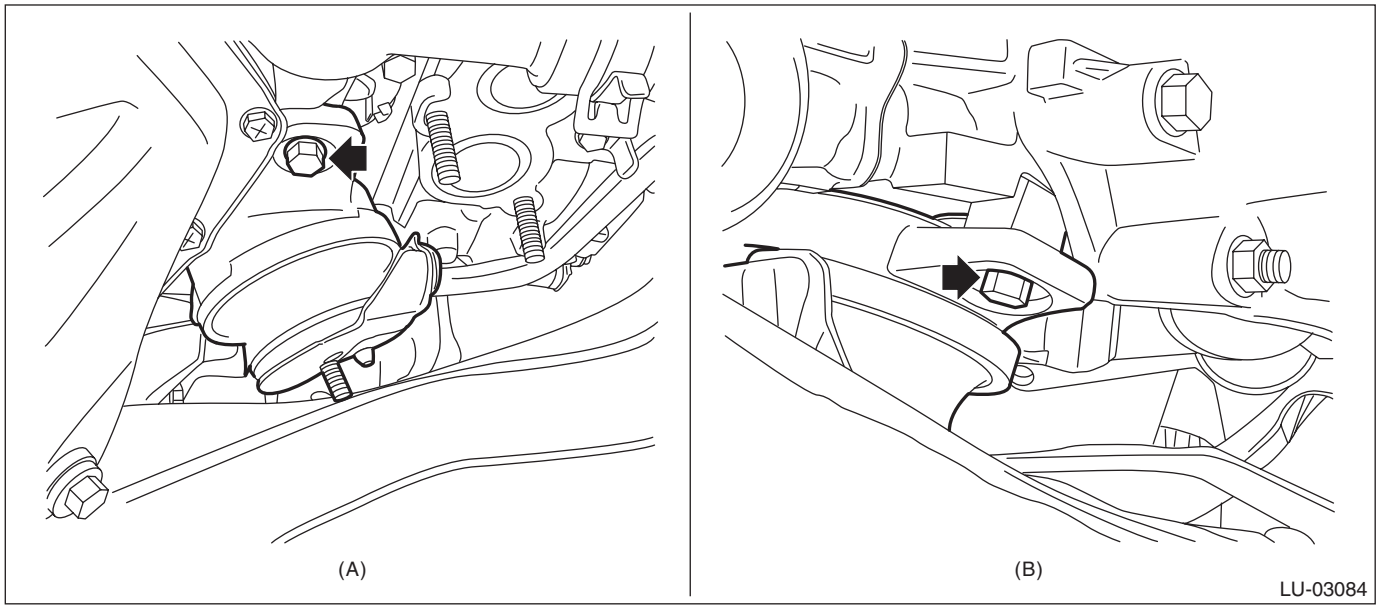

(A) Front side (B) Rear side

34) Remove clip (A) from the oil pan upper, and remove the oil level switch.

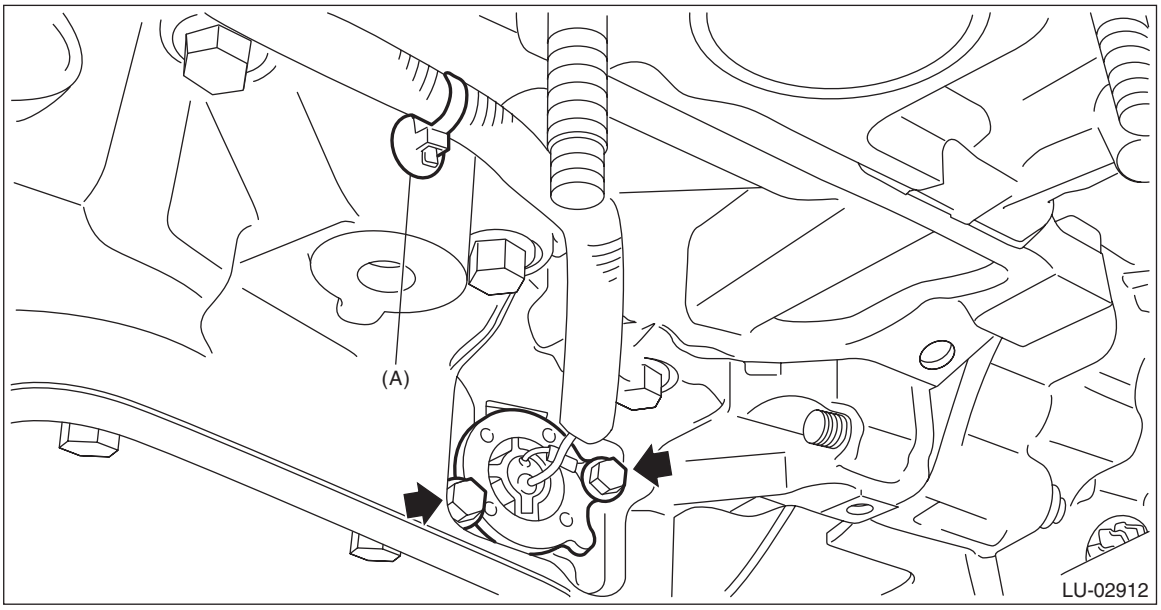

B: INSTALLATION

1. GASOLINE ENGINE MODEL

1) Install the oil level switch and the clip (A) to the oil pan upper.

NOTE:
- Use new O-rings.
- Apply a coat of engine oil to the O-rings.

Tightening torque:
6.4 N·m (0.7 kgf-m, 4.7 ft-lb)

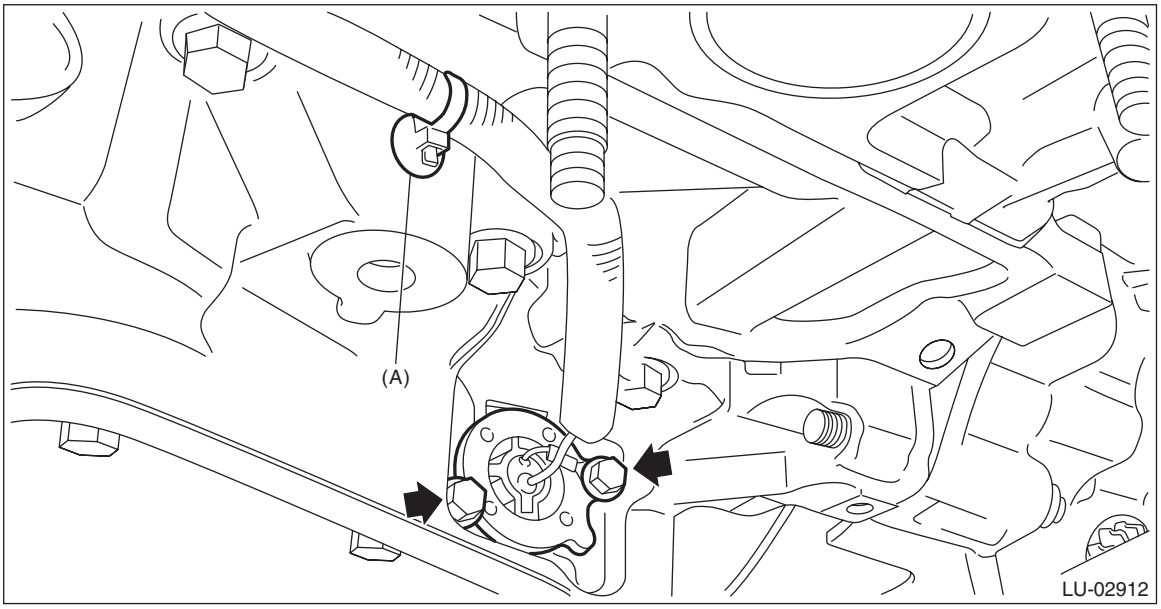

2) Install the engine mounting LH onto the engine.

Tightening torque:
35 N·m (3.6 kgf-m, 25.8 ft-lb)

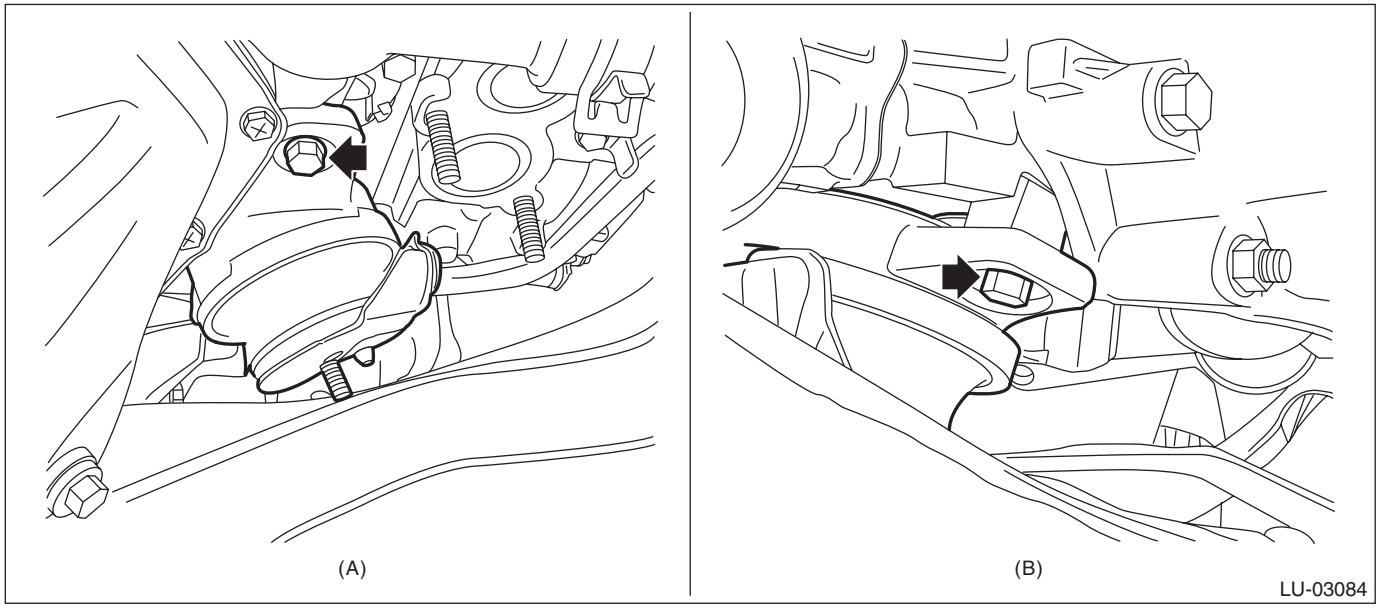

(A) Front side (B) Rear side

3) Lower the engine and remove the lifting device and wire ropes.

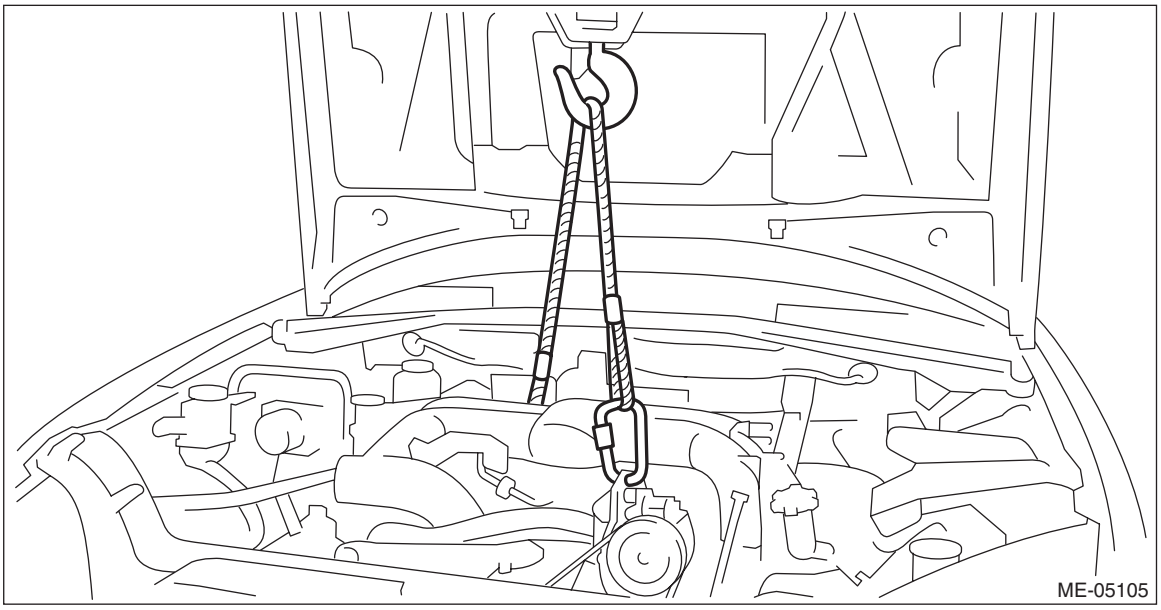

4) Remove the bolt and turn the transmission harness counterclockwise to install the transmission harness to the control valve body. (CVT model)

Tightening torque:
7 N·m (0.7 kgf-m, 5.2 ft-lb)

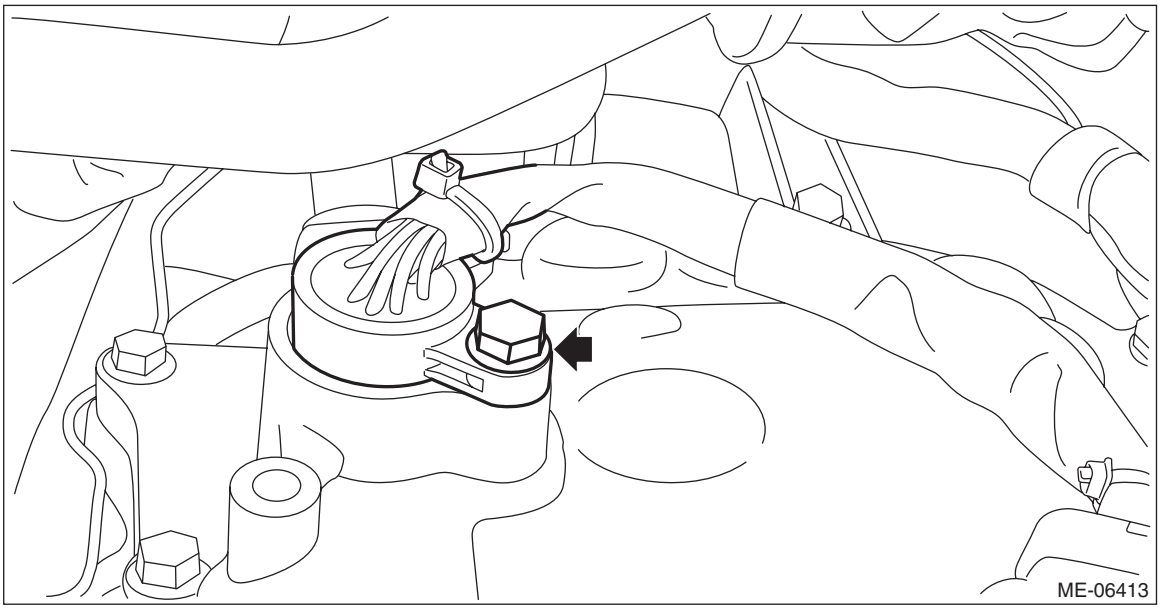

5) Install the bolt which holds the transmission harness stay. (CVT model)

Tightening torque:
7 N·m (0.7 kgf-m, 5.2 ft-lb)

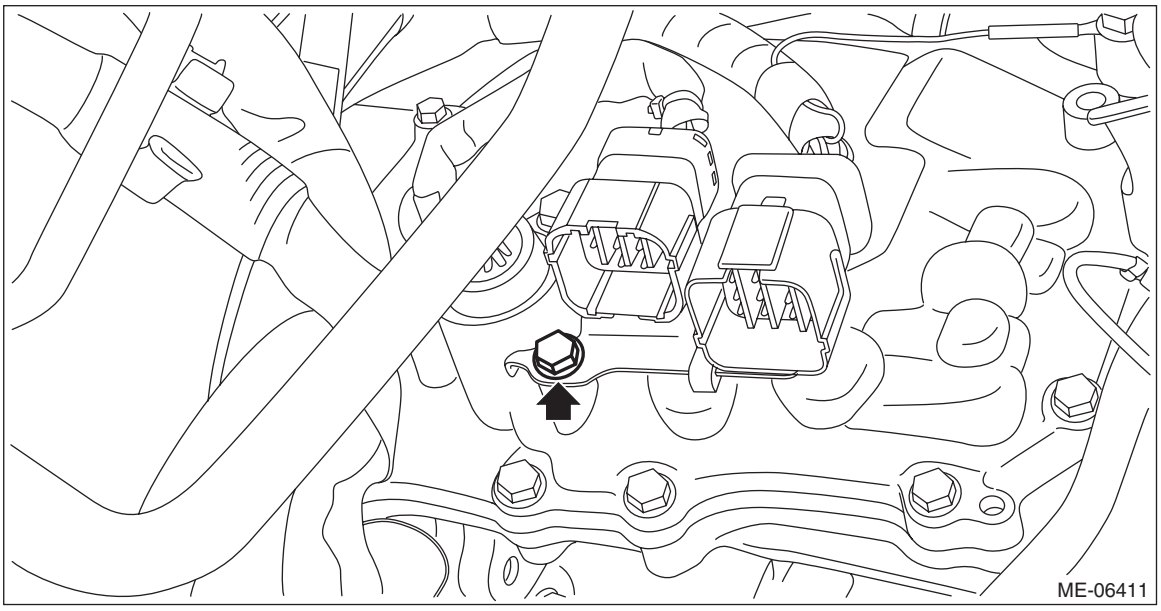

6) Install the transmission case cover. (CVT model)

Tightening torque:
8 N·m (0.8 kgf-m, 5.9 ft-lb)

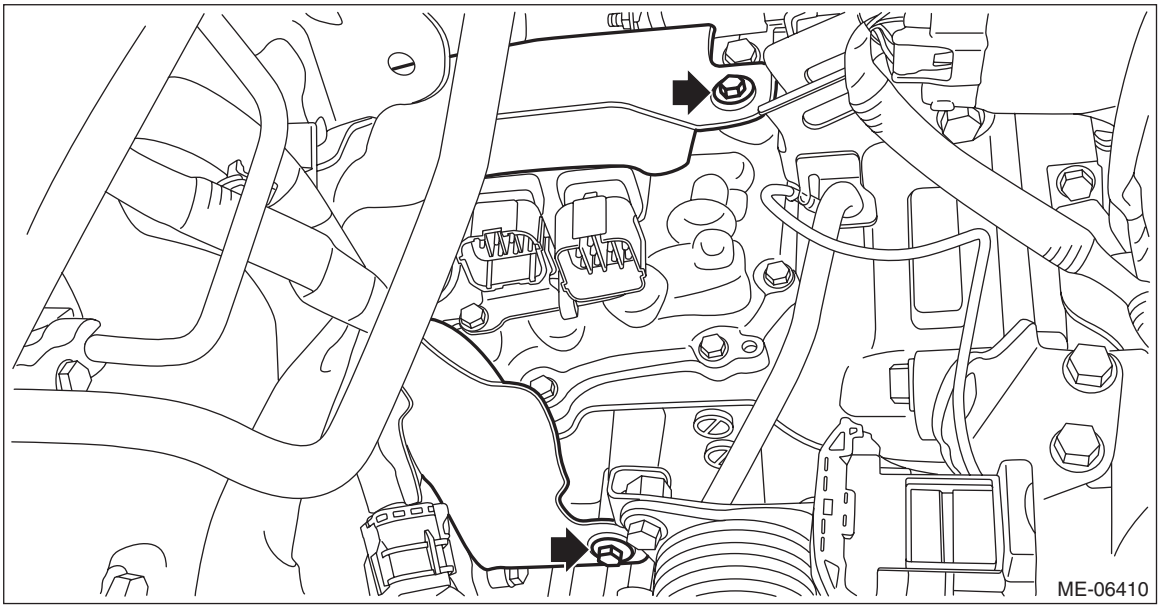

7) Install the pitching stopper.

Tightening torque:
T1: 50 N·m (5.1 kgf-m, 36.9 ft-lb)
T2: 58 N·m (5.9 kgf-m, 42.8 ft-lb)

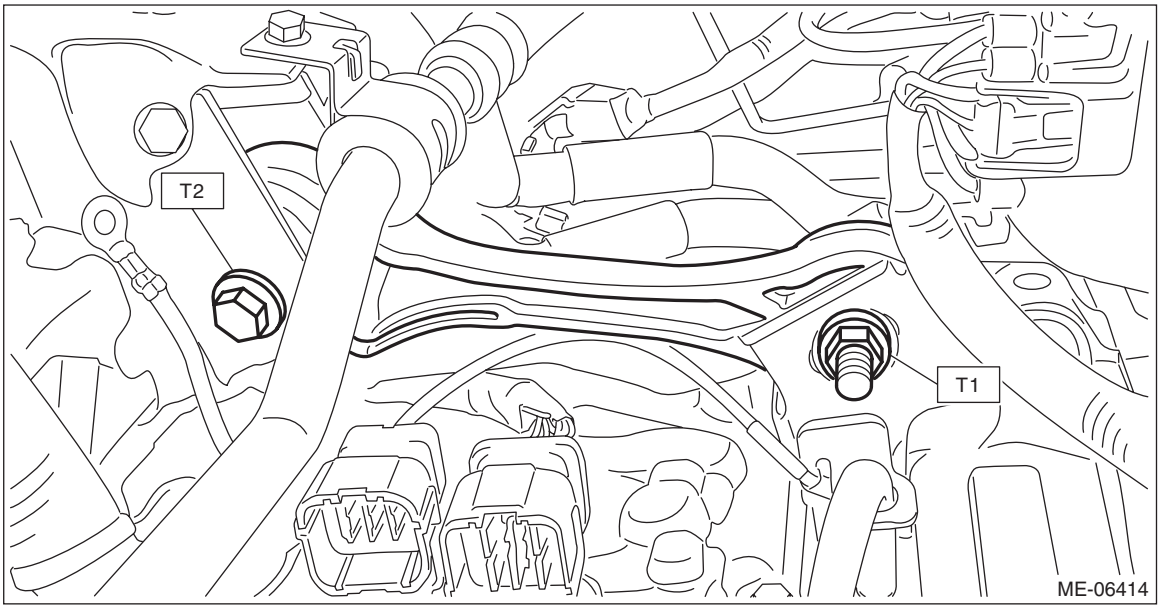

8) Connect the transmission radio ground terminal (C) to the vehicle body, and connect the bulkhead harness connector to the transmission harness connector (A) and the inhibitor harness connector (B). (CVT model)

Tightening torque:
13 N·m (1.3 kgf-m, 9.6 ft-lb)

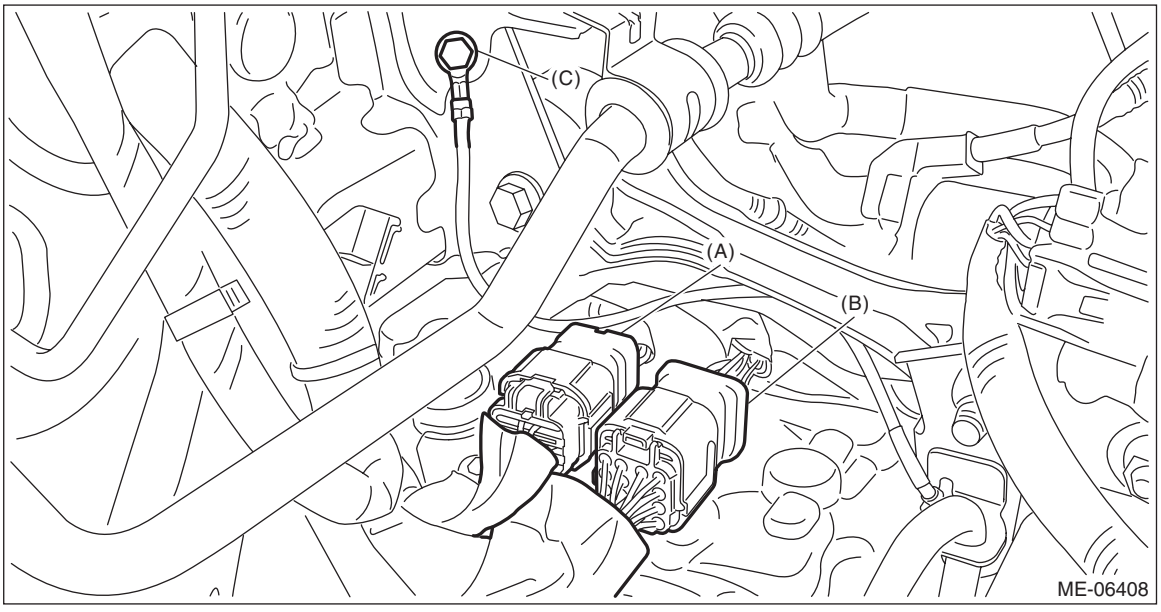

9) Install the electric power steering gearbox. <Ref. to PS-31, INSTALLATION, Electric Power Steering Gearbox.>
10) Install the front drive shaft LH. <Ref. to DS-58, INSTALLATION, Front Drive Shaft.>
11) Install the nuts which hold the engine mounting to the crossmember. (CVT model)

NOTE:
Make sure that locators (A) of the engine mounting are securely inserted.

Tightening torque:
45 N·m (4.6 kgf-m, 33.2 ft-lb)

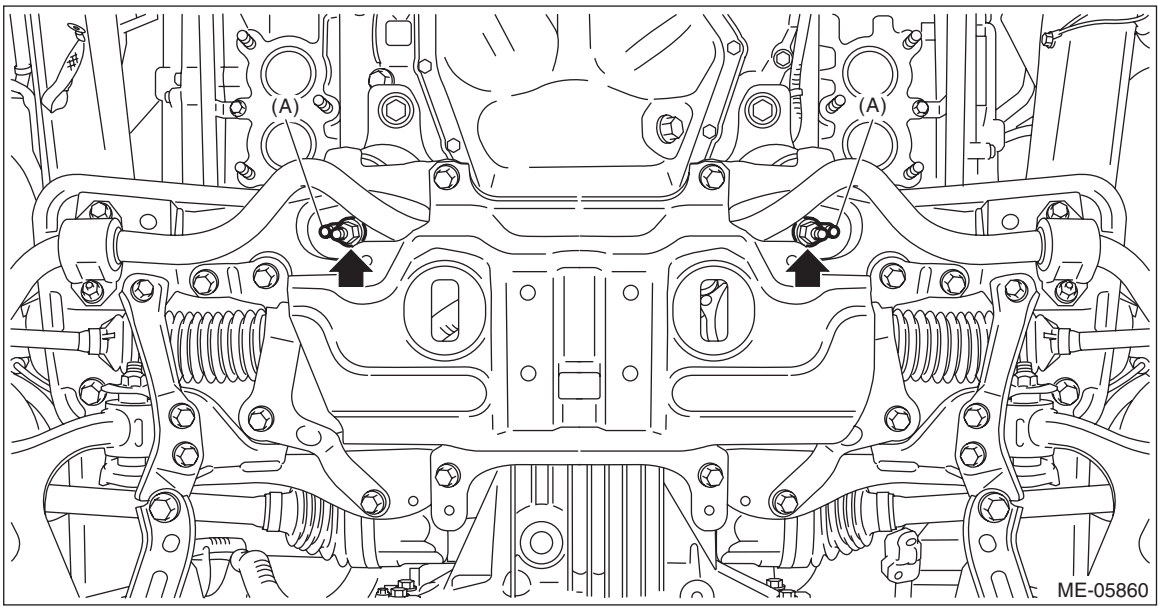

12) Install the nuts which hold the engine mounting to the crossmember. (MT model)

Tightening torque:
45 N·m (4.6 kgf-m, 33.2 ft-lb)

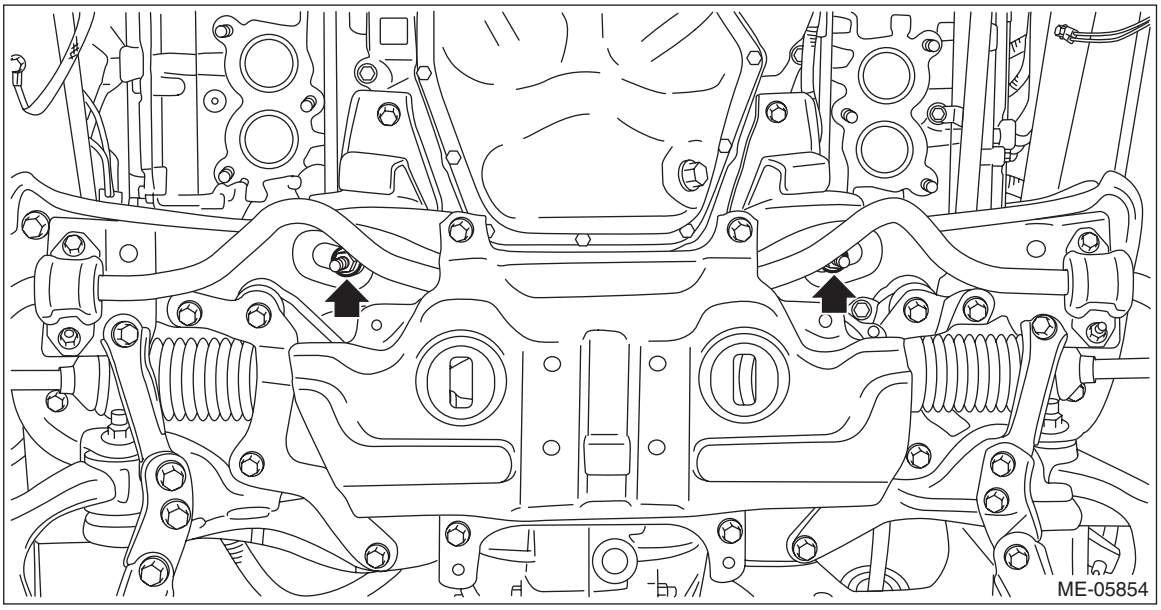

13) Connect the connector of oil level switch to the engine harness, and install the clip (A) securing the harness.

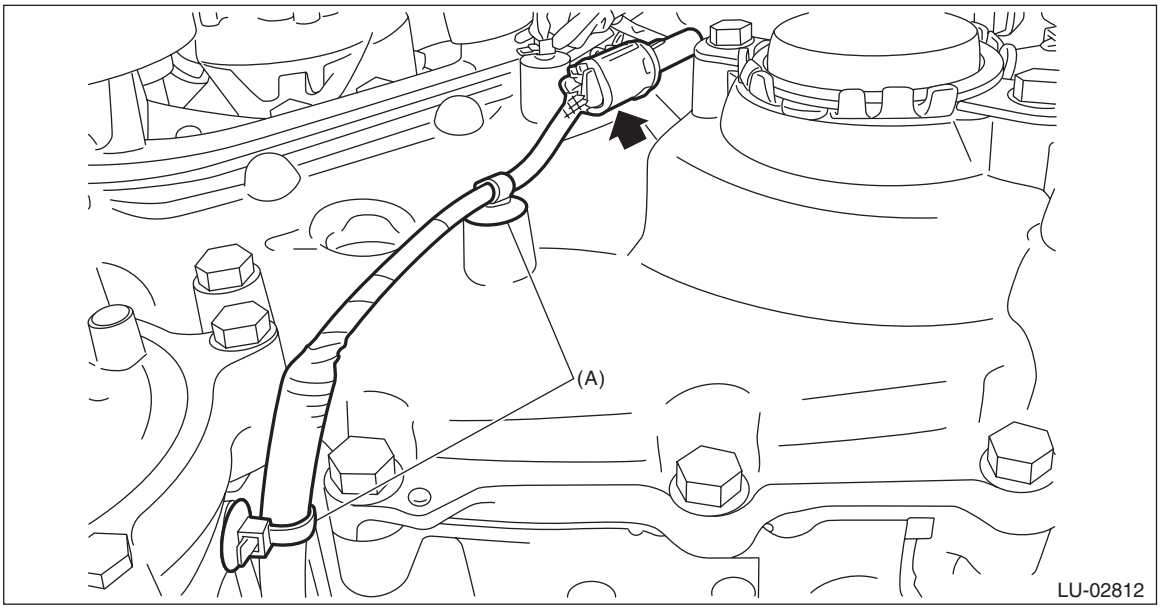

14) Install the front exhaust pipe. <Ref. to EX(H4DO(w/o HEV))-8, INSTALLATION, Front Exhaust Pipe.>
15) Install the under cover.
16) Lower the vehicle.
17) Secure the air breather hose to the engine rear hanger using clip. (MT model)

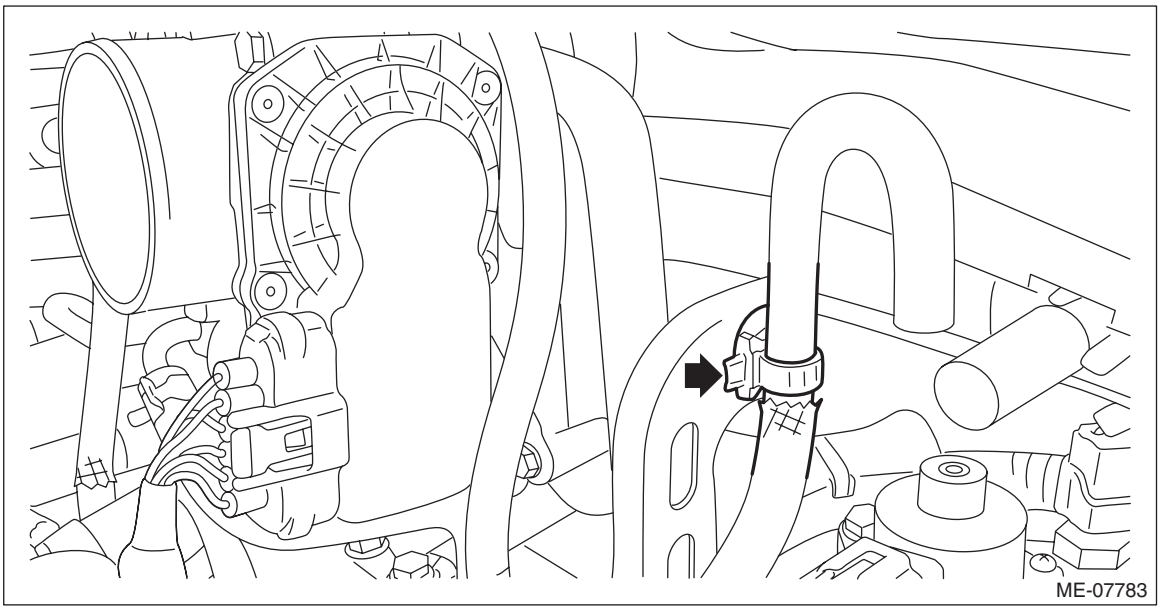

18) Install the air intake case (rear).

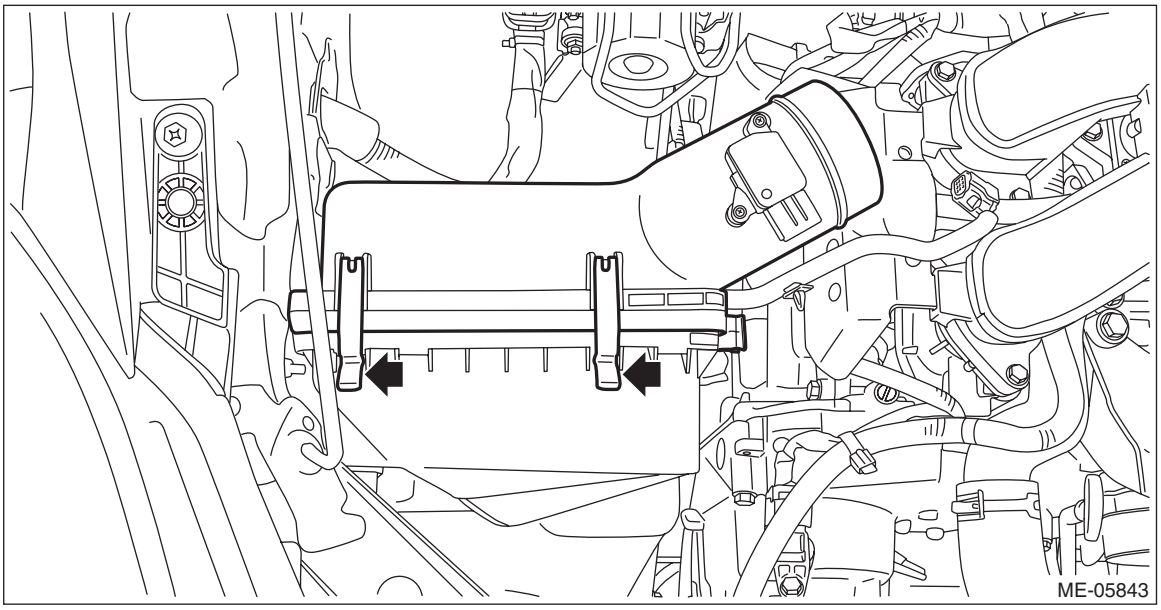

19) Install the clip (A) which secures the air flow and intake air temperature sensor harness, and connect the connector to the air flow and intake air temperature sensor.

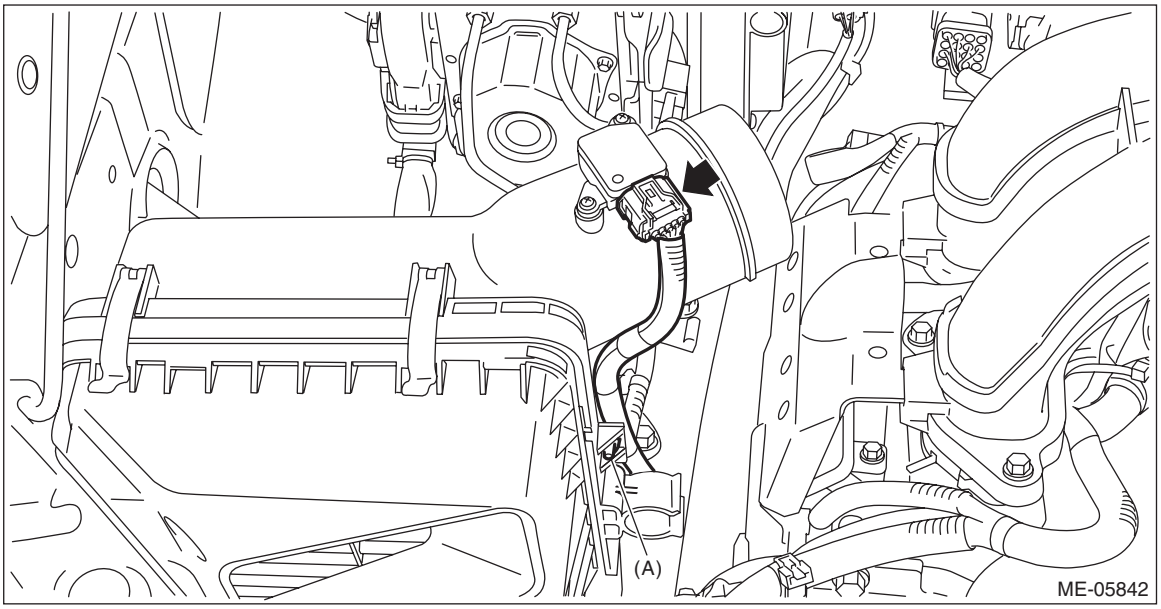

20) Install the air intake boot. <Ref. to IN(H4DO(w/o HEV))-12, INSTALLATION, Air Intake Boot.>
21) Install the air intake duct. <Ref. to IN(H4DO(w/o HEV))-13, INSTALLATION, Air Intake Duct.>

22) Install the V-belt cover.

Tightening torque:
6.4 N·m (0.7 kgf-m, 4.7 ft-lb)

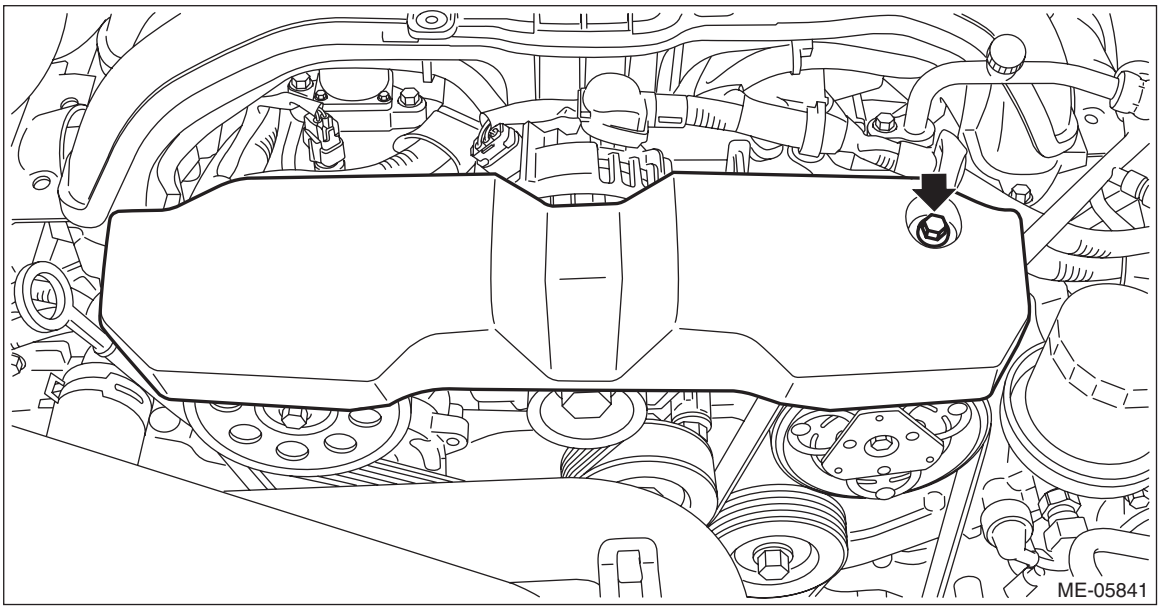

23) Refill the engine oil. <Ref. to LU(H4DO(w/o HEV))-13, REPLACEMENT, Engine Oil.>
24) Connect the battery ground terminal.

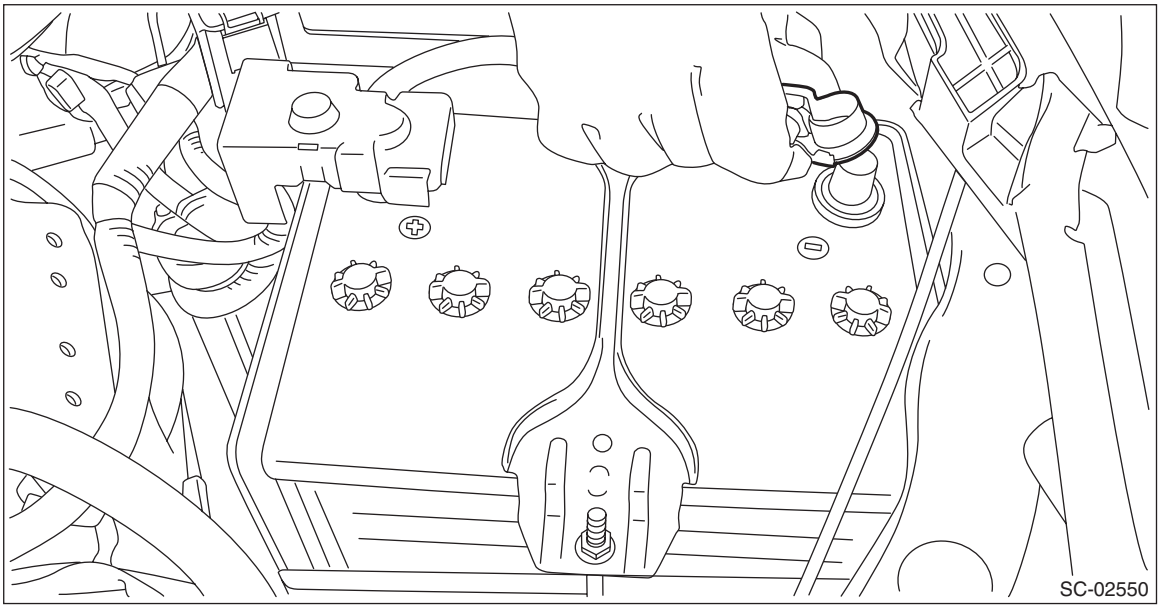

25) Change the front hood stay position from (B) to (A).

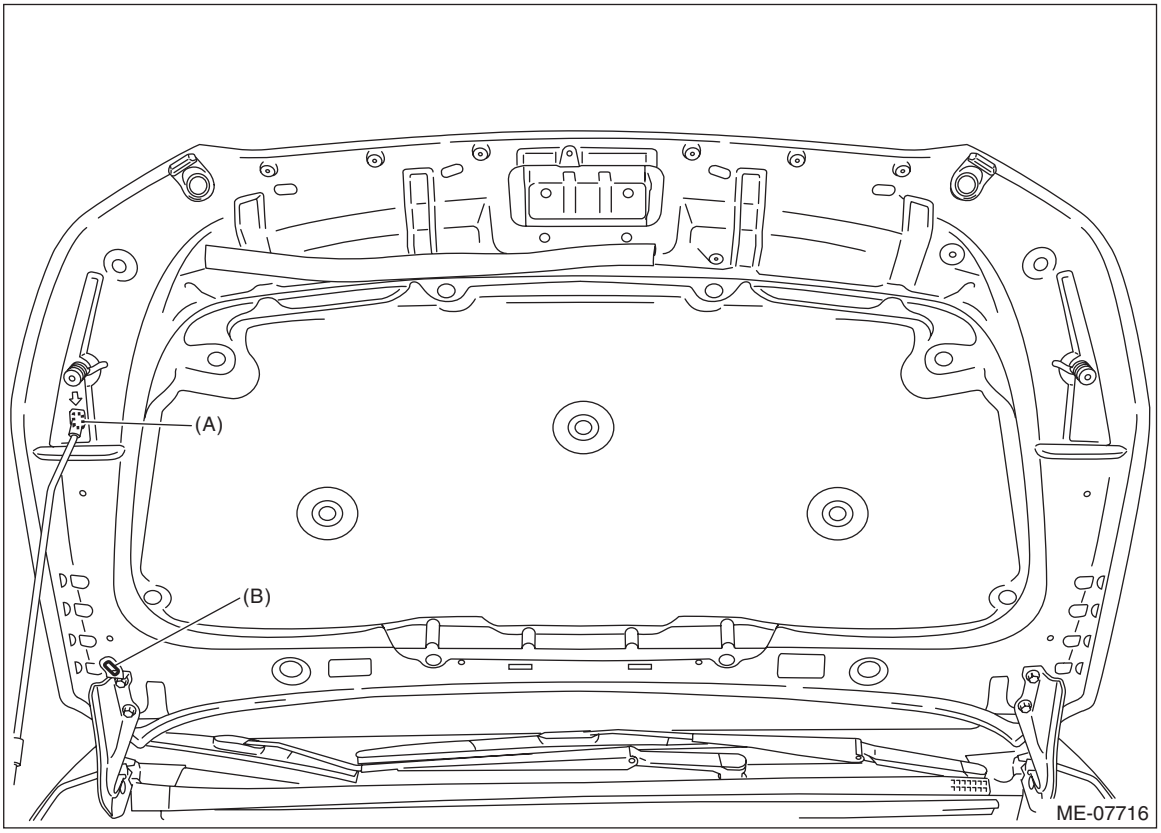

26) Install the front hood striker to the front hood by aligning the alignment marks (A), and close the front hood.

Tightening torque:
33 N·m (3.4 kgf-m, 24.3 ft-lb)

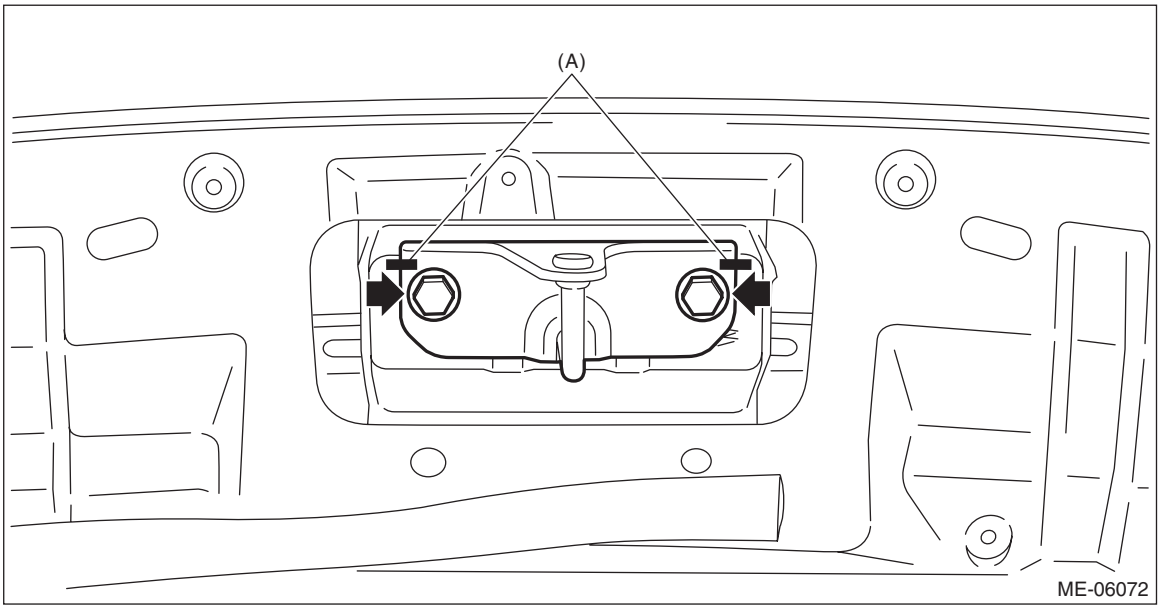

2. HEV MODEL

1) Install the oil level switch and the clip (A) to the oil pan upper.

NOTE:
- Use new O-rings.
- Apply a coat of engine oil to the O-rings.

Tightening torque:
6.4 N·m (0.7 kgf-m, 4.7 ft-lb)

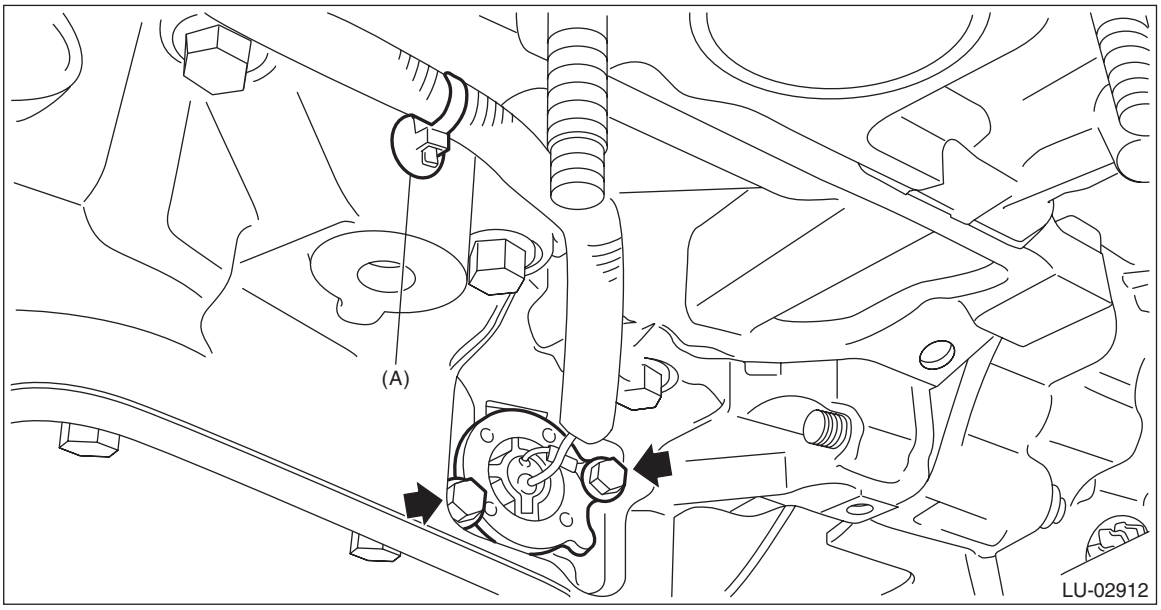

2) Install the engine mounting LH onto the engine.

Tightening torque:
35 N·m (3.6 kgf-m, 25.8 ft-lb)

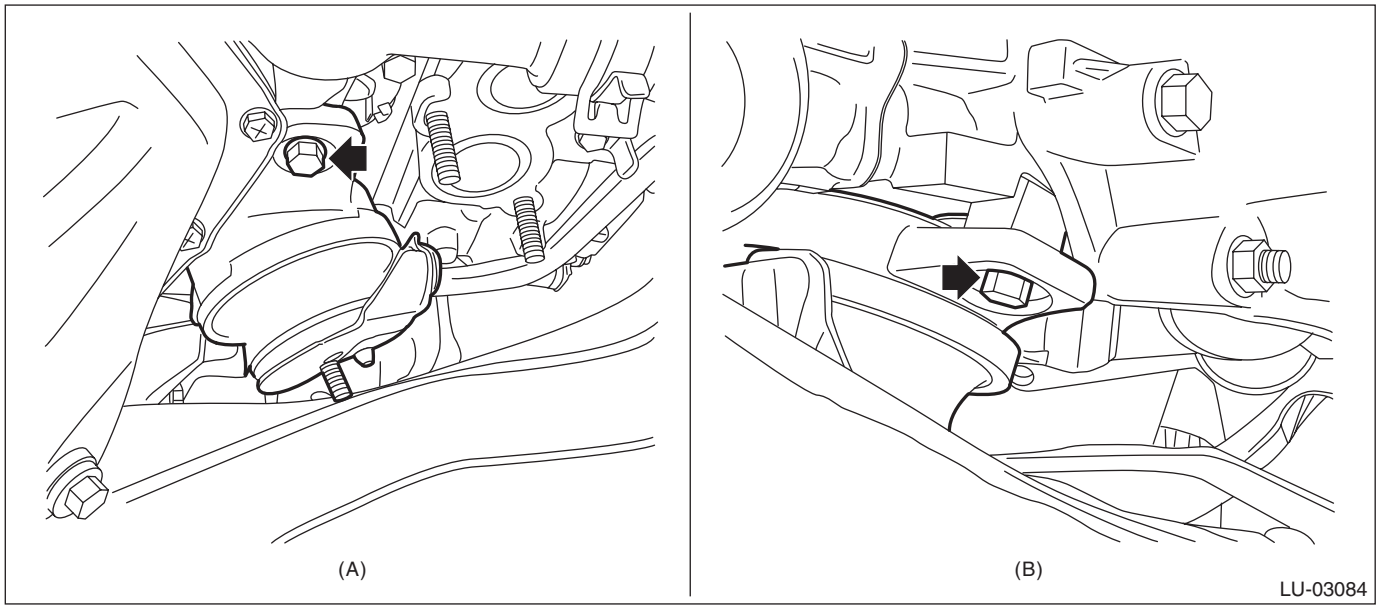

(A) Front side (B) Rear side

3) Lower the engine and remove the lifting device and wire ropes.

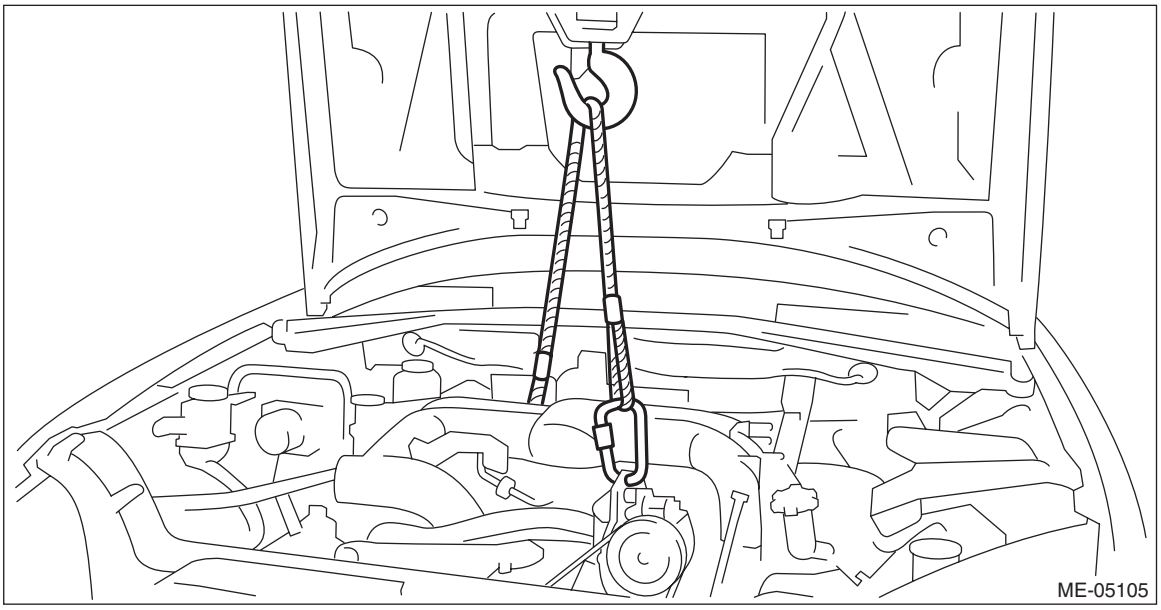

4) Install the bolts which secure the purge control solenoid valve bracket to the intake manifold, and secure the engine harness to the purge control solenoid valve bracket with the clip (A).

Tightening torque:
6.4 N·m (0.7 kgf-m, 4.7 ft-lb)

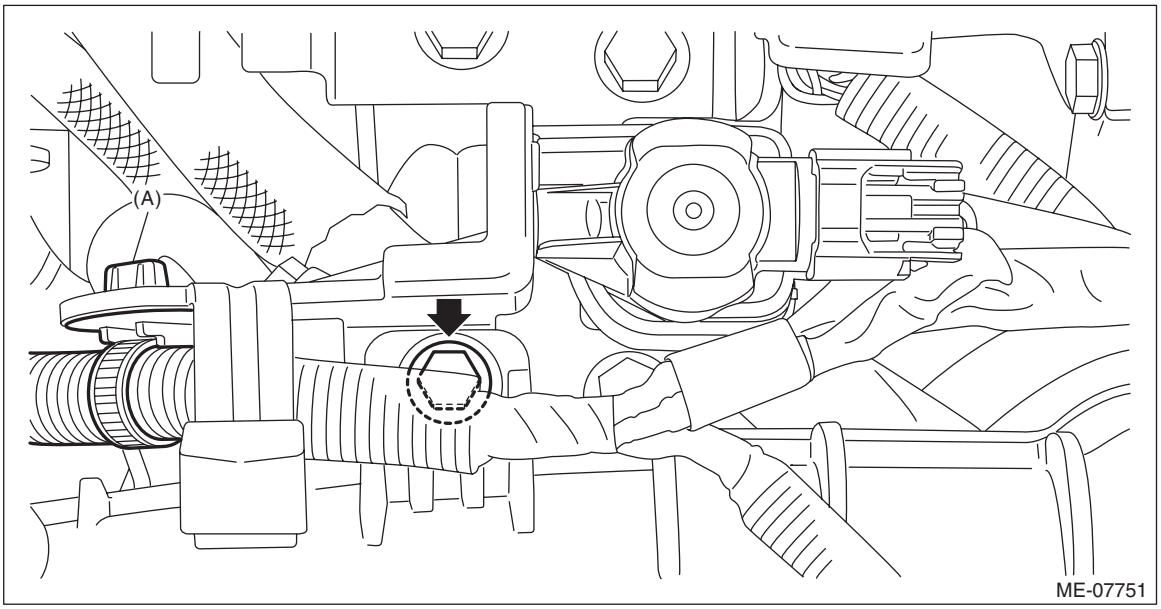

5) Remove the bolt and turn the transmission harness counterclockwise to install the transmission harness to the control valve body.

Tightening torque:
7 N·m (0.7 kgf-m, 5.2 ft-lb)

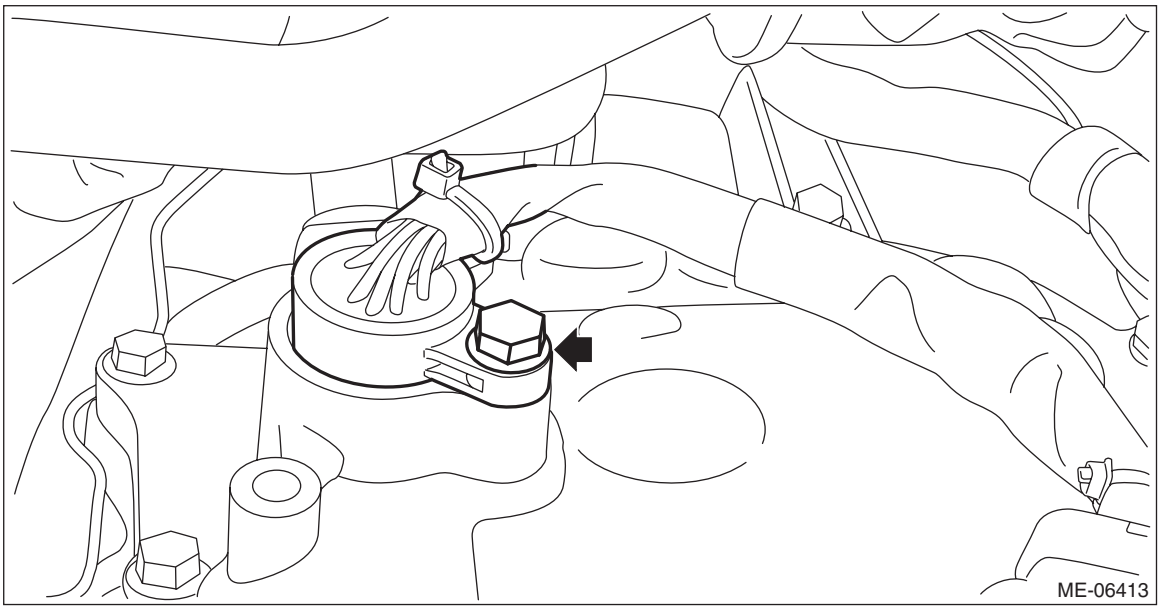

6) Install the bolt which holds the transmission harness stay.

Tightening torque:
7 N·m (0.7 kgf-m, 5.2 ft-lb)

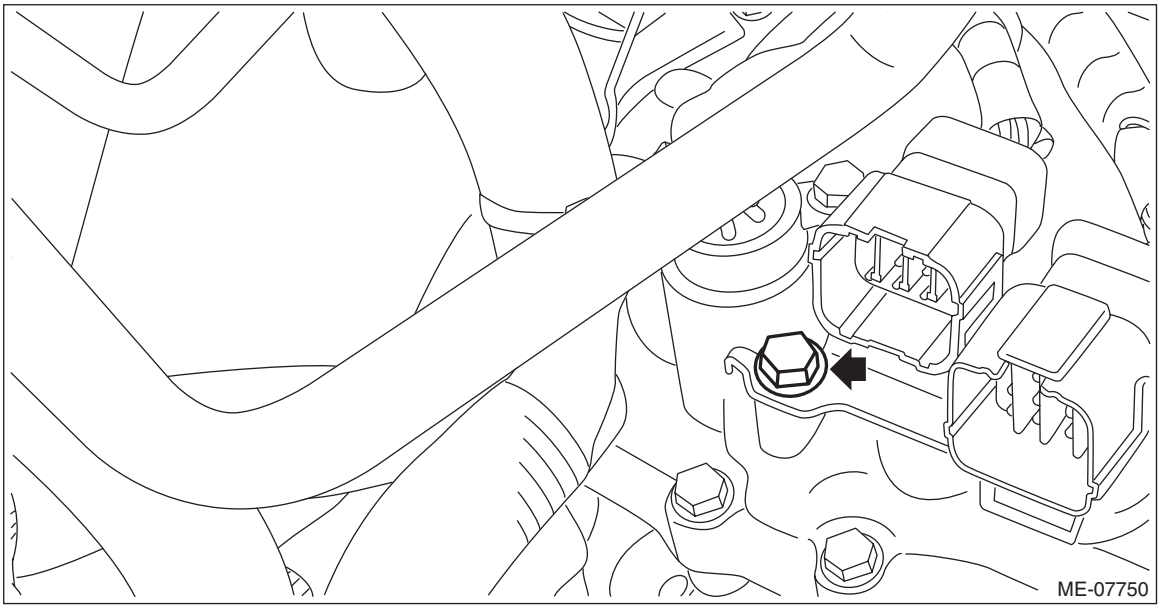

7) Install the transmission case cover.

Tightening torque:
8 N·m (0.8 kgf-m, 5.9 ft-lb)

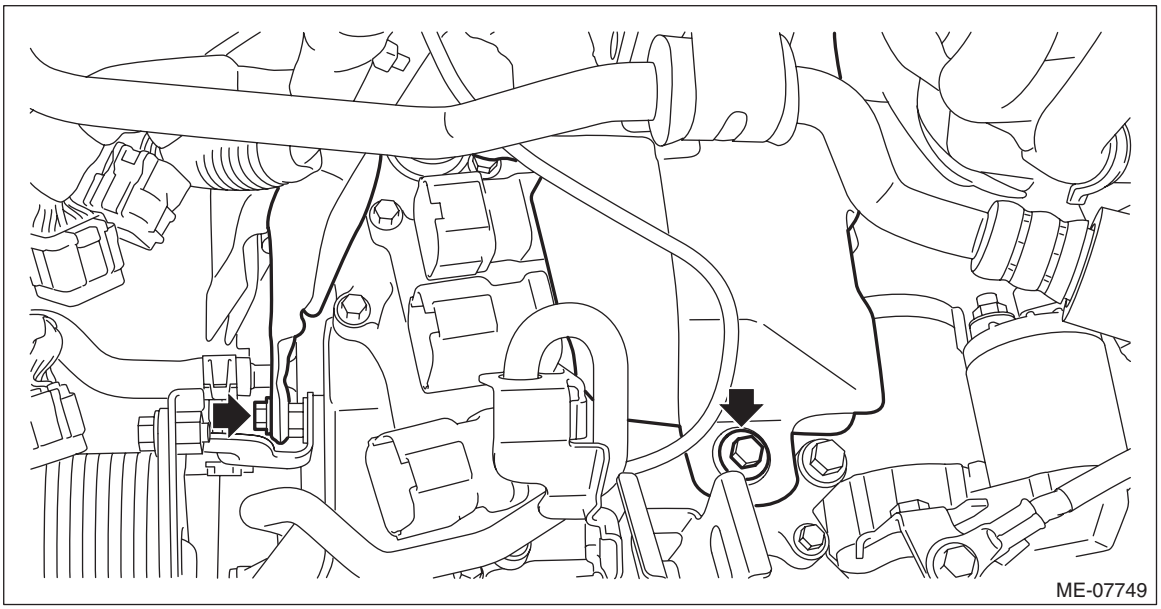

8) Connect the bulkhead harness connector to the transmission harness connector (C), inhibitor harness connector (D) and drive motor harness connector (E).
9) Connect the bulkhead harness connector to the engine harness connector (brown) (B), and install the bolt (A) securing the bulkhead harness connector bracket.

Tightening torque:
7.5 N·m (0.8 kgf-m, 5.5 ft-lb)

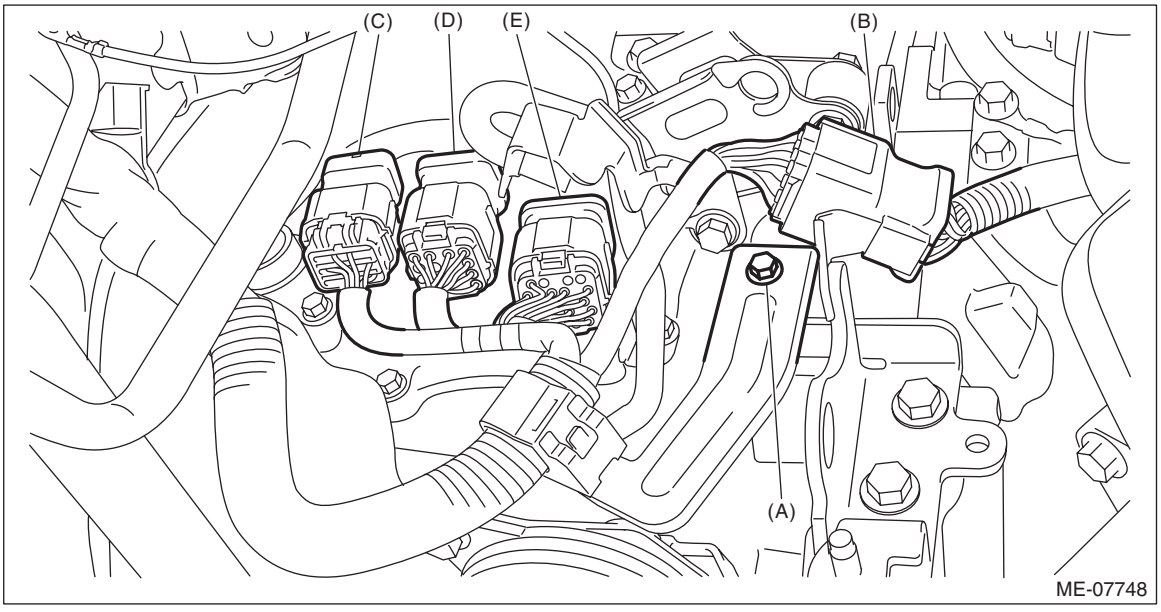

10) Install the pitching stopper, and connect the transmission radio ground terminal (A) to the vehicle.

Tightening torque:
T1: 13 N·m (1.3 kgf-m, 9.6 ft-lb)
T2: 50 N·m (5.1 kgf-m, 36.9 ft-lb)
T3: 58 N·m (5.9 kgf-m, 42.8 ft-lb)

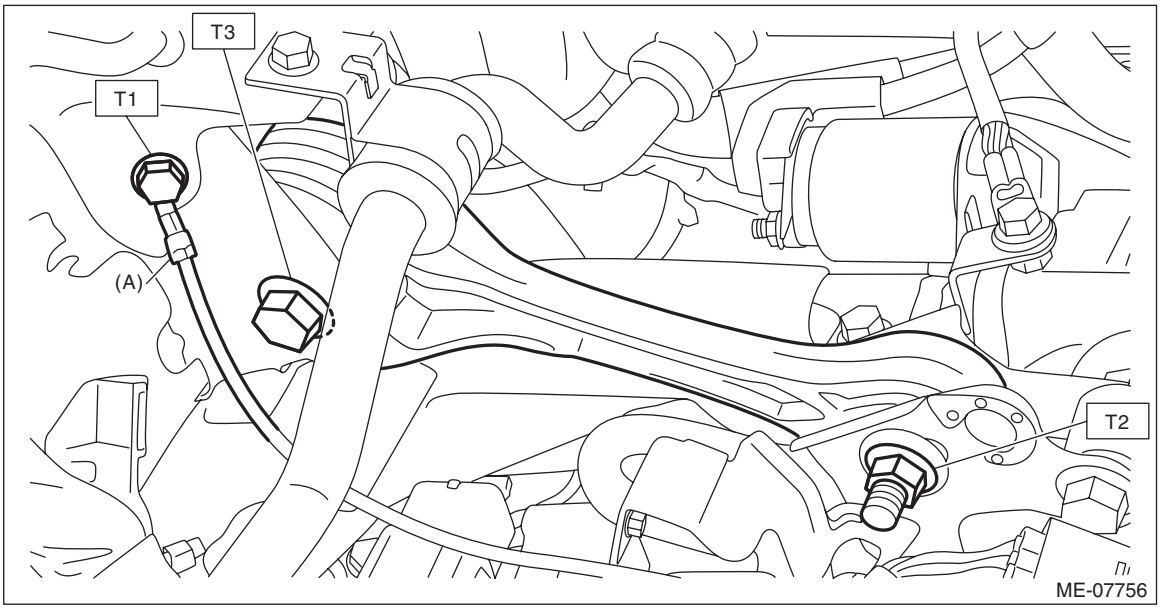

11) Install the electric power steering gearbox. <Ref. to PS-31, INSTALLATION, Electric Power Steering Gearbox.>
12) Install the front drive shaft LH. <Ref. to DS-58, INSTALLATION, Front Drive Shaft.>
13) Install the nuts which hold the engine mounting to the crossmember.

NOTE:
Make sure that locators (A) of the engine mounting are securely inserted.

Tightening torque:
45 N·m (4.6 kgf-m, 33.2 ft-lb)

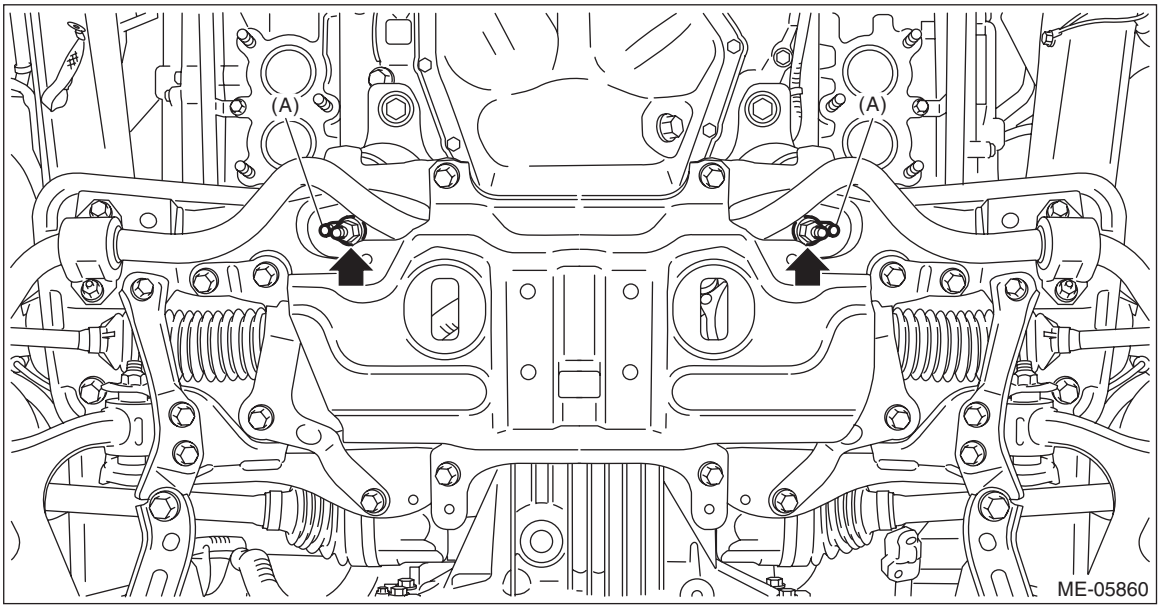

14) Connect the connector of oil level switch to the engine harness, and install the clip (A) securing the harness.

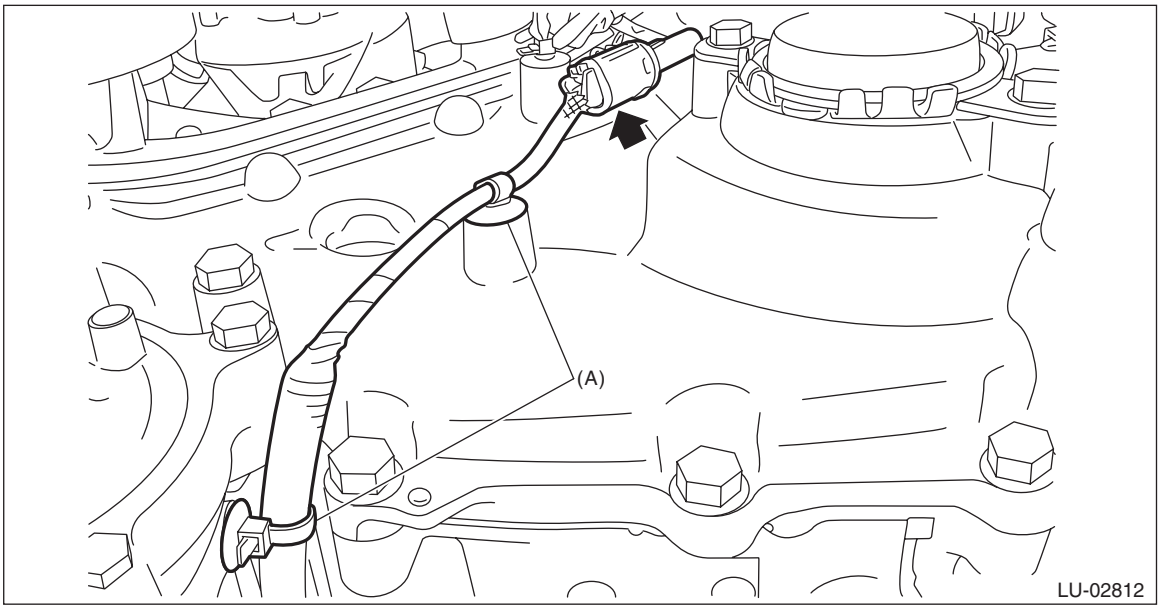

15) Install the front exhaust pipe. <Ref. to EX(H4DO(w/o HEV))-8, INSTALLATION, Front Exhaust Pipe.>
16) Install the under cover.
17) Lower the vehicle.
18) Set the battery cable assembly, and install the clip (C) which secures the battery cable assembly to the battery cable bracket No. 1.
19) Connect the terminal (A) and the terminal (B) to ISG.

Tightening torque:
T1: 7.5 N·m (0.8 kgf-m, 5.5 ft-lb)
T2: 15.5 N·m (1.6 kgf-m, 11.4 ft-lb)

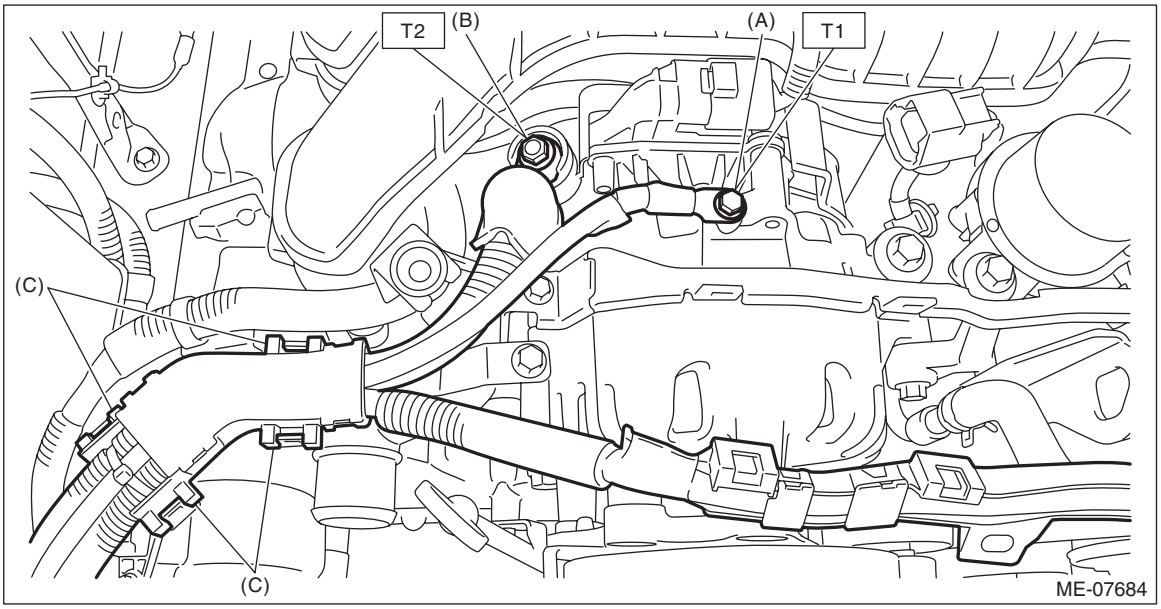

20) Install the clip (B) which secures the battery cable assembly to the collector cover bracket, and install the bolt (A) which secures the battery cable stay to the chain cover.

NOTE:
When installing the battery cable stay, install it by fitting the folded end (a) of the battery cable stay to the chain cover boss.

Tightening torque:
6.4 N·m (0.7 kgf-m, 4.7 ft-lb)

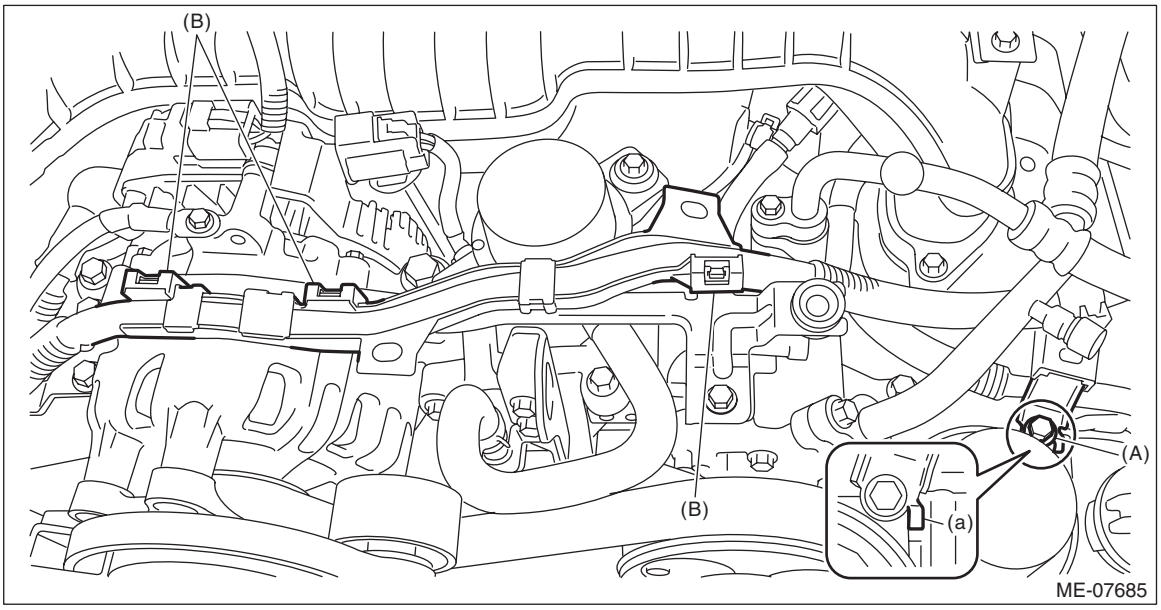

21) Install the battery cable assembly to the main fuse box, and install the nut which secures the battery cable assembly to the slow blow fuse (12 volt auxiliary battery).

Tightening torque:
7.5 N·m (0.8 kgf-m, 5.5 ft-lb)

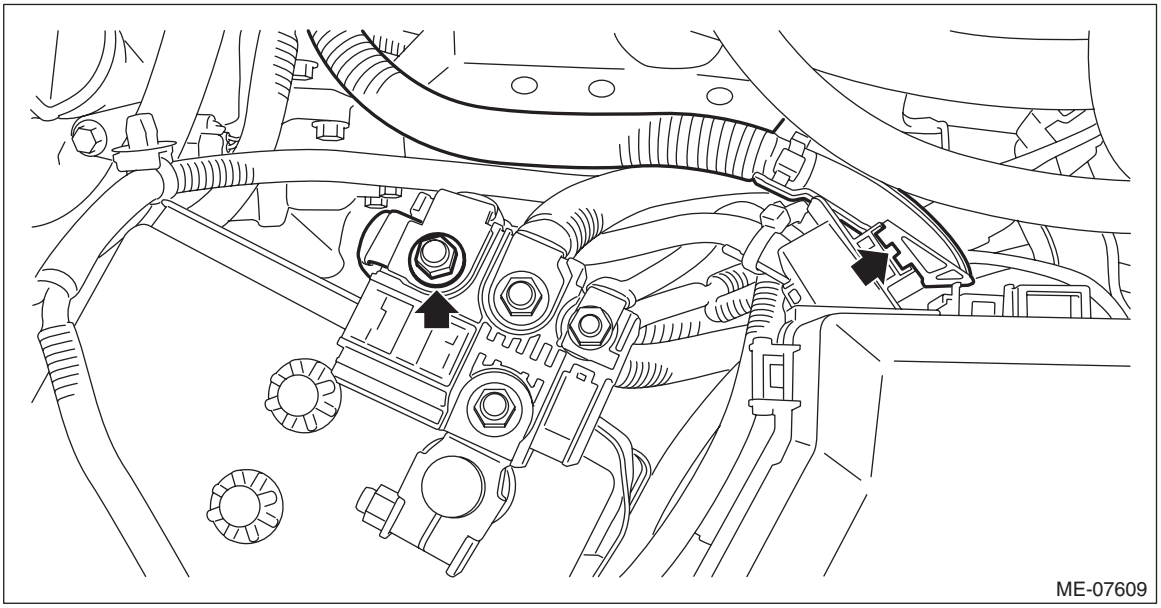

22) Install the terminal boot to the positive terminal of the 12 volt auxiliary battery.
23) Set the harness, and install the clip (C) and the clip (D) which secure the harness to the battery cable assembly.

24) Connect the connector (A) to the brake vacuum pump, and connect the connector (B) to the A/C compressor.

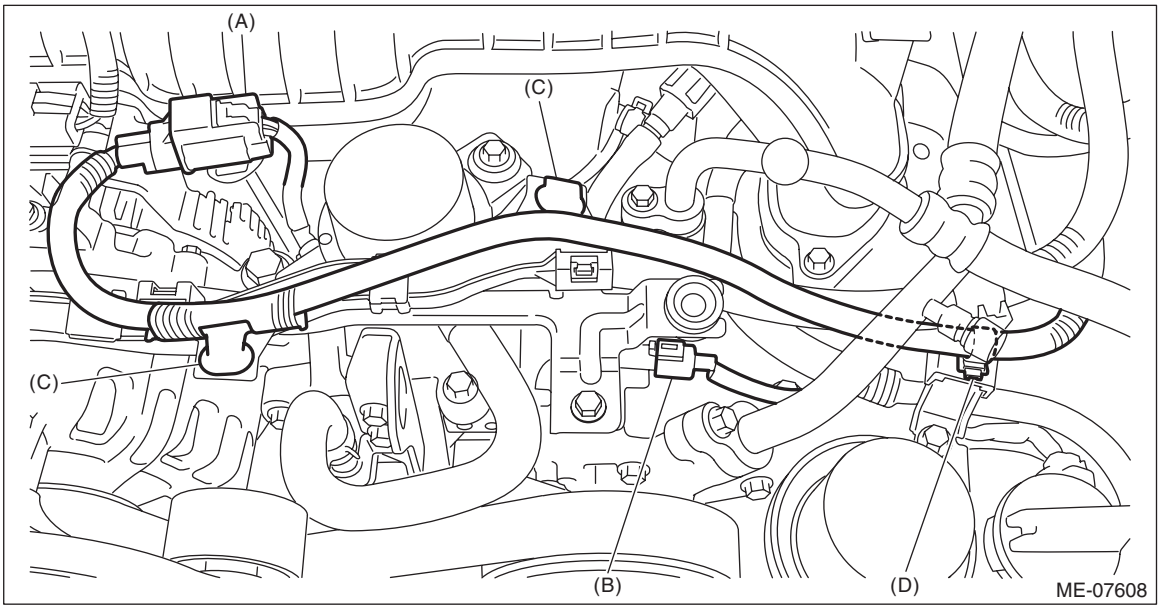

25) Install the air cleaner case. <Ref. to IN(H4DO(HEV))-8, INSTALLATION, Air Cleaner Case.>
26) Install the air intake duct. <Ref. to IN(H4DO(HEV))-15, INSTALLATION, Air Intake Duct.>
27) Install the collector cover.
28) Refill the engine oil. <Ref. to LU(H4DO(w/o HEV))-13, REPLACEMENT, Engine Oil.>
29) Connect the battery ground terminal. <Ref. to NT-5, BATTERY, NOTE, Note.>
30) Change the front hood stay position from (B) to (A).

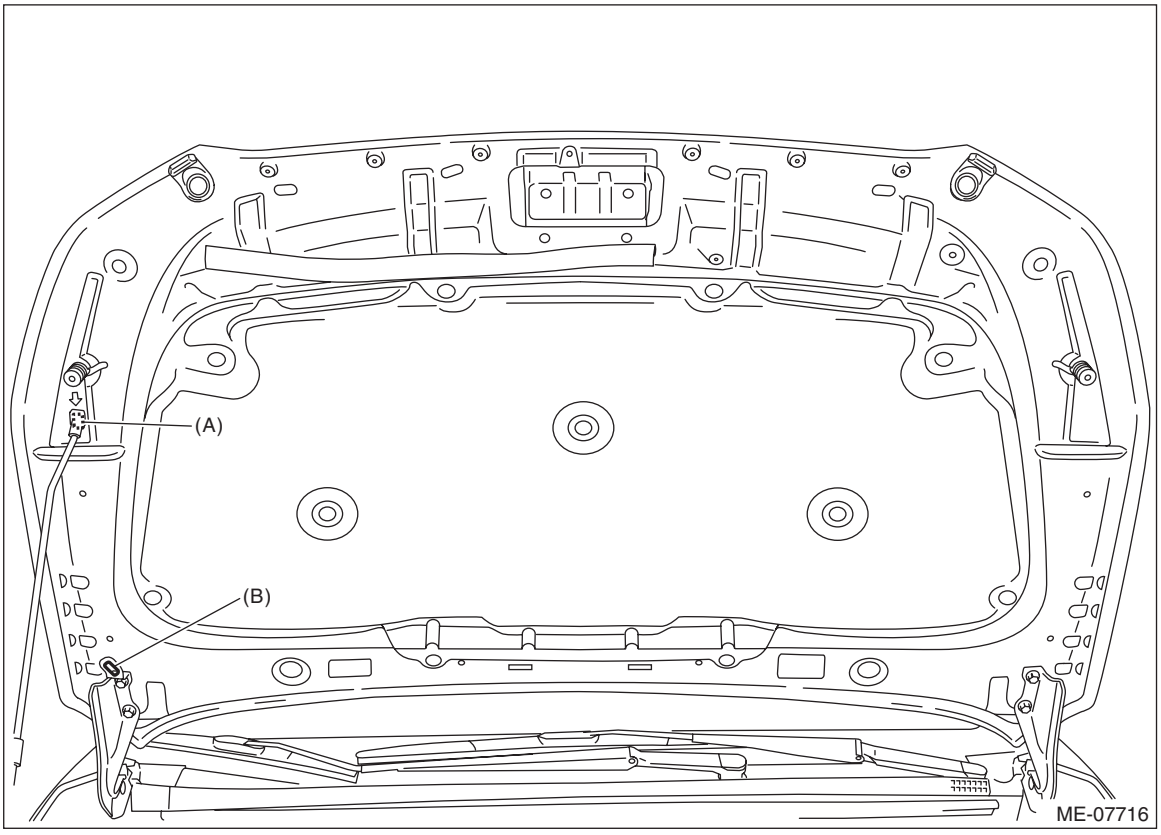

31) Install the front hood striker to the front hood by aligning the alignment marks (A), and close the front hood.

Tightening torque:
33 N·m (3.4 kgf-m, 24.3 ft-lb)

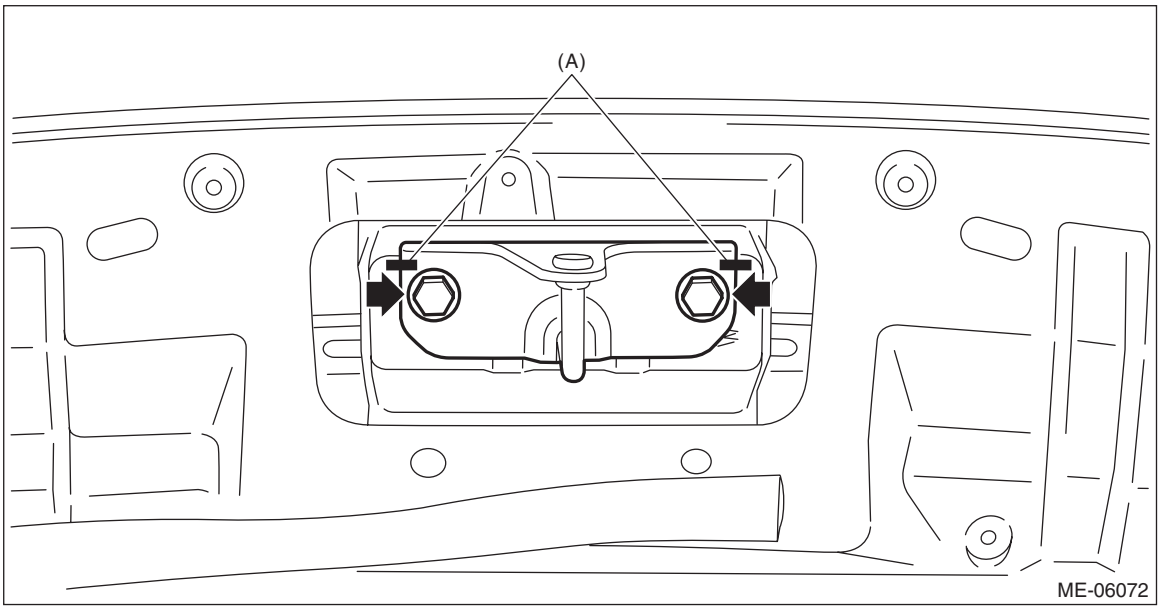

C: WIRING DIAGRAM

- Engine electrical system <Ref. to WI(w/o HEV)-74, WIRING DIAGRAM, Engine Electrical System.>
- CAN communication system <Ref. to WI(w/o HEV)-46, WIRING DIAGRAM, CAN Communication System.>
- Gasoline engine model

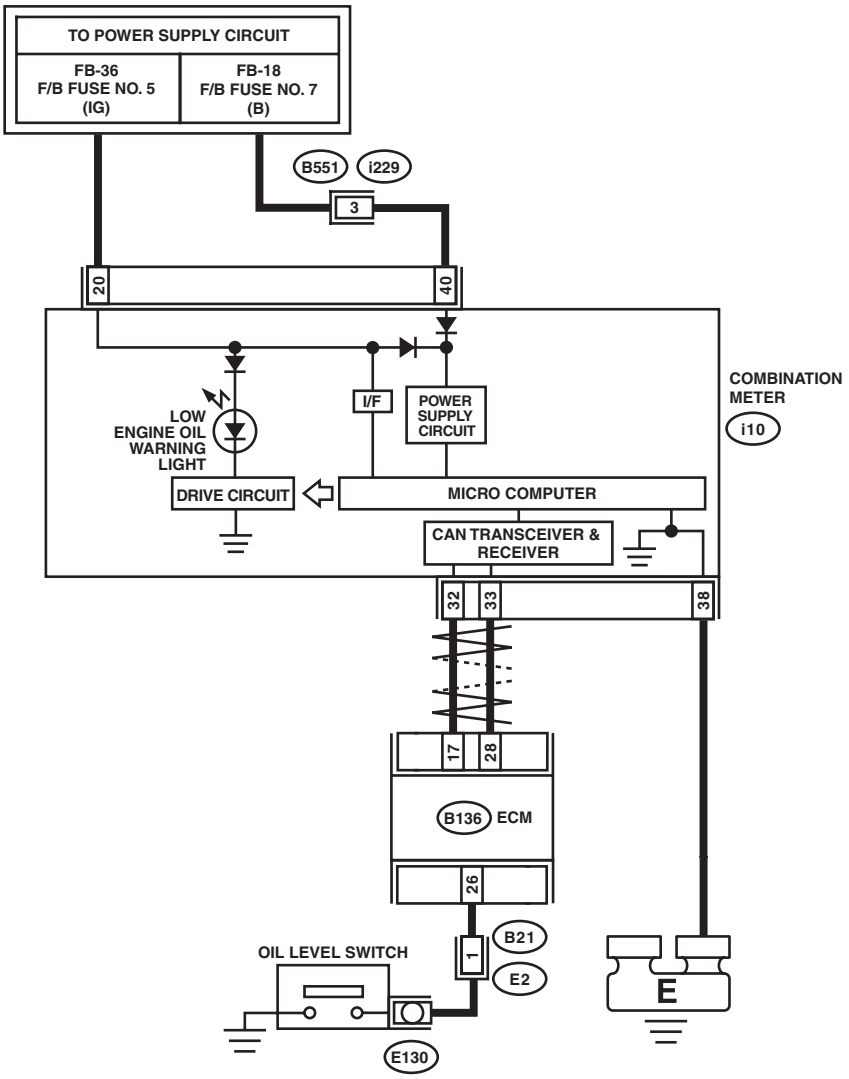

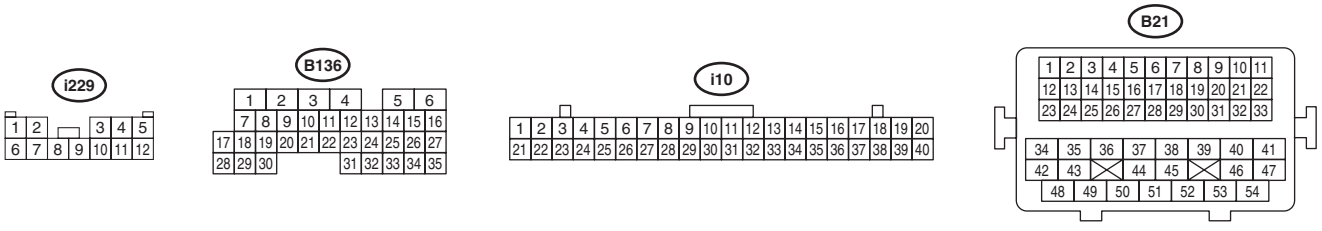

LU-02835

- HEV model

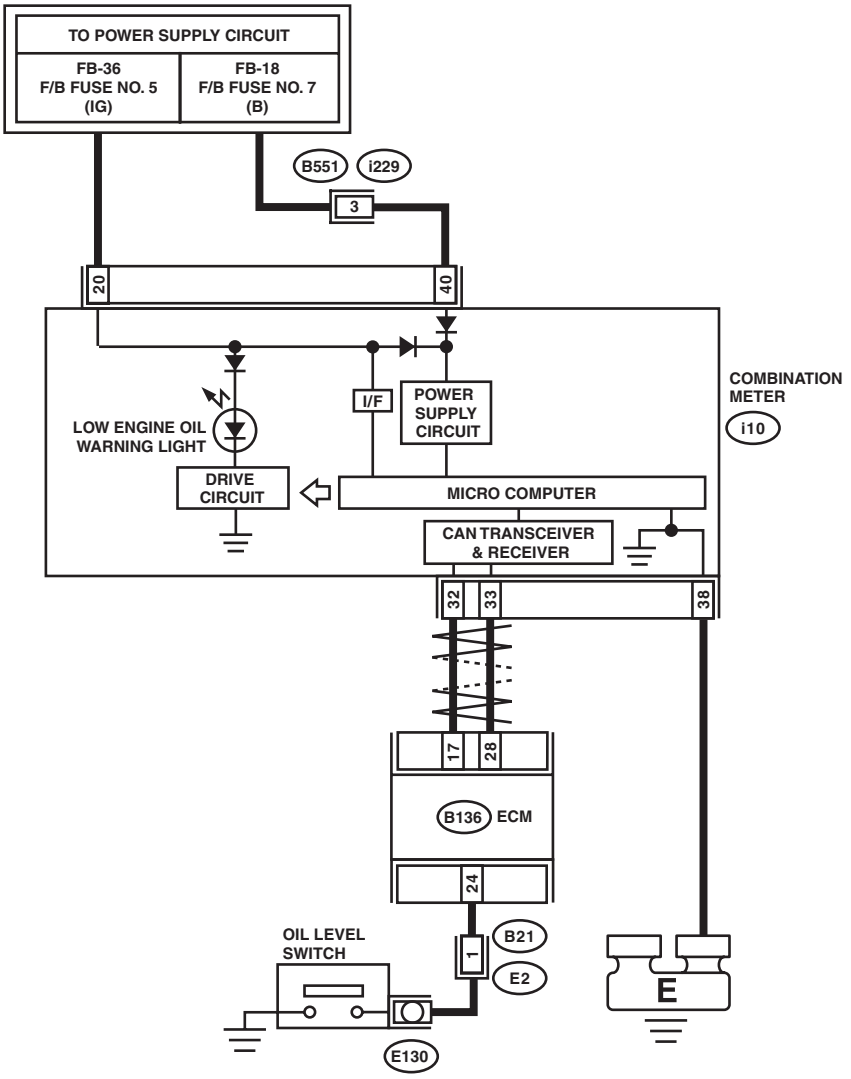

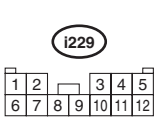

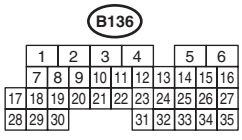

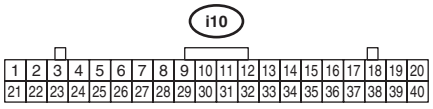

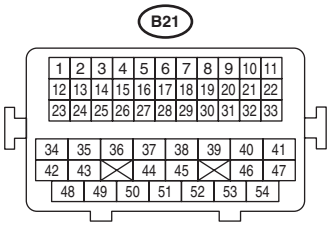

LU-03165

D: INSPECTION

1. INSPECTION WHEN LOW ENGINE OIL WARNING LIGHT IS ILLUMINATED

Step	Check	Yes	No
1 **CHECK ENGINE OIL LEVEL.**	Is engine oil level normal?	Go to step **2**.	Replace engine oil or refill, and check again while the oil level is normal condition. <Ref. to LU(H4DO(w/o HEV))-13, REPLACEMENT, Engine Oil.> To turn off the low engine oil warning light, install the spare fuse at the delivery (test) mode fuse in the main fuse box. Then turn the ignition switch to ON (engine off) again, to confirm the low engine oil warning light turns off. Remove the spare fuse installed to finish. NOTE: The engine oil level switch is normal if the low engine oil warning light turns off with the delivery (test) mode fuse inserted.
2 **CHECK LAN SYSTEM.**	Has a DTC of the LAN system been input?	Perform the diagnosis according to DTC.	Go to step **3**.

Step		Check	Yes	No
3	**CHECK OIL LEVEL SWITCH CIRCUIT.** 1) Turn the ignition switch to ON (engine OFF). 2) Read the current data for engine in the Subaru Select Monitor to confirm the item for "Oil level switch". <Ref. to EN(H4DO w/o HEV)(diag)-36, READ CURRENT DATA FOR ENGINE (NORMAL MODE), OPERATION, Subaru Select Monitor.> <Ref. to EN(H4DO HEV)(diag)-37, DISPLAY CURRENT ENGINE DATA, OPERATION, Subaru Select Monitor.>	Is the "Oil level switch" signal displayed in Subaru Select Monitor HIGH?	To turn off the low engine oil warning light, install the spare fuse at the delivery (test) mode fuse in the main fuse box. Then turn the ignition switch to ON (engine off) again, to confirm the low engine oil warning light turns off. Remove the spare fuse installed to finish. NOTE: The engine oil level switch is normal if the low engine oil warning light turns off with the delivery (test) mode fuse inserted.	Go to step **4**.
4	**CHECK COMBINATION METER.** Perform the self-diagnosis of combination meter to check if there are any faults in the combination meter. <Ref. to IDI-7, OPERATION, Combination Meter System.>	Is combination meter OK?	Go to step **5**.	Replace the combination meter. <Ref. to IDI-16, REMOVAL, Combination Meter.>
5	**CHECK SECURE CONNECTION OF CONNECTOR BETWEEN ENGINE HARNESS AND OIL LEVEL SWITCH.**	Is there any insecure connection?	Remedy the connection condition. Then, to turn off the low engine oil warning light, install the spare fuse at the delivery (test) mode fuse in the main fuse box. Then turn the ignition switch to ON (engine off) again, to confirm the low engine oil warning light turns off. Remove the spare fuse installed to finish. NOTE: The engine oil level switch is normal if the low engine oil warning light turns off with the delivery (test) mode fuse inserted.	Go to step **6**.

	Step	Check	Yes	No
6	**CHECK OIL LEVEL SWITCH.** 1) Deliberately short circuits by connecting the engine harness connector terminal and chassis ground. 2) Turn the ignition switch to ON (engine OFF). 3) Read the current data for engine in the Subaru Select Monitor to confirm the item for "Oil level switch". <Ref. to EN(H4DO w/o HEV)(diag)-36, READ CURRENT DATA FOR ENGINE (NORMAL MODE), OPERATION, Subaru Select Monitor.> <Ref. to EN(H4DO HEV)(diag)-37, DISPLAY CURRENT ENGINE DATA, OPERATION, Subaru Select Monitor.> ***Connector & terminal*** ***(E130) No. 1 — Chassis ground:***	Is the "Oil level switch" signal displayed in Subaru Select Monitor HIGH?	Replace the oil level switch. <Ref. to LU(H4DO(w/o HEV))-30, REMOVAL, Oil Level Switch.>	Go to step **7**.
7	**CHECK SECURE CONNECTION OF CONNECTOR BETWEEN BULKHEAD HARNESS AND ENGINE HARNESS.**	Is there any insecure connection?	Remedy the connection condition. Then, to turn off the low engine oil warning light, install the spare fuse at the delivery (test) mode fuse in the main fuse box. Then turn the ignition switch to ON (engine off) again, to confirm the low engine oil warning light turns off. Remove the spare fuse installed to finish. NOTE: The engine oil level switch is normal if the low engine oil warning light turns off with the delivery (test) mode fuse inserted.	Go to step **8**.
8	**CHECK ENGINE HARNESS.** 1) Disconnect the connector on the oil level switch side for the engine harness. 2) Disconnect the connector on the bulkhead harness side for the engine harness. 3) Measure the resistance between connector terminals. ***Connector & terminal*** ***(E2) No. 1 — (E130) No. 1:***	Is the resistance less than 1 Ω?	Go to step **9**.	Repair or replace the open circuit of engine harness.

	Step	Check	Yes	No
9	**CHECK SECURE CONNECTION OF CONNECTOR BETWEEN ENGINE CONTROL MODULE (ECM) AND BULKHEAD HARNESS.** Remove the glove box lid assembly. <Ref. to EI-73, REMOVAL, Glove Box.>	Is there any insecure connection?	Remedy the connection condition. Then, to turn off the low engine oil warning light, install the spare fuse at the delivery (test) mode fuse in the main fuse box. Then turn the ignition switch to ON (engine off) again, to confirm the low engine oil warning light turns off. Remove the spare fuse installed to finish. NOTE: The engine oil level switch is normal if the low engine oil warning light turns off with the delivery (test) mode fuse inserted.	Go to step **10**.
10	**CHECK BULKHEAD HARNESS.** 1) Remove the glove box lid assembly. <Ref. to EI-73, REMOVAL, Glove Box.> 2) Disconnect the engine control module (ECM) side connector for the bulkhead harness. 3) Disconnect the engine harness connectors from the bulkhead harness. 4) Measure the resistance between connector terminals. ***Connector & terminal*** ***Gasoline engine model*** ***(B136) No. 26 — (B21) No. 1:*** ***HEV model*** ***(B136) No. 24 — (B21) No. 1:***	Is the resistance less than 1 Ω?	Replace the engine control module (ECM). <Ref. to FU(H4DO(w/o HEV))-106, REMOVAL, Engine Control Module (ECM).> <Ref. to FU(H4DO(HEV))-85, REMOVAL, Engine Control Module (ECM).>	Repair or replace the open circuit of the bulkhead harness.

2. OTHER INSPECTIONS

1) Check that the oil level switch does not have deformation, cracks, or damage.
2) Check the oil level switch installation part for oil leakage and oil seepage.

9. Engine Lubrication System Trouble in General

A: INSPECTION

Before performing diagnostics, make sure that the engine oil level is correct and no oil leakage exists.

Trouble	Possible cause	Corrective action
Warning light remains ON.	a. Oil pressure switch failure	
	❍ Cracked diaphragm or oil leakage within switch	Replace.
	❍ Broken spring or seized contacts	Replace.
	b. Low oil pressure	
	❍ Clogging of oil filter	Replace.
	❍ Malfunction of oil by-pass valve in oil filter	Replace.
	❍ Clogged oil passage	Clean.
	❍ Excessive tip clearance and side clearance of oil pump rotor	Replace.
	❍ Clogged oil strainer or broken pipe	Clean or replace.
	c. No oil pressure	
	❍ Insufficient engine oil (degradation, etc.)	Replace.
	❍ Broken pipe of oil strainer	Replace.
	❍ Stuck oil pump rotor	Replace.
Warning light does not illuminate.	a. Malfunction of combination meter	Replace.
	b. Poor contact of switch contact points	Replace.
	c. Disconnection of wiring	Repair.
Warning light flickers momentarily.	a. Defective terminal contact	Repair.
	b. Defective wiring harness	Repair.
	c. Oil pressure switch failure	
	❍ Cracked diaphragm or oil leakage within switch	Replace.
	❍ Broken spring or seized contacts	Replace.
	d. Low oil pressure	
	❍ Clogging of oil filter	Replace.
	❍ Malfunction of oil by-pass valve in oil filter	Replace.
	❍ Clogged oil passage	Clean.
	❍ Excessive tip clearance and side clearance of oil pump rotor	Replace.
	❍ Clogged oil strainer or broken pipe	Clean or replace.

SPEED CONTROL SYSTEMS

SP(H4DO(w/o HEV))

Page

1. General Description 2
2. Accelerator Pedal 4

1. General Description

A: SPECIFICATION

Accelerator pedal	Stroke	At pedal pad	50 — 59 mm (1.97 — 2.32 in)

B: COMPONENT

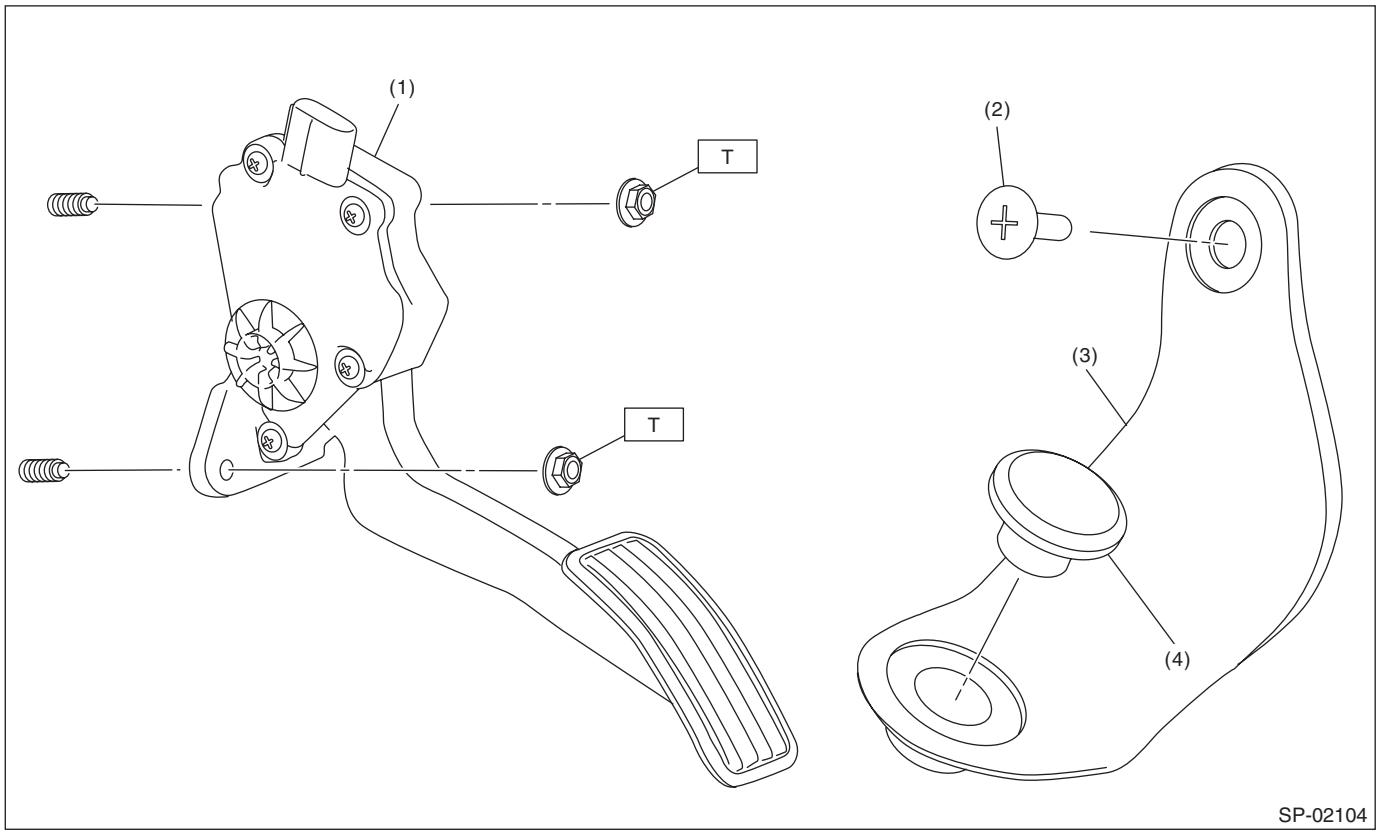

(1) Accelerator pedal ASSY
(2) Clip
(3) Accelerator plate
(4) Accelerator stopper

Tightening torque: N·m (kgf-m, ft-lb)
T: 7.5 (0.8, 5.5)

C: CAUTION

- Prior to starting work, pay special attention to the following:
  1. Always wear work clothes, a work cap, and protective shoes. Additionally, wear a helmet, protective goggles, etc. if necessary.
  2. Protect the vehicle using a seat cover, fender cover, etc.
  3. Prepare the service tools, clean cloth, containers to catch grease and oil, etc.
- Vehicle components are extremely hot immediately after driving. Be wary of receiving burns from heated parts.
- When performing a repair, identify the cause of trouble and avoid unnecessary removal, disassembly and replacement.
- Before disconnecting connectors of sensors or units, be sure to disconnect the ground cable from battery.
- Always use the jack-up point when the shop jacks or rigid racks are used to support the vehicle.
- Remove contamination including dirt and corrosion before removal, installation, disassembly or assembly.
- Keep the removed parts in order and protect them from dust and dirt.
- All removed parts, if to be reused, should be reinstalled in the original positions with attention to the correct directions, etc.
- Bolts, nuts and washers should be replaced with new parts as required.
- Be sure to tighten the fasteners including bolts and nuts to the specified torque.

D: PREPARATION TOOL

1. SPECIAL TOOL

ILLUSTRATION	TOOL NUMBER	DESCRIPTION	REMARKS
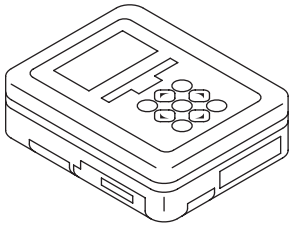 ST1B022XU0	1B022XU0	SUBARU SELECT MONITOR III KIT	Used for inspecting the accelerator pedal.

2. GENERAL TOOL

TOOL NAME	REMARKS
Circuit tester	Used for measuring voltage.

2. Accelerator Pedal

A: REMOVAL

1) Disconnect the ground cable from battery. <Ref. to NT-5, BATTERY, NOTE, Note.>

NOTE:
For the 12 volt engine restart battery of HEV model, disconnect the ground terminal from 12V engine restart battery sensor.
2) Disconnect the connector (A).
3) Remove the nut (B) securing accelerator pedal assembly, and remove the accelerator pedal assembly.

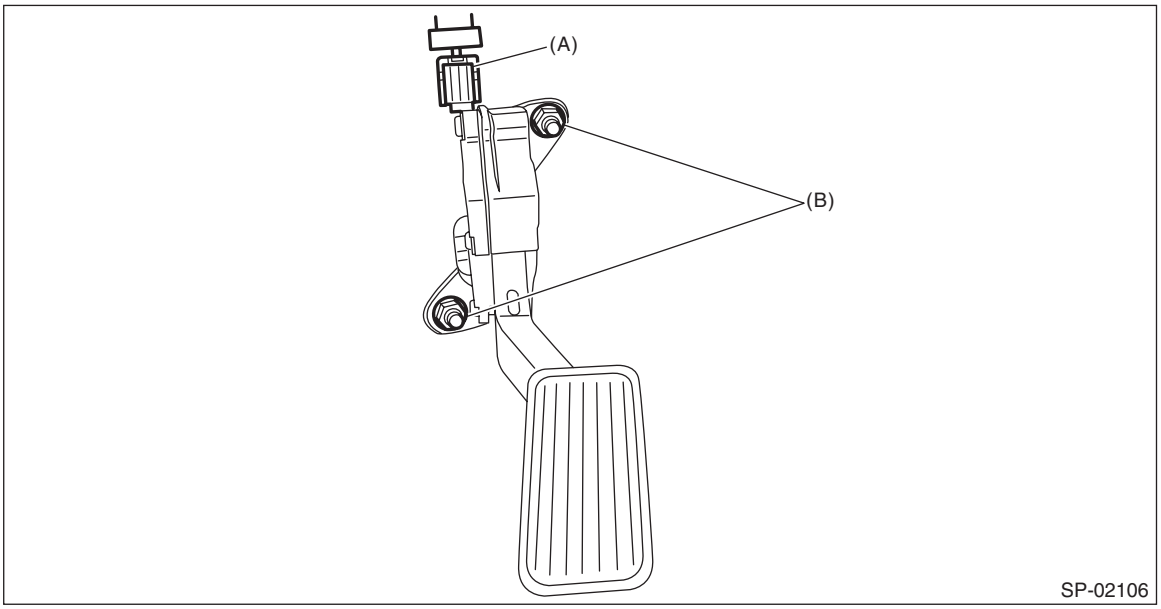

B: INSTALLATION

Install in the reverse order of removal.

Tightening torque:
7.5 N·m (0.8 kgf-m, 5.5 ft-lb)

C: DISASSEMBLY

NOTE:
The accelerator pedal cannot be disassembled.

D: INSPECTION

1. CHECK ACCELERATOR PEDAL SENSOR AREA (METHOD WITH CIRCUIT TESTER)

1) Remove the glove box. <Ref. to EI-73, REMOVAL, Glove Box.>
2) Turn the ignition switch to ON. (engine OFF)
3) Measure the voltage between ECM connector terminals.

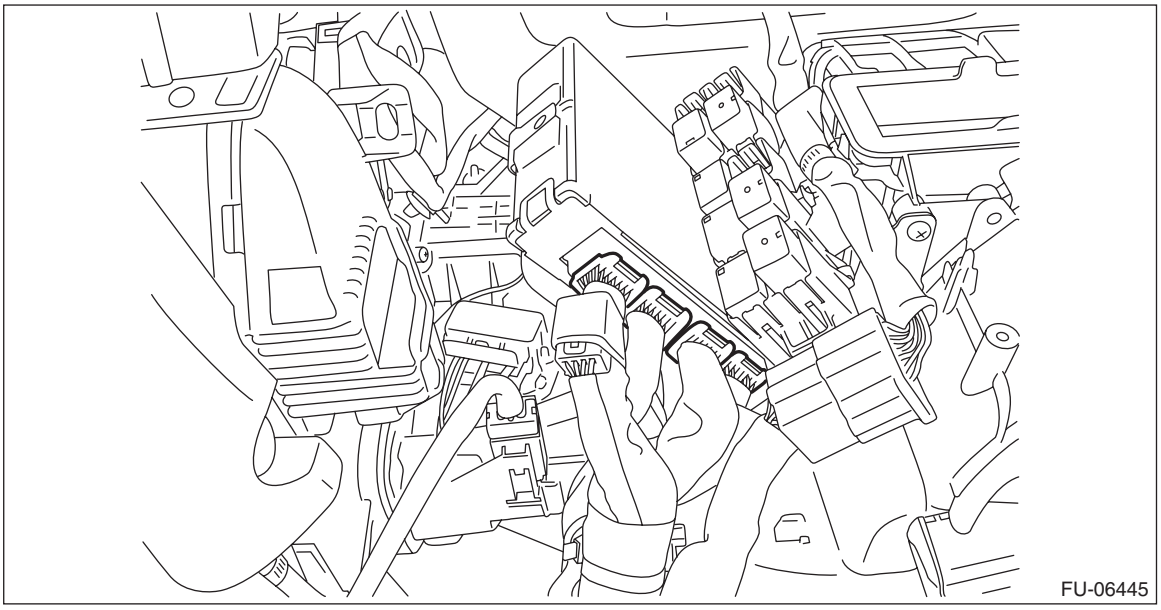
FU-06445

Main sensor side

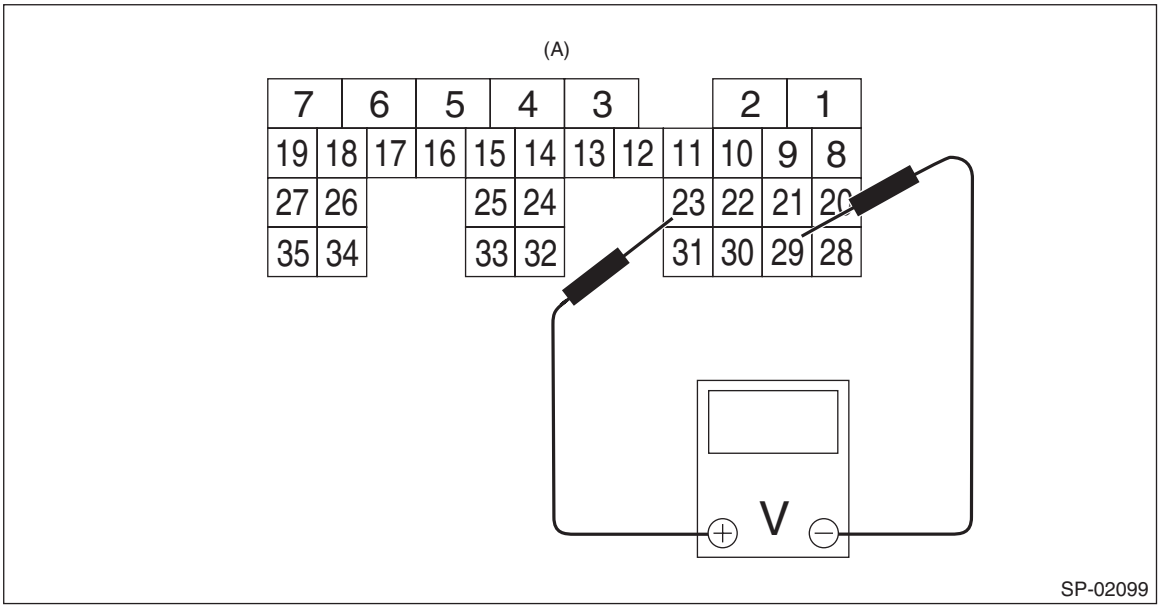

SP-02099

Sub sensor side

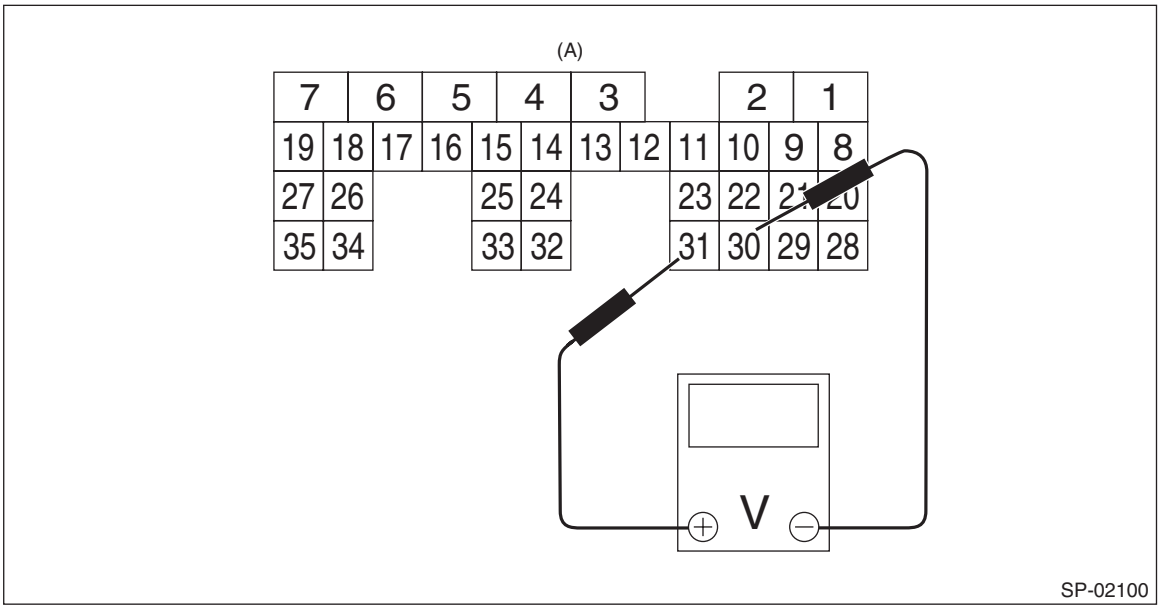

(A) To ECM connector

Accelerator pedal sensor	Accelerator pedal	Terminal No.	Standard
Main	Not depressed (full closed)	23 (+) and 29 (–)	0.4 — 1.0 V
	Depressed (full opened)		2.4 — 3.7 V
Sub	Not depressed (full closed)	31 (+) and 30 (–)	0.3 — 1.1 V
	Depressed (full opened)		2.3 — 3.8 V

4) After inspection, install the related parts in the reverse order of removal.

2. CHECK ACCELERATOR PEDAL SENSOR AREA (METHOD WITH SUBARU SELECT MONITOR)

1) Turn the ignition switch to ON. (engine OFF)
2) Read the accelerator pedal opening angle signal and voltage of accelerator pedal sensor using Subaru Select Monitor. <Ref. to EN(H4DO w/o HEV)(diag)-36, READ CURRENT DATA FOR ENGINE (NORMAL MODE), OPERATION, Subaru Select Monitor.> <Ref. to EN(H4DO HEV)(diag)-37, DISPLAY CURRENT ENGINE DATA, OPERATION, Subaru Select Monitor.>

Accelerator pedal sensor	Accelerator pedal opening angle signal	Standard
Main	0.0%	0.4 — 1.0 V
	100.0%	2.4 — 3.7 V
Sub	0.0%	0.3 — 1.1 V
	100.0%	2.3 — 3.8 V

3. OTHER INSPECTIONS

1) Check that the accelerator pedal does not have deformation, cracks or damage.
2) Check for smooth operation when the accelerator pedal is depressed.
3) Check if the accelerator pedal returns to its original position smoothly when the pedal is released.

IGNITION

IG(H4DO(w/o HEV))

Page

1. General Description 2
2. Spark Plug 4
3. Ignition Coil 11

1. General Description

A: SPECIFICATION

Item				Specifications
Ignition coil	Type	Gasoline engine model		FK0453
		HEV model		FK0438
	Ignition system			Independent ignition coil
	Manufacturer			Diamond Electric
Spark plug	Manufacturer and type	Gasoline engine model		NGK: SILZKAR7B11
		HEV model		NGK: DILZKAR7B11
	Thread size (diameter, pitch, length) mm			12, 1.25, 26.5
	Spark plug gap mm (in)		Standard	1.0 — 1.1 (0.039 — 0.043)
	Electrode			Iridium

B: COMPONENT

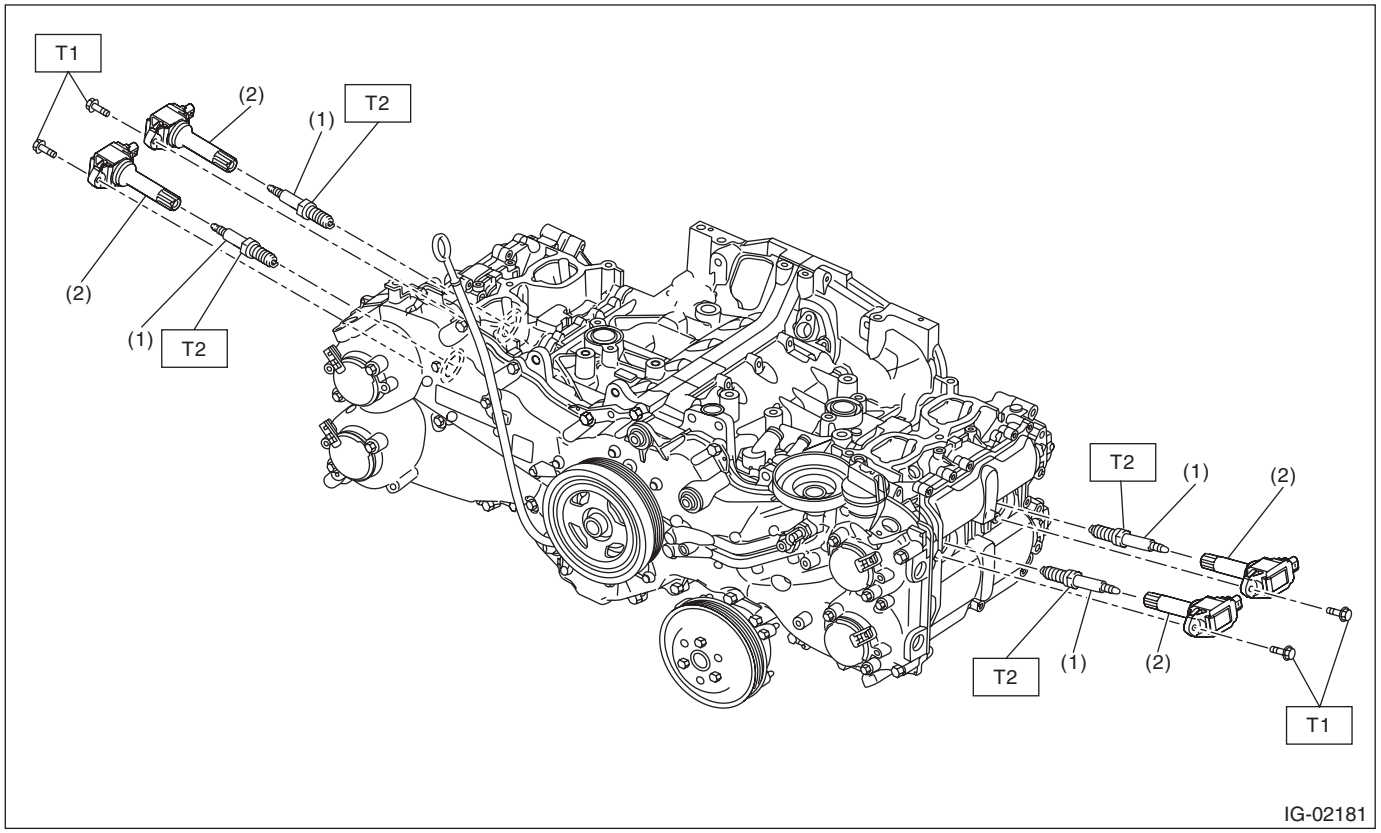

(1) Spark plug
(2) Ignition coil

Tightening torque: N·m (kgf-m, ft-lb)
T1: 8.5 (0.9, 6.3)
T2: 17.5 (1.8, 12.9)

C: CAUTION

- Prior to starting work, pay special attention to the following:
  1. Always wear work clothes, a work cap, and protective shoes. Additionally, wear a helmet, protective goggles, etc. if necessary.
  2. Protect the vehicle using a seat cover, fender cover, etc.
  3. Prepare the service tools, clean cloth, containers to catch grease and oil, etc.
- Vehicle components are extremely hot immediately after driving. Be wary of receiving burns from heated parts.
- When performing a repair, identify the cause of trouble and avoid unnecessary removal, disassembly and replacement.
- Before disconnecting connectors of sensors or units, be sure to disconnect the ground cable from battery.
- Always use the jack-up point when the shop jacks or rigid racks are used to support the vehicle.
- Remove contamination including dirt and corrosion before removal, installation, disassembly or assembly.
- Keep the removed parts in order and protect them from dust and dirt.
- All removed parts, if to be reused, should be reinstalled in the original positions with attention to the correct directions, etc.
- Bolts, nuts and washers should be replaced with new parts as required.
- Be sure to tighten the fasteners including bolts and nuts to the specified torque.

2. Spark Plug

A: REMOVAL

Spark plug:

Refer to "SPECIFICATION" for spark plug. <Ref. to IG(H4DO(w/o HEV))-2, SPECIFICATION, General Description.>

1. RH SIDE

1) Disconnect the ground cable from battery. <Ref. to NT-5, BATTERY, NOTE, Note.>

NOTE:
For the 12 volt engine restart battery of HEV model, disconnect the ground terminal from 12V engine restart battery sensor.

2) Remove the air cleaner case. (Gasoline engine model) <Ref. to IN(H4DO(w/o HEV))-7, REMOVAL, Air Cleaner Case.>

3) Remove the 12 volt engine restart battery. (HEV model) <Ref. to SC(H4DO(HEV))-39, 12 VOLT ENGINE RESTART BATTERY, REMOVAL, Battery.>

4) Remove the battery cable assembly from the battery cable bracket No. 2. (HEV model)

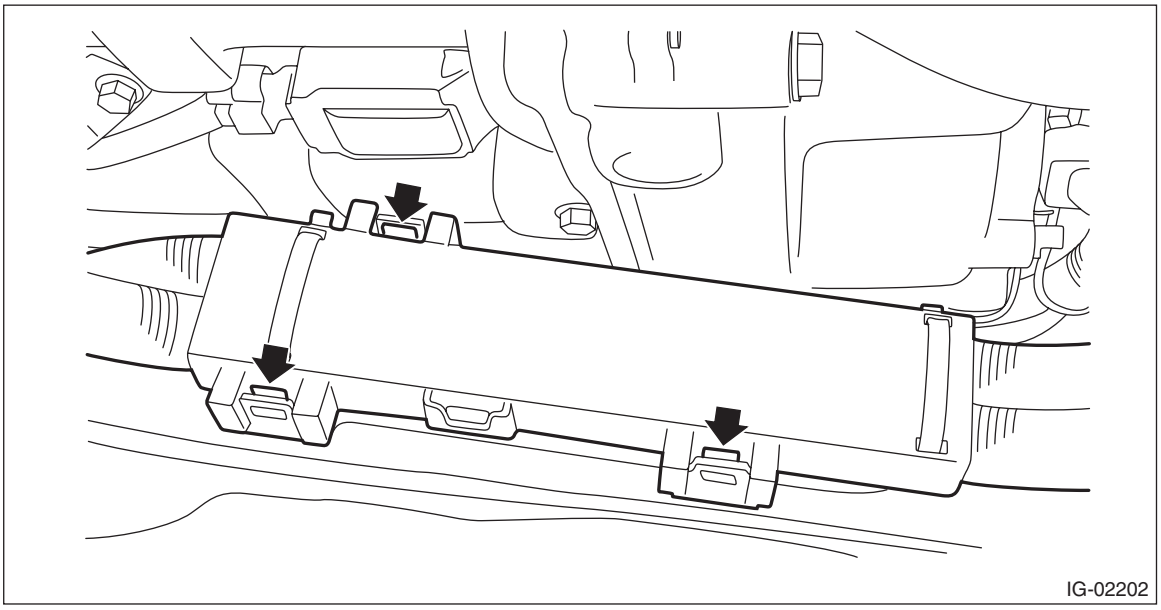

5) Disconnect the connector from ignition coil.

6) Remove the ignition coil.

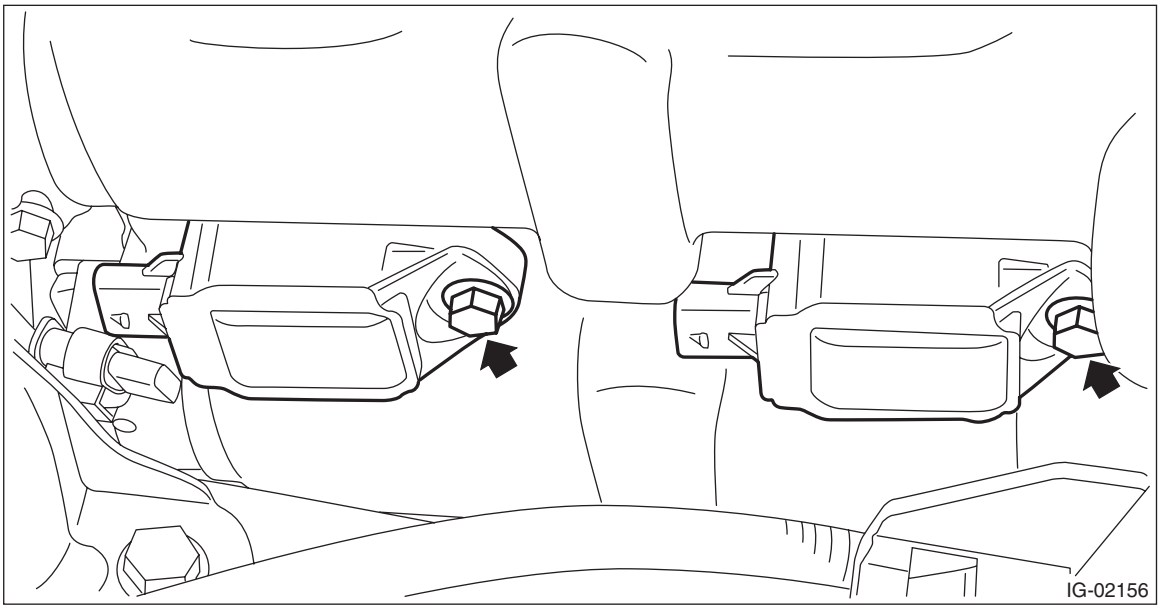

7) Remove the spark plug with a spark plug socket.

2. LH SIDE

1) Disconnect the ground cable from battery. <Ref. to NT-5, BATTERY, NOTE, Note.>

NOTE:
For the 12 volt engine restart battery of HEV model, disconnect the ground terminal from 12V engine restart battery sensor.

2) Disconnect the connector from ignition coil.
3) Remove the ignition coil.

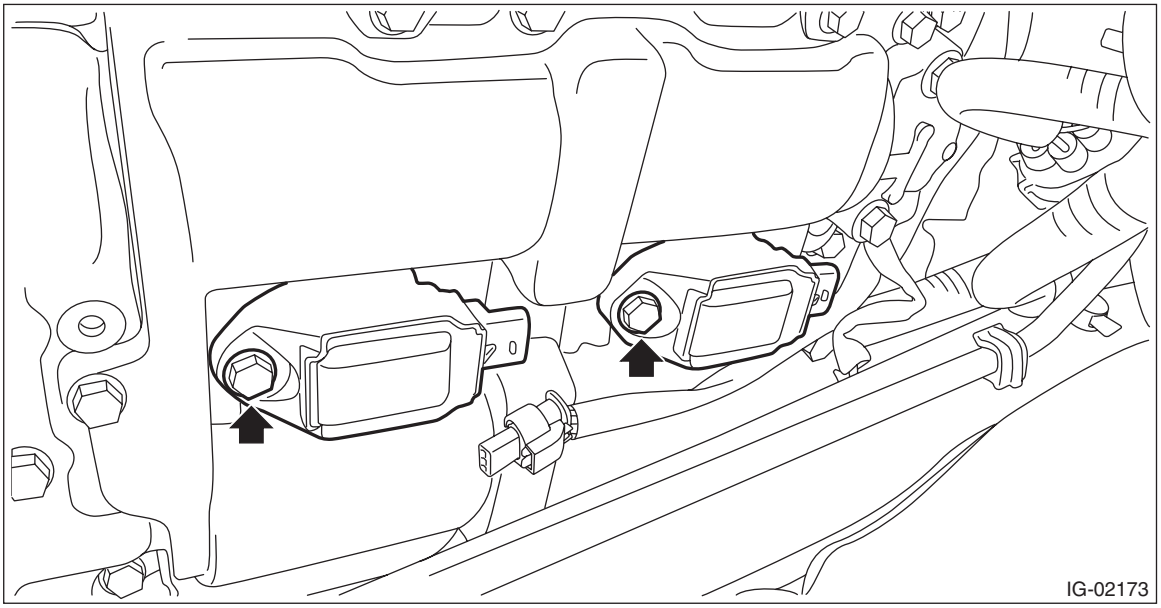

4) Remove the spark plug with a spark plug socket.

B: INSTALLATION

1. RH SIDE

Install in the reverse order of removal.

CAUTION:
Degrease the ignition coil installation portion and the mounting bolts.

Tightening torque:
Spark plug
17.5 N·m (1.8 kgf-m, 12.9 ft-lb)
Ignition coil
8.5 N·m (0.9 kgf-m, 6.3 ft-lb)

2. LH SIDE

Install in the reverse order of removal.

CAUTION:
Degrease the ignition coil installation portion and the mounting bolts.

Tightening torque:
Spark plug
17.5 N·m (1.8 kgf-m, 12.9 ft-lb)
Ignition coil
8.5 N·m (0.9 kgf-m, 6.3 ft-lb)

C: INSPECTION

1) Check the spark plug for abnormalities. If defective, replace the spark plug.
- Gasoline engine model

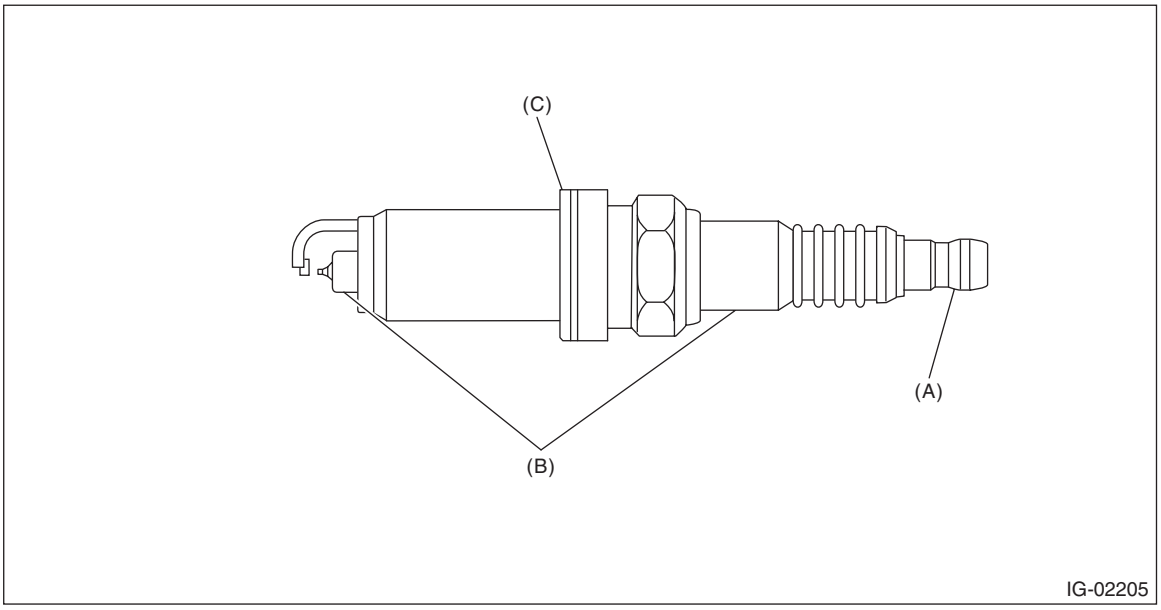

(A) Terminal damage (B) Crack or damage in insulator (C) Damaged gasket

- HEV model

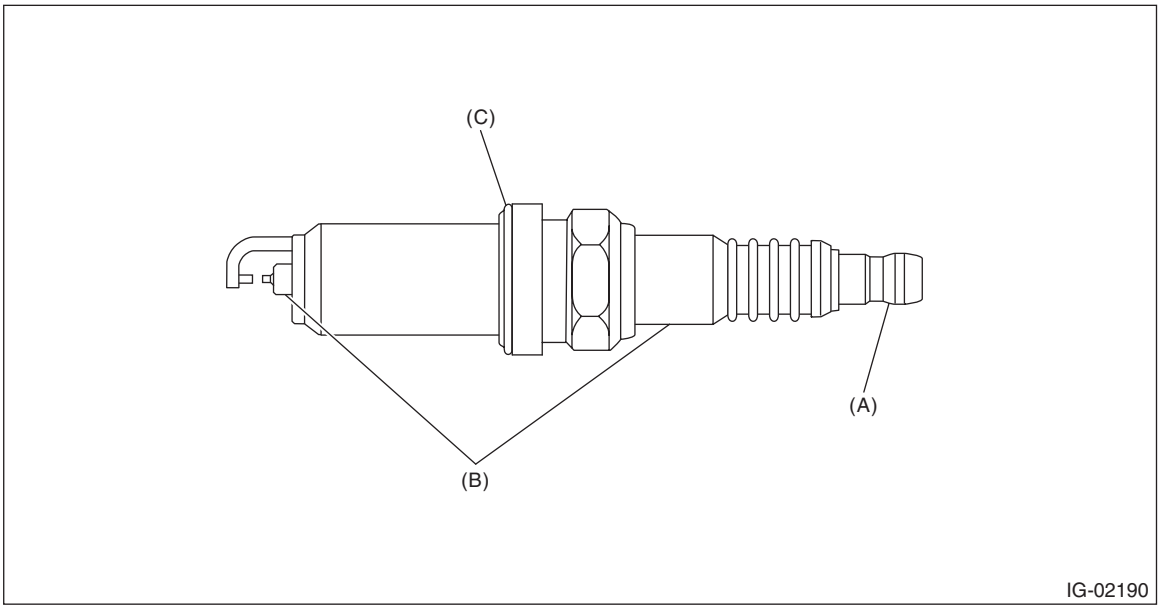

(A) Terminal damage (B) Crack or damage in insulator (C) Damaged gasket

2) Check the spark plug electrode and condition of the insulator. If abnormal, check and repair the cause and replace the spark plug.

(1) Normal:

Brown to grayish-tan deposits and slight electrode wear indicate correct spark plug heat range.

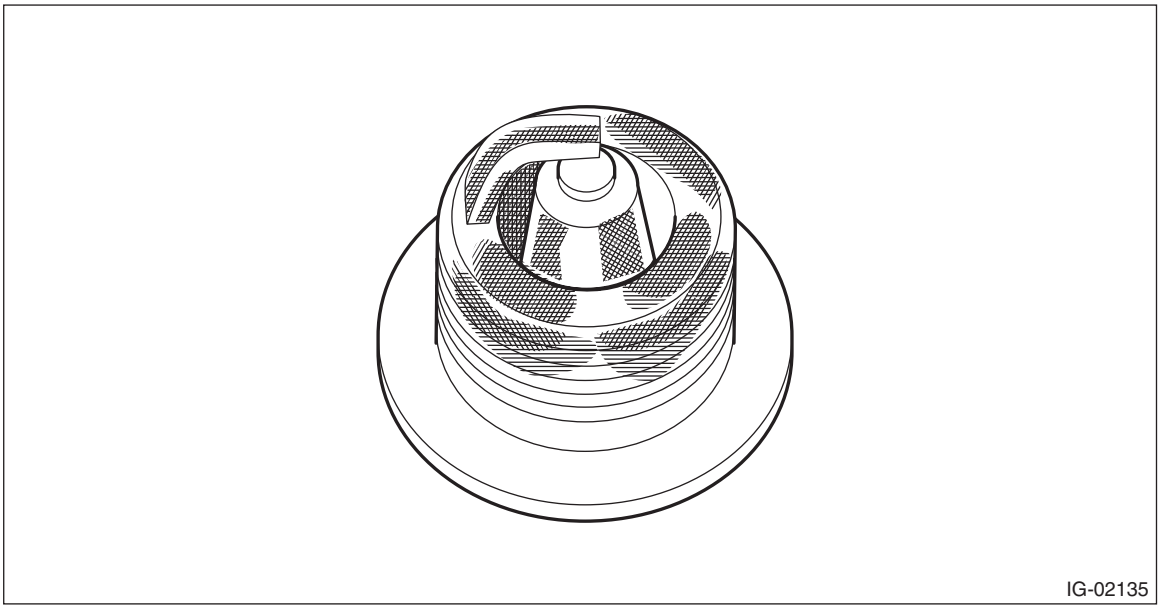

(2) Carbon fouled:
Dry fluffy carbon deposits on the insulator and electrode are mostly caused by slow-speed driving in town, weak ignition, too rich fuel mixture, etc.

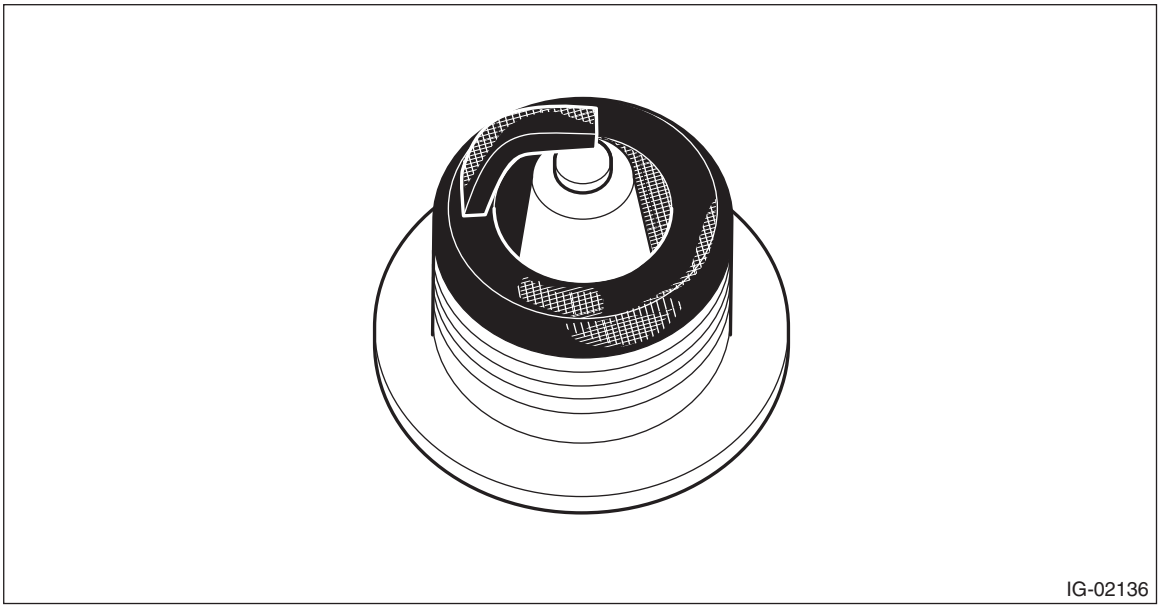

(3) Oil fouled:
Wet black deposits show oil entrance into combustion chamber through worn piston rings or increased clearance between valve guides and valve stems.

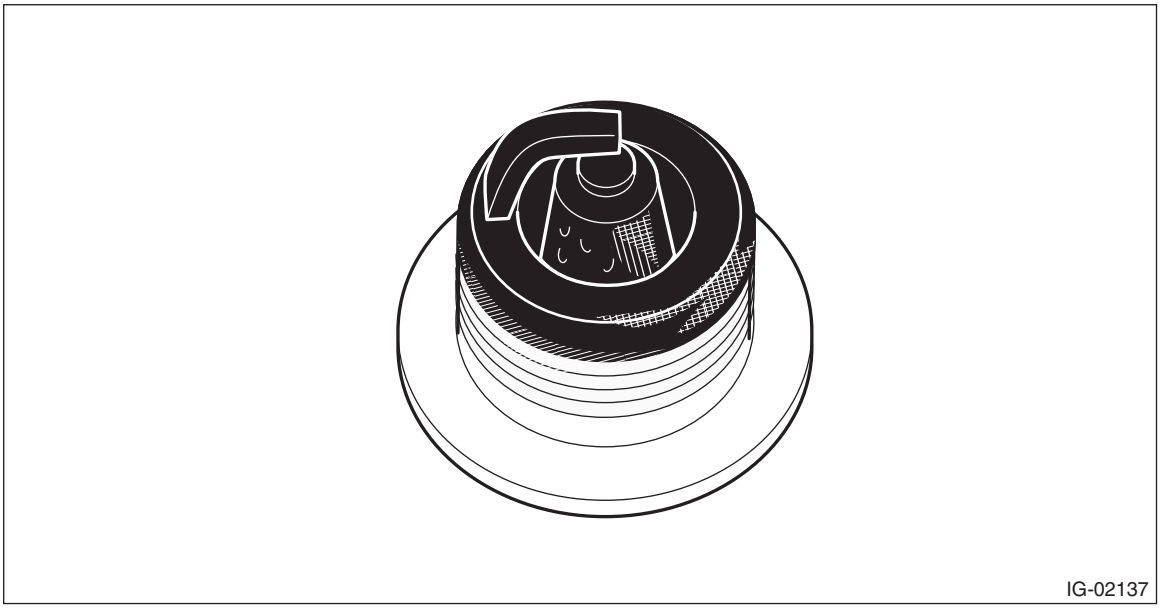

(4) Overheating:
A white or light gray insulator with black or brown spots and bluish burnt electrodes indicate engine overheating, wrong selection of fuel, or loose spark plugs.

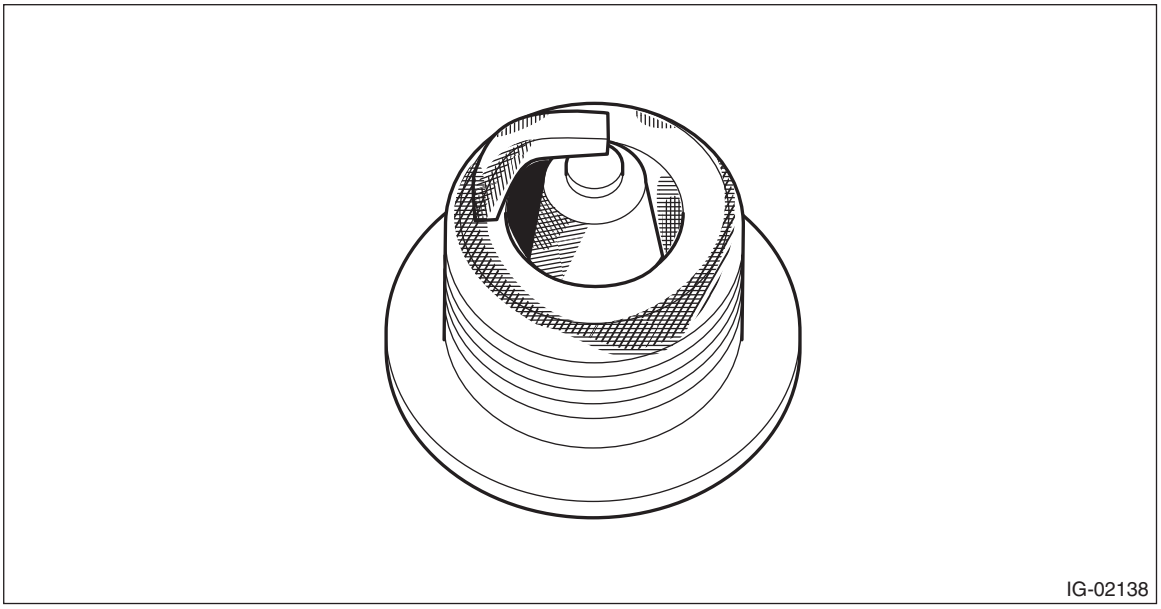
IG-02138

3) Using a nylon brush, etc., clean and remove the carbon or oxide deposits from the spark plug. If deposits are too stubborn, replace the spark plugs. After cleaning the spark plugs, check the spark plug gap “L” using a gap gauge. If it is not within the standard, replace the spark plug.

NOTE:
- Never use a plug cleaner.
- Do not use a metal brush as it may damage the electrode area.

Spark plug gap L:
Standard
1.0 — 1.1 mm (0.039 — 0.043 in)
- Gasoline engine model

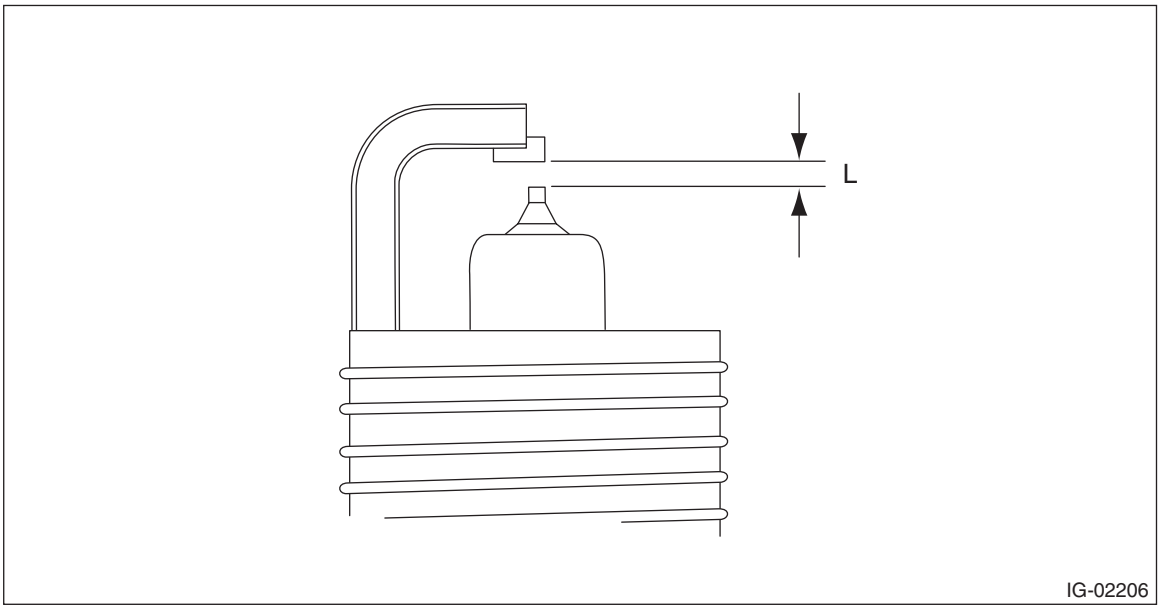

IG-02206

- HEV model

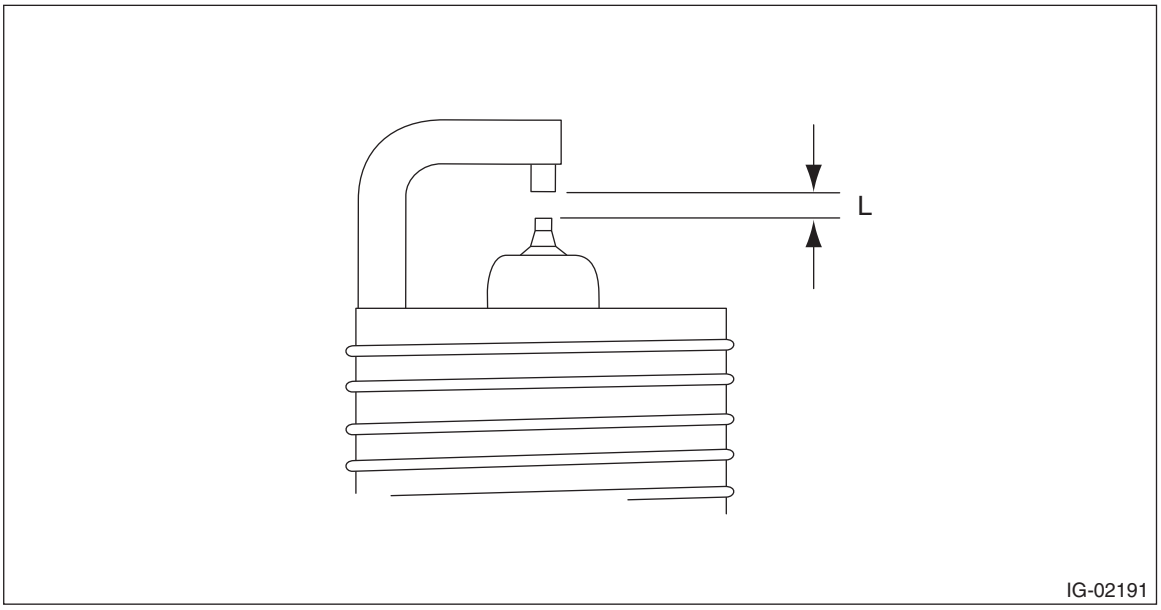

3. Ignition Coil

A: REMOVAL

Direct ignition type is adopted. Refer to “Spark Plug” for removal procedure. <Ref. to IG(H4DO(w/o HEV))-4, REMOVAL, Spark Plug.>

B: INSTALLATION

Direct ignition type is adopted. Refer to “Spark Plug” for the installation procedure. <Ref. to IG(H4DO(w/o HEV))-6, INSTALLATION, Spark Plug.>

C: INSPECTION

For inspection procedure, refer to “Diagnostics for Engine Starting Failure”. <Ref. to EN(H4DO w/o HEV)(diag)-74, IGNITION CONTROL SYSTEM, Diagnostics for Engine Starting Failure.> <Ref. to EN(H4DO HEV)(diag)-81, IGNITION CONTROL SYSTEM, Diagnostics for Engine Starting Failure.>

STARTING/CHARGING SYSTEMS

SC(H4DO(w/o HEV))

		Page
1.	General Description	2
2.	Starter	9
3.	Generator	33
4.	Battery	55
5.	Battery Current & Temperature Sensor	58

1. General Description

A: SPECIFICATION

Item			Specifications	
Vehicle model			CVT	MT
Starter	Type		Reduction type	
	Model		M000T38571	M000T33176
	Manufacturer		Mitsubishi Electric	
	Voltage and output		12 V — 1.2 kW	12 V — 1.0 kW
	Direction of rotation		Counterclockwise (when observed from pinion)	
	Number of pinion teeth		9	8
	Armature commutator runout	Standard	0.05 mm (0.0020 in)	
		Limit	0.10 mm (0.0039 in)	
	Armature depth of segment mold	Standard	0.50 mm (0.020 in)	
	Brush length	Standard	12.3 mm (0.484 in)	
		Limit	7.0 mm (0.276 in)	
	Brush spring force	Standard	15.9 — 19.5 N (1.62 — 1.99 kgf, 3.57 — 4.38 lbf)	
		Limit	2.5 N (0.25 kgf, 0.56 lbf)	
	No-load characteristics	Voltage	11 V	
		Current	90 A or less	95 A or less
		Rotating speed	2,370 rpm or more	2,500 rpm or more
	Load characteristics	Voltage	7.5 V	7.5 V
		Current	300 A	300 A
		Torque	10.65 N·m (1.1 kgf-m, 7.8 ft-lb) or more	8.84 N·m (0.9 kgf-m, 6.5 ft-lb) or more
		Rotating speed	840 rpm or more	870 rpm or more
	Lock characteristics	Voltage	4 V	4 V
		Current	780 A or less	680 A or less
		Torque	20 N·m (2.0 kgf-m, 14.8 ft-lb) or more	17 N·m (1.7 kgf-m, 12.5 ft-lb) or more
Generator	Type		Rotating-field three-phase type, voltage regulator built-in type, with load response control system	
	Model		A2TL0291	
	Manufacturer		Mitsubishi Electric	
	Voltage and output		12 V — 110 A	
	Polarity on ground side		Negative	
	Direction of rotation		Clockwise (when observed from pulley side)	
	Stator connection		3-phase △ type	
	Output current		1,500 rpm — 46 A or more 2,500 rpm — 90 A or more 5,000 rpm — 109 A or more	
	Regulated voltage		14.1 — 14.8 V [20°C (68°F)]	
	Rotor slip ring outer diameter	Standard	22.7 mm (0.894 in)	
		Limit	22.1 mm (0.870 in)	
	Brush length	Standard	22.5 mm (0.886 in)	
		Limit	5.0 mm (0.197 in)	
Battery	Type and capacity		12 V — 48 AH (55D 23L)	
	CCA		390A	

B: COMPONENT

1. STARTER

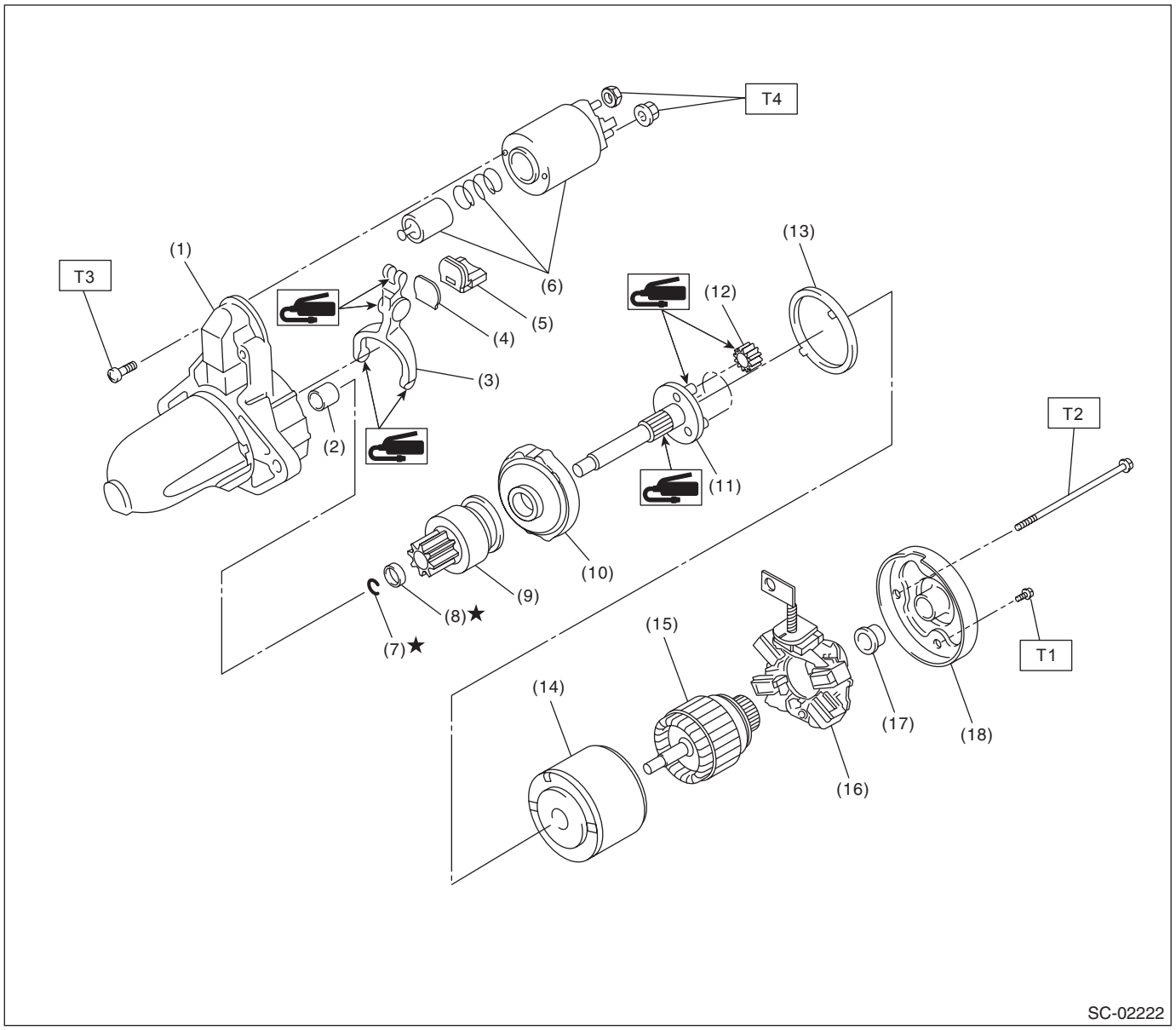

(1)	Starter housing ASSY	(9)	Overrunning clutch	(17)	Sleeve bearing
(2)	Sleeve bearing	(10)	Internal gear ASSY	(18)	Starter cover ASSY
(3)	Shift lever	(11)	Shaft		
(4)	Plate	(12)	Pinion gear	***Tightening torque: N·m (kgf-m, ft-lb)***	
(5)	Seal rubber	(13)	Seal rubber	***T1:***	***1.4 (0.1, 1.0)***
(6)	Magnet switch ASSY	(14)	Yoke ASSY	***T2:***	***6 (0.6, 4.4)***
(7)	Snap ring	(15)	Armature ASSY	***T3:***	***7.5 (0.8, 5.5)***
(8)	Stopper	(16)	Brush holder ASSY	***T4:***	***10 (1.0, 7.4)***

2. GENERATOR

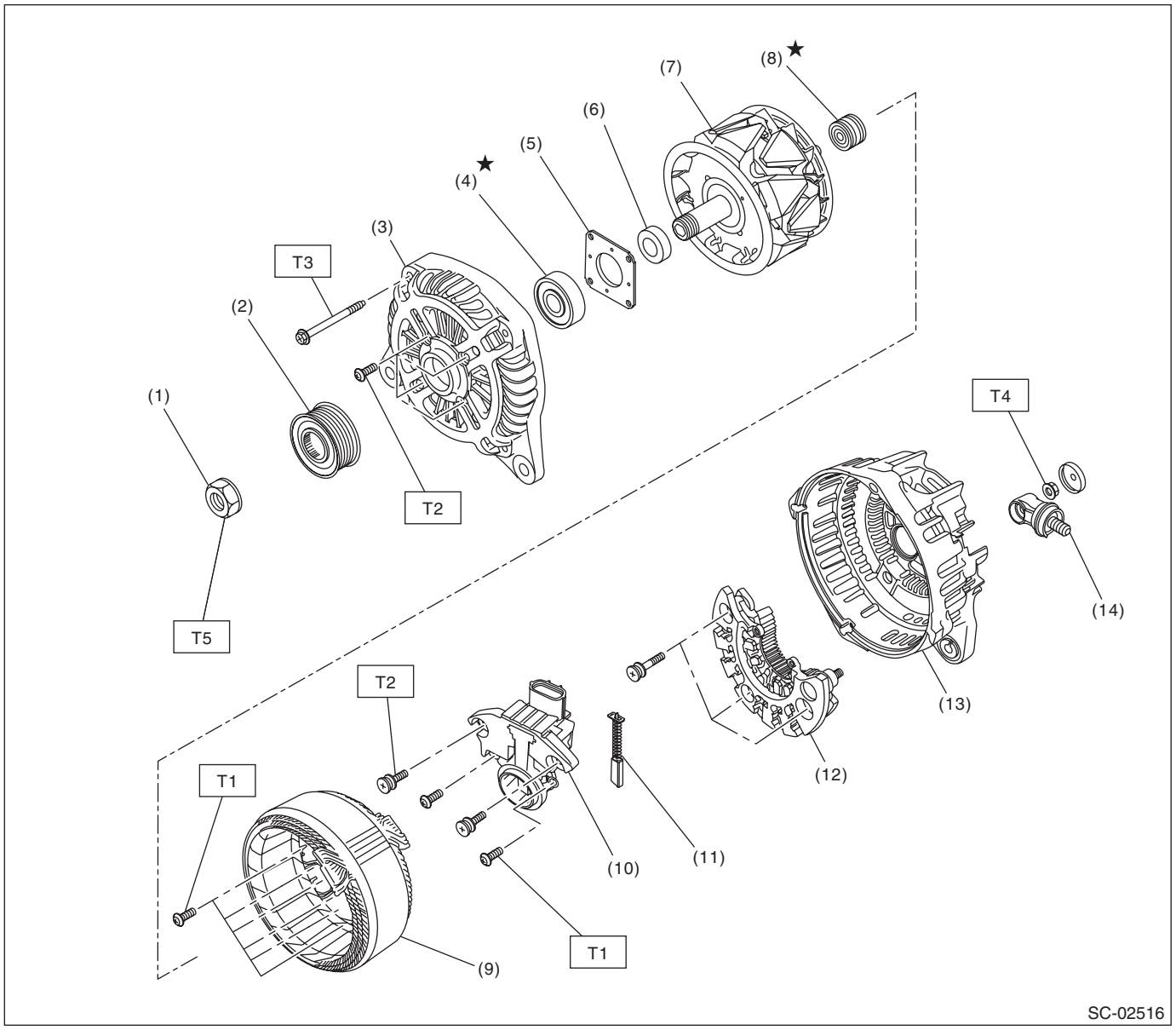

(1)	Nut	(8)	Bearing
(2)	Pulley	(9)	Stator coil
(3)	Front cover	(10)	IC regulator
(4)	Ball bearing	(11)	Brush
(5)	Bearing retainer	(12)	Rectifier
(6)	Spacer	(13)	Rear cover
(7)	Rotor	(14)	Terminal B

Tightening torque: N·m (kgf-m, ft-lb)
T1: 2 (0.2, 1.5)
T2: 3.9 (0.4, 2.9)
T3: 4.4 (0.4, 3.2)
T4: 8.9 (0.9, 6.6)
T5: 108 (11.0, 79.8)

3. GENERATOR BRACKET

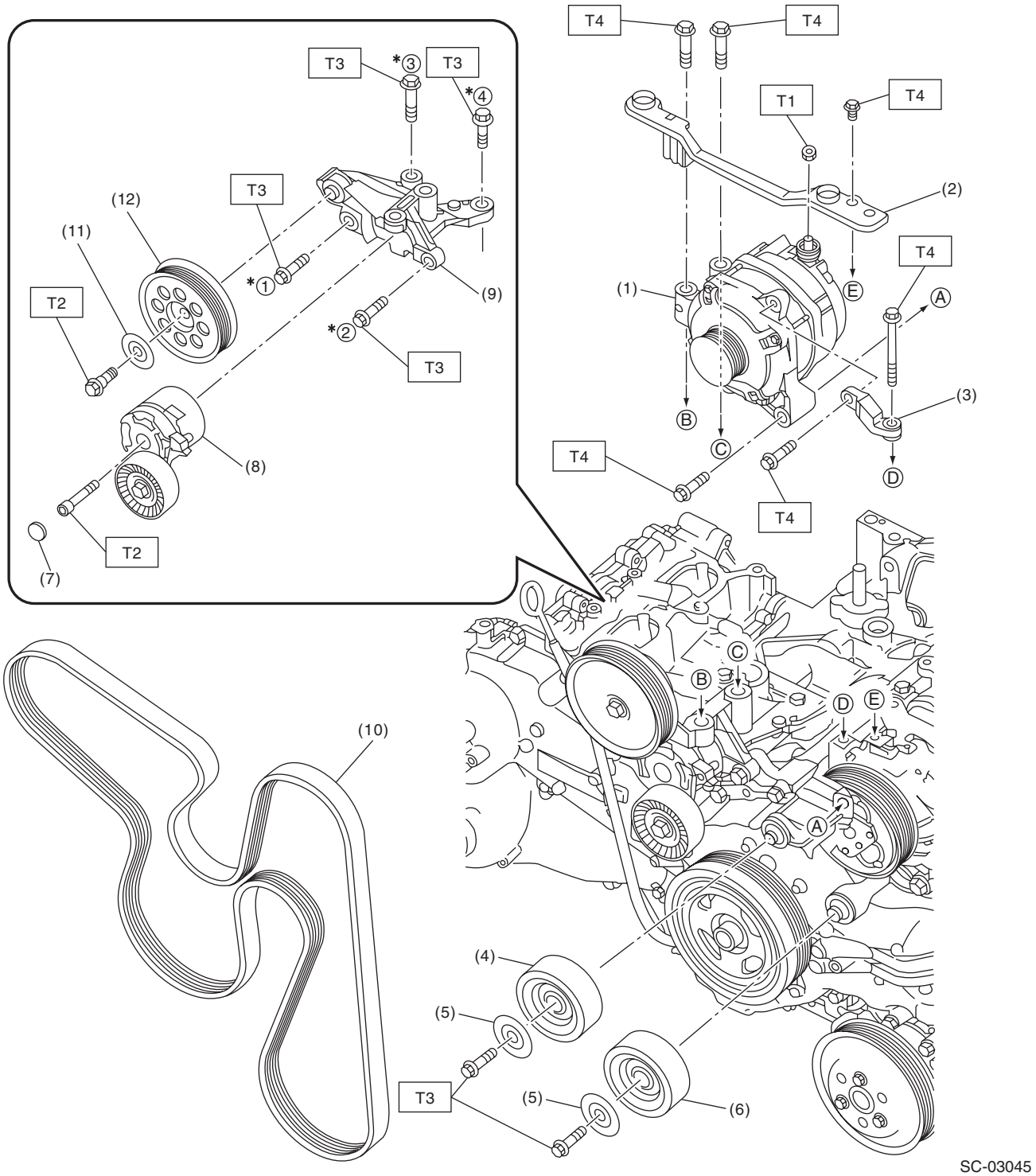

SC-03045

(1) Generator
(2) V-belt cover bracket
(3) Generator bracket
(4) Idler pulley A
(5) Idler pulley cover A
(6) Idler pulley B
(7) Cap
(8) V-belt tensioner ASSY
(9) Generator bracket
(10) V-belt
(11) Idler pulley cover B
(12) Idler pulley C

* Tighten the generator bracket in the numerical order as shown in the figure.

Tightening torque: N·m (kgf-m, ft-lb)
T1: 16 (1.6, 11.8)
T2: 25 (2.5, 18.4)
T3: 36 (3.7, 26.6)
T4: <Ref. to SC(H4DO(w/o HEV))-36, INSTALLATION, Generator.>

4. BATTERY CURRENT & TEMPERATURE SENSOR

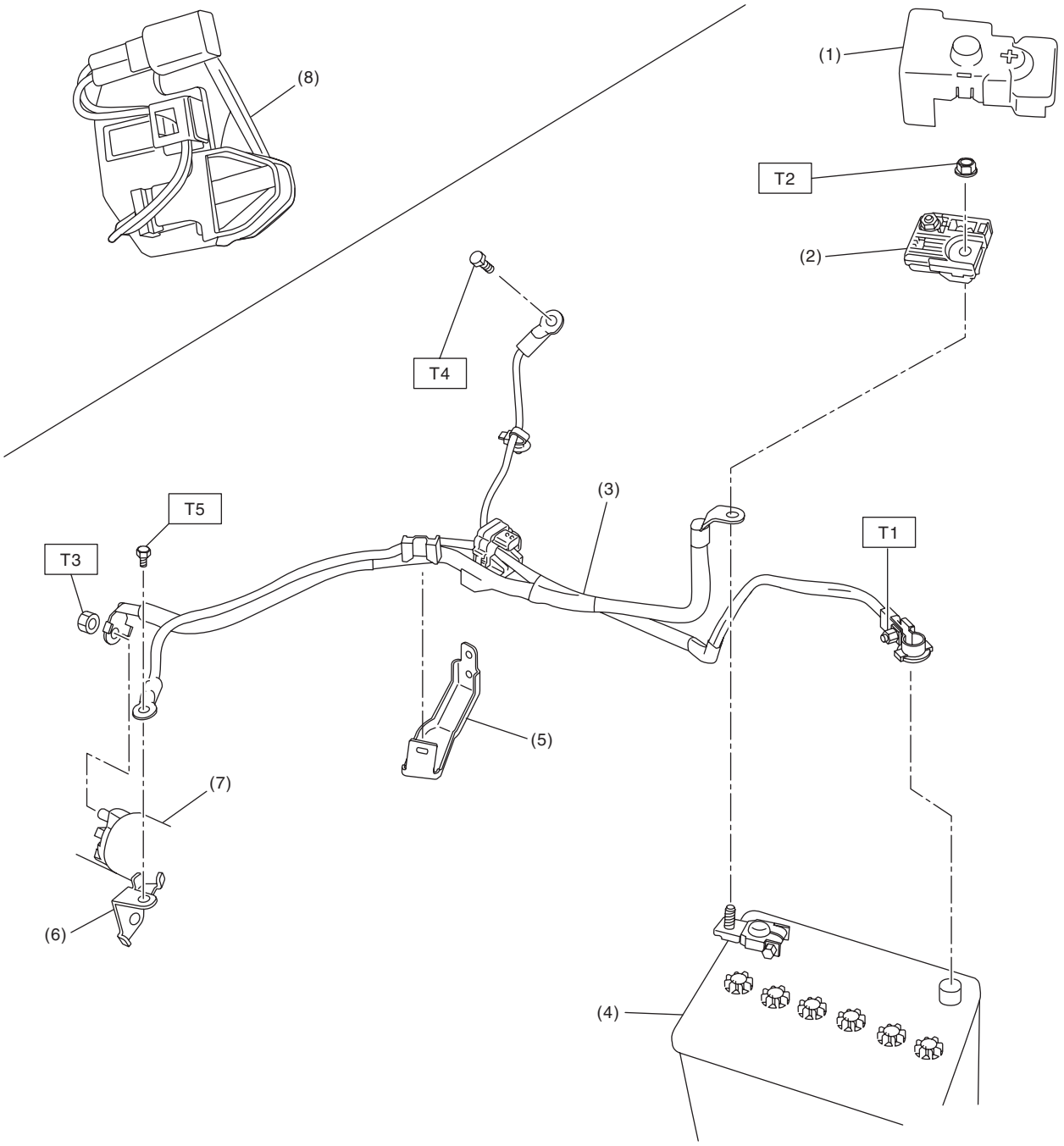

SC-02563

(1) Terminal boot
(2) Terminal fuse ASSY
(3) Battery cable ASSY
(4) Battery
(5) Battery cable bracket
(6) Battery cable stay
(7) Starter
(8) Battery temperature sensor

Tightening torque: N·m (kgf-m, ft-lb)
T1: 6 (0.6, 4.4)
T2: 7.5 (0.8, 5.5)
T3: 11 (1.1, 8.1)
T4: 13 (1.3, 9.6)
T5: 14 (1.4, 10.3)

C: CAUTION

- Prior to starting work, pay special attention to the following:
  1. Always wear work clothes, a work cap, and protective shoes. Additionally, wear a helmet, protective goggles, etc. if necessary.
  2. Protect the vehicle using a seat cover, fender cover, etc.
  3. Prepare the service tools, clean cloth, containers to catch grease and oil, etc.
- Vehicle components are extremely hot immediately after driving. Be wary of receiving burns from heated parts.
- When performing a repair, identify the cause of trouble and avoid unnecessary removal, disassembly and replacement.
- Before disconnecting connectors of sensors or units, be sure to disconnect the ground cable from battery.
- Always use the jack-up point when the shop jacks or rigid racks are used to support the vehicle.
- Remove contamination including dirt and corrosion before removal, installation, disassembly or assembly.
- Keep the removed parts in order and protect them from dust and dirt.
- All removed parts, if to be reused, should be reinstalled in the original positions with attention to the correct directions, etc.
- Bolts, nuts and washers should be replaced with new parts as required.
- Be sure to tighten the fasteners including bolts and nuts to the specified torque.

D: PREPARATION TOOL

1. GENERAL TOOL

TOOL NAME	REMARKS
Circuit tester	Used for measuring resistance, voltage and current.

2. Starter

A: REMOVAL

1) Disconnect the ground cable from battery.

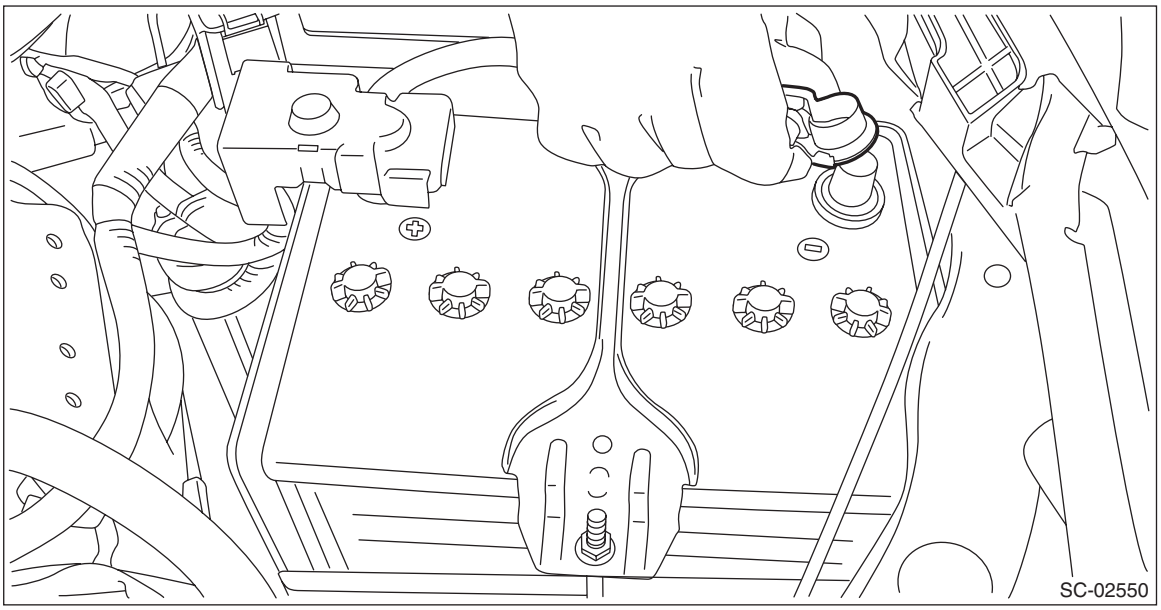

2) Remove the clip (A) from the air intake boot.
3) Loosen the clamp (B) securing the air cleaner case (rear) to the air intake boot.
4) Loosen the clamp (C) which secures the throttle body to the air intake boot.

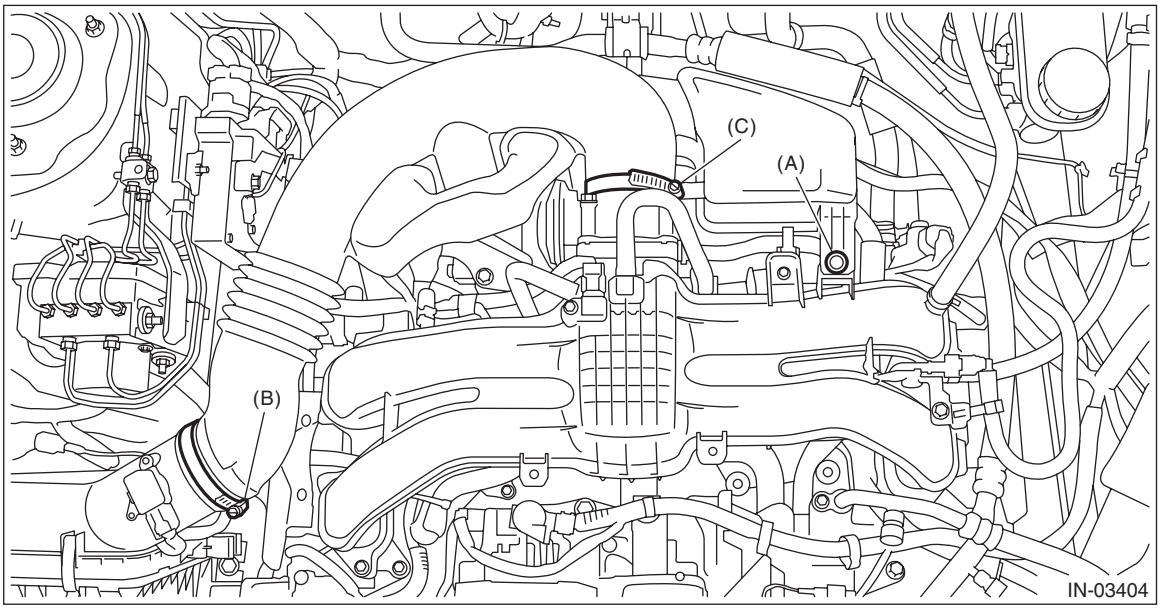

5) Remove the air intake boot from the throttle body, and move the air intake boot to the left side wheel apron.

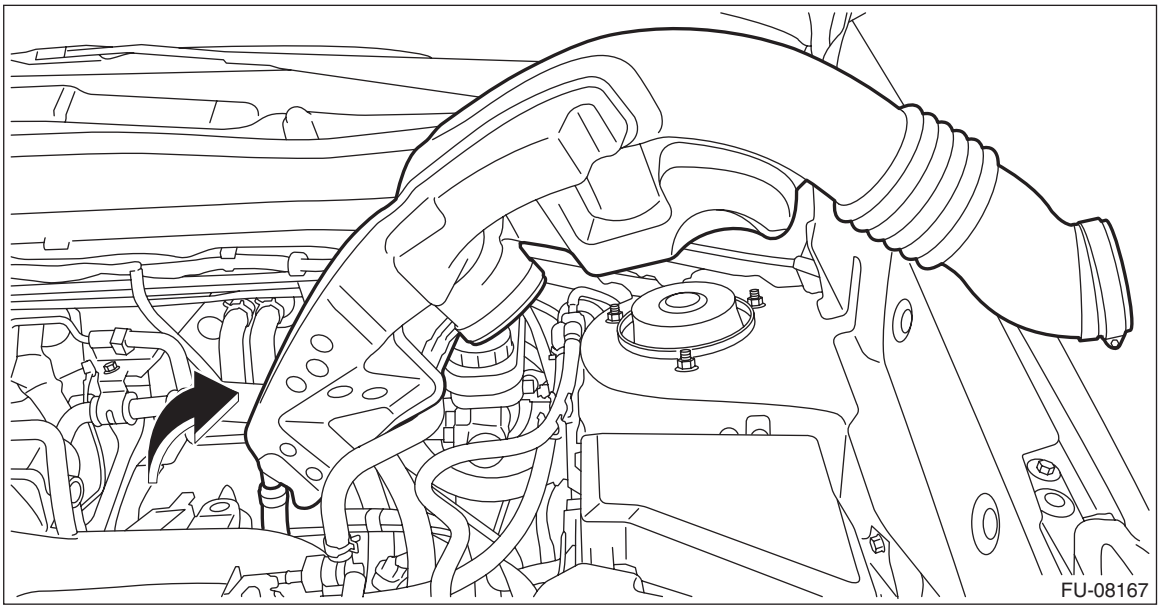

6) Disconnect the connector (B) and terminal (A) from starter.

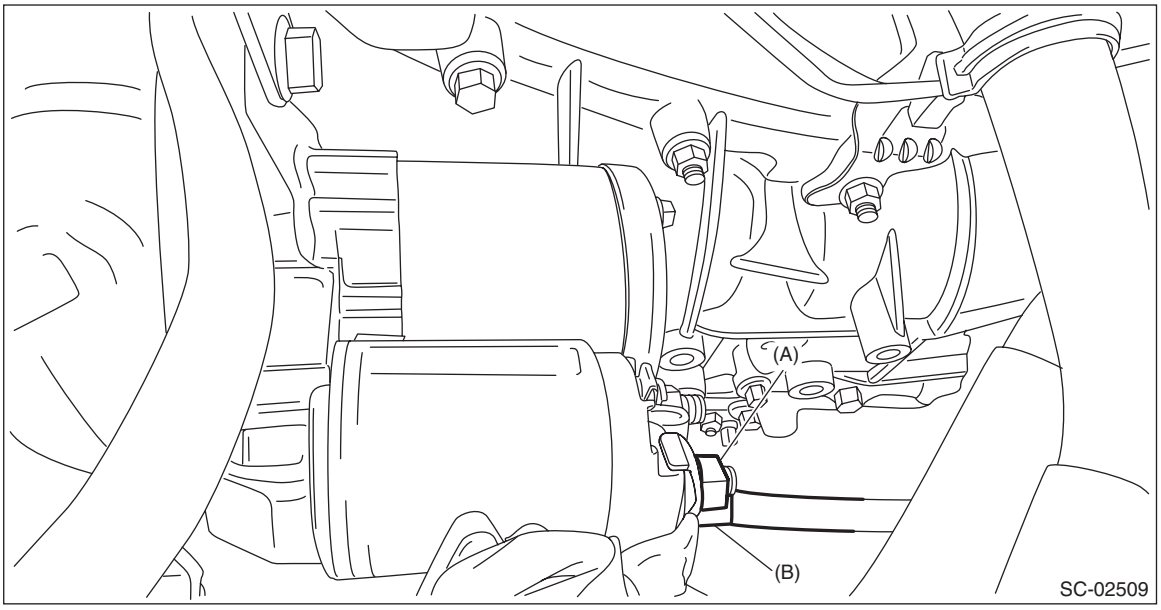

7) Remove the starter from transmission.

NOTE:
For CVT model, a nut is used at (A).

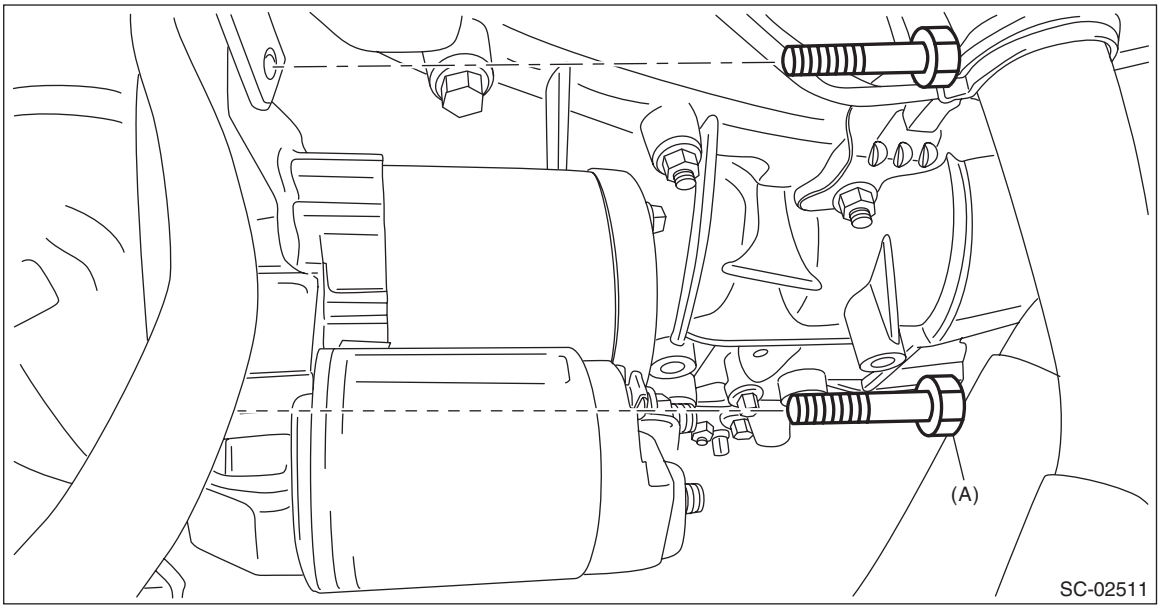

B: INSTALLATION

Install in the reverse order of removal.

NOTE:
For CVT model, a nut is used at (A).

Tightening torque:
50 N·m (5.1 kgf-m, 36.9 ft-lb)

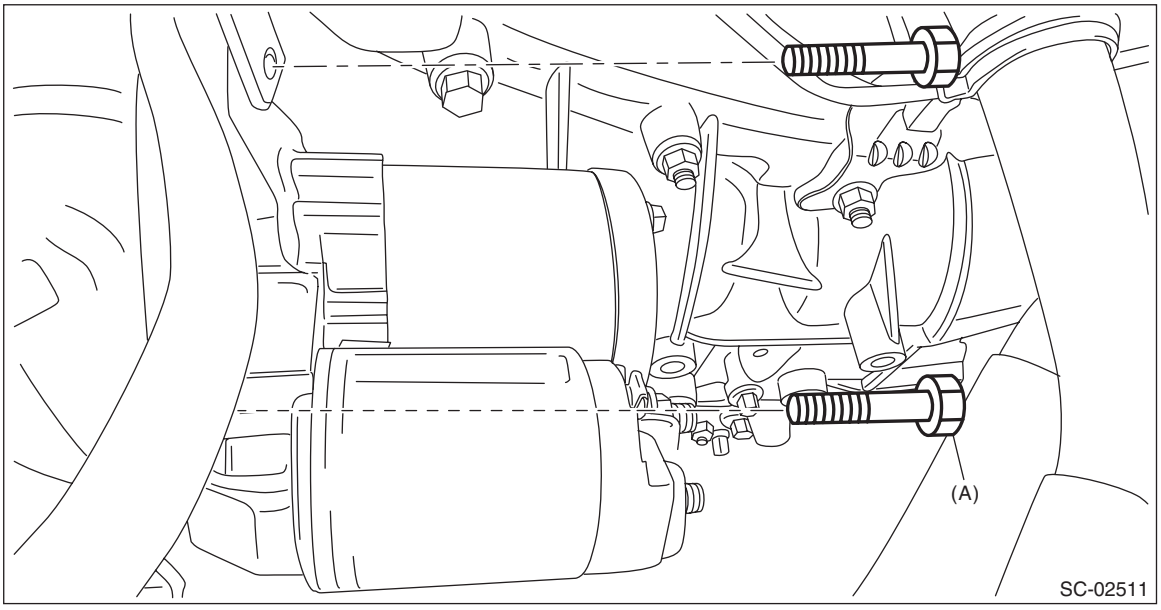

Tightening torque:
10 N·m (1.0 kgf-m, 7.4 ft-lb)

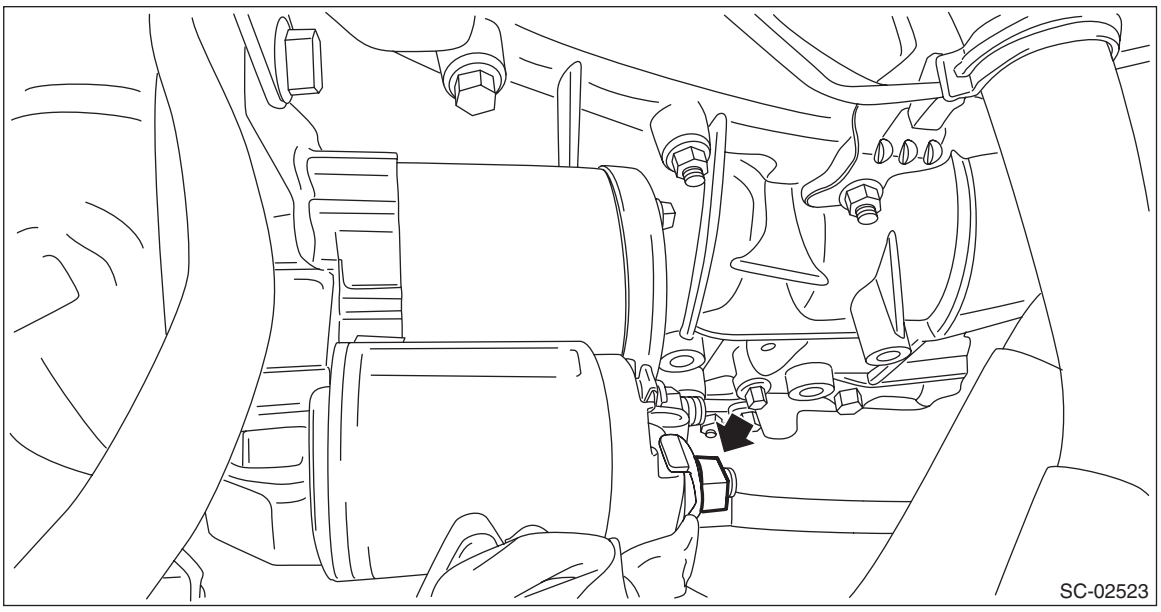

Tightening torque:
3 N·m (0.3 kgf-m, 2.2 ft-lb)

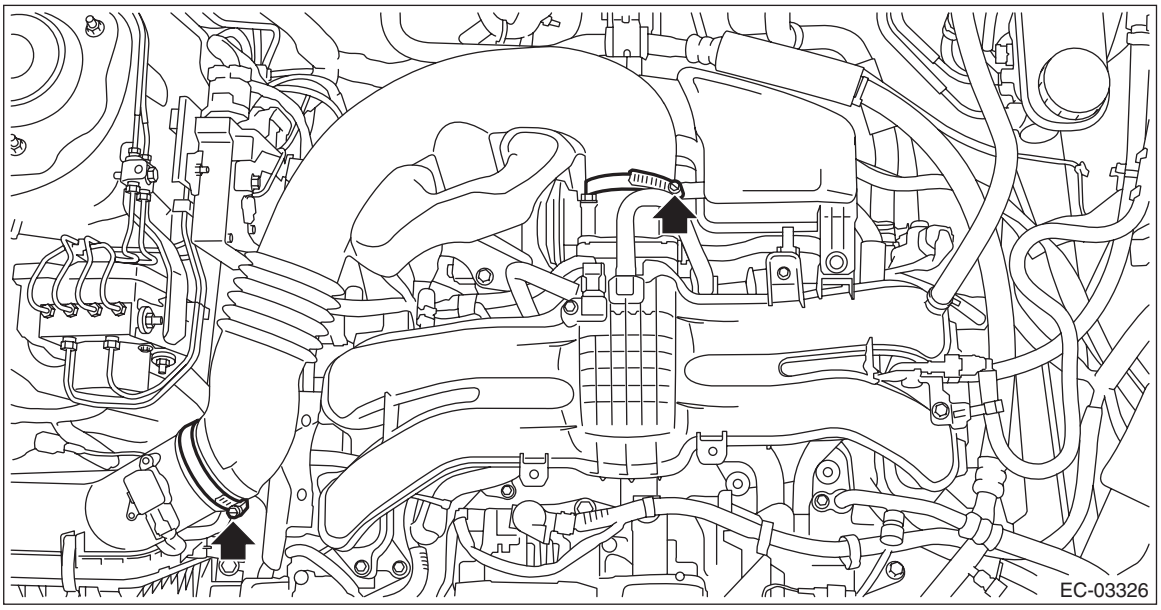

C: DISASSEMBLY

1) Disconnect the terminal M from the magnet switch assembly.

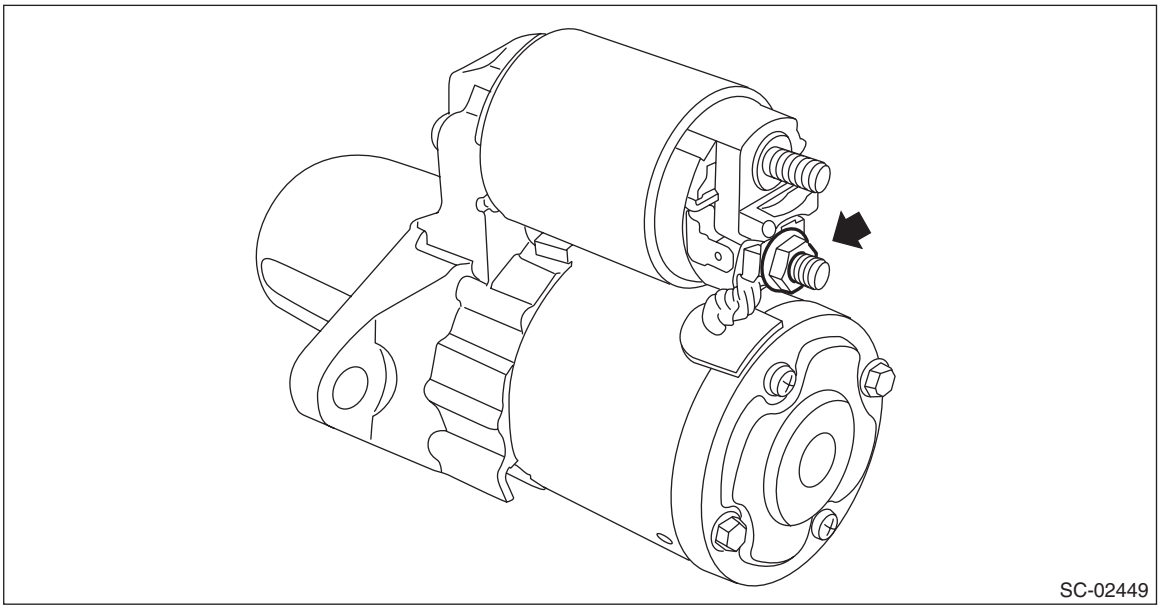
SC-02449

2) Remove the magnet switch assembly from the starter housing assembly.

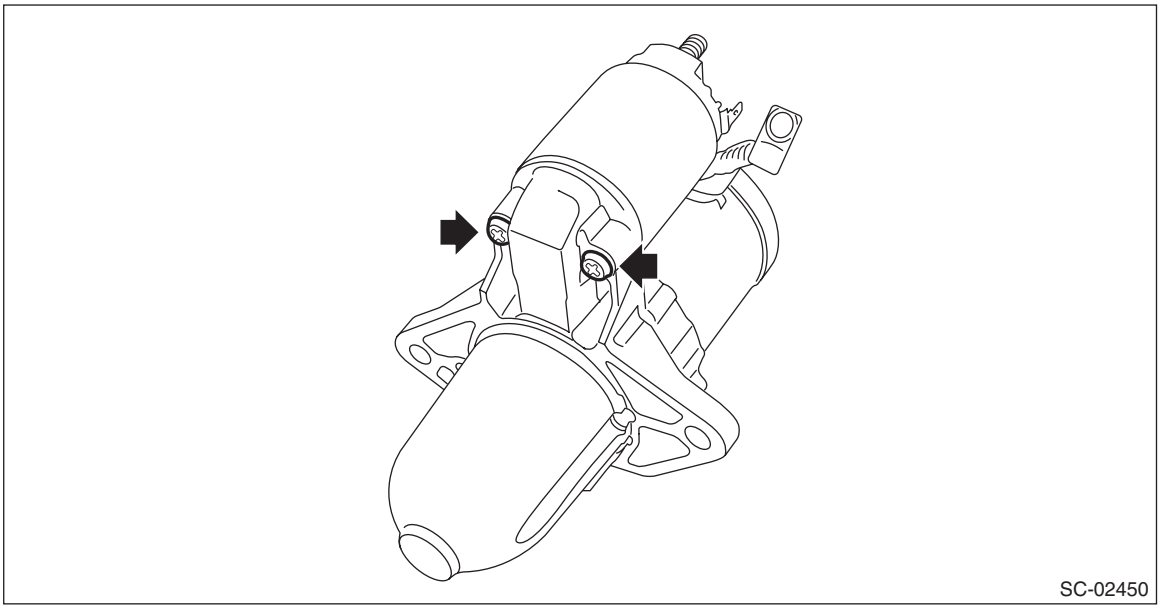
SC-02450

3) Remove screws (A) of the brush holder assembly, and through bolts (B) on both sides, and remove the starter cover assembly.

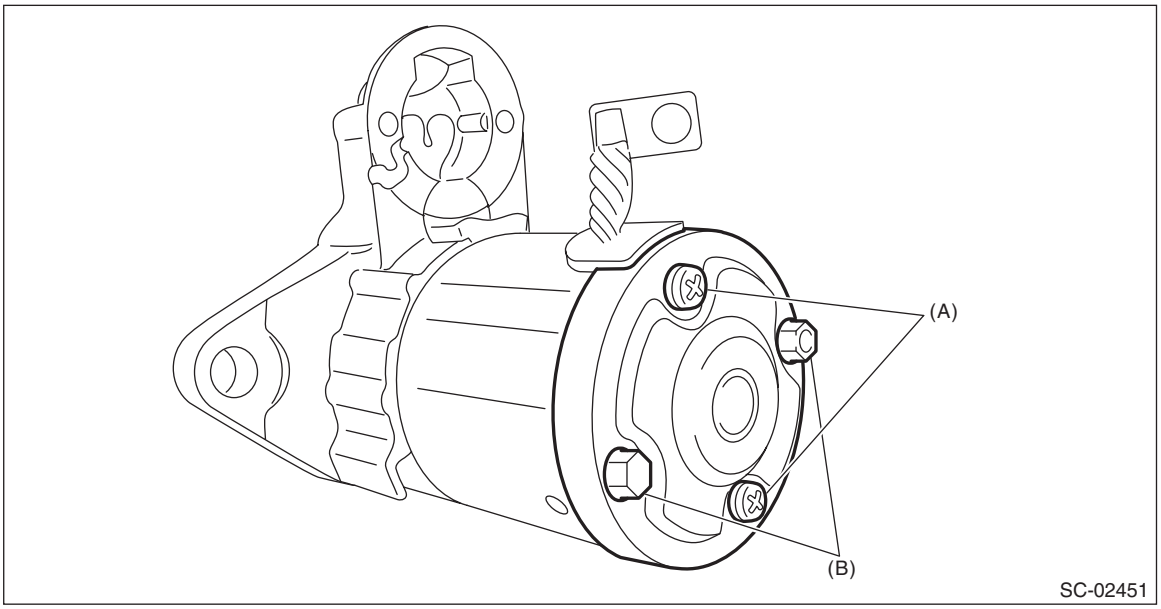

4) Remove the brush holder assembly from the armature assembly.

NOTE:
Hold the brush with your fingers so that the brush spring does not come flying out.

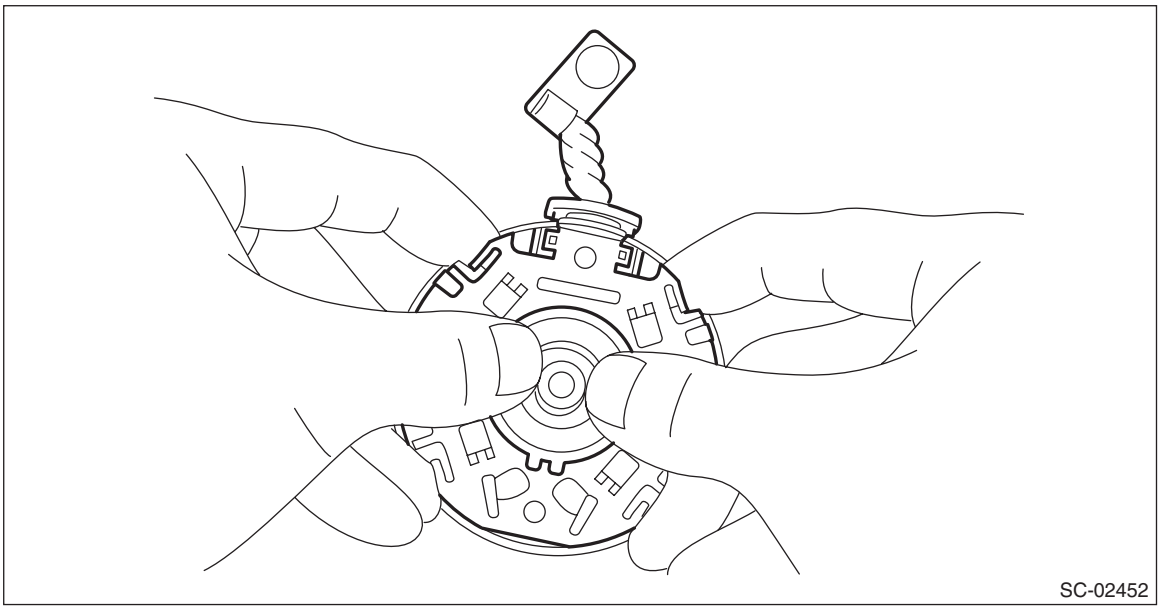

5) Remove the armature assembly and yoke assembly from the starter housing assembly together as a single unit.

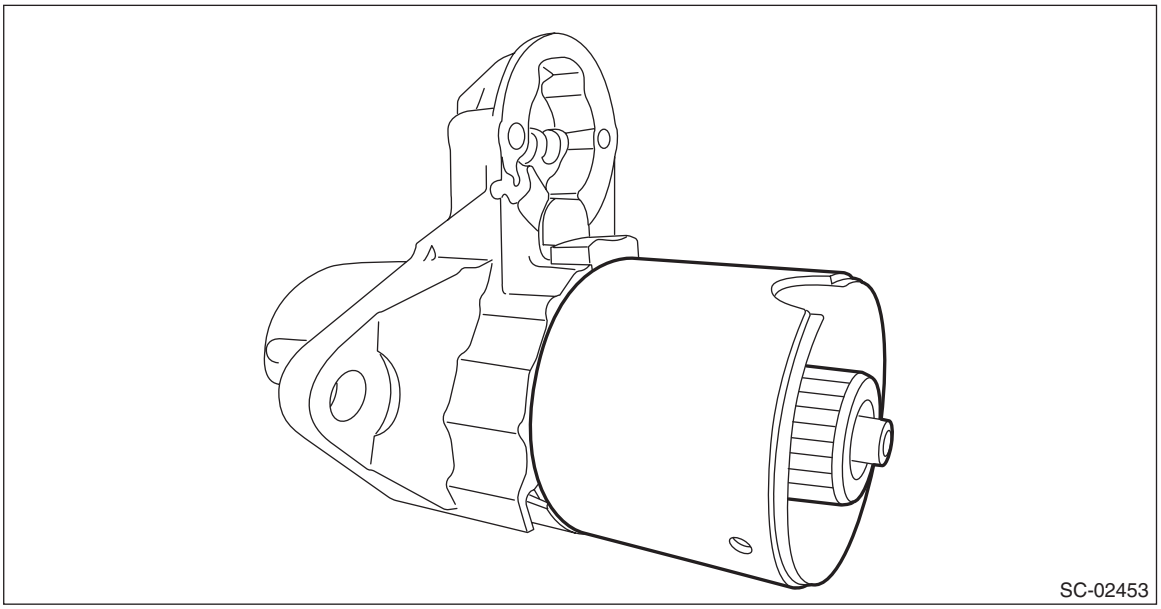
SC-02453

6) Separate the armature assembly and yoke assembly.

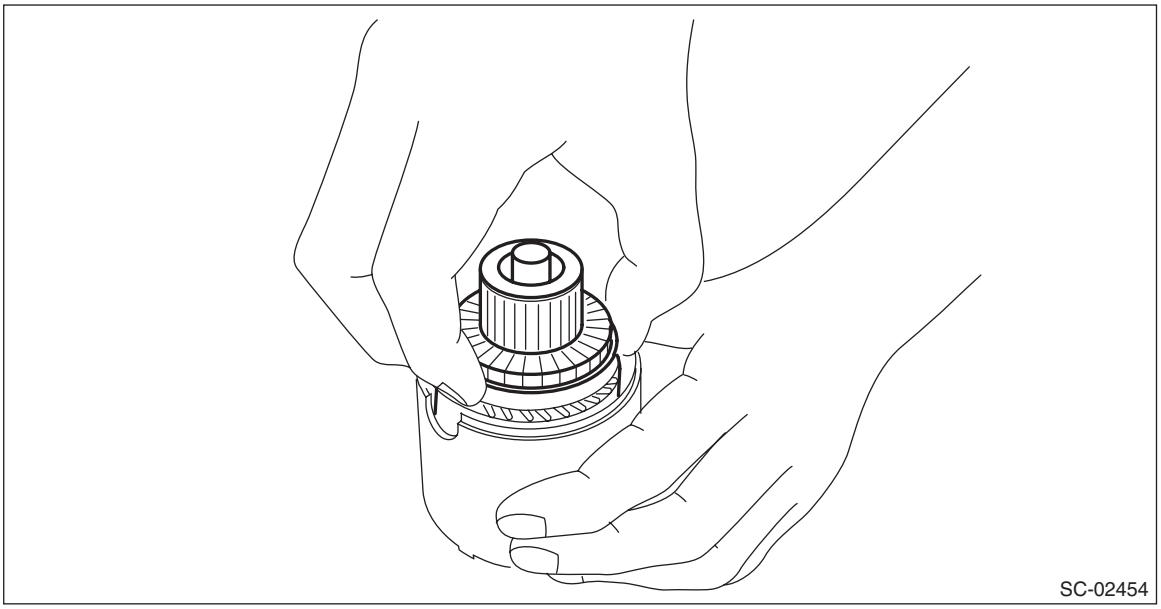
SC-02454

7) Remove the pinion gear from the internal gear assembly.

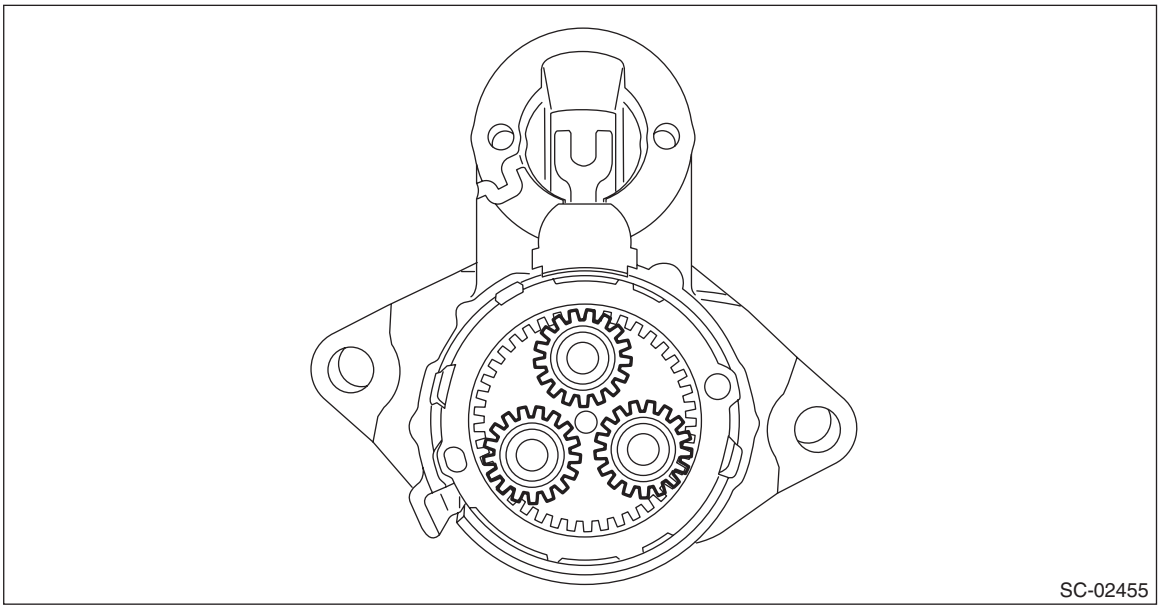

8) Remove seal rubber (A), plate (B), and seal rubber (C).

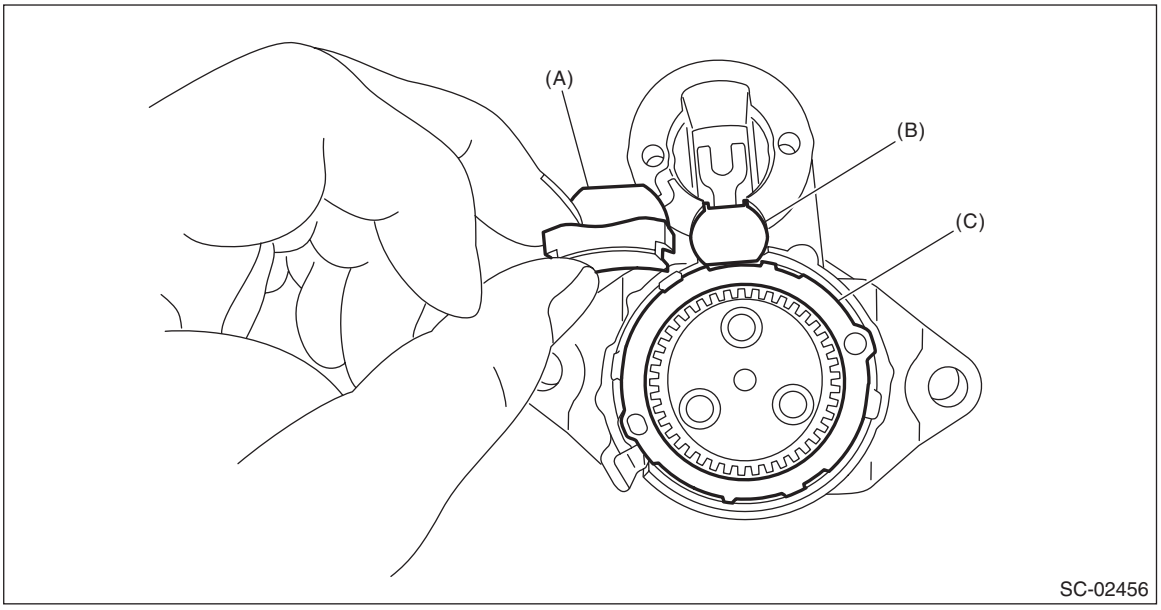

9) Lightly tap the starter housing assembly with a plastic hammer as shown in the figure, and remove the overrunning clutch, internal gear assembly, shaft and shift lever together as one unit.

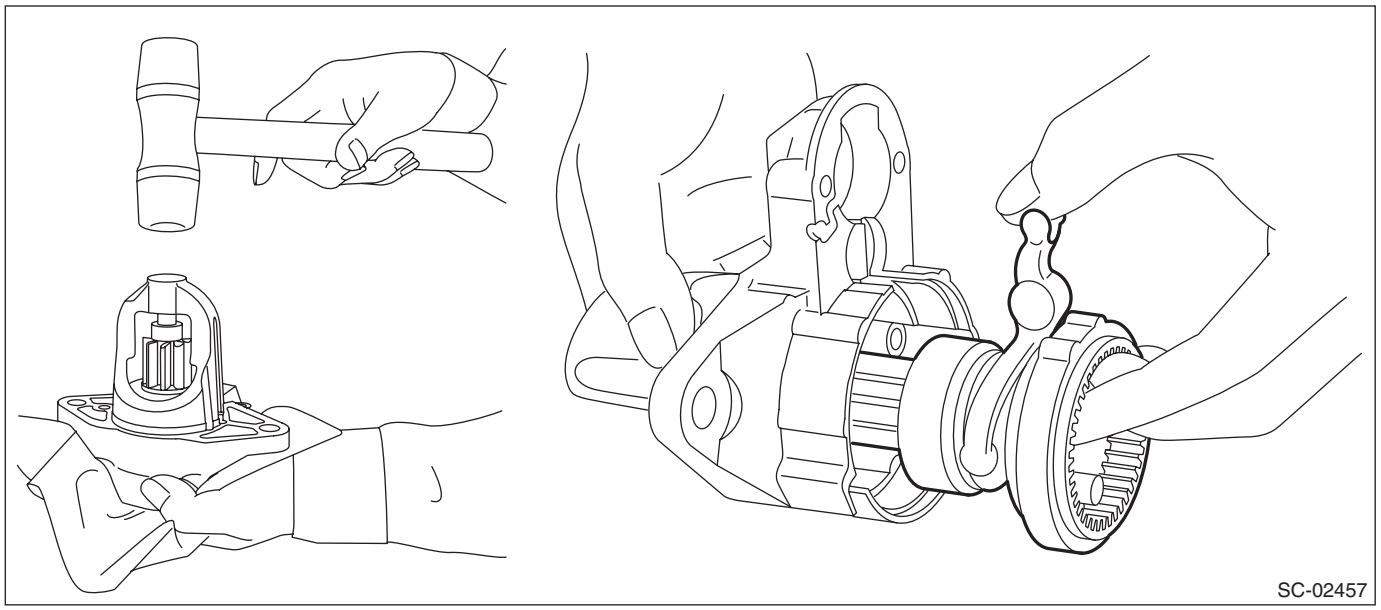
SC-02457

10) Use the following procedures to remove the overrunning clutch from the shaft.
(1) Use an appropriate tool (such as a fit socket wrench), and remove the stopper from snap ring by lightly tapping the stopper with a plastic hammer.

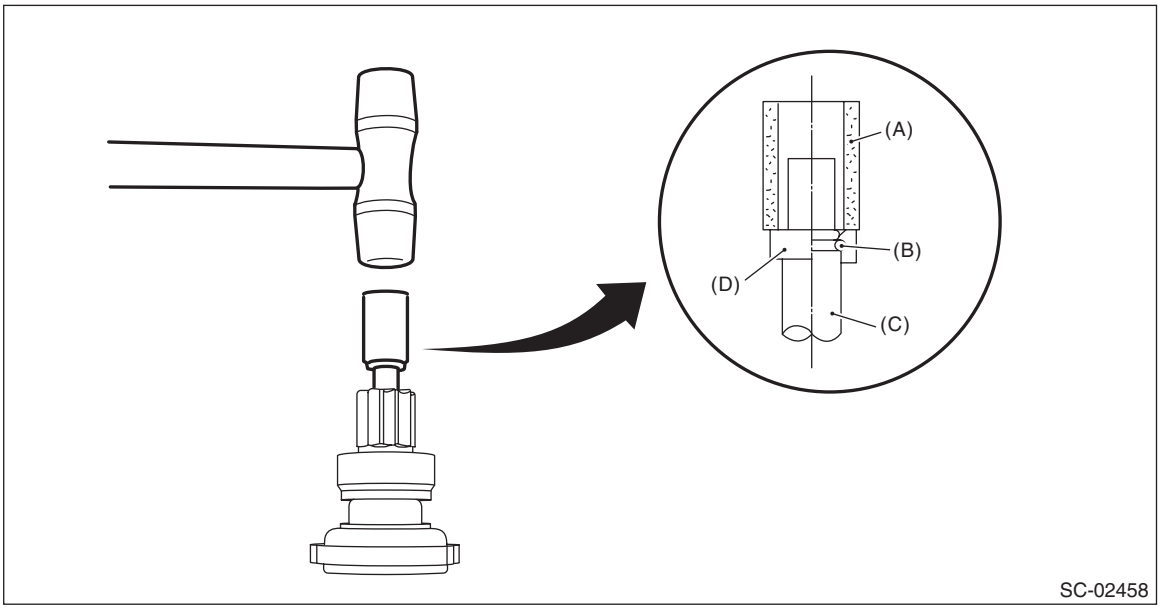

SC-02458

(A) Appropriate tool (B) Snap ring (C) Shaft
(D) Stopper

(2) Remove snap ring (A) from the shaft, and remove stopper (B).

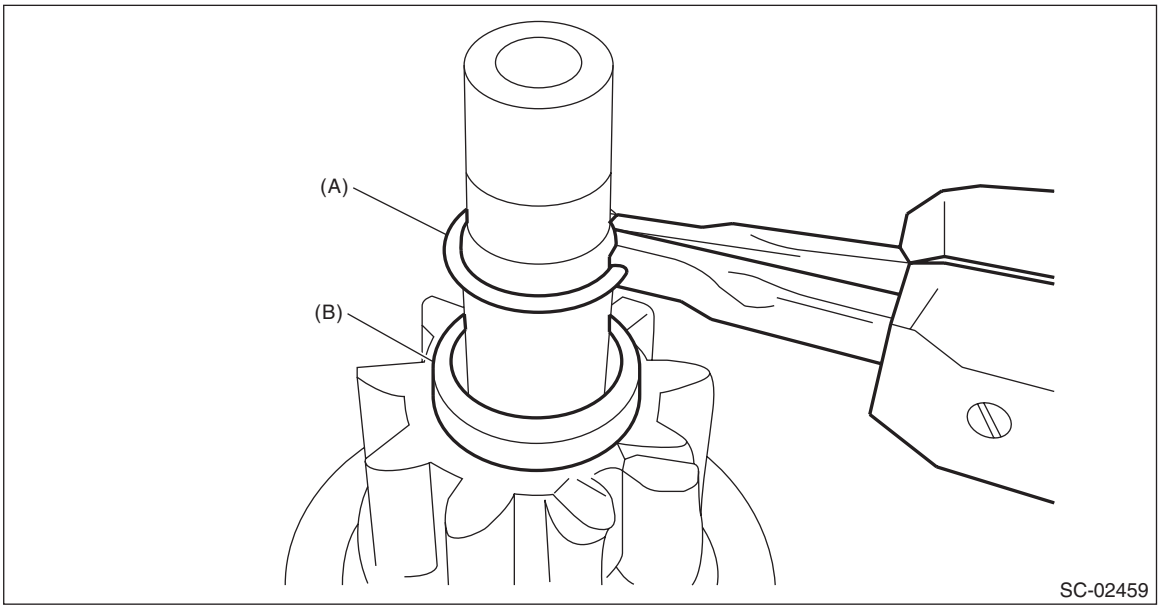

(3) Remove the overrunning clutch from the shaft.

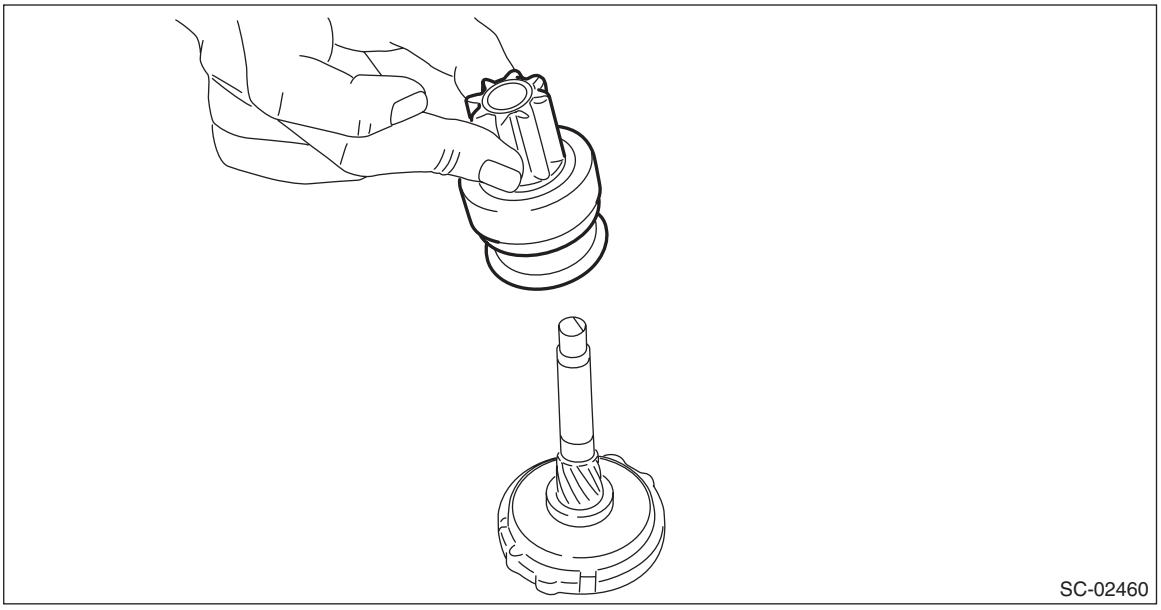

11) Separate the internal gear assembly and shaft.

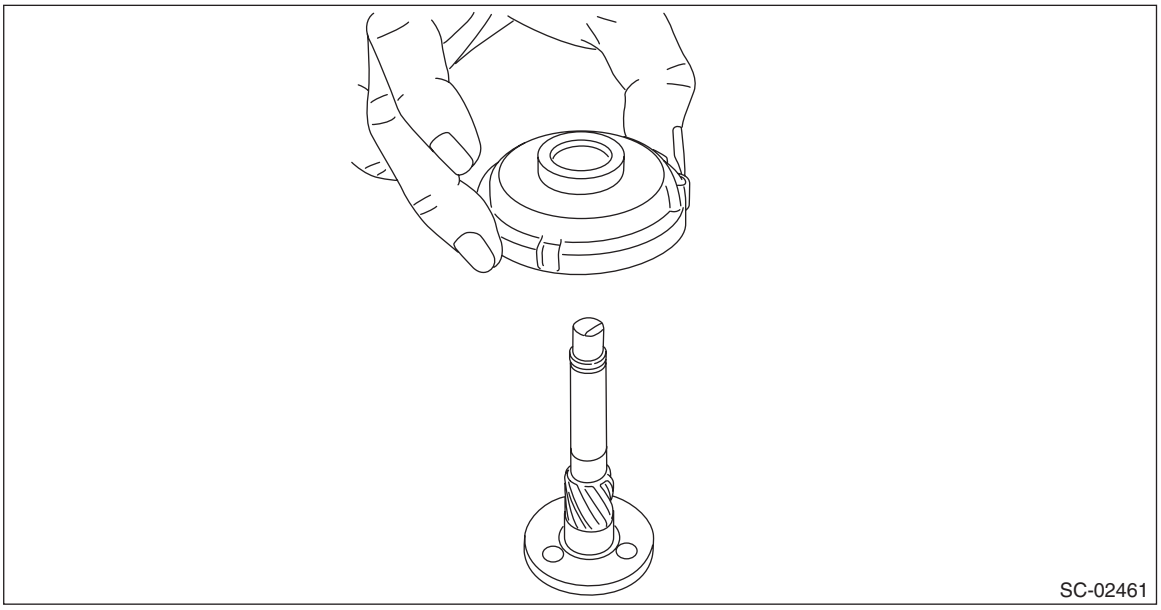

D: ASSEMBLY

1) Apply grease to the shaft sliding surfaces of the internal gear assembly.

Grease:
Multemp #6129 or equivalent

2) Assemble the shaft to the internal gear assembly.

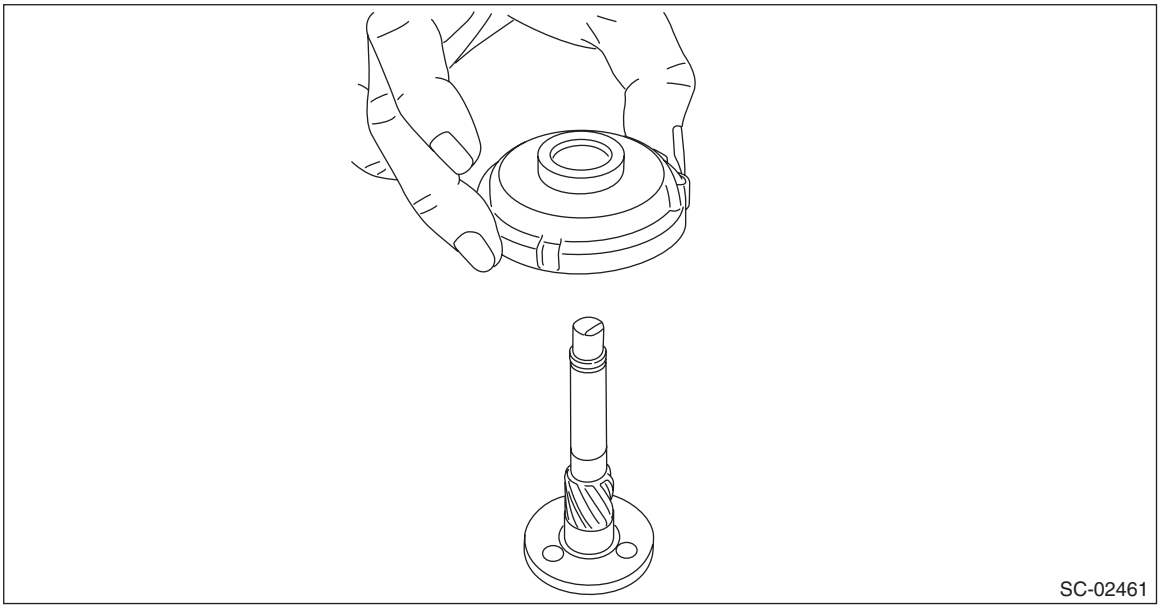

3) Assemble the overrunning clutch as follows:
(1) Apply grease to the spline portion of the shaft.

Grease:
Multemp #6129 or equivalent

(2) Install the overrunning clutch to shaft.

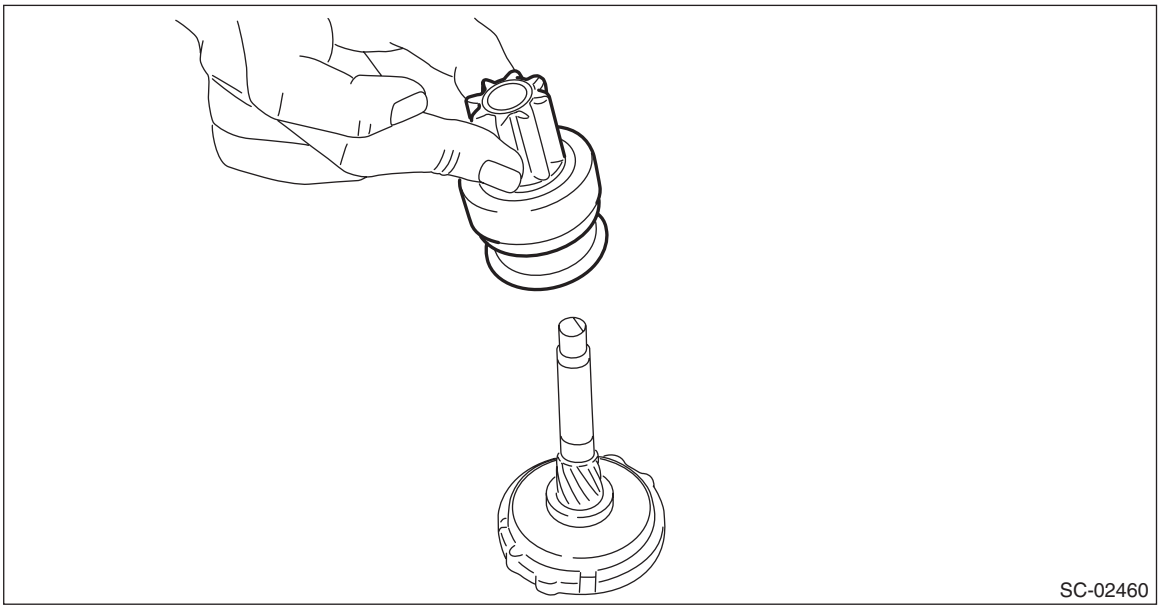

(3) Pass stopper (B) through the shaft assembly, and attach snap ring (A).

NOTE:
Use new stoppers and snap rings.

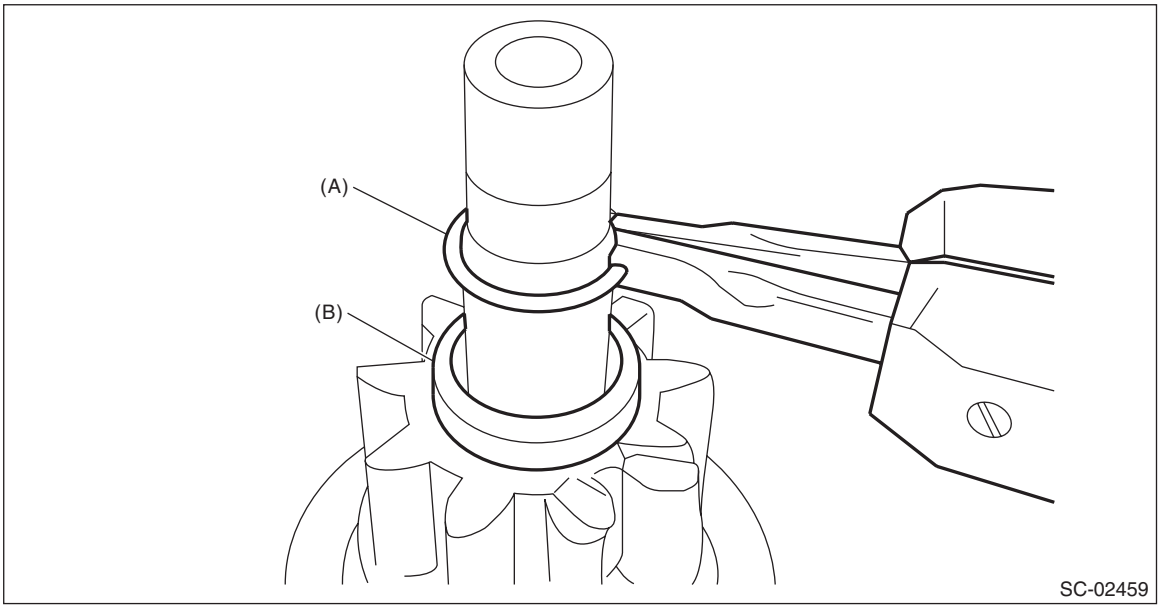

(4) Using a press, pressure fit stopper (B) into snap ring (A).

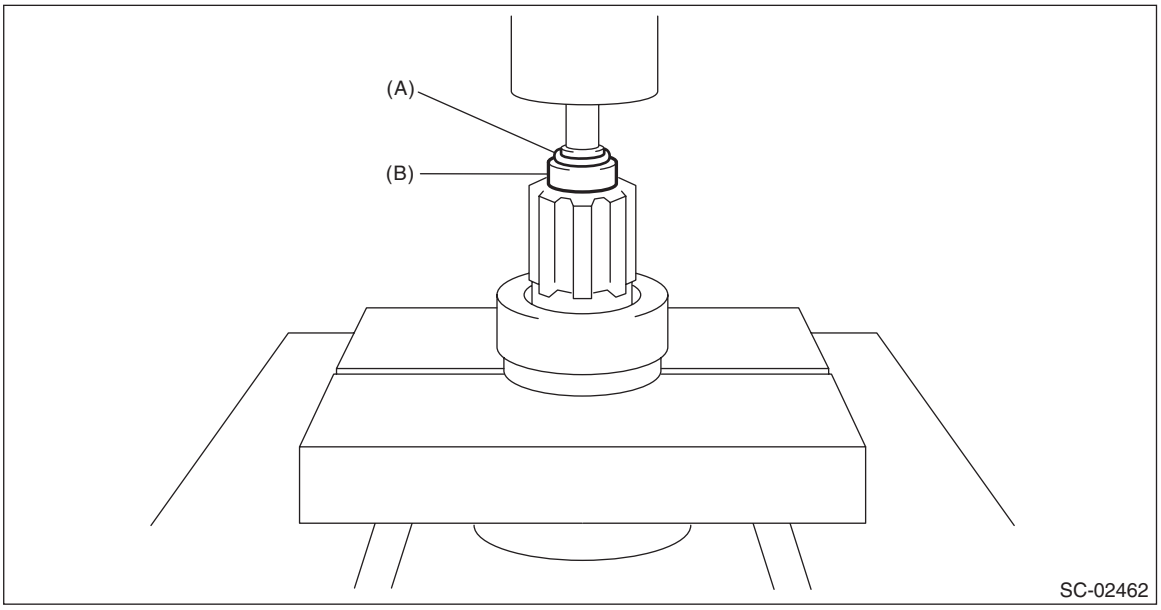

4) Assemble the overrunning clutch, internal gear assembly, shaft and shift lever as a single unit into the starter housing assembly.

NOTE:
Apply grease to the moving parts of the shift lever.

Grease:
Multemp #6129 or equivalent

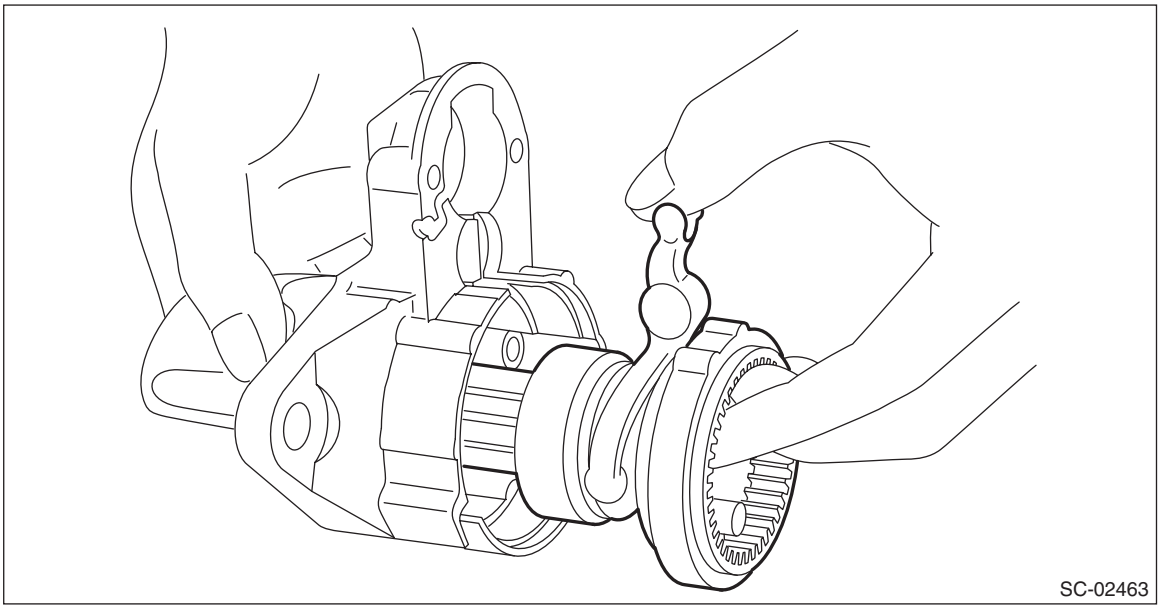

5) Apply grease to the inside of the internal gear assembly and pinion gear, and attach the pinion gear to the internal gear assembly.

NOTE:
- Apply grease evenly to the contact surfaces of each gear.
- Be careful that no debris becomes attached.

Grease:
Molykote® AG650 or equivalent

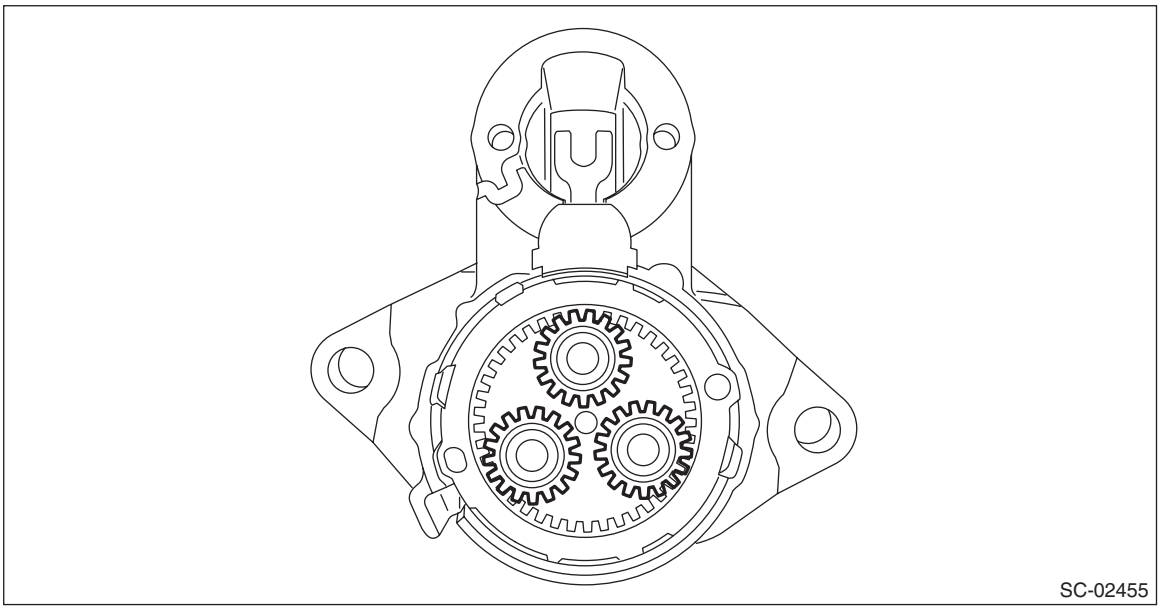

6) Install seal rubber (A), plate (B), and seal rubber (C).

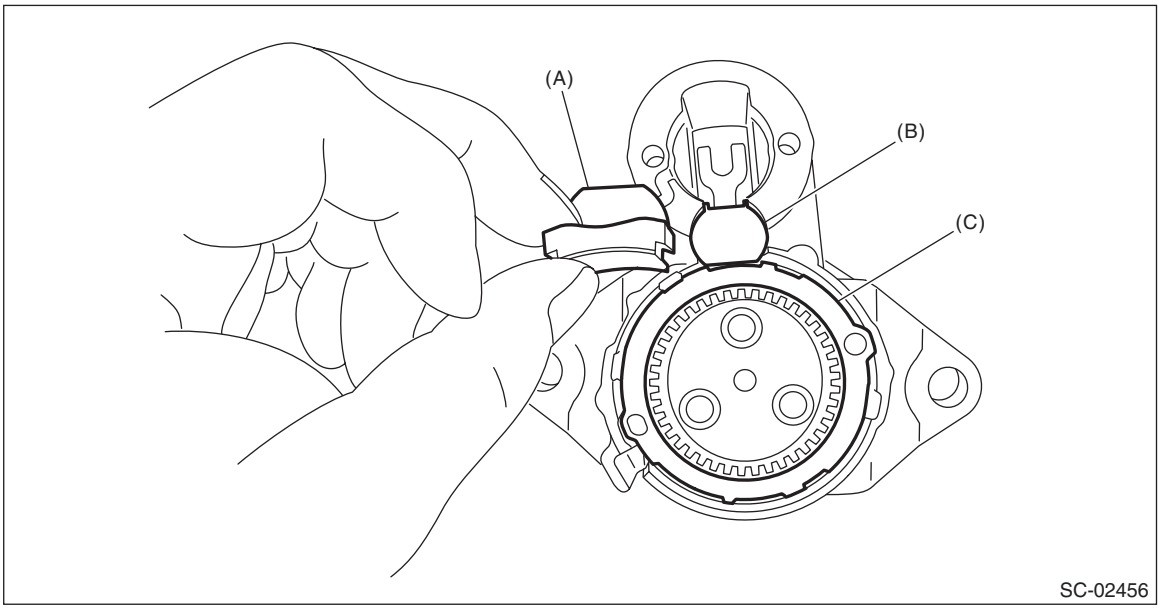

7) Assemble the armature assembly to the yoke assembly.

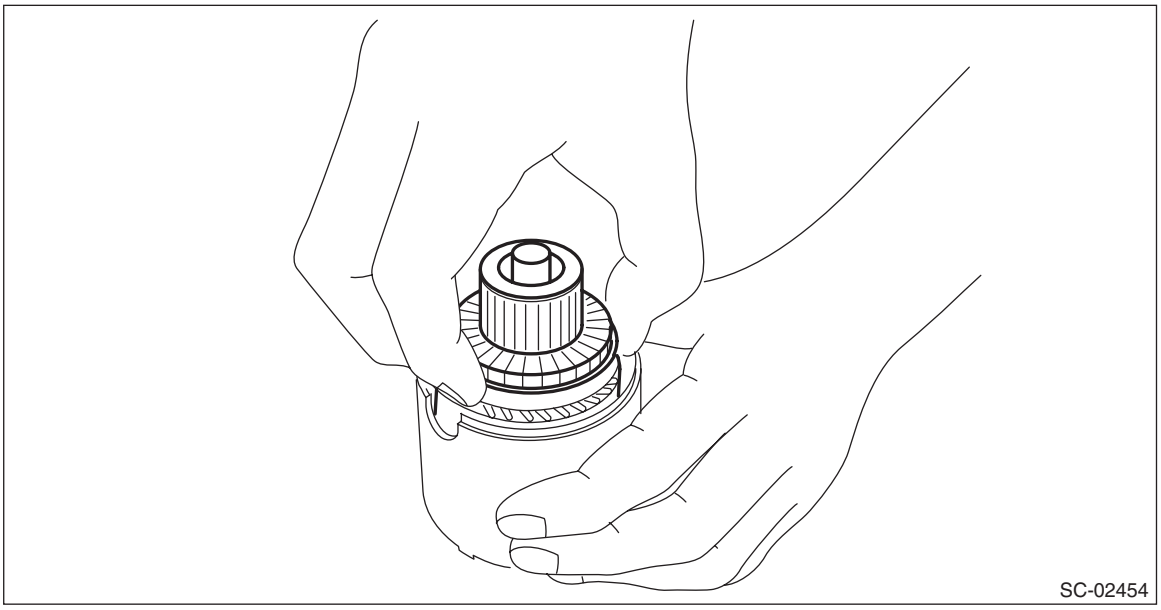

8) Attach the armature assembly and yoke assembly to the starter housing assembly together as a single unit.

NOTE:
As shown in the figure, match the protrusion of the yoke assembly to the cut out of the starter housing assembly.

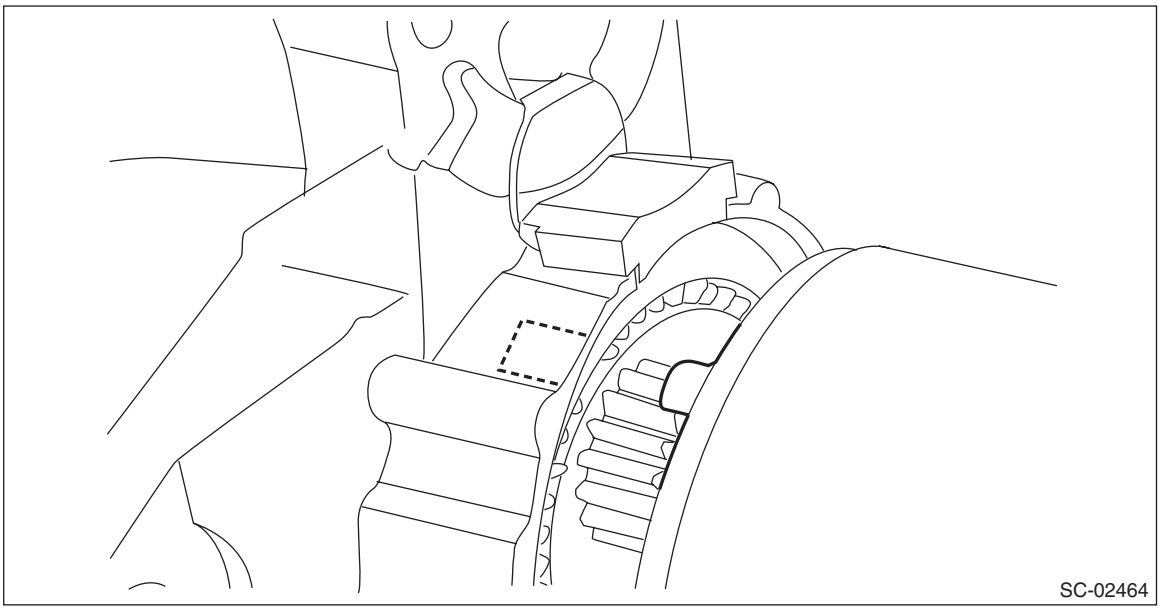
SC-02464

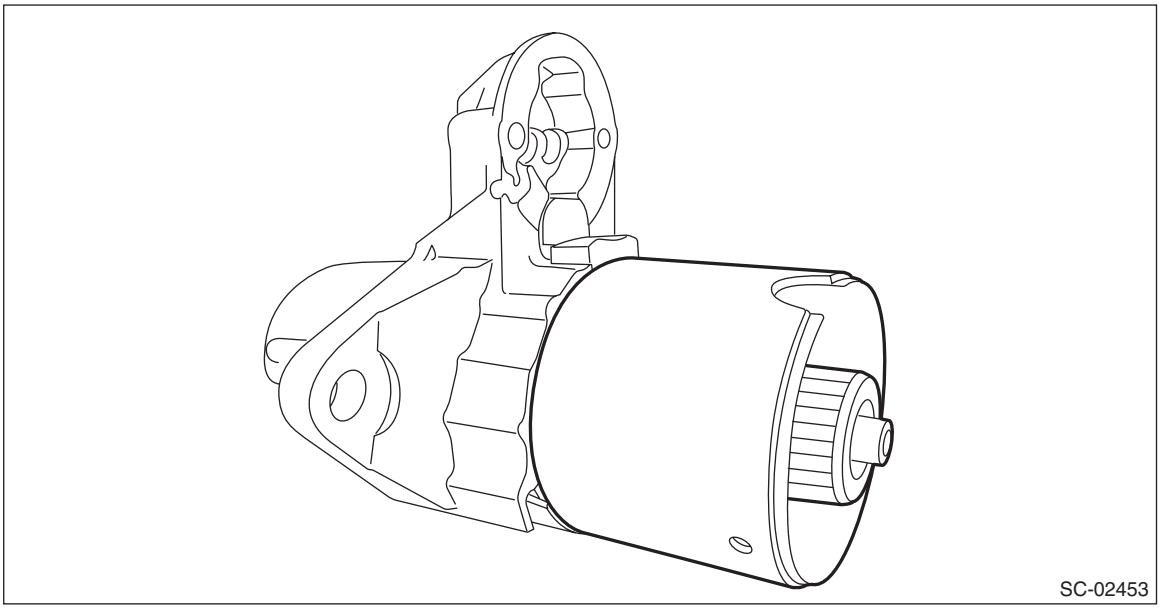
SC-02453

9) Use an appropriate tool (such as correctly sized socket wrenches) and attach the brush holder assembly to the armature assembly.

NOTE:
Be careful not to damage the brushes.

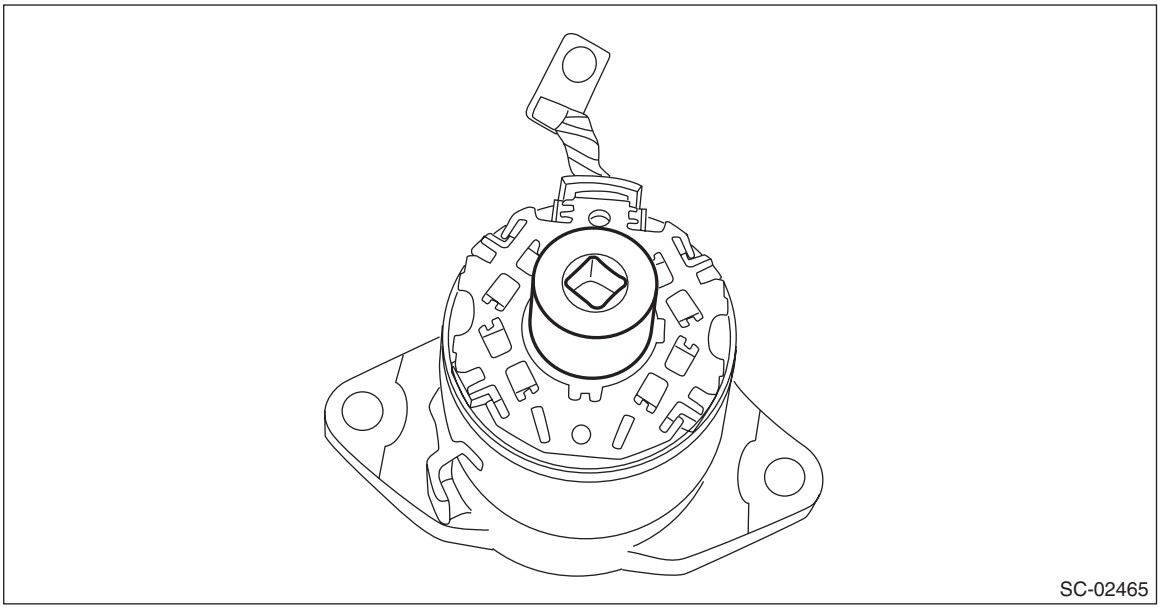
SC-02465

10) Secure starter cover assembly to the brush holder assembly with screws (A).

Tightening torque:
1.4 N·m (0.1 kgf-m, 1.0 ft-lb)

11) Tighten through bolts (B) on both sides.

Tightening torque:
6 N·m (0.6 kgf-m, 4.4 ft-lb)

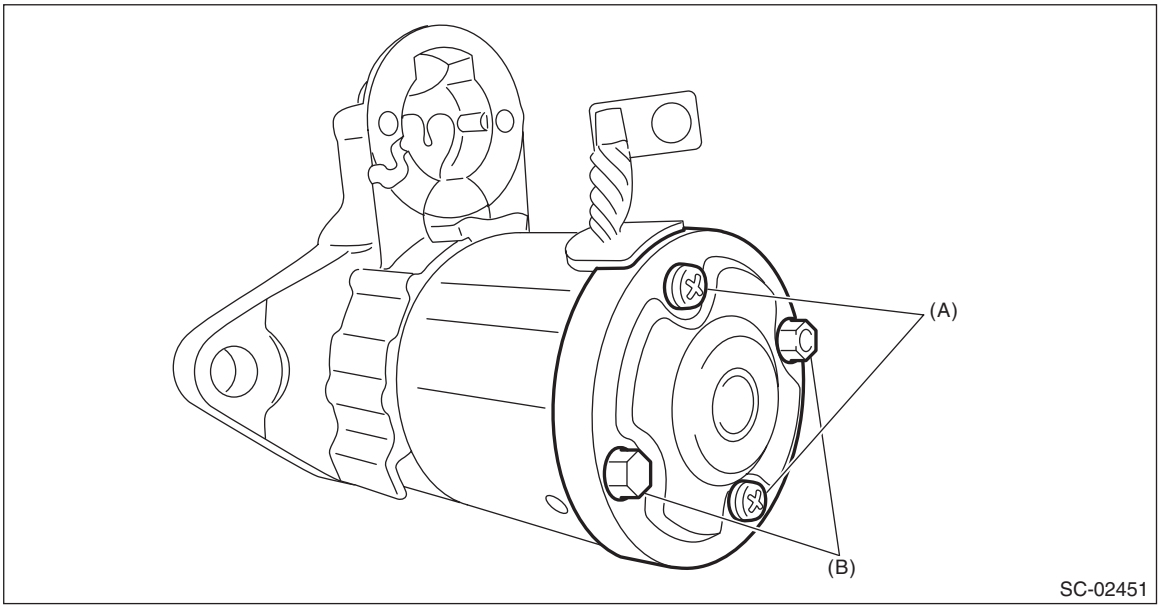

SC-02451

12) Attach the magnet switch assembly to the starter housing assembly.

Tightening torque:
7.5 N·m (0.8 kgf-m, 5.5 ft-lb)

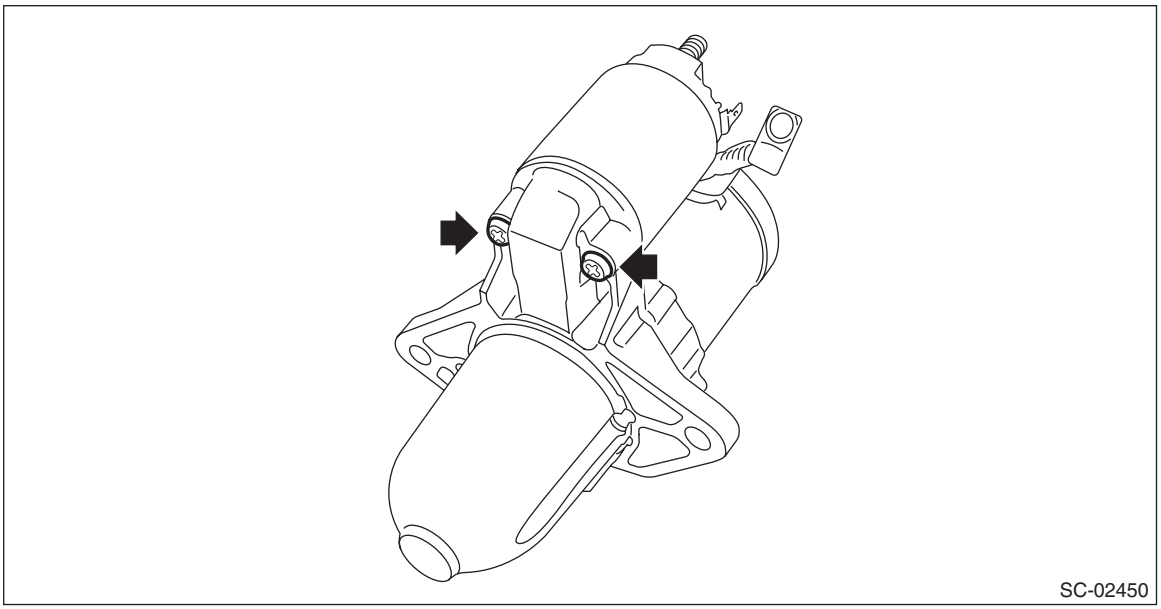
SC-02450

13) Attach the cable to the terminal M of the magnet switch assembly, and secure with nuts.

Tightening torque:
10 N·m (1.0 kgf-m, 7.4 ft-lb)

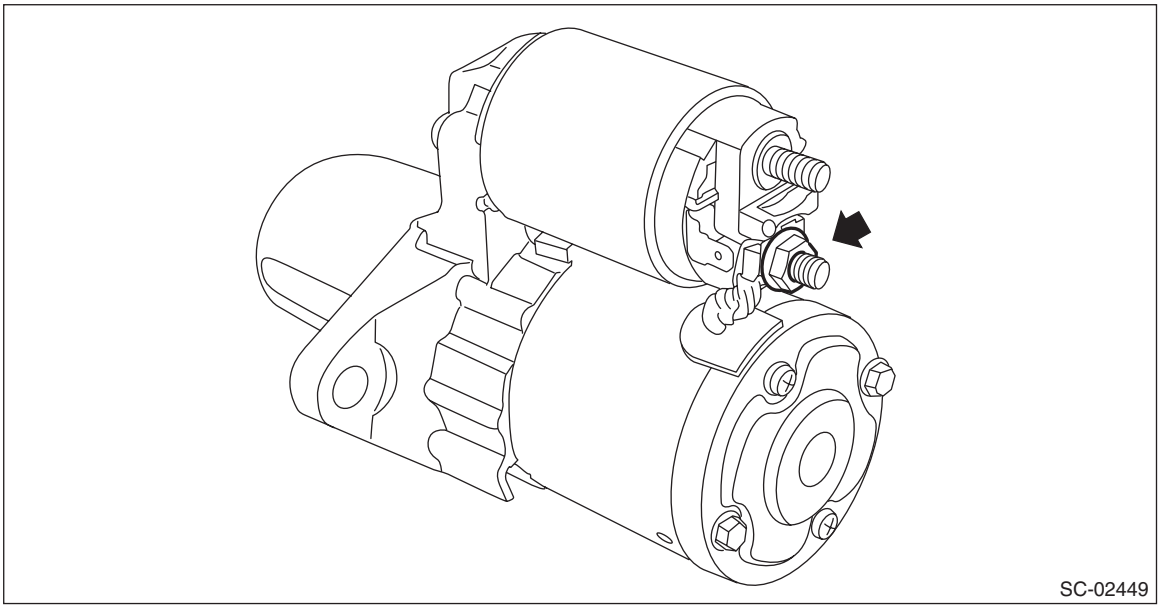
SC-02449

E: INSPECTION

1. ARMATURE

1) Check the commutator for signs of seizure or stepped wear caused by roughness of the surface. If there is light wear, use sandpaper to repair.

2) Check for runout on the commutator. If excessive, replace the armature.

Commutator runout:
Standard
0.05 mm (0.0020 in)
Limit
0.10 mm (0.0039 in)

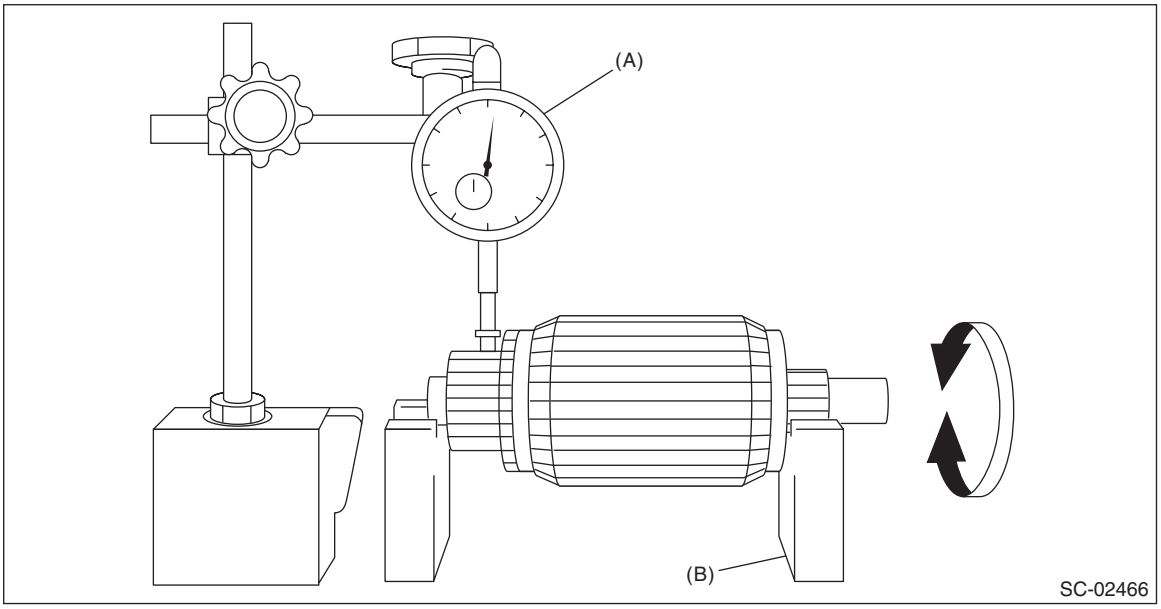

(A) Dial gauge (B) V-block

3) Check the depth of the segment mold. If it is not within the standard, replace the armature.

Depth of segment mold:
Standard
0.50 mm (0.020 in)

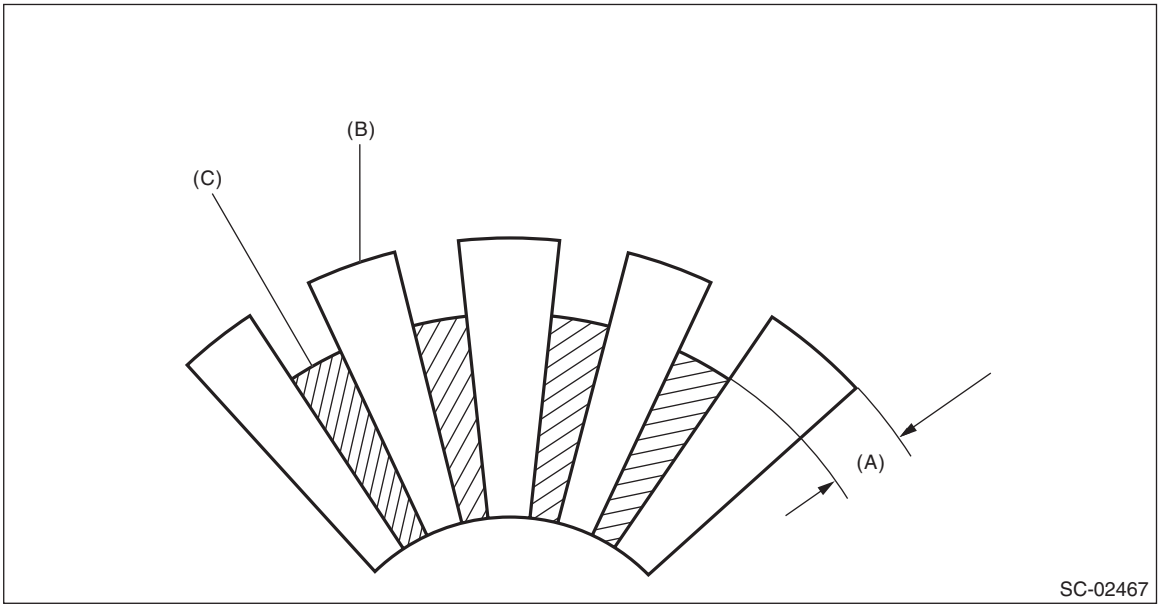

(A) Depth of mold (B) Segment (C) Mold

4) Place the armature on the growler tester to check for short circuits. While slowly turning the armature, support the steel sheet for the armature core. If the circuit of the armature is shorted, the steel sheet will vibrate, causing it to move towards the core. When the steel sheet has moved or vibrated, replace the armature.

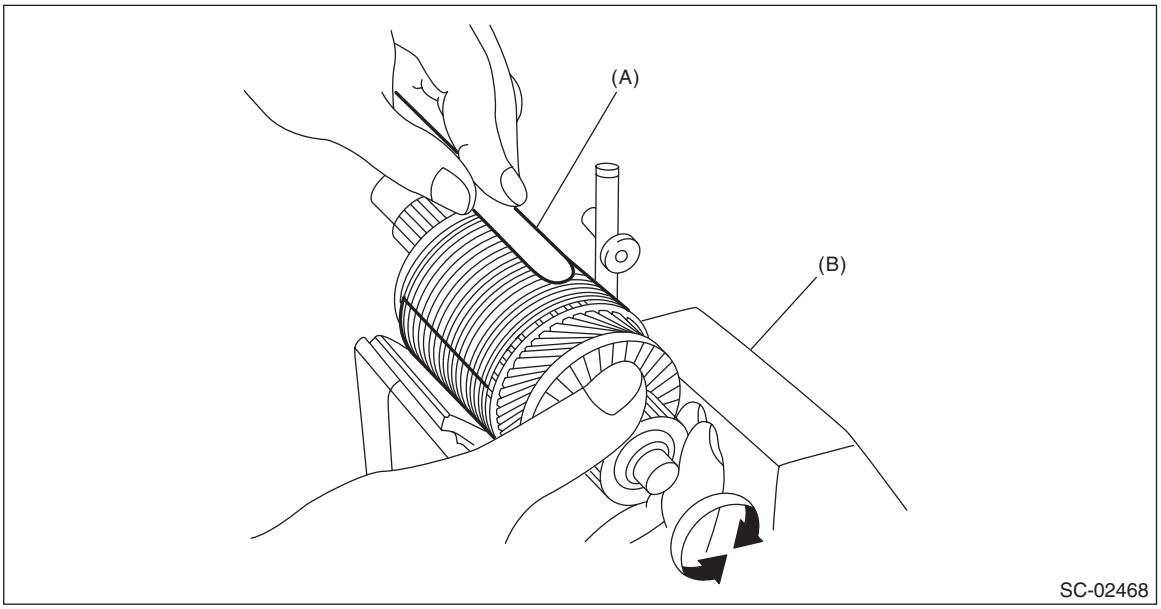

(A) Steel sheet (B) Growler tester

5) Use a circuit tester to touch the probe of one side to the commutator segment, and the other probe to the shaft. If there is continuity, replace the armature.

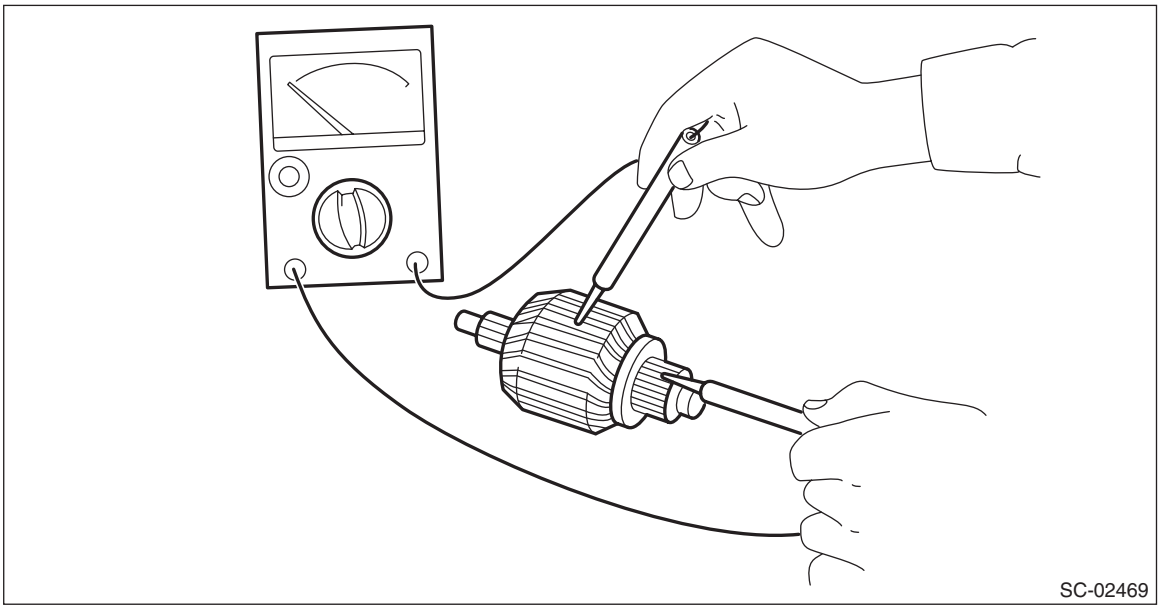

2. YOKE

Make sure that the pole is set at the predetermined position.

3. OVERRUNNING CLUTCH

Inspect the pinion, and if there is any wear or damage, replace the overrunning clutch. Also, check that the pinion rotates counterclockwise smoothly and does not rotate clockwise. If there is any fault, replace the overrunning clutch.

CAUTION:
To prevent spilling of grease, do not clean the overrunning clutch with oil.

4. BRUSH AND BRUSH HOLDER

1) Visually check the brush. If there is any abnormal wear or cracks, replace the brush.
2) Measure the length of the brush. If it exceeds service limits, replace the brush.

Brush length:
Standard
12.3 mm (0.484 in)
Limit
7.0 mm (0.276 in)

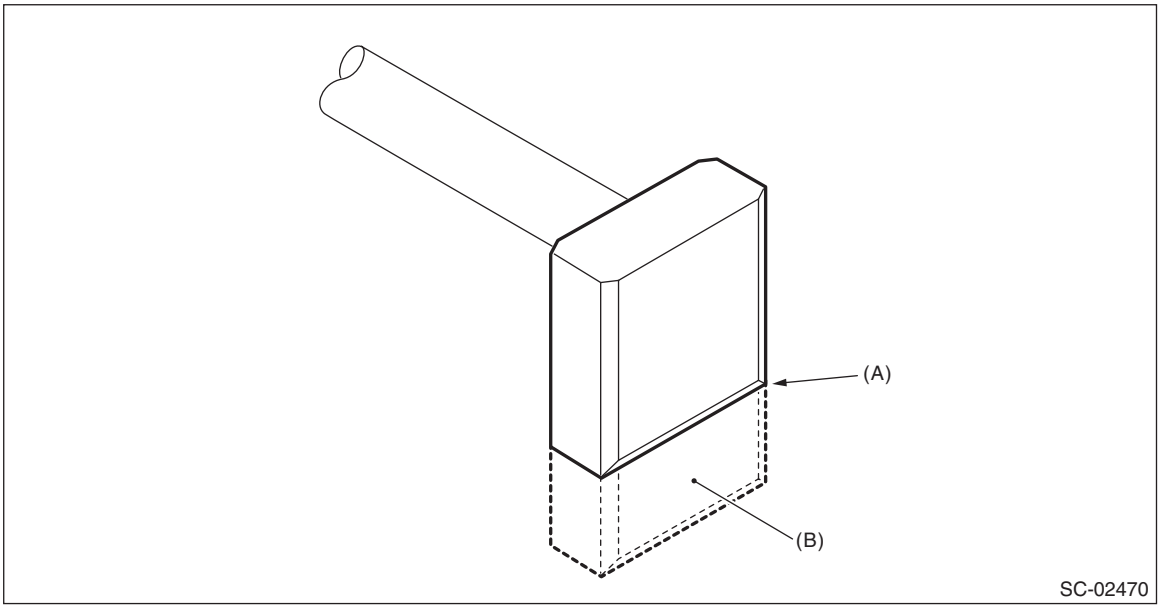

(A) Service limit line (B) Brush

3) Check that the brush moves smoothly in the brush holder.
4) Measure the brush spring force with a spring scale. Replace the brush holder if below the service limit.

Brush spring force:
Standard
15.9 — 19.5 N (1.62 — 1.99 kgf, 3.57 — 4.38 lbf) (when new)
Limit
2.5 N (0.25 kgf, 0.56 lbf)

5. SWITCH ASSEMBLY

Using a circuit tester (set to “ohm”), check that there is continuity between terminals S and M, and between terminal S and ground. Also check to be sure there is no continuity between terminal M and B.

Resistance between switch assembly terminals:

Terminals	Standard
S — M	1 Ω or less
S — Ground	1 Ω or less
M — B	1 MΩ or more

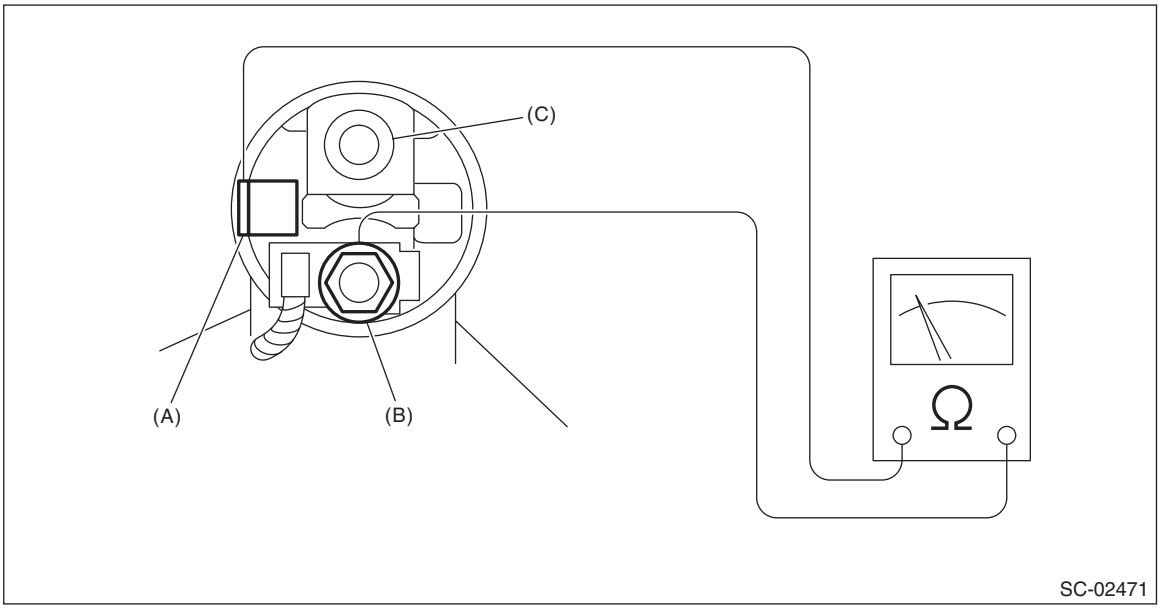

(A) Terminal S (B) Terminal M (C) Terminal B

6. SWITCH ASSEMBLY OPERATION

1) Using a lead wire, connect the switch assembly terminal S to the positive terminal of battery, and the starter body to the ground terminal of battery. The pinion should be forced endwise on shaft.

NOTE:
With the pinion forced endwise on shaft, starter motor can sometimes rotate because current flows, through pull-in coil, to motor. This is not a problem.

2) Disconnect the connector from terminal M. Then using a lead wire, connect the positive terminal of battery and terminal M, and ground terminal to starter body.
In this test set up, the pinion should return to its original position even when it is pulled out with a screwdriver.

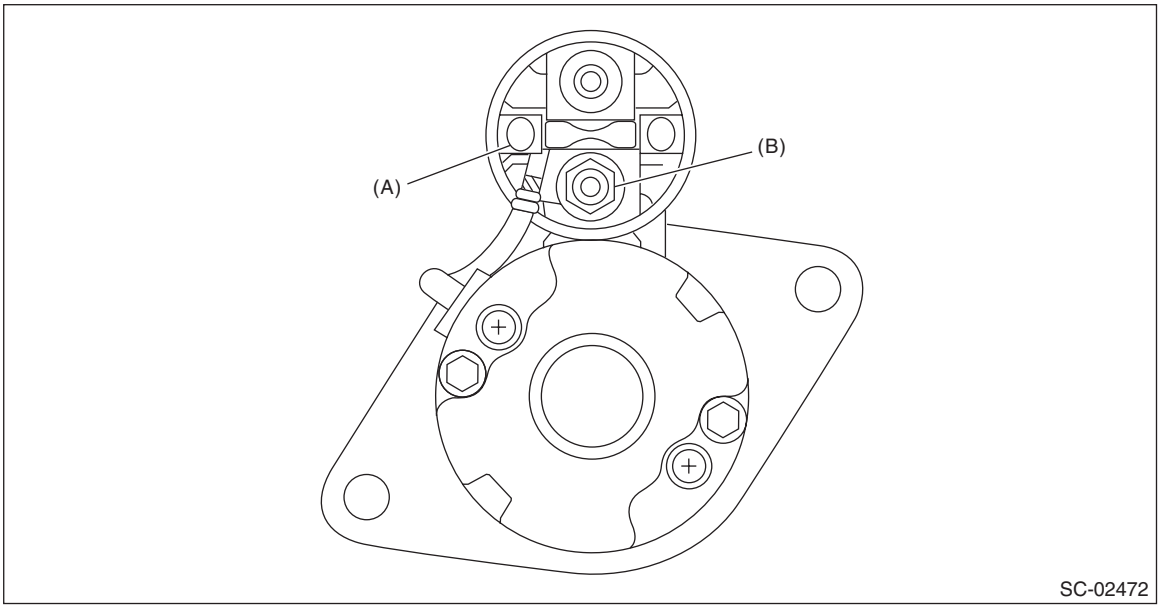

(A) Terminal S (B) Terminal M

7. PERFORMANCE TEST

The starter should be submitted to performance tests whenever it has been overhauled, to assure its satisfactory performance when installed on the engine.
Three performance tests, no-load test, load test, and lock test, are presented here; however, if the load test and lock test cannot be performed, carry out at least the no-load test.
For these performance tests, use the circuit shown in figure.

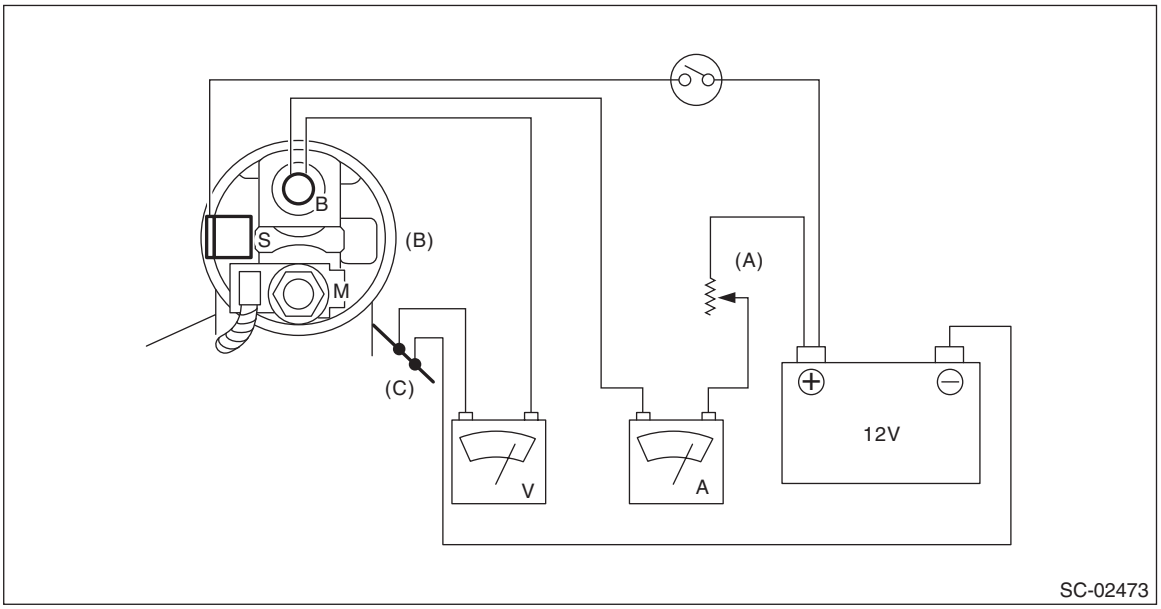

(A) Variable resistance (B) Magnet switch (C) Starter body

1) Adjust the variable resistance with the switch on until the voltage is 11 V, and read the value displayed by the ammeter to measure starter speed. Compare these values with the standard.

No-load test (standard):

Voltage/Current
CVT model
Max. 11 V/90 A or less
MT model
Max. 11 V/95 A or less

Rotating speed
CVT model
2,370 rpm or more
MT model
2,500 rpm or more

2) Apply the specified braking torque to starter. The condition is normal if the current draw and starter speed are within standard.

Load test (standard):

Voltage/Load
CVT model
7.5 V/10.65 N·m (1.1 kgf-m, 7.8 ft-lb)
MT model
7.5 V/8.84 N·m (0.9 kgf-m, 6.5 ft-lb)

Current/Speed
CVT model
300 A/840 rpm or more
MT model
300 A/870 rpm or more

3) With the starter stalled, or not rotating, measure the torque developed and current draw when the voltage is adjusted to standard voltage.

Lock test (standard):

Voltage/Current
CVT model
4 V/780 A or less
MT model
4 V/680 A or less

Torque
CVT model
20 N·m (2.0 kgf-m, 14.8 ft-lb) or more
MT model
17 N·m (1.7 kgf-m, 12.5 ft-lb) or more

8. OTHER INSPECTIONS

Check that the starter does not have deformation, cracks and any other damage.

3. Generator

A: REMOVAL

1) Remove the V-belt covers.

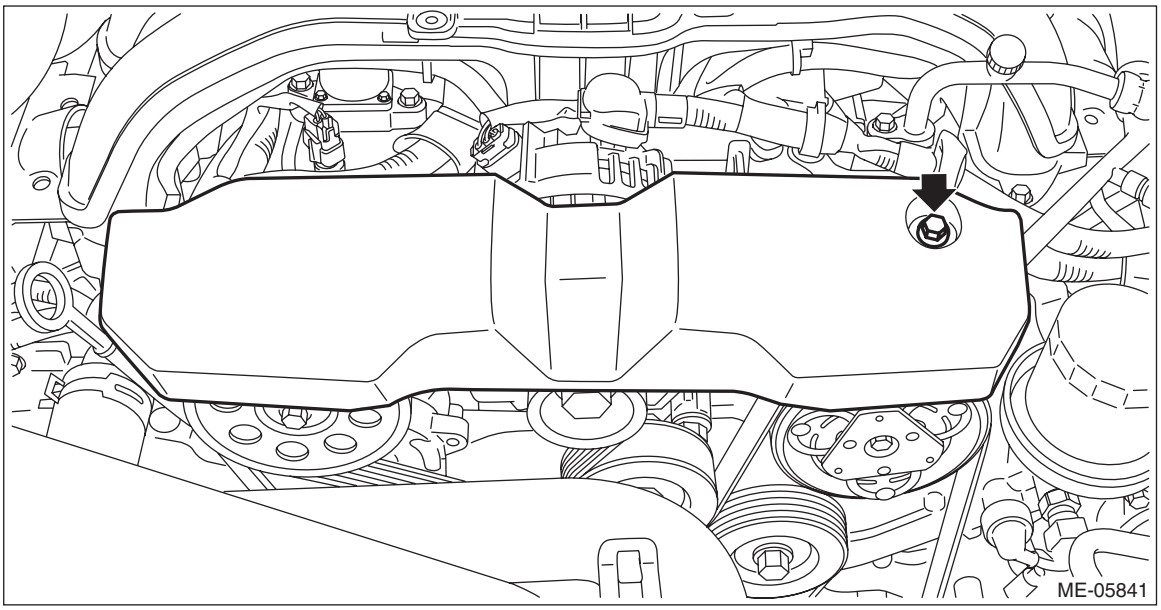

2) Disconnect the ground cable from battery.

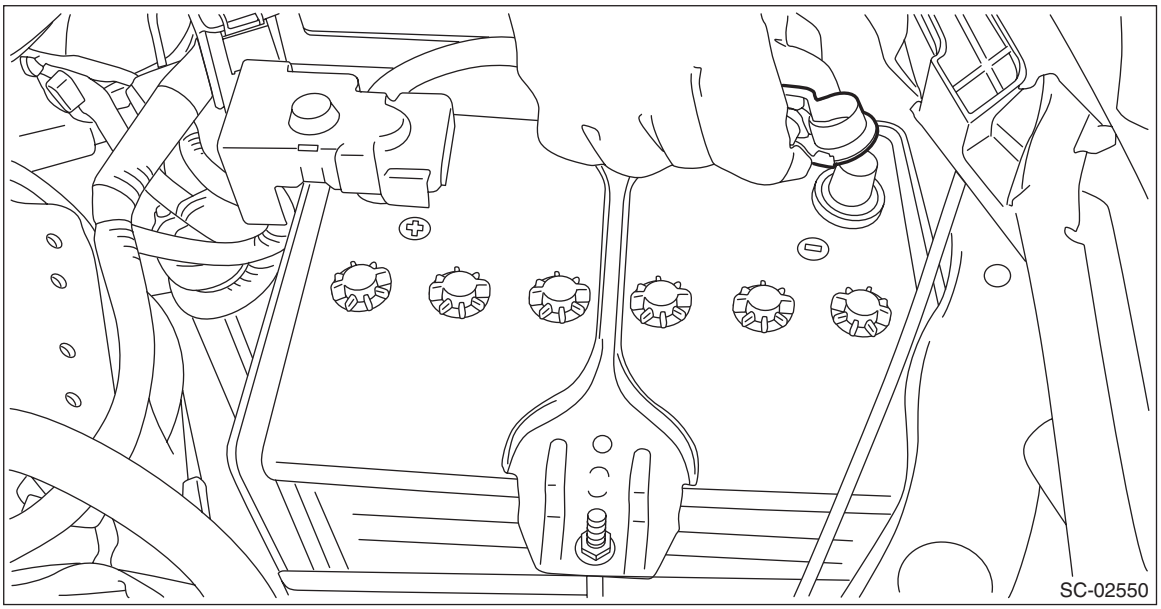

3) Remove the V-belts. <Ref. to ME(H4DO(w/o HEV))-120, REMOVAL, V-belt.>

4) Remove the V-belt cover bracket.

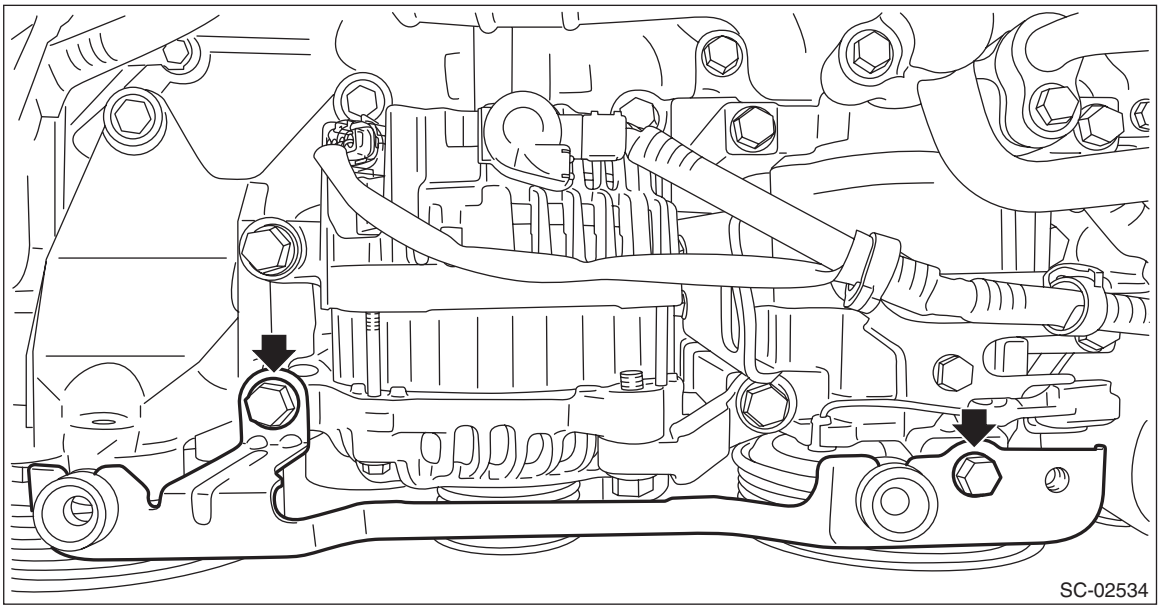

5) Disconnect the connector (A) and terminal (B) from the generator.

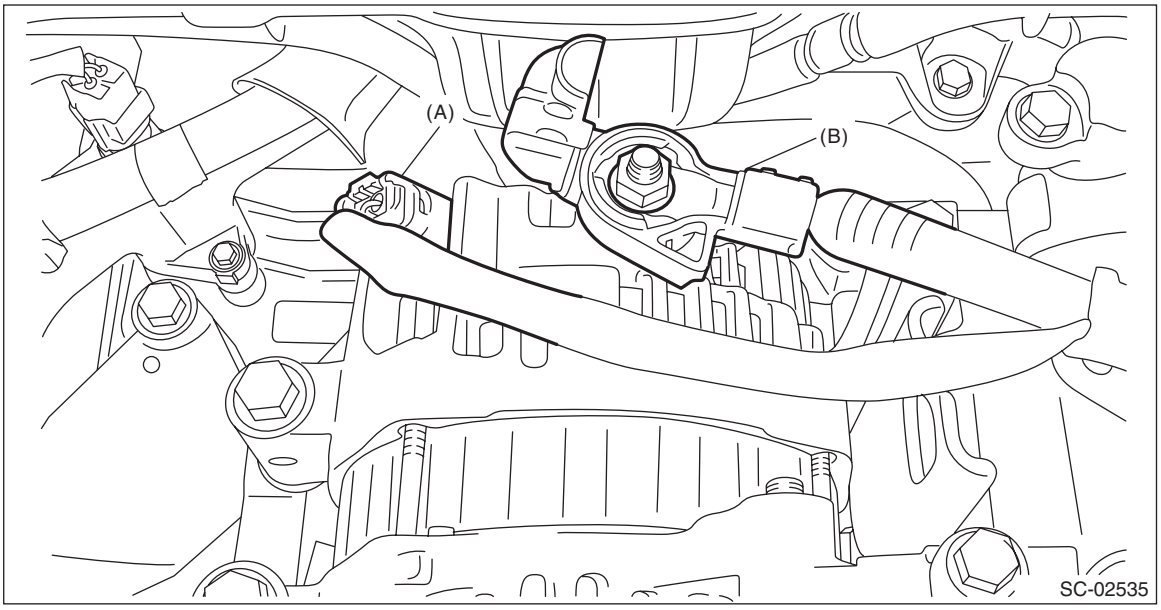

6) Remove the idler pulley from the chain cover.

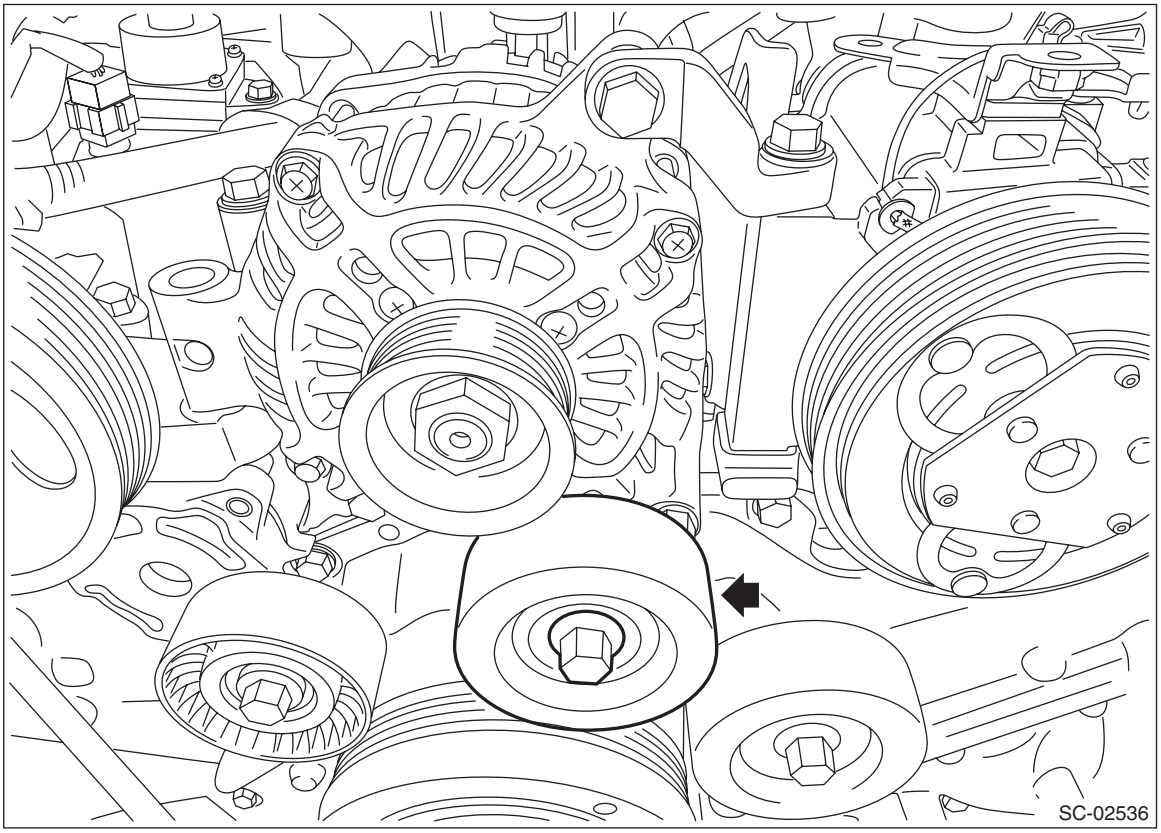

7) Remove the generator from the bracket.

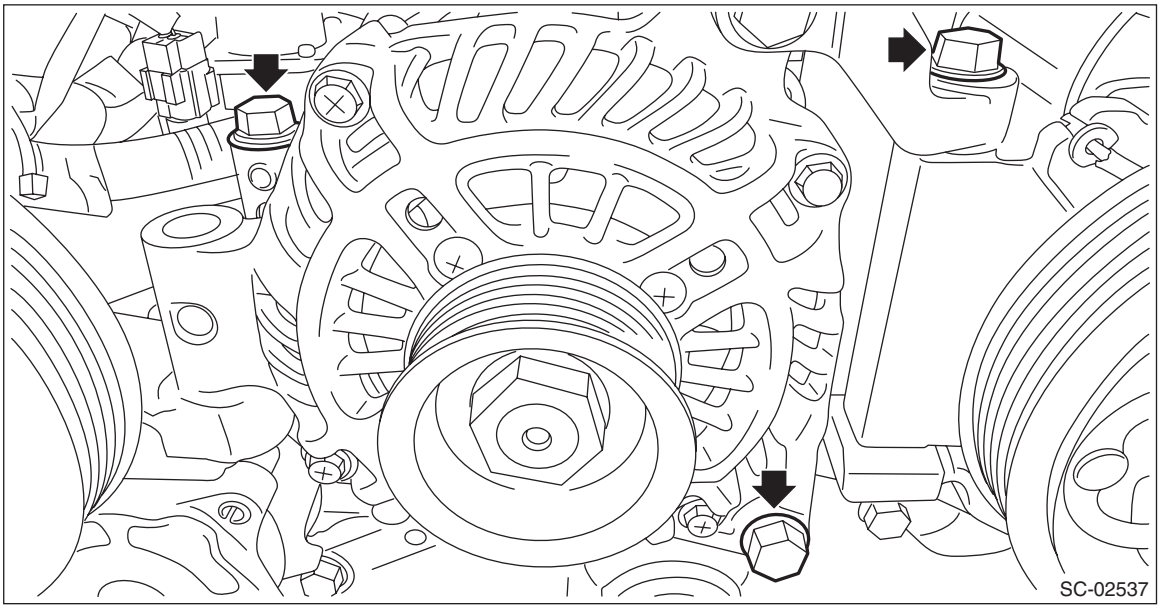

8) Remove the generator bracket from the generator.

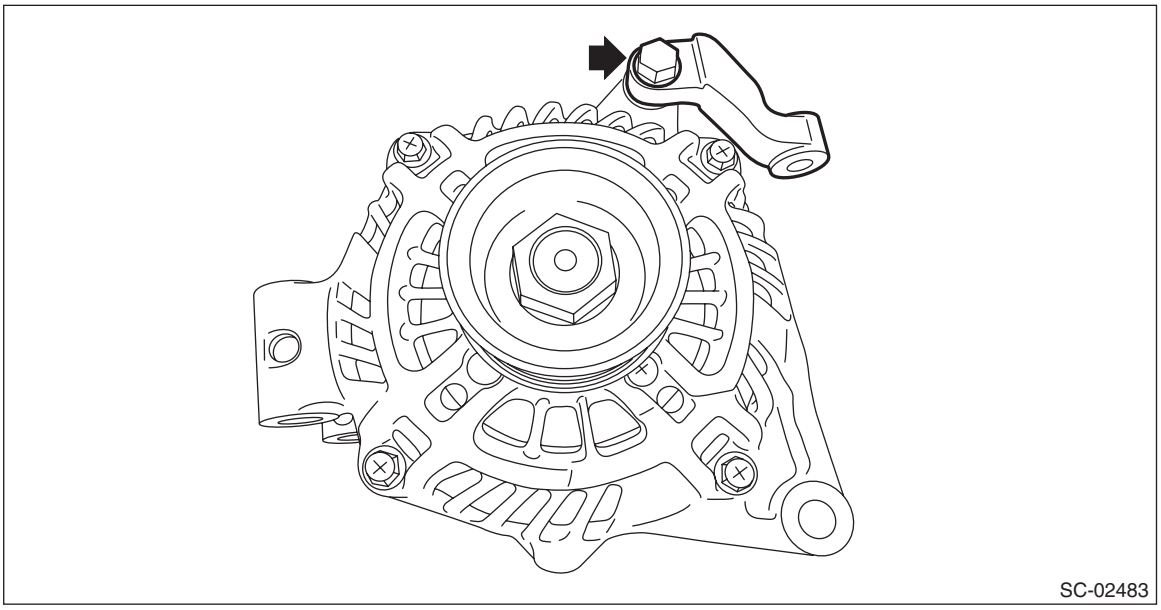

B: INSTALLATION

1) Temporarily install the generator bracket to the generator.

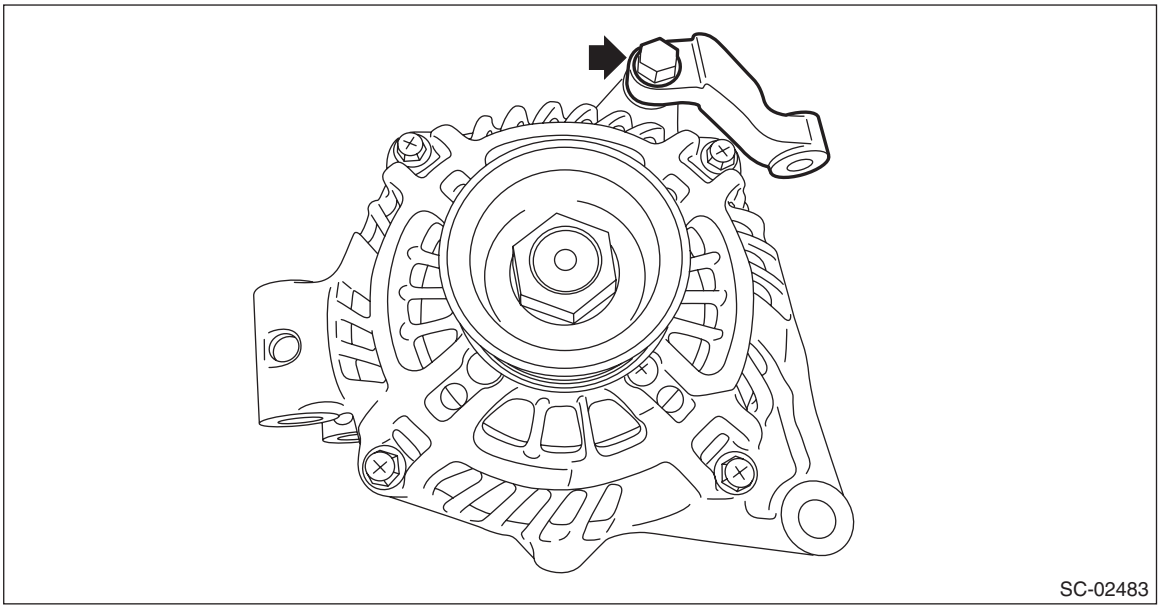

2) Temporarily install the generator to the engine.

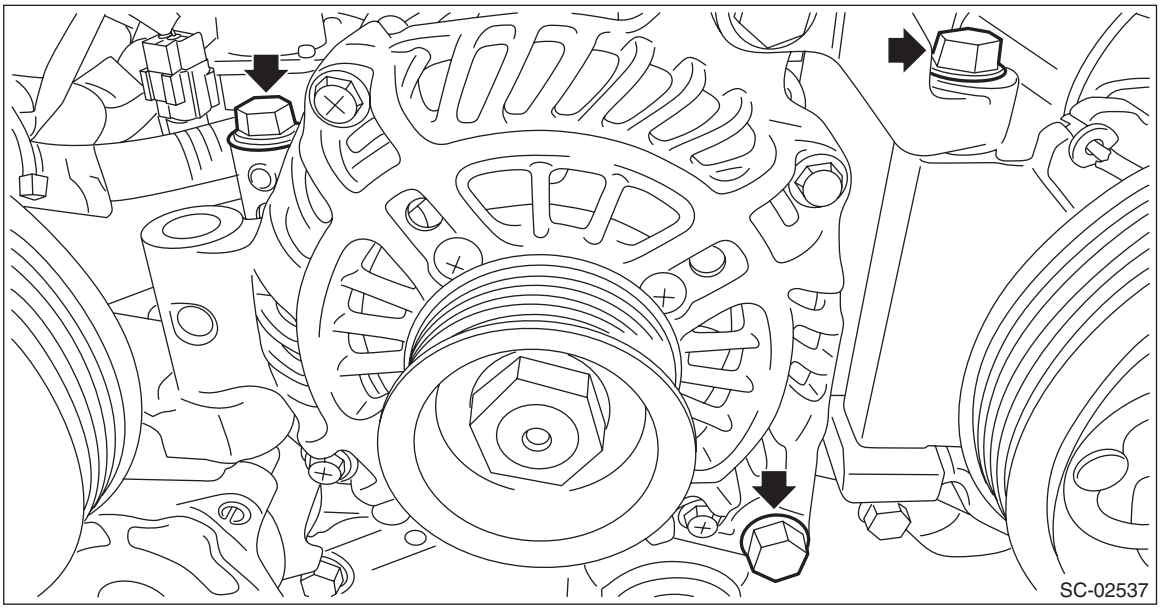

3) Tighten the generator and generator bracket in the numerical order.

Tightening torque:
T1: 25 N·m (2.5 kgf-m, 18.4 ft-lb)
T2: 36 N·m (3.7 kgf-m, 26.6 ft-lb)

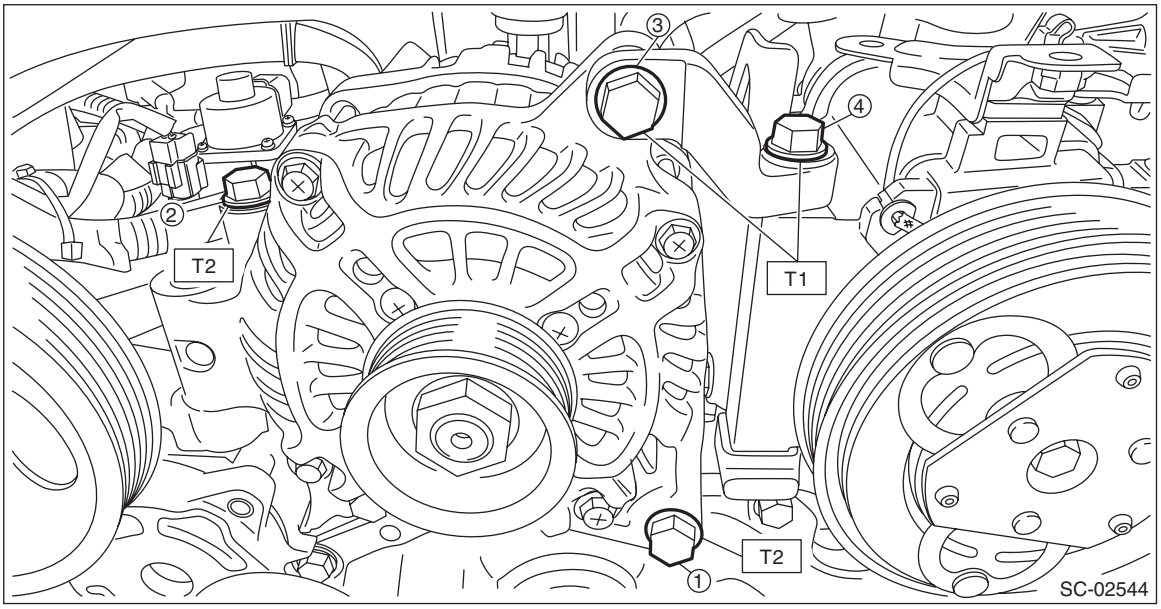

4) Install the V-belt cover bracket and tighten the bolts in the numerical order.

Tightening torque:
T1: 6.4 N·m (0.7 kgf-m, 4.7 ft-lb)
T2: 36 N·m (3.7 kgf-m, 26.6 ft-lb)

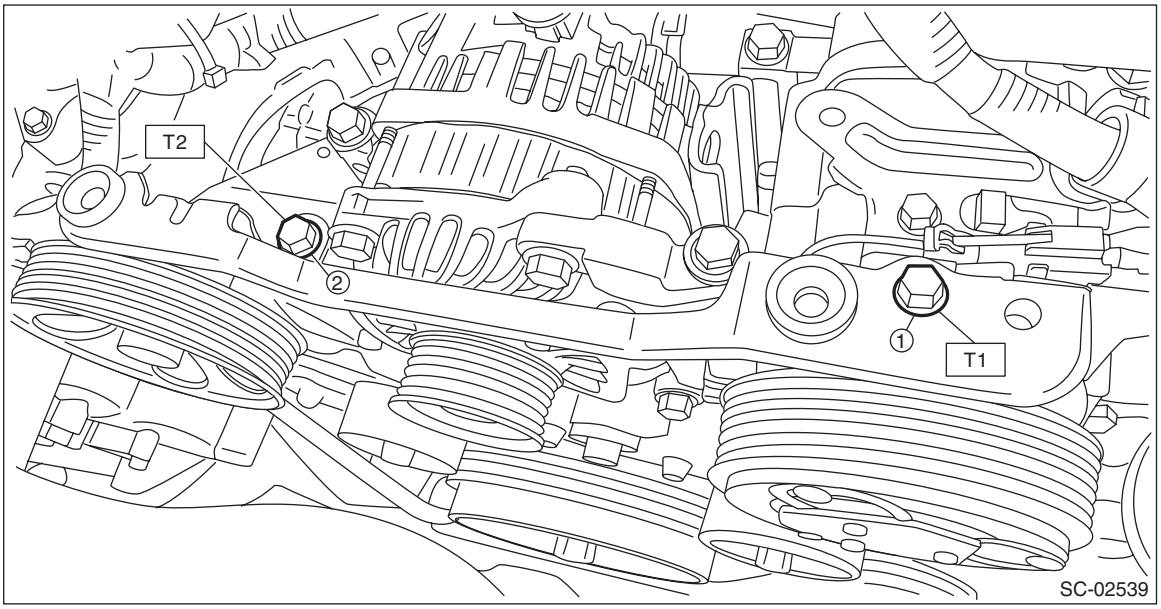

5) Install the idler pulley to the chain cover.

Tightening torque:
36 N·m (3.7 kgf-m, 26.6 ft-lb)

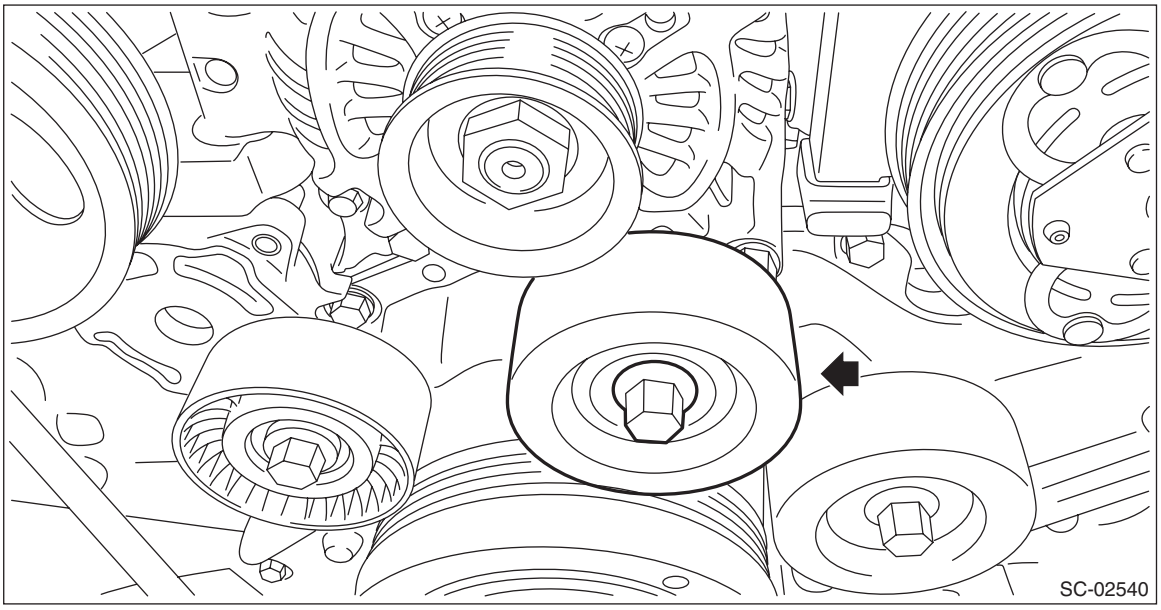

6) Connect the connector (A) and terminal (B) to the generator.

Tightening torque:
16 N·m (1.6 kgf-m, 11.8 ft-lb)

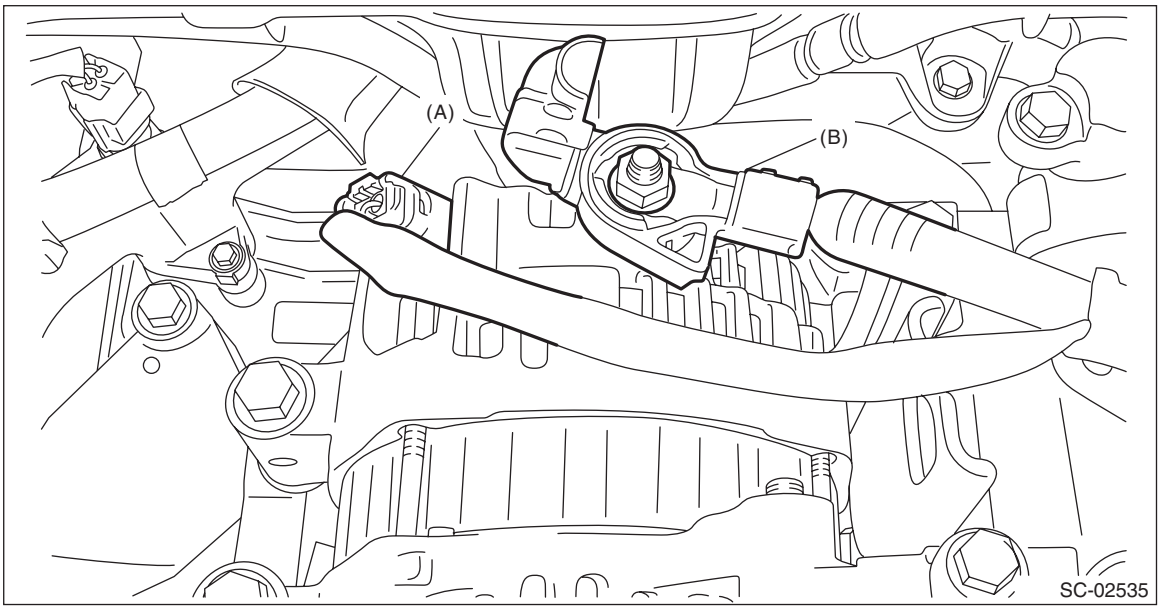

7) Install the V-belts. <Ref. to ME(H4DO(w/o HEV))-128, INSTALLATION, V-belt.>
8) Connect the battery ground terminal.

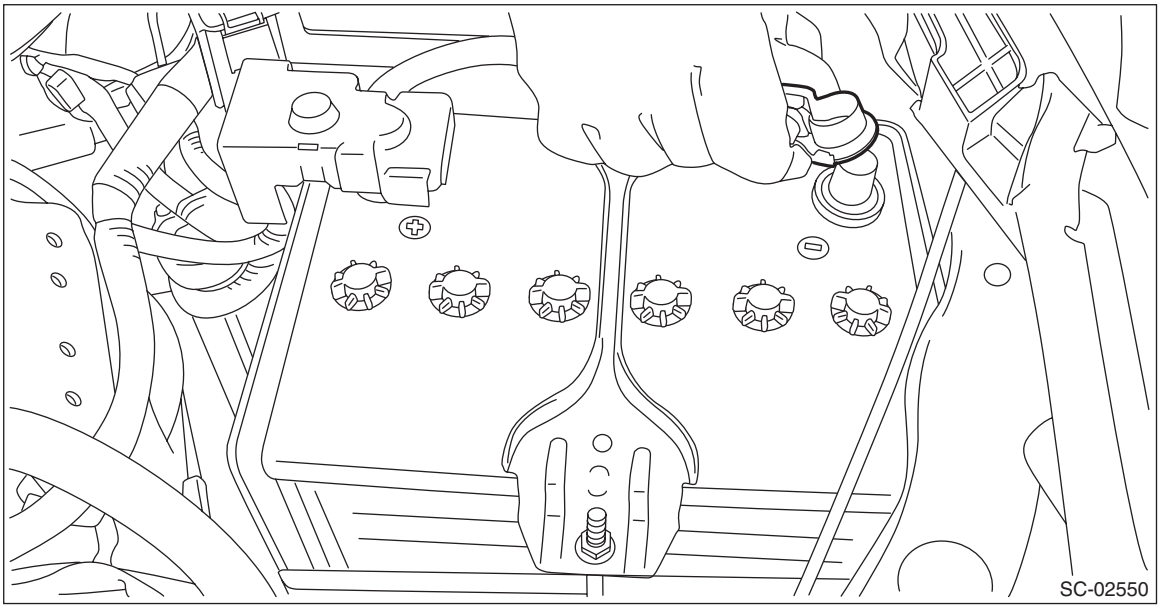

9) Install the V-belt cover.

Tightening torque:
6.4 N·m (0.7 kgf-m, 4.7 ft-lb)

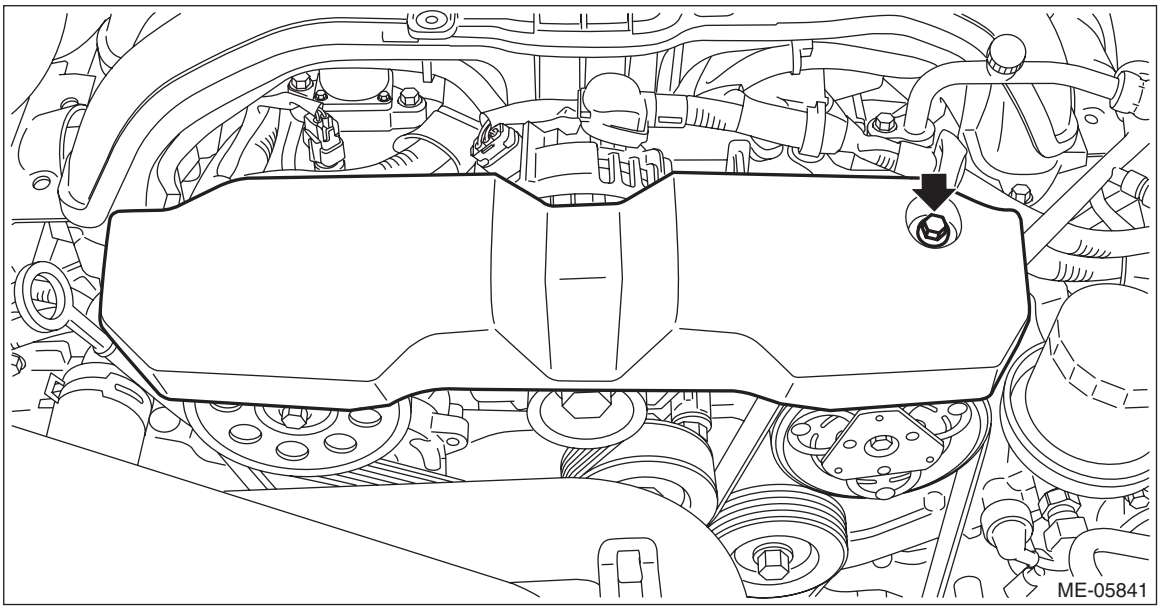

C: DISASSEMBLY

1) Remove the four through bolts.

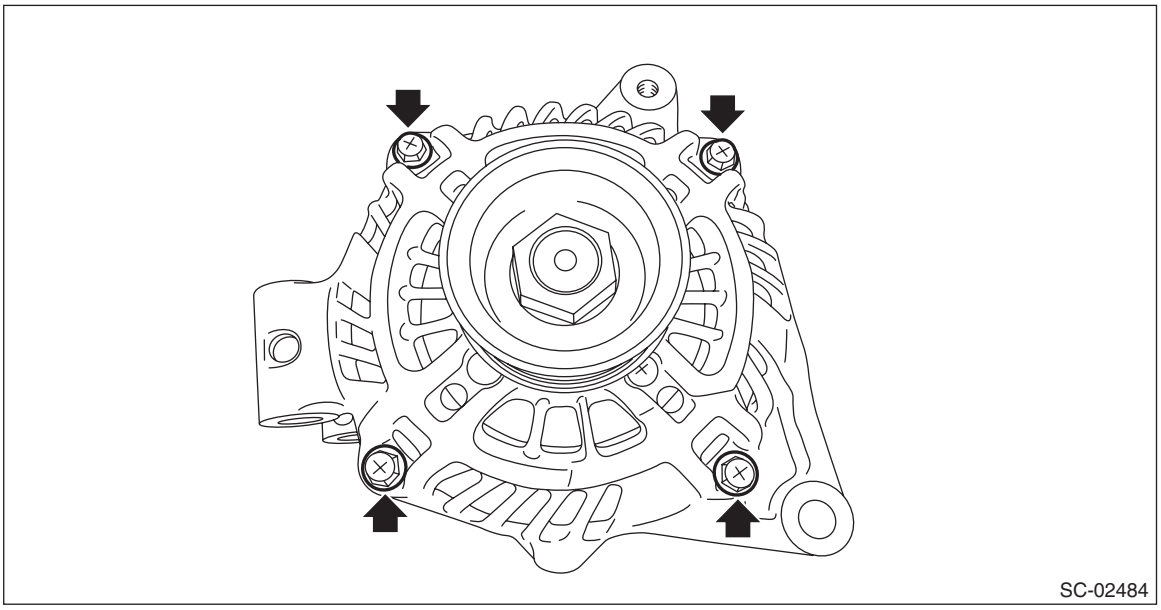

2) Use a drier to heat the rear cover (A) portion to 50 — 60°C (122 — 140°F).

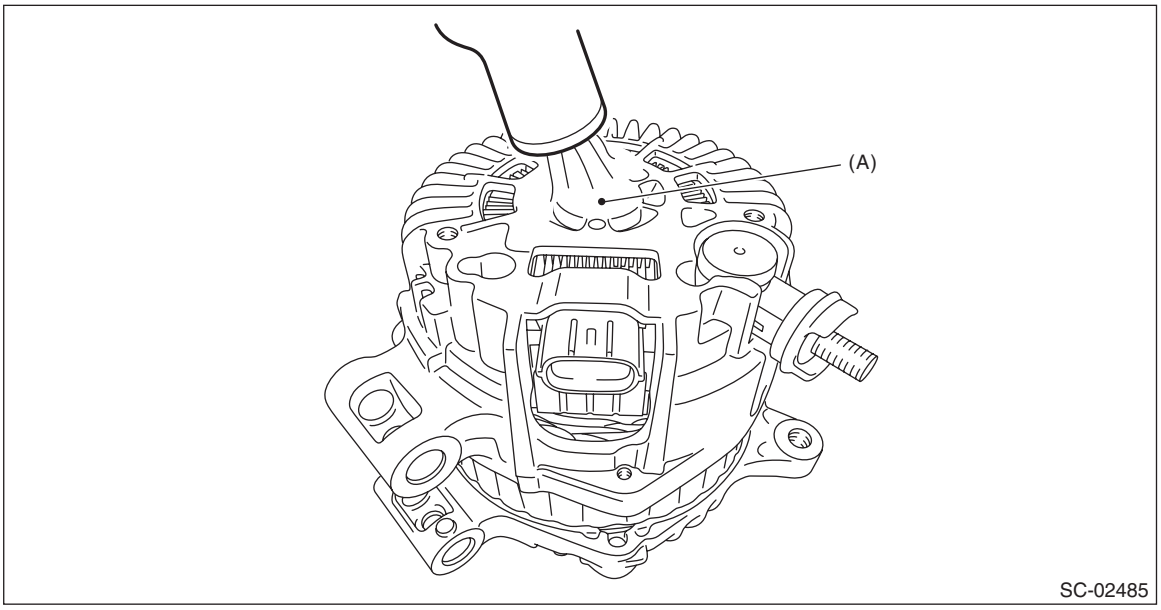

3) Insert a flat tip screwdriver or similar tool wrapped with protective tape into the gap between stator core and the front cover to disassemble.

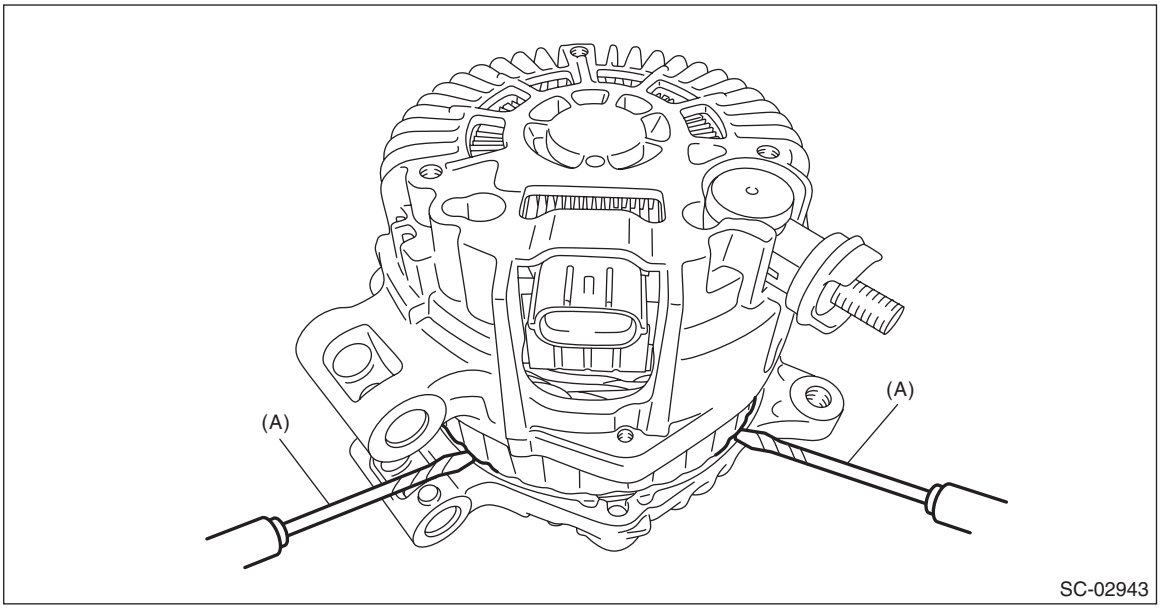

(A) Flat tip screwdriver

4) Hold the rotor on a vise and remove the pulley nut.

CAUTION:
When holding the rotor with a vise, place aluminum plates or wooden pieces on the vise jaws to prevent rotor from damage.

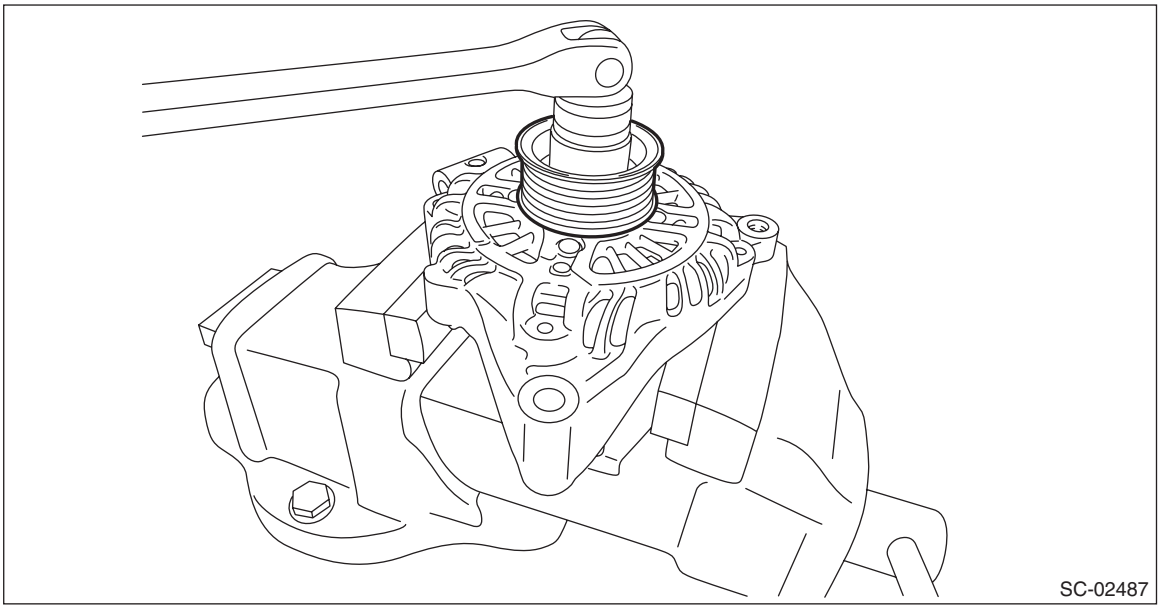

5) Remove the rotor from the front cover.

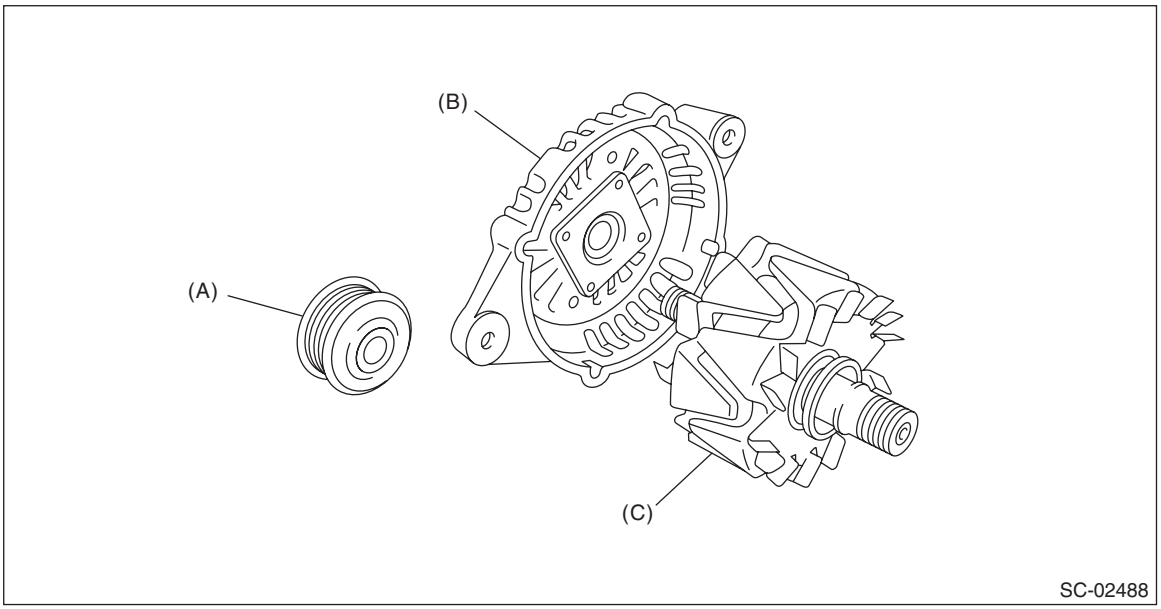

(A) Pulley (B) Front cover (C) Rotor

6) Use the following procedures to remove the ball bearings.
(1) Remove the bolt, and then detach the bearing retainer.

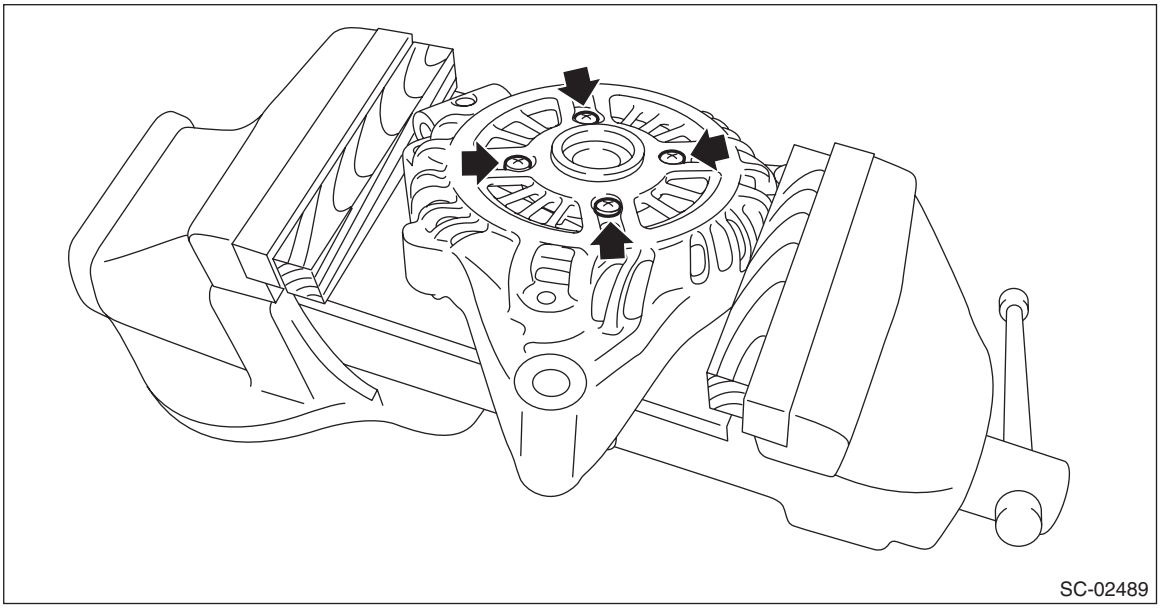
SC-02489

(2) Firmly attach an appropriate tool (such as a correct size socket wrench) to the bearing inner race.

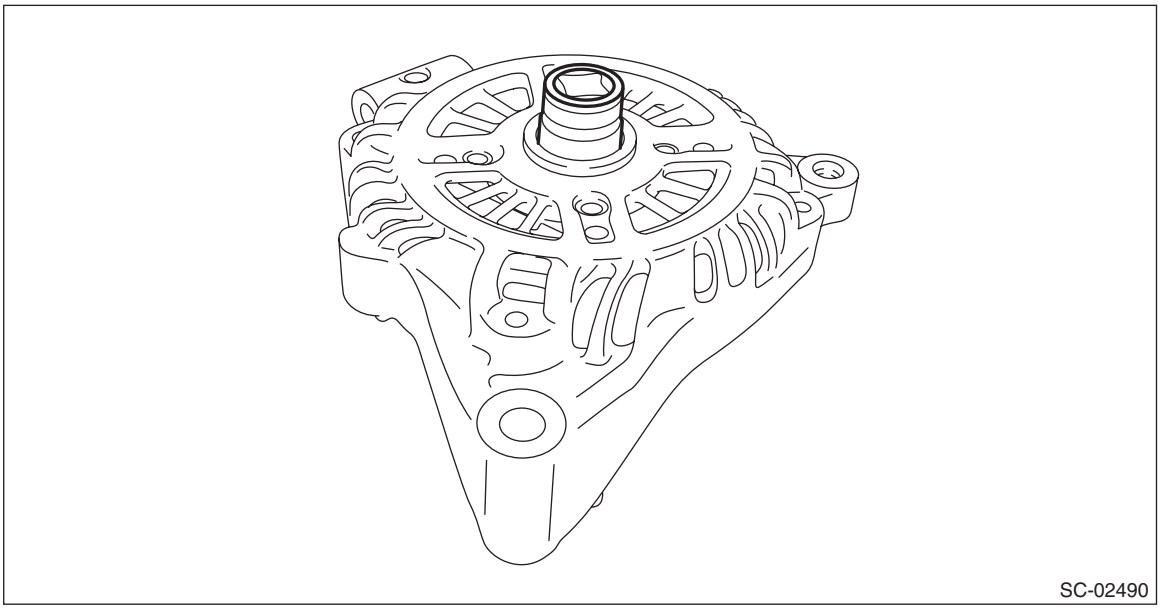
SC-02490

(3) Use the press to push the ball bearings out from the front cover.

7) Using the bearing puller, remove the bearings from the rotor.

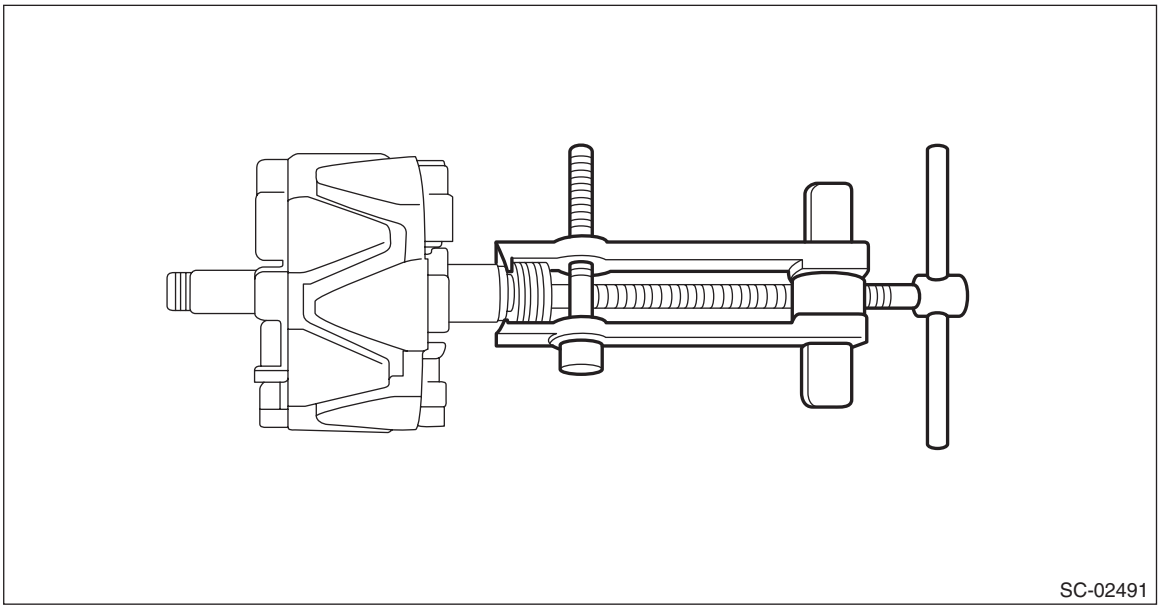
SC-02491

8) Remove six bolts which connect the rectifier and stator coil, then remove the stator coil.

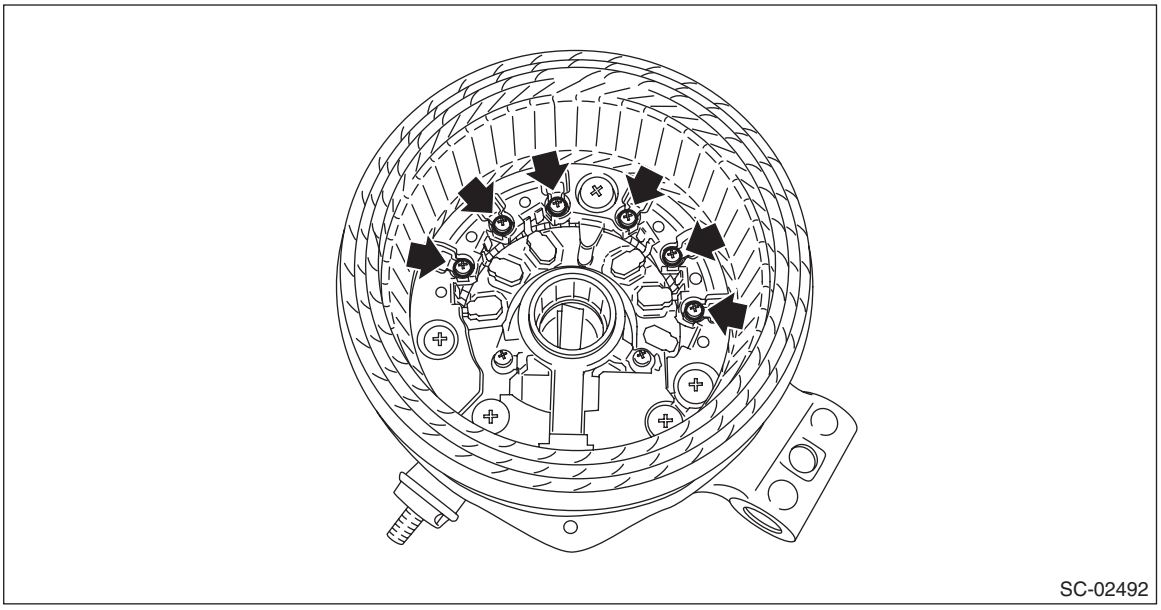
SC-02492

9) Remove four screws which secure the IC regulator to the rear cover, then remove the IC regulator.

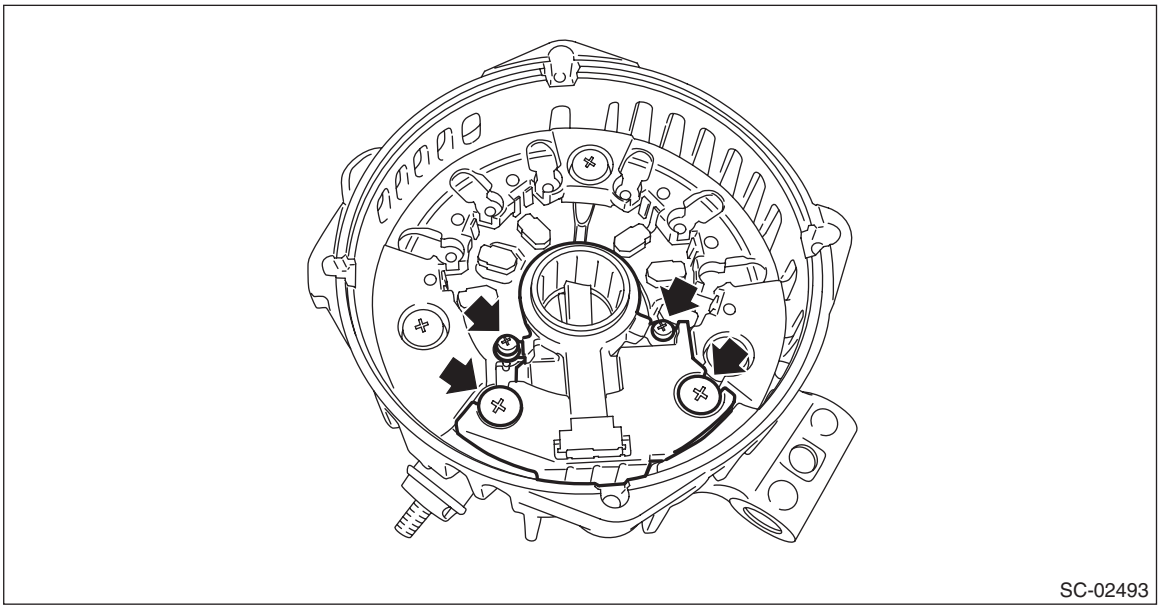
SC-02493

10) Use the following procedures to remove the brush.
(1) Remove the cover A.

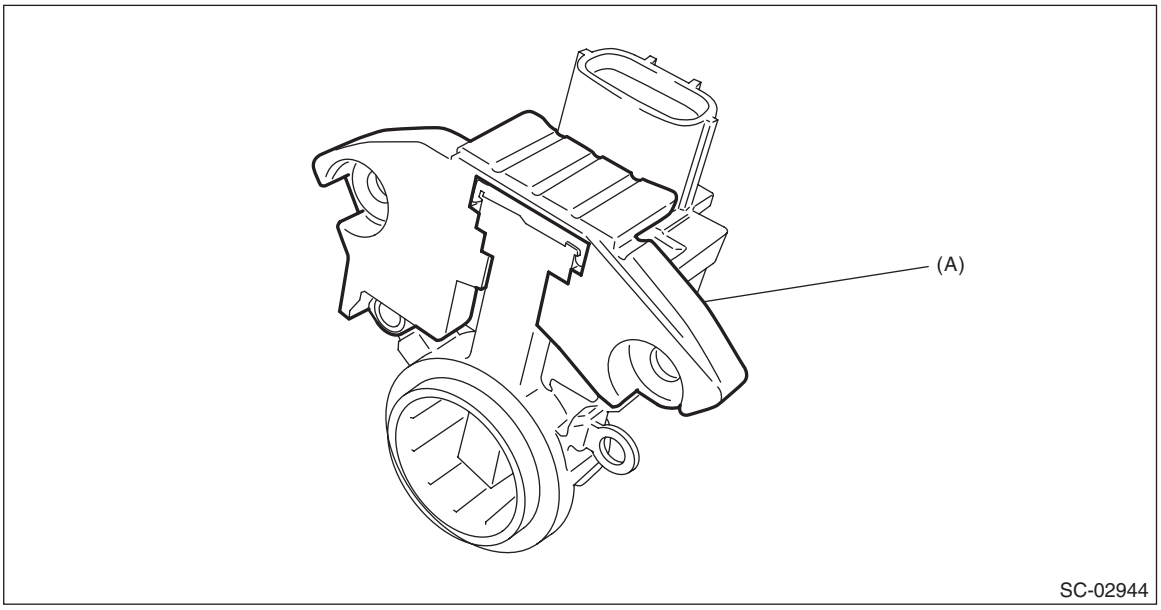

SC-02944

(A) Cover A

(2) Remove the cover B.

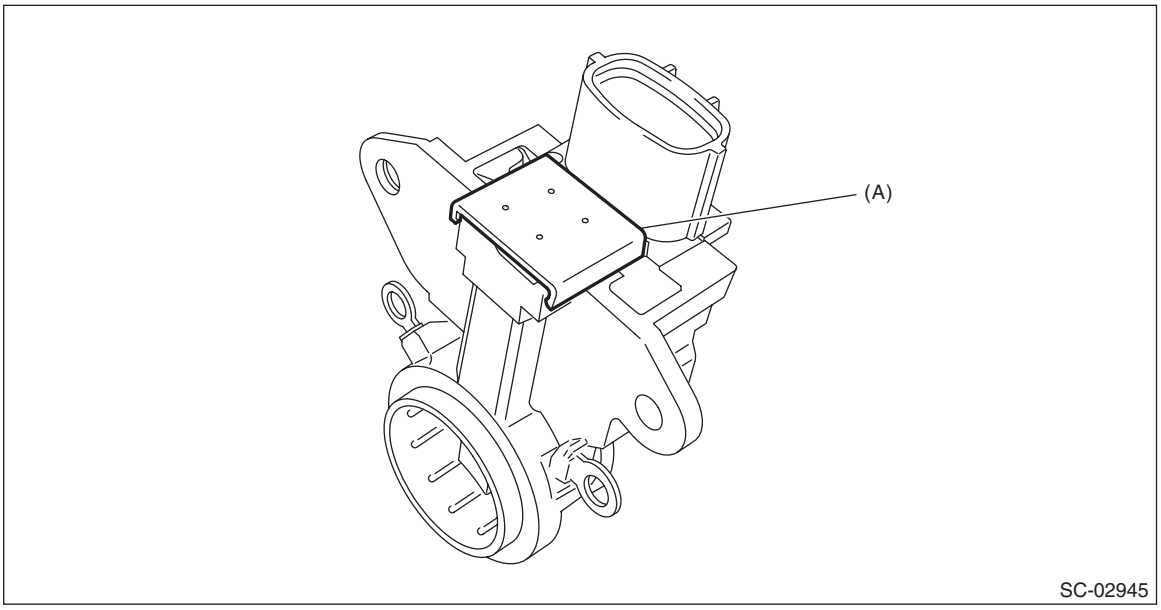

(A) Cover B

(3) Disconnect the connection and remove the brush.

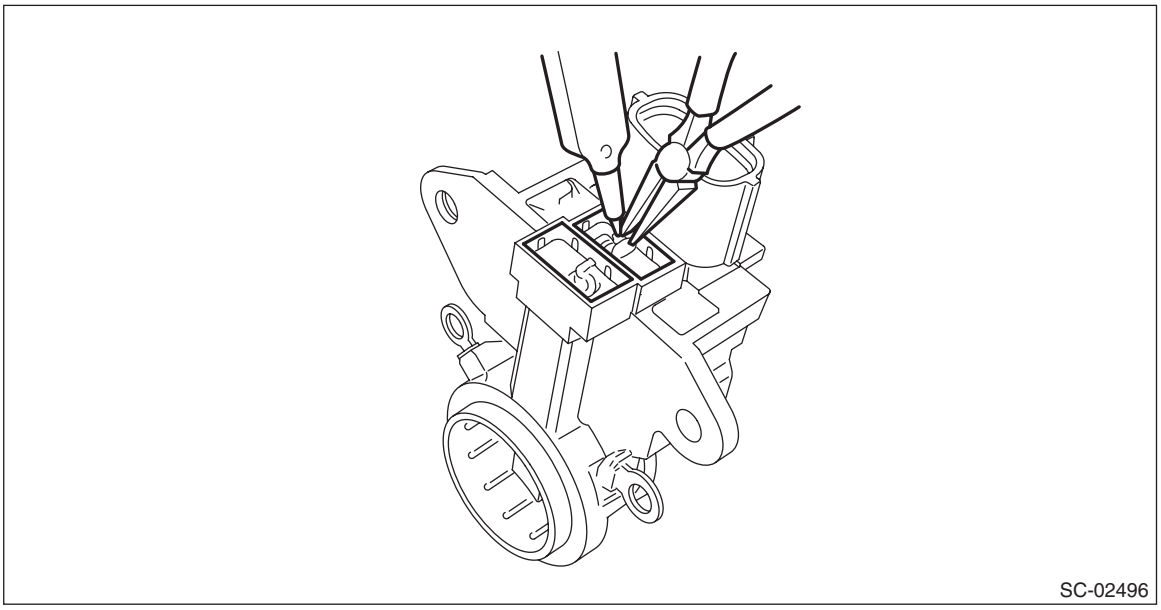

11) Remove the rectifier as follows.
(1) Remove the cover on terminal B.

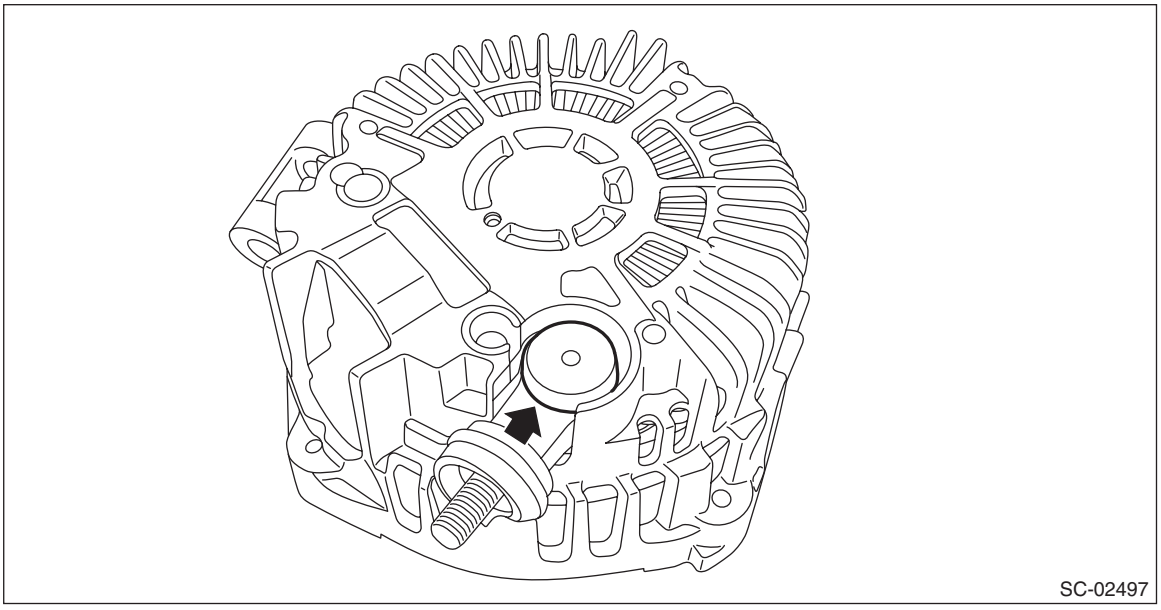
SC-02497

(2) Remove the nut on terminal B.

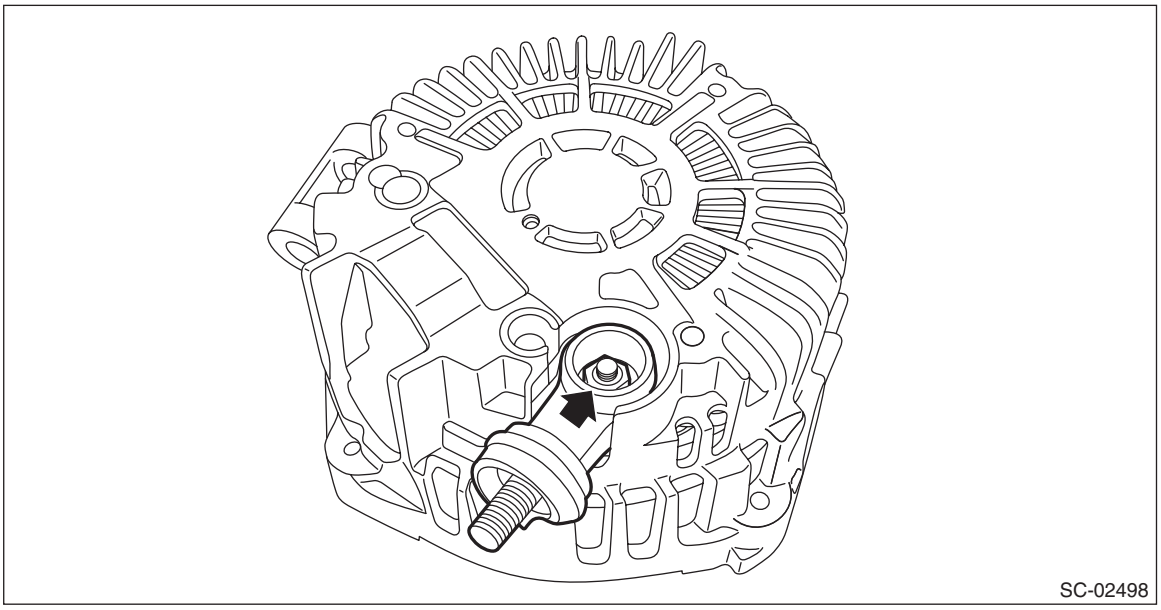
SC-02498

(3) Remove the bolts which secure the rectifier, and remove the rectifier.

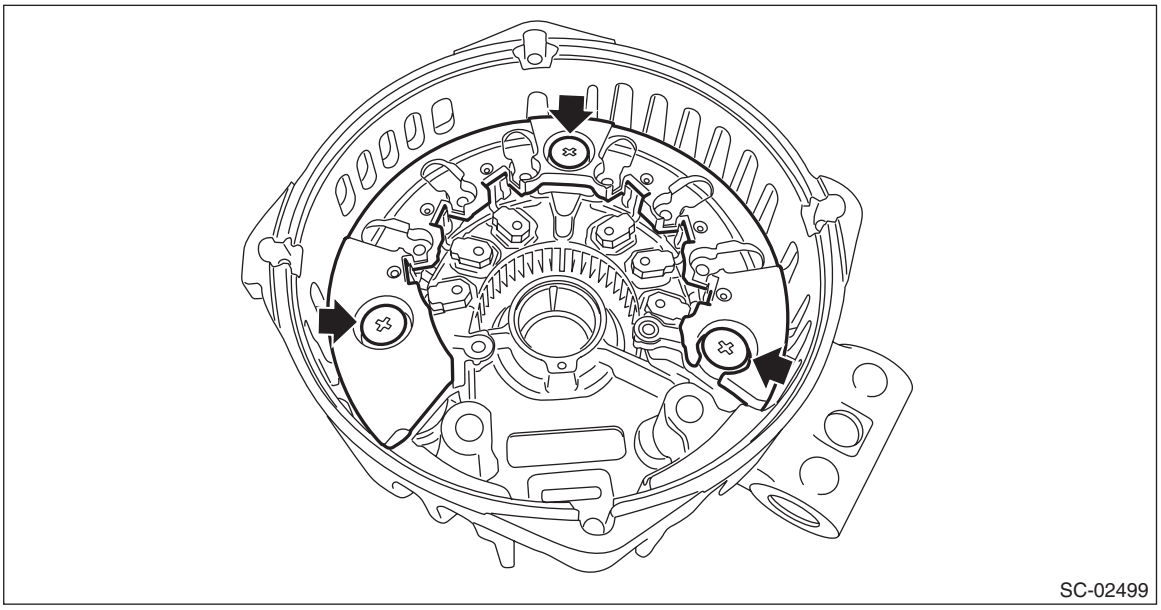

D: ASSEMBLY

Assemble in the reverse order of disassembly.

NOTE:
- Refer to component for tightening torque of each part. <Ref. to SC(H4DO(w/o HEV))-4, GENERATOR, COMPONENT, General Description.>
- After assembling, manually turn the pulley to check that the rotor rotates smoothly.

1) Assembling the rear cover and rectifier

Remove old silicone grease on the mating surface of rear cover and rectifier and apply new silicone grease.

CAUTION:
Do not apply silicone grease to the attachment threads of rectifier.

2) Push of the brush
Before assembling the front and rear parts, press the brush down into the brush holder, then fix the brush in that position by inserting a [1 mm (0.0394 in) dia., 40 — 50 mm (1.5748 — 1.9685 in) long] wire through the hole as shown in the figure.

CAUTION:
After assembling, remove the wire.

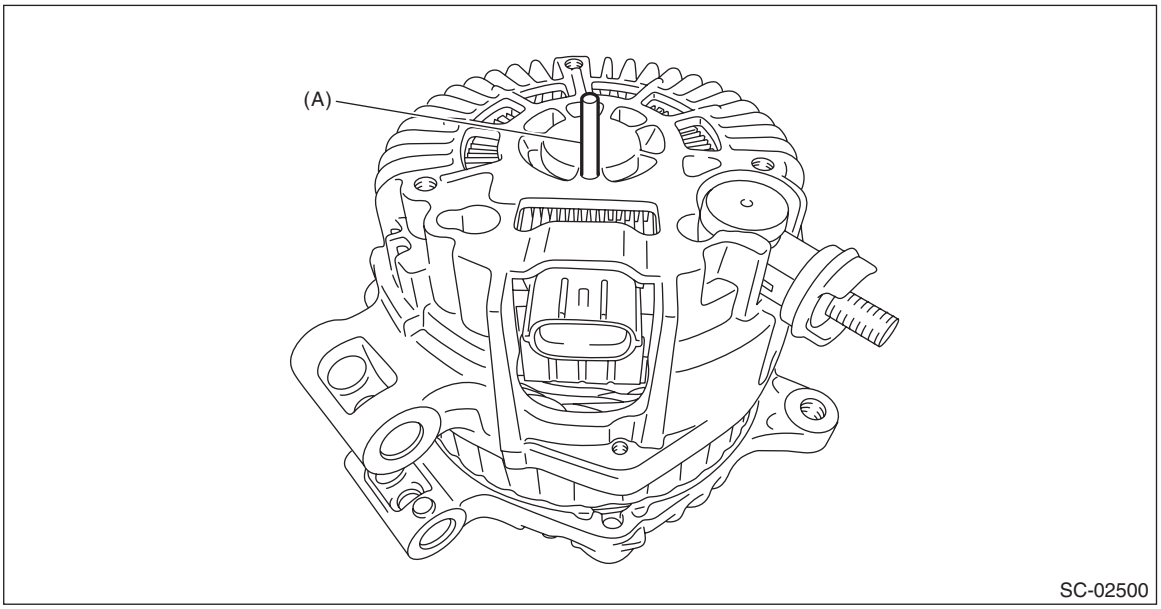

(A) Wire

3) Install the ball bearings.
   (1) Set the ball bearings in the front cover, then securely install an appropriate tool (such as a socket wrench of proper size) to the bearing outer race.
   (2) Using a press to press the ball bearings into the specified location.
   (3) Install the bearing retainer.
4) Install the bearings.

CAUTION:
Do not apply grease to the bearings. If there is any oil on the bearing box, remove it completely.
   (1) Use a press to install the bearings to the rotor shaft.
   (2) Heat the bearing box in rear cover at 50 to 60°C (122 to 140°F), and then press the bearing into rear cover.

E: INSPECTION

1. DIODE

CAUTION:
There is the possibility of damaging the diodes if a mega-tester (used to measure high voltages) or a similar measuring instrument is used. Never use a mega tester or equivalent for this test.
1) Check for continuity between the diode lead and terminal E or B. If continuity is not as shown in the table, replace the rectifier.
- At analog type tester

Tester lead		Continuity
–lead	+lead	
E	P1, P2, P3, P4, P5, P6	Yes
B		No
P1, P2, P3, P4, P5, P6	E	No
	B	Yes

- At digital type tester

Tester lead		Continuity
–lead	+lead	
E	P1, P2, P3, P4, P5, P6	No
B		Yes
P1, P2, P3, P4, P5, P6	E	Yes
	B	No

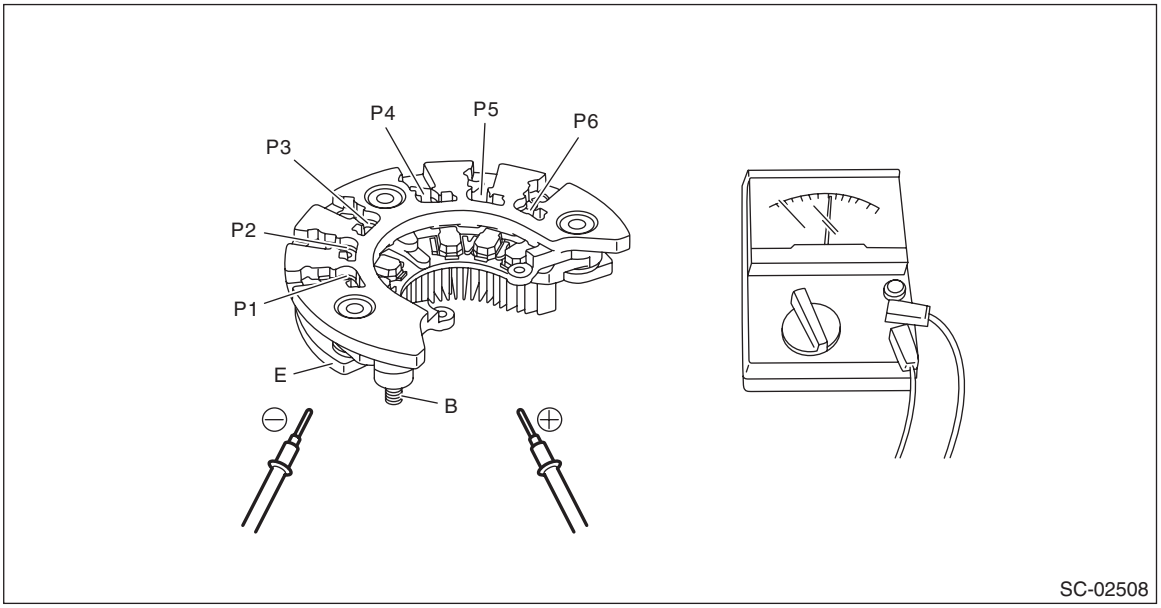

2. ROTOR

1) Slip ring surface
Inspect the slip rings for contamination or any roughness on the sliding surface. Repair the slip ring surface using a lathe or sand paper.

2) Slip ring outer diameter
Measure the slip ring outer diameter. Replace the rotor if the slip ring is worn.

Slip ring outer diameter:
Standard
22.7 mm (0.894 in)
Limit
22.1 mm (0.870 in)

3) Continuity test
Using a circuit tester, check the resistance between slip rings. If the resistance is not within the standard, replace the rotor.

Standard:
Approx. 2.0 — 2.4 Ω

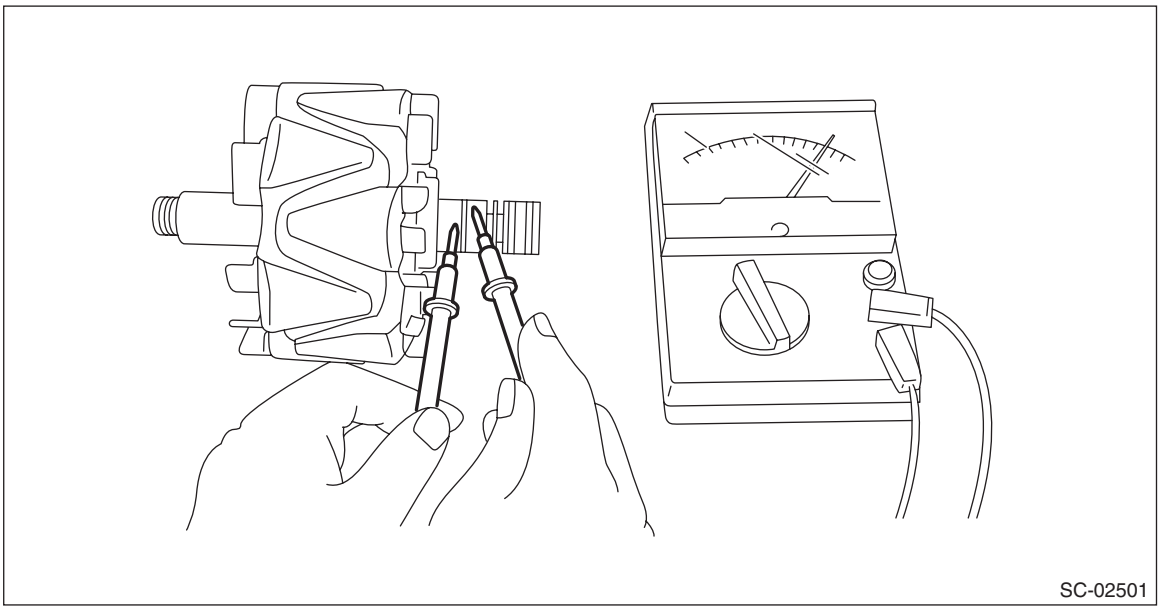
SC-02501

4) Insulation test
Check the continuity between slip ring and rotor core or shaft. If there is continuity, replace the rotor because the rotor coil is grounded.

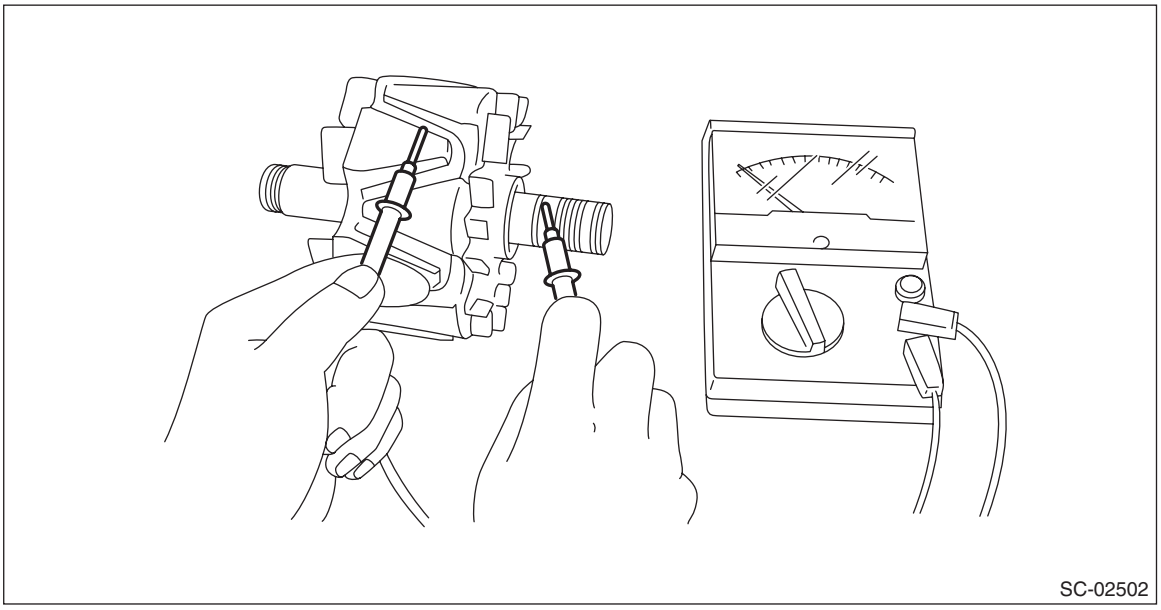
SC-02502

5) Bearing
Check the bearings. If there is any noise, or the rotor does not rotate smoothly, replace the bearings.

3. STATOR COIL

1) Continuity test

Inspect the continuity between the stator coil terminals. If continuity is not as shown in the table, replace the stator coil.

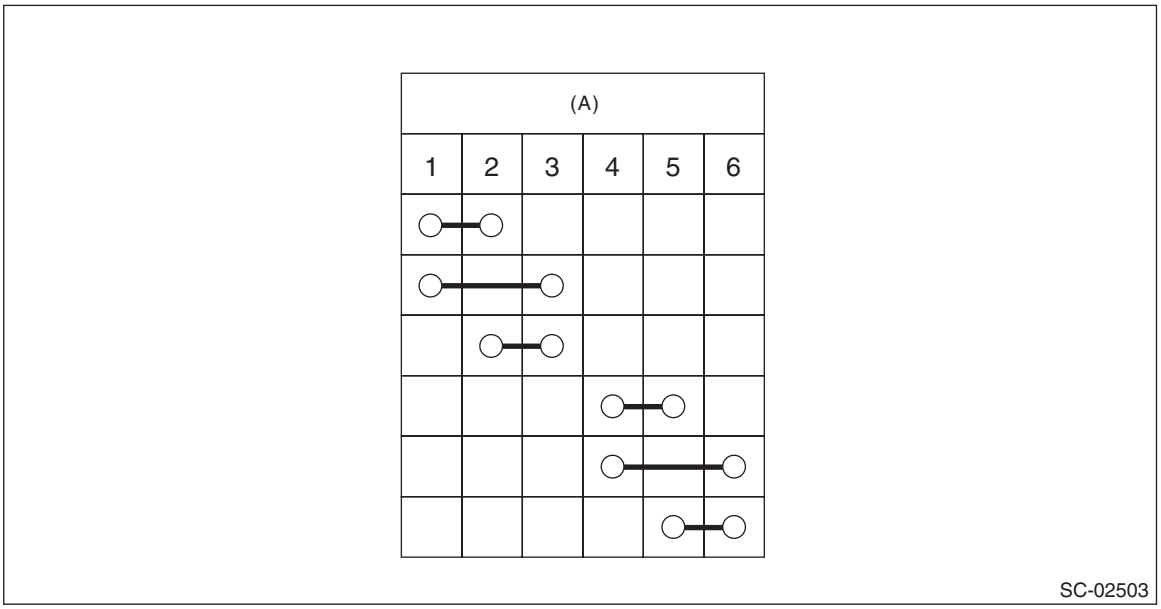

(A) Terminals

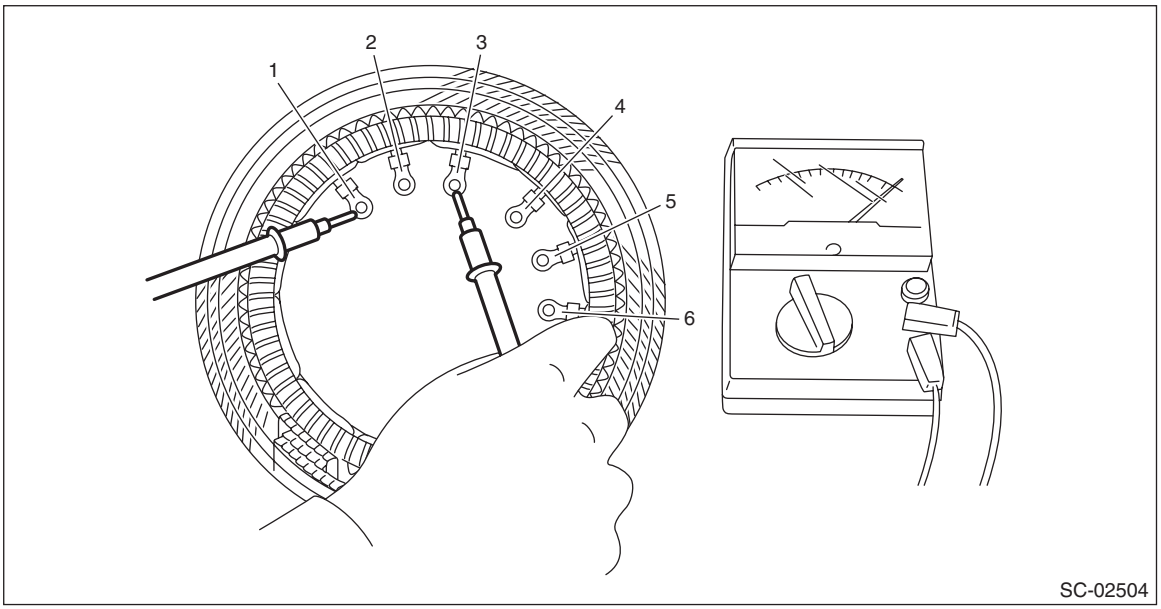

2) Insulation test
Inspect the continuity between the stator coil stator core and lead wire terminals. If there is continuity, replace the stator coil because the stator coil is grounded.

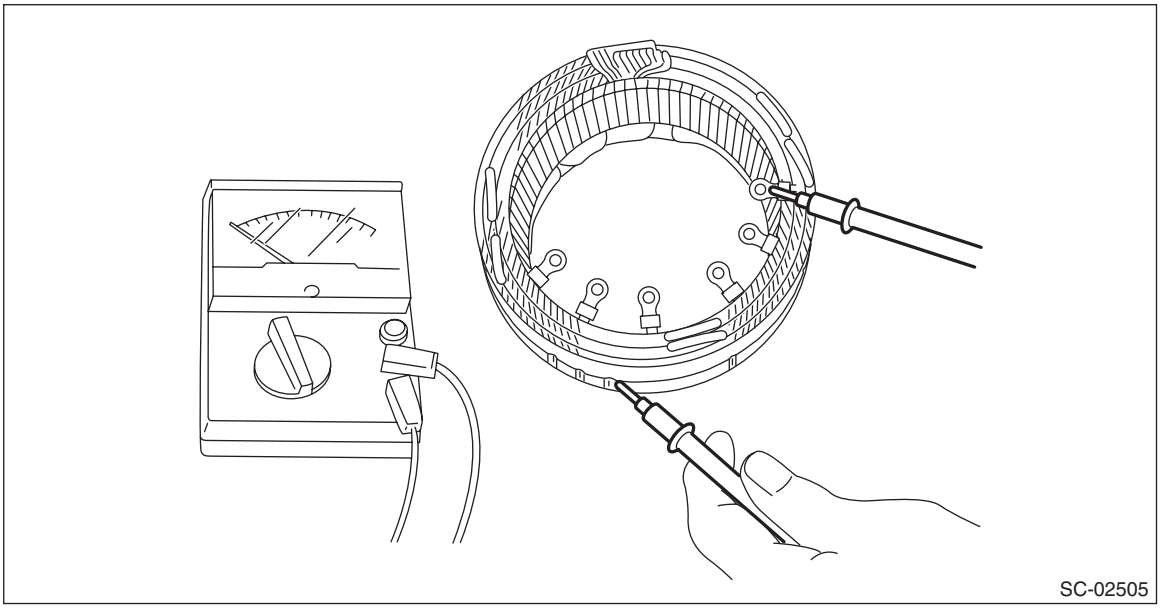
SC-02505

4. BRUSH

1) Measure the length of each brush. Replace the brush if wear exceeds service limits. There is a service limit mark (A) on each brush.

Brush length:
Standard (1)
22.5 mm (0.886 in)
Limit (2)
5.0 mm (0.197 in)

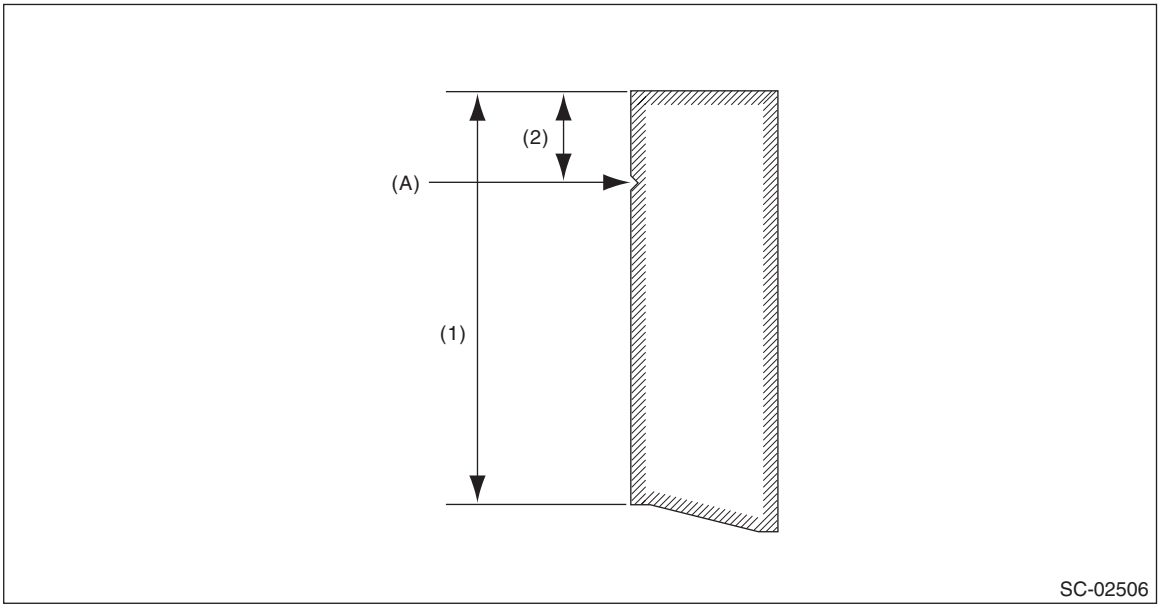

SC-02506

2) Check that there is appropriate pressure on the brush spring. Using a spring pressure indicator, push the brush into the brush holder until its tip protrudes 2 mm (0.0787 in). Then measure the pressure of brush spring. If the pressure is 1.7 N (173 gf, 6.11 ozf) or less, replace the brush spring. 4.1 — 5.3 N (418 — 540 gf, 14.75 — 19.06 ozf) pressure is required on the new spring.

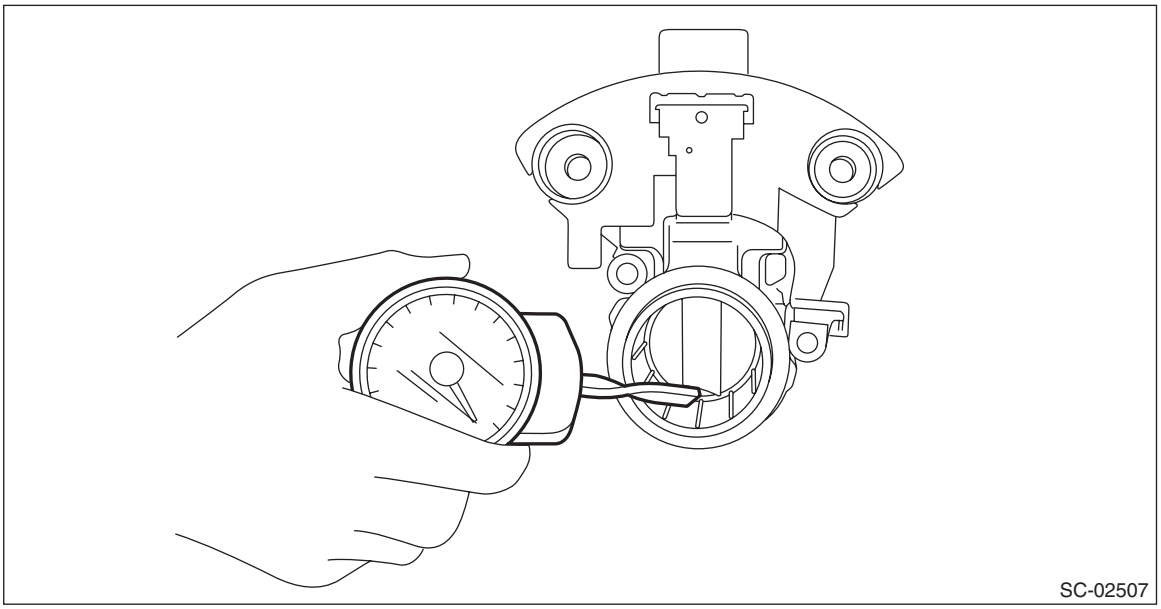

5. BALL BEARING

Check the ball bearings. Replace the ball bearings if there is resistance in the rotation, or if there is any abnormal noise.

4. Battery

A: REMOVAL

1) Disconnect the positive (+) terminal after disconnecting the negative (–) terminal of battery.
2) Remove the battery cable holder from the battery rod.
3) Remove the flange nut from battery rod and remove battery holder.

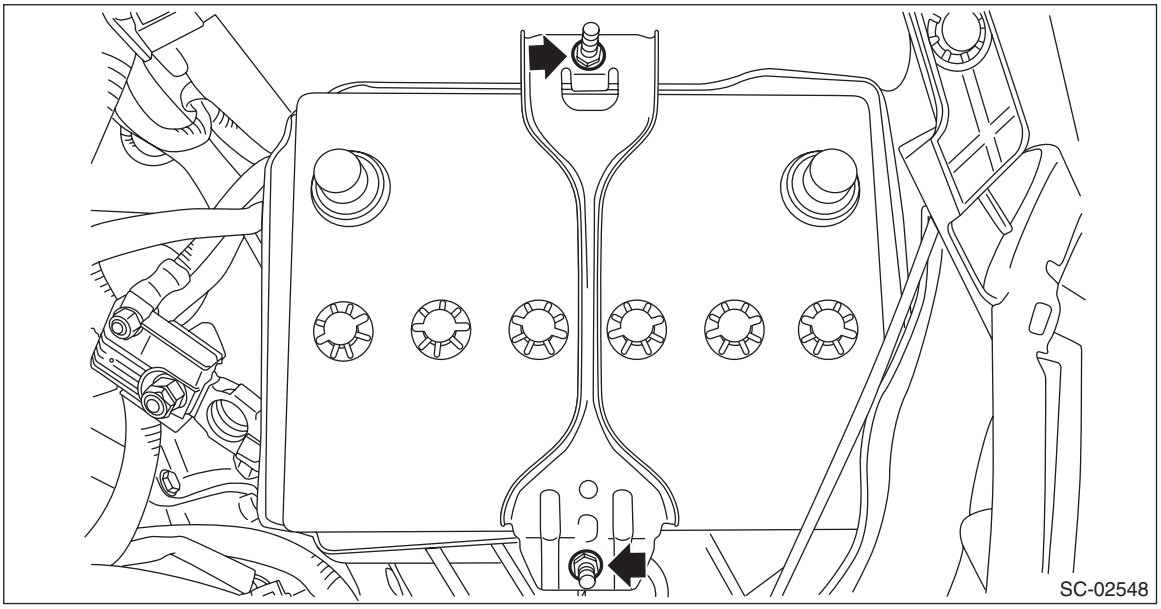

4) Remove the battery.

B: INSTALLATION

Install in the reverse order of removal.

Tightening torque:
3.5 N·m (0.4 kgf-m, 2.6 ft-lb)

NOTE:
- Clean the battery cable terminals and apply grease to retard the formation of corrosion.
- Connect the positive (+) terminal, and then connect the negative (–) terminal of the battery.
- After the battery is installed, initial diagnosis of the electronic throttle control is performed. Wait for 10 seconds or more after turning the ignition switch to ON, and then start the engine.

C: INSPECTION

WARNING:
- **Electrolyte is corrosive acid, and has toxicity; be careful of handling the fluid.**
- **Make sure the electrode does not come into contact with skin, eyes or clothing. Especially at contact with eyes, flush with water for 15 minutes and get prompt medical attention.**
- **In addition, be careful not to let the electrode contact with the coated parts.**
- **Be careful when handling the batteries because they produce explosive gases.**
- **Be sure to keep battery away from any fire.**
- **For safety, in case an explosion does occur, wear eye protection or shield your eyes when working near any battery. In addition, never lean over the battery.**
- **Ventilate sufficiently when using or charging battery in enclosed space.**
- **Before starting work, remove rings, metal watch-bands, and other metal jewelry.**
- **Never allow metal tools to contact the positive battery terminal and anything connected to it while you are at the same time in contact with any other metallic portion of the vehicle.**

1. EXTERNAL PARTS

Check the battery case, top cover, vent plugs, and terminal posts for dirt or cracks. If necessary, clean with water and wipe with a dry cloth.
Apply a thin coat of grease on the terminal posts to prevent corrosion.

2. ELECTROLYTE LEVEL

Check the electrolyte level in each cell. If the level is below MIN level, bring the level to MAX level by pouring distilled water into the battery cell. Do not fill beyond MAX level.

3. SPECIFIC GRAVITY OF ELECTROLYTE

1) Measure specific gravity of electrolyte using a hydrometer and a thermometer.
Specific gravity varies with temperature of electrolyte so that it must be corrected at 20°C (68°F) using the following calculation:

S_{20} = St + 0.0007 × (t – 20)
S_{20}: Specific gravity corrected at electrolyte temperature of 20°C
St: Measured specific gravity
t: Measured temperature (°C)
Judge whether or not the battery requires charging according to corrected specific gravity.
Standard specific gravity: 1.220 — 1.290 [at 20°C (68°F)]

2) Measuring the specific gravity of the electrolyte in the battery will disclose the state of charge of the battery. The relation between specific gravity and state of charge is as shown in the figure.

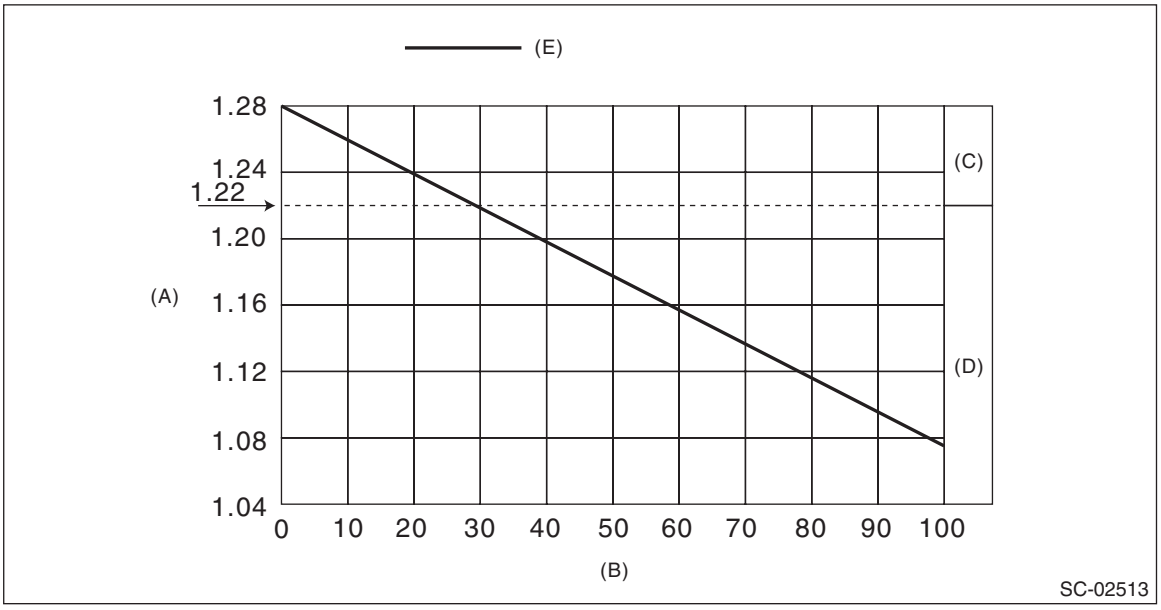

(A) Specific gravity [20°C (68°F)]
(B) Amount of discharge (%)
(C) Good
(D) Need to charge
(E) Battery with standard specific gravity 1.280 [20°C (68°F)]

D: MEASUREMENT

WARNING:
Do not bring an open flame close to the battery when working.

CAUTION:
- **Prior to charging, corroded terminals should be cleaned with a brush and common caustic soda solution.**
- **Be careful while charging the battery because it produces flammable gasses.**
- **Observe instructions when handling the battery charger.**
- **Before charging the battery on the vehicle, disconnect the battery ground terminal to prevent damage of generator diodes or other electrical units.**

1. JUDGMENT OF BATTERY IN CHARGED CONDITION

1) Specific gravity of electrolyte should be held within the specific range of 1.250 — 1.290 for one hour or more.
2) Voltage per battery cell should be held at a specific value in a range of 2.5 — 2.8 V for one hour or more.

2. CHECK CONDITION OF CHARGE WITH HYDROMETER

Hydrometer indicator	State of charge	Corrective action
Green dot	65% or more	Load test
Dark dot	65% or less	Charge battery
Clear dot	Low electrolyte	Replace the battery* (If cranking is difficult)
* Check electrical system before replacement.		

3. NORMAL CHARGING

Charge the battery at the current value specified by manufacturer or at approximately 1/10 of battery's ampere-hour rating.

4. QUICK CHARGING

CAUTION:
- **Observe the items in "3. NORMAL CHARGING".**
- **Never use 10 A or more when charging the battery because it will shorten the battery life.**

Quick charging is a method that the battery is charged in a short period of time with a relatively large current by using a quick charger.
Since a large current flow raises electrolyte temperature, the battery is subject to damage if the large current is used for prolonged time. For this reason, quick charging must be carried out within a current range that will not raise the electrolyte temperature to 40°C (104°F) or more.
Also the quick charging is a temporary mean to bring battery voltage up to some level, and battery should be charged slowly with low current as a rule.

5. Battery Current & Temperature Sensor

A: REMOVAL

1. BATTERY CURRENT SENSOR

NOTE:
Remove the battery current sensor and battery cable as a unit.
1) Disconnect the battery ground cable and remove the clip from the battery rod.
2) Remove the battery terminal boot.
3) Remove the nuts, and then remove the terminal fuse assembly.

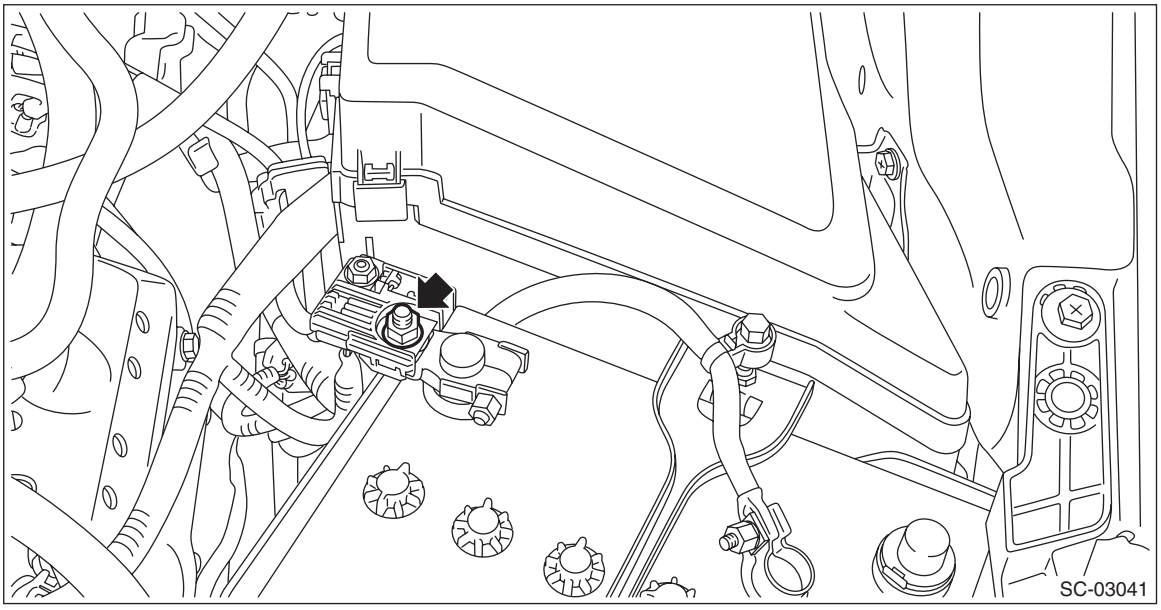

4) Remove the ground terminal from the vehicle and remove the harness clip.

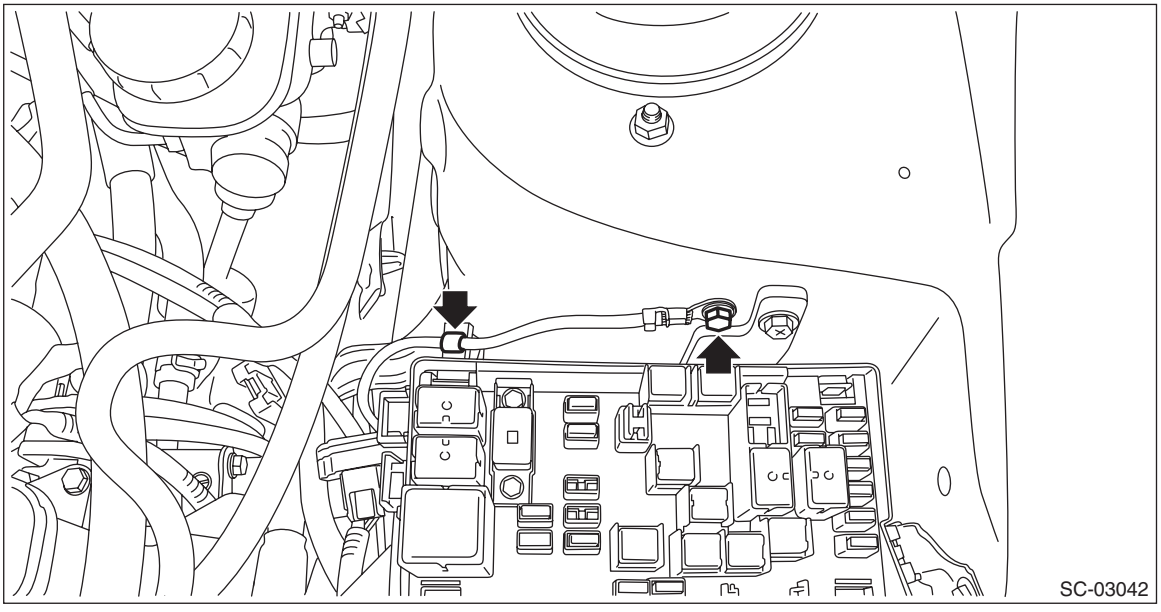

5) Disconnect the harness connector (A) from the battery cable.
6) Remove the battery cable clip (B) from the battery cable bracket.

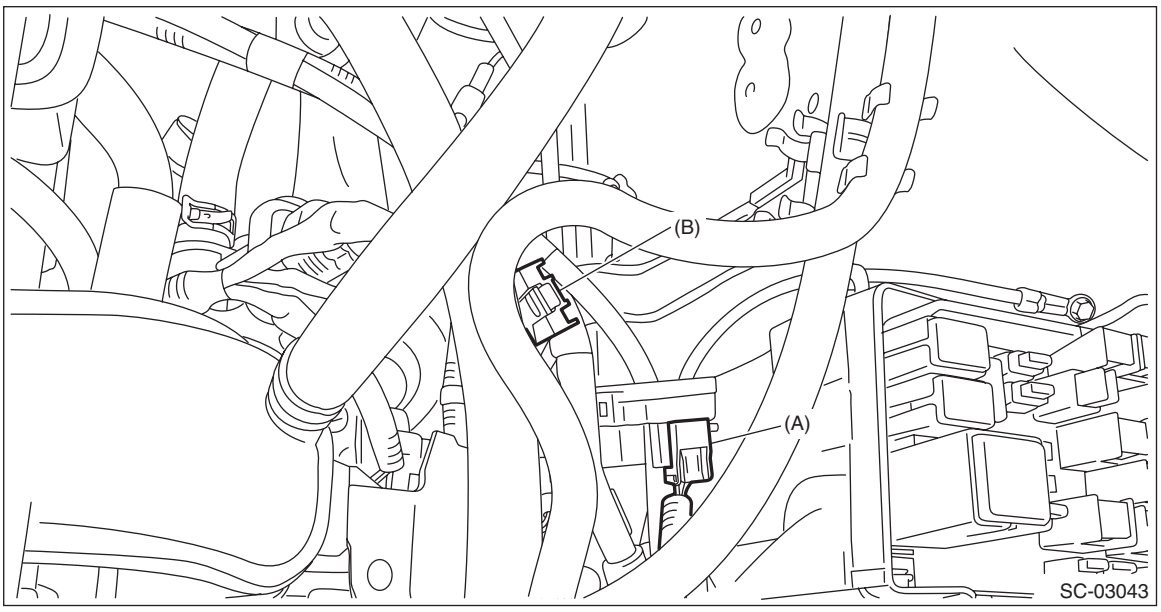

7) Remove the clip (A) from the air intake boot.
8) Loosen the clamp (B) securing the air cleaner case (rear) to the air intake boot.
9) Loosen the clamp (C) which secures the throttle body to the air intake boot.

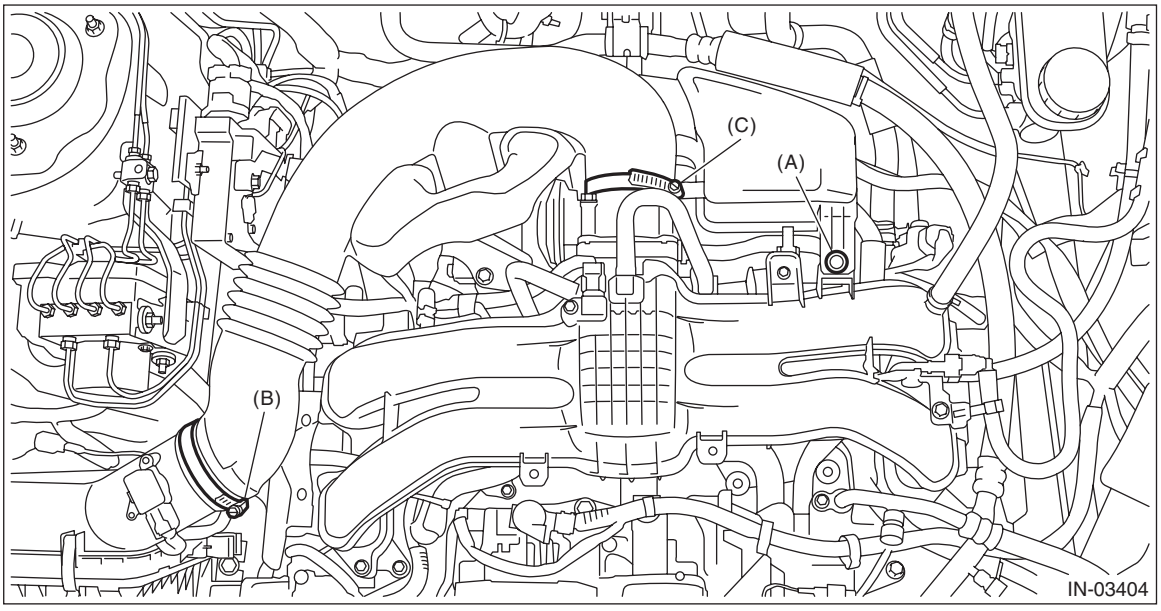

10) Remove the air intake boot from the throttle body, and move the air intake boot to the left side wheel apron.

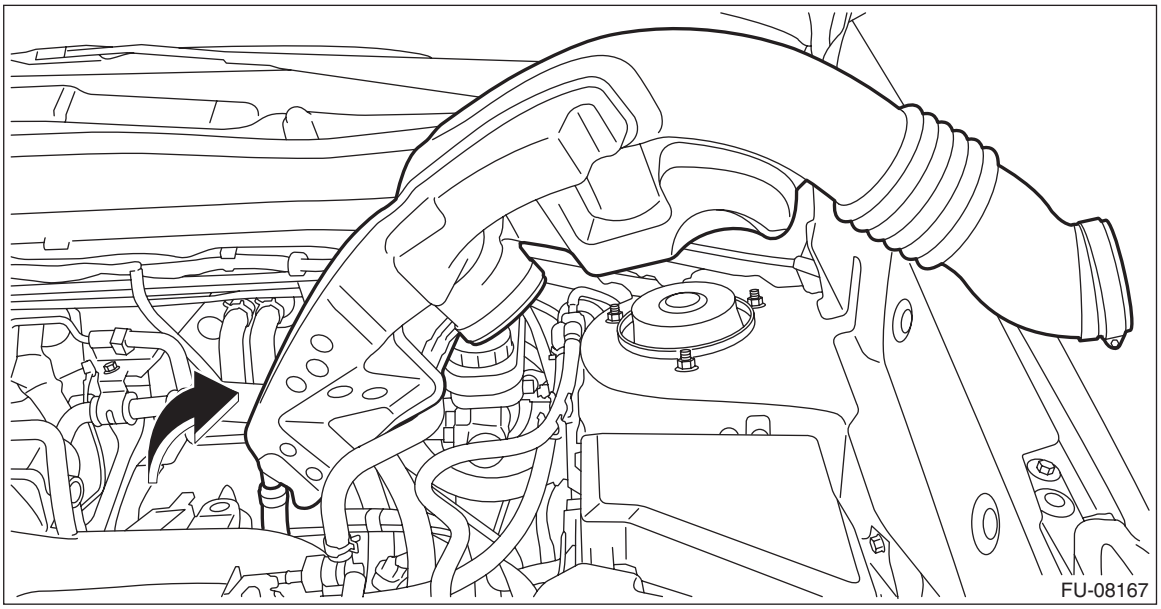

11) Remove the terminal B (A) from the starter.
12) Remove the starter ground cable (B) and remove the battery cable.

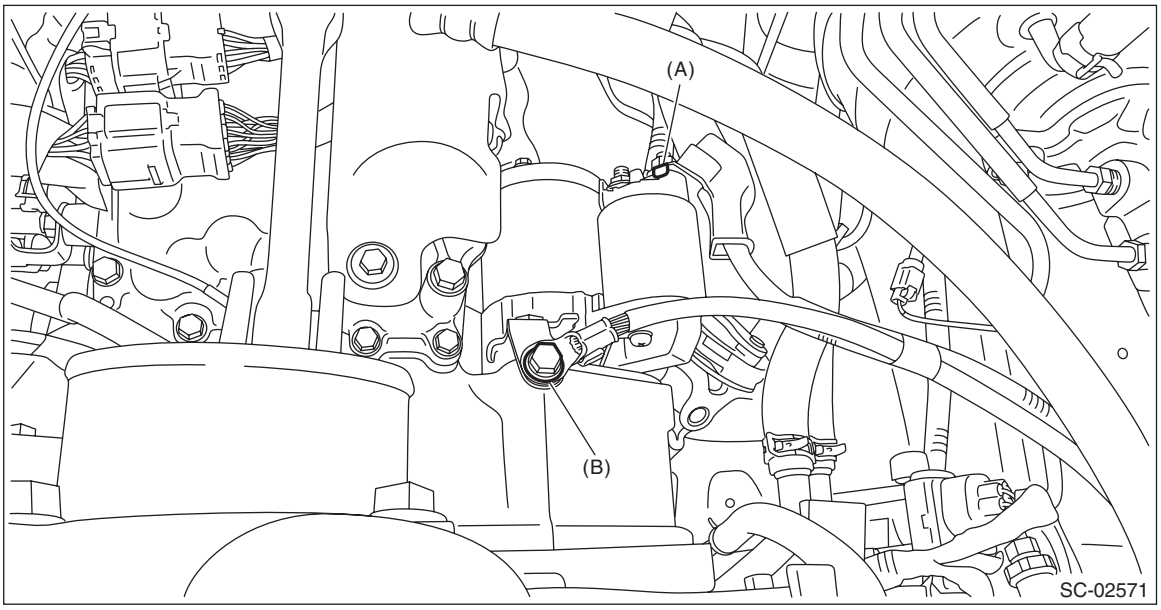

2. BATTERY TEMPERATURE SENSOR

1) Remove the battery. <Ref. to SC(H4DO(w/o HEV))-55, REMOVAL, Battery.>
2) Remove the clip, and remove the battery temperature sensor from the bracket.

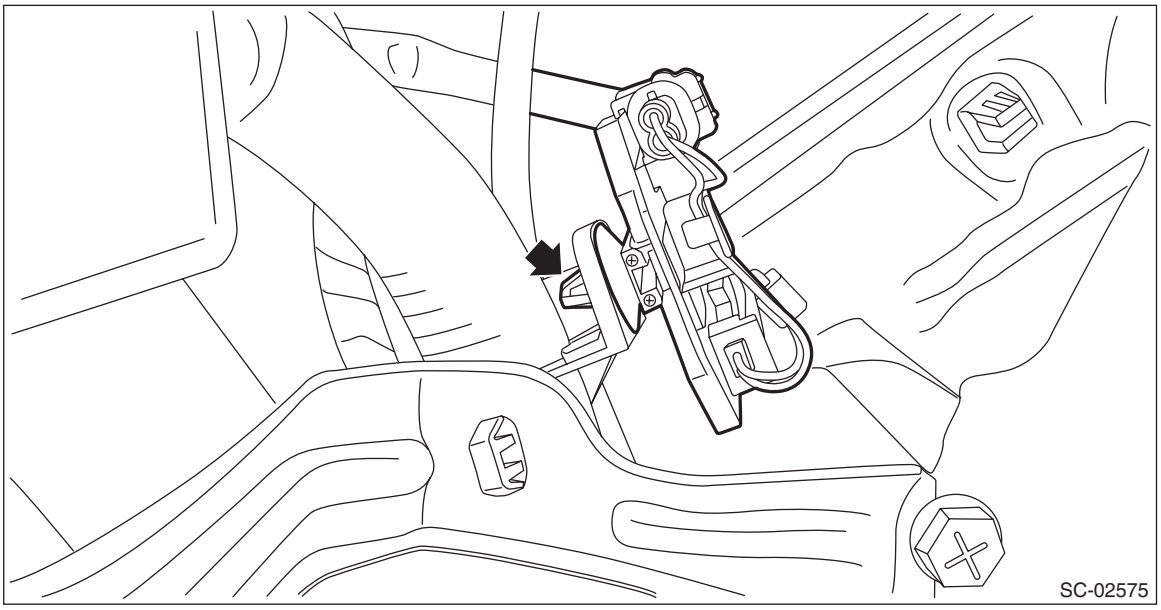

3) Disconnect the connector and remove the battery temperature sensor.

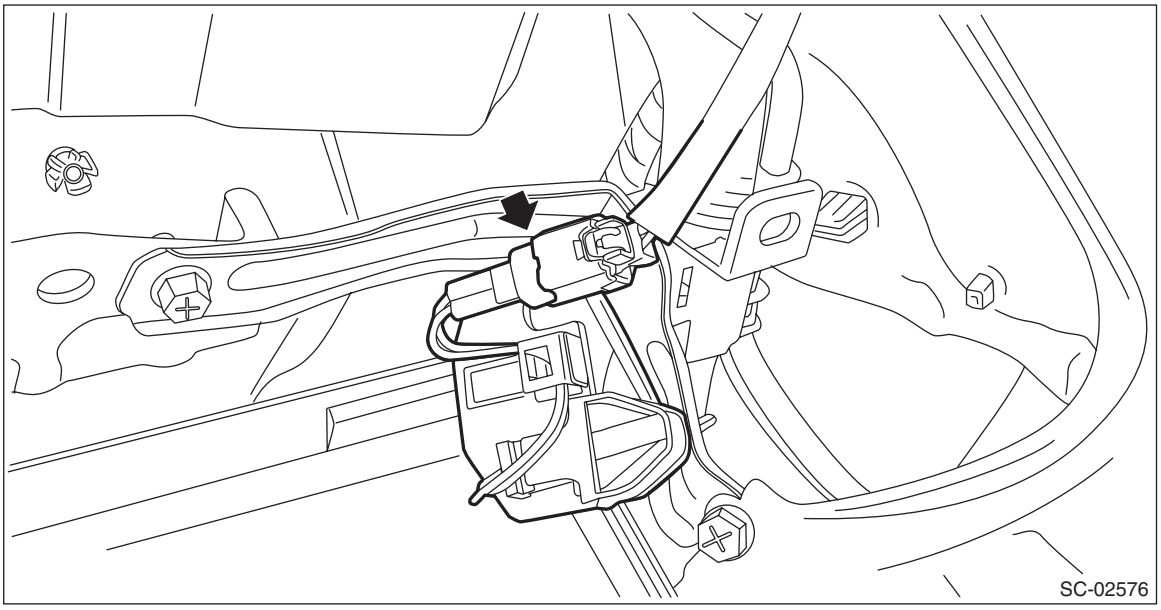

B: INSTALLATION

1. BATTERY CURRENT SENSOR

Install in the reverse order of removal.

Tightening torque:
<Ref. to SC(H4DO(w/o HEV))-7, BATTERY CURRENT & TEMPERATURE SENSOR, COMPONENT, General Description.>

2. BATTERY TEMPERATURE SENSOR

Install in the reverse order of removal.

C: INSPECTION

1. BATTERY CURRENT SENSOR

CAUTION:
Pay attention to polarity when checking the resistance in the battery current sensor.
Check the resistance between the battery current sensor terminals.

Terminal No.	Standard
1 (+) and 2 (–)	3 — 10 kΩ
1 (+) and 3 (–)	0.5 kΩ or less
2 (+) and 3 (–)	3 — 10 kΩ

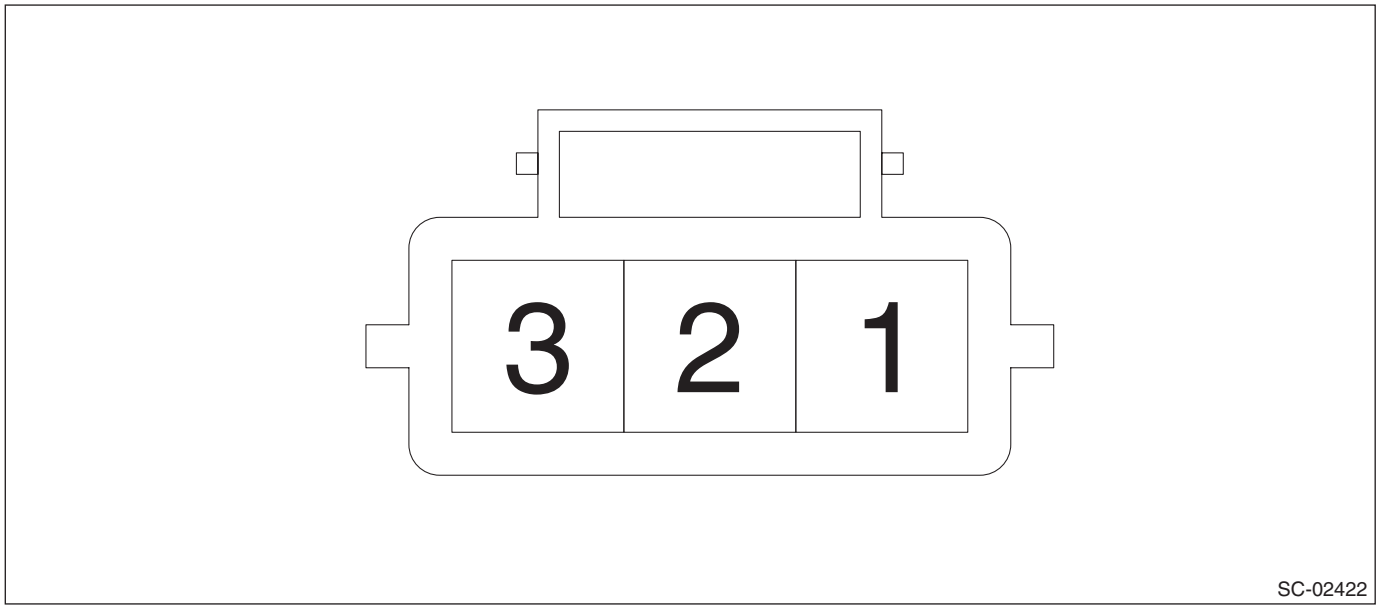

2. BATTERY TEMPERATURE SENSOR

Check the resistance between the battery temperature sensor terminals.

Temperature	Terminal No.	Standard
20 — 30°C (68 — 86°F)	1 and 2	1.5 — 2.8 kΩ

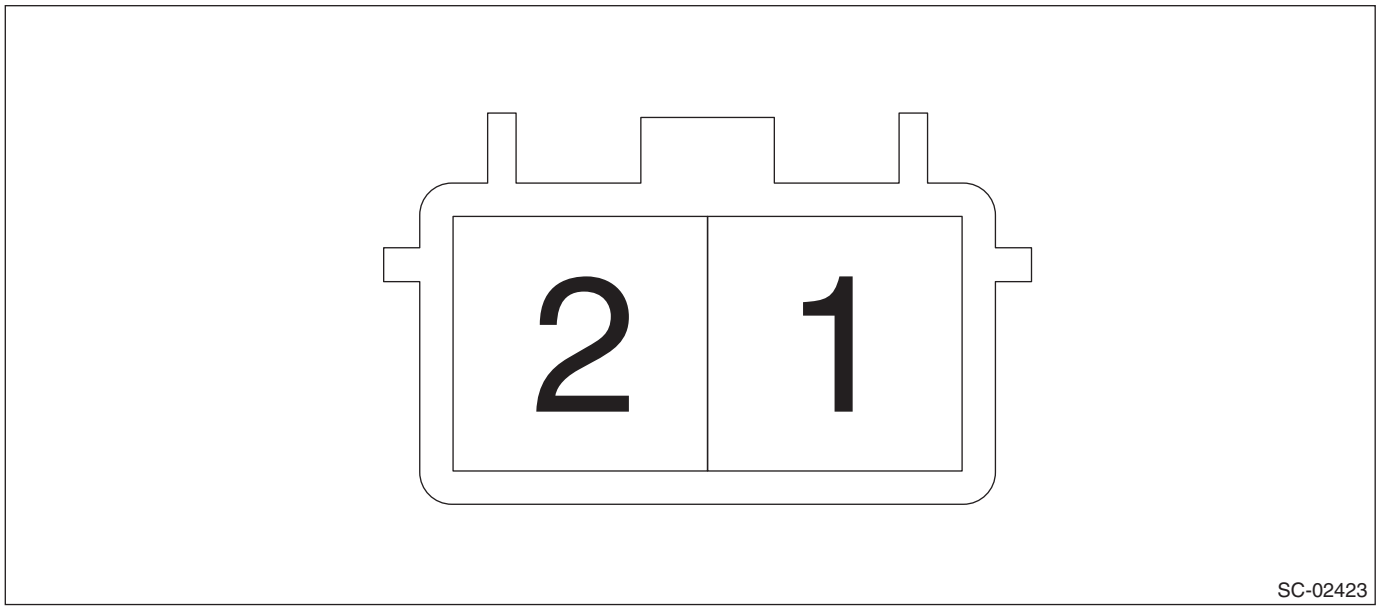

3. OTHER INSPECTIONS

Check that the battery current & temperature sensor has no deformation, cracks or other damages.

ENGINE (DIAGNOSTICS)

EN(H4DO w/o HEV) (diag)

		Page
1.	Basic Diagnostic Procedure	2
2.	Check List for Interview	4
3.	General Description	6
4.	Electrical Component Location	9
5.	Engine Control Module (ECM) I/O Signal	19
6.	Engine Condition Data	29
7.	Data Link Connector	30
8.	General Scan Tool	31
9.	Subaru Select Monitor	36
10.	Read Diagnostic Trouble Code (DTC)	43
11.	Inspection Mode	44
12.	Drive Cycle	50
13.	Clear Memory Mode	59
14.	System Operation Check Mode	60
15.	Malfunction Indicator Light	61
16.	Diagnostics for Engine Starting Failure	67
17.	Diagnostic Procedure for Subaru Select Monitor Communication	81
18.	List of Diagnostic Trouble Code (DTC)	83
19.	Diagnostic Procedure with Diagnostic Trouble Code (DTC)	93
20.	General Diagnostic Table	361

1. Basic Diagnostic Procedure

A: PROCEDURE

1. ENGINE

	Step	Check	Yes	No
1	**CHECK ENGINE START FAILURE.** 1) Ask the customer when and how the trouble occurred using the interview check list. <Ref. to EN(H4DO w/o HEV)(diag)-4, CHECK, Check List for Interview.> 2) Start the engine.	Does the engine start?	Go to step **2**.	Inspection using "Diagnostics for Engine Starting Failure". <Ref. to EN(H4DO w/o HEV)(diag)-67, Diagnostics for Engine Starting Failure.>
2	**CHECK ILLUMINATION OF MALFUNCTION INDICATOR LIGHT.**	Does the malfunction indicator light illuminate?	Go to step **3**.	Inspection using "General Diagnostic Table". <Ref. to EN(H4DO w/o HEV)(diag)-361, INSPECTION, General Diagnostic Table.>
3	**CHECK COMMUNICATION STATUS.** 1) Turn the ignition switch to OFF. 2) Connect the Subaru Select Monitor or general scan tool to the data link connector. 3) Turn the ignition switch to ON, and run the Subaru Select Monitor or general scan tool. NOTE: • Subaru Select Monitor For detailed procedures, refer to "Subaru Select Monitor". <Ref. to EN(H4DO w/o HEV)(diag)-36, Subaru Select Monitor.> • General scan tool For detailed operation procedures, refer to the general scan tool operation manual.	Does Subaru Select Monitor or general scan tool communicate with vehicle normally?	Go to step **4**.	Inspection using "Diagnostic Procedure for Subaru Select Monitor Communication". <Ref. to EN(H4DO w/o HEV)(diag)-81, Diagnostic Procedure for Subaru Select Monitor Communication.>
4	**CHECK DTC.** Read DTC using Subaru Select Monitor or general scan tool. NOTE: • Subaru Select Monitor Refer to "Read Diagnostic Trouble Code (DTC)" for detailed operation procedure. <Ref. to EN(H4DO w/o HEV)(diag)-43, Read Diagnostic Trouble Code (DTC).> • General scan tool For detailed operation procedures, refer to the general scan tool operation manual.	Is DTC displayed on Subaru Select Monitor or general scan tool?	Record DTC and freeze frame data, then repair the trouble cause. <Ref. to EN(H4DO w/o HEV)(diag)-83, List of Diagnostic Trouble Code (DTC).> After repair, go to the next step. Go to step **5**.	Repair the related parts. NOTE: If DTC is not shown on display although the malfunction indicator light illuminates, perform the diagnosis of malfunction indicator light circuit or combination meter. <Ref. to EN(H4DO w/o HEV)(diag)-61, Malfunction Indicator Light.>

Step		Check	Yes	No
5	**PERFORM DIAGNOSIS.** 1) Perform the Clear Memory Mode. <Ref. to EN(H4DO w/o HEV)(diag)-59, Clear Memory Mode.> 2) Perform the Inspection Mode or Drive Cycle. <Ref. to EN(H4DO w/o HEV)(diag)-44, Inspection Mode.> <Ref. to EN(H4DO w/o HEV)(diag)-50, Drive Cycle.>	Is DTC displayed on Subaru Select Monitor or general scan tool?	Inspect using "Diagnostic Procedure with Diagnostic Trouble Code (DTC)". <Ref. to EN(H4DO w/o HEV)(diag)-93, Diagnostic Procedure with Diagnostic Trouble Code (DTC).>	Finish the diagnosis.

2. Check List for Interview

A: CHECK

1. CHECK LIST NO. 1

Check the following item when problem has occurred.

NOTE:
Use copies of this page for interviewing customers.

Customer's name		Engine No.	
Date of purchase		Fuel type	
Date of repair		Odometer reading	km
V.I.N.			miles
Weather	❑ Fine ❑ Cloudy ❑ Rainy ❑ Snowy ❑ Various/Others:		
Ambient air temperature	°C (°F)		
	❑ Hot ❑ Warm ❑ Cool ❑ Cold		
Place	❑ Highway ❑ Suburbs ❑ Inner city ❑ Uphill ❑ Downhill ❑ Rough road ❑ Others:		
Engine temperature	❑ Cold ❑ Warming-up ❑ After warming-up ❑ Any temperature ❑ Others:		
Engine speed	rpm		
Vehicle speed	km/h (MPH)		
Driving conditions	❑ Not affected ❑ At starting ❑ While idling ❑ At racing ❑ While accelerating ❑ While cruising ❑ While decelerating ❑ While turning (RH/LH)		
Headlight	❑ ON/❑ OFF	Rear defogger	❑ ON/❑ OFF
Blower	❑ ON/❑ OFF	Audio	❑ ON/❑ OFF
A/C compressor	❑ ON/❑ OFF	Rear entertainment system	❑ ON/❑ OFF
Radiator fan	❑ ON/❑ OFF	Car phone	❑ ON/❑ OFF
Front wiper	❑ ON/❑ OFF	Wireless device	❑ ON/❑ OFF
Rear wiper	❑ ON/❑ OFF		

2. CHECK LIST NO. 2

Check the following item about the vehicle's state when the malfunction indicator light turns on.

NOTE:
Use copies of this page for interviewing customers.

a) Other warning lights or indicators illuminate: ❑ Yes / ❑ No
❑ Fuel level warning light ❑ Charge warning light ❑ Engine coolant temperature warning light ❑ Oil pressure warning light ❑ ATF temperature warning light or Sport indicator light ❑ Driver's control center differential indicator light ❑ ABS warning light ❑ VDC warning light ❑ Cruise indicator light ❑ SI-CRUISE warning light ❑ Immobilizer indicator light ❑ STEERING warning light ❑ Electronic parking brake warning light ❑ Glow indicator light ❑ Sedimentor warning light ❑ Others:
b) Fuel level
• Lack of fuel: ❑ Yes / ❑ No • Indicator position of fuel gauge: • Experienced running out of fuel: ❑ Yes / ❑ No
c) Intentional connecting or disconnecting of harness connectors or spark plug cords: ❑ Yes / ❑ No
• What:
d) Intentional connecting or disconnecting of hoses: ❑ Yes / ❑ No
• What:
e) Installing of other parts except genuine parts: ❑ Yes / ❑ No
• What: • Where:
f) Occurrence of noise: ❑ Yes / ❑ No
• From where: • What kind:
g) Occurrence of smell: ❑ Yes / ❑ No
• From where: • What kind:
h) Intrusion of water into engine compartment or passenger compartment: ❑ Yes / ❑ No
i) Troubles occurred
❑ Engine does not start. ❑ Engine stalls during idling. ❑ Engine stalls while driving. ❑ Engine speed decreases. ❑ Engine speed does not decrease. ❑ Rough idling ❑ Poor acceleration ❑ Back fire ❑ After fire ❑ Does not shift. ❑ Excessive shift shock

3. General Description

A: CAUTION

1) Airbag system wiring harness is routed near the ECM, main relay and fuel pump relay.

CAUTION:
• Do not use electrical test equipment on the airbag system circuits.
• Be careful not to damage the airbag system wiring harness when servicing the ECM, TCM, main relay and fuel pump relay.

2) Never connect the battery in reverse polarity. Doing so will damage the ECM instantly, and other parts will also be damaged.

3) Do not disconnect the battery cables while the engine is running. A large counter electromotive force will be generated in the generator, and this voltage may damage electronic parts such as ECM etc.

4) When disconnecting the connectors of the electrical components, always be sure to turn the ignition switch to OFF. Perform the Clear Memory Mode after connecting the connectors. <Ref. to EN(H4DO w/o HEV)(diag)-59, Clear Memory Mode.>

5) When measuring the voltage or resistance of individual sensor or all electrical control modules, use a tapered pin with a diameter of less than 0.6 mm (0.024 in). Do not insert the pin 4 mm (0.16 in) or more into the part.

CAUTION:
When replacing the ECM, be careful not to use the ECM of wrong specification to avoid any damage on the fuel injection system.

NOTE:
When replacing the ECM of the models with immobilizer, immobilizer system must be registered. For detailed procedures, refer to “REGISTRATION MANUAL FOR IMMOBILIZER”.

6) Take care not to allow water to get into the connectors when servicing or washing the vehicle in rainy weather. Avoid exposure to water even if the connectors are waterproof.

7) Use ECM mounting stud bolts for the grounding point when measuring voltage and resistance inside the passenger compartment.

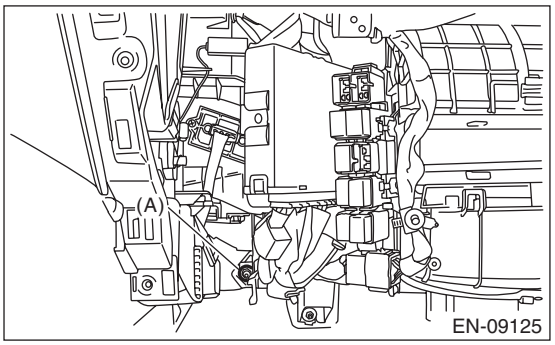

(A) Stud bolt

8) Use the engine ground terminal or engine assembly for the grounding point when measuring the voltage and resistance in engine compartment.

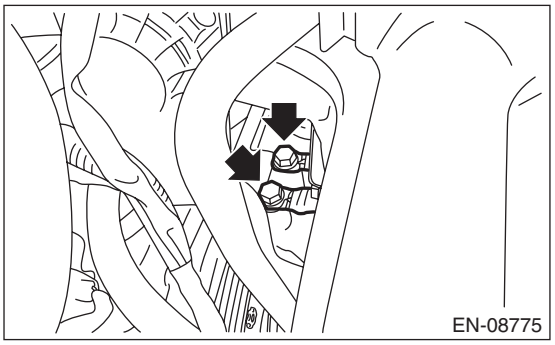

9) All parts related to the engine control system are precision parts. Do not drop or otherwise apply impact. Do not reuse the parts that are dropped accidentally.

10) Observe the following cautions when installing a radio in vehicle.

CAUTION:
• The antenna must be kept as far apart as possible from the ECM. <Ref. to EN(H4DO w/o HEV)(diag)-9, CONTROL MODULE, LOCATION, Electrical Component Location.>
• The antenna feeder must be placed as far apart as possible from the ECM and engine control system harness.
• Carefully adjust the antenna for correct matching.
• When mounting a large power type radio, pay special attention to the three items mentioned above.
• Incorrect installation of the radio may affect the operation of ECM.

11) When disconnecting the fuel hose, release the fuel pressure. <Ref. to FU(H4DO(w/o HEV))-116, RELEASING OF FUEL PRESSURE, PROCEDURE, Fuel.>

12) Warning lights may illuminate when performing driving test with jacked-up or lifted-up condition, but this is not a system malfunction. The reason for this is the rotating speed difference between the front and rear wheels. When engine control system diagnosis is finished, perform the VDC memory clearance procedure of self-diagnosis function. <Ref. to VDC(diag)-23, Clear Memory Mode.>

B: INSPECTION

Before performing diagnostics, check the following item which might affect engine problems.

1. BATTERY

1) Measure the battery voltage and specific gravity of the electrolyte.

Standard voltage: 12 V

Specific gravity: 1.260 or more

2) Check the condition of the main and other fuses, and harnesses and connectors. Also check for proper grounding.

2. ENGINE GROUND

Make sure that the engine ground terminal has no contamination, corrosion or looseness and is properly connected to the engine.

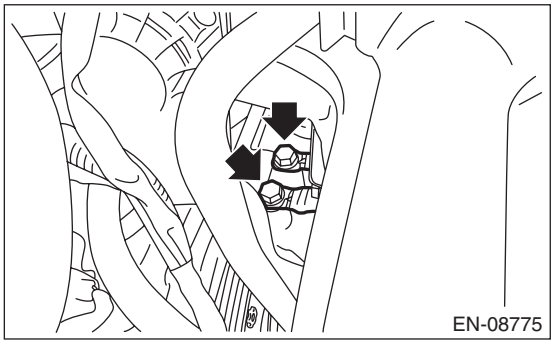

C: NOTE

• The on-board diagnostic (OBD) system detects and indicates a fault in various inputs and outputs of the complex electronic control. Malfunction indicator light in the combination meter indicates occurrence of a fault or trouble.
• Further, against such a failure of sensors as may disable the drive, the fail-safe function is provided to ensure the minimal drivability.
• The OBD system incorporated with the vehicles within this type of engine complies with OBD-II regulations. The OBD system monitors the components and the system malfunction listed in “Engine Section” which affects on emissions.
• When the system decides that a malfunction occurs, malfunction indicator light illuminates. At the same time of the malfunction indicator light illumination or blinking, a DTC and a freeze frame engine conditions are stored into on-board computer.
• The OBD system stores freeze frame engine condition data (engine load, engine coolant temperature, fuel trim, engine speed and vehicle speed, etc.) into on-board computer when it detects a malfunction.
• Freeze frame engine condition data are stored until the DTCs are cleared. However when such malfunctions as fuel trim fault and misfire are detected with the freeze frame engine condition data stored, they are rewritten into those related to the fuel trim fault and misfire.
• When the malfunction does not occur again for three consecutive driving cycles*, malfunction indicator light is turned off, but DTC remains at on-board computer.
*: One driving cycle means the period between the ignition switch ON and the ignition switch OFF after driving.
• When performing diagnosis, connect the Subaru Select Monitor or general scan tool to the vehicle.

D: PREPARATION TOOL

ILLUSTRATION	TOOL NUMBER	DESCRIPTION	REMARKS
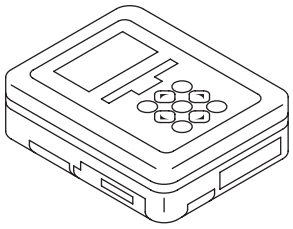 ST1B022XU0	1B022XU0	SUBARU SELECT MONITOR III KIT	Used for troubleshooting the electrical system.
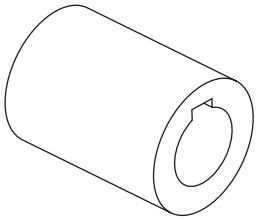 ST18252AA000	18252AA000	CRANKSHAFT SOCKET	Used for rotating crankshaft.

4. Electrical Component Location

A: LOCATION

1. CONTROL MODULE

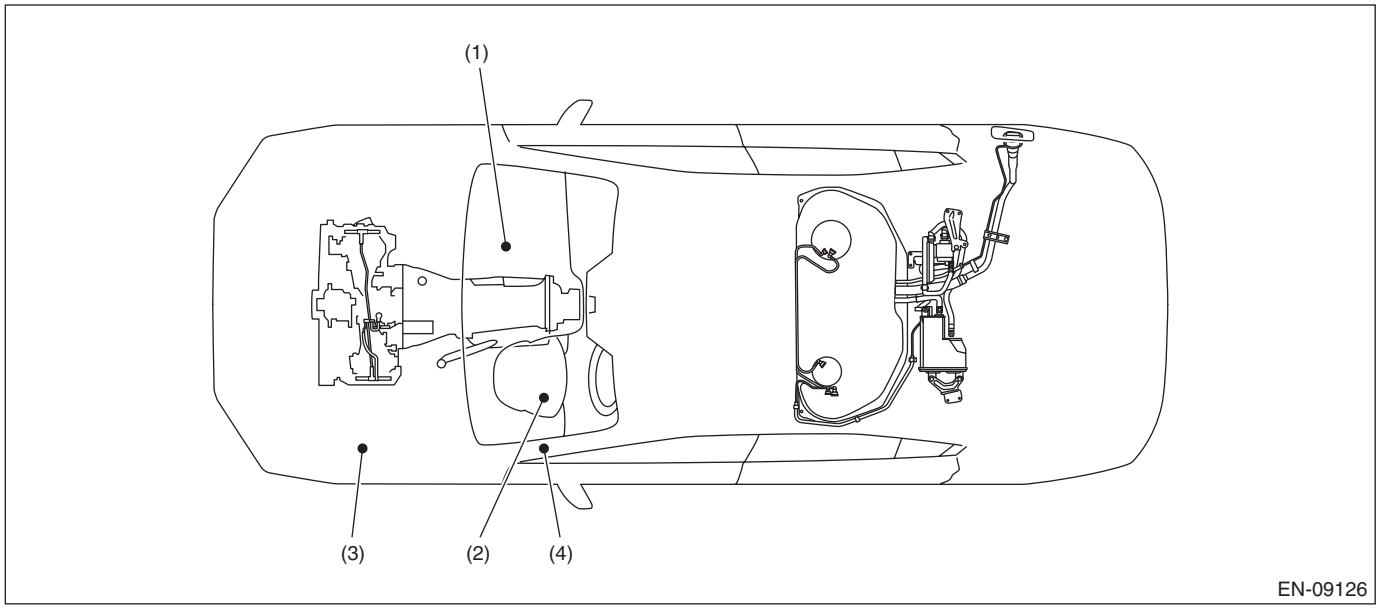

(1) Engine control module (ECM)
(2) Malfunction indicator light
(3) Delivery (test) mode fuse
(4) Data link connector

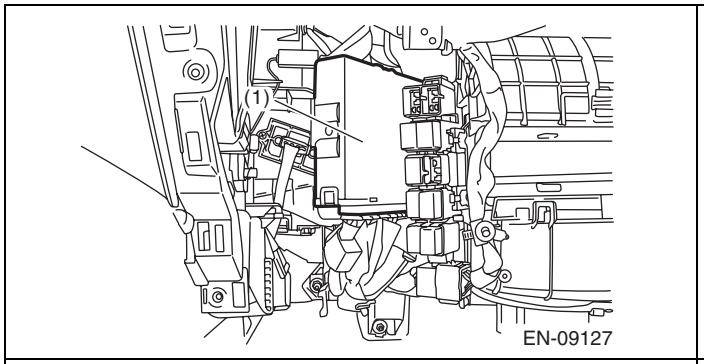

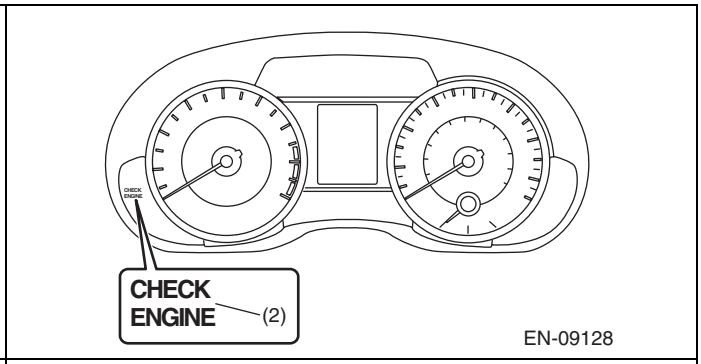

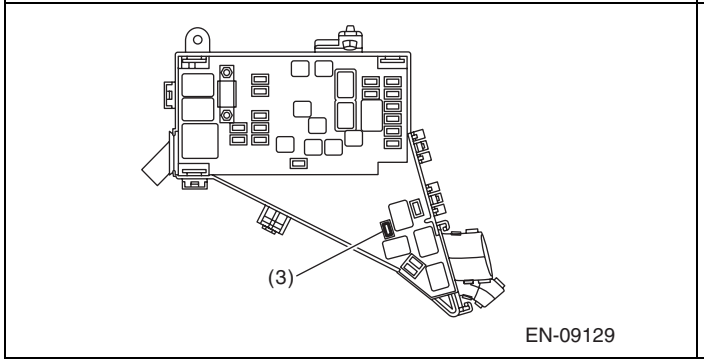

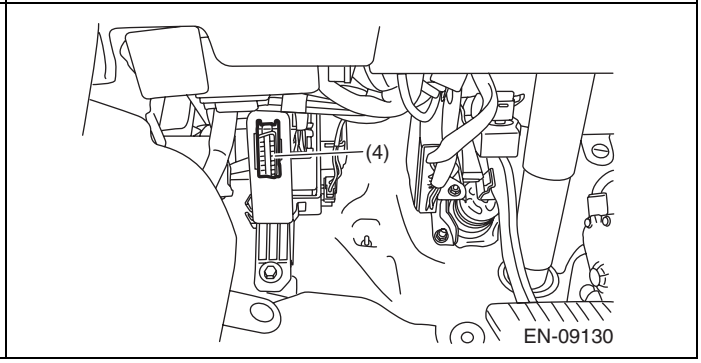

2. SENSOR

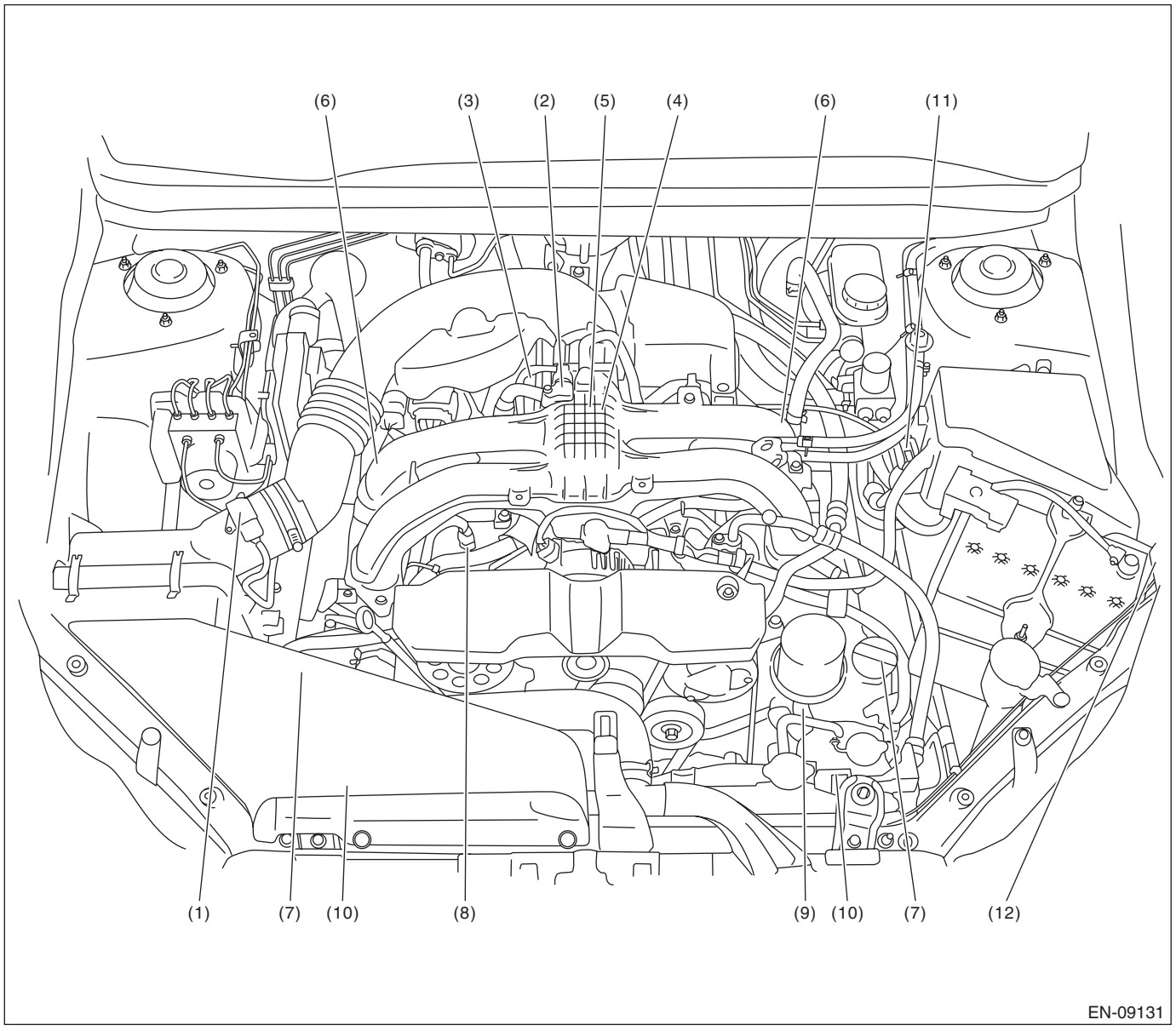

(1)	Mass air flow and intake air temperature sensor	(5)	Crankshaft position sensor	(9)	Engine oil temperature sensor
(2)	Manifold absolute pressure sensor	(6)	Tumble generator valve actuators (with built-in opening angle switch)	(10)	Exhaust camshaft position sensor
(3)	Electronic throttle control	(7)	Intake camshaft position sensor	(11)	Battery current sensor
(4)	Knock sensor	(8)	Engine coolant temperature sensor	(12)	Battery temperature sensor

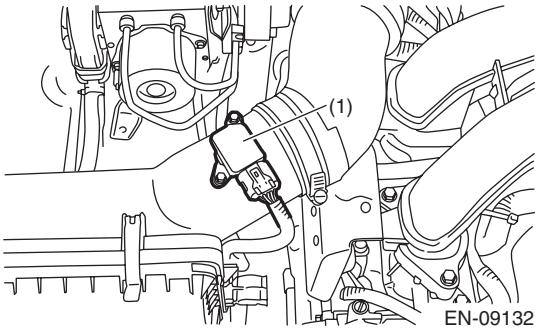
(1)
EN-09132

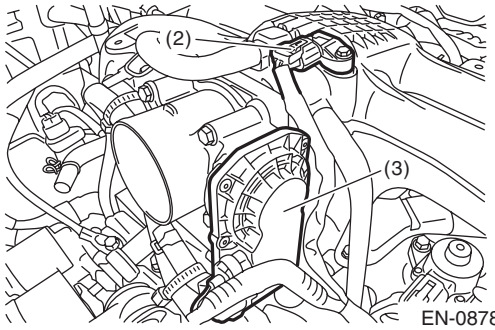
(2)
(3)
EN-08780

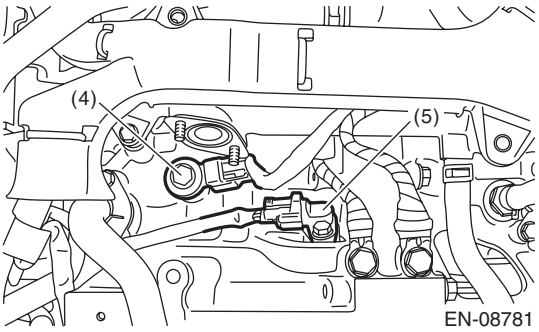
(4)
(5)
EN-08781

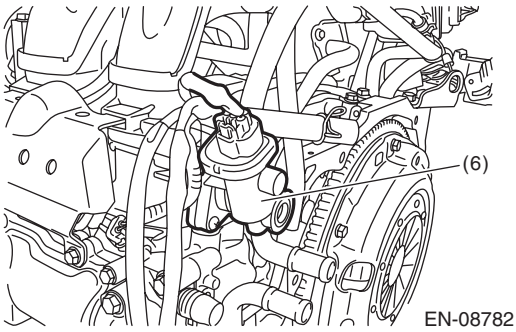
(6)
EN-08782

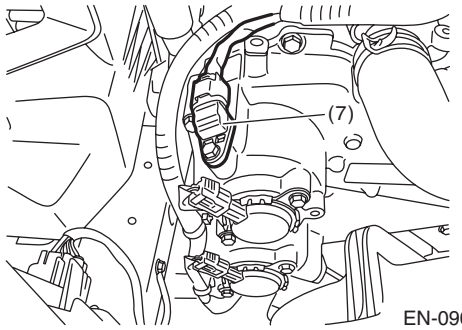
(7)
EN-09025

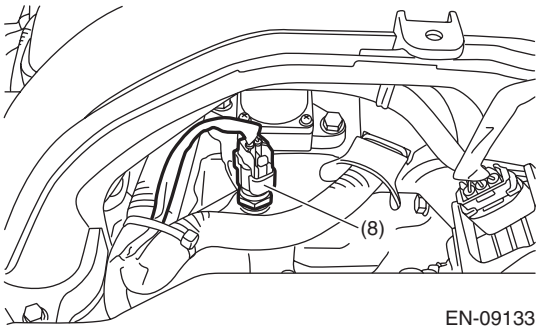
(8)
EN-09133

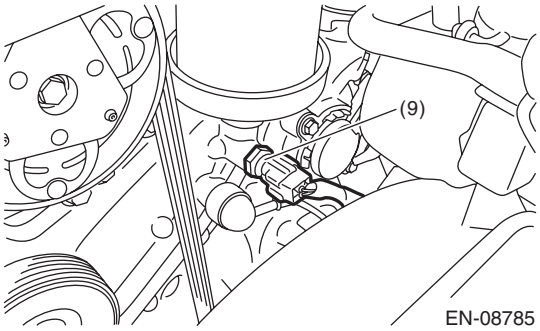
(9)
EN-08785

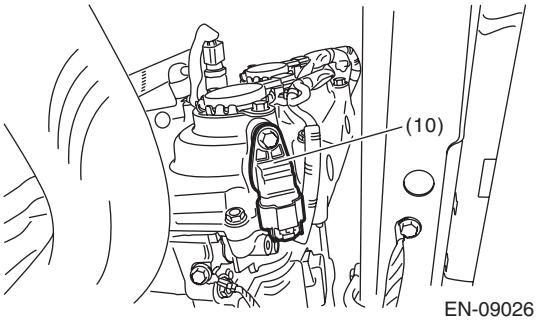
(10)
EN-09026

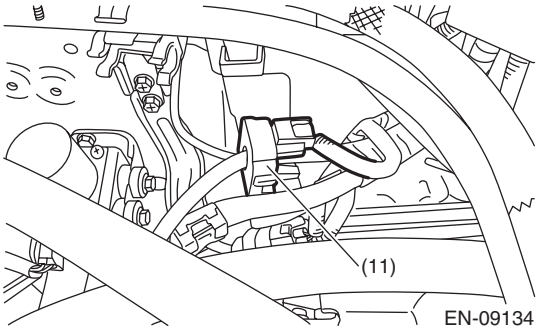
(11)
EN-09134

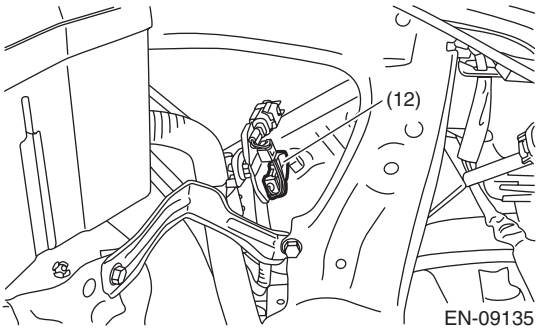
(12)
EN-09135

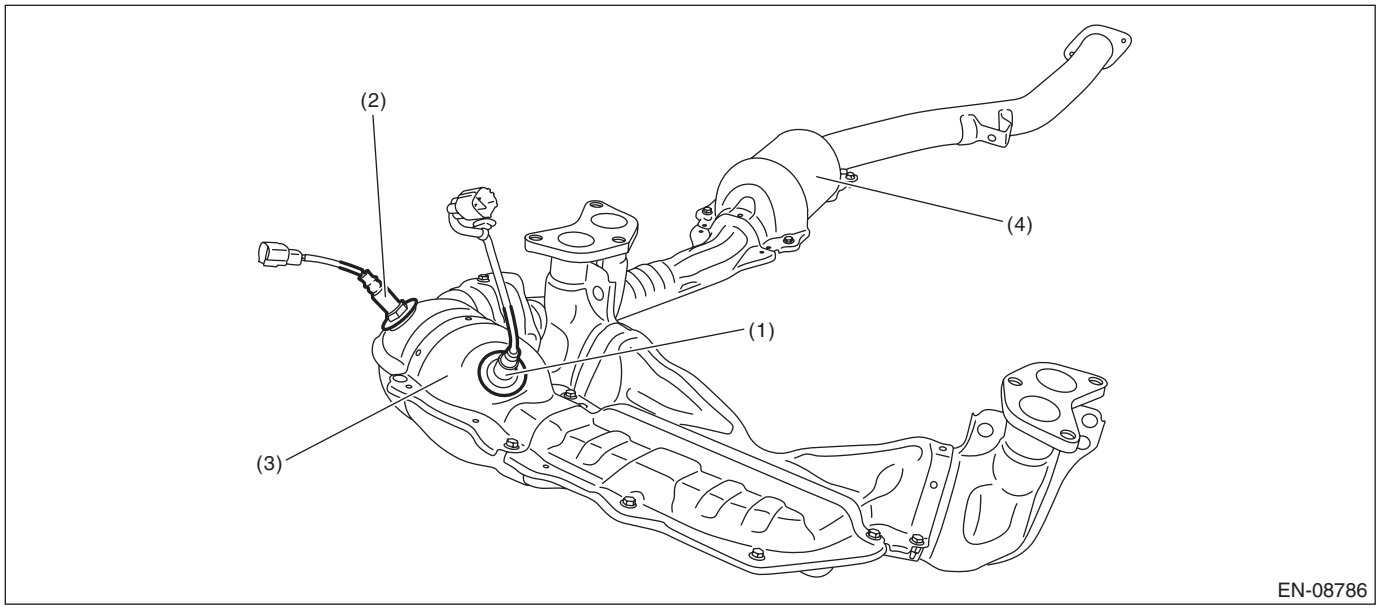

(1) Front oxygen (A/F) sensor
(2) Rear oxygen sensor
(3) Front catalytic converter
(4) Rear catalytic converter

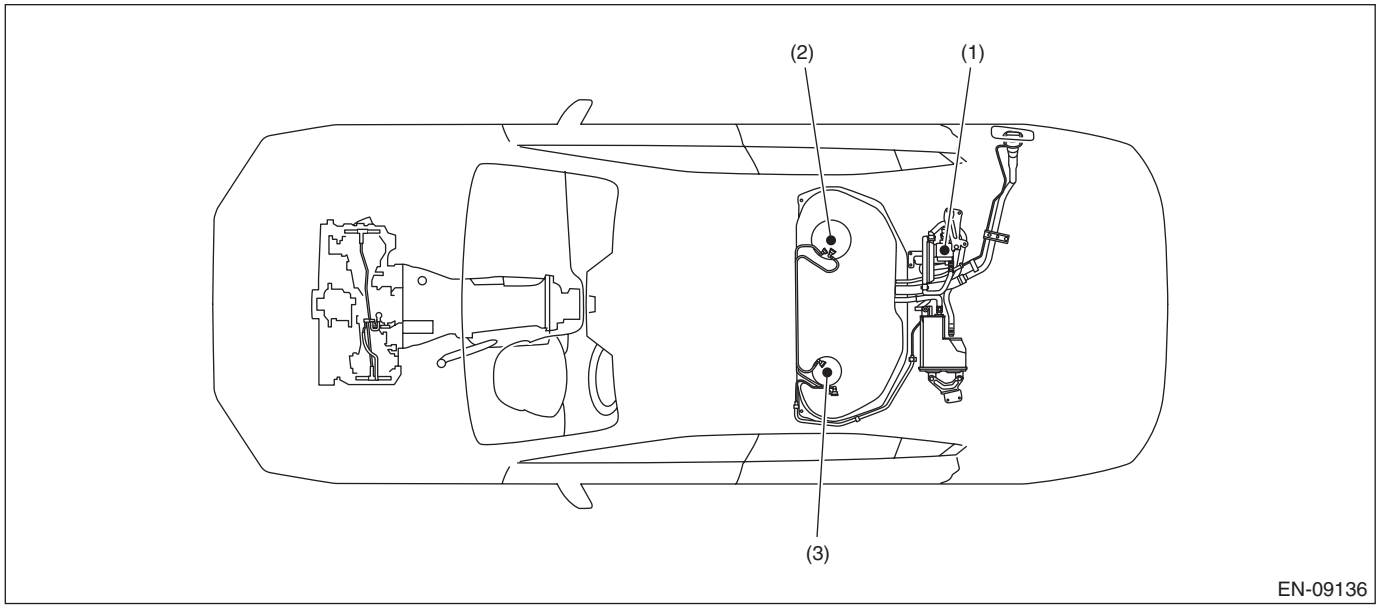

(1) Leak check valve ASSY (with built-in pressure sensor)
(2) Fuel level sensor
(3) Fuel sub level sensor

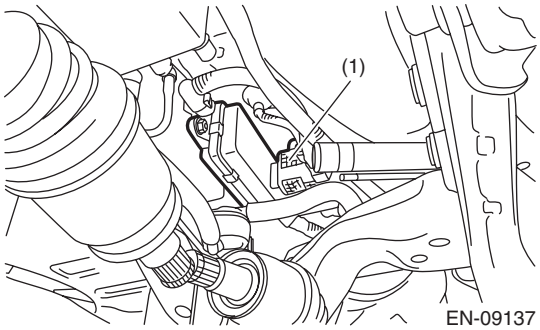

EN-09137

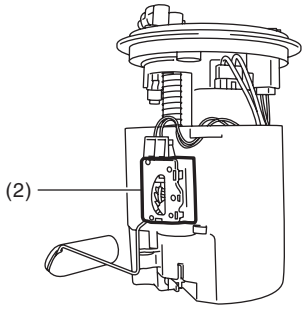

EN-08789

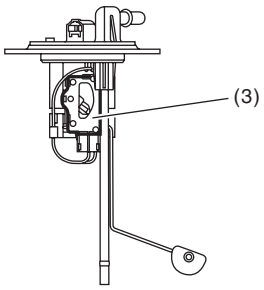

EN-08790

3. SOLENOID VALVE, ACTUATOR, EMISSION CONTROL SYSTEM PARTS AND IGNITION SYSTEM PARTS

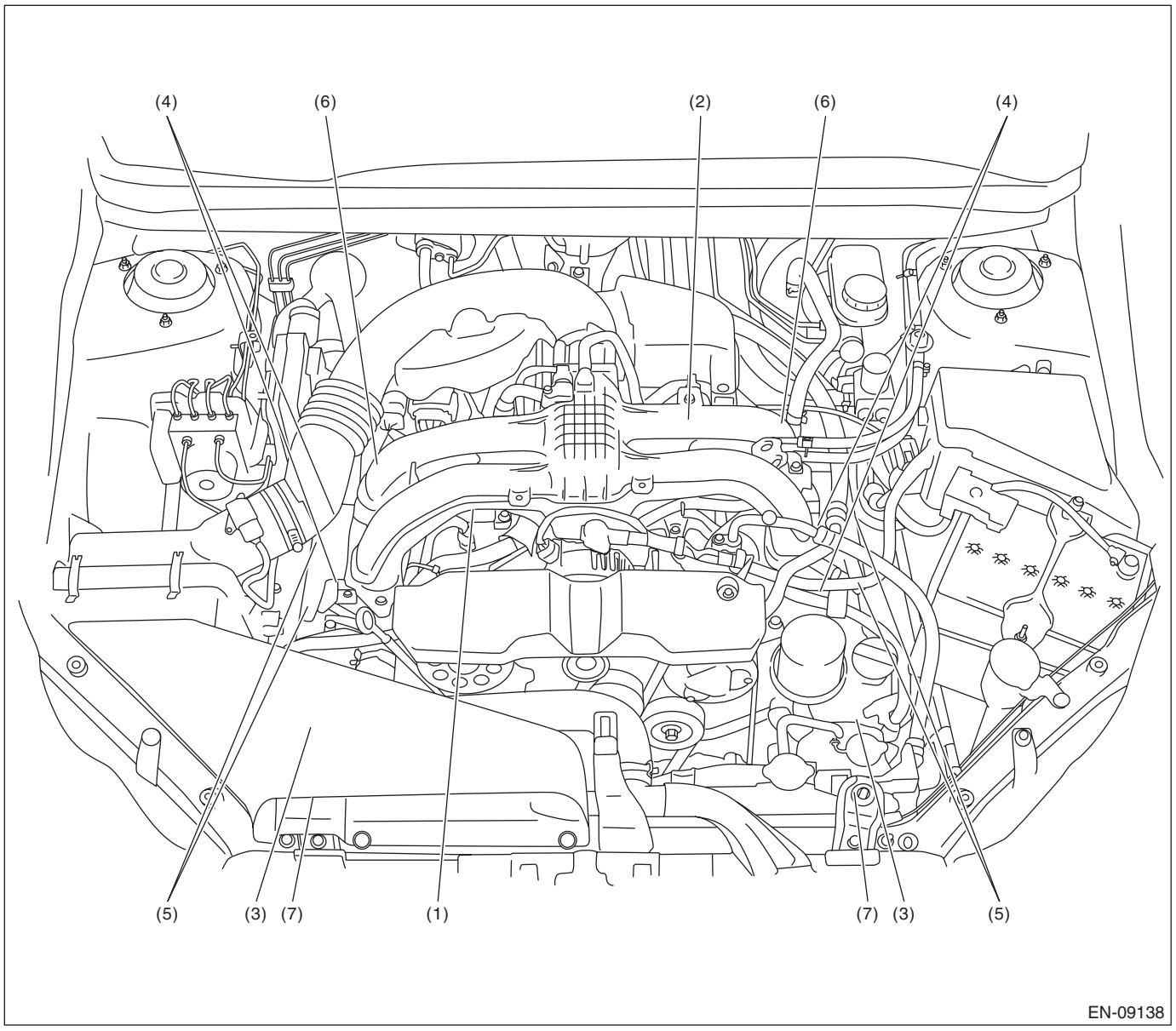

(1) EGR control valve
(2) Purge control solenoid valve
(3) Intake oil control solenoid
(4) Fuel injector
(5) Ignition coil
(6) Tumble generator valve actuator
(7) Exhaust oil control solenoid

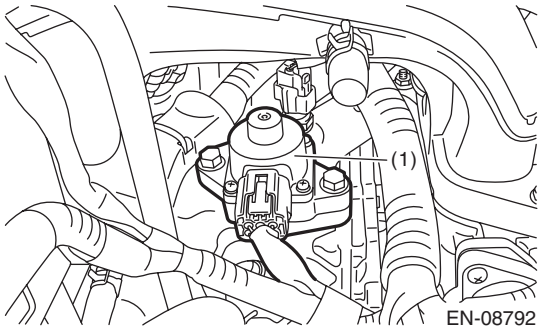
(1)
EN-08792

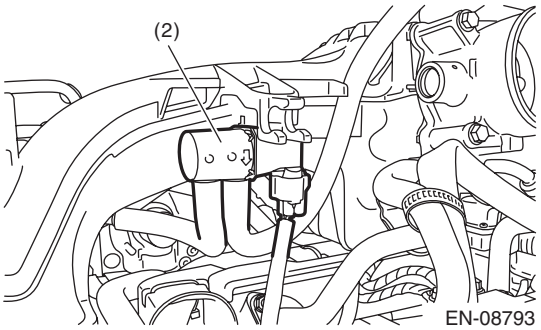
(2)
EN-08793

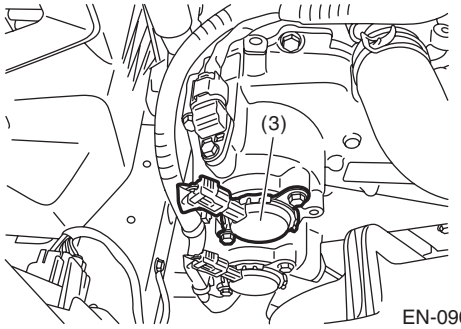
(3)
EN-09029

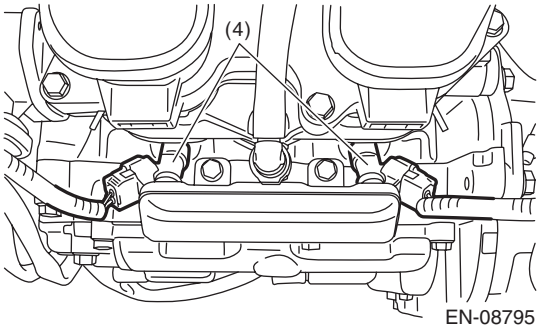
(4)
EN-08795

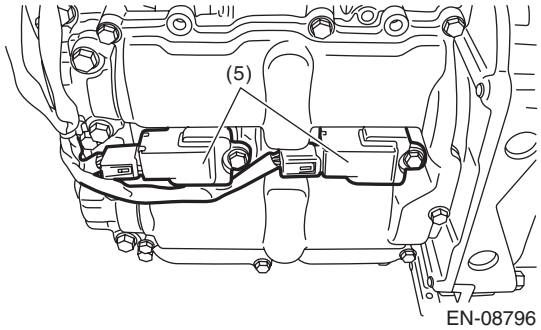
(5)
EN-08796

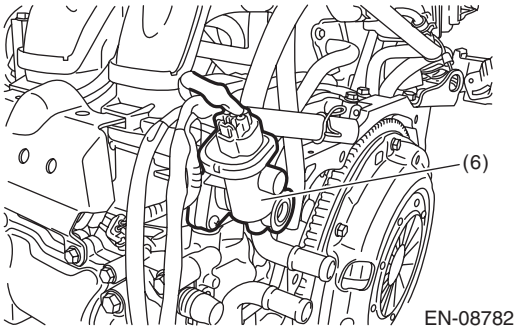
(6)
EN-08782

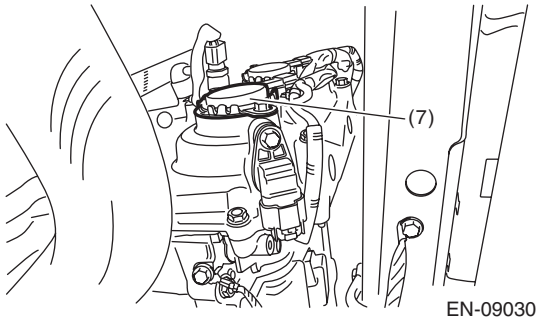
(7)
EN-09030

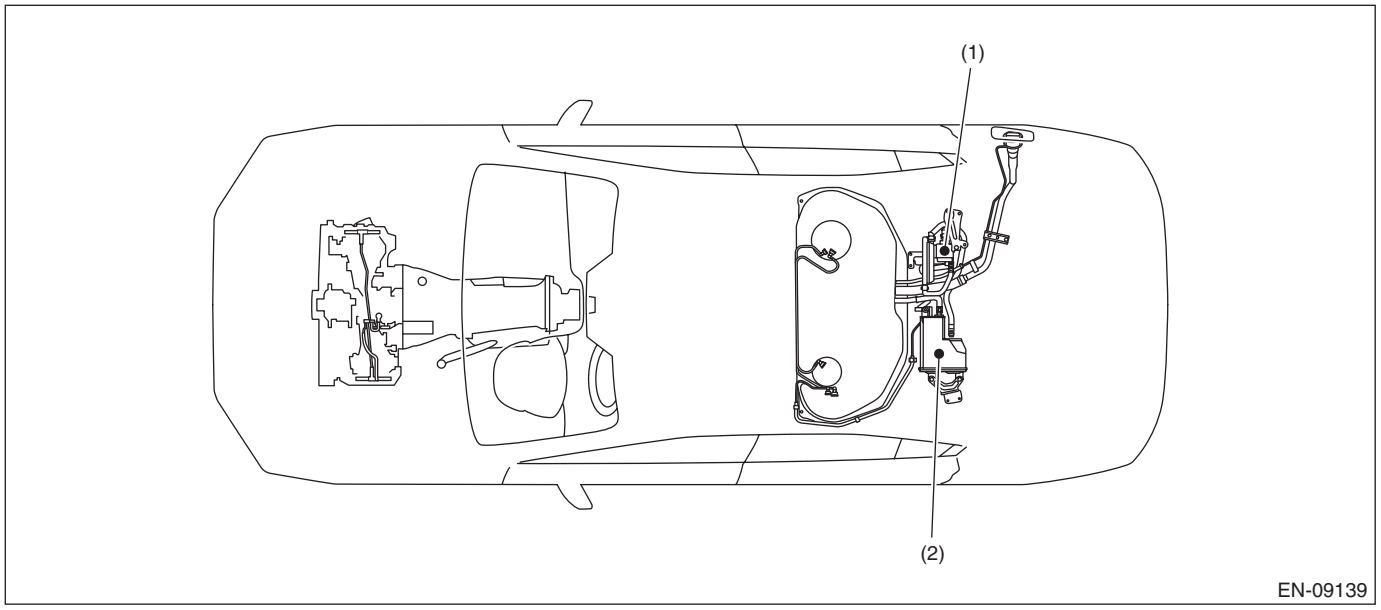

(1) Leak check valve ASSY (2) Canister

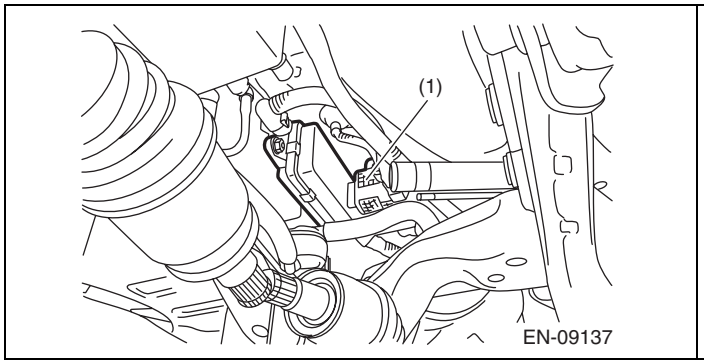

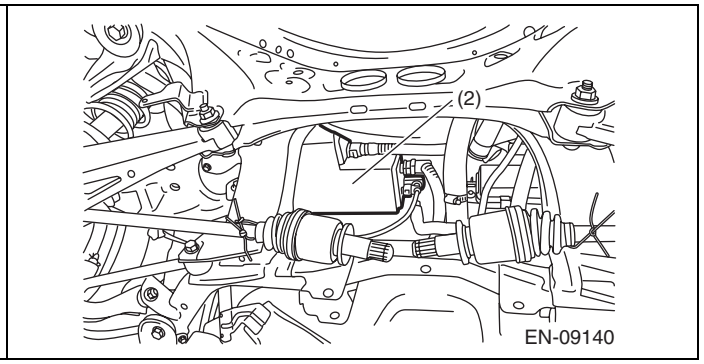

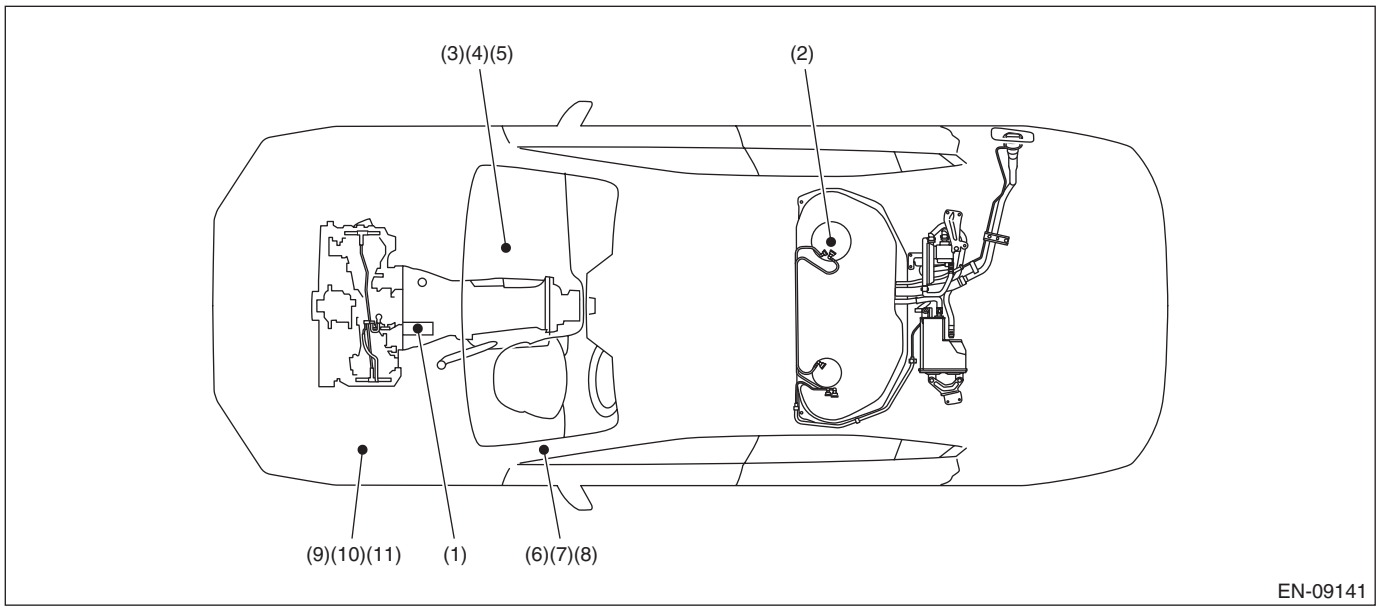

(1) Starter
(2) Fuel pump
(3) Main relay
(4) IG relay
(5) Fuel pump relay
(6) A/F, oxygen sensor relay
(7) Electronic throttle control relay
(8) Starter relay 1
(9) Radiator main fan relay 1
(10) Radiator main fan relay 2
(11) Radiator sub fan relay

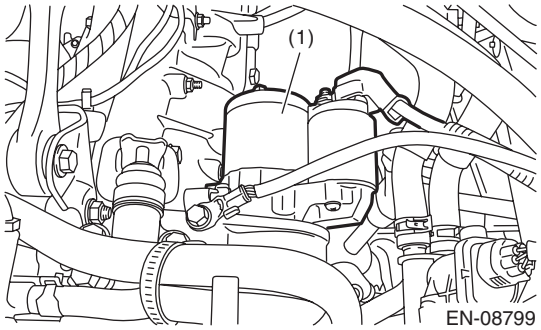
(1)
EN-08799

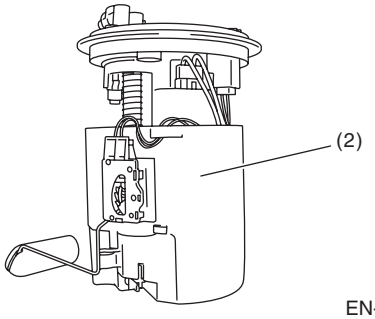
(2)
EN-08800

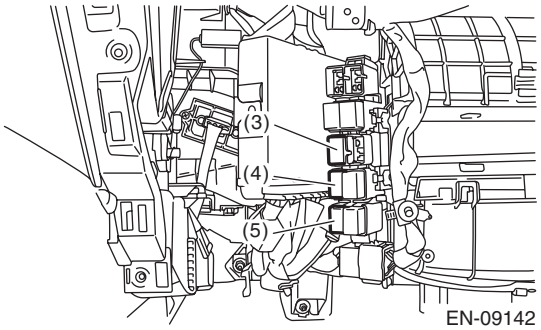
(3)
(4)
(5)
EN-09142

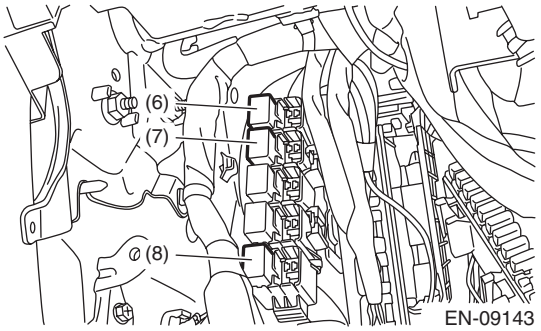
(6)
(7)
(8)
EN-09143

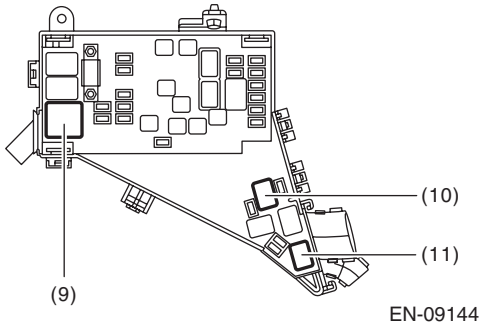
(9)
(10)
(11)
EN-09144

5. Engine Control Module (ECM) I/O Signal

A: ELECTRICAL SPECIFICATION

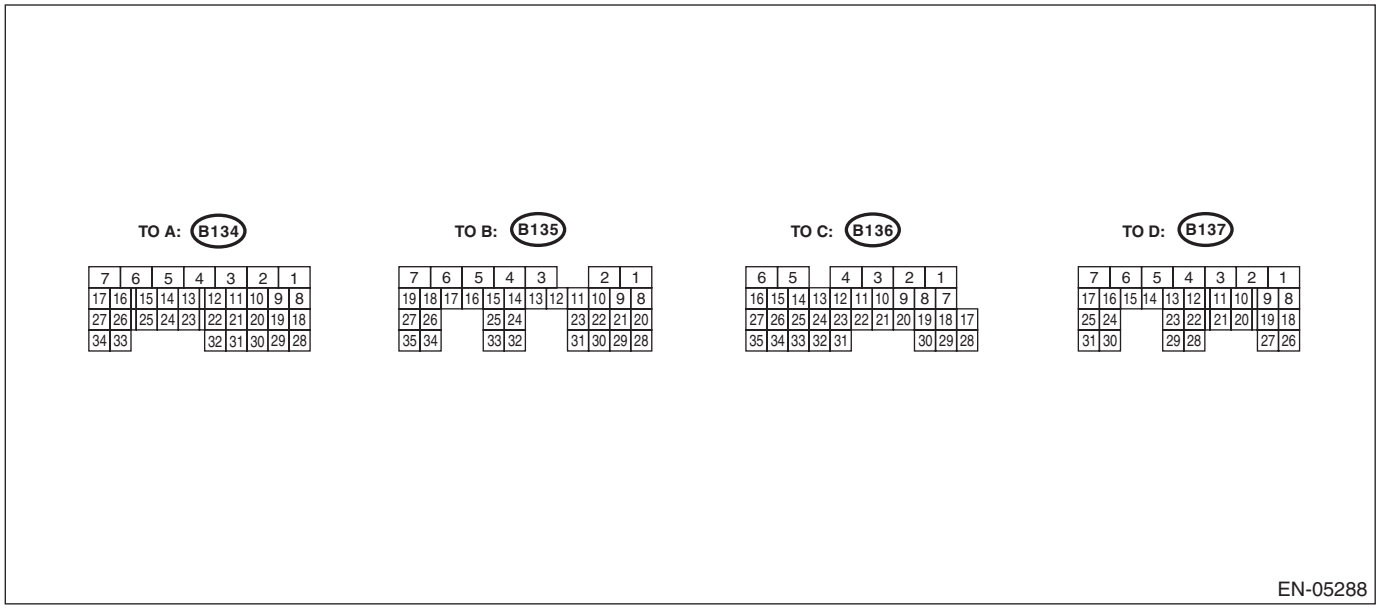

Description		Connector No.	Terminal No.	Signal (V)		Note
				Ignition SW ON (engine OFF)	Engine ON (idling)	
Crankshaft position sensor	Signal (+)	B137	17	0	–7 — +7	Waveform
	Signal (–)	B137	25	0	0	—
	Shield	B137	31	0	0	—
Front oxygen (A/F) sensor	Signal (+)	B136	19	2.8 — 3.2	2.8 — 3.2	—
	Signal (–)	B136	18	2.4 — 2.7	2.4 — 2.7	—
	Shield	B136	9	0	0	—
Rear oxygen sensor	Signal	B136	20	0	0 — 0.9	—
	Shield	B136	9	0	0	—
	Ground (sensor)	B135	30	0	0	—
Front oxygen (A/F) sensor heater	Signal 1	B136	6	—	—	Waveform
	Signal 2	B136	5	—	—	Waveform
Rear oxygen sensor heater signal		B135	6	0 — 13	—	Waveform
Engine coolant temperature sensor	Signal	B137	22	1.0 — 1.4	1.0 — 1.4	After engine is warmed up.
	Ground (sensor)	B134	29	0	0	After engine is warmed up.
Air flow sensor	Signal	B136	22	—	0.3 — 4.5	—
	Shield	B136	10	0	0	—
	Ground	B136	11	0	0	—
Intake air temperature sensor signal		B136	31	0.3 — 4.6	0.3 — 4.6	—
Engine oil temperature sensor signal		B137	21	1.0 — 1.4	1.0 — 1.4	After engine is warmed up.
Starter switch		B136	16	0	0	Cranking: 8 — 14
Ignition switch		B136	30	10 — 13	12 — 14	—
Neutral position switch		B136	35	ON: 0 OFF: 10 — 13	ON: 0 OFF: 12 — 14	—

Engine Control Module (ECM) I/O Signal

Description		Connector No.	Terminal No.	Signal (V)		Note
				Ignition SW ON (engine OFF)	Engine ON (idling)	
Delivery (test) mode switch		B136	34	10 — 13	12 — 14	When fuse is installed: 0
Knock sensor	Signal	B137	2	2.4 — 2.6	2.4 — 2.6	—
	Shield	B137	8	0	0	—
Back-up power supply		B136	2	10 — 13	12 — 14	Ignition switch “OFF”: 10 — 13
Control module power supply		B137	7	10 — 13	12 — 14	—
		B136	1	10 — 13	12 — 14	—
Sensor power supply		B134	19	5	5	—
		B135	22	5	5	—
Ignition control	#1	B134	21	0	0 or 5	Waveform
	#2	B134	22	0	0 or 5	Waveform
	#3	B134	31	0	0 or 5	Waveform
	#4	B134	32	0	0 or 5	Waveform
Fuel injector	#1	B134	10	10 — 13	1 — 14	Waveform
	#2	B134	11	10 — 13	1 — 14	Waveform
	#3	B134	12	10 — 13	1 — 14	Waveform
	#4	B134	13	10 — 13	1 — 14	Waveform
Fuel pump relay control		B136	14	ON: 0.5 or less OFF: 10 — 13	ON: 0.5 or less OFF: 12 — 14	—
A/C relay control		B135	35	ON: 0.5 or less OFF: 10 — 13	ON: 0.5 or less OFF: 12 — 14	—
A/C switch		B136	29	ON: 10 — 13 OFF: 0	ON: 12 — 14 OFF: 0	Manual A/C model
Blower fan switch		B135	19	ON: 0 OFF: 10 — 13	ON: 0 OFF: 12 — 14	Manual A/C model
A/C middle pressure switch		B136	7	ON: 0 OFF: 10 — 13	ON: 0 OFF: 12 — 14	—
Main fan relay control		B135	12	ON: 0.5 or less OFF: 10 — 13	ON: 0.5 or less OFF: 12 — 14	—
Sub fan relay control		B135	11	ON: 0.5 or less OFF: 10 — 13	ON: 0.5 or less OFF: 12 — 14	—
Purge control solenoid valve		B137	6	ON: 1 or less OFF: 10 — 13	ON: 1 or less OFF: 12 — 14	Waveform
EGR control valve	Signal 1	B134	8	0 or 10 — 13	0 or 12 — 14	Waveform
	Signal 2	B134	9	0 or 10 — 13	0 or 12 — 14	Waveform
	Signal 3	B134	20	0 or 10 — 13	0 or 12 — 14	Waveform
	Signal 4	B134	30	0 or 10 — 13	0 or 12 — 14	Waveform
Manifold absolute pressure sensor	Signal	B137	20	2.4 — 3.8	1.1 — 1.6	—
	Power supply	B134	19	5	5	
	Ground (sensor)	B134	29	0	0	
SSM communication line		B135	14	1 or less ←→ 4 or more	1 or less ←→ 4 or more	—

Engine Control Module (ECM) I/O Signal

Description		Connector No.	Terminal No.	Signal (V)		Note
				Ignition SW ON (engine OFF)	Engine ON (idling)	
Electronic Throttle	Main	B134	18	Approx. 0.7	Approx. 0.6 — 0.7 (After engine is warmed up.)	Fully closed: Approx. 0.6 Fully open: Approx. 4.0
	Sub	B134	28	Approx. 1.6	Approx. 1.5 — 1.6 (After engine is warmed up.)	Fully closed: Approx. 1.5 Fully open: Approx. 4.2
	Power supply	B134	19	5	5	—
	Ground (sensor)	B134	29	0	0	—
Electronic throttle control motor (+)		B134	2	Duty waveform	Duty waveform	Drive frequency: 500 Hz
Electronic throttle control motor (–)		B134	1	Duty waveform	Duty waveform	Drive frequency: 500 Hz
Electronic throttle control motor power supply		B135	7	10 — 13	12 — 14	—
Electronic throttle control motor relay		B135	17	ON: 0 OFF: 10 — 13	ON: 0 OFF: 12 — 14	When ignition switch is turned to ON: ON
Intake oil control solenoid (LH)	Signal (+)	B134	17	ON: 10 — 13 OFF: 0	ON: 12 — 14 OFF: 0	—
	Signal (–)	B134	16	0	0	—
Intake oil control solenoid (RH)	Signal (+)	B134	34	ON: 10 — 13 OFF: 0	ON: 12 — 14 OFF: 0	—
	Signal (–)	B134	27	0	0	—
Exhaust oil control solenoid (LH)	Signal (+)	B134	5	ON: 10 — 13 OFF: 0	ON: 12 — 14 OFF: 0	—
	Signal (–)	B134	14	0	0	—
Exhaust oil control solenoid (RH)	Signal (+)	B134	7	ON: 10 — 13 OFF: 0	ON: 12 — 14 OFF: 0	—
	Signal (–)	B134	15	0	0	—
Intake camshaft position sensor (LH)		B137	16	0 or 5	0 or 5	Waveform
Intake camshaft position sensor (RH)		B137	24	0 or 5	0 or 5	Waveform
Exhaust camshaft position sensor (LH)		B137	29	0 or 5	0 or 5	Waveform
Exhaust camshaft position sensor (RH)		B137	23	0 or 5	0 or 5	Waveform
Camshaft position sensor ground		B137	30	0	0	—

Engine Control Module (ECM) I/O Signal

Description		Connector No.	Terminal No.	Signal (V)		Note
				Ignition SW ON (engine OFF)	Engine ON (idling)	
Accelerator pedal position sensor	Main sensor signal	B135	23	Fully closed: 0.4 — 1.0 Fully opened: 2.4 — 3.7	Fully closed: 0.4 — 1.0 Fully opened: 2.4 — 3.7	—
	Shield	B136	4	0	0	—
	Main power supply	B135	21	5	5	—
	Ground (main sensor)	B135	29	0	0	—
	Sub signal sensor	B135	31	Fully closed: 0.3 — 1.1 Fully opened: 2.3 — 3.8	Fully closed: 0.3 — 1.1 Fully opened: 2.3 — 3.8	—
	Sub power supply	B135	22	5	5	—
	Ground (sub sensor)	B135	30	0	0	—
Starter relay		B135	26	ON: 0 OFF: 10 — 13	ON: 0 OFF: 12 — 14	ON: cranking
Clutch switch		B135	9	When clutch pedal is depressed: 0 When clutch pedal is released: 10 — 13	When clutch pedal is depressed: 0 When clutch pedal is released: 12 — 14	MT model
Brake switch 1 (brake switch)		B136	15	When brake pedal is depressed: 0 When brake pedal is released: 10 — 13	When brake pedal is depressed: 0 When brake pedal is released: 12 — 14	—
Brake switch 2 (stop light switch)		B136	3	When brake pedal is depressed: 10 — 13 When brake pedal is released: 0	When brake pedal is depressed: 12 — 14 When brake pedal is released: 0	—
Cruise control command switch		B136	12	When operating nothing: 3.5 — 4.5 When operating RES/ACC: 2.5 — 3.5 When operating following distance setting: 1.5 — 2.5 When operating SET/COAST: 0.5 — 1.5 When operating CANCEL: 0 — 0.5	When operating nothing: 3.5 — 4.5 When operating RES/ACC: 2.5 — 3.5 When operating following distance setting: 1.5 — 2.5 When operating SET/COAST: 0.5 — 1.5 When operating CANCEL: 0 — 0.5	—
Cruise control main switch		B136	13	ON: 0 OFF: 5	ON: 0 OFF: 5	—
CAN communication	(Hi)	B136	17	—	—	—
	(Lo)	B136	28	—	—	—
Self-shutoff control		B135	13	0	0	—
Generator control		B135	18	0 — 6.5	0 — 6.5	—
Battery current sensor		B136	32	2.6 — 2.8	2.4 — 2.6	After engine is warmed up. (New battery)

Description		Connector No.	Terminal No.	Signal (V)		Note
				Ignition SW ON (engine OFF)	Engine ON (idling)	
Battery temperature sensor		B136	24	1.1 — 2.4	1.1 — 2.4	When battery temperature is 20 — 50°C (68 — 122°F)
Oil level switch		B136	26	0	0	Oil level Low: 10 — 14
Tumble generator valve opening angle switch signal (LH)		B137	10	Fully closed: 0.5 or less Fully opened: 9.5 or more	Fully closed: 0.5 or less Fully opened: 9.5 or more	—
Tumble generator valve (LH open)		B134	23	0 or 10 — 13	0 or 12 — 14	—
Tumble generator valve (LH closed)		B134	24	0 or 10 — 13	0 or 12 — 14	—
Tumble generator valve opening angle switch signal (RH)		B137	11	Fully closed: 0.5 or less Fully opened: 9.5 or more	Fully closed: 0.5 or less Fully opened: 9.5 or more	—
Tumble generator valve (RH open)		B134	25	0 or 10 — 13	0 or 12 — 14	—
Tumble generator valve (RH closed)		B134	26	0 or 10 — 13	0 or 12 — 14	—
Immobilizer	Communication 1	B135	25	—	—	—
	Communication 2	B135	24	—	—	—
ELCM	Switching valve	B135	4	10 — 13	12 — 14	Operating: 0
	Pressure sensor	B136	21	1 — 4	1 — 4	When ignition switch is turned to ON: atmospheric pressure
	Vacuum pump	B137	27	10 — 13	12 — 14	Operating: 0
Ground	Sensor	B134	29	0	0	—
		B135	30	0	0	—
	Engine 1	B134	6	0	0	—
	Engine 2	B134	4	0	0	—
	Engine 3	B134	3	0	0	—
	Engine 4	B137	1	0	0	—
	Engine 5	B137	3	0	0	—
	Body	B136	4	0	0	—

Input/output name:
- Crankshaft position sensor
- Intake camshaft position sensor RH
- Intake camshaft position sensor LH
- Exhaust camshaft position sensor RH
- Exhaust camshaft position sensor LH

Measuring condition:
- After warming-up
- At idling

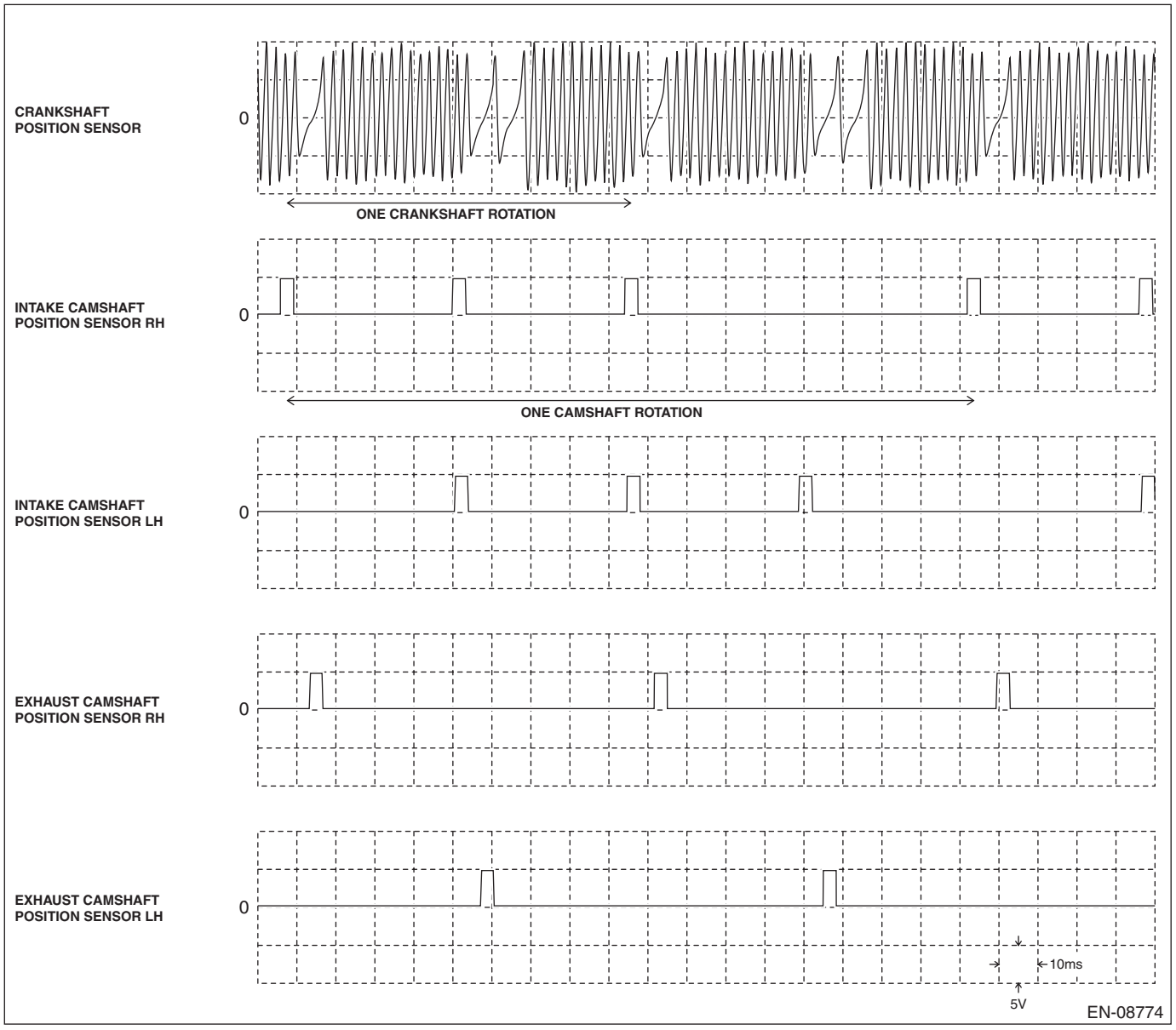

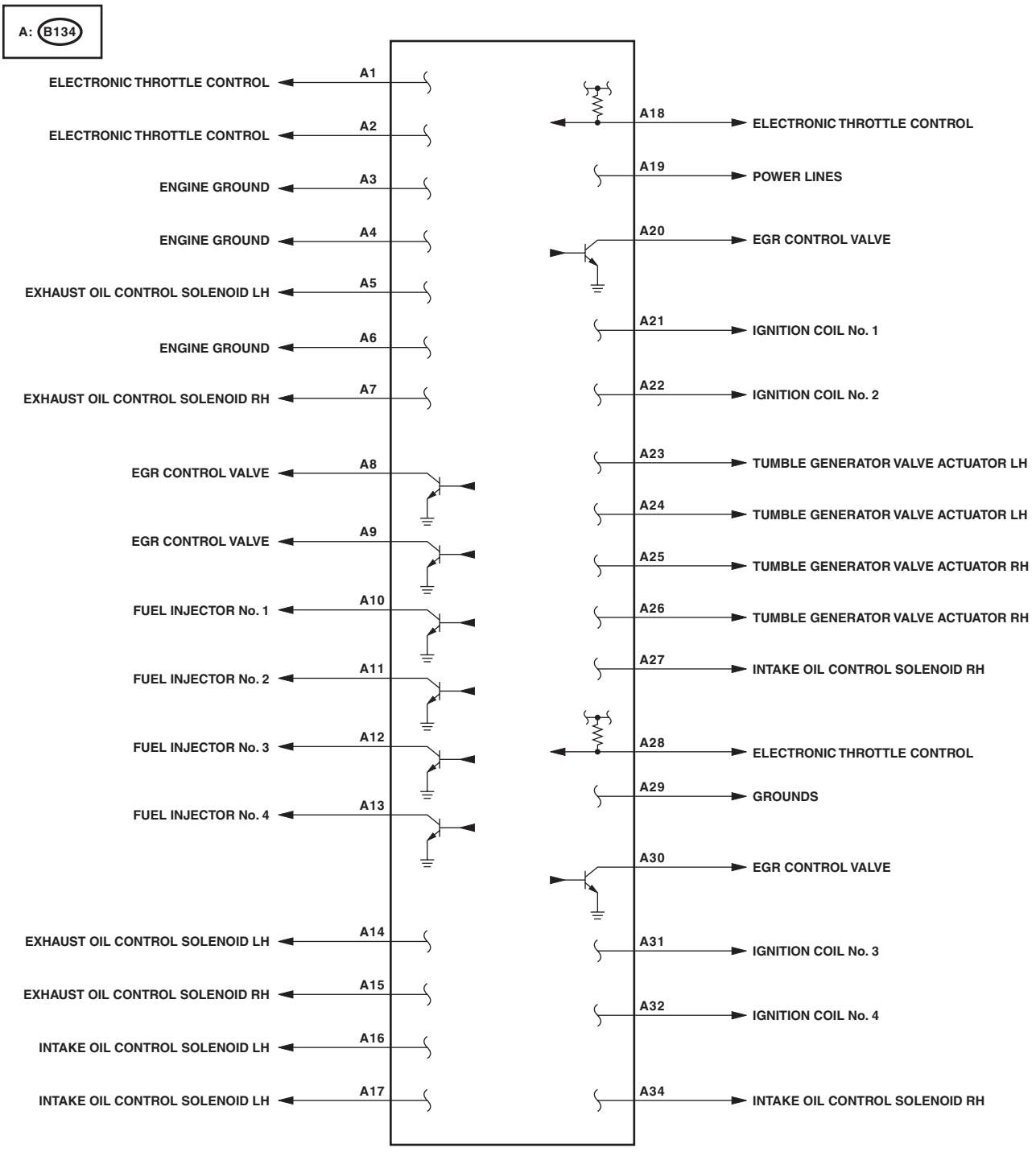
A: B134
A1
ELECTRONIC THROTTLE CONTROL
A2
ELECTRONIC THROTTLE CONTROL
A3
ENGINE GROUND
A4
ENGINE GROUND
A5
EXHAUST OIL CONTROL SOLENOID LH
A6
ENGINE GROUND
A7
EXHAUST OIL CONTROL SOLENOID RH
A8
EGR CONTROL VALVE
A9
EGR CONTROL VALVE
A10
FUEL INJECTOR No. 1
A11
FUEL INJECTOR No. 2
A12
FUEL INJECTOR No. 3
A13
FUEL INJECTOR No. 4
A14
EXHAUST OIL CONTROL SOLENOID LH
A15
EXHAUST OIL CONTROL SOLENOID RH
A16
INTAKE OIL CONTROL SOLENOID LH
A17
INTAKE OIL CONTROL SOLENOID LH
A18
ELECTRONIC THROTTLE CONTROL
A19
POWER LINES
A20
EGR CONTROL VALVE
A21
IGNITION COIL No. 1
A22
IGNITION COIL No. 2
A23
TUMBLE GENERATOR VALVE ACTUATOR LH
A24
TUMBLE GENERATOR VALVE ACTUATOR LH
A25
TUMBLE GENERATOR VALVE ACTUATOR RH
A26
TUMBLE GENERATOR VALVE ACTUATOR RH
A27
INTAKE OIL CONTROL SOLENOID RH
A28
ELECTRONIC THROTTLE CONTROL
A29
GROUNDS
A30
EGR CONTROL VALVE
A31
IGNITION COIL No. 3
A32
IGNITION COIL No. 4
A34
INTAKE OIL CONTROL SOLENOID RH

EN-09548

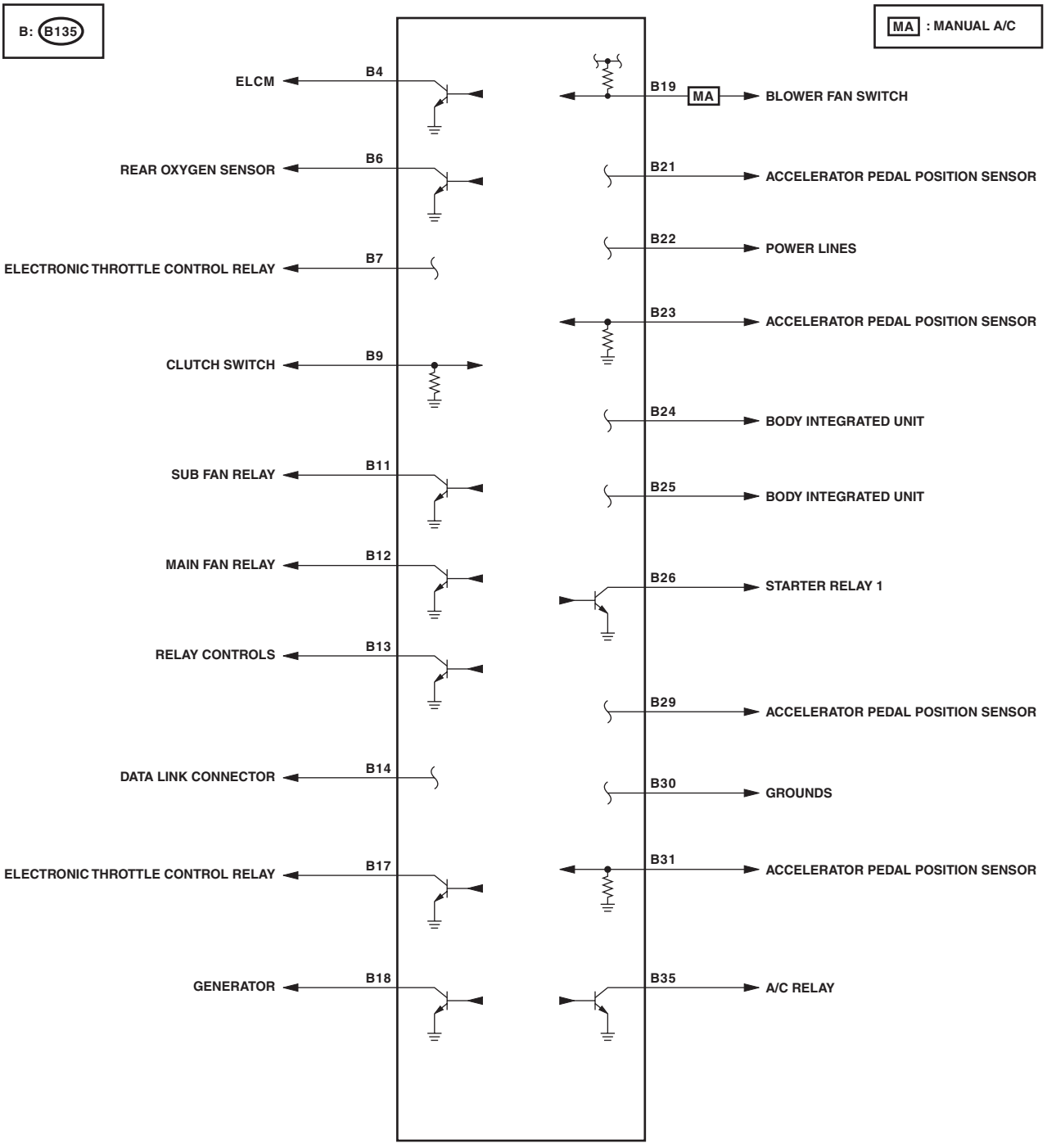
B: B135
MA : MANUAL A/C
ELCM
B4
REAR OXYGEN SENSOR
B6
ELECTRONIC THROTTLE CONTROL RELAY
B7
CLUTCH SWITCH
B9
SUB FAN RELAY
B11
MAIN FAN RELAY
B12
RELAY CONTROLS
B13
DATA LINK CONNECTOR
B14
ELECTRONIC THROTTLE CONTROL RELAY
B17
GENERATOR
B18
B19
MA
BLOWER FAN SWITCH
B21
ACCELERATOR PEDAL POSITION SENSOR
B22
POWER LINES
B23
ACCELERATOR PEDAL POSITION SENSOR
B24
BODY INTEGRATED UNIT
B25
BODY INTEGRATED UNIT
B26
STARTER RELAY 1
B29
ACCELERATOR PEDAL POSITION SENSOR
B30
GROUNDS
B31
ACCELERATOR PEDAL POSITION SENSOR
B35
A/C RELAY

EN-09219

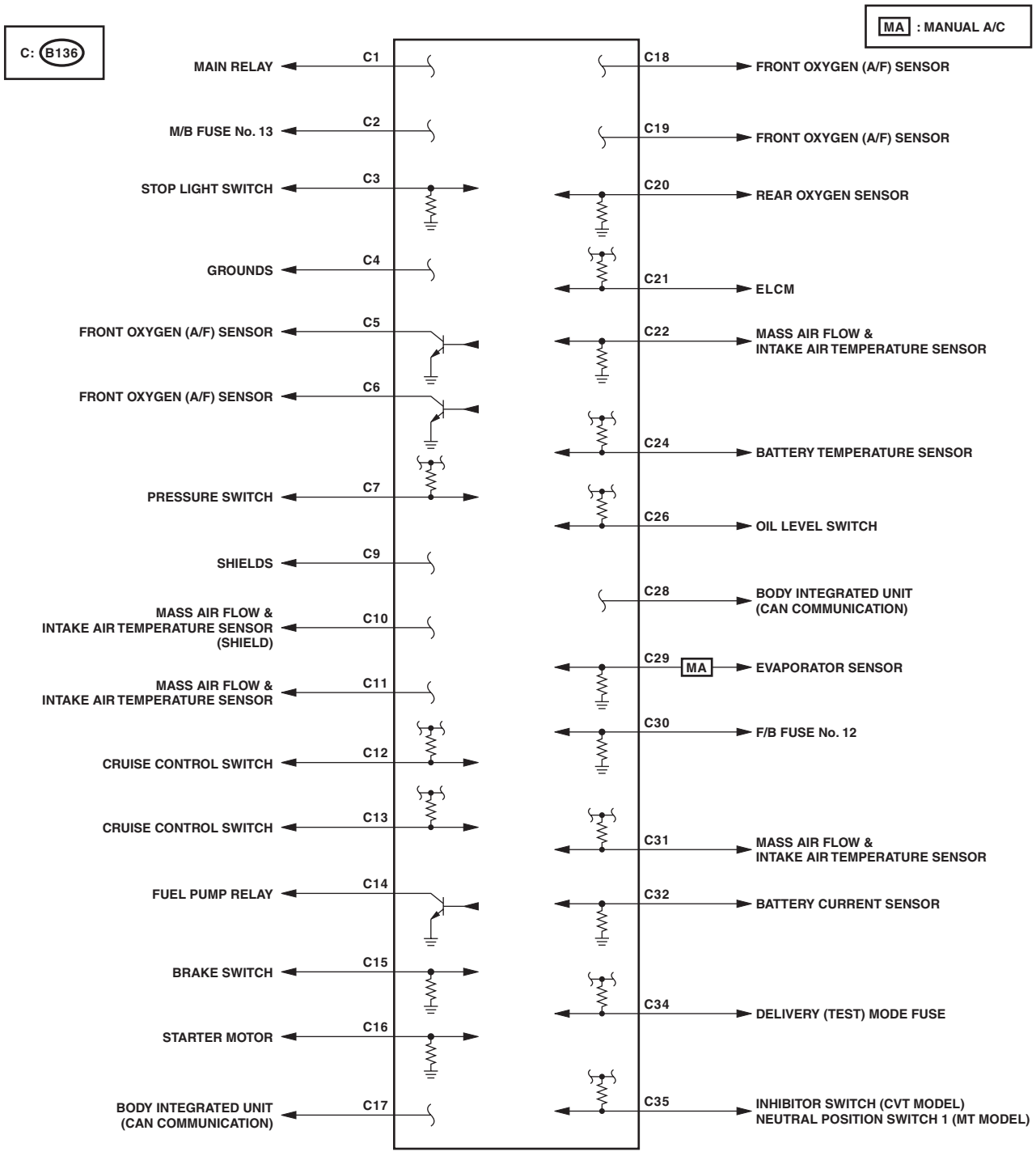
C: B136
MA : MANUAL A/C
MAIN RELAY
C1
M/B FUSE No. 13
C2
STOP LIGHT SWITCH
C3
GROUNDS
C4
FRONT OXYGEN (A/F) SENSOR
C5
FRONT OXYGEN (A/F) SENSOR
C6
PRESSURE SWITCH
C7
SHIELDS
C9
MASS AIR FLOW & INTAKE AIR TEMPERATURE SENSOR (SHIELD)
C10
MASS AIR FLOW & INTAKE AIR TEMPERATURE SENSOR
C11
CRUISE CONTROL SWITCH
C12
CRUISE CONTROL SWITCH
C13
FUEL PUMP RELAY
C14
BRAKE SWITCH
C15
STARTER MOTOR
C16
BODY INTEGRATED UNIT (CAN COMMUNICATION)
C17
C18
FRONT OXYGEN (A/F) SENSOR
C19
FRONT OXYGEN (A/F) SENSOR
C20
REAR OXYGEN SENSOR
C21
ELCM
C22
MASS AIR FLOW & INTAKE AIR TEMPERATURE SENSOR
C24
BATTERY TEMPERATURE SENSOR
C26
OIL LEVEL SWITCH
C28
BODY INTEGRATED UNIT (CAN COMMUNICATION)
C29
MA
EVAPORATOR SENSOR
C30
F/B FUSE No. 12
C31
MASS AIR FLOW & INTAKE AIR TEMPERATURE SENSOR
C32
BATTERY CURRENT SENSOR
C34
DELIVERY (TEST) MODE FUSE
C35
INHIBITOR SWITCH (CVT MODEL)
NEUTRAL POSITION SWITCH 1 (MT MODEL)

EN-09220

Engine Control Module (ECM) I/O Signal

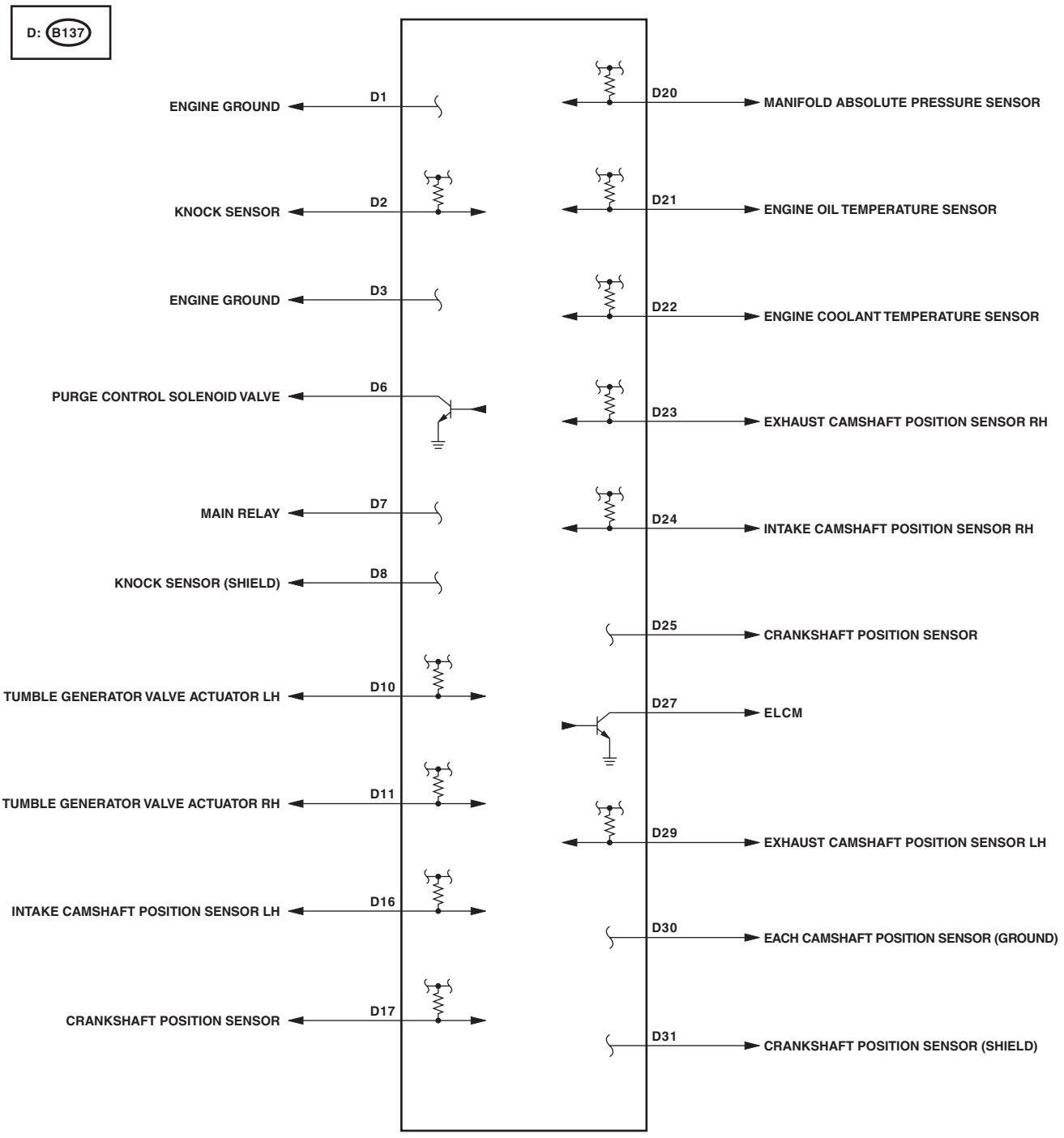

EN-09221

6. Engine Condition Data

A: ELECTRICAL SPECIFICATION

Contents	Specifications
Engine load	13.6 — 40.5 (%): Idling
	14.7 — 29.8 (%): 2,500 rpm racing

Measuring condition:
- After engine is warmed up.
- Set the select lever in “P” range or “N” range, or the shift lever in neutral.
- Turn the A/C to OFF.
- Turn all the accessory switches to OFF.

7. Data Link Connector

A: NOTE

This connector is used for Subaru Select Monitor.

CAUTION:
Do not connect any scan tools other than Subaru Select Monitor or general scan tool because the circuit for Subaru Select Monitor may be damaged.

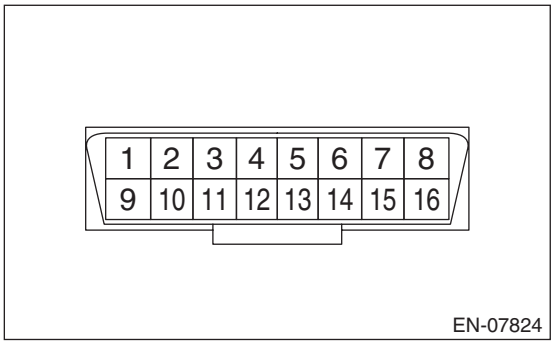

Terminal No.	Contents	Terminal No.	Contents
1	Blank	9	Blank
2	Blank	10	Blank
3	Blank	11	Blank
4	Ground	12	Blank
5	Ground	13	Blank
6	CAN communication (Hi)	14	CAN communication (Lo)
7	Subaru Select Monitor signal	15	Blank
8	Blank	16	Power supply

8. General Scan Tool

A: OPERATION

1. HOW TO USE GENERAL SCAN TOOL

1) Prepare a scan tool (general scan tool) required by SAE J1978.
2) Connect the general scan tool to data link connector located in the lower portion of the instrument panel (on the driver's side).

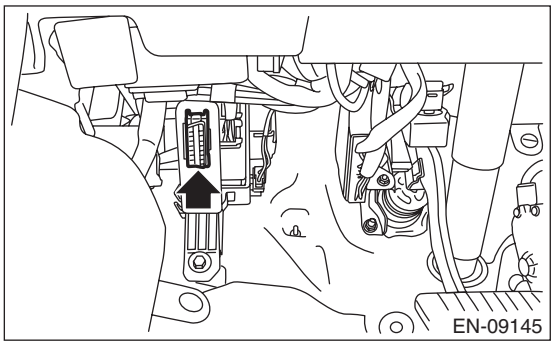

3) Using the general scan tool, call up each data. General scan tool functions consist of:
   (1) MODE $01: Current powertrain diagnostic data
   (2) MODE $02: Powertrain freeze frame data
   (3) MODE $03: Emission-related powertrain DTC
   (4) MODE $04: Clear/Reset emission-related diagnostic information
   (5) MODE $06: Request on-board monitoring test results for intermittently monitored systems
   (6) MODE $07: Request on-board monitoring test results for continuously monitored systems
   (7) MODE $08: Request control for on-board system, test, and component
   (8) MODE $09: Request vehicle information
4) Read out the data according to repair procedures. (For detailed operation procedure, refer to the general scan tool operation manual.)

NOTE:
For details concerning DTC, refer to "List of Diagnostic Trouble Code (DTC)". <Ref. to EN(H4DO w/o HEV)(diag)-83, List of Diagnostic Trouble Code (DTC).>

2. MODE $01: (CURRENT POWERTRAIN DIAGNOSTIC DATA)

Refer to data denoting the current operating condition of analog input/output, digital input/output or the powertrain system.
A list of the support data and PID (Parameter Identification) codes are shown in the following table.

PID	Data	Unit of measure
$01	Number of emission-related powertrain DTC, and malfunction indicator light status and diagnosis support information	—
$03	Fuel system control status	—
$04	Calculated engine load value	%
$05	Engine coolant temperature	°C
$06	Short term fuel trim	%
$07	Long term fuel trim	%
$0B	Intake manifold absolute pressure	kPa
$0C	Engine speed	rpm
$0D	Vehicle speed	MPH
$0E	Ignition timing advance	°
$0F	Intake air temperature	°C
$10	Intake air amount	g/s
$11	Throttle valve opening angle	%
$13	Air fuel ratio sensor	—
$15	Oxygen sensor output voltage and short term fuel trim associated with oxygen sensor (Bank 1 Sensor 2)	V and %
$1C	Supporting OBD system	—
$1F	Elapsed time after starting the engine	sec
$21	Travel distance after the malfunction indicator light illuminates	miles
$24	A/F value and A/F sensor output voltage (Bank 1 Sensor 1)	— and V
$2C	Target EGR	%
$2D	EGR deviation	%
$2E	Evaporative purge	%
$2F	Fuel level	%
$30	Number of warm ups after DTC clear	time
$31	Travel distance after DTC clear	miles
$33	Barometric pressure	kPa
$34	A/F value and A/F sensor current (Bank 1 Sensor 1)	— and mA
$3C	Catalyst temperature #1	°C
$41	Diagnostic monitor of each drive cycle	—
$42	ECM power voltage	V
$43	Absolute load	%
$44	A/F target lambda	—
$45	Relative throttle opening angle	%
$46	Ambient temperature	°C
$47	Absolute throttle opening angle 2	%
$49	Absolute accelerator opening angle 1	%
$4A	Absolute accelerator opening angle 2	%
$4C	Target throttle opening angle	%
$4D	Engine operating time while malfunction indicator lit	min
$4E	Elapsed time after DTC clear	min
$51	Fuel used	—
$53	ELCM pressure	—
$5A	Relative accelerator opening angle	%
$5C	Engine oil temperature	°C
$65	Neutral status	—

NOTE:
Refer to general scan tool manufacturer's operation manual to access current powertrain diagnostic data (MODE $01).

3. MODE $02 (POWERTRAIN FREEZE FRAME DATA)

Refer to data denoting the operating condition when trouble is detected by on-board diagnosis system.
A list of the support data and PID (Parameter Identification) codes are shown in the following table.

PID	Data	Unit of measure
$02	DTC that caused freeze frame data to be stored	—
$03	Fuel system control status	—
$04	Calculated engine load value	%
$05	Engine coolant temperature	°C
$06	Short term fuel trim (Bank 1 Sensor 1)	%
$07	Long term fuel trim (Bank 1 Sensor 1)	%
$0B	Intake manifold absolute pressure	kPa
$0C	Engine speed	rpm
$0D	Vehicle speed	MPH
$0E	Ignition timing advance	°
$0F	Intake air temperature	°C
$10	Intake air amount	g/s
$11	Throttle valve opening angle	%
$13	Air fuel ratio sensor	—
$15	Oxygen sensor output voltage and short term fuel trim associated with oxygen sensor (Bank 1 Sensor 2)	V and %
$1C	Supporting OBD system	—
$1F	Elapsed time after starting the engine	sec
$2C	Target EGR	%
$2D	EGR deviation	%
$2E	Evaporative purge	%
$2F	Fuel level	%
$33	Barometric pressure	kPa
$42	ECM power voltage	V
$43	Absolute load	%
$44	A/F target lambda	—
$45	Relative throttle opening angle	%
$46	Ambient temperature	°C
$47	Absolute throttle opening angle 2	%
$49	Absolute accelerator opening angle 1	%
$4A	Absolute accelerator opening angle 2	%
$4C	Target throttle opening angle	%
$65	Neutral status	—

NOTE:
Refer to general scan tool manufacturer's instruction manual to access freeze frame data (MODE $02).

4. MODE $03 (EMISSION-RELATED POWERTRAIN DTC)

Refer to "List of Diagnostic Trouble Code (DTC)" for information about data denoting emission-related powertrain DTC. <Ref. to EN(H4DO w/o HEV)(diag)-83, List of Diagnostic Trouble Code (DTC).>

5. MODE $04 (CLEAR/RESET EMISSION-RELATED DIAGNOSTIC INFORMATION)

Refer to the mode used to clear or reset emission-related diagnostic information.

NOTE:
Refer to general scan tool manufacturer's instruction manual to clear the emission-related diagnostic information (MODE $04).

6. MODE $06

Refer to diagnostic value of troubleshooting and data of test limit indicated on the support data bit sequence table. A list of the support data is shown in the following table.

NOTE:
Some items are not displayed according to the specifications.

OBDMID	TID	SID	Diagnostic item
$01	$84	$1E	A/F sensor range failure (Bank 1 Sensor 1)
	$85	$1E	
	$86	$20	A/F sensor response failure (Bank 1 Sensor 1)
	$91	$20	
	$92	$10	
	$A3	$20	
	$A4	$10	
	$AC	$10	
	$AD	$10	
	$AE	$10	
	$AF	$10	
	$CD	$20	
	$CF	$20	
	$DF	$10	
$02	$07	$0B	Oxygen sensor drop failure (Bank 1 Sensor 2)
	$08	$0B	
	$05	$10	Oxygen sensor response failure (Bank 1 Sensor 2)
	$06	$10	
	$BD	$10	
	$D1	$10	Oxygen sensor delay failure (Bank 1 Sensor 2)
	$D2	$01	
$21	$89	$20	Catalyst deterioration diagnosis (Bank 1)
$31	$8A	$FD	EGR system diagnosis
$35	$8B	$9D	VVT monitor (Bank 1)
	$8C	$9D	
	$8D	$9D	
	$8E	$9D	
	$D3	$9D	
	$D4	$9D	
	$D5	$9D	
	$D6	$9D	
$36	$8B	$9D	VVT monitor (Bank 2)
	$8C	$9D	
	$8D	$9D	
	$8E	$9D	
	$D3	$9D	
	$D4	$9D	
	$D5	$9D	
	$D6	$9D	

OBDMID	TID	SID	Diagnostic item
$3C	$96	$FE	Evaporative emission control system (0.02 inch leak)
	$C1	$FE	
	$C2	$FE	
	$C3	$FE	
	$C4	$FE	
	$C5	$FE	
	$C6	$35	
	$C7	$FE	
	$C8	$FE	
	$C9	$FE	
	$CA	$FE	
$3D	$98	$FE	Evaporative emission control system (purge flow)
	$CB	$35	ELCM purge flow
	$CC	$FE	
$41	$9B	$14	A/F sensor heater characteristics failure (Bank 1 Sensor 1)
$42	$A2	$24	Oxygen sensor heater characteristics failure (Bank 1 Sensor 2)
$A1	$0B	$24	Misfire monitoring (all cylinders)
	$0C	$24	
$A2	$0B	$24	Misfire monitoring (#1 cylinder)
	$0C	$24	
$A3	$0B	$24	Misfire monitoring (#2 cylinder)
	$0C	$24	
$A4	$0B	$24	Misfire monitoring (#3 cylinder)
	$0C	$24	
$A5	$0B	$24	Misfire monitoring (#4 cylinder)
	$0C	$24	

7. MODE $07

Refer to the data of DTC (pending code) for troubleshooting result about emission in the first time.

8. MODE $09

Perform “Active Test” of the on-board system.

9. MODE $09

Refer to the data of the vehicle specification.

9. Subaru Select Monitor

A: OPERATION

1. HOW TO USE SUBARU SELECT MONITOR

NOTE:
For detailed operation procedures, refer to “PC application help for Subaru Select Monitor”.

2. READ CURRENT DATA FOR ENGINE (NORMAL MODE)

NOTE:
- For detailed operation procedures, refer to “PC application help for Subaru Select Monitor”.
- A list of the support data is shown in the following table.
- *: For models without cruise control, the brake switch signal does not change.

Contents	Display	Unit of measure	Note (at idling)
Engine load	Engine Load	%	13.6 — 40.5%
Engine coolant temperature signal	Coolant Temperature	°C or °F	85°C or 185°F or more (after warm-up)
A/F correction #1	A/F Correction #1	%	–0.8%
A/F learning #1	A/F Learning #1	%	0.0%
Intake manifold absolute pressure	Mani. Absolute Pressure	mmHg, kPa, inHg or psig	200 — 300 mmHg, 26.7 — 40 kPa, 7.8 — 11.8 inHg or 3.8 — 5.8 psig
Engine speed signal	Engine Speed	rpm	700 rpm (Agree with the tachometer indication)
Meter vehicle speed signal	Vehicle Speed	km/h or MPH	0 km/h or 0 MPH (at parking)
Ignition timing signal	Ignition Timing	deg	14 — 16 deg
Intake air temperature signal	Intake Air Temp.	°C or °F	(Ambient air temperature)
Intake air amount	Mass Air Flow	g/s or lb/m	2.5 g/s or 0.33 lb/m
Throttle opening angle signal	Throttle Opening Angle	%	2.0%
Rear oxygen sensor voltage	Rear O2 Sensor	V	0.1 — 0.7 V
Battery voltage	Battery Voltage	V	12 — 14 V
Mass air flow voltage	Air Flow Sensor Voltage	V	1.26 V
Injection 1 pulse width	Fuel Injection #1 Pulse	ms	2.82 ms
Atmospheric pressure signal	Atmospheric pressure	mmHg, kPa, inHg or psig	(Atmospheric pressure)
Intake manifold relative pressure	Mani. Relative Pressure	mmHg, kPa, inHg or psig	(Air intake absolute pressure – Atmospheric pressure)
Learned value of ignition timing	Learned Ignition Timing	deg	0 deg
Acceleration opening angle signal	Accel opening angle	%	0.0%
Purge control solenoid duty ratio	CPC Valve Duty Ratio	%	0 — 3%
Number of EGR steps	No. of EGR steps	STEP	0 STEP
Generator duty ratio	ALT Duty	%	0 — 100%
AVCS advance angle amount RH	VVT Adv. Ang. Amount R	deg	0 deg
AVCS advance angle amount LH	VVT Adv. Ang. Amount L	deg	0 deg
Oil control solenoid duty ratio RH	OCV Duty R	%	40 — 60%
Oil control solenoid duty ratio LH	OCV Duty L	%	40 — 60%
Oil control solenoid current RH	OCV Current R	mA	550 — 850 mA
Oil control solenoid current LH	OCV Current L	mA	550 — 850 mA
A/F sensor current value 1	A/F Sensor #1 Current	mA	–0.2 — 0.2 mA
A/F sensor resistance value 1	A/F Sensor #1 Resistance	Ω	32 Ω

Contents	Display	Unit of measure	Note (at idling)
A/F sensor output lambda 1	A/F Sensor #1	—	1.0
A/F correction #3	A/F Correction #3	%	0.3%
A/F learning #3	A/F Learning #3	%	0.00%
Throttle motor duty	Throttle Motor Duty	%	–15%
Throttle motor voltage	Throttle Motor Voltage	V	(Battery voltage)
Sub throttle sensor voltage	Sub-Throttle Sensor	V	1.52 V
Main throttle sensor voltage	Main-Throttle Sensor	V	0.66 V
Sub accelerator sensor voltage	Sub-Accelerator Sensor	V	0.68 V
Main acceleration sensor voltage	Main-Accelerator Sensor	V	0.68 V
Memory vehicle speed	Memorized Cruise Speed	km/h or MPH	0 km/h or 0 MPH
Engine oil temperature signal	Oil Temperature	°C	≥ 85°C (after warm-up)
Exhaust AVCS retard angle amount RH	Exh. VVT Retard Ang. R	deg	±5 deg
Exhaust AVCS retard angle amount LH	Exh. VVT Retard Ang. L	deg	±5 deg
Exhaust oil control solenoid duty ratio RH	Exh. OCV Duty R	%	45 — 55%
Exhaust oil control solenoid duty ratio LH	Exh. OCV Duty L	%	45 — 55%
Exhaust oil control solenoid current value RH	Exh. OCV Current R	mA	650 — 800 mA
Exhaust oil control solenoid current value LH	Exh. OCV Current L	mA	650 — 800 mA
#1 cylinder roughness monitor	Roughness Monitor #1	—	0
#2 cylinder roughness monitor	Roughness Monitor #2	—	0
#3 cylinder roughness monitor	Roughness Monitor #3	—	0
#4 cylinder roughness monitor	Roughness Monitor #4	—	0
Knock sensor correction	Knocking Correction	deg	0.0 deg
Battery current value	Battery current value	A	–2 — 5A
Battery temperature signal	Battery temperature	°C or °F	20 — 50°C or 68 — 122°F
Alternator control mode	Alternator control mode	—	High/Mid/Low
Intake AVCS initial position learning value (bank 1)	VVT Initial Position Learning Value #1	°CA	60°CA
Intake AVCS initial position learning value (bank 2)	VVT Initial Position Learning Value #2	°CA	60°CA
Exhaust AVCS initial position learning value (bank 1)	VVT Ex Initial Position Learning Value #1	°CA	90°CA
Exhaust AVCS initial position learning value (bank 2)	VVT Ex Initial Position Learning Value #2	°CA	90°CA
AT/MT identification terminal	AT Vehicle ID Signal	—	ON/OFF
D-check require flag	D-check Require Flag	—	OFF
Delivery (test) mode terminal	Delivery Mode Connector (Test Mode Connector)	—	OFF
Neutral position switch signal	Neutral switch	—	Neutral
Soft idle switch signal	Idle Switch Signal	—	Idle
Ignition switch signal	Ignition switch	—	ON
Air conditioning switch signal	A/C Switch	—	OFF (when OFF)
Starter switch signal	Starter SW	—	OFF
Rear oxygen monitor	Rear O2 Rich Signal	—	ON/OFF
Knocking signal	Knocking Signal	—	OFF
Crankshaft position sensor signal	Crankshaft Position Sig.	—	ON
Camshaft position sensor signal	Camshaft Position Sig.	—	ON
Rear defogger switch signal	Rear Defogger SW	—	OFF (when OFF)

Contents	Display	Unit of measure	Note (at idling)
Blower fan switch signal	Blower Fan SW	—	OFF (when OFF)
Light switch signal	Light Switch	—	OFF (when OFF)
Wiper switch signal	Wiper Switch	—	OFF (when OFF)
Air conditioner middle pressure switch signal	A/C Mid Pressure Switch	—	OFF (when OFF)
Air conditioner compressor relay output signal	A/C Compressor Signal	—	OFF (when OFF)
Radiator fan relay 1 signal	Radiator Fan Relay #1	—	OFF (when OFF)
Radiator fan relay 2 signal	Radiator Fan Relay #2	—	OFF (when OFF)
Fuel pump relay signal	Fuel Pump Relay	—	ON
Tumble generator valve output signal	TGV Output	—	OFF
Tumble generator valve driving signal	TGV Drive	—	Close
AT coordinate retard angle demand signal	Retard Signal from AT	—	OFF
AT coordinate fuel cut demand signal	Fuel Cut signal from AT	—	OFF
Vehicle dynamics control (VDC) torque down prohibition output	Ban of Torque Down	—	Allowance
Vehicle dynamics control (VDC) torque down demand	Request Torque Down VDC	—	OFF
Permission signal in coordination with AT	Torque Permission Signal	—	ON (OFF on MT vehicles)
Electronic throttle control motor relay signal	ETC Motor Relay	—	ON
Clutch switch signal (MT model)	Clutch switch	—	OFF (when OFF)
Stop light switch signal	Stop light SW	—	OFF (when OFF)
SET/COAST switch signal	SET/COAST SW	—	OFF (when OFF)
RES/ACC switch signal	RESUME/ACCEL SW	—	OFF (when OFF)
Brake switch signal*	Brake SW	—	OFF (when OFF)
Main switch signal	Main switch	—	OFF (when OFF)
Cruise control cancel switch signal	Cruise Control Cancel Switch Signal	—	OFF (when OFF)
Malfunction indicator light signal	MIL On Flag	—	OFF (when unlit)
Oil level switch signal	Oil level switch	—	HIGH level
Tumble generator valve RH opening switch signal	TGV Position SW1	—	Close
Tumble generator valve LH opening switch signal	TGV Position SW2	—	Close
ELCM switching valve drive signal	ELCM switching valve	—	Open
ELCM vacuum pump drive signal	ELCM pump	—	OFF

3. READ CURRENT DATA FOR ENGINE (OBD MODE)

NOTE:
- For detailed operation procedures, refer to “PC application help for Subaru Select Monitor”.
- A list of the support data is shown in the following table.

Contents	Display	Note (at idling)	Unit of measure
Number of diagnosis code	Number of Diag. Code:	0	—
Condition of malfunction indicator light	MI(MIL)	OFF	—
Monitoring test of misfire	Misfire monitoring(Supp)	YES	—
Monitoring test of misfire	Misfire monitoring(Rdy)	YES	—
Monitoring test of fuel system	Fuel system monitoring(Supp)	YES	—
Monitoring test of fuel system	Fuel system monitoring(Rdy)	YES	—
Monitoring test of comprehensive component	Component monitoring(Supp)	YES	—
Monitoring test of comprehensive component	Component monitoring(Rdy)	YES	—
Test of catalyst	Catalyst Diagnosis(Supp)	YES	—
Test of catalyst	Catalyst Diagnosis(Rdy)	NO	—
Test of heating-type catalyst	Heated catalyst(Supp)	NO	—
Test of heating-type catalyst	Heated catalyst(Rdy)	N/A	—
Test of evaporative emission purge control system	Evaporative purge system(Supp)	YES	—
Test of evaporative emission purge control system	Evaporative purge system(Rdy)	NO	—
Secondary air system test	Secondary air system(Supp)	NO	—
Secondary air system test	Secondary air system(Rdy)	N/A	—
Test of air conditioning system refrigerant	A/C system refrigerant(Supp)	NO	—
Test of air conditioning system refrigerant	A/C system refrigerant(Rdy)	N/A	—
Test of oxygen sensor	Oxygen sensor (Supp)	YES	—
Test of oxygen sensor	Oxygen sensor (Rdy)	NO	—
Test of oxygen sensor heater	O2 Heater Diagnosis(Supp)	YES	—
Test of oxygen sensor heater	O2 Heater Diagnosis(Rdy)	NO	—
Test of EGR system	EGR system(Supp)	YES	—
Test of EGR system	EGR system(Rdy)	NO	—
Air fuel ratio control system for bank 1	Fuel system for Bank 1	Cl_normal	—
Engine load data	Calculated load value	23.0	%
Engine coolant temperature signal	Coolant Temperature	92	°C
Short term fuel trim by front oxygen (A/F) sensor (bank 1)	Short term fuel trim B1	–0.8	%
Long term fuel trim by front oxygen (A/F) sensor (bank 1)	Long term fuel trim B1	0.0	%
Intake manifold absolute pressure signal	Mani. Absolute Pressure	211	mmHg
Engine speed signal	Engine Speed	700	rpm
Vehicle speed signal	Vehicle speed	0	km/h
#1 cylinder ignition timing	Ignition timing adv. #1	16.0	°
Intake air temperature signal	Intake Air Temp.	36	°C
Intake air amount	Mass Air Flow	2.7	g/s

Contents	Display	Note (at idling)	Unit of measure
Throttle position signal	Throttle Opening Angle	13	%
Oxygen sensor (bank 1 sensor 2)	Oxygen sensor #12	0.7	V
A/F correction (bank 1 sensor 2)	Short term fuel trim #12	0.0	%
On-board diagnostic system	OBD System	OBD/OBD2	—
Front oxygen (A/F) sensor (bank 1 sensor 1)	Oxygen sensor #11	Support	—
Oxygen sensor (bank 1 sensor 2)	Oxygen sensor #12	Support	—
Elapsed time after starting the engine	Time Since Engine Start	—	sec
Travel distance after the malfunction indicator light illuminates	Lighted MI lamp history	—	km
A/F lambda signal (bank 1 sensor 1)	A/F Sensor #11	1.001	—
A/F sensor output signal (bank 1 sensor 1)	A/F Sensor #11	2.79	V
Target EGR	Commanded EGR	—	%
EGR error	EGR Error	—	%
Evaporative purge	Evap Purge	0	%
Fuel level signal	Fuel Level	—	%
Number of warm ups after DTC clear	Number of warm-ups	—	times
Travel distance after DTC clear	Meter since DTC cleared	—	km
Atmospheric pressure signal	Atmospheric pressure	Atmospheric pressure	mmHg
A/F lambda signal (bank 1 sensor 1)	A/F Sensor #11	1.001	—
A/F sensor current (bank 1 sensor 1)	A/F Sensor #11	0.00	mA
Catalyst temperature #1	Catalyst Temperature #11	—	°C
Monitoring test of misfire	Misfire monitoring(Enable)	YES	—
Monitoring test of misfire	Misfire monitoring(Comp)	NO	—
Monitoring test of fuel system	Fuel system monitoring(Enable)	YES	—
Monitoring test of fuel system	Fuel system monitoring(Comp)	NO	—
Monitoring test of comprehensive component	Component monitoring(Enable)	YES	—
Monitoring test of comprehensive component	Component monitoring(Comp)	NO	—
Test of catalyst	Catalyst Diagnosis(Enable)	YES	—
Test of catalyst	Catalyst Diagnosis(Comp)	NO	—
Test of heating-type catalyst	Heated catalyst(Enable)	N/A	—
Test of heating-type catalyst	Heated catalyst(Comp)	N/A	—
Test of evaporative emission purge control system	Evaporative purge system(Enable)	YES	—
Test of evaporative emission purge control system	Evaporative purge system(Comp)	NO	—
Secondary air system test	Secondary air system(Enable)	N/A	—
Secondary air system test	Secondary air system(Comp)	N/A	—
Test of air conditioning system refrigerant	A/C system refrigerant(Enable)	N/A	—
Test of air conditioning system refrigerant	A/C system refrigerant(Comp)	N/A	—
Test of oxygen sensor	Oxygen sensor(Enable)	YES	—
Test of oxygen sensor	Oxygen sensor(Comp)	NO	—

Contents	Display	Note (at idling)	Unit of measure
Test of oxygen sensor heater	O2 Heater Diagnosis(Enable)	YES	—
Test of oxygen sensor heater	O2 Heater Diagnosis(Comp)	NO	—
Test of EGR system	EGR system(Enable)	YES	—
Test of EGR system	EGR system(Comp)	NO	—
ECM power supply voltage	ECU ACC	13.789	V
Absolute load	Absolute Load Value	22	%
A/F target lambda	Target Equivalence Ratio	0.976	—
Relative throttle opening angle	Relative Throttle Pos.	2	%
Ambient temperature	Ambient Temperature	Ambient Temp for A/C	°C
Absolute throttle opening angle 2	Absolute Throttle Pos.#2	32	%
Absolute accelerator opening angle 1	Accelerator Pedal Pos.#1	13	%
Absolute accelerator opening angle 2	Accelerator Pedal Pos.#2	13	%
Target throttle opening angle	Target Throttle Opening Angle	0	%
Engine operating time while malfunction indicator light lit	Time while MIL lighted	—	min
Elapsed time after DTC clear	Time since DTC cleared	—	min
Type of fuel	Type of fuel	GAS	—
Relative acceleration opening angle	Relative Accelera. Pos.	0	%
Neutral condition	AT drive status / MT gear status	NEUT	—

4. READ FREEZE FRAME DATA FOR ENGINE (OBD MODE)

NOTE:
- For detailed operation procedures, refer to “PC application help for Subaru Select Monitor”.
- A list of the support data is shown in the following table.

Description	Display	Unit of measure
DTCs of freeze frame data	Freeze frame data	—
Air fuel ratio control system for bank 1	Fuel system for Bank 1	—
Engine load data	Calculated load value	%
Engine coolant temperature signal	Coolant Temperature	°C or °F
Short term fuel trim by front oxygen (A/F) sensor	Short term fuel trim B1	%
Long term fuel trim by front oxygen (A/F) sensor	Long term fuel trim B1	%
Intake manifold absolute pressure signal	Mani. Absolute Pressure	mmHg, kPa, inHg or psig
Engine speed signal	Engine Speed	rpm
Vehicle speed signal	Vehicle speed	km/h or MPH
Ignition timing advance for #1 cylinder	Ignition timing adv. #1	°
Intake air temperature signal	Intake Air Temp.	°C or °F
Intake air amount	Mass Air Flow	g/s or lb/m
Throttle position signal	Throttle Opening Angle	%
Oxygen sensor (bank 1 sensor 2)	Oxygen sensor #12	V
A/F correction (bank 1 sensor 2)	Short term fuel trim #12	%
On-board diagnostic system	OBD System	—
Front oxygen (A/F) sensor (bank 1 sensor 1)	Oxygen sensor #11	—
Oxygen sensor (bank 1 sensor 2)	Oxygen sensor #12	—
Elapsed time after starting the engine	Time Since Engine Start	sec
Target EGR	Commanded EGR	%
EGR deviation	EGR Error	%
Evaporative purge	Evap Purge	%
Fuel level signal	Fuel Level	%
Atmospheric pressure	Atmospheric pressure	mmHg, kPa, inHg or psig
ECM power supply voltage	ECU ACC	V
Absolute load	Absolute Load Value	%
A/F target lambda	Target Equivalence Ratio	—
Relative throttle opening angle	Relative Throttle Pos.	%
Ambient temperature	Ambient Temperature	°C or °F
Absolute throttle opening angle 2	Absolute Throttle Pos.#2	%
Absolute accelerator opening angle 1	Accelerator Pedal Pos.#1	%
Absolute accelerator opening angle 2	Accelerator Pedal Pos.#2	%
Target throttle opening angle	Target Throttle Opening Angle	%
Neutral condition	AT drive status / MT gear status	—

5. V.I.N REGISTRATION

1) On «Main Menu» display, select {Each System Check}.
2) On «System Selection Menu» display, select {Engine Control System}.
3) Click the [OK] button after the information of engine type has been displayed.
4) On the «Engine Diagnosis» display, select {Entry VIN}.
5) Perform the procedures shown on the display screen.

10.Read Diagnostic Trouble Code (DTC)

A: OPERATION

1. SUBARU SELECT MONITOR

NOTE:
• For detailed operation procedures, refer to “PC application help for Subaru Select Monitor”.
• For details concerning DTC, refer to “List of Diagnostic Trouble Code (DTC)”. <Ref. to EN(H4DO w/o HEV)(diag)-83, List of Diagnostic Trouble Code (DTC).>

2. GENERAL SCAN TOOL

Refer to data denoting emission-related powertrain DTC. For details concerning DTC, refer to “List of Diagnostic Trouble Code (DTC)”. <Ref. to EN(H4DO w/o HEV)(diag)-83, List of Diagnostic Trouble Code (DTC).>

NOTE:
Refer to general scan tool manufacturer’s instruction manual to access powertrain DTC (MODE $03).

11.Inspection Mode

A: PROCEDURE

Perform the diagnosis shown in the following DTC table.
When performing the diagnosis not listed in “List of Diagnostic Trouble Code (DTC)”, refer to the item on the drive cycle. <Ref. to EN(H4DO w/o HEV)(diag)-50, Drive Cycle.>

DTC	Item	Condition
B1570	Antenna	—
B1571	Reference Code Incompatibility	—
B1572	IMM Circuit Failure (Except Antenna Circuit)	—
B1574	Key Communication Failure	—
B1575	Incorrect Immobilizer Key	—
B1576	EGI Control Module EEPROM	—
B1577	IMM Control Module EEPROM	—
B1578	Meter Failure	—
P0011	Intake Camshaft Position - Timing Over-Advanced or System Performance (Bank 1)	—
P0014	Exhaust AVCS System 1 (Range/Performance)	—
P0021	Intake Camshaft Position - Timing Over-Advanced or System Performance (Bank 2)	—
P0024	Exhaust AVCS System 2 (Range/Performance)	—
P0031	HO2S Heater Control Circuit Low (Bank 1 Sensor 1)	—
P0032	HO2S Heater Control Circuit High (Bank 1 Sensor 1)	—
P0037	HO2S Heater Control Circuit Low (Bank 1 Sensor 2)	—
P0038	HO2S Heater Control Circuit High (Bank 1 Sensor 2)	—
P0102	Mass or Volume Air Flow Circuit Low Input	—
P0103	Mass or Volume Air Flow Circuit High Input	—
P0107	Manifold Absolute Pressure/Barometric Pressure Circuit Low Input	—
P0108	Manifold Absolute Pressure/Barometric Pressure Circuit High Input	—
P0112	Intake Air Temperature Sensor 1 Circuit Low	—
P0113	Intake Air Temperature Sensor 1 Circuit High	—
P0117	Engine Coolant Temperature Circuit Low	—
P0118	Engine Coolant Temperature Circuit High	—
P0122	Throttle/Pedal Position Sensor/Switch “A” Circuit Low	—
P0123	Throttle/Pedal Position Sensor/Switch “A” Circuit High	—
P0131	O2 Sensor Circuit Low Voltage (Bank 1 Sensor 1)	—
P0132	O2 Sensor Circuit High Voltage (Bank 1 Sensor 1)	—
P0137	O2 Sensor Circuit Low Voltage (Bank 1 Sensor 2)	—
P0138	O2 Sensor Circuit High Voltage (Bank 1 Sensor 2)	—
P0140	O2 Sensor Circuit No Activity Detected (Bank1 Sensor2)	—
P0197	Engine Oil Temperature Sensor Low	—
P0198	Engine Oil Temperature Sensor High	—
P0201	Injector #1	—
P0202	Injector #2	—
P0203	Injector #3	—
P0204	Injector #4	—
P0222	Throttle/Pedal Position Sensor/Switch “B” Circuit Low	—
P0223	Throttle/Pedal Position Sensor/Switch “B” Circuit High	—
P0327	Knock Sensor 1 Circuit Low (Bank 1 or Single Sensor)	—
P0328	Knock Sensor 1 Circuit High (Bank 1 or Single Sensor)	—
P0335	Crankshaft Position Sensor “A” Circuit	—
P0336	Crankshaft Position Sensor “A” Circuit Range/Performance	—
P0340	Camshaft Position Sensor “A” Circuit (Bank 1 or Single Sensor)	—

DTC	Item	Condition
P0341	Camshaft Position Sensor "A" Circuit Range/Performance (Bank 1 or Single Sensor)	—
P0345	Camshaft Position Sensor “A” Circuit (Bank 2)	—
P0346	Camshaft Position Sensor "A" Circuit Range/Performance (Bank 2)	—
P0351	Ignition Coil A Primary/Secondary Circuit	—
P0352	Ignition Coil B Primary/Secondary Circuit	—
P0353	Ignition Coil C Primary/Secondary Circuit	—
P0354	Ignition Coil D Primary/Secondary Circuit	—
P0365	Camshaft Position Sensor “B” Circuit (Bank 1)	—
P0366	Camshaft Position Sensor B Circuit Range/Performance (Bank 1)	—
P0390	Camshaft Position Sensor “B” Circuit (Bank 2)	—
P0391	Camshaft Position Sensor B Circuit Range/Performance (Bank 2)	—
P0451	Evaporative Emission System Pressure Sensor/Switch Range/Performance	—
P0452	Evaporative Emission System Pressure Sensor/Switch Low	—
P0453	Evaporative Emission System Pressure Sensor/Switch High	—
P0458	Evaporative Emission System Purge Control Valve Circuit Low	—
P0462	Fuel Level Sensor “A” Circuit Low	—
P0463	Fuel Level Sensor “A” Circuit High	—
P0500	Vehicle Speed Sensor “A”	—
P0516	Battery Temperature Sensor Circuit Low	—
P0517	Battery Temperature Sensor Circuit High	—
P0560	System Voltage	—
P0604	Internal Control Module Random Access Memory (RAM) Error	—
P0605	Internal Control Module Read Only Memory (ROM) Error	—
P0606	Control Module Processor	—
P060A	Internal Control Module Monitoring Processor Performance	—
P060B	Internal Control Module A/D Processing Performance	—
P0616	Starter Relay Circuit Low	—
P0617	Starter Relay Circuit High	—
P062F	Internal Control Module EEPROM Error	—
P0700	Transmission Control System (MIL Request)	—
P0851	Park/Neutral Switch Input Circuit Low	—
P0852	Park/Neutral Switch Input Circuit High	—
P1160	Return Spring Failure	—
P1530	Battery Current Sensor Circuit Low	—
P1531	Battery Current Sensor Circuit High	—
P1532	Battery Charging System	—
P2006	Intake Manifold Runner Control Stuck Closed (Bank 1)	—
P2007	Intake Manifold Runner Control Stuck Closed (Bank 2)	—
P2009	Intake Manifold Runner Control Circuit Low (Bank 1)	—
P2012	Intake Manifold Runner Control Circuit Low (Bank 2)	—
P2088	Intake Camshaft Position Actuator Control Circuit Low (Bank 1)	—
P2089	Intake Camshaft Position Actuator Control Circuit High (Bank 1)	—
P2090	Exhaust Camshaft Position Actuator Control Circuit Low (Bank 1)	—
P2091	Exhaust Camshaft Position Actuator Control Circuit High (Bank 1)	—
P2092	Intake Camshaft Position Actuator Control Circuit Low (Bank 2)	—
P2093	Intake Camshaft Position Actuator Control Circuit High (Bank 2)	—
P2094	Exhaust Camshaft Position Actuator Control Circuit Low (Bank 2)	—
P2095	Exhaust Camshaft Position Actuator Control Circuit High (Bank 2)	—
P2101	Throttle Actuator Control Motor Circuit Range/Performance	—
P2102	Throttle Actuator Control Motor Circuit Low	—

DTC	Item	Condition
P2103	Throttle Actuator Control Motor Circuit High	—
P2109	Throttle/Pedal Position Sensor “A” Minimum Stop Performance	—
P2119	Throttle Actuator Control Throttle Body Range/Performance	—
P2122	Throttle/Pedal Position Sensor/Switch “D” Circuit Low Input	—
P2123	Throttle/Pedal Position Sensor/Switch “D” Circuit High Input	—
P2127	Throttle/Pedal Position Sensor/Switch “E” Circuit Low Input	—
P2128	Throttle/Pedal Position Sensor/Switch “E” Circuit High Input	—
P2135	Throttle/Pedal Position Sensor/Switch “A”/“B” Voltage Correlation	—
P2138	Throttle/Pedal Position Sensor/Switch “D”/“E” Voltage Correlation	—
P2195	O2 Sensor Signal Biased/Stuck Lean (Bank 1 Sensor 1)	—
P2196	O2 Sensor Signal Biased/Stuck Rich (Bank 1 Sensor 1)	—
P2401	Evaporative Emission System Leak Detection Pump Control Circuit Low	—
P2419	Evaporative Emission System Switching Valve Control Circuit Low	—
U0073	Control Module Communication Bus Off	—
U0101	Lost Communication With TCM	—
U0122	Lost Communication With Vehicle Dynamics Control Module	—
U0155	Lost Communication With Instrument Panel Cluster (IPC) Control Module	—
U0402	Invalid Data Received From TCM	—
U0416	Invalid Data Received From Vehicle Dynamics Control Module	—
U0423	Invalid Data Received From Instrument Panel Cluster Control Module	—

1. PREPARATION FOR THE INSPECTION MODE

1) Check that the battery voltage is 12 V or more and fuel remains approx. half [20 — 40 L (5.3 — 10.6 US gal, 4.4 — 8.8 Imp gal)].
2) Lift up the vehicle using a garage jack and place it on rigid racks, or drive the vehicle onto free rollers.

WARNING:
• Before lifting up the vehicle, ensure parking brake is applied.
• Do not use a pantograph jack in place of a rigid rack.
• Secure a rope or wire to the front or rear towing hooks to prevent the lateral runout of front wheels.
• Before rotating the wheels, make sure that there is no one in front of the vehicle. Besides while the wheels are rotating, make sure that no one approaches the vehicle front side.
• Make sure that there is nothing around the wheels. For AWD model, pay attention to all four wheels.
• While servicing, do not depress or release the clutch pedal or accelerator pedal quickly regardless of the engine speed. Quick operation may cause the vehicle to drop off the free roller.
• To prevent the vehicle from slipping due to vibration, do not place anything between rigid rack and the vehicle.

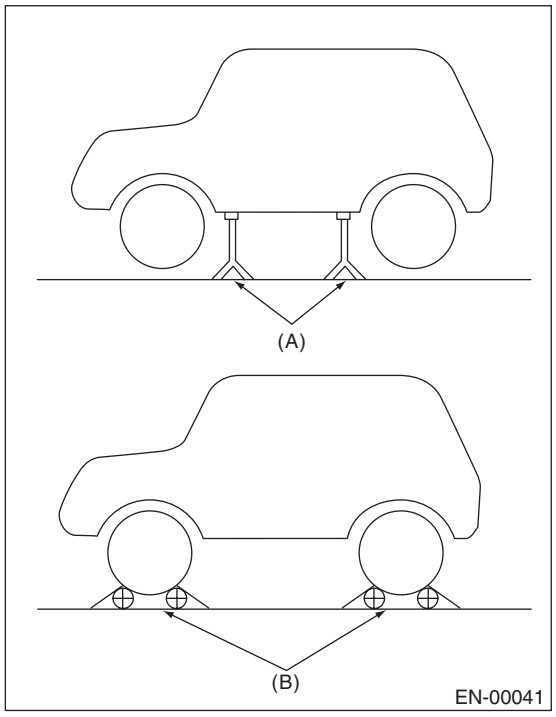

(A) Rigid rack
(B) Free roller

2. SUBARU SELECT MONITOR

1) Check that no DTC remains after clearing memory. <Ref. to EN(H4DO w/o HEV)(diag)-59, Clear Memory Mode.>
2) Warm up the engine.
3) Prepare the Subaru Select Monitor kit. <Ref. to EN(H4DO w/o HEV)(diag)-8, PREPARATION TOOL, General Description.>

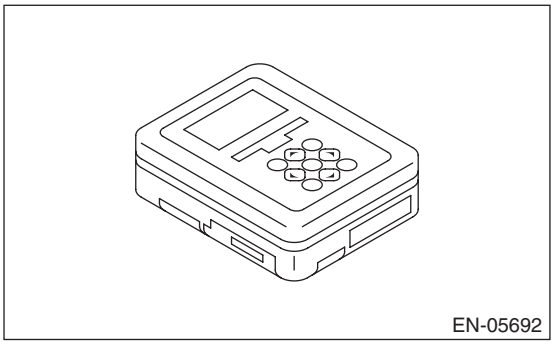

4) Prepare PC with Subaru Select Monitor installed.
5) Connect the USB cable to SDI (Subaru Diagnosis Interface) and USB port on the personal computer (dedicated port for the Subaru Select Monitor).

NOTE:
The dedicated port for the Subaru Select Monitor means the USB port which was used to install the Subaru Select Monitor.
6) Connect the diagnosis cable to SDI.
7) Install the delivery (test) mode fuse (A).

CAUTION:
Do not use any fuses that are installed on the vehicle.

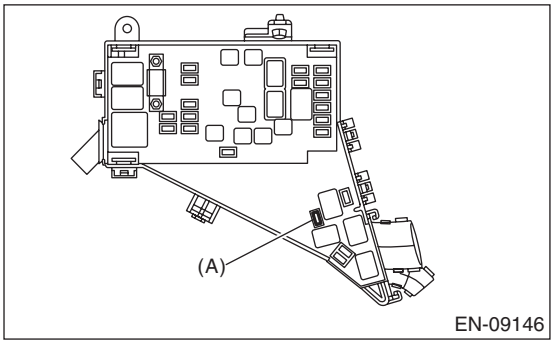

8) Connect SDI to data link connector located in the lower portion of the instrument panel (on the driver's side).

CAUTION:
Do not connect the scan tools except for Subaru Select Monitor and general scan tool.

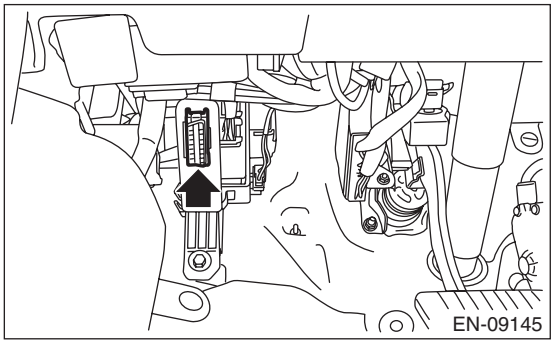

9) Start the PC.
10) Turn the ignition switch to ON (engine OFF) and run the "PC application for Subaru Select Monitor".
11) On «Main Menu» display, select {Each System Check}.
12) On «System Selection Menu» display, select {Engine Control System}.
13) Click the [OK] button after the information of engine type has been displayed.
14) On «Engine Diagnosis» display, select {Dealer Check Mode Procedure}.
15) When the "Perform Inspection (Dealer Check) Mode ?" is shown on the screen, click the [Next] button.
16) Perform subsequent procedures as instructed on the display screen.

- If trouble still remains in the memory, the corresponding DTC appears on the display screen.

NOTE:
- For detailed operation procedures, refer to "PC application help for Subaru Select Monitor".
- For details concerning DTC, refer to "List of Diagnostic Trouble Code (DTC)".
  <Ref. to EN(H4DO w/o HEV)(diag)-83, List of Diagnostic Trouble Code (DTC).>
- Release the parking brake.
- The rotating speed difference between front and rear wheels may illuminate the warning light, but this does not indicate a malfunction. When engine control system diagnosis is finished, perform the VDC memory clearance procedure of self-diagnosis function. <Ref. to VDC(diag)-23, Clear Memory Mode.>

3. GENERAL SCAN TOOL

1) Check that no DTC remains after clearing memory. <Ref. to EN(H4DO w/o HEV)(diag)-59, Clear Memory Mode.>
2) Warm up the engine.
3) Install the delivery (test) mode fuse (A).

CAUTION:
Do not use any fuses that are installed on the vehicle.

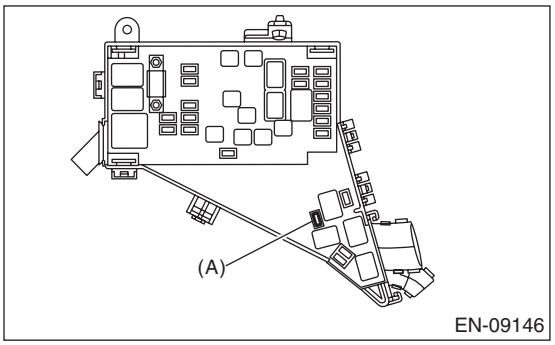

4) Connect the general scan tool to data link connector located in the lower portion of the instrument panel (on the driver's side).

CAUTION:
Do not connect the scan tools except for Subaru Select Monitor and general scan tool.

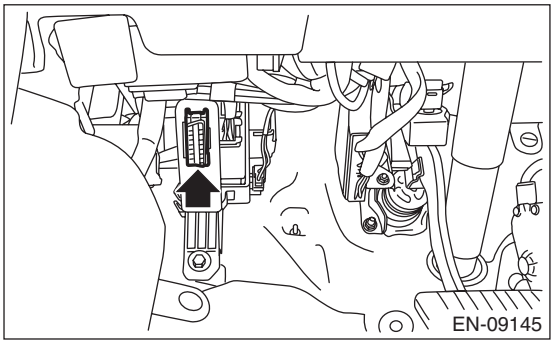

5) Start the engine.

NOTE:
- Ensure the selector lever is placed in the "P" range before starting. (CVT model)
- Depress the clutch pedal when starting engine. (MT model)

6) Turn the neutral position switch to ON using select lever or shift lever.
7) Depress the brake pedal to turn the brake switch ON. (CVT model)
8) Keep the engine speed in 2,500 — 3,000 rpm range for 40 seconds.

9) Place the select lever or shift lever in “D” position (CVT model) or “1st gear” (MT model) and drive the vehicle at 5 to 10 km/h (3 to 6 MPH).

NOTE:
- For AWD model, release the parking brake.
- The rotating speed difference between front and rear wheels may illuminate the ABS warning light, but this does not indicate a malfunction. When engine control system diagnosis is finished, perform the VDC memory clearance procedure of self-diagnosis function. <Ref. to VDC(diag)-23, Clear Memory Mode.>

10) Using the general scan tool, check for DTC and record the result(s).

NOTE:
- For detailed operation procedures, refer to the general scan tool operation manual.
- For details concerning DTC, refer to “List of Diagnostic Trouble Code (DTC)”.

<Ref. to EN(H4DO w/o HEV)(diag)-83, List of Diagnostic Trouble Code (DTC).>

12.Drive Cycle

A: PROCEDURE

It is necessary to perform the drive cycle listed below if DTC is not found in the Inspection Mode. It is possible to complete diagnosis of the DTC by performing the indicated drive cycle. After the repair for the DTC, perform a necessary drive cycle and make sure the function recovers and the DTC is recorded.

1. PREPARATION FOR DRIVE CYCLE

1) Check that the battery voltage is 12 V or more and fuel remains approx. half [20 — 40 L (5.3 — 10.6 US gal, 4.4 — 8.8 Imp gal)].
2) After performing the diagnostics and Clear Memory Mode, check that no DTC remains. <Ref. to EN(H4DO w/o HEV)(diag)-59, Clear Memory Mode.>
3) Check the delivery (test) mode fuse is removed.

NOTE:
• Perform the drive cycle after warming up the engine except when the engine coolant temperature at engine start is specified.
• Perform the drive cycle twice if the DTC in the list is marked with *. After completing the first drive cycle, stop the engine and perform second diagnosis in same condition.

2. DRIVE CYCLE A

DTC	Item	Condition
*P0116	Engine Coolant Temperature Sensor 1 Circuit Range/Performance	—
*P0128	Coolant Thermostat (Engine Coolant Temperature Below Thermostat Regulating Temperature)	—
*P0141	O2 Sensor Heater Circuit (Bank1 Sensor2)	—
*P014C	O2 Sensor Slow Response - Rich to Lean (Bank 1 Sensor 1)	—
*P014D	O2 Sensor Slow Response - Lean to Rich (Bank 1 Sensor 1)	—
*P015A	O2 Sensor Delayed Response - Rich to Lean (Bank 1 Sensor 1)	—
*P015B	O2 Sensor Delayed Response - Lean to Rich (Bank 1 Sensor 1)	—
*P0171	System Too Lean (Bank 1)	Complete diagnosis with drive cycle B or C as well.
*P0172	System Too Rich (Bank 1)	Complete diagnosis with drive cycle B or C as well.
*P0196	Engine Oil Temperature Sensor Circuit Range/Performance	Engine oil temperature at engine start is approximately the same as ambient air temperature.
*P0300	Random/Multiple Cylinder Misfire Detected	Complete diagnosis with drive cycle B or C as well.
*P0301	Cylinder 1 Misfire Detected	Complete diagnosis with drive cycle B or C as well.
*P0302	Cylinder 2 Misfire Detected	Complete diagnosis with drive cycle B or C as well.
*P0303	Cylinder 3 Misfire Detected	Complete diagnosis with drive cycle B or C as well.
*P0304	Cylinder 4 Misfire Detected	Complete diagnosis with drive cycle B or C as well.
*P0420	Catalyst System Efficiency Below Threshold (Bank 1)	—
*P0459	Evaporative Emission System Purge Control Valve Circuit High	—
*P2096	Post Catalyst Fuel Trim System Too Lean (Bank 1)	Complete diagnosis with drive cycle B or C as well.
*P2097	Post Catalyst Fuel Trim System Too Rich (Bank 1)	Complete diagnosis with drive cycle B or C as well.

Diagnostic procedure:
1) Drive for 20 minutes or more at a constant speed of 80 km/h (50 MPH) or more.
2) Stop the vehicle and idle for one minute.

3. DRIVE CYCLE B

DTC	Item	Condition
*P0125	Insufficient Coolant Temperature for Closed Loop Fuel Control	«Coolant Temp.» at engine start: Less than –15°C (5°F)
*P0171	System Too Lean (Bank 1)	Complete diagnosis with drive cycle A or C as well.
*P0172	System Too Rich (Bank 1)	Complete diagnosis with drive cycle A or C as well.
*P0300	Random/Multiple Cylinder Misfire Detected	Complete diagnosis with drive cycle A or C as well.
*P0301	Cylinder 1 Misfire Detected	Complete diagnosis with drive cycle A or C as well.
*P0302	Cylinder 2 Misfire Detected	Complete diagnosis with drive cycle A or C as well.
*P0303	Cylinder 3 Misfire Detected	Complete diagnosis with drive cycle A or C as well.
*P0304	Cylinder 4 Misfire Detected	Complete diagnosis with drive cycle A or C as well.
*P0506	Idle Air Control System RPM Lower Than Expected	—
*P0507	Idle Air Control System RPM Higher Than Expected	—
*P2096	Post Catalyst Fuel Trim System Too Lean (Bank 1)	Complete diagnosis with drive cycle A or C as well.
*P2097	Post Catalyst Fuel Trim System Too Rich (Bank 1)	Complete diagnosis with drive cycle A or C as well.
*P219A	Bank 1 Air-Fuel Ratio Imbalance	Complete diagnosis with drive cycle C as well.

Diagnostic procedure:
1) Drive at 10 km/h (6 MPH) or more.
2) Stop the vehicle and idle for ten minutes.

4. DRIVE CYCLE C

DTC	Item	Condition
*P000A	A Camshaft Position Slow Response (Bank 1)	—
*P000B	B Camshaft Position Slow Response (Bank 1)	—
*P000C	A Camshaft Position Slow Response (Bank 2)	—
*P000D	B Camshaft Position Slow Response (Bank 2)	—
*P0030	HO2S Heater Control Circuit (Bank 1 Sensor 1)	—
*P0068	MAP/MAF - Throttle Position Correlation	—
*P0101	Mass or Volume Air Flow Circuit Range/Performance	—
P0134	O2 Sensor Circuit No Activity Detected (Bank 1 Sensor 1)	—
*P013A	O2 Sensor Slow Response - Rich to Lean (Bank 1 Sensor 2)	—
*P013B	O2 Sensor Slow Response - Lean to Rich (Bank 1 Sensor 2)	—
*P013E	O2 Sensor Delayed Response - Rich to Lean (Bank 1 Sensor 2)	—
*P013F	O2 Sensor Delayed Response - Lean to Rich (Bank 1 Sensor 2)	—
*P0171	System Too Lean (Bank 1)	Complete diagnosis with drive cycle A or B as well.
*P0172	System Too Rich (Bank 1)	Complete diagnosis with drive cycle A or B as well.
*P0300	Random/Multiple Cylinder Misfire Detected	Complete diagnosis with drive cycle A or B as well.
*P0301	Cylinder 1 Misfire Detected	Complete diagnosis with drive cycle A or B as well.
*P0302	Cylinder 2 Misfire Detected	Complete diagnosis with drive cycle A or B as well.
*P0303	Cylinder 3 Misfire Detected	Complete diagnosis with drive cycle A or B as well.
*P0304	Cylinder 4 Misfire Detected	Complete diagnosis with drive cycle A or B as well.
*P0400	Exhaust Gas Recirculation Flow	—
*P0441	Evaporative Emission Cont. Sys. Incorrect Purge Flow	—
*P1449	Evaporative Emission Cont. Sys. Air Filter Clog	—
P1492	EGR Solenoid Valve Signal #1 Circuit Malfunction (Low Input)	—
P1493	EGR Solenoid Valve Signal #1 Circuit Malfunction (High Input)	—
P1494	EGR Solenoid Valve Signal #2 Circuit Malfunction (Low Input)	—
P1495	EGR Solenoid Valve Signal #2 Circuit Malfunction (High Input)	—
P1496	EGR Solenoid Valve Signal #3 Circuit Malfunction (Low Input)	—
P1497	EGR Solenoid Valve Signal #3 Circuit Malfunction (High Input)	—
P1498	EGR Solenoid Valve Signal #4 Circuit Malfunction (Low Input)	—
P1499	EGR Solenoid Valve Signal #4 Circuit Malfunction (High Input)	—
P2004	Intake Manifold Runner Control Stuck Open (Bank 1)	—
P2005	Intake Manifold Runner Control Stuck Open (Bank 2)	—
*P2096	Post Catalyst Fuel Trim System Too Lean (Bank 1)	Complete diagnosis with drive cycle A or B as well.
*P2097	Post Catalyst Fuel Trim System Too Rich (Bank 1)	Complete diagnosis with drive cycle A or B as well.
*P219A	Bank 1 Air-Fuel Ratio Imbalance	Complete diagnosis with drive cycle B as well.

Diagnostic procedure:
Drive according to the drive pattern described below.

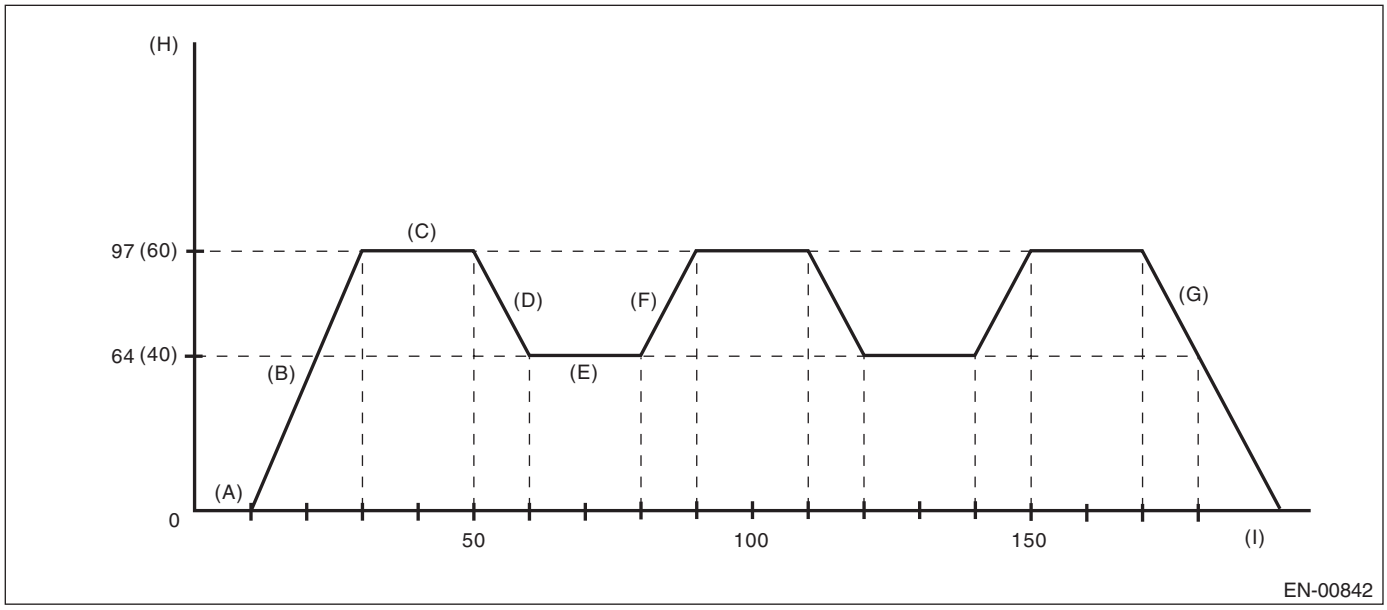

(A)	Shift the select lever to “P” range or the shift lever to the neutral position, and let the engine idle for 10 seconds or more.	(D)	Decelerate with fully closed throttle to 64 km/h (40 MPH) or less.	(G)	Stop vehicle with the throttle fully closed.
(B)	Accelerate to 97 km/h (60 MPH) or more within 20 seconds.	(E)	Drive for 20 seconds or more at 64 km/h (40 MPH) or less.	(H)	Vehicle speed km/h (MPH)
(C)	Drive for 20 seconds or more at 97 km/h (60 MPH) or more.	(F)	Accelerate to 97 km/h (60 MPH) or more within 10 seconds.	(I)	Sec.

5. DRIVE CYCLE E

DTC	Item	Condition
*P0461	Fuel Level Sensor “A” Circuit Range/Performance	—

Diagnostic procedure:
1) Make sure that the battery voltage is 10.9 V or more.
2) Perform the Clear Memory Mode. <Ref. to EN(H4DO w/o HEV)(diag)-59, Clear Memory Mode.>
3) Drive for approximately 30 L (7.9 US gal, 6.6 Imp gal) of fuel.

NOTE:
- It is acceptable to drive the vehicle intermittently.
- Do not disconnect the battery terminals while diagnosing. (Data will be cleared by disconnecting the battery terminals.)

6. DRIVE CYCLE F

DTC	Item	Condition
*P0111	Intake Air Temperature Sensor 1 Circuit Range/Performance	—

Diagnostic procedure:
1) Make sure that the engine coolant temperature is less than 30°C (86°F).

2) Drive according to the drive pattern described below.

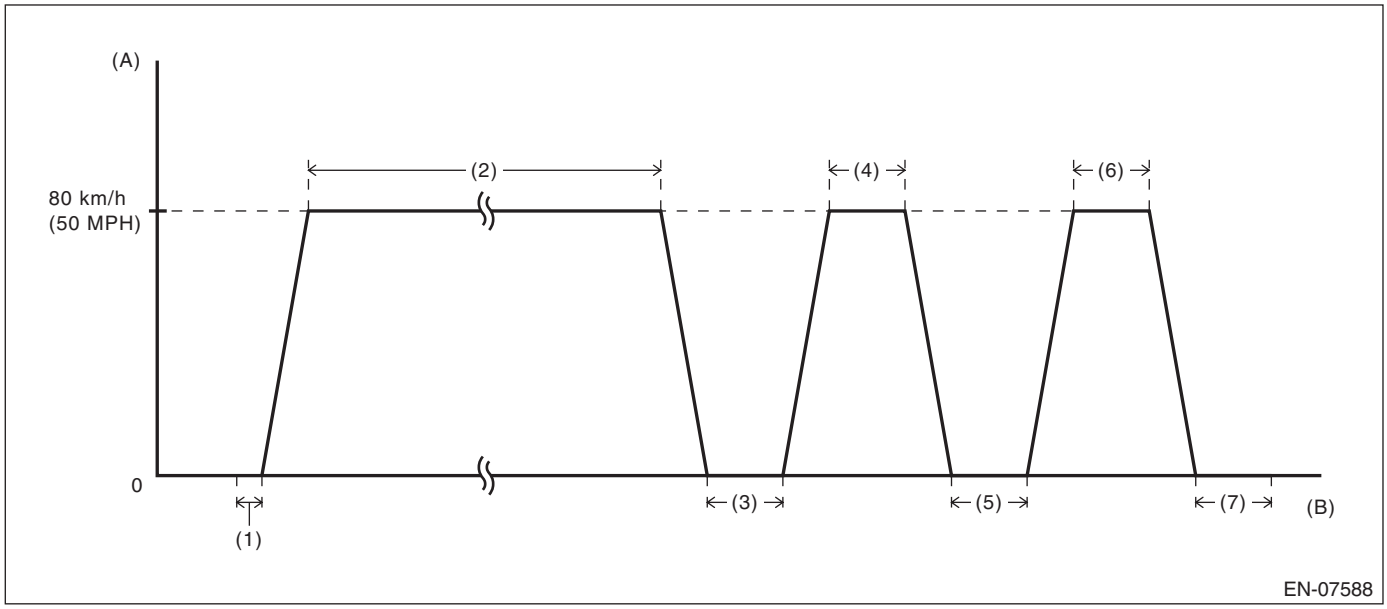

(A) Vehicle speed
(B) Elapsed time
(1) Idle the engine for 10 seconds or more after engine start.
(2) Drive for 8 minutes or more at a constant speed of 80 km/h (50 MPH) or more.
(3) Stop the vehicle and idle for 30 seconds or more.
(4) Drive for 30 seconds or more at a constant speed of 80 km/h (50 MPH) or more.
(5) Stop the vehicle and idle for 30 seconds or more.
(6) Drive for 30 seconds or more at a constant speed of 80 km/h (50 MPH) or more.
(7) Stop the vehicle and idle for 30 seconds.

NOTE:
- There is no given transition time between idling and cruising.
- Driving at constant speed only on a downhill causes smaller engine load and may result in failure to obtain a right diagnostic result.
- When the engine stops while performing drive cycle F, perform it again from the state of procedure 1).

7. DRIVE CYCLE H

DTC	Item	Condition
*P050A	Cold Start Idle Air Control System Performance	—
*P050B	Cold Start Ignition Timing Performance	—

1) Perform the Clear Memory Mode. <Ref. to EN(H4DO w/o HEV)(diag)-59, Clear Memory Mode.>
2) With the ignition switch ON, read the value in «Coolant Temp.» and «Intake Air Temp.». <Ref. to EN(H4DO w/o HEV)(diag)-36, Subaru Select Monitor.>
3) If the values from step 2) satisfy the following conditions, idle the engine for one minute.

Condition:
|Engine coolant temperature — Intake air temperature| ≤ 5°C (9°F)

NOTE:
- If the conditions are not satisfied, turn the ignition switch to OFF and wait until the parameters are satisfied.
- For CVT models, hold the select lever to “P” range or “N” range at idling, and for MT models, the shift lever in the neutral position at idling.

8. DRIVE CYCLE I

DTC	Item	Condition
*P0455	Evaporative Emission System Leak Detected (Large Leak)	«Coolant Temp.»: 5 — 45°C (41 — 113°F) «Intake Air Temp.»: 5 — 50°C (41 — 122°F)
*P0456	Evaporative Emission Control System Leak Detected (Very Small Leak)	
*P1451	Evaporative Emission Cont. Sys.	
*P2402	Evaporative Emission System Leak Detection Pump Control Circuit High	
*P2404	Evaporative Emission System Leak Detection Pump Sense Circuit Range/Performance	
*P2420	Evaporative Emission System Switching Valve Control Circuit High	

CAUTION:
Be careful of the state of the battery when performing the DRIVE CYCLE I consecutively. Performing the DRIVE CYCLE I consecutively without the engine running may cause a low battery voltage and battery discharge.

NOTE:
• If it is necessary to perform DRIVE CYCLE I consecutively, drive the vehicle under the following conditions to release accumulated evaporating gas. Performing the DRIVE CYCLE I consecutively without starting the engine causes a large amount of evaporating gas to accumulate in the canister, which hinders an accurate diagnosis.
  • After engine is warmed up
  • Drive for 10 minutes or more at a speed of 48 km/h (30 MPH) or more (duration of drive can be an accumulation)
• To obtain an accurate diagnostic result, perform the procedures according to the following points.
  • Do not refuel gas immediately before performing DRIVE CYCLE I. There will be a large amount of evaporating gas immediately after refuel, which may cause a less accurate diagnostic performance.
  • Do not shake the vehicle while performing DRIVE CYCLE I. Shaking the vehicle causes evaporating gas to increase inside the fuel tank, which may cause a less accurate diagnostic performance.
  • Do not perform any service operation including installation or removal of parts or connectors while performing DRIVE CYCLE I. Performing service operation could affect on the functions of related parts, which may cause a less accurate diagnostic performance.

1) Prepare the Subaru Select Monitor kit. <Ref. to EN(H4DO w/o HEV)(diag)-8, PREPARATION TOOL, General Description.>

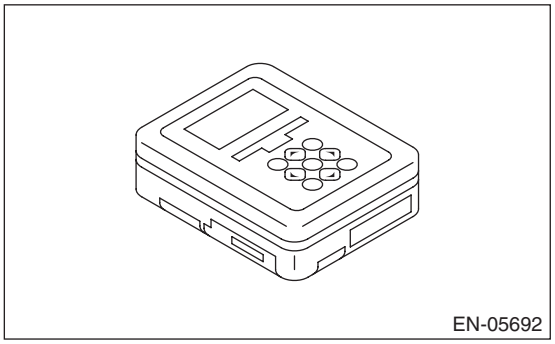
EN-05692

2) Prepare PC with Subaru Select Monitor installed.
3) Connect the USB cable to SDI (Subaru Diagnosis Interface) and USB port on the personal computer (dedicated port for the Subaru Select Monitor).

NOTE:
The dedicated port for the Subaru Select Monitor means the USB port which was used to install the Subaru Select Monitor.
4) Connect the diagnosis cable to SDI.

5) Connect SDI to data link connector located in the lower portion of the instrument panel (on the driver's side).

CAUTION:
Do not connect the scan tools except for Subaru Select Monitor and general scan tool.

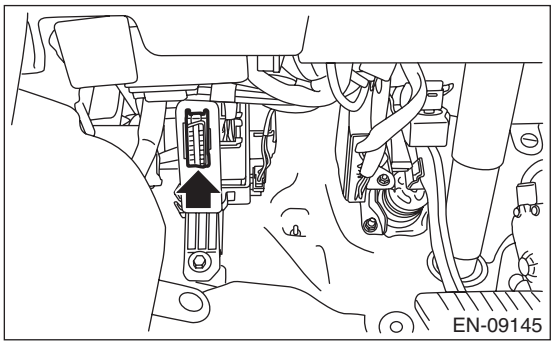

6) Start the PC.
7) Turn the ignition switch to ON (engine OFF) and run the "PC application for Subaru Select Monitor".
8) On «Main Menu» display, select {Each System Check}.
9) On «System Selection Menu» display, select {Engine Control System}.
10) Click the [OK] button after the information of engine type has been displayed.
11) On «Engine Diagnosis» display, select {OBD System}.
12) On «OBD Menu» display, select {Evaporative System Leak Test}.
13) On «Evaporative System Leak Test» display, select {Evaporative System Leak Test}.
14) On «Evaporative System Leak Test is running. Press Cancel to exit this function.» display, click the [OK] button to perform evaporative system leak test.
15) When «Conditions have been enabled to control this function. Turn the ignition switch off to terminate the test.» display appears, wait for 30 minutes without clicking the [OK] button.

CAUTION:
Do not leave the vehicle for an extended period of time after the test is complete. This may cause early deterioration of the battery or discharged battery.

NOTE:
• Clicking the [OK] button bring the «Evaporative System Leak Test» display back, although the test is continuing.
• The Subaru Select Monitor screen does not change after the evaporative system leak test is complete or when the test is aborted by turning off the ignition switch.
• If the «Test conditions are not correct» display appears, check that the values of «Coolant Temp.» and «Intake Air Temp.» are within the specified range using Subaru Select Monitor. If the conditions are satisfied, make the necessary preparation for the drive cycle again. <Ref. to EN(H4DO w/o HEV)(diag)-50, PREPARATION FOR DRIVE CYCLE, PROCEDURE, Drive Cycle.>
16) After 30 minutes passed from the start of step 14), click the [OK] button to return to the «Evaporative System Leak Test» display.
17) Click buttons until the «OBD Menu» display appears, then select {Result of on-board monitor test}.
18) In the {Result of on-board monitor test}, check TID $C1 — $CA of MID $3C.

Result of on-board monitor test

Display	Details	Remarks
$0000 is stored in all Val.	During the evaporative system leak test, the test conditions were not met and the test was cancelled.	Once the test conditions are met, perform the test again.
All Val. are stored with values and OK is set to all the results.	Evaporative system leak test is completed correctly.	While the ignition switch is ON, read temporary codes using the Subaru Select Monitor.
Some results were no good.	The evaporative system leak test completed successfully but the results were faulty.	While the ignition switch is ON, read temporary codes using the Subaru Select Monitor.

19) When the evaporative system leak test is completed correctly, read the temporary codes with the ignition switch turned to ON position. If the DTC is recorded, check the appropriate DTC. <Ref. to EN(H4DO w/o HEV)(diag)-43, OPERATION, Read Diagnostic Trouble Code (DTC).>

NOTE:
The temporary code will be cleared by turning ignition switch to OFF.

9. DRIVE CYCLE J

DTC	Item	Condition
P2610	ECM/PCM Internal Engine Off Timer Performance	—

1) Idle the engine for 15 minutes or more.
2) Turn the ignition switch to OFF.
3) After 10 hours passed from the start of step 2), read the temporary code using the Subaru Select Monitor. <Ref. to EN(H4DO w/o HEV)(diag)-43, OPERATION, Read Diagnostic Trouble Code (DTC).>

10.DRIVE CYCLE N

DTC	Item	Condition
P0016	Crankshaft Position - Camshaft Position Correlation (Bank1)	«Coolant Temp.»: 80°C (176°F) or more
P0017	Crank and Cam Timing B System Failure (Bank 1)	
P0018	Crankshaft Position - Camshaft Position Correlation (Bank2)	
P0019	Crank and Cam Timing B System Failure (Bank 2)	

WARNING:
When performing drive cycle N on the road, pay great attention to traffic conditions and place top priority on safety drive.
1) Using Subaru Select Monitor or general scan tool, confirm the data in the condition field of the table.

NOTE:
• Subaru Select Monitor
For detailed operation procedures, refer to “READ CURRENT DATA FOR ENGINE”. <Ref. to EN(H4DO w/o HEV)(diag)-36, READ CURRENT DATA FOR ENGINE (NORMAL MODE), OPERATION, Subaru Select Monitor.>
• General scan tool
For detailed operation procedures, refer to the general scan tool operation manual.
2) Race up the engine at approx. 2500 rpm of engine speed for 40 seconds or more from a status where the conditions in the table are established.
3) Start the vehicle and accelerate up to 50 km/h (31.1 MPH) or more.
4) When the vehicle speed reaches 50 km/h (31.1 MPH) or more, release the accelerator pedal, brake pedal and clutch pedal (MT model) and decelerate without shifting operation. At this time, select an appropriate gear in advance so that the engine speed keeps between 2500 rpm and 1900 rpm for 5 seconds or more.

NOTE:
• As long as the engine speed keeps between 2500 rpm and 1900 rpm for 5 seconds or more, it does not matter how much speed the vehicle runs.
Example) On downhill, this could be performed at low vehicle speed and in lower gear.
• To keep continuous time longer, turn electrical load (A/C, etc.) to OFF or drive on downhill because the engine speed decreases more slowly.
5) Stop the vehicle at a safe place and let it idle for 5 minutes or more.

NOTE:
There is no special rule for driving operation until the vehicle is stopped at a safe place.

6) Read temporary DTC codes using Subaru Select Monitor or general scan tool at idling.

NOTE:
• Refer to “Read Diagnostic Trouble Code (DTC)” for detailed operation procedure. <Ref. to EN(H4DO w/o HEV)(diag)-43, Read Diagnostic Trouble Code (DTC).>
• In step 6), if no DTC is shown on the screen of Subaru Select Monitor or general scan tool, the trouble has been solved.

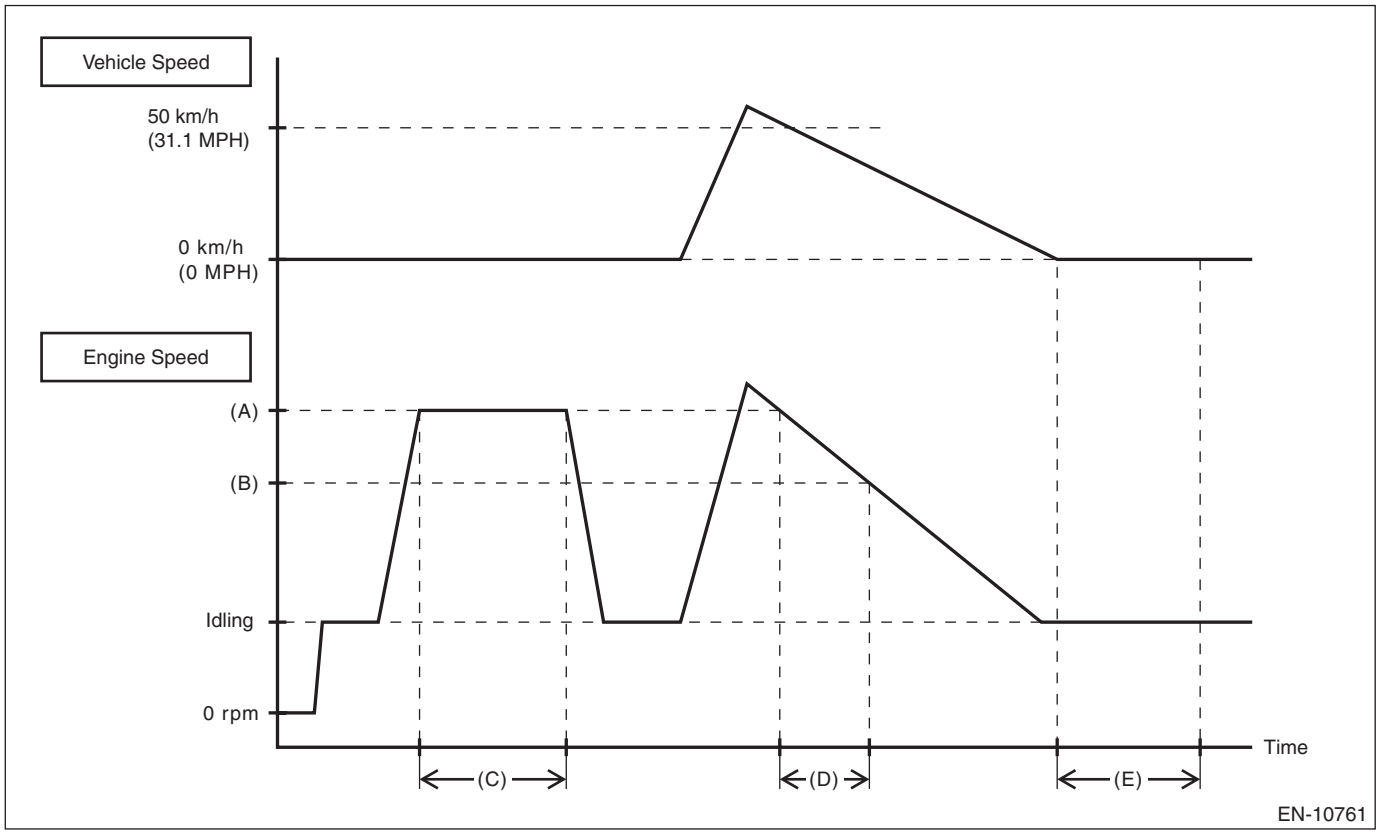

(A) 2500 rpm
(B) 1900 rpm
(C) 40 seconds or more
(D) 5 seconds or more
(E) 5 minutes or more

13.Clear Memory Mode

A: OPERATION

1. SUBARU SELECT MONITOR

NOTE:
• Initial diagnosis of electronic throttle control is performed after memory clearance. Wait for 10 seconds or more after turning the ignition switch to ON, and then start the engine.
• For detailed operation procedures, refer to “PC application help for Subaru Select Monitor”.

2. GENERAL SCAN TOOL

For clear memory procedures using the general scan tool, refer to “General Scan Tool Instruction Manual”.

NOTE:
Initial diagnosis of electronic throttle control is performed after memory clearance. Wait for 10 seconds or more after turning the ignition switch to ON, and then start the engine.

14. System Operation Check Mode

A: OPERATION

CAUTION:
After executing the system operation check mode, execute the Clear Memory Mode. <Ref. to EN(H4DO w/o HEV)(diag)-59, OPERATION, Clear Memory Mode.>

NOTE:
For detailed operation procedures, refer to “PC application help for Subaru Select Monitor”.

15.Malfunction Indicator Light

A: PROCEDURE

1. Activation of malfunction indicator light <Ref. to EN(H4DO w/o HEV)(diag)-61, ACTIVATION OF MALFUNCTION INDICATOR LIGHT, Malfunction Indicator Light.>
↓
2. Malfunction indicator light does not come on <Ref. to EN(H4DO w/o HEV)(diag)-62, MALFUNCTION INDICATOR LIGHT DOES NOT COME ON, Malfunction Indicator Light.>
↓
3. Malfunction indicator light does not go off <Ref. to EN(H4DO w/o HEV)(diag)-63, MALFUNCTION INDICATOR LIGHT DOES NOT GO OFF, Malfunction Indicator Light.>
↓
4. Malfunction indicator light does not blink <Ref. to EN(H4DO w/o HEV)(diag)-64, MALFUNCTION INDICATOR LIGHT DOES NOT BLINK, Malfunction Indicator Light.>
↓
5. Malfunction indicator light remains blinking <Ref. to EN(H4DO w/o HEV)(diag)-66, MALFUNCTION INDICATOR LIGHT REMAINS BLINKING, Malfunction Indicator Light.>

B: ACTIVATION OF MALFUNCTION INDICATOR LIGHT

1) When the ignition switch is turned to ON (engine OFF), the malfunction indicator light (A) in the combination meter illuminates.

NOTE:
If the malfunction indicator light does not illuminate, perform diagnostics of the malfunction indicator light circuit or the combination meter circuit. <Ref. to EN(H4DO w/o HEV)(diag)-62, MALFUNCTION INDICATOR LIGHT DOES NOT COME ON, Malfunction Indicator Light.>

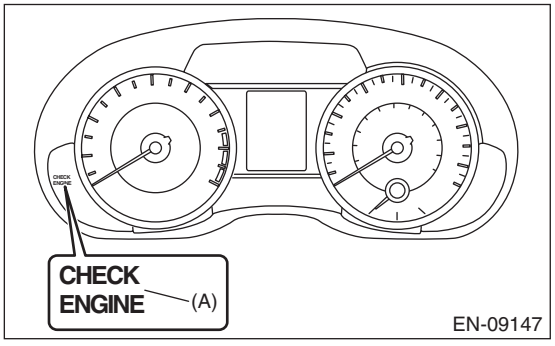

2) After starting the engine, the malfunction indicator light goes out. If it does not go off, any of the engine and emission control system has malfunction.

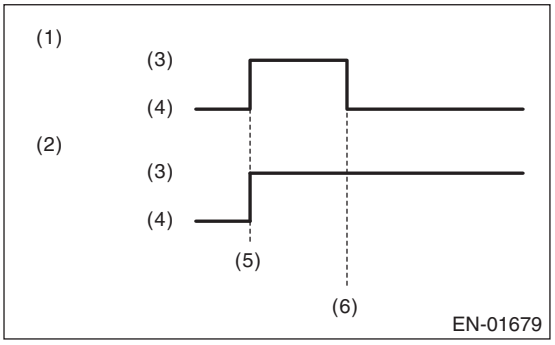

(1) No faulty
(2) Trouble occurs
(3) ON
(4) OFF
(5) Ignition switch ON
(6) Engine start

3) If the diagnostic system detects a misfire which could damage the catalyst, the malfunction indicator light will blink at a cycle of 1 Hz.

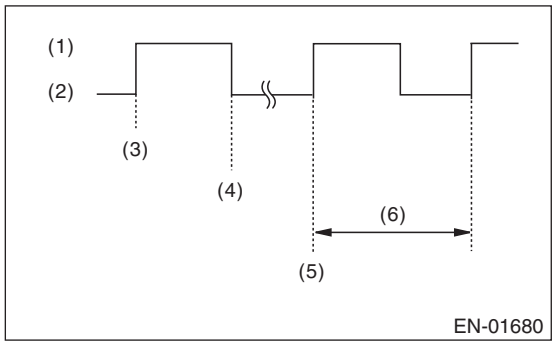

(1) ON
(2) OFF
(3) Ignition switch ON
(4) Engine start
(5) Misfire start
(6) 1 second

4) Install the delivery (test) mode fuse (A) with ignition switch to OFF.

CAUTION:
Do not use any fuses that are installed on the vehicle.

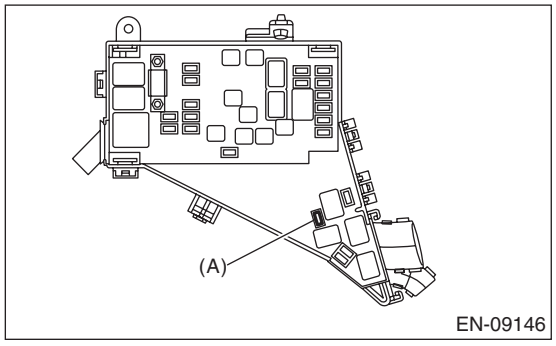

(1) When the ignition switch is turned to ON (engine OFF), the malfunction indicator light illuminates.
(2) After the engine starts, malfunction indicator light blinks in a cycle of 0.5 Hz. (During diagnosis)
(3) Malfunction indicator light blinks at a cycle of 3 Hz after diagnosis if there is no trouble. Malfunction indicator light illuminates if faulty.

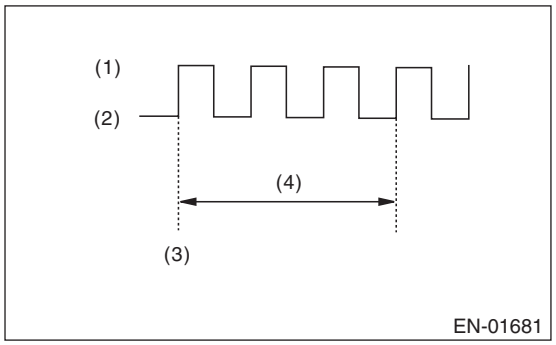

(1) ON
(2) OFF
(3) Ignition switch ON
(4) 1 second

C: MALFUNCTION INDICATOR LIGHT DOES NOT COME ON

TROUBLE SYMPTOM:
When the ignition switch is turned to ON (engine OFF), malfunction indicator light does not illuminate.

NOTE:
Refer to IDI section for diagnostic procedure. <Ref. to IDI(diag)-2, Basic Diagnostic Procedure.>

D: MALFUNCTION INDICATOR LIGHT DOES NOT GO OFF

TROUBLE SYMPTOM:
Although malfunction indicator light comes on when the engine runs, DTC is not shown on the Subaru Select Monitor or general scan tool display.

Step		Check	Yes	No
1	CHECK DTC.	Is DTC of engine or LAN system displayed? <Ref. to EN(H4DO w/o HEV)(diag)-43, OPERATION, Read Diagnostic Trouble Code (DTC).>	Check the appropriate DTC using the “List of Diagnostic Trouble Code (DTC)”. <Ref. to EN(H4DO w/o HEV)(diag)-83, List of Diagnostic Trouble Code (DTC).> <Ref. to LAN(w/o HEV)(diag)-50, List of Diagnostic Trouble Code (DTC).>	Check the combination meter system. <Ref. to IDI(diag)-2, Basic Diagnostic Procedure.>

E: MALFUNCTION INDICATOR LIGHT DOES NOT BLINK

DIAGNOSIS:

- The malfunction indicator light circuit is open or shorted.
- The delivery (test) mode fuse circuit is open.

TROUBLE SYMPTOM:

Malfunction indicator light does not blink during Inspection Mode.

WIRING DIAGRAM:

Engine electrical system <Ref. to WI(w/o HEV)-74, Engine Electrical System.>

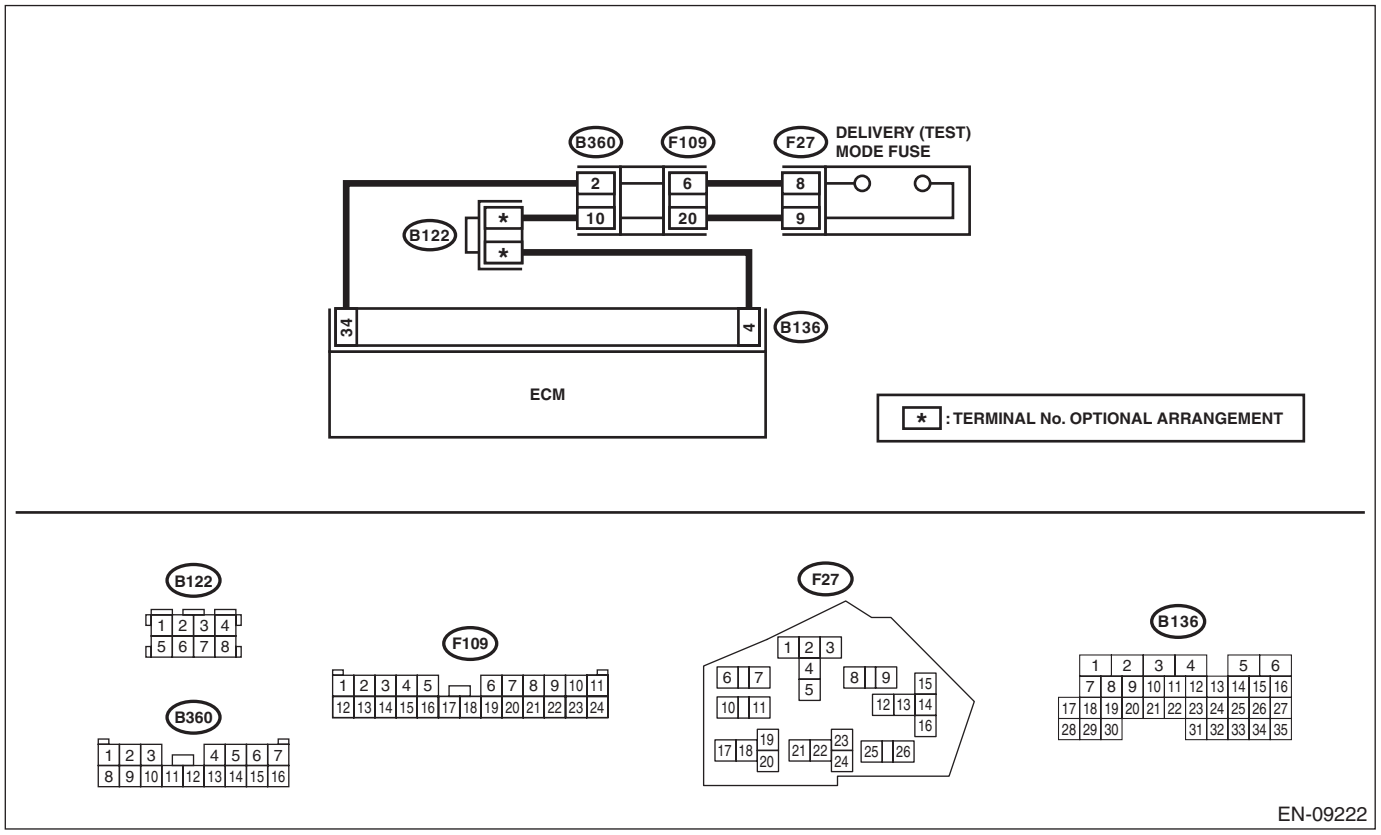

Step		Check	Yes	No
1	**CHECK STATUS OF MALFUNCTION INDICATOR LIGHT.** 1) Turn the ignition switch to OFF. 2) Check the delivery (test) mode fuse is removed. 3) Turn the ignition switch to ON. (engine OFF)	Does the malfunction indicator light illuminate?	Go to step **2**.	Repair the malfunction indicator light circuit. <Ref. to EN(H4DO w/o HEV)(diag)-62, MALFUNCTION INDICATOR LIGHT DOES NOT COME ON, Malfunction Indicator Light.>

	Step	Check	Yes	No
2	**CHECK HARNESS BETWEEN ECM AND DELIVERY (TEST) MODE FUSE.** 1) Turn the ignition switch to OFF. 2) Disconnect the connector from ECM. 3) Install the delivery (test) mode fuse. **CAUTION:** **Do not use any fuses that are installed on the vehicle.** 4) Measure the resistance of harness between ECM connectors. ***Connector & terminal*** ***(B136) No. 34 — (B136) No. 4:***	Is the resistance less than 1 Ω?	Go to step **3**.	Repair the harness and connector. NOTE: In this case, repair the following item: • Open circuit in harness between ECM connector • Poor contact of each connector between ECM connector
3	**CHECK FOR POOR CONTACT.** Check for poor contact of ECM connector.	Is there poor contact of ECM connector?	Repair the poor contact of ECM connector.	Replace the ECM. <Ref. to FU(H4DO(w/o HEV))-106, Engine Control Module (ECM).>

F: MALFUNCTION INDICATOR LIGHT REMAINS BLINKING

DIAGNOSIS:
The delivery (test) mode fuse circuit is short-circuited to ground.
TROUBLE SYMPTOM:
Malfunction indicator light blinks when delivery (test) mode fuse is not connected.
WIRING DIAGRAM:
Engine electrical system <Ref. to WI(w/o HEV)-74, Engine Electrical System.>

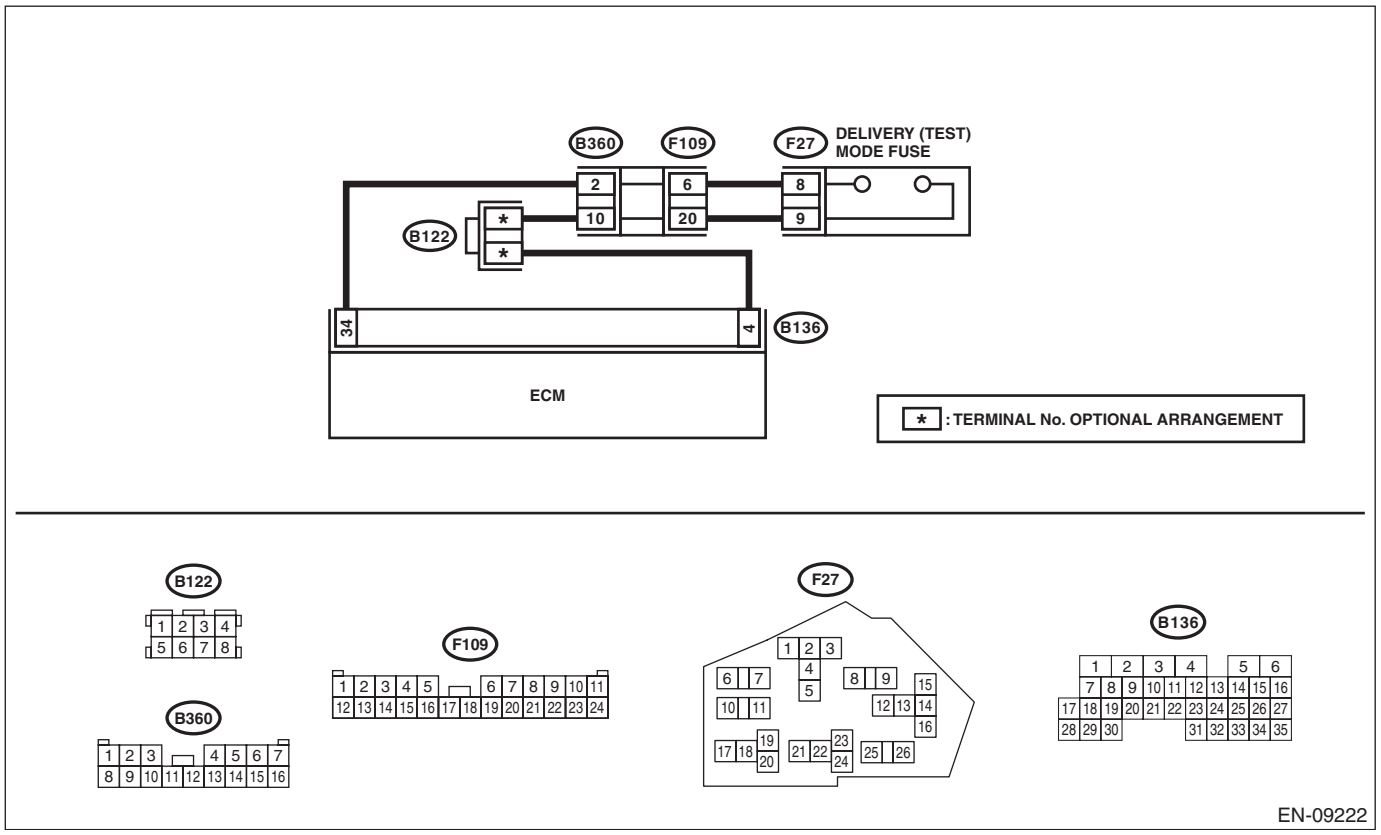

EN-09222

	Step	Check	Yes	No
1	**CHECK DELIVERY (TEST) MODE CONNECTOR.** 1) Check the delivery (test) mode fuse is removed. 2) Turn the ignition switch to ON.	Does the malfunction indicator light blink?	Go to step **2**.	System is normal. NOTE: Malfunction indicator light blinks at a cycle of 3 Hz when delivery (test) mode fuse is attached.
2	**CHECK HARNESS BETWEEN ECM AND DELIVERY (TEST) MODE FUSE.** 1) Turn the ignition switch to OFF. 2) Disconnect the connector from ECM. 3) Measure the resistance between ECM connector and chassis ground. ***Connector & terminal*** ***(B136) No. 34 — Chassis ground:***	Is the resistance 1 MΩ or more?	Replace the ECM. <Ref. to FU(H4DO(w/o HEV))-106, Engine Control Module (ECM).>	Repair the short circuit to ground in the harness between the ECM connector and delivery (test) mode fuse.

16.Diagnostics for Engine Starting Failure

A: PROCEDURE

1. Check of the fuel amount
↓
2. Inspection of starter motor circuit <Ref. to EN(H4DO w/o HEV)(diag)-68, STARTER MOTOR CIRCUIT, Diagnostics for Engine Starting Failure.>
↓
3. Inspection of ECM power supply and ground line <Ref. to EN(H4DO w/o HEV)(diag)-72, CHECK POWER SUPPLY AND GROUND LINE OF ENGINE CONTROL MODULE (ECM), Diagnostics for Engine Starting Failure.>
↓
4. Inspection of ignition control system <Ref. to EN(H4DO w/o HEV)(diag)-74, IGNITION CONTROL SYSTEM, Diagnostics for Engine Starting Failure.>
↓
5. Inspection of fuel pump circuit <Ref. to EN(H4DO w/o HEV)(diag)-76, FUEL PUMP CIRCUIT, Diagnostics for Engine Starting Failure.>
↓
6. Inspection of fuel injector circuit <Ref. to EN(H4DO w/o HEV)(diag)-79, FUEL INJECTOR CIRCUIT, Diagnostics for Engine Starting Failure.>

B: STARTER MOTOR CIRCUIT

CAUTION:
After servicing or replacing faulty parts, perform Clear Memory Mode <Ref. to EN(H4DO w/o HEV)(diag)-59, Clear Memory Mode.>, and Inspection Mode <Ref. to EN(H4DO w/o HEV)(diag)-44, Inspection Mode.>.

WIRING DIAGRAM:
Engine electrical system <Ref. to WI(w/o HEV)-74, Engine Electrical System.>

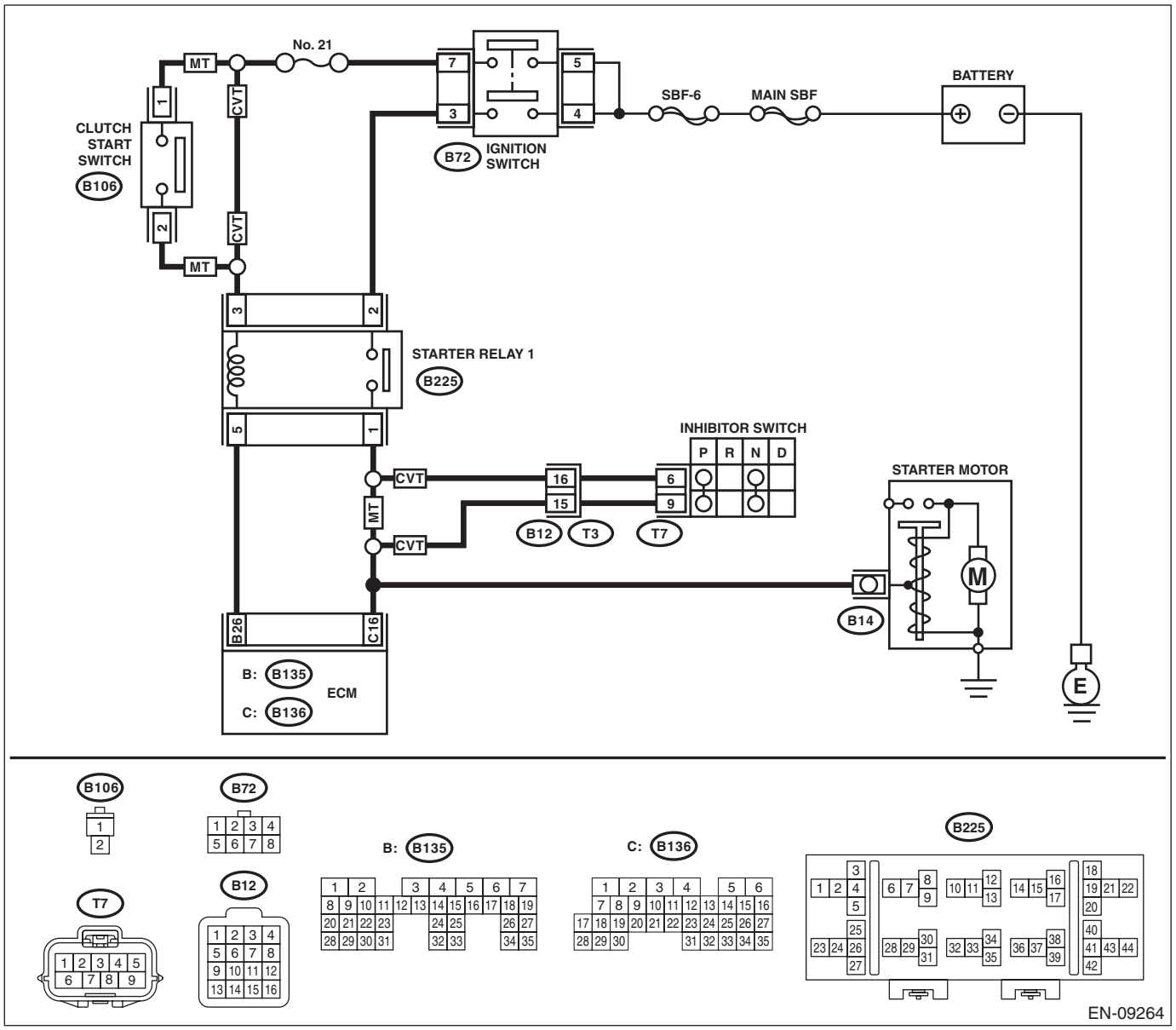

Step		Check	Yes	No
1	**CHECK BATTERY.** Check the battery. <Ref. to SC(H4DO(w/o HEV))-55, Battery.>	Is the battery OK?	Go to step **2**.	Charge or replace the battery. <Ref. to SC(H4DO(w/o HEV))-55, Battery.>
2	**CHECK OPERATION OF STARTER MOTOR.**	Does the starter motor operate?	Go to step **3**.	Go to step **4**.

	Step	Check	Yes	No
3	**CHECK DTC.**	Is DTC displayed? <Ref. to EN(H4DO w/o HEV)(diag)-43, OPERATION, Read Diagnostic Trouble Code (DTC).>	Check the appropriate DTC using the "List of Diagnostic Trouble Code (DTC)". <Ref. to EN(H4DO w/o HEV)(diag)-83, List of Diagnostic Trouble Code (DTC).>	Check ignition control system. <Ref. to EN(H4DO w/o HEV)(diag)-74, IGNITION CONTROL SYSTEM, Diagnostics for Engine Starting Failure.>
4	**CHECK INPUT SIGNAL FOR STARTER MOTOR.** 1) Turn the ignition switch to OFF. 2) Disconnect the connector from starter motor. 3) Turn the ignition switch to START. 4) Measure the voltage between the starter motor connector and the engine ground. ***Connector & terminal*** ***(B14) No. 1 (+) — Engine ground (–):*** NOTE: • For CVT model, place the select lever in "P" range or "N" range. • For MT model, depress the clutch pedal.	Is the voltage 10 V or more?	Check the starter motor. <Ref. to SC(H4DO(w/o HEV))-9, Starter.>	Go to step **5**.
5	**CHECK HARNESS BETWEEN BATTERY AND IGNITION SWITCH CONNECTOR.** 1) Turn the ignition switch to OFF. 2) Disconnect the connector from ignition switch. 3) Measure the power supply voltage between ignition switch connector and chassis ground. ***Connector & terminal*** ***(B72) No. 4 (+) — Chassis ground (–):*** ***(B72) No. 5 (+) — Chassis ground (–):***	Is the voltage 10 V or more?	Go to step **6**.	Repair the power supply circuit.
6	**CHECK IGNITION SWITCH.** Measure the resistance between ignition switch terminals after turning the ignition switch to START position. ***Terminals*** ***No. 3 — No. 4:*** ***No. 5 — No. 7:***	Is the resistance less than 1 Ω?	Go to step **7**.	Replace the ignition switch. <Ref. to SL-65, REPLACEMENT, Ignition Key Lock.>
7	**CHECK INPUT VOLTAGE OF STARTER RELAY 1.** 1) Turn the ignition switch to OFF. 2) Remove the starter relay 1. 3) Connect the connector to ignition switch. 4) Measure the voltage between starter relay 1 connector and chassis ground after turning the ignition switch to START position. ***Connector & terminal*** ***(B225) No. 2 (+) — Chassis ground (–):***	Is the voltage 10 V or more?	Go to step **8**.	Repair the open circuit of harness between starter relay 1 and ignition switch connector.
8	**CHECK HARNESS BETWEEN ECM AND STARTER RELAY 1 CONNECTOR.** 1) Turn the ignition switch to OFF. 2) Disconnect the connector from ECM. 3) Measure the resistance of harness between ECM connector and starter relay 1 connector. ***Connector & terminal*** ***(B135) No. 26 — (B225) No. 5:***	Is the resistance less than 1 Ω?	Go to step **9**.	Repair the open circuit of harness between ECM connector and starter relay 1 connector.

	Step	Check	Yes	No
9	**CHECK STARTER RELAY 1.** 1) Connect the battery to starter relay 1 terminals No. 3 and No. 5. 2) Measure the resistance between starter relay 1 terminals. ***Terminals*** ***No. 1 — No. 2:***	Is the resistance less than 1 Ω?	Go to step **10**.	Replace the starter relay 1. <Ref. to EN(H4DO w/o HEV)(diag)-9, Electrical Component Location.>
10	**CHECK TRANSMISSION TYPE.**	Is the transmission type CVT?	Go to step **11**.	Go to step **15**.
11	**CHECK INPUT VOLTAGE OF STARTER RELAY 1.** Measure the voltage between starter relay 1 connector and chassis ground after turning the ignition switch to START position. ***Connector & terminal*** ***(B225) No. 3 (+) — Chassis ground (–):***	Is the voltage 10 V or more?	Go to step **12**.	Check the following item and repair if necessary. • Blown out of fuse • Open or short circuit to ground in harness between starter relay 1 and ignition switch connector
12	**CHECK HARNESS BETWEEN STARTER RELAY 1 AND INHIBITOR SWITCH CONNECTOR.** 1) Turn the ignition switch to OFF. 2) Disconnect the connector from inhibitor switch. 3) Measure the resistance of harness between starter relay 1 connector and inhibitor switch connector. ***Connector & terminal*** ***(B225) No. 1 — (T7) No. 6:***	Is the resistance less than 1 Ω?	Go to step **13**.	Repair the harness and connector. NOTE: In this case, repair the following item: • Open circuit in harness between starter relay 1 connector and inhibitor switch connector • Poor contact of coupling connector
13	**CHECK HARNESS BETWEEN INHIBITOR SWITCH AND STARTER MOTOR.** Measure the resistance of harness between the inhibitor switch connector and starter motor. ***Connector & terminal*** ***(T7) No. 9 — (B14) No. 1:***	Is the resistance less than 1 Ω?	Go to step **14**.	Repair the harness and connector. NOTE: In this case, repair the following item: • Open circuit in harness between inhibitor switch connector and starter motor • Poor contact of coupling connector
14	**CHECK INHIBITOR SWITCH.** 1) Place the select lever in “P” range and “N” range. 2) Measure the resistance between inhibitor switch terminals. ***Terminals*** ***No. 6 — No. 9:***	Is the resistance less than 1 Ω?	Check the engine control module (ECM) power supply and ground line. <Ref. to EN(H4DO w/o HEV)(diag)-72, CHECK POWER SUPPLY AND GROUND LINE OF ENGINE CONTROL MODULE (ECM), Diagnostics for Engine Starting Failure.>	Replace the inhibitor switch. <Ref. to CVT(TR580)-92, Inhibitor Switch.>

	Step	Check	Yes	No
15	**CHECK INPUT VOLTAGE OF CLUTCH START SWITCH.** 1) Disconnect the connector from clutch start switch. 2) Turn the ignition switch to START. 3) Measure the voltage between the clutch start switch connector and chassis ground. ***Connector & terminal*** ***(B106) No. 1 (+) — Chassis ground (–):***	Is the voltage 10 V or more?	Go to step **16**.	Check the following item and repair if necessary. • Blown out of fuse • Open or short circuit to ground in harness between ignition switch connector and clutch start switch connector
16	**CHECK CLUTCH START SWITCH.** 1) Turn the ignition switch to OFF. 2) Measure the resistance between clutch start switch terminals while keeping the clutch pedal depressed. ***Terminals*** ***No. 1 — No. 2:***	Is the resistance less than 1 Ω?	Go to step **17**.	Replace the clutch start switch. <Ref. to CL-28, Clutch Switch.>
17	**CHECK HARNESS BETWEEN STARTER RELAY 1 AND CLUTCH START SWITCH.** Measure the resistance of harness between starter relay 1 and clutch start switch connector. ***Connector & terminal*** ***(B225) No. 3 — (B106) No. 2:***	Is the resistance less than 1 Ω?	Go to step **18**.	Repair the open circuit in harness between starter relay 1 and clutch start switch connector.
18	**CHECK HARNESS BETWEEN STARTER RELAY 1 AND STARTER MOTOR.** Measure the resistance of harness between starter relay 1 connector and starter motor. ***Connector & terminal*** ***(B225) No. 1 — (B14) No. 1:***	Is the resistance less than 1 Ω?	Check the engine control module (ECM) power supply and ground line. <Ref. to EN(H4DO w/o HEV)(diag)-72, CHECK POWER SUPPLY AND GROUND LINE OF ENGINE CONTROL MODULE (ECM), Diagnostics for Engine Starting Failure.>	Repair the open circuit of the harness between starter relay 1 connector and starter motor.

C: CHECK POWER SUPPLY AND GROUND LINE OF ENGINE CONTROL MODULE (ECM)

CAUTION:
After servicing or replacing faulty parts, perform Clear Memory Mode <Ref. to EN(H4DO w/o HEV)(diag)-59, OPERATION, Clear Memory Mode.>, and Inspection Mode <Ref. to EN(H4DO w/o HEV)(diag)-44, PROCEDURE, Inspection Mode.>.

WIRING DIAGRAM:
Engine electrical system <Ref. to WI(w/o HEV)-74, Engine Electrical System.>

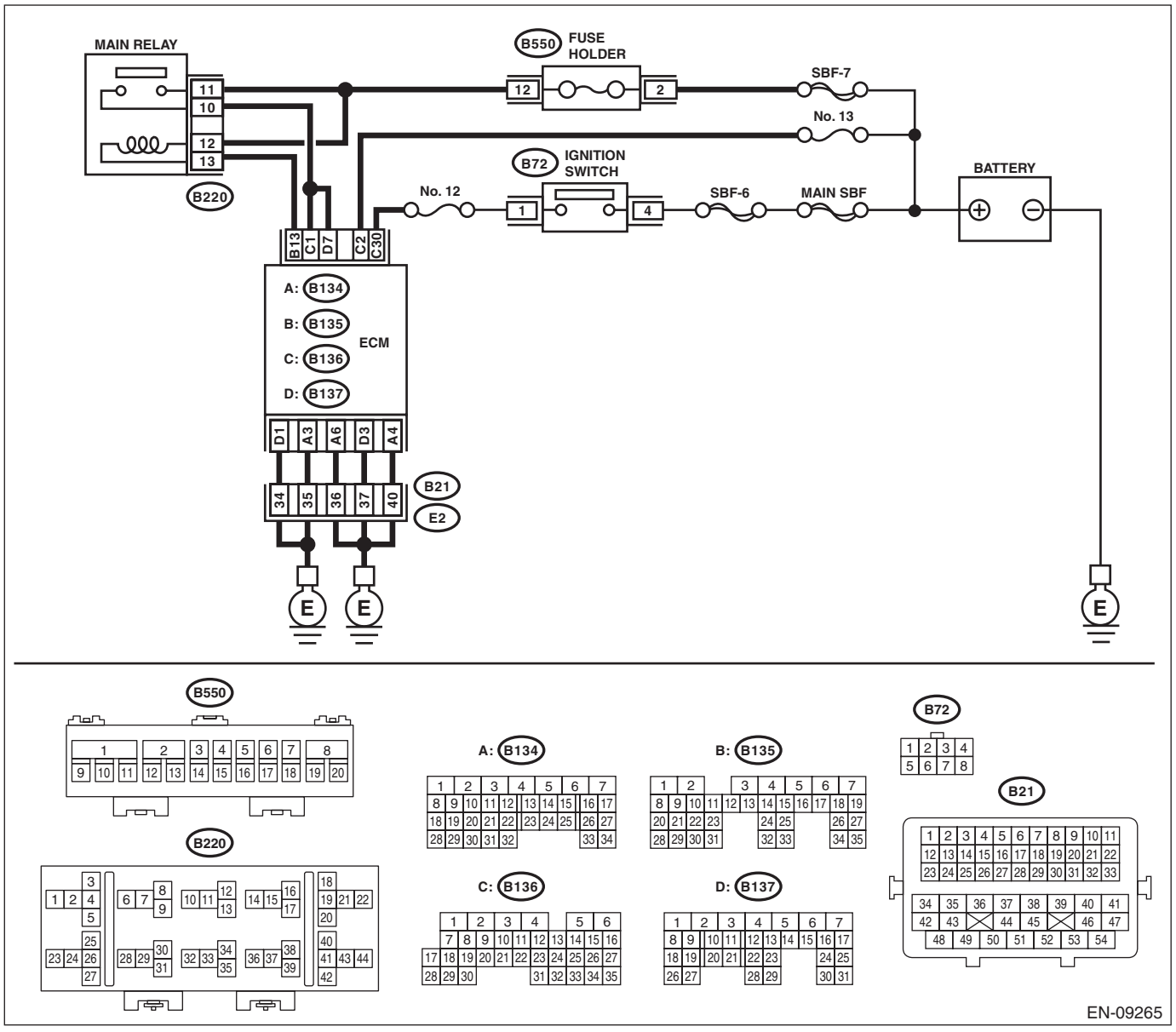

Step		Check	Yes	No
1	**CHECK MAIN RELAY.** 1) Turn the ignition switch to OFF. 2) Remove the main relay. 3) Connect the battery to main relay terminals No. 12 and No. 13. 4) Measure the resistance between main relay terminals. ***Terminals*** ***No. 10 — No. 11:***	Is the resistance less than 1 Ω?	Go to step **2**.	Replace the main relay. <Ref. to FU(H4DO(w/o HEV))-109, Main Relay.>

	Step	Check	Yes	No
2	**CHECK GROUND CIRCUIT FOR ECM.** 1) Disconnect the connector from ECM. 2) Measure the resistance of harness between ECM connector and chassis ground. ***Connector & terminal*** ***(B134) No. 3 — Chassis ground:*** ***(B134) No. 4 — Chassis ground:*** ***(B134) No. 6 — Chassis ground:*** ***(B137) No. 1 — Chassis ground:*** ***(B137) No. 3 — Chassis ground:***	Is the resistance less than 5 Ω?	Go to step **3**.	Repair the harness and connector. NOTE: In this case, repair the following item: • Open circuit of harness between ECM connector and engine ground terminal • Poor contact of coupling connector
3	**CHECK INPUT VOLTAGE OF ECM.** 1) Turn the ignition switch to ON. 2) Measure the voltage between ECM connector and chassis ground. ***Connector & terminal*** ***(B136) No. 2 (+) — Chassis ground (–):*** ***(B136) No. 30 (+) — Chassis ground (–):***	Is the voltage 10 V or more?	Go to step **4**.	Repair the open or ground short circuit of harness of power supply circuit.
4	**CHECK INPUT VOLTAGE OF MAIN RELAY.** Measure the voltage between main relay connector and chassis ground. ***Connector & terminal*** ***(B220) No. 11 (+) — Chassis ground (–):*** ***(B220) No. 12 (+) — Chassis ground (–):***	Is the voltage 10 V or more?	Go to step **5**.	Repair the open or ground short circuit of harness of power supply circuit.
5	**CHECK INPUT VOLTAGE OF ECM.** 1) Turn the ignition switch to OFF. 2) Install the main relay. 3) Turn the ignition switch to ON. 4) Measure the voltage between ECM connector and chassis ground. ***Connector & terminal*** ***(B135) No. 13 (+) — Chassis ground (–):***	Is the voltage 10 V or more?	Go to step **6**.	Repair the open circuit of harness between ECM connector and main relay connector.
6	**CHECK INPUT VOLTAGE OF ECM.** 1) Turn the ignition switch to OFF. 2) Connect the connector to ECM. 3) Turn the ignition switch to ON. 4) Measure the voltage between ECM connector and chassis ground. ***Connector & terminal*** ***(B136) No. 1 (+) — Chassis ground (–):*** ***(B137) No. 7 (+) — Chassis ground (–):***	Is the voltage 10 V or more?	Check ignition control system. <Ref. to EN(H4DO w/o HEV)(diag)-74, IGNITION CONTROL SYSTEM, Diagnostics for Engine Starting Failure.>	Repair the harness and connector. NOTE: In this case, repair the following item: • Open circuit in harness between ECM connector and main relay connector • Poor contact of main relay connector • Poor contact of ECM connector

D: IGNITION CONTROL SYSTEM

CAUTION:
After servicing or replacing faulty parts, perform Clear Memory Mode <Ref. to EN(H4DO w/o HEV)(diag)-59, Clear Memory Mode.>, and Inspection Mode <Ref. to EN(H4DO w/o HEV)(diag)-44, Inspection Mode.>.

WIRING DIAGRAM:
Engine electrical system <Ref. to WI(w/o HEV)-74, Engine Electrical System.>

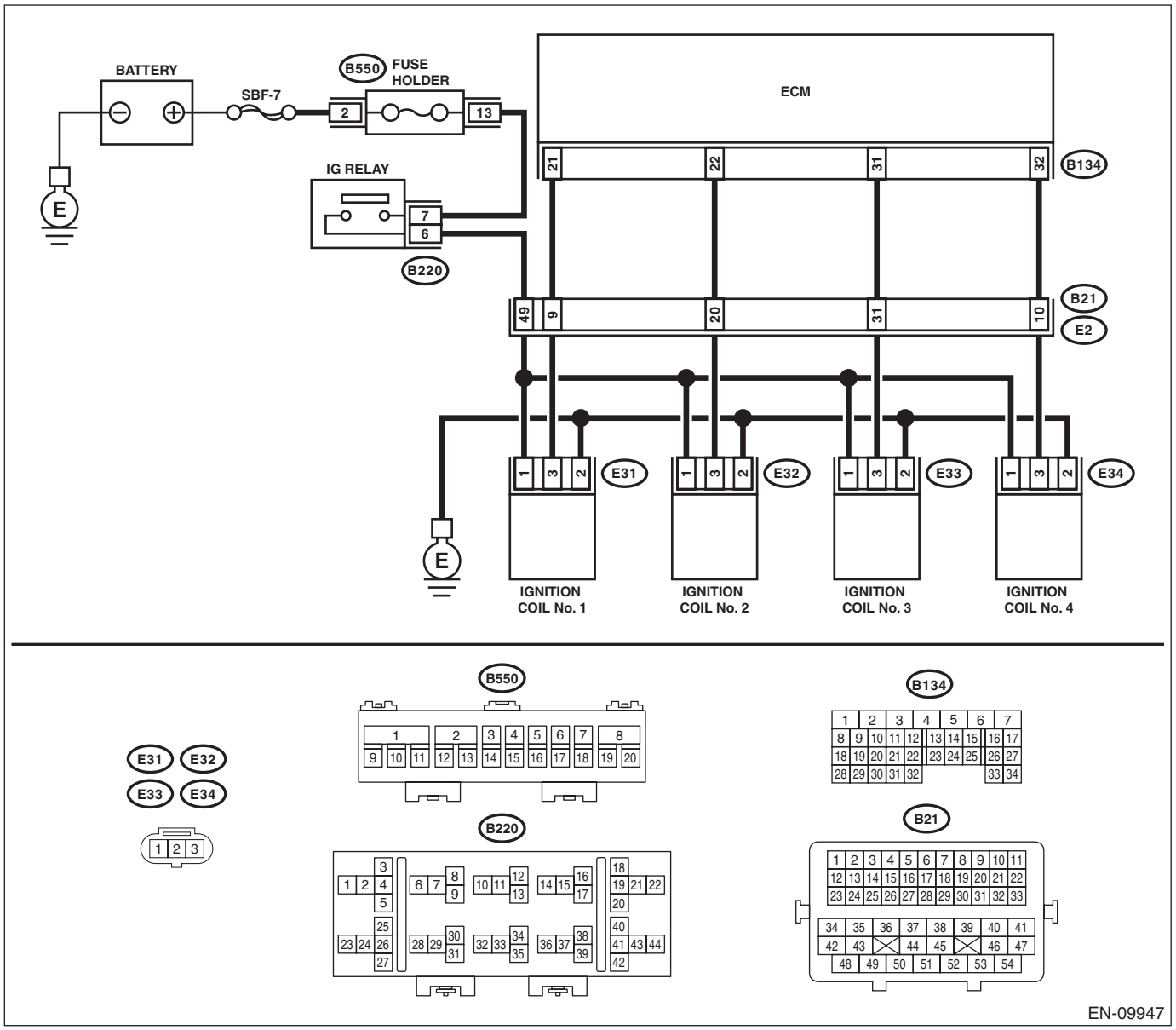

Step		Check	Yes	No
1	**CHECK SPARK PLUG CONDITION.** 1) Remove the spark plug. <Ref. to IG(H4DO(w/o HEV))-4, REMOVAL, Spark Plug.> 2) Check the spark plug condition. <Ref. to IG(H4DO(w/o HEV))-6, INSPECTION, Spark Plug.>	Is the spark plug condition normal?	Go to step **2**.	Replace the spark plug. <Ref. to IG(H4DO(w/o HEV))-4, Spark Plug.>

	Step	Check	Yes	No
2	**CHECK IGNITION SYSTEM FOR SPARKS.** 1) Connect the spark plug to ignition coil. 2) Release the fuel pressure. <Ref. to FU(H4DO(w/o HEV))-116, RELEASING OF FUEL PRESSURE, PROCEDURE, Fuel.> 3) Contact the spark plug thread portion to engine. 4) While opening the throttle valve fully, crank the engine to check that spark occurs at each cylinder.	Does spark occur at each cylinder?	Check fuel pump system. <Ref. to EN(H4DO w/o HEV)(diag)-76, FUEL PUMP CIRCUIT, Diagnostics for Engine Starting Failure.>	Go to step **3**.
3	**CHECK IGNITION COIL POWER SUPPLY CIRCUIT.** 1) Turn the ignition switch to OFF. 2) Disconnect the connector from ignition coil. 3) Turn the ignition switch to ON. 4) Measure the voltage between ignition coil connector and engine ground. ***Connector & terminal*** ***(E31) No. 1 (+) — Engine ground (–):*** ***(E32) No. 1 (+) — Engine ground (–):*** ***(E33) No. 1 (+) — Engine ground (–):*** ***(E34) No. 1 (+) — Engine ground (–):***	Is the voltage 10 V or more?	Go to step **4**.	Repair the harness and connector. NOTE: In this case, repair the following item: • Open circuit or short circuit to ground in harness of power supply circuit • Poor contact of coupling connector • Blown out of fuse
4	**CHECK HARNESS OF IGNITION COIL GROUND CIRCUIT.** 1) Turn the ignition switch to OFF. 2) Measure the resistance of harness between ignition coil connector and engine ground. ***Connector & terminal*** ***(E31) No. 2 — Engine ground:*** ***(E32) No. 2 — Engine ground:*** ***(E33) No. 2 — Engine ground:*** ***(E34) No. 2 — Engine ground:***	Is the resistance less than 5 Ω?	Go to step **5**.	Repair the open circuit in harness between ignition coil connector and engine grounding terminal.
5	**CHECK HARNESS BETWEEN ECM AND IGNITION COIL CONNECTOR.** 1) Disconnect the connector from ECM. 2) Measure the resistance of harness between ECM connector and ignition coil connector. ***Connector & terminal*** ***(B134) No. 21 — (E31) No. 3:*** ***(B134) No. 22 — (E32) No. 3:*** ***(B134) No. 31 — (E33) No. 3:*** ***(B134) No. 32 — (E34) No. 3:***	Is the resistance less than 1 Ω?	Go to step **6**.	Repair the harness and connector. NOTE: In this case, repair the following item: • Open circuit of harness between ECM connector and the ignition coil connector • Poor contact of coupling connector
6	**CHECK HARNESS BETWEEN ECM AND IGNITION COIL CONNECTOR.** Measure the resistance of harness between ECM connector and engine ground. ***Connector & terminal:*** ***(B134) No. 21 — Engine ground:*** ***(B134) No. 22 — Engine ground:*** ***(B134) No. 31 — Engine ground:*** ***(B134) No. 32 — Engine ground:***	Is the resistance 1 MΩ or more?	Go to step **7**.	Repair the ground short circuit of harness between ECM connector and ignition coil connector.
7	**CHECK FOR POOR CONTACT.** Check for poor contact of ECM connector.	Is there poor contact of ECM connector?	Repair the poor contact of ECM connector.	Replace the ignition coil. <Ref. to IG(H4DO(w/o HEV))-11, Ignition Coil.>

E: FUEL PUMP CIRCUIT

CAUTION:
After servicing or replacing faulty parts, perform Clear Memory Mode <Ref. to EN(H4DO w/o HEV)(diag)-59, OPERATION, Clear Memory Mode.>, and Inspection Mode <Ref. to EN(H4DO w/o HEV)(diag)-44, PROCEDURE, Inspection Mode.>.

WIRING DIAGRAM:

Engine electrical system <Ref. to WI(w/o HEV)-74, Engine Electrical System.>

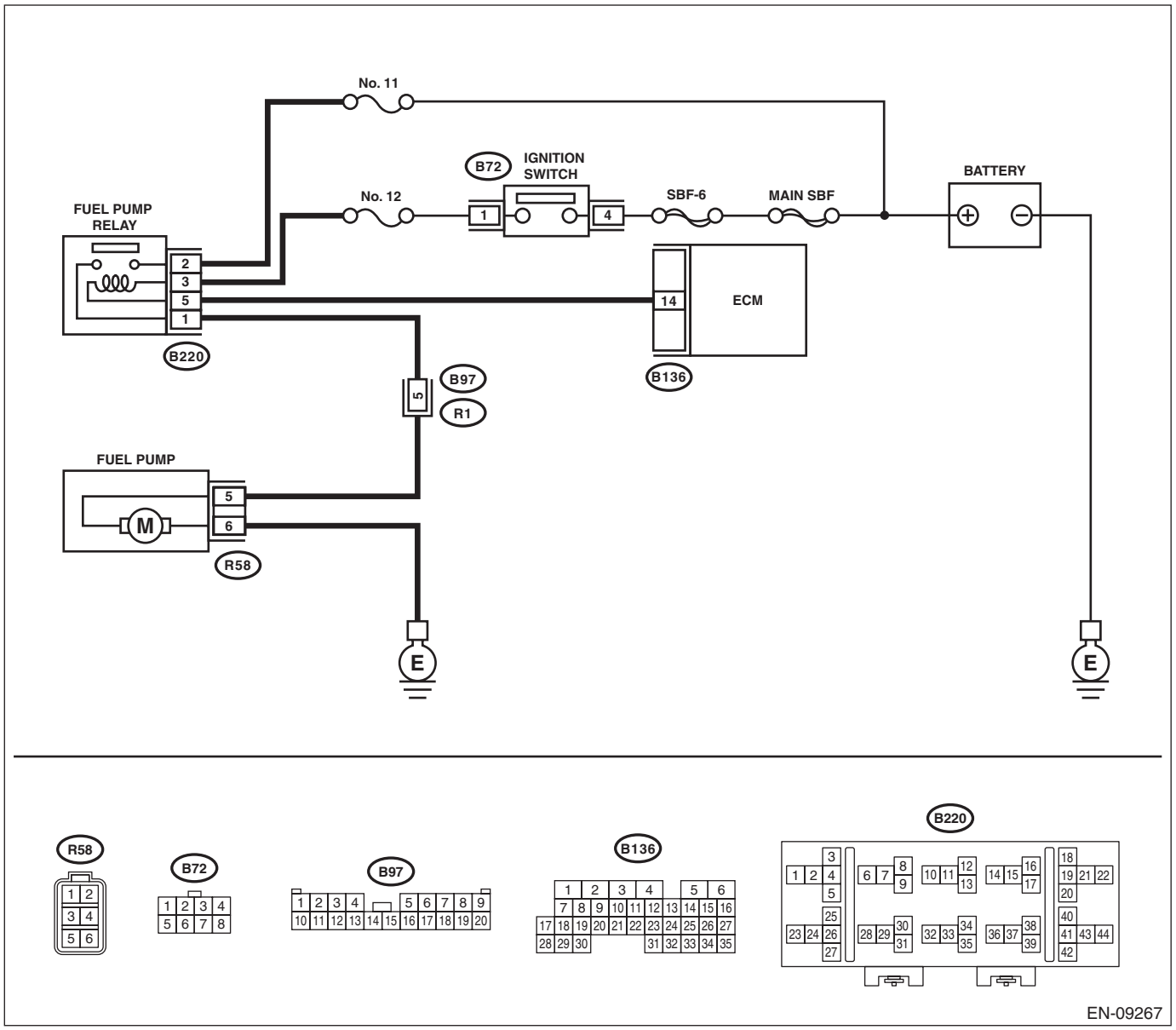

	Step	Check	Yes	No
1	**CHECK OPERATING SOUND OF FUEL PUMP.** Check if the fuel pump operates for two seconds when turning the ignition switch to ON. NOTE: Fuel pump operation can be executed using the Subaru Select Monitor. For detailed procedures, refer to "SYSTEM OPERATION CHECK MODE". <Ref. to EN(H4DO w/o HEV)(diag)-60, System Operation Check Mode.>	Does the fuel pump emit operating sound?	Check the fuel injector circuit. <Ref. to EN(H4DO w/o HEV)(diag)-79, FUEL INJECTOR CIRCUIT, Diagnostics for Engine Starting Failure.>	Go to step **2**.
2	**CHECK GROUND CIRCUIT OF FUEL PUMP.** 1) Turn the ignition switch to OFF. 2) Remove the fuel pump access hole lid. 3) Disconnect the connector from fuel pump. 4) Measure the resistance of harness between fuel pump and chassis ground. ***Connector & terminal*** ***(R58) No. 6 — Chassis ground:***	Is the resistance less than 5 Ω?	Go to step **3**.	Repair the open circuit in harness between fuel pump connector and chassis ground terminal.
3	**CHECK POWER SUPPLY TO FUEL PUMP.** 1) Turn the ignition switch to ON. 2) Measure the voltage of power supply circuit between fuel pump connector and chassis ground. ***Connector & terminal*** ***(R58) No. 5 (+) — Chassis ground (–):***	Is the voltage 10 V or more?	Replace the fuel pump. <Ref. to FU(H4DO(w/o HEV))-141, Fuel Pump.>	Go to step **4**.
4	**CHECK HARNESS BETWEEN FUEL PUMP CONNECTOR AND FUEL PUMP RELAY CONNECTOR.** 1) Turn the ignition switch to OFF. 2) Remove the fuel pump relay. 3) Measure the resistance of harness between fuel pump connector and fuel pump relay connector. ***Connector & terminal*** ***(R58) No. 5 — (B220) No. 1:***	Is the resistance less than 1 Ω?	Go to step **5**.	Repair the harness and connector. NOTE: In this case, repair the following item: • Open circuit in harness between fuel pump connector and fuel pump relay connector • Poor contact of coupling connector
5	**CHECK HARNESS BETWEEN FUEL PUMP CONNECTOR AND FUEL PUMP RELAY CONNECTOR.** Measure the resistance between fuel pump connector and chassis ground. ***Connector & terminal*** ***(R58) No. 5 — Chassis ground:***	Is the resistance 1 MΩ or more?	Go to step **6**.	Repair the short circuit to ground in harness between fuel pump connector and fuel pump relay connector.
6	**CHECK FUEL PUMP RELAY.** 1) Connect the battery to fuel pump relay terminals No. 3 and No. 5. 2) Measure the resistance between fuel pump relay terminals. ***Terminals*** ***No. 1 — No. 2:***	Is the resistance less than 1 Ω?	Go to step **7**.	Replace the fuel pump relay. <Ref. to FU(H4DO(w/o HEV))-111, Fuel Pump Relay.>
7	**CHECK HARNESS BETWEEN ECM AND FUEL PUMP RELAY CONNECTOR.** 1) Disconnect the connector from ECM. 2) Measure the resistance of harness between ECM connector and fuel pump relay connector. ***Connector & terminal*** ***(B136) No. 14 — (B220) No. 5:***	Is the resistance less than 1 Ω?	Go to step **8**.	Repair the open circuit of harness between ECM connector and fuel pump relay connector.

	Step	Check	Yes	No
8	**CHECK POWER SUPPLY OF FUEL PUMP RELAY.** 1) Turn the ignition switch to ON. 2) Measure the voltage between fuel pump relay connector and chassis ground. ***Connector & terminal*** ***(B220) No. 2 (+) — Chassis ground (–):*** ***(B220) No. 3 (+) — Chassis ground (–):***	Is the voltage 10 V or more?	Repair the poor contact of ECM connector.	Repair the open or ground short circuit of harness of power supply circuit.

F: FUEL INJECTOR CIRCUIT

CAUTION:
- **Check or repair only faulty parts.**
- **After servicing or replacing faulty parts, perform Clear Memory Mode <Ref. to EN(H4DO w/o HEV)(diag)-59, OPERATION, Clear Memory Mode.>, and Inspection Mode <Ref. to EN(H4DO w/o HEV)(diag)-44, PROCEDURE, Inspection Mode.>.**

WIRING DIAGRAM:
Engine electrical system <Ref. to WI(w/o HEV)-74, Engine Electrical System.>

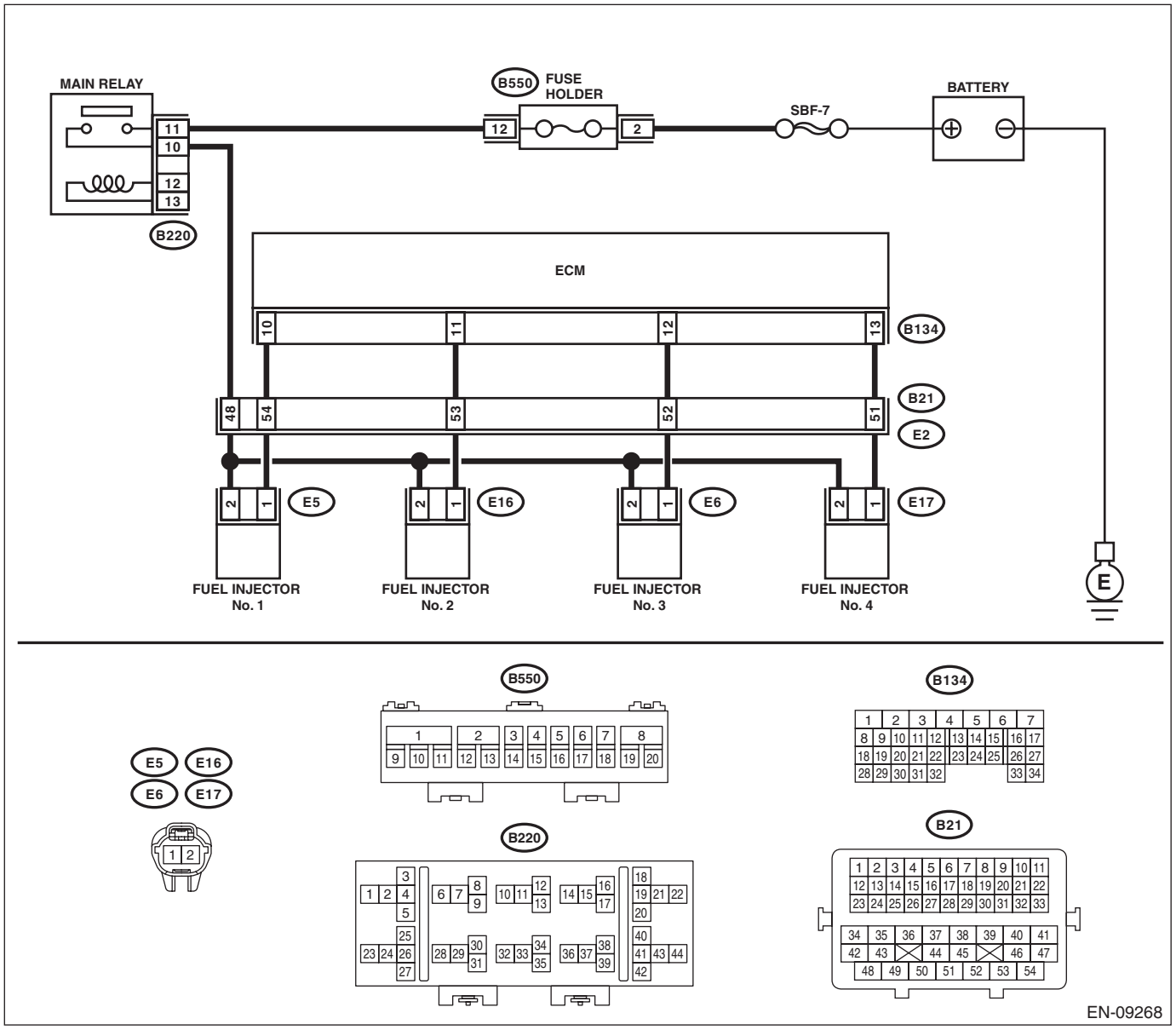

Step		Check	Yes	No
1	**CHECK OPERATION OF EACH FUEL INJECTOR.** While cranking the engine, check each fuel injector emits operating sound. Use a sound scope or attach a screwdriver to the injector to listen to sounds for this check.	Does the fuel injector emit operating sound?	Check the fuel pressure. <Ref. to ME(H4DO(w/o HEV))-35, INSPECTION, Fuel Pressure.>	Go to step **2**.

	Step	Check	Yes	No
2	**CHECK POWER SUPPLY TO EACH FUEL INJECTOR.** 1) Turn the ignition switch to OFF. 2) Disconnect the connector from fuel injector. 3) Turn the ignition switch to ON. 4) Measure the power supply voltage between fuel injector terminal and engine ground. ***Connector & terminal*** ***#1 (E5) No. 2 (+) — Engine ground (–):*** ***#2 (E16) No. 2 (+) — Engine ground (–):*** ***#3 (E6) No. 2 (+) — Engine ground (–):*** ***#4 (E17) No. 2 (+) — Engine ground (–):***	Is the voltage 10 V or more?	Go to step **3**.	Repair the harness and connector. NOTE: In this case, repair the following item: • Open circuit in harness between main relay connector and fuel injector connector • Poor contact of main relay connector • Poor contact of coupling connector
3	**CHECK HARNESS BETWEEN ECM AND FUEL INJECTOR CONNECTOR.** 1) Turn the ignition switch to OFF. 2) Disconnect the connector from ECM. 3) Measure the resistance of harness between ECM connector and fuel injector connector. ***Connector & terminal*** ***#1 (B134) No. 10 — (E5) No. 1:*** ***#2 (B134) No. 11 — (E16) No. 1:*** ***#3 (B134) No. 12 — (E6) No. 1:*** ***#4 (B134) No. 13 — (E17) No. 1:***	Is the resistance less than 1 Ω?	Go to step **4**.	Repair the harness and connector. NOTE: In this case, repair the following item: • Open circuit in harness between ECM connector and fuel injector connector • Poor contact of coupling connector
4	**CHECK HARNESS BETWEEN ECM AND FUEL INJECTOR CONNECTOR.** Measure the resistance between ECM connector and chassis ground. ***Connector & terminal*** ***#1 (B134) No. 10 — Chassis ground:*** ***#2 (B134) No. 11 — Chassis ground:*** ***#3 (B134) No. 12 — Chassis ground:*** ***#4 (B134) No. 13 — Chassis ground:***	Is the resistance 1 MΩ or more?	Go to step **5**.	Repair the short circuit to ground in harness between ECM connector and fuel injector connector.
5	**CHECK EACH FUEL INJECTOR.** Measure the resistance between each fuel injector terminals. ***Terminals*** ***No. 1 — No. 2:***	Is the resistance 5 — 20 Ω?	Go to step **6**.	Replace the faulty fuel injector. <Ref. to FU(H4DO(w/o HEV))-84, Fuel Injector.>
6	**CHECK FOR POOR CONTACT.** Check for poor contact of ECM connector.	Is there poor contact of ECM connector?	Repair the poor contact of ECM connector.	Inspection using “General Diagnostic Table” <Ref. to EN(H4DO w/o HEV)(diag)-361, INSPECTION, General Diagnostic Table.>

17.Diagnostic Procedure for Subaru Select Monitor Communication

A: COMMUNICATION FOR INITIALIZING IMPOSSIBLE

DIAGNOSIS:
Open or short circuit in data link connector
TROUBLE SYMPTOM:
Subaru Select Monitor communication failure
WIRING DIAGRAM:
Engine electrical system <Ref. to WI(w/o HEV)-74, Engine Electrical System.>

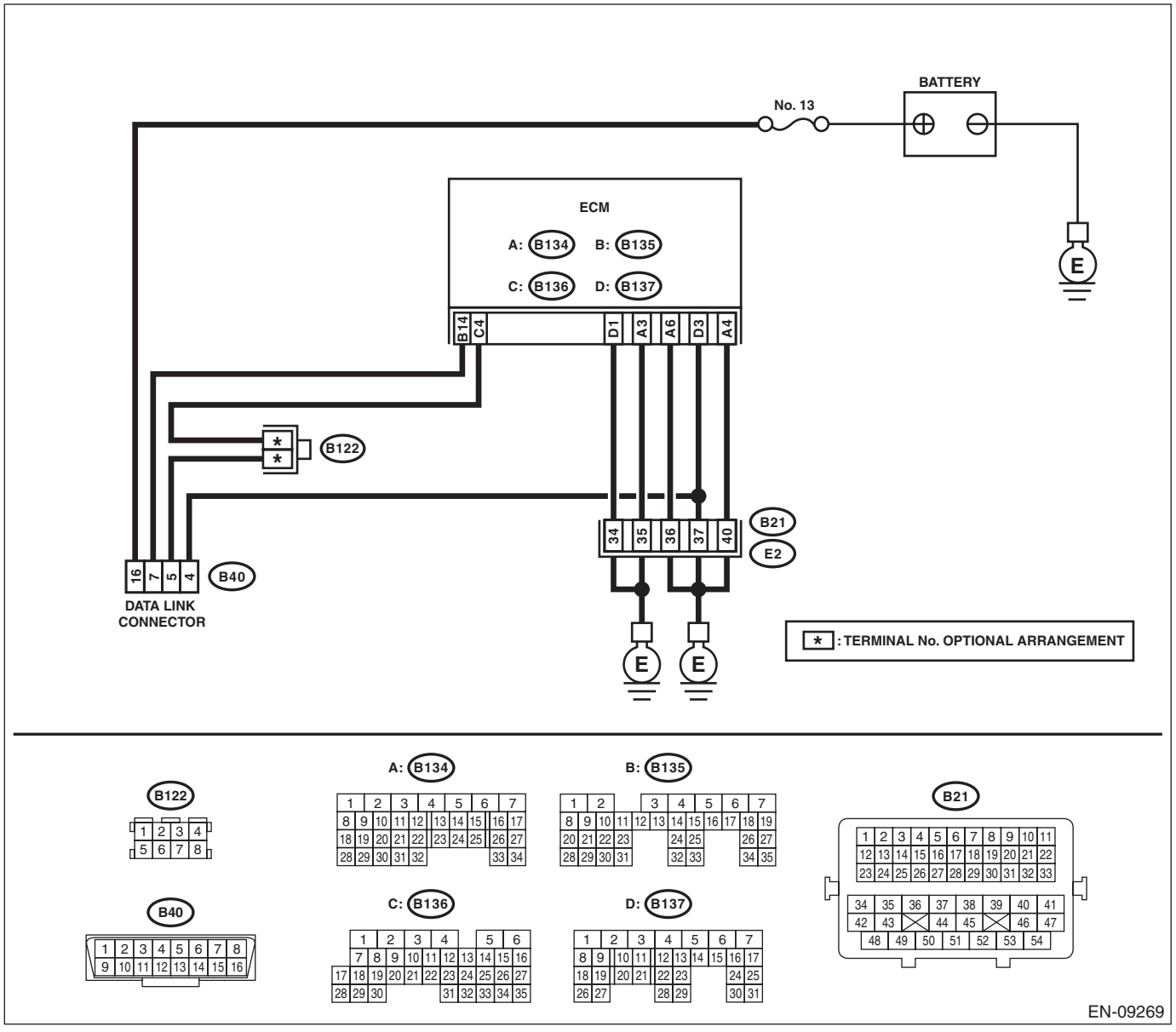

Step		Check	Yes	No
1	**CHECK POWER SUPPLY CIRCUIT.** Connect the SDI (Subaru Diagnosis Interface) or general scan tool to data link connector.	Does SDI or general scan tool turn ON?	Go to step **4**.	Go to step **2**.

	Step	Check	Yes	No
2	**CHECK POWER SUPPLY CIRCUIT.** Measure the voltage between data link connector and chassis ground. ***Connector & terminal*** ***(B40) No. 16 (+) — Chassis ground (–):***	Is the voltage 10 V or more?	Go to step **3**.	Repair the power supply circuit. NOTE: In this case, repair the following item: • Open or ground short circuit of harness between battery and data link connector • Blown out of fuse (M/B No. 13)
3	**CHECK HARNESS BETWEEN DATA LINK CONNECTOR AND CHASSIS GROUND.** 1) Turn the ignition switch to OFF. 2) Measure the resistance of harness between data link connector and chassis ground. ***Connector & terminal*** ***(B40) No. 4 — Chassis ground:*** ***(B40) No. 5 — Chassis ground:***	Is the resistance less than 5 Ω?	Repair the poor contact of data link connector.	Repair the harness and connector. NOTE: In this case, repair the following item: • Open circuit in harness between ECM connector and data link connector • Open circuit of harness between ECM connector and engine ground • Poor contact of ECM connector • Poor contact of coupling connector
4	**CHECK HARNESS BETWEEN ECM AND DATA LINK CONNECTOR.** 1) Disconnect the connectors from ECM, TCM, VDC CM, airbag CM, power steering CM and body integrated unit. **CAUTION:** **When disconnecting the connector from airbag CM, always follow the precautions on AB section. <Ref. to AB-11, CAUTION, General Description.>** 2) Measure the resistance of harness between ECM connector and data link connector. ***Connector & terminal*** ***(B135) No. 14 — (B40) No. 7:***	Is the resistance less than 1 Ω?	Go to step **5**.	Repair the open circuit of harness between ECM connector and data link connector.
5	**CHECK HARNESS BETWEEN ECM AND DATA LINK CONNECTOR.** Measure the resistance between data link connector and chassis ground. ***Connector & terminal*** ***(B40) No. 7 — Chassis ground:***	Is the resistance 1 MΩ or more?	Repair the poor contact of the ECM or data link connector.	Repair the short circuit to ground in harness between ECM connector and data link connector.

18.List of Diagnostic Trouble Code (DTC)

A: LIST

DTC	Item	Note
B1570	Antenna	<Ref. to IM(diag)-17, DTC B1570 ANTENNA, Diagnostic Procedure with Diagnostic Trouble Code (DTC).>
B1571	Reference Code Incompatibility	<Ref. to IM(diag)-20, DTC B1571 REFERENCE CODE INCOMPATIBILITY, Diagnostic Procedure with Diagnostic Trouble Code (DTC).>
B1572	IMM Circuit Failure (Except Antenna Circuit)	<Ref. to IM(diag)-21, DTC B1572 IMM CIRCUIT FAILURE (EXCEPT ANTENNA CIRCUIT), Diagnostic Procedure with Diagnostic Trouble Code (DTC).>
B1574	Key Communication Failure	<Ref. to IM(diag)-25, DTC B1574 KEY COMMUNICATION FAILURE, Diagnostic Procedure with Diagnostic Trouble Code (DTC).>
B1575	Incorrect Immobilizer Key	<Ref. to IM(diag)-25, DTC B1575 INCORRECT IMMOBILIZER KEY, Diagnostic Procedure with Diagnostic Trouble Code (DTC).>
B1576	EGI Control Module EEPROM	<Ref. to IM(diag)-26, DTC B1576 EGI CONTROL MODULE EEPROM, Diagnostic Procedure with Diagnostic Trouble Code (DTC).>
B1577	IMM Control Module EEPROM	<Ref. to IM(diag)-26, DTC B1577 IMM CONTROL MODULE EEPROM, Diagnostic Procedure with Diagnostic Trouble Code (DTC).>
B1578	Meter Failure	<Ref. to IM(diag)-27, DTC B1578 METER FAILURE, Diagnostic Procedure with Diagnostic Trouble Code (DTC).>
P000A	A Camshaft Position Slow Response (Bank 1)	<Ref. to EN(H4DO w/o HEV)(diag)-93, DTC P000A A CAMSHAFT POSITION SLOW RESPONSE (BANK 1), Diagnostic Procedure with Diagnostic Trouble Code (DTC).>
P000B	B Camshaft Position Slow Response (Bank 1)	<Ref. to EN(H4DO w/o HEV)(diag)-93, DTC P000B B CAMSHAFT POSITION SLOW RESPONSE (BANK 1), Diagnostic Procedure with Diagnostic Trouble Code (DTC).>
P000C	A Camshaft Position Slow Response (Bank 2)	<Ref. to EN(H4DO w/o HEV)(diag)-93, DTC P000C A CAMSHAFT POSITION SLOW RESPONSE (BANK 2), Diagnostic Procedure with Diagnostic Trouble Code (DTC).>
P000D	B Camshaft Position Slow Response (Bank 2)	<Ref. to EN(H4DO w/o HEV)(diag)-93, DTC P000D B CAMSHAFT POSITION SLOW RESPONSE (BANK 2), Diagnostic Procedure with Diagnostic Trouble Code (DTC).>
P0011	Intake Camshaft Position - Timing Over-Advanced or System Performance (Bank 1)	<Ref. to EN(H4DO w/o HEV)(diag)-94, DTC P0011 INTAKE CAMSHAFT POSITION - TIMING OVER-ADVANCED OR SYSTEM PERFORMANCE (BANK 1), Diagnostic Procedure with Diagnostic Trouble Code (DTC).>
P0014	Exhaust AVCS System 1 (Range/Performance)	<Ref. to EN(H4DO w/o HEV)(diag)-95, DTC P0014 EXHAUST AVCS SYSTEM 1 (RANGE/PERFORMANCE), Diagnostic Procedure with Diagnostic Trouble Code (DTC).>
P0016	Crankshaft Position - Camshaft Position Correlation (Bank1)	<Ref. to EN(H4DO w/o HEV)(diag)-96, DTC P0016 CRANKSHAFT POSITION - CAMSHAFT POSITION CORRELATION (BANK1), Diagnostic Procedure with Diagnostic Trouble Code (DTC).>
P0017	Crank and Cam Timing B System Failure (Bank 1)	<Ref. to EN(H4DO w/o HEV)(diag)-98, DTC P0017 CRANK AND CAM TIMING B SYSTEM FAILURE (BANK 1), Diagnostic Procedure with Diagnostic Trouble Code (DTC).>
P0018	Crankshaft Position - Camshaft Position Correlation (Bank2)	<Ref. to EN(H4DO w/o HEV)(diag)-100, DTC P0018 CRANKSHAFT POSITION - CAMSHAFT POSITION CORRELATION (BANK2), Diagnostic Procedure with Diagnostic Trouble Code (DTC).>
P0019	Crank and Cam Timing B System Failure (Bank 2)	<Ref. to EN(H4DO w/o HEV)(diag)-102, DTC P0019 CRANK AND CAM TIMING B SYSTEM FAILURE (BANK 2), Diagnostic Procedure with Diagnostic Trouble Code (DTC).>
P0021	Intake Camshaft Position - Timing Over-Advanced or System Performance (Bank 2)	<Ref. to EN(H4DO w/o HEV)(diag)-104, DTC P0021 INTAKE CAMSHAFT POSITION - TIMING OVER-ADVANCED OR SYSTEM PERFORMANCE (BANK 2), Diagnostic Procedure with Diagnostic Trouble Code (DTC).>
P0024	Exhaust AVCS System 2 (Range/Performance)	<Ref. to EN(H4DO w/o HEV)(diag)-105, DTC P0024 EXHAUST AVCS SYSTEM 2 (RANGE/PERFORMANCE), Diagnostic Procedure with Diagnostic Trouble Code (DTC).>

DTC	Item	Note
P0030	HO2S Heater Control Circuit (Bank 1 Sensor 1)	<Ref. to EN(H4DO w/o HEV)(diag)-106, DTC P0030 HO2S HEATER CONTROL CIRCUIT (BANK 1 SENSOR 1), Diagnostic Procedure with Diagnostic Trouble Code (DTC).>
P0031	HO2S Heater Control Circuit Low (Bank 1 Sensor 1)	<Ref. to EN(H4DO w/o HEV)(diag)-108, DTC P0031 HO2S HEATER CONTROL CIRCUIT LOW (BANK 1 SENSOR 1), Diagnostic Procedure with Diagnostic Trouble Code (DTC).>
P0032	HO2S Heater Control Circuit High (Bank 1 Sensor 1)	<Ref. to EN(H4DO w/o HEV)(diag)-110, DTC P0032 HO2S HEATER CONTROL CIRCUIT HIGH (BANK 1 SENSOR 1), Diagnostic Procedure with Diagnostic Trouble Code (DTC).>
P0037	HO2S Heater Control Circuit Low (Bank 1 Sensor 2)	<Ref. to EN(H4DO w/o HEV)(diag)-112, DTC P0037 HO2S HEATER CONTROL CIRCUIT LOW (BANK 1 SENSOR 2), Diagnostic Procedure with Diagnostic Trouble Code (DTC).>
P0038	HO2S Heater Control Circuit High (Bank 1 Sensor 2)	<Ref. to EN(H4DO w/o HEV)(diag)-114, DTC P0038 HO2S HEATER CONTROL CIRCUIT HIGH (BANK 1 SENSOR 2), Diagnostic Procedure with Diagnostic Trouble Code (DTC).>
P0068	MAP/MAF - Throttle Position Correlation	<Ref. to EN(H4DO w/o HEV)(diag)-116, DTC P0068 MAP/MAF - THROTTLE POSITION CORRELATION, Diagnostic Procedure with Diagnostic Trouble Code (DTC).>
P0101	Mass or Volume Air Flow Circuit Range/Performance	<Ref. to EN(H4DO w/o HEV)(diag)-117, DTC P0101 MASS OR VOLUME AIR FLOW CIRCUIT RANGE/PERFORMANCE, Diagnostic Procedure with Diagnostic Trouble Code (DTC).>
P0102	Mass or Volume Air Flow Circuit Low Input	<Ref. to EN(H4DO w/o HEV)(diag)-118, DTC P0102 MASS OR VOLUME AIR FLOW CIRCUIT LOW INPUT, Diagnostic Procedure with Diagnostic Trouble Code (DTC).>
P0103	Mass or Volume Air Flow Circuit High Input	<Ref. to EN(H4DO w/o HEV)(diag)-120, DTC P0103 MASS OR VOLUME AIR FLOW CIRCUIT HIGH INPUT, Diagnostic Procedure with Diagnostic Trouble Code (DTC).>
P0107	Manifold Absolute Pressure/Barometric Pressure Circuit Low Input	<Ref. to EN(H4DO w/o HEV)(diag)-122, DTC P0107 MANIFOLD ABSOLUTE PRESSURE/BAROMETRIC PRESSURE CIRCUIT LOW INPUT, Diagnostic Procedure with Diagnostic Trouble Code (DTC).>
P0108	Manifold Absolute Pressure/Barometric Pressure Circuit High Input	<Ref. to EN(H4DO w/o HEV)(diag)-124, DTC P0108 MANIFOLD ABSOLUTE PRESSURE/BAROMETRIC PRESSURE CIRCUIT HIGH INPUT, Diagnostic Procedure with Diagnostic Trouble Code (DTC).>
P0111	Intake Air Temperature Sensor Range/Performance Problem	<Ref. to EN(H4DO w/o HEV)(diag)-126, DTC P0111 INTAKE AIR TEMPERATURE SENSOR RANGE/PERFORMANCE PROBLEM, Diagnostic Procedure with Diagnostic Trouble Code (DTC).>
P0112	Intake Air Temperature Sensor 1 Circuit Low	<Ref. to EN(H4DO w/o HEV)(diag)-127, DTC P0112 INTAKE AIR TEMPERATURE SENSOR 1 CIRCUIT LOW, Diagnostic Procedure with Diagnostic Trouble Code (DTC).>
P0113	Intake Air Temperature Sensor 1 Circuit High	<Ref. to EN(H4DO w/o HEV)(diag)-129, DTC P0113 INTAKE AIR TEMPERATURE SENSOR 1 CIRCUIT HIGH, Diagnostic Procedure with Diagnostic Trouble Code (DTC).>
P0116	Engine Coolant Temperature Sensor 1 Circuit Range/Performance	<Ref. to EN(H4DO w/o HEV)(diag)-131, DTC P0116 ENGINE COOLANT TEMPERATURE SENSOR 1 CIRCUIT RANGE/PERFORMANCE, Diagnostic Procedure with Diagnostic Trouble Code (DTC).>
P0117	Engine Coolant Temperature Circuit Low	<Ref. to EN(H4DO w/o HEV)(diag)-132, DTC P0117 ENGINE COOLANT TEMPERATURE CIRCUIT LOW, Diagnostic Procedure with Diagnostic Trouble Code (DTC).>
P0118	Engine Coolant Temperature Circuit High	<Ref. to EN(H4DO w/o HEV)(diag)-134, DTC P0118 ENGINE COOLANT TEMPERATURE CIRCUIT HIGH, Diagnostic Procedure with Diagnostic Trouble Code (DTC).>
P0122	Throttle/Pedal Position Sensor/Switch “A” Circuit Low	<Ref. to EN(H4DO w/o HEV)(diag)-136, DTC P0122 THROTTLE/PEDAL POSITION SENSOR/SWITCH “A” CIRCUIT LOW, Diagnostic Procedure with Diagnostic Trouble Code (DTC).>
P0123	Throttle/Pedal Position Sensor/Switch “A” Circuit High	<Ref. to EN(H4DO w/o HEV)(diag)-138, DTC P0123 THROTTLE/PEDAL POSITION SENSOR/SWITCH “A” CIRCUIT HIGH, Diagnostic Procedure with Diagnostic Trouble Code (DTC).>

DTC	Item	Note
P0125	Insufficient Coolant Temperature for Closed Loop Fuel Control	<Ref. to EN(H4DO w/o HEV)(diag)-140, DTC P0125 INSUFFICIENT COOLANT TEMPERATURE FOR CLOSED LOOP FUEL CONTROL, Diagnostic Procedure with Diagnostic Trouble Code (DTC).>
P0128	Coolant Thermostat (Engine Coolant Temperature Below Thermostat Regulating Temperature)	<Ref. to EN(H4DO w/o HEV)(diag)-141, DTC P0128 COOLANT THERMOSTAT (ENGINE COOLANT TEMPERATURE BELOW THERMOSTAT REGULATING TEMPERATURE), Diagnostic Procedure with Diagnostic Trouble Code (DTC).>
P0131	O2 Sensor Circuit Low Voltage (Bank 1 Sensor 1)	<Ref. to EN(H4DO w/o HEV)(diag)-142, DTC P0131 O2 SENSOR CIRCUIT LOW VOLTAGE (BANK 1 SENSOR 1), Diagnostic Procedure with Diagnostic Trouble Code (DTC).>
P0132	O2 Sensor Circuit High Voltage (Bank 1 Sensor 1)	<Ref. to EN(H4DO w/o HEV)(diag)-144, DTC P0132 O2 SENSOR CIRCUIT HIGH VOLTAGE (BANK 1 SENSOR 1), Diagnostic Procedure with Diagnostic Trouble Code (DTC).>
P0134	O2 Sensor Circuit No Activity Detected (Bank 1 Sensor 1)	<Ref. to EN(H4DO w/o HEV)(diag)-146, DTC P0134 O2 SENSOR CIRCUIT NO ACTIVITY DETECTED (BANK 1 SENSOR 1), Diagnostic Procedure with Diagnostic Trouble Code (DTC).>
P0137	O2 Sensor Circuit Low Voltage (Bank 1 Sensor 2)	<Ref. to EN(H4DO w/o HEV)(diag)-148, DTC P0137 O2 SENSOR CIRCUIT LOW VOLTAGE (BANK 1 SENSOR 2), Diagnostic Procedure with Diagnostic Trouble Code (DTC).>
P0138	O2 Sensor Circuit High Voltage (Bank 1 Sensor 2)	<Ref. to EN(H4DO w/o HEV)(diag)-150, DTC P0138 O2 SENSOR CIRCUIT HIGH VOLTAGE (BANK 1 SENSOR 2), Diagnostic Procedure with Diagnostic Trouble Code (DTC).>
P013A	O2 Sensor Slow Response - Rich to Lean (Bank 1 Sensor 2)	<Ref. to EN(H4DO w/o HEV)(diag)-152, DTC P013A O2 SENSOR SLOW RESPONSE - RICH TO LEAN (BANK 1 SENSOR 2), Diagnostic Procedure with Diagnostic Trouble Code (DTC).>
P013B	O2 Sensor Slow Response - Lean to Rich (Bank 1 Sensor 2)	<Ref. to EN(H4DO w/o HEV)(diag)-153, DTC P013B O2 SENSOR SLOW RESPONSE - LEAN TO RICH (BANK 1 SENSOR 2), Diagnostic Procedure with Diagnostic Trouble Code (DTC).>
P013E	O2 Sensor Delayed Response - Rich to Lean (Bank 1 Sensor 2)	<Ref. to EN(H4DO w/o HEV)(diag)-153, DTC P013E O2 SENSOR DELAYED RESPONSE - RICH TO LEAN (BANK 1 SENSOR 2), Diagnostic Procedure with Diagnostic Trouble Code (DTC).>
P013F	O2 Sensor Delayed Response - Lean to Rich (Bank 1 Sensor 2)	<Ref. to EN(H4DO w/o HEV)(diag)-153, DTC P013F O2 SENSOR DELAYED RESPONSE - LEAN TO RICH (BANK 1 SENSOR 2), Diagnostic Procedure with Diagnostic Trouble Code (DTC).>
P0140	O2 Sensor Circuit No Activity Detected (Bank1 Sensor2)	<Ref. to EN(H4DO w/o HEV)(diag)-154, DTC P0140 O2 SENSOR CIRCUIT NO ACTIVITY DETECTED (BANK1 SENSOR2), Diagnostic Procedure with Diagnostic Trouble Code (DTC).>
P0141	O2 Sensor Heater Circuit (Bank1 Sensor2)	<Ref. to EN(H4DO w/o HEV)(diag)-156, DTC P0141 O2 SENSOR HEATER CIRCUIT (BANK1 SENSOR2), Diagnostic Procedure with Diagnostic Trouble Code (DTC).>
P014C	O2 Sensor Slow Response - Rich to Lean (Bank 1 Sensor 1)	<Ref. to EN(H4DO w/o HEV)(diag)-157, DTC P014C O2 SENSOR SLOW RESPONSE - RICH TO LEAN (BANK 1 SENSOR 1), Diagnostic Procedure with Diagnostic Trouble Code (DTC).>
P014D	O2 Sensor Slow Response - Lean to Rich (Bank 1 Sensor 1)	<Ref. to EN(H4DO w/o HEV)(diag)-157, DTC P014D O2 SENSOR SLOW RESPONSE - LEAN TO RICH (BANK 1 SENSOR 1), Diagnostic Procedure with Diagnostic Trouble Code (DTC).>
P015A	O2 Sensor Delayed Response - Rich to Lean (Bank 1 Sensor 1)	<Ref. to EN(H4DO w/o HEV)(diag)-157, DTC P015A O2 SENSOR DELAYED RESPONSE - RICH TO LEAN (BANK 1 SENSOR 1), Diagnostic Procedure with Diagnostic Trouble Code (DTC).>
P015B	O2 Sensor Delayed Response - Lean to Rich (Bank 1 Sensor 1)	<Ref. to EN(H4DO w/o HEV)(diag)-157, DTC P015B O2 SENSOR DELAYED RESPONSE - LEAN TO RICH (BANK 1 SENSOR 1), Diagnostic Procedure with Diagnostic Trouble Code (DTC).>
P0171	System Too Lean (Bank 1)	<Ref. to EN(H4DO w/o HEV)(diag)-157, DTC P0171 SYSTEM TOO LEAN (BANK 1), Diagnostic Procedure with Diagnostic Trouble Code (DTC).>
P0172	System Too Rich (Bank 1)	<Ref. to EN(H4DO w/o HEV)(diag)-158, DTC P0172 SYSTEM TOO RICH (BANK 1), Diagnostic Procedure with Diagnostic Trouble Code (DTC).>

DTC	Item	Note
P0196	Engine Oil Temperature Sensor Circuit Range/Performance	<Ref. to EN(H4DO w/o HEV)(diag)-160, DTC P0196 ENGINE OIL TEMPERATURE SENSOR CIRCUIT RANGE/PERFORMANCE, Diagnostic Procedure with Diagnostic Trouble Code (DTC).>
P0197	Engine Oil Temperature Sensor Low	<Ref. to EN(H4DO w/o HEV)(diag)-161, DTC P0197 ENGINE OIL TEMPERATURE SENSOR LOW, Diagnostic Procedure with Diagnostic Trouble Code (DTC).>
P0198	Engine Oil Temperature Sensor High	<Ref. to EN(H4DO w/o HEV)(diag)-163, DTC P0198 ENGINE OIL TEMPERATURE SENSOR HIGH, Diagnostic Procedure with Diagnostic Trouble Code (DTC).>
P0201	Injector #1	<Ref. to EN(H4DO w/o HEV)(diag)-165, DTC P0201 INJECTOR #1, Diagnostic Procedure with Diagnostic Trouble Code (DTC).>
P0202	Injector #2	<Ref. to EN(H4DO w/o HEV)(diag)-167, DTC P0202 INJECTOR #2, Diagnostic Procedure with Diagnostic Trouble Code (DTC).>
P0203	Injector #3	<Ref. to EN(H4DO w/o HEV)(diag)-167, DTC P0203 INJECTOR #3, Diagnostic Procedure with Diagnostic Trouble Code (DTC).>
P0204	Injector #4	<Ref. to EN(H4DO w/o HEV)(diag)-167, DTC P0204 INJECTOR #4, Diagnostic Procedure with Diagnostic Trouble Code (DTC).>
P0222	Throttle/Pedal Position Sensor/Switch “B” Circuit Low	<Ref. to EN(H4DO w/o HEV)(diag)-168, DTC P0222 THROTTLE/PEDAL POSITION SENSOR/SWITCH “B” CIRCUIT LOW, Diagnostic Procedure with Diagnostic Trouble Code (DTC).>
P0223	Throttle/Pedal Position Sensor/Switch “B” Circuit High	<Ref. to EN(H4DO w/o HEV)(diag)-170, DTC P0223 THROTTLE/PEDAL POSITION SENSOR/SWITCH “B” CIRCUIT HIGH, Diagnostic Procedure with Diagnostic Trouble Code (DTC).>
P0300	Random/Multiple Cylinder Misfire Detected	<Ref. to EN(H4DO w/o HEV)(diag)-172, DTC P0300 RANDOM/MULTIPLE CYLINDER MISFIRE DETECTED, Diagnostic Procedure with Diagnostic Trouble Code (DTC).>
P0301	Cylinder 1 Misfire Detected	<Ref. to EN(H4DO w/o HEV)(diag)-176, DTC P0301 CYLINDER 1 MISFIRE DETECTED, Diagnostic Procedure with Diagnostic Trouble Code (DTC).>
P0302	Cylinder 2 Misfire Detected	<Ref. to EN(H4DO w/o HEV)(diag)-176, DTC P0302 CYLINDER 2 MISFIRE DETECTED, Diagnostic Procedure with Diagnostic Trouble Code (DTC).>
P0303	Cylinder 3 Misfire Detected	<Ref. to EN(H4DO w/o HEV)(diag)-176, DTC P0303 CYLINDER 3 MISFIRE DETECTED, Diagnostic Procedure with Diagnostic Trouble Code (DTC).>
P0304	Cylinder 4 Misfire Detected	<Ref. to EN(H4DO w/o HEV)(diag)-177, DTC P0304 CYLINDER 4 MISFIRE DETECTED, Diagnostic Procedure with Diagnostic Trouble Code (DTC).>
P0327	Knock Sensor 1 Circuit Low (Bank 1 or Single Sensor)	<Ref. to EN(H4DO w/o HEV)(diag)-181, DTC P0327 KNOCK SENSOR 1 CIRCUIT LOW (BANK 1 OR SINGLE SENSOR), Diagnostic Procedure with Diagnostic Trouble Code (DTC).>
P0328	Knock Sensor 1 Circuit High (Bank 1 or Single Sensor)	<Ref. to EN(H4DO w/o HEV)(diag)-183, DTC P0328 KNOCK SENSOR 1 CIRCUIT HIGH (BANK 1 OR SINGLE SENSOR), Diagnostic Procedure with Diagnostic Trouble Code (DTC).>
P0335	Crankshaft Position Sensor “A” Circuit	<Ref. to EN(H4DO w/o HEV)(diag)-185, DTC P0335 CRANKSHAFT POSITION SENSOR “A” CIRCUIT, Diagnostic Procedure with Diagnostic Trouble Code (DTC).>
P0336	Crankshaft Position Sensor “A” Circuit Range/Performance	<Ref. to EN(H4DO w/o HEV)(diag)-187, DTC P0336 CRANKSHAFT POSITION SENSOR “A” CIRCUIT RANGE/PERFORMANCE, Diagnostic Procedure with Diagnostic Trouble Code (DTC).>
P0340	Camshaft Position Sensor “A” Circuit (Bank 1 or Single Sensor)	<Ref. to EN(H4DO w/o HEV)(diag)-188, DTC P0340 CAMSHAFT POSITION SENSOR “A” CIRCUIT (BANK 1 OR SINGLE SENSOR), Diagnostic Procedure with Diagnostic Trouble Code (DTC).>
P0341	Camshaft Position Sensor "A" Circuit Range/Performance (Bank 1 or Single Sensor)	<Ref. to EN(H4DO w/o HEV)(diag)-190, DTC P0341 CAMSHAFT POSITION SENSOR "A" CIRCUIT RANGE/PERFORMANCE (BANK 1 OR SINGLE SENSOR), Diagnostic Procedure with Diagnostic Trouble Code (DTC).>
P0345	Camshaft Position Sensor “A” Circuit (Bank 2)	<Ref. to EN(H4DO w/o HEV)(diag)-191, DTC P0345 CAMSHAFT POSITION SENSOR “A” CIRCUIT (BANK 2), Diagnostic Procedure with Diagnostic Trouble Code (DTC).>

DTC	Item	Note
P0346	Camshaft Position Sensor "A" Circuit Range/Performance (Bank 2)	<Ref. to EN(H4DO w/o HEV)(diag)-193, DTC P0346 CAMSHAFT POSITION SENSOR "A" CIRCUIT RANGE/PERFORMANCE (BANK 2), Diagnostic Procedure with Diagnostic Trouble Code (DTC).>
P0351	Ignition Coil A Primary/Secondary Circuit	<Ref. to EN(H4DO w/o HEV)(diag)-194, DTC P0351 IGNITION COIL A PRIMARY/SECONDARY CIRCUIT, Diagnostic Procedure with Diagnostic Trouble Code (DTC).>
P0352	Ignition Coil B Primary/Secondary Circuit	<Ref. to EN(H4DO w/o HEV)(diag)-196, DTC P0352 IGNITION COIL B PRIMARY/SECONDARY CIRCUIT, Diagnostic Procedure with Diagnostic Trouble Code (DTC).>
P0353	Ignition Coil C Primary/Secondary Circuit	<Ref. to EN(H4DO w/o HEV)(diag)-196, DTC P0353 IGNITION COIL C PRIMARY/SECONDARY CIRCUIT, Diagnostic Procedure with Diagnostic Trouble Code (DTC).>
P0354	Ignition Coil D Primary/Secondary Circuit	<Ref. to EN(H4DO w/o HEV)(diag)-196, DTC P0354 IGNITION COIL D PRIMARY/SECONDARY CIRCUIT, Diagnostic Procedure with Diagnostic Trouble Code (DTC).>
P0365	Camshaft Position Sensor “B” Circuit (Bank 1)	<Ref. to EN(H4DO w/o HEV)(diag)-197, DTC P0365 CAMSHAFT POSITION SENSOR “B” CIRCUIT (BANK 1), Diagnostic Procedure with Diagnostic Trouble Code (DTC).>
P0366	Camshaft Position Sensor B Circuit Range/Performance (Bank 1)	<Ref. to EN(H4DO w/o HEV)(diag)-199, DTC P0366 CAMSHAFT POSITION SENSOR B CIRCUIT RANGE/PERFORMANCE (BANK 1), Diagnostic Procedure with Diagnostic Trouble Code (DTC).>
P0390	Camshaft Position Sensor “B” Circuit (Bank 2)	<Ref. to EN(H4DO w/o HEV)(diag)-200, DTC P0390 CAMSHAFT POSITION SENSOR “B” CIRCUIT (BANK 2), Diagnostic Procedure with Diagnostic Trouble Code (DTC).>
P0391	Camshaft Position Sensor B Circuit Range/Performance (Bank 2)	<Ref. to EN(H4DO w/o HEV)(diag)-202, DTC P0391 CAMSHAFT POSITION SENSOR B CIRCUIT RANGE/PERFORMANCE (BANK 2), Diagnostic Procedure with Diagnostic Trouble Code (DTC).>
P0400	Exhaust Gas Recirculation Flow	<Ref. to EN(H4DO w/o HEV)(diag)-203, DTC P0400 EXHAUST GAS RECIRCULATION FLOW, Diagnostic Procedure with Diagnostic Trouble Code (DTC).>
P0420	Catalyst System Efficiency Below Threshold (Bank 1)	<Ref. to EN(H4DO w/o HEV)(diag)-204, DTC P0420 CATALYST SYSTEM EFFICIENCY BELOW THRESHOLD (BANK 1), Diagnostic Procedure with Diagnostic Trouble Code (DTC).>
P0441	Evaporative Emission Cont. Sys. Incorrect Purge Flow	<Ref. to EN(H4DO w/o HEV)(diag)-209, DTC P0441 EVAPORATIVE EMISSION CONT. SYS. INCORRECT PURGE FLOW, Diagnostic Procedure with Diagnostic Trouble Code (DTC).>
P0451	Evaporative Emission System Pressure Sensor/Switch Range/Performance	<Ref. to EN(H4DO w/o HEV)(diag)-210, DTC P0451 EVAPORATIVE EMISSION SYSTEM PRESSURE SENSOR/SWITCH RANGE/PERFORMANCE, Diagnostic Procedure with Diagnostic Trouble Code (DTC).>
P0452	Evaporative Emission System Pressure Sensor/Switch Low	<Ref. to EN(H4DO w/o HEV)(diag)-211, DTC P0452 EVAPORATIVE EMISSION SYSTEM PRESSURE SENSOR/SWITCH LOW, Diagnostic Procedure with Diagnostic Trouble Code (DTC).>
P0453	Evaporative Emission System Pressure Sensor/Switch High	<Ref. to EN(H4DO w/o HEV)(diag)-213, DTC P0453 EVAPORATIVE EMISSION SYSTEM PRESSURE SENSOR/SWITCH HIGH, Diagnostic Procedure with Diagnostic Trouble Code (DTC).>
P0455	Evaporative Emission System Leak Detected (Large Leak)	<Ref. to EN(H4DO w/o HEV)(diag)-215, DTC P0455 EVAPORATIVE EMISSION SYSTEM LEAK DETECTED (LARGE LEAK), Diagnostic Procedure with Diagnostic Trouble Code (DTC).>
P0456	Evaporative Emission Control System Leak Detected (Very Small Leak)	<Ref. to EN(H4DO w/o HEV)(diag)-216, DTC P0456 EVAPORATIVE EMISSION CONTROL SYSTEM LEAK DETECTED (VERY SMALL LEAK), Diagnostic Procedure with Diagnostic Trouble Code (DTC).>
P0458	Evaporative Emission System Purge Control Valve Circuit Low	<Ref. to EN(H4DO w/o HEV)(diag)-217, DTC P0458 EVAPORATIVE EMISSION SYSTEM PURGE CONTROL VALVE CIRCUIT LOW, Diagnostic Procedure with Diagnostic Trouble Code (DTC).>
P0459	Evaporative Emission System Purge Control Valve Circuit High	<Ref. to EN(H4DO w/o HEV)(diag)-220, DTC P0459 EVAPORATIVE EMISSION SYSTEM PURGE CONTROL VALVE CIRCUIT HIGH, Diagnostic Procedure with Diagnostic Trouble Code (DTC).>

List of Diagnostic Trouble Code (DTC)

DTC	Item	Note
P0461	Fuel Level Sensor “A” Circuit Range/ Performance	<Ref. to EN(H4DO w/o HEV)(diag)-222, DTC P0461 FUEL LEVEL SENSOR “A” CIRCUIT RANGE/PERFORMANCE, Diagnostic Procedure with Diagnostic Trouble Code (DTC).>
P0462	Fuel Level Sensor “A” Circuit Low	<Ref. to EN(H4DO w/o HEV)(diag)-222, DTC P0462 FUEL LEVEL SENSOR “A” CIRCUIT LOW, Diagnostic Procedure with Diagnostic Trouble Code (DTC).>
P0463	Fuel Level Sensor “A” Circuit High	<Ref. to EN(H4DO w/o HEV)(diag)-223, DTC P0463 FUEL LEVEL SENSOR “A” CIRCUIT HIGH, Diagnostic Procedure with Diagnostic Trouble Code (DTC).>
P0500	Vehicle Speed Sensor “A”	<Ref. to EN(H4DO w/o HEV)(diag)-223, DTC P0500 VEHICLE SPEED SENSOR “A”, Diagnostic Procedure with Diagnostic Trouble Code (DTC).>
P0506	Idle Air Control System RPM Lower Than Expected	<Ref. to EN(H4DO w/o HEV)(diag)-224, DTC P0506 IDLE AIR CONTROL SYSTEM RPM LOWER THAN EXPECTED, Diagnostic Procedure with Diagnostic Trouble Code (DTC).>
P0507	Idle Air Control System RPM Higher Than Expected	<Ref. to EN(H4DO w/o HEV)(diag)-225, DTC P0507 IDLE AIR CONTROL SYSTEM RPM HIGHER THAN EXPECTED, Diagnostic Procedure with Diagnostic Trouble Code (DTC).>
P050A	Cold Start Idle Air Control System Performance	<Ref. to EN(H4DO w/o HEV)(diag)-226, DTC P050A COLD START IDLE AIR CONTROL SYSTEM PERFORMANCE, Diagnostic Procedure with Diagnostic Trouble Code (DTC).>
P050B	Cold Start Ignition Timing Performance	<Ref. to EN(H4DO w/o HEV)(diag)-234, DTC P050B COLD START IGNITION TIMING PERFORMANCE, Diagnostic Procedure with Diagnostic Trouble Code (DTC).>
P0516	Battery Temperature Sensor Circuit Low	<Ref. to EN(H4DO w/o HEV)(diag)-235, DTC P0516 BATTERY TEMPERATURE SENSOR CIRCUIT LOW, Diagnostic Procedure with Diagnostic Trouble Code (DTC).>
P0517	Battery Temperature Sensor Circuit High	<Ref. to EN(H4DO w/o HEV)(diag)-237, DTC P0517 BATTERY TEMPERATURE SENSOR CIRCUIT HIGH, Diagnostic Procedure with Diagnostic Trouble Code (DTC).>
P0560	System Voltage	<Ref. to EN(H4DO w/o HEV)(diag)-239, DTC P0560 SYSTEM VOLTAGE, Diagnostic Procedure with Diagnostic Trouble Code (DTC).>
P0604	Internal Control Module Random Access Memory (RAM) Error	<Ref. to EN(H4DO w/o HEV)(diag)-241, DTC P0604 INTERNAL CONTROL MODULE RANDOM ACCESS MEMORY (RAM) ERROR, Diagnostic Procedure with Diagnostic Trouble Code (DTC).>
P0605	Internal Control Module Read Only Memory (ROM) Error	<Ref. to EN(H4DO w/o HEV)(diag)-241, DTC P0605 INTERNAL CONTROL MODULE READ ONLY MEMORY (ROM) ERROR, Diagnostic Procedure with Diagnostic Trouble Code (DTC).>
P0606	Control Module Processor	<Ref. to EN(H4DO w/o HEV)(diag)-242, DTC P0606 CONTROL MODULE PROCESSOR, Diagnostic Procedure with Diagnostic Trouble Code (DTC).>
P060A	Internal Control Module Monitoring Processor Performance	<Ref. to EN(H4DO w/o HEV)(diag)-243, DTC P060A INTERNAL CONTROL MODULE MONITORING PROCESSOR PERFORMANCE, Diagnostic Procedure with Diagnostic Trouble Code (DTC).>
P060B	Internal Control Module A/D Processing Performance	<Ref. to EN(H4DO w/o HEV)(diag)-243, DTC P060B INTERNAL CONTROL MODULE A/D PROCESSING PERFORMANCE, Diagnostic Procedure with Diagnostic Trouble Code (DTC).>
P0616	Starter Relay Circuit Low	<Ref. to EN(H4DO w/o HEV)(diag)-244, DTC P0616 STARTER RELAY CIRCUIT LOW, Diagnostic Procedure with Diagnostic Trouble Code (DTC).>
P0617	Starter Relay Circuit High	<Ref. to EN(H4DO w/o HEV)(diag)-246, DTC P0617 STARTER RELAY CIRCUIT HIGH, Diagnostic Procedure with Diagnostic Trouble Code (DTC).>
P062F	Internal Control Module EEPROM Error	<Ref. to EN(H4DO w/o HEV)(diag)-247, DTC P062F INTERNAL CONTROL MODULE EEPROM ERROR, Diagnostic Procedure with Diagnostic Trouble Code (DTC).>
P0700	Transmission Control System (MIL Request)	<Ref. to EN(H4DO w/o HEV)(diag)-247, DTC P0700 TRANSMISSION CONTROL SYSTEM (MIL REQUEST), Diagnostic Procedure with Diagnostic Trouble Code (DTC).>

DTC	Item	Note
P0851	Park/Neutral Switch Input Circuit Low (AT Model)	<Ref. to EN(H4DO w/o HEV)(diag)-248, DTC P0851 PARK/NEUTRAL SWITCH INPUT CIRCUIT LOW (AT MODEL), Diagnostic Procedure with Diagnostic Trouble Code (DTC).>
P0851	Neutral Switch Input Circuit Low (MT Model)	<Ref. to EN(H4DO w/o HEV)(diag)-250, DTC P0851 NEUTRAL SWITCH INPUT CIRCUIT LOW (MT MODEL), Diagnostic Procedure with Diagnostic Trouble Code (DTC).>
P0852	Park/Neutral Switch Input Circuit High (AT Model)	<Ref. to EN(H4DO w/o HEV)(diag)-252, DTC P0852 PARK/NEUTRAL SWITCH INPUT CIRCUIT HIGH (AT MODEL), Diagnostic Procedure with Diagnostic Trouble Code (DTC).>
P0852	Neutral Switch Input Circuit High (MT Model)	<Ref. to EN(H4DO w/o HEV)(diag)-254, DTC P0852 NEUTRAL SWITCH INPUT CIRCUIT HIGH (MT MODEL), Diagnostic Procedure with Diagnostic Trouble Code (DTC).>
P1160	Return Spring Failure	<Ref. to EN(H4DO w/o HEV)(diag)-255, DTC P1160 RETURN SPRING FAILURE, Diagnostic Procedure with Diagnostic Trouble Code (DTC).>
P1449	Evaporative Emission Cont. Sys. Air Filter Clog	<Ref. to EN(H4DO w/o HEV)(diag)-256, DTC P1449 EVAPORATIVE EMISSION CONT. SYS. AIR FILTER CLOG, Diagnostic Procedure with Diagnostic Trouble Code (DTC).>
P1451	Evaporative Emission Cont. Sys.	<Ref. to EN(H4DO w/o HEV)(diag)-257, DTC P1451 EVAPORATIVE EMISSION CONT. SYS., Diagnostic Procedure with Diagnostic Trouble Code (DTC).>
P1492	EGR Solenoid Valve Signal #1 Circuit Malfunction (Low Input)	<Ref. to EN(H4DO w/o HEV)(diag)-258, DTC P1492 EGR SOLENOID VALVE SIGNAL #1 CIRCUIT MALFUNCTION (LOW INPUT), Diagnostic Procedure with Diagnostic Trouble Code (DTC).>
P1493	EGR Solenoid Valve Signal #1 Circuit Malfunction (High Input)	<Ref. to EN(H4DO w/o HEV)(diag)-258, DTC P1493 EGR SOLENOID VALVE SIGNAL #1 CIRCUIT MALFUNCTION (HIGH INPUT), Diagnostic Procedure with Diagnostic Trouble Code (DTC).>
P1494	EGR Solenoid Valve Signal #2 Circuit Malfunction (Low Input)	<Ref. to EN(H4DO w/o HEV)(diag)-258, DTC P1494 EGR SOLENOID VALVE SIGNAL #2 CIRCUIT MALFUNCTION (LOW INPUT), Diagnostic Procedure with Diagnostic Trouble Code (DTC).>
P1495	EGR Solenoid Valve Signal #2 Circuit Malfunction (High Input)	<Ref. to EN(H4DO w/o HEV)(diag)-258, DTC P1495 EGR SOLENOID VALVE SIGNAL #2 CIRCUIT MALFUNCTION (HIGH INPUT), Diagnostic Procedure with Diagnostic Trouble Code (DTC).>
P1496	EGR Solenoid Valve Signal #3 Circuit Malfunction (Low Input)	<Ref. to EN(H4DO w/o HEV)(diag)-258, DTC P1496 EGR SOLENOID VALVE SIGNAL #3 CIRCUIT MALFUNCTION (LOW INPUT), Diagnostic Procedure with Diagnostic Trouble Code (DTC).>
P1497	EGR Solenoid Valve Signal #3 Circuit Malfunction (High Input)	<Ref. to EN(H4DO w/o HEV)(diag)-258, DTC P1497 EGR SOLENOID VALVE SIGNAL #3 CIRCUIT MALFUNCTION (HIGH INPUT), Diagnostic Procedure with Diagnostic Trouble Code (DTC).>
P1498	EGR Solenoid Valve Signal #4 Circuit Malfunction (Low Input)	<Ref. to EN(H4DO w/o HEV)(diag)-259, DTC P1498 EGR SOLENOID VALVE SIGNAL #4 CIRCUIT MALFUNCTION (LOW INPUT), Diagnostic Procedure with Diagnostic Trouble Code (DTC).>
P1499	EGR Solenoid Valve Signal #4 Circuit Malfunction (High Input)	<Ref. to EN(H4DO w/o HEV)(diag)-262, DTC P1499 EGR SOLENOID VALVE SIGNAL #4 CIRCUIT MALFUNCTION (HIGH INPUT), Diagnostic Procedure with Diagnostic Trouble Code (DTC).>
P1530	Battery Current Sensor Circuit Low	<Ref. to EN(H4DO w/o HEV)(diag)-265, DTC P1530 BATTERY CURRENT SENSOR CIRCUIT LOW, Diagnostic Procedure with Diagnostic Trouble Code (DTC).>
P1531	Battery Current Sensor Circuit High	<Ref. to EN(H4DO w/o HEV)(diag)-267, DTC P1531 BATTERY CURRENT SENSOR CIRCUIT HIGH, Diagnostic Procedure with Diagnostic Trouble Code (DTC).>
P1532	Battery Charging System	<Ref. to EN(H4DO w/o HEV)(diag)-269, DTC P1532 BATTERY CHARGING SYSTEM, Diagnostic Procedure with Diagnostic Trouble Code (DTC).>
P2004	Intake Manifold Runner Control Stuck Open (Bank 1)	<Ref. to EN(H4DO w/o HEV)(diag)-272, DTC P2004 INTAKE MANIFOLD RUNNER CONTROL STUCK OPEN (BANK 1), Diagnostic Procedure with Diagnostic Trouble Code (DTC).>

DTC	Item	Note
P2005	Intake Manifold Runner Control Stuck Open (Bank 2)	<Ref. to EN(H4DO w/o HEV)(diag)-273, DTC P2005 INTAKE MANIFOLD RUNNER CONTROL STUCK OPEN (BANK 2), Diagnostic Procedure with Diagnostic Trouble Code (DTC).>
P2006	Intake Manifold Runner Control Stuck Closed (Bank 1)	<Ref. to EN(H4DO w/o HEV)(diag)-274, DTC P2006 INTAKE MANIFOLD RUNNER CONTROL STUCK CLOSED (BANK 1), Diagnostic Procedure with Diagnostic Trouble Code (DTC).>
P2007	Intake Manifold Runner Control Stuck Closed (Bank 2)	<Ref. to EN(H4DO w/o HEV)(diag)-275, DTC P2007 INTAKE MANIFOLD RUNNER CONTROL STUCK CLOSED (BANK 2), Diagnostic Procedure with Diagnostic Trouble Code (DTC).>
P2009	Intake Manifold Runner Control Circuit Low (Bank 1)	<Ref. to EN(H4DO w/o HEV)(diag)-276, DTC P2009 INTAKE MANIFOLD RUNNER CONTROL CIRCUIT LOW (BANK 1), Diagnostic Procedure with Diagnostic Trouble Code (DTC).>
P2012	Intake Manifold Runner Control Circuit Low (Bank 2)	<Ref. to EN(H4DO w/o HEV)(diag)-278, DTC P2012 INTAKE MANIFOLD RUNNER CONTROL CIRCUIT LOW (BANK 2), Diagnostic Procedure with Diagnostic Trouble Code (DTC).>
P2088	Intake Camshaft Position Actuator Control Circuit Low (Bank 1)	<Ref. to EN(H4DO w/o HEV)(diag)-280, DTC P2088 INTAKE CAMSHAFT POSITION ACTUATOR CONTROL CIRCUIT LOW (BANK 1), Diagnostic Procedure with Diagnostic Trouble Code (DTC).>
P2089	Intake Camshaft Position Actuator Control Circuit High (Bank 1)	<Ref. to EN(H4DO w/o HEV)(diag)-282, DTC P2089 INTAKE CAMSHAFT POSITION ACTUATOR CONTROL CIRCUIT HIGH (BANK 1), Diagnostic Procedure with Diagnostic Trouble Code (DTC).>
P2090	Exhaust Camshaft Position Actuator Control Circuit Low (Bank 1)	<Ref. to EN(H4DO w/o HEV)(diag)-284, DTC P2090 EXHAUST CAMSHAFT POSITION ACTUATOR CONTROL CIRCUIT LOW (BANK 1), Diagnostic Procedure with Diagnostic Trouble Code (DTC).>
P2091	Exhaust Camshaft Position Actuator Control Circuit High (Bank 1)	<Ref. to EN(H4DO w/o HEV)(diag)-286, DTC P2091 EXHAUST CAMSHAFT POSITION ACTUATOR CONTROL CIRCUIT HIGH (BANK 1), Diagnostic Procedure with Diagnostic Trouble Code (DTC).>
P2092	Intake Camshaft Position Actuator Control Circuit Low (Bank 2)	<Ref. to EN(H4DO w/o HEV)(diag)-288, DTC P2092 INTAKE CAMSHAFT POSITION ACTUATOR CONTROL CIRCUIT LOW (BANK 2), Diagnostic Procedure with Diagnostic Trouble Code (DTC).>
P2093	Intake Camshaft Position Actuator Control Circuit High (Bank 2)	<Ref. to EN(H4DO w/o HEV)(diag)-290, DTC P2093 INTAKE CAMSHAFT POSITION ACTUATOR CONTROL CIRCUIT HIGH (BANK 2), Diagnostic Procedure with Diagnostic Trouble Code (DTC).>
P2094	Exhaust Camshaft Position Actuator Control Circuit Low (Bank 2)	<Ref. to EN(H4DO w/o HEV)(diag)-292, DTC P2094 EXHAUST CAMSHAFT POSITION ACTUATOR CONTROL CIRCUIT LOW (BANK 2), Diagnostic Procedure with Diagnostic Trouble Code (DTC).>
P2095	Exhaust Camshaft Position Actuator Control Circuit High (Bank 2)	<Ref. to EN(H4DO w/o HEV)(diag)-294, DTC P2095 EXHAUST CAMSHAFT POSITION ACTUATOR CONTROL CIRCUIT HIGH (BANK 2), Diagnostic Procedure with Diagnostic Trouble Code (DTC).>
P2096	Post Catalyst Fuel Trim System Too Lean (Bank 1)	<Ref. to EN(H4DO w/o HEV)(diag)-296, DTC P2096 POST CATALYST FUEL TRIM SYSTEM TOO LEAN (BANK 1), Diagnostic Procedure with Diagnostic Trouble Code (DTC).>
P2097	Post Catalyst Fuel Trim System Too Rich (Bank 1)	<Ref. to EN(H4DO w/o HEV)(diag)-302, DTC P2097 POST CATALYST FUEL TRIM SYSTEM TOO RICH (BANK 1), Diagnostic Procedure with Diagnostic Trouble Code (DTC).>
P2101	Throttle Actuator Control Motor Circuit Range/Performance	<Ref. to EN(H4DO w/o HEV)(diag)-308, DTC P2101 THROTTLE ACTUATOR CONTROL MOTOR CIRCUIT RANGE/PERFORMANCE, Diagnostic Procedure with Diagnostic Trouble Code (DTC).>
P2102	Throttle Actuator Control Motor Circuit Low	<Ref. to EN(H4DO w/o HEV)(diag)-313, DTC P2102 THROTTLE ACTUATOR CONTROL MOTOR CIRCUIT LOW, Diagnostic Procedure with Diagnostic Trouble Code (DTC).>
P2103	Throttle Actuator Control Motor Circuit High	<Ref. to EN(H4DO w/o HEV)(diag)-315, DTC P2103 THROTTLE ACTUATOR CONTROL MOTOR CIRCUIT HIGH, Diagnostic Procedure with Diagnostic Trouble Code (DTC).>
P2109	Throttle/Pedal Position Sensor “A” Minimum Stop Performance	<Ref. to EN(H4DO w/o HEV)(diag)-316, DTC P2109 THROTTLE/PEDAL POSITION SENSOR “A” MINIMUM STOP PERFORMANCE, Diagnostic Procedure with Diagnostic Trouble Code (DTC).>

DTC	Item	Note
P2119	Throttle Actuator Control Throttle Body Range/Performance	<Ref. to EN(H4DO w/o HEV)(diag)-316, DTC P2119 THROTTLE ACTUATOR CONTROL THROTTLE BODY RANGE/PERFORMANCE, Diagnostic Procedure with Diagnostic Trouble Code (DTC).>
P2122	Throttle/Pedal Position Sensor/Switch “D” Circuit Low Input	<Ref. to EN(H4DO w/o HEV)(diag)-317, DTC P2122 THROTTLE/PEDAL POSITION SENSOR/SWITCH “D” CIRCUIT LOW INPUT, Diagnostic Procedure with Diagnostic Trouble Code (DTC).>
P2123	Throttle/Pedal Position Sensor/Switch “D” Circuit High Input	<Ref. to EN(H4DO w/o HEV)(diag)-319, DTC P2123 THROTTLE/PEDAL POSITION SENSOR/SWITCH “D” CIRCUIT HIGH INPUT, Diagnostic Procedure with Diagnostic Trouble Code (DTC).>
P2127	Throttle/Pedal Position Sensor/Switch “E” Circuit Low Input	<Ref. to EN(H4DO w/o HEV)(diag)-321, DTC P2127 THROTTLE/PEDAL POSITION SENSOR/SWITCH “E” CIRCUIT LOW INPUT, Diagnostic Procedure with Diagnostic Trouble Code (DTC).>
P2128	Throttle/Pedal Position Sensor/Switch “E” Circuit High Input	<Ref. to EN(H4DO w/o HEV)(diag)-323, DTC P2128 THROTTLE/PEDAL POSITION SENSOR/SWITCH “E” CIRCUIT HIGH INPUT, Diagnostic Procedure with Diagnostic Trouble Code (DTC).>
P2135	Throttle/Pedal Position Sensor/Switch “A”/“B” Voltage Correlation	<Ref. to EN(H4DO w/o HEV)(diag)-325, DTC P2135 THROTTLE/PEDAL POSITION SENSOR/SWITCH “A”/“B” VOLTAGE CORRELATION, Diagnostic Procedure with Diagnostic Trouble Code (DTC).>
P2138	Throttle/Pedal Position Sensor/Switch “D”/“E” Voltage Correlation	<Ref. to EN(H4DO w/o HEV)(diag)-328, DTC P2138 THROTTLE/PEDAL POSITION SENSOR/SWITCH “D”/“E” VOLTAGE CORRELATION, Diagnostic Procedure with Diagnostic Trouble Code (DTC).>
P2195	O2 Sensor Signal Biased/Stuck Lean (Bank 1 Sensor 1)	<Ref. to EN(H4DO w/o HEV)(diag)-330, DTC P2195 O2 SENSOR SIGNAL BIASED/STUCK LEAN (BANK 1 SENSOR 1), Diagnostic Procedure with Diagnostic Trouble Code (DTC).>
P2196	O2 Sensor Signal Biased/Stuck Rich (Bank 1 Sensor 1)	<Ref. to EN(H4DO w/o HEV)(diag)-332, DTC P2196 O2 SENSOR SIGNAL BIASED/STUCK RICH (BANK 1 SENSOR 1), Diagnostic Procedure with Diagnostic Trouble Code (DTC).>
P219A	Bank 1 Air-Fuel Ratio Imbalance	<Ref. to EN(H4DO w/o HEV)(diag)-334, DTC P219A BANK 1 AIR-FUEL RATIO IMBALANCE, Diagnostic Procedure with Diagnostic Trouble Code (DTC).>
P2401	Evaporative Emission System Leak Detection Pump Control Circuit Low	<Ref. to EN(H4DO w/o HEV)(diag)-345, DTC P2401 EVAPORATIVE EMISSION SYSTEM LEAK DETECTION PUMP CONTROL CIRCUIT LOW, Diagnostic Procedure with Diagnostic Trouble Code (DTC).>
P2402	Evaporative Emission System Leak Detection Pump Control Circuit High	<Ref. to EN(H4DO w/o HEV)(diag)-348, DTC P2402 EVAPORATIVE EMISSION SYSTEM LEAK DETECTION PUMP CONTROL CIRCUIT HIGH, Diagnostic Procedure with Diagnostic Trouble Code (DTC).>
P2404	Evaporative Emission System Leak Detection Pump Sense Circuit Range/Performance	<Ref. to EN(H4DO w/o HEV)(diag)-350, DTC P2404 EVAPORATIVE EMISSION SYSTEM LEAK DETECTION PUMP SENSE CIRCUIT RANGE/PERFORMANCE, Diagnostic Procedure with Diagnostic Trouble Code (DTC).>
P2419	Evaporative Emission System Switching Valve Control Circuit Low	<Ref. to EN(H4DO w/o HEV)(diag)-354, DTC P2419 EVAPORATIVE EMISSION SYSTEM SWITCHING VALVE CONTROL CIRCUIT LOW, Diagnostic Procedure with Diagnostic Trouble Code (DTC).>
P2420	Evaporative Emission System Switching Valve Control Circuit High	<Ref. to EN(H4DO w/o HEV)(diag)-357, DTC P2420 EVAPORATIVE EMISSION SYSTEM SWITCHING VALVE CONTROL CIRCUIT HIGH, Diagnostic Procedure with Diagnostic Trouble Code (DTC).>
P2610	ECM/PCM Internal Engine Off Timer Performance	<Ref. to EN(H4DO w/o HEV)(diag)-359, DTC P2610 ECM/PCM INTERNAL ENGINE OFF TIMER PERFORMANCE, Diagnostic Procedure with Diagnostic Trouble Code (DTC).>
U0073	Control Module Communication Bus Off	<Ref. to EN(H4DO w/o HEV)(diag)-360, DTC U0073 CONTROL MODULE COMMUNICATION BUS OFF, Diagnostic Procedure with Diagnostic Trouble Code (DTC).>
U0101	Lost Communication With TCM	<Ref. to EN(H4DO w/o HEV)(diag)-360, DTC U0101 LOST COMMUNICATION WITH TCM, Diagnostic Procedure with Diagnostic Trouble Code (DTC).>
U0122	Lost Communication With Vehicle Dynamics Control Module	<Ref. to EN(H4DO w/o HEV)(diag)-360, DTC U0122 LOST COMMUNICATION WITH VEHICLE DYNAMICS CONTROL MODULE, Diagnostic Procedure with Diagnostic Trouble Code (DTC).>

DTC	Item	Note
U0155	Lost Communication With Instrument Panel Cluster (IPC) Control Module	<Ref. to EN(H4DO w/o HEV)(diag)-360, DTC U0155 LOST COMMUNICATION WITH INSTRUMENT PANEL CLUSTER (IPC) CONTROL MODULE, Diagnostic Procedure with Diagnostic Trouble Code (DTC).>
U0402	Invalid Data Received From TCM	<Ref. to EN(H4DO w/o HEV)(diag)-360, DTC U0402 INVALID DATA RECEIVED FROM TCM, Diagnostic Procedure with Diagnostic Trouble Code (DTC).>
U0416	Invalid Data Received From Vehicle Dynamics Control Module	<Ref. to EN(H4DO w/o HEV)(diag)-360, DTC U0416 INVALID DATA RECEIVED FROM VEHICLE DYNAMICS CONTROL MODULE, Diagnostic Procedure with Diagnostic Trouble Code (DTC).>
U0423	Invalid Data Received From Instrument Panel Cluster Control Module	<Ref. to EN(H4DO w/o HEV)(diag)-360, DTC U0423 INVALID DATA RECEIVED FROM INSTRUMENT PANEL CLUSTER CONTROL MODULE, Diagnostic Procedure with Diagnostic Trouble Code (DTC).>

19.Diagnostic Procedure with Diagnostic Trouble Code (DTC)

A: DTC P000A A CAMSHAFT POSITION SLOW RESPONSE (BANK 1)

NOTE:
For the diagnostic procedure, refer to DTC P0011. <Ref. to EN(H4DO w/o HEV)(diag)-94, DTC P0011 INTAKE CAMSHAFT POSITION - TIMING OVER-ADVANCED OR SYSTEM PERFORMANCE (BANK 1), Diagnostic Procedure with Diagnostic Trouble Code (DTC).>

B: DTC P000B B CAMSHAFT POSITION SLOW RESPONSE (BANK 1)

NOTE:
For the diagnostic procedure, refer to DTC P0014. <Ref. to EN(H4DO w/o HEV)(diag)-95, DTC P0014 EXHAUST AVCS SYSTEM 1 (RANGE/PERFORMANCE), Diagnostic Procedure with Diagnostic Trouble Code (DTC).>

C: DTC P000C A CAMSHAFT POSITION SLOW RESPONSE (BANK 2)

NOTE:
For the diagnostic procedure, refer to DTC P0021. <Ref. to EN(H4DO w/o HEV)(diag)-104, DTC P0021 INTAKE CAMSHAFT POSITION - TIMING OVER-ADVANCED OR SYSTEM PERFORMANCE (BANK 2), Diagnostic Procedure with Diagnostic Trouble Code (DTC).>

D: DTC P000D B CAMSHAFT POSITION SLOW RESPONSE (BANK 2)

NOTE:
For the diagnostic procedure, refer to DTC P0024. <Ref. to EN(H4DO w/o HEV)(diag)-105, DTC P0024 EXHAUST AVCS SYSTEM 2 (RANGE/PERFORMANCE), Diagnostic Procedure with Diagnostic Trouble Code (DTC).>

E: DTC P0011 INTAKE CAMSHAFT POSITION - TIMING OVER-ADVANCED OR SYSTEM PERFORMANCE (BANK 1)

DTC DETECTING CONDITION:

- Detected when two consecutive driving cycles with fault occur.
- GENERAL DESCRIPTION <Ref. to GD(H4DO w/o HEV)-17, DTC P0011 INTAKE CAMSHAFT POSITION - TIMING OVER-ADVANCED OR SYSTEM PERFORMANCE (BANK 1), Diagnostic Trouble Code (DTC) Detecting Criteria.>

TROUBLE SYMPTOM:

- Engine stalls.
- Improper idling

CAUTION:

After servicing or replacing faulty parts, perform Clear Memory Mode <Ref. to EN(H4DO w/o HEV)(diag)-59, OPERATION, Clear Memory Mode.>, and Inspection Mode <Ref. to EN(H4DO w/o HEV)(diag)-44, PROCEDURE, Inspection Mode.>.

	Step	Check	Yes	No
1	**IDENTIFYING FAULTY PART.** 1) Perform the Clear Memory Mode. <Ref. to EN(H4DO w/o HEV)(diag)-59, Clear Memory Mode.> 2) Replace the defective oil control solenoid by the other (RH or LH, intake side or exhaust side) oil control solenoid. 3) Perform appropriate drive cycle test. <Ref. to EN(H4DO w/o HEV)(diag)-50, Drive Cycle.> 4) Make sure that the fault occurrence (DTC and incorrect advancing) has shifted to the other location.	Did the detected DTC shift to the location where the oil control solenoid was replaced?	Replace the faulty oil control solenoid.	Go to step **2**.
2	**CHECK CURRENT DATA.** 1) Start the engine and let it idle. 2) Read the value of «VVT Adv. Ang. Amount R» using the Subaru Select Monitor. NOTE: For detailed operation procedures, refer to “READ CURRENT DATA FOR ENGINE”. <Ref. to EN(H4DO w/o HEV)(diag)-36, Subaru Select Monitor.>	Is the value of «VVT Adv. Ang. Amount R» approx. 0 deg?	Go to step **3**.	Check the following item and repair or replace if necessary. • Intake cam sprocket (clog or dirt of oil routing, setting of spring) • Intake camshaft (dirt, damage of camshaft)
3	**CHECK CURRENT DATA.** 1) Drive with acceleration and deceleration at 80 km/h (50 MPH) or less. NOTE: Drive to an extent that the duty output of oil flow control solenoid valve increases. 2) Read the values of «OCV Duty R» and «VVT Adv. Ang. Amount R» using the Subaru Select Monitor. NOTE: For detailed operation procedures, refer to “READ CURRENT DATA FOR ENGINE”. <Ref. to EN(H4DO w/o HEV)(diag)-36, Subaru Select Monitor.>	When the value of «OCV Duty R» increases more than 10%, is the value of «VVT Adv. Ang. Amount R» approx. 0 deg?	Check the following item and repair or replace if necessary. • Intake cam sprocket (clog or dirt of oil routing, setting of spring) • Intake camshaft (dirt, damage of camshaft)	Perform the following procedures, and clean the oil routing. Replace the engine oil and idle the engine for 5 minutes, and then replace the oil filter and engine oil. <Ref. to LU(H4DO(w/o HEV))-13, REPLACEMENT, Engine Oil.> <Ref. to LU(H4DO(w/o HEV))-28, Engine Oil Filter.>

F: DTC P0014 EXHAUST AVCS SYSTEM 1 (RANGE/PERFORMANCE)

DTC DETECTING CONDITION:

- Detected when two consecutive driving cycles with fault occur.
- GENERAL DESCRIPTION <Ref. to GD(H4DO w/o HEV)-19, DTC P0014 EXHAUST AVCS SYSTEM 1 (RANGE/PERFORMANCE), Diagnostic Trouble Code (DTC) Detecting Criteria.>

TROUBLE SYMPTOM:

- Engine stalls.
- Improper idling

CAUTION:

After servicing or replacing faulty parts, perform Clear Memory Mode <Ref. to EN(H4DO w/o HEV)(diag)-59, OPERATION, Clear Memory Mode.>, and Inspection Mode <Ref. to EN(H4DO w/o HEV)(diag)-44, PROCEDURE, Inspection Mode.>.

	Step	Check	Yes	No
1	**IDENTIFYING FAULTY PART.** 1) Perform the Clear Memory Mode. <Ref. to EN(H4DO w/o HEV)(diag)-59, Clear Memory Mode.> 2) Replace the defective oil control solenoid by the other (RH or LH, intake side or exhaust side) oil control solenoid. 3) Perform appropriate drive cycle test. <Ref. to EN(H4DO w/o HEV)(diag)-50, Drive Cycle.> 4) Make sure that the fault occurrence (DTC and incorrect advancing) has shifted to the other location.	Did the detected DTC shift to the location where the oil control solenoid was replaced?	Replace the faulty oil control solenoid.	Go to step **2**.
2	**CHECK CURRENT DATA.** 1) Start the engine and let it idle. 2) Read the value of «Exh. VVT Retard Ang. R» using the Subaru Select Monitor. NOTE: For detailed operation procedures, refer to “READ CURRENT DATA FOR ENGINE”. <Ref. to EN(H4DO w/o HEV)(diag)-36, Subaru Select Monitor.>	Is the value of «Exh. VVT Retard Ang. R» approx. 0 deg?	Go to step **3**.	Check the following item and repair or replace if necessary. • Exhaust cam sprocket (clog or dirt of oil routing, setting of spring) • Exhaust camshaft (dirt, damage of camshaft)
3	**CHECK CURRENT DATA.** 1) Drive with acceleration and deceleration at 80 km/h (50 MPH) or less. NOTE: Drive to an extent that the duty output of oil flow control solenoid valve increases. 2) Read the values of «Exh. OCV Duty R» and «Exh. VVT Retard Ang. R» using the Subaru Select Monitor. NOTE: For detailed operation procedures, refer to “READ CURRENT DATA FOR ENGINE”. <Ref. to EN(H4DO w/o HEV)(diag)-36, Subaru Select Monitor.>	When the value of «Exh. OCV Duty R» increases more than 10%, is the value of «Exh. VVT Retard Ang. R» approx. 0 deg?	Check the following item and repair or replace if necessary. • Exhaust cam sprocket (clog or dirt of oil routing, setting of spring) • Exhaust camshaft (dirt, damage of camshaft)	Perform the following procedures, and clean the oil routing. Replace the engine oil and idle the engine for 5 minutes, and then replace the oil filter and engine oil. <Ref. to LU(H4DO(w/o HEV))-13, REPLACEMENT, Engine Oil.> <Ref. to LU(H4DO(w/o HEV))-28, Engine Oil Filter.>

G: DTC P0016 CRANKSHAFT POSITION - CAMSHAFT POSITION CORRELATION (BANK1)

DTC DETECTING CONDITION:

- Detected when two consecutive driving cycles with fault occur.
- GENERAL DESCRIPTION <Ref. to GD(H4DO w/o HEV)-20, DTC P0016 CRANKSHAFT POSITION - CAMSHAFT POSITION CORRELATION (BANK1), Diagnostic Trouble Code (DTC) Detecting Criteria.>

TROUBLE SYMPTOM:

- Engine stalls.
- Improper idling

CAUTION:

After servicing or replacing faulty parts, perform Clear Memory Mode <Ref. to EN(H4DO w/o HEV)(diag)-59, OPERATION, Clear Memory Mode.>, and Inspection Mode <Ref. to EN(H4DO w/o HEV)(diag)-44, PROCEDURE, Inspection Mode.>.

	Step	Check	Yes	No
1	**CHECK FOR ANY OTHER DTC ON DISPLAY.**	Are DTCs other than P0016, P0017, P0018 or P0019 displayed?	Check the appropriate DTC using the "List of Diagnostic Trouble Code (DTC)". <Ref. to EN(H4DO w/o HEV)(diag)-83, List of Diagnostic Trouble Code (DTC).>	Go to step **2**.
2	**CHECK INTAKE OIL CONTROL SOLENOID RH.** Check the intake oil control solenoid RH. <Ref. to FU(H4DO(w/o HEV))-72, INSPECTION, Oil Control Solenoid.>	Is intake oil control solenoid RH normal?	Go to step **3**.	Replace the intake oil control solenoid RH. <Ref. to FU(H4DO(w/o HEV))-69, Oil Control Solenoid.>
3	**CHECK INSTALLATION CONDITION OF TIMING CHAIN.** Using ST and by turning the crankshaft, align the alignment marks of crank sprocket, intake cam sprocket and exhaust cam sprocket. <Ref. to ME(H4DO(w/o HEV))-163, Timing Chain Assembly.> ST 18252AA000 CRANKSHAFT SOCKET	Is timing chain installed to the appropriate position?	Go to step **4**.	Correct the installation condition of timing chain. <Ref. to ME(H4DO(w/o HEV))-163, Timing Chain Assembly.>
4	**CHECK CAM CARRIER FILTER.** Check the filter installed to cam carrier. <Ref. to ME(H4DO(w/o HEV))-250, INSPECTION, Cam Carrier.>	Is filter of cam carrier normal?	Replace the intake cam sprocket RH. <Ref. to ME(H4DO(w/o HEV))-183, Cam Sprocket.> After the operation is complete, go to the next step. Go to step **5**.	Replace the filter of cam carrier. <Ref. to ME(H4DO(w/o HEV))-209, Cam Carrier.>

	Step	Check	Yes	No
5	**CHECK CURRENT DATA.** 1) Clear the memory using the Subaru Select Monitor or general scan tool. <Ref. to EN(H4DO w/o HEV)(diag)-59, OPERATION, Clear Memory Mode.> 2) Start the engine and warm up completely. 3) Using Subaru Select Monitor, read the value of «VVT Initial Position Learning Value #1» and «VVT Adv. Ang. Amount R» when idling condition is stable for 30 seconds or more. NOTE: For detailed operation procedures, refer to "READ CURRENT DATA FOR ENGINE". <Ref. to EN(H4DO w/o HEV)(diag)-36, Subaru Select Monitor.> 4) Calculate the read value according to the following formula. At this time, ignore the unit. |«VVT Initial Position Learning Value #1» – (60 + «VVT Adv. Ang. Amount R»)|	Is the calculation result less than 10?	Go to step **6**.	Replace the ECM. <Ref. to FU(H4DO(w/o HEV))-106, Engine Control Module (ECM).>
6	**CHECK DTC.** 1) Clear the memory using the Subaru Select Monitor or general scan tool. <Ref. to EN(H4DO w/o HEV)(diag)-59, OPERATION, Clear Memory Mode.> 2) Perform drive cycle N. <Ref. to EN(H4DO w/o HEV)(diag)-57, DRIVE CYCLE N, PROCEDURE, Drive Cycle.>	Is the same DTC as current diagnosis displayed?	Replace the ECM. <Ref. to FU(H4DO(w/o HEV))-106, Engine Control Module (ECM).>	End.

H: DTC P0017 CRANK AND CAM TIMING B SYSTEM FAILURE (BANK 1)

DTC DETECTING CONDITION:

- Detected when two consecutive driving cycles with fault occur.
- GENERAL DESCRIPTION <Ref. to GD(H4DO w/o HEV)-21, DTC P0017 CRANK AND CAM TIMING B SYSTEM FAILURE (BANK 1), Diagnostic Trouble Code (DTC) Detecting Criteria.>

TROUBLE SYMPTOM:

- Engine stalls.
- Improper idling

CAUTION:
After servicing or replacing faulty parts, perform Clear Memory Mode <Ref. to EN(H4DO w/o HEV)(diag)-59, OPERATION, Clear Memory Mode.>, and Inspection Mode <Ref. to EN(H4DO w/o HEV)(diag)-44, PROCEDURE, Inspection Mode.>.

	Step	Check	Yes	No
1	**CHECK FOR ANY OTHER DTC ON DISPLAY.**	Are DTCs other than P0016, P0017, P0018 or P0019 displayed?	Check the appropriate DTC using the "List of Diagnostic Trouble Code (DTC)". <Ref. to EN(H4DO w/o HEV)(diag)-83, List of Diagnostic Trouble Code (DTC).>	Go to step **2**.
2	**CHECK EXHAUST OIL CONTROL SOLENOID RH.** Check the exhaust oil control solenoid RH. <Ref. to FU(H4DO(w/o HEV))-72, INSPECTION, Oil Control Solenoid.>	Is exhaust oil control solenoid RH normal?	Go to step **3**.	Replace the exhaust oil control solenoid RH. <Ref. to FU(H4DO(w/o HEV))-69, Oil Control Solenoid.>
3	**CHECK INSTALLATION CONDITION OF TIMING CHAIN.** Using ST and by turning the crankshaft, align the alignment marks of crank sprocket, intake cam sprocket and exhaust cam sprocket. <Ref. to ME(H4DO(w/o HEV))-163, Timing Chain Assembly.> ST 18252AA000 CRANKSHAFT SOCKET	Is timing chain installed to the appropriate position?	Go to step **4**.	Correct the installation condition of timing chain. <Ref. to ME(H4DO(w/o HEV))-163, Timing Chain Assembly.>
4	**CHECK CAM CARRIER FILTER.** Check the filter installed to cam carrier. <Ref. to ME(H4DO(w/o HEV))-250, INSPECTION, Cam Carrier.>	Is filter of cam carrier normal?	Replace the exhaust cam sprocket RH. <Ref. to ME(H4DO(w/o HEV))-183, Cam Sprocket.> After the operation is complete, go to the next step. Go to step **5**.	Replace the filter of cam carrier. <Ref. to ME(H4DO(w/o HEV))-209, Cam Carrier.>

	Step	Check	Yes	No
5	**CHECK CURRENT DATA.** 1) Clear the memory using the Subaru Select Monitor or general scan tool. <Ref. to EN(H4DO w/o HEV)(diag)-59, OPERATION, Clear Memory Mode.> 2) Start the engine and warm up completely. 3) Using Subaru Select Monitor, read the value of «VVT Ex Initial Position Learning Value #1» and «Exh. VVT Retard Ang. R» when idling condition is stable for 30 seconds or more. NOTE: For detailed operation procedures, refer to "READ CURRENT DATA FOR ENGINE". <Ref. to EN(H4DO w/o HEV)(diag)-36, Subaru Select Monitor.> 4) Calculate the read value according to the following formula. At this time, ignore the unit. |«VVT Ex Initial Position Learning Value #1» – (90 – «Exh. VVT Retard Ang. R»)|	Is the calculation result less than 10?	Go to step **6**.	Replace the ECM. <Ref. to FU(H4DO(w/o HEV))-106, Engine Control Module (ECM).>
6	**CHECK DTC.** 1) Clear the memory using the Subaru Select Monitor or general scan tool. <Ref. to EN(H4DO w/o HEV)(diag)-59, OPERATION, Clear Memory Mode.> 2) Perform drive cycle N. <Ref. to EN(H4DO w/o HEV)(diag)-57, DRIVE CYCLE N, PROCEDURE, Drive Cycle.>	Is the same DTC as current diagnosis displayed?	Replace the ECM. <Ref. to FU(H4DO(w/o HEV))-106, Engine Control Module (ECM).>	End.

I: DTC P0018 CRANKSHAFT POSITION - CAMSHAFT POSITION CORRELATION (BANK2)

DTC DETECTING CONDITION:

- Detected when two consecutive driving cycles with fault occur.
- GENERAL DESCRIPTION <Ref. to GD(H4DO w/o HEV)-22, DTC P0018 CRANKSHAFT POSITION - CAMSHAFT POSITION CORRELATION (BANK2), Diagnostic Trouble Code (DTC) Detecting Criteria.>

TROUBLE SYMPTOM:

- Engine stalls.
- Improper idling

CAUTION:

After servicing or replacing faulty parts, perform Clear Memory Mode <Ref. to EN(H4DO w/o HEV)(diag)-59, OPERATION, Clear Memory Mode.>, and Inspection Mode <Ref. to EN(H4DO w/o HEV)(diag)-44, PROCEDURE, Inspection Mode.>.

	Step	Check	Yes	No
1	**CHECK FOR ANY OTHER DTC ON DISPLAY.**	Are DTCs other than P0016, P0017, P0018 or P0019 displayed?	Check the appropriate DTC using the "List of Diagnostic Trouble Code (DTC)". <Ref. to EN(H4DO w/o HEV)(diag)-83, List of Diagnostic Trouble Code (DTC).>	Go to step **2**.
2	**CHECK INTAKE OIL CONTROL SOLENOID LH.** Check the intake oil control solenoid LH. <Ref. to FU(H4DO(w/o HEV))-72, INSPECTION, Oil Control Solenoid.>	Is intake oil control solenoid LH normal?	Go to step **3**.	Replace the intake oil control solenoid LH. <Ref. to FU(H4DO(w/o HEV))-69, Oil Control Solenoid.>
3	**CHECK INSTALLATION CONDITION OF TIMING CHAIN.** Using ST and by turning the crankshaft, align the alignment marks of crank sprocket, intake cam sprocket and exhaust cam sprocket. <Ref. to ME(H4DO(w/o HEV))-163, Timing Chain Assembly.> ST 18252AA000 CRANKSHAFT SOCKET	Is timing chain installed to the appropriate position?	Go to step **4**.	Correct the installation condition of timing chain. <Ref. to ME(H4DO(w/o HEV))-163, Timing Chain Assembly.>
4	**CHECK CAM CARRIER FILTER.** Check the filter installed to cam carrier. <Ref. to ME(H4DO(w/o HEV))-250, INSPECTION, Cam Carrier.>	Is filter of cam carrier normal?	Replace the intake cam sprocket LH. <Ref. to ME(H4DO(w/o HEV))-183, Cam Sprocket.> After the operation is complete, go to the next step. Go to step **5**.	Replace the filter of cam carrier. <Ref. to ME(H4DO(w/o HEV))-209, Cam Carrier.>

	Step	Check	Yes	No
5	**CHECK CURRENT DATA.** 1) Clear the memory using the Subaru Select Monitor or general scan tool. <Ref. to EN(H4DO w/o HEV)(diag)-59, OPERATION, Clear Memory Mode.> 2) Start the engine and warm up completely. 3) Using Subaru Select Monitor, read the value of «VVT Initial Position Learning Value #2» and «VVT Adv. Ang. Amount L» when idling condition is stable for 30 seconds or more. NOTE: For detailed operation procedures, refer to "READ CURRENT DATA FOR ENGINE". <Ref. to EN(H4DO w/o HEV)(diag)-36, Subaru Select Monitor.> 4) Calculate the read value according to the following formula. At this time, ignore the unit. |«VVT Initial Position Learning Value #2» – (60 + «VVT Adv. Ang. Amount L»)|	Is the calculation result less than 10?	Go to step **6**.	Replace the ECM. <Ref. to FU(H4DO(w/o HEV))-106, Engine Control Module (ECM).>
6	**CHECK DTC.** 1) Clear the memory using the Subaru Select Monitor or general scan tool. <Ref. to EN(H4DO w/o HEV)(diag)-59, OPERATION, Clear Memory Mode.> 2) Perform drive cycle N. <Ref. to EN(H4DO w/o HEV)(diag)-57, DRIVE CYCLE N, PROCEDURE, Drive Cycle.>	Is the same DTC as current diagnosis displayed?	Replace the ECM. <Ref. to FU(H4DO(w/o HEV))-106, Engine Control Module (ECM).>	End.

J: DTC P0019 CRANK AND CAM TIMING B SYSTEM FAILURE (BANK 2)

DTC DETECTING CONDITION:

- Detected when two consecutive driving cycles with fault occur.
- GENERAL DESCRIPTION <Ref. to GD(H4DO w/o HEV)-22, DTC P0019 CRANK AND CAM TIMING B SYSTEM FAILURE (BANK 2), Diagnostic Trouble Code (DTC) Detecting Criteria.>

TROUBLE SYMPTOM:

- Engine stalls.
- Improper idling

CAUTION:
After servicing or replacing faulty parts, perform Clear Memory Mode <Ref. to EN(H4DO w/o HEV)(diag)-59, OPERATION, Clear Memory Mode.>, and Inspection Mode <Ref. to EN(H4DO w/o HEV)(diag)-44, PROCEDURE, Inspection Mode.>.

	Step	Check	Yes	No
1	**CHECK FOR ANY OTHER DTC ON DISPLAY.**	Are DTCs other than P0016, P0017, P0018 or P0019 displayed?	Check the appropriate DTC using the "List of Diagnostic Trouble Code (DTC)". <Ref. to EN(H4DO w/o HEV)(diag)-83, List of Diagnostic Trouble Code (DTC).>	Go to step **2**.
2	**CHECK EXHAUST OIL CONTROL SOLENOID LH.** Check the exhaust oil control solenoid LH. <Ref. to FU(H4DO(w/o HEV))-72, INSPECTION, Oil Control Solenoid.>	Is exhaust oil control solenoid LH normal?	Go to step **3**.	Replace the exhaust oil control solenoid LH. <Ref. to FU(H4DO(w/o HEV))-69, Oil Control Solenoid.>
3	**CHECK INSTALLATION CONDITION OF TIMING CHAIN.** Using ST and by turning the crankshaft, align the alignment marks of crank sprocket, intake cam sprocket and exhaust cam sprocket. <Ref. to ME(H4DO(w/o HEV))-163, Timing Chain Assembly.> ST 18252AA000 CRANKSHAFT SOCKET	Is timing chain installed to the appropriate position?	Go to step **4**.	Correct the installation condition of timing chain. <Ref. to ME(H4DO(w/o HEV))-163, Timing Chain Assembly.>
4	**CHECK CAM CARRIER FILTER.** Check the filter installed to cam carrier. <Ref. to ME(H4DO(w/o HEV))-250, INSPECTION, Cam Carrier.>	Is filter of cam carrier normal?	Replace the exhaust cam sprocket LH. <Ref. to ME(H4DO(w/o HEV))-183, Cam Sprocket.> After the operation is complete, go to the next step. Go to step **5**.	Replace the filter of cam carrier. <Ref. to ME(H4DO(w/o HEV))-209, Cam Carrier.>

	Step	Check	Yes	No
5	**CHECK CURRENT DATA.** 1) Clear the memory using the Subaru Select Monitor or general scan tool. <Ref. to EN(H4DO w/o HEV)(diag)-59, OPERATION, Clear Memory Mode.> 2) Start the engine and warm up completely. 3) Using Subaru Select Monitor, read the value of «VVT Ex Initial Position Learning Value #2» and «Exh. VVT Retard Ang. L» when idling condition is stable for 30 seconds or more. NOTE: For detailed operation procedures, refer to "READ CURRENT DATA FOR ENGINE". <Ref. to EN(H4DO w/o HEV)(diag)-36, Subaru Select Monitor.> 4) Calculate the read value according to the following formula. At this time, ignore the unit. |«VVT Ex Initial Position Learning Value #2» – (90 – «Exh. VVT Retard Ang. L»)|	Is the calculation result less than 10?	Go to step **6**.	Replace the ECM. <Ref. to FU(H4DO(w/o HEV))-106, Engine Control Module (ECM).>
6	**CHECK DTC.** 1) Clear the memory using the Subaru Select Monitor or general scan tool. <Ref. to EN(H4DO w/o HEV)(diag)-59, OPERATION, Clear Memory Mode.> 2) Perform drive cycle N. <Ref. to EN(H4DO w/o HEV)(diag)-57, DRIVE CYCLE N, PROCEDURE, Drive Cycle.>	Is the same DTC as current diagnosis displayed?	Replace the ECM. <Ref. to FU(H4DO(w/o HEV))-106, Engine Control Module (ECM).>	End.

K: DTC P0021 INTAKE CAMSHAFT POSITION - TIMING OVER-ADVANCED OR SYSTEM PERFORMANCE (BANK 2)

DTC DETECTING CONDITION:

- Detected when two consecutive driving cycles with fault occur.
- GENERAL DESCRIPTION <Ref. to GD(H4DO w/o HEV)-22, DTC P0021 INTAKE CAMSHAFT POSITION - TIMING OVER-ADVANCED OR SYSTEM PERFORMANCE (BANK 2), Diagnostic Trouble Code (DTC) Detecting Criteria.>

TROUBLE SYMPTOM:

- Engine stalls.
- Improper idling

CAUTION:

After servicing or replacing faulty parts, perform Clear Memory Mode <Ref. to EN(H4DO w/o HEV)(diag)-59, OPERATION, Clear Memory Mode.>, and Inspection Mode <Ref. to EN(H4DO w/o HEV)(diag)-44, PROCEDURE, Inspection Mode.>.

	Step	Check	Yes	No
1	**IDENTIFYING FAULTY PART.** 1) Perform the Clear Memory Mode. <Ref. to EN(H4DO w/o HEV)(diag)-59, Clear Memory Mode.> 2) Replace the defective oil control solenoid by the other (RH or LH, intake side or exhaust side) oil control solenoid. 3) Perform appropriate drive cycle test. <Ref. to EN(H4DO w/o HEV)(diag)-50, Drive Cycle.> 4) Make sure that the fault occurrence (DTC and incorrect advancing) has shifted to the other location.	Did the detected DTC shift to the location where the oil control solenoid was replaced?	Replace the faulty oil control solenoid.	Go to step **2**.
2	**CHECK CURRENT DATA.** 1) Start the engine and let it idle. 2) Read the value of «VVT Adv. Ang. Amount L» using the Subaru Select Monitor. NOTE: For detailed operation procedures, refer to “READ CURRENT DATA FOR ENGINE”. <Ref. to EN(H4DO w/o HEV)(diag)-36, Subaru Select Monitor.>	Is the value of «VVT Adv. Ang. Amount L» approx. 0 deg?	Go to step **3**.	Check the following item and repair or replace if necessary. • Intake cam sprocket (clog or dirt of oil routing, setting of spring) • Intake camshaft (dirt, damage of camshaft)
3	**CHECK CURRENT DATA.** 1) Drive with acceleration and deceleration at 80 km/h (50 MPH) or less. NOTE: Drive to an extent that the duty output of oil flow control solenoid valve increases. 2) Read the values of «OCV Duty L» and «VVT Adv. Ang. Amount L» using the Subaru Select Monitor. NOTE: For detailed operation procedures, refer to “READ CURRENT DATA FOR ENGINE”. <Ref. to EN(H4DO w/o HEV)(diag)-36, Subaru Select Monitor.>	When the value of «OCV Duty L» increases more than 10%, is the value of «VVT Adv. Ang. Amount L» approx. 0 deg?	Check the following item and repair or replace if necessary. • Intake cam sprocket (clog or dirt of oil routing, setting of spring) • Intake camshaft (dirt, damage of camshaft)	Perform the following procedures, and clean the oil routing. Replace the engine oil and idle the engine for 5 minutes, and then replace the oil filter and engine oil. <Ref. to LU(H4DO(w/o HEV))-13, REPLACEMENT, Engine Oil.> <Ref. to LU(H4DO(w/o HEV))-28, Engine Oil Filter.>

L: DTC P0024 EXHAUST AVCS SYSTEM 2 (RANGE/PERFORMANCE)

DTC DETECTING CONDITION:

- Detected when two consecutive driving cycles with fault occur.
- GENERAL DESCRIPTION <Ref. to GD(H4DO w/o HEV)-22, DTC P0024 EXHAUST AVCS SYSTEM 2 (RANGE/PERFORMANCE), Diagnostic Trouble Code (DTC) Detecting Criteria.>

TROUBLE SYMPTOM:

- Engine stalls.
- Improper idling

CAUTION:

After servicing or replacing faulty parts, perform Clear Memory Mode <Ref. to EN(H4DO w/o HEV)(diag)-59, OPERATION, Clear Memory Mode.>, and Inspection Mode <Ref. to EN(H4DO w/o HEV)(diag)-44, PROCEDURE, Inspection Mode.>.

	Step	Check	Yes	No
1	**IDENTIFYING FAULTY PART.** 1) Perform the Clear Memory Mode. <Ref. to EN(H4DO w/o HEV)(diag)-59, Clear Memory Mode.> 2) Replace the defective oil control solenoid by the other (RH or LH, intake side or exhaust side) oil control solenoid. 3) Perform appropriate drive cycle test. <Ref. to EN(H4DO w/o HEV)(diag)-50, Drive Cycle.> 4) Make sure that the fault occurrence (DTC and incorrect advancing) has shifted to the other location.	Did the detected DTC shift to the location where the oil control solenoid was replaced?	Replace the faulty oil control solenoid.	Go to step **2**.
2	**CHECK CURRENT DATA.** 1) Start the engine and let it idle. 2) Read the value of «Exh. VVT Retard Ang. L» using the Subaru Select Monitor. NOTE: For detailed operation procedures, refer to “READ CURRENT DATA FOR ENGINE”. <Ref. to EN(H4DO w/o HEV)(diag)-36, Subaru Select Monitor.>	Is the value of «Exh. VVT Retard Ang. L» approx. 0 deg?	Go to step **3**.	Check the following item and repair or replace if necessary. • Exhaust cam sprocket (clog or dirt of oil routing, setting of spring) • Exhaust camshaft (dirt, damage of camshaft)
3	**CHECK CURRENT DATA.** 1) Drive with acceleration and deceleration at 80 km/h (50 MPH) or less. NOTE: Drive to an extent that the duty output of oil flow control solenoid valve increases. 2) Read the values of «Exh. OCV Duty L» and «Exh. VVT Retard Ang. L» using the Subaru Select Monitor. NOTE: For detailed operation procedures, refer to “READ CURRENT DATA FOR ENGINE”. <Ref. to EN(H4DO w/o HEV)(diag)-36, Subaru Select Monitor.>	When the value of «Exh. OCV Duty L» increases more than 10%, is the value of «Exh. VVT Retard Ang. L» approx. 0 deg?	Check the following item and repair or replace if necessary. • Exhaust cam sprocket (clog or dirt of oil routing, setting of spring) • Exhaust camshaft (dirt, damage of camshaft)	Perform the following procedures, and clean the oil routing. Replace the engine oil and idle the engine for 5 minutes, and then replace the oil filter and engine oil. <Ref. to LU(H4DO(w/o HEV))-13, REPLACEMENT, Engine Oil.> <Ref. to LU(H4DO(w/o HEV))-28, Engine Oil Filter.>

M: DTC P0030 HO2S HEATER CONTROL CIRCUIT (BANK 1 SENSOR 1)

DTC DETECTING CONDITION:

- Detected when two consecutive driving cycles with fault occur.
- GENERAL DESCRIPTION <Ref. to GD(H4DO w/o HEV)-23, DTC P0030 HO2S HEATER CONTROL CIRCUIT (BANK 1 SENSOR 1), Diagnostic Trouble Code (DTC) Detecting Criteria.>

CAUTION:

After servicing or replacing faulty parts, perform Clear Memory Mode <Ref. to EN(H4DO w/o HEV)(diag)-59, OPERATION, Clear Memory Mode.>, and Inspection Mode <Ref. to EN(H4DO w/o HEV)(diag)-44, PROCEDURE, Inspection Mode.>.

WIRING DIAGRAM:

Engine electrical system <Ref. to WI(w/o HEV)-74, Engine Electrical System.>

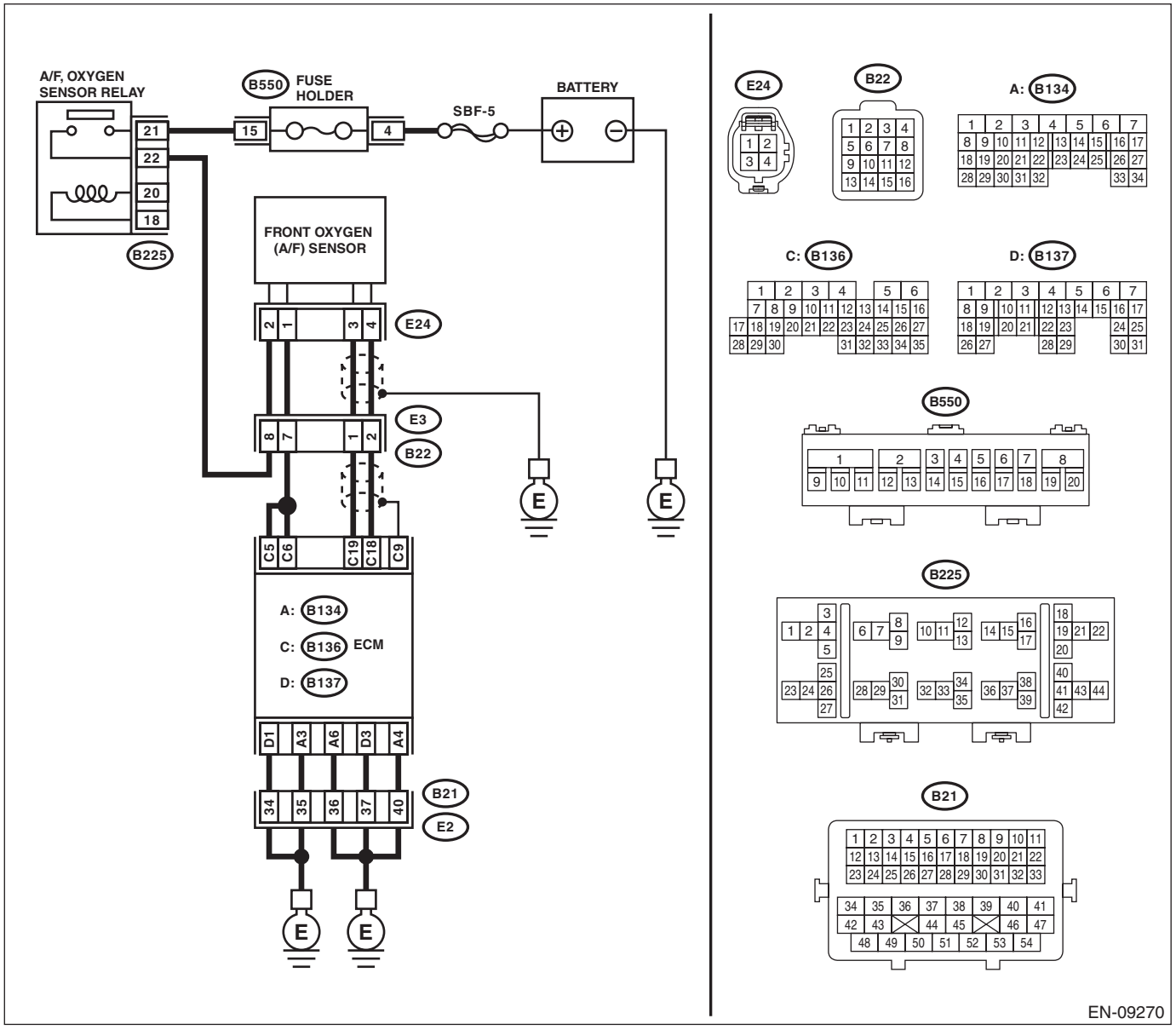

	Step	Check	Yes	No
1	**CHECK HARNESS BETWEEN ECM AND FRONT OXYGEN (A/F) SENSOR CONNECTOR.** 1) Start and warm up the engine. 2) Turn the ignition switch to OFF. 3) Disconnect the connectors from ECM and front oxygen (A/F) sensor. 4) Measure the resistance of harness between ECM connector and front oxygen (A/F) sensor connector. ***Connector & terminal*** ***(B136) No. 5 — (E24) No. 1:*** ***(B136) No. 6 — (E24) No. 1:*** ***(B136) No. 19 — (E24) No. 3:*** ***(B136) No. 18 — (E24) No. 4:***	Is the resistance less than 1 Ω?	Go to step **2**.	Repair the harness and connector. NOTE: In this case, repair the following item: • Open circuit in harness between ECM connector and front oxygen (A/F) sensor connector • Poor contact of coupling connector
2	**CHECK FRONT OXYGEN (A/F) SENSOR.** Measure the resistance between front oxygen (A/F) sensor terminals. ***Terminals*** ***No. 1 — No. 2:***	Is the resistance 2 — 3 Ω?	Go to step **3**.	Replace the front oxygen (A/F) sensor. <Ref. to FU(H4DO(w/o HEV))-97, Front Oxygen (A/F) Sensor.>
3	**CHECK FOR POOR CONTACT.** Check for poor contact of ECM and front oxygen (A/F) sensor connector.	Is there poor contact of ECM or front oxygen (A/F) sensor connector?	Repair the poor contact of ECM or front oxygen (A/F) sensor connector.	Replace the front oxygen (A/F) sensor. <Ref. to FU(H4DO(w/o HEV))-97, Front Oxygen (A/F) Sensor.>

N: DTC P0031 HO2S HEATER CONTROL CIRCUIT LOW (BANK 1 SENSOR 1)

DTC DETECTING CONDITION:

- Immediately at fault recognition
- GENERAL DESCRIPTION <Ref. to GD(H4DO w/o HEV)-25, DTC P0031 HO2S HEATER CONTROL CIRCUIT LOW (BANK 1 SENSOR 1), Diagnostic Trouble Code (DTC) Detecting Criteria.>

CAUTION:

After servicing or replacing faulty parts, perform Clear Memory Mode <Ref. to EN(H4DO w/o HEV)(diag)-59, OPERATION, Clear Memory Mode.>, and Inspection Mode <Ref. to EN(H4DO w/o HEV)(diag)-44, PROCEDURE, Inspection Mode.>.

WIRING DIAGRAM:

Engine electrical system <Ref. to WI(w/o HEV)-74, Engine Electrical System.>

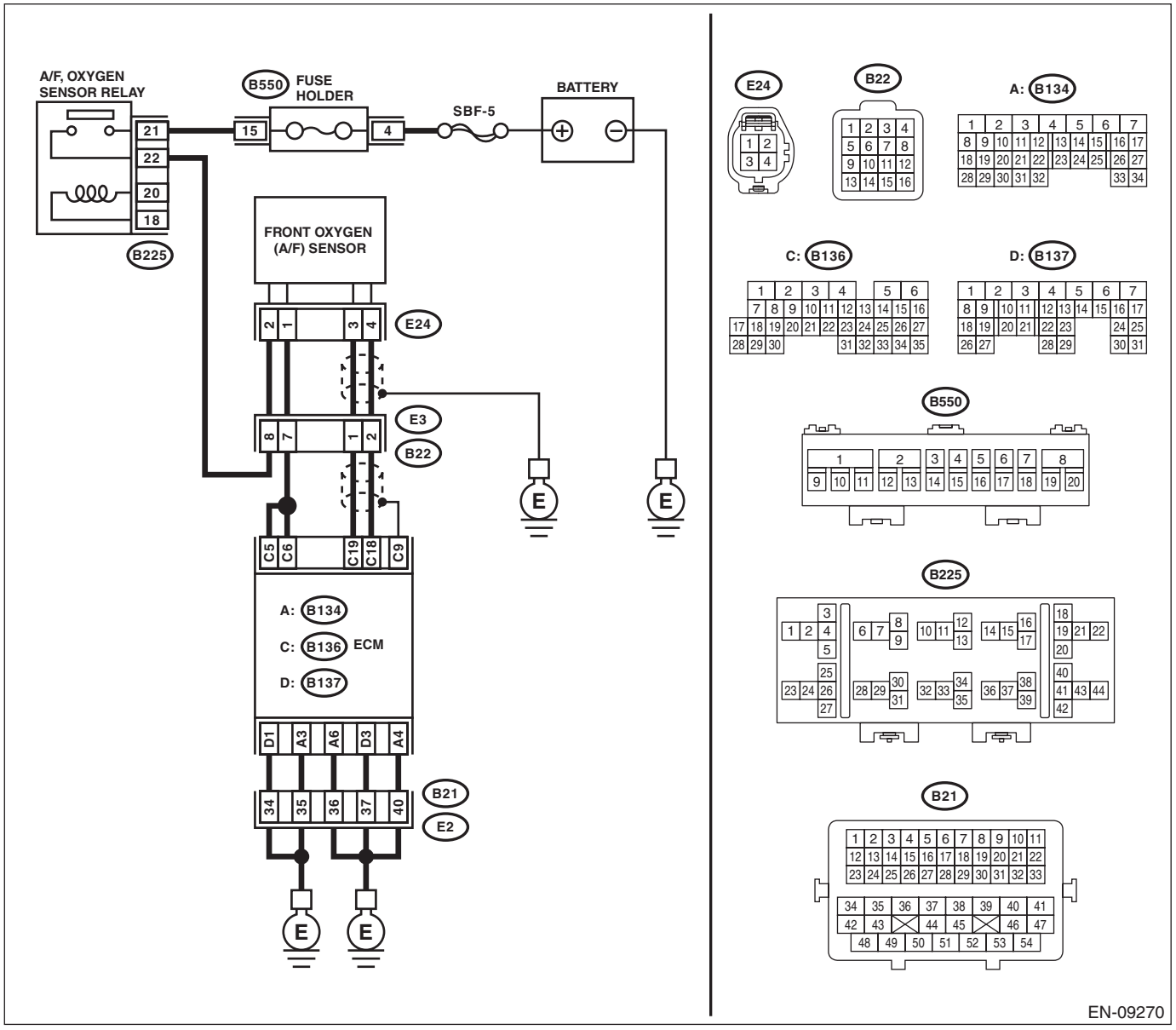

	Step	Check	Yes	No
1	**CHECK POWER SUPPLY TO FRONT OXYGEN (A/F) SENSOR.** 1) Turn the ignition switch to OFF. 2) Disconnect the connectors from front oxygen (A/F) sensor. 3) Turn the ignition switch to ON. 4) Measure the voltage between front oxygen (A/F) sensor connector and engine ground. ***Connector & terminal*** ***(E24) No. 2 (+) — Engine ground (–):***	Is the voltage 10 V or more?	Go to step **2**.	Repair the power supply line. NOTE: In this case, repair the following item: • Open circuit in harness between A/F, oxygen sensor relay connector and front oxygen (A/F) sensor connector • Poor contact of A/F, oxygen sensor relay connector • Poor contact of coupling connector • Malfunction of A/F, oxygen sensor relay
2	**CHECK HARNESS BETWEEN ECM AND FRONT OXYGEN (A/F) SENSOR CONNECTOR.** 1) Turn the ignition switch to OFF. 2) Disconnect the connector from ECM. 3) Measure the resistance between ECM connector and front oxygen (A/F) sensor connector. ***Connector & terminal*** ***(B136) No. 5 — (E24) No. 1:*** ***(B136) No. 6 — (E24) No. 1:***	Is the resistance less than 1 Ω?	Go to step **3**.	Repair the harness and connector. NOTE: In this case, repair the following item: • Open circuit in harness between ECM connector and front oxygen (A/F) sensor connector • Poor contact of coupling connector
3	**CHECK GROUND CIRCUIT FOR ECM.** Measure the resistance of harness between ECM connector and chassis ground. ***Connector & terminal*** ***(B134) No. 3 — Chassis ground:*** ***(B134) No. 4 — Chassis ground:*** ***(B134) No. 6 — Chassis ground:*** ***(B137) No. 1 — Chassis ground:*** ***(B137) No. 3 — Chassis ground:***	Is the resistance less than 5 Ω?	Go to step **4**.	Repair the harness and connector. NOTE: In this case, repair the following item: • Open circuit of harness between ECM connector and engine ground • Poor contact of coupling connector
4	**CHECK FRONT OXYGEN (A/F) SENSOR.** Measure the resistance between front oxygen (A/F) sensor terminals. ***Terminals*** ***No. 1 — No. 2:***	Is the resistance 2 — 3 Ω?	Repair the poor contact of ECM connector.	Replace the front oxygen (A/F) sensor. <Ref. to FU(H4DO(w/o HEV))-97, Front Oxygen (A/F) Sensor.>

O: DTC P0032 HO2S HEATER CONTROL CIRCUIT HIGH (BANK 1 SENSOR 1)

DTC DETECTING CONDITION:

- Immediately at fault recognition
- GENERAL DESCRIPTION <Ref. to GD(H4DO w/o HEV)-27, DTC P0032 HO2S HEATER CONTROL CIRCUIT HIGH (BANK 1 SENSOR 1), Diagnostic Trouble Code (DTC) Detecting Criteria.>

CAUTION:

After servicing or replacing faulty parts, perform Clear Memory Mode <Ref. to EN(H4DO w/o HEV)(diag)-59, OPERATION, Clear Memory Mode.>, and Inspection Mode <Ref. to EN(H4DO w/o HEV)(diag)-44, PROCEDURE, Inspection Mode.>.

WIRING DIAGRAM:

Engine electrical system <Ref. to WI(w/o HEV)-74, Engine Electrical System.>

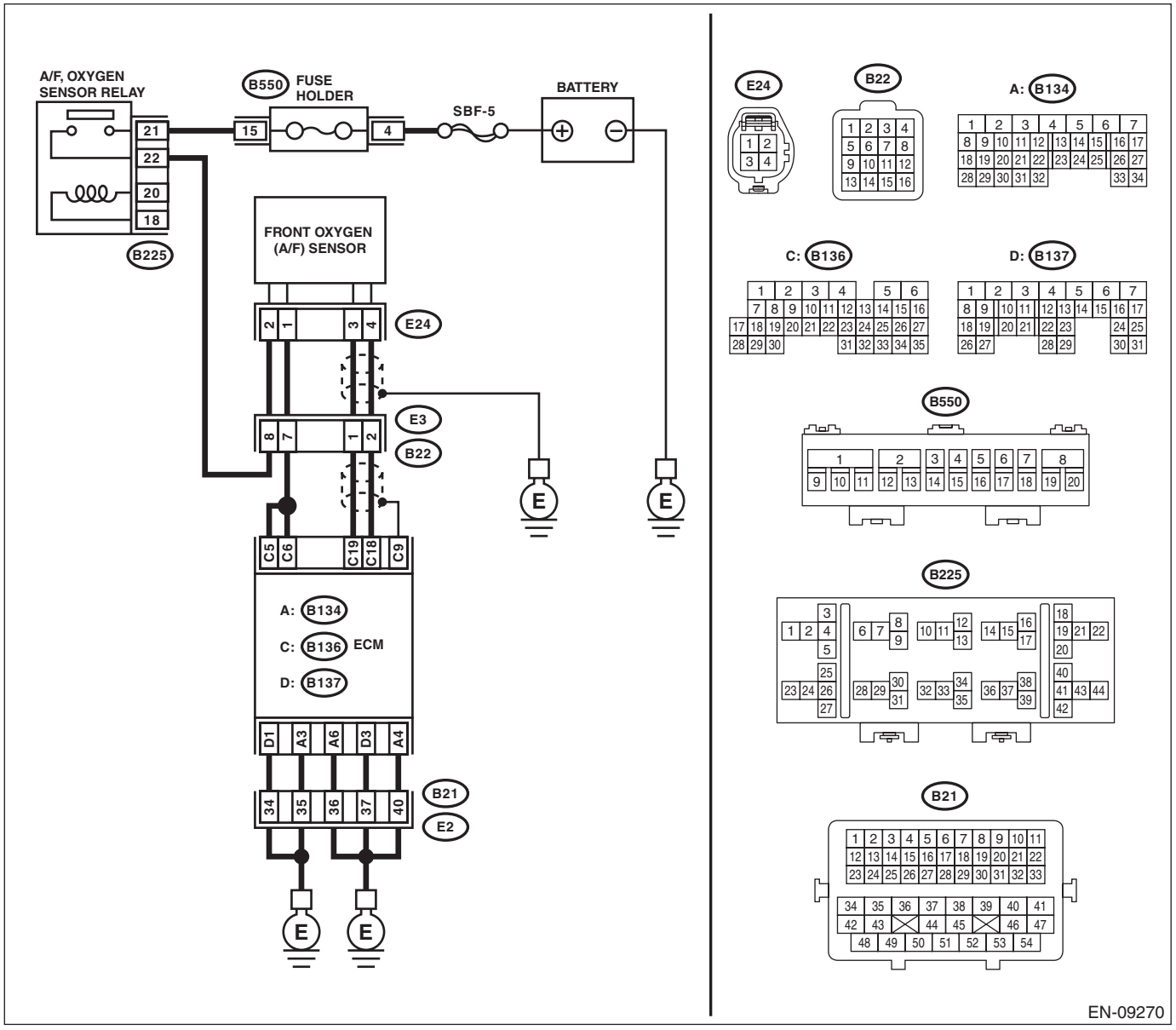

	Step	Check	Yes	No
1	**CHECK HARNESS BETWEEN ECM AND FRONT OXYGEN (A/F) SENSOR CONNECTOR.** 1) Turn the ignition switch to OFF. 2) Measure the voltage between ECM connector and chassis ground. ***Connector & terminal*** ***(B136) No. 5 (+) — Chassis ground (–):*** ***(B136) No. 6 (+) — Chassis ground (–):***	Is the voltage 10 V or more?	Repair the short circuit to power in the harness between ECM connector and front oxygen (A/F) sensor connector.	Go to step **2**.
2	**CHECK GROUND CIRCUIT FOR ECM.** 1) Disconnect the connector from ECM. 2) Measure the resistance between ECM connector and chassis ground. ***Connector & terminal*** ***(B134) No. 3 — Chassis ground:*** ***(B134) No. 4 — Chassis ground:*** ***(B134) No. 6 — Chassis ground:*** ***(B137) No. 1 — Chassis ground:*** ***(B137) No. 3 — Chassis ground:***	Is the resistance less than 5 Ω?	Repair the poor contact of ECM connector.	Repair the harness and connector. NOTE: In this case, repair the following item: • Open circuit of harness between ECM connector and engine ground • Poor contact of coupling connector

P: DTC P0037 HO2S HEATER CONTROL CIRCUIT LOW (BANK 1 SENSOR 2)

DTC DETECTING CONDITION:

- Detected when two consecutive driving cycles with fault occur.
- GENERAL DESCRIPTION <Ref. to GD(H4DO w/o HEV)-29, DTC P0037 HO2S HEATER CONTROL CIRCUIT LOW (BANK 1 SENSOR 2), Diagnostic Trouble Code (DTC) Detecting Criteria.>

CAUTION:

After servicing or replacing faulty parts, perform Clear Memory Mode <Ref. to EN(H4DO w/o HEV)(diag)-59, OPERATION, Clear Memory Mode.>, and Inspection Mode <Ref. to EN(H4DO w/o HEV)(diag)-44, PROCEDURE, Inspection Mode.>.

WIRING DIAGRAM:

Engine electrical system <Ref. to WI(w/o HEV)-74, Engine Electrical System.>

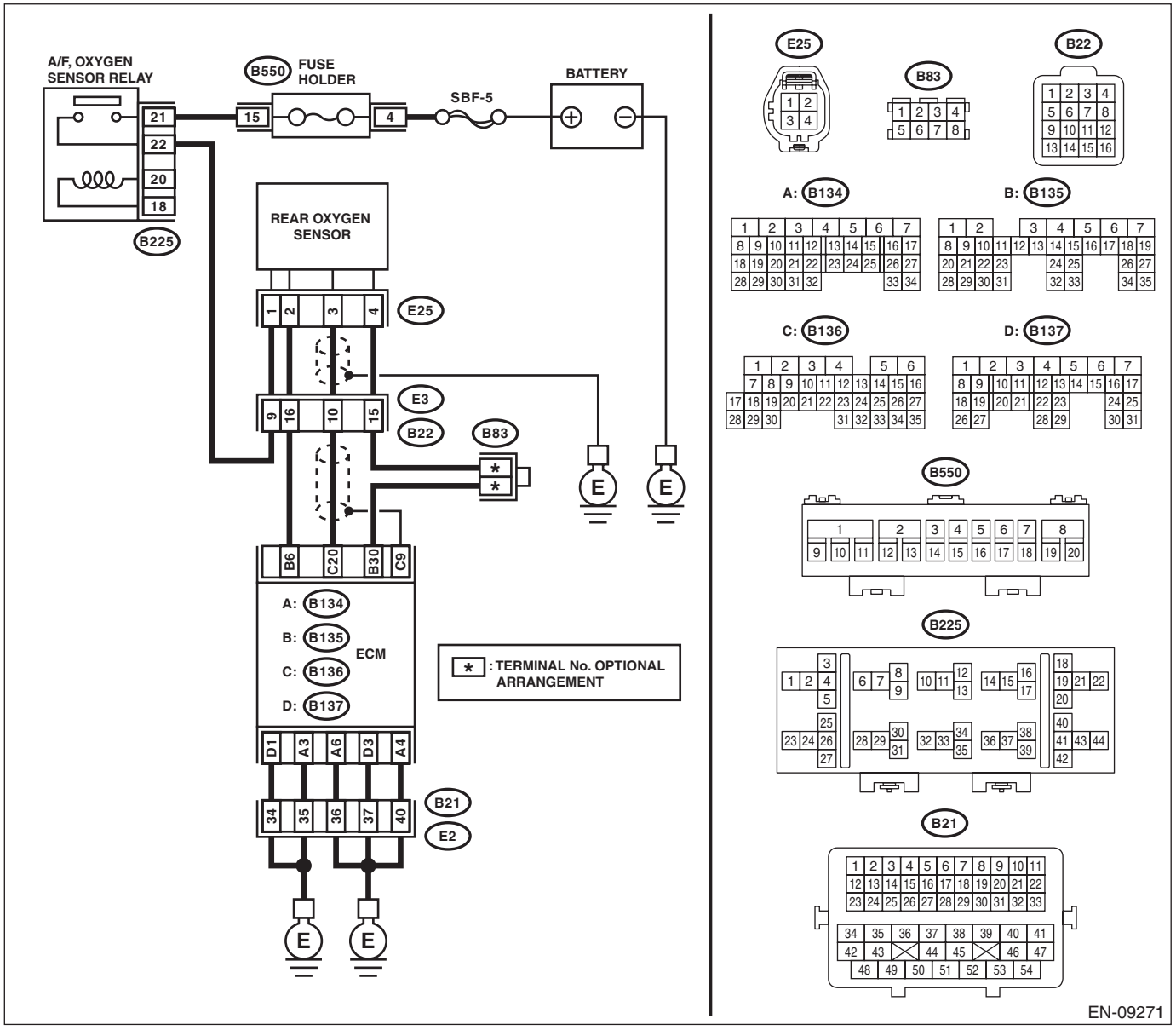

	Step	Check	Yes	No
1	**CHECK POWER SUPPLY TO REAR OXYGEN SENSOR.** 1) Turn the ignition switch to OFF. 2) Disconnect the connector from rear oxygen sensor. 3) Turn the ignition switch to ON. 4) Measure the voltage between rear oxygen sensor connector and engine ground. ***Connector & terminal*** ***(E25) No. 1 (+) — Engine ground (–):***	Is the voltage 10 V or more?	Go to step **2**.	Repair the power supply line. Or replace the main relay. NOTE: In this case, repair the following item: • Open circuit in harness between A/F, oxygen sensor relay connector and rear oxygen sensor connector • Poor contact of A/F, oxygen sensor relay connector • Poor contact of coupling connector • Malfunction of A/F, oxygen sensor relay
2	**CHECK HARNESS BETWEEN ECM AND REAR OXYGEN SENSOR CONNECTOR.** 1) Turn the ignition switch to OFF. 2) Disconnect the connector from ECM. 3) Measure the resistance between ECM connector and oxygen sensor connector. ***Connector & terminal*** ***(B135) No. 6 — (E25) No. 2:***	Is the resistance less than 1 Ω?	Go to step **3**.	Repair the harness and connector. NOTE: In this case, repair the following item: • Open circuit in harness between ECM connector and rear oxygen sensor connector • Poor contact of coupling connector
3	**CHECK GROUND CIRCUIT FOR ECM.** Measure the resistance of harness between ECM connector and chassis ground. ***Connector & terminal*** ***(B134) No. 3 — Chassis ground:*** ***(B134) No. 4 — Chassis ground:*** ***(B134) No. 6 — Chassis ground:*** ***(B137) No. 1 — Chassis ground:*** ***(B137) No. 3 — Chassis ground:***	Is the resistance less than 5 Ω?	Go to step **4**.	Repair the harness and connector. NOTE: In this case, repair the following item: • Open circuit of harness between ECM connector and engine ground • Poor contact of coupling connector
4	**CHECK REAR OXYGEN SENSOR.** Measure the resistance between rear oxygen sensor terminals. ***Terminals*** ***No. 2 — No. 1:***	Is the resistance 5 — 6.4 Ω?	Repair the poor contact of ECM connector.	Replace the rear oxygen sensor. <Ref. to FU(H4DO(w/o HEV))-101, Rear Oxygen Sensor.>

Q: DTC P0038 HO2S HEATER CONTROL CIRCUIT HIGH (BANK 1 SENSOR 2)

DTC DETECTING CONDITION:

- Detected when two consecutive driving cycles with fault occur.
- GENERAL DESCRIPTION <Ref. to GD(H4DO w/o HEV)-31, DTC P0038 HO2S HEATER CONTROL CIRCUIT HIGH (BANK 1 SENSOR 2), Diagnostic Trouble Code (DTC) Detecting Criteria.>

CAUTION:

After servicing or replacing faulty parts, perform Clear Memory Mode <Ref. to EN(H4DO w/o HEV)(diag)-59, OPERATION, Clear Memory Mode.>, and Inspection Mode <Ref. to EN(H4DO w/o HEV)(diag)-44, PROCEDURE, Inspection Mode.>.

WIRING DIAGRAM:

Engine electrical system <Ref. to WI(w/o HEV)-74, Engine Electrical System.>

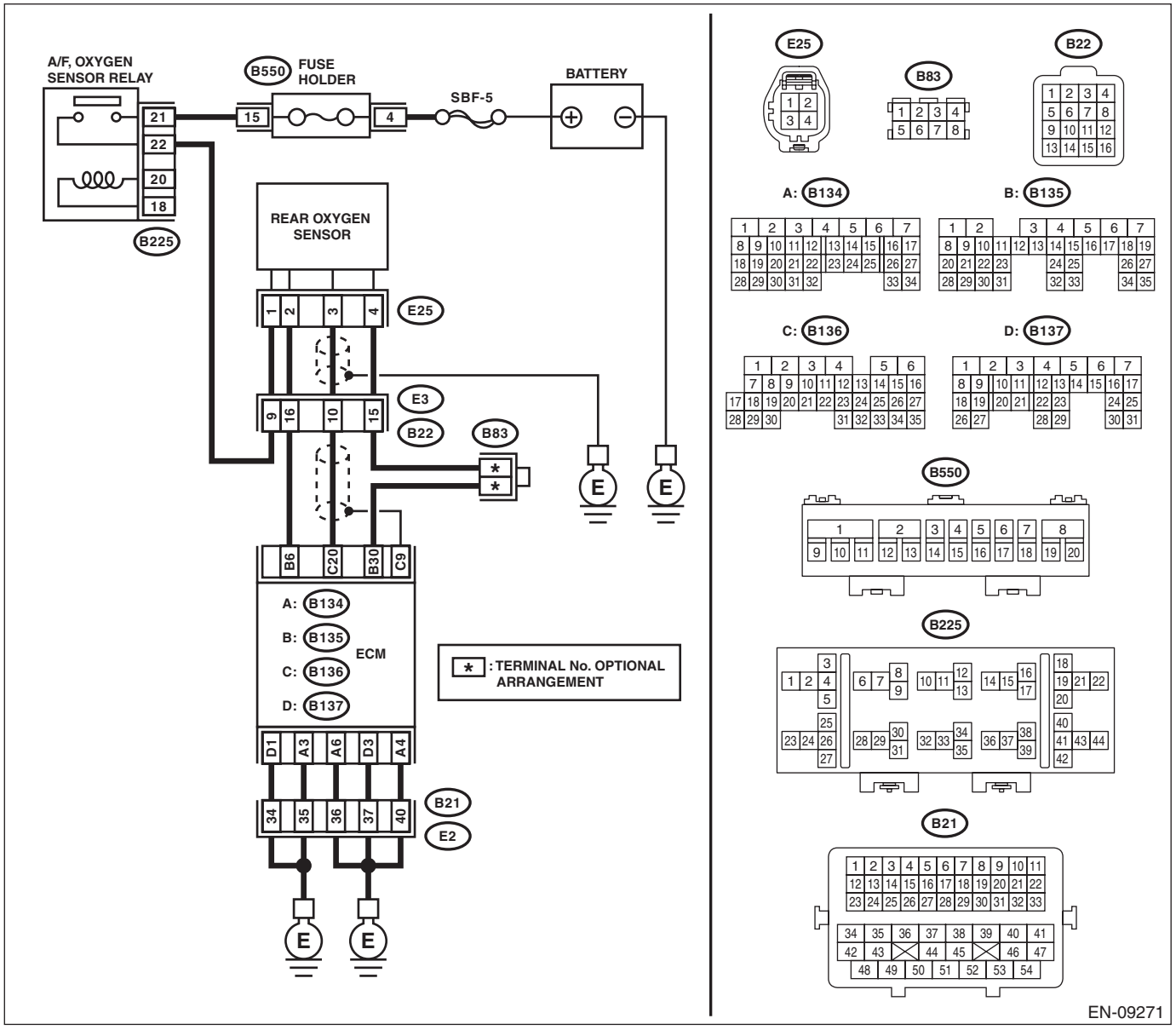

	Step	Check	Yes	No
1	**CHECK HARNESS BETWEEN ECM AND REAR OXYGEN SENSOR CONNECTOR.** 1) Turn the ignition switch to OFF. 2) Measure the voltage between ECM connector and chassis ground. ***Connector & terminal*** ***(B135) No. 6 (+) — Chassis ground (–):***	Is the voltage 10 V or more?	Repair the short circuit to power in the harness between ECM connector and rear oxygen sensor connector.	Go to step **2**.
2	**CHECK GROUND CIRCUIT FOR ECM.** 1) Disconnect the connector from ECM. 2) Measure the resistance between ECM connector and chassis ground. ***Connector & terminal*** ***(B134) No. 3 — Chassis ground:*** ***(B134) No. 4 — Chassis ground:*** ***(B134) No. 6 — Chassis ground:*** ***(B137) No. 1 — Chassis ground:*** ***(B137) No. 3 — Chassis ground:***	Is the resistance less than 5 Ω?	Repair the poor contact of ECM connector.	Repair the harness and connector. NOTE: In this case, repair the following item: • Open circuit of harness between ECM connector and engine ground • Poor contact of coupling connector

R: DTC P0068 MAP/MAF - THROTTLE POSITION CORRELATION

DTC DETECTING CONDITION:

- Detected when two consecutive driving cycles with fault occur.
- GENERAL DESCRIPTION <Ref. to GD(H4DO w/o HEV)-33, DTC P0068 MAP/MAF - THROTTLE POSITION CORRELATION, Diagnostic Trouble Code (DTC) Detecting Criteria.>

CAUTION:
After servicing or replacing faulty parts, perform Clear Memory Mode <Ref. to EN(H4DO w/o HEV)(diag)-59, OPERATION, Clear Memory Mode.>, and Inspection Mode <Ref. to EN(H4DO w/o HEV)(diag)-44, PROCEDURE, Inspection Mode.>.

	Step	Check	Yes	No
1	**CHECK AIR INTAKE SYSTEM.**	Are there holes, loose bolts or disconnection of hose on air intake system?	Repair the air intake system.	Go to step **2**.
2	**CHECK MANIFOLD ABSOLUTE PRESSURE SENSOR.** 1) Start the engine and warm up engine until coolant temperature is higher than 75°C (167°F). 2) For CVT models, set the select lever to "P" range or "N" range, and for MT models, place the shift lever in the neutral position. 3) Turn the A/C switch to OFF. 4) Turn all the accessory switches to OFF. 5) Read the value of «Mani. Absolute Pressure» using the Subaru Select Monitor or a general scan tool. NOTE: • Subaru Select Monitor For detailed operation procedures, refer to "READ CURRENT DATA FOR ENGINE". <Ref. to EN(H4DO w/o HEV)(diag)-36, Subaru Select Monitor.> • General scan tool For detailed operation procedures, refer to the "General Scan Tool Instruction Manual".	Is the value of «Mani. Absolute Pressure» 73.3 — 106.6 kPa (550 — 800 mmHg, 21.65 — 31.50 inHg) when the ignition is turned ON, and 20.0 — 46.7 kPa (150 — 350 mmHg, 5.91 — 13.78 inHg) while idling?	Go to step **3**.	Replace the manifold absolute pressure sensor. <Ref. to FU(H4DO(w/o HEV))-81, Manifold Absolute Pressure Sensor.>
3	**CHECK THROTTLE OPENING ANGLE.** Read the value of «Throttle Opening Angle» using the Subaru Select Monitor or a general scan tool. NOTE: • Subaru Select Monitor For detailed operation procedures, refer to "READ CURRENT DATA FOR ENGINE". <Ref. to EN(H4DO w/o HEV)(diag)-36, Subaru Select Monitor.> • General scan tool For detailed operation procedures, refer to the "General Scan Tool Instruction Manual".	Is the value of «Throttle Opening Angle» less than 5% when the throttle is fully closed?	Go to step **4**.	Replace the electronic throttle control. <Ref. to FU(H4DO(w/o HEV))-15, Throttle Body.>
4	**CHECK THROTTLE OPENING ANGLE.**	Is the value of «Throttle Opening Angle» 85% or more when the throttle is fully open?	Replace the manifold absolute pressure sensor. <Ref. to FU(H4DO(w/o HEV))-81, Manifold Absolute Pressure Sensor.>	Replace the electronic throttle control. <Ref. to FU(H4DO(w/o HEV))-15, Throttle Body.>

S: DTC P0101 MASS OR VOLUME AIR FLOW CIRCUIT RANGE/PERFORMANCE

DTC DETECTING CONDITION:

- Detected when two consecutive driving cycles with fault occur.
- GENERAL DESCRIPTION <Ref. to GD(H4DO w/o HEV)-35, DTC P0101 MASS OR VOLUME AIR FLOW CIRCUIT RANGE/PERFORMANCE, Diagnostic Trouble Code (DTC) Detecting Criteria.>

TROUBLE SYMPTOM:

- Improper idling
- Engine stalls.
- Poor driving performance

CAUTION:

After servicing or replacing faulty parts, perform Clear Memory Mode <Ref. to EN(H4DO w/o HEV)(diag)-59, OPERATION, Clear Memory Mode.>, and Inspection Mode <Ref. to EN(H4DO w/o HEV)(diag)-44, PROCEDURE, Inspection Mode.>.

	Step	Check	Yes	No
1	**CHECK FOR ANY OTHER DTC ON DISPLAY.**	Is any other DTC displayed?	Check the appropriate DTC using the “List of Diagnostic Trouble Code (DTC)”. <Ref. to EN(H4DO w/o HEV)(diag)-83, List of Diagnostic Trouble Code (DTC).>	Replace the mass air flow and intake air temperature sensor. <Ref. to FU(H4DO(w/o HEV))-78, Mass Air Flow and Intake Air Temperature Sensor.>

T: DTC P0102 MASS OR VOLUME AIR FLOW CIRCUIT LOW INPUT

DTC DETECTING CONDITION:

- Immediately at fault recognition
- GENERAL DESCRIPTION <Ref. to GD(H4DO w/o HEV)-38, DTC P0102 MASS OR VOLUME AIR FLOW CIRCUIT LOW INPUT, Diagnostic Trouble Code (DTC) Detecting Criteria.>

TROUBLE SYMPTOM:

- Improper idling
- Engine stalls.
- Poor driving performance

CAUTION:

After servicing or replacing faulty parts, perform Clear Memory Mode <Ref. to EN(H4DO w/o HEV)(diag)-59, OPERATION, Clear Memory Mode.>, and Inspection Mode <Ref. to EN(H4DO w/o HEV)(diag)-44, PROCEDURE, Inspection Mode.>.

WIRING DIAGRAM:

Engine electrical system <Ref. to WI(w/o HEV)-74, Engine Electrical System.>

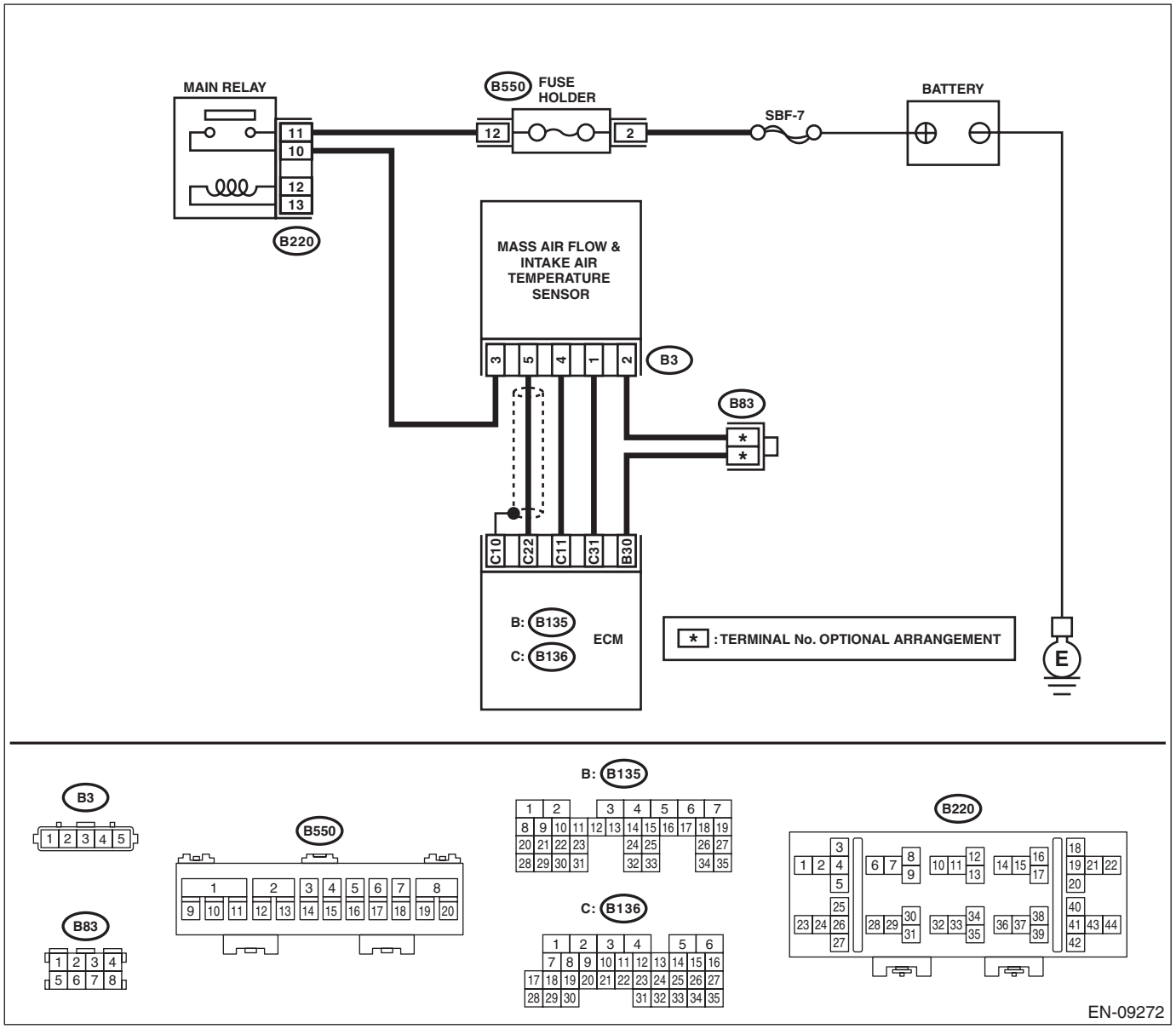

	Step	Check	Yes	No
1	**CHECK CURRENT DATA.** 1) Start the engine. 2) Read the value of «Air Flow Sensor Voltage» using Subaru Select Monitor. NOTE: For detailed operation procedures, refer to "READ CURRENT DATA FOR ENGINE". <Ref. to EN(H4DO w/o HEV)(diag)-36, Subaru Select Monitor.>	Is the value of «Air Flow Sensor Voltage» less than 0.2 V?	Go to step **2**.	Even if DTC is detected, the circuit has returned to a normal condition at this time. Reproduce the failure, and then perform the diagnosis again. NOTE: In this case, temporary poor contact of connector, temporary open or short circuit of harness may be the cause.
2	**CHECK POWER SUPPLY OF MASS AIR FLOW AND INTAKE AIR TEMPERATURE SENSOR.** 1) Turn the ignition switch to OFF. 2) Disconnect the connectors from the mass air flow and intake air temperature sensor. 3) Turn the ignition switch to ON. 4) Measure the voltage between mass air flow and intake air temperature sensor connector and engine ground. ***Connector & terminal*** ***(B3) No. 3 (+) — Engine ground (–):***	Is the voltage 10 V or more?	Go to step **3**.	Repair the harness and connector. NOTE: In this case, repair the following item: • Open circuit in harness between main relay and mass air flow and intake air temperature sensor connector • Poor contact of main relay connector
3	**CHECK HARNESS BETWEEN ECM AND MASS AIR FLOW AND INTAKE AIR TEMPERATURE SENSOR CONNECTOR.** 1) Turn the ignition switch to OFF. 2) Disconnect the connector from ECM. 3) Measure the resistance of harness between ECM connector and the mass air flow and intake air temperature sensor connector. ***Connector & terminal*** ***(B136) No. 22 — (B3) No. 5:***	Is the resistance less than 1 Ω?	Go to step **4**.	Repair the open circuit of harness between ECM connector and the mass air flow and intake air temperature sensor connector.
4	**CHECK HARNESS BETWEEN ECM AND MASS AIR FLOW AND INTAKE AIR TEMPERATURE SENSOR CONNECTOR.** Measure the resistance between ECM connector and chassis ground. ***Connector & terminal*** ***(B136) No. 22 — Chassis ground:***	Is the resistance 1 MΩ or more?	Go to step **5**.	Repair the ground short circuit of harness between ECM connector and the mass air flow and intake air temperature sensor connector.
5	**CHECK FOR POOR CONTACT.** Check for poor contact of ECM and mass air flow and intake air temperature sensor connector.	Is there poor contact of ECM or mass air flow and intake air temperature sensor connector?	Repair the poor contact of ECM or mass air flow and intake air temperature sensor connector.	Replace the mass air flow and intake air temperature sensor. <Ref. to FU(H4DO(w/o HEV))-78, Mass Air Flow and Intake Air Temperature Sensor.>

U: DTC P0103 MASS OR VOLUME AIR FLOW CIRCUIT HIGH INPUT

DTC DETECTING CONDITION:

- Immediately at fault recognition
- GENERAL DESCRIPTION <Ref. to GD(H4DO w/o HEV)-40, DTC P0103 MASS OR VOLUME AIR FLOW CIRCUIT HIGH INPUT, Diagnostic Trouble Code (DTC) Detecting Criteria.>

TROUBLE SYMPTOM:

- Improper idling
- Engine stalls.
- Poor driving performance

CAUTION:

After servicing or replacing faulty parts, perform Clear Memory Mode <Ref. to EN(H4DO w/o HEV)(diag)-59, OPERATION, Clear Memory Mode.>, and Inspection Mode <Ref. to EN(H4DO w/o HEV)(diag)-44, PROCEDURE, Inspection Mode.>.

WIRING DIAGRAM:

Engine electrical system <Ref. to WI(w/o HEV)-74, Engine Electrical System.>

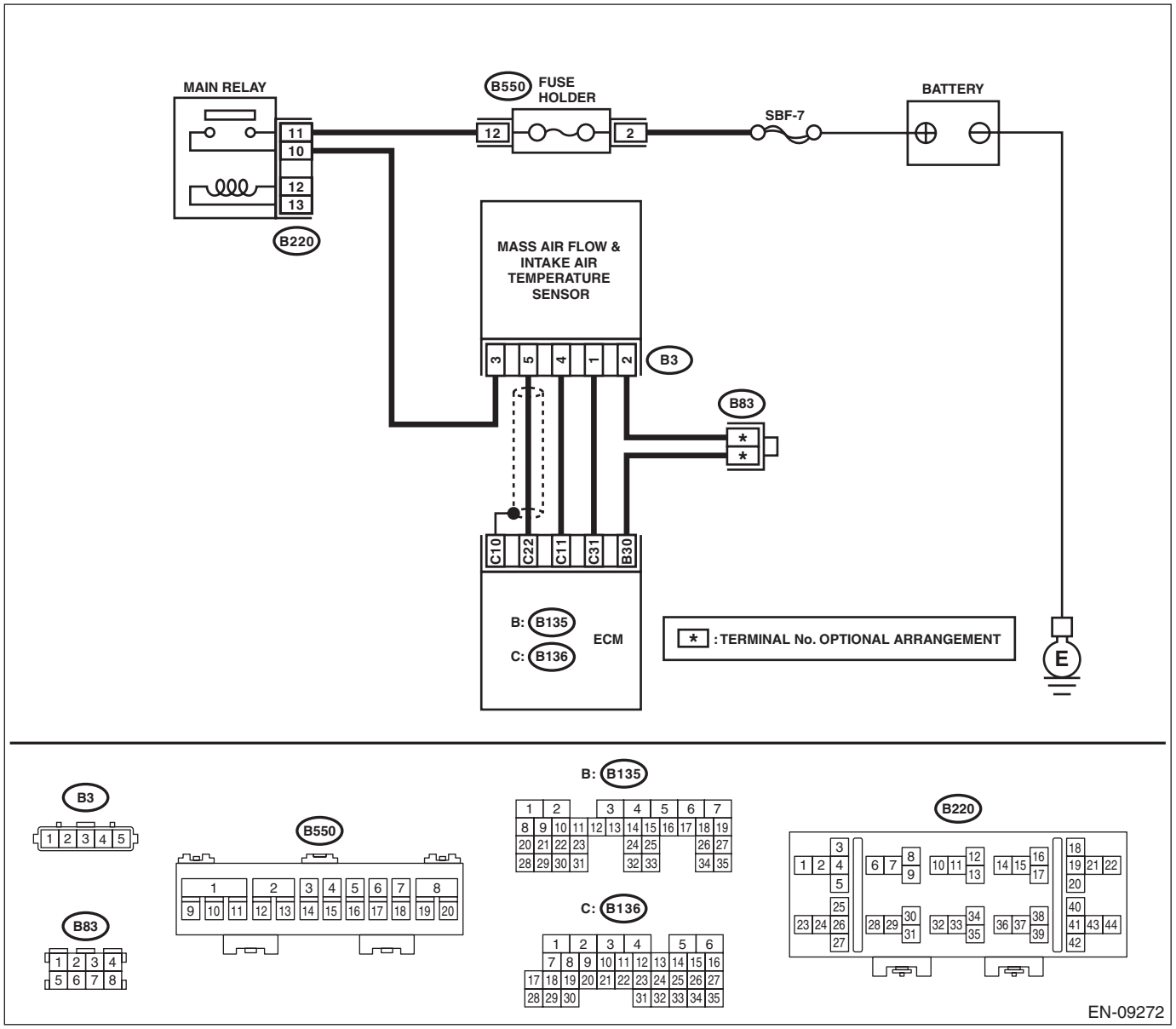

	Step	Check	Yes	No
1	**CHECK CURRENT DATA.** 1) Start the engine. 2) Read the value of «Air Flow Sensor Voltage» using Subaru Select Monitor. NOTE: For detailed operation procedures, refer to "READ CURRENT DATA FOR ENGINE". <Ref. to EN(H4DO w/o HEV)(diag)-36, Subaru Select Monitor.>	Is the value of «Air Flow Sensor Voltage» 5 V or more?	Go to step **2**.	Even if DTC is detected, the circuit has returned to a normal condition at this time. Reproduce the failure, and then perform the diagnosis again. NOTE: In this case, temporary poor contact of connector, temporary open or short circuit of harness may be the cause.
2	**CHECK HARNESS BETWEEN ECM AND MASS AIR FLOW AND INTAKE AIR TEMPERATURE SENSOR CONNECTOR.** 1) Turn the ignition switch to OFF. 2) Disconnect the connectors from the mass air flow and intake air temperature sensor. 3) Start the engine. 4) Read the value of «Air Flow Sensor Voltage» using Subaru Select Monitor. NOTE: For detailed operation procedures, refer to "READ CURRENT DATA FOR ENGINE". <Ref. to EN(H4DO w/o HEV)(diag)-36, Subaru Select Monitor.>	Is the value of «Air Flow Sensor Voltage» 5 V or more?	Repair the short circuit of harness to power supply between ECM connector and the mass air flow and intake air temperature sensor connector.	Go to step **3**.
3	**CHECK HARNESS BETWEEN ECM AND MASS AIR FLOW AND INTAKE AIR TEMPERATURE SENSOR CONNECTOR.** 1) Turn the ignition switch to OFF. 2) Measure the resistance of harness between mass air flow and intake air temperature sensor connector and engine ground. ***Connector & terminal*** ***(B3) No. 4 — Engine ground:***	Is the resistance less than 5 Ω?	Go to step **4**.	Repair the harness and connector. NOTE: In this case, repair the following item: • Open circuit in harness between ECM connector and the mass air flow and intake air temperature sensor connector • Poor contact of ECM connector
4	**CHECK FOR POOR CONTACT.** Check for poor contact of mass air flow and intake air temperature sensor connector.	Is there poor contact of mass air flow and intake air temperature sensor connector?	Repair the poor contact of mass air flow and intake air temperature sensor connector.	Replace the mass air flow and intake air temperature sensor. <Ref. to FU(H4DO(w/o HEV))-78, Mass Air Flow and Intake Air Temperature Sensor.>

V: DTC P0107 MANIFOLD ABSOLUTE PRESSURE/BAROMETRIC PRESSURE CIRCUIT LOW INPUT

DTC DETECTING CONDITION:

- Immediately at fault recognition
- GENERAL DESCRIPTION <Ref. to GD(H4DO w/o HEV)-42, DTC P0107 MANIFOLD ABSOLUTE PRESSURE/BAROMETRIC PRESSURE CIRCUIT LOW INPUT, Diagnostic Trouble Code (DTC) Detecting Criteria.>

CAUTION:
After servicing or replacing faulty parts, perform Clear Memory Mode <Ref. to EN(H4DO w/o HEV)(diag)-59, OPERATION, Clear Memory Mode.>, and Inspection Mode <Ref. to EN(H4DO w/o HEV)(diag)-44, PROCEDURE, Inspection Mode.>.

WIRING DIAGRAM:

Engine electrical system <Ref. to WI(w/o HEV)-74, Engine Electrical System.>

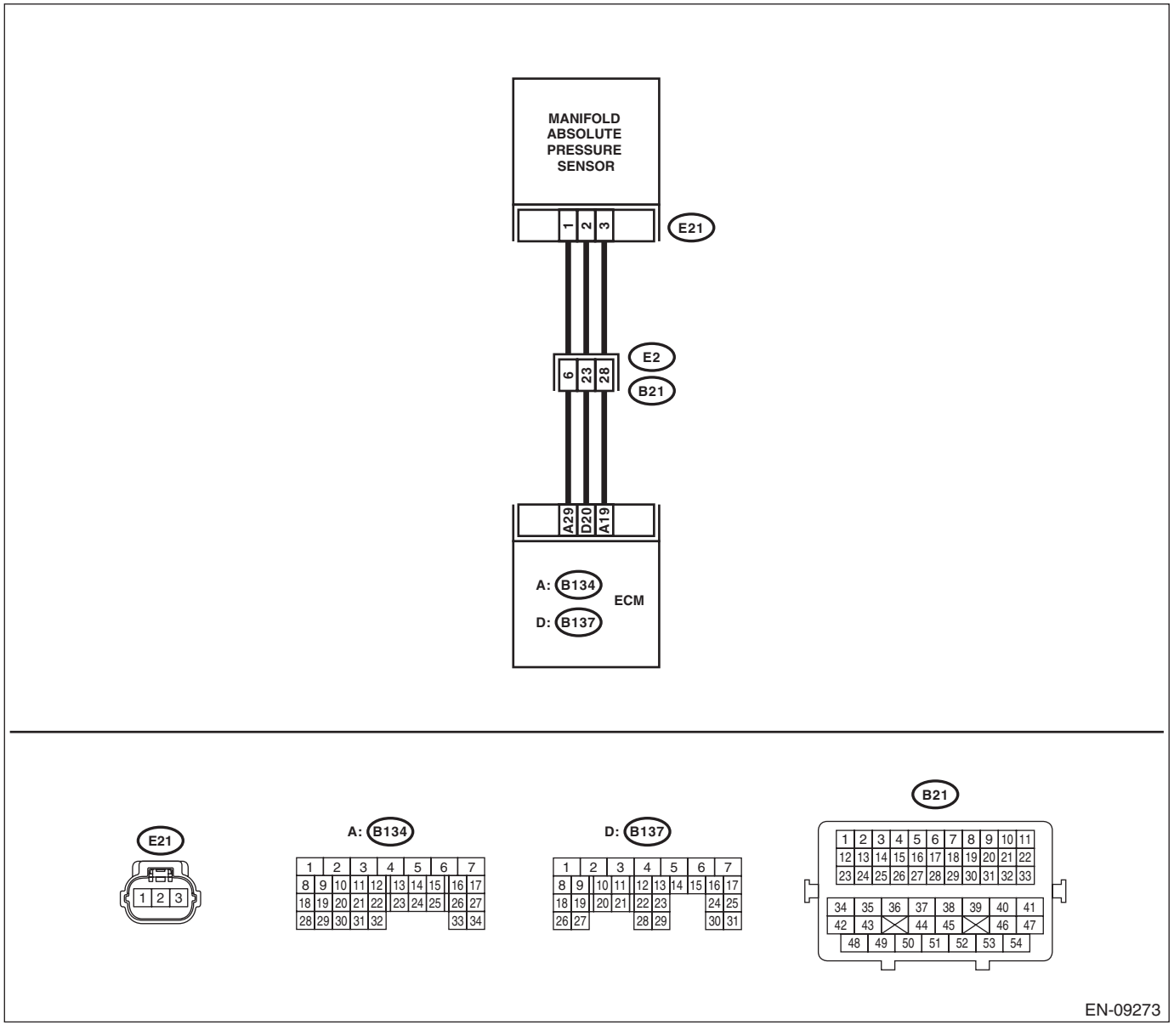

	Step	Check	Yes	No
1	**CHECK CURRENT DATA.** 1) Start the engine. 2) Read the value of «Mani. Absolute Pressure» using the Subaru Select Monitor or a general scan tool. NOTE: • Subaru Select Monitor For detailed operation procedures, refer to "READ CURRENT DATA FOR ENGINE". <Ref. to EN(H4DO w/o HEV)(diag)-36, Subaru Select Monitor.> • General scan tool For detailed operation procedures, refer to the general scan tool operation manual.	Is the value of «Mani. Absolute Pressure» less than 13.3 kPa (100 mmHg, 3.94 inHg)?	Go to step **2**.	Even if DTC is detected, the circuit has returned to a normal condition at this time. Reproduce the failure, and then perform the diagnosis again. NOTE: In this case, temporary poor contact of connector, temporary open or short circuit of harness may be the cause.
2	**CHECK POWER SUPPLY OF MANIFOLD ABSOLUTE PRESSURE SENSOR.** 1) Turn the ignition switch to OFF. 2) Disconnect the connector from manifold absolute pressure sensor. 3) Turn the ignition switch to ON. 4) Measure the voltage between manifold absolute pressure sensor connector and engine ground. ***Connector & terminal*** ***(E21) No. 3 (+) — Engine ground (–):***	Is the voltage 4.5 V or more?	Go to step **3**.	Repair the harness and connector. NOTE: In this case, repair the following item: • Open circuit of harness between ECM connector and manifold absolute pressure sensor connector • Poor contact of ECM connector • Poor contact of coupling connector
3	**CHECK HARNESS BETWEEN ECM AND MANIFOLD ABSOLUTE PRESSURE SENSOR CONNECTOR.** 1) Turn the ignition switch to OFF. 2) Disconnect the connector from ECM. 3) Measure the resistance of harness between ECM connector and manifold absolute pressure sensor connector. ***Connector & terminal*** ***(B137) No. 20 — (E21) No. 2:***	Is the resistance less than 1 Ω?	Go to step **4**.	Repair the harness and connector. NOTE: In this case, repair the following item: • Open circuit of harness between ECM connector and manifold absolute pressure sensor connector • Poor contact of coupling connector
4	**CHECK HARNESS BETWEEN ECM AND MANIFOLD ABSOLUTE PRESSURE SENSOR CONNECTOR.** Measure the resistance between ECM connector and chassis ground. ***Connector & terminal*** ***(B137) No. 20 — Chassis ground:***	Is the resistance 1 MΩ or more?	Go to step **5**.	Repair short circuit to ground in harness between ECM connector and manifold absolute pressure sensor connector.
5	**CHECK FOR POOR CONTACT.** Check for poor contact of ECM and manifold absolute pressure sensor connector.	Is there poor contact of ECM or manifold absolute pressure sensor connector?	Repair the poor contact of ECM or manifold absolute pressure sensor connector.	Replace the manifold absolute pressure sensor. <Ref. to FU(H4DO(w/o HEV))-81, Manifold Absolute Pressure Sensor.>

W: DTC P0108 MANIFOLD ABSOLUTE PRESSURE/BAROMETRIC PRESSURE CIRCUIT HIGH INPUT

DTC DETECTING CONDITION:

- Immediately at fault recognition
- GENERAL DESCRIPTION <Ref. to GD(H4DO w/o HEV)-44, DTC P0108 MANIFOLD ABSOLUTE PRESSURE/BAROMETRIC PRESSURE CIRCUIT HIGH INPUT, Diagnostic Trouble Code (DTC) Detecting Criteria.>

CAUTION:
After servicing or replacing faulty parts, perform Clear Memory Mode <Ref. to EN(H4DO w/o HEV)(diag)-59, OPERATION, Clear Memory Mode.>, and Inspection Mode <Ref. to EN(H4DO w/o HEV)(diag)-44, PROCEDURE, Inspection Mode.>.

WIRING DIAGRAM:

Engine electrical system <Ref. to WI(w/o HEV)-74, Engine Electrical System.>

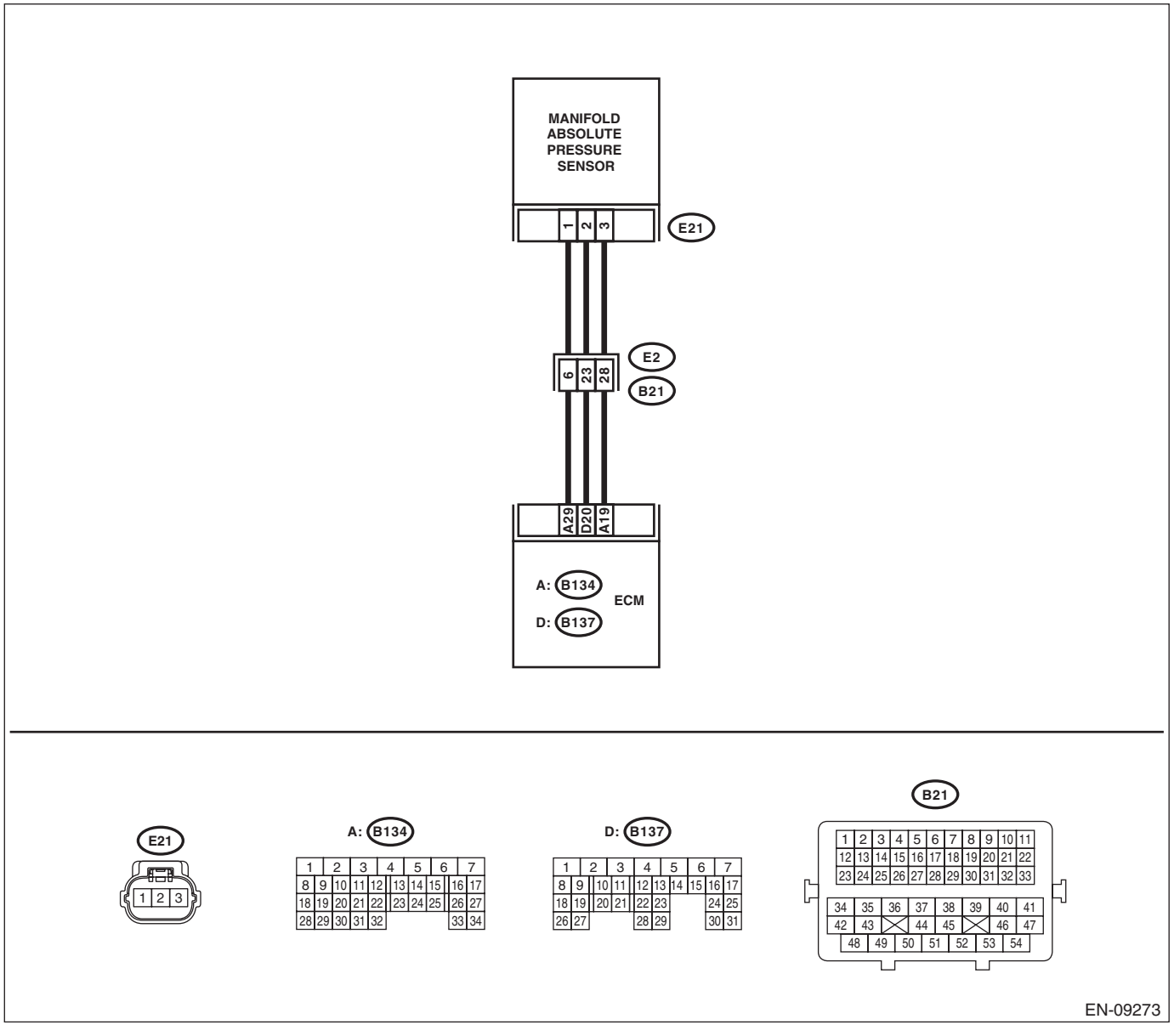

	Step	Check	Yes	No
1	**CHECK CURRENT DATA.** 1) Start the engine. 2) Read the value of «Mani. Absolute Pressure» using the Subaru Select Monitor or a general scan tool. NOTE: • Subaru Select Monitor For detailed operation procedures, refer to "READ CURRENT DATA FOR ENGINE". <Ref. to EN(H4DO w/o HEV)(diag)-36, Subaru Select Monitor.> • General scan tool For detailed operation procedures, refer to the general scan tool operation manual.	Is the value of «Mani. Absolute Pressure» 119.5 kPa (896.5 mmHg, 35.29 inHg) or more?	Go to step **2**.	Even if DTC is detected, the circuit has returned to a normal condition at this time. Reproduce the failure, and then perform the diagnosis again. NOTE: In this case, temporary poor contact of connector, temporary open or short circuit of harness may be the cause.
2	**CHECK HARNESS BETWEEN ECM AND MANIFOLD ABSOLUTE PRESSURE SENSOR CONNECTOR.** 1) Turn the ignition switch to OFF. 2) Disconnect the connector from manifold absolute pressure sensor. 3) Start the engine. 4) Read the value data of «Mani. Absolute Pressure» using the Subaru Select Monitor or a general scan tool. NOTE: • Subaru Select Monitor For detailed operation procedures, refer to "READ CURRENT DATA FOR ENGINE". <Ref. to EN(H4DO w/o HEV)(diag)-36, Subaru Select Monitor.> • General scan tool For detailed operation procedures, refer to the general scan tool operation manual.	Is the value of «Mani. Absolute Pressure» 119.5 kPa (896.5 mmHg, 35.29 inHg) or more?	Repair the short circuit to power in harness between ECM connector and manifold absolute pressure sensor connector.	Go to step **3**.
3	**CHECK HARNESS BETWEEN ECM AND MANIFOLD ABSOLUTE PRESSURE SENSOR CONNECTOR.** 1) Turn the ignition switch to OFF. 2) Measure the resistance of harness between manifold absolute pressure sensor connector and engine ground. ***Connector & terminal*** ***(E21) No. 1 — Engine ground:***	Is the resistance less than 5 Ω?	Go to step **4**.	Repair the harness and connector. NOTE: In this case, repair the following item: • Open circuit of harness between ECM connector and manifold absolute pressure sensor connector • Poor contact of ECM connector • Poor contact of coupling connector
4	**CHECK FOR POOR CONTACT.** Check for poor contact of manifold absolute pressure sensor connector.	Is there poor contact of manifold absolute pressure sensor connector?	Repair the poor contact of manifold absolute pressure sensor connector.	Replace the manifold absolute pressure sensor. <Ref. to FU(H4DO(w/o HEV))-81, Manifold Absolute Pressure Sensor.>

X: DTC P0111 INTAKE AIR TEMPERATURE SENSOR RANGE/PERFORMANCE PROBLEM

DTC DETECTING CONDITION:

- Detected when two consecutive driving cycles with fault occur.
- GENERAL DESCRIPTION <Ref. to GD(H4DO w/o HEV)-46, DTC P0111 INTAKE AIR TEMPERATURE SENSOR RANGE/PERFORMANCE PROBLEM, Diagnostic Trouble Code (DTC) Detecting Criteria.>

TROUBLE SYMPTOM:

- Improper idling
- Poor driving performance

CAUTION:

After servicing or replacing faulty parts, perform Clear Memory Mode <Ref. to EN(H4DO w/o HEV)(diag)-59, OPERATION, Clear Memory Mode.>, and Inspection Mode <Ref. to EN(H4DO w/o HEV)(diag)-44, PROCEDURE, Inspection Mode.>.

	Step	Check	Yes	No
1	**CHECK ENGINE COOLANT TEMPERATURE.** 1) Start the engine and warm up completely. 2) Read the value of «Coolant Temp.» using the Subaru Select Monitor or a general scan tool. NOTE: • Subaru Select Monitor For detailed operation procedures, refer to “READ CURRENT DATA FOR ENGINE”. <Ref. to EN(H4DO w/o HEV)(diag)-36, Subaru Select Monitor.> • General scan tool For detailed operation procedures, refer to the general scan tool operation manual.	Is the value of «Coolant Temp.» 75°C (167°F) or more?	Replace the mass air flow and intake air temperature sensor. <Ref. to FU(H4DO(w/o HEV))-78, Mass Air Flow and Intake Air Temperature Sensor.>	Check for DTC P0125. <Ref. to EN(H4DO w/o HEV)(diag)-140, DTC P0125 INSUFFICIENT COOLANT TEMPERATURE FOR CLOSED LOOP FUEL CONTROL, Diagnostic Procedure with Diagnostic Trouble Code (DTC).>

Y: DTC P0112 INTAKE AIR TEMPERATURE SENSOR 1 CIRCUIT LOW

DTC DETECTING CONDITION:

- Immediately at fault recognition
- GENERAL DESCRIPTION <Ref. to GD(H4DO w/o HEV)-48, DTC P0112 INTAKE AIR TEMPERATURE SENSOR 1 CIRCUIT LOW, Diagnostic Trouble Code (DTC) Detecting Criteria.>

TROUBLE SYMPTOM:

- Improper idling
- Poor driving performance

CAUTION:

After servicing or replacing faulty parts, perform Clear Memory Mode <Ref. to EN(H4DO w/o HEV)(diag)-59, OPERATION, Clear Memory Mode.>, and Inspection Mode <Ref. to EN(H4DO w/o HEV)(diag)-44, PROCEDURE, Inspection Mode.>.

WIRING DIAGRAM:

Engine electrical system <Ref. to WI(w/o HEV)-74, Engine Electrical System.>

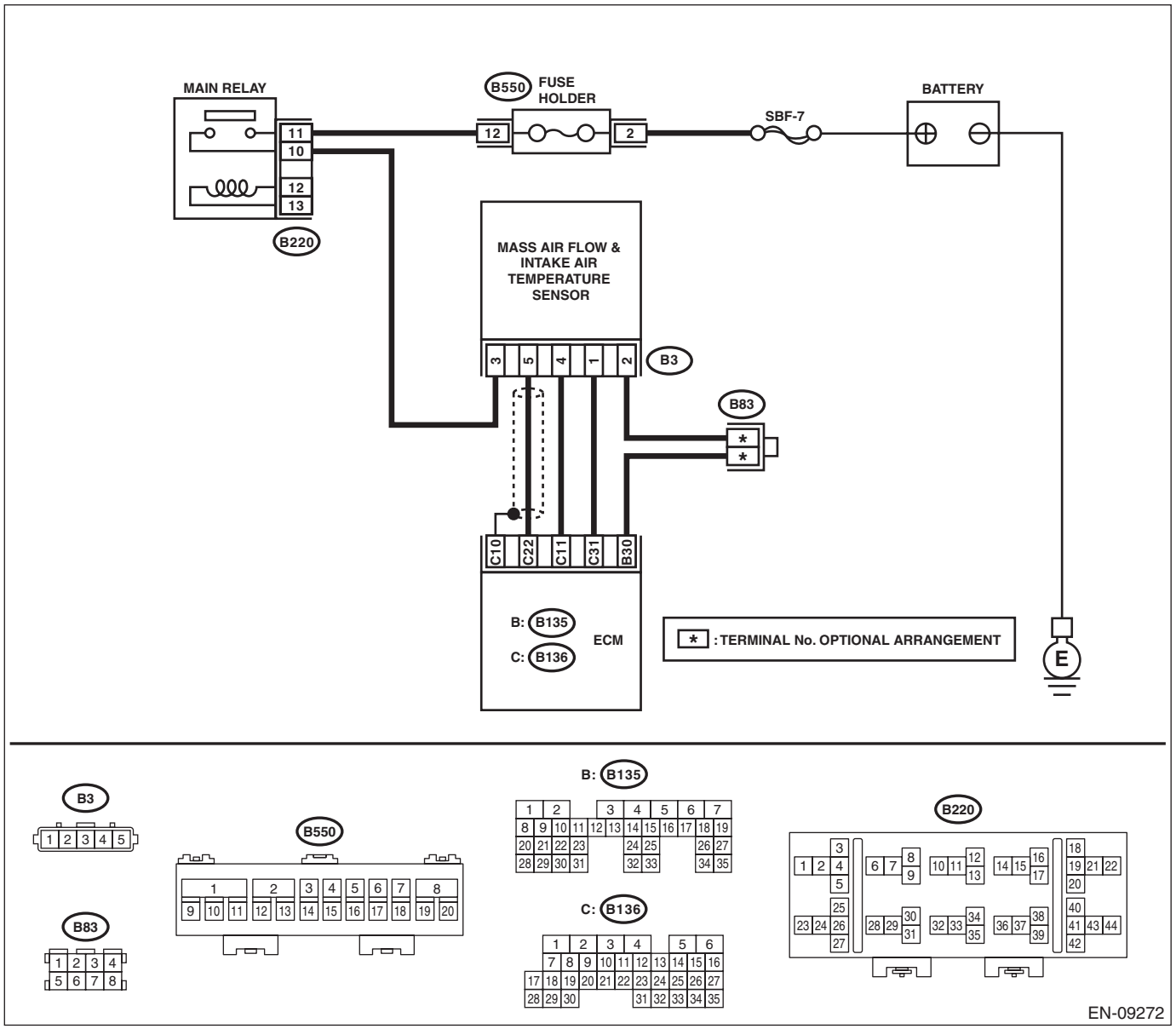

	Step	Check	Yes	No
1	**CHECK CURRENT DATA.** 1) Start the engine. 2) Read the value of «Intake Air Temp.» using the Subaru Select Monitor or a general scan tool. NOTE: • Subaru Select Monitor For detailed operation procedures, refer to "READ CURRENT DATA FOR ENGINE". <Ref. to EN(H4DO w/o HEV)(diag)-36, Subaru Select Monitor.> • General scan tool For detailed operation procedures, refer to the general scan tool operation manual.	Is the value of «Intake Air Temp.» 120°C (248°F) or more?	Go to step **2**.	Even if DTC is detected, the circuit has returned to a normal condition at this time. Reproduce the failure, and then perform the diagnosis again. NOTE: In this case, temporary poor contact of connector, temporary open or short circuit of harness may be the cause.
2	**CHECK HARNESS BETWEEN ECM AND MASS AIR FLOW AND INTAKE AIR TEMPERATURE SENSOR CONNECTOR.** 1) Turn the ignition switch to OFF. 2) Disconnect the connector from ECM and the mass air flow and intake air temperature sensor. 3) Measure the resistance between ECM connector and chassis ground. ***Connector & terminal*** ***(B136) No. 31 — Chassis ground:***	Is the resistance 1 MΩ or more?	Replace the mass air flow and intake air temperature sensor. <Ref. to FU(H4DO(w/o HEV))-78, Mass Air Flow and Intake Air Temperature Sensor.>	Repair the ground short circuit of harness between ECM connector and the mass air flow and intake air temperature sensor connector.

Z: DTC P0113 INTAKE AIR TEMPERATURE SENSOR 1 CIRCUIT HIGH

DTC DETECTING CONDITION:

- Immediately at fault recognition
- GENERAL DESCRIPTION <Ref. to GD(H4DO w/o HEV)-50, DTC P0113 INTAKE AIR TEMPERATURE SENSOR 1 CIRCUIT HIGH, Diagnostic Trouble Code (DTC) Detecting Criteria.>

TROUBLE SYMPTOM:

- Improper idling
- Poor driving performance

CAUTION:

After servicing or replacing faulty parts, perform Clear Memory Mode <Ref. to EN(H4DO w/o HEV)(diag)-59, OPERATION, Clear Memory Mode.>, and Inspection Mode <Ref. to EN(H4DO w/o HEV)(diag)-44, PROCEDURE, Inspection Mode.>.

WIRING DIAGRAM:

Engine electrical system <Ref. to WI(w/o HEV)-74, Engine Electrical System.>

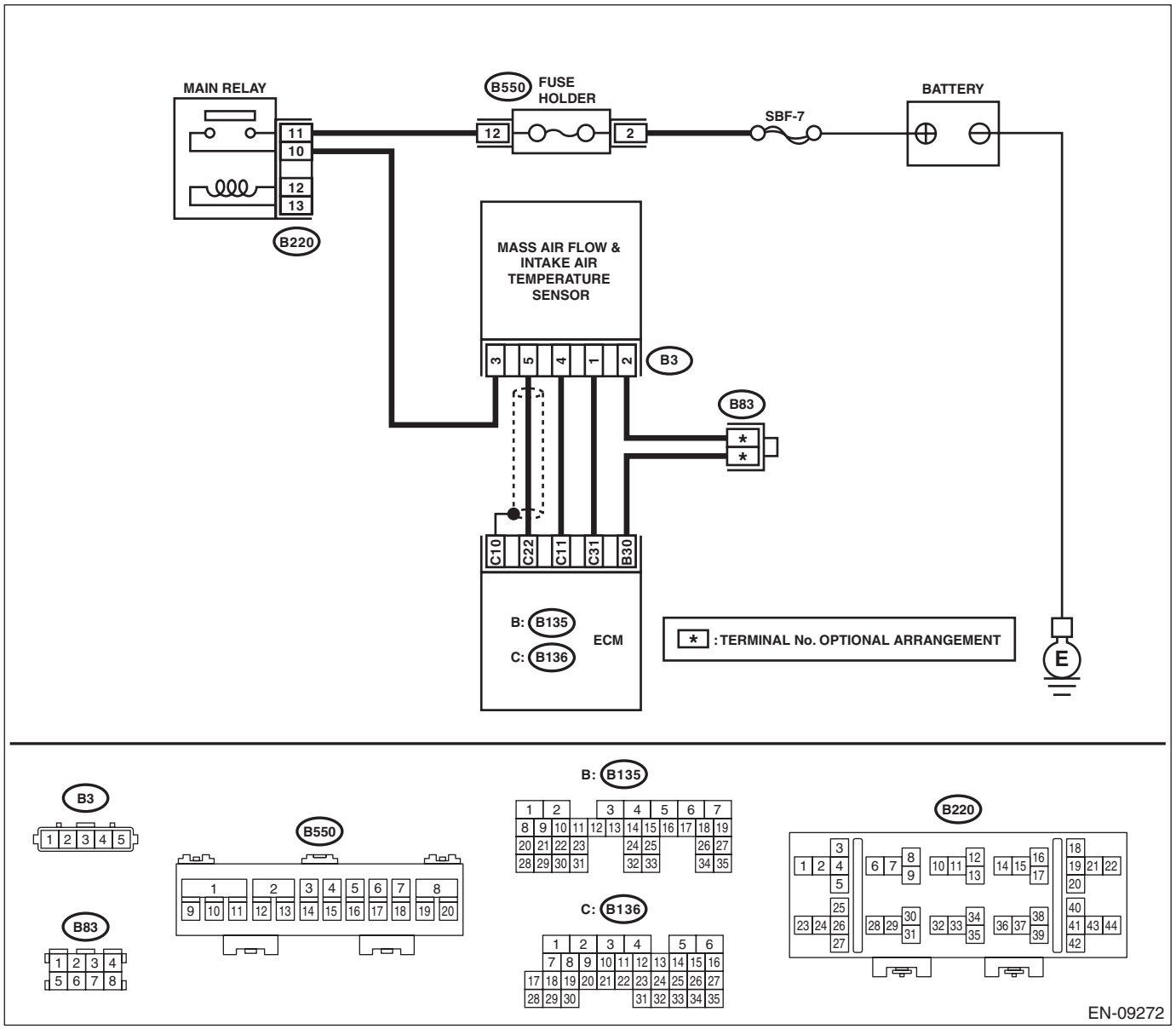

	Step	Check	Yes	No
1	**CHECK CURRENT DATA.** 1) Start the engine. 2) Read the value of «Intake Air Temp.» using the Subaru Select Monitor or a general scan tool. NOTE: • Subaru Select Monitor For detailed operation procedures, refer to "READ CURRENT DATA FOR ENGINE". <Ref. to EN(H4DO w/o HEV)(diag)-36, Subaru Select Monitor.> • General scan tool For detailed operation procedures, refer to the general scan tool operation manual.	Is the value of «Intake Air Temp.» –40°C (–40°F) or less?	Go to step **2**.	Even if DTC is detected, the circuit has returned to a normal condition at this time. Reproduce the failure, and then perform the diagnosis again. NOTE: In this case, temporary poor contact of connector, temporary open or short circuit of harness may be the cause.
2	**CHECK FOR POOR CONTACT.** Check for poor contact of ECM and mass air flow and intake air temperature sensor connector.	Is there poor contact of ECM or mass air flow and intake air temperature sensor connector?	Repair the poor contact of ECM or mass air flow and intake air temperature sensor connector.	Go to step **3**.
3	**CHECK HARNESS BETWEEN ECM AND MASS AIR FLOW AND INTAKE AIR TEMPERATURE SENSOR CONNECTOR.** 1) Turn the ignition switch to OFF. 2) Disconnect the connector from ECM and the mass air flow and intake air temperature sensor. 3) Measure the resistance of harness between ECM connector and the mass air flow and intake air temperature sensor connector. ***Connector & terminal*** ***(B136) No. 31 — (B3) No. 1:*** ***(B135) No. 30 — (B3) No. 2:***	Is the resistance less than 1 Ω?	Go to step **4**.	Repair the harness and connector. NOTE: In this case, repair the following item: • Open circuit in harness between ECM connector and the mass air flow and intake air temperature sensor connector • Poor contact of joint connector
4	**CHECK HARNESS BETWEEN ECM AND MASS AIR FLOW AND INTAKE AIR TEMPERATURE SENSOR CONNECTOR.** 1) Connect all connectors. 2) Turn the ignition switch to ON. 3) Measure the voltage between ECM connector and chassis ground. ***Connector & terminal*** ***(B136) No. 31 (+) — Chassis ground (–):***	Is the voltage 5 V or more?	Repair the short circuit of harness to power supply between ECM connector and the mass air flow and intake air temperature sensor connector.	Replace the mass air flow and intake air temperature sensor. <Ref. to FU(H4DO(w/o HEV))-78, Mass Air Flow and Intake Air Temperature Sensor.>

AA:DTC P0116 ENGINE COOLANT TEMPERATURE SENSOR 1 CIRCUIT RANGE/PERFORMANCE

DTC DETECTING CONDITION:

- Detected when two consecutive driving cycles with fault occur.
- GENERAL DESCRIPTION <Ref. to GD(H4DO w/o HEV)-52, DTC P0116 ENGINE COOLANT TEMPERATURE SENSOR 1 CIRCUIT RANGE/PERFORMANCE, Diagnostic Trouble Code (DTC) Detecting Criteria.>

TROUBLE SYMPTOM:

- Hard to start
- Improper idling
- Poor driving performance

CAUTION:

After servicing or replacing faulty parts, perform Clear Memory Mode <Ref. to EN(H4DO w/o HEV)(diag)-59, OPERATION, Clear Memory Mode.>, and Inspection Mode <Ref. to EN(H4DO w/o HEV)(diag)-44, PROCEDURE, Inspection Mode.>.

	Step	Check	Yes	No
1	**CHECK FOR ANY OTHER DTC ON DISPLAY.**	Is any other DTC displayed?	Check the appropriate DTC using the “List of Diagnostic Trouble Code (DTC)”. <Ref. to EN(H4DO w/o HEV)(diag)-83, List of Diagnostic Trouble Code (DTC).>	Go to step **2**.
2	**CHECK ENGINE COOLANT TEMPERATURE SENSOR.** 1) Disconnect the connectors from the engine coolant temperature sensor. 2) Measure the resistance between engine coolant temperature sensor terminals when the engine coolant is cold and after warmed up. ***Terminals*** ***No. 1 — No. 2:***	Is the resistance of engine coolant temperature sensor different between when engine coolant is cold and after warmed up?	Repair the poor contact of ECM connector.	Replace the engine coolant temperature sensor. <Ref. to FU(H4DO(w/o HEV))-53, Engine Coolant Temperature Sensor.>

AB:DTC P0117 ENGINE COOLANT TEMPERATURE CIRCUIT LOW

DTC DETECTING CONDITION:

- Immediately at fault recognition
- GENERAL DESCRIPTION <Ref. to GD(H4DO w/o HEV)-54, DTC P0117 ENGINE COOLANT TEMPERATURE CIRCUIT LOW, Diagnostic Trouble Code (DTC) Detecting Criteria.>

TROUBLE SYMPTOM:

- Hard to start
- Improper idling
- Poor driving performance

CAUTION:
After servicing or replacing faulty parts, perform Clear Memory Mode <Ref. to EN(H4DO w/o HEV)(diag)-59, OPERATION, Clear Memory Mode.>, and Inspection Mode <Ref. to EN(H4DO w/o HEV)(diag)-44, PROCEDURE, Inspection Mode.>.

WIRING DIAGRAM:
Engine electrical system <Ref. to WI(w/o HEV)-74, Engine Electrical System.>

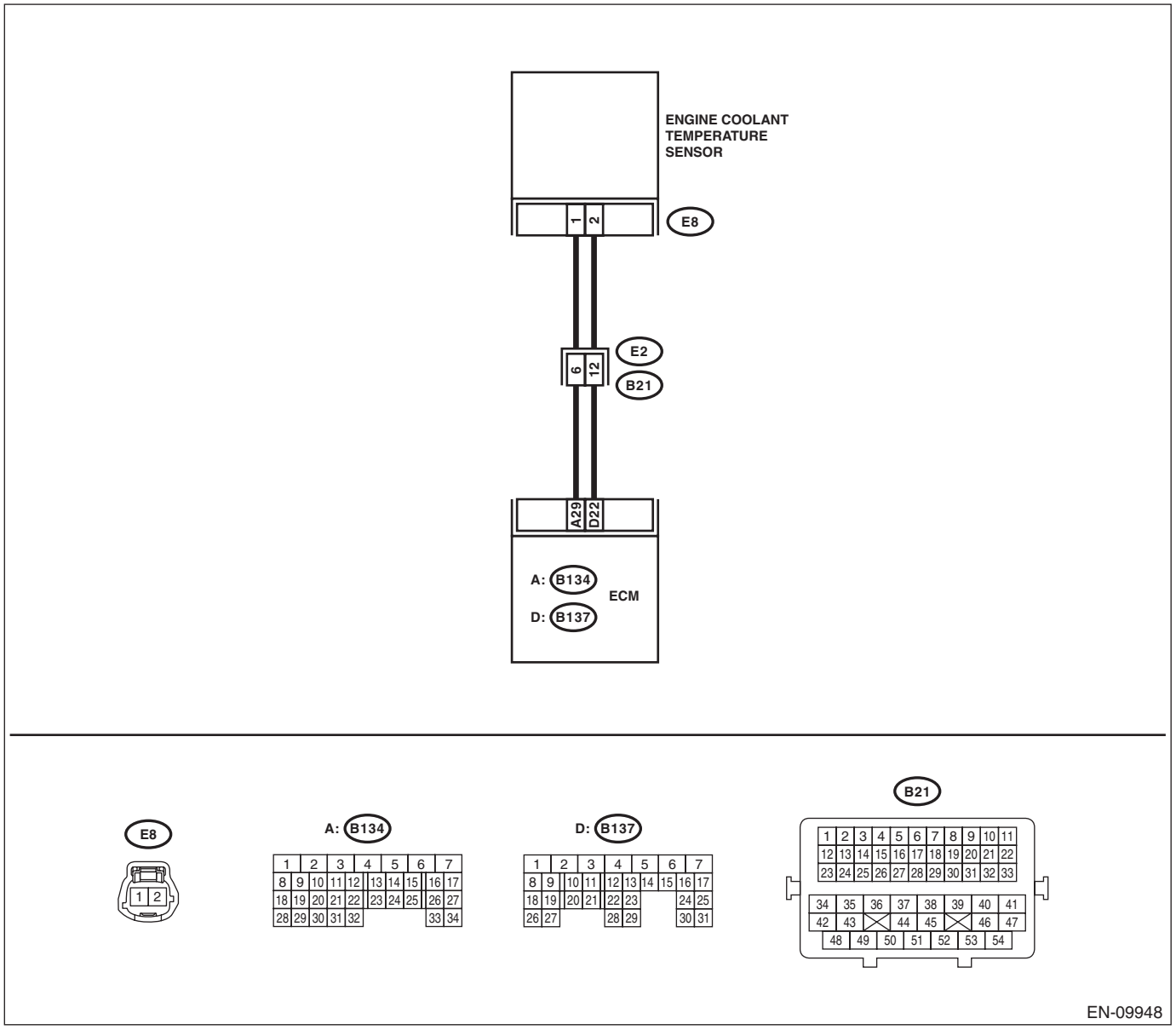

	Step	Check	Yes	No
1	**CHECK CURRENT DATA.** 1) Start the engine. 2) Read the value of «Coolant Temp.» using the Subaru Select Monitor or a general scan tool. NOTE: • Subaru Select Monitor For detailed operation procedures, refer to "READ CURRENT DATA FOR ENGINE". <Ref. to EN(H4DO w/o HEV)(diag)-36, Subaru Select Monitor.> • General scan tool For detailed operation procedures, refer to the general scan tool operation manual.	Is the value of «Coolant Temp.» 120°C (248°F) or more?	Go to step **2**.	Even if DTC is detected, the circuit has returned to a normal condition at this time. Reproduce the failure, and then perform the diagnosis again. NOTE: In this case, temporary poor contact of connector, temporary open or short circuit of harness may be the cause.
2	**CHECK HARNESS BETWEEN ECM AND ENGINE COOLANT TEMPERATURE SENSOR CONNECTOR.** 1) Turn the ignition switch to OFF. 2) Disconnect the connectors from ECM and engine coolant temperature sensor. 3) Measure the resistance between ECM connector and chassis ground. ***Connector & terminal*** ***(B137) No. 22 — Chassis ground:***	Is the resistance 1 MΩ or more?	Replace the engine coolant temperature sensor. <Ref. to FU(H4DO(w/o HEV))-53, Engine Coolant Temperature Sensor.>	Repair the short circuit to ground in harness between ECM connector and engine coolant temperature sensor connector.

AC:DTC P0118 ENGINE COOLANT TEMPERATURE CIRCUIT HIGH

DTC DETECTING CONDITION:

- Immediately at fault recognition
- GENERAL DESCRIPTION <Ref. to GD(H4DO w/o HEV)-56, DTC P0118 ENGINE COOLANT TEMPERATURE CIRCUIT HIGH, Diagnostic Trouble Code (DTC) Detecting Criteria.>

TROUBLE SYMPTOM:

- Hard to start
- Improper idling
- Poor driving performance

CAUTION:
After servicing or replacing faulty parts, perform Clear Memory Mode <Ref. to EN(H4DO w/o HEV)(diag)-59, OPERATION, Clear Memory Mode.>, and Inspection Mode <Ref. to EN(H4DO w/o HEV)(diag)-44, PROCEDURE, Inspection Mode.>.

WIRING DIAGRAM:
Engine electrical system <Ref. to WI(w/o HEV)-74, Engine Electrical System.>

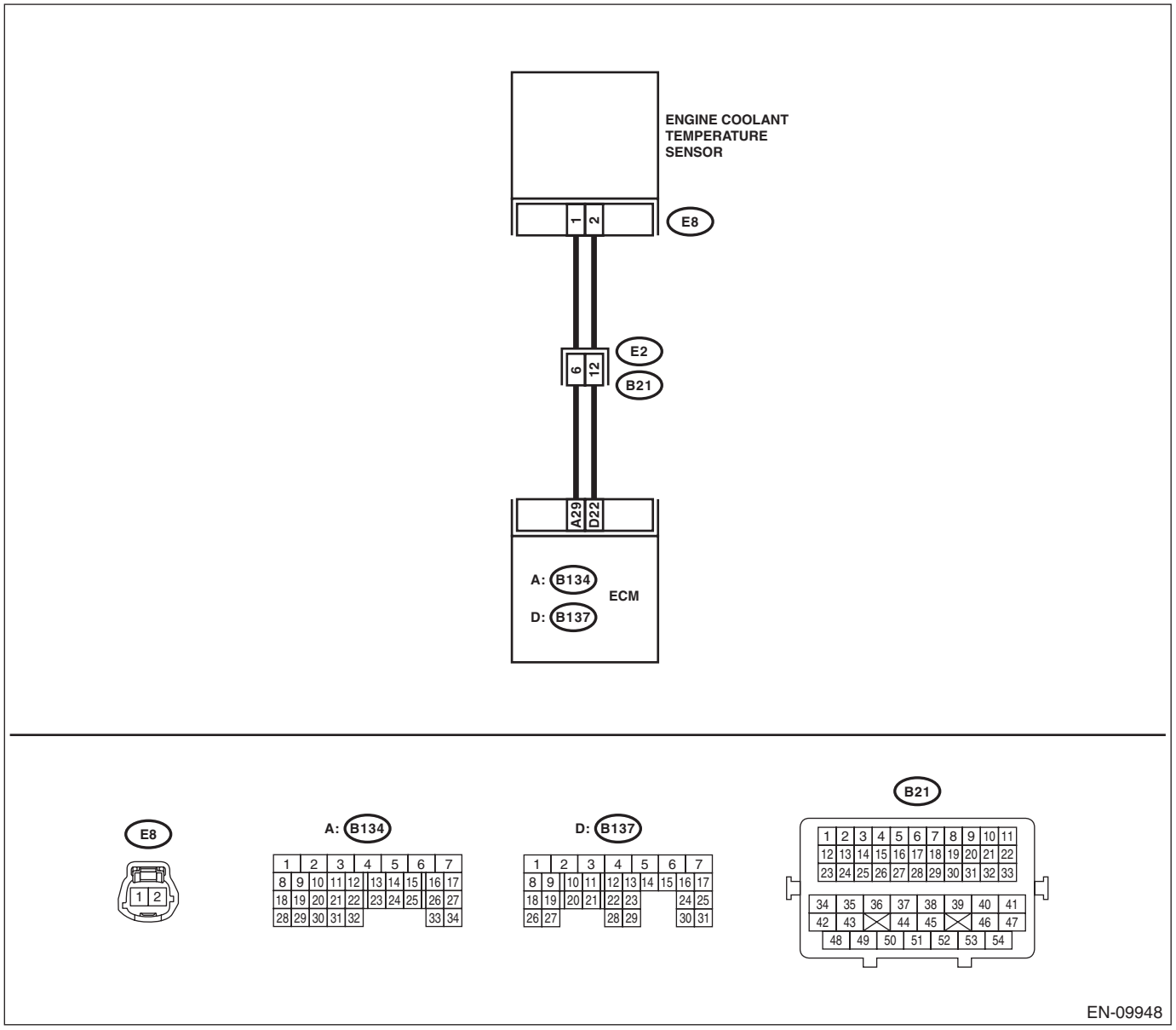

	Step	Check	Yes	No
1	**CHECK CURRENT DATA.** 1) Start the engine. 2) Read the value of «Coolant Temp.» using the Subaru Select Monitor or a general scan tool. NOTE: • Subaru Select Monitor For detailed operation procedures, refer to "READ CURRENT DATA FOR ENGINE". <Ref. to EN(H4DO w/o HEV)(diag)-36, Subaru Select Monitor.> • General scan tool For detailed operation procedures, refer to the general scan tool operation manual.	Is the value of «Coolant Temp.» –40°C (–40°F) or less?	Go to step **2**.	Even if DTC is detected, the circuit has returned to a normal condition at this time. Reproduce the failure, and then perform the diagnosis again. NOTE: In this case, temporary poor contact of connector, temporary open or short circuit of harness may be the cause.
2	**CHECK FOR POOR CONTACT.** Check for poor contact of ECM and engine coolant temperature sensor connector.	Is there poor contact of ECM or engine coolant temperature sensor connector?	Repair the poor contact of ECM or engine coolant temperature sensor connector.	Go to step **3**.
3	**CHECK HARNESS BETWEEN ECM AND ENGINE COOLANT TEMPERATURE SENSOR CONNECTOR.** 1) Turn the ignition switch to OFF. 2) Disconnect the connectors from ECM and engine coolant temperature sensor. 3) Measure the resistance of harness between ECM connector and engine coolant temperature sensor connector. ***Connector & terminal*** ***(B137) No. 22 — (E8) No. 2:*** ***(B134) No. 29 — (E8) No. 1:***	Is the resistance less than 1 Ω?	Go to step **4**.	Repair the harness and connector. NOTE: In this case, repair the following item: • Open circuit in harness between ECM connector and engine coolant temperature sensor connector • Poor contact of coupling connector
4	**CHECK HARNESS BETWEEN ECM AND ENGINE COOLANT TEMPERATURE SENSOR CONNECTOR.** 1) Connect all connectors. 2) Turn the ignition switch to ON. 3) Measure the voltage between ECM connector and chassis ground. ***Connector & terminal*** ***(B137) No. 22 (+) — Chassis ground (–):***	Is the voltage 5 V or more?	Repair the short circuit of harness to power supply between ECM connector and engine coolant temperature sensor connector.	Replace the engine coolant temperature sensor. <Ref. to FU(H4DO(w/o HEV))-53, Engine Coolant Temperature Sensor.>

AD:DTC P0122 THROTTLE/PEDAL POSITION SENSOR/SWITCH “A” CIRCUIT LOW

DTC DETECTING CONDITION:

- Immediately at fault recognition
- GENERAL DESCRIPTION <Ref. to GD(H4DO w/o HEV)-58, DTC P0122 THROTTLE/PEDAL POSITION SENSOR/SWITCH “A” CIRCUIT LOW, Diagnostic Trouble Code (DTC) Detecting Criteria.>

TROUBLE SYMPTOM:

- Improper idling
- Engine stalls.
- Poor driving performance

CAUTION:

After servicing or replacing faulty parts, perform Clear Memory Mode <Ref. to EN(H4DO w/o HEV)(diag)-59, OPERATION, Clear Memory Mode.>, and Inspection Mode <Ref. to EN(H4DO w/o HEV)(diag)-44, PROCEDURE, Inspection Mode.>.

WIRING DIAGRAM:

Engine electrical system <Ref. to WI(w/o HEV)-74, Engine Electrical System.>

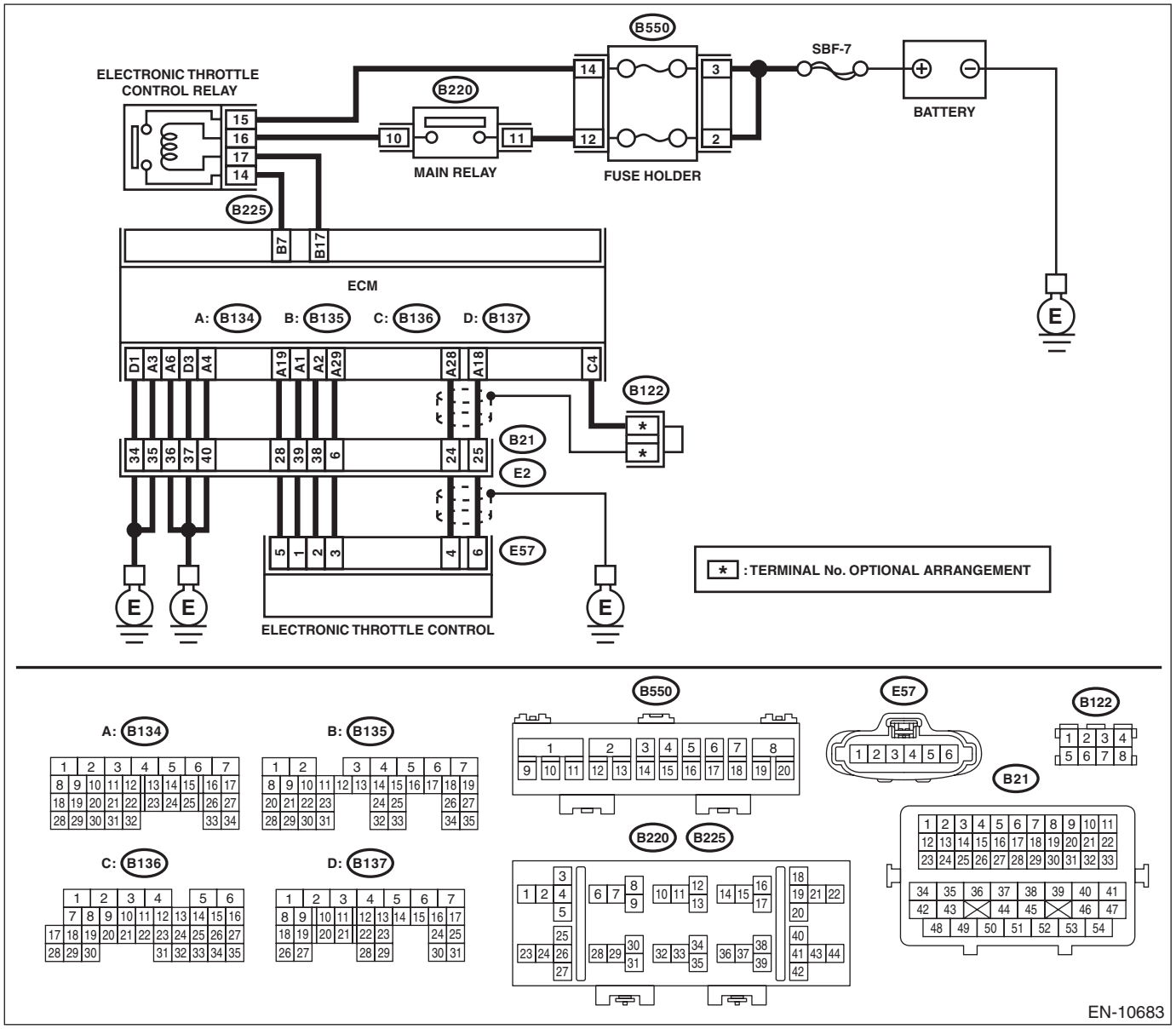

	Step	Check	Yes	No
1	**CHECK HARNESS BETWEEN ECM AND ELECTRONIC THROTTLE CONTROL CONNECTOR.** 1) Turn the ignition switch to OFF. 2) Disconnect the connectors from ECM and electronic throttle control. 3) Measure the resistance between ECM connector and chassis ground. ***Connector & terminal*** ***(B134) No. 19 — Chassis ground:*** ***(B134) No. 18 — Chassis ground:*** ***(B134) No. 18 — (B136) No. 4:***	Is the resistance 1 MΩ or more?	Go to step **2**.	Repair the ground short circuit of harness between ECM connector and electronic throttle control connector.
2	**CHECK SHORT CIRCUIT INSIDE THE ECM.** 1) Connect the connector to ECM. 2) Measure the resistance between electronic throttle control connector and engine ground. ***Connector & terminal*** ***(E57) No. 6 — Engine ground:***	Is the resistance 1 MΩ or more?	Replace the electronic throttle control. <Ref. to FU(H4DO(w/o HEV))-15, Throttle Body.>	Repair the ground short circuit of harness between ECM connector and electronic throttle control connector. Replace the ECM if defective. <Ref. to FU(H4DO(w/o HEV))-106, Engine Control Module (ECM).>

AE:DTC P0123 THROTTLE/PEDAL POSITION SENSOR/SWITCH “A” CIRCUIT HIGH

DTC DETECTING CONDITION:

- Immediately at fault recognition
- GENERAL DESCRIPTION <Ref. to GD(H4DO w/o HEV)-60, DTC P0123 THROTTLE/PEDAL POSITION SENSOR/SWITCH “A” CIRCUIT HIGH, Diagnostic Trouble Code (DTC) Detecting Criteria.>

TROUBLE SYMPTOM:

- Improper idling
- Engine stalls.
- Poor driving performance

CAUTION:

After servicing or replacing faulty parts, perform Clear Memory Mode <Ref. to EN(H4DO w/o HEV)(diag)-59, OPERATION, Clear Memory Mode.>, and Inspection Mode <Ref. to EN(H4DO w/o HEV)(diag)-44, PROCEDURE, Inspection Mode.>.

WIRING DIAGRAM:

Engine electrical system <Ref. to WI(w/o HEV)-74, Engine Electrical System.>

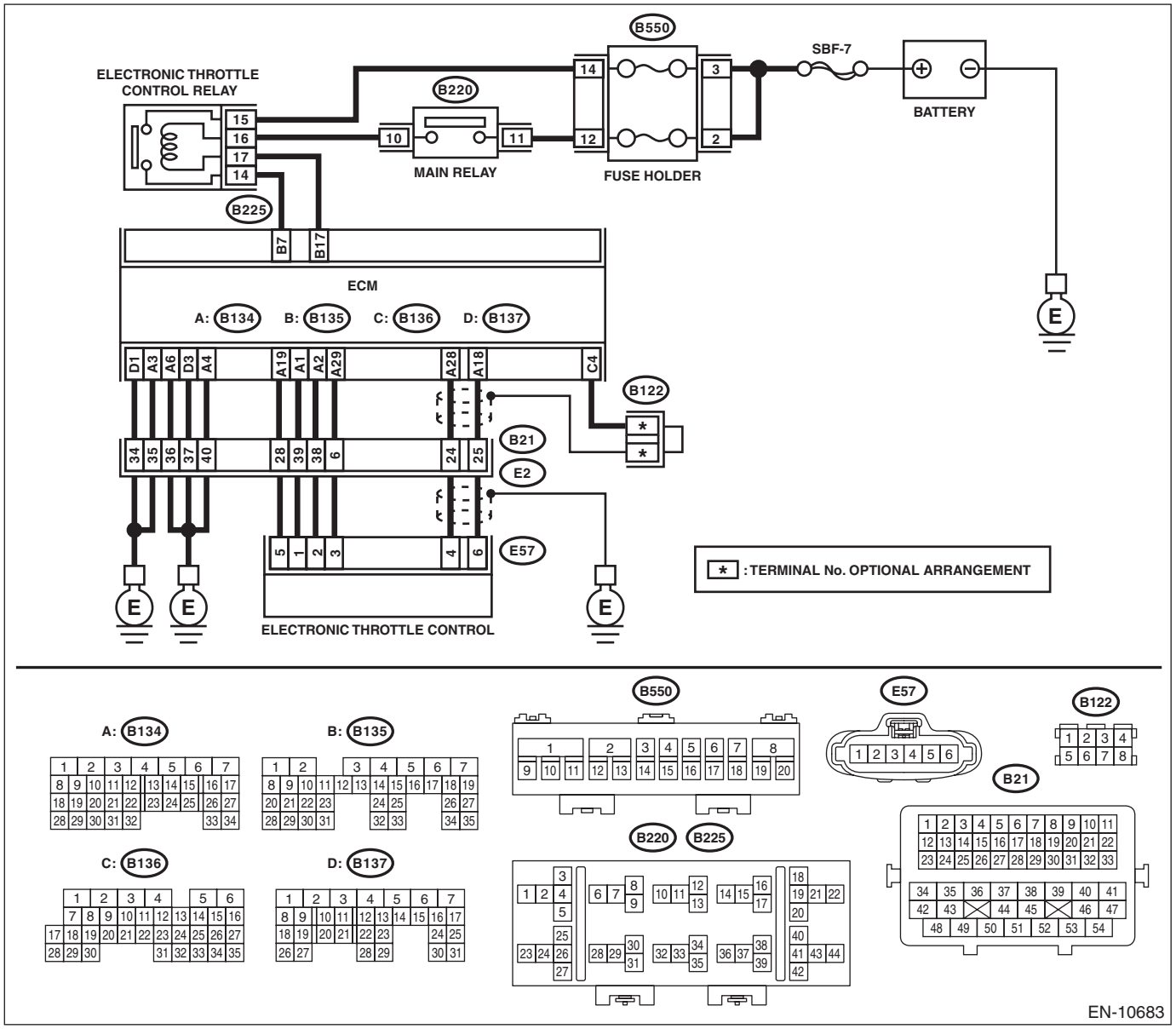

	Step	Check	Yes	No
1	**CHECK HARNESS BETWEEN ECM AND ELECTRONIC THROTTLE CONTROL CONNECTOR.** 1) Turn the ignition switch to OFF. 2) Disconnect the connectors from ECM and electronic throttle control. 3) Measure the resistance of harness between ECM connector and electronic throttle control connector. ***Connector & terminal*** ***(B134) No. 18 — (E57) No. 6:*** ***(B134) No. 29 — (E57) No. 3:***	Is the resistance less than 1 Ω?	Go to step **2**.	Repair the harness and connector. NOTE: In this case, repair the following item: • Open circuit in harness between ECM connector and electronic throttle control connector • Poor contact of coupling connector
2	**CHECK HARNESS BETWEEN ECM AND ELECTRONIC THROTTLE CONTROL CONNECTOR.** 1) Connect the connector to ECM. 2) Measure the resistance between electronic throttle control connector and engine ground. ***Connector & terminal*** ***(E57) No. 3 — Engine ground:***	Is the resistance less than 5 Ω?	Go to step **3**.	Repair the harness and connector. NOTE: In this case, repair the following item: • Open circuit of harness between ECM connector and engine ground • Poor contact of ECM connector • Poor contact of coupling connector
3	**CHECK HARNESS BETWEEN ECM AND ELECTRONIC THROTTLE CONTROL CONNECTOR.** 1) Turn the ignition switch to ON. 2) Measure the voltage between electronic throttle control connector and engine ground. ***Connector & terminal*** ***(E57) No. 6 (+) — Engine ground (–):***	Is the voltage 5 V or more?	Repair the short circuit to power in the harness between ECM connector and electronic throttle control connector.	Go to step **4**.
4	**CHECK HARNESS BETWEEN ECM AND ELECTRONIC THROTTLE CONTROL CONNECTOR.** 1) Turn the ignition switch to OFF. 2) Disconnect the connector from ECM. 3) Measure the resistance between ECM connectors. ***Connector & terminal*** ***(B134) No. 19 — (B134) No. 18:***	Is the resistance 1 MΩ or more?	Repair the poor contact of electronic throttle control connector. Replace the electronic throttle control if defective. <Ref. to FU(H4DO(w/o HEV))-15, Throttle Body.>	Repair the short circuit to power in the harness between ECM connector and electronic throttle control connector.

AF:DTC P0125 INSUFFICIENT COOLANT TEMPERATURE FOR CLOSED LOOP FUEL CONTROL

DTC DETECTING CONDITION:

- Detected when two consecutive driving cycles with fault occur.
- GENERAL DESCRIPTION <Ref. to GD(H4DO w/o HEV)-62, DTC P0125 INSUFFICIENT COOLANT TEMPERATURE FOR CLOSED LOOP FUEL CONTROL, Diagnostic Trouble Code (DTC) Detecting Criteria.>

TROUBLE SYMPTOM:

Engine does not return to idle.

CAUTION:

After servicing or replacing faulty parts, perform Clear Memory Mode <Ref. to EN(H4DO w/o HEV)(diag)-59, OPERATION, Clear Memory Mode.>, and Inspection Mode <Ref. to EN(H4DO w/o HEV)(diag)-44, PROCEDURE, Inspection Mode.>.

	Step	Check	Yes	No
1	**CHECK TIRE SIZE.**	Is the tire size as specified and the same size as three other wheels?	Go to step **2**.	Replace the tire.
2	**CHECK ENGINE COOLANT.** Check the following items: • Amount of engine coolant • Engine coolant freeze • Contamination of engine coolant	Is the engine coolant normal?	Go to step **3**.	Fill or replace the engine coolant. <Ref. to CO(H4DO(w/o HEV))-16, REPLACEMENT, Engine Coolant.>
3	**CHECK THERMOSTAT.**	Does the thermostat remain opened?	Replace the thermostat. <Ref. to CO(H4DO(w/o HEV))-64, Thermostat.>	Replace the engine coolant temperature sensor. <Ref. to FU(H4DO(w/o HEV))-53, Engine Coolant Temperature Sensor.>

AG:DTC P0128 COOLANT THERMOSTAT (ENGINE COOLANT TEMPERATURE BELOW THERMOSTAT REGULATING TEMPERATURE)

DTC DETECTING CONDITION:

- Detected when two consecutive driving cycles with fault occur.
- GENERAL DESCRIPTION <Ref. to GD(H4DO w/o HEV)-64, DTC P0128 COOLANT THERMOSTAT (ENGINE COOLANT TEMPERATURE BELOW THERMOSTAT REGULATING TEMPERATURE), Diagnostic Trouble Code (DTC) Detecting Criteria.>

TROUBLE SYMPTOM:

Thermostat remains open.

CAUTION:

After servicing or replacing faulty parts, perform Clear Memory Mode <Ref. to EN(H4DO w/o HEV)(diag)-59, OPERATION, Clear Memory Mode.>, and Inspection Mode <Ref. to EN(H4DO w/o HEV)(diag)-44, PROCEDURE, Inspection Mode.>.

	Step	Check	Yes	No
1	**CHECK FOR ANY OTHER DTC ON DISPLAY.**	Is any other DTC displayed?	Check the appropriate DTC using the "List of Diagnostic Trouble Code (DTC)". <Ref. to EN(H4DO w/o HEV)(diag)-83, List of Diagnostic Trouble Code (DTC).>	Go to step **2**.
2	**CHECK ENGINE COOLANT.**	Is the engine coolant amount normal?	Go to step **3**.	Refill the engine coolant. <Ref. to CO(H4DO(w/o HEV))-16, Engine Coolant.>
3	**CHECK RADIATOR FAN.** 1) Start the engine. 2) Check the radiator fan operation.	Does the radiator fan continuously rotate for 3 minutes or more during idling?	Repair radiator fan circuit. <Ref. to CO(H4DO(w/o HEV))-89, Radiator Main Fan and Fan Motor.> and <Ref. to CO(H4DO(w/o HEV))-93, Radiator Sub Fan and Fan Motor.>	Replace the thermostat. <Ref. to CO(H4DO(w/o HEV))-64, Thermostat.>

AH:DTC P0131 O2 SENSOR CIRCUIT LOW VOLTAGE (BANK 1 SENSOR 1)

DTC DETECTING CONDITION:

- Immediately at fault recognition
- GENERAL DESCRIPTION <Ref. to GD(H4DO w/o HEV)-68, DTC P0131 O2 SENSOR CIRCUIT LOW VOLTAGE (BANK 1 SENSOR 1), Diagnostic Trouble Code (DTC) Detecting Criteria.>

CAUTION:

After servicing or replacing faulty parts, perform Clear Memory Mode <Ref. to EN(H4DO w/o HEV)(diag)-59, OPERATION, Clear Memory Mode.>, and Inspection Mode <Ref. to EN(H4DO w/o HEV)(diag)-44, PROCEDURE, Inspection Mode.>.

WIRING DIAGRAM:

Engine electrical system <Ref. to WI(w/o HEV)-74, Engine Electrical System.>

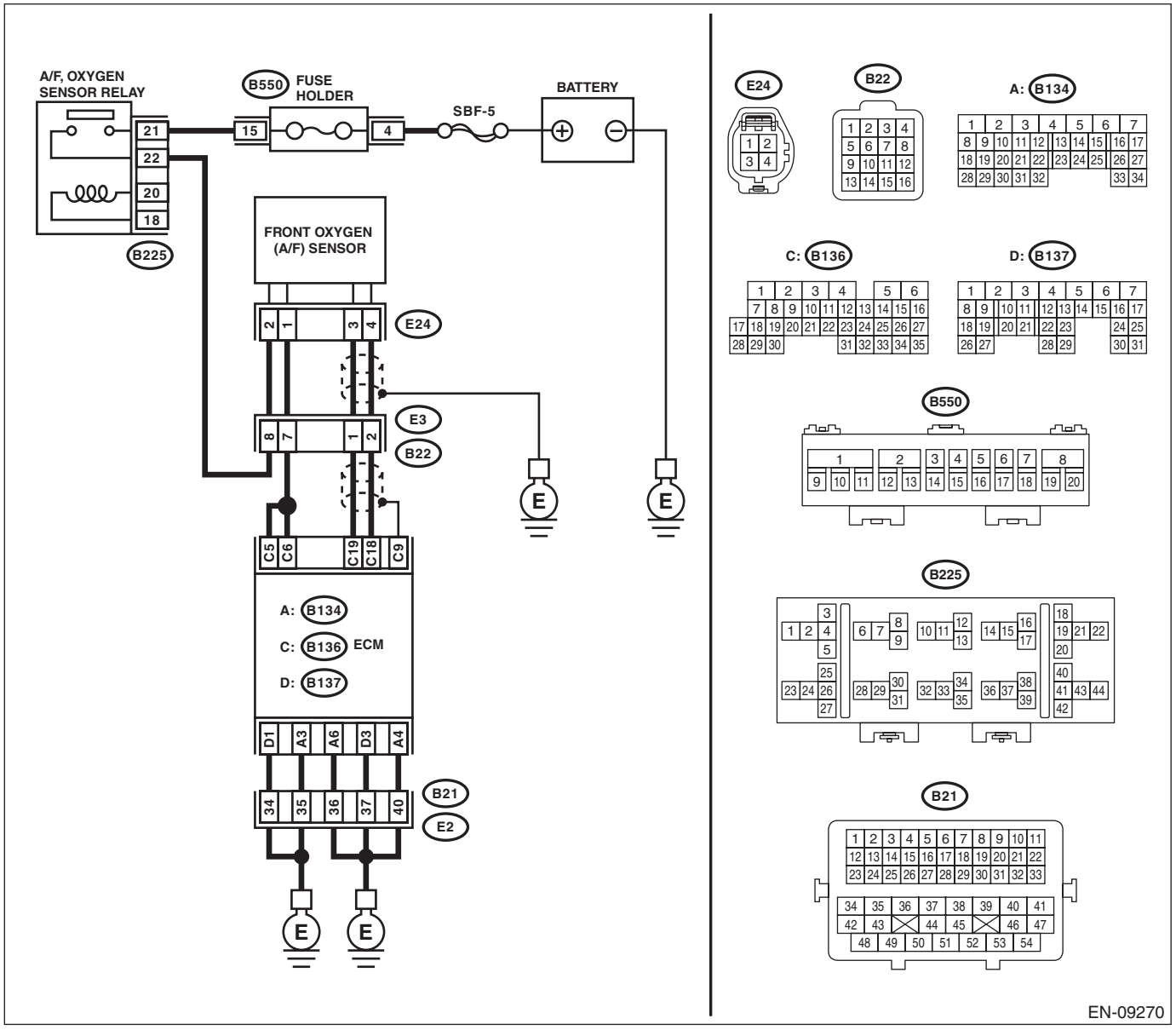

Step		Check	Yes	No
1	**CHECK FRONT OXYGEN (A/F) SENSOR CONNECTOR AND COUPLING CONNECTOR.**	Has water entered the connector?	Completely remove any water inside.	Go to step **2**.

	Step	Check	Yes	No
2	**CHECK HARNESS BETWEEN ECM AND FRONT OXYGEN (A/F) SENSOR CONNECTOR.** 1) Turn the ignition switch to OFF. 2) Disconnect the connectors from ECM and front oxygen (A/F) sensor. 3) Measure the resistance between ECM connector and chassis ground. ***Connector & terminal*** ***(B136) No. 18 — Chassis ground:*** ***(B136) No. 19 — Chassis ground:***	Is the resistance 1 MΩ or more?	Go to step **3**.	Repair the short circuit to ground in harness between ECM connector and front oxygen (A/F) sensor connector.
3	**CHECK FOR POOR CONTACT.** Check for poor contact of the front oxygen (A/F) sensor connector.	Is there poor contact of front oxygen (A/F) sensor connector?	Repair the poor contact of front oxygen (A/F) sensor connector.	Replace the front oxygen (A/F) sensor. <Ref. to FU(H4DO(w/o HEV))-97, Front Oxygen (A/F) Sensor.>

AI: DTC P0132 O2 SENSOR CIRCUIT HIGH VOLTAGE (BANK 1 SENSOR 1)

DTC DETECTING CONDITION:

- Immediately at fault recognition
- GENERAL DESCRIPTION <Ref. to GD(H4DO w/o HEV)-70, DTC P0132 O2 SENSOR CIRCUIT HIGH VOLTAGE (BANK 1 SENSOR 1), Diagnostic Trouble Code (DTC) Detecting Criteria.>

CAUTION:

After servicing or replacing faulty parts, perform Clear Memory Mode <Ref. to EN(H4DO w/o HEV)(diag)-59, OPERATION, Clear Memory Mode.>, and Inspection Mode <Ref. to EN(H4DO w/o HEV)(diag)-44, PROCEDURE, Inspection Mode.>.

WIRING DIAGRAM:

Engine electrical system <Ref. to WI(w/o HEV)-74, Engine Electrical System.>

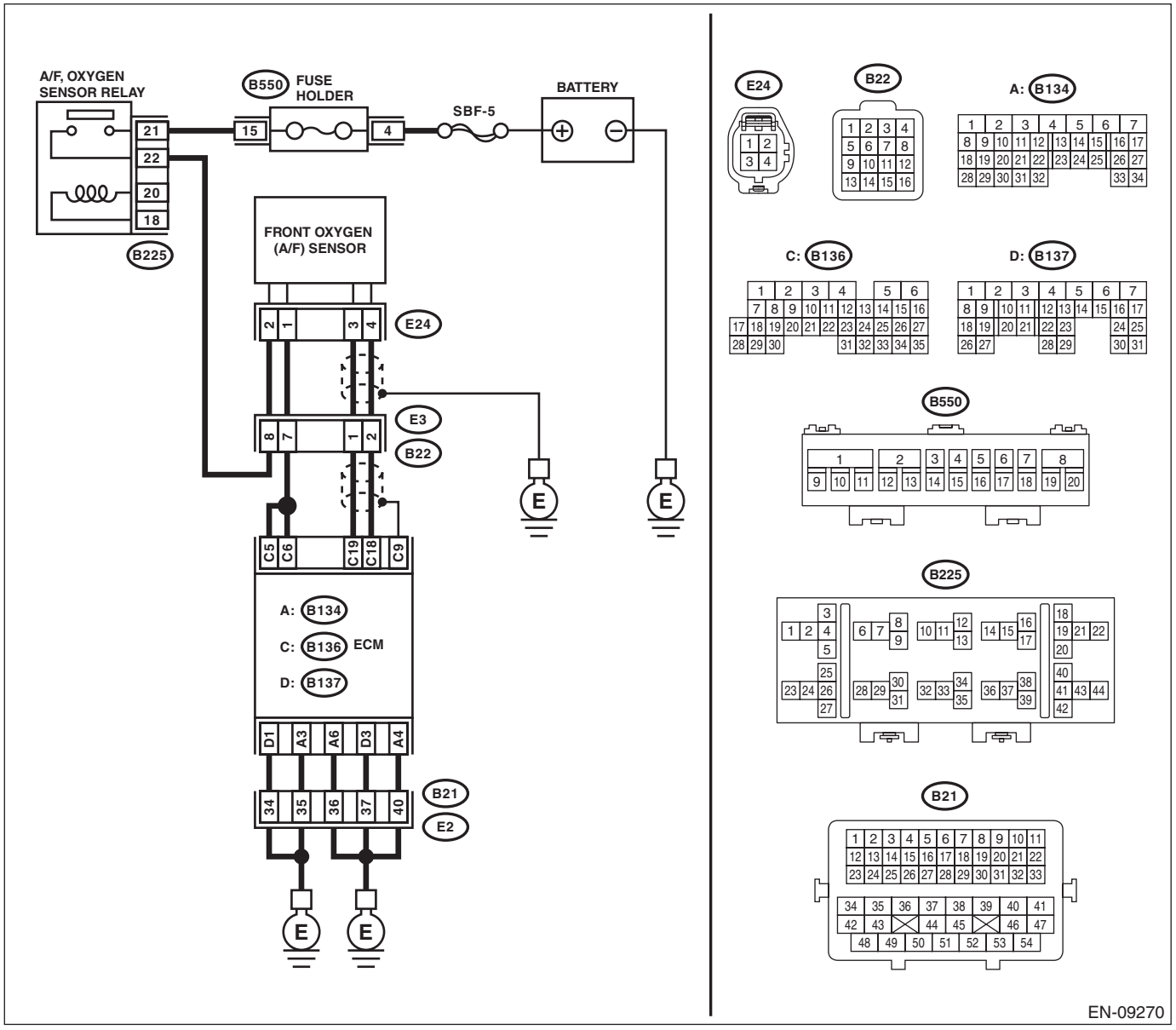

Step		Check	Yes	No
1	**CHECK FRONT OXYGEN (A/F) SENSOR CONNECTOR AND COUPLING CONNECTOR.**	Has water entered the connector?	Completely remove any water inside.	Go to step **2**.

	Step	Check	Yes	No
2	**CHECK HARNESS BETWEEN ECM AND FRONT OXYGEN (A/F) SENSOR CONNECTOR.** 1) Turn the ignition switch to OFF. 2) Disconnect the connectors from front oxygen (A/F) sensor. 3) Turn the ignition switch to ON. 4) Measure the voltage between ECM connector and chassis ground. ***Connector & terminal*** ***(B136) No. 18 (+) — Chassis ground (–):*** ***(B136) No. 19 (+) — Chassis ground (–):***	Is the voltage 8 V or more?	Repair the short circuit to power in the harness between ECM connector and front oxygen (A/F) sensor connector.	Replace the front oxygen (A/F) sensor. <Ref. to FU(H4DO(w/o HEV))-97, Front Oxygen (A/F) Sensor.>

AJ:DTC P0134 O2 SENSOR CIRCUIT NO ACTIVITY DETECTED (BANK 1 SENSOR 1)

DTC DETECTING CONDITION:

- Immediately at fault recognition
- GENERAL DESCRIPTION <Ref. to GD(H4DO w/o HEV)-72, DTC P0134 O2 SENSOR CIRCUIT NO ACTIVITY DETECTED (BANK 1 SENSOR 1), Diagnostic Trouble Code (DTC) Detecting Criteria.>

CAUTION:

After servicing or replacing faulty parts, perform Clear Memory Mode <Ref. to EN(H4DO w/o HEV)(diag)-59, OPERATION, Clear Memory Mode.>, and Inspection Mode <Ref. to EN(H4DO w/o HEV)(diag)-44, PROCEDURE, Inspection Mode.>.

WIRING DIAGRAM:

Engine electrical system <Ref. to WI(w/o HEV)-74, Engine Electrical System.>

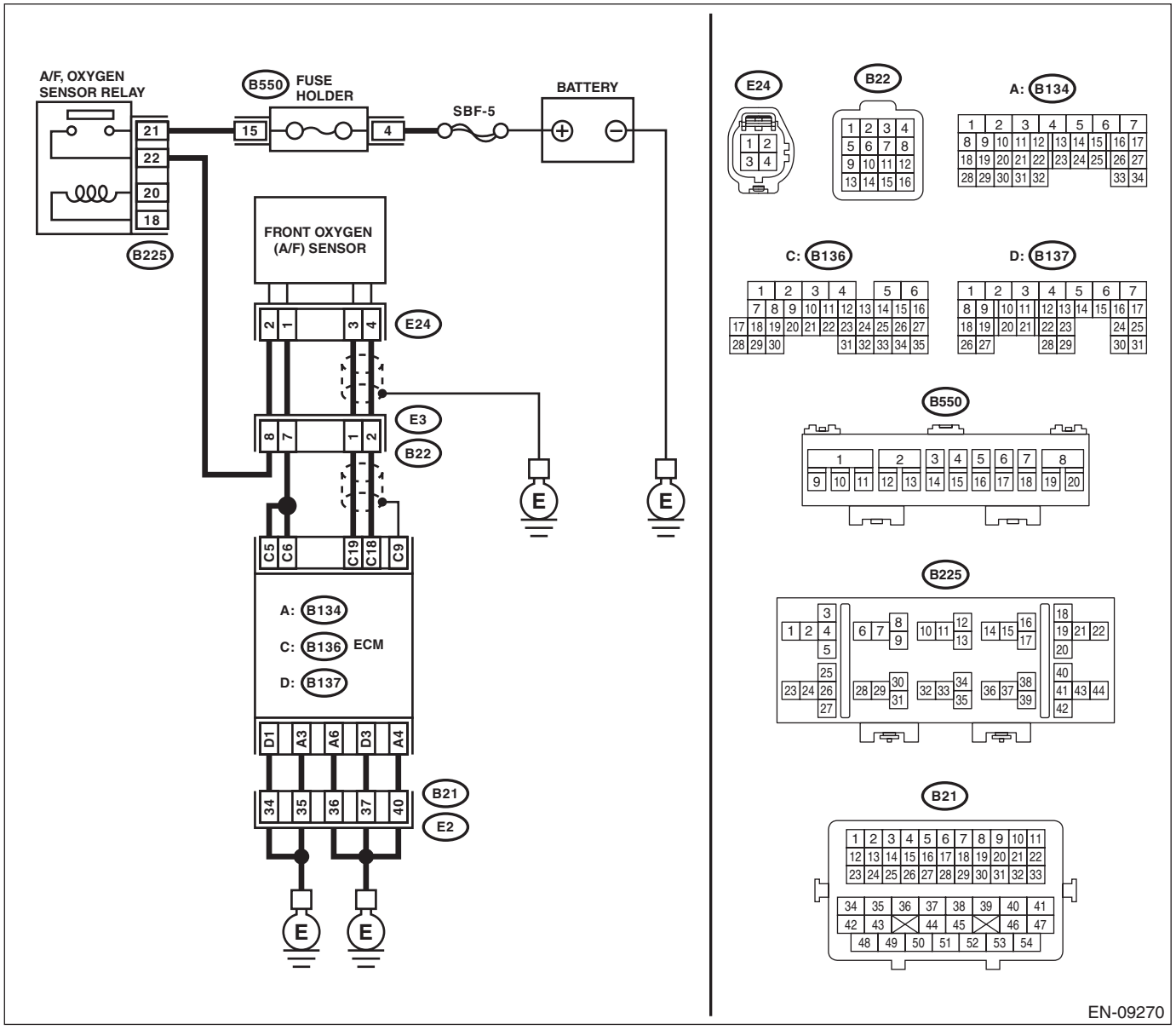

	Step	Check	Yes	No
1	**CHECK HARNESS BETWEEN ECM AND FRONT OXYGEN (A/F) SENSOR CONNECTOR.** 1) Turn the ignition switch to OFF. 2) Disconnect the connectors from ECM and front oxygen (A/F) sensor. 3) Measure the resistance of harness between ECM connector and front oxygen (A/F) sensor connector. ***Connector & terminal*** ***(B136) No. 19 — (E24) No. 3:*** ***(B136) No. 18 — (E24) No. 4:***	Is the resistance less than 1 Ω?	Go to step **2**.	Repair the harness and connector. NOTE: In this case, repair the following item: • Open circuit in harness between ECM connector and front oxygen (A/F) sensor connector • Poor contact of coupling connector
2	**CHECK FOR POOR CONTACT.** Check for poor contact of ECM and front oxygen (A/F) sensor connector.	Is there poor contact of ECM or front oxygen (A/F) sensor connector?	Repair the poor contact of ECM or front oxygen (A/F) sensor connector.	Replace the front oxygen (A/F) sensor. <Ref. to FU(H4DO(w/o HEV))-97, Front Oxygen (A/F) Sensor.>

AK:DTC P0137 O2 SENSOR CIRCUIT LOW VOLTAGE (BANK 1 SENSOR 2)

DTC DETECTING CONDITION:

- Detected when two consecutive driving cycles with fault occur.
- GENERAL DESCRIPTION <Ref. to GD(H4DO w/o HEV)-74, DTC P0137 O2 SENSOR CIRCUIT LOW VOLTAGE (BANK 1 SENSOR 2), Diagnostic Trouble Code (DTC) Detecting Criteria.>

CAUTION:

After servicing or replacing faulty parts, perform Clear Memory Mode <Ref. to EN(H4DO w/o HEV)(diag)-59, OPERATION, Clear Memory Mode.>, and Inspection Mode <Ref. to EN(H4DO w/o HEV)(diag)-44, PROCEDURE, Inspection Mode.>.

WIRING DIAGRAM:

Engine electrical system <Ref. to WI(w/o HEV)-74, Engine Electrical System.>

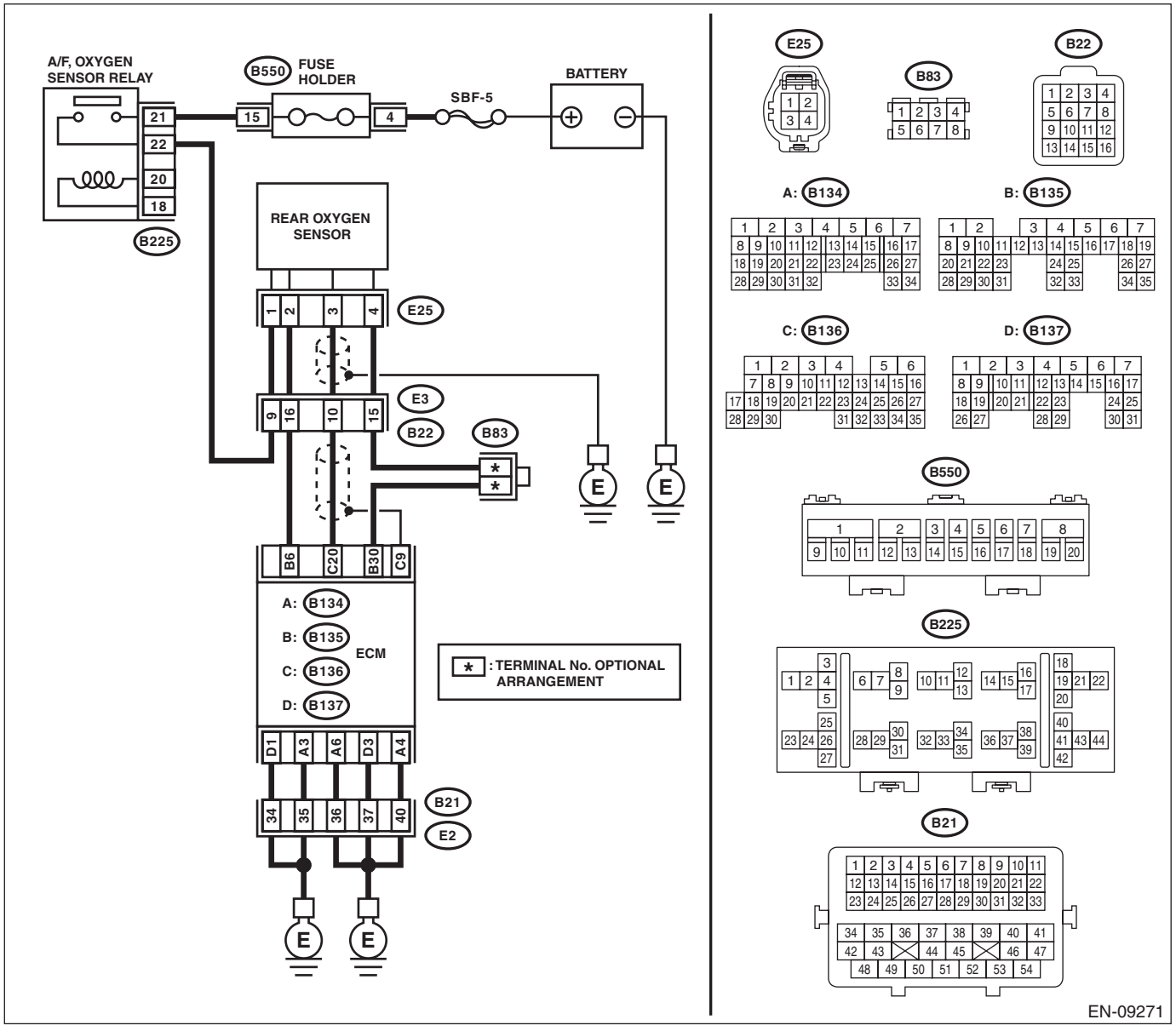

	Step	Check	Yes	No
1	**CHECK REAR OXYGEN SENSOR DATA.** 1) Warm up the engine until engine coolant temperature is higher than 75°C (167°F), and keep the engine speed at 3,000 rpm. (2 minutes maximum) 2) Read the value of «Rear O2 Sensor» using the Subaru Select Monitor or a general scan tool. NOTE: • Subaru Select Monitor For detailed operation procedures, refer to "READ CURRENT DATA FOR ENGINE". <Ref. to EN(H4DO w/o HEV)(diag)-36, Subaru Select Monitor.> • General scan tool For detailed operation procedures, refer to the general scan tool operation manual.	Is the value of «Rear O2 Sensor» 0.490 V or more?	Go to step **5**.	Go to step **2**.
2	**CHECK REAR OXYGEN SENSOR CONNECTOR AND COUPLING CONNECTOR.**	Has water entered the connector?	Completely remove any water inside.	Go to step **3**.
3	**CHECK HARNESS BETWEEN ECM AND REAR OXYGEN SENSOR CONNECTOR.** 1) Turn the ignition switch to OFF. 2) Disconnect the connector from ECM and rear oxygen sensor. 3) Measure the resistance of harness between ECM connector and rear oxygen sensor connector. ***Connector & terminal*** ***(B136) No. 20 — (E25) No. 3:*** ***(B135) No. 30 — (E25) No. 4:***	Is the resistance less than 1 Ω?	Go to step **4**.	Repair the harness and connector. NOTE: In this case, repair the following item: • Open circuit in harness between ECM connector and rear oxygen sensor connector • Poor contact of coupling connector
4	**CHECK HARNESS BETWEEN ECM AND REAR OXYGEN SENSOR CONNECTOR.** 1) Connect the connector to ECM. 2) Turn the ignition switch to ON. 3) Measure the voltage between rear oxygen sensor connector and chassis ground. ***Connector & terminal*** ***(E25) No. 3 (+) — Chassis ground (–):***	Is the voltage 0.2 — 0.5 V?	Replace the rear oxygen sensor. <Ref. to FU(H4DO(w/o HEV))-101, Rear Oxygen Sensor.>	Repair the harness and connector. NOTE: In this case, repair the following item: • Open circuit in harness between ECM connector and rear oxygen sensor connector • Poor contact of coupling connector • Poor contact of ECM connector
5	**CHECK EXHAUST SYSTEM.** Check exhaust system parts. NOTE: Check the following items. • Looseness and improper fitting of exhaust system parts • Damage (crack, hole etc.) of parts • Loose part and improper installation between front oxygen (A/F) sensor and rear oxygen sensor	Is there any fault in exhaust system?	Repair or replace faulty parts.	Replace the rear oxygen sensor. <Ref. to FU(H4DO(w/o HEV))-101, Rear Oxygen Sensor.>

AL:DTC P0138 O2 SENSOR CIRCUIT HIGH VOLTAGE (BANK 1 SENSOR 2)

DTC DETECTING CONDITION:

- Detected when two consecutive driving cycles with fault occur.
- GENERAL DESCRIPTION <Ref. to GD(H4DO w/o HEV)-76, DTC P0138 O2 SENSOR CIRCUIT HIGH VOLTAGE (BANK 1 SENSOR 2), Diagnostic Trouble Code (DTC) Detecting Criteria.>

CAUTION:

After servicing or replacing faulty parts, perform Clear Memory Mode <Ref. to EN(H4DO w/o HEV)(diag)-59, OPERATION, Clear Memory Mode.>, and Inspection Mode <Ref. to EN(H4DO w/o HEV)(diag)-44, PROCEDURE, Inspection Mode.>.

WIRING DIAGRAM:

Engine electrical system <Ref. to WI(w/o HEV)-74, Engine Electrical System.>

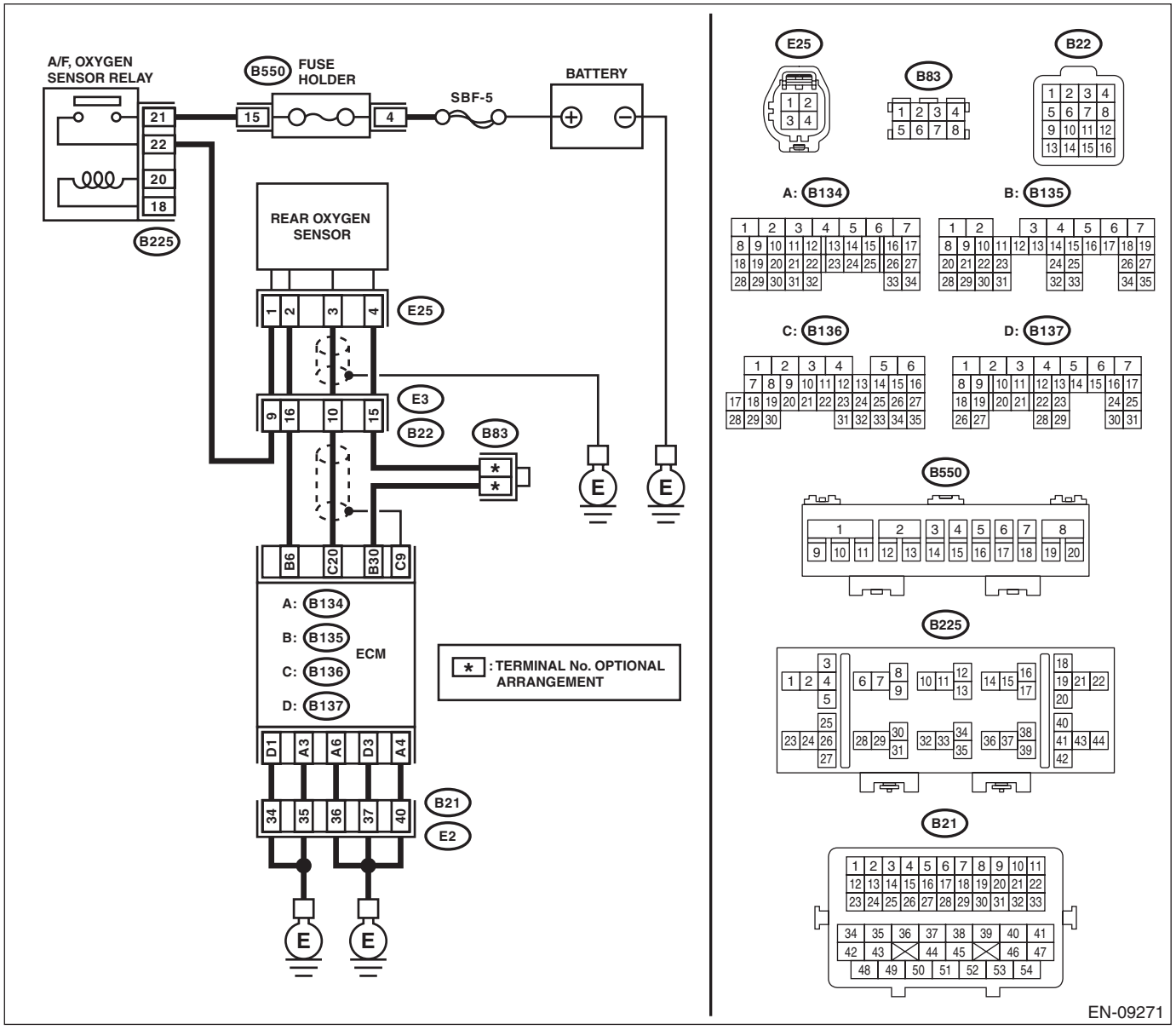

	Step	Check	Yes	No
1	**CHECK REAR OXYGEN SENSOR DATA.** 1) Warm up the engine until engine coolant temperature is higher than 75°C (167°F), and rapidly reduce the engine speed from 3,000 rpm. 2) Read the value of «Rear O2 Sensor» using the Subaru Select Monitor or a general scan tool. NOTE: • Subaru Select Monitor For detailed operation procedures, refer to "READ CURRENT DATA FOR ENGINE". <Ref. to EN(H4DO w/o HEV)(diag)-36, Subaru Select Monitor.> • General scan tool For detailed operation procedures, refer to the general scan tool operation manual.	Is the value of «Rear O2 Sensor» 0.250 V or less?	Go to step **5**.	Go to step **2**.
2	**CHECK REAR OXYGEN SENSOR CONNECTOR AND COUPLING CONNECTOR.**	Has water entered the connector?	Completely remove any water inside.	Go to step **3**.
3	**CHECK HARNESS BETWEEN ECM AND REAR OXYGEN SENSOR CONNECTOR.** 1) Turn the ignition switch to OFF. 2) Disconnect the connector from ECM and rear oxygen sensor. 3) Measure the resistance of harness between ECM connector and rear oxygen sensor connector. ***Connector & terminal*** ***(B136) No. 20 — (E25) No. 3:*** ***(B135) No. 30 — (E25) No. 4:***	Is the resistance less than 1 Ω?	Go to step **4**.	Repair the harness and connector. NOTE: In this case, repair the following item: • Open circuit in harness between ECM connector and rear oxygen sensor connector • Poor contact of coupling connector
4	**CHECK HARNESS BETWEEN ECM AND REAR OXYGEN SENSOR CONNECTOR.** 1) Connect the connector to ECM. 2) Turn the ignition switch to ON. 3) Measure the voltage between rear oxygen sensor connector and chassis ground. ***Connector & terminal*** ***(E25) No. 3 (+) — Chassis ground (–):***	Is the voltage 0.2 — 0.5 V?	Replace the rear oxygen sensor. <Ref. to FU(H4DO(w/o HEV))-101, Rear Oxygen Sensor.>	Repair the harness and connector. NOTE: In this case, repair the following item: • Open circuit in harness between ECM connector and rear oxygen sensor connector • Poor contact of coupling connector • Poor contact of ECM connector
5	**CHECK EXHAUST SYSTEM.** Check exhaust system parts. NOTE: Check the following items. • Looseness and improper fitting of exhaust system parts • Damage (crack, hole etc.) of parts • Loose part and improper installation between front oxygen (A/F) sensor and rear oxygen sensor	Is there any fault in exhaust system?	Repair or replace faulty parts.	Replace the rear oxygen sensor. <Ref. to FU(H4DO(w/o HEV))-101, Rear Oxygen Sensor.>

AM:DTC P013A O2 SENSOR SLOW RESPONSE - RICH TO LEAN (BANK 1 SENSOR 2)

DTC DETECTING CONDITION:

- Detected when two consecutive driving cycles with fault occur.
- GENERAL DESCRIPTION <Ref. to GD(H4DO w/o HEV)-77, DTC P013A O2 SENSOR SLOW RESPONSE - RICH TO LEAN (BANK 1 SENSOR 2), Diagnostic Trouble Code (DTC) Detecting Criteria.>

CAUTION:

After servicing or replacing faulty parts, perform Clear Memory Mode <Ref. to EN(H4DO w/o HEV)(diag)-59, OPERATION, Clear Memory Mode.>, and Inspection Mode <Ref. to EN(H4DO w/o HEV)(diag)-44, PROCEDURE, Inspection Mode.>.

WIRING DIAGRAM:

Engine electrical system <Ref. to WI(w/o HEV)-74, Engine Electrical System.>

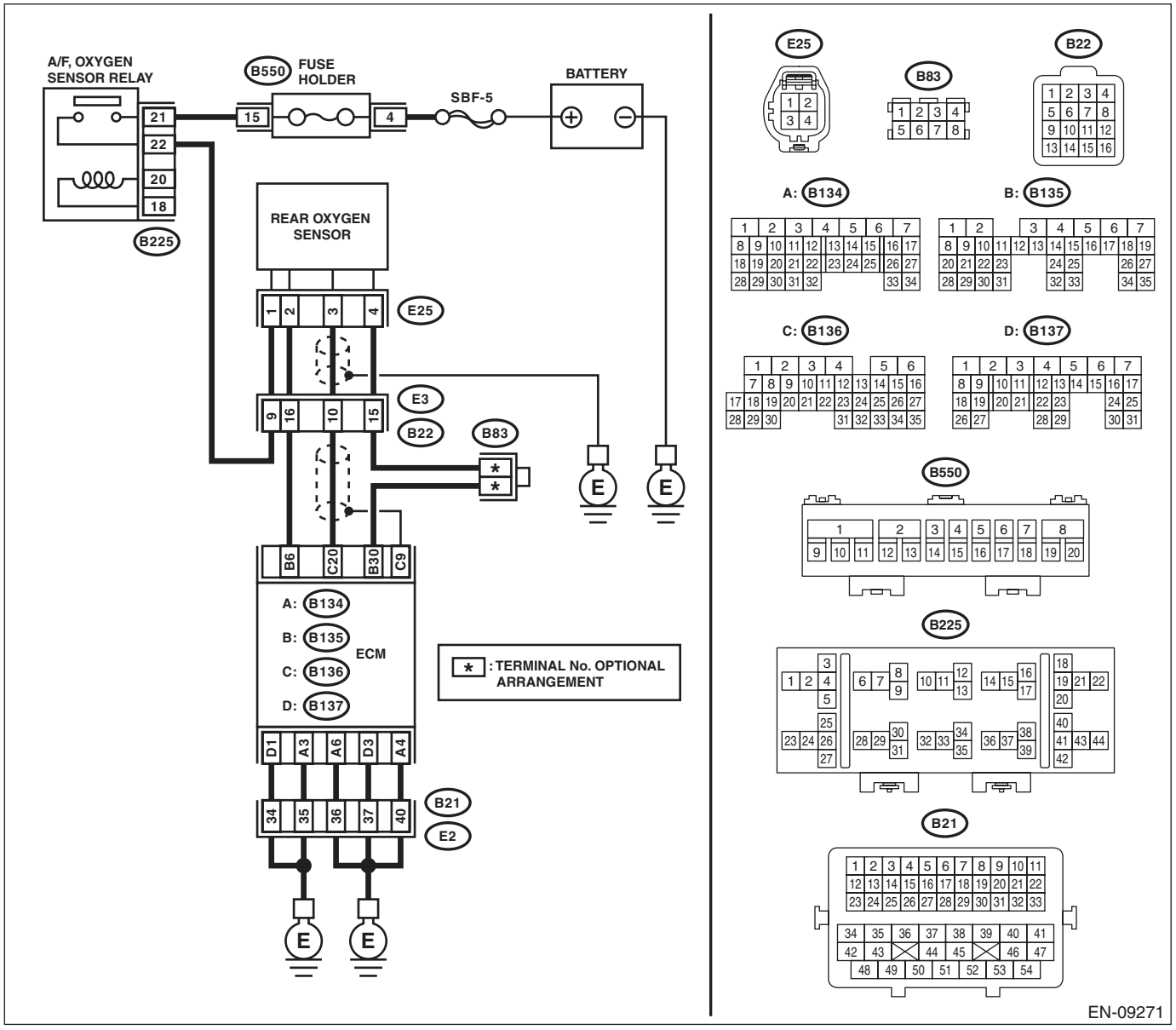

	Step	Check	Yes	No
1	**CHECK HARNESS BETWEEN ECM AND REAR OXYGEN SENSOR CONNECTOR.** 1) Turn the ignition switch to OFF. 2) Disconnect the connector from ECM and rear oxygen sensor. 3) Measure the resistance of harness between ECM connector and rear oxygen sensor connector. ***Connector & terminal*** ***(B136) No. 20 — (E25) No. 3:***	Is the resistance less than 1 Ω?	Go to step **2**.	Repair the harness and connector. NOTE: In this case, repair the following item: • Open circuit in harness between ECM connector and rear oxygen sensor connector • Poor contact of coupling connector
2	**CHECK HARNESS BETWEEN ECM AND REAR OXYGEN SENSOR CONNECTOR.** Measure the resistance between rear oxygen sensor connector and chassis ground. ***Connector & terminal*** ***(E25) No. 3 — Chassis ground:***	Is the resistance 1 MΩ or more?	Go to step **3**.	Repair the short circuit to ground in harness between ECM connector and rear oxygen sensor connector.
3	**CHECK REAR OXYGEN SENSOR.** Measure the resistance between rear oxygen sensor terminals. ***Terminals*** ***No. 3 — No. 4***	Is the resistance less than 1 Ω?	Replace the rear oxygen sensor. <Ref. to FU(H4DO(w/o HEV))-101, Rear Oxygen Sensor.>	Even if DTC is detected, the circuit has returned to a normal condition at this time. Reproduce the failure, and then perform the diagnosis again. NOTE: In this case, temporary poor contact of connector, temporary open or short circuit of harness may be the cause.

AN:DTC P013B O2 SENSOR SLOW RESPONSE - LEAN TO RICH (BANK 1 SENSOR 2)

NOTE:
For the diagnostic procedure, refer to DTC P013A. <Ref. to EN(H4DO w/o HEV)(diag)-152, DTC P013A O2 SENSOR SLOW RESPONSE - RICH TO LEAN (BANK 1 SENSOR 2), Diagnostic Procedure with Diagnostic Trouble Code (DTC).>

AO:DTC P013E O2 SENSOR DELAYED RESPONSE - RICH TO LEAN (BANK 1 SENSOR 2)

NOTE:
For the diagnostic procedure, refer to DTC P013A. <Ref. to EN(H4DO w/o HEV)(diag)-152, DTC P013A O2 SENSOR SLOW RESPONSE - RICH TO LEAN (BANK 1 SENSOR 2), Diagnostic Procedure with Diagnostic Trouble Code (DTC).>

AP:DTC P013F O2 SENSOR DELAYED RESPONSE - LEAN TO RICH (BANK 1 SENSOR 2)

NOTE:
For the diagnostic procedure, refer to DTC P013A. <Ref. to EN(H4DO w/o HEV)(diag)-152, DTC P013A O2 SENSOR SLOW RESPONSE - RICH TO LEAN (BANK 1 SENSOR 2), Diagnostic Procedure with Diagnostic Trouble Code (DTC).>

AQ:DTC P0140 O2 SENSOR CIRCUIT NO ACTIVITY DETECTED (BANK1 SENSOR2)

DTC DETECTING CONDITION:

- Detected when two consecutive driving cycles with fault occur.
- GENERAL DESCRIPTION <Ref. to GD(H4DO w/o HEV)-85, DTC P0140 O2 SENSOR CIRCUIT NO ACTIVITY DETECTED (BANK1 SENSOR2), Diagnostic Trouble Code (DTC) Detecting Criteria.>

CAUTION:

After servicing or replacing faulty parts, perform Clear Memory Mode <Ref. to EN(H4DO w/o HEV)(diag)-59, OPERATION, Clear Memory Mode.>, and Inspection Mode <Ref. to EN(H4DO w/o HEV)(diag)-44, PROCEDURE, Inspection Mode.>.

WIRING DIAGRAM:

Engine electrical system <Ref. to WI(w/o HEV)-74, Engine Electrical System.>

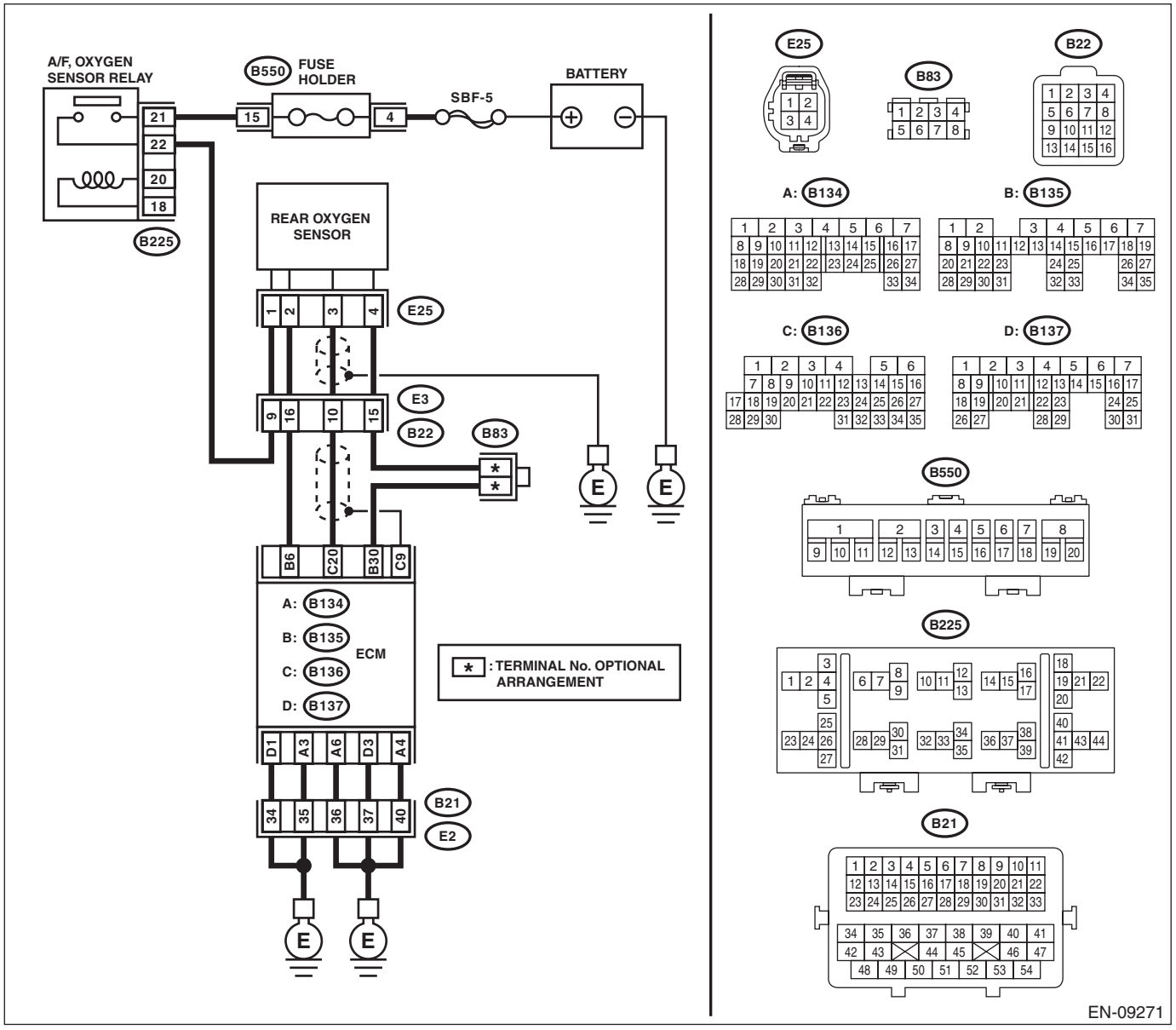

	Step	Check	Yes	No
1	**CHECK REAR OXYGEN SENSOR DATA.** 1) Warm up the engine until engine coolant temperature is higher than 75°C (167°F), and keep the engine speed at 3,000 rpm. (2 minutes maximum) 2) Read the value of «Rear O2 Sensor» using the Subaru Select Monitor or a general scan tool. NOTE: • Subaru Select Monitor For detailed operation procedures, refer to "READ CURRENT DATA FOR ENGINE". <Ref. to EN(H4DO w/o HEV)(diag)-36, Subaru Select Monitor.> • General scan tool For detailed operation procedures, refer to the general scan tool operation manual.	Is the value of «Rear O2 Sensor» 0.490 V or more?	Go to step **6**.	Go to step **2**.
2	**CHECK REAR OXYGEN SENSOR DATA.** 1) Warm up the engine until engine coolant temperature is higher than 75°C (167°F), and rapidly reduce the engine speed from 3,000 rpm. 2) Read the value of «Rear O2 Sensor» using the Subaru Select Monitor or a general scan tool. NOTE: • Subaru Select Monitor For detailed operation procedures, refer to "READ CURRENT DATA FOR ENGINE". <Ref. to EN(H4DO w/o HEV)(diag)-36, Subaru Select Monitor.> • General scan tool For detailed operation procedures, refer to the general scan tool operation manual.	Is the value of «Rear O2 Sensor» 0.250 V or less?	Go to step **6**.	Go to step **3**.
3	**CHECK REAR OXYGEN SENSOR CONNECTOR AND COUPLING CONNECTOR.**	Has water entered the connector?	Completely remove any water inside.	Go to step **4**.
4	**CHECK HARNESS BETWEEN ECM AND REAR OXYGEN SENSOR CONNECTOR.** 1) Turn the ignition switch to OFF. 2) Disconnect the connector from ECM and rear oxygen sensor. 3) Measure the resistance of harness between ECM connector and rear oxygen sensor connector. ***Connector & terminal*** ***(B136) No. 20 — (E25) No. 3:*** ***(B135) No. 30 — (E25) No. 4:***	Is the resistance less than 1 Ω?	Go to step **5**.	Repair the harness and connector. NOTE: In this case, repair the following item: • Open circuit in harness between ECM connector and rear oxygen sensor connector • Poor contact of coupling connector

	Step	Check	Yes	No
5	**CHECK HARNESS BETWEEN ECM AND REAR OXYGEN SENSOR CONNECTOR.** 1) Connect the connector to ECM. 2) Turn the ignition switch to ON. 3) Measure the voltage between rear oxygen sensor connector and chassis ground. ***Connector & terminal*** ***(E25) No. 3 (+) — Chassis ground (–):***	Is the voltage 0.2 — 0.5 V?	Replace the rear oxygen sensor. <Ref. to FU(H4DO(w/o HEV))-101, Rear Oxygen Sensor.>	Repair the harness and connector. NOTE: In this case, repair the following item: • Open circuit in harness between ECM connector and rear oxygen sensor connector • Poor contact of coupling connector • Poor contact of ECM connector
6	**CHECK EXHAUST SYSTEM.** Check exhaust system parts. NOTE: Check the following items. • Looseness and improper fitting of exhaust system parts • Damage (crack, hole etc.) of parts • Loose part and improper installation between front oxygen (A/F) sensor and rear oxygen sensor	Is there any fault in exhaust system?	Repair or replace faulty parts.	Replace the rear oxygen sensor. <Ref. to FU(H4DO(w/o HEV))-101, Rear Oxygen Sensor.>

AR:DTC P0141 O2 SENSOR HEATER CIRCUIT (BANK1 SENSOR2)

Refer to DTC P0037 for diagnostic procedure. <Ref. to EN(H4DO w/o HEV)(diag)-112, DTC P0037 HO2S HEATER CONTROL CIRCUIT LOW (BANK 1 SENSOR 2), Diagnostic Procedure with Diagnostic Trouble Code (DTC).>

AS:DTC P014C O2 SENSOR SLOW RESPONSE - RICH TO LEAN (BANK 1 SENSOR 1)

DTC DETECTING CONDITION:

- Detected when two consecutive driving cycles with fault occur.
- GENERAL DESCRIPTION <Ref. to GD(H4DO w/o HEV)-89, DTC P014C O2 SENSOR SLOW RESPONSE - RICH TO LEAN (BANK 1 SENSOR 1), Diagnostic Trouble Code (DTC) Detecting Criteria.>

CAUTION:
After servicing or replacing faulty parts, perform Clear Memory Mode <Ref. to EN(H4DO w/o HEV)(diag)-59, OPERATION, Clear Memory Mode.>, and Inspection Mode <Ref. to EN(H4DO w/o HEV)(diag)-44, PROCEDURE, Inspection Mode.>.

	Step	Check	Yes	No
1	**CHECK EXHAUST SYSTEM.** NOTE: Check the following items. • Loose installation of front portion of exhaust pipe onto cylinder heads • Loose connection between front exhaust pipe and front catalytic converter • Damage of exhaust pipe resulting in a hole	Is there any fault in exhaust system?	Repair the exhaust system.	Replace the front oxygen (A/F) sensor. <Ref. to FU(H4DO(w/o HEV))-97, Front Oxygen (A/F) Sensor.>

AT:DTC P014D O2 SENSOR SLOW RESPONSE - LEAN TO RICH (BANK 1 SENSOR 1)

NOTE:
For the diagnostic procedure, refer to DTC P014C. <Ref. to EN(H4DO w/o HEV)(diag)-157, DTC P014C O2 SENSOR SLOW RESPONSE - RICH TO LEAN (BANK 1 SENSOR 1), Diagnostic Procedure with Diagnostic Trouble Code (DTC).>

AU:DTC P015A O2 SENSOR DELAYED RESPONSE - RICH TO LEAN (BANK 1 SENSOR 1)

NOTE:
For the diagnostic procedure, refer to DTC P014C. <Ref. to EN(H4DO w/o HEV)(diag)-157, DTC P014C O2 SENSOR SLOW RESPONSE - RICH TO LEAN (BANK 1 SENSOR 1), Diagnostic Procedure with Diagnostic Trouble Code (DTC).>

AV:DTC P015B O2 SENSOR DELAYED RESPONSE - LEAN TO RICH (BANK 1 SENSOR 1)

NOTE:
For the diagnostic procedure, refer to DTC P014C. <Ref. to EN(H4DO w/o HEV)(diag)-157, DTC P014C O2 SENSOR SLOW RESPONSE - RICH TO LEAN (BANK 1 SENSOR 1), Diagnostic Procedure with Diagnostic Trouble Code (DTC).>

AW:DTC P0171 SYSTEM TOO LEAN (BANK 1)

Refer to DTC P0172 for diagnostic procedure. <Ref. to EN(H4DO w/o HEV)(diag)-158, DTC P0172 SYSTEM TOO RICH (BANK 1), Diagnostic Procedure with Diagnostic Trouble Code (DTC).>

AX:DTC P0172 SYSTEM TOO RICH (BANK 1)

DTC DETECTING CONDITION:

- Detected when two consecutive driving cycles with fault occur.
- GENERAL DESCRIPTION <Ref. to GD(H4DO w/o HEV)-102, DTC P0172 SYSTEM TOO RICH (BANK 1), Diagnostic Trouble Code (DTC) Detecting Criteria.>

TROUBLE SYMPTOM:

- Improper idling
- Engine stalls.
- Poor driving performance

CAUTION:
After servicing or replacing faulty parts, perform Clear Memory Mode <Ref. to EN(H4DO w/o HEV)(diag)-59, OPERATION, Clear Memory Mode.>, and Inspection Mode <Ref. to EN(H4DO w/o HEV)(diag)-44, PROCEDURE, Inspection Mode.>.

	Step	Check	Yes	No
1	**CHECK EXHAUST SYSTEM.**	Are there holes or loose bolts on exhaust system?	Repair the exhaust system.	Go to step **2**.
2	**CHECK AIR INTAKE SYSTEM.**	Are there holes, loose bolts or disconnection of hose on air intake system?	Repair the air intake system.	Go to step **3**.
3	**CHECK FUEL PRESSURE.** **WARNING:** **Place "NO OPEN FLAMES" signs near the working area.** **CAUTION:** **Be careful not to spill fuel.** Measure the fuel pressure. <Ref. to ME(H4DO(w/o HEV))-35, INSPECTION, Fuel Pressure.> **CAUTION:** **Release fuel pressure before removing the fuel pressure gauge.**	Is the measured value 340 — 400 kPa (3.5 — 4.1 kg/cm^2, 49 — 58 psi)?	Go to step **4**.	Check the fuel pump and fuel delivery line. <Ref. to FU(H4DO(w/o HEV))-145, INSPECTION, Fuel Pump.> <Ref. to FU(H4DO(w/o HEV))-165, INSPECTION, Fuel Delivery and Evaporation Lines.>
4	**CHECK ENGINE COOLANT TEMPERATURE SENSOR.** 1) Start the engine and warm up completely. 2) Read the value of «Coolant Temp.» using the Subaru Select Monitor or a general scan tool. NOTE: • Subaru Select Monitor For detailed operation procedures, refer to "READ CURRENT DATA FOR ENGINE". <Ref. to EN(H4DO w/o HEV)(diag)-36, Subaru Select Monitor.> • General scan tool For detailed operation procedures, refer to the general scan tool operation manual.	Is the value of «Coolant Temp.» 75°C (167°F) or more?	Go to step **5**.	Replace the engine coolant temperature sensor. <Ref. to FU(H4DO(w/o HEV))-53, Engine Coolant Temperature Sensor.>

	Step	Check	Yes	No
5	**CHECK MASS AIR FLOW AND INTAKE AIR TEMPERATURE SENSOR.** 1) Start the engine and warm up engine until coolant temperature is higher than 75°C (167°F). 2) For CVT models, set the select lever to "P" range or "N" range, and for MT models, place the shift lever in the neutral position. 3) Turn the A/C switch to OFF. 4) Turn all the accessory switches to OFF. 5) Read the value of «Mass Air Flow» using the Subaru Select Monitor or a general scan tool. NOTE: • Subaru Select Monitor For detailed operation procedures, refer to "READ CURRENT DATA FOR ENGINE". <Ref. to EN(H4DO w/o HEV)(diag)-36, Subaru Select Monitor.> • General scan tool For detailed operation procedures, refer to the general scan tool operation manual.	Is the value of «Mass Air Flow» 2.0 — 5.0 g/s (0.26 — 0.66 lb/m)?	Go to step **6**.	Replace the mass air flow and intake air temperature sensor. <Ref. to FU(H4DO(w/o HEV))-78, Mass Air Flow and Intake Air Temperature Sensor.>
6	**CHECK MASS AIR FLOW AND INTAKE AIR TEMPERATURE SENSOR.** 1) Start the engine and warm up engine until coolant temperature is higher than 75°C (167°F). 2) For CVT models, set the select lever to "P" range or "N" range, and for MT models, place the shift lever in the neutral position. 3) Turn the A/C switch to OFF. 4) Turn all the accessory switches to OFF. 5) Open the front hood. 6) Measure the ambient temperature. 7) Read the value of «Intake Air Temp.» using the Subaru Select Monitor or a general scan tool. NOTE: • Subaru Select Monitor For detailed operation procedures, refer to "READ CURRENT DATA FOR ENGINE". <Ref. to EN(H4DO w/o HEV)(diag)-36, Subaru Select Monitor.> • General scan tool For detailed operation procedures, refer to the general scan tool operation manual.	Subtract ambient temperature from «Intake Air Temp.». Is the obtained value –10 — 50°C (–18 — 90°F)?	Repair the poor contact of ECM connector.	Check the mass air flow and intake air temperature sensor. <Ref. to FU(H4DO(w/o HEV))-78, Mass Air Flow and Intake Air Temperature Sensor.>

AY:DTC P0196 ENGINE OIL TEMPERATURE SENSOR CIRCUIT RANGE/PERFORMANCE

DTC DETECTING CONDITION:

- Detected when two consecutive driving cycles with fault occur.
- GENERAL DESCRIPTION <Ref. to GD(H4DO w/o HEV)-104, DTC P0196 ENGINE OIL TEMPERATURE SENSOR CIRCUIT RANGE/PERFORMANCE, Diagnostic Trouble Code (DTC) Detecting Criteria.>

TROUBLE SYMPTOM:

- Hard to start
- Improper idling
- Poor driving performance

CAUTION:

After servicing or replacing faulty parts, perform Clear Memory Mode <Ref. to EN(H4DO w/o HEV)(diag)-59, OPERATION, Clear Memory Mode.>, and Inspection Mode <Ref. to EN(H4DO w/o HEV)(diag)-44, PROCEDURE, Inspection Mode.>.

Step		Check	Yes	No
1	**CHECK FOR ANY OTHER DTC ON DISPLAY.**	Is any other DTC displayed?	Check the appropriate DTC using the “List of Diagnostic Trouble Code (DTC)”. <Ref. to EN(H4DO w/o HEV)(diag)-83, List of Diagnostic Trouble Code (DTC).>	Replace the engine oil temperature sensor. <Ref. to FU(H4DO(w/o HEV))-55, Engine Oil Temperature Sensor.>

AZ:DTC P0197 ENGINE OIL TEMPERATURE SENSOR LOW

DTC DETECTING CONDITION:

- Immediately at fault recognition
- GENERAL DESCRIPTION <Ref. to GD(H4DO w/o HEV)-106, DTC P0197 ENGINE OIL TEMPERATURE SENSOR LOW, Diagnostic Trouble Code (DTC) Detecting Criteria.>

TROUBLE SYMPTOM:

- Hard to start
- Improper idling
- Poor driving performance

CAUTION:
After servicing or replacing faulty parts, perform Clear Memory Mode <Ref. to EN(H4DO w/o HEV)(diag)-59, OPERATION, Clear Memory Mode.>, and Inspection Mode <Ref. to EN(H4DO w/o HEV)(diag)-44, PROCEDURE, Inspection Mode.>.

WIRING DIAGRAM:
Engine electrical system <Ref. to WI(w/o HEV)-74, Engine Electrical System.>

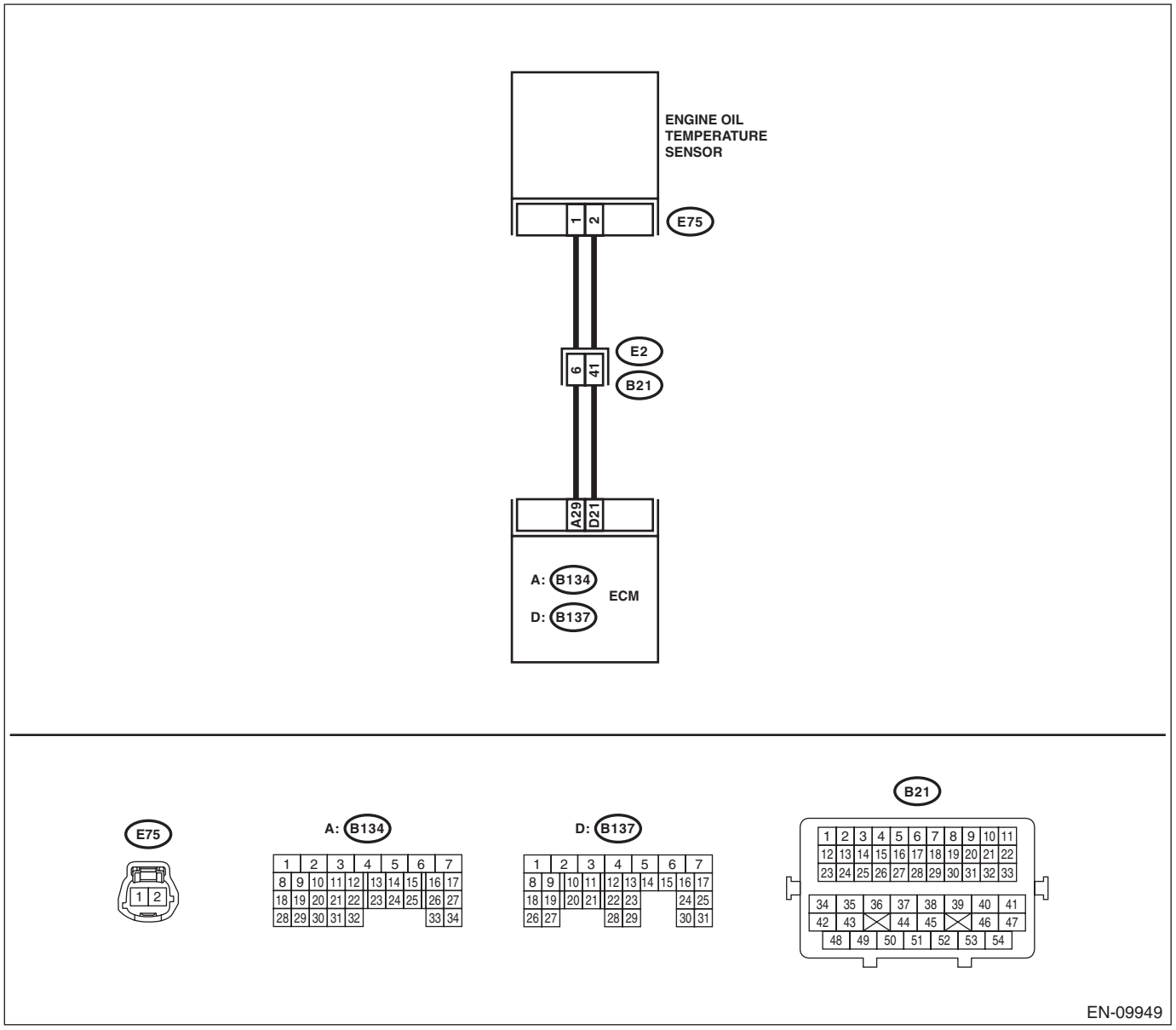

	Step	Check	Yes	No
1	**CHECK CURRENT DATA.** 1) Start the engine. 2) Read the value of «Oil Temperature» using Subaru Select Monitor. NOTE: For detailed operation procedures, refer to "READ CURRENT DATA FOR ENGINE". <Ref. to EN(H4DO w/o HEV)(diag)-36, Subaru Select Monitor.>	Is the value of «Oil Temperature» 150°C (302°F) or more?	Go to step **2**.	Even if DTC is detected, the circuit has returned to a normal condition at this time. Reproduce the failure, and then perform the diagnosis again. NOTE: In this case, temporary poor contact of connector, temporary open or short circuit of harness may be the cause.
2	**CHECK HARNESS BETWEEN ECM AND ENGINE OIL TEMPERATURE SENSOR CONNECTOR.** 1) Turn the ignition switch to OFF. 2) Disconnect the connectors from the ECM and engine oil temperature sensor. 3) Measure the resistance between ECM connector and chassis ground. ***Connector & terminal*** ***(B137) No. 21 — Chassis ground:***	Is the resistance 1 MΩ or more?	Replace the engine oil temperature sensor. <Ref. to FU(H4DO(w/o HEV))-55, Engine Oil Temperature Sensor.>	Repair the short circuit to ground in the harness between the ECM connector and engine oil temperature sensor connector.

BA:DTC P0198 ENGINE OIL TEMPERATURE SENSOR HIGH

DTC DETECTING CONDITION:

- Immediately at fault recognition
- GENERAL DESCRIPTION <Ref. to GD(H4DO w/o HEV)-108, DTC P0198 ENGINE OIL TEMPERATURE SENSOR HIGH, Diagnostic Trouble Code (DTC) Detecting Criteria.>

TROUBLE SYMPTOM:

- Hard to start
- Improper idling
- Poor driving performance

CAUTION:
After servicing or replacing faulty parts, perform Clear Memory Mode <Ref. to EN(H4DO w/o HEV)(diag)-59, OPERATION, Clear Memory Mode.>, and Inspection Mode <Ref. to EN(H4DO w/o HEV)(diag)-44, PROCEDURE, Inspection Mode.>.

WIRING DIAGRAM:
Engine electrical system <Ref. to WI(w/o HEV)-74, Engine Electrical System.>

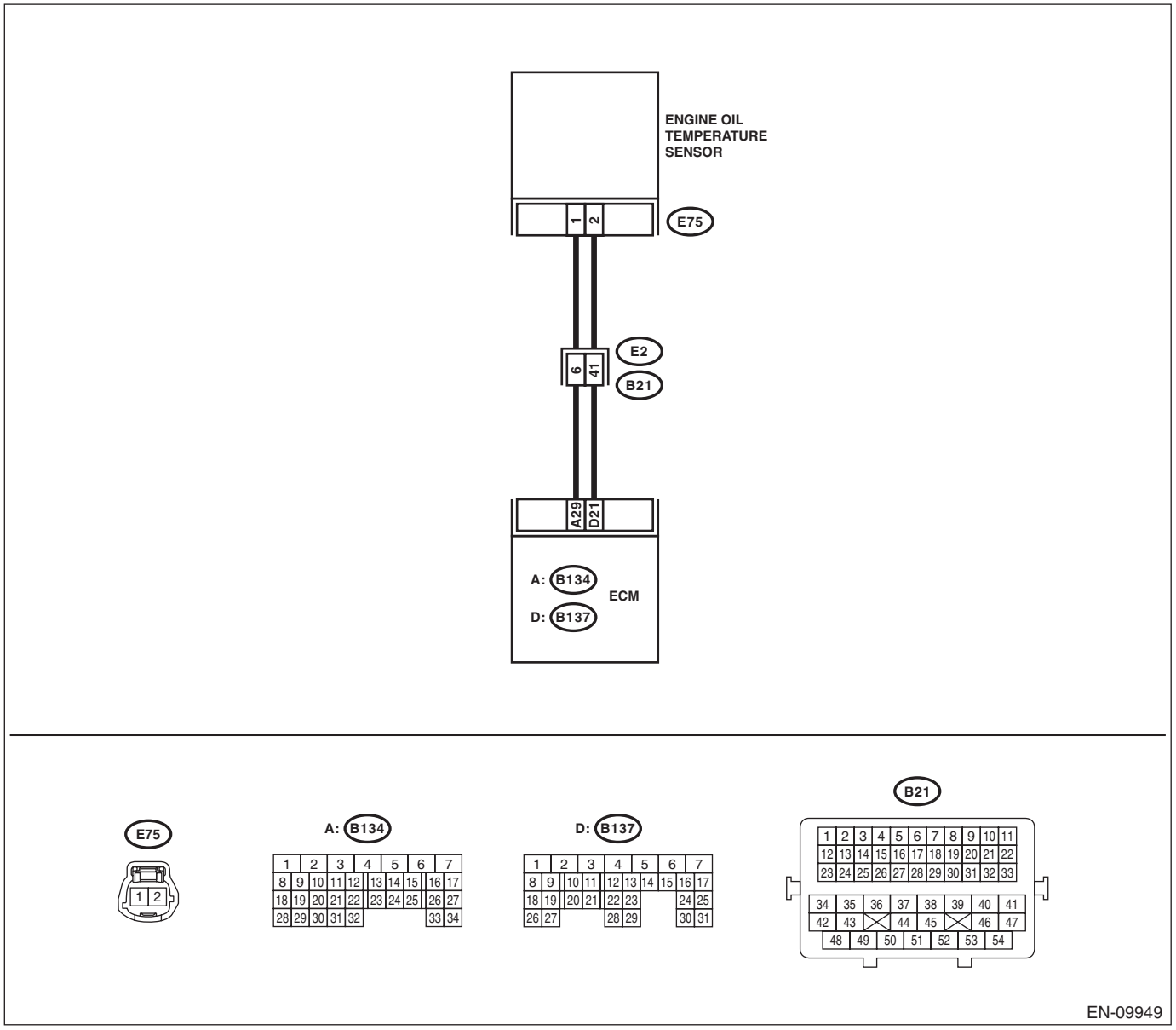

	Step	Check	Yes	No
1	**CHECK CURRENT DATA.** 1) Start the engine. 2) Read the value of «Oil Temperature» using Subaru Select Monitor. NOTE: For detailed operation procedures, refer to "READ CURRENT DATA FOR ENGINE". <Ref. to EN(H4DO w/o HEV)(diag)-36, Subaru Select Monitor.>	Is the value of «Oil Temperature» –40°C (–40°F) or less?	Go to step **2**.	Even if DTC is detected, the circuit has returned to a normal condition at this time. Reproduce the failure, and then perform the diagnosis again. NOTE: In this case, temporary poor contact of connector, temporary open or short circuit of harness may be the cause.
2	**CHECK FOR POOR CONTACT.** Check for poor contact between the ECM and engine oil temperature sensor connectors.	Is there poor contact of the ECM or engine oil temperature sensor connectors?	Repair the poor contact of ECM or engine oil temperature sensor connector.	Go to step **3**.
3	**CHECK HARNESS BETWEEN ECM AND ENGINE OIL TEMPERATURE SENSOR CONNECTOR.** 1) Turn the ignition switch to OFF. 2) Disconnect the connectors from the ECM and engine oil temperature sensor. 3) Measure the resistance of the harness between the ECM connector and engine oil temperature sensor connector. ***Connector & terminal*** ***(B134) No. 29 — (E75) No. 1:*** ***(B137) No. 21 — (E75) No. 2:***	Is the resistance less than 1 Ω?	Go to step **4**.	Repair the harness and connector. NOTE: In this case, repair the following item: • Open circuit in harness between ECM connector and engine oil temperature sensor connector • Poor contact of coupling connector
4	**CHECK HARNESS BETWEEN ECM AND ENGINE OIL TEMPERATURE SENSOR CONNECTOR.** 1) Connect all connectors. 2) Turn the ignition switch to ON. 3) Measure the voltage between ECM connector and chassis ground. ***Connector & terminal*** ***(B137) No. 21 (+) — Chassis ground (–):***	Is the voltage 5 V or more?	Repair the short circuit to power in harness between ECM connector and engine oil temperature sensor connector.	Replace the engine oil temperature sensor. <Ref. to FU(H4DO(w/o HEV))-55, Engine Oil Temperature Sensor.>

BB:DTC P0201 INJECTOR #1

DTC DETECTING CONDITION:

- Immediately at fault recognition
- GENERAL DESCRIPTION <Ref. to GD(H4DO w/o HEV)-110, DTC P0201 INJECTOR #1, Diagnostic Trouble Code (DTC) Detecting Criteria.>

TROUBLE SYMPTOM:

- Improper idling
- Poor driving performance

CAUTION:

After servicing or replacing faulty parts, perform Clear Memory Mode <Ref. to EN(H4DO w/o HEV)(diag)-59, OPERATION, Clear Memory Mode.>, and Inspection Mode <Ref. to EN(H4DO w/o HEV)(diag)-44, PROCEDURE, Inspection Mode.>.

WIRING DIAGRAM:

Engine electrical system <Ref. to WI(w/o HEV)-74, Engine Electrical System.>

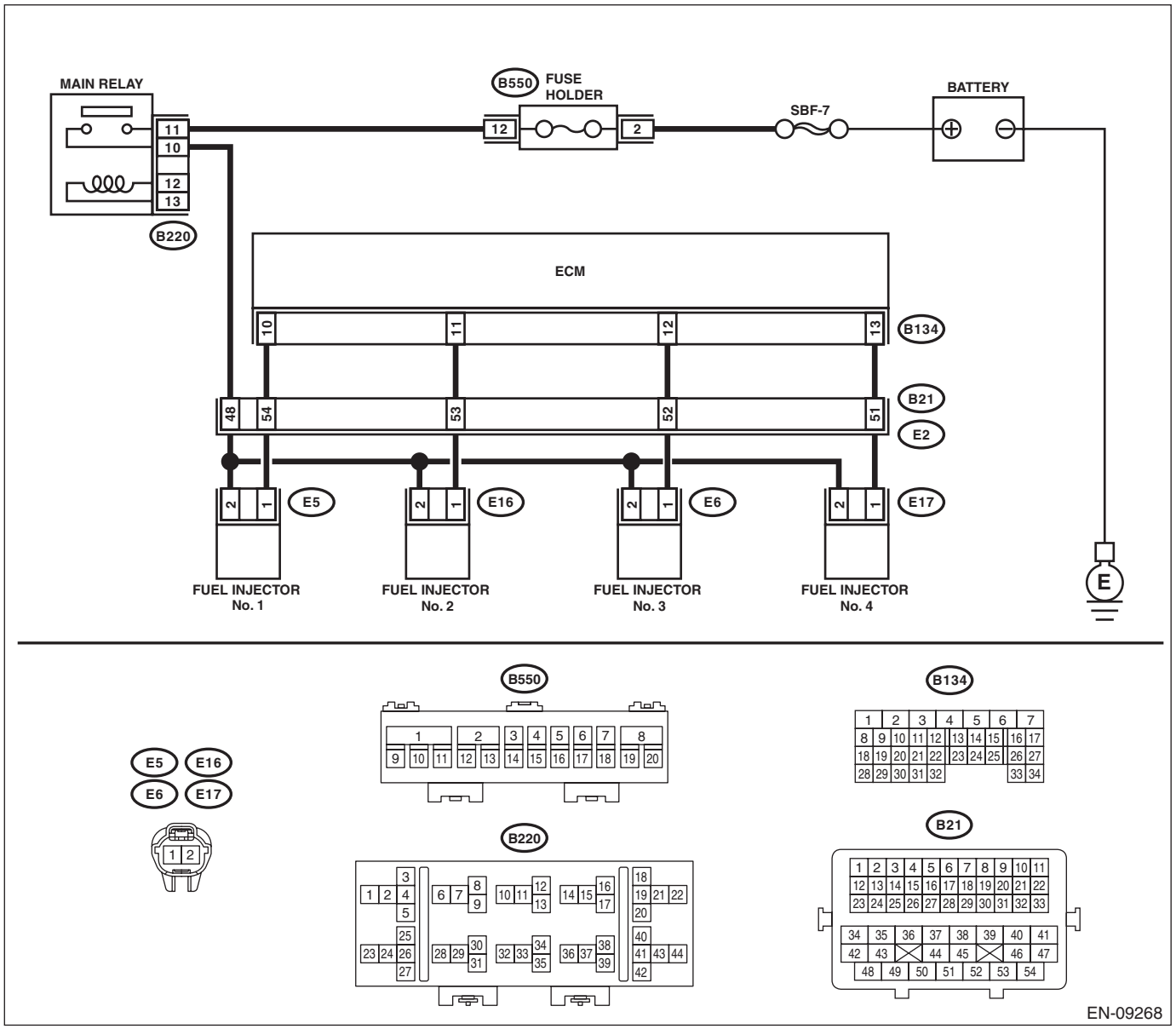

	Step	Check	Yes	No
1	**CHECK POWER SUPPLY TO FUEL INJECTOR.** 1) Turn the ignition switch to OFF. 2) Disconnect the connector from fuel injector. 3) Turn the ignition switch to ON. 4) Measure the voltage between fuel injector connector and the engine ground. ***Connector & terminal*** ***DTC P0201; (E5) No. 2 (+) — Engine ground (–):*** ***DTC P0202; (E16) No. 2 (+) — Engine ground (–):*** ***DTC P0203; (E6) No. 2 (+) — Engine ground (–):*** ***DTC P0204; (E17) No. 2 (+) — Engine ground (–):***	Is the voltage 10 V or more?	Go to step **2**.	Repair the harness and connector. NOTE: In this case, repair the following item: • Open circuit in harness between main relay and fuel injector connector • Poor contact of main relay connector • Poor contact of coupling connector
2	**CHECK HARNESS BETWEEN ECM AND FUEL INJECTOR CONNECTOR.** 1) Turn the ignition switch to OFF. 2) Disconnect the connector from ECM. 3) Measure the resistance between fuel injector connector and engine ground. ***Connector & terminal*** ***DTC P0201; (E5) No. 1 — Engine ground:*** ***DTC P0202; (E16) No. 1 — Engine ground:*** ***DTC P0203; (E6) No. 1 — Engine ground:*** ***DTC P0204; (E17) No. 1 — Engine ground:***	Is the resistance 1 MΩ or more?	Go to step **3**.	Repair the short circuit to ground in harness between ECM connector and fuel injector connector.
3	**CHECK HARNESS BETWEEN ECM AND FUEL INJECTOR CONNECTOR.** Measure the resistance of harness between ECM connector and fuel injector connector. ***Connector & terminal*** ***DTC P0201; (B134) No. 10 — (E5) No. 1:*** ***DTC P0202; (B134) No. 11 — (E16) No. 1:*** ***DTC P0203; (B134) No. 12 — (E6) No. 1:*** ***DTC P0204; (B134) No. 13 — (E17) No. 1:***	Is the resistance less than 1 Ω?	Go to step **4**.	Repair the harness and connector. NOTE: In this case, repair the following item: • Open circuit in harness between ECM connector and fuel injector connector • Poor contact of coupling connector
4	**CHECK FUEL INJECTOR.** Measure the resistance between fuel injector terminals on the corresponding cylinder. ***Terminals*** ***No. 1 — No. 2:***	Is the resistance 5 — 20 Ω?	Go to step **5**.	Replace the fuel injector. <Ref. to FU(H4DO(w/o HEV))-84, Fuel Injector.>
5	**CHECK FOR POOR CONTACT.** Check for poor contact of ECM connector.	Is there poor contact of ECM connector?	Repair the poor contact of ECM connector.	Go to step **6**.

Step		Check	Yes	No
6	**CHECK FUEL INJECTOR OPERATION.** 1) Connect all connectors. 2) Start the engine. 3) Check if the corresponding fuel injector emits operating sound. NOTE: Use a sound scope to check the operating sound.	Does the fuel injector emit operating sound?	Even if DTC is detected, the circuit has returned to a normal condition at this time. Reproduce the failure, and then perform the diagnosis again. NOTE: In this case, temporary poor contact of connector, temporary open or short circuit of harness may be the cause.	Repair the poor contact of fuel injector connector.

BC:DTC P0202 INJECTOR #2

NOTE:
For the diagnostic procedure, refer to DTC P0201. <Ref. to EN(H4DO w/o HEV)(diag)-165, DTC P0201 INJECTOR #1, Diagnostic Procedure with Diagnostic Trouble Code (DTC).>

BD:DTC P0203 INJECTOR #3

NOTE:
For the diagnostic procedure, refer to DTC P0201. <Ref. to EN(H4DO w/o HEV)(diag)-165, DTC P0201 INJECTOR #1, Diagnostic Procedure with Diagnostic Trouble Code (DTC).>

BE:DTC P0204 INJECTOR #4

NOTE:
For the diagnostic procedure, refer to DTC P0201. <Ref. to EN(H4DO w/o HEV)(diag)-165, DTC P0201 INJECTOR #1, Diagnostic Procedure with Diagnostic Trouble Code (DTC).>

BF:DTC P0222 THROTTLE/PEDAL POSITION SENSOR/SWITCH “B” CIRCUIT LOW

DTC DETECTING CONDITION:

- Immediately at fault recognition
- GENERAL DESCRIPTION <Ref. to GD(H4DO w/o HEV)-112, DTC P0222 THROTTLE/PEDAL POSITION SENSOR/SWITCH “B” CIRCUIT LOW, Diagnostic Trouble Code (DTC) Detecting Criteria.>

TROUBLE SYMPTOM:

- Improper idling
- Poor driving performance
- Engine stalls.

CAUTION:

After servicing or replacing faulty parts, perform Clear Memory Mode <Ref. to EN(H4DO w/o HEV)(diag)-59, OPERATION, Clear Memory Mode.>, and Inspection Mode <Ref. to EN(H4DO w/o HEV)(diag)-44, PROCEDURE, Inspection Mode.>.

WIRING DIAGRAM:

Engine electrical system <Ref. to WI(w/o HEV)-74, Engine Electrical System.>

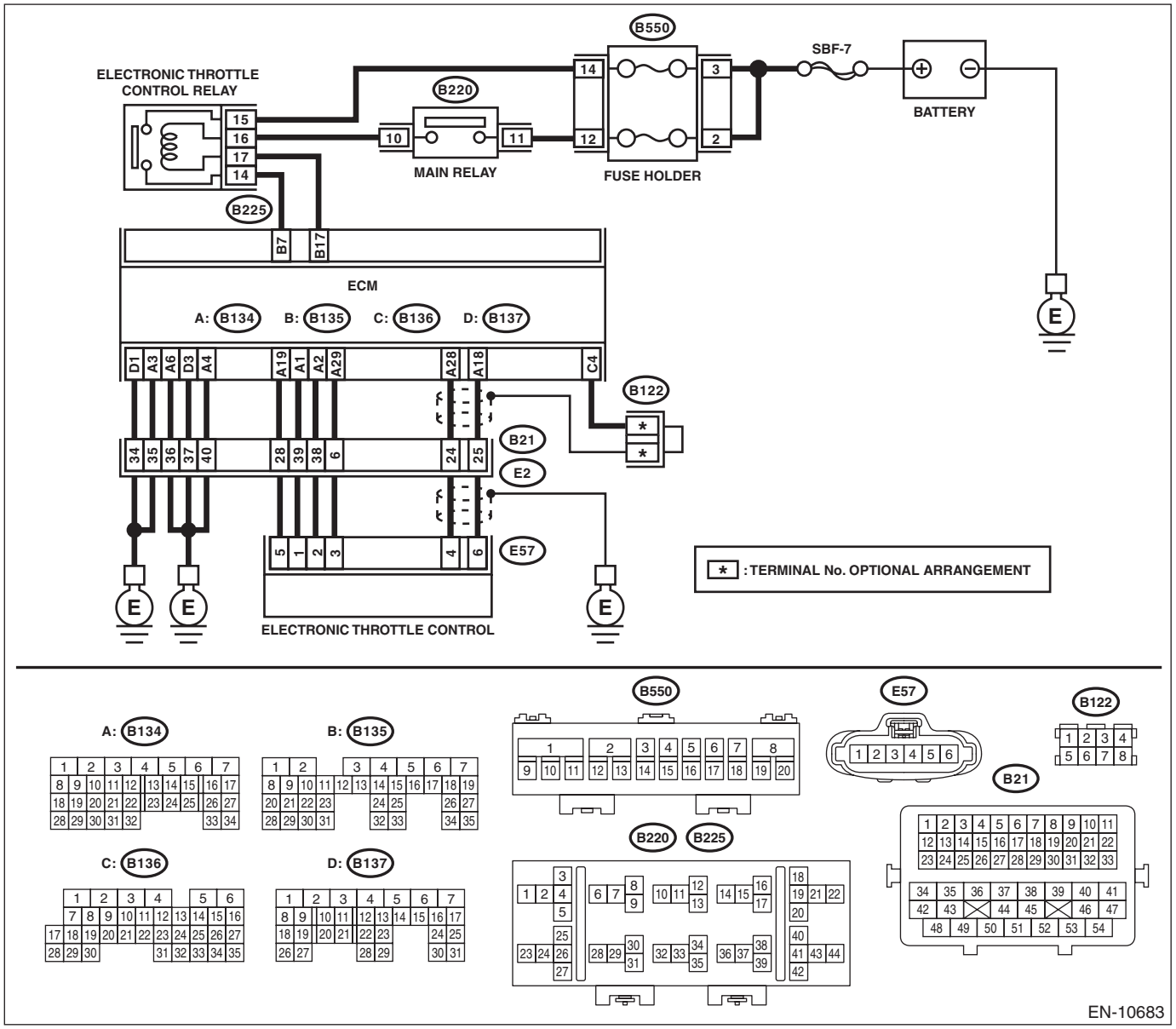

	Step	Check	Yes	No
1	**CHECK HARNESS BETWEEN ECM AND ELECTRONIC THROTTLE CONTROL CONNECTOR.** 1) Turn the ignition switch to OFF. 2) Disconnect the connectors from ECM and electronic throttle control. 3) Measure the resistance between ECM connector and chassis ground. ***Connector & terminal*** ***(B134) No. 19 — Chassis ground:*** ***(B134) No. 28 — Chassis ground:*** ***(B134) No. 28 — (B136) No. 4:***	Is the resistance 1 MΩ or more?	Go to step **2**.	Repair the ground short circuit of harness between ECM connector and electronic throttle control connector.
2	**CHECK SHORT CIRCUIT INSIDE THE ECM.** 1) Connect the connector to ECM. 2) Measure the resistance between electronic throttle control connector and engine ground. ***Connector & terminal*** ***(E57) No. 4 — Engine ground:***	Is the resistance 1 MΩ or more?	Replace the electronic throttle control. <Ref. to FU(H4DO(w/o HEV))-15, Throttle Body.>	Repair the ground short circuit of harness between ECM connector and electronic throttle control connector. Replace the ECM if defective. <Ref. to FU(H4DO(w/o HEV))-106, Engine Control Module (ECM).>

BG:DTC P0223 THROTTLE/PEDAL POSITION SENSOR/SWITCH “B” CIRCUIT HIGH

DTC DETECTING CONDITION:

- Immediately at fault recognition
- GENERAL DESCRIPTION <Ref. to GD(H4DO w/o HEV)-114, DTC P0223 THROTTLE/PEDAL POSITION SENSOR/SWITCH “B” CIRCUIT HIGH, Diagnostic Trouble Code (DTC) Detecting Criteria.>

TROUBLE SYMPTOM:

- Improper idling
- Poor driving performance
- Engine stalls.

CAUTION:

After servicing or replacing faulty parts, perform Clear Memory Mode <Ref. to EN(H4DO w/o HEV)(diag)-59, OPERATION, Clear Memory Mode.>, and Inspection Mode <Ref. to EN(H4DO w/o HEV)(diag)-44, PROCEDURE, Inspection Mode.>.

WIRING DIAGRAM:

Engine electrical system <Ref. to WI(w/o HEV)-74, Engine Electrical System.>

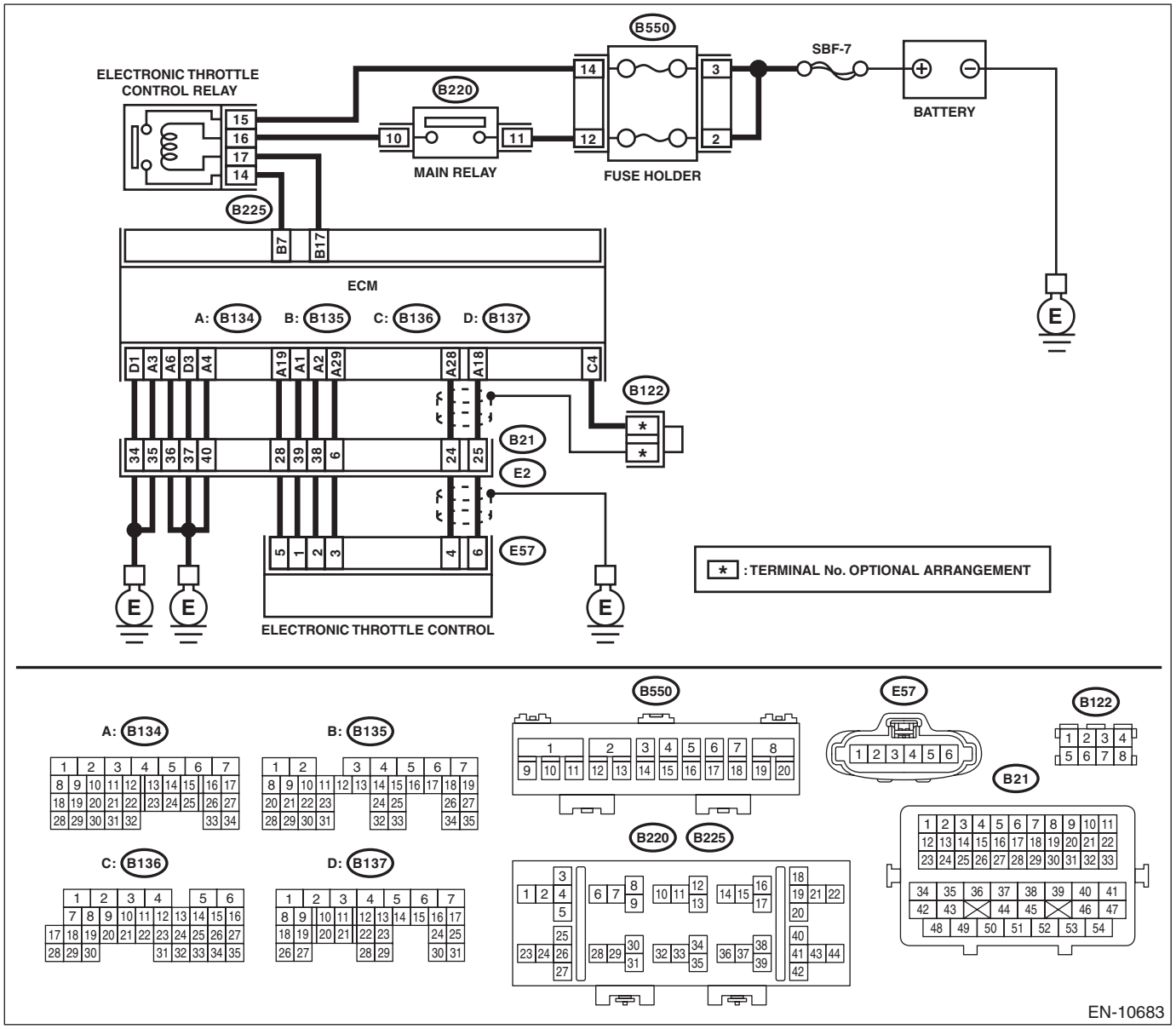

	Step	Check	Yes	No
1	**CHECK HARNESS BETWEEN ECM AND ELECTRONIC THROTTLE CONTROL CONNECTOR.** 1) Turn the ignition switch to OFF. 2) Disconnect the connectors from ECM and electronic throttle control. 3) Measure the resistance of harness between ECM connector and electronic throttle control connector. ***Connector & terminal*** ***(B134) No. 28 — (E57) No. 4:*** ***(B134) No. 29 — (E57) No. 3:***	Is the resistance less than 1 Ω?	Go to step **2**.	Repair the harness and connector. NOTE: In this case, repair the following item: • Open circuit in harness between ECM connector and electronic throttle control connector • Poor contact of coupling connector
2	**CHECK HARNESS BETWEEN ECM AND ELECTRONIC THROTTLE CONTROL CONNECTOR.** 1) Connect the connector to ECM. 2) Measure the resistance between electronic throttle control connector and engine ground. ***Connector & terminal*** ***(E57) No. 3 — Engine ground:***	Is the resistance less than 5 Ω?	Go to step **3**.	Repair the harness and connector. NOTE: In this case, repair the following item: • Open circuit of harness between ECM connector and engine ground • Poor contact of ECM connector • Poor contact of coupling connector
3	**CHECK HARNESS BETWEEN ECM AND ELECTRONIC THROTTLE CONTROL CONNECTOR.** 1) Turn the ignition switch to ON. 2) Measure the voltage between electronic throttle control connector and engine ground. ***Connector & terminal*** ***(E57) No. 4 (+) — Engine ground (–):***	Is the voltage 5 V or more?	Repair the short circuit to power in the harness between ECM connector and electronic throttle control connector.	Go to step **4**.
4	**CHECK HARNESS BETWEEN ECM AND ELECTRONIC THROTTLE CONTROL CONNECTOR.** 1) Turn the ignition switch to OFF. 2) Disconnect the connector from ECM. 3) Measure the resistance between ECM connectors. ***Connector & terminal*** ***(B134) No. 19 — (B134) No. 28:***	Is the resistance 1 MΩ or more?	Repair the poor contact of electronic throttle control connector. Replace the electronic throttle control if defective. <Ref. to FU(H4DO(w/o HEV))-15, Throttle Body.>	Repair the short circuit to power in the harness between ECM connector and electronic throttle control connector.

BH:DTC P0300 RANDOM/MULTIPLE CYLINDER MISFIRE DETECTED

DTC DETECTING CONDITION:

- Detected when two consecutive driving cycles with fault occur.
- Immediately at fault recognition (A misfire which could damage catalyst occurs.)
- GENERAL DESCRIPTION <Ref. to GD(H4DO w/o HEV)-115, DTC P0300 RANDOM/MULTIPLE CYLINDER MISFIRE DETECTED, Diagnostic Trouble Code (DTC) Detecting Criteria.>

TROUBLE SYMPTOM:

- Engine stalls.
- Improper idling
- Rough driving

CAUTION:

After servicing or replacing faulty parts, perform Clear Memory Mode <Ref. to EN(H4DO w/o HEV)(diag)-59, OPERATION, Clear Memory Mode.>, and Inspection Mode <Ref. to EN(H4DO w/o HEV)(diag)-44, PROCEDURE, Inspection Mode.>.

WIRING DIAGRAM:

Engine electrical system <Ref. to WI(w/o HEV)-74, Engine Electrical System.>

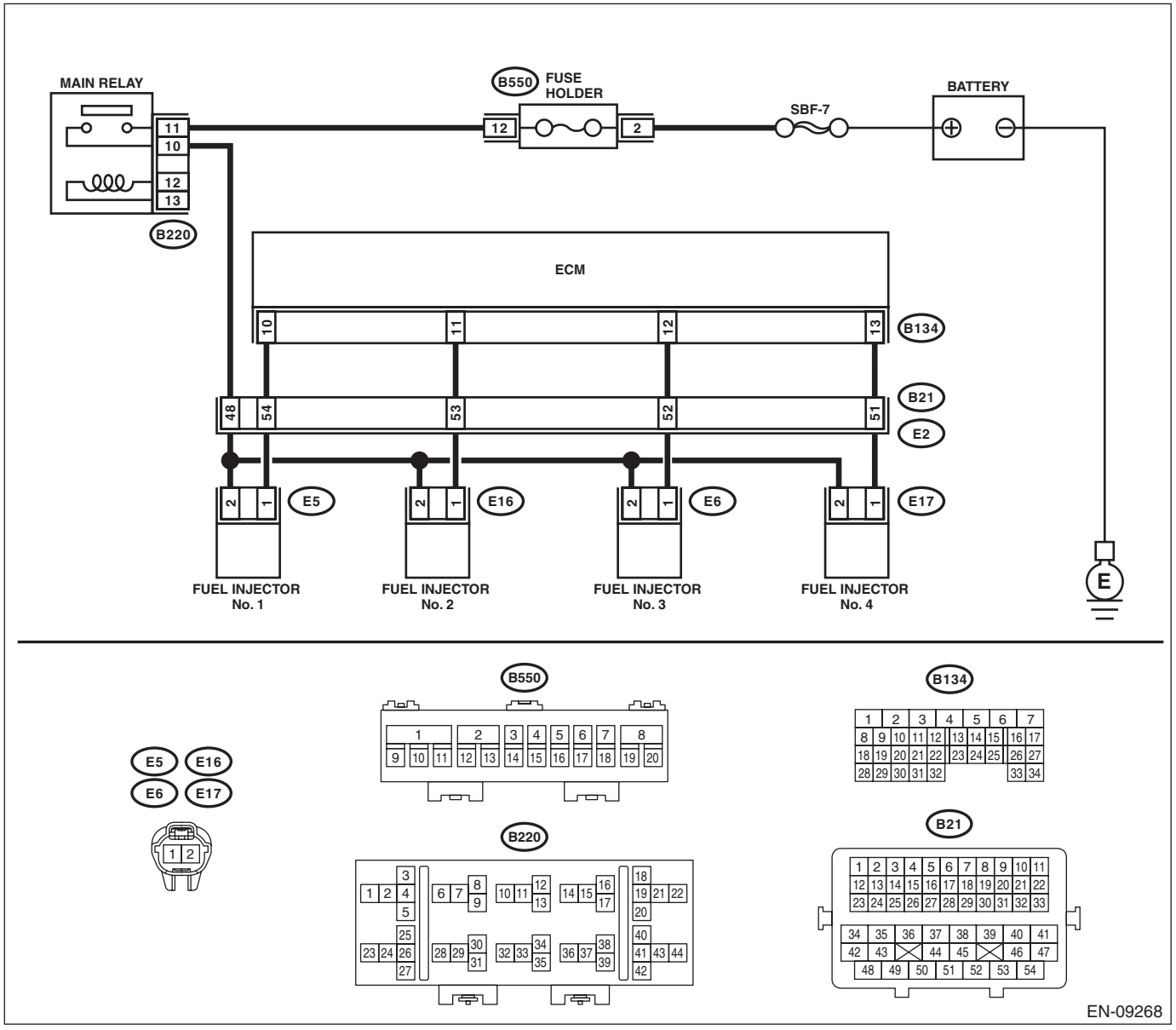

	Step	Check	Yes	No
1	**CHECK OUTPUT SIGNAL OF ECM.** 1) Turn the ignition switch to ON. 2) Measure the voltage between ECM and chassis ground on all cylinders. ***Connector & terminal*** ***#1 (B134) No. 10 (+) — Chassis ground (–):*** ***#2 (B134) No. 11 (+) — Chassis ground (–):*** ***#3 (B134) No. 12 (+) — Chassis ground (–):*** ***#4 (B134) No. 13 (+) — Chassis ground (–):***	Is the voltage 10 V or more?	Go to step **6**.	Go to step **2**.
2	**CHECK HARNESS BETWEEN ECM AND FUEL INJECTOR CONNECTOR.** 1) Turn the ignition switch to OFF. 2) Disconnect the connector from all fuel injectors. 3) Measure the resistance between all fuel injector connectors and engine ground. ***Connector & terminal*** ***#1 (E5) No. 1 — Engine ground:*** ***#2 (E16) No. 1 — Engine ground:*** ***#3 (E6) No. 1 — Engine ground:*** ***#4 (E17) No. 1 — Engine ground:***	Is the resistance 1 MΩ or more?	Go to step **3**.	Repair the short circuit to ground in harness between ECM connector and fuel injector connector.
3	**CHECK HARNESS BETWEEN ECM AND FUEL INJECTOR CONNECTOR.** Measure the resistance of harness between ECM and fuel injector on all cylinders. ***Connector & terminal*** ***#1 (B134) No. 10 — (E5) No. 1:*** ***#2 (B134) No. 11 — (E16) No. 1:*** ***#3 (B134) No. 12 — (E6) No. 1:*** ***#4 (B134) No. 13 — (E17) No. 1:***	Is the resistance less than 1 Ω?	Go to step **4**.	Repair the harness and connector. NOTE: In this case, repair the following item: • Open circuit in harness between ECM connector and fuel injector connector • Poor contact of coupling connector
4	**CHECK FUEL INJECTOR.** Measure the resistance between all fuel injector terminals. ***Terminals*** ***No. 1 — No. 2:***	Is the resistance 5 — 20 Ω?	Go to step **5**.	Replace the faulty fuel injector. <Ref. to FU(H4DO(w/o HEV))-84, Fuel Injector.>
5	**CHECK POWER SUPPLY LINE.** 1) Turn the ignition switch to ON. 2) Measure the voltage between all fuel injectors and the engine ground. ***Connector & terminal*** ***#1 (E5) No. 2 (+) — Engine ground (–):*** ***#2 (E16) No. 2 (+) — Engine ground (–):*** ***#3 (E6) No. 2 (+) — Engine ground (–):*** ***#4 (E17) No. 2 (+) — Engine ground (–):***	Is the voltage 10 V or more?	Repair the poor contact of all connectors in fuel injector circuit.	Repair the harness and connector. NOTE: In this case, repair the following item: • Open circuit in harness between the main relay connector and fuel injector connector on faulty cylinders • Poor contact of coupling connector • Poor contact of main relay connector

	Step	Check	Yes	No
6	**CHECK HARNESS BETWEEN ECM AND FUEL INJECTOR CONNECTOR.** 1) Turn the ignition switch to OFF. 2) Disconnect the connector from all fuel injectors. 3) Turn the ignition switch to ON. 4) Measure the voltage between ECM and chassis ground on all cylinders. ***Connector & terminal*** ***#1 (B134) No. 10 (+) — Chassis ground (–):*** ***#2 (B134) No. 11 (+) — Chassis ground (–):*** ***#3 (B134) No. 12 (+) — Chassis ground (–):*** ***#4 (B134) No. 13 (+) — Chassis ground (–):***	Is the voltage 10 V or more?	Repair the short circuit to power in harness between ECM connector and fuel injector connectors.	Go to step **7**.
7	**CHECK FUEL INJECTOR.** 1) Turn the ignition switch to OFF. 2) Measure the resistance between all fuel injector terminals. ***Terminals*** ***No. 1 — No. 2:***	Is the resistance 5 — 20 Ω?	Go to step **8**.	Replace the faulty fuel injector. <Ref. to FU(H4DO(w/o HEV))-84, Fuel Injector.>
8	**CHECK INSTALLATION CONDITION OF CAMSHAFT POSITION SENSOR/CRANKSHAFT POSITION SENSOR.**	Is the camshaft position sensor or crankshaft position sensor loosely installed?	Tighten the camshaft position sensor or crankshaft position sensor. <Ref. to FU(H4DO(w/o HEV))-65, INSTALLATION, Camshaft Position Sensor.> <Ref. to FU(H4DO(w/o HEV))-59, INSTALLATION, Crankshaft Position Sensor.>	Go to step **9**.
9	**CHECK CRANKSHAFT POSITION SENSOR PLATE.**	Is the crankshaft position sensor plate rusted or does it have broken teeth?	Replace the crankshaft position sensor plate. <Ref. to ME(H4DO(w/o HEV))-299, Cylinder Block.>	Go to step **10**.
10	**CHECK INSTALLATION CONDITION OF TIMING CHAIN.** Turn the crankshaft using ST, and align the alignment mark on crank sprocket with alignment mark on cylinder block. ST 18252AA000 CRANKSHAFT SOCKET	Is the timing chain dislocated from its proper position?	Correct the installation condition of timing chain. <Ref. to ME(H4DO(w/o HEV))-163, Timing Chain Assembly.>	Go to step **11**.
11	**CHECK FUEL LEVEL.**	Is the fuel meter indication higher than the “Lower” level?	Go to step **12**.	Refill the fuel so that the fuel meter indication is higher than the “Lower” level, and proceed to the next step. Go to step **12**.

	Step	Check	Yes	No
12	**CHECK STATUS OF MALFUNCTION INDICATOR LIGHT.** 1) Clear the memory using the Subaru Select Monitor or general scan tool. <Ref. to EN(H4DO w/o HEV)(diag)-59, Clear Memory Mode.> 2) Start the engine, and drive the vehicle 10 minutes or more.	Does the malfunction indicator light illuminate or blink?	Go to step **14**.	Go to step **13**.
13	**CHECK CAUSE OF MISFIRE.**	Was the cause of misfire identified when the engine is running?	Finish diagnostics operation, if the engine has no abnormality.	Repair the poor contact of connector. NOTE: In this case, repair the following item: • Poor contact of ignition coil connector • Poor contact of fuel injector connector on faulty cylinders • Poor contact of ECM connector • Poor contact of coupling connector
14	**CHECK AIR INTAKE SYSTEM.**	Is there any fault in air intake system?	Repair the air intake system. NOTE: Check the following items. • Are there air leaks or air suction caused by loose or dislocated nuts and bolts? • Are there cracks or any disconnection of hoses?	Go to step **15**.
15	**CHECK ALL CYLINDERS.**	Is there a fault in any cylinder?	Repair or replace the faulty part of the faulty cylinder. NOTE: Check the following items. • Spark plug • Ignition coil • Fuel injector • Compression ratio • Skipping timing chain teeth	Go to DTC P0171. <Ref. to EN(H4DO w/o HEV)(diag)-157, DTC P0171 SYSTEM TOO LEAN (BANK 1), Diagnostic Procedure with Diagnostic Trouble Code (DTC).>

BI: DTC P0301 CYLINDER 1 MISFIRE DETECTED

NOTE:
For the diagnostic procedure, refer to DTC P0304. <Ref. to EN(H4DO w/o HEV)(diag)-177, DTC P0304 CYLINDER 4 MISFIRE DETECTED, Diagnostic Procedure with Diagnostic Trouble Code (DTC).>

BJ:DTC P0302 CYLINDER 2 MISFIRE DETECTED

NOTE:
For the diagnostic procedure, refer to DTC P0304. <Ref. to EN(H4DO w/o HEV)(diag)-177, DTC P0304 CYLINDER 4 MISFIRE DETECTED, Diagnostic Procedure with Diagnostic Trouble Code (DTC).>

BK:DTC P0303 CYLINDER 3 MISFIRE DETECTED

NOTE:
For the diagnostic procedure, refer to DTC P0304. <Ref. to EN(H4DO w/o HEV)(diag)-177, DTC P0304 CYLINDER 4 MISFIRE DETECTED, Diagnostic Procedure with Diagnostic Trouble Code (DTC).>

BL:DTC P0304 CYLINDER 4 MISFIRE DETECTED

DTC DETECTING CONDITION:

- Detected when two consecutive driving cycles with fault occur.
- Immediately at fault recognition (A misfire which could damage catalyst occurs.)
- GENERAL DESCRIPTION <Ref. to GD(H4DO w/o HEV)-125, DTC P0304 CYLINDER 4 MISFIRE DETECTED, Diagnostic Trouble Code (DTC) Detecting Criteria.>

TROUBLE SYMPTOM:

- Engine stalls.
- Improper idling
- Rough driving

CAUTION:

After servicing or replacing faulty parts, perform Clear Memory Mode <Ref. to EN(H4DO w/o HEV)(diag)-59, OPERATION, Clear Memory Mode.>, and Inspection Mode <Ref. to EN(H4DO w/o HEV)(diag)-44, PROCEDURE, Inspection Mode.>.

WIRING DIAGRAM:

Engine electrical system <Ref. to WI(w/o HEV)-74, Engine Electrical System.>

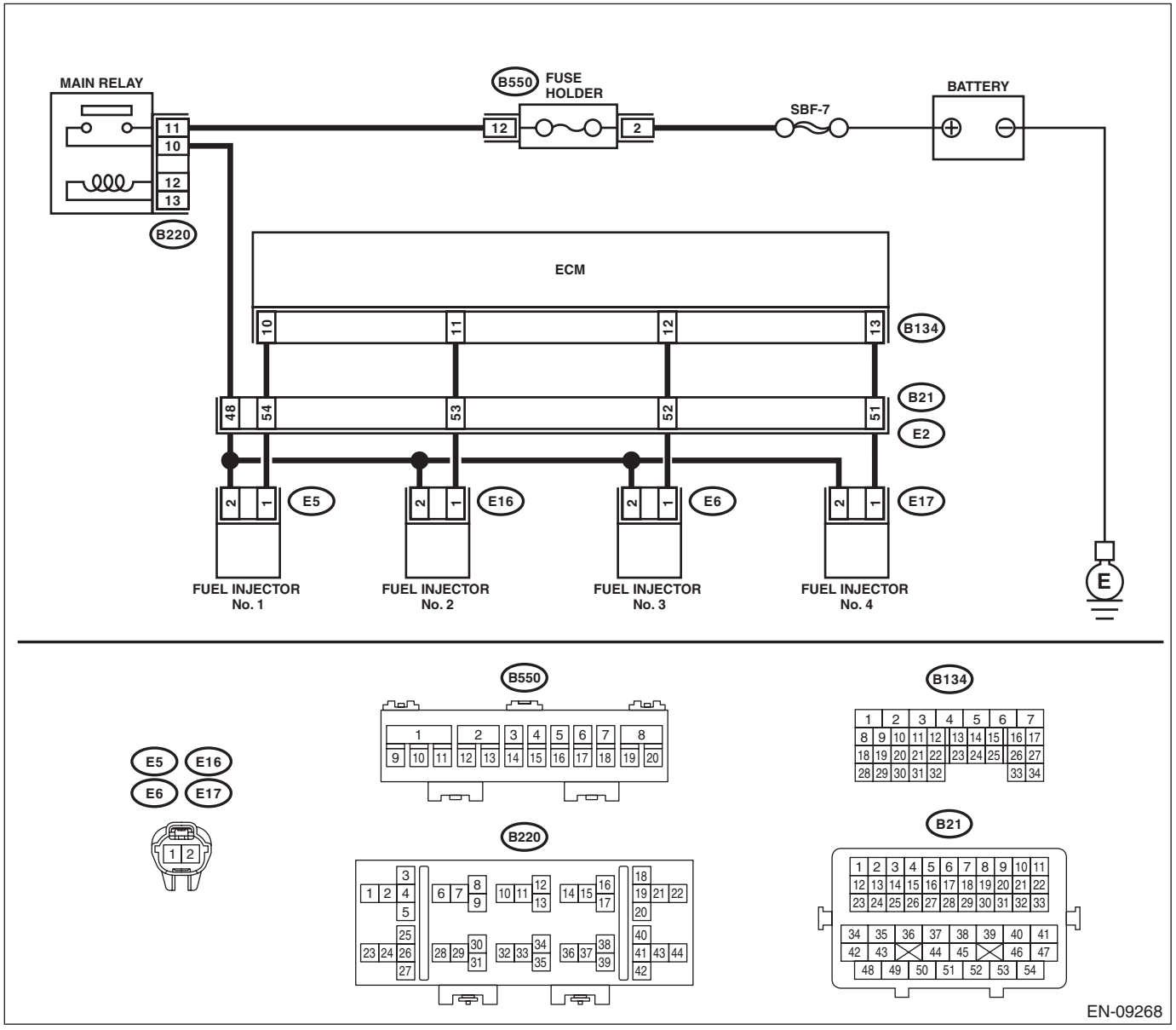

	Step	Check	Yes	No
1	**CHECK OUTPUT SIGNAL OF ECM.** 1) Turn the ignition switch to ON. 2) Measure the voltage between ECM and chassis ground on faulty cylinders. ***Connector & terminal*** ***#1 (B134) No. 10 (+) — Chassis ground (–):*** ***#2 (B134) No. 11 (+) — Chassis ground (–):*** ***#3 (B134) No. 12 (+) — Chassis ground (–):*** ***#4 (B134) No. 13 (+) — Chassis ground (–):***	Is the voltage 10 V or more?	Go to step **6**.	Go to step **2**.
2	**CHECK HARNESS BETWEEN ECM AND FUEL INJECTOR CONNECTOR.** 1) Turn the ignition switch to OFF. 2) Disconnect the connector from fuel injector on faulty cylinders. 3) Measure the resistance between fuel injector connector and engine ground on faulty cylinders. ***Connector & terminal*** ***#1 (E5) No. 1 — Engine ground:*** ***#2 (E16) No. 1 — Engine ground:*** ***#3 (E6) No. 1 — Engine ground:*** ***#4 (E17) No. 1 — Engine ground:***	Is the resistance 1 MΩ or more?	Go to step **3**.	Repair the short circuit to ground in harness between ECM connector and fuel injector connector.
3	**CHECK HARNESS BETWEEN ECM AND FUEL INJECTOR CONNECTOR.** Measure the resistance of harness between ECM and fuel injector on faulty cylinders. ***Connector & terminal*** ***#1 (B134) No. 10 — (E5) No. 1:*** ***#2 (B134) No. 11 — (E16) No. 1:*** ***#3 (B134) No. 12 — (E6) No. 1:*** ***#4 (B134) No. 13 — (E17) No. 1:***	Is the resistance less than 1 Ω?	Go to step **4**.	Repair the harness and connector. NOTE: In this case, repair the following item: • Open circuit in harness between ECM connector and fuel injector connector • Poor contact of coupling connector
4	**CHECK FUEL INJECTOR.** Measure the resistance between fuel injector terminals on faulty cylinder. ***Terminals*** ***No. 1 — No. 2:***	Is the resistance 5 — 20 Ω?	Go to step **5**.	Replace the faulty fuel injector. <Ref. to FU(H4DO(w/o HEV))-84, Fuel Injector.>
5	**CHECK POWER SUPPLY LINE.** 1) Turn the ignition switch to ON. 2) Measure the voltage between fuel injector and engine ground on faulty cylinders. ***Connector & terminal*** ***#1 (E5) No. 2 (+) — Engine ground (–):*** ***#2 (E16) No. 2 (+) — Engine ground (–):*** ***#3 (E6) No. 2 (+) — Engine ground (–):*** ***#4 (E17) No. 2 (+) — Engine ground (–):***	Is the voltage 10 V or more?	Repair the poor contact of all connectors in fuel injector circuit.	Repair the harness and connector. NOTE: In this case, repair the following item: • Open circuit in harness between the main relay connector and fuel injector connector on faulty cylinders • Poor contact of coupling connector • Poor contact of main relay connector

	Step	Check	Yes	No
6	**CHECK HARNESS BETWEEN ECM AND FUEL INJECTOR CONNECTOR.** 1) Turn the ignition switch to OFF. 2) Disconnect the connector from fuel injector on faulty cylinders. 3) Turn the ignition switch to ON. 4) Measure the voltage between ECM and chassis ground on faulty cylinders. ***Connector & terminal*** ***#1 (B134) No. 10 (+) — Chassis ground (–):*** ***#2 (B134) No. 11 (+) — Chassis ground (–):*** ***#3 (B134) No. 12 (+) — Chassis ground (–):*** ***#4 (B134) No. 13 (+) — Chassis ground (–):***	Is the voltage 10 V or more?	Repair the short circuit to power in harness between ECM connector and fuel injector connectors.	Go to step **7**.
7	**CHECK FUEL INJECTOR.** 1) Turn the ignition switch to OFF. 2) Measure the resistance between fuel injector terminals on faulty cylinder. ***Terminals*** ***No. 1 — No. 2:***	Is the resistance 5 — 20 Ω?	Go to step **8**.	Replace the faulty fuel injector. <Ref. to FU(H4DO(w/o HEV))-84, Fuel Injector.>
8	**CHECK INSTALLATION CONDITION OF CAMSHAFT POSITION SENSOR/CRANKSHAFT POSITION SENSOR.**	Is the camshaft position sensor or crankshaft position sensor loosely installed?	Tighten the camshaft position sensor or crankshaft position sensor. <Ref. to FU(H4DO(w/o HEV))-65, INSTALLATION, Camshaft Position Sensor.> <Ref. to FU(H4DO(w/o HEV))-59, INSTALLATION, Crankshaft Position Sensor.>	Go to step **9**.
9	**CHECK CRANKSHAFT POSITION SENSOR PLATE.**	Is the crankshaft position sensor plate rusted or does it have broken teeth?	Replace the crankshaft position sensor plate. <Ref. to ME(H4DO(w/o HEV))-299, Cylinder Block.>	Go to step **10**.
10	**CHECK INSTALLATION CONDITION OF TIMING CHAIN.** Turn the crankshaft using ST, and align the alignment mark on crank sprocket with alignment mark on cylinder block. ST 18252AA000 CRANKSHAFT SOCKET	Is the timing chain dislocated from its proper position?	Correct the installation condition of timing chain. <Ref. to ME(H4DO(w/o HEV))-163, Timing Chain Assembly.>	Go to step **11**.
11	**CHECK FUEL LEVEL.**	Is the fuel meter indication higher than the “Lower” level?	Go to step **12**.	Refill the fuel so that the fuel meter indication is higher than the “Lower” level, and proceed to the next step. Go to step **12**.

	Step	Check	Yes	No
12	**CHECK STATUS OF MALFUNCTION INDICATOR LIGHT.** 1) Clear the memory using the Subaru Select Monitor or general scan tool. <Ref. to EN(H4DO w/o HEV)(diag)-59, Clear Memory Mode.> 2) Start the engine, and drive the vehicle 10 minutes or more.	Does the malfunction indicator light illuminate or blink?	Go to step **14**.	Go to step **13**.
13	**CHECK CAUSE OF MISFIRE.**	Was the cause of misfire identified when the engine is running?	Finish diagnostics operation, if the engine has no abnormality.	Repair the poor contact of connector. NOTE: In this case, repair the following item: • Poor contact of ignition coil connector • Poor contact of fuel injector connector on faulty cylinders • Poor contact of ECM connector • Poor contact of coupling connector
14	**CHECK AIR INTAKE SYSTEM.**	Is there any fault in air intake system?	Repair the air intake system. NOTE: Check the following items. • Are there air leaks or air suction caused by loose or dislocated nuts and bolts? • Are there cracks or any disconnection of hoses?	Go to step **15**.
15	**CHECK CYLINDER.**	Is there any fault in the cylinder?	Repair or replace faulty parts. NOTE: Check the following items. • Spark plug • Ignition coil • Fuel injector • Compression ratio • Skipping timing chain teeth	Go to DTC P0171. <Ref. to EN(H4DO w/o HEV)(diag)-157, DTC P0171 SYSTEM TOO LEAN (BANK 1), Diagnostic Procedure with Diagnostic Trouble Code (DTC).>

BM:DTC P0327 KNOCK SENSOR 1 CIRCUIT LOW (BANK 1 OR SINGLE SENSOR)

DTC DETECTING CONDITION:

- Immediately at fault recognition
- GENERAL DESCRIPTION <Ref. to GD(H4DO w/o HEV)-126, DTC P0327 KNOCK SENSOR 1 CIRCUIT LOW (BANK 1 OR SINGLE SENSOR), Diagnostic Trouble Code (DTC) Detecting Criteria.>

TROUBLE SYMPTOM:

- Poor driving performance
- Knocking occurs

CAUTION:

After servicing or replacing faulty parts, perform Clear Memory Mode <Ref. to EN(H4DO w/o HEV)(diag)-59, OPERATION, Clear Memory Mode.>, and Inspection Mode <Ref. to EN(H4DO w/o HEV)(diag)-44, PROCEDURE, Inspection Mode.>.

WIRING DIAGRAM:

Engine electrical system <Ref. to WI(w/o HEV)-74, Engine Electrical System.>

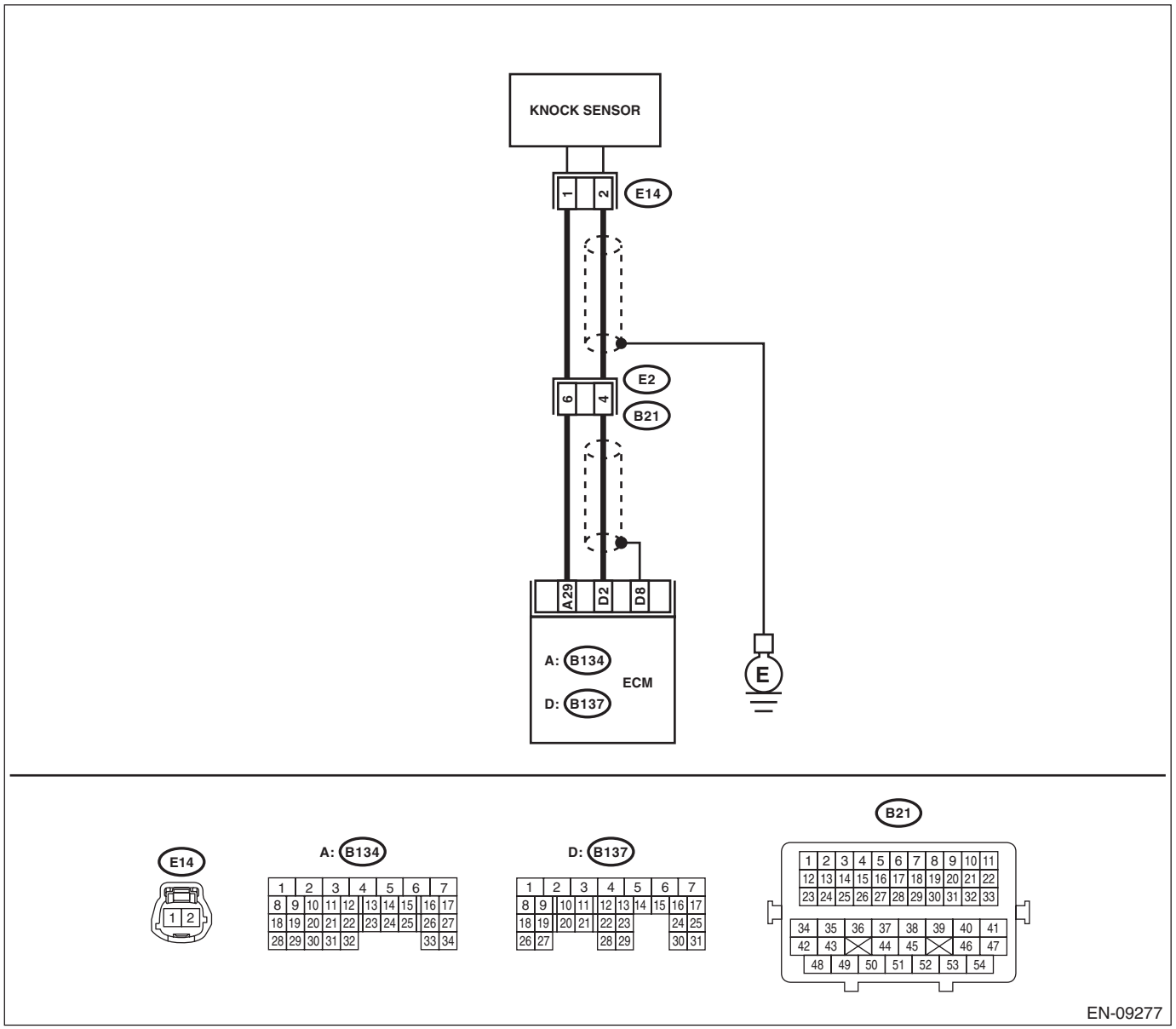

	Step	Check	Yes	No
1	**CHECK HARNESS BETWEEN ECM AND KNOCK SENSOR CONNECTOR.** 1) Turn the ignition switch to OFF. 2) Disconnect the connector from ECM. 3) Measure the resistance between ECM connectors. ***Connector & terminal*** ***(B137) No. 2 — (B134) No. 29:***	Is the resistance less than 500 kΩ?	Go to step **2**.	Go to step **3**.
2	**CHECK KNOCK SENSOR.** 1) Disconnect the connector from the knock sensor. 2) Measure the resistance between knock sensor terminals. ***Terminals*** ***No. 1 — No. 2:***	Is the resistance less than 500 kΩ?	Replace the knock sensor. <Ref. to FU(H4DO(w/o HEV))-73, Knock Sensor.>	Repair the short circuit to ground in harness between ECM connector and knock sensor connector. NOTE: The harness between both connectors are shielded. Remove the shield and repair the short circuit of harness.
3	**CHECK INPUT SIGNAL OF ECM.** 1) Connect the connector to ECM. 2) Turn the ignition switch to ON. 3) Measure the voltage between ECM connector and chassis ground. ***Connector & terminal*** ***(B137) No. 2 (+) — Chassis ground (–):***	Is the voltage 2 V or more?	Even if DTC is detected, the circuit has returned to a normal condition at this time. Reproduce the failure, and then perform the diagnosis again. NOTE: In this case, temporary poor contact of connector, temporary open or short circuit of harness may be the cause.	Repair the short circuit to ground in harness between ECM connector and knock sensor connector. NOTE: The harness between both connectors are shielded. Remove the shield and repair the short circuit of harness.

BN:DTC P0328 KNOCK SENSOR 1 CIRCUIT HIGH (BANK 1 OR SINGLE SENSOR)

DTC DETECTING CONDITION:

- Immediately at fault recognition
- GENERAL DESCRIPTION <Ref. to GD(H4DO w/o HEV)-128, DTC P0328 KNOCK SENSOR 1 CIRCUIT HIGH (BANK 1 OR SINGLE SENSOR), Diagnostic Trouble Code (DTC) Detecting Criteria.>

TROUBLE SYMPTOM:

- Poor driving performance
- Knocking occurs

CAUTION:

After servicing or replacing faulty parts, perform Clear Memory Mode <Ref. to EN(H4DO w/o HEV)(diag)-59, OPERATION, Clear Memory Mode.>, and Inspection Mode <Ref. to EN(H4DO w/o HEV)(diag)-44, PROCEDURE, Inspection Mode.>.

WIRING DIAGRAM:

Engine electrical system <Ref. to WI(w/o HEV)-74, Engine Electrical System.>

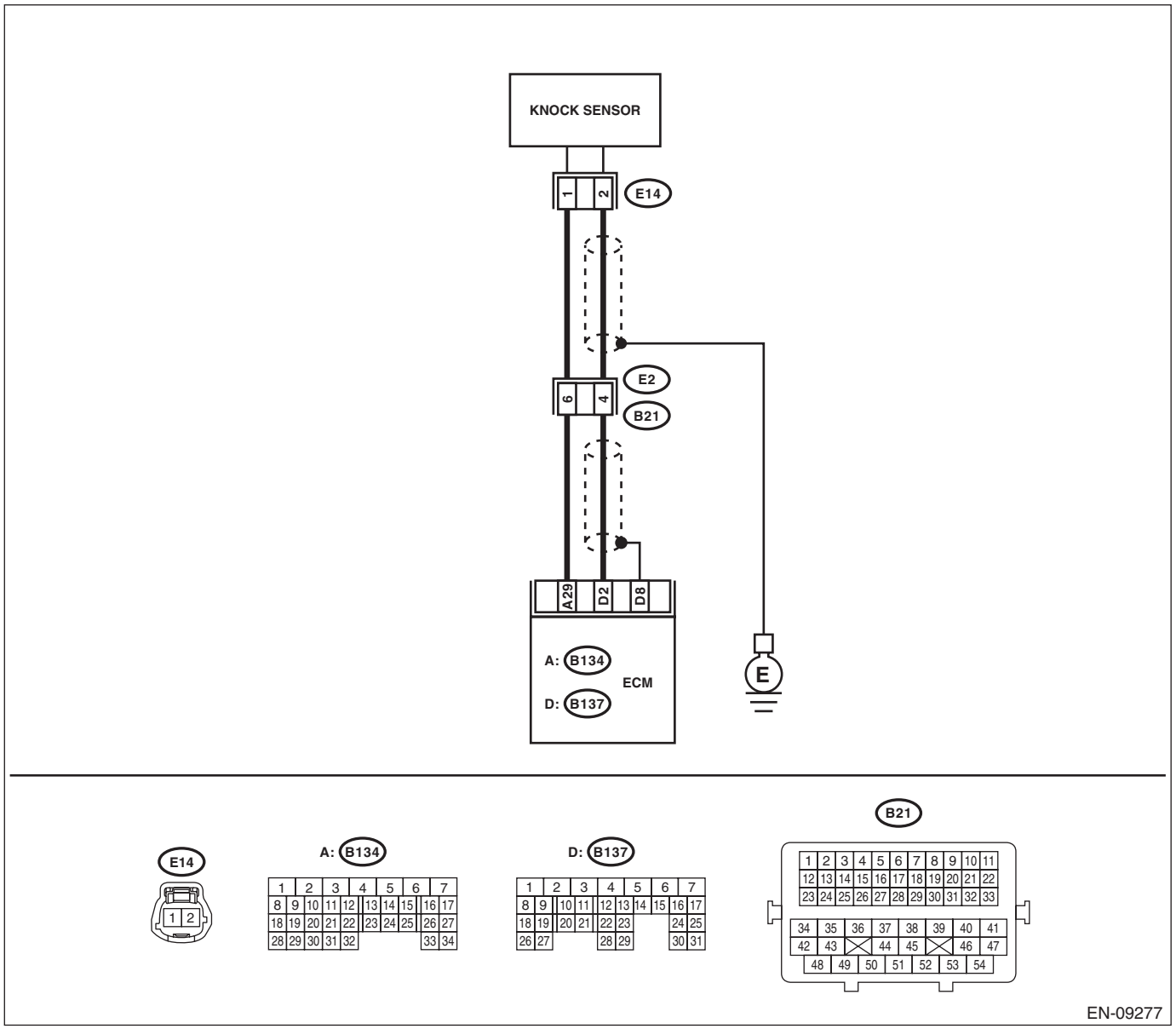

	Step	Check	Yes	No
1	**CHECK HARNESS BETWEEN ECM AND KNOCK SENSOR CONNECTOR.** 1) Turn the ignition switch to OFF. 2) Disconnect the connector from ECM. 3) Measure the resistance between ECM connectors. ***Connector & terminal*** ***(B137) No. 2 — (B134) No. 29:***	Is the resistance 600 kΩ or more?	Go to step **2**.	Repair the poor contact of ECM connector.
2	**CHECK KNOCK SENSOR.** 1) Disconnect the connector from the knock sensor. 2) Measure the resistance between knock sensor terminals. ***Terminals*** ***No. 1 — No. 2:***	Is the resistance 600 kΩ or more?	Replace the knock sensor. <Ref. to FU(H4DO(w/o HEV))-73, Knock Sensor.>	Repair the harness and connector. NOTE: In this case, repair the following item: • Open circuit in harness between ECM connector and knock sensor connector • Poor contact of knock sensor connector • Poor contact of coupling connector

BO:DTC P0335 CRANKSHAFT POSITION SENSOR “A” CIRCUIT

DTC DETECTING CONDITION:

- Immediately at fault recognition
- GENERAL DESCRIPTION <Ref. to GD(H4DO w/o HEV)-130, DTC P0335 CRANKSHAFT POSITION SENSOR “A” CIRCUIT, Diagnostic Trouble Code (DTC) Detecting Criteria.>

TROUBLE SYMPTOM:

- Engine stalls.
- Failure of engine to start

CAUTION:

After servicing or replacing faulty parts, perform Clear Memory Mode <Ref. to EN(H4DO w/o HEV)(diag)-59, OPERATION, Clear Memory Mode.>, and Inspection Mode <Ref. to EN(H4DO w/o HEV)(diag)-44, PROCEDURE, Inspection Mode.>.

WIRING DIAGRAM:

Engine electrical system <Ref. to WI(w/o HEV)-74, Engine Electrical System.>

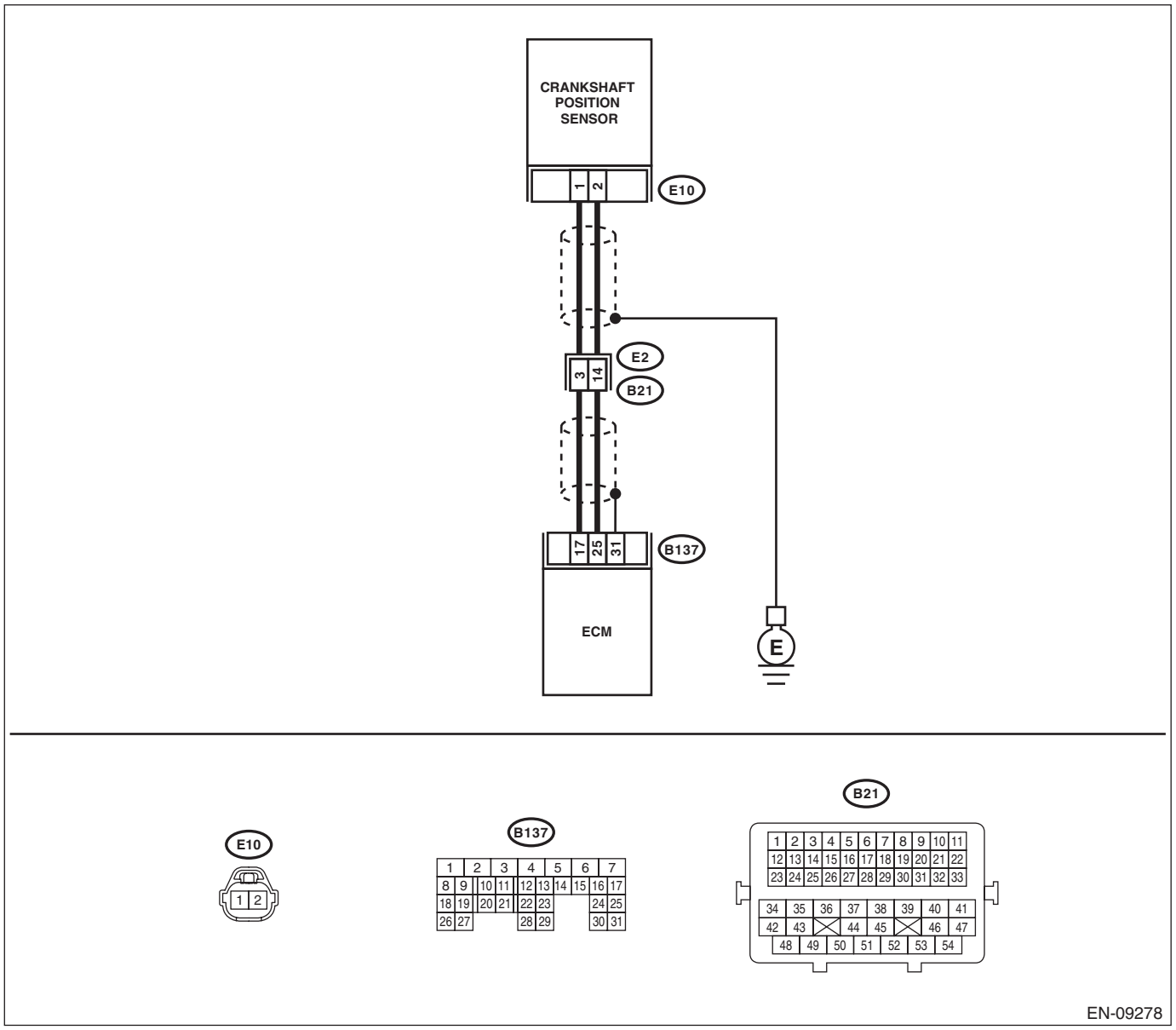

	Step	Check	Yes	No
1	**CHECK INSTALLATION CONDITION OF CRANKSHAFT POSITION SENSOR.**	Is the crankshaft position sensor installation bolt tightened securely?	Go to step **2**.	Tighten the crankshaft position sensor installation bolt securely. <Ref. to FU(H4DO(w/o HEV))-59, INSTALLATION, Crankshaft Position Sensor.>
2	**CHECK CRANKSHAFT POSITION SENSOR.** 1) Turn the ignition switch to OFF. 2) Remove the crankshaft position sensor. 3) Measure the resistance between terminals of crankshaft position sensor. ***Terminals*** ***No. 1 — No. 2:***	Is the resistance between 1 and 4 kΩ?	Go to step **3**.	Replace the crankshaft position sensor. <Ref. to FU(H4DO(w/o HEV))-57, Crankshaft Position Sensor.>
3	**CHECK HARNESS BETWEEN ECM AND CRANKSHAFT POSITION SENSOR CONNECTOR.** 1) Disconnect the connector from ECM. 2) Measure the resistance of harness between ECM connector and crankshaft position sensor connector. ***Connector & terminal*** ***(B137) No. 17 — (E10) No. 1:*** ***(B137) No. 25 — (E10) No. 2:***	Is the resistance less than 1 Ω?	Repair the poor contact of ECM and crankshaft position sensor connector.	Repair the harness and connector. NOTE: In this case, repair the following item: • Open circuit in harness between ECM connector and crankshaft position sensor connector • Poor contact of coupling connector

BP:DTC P0336 CRANKSHAFT POSITION SENSOR “A” CIRCUIT RANGE/PERFORMANCE

DTC DETECTING CONDITION:

- Detected when two consecutive driving cycles with fault occur.
- GENERAL DESCRIPTION <Ref. to GD(H4DO w/o HEV)-132, DTC P0336 CRANKSHAFT POSITION SENSOR “A” CIRCUIT RANGE/PERFORMANCE, Diagnostic Trouble Code (DTC) Detecting Criteria.>

TROUBLE SYMPTOM:

- Engine stalls.
- Failure of engine to start

CAUTION:

After servicing or replacing faulty parts, perform Clear Memory Mode <Ref. to EN(H4DO w/o HEV)(diag)-59, OPERATION, Clear Memory Mode.>, and Inspection Mode <Ref. to EN(H4DO w/o HEV)(diag)-44, PROCEDURE, Inspection Mode.>.

	Step	Check	Yes	No
1	**CHECK CONDITION OF CRANKSHAFT POSITION SENSOR.** Turn the ignition switch to OFF.	Is the crankshaft position sensor installation bolt tightened securely?	Go to step **2**.	Tighten the crankshaft position sensor installation bolt securely. <Ref. to FU(H4DO(w/o HEV))-59, INSTALLATION, Crankshaft Position Sensor.>
2	**CHECK CRANKSHAFT POSITION SENSOR PLATE.**	Is there crack or damage in the crankshaft position sensor plate teeth?	Replace the crankshaft position sensor plate. <Ref. to ME(H4DO(w/o HEV))-299, Cylinder Block.>	Go to step **3**.
3	**CHECK INSTALLATION CONDITION OF TIMING CHAIN.** Turn the crankshaft, and align alignment mark on crank sprocket with alignment mark on cylinder block. ST 18252AA000 CRANKSHAFT SOCKET	Is the timing chain dislocated from its proper position?	Correct the installation condition of timing chain. <Ref. to ME(H4DO(w/o HEV))-163, Timing Chain Assembly.>	Replace the crankshaft position sensor. <Ref. to FU(H4DO(w/o HEV))-57, Crankshaft Position Sensor.>

BQ:DTC P0340 CAMSHAFT POSITION SENSOR “A” CIRCUIT (BANK 1 OR SINGLE SENSOR)

DTC DETECTING CONDITION:

- Immediately at fault recognition
- GENERAL DESCRIPTION <Ref. to GD(H4DO w/o HEV)-134, DTC P0340 CAMSHAFT POSITION SENSOR “A” CIRCUIT (BANK 1 OR SINGLE SENSOR), Diagnostic Trouble Code (DTC) Detecting Criteria.>

TROUBLE SYMPTOM:

- Engine stalls.
- Failure of engine to start

CAUTION:

After servicing or replacing faulty parts, perform Clear Memory Mode <Ref. to EN(H4DO w/o HEV)(diag)-59, OPERATION, Clear Memory Mode.>, and Inspection Mode <Ref. to EN(H4DO w/o HEV)(diag)-44, PROCEDURE, Inspection Mode.>.

WIRING DIAGRAM:

Engine electrical system <Ref. to WI(w/o HEV)-74, Engine Electrical System.>

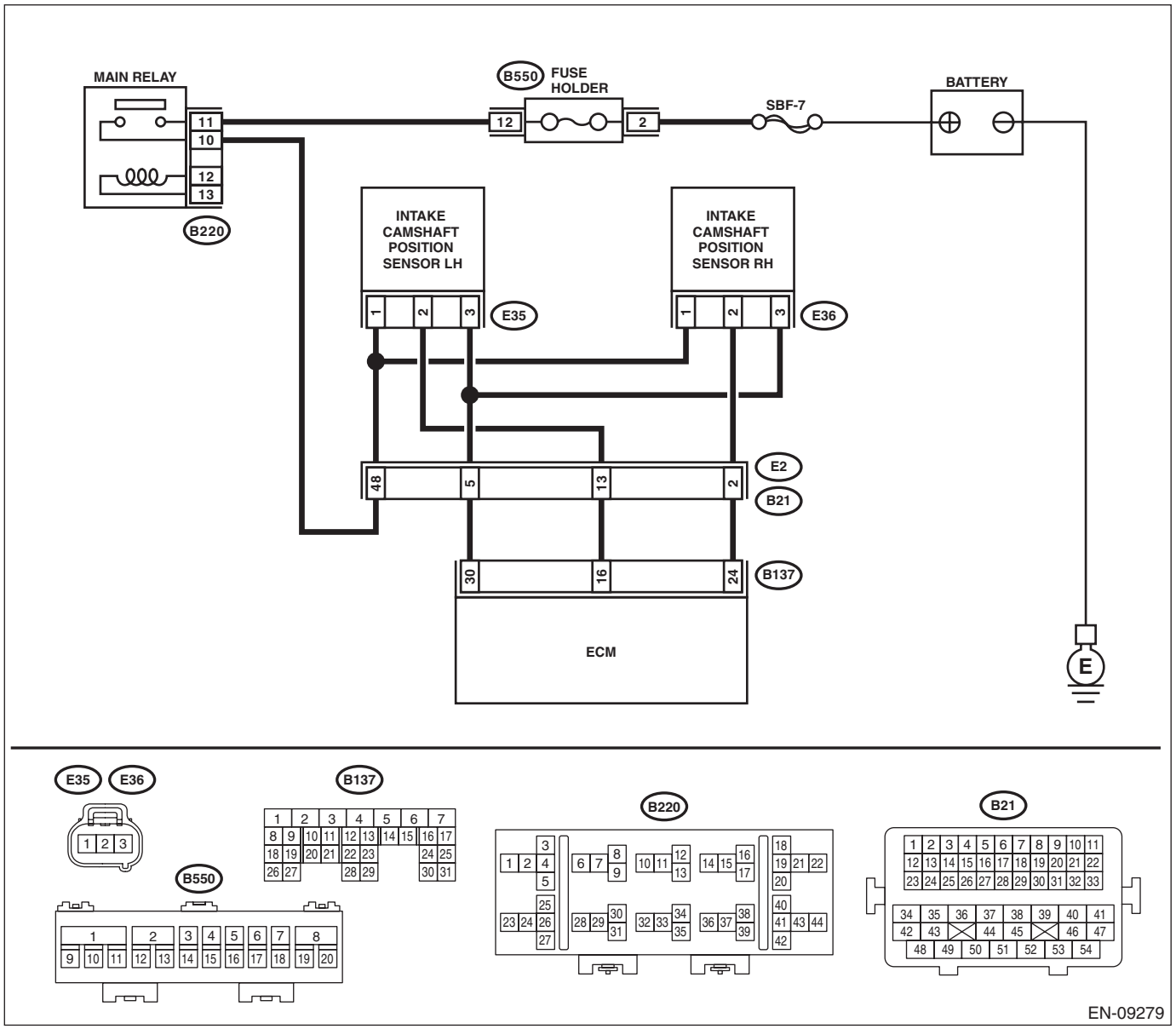

	Step	Check	Yes	No
1	**CHECK POWER SUPPLY OF CAMSHAFT POSITION SENSOR.** 1) Turn the ignition switch to OFF. 2) Disconnect the connector from camshaft position sensor. 3) Turn the ignition switch to ON. 4) Measure the voltage between camshaft position sensor connector and engine ground. ***Connector & terminal*** ***(E36) No. 1 (+) — Engine ground (–):***	Is the voltage 10 V or more?	Go to step **2**.	Repair the harness and connector. NOTE: In this case, repair the following item: • Open circuit or short circuit to ground in harness between main relay connector and camshaft position sensor connector • Poor contact of coupling connector
2	**CHECK HARNESS BETWEEN ECM AND CAMSHAFT POSITION SENSOR CONNECTOR.** 1) Turn the ignition switch to OFF. 2) Disconnect the connector from ECM. 3) Measure the resistance between ECM connector and camshaft position sensor connector. ***Connector & terminal*** ***(B137) No. 24 — (E36) No. 2:*** ***(B137) No. 30 — (E36) No. 3:***	Is the resistance less than 1 Ω?	Go to step **3**.	Repair the harness and connector. NOTE: In this case, repair the following item: • Open circuit in harness between ECM connector and camshaft position sensor connector • Poor contact of coupling connector
3	**CHECK HARNESS BETWEEN ECM AND CAMSHAFT POSITION SENSOR CONNECTOR.** Measure the resistance between camshaft position sensor connector and engine ground. ***Connector & terminal*** ***(E36) No. 2 — Engine ground:***	Is the resistance 1 MΩ or more?	Go to step **4**.	Repair short circuit to ground in harness between ECM connector and camshaft position sensor connector.
4	**CHECK HARNESS BETWEEN ECM AND CAMSHAFT POSITION SENSOR CONNECTOR.** Measure the voltage between camshaft position sensor connector and engine ground. ***Connector & terminal*** ***(E36) No. 2 (+) — Engine ground (–):***	Is the voltage 5 V or more?	Repair the short circuit to power in the harness between ECM connector and camshaft position sensor connector.	Go to step **5**.
5	**CHECK CONDITION OF CAMSHAFT POSITION SENSOR.**	Is the camshaft position sensor installation bolt tightened securely?	Go to step **6**.	Tighten the camshaft position sensor installation bolt securely.
6	**CHECK CAMSHAFT POSITION SENSOR.** Check the waveform of the camshaft position sensor. <Ref. to EN(H4DO w/o HEV)(diag)-19, Engine Control Module (ECM) I/O Signal.>	Is there any abnormality in waveform?	Replace the camshaft position sensor. <Ref. to FU(H4DO(w/o HEV))-63, Camshaft Position Sensor.>	Repair the following item. • Poor contact of ECM connector • Poor contact of camshaft position sensor connector • Poor contact of coupling connector

BR:DTC P0341 CAMSHAFT POSITION SENSOR "A" CIRCUIT RANGE/PERFORMANCE (BANK 1 OR SINGLE SENSOR)

NOTE:
For the diagnostic procedure, refer to DTC P0340. <Ref. to EN(H4DO w/o HEV)(diag)-188, DTC P0340 CAMSHAFT POSITION SENSOR “A” CIRCUIT (BANK 1 OR SINGLE SENSOR), Diagnostic Procedure with Diagnostic Trouble Code (DTC).>

BS:DTC P0345 CAMSHAFT POSITION SENSOR “A” CIRCUIT (BANK 2)

DTC DETECTING CONDITION:

- Immediately at fault recognition
- GENERAL DESCRIPTION <Ref. to GD(H4DO w/o HEV)-137, DTC P0345 CAMSHAFT POSITION SENSOR “A” CIRCUIT (BANK 2), Diagnostic Trouble Code (DTC) Detecting Criteria.>

TROUBLE SYMPTOM:

- Engine stalls.
- Failure of engine to start

CAUTION:

After servicing or replacing faulty parts, perform Clear Memory Mode <Ref. to EN(H4DO w/o HEV)(diag)-59, OPERATION, Clear Memory Mode.>, and Inspection Mode <Ref. to EN(H4DO w/o HEV)(diag)-44, PROCEDURE, Inspection Mode.>.

WIRING DIAGRAM:

Engine electrical system <Ref. to WI(w/o HEV)-74, Engine Electrical System.>

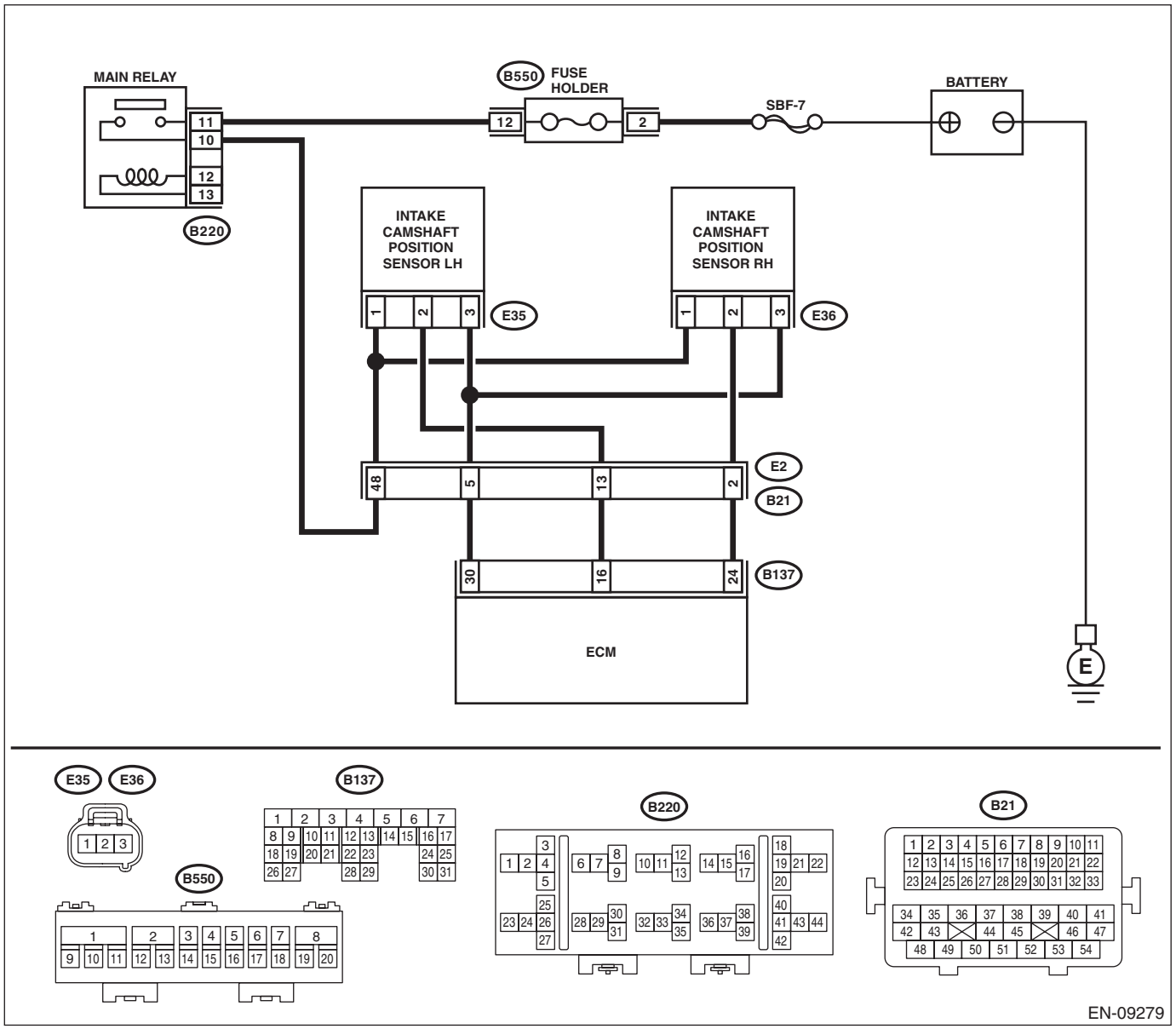

	Step	Check	Yes	No
1	**CHECK POWER SUPPLY OF CAMSHAFT POSITION SENSOR.** 1) Turn the ignition switch to OFF. 2) Disconnect the connector from camshaft position sensor. 3) Turn the ignition switch to ON. 4) Measure the voltage between camshaft position sensor connector and engine ground. ***Connector & terminal*** ***(E35) No. 1 (+) — Engine ground (–):***	Is the voltage 10 V or more?	Go to step **2**.	Repair the harness and connector. NOTE: In this case, repair the following item: • Open circuit or short circuit to ground in harness between main relay connector and camshaft position sensor connector • Poor contact of coupling connector
2	**CHECK HARNESS BETWEEN ECM AND CAMSHAFT POSITION SENSOR CONNECTOR.** 1) Turn the ignition switch to OFF. 2) Disconnect the connector from ECM. 3) Measure the resistance between ECM connector and camshaft position sensor connector. ***Connector & terminal*** ***(B137) No. 16 — (E35) No. 2:*** ***(B137) No. 30 — (E35) No. 3:***	Is the resistance less than 1 Ω?	Go to step **3**.	Repair the harness and connector. NOTE: In this case, repair the following item: • Open circuit in harness between ECM connector and camshaft position sensor connector • Poor contact of coupling connector
3	**CHECK HARNESS BETWEEN ECM AND CAMSHAFT POSITION SENSOR CONNECTOR.** Measure the resistance between camshaft position sensor connector and engine ground. ***Connector & terminal*** ***(E35) No. 2 — Engine ground:***	Is the resistance 1 MΩ or more?	Go to step **4**.	Repair short circuit to ground in harness between ECM connector and camshaft position sensor connector.
4	**CHECK HARNESS BETWEEN ECM AND CAMSHAFT POSITION SENSOR CONNECTOR.** Measure the voltage between camshaft position sensor connector and engine ground. ***Connector & terminal*** ***(E35) No. 2 (+) — Engine ground (–):***	Is the voltage 5 V or more?	Repair the short circuit to power in the harness between ECM connector and camshaft position sensor connector.	Go to step **5**.
5	**CHECK CONDITION OF CAMSHAFT POSITION SENSOR.**	Is the camshaft position sensor installation bolt tightened securely?	Go to step **6**.	Tighten the camshaft position sensor installation bolt securely.
6	**CHECK CAMSHAFT POSITION SENSOR.** Check the waveform of the camshaft position sensor. <Ref. to EN(H4DO w/o HEV)(diag)-19, Engine Control Module (ECM) I/O Signal.>	Is there any abnormality in waveform?	Replace the camshaft position sensor. <Ref. to FU(H4DO(w/o HEV))-63, Camshaft Position Sensor.>	Repair the following item. • Poor contact of ECM connector • Poor contact of camshaft position sensor connector • Poor contact of coupling connector

BT:DTC P0346 CAMSHAFT POSITION SENSOR "A" CIRCUIT RANGE/PERFORMANCE (BANK 2)

NOTE:
For the diagnostic procedure, refer to DTC P0345. <Ref. to EN(H4DO w/o HEV)(diag)-191, DTC P0345 CAMSHAFT POSITION SENSOR “A” CIRCUIT (BANK 2), Diagnostic Procedure with Diagnostic Trouble Code (DTC).>

BU:DTC P0351 IGNITION COIL A PRIMARY/SECONDARY CIRCUIT

DTC DETECTING CONDITION:

- Immediately at fault recognition
- GENERAL DESCRIPTION <Ref. to GD(H4DO w/o HEV)-138, DTC P0351 IGNITION COIL A PRIMARY/SECONDARY CIRCUIT, Diagnostic Trouble Code (DTC) Detecting Criteria.>

TROUBLE SYMPTOM:

- Improper idling
- Poor driving performance

CAUTION:

After servicing or replacing faulty parts, perform Clear Memory Mode <Ref. to EN(H4DO w/o HEV)(diag)-59, OPERATION, Clear Memory Mode.>, and Inspection Mode <Ref. to EN(H4DO w/o HEV)(diag)-44, PROCEDURE, Inspection Mode.>.

WIRING DIAGRAM:

Engine electrical system <Ref. to WI(w/o HEV)-74, Engine Electrical System.>

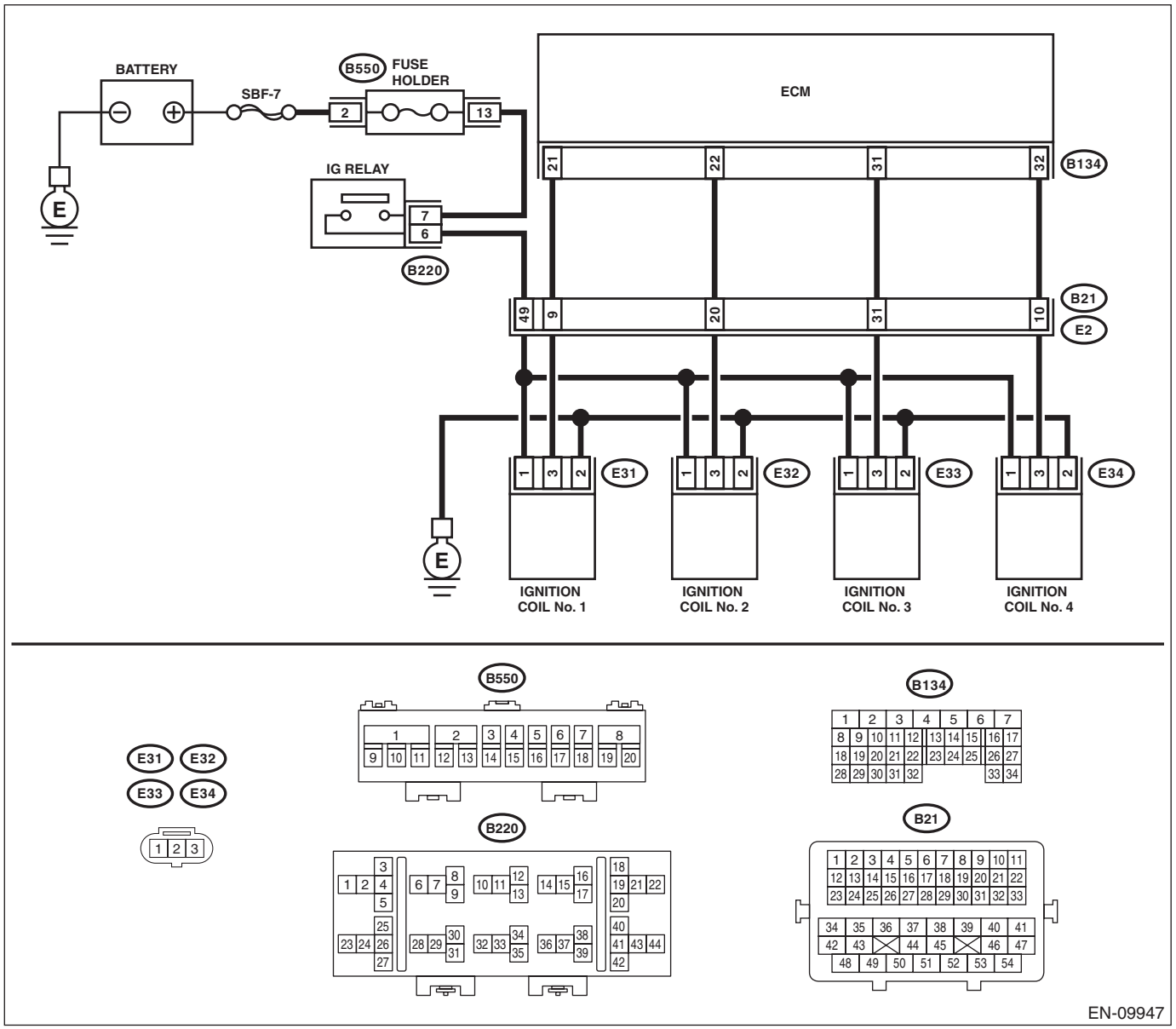

	Step	Check	Yes	No
1	**CHECK IGNITION COIL POWER SUPPLY CIRCUIT.** 1) Turn the ignition switch to OFF. 2) Disconnect the connector from ignition coil. 3) Turn the ignition switch to ON. 4) Measure the voltage between ignition coil connector and engine ground. ***Connector & terminal*** ***DTC P0351; (E31) No. 1 (+) — Engine ground (–):*** ***DTC P0352; (E32) No. 1 (+) — Engine ground (–):*** ***DTC P0353; (E33) No. 1 (+) — Engine ground (–):*** ***DTC P0354; (E34) No. 1 (+) — Engine ground (–):***	Is the voltage 10 V or more?	Go to step **2**.	Repair the harness and connector. NOTE: In this case, repair the following item: • Open circuit or short circuit to ground in harness of power supply circuit • Blown out of fuse • Poor contact of IG relay connector • Poor contact of coupling connector • Faulty IG relay
2	**CHECK HARNESS OF IGNITION COIL GROUND CIRCUIT.** 1) Turn the ignition switch to OFF. 2) Measure the resistance of harness between ignition coil connector and engine ground. ***Connector & terminal*** ***DTC P0351; (E31) No. 2 — Engine ground:*** ***DTC P0352; (E32) No. 2 — Engine ground:*** ***DTC P0353; (E33) No. 2 — Engine ground:*** ***DTC P0354; (E34) No. 2 — Engine ground:***	Is the resistance less than 5 Ω?	Go to step **3**.	Repair the open circuit in harness between ignition coil connector and engine grounding terminal.
3	**CHECK HARNESS BETWEEN ECM AND IGNITION COIL CONNECTOR.** 1) Disconnect the connector from ECM. 2) Measure the resistance between ignition coil connector and engine ground. ***Connector & terminal*** ***DTC P0351; (E31) No. 3 — Engine ground:*** ***DTC P0352; (E32) No. 3 — Engine ground:*** ***DTC P0353; (E33) No. 3 — Engine ground:*** ***DTC P0354; (E34) No. 3 — Engine ground:***	Is the resistance 1 MΩ or more?	Go to step **4**.	Repair the ground short circuit of harness between ECM connector and ignition coil connector.
4	**CHECK HARNESS BETWEEN ECM AND IGNITION COIL CONNECTOR.** Measure the resistance of harness between ECM connector and ignition coil connector. ***Connector & terminal*** ***DTC P0351; (B134) No. 21 — (E31) No. 3:*** ***DTC P0352; (B134) No. 22 — (E32) No. 3:*** ***DTC P0353; (B134) No. 31 — (E33) No. 3:*** ***DTC P0354; (B134) No. 32 — (E34) No. 3:***	Is the resistance less than 1 Ω?	Go to step **5**.	Repair the harness and connector. NOTE: In this case, repair the following item: • Open circuit of harness between ECM connector and the ignition coil connector • Poor contact of coupling connector
5	**CHECK FOR POOR CONTACT.** Check for poor contact of ECM connector.	Is there poor contact of ECM connector?	Repair the poor contact of ECM connector.	Go to step **6**.
6	**CHECK SPARK PLUG CONDITION.** 1) Remove the spark plug of the corresponding cylinder. <Ref. to IG(H4DO(w/o HEV))-4, REMOVAL, Spark Plug.> 2) Check the spark plug condition. <Ref. to IG(H4DO(w/o HEV))-6, INSPECTION, Spark Plug.>	Is the spark plug condition normal?	Replace the ignition coil. <Ref. to IG(H4DO(w/o HEV))-11, Ignition Coil.>	Replace the spark plug. <Ref. to IG(H4DO(w/o HEV))-4, Spark Plug.>

BV:DTC P0352 IGNITION COIL B PRIMARY/SECONDARY CIRCUIT

NOTE:
For the diagnostic procedure, refer to DTC P0351. <Ref. to EN(H4DO w/o HEV)(diag)-194, DTC P0351 IGNITION COIL A PRIMARY/SECONDARY CIRCUIT, Diagnostic Procedure with Diagnostic Trouble Code (DTC).>

BW:DTC P0353 IGNITION COIL C PRIMARY/SECONDARY CIRCUIT

NOTE:
For the diagnostic procedure, refer to DTC P0351. <Ref. to EN(H4DO w/o HEV)(diag)-194, DTC P0351 IGNITION COIL A PRIMARY/SECONDARY CIRCUIT, Diagnostic Procedure with Diagnostic Trouble Code (DTC).>

BX:DTC P0354 IGNITION COIL D PRIMARY/SECONDARY CIRCUIT

NOTE:
For the diagnostic procedure, refer to DTC P0351. <Ref. to EN(H4DO w/o HEV)(diag)-194, DTC P0351 IGNITION COIL A PRIMARY/SECONDARY CIRCUIT, Diagnostic Procedure with Diagnostic Trouble Code (DTC).>

BY:DTC P0365 CAMSHAFT POSITION SENSOR “B” CIRCUIT (BANK 1)

DTC DETECTING CONDITION:

- Immediately at fault recognition
- GENERAL DESCRIPTION <Ref. to GD(H4DO w/o HEV)-139, DTC P0365 CAMSHAFT POSITION SENSOR “B” CIRCUIT (BANK 1), Diagnostic Trouble Code (DTC) Detecting Criteria.>

TROUBLE SYMPTOM:

- Engine stalls.
- Failure of engine to start

CAUTION:

After servicing or replacing faulty parts, perform Clear Memory Mode <Ref. to EN(H4DO w/o HEV)(diag)-59, OPERATION, Clear Memory Mode.>, and Inspection Mode <Ref. to EN(H4DO w/o HEV)(diag)-44, PROCEDURE, Inspection Mode.>.

WIRING DIAGRAM:

Engine electrical system <Ref. to WI(w/o HEV)-74, Engine Electrical System.>

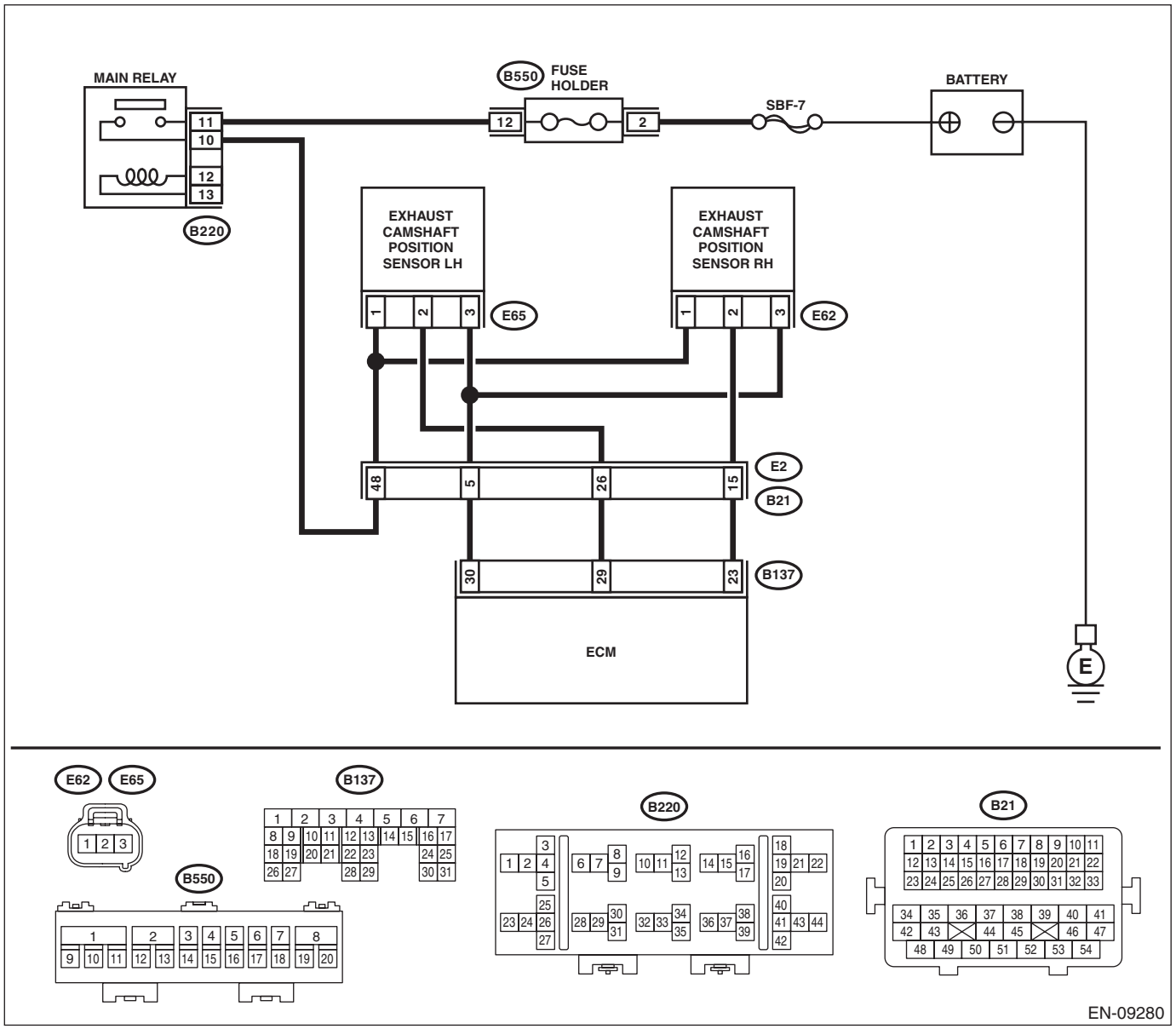

	Step	Check	Yes	No
1	**CHECK POWER SUPPLY OF CAMSHAFT POSITION SENSOR.** 1) Turn the ignition switch to OFF. 2) Disconnect the connector from camshaft position sensor. 3) Turn the ignition switch to ON. 4) Measure the voltage between camshaft position sensor connector and engine ground. ***Connector & terminal*** ***(E62) No. 1 (+) — Engine ground (–):***	Is the voltage 10 V or more?	Go to step **2**.	Repair the harness and connector. NOTE: In this case, repair the following item: • Open circuit or short circuit to ground in harness between main relay connector and camshaft position sensor connector • Poor contact of coupling connector
2	**CHECK HARNESS BETWEEN ECM AND CAMSHAFT POSITION SENSOR CONNECTOR.** 1) Turn the ignition switch to OFF. 2) Disconnect the connector from ECM. 3) Measure the resistance between ECM connector and camshaft position sensor connector. ***Connector & terminal*** ***(B137) No. 23 — (E62) No. 2:*** ***(B137) No. 30 — (E62) No. 3:***	Is the resistance less than 1 Ω?	Go to step **3**.	Repair the harness and connector. NOTE: In this case, repair the following item: • Open circuit in harness between ECM connector and camshaft position sensor connector • Poor contact of coupling connector
3	**CHECK HARNESS BETWEEN ECM AND CAMSHAFT POSITION SENSOR CONNECTOR.** Measure the resistance between camshaft position sensor connector and engine ground. ***Connector & terminal*** ***(E62) No. 2 — Engine ground:***	Is the resistance 1 MΩ or more?	Go to step **4**.	Repair short circuit to ground in harness between ECM connector and camshaft position sensor connector.
4	**CHECK HARNESS BETWEEN ECM AND CAMSHAFT POSITION SENSOR CONNECTOR.** Measure the voltage between camshaft position sensor connector and engine ground. ***Connector & terminal*** ***(E62) No. 2 (+) — Engine ground (–):***	Is the voltage 5 V or more?	Repair the short circuit to power in the harness between ECM connector and camshaft position sensor connector.	Go to step **5**.
5	**CHECK CONDITION OF CAMSHAFT POSITION SENSOR.**	Is the camshaft position sensor installation bolt tightened securely?	Go to step **6**.	Tighten the camshaft position sensor installation bolt securely.
6	**CHECK CAMSHAFT POSITION SENSOR.** Check the waveform of the camshaft position sensor. <Ref. to EN(H4DO w/o HEV)(diag)-19, Engine Control Module (ECM) I/O Signal.>	Is there any abnormality in waveform?	Replace the camshaft position sensor. <Ref. to FU(H4DO(w/o HEV))-63, Camshaft Position Sensor.>	Repair the following item. • Poor contact of ECM connector • Poor contact of camshaft position sensor connector • Poor contact of coupling connector

BZ:DTC P0366 CAMSHAFT POSITION SENSOR B CIRCUIT RANGE/PERFORMANCE (BANK 1)

NOTE:
For the diagnostic procedure, refer to DTC P0365. <Ref. to EN(H4DO w/o HEV)(diag)-197, DTC P0365 CAMSHAFT POSITION SENSOR “B” CIRCUIT (BANK 1), Diagnostic Procedure with Diagnostic Trouble Code (DTC).>

CA:DTC P0390 CAMSHAFT POSITION SENSOR “B” CIRCUIT (BANK 2)

DTC DETECTING CONDITION:

- Immediately at fault recognition
- GENERAL DESCRIPTION <Ref. to GD(H4DO w/o HEV)-142, DTC P0390 CAMSHAFT POSITION SENSOR “B” CIRCUIT (BANK 2), Diagnostic Trouble Code (DTC) Detecting Criteria.>

TROUBLE SYMPTOM:

- Engine stalls.
- Failure of engine to start

CAUTION:

After servicing or replacing faulty parts, perform Clear Memory Mode <Ref. to EN(H4DO w/o HEV)(diag)-59, OPERATION, Clear Memory Mode.>, and Inspection Mode <Ref. to EN(H4DO w/o HEV)(diag)-44, PROCEDURE, Inspection Mode.>.

WIRING DIAGRAM:

Engine electrical system <Ref. to WI(w/o HEV)-74, Engine Electrical System.>

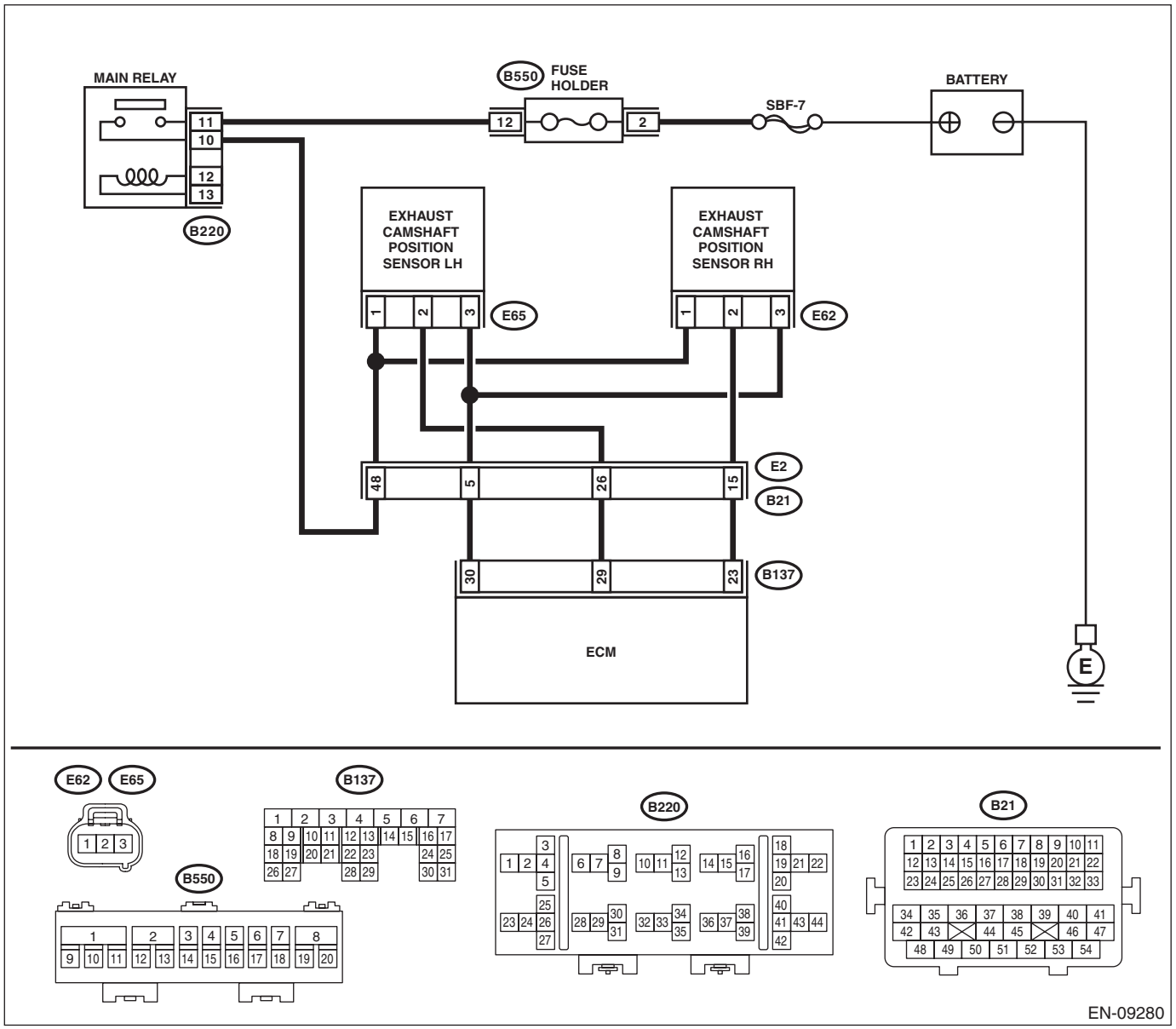

	Step	Check	Yes	No
1	**CHECK POWER SUPPLY OF CAMSHAFT POSITION SENSOR.** 1) Turn the ignition switch to OFF. 2) Disconnect the connector from camshaft position sensor. 3) Turn the ignition switch to ON. 4) Measure the voltage between camshaft position sensor connector and engine ground. ***Connector & terminal*** ***(E65) No. 1 (+) — Engine ground (–):***	Is the voltage 10 V or more?	Go to step **2**.	Repair the harness and connector. NOTE: In this case, repair the following item: • Open circuit or short circuit to ground in harness between main relay connector and camshaft position sensor connector • Poor contact of coupling connector
2	**CHECK HARNESS BETWEEN ECM AND CAMSHAFT POSITION SENSOR CONNECTOR.** 1) Turn the ignition switch to OFF. 2) Disconnect the connector from ECM. 3) Measure the resistance between ECM connector and camshaft position sensor connector. ***Connector & terminal*** ***(B137) No. 29 — (E65) No. 2:*** ***(B137) No. 30 — (E65) No. 3:***	Is the resistance less than 1 Ω?	Go to step **3**.	Repair the harness and connector. NOTE: In this case, repair the following item: • Open circuit in harness between ECM connector and camshaft position sensor connector • Poor contact of coupling connector
3	**CHECK HARNESS BETWEEN ECM AND CAMSHAFT POSITION SENSOR CONNECTOR.** Measure the resistance between camshaft position sensor connector and engine ground. ***Connector & terminal*** ***(E65) No. 2 — Engine ground:***	Is the resistance 1 MΩ or more?	Go to step **4**.	Repair short circuit to ground in harness between ECM connector and camshaft position sensor connector.
4	**CHECK HARNESS BETWEEN ECM AND CAMSHAFT POSITION SENSOR CONNECTOR.** Measure the voltage between camshaft position sensor connector and engine ground. ***Connector & terminal*** ***(E65) No. 2 (+) — Engine ground (–):***	Is the voltage 5 V or more?	Repair the short circuit to power in the harness between ECM connector and camshaft position sensor connector.	Go to step **5**.
5	**CHECK CONDITION OF CAMSHAFT POSITION SENSOR.**	Is the camshaft position sensor installation bolt tightened securely?	Go to step **6**.	Tighten the camshaft position sensor installation bolt securely.
6	**CHECK CAMSHAFT POSITION SENSOR.** Check the waveform of the camshaft position sensor. <Ref. to EN(H4DO w/o HEV)(diag)-19, Engine Control Module (ECM) I/O Signal.>	Is there any abnormality in waveform?	Replace the camshaft position sensor. <Ref. to FU(H4DO(w/o HEV))-63, Camshaft Position Sensor.>	Repair the following item. • Poor contact of ECM connector • Poor contact of camshaft position sensor connector • Poor contact of coupling connector

CB:DTC P0391 CAMSHAFT POSITION SENSOR B CIRCUIT RANGE/PERFORMANCE (BANK 2)

NOTE:
For the diagnostic procedure, refer to DTC P0390. <Ref. to EN(H4DO w/o HEV)(diag)-200, DTC P0390 CAMSHAFT POSITION SENSOR “B” CIRCUIT (BANK 2), Diagnostic Procedure with Diagnostic Trouble Code (DTC).>

CC:DTC P0400 EXHAUST GAS RECIRCULATION FLOW

DTC DETECTING CONDITION:

- Detected when two consecutive driving cycles with fault occur.
- GENERAL DESCRIPTION <Ref. to GD(H4DO w/o HEV)-143, DTC P0400 EXHAUST GAS RECIRCULATION FLOW, Diagnostic Trouble Code (DTC) Detecting Criteria.>

TROUBLE SYMPTOM:

- Movement performance problem when engine is low speed.
- Improper idling
- Movement performance problem

CAUTION:
After servicing or replacing faulty parts, perform Clear Memory Mode <Ref. to EN(H4DO w/o HEV)(diag)-59, OPERATION, Clear Memory Mode.>, and Inspection Mode <Ref. to EN(H4DO w/o HEV)(diag)-44, PROCEDURE, Inspection Mode.>.

	Step	Check	Yes	No
1	**CHECK CURRENT DATA.** 1) Start the engine. 2) Read the value of «Mani. Absolute Pressure» using the Subaru Select Monitor or a general scan tool. NOTE: • Subaru Select Monitor For detailed operation procedures, refer to “READ CURRENT DATA FOR ENGINE”. <Ref. to EN(H4DO w/o HEV)(diag)-36, Subaru Select Monitor.> • General scan tool For detailed operation procedures, refer to the general scan tool operation manual.	Is the value of «Mani. Absolute Pressure» 53.3 kPa (400 mmHg, 15.75 inHg) or more?	Make sure that the EGR control valve, manifold absolute pressure sensor and throttle body are installed securely.	Go to step **2**.
2	**CHECK EGR CONTROL VALVE.** Remove the EGR control valve.	Are there any holes, clogged lines or foreign matters in the EGR system?	Repair the EGR system.	Replace EGR control valve. <Ref. to EC(H4DO(w/o HEV))-22, EGR Control Valve.>

CD:DTC P0420 CATALYST SYSTEM EFFICIENCY BELOW THRESHOLD (BANK 1)

DTC DETECTING CONDITION:

- Detected when two consecutive driving cycles with fault occur.
- GENERAL DESCRIPTION <Ref. to GD(H4DO w/o HEV)-146, DTC P0420 CATALYST SYSTEM EFFICIENCY BELOW THRESHOLD (BANK 1), Diagnostic Trouble Code (DTC) Detecting Criteria.>

TROUBLE SYMPTOM:

- Engine stalls.
- Idle mixture is out of specifications.

CAUTION:

After servicing or replacing faulty parts, perform Clear Memory Mode <Ref. to EN(H4DO w/o HEV)(diag)-59, OPERATION, Clear Memory Mode.>, and Inspection Mode <Ref. to EN(H4DO w/o HEV)(diag)-44, PROCEDURE, Inspection Mode.>.

WIRING DIAGRAM:

Engine electrical system <Ref. to WI(w/o HEV)-74, Engine Electrical System.>

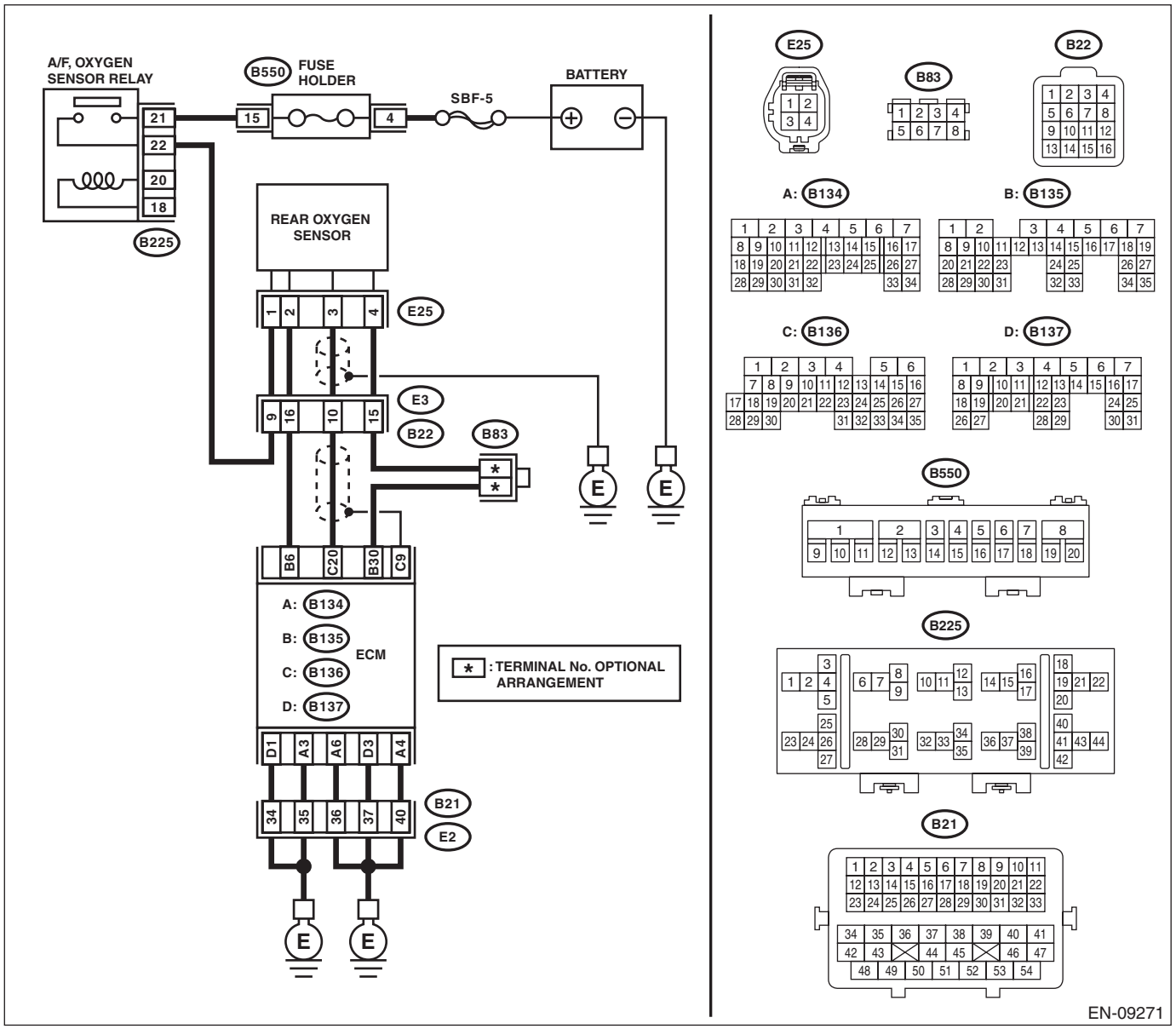

	Step	Check	Yes	No
1	**CHECK EXHAUST SYSTEM.** Check for gas leaks or air suction caused by loose or dislocated nuts and bolts, and open hole at exhaust pipes. NOTE: Check the following positions. • Between cylinder head and front exhaust pipe • Between front exhaust pipe and front catalytic converter • Between front catalytic converter and rear catalytic converter • Loose or improperly attached front oxygen (A/F) sensor or rear oxygen sensor	Is there any fault in exhaust system?	Repair or replace the exhaust system. <Ref. to EX(H4DO(w/o HEV))-2, General Description.>	Go to step **2**.
2	**CHECK WAVEFORM DATA ON THE SUBARU SELECT MONITOR (WHILE DRIVING).** 1) Drive at a constant speed between 80 — 112 km/h (50 — 70 MPH). 2) After 5 minutes have elapsed in the condition of step 1), use the Subaru Select Monitor while still driving to read the waveform data. • At normal condition 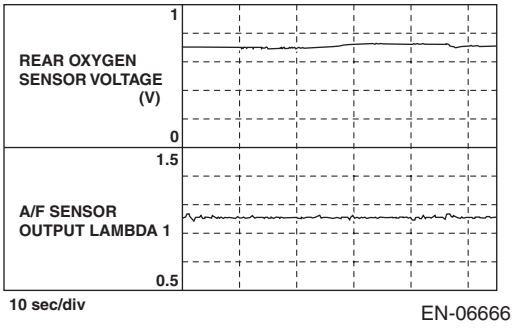 EN-06666 • At abnormal condition (numerous inversion) 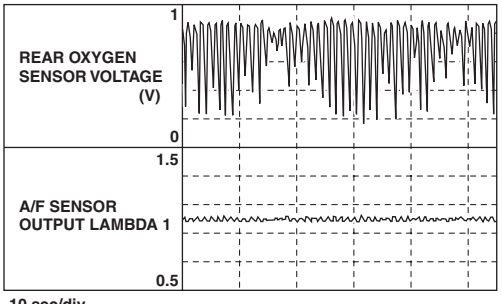 EN-06667	Is a normal waveform displayed?	Even if DTC is detected, the circuit has returned to a normal condition at this time. Reproduce the failure, and then perform the diagnosis again. NOTE: In this case, temporary poor contact of connector, temporary open or short circuit of harness may be the cause.	Go to step **3**.

	Step	Check	Yes	No
3	**CHECK WAVEFORM DATA ON THE SUBARU SELECT MONITOR (WHILE IDLING).** 1) Run the engine at idle. 2) In the condition of step 1), use the Subaru Select Monitor to read the waveform data. • At normal condition 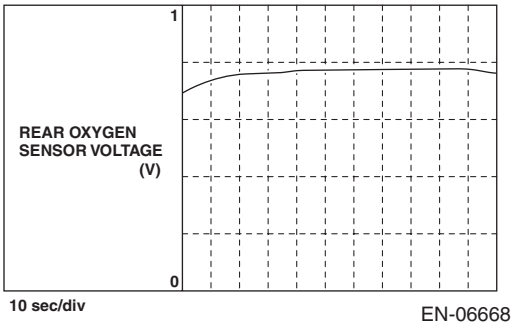 EN-06668 • At abnormal condition 1 (numerous inversion) 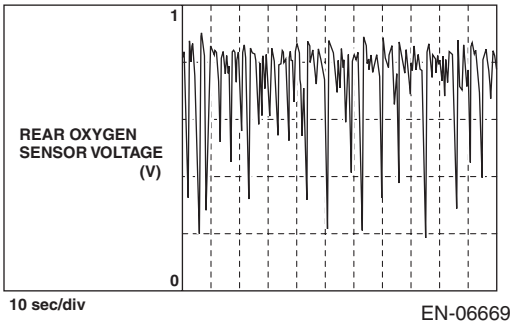 EN-06669 • At abnormal condition 2 (noise input) 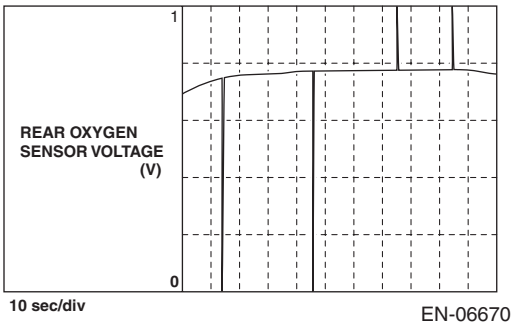 EN-06670	Is a normal waveform displayed?	Go to step **4**.	• The waveform is displayed at abnormal condition 1: Go to step **4**. • The waveform is displayed at abnormal condition 2: Go to step **5**.
4	**CHECK CATALYTIC CONVERTER.**	Is the catalytic converter damaged?	Replace the catalytic converter. <Ref. to EC(H4DO(w/o HEV))-7, Front Catalytic Converter.>	Go to step **5**.
5	**CHECK REAR OXYGEN SENSOR CONNECTOR AND COUPLING CONNECTOR.**	Has water entered the connector?	Completely remove any water inside.	Go to step **6**.

	Step	Check	Yes	No
6	**CHECK HARNESS BETWEEN ECM AND REAR OXYGEN SENSOR CONNECTOR.** 1) Turn the ignition switch to OFF. 2) Disconnect the connector from ECM and rear oxygen sensor. 3) Measure the resistance of harness between ECM connector and rear oxygen sensor connector. ***Connector & terminal*** ***(B136) No. 20 — (E25) No. 3:*** ***(B135) No. 30 — (E25) No. 4:***	Is the resistance less than 1 Ω?	Go to step **7**.	Repair the harness and connector. NOTE: Repair the following locations. • Open circuit in harness between ECM connector and rear oxygen sensor connector • Poor contact of coupling connector
7	**CHECK REAR OXYGEN SENSOR SHIELD.** 1) Turn the ignition switch to OFF. 2) Expose the rear oxygen sensor connector body side harness sensor shield. 3) Measure the resistance between sensor shield and chassis ground.	Is the resistance less than 1 Ω?	Go to step **8**.	Repair the open circuit of rear oxygen sensor harness.
8	**CHECK ENGINE OIL AMOUNT AND EXHAUST GAS.** 1) Check the engine oil amount. <Ref. to LU(H4DO(w/o HEV))-12, INSPECTION, Engine Oil.> 2) Check exhaust gas during idling.	Does the engine oil amount drop or white smoke emit from the muffler?	Check the engine, and repair the defective part. <Ref. to ME(H4DO(w/o HEV))-418, INSPECTION, Engine Trouble in General.> After repairing the engine, replace the front catalytic converter. <Ref. to EX(H4DO(w/o HEV))-6, Front Exhaust Pipe.> After the catalytic converter is replaced, perform step 2 to check the normal waveform is displayed, and then exit the procedure.	Go to step **9**.
9	**CHECK IGNITION SYSTEM.** 1) Check the spark plug. <Ref. to IG(H4DO(w/o HEV))-6, INSPECTION, Spark Plug.> 2) Check the status of the ignition coil connector and the spark plug terminal.	Is there any fault in the ignition system?	After repairing the ignition system, replace the front catalytic converter. <Ref. to EX(H4DO(w/o HEV))-6, Front Exhaust Pipe.> After the catalytic converter is replaced, perform step 2 to check the normal waveform is displayed, and then exit the procedure.	Go to step **10**.

	Step	Check	Yes	No
10	**CHECK FUEL SYSTEM.** 1) Refer to and check the items in “Insufficient fuel supply to fuel injector (except for “a. Fuel pump does not operate.”)” and “Leakage or blow out of fuel”. <Ref. to FU(H4DO(w/o HEV))-166, INSPECTION, Fuel System Trouble in General.> 2) Check throttle body. <Ref. to FU(H4DO(w/o HEV))-18, INSPECTION, Throttle Body.> 3) Check intake manifold. <Ref. to FU(H4DO(w/o HEV))-43, INSPECTION, Intake Manifold.>	Is there any fault in the fuel system?	After repairing the fuel system, replace the front catalytic converter. <Ref. to EX(H4DO(w/o HEV))-6, Front Exhaust Pipe.> After the catalytic converter is replaced, perform step 2 to check the normal waveform is displayed, and then exit the procedure.	Go to step **11**.
11	**CHECK DTC.**	Is any other DTC displayed?	Check the appropriate DTC using the “List of Diagnostic Trouble Code (DTC)”. <Ref. to EN(H4DO w/o HEV)(diag)-83, List of Diagnostic Trouble Code (DTC).> After checking the DTC, replace the front catalytic converter. <Ref. to EX(H4DO(w/o HEV))-6, Front Exhaust Pipe.> After the catalytic converter is replaced, perform step 2 to check the normal waveform is displayed, and then exit the procedure.	Replace the rear oxygen sensor. <Ref. to FU(H4DO(w/o HEV))-101, Rear Oxygen Sensor.>

CE:DTC P0441 EVAPORATIVE EMISSION CONT. SYS. INCORRECT PURGE FLOW

DTC DETECTING CONDITION:

- Detected when two consecutive driving cycles with fault occur.
- GENERAL DESCRIPTION <Ref. to GD(H4DO w/o HEV)-148, DTC P0441 EVAPORATIVE EMISSION CONT. SYS. INCORRECT PURGE FLOW, Diagnostic Trouble Code (DTC) Detecting Criteria.>

TROUBLE SYMPTOM:

Improper idling

CAUTION:

After servicing or replacing faulty parts, perform Clear Memory Mode <Ref. to EN(H4DO w/o HEV)(diag)-59, OPERATION, Clear Memory Mode.>, and Inspection Mode <Ref. to EN(H4DO w/o HEV)(diag)-44, PROCEDURE, Inspection Mode.>.

	Step	Check	Yes	No
1	**CHECK FOR ANY OTHER DTC ON DISPLAY.**	Is any other DTC displayed?	Check the appropriate DTC using the "List of Diagnostic Trouble Code (DTC)". <Ref. to EN(H4DO w/o HEV)(diag)-83, List of Diagnostic Trouble Code (DTC).>	Go to step **2**.
2	**CHECK PURGE CONTROL SOLENOID VALVE.** Operate the purge control solenoid valve using the Subaru Select Monitor. NOTE: For detailed procedures, refer to "System Operation Check Mode". <Ref. to EN(H4DO w/o HEV)(diag)-60, System Operation Check Mode.>	Does the purge control solenoid valve operate?	Go to step **3**.	Replace the purge control solenoid valve. <Ref. to EC(H4DO(w/o HEV))-17, Purge Control Solenoid Valve.>
3	**CHECK EVAPORATIVE EMISSION CONTROL SYSTEM LINE.** 1) Turn the ignition switch to OFF. 2) Check the delivery (test) mode fuse is removed.	Are there holes, cracks, clogging, or disconnection, misconnection of hoses or pipes in evaporative emission control system?	Repair or replace the hoses or pipes.	Repair the poor contact of ECM connector.

CF:DTC P0451 EVAPORATIVE EMISSION SYSTEM PRESSURE SENSOR/ SWITCH RANGE/PERFORMANCE

DTC DETECTING CONDITION:

- Detected when two consecutive driving cycles with fault occur.
- GENERAL DESCRIPTION <Ref. to GD(H4DO w/o HEV)-151, DTC P0451 EVAPORATIVE EMISSION SYSTEM PRESSURE SENSOR/SWITCH RANGE/PERFORMANCE, Diagnostic Trouble Code (DTC) Detecting Criteria.>

CAUTION:

After servicing or replacing faulty parts, perform Clear Memory Mode <Ref. to EN(H4DO w/o HEV)(diag)-59, OPERATION, Clear Memory Mode.>, and Inspection Mode <Ref. to EN(H4DO w/o HEV)(diag)-44, PROCEDURE, Inspection Mode.>.

	Step	Check	Yes	No
1	**CHECK FOR ANY OTHER DTC ON DISPLAY.**	Is any other DTC displayed?	Check the appropriate DTC using the “List of Diagnostic Trouble Code (DTC)”. <Ref. to EN(H4DO w/o HEV)(diag)-83, List of Diagnostic Trouble Code (DTC).>	Go to step **2**.
2	**CHECK CURRENT DATA.** 1) Turn the ignition switch to ON (engine OFF). 2) Using the Subaru Select Monitor or general scan tool, read the value in «Atmosphere Pressure» and «Mani. Absolute Pressure», and compare them with the actual atmospheric pressure. NOTE: • Subaru Select Monitor For detailed operation procedures, refer to “READ CURRENT DATA FOR ENGINE”. <Ref. to EN(H4DO w/o HEV)(diag)-36, Subaru Select Monitor.> • General scan tool For detailed operation procedures, refer to the general scan tool operation manual. • To read the actual atmospheric pressure, connect the Subaru Select Monitor or general scan tool to the other known good vehicle.	Is the difference with the actual atmospheric pressure 2.1 kPa (16 mmHg, 0.63 inHg) or more?	Replace the part that showed larger deviation from the actual atmospheric pressure than the other. • If deviations in value for «Atmosphere Pressure» is larger: Replace the leak check valve assembly. <Ref. to EC(H4DO(w/o HEV))-36, Leak Check Valve Assembly.> • If deviations in value for «Mani. Absolute Pressure» is larger: Replace the manifold absolute pressure sensor. <Ref. to FU(H4DO(w/o HEV))-81, Manifold Absolute Pressure Sensor.>	Even if DTC is detected, the circuit has returned to a normal condition at this time. Reproduce the failure, and then perform the diagnosis again. NOTE: In this case, temporary poor contact of connector, temporary open or short circuit of harness may be the cause.

CG:DTC P0452 EVAPORATIVE EMISSION SYSTEM PRESSURE SENSOR/ SWITCH LOW

DTC DETECTING CONDITION:

- Immediately at fault recognition
- GENERAL DESCRIPTION <Ref. to GD(H4DO w/o HEV)-153, DTC P0452 EVAPORATIVE EMISSION SYSTEM PRESSURE SENSOR/SWITCH LOW, Diagnostic Trouble Code (DTC) Detecting Criteria.>

CAUTION:

After servicing or replacing faulty parts, perform Clear Memory Mode <Ref. to EN(H4DO w/o HEV)(diag)-59, OPERATION, Clear Memory Mode.>, and Inspection Mode <Ref. to EN(H4DO w/o HEV)(diag)-44, PROCEDURE, Inspection Mode.>.

WIRING DIAGRAM:

Engine electrical system <Ref. to WI(w/o HEV)-74, Engine Electrical System.>

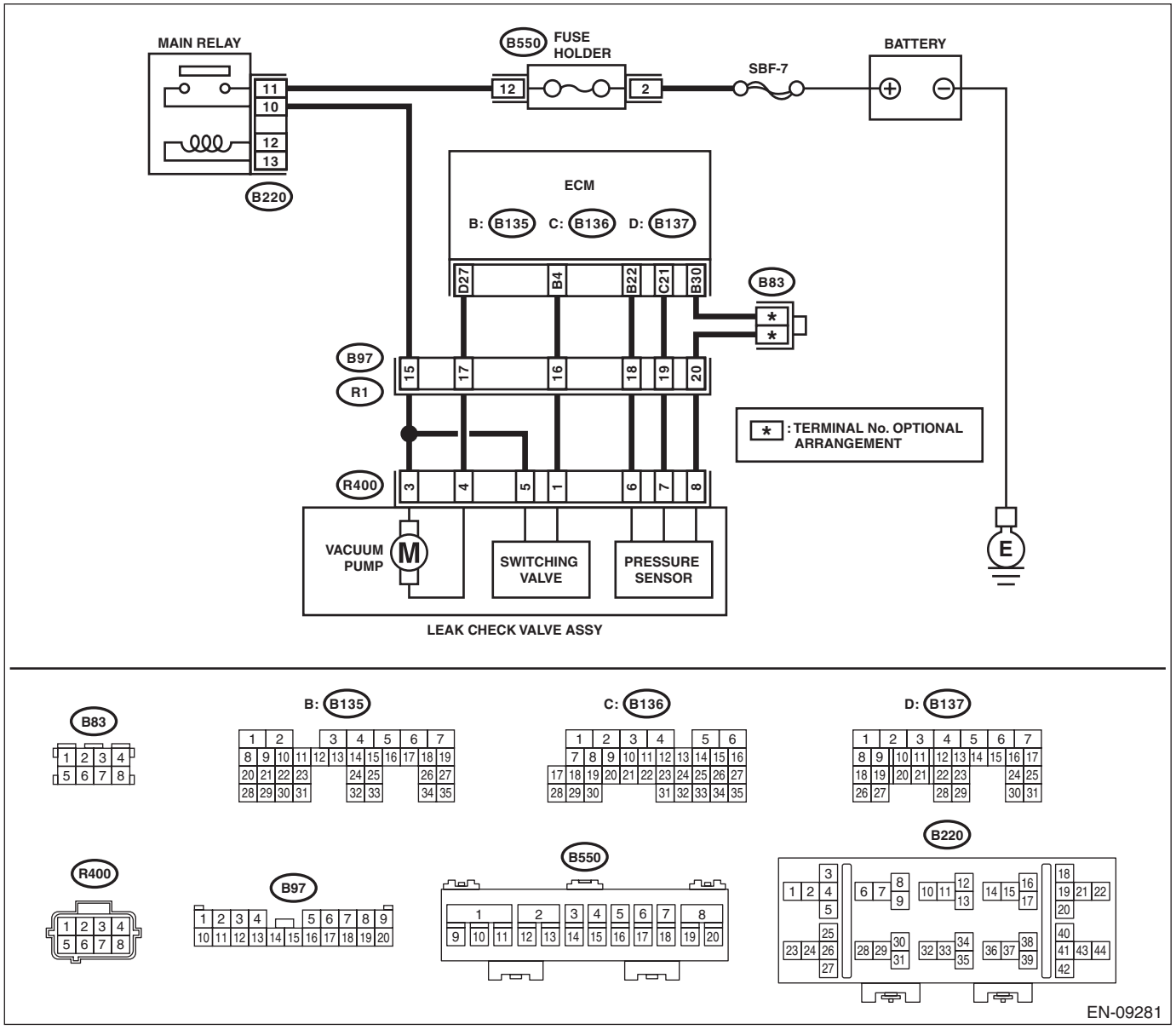

	Step	Check	Yes	No
1	**CHECK CURRENT DATA.** 1) Turn the ignition switch to ON. 2) Read the value of «Atmosphere Pressure» using the Subaru Select Monitor or a general scan tool. NOTE: • Subaru Select Monitor For detailed operation procedures, refer to "READ CURRENT DATA FOR ENGINE". <Ref. to EN(H4DO w/o HEV)(diag)-36, Subaru Select Monitor.> • General scan tool For detailed operation procedures, refer to the general scan tool operation manual.	Is the value in «Atmosphere Pressure» 34 kPa (255 mmHg, 10 inHg) or less?	Go to step **2**.	Even if DTC is detected, the circuit has returned to a normal condition at this time. Reproduce the failure, and then perform the diagnosis again. NOTE: In this case, temporary poor contact of connector, temporary open or short circuit of harness may be the cause.
2	**CHECK POWER SUPPLY OF LEAK CHECK VALVE ASSEMBLY.** 1) Turn the ignition switch to OFF. 2) Disconnect the connector from the leak check valve assembly. 3) Turn the ignition switch to ON. 4) Measure the voltage between the leak check valve assembly connector and chassis ground. ***Connector & terminal*** ***(R400) No. 6 (+) — Chassis ground (–):***	Is the voltage 4.5 V or more?	Go to step **3**.	Repair the harness and connector. NOTE: In this case, repair the following item: • Open circuit in harness between ECM connector and the leak check valve assembly connector • Poor contact of ECM connector • Poor contact of coupling connector
3	**CHECK HARNESS BETWEEN ECM AND LEAK CHECK VALVE ASSEMBLY CONNECTOR.** 1) Turn the ignition switch to OFF. 2) Disconnect the connector from ECM. 3) Measure the resistance between ECM connector and chassis ground. ***Connector & terminal*** ***(B136) No. 21 — Chassis ground:***	Is the resistance 1 MΩ or more?	Go to step **4**.	Repair the short circuit to ground in harness between ECM connector and leak check valve assembly connector.
4	**CHECK FOR POOR CONTACT.** Check for poor contact of leak check valve assembly connector.	Is there poor contact in the leak check valve assembly connector?	Repair the poor contact in the leak check valve assembly connector.	Replace the leak check valve assembly. <Ref. to EC(H4DO(w/o HEV))-36, Leak Check Valve Assembly.>

CH:DTC P0453 EVAPORATIVE EMISSION SYSTEM PRESSURE SENSOR/ SWITCH HIGH

DTC DETECTING CONDITION:

- Immediately at fault recognition
- GENERAL DESCRIPTION <Ref. to GD(H4DO w/o HEV)-155, DTC P0453 EVAPORATIVE EMISSION SYSTEM PRESSURE SENSOR/SWITCH HIGH, Diagnostic Trouble Code (DTC) Detecting Criteria.>

CAUTION:

After servicing or replacing faulty parts, perform Clear Memory Mode <Ref. to EN(H4DO w/o HEV)(diag)-59, OPERATION, Clear Memory Mode.>, and Inspection Mode <Ref. to EN(H4DO w/o HEV)(diag)-44, PROCEDURE, Inspection Mode.>.

WIRING DIAGRAM:

Engine electrical system <Ref. to WI(w/o HEV)-74, Engine Electrical System.>

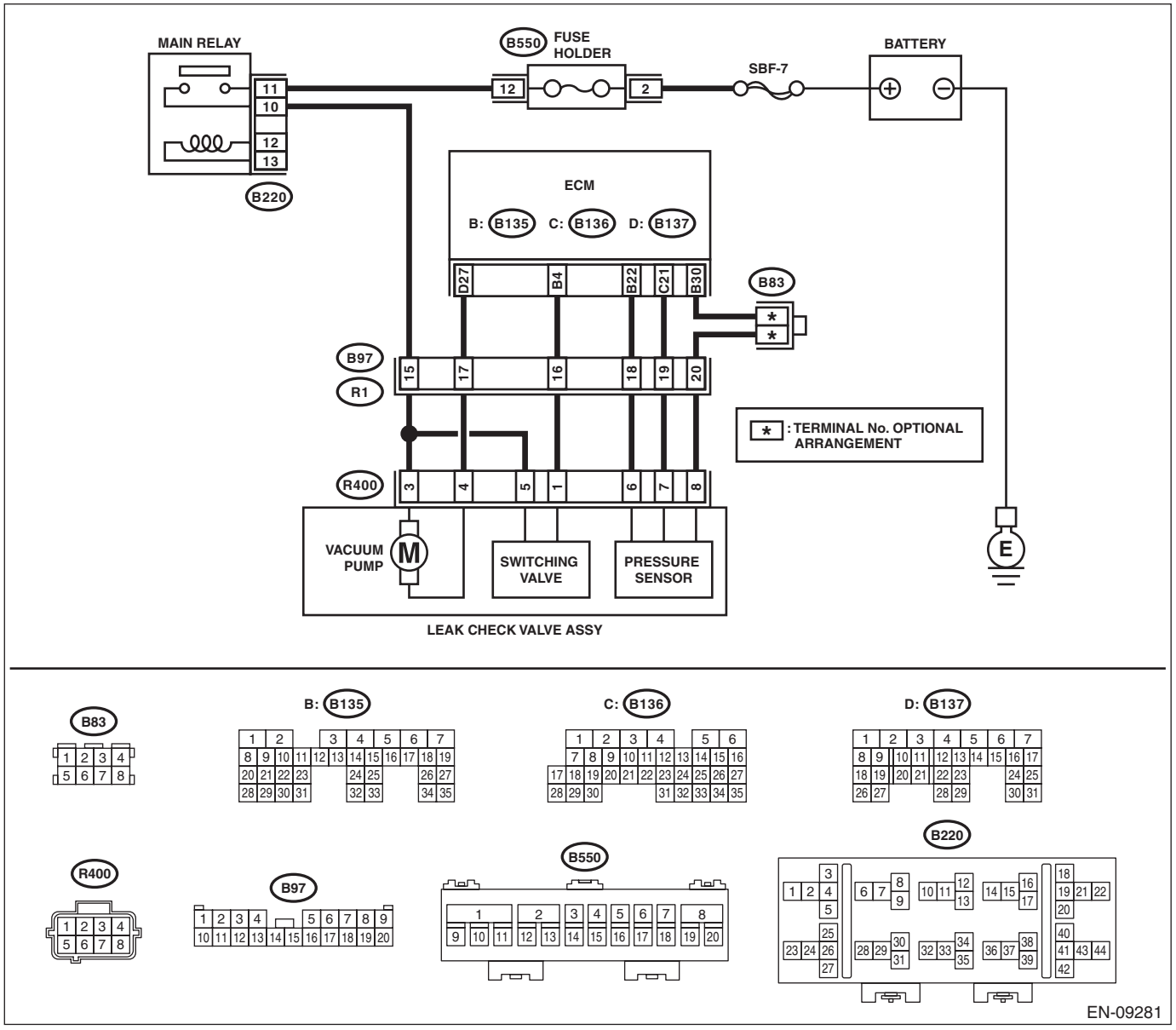

	Step	Check	Yes	No
1	**CHECK CURRENT DATA.** 1) Turn the ignition switch to ON. 2) Read the value of «Atmosphere Pressure» using the Subaru Select Monitor or a general scan tool. NOTE: • Subaru Select Monitor For detailed operation procedures, refer to "READ CURRENT DATA FOR ENGINE". <Ref. to EN(H4DO w/o HEV)(diag)-36, Subaru Select Monitor.> • General scan tool For detailed operation procedures, refer to the general scan tool operation manual.	Is the value in «Atmosphere Pressure» 125 kPa (938 mmHg, 36.9 inHg) or more?	Go to step **2**.	Even if DTC is detected, the circuit has returned to a normal condition at this time. Reproduce the failure, and then perform the diagnosis again. NOTE: In this case, temporary poor contact of connector, temporary open or short circuit of harness may be the cause.
2	**CHECK HARNESS BETWEEN ECM AND LEAK CHECK VALVE ASSEMBLY CONNECTOR.** 1) Turn the ignition switch to OFF. 2) Disconnect the connector from ECM and the leak check valve assembly. 3) Measure the resistance of harness between ECM connector and the leak check valve assembly connector. ***Connector & terminal*** ***(B136) No. 21 — (R400) No. 7:*** ***(B135) No. 30 — (R400) No. 8:***	Is the resistance less than 1 Ω?	Go to step **3**.	Repair the harness and connector. NOTE: In this case, repair the following item: • Open circuit in harness between ECM connector and the leak check valve assembly connector • Poor contact of coupling connector • Poor contact of joint connector
3	**CHECK FOR POOR CONTACT.** Check for poor contact of ECM and the leak check valve assembly connector.	Is there poor contact in ECM and the leak check valve assembly connector?	Repair the poor contact of ECM and the leak check valve assembly connector.	Go to step **4**.
4	**CHECK LEAK CHECK VALVE ASSEMBLY.** Check the pressure sensor of the leak check valve assembly. <Ref. to EC(H4DO(w/o HEV))-53, CHECK PRESSURE SENSOR, INSPECTION, Leak Check Valve Assembly.>	Is the pressure sensor of the leak check valve assembly OK?	Repair the short circuit to power in harness between ECM connector and leak check valve assembly connector.	Replace the leak check valve assembly. <Ref. to EC(H4DO(w/o HEV))-36, Leak Check Valve Assembly.>

CI: DTC P0455 EVAPORATIVE EMISSION SYSTEM LEAK DETECTED (LARGE LEAK)

DTC DETECTING CONDITION:

- Detected when two consecutive driving cycles with fault occur.
- GENERAL DESCRIPTION <Ref. to GD(H4DO w/o HEV)-157, DTC P0455 EVAPORATIVE EMISSION SYSTEM LEAK DETECTED (LARGE LEAK), Diagnostic Trouble Code (DTC) Detecting Criteria.>

TROUBLE SYMPTOM:

- Fuel odor
- There is a hole of more than 1.0 mm (0.04 in) dia. in evaporation system or fuel tank.
- Fuel filler cap loose or lost

CAUTION:

After servicing or replacing faulty parts, perform Clear Memory Mode <Ref. to EN(H4DO w/o HEV)(diag)-59, OPERATION, Clear Memory Mode.>, and Inspection Mode <Ref. to EN(H4DO w/o HEV)(diag)-44, PROCEDURE, Inspection Mode.>.

	Step	Check	Yes	No
1	**CHECK FUEL FILLER CAP.** 1) Turn the ignition switch to OFF. 2) Check the fuel filler cap. NOTE: The DTC is stored in memory if fuel filler cap is or was loose or if the cap chain has caught while tightening.	Is the fuel filler cap tightened securely?	Go to step **2**.	Tighten fuel filler cap securely.
2	**CHECK FUEL FILLER CAP.**	Is the fuel filler cap genuine?	Go to step **3**.	Replace with a genuine fuel filler cap.
3	**CHECK FUEL FILLER PIPE GASKET.**	Is there any damage to the seal between fuel filler cap and fuel filler pipe?	Repair or replace the fuel filler cap and fuel filler pipe. <Ref. to FU(H4DO(w/o HEV))-136, Fuel Filler Pipe.>	Go to step **4**.
4	**CHECK PURGE CONTROL SOLENOID VALVE.** Check air-tightness of the purge control solenoid valve. <Ref. to EC(H4DO(w/o HEV))-20, INSPECTION, Purge Control Solenoid Valve.>	Is the purge control solenoid valve OK?	Go to step **5**.	Replace the purge control solenoid valve. <Ref. to EC(H4DO(w/o HEV))-17, Purge Control Solenoid Valve.>
5	**CHECK EVAPORATIVE EMISSION CONTROL SYSTEM LINE.**	Are there holes on the evaporation line?	Repair or replace the evaporation line. <Ref. to FU(H4DO(w/o HEV))-159, Fuel Delivery and Evaporation Lines.>	Go to step **6**.
6	**CHECK CANISTER.**	Are there holes on the canister?	Replace the canister. <Ref. to EC(H4DO(w/o HEV))-9, Canister.>	Go to step **7**.

	Step	Check	Yes	No
7	**CHECK LEAK CHECK VALVE ASSEMBLY.**	Are there damage or holes on the leak check valve assembly?	Replace the leak check valve assembly. <Ref. to EC(H4DO(w/o HEV))-36, Leak Check Valve Assembly.>	Go to step **8**.
8	**CHECK FUEL TANK.** Remove the fuel tank. <Ref. to FU(H4DO(w/o HEV))-122, Fuel Tank.>	Are there damage or holes on the fuel tank?	Repair or replace the fuel tank. <Ref. to FU(H4DO(w/o HEV))-122, Fuel Tank.>	Go to step **9**.
9	**CHECK ANY OTHER MECHANICAL TROUBLE IN EVAPORATIVE EMISSION CONTROL SYSTEM.**	Are there holes, cracks, clogging, or disconnection, misconnection of hoses or pipes in evaporative emission control system?	Repair or replace the hoses or pipes.	Repair the poor contact of ECM connector.

CJ:DTC P0456 EVAPORATIVE EMISSION CONTROL SYSTEM LEAK DETECTED (VERY SMALL LEAK)

NOTE:
For the diagnostic procedure, refer to DTC P0455. <Ref. to EN(H4DO w/o HEV)(diag)-215, DTC P0455 EVAPORATIVE EMISSION SYSTEM LEAK DETECTED (LARGE LEAK), Diagnostic Procedure with Diagnostic Trouble Code (DTC).>

CK:DTC P0458 EVAPORATIVE EMISSION SYSTEM PURGE CONTROL VALVE CIRCUIT LOW

DTC DETECTING CONDITION:

- Detected when two consecutive driving cycles with fault occur.
- GENERAL DESCRIPTION <Ref. to GD(H4DO w/o HEV)-165, DTC P0458 EVAPORATIVE EMISSION SYSTEM PURGE CONTROL VALVE CIRCUIT LOW, Diagnostic Trouble Code (DTC) Detecting Criteria.>

TROUBLE SYMPTOM:

Improper idling

CAUTION:

After servicing or replacing faulty parts, perform Clear Memory Mode <Ref. to EN(H4DO w/o HEV)(diag)-59, OPERATION, Clear Memory Mode.>, and Inspection Mode <Ref. to EN(H4DO w/o HEV)(diag)-44, PROCEDURE, Inspection Mode.>.

WIRING DIAGRAM:

Engine electrical system <Ref. to WI(w/o HEV)-74, Engine Electrical System.>

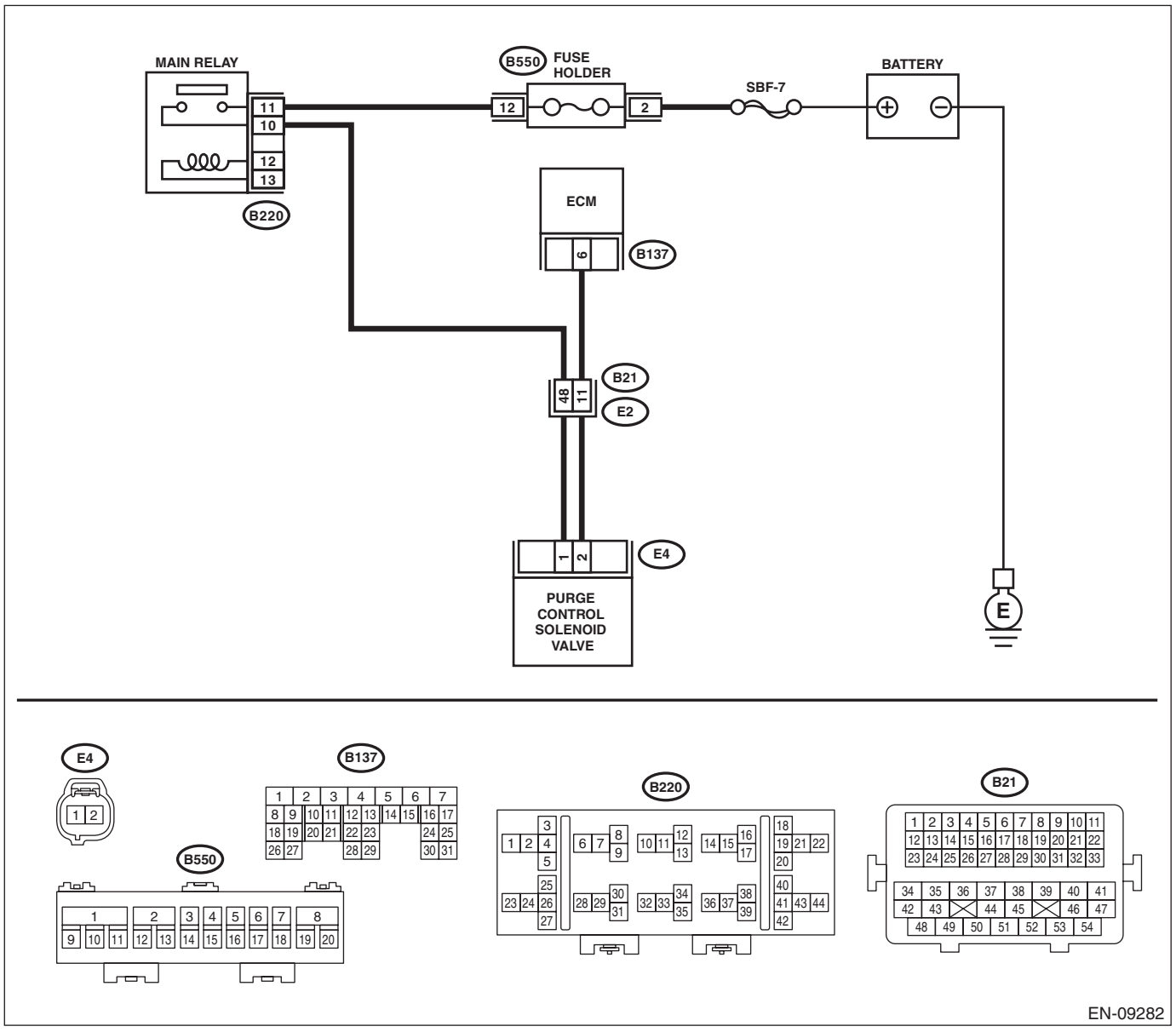

	Step	Check	Yes	No
1	**CHECK OUTPUT SIGNAL OF ECM.** 1) Turn the ignition switch to ON. 2) Measure the voltage between ECM connector and chassis ground. ***Connector & terminal*** ***(B137) No. 6 (+) — Chassis ground (–):***	Is the voltage 10 V or more?	Go to step **2**.	Go to step **3**.
2	**CHECK FOR POOR CONTACT.** Check for poor contact of ECM connector.	Is there poor contact of ECM connector?	Repair the poor contact of ECM connector.	Even if DTC is detected, the circuit has returned to a normal condition at this time. Reproduce the failure, and then perform the diagnosis again. NOTE: In this case, temporary open or short circuit of harness or temporary poor contact of connector may be the cause.
3	**CHECK POWER SUPPLY TO PURGE CONTROL SOLENOID VALVE.** Measure the voltage between purge control solenoid valve connector and engine ground. ***Connector & terminal*** ***(E4) No. 1 (+) — Engine ground (–):***	Is the voltage 10 V or more?	Go to step **4**.	Repair the power supply circuit.
4	**CHECK HARNESS BETWEEN ECM AND PURGE CONTROL SOLENOID VALVE CONNECTOR.** 1) Turn the ignition switch to OFF. 2) Disconnect the connectors from ECM and purge control solenoid valve. 3) Measure the resistance between the purge control solenoid valve connector and engine ground. ***Connector & terminal*** ***(E4) No. 2 — Engine ground:***	Is the resistance 1 MΩ or more?	Go to step **5**.	Repair the short circuit to ground in harness between ECM connector and purge control solenoid valve connector.
5	**CHECK HARNESS BETWEEN ECM AND PURGE CONTROL SOLENOID VALVE CONNECTOR.** Measure the resistance of harness between ECM connector and purge control solenoid valve. ***Connector & terminal*** ***(B137) No. 6 — (E4) No. 2:***	Is the resistance less than 1 Ω?	Go to step **6**.	Repair the harness and connector. NOTE: In this case, repair the following item: • Open circuit in harness between ECM connector and purge control solenoid valve connector • Poor contact of coupling connector

	Step	Check	Yes	No
6	**CHECK PURGE CONTROL SOLENOID VALVE.** 1) Remove the purge control solenoid valve. 2) Measure the resistance between purge control solenoid valve terminals. ***Terminals*** ***No. 1 — No. 2:***	Is the resistance 10 — 100 Ω?	Repair the poor contact of purge control solenoid valve connector.	Replace the purge control solenoid valve. <Ref. to EC(H4DO(w/o HEV))-17, Purge Control Solenoid Valve.>

CL:DTC P0459 EVAPORATIVE EMISSION SYSTEM PURGE CONTROL VALVE CIRCUIT HIGH

DTC DETECTING CONDITION:

- Detected when two consecutive driving cycles with fault occur.
- GENERAL DESCRIPTION <Ref. to GD(H4DO w/o HEV)-167, DTC P0459 EVAPORATIVE EMISSION SYSTEM PURGE CONTROL VALVE CIRCUIT HIGH, Diagnostic Trouble Code (DTC) Detecting Criteria.>

TROUBLE SYMPTOM:

Improper idling

CAUTION:

After servicing or replacing faulty parts, perform Clear Memory Mode <Ref. to EN(H4DO w/o HEV)(diag)-59, OPERATION, Clear Memory Mode.>, and Inspection Mode <Ref. to EN(H4DO w/o HEV)(diag)-44, PROCEDURE, Inspection Mode.>.

WIRING DIAGRAM:

Engine electrical system <Ref. to WI(w/o HEV)-74, Engine Electrical System.>

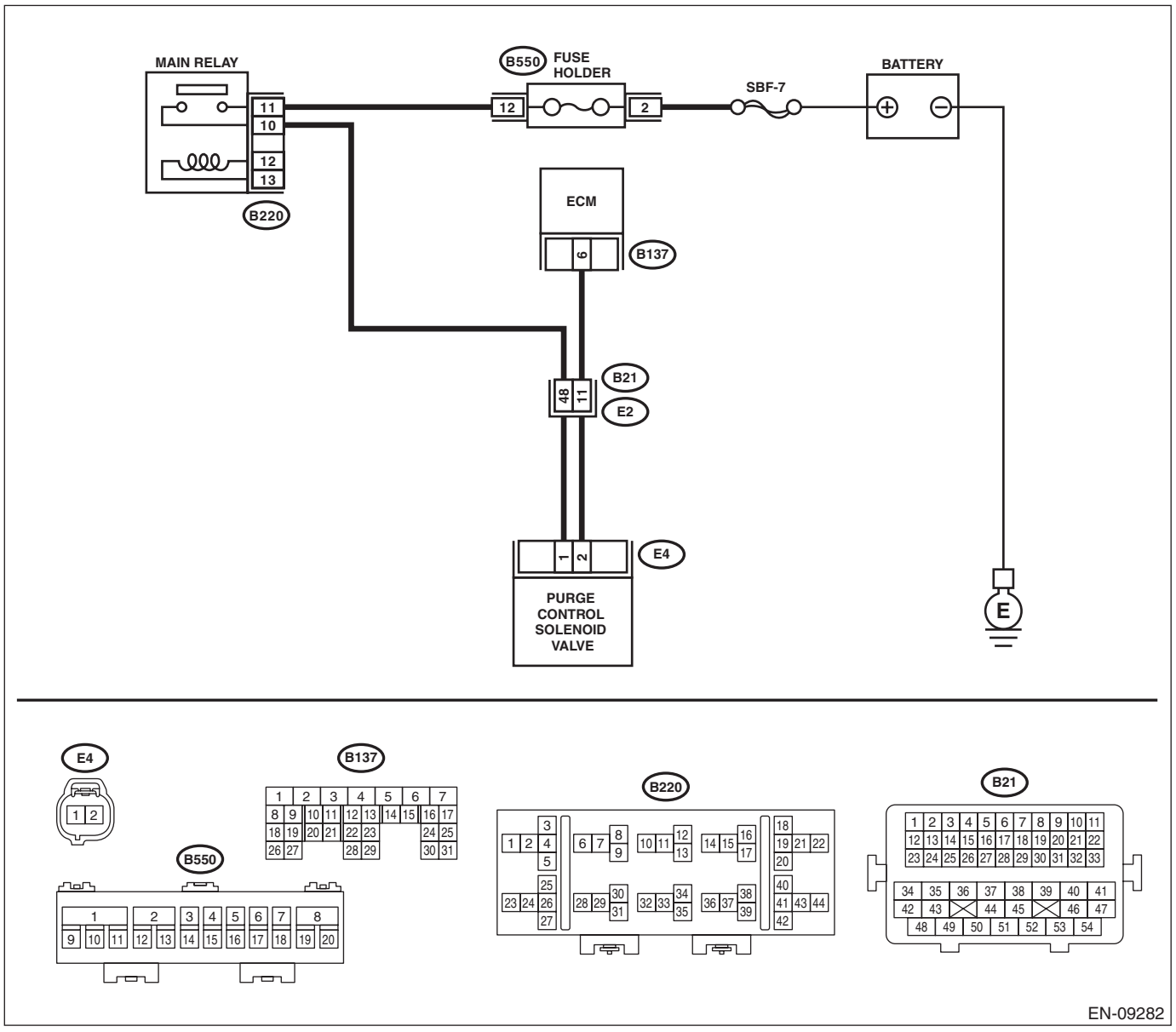

	Step	Check	Yes	No
1	**CHECK HARNESS BETWEEN ECM AND PURGE CONTROL SOLENOID VALVE CONNECTOR.** 1) Turn the ignition switch to OFF. 2) Disconnect the connectors from ECM and purge control solenoid valve. 3) Turn the ignition switch to ON. 4) Measure the voltage between ECM connector and chassis ground. ***Connector & terminal*** ***(B137) No. 6 (+) — Chassis ground (–):***	Is the voltage 10 V or more?	Repair the short circuit to power in the harness between ECM connector and purge control solenoid valve connector.	Go to step **2**.
2	**CHECK PURGE CONTROL SOLENOID VALVE.** 1) Turn the ignition switch to OFF. 2) Measure the resistance between purge control solenoid valve terminals. ***Terminals*** ***No. 1 — No. 2:***	Is the resistance less than 1 Ω?	Replace the purge control solenoid valve. <Ref. to EC(H4DO(w/o HEV))-17, Purge Control Solenoid Valve.>	Repair the poor contact of ECM connector.

CM:DTC P0461 FUEL LEVEL SENSOR “A” CIRCUIT RANGE/PERFORMANCE

DTC DETECTING CONDITION:

- Detected when two consecutive driving cycles with fault occur.
- GENERAL DESCRIPTION <Ref. to GD(H4DO w/o HEV)-169, DTC P0461 FUEL LEVEL SENSOR “A” CIRCUIT RANGE/PERFORMANCE, Diagnostic Trouble Code (DTC) Detecting Criteria.>

CAUTION:
After servicing or replacing faulty parts, perform Clear Memory Mode <Ref. to EN(H4DO w/o HEV)(diag)-59, OPERATION, Clear Memory Mode.>, and Inspection Mode <Ref. to EN(H4DO w/o HEV)(diag)-44, PROCEDURE, Inspection Mode.>.

Step		Check	Yes	No
1	**CHECK FOR ANY OTHER DTC ON DISPLAY.**	Is any other DTC displayed?	Check the appropriate DTC using the “List of Diagnostic Trouble Code (DTC)”. <Ref. to EN(H4DO w/o HEV)(diag)-83, List of Diagnostic Trouble Code (DTC).>	Replace the fuel level sensor and fuel sub level sensor. <Ref. to FU(H4DO(w/o HEV))-146, Fuel Level Sensor.> <Ref. to FU(H4DO(w/o HEV))-148, Fuel Sub Level Sensor.>

CN:DTC P0462 FUEL LEVEL SENSOR “A” CIRCUIT LOW

NOTE:
For the diagnostic procedure, refer to DTC P0463. <Ref. to EN(H4DO w/o HEV)(diag)-223, DTC P0463 FUEL LEVEL SENSOR “A” CIRCUIT HIGH, Diagnostic Procedure with Diagnostic Trouble Code (DTC).>

CO:DTC P0463 FUEL LEVEL SENSOR “A” CIRCUIT HIGH

DTC DETECTING CONDITION:

- Detected when two consecutive driving cycles with fault occur.
- GENERAL DESCRIPTION <Ref. to GD(H4DO w/o HEV)-173, DTC P0463 FUEL LEVEL SENSOR “A” CIRCUIT HIGH, Diagnostic Trouble Code (DTC) Detecting Criteria.>

CAUTION:
After servicing or replacing faulty parts, perform Clear Memory Mode <Ref. to EN(H4DO w/o HEV)(diag)-59, OPERATION, Clear Memory Mode.>, and Inspection Mode <Ref. to EN(H4DO w/o HEV)(diag)-44, PROCEDURE, Inspection Mode.>.

Step		Check	Yes	No
1	**CHECK FOR ANY OTHER DTC ON DISPLAY.**	Is DTC P0462 or P0463 displayed on the Subaru Select Monitor?	Perform the diagnosis from step 2 in DTC B1500 of the combination meter. <Ref. to IDI(diag)-32, DTC B1500 FUEL SENDER OPEN/SHORT-CIRCUIT DETECTION, Diagnostic Procedure with Diagnostic Trouble Code (DTC).>	Even if DTC is detected, the circuit has returned to a normal condition at this time. Reproduce the failure, and then perform the diagnosis again. NOTE: In this case, temporary poor contact of connector, temporary open or short circuit of harness may be the cause.

CP:DTC P0500 VEHICLE SPEED SENSOR “A”

DTC DETECTING CONDITION:

- Immediately at fault recognition
- GENERAL DESCRIPTION <Ref. to GD(H4DO w/o HEV)-175, DTC P0500 VEHICLE SPEED SENSOR “A”, Diagnostic Trouble Code (DTC) Detecting Criteria.>

CAUTION:
After servicing or replacing faulty parts, perform Clear Memory Mode <Ref. to EN(H4DO w/o HEV)(diag)-59, OPERATION, Clear Memory Mode.>, and Inspection Mode <Ref. to EN(H4DO w/o HEV)(diag)-44, PROCEDURE, Inspection Mode.>.

Step		Check	Yes	No
1	**CHECK DTC OF VDC.** Check DTC of VDC.	Is DTC of VDC displayed?	Perform the diagnosis according to DTC. <Ref. to VDC(diag)-37, List of Diagnostic Trouble Code (DTC).>	Repair the poor contact of ECM connector.

CQ:DTC P0506 IDLE AIR CONTROL SYSTEM RPM LOWER THAN EXPECTED

DTC DETECTING CONDITION:

- Detected when two consecutive driving cycles with fault occur.
- GENERAL DESCRIPTION <Ref. to GD(H4DO w/o HEV)-176, DTC P0506 IDLE AIR CONTROL SYSTEM RPM LOWER THAN EXPECTED, Diagnostic Trouble Code (DTC) Detecting Criteria.>

TROUBLE SYMPTOM:

- Hard to start the engine.
- Engine does not start.
- Improper idling
- Engine stalls.

CAUTION:

After servicing or replacing faulty parts, perform Clear Memory Mode <Ref. to EN(H4DO w/o HEV)(diag)-59, OPERATION, Clear Memory Mode.>, and Inspection Mode <Ref. to EN(H4DO w/o HEV)(diag)-44, PROCEDURE, Inspection Mode.>.

	Step	Check	Yes	No
1	**CHECK FOR ANY OTHER DTC ON DISPLAY.**	Is any other DTC displayed?	Check the appropriate DTC using the "List of Diagnostic Trouble Code (DTC)". <Ref. to EN(H4DO w/o HEV)(diag)-83, List of Diagnostic Trouble Code (DTC).>	Go to step **2**.
2	**CHECK AIR CLEANER ELEMENT.** 1) Turn the ignition switch to OFF. 2) Check the air cleaner element.	Is there excessive clogging on air cleaner element?	Replace the air cleaner element. <Ref. to IN(H4DO(w/o HEV))-4, Air Cleaner Element.>	Go to step **3**.
3	**CHECK ELECTRONIC THROTTLE CONTROL.** 1) Remove the electronic throttle control. <Ref. to FU(H4DO(w/o HEV))-15, REMOVAL, Throttle Body.> 2) Check the electronic throttle control.	Are foreign matter found inside electronic throttle control?	Remove foreign matter from electronic throttle control.	Perform the diagnosis of DTC P2101. <Ref. to EN(H4DO w/o HEV)(diag)-308, DTC P2101 THROTTLE ACTUATOR CONTROL MOTOR CIRCUIT RANGE/PERFORMANCE, Diagnostic Procedure with Diagnostic Trouble Code (DTC).>

CR:DTC P0507 IDLE AIR CONTROL SYSTEM RPM HIGHER THAN EXPECTED

DTC DETECTING CONDITION:

- Detected when two consecutive driving cycles with fault occur.
- GENERAL DESCRIPTION <Ref. to GD(H4DO w/o HEV)-177, DTC P0507 IDLE AIR CONTROL SYSTEM RPM HIGHER THAN EXPECTED, Diagnostic Trouble Code (DTC) Detecting Criteria.>

TROUBLE SYMPTOM:

Engine keeps running at higher speed than specified idle speed.

CAUTION:

After servicing or replacing faulty parts, perform Clear Memory Mode <Ref. to EN(H4DO w/o HEV)(diag)-59, OPERATION, Clear Memory Mode.>, and Inspection Mode <Ref. to EN(H4DO w/o HEV)(diag)-44, PROCEDURE, Inspection Mode.>.

	Step	Check	Yes	No
1	**CHECK FOR ANY OTHER DTC ON DISPLAY.**	Is any other DTC displayed?	Check the appropriate DTC using the "List of Diagnostic Trouble Code (DTC)". <Ref. to EN(H4DO w/o HEV)(diag)-83, List of Diagnostic Trouble Code (DTC).>	Go to step **2**.
2	**CHECK AIR INTAKE SYSTEM.** 1) Start and idle the engine. 2) Check the following items. • Loose installation of intake manifold and throttle body • Cracks of intake manifold gasket and throttle body gasket • Disconnection of vacuum hoses	Is there any fault in air intake system?	Repair air suction and leaks.	Go to step **3**.
3	**CHECK ELECTRONIC THROTTLE CONTROL.** 1) Turn the ignition switch to OFF. 2) Remove the electronic throttle control. <Ref. to FU(H4DO(w/o HEV))-15, REMOVAL, Throttle Body.> 3) Check the electronic throttle control.	Are foreign matter found inside electronic throttle control?	Remove foreign matter from electronic throttle control.	Perform the diagnosis of DTC P2101. <Ref. to EN(H4DO w/o HEV)(diag)-308, DTC P2101 THROTTLE ACTUATOR CONTROL MOTOR CIRCUIT RANGE/PERFORMANCE, Diagnostic Procedure with Diagnostic Trouble Code (DTC).>

CS:DTC P050A COLD START IDLE AIR CONTROL SYSTEM PERFORMANCE

DTC DETECTING CONDITION:

- Detected when two consecutive driving cycles with fault occur.
- GENERAL DESCRIPTION <Ref. to GD(H4DO w/o HEV)-178, DTC P050A COLD START IDLE AIR CONTROL SYSTEM PERFORMANCE, Diagnostic Trouble Code (DTC) Detecting Criteria.>

TROUBLE SYMPTOM:

- Engine keeps running at higher speed than specified idle speed.
- Engine keeps running at a lower speed than the specified idle speed.
- Engine stalls.

CAUTION:

After servicing or replacing faulty parts, perform Clear Memory Mode <Ref. to EN(H4DO w/o HEV)(diag)-59, OPERATION, Clear Memory Mode.>, and Inspection Mode <Ref. to EN(H4DO w/o HEV)(diag)-44, PROCEDURE, Inspection Mode.>.

WIRING DIAGRAM:

Engine electrical system <Ref. to WI(w/o HEV)-74, Engine Electrical System.>

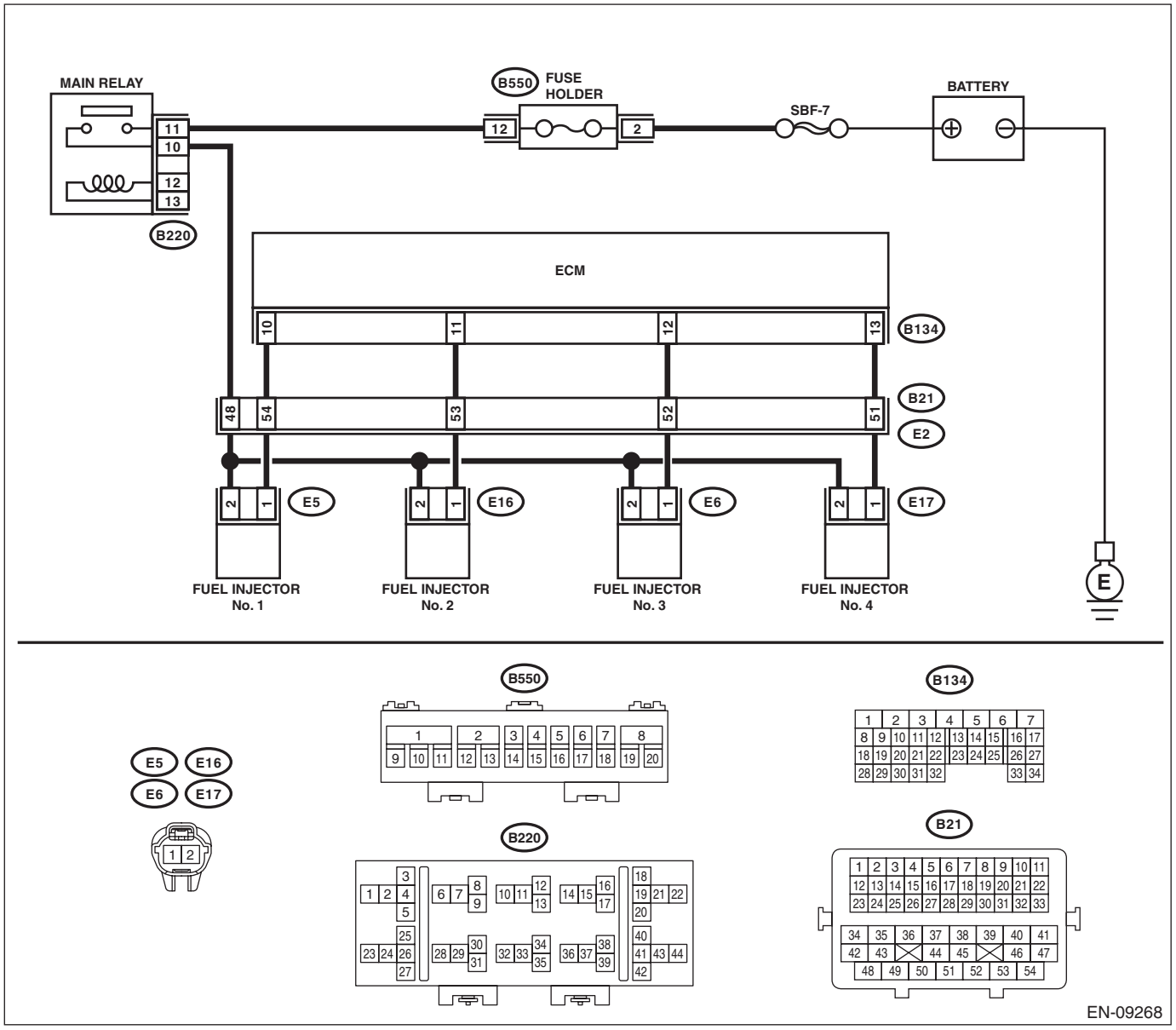

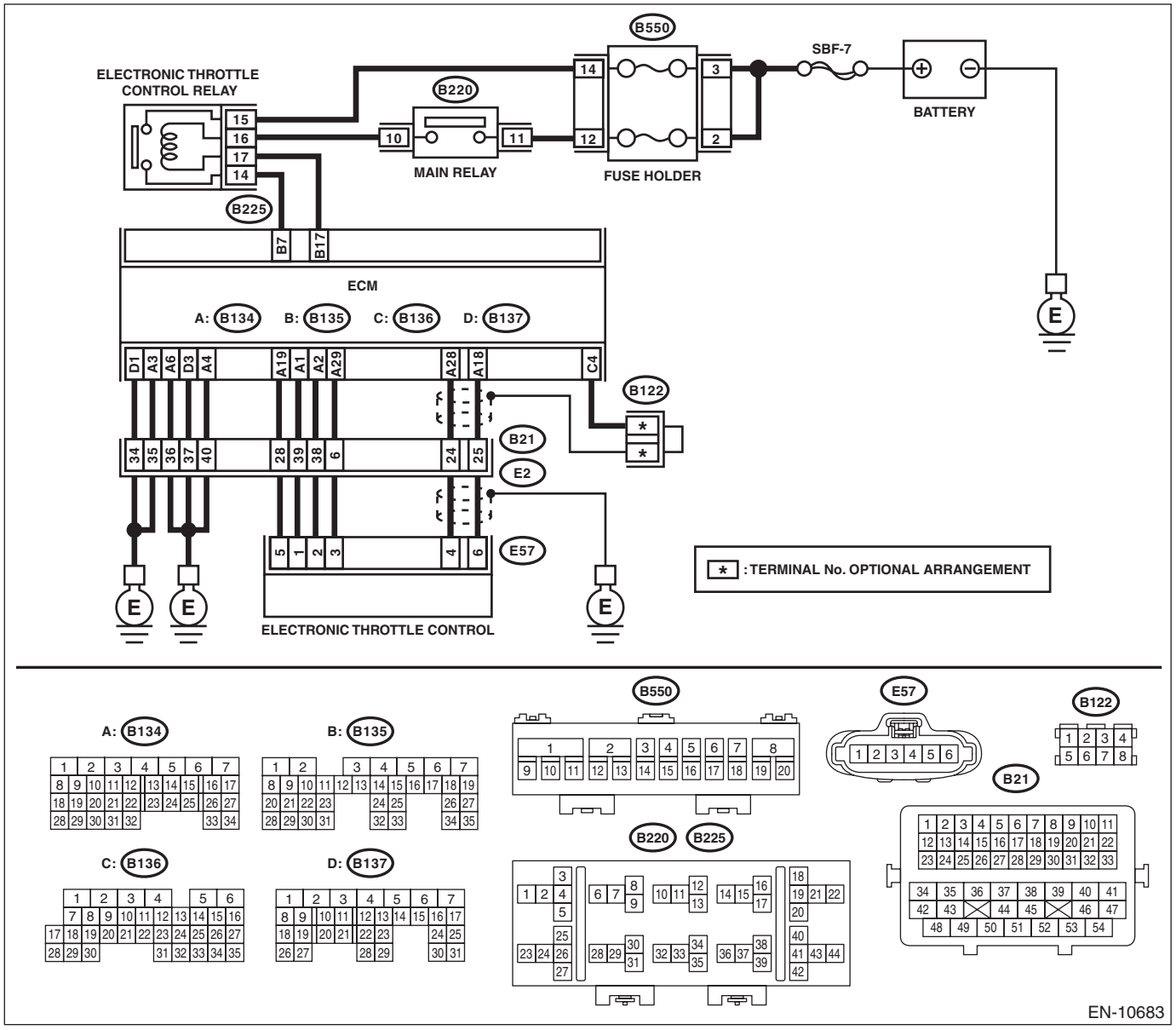

Step		Check	Yes	No
1	**CHECK FOR ANY OTHER DTC ON DISPLAY.**	Is any other DTC displayed?	Check the appropriate DTC using the "List of Diagnostic Trouble Code (DTC)". <Ref. to EN(H4DO w/o HEV)(diag)-83, List of Diagnostic Trouble Code (DTC).>	Go to step **2**.
2	**CHECK ENGINE OIL.**	Is there a proper amount of engine oil?	Go to step **3**.	Replace engine oil. <Ref. to LU(H4DO(w/o HEV))-13, REPLACEMENT, Engine Oil.>
3	**CHECK EXHAUST SYSTEM.**	Are there holes or loose bolts on exhaust system?	Repair the exhaust system.	Go to step **4**.

Step		Check	Yes	No
4	**CHECK AIR INTAKE SYSTEM.**	Are there holes, loose bolts or disconnection of hose on air intake system?	Repair the air intake system.	Go to step **5**.
5	**CHECK FUEL PRESSURE.** **WARNING:** **Place "NO OPEN FLAMES" signs near the working area.** **CAUTION:** **Be careful not to spill fuel.** Measure the fuel pressure. <Ref. to ME(H4DO(w/o HEV))-35, INSPECTION, Fuel Pressure.> **CAUTION:** **Release fuel pressure before removing the fuel pressure gauge.**	Is the measured value 340 — 400 kPa (3.5 — 4.1 kg/cm^2, 49 — 58 psi)?	Go to step **6**.	Check the fuel pump and fuel delivery line. <Ref. to FU(H4DO(w/o HEV))-145, INSPECTION, Fuel Pump.> <Ref. to FU(H4DO(w/o HEV))-165, INSPECTION, Fuel Delivery and Evaporation Lines.>
6	**CHECK ENGINE COOLANT TEMPERATURE SENSOR.** 1) Start the engine and warm up completely. 2) Read the value of «Coolant Temp.» using the Subaru Select Monitor or a general scan tool. NOTE: • Subaru Select Monitor For detailed operation procedures, refer to "READ CURRENT DATA FOR ENGINE". <Ref. to EN(H4DO w/o HEV)(diag)-36, Subaru Select Monitor.> • General scan tool For detailed operation procedures, refer to the general scan tool operation manual.	Is the value of «Coolant Temp.» 75°C (167°F) or more?	Go to step **7**.	Replace the engine coolant temperature sensor. <Ref. to FU(H4DO(w/o HEV))-53, Engine Coolant Temperature Sensor.>
7	**CHECK MASS AIR FLOW AND INTAKE AIR TEMPERATURE SENSOR.** 1) Start the engine and warm up engine until coolant temperature is higher than 75°C (167°F). 2) For CVT models, set the select lever to "P" range or "N" range, and for MT models, place the shift lever in the neutral position. 3) Turn the A/C switch to OFF. 4) Turn all the accessory switches to OFF. 5) Read the value of «Mass Air Flow» using the Subaru Select Monitor or a general scan tool. NOTE: • Subaru Select Monitor For detailed operation procedures, refer to "READ CURRENT DATA FOR ENGINE". <Ref. to EN(H4DO w/o HEV)(diag)-36, Subaru Select Monitor.> • General scan tool For detailed operation procedures, refer to the general scan tool operation manual.	Is the value of «Mass Air Flow» 2.0 — 5.0 g/s (0.26 — 0.66 lb/m)?	Go to step **8**.	Replace the mass air flow and intake air temperature sensor. <Ref. to FU(H4DO(w/o HEV))-78, Mass Air Flow and Intake Air Temperature Sensor.>

	Step	Check	Yes	No
8	**CHECK MASS AIR FLOW AND INTAKE AIR TEMPERATURE SENSOR.** 1) Start the engine and warm up engine until coolant temperature is higher than 75°C (167°F). 2) For CVT models, set the select lever to "P" range or "N" range, and for MT models, place the shift lever in the neutral position. 3) Turn the A/C switch to OFF. 4) Turn all the accessory switches to OFF. 5) Open the front hood. 6) Measure the ambient temperature. 7) Read the value of «Intake Air Temp.» using the Subaru Select Monitor or a general scan tool. NOTE: • Subaru Select Monitor For detailed operation procedures, refer to "READ CURRENT DATA FOR ENGINE". <Ref. to EN(H4DO w/o HEV)(diag)-36, Subaru Select Monitor.> • General scan tool For detailed operation procedures, refer to the general scan tool operation manual.	Subtract ambient temperature from «Intake Air Temp.». Is the obtained value –10 — 50°C (–18 — 90°F)?	Go to step **9**.	Check the mass air flow and intake air temperature sensor. <Ref. to FU(H4DO(w/o HEV))-78, Mass Air Flow and Intake Air Temperature Sensor.>
9	**CHECK OUTPUT SIGNAL OF ECM.** 1) Turn the ignition switch to ON. 2) Measure the voltage between ECM and chassis ground on faulty cylinders. ***Connector & terminal*** ***#1 (B134) No. 10 (+) — Chassis ground (–):*** ***#2 (B134) No. 11 (+) — Chassis ground (–):*** ***#3 (B134) No. 12 (+) — Chassis ground (–):*** ***#4 (B134) No. 13 (+) — Chassis ground (–):***	Is the voltage 10 V or more?	Go to step **14**.	Go to step **10**.
10	**CHECK HARNESS BETWEEN ECM AND FUEL INJECTOR CONNECTOR.** 1) Turn the ignition switch to OFF. 2) Disconnect the connector from fuel injector on faulty cylinders. 3) Measure the resistance between fuel injector connector and engine ground on faulty cylinders. ***Connector & terminal*** ***#1 (E5) No. 1 — Engine ground:*** ***#2 (E16) No. 1 — Engine ground:*** ***#3 (E6) No. 1 — Engine ground:*** ***#4 (E17) No. 1 — Engine ground:***	Is the resistance 1 MΩ or more?	Go to step **11**.	Repair the short circuit to ground in harness between ECM connector and fuel injector connector.
11	**CHECK HARNESS BETWEEN ECM AND FUEL INJECTOR CONNECTOR.** Measure the resistance of harness between ECM and fuel injector connector on faulty cylinders. ***Connector & terminal*** ***#1 (B134) No. 10 — (E5) No. 1:*** ***#2 (B134) No. 11 — (E16) No. 1:*** ***#3 (B134) No. 12 — (E6) No. 1:*** ***#4 (B134) No. 13 — (E17) No. 1:***	Is the resistance less than 1 Ω?	Go to step **12**.	Repair the harness and connector. NOTE: In this case, repair the following item: • Open circuit in harness between ECM connector and fuel injector connector • Poor contact of coupling connector

	Step	Check	Yes	No
12	**CHECK FUEL INJECTOR.** Measure the resistance between fuel injector terminals on faulty cylinder. ***Terminals*** ***No. 1 — No. 2:***	Is the resistance 5 — 20 Ω?	Go to step **13**.	Replace the faulty fuel injector. <Ref. to FU(H4DO(w/o HEV))-84, Fuel Injector.>
13	**CHECK POWER SUPPLY LINE.** 1) Turn the ignition switch to ON. 2) Measure the voltage between fuel injector and engine ground on faulty cylinders. ***Connector & terminal*** ***#1 (E5) No. 2 (+) — Engine ground (–):*** ***#2 (E16) No. 2 (+) — Engine ground (–):*** ***#3 (E6) No. 2 (+) — Engine ground (–):*** ***#4 (E17) No. 2 (+) — Engine ground (–):***	Is the voltage 10 V or more?	Repair the poor contact of all connectors in fuel injector circuit.	Repair the harness and connector. NOTE: In this case, repair the following item: • Open circuit in harness between the main relay connector and fuel injector connector on faulty cylinders • Poor contact of coupling connector • Poor contact of main relay connector
14	**CHECK HARNESS BETWEEN ECM AND FUEL INJECTOR CONNECTOR.** 1) Turn the ignition switch to OFF. 2) Disconnect the connector from fuel injector on faulty cylinders. 3) Turn the ignition switch to ON. 4) Measure the voltage between ECM and chassis ground on faulty cylinders. ***Connector & terminal*** ***#1 (B134) No. 10 (+) — Chassis ground (–):*** ***#2 (B134) No. 11 (+) — Chassis ground (–):*** ***#3 (B134) No. 12 (+) — Chassis ground (–):*** ***#4 (B134) No. 13 (+) — Chassis ground (–):***	Is the voltage 10 V or more?	Repair the short circuit to power in harness between ECM connector and fuel injector.	Go to step **15**.
15	**CHECK FUEL INJECTOR.** 1) Turn the ignition switch to OFF. 2) Measure the resistance between fuel injector terminals on faulty cylinder. ***Terminals*** ***No. 1 — No. 2:***	Is the resistance 5 — 20 Ω?	Go to step **16**.	Replace the faulty fuel injector. <Ref. to FU(H4DO(w/o HEV))-84, Fuel Injector.>
16	**CHECK INSTALLATION CONDITION OF CAMSHAFT POSITION SENSOR/CRANKSHAFT POSITION SENSOR.**	Is the camshaft position sensor or crankshaft position sensor loosely installed?	Tighten the camshaft position sensor or crankshaft position sensor. <Ref. to FU(H4DO(w/o HEV))-65, INSTALLATION, Camshaft Position Sensor.> <Ref. to FU(H4DO(w/o HEV))-59, INSTALLATION, Crankshaft Position Sensor.>	Go to step **17**.

	Step	Check	Yes	No
17	**CHECK CRANKSHAFT POSITION SENSOR PLATE.**	Is the crankshaft position sensor plate rusted or does it have broken teeth?	Replace the crankshaft position sensor plate. <Ref. to ME(H4DO(w/o HEV))-299, Cylinder Block.>	Go to step **18**.
18	**CHECK INSTALLATION CONDITION OF TIMING CHAIN.** Turn the crankshaft using ST, and align the alignment mark on crank sprocket with alignment mark on cylinder block. ST 18252AA000 CRANKSHAFT SOCKET	Is the timing chain dislocated from its proper position?	Correct the installation condition of timing chain. <Ref. to ME(H4DO(w/o HEV))-163, Timing Chain Assembly.>	Go to step **19**.
19	**CHECK ELECTRONIC THROTTLE CONTROL RELAY.** 1) Turn the ignition switch to OFF. 2) Remove the electronic throttle control relay. 3) Connect the battery to terminals No. 16 and No. 17 of electronic throttle control relay. 4) Measure the resistance between electronic throttle control relay terminals. ***Terminals*** ***No. 14 — No. 15:***	Is the resistance less than 1 Ω?	Go to step **20**.	Replace the electronic throttle control relay. <Ref. to FU(H4DO(w/o HEV))-113, Electronic Throttle Control Relay.>
20	**CHECK POWER SUPPLY OF ELECTRONIC THROTTLE CONTROL RELAY.** Measure the voltage between electronic throttle control relay connector and chassis ground. ***Connector & terminal*** ***(B225) No. 15 (+) — Chassis ground (–):***	Is the voltage 10 V or more?	Go to step **21**.	Repair the open or ground short circuit of power supply circuit.
21	**CHECK HARNESS BETWEEN ECM AND ELECTRONIC THROTTLE CONTROL RELAY CONNECTOR.** 1) Disconnect the connector from ECM. 2) Turn the ignition switch to ON. 3) Measure the voltage between electronic throttle control relay connector and chassis ground. ***Connector & terminal*** ***(B225) No. 17 (+) — Chassis ground (–):***	Is the voltage 10 V or more?	Repair the short circuit to power in the harness between ECM connector and electronic throttle control relay connector.	Go to step **22**.
22	**CHECK HARNESS BETWEEN ECM AND ELECTRONIC THROTTLE CONTROL RELAY CONNECTOR.** 1) Turn the ignition switch to OFF. 2) Measure the resistance between electronic throttle control relay connector and chassis ground. ***Connector & terminal*** ***(B225) No. 14 — Chassis ground:*** ***(B225) No. 17 — Chassis ground:***	Is the resistance 1 MΩ or more?	Go to step **23**.	Repair the short circuit to ground in harness between ECM connector and electronic throttle control relay connector.
23	**CHECK HARNESS BETWEEN ECM AND ELECTRONIC THROTTLE CONTROL RELAY CONNECTOR.** Measure the resistance of harness between ECM connector and electronic throttle control relay connector. ***Connector & terminal*** ***(B135) No. 17 — (B225) No. 17:*** ***(B135) No. 7 — (B225) No. 14:***	Is the resistance less than 1 Ω?	Go to step **24**.	Repair the open circuit in harness between ECM connector and electronic throttle control relay connector.

	Step	Check	Yes	No
24	**CHECK HARNESS BETWEEN ECM AND ELECTRONIC THROTTLE CONTROL CONNECTOR.** 1) Turn the ignition switch to OFF. 2) Disconnect the connectors from ECM and electronic throttle control. 3) Measure the resistance between ECM connector and chassis ground. ***Connector & terminal*** ***(B134) No. 19 — Chassis ground:*** ***(B134) No. 18 — Chassis ground:*** ***(B134) No. 18 — (B136) No. 4:*** ***(B134) No. 28 — Chassis ground:*** ***(B134) No. 28 — (B136) No. 4:***	Is the resistance 1 MΩ or more?	Go to step **25**.	Repair the ground short circuit of harness between ECM connector and electronic throttle control connector.
25	**CHECK SHORT CIRCUIT INSIDE THE ECM.** 1) Connect the connector to ECM. 2) Measure the resistance between electronic throttle control connector and engine ground. ***Connector & terminal*** ***(E57) No. 6 — Engine ground:*** ***(E57) No. 4 — Engine ground:***	Is the resistance 1 MΩ or more?	Go to step **26**.	Repair the ground short circuit of harness between ECM connector and electronic throttle control connector. Replace the ECM if defective. <Ref. to FU(H4DO(w/o HEV))-106, Engine Control Module (ECM).>
26	**CHECK HARNESS BETWEEN ECM AND ELECTRONIC THROTTLE CONTROL CONNECTOR.** 1) Disconnect the connector from ECM. 2) Measure the resistance of harness between ECM connector and electronic throttle control connector. ***Connector & terminal*** ***(B134) No. 18 — (E57) No. 6:*** ***(B134) No. 28 — (E57) No. 4:*** ***(B134) No. 29 — (E57) No. 3:***	Is the resistance less than 1 Ω?	Go to step **27**.	Repair the harness and connector. NOTE: In this case, repair the following item: • Open circuit in harness between ECM connector and electronic throttle control connector • Poor contact of coupling connector
27	**CHECK HARNESS BETWEEN ECM AND ELECTRONIC THROTTLE CONTROL CONNECTOR.** 1) Connect the connector to ECM. 2) Measure the resistance between electronic throttle control connector and engine ground. ***Connector & terminal*** ***(E57) No. 3 — Engine ground:***	Is the resistance less than 5 Ω?	Go to step **28**.	Repair the harness and connector. NOTE: In this case, repair the following item: • Open circuit of harness between ECM connector and engine ground • Poor contact of ECM connector • Poor contact of coupling connector

	Step	Check	Yes	No
28	**CHECK HARNESS BETWEEN ECM AND ELECTRONIC THROTTLE CONTROL CONNECTOR.** 1) Turn the ignition switch to ON. 2) Measure the voltage between electronic throttle control connector and engine ground. ***Connector & terminal*** ***(E57) No. 6 (+) — Engine ground (–):*** ***(E57) No. 4 (+) — Engine ground (–):***	Is the voltage 5 V or more?	Repair the short circuit to power in the harness between ECM connector and electronic throttle control connector.	Go to step **29**.
29	**CHECK HARNESS BETWEEN ECM AND ELECTRONIC THROTTLE CONTROL CONNECTOR.** 1) Turn the ignition switch to OFF. 2) Disconnect the connector from ECM. 3) Measure the resistance between ECM connectors. ***Connector & terminal*** ***(B134) No. 19 — (B134) No. 18:*** ***(B134) No. 19 — (B134) No. 28:***	Is the resistance 1 MΩ or more?	Go to step **30**.	Repair the short circuit to power in the harness between ECM connector and electronic throttle control connector.
30	**CHECK SENSOR OUTPUT.** 1) Connect all connectors. 2) Turn the ignition switch to ON. 3) Read the value of «Main-Throttle Sensor» using Subaru Select Monitor. NOTE: For detailed operation procedures, refer to “READ CURRENT DATA FOR ENGINE”. <Ref. to EN(H4DO w/o HEV)(diag)-36, Subaru Select Monitor.>	Is the value of «Main-Throttle Sensor» 0.81 — 0.87 V?	Go to step **31**.	Repair the poor contact of electronic throttle control connector. Replace the electronic throttle control if defective. <Ref. to FU(H4DO(w/o HEV))-15, Throttle Body.>
31	**CHECK SENSOR OUTPUT.** Read the value of «Sub-Throttle Sensor» using Subaru Select Monitor. NOTE: For detailed operation procedures, refer to “READ CURRENT DATA FOR ENGINE”. <Ref. to EN(H4DO w/o HEV)(diag)-36, Subaru Select Monitor.>	Is the value of «Sub-Throttle Sensor» 1.64 — 1.70 V?	Go to step **32**.	Repair the poor contact of electronic throttle control connector. Replace the electronic throttle control if defective. <Ref. to FU(H4DO(w/o HEV))-15, Throttle Body.>
32	**CHECK HARNESS BETWEEN ECM AND ELECTRONIC THROTTLE CONTROL CONNECTOR.** 1) Turn the ignition switch to OFF. 2) Disconnect the connectors from ECM and electronic throttle control. 3) Measure the resistance between ECM connector and electronic throttle control connector. ***Connector & terminal*** ***(B134) No. 2 — (E57) No. 2:*** ***(B134) No. 1 — (E57) No. 1:***	Is the resistance less than 1 Ω?	Go to step **33**.	Repair the harness and connector. NOTE: In this case, repair the following item: • Open circuit in harness between ECM connector and electronic throttle control connector • Poor contact of coupling connector

	Step	Check	Yes	No
33	**CHECK HARNESS BETWEEN ECM AND ELECTRONIC THROTTLE CONTROL CONNECTOR.** 1) Connect the connector to ECM. 2) Turn the ignition switch to ON. 3) Measure the voltage between electronic throttle control connector and engine ground. ***Connector & terminal*** ***(E57) No. 2 (+) — Engine ground (–):*** ***(E57) No. 1 (+) — Engine ground (–):***	Is the voltage 5 V or more?	Repair the short circuit to power in the harness between ECM connector and electronic throttle control connector.	Go to step **34**.
34	**CHECK HARNESS BETWEEN ECM AND ELECTRONIC THROTTLE CONTROL CONNECTOR.** 1) Turn the ignition switch to OFF. 2) Disconnect the connector from ECM. 3) Measure the resistance between electronic throttle control connector and engine ground. ***Connector & terminal*** ***(E57) No. 2 — Engine ground:*** ***(E57) No. 1 — Engine ground:***	Is the resistance 1 MΩ or more?	Go to step **35**.	Repair the ground short circuit of harness between ECM connector and electronic throttle control connector.
35	**CHECK HARNESS BETWEEN ELECTRONIC THROTTLE CONTROL CONNECTOR.** Measure the resistance between electronic throttle control connectors. ***Connector & terminal*** ***(E57) No. 2 — (E57) No. 1:***	Is the resistance 1 MΩ or more?	Go to step **36**.	Repair the short circuit in harness between ECM connector and electronic throttle control connector.
36	**CHECK ELECTRONIC THROTTLE CONTROL GROUND CIRCUIT.** Measure the resistance between ECM connector and chassis ground. ***Connector & terminal*** ***(B134) No. 3 — Chassis ground:*** ***(B134) No. 4 — Chassis ground:*** ***(B134) No. 6 — Chassis ground:*** ***(B137) No. 1 — Chassis ground:*** ***(B137) No. 3 — Chassis ground:***	Is the resistance less than 5 Ω?	Go to step **37**.	Repair the harness and connector. NOTE: In this case, repair the following item: • Open circuit of harness between ECM connector and engine ground • Poor contact of coupling connector
37	**CHECK ELECTRONIC THROTTLE CONTROL.** Measure the resistance between electronic throttle control terminals. ***Terminals*** ***No. 2 — No. 1:***	Is the resistance 50 Ω or less?	Go to step **38**.	Replace the electronic throttle control. <Ref. to FU(H4DO(w/o HEV))-15, Throttle Body.>
38	**CHECK ELECTRONIC THROTTLE CONTROL.** Move the throttle valve to the fully open and fully closed positions with fingers. Check that the valve returns to the specified position when releasing fingers.	Does the valve return to the specified position? Standard value: 3 mm (0.12 in) from fully closed position	Repair the poor contact of ECM connector.	Replace the electronic throttle control. <Ref. to FU(H4DO(w/o HEV))-15, Throttle Body.>

CT:DTC P050B COLD START IGNITION TIMING PERFORMANCE

NOTE:
For the diagnostic procedure, refer to DTC P050A. <Ref. to EN(H4DO w/o HEV)(diag)-226, DTC P050A COLD START IDLE AIR CONTROL SYSTEM PERFORMANCE, Diagnostic Procedure with Diagnostic Trouble Code (DTC).>

CU:DTC P0516 BATTERY TEMPERATURE SENSOR CIRCUIT LOW

DTC DETECTING CONDITION:

- Immediately at fault recognition
- GENERAL DESCRIPTION <Ref. to GD(H4DO w/o HEV)-182, DTC P0516 BATTERY TEMPERATURE SENSOR CIRCUIT LOW, Diagnostic Trouble Code (DTC) Detecting Criteria.>

CAUTION:
After servicing or replacing faulty parts, perform Clear Memory Mode <Ref. to EN(H4DO w/o HEV)(diag)-59, OPERATION, Clear Memory Mode.>, and Inspection Mode <Ref. to EN(H4DO w/o HEV)(diag)-44, PROCEDURE, Inspection Mode.>.

WIRING DIAGRAM:

Engine electrical system <Ref. to WI(w/o HEV)-74, Engine Electrical System.>

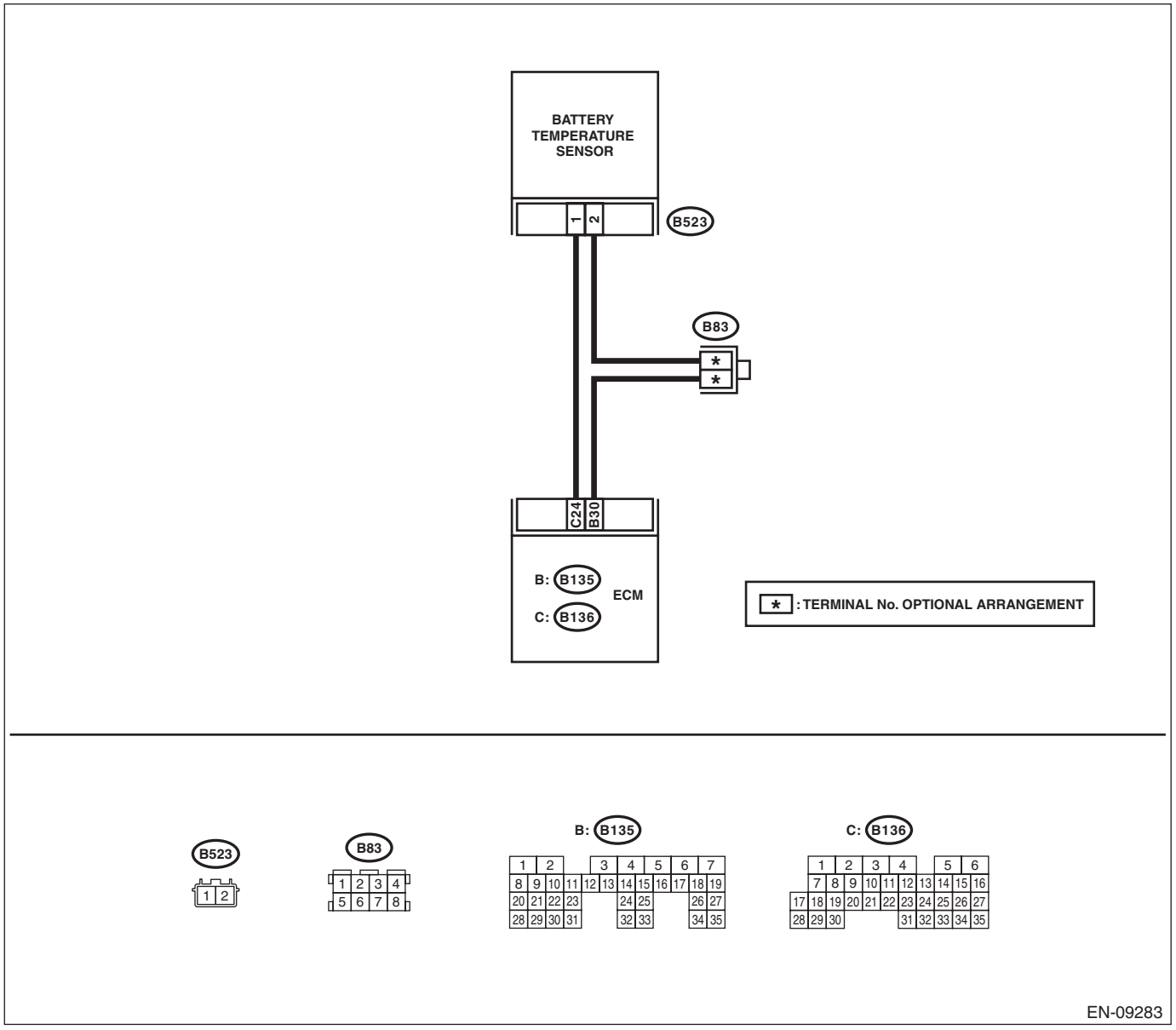

	Step	Check	Yes	No
1	**CHECK CURRENT DATA.** 1) Start the engine. 2) Read the value of «Battery temperature» using the Subaru Select Monitor. NOTE: For detailed operation procedures, refer to "READ CURRENT DATA FOR ENGINE". <Ref. to EN(H4DO w/o HEV)(diag)-36, Subaru Select Monitor.>	Is the value of «Battery temperature» 100°C (212°F) or more?	Go to step **2**.	Even if DTC is detected, the circuit has returned to a normal condition at this time. Reproduce the failure, and then perform the diagnosis again. NOTE: In this case, temporary poor contact of connector, temporary open or short circuit of harness may be the cause.
2	**CHECK HARNESS BETWEEN ECM AND BATTERY TEMPERATURE SENSOR CONNECTOR.** 1) Turn the ignition switch to OFF. 2) Disconnect the connectors from the ECM and battery temperature sensor. 3) Measure the resistance between ECM connector and chassis ground. ***Connector & terminal*** ***(B136) No. 24 — Chassis ground:***	Is the resistance 1 MΩ or more?	Replace the battery temperature sensor. <Ref. to SC(H4DO(w/o HEV))-58, Battery Current & Temperature Sensor.>	Repair the short circuit to ground in the harness between the ECM connector and battery temperature sensor connector.

CV:DTC P0517 BATTERY TEMPERATURE SENSOR CIRCUIT HIGH

DTC DETECTING CONDITION:

- Immediately at fault recognition
- GENERAL DESCRIPTION <Ref. to GD(H4DO w/o HEV)-184, DTC P0517 BATTERY TEMPERATURE SENSOR CIRCUIT HIGH, Diagnostic Trouble Code (DTC) Detecting Criteria.>

CAUTION:
After servicing or replacing faulty parts, perform Clear Memory Mode <Ref. to EN(H4DO w/o HEV)(diag)-59, OPERATION, Clear Memory Mode.>, and Inspection Mode <Ref. to EN(H4DO w/o HEV)(diag)-44, PROCEDURE, Inspection Mode.>.

WIRING DIAGRAM:

Engine electrical system <Ref. to WI(w/o HEV)-74, Engine Electrical System.>

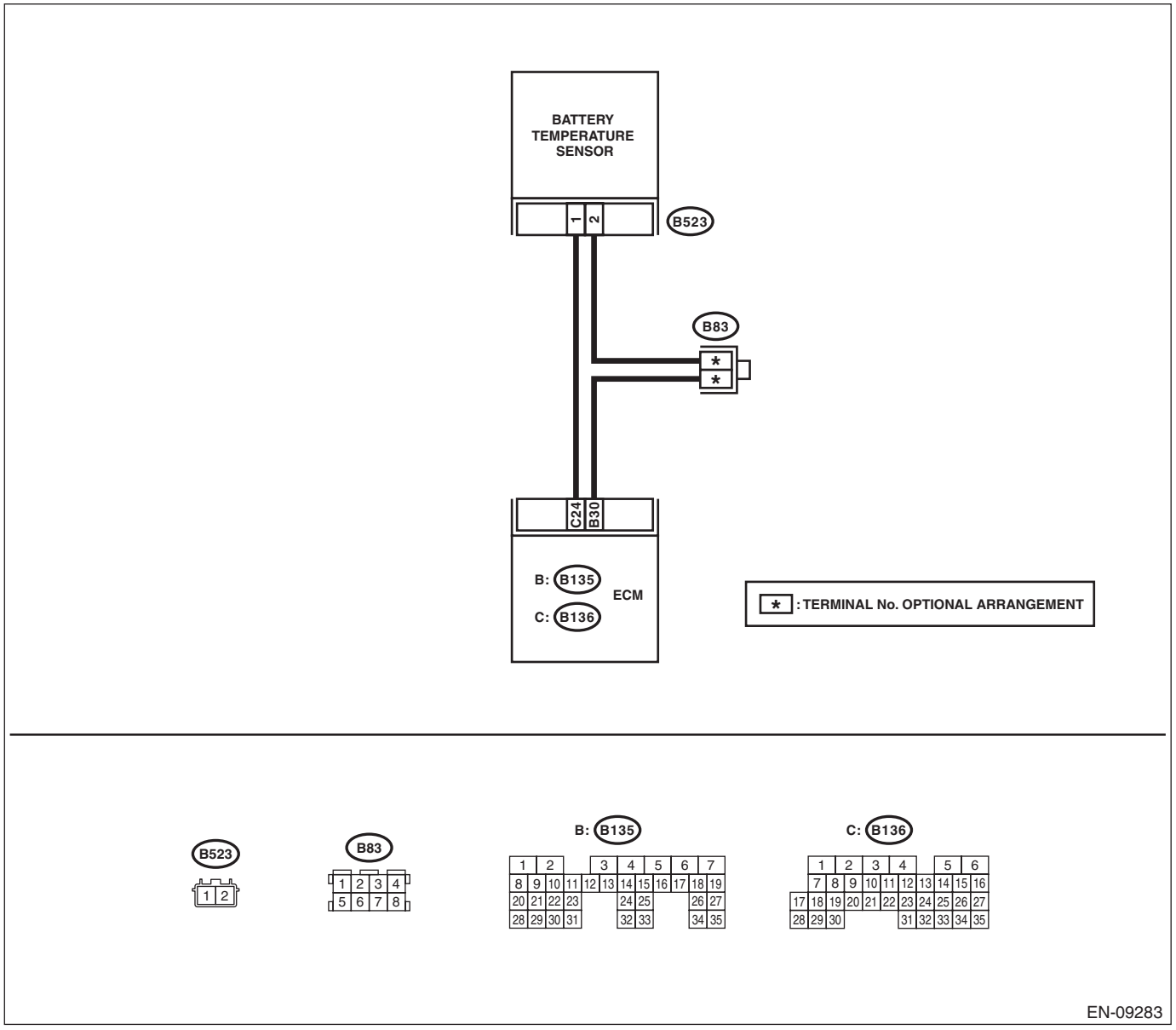

	Step	Check	Yes	No
1	**CHECK CURRENT DATA.** 1) Start the engine. 2) Read the value of «Battery temperature» using the Subaru Select Monitor. NOTE: For detailed operation procedures, refer to "READ CURRENT DATA FOR ENGINE". <Ref. to EN(H4DO w/o HEV)(diag)-36, Subaru Select Monitor.>	Is the value of «Battery temperature» –40°C (–40°F) or less?	Go to step **2**.	Even if DTC is detected, the circuit has returned to a normal condition at this time. Reproduce the failure, and then perform the diagnosis again. NOTE: In this case, temporary poor contact of connector, temporary open or short circuit of harness may be the cause.
2	**CHECK FOR POOR CONTACT.** Check for poor contact between the ECM and battery temperature sensor connectors.	Is there poor contact of the ECM or battery temperature sensor connectors?	Repair any poor contact between the ECM and battery temperature sensor connectors.	Go to step **3**.
3	**CHECK HARNESS BETWEEN ECM AND BATTERY TEMPERATURE SENSOR CONNECTOR.** 1) Turn the ignition switch to OFF. 2) Disconnect the connectors from the ECM and battery temperature sensor. 3) Measure the resistance of harness between ECM connector and battery temperature sensor connector. ***Connector & terminal*** ***(B136) No. 24 — (B523) No. 1:*** ***(B135) No. 30 — (B523) No. 2:***	Is the resistance less than 1 Ω?	Go to step **4**.	Repair the harness and connector. NOTE: In this case, repair the following item: • Open circuit in harness between ECM connector and battery temperature sensor connector • Poor contact of joint connector
4	**CHECK HARNESS BETWEEN ECM AND BATTERY TEMPERATURE SENSOR CONNECTOR.** 1) Connect all connectors. 2) Turn the ignition switch to ON. 3) Measure the voltage between ECM connector and chassis ground. ***Connector & terminal*** ***(B136) No. 24 (+) — Chassis ground (–):***	Is the voltage 5 V or more?	Repair the short circuit to power in harness between ECM connector and battery temperature sensor connector.	Replace the battery temperature sensor. <Ref. to SC(H4DO(w/o HEV))-58, Battery Current & Temperature Sensor.>

CW:DTC P0560 SYSTEM VOLTAGE

DTC DETECTING CONDITION:

- Immediately at fault recognition
- GENERAL DESCRIPTION <Ref. to GD(H4DO w/o HEV)-186, DTC P0560 SYSTEM VOLTAGE, Diagnostic Trouble Code (DTC) Detecting Criteria.>

CAUTION:

After servicing or replacing faulty parts, perform Clear Memory Mode <Ref. to EN(H4DO w/o HEV)(diag)-59, OPERATION, Clear Memory Mode.>, and Inspection Mode <Ref. to EN(H4DO w/o HEV)(diag)-44, PROCEDURE, Inspection Mode.>.

WIRING DIAGRAM:

Engine electrical system <Ref. to WI(w/o HEV)-74, Engine Electrical System.>

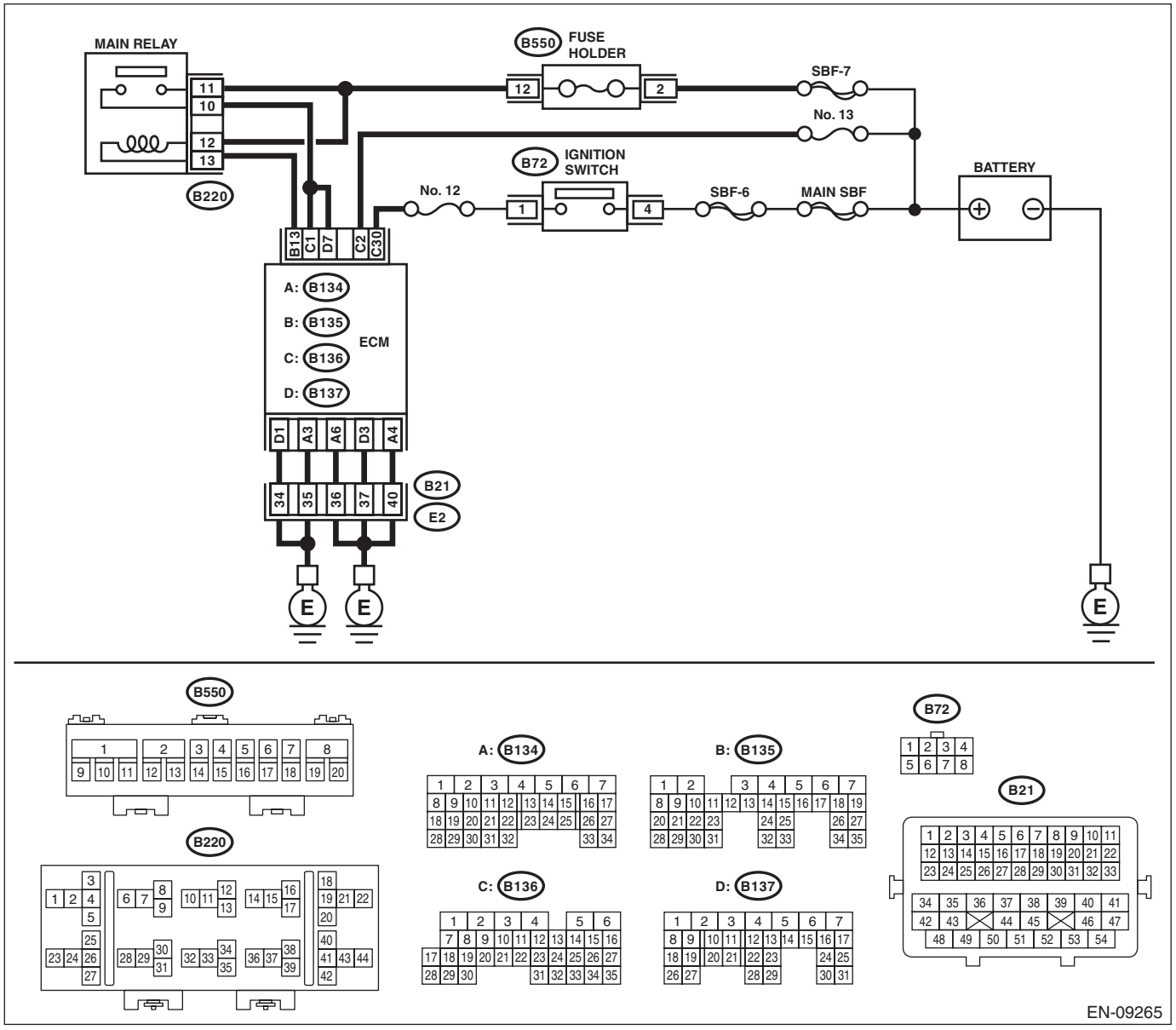

Step		Check	Yes	No
1	**CHECK INPUT SIGNAL OF ECM.** 1) Turn the ignition switch to OFF. 2) Measure the voltage between ECM connector and chassis ground. ***Connector & terminal*** ***(B136) No. 2 (+) — Chassis ground (–):***	Is the voltage 10 V or more?	Repair the poor contact of ECM connector.	Go to step **2**.

Step		Check	Yes	No
2	**CHECK HARNESS BETWEEN ECM AND MAIN FUSE BOX CONNECTOR.** 1) Disconnect the connector from ECM. 2) Measure the resistance between ECM connector and chassis ground. ***Connector & terminal*** ***(B136) No. 2 — Chassis ground:***	Is the resistance 1 MΩ or more?	Go to step **3**.	Repair the short circuit to ground in harness between ECM connector and battery terminal.
3	**CHECK FUSE NO. 13 (MAIN FUSE BOX).**	Is the fuse blown out?	Replace the fuse.	Repair the harness and connector. NOTE: In this case, repair the following item: • Open circuit in harness between ECM connector and battery • Poor contact of ECM connector • Poor contact of battery terminal

CX:DTC P0604 INTERNAL CONTROL MODULE RANDOM ACCESS MEMORY (RAM) ERROR

DTC DETECTING CONDITION:

- Immediately at fault recognition
- GENERAL DESCRIPTION <Ref. to GD(H4DO w/o HEV)-187, DTC P0604 INTERNAL CONTROL MODULE RANDOM ACCESS MEMORY (RAM) ERROR, Diagnostic Trouble Code (DTC) Detecting Criteria.>

TROUBLE SYMPTOM:

- Engine does not start.
- Engine stalls.

CAUTION:

After servicing or replacing faulty parts, perform Clear Memory Mode <Ref. to EN(H4DO w/o HEV)(diag)-59, OPERATION, Clear Memory Mode.>, and Inspection Mode <Ref. to EN(H4DO w/o HEV)(diag)-44, PROCEDURE, Inspection Mode.>.

Step	Check	Yes	No
1 **CHECK FOR ANY OTHER DTC ON DISPLAY.**	Is any other DTC displayed?	Check the appropriate DTC using the "List of Diagnostic Trouble Code (DTC)". <Ref. to EN(H4DO w/o HEV)(diag)-83, List of Diagnostic Trouble Code (DTC).>	Even if DTC is detected, the circuit has returned to a normal condition at this time. Reproduce the failure, and then perform the diagnosis again. NOTE: In this case, temporary poor contact of connector, temporary open or short circuit of harness may be the cause.

CY:DTC P0605 INTERNAL CONTROL MODULE READ ONLY MEMORY (ROM) ERROR

NOTE:
For the diagnostic procedure, refer to DTC P0606. <Ref. to EN(H4DO w/o HEV)(diag)-242, DTC P0606 CONTROL MODULE PROCESSOR, Diagnostic Procedure with Diagnostic Trouble Code (DTC).>

CZ:DTC P0606 CONTROL MODULE PROCESSOR

DTC DETECTING CONDITION:

- Immediately at fault recognition
- GENERAL DESCRIPTION <Ref. to GD(H4DO w/o HEV)-189, DTC P0606 CONTROL MODULE PROCESSOR, Diagnostic Trouble Code (DTC) Detecting Criteria.>

TROUBLE SYMPTOM:

- Improper idling
- Poor driving performance

CAUTION:

After servicing or replacing faulty parts, perform Clear Memory Mode <Ref. to EN(H4DO w/o HEV)(diag)-59, OPERATION, Clear Memory Mode.>, and Inspection Mode <Ref. to EN(H4DO w/o HEV)(diag)-44, PROCEDURE, Inspection Mode.>.

WIRING DIAGRAM:

Engine electrical system <Ref. to WI(w/o HEV)-74, Engine Electrical System.>

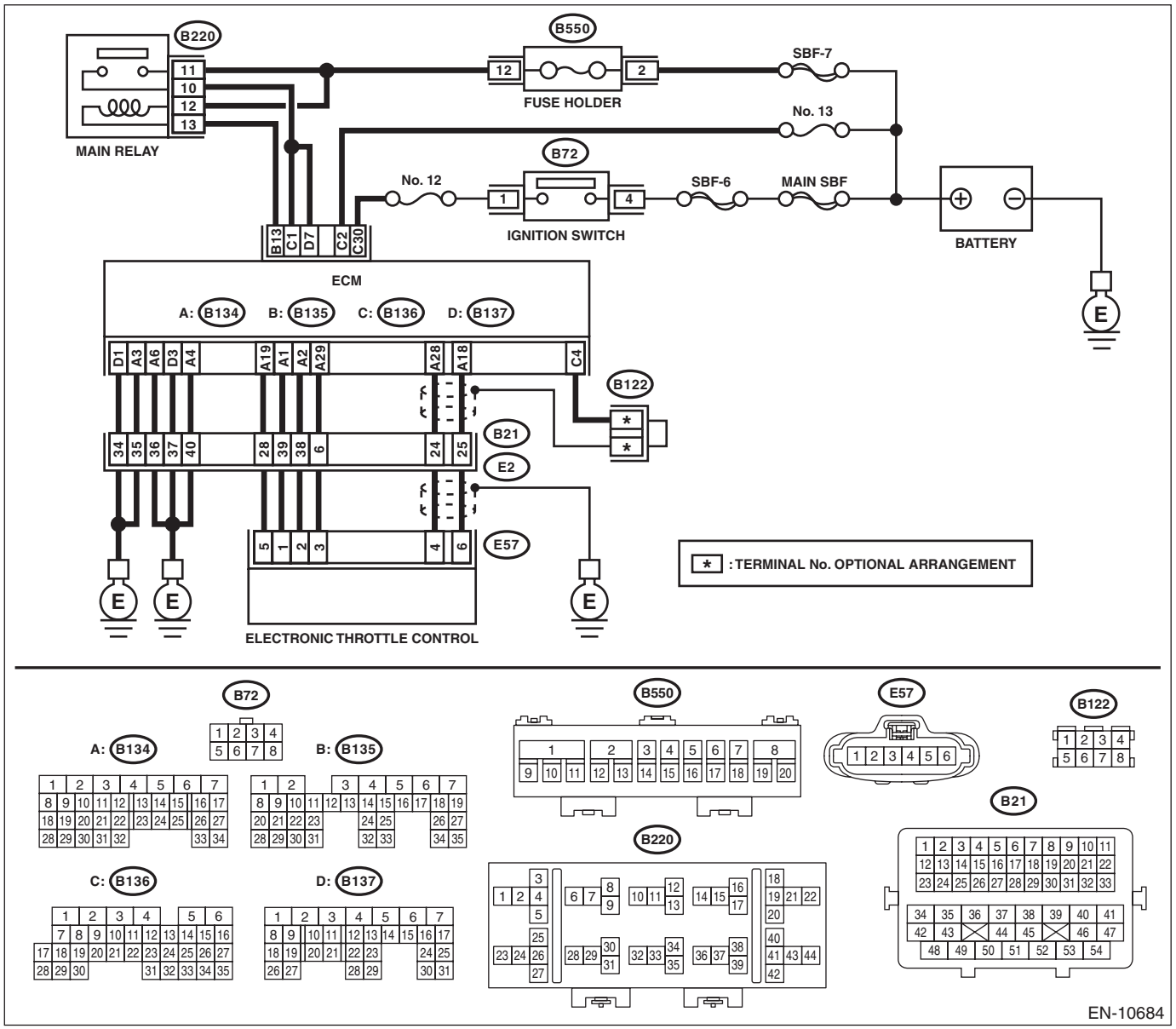

	Step	Check	Yes	No
1	**CHECK INPUT VOLTAGE OF ECM.** 1) Turn the ignition switch to ON. 2) Measure the voltage between ECM connector and chassis ground. ***Connector & terminal*** ***(B136) No. 1 (+) — Chassis ground (–):*** ***(B137) No. 7 (+) — Chassis ground (–):***	Is the voltage 10 — 13 V?	Go to step **2**.	Repair the open or ground short circuit of power supply circuit.
2	**CHECK INPUT VOLTAGE OF ECM.** 1) Start the engine. 2) Measure the voltage between ECM connector and chassis ground. ***Connector & terminal*** ***(B136) No. 1 (+) — Chassis ground (–):*** ***(B137) No. 7 (+) — Chassis ground (–):***	Is the voltage 13 — 15 V?	Go to step **3**.	Repair the open or ground short circuit of power supply circuit.
3	**CHECK HARNESS BETWEEN ECM AND ELECTRONIC THROTTLE CONTROL CONNECTOR.** 1) Turn the ignition switch to OFF. 2) Disconnect the connectors from ECM and electronic throttle control. 3) Measure the resistance of harness between ECM connector and electronic throttle control connector. ***Connector & terminal*** ***(B134) No. 19 — (E57) No. 5:*** ***(B134) No. 29 — (E57) No. 3:***	Is the resistance less than 1 Ω?	Go to step **4**.	Repair the harness and connector. NOTE: In this case, repair the following item: • Open circuit in harness between ECM connector and electronic throttle control connector • Poor contact of coupling connector
4	**CHECK ECM GROUND HARNESS.** 1) Connect all connectors. 2) Turn the ignition to ON. 3) Measure the voltage between ECM connector and chassis ground. ***Connector & terminal*** ***(B134) No. 3 (+) — Chassis ground (–):*** ***(B134) No. 4 (+) — Chassis ground (–):*** ***(B134) No. 6 (+) — Chassis ground (–):*** ***(B137) No. 1 (+) — Chassis ground (–):*** ***(B137) No. 3 (+) — Chassis ground (–):***	Is the voltage less than 1 V?	Repair the poor contact of ECM connector.	Repair the harness and connector. NOTE: In this case, repair the following item: • Open circuit in ground circuit • Further tightening of the engine ground terminal • Poor contact of coupling connector

DA:DTC P060A INTERNAL CONTROL MODULE MONITORING PROCESSOR PERFORMANCE

NOTE:
For the diagnostic procedure, refer to DTC P0606. <Ref. to EN(H4DO w/o HEV)(diag)-242, DTC P0606 CONTROL MODULE PROCESSOR, Diagnostic Procedure with Diagnostic Trouble Code (DTC).>

DB:DTC P060B INTERNAL CONTROL MODULE A/D PROCESSING PERFORMANCE

NOTE:
For the diagnostic procedure, refer to DTC P0606. <Ref. to EN(H4DO w/o HEV)(diag)-242, DTC P0606 CONTROL MODULE PROCESSOR, Diagnostic Procedure with Diagnostic Trouble Code (DTC).>

DC:DTC P0616 STARTER RELAY CIRCUIT LOW

DTC DETECTING CONDITION:

- Immediately at fault recognition
- GENERAL DESCRIPTION <Ref. to GD(H4DO w/o HEV)-194, DTC P0616 STARTER RELAY CIRCUIT LOW, Diagnostic Trouble Code (DTC) Detecting Criteria.>

CAUTION:

After servicing or replacing faulty parts, perform Clear Memory Mode <Ref. to EN(H4DO w/o HEV)(diag)-59, OPERATION, Clear Memory Mode.>, and Inspection Mode <Ref. to EN(H4DO w/o HEV)(diag)-44, PROCEDURE, Inspection Mode.>.

WIRING DIAGRAM:

Engine electrical system <Ref. to WI(w/o HEV)-74, Engine Electrical System.>

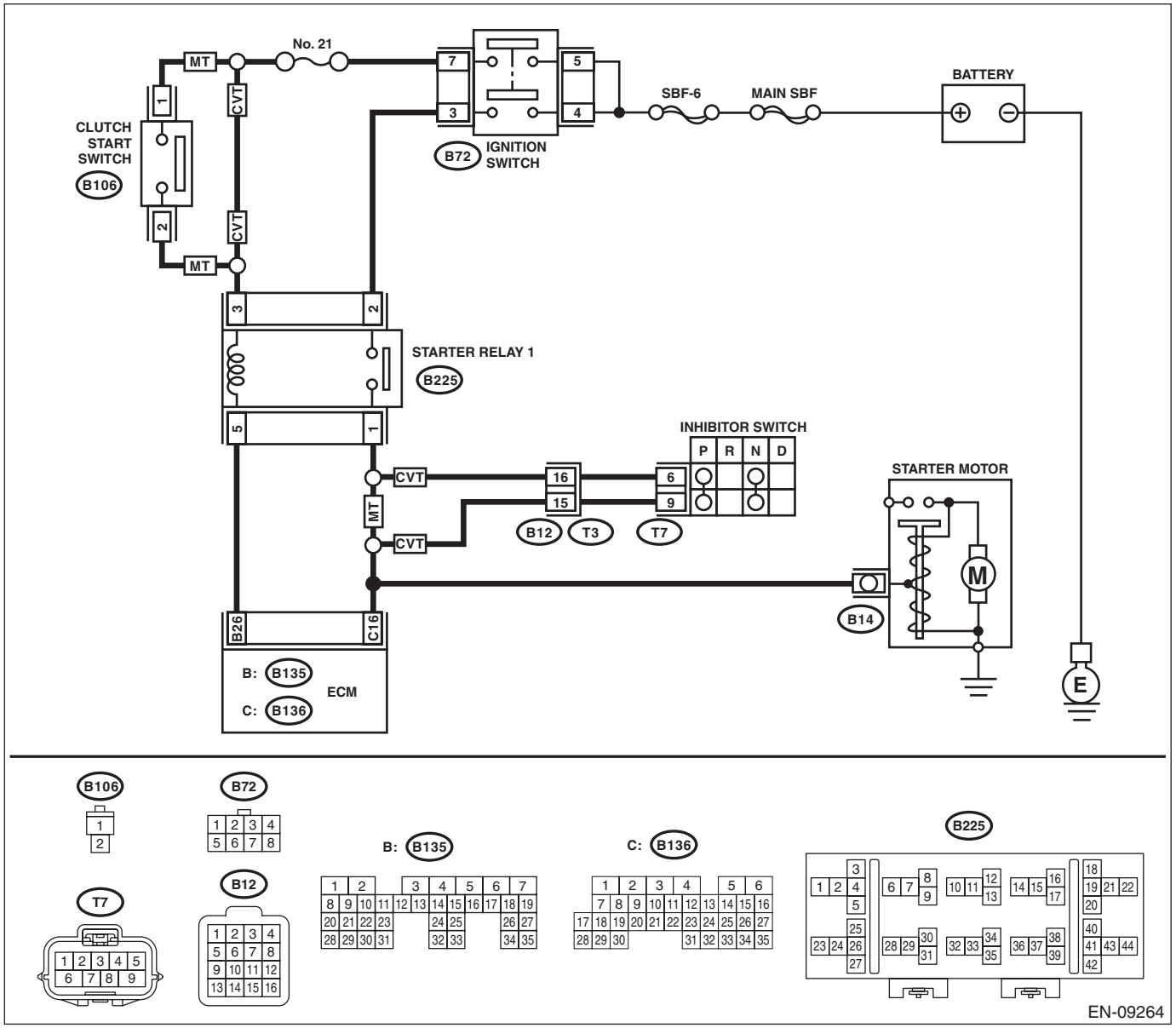

	Step	Check	Yes	No
1	**CHECK FOR ANY OTHER DTC ON DISPLAY.**	Is any other DTC displayed?	Check DTC using "List of Diagnostic Trouble Code (DTC)". <Ref. to EN(H4DO w/o HEV)(diag)-83, List of Diagnostic Trouble Code (DTC).>	Go to step **2**.
2	**CHECK HARNESS BETWEEN ECM AND STARTER RELAY 1 CONNECTOR.** 1) Turn the ignition switch to OFF. 2) Remove the starter relay 1. 3) Disconnect the connectors from ECM and starter motor. 4) Measure the resistance of harness between ECM connector and starter relay 1 connector. ***Connector & terminal*** ***(B136) No. 16 — (B225) No. 1:*** NOTE: For CVT model, place the select lever in "P" range or "N" range.	Is the resistance less than 1 Ω?	Go to step **3**.	NOTE: Check the following item and repair or replace if necessary. • Open circuit of harness between ECM connector and starter relay 1 connector • Poor contact of coupling connector
3	**CHECK HARNESS BETWEEN ECM AND STARTER RELAY 1 CONNECTOR.** Measure the resistance between ECM connector and chassis ground. ***Connector & terminal*** ***(B136) No. 16 — Chassis ground:***	Is the resistance 1 MΩ or more?	Repair the poor contact of ECM connector.	Repair the short circuit to ground in harness between ECM connector and starter relay 1 connector.

DD:DTC P0617 STARTER RELAY CIRCUIT HIGH

DTC DETECTING CONDITION:

- Immediately at fault recognition
- GENERAL DESCRIPTION <Ref. to GD(H4DO w/o HEV)-195, DTC P0617 STARTER RELAY CIRCUIT HIGH, Diagnostic Trouble Code (DTC) Detecting Criteria.>

TROUBLE SYMPTOM:

Failure of engine to start

CAUTION:

After servicing or replacing faulty parts, perform Clear Memory Mode <Ref. to EN(H4DO w/o HEV)(diag)-59, OPERATION, Clear Memory Mode.>, and Inspection Mode <Ref. to EN(H4DO w/o HEV)(diag)-44, PROCEDURE, Inspection Mode.>.

WIRING DIAGRAM:

Engine electrical system <Ref. to WI(w/o HEV)-74, Engine Electrical System.>

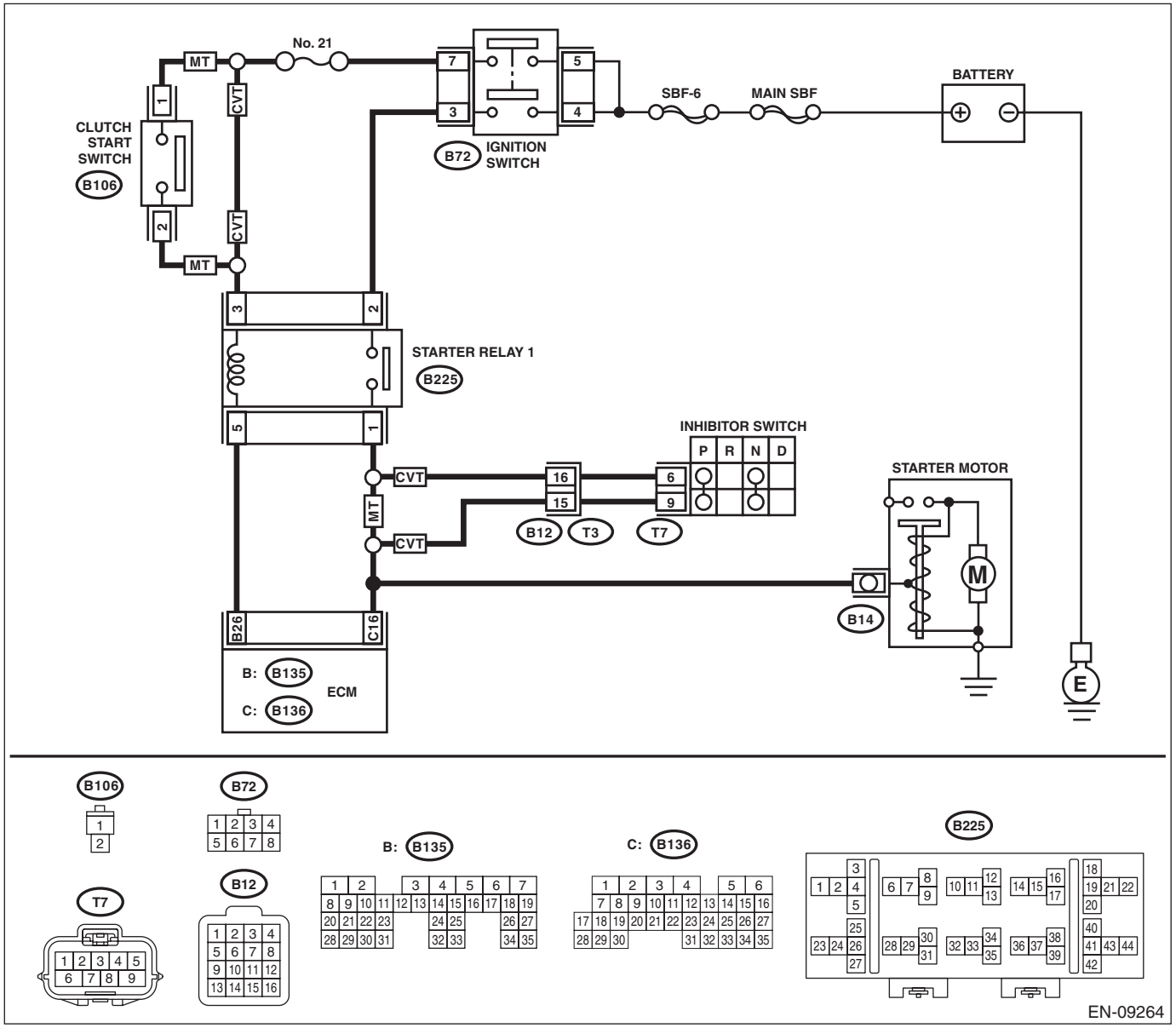

	Step	Check	Yes	No
1	**CHECK FOR ANY OTHER DTC ON DISPLAY.**	Is any other DTC displayed?	Check the appropriate DTC using the "List of Diagnostic Trouble Code (DTC)". <Ref. to EN(H4DO w/o HEV)(diag)-83, List of Diagnostic Trouble Code (DTC).>	Go to step **2**.
2	**CHECK HARNESS BETWEEN ECM AND STARTER RELAY 1 CONNECTOR.** 1) Turn the ignition switch to OFF. 2) Disconnect the connector from ECM. 3) Turn the ignition switch to ON. 4) Measure the voltage between ECM connector and chassis ground. ***Connector & terminal*** ***(B136) No. 16 (+) — Chassis ground (–):*** NOTE: For CVT model, place the select lever in "P" range or "N" range.	Is the voltage 10 V or more?	Repair the short circuit to power in harness between ECM connector and starter relay 1 connector.	Repair the poor contact of ECM connector.

DE:DTC P062F INTERNAL CONTROL MODULE EEPROM ERROR

NOTE:
For the diagnostic procedure, refer to DTC P0606. <Ref. to EN(H4DO w/o HEV)(diag)-242, DTC P0606 CONTROL MODULE PROCESSOR, Diagnostic Procedure with Diagnostic Trouble Code (DTC).>

DF:DTC P0700 TRANSMISSION CONTROL SYSTEM (MIL REQUEST)

NOTE:
For the diagnostic procedure, refer to CVT section. <Ref. to CVT(w/o HEV)(diag)-2, Basic Diagnostic Procedure.>

DG:DTC P0851 PARK/NEUTRAL SWITCH INPUT CIRCUIT LOW (AT MODEL)

DTC DETECTING CONDITION:

- Detected when two consecutive driving cycles with fault occur.
- GENERAL DESCRIPTION <Ref. to GD(H4DO w/o HEV)-198, DTC P0851 PARK/NEUTRAL SWITCH INPUT CIRCUIT LOW (AT MODEL), Diagnostic Trouble Code (DTC) Detecting Criteria.>

TROUBLE SYMPTOM:

Improper idling

CAUTION:

After servicing or replacing faulty parts, perform Clear Memory Mode <Ref. to EN(H4DO w/o HEV)(diag)-59, OPERATION, Clear Memory Mode.>, and Inspection Mode <Ref. to EN(H4DO w/o HEV)(diag)-44, PROCEDURE, Inspection Mode.>.

WIRING DIAGRAM:

Engine electrical system <Ref. to WI(w/o HEV)-74, Engine Electrical System.>

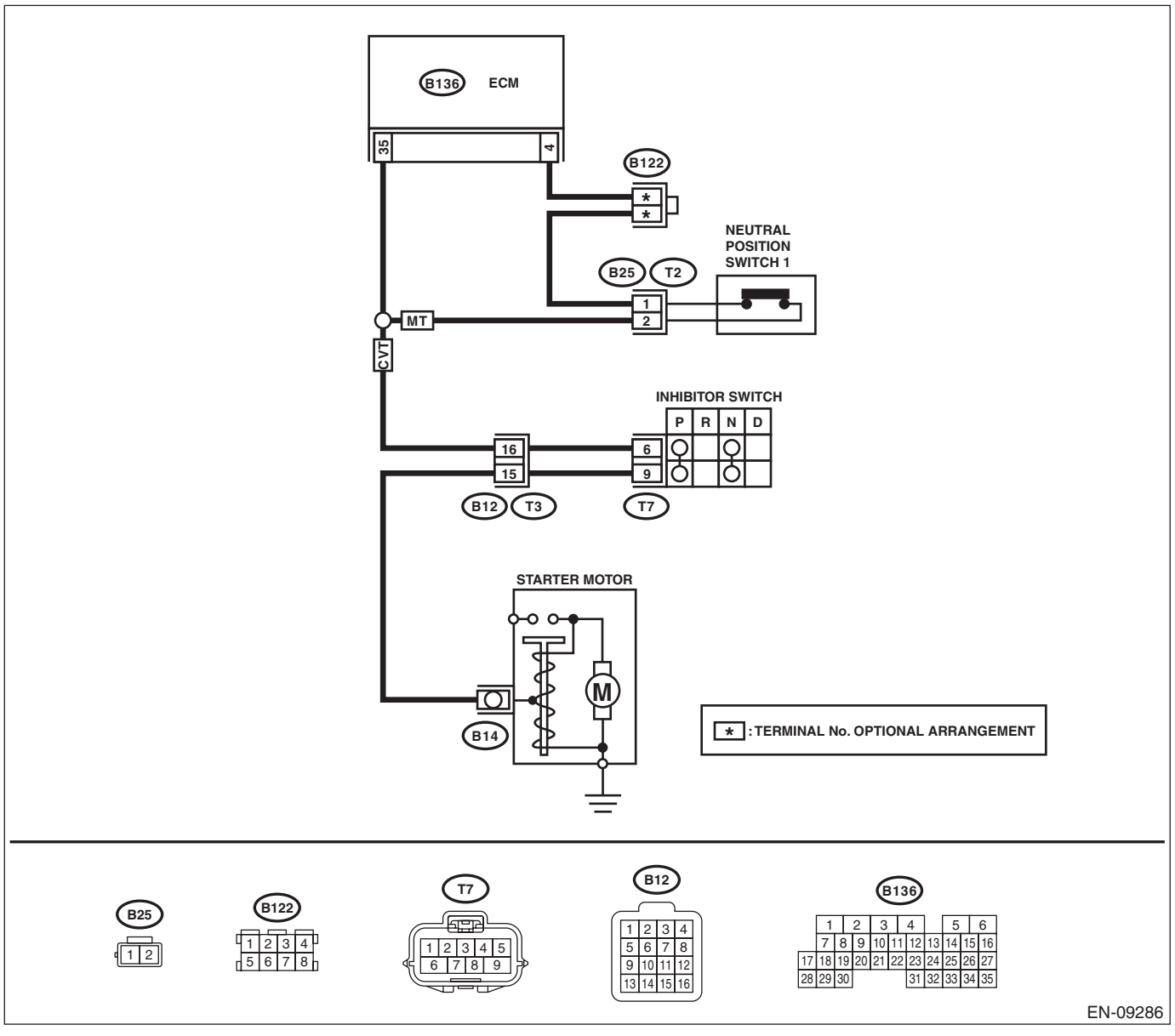

	Step	Check	Yes	No
1	**CHECK SELECT CABLE.**	Is there any fault in select cable?	Repair or adjust the select cable. <Ref. to CS-47, Select Cable.>	Go to step **2**.
2	**CHECK INPUT SIGNAL OF ECM.** 1) Turn the ignition switch to ON. 2) Place the select lever in other than "P" range and "N" range. 3) Measure the voltage between ECM connector and chassis ground. ***Connector & terminal*** ***(B136) No. 35 (+) — Chassis ground (–):***	Is the voltage 10 V or more?	Repair the poor contact of ECM connector.	Go to step **3**.
3	**CHECK HARNESS BETWEEN ECM AND TRANSMISSION HARNESS CONNECTOR.** 1) Turn the ignition switch to OFF. 2) Disconnect the connectors from ECM and transmission harness connector (T3). 3) Measure the resistance between ECM connector and chassis ground. ***Connector & terminal*** ***(B136) No. 35 — Chassis ground:***	Is the resistance 1 MΩ or more?	Go to step **4**.	Repair the short circuit to ground in harness between ECM connector and transmission harness connector.
4	**CHECK TRANSMISSION HARNESS CONNECTOR.** 1) Disconnect the connector from inhibitor switch. 2) Measure the resistance between transmission harness connector and engine ground. ***Connector & terminal*** ***(T3) No. 16 — Engine ground:***	Is the resistance 1 MΩ or more?	Replace the inhibitor switch. <Ref. to CVT(TR580)-92, Inhibitor Switch.>	Repair short circuit to ground in harness between transmission harness connector and inhibitor switch connector.

DH:DTC P0851 NEUTRAL SWITCH INPUT CIRCUIT LOW (MT MODEL)

DTC DETECTING CONDITION:

- Detected when two consecutive driving cycles with fault occur.
- GENERAL DESCRIPTION <Ref. to GD(H4DO w/o HEV)-199, DTC P0851 NEUTRAL SWITCH INPUT CIRCUIT LOW (MT MODEL), Diagnostic Trouble Code (DTC) Detecting Criteria.>

TROUBLE SYMPTOM:

Improper idling

CAUTION:

After servicing or replacing faulty parts, perform Clear Memory Mode <Ref. to EN(H4DO w/o HEV)(diag)-59, OPERATION, Clear Memory Mode.>, and Inspection Mode <Ref. to EN(H4DO w/o HEV)(diag)-44, PROCEDURE, Inspection Mode.>.

WIRING DIAGRAM:

Engine electrical system <Ref. to WI(w/o HEV)-74, Engine Electrical System.>

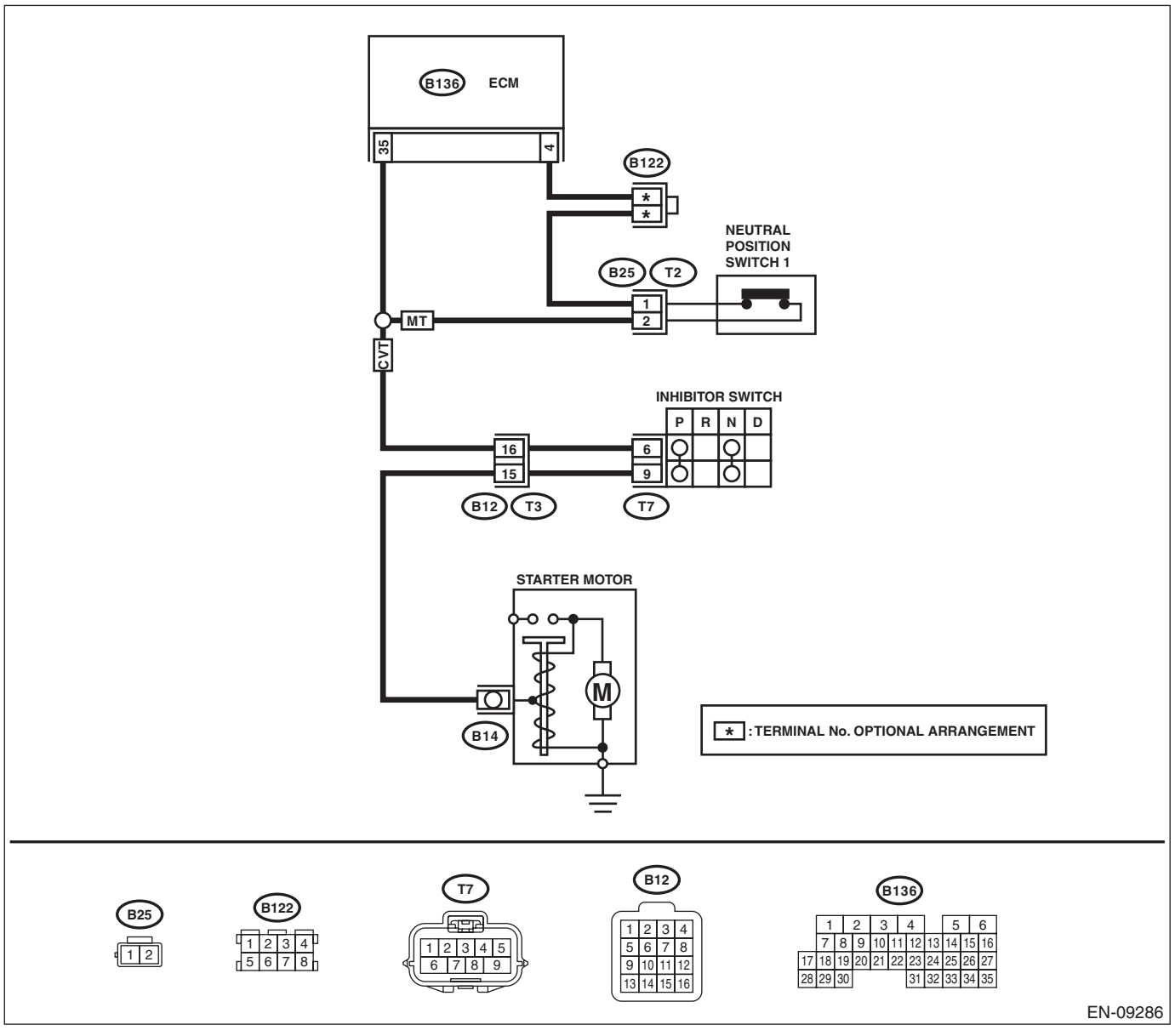

	Step	Check	Yes	No
1	**CHECK INPUT SIGNAL OF ECM.** 1) Turn the ignition switch to ON. 2) Place the shift lever in a position other than neutral. 3) Measure the voltage between ECM connector and chassis ground. ***Connector & terminal*** ***(B136) No. 35 (+) — Chassis ground (–):***	Is the voltage 10 V or more?	Repair the poor contact of ECM connector.	Go to step **2**.
2	**CHECK HARNESS BETWEEN ECM AND NEUTRAL POSITION SWITCH 1 CONNECTOR.** 1) Turn the ignition switch to OFF. 2) Disconnect the connectors from ECM and neutral position switch 1. 3) Measure the resistance between ECM connector and chassis ground. ***Connector & terminal*** ***(B136) No. 35 — Chassis ground:***	Is the resistance 1 MΩ or more?	Replace the neutral position switch 1. <Ref. to 5MT-35, Switches and Harness.>	Repair the short circuit to ground in harness between ECM connector and neutral position switch 1 connector.

DI: DTC P0852 PARK/NEUTRAL SWITCH INPUT CIRCUIT HIGH (AT MODEL)

DTC DETECTING CONDITION:

- Detected when two consecutive driving cycles with fault occur.
- GENERAL DESCRIPTION <Ref. to GD(H4DO w/o HEV)-200, DTC P0852 PARK/NEUTRAL SWITCH INPUT CIRCUIT HIGH (AT MODEL), Diagnostic Trouble Code (DTC) Detecting Criteria.>

TROUBLE SYMPTOM:

Improper idling

CAUTION:

After servicing or replacing faulty parts, perform Clear Memory Mode <Ref. to EN(H4DO w/o HEV)(diag)-59, OPERATION, Clear Memory Mode.>, and Inspection Mode <Ref. to EN(H4DO w/o HEV)(diag)-44, PROCEDURE, Inspection Mode.>.

WIRING DIAGRAM:

Engine electrical system <Ref. to WI(w/o HEV)-74, Engine Electrical System.>

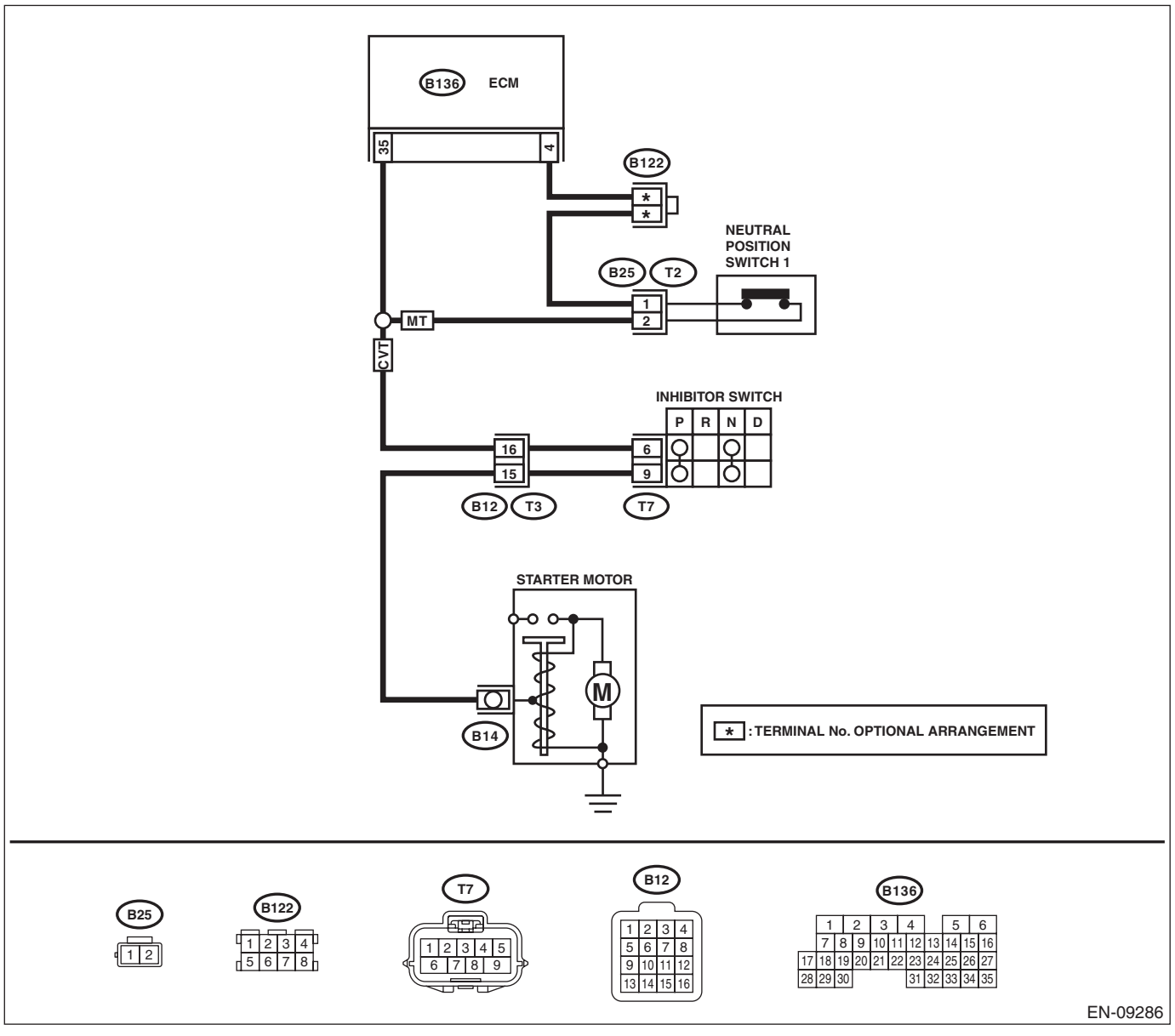

	Step	Check	Yes	No
1	**CHECK SELECT CABLE.**	Is there any fault in select cable?	Repair or adjust the select cable. <Ref. to CS-47, Select Cable.>	Go to step **2**.
2	**CHECK INPUT SIGNAL OF ECM.** 1) Turn the ignition switch to ON. 2) Measure the voltage between ECM and chassis ground with select lever at "P" range and "N" range. ***Connector & terminal*** ***(B136) No. 35 (+) — Chassis ground (–):***	Is the voltage less than 1 V?	Repair the poor contact of ECM connector.	Go to step **3**.
3	**CHECK HARNESS BETWEEN ECM AND INHIBITOR SWITCH CONNECTOR.** 1) Turn the ignition switch to OFF. 2) Disconnect the connectors from ECM and inhibitor switch. 3) Measure the resistance of harness between ECM connector and inhibitor switch connector. ***Connector & terminal*** ***(B136) No. 35 — (T7) No. 6:***	Is the resistance less than 1 Ω?	Go to step **4**.	Repair the harness and connector. NOTE: In this case, repair the following item: • Open circuit in harness between ECM connector and inhibitor switch connector • Poor contact of coupling connector
4	**CHECK INHIBITOR SWITCH GROUND LINE.** Measure the resistance of harness between inhibitor switch connector and engine ground. ***Connector & terminal*** ***(T7) No. 9 — Engine ground:***	Is the resistance less than 5 Ω?	Replace the inhibitor switch. <Ref. to CVT(TR580)-92, Inhibitor Switch.>	Repair the harness and connector. NOTE: In this case, repair the following item: • Open circuit of harness between inhibitor switch connector and starter motor ground line • Poor contact of coupling connector • Poor contact of starter motor connector • Poor contact of starter motor ground • Starter motor

DJ:DTC P0852 NEUTRAL SWITCH INPUT CIRCUIT HIGH (MT MODEL)

DTC DETECTING CONDITION:

- Detected when two consecutive driving cycles with fault occur.
- GENERAL DESCRIPTION <Ref. to GD(H4DO w/o HEV)-201, DTC P0852 NEUTRAL SWITCH INPUT CIRCUIT HIGH (MT MODEL), Diagnostic Trouble Code (DTC) Detecting Criteria.>

TROUBLE SYMPTOM:

Improper idling

CAUTION:

After servicing or replacing faulty parts, perform Clear Memory Mode <Ref. to EN(H4DO w/o HEV)(diag)-59, OPERATION, Clear Memory Mode.>, and Inspection Mode <Ref. to EN(H4DO w/o HEV)(diag)-44, PROCEDURE, Inspection Mode.>.

WIRING DIAGRAM:

Engine electrical system <Ref. to WI(w/o HEV)-74, Engine Electrical System.>

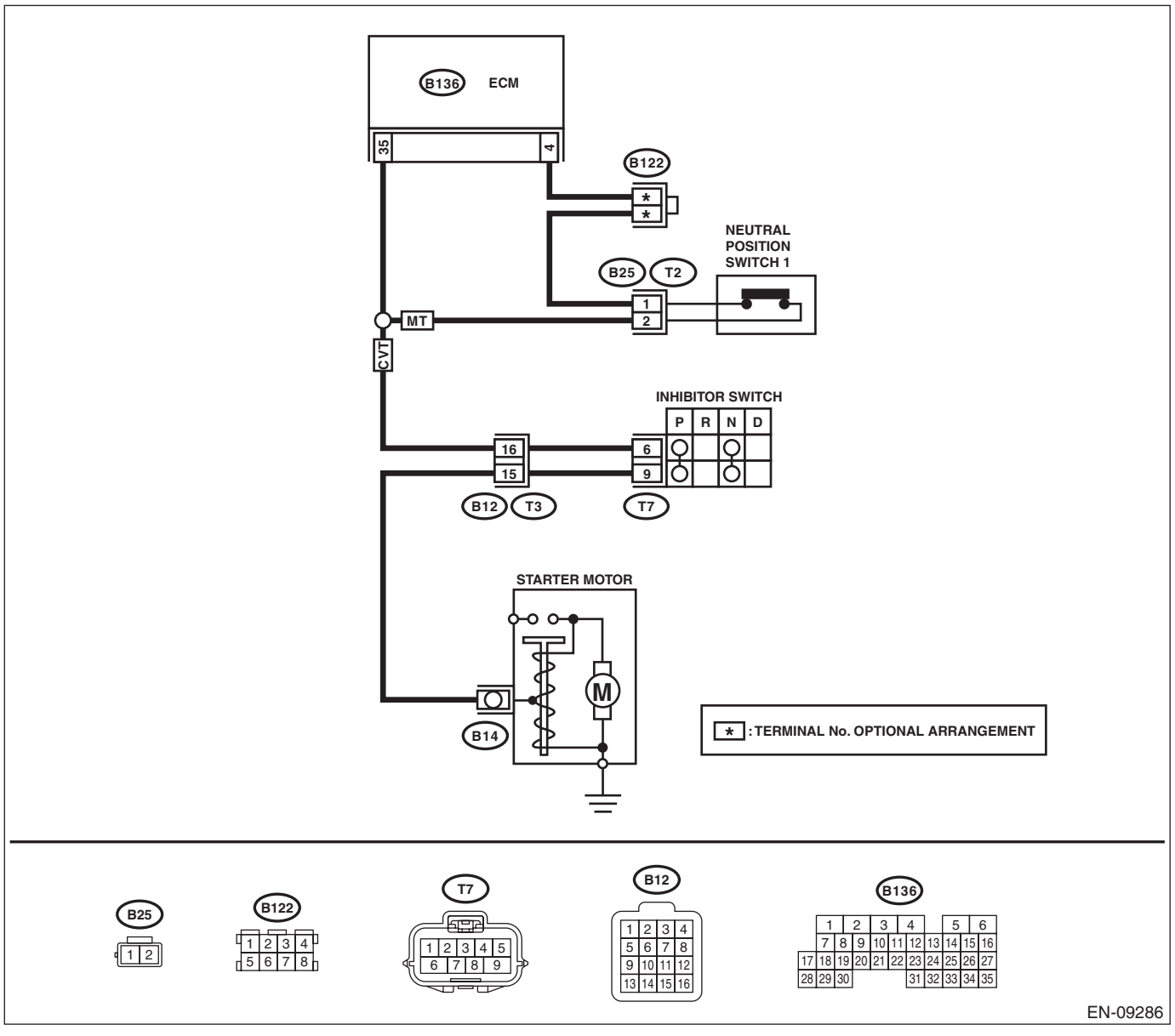

	Step	Check	Yes	No
1	**CHECK INPUT SIGNAL OF ECM.** 1) Turn the ignition switch to ON. 2) Place the shift lever in neutral. 3) Measure the voltage between ECM connector and chassis ground. ***Connector & terminal*** ***(B136) No. 35 (+) — Chassis ground (–):***	Is the voltage less than 1 V?	Repair the poor contact of ECM connector.	Go to step **2**.
2	**CHECK HARNESS BETWEEN ECM AND NEUTRAL POSITION SWITCH 1 CONNECTOR.** 1) Turn the ignition switch to OFF. 2) Disconnect the connectors from ECM and neutral position switch 1. 3) Measure the resistance of harness between ECM connector and neutral position switch 1 connector. ***Connector & terminal*** ***(B136) No. 35 — (B25) No. 2:*** ***(B136) No. 4 — (B25) No. 1:***	Is the resistance less than 1 Ω?	Go to step **3**.	Repair the harness and connector. NOTE: In this case, repair the following item: • Open circuit in harness between ECM connector and neutral position switch 1 connector • Poor contact of coupling connector
3	**CHECK NEUTRAL POSITION SWITCH 1.** 1) Place the shift lever in neutral. 2) Measure the resistance between neutral position switch 1 terminals. ***Terminals*** ***No. 1 — No. 2:***	Is the resistance less than 1 Ω?	Repair the poor contact of neutral position switch 1 connector.	Replace the neutral position switch 1. <Ref. to 5MT-35, Switches and Harness.>

DK:DTC P1160 RETURN SPRING FAILURE

NOTE:
For the diagnostic procedure, refer to DTC P2101. <Ref. to EN(H4DO w/o HEV)(diag)-308, DTC P2101 THROTTLE ACTUATOR CONTROL MOTOR CIRCUIT RANGE/PERFORMANCE, Diagnostic Procedure with Diagnostic Trouble Code (DTC).>

DL:DTC P1449 EVAPORATIVE EMISSION CONT. SYS. AIR FILTER CLOG

DTC DETECTING CONDITION:

- Detected when two consecutive driving cycles with fault occur.
- GENERAL DESCRIPTION <Ref. to GD(H4DO w/o HEV)-204, DTC P1449 EVAPORATIVE EMISSION CONT. SYS. AIR FILTER CLOG, Diagnostic Trouble Code (DTC) Detecting Criteria.>

CAUTION:
After servicing or replacing faulty parts, perform Clear Memory Mode <Ref. to EN(H4DO w/o HEV)(diag)-59, OPERATION, Clear Memory Mode.>, and Inspection Mode <Ref. to EN(H4DO w/o HEV)(diag)-44, PROCEDURE, Inspection Mode.>.

	Step	Check	Yes	No
1	**CHECK FOR ANY OTHER DTC ON DISPLAY.**	Is any other DTC displayed?	Check the appropriate DTC using the “List of Diagnostic Trouble Code (DTC)”. <Ref. to EN(H4DO w/o HEV)(diag)-83, List of Diagnostic Trouble Code (DTC).>	Go to step **2**.
2	**CHECK DRAIN TUBE B OF LEAK CHECK VALVE ASSEMBLY.**	Is the drain tube B of leak check valve assembly clogged?	Replace the drain tube B of leak check valve assembly. <Ref. to EC(H4DO(w/o HEV))-36, Leak Check Valve Assembly.>	Go to step **3**.
3	**CHECK DRAIN HOSE AND DRAIN TUBE C BETWEEN LEAK CHECK VALVE ASSEMBLY AND DRAIN SEPARATOR.**	Is the drain hose or the drain tube C between leak check valve assembly and drain separator clogged?	Replace the drain hose or the drain tube C between leak check valve assembly and drain separator. <Ref. to EC(H4DO(w/o HEV))-55, Drain Separator.>	Go to step **4**.
4	**CHECK DRAIN SEPARATOR.**	Is the drain separator clogged?	Replace the drain separator. <Ref. to EC(H4DO(w/o HEV))-55, Drain Separator.>	Go to step **5**.
5	**CHECK INTAKE HOSE AND CONNECTOR BETWEEN DRAIN SEPARATOR AND VEHICLE BODY.**	Is the intake hose or the connector between drain separator and vehicle body clogged?	Replace the intake hose or the connector between drain separator and vehicle body. <Ref. to EC(H4DO(w/o HEV))-55, Drain Separator.>	Replace the leak check valve assembly. <Ref. to EC(H4DO(w/o HEV))-36, Leak Check Valve Assembly.>

DM:DTC P1451 EVAPORATIVE EMISSION CONT. SYS.

DTC DETECTING CONDITION:

- Detected when two consecutive driving cycles with fault occur.
- GENERAL DESCRIPTION <Ref. to GD(H4DO w/o HEV)-206, DTC P1451 EVAPORATIVE EMISSION CONT. SYS., Diagnostic Trouble Code (DTC) Detecting Criteria.>

CAUTION:
After servicing or replacing faulty parts, perform Clear Memory Mode <Ref. to EN(H4DO w/o HEV)(diag)-59, OPERATION, Clear Memory Mode.>, and Inspection Mode <Ref. to EN(H4DO w/o HEV)(diag)-44, PROCEDURE, Inspection Mode.>.

	Step	Check	Yes	No
1	**CHECK DRAIN TUBE BETWEEN CANISTER AND LEAK CHECK VALVE ASSEMBLY.**	Is the drain tube between canister and leak check valve assembly clogged?	Replace the drain tube between the canister and leak check valve assembly. <Ref. to EC(H4DO(w/o HEV))-9, Canister.>	Go to step **2**.
2	**CHECK HOSES BETWEEN CANISTER AND FUEL TANK.**	Are the hoses between the canister and fuel tank clogged?	Replace the hoses between the canister and fuel tank. <Ref. to EC(H4DO(w/o HEV))-9, Canister.> <Ref. to FU(H4DO(w/o HEV))-122, Fuel Tank.>	Replace the canister. <Ref. to EC(H4DO(w/o HEV))-9, Canister.> After the operation is complete, go to the next step. Go to step **3**.
3	**CHECK EVAPORATIVE EMISSION CONTROL SYSTEM.** Perform drive cycle I. <Ref. to EN(H4DO w/o HEV)(diag)-55, DRIVE CYCLE I, PROCEDURE, Drive Cycle.>	Is DTC P1451 displayed on the display?	Replace the leak check valve assembly. <Ref. to EC(H4DO(w/o HEV))-36, Leak Check Valve Assembly.>	End.

DN:DTC P1492 EGR SOLENOID VALVE SIGNAL #1 CIRCUIT MALFUNCTION (LOW INPUT)

NOTE:
For the diagnostic procedure, refer to DTC P1498. <Ref. to EN(H4DO w/o HEV)(diag)-259, DTC P1498 EGR SOLENOID VALVE SIGNAL #4 CIRCUIT MALFUNCTION (LOW INPUT), Diagnostic Procedure with Diagnostic Trouble Code (DTC).>

DO:DTC P1493 EGR SOLENOID VALVE SIGNAL #1 CIRCUIT MALFUNCTION (HIGH INPUT)

NOTE:
For the diagnostic procedure, refer to DTC P1499. <Ref. to EN(H4DO w/o HEV)(diag)-262, DTC P1499 EGR SOLENOID VALVE SIGNAL #4 CIRCUIT MALFUNCTION (HIGH INPUT), Diagnostic Procedure with Diagnostic Trouble Code (DTC).>

DP:DTC P1494 EGR SOLENOID VALVE SIGNAL #2 CIRCUIT MALFUNCTION (LOW INPUT)

NOTE:
For the diagnostic procedure, refer to DTC P1498. <Ref. to EN(H4DO w/o HEV)(diag)-259, DTC P1498 EGR SOLENOID VALVE SIGNAL #4 CIRCUIT MALFUNCTION (LOW INPUT), Diagnostic Procedure with Diagnostic Trouble Code (DTC).>

DQ:DTC P1495 EGR SOLENOID VALVE SIGNAL #2 CIRCUIT MALFUNCTION (HIGH INPUT)

NOTE:
For the diagnostic procedure, refer to DTC P1499. <Ref. to EN(H4DO w/o HEV)(diag)-262, DTC P1499 EGR SOLENOID VALVE SIGNAL #4 CIRCUIT MALFUNCTION (HIGH INPUT), Diagnostic Procedure with Diagnostic Trouble Code (DTC).>

DR:DTC P1496 EGR SOLENOID VALVE SIGNAL #3 CIRCUIT MALFUNCTION (LOW INPUT)

NOTE:
For the diagnostic procedure, refer to DTC P1498. <Ref. to EN(H4DO w/o HEV)(diag)-259, DTC P1498 EGR SOLENOID VALVE SIGNAL #4 CIRCUIT MALFUNCTION (LOW INPUT), Diagnostic Procedure with Diagnostic Trouble Code (DTC).>

DS:DTC P1497 EGR SOLENOID VALVE SIGNAL #3 CIRCUIT MALFUNCTION (HIGH INPUT)

NOTE:
For the diagnostic procedure, refer to DTC P1499. <Ref. to EN(H4DO w/o HEV)(diag)-262, DTC P1499 EGR SOLENOID VALVE SIGNAL #4 CIRCUIT MALFUNCTION (HIGH INPUT), Diagnostic Procedure with Diagnostic Trouble Code (DTC).>

DT:DTC P1498 EGR SOLENOID VALVE SIGNAL #4 CIRCUIT MALFUNCTION (LOW INPUT)

DTC DETECTING CONDITION:

- Immediately at fault recognition
- GENERAL DESCRIPTION <Ref. to GD(H4DO w/o HEV)-207, DTC P1492 EGR SOLENOID VALVE SIGNAL #1 CIRCUIT MALFUNCTION (LOW INPUT), Diagnostic Trouble Code (DTC) Detecting Criteria.> <Ref. to GD(H4DO w/o HEV)-211, DTC P1494 EGR SOLENOID VALVE SIGNAL #2 CIRCUIT MALFUNCTION (LOW INPUT), Diagnostic Trouble Code (DTC) Detecting Criteria.> <Ref. to GD(H4DO w/o HEV)-211, DTC P1496 EGR SOLENOID VALVE SIGNAL #3 CIRCUIT MALFUNCTION (LOW INPUT), Diagnostic Trouble Code (DTC) Detecting Criteria.> <Ref. to GD(H4DO w/o HEV)-211, DTC P1498 EGR SOLENOID VALVE SIGNAL #4 CIRCUIT MALFUNCTION (LOW INPUT), Diagnostic Trouble Code (DTC) Detecting Criteria.>

TROUBLE SYMPTOM:

- Improper idling
- Poor driving performance
- Engine breathing

CAUTION:

After servicing or replacing faulty parts, perform Clear Memory Mode <Ref. to EN(H4DO w/o HEV)(diag)-59, OPERATION, Clear Memory Mode.>, and Inspection Mode <Ref. to EN(H4DO w/o HEV)(diag)-44, PROCEDURE, Inspection Mode.>.

WIRING DIAGRAM:
Engine electrical system <Ref. to WI(w/o HEV)-74, Engine Electrical System.>

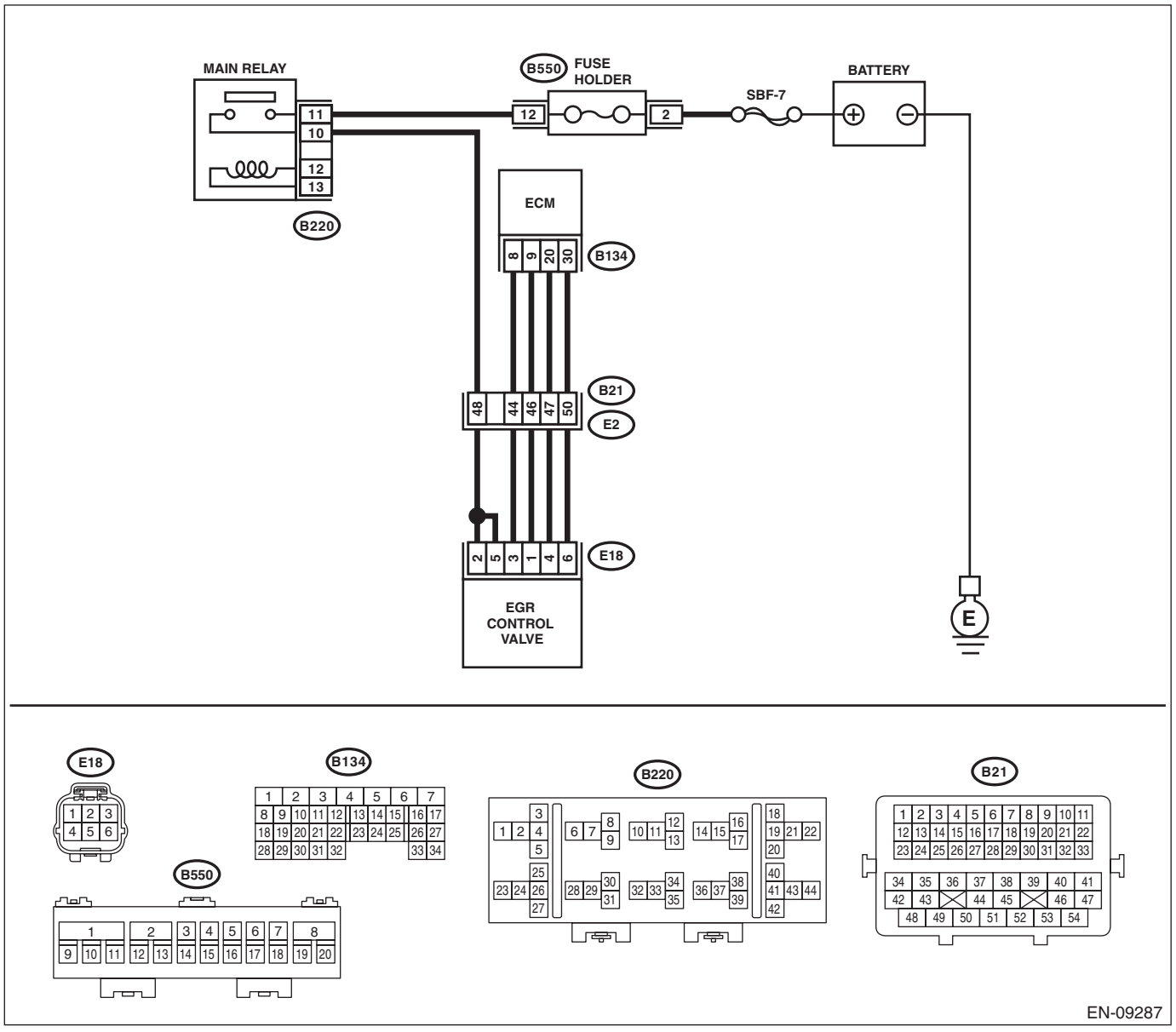

Step		Check	Yes	No
1	**CHECK POWER SUPPLY TO EGR CONTROL VALVE.** 1) Turn the ignition switch to OFF. 2) Disconnect the connector from the EGR control valve. 3) Turn the ignition switch to ON. 4) Measure the voltage between EGR control valve connector and engine ground. ***Connector & terminal*** ***(E18) No. 2 (+) — Engine ground (–):*** ***(E18) No. 5 (+) — Engine ground (–):***	Is the voltage 10 V or more?	Go to step **2**.	Repair the harness and connector. NOTE: In this case, repair the following item: • Open circuit in harness between EGR control valve and main relay connector • Poor contact of coupling connector

	Step	Check	Yes	No
2	**CHECK HARNESS BETWEEN ECM AND EGR CONTROL VALVE CONNECTOR.** 1) Turn the ignition switch to OFF. 2) Disconnect the connector from ECM. 3) Measure the resistance between ECM connector and EGR control valve connector. ***Connector & terminal*** ***DTC P1492; (B134) No. 8 — (E18) No. 3:*** ***DTC P1494; (B134) No. 9 — (E18) No. 1:*** ***DTC P1496; (B134) No. 20 — (E18) No. 4:*** ***DTC P1498; (B134) No. 30 — (E18) No. 6:***	Is the resistance less than 1 Ω?	Go to step **3**.	Repair the harness and connector. NOTE: In this case, repair the following item: • Open circuit of harness between ECM connector and EGR control valve connector • Poor contact of coupling connector
3	**CHECK HARNESS BETWEEN ECM AND EGR CONTROL VALVE CONNECTOR.** 1) Disconnect the connector from ECM. 2) Measure the resistance between ECM connector and chassis ground. ***Connector & terminal*** ***DTC P1492; (B134) No. 8 — Chassis ground:*** ***DTC P1494; (B134) No. 9 — Chassis ground:*** ***DTC P1496; (B134) No. 20 — Chassis ground:*** ***DTC P1498; (B134) No. 30 — Chassis ground:***	Is the resistance 1 MΩ or more?	Go to step **4**.	Repair ground short circuit of harness between ECM connector and EGR control valve connector.
4	**CHECK FOR POOR CONTACT.** Check for poor contact between ECM connector and EGR control valve connector.	Is there poor contact in ECM or EGR control valve connector?	Repair the poor contact of ECM or EGR control valve connector.	Replace EGR control valve. <Ref. to EC(H4DO(w/o HEV))-22, EGR Control Valve.>

DU:DTC P1499 EGR SOLENOID VALVE SIGNAL #4 CIRCUIT MALFUNCTION (HIGH INPUT)

DTC DETECTING CONDITION:

- Immediately at fault recognition
- GENERAL DESCRIPTION <Ref. to GD(H4DO w/o HEV)-209, DTC P1493 EGR SOLENOID VALVE SIGNAL #1 CIRCUIT MALFUNCTION (HIGH INPUT), Diagnostic Trouble Code (DTC) Detecting Criteria.> <Ref. to GD(H4DO w/o HEV)-211, DTC P1495 EGR SOLENOID VALVE SIGNAL #2 CIRCUIT MALFUNCTION (HIGH INPUT), Diagnostic Trouble Code (DTC) Detecting Criteria.> <Ref. to GD(H4DO w/o HEV)-211, DTC P1497 EGR SOLENOID VALVE SIGNAL #3 CIRCUIT MALFUNCTION (HIGH INPUT), Diagnostic Trouble Code (DTC) Detecting Criteria.> <Ref. to GD(H4DO w/o HEV)-211, DTC P1499 EGR SOLENOID VALVE SIGNAL #4 CIRCUIT MALFUNCTION (HIGH INPUT), Diagnostic Trouble Code (DTC) Detecting Criteria.>

TROUBLE SYMPTOM:

- Improper idling
- Poor driving performance
- Engine breathing

CAUTION:

After servicing or replacing faulty parts, perform Clear Memory Mode <Ref. to EN(H4DO w/o HEV)(diag)-59, OPERATION, Clear Memory Mode.>, and Inspection Mode <Ref. to EN(H4DO w/o HEV)(diag)-44, PROCEDURE, Inspection Mode.>.

WIRING DIAGRAM:
Engine electrical system <Ref. to WI(w/o HEV)-74, Engine Electrical System.>

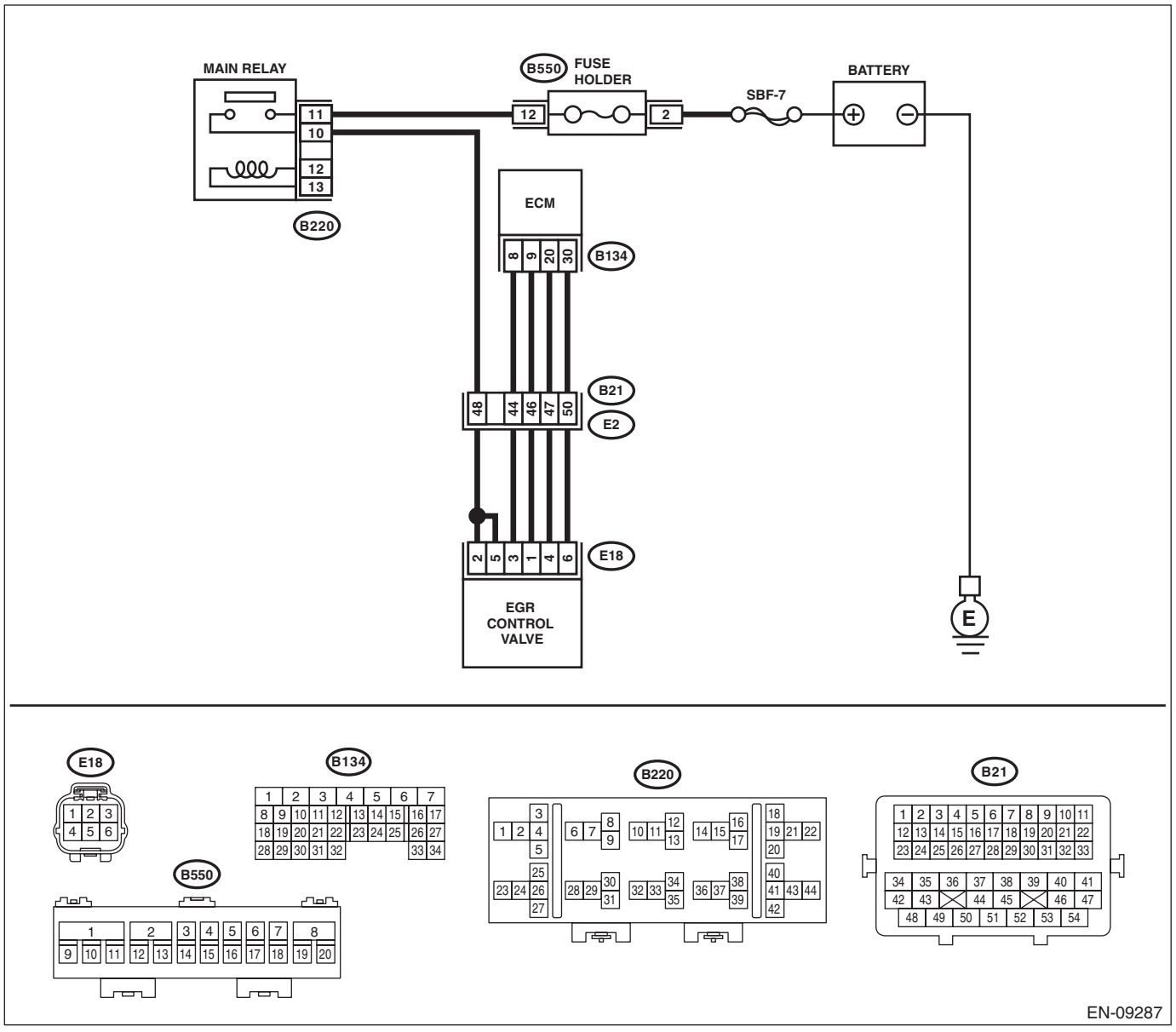

Step		Check	Yes	No
1	**CHECK HARNESS BETWEEN ECM AND EGR CONTROL VALVE CONNECTOR.** 1) Turn the ignition switch to OFF. 2) Disconnect the connector from ECM and EGR control valve. 3) Turn the ignition switch to ON. 4) Measure the voltage between ECM connector and chassis ground. ***Connector & terminal*** ***DTC P1493; (B134) No. 8 (+) — Chassis ground (–):*** ***DTC P1495; (B134) No. 9 (+) — Chassis ground (–):*** ***DTC P1497; (B134) No. 20 (+) — Chassis ground (–):*** ***DTC P1499; (B134) No. 30 (+) — Chassis ground (–):***		Is the voltage 10 V or more?	Repair the short circuit to power supply in the harness between the ECM connector and EGR control valve connector.	Go to step **2**.

Step		Check	Yes	No
2	**CHECK EGR CONTROL VALVE.** Measure the resistance between EGR control valve terminals. ***Terminals*** ***DTC P1493; No. 2 — No. 3:*** ***DTC P1495; No. 2 — No. 1:*** ***DTC P1497; No. 5 — No. 4:*** ***DTC P1499; No. 5 — No. 6:***	Is the resistance 20 Ω or more?	Repair the poor contact of ECM connector.	Replace EGR control valve. <Ref. to EC(H4DO(w/o HEV))-22, EGR Control Valve.>

DV:DTC P1530 BATTERY CURRENT SENSOR CIRCUIT LOW

DTC DETECTING CONDITION:

- Immediately at fault recognition
- GENERAL DESCRIPTION <Ref. to GD(H4DO w/o HEV)-212, DTC P1530 BATTERY CURRENT SENSOR CIRCUIT LOW, Diagnostic Trouble Code (DTC) Detecting Criteria.>

CAUTION:

After servicing or replacing faulty parts, perform Clear Memory Mode <Ref. to EN(H4DO w/o HEV)(diag)-59, OPERATION, Clear Memory Mode.>, and Inspection Mode <Ref. to EN(H4DO w/o HEV)(diag)-44, PROCEDURE, Inspection Mode.>.

WIRING DIAGRAM:

Engine electrical system <Ref. to WI(w/o HEV)-74, Engine Electrical System.>

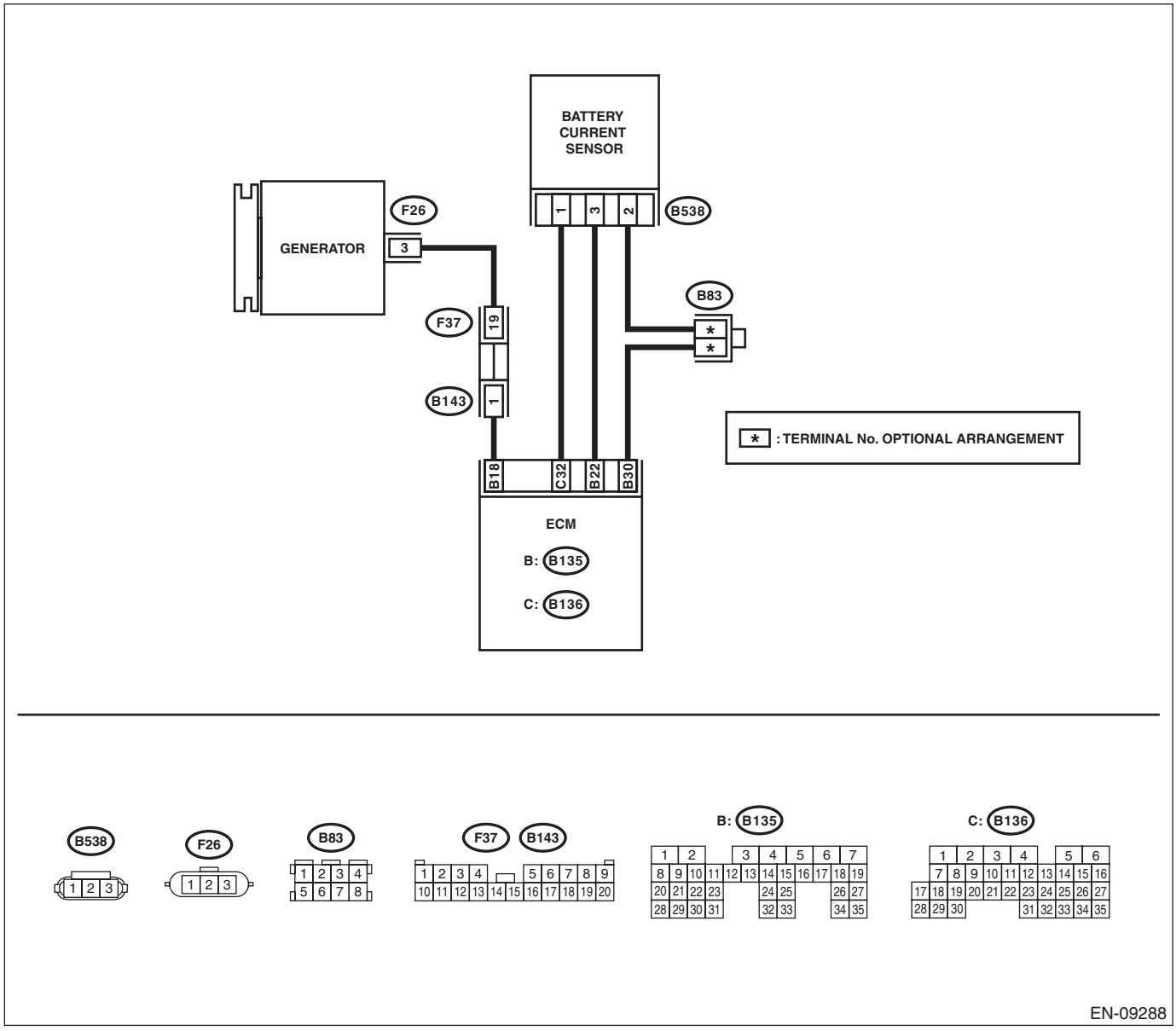

	Step	Check	Yes	No
1	**CHECK CURRENT DATA.** 1) Start the engine. 2) Read the value of «Battery current value» using the Subaru Select Monitor. NOTE: For detailed operation procedures, refer to "READ CURRENT DATA FOR ENGINE". <Ref. to EN(H4DO w/o HEV)(diag)-36, Subaru Select Monitor.>	Is the value of «Battery current value» 100 A or more?	Go to step **2**.	Even if DTC is detected, the circuit has returned to a normal condition at this time. Reproduce the failure, and then perform the diagnosis again. NOTE: In this case, temporary poor contact of connector, temporary open or short circuit of harness may be the cause.
2	**CHECK HARNESS BETWEEN ECM AND BATTERY CURRENT SENSOR CONNECTOR.** 1) Turn the ignition switch to OFF. 2) Disconnect the connectors from the ECM and battery current sensor. 3) Measure the resistance of the harness between ECM connector and battery current sensor connector. ***Connector & terminal*** ***(B135) No. 22 — (B538) No. 3:*** ***(B136) No. 32 — (B538) No. 1:***	Is the resistance less than 1 Ω?	Go to step **3**.	Repair the open circuit in the harness between ECM connector and battery current sensor connector.
3	**CHECK HARNESS BETWEEN ECM AND BATTERY CURRENT SENSOR CONNECTOR.** Measure the resistance between ECM connector and chassis ground. ***Connector & terminal*** ***(B135) No. 22 — Chassis ground:*** ***(B136) No. 32 — Chassis ground:***	Is the resistance 1 MΩ or more?	Go to step **4**.	Repair the short circuit to ground in the harness between ECM connector and battery current sensor connector.
4	**CHECK FOR POOR CONTACT.** Check for poor contact between the ECM and battery current sensor connectors.	Is there poor contact of the ECM or battery current sensor connectors?	Repair any poor contact between the ECM and battery current sensor connectors.	Replace the battery current sensor. <Ref. to SC(H4DO(w/o HEV))-58, Battery Current & Temperature Sensor.>

DW:DTC P1531 BATTERY CURRENT SENSOR CIRCUIT HIGH

DTC DETECTING CONDITION:

- Immediately at fault recognition
- GENERAL DESCRIPTION <Ref. to GD(H4DO w/o HEV)-214, DTC P1531 BATTERY CURRENT SENSOR CIRCUIT HIGH, Diagnostic Trouble Code (DTC) Detecting Criteria.>

CAUTION:

After servicing or replacing faulty parts, perform Clear Memory Mode <Ref. to EN(H4DO w/o HEV)(diag)-59, OPERATION, Clear Memory Mode.>, and Inspection Mode <Ref. to EN(H4DO w/o HEV)(diag)-44, PROCEDURE, Inspection Mode.>.

WIRING DIAGRAM:

Engine electrical system <Ref. to WI(w/o HEV)-74, Engine Electrical System.>

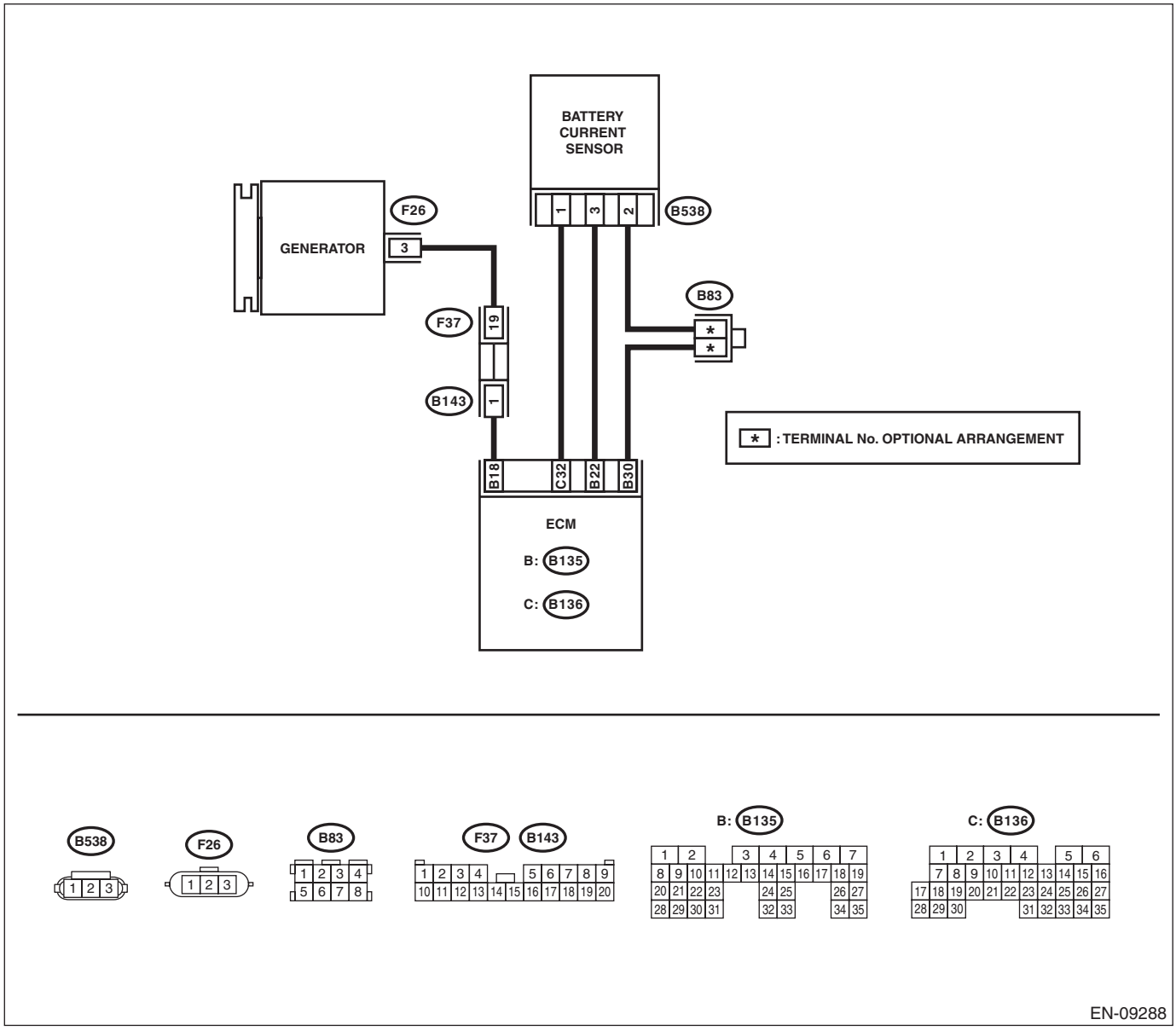

	Step	Check	Yes	No
1	**CHECK CURRENT DATA.** 1) Start the engine. 2) Read the value of «Battery current value» using the Subaru Select Monitor. NOTE: For detailed operation procedures, refer to "READ CURRENT DATA FOR ENGINE". <Ref. to EN(H4DO w/o HEV)(diag)-36, Subaru Select Monitor.>	Is the value of «Battery current value» –100 A or less?	Go to step **2**.	Even if DTC is detected, the circuit has returned to a normal condition at this time. Reproduce the failure, and then perform the diagnosis again. NOTE: In this case, temporary poor contact of connector, temporary open or short circuit of harness may be the cause.
2	**CHECK HARNESS BETWEEN ECM AND BATTERY CURRENT SENSOR CONNECTOR.** 1) Turn the ignition switch to OFF. 2) Disconnect the connector from the battery current sensor. 3) Start the engine. 4) Read the value of «Battery current value» using the Subaru Select Monitor. NOTE: For detailed operation procedures, refer to "READ CURRENT DATA FOR ENGINE". <Ref. to EN(H4DO w/o HEV)(diag)-36, Subaru Select Monitor.>	Is the value of «Battery current value» –100 A or less?	Repair the short circuit to power in the harness between ECM connector and battery current sensor connector.	Go to step **3**.
3	**CHECK HARNESS BETWEEN ECM AND BATTERY CURRENT SENSOR CONNECTOR.** 1) Turn the ignition switch to OFF. 2) Measure the resistance of the harness between the battery current sensor connector and engine ground. ***Connector & terminal*** ***(B538) No. 2 — Engine ground:***	Is the resistance less than 5 Ω?	Go to step **4**.	Repair the harness and connector. NOTE: In this case, repair the following item: • Open circuit in harness between ECM connector and battery current sensor connector • Poor contact of joint connector
4	**CHECK FOR POOR CONTACT.** Check for poor contact of the battery current sensor connector.	Is there poor contact of the battery current sensor connector?	Repair the poor contact of the battery current sensor connector.	Replace the battery current sensor. <Ref. to SC(H4DO(w/o HEV))-58, Battery Current & Temperature Sensor.>

DX:DTC P1532 BATTERY CHARGING SYSTEM

DTC DETECTING CONDITION:

- Immediately at fault recognition
- GENERAL DESCRIPTION <Ref. to GD(H4DO w/o HEV)-216, DTC P1532 BATTERY CHARGING SYSTEM, Diagnostic Trouble Code (DTC) Detecting Criteria.>

CAUTION:

After servicing or replacing faulty parts, perform Clear Memory Mode <Ref. to EN(H4DO w/o HEV)(diag)-59, OPERATION, Clear Memory Mode.>, and Inspection Mode <Ref. to EN(H4DO w/o HEV)(diag)-44, PROCEDURE, Inspection Mode.>.

WIRING DIAGRAM:

Engine electrical system <Ref. to WI(w/o HEV)-74, Engine Electrical System.>

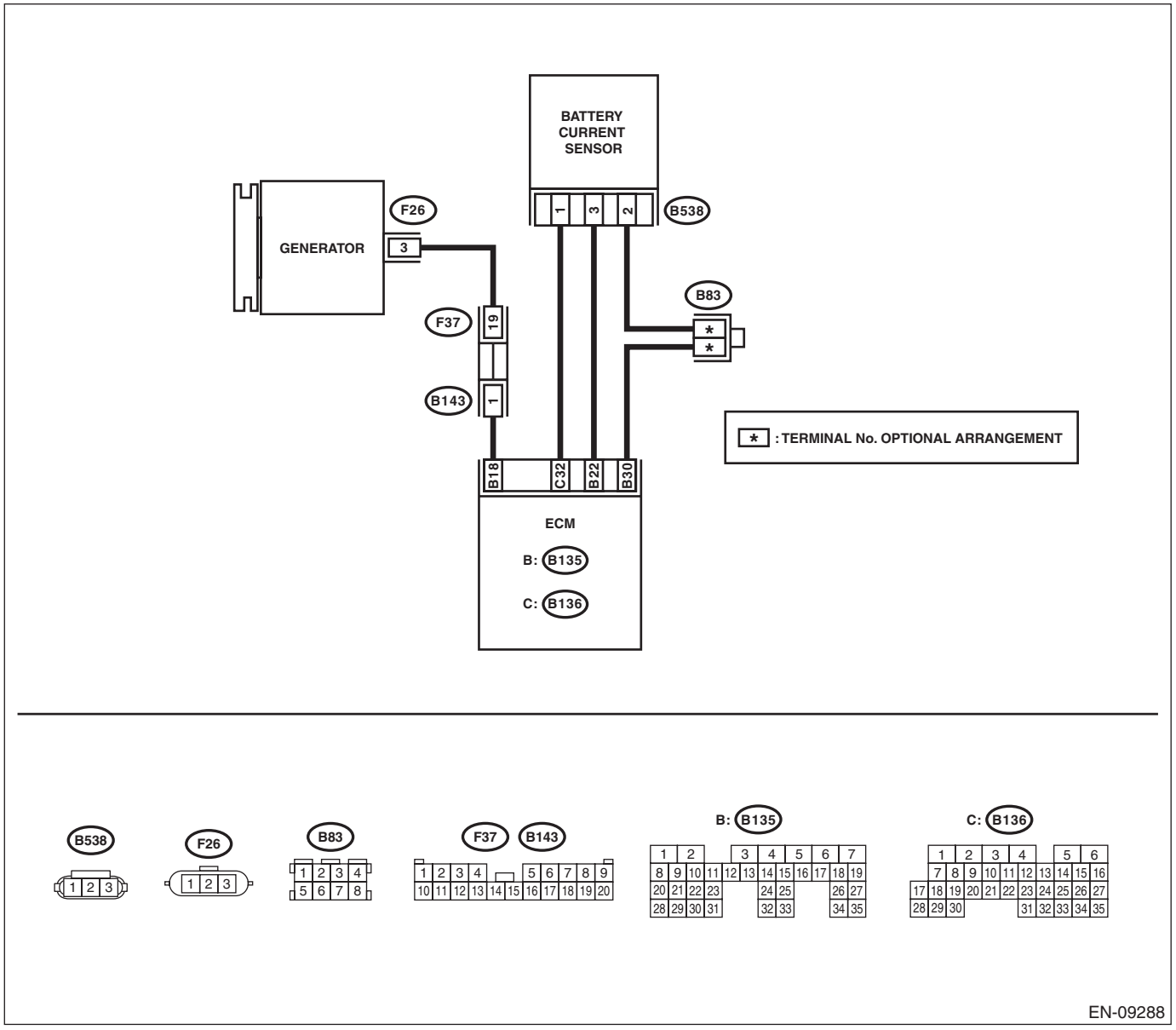

Step		Check	Yes	No
1	**CHECK INSTALLATION CONDITION OF BATTERY.** Turn the ignition switch to OFF.	Are the positive and negative terminals of battery securely tightened?	Go to step **2**.	Tighten the positive and negative terminals of battery securely.

	Step	Check	Yes	No
2	**CHECK BATTERY TERMINAL.**	Is there any connection of electrical parts to the positive and negative terminals of battery?	Remove the wiring of electrical parts connected to the positive and negative terminals of battery. NOTE: Directly connecting electrical parts to the battery may cause erroneous operation of the battery current sensor.	Go to step **3**.
3	**CHECK INSTALLATION CONDITION OF V-BELT.** Check the installation condition of V-belt. <Ref. to ME(H4DO(w/o HEV))-135, INSPECTION, V-belt.>	Is the V-belt installed properly?	Go to step **4**.	Install the V-belt properly. <Ref. to ME(H4DO(w/o HEV))-120, V-belt.>
4	**CHECK BATTERY VOLTAGE.** 1) Start the engine. 2) Select "High mode" from "Alternator control" in "System Operation Check Mode", and measure the battery voltage after 10 seconds or more have passed. NOTE: For detailed procedures, refer to "System Operation Check Mode". <Ref. to EN(H4DO w/o HEV)(diag)-60, System Operation Check Mode.> 3) Select "Low mode" from "Alternator control" in "System Operation Check Mode", and measure the battery voltage. **CAUTION:** **Do not continue the "Low mode" operation for one minute or more.** NOTE: For detailed procedures, refer to "System Operation Check Mode". <Ref. to EN(H4DO w/o HEV)(diag)-60, System Operation Check Mode.>	Does battery voltage lower from 13.9 — 14.8 V to 12.2 — 13.1 V between step 2) and step 3)?	Go to step **7**.	Go to step **5**.
5	**CHECK HARNESS BETWEEN ECM AND GENERATOR CONNECTOR.** 1) Turn the ignition switch to OFF. 2) Disconnect the connectors from ECM and generator. 3) Measure the resistance of harness between ECM connector and generator connector. ***Connector & terminal*** ***(B135) No. 18 — (F26) No. 3:***	Is the resistance less than 1 Ω?	Go to step **6**.	Repair the open circuit of harness between ECM connector and generator connector.
6	**CHECK HARNESS BETWEEN ECM AND GENERATOR CONNECTOR.** Measure the resistance between generator connector and engine ground. ***Connector & terminal*** ***(F26) No. 3 — Engine ground:***	Is the resistance 1 MΩ or more?	Go to step **7**.	Repair the ground short circuit of harness between ECM connector and generator connector.
7	**CHECK BATTERY CURRENT SENSOR.**	Has water entered the connector?	Completely remove any water inside.	Go to step **8**.

	Step	Check	Yes	No
8	**CHECK HARNESS BETWEEN ECM AND BATTERY CURRENT SENSOR CONNECTOR.** 1) Disconnect the connectors from the ECM and battery current sensor. 2) Measure the resistance of the harness between ECM connector and battery current sensor connector. ***Connector & terminal*** ***(B135) No. 22 — (B538) No. 3:*** ***(B136) No. 32 — (B538) No. 1:***	Is the resistance less than 1 Ω?	Go to step **9**.	Repair the open circuit in the harness between ECM connector and battery current sensor connector.
9	**CHECK HARNESS BETWEEN ECM AND BATTERY CURRENT SENSOR CONNECTOR.** Measure the resistance between ECM connector and chassis ground. ***Connector & terminal*** ***(B135) No. 22 — Chassis ground:*** ***(B136) No. 32 — Chassis ground:***	Is the resistance 1 MΩ or more?	Go to step **10**.	Repair the short circuit to ground in the harness between ECM connector and battery current sensor connector.
10	**CHECK HARNESS BETWEEN ECM AND BATTERY CURRENT SENSOR CONNECTOR.** Measure the resistance between ECM connectors. ***Connector & terminal*** ***(B135) No. 22 — (B136) No. 32:***	Is the resistance 1 MΩ or more?	Go to step **11**.	Repair the short circuit to power in the harness between ECM connector and battery current sensor connector.
11	**CHECK HARNESS BETWEEN ECM AND BATTERY CURRENT SENSOR CONNECTOR.** 1) Connect the connector to ECM. 2) Measure the resistance of the harness between the battery current sensor connector and engine ground. ***Connector & terminal*** ***(B538) No. 2 — Engine ground:***	Is the resistance less than 5 Ω?	Go to step **12**.	Repair the harness and connector. NOTE: In this case, repair the following item: • Open circuit in harness between ECM connector and battery current sensor connector • Poor contact of joint connector
12	**CHECK FOR POOR CONTACT.** Check for poor contact of the battery current sensor connector.	Is there poor contact of the battery current sensor connector?	Repair the poor contact of the battery current sensor connector.	Replace the battery current sensor. <Ref. to SC(H4DO(w/o HEV))-58, Battery Current & Temperature Sensor.>

DY:DTC P2004 INTAKE MANIFOLD RUNNER CONTROL STUCK OPEN (BANK 1)

DTC DETECTING CONDITION:

- Immediately at fault recognition
- GENERAL DESCRIPTION <Ref. to GD(H4DO w/o HEV)-219, DTC P2004 INTAKE MANIFOLD RUNNER CONTROL STUCK OPEN (BANK 1), Diagnostic Trouble Code (DTC) Detecting Criteria.>

CAUTION:
After servicing or replacing faulty parts, perform Clear Memory Mode <Ref. to EN(H4DO w/o HEV)(diag)-59, OPERATION, Clear Memory Mode.>, and Inspection Mode <Ref. to EN(H4DO w/o HEV)(diag)-44, PROCEDURE, Inspection Mode.>.

	Step	Check	Yes	No
1	**CHECK FOR ANY OTHER DTC ON DISPLAY.**	Is any other DTC displayed?	Check the appropriate DTC using the "List of Diagnostic Trouble Code (DTC)". <Ref. to EN(H4DO w/o HEV)(diag)-83, List of Diagnostic Trouble Code (DTC).>	Go to step **2**.
2	**CHECK TUMBLE GENERATOR VALVE RH.** 1) Remove the tumble generator valve assembly RH. 2) Check the tumble generator valve.	Is there any dirt or clogging with foreign objects in the tumble generator valve?	Clean the tumble generator valve.	Replace the tumble generator valve RH. <Ref. to FU(H4DO(w/o HEV))-90, Tumble Generator Valve Assembly.>

DZ:DTC P2005 INTAKE MANIFOLD RUNNER CONTROL STUCK OPEN (BANK 2)

DTC DETECTING CONDITION:

- Immediately at fault recognition
- GENERAL DESCRIPTION <Ref. to GD(H4DO w/o HEV)-220, DTC P2005 INTAKE MANIFOLD RUNNER CONTROL STUCK OPEN (BANK 2), Diagnostic Trouble Code (DTC) Detecting Criteria.>

CAUTION:
After servicing or replacing faulty parts, perform Clear Memory Mode <Ref. to EN(H4DO w/o HEV)(diag)-59, OPERATION, Clear Memory Mode.>, and Inspection Mode <Ref. to EN(H4DO w/o HEV)(diag)-44, PROCEDURE, Inspection Mode.>.

	Step	Check	Yes	No
1	**CHECK FOR ANY OTHER DTC ON DISPLAY.**	Is any other DTC displayed?	Check the appropriate DTC using the "List of Diagnostic Trouble Code (DTC)". <Ref. to EN(H4DO w/o HEV)(diag)-83, List of Diagnostic Trouble Code (DTC).>	Go to step **2**.
2	**CHECK TUMBLE GENERATOR VALVE LH.** 1) Remove the tumble generator valve assembly LH. 2) Check the tumble generator valve.	Is there any dirt or clogging with foreign objects in the tumble generator valve?	Clean the tumble generator valve.	Replace the tumble generator valve LH. <Ref. to FU(H4DO(w/o HEV))-90, Tumble Generator Valve Assembly.>

EA:DTC P2006 INTAKE MANIFOLD RUNNER CONTROL STUCK CLOSED (BANK 1)

DTC DETECTING CONDITION:

- Immediately at fault recognition
- GENERAL DESCRIPTION <Ref. to GD(H4DO w/o HEV)-221, DTC P2006 INTAKE MANIFOLD RUNNER CONTROL STUCK CLOSED (BANK 1), Diagnostic Trouble Code (DTC) Detecting Criteria.>

CAUTION:
After servicing or replacing faulty parts, perform Clear Memory Mode <Ref. to EN(H4DO w/o HEV)(diag)-59, OPERATION, Clear Memory Mode.>, and Inspection Mode <Ref. to EN(H4DO w/o HEV)(diag)-44, PROCEDURE, Inspection Mode.>.

	Step	Check	Yes	No
1	**CHECK FOR ANY OTHER DTC ON DISPLAY.**	Is any other DTC displayed?	Check the appropriate DTC using the "List of Diagnostic Trouble Code (DTC)". <Ref. to EN(H4DO w/o HEV)(diag)-83, List of Diagnostic Trouble Code (DTC).>	Go to step **2**.
2	**CHECK TUMBLE GENERATOR VALVE RH.** 1) Remove the tumble generator valve assembly RH. 2) Check the tumble generator valve.	Is there any dirt or clogging with foreign objects in the tumble generator valve?	Clean the tumble generator valve.	Replace the tumble generator valve RH. <Ref. to FU(H4DO(w/o HEV))-90, Tumble Generator Valve Assembly.>

EB:DTC P2007 INTAKE MANIFOLD RUNNER CONTROL STUCK CLOSED (BANK 2)

DTC DETECTING CONDITION:

- Immediately at fault recognition
- GENERAL DESCRIPTION <Ref. to GD(H4DO w/o HEV)-222, DTC P2007 INTAKE MANIFOLD RUNNER CONTROL STUCK CLOSED (BANK 2), Diagnostic Trouble Code (DTC) Detecting Criteria.>

CAUTION:

After servicing or replacing faulty parts, perform Clear Memory Mode <Ref. to EN(H4DO w/o HEV)(diag)-59, OPERATION, Clear Memory Mode.>, and Inspection Mode <Ref. to EN(H4DO w/o HEV)(diag)-44, PROCEDURE, Inspection Mode.>.

	Step	Check	Yes	No
1	**CHECK FOR ANY OTHER DTC ON DISPLAY.**	Is any other DTC displayed?	Check the appropriate DTC using the "List of Diagnostic Trouble Code (DTC)". <Ref. to EN(H4DO w/o HEV)(diag)-83, List of Diagnostic Trouble Code (DTC).>	Go to step **2**.
2	**CHECK TUMBLE GENERATOR VALVE LH.** 1) Remove the tumble generator valve assembly LH. 2) Check the tumble generator valve.	Is there any dirt or clogging with foreign objects in the tumble generator valve?	Clean the tumble generator valve.	Replace the tumble generator valve LH. <Ref. to FU(H4DO(w/o HEV))-90, Tumble Generator Valve Assembly.>

EC:DTC P2009 INTAKE MANIFOLD RUNNER CONTROL CIRCUIT LOW (BANK 1)

DTC DETECTING CONDITION:

- Immediately at fault recognition
- GENERAL DESCRIPTION <Ref. to GD(H4DO w/o HEV)-223, DTC P2009 INTAKE MANIFOLD RUNNER CONTROL CIRCUIT LOW (BANK 1), Diagnostic Trouble Code (DTC) Detecting Criteria.>

CAUTION:
After servicing or replacing faulty parts, perform Clear Memory Mode <Ref. to EN(H4DO w/o HEV)(diag)-59, OPERATION, Clear Memory Mode.>, and Inspection Mode <Ref. to EN(H4DO w/o HEV)(diag)-44, PROCEDURE, Inspection Mode.>.

WIRING DIAGRAM:

Engine electrical system <Ref. to WI(w/o HEV)-74, Engine Electrical System.>

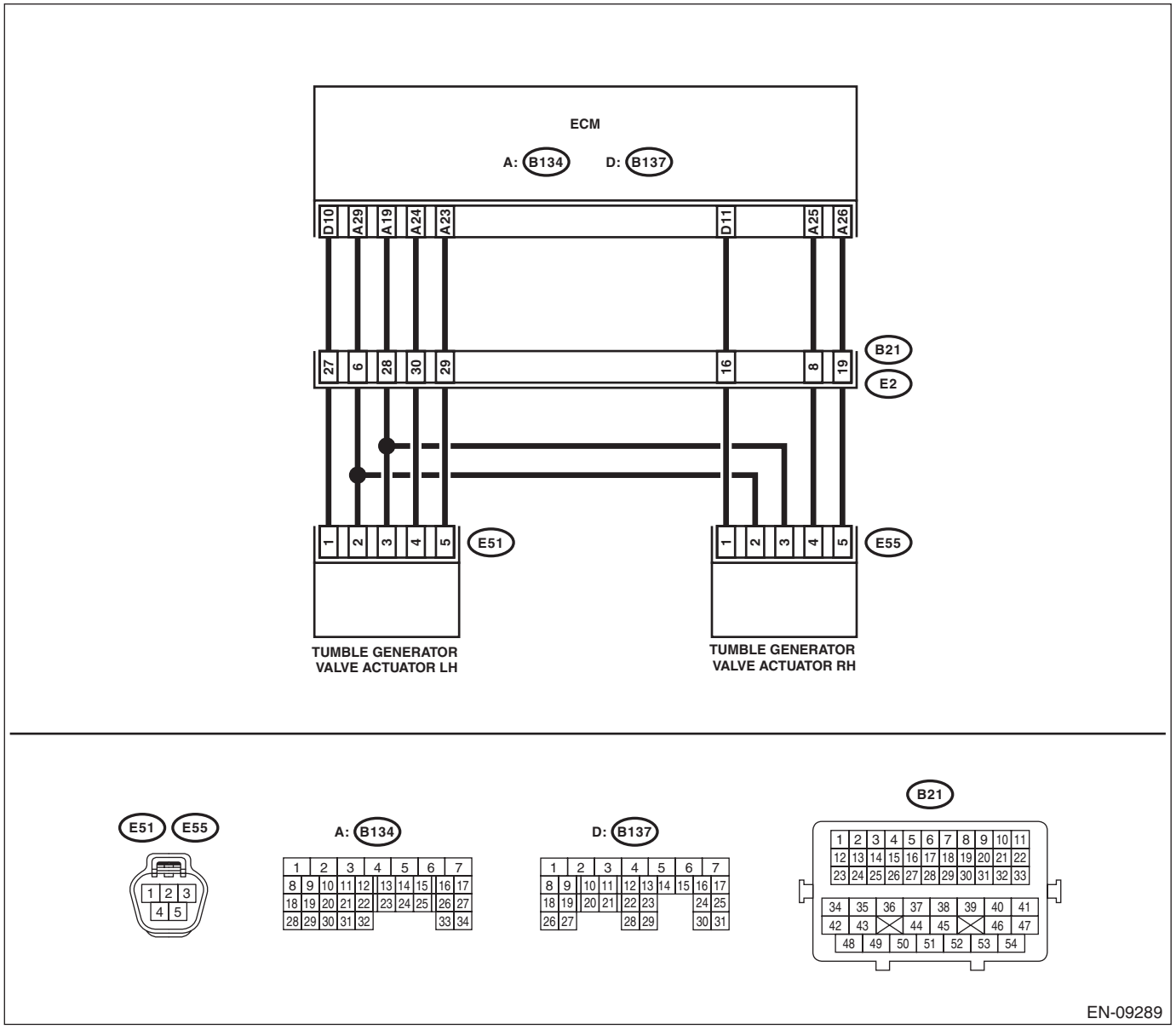

	Step	Check	Yes	No
1	**CHECK HARNESS BETWEEN ECM AND TUMBLE GENERATOR VALVE ACTUATOR RH CONNECTOR.** 1) Turn the ignition switch to OFF. 2) Disconnect the connector from ECM. 3) Measure the voltage between ECM connector and chassis ground. ***Connector & terminal*** ***(B134) No. 25 (+) — Chassis ground (–):*** ***(B134) No. 26 (+) — Chassis ground (–):***	Is the voltage 5 V or more?	Repair the short circuit to power in harness between ECM connector and tumble generator valve actuator RH connector.	Replace the tumble generator valve actuator RH. <Ref. to FU(H4DO(w/o HEV))-95, Tumble Generator Valve Actuator.>

ED:DTC P2012 INTAKE MANIFOLD RUNNER CONTROL CIRCUIT LOW (BANK 2)

DTC DETECTING CONDITION:

- Immediately at fault recognition
- GENERAL DESCRIPTION <Ref. to GD(H4DO w/o HEV)-224, DTC P2012 INTAKE MANIFOLD RUNNER CONTROL CIRCUIT LOW (BANK 2), Diagnostic Trouble Code (DTC) Detecting Criteria.>

CAUTION:
After servicing or replacing faulty parts, perform Clear Memory Mode <Ref. to EN(H4DO w/o HEV)(diag)-59, OPERATION, Clear Memory Mode.>, and Inspection Mode <Ref. to EN(H4DO w/o HEV)(diag)-44, PROCEDURE, Inspection Mode.>.

WIRING DIAGRAM:

Engine electrical system <Ref. to WI(w/o HEV)-74, Engine Electrical System.>

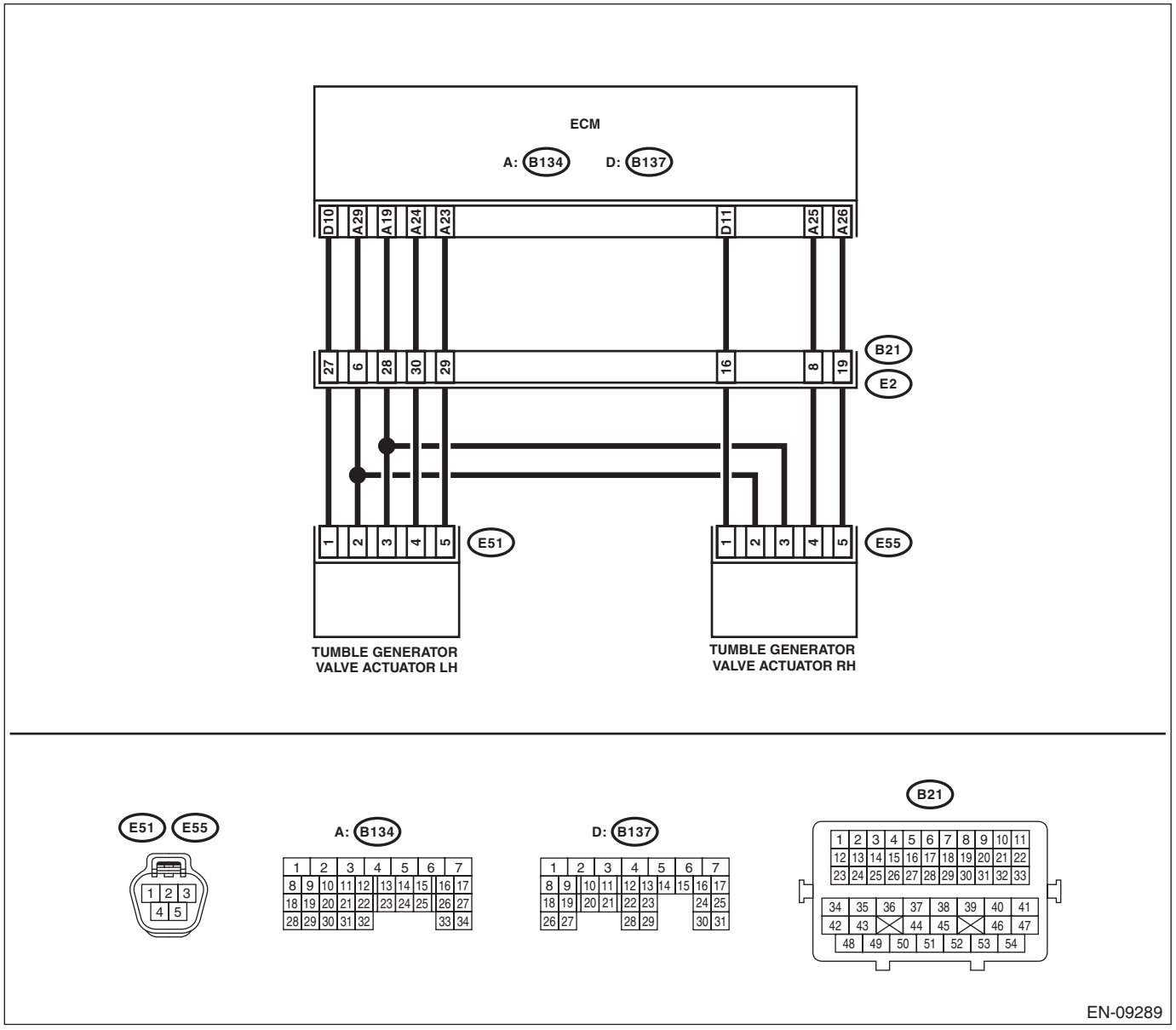

	Step	Check	Yes	No
1	**CHECK HARNESS BETWEEN ECM AND TUMBLE GENERATOR VALVE ACTUATOR LH CONNECTOR.** 1) Turn the ignition switch to OFF. 2) Disconnect the connector from ECM. 3) Measure the voltage between ECM connector and chassis ground. ***Connector & terminal*** ***(B134) No. 23 (+) — Chassis ground (–):*** ***(B134) No. 24 (+) — Chassis ground (–):***	Is the voltage 5 V or more?	Repair the short circuit to power in harness between ECM connector and tumble generator valve actuator LH connector.	Replace the tumble generator valve actuator LH. <Ref. to FU(H4DO(w/o HEV))-95, Tumble Generator Valve Actuator.>

EE:DTC P2088 INTAKE CAMSHAFT POSITION ACTUATOR CONTROL CIRCUIT LOW (BANK 1)

DTC DETECTING CONDITION:

- Immediately at fault recognition
- GENERAL DESCRIPTION <Ref. to GD(H4DO w/o HEV)-225, DTC P2088 INTAKE CAMSHAFT POSITION ACTUATOR CONTROL CIRCUIT LOW (BANK 1), Diagnostic Trouble Code (DTC) Detecting Criteria.>

TROUBLE SYMPTOM:

Improper idling

CAUTION:

After servicing or replacing faulty parts, perform Clear Memory Mode <Ref. to EN(H4DO w/o HEV)(diag)-59, OPERATION, Clear Memory Mode.>, and Inspection Mode <Ref. to EN(H4DO w/o HEV)(diag)-44, PROCEDURE, Inspection Mode.>.

WIRING DIAGRAM:

Engine electrical system <Ref. to WI(w/o HEV)-74, Engine Electrical System.>

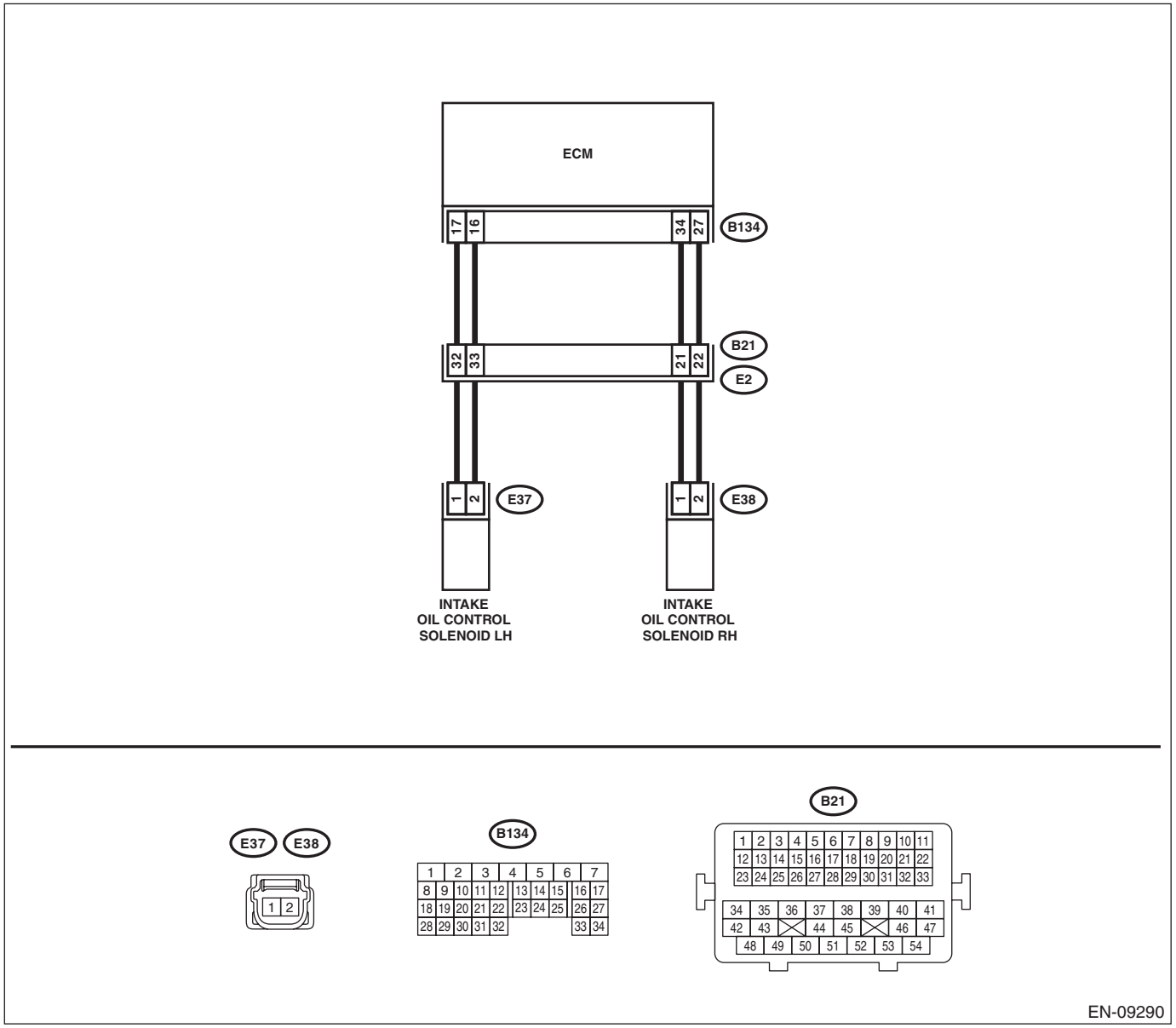

	Step	Check	Yes	No
1	**CHECK HARNESS BETWEEN ECM AND OIL CONTROL SOLENOID RH CONNECTOR.** 1) Turn the ignition switch to OFF. 2) Disconnect the connectors from ECM and oil control solenoid RH. 3) Measure the resistance of harness between ECM connector and oil control solenoid RH connector. ***Connector & terminal*** ***(B134) No. 34 — (E38) No. 1:*** ***(B134) No. 27 — (E38) No. 2:***	Is the resistance less than 1 Ω?	Go to step **2**.	Repair the harness and connector. NOTE: In this case, repair the following item: • Open circuit in harness between ECM connector and oil control solenoid RH connector • Poor contact of coupling connector
2	**CHECK HARNESS BETWEEN ECM AND OIL CONTROL SOLENOID RH CONNECTOR.** Measure the resistance between ECM connector and chassis ground. ***Connector & terminal*** ***(B134) No. 34 — Chassis ground:*** ***(B134) No. 27 — Chassis ground:***	Is the resistance 1 MΩ or more?	Go to step **3**.	Repair the short circuit to ground in harness between ECM connector and oil control solenoid RH connector.
3	**CHECK OIL CONTROL SOLENOID.** Measure the resistance between oil control solenoid terminals. ***Terminals*** ***No. 1 — No. 2:***	Is the resistance 6 — 12 Ω?	Repair the poor contact of ECM and oil control solenoid RH connector.	Replace the oil control solenoid RH. <Ref. to FU(H4DO(w/o HEV))-69, Oil Control Solenoid.>

EF:DTC P2089 INTAKE CAMSHAFT POSITION ACTUATOR CONTROL CIRCUIT HIGH (BANK 1)

DTC DETECTING CONDITION:

- Immediately at fault recognition
- GENERAL DESCRIPTION <Ref. to GD(H4DO w/o HEV)-226, DTC P2089 INTAKE CAMSHAFT POSITION ACTUATOR CONTROL CIRCUIT HIGH (BANK 1), Diagnostic Trouble Code (DTC) Detecting Criteria.>

TROUBLE SYMPTOM:

Improper idling

CAUTION:

After servicing or replacing faulty parts, perform Clear Memory Mode <Ref. to EN(H4DO w/o HEV)(diag)-59, OPERATION, Clear Memory Mode.>, and Inspection Mode <Ref. to EN(H4DO w/o HEV)(diag)-44, PROCEDURE, Inspection Mode.>.

WIRING DIAGRAM:

Engine electrical system <Ref. to WI(w/o HEV)-74, Engine Electrical System.>

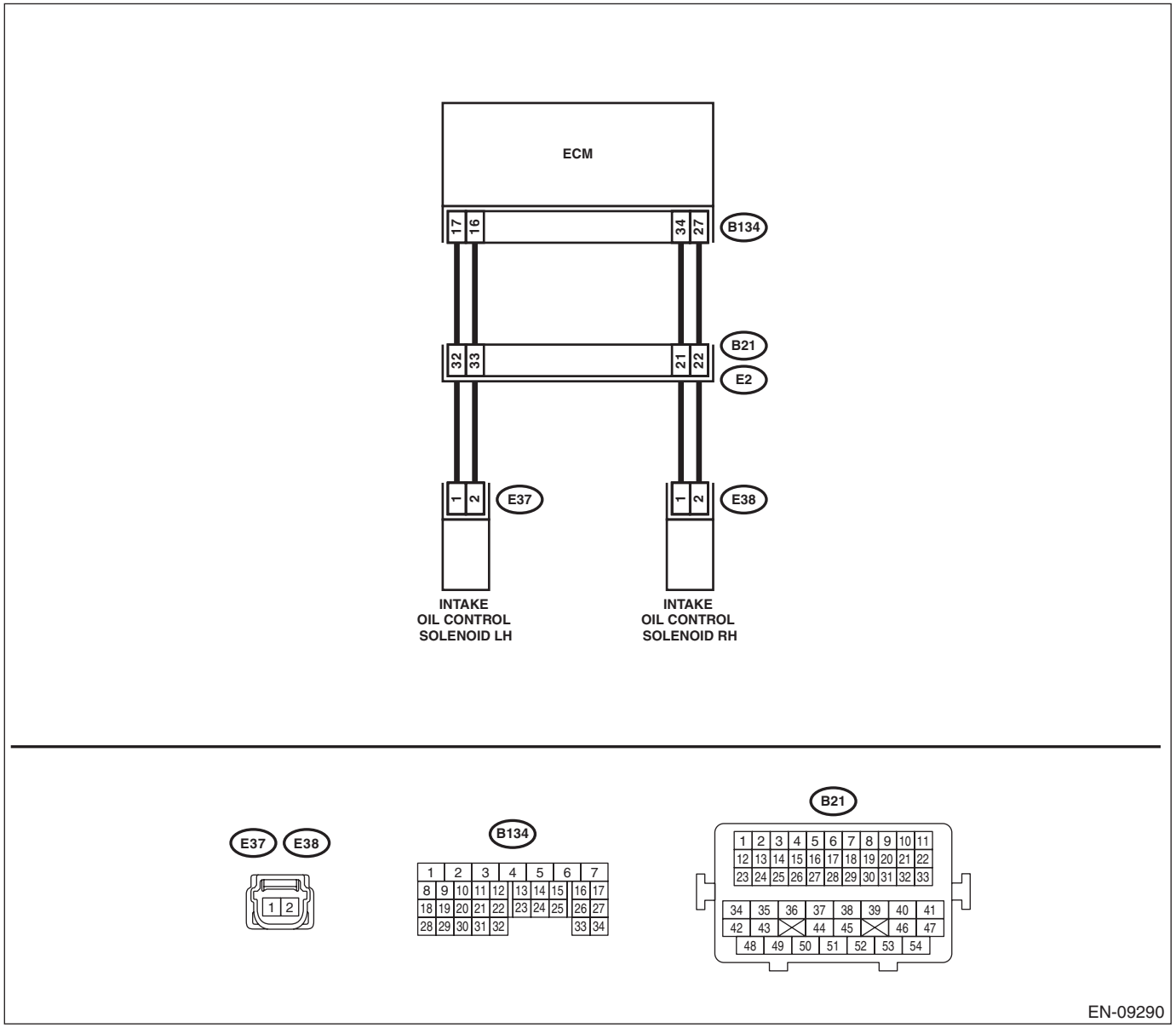

	Step	Check	Yes	No
1	**CHECK HARNESS BETWEEN ECM AND OIL CONTROL SOLENOID RH CONNECTOR.** 1) Turn the ignition switch to OFF. 2) Disconnect the connectors from ECM and oil control solenoid RH. 3) Measure the voltage between ECM connector and chassis ground. ***Connector & terminal*** ***(B134) No. 34 (+) — Chassis ground (–):*** ***(B134) No. 27 (+) — Chassis ground (–):***	Is the voltage less than 1 V?	Go to step **2**.	Repair the short circuit to power in harness between ECM connector and oil control solenoid RH connector.
2	**CHECK HARNESS BETWEEN ECM AND OIL CONTROL SOLENOID RH CONNECTOR.** Measure the resistance of harness between ECM connector and oil control solenoid RH connector. ***Connector & terminal*** ***(B134) No. 34 — (E38) No. 1:*** ***(B134) No. 27 — (E38) No. 2:***	Is the resistance less than 1 Ω?	Go to step **3**.	Repair the harness and connector. NOTE: In this case, repair the following item: • Open circuit in harness between ECM connector and oil control solenoid RH connector • Poor contact of coupling connector
3	**CHECK OIL CONTROL SOLENOID.** Measure the resistance between oil control solenoid terminals. ***Terminals*** ***No. 1 — No. 2:***	Is the resistance 6 — 12 Ω?	Repair the poor contact of ECM and oil control solenoid RH connector.	Replace the oil control solenoid RH. <Ref. to FU(H4DO(w/o HEV))-69, Oil Control Solenoid.>

EG:DTC P2090 EXHAUST CAMSHAFT POSITION ACTUATOR CONTROL CIRCUIT LOW (BANK 1)

DTC DETECTING CONDITION:

- Immediately at fault recognition
- GENERAL DESCRIPTION <Ref. to GD(H4DO w/o HEV)-227, DTC P2090 EXHAUST CAMSHAFT POSITION ACTUATOR CONTROL CIRCUIT LOW (BANK 1), Diagnostic Trouble Code (DTC) Detecting Criteria.>

TROUBLE SYMPTOM:

Improper idling

CAUTION:

After servicing or replacing faulty parts, perform Clear Memory Mode <Ref. to EN(H4DO w/o HEV)(diag)-59, OPERATION, Clear Memory Mode.>, and Inspection Mode <Ref. to EN(H4DO w/o HEV)(diag)-44, PROCEDURE, Inspection Mode.>.

WIRING DIAGRAM:

Engine electrical system <Ref. to WI(w/o HEV)-74, Engine Electrical System.>

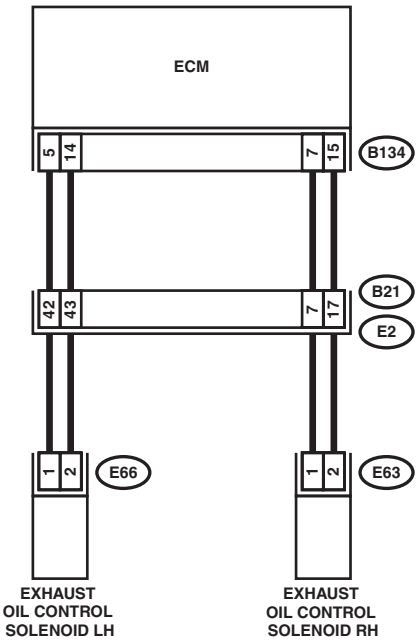

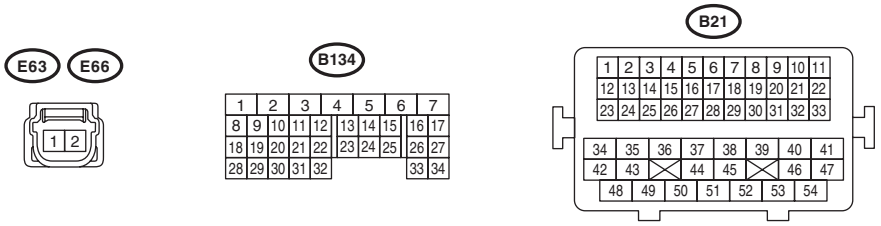

EN-09291

	Step	Check	Yes	No
1	**CHECK HARNESS BETWEEN ECM AND OIL CONTROL SOLENOID RH CONNECTOR.** 1) Turn the ignition switch to OFF. 2) Disconnect the connectors from ECM and oil control solenoid RH. 3) Measure the resistance of harness between ECM connector and oil control solenoid RH connector. ***Connector & terminal*** ***(B134) No. 7 — (E63) No. 1:*** ***(B134) No. 15 — (E63) No. 2:***	Is the resistance less than 1 Ω?	Go to step **2**.	Repair the harness and connector. NOTE: In this case, repair the following item: • Open circuit in harness between ECM connector and oil control solenoid RH connector • Poor contact of coupling connector
2	**CHECK HARNESS BETWEEN ECM AND OIL CONTROL SOLENOID RH CONNECTOR.** Measure the resistance between ECM connector and chassis ground. ***Connector & terminal*** ***(B134) No. 7 — Chassis ground:*** ***(B134) No. 15 — Chassis ground:***	Is the resistance 1 MΩ or more?	Go to step **3**.	Repair the short circuit to ground in harness between ECM connector and oil control solenoid RH connector.
3	**CHECK OIL CONTROL SOLENOID.** Measure the resistance between oil control solenoid terminals. ***Terminals*** ***No. 1 — No. 2:***	Is the resistance 6 — 12 Ω?	Repair the poor contact of ECM and oil control solenoid RH connector.	Replace the oil control solenoid RH. <Ref. to FU(H4DO(w/o HEV))-69, Oil Control Solenoid.>

EH:DTC P2091 EXHAUST CAMSHAFT POSITION ACTUATOR CONTROL CIRCUIT HIGH (BANK 1)

DTC DETECTING CONDITION:

- Immediately at fault recognition
- GENERAL DESCRIPTION <Ref. to GD(H4DO w/o HEV)-228, DTC P2091 EXHAUST CAMSHAFT POSITION ACTUATOR CONTROL CIRCUIT HIGH (BANK 1), Diagnostic Trouble Code (DTC) Detecting Criteria.>

TROUBLE SYMPTOM:

Improper idling

CAUTION:

After servicing or replacing faulty parts, perform Clear Memory Mode <Ref. to EN(H4DO w/o HEV)(diag)-59, OPERATION, Clear Memory Mode.>, and Inspection Mode <Ref. to EN(H4DO w/o HEV)(diag)-44, PROCEDURE, Inspection Mode.>.

WIRING DIAGRAM:

Engine electrical system <Ref. to WI(w/o HEV)-74, Engine Electrical System.>

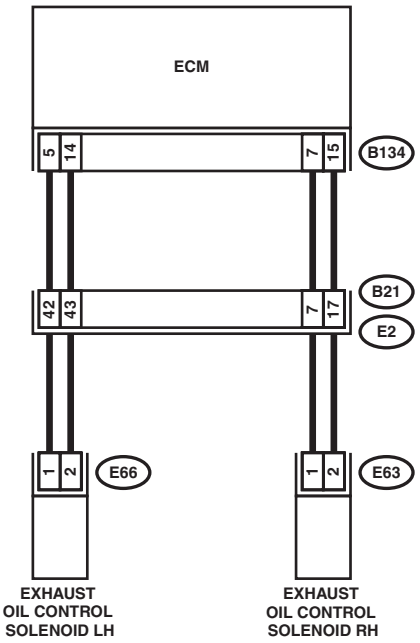

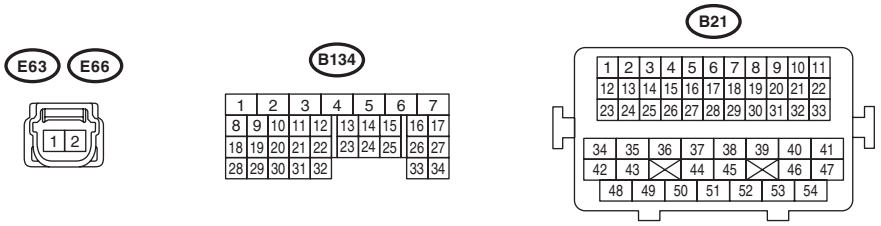

EN-09291

	Step	Check	Yes	No
1	**CHECK HARNESS BETWEEN ECM AND OIL CONTROL SOLENOID RH CONNECTOR.** 1) Turn the ignition switch to OFF. 2) Disconnect the connectors from ECM and oil control solenoid RH. 3) Measure the voltage between ECM connector and chassis ground. ***Connector & terminal*** ***(B134) No. 7 (+) — Chassis ground (–):*** ***(B134) No. 15 (+) — Chassis ground (–):***	Is the voltage less than 1 V?	Go to step **2**.	Repair the short circuit to power in harness between ECM connector and oil control solenoid RH connector.
2	**CHECK HARNESS BETWEEN ECM AND OIL CONTROL SOLENOID RH CONNECTOR.** Measure the resistance of harness between ECM connector and oil control solenoid RH connector. ***Connector & terminal*** ***(B134) No. 7 — (E63) No. 1:*** ***(B134) No. 15 — (E63) No. 2:***	Is the resistance less than 1 Ω?	Go to step **3**.	Repair the harness and connector. NOTE: In this case, repair the following item: • Open circuit in harness between ECM connector and oil control solenoid RH connector • Poor contact of coupling connector
3	**CHECK OIL CONTROL SOLENOID.** Measure the resistance between oil control solenoid terminals. ***Terminals*** ***No. 1 — No. 2:***	Is the resistance 6 — 12 Ω?	Repair the poor contact of ECM and oil control solenoid RH connector.	Replace the oil control solenoid RH. <Ref. to FU(H4DO(w/o HEV))-69, Oil Control Solenoid.>

EI: DTC P2092 INTAKE CAMSHAFT POSITION ACTUATOR CONTROL CIRCUIT LOW (BANK 2)

DTC DETECTING CONDITION:

- Immediately at fault recognition
- GENERAL DESCRIPTION <Ref. to GD(H4DO w/o HEV)-229, DTC P2092 INTAKE CAMSHAFT POSITION ACTUATOR CONTROL CIRCUIT LOW (BANK 2), Diagnostic Trouble Code (DTC) Detecting Criteria.>

TROUBLE SYMPTOM:

Improper idling

CAUTION:

After servicing or replacing faulty parts, perform Clear Memory Mode <Ref. to EN(H4DO w/o HEV)(diag)-59, OPERATION, Clear Memory Mode.>, and Inspection Mode <Ref. to EN(H4DO w/o HEV)(diag)-44, PROCEDURE, Inspection Mode.>.

WIRING DIAGRAM:

Engine electrical system <Ref. to WI(w/o HEV)-74, Engine Electrical System.>

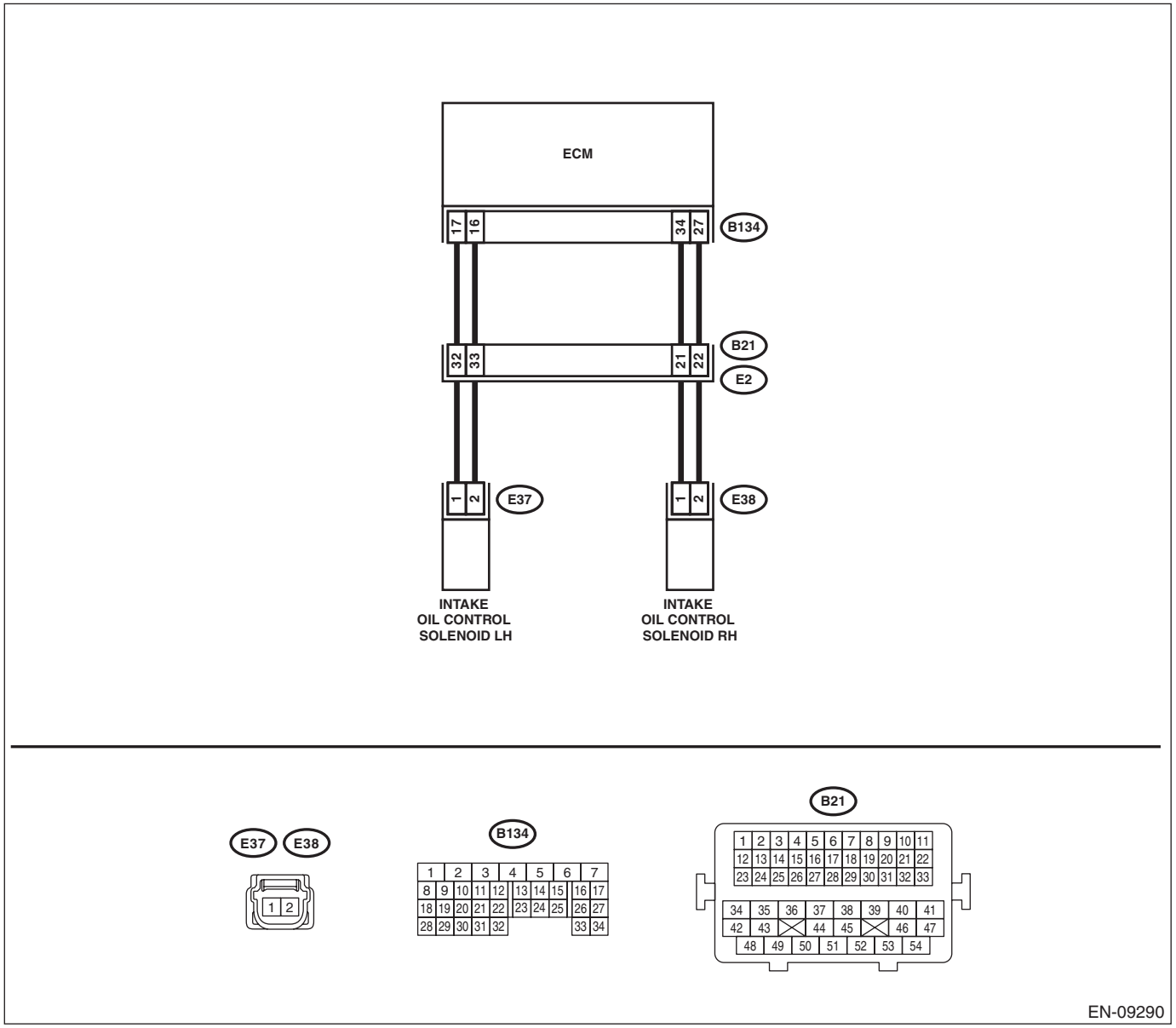

	Step	Check	Yes	No
1	**CHECK HARNESS BETWEEN ECM AND OIL CONTROL SOLENOID LH CONNECTOR.** 1) Turn the ignition switch to OFF. 2) Disconnect the connectors from ECM and oil control solenoid LH. 3) Measure the resistance of harness between ECM connector and oil control solenoid LH connector. ***Connector & terminal*** ***(B134) No. 17 — (E37) No. 1:*** ***(B134) No. 16 — (E37) No. 2:***	Is the resistance less than 1 Ω?	Go to step **2**.	Repair the harness and connector. NOTE: In this case, repair the following item: • Open circuit in harness between ECM connector and oil control solenoid LH connector • Poor contact of coupling connector
2	**CHECK HARNESS BETWEEN ECM AND OIL CONTROL SOLENOID LH CONNECTOR.** Measure the resistance between ECM connector and chassis ground. ***Connector & terminal*** ***(B134) No. 17 — Chassis ground:*** ***(B134) No. 16 — Chassis ground:***	Is the resistance 1 MΩ or more?	Go to step **3**.	Repair the short circuit to ground in harness between ECM connector and oil control solenoid LH connector.
3	**CHECK OIL CONTROL SOLENOID.** Measure the resistance between oil control solenoid terminals. ***Terminals*** ***No. 1 — No. 2:***	Is the resistance 6 — 12 Ω?	Repair the poor contact of ECM and oil control solenoid LH connector.	Replace the oil control solenoid LH. <Ref. to FU(H4DO(w/o HEV))-69, Oil Control Solenoid.>

EJ: DTC P2093 INTAKE CAMSHAFT POSITION ACTUATOR CONTROL CIRCUIT HIGH (BANK 2)

DTC DETECTING CONDITION:

- Immediately at fault recognition
- GENERAL DESCRIPTION <Ref. to GD(H4DO w/o HEV)-229, DTC P2093 INTAKE CAMSHAFT POSITION ACTUATOR CONTROL CIRCUIT HIGH (BANK 2), Diagnostic Trouble Code (DTC) Detecting Criteria.>

TROUBLE SYMPTOM:

Improper idling

CAUTION:

After servicing or replacing faulty parts, perform Clear Memory Mode <Ref. to EN(H4DO w/o HEV)(diag)-59, OPERATION, Clear Memory Mode.>, and Inspection Mode <Ref. to EN(H4DO w/o HEV)(diag)-44, PROCEDURE, Inspection Mode.>.

WIRING DIAGRAM:

Engine electrical system <Ref. to WI(w/o HEV)-74, Engine Electrical System.>

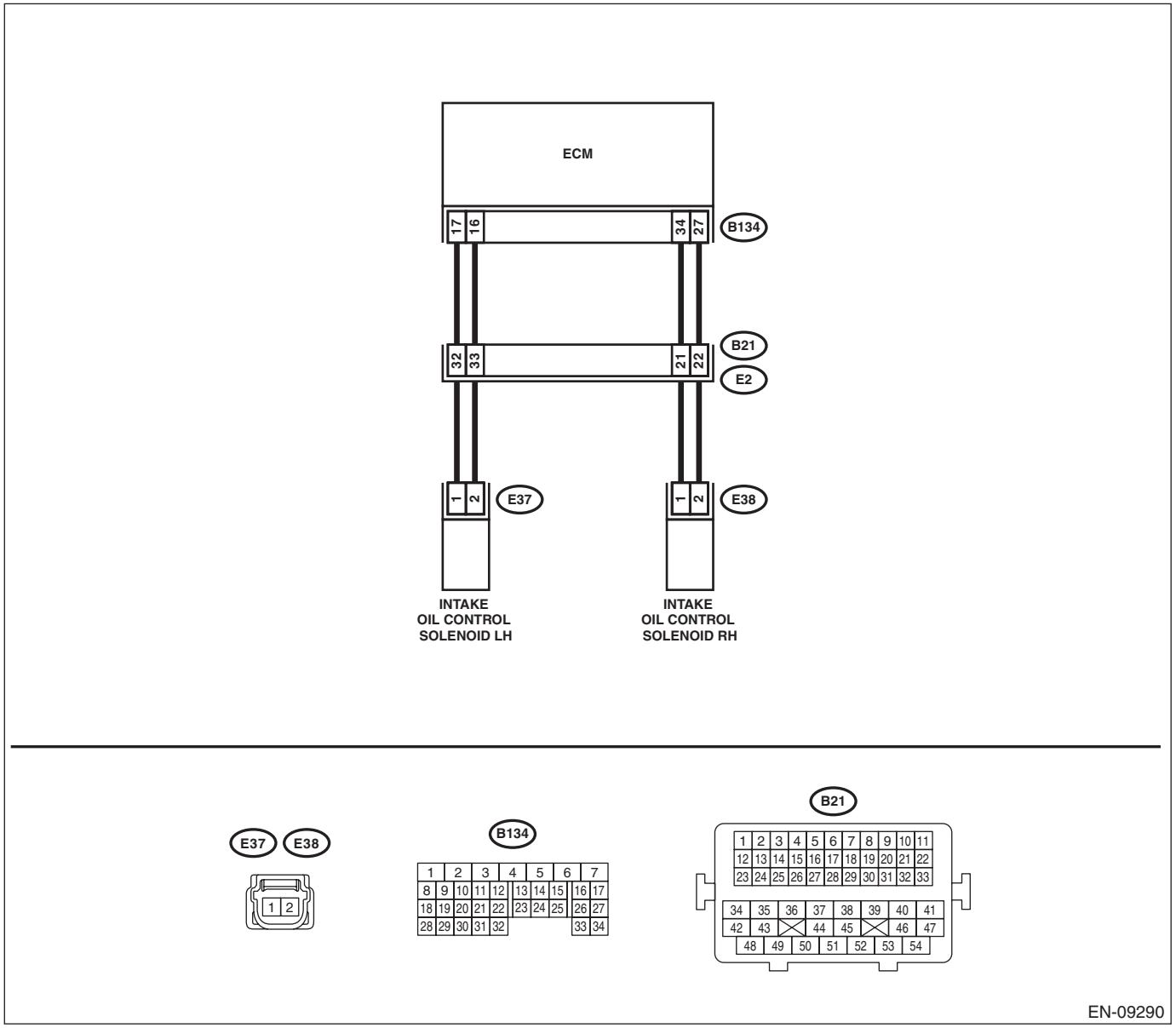

	Step	Check	Yes	No
1	**CHECK HARNESS BETWEEN ECM AND OIL CONTROL SOLENOID LH CONNECTOR.** 1) Turn the ignition switch to OFF. 2) Disconnect the connectors from ECM and oil control solenoid LH. 3) Measure the voltage between ECM connector and chassis ground. ***Connector & terminal*** ***(B134) No. 17 (+) — Chassis ground (–):*** ***(B134) No. 16 (+) — Chassis ground (–):***	Is the voltage less than 1 V?	Go to step **2**.	Repair the short circuit to power in harness between ECM connector and oil control solenoid LH connector.
2	**CHECK HARNESS BETWEEN ECM AND OIL CONTROL SOLENOID LH CONNECTOR.** Measure the resistance of harness between ECM connector and oil control solenoid LH connector. ***Connector & terminal*** ***(B134) No. 17 — (E37) No. 1:*** ***(B134) No. 16 — (E37) No. 2:***	Is the resistance less than 1 Ω?	Go to step **3**.	Repair the harness and connector. NOTE: In this case, repair the following item: • Open circuit in harness between ECM connector and oil control solenoid LH connector • Poor contact of coupling connector
3	**CHECK OIL CONTROL SOLENOID.** Measure the resistance between oil control solenoid terminals. ***Terminals*** ***No. 1 — No. 2:***	Is the resistance 6 — 12 Ω?	Repair the poor contact of ECM and oil control solenoid LH connector.	Replace the oil control solenoid LH. <Ref. to FU(H4DO(w/o HEV))-69, Oil Control Solenoid.>

EK:DTC P2094 EXHAUST CAMSHAFT POSITION ACTUATOR CONTROL CIRCUIT LOW (BANK 2)

DTC DETECTING CONDITION:

- Immediately at fault recognition
- GENERAL DESCRIPTION <Ref. to GD(H4DO w/o HEV)-229, DTC P2094 EXHAUST CAMSHAFT POSITION ACTUATOR CONTROL CIRCUIT LOW (BANK 2), Diagnostic Trouble Code (DTC) Detecting Criteria.>

TROUBLE SYMPTOM:

Improper idling

CAUTION:

After servicing or replacing faulty parts, perform Clear Memory Mode <Ref. to EN(H4DO w/o HEV)(diag)-59, OPERATION, Clear Memory Mode.>, and Inspection Mode <Ref. to EN(H4DO w/o HEV)(diag)-44, PROCEDURE, Inspection Mode.>.

WIRING DIAGRAM:

Engine electrical system <Ref. to WI(w/o HEV)-74, Engine Electrical System.>

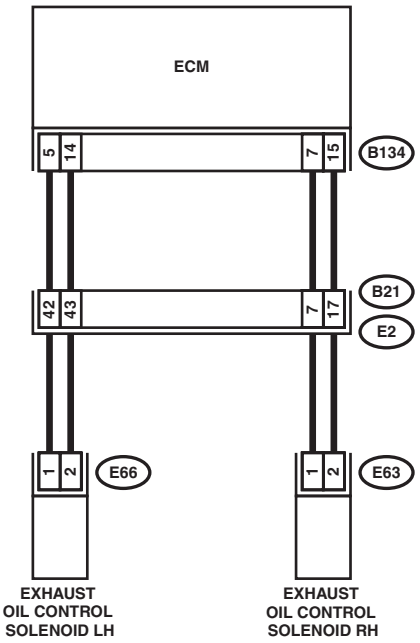

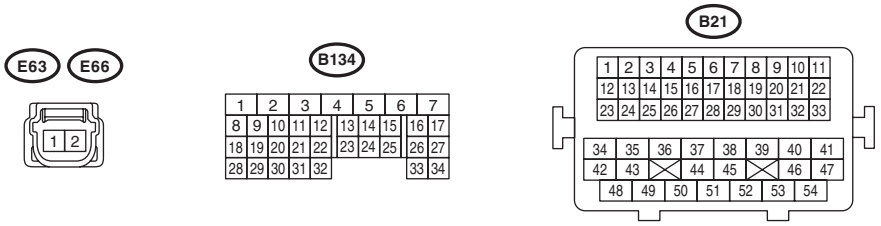

EN-09291

	Step	Check	Yes	No
1	**CHECK HARNESS BETWEEN ECM AND OIL CONTROL SOLENOID LH CONNECTOR.** 1) Turn the ignition switch to OFF. 2) Disconnect the connectors from ECM and oil control solenoid LH. 3) Measure the resistance of harness between ECM connector and oil control solenoid LH connector. ***Connector & terminal*** ***(B134) No. 5 — (E66) No. 1:*** ***(B134) No. 14 — (E66) No. 2:***	Is the resistance less than 1 Ω?	Go to step **2**.	Repair the harness and connector. NOTE: In this case, repair the following item: • Open circuit in harness between ECM connector and oil control solenoid LH connector • Poor contact of coupling connector
2	**CHECK HARNESS BETWEEN ECM AND OIL CONTROL SOLENOID LH CONNECTOR.** Measure the resistance between ECM connector and chassis ground. ***Connector & terminal*** ***(B134) No. 5 — Chassis ground:*** ***(B134) No. 14 — Chassis ground:***	Is the resistance 1 MΩ or more?	Go to step **3**.	Repair the short circuit to ground in harness between ECM connector and oil control solenoid LH connector.
3	**CHECK OIL CONTROL SOLENOID.** Measure the resistance between oil control solenoid terminals. ***Terminals*** ***No. 1 — No. 2:***	Is the resistance 6 — 12 Ω?	Repair the poor contact of ECM and oil control solenoid LH connector.	Replace the oil control solenoid LH. <Ref. to FU(H4DO(w/o HEV))-69, Oil Control Solenoid.>

EL:DTC P2095 EXHAUST CAMSHAFT POSITION ACTUATOR CONTROL CIRCUIT HIGH (BANK 2)

DTC DETECTING CONDITION:

- Immediately at fault recognition
- GENERAL DESCRIPTION <Ref. to GD(H4DO w/o HEV)-229, DTC P2095 EXHAUST CAMSHAFT POSITION ACTUATOR CONTROL CIRCUIT HIGH (BANK 2), Diagnostic Trouble Code (DTC) Detecting Criteria.>

TROUBLE SYMPTOM:

Improper idling

CAUTION:

After servicing or replacing faulty parts, perform Clear Memory Mode <Ref. to EN(H4DO w/o HEV)(diag)-59, OPERATION, Clear Memory Mode.>, and Inspection Mode <Ref. to EN(H4DO w/o HEV)(diag)-44, PROCEDURE, Inspection Mode.>.

WIRING DIAGRAM:

Engine electrical system <Ref. to WI(w/o HEV)-74, Engine Electrical System.>

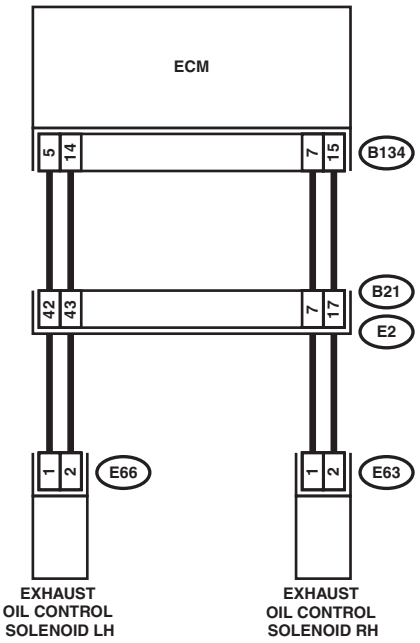

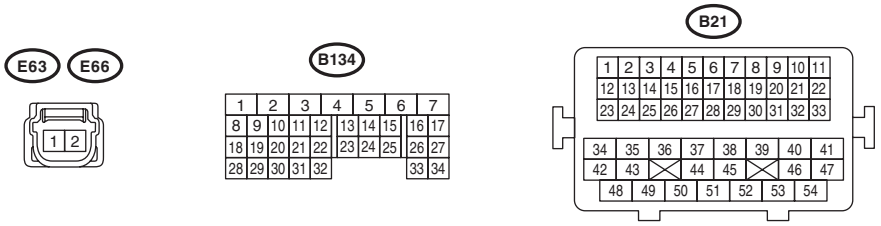

EN-09291

	Step	Check	Yes	No
1	**CHECK HARNESS BETWEEN ECM AND OIL CONTROL SOLENOID LH CONNECTOR.** 1) Turn the ignition switch to OFF. 2) Disconnect the connectors from ECM and oil control solenoid LH. 3) Measure the voltage between ECM connector and chassis ground. ***Connector & terminal*** ***(B134) No. 5 (+) — Chassis ground (–):*** ***(B134) No. 14 (+) — Chassis ground (–):***	Is the voltage less than 1 V?	Go to step **2**.	Repair the short circuit to power in harness between ECM connector and oil control solenoid LH connector.
2	**CHECK HARNESS BETWEEN ECM AND OIL CONTROL SOLENOID LH CONNECTOR.** Measure the resistance of harness between ECM connector and oil control solenoid LH connector. ***Connector & terminal*** ***(B134) No. 5 — (E66) No. 1:*** ***(B134) No. 14 — (E66) No. 2:***	Is the resistance less than 1 Ω?	Go to step **3**.	Repair the harness and connector. NOTE: In this case, repair the following item: • Open circuit in harness between ECM connector and oil control solenoid LH connector • Poor contact of coupling connector
3	**CHECK OIL CONTROL SOLENOID.** Measure the resistance between oil control solenoid terminals. ***Terminals*** ***No. 1 — No. 2:***	Is the resistance 6 — 12 Ω?	Repair the poor contact of ECM and oil control solenoid LH connector.	Replace the oil control solenoid LH. <Ref. to FU(H4DO(w/o HEV))-69, Oil Control Solenoid.>

EM:DTC P2096 POST CATALYST FUEL TRIM SYSTEM TOO LEAN (BANK 1)

DTC DETECTING CONDITION:

- Detected when two consecutive driving cycles with fault occur.
- GENERAL DESCRIPTION <Ref. to GD(H4DO w/o HEV)-230, DTC P2096 POST CATALYST FUEL TRIM SYSTEM TOO LEAN (BANK 1), Diagnostic Trouble Code (DTC) Detecting Criteria.>

CAUTION:

After servicing or replacing faulty parts, perform Clear Memory Mode <Ref. to EN(H4DO w/o HEV)(diag)-59, OPERATION, Clear Memory Mode.>, and Inspection Mode <Ref. to EN(H4DO w/o HEV)(diag)-44, PROCEDURE, Inspection Mode.>.

WIRING DIAGRAM:

Engine electrical system <Ref. to WI(w/o HEV)-74, Engine Electrical System.>

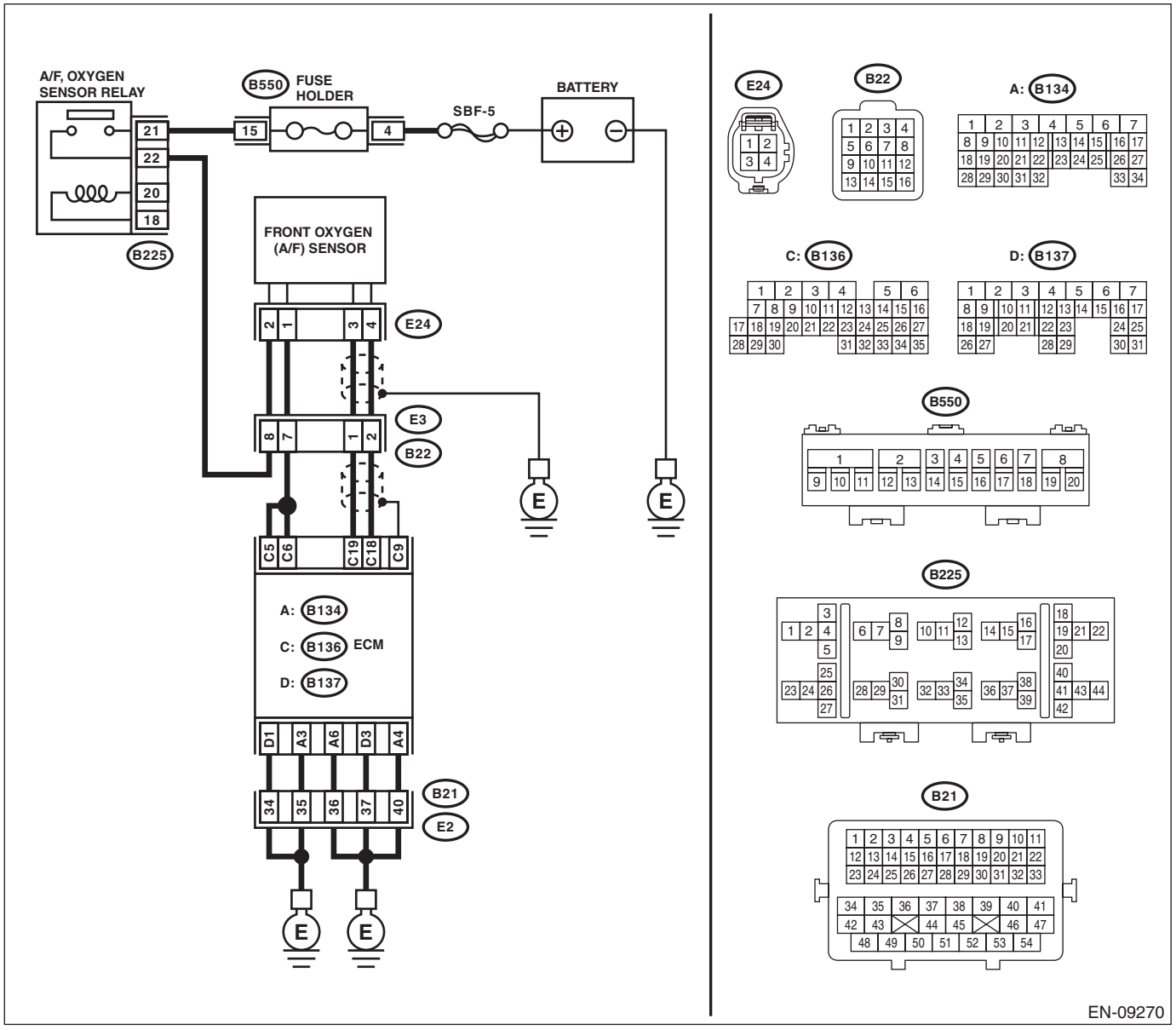

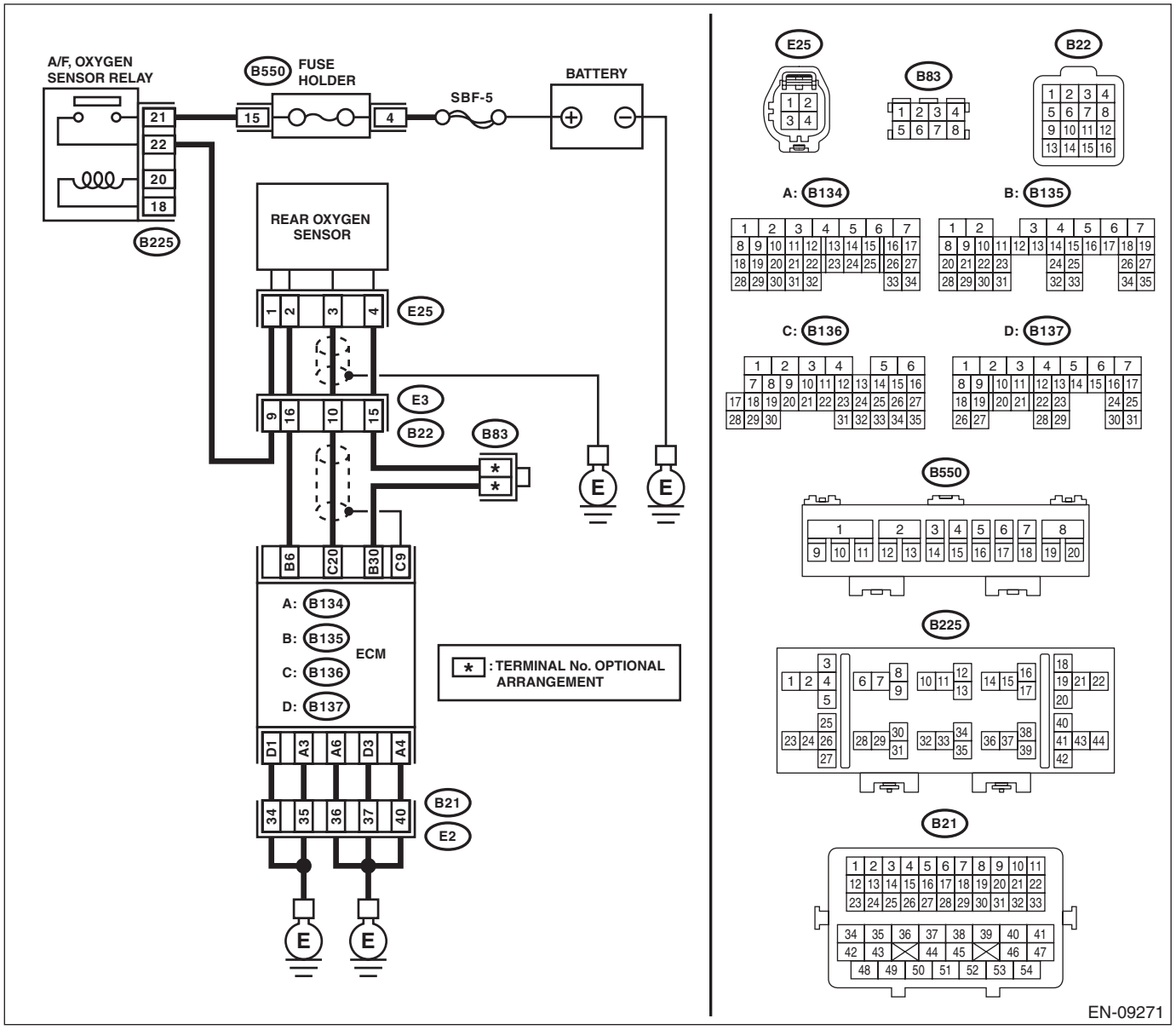

Step		Check	Yes	No
1	**CHECK FOR ANY OTHER DTC ON DISPLAY.**	Is any other DTC displayed?	Check DTC using "List of Diagnostic Trouble Code (DTC)". <Ref. to EN(H4DO w/o HEV)(diag)-83, List of Diagnostic Trouble Code (DTC).>	Go to step **2**.
2	**CHECK FRONT OXYGEN (A/F) SENSOR CONNECTOR AND COUPLING CONNECTOR.**	Has water entered the connector?	Completely remove any water inside.	Go to step **3**.

	Step	Check	Yes	No
3	**CHECK HARNESS BETWEEN ECM AND FRONT OXYGEN (A/F) SENSOR CONNECTOR.** 1) Turn the ignition switch to OFF. 2) Disconnect the connectors from ECM and front oxygen (A/F) sensor. 3) Measure the resistance of harness between ECM connector and front oxygen (A/F) sensor connector. ***Connector & terminal*** ***(B136) No. 19 — (E24) No. 3:*** ***(B136) No. 18 — (E24) No. 4:***	Is the resistance less than 1 Ω?	Go to step **4**.	Repair the harness and connector. NOTE: In this case, repair the following item: • Open circuit in harness between ECM connector and front oxygen (A/F) sensor connector • Poor contact of coupling connector
4	**CHECK HARNESS BETWEEN ECM AND FRONT OXYGEN (A/F) SENSOR CONNECTOR.** Measure the resistance between ECM connector and chassis ground. ***Connector & terminal*** ***(B136) No. 19 — Chassis ground:*** ***(B136) No. 18 — Chassis ground:***	Is the resistance 1 MΩ or more?	Go to step **5**.	Repair the short circuit to ground in harness between ECM connector and front oxygen (A/F) sensor connector.
5	**CHECK OUTPUT SIGNAL FOR ECM.** 1) Connect the connector to ECM. 2) Turn the ignition switch to ON. 3) Measure the voltage between front oxygen (A/F) sensor connector and chassis ground. ***Connector & terminal*** ***(E24) No. 3 (+) — Chassis ground (–):***	Is the voltage 4.5 V or more?	Go to step **7**.	Go to step **6**.
6	**CHECK OUTPUT SIGNAL FOR ECM.** Measure the voltage between front oxygen (A/F) sensor connector and chassis ground. ***Connector & terminal*** ***(E24) No. 4 (+) — Chassis ground (–):***	Is the voltage 4.95 V or more?	Go to step **7**.	Go to step **8**.
7	**CHECK OUTPUT SIGNAL FOR ECM.** Measure the voltage between front oxygen (A/F) sensor connector and chassis ground. ***Connector & terminal*** ***(E24) No. 3 (+) — Chassis ground (–):*** ***(E24) No. 4 (+) — Chassis ground (–):***	Is the voltage 8 V or more?	Repair the short circuit to power in the harness between ECM connector and front oxygen (A/F) sensor connector. After repair, replace the ECM. <Ref. to FU(H4DO(w/o HEV))-106, Engine Control Module (ECM).>	Repair the poor contact of ECM connector.
8	**CHECK EXHAUST SYSTEM.**	Are there holes or loose bolts on exhaust system?	Repair the exhaust system.	Go to step **9**.
9	**CHECK AIR INTAKE SYSTEM.**	Are there holes, loose bolts or disconnection of hose on air intake system?	Repair the air intake system.	Go to step **10**.

	Step	Check	Yes	No
10	**CHECK FUEL PRESSURE.** **WARNING:** **Place "NO OPEN FLAMES" signs near the working area.** **CAUTION:** **Be careful not to spill fuel.** 1) Connect the front oxygen (A/F) sensor connector. 2) Measure the fuel pressure. <Ref. to ME(H4DO(w/o HEV))-35, INSPECTION, Fuel Pressure.> **CAUTION:** **Release fuel pressure before removing the fuel pressure gauge.**	Is the measured value 340 — 400 kPa (3.5 — 4.1 kg/cm^2, 49 — 58 psi)?	Go to step **11**.	Check the fuel pump and fuel delivery line. <Ref. to FU(H4DO(w/o HEV))-145, INSPECTION, Fuel Pump.> <Ref. to FU(H4DO(w/o HEV))-165, INSPECTION, Fuel Delivery and Evaporation Lines.>
11	**CHECK ENGINE COOLANT TEMPERATURE SENSOR.** 1) Start the engine and warm up completely. 2) Read the value of «Coolant Temp.» using the Subaru Select Monitor or a general scan tool. NOTE: • Subaru Select Monitor For detailed operation procedures, refer to "READ CURRENT DATA FOR ENGINE". <Ref. to EN(H4DO w/o HEV)(diag)-36, Subaru Select Monitor.> • General scan tool For detailed operation procedures, refer to the general scan tool operation manual.	Is the value of «Coolant Temp.» 75°C (167°F) or more?	Go to step **12**.	Replace the engine coolant temperature sensor. <Ref. to FU(H4DO(w/o HEV))-53, Engine Coolant Temperature Sensor.>
12	**CHECK MASS AIR FLOW AND INTAKE AIR TEMPERATURE SENSOR.** 1) Start the engine and warm up engine until coolant temperature is higher than 75°C (167°F). 2) For CVT models, set the select lever to "P" range or "N" range, and for MT models, place the shift lever in the neutral position. 3) Turn the A/C switch to OFF. 4) Turn all the accessory switches to OFF. 5) Read the value of «Mass Air Flow» using the Subaru Select Monitor or a general scan tool. NOTE: • Subaru Select Monitor For detailed operation procedures, refer to "READ CURRENT DATA FOR ENGINE". <Ref. to EN(H4DO w/o HEV)(diag)-36, Subaru Select Monitor.> • General scan tool For detailed operation procedures, refer to the general scan tool operation manual.	Is the value of «Mass Air Flow» 2.0 — 5.0 g/s (0.26 — 0.66 lb/m)?	Go to step **13**.	Replace the mass air flow and intake air temperature sensor. <Ref. to FU(H4DO(w/o HEV))-78, Mass Air Flow and Intake Air Temperature Sensor.>

	Step	Check	Yes	No
13	**CHECK MASS AIR FLOW AND INTAKE AIR TEMPERATURE SENSOR.** 1) Start the engine and warm up engine until coolant temperature is higher than 75°C (167°F). 2) For CVT models, set the select lever to "P" range or "N" range, and for MT models, place the shift lever in the neutral position. 3) Turn the A/C switch to OFF. 4) Turn all the accessory switches to OFF. 5) Open the front hood. 6) Measure the ambient temperature. 7) Read the value of «Intake Air Temp.» using the Subaru Select Monitor or a general scan tool. NOTE: • Subaru Select Monitor For detailed operation procedures, refer to "READ CURRENT DATA FOR ENGINE". <Ref. to EN(H4DO w/o HEV)(diag)-36, Subaru Select Monitor.> • General scan tool For detailed operation procedures, refer to the general scan tool operation manual.	Subtract ambient temperature from «Intake Air Temp.». Is the obtained value –10 — 50°C (–18 — 90°F)?	Go to step **14**.	Check the mass air flow and intake air temperature sensor. <Ref. to FU(H4DO(w/o HEV))-78, Mass Air Flow and Intake Air Temperature Sensor.>
14	**CHECK REAR OXYGEN SENSOR DATA.** 1) Warm up the engine until engine coolant temperature is higher than 75°C (167°F), and keep the engine speed at 3,000 rpm. (2 minutes maximum) 2) Read the value of «Rear O2 Sensor» using the Subaru Select Monitor or a general scan tool. NOTE: • Depress the clutch pedal. (MT model) • Subaru Select Monitor For detailed operation procedures, refer to "READ CURRENT DATA FOR ENGINE". <Ref. to EN(H4DO w/o HEV)(diag)-36, Subaru Select Monitor.> • General scan tool For detailed operation procedures, refer to the general scan tool operation manual.	Is the value of «Rear O2 Sensor» 0.490 V or more?	Go to step **15**.	Go to step **16**.
15	**CHECK REAR OXYGEN SENSOR DATA.** 1) Warm up the engine until engine coolant temperature is higher than 75°C (167°F), and rapidly reduce the engine speed from 3,000 rpm. 2) Read the value of «Rear O2 Sensor» using the Subaru Select Monitor or a general scan tool. NOTE: • Depress the clutch pedal. (MT model) • Subaru Select Monitor For detailed operation procedures, refer to "READ CURRENT DATA FOR ENGINE". <Ref. to EN(H4DO w/o HEV)(diag)-36, Subaru Select Monitor.> • General scan tool For detailed operation procedures, refer to the general scan tool operation manual.	Is the value of «Rear O2 Sensor» 0.250 V or less?	Go to step **17**.	Go to step **16**.

	Step	Check	Yes	No
16	**CHECK REAR OXYGEN SENSOR CONNECTOR AND COUPLING CONNECTOR.**	Has water entered the connector?	Completely remove any water inside.	Go to step **18**.
17	**CHECK FRONT OXYGEN (A/F) SENSOR USING REAR OXYGEN SENSOR SIGNAL.** 1) Warm up the engine until engine coolant temperature is higher than 75°C (167°F), then keep the engine idling for 5 minutes or more. 2) Read the value of «Rear O2 Sensor» using the Subaru Select Monitor or a general scan tool. NOTE: • Subaru Select Monitor For detailed operation procedures, refer to "READ CURRENT DATA FOR ENGINE". <Ref. to EN(H4DO w/o HEV)(diag)-36, Subaru Select Monitor.> • General scan tool For detailed operation procedures, refer to the general scan tool operation manual.	Is the value in «Rear O2 Sensor» kept at 0.250 V or less for 5 minutes or more?	Replace the front oxygen (A/F) sensor. <Ref. to FU(H4DO(w/o HEV))-97, Front Oxygen (A/F) Sensor.>	Go to step **18**.
18	**CHECK HARNESS BETWEEN ECM AND REAR OXYGEN SENSOR CONNECTOR.** 1) Turn the ignition switch to OFF. 2) Disconnect the connector from ECM and rear oxygen sensor. 3) Measure the resistance of harness between ECM connector and rear oxygen sensor connector. ***Connector & terminal*** ***(B136) No. 20 — (E25) No. 3:*** ***(B135) No. 30 — (E25) No. 4:***	Is the resistance less than 1 Ω?	Go to step **19**.	Repair the harness and connector. NOTE: In this case, repair the following item: • Open circuit in harness between ECM connector and rear oxygen sensor connector • Poor contact of coupling connector
19	**CHECK HARNESS BETWEEN ECM AND REAR OXYGEN SENSOR CONNECTOR.** 1) Connect the connector to ECM. 2) Turn the ignition switch to ON. 3) Measure the voltage between rear oxygen sensor connector and chassis ground. ***Connector & terminal*** ***(E25) No. 3 (+) — Chassis ground (–):***	Is the voltage 0.2 — 0.5 V?	Replace the rear oxygen sensor. <Ref. to FU(H4DO(w/o HEV))-101, Rear Oxygen Sensor.>	Repair the harness and connector. NOTE: In this case, repair the following item: • Open circuit in harness between ECM connector and rear oxygen sensor connector • Poor contact of ECM connector • Poor contact of coupling connector

EN:DTC P2097 POST CATALYST FUEL TRIM SYSTEM TOO RICH (BANK 1)

DTC DETECTING CONDITION:

- Detected when two consecutive driving cycles with fault occur.
- GENERAL DESCRIPTION <Ref. to GD(H4DO w/o HEV)-232, DTC P2097 POST CATALYST FUEL TRIM SYSTEM TOO RICH (BANK 1), Diagnostic Trouble Code (DTC) Detecting Criteria.>

CAUTION:
After servicing or replacing faulty parts, perform Clear Memory Mode <Ref. to EN(H4DO w/o HEV)(diag)-59, OPERATION, Clear Memory Mode.>, and Inspection Mode <Ref. to EN(H4DO w/o HEV)(diag)-44, PROCEDURE, Inspection Mode.>.

WIRING DIAGRAM:

Engine electrical system <Ref. to WI(w/o HEV)-74, Engine Electrical System.>

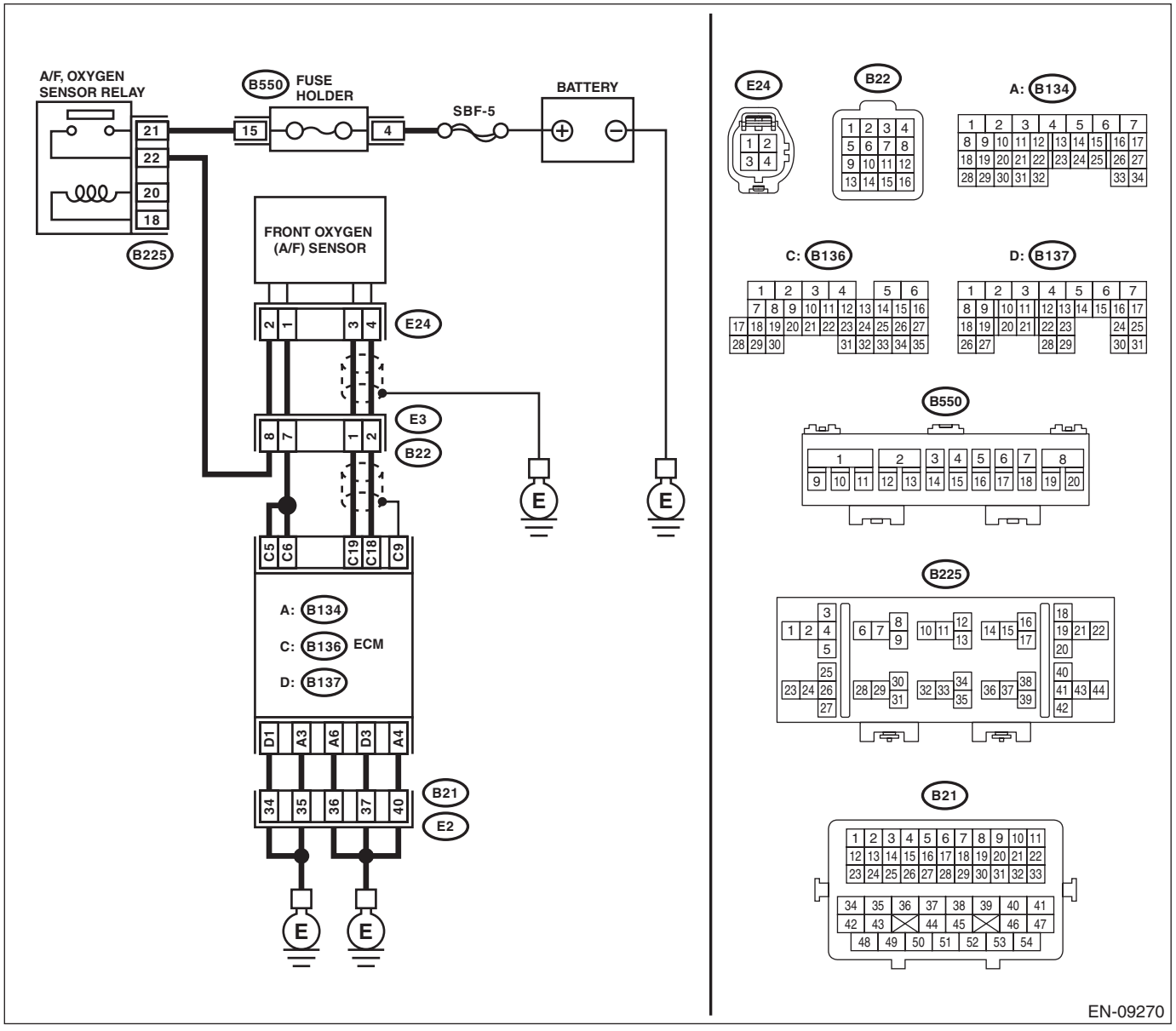

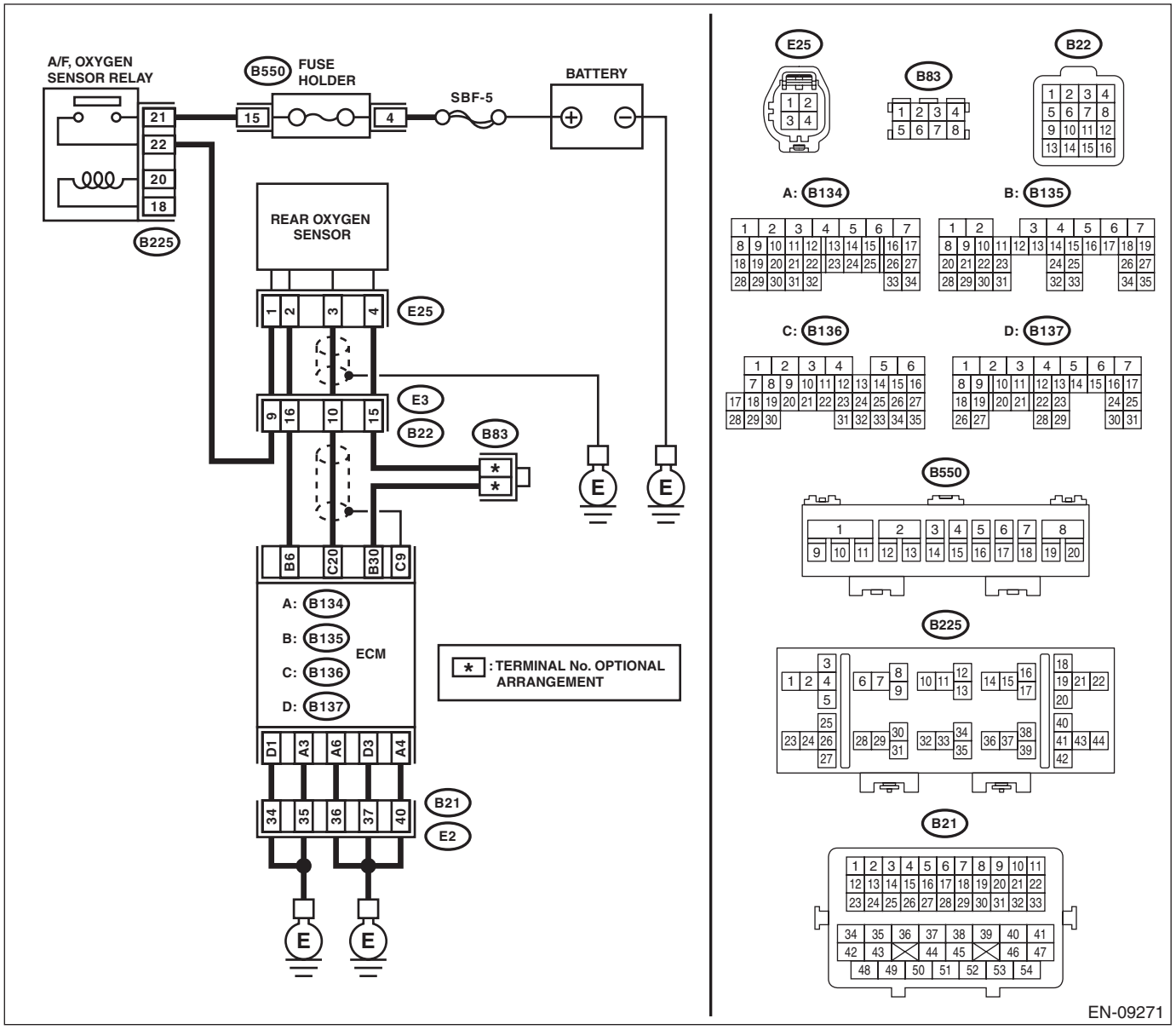

Step		Check	Yes	No
1	**CHECK FOR ANY OTHER DTC ON DISPLAY.**	Is any other DTC displayed?	Check DTC using "List of Diagnostic Trouble Code (DTC)". <Ref. to EN(H4DO w/o HEV)(diag)-83, List of Diagnostic Trouble Code (DTC).>	Go to step **2**.
2	**CHECK FRONT OXYGEN (A/F) SENSOR CONNECTOR AND COUPLING CONNECTOR.**	Has water entered the connector?	Completely remove any water inside.	Go to step **3**.

	Step	Check	Yes	No
3	**CHECK HARNESS BETWEEN ECM AND FRONT OXYGEN (A/F) SENSOR CONNECTOR.** 1) Turn the ignition switch to OFF. 2) Disconnect the connectors from ECM and front oxygen (A/F) sensor. 3) Measure the resistance of harness between ECM connector and front oxygen (A/F) sensor connector. ***Connector & terminal*** ***(B136) No. 19 — (E24) No. 3:*** ***(B136) No. 18 — (E24) No. 4:***	Is the resistance less than 1 Ω?	Go to step **4**.	Repair the harness and connector. NOTE: In this case, repair the following item: • Open circuit in harness between ECM connector and front oxygen (A/F) sensor connector • Poor contact of coupling connector
4	**CHECK HARNESS BETWEEN ECM AND FRONT OXYGEN (A/F) SENSOR CONNECTOR.** Measure the resistance between ECM connector and chassis ground. ***Connector & terminal*** ***(B136) No. 19 — Chassis ground:*** ***(B136) No. 18 — Chassis ground:***	Is the resistance 1 MΩ or more?	Go to step **5**.	Repair the short circuit to ground in harness between ECM connector and front oxygen (A/F) sensor connector.
5	**CHECK OUTPUT SIGNAL FOR ECM.** 1) Connect the connector to ECM. 2) Turn the ignition switch to ON. 3) Measure the voltage between front oxygen (A/F) sensor connector and chassis ground. ***Connector & terminal*** ***(E24) No. 3 (+) — Chassis ground (–):***	Is the voltage 4.5 V or more?	Go to step **7**.	Go to step **6**.
6	**CHECK OUTPUT SIGNAL FOR ECM.** Measure the voltage between front oxygen (A/F) sensor connector and chassis ground. ***Connector & terminal*** ***(E24) No. 4 (+) — Chassis ground (–):***	Is the voltage 4.95 V or more?	Go to step **7**.	Go to step **8**.
7	**CHECK OUTPUT SIGNAL FOR ECM.** Measure the voltage between front oxygen (A/F) sensor connector and chassis ground. ***Connector & terminal*** ***(E24) No. 3 (+) — Chassis ground (–):*** ***(E24) No. 4 (+) — Chassis ground (–):***	Is the voltage 8 V or more?	Repair the short circuit to power in the harness between ECM connector and front oxygen (A/F) sensor connector. After repair, replace the ECM. <Ref. to FU(H4DO(w/o HEV))-106, Engine Control Module (ECM).>	Repair the poor contact of ECM connector.
8	**CHECK EXHAUST SYSTEM.**	Are there holes or loose bolts on exhaust system?	Repair the exhaust system.	Go to step **9**.
9	**CHECK AIR INTAKE SYSTEM.**	Are there holes, loose bolts or disconnection of hose on air intake system?	Repair the air intake system.	Go to step **10**.

	Step	Check	Yes	No
10	**CHECK FUEL PRESSURE.** **WARNING:** **Place "NO OPEN FLAMES" signs near the working area.** **CAUTION:** **Be careful not to spill fuel.** 1) Connect the front oxygen (A/F) sensor connector. 2) Measure the fuel pressure. <Ref. to ME(H4DO(w/o HEV))-35, INSPECTION, Fuel Pressure.> **CAUTION:** **Release fuel pressure before removing the fuel pressure gauge.**	Is the measured value 340 — 400 kPa (3.5 — 4.1 kg/cm^2, 49 — 58 psi)?	Go to step **11**.	Check the fuel pump and fuel delivery line. <Ref. to FU(H4DO(w/o HEV))-145, INSPECTION, Fuel Pump.> <Ref. to FU(H4DO(w/o HEV))-165, INSPECTION, Fuel Delivery and Evaporation Lines.>
11	**CHECK ENGINE COOLANT TEMPERATURE SENSOR.** 1) Start the engine and warm up completely. 2) Read the value of «Coolant Temp.» using the Subaru Select Monitor or a general scan tool. NOTE: • Subaru Select Monitor For detailed operation procedures, refer to "READ CURRENT DATA FOR ENGINE". <Ref. to EN(H4DO w/o HEV)(diag)-36, Subaru Select Monitor.> • General scan tool For detailed operation procedures, refer to the general scan tool operation manual.	Is the value of «Coolant Temp.» 75°C (167°F) or more?	Go to step **12**.	Replace the engine coolant temperature sensor. <Ref. to FU(H4DO(w/o HEV))-53, Engine Coolant Temperature Sensor.>
12	**CHECK MASS AIR FLOW AND INTAKE AIR TEMPERATURE SENSOR.** 1) Start the engine and warm up engine until coolant temperature is higher than 75°C (167°F). 2) For CVT models, set the select lever to "P" range or "N" range, and for MT models, place the shift lever in the neutral position. 3) Turn the A/C switch to OFF. 4) Turn all the accessory switches to OFF. 5) Read the value of «Mass Air Flow» using the Subaru Select Monitor or a general scan tool. NOTE: • Subaru Select Monitor For detailed operation procedures, refer to "READ CURRENT DATA FOR ENGINE". <Ref. to EN(H4DO w/o HEV)(diag)-36, Subaru Select Monitor.> • General scan tool For detailed operation procedures, refer to the general scan tool operation manual.	Is the value of «Mass Air Flow» 2.0 — 5.0 g/s (0.26 — 0.66 lb/m)?	Go to step **13**.	Replace the mass air flow and intake air temperature sensor. <Ref. to FU(H4DO(w/o HEV))-78, Mass Air Flow and Intake Air Temperature Sensor.>

	Step	Check	Yes	No
13	**CHECK MASS AIR FLOW AND INTAKE AIR TEMPERATURE SENSOR.** 1) Start the engine and warm up engine until coolant temperature is higher than 75°C (167°F). 2) For CVT models, set the select lever to "P" range or "N" range, and for MT models, place the shift lever in the neutral position. 3) Turn the A/C switch to OFF. 4) Turn all the accessory switches to OFF. 5) Open the front hood. 6) Measure the ambient temperature. 7) Read the value of «Intake Air Temp.» using the Subaru Select Monitor or a general scan tool. NOTE: • Subaru Select Monitor For detailed operation procedures, refer to "READ CURRENT DATA FOR ENGINE". <Ref. to EN(H4DO w/o HEV)(diag)-36, Subaru Select Monitor.> • General scan tool For detailed operation procedures, refer to the general scan tool operation manual.	Subtract ambient temperature from «Intake Air Temp.». Is the obtained value –10 — 50°C (–18 — 90°F)?	Go to step **14**.	Check the mass air flow and intake air temperature sensor. <Ref. to FU(H4DO(w/o HEV))-78, Mass Air Flow and Intake Air Temperature Sensor.>
14	**CHECK REAR OXYGEN SENSOR DATA.** 1) Warm up the engine until engine coolant temperature is higher than 75°C (167°F), and keep the engine speed at 3,000 rpm. (2 minutes maximum) 2) Read the value of «Rear O2 Sensor» using the Subaru Select Monitor or a general scan tool. NOTE: • Depress the clutch pedal. (MT model) • Subaru Select Monitor For detailed operation procedures, refer to "READ CURRENT DATA FOR ENGINE". <Ref. to EN(H4DO w/o HEV)(diag)-36, Subaru Select Monitor.> • General scan tool For detailed operation procedures, refer to the general scan tool operation manual.	Is the value of «Rear O2 Sensor» 0.490 V or more?	Go to step **15**.	Go to step **16**.
15	**CHECK REAR OXYGEN SENSOR DATA.** 1) Warm up the engine until engine coolant temperature is higher than 75°C (167°F), and rapidly reduce the engine speed from 3,000 rpm. 2) Read the value of «Rear O2 Sensor» using the Subaru Select Monitor or a general scan tool. NOTE: • Depress the clutch pedal. (MT model) • Subaru Select Monitor For detailed operation procedures, refer to "READ CURRENT DATA FOR ENGINE". <Ref. to EN(H4DO w/o HEV)(diag)-36, Subaru Select Monitor.> • General scan tool For detailed operation procedures, refer to the general scan tool operation manual.	Is the value of «Rear O2 Sensor» 0.250 V or less?	Go to step **17**.	Go to step **16**.

	Step	Check	Yes	No
16	**CHECK REAR OXYGEN SENSOR CONNECTOR AND COUPLING CONNECTOR.**	Has water entered the connector?	Completely remove any water inside.	Go to step **18**.
17	**CHECK FRONT OXYGEN (A/F) SENSOR USING REAR OXYGEN SENSOR SIGNAL.** 1) Warm up the engine until engine coolant temperature is higher than 75°C (167°F), then keep the engine idling for 5 minutes or more. 2) Read the value of «Rear O2 Sensor» using the Subaru Select Monitor or a general scan tool. NOTE: • Subaru Select Monitor For detailed operation procedures, refer to "READ CURRENT DATA FOR ENGINE". <Ref. to EN(H4DO w/o HEV)(diag)-36, Subaru Select Monitor.> • General scan tool For detailed operation procedures, refer to the general scan tool operation manual.	Is the value in «Rear O2 Sensor» kept at 0.8 V or more for 5 minutes or more?	Replace the front oxygen (A/F) sensor. <Ref. to FU(H4DO(w/o HEV))-97, Front Oxygen (A/F) Sensor.>	Go to step **18**.
18	**CHECK HARNESS BETWEEN ECM AND REAR OXYGEN SENSOR CONNECTOR.** 1) Turn the ignition switch to OFF. 2) Disconnect the connector from ECM and rear oxygen sensor. 3) Measure the resistance of harness between ECM connector and rear oxygen sensor connector. ***Connector & terminal*** ***(B136) No. 20 — (E25) No. 3:*** ***(B135) No. 30 — (E25) No. 4:***	Is the resistance less than 1 Ω?	Go to step **19**.	Repair the harness and connector. NOTE: In this case, repair the following item: • Open circuit in harness between ECM connector and rear oxygen sensor connector • Poor contact of coupling connector
19	**CHECK HARNESS BETWEEN ECM AND REAR OXYGEN SENSOR CONNECTOR.** 1) Connect the connector to ECM. 2) Turn the ignition switch to ON. 3) Measure the voltage between rear oxygen sensor connector and chassis ground. ***Connector & terminal*** ***(E25) No. 3 (+) — Chassis ground (–):***	Is the voltage 0.2 — 0.5 V?	Replace the rear oxygen sensor. <Ref. to FU(H4DO(w/o HEV))-101, Rear Oxygen Sensor.>	Repair the harness and connector. NOTE: In this case, repair the following item: • Open circuit in harness between ECM connector and rear oxygen sensor connector • Poor contact of ECM connector • Poor contact of coupling connector

EO:DTC P2101 THROTTLE ACTUATOR CONTROL MOTOR CIRCUIT RANGE/ PERFORMANCE

DTC DETECTING CONDITION:

- Immediately at fault recognition
- GENERAL DESCRIPTION <Ref. to GD(H4DO w/o HEV)-234, DTC P2101 THROTTLE ACTUATOR CONTROL MOTOR CIRCUIT RANGE/PERFORMANCE, Diagnostic Trouble Code (DTC) Detecting Criteria.>

TROUBLE SYMPTOM:

- Improper idling
- Poor driving performance
- Engine stalls.

CAUTION:

After servicing or replacing faulty parts, perform Clear Memory Mode <Ref. to EN(H4DO w/o HEV)(diag)-59, OPERATION, Clear Memory Mode.>, and Inspection Mode <Ref. to EN(H4DO w/o HEV)(diag)-44, PROCEDURE, Inspection Mode.>.

WIRING DIAGRAM:

Engine electrical system <Ref. to WI(w/o HEV)-74, Engine Electrical System.>

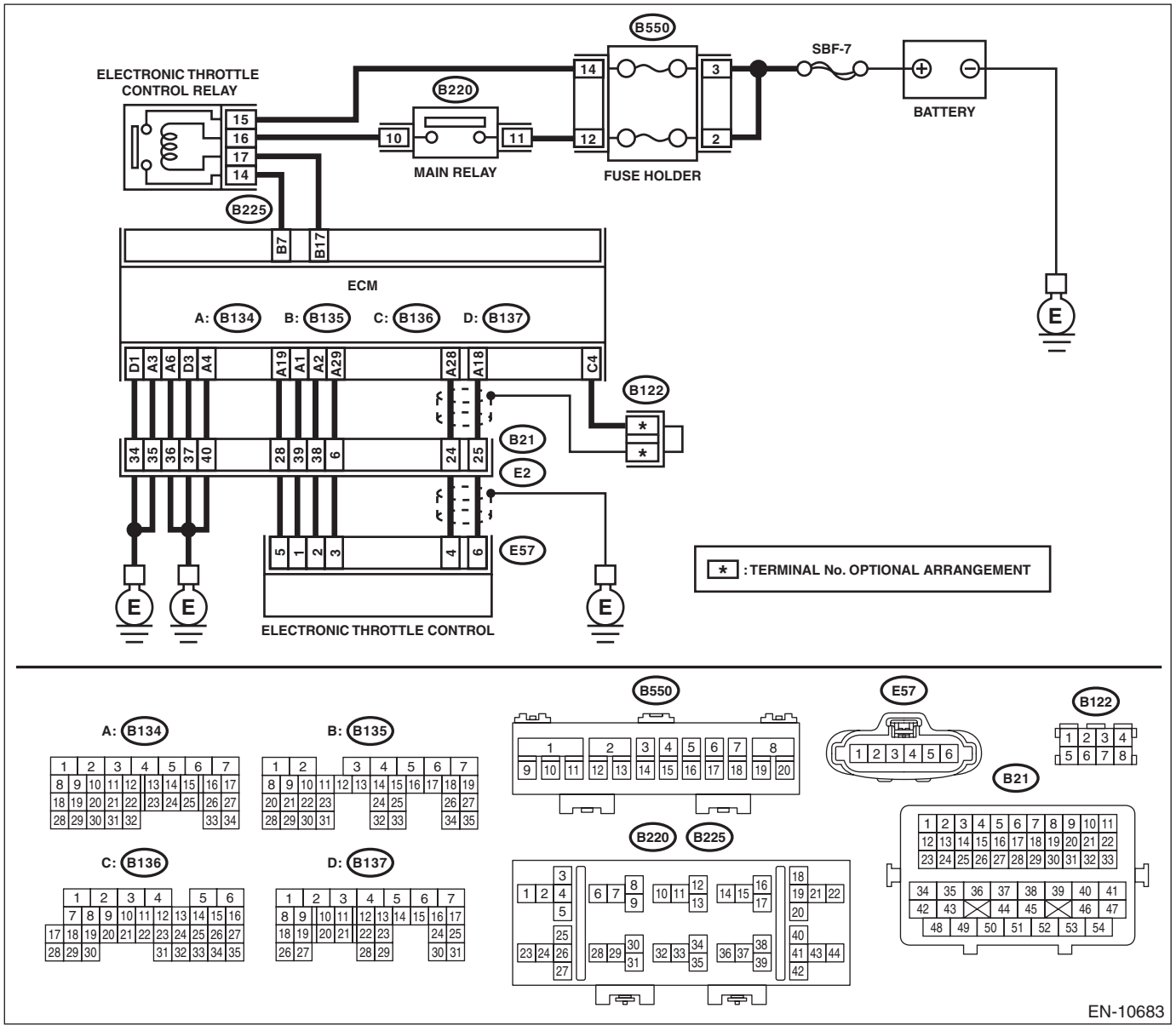

	Step	Check	Yes	No
1	**CHECK ELECTRONIC THROTTLE CONTROL RELAY.** 1) Turn the ignition switch to OFF. 2) Remove the electronic throttle control relay. 3) Connect the battery to terminals No. 16 and No. 17 of electronic throttle control relay. 4) Measure the resistance between electronic throttle control relay terminals. ***Terminals*** ***No. 14 — No. 15:***	Is the resistance less than 1 Ω?	Go to step **2**.	Replace the electronic throttle control relay. <Ref. to FU(H4DO(w/o HEV))-113, Electronic Throttle Control Relay.>
2	**CHECK POWER SUPPLY OF ELECTRONIC THROTTLE CONTROL RELAY.** Measure the voltage between electronic throttle control relay connector and chassis ground. ***Connector & terminal*** ***(B225) No. 15 (+) — Chassis ground (–):***	Is the voltage 10 V or more?	Go to step **3**.	Repair the open or ground short circuit of power supply circuit.
3	**CHECK HARNESS BETWEEN ECM AND ELECTRONIC THROTTLE CONTROL RELAY CONNECTOR.** 1) Disconnect the connector from ECM. 2) Turn the ignition switch to ON. 3) Measure the voltage between electronic throttle control relay connector and chassis ground. ***Connector & terminal*** ***(B225) No. 17 (+) — Chassis ground (–):***	Is the voltage 10 V or more?	Repair the short circuit to power in the harness between ECM connector and electronic throttle control relay connector.	Go to step **4**.
4	**CHECK HARNESS BETWEEN ECM AND ELECTRONIC THROTTLE CONTROL RELAY CONNECTOR.** 1) Turn the ignition switch to OFF. 2) Measure the resistance between electronic throttle control relay connector and chassis ground. ***Connector & terminal*** ***(B225) No. 14 — Chassis ground:*** ***(B225) No. 17 — Chassis ground:***	Is the resistance 1 MΩ or more?	Go to step **5**.	Repair the short circuit to ground in harness between ECM connector and electronic throttle control relay connector.
5	**CHECK HARNESS BETWEEN ECM AND ELECTRONIC THROTTLE CONTROL RELAY CONNECTOR.** Measure the resistance between ECM connector and electronic throttle control relay connector. ***Connector & terminal*** ***(B135) No. 17 — (B225) No. 17:*** ***(B135) No. 7 — (B225) No. 14:***	Is the resistance less than 1 Ω?	Go to step **6**.	Repair the open circuit in harness between ECM connector and electronic throttle control relay connector.
6	**CHECK HARNESS BETWEEN ECM AND ELECTRONIC THROTTLE CONTROL CONNECTOR.** 1) Turn the ignition switch to OFF. 2) Disconnect the connectors from electronic throttle control. 3) Measure the resistance between ECM connector and chassis ground. ***Connector & terminal*** ***(B134) No. 19 — Chassis ground:*** ***(B134) No. 18 — Chassis ground:*** ***(B134) No. 18 — (B136) No. 4:*** ***(B134) No. 28 — Chassis ground:*** ***(B134) No. 28 — (B136) No. 4:***	Is the resistance 1 MΩ or more?	Go to step **7**.	Repair the ground short circuit of harness between ECM connector and electronic throttle control connector.

	Step	Check	Yes	No
7	**CHECK SHORT CIRCUIT INSIDE THE ECM.** 1) Connect the connector to ECM. 2) Measure the resistance between electronic throttle control connector and engine ground. ***Connector & terminal*** ***(E57) No. 6 — Engine ground:*** ***(E57) No. 4 — Engine ground:***	Is the resistance 1 MΩ or more?	Go to step **8**.	Repair the ground short circuit of harness between ECM connector and electronic throttle control connector. Replace the ECM if defective. <Ref. to FU(H4DO(w/o HEV))-106, Engine Control Module (ECM).>
8	**CHECK HARNESS BETWEEN ECM AND ELECTRONIC THROTTLE CONTROL CONNECTOR.** 1) Disconnect the connector from ECM. 2) Measure the resistance of harness between ECM connector and electronic throttle control connector. ***Connector & terminal*** ***(B134) No. 18 — (E57) No. 6:*** ***(B134) No. 28 — (E57) No. 4:*** ***(B134) No. 29 — (E57) No. 3:***	Is the resistance less than 1 Ω?	Go to step **9**.	Repair the harness and connector. NOTE: In this case, repair the following item: • Open circuit in harness between ECM connector and electronic throttle control connector • Poor contact of coupling connector
9	**CHECK HARNESS BETWEEN ECM AND ELECTRONIC THROTTLE CONTROL CONNECTOR.** 1) Connect the connector to ECM. 2) Measure the resistance between electronic throttle control connector and engine ground. ***Connector & terminal*** ***(E57) No. 3 — Engine ground:***	Is the resistance less than 5 Ω?	Go to step **10**.	Repair the harness and connector. NOTE: In this case, repair the following item: • Open circuit of harness between ECM connector and engine ground • Poor contact of ECM connector • Poor contact of coupling connector
10	**CHECK HARNESS BETWEEN ECM AND ELECTRONIC THROTTLE CONTROL CONNECTOR.** 1) Turn the ignition switch to ON. 2) Measure the voltage between electronic throttle control connector and engine ground. ***Connector & terminal*** ***(E57) No. 6 (+) — Engine ground (–):*** ***(E57) No. 4 (+) — Engine ground (–):***	Is the voltage 5 V or more?	Repair the short circuit to power in the harness between ECM connector and electronic throttle control connector.	Go to step **11**.
11	**CHECK HARNESS BETWEEN ECM AND ELECTRONIC THROTTLE CONTROL CONNECTOR.** 1) Turn the ignition switch to OFF. 2) Disconnect the connector from ECM. 3) Measure the resistance between ECM connectors. ***Connector & terminal*** ***(B134) No. 19 — (B134) No. 18:*** ***(B134) No. 19 — (B134) No. 28:***	Is the resistance 1 MΩ or more?	Go to step **12**.	Repair the short circuit to power in the harness between ECM connector and electronic throttle control connector.

	Step	Check	Yes	No
12	**CHECK SENSOR OUTPUT.** 1) Connect all connectors. 2) Start the engine and warm up completely. 3) Stop the engine, and then turn the ignition switch to ON (engine OFF). 4) Read the value of «Main-Throttle Sensor» using Subaru Select Monitor. NOTE: For detailed operation procedures, refer to "READ CURRENT DATA FOR ENGINE". <Ref. to EN(H4DO w/o HEV)(diag)-36, Subaru Select Monitor.>	Is the value of «Main-Throttle Sensor» 0.81 — 0.87 V?	Go to step **13**.	Repair the poor contact of electronic throttle control connector. Replace the electronic throttle control if defective. <Ref. to FU(H4DO(w/o HEV))-15, Throttle Body.>
13	**CHECK SENSOR OUTPUT.** Read the value of «Sub-Throttle Sensor» using Subaru Select Monitor. NOTE: For detailed operation procedures, refer to "READ CURRENT DATA FOR ENGINE". <Ref. to EN(H4DO w/o HEV)(diag)-36, Subaru Select Monitor.>	Is the value of «Sub-Throttle Sensor» 1.64 — 1.70 V?	Go to step **14**.	Repair the poor contact of electronic throttle control connector. Replace the electronic throttle control if defective. <Ref. to FU(H4DO(w/o HEV))-15, Throttle Body.>
14	**CHECK HARNESS BETWEEN ECM AND ELECTRONIC THROTTLE CONTROL CONNECTOR.** 1) Turn the ignition switch to OFF. 2) Disconnect the connectors from ECM and electronic throttle control. 3) Measure the resistance between ECM connector and electronic throttle control connector. ***Connector & terminal*** ***(B134) No. 2 — (E57) No. 2:*** ***(B134) No. 1 — (E57) No. 1:***	Is the resistance less than 1 Ω?	Go to step **15**.	Repair the harness and connector. NOTE: In this case, repair the following item: • Open circuit in harness between ECM connector and electronic throttle control connector • Poor contact of coupling connector
15	**CHECK HARNESS BETWEEN ECM AND ELECTRONIC THROTTLE CONTROL CONNECTOR.** 1) Connect the connector to ECM. 2) Turn the ignition switch to ON. 3) Measure the voltage between electronic throttle control connector and engine ground. ***Connector & terminal*** ***(E57) No. 2 (+) — Engine ground (–):*** ***(E57) No. 1 (+) — Engine ground (–):***	Is the voltage 5 V or more?	Repair the short circuit to power in the harness between ECM connector and electronic throttle control connector.	Go to step **16**.
16	**CHECK HARNESS BETWEEN ECM AND ELECTRONIC THROTTLE CONTROL CONNECTOR.** 1) Turn the ignition switch to OFF. 2) Disconnect the connector from ECM. 3) Measure the resistance between electronic throttle control connector and engine ground. ***Connector & terminal*** ***(E57) No. 2 — Engine ground:*** ***(E57) No. 1 — Engine ground:***	Is the resistance 1 MΩ or more?	Go to step **17**.	Repair the ground short circuit of harness between ECM connector and electronic throttle control connector.

	Step	Check	Yes	No
17	**CHECK ELECTRONIC THROTTLE CONTROL CONNECTOR HARNESS.** Measure the resistance between electronic throttle control connectors. ***Connector & terminal*** ***(E57) No. 2 — (E57) No. 1:***	Is the resistance 1 MΩ or more?	Go to step **18**.	Repair the short circuit in harness between ECM connector and electronic throttle control connector.
18	**CHECK ELECTRONIC THROTTLE CONTROL GROUND CIRCUIT.** Measure the resistance between ECM connector and chassis ground. ***Connector & terminal*** ***(B134) No. 3 — Chassis ground:*** ***(B134) No. 4 — Chassis ground:*** ***(B134) No. 6 — Chassis ground:*** ***(B137) No. 1 — Chassis ground:*** ***(B137) No. 3 — Chassis ground:***	Is the resistance less than 5 Ω?	Go to step **19**.	Repair the harness and connector. NOTE: In this case, repair the following item: • Open circuit of harness between ECM connector and engine ground • Poor contact of coupling connector
19	**CHECK ELECTRONIC THROTTLE CONTROL.** Measure the resistance between electronic throttle control terminals. ***Terminals*** ***No. 2 — No. 1:***	Is the resistance 50 Ω or less?	Go to step **20**.	Replace the electronic throttle control. <Ref. to FU(H4DO(w/o HEV))-15, Throttle Body.>
20	**CHECK ELECTRONIC THROTTLE CONTROL.** Move the throttle valve to the fully open and fully closed positions with fingers. Check that the valve returns to the specified position when releasing fingers.	Does the valve return to the specified position? Standard value: 3 mm (0.12 in) from fully closed position	Repair the poor contact of ECM connector.	Replace the electronic throttle control. <Ref. to FU(H4DO(w/o HEV))-15, Throttle Body.>

EP:DTC P2102 THROTTLE ACTUATOR CONTROL MOTOR CIRCUIT LOW

DTC DETECTING CONDITION:

- Immediately at fault recognition
- GENERAL DESCRIPTION <Ref. to GD(H4DO w/o HEV)-236, DTC P2102 THROTTLE ACTUATOR CONTROL MOTOR CIRCUIT LOW, Diagnostic Trouble Code (DTC) Detecting Criteria.>

TROUBLE SYMPTOM:

- Improper idling
- Poor driving performance
- Engine stalls.

CAUTION:

After servicing or replacing faulty parts, perform Clear Memory Mode <Ref. to EN(H4DO w/o HEV)(diag)-59, OPERATION, Clear Memory Mode.>, and Inspection Mode <Ref. to EN(H4DO w/o HEV)(diag)-44, PROCEDURE, Inspection Mode.>.

WIRING DIAGRAM:

Engine electrical system <Ref. to WI(w/o HEV)-74, Engine Electrical System.>

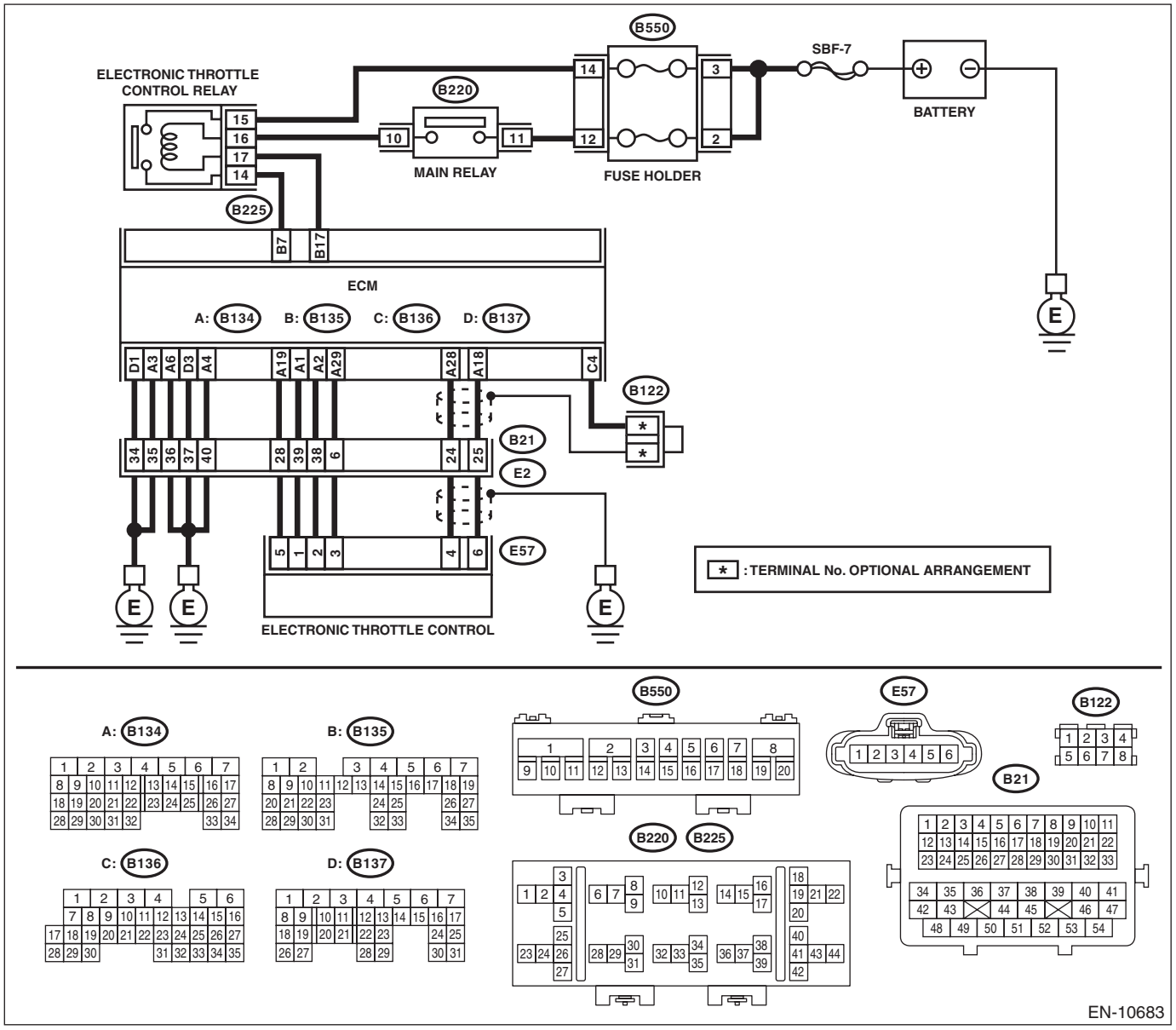

	Step	Check	Yes	No
1	**CHECK ELECTRONIC THROTTLE CONTROL RELAY.** 1) Turn the ignition switch to OFF. 2) Remove the electronic throttle control relay. 3) Connect the battery to terminals No. 16 and No. 17 of electronic throttle control relay. 4) Measure the resistance between electronic throttle control relay terminals. ***Terminals*** ***No. 14 — No. 15:***	Is the resistance less than 1 Ω?	Go to step **2**.	Replace the electronic throttle control relay. <Ref. to FU(H4DO(w/o HEV))-113, Electronic Throttle Control Relay.>
2	**CHECK POWER SUPPLY OF ELECTRONIC THROTTLE CONTROL RELAY.** Measure the voltage between electronic throttle control relay connector and chassis ground. ***Connector & terminal*** ***(B225) No. 15 (+) — Chassis ground (–):***	Is the voltage 10 V or more?	Go to step **3**.	Repair the open or ground short circuit of power supply circuit.
3	**CHECK HARNESS BETWEEN ECM AND ELECTRONIC THROTTLE CONTROL RELAY CONNECTOR.** 1) Disconnect the connector from ECM. 2) Turn the ignition switch to ON. 3) Measure the voltage between electronic throttle control relay connector and chassis ground. ***Connector & terminal*** ***(B225) No. 17 (+) — Chassis ground (–):***	Is the voltage 10 V or more?	Repair the short circuit to power in the harness between ECM connector and electronic throttle control relay connector.	Go to step **4**.
4	**CHECK HARNESS BETWEEN ECM AND ELECTRONIC THROTTLE CONTROL RELAY CONNECTOR.** 1) Turn the ignition switch to OFF. 2) Measure the resistance between electronic throttle control relay connector and chassis ground. ***Connector & terminal*** ***(B225) No. 14 — Chassis ground:*** ***(B225) No. 17 — Chassis ground:***	Is the resistance 1 MΩ or more?	Go to step **5**.	Repair the short circuit to ground in harness between ECM connector and electronic throttle control relay connector.
5	**CHECK HARNESS BETWEEN ECM AND ELECTRONIC THROTTLE CONTROL RELAY CONNECTOR.** Measure the resistance between ECM connector and electronic throttle control relay connector. ***Connector & terminal*** ***(B135) No. 17 — (B225) No. 17:*** ***(B135) No. 7 — (B225) No. 14:***	Is the resistance less than 1 Ω?	Repair the poor contact of ECM connector.	Repair the open circuit in harness between ECM connector and electronic throttle control relay connector.

EQ:DTC P2103 THROTTLE ACTUATOR CONTROL MOTOR CIRCUIT HIGH

DTC DETECTING CONDITION:

- Immediately at fault recognition
- GENERAL DESCRIPTION <Ref. to GD(H4DO w/o HEV)-238, DTC P2103 THROTTLE ACTUATOR CONTROL MOTOR CIRCUIT HIGH, Diagnostic Trouble Code (DTC) Detecting Criteria.>

CAUTION:

After servicing or replacing faulty parts, perform Clear Memory Mode <Ref. to EN(H4DO w/o HEV)(diag)-59, OPERATION, Clear Memory Mode.>, and Inspection Mode <Ref. to EN(H4DO w/o HEV)(diag)-44, PROCEDURE, Inspection Mode.>.

WIRING DIAGRAM:

Engine electrical system <Ref. to WI(w/o HEV)-74, Engine Electrical System.>

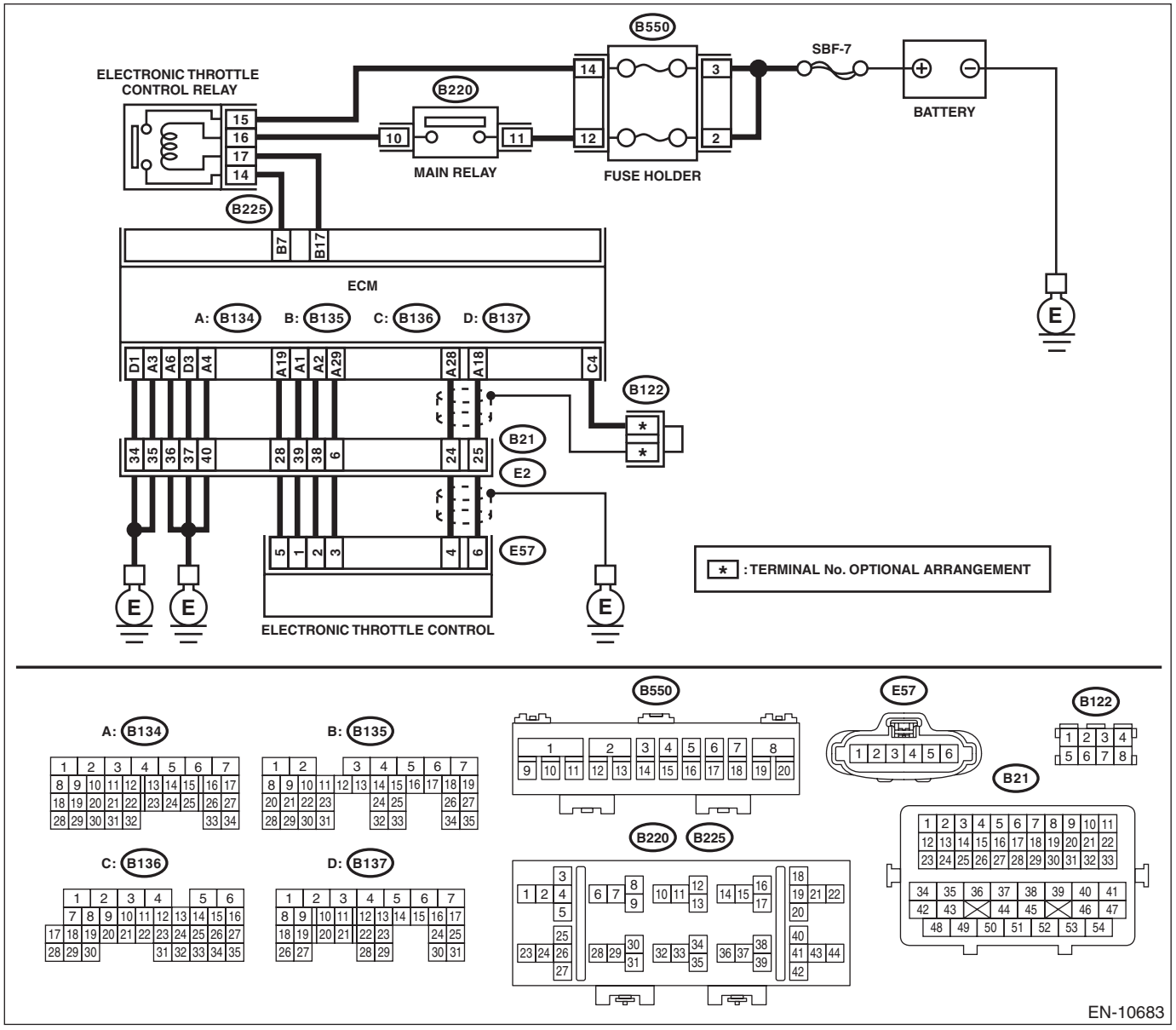

	Step	Check	Yes	No
1	**CHECK ELECTRONIC THROTTLE CONTROL RELAY.** 1) Turn the ignition switch to OFF. 2) Remove the electronic throttle control relay. 3) Measure the resistance between electronic throttle control relay terminals. ***Terminals*** ***No. 14 — No. 15:***	Is the resistance 1 MΩ or more?	Go to step **2**.	Replace the electronic throttle control relay. <Ref. to FU(H4DO(w/o HEV))-113, Electronic Throttle Control Relay.>
2	**CHECK SHORT CIRCUIT OF ELECTRONIC THROTTLE CONTROL RELAY POWER SUPPLY.** 1) Turn the ignition switch to ON. 2) Measure the voltage between electronic throttle control relay connector and chassis ground. ***Connector & terminal*** ***(B225) No. 14 (+) — Chassis ground (–):***	Is the voltage 10 V or more?	Repair the short circuit to power in the harness between ECM connector and electronic throttle control relay connector.	Go to step **3**.
3	**CHECK HARNESS BETWEEN ECM AND ELECTRONIC THROTTLE CONTROL RELAY CONNECTOR.** 1) Turn the ignition switch to OFF. 2) Disconnect the connector from ECM. 3) Measure the resistance between ECM connector and chassis ground. ***Connector & terminal*** ***(B135) No. 17 — Chassis ground:***	Is the resistance 1 MΩ or more?	Repair the poor contact of ECM connector.	Repair the short circuit to ground in harness between ECM connector and electronic throttle control relay connector.

ER:DTC P2109 THROTTLE/PEDAL POSITION SENSOR “A” MINIMUM STOP PERFORMANCE

NOTE:
For the diagnostic procedure, refer to DTC P2101. <Ref. to EN(H4DO w/o HEV)(diag)-308, DTC P2101 THROTTLE ACTUATOR CONTROL MOTOR CIRCUIT RANGE/PERFORMANCE, Diagnostic Procedure with Diagnostic Trouble Code (DTC).>

ES:DTC P2119 THROTTLE ACTUATOR CONTROL THROTTLE BODY RANGE/PERFORMANCE

NOTE:
For the diagnostic procedure, refer to DTC P2101. <Ref. to EN(H4DO w/o HEV)(diag)-308, DTC P2101 THROTTLE ACTUATOR CONTROL MOTOR CIRCUIT RANGE/PERFORMANCE, Diagnostic Procedure with Diagnostic Trouble Code (DTC).>

ET:DTC P2122 THROTTLE/PEDAL POSITION SENSOR/SWITCH “D” CIRCUIT LOW INPUT

DTC DETECTING CONDITION:

- Immediately at fault recognition
- GENERAL DESCRIPTION <Ref. to GD(H4DO w/o HEV)-244, DTC P2122 THROTTLE/PEDAL POSITION SENSOR/SWITCH “D” CIRCUIT LOW INPUT, Diagnostic Trouble Code (DTC) Detecting Criteria.>

TROUBLE SYMPTOM:

- Improper idling
- Poor driving performance

CAUTION:

After servicing or replacing faulty parts, perform Clear Memory Mode <Ref. to EN(H4DO w/o HEV)(diag)-59, OPERATION, Clear Memory Mode.>, and Inspection Mode <Ref. to EN(H4DO w/o HEV)(diag)-44, PROCEDURE, Inspection Mode.>.

WIRING DIAGRAM:

Engine electrical system <Ref. to WI(w/o HEV)-74, Engine Electrical System.>

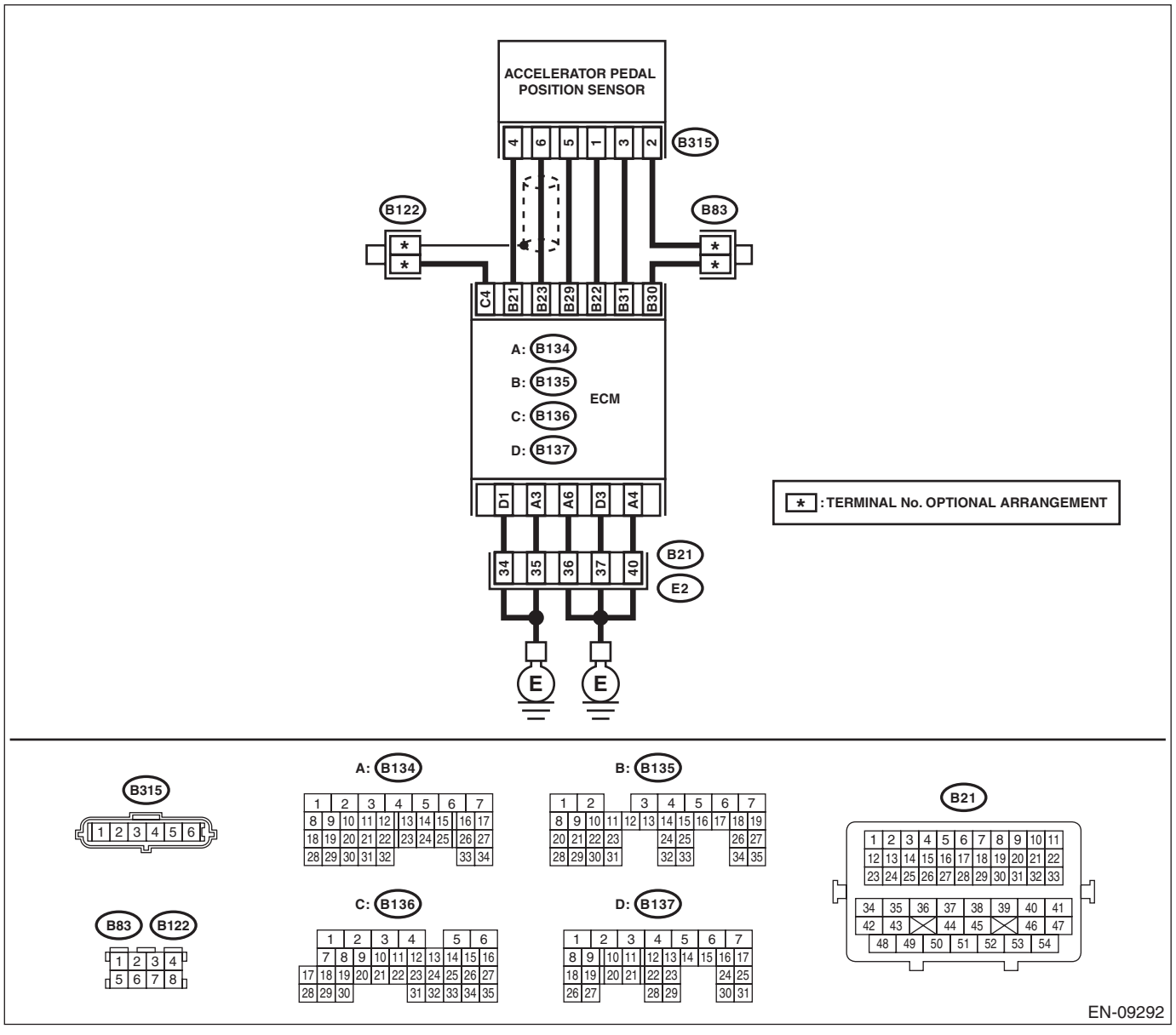

	Step	Check	Yes	No
1	**CHECK HARNESS BETWEEN ECM AND ACCELERATOR PEDAL POSITION SENSOR CONNECTOR.** 1) Turn the ignition switch to OFF. 2) Disconnect the connectors from ECM and accelerator pedal position sensor. 3) Measure the resistance between ECM connector and chassis ground. ***Connector & terminal*** ***(B135) No. 21 — Chassis ground:*** ***(B135) No. 23 — Chassis ground:*** ***(B135) No. 23 — (B136) No. 4:***	Is the resistance 1 MΩ or more?	Go to step **2**.	Repair the short circuit to ground in harness between ECM connector and accelerator pedal position sensor connector.
2	**CHECK SHORT CIRCUIT INSIDE THE ECM.** 1) Connect the connector to ECM. 2) Measure the resistance between accelerator pedal position sensor connector and chassis ground. ***Connector & terminal*** ***(B315) No. 6 — Chassis ground:***	Is the resistance 1 MΩ or more?	Replace the accelerator pedal. <Ref. to SP(H4DO(w/o HEV))-4, Accelerator Pedal.>	Repair the short circuit to ground in harness between ECM connector and accelerator pedal position sensor connector. Replace the ECM if defective. <Ref. to FU(H4DO(w/o HEV))-106, Engine Control Module (ECM).>

EU:DTC P2123 THROTTLE/PEDAL POSITION SENSOR/SWITCH “D” CIRCUIT HIGH INPUT

DTC DETECTING CONDITION:

- Immediately at fault recognition
- GENERAL DESCRIPTION <Ref. to GD(H4DO w/o HEV)-246, DTC P2123 THROTTLE/PEDAL POSITION SENSOR/SWITCH “D” CIRCUIT HIGH INPUT, Diagnostic Trouble Code (DTC) Detecting Criteria.>

TROUBLE SYMPTOM:

- Improper idling
- Poor driving performance

CAUTION:

After servicing or replacing faulty parts, perform Clear Memory Mode <Ref. to EN(H4DO w/o HEV)(diag)-59, OPERATION, Clear Memory Mode.>, and Inspection Mode <Ref. to EN(H4DO w/o HEV)(diag)-44, PROCEDURE, Inspection Mode.>.

WIRING DIAGRAM:

Engine electrical system <Ref. to WI(w/o HEV)-74, Engine Electrical System.>

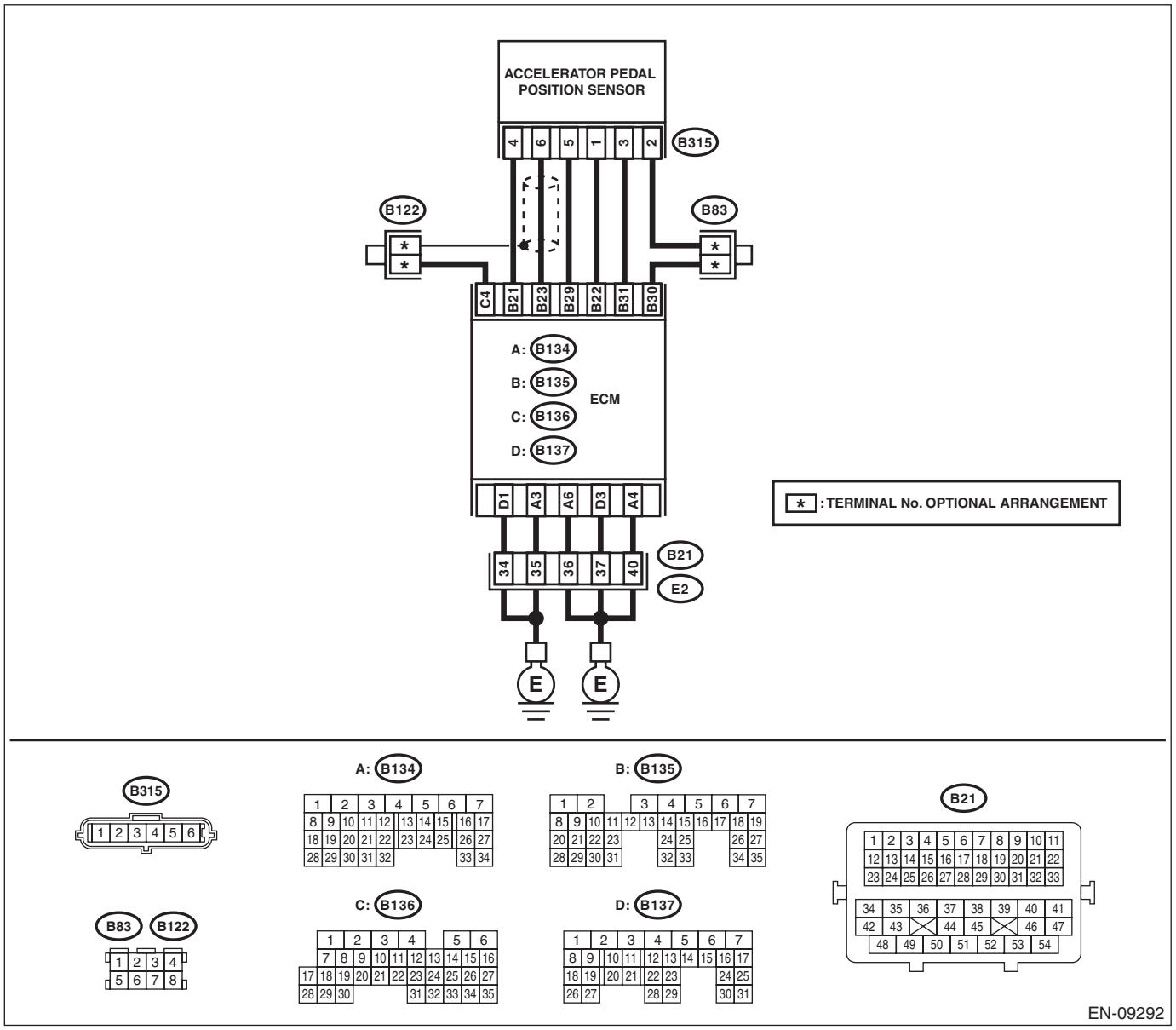

	Step	Check	Yes	No
1	**CHECK HARNESS BETWEEN ECM AND ACCELERATOR PEDAL POSITION SENSOR CONNECTOR.** 1) Turn the ignition switch to OFF. 2) Disconnect the connectors from ECM and accelerator pedal position sensor. 3) Measure the resistance of harness between ECM connector and accelerator pedal position sensor connector. ***Connector & terminal*** ***(B135) No. 23 — (B315) No. 6:*** ***(B135) No. 29 — (B315) No. 5:***	Is the resistance less than 1 Ω?	Go to step **2**.	Repair the open circuit of harness between ECM connector and accelerator pedal position sensor connector.
2	**CHECK HARNESS BETWEEN ECM AND ACCELERATOR PEDAL POSITION SENSOR CONNECTOR.** 1) Connect the connector to ECM. 2) Measure the resistance between accelerator pedal position sensor connector and chassis ground. ***Connector & terminal*** ***(B315) No. 5 — Chassis ground:***	Is the resistance less than 5 Ω?	Go to step **3**.	Repair the harness and connector. NOTE: In this case, repair the following item: • Open circuit of harness between ECM connector and engine ground • Poor contact of ECM connector • Poor contact of coupling connector
3	**CHECK HARNESS BETWEEN ECM AND ACCELERATOR PEDAL POSITION SENSOR CONNECTOR.** 1) Turn the ignition switch to ON. 2) Measure the voltage between accelerator pedal position sensor connector and chassis ground. ***Connector & terminal*** ***(B315) No. 6 (+) — Chassis ground (–):***	Is the voltage 5 V or more?	Repair the short circuit to power supply in harness between ECM connector and accelerator pedal position sensor connector.	Go to step **4**.
4	**CHECK HARNESS BETWEEN ECM AND ACCELERATOR PEDAL POSITION SENSOR CONNECTOR.** 1) Turn the ignition switch to OFF. 2) Disconnect the connector from ECM. 3) Measure the resistance between ECM connectors. ***Connector & terminal*** ***(B135) No. 21 — (B135) No. 23:***	Is the resistance 1 MΩ or more?	Repair the poor contact of accelerator pedal position sensor connector. Replace the accelerator pedal if defective. <Ref. to SP(H4DO(w/o HEV))-4, Accelerator Pedal.>	Repair the short circuit to power supply in harness between ECM connector and accelerator pedal position sensor connector.

EV:DTC P2127 THROTTLE/PEDAL POSITION SENSOR/SWITCH “E” CIRCUIT LOW INPUT

DTC DETECTING CONDITION:

- Immediately at fault recognition
- GENERAL DESCRIPTION <Ref. to GD(H4DO w/o HEV)-248, DTC P2127 THROTTLE/PEDAL POSITION SENSOR/SWITCH “E” CIRCUIT LOW INPUT, Diagnostic Trouble Code (DTC) Detecting Criteria.>

TROUBLE SYMPTOM:

- Improper idling
- Poor driving performance

CAUTION:

After servicing or replacing faulty parts, perform Clear Memory Mode <Ref. to EN(H4DO w/o HEV)(diag)-59, OPERATION, Clear Memory Mode.>, and Inspection Mode <Ref. to EN(H4DO w/o HEV)(diag)-44, PROCEDURE, Inspection Mode.>.

WIRING DIAGRAM:

Engine electrical system <Ref. to WI(w/o HEV)-74, Engine Electrical System.>

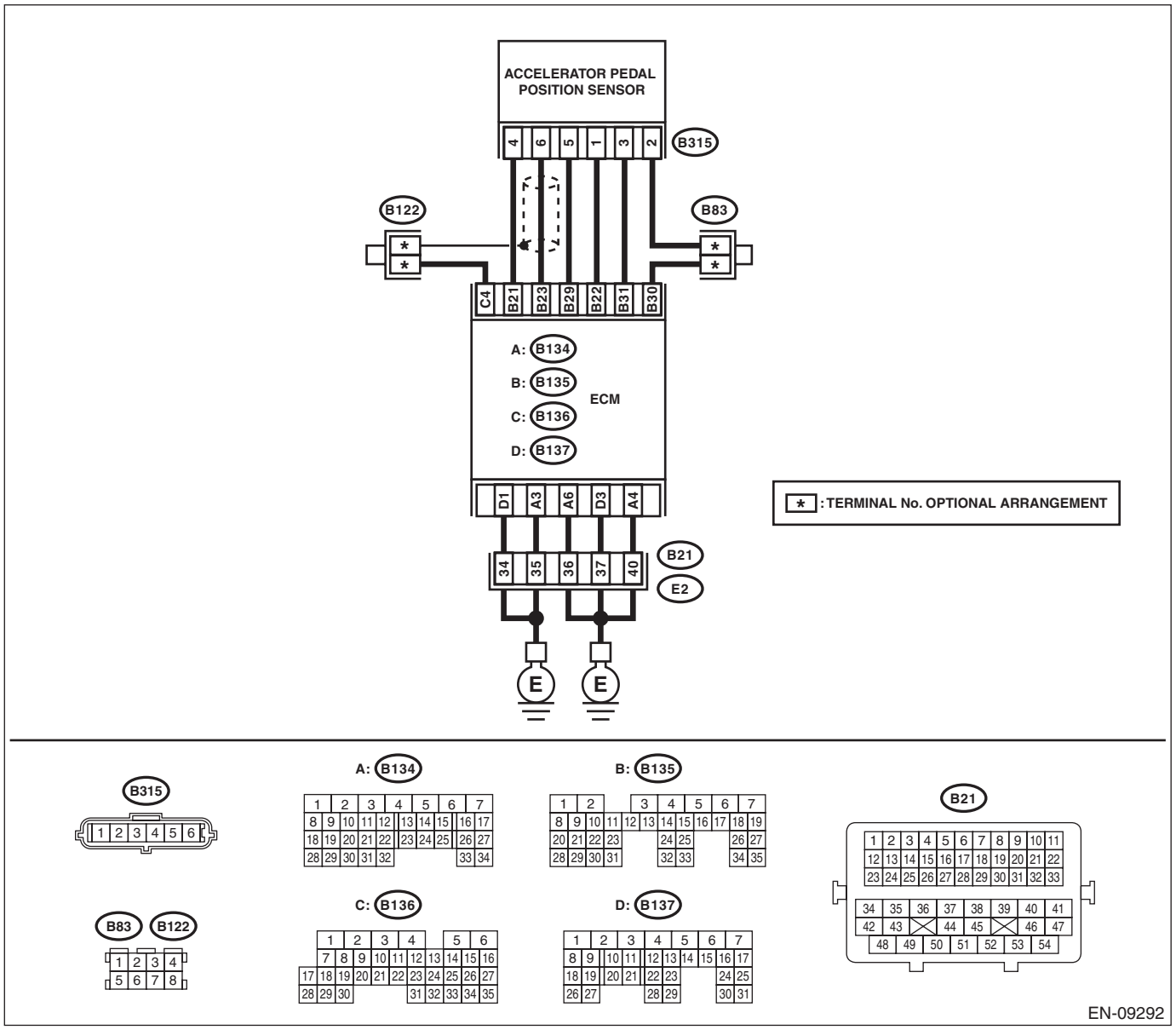

	Step	Check	Yes	No
1	**CHECK HARNESS BETWEEN ECM AND ACCELERATOR PEDAL POSITION SENSOR CONNECTOR.** 1) Turn the ignition switch to OFF. 2) Disconnect the connectors from ECM and accelerator pedal position sensor. 3) Measure the resistance between ECM connector and chassis ground. ***Connector & terminal*** ***(B135) No. 22 — Chassis ground:*** ***(B135) No. 31 — Chassis ground:***	Is the resistance 1 MΩ or more?	Go to step **2**.	Repair the short circuit to ground in harness between ECM connector and accelerator pedal position sensor connector.
2	**CHECK SHORT CIRCUIT INSIDE THE ECM.** 1) Connect the connector to ECM. 2) Measure the resistance between accelerator pedal position sensor connector and chassis ground. ***Connector & terminal*** ***(B315) No. 3 — Chassis ground:***	Is the resistance 1 MΩ or more?	Replace the accelerator pedal. <Ref. to SP(H4DO(w/o HEV))-4, Accelerator Pedal.>	Repair the short circuit to ground in harness between ECM connector and accelerator pedal position sensor connector. Replace the ECM if defective. <Ref. to FU(H4DO(w/o HEV))-106, Engine Control Module (ECM).>

EW:DTC P2128 THROTTLE/PEDAL POSITION SENSOR/SWITCH “E” CIRCUIT HIGH INPUT

DTC DETECTING CONDITION:

- Immediately at fault recognition
- GENERAL DESCRIPTION <Ref. to GD(H4DO w/o HEV)-250, DTC P2128 THROTTLE/PEDAL POSITION SENSOR/SWITCH “E” CIRCUIT HIGH INPUT, Diagnostic Trouble Code (DTC) Detecting Criteria.>

TROUBLE SYMPTOM:

- Improper idling
- Poor driving performance

CAUTION:

After servicing or replacing faulty parts, perform Clear Memory Mode <Ref. to EN(H4DO w/o HEV)(diag)-59, OPERATION, Clear Memory Mode.>, and Inspection Mode <Ref. to EN(H4DO w/o HEV)(diag)-44, PROCEDURE, Inspection Mode.>.

WIRING DIAGRAM:

Engine electrical system <Ref. to WI(w/o HEV)-74, Engine Electrical System.>

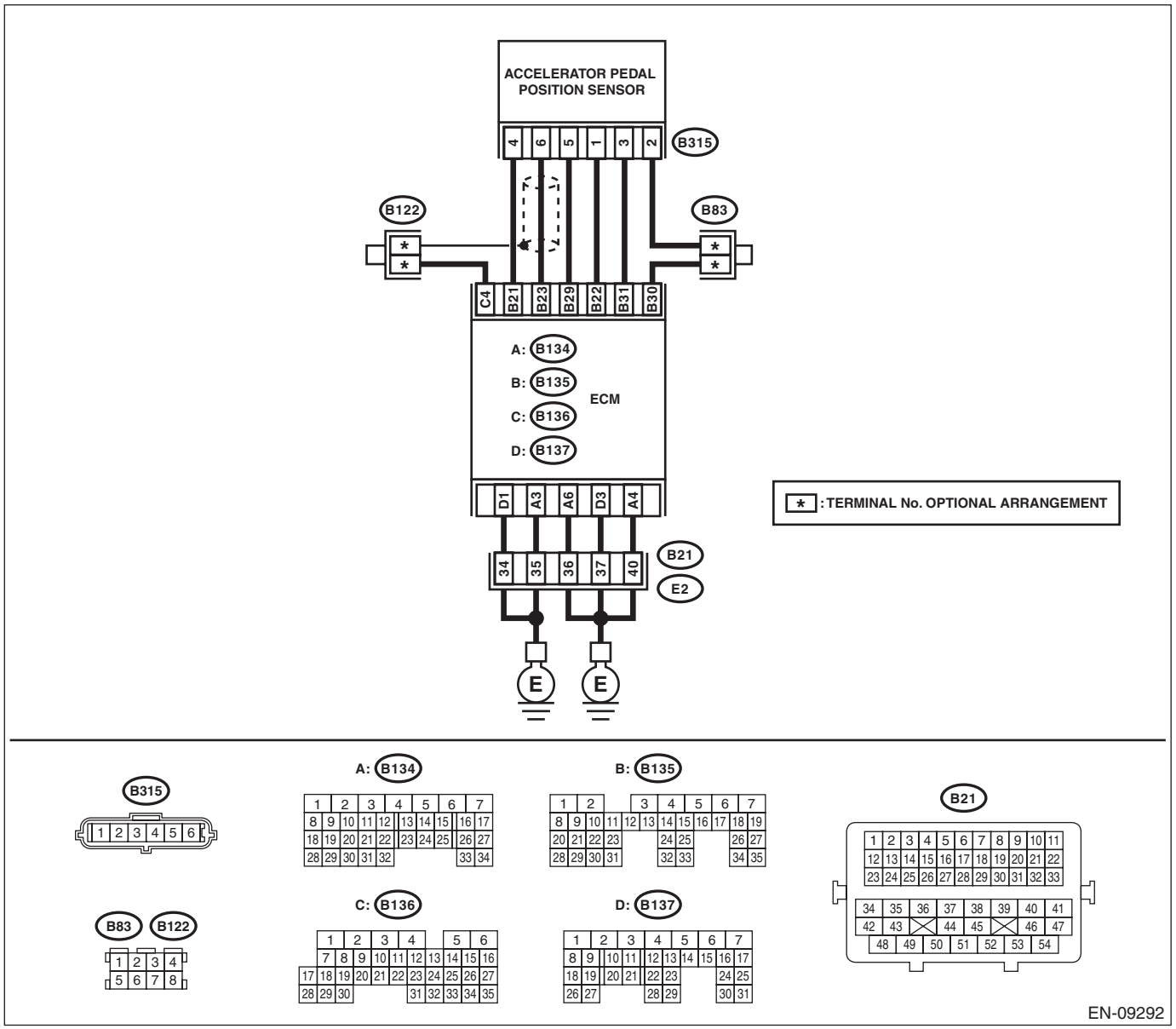

	Step	Check	Yes	No
1	**CHECK HARNESS BETWEEN ECM AND ACCELERATOR PEDAL POSITION SENSOR CONNECTOR.** 1) Turn the ignition switch to OFF. 2) Disconnect the connectors from ECM and accelerator pedal position sensor. 3) Measure the resistance of harness between ECM connector and accelerator pedal position sensor connector. ***Connector & terminal*** ***(B135) No. 31 — (B315) No. 3:*** ***(B135) No. 30 — (B315) No. 2:***	Is the resistance less than 1 Ω?	Go to step **2**.	Repair the harness and connector. NOTE: In this case, repair the following item: • Open circuit of harness between ECM connector and accelerator pedal position sensor connector • Poor contact of joint connector
2	**CHECK HARNESS BETWEEN ECM AND ACCELERATOR PEDAL POSITION SENSOR CONNECTOR.** 1) Connect the connector to ECM. 2) Measure the resistance between accelerator pedal position sensor connector and chassis ground. ***Connector & terminal*** ***(B315) No. 2 — Chassis ground:***	Is the resistance less than 1 Ω?	Go to step **3**.	Repair the harness and connector. NOTE: In this case, repair the following item: • Open circuit of harness between ECM connector and engine ground • Poor contact of ECM connector • Poor contact of coupling connector
3	**CHECK HARNESS BETWEEN ECM AND ACCELERATOR PEDAL POSITION SENSOR CONNECTOR.** 1) Turn the ignition switch to ON. 2) Measure the voltage between accelerator pedal position sensor connector and chassis ground. ***Connector & terminal*** ***(B315) No. 3 (+) — Chassis ground (–):***	Is the voltage 5 V or more?	Repair the short circuit to power supply in harness between ECM connector and accelerator pedal position sensor connector.	Go to step **4**.
4	**CHECK HARNESS BETWEEN ECM AND ACCELERATOR PEDAL POSITION SENSOR CONNECTOR.** 1) Turn the ignition switch to OFF. 2) Disconnect the connector from ECM. 3) Measure the resistance between ECM connectors. ***Connector & terminal*** ***(B135) No. 22 — (B135) No. 31:***	Is the resistance 1 MΩ or more?	Repair the poor contact of accelerator pedal position sensor connector. Replace the accelerator pedal if defective. <Ref. to SP(H4DO(w/o HEV))-4, Accelerator Pedal.>	Repair the short circuit to power supply in harness between ECM connector and accelerator pedal position sensor connector.

EX:DTC P2135 THROTTLE/PEDAL POSITION SENSOR/SWITCH “A”/“B” VOLTAGE CORRELATION

DTC DETECTING CONDITION:

- Immediately at fault recognition
- GENERAL DESCRIPTION <Ref. to GD(H4DO w/o HEV)-252, DTC P2135 THROTTLE/PEDAL POSITION SENSOR/SWITCH “A”/“B” VOLTAGE CORRELATION, Diagnostic Trouble Code (DTC) Detecting Criteria.>

TROUBLE SYMPTOM:

- Improper idling
- Poor driving performance

CAUTION:

After servicing or replacing faulty parts, perform Clear Memory Mode <Ref. to EN(H4DO w/o HEV)(diag)-59, OPERATION, Clear Memory Mode.>, and Inspection Mode <Ref. to EN(H4DO w/o HEV)(diag)-44, PROCEDURE, Inspection Mode.>.

WIRING DIAGRAM:

Engine electrical system <Ref. to WI(w/o HEV)-74, Engine Electrical System.>

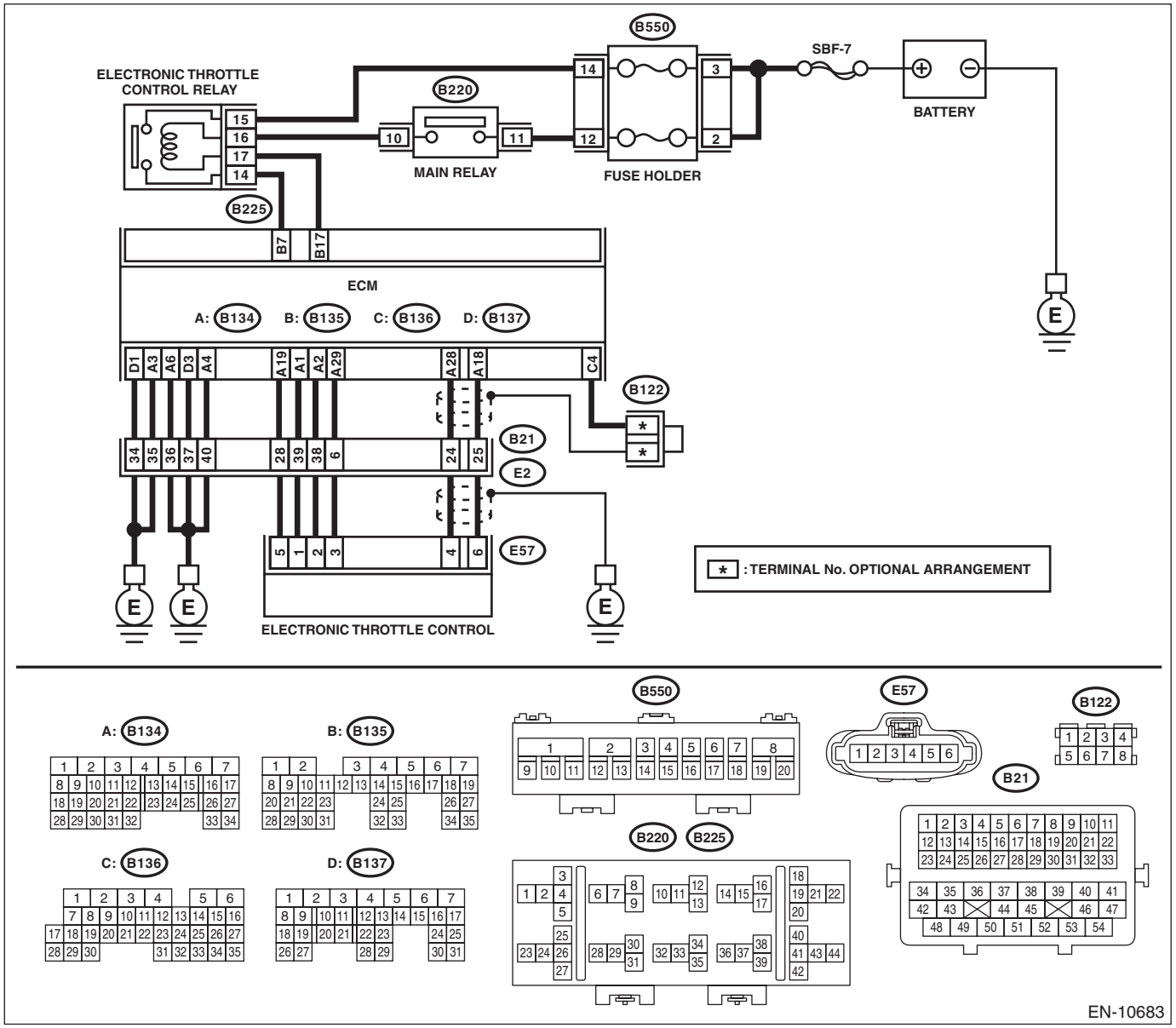

	Step	Check	Yes	No
1	**CHECK HARNESS BETWEEN ECM AND ELECTRONIC THROTTLE CONTROL CONNECTOR.** 1) Turn the ignition switch to OFF. 2) Disconnect the connectors from ECM and electronic throttle control. 3) Measure the resistance between ECM connector and chassis ground. ***Connector & terminal*** ***(B134) No. 19 — Chassis ground:*** ***(B134) No. 18 — Chassis ground:*** ***(B134) No. 18 — (B136) No. 4:*** ***(B134) No. 28 — Chassis ground:*** ***(B134) No. 28 — (B136) No. 4:***	Is the resistance 1 MΩ or more?	Go to step **2**.	Repair the ground short circuit of harness between ECM connector and electronic throttle control connector.
2	**CHECK SHORT CIRCUIT INSIDE THE ECM.** 1) Connect the connector to ECM. 2) Measure the resistance between electronic throttle control connector and engine ground. ***Connector & terminal*** ***(E57) No. 6 — Engine ground:*** ***(E57) No. 4 — Engine ground:***	Is the resistance 1 MΩ or more?	Go to step **3**.	Repair the ground short circuit of harness between ECM connector and electronic throttle control connector. Replace the ECM if defective. <Ref. to FU(H4DO(w/o HEV))-106, Engine Control Module (ECM).>
3	**CHECK HARNESS BETWEEN ECM AND ELECTRONIC THROTTLE CONTROL CONNECTOR.** 1) Disconnect the connector from ECM. 2) Measure the resistance of harness between ECM connector and electronic throttle control connector. ***Connector & terminal*** ***(B134) No. 18 — (E57) No. 6:*** ***(B134) No. 28 — (E57) No. 4:*** ***(B134) No. 29 — (E57) No. 3:***	Is the resistance less than 1 Ω?	Go to step **4**.	Repair the harness and connector. NOTE: In this case, repair the following item: • Open circuit in harness between ECM connector and electronic throttle control connector • Poor contact of coupling connector
4	**CHECK HARNESS BETWEEN ECM AND ELECTRONIC THROTTLE CONTROL CONNECTOR.** 1) Connect the connector to ECM. 2) Measure the resistance between electronic throttle control connector and engine ground. ***Connector & terminal*** ***(E57) No. 3 — Engine ground:***	Is the resistance less than 5 Ω?	Go to step **5**.	Repair the harness and connector. NOTE: In this case, repair the following item: • Open circuit of harness between ECM connector and engine ground • Poor contact of ECM connector • Poor contact of coupling connector

	Step	Check	Yes	No
5	**CHECK HARNESS BETWEEN ECM AND ELECTRONIC THROTTLE CONTROL CONNECTOR.** 1) Turn the ignition switch to ON. 2) Measure the voltage between electronic throttle control connector and engine ground. ***Connector & terminal*** ***(E57) No. 6 (+) — Engine ground (–):*** ***(E57) No. 4 (+) — Engine ground (–):***	Is the voltage 5 V or more?	Repair the short circuit to power in the harness between ECM connector and electronic throttle control connector.	Go to step **6**.
6	**CHECK HARNESS BETWEEN ECM AND ELECTRONIC THROTTLE CONTROL CONNECTOR.** 1) Turn the ignition switch to OFF. 2) Disconnect the connector from ECM. 3) Measure the resistance between ECM connectors. ***Connector & terminal*** ***(B134) No. 19 — (B134) No. 18:*** ***(B134) No. 19 — (B134) No. 28:***	Is the resistance 1 MΩ or more?	Repair the poor contact of electronic throttle control connector. Replace the electronic throttle control if defective. <Ref. to FU(H4DO(w/o HEV))-15, Throttle Body.>	Repair the short circuit to power in the harness between ECM connector and electronic throttle control connector.

EY:DTC P2138 THROTTLE/PEDAL POSITION SENSOR/SWITCH “D”/“E” VOLTAGE CORRELATION

DTC DETECTING CONDITION:

- Immediately at fault recognition
- GENERAL DESCRIPTION <Ref. to GD(H4DO w/o HEV)-254, DTC P2138 THROTTLE/PEDAL POSITION SENSOR/SWITCH “D”/“E” VOLTAGE CORRELATION, Diagnostic Trouble Code (DTC) Detecting Criteria.>

TROUBLE SYMPTOM:

- Improper idling
- Poor driving performance

CAUTION:

After servicing or replacing faulty parts, perform Clear Memory Mode <Ref. to EN(H4DO w/o HEV)(diag)-59, OPERATION, Clear Memory Mode.>, and Inspection Mode <Ref. to EN(H4DO w/o HEV)(diag)-44, PROCEDURE, Inspection Mode.>.

WIRING DIAGRAM:

Engine electrical system <Ref. to WI(w/o HEV)-74, Engine Electrical System.>

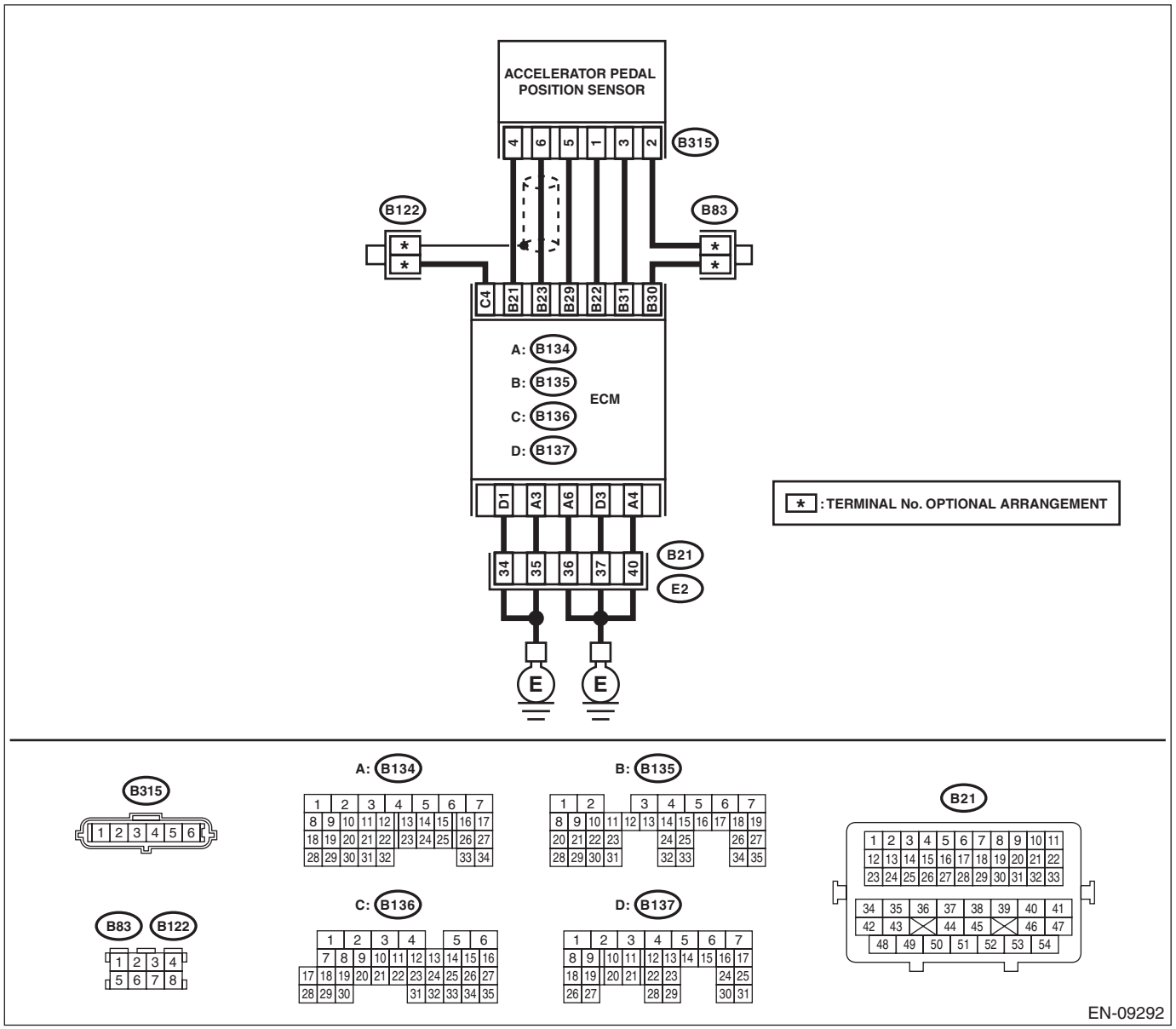

	Step	Check	Yes	No
1	**CHECK ACCELERATOR PEDAL POSITION SENSOR OUTPUT.** 1) Turn the ignition switch to ON. 2) Measure the voltage between ECM connector and chassis ground. ***Connector & terminal*** ***Main accelerator pedal position sensor signal*** ***(B135) No. 23 (+) — Chassis ground (–):*** ***Sub accelerator pedal position sensor signal*** ***(B135) No. 31 (+) — Chassis ground (–):***	Is the difference in measured values for the main accelerator pedal position sensor signal and the sub accelerator pedal position sensor signal 0 V?	Go to step **3**.	Go to step **2**.
2	**CHECK ACCELERATOR PEDAL POSITION SENSOR OUTPUT.** 1) Measure the voltage between accelerator pedal position sensor connector and chassis ground. ***Connector & terminal*** ***(B315) No. 6 (+) — Chassis ground (–):*** ***(B315) No. 3 (+) — Chassis ground (–):***	Is the difference in measured values for the main accelerator pedal position sensor signal and the sub accelerator pedal position sensor signal 0 V?	Replace the accelerator pedal. <Ref. to SP(H4DO(w/o HEV))-4, Accelerator Pedal.>	Repair the harness and connector. NOTE: In this case, repair the following item: • Open circuit of harness between ECM connector and accelerator pedal position sensor connector • Short circuit to ground in harness between ECM connector and accelerator pedal position sensor connector
3	**CHECK HARNESS BETWEEN ECM AND ACCELERATOR PEDAL POSITION SENSOR CONNECTOR.** Measure the resistance of harness between accelerator pedal position sensor connector and chassis ground. ***Connector & terminal*** ***(B315) No. 5 — Chassis ground:*** ***(B315) No. 2 — Chassis ground:***	Is the resistance less than 5 Ω?	Repair the poor contact of ECM connector.	Repair the harness and connector. NOTE: In this case, repair the following item: • Open circuit of harness between ECM connector and accelerator pedal position sensor connector • Open circuit of harness between ECM connector and engine ground • Poor contact of ECM connector • Poor contact of joint connector

EZ:DTC P2195 O2 SENSOR SIGNAL BIASED/STUCK LEAN (BANK 1 SENSOR 1)

DTC DETECTING CONDITION:

- Detected when two consecutive driving cycles with fault occur.
- GENERAL DESCRIPTION <Ref. to GD(H4DO w/o HEV)-256, DTC P2195 O2 SENSOR SIGNAL BIASED/STUCK LEAN (BANK 1 SENSOR 1), Diagnostic Trouble Code (DTC) Detecting Criteria.>

CAUTION:
After servicing or replacing faulty parts, perform Clear Memory Mode <Ref. to EN(H4DO w/o HEV)(diag)-59, OPERATION, Clear Memory Mode.>, and Inspection Mode <Ref. to EN(H4DO w/o HEV)(diag)-44, PROCEDURE, Inspection Mode.>.

WIRING DIAGRAM:

Engine electrical system <Ref. to WI(w/o HEV)-74, Engine Electrical System.>

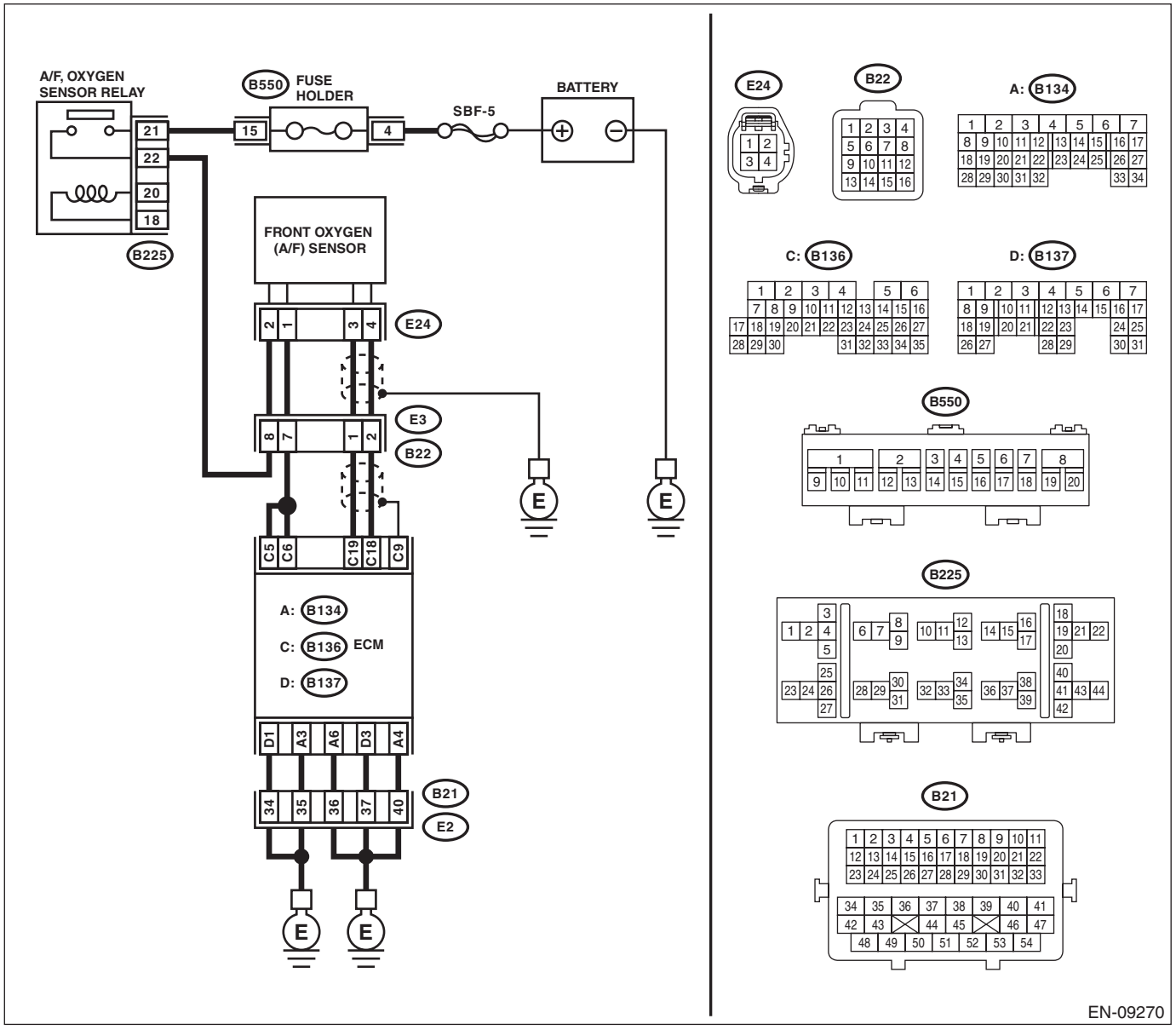

Step		Check	Yes	No
1	**CHECK FRONT OXYGEN (A/F) SENSOR CONNECTOR AND COUPLING CONNECTOR.**	Has water entered the connector?	Completely remove any water inside.	Go to step **2**.

	Step	Check	Yes	No
2	**CHECK HARNESS BETWEEN ECM AND FRONT OXYGEN (A/F) SENSOR CONNECTOR.** 1) Turn the ignition switch to OFF. 2) Disconnect the connectors from ECM and front oxygen (A/F) sensor. 3) Measure the resistance of harness between ECM connector and front oxygen (A/F) sensor connector. ***Connector & terminal*** ***(B136) No. 19 — (E24) No. 3:*** ***(B136) No. 18 — (E24) No. 4:***	Is the resistance less than 1 Ω?	Go to step **3**.	Repair the harness and connector. NOTE: In this case, repair the following item: • Open circuit in harness between ECM connector and front oxygen (A/F) sensor connector • Poor contact of coupling connector
3	**CHECK FOR POOR CONTACT.** Check for poor contact of the front oxygen (A/F) sensor connector.	Is there poor contact of front oxygen (A/F) sensor connector?	Repair the poor contact of front oxygen (A/F) sensor connector.	Replace the front oxygen (A/F) sensor. <Ref. to FU(H4DO(w/o HEV))-97, Front Oxygen (A/F) Sensor.>

FA:DTC P2196 O2 SENSOR SIGNAL BIASED/STUCK RICH (BANK 1 SENSOR 1)

DTC DETECTING CONDITION:

- Detected when two consecutive driving cycles with fault occur.
- GENERAL DESCRIPTION <Ref. to GD(H4DO w/o HEV)-258, DTC P2196 O2 SENSOR SIGNAL BIASED/STUCK RICH (BANK 1 SENSOR 1), Diagnostic Trouble Code (DTC) Detecting Criteria.>

CAUTION:

After servicing or replacing faulty parts, perform Clear Memory Mode <Ref. to EN(H4DO w/o HEV)(diag)-59, OPERATION, Clear Memory Mode.>, and Inspection Mode <Ref. to EN(H4DO w/o HEV)(diag)-44, PROCEDURE, Inspection Mode.>.

WIRING DIAGRAM:

Engine electrical system <Ref. to WI(w/o HEV)-74, Engine Electrical System.>

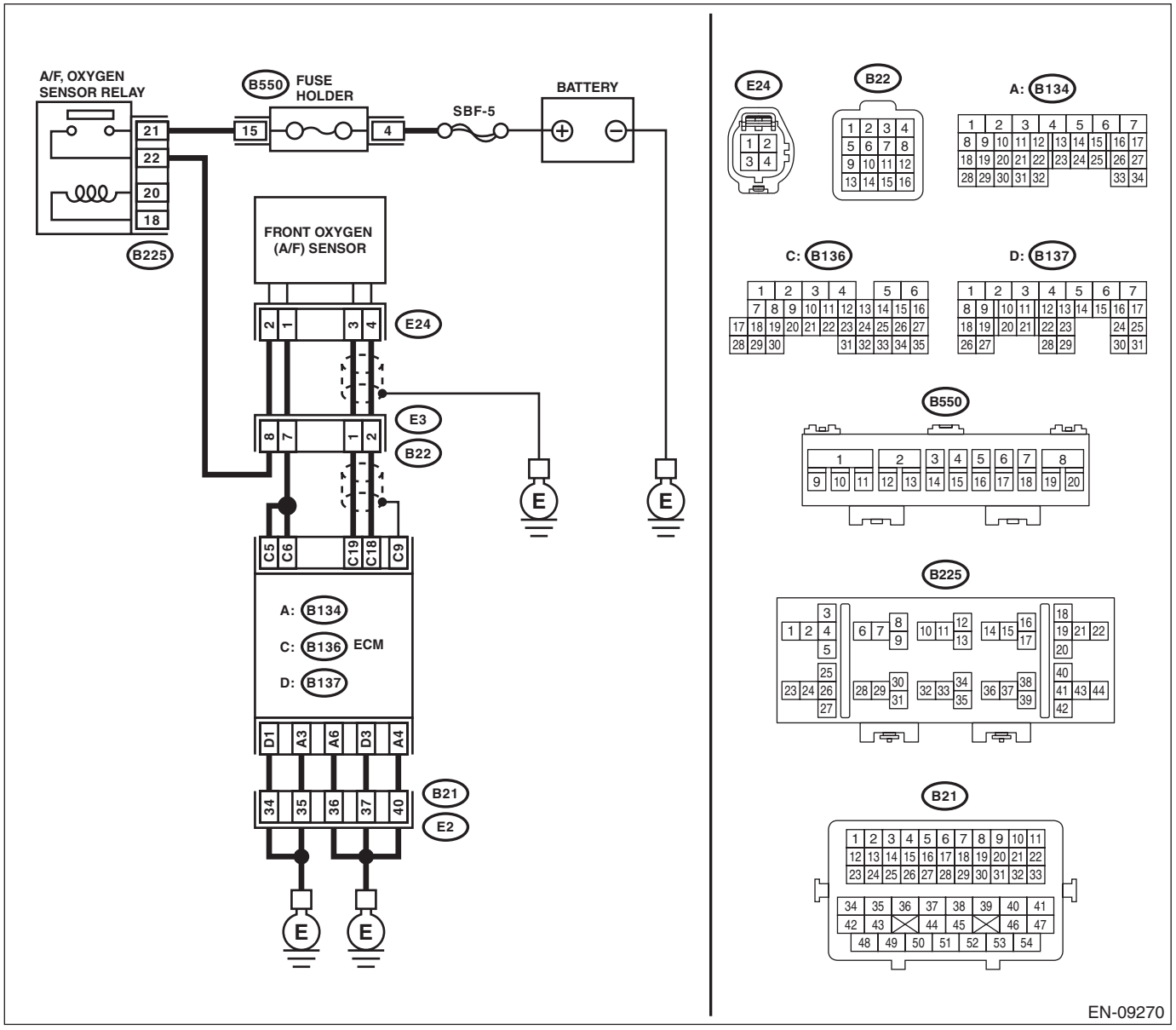

Step		Check	Yes	No
1	**CHECK FRONT OXYGEN (A/F) SENSOR CONNECTOR AND COUPLING CONNECTOR.**	Has water entered the connector?	Completely remove any water inside.	Go to step **2**.

	Step	Check	Yes	No
2	**CHECK HARNESS BETWEEN ECM AND FRONT OXYGEN (A/F) SENSOR CONNECTOR.** 1) Turn the ignition switch to OFF. 2) Disconnect the connector from ECM. 3) Measure the resistance between ECM connector and chassis ground. ***Connector & terminal*** ***(B136) No. 19 — Chassis ground:*** ***(B136) No. 18 — Chassis ground:***	Is the resistance 1 MΩ or more?	Go to step **3**.	Repair the short circuit to ground in harness between ECM connector and front oxygen (A/F) sensor connector.
3	**CHECK OUTPUT SIGNAL FOR ECM.** 1) Connect the connector to ECM. 2) Turn the ignition switch to ON. 3) Measure the voltage between ECM connector and chassis ground. ***Connector & terminal*** ***(B136) No. 19 (+) — Chassis ground (–):***	Is the voltage 4.5 V or more?	Go to step **5**.	Go to step **4**.
4	**CHECK OUTPUT SIGNAL FOR ECM.** Measure the voltage between ECM connector and chassis ground. ***Connector & terminal*** ***(B136) No. 18 (+) — Chassis ground (–):***	Is the voltage 4.95 V or more?	Go to step **5**.	Replace the front oxygen (A/F) sensor. <Ref. to FU(H4DO(w/o HEV))-97, Front Oxygen (A/F) Sensor.>
5	**CHECK OUTPUT SIGNAL FOR ECM.** Measure the voltage between ECM connector and chassis ground. ***Connector & terminal*** ***(B136) No. 19 (+) — Chassis ground (–):*** ***(B136) No. 18 (+) — Chassis ground (–):***	Is the voltage 8 V or more?	Repair the short circuit to power in the harness between ECM connector and front oxygen (A/F) sensor connector. After repair, replace the ECM. <Ref. to FU(H4DO(w/o HEV))-106, Engine Control Module (ECM).>	Repair the poor contact of ECM connector.

FB:DTC P219A BANK 1 AIR-FUEL RATIO IMBALANCE

DTC DETECTING CONDITION:

- Detected when two consecutive driving cycles with fault occur.
- GENERAL DESCRIPTION <Ref. to GD(H4DO w/o HEV)-260, DTC P219A BANK 1 AIR-FUEL RATIO IMBALANCE, Diagnostic Trouble Code (DTC) Detecting Criteria.>

TROUBLE SYMPTOM:

- Engine stalls.
- Improper idling

CAUTION:

After servicing or replacing faulty parts, perform Clear Memory Mode <Ref. to EN(H4DO w/o HEV)(diag)-59, OPERATION, Clear Memory Mode.>, and Inspection Mode <Ref. to EN(H4DO w/o HEV)(diag)-44, PROCEDURE, Inspection Mode.>.

WIRING DIAGRAM:

Engine electrical system <Ref. to WI(w/o HEV)-74, Engine Electrical System.>

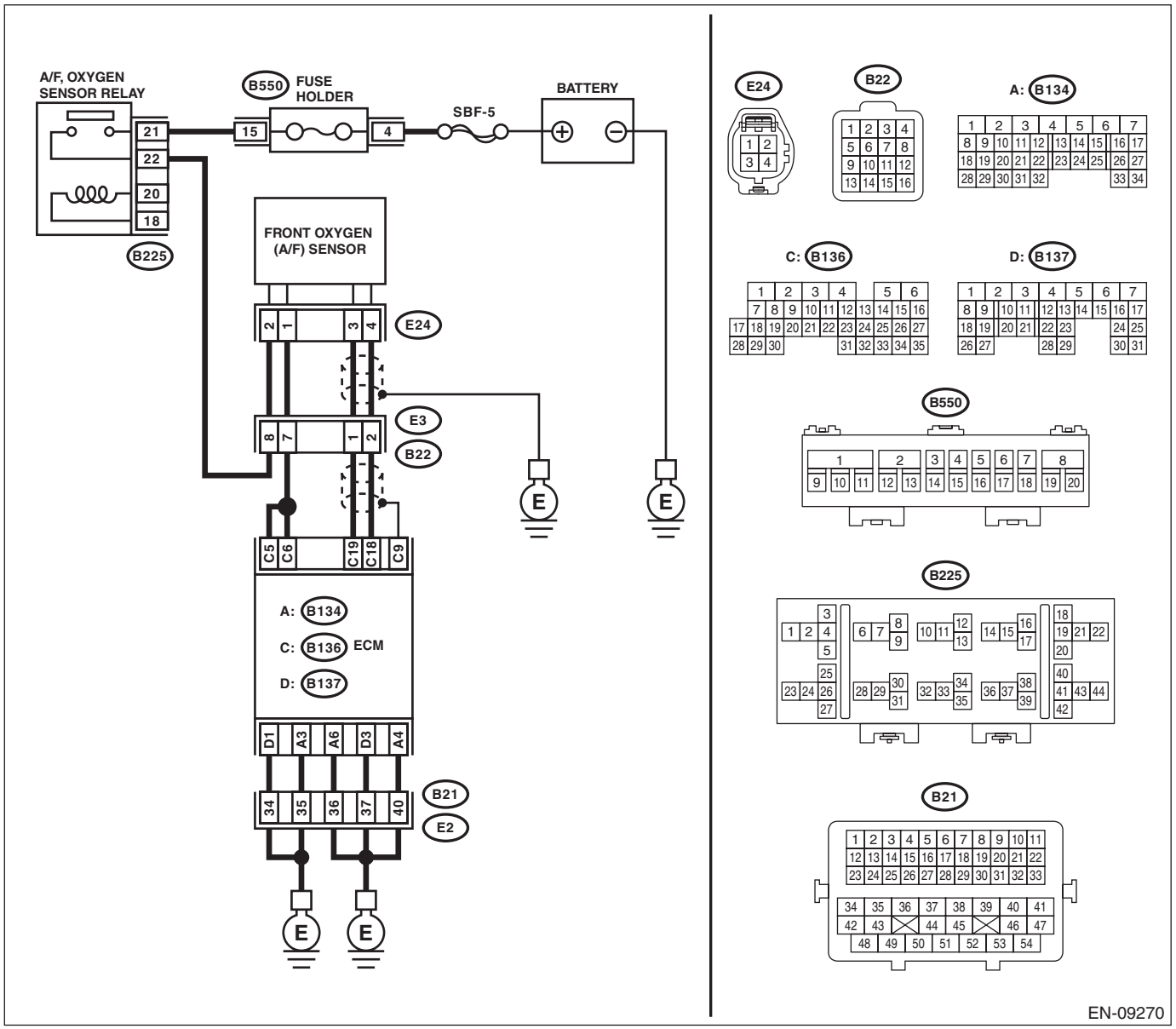

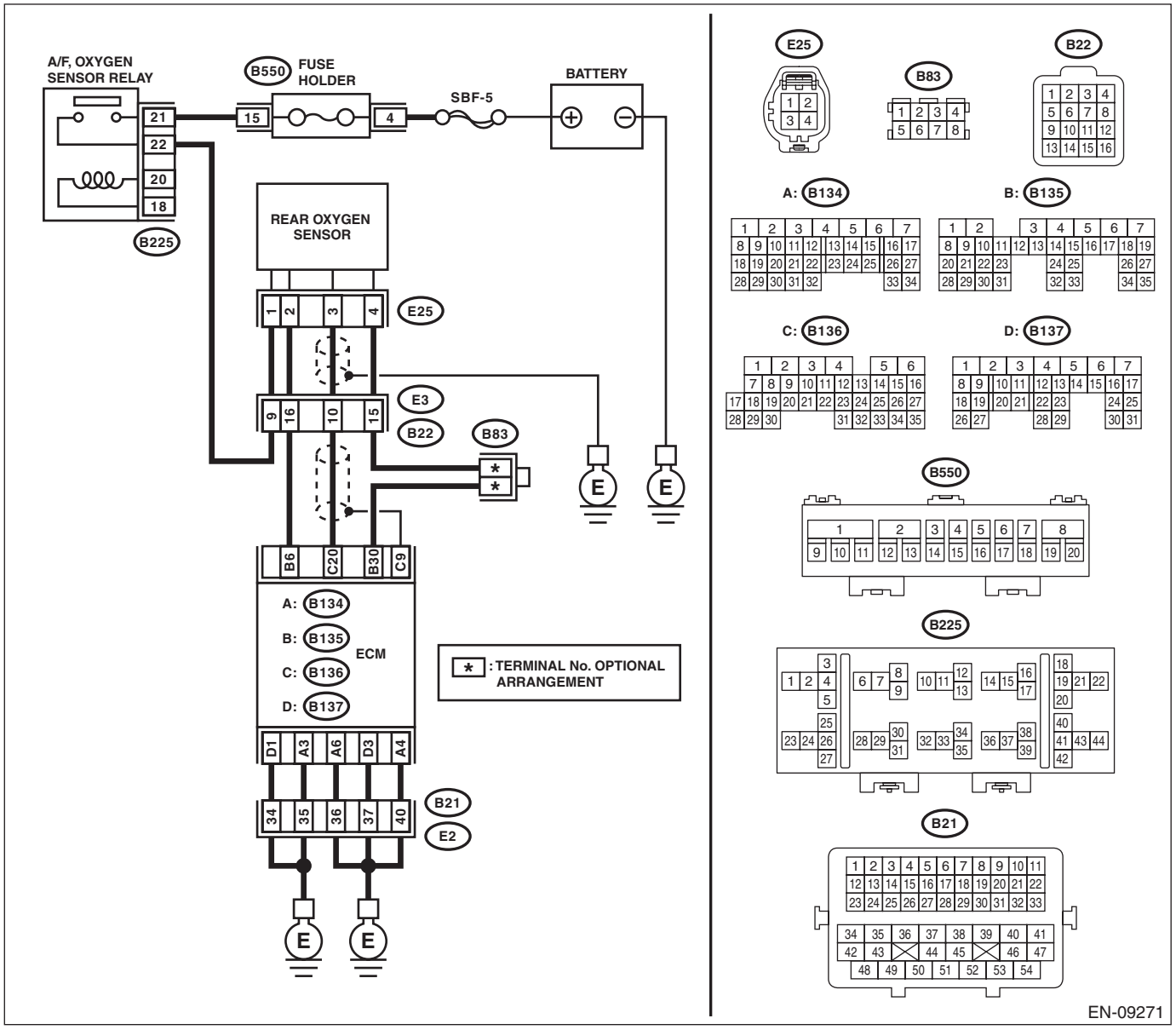
A/F, OXYGEN SENSOR RELAY
B550 FUSE HOLDER
BATTERY
SBF-5
21
22
20
18
15
4
B225
REAR OXYGEN SENSOR
1 2 3 4
E25
9 16 10 15
E3
B22
B83
B6 C20 B30 C9
A: B134
B: B135
C: B136
D: B137
ECM
D1 A3 A6 D3 A4
34 35 36 37 40
B21
E2
E
E
E
E
* : TERMINAL No. OPTIONAL ARRANGEMENT
E25
B83
B22
A: B134
B: B135
C: B136
D: B137
B550
B225
B21
EN-09271

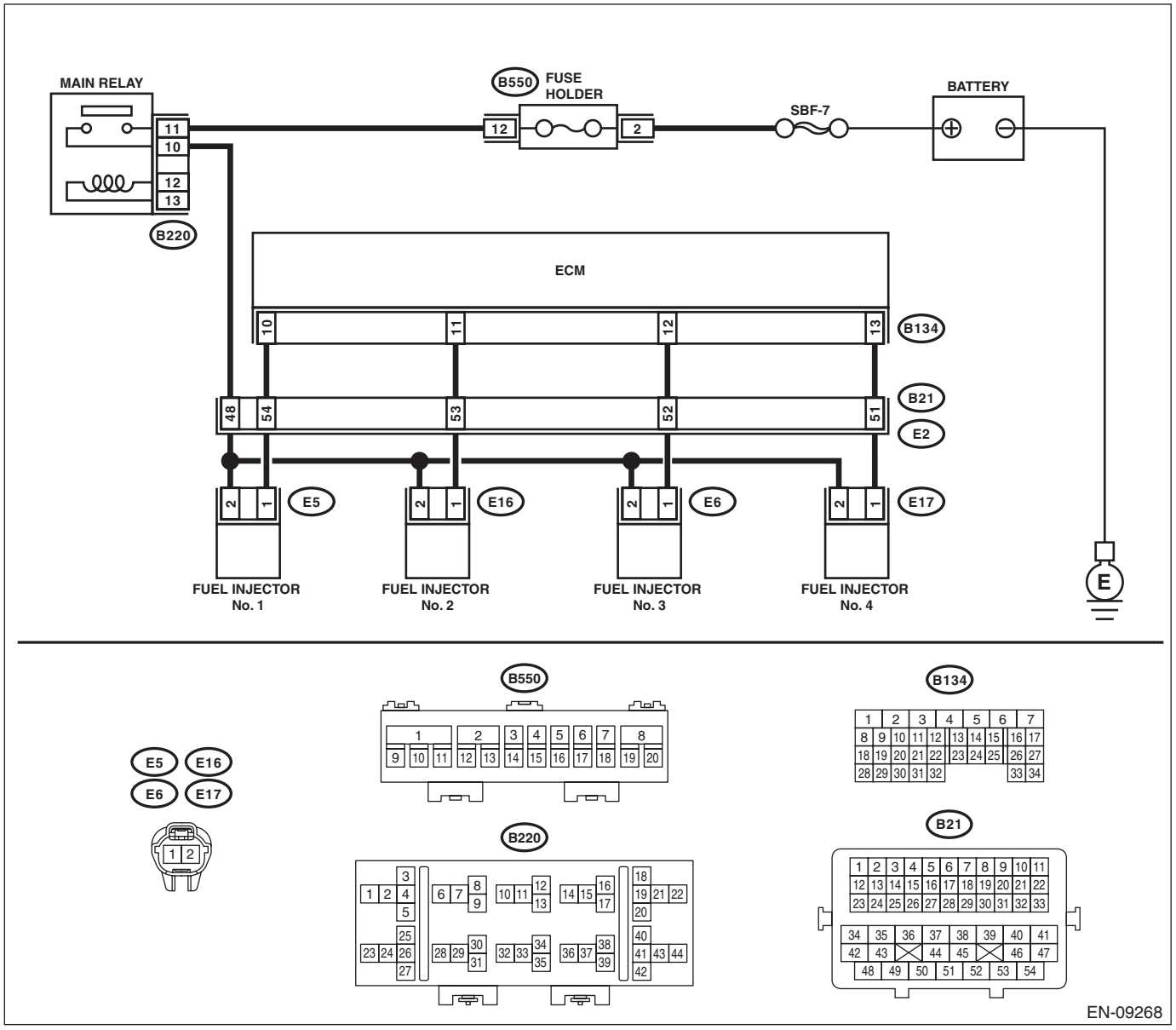

Step		Check	Yes	No
1	**CHECK FRONT OXYGEN (A/F) SENSOR CONNECTOR AND COUPLING CONNECTOR.**	Has water entered the connector?	Completely remove any water inside.	Go to step **2**.
2	**CHECK HARNESS BETWEEN ECM AND FRONT OXYGEN (A/F) SENSOR CONNECTOR.** 1) Turn the ignition switch to OFF. 2) Disconnect the connectors from ECM and front oxygen (A/F) sensor. 3) Measure the resistance of harness between ECM connector and front oxygen (A/F) sensor connector. ***Connector & terminal*** ***(B136) No. 19 — (E24) No. 3:*** ***(B136) No. 18 — (E24) No. 4:***	Is the resistance less than 1 Ω?	Go to step **3**.	Repair the harness and connector. NOTE: In this case, repair the following item: • Open circuit in harness between ECM connector and front oxygen (A/F) sensor connector • Poor contact of coupling connector

	Step	Check	Yes	No
3	**CHECK HARNESS BETWEEN ECM AND FRONT OXYGEN (A/F) SENSOR CONNECTOR.** Measure the resistance between ECM connector and chassis ground. ***Connector & terminal*** ***(B136) No. 19 — Chassis ground:*** ***(B136) No. 18 — Chassis ground:***	Is the resistance 1 MΩ or more?	Go to step **4**.	Repair the short circuit to ground in harness between ECM connector and front oxygen (A/F) sensor connector.
4	**CHECK OUTPUT SIGNAL FOR ECM.** 1) Connect the connector to ECM. 2) Turn the ignition switch to ON. 3) Measure the voltage between front oxygen (A/F) sensor connector and chassis ground. ***Connector & terminal*** ***(E24) No. 3 (+) — Chassis ground (–):***	Is the voltage 4.5 V or more?	Go to step **6**.	Go to step **5**.
5	**CHECK OUTPUT SIGNAL FOR ECM.** Measure the voltage between front oxygen (A/F) sensor connector and chassis ground. ***Connector & terminal*** ***(E24) No. 4 (+) — Chassis ground (–):***	Is the voltage 4.95 V or more?	Go to step **6**.	Go to step **7**.
6	**CHECK OUTPUT SIGNAL FOR ECM.** Measure the voltage between front oxygen (A/F) sensor connector and chassis ground. ***Connector & terminal*** ***(E24) No. 3 (+) — Chassis ground (–):*** ***(E24) No. 4 (+) — Chassis ground (–):***	Is the voltage 8 V or more?	Repair the short circuit to power in the harness between ECM connector and front oxygen (A/F) sensor connector. After repair, replace the ECM. <Ref. to FU(H4DO(w/o HEV))-106, Engine Control Module (ECM).>	Repair the poor contact of ECM connector.
7	**CHECK EXHAUST SYSTEM.**	Are there holes or loose bolts on exhaust system?	Repair the exhaust system.	Go to step **8**.
8	**CHECK AIR INTAKE SYSTEM.**	Are there holes, loose bolts or disconnection of hose on air intake system?	Repair the air intake system.	Go to step **9**.
9	**CHECK FUEL PRESSURE.** **WARNING:** **Place "NO OPEN FLAMES" signs near the working area.** **CAUTION:** **Be careful not to spill fuel.** 1) Connect the front oxygen (A/F) sensor connector. 2) Measure the fuel pressure. <Ref. to ME(H4DO(w/o HEV))-35, INSPECTION, Fuel Pressure.> **CAUTION:** **Release fuel pressure before removing the fuel pressure gauge.**	Is the measured value 340 — 400 kPa (3.5 — 4.1 kg/cm^2, 49 — 58 psi)?	Go to step **10**.	Check the fuel pump and fuel delivery line. <Ref. to FU(H4DO(w/o HEV))-145, INSPECTION, Fuel Pump.> <Ref. to FU(H4DO(w/o HEV))-165, INSPECTION, Fuel Delivery and Evaporation Lines.>

	Step	Check	Yes	No
10	**CHECK ENGINE COOLANT TEMPERATURE SENSOR.** 1) Start the engine and warm up completely. 2) Read the value of «Coolant Temp.» using the Subaru Select Monitor or a general scan tool. NOTE: • Subaru Select Monitor For detailed operation procedures, refer to “READ CURRENT DATA FOR ENGINE”. <Ref. to EN(H4DO w/o HEV)(diag)-36, Subaru Select Monitor.> • General scan tool For detailed operation procedures, refer to the general scan tool operation manual.	Is the value of «Coolant Temp.» 75°C (167°F) or more?	Go to step **11**.	Replace the engine coolant temperature sensor. <Ref. to FU(H4DO(w/o HEV))-53, Engine Coolant Temperature Sensor.>
11	**CHECK MASS AIR FLOW AND INTAKE AIR TEMPERATURE SENSOR.** 1) Start the engine and warm up engine until coolant temperature is higher than 75°C (167°F). 2) For AT models, set the select lever to “P” range or “N” range, and for MT models, place the shift lever in the neutral position. 3) Turn the A/C switch to OFF. 4) Turn all the accessory switches to OFF. 5) Read the value of «Mass Air Flow» using the Subaru Select Monitor or a general scan tool. NOTE: • Subaru Select Monitor For detailed operation procedures, refer to “READ CURRENT DATA FOR ENGINE”. <Ref. to EN(H4DO w/o HEV)(diag)-36, Subaru Select Monitor.> • General scan tool For detailed operation procedures, refer to the general scan tool operation manual.	Is the value of «Mass Air Flow» 2.0 — 5.0 g/s (0.26 — 0.66 lb/m)?	Go to step **12**.	Replace the mass air flow and intake air temperature sensor. <Ref. to FU(H4DO(w/o HEV))-78, Mass Air Flow and Intake Air Temperature Sensor.>

	Step	Check	Yes	No
12	**CHECK MASS AIR FLOW AND INTAKE AIR TEMPERATURE SENSOR.** 1) Start the engine and warm up engine until coolant temperature is higher than 75°C (167°F). 2) For AT models, set the select lever to "P" range or "N" range, and for MT models, place the shift lever in the neutral position. 3) Turn the A/C switch to OFF. 4) Turn all the accessory switches to OFF. 5) Open the front hood. 6) Measure the ambient temperature. 7) Read the value of «Intake Air Temp.» using the Subaru Select Monitor or a general scan tool. NOTE: • Subaru Select Monitor For detailed operation procedures, refer to "READ CURRENT DATA FOR ENGINE". <Ref. to EN(H4DO w/o HEV)(diag)-36, Subaru Select Monitor.> • General scan tool For detailed operation procedures, refer to the general scan tool operation manual.	Subtract ambient temperature from «Intake Air Temp.». Is the obtained value –10 — 50°C (–18 — 90°F)?	Go to step **13**.	Check the mass air flow and intake air temperature sensor. <Ref. to FU(H4DO(w/o HEV))-78, Mass Air Flow and Intake Air Temperature Sensor.>
13	**CHECK REAR OXYGEN SENSOR DATA.** 1) Warm up the engine until engine coolant temperature is higher than 75°C (167°F), and keep the engine speed at 3,000 rpm. (2 minutes maximum) 2) Read the value of «Rear O2 Sensor» using the Subaru Select Monitor or a general scan tool. NOTE: • Depress the clutch pedal (MT model) • Subaru Select Monitor For detailed operation procedures, refer to "READ CURRENT DATA FOR ENGINE". <Ref. to EN(H4DO w/o HEV)(diag)-36, Subaru Select Monitor.> • General scan tool For detailed operation procedures, refer to the general scan tool operation manual.	Is the value of «Rear O2 Sensor» 0.490 V or more?	Go to step **14**.	Go to step **15**.
14	**CHECK REAR OXYGEN SENSOR DATA.** 1) Warm up the engine until engine coolant temperature is higher than 75°C (167°F), and rapidly reduce the engine speed from 3,000 rpm. 2) Read the value of «Rear O2 Sensor» using the Subaru Select Monitor or a general scan tool. NOTE: • Depress the clutch pedal (MT model) • Subaru Select Monitor For detailed operation procedures, refer to "READ CURRENT DATA FOR ENGINE". <Ref. to EN(H4DO w/o HEV)(diag)-36, Subaru Select Monitor.> • General scan tool For detailed operation procedures, refer to the general scan tool operation manual.	Is the value of «Rear O2 Sensor» 0.250 V or less?	Go to step **16**.	Go to step **15**.

	Step	Check	Yes	No
15	**CHECK REAR OXYGEN SENSOR CONNECTOR AND COUPLING CONNECTOR.**	Has water entered the connector?	Completely remove any water inside.	Go to step **17**.
16	**CHECK FRONT OXYGEN (A/F) SENSOR USING REAR OXYGEN SENSOR SIGNAL.** 1) Warm up the engine until engine coolant temperature is higher than 75°C (167°F), then keep the engine idling for 5 minutes or more. 2) Read the value of «Rear O2 Sensor» using the Subaru Select Monitor or a general scan tool. NOTE: • Subaru Select Monitor For detailed operation procedures, refer to "READ CURRENT DATA FOR ENGINE". <Ref. to EN(H4DO w/o HEV)(diag)-36, Subaru Select Monitor.> • General scan tool For detailed operation procedures, refer to the general scan tool operation manual.	Is the value in «Rear O2 Sensor» kept at 0.250 V or less for 5 minutes or more?	Replace the front oxygen (A/F) sensor. <Ref. to FU(H4DO(w/o HEV))-97, Front Oxygen (A/F) Sensor.>	Go to step **17**.
17	**CHECK HARNESS BETWEEN ECM AND REAR OXYGEN SENSOR CONNECTOR.** 1) Turn the ignition switch to OFF. 2) Disconnect the connector from ECM and rear oxygen sensor. 3) Measure the resistance of harness between ECM connector and rear oxygen sensor connector. ***Connector & terminal*** ***(B136) No. 20 — (E25) No. 3:*** ***(B135) No. 30 — (E25) No. 4:***	Is the resistance less than 1 Ω?	Go to step **18**.	Repair the harness and connector. NOTE: In this case, repair the following item: • Open circuit in harness between ECM connector and rear oxygen sensor connector • Poor contact of coupling connector
18	**CHECK HARNESS BETWEEN ECM AND REAR OXYGEN SENSOR CONNECTOR.** 1) Connect the connector to ECM. 2) Turn the ignition switch to ON. 3) Measure the voltage between rear oxygen sensor connector and chassis ground. ***Connector & terminal*** ***(E25) No. 3 (+) — Chassis ground (–):***	Is the voltage 0.2 — 0.5 V?	Replace the rear oxygen sensor. <Ref. to FU(H4DO(w/o HEV))-97, Front Oxygen (A/F) Sensor.>	Go to step **19**.
19	**CHECK OUTPUT SIGNAL OF ECM.** 1) Turn the ignition switch to ON. 2) Measure the voltage between ECM and chassis ground on faulty cylinders. ***Connector & terminal*** ***#1 (B134) No. 10 (+) — Chassis ground (–):*** ***#2 (B134) No. 11 (+) — Chassis ground (–):*** ***#3 (B134) No. 12 (+) — Chassis ground (–):*** ***#4 (B134) No. 13 (+) — Chassis ground (–):***	Is the voltage 10 V or more?	Go to step **24**.	Go to step **20**.

	Step	Check	Yes	No
20	**CHECK HARNESS BETWEEN ECM AND FUEL INJECTOR CONNECTOR.** 1) Turn the ignition switch to OFF. 2) Disconnect the connector from fuel injector on faulty cylinders. 3) Measure the resistance between fuel injector connector and engine ground on faulty cylinders. ***Connector & terminal*** ***#1 (E5) No. 1 — Engine ground:*** ***#2 (E16) No. 1 — Engine ground:*** ***#3 (E6) No. 1 — Engine ground:*** ***#4 (E17) No. 1 — Engine ground:***	Is the resistance 1 MΩ or more?	Go to step **21**.	Repair the short circuit to ground in harness between ECM connector and fuel injector connector.
21	**CHECK HARNESS BETWEEN ECM AND FUEL INJECTOR CONNECTOR.** Measure the resistance of harness between ECM and fuel injector connector on faulty cylinders. ***Connector & terminal*** ***#1 (B134) No. 10 — (E5) No. 1:*** ***#2 (B134) No. 11 — (E16) No. 1:*** ***#3 (B134) No. 12 — (E6) No. 1:*** ***#4 (B134) No. 13 — (E17) No. 1:***	Is the resistance less than 1 Ω?	Go to step **22**.	Repair the harness and connector. NOTE: In this case, repair the following item: • Open circuit in harness between ECM connector and fuel injector connector • Poor contact of coupling connector
22	**CHECK FUEL INJECTOR.** Measure the resistance between fuel injector terminals on faulty cylinder. ***Terminals*** ***No. 1 — No. 2:***	Is the resistance 5 — 20 Ω?	Go to step **23**.	Replace the faulty fuel injector. <Ref. to FU(H4DO(w/o HEV))-84, Fuel Injector.>
23	**CHECK POWER SUPPLY LINE.** 1) Turn the ignition switch to ON. 2) Measure the voltage between fuel injector connector of faulty cylinders and engine ground. ***Connector & terminal*** ***#1 (E5) No. 2 (+) — Engine ground (–):*** ***#2 (E16) No. 2 (+) — Engine ground (–):*** ***#3 (E6) No. 2 (+) — Engine ground (–):*** ***#4 (E17) No. 2 (+) — Engine ground (–):***	Is the voltage 10 V or more?	Repair the poor contact of all connectors in fuel injector circuit.	Repair the harness and connector. NOTE: In this case, repair the following item: • Open circuit in harness between the main relay and fuel injector connector on faulty cylinders • Poor contact of coupling connector • Poor contact of main relay connector
24	**CHECK HARNESS BETWEEN ECM AND FUEL INJECTOR CONNECTOR.** 1) Turn the ignition switch to OFF. 2) Disconnect the connector from fuel injector on faulty cylinders. 3) Turn the ignition switch to ON. 4) Measure the voltage between ECM and chassis ground on faulty cylinders. ***Connector & terminal*** ***#1 (B134) No. 10 (+) — Chassis ground (–):*** ***#2 (B134) No. 11 (+) — Chassis ground (–):*** ***#3 (B134) No. 12 (+) — Chassis ground (–):*** ***#4 (B134) No. 13 (+) — Chassis ground (–):***	Is the voltage 10 V or more?	Repair the short circuit to power in harness between ECM connector and fuel injector connectors.	Go to step **25**.

	Step	Check	Yes	No
25	**CHECK FUEL INJECTOR.** 1) Turn the ignition switch to OFF. 2) Measure the resistance between fuel injector terminals on faulty cylinder. ***Terminals*** ***No. 1 — No. 2:***	Is the resistance 5 — 20 Ω?	Go to step **26**.	Replace the faulty fuel injector. <Ref. to FU(H4DO(w/o HEV))-84, Fuel Injector.>
26	**CHECK INSTALLATION CONDITION OF CAMSHAFT POSITION SENSOR/CRANKSHAFT POSITION SENSOR.**	Is the camshaft position sensor or crankshaft position sensor loosely installed?	Tighten the camshaft position sensor or crankshaft position sensor. <Ref. to FU(H4DO(w/o HEV))-65, INSTALLATION, Camshaft Position Sensor.> <Ref. to FU(H4DO(w/o HEV))-59, INSTALLATION, Crankshaft Position Sensor.>	Go to step **27**.
27	**CHECK CRANKSHAFT POSITION SENSOR PLATE.**	Is the crankshaft position sensor plate rusted or does it have broken teeth?	Replace the crankshaft position sensor plate. <Ref. to ME(H4DO(w/o HEV))-299, Cylinder Block.>	Go to step **28**.
28	**CHECK INSTALLATION CONDITION OF TIMING CHAIN.** Turn the crankshaft using ST, and align the alignment mark on crank sprocket with alignment mark on cylinder block. ST 18252AA000 CRANKSHAFT SOCKET	Is the timing chain dislocated from its proper position?	Correct the installation condition of timing chain. <Ref. to ME(H4DO(w/o HEV))-163, Timing Chain Assembly.>	Go to step **29**.
29	**CHECK FUEL LEVEL.**	Is the fuel meter indication higher than the “Lower” level?	Go to step **30**.	Refill the fuel so that the fuel meter indication is higher than the “Lower” level, and proceed to the next step. Go to step **30**.
30	**CHECK STATUS OF MALFUNCTION INDICATOR LIGHT.** 1) Clear the memory using the Subaru Select Monitor or general scan tool. <Ref. to EN(H4DO w/o HEV)(diag)-59, Clear Memory Mode.> 2) Start the engine, and drive the vehicle 10 minutes or more.	Does the malfunction indicator light illuminate or blink?	Go to step **32**.	Go to step **31**.

	Step	Check	Yes	No
31	**CHECK CAUSE OF MISFIRE.**	Was the cause of misfire identified when the engine is running?	Finish diagnostics operation, if the engine has no abnormality.	Repair the poor contact of connector. NOTE: In this case, repair the following item: • Poor contact of ignition coil connector • Poor contact of fuel injector connector on faulty cylinders • Poor contact of ECM connector • Poor contact of coupling connector
32	**CHECK AIR INTAKE SYSTEM.**	Is there any fault in air intake system?	Repair the air intake system. NOTE: Check the following items. • Are there air leaks or air suction caused by loose or dislocated nuts and bolts? • Are there cracks or any disconnection of hoses?	Go to step **33**.
33	**CHECK MISFIRE SYMPTOM.** 1) Turn the ignition switch to ON. 2) Check for DTC. <Ref. to EN(H4DO w/o HEV)(diag)-43, Read Diagnostic Trouble Code (DTC).>	Does the Subaru Select Monitor or general scan tool indicate only one DTC?	Go to step **36**.	Go to step **34**.
34	**CHECK DTC.**	Is DTC P0301 and P0303 displayed on the Subaru Select Monitor or general scan tool?	Go to step **37**.	Go to step **35**.
35	**CHECK DTC.**	Is DTC P0302 and P0304 displayed on the Subaru Select Monitor or general scan tool?	Go to step **38**.	Go to step **39**.
36	**ONLY ONE CYLINDER.**	Is there any fault in the cylinder?	Repair or replace faulty parts. NOTE: Check the following items. • Spark plug • Ignition coil • Fuel injector • Compression ratio	Go to DTC P0171. <Ref. to EN(H4DO w/o HEV)(diag)-157, DTC P0171 SYSTEM TOO LEAN (BANK 1), Diagnostic Procedure with Diagnostic Trouble Code (DTC).>

Step		Check	Yes	No
37	GROUP OF #1 AND #3 CYLINDERS.	Are there any faults in #1 and #3 cylinders?	Repair or replace faulty parts. NOTE: Check the following items. • Spark plug • Ignition coil • Fuel injector • Compression ratio • Skipping timing belt teeth	Go to DTC P0171. <Ref. to EN(H4DO w/o HEV)(diag)-157, DTC P0171 SYSTEM TOO LEAN (BANK 1), Diagnostic Procedure with Diagnostic Trouble Code (DTC).>
38	GROUP OF #2 AND #4 CYLINDERS.	Are there any faults in #2 and #4 cylinders?	Repair or replace faulty parts. NOTE: Check the following items. • Spark plug • Ignition coil • Fuel injector • Compression ratio • Skipping timing belt teeth	Go to DTC P0171. <Ref. to EN(H4DO w/o HEV)(diag)-157, DTC P0171 SYSTEM TOO LEAN (BANK 1), Diagnostic Procedure with Diagnostic Trouble Code (DTC).>
39	CYLINDER AT RANDOM.	Is the engine idle rough?	Go to DTC P0171. <Ref. to EN(H4DO w/o HEV)(diag)-157, DTC P0171 SYSTEM TOO LEAN (BANK 1), Diagnostic Procedure with Diagnostic Trouble Code (DTC).>	Repair or replace faulty parts. NOTE: Check the following items. • Spark plug • Ignition coil • Fuel injector • Compression ratio

FC:DTC P2401 EVAPORATIVE EMISSION SYSTEM LEAK DETECTION PUMP CONTROL CIRCUIT LOW

DTC DETECTING CONDITION:

- Immediately at fault recognition
- GENERAL DESCRIPTION <Ref. to GD(H4DO w/o HEV)-266, DTC P2401 EVAPORATIVE EMISSION SYSTEM LEAK DETECTION PUMP CONTROL CIRCUIT LOW, Diagnostic Trouble Code (DTC) Detecting Criteria.>

CAUTION:

After servicing or replacing faulty parts, perform Clear Memory Mode <Ref. to EN(H4DO w/o HEV)(diag)-59, OPERATION, Clear Memory Mode.>, and Inspection Mode <Ref. to EN(H4DO w/o HEV)(diag)-44, PROCEDURE, Inspection Mode.>.

WIRING DIAGRAM:

Engine electrical system <Ref. to WI(w/o HEV)-74, Engine Electrical System.>

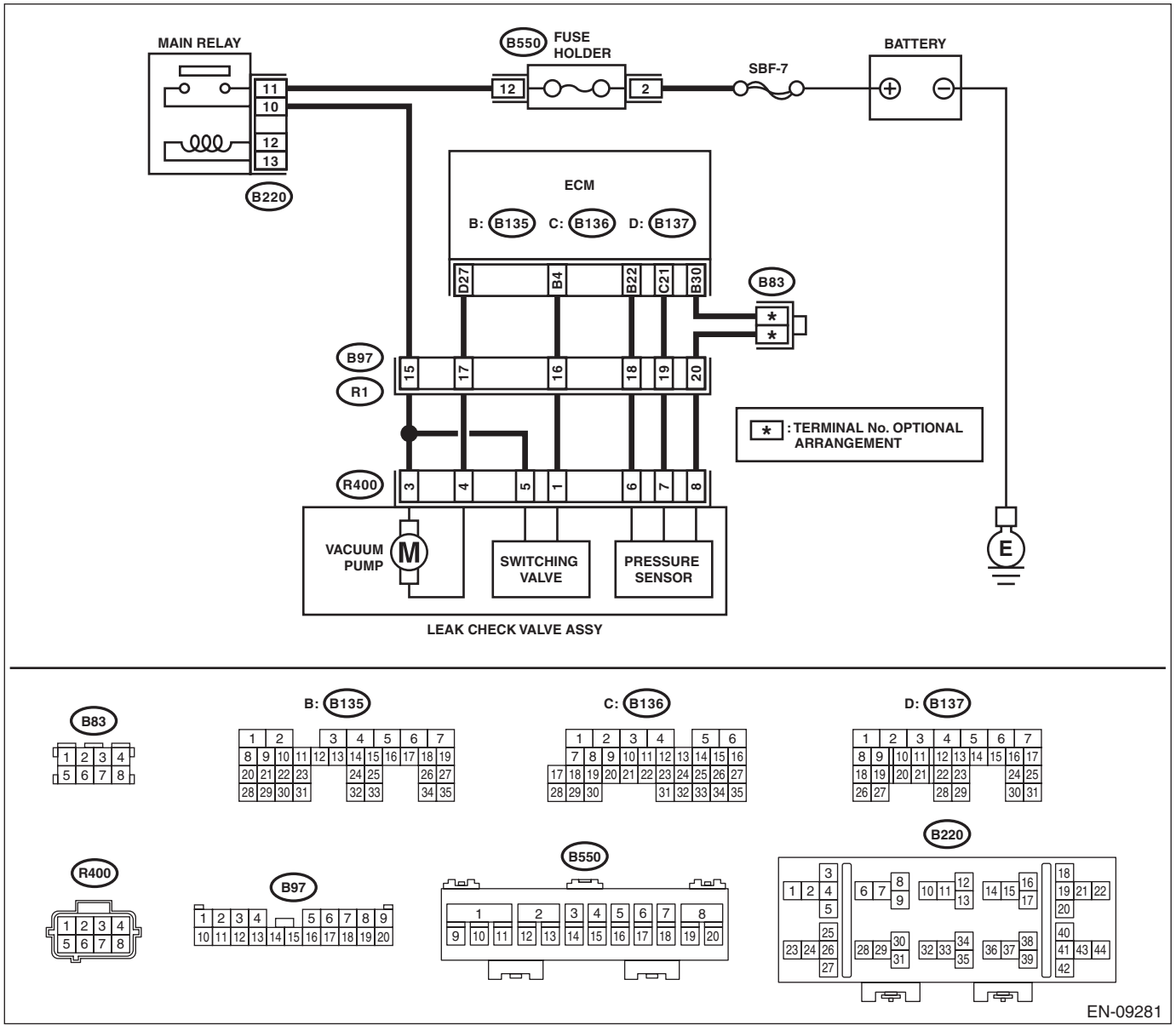

	Step	Check	Yes	No
1	**CHECK HARNESS BETWEEN ECM AND LEAK CHECK VALVE ASSEMBLY CONNECTOR.** 1) Turn the ignition switch to ON. 2) Measure the voltage between ECM connector and chassis ground. ***Connector & terminal*** ***(B137) No. 27 (+) — Chassis ground (–):***	Is the voltage 10 V or more?	Go to step **2**.	Go to step **3**.
2	**CHECK FOR POOR CONTACT.** Check for poor contact of ECM connector.	Is there poor contact of ECM connector?	Repair the poor contact of ECM connector.	Even if DTC is detected, the circuit has returned to a normal condition at this time. Reproduce the failure, and then perform the diagnosis again. NOTE: In this case, temporary open or short circuit of harness or temporary poor contact of connector may be the cause.
3	**CHECK POWER SUPPLY TO LEAK CHECK VALVE ASSEMBLY.** Measure the voltage between the leak check valve assembly connector and engine ground. ***Connector & terminal*** ***(R400) No. 3 (+) — Engine ground (–):***	Is the voltage 10 V or more?	Go to step **4**.	Repair the power supply circuit.
4	**CHECK HARNESS BETWEEN ECM AND LEAK CHECK VALVE ASSEMBLY CONNECTOR.** 1) Turn the ignition switch to OFF. 2) Disconnect the connector from ECM and the leak check valve assembly. 3) Measure the resistance between leak check valve assembly and chassis ground. ***Connector & terminal*** ***(R400) No. 4 — Chassis ground:***	Is the resistance 1 MΩ or more?	Go to step **5**.	Repair the short circuit to ground in harness between ECM connector and leak check valve assembly connector.
5	**CHECK HARNESS BETWEEN ECM AND LEAK CHECK VALVE ASSEMBLY CONNECTOR.** Measure the resistance of harness between ECM connector and the leak check valve assembly connector. ***Connector & terminal*** ***(B137) No. 27 — (R400) No. 4:***	Is the resistance less than 1 Ω?	Go to step **6**.	Repair the harness and connector. NOTE: In this case, repair the following item: • Open circuit in harness between ECM connector and the leak check valve assembly connector • Poor contact of coupling connector

Step		Check	Yes	No
6	**CHECK LEAK CHECK VALVE ASSEMBLY.** Check the vacuum pump of the leak check valve assembly. <Ref. to EC(H4DO(w/o HEV))-53, CHECK VACUUM PUMP, INSPECTION, Leak Check Valve Assembly.>	Is the vacuum pump of the leak check valve assembly OK?	Repair the poor contact in the leak check valve assembly connector.	Replace the leak check valve assembly. <Ref. to EC(H4DO(w/o HEV))-36, Leak Check Valve Assembly.>

FD:DTC P2402 EVAPORATIVE EMISSION SYSTEM LEAK DETECTION PUMP CONTROL CIRCUIT HIGH

DTC DETECTING CONDITION:

- Immediately at fault recognition
- GENERAL DESCRIPTION <Ref. to GD(H4DO w/o HEV)-268, DTC P2402 EVAPORATIVE EMISSION SYSTEM LEAK DETECTION PUMP CONTROL CIRCUIT HIGH, Diagnostic Trouble Code (DTC) Detecting Criteria.>

CAUTION:

After servicing or replacing faulty parts, perform Clear Memory Mode <Ref. to EN(H4DO w/o HEV)(diag)-59, OPERATION, Clear Memory Mode.>, and Inspection Mode <Ref. to EN(H4DO w/o HEV)(diag)-44, PROCEDURE, Inspection Mode.>.

WIRING DIAGRAM:

Engine electrical system <Ref. to WI(w/o HEV)-74, Engine Electrical System.>

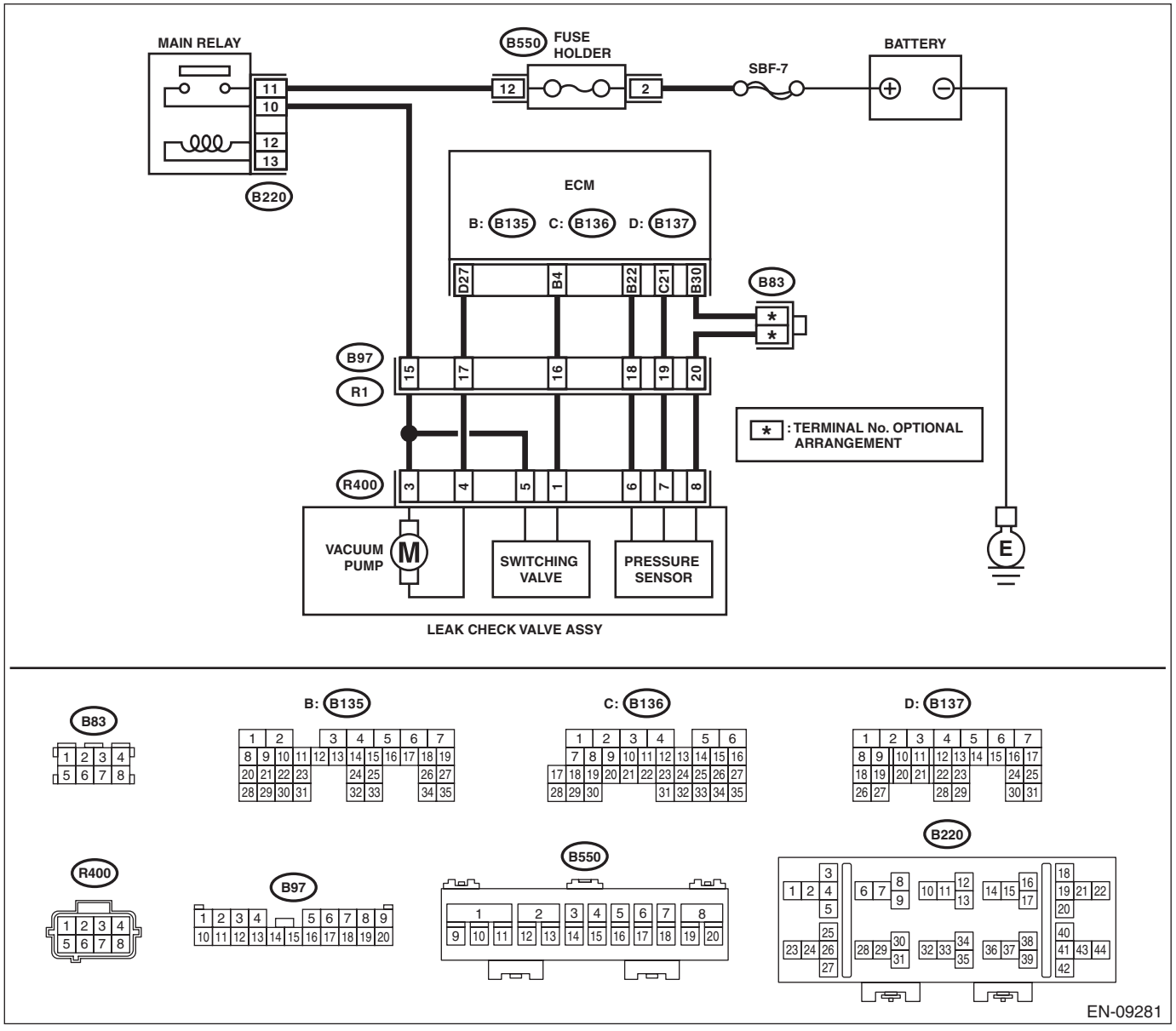

	Step	Check	Yes	No
1	**CHECK HARNESS BETWEEN ECM AND LEAK CHECK VALVE ASSEMBLY CONNECTOR.** 1) Turn the ignition switch to OFF. 2) Disconnect the connector from the leak check valve assembly. 3) Turn the ignition switch to ON. 4) Measure the voltage between leak check valve assembly and chassis ground. ***Connector & terminal*** ***(R400) No. 4 (+) — Chassis ground (–):***	Is the voltage 10 V or more?	Repair the short circuit to power in harness between ECM connector and leak check valve assembly connector.	Go to step **2**.
2	**CHECK LEAK CHECK VALVE ASSEMBLY.** 1) Turn the ignition switch to OFF. 2) Check the vacuum pump of the leak check valve assembly. <Ref. to EC(H4DO(w/o HEV))-53, CHECK VACUUM PUMP, INSPECTION, Leak Check Valve Assembly.>	Is the vacuum pump of the leak check valve assembly OK?	Repair the poor contact in the leak check valve assembly connector.	Replace the leak check valve assembly. <Ref. to EC(H4DO(w/o HEV))-36, Leak Check Valve Assembly.>

FE:DTC P2404 EVAPORATIVE EMISSION SYSTEM LEAK DETECTION PUMP SENSE CIRCUIT RANGE/PERFORMANCE

DTC DETECTING CONDITION:

- Detected when two consecutive driving cycles with fault occur.
- GENERAL DESCRIPTION <Ref. to GD(H4DO w/o HEV)-269, DTC P2404 EVAPORATIVE EMISSION SYSTEM LEAK DETECTION PUMP SENSE CIRCUIT RANGE/PERFORMANCE, Diagnostic Trouble Code (DTC) Detecting Criteria.>

CAUTION:

After servicing or replacing faulty parts, perform Clear Memory Mode <Ref. to EN(H4DO w/o HEV)(diag)-59, OPERATION, Clear Memory Mode.>, and Inspection Mode <Ref. to EN(H4DO w/o HEV)(diag)-44, PROCEDURE, Inspection Mode.>.

WIRING DIAGRAM:

Engine electrical system <Ref. to WI(w/o HEV)-74, Engine Electrical System.>

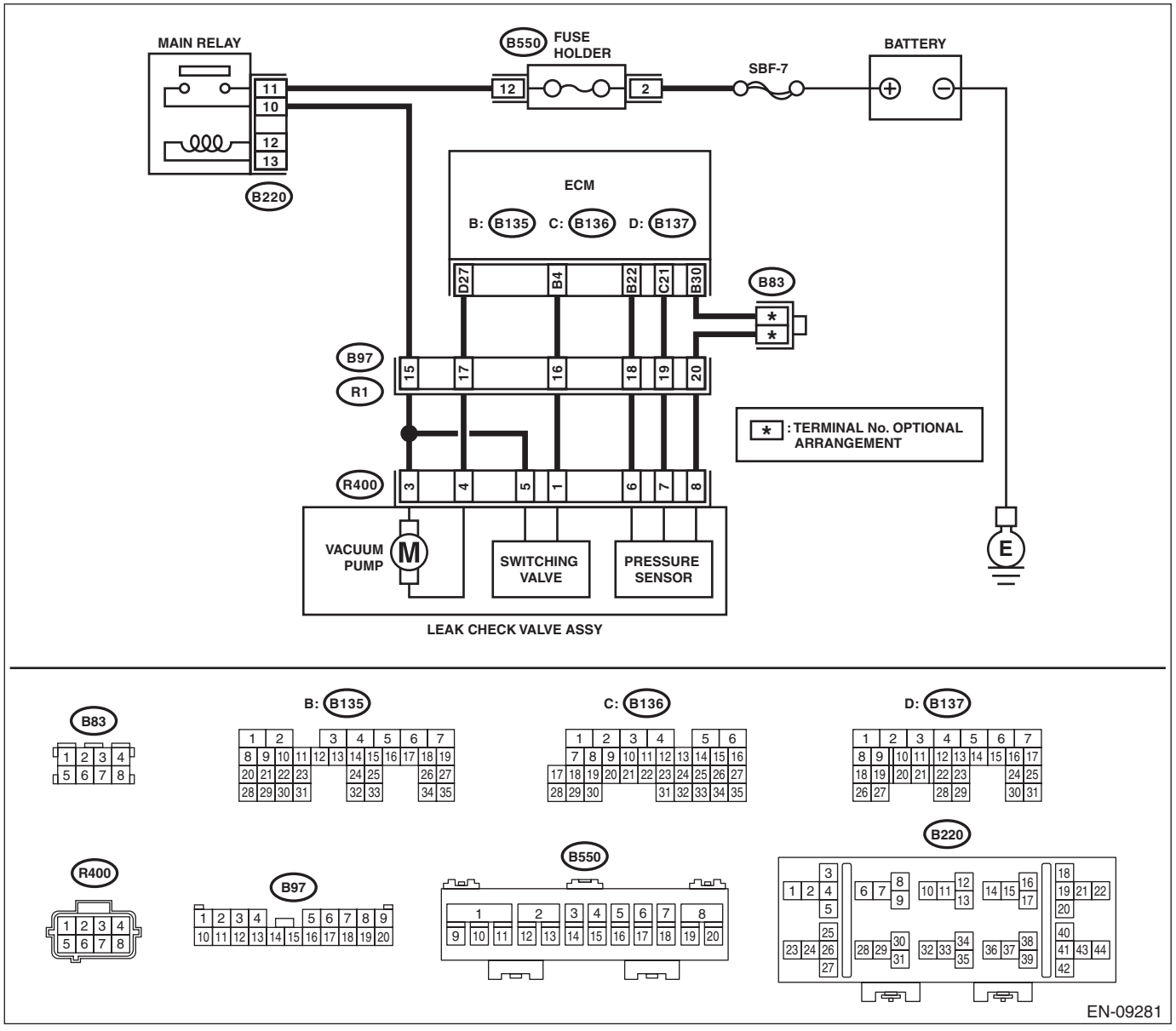

	Step	Check	Yes	No
1	**CHECK FOR ANY OTHER DTC ON DISPLAY.**	Is any other DTC displayed?	Check the appropriate DTC using the "List of Diagnostic Trouble Code (DTC)". <Ref. to EN(H4DO w/o HEV)(diag)-83, List of Diagnostic Trouble Code (DTC).>	Go to step **2**.
2	**CHECK ELCM PUMP.** Operate the ELCM pump using the Subaru Select Monitor. NOTE: For detailed procedures, refer to "System Operation Check Mode". <Ref. to EN(H4DO w/o HEV)(diag)-60, System Operation Check Mode.>	Does the ELCM pump operate?	Go to step **6**.	Go to step **3**.
3	**CHECK POWER SUPPLY OF LEAK CHECK VALVE ASSEMBLY.** 1) Turn the ignition switch to OFF. 2) Disconnect the connector from the leak check valve assembly. 3) Turn the ignition switch to ON. 4) Measure the voltage between the leak check valve assembly connector and chassis ground. ***Connector & terminal*** ***(R400) No. 3 (+) — Chassis ground (–):***	Is the voltage 10 V or more?	Go to step **4**.	Repair the harness and connector. NOTE: In this case, repair the following item: • Open circuit in harness between the main relay and the leak check valve assembly connector • Poor contact of main relay connector • Poor contact of coupling connector
4	**CHECK HARNESS BETWEEN ECM AND LEAK CHECK VALVE ASSEMBLY CONNECTOR.** 1) Turn the ignition switch to OFF. 2) Disconnect the connector from ECM. 3) Measure the resistance of harness between ECM connector and the leak check valve assembly connector. ***Connector & terminal*** ***(B137) No. 27 — (R400) No. 4:***	Is the resistance less than 1 Ω?	Go to step **5**.	Repair the harness and connector. NOTE: In this case, repair the following item: • Open circuit in harness between ECM connector and the leak check valve assembly connector • Poor contact of coupling connector
5	**CHECK HARNESS BETWEEN ECM AND LEAK CHECK VALVE ASSEMBLY CONNECTOR.** 1) Measure the resistance of harness between ECM connector and chassis ground. ***Connector & terminal*** ***(B137) No. 27 — Chassis ground:***	Is the resistance 1 MΩ or more?	Replace the leak check valve assembly. <Ref. to EC(H4DO(w/o HEV))-36, Leak Check Valve Assembly.>	Repair the short circuit to ground in harness between ECM connector and leak check valve assembly connector.

	Step	Check	Yes	No
6	**CHECK ELCM SWITCHING VALVE.** Operate the ELCM switching valve using the Subaru Select Monitor. NOTE: For detailed procedures, refer to "System Operation Check Mode". <Ref. to EN(H4DO w/o HEV)(diag)-60, System Operation Check Mode.>	Does the ELCM switching valve operate?	Go to step **10**.	Go to step **7**.
7	**CHECK POWER SUPPLY OF LEAK CHECK VALVE ASSEMBLY.** 1) Turn the ignition switch to OFF. 2) Disconnect the connector from the leak check valve assembly. 3) Turn the ignition switch to ON. 4) Measure the voltage between the leak check valve assembly connector and chassis ground. ***Connector & terminal*** ***(R400) No. 5 (+) — Chassis ground (–):***	Is the voltage 10 V or more?	Go to step **8**.	Repair the harness and connector. NOTE: In this case, repair the following item: • Open circuit in harness between the main relay and the leak check valve assembly connector • Poor contact of main relay connector • Poor contact of coupling connector
8	**CHECK HARNESS BETWEEN ECM AND LEAK CHECK VALVE ASSEMBLY CONNECTOR.** 1) Turn the ignition switch to OFF. 2) Disconnect the connector from ECM. 3) Measure the resistance of harness between ECM connector and the leak check valve assembly connector. ***Connector & terminal*** ***(B135) No. 4 — (R400) No. 1:***	Is the resistance less than 1 Ω?	Go to step **9**.	Repair the harness and connector. NOTE: In this case, repair the following item: • Open circuit in harness between ECM connector and the leak check valve assembly connector • Poor contact of coupling connector
9	**CHECK HARNESS BETWEEN ECM AND LEAK CHECK VALVE ASSEMBLY CONNECTOR.** 1) Measure the resistance of harness between ECM connector and chassis ground. ***Connector & terminal*** ***(B135) No. 4 — Chassis ground:***	Is the resistance 1 MΩ or more?	Replace the leak check valve assembly. <Ref. to EC(H4DO(w/o HEV))-36, Leak Check Valve Assembly.>	Repair the short circuit to ground in harness between ECM connector and leak check valve assembly connector.

	Step	Check	Yes	No
10	**CHECK EVAPORATIVE EMISSION CONTROL SYSTEM.** Perform drive cycle I. <Ref. to EN(H4DO w/o HEV)(diag)-55, DRIVE CYCLE I, PROCEDURE, Drive Cycle.>	Is DTC P2404 displayed on the display?	Replace the leak check valve assembly. <Ref. to EC(H4DO(w/o HEV))-36, Leak Check Valve Assembly.>	Even if DTC is detected, the circuit has returned to a normal condition at this time. Reproduce the failure, and then perform the diagnosis again. NOTE: In this case, temporary poor contact of connector, temporary open or short circuit of harness may be the cause.

FF: DTC P2419 EVAPORATIVE EMISSION SYSTEM SWITCHING VALVE CONTROL CIRCUIT LOW

DTC DETECTING CONDITION:

- Immediately at fault recognition
- GENERAL DESCRIPTION <Ref. to GD(H4DO w/o HEV)-270, DTC P2419 EVAPORATIVE EMISSION SYSTEM SWITCHING VALVE CONTROL CIRCUIT LOW, Diagnostic Trouble Code (DTC) Detecting Criteria.>

CAUTION:

After servicing or replacing faulty parts, perform Clear Memory Mode <Ref. to EN(H4DO w/o HEV)(diag)-59, OPERATION, Clear Memory Mode.>, and Inspection Mode <Ref. to EN(H4DO w/o HEV)(diag)-44, PROCEDURE, Inspection Mode.>.

WIRING DIAGRAM:

Engine electrical system <Ref. to WI(w/o HEV)-74, Engine Electrical System.>

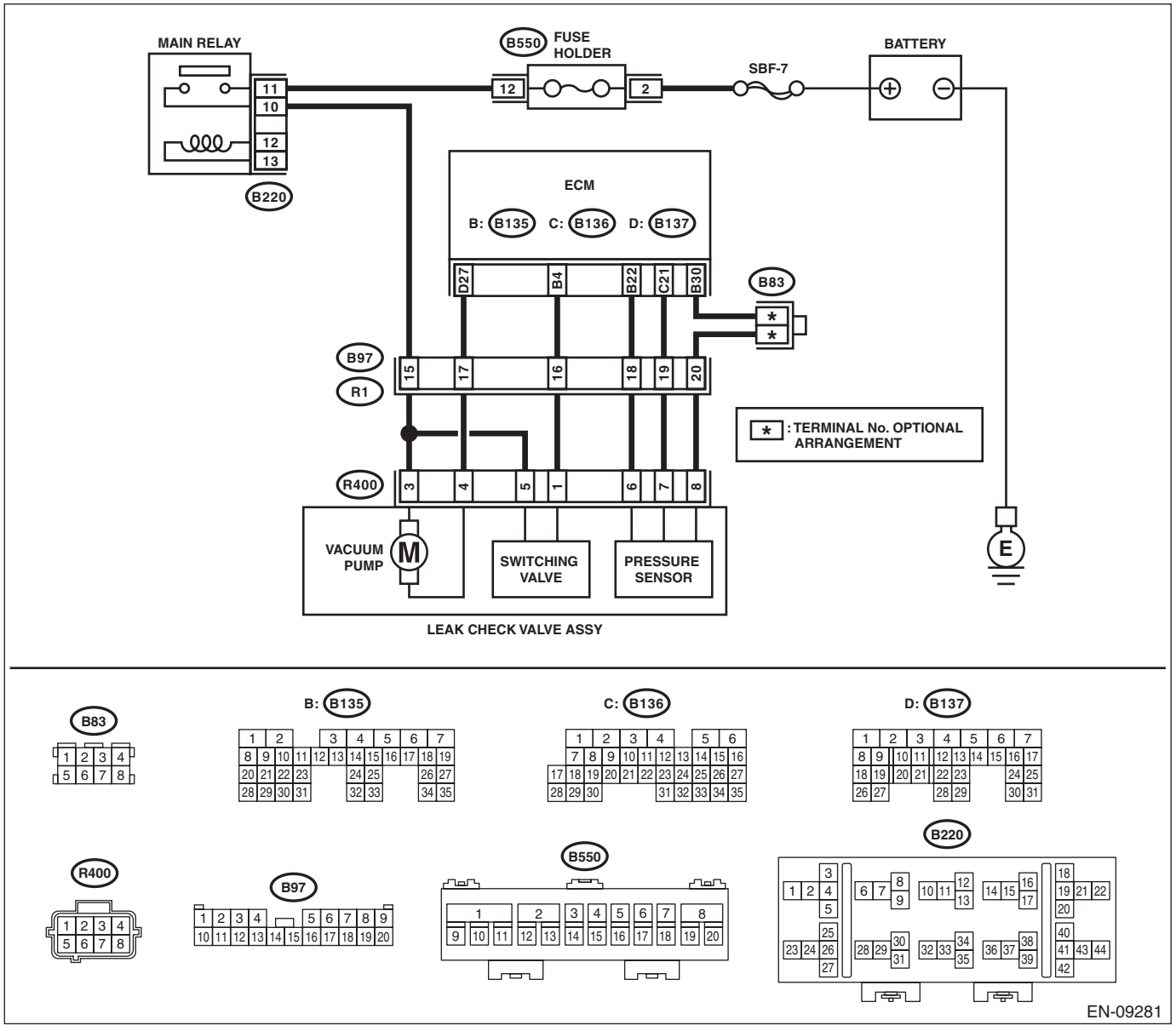

	Step	Check	Yes	No
1	**CHECK HARNESS BETWEEN ECM AND LEAK CHECK VALVE ASSEMBLY CONNECTOR.** 1) Turn the ignition switch to ON. 2) Measure the voltage between ECM connector and chassis ground. ***Connector & terminal*** ***(B135) No. 4 (+) — Chassis ground (–):***	Is the voltage 10 V or more?	Go to step **2**.	Go to step **3**.
2	**CHECK FOR POOR CONTACT.** Check for poor contact of ECM connector.	Is there poor contact of ECM connector?	Repair the poor contact of ECM connector.	Even if DTC is detected, the circuit has returned to a normal condition at this time. Reproduce the failure, and then perform the diagnosis again. NOTE: In this case, temporary open or short circuit of harness or temporary poor contact of connector may be the cause.
3	**CHECK POWER SUPPLY TO LEAK CHECK VALVE ASSEMBLY.** Measure the voltage between the leak check valve assembly connector and engine ground. ***Connector & terminal*** ***(R400) No. 5 (+) — Engine ground (–):***	Is the voltage 10 V or more?	Go to step **4**.	Repair the power supply circuit.
4	**CHECK HARNESS BETWEEN ECM AND LEAK CHECK VALVE ASSEMBLY CONNECTOR.** 1) Turn the ignition switch to OFF. 2) Disconnect the connector from ECM and the leak check valve assembly. 3) Measure the resistance between leak check valve assembly and chassis ground. ***Connector & terminal*** ***(R400) No. 1 — Chassis ground:***	Is the resistance 1 MΩ or more?	Go to step **5**.	Repair the short circuit to ground in harness between ECM connector and leak check valve assembly connector.
5	**CHECK HARNESS BETWEEN ECM AND LEAK CHECK VALVE ASSEMBLY CONNECTOR.** Measure the resistance of harness between ECM connector and the leak check valve assembly connector. ***Connector & terminal*** ***(B135) No. 4 — (R400) No. 1:***	Is the resistance less than 1 Ω?	Go to step **6**.	Repair the harness and connector. NOTE: In this case, repair the following item: • Open circuit in harness between ECM connector and the leak check valve assembly connector • Poor contact of coupling connector

Step		Check	Yes	No
6	**CHECK LEAK CHECK VALVE ASSEMBLY.** Check the switching valve of the leak check valve assembly. <Ref. to EC(H4DO(w/o HEV))-52, CHECK SWITCHING VALVE, INSPECTION, Leak Check Valve Assembly.>	Is the switching valve of the leak check valve assembly OK?	Repair the poor contact in the leak check valve assembly connector.	Replace the leak check valve assembly. <Ref. to EC(H4DO(w/o HEV))-36, Leak Check Valve Assembly.>

FG:DTC P2420 EVAPORATIVE EMISSION SYSTEM SWITCHING VALVE CONTROL CIRCUIT HIGH

DTC DETECTING CONDITION:

- Immediately at fault recognition
- GENERAL DESCRIPTION <Ref. to GD(H4DO w/o HEV)-272, DTC P2420 EVAPORATIVE EMISSION SYSTEM SWITCHING VALVE CONTROL CIRCUIT HIGH, Diagnostic Trouble Code (DTC) Detecting Criteria.>

CAUTION:

After servicing or replacing faulty parts, perform Clear Memory Mode <Ref. to EN(H4DO w/o HEV)(diag)-59, OPERATION, Clear Memory Mode.>, and Inspection Mode <Ref. to EN(H4DO w/o HEV)(diag)-44, PROCEDURE, Inspection Mode.>.

WIRING DIAGRAM:

Engine electrical system <Ref. to WI(w/o HEV)-74, Engine Electrical System.>

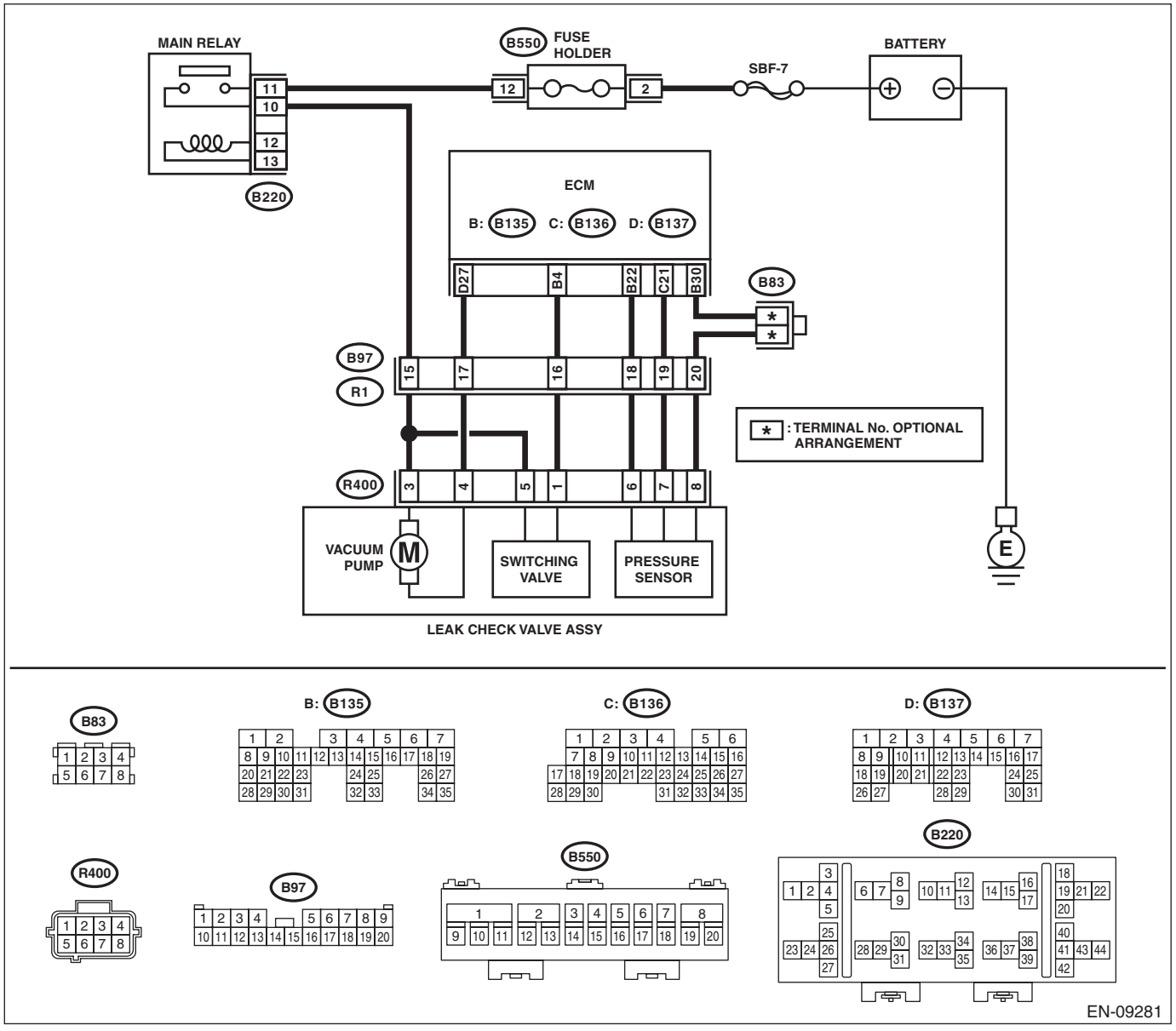

	Step	Check	Yes	No
1	**CHECK HARNESS BETWEEN ECM AND LEAK CHECK VALVE ASSEMBLY CONNECTOR.** 1) Turn the ignition switch to OFF. 2) Disconnect the connector from the leak check valve assembly. 3) Turn the ignition switch to ON. 4) Measure the voltage between leak check valve assembly and chassis ground. ***Connector & terminal*** ***(R400) No. 1 (+) — Chassis ground (–):***	Is the voltage 10 V or more?	Repair the short circuit to power in harness between ECM connector and leak check valve assembly connector.	Go to step **2**.
2	**CHECK LEAK CHECK VALVE ASSEMBLY.** 1) Turn the ignition switch to OFF. 2) Check the switching valve of the leak check valve assembly. <Ref. to EC(H4DO(w/o HEV))-52, CHECK SWITCHING VALVE, INSPECTION, Leak Check Valve Assembly.>	Is the switching valve of the leak check valve assembly OK?	Repair the poor contact in the leak check valve assembly connector.	Replace the leak check valve assembly. <Ref. to EC(H4DO(w/o HEV))-36, Leak Check Valve Assembly.>

FH:DTC P2610 ECM/PCM INTERNAL ENGINE OFF TIMER PERFORMANCE

DTC DETECTING CONDITION:

- Detected when two consecutive driving cycles with fault occur.
- GENERAL DESCRIPTION <Ref. to GD(H4DO w/o HEV)-274, DTC P2610 ECM/PCM INTERNAL ENGINE OFF TIMER PERFORMANCE, Diagnostic Trouble Code (DTC) Detecting Criteria.>

CAUTION:
After servicing or replacing faulty parts, perform Clear Memory Mode <Ref. to EN(H4DO w/o HEV)(diag)-59, OPERATION, Clear Memory Mode.>, and Inspection Mode <Ref. to EN(H4DO w/o HEV)(diag)-44, PROCEDURE, Inspection Mode.>.

Step	Check	Yes	No
1 **CHECK FOR ANY OTHER DTC ON DISPLAY.**	Is any other DTC displayed?	Check DTC using “List of Diagnostic Trouble Code (DTC)”. <Ref. to EN(H4DO w/o HEV)(diag)-83, List of Diagnostic Trouble Code (DTC).>	Replace the ECM. <Ref. to FU(H4DO(w/o HEV))-106, Engine Control Module (ECM).> NOTE: The soak timer IC is built into the ECM.

FI: DTC U0073 CONTROL MODULE COMMUNICATION BUS OFF

NOTE:
For the diagnostic procedure, refer to LAN section. <Ref. to LAN(w/o HEV)(diag)-2, Basic Diagnostic Procedure.>

FJ: DTC U0101 LOST COMMUNICATION WITH TCM

NOTE:
For the diagnostic procedure, refer to LAN section. <Ref. to LAN(w/o HEV)(diag)-2, Basic Diagnostic Procedure.>

FK: DTC U0122 LOST COMMUNICATION WITH VEHICLE DYNAMICS CONTROL MODULE

NOTE:
For the diagnostic procedure, refer to LAN section. <Ref. to LAN(w/o HEV)(diag)-2, Basic Diagnostic Procedure.>

FL: DTC U0155 LOST COMMUNICATION WITH INSTRUMENT PANEL CLUSTER (IPC) CONTROL MODULE

NOTE:
For the diagnostic procedure, refer to LAN section. <Ref. to LAN(w/o HEV)(diag)-2, Basic Diagnostic Procedure.>

FM: DTC U0402 INVALID DATA RECEIVED FROM TCM

NOTE:
For the diagnostic procedure, refer to LAN section. <Ref. to LAN(w/o HEV)(diag)-2, Basic Diagnostic Procedure.>

FN: DTC U0416 INVALID DATA RECEIVED FROM VEHICLE DYNAMICS CONTROL MODULE

NOTE:
For the diagnostic procedure, refer to LAN section. <Ref. to LAN(w/o HEV)(diag)-2, Basic Diagnostic Procedure.>

FO: DTC U0423 INVALID DATA RECEIVED FROM INSTRUMENT PANEL CLUSTER CONTROL MODULE

NOTE:
For the diagnostic procedure, refer to LAN section. <Ref. to LAN(w/o HEV)(diag)-2, Basic Diagnostic Procedure.>

20.General Diagnostic Table

A: INSPECTION

1. ENGINE

NOTE:
Malfunction of parts other than those listed is also possible. <Ref. to ME(H4DO(w/o HEV))-418, Engine Trouble in General.>

Symptoms	Faulty parts
1. Engine stalls during idling.	1) Manifold absolute pressure sensor 2) Mass air flow and intake air temperature sensor 3) Ignition parts (*1) 4) Engine coolant temperature sensor (*2) 5) Crankshaft position sensor (*3) 6) Camshaft position sensor (*3) 7) Fuel injection parts (*4) 8) Electronic throttle control
2. Rough idling	1) Manifold absolute pressure sensor 2) Mass air flow and intake air temperature sensor 3) Engine coolant temperature sensor (*2) 4) Ignition parts (*1) 5) Air intake system (*5) 6) Fuel injection parts (*4) 7) Electronic throttle control 8) Crankshaft position sensor (*3) 9) Camshaft position sensor (*3) 10) Oxygen sensor 11) Fuel pump and fuel pump relay 12) EGR control valve
3. Engine does not return to idle.	1) Engine coolant temperature sensor 2) Electronic throttle control 3) Manifold absolute pressure sensor 4) Mass air flow and intake air temperature sensor 5) EGR control valve 6) Accelerator pedal position sensor 7) Engine oil temperature sensor
4. Poor acceleration	1) Manifold absolute pressure sensor 2) Mass air flow and intake air temperature sensor 3) Electronic throttle control 4) Fuel injection parts (*4) 5) Fuel pump and fuel pump relay 6) Engine coolant temperature sensor (*2) 7) Crankshaft position sensor (*3) 8) Camshaft position sensor (*3) 9) Engine torque control signal circuit 10) Ignition parts (*1) 11) EGR control valve 12) Accelerator pedal position sensor 13) Engine oil temperature sensor
5. Engine stalls, hesitates, or sputters at acceleration.	1) Manifold absolute pressure sensor 2) Mass air flow and intake air temperature sensor 3) Engine coolant temperature sensor (*2) 4) Crankshaft position sensor (*3) 5) Camshaft position sensor (*3) 6) Purge control solenoid valve 7) Fuel injection parts (*4) 8) Electronic throttle control 9) Fuel pump and fuel pump relay 10) EGR control valve

Symptoms	Faulty parts
6. Surging	1) Mass air flow and intake air temperature sensor 2) Manifold absolute pressure sensor 3) Engine coolant temperature sensor (*2) 4) Crankshaft position sensor (*3) 5) Camshaft position sensor (*3) 6) Fuel injection parts (*4) 7) Electronic throttle control 8) Fuel pump and fuel pump relay 9) EGR control valve
7. Spark knock	1) Mass air flow and intake air temperature sensor 2) Manifold absolute pressure sensor 3) Engine coolant temperature sensor 4) Knock sensor 5) Fuel injection parts (*4) 6) Fuel pump and fuel pump relay 7) EGR control valve
8. After burning in exhaust system	1) Mass air flow and intake air temperature sensor 2) Manifold absolute pressure sensor 3) Engine coolant temperature sensor (*2) 4) Fuel injection parts (*4) 5) Fuel pump and fuel pump relay

*1: Check ignition coil and spark plug.
*2: Indicate the symptom occurring only in cold temperatures.
*3: Ensure the secure installation.
*4: Check fuel injector and fuel filter.
*5: Inspect air leak in air intake system.

GENERAL DESCRIPTION

GD(H4DO w/o HEV)

Page

1. List of Diagnostic Trouble Code (DTC) 2
2. Diagnostic Trouble Code (DTC) Detecting Criteria 11

1. List of Diagnostic Trouble Code (DTC)

A: LIST

DTC	Item	Note
B1570	Antenna	<Ref. to GD(H4DO w/o HEV)-11, DTC B1570 ANTENNA, Diagnostic Trouble Code (DTC) Detecting Criteria.>
B1571	Reference Code Incompatibility	<Ref. to GD(H4DO w/o HEV)-11, DTC B1571 REFERENCE CODE INCOMPATIBILITY, Diagnostic Trouble Code (DTC) Detecting Criteria.>
B1572	IMM Circuit Failure (Except Antenna Circuit)	<Ref. to GD(H4DO w/o HEV)-11, DTC B1572 IMM CIRCUIT FAILURE (EXCEPT ANTENNA CIRCUIT), Diagnostic Trouble Code (DTC) Detecting Criteria.>
B1574	Key Communication Failure	<Ref. to GD(H4DO w/o HEV)-11, DTC B1574 KEY COMMUNICATION FAILURE, Diagnostic Trouble Code (DTC) Detecting Criteria.>
B1575	Incorrect Immobilizer Key	<Ref. to GD(H4DO w/o HEV)-12, DTC B1575 INCORRECT IMMOBILIZER KEY, Diagnostic Trouble Code (DTC) Detecting Criteria.>
B1576	EGI Control Module EEPROM	<Ref. to GD(H4DO w/o HEV)-12, DTC B1576 EGI CONTROL MODULE EEPROM, Diagnostic Trouble Code (DTC) Detecting Criteria.>
B1577	IMM Control Module EEPROM	<Ref. to GD(H4DO w/o HEV)-12, DTC B1577 IMM CONTROL MODULE EEPROM, Diagnostic Trouble Code (DTC) Detecting Criteria.>
B1578	Meter Failure	<Ref. to GD(H4DO w/o HEV)-12, DTC B1578 METER FAILURE, Diagnostic Trouble Code (DTC) Detecting Criteria.>
P000A	A Camshaft Position Slow Response (Bank 1)	<Ref. to GD(H4DO w/o HEV)-13, DTC P000A A CAMSHAFT POSITION SLOW RESPONSE (BANK 1), Diagnostic Trouble Code (DTC) Detecting Criteria.>
P000B	B Camshaft Position Slow Response (Bank 1)	<Ref. to GD(H4DO w/o HEV)-15, DTC P000B B CAMSHAFT POSITION SLOW RESPONSE (BANK 1), Diagnostic Trouble Code (DTC) Detecting Criteria.>
P000C	A Camshaft Position Slow Response (Bank 2)	<Ref. to GD(H4DO w/o HEV)-16, DTC P000C A CAMSHAFT POSITION SLOW RESPONSE (BANK 2), Diagnostic Trouble Code (DTC) Detecting Criteria.>
P000D	B Camshaft Position Slow Response (Bank 2)	<Ref. to GD(H4DO w/o HEV)-16, DTC P000D B CAMSHAFT POSITION SLOW RESPONSE (BANK 2), Diagnostic Trouble Code (DTC) Detecting Criteria.>
P0011	Intake Camshaft Position - Timing Over-Advanced or System Performance (Bank 1)	<Ref. to GD(H4DO w/o HEV)-17, DTC P0011 INTAKE CAMSHAFT POSITION - TIMING OVER-ADVANCED OR SYSTEM PERFORMANCE (BANK 1), Diagnostic Trouble Code (DTC) Detecting Criteria.>
P0014	Exhaust AVCS System 1 (Range/Performance)	<Ref. to GD(H4DO w/o HEV)-19, DTC P0014 EXHAUST AVCS SYSTEM 1 (RANGE/PERFORMANCE), Diagnostic Trouble Code (DTC) Detecting Criteria.>
P0016	Crankshaft Position - Camshaft Position Correlation (Bank1)	<Ref. to GD(H4DO w/o HEV)-20, DTC P0016 CRANKSHAFT POSITION - CAMSHAFT POSITION CORRELATION (BANK1), Diagnostic Trouble Code (DTC) Detecting Criteria.>
P0017	Crank and Cam Timing B System Failure (Bank 1)	<Ref. to GD(H4DO w/o HEV)-21, DTC P0017 CRANK AND CAM TIMING B SYSTEM FAILURE (BANK 1), Diagnostic Trouble Code (DTC) Detecting Criteria.>
P0018	Crankshaft Position - Camshaft Position Correlation (Bank2)	<Ref. to GD(H4DO w/o HEV)-22, DTC P0018 CRANKSHAFT POSITION - CAMSHAFT POSITION CORRELATION (BANK2), Diagnostic Trouble Code (DTC) Detecting Criteria.>
P0019	Crank and Cam Timing B System Failure (Bank 2)	<Ref. to GD(H4DO w/o HEV)-22, DTC P0019 CRANK AND CAM TIMING B SYSTEM FAILURE (BANK 2), Diagnostic Trouble Code (DTC) Detecting Criteria.>
P0021	Intake Camshaft Position - Timing Over-Advanced or System Performance (Bank 2)	<Ref. to GD(H4DO w/o HEV)-22, DTC P0021 INTAKE CAMSHAFT POSITION - TIMING OVER-ADVANCED OR SYSTEM PERFORMANCE (BANK 2), Diagnostic Trouble Code (DTC) Detecting Criteria.>
P0024	Exhaust AVCS System 2 (Range/Performance)	<Ref. to GD(H4DO w/o HEV)-22, DTC P0024 EXHAUST AVCS SYSTEM 2 (RANGE/PERFORMANCE), Diagnostic Trouble Code (DTC) Detecting Criteria.>

DTC	Item	Note
P0030	HO2S Heater Control Circuit (Bank 1 Sensor 1)	<Ref. to GD(H4DO w/o HEV)-23, DTC P0030 HO2S HEATER CONTROL CIRCUIT (BANK 1 SENSOR 1), Diagnostic Trouble Code (DTC) Detecting Criteria.>
P0031	HO2S Heater Control Circuit Low (Bank 1 Sensor 1)	<Ref. to GD(H4DO w/o HEV)-25, DTC P0031 HO2S HEATER CONTROL CIRCUIT LOW (BANK 1 SENSOR 1), Diagnostic Trouble Code (DTC) Detecting Criteria.>
P0032	HO2S Heater Control Circuit High (Bank 1 Sensor 1)	<Ref. to GD(H4DO w/o HEV)-27, DTC P0032 HO2S HEATER CONTROL CIRCUIT HIGH (BANK 1 SENSOR 1), Diagnostic Trouble Code (DTC) Detecting Criteria.>
P0037	HO2S Heater Control Circuit Low (Bank 1 Sensor 2)	<Ref. to GD(H4DO w/o HEV)-29, DTC P0037 HO2S HEATER CONTROL CIRCUIT LOW (BANK 1 SENSOR 2), Diagnostic Trouble Code (DTC) Detecting Criteria.>
P0038	HO2S Heater Control Circuit High (Bank 1 Sensor 2)	<Ref. to GD(H4DO w/o HEV)-31, DTC P0038 HO2S HEATER CONTROL CIRCUIT HIGH (BANK 1 SENSOR 2), Diagnostic Trouble Code (DTC) Detecting Criteria.>
P0068	MAP/MAF - Throttle Position Correlation	<Ref. to GD(H4DO w/o HEV)-33, DTC P0068 MAP/MAF - THROTTLE POSITION CORRELATION, Diagnostic Trouble Code (DTC) Detecting Criteria.>
P0101	Mass or Volume Air Flow Circuit Range/Performance	<Ref. to GD(H4DO w/o HEV)-35, DTC P0101 MASS OR VOLUME AIR FLOW CIRCUIT RANGE/PERFORMANCE, Diagnostic Trouble Code (DTC) Detecting Criteria.>
P0102	Mass or Volume Air Flow Circuit Low Input	<Ref. to GD(H4DO w/o HEV)-38, DTC P0102 MASS OR VOLUME AIR FLOW CIRCUIT LOW INPUT, Diagnostic Trouble Code (DTC) Detecting Criteria.>
P0103	Mass or Volume Air Flow Circuit High Input	<Ref. to GD(H4DO w/o HEV)-40, DTC P0103 MASS OR VOLUME AIR FLOW CIRCUIT HIGH INPUT, Diagnostic Trouble Code (DTC) Detecting Criteria.>
P0107	Manifold Absolute Pressure/Barometric Pressure Circuit Low Input	<Ref. to GD(H4DO w/o HEV)-42, DTC P0107 MANIFOLD ABSOLUTE PRESSURE/BAROMETRIC PRESSURE CIRCUIT LOW INPUT, Diagnostic Trouble Code (DTC) Detecting Criteria.>
P0108	Manifold Absolute Pressure/Barometric Pressure Circuit High Input	<Ref. to GD(H4DO w/o HEV)-44, DTC P0108 MANIFOLD ABSOLUTE PRESSURE/BAROMETRIC PRESSURE CIRCUIT HIGH INPUT, Diagnostic Trouble Code (DTC) Detecting Criteria.>
P0111	Intake Air Temperature Sensor Range/Performance Problem	<Ref. to GD(H4DO w/o HEV)-46, DTC P0111 INTAKE AIR TEMPERATURE SENSOR RANGE/PERFORMANCE PROBLEM, Diagnostic Trouble Code (DTC) Detecting Criteria.>
P0112	Intake Air Temperature Sensor 1 Circuit Low	<Ref. to GD(H4DO w/o HEV)-48, DTC P0112 INTAKE AIR TEMPERATURE SENSOR 1 CIRCUIT LOW, Diagnostic Trouble Code (DTC) Detecting Criteria.>
P0113	Intake Air Temperature Sensor 1 Circuit High	<Ref. to GD(H4DO w/o HEV)-50, DTC P0113 INTAKE AIR TEMPERATURE SENSOR 1 CIRCUIT HIGH, Diagnostic Trouble Code (DTC) Detecting Criteria.>
P0116	Engine Coolant Temperature Sensor 1 Circuit Range/Performance	<Ref. to GD(H4DO w/o HEV)-52, DTC P0116 ENGINE COOLANT TEMPERATURE SENSOR 1 CIRCUIT RANGE/PERFORMANCE, Diagnostic Trouble Code (DTC) Detecting Criteria.>
P0117	Engine Coolant Temperature Circuit Low	<Ref. to GD(H4DO w/o HEV)-54, DTC P0117 ENGINE COOLANT TEMPERATURE CIRCUIT LOW, Diagnostic Trouble Code (DTC) Detecting Criteria.>
P0118	Engine Coolant Temperature Circuit High	<Ref. to GD(H4DO w/o HEV)-56, DTC P0118 ENGINE COOLANT TEMPERATURE CIRCUIT HIGH, Diagnostic Trouble Code (DTC) Detecting Criteria.>
P0122	Throttle/Pedal Position Sensor/Switch “A” Circuit Low	<Ref. to GD(H4DO w/o HEV)-58, DTC P0122 THROTTLE/PEDAL POSITION SENSOR/SWITCH “A” CIRCUIT LOW, Diagnostic Trouble Code (DTC) Detecting Criteria.>
P0123	Throttle/Pedal Position Sensor/Switch “A” Circuit High	<Ref. to GD(H4DO w/o HEV)-60, DTC P0123 THROTTLE/PEDAL POSITION SENSOR/SWITCH “A” CIRCUIT HIGH, Diagnostic Trouble Code (DTC) Detecting Criteria.>
P0125	Insufficient Coolant Temperature for Closed Loop Fuel Control	<Ref. to GD(H4DO w/o HEV)-62, DTC P0125 INSUFFICIENT COOLANT TEMPERATURE FOR CLOSED LOOP FUEL CONTROL, Diagnostic Trouble Code (DTC) Detecting Criteria.>

DTC	Item	Note
P0128	Coolant Thermostat (Engine Coolant Temperature Below Thermostat Regulating Temperature)	<Ref. to GD(H4DO w/o HEV)-64, DTC P0128 COOLANT THERMOSTAT (ENGINE COOLANT TEMPERATURE BELOW THERMOSTAT REGULATING TEMPERATURE), Diagnostic Trouble Code (DTC) Detecting Criteria.>
P0131	O2 Sensor Circuit Low Voltage (Bank 1 Sensor 1)	<Ref. to GD(H4DO w/o HEV)-68, DTC P0131 O2 SENSOR CIRCUIT LOW VOLTAGE (BANK 1 SENSOR 1), Diagnostic Trouble Code (DTC) Detecting Criteria.>
P0132	O2 Sensor Circuit High Voltage (Bank 1 Sensor 1)	<Ref. to GD(H4DO w/o HEV)-70, DTC P0132 O2 SENSOR CIRCUIT HIGH VOLTAGE (BANK 1 SENSOR 1), Diagnostic Trouble Code (DTC) Detecting Criteria.>
P0134	O2 Sensor Circuit No Activity Detected (Bank 1 Sensor 1)	<Ref. to GD(H4DO w/o HEV)-72, DTC P0134 O2 SENSOR CIRCUIT NO ACTIVITY DETECTED (BANK 1 SENSOR 1), Diagnostic Trouble Code (DTC) Detecting Criteria.>
P0137	O2 Sensor Circuit Low Voltage (Bank 1 Sensor 2)	<Ref. to GD(H4DO w/o HEV)-74, DTC P0137 O2 SENSOR CIRCUIT LOW VOLTAGE (BANK 1 SENSOR 2), Diagnostic Trouble Code (DTC) Detecting Criteria.>
P0138	O2 Sensor Circuit High Voltage (Bank 1 Sensor 2)	<Ref. to GD(H4DO w/o HEV)-76, DTC P0138 O2 SENSOR CIRCUIT HIGH VOLTAGE (BANK 1 SENSOR 2), Diagnostic Trouble Code (DTC) Detecting Criteria.>
P013A	O2 Sensor Slow Response - Rich to Lean (Bank 1 Sensor 2)	<Ref. to GD(H4DO w/o HEV)-77, DTC P013A O2 SENSOR SLOW RESPONSE - RICH TO LEAN (BANK 1 SENSOR 2), Diagnostic Trouble Code (DTC) Detecting Criteria.>
P013B	O2 Sensor Slow Response - Lean to Rich (Bank 1 Sensor 2)	<Ref. to GD(H4DO w/o HEV)-79, DTC P013B O2 SENSOR SLOW RESPONSE - LEAN TO RICH (BANK 1 SENSOR 2), Diagnostic Trouble Code (DTC) Detecting Criteria.>
P013E	O2 Sensor Delayed Response - Rich to Lean (Bank 1 Sensor 2)	<Ref. to GD(H4DO w/o HEV)-81, DTC P013E O2 SENSOR DELAYED RESPONSE - RICH TO LEAN (BANK 1 SENSOR 2), Diagnostic Trouble Code (DTC) Detecting Criteria.>
P013F	O2 Sensor Delayed Response - Lean to Rich (Bank 1 Sensor 2)	<Ref. to GD(H4DO w/o HEV)-83, DTC P013F O2 SENSOR DELAYED RESPONSE - LEAN TO RICH (BANK 1 SENSOR 2), Diagnostic Trouble Code (DTC) Detecting Criteria.>
P0140	O2 Sensor Circuit No Activity Detected (Bank1 Sensor2)	<Ref. to GD(H4DO w/o HEV)-85, DTC P0140 O2 SENSOR CIRCUIT NO ACTIVITY DETECTED (BANK1 SENSOR2), Diagnostic Trouble Code (DTC) Detecting Criteria.>
P0141	O2 Sensor Heater Circuit (Bank1 Sensor2)	<Ref. to GD(H4DO w/o HEV)-87, DTC P0141 O2 SENSOR HEATER CIRCUIT (BANK1 SENSOR2), Diagnostic Trouble Code (DTC) Detecting Criteria.>
P014C	O2 Sensor Slow Response - Rich to Lean (Bank 1 Sensor 1)	<Ref. to GD(H4DO w/o HEV)-89, DTC P014C O2 SENSOR SLOW RESPONSE - RICH TO LEAN (BANK 1 SENSOR 1), Diagnostic Trouble Code (DTC) Detecting Criteria.>
P014D	O2 Sensor Slow Response - Lean to Rich (Bank 1 Sensor 1)	<Ref. to GD(H4DO w/o HEV)-92, DTC P014D O2 SENSOR SLOW RESPONSE - LEAN TO RICH (BANK 1 SENSOR 1), Diagnostic Trouble Code (DTC) Detecting Criteria.>
P015A	O2 Sensor Delayed Response - Rich to Lean (Bank 1 Sensor 1)	<Ref. to GD(H4DO w/o HEV)-93, DTC P015A O2 SENSOR DELAYED RESPONSE - RICH TO LEAN (BANK 1 SENSOR 1), Diagnostic Trouble Code (DTC) Detecting Criteria.>
P015B	O2 Sensor Delayed Response - Lean to Rich (Bank 1 Sensor 1)	<Ref. to GD(H4DO w/o HEV)-99, DTC P015B O2 SENSOR DELAYED RESPONSE - LEAN TO RICH (BANK 1 SENSOR 1), Diagnostic Trouble Code (DTC) Detecting Criteria.>
P0171	System Too Lean (Bank 1)	<Ref. to GD(H4DO w/o HEV)-100, DTC P0171 SYSTEM TOO LEAN (BANK 1), Diagnostic Trouble Code (DTC) Detecting Criteria.>
P0172	System Too Rich (Bank 1)	<Ref. to GD(H4DO w/o HEV)-102, DTC P0172 SYSTEM TOO RICH (BANK 1), Diagnostic Trouble Code (DTC) Detecting Criteria.>
P0196	Engine Oil Temperature Sensor Circuit Range/Performance	<Ref. to GD(H4DO w/o HEV)-104, DTC P0196 ENGINE OIL TEMPERATURE SENSOR CIRCUIT RANGE/PERFORMANCE, Diagnostic Trouble Code (DTC) Detecting Criteria.>
P0197	Engine Oil Temperature Sensor Low	<Ref. to GD(H4DO w/o HEV)-106, DTC P0197 ENGINE OIL TEMPERATURE SENSOR LOW, Diagnostic Trouble Code (DTC) Detecting Criteria.>

DTC	Item	Note
P0198	Engine Oil Temperature Sensor High	<Ref. to GD(H4DO w/o HEV)-108, DTC P0198 ENGINE OIL TEMPERATURE SENSOR HIGH, Diagnostic Trouble Code (DTC) Detecting Criteria.>
P0201	Injector #1	<Ref. to GD(H4DO w/o HEV)-110, DTC P0201 INJECTOR #1, Diagnostic Trouble Code (DTC) Detecting Criteria.>
P0202	Injector #2	<Ref. to GD(H4DO w/o HEV)-111, DTC P0202 INJECTOR #2, Diagnostic Trouble Code (DTC) Detecting Criteria.>
P0203	Injector #3	<Ref. to GD(H4DO w/o HEV)-111, DTC P0203 INJECTOR #3, Diagnostic Trouble Code (DTC) Detecting Criteria.>
P0204	Injector #4	<Ref. to GD(H4DO w/o HEV)-111, DTC P0204 INJECTOR #4, Diagnostic Trouble Code (DTC) Detecting Criteria.>
P0222	Throttle/Pedal Position Sensor/Switch “B” Circuit Low	<Ref. to GD(H4DO w/o HEV)-112, DTC P0222 THROTTLE/PEDAL POSITION SENSOR/SWITCH “B” CIRCUIT LOW, Diagnostic Trouble Code (DTC) Detecting Criteria.>
P0223	Throttle/Pedal Position Sensor/Switch “B” Circuit High	<Ref. to GD(H4DO w/o HEV)-114, DTC P0223 THROTTLE/PEDAL POSITION SENSOR/SWITCH “B” CIRCUIT HIGH, Diagnostic Trouble Code (DTC) Detecting Criteria.>
P0300	Random/Multiple Cylinder Misfire Detected	<Ref. to GD(H4DO w/o HEV)-115, DTC P0300 RANDOM/MULTIPLE CYLINDER MISFIRE DETECTED, Diagnostic Trouble Code (DTC) Detecting Criteria.>
P0301	Cylinder 1 Misfire Detected	<Ref. to GD(H4DO w/o HEV)-116, DTC P0301 CYLINDER 1 MISFIRE DETECTED, Diagnostic Trouble Code (DTC) Detecting Criteria.>
P0302	Cylinder 2 Misfire Detected	<Ref. to GD(H4DO w/o HEV)-125, DTC P0302 CYLINDER 2 MISFIRE DETECTED, Diagnostic Trouble Code (DTC) Detecting Criteria.>
P0303	Cylinder 3 Misfire Detected	<Ref. to GD(H4DO w/o HEV)-125, DTC P0303 CYLINDER 3 MISFIRE DETECTED, Diagnostic Trouble Code (DTC) Detecting Criteria.>
P0304	Cylinder 4 Misfire Detected	<Ref. to GD(H4DO w/o HEV)-125, DTC P0304 CYLINDER 4 MISFIRE DETECTED, Diagnostic Trouble Code (DTC) Detecting Criteria.>
P0327	Knock Sensor 1 Circuit Low (Bank 1 or Single Sensor)	<Ref. to GD(H4DO w/o HEV)-126, DTC P0327 KNOCK SENSOR 1 CIRCUIT LOW (BANK 1 OR SINGLE SENSOR), Diagnostic Trouble Code (DTC) Detecting Criteria.>
P0328	Knock Sensor 1 Circuit High (Bank 1 or Single Sensor)	<Ref. to GD(H4DO w/o HEV)-128, DTC P0328 KNOCK SENSOR 1 CIRCUIT HIGH (BANK 1 OR SINGLE SENSOR), Diagnostic Trouble Code (DTC) Detecting Criteria.>
P0335	Crankshaft Position Sensor “A” Circuit	<Ref. to GD(H4DO w/o HEV)-130, DTC P0335 CRANKSHAFT POSITION SENSOR “A” CIRCUIT, Diagnostic Trouble Code (DTC) Detecting Criteria.>
P0336	Crankshaft Position Sensor “A” Circuit Range/Performance	<Ref. to GD(H4DO w/o HEV)-132, DTC P0336 CRANKSHAFT POSITION SENSOR “A” CIRCUIT RANGE/PERFORMANCE, Diagnostic Trouble Code (DTC) Detecting Criteria.>
P0340	Camshaft Position Sensor “A” Circuit (Bank 1 or Single Sensor)	<Ref. to GD(H4DO w/o HEV)-134, DTC P0340 CAMSHAFT POSITION SENSOR “A” CIRCUIT (BANK 1 OR SINGLE SENSOR), Diagnostic Trouble Code (DTC) Detecting Criteria.>
P0341	Camshaft Position Sensor "A" Circuit Range/Performance (Bank 1 or Single Sensor)	<Ref. to GD(H4DO w/o HEV)-136, DTC P0341 CAMSHAFT POSITION SENSOR "A" CIRCUIT RANGE/PERFORMANCE (BANK 1 OR SINGLE SENSOR), Diagnostic Trouble Code (DTC) Detecting Criteria.>
P0345	Camshaft Position Sensor “A” Circuit (Bank 2)	<Ref. to GD(H4DO w/o HEV)-137, DTC P0345 CAMSHAFT POSITION SENSOR “A” CIRCUIT (BANK 2), Diagnostic Trouble Code (DTC) Detecting Criteria.>
P0346	Camshaft Position Sensor "A" Circuit Range/Performance (Bank 2)	<Ref. to GD(H4DO w/o HEV)-137, DTC P0346 CAMSHAFT POSITION SENSOR "A" CIRCUIT RANGE/PERFORMANCE (BANK 2), Diagnostic Trouble Code (DTC) Detecting Criteria.>
P0351	Ignition Coil A Primary/Secondary Circuit	<Ref. to GD(H4DO w/o HEV)-138, DTC P0351 IGNITION COIL A PRIMARY/SECONDARY CIRCUIT, Diagnostic Trouble Code (DTC) Detecting Criteria.>
P0352	Ignition Coil B Primary/Secondary Circuit	<Ref. to GD(H4DO w/o HEV)-138, DTC P0352 IGNITION COIL B PRIMARY/SECONDARY CIRCUIT, Diagnostic Trouble Code (DTC) Detecting Criteria.>
P0353	Ignition Coil C Primary/Secondary Circuit	<Ref. to GD(H4DO w/o HEV)-138, DTC P0353 IGNITION COIL C PRIMARY/SECONDARY CIRCUIT, Diagnostic Trouble Code (DTC) Detecting Criteria.>

DTC	Item	Note
P0354	Ignition Coil D Primary/Secondary Circuit	<Ref. to GD(H4DO w/o HEV)-138, DTC P0354 IGNITION COIL D PRIMARY/ SECONDARY CIRCUIT, Diagnostic Trouble Code (DTC) Detecting Criteria.>
P0365	Camshaft Position Sensor “B” Circuit (Bank 1)	<Ref. to GD(H4DO w/o HEV)-139, DTC P0365 CAMSHAFT POSITION SENSOR “B” CIRCUIT (BANK 1), Diagnostic Trouble Code (DTC) Detecting Criteria.>
P0366	Camshaft Position Sensor B Circuit Range/Performance (Bank 1)	<Ref. to GD(H4DO w/o HEV)-141, DTC P0366 CAMSHAFT POSITION SENSOR B CIRCUIT RANGE/PERFORMANCE (BANK 1), Diagnostic Trouble Code (DTC) Detecting Criteria.>
P0390	Camshaft Position Sensor “B” Circuit (Bank 2)	<Ref. to GD(H4DO w/o HEV)-142, DTC P0390 CAMSHAFT POSITION SENSOR “B” CIRCUIT (BANK 2), Diagnostic Trouble Code (DTC) Detecting Criteria.>
P0391	Camshaft Position Sensor B Circuit Range/Performance (Bank 2)	<Ref. to GD(H4DO w/o HEV)-142, DTC P0391 CAMSHAFT POSITION SENSOR B CIRCUIT RANGE/PERFORMANCE (BANK 2), Diagnostic Trouble Code (DTC) Detecting Criteria.>
P0400	Exhaust Gas Recirculation Flow	<Ref. to GD(H4DO w/o HEV)-143, DTC P0400 EXHAUST GAS RECIRCULATION FLOW, Diagnostic Trouble Code (DTC) Detecting Criteria.>
P0420	Catalyst System Efficiency Below Threshold (Bank 1)	<Ref. to GD(H4DO w/o HEV)-146, DTC P0420 CATALYST SYSTEM EFFICIENCY BELOW THRESHOLD (BANK 1), Diagnostic Trouble Code (DTC) Detecting Criteria.>
P0441	Evaporative Emission Cont. Sys. Incorrect Purge Flow	<Ref. to GD(H4DO w/o HEV)-148, DTC P0441 EVAPORATIVE EMISSION CONT. SYS. INCORRECT PURGE FLOW, Diagnostic Trouble Code (DTC) Detecting Criteria.>
P0451	Evaporative Emission System Pressure Sensor/Switch Range/Performance	<Ref. to GD(H4DO w/o HEV)-151, DTC P0451 EVAPORATIVE EMISSION SYSTEM PRESSURE SENSOR/SWITCH RANGE/PERFORMANCE, Diagnostic Trouble Code (DTC) Detecting Criteria.>
P0452	Evaporative Emission System Pressure Sensor/Switch Low	<Ref. to GD(H4DO w/o HEV)-153, DTC P0452 EVAPORATIVE EMISSION SYSTEM PRESSURE SENSOR/SWITCH LOW, Diagnostic Trouble Code (DTC) Detecting Criteria.>
P0453	Evaporative Emission System Pressure Sensor/Switch High	<Ref. to GD(H4DO w/o HEV)-155, DTC P0453 EVAPORATIVE EMISSION SYSTEM PRESSURE SENSOR/SWITCH HIGH, Diagnostic Trouble Code (DTC) Detecting Criteria.>
P0455	Evaporative Emission System Leak Detected (Large Leak)	<Ref. to GD(H4DO w/o HEV)-157, DTC P0455 EVAPORATIVE EMISSION SYSTEM LEAK DETECTED (LARGE LEAK), Diagnostic Trouble Code (DTC) Detecting Criteria.>
P0456	Evaporative Emission Control System Leak Detected (Very Small Leak)	<Ref. to GD(H4DO w/o HEV)-164, DTC P0456 EVAPORATIVE EMISSION CONTROL SYSTEM LEAK DETECTED (VERY SMALL LEAK), Diagnostic Trouble Code (DTC) Detecting Criteria.>
P0458	Evaporative Emission System Purge Control Valve Circuit Low	<Ref. to GD(H4DO w/o HEV)-165, DTC P0458 EVAPORATIVE EMISSION SYSTEM PURGE CONTROL VALVE CIRCUIT LOW, Diagnostic Trouble Code (DTC) Detecting Criteria.>
P0459	Evaporative Emission System Purge Control Valve Circuit High	<Ref. to GD(H4DO w/o HEV)-167, DTC P0459 EVAPORATIVE EMISSION SYSTEM PURGE CONTROL VALVE CIRCUIT HIGH, Diagnostic Trouble Code (DTC) Detecting Criteria.>
P0461	Fuel Level Sensor “A” Circuit Range/ Performance	<Ref. to GD(H4DO w/o HEV)-169, DTC P0461 FUEL LEVEL SENSOR “A” CIRCUIT RANGE/PERFORMANCE, Diagnostic Trouble Code (DTC) Detecting Criteria.>
P0462	Fuel Level Sensor “A” Circuit Low	<Ref. to GD(H4DO w/o HEV)-171, DTC P0462 FUEL LEVEL SENSOR “A” CIRCUIT LOW, Diagnostic Trouble Code (DTC) Detecting Criteria.>
P0463	Fuel Level Sensor “A” Circuit High	<Ref. to GD(H4DO w/o HEV)-173, DTC P0463 FUEL LEVEL SENSOR “A” CIRCUIT HIGH, Diagnostic Trouble Code (DTC) Detecting Criteria.>
P0500	Vehicle Speed Sensor “A”	<Ref. to GD(H4DO w/o HEV)-175, DTC P0500 VEHICLE SPEED SENSOR “A”, Diagnostic Trouble Code (DTC) Detecting Criteria.>
P0506	Idle Air Control System RPM Lower Than Expected	<Ref. to GD(H4DO w/o HEV)-176, DTC P0506 IDLE AIR CONTROL SYSTEM RPM LOWER THAN EXPECTED, Diagnostic Trouble Code (DTC) Detecting Criteria.>

DTC	Item	Note
P0507	Idle Air Control System RPM Higher Than Expected	<Ref. to GD(H4DO w/o HEV)-177, DTC P0507 IDLE AIR CONTROL SYSTEM RPM HIGHER THAN EXPECTED, Diagnostic Trouble Code (DTC) Detecting Criteria.>
P050A	Cold Start Idle Air Control System Performance	<Ref. to GD(H4DO w/o HEV)-178, DTC P050A COLD START IDLE AIR CONTROL SYSTEM PERFORMANCE, Diagnostic Trouble Code (DTC) Detecting Criteria.>
P050B	Cold Start Ignition Timing Performance	<Ref. to GD(H4DO w/o HEV)-181, DTC P050B COLD START IGNITION TIMING PERFORMANCE, Diagnostic Trouble Code (DTC) Detecting Criteria.>
P0516	Battery Temperature Sensor Circuit Low	<Ref. to GD(H4DO w/o HEV)-182, DTC P0516 BATTERY TEMPERATURE SENSOR CIRCUIT LOW, Diagnostic Trouble Code (DTC) Detecting Criteria.>
P0517	Battery Temperature Sensor Circuit High	<Ref. to GD(H4DO w/o HEV)-184, DTC P0517 BATTERY TEMPERATURE SENSOR CIRCUIT HIGH, Diagnostic Trouble Code (DTC) Detecting Criteria.>
P0560	System Voltage	<Ref. to GD(H4DO w/o HEV)-186, DTC P0560 SYSTEM VOLTAGE, Diagnostic Trouble Code (DTC) Detecting Criteria.>
P0604	Internal Control Module Random Access Memory (RAM) Error	<Ref. to GD(H4DO w/o HEV)-187, DTC P0604 INTERNAL CONTROL MODULE RANDOM ACCESS MEMORY (RAM) ERROR, Diagnostic Trouble Code (DTC) Detecting Criteria.>
P0605	Internal Control Module Read Only Memory (ROM) Error	<Ref. to GD(H4DO w/o HEV)-188, DTC P0605 INTERNAL CONTROL MODULE READ ONLY MEMORY (ROM) ERROR, Diagnostic Trouble Code (DTC) Detecting Criteria.>
P0606	Control Module Processor	<Ref. to GD(H4DO w/o HEV)-189, DTC P0606 CONTROL MODULE PROCESSOR, Diagnostic Trouble Code (DTC) Detecting Criteria.>
P060A	Internal Control Module Monitoring Processor Performance	<Ref. to GD(H4DO w/o HEV)-191, DTC P060A INTERNAL CONTROL MODULE MONITORING PROCESSOR PERFORMANCE, Diagnostic Trouble Code (DTC) Detecting Criteria.>
P060B	Internal Control Module A/D Processing Performance	<Ref. to GD(H4DO w/o HEV)-192, DTC P060B INTERNAL CONTROL MODULE A/D PROCESSING PERFORMANCE, Diagnostic Trouble Code (DTC) Detecting Criteria.>
P0616	Starter Relay Circuit Low	<Ref. to GD(H4DO w/o HEV)-194, DTC P0616 STARTER RELAY CIRCUIT LOW, Diagnostic Trouble Code (DTC) Detecting Criteria.>
P0617	Starter Relay Circuit High	<Ref. to GD(H4DO w/o HEV)-195, DTC P0617 STARTER RELAY CIRCUIT HIGH, Diagnostic Trouble Code (DTC) Detecting Criteria.>
P062F	Internal Control Module EEPROM Error	<Ref. to GD(H4DO w/o HEV)-196, DTC P062F INTERNAL CONTROL MODULE EEPROM ERROR, Diagnostic Trouble Code (DTC) Detecting Criteria.>
P0700	Transmission Control System (MIL Request)	<Ref. to GD(H4DO w/o HEV)-197, DTC P0700 TRANSMISSION CONTROL SYSTEM (MIL REQUEST), Diagnostic Trouble Code (DTC) Detecting Criteria.>
P0851	Park/Neutral Switch Input Circuit Low (AT Model)	<Ref. to GD(H4DO w/o HEV)-198, DTC P0851 PARK/NEUTRAL SWITCH INPUT CIRCUIT LOW (AT MODEL), Diagnostic Trouble Code (DTC) Detecting Criteria.>
P0851	Neutral Switch Input Circuit Low (MT Model)	<Ref. to GD(H4DO w/o HEV)-199, DTC P0851 NEUTRAL SWITCH INPUT CIRCUIT LOW (MT MODEL), Diagnostic Trouble Code (DTC) Detecting Criteria.>
P0852	Park/Neutral Switch Input Circuit High (AT Model)	<Ref. to GD(H4DO w/o HEV)-200, DTC P0852 PARK/NEUTRAL SWITCH INPUT CIRCUIT HIGH (AT MODEL), Diagnostic Trouble Code (DTC) Detecting Criteria.>
P0852	Neutral Switch Input Circuit High (MT Model)	<Ref. to GD(H4DO w/o HEV)-201, DTC P0852 NEUTRAL SWITCH INPUT CIRCUIT HIGH (MT MODEL), Diagnostic Trouble Code (DTC) Detecting Criteria.>
P1160	Return Spring Failure	<Ref. to GD(H4DO w/o HEV)-202, DTC P1160 RETURN SPRING FAILURE, Diagnostic Trouble Code (DTC) Detecting Criteria.>
P1449	Evaporative Emission Cont. Sys. Air Filter Clog	<Ref. to GD(H4DO w/o HEV)-204, DTC P1449 EVAPORATIVE EMISSION CONT. SYS. AIR FILTER CLOG, Diagnostic Trouble Code (DTC) Detecting Criteria.>
P1451	Evaporative Emission Cont. Sys.	<Ref. to GD(H4DO w/o HEV)-206, DTC P1451 EVAPORATIVE EMISSION CONT. SYS., Diagnostic Trouble Code (DTC) Detecting Criteria.>

DTC	Item	Note
P1492	EGR Solenoid Valve Signal #1 Circuit Malfunction (Low Input)	<Ref. to GD(H4DO w/o HEV)-207, DTC P1492 EGR SOLENOID VALVE SIGNAL #1 CIRCUIT MALFUNCTION (LOW INPUT), Diagnostic Trouble Code (DTC) Detecting Criteria.>
P1493	EGR Solenoid Valve Signal #1 Circuit Malfunction (High Input)	<Ref. to GD(H4DO w/o HEV)-209, DTC P1493 EGR SOLENOID VALVE SIGNAL #1 CIRCUIT MALFUNCTION (HIGH INPUT), Diagnostic Trouble Code (DTC) Detecting Criteria.>
P1494	EGR Solenoid Valve Signal #2 Circuit Malfunction (Low Input)	<Ref. to GD(H4DO w/o HEV)-211, DTC P1494 EGR SOLENOID VALVE SIGNAL #2 CIRCUIT MALFUNCTION (LOW INPUT), Diagnostic Trouble Code (DTC) Detecting Criteria.>
P1495	EGR Solenoid Valve Signal #2 Circuit Malfunction (High Input)	<Ref. to GD(H4DO w/o HEV)-211, DTC P1495 EGR SOLENOID VALVE SIGNAL #2 CIRCUIT MALFUNCTION (HIGH INPUT), Diagnostic Trouble Code (DTC) Detecting Criteria.>
P1496	EGR Solenoid Valve Signal #3 Circuit Malfunction (Low Input)	<Ref. to GD(H4DO w/o HEV)-211, DTC P1496 EGR SOLENOID VALVE SIGNAL #3 CIRCUIT MALFUNCTION (LOW INPUT), Diagnostic Trouble Code (DTC) Detecting Criteria.>
P1497	EGR Solenoid Valve Signal #3 Circuit Malfunction (High Input)	<Ref. to GD(H4DO w/o HEV)-211, DTC P1497 EGR SOLENOID VALVE SIGNAL #3 CIRCUIT MALFUNCTION (HIGH INPUT), Diagnostic Trouble Code (DTC) Detecting Criteria.>
P1498	EGR Solenoid Valve Signal #4 Circuit Malfunction (Low Input)	<Ref. to GD(H4DO w/o HEV)-211, DTC P1498 EGR SOLENOID VALVE SIGNAL #4 CIRCUIT MALFUNCTION (LOW INPUT), Diagnostic Trouble Code (DTC) Detecting Criteria.>
P1499	EGR Solenoid Valve Signal #4 Circuit Malfunction (High Input)	<Ref. to GD(H4DO w/o HEV)-211, DTC P1499 EGR SOLENOID VALVE SIGNAL #4 CIRCUIT MALFUNCTION (HIGH INPUT), Diagnostic Trouble Code (DTC) Detecting Criteria.>
P1530	Battery Current Sensor Circuit Low	<Ref. to GD(H4DO w/o HEV)-212, DTC P1530 BATTERY CURRENT SENSOR CIRCUIT LOW, Diagnostic Trouble Code (DTC) Detecting Criteria.>
P1531	Battery Current Sensor Circuit High	<Ref. to GD(H4DO w/o HEV)-214, DTC P1531 BATTERY CURRENT SENSOR CIRCUIT HIGH, Diagnostic Trouble Code (DTC) Detecting Criteria.>
P1532	Battery Charging System	<Ref. to GD(H4DO w/o HEV)-216, DTC P1532 BATTERY CHARGING SYSTEM, Diagnostic Trouble Code (DTC) Detecting Criteria.>
P2004	Intake Manifold Runner Control Stuck Open (Bank 1)	<Ref. to GD(H4DO w/o HEV)-219, DTC P2004 INTAKE MANIFOLD RUNNER CONTROL STUCK OPEN (BANK 1), Diagnostic Trouble Code (DTC) Detecting Criteria.>
P2005	Intake Manifold Runner Control Stuck Open (Bank 2)	<Ref. to GD(H4DO w/o HEV)-220, DTC P2005 INTAKE MANIFOLD RUNNER CONTROL STUCK OPEN (BANK 2), Diagnostic Trouble Code (DTC) Detecting Criteria.>
P2006	Intake Manifold Runner Control Stuck Closed (Bank 1)	<Ref. to GD(H4DO w/o HEV)-221, DTC P2006 INTAKE MANIFOLD RUNNER CONTROL STUCK CLOSED (BANK 1), Diagnostic Trouble Code (DTC) Detecting Criteria.>
P2007	Intake Manifold Runner Control Stuck Closed (Bank 2)	<Ref. to GD(H4DO w/o HEV)-222, DTC P2007 INTAKE MANIFOLD RUNNER CONTROL STUCK CLOSED (BANK 2), Diagnostic Trouble Code (DTC) Detecting Criteria.>
P2009	Intake Manifold Runner Control Circuit Low (Bank 1)	<Ref. to GD(H4DO w/o HEV)-223, DTC P2009 INTAKE MANIFOLD RUNNER CONTROL CIRCUIT LOW (BANK 1), Diagnostic Trouble Code (DTC) Detecting Criteria.>
P2012	Intake Manifold Runner Control Circuit Low (Bank 2)	<Ref. to GD(H4DO w/o HEV)-224, DTC P2012 INTAKE MANIFOLD RUNNER CONTROL CIRCUIT LOW (BANK 2), Diagnostic Trouble Code (DTC) Detecting Criteria.>
P2088	Intake Camshaft Position Actuator Control Circuit Low (Bank 1)	<Ref. to GD(H4DO w/o HEV)-225, DTC P2088 INTAKE CAMSHAFT POSITION ACTUATOR CONTROL CIRCUIT LOW (BANK 1), Diagnostic Trouble Code (DTC) Detecting Criteria.>
P2089	Intake Camshaft Position Actuator Control Circuit High (Bank 1)	<Ref. to GD(H4DO w/o HEV)-226, DTC P2089 INTAKE CAMSHAFT POSITION ACTUATOR CONTROL CIRCUIT HIGH (BANK 1), Diagnostic Trouble Code (DTC) Detecting Criteria.>
P2090	Exhaust Camshaft Position Actuator Control Circuit Low (Bank 1)	<Ref. to GD(H4DO w/o HEV)-227, DTC P2090 EXHAUST CAMSHAFT POSITION ACTUATOR CONTROL CIRCUIT LOW (BANK 1), Diagnostic Trouble Code (DTC) Detecting Criteria.>

DTC	Item	Note
P2091	Exhaust Camshaft Position Actuator Control Circuit High (Bank 1)	<Ref. to GD(H4DO w/o HEV)-228, DTC P2091 EXHAUST CAMSHAFT POSITION ACTUATOR CONTROL CIRCUIT HIGH (BANK 1), Diagnostic Trouble Code (DTC) Detecting Criteria.>
P2092	Intake Camshaft Position Actuator Control Circuit Low (Bank 2)	<Ref. to GD(H4DO w/o HEV)-229, DTC P2092 INTAKE CAMSHAFT POSITION ACTUATOR CONTROL CIRCUIT LOW (BANK 2), Diagnostic Trouble Code (DTC) Detecting Criteria.>
P2093	Intake Camshaft Position Actuator Control Circuit High (Bank 2)	<Ref. to GD(H4DO w/o HEV)-229, DTC P2093 INTAKE CAMSHAFT POSITION ACTUATOR CONTROL CIRCUIT HIGH (BANK 2), Diagnostic Trouble Code (DTC) Detecting Criteria.>
P2094	Exhaust Camshaft Position Actuator Control Circuit Low (Bank 2)	<Ref. to GD(H4DO w/o HEV)-229, DTC P2094 EXHAUST CAMSHAFT POSITION ACTUATOR CONTROL CIRCUIT LOW (BANK 2), Diagnostic Trouble Code (DTC) Detecting Criteria.>
P2095	Exhaust Camshaft Position Actuator Control Circuit High (Bank 2)	<Ref. to GD(H4DO w/o HEV)-229, DTC P2095 EXHAUST CAMSHAFT POSITION ACTUATOR CONTROL CIRCUIT HIGH (BANK 2), Diagnostic Trouble Code (DTC) Detecting Criteria.>
P2096	Post Catalyst Fuel Trim System Too Lean (Bank 1)	<Ref. to GD(H4DO w/o HEV)-230, DTC P2096 POST CATALYST FUEL TRIM SYSTEM TOO LEAN (BANK 1), Diagnostic Trouble Code (DTC) Detecting Criteria.>
P2097	Post Catalyst Fuel Trim System Too Rich (Bank 1)	<Ref. to GD(H4DO w/o HEV)-232, DTC P2097 POST CATALYST FUEL TRIM SYSTEM TOO RICH (BANK 1), Diagnostic Trouble Code (DTC) Detecting Criteria.>
P2101	Throttle Actuator Control Motor Circuit Range/Performance	<Ref. to GD(H4DO w/o HEV)-234, DTC P2101 THROTTLE ACTUATOR CONTROL MOTOR CIRCUIT RANGE/PERFORMANCE, Diagnostic Trouble Code (DTC) Detecting Criteria.>
P2102	Throttle Actuator Control Motor Circuit Low	<Ref. to GD(H4DO w/o HEV)-236, DTC P2102 THROTTLE ACTUATOR CONTROL MOTOR CIRCUIT LOW, Diagnostic Trouble Code (DTC) Detecting Criteria.>
P2103	Throttle Actuator Control Motor Circuit High	<Ref. to GD(H4DO w/o HEV)-238, DTC P2103 THROTTLE ACTUATOR CONTROL MOTOR CIRCUIT HIGH, Diagnostic Trouble Code (DTC) Detecting Criteria.>
P2109	Throttle/Pedal Position Sensor “A” Minimum Stop Performance	<Ref. to GD(H4DO w/o HEV)-240, DTC P2109 THROTTLE/PEDAL POSITION SENSOR “A” MINIMUM STOP PERFORMANCE, Diagnostic Trouble Code (DTC) Detecting Criteria.>
P2119	Throttle Actuator Control Throttle Body Range/Performance	<Ref. to GD(H4DO w/o HEV)-242, DTC P2119 THROTTLE ACTUATOR CONTROL THROTTLE BODY RANGE/PERFORMANCE, Diagnostic Trouble Code (DTC) Detecting Criteria.>
P2122	Throttle/Pedal Position Sensor/Switch “D” Circuit Low Input	<Ref. to GD(H4DO w/o HEV)-244, DTC P2122 THROTTLE/PEDAL POSITION SENSOR/SWITCH “D” CIRCUIT LOW INPUT, Diagnostic Trouble Code (DTC) Detecting Criteria.>
P2123	Throttle/Pedal Position Sensor/Switch “D” Circuit High Input	<Ref. to GD(H4DO w/o HEV)-246, DTC P2123 THROTTLE/PEDAL POSITION SENSOR/SWITCH “D” CIRCUIT HIGH INPUT, Diagnostic Trouble Code (DTC) Detecting Criteria.>
P2127	Throttle/Pedal Position Sensor/Switch “E” Circuit Low Input	<Ref. to GD(H4DO w/o HEV)-248, DTC P2127 THROTTLE/PEDAL POSITION SENSOR/SWITCH “E” CIRCUIT LOW INPUT, Diagnostic Trouble Code (DTC) Detecting Criteria.>
P2128	Throttle/Pedal Position Sensor/Switch “E” Circuit High Input	<Ref. to GD(H4DO w/o HEV)-250, DTC P2128 THROTTLE/PEDAL POSITION SENSOR/SWITCH “E” CIRCUIT HIGH INPUT, Diagnostic Trouble Code (DTC) Detecting Criteria.>
P2135	Throttle/Pedal Position Sensor/Switch “A”/“B” Voltage Correlation	<Ref. to GD(H4DO w/o HEV)-252, DTC P2135 THROTTLE/PEDAL POSITION SENSOR/SWITCH “A”/“B” VOLTAGE CORRELATION, Diagnostic Trouble Code (DTC) Detecting Criteria.>
P2138	Throttle/Pedal Position Sensor/Switch “D”/“E” Voltage Correlation	<Ref. to GD(H4DO w/o HEV)-254, DTC P2138 THROTTLE/PEDAL POSITION SENSOR/SWITCH “D”/“E” VOLTAGE CORRELATION, Diagnostic Trouble Code (DTC) Detecting Criteria.>
P2195	O2 Sensor Signal Biased/Stuck Lean (Bank 1 Sensor 1)	<Ref. to GD(H4DO w/o HEV)-256, DTC P2195 O2 SENSOR SIGNAL BIASED/STUCK LEAN (BANK 1 SENSOR 1), Diagnostic Trouble Code (DTC) Detecting Criteria.>

DTC	Item	Note
P2196	O2 Sensor Signal Biased/Stuck Rich (Bank 1 Sensor 1)	<Ref. to GD(H4DO w/o HEV)-258, DTC P2196 O2 SENSOR SIGNAL BIASED/STUCK RICH (BANK 1 SENSOR 1), Diagnostic Trouble Code (DTC) Detecting Criteria.>
P219A	Bank 1 Air-Fuel Ratio Imbalance	<Ref. to GD(H4DO w/o HEV)-260, DTC P219A BANK 1 AIR-FUEL RATIO IMBALANCE, Diagnostic Trouble Code (DTC) Detecting Criteria.>
P2401	Evaporative Emission System Leak Detection Pump Control Circuit Low	<Ref. to GD(H4DO w/o HEV)-266, DTC P2401 EVAPORATIVE EMISSION SYSTEM LEAK DETECTION PUMP CONTROL CIRCUIT LOW, Diagnostic Trouble Code (DTC) Detecting Criteria.>
P2402	Evaporative Emission System Leak Detection Pump Control Circuit High	<Ref. to GD(H4DO w/o HEV)-268, DTC P2402 EVAPORATIVE EMISSION SYSTEM LEAK DETECTION PUMP CONTROL CIRCUIT HIGH, Diagnostic Trouble Code (DTC) Detecting Criteria.>
P2404	Evaporative Emission System Leak Detection Pump Sense Circuit Range/ Performance	<Ref. to GD(H4DO w/o HEV)-269, DTC P2404 EVAPORATIVE EMISSION SYSTEM LEAK DETECTION PUMP SENSE CIRCUIT RANGE/PERFORMANCE, Diagnostic Trouble Code (DTC) Detecting Criteria.>
P2419	Evaporative Emission System Switching Valve Control Circuit Low	<Ref. to GD(H4DO w/o HEV)-270, DTC P2419 EVAPORATIVE EMISSION SYSTEM SWITCHING VALVE CONTROL CIRCUIT LOW, Diagnostic Trouble Code (DTC) Detecting Criteria.>
P2420	Evaporative Emission System Switching Valve Control Circuit High	<Ref. to GD(H4DO w/o HEV)-272, DTC P2420 EVAPORATIVE EMISSION SYSTEM SWITCHING VALVE CONTROL CIRCUIT HIGH, Diagnostic Trouble Code (DTC) Detecting Criteria.>
P2610	ECM/PCM Internal Engine Off Timer Performance	<Ref. to GD(H4DO w/o HEV)-274, DTC P2610 ECM/PCM INTERNAL ENGINE OFF TIMER PERFORMANCE, Diagnostic Trouble Code (DTC) Detecting Criteria.>
U0073	Control Module Communication Bus Off	<Ref. to GD(H4DO w/o HEV)-282, DTC U0073 CONTROL MODULE COMMUNICATION BUS OFF, Diagnostic Trouble Code (DTC) Detecting Criteria.>
U0101	Lost Communication With TCM	<Ref. to GD(H4DO w/o HEV)-283, DTC U0101 LOST COMMUNICATION WITH TCM, Diagnostic Trouble Code (DTC) Detecting Criteria.>
U0122	Lost Communication With Vehicle Dynamics Control Module	<Ref. to GD(H4DO w/o HEV)-284, DTC U0122 LOST COMMUNICATION WITH VEHICLE DYNAMICS CONTROL MODULE, Diagnostic Trouble Code (DTC) Detecting Criteria.>
U0155	Lost Communication With Instrument Panel Cluster (IPC) Control Module	<Ref. to GD(H4DO w/o HEV)-284, DTC U0155 LOST COMMUNICATION WITH INSTRUMENT PANEL CLUSTER (IPC) CONTROL MODULE, Diagnostic Trouble Code (DTC) Detecting Criteria.>
U0402	Invalid Data Received From TCM	<Ref. to GD(H4DO w/o HEV)-285, DTC U0402 INVALID DATA RECEIVED FROM TCM, Diagnostic Trouble Code (DTC) Detecting Criteria.>
U0416	Invalid Data Received From Vehicle Dynamics Control Module	<Ref. to GD(H4DO w/o HEV)-286, DTC U0416 INVALID DATA RECEIVED FROM VEHICLE DYNAMICS CONTROL MODULE, Diagnostic Trouble Code (DTC) Detecting Criteria.>
U0423	Invalid Data Received From Instrument Panel Cluster Control Module	<Ref. to GD(H4DO w/o HEV)-286, DTC U0423 INVALID DATA RECEIVED FROM INSTRUMENT PANEL CLUSTER CONTROL MODULE, Diagnostic Trouble Code (DTC) Detecting Criteria.>

2. Diagnostic Trouble Code (DTC) Detecting Criteria

A: DTC B1570 ANTENNA

1. OUTLINE OF DIAGNOSIS

DTC	Item	OUTLINE OF DIAGNOSIS
B1570	Antenna	Faulty antenna
B1571	Reference Code Incompatibility	Reference code incompatibility between body integrated unit and ECM
B1572	IMM Circuit Failure (Except Antenna Circuit)	Communication failure between body integrated unit and ECM
B1574	Key Communication Failure	The body integrated unit to confirm the key (transponder) ID code has malfunction, of the transponder is faulty.
B1575	Incorrect Immobilizer Key	Incorrect immobilizer key (Use of unregistered key in body integrated unit)
B1576	EGI Control Module EEPROM	ECM malfunctioning
B1577	IMM Control Module EEPROM	Body integrated unit malfunctioning
B1578	Meter Failure	Reference code incompatibility between combination meter and body integrated unit

2. ENABLE CONDITIONS

When starting the engine.

3. GENERAL DRIVING CYCLE

Perform the diagnosis only after starting the engine.

4. DIAGNOSTIC METHOD

Judge as NG when the conditions for the outline of the diagnosis of the top are established.

B: DTC B1571 REFERENCE CODE INCOMPATIBILITY

1. OUTLINE OF DIAGNOSIS

NOTE:
For the detection standard, refer to DTC B1570. <Ref. to GD(H4DO w/o HEV)-11, DTC B1570 ANTENNA, Diagnostic Trouble Code (DTC) Detecting Criteria.>

C: DTC B1572 IMM CIRCUIT FAILURE (EXCEPT ANTENNA CIRCUIT)

1. OUTLINE OF DIAGNOSIS

NOTE:
For the detection standard, refer to DTC B1570. <Ref. to GD(H4DO w/o HEV)-11, DTC B1570 ANTENNA, Diagnostic Trouble Code (DTC) Detecting Criteria.>

D: DTC B1574 KEY COMMUNICATION FAILURE

1. OUTLINE OF DIAGNOSIS

NOTE:
For the detection standard, refer to DTC B1570. <Ref. to GD(H4DO w/o HEV)-11, DTC B1570 ANTENNA, Diagnostic Trouble Code (DTC) Detecting Criteria.>

E: DTC B1575 INCORRECT IMMOBILIZER KEY

1. OUTLINE OF DIAGNOSIS

NOTE:
For the detection standard, refer to DTC B1570. <Ref. to GD(H4DO w/o HEV)-11, DTC B1570 ANTENNA, Diagnostic Trouble Code (DTC) Detecting Criteria.>

F: DTC B1576 EGI CONTROL MODULE EEPROM

1. OUTLINE OF DIAGNOSIS

NOTE:
For the detection standard, refer to DTC B1570. <Ref. to GD(H4DO w/o HEV)-11, DTC B1570 ANTENNA, Diagnostic Trouble Code (DTC) Detecting Criteria.>

G: DTC B1577 IMM CONTROL MODULE EEPROM

1. OUTLINE OF DIAGNOSIS

NOTE:
For the detection standard, refer to DTC B1570. <Ref. to GD(H4DO w/o HEV)-11, DTC B1570 ANTENNA, Diagnostic Trouble Code (DTC) Detecting Criteria.>

H: DTC B1578 METER FAILURE

1. OUTLINE OF DIAGNOSIS

NOTE:
For the detection standard, refer to DTC B1570. <Ref. to GD(H4DO w/o HEV)-11, DTC B1570 ANTENNA, Diagnostic Trouble Code (DTC) Detecting Criteria.>

I: DTC P000A A CAMSHAFT POSITION SLOW RESPONSE (BANK 1)

1. OUTLINE OF DIAGNOSIS

Detect the AVCS system malfunction.
Judge NG when the amount of AVCS actual timing advance does not approach to the amount of AVCS target timing advance.

2. ENABLE CONDITIONS

Secondary Parameters	Enable Conditions
Time of establishing all secondary parameter conditions	≥ 500 ms
Battery voltage	≥ 10.9 V
Engine speed	≥ 500 rpm
Engine oil temperature	≥ –40 °C (–40 °F)
AVCS control	Operation
Target timing advance change amount (per 64 ms)	< 3.2 °CA

3. GENERAL DRIVING CYCLE

Perform the diagnosis continuously when the engine speed increases and AVCS operates.

4. DIAGNOSTIC METHOD

When the differences of target timing advance amount and actual timing advance amount is calculated during AVCS control, and the difference per predetermined time is the specified value or larger.

- **Abnormality Judgment**

Judge as NG when the following conditions are established within the predetermined time.

Judgment value (Except for U5 model)

Malfunction Criteria	Threshold Value
Σ(Target position – Actual position)	> 4000 °CA (Bank 1) > 4000 °CA (Bank 2)
or	
Σ(Target position – Actual position)	< –4000 °CA (Bank 1) < –4000 °CA (Bank 2)

Judgment value (U5 model)

Malfunction Criteria	Threshold Value
Σ(Target position – Actual position)	> 2000 °CA (Bank 1) > 2000 °CA (Bank 2)
or	
Σ(Target position – Actual position)	< –2000 °CA (Bank 1) < –2000 °CA (Bank 2)

Time Needed for Diagnosis: 25000 ms
Malfunction Indicator Light Illumination: Illuminates when malfunction occurs in 2 continuous driving cycles.

- **Normality Judgment**

Judge as OK and clear the NG if the following conditions are established within the predetermined time.

Judgment value (Except for U5 model)

Malfunction Criteria	Threshold Value
Σ(Target position – Actual position)	≤ 4000 °CA (Bank 1) ≤ 4000 °CA (Bank 2) and ≥ –4000 °CA (Bank 1) ≥ –4000 °CA (Bank 2)

Judgment value (U5 model)

Malfunction Criteria	Threshold Value
Σ(Target position – Actual position)	≤ 2000 °CA (Bank 1) ≤ 2000 °CA (Bank 2) and ≥ –2000 °CA (Bank 1) ≥ –2000 °CA (Bank 2)

Time Needed for Diagnosis: 25000 ms

J: DTC P000B B CAMSHAFT POSITION SLOW RESPONSE (BANK 1)

1. OUTLINE OF DIAGNOSIS

Detect the exhaust AVCS system malfunction.
Judge NG when the amount of exhaust AVCS actual timing advance does not approach the amount of exhaust AVCS target timing advance.

2. ENABLE CONDITIONS

Secondary Parameters	Enable Conditions
Time of establishing all secondary parameter conditions	≥ 500 ms
Battery voltage	≥ 10.9 V
Engine speed	≥ 500 rpm
Engine oil temperature	≥ –40 °C (–40 °F)
Exhaust AVCS control	Operation
Target timing advance change amount (per 64 ms)	< 3.2 °CA

3. GENERAL DRIVING CYCLE

Perform the diagnosis continuously when the engine speed increases and exhaust AVCS operates.

4. DIAGNOSTIC METHOD

When the differences of target timing advance amount and actual timing advance amount is calculated during exhaust AVCS control, and the difference per predetermined time is the specified value or larger.

- **Abnormality Judgment**

Judge as NG when the following conditions are established within the predetermined time.

Judgment value (Except for U5 model)

Malfunction Criteria	Threshold Value
Σ(Target position – Actual position)	> 4000 °CA (Bank 1) > 4000 °CA (Bank 2)
or	
Σ(Target position – Actual position)	< –4000 °CA (Bank 1) < –4000 °CA (Bank 2)

Judgment value (U5 model)

Malfunction Criteria	Threshold Value
Σ(Target position – Actual position)	> 2000 °CA (Bank 1) > 2000 °CA (Bank 2)
or	
Σ(Target position – Actual position)	< –2000 °CA (Bank 1) < –2000 °CA (Bank 2)

Time Needed for Diagnosis: 25000 ms

Malfunction Indicator Light Illumination: Illuminates when malfunction occurs in 2 continuous driving cycles.

• Normality Judgment

Judge as OK and clear the NG if the following conditions are established within the predetermined time.

Judgment value (Except for U5 model)

Malfunction Criteria	Threshold Value
Σ(Target position – Actual position)	≤ 4000 °CA (Bank 1) ≤ 4000 °CA (Bank 2) and ≥ –4000 °CA (Bank 1) ≥ –4000 °CA (Bank 2)

Judgment value (U5 model)

Malfunction Criteria	Threshold Value
Σ(Target position – Actual position)	≤ 2000 °CA (Bank 1) ≤ 2000 °CA (Bank 2) and ≥ –2000 °CA (Bank 1) ≥ –2000 °CA (Bank 2)

Time Needed for Diagnosis: 25000 ms

K: DTC P000C A CAMSHAFT POSITION SLOW RESPONSE (BANK 2)

1. OUTLINE OF DIAGNOSIS

NOTE:
For the detection standard, refer to P000A. <Ref. to GD(H4DO w/o HEV)-13, DTC P000A A CAMSHAFT POSITION SLOW RESPONSE (BANK 1), Diagnostic Trouble Code (DTC) Detecting Criteria.>

L: DTC P000D B CAMSHAFT POSITION SLOW RESPONSE (BANK 2)

1. OUTLINE OF DIAGNOSIS

NOTE:
For the detection standard, refer to P000B. <Ref. to GD(H4DO w/o HEV)-15, DTC P000B B CAMSHAFT POSITION SLOW RESPONSE (BANK 1), Diagnostic Trouble Code (DTC) Detecting Criteria.>

M: DTC P0011 INTAKE CAMSHAFT POSITION - TIMING OVER-ADVANCED OR SYSTEM PERFORMANCE (BANK 1)

1. OUTLINE OF DIAGNOSIS

Detect the AVCS system malfunction.
Judge as NG when the conditions during which the differences of AVCS target timing advance amount and AVCS actual timing advance amount is large continues.

2. ENABLE CONDITION

- Normal

Secondary Parameters	Enable Conditions
Time of establishing all secondary parameter conditions	≥ 5000 ms
Battery voltage	≥ 10.9 V
Engine speed	≥ 500 rpm
Engine oil temperature	≥ –40 °C (–40 °F)
AVCS control	Operation

- Intermediate lock

Secondary Parameters	Enable Conditions
Time of establishing all secondary parameter conditions	≥ 2000 ms
Battery voltage	≥ 10.9 V
Engine speed	≥ 500 rpm
Engine oil temperature	≥ –40 °C (–40 °F)
AVCS control	Intermediate lock
Elapsed time after starting the engine	> 500 ms

3. GENERAL DRIVING CYCLE

- Normal

Perform the diagnosis continuously when the engine speed increases and AVCS operates.

- Intermediate lock

Perform the diagnosis when the AVCS is carrying out the intermediate lock control at the engine start.

4. DIAGNOSTIC METHOD

When the conditions during which the differences of AVCS target timing advance amount and AVCS actual timing advance amount is large continues for certain amount of time.

• Abnormality Judgment

Judge as NG when the following conditions are established within the predetermined time.

Judgment Value

Malfunction Criteria	Threshold Value
• Normal (Target position – Actual position)	> 15 °CA or < –15 °CA
• Intermediate lock (Target position – Actual position)	> 15 °CA or < –15 °CA

Time Needed for Diagnosis:

- Normal: 5000 ms
- Intermediate lock: 2000 ms

Malfunction Indicator Light Illumination: Illuminates when malfunction occurs in 2 continuous driving cycles.

- **Normality Judgment**

Judge as OK and clear the NG if the following conditions are established within the predetermined time.

Judgment Value

Malfunction Criteria	Threshold Value
• Normal (Target position – Actual position)	≤ 15 °CA and ≥ –15 °CA
• Intermediate lock (Target position – Actual position)	≤ 15 °CA and ≥ –15 °CA

Time Needed for Diagnosis:

- Normal: 5000 ms
- Intermediate lock: 2000 ms

N: DTC P0014 EXHAUST AVCS SYSTEM 1 (RANGE/PERFORMANCE)

1. OUTLINE OF DIAGNOSIS

Detect the exhaust AVCS system malfunction.
Judge as NG when the conditions during which the differences of exhaust AVCS target timing advance amount and exhaust AVCS actual timing advance amount is large continues.

2. ENABLE CONDITIONS

Secondary Parameters	Enable Conditions
Time of establishing all secondary parameter conditions	≥ 5000 ms
Battery voltage	≥ 10.9 V
Engine speed	≥ 500 rpm
Engine oil temperature	≥ –40 °C (–40 °F)
Exhaust AVCS control	Operation

3. GENERAL DRIVING CYCLE

Perform the diagnosis continuously when the engine speed increases and exhaust AVCS operates.

4. DIAGNOSTIC METHOD

When the conditions during which the differences of exhaust AVCS target timing advance amount and exhaust AVCS actual timing advance amount is large continues for certain amount of time.

- **Abnormality Judgment**

Judge as NG when the following conditions are established within the predetermined time.

Judgment Value

Malfunction Criteria	Threshold Value
(Target position – Actual position)	> 15 °CA or < –15 °CA

Time Needed for Diagnosis: 5000 ms
Malfunction Indicator Light Illumination: Illuminates when malfunction occurs in 2 continuous driving cycles.

- **Normality Judgment**

Judge as OK and clear the NG if the following conditions are established within the predetermined time.

Judgment Value

Malfunction Criteria	Threshold Value
(Target position – Actual position)	≤ 15 °CA and ≥ –15 °CA

Time Needed for Diagnosis: 5000 ms

O: DTC P0016 CRANKSHAFT POSITION - CAMSHAFT POSITION CORRELATION (BANK1)

1. OUTLINE OF DIAGNOSIS

Detect the AVCS system malfunction.
Judge as NG when standard timing advance amount is far from learning angle.

2. ENABLE CONDITION

Secondary Parameters	Enable Conditions
Battery voltage	≥ 10.9 V
Engine speed	≥ 1500 rpm and < 3000 rpm
Engine coolant temperature	≥ 50 °C (122 °F)
AVCS control	Not in operation
Target timing advance	0°CA

3. GENERAL DRIVING CYCLE

Perform the diagnosis continuously after starting engine and while AVCS is not operating.

4. DIAGNOSTIC METHOD

Judge as NG when the absolute value of the difference between cam signal input position and learning value is out of specification.

- **Abnormality Judgment**

If the duration of time while the following conditions are met is longer than the time indicated, judge as NG.

Judgment Value

Malfunction Criteria	Threshold Value
|Crankshaft position when camshaft position sensor signal is input – Learning value|	> 10 °CA

Time Needed for Diagnosis: 3000 ms
Malfunction Indicator Light Illumination: Illuminates when malfunction occurs in 2 continuous driving cycles.

NOTE:
Initial standard learning value is the value of crank angle initially input at the production plant. And then it will be updated every time normal judgment has been completed. Learning value will not be updated if NG judgment occurs because timing belt or chain derails suddenly in process or because wrong assembly occurs during servicing.

- **Normality Judgment**

Judge as OK and clear the NG if the continuous time while the following conditions are established is more than the predetermined time.

Judgment Value

Malfunction Criteria	Threshold Value
|Crankshaft position when camshaft position sensor signal is input – Learning value|	≤ 10 °CA

Time Needed for Diagnosis: Less than 1 second

P: DTC P0017 CRANK AND CAM TIMING B SYSTEM FAILURE (BANK 1)

1. OUTLINE OF DIAGNOSIS

Detect the exhaust AVCS system malfunction.
Judge as NG when standard timing advance amount is far from learning angle.

2. ENABLE CONDITIONS

Secondary Parameters	Enable Conditions
Battery voltage	≥ 10.9 V
Engine speed	≥ 500 rpm and < 1200 rpm
Engine coolant temperature	≥ 50 °C (122 °F)
Exhaust AVCS control	Not in operation
Target timing advance	0°CA

3. GENERAL DRIVING CYCLE

Perform the diagnosis continuously while the exhaust AVCS is not operating after warming up.

4. DIAGNOSTIC METHOD

Judge as NG when the absolute value of the difference between cam signal input position and learning value is out of specification.

- **Abnormality Judgment**

If the duration of time while the following conditions are met is longer than the time indicated, judge as NG.

Judgment Value

Malfunction Criteria	Threshold Value
|Crankshaft position when camshaft position sensor signal is input – Learning value|	> 10 °CA

Time Needed for Diagnosis: 5000 ms
Malfunction Indicator Light Illumination: Illuminates when malfunction occurs in 2 continuous driving cycles.

NOTE:
Initial standard learning value is the value of crank angle initially input at the production plant. And then it will be updated every time normal judgment has been completed. Learning value will not be updated if NG judgment occurs because timing belt or chain derails suddenly in process or because wrong assembly occurs during servicing.

- **Normality Judgment**

Judge as OK and clear the NG if the continuous time while the following conditions are established is more than the predetermined time.

Judgment Value

Malfunction Criteria	Threshold Value
|Crankshaft position when camshaft position sensor signal is input – Learning value|	≤ 10 °CA

Time Needed for Diagnosis: Less than 1 second

Q: DTC P0018 CRANKSHAFT POSITION - CAMSHAFT POSITION CORRELATION (BANK2)

1. OUTLINE OF DIAGNOSIS

NOTE:
For the detection standard, refer to DTC P0016. <Ref. to GD(H4DO w/o HEV)-20, DTC P0016 CRANKSHAFT POSITION - CAMSHAFT POSITION CORRELATION (BANK1), Diagnostic Trouble Code (DTC) Detecting Criteria.>

R: DTC P0019 CRANK AND CAM TIMING B SYSTEM FAILURE (BANK 2)

1. OUTLINE OF DIAGNOSIS

NOTE:
For the detection standard, refer to DTC P0017. <Ref. to GD(H4DO w/o HEV)-21, DTC P0017 CRANK AND CAM TIMING B SYSTEM FAILURE (BANK 1), Diagnostic Trouble Code (DTC) Detecting Criteria.>

S: DTC P0021 INTAKE CAMSHAFT POSITION - TIMING OVER-ADVANCED OR SYSTEM PERFORMANCE (BANK 2)

1. OUTLINE OF DIAGNOSIS

NOTE:
For the detection standard, refer to DTC P0011. <Ref. to GD(H4DO w/o HEV)-17, DTC P0011 INTAKE CAMSHAFT POSITION - TIMING OVER-ADVANCED OR SYSTEM PERFORMANCE (BANK 1), Diagnostic Trouble Code (DTC) Detecting Criteria.>

T: DTC P0024 EXHAUST AVCS SYSTEM 2 (RANGE/PERFORMANCE)

1. OUTLINE OF DIAGNOSIS

NOTE:
For the detection standard, refer to DTC P0014. <Ref. to GD(H4DO w/o HEV)-19, DTC P0014 EXHAUST AVCS SYSTEM 1 (RANGE/PERFORMANCE), Diagnostic Trouble Code (DTC) Detecting Criteria.>

U: DTC P0030 HO2S HEATER CONTROL CIRCUIT (BANK 1 SENSOR 1)

1. OUTLINE OF DIAGNOSIS

Detect functional errors of the front oxygen (A/F) sensor heater.
Judge as NG when it is determined that the front oxygen (A/F) sensor impedance is large when looking at engine status such as deceleration fuel cut.

2. COMPONENT DESCRIPTION

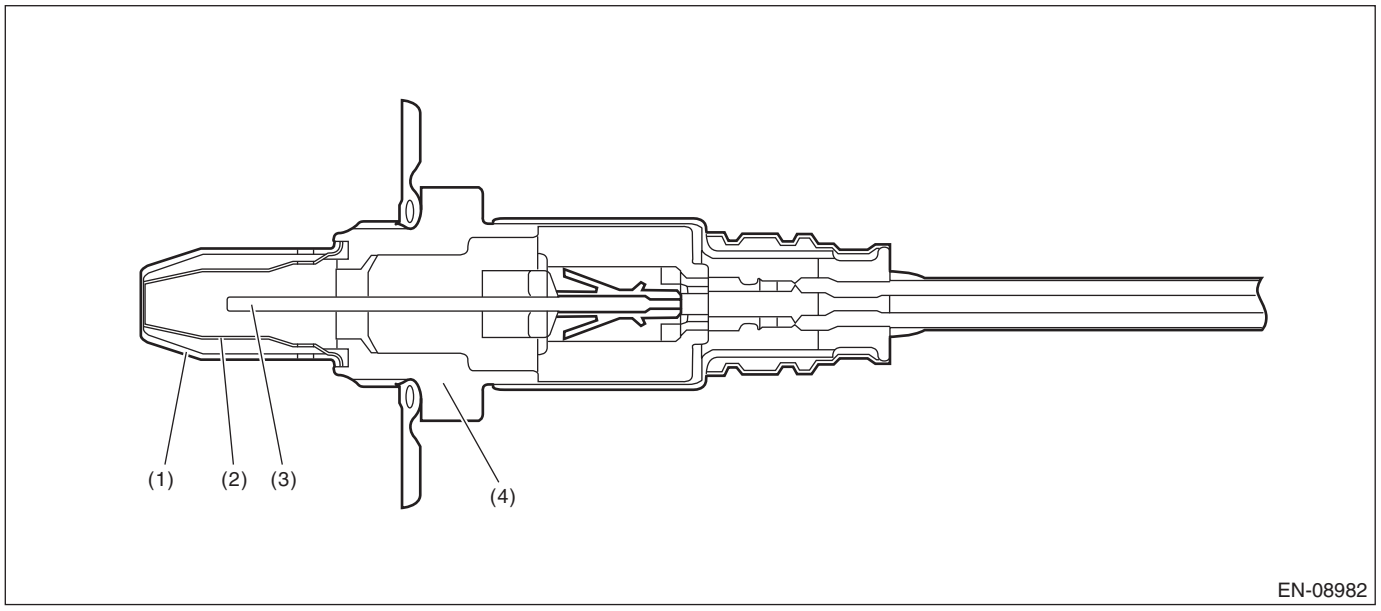

(1) Element cover (outer)
(2) Element cover (inner)
(3) Sensor element
(4) Sensor housing

3. ENABLE CONDITION

Secondary Parameters	Enable Conditions
Condition established time	≥ 42000 ms
Battery voltage	≥ 10.9 V
Heater current	Permitted
A/F sensor heater final control	Main energization status
After fuel cut	≥ 20000 ms

4. GENERAL DRIVING CYCLE

Perform the diagnosis continuously after 42000 ms seconds or more have passed since the engine started.

5. DIAGNOSTIC METHOD

• Abnormality Judgment

If the duration of time while the following conditions are met is longer than the time indicated, judge as NG.

Judgment Value

Malfunction Criteria	Threshold Value
Front oxygen (A/F) sensor impedance	> 50 Ω

Time Needed for Diagnosis: 10000 ms
Malfunction Indicator Light Illumination: Illuminates when malfunction occurs in 2 continuous driving cycles.

• Normality Judgment

Judge as OK and clear the NG if the continuous time while the following conditions are established is more than the predetermined time.

Judgment Value

Malfunction Criteria	Threshold Value
Front oxygen (A/F) sensor impedance	≤ 50 Ω

Time Needed for Diagnosis: 10000 ms

V: DTC P0031 HO2S HEATER CONTROL CIRCUIT LOW (BANK 1 SENSOR 1)

1. OUTLINE OF DIAGNOSIS

Detect front oxygen (A/F) sensor heater open or short circuit.
The front oxygen (A/F) sensor heater performs duty control, and the output terminal voltage at ON is 0 V, and the output terminal voltage at OFF is the battery voltage.
Judge as NG when the terminal voltage remains Low.

2. COMPONENT DESCRIPTION

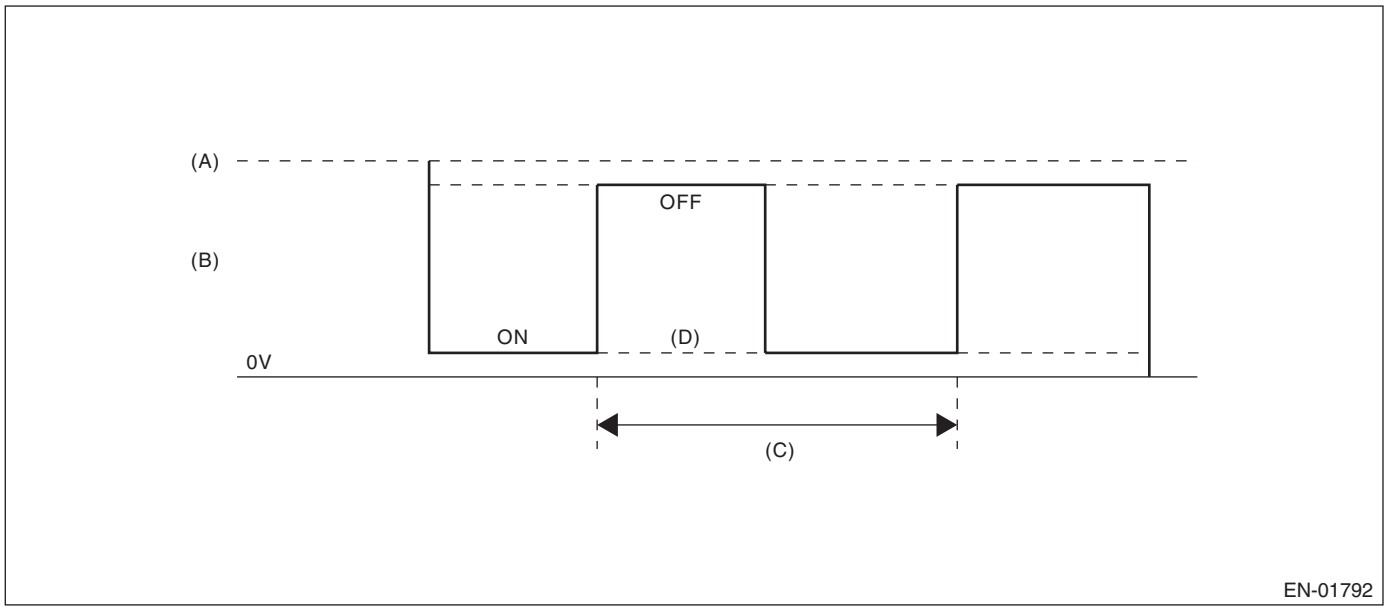

(A) Battery voltage
(B) Front oxygen (A/F) sensor heater output voltage
(C) 128 ms
(D) Low error

3. ENABLE CONDITION

Secondary Parameters	Enable Conditions
Battery voltage	≥ 10.9 V

4. GENERAL DRIVING CYCLE

Always perform the diagnosis continuously.

5. DIAGNOSTIC METHOD

- **Abnormality Judgment**

If the duration of time while the following conditions are met is longer than the time indicated, judge as NG.

Judgment Value

Malfunction Criteria	Threshold Value
Output voltage level Front oxygen (A/F) sensor heater control duty	Low < 87.5 %

Time Needed for Diagnosis: 4 ms × 250 time(s)
Malfunction Indicator Light Illumination: Illuminates as soon as a malfunction occurs.

- **Normality Judgment**

Judge as OK and clear the NG if the continuous time while the following conditions are established is more than the predetermined time.

Judgment Value

Malfunction Criteria	Threshold Value
Output voltage level	High

Time Needed for Diagnosis: Less than 1 second

W: DTC P0032 HO2S HEATER CONTROL CIRCUIT HIGH (BANK 1 SENSOR 1)

1. OUTLINE OF DIAGNOSIS

Detect front oxygen (A/F) sensor heater open or short circuit.
The front oxygen (A/F) sensor heater performs duty control, and the output terminal voltage at ON is 0 V, and the output terminal voltage at OFF is the battery voltage.
Judge as NG when the terminal voltage remains High.

2. COMPONENT DESCRIPTION

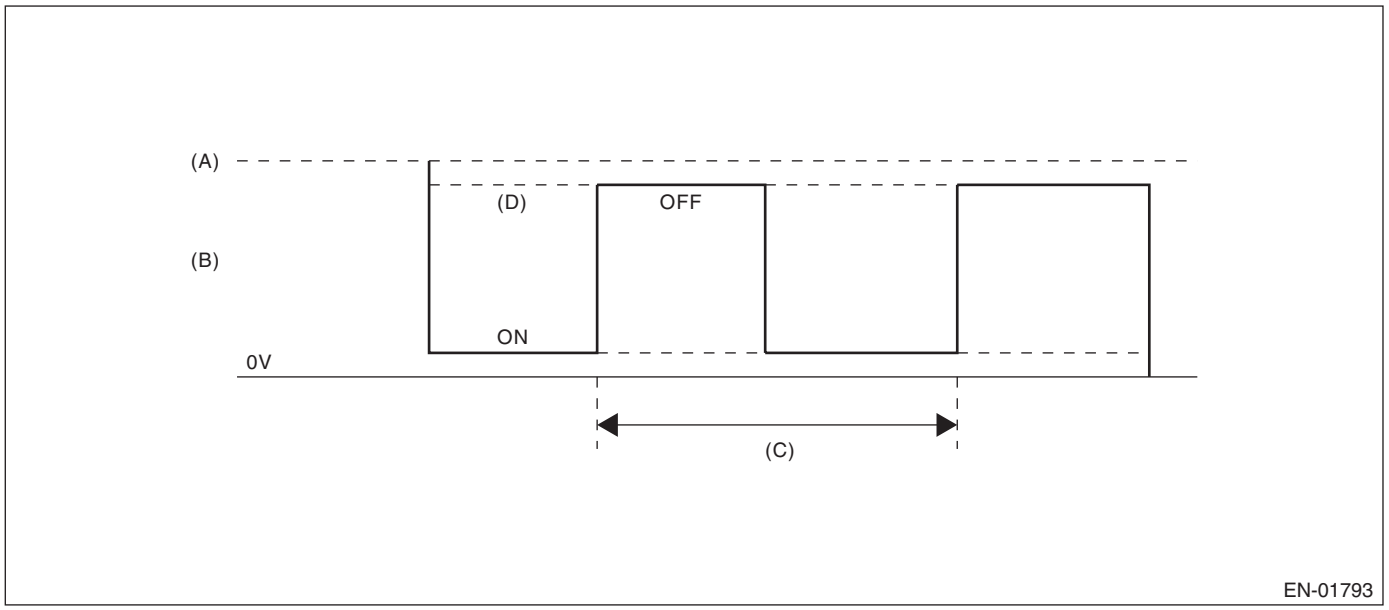

(A) Battery voltage
(B) Front oxygen (A/F) sensor heater output voltage
(C) 128 ms
(D) High error

3. ENABLE CONDITION

Secondary Parameters	Enable Conditions
Battery voltage	≥ 10.9 V

4. GENERAL DRIVING CYCLE

Always perform the diagnosis continuously.

5. DIAGNOSTIC METHOD

- **Abnormality Judgment**

If the duration of time while the following conditions are met is longer than the time indicated, judge as NG.

Judgment Value

Malfunction Criteria	Threshold Value
Output voltage level Front oxygen (A/F) sensor heater control duty	High ≥ 12.5 %

Time Needed for Diagnosis: 4 ms × 500 time(s)
Malfunction Indicator Light Illumination: Illuminates as soon as a malfunction occurs.

- **Normality Judgment**

Judge as OK and clear the NG if the continuous time while the following conditions are established is more than the predetermined time.

Judgment Value

Malfunction Criteria	Threshold Value
Output voltage level	Low

Time Needed for Diagnosis: Less than 1 second

X: DTC P0037 HO2S HEATER CONTROL CIRCUIT LOW (BANK 1 SENSOR 2)

1. OUTLINE OF DIAGNOSIS

Detect the rear oxygen sensor heater open or short circuit.
The rear oxygen sensor heater performs duty control, and the output terminal voltage at ON is 0 V, and the output terminal voltage at OFF is the battery voltage.
Judge as NG when the terminal voltage remains Low.

2. COMPONENT DESCRIPTION

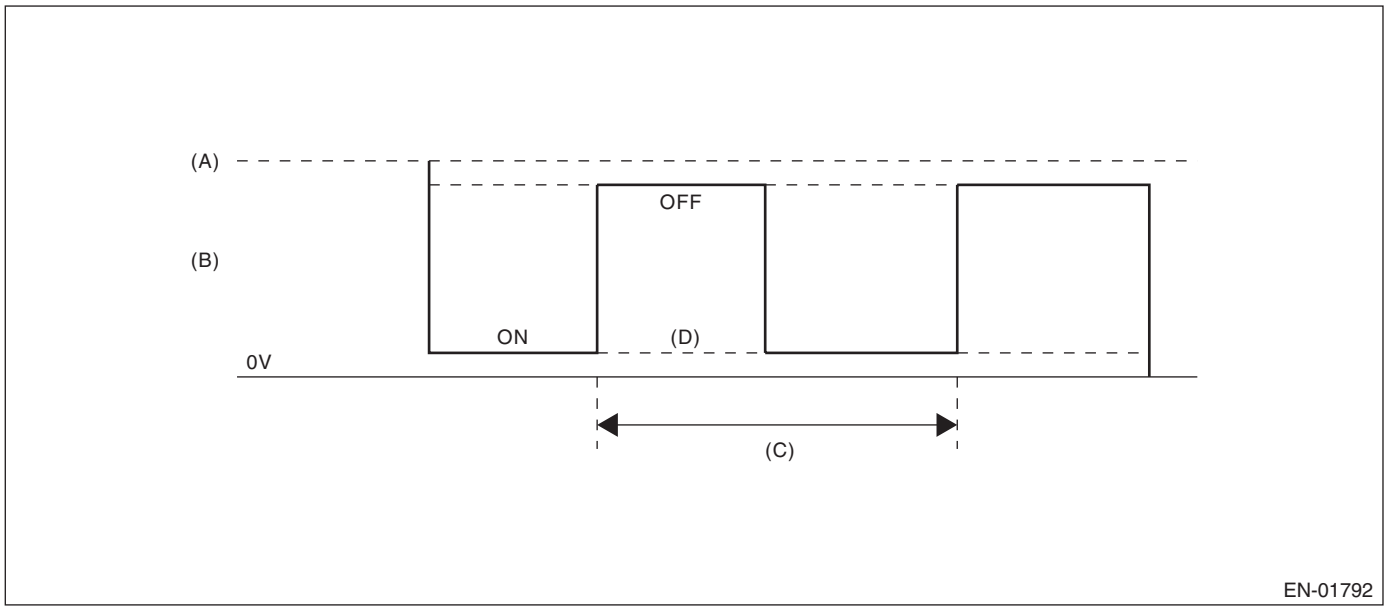

(A) Battery voltage
(B) Output voltage of the rear oxygen sensor heater
(C) 256 ms (cycle)
(D) Low error

3. ENABLE CONDITION

Secondary Parameters	Enable Conditions
Battery voltage	≥ 10.9 V
Elapsed time after starting the engine	≥ 1 second
Engine speed	< 8000 rpm

4. GENERAL DRIVING CYCLE

After starting the engine, perform the diagnosis continuously when engine is low speed.

5. DIAGNOSTIC METHOD

- **Abnormality Judgment**

If the duration of time while the following conditions are met is longer than the time indicated, judge as NG.

Judgment Value

Malfunction Criteria	Threshold Value
Output voltage level	Low
Rear oxygen sensor heater control duty	< 75 %

Time Needed for Diagnosis: 8 ms × 1250 time(s)
Malfunction Indicator Light Illumination: Illuminates when malfunction occurs in 2 continuous driving cycles.

- **Normality Judgment**

Judge as OK and clear the NG if the continuous time while the following conditions are established is more than the predetermined time.

Judgment Value

Malfunction Criteria	Threshold Value
Output voltage level	High

Time Needed for Diagnosis: Less than 1 second

Y: DTC P0038 HO2S HEATER CONTROL CIRCUIT HIGH (BANK 1 SENSOR 2)

1. OUTLINE OF DIAGNOSIS

Detect the rear oxygen sensor heater open or short circuit.
The rear oxygen sensor heater performs duty control, and the output terminal voltage at ON is 0 V, and the output terminal voltage at OFF is the battery voltage.
Judge as NG when the terminal voltage remains High.

2. COMPONENT DESCRIPTION

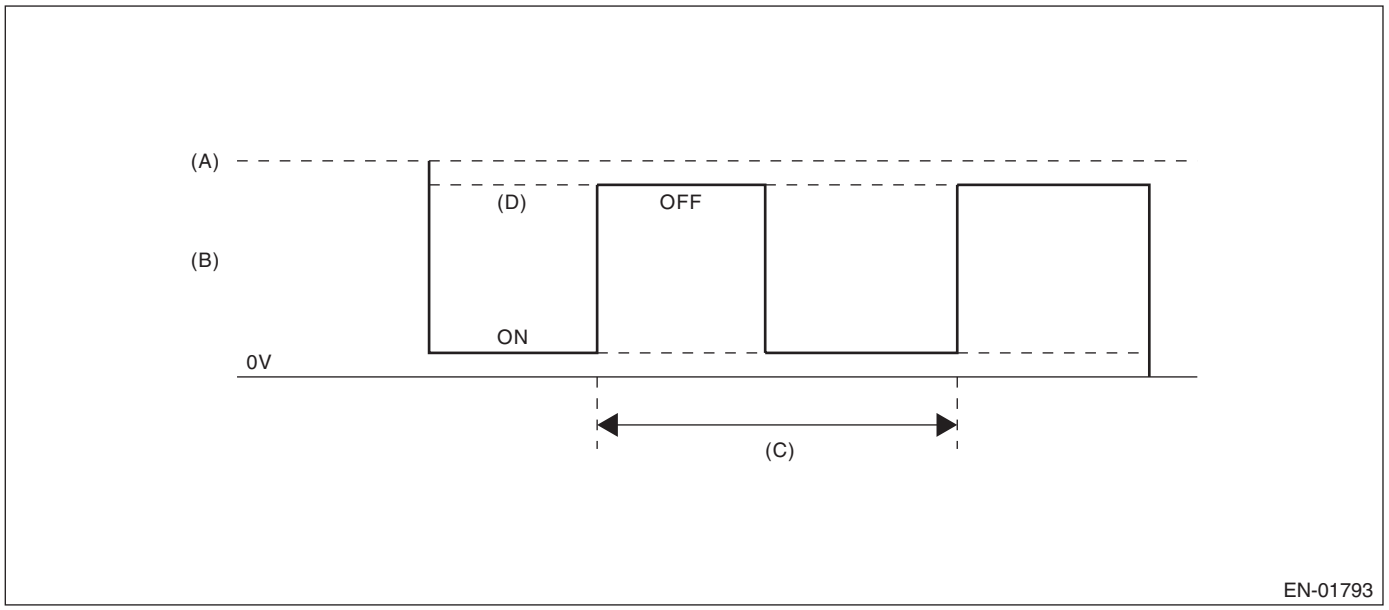

(A) Battery voltage
(B) Output voltage of the rear oxygen sensor heater
(C) 256 ms (cycle)
(D) High error

3. ENABLE CONDITION

Secondary Parameters	Enable Conditions
Battery voltage	≥ 10.9 V
Elapsed time after starting the engine	≥ 1 second
Engine speed	< 8000 rpm

4. GENERAL DRIVING CYCLE

After starting the engine, perform the diagnosis continuously when engine is low speed.

5. DIAGNOSTIC METHOD

- **Abnormality Judgment**

If the duration of time while the following conditions are met is longer than the time indicated, judge as NG.

Judgment Value

Malfunction Criteria	Threshold Value
Output voltage level	High
Rear oxygen sensor heater control duty	≥ 20 %

Time Needed for Diagnosis: 8 ms × 1250 time(s)
Malfunction Indicator Light Illumination: Illuminates when malfunction occurs in 2 continuous driving cycles.

- **Normality Judgment**

Judge as OK and clear the NG if the continuous time while the following conditions are established is more than the predetermined time.

Judgment Value

Malfunction Criteria	Threshold Value
Output voltage level	Low

Time Needed for Diagnosis: Less than 1 second

Z: DTC P0068 MAP/MAF - THROTTLE POSITION CORRELATION

1. OUTLINE OF DIAGNOSIS

Detect problems in the intake manifold pressure sensor output properties.
Judge as NG when the intake air pressure AD value is Low whereas it seemed to be High from the viewpoint of engine condition, or when it is High whereas it seemed to be Low from the engine condition.

2. COMPONENT DESCRIPTION

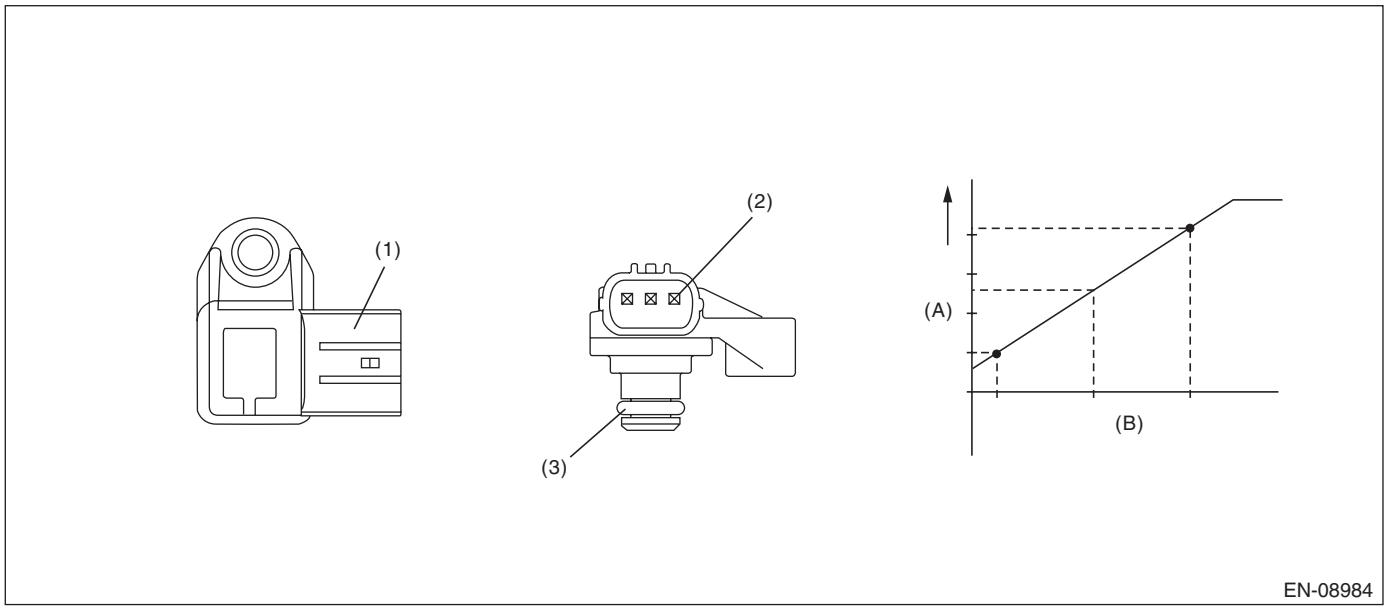

(A) Output voltage
(B) Absolute pressure
(1) Connector
(2) Terminals
(3) O-ring

3. ENABLE CONDITION

Secondary Parameters	Enable Conditions
Engine coolant temperature	≥ 60 °C (140 °F)

4. GENERAL DRIVING CYCLE

Perform the diagnosis continuously after idling.

5. DIAGNOSTIC METHOD

• Abnormality Judgment

Judge as NG when Low side or High side becomes NG.
If the duration of time while the following conditions are met is longer than the time indicated, judge as NG.

Judgment Value

Malfunction Criteria	Threshold Value
Low	
Engine speed	< 2900 rpm
Throttle position	≥ 12 °
Output voltage	< 1.44 V
Engine load	> 0.36 g/rev (0.01 oz/rev)
High	
Engine speed	500 rpm — 950 rpm (CVT model) 550 rpm — 950 rpm (MT model)
Throttle position	< 5.2 ° (CVT model) < 4.9 ° (MT model)
Output voltage	≥ 2.53 V
Engine load	< 0.34 g/rev (0.01 oz/rev) (CVT model) < 0.31 g/rev (0.01 oz/rev) (MT model)

Time Needed for Diagnosis:
Low side: 5000 ms
High side: 5000 ms
Malfunction Indicator Light Illumination: Illuminates when malfunction occurs in 2 continuous driving cycles.

• Normality Judgment

Judge as OK and clear the NG when both Low side and High side become OK.
If the duration of time while the following conditions are met is longer than the time indicated, judge as OK.

Judgment Value

Malfunction Criteria	Threshold Value
Low	
Engine speed	< 2900 rpm
Throttle position	≥ 12 °
Output voltage	≥ 1.44 V
Engine load	> 0.36 g/rev (0.01 oz/rev)
High	
Engine speed	500 rpm — 950 rpm (CVT model) 550 rpm — 950 rpm (MT model)
Throttle position	< 5.2 ° (CVT model) < 4.9 ° (MT model)
Output voltage	< 2.53 V
Engine load	< 0.34 g/rev (0.01 oz/rev) (CVT model) < 0.31 g/rev (0.01 oz/rev) (MT model)

Time Needed for Diagnosis:
Low side: Less than 1 second
High side: Less than 1 second

AA:DTC P0101 MASS OR VOLUME AIR FLOW CIRCUIT RANGE/PERFORMANCE

1. OUTLINE OF DIAGNOSIS

Detect the malfunction of air flow sensor output properties.
Judge as a low side NG when the air flow voltage indicates a small value regardless of running in a state where the air flow voltage increases. Judge as a high side NG when the air flow voltage indicates a large value regardless of running in a state where the air flow voltage decreases. Judge air flow sensor property NG when the Low side or High side becomes NG.

2. COMPONENT DESCRIPTION

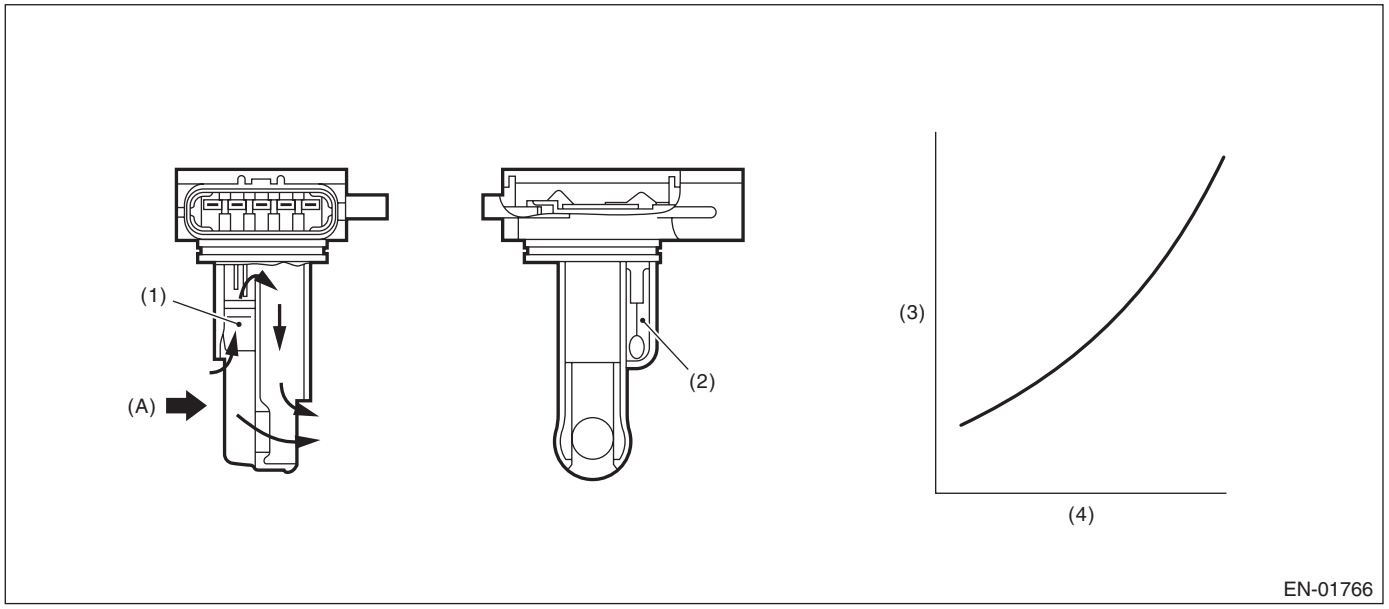

(A) Air

(1) Air flow sensor
(2) Intake air temperature sensor
(3) Voltage (V)
(4) Amount of intake air (kg (lb)/s)

3. ENABLE CONDITION

Secondary Parameters	Enable Conditions
Engine coolant temperature	≥ 60 °C (140 °F)

4. GENERAL DRIVING CYCLE

Perform the diagnosis continuously after idling.

5. DIAGNOSTIC METHOD

- **Abnormality Judgment**

Judge as NG when Low side or High side becomes NG.
If the duration of time while the following conditions are met is longer than the time indicated, judge as NG.

Judgment Value

Malfunction Criteria	Threshold Value
Low	
Output voltage	< 1.33 V
Engine speed	≥ 1600 rpm
Throttle opening angle	≥ 12 °
Intake manifold pressure	≥ 66.7 kPa (500 mmHg, 19.7 inHg)
High (1)	
Output voltage	≥ 1.86 V
Engine speed	500 rpm — 950 rpm (CVT model) 550 rpm — 950 rpm (MT model)
Throttle opening angle	< 5.2 ° (CVT model) < 4.9 ° (MT model)
Intake manifold pressure	≥ 44.8 kPa (336.3 mmHg, 13.2 inHg) (CVT model) ≥ 44.4 kPa (332.9 mmHg, 13.1 inHg) (MT model)
High (2)	
Output voltage	≥ 1.76 V
Engine speed	500 rpm — 950 rpm (CVT model) 550 rpm — 950 rpm (MT model)
Throttle opening angle	< 5.2 ° (CVT model) < 4.9 ° (MT model)
Intake manifold pressure	≥ 44.8 kPa (336.3 mmHg, 13.2 inHg) (CVT model) ≥ 44.4 kPa (332.9 mmHg, 13.1 inHg) (MT model)
Fuel system diagnosis	Rich side malfunction

Time Needed for Diagnosis:
Low: 5000 ms
High: 5000 ms
Malfunction Indicator Light Illumination: Illuminates when malfunction occurs in 2 continuous driving cycles.

- **Normality Judgment**

Judge as OK and clear the NG when both Low side and High side become OK.
Judge as OK and clear the NG if the continuous time while the following conditions are established is more than the predetermined time.

Judgment Value

Malfunction Criteria	Threshold Value
Low	
Output voltage	≥ 1.33 V
Engine speed	≥ 1600 rpm
Throttle opening angle	≥ 12 °
Intake manifold pressure	≥ 66.7 kPa (500 mmHg, 19.7 inHg)
High	
Output voltage	< 1.86 V
Engine speed	500 rpm — 950 rpm (CVT model) 550 rpm — 950 rpm (MT model)
Throttle opening angle	< 5.2 ° (CVT model) < 4.9 ° (MT model)
Intake manifold pressure	< 44.8 kPa (336.3 mmHg, 13.2 inHg) (CVT model) < 44.4 kPa (332.9 mmHg, 13.1 inHg) (MT model)
Fuel system diagnosis	Rich side normal

Time Needed for Diagnosis:
Low: Less than 1 second
High: Less than 1 second

AB:DTC P0102 MASS OR VOLUME AIR FLOW CIRCUIT LOW INPUT

1. OUTLINE OF DIAGNOSIS

Detect open or short circuits of the air flow sensor.
Judge as NG if out of specification.

2. COMPONENT DESCRIPTION

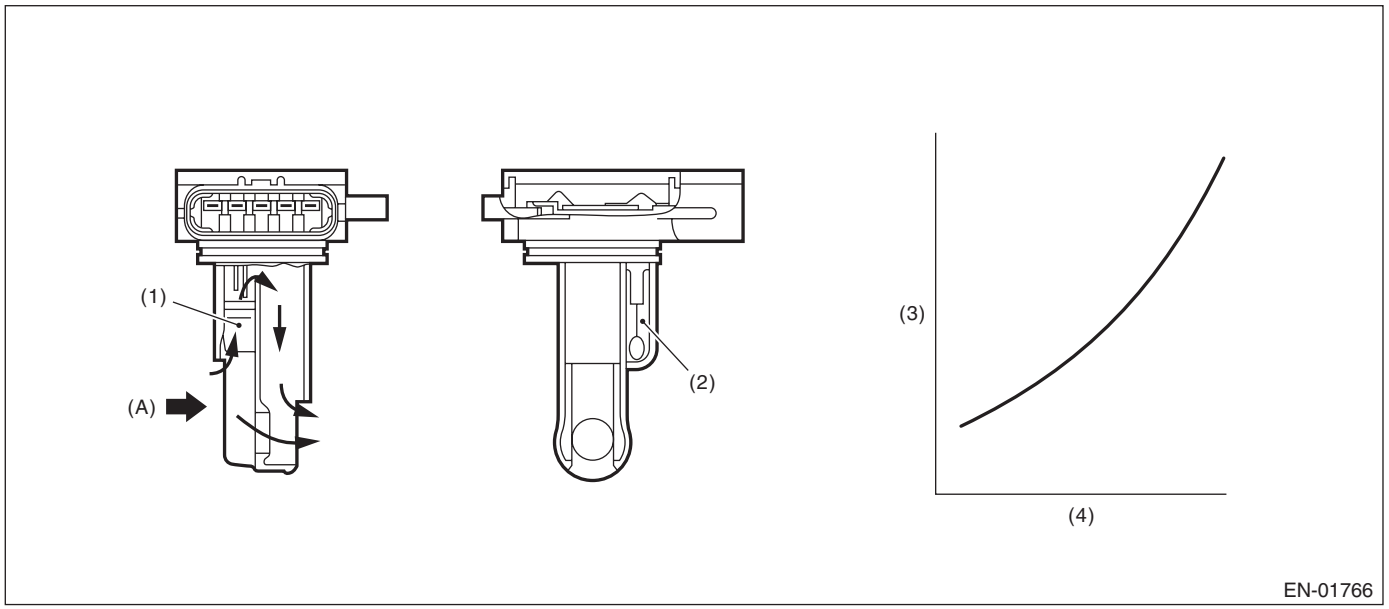

(A) Air

(1) Air flow sensor
(2) Intake air temperature sensor
(3) Voltage (V)
(4) Amount of intake air (kg (lb)/s)

3. ENABLE CONDITION

Secondary Parameters	Enable Conditions
None	

4. GENERAL DRIVING CYCLE

Always perform the diagnosis continuously.

5. DIAGNOSTIC METHOD

- **Abnormality Judgment**

If the duration of time while the following conditions are met is longer than the time indicated, judge as NG.

Judgment Value

Malfunction Criteria	Threshold Value
Output voltage	≤ 0.22 V

Time Needed for Diagnosis: 500 ms
Malfunction Indicator Light Illumination: Illuminates as soon as a malfunction occurs.

- **Normality Judgment**

Judge as OK and clear the NG if the continuous time while the following conditions are established is more than the predetermined time.

Judgment Value

Malfunction Criteria	Threshold Value
Output voltage	> 0.22 V

Time Needed for Diagnosis: Less than 1 second

AC:DTC P0103 MASS OR VOLUME AIR FLOW CIRCUIT HIGH INPUT

1. OUTLINE OF DIAGNOSIS

Detect open or short circuits of the air flow sensor.
Judge as NG if out of specification.

2. COMPONENT DESCRIPTION

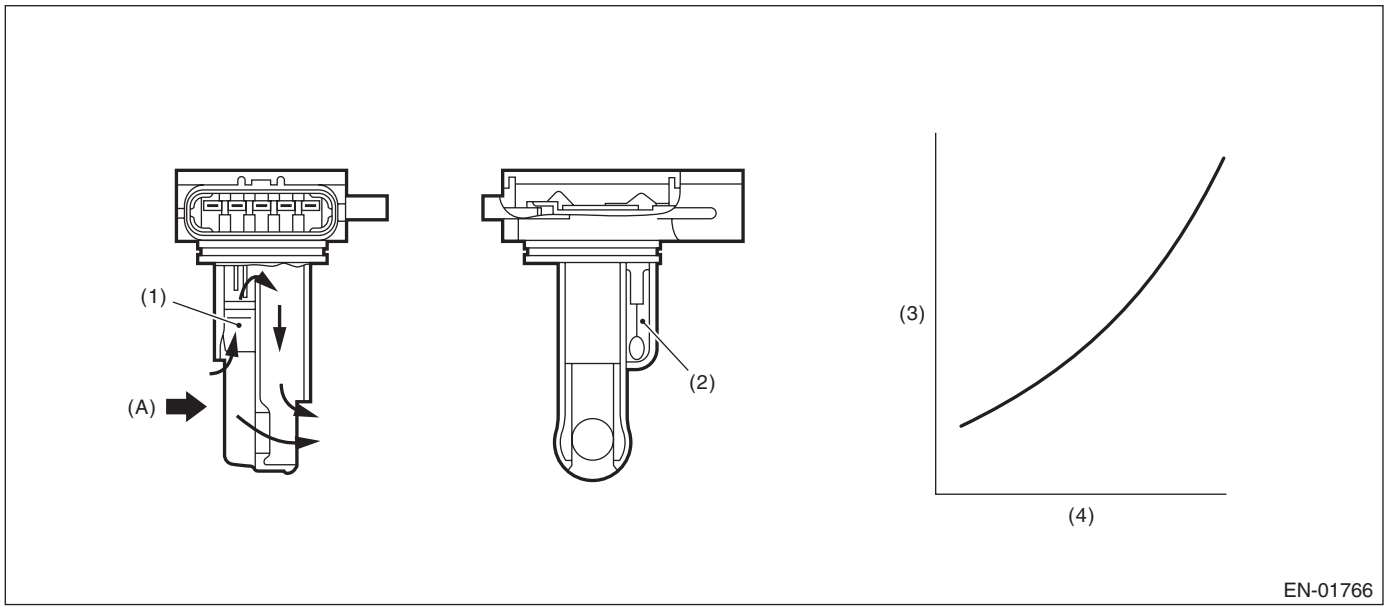

(A) Air

(1) Air flow sensor
(2) Intake air temperature sensor
(3) Voltage (V)
(4) Amount of intake air (kg (lb)/s)

3. ENABLE CONDITION

Secondary Parameters	Enable Conditions
None	

4. GENERAL DRIVING CYCLE

Always perform the diagnosis continuously.

5. DIAGNOSTIC METHOD

- **Abnormality Judgment**

If the duration of time while the following conditions are met is longer than the time indicated, judge as NG.

Judgment Value

Malfunction Criteria	Threshold Value
Output voltage	≥ 4.442 V

Time Needed for Diagnosis: 500 ms
Malfunction Indicator Light Illumination: Illuminates as soon as a malfunction occurs.

- **Normality Judgment**

Judge as OK and clear the NG if the continuous time while the following conditions are established is more than the predetermined time.

Judgment Value

Malfunction Criteria	Threshold Value
Output voltage	< 4.442 V

Time Needed for Diagnosis: Less than 1 second

AD:DTC P0107 MANIFOLD ABSOLUTE PRESSURE/BAROMETRIC PRESSURE CIRCUIT LOW INPUT

1. OUTLINE OF DIAGNOSIS

Detect the open or short circuit of intake manifold pressure sensor.
Judge as NG if out of specification.

2. COMPONENT DESCRIPTION

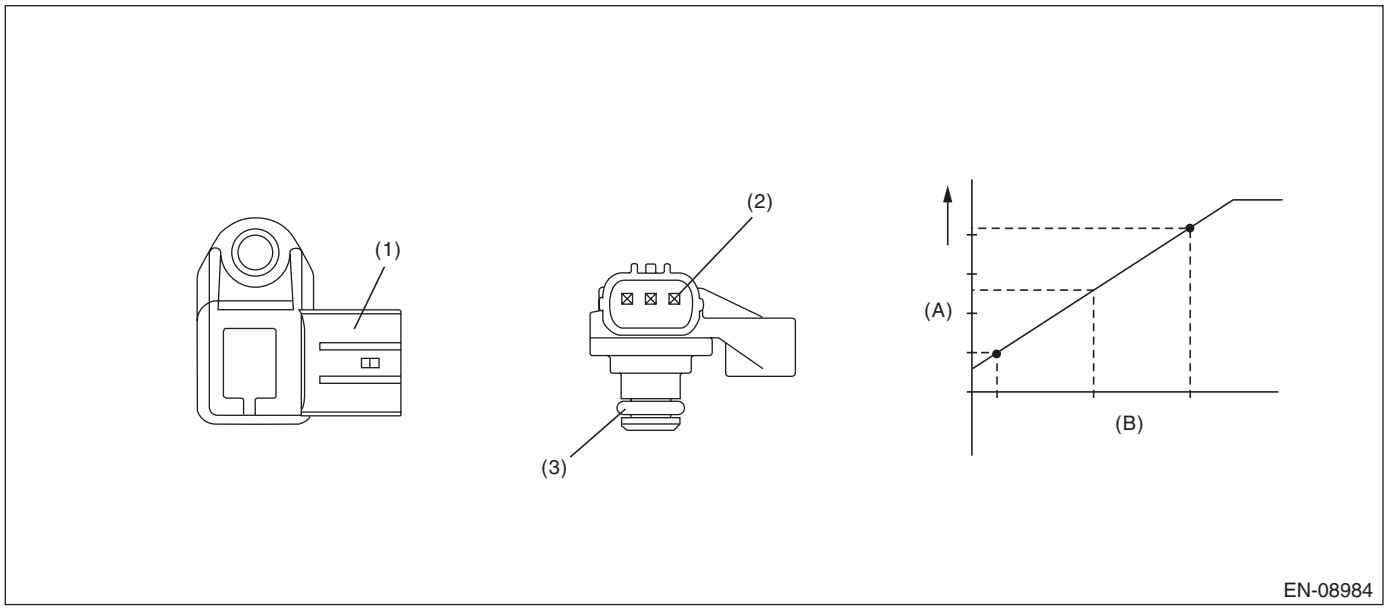

(A) Output voltage
(B) Absolute pressure
(1) Connector
(2) Terminals
(3) O-ring

3. ENABLE CONDITION

Secondary Parameters	Enable Conditions
None	

4. GENERAL DRIVING CYCLE

Always perform the diagnosis continuously.

5. DIAGNOSTIC METHOD

- **Abnormality Judgment**

If the duration of time while the following conditions are met is longer than the time indicated, judge as NG.

Judgment Value

Malfunction Criteria	Threshold Value
Output voltage	≤ 0.606 V

Time Needed for Diagnosis: 2000 ms
Malfunction Indicator Light Illumination: Illuminates as soon as a malfunction occurs.

- **Normality Judgment**

Judge as OK and clear the NG if the continuous time while the following conditions are established is more than the predetermined time.

Judgment Value

Malfunction Criteria	Threshold Value
Output voltage	> 0.606 V

Time Needed for Diagnosis: Less than 1 second

AE:DTC P0108 MANIFOLD ABSOLUTE PRESSURE/BAROMETRIC PRESSURE CIRCUIT HIGH INPUT

1. OUTLINE OF DIAGNOSIS

Detect the open or short circuit of intake manifold pressure sensor.
Judge as NG if out of specification.

2. COMPONENT DESCRIPTION

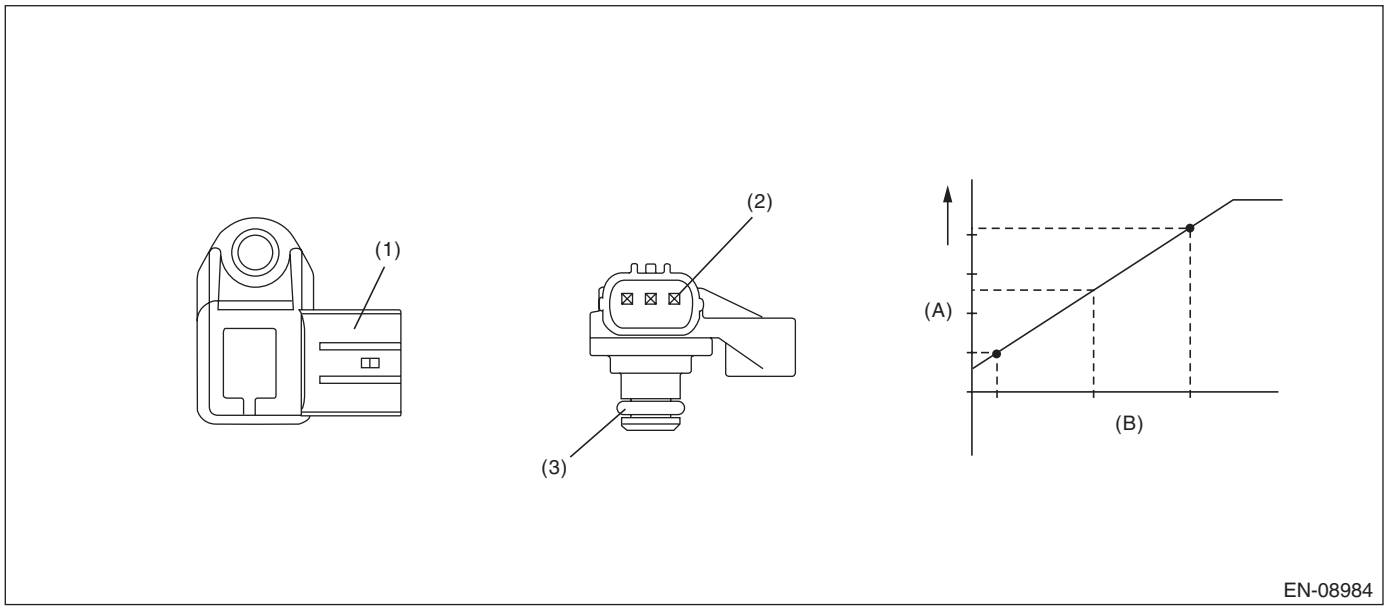

(A) Output voltage
(B) Absolute pressure
(1) Connector
(2) Terminals
(3) O-ring

3. ENABLE CONDITION

Secondary Parameters	Enable Conditions
None	

4. GENERAL DRIVING CYCLE

Always perform the diagnosis continuously.

5. DIAGNOSTIC METHOD

- **Abnormality Judgment**

If the duration of time while the following conditions are met is longer than the time indicated, judge as NG.

Judgment Value

Malfunction Criteria	Threshold Value
Output voltage	≥ 3.906 V

Time Needed for Diagnosis: 2000 ms
Malfunction Indicator Light Illumination: Illuminates as soon as a malfunction occurs.

- **Normality Judgment**

Judge as OK and clear the NG if the continuous time while the following conditions are established is more than the predetermined time.

Judgment Value

Malfunction Criteria	Threshold Value
Output voltage	< 3.906 V

Time Needed for Diagnosis: Less than 1 second

AF:DTC P0111 INTAKE AIR TEMPERATURE SENSOR RANGE/PERFORMANCE PROBLEM

1. OUTLINE OF DIAGNOSIS

Detect the malfunction of intake air temperature sensor output property.
Judge as NG when the intake air temperature is not varied whereas it seemed to be varied from the viewpoint of engine condition.

2. COMPONENT DESCRIPTION

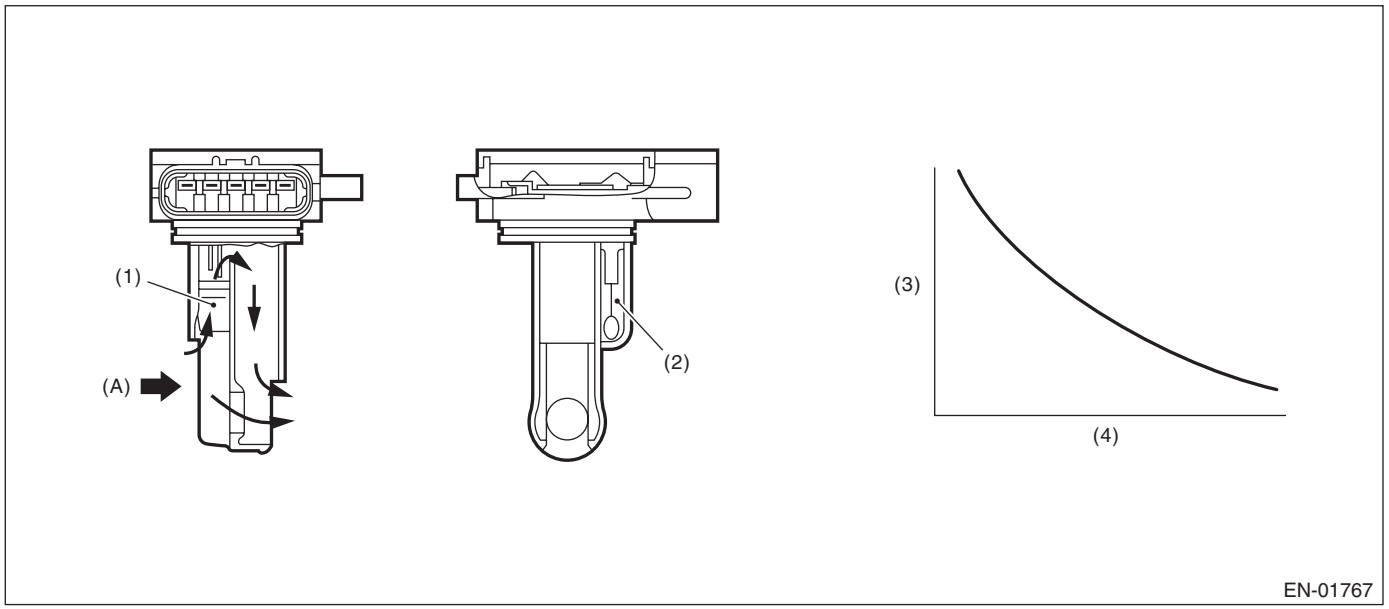

(A) Air

(1) Air flow sensor
(2) Intake air temperature sensor
(3) Resistance value (Ω)
(4) Intake air temperature °C (°F)

3. ENABLE CONDITION

Secondary Parameters	Enable Conditions
Engine coolant temperature at engine starting	< 200 °C (392 °F)
Battery voltage	≥ 10.9 V
Continuous time when the vehicle speed is less than 200 km/h (124.3 MPH)	≥ 1 s
Engine coolant temperature	≥ 60 °C (140 °F)
Intake air amount sum value	≥ Value of Map 1
Number of experiences under conditions below	≥ 3 time(s)
• Continuous time when vehicle speed is less than 4 km/h (2.5 MPH)	≥ Value from Map 2
• Continuous time when vehicle speed is 40 km/h (24.9 MPH) or more and	≥ 15 s
Establishing time of 1, 2	≥ 15 s
1. Intake air amount	≥ 10 g/s (0.35 oz/s)
2. Vehicle speed	≥ 4 km/h (2.5 MPH)

Map 1

Engine coolant temperature °C (°F)	–30 (–22)	–10 (14)	0 (32)	10 (50)	20 (68)
Intake air amount sum value (g (oz))	60000 (2116.2)	8500 (299.8)	7500 (264.53)	7000 (246.89)	6500 (229.26)

Map 2

Engine coolant temperature °C (°F)	–30 (–22)	–10 (14)	0 (32)	10 (50)	20 (68)
Continuous time (s) when vehicle speed is less than 4 km/h (2.5 MPH)	180	100	70	45	20

4. GENERAL DRIVING CYCLE

Perform the diagnosis when the vehicle speed condition is met after warming up from a cold condition.

5. DIAGNOSTIC METHOD

• Abnormality Judgment

Judge as NG when the following conditions are established.

Judgment Value

Malfunction Criteria	Threshold Value
Output voltage difference between Max. and Min.	< 0.02 V(Equivalent to approximately 0.5°C (0.9°F) near 25°C)

Time Needed for Diagnosis: Less than 1 second
Malfunction Indicator Light Illumination: Illuminates when malfunction occurs in 2 continuous driving cycles.

• Normality Judgment

Judge as OK and clear the NG if the following conditions are established.

Judgment Value

Malfunction Criteria	Threshold Value
Output voltage difference between Max. and Min.	≥ 0.02 V

Time Needed for Diagnosis: Less than 1 second

AG:DTC P0112 INTAKE AIR TEMPERATURE SENSOR 1 CIRCUIT LOW

1. OUTLINE OF DIAGNOSIS

Detect open or short circuit of the intake air temperature sensor.
Judge as NG if out of specification.

2. COMPONENT DESCRIPTION

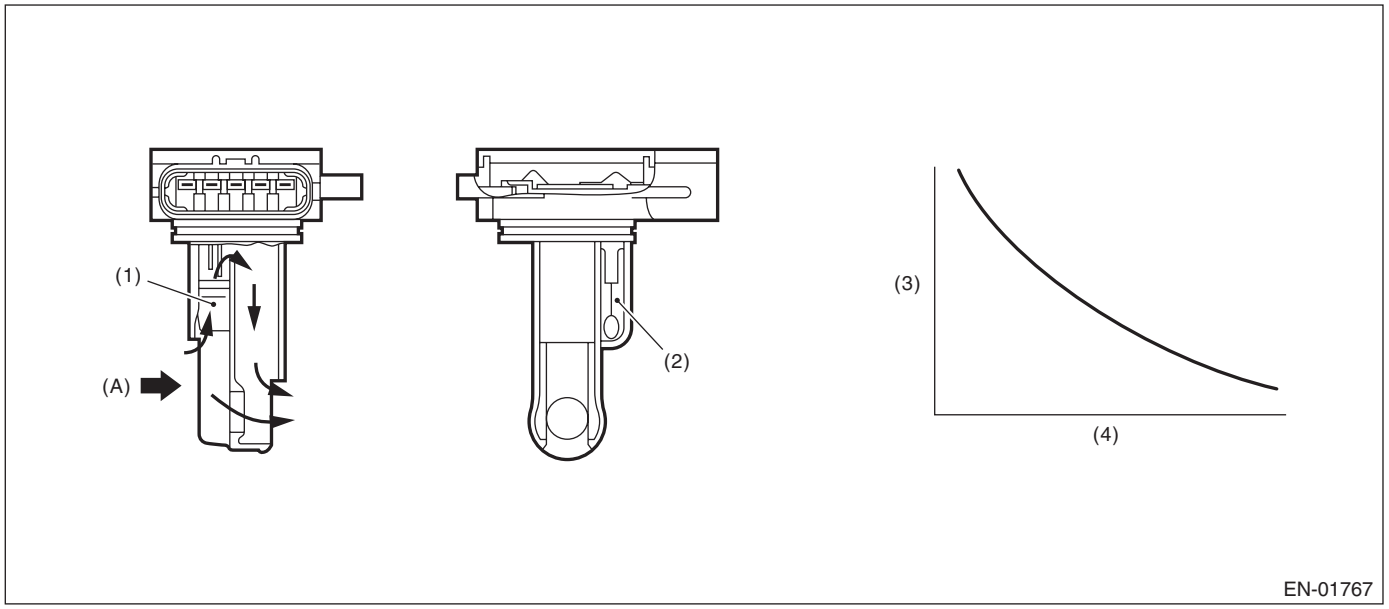

(A) Air

(1) Air flow sensor
(2) Intake air temperature sensor
(3) Resistance value (Ω)
(4) Intake air temperature °C (°F)

3. ENABLE CONDITION

Secondary Parameters	Enable Conditions
None	

4. GENERAL DRIVING CYCLE

Always perform the diagnosis continuously.

5. DIAGNOSTIC METHOD

- **Abnormality Judgment**

If the duration of time while the following conditions are met is longer than the time indicated, judge as NG.

Judgment Value

Malfunction Criteria	Threshold Value
Output voltage	< 0.395 V

Time Needed for Diagnosis: 500 ms
Malfunction Indicator Light Illumination: Illuminates as soon as a malfunction occurs.

- **Normality Judgment**

Judge as OK and clear the NG if the continuous time while the following conditions are established is more than the predetermined time.

Judgment Value

Malfunction Criteria	Threshold Value
Output voltage	≥ 0.395 V

Time Needed for Diagnosis: Less than 1 second

AH:DTC P0113 INTAKE AIR TEMPERATURE SENSOR 1 CIRCUIT HIGH

1. OUTLINE OF DIAGNOSIS

Detect open or short circuit of the intake air temperature sensor.
Judge as NG if out of specification.

2. COMPONENT DESCRIPTION

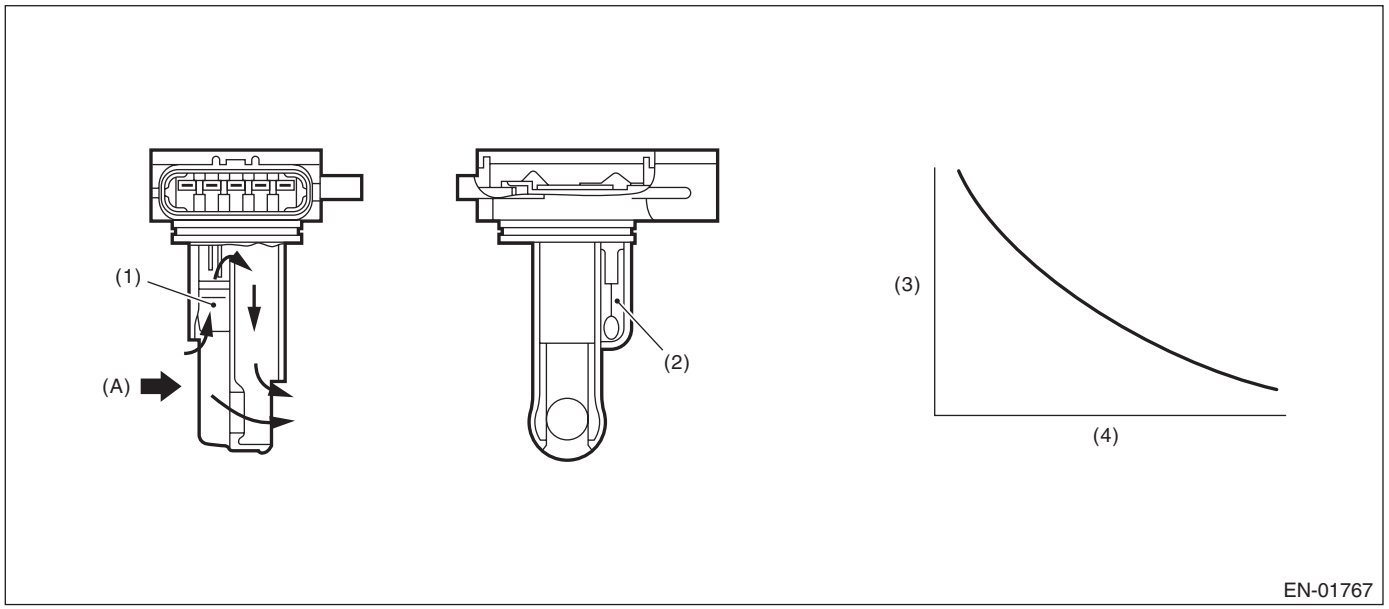

(A) Air

(1) Air flow sensor
(2) Intake air temperature sensor
(3) Resistance value (Ω)
(4) Intake air temperature °C (°F)

3. ENABLE CONDITION

Secondary Parameters	Enable Conditions
None	

4. GENERAL DRIVING CYCLE

Always perform the diagnosis continuously.

5. DIAGNOSTIC METHOD

- **Abnormality Judgment**

If the duration of time while the following conditions are met is longer than the time indicated, judge as NG.

Judgment Value

Malfunction Criteria	Threshold Value
Output voltage	≥ 4.712 V

Time Needed for Diagnosis: 500 ms
Malfunction Indicator Light Illumination: Illuminates as soon as a malfunction occurs.

- **Normality Judgment**

Judge as OK and clear the NG if the continuous time while the following conditions are established is more than the predetermined time.

Judgment Value

Malfunction Criteria	Threshold Value
Output voltage	< 4.712 V

Time Needed for Diagnosis: Less than 1 second

AI: DTC P0116 ENGINE COOLANT TEMPERATURE SENSOR 1 CIRCUIT RANGE/PERFORMANCE

1. OUTLINE OF DIAGNOSIS

Detect the malfunction of the engine coolant temperature sensor characteristics.
When the ignition is ON after the specified period of soaking time has elapsed, compare the engine coolant temperature with intake air temperature. Judge as NG if the difference between two temperatures is larger than the predetermined value and the engine coolant temperature becomes the specified value or more.

2. COMPONENT DESCRIPTION

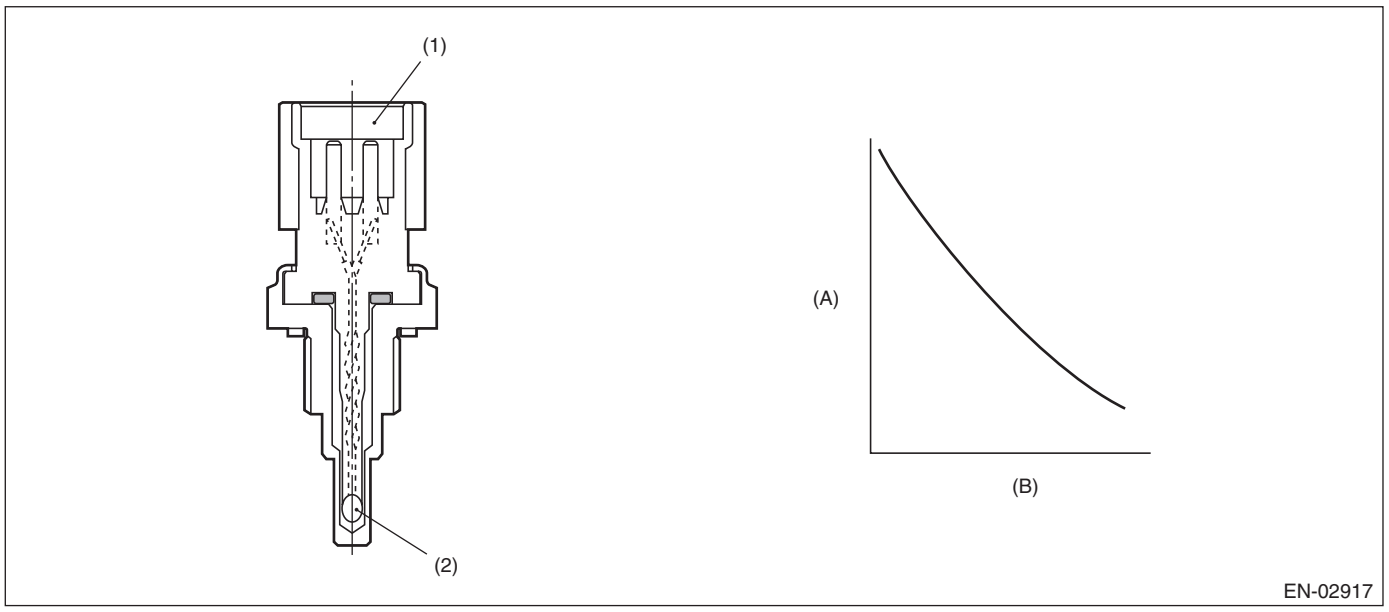

(A) Resistance value (kΩ)
(B) Temperature °C (°F)
(1) Connector
(2) Thermistor element

3. ENABLE CONDITIONS

Secondary Parameters	Enable Conditions
Battery voltage	≥ 10.9 V
Soaking time	≥ 21600 s
Engine coolant temperature at the last engine stop	≥ Value from Map

Map

Estimate ambient temperature °C (°F)	–7 (19.4)	8 (46.4)	10 (50)	25 (77)
Engine coolant temperature at the last engine stop °C (°F)	58 (136.4)	58 (136.4)	58 (136.4)	58 (136.4)

4. GENERAL DRIVING CYCLE

Perform the diagnosis only once after starting the engine.

5. DIAGNOSTIC METHOD

• Abnormality Judgment

If the duration of time while the following conditions are met is longer than the time indicated, judge as NG.

Judgment Value

Malfunction Criteria	Threshold Value
All of the following conditions are established.	
Engine coolant temperature – intake air temperature	> 15°C (27°F)
Engine coolant temperature	> 45 °C (113 °F)

Time Needed for Diagnosis: 512 ms
Malfunction Indicator Light Illumination: Illuminates when malfunction occurs in 2 continuous driving cycles.

• Normality Judgment

Judge as OK and clear the NG if the continuous time while the following conditions are established is more than the predetermined time.

Judgment Value

Malfunction Criteria	Threshold Value
When any one of the followings is established.	
Engine coolant temperature – intake air temperature	≤ 15°C (27°F)
Engine coolant temperature	≤ 45 °C (113 °F)

Time Needed for Diagnosis: Less than 1 second

AJ:DTC P0117 ENGINE COOLANT TEMPERATURE CIRCUIT LOW

1. OUTLINE OF DIAGNOSIS

Detect the open or short circuit of the engine coolant temperature sensor.
Judge as NG if out of specification.

2. COMPONENT DESCRIPTION

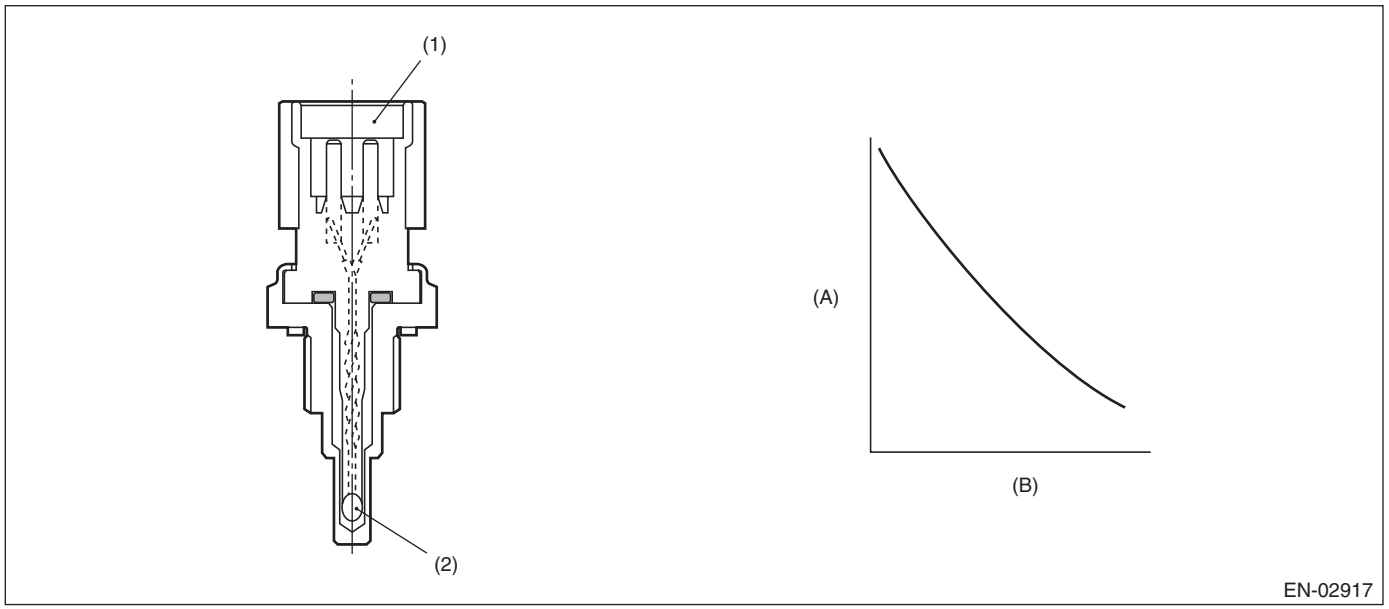

(A) Resistance value (kΩ)
(B) Temperature °C (°F)
(1) Connector
(2) Thermistor element

3. ENABLE CONDITION

Secondary Parameters	Enable Conditions
None	

4. GENERAL DRIVING CYCLE

Always perform the diagnosis continuously.

5. DIAGNOSTIC METHOD

- **Abnormality Judgment**

If the duration of time while the following conditions are met is longer than the time indicated, judge as NG.

Judgment Value

Malfunction Criteria	Threshold Value
Output voltage	< 0.464 V

Time Needed for Diagnosis: 500 ms
Malfunction Indicator Light Illumination: Illuminates as soon as a malfunction occurs.

- **Normality Judgment**

Judge as OK and clear the NG if the continuous time while the following conditions are established is more than the predetermined time.

Judgment Value

Malfunction Criteria	Threshold Value
Output voltage	≥ 0.464 V

Time Needed for Diagnosis: Less than 1 second

AK:DTC P0118 ENGINE COOLANT TEMPERATURE CIRCUIT HIGH

1. OUTLINE OF DIAGNOSIS

Detect the open or short circuit of the engine coolant temperature sensor.
Judge as NG if out of specification.

2. COMPONENT DESCRIPTION

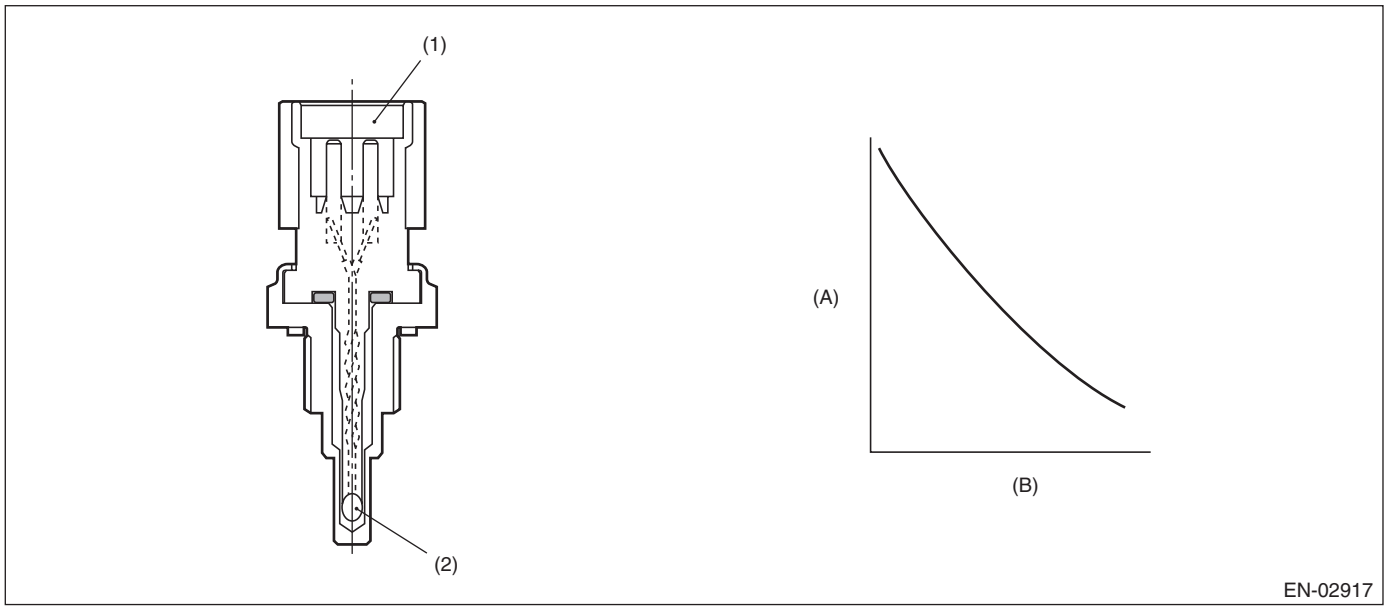

(A) Resistance value (kΩ)
(B) Temperature °C (°F)
(1) Connector
(2) Thermistor element

3. ENABLE CONDITION

Secondary Parameters	Enable Conditions
None	

4. GENERAL DRIVING CYCLE

Always perform the diagnosis continuously.

5. DIAGNOSTIC METHOD

- **Abnormality Judgment**

If the duration of time while the following conditions are met is longer than the time indicated, judge as NG.

Judgment Value

Malfunction Criteria	Threshold Value
Output voltage	≥ 4.702 V

Time Needed for Diagnosis: 500 ms
Malfunction Indicator Light Illumination: Illuminates as soon as a malfunction occurs.

- **Normality Judgment**

Judge as OK and clear the NG if the continuous time while the following conditions are established is more than the predetermined time.

Judgment Value

Malfunction Criteria	Threshold Value
Output voltage	< 4.702 V

Time Needed for Diagnosis: Less than 1 second

AL:DTC P0122 THROTTLE/PEDAL POSITION SENSOR/SWITCH “A” CIRCUIT LOW

1. OUTLINE OF DIAGNOSIS

Detect the open or short circuit of throttle position sensor 1.
Judge as NG if out of specification.

2. COMPONENT DESCRIPTION

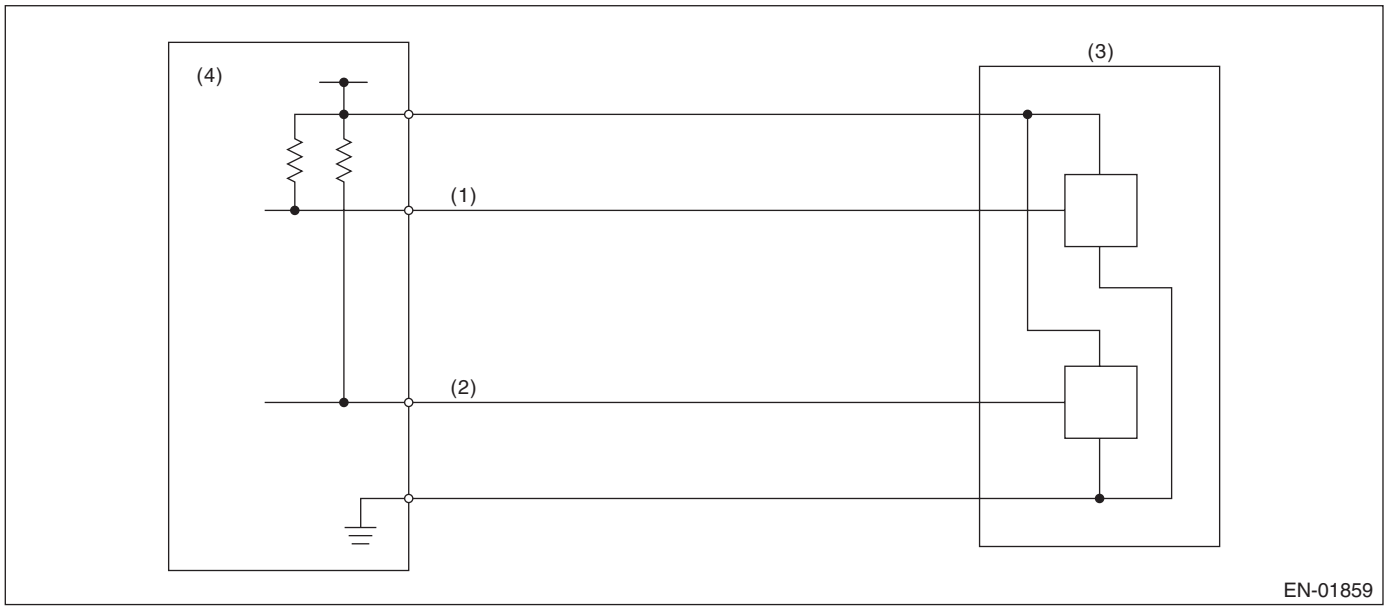

(1) Throttle position sensor 1 signal
(2) Throttle position sensor 2 signal
(3) Throttle position sensor
(4) Engine control module (ECM)

3. ENABLE CONDITION

Secondary Parameters	Enable Conditions
Ignition switch	ON
Battery voltage	≥ 6 V

4. GENERAL DRIVING CYCLE

Always perform the diagnosis continuously.

5. DIAGNOSTIC METHOD

- **Abnormality Judgment**

If the duration of time while the following conditions are met is longer than the time indicated, judge as NG.

Judgment Value

Malfunction Criteria	Threshold Value
Sensor 1 input voltage	≤ 0.27 V

Time Needed for Diagnosis: 24 ms
Malfunction Indicator Light Illumination: Illuminates as soon as a malfunction occurs.

- **Normality Judgment**

Judge as OK and clear the NG if the continuous time while the following conditions are established is more than the predetermined time.

Judgment Value

Malfunction Criteria	Threshold Value
Sensor 1 input voltage	> 0.27 V

Time Needed for Diagnosis: 24 ms

AM:DTC P0123 THROTTLE/PEDAL POSITION SENSOR/SWITCH “A” CIRCUIT HIGH

1. OUTLINE OF DIAGNOSIS

Detect the open or short circuit of throttle position sensor 1.
Judge as NG if out of specification.

2. COMPONENT DESCRIPTION

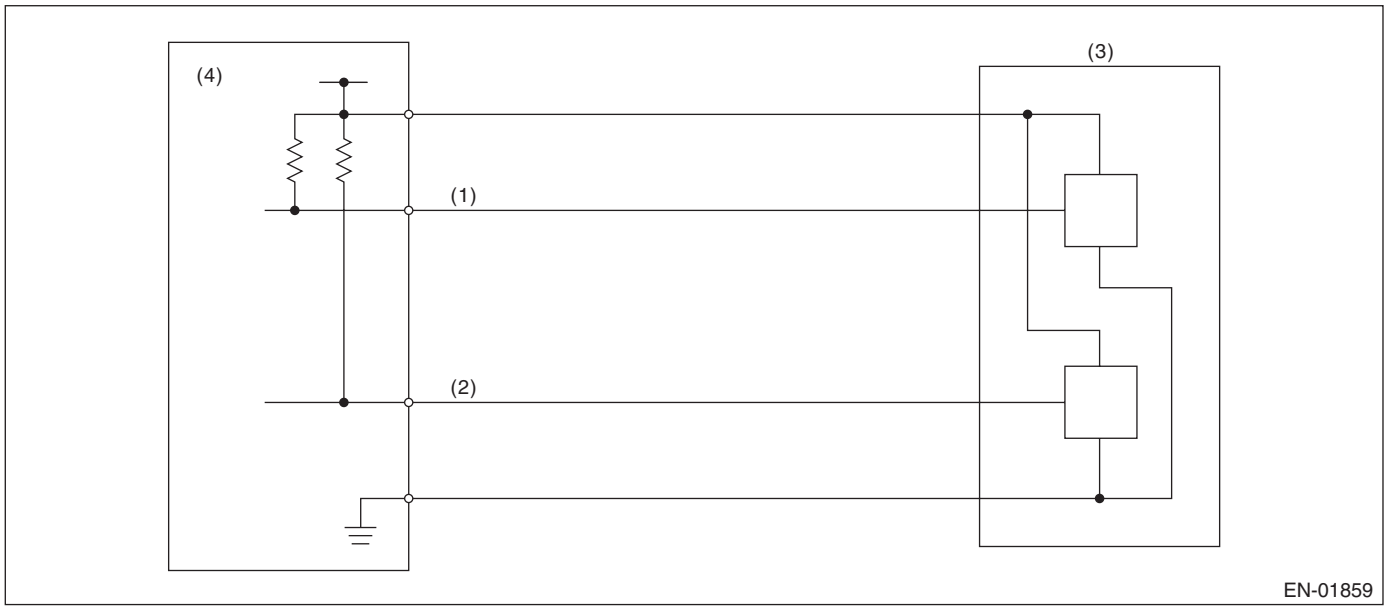

(1) Throttle position sensor 1 signal
(2) Throttle position sensor 2 signal
(3) Throttle position sensor
(4) Engine control module (ECM)

3. ENABLE CONDITION

Secondary Parameters	Enable Conditions
Ignition switch	ON
Battery voltage	≥ 6 V

4. GENERAL DRIVING CYCLE

Always perform the diagnosis continuously.

5. DIAGNOSTIC METHOD

- **Abnormality Judgment**

If the duration of time while the following conditions are met is longer than the time indicated, judge as NG.

Judgment Value

Malfunction Criteria	Threshold Value
Sensor 1 input voltage	≥ 4.858 V

Time Needed for Diagnosis: 24 ms
Malfunction Indicator Light Illumination: Illuminates as soon as a malfunction occurs.

- **Normality Judgment**

Judge as OK and clear the NG if the continuous time while the following conditions are established is more than the predetermined time.

Judgment Value

Malfunction Criteria	Threshold Value
Sensor 1 input voltage	< 4.858 V

Time Needed for Diagnosis: 24 ms

AN:DTC P0125 INSUFFICIENT COOLANT TEMPERATURE FOR CLOSED LOOP FUEL CONTROL

1. OUTLINE OF DIAGNOSIS

Detect the malfunction of engine coolant temperature output property.
Judge as NG when the engine coolant temperature does not rise in driving conditions where it should.

2. COMPONENT DESCRIPTION

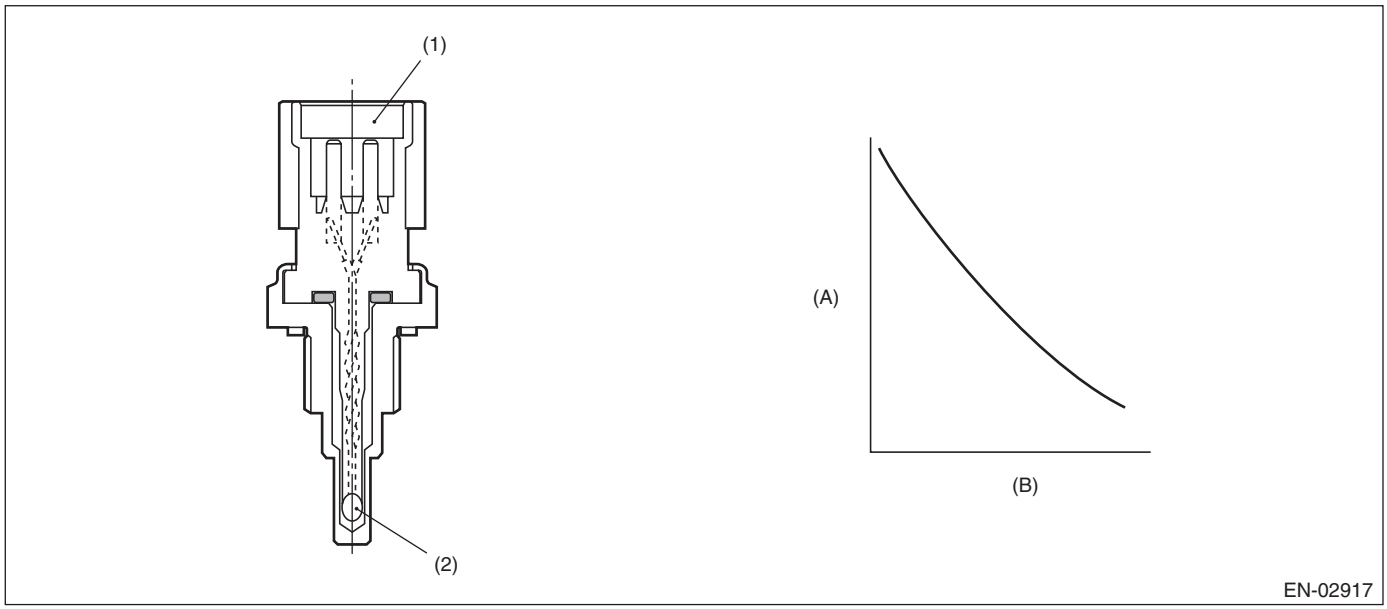

(A) Resistance value (kΩ)
(B) Temperature °C (°F)
(1) Connector
(2) Thermistor element

3. ENABLE CONDITION

Secondary Parameters	Enable Conditions
Engine speed	≥ Value from Map
Battery voltage	≥ 10.9 V
Engine coolant temperature at engine starting	< –15 °C (5 °F)

Map

Engine coolant temperature °C (°F)	–40 (–40)	–30 (–22)	–20 (–4)	–10 (14)	0 (32)	10 (50)	20 (68)	30 (86)
Engine speed rpm	500	500	500	500	500	500	500	500

Engine coolant temperature °C (°F)	40 (104)	50 (122)	60 (140)	70 (158)	80 (176)	90 (194)	100 (212)	110 (230)
Engine speed rpm	500	500	500	500	500	500	500	500

4. GENERAL DRIVING CYCLE

Perform the diagnosis only once after engine start.

5. DIAGNOSTIC METHOD

• Abnormality Judgment

Judge as NG if the criteria below are met.

Judgment Value

Malfunction Criteria	Threshold Value
Engine coolant temperature	< –15 °C (5 °F)
Timer after starting for diagnosis	≥ 299968 ms

Timer after starting for diagnosis
64 ms + TWCNT ms (at 64 ms)
Refer to the table below for TWCNT.

		Vehicle speed km/h (MPH)							
		0 (0)	8 (5)	16 (9.9)	24 (14.9)	32 (19.9)	40 (24.9)	48 (29.8)	56 (34.8)
Minimum engine coolant temperature °C (°F)	–35 (–31)	0	0	0	0	0	0	0	0
	–23.5 (–10.3)	0	0	0	0	0	0	0	0
	–23.4 (–10.1)	96	96	96	96	96	96	96	96
	–15 (5)	96	96	96	96	96	96	96	96

Time Needed for Diagnosis: 120 s or 300 s
Malfunction Indicator Light Illumination: Illuminates when malfunction occurs in 2 continuous driving cycles.

• Normality Judgment

Judge as OK and clear the NG when the malfunction criteria below are met.

Judgment Value

Malfunction Criteria	Threshold Value
Engine coolant temperature	≥ –15 °C (5 °F)

Time Needed for Diagnosis: Less than 1 second

AO:DTC P0128 COOLANT THERMOSTAT (ENGINE COOLANT TEMPERATURE BELOW THERMOSTAT REGULATING TEMPERATURE)

1. OUTLINE OF DIAGNOSIS

Detect malfunctions of the thermostat function.
Judge as NG when any one of the following conditions is established.

- When the actual engine coolant temperature does not reach the maximum temperature necessary to perform other OBDII diagnosis and Σ (Estimated engine coolant temperature – actual engine coolant temperature) exceeded the predetermined value. (Judgment 1)
- When the actual engine coolant temperature does not reach the range within –11°C (–19.8°F) from the regulated temperature and Σ (Estimated engine coolant temperature – actual engine coolant temperature) exceeded the predetermined value. (Judgment 2)
- When the difference between the estimated coolant temperature and the actual engine coolant temperature exceeds the predetermined value, and Σ (Estimated engine coolant temperature – actual engine coolant temperature) exceeded the predetermined value. (Judgment 3)

2. COMPONENT DESCRIPTION

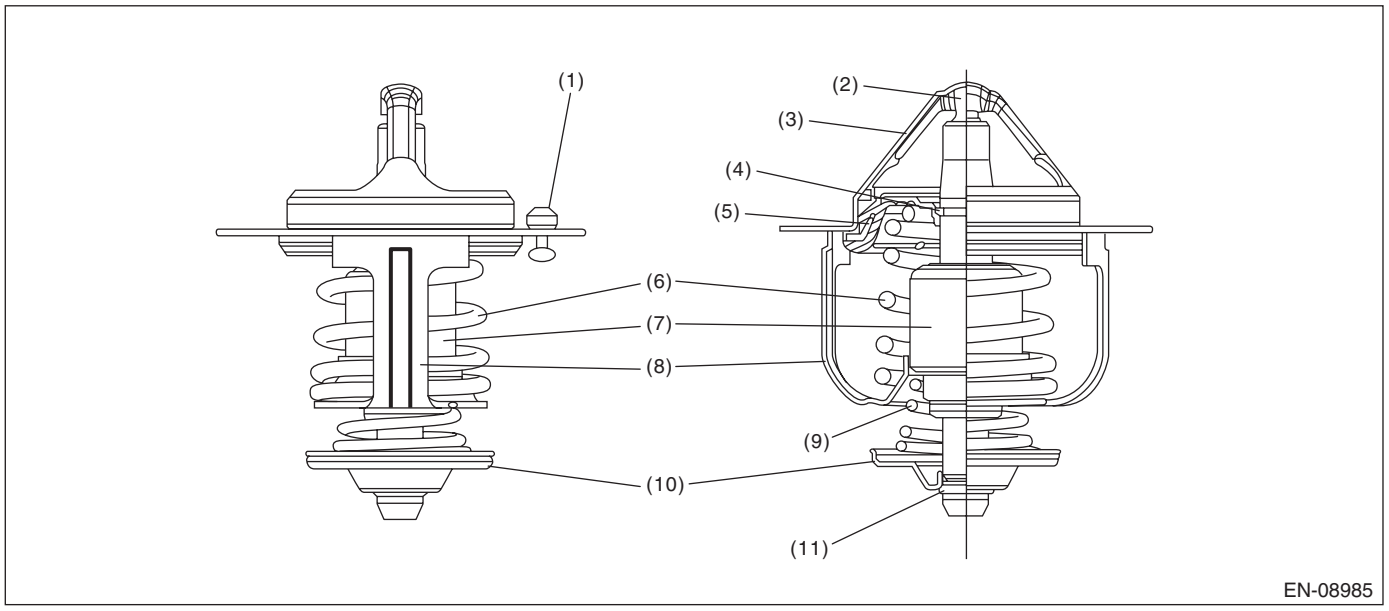

(1) Jiggle valve
(2) Piston
(3) Flange
(4) Stop ring
(5) Dust seal
(6) Main spring
(7) Wax element
(8) Frame
(9) Bypass spring
(10) Bypass valve
(11) Stop ring

3. ENABLE CONDITIONS

Secondary Parameters	Enable Conditions
<Judgment 1>	
Battery voltage	≥ 10.9 V
Estimate ambient temperature	≥ –7 °C (19.4 °F)
Vehicle speed	≥ 30 km/h (18.6 MPH)
Estimated coolant temperature	≥ Value of Map 1
<Judgment 2>	
Battery voltage	≥ 10.9 V
Estimate ambient temperature	≥ –7 °C (19.4 °F)
Vehicle speed	≥ 30 km/h (18.6 MPH)
Estimated coolant temperature	≥ Value from Map 2
<Judgment 3>	
Battery voltage	≥ 10.9 V
Estimate ambient temperature	≥ –7 °C (19.4 °F)
Vehicle speed	≥ 30 km/h (18.6 MPH)
Estimated coolant temperature	≥ Value from Map 3

Map 1

Engine coolant temperature at engine starting °C (°F)	–7 (19.4)	8 (46.4)	10 (50)	25 (77)
Estimated coolant temperature °C (°F)	60 (140)	60 (140)	60 (140)	60 (140)

Map 2

Engine coolant temperature at engine starting °C (°F)	–7 (19.4)	8 (46.4)	10 (50)	25 (77)
Estimated coolant temperature °C (°F)	70.2 (158.4)	75.8 (168.4)	75.8 (168.4)	75.8 (168.4)

Map 3

Engine coolant temperature at engine starting °C (°F)	–7 (19.4)	10 (50)	25 (77)	49.6 (121.3)
Estimated coolant temperature °C (°F)	52.3 (126.1)	59.4 (138.9)	65.5 (149.9)	75.8 (168.4)

4. GENERAL DRIVING CYCLE

Perform the diagnosis only once after starting the engine.

5. DIAGNOSTIC METHOD

• Abnormality Judgment

If the duration of time while the following conditions are met is longer than the time indicated, judge as NG.

Judgment Value

Malfunction Criteria	Threshold Value
When any one of the followings is established.	
<Judgment 1>	
Actual engine coolant temperature and Σ (Estimated engine coolant temperature – actual engine coolant temperature)	< Value of Map 4 > Value of Map 5
<Judgment 2>	
Actual engine coolant temperature and Σ (Estimated engine coolant temperature – actual engine coolant temperature)	< Regulated temperature – Value of Map 6 > Value of Map 7
<Judgment 3>	
Estimated engine coolant temperature – actual engine coolant temperature and Σ (Estimated engine coolant temperature – actual engine coolant temperature)	> Value of Map 8 > Value of Map 9

Map 4

Estimate ambient temperature °C (°F)	–7 (19.4)	8 (46.4)	10 (50)	25 (77)
Threshold Value °C (°F)	60 (140)	60 (140)	60 (140)	60 (140)

Map 5

Engine coolant temperature at engine starting °C (°F)	–7 (19.4)	0 (32)	8 (46.4)	10 (50)	25 (77)	35 (95)
Threshold Value °C (°F)	1731.6 (3116.9)	1731.6 (3116.9)	1731.6 (3116.9)	1731.6 (3116.9)	1731.6 (3116.9)	1200 (2160)

Map 6

Estimate ambient temperature °C (°F)	–7 (19.4)	8 (46.4)	10 (50)	25 (77)
Threshold Value °C (°F)	16.7 (30.1)	11.1 (20)	11.1 (20)	11.1 (20)

Map 7

Engine coolant temperature at engine starting °C (°F)	–7 (19.4)	0 (32)	8 (46.4)	10 (50)	30 (86)	35 (95)
Threshold Value °C (°F)	1731.6 (3116.9)	1731.6 (3116.9)	1731.6 (3116.9)	1731.6 (3116.9)	1731.6 (3116.9)	1500 (2700)

Map 8

Estimate ambient temperature °C (°F)	–7 (19.4)	8 (46.4)	10 (50)	25 (77)
Threshold Value °C (°F)	11.1 (20)	11.1 (20)	11.1 (20)	11.1 (20)

Map 9

Engine coolant temperature at engine starting °C (°F)	–7 (19.4)	8 (46.4)	10 (50)	25 (77)
Threshold Value °C (°F)	1731.6 (3116.9)	1731.6 (3116.9)	1731.6 (3116.9)	1731.6 (3116.9)

Time Needed for Diagnosis: 300 — 700 seconds
Malfunction Indicator Light Illumination: Illuminates when malfunction occurs in 2 continuous driving cycles.

- **Normality Judgment**

Judge as OK and clear the NG if the continuous time while the following conditions are established is more than the predetermined time.

Judgment Value

Malfunction Criteria	Threshold Value
All of the following conditions are established.	
<Judgment 1>	
Actual engine coolant temperature and Σ (Estimated engine coolant temperature – actual engine coolant temperature)	≥ Value of Map 4 ≤ Value of Map 5
<Judgment 2>	
Actual engine coolant temperature and Σ (Estimated engine coolant temperature – actual engine coolant temperature)	≥ Regulated temperature – Value of Map 6 ≤ Value of Map 7
<Judgment 3>	
Estimated engine coolant temperature – actual engine coolant temperature and Σ (Estimated engine coolant temperature – actual engine coolant temperature) and Actual engine coolant temperature	≤ Value of Map 8 ≤ Value of Map 9 ≥ Regulated temperature – Value of Map 10

Map 10

Estimate ambient temperature °C (°F)	–7 (19.4)	8 (46.4)	10 (50)	25 (77)
Threshold Value °C (°F)	16.7 (30.1)	11.1 (20)	11.1 (20)	11.1 (20)

Time Needed for Diagnosis: 300 — 700 seconds

AP:DTC P0131 O2 SENSOR CIRCUIT LOW VOLTAGE (BANK 1 SENSOR 1)

1. OUTLINE OF DIAGNOSIS

Detect the open or short circuit of sensor.
Judge as NG, when the element voltage is out of the specified range.

2. COMPONENT DESCRIPTION

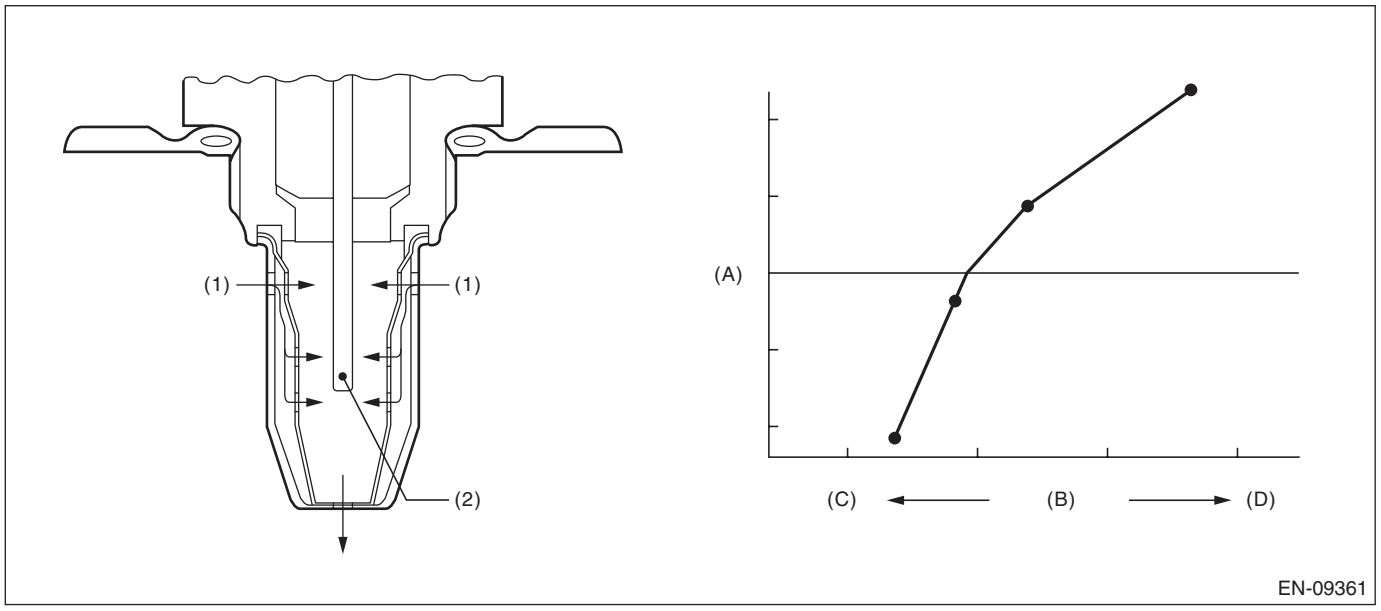

(A) Electromotive force (B) Air fuel ratio (C) Rich
(D) Lean

(1) Exhaust gas (2) ZrO_2

3. ENABLE CONDITION

Secondary Parameters	Enable Conditions
Battery voltage	≥ 10.9 V

4. GENERAL DRIVING CYCLE

Always perform the diagnosis continuously.

5. DIAGNOSTIC METHOD

- **Abnormality Judgment**

If the duration of time while the following conditions are met is longer than the time indicated, judge as NG.

Judgment Value

Malfunction Criteria	Threshold Value
Input voltage (+)	< 1.128 V
or	
Input voltage (–)	< 0.23 V
or	
|Input voltage (+) – Input voltage (–)|	< 0.573 V

Time Needed for Diagnosis:
Input voltage (+): 1000 ms
Input voltage (–): 1000 ms
|Input voltage (+) – Input voltage (–)|: 1000 ms
Malfunction Indicator Light Illumination: Illuminates as soon as a malfunction occurs.

- **Normality Judgment**

Judge as OK and clear the NG if the continuous time while the following conditions are established is more than the predetermined time.

Judgment Value

Malfunction Criteria	Threshold Value
Input voltage (+)	≥ 1.128 V
Input voltage (–)	≥ 0.23 V
|Input voltage (+) – Input voltage (–)|	≥ 0.573 V

Time Needed for Diagnosis: Less than 1 second

AQ:DTC P0132 O2 SENSOR CIRCUIT HIGH VOLTAGE (BANK 1 SENSOR 1)

1. OUTLINE OF DIAGNOSIS

Detect the open or short circuit of sensor.
Judge as NG, when the element voltage is out of the specified range.

2. COMPONENT DESCRIPTION

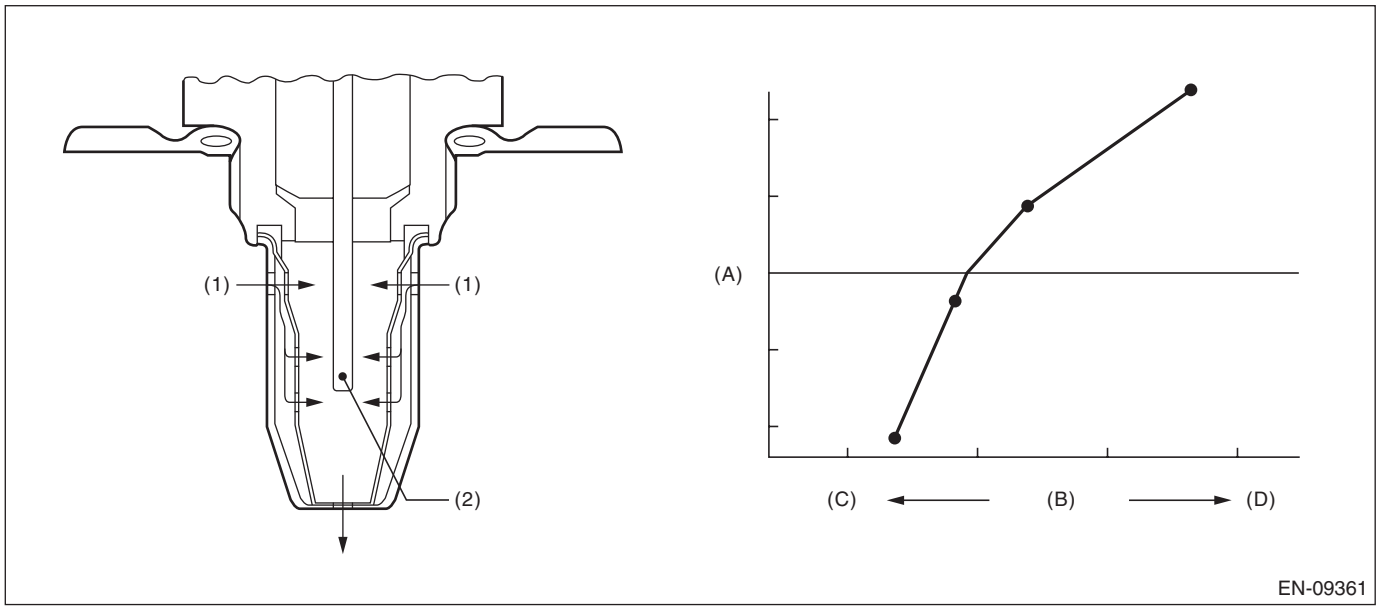

(A) Electromotive force (B) Air fuel ratio (C) Rich
(D) Lean

(1) Exhaust gas (2) ZrO_2

3. ENABLE CONDITION

Secondary Parameters	Enable Conditions
Battery voltage	≥ 10.9 V

4. GENERAL DRIVING CYCLE

Always perform the diagnosis continuously.

5. DIAGNOSTIC METHOD

- **Abnormality Judgment**

If the duration of time while the following conditions are met is longer than the time indicated, judge as NG.

Judgment Value

Malfunction Criteria	Threshold Value
Input voltage (+)	> 3.589 V
or	
Input voltage (–)	> 3.599 V

Time Needed for Diagnosis:
Input voltage (+): 1000 ms
Input voltage (–): 1000 ms
Malfunction Indicator Light Illumination: Illuminates as soon as a malfunction occurs.

- **Normality Judgment**

Judge as OK and clear the NG if the continuous time while the following conditions are established is more than the predetermined time.

Judgment Value

Malfunction Criteria	Threshold Value
Input voltage (+)	≤ 3.589 V
Input voltage (–)	≤ 3.599 V

Time Needed for Diagnosis: Less than 1 second

AR:DTC P0134 O2 SENSOR CIRCUIT NO ACTIVITY DETECTED (BANK 1 SENSOR 1)

1. OUTLINE OF DIAGNOSIS

Detect open circuits of the sensor.
Judge as NG when the impedance of the element is large.

2. COMPONENT DESCRIPTION

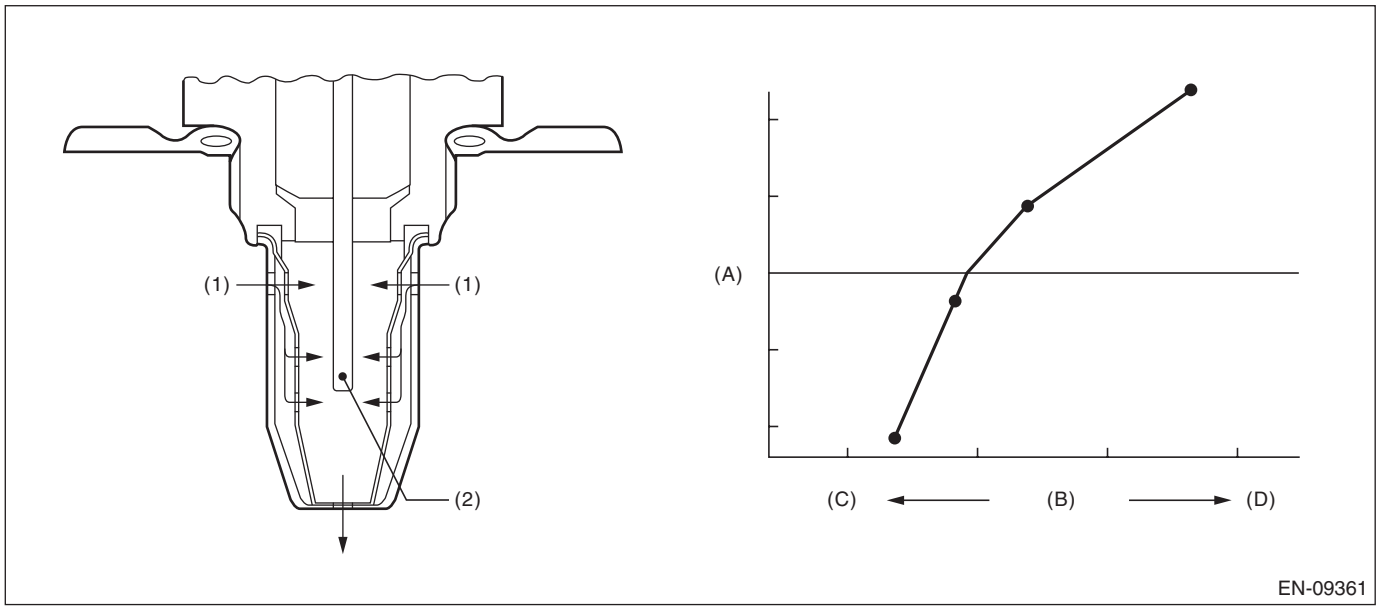

(A) Electromotive force (B) Air fuel ratio (C) Rich
(D) Lean

(1) Exhaust gas (2) ZrO_2

3. ENABLE CONDITION

Secondary Parameters	Enable Conditions
None	

4. GENERAL DRIVING CYCLE

Always perform the diagnosis continuously.

5. DIAGNOSTIC METHOD

• Abnormality Judgment

If the duration of time while the following conditions are met is longer than the time indicated, judge as NG.

Judgment Value

Malfunction Criteria	Threshold Value
Battery voltage	≥ 10.9 V
Time of heater control duty at 70 % or more	≥ 36000 ms
Front oxygen (A/F) sensor impedance.	> 500 Ω

Time Needed for Diagnosis: 5000 ms
Malfunction Indicator Light Illumination: Illuminates as soon as a malfunction occurs.

• Normality Judgment

Judge as OK and clear the NG if the continuous time while the following conditions are established is more than the predetermined time.

Judgment Value

Malfunction Criteria	Threshold Value
Battery voltage	≥ 10.9 V
Front oxygen (A/F) sensor impedance.	≤ 500 Ω

Time Needed for Diagnosis: Less than 1 second

AS:DTC P0137 O2 SENSOR CIRCUIT LOW VOLTAGE (BANK 1 SENSOR 2)

1. OUTLINE OF DIAGNOSIS

Detect continuity NG of the oxygen sensor. If the oxygen sensor voltage reading is not within the probable range considering the operating conditions, judge as NG.

2. COMPONENT DESCRIPTION

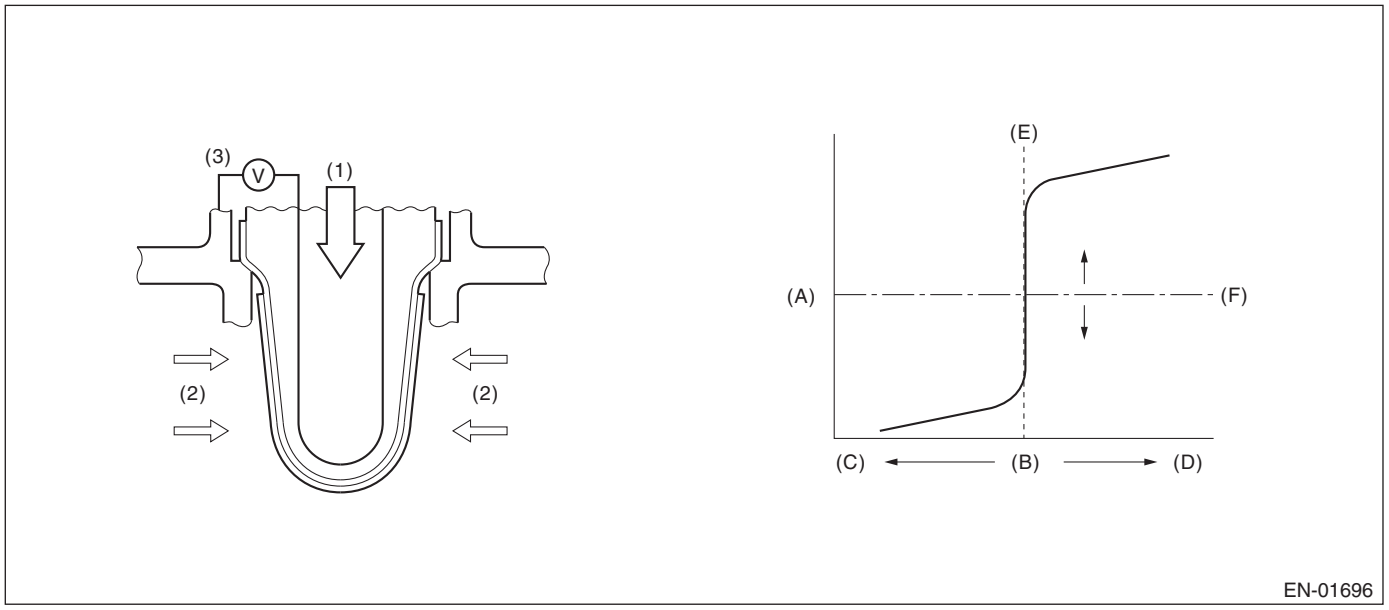

(A)	Electromotive force	(B)	Air fuel ratio	(C)	Lean
(D)	Rich	(E)	Theoretical air fuel ratio	(F)	Comparative voltage
(1)	Atmosphere	(2)	Exhaust gas	(3)	Electromotive force

3. ENABLE CONDITION

Used for abnormality judgment

Secondary Parameters	Enable Conditions
High	
Secondary air system	Not in operation
Closed loop control at the oxygen sensor	In operation
Misfire detection every 200 rotations	< 65535 time(s)
Front oxygen (A/F) sensor compensation coefficient	Not in limit value
Battery voltage	≥ 10.9 V
Engine coolant temperature	≥ 60 °C (140 °F)
Low (1)	
Secondary air system	Not in operation
Closed loop control at the oxygen sensor	In operation
Misfire detection every 200 rotations	< 65535 time(s)
Front oxygen (A/F) sensor compensation coefficient	Not in limit value
Battery voltage	≥ 10.9 V
Engine coolant temperature	≥ 60 °C (140 °F)
Amount of intake air	≥ 10 g/s (0.35 oz/s)
Low (2)	
Secondary air system	Not in operation
Closed loop control at the oxygen sensor	In operation
Misfire detection every 200 rotations	< 65535 time(s)
Front oxygen (A/F) sensor compensation coefficient	Not in limit value
Battery voltage	≥ 10.9 V
Engine coolant temperature	≥ 60 °C (140 °F)
Amount of intake air	< 10 g/s (0.35 oz/s)
Current continuation time of the rear oxygen sensor heater	≥ 30000 ms
Low (3)	
Secondary air system	Not in operation
Closed loop control at the oxygen sensor	In operation
Misfire detection every 200 rotations	< 65535 time(s)
Front oxygen (A/F) sensor compensation coefficient	Not in limit value
Battery voltage	≥ 10.9 V
Engine coolant temperature	≥ 60 °C (140 °F)
Amount of intake air	< 10 g/s (0.35 oz/s)
Current continuation time of the rear oxygen sensor heater	≥ 30000 ms
Fuel cut	Experienced

Used for normality judgment

Secondary Parameters	Enable Conditions
Secondary air system	Not in operation
Closed loop control at the oxygen sensor	In operation
Misfire detection every 200 rotations	< 65535 time(s)
Front oxygen (A/F) sensor compensation coefficient	Not in limit value
Battery voltage	≥ 10.9 V
Engine coolant temperature	≥ 60 °C (140 °F)

4. GENERAL DRIVING CYCLE

After starting the engine, continuously perform the diagnosis with the same engine condition.

5. DIAGNOSTIC METHOD

• Abnormality Judgment

If the duration of time while the following conditions are met is longer than the time indicated, judge as NG.

Judgment Value

Malfunction Criteria	Threshold Value	DTC
High Sensor output voltage	> 1.2 V	P0138
Low Sensor output voltage	< 0.03 V	P0137

Time Needed for Diagnosis:

High: 2500 ms
Low (1): 20000 ms
Low (2): 40000 ms
Low (3): Value from Map

Map

Fuel cut time (ms)	0	2000	10000
Time Needed for Diagnosis (ms)	40000	40000	60000

Malfunction Indicator Light Illumination: Illuminates when malfunction occurs in 2 continuous driving cycles.

• Normality Judgment

Judge as OK and clear the NG if the continuous time while the following conditions are established is more than the predetermined time.

Judgment Value

Malfunction Criteria	Threshold Value	DTC
High Sensor output voltage	≤ 1.2 V	P0138
Low Sensor output voltage	≥ 0.03 V	P0137

Time Needed for Diagnosis:

High: Less than 1 second
Low (1): Less than 1 second
Low (2): Less than 1 second
Low (3): Less than 1 second

AT:DTC P0138 O2 SENSOR CIRCUIT HIGH VOLTAGE (BANK 1 SENSOR 2)

1. OUTLINE OF DIAGNOSIS

NOTE:
For the detection standard, refer to DTC P0137. <Ref. to GD(H4DO w/o HEV)-74, DTC P0137 O2 SENSOR CIRCUIT LOW VOLTAGE (BANK 1 SENSOR 2), Diagnostic Trouble Code (DTC) Detecting Criteria.>

AU:DTC P013A O2 SENSOR SLOW RESPONSE - RICH TO LEAN (BANK 1 SENSOR 2)

1. OUTLINE OF DIAGNOSIS

Detect the slow response of rich → lean for rear oxygen sensor output.
When the deceleration fuel cut has occurred, detect the trouble by calculating the time when the rear oxygen sensor output passes through the predetermined range of voltages.
Judge as NG when the response time is larger than the threshold value.

2. COMPONENT DESCRIPTION

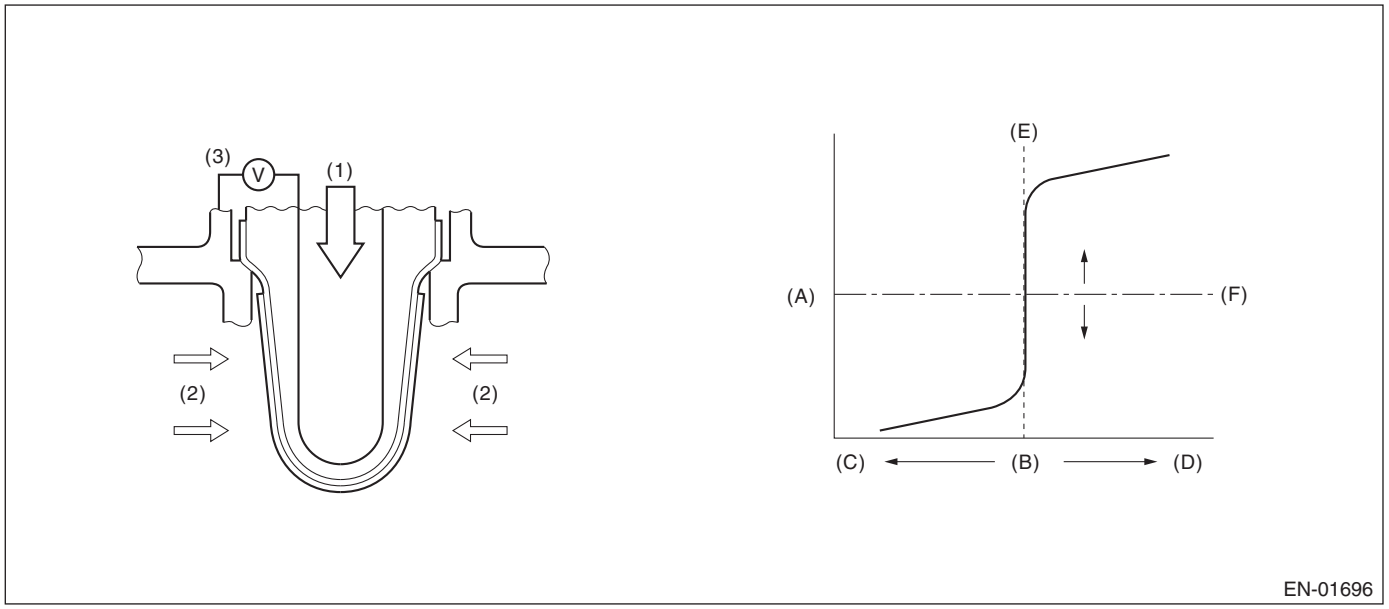

(A) Electromotive force
(B) Air fuel ratio
(C) Lean
(D) Rich
(E) Theoretical air fuel ratio
(F) Comparative voltage

(1) Atmosphere
(2) Exhaust gas
(3) Electromotive force

3. ENABLE CONDITIONS

Secondary Parameters	Enable Conditions
Battery voltage	> 10.9 V
Rear oxygen sensor closed loop control	Operation
Current calculation time of the rear oxygen sensor heater after starting	≥ 180000 ms
Engine speed when fuel cut starts	≥ 1000 rpm
Rear oxygen sensor voltage when fuel cut starts	≥ 0.55 V
Fuel cut time	≥ 5000 ms
Engine coolant temperature when fuel cut starts	≥ –40 °C (–40 °F)
Estimated temperature of rear oxygen sensor element when fuel cut starts	≥ 500 °C (932 °F)

4. GENERAL DRIVING CYCLE

Perform diagnosis once during deceleration fuel cut from a constant and high speed driving, when rear oxygen sensor is warmed up sufficiently.

5. DIAGNOSTIC METHOD

Detect the trouble by calculating the response time of the rear oxygen sensor during fuel cut.

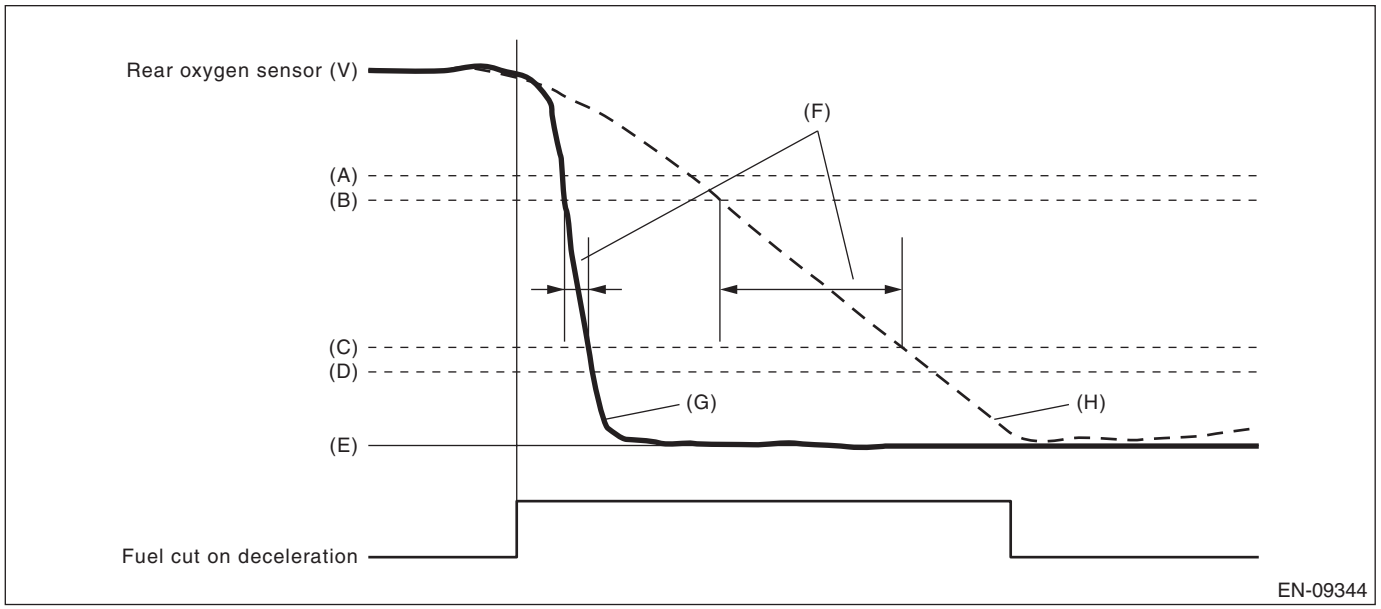

(A) 0.55 V
(B) 0.50 V
(C) 0.20 V
(D) 0.15 V
(E) 0 V
(F) Diagnostic parameter
(G) Normal
(H) Malfunction

- **Abnormality Judgment**

Judge as NG when the following conditions are established.

Judgment Value

Malfunction Criteria	Threshold Value
Time when rear oxygen sensor voltage changed from 0.5 V to 0.2 V.	> 491 ms

Time Needed for Diagnosis: 10 seconds
Malfunction Indicator Light Illumination: Illuminates when malfunction occurs in 2 continuous driving cycles.

- **Normality Judgment**

Judge as OK and clear the NG if the following conditions are established.

Judgment Value

Malfunction Criteria	Threshold Value
Time when rear oxygen sensor voltage changed from 0.5 V to 0.2 V.	≤ 491 ms

Time Needed for Diagnosis: 10 seconds

AV:DTC P013B O2 SENSOR SLOW RESPONSE - LEAN TO RICH (BANK 1 SENSOR 2)

1. OUTLINE OF DIAGNOSIS

Detect the slow response of lean → rich for rear oxygen sensor output.
After the deceleration fuel cut has occurred, detect the trouble by calculating the time when the rear oxygen sensor output passes through the predetermined range of voltages.
Judge as NG when the response time is larger than the threshold value.

2. COMPONENT DESCRIPTION

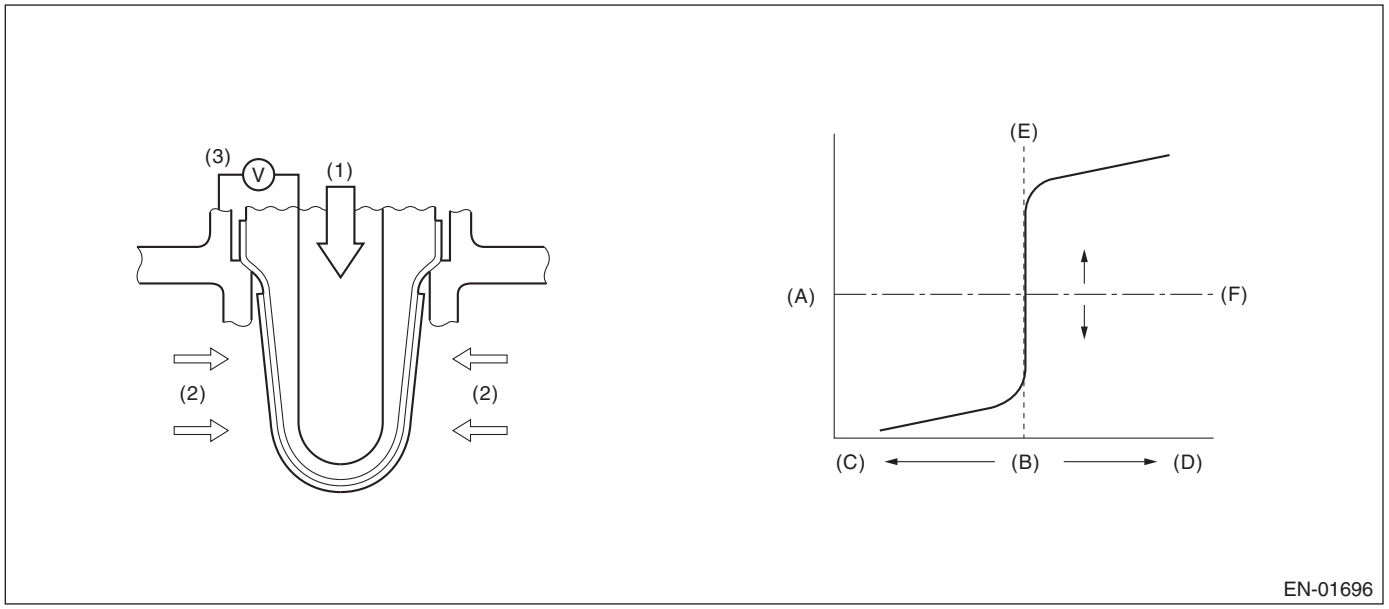

(A)	Electromotive force	(B)	Air fuel ratio	(C)	Lean
(D)	Rich	(E)	Theoretical air fuel ratio	(F)	Comparative voltage
(1)	Atmosphere	(2)	Exhaust gas	(3)	Electromotive force

3. ENABLE CONDITIONS

Secondary Parameters	Enable Conditions
Battery voltage	> 10.9 V
Front oxygen (A/F) sensor closed loop control	Operation
Fuel cut time	≥ 5000 ms

4. GENERAL DRIVING CYCLE

Perform diagnosis only once after recovering from a deceleration fuel cut continued for more than predetermined time.

5. DIAGNOSTIC METHOD

Detect the trouble by calculating the response time of the rear oxygen sensor after fuel cut.

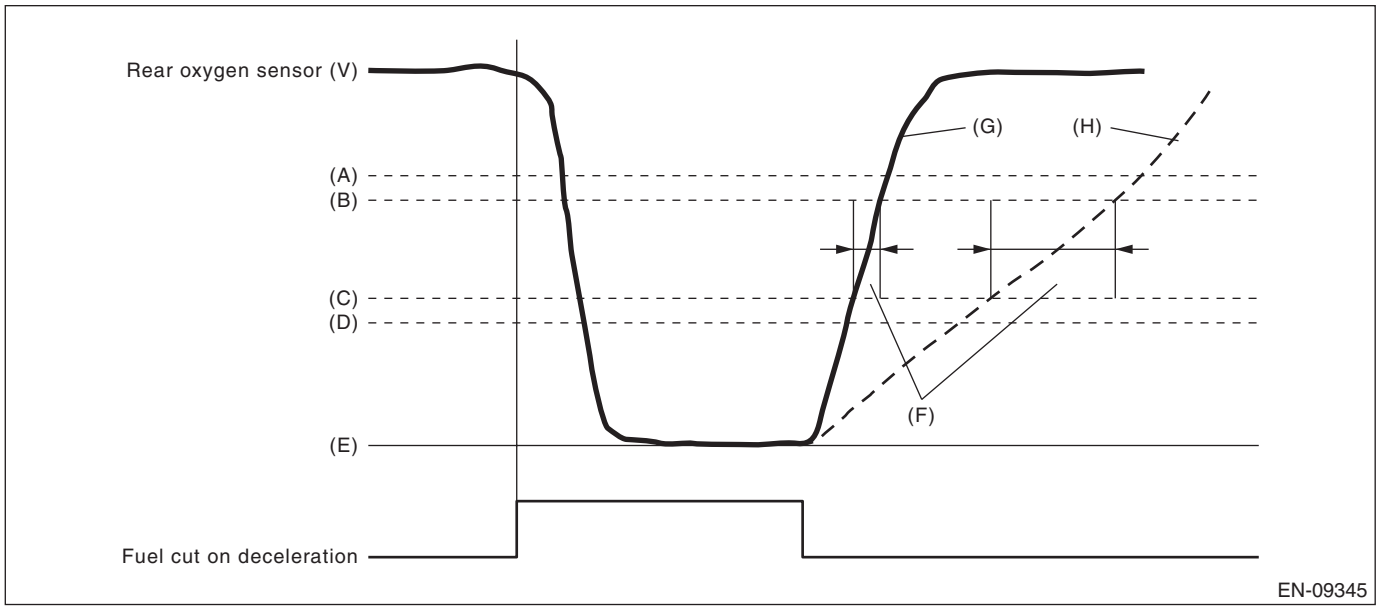

(A) 0.55 V
(B) 0.50 V
(C) 0.30 V
(D) 0.25 V
(E) 0 V
(F) Diagnostic parameter
(G) Normal
(H) Malfunction

- **Abnormality Judgment**

Judge as NG when the following conditions are established.

Judgment Value

Malfunction Criteria	Threshold Value
Time when rear oxygen sensor voltage changed from 0.3 V to 0.5 V.	> 4000 ms

Time Needed for Diagnosis: 10 seconds
Malfunction Indicator Light Illumination: Illuminates when malfunction occurs in 2 continuous driving cycles.

- **Normality Judgment**

Judge as OK and clear the NG if the following conditions are established.

Judgment Value

Malfunction Criteria	Threshold Value
Time when rear oxygen sensor voltage changed from 0.3 V to 0.5 V.	≤ 4000 ms

Time Needed for Diagnosis: 10 seconds

AW:DTC P013E O2 SENSOR DELAYED RESPONSE - RICH TO LEAN (BANK 1 SENSOR 2)

1. OUTLINE OF DIAGNOSIS

Detect the delayed response of rear oxygen sensor output for rich → lean.
After the deceleration fuel cut has started, detect the trouble by calculating the time when the rear oxygen sensor output decreases to the predetermined voltages.
Judge as NG when the response time is larger than the threshold value.

2. COMPONENT DESCRIPTION

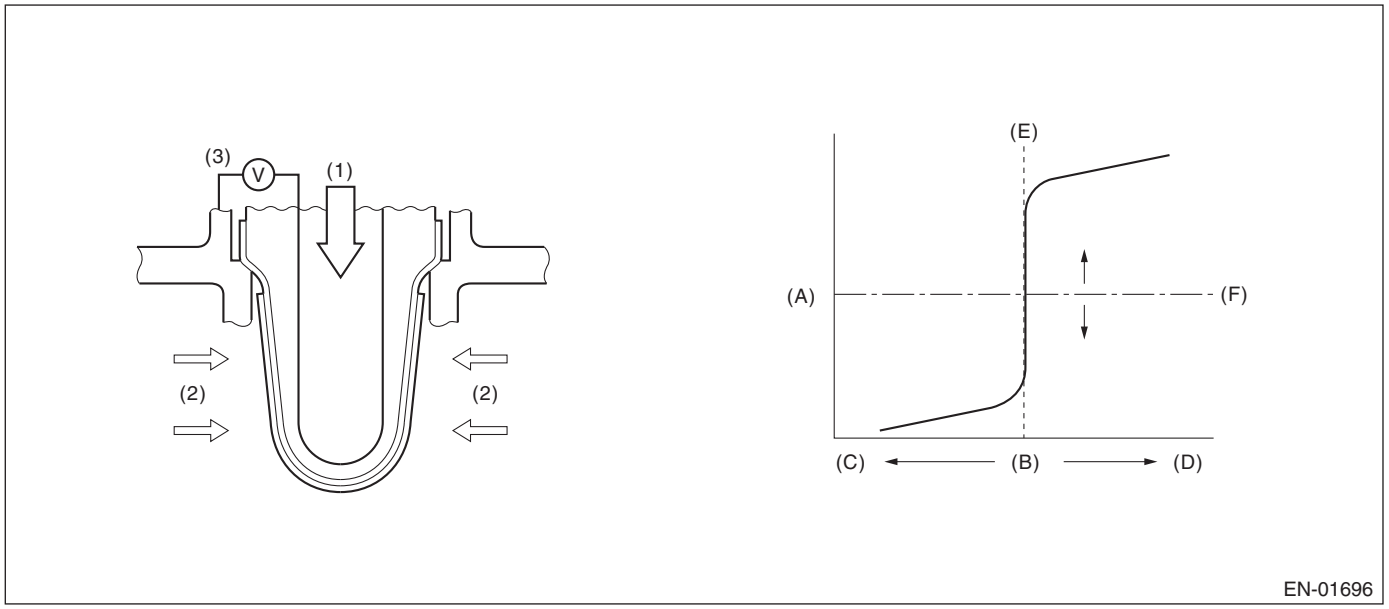

(A)	Electromotive force	(B)	Air fuel ratio	(C)	Lean
(D)	Rich	(E)	Theoretical air fuel ratio	(F)	Comparative voltage
(1)	Atmosphere	(2)	Exhaust gas	(3)	Electromotive force

3. ENABLE CONDITIONS

Secondary Parameters	Enable Conditions
Battery voltage	> 10.9 V
Rear oxygen sensor closed loop control	Operation
Engine speed when fuel cut starts	≥ 1000 rpm
Rear oxygen sensor voltage when fuel cut starts	≥ 0.55 V
Fuel cut time	≥ 5000 ms
Engine coolant temperature when fuel cut starts	≥ –40 °C (–40 °F)
Estimated temperature of rear oxygen sensor element when fuel cut starts	≥ 500 °C (932 °F)

4. GENERAL DRIVING CYCLE

Perform diagnosis once during deceleration fuel cut from a constant and high speed driving, when rear oxygen sensor is warmed up sufficiently.

5. DIAGNOSTIC METHOD

Detect the trouble by calculating the time from the beginning of the fuel cut to the beginning of the rear oxygen sensor voltage starting to drop.

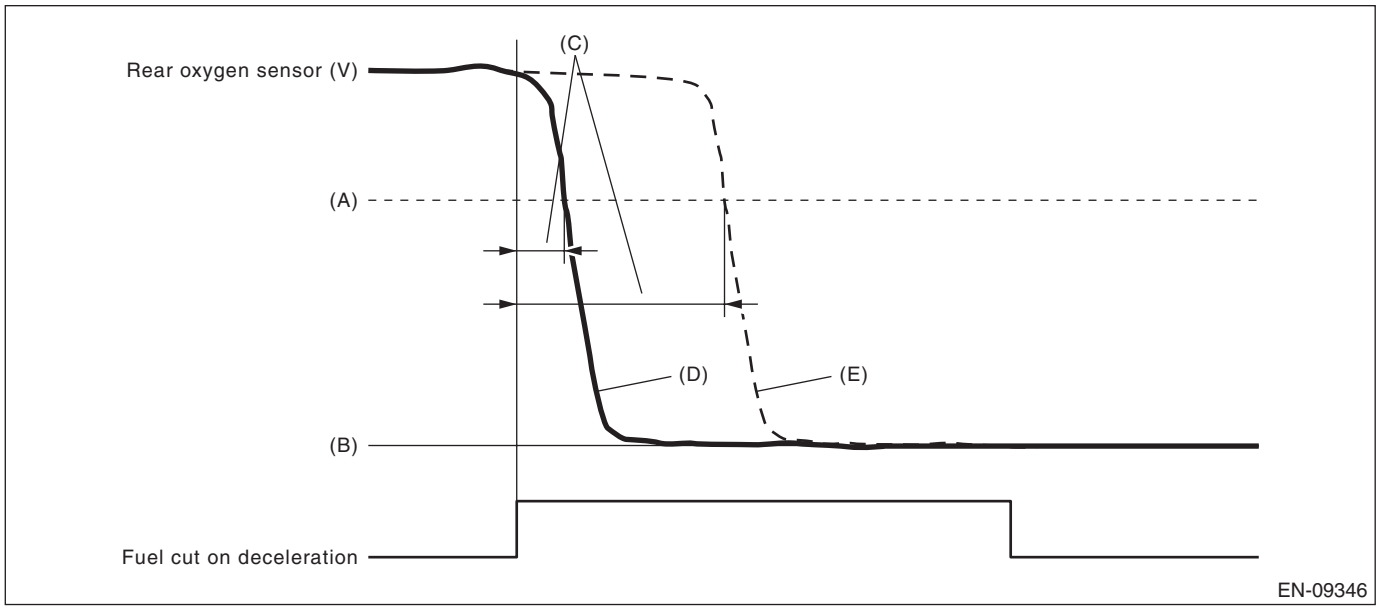

(A) 0.5 V
(B) 0 V
(C) Diagnostic parameter
(D) Normal
(E) Malfunction

• Abnormality Judgment

Judge as NG when the following conditions are established.

Judgment Value

Malfunction Criteria	Threshold Value
Time when rear oxygen sensor voltage changed to 0.5 V after the fuel cut started.	> 4000 ms

Time Needed for Diagnosis: 10 seconds
Malfunction Indicator Light Illumination: Illuminates when malfunction occurs in 2 continuous driving cycles.

• Normality Judgment

Judge as OK and clear the NG if the following conditions are established.

Judgment Value

Malfunction Criteria	Threshold Value
Time when rear oxygen sensor voltage changed to 0.5 V after the fuel cut started.	≤ 4000 ms

Time Needed for Diagnosis: 10 seconds

AX:DTC P013F O2 SENSOR DELAYED RESPONSE - LEAN TO RICH (BANK 1 SENSOR 2)

1. OUTLINE OF DIAGNOSIS

Detect the delayed response of rear oxygen sensor output for lean → rich.
After the deceleration fuel cut has completed, detect the trouble by calculating the time when the rear oxygen sensor output increases to the predetermined voltages.
Judge as NG when the response time is larger than the threshold value.

2. COMPONENT DESCRIPTION

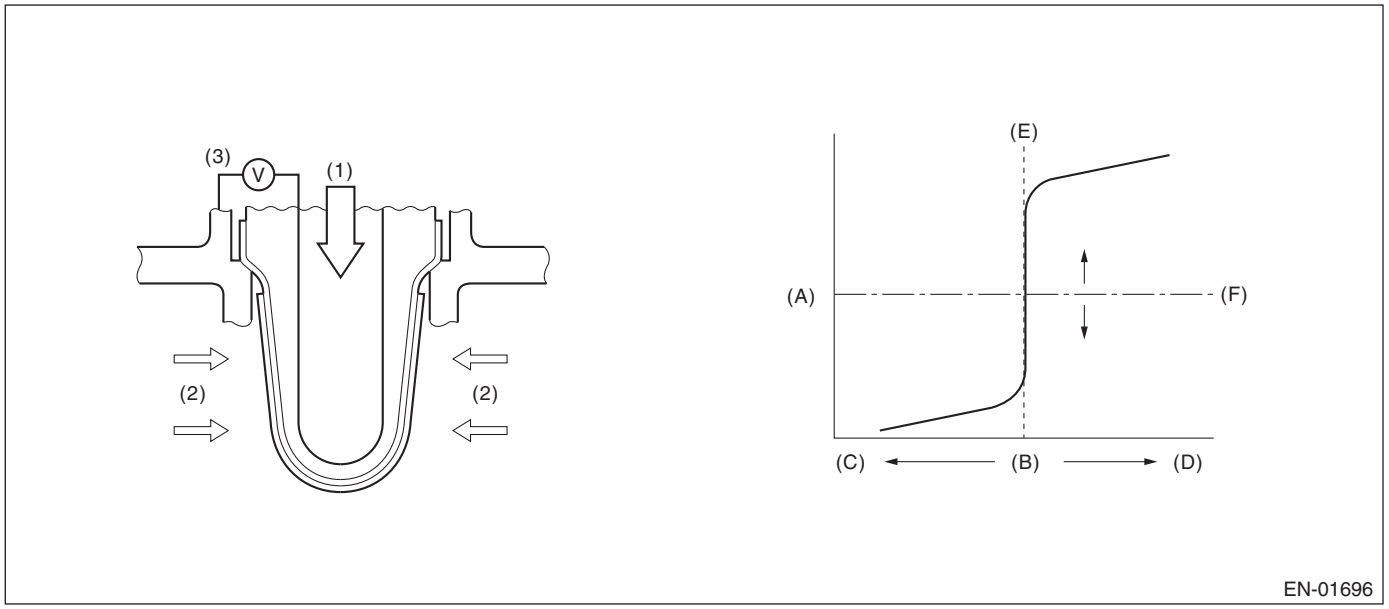

(A)	Electromotive force	(B)	Air fuel ratio	(C)	Lean
(D)	Rich	(E)	Theoretical air fuel ratio	(F)	Comparative voltage
(1)	Atmosphere	(2)	Exhaust gas	(3)	Electromotive force

3. ENABLE CONDITIONS

Secondary Parameters	Enable Conditions
Battery voltage	> 10.9 V
Front oxygen (A/F) sensor closed loop control	Operation
Engine speed	≥ 500 rpm
Rear oxygen sensor voltage when fuel cut has completed	< 0.15 V
Fuel cut time	≥ 5000 ms
Engine coolant temperature when fuel cut has completed	≥ –40 °C (–40 °F)
Estimated element temperature of rear oxygen sensor when fuel cut has completed	≥ 500 °C (932 °F)

4. GENERAL DRIVING CYCLE

Perform diagnosis only once when recovering from the deceleration fuel cut continued for more than predetermined time with the rear oxygen sensor warmed up sufficiently.

5. DIAGNOSTIC METHOD

Detect the trouble by calculating the time from the completion of the fuel cut to the beginning of the rear oxygen sensor voltage starting to rise.

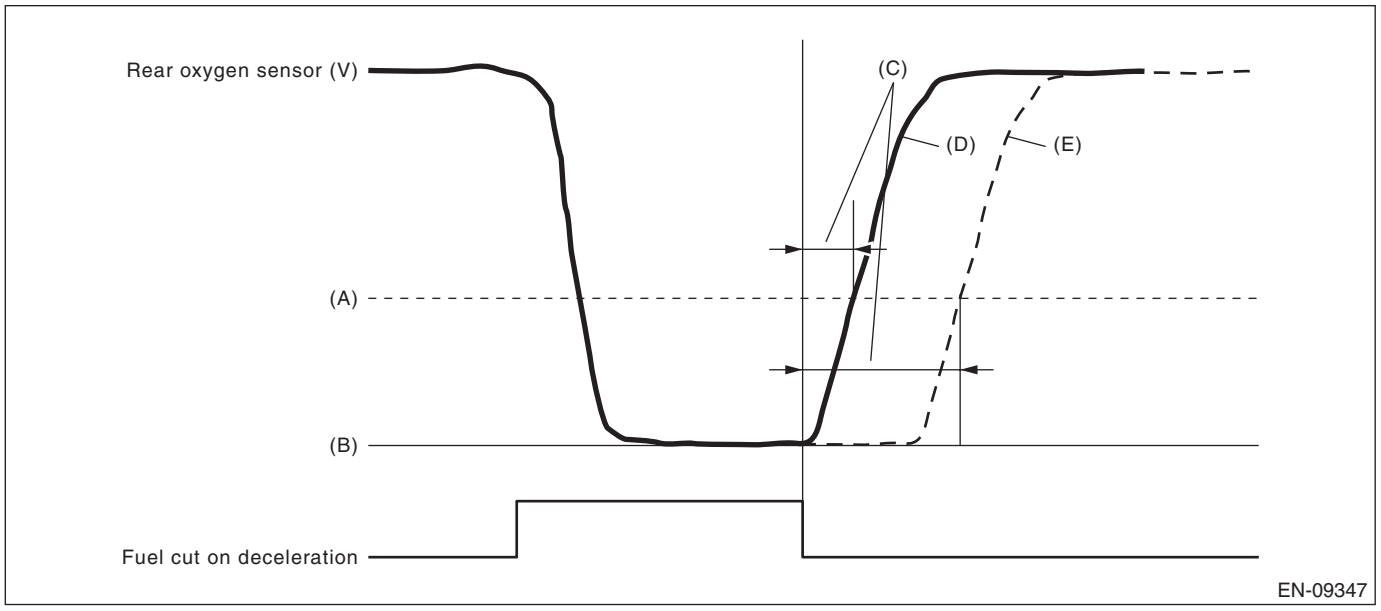

(A) 0.3 V
(B) 0 V
(C) Diagnostic parameter
(D) Normal
(E) Malfunction

• Abnormality Judgment

Judge as NG when the following conditions are established.

Judgment Value

Malfunction Criteria	Threshold Value
The number of times that the rear oxygen sensor voltage changed to 0.3 V after the fuel cut has completed (time counter)	> 3750 time(s)

Time Needed for Diagnosis: 10 seconds
Malfunction Indicator Light Illumination: Illuminates when malfunction occurs in 2 continuous driving cycles.

• Normality Judgment

Judge as OK and clear the NG if the following conditions are established.

Judgment Value

Malfunction Criteria	Threshold Value
The number of times that the rear oxygen sensor voltage changed to 0.3 V after the fuel cut has completed (time counter)	≤ 3750 time(s)

Time Needed for Diagnosis: 10 seconds

AY:DTC P0140 O2 SENSOR CIRCUIT NO ACTIVITY DETECTED (BANK1 SENSOR2)

1. OUTLINE OF DIAGNOSIS

Detect the rear oxygen sensor open or short circuit. Judge as NG when the rear oxygen sensor voltage can be determined to be abnormal considering conditions such as intake air amount, engine coolant temperature, main feedback control and deceleration fuel cut.

2. COMPONENT DESCRIPTION

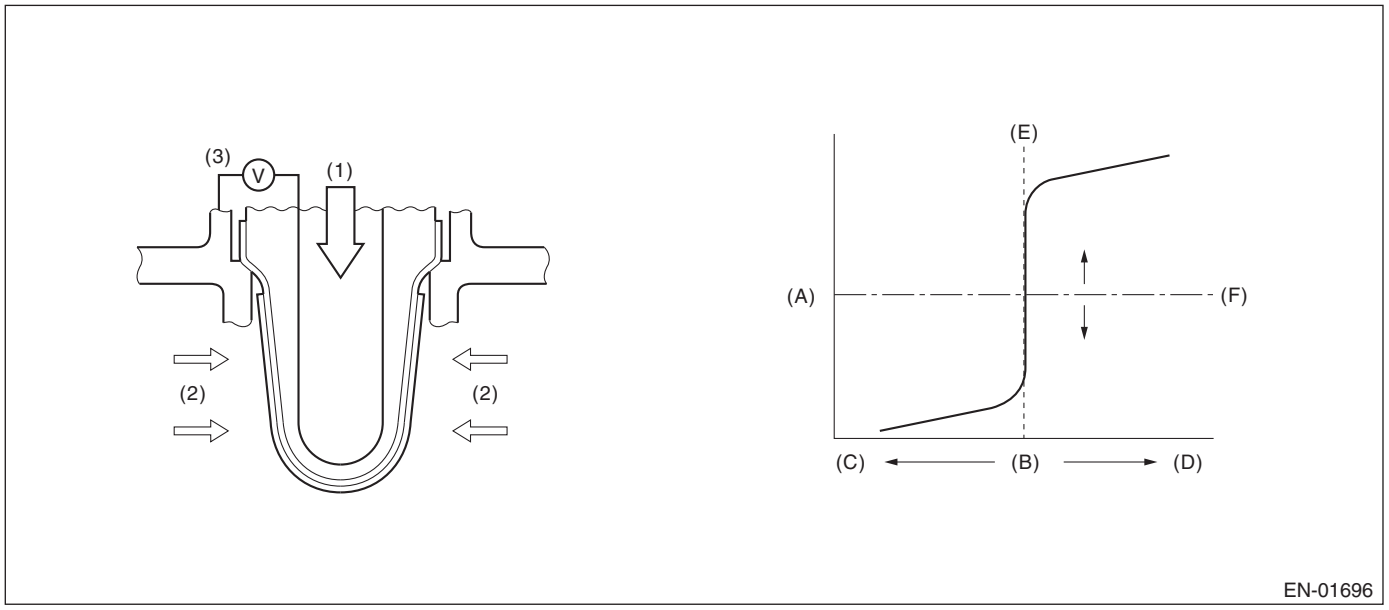

(A)	Electromotive force	(B)	Air fuel ratio	(C)	Lean
(D)	Rich	(E)	Theoretical air fuel ratio	(F)	Comparative voltage
(1)	Atmosphere	(2)	Exhaust gas	(3)	Electromotive force

3. ENABLE CONDITION (USED ONLY FOR MALFUNCTION JUDGMENT)

Secondary Parameters	Enable Conditions
Closed loop control at the rear oxygen sensor	In operation
Target output voltage of rear oxygen sensor	≥ 0.55 V + 0.05 V
Amount of intake air	≥ 10 g/s (0.35 oz/s)
Engine coolant temperature	≥ –40 °C (–40 °F)
Misfire detection every 200 rotations	< 65535 time(s)
Front oxygen (A/F) sensor compensation coefficient	Not in limit value
Battery voltage	≥ 10.9 V
Deceleration fuel cut of 5000 ms or more.	Experienced

4. GENERAL DRIVING CYCLE

Perform the diagnosis once after starting the engine.

5. DIAGNOSTIC METHOD

- **Abnormality Judgment**

If the duration of time while the following conditions are met is longer than the time indicated, judge as NG.

Judgment Value

Malfunction Criteria	Threshold Value
Minimum output voltage	> 0.15 V
or	
Maximum output voltage	< 0.55 V

Time Needed for Diagnosis: 90000 ms
Malfunction Indicator Light Illumination: Illuminates when malfunction occurs in 2 continuous driving cycles.

- **Normality Judgment**

Judge as OK and clear the NG if the following conditions are established.

Judgment Value

Malfunction Criteria	Threshold Value
Diagnosis of the rear oxygen sensor voltage low side	Incomplete
Minimum output voltage	≤ 0.15 V
Maximum output voltage	≥ 0.55 V

AZ:DTC P0141 O2 SENSOR HEATER CIRCUIT (BANK1 SENSOR2)

1. OUTLINE OF DIAGNOSIS

Detect the malfunction of rear oxygen sensor heater.
While observing the engine condition, judge as NG if the rear oxygen sensor impedance is great.

2. COMPONENT DESCRIPTION

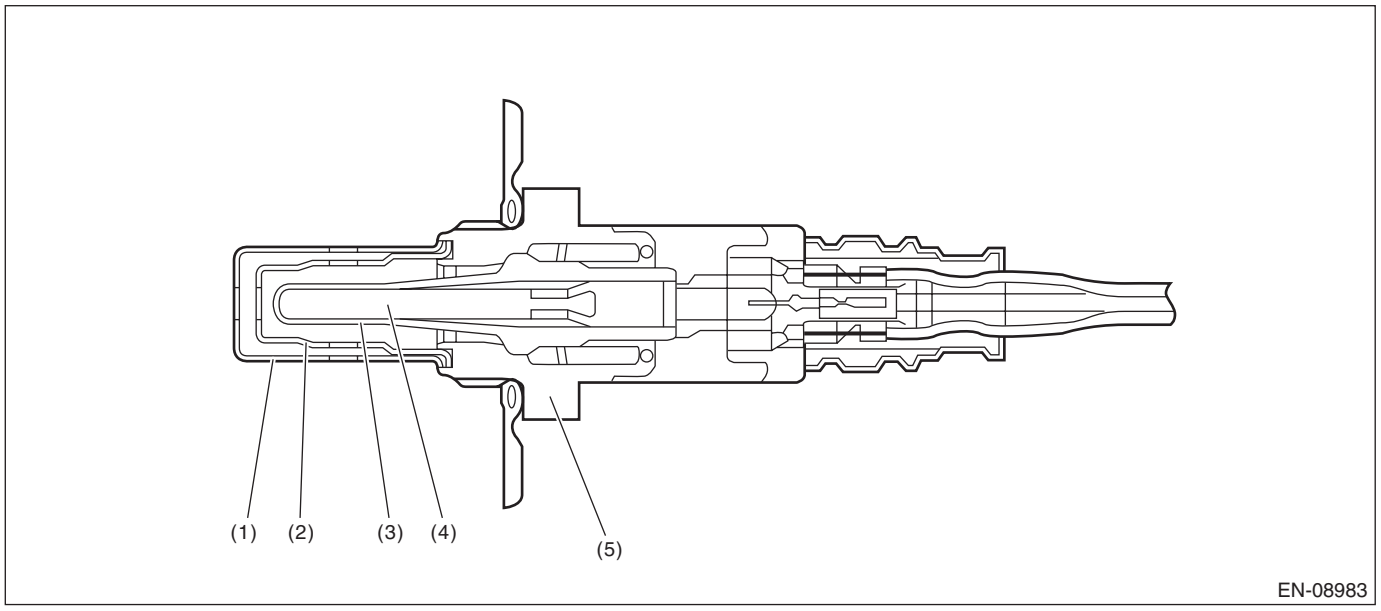

(1) Element cover (outer)
(2) Element cover (inner)
(3) Sensor element
(4) Ceramic heater
(5) Sensor housing

3. ENABLE CONDITIONS

Secondary Parameters	Enable Conditions
Battery voltage	≥ 10.9 V
Elapsed time after starting the engine	≥ 1000 ms
Engine coolant temperature	≥ 60 °C (140 °F)
A/F sensor element impedance	≤ 50 Ω
A/F sensor heater control duty	≤ 75 %
Rear oxygen sensor heater control duty	< 70 %

4. GENERAL DRIVING CYCLE

Perform the diagnosis continuously after 1000 ms seconds or more have passed since the engine started.

5. DIAGNOSTIC METHOD

• Abnormality Judgment

If the duration of time while the following conditions are met is longer than the time indicated, judge as NG.

Judgment Value

Malfunction Criteria	Threshold Value
Output terminal for heater characteristics failure detection	Low

Time Needed for Diagnosis: 4 ms × 2500 time(s)
Malfunction Indicator Light Illumination: Illuminates when malfunction occurs in 2 continuous driving cycles.

• Normality Judgment

Judge as OK and clear the NG if the continuous time while the following conditions are established is more than the predetermined time.

Judgment Value

Malfunction Criteria	Threshold Value
Output terminal for heater characteristics failure detection	High

Time Needed for Diagnosis: 4 ms × 2500 time(s)

BA:DTC P014C O2 SENSOR SLOW RESPONSE - RICH TO LEAN (BANK 1 SENSOR 1)

1. OUTLINE OF DIAGNOSIS

Detect the slow response of front oxygen (A/F) sensor.
For diagnosis, detect the trouble by processing the λ waveform in normal driving without forcibly changing the target air fuel ratio.

2. COMPONENT DESCRIPTION

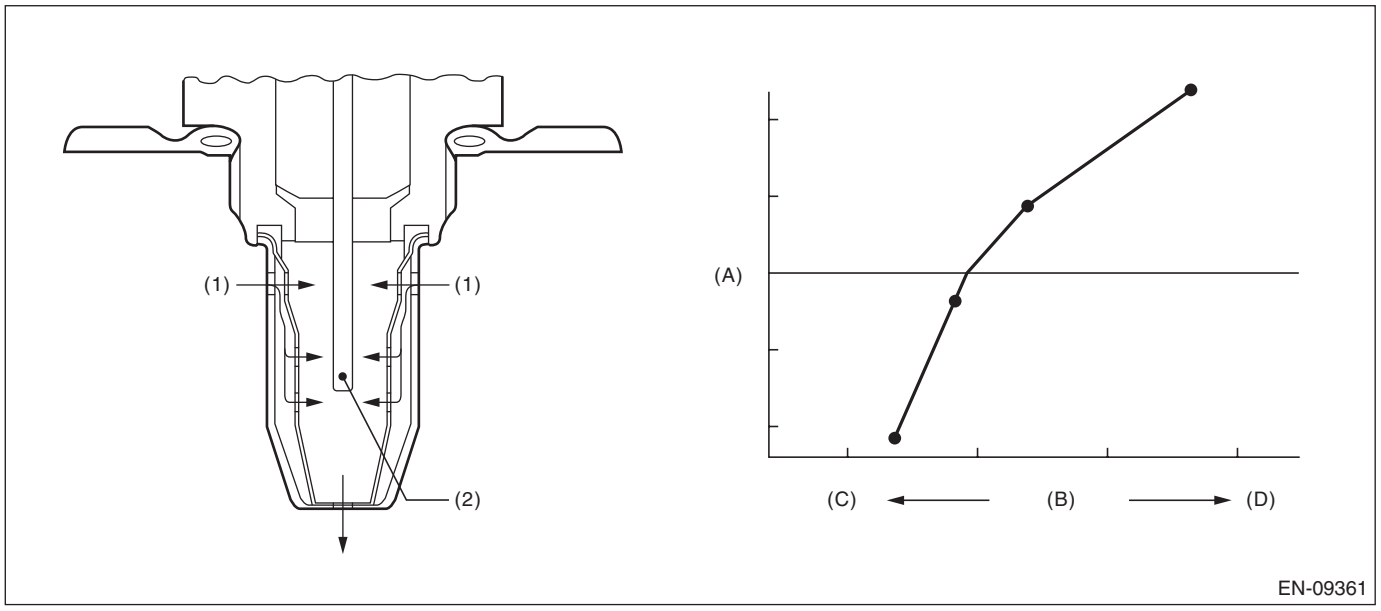

(A) Electromotive force (B) Air fuel ratio (C) Rich
(D) Lean

(1) Exhaust gas (2) ZrO_2

3. ENABLE CONDITIONS

Secondary Parameters	Enable Conditions
Battery voltage	> 10.9 V
Closed loop control with main feedback	Operation
Engine speed	≥ 1000 rpm
Amount of intake air	≥ 10 g/s (0.35 oz/s) (CVT model) ≥ 8 g/s (0.28 oz/s) (MT model)
Elapsed time after returning from the fuel cut	≥ 3000 ms
Accelerator pedal position	≠ 0%

4. GENERAL DRIVING CYCLE

Perform diagnosis only once in a city driving including normal acceleration and deceleration.

5. DIAGNOSTIC METHOD 1

Detect the malfunction by checking “Cumulative value of time when λ changes from lean → rich” in comparison to “Time during which diagnosis is in progress”.

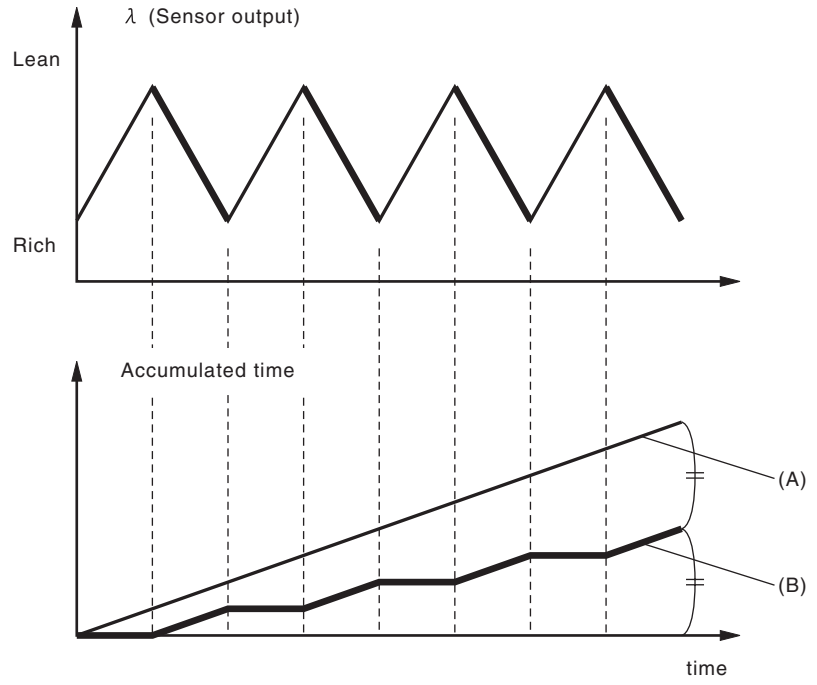

(A) Time during which diagnosis is in progress

(B) Cumulative value of time when λ changes from lean → rich

• **Abnormality Judgment**

Judge as NG when the following conditions are established.

Judgment Value

Malfunction Criteria	Threshold Value	DTC
(Cumulative value of time when λ changes from lean → rich) / (Time during which diagnosis is in progress)	< 0.39 (CVT models except for U5 model) < 0.35 (MT models except for U5 model) < 0.39 (U5 CVT model) < 0.39 (U5 MT model)	P014C
	> 0.63 (CVT models except for U5 model) > 0.65 (MT models except for U5 model) > 0.63 (U5 CVT model) > 0.61 (U5 MT model)	P014D

Time Needed for Diagnosis: 90 seconds
Malfunction Indicator Light Illumination: Illuminates when malfunction occurs in 2 continuous driving cycles.

• **Normality Judgment**

Judge as OK and clear the NG if the following conditions are established.

Judgment Value

Malfunction Criteria	Threshold Value	DTC
(Cumulative value of time when λ changes from lean → rich) / (Time during which diagnosis is in progress)	≥ 0.39 (CVT models except for U5 model) ≥ 0.35 (MT models except for U5 model) ≥ 0.39 (U5 CVT model) ≥ 0.39 (U5 MT model)	P014C
	≤ 0.63 (CVT models except for U5 model) ≤ 0.65 (MT models except for U5 model) ≤ 0.63 (U5 CVT model) ≤ 0.61 (U5 MT model)	P014D

Time Needed for Diagnosis: 90 seconds

6. DIAGNOSTIC METHOD 2

Detect the malfunction by the cumulative value obtained from the amount of variation in λ change.

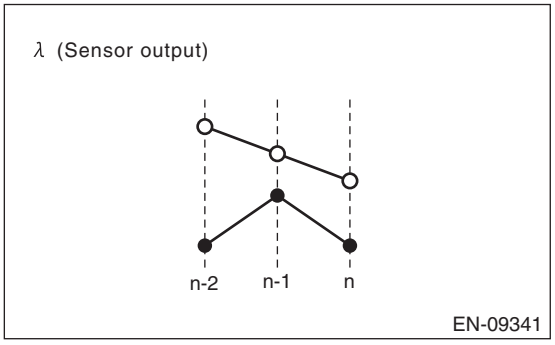

• Abnormality Judgment

Judge as NG when the following conditions are established.

Judgment Value

Malfunction Criteria	Threshold Value	DTC
Cumulative value obtained from the amount of variation in λ change Σ |(lambda(n) – lambda(n-1)) – (lambda(n-1) – lambda(n-2))|	< Value from Map	P014C and P014D

Map (CVT models except for U5 model)

Cumulative value obtained from the amount of variation in λ Σ |lambda(n) – lambda(n-1)|	0.00	3.00
Cumulative value obtained from the amount of variation in λ change	0.50	2.00

Map (MT models except for U5 model)

Cumulative value obtained from the amount of variation in λ Σ |lambda(n) – lambda(n-1)|	0.00	4.00
Cumulative value obtained from the amount of variation in λ change	0.00	2.00

Map (U5 CVT model)

Cumulative value obtained from the amount of variation in λ Σ |lambda(n) – lambda(n-1)|	0.00	4.00
Cumulative value obtained from the amount of variation in λ change	0.50	2.00

Map (U5 MT model)

Cumulative value obtained from the amount of variation in λ Σ |lambda(n) – lambda(n-1)|	0.00	5.00
Cumulative value obtained from the amount of variation in λ change	0.00	3.25

Time Needed for Diagnosis: 90 seconds
Malfunction Indicator Light Illumination: Illuminates when malfunction occurs in 2 continuous driving cycles.

• Normality Judgment

Judge as OK and clear the NG if the following conditions are established.

Judgment Value

Malfunction Criteria	Threshold Value	DTC
Cumulative value obtained from the amount of variation in λ change Σ |(lambda(n) – lambda(n-1)) – (lambda(n-1) – lambda(n-2))|	≥ Value from Map	P014C and P014D

Time Needed for Diagnosis: 90 seconds

BB:DTC P014D O2 SENSOR SLOW RESPONSE - LEAN TO RICH (BANK 1 SENSOR 1)

1. OUTLINE OF DIAGNOSIS

NOTE:
For the detection standard, refer to DTC P014C. <Ref. to GD(H4DO w/o HEV)-89, DTC P014C O2 SENSOR SLOW RESPONSE - RICH TO LEAN (BANK 1 SENSOR 1), Diagnostic Trouble Code (DTC) Detecting Criteria.>

BC:DTC P015A O2 SENSOR DELAYED RESPONSE - RICH TO LEAN (BANK 1 SENSOR 1)

1. OUTLINE OF DIAGNOSIS

Detect the slow response of front oxygen (A/F) sensor.
For diagnosis, detect the trouble by processing the λ waveform in normal driving without forcibly changing the target air fuel ratio.

2. COMPONENT DESCRIPTION

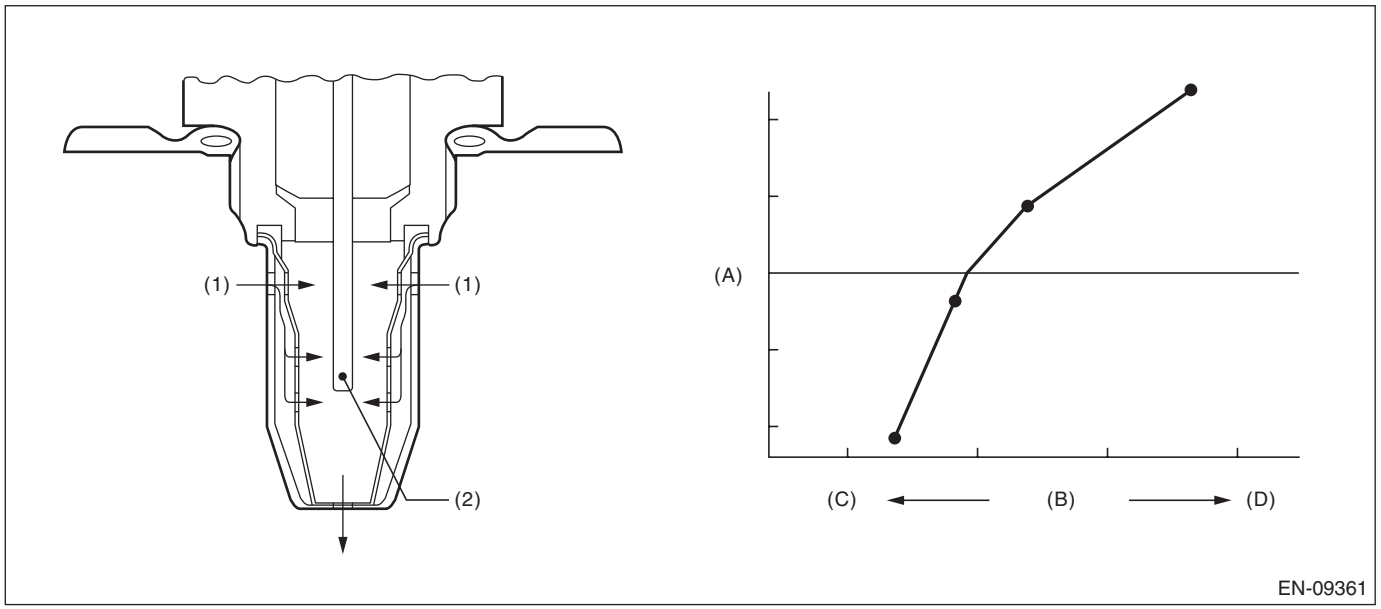

(A) Electromotive force
(B) Air fuel ratio
(C) Rich
(D) Lean

(1) Exhaust gas
(2) ZrO_2

3. ENABLE CONDITIONS

Diagnostic method 1 and 2

Secondary Parameters	Enable Conditions
Battery voltage	> 10.9 V
Closed loop control with main feedback	Operation
Engine speed	≥ 1000 rpm
Amount of intake air	≥ 10 g/s (0.35 oz/s) (CVT model) ≥ 8 g/s (0.28 oz/s) (MT model)
Elapsed time after returning from the fuel cut	≥ 3000 ms
Accelerator pedal position	≠ 0%

Diagnosis method 3 (only MT model)

Secondary Parameters	Enable Conditions
Battery voltage	> 10.9 V
Closed loop control with main feedback	Operation
Vehicle speed	≥ 40 km/h (24.9 MPH)
Engine speed	≥ 1000 rpm and < 4000 rpm
Amount of intake air	≥ 7.5 g/s (0.26 oz/s) and < 40 g/s (1.41 oz/s)
Catalyst deterioration diagnosis	Not diagnosed

4. GENERAL DRIVING CYCLE

Perform diagnosis only once in a city driving including normal acceleration and deceleration.

5. DIAGNOSTIC METHOD 1

Detect the malfunction depending on the average value of time necessary for λ to inverse the air fuel ratio from “Lean → Rich → Lean” to “Rich → Lean → Rich”.

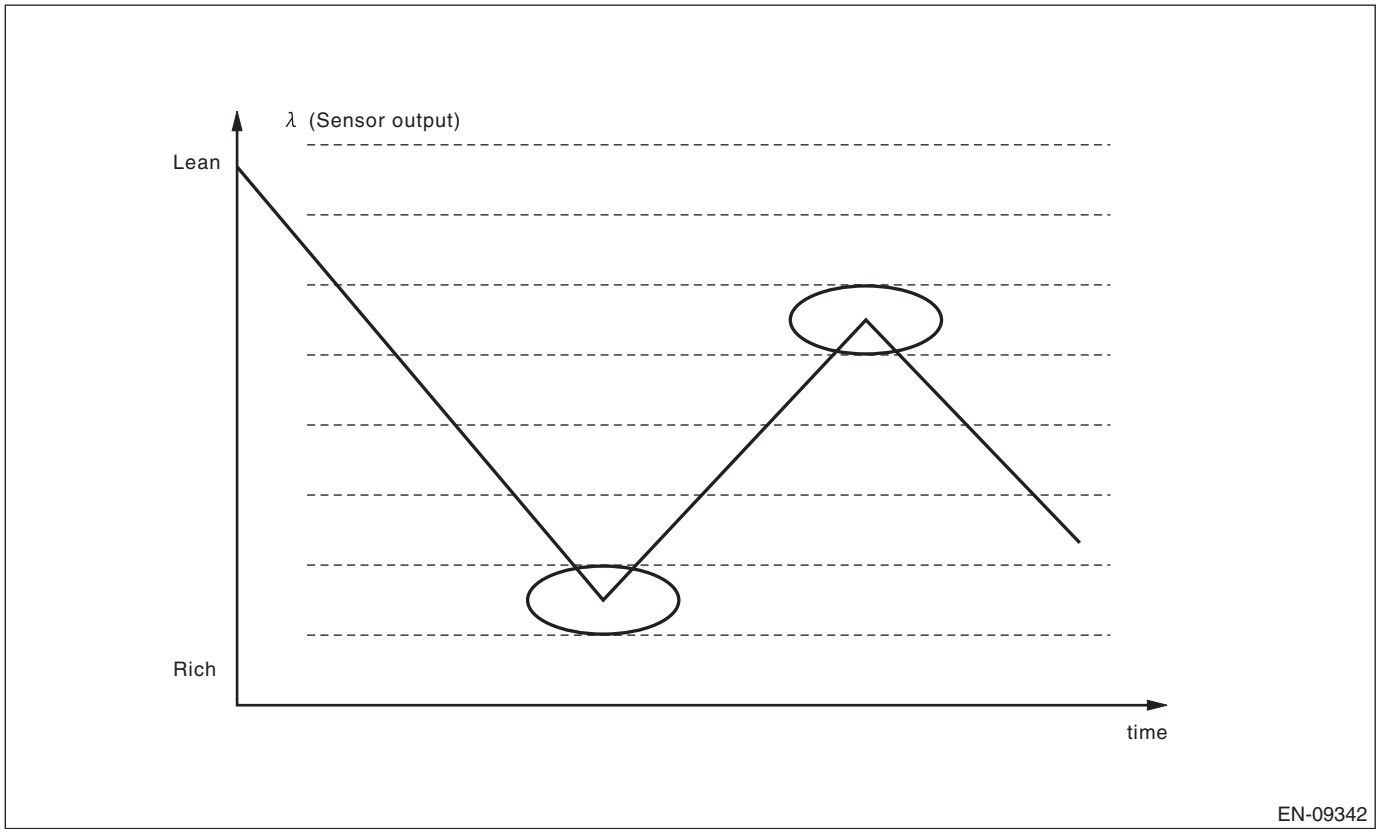

- **Abnormality Judgment**

Judge as NG when the following conditions are established.

Judgment Value

Malfunction Criteria	Threshold Value	DTC
Average value of time necessary for λ to inverse the air fuel ratio to Lean → Rich → Lean.	> 220 ms (CVT models except for U5 model) > 500 ms (MT models except for U5 model) > 100 ms (U5 CVT model) > 380 ms (U5 MT model)	P015A
Average value of time necessary for λ to inverse the air fuel ratio to Rich → Lean → Rich.	> 600 ms (CVT models except for U5 model) > 500 ms (MT models except for U5 model) > 240 ms (U5 CVT model) > 270 ms (U5 MT model)	P015B

Time Needed for Diagnosis: 50 times of inversion
Malfunction Indicator Light Illumination: Illuminates when malfunction occurs in 2 continuous driving cycles.

• Normality Judgment

Judge as OK and clear the NG if the following conditions are established.

Judgment Value

Malfunction Criteria	Threshold Value	DTC
Average value of time necessary for λ to inverse the air fuel ratio to Lean → Rich → Lean.	≤ 220 ms (CVT models except for U5 model) ≤ 500 ms (MT models except for U5 model) ≤ 100 ms (U5 CVT model) ≤ 380 ms (U5 MT model)	P015A
Average value of time necessary for λ to inverse the air fuel ratio to Rich → Lean → Rich.	≤ 600 ms (CVT models except for U5 model) ≤ 500 ms (MT models except for U5 model) ≤ 240 ms (U5 CVT model) ≤ 270 ms (U5 MT model)	P015B

Time Needed for Diagnosis: 50 times of inversion

6. DIAGNOSTIC METHOD 2

Detect the malfunction by calculating the average amplitude of λ.

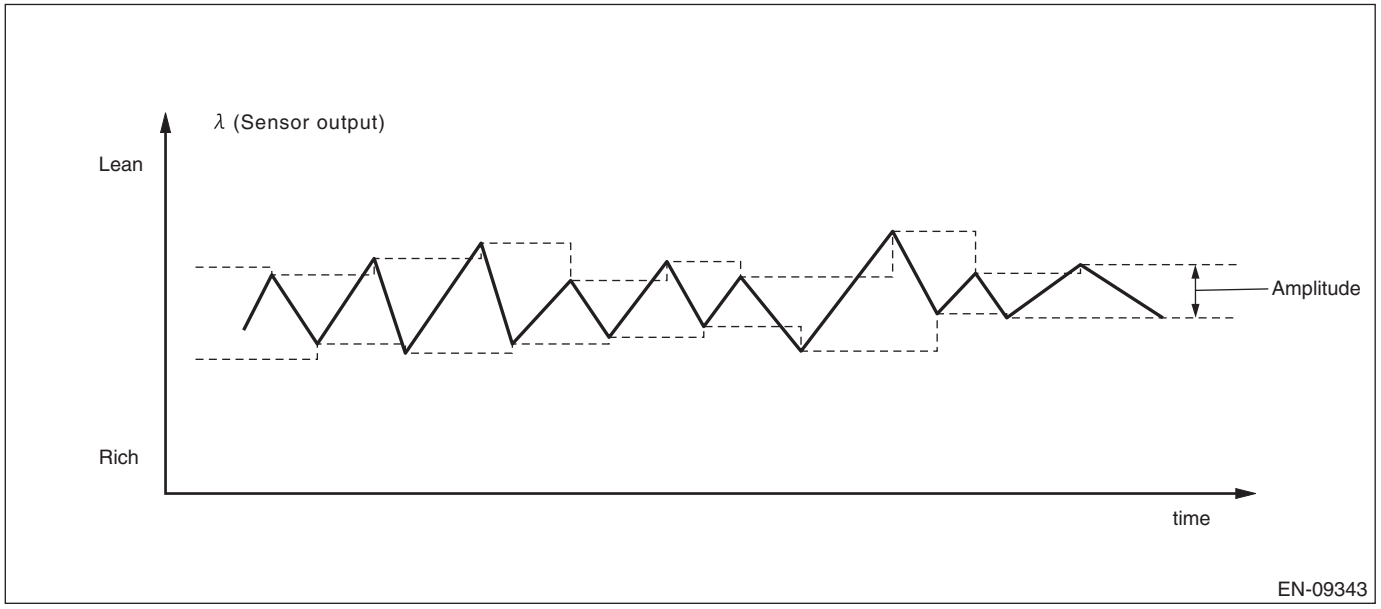

• Abnormality Judgment

Judge as NG when the following conditions are established.

Judgment Value

Malfunction Criteria	Threshold Value	DTC
Average value for λ amplitude	> 0.048 (CVT models except for U5 model) > 0.1 (MT models except for U5 model) > 0.06 (U5 CVT model) > 0.1 (U5 MT model)	P015A and P015B

Time Needed for Diagnosis: 11250 time(s) × 8 ms
Malfunction Indicator Light Illumination: Illuminates when malfunction occurs in 2 continuous driving cycles.

• **Normality Judgment**

Judge as OK and clear the NG if the following conditions are established.

Judgment Value

Malfunction Criteria	Threshold Value	DTC
Average value for λ amplitude	≤ 0.048 (CVT models except for U5 model) ≤ 0.1 (MT models except for U5 model) ≤ 0.06 (U5 CVT model) ≤ 0.1 (U5 MT model)	P015A and P015B

Time Needed for Diagnosis: 11250 time(s) × 8 ms

7. DIAGNOSIS METHOD 3 (MT MODEL ONLY)

Change STFT (A/F compensation value) by interruption, and measure the reaction time of λ value. When A/F sensor malfunctions, the reaction time takes longer than at normal condition. In this case, judge as abnormal.

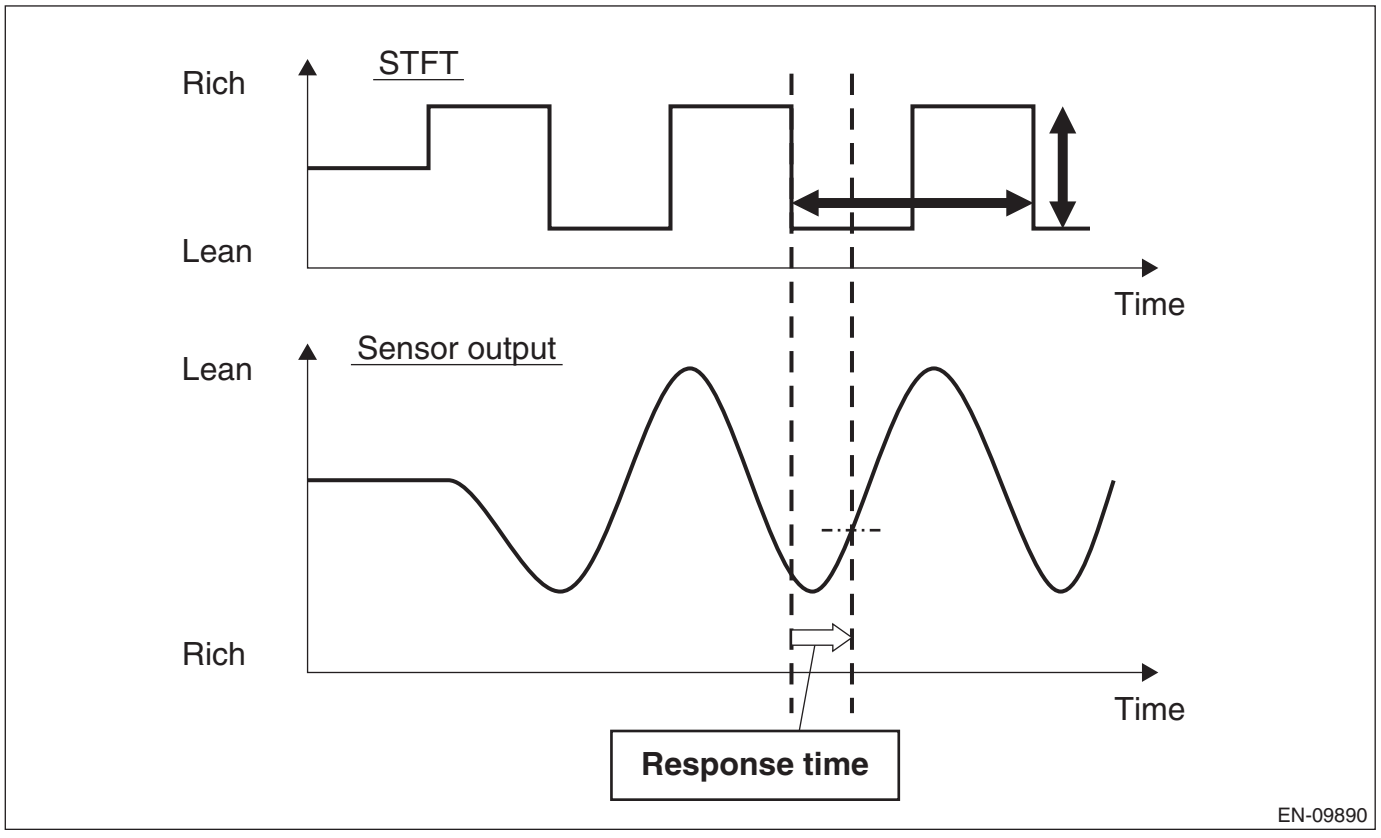

Measure reaction time (t1, t2, t3) and reaction time (t4, t5, t6). Use the average value of the reaction time to obtain the diagnostic value.

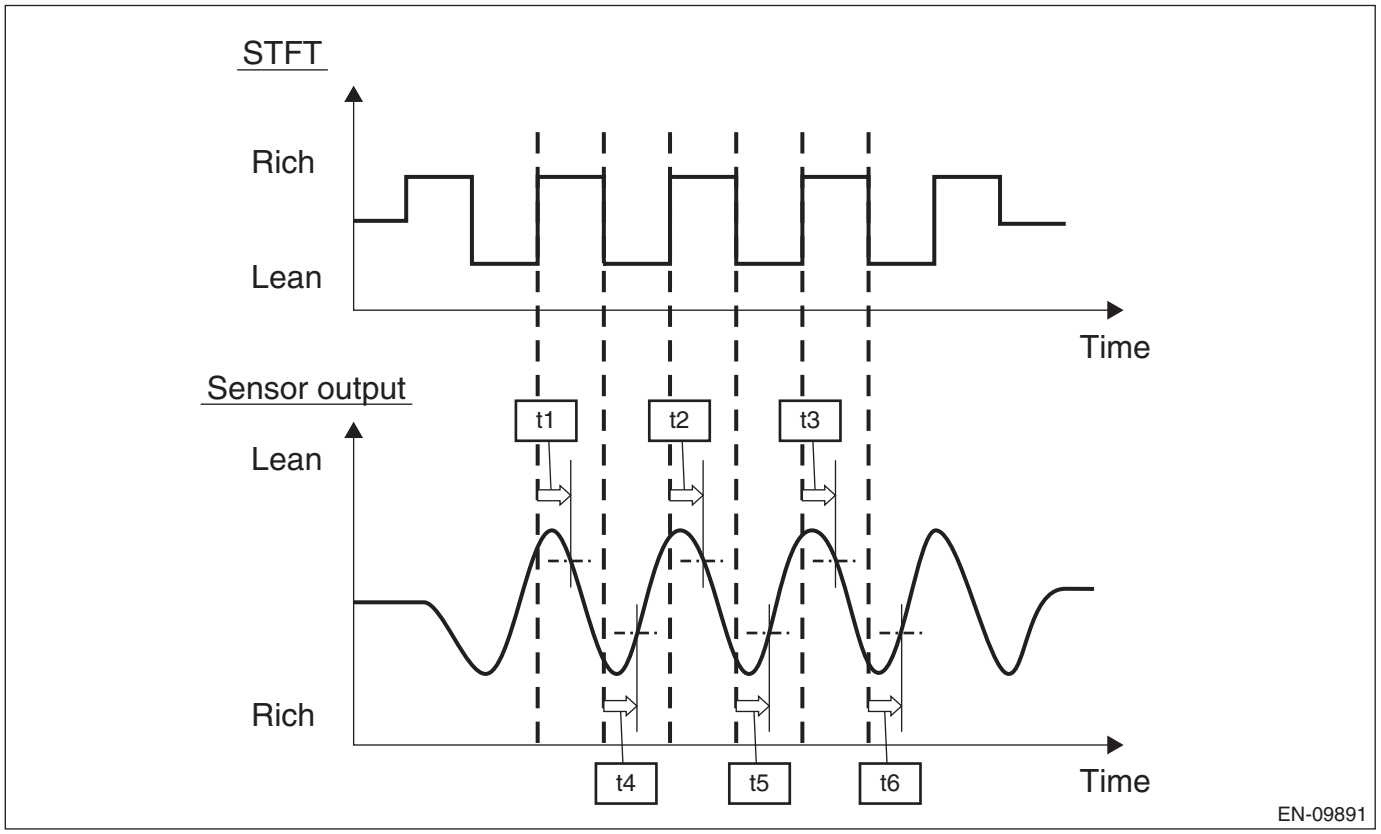

- **Abnormality Judgment**

Judge as NG when the following conditions are established.

Judgment Value

Malfunction Criteria	Threshold Value	DTC
(t1 + t2 + t3)/3 and (t4 + t5 + t6)/3	> 750 ms > 750 ms	P015A and P015B

Time Needed for Diagnosis: 1000 ms × [1 time(s)/2] + 1000 ms × 3 time(s) + 500 ms
Malfunction Indicator Light Illumination: Illuminates when malfunction occurs in 2 continuous driving cycles.

- **Normality Judgment**

Judge as OK and clear the NG if the following conditions are established.

Judgment Value

Malfunction Criteria	Threshold Value	DTC
(t1 + t2 + t3)/3 or (t4 + t5 + t6)/3	≤ 750 ms ≤ 750 ms	P015A and P015B

Time Needed for Diagnosis: 1000 ms × [1 time(s)/2] + 1000 ms × 3 time(s) + 500 ms

BD:DTC P015B O2 SENSOR DELAYED RESPONSE - LEAN TO RICH (BANK 1 SENSOR 1)

1. OUTLINE OF DIAGNOSIS

NOTE:
For the detection standard, refer to DTC P015A. <Ref. to GD(H4DO w/o HEV)-93, DTC P015A O2 SENSOR DELAYED RESPONSE - RICH TO LEAN (BANK 1 SENSOR 1), Diagnostic Trouble Code (DTC) Detecting Criteria.>

BE:DTC P0171 SYSTEM TOO LEAN (BANK 1)

1. OUTLINE OF DIAGNOSIS

Detect fuel system malfunction by the amount of main feedback control.

DIAGNOSTIC METHOD

Fuel system is diagnosed by comparing the target air fuel ratio calculated by ECM with the actual air fuel ratio measured by sensor.

2. ENABLE CONDITION

Secondary Parameters	Enable Conditions
A/F main learning system	In operation
Engine coolant temperature	≥ 60 °C (140 °F)
Engine load change	< 0.02 g/rev (0 oz/rev)
Engine load	≥ Value of Map 1

Map 1 (CVT model)

Engine speed (rpm)	Idling	600	1000	1500	2000	2500	3000	3500	4000	4500
Measured value (g (oz)/rev)	na	0.139 (0)	0.146 (0.01)	0.135 (0)	0.152 (0.01)	0.166 (0.01)	0.182 (0.01)	0.191 (0.01)	0.211 (0.01)	0.22 (0.01)

Map 1 (MT model)

Engine speed (rpm)	Idling	650	1000	1500	2000	2500	3000	3500	4000	4500
Measured value (g (oz)/rev)	na	0.136 (0)	0.138 (0)	0.127 (0)	0.13 (0)	0.146 (0.01)	0.151 (0.01)	0.168 (0.01)	0.182 (0.01)	0.188 (0.01)

3. GENERAL DRIVING CYCLE

Perform the diagnosis continuously at idling or at a constant speed after warming up the engine.

4. DIAGNOSTIC METHOD

- **Abnormality Judgment**

Compare the diagnostic value (fsobd) with the threshold value, and if a condition meeting the malfunction criteria below continues for 10 s × 3 time(s) or more, judge that there is a fault in the fuel system.

Judgment Value

Malfunction Criteria	Threshold Value
fsobd = (sglmd – tglmda) + faf + flaf In this case: sglmd = measured lambda tglmda = target lambda faf = main feedback compensation coefficient (every 64 milliseconds) flaf = main feedback learning compensation coefficient	≥ Value from Map 2

Map 2

Amount of air (g (oz)/s)	0 (0)	3.2 (0.11)	6.4 (0.23)	9.6 (0.34)	12.8 (0.45)	16 (0.56)	19.2 (0.68)
fsobdL1 (%)	1.35	1.35	1.35	1.35	1.35	1.35	1.35

Time Needed for Diagnosis: 10 s × 3 time(s)
Malfunction Indicator Light Illumination: Illuminates when malfunction occurs in 2 continuous driving cycles.

- **Normality Judgment**

Judge as OK and clear the NG if the continuous time while the following conditions are established is more than the predetermined time.

Judgment Value

Malfunction Criteria	Threshold Value
fsobd = (sglmd – tglmda) + faf + flaf	< 1.15

Time Needed for Diagnosis: 10 s

BF:DTC P0172 SYSTEM TOO RICH (BANK 1)

1. OUTLINE OF DIAGNOSIS

Detect fuel system malfunction by the amount of main feedback control.

Diagnostic method

Fuel system is diagnosed by comparing the target air fuel ratio calculated by ECM with the actual air fuel ratio measured by sensor.

2. ENABLE CONDITION

Secondary Parameters	Enable Conditions
A/F main learning system	In operation
Engine coolant temperature	≥ 60 °C (140 °F)
Engine load change	≤ 0.02 g/rev (0 oz/rev)
Cumulative time of canister purge after engine start	≥ 0 s
Continuous period after canister purge starting	≥ 5000 ms
Engine load	≥ Value of Map 1

Map 1 (CVT model)

Engine speed (rpm)	Idling	600	1000	1500	2000	2500	3000	3500	4000	4500
Measured value (g (oz)/rev)	na	0.139 (0)	0.146 (0.01)	0.135 (0)	0.152 (0.01)	0.166 (0.01)	0.182 (0.01)	0.191 (0.01)	0.211 (0.01)	0.22 (0.01)

Map 1 (MT model)

Engine speed (rpm)	Idling	650	1000	1500	2000	2500	3000	3500	4000	4500
Measured value (g (oz)/rev)	na	0.136 (0)	0.138 (0)	0.127 (0)	0.13 (0)	0.146 (0.01)	0.151 (0.01)	0.168 (0.01)	0.182 (0.01)	0.188 (0.01)

3. GENERAL DRIVING CYCLE

Perform the diagnosis continuously at idling or at a constant speed after warming up the engine.

4. DIAGNOSTIC METHOD

• Abnormality Judgment

Compare the diagnostic value (fsobd) with the threshold value, and if a condition meeting the malfunction criteria below continues for 10 s × 3 time(s) or more, judge that there is a fault in the fuel system.

Judgment Value

Malfunction Criteria	Threshold Value
fsobd = (sglmd – tglmda) + faf + flaf In this case: sglmd = measured lambda tglmda = target lambda faf = main feedback compensation coefficient (every 64 milliseconds) flaf = main feedback learning compensation coefficient	< Value of Map 2

Map 2

Amount of air (g (oz)/s)	0 (0)	3.2 (0.11)	6.4 (0.23)	9.6 (0.34)	12.8 (0.45)	16 (0.56)	19.2 (0.68)
fsobdL1 (%)	0.65	0.65	0.65	0.65	0.65	0.65	0.65

Time Needed for Diagnosis: 10 s × 3 time(s)
Malfunction Indicator Light Illumination: Illuminates when malfunction occurs in 2 continuous driving cycles.

- **Normality Judgment**

Judge as OK if the status that the criteria below are met continues for 10 seconds.

Judgment Value

Malfunction Criteria	Threshold Value
fsobd = (sglmd – tglmda) + faf + flaf	≥ 0.85

Time Needed for Diagnosis: 10 s

BG:DTC P0196 ENGINE OIL TEMPERATURE SENSOR CIRCUIT RANGE/PERFORMANCE

1. OUTLINE OF DIAGNOSIS

Detect for abnormal values in the oil temperature sensor output properties.
Judge as NG when the oil temperature does not rise even though the engine is running under a condition where it should rise.

2. COMPONENT DESCRIPTION

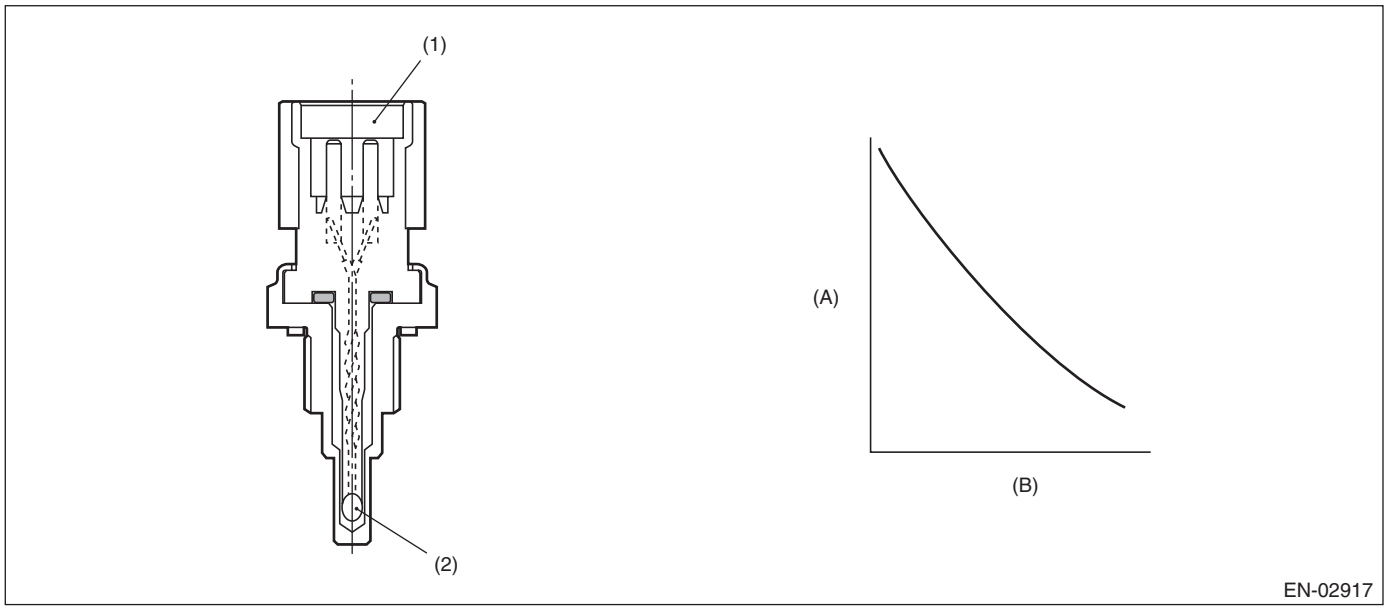

(A) Resistance value (kΩ)
(B) Temperature °C (°F)
(1) Connector
(2) Thermistor element

3. ENABLE CONDITIONS

Secondary Parameters	Enable Conditions
Battery voltage	≥ 10.9 V
Engine oil temperature at starting	< 50 °C (122 °F)

4. GENERAL DRIVING CYCLE

Perform the diagnosis continuously after starting the engine.

5. DIAGNOSTIC METHOD

• Abnormality Judgment

Judge as NG when the following conditions are established.

Judgment Value

Malfunction Criteria	Threshold Value
Engine oil temperature	< 50 °C (122 °F)
Timer after starting for oil temperature sensor characteristics diagnosis	≥ Judgment value of timer after starting for oil temperature sensor characteristics diagnosis

Timer after starting for oil temperature sensor characteristics diagnosis (timer for diagnosis)
a. Timer stop at fuel cut
b. Timer counts up as follows under the driving conditions other than above a).
64 ms + TOILCNT ms (at 64 ms)
The definition of TOILCNT is as follows.
TOILCNT = 0 (idle switch ON)
For TOILCNT at idle switch OFF, refer to the following table.

		Vehicle speed km/h (MPH)							
		0 (0)	8 (5)	16 (9.9)	24 (14.9)	32 (19.9)	40 (24.9)	48 (29.8)	56 (34.8)
Minimum engine oil temperature °C (°F)	–30 (–22)	39.8	47.3	55.9	66.0	79.7	96.5	117.8	145.7
	–20 (–4)	31.6	38.6	46.6	56.0	68.7	84.7	104.8	131.3
	–10 (14)	21.6	27.9	35.1	43.6	55.4	70.1	88.8	113.6
	0 (32)	11.8	17.4	23.9	31.5	42.3	55.9	73.3	96.8
	10 (50)	9.9	15.4	21.9	29.5	40.4	54.5	72.4	97.4

Judgment value of timer after starting for oil temperature sensor characteristics diagnosis (t)
t = 2402277 ms – 55052 ms × Ti (t ≥ 2400000)
Ti = Minimum engine oil temperature after engine starting
Time Needed for Diagnosis: Less than 1 second
Malfunction Indicator Light Illumination: Illuminates when malfunction occurs in 2 continuous driving cycles.

• Normality Judgment

Judge as OK and clear the NG if the following conditions are established.

Judgment Value

Malfunction Criteria	Threshold Value
Engine oil temperature	≥ 50 °C (122 °F)

Time Needed for Diagnosis: Less than 1 second

BH:DTC P0197 ENGINE OIL TEMPERATURE SENSOR LOW

1. OUTLINE OF DIAGNOSIS

Detect the open or short circuit of the oil temperature sensor.
Judge as NG when outside of the judgment value.

2. COMPONENT DESCRIPTION

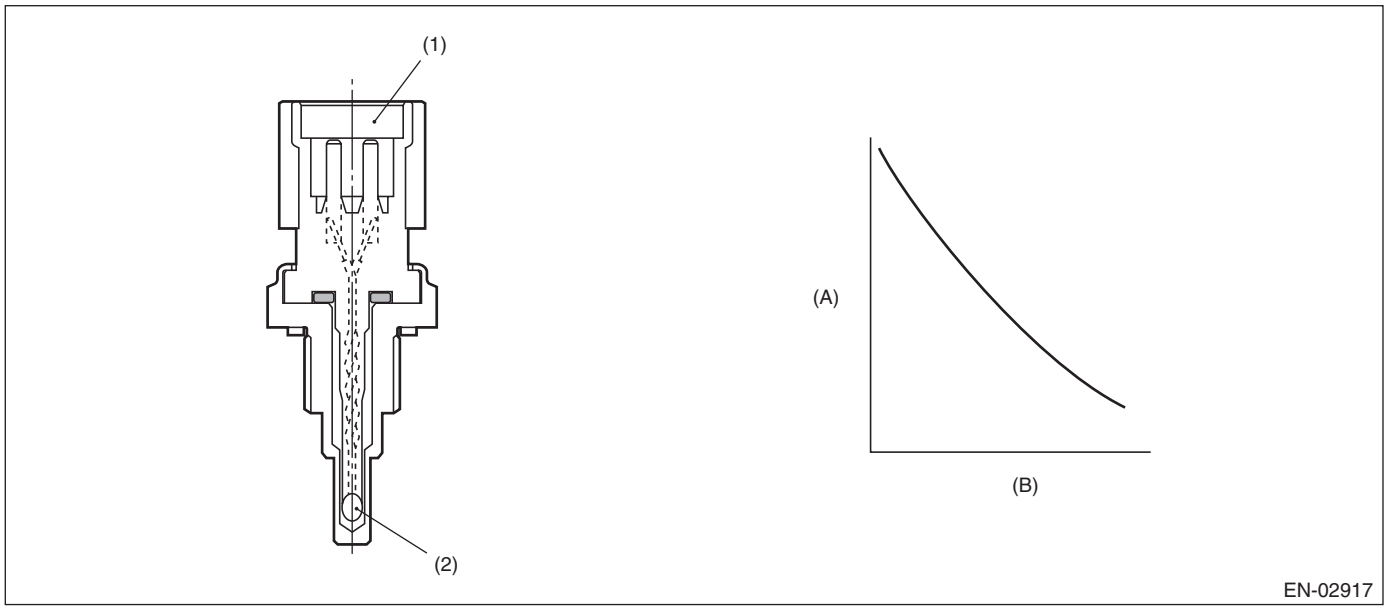

(A) Resistance value (kΩ)
(B) Temperature °C (°F)
(1) Connector
(2) Thermistor element

3. ENABLE CONDITIONS

Secondary Parameters	Enable Conditions
None	

4. GENERAL DRIVING CYCLE

Always perform the diagnosis continuously.

5. DIAGNOSTIC METHOD

- **Abnormality Judgment**

If the duration of time while the following conditions are met is longer than the time indicated, judge as NG.

Judgment Value

Malfunction Criteria	Threshold Value
Output voltage	< 0.135 V

Time Needed for Diagnosis: 500 ms
Malfunction Indicator Light Illumination: Illuminates as soon as a malfunction occurs.

- **Normality Judgment**

Judge as OK and clear the NG if the continuous time while the following conditions are established is more than the predetermined time.

Judgment Value

Malfunction Criteria	Threshold Value
Output voltage	≥ 0.135 V

Time Needed for Diagnosis: Less than 1 second

BI: DTC P0198 ENGINE OIL TEMPERATURE SENSOR HIGH

1. OUTLINE OF DIAGNOSIS

Detect the open or short circuit of the oil temperature sensor.
Judge as NG when outside of the judgment value.

2. COMPONENT DESCRIPTION

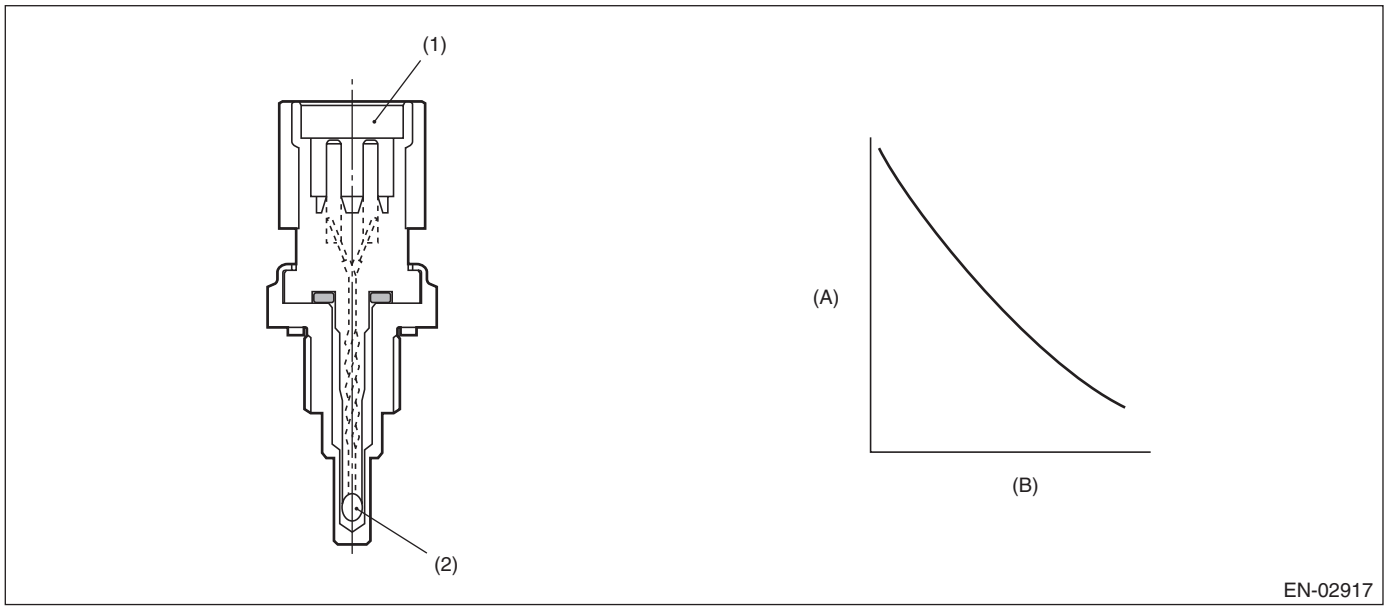

(A) Resistance value (kΩ)
(B) Temperature °C (°F)
(1) Connector
(2) Thermistor element

3. ENABLE CONDITIONS

Secondary Parameters	Enable Conditions
None	

4. GENERAL DRIVING CYCLE

Always perform the diagnosis continuously.

5. DIAGNOSTIC METHOD

- **Abnormality Judgment**

If the duration of time while the following conditions are met is longer than the time indicated, judge as NG.

Judgment Value

Malfunction Criteria	Threshold Value
Output voltage	≥ 4.876 V

Time Needed for Diagnosis: 500 ms
Malfunction Indicator Light Illumination: Illuminates as soon as a malfunction occurs.

- **Normality Judgment**

Judge as OK and clear the NG if the continuous time while the following conditions are established is more than the predetermined time.

Judgment Value

Malfunction Criteria	Threshold Value
Output voltage	< 4.876 V

Time Needed for Diagnosis: Less than 1 second

BJ:DTC P0201 INJECTOR #1

1. OUTLINE OF DIAGNOSIS

Based on the self-diagnostic result of the injector driving IC, judge the injector driving circuit as normal or abnormal.
Injector driving IC detects the status of “fuel remains injected” or “fuel is not injected” as a malfunction.

2. ENABLE CONDITIONS

Secondary Parameters	Enable Conditions
Battery voltage	≥ 10.9 V
Elapsed time after starting the engine	> 1 s
Engine speed	> 500 rpm
Injection time	≥ 1000 μs and < 120000000/engine speed – 1000 μs
Injection status	Not during fuel cut and Not during asynchronous injection controlled by crankshaft position sensor

3. GENERAL DRIVING CYCLE

Always perform the diagnosis continuously.

4. DIAGNOSTIC METHOD

- **Abnormality Judgment**

Judge as NG when the following conditions are established.

Judgment Value

Malfunction Criteria	Threshold Value
Injector driving IC information	Malfunction

Time Needed for Diagnosis: 2500 ms
Malfunction Indicator Light Illumination: Illuminates as soon as a malfunction occurs.

- **Normality Judgment**

Judge as OK and clear the NG if the following conditions are established.

Judgment Value

Malfunction Criteria	Threshold Value
Injector driving IC information	Normal

Time Needed for Diagnosis: Less than 1 second

BK:DTC P0202 INJECTOR #2

1. OUTLINE OF DIAGNOSIS

NOTE:
For the detection standard, refer to DTC P0201. <Ref. to GD(H4DO w/o HEV)-110, DTC P0201 INJECTOR #1, Diagnostic Trouble Code (DTC) Detecting Criteria.>

BL:DTC P0203 INJECTOR #3

1. OUTLINE OF DIAGNOSIS

NOTE:
For the detection standard, refer to DTC P0201. <Ref. to GD(H4DO w/o HEV)-110, DTC P0201 INJECTOR #1, Diagnostic Trouble Code (DTC) Detecting Criteria.>

BM:DTC P0204 INJECTOR #4

1. OUTLINE OF DIAGNOSIS

NOTE:
For the detection standard, refer to DTC P0201. <Ref. to GD(H4DO w/o HEV)-110, DTC P0201 INJECTOR #1, Diagnostic Trouble Code (DTC) Detecting Criteria.>

BN:DTC P0222 THROTTLE/PEDAL POSITION SENSOR/SWITCH “B” CIRCUIT LOW

1. OUTLINE OF DIAGNOSIS

Detect the open or short circuit of throttle position sensor 2.
Judge as NG if out of specification.

2. COMPONENT DESCRIPTION

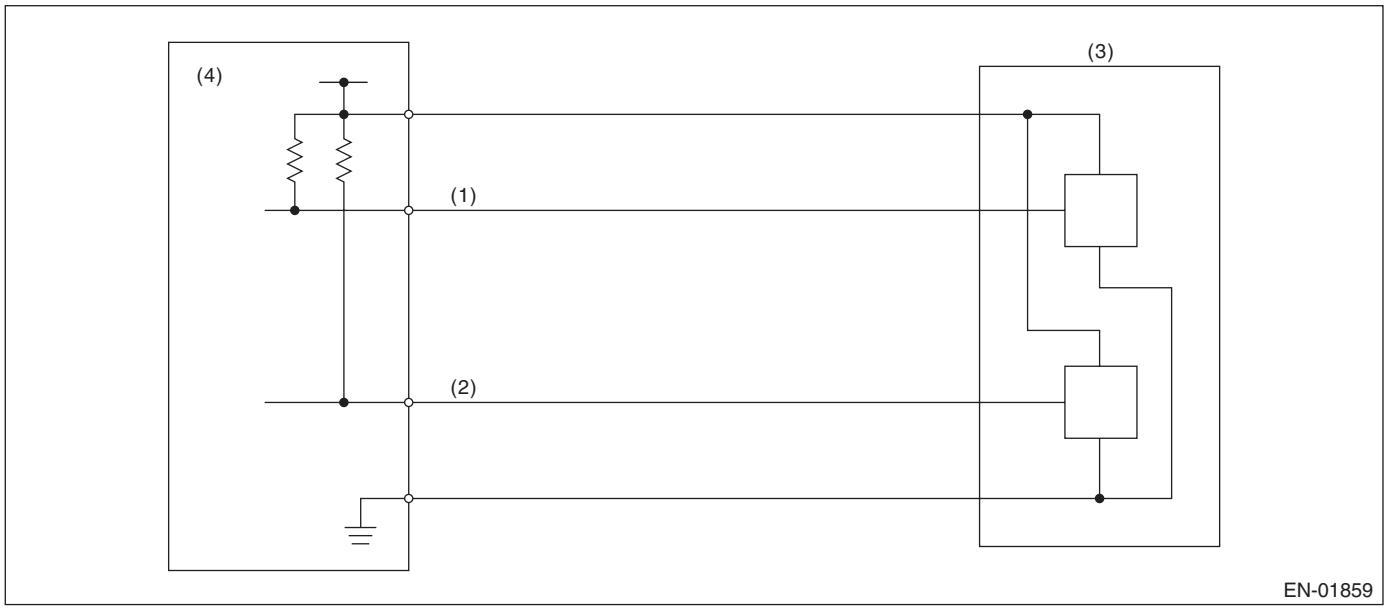

(1) Throttle position sensor 1 signal
(2) Throttle position sensor 2 signal
(3) Throttle position sensor
(4) Engine control module (ECM)

3. ENABLE CONDITION

Secondary Parameters	Enable Conditions
Ignition switch	ON
Battery voltage	≥ 6 V

4. GENERAL DRIVING CYCLE

Always perform the diagnosis continuously.

5. DIAGNOSTIC METHOD

- **Abnormality Judgment**

If the duration of time while the following conditions are met is longer than the time indicated, judge as NG.

Judgment Value

Malfunction Criteria	Threshold Value
Sensor 2 input voltage	≤ 1.15 V

Time Needed for Diagnosis: 24 ms
Malfunction Indicator Light Illumination: Illuminates as soon as a malfunction occurs.

- **Normality Judgment**

Judge as OK and clear the NG if the continuous time while the following conditions are established is more than the predetermined time.

Judgment Value

Malfunction Criteria	Threshold Value
Sensor 2 input voltage	> 1.15 V

Time Needed for Diagnosis: 24 ms

BO:DTC P0223 THROTTLE/PEDAL POSITION SENSOR/SWITCH “B” CIRCUIT HIGH

1. OUTLINE OF DIAGNOSIS

Detect the open or short circuit of throttle position sensor 2.
Judge as NG if out of specification.

2. COMPONENT DESCRIPTION

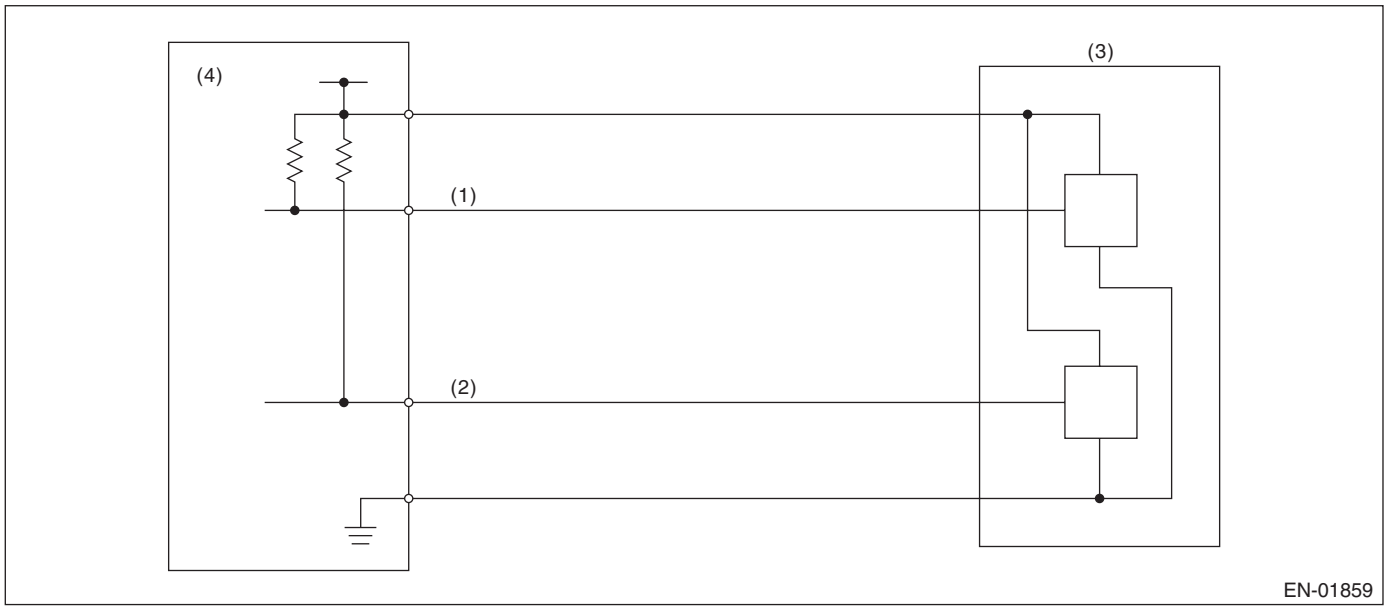

(1) Throttle position sensor 1 signal
(2) Throttle position sensor 2 signal
(3) Throttle position sensor
(4) Engine control module (ECM)

3. ENABLE CONDITION

Secondary Parameters	Enable Conditions
Ignition switch	ON
Battery voltage	≥ 6 V

4. GENERAL DRIVING CYCLE

Always perform the diagnosis continuously.

5. DIAGNOSTIC METHOD

• Abnormality Judgment

If the duration of time while the following conditions are met is longer than the time indicated, judge as NG.

Judgment Value

Malfunction Criteria	Threshold Value
Sensor 2 input voltage	≥ 4.858 V

Time Needed for Diagnosis: 24 ms
Malfunction Indicator Light Illumination: Illuminates as soon as a malfunction occurs.

• Normality Judgment

Judge as OK and clear the NG if the continuous time while the following conditions are established is more than the predetermined time.

Judgment Value

Malfunction Criteria	Threshold Value
Sensor 2 input voltage	< 4.858 V

Time Needed for Diagnosis: 24 ms

BP:DTC P0300 RANDOM/MULTIPLE CYLINDER MISFIRE DETECTED

1. OUTLINE OF DIAGNOSIS

NOTE:
For the detection standard, refer to DTC P0301. <Ref. to GD(H4DO w/o HEV)-116, DTC P0301 CYLINDER 1 MISFIRE DETECTED, Diagnostic Trouble Code (DTC) Detecting Criteria.>

BQ:DTC P0301 CYLINDER 1 MISFIRE DETECTED

1. OUTLINE OF DIAGNOSIS

Detect the presence of misfire occurrence. (Revolution fluctuation method)
Monitoring Misfire which influences exhaust deterioration (1.5 times of FTP) and catalyst damage is made obligatory by the law. Misfire affecting these two has two patterns below:

- Intermittent misfire (The same cylinder misfires in random, or different cylinders misfire in random.): FTP 1.5 times misfire
- Every time misfire (The same cylinder misfires every time.): FTP 1.5 times misfire, Catalyst damage misfire

The following detecting methods are adopted for these detection.
1) Intermittent misfire: FTP 1.5 times misfire

- 180° Interval Difference Method (MT: 1,800 rpm or less; CVT: None)
- 360° Interval Difference Method (whole range)
- 720° Interval Difference Method (3,000 rpm or more)

2) Misfire every time: FTP 1.5 times misfire, Catalyst damage misfire

- 360° Interval Difference Method

2. ENABLE CONDITION

Secondary Parameters	Enable Conditions
All secondary parameters enable conditions	≥ 1024 ms
Intake manifold pressure change at 180°CA	< Value of Map 1
Throttle position change during 16 milliseconds	< 21 °
Fuel shut-off function	Not in operation
Fuel level	≥ 8.25 ℓ (2.18 US gal, 1.82 Imp gal) (except for XV model) ≥ 9 ℓ (2.38 US gal, 1.98 Imp gal) (XV model)
Vehicle dynamic control or AT torque control	Not in operation
Evaporative system leak check	Not in operation
Engine speed	450 rpm — 6700 rpm (CVT model) 500 rpm — 6700 rpm (MT model)
Intake manifold pressure	≥ Value from Map 2
Battery voltage	≥ 8 V
Fuel parameter determination	Not extremely low volatility
Elapsed time after starting the engine	≥ 0 ms
Engine speed change during 32 milliseconds	< 1000 rpm

Map 1

- CVT model

rpm	700	1000	1500	2000	2500	3000	3500	4000	4500	5000	5500	6000	6300
kPa (mmHg, inHg)	26.7 (200, 7.9)	26.7 (200, 7.9)	26.7 (200, 7.9)	26.7 (200, 7.9)	26.7 (200, 7.9)	26.7 (200, 7.9)	26.7 (200, 7.9)	26.7 (200, 7.9)	26.7 (200, 7.9)	26.7 (200, 7.9)	26.7 (200, 7.9)	26.7 (200, 7.9)	26.7 (200, 7.9)

- MT model

rpm	650	1000	1500	2000	2500	3000	3500	4000	4500	5000	5500	6000	6300
kPa (mmHg, inHg)	26.7 (200, 7.9)	26.7 (200, 7.9)	26.7 (200, 7.9)	26.7 (200, 7.9)	26.7 (200, 7.9)	26.7 (200, 7.9)	26.7 (200, 7.9)	26.7 (200, 7.9)	26.7 (200, 7.9)	26.7 (200, 7.9)	26.7 (200, 7.9)	26.7 (200, 7.9)	26.7 (200, 7.9)

Map 2 (CVT model)

- Normal ignition

		Barometric pressure (kPa (mmHg, inHg))							
		67.3 (505 , 19.9)	72.5 (544 , 21.4)	77.2 (579 , 22.8)	80 (600 , 23.6)	84 (630 , 24.8)	87.3 (655 , 25.8)	92.4 (693 , 27.3)	100.4 (753, 29.6)
Engine speed (rpm)	700	21.5 (161.6 , 6.4)	20 (149.7 , 5.9)	20.8 (155.7 , 6.1)	21.2 (159.3 , 6.3)	21.9 (164.4 , 6.5)	22.5 (169.1 , 6.7)	24.2 (181.6 , 7.1)	25 (187.5547162, 7.4)
	1000	19.3 (144.8 , 5.7)	19 (142.4 , 5.6)	19.5 (146.4 , 5.8)	20.1 (150.4 , 5.9)	20.7 (155.5 , 6.1)	21.3 (159.6 , 6.3)	22.6 (169.3 , 6.7)	23.4 (175.2864583, 6.9)
	1200	18.9 (141.8 , 5.6)	18.8 (141.1 , 5.6)	19.2 (144.4 , 5.7)	19.7 (147.5 , 5.8)	20.3 (152.0 , 6)	21 (157.4 , 6.2)	22.2 (166.5 , 6.6)	23 (172.5247257, 6.8)
	1600	18.6 (139.5 , 5.5)	19 (142.3 , 5.6)	19.2 (144.2 , 5.7)	19.8 (148.5 , 5.8)	20.3 (152.3 , 6)	21 (157.6 , 6.2)	22 (165.1 , 6.5)	22.9 (172.1126302, 6.8)
	2000	20.6 (154.8 , 6.1)	21.2 (158.7 , 6.2)	21.3 (159.6 , 6.3)	22 (164.8 , 6.5)	22.2 (166.2 , 6.5)	23 (172.6 , 6.8)	23.8 (178.6 , 7)	25.1 (188.0311802, 7.4)
	2400	21 (157.4 , 6.2)	21.2 (159.1 , 6.3)	21 (157.7 , 6.2)	21.7 (162.9 , 6.4)	22.3 (167.1 , 6.6)	24 (180.1 , 7.1)	24.9 (186.7 , 7.3)	26.4 (198.3294412, 7.8)
	2800	21.5 (161.5 , 6.4)	21.9 (164.0 , 6.5)	21.6 (162.0 , 6.4)	22.3 (167.2 , 6.6)	23.1 (173.4 , 6.8)	24.1 (180.5 , 7.1)	25.5 (191.4 , 7.5)	26.6 (199.7301136, 7.9)
	3200	24.7 (185.3 , 7.3)	25.6 (192.2 , 7.6)	25.3 (189.7 , 7.5)	25.6 (191.8 , 7.6)	26.5 (198.7 , 7.8)	27.3 (204.7 , 8.1)	28.5 (213.8 , 8.4)	29.3 (219.8410072, 8.7)
	3600	27.5 (205.9 , 8.1)	28.4 (213.4 , 8.4)	28.5 (213.8 , 8.4)	28.7 (215.3 , 8.5)	29.5 (221.0 , 8.7)	30.6 (229.4 , 9)	31.8 (238.3 , 9.4)	32.4 (243.1353401, 9.6)
	4000	29.4 (220.3 , 8.7)	29.8 (223.7 , 8.8)	29.3 (219.7 , 8.6)	29.9 (224.3 , 8.8)	30.5 (228.4 , 9)	31.9 (239.6 , 9.4)	33.7 (253.0 , 10)	33.1 (248.5103319, 9.8)
	4400	30.9 (232.1 , 9.1)	31.4 (235.5 , 9.3)	30.9 (231.5 , 9.1)	31.5 (236.0 , 9.3)	32 (240.2 , 9.5)	33.5 (251.4 , 9.9)	35.3 (264.7 , 10.4)	34.7 (260.2750377, 10.2)
	4800	32.5 (243.9 , 9.6)	33 (247.3 , 9.7)	32.4 (243.2 , 9.6)	33 (247.8 , 9.8)	33.6 (251.9 , 9.9)	35.1 (263.2 , 10.4)	36.9 (276.5 , 10.9)	36.3 (272.0397436, 10.7)
	5200	34.1 (255.6 , 10.1)	34.5 (259.0 , 10.2)	34 (255.0 , 10)	34.6 (259.6 , 10.2)	35.2 (263.7 , 10.4)	36.7 (274.9 , 10.8)	38.4 (288.3 , 11.3)	37.8 (283.8044495, 11.2)
	5600	35.6 (267.4 , 10.5)	36.1 (270.8 , 10.7)	35.6 (266.8 , 10.5)	36.2 (271.3 , 10.7)	36.7 (275.5 , 10.8)	38.2 (286.7 , 11.3)	40 (300.0 , 11.8)	39.4 (295.5691554, 11.6)
	6000	37.2 (279.2 , 11)	37.7 (282.6 , 11.1)	37.1 (278.5 , 11)	37.7 (283.1 , 11.1)	38.3 (287.2 , 11.3)	39.8 (298.5 , 11.8)	41.6 (311.8 , 12.3)	41 (307.3338613, 12.1)
	6400	38.8 (290.9 , 11.5)	39.2 (294.3 , 11.6)	38.7 (290.3 , 11.4)	39.3 (294.9 , 11.6)	39.9 (299.0 , 11.8)	41.4 (310.2 , 12.2)	43.1 (323.6 , 12.7)	42.5 (319.0985672, 12.6)

kPa (mmHg, inHg)

- Idling ignition

		Barometric pressure (kPa (mmHg, inHg))							
		67.3 (505 , 19.9)	72.5 (544 , 21.4)	77.2 (579 , 22.8)	80 (600 , 23.6)	84 (630 , 24.8)	87.3 (655 , 25.8)	92.4 (693 , 27.3)	100.4 (753, 29.6)
Engine speed (rpm)	700	21.2 (159.1 , 6.3)	19.9 (149.2 , 5.9)	20.6 (154.7 , 6.1)	21.4 (160.5 , 6.3)	21.9 (164.2 , 6.5)	22.9 (172.0 , 6.8)	23.9 (179.0 , 7)	25 (187.3320497, 7.4)
	1000	19.7 (147.8 , 5.8)	19.4 (145.8 , 5.7)	20.1 (150.6 , 5.9)	20.9 (156.7 , 6.2)	21.5 (161.4 , 6.4)	22 (165.1 , 6.5)	23.2 (173.7 , 6.8)	24.4 (183.0684408, 7.2)
	1200	19.3 (145.1 , 5.7)	19 (142.7 , 5.6)	19.7 (147.9 , 5.8)	20.3 (152.3 , 6)	21 (157.7 , 6.2)	21.8 (163.4 , 6.4)	22.9 (171.9 , 6.8)	24.2 (181.8546978, 7.2)
	1600	19.1 (143.6 , 5.7)	19.5 (146.4 , 5.8)	20 (149.8 , 5.9)	20.4 (153.4 , 6)	21.1 (158.2 , 6.2)	22.2 (166.4 , 6.6)	23.4 (175.4 , 6.9)	24.4 (182.9412842, 7.2)
	2000	20.3 (152.6 , 6)	21.1 (157.9 , 6.2)	21.4 (160.7 , 6.3)	22 (164.7 , 6.5)	22 (164.9 , 6.5)	24 (180.2 , 7.1)	25 (187.9 , 7.4)	26.3 (197.0992606, 7.8)
	2400	20.6 (154.5 , 6.1)	21.1 (158.6 , 6.2)	21.4 (160.5 , 6.3)	21.9 (164.3 , 6.5)	22.4 (167.8 , 6.6)	23.5 (176.3 , 6.9)	24.5 (184.0 , 7.2)	26.7 (200.5747223, 7.9)
	2800	20.9 (156.9 , 6.2)	21.7 (162.8 , 6.4)	21.6 (161.9 , 6.4)	22.4 (167.8 , 6.6)	23.1 (173.4 , 6.8)	23.5 (176.0 , 6.9)	25.3 (189.7 , 7.5)	26.8 (201.3433838, 7.9)
	3200	26.2 (196.5 , 7.7)	27.2 (203.8 , 8)	25.3 (189.8 , 7.5)	28.6 (214.8 , 8.5)	29.2 (219.0 , 8.6)	29.8 (223.4 , 8.8)	31 (232.8 , 9.2)	29.4 (220.8900259, 8.7)
	3600	27.9 (209.1 , 8.2)	29.4 (220.4 , 8.7)	28.7 (215.6 , 8.5)	29.5 (221.6 , 8.7)	30.3 (227.5 , 9)	30.6 (229.2 , 9)	33.3 (249.4 , 9.8)	33.3 (250.1209122, 9.8)
	4000	29.3 (219.4 , 8.6)	30.8 (230.9 , 9.1)	29.6 (222.2 , 8.7)	30.1 (225.5 , 8.9)	31 (232.7 , 9.2)	31.7 (237.9 , 9.4)	34.5 (258.4 , 10.2)	33.7 (252.8822955, 10)
	4400	30.8 (231.2 , 9.1)	32.4 (242.7 , 9.6)	31.2 (234.0 , 9.2)	31.6 (237.3 , 9.3)	32.6 (244.4 , 9.6)	33.3 (249.7 , 9.8)	36 (270.2 , 10.6)	35.3 (264.6470014, 10.4)
	4800	32.4 (243.0 , 9.6)	33.9 (254.4 , 10)	32.8 (245.8 , 9.7)	33.2 (249.1 , 9.8)	34.2 (256.2 , 10.1)	34.9 (261.5 , 10.3)	37.6 (282.0 , 11.1)	36.9 (276.4117073, 10.9)
	5200	34 (254.7 , 10)	35.5 (266.2 , 10.5)	34.3 (257.5 , 10.1)	34.8 (260.8 , 10.3)	35.7 (268.0 , 10.5)	36.4 (273.2 , 10.8)	39.2 (293.7 , 11.6)	38.4 (288.1764131, 11.3)
	5600	35.5 (266.5 , 10.5)	37.1 (278.0 , 10.9)	35.9 (269.3 , 10.6)	36.3 (272.6 , 10.7)	37.3 (279.7 , 11)	38 (285.0 , 11.2)	40.7 (305.5 , 12)	40 (299.941119, 11.8)
	6000	37.1 (278.3 , 11)	38.6 (289.7 , 11.4)	37.5 (281.1 , 11.1)	37.9 (284.3 , 11.2)	38.9 (291.5 , 11.5)	39.6 (296.8 , 11.7)	42.3 (317.2 , 12.5)	41.6 (311.7058249, 12.3)
	6400	38.7 (290.0 , 11.4)	40.2 (301.5 , 11.9)	39 (292.8 , 11.5)	39.5 (296.1 , 11.7)	40.4 (303.3 , 11.9)	41.1 (308.5 , 12.1)	43.9 (329.0 , 13)	43.1 (323.4705308, 12.7)
kPa (mmHg, inHg)									

Map 2 (MT model)

- Normal ignition

		Barometric pressure (kPa (mmHg, inHg))						
		66.7 (500 , 19.7)	67.6 (507 , 20)	73.5 (551 , 21.7)	85.5 (641 , 25.2)	86.5 (649 , 25.6)	92.4 (693 , 27.3)	100.7 (755 , 29.7)
Engine speed (rpm)	700	19.6 (146.8 , 5.8)	19.6 (146.8 , 5.8)	19.9 (149.2 , 5.9)	21.3 (160.1 , 6.3)	21.9 (164.5 , 6.5)	22.7 (170.0 , 6.7)	24.1 (181.0 , 7.1)
	1000	18.5 (138.5 , 5.5)	18.5 (138.5 , 5.5)	18.2 (136.6 , 5.4)	20.2 (151.5 , 6)	20.6 (154.2 , 6.1)	21.5 (161.0 , 6.3)	22.7 (170.2 , 6.7)
	1200	17.2 (129.3 , 5.1)	17.2 (129.3 , 5.1)	17.9 (134.2 , 5.3)	19.9 (149.4 , 5.9)	20.1 (151.0 , 5.9)	21.1 (158.0 , 6.2)	22.1 (165.9 , 6.5)
	1600	17 (127.5 , 5)	17 (127.5 , 5)	17.8 (133.6 , 5.3)	20 (149.7 , 5.9)	20.4 (153.3 , 6)	21.4 (160.4 , 6.3)	22.5 (169.0 , 6.7)
	2000	17.2 (129.3 , 5.1)	17.2 (129.3 , 5.1)	18.1 (135.4 , 5.3)	20.5 (153.8 , 6.1)	20.9 (156.8 , 6.2)	21.5 (161.0 , 6.3)	22.4 (167.8 , 6.6)
	2400	17.6 (132.4 , 5.2)	17.6 (132.4 , 5.2)	18.5 (139.0 , 5.5)	21 (157.8 , 6.2)	21.3 (159.6 , 6.3)	22.4 (167.8 , 6.6)	23 (172.6 , 6.8)
	2800	18.3 (137.2 , 5.4)	18.3 (137.2 , 5.4)	19.1 (143.3 , 5.6)	21.7 (162.5 , 6.4)	21.8 (163.4 , 6.4)	22.7 (170.2 , 6.7)	23.7 (178.1 , 7)
	3200	21.8 (163.5 , 6.4)	21.8 (163.5 , 6.4)	21.9 (164.1 , 6.5)	24.6 (184.5 , 7.3)	24.5 (183.6 , 7.2)	24.6 (184.3 , 7.3)	26.7 (200.0 , 7.9)
	3600	23.4 (175.8 , 6.9)	23.4 (175.8 , 6.9)	24.3 (182.5 , 7.2)	26.8 (200.7 , 7.9)	26.2 (196.7 , 7.7)	27.7 (207.6 , 8.2)	29.3 (219.8 , 8.7)
	4000	24.6 (184.6 , 7.3)	24.6 (184.6 , 7.3)	24.9 (187.0 , 7.4)	27.3 (204.9 , 8.1)	27.6 (206.9 , 8.1)	29.7 (222.4 , 8.8)	27.5 (206.6 , 8.1)
	4400	24.7 (185.4 , 7.3)	24.7 (185.4 , 7.3)	25.3 (189.6 , 7.5)	27.8 (208.3 , 8.2)	28 (209.8 , 8.3)	29 (217.7 , 8.6)	28.9 (217.1 , 8.5)
	4800	27.1 (203.2 , 8)	27.1 (203.2 , 8)	28.5 (213.6 , 8.4)	30.9 (231.4 , 9.1)	31 (232.5 , 9.2)	31.8 (238.6 , 9.4)	30.8 (231.3 , 9.1)
	5200	30.8 (230.9 , 9.1)	30.8 (230.9 , 9.1)	31.8 (238.8 , 9.4)	34.3 (257.5 , 10.1)	34.1 (255.6 , 10.1)	34.8 (260.8 , 10.3)	32.1 (240.6 , 9.5)
	5600	33.2 (248.7 , 9.8)	33.2 (248.7 , 9.8)	34.2 (256.7 , 10.1)	36.2 (271.7 , 10.7)	36.2 (271.8 , 10.7)	37.6 (281.7 , 11.1)	33.8 (253.6 , 10)
	6000	37.7 (282.5 , 11.1)	37.7 (282.5 , 11.1)	38.7 (290.4 , 11.4)	40.7 (305.3 , 12)	40.7 (305.4 , 12)	42.5 (319.1 , 12.6)	42.1 (316.0 , 12.4)
	6400	39.9 (299.1 , 11.8)	39.9 (299.1 , 11.8)	41.3 (309.5 , 12.2)	44.6 (334.2 , 13.2)	44.5 (333.9 , 13.1)	46.1 (345.5 , 13.6)	46.1 (346.1 , 13.6)
kPa (mmHg, inHg)								

- Idling ignition

		Barometric pressure (kPa (mmHg, inHg))						
		66.7 (500 , 19.7)	67.6 (507 , 20)	73.5 (551 , 21.7)	85.5 (641 , 25.2)	86.5 (649 , 25.6)	92.4 (693 , 27.3)	100.7 (755 , 29.7)
Engine speed (rpm)	700	19.9 (149.2 , 5.9)	19.9 (149.2 , 5.9)	20.1 (150.4 , 5.9)	22.2 (166.4 , 6.6)	22.3 (167.4 , 6.6)	23.4 (175.4 , 6.9)	24.6 (184.6 , 7.3)
	1000	19.3 (144.6 , 5.7)	19.3 (144.6 , 5.7)	20.7 (154.9 , 6.1)	22.3 (167.3 , 6.6)	22.4 (167.9 , 6.6)	23.7 (177.6 , 7)	25.1 (188.5 , 7.4)
	1200	18.7 (140.3 , 5.5)	18.7 (140.3 , 5.5)	20 (150.1 , 5.9)	22.2 (166.8 , 6.6)	22.4 (167.7 , 6.6)	23.6 (176.6 , 7)	24.9 (186.7 , 7.3)
	1600	18.9 (141.5 , 5.6)	18.9 (141.5 , 5.6)	19.8 (148.8 , 5.9)	22.6 (169.8 , 6.7)	22.8 (171.1 , 6.7)	24.2 (181.6 , 7.1)	25.6 (192.2 , 7.6)
	2000	18.7 (140.3 , 5.5)	18.7 (140.3 , 5.5)	19.8 (148.8 , 5.9)	22.6 (169.6 , 6.7)	23.1 (173.6 , 6.8)	24.2 (181.3 , 7.1)	24.8 (186.1 , 7.3)
	2400	19.1 (143.3 , 5.6)	19.1 (143.3 , 5.6)	19.9 (149.4 , 5.9)	22.8 (170.7 , 6.7)	23 (172.4 , 6.8)	23.9 (179.5 , 7.1)	28.1 (211.1 , 8.3)
	2800	19.8 (148.8 , 5.9)	19.8 (148.8 , 5.9)	21.1 (158.6 , 6.2)	22.9 (171.9 , 6.8)	23.3 (174.6 , 6.9)	24.3 (182.0 , 7.2)	28.6 (214.8 , 8.5)
	3200	31.5 (235.9 , 9.3)	31.5 (235.9 , 9.3)	32.5 (244.1 , 9.6)	36.5 (273.6 , 10.8)	36.3 (272.6 , 10.7)	37.7 (282.9 , 11.1)	40.3 (302.0 , 11.9)
	3600	33.5 (250.9 , 9.9)	33.5 (250.9 , 9.9)	34.2 (256.4 , 10.1)	38.3 (287.4 , 11.3)	39.1 (293.4 , 11.6)	39.6 (297.0 , 11.7)	40.9 (307.1 , 12.1)
	4000	34.6 (259.7 , 10.2)	34.6 (259.7 , 10.2)	35.5 (266.4 , 10.5)	39.2 (293.7 , 11.6)	40.7 (305.2 , 12)	41 (307.5 , 12.1)	40.2 (301.2 , 11.9)
	4400	30.7 (230.5 , 9.1)	30.7 (230.5 , 9.1)	31.5 (236.0 , 9.3)	34.3 (257.0 , 10.1)	34.7 (260.1 , 10.2)	35.4 (265.2 , 10.4)	36.3 (272.0 , 10.7)
	4800	30 (225.2 , 8.9)	30 (225.2 , 8.9)	30.8 (231.3 , 9.1)	33.7 (252.9 , 10)	33.7 (252.7 , 9.9)	34.7 (260.0 , 10.2)	40.7 (305.2 , 12)
	5200	32.7 (245.5 , 9.7)	32.7 (245.5 , 9.7)	33.8 (253.4 , 10)	36.5 (273.7 , 10.8)	37 (277.8 , 10.9)	37.9 (284.2 , 11.2)	37 (277.3 , 10.9)
	5600	34.1 (256.1 , 10.1)	34.1 (256.1 , 10.1)	35.1 (263.4 , 10.4)	37.5 (280.9 , 11.1)	38 (285.1 , 11.2)	38.5 (289.1 , 11.4)	37.8 (283.5 , 11.2)
	6000	37.6 (281.9 , 11.1)	37.6 (281.9 , 11.1)	38.6 (289.2 , 11.4)	41.3 (309.5 , 12.2)	41.8 (313.8 , 12.4)	43 (322.8 , 12.7)	39.1 (293.5 , 11.6)
	6400	40.2 (301.6 , 11.9)	40.2 (301.6 , 11.9)	41 (307.7 , 12.1)	44.9 (336.6 , 13.3)	44.6 (334.4 , 13.2)	46.7 (350.5 , 13.8)	43.8 (328.4 , 12.9)
kPa (mmHg, inHg)								

3. GENERAL DRIVING CYCLE

- If conditions are met, it is possible to detect the misfires from idling to high engine speed. However, to avoid excessive load or harm to the engine, perform diagnosis at idle.
- Perform the diagnosis continuously.

4. DIAGNOSTIC METHOD

When a misfire occurs, the engine speed will decrease and the crankshaft position speed will change. Calculate the interval difference value (diagnostic value) from crankshaft position speed by the following formula, and judge whether a misfire is occurring or not comparing the calculated result with judgment value. Count the number of misfires, if the misfire ratio is higher during 1000 revs. or 200 revs., judge corresponding cylinders as NG.

Diagnostic value calculation (Calculate from angle speed) →	Misfire detection every single ignition (Compare diagnostic value with judgment value) →	NG judgment (Misfire occurrence judgment required by the law) (Compare number of misfire with judgment value)
	• 180° Interval Difference Method • 360° Interval Difference Method • 720° Interval Difference Method	• FTP 1.5 times misfire NG judgment • Catalyst damage misfire NG judgment

As shown in the following figure, pick a cylinder as the standard and name it omg 0. And the former crankshaft position speed is named omg 1, the second former crankshaft position speed is named omg 2, the third is named omg 3, etc.

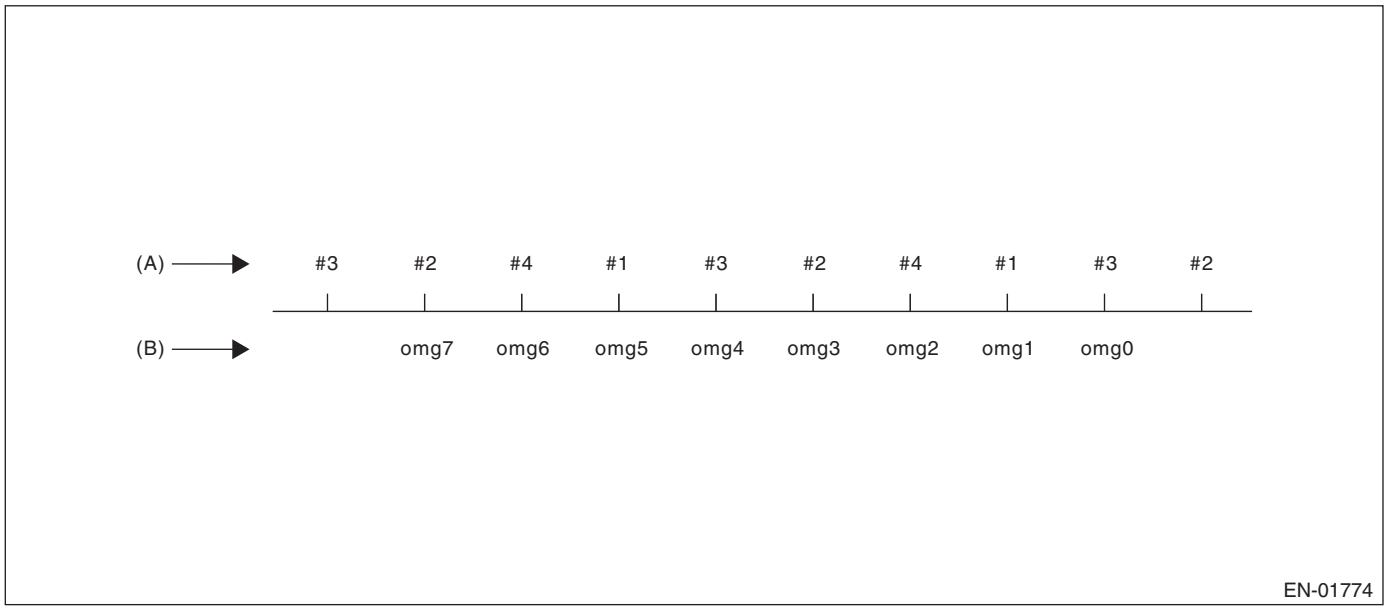

(A) Ignition order (B) Crankshaft position speed

180° Interval Difference Method

Diagnostic value	domg 180 = (omg 1 – omg 0) – (omg 5 – omg 1)/4
Judge as a misfire in the following cases. • domg 180 > judgment value of positive side • domg 180 ≤ judgment value of negative side (Diagnostic value before 180° CA)	

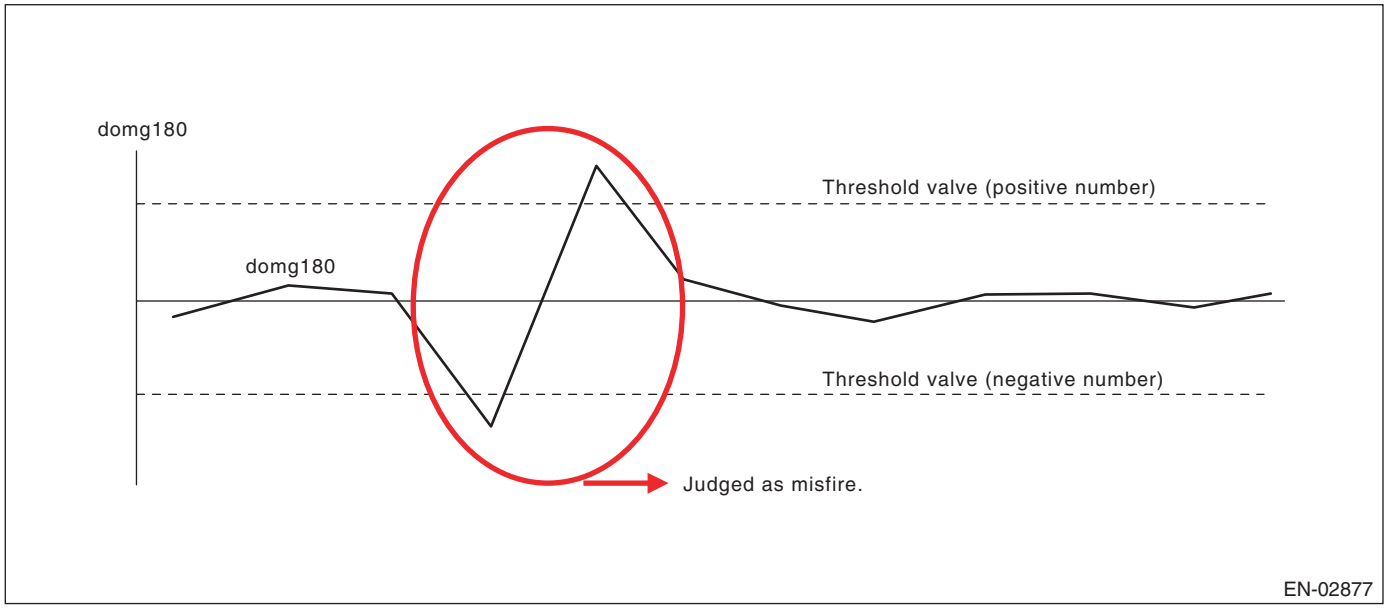

360° Interval Difference Method

Diagnostic value	domg 360 = (omg 1 – omg 0) – (omg 3 – omg 2)
Misfire judgment	domg 360 > Judgment value → Judge as misfire

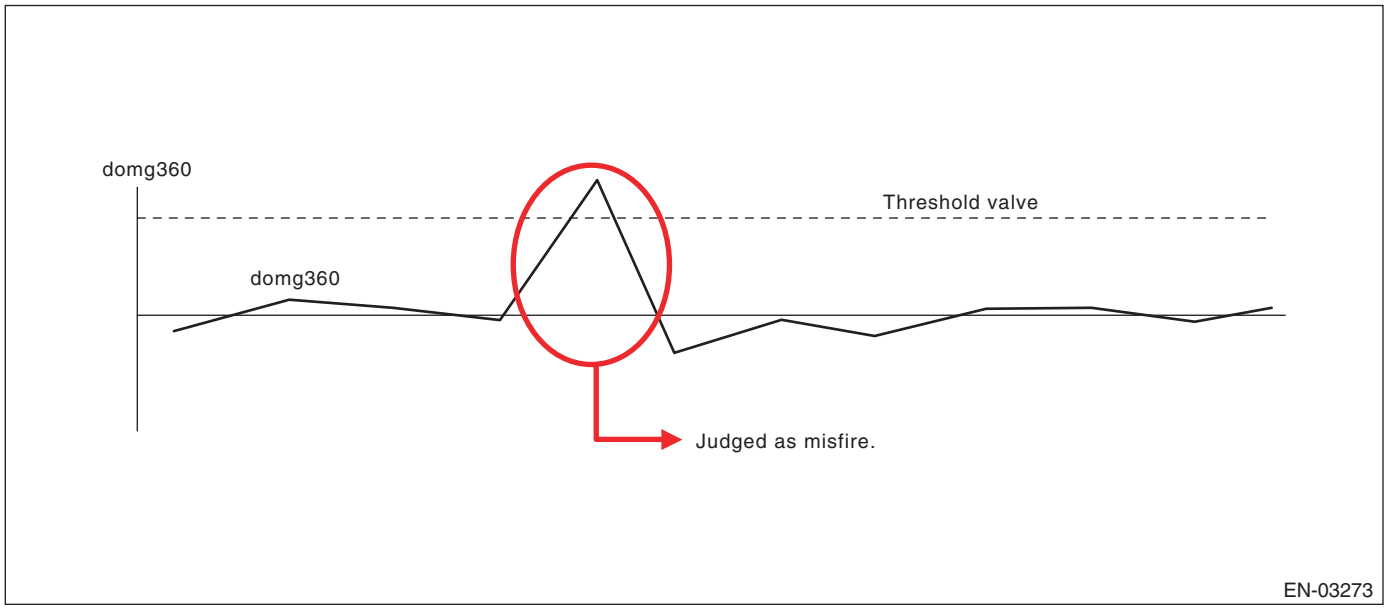

720° Interval Difference Method

Diagnostic value	domg 720 = (omg 1 – omg 0) – (omg 5 – omg 4)
Misfire judgment	domg 720 > Judgment value → Judge as misfire

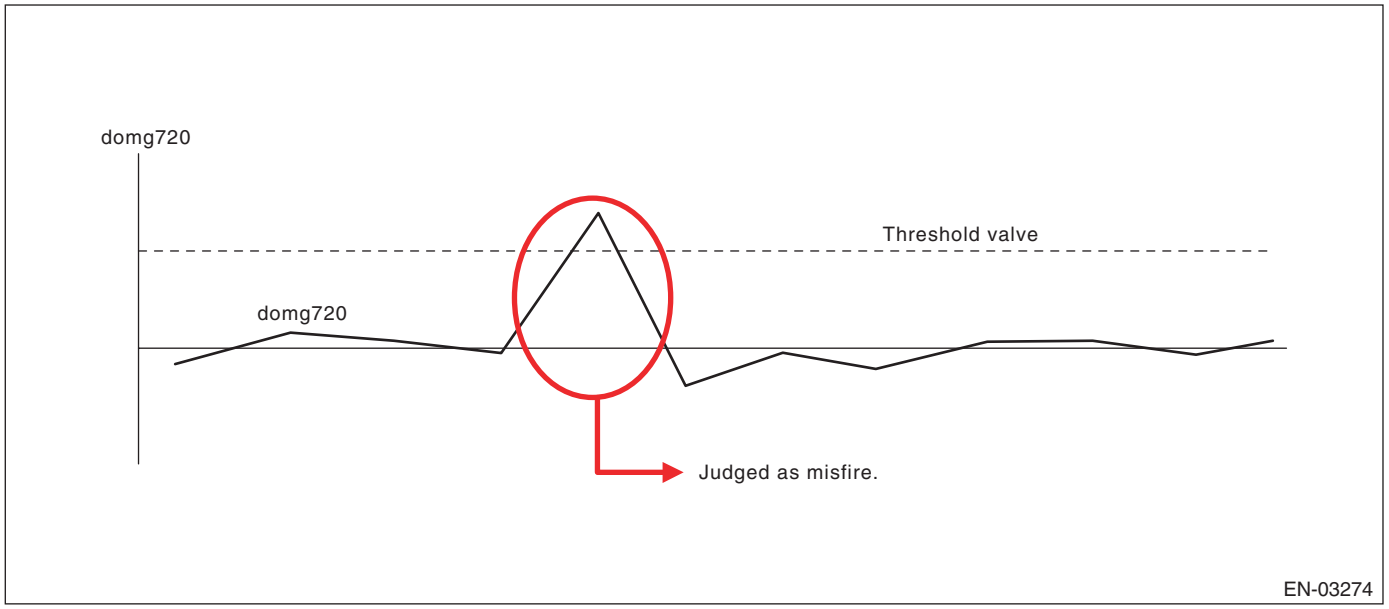

- **FTP 1.5 times misfire (Misfire occurrence level which influences exhaust gas)**
- **Abnormality Judgment**

Judgment Value (except for U5 model) (Judge that malfunction occurs when the misfire ratio is high in 1000 engine revs.)

Malfunction Criteria	Threshold Value
FTP emission diagnostic value	≥ 42 × 100/2000% in 1000 revs. (except for XV model) ≥ 47 × 100/2000% in 1000 revs. (XV model)

Judgment Value (U5 model) (Judge that malfunction occurs when the misfire ratio is high in 1000 engine revs.)

Malfunction Criteria	Threshold Value
FTP emission diagnostic value	≥ 17 × 100/2000% in 1000 revs.

Time Needed for Diagnosis: 1000 engine revs.
Malfunction Indicator Light Illumination: Illuminates when malfunction occurs in 2 continuous driving cycles.

- **Normality Judgment**

Judgment value (Except for U5 model)

Malfunction Criteria	Threshold Value
FTP emission diagnostic value	< 42 × 100/2000% in 1000 revs. (except for XV model) < 47 × 100/2000% in 1000 revs. (XV model)

Judgment value (U5 model)

Malfunction Criteria	Threshold Value
FTP emission diagnostic value	< 17 × 100/2000% in 1000 revs.

Time Needed for Diagnosis: 1000 engine revs.

- **Catalyst damage misfire (Misfire occurrence level damaging catalyst)**
- **Abnormality Judgment**

Judgment Value

Malfunction Criteria	Threshold Value
Catalyst damage misfire diagnostic value	≥ Value from Map 3

Map 3

		Intake air (g(oz)/rev)									
		0.2 (0.01)	0.3 (0.01)	0.4 (0.01)	0.5 (0.02)	0.6 (0.02)	0.7 (0.02)	0.8 (0.03)	0.9 (0.03)	1 (0.04)	1.1 (0.04)
Engine speed (rpm)	700	100	100	100	100	80	80	80	80	80	80
	1000	100	100	100	100	80	80	57	44	80	80
	1200	100	100	100	100	100	80	67	57	57	57
	1600	100	100	80	80	80	57	44	36	44	44
	2000	100	80	80	80	80	57	44	27	44	44
	2400	100	80	80	80	80	57	31	36	36	36
	2800	80	80	80	80	57	44	44	36	36	36
	3200	80	80	57	57	44	36	36	36	36	36
	3600	57	57	57	44	44	44	44	44	44	44
	4000	57	57	57	36	36	36	44	44	44	44
	4400	44	44	44	44	44	44	44	44	44	44
	4800	44	44	44	36	36	36	36	36	36	36
	5200	36	36	36	36	36	36	36	44	44	44
	5600	27	27	27	31	36	36	36	44	44	44
	6000	44	44	44	44	44	44	44	44	36	36
	6400	24	24	24	21	21	21	25	31	31	31

Time Needed for Diagnosis: 200 engine revs.
Malfunction Indicator Light Illumination: Illuminates as soon as a malfunction occurs.

- **Normality Judgment**

Judgment Value

Malfunction Criteria	Threshold Value
Catalyst damage misfire diagnostic value	< Value of Map 3

Time Needed for Diagnosis: 200 engine revs.

BR:DTC P0302 CYLINDER 2 MISFIRE DETECTED

1. OUTLINE OF DIAGNOSIS

NOTE:
For the detection standard, refer to DTC P0301. <Ref. to GD(H4DO w/o HEV)-116, DTC P0301 CYLINDER 1 MISFIRE DETECTED, Diagnostic Trouble Code (DTC) Detecting Criteria.>

BS:DTC P0303 CYLINDER 3 MISFIRE DETECTED

1. OUTLINE OF DIAGNOSIS

NOTE:
For the detection standard, refer to DTC P0301. <Ref. to GD(H4DO w/o HEV)-116, DTC P0301 CYLINDER 1 MISFIRE DETECTED, Diagnostic Trouble Code (DTC) Detecting Criteria.>

BT:DTC P0304 CYLINDER 4 MISFIRE DETECTED

1. OUTLINE OF DIAGNOSIS

NOTE:
For the detection standard, refer to DTC P0301. <Ref. to GD(H4DO w/o HEV)-116, DTC P0301 CYLINDER 1 MISFIRE DETECTED, Diagnostic Trouble Code (DTC) Detecting Criteria.>

BU:DTC P0327 KNOCK SENSOR 1 CIRCUIT LOW (BANK 1 OR SINGLE SENSOR)

1. OUTLINE OF DIAGNOSIS

Detect the open or short circuit of knock sensor.
Judge as NG if out of specification.

2. COMPONENT DESCRIPTION

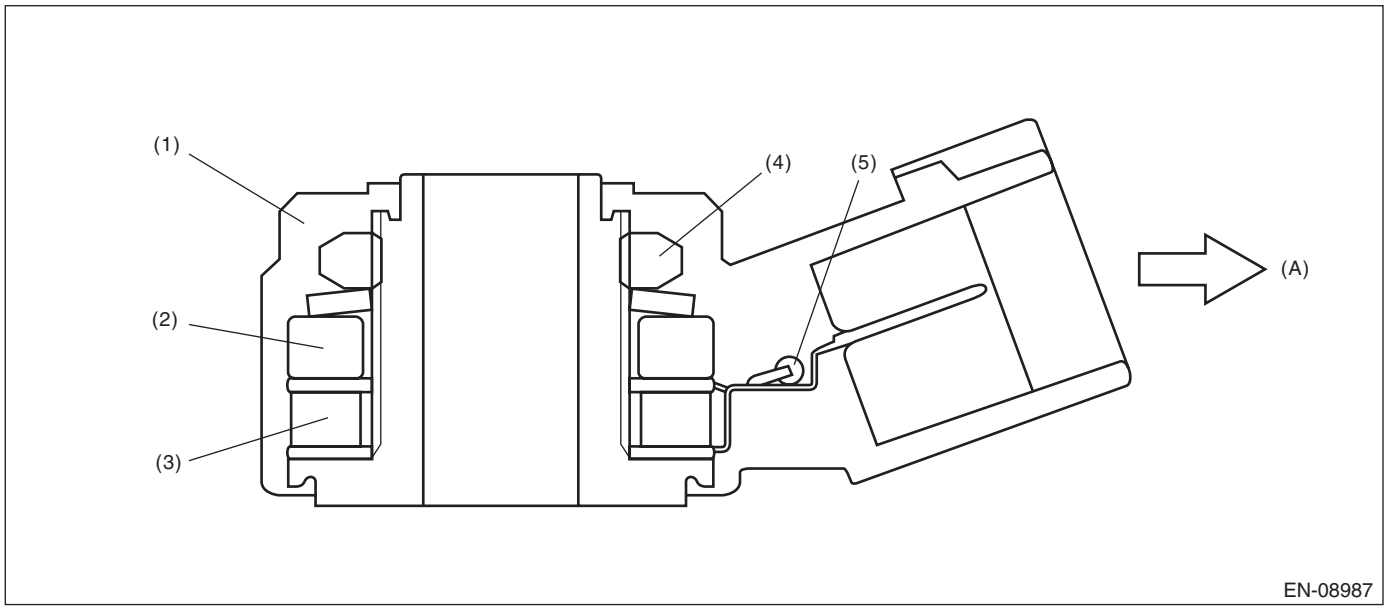

(A) To knock sensor harness

(1) Case
(2) Weight
(3) Piezoelectric element
(4) Nut
(5) Resistance

3. ENABLE CONDITION

Secondary Parameters	Enable Conditions
None	

4. GENERAL DRIVING CYCLE

Always perform the diagnosis continuously.

5. DIAGNOSTIC METHOD

- **Abnormality Judgment**

If the duration of time while the following conditions are met is longer than the time indicated, judge as NG.

Judgment Value

Malfunction Criteria	Threshold Value
Output voltage	< 0.243 V

Time Needed for Diagnosis: 1000 ms
Malfunction Indicator Light Illumination: Illuminates as soon as a malfunction occurs.

- **Normality Judgment**

Judge as OK and clear the NG if the continuous time while the following conditions are established is more than the predetermined time.

Judgment Value

Malfunction Criteria	Threshold Value
Output voltage	≥ 0.243 V

Time Needed for Diagnosis: Less than 1 second

BV:DTC P0328 KNOCK SENSOR 1 CIRCUIT HIGH (BANK 1 OR SINGLE SENSOR)

1. OUTLINE OF DIAGNOSIS

Detect the open or short circuit of knock sensor.
Judge as NG if out of specification.

2. COMPONENT DESCRIPTION

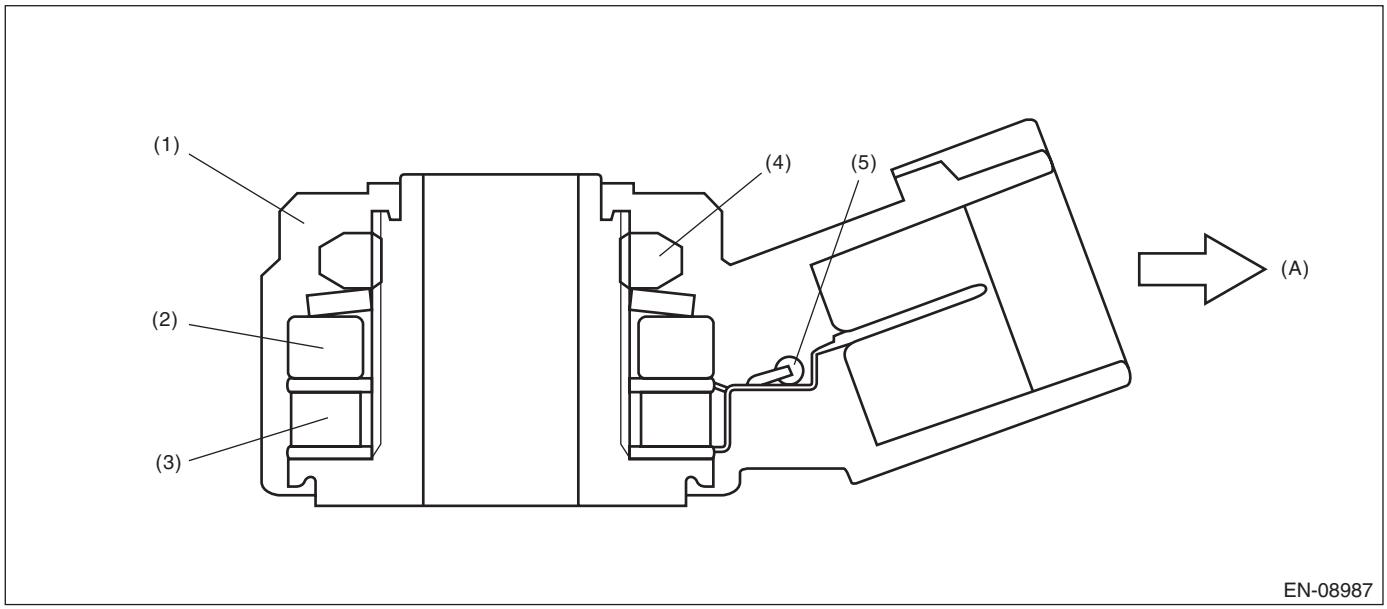

(A) To knock sensor harness

(1) Case
(2) Weight
(3) Piezoelectric element
(4) Nut
(5) Resistance

3. ENABLE CONDITION

Secondary Parameters	Enable Conditions
None	

4. GENERAL DRIVING CYCLE

Always perform the diagnosis continuously.

5. DIAGNOSTIC METHOD

- **Abnormality Judgment**

If the duration of time while the following conditions are met is longer than the time indicated, judge as NG.

Judgment Value

Malfunction Criteria	Threshold Value
Output voltage	≥ 4.709 V

Time Needed for Diagnosis: 1000 ms
Malfunction Indicator Light Illumination: Illuminates as soon as a malfunction occurs.

- **Normality Judgment**

Judge as OK and clear the NG if the continuous time while the following conditions are established is more than the predetermined time.

Judgment Value

Malfunction Criteria	Threshold Value
Output voltage	< 4.709 V

Time Needed for Diagnosis: Less than 1 second

BW:DTC P0335 CRANKSHAFT POSITION SENSOR “A” CIRCUIT

1. OUTLINE OF DIAGNOSIS

Detect the open or short circuit of the crankshaft position sensor.
Judge as NG when the crank signal is not input even though the starter was rotated.

2. COMPONENT DESCRIPTION

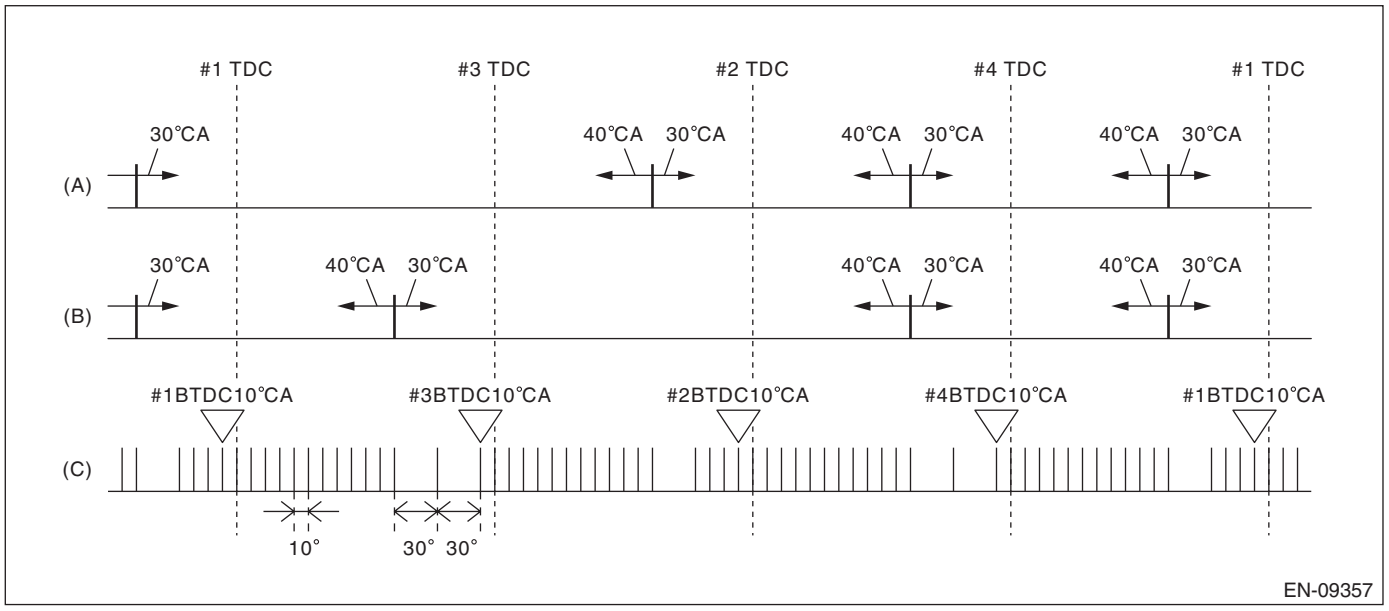

(A) Camshaft signal (RH) (B) Camshaft signal (LH) (C) Crankshaft signal

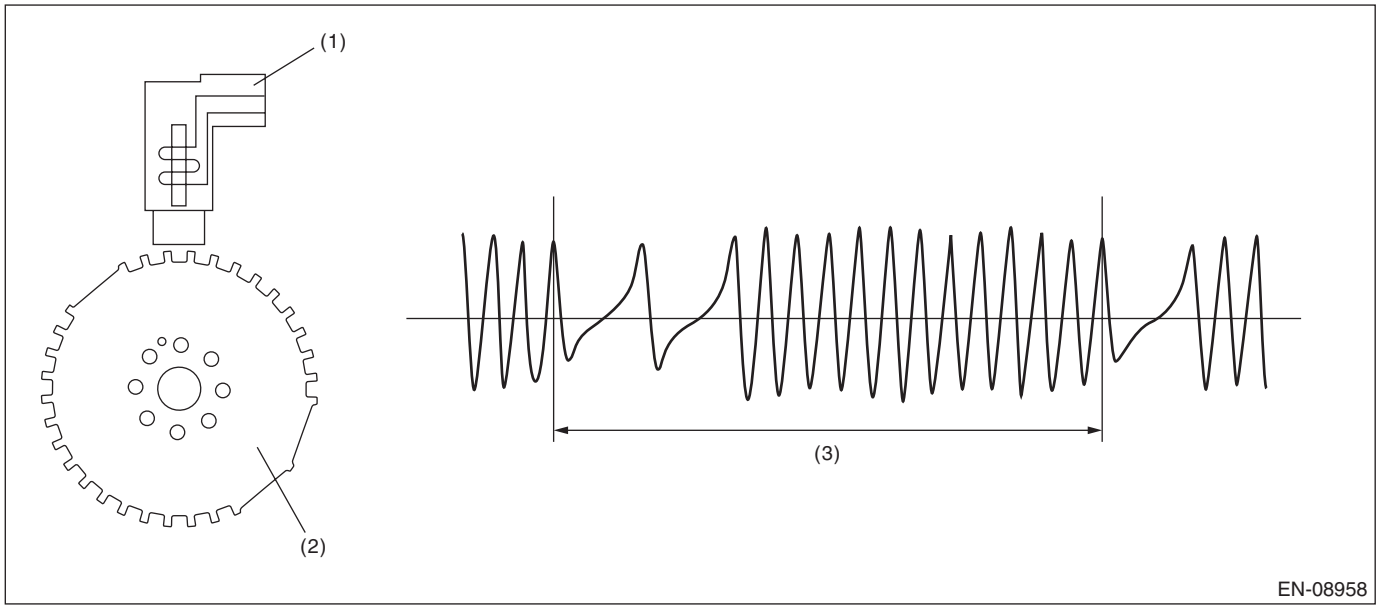

(1) Crankshaft position sensor (2) Crankshaft position sensor plate (3) Crankshaft half-turn

3. ENABLE CONDITION

Secondary Parameters	Enable Conditions
None	

4. GENERAL DRIVING CYCLE

Always perform the diagnosis continuously.

5. DIAGNOSTIC METHOD

- **Abnormality Judgment**

If the duration of time while the following conditions are met is longer than the time indicated, judge as NG.

Judgment Value

Malfunction Criteria	Threshold Value
Starter switch	ON
Crankshaft position sensor signal	Not detected
Battery voltage	≥ 8 V

Time Needed for Diagnosis: 3000 ms
Malfunction Indicator Light Illumination: Illuminates as soon as a malfunction occurs.

- **Normality Judgment**

Judge as OK and clear the NG if the continuous time while the following conditions are established is more than the predetermined time.

Judgment Value

Malfunction Criteria	Threshold Value
Crankshaft position sensor signal	Input exists
Battery voltage	≥ 8 V

Time Needed for Diagnosis: Less than 1 second

BX:DTC P0336 CRANKSHAFT POSITION SENSOR “A” CIRCUIT RANGE/PERFORMANCE

1. OUTLINE OF DIAGNOSIS

Detect for faults in crankshaft position sensor output properties.
Judge as NG when there is a problem in the number of crankshaft signals for every revolution of crankshaft.

2. COMPONENT DESCRIPTION

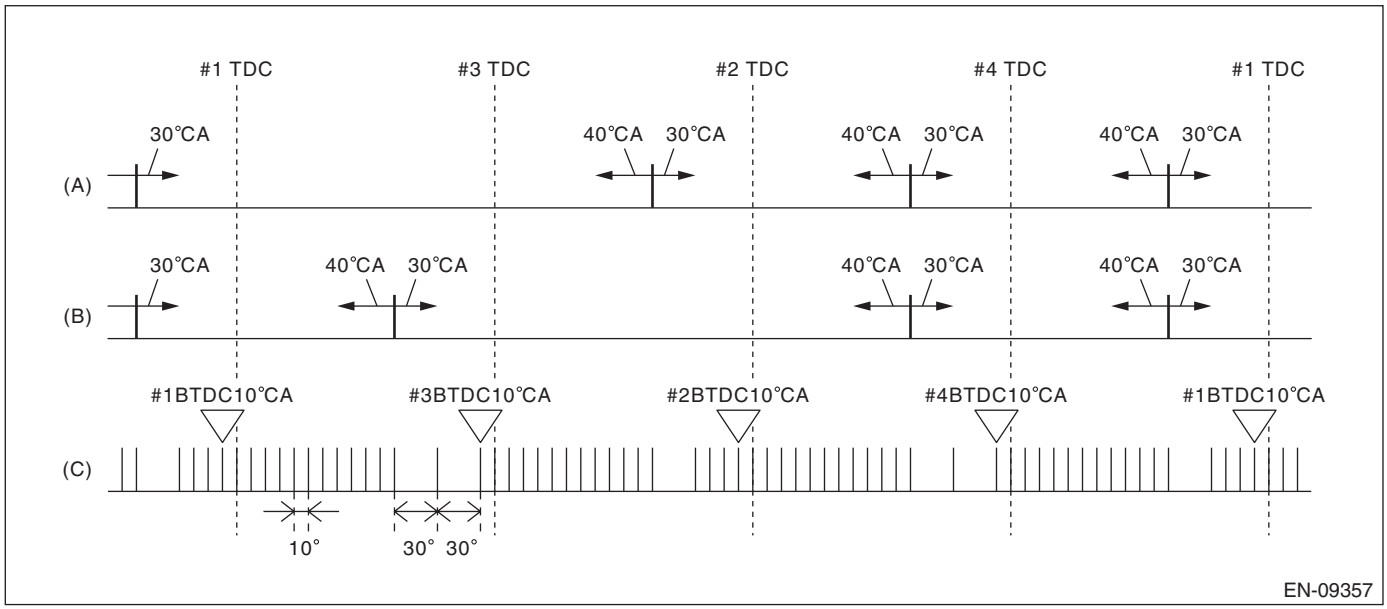

(A) Camshaft signal (RH) (B) Camshaft signal (LH) (C) Crankshaft signal

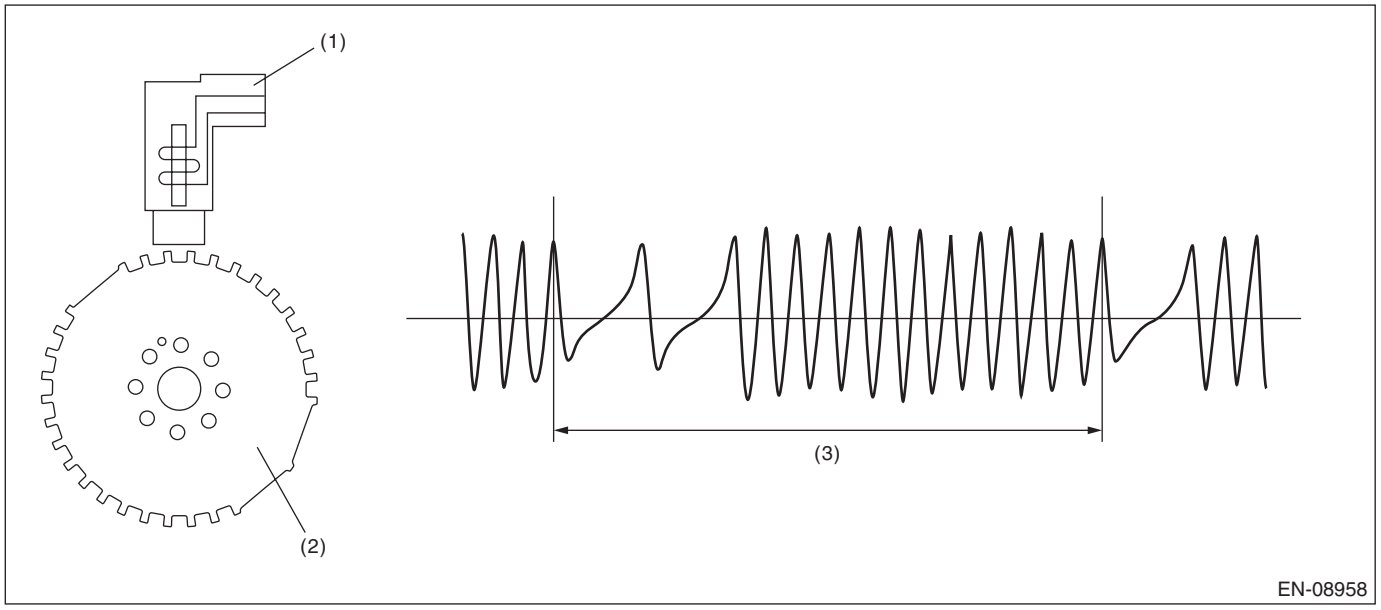

(1) Crankshaft position sensor (2) Crankshaft position sensor plate (3) Crankshaft half-turn

3. ENABLE CONDITION

Secondary Parameters	Enable Conditions
Battery voltage	≥ 8 V
Engine speed	< 4000 rpm

4. GENERAL DRIVING CYCLE

Perform diagnosis continuously below engine speed 4000 rpm.

5. DIAGNOSTIC METHOD

• Abnormality Judgment

Judge as NG when the following conditions are established.

Judgment Value

Malfunction Criteria	Threshold Value
Cylinder number identification	Completed
Amount of crank sensor signal during 1 rev of crankshaft	Not = 30

Time Needed for Diagnosis: Engine speed 10 engine revs.
Malfunction Indicator Light Illumination: Illuminates when malfunction occurs in 2 continuous driving cycles.

• Normality Judgment

Judge as OK and clear the NG if the continuous time while the following conditions are established is more than the predetermined time.

Judgment Value

Malfunction Criteria	Threshold Value
Cylinder number identification	Completed
Amount of crank sensor signal during 1 rev of crankshaft	= 30

Time Needed for Diagnosis: Less than 1 second

BY:DTC P0340 CAMSHAFT POSITION SENSOR “A” CIRCUIT (BANK 1 OR SINGLE SENSOR)

1. OUTLINE OF DIAGNOSIS

Detect the open or short circuit of the camshaft position sensor.
When there is no camshaft position signal input continuously, judge as NG.

2. COMPONENT DESCRIPTION

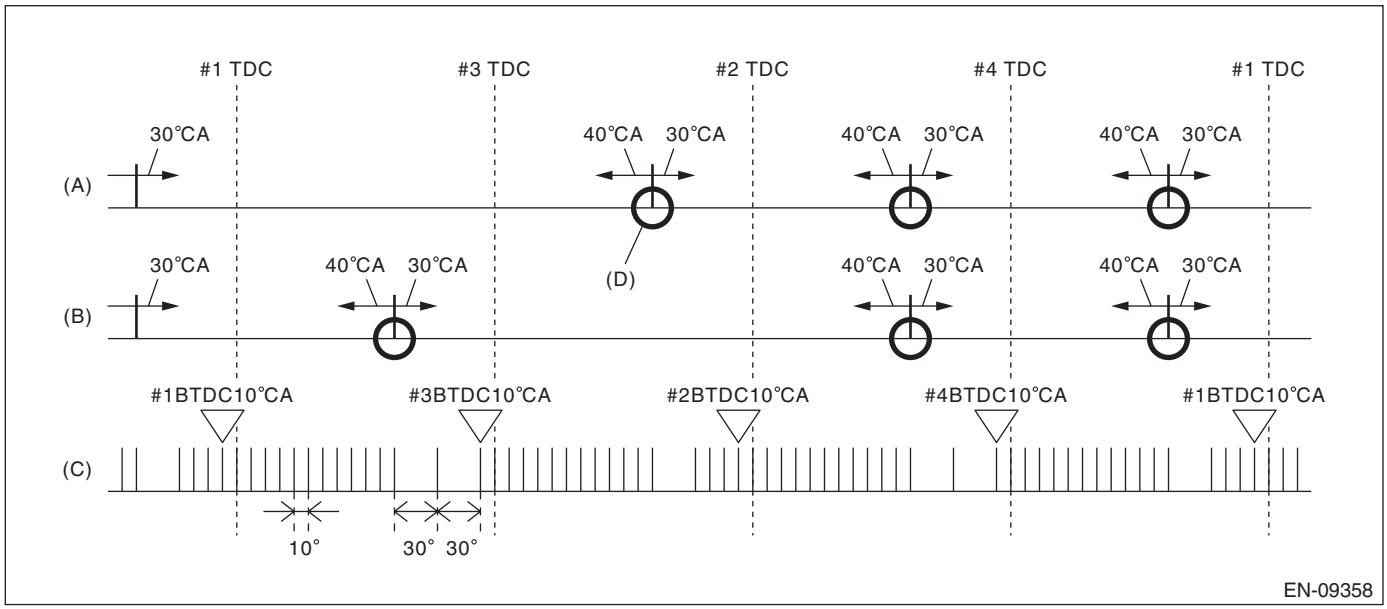

(A) Camshaft signal (RH)
(B) Camshaft signal (LH)
(C) Crankshaft signal
(D) Camshaft position signal: When normal, there will be 3 camshaft position signals for every 2 crankshaft revolutions.

3. ENABLE CONDITION

Diagnosis 1

Secondary Parameters	Enable Conditions
Battery voltage	≥ 8 V
Elapsed time after starting the engine	≥ 200 ms

Diagnosis 2

Secondary Parameters	Enable Conditions
Battery voltage	≥ 8 V
Starter	ON

4. GENERAL DRIVING CYCLE

Always perform the diagnosis continuously.

5. DIAGNOSTIC METHOD

- **Abnormality Judgment**

Diagnosis 1
Judge as NG when no input of camshaft position sensor signal in TDC remains for 10 time(s).

Judgment Value

Malfunction Criteria	Threshold Value
No camshaft position sensor signal input in TDC	≥ 10 time(s)

Time Needed for Diagnosis: TDC × 10 time(s)

Diagnosis 2
If the duration of time while the following conditions are met is longer than the time indicated, judge as NG.

Judgment Value

Malfunction Criteria	Threshold Value
Camshaft position sensor signal	No input

Time Needed for Diagnosis: 3000 ms
Malfunction Indicator Light Illumination: Illuminates as soon as a malfunction occurs.

- **Normality Judgment**

Diagnosis 1
Judge as OK and clear the NG when the malfunction criteria below are met.

Judgment Value

Malfunction Criteria	Threshold Value
No camshaft position sensor signal input in TDC	= 0 time(s)

Time Needed for Diagnosis: TDC × 10 time(s)

Diagnosis 2
Judge as OK and clear the NG if the continuous time while the following conditions are established is more than the predetermined time.

Judgment Value

Malfunction Criteria	Threshold Value
Camshaft position sensor signal	Input exists

Time Needed for Diagnosis: 32 ms

BZ:DTC P0341 CAMSHAFT POSITION SENSOR "A" CIRCUIT RANGE/PERFORMANCE (BANK 1 OR SINGLE SENSOR)

1. OUTLINE OF DIAGNOSIS

Detect the malfunction of camshaft position sensor property.
Judge as NG when the number of camshaft signals remains abnormal.

2. COMPONENT DESCRIPTION

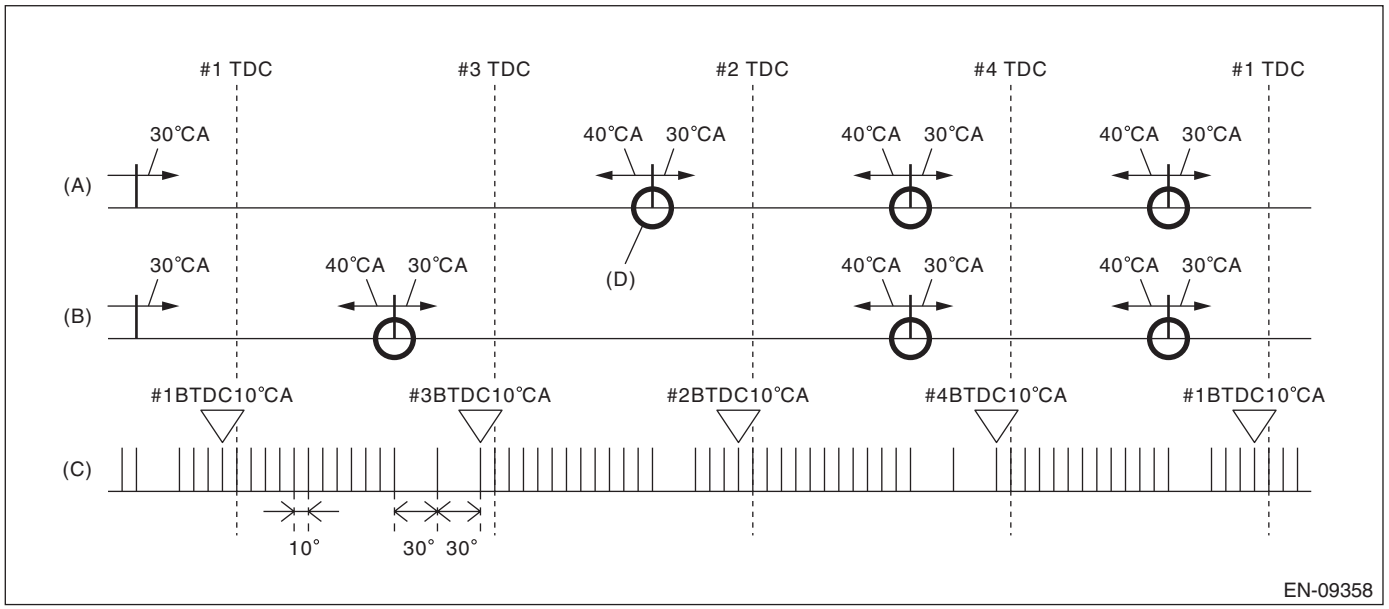

(A) Camshaft signal (RH)
(B) Camshaft signal (LH)
(C) Crankshaft signal
(D) Camshaft position signal: When normal, there will be 3 camshaft position signals for every 2 crankshaft revolutions.

3. ENABLE CONDITIONS

Secondary Parameters	Enable Conditions
Battery voltage	≥ 8 V
Elapsed time after starting the engine	≥ 200 ms

4. GENERAL DRIVING CYCLE

Always perform the diagnosis continuously.

5. DIAGNOSTIC METHOD

• Abnormality Judgment

Judge as NG when the status where the number of camshaft position sensor signals in two crankshaft revolutions is other than 3 time(s).

Judgment Value

Malfunction Criteria	Threshold Value
Amount of camshaft sensor signal during 2 revs of crankshaft	≠ 3 time(s)

Time Needed for Diagnosis: Two engine revs. × 4 time(s)
Malfunction Indicator Light Illumination: Illuminates as soon as a malfunction occurs.

• Normality Judgment

Judge as OK and clear the NG when the malfunction criteria below are met.

Judgment Value

Malfunction Criteria	Threshold Value
Camshaft position sensor signal	= 3 time(s)

Time Needed for Diagnosis: 2 engine revs.

CA:DTC P0345 CAMSHAFT POSITION SENSOR “A” CIRCUIT (BANK 2)

1. OUTLINE OF DIAGNOSIS

NOTE:
For the detection standard, refer to DTC P0340. <Ref. to GD(H4DO w/o HEV)-134, DTC P0340 CAMSHAFT POSITION SENSOR “A” CIRCUIT (BANK 1 OR SINGLE SENSOR), Diagnostic Trouble Code (DTC) Detecting Criteria.>

CB:DTC P0346 CAMSHAFT POSITION SENSOR "A" CIRCUIT RANGE/PERFORMANCE (BANK 2)

1. OUTLINE OF DIAGNOSIS

NOTE:
For the detection standard, refer to DTC P0341. <Ref. to GD(H4DO w/o HEV)-136, DTC P0341 CAMSHAFT POSITION SENSOR "A" CIRCUIT RANGE/PERFORMANCE (BANK 1 OR SINGLE SENSOR), Diagnostic Trouble Code (DTC) Detecting Criteria.>

CC:DTC P0351 IGNITION COIL A PRIMARY/SECONDARY CIRCUIT

1. OUTLINE OF DIAGNOSIS

Based on the self-diagnostic result of the ignition coil driving IC, judge the ignition coil driving circuit as normal or abnormal.
The ignition coil driving IC detects “no ignition” status as a malfunction.

2. ENABLE CONDITIONS

Secondary Parameters	Enable Conditions
Battery voltage	≥ 10.9 V
Elapsed time after starting the engine	> 1 s
Engine speed	> 500 rpm
Ignition energization time	> 2000 μs
Ignition status	Not during ignition cut

3. GENERAL DRIVING CYCLE

Always perform the diagnosis continuously.

4. DIAGNOSTIC METHOD

- **Abnormality Judgment**

Judge as NG when the following conditions are established.

Judgment Value

Malfunction Criteria	Threshold Value
Ignition driving IC information	Malfunction

Time Needed for Diagnosis: 2500 ms
Malfunction Indicator Light Illumination: Illuminates as soon as a malfunction occurs.

- **Normality Judgment**

Judge as OK and clear the NG if the following conditions are established.

Judgment Value

Malfunction Criteria	Threshold Value
Ignition driving IC information	Normal

Time Needed for Diagnosis: Less than 1 second

CD:DTC P0352 IGNITION COIL B PRIMARY/SECONDARY CIRCUIT

1. OUTLINE OF DIAGNOSIS

NOTE:
For the detection standard, refer to DTC P0351. <Ref. to GD(H4DO w/o HEV)-138, DTC P0351 IGNITION COIL A PRIMARY/SECONDARY CIRCUIT, Diagnostic Trouble Code (DTC) Detecting Criteria.>

CE:DTC P0353 IGNITION COIL C PRIMARY/SECONDARY CIRCUIT

1. OUTLINE OF DIAGNOSIS

NOTE:
For the detection standard, refer to DTC P0351. <Ref. to GD(H4DO w/o HEV)-138, DTC P0351 IGNITION COIL A PRIMARY/SECONDARY CIRCUIT, Diagnostic Trouble Code (DTC) Detecting Criteria.>

CF:DTC P0354 IGNITION COIL D PRIMARY/SECONDARY CIRCUIT

1. OUTLINE OF DIAGNOSIS

NOTE:
For the detection standard, refer to DTC P0351. <Ref. to GD(H4DO w/o HEV)-138, DTC P0351 IGNITION COIL A PRIMARY/SECONDARY CIRCUIT, Diagnostic Trouble Code (DTC) Detecting Criteria.>

CG:DTC P0365 CAMSHAFT POSITION SENSOR “B” CIRCUIT (BANK 1)

1. OUTLINE OF DIAGNOSIS

Detect the open or short circuit of the camshaft position sensor.
When there is no camshaft position signal input continuously, judge as NG.

2. COMPONENT DESCRIPTION

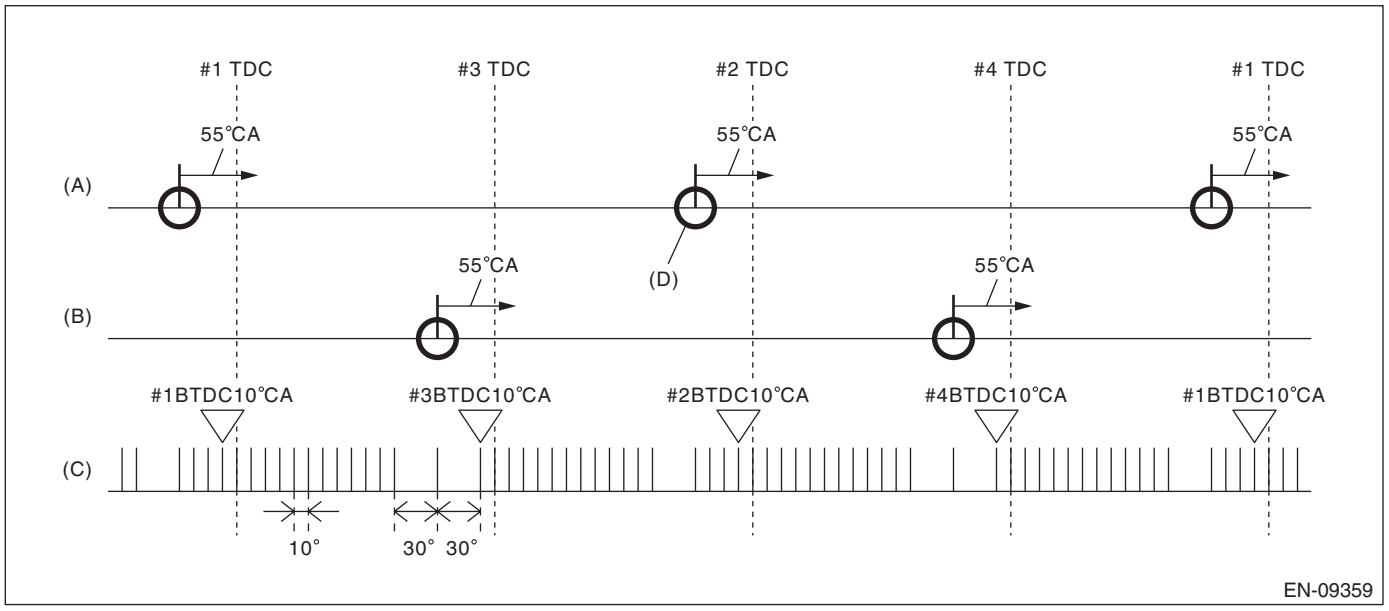

(A) Camshaft signal (RH)
(B) Camshaft signal (LH)
(C) Crankshaft signal
(D) Camshaft position signal: When normal, there will be 2 camshaft position signals for every 2 crankshaft revolutions.

3. ENABLE CONDITIONS

Secondary Parameters	Enable Conditions
Battery voltage	≥ 8 V
Elapsed time after starting the engine	≥ 200 ms

4. GENERAL DRIVING CYCLE

Always perform the diagnosis continuously.

5. DIAGNOSTIC METHOD

- **Abnormality Judgment**

Judge as NG when no input of camshaft position sensor signal in TDC remains for 10 time(s).

Judgment Value

Malfunction Criteria	Threshold Value
No camshaft position sensor signal input in TDC	≥ 10 time(s)

Time Needed for Diagnosis: TDC × 10 time(s)
Malfunction Indicator Light Illumination: Illuminates as soon as a malfunction occurs.

- **Normality Judgment**

Judge as OK and clear the NG when the malfunction criteria below are met.

Judgment Value

Malfunction Criteria	Threshold Value
No camshaft position sensor signal input in TDC	= 0 time(s)

Time Needed for Diagnosis: 2 engine revs.

CH:DTC P0366 CAMSHAFT POSITION SENSOR B CIRCUIT RANGE/PERFORMANCE (BANK 1)

1. OUTLINE OF DIAGNOSIS

Detect the malfunction of camshaft position sensor property.
Judge as NG when the number of camshaft signals remains abnormal.

2. COMPONENT DESCRIPTION

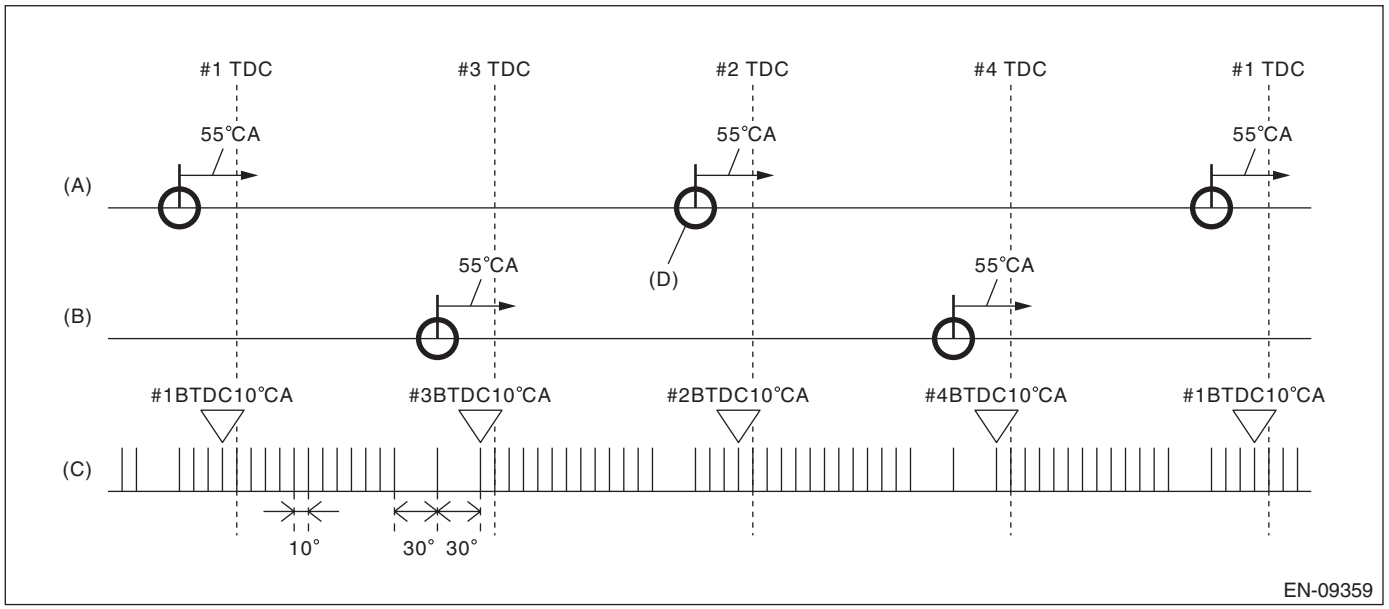

(A) Camshaft signal (RH)
(B) Camshaft signal (LH)
(C) Crankshaft signal
(D) Camshaft position signal: When normal, there will be 2 camshaft position signals for every 2 crankshaft revolutions.

3. ENABLE CONDITIONS

Secondary Parameters	Enable Conditions
Battery voltage	≥ 8 V
Elapsed time after starting the engine	≥ 200 ms

4. GENERAL DRIVING CYCLE

Always perform the diagnosis continuously.

5. DIAGNOSTIC METHOD

• Abnormality Judgment

Judge as NG when the status where the number of camshaft position sensor signals in two crankshaft revolutions is other than 2 time(s).

Judgment Value

Malfunction Criteria	Threshold Value
Amount of camshaft sensor signal during 2 revs of crankshaft	≠ 2 time(s)

Time Needed for Diagnosis: Two engine revs. × 4 time(s)
Malfunction Indicator Light Illumination: Illuminates as soon as a malfunction occurs.

• Normality Judgment

Judge as OK and clear the NG when the malfunction criteria below are met.

Judgment Value

Malfunction Criteria	Threshold Value
Camshaft position sensor signal	= 2 time(s)

Time Needed for Diagnosis: 2 engine revs.

CI: DTC P0390 CAMSHAFT POSITION SENSOR “B” CIRCUIT (BANK 2)

1. OUTLINE OF DIAGNOSIS

NOTE:
For the detection standard, refer to DTC P0365. <Ref. to GD(H4DO w/o HEV)-139, DTC P0365 CAMSHAFT POSITION SENSOR “B” CIRCUIT (BANK 1), Diagnostic Trouble Code (DTC) Detecting Criteria.>

CJ:DTC P0391 CAMSHAFT POSITION SENSOR B CIRCUIT RANGE/PERFORMANCE (BANK 2)

1. OUTLINE OF DIAGNOSIS

NOTE:
For the detection standard, refer to DTC P0366. <Ref. to GD(H4DO w/o HEV)-141, DTC P0366 CAMSHAFT POSITION SENSOR B CIRCUIT RANGE/PERFORMANCE (BANK 1), Diagnostic Trouble Code (DTC) Detecting Criteria.>

CK:DTC P0400 EXHAUST GAS RECIRCULATION FLOW

1. OUTLINE OF DIAGNOSIS

Detect EGR system malfunction.
Intake manifold pressure (negative pressure) is constant because the throttle valve is fully closed during deceleration fuel cut. At this time, when the EGR control valve is opened/closed, the intake manifold pressure will change. EGR System OK/NG is judged by the range of this change.

2. COMPONENT DESCRIPTION

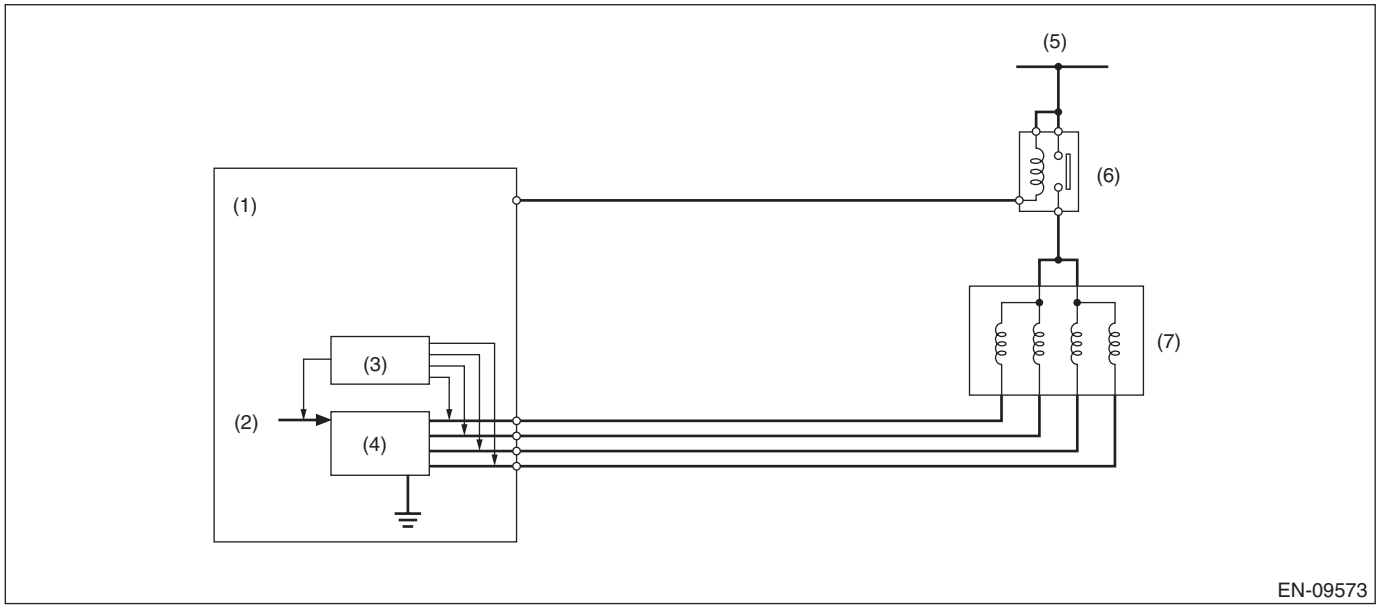

(1) Engine control module (ECM)
(2) Computer unit (CPU)
(3) Detecting circuit
(4) Switching circuit
(5) Battery voltage
(6) Main relay
(7) EGR control valve

3. ENABLE CONDITIONS

Secondary Parameters	Enable Conditions
Engine speed	1200 rpm — 5000 rpm
Intake manifold pressure (absolute pressure)	< 64 kPa (480 mmHg, 18.9 inHg)
Ambient air temperature	≥ 5 °C(41 °F)
Throttle position	< 0.25 °
Battery voltage	≥ 10.9 V
Atmospheric pressure	≥ 75.1 kPa (563 mmHg, 22.2 inHg)
Vehicle speed	≥58 km/h (36 MPH)
Fuel shut-off function	In operation
Neutral switch	OFF

4. GENERAL DRIVING CYCLE

During deceleration fuel cut from 53 km/h (approx. 33 MPH) or more, perform diagnosis once.
Be careful of vehicle speed and engine speed. (Diagnosis will not be completed if the vehicle speed and engine speed conditions become out of specification due to deceleration.)

5. DIAGNOSTIC METHOD

Measure the pressure values when the enable conditions are established, and perform diagnosis by calculating those results.
1. Label the intake manifold pressure value as PMOF1, which is observed when enable conditions are established, and set the EGR target step to 45 step(s) (nearly full open).
2. Label the intake manifold pressure value as PMON, which is observed after 1000 ms has passed since EGR target step was set to 45 step(s) (when the enable conditions were established), and set the EGR target step to 0.
3. Label the intake manifold pressure as PMOF2, which is observed after 1000 ms has passed since EGR target step was set to 0 (after (1000 ms + 1000 ms) have passed since the enable conditions were established).

- **Abnormality Judgment**

Judge as NG when the following conditions are established.

Judgment Value

Malfunction Criteria	Threshold Value
PMON – (PMOF1 + PMOF2)/2	< 2.5 kPa (18.63 mmHg, 0.7 inHg)

Time Needed for Diagnosis: 1 time

Malfunction Indicator Light Illumination: Illuminates when malfunction occurs in 2 continuous driving cycles.

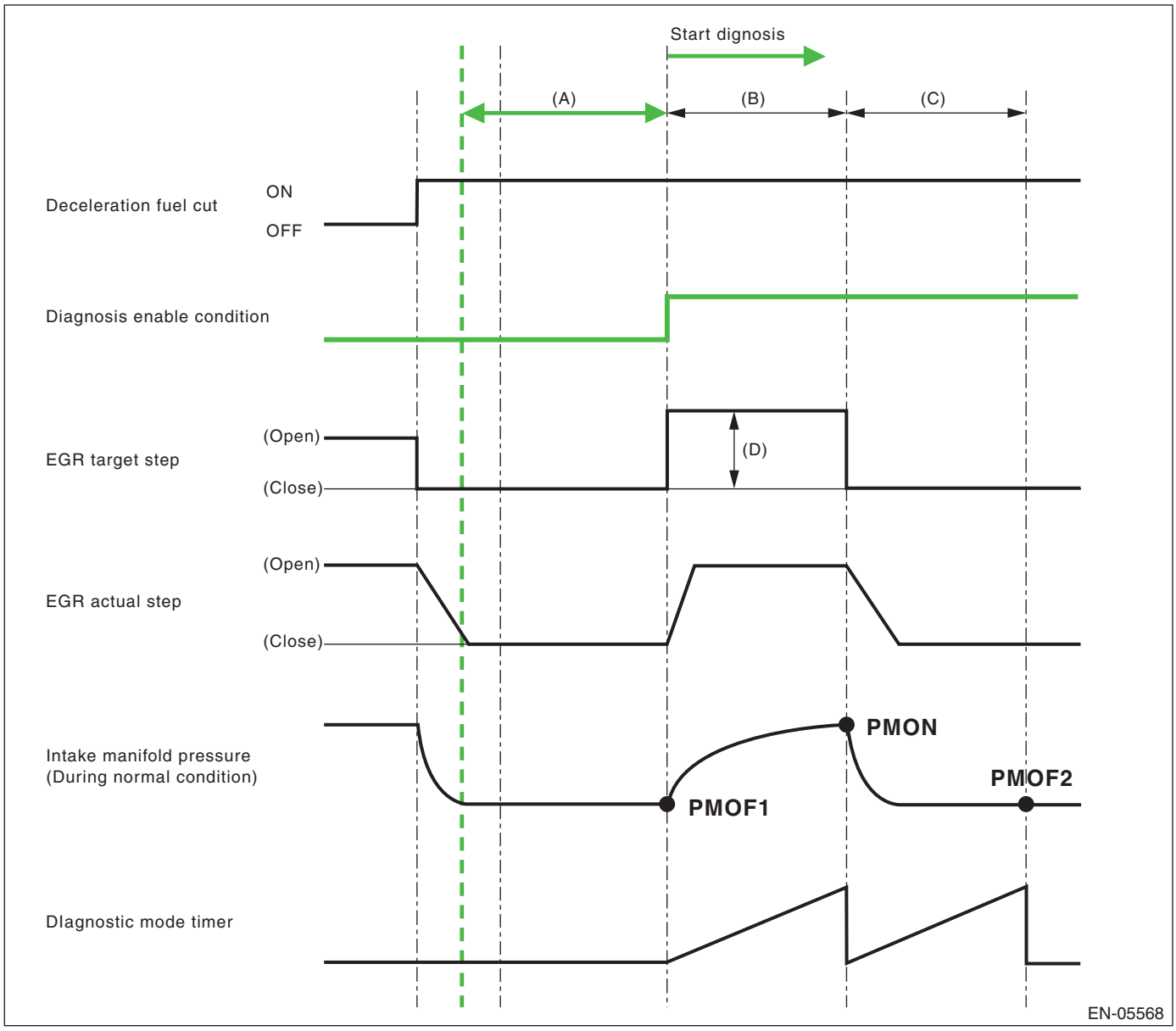

(A) 3000 ms (B) 1000 ms (C) 1000 ms
(D) 45 step(s)

- **Normality Judgment**

Judge as OK and clear the NG if the following conditions are established.

Judgment Value

Malfunction Criteria	Threshold Value
PMON – (PMOF1 + PMOF2)/2	≥ 2.5 kPa (18.63 mmHg, 0.7 inHg)

Time Needed for Diagnosis: 1 time

CL:DTC P0420 CATALYST SYSTEM EFFICIENCY BELOW THRESHOLD (BANK 1)

1. OUTLINE OF DIAGNOSIS

Detect the deterioration of the catalyst function.
Though the front oxygen sensor output would change slowly with a new catalyst, the sensor output with a deteriorated catalyst becomes high and the inversion time is shortened.
For this reason, the catalyst diagnosis is carried out by monitoring the front oxygen sensor output and comparing it with the front oxygen (A/F) sensor output.

2. COMPONENT DESCRIPTION

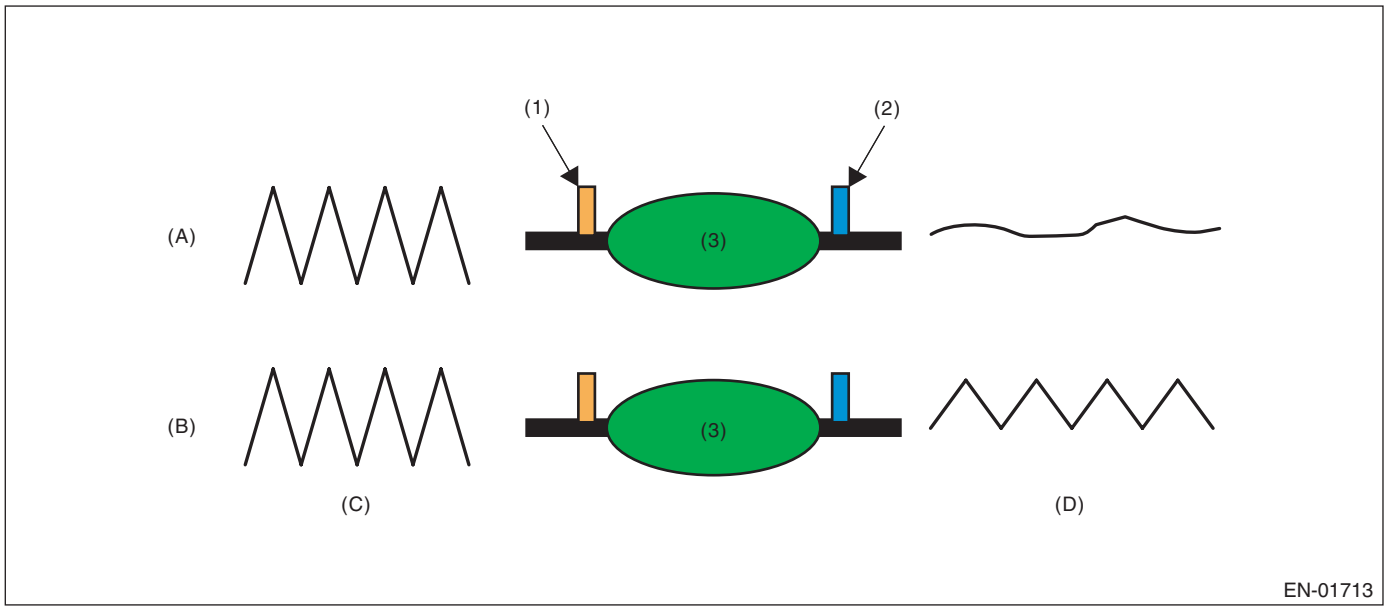

(A) Normal
(B) Deterioration
(C) Output waveform from the front oxygen (A/F) sensor
(D) Output waveform from the front oxygen sensor
(1) Front oxygen (A/F) sensor
(2) Front oxygen sensor
(3) Catalytic converter

3. ENABLE CONDITION

Secondary Parameters	Enable Conditions
Battery voltage	≥ 10.9 V
Atmospheric pressure	≥ 75.1 kPa (563 mmHg, 22.2 inHg)
Estimated catalyst temperature	≥ 490 °C (914 °F) (CVT model) ≥ 490 °C (914 °F) (MT model)
Misfire detection every 200 rotations	< 65535 time(s)
Sub feedback	In operation
Evaporative system diagnosis	Not in operation
Time of difference (< 0.10) between actual lambda and target lambda	≥ 0 ms
Vehicle speed	> 40 km/h (24.9 MPH)
Amount of intake air	≥ 5 g/s (0.18 oz/s) and < 40 g/s (1.41 oz/s)
Engine load change every 0.5 engine revs.	< 255 g/rev (8.99 oz/rev)
Rear oxygen output change from 660 mV or less to 660 mV or more	Experienced after fuel cut
Purge execution calculated time	≥ 0 s

4. GENERAL DRIVING CYCLE

Perform the diagnosis only once at a constant speed of 40 km/h (24.9 MPH) or higher.

5. DIAGNOSTIC METHOD

After the enable conditions have been established, calculate the front oxygen (A/F) sensor lambda value deviation sum value (Σ |(sglmd$_n$ – sglmd$_{n-1}$)|), and rear oxygen sensor output voltage deviation sum value (Σ |(ro2sad$_n$ – ro2sad$_{n-1}$)|) in every 32 ms × 4 times. If the front oxygen (A/F) sensor lambda value deviation sum value (Σ |(sglmd$_n$ – sglmd$_{n-1}$)|) is the predetermined value or more, calculate the diagnostic value.

- **Abnormality Judgment**

If the duration of time while the following conditions are met is within the time indicated, judge as NG.

Judgment Value

Malfunction Criteria	Threshold Value
Σ |(ro2sad$_n$ – ro2sad$_{n-1}$)| / Σ |(sglmd$_n$ – sglmd$_{n-1}$)|	> 8

Time Needed for Diagnosis: 30 — 55 seconds
Malfunction Indicator Light Illumination: Illuminates when malfunction occurs in 2 continuous driving cycles.

- **Normality Judgment**

Judge as OK and clear the NG if the continuous time while the following conditions are established is within the predetermined time.

Judgment Value

Malfunction Criteria	Threshold Value
Σ |(ro2sad$_n$ – ro2sad$_{n-1}$)| / Σ |(sglmd$_n$ – sglmd$_{n-1}$)|	≤ 8

Time Needed for Diagnosis: 30 — 55 seconds

CM:DTC P0441 EVAPORATIVE EMISSION CONT. SYS. INCORRECT PURGE FLOW

1. OUTLINE OF DIAGNOSIS

Detect the malfunction of purge flow by the change of ELCM pressure sensor output value before/after purge introduction.

2. ENABLE CONDITIONS

Secondary Parameters	Enable Conditions
<Common conditions>	
Battery voltage	≥ 10.9 V
Atmospheric pressure	> 75.1 kPa (563 mmHg, 22.2 inHg)
<First diagnosis>	
Total time of canister purge operation	≥ 20 s
<Second diagnosis>	
Time after cancel of second diagnosis	≥ 60000 ms
Total time of canister purge operation	≥ 120 s
Intake manifold pressure (absolute pressure)	> 13.3 kPa (100 mmHg, 3.9 inHg)
Engine speed	≥ 0 rpm
Intake manifold pressure (relative pressure)	< 6.7 kPa (50 mmHg, 2 inHg)
Vehicle speed	≥ 30 km/h (18.6 MPH)
Closed air/fuel ratio control	In operation
Air fuel ratio	> 0 and < 2
Main feedback compensation coefficient	> 0
Estimated ambient temperature value	> –25 °C (–13 °F)

3. GENERAL DRIVING CYCLE

Perform the diagnosis only once after engine start.

4. DIAGNOSTIC METHOD

First diagnosis

Pressure decreases when the purge is introduced compared with when the purge is not performed. By using this, judge if the purge is correctly performed. If there is no pressure decrease, go to the second diagnosis.

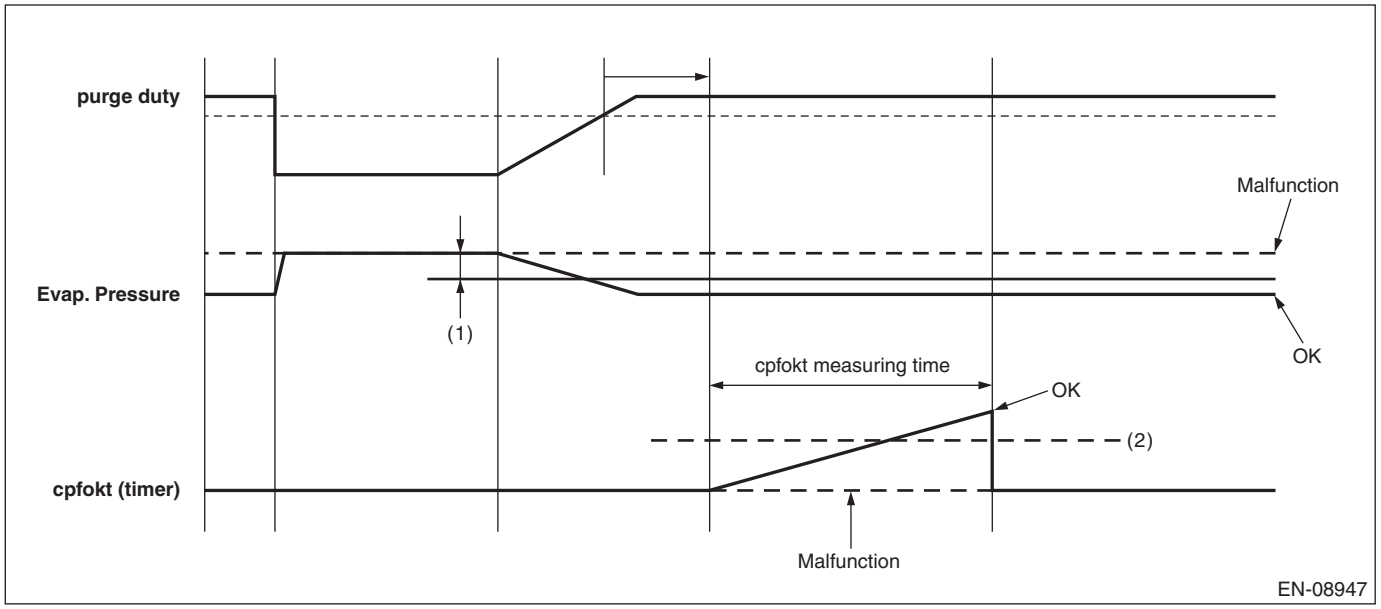

(1) 0.0045 V (2) 2000 ms

- **Abnormality Judgment**

Judge as NG when the following conditions are established.

Judgment Value

Malfunction Criteria	Threshold Value
ELCM pressure sensor output voltage when purge is not performed – ELCM pressure sensor output voltage when purge is performed	> 0.0045 V
The accumulated time while the above conditions are met: cpfokt	< 2000 ms

Time Needed for Diagnosis: 26 seconds

- **Normality Judgment**

Judge as OK and clear the NG if the following conditions are established.

Judgment Value

Malfunction Criteria	Threshold Value
ELCM pressure sensor output voltage when purge is not performed – ELCM pressure sensor output voltage when purge is performed	> 0.0045 V
The accumulated time while the above conditions are met: cpfokt	≥ 2000 ms

Time Needed for Diagnosis: 26 seconds

Second diagnosis
Close the ELCM switching valve, and close the fuel tank completely, and perform the forced purging. If pressure change amount is 0.7 kPa (5 mmHg, 0.2 inHg) or less, judge as malfunction of purge flow.

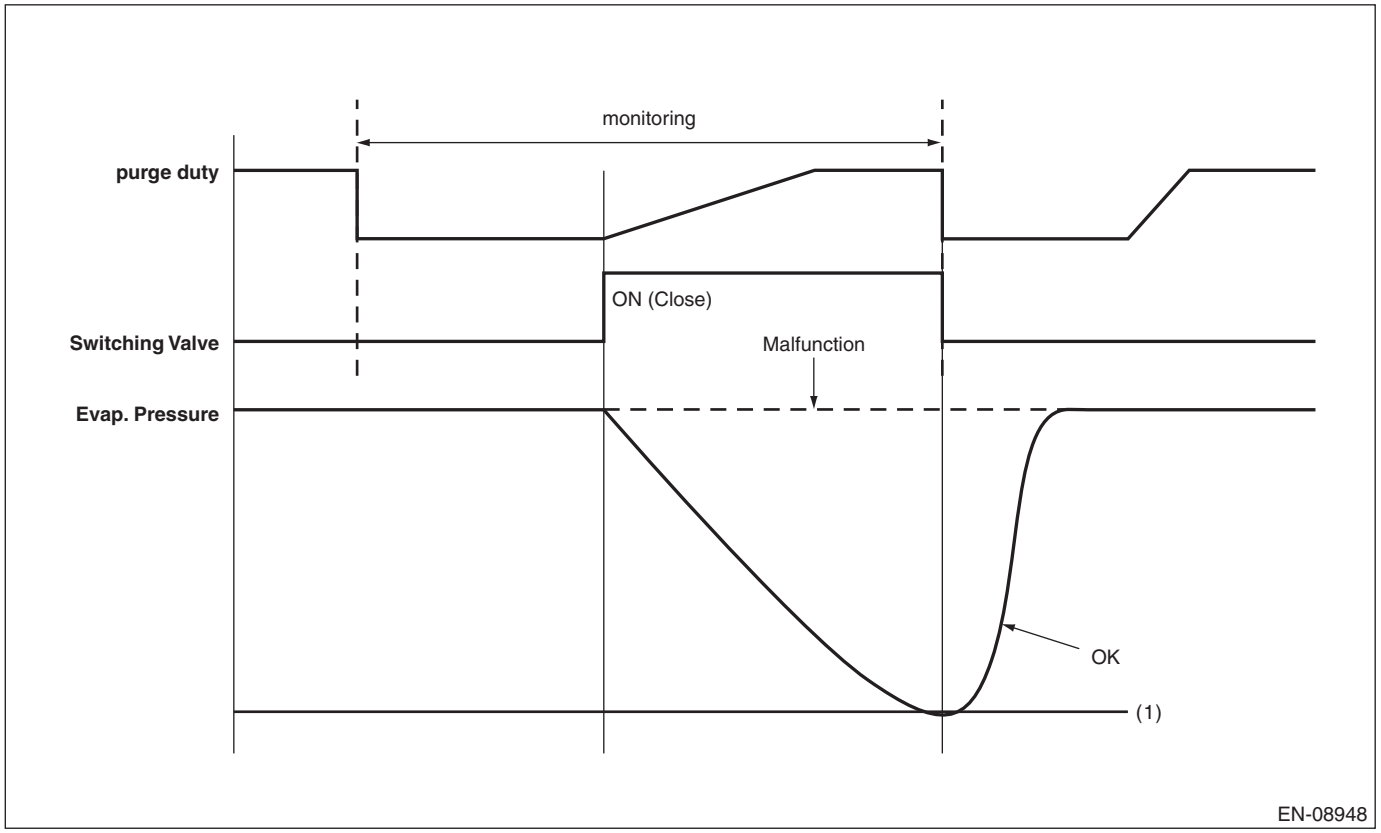

(1) 0.7 kPa (5 mmHg, 0.2 inHg)

- **Abnormality Judgment**

Judge as NG when the following conditions are established.

Judgment Value

Malfunction Criteria	Threshold Value
ELCM pressure sensor output voltage when purge is not performed – ELCM pressure sensor output voltage when purge is performed	< 0.7 kPa (5 mmHg, 0.2 inHg)
Time of negative pressure introduction	≥ 30000 ms

Time Needed for Diagnosis: 21 seconds
Malfunction Indicator Light Illumination: Illuminates when malfunction occurs in 2 continuous driving cycles.

- **Normality Judgment**

Judge as OK and clear the NG if the following conditions are established.

Judgment Value

Malfunction Criteria	Threshold Value
ELCM pressure sensor output voltage when purge is not performed – ELCM pressure sensor output voltage when purge is performed	≥ 0.7 kPa (5 mmHg, 0.2 inHg)

Time Needed for Diagnosis: Less than 21 seconds

CN:DTC P0451 EVAPORATIVE EMISSION SYSTEM PRESSURE SENSOR/ SWITCH RANGE/PERFORMANCE

1. OUTLINE OF DIAGNOSIS

Detect the malfunction of ELCM pressure sensor output properties.
Judge as NG when the ELCM pressure sensor output value is largely different from the intake manifold pressure when the ignition switch is ON.

2. COMPONENT DESCRIPTION

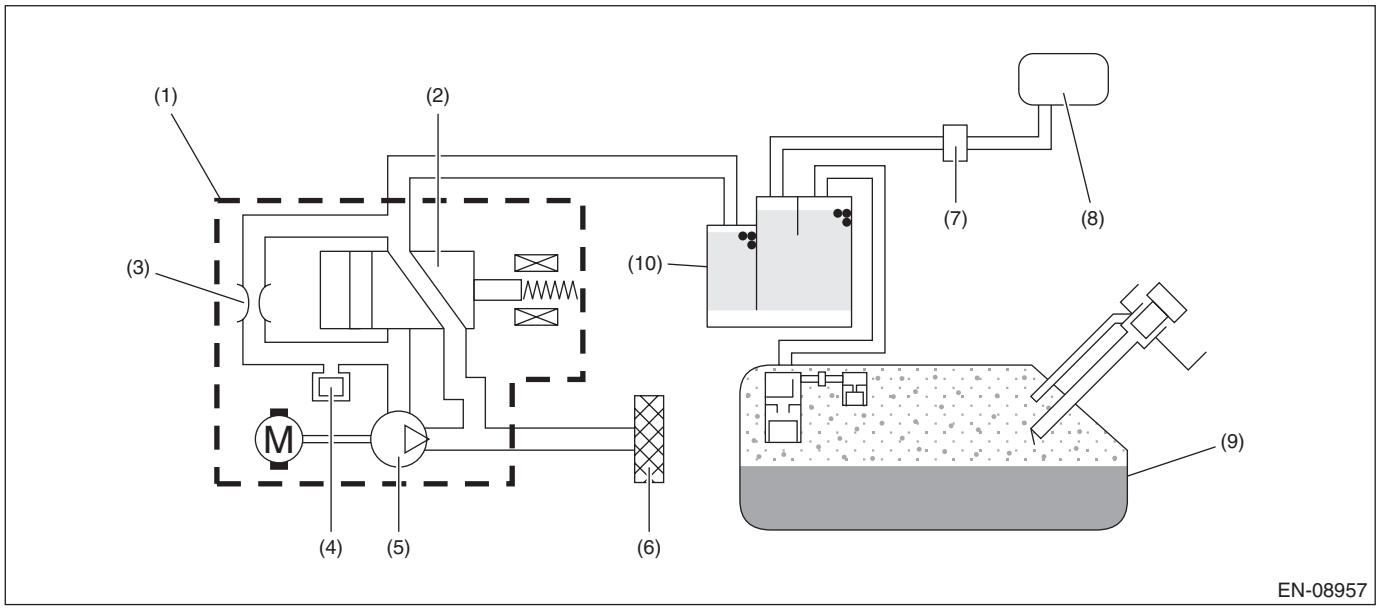

(1) ELCM
(2) Switching valve
(3) Reference orifice (0.02 inch orifice)
(4) Pressure sensor
(5) Vacuum pump
(6) Drain filter
(7) Purge control solenoid valve
(8) Intake manifold
(9) Fuel tank
(10) Canister

3. ENABLE CONDITIONS

Secondary Parameters	Enable Conditions
Ignition switch	ON
Engine speed	< 300 rpm
Vehicle speed	< 1 km/h (0.621 MPH)
Soaking time	≥ 60 s
Variation value of intake manifold pressure (absolute pressure) since ignition switch is turned to ON	< 1.332 kPa (9.99 mmHg, 0.39 inHg)
ELCM vacuum pump	Not in operation
ELCM switching valve	Open
Purge control	Not in operation

4. GENERAL DRIVING CYCLE

Perform the diagnosis once at ignition ON.

5. DIAGNOSTIC METHOD

• Abnormality Judgment

If the duration of time while the following conditions are met is longer than the time indicated, judge as NG.

Judgment Value

Malfunction Criteria	Threshold Value
|ELCM pressure sensor output value – intake manifold pressure (absolute pressure) when ignition switch is ON|	> 4.3 kPa (32 mmHg, 1.3 inHg)

Time Needed for Diagnosis: 328 ms
Malfunction Indicator Light Illumination: Illuminates when malfunction occurs in 2 continuous driving cycles.

• Normality Judgment

Judge as OK and clear the NG if the continuous time while the following conditions are established is more than the predetermined time.

Judgment Value

Malfunction Criteria	Threshold Value
|ELCM pressure sensor output value – intake manifold pressure (absolute pressure) when ignition switch is ON|	≤ 4.3 kPa (32 mmHg, 1.3 inHg)

Time Needed for Diagnosis: 262 ms

CO:DTC P0452 EVAPORATIVE EMISSION SYSTEM PRESSURE SENSOR/ SWITCH LOW

1. OUTLINE OF DIAGNOSIS

Detect the open or short circuit of the ELCM pressure sensor.
Judge as NG if out of specification.

2. COMPONENT DESCRIPTION

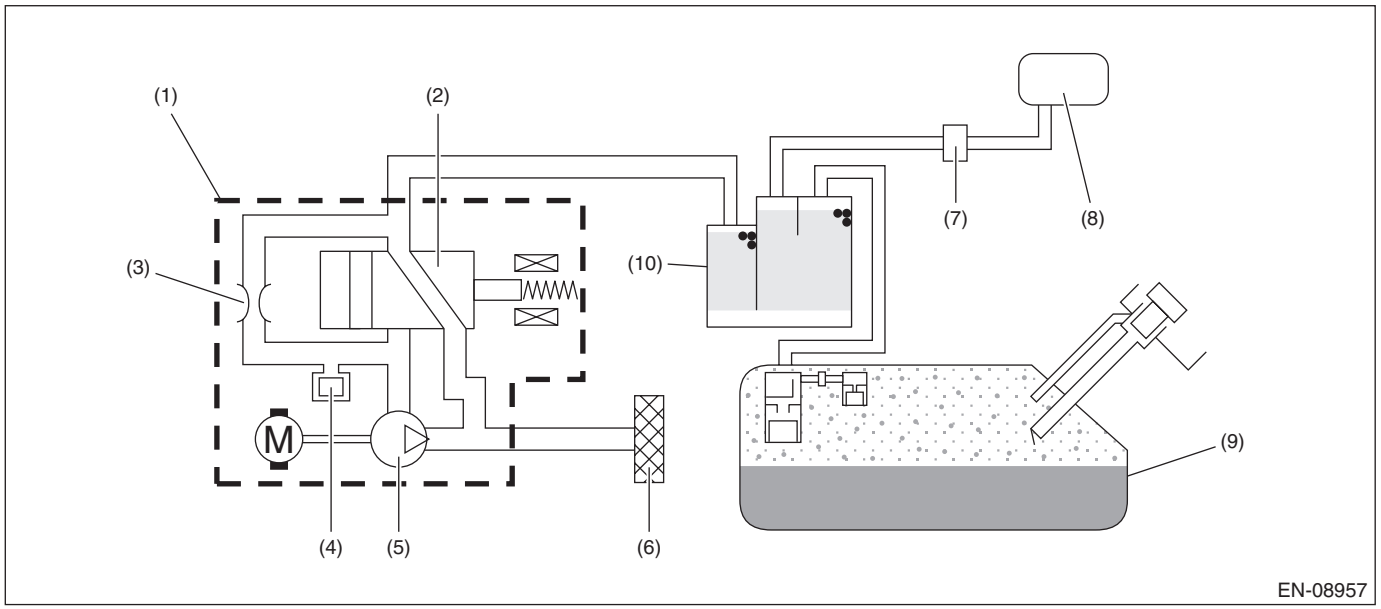

(1) ELCM
(2) Switching valve
(3) Reference orifice (0.02 inch orifice)
(4) Pressure sensor
(5) Vacuum pump
(6) Drain filter
(7) Purge control solenoid valve
(8) Intake manifold
(9) Fuel tank
(10) Canister

3. ENABLE CONDITIONS

Secondary Parameters	Enable Conditions
None	

4. GENERAL DRIVING CYCLE

Always perform the diagnosis continuously.

5. DIAGNOSTIC METHOD

- **Abnormality Judgment**

If the duration of time while the following conditions are met is longer than the time indicated, judge as NG.

Judgment Value

Malfunction Criteria	Threshold Value
Output voltage	< 0.973 V

Time Needed for Diagnosis: 1000 ms
Malfunction Indicator Light Illumination: Illuminates as soon as a malfunction occurs.

- **Normality Judgment**

Judge as OK and clear the NG if the continuous time while the following conditions are established is more than the predetermined time.

Judgment Value

Malfunction Criteria	Threshold Value
Output voltage	≥ 0.973 V

Time Needed for Diagnosis: Less than 1 second

CP:DTC P0453 EVAPORATIVE EMISSION SYSTEM PRESSURE SENSOR/ SWITCH HIGH

1. OUTLINE OF DIAGNOSIS

Detect the open or short circuit of the ELCM pressure sensor.
Judge as NG if out of specification.

2. COMPONENT DESCRIPTION

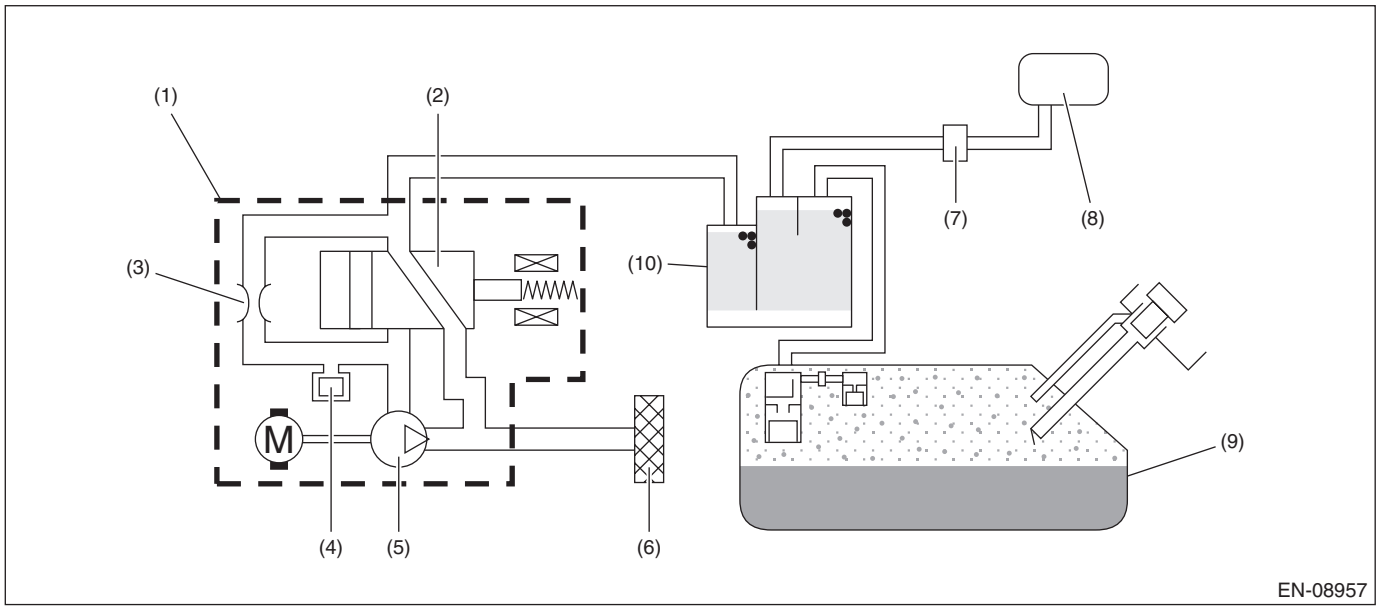

(1) ELCM
(2) Switching valve
(3) Reference orifice (0.02 inch orifice)
(4) Pressure sensor
(5) Vacuum pump
(6) Drain filter
(7) Purge control solenoid valve
(8) Intake manifold
(9) Fuel tank
(10) Canister

3. ENABLE CONDITIONS

Secondary Parameters	Enable Conditions
None	

4. GENERAL DRIVING CYCLE

Always perform the diagnosis continuously.

5. DIAGNOSTIC METHOD

- **Abnormality Judgment**

If the duration of time while the following conditions are met is longer than the time indicated, judge as NG.

Judgment Value

Malfunction Criteria	Threshold Value
Output voltage	≥ 4.095 V

Time Needed for Diagnosis: 1000 ms
Malfunction Indicator Light Illumination: Illuminates as soon as a malfunction occurs.

- **Normality Judgment**

Judge as OK and clear the NG if the continuous time while the following conditions are established is more than the predetermined time.

Judgment Value

Malfunction Criteria	Threshold Value
Output voltage	< 4.095 V

Time Needed for Diagnosis: Less than 1 second

CQ:DTC P0455 EVAPORATIVE EMISSION SYSTEM LEAK DETECTED (LARGE LEAK)

1. OUTLINE OF DIAGNOSIS

This diagnosis judges whether the ELCM operation is normal or not, and whether the evaporative emission system has leak and clogging or not.
To purge the canister, after driving, perform the five hours soaking after ignition switch OFF in order to stabilize the evaporative gas status. * After 5, 7 or 9.5 hours passed, ECM is activated by soaking timer, and the leak check is started.
Judges whether the ELCM operation is normal or not, by measuring the reference pressure status via reference orifice (0.02 inch orifice). Judge as malfunction if the reference pressure is out of specified range. Then, judge whether there is a leak or not, by comparing the pressure (leak pressure) when the reference pressure and the evaporative emission system are in negative pressure condition. Judge as system leak in the evaporative emission system if the leak pressure is higher than reference pressure. Judge as clogging of pipe if the leak pressure becomes lower than the reference pressure within the specified amount of time.
0.02 inch leak and 0.04 inch leak can be distinguished by measuring the leak pressure.
The diagnosis results are stored inside ECM until the engine is started again.
*: When the test conditions are not met in 5 hours, perform diagnosis at elapsed time of 7 hours. When the test conditions are not met in 7 hours, perform diagnosis at elapsed time of 9.5 hours.

Diagnostic item	
ELCM system (ELCM body)	Vacuum pump stuck Switching valve stuck to open Switching valve stuck to close Reference orifice flow large Reference orifice flow small
Leak check	Large leak • 0.04 inch leak • Fuel cap loose • Fuel cap off • System malfunction
	Very small leak • 0.02 inch leak
Clogging of pipe	—

OUTLINE OF DIAGNOSIS

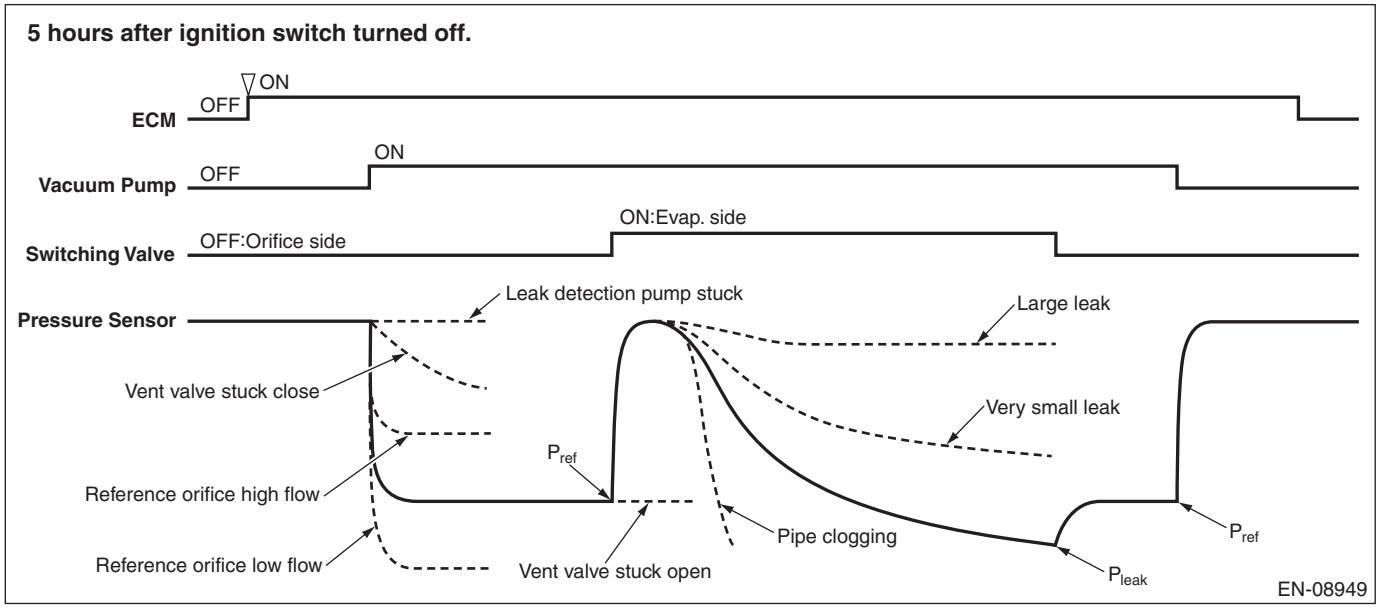

2. COMPONENT DESCRIPTION

ELCM consists of the pressure sensor, the reference orifice (diameter of 0.02 inch), the vacuum pump which introduces the negative pressure into evaporative emission system, and the switching valve which switches the passage to introduce the negative pressure.

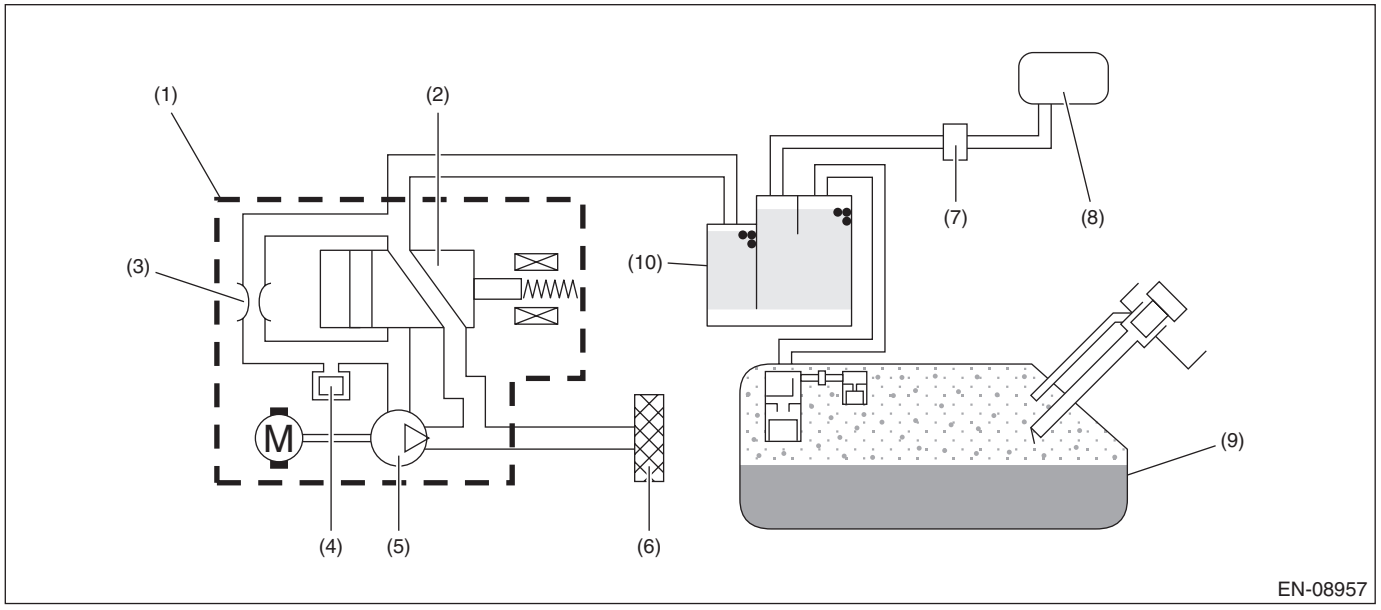

(1) ELCM
(2) Switching valve
(3) Reference orifice (0.02 inch orifice)
(4) Pressure sensor
(5) Vacuum pump
(6) Drain filter
(7) Purge control solenoid valve
(8) Intake manifold
(9) Fuel tank
(10) Canister

3. ENABLE CONDITIONS

Secondary Parameters	Enable Conditions
Activation of soaking timer	Completed
Battery voltage	≥ 10.9 V
Ignition switch	OFF
Engine coolant temperature	≥ 4.4 °C (39.9 °F) and < 45 °C (113 °F)
Atmospheric pressure	≥ 75.1 kPa (563 mmHg, 22.2 inHg) and < 110 kPa (825 mmHg, 32.5 inHg)
Accumulated purge amount during previous driving cycle	≥ Value of Map 1

Map 1 (other than U5 model)

Engine coolant temperature °C (°F)	0 (32)	30 (86)	35 (95)	40 (104)	45 (113)
Accumulated purge amount during previous driving cycle g (oz)	150 (5.29)	150 (5.29)	2000 (70.54)	9000 (317.43)	12000 (423.24)

Map 1 (U5 model)

Engine coolant temperature °C (°F)	0 (32)	30 (86)	35 (95)	40 (104)	45 (113)
Accumulated purge amount during previous driving cycle g (oz)	4000 (141.08)	4000 (141.08)	15000 (529.05)	25000 (881.75)	35000 (1234.45)

4. GENERAL DRIVING CYCLE

Perform the diagnosis only once when 5, 7 or 9.5 hours has passed after ignition switch is OFF. For more detail, refer to “OUTLINE OF DIAGNOSIS”. <Ref. to GD(H4DO w/o HEV)-157, OUTLINE OF DIAGNOSIS, DTC P0455 EVAPORATIVE EMISSION SYSTEM LEAK DETECTED (LARGE LEAK), Diagnostic Trouble Code (DTC) Detecting Criteria.>

5. DIAGNOSTIC METHOD

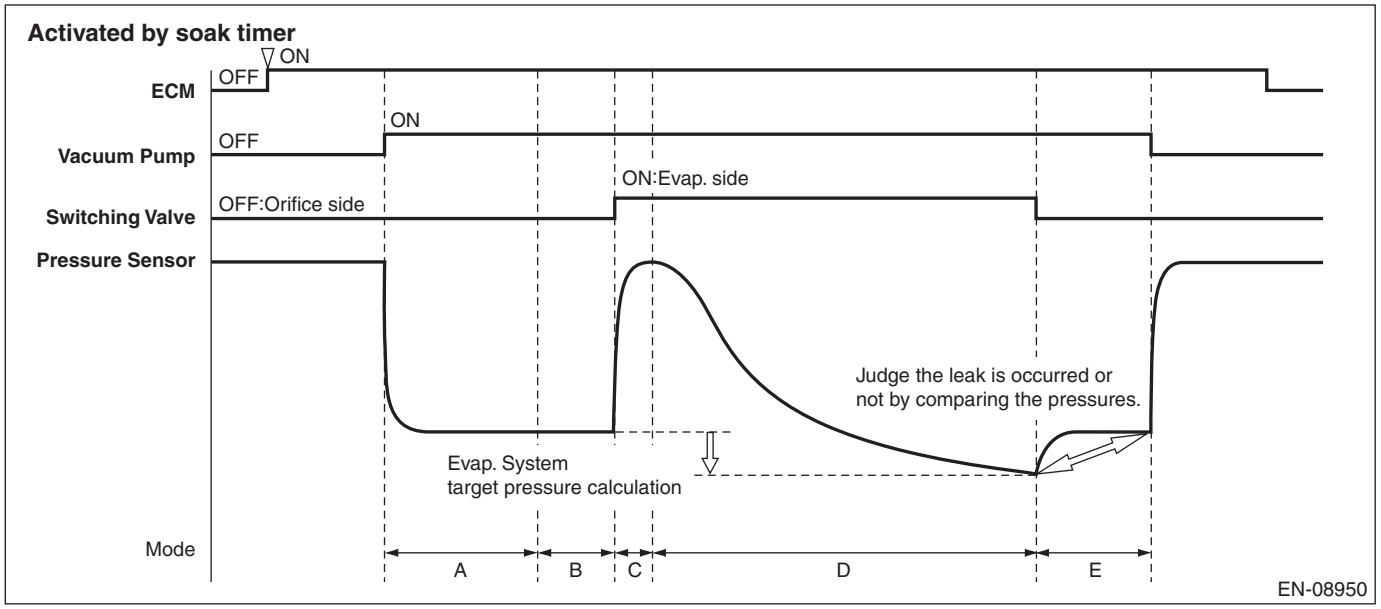

Mode	Explanation of Mode	Diagnosis Period
A	Vacuum pump operation confirmation and characteristics stability	7 s or less & 300 s
B	Measurement of reference pressure for setting the target negative pressure	40 s or less
C	Switching valve operation confirmation	12 s or less
D	Clogging of pipe diagnosis and leak pressure measurement	900 s or less
E	Reference pressure measurement for judgment	40 s or less

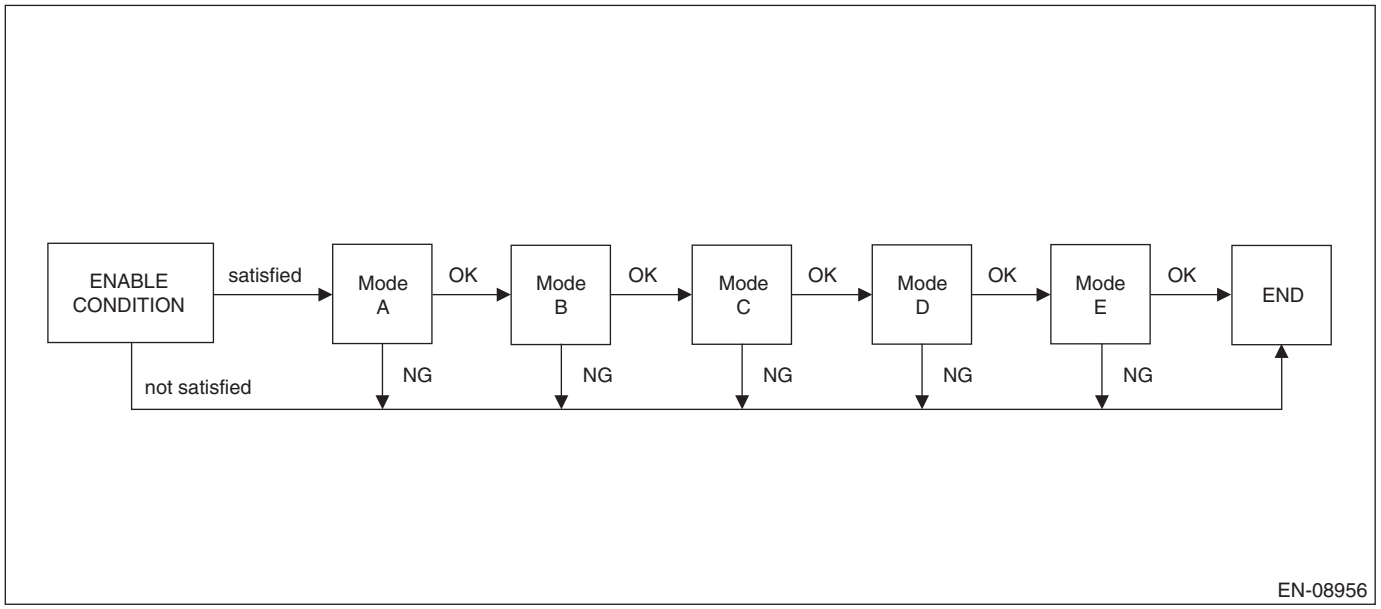

Mode A (Vacuum pump operation confirmation and characteristics stability)

Purpose: Detect the vacuum pump operation trouble.
Judge as NG when the following conditions are established.
Judge as OK if the following conditions are not established, and warm up for five minutes to stabilize the vacuum pump characteristics.

Judgment Value

Malfunction Criteria	Threshold Value	DTC
Pressure sensor output value	> –0.2 kPa (–1.68 mmHg, –0.1 inHg)	P2404

Mode B (Measurement of reference pressure for setting the target negative pressure)

1. Purpose: Judge the reference pressure stability.
Judge as NG when the following conditions are established.

Judgment Value

Malfunction Criteria	Threshold Value	DTC
|Pressure sensor maximum output value – Pressure sensor minimum output value|	> 0.3 kPa (2.355 mmHg, 0.1 inHg)	P2404

2. Purpose: Judge whether the reference pressure is within the normal range, and detect the vacuum pump and orifice malfunctions.
Judge as NG when the following conditions are established.

Judgment Value

Malfunction Criteria	Threshold Value	DTC
Reference pressure for setting the target negative pressure	< Value of Map 2 or > Value of Map 3	P2404

Map 2

Atmospheric pressure kPa (mmHg, inHg)	70 (525, 20.7)	80 (600, 23.6)	90 (675, 26.6)	100 (750, 29.5)
Reference pressure for setting the target negative pressure kPa (mmHg, inHg)	–4 (–29.79, –1.2)	–4.1 (–30.593, –1.2)	–4.2 (–31.395, –1.2)	–4.3 (–32.19, –1.3)

Map 3

Atmospheric pressure kPa (mmHg, inHg)	70 (525, 20.7)	80 (600, 23.6)	90 (675, 26.6)	100 (750, 29.5)
Reference pressure for setting the target negative pressure kPa (mmHg, inHg)	–0.9 (–7.065, –0.3)	–1 (–7.86, –0.3)	–1.2 (–8.663, –0.3)	–1.3 (–9.465, –0.4)

Mode C (Switching valve operation confirmation)

Purpose: Measure the pressure increase when switching valve is changed from open to close, and detect the stuck to open/close malfunctions of the switching valve.
Judge as NG when the following conditions are established.

Judgment Value

Malfunction Criteria	Threshold Value	DTC
Pressure sensor output value – Reference pressure for setting the target negative pressure	< 0.2 kPa (1.68 mmHg, 0.1 inHg)	P2404

Mode D (Clogging of pipe diagnosis and leak pressure measurement)

1. **Clogging of pipe**
   Purpose: Measure the time required for the evaporative emission system to reach the target negative pressure by the vacuum pump, and detect the clogging of pipe trouble.
   Judge as clogging of pipe malfunction if the evaporative emission system reaches to the target negative pressure within the specified time.

Judgment Value

Malfunction Criteria	Threshold Value	DTC
Time required to reach to the target negative pressure For target vacuum, use one of the followings. •Reference pressure for target vacuum setting – value of Map 4 •–5 kPa (–37.298 mmHg, –1.5 inHg)	≤ 30000 ms	P1451

Map 4

Time of negative pressure introduction ms	0	100000	200000	300000	400000	500000	600000	700000	800000	900000	1000000	1100000	1200000
Reference pressure for setting the target negative pressure – Pressure sensor output value kPa (mmHg, inHg)	0.9 (7.058, 0.3)	0.9 (7.058, 0.3)	0.9 (7.058, 0.3)	0.9 (7.058, 0.3)	0.9 (7.058, 0.3)	0.9 (7.058, 0.3)	0.9 (7.058, 0.3)	0.9 (7.058, 0.3)	0.9 (7.058, 0.3)	0.9 (7.058, 0.3)	0.9 (7.058, 0.3)	0.9 (7.058, 0.3)	0.9 (7.058, 0.3)

2. **Leak pressure measurement**
Purpose: Measure the pressure (leak pressure) when the evaporative emission system becomes the negative pressure by the vacuum pump.
Store the pressure as a leak pressure while the following conditions are met.

Judgment Value

Conditions for storing the leak pressure	Threshold Value
When any one of the followings is established:	
• Reference pressure for setting the target negative pressure – Pressure sensor output value	≥ Value of Map 4
• Pressure sensor output value	< –5 kPa (–37.298 mmHg, –1.5 inHg)
• Time of negative pressure introduction	≥ 900000 ms

Mode E (Measurement of reference pressure for judgment)

1. Purpose: Judge the reference pressure stability.
Judge as NG when the following conditions are established.

Judgment Value

Malfunction Criteria	Threshold Value	DTC
|Pressure sensor maximum output value – Pressure sensor minimum output value|	> 0.3 kPa (2.355 mmHg, 0.1 inHg)	P2404

2. Purpose: Judge whether the reference pressure is within the normal range, and detect the vacuum pump and orifice malfunctions. Judge the vacuum pump performance stability.
Judge as NG when the following conditions are established.

Judgment Value

Malfunction Criteria	Threshold Value	DTC
Reference pressure for judgment	< Value of Map 5 or > Value of Map 6	P2404

Map 5

Atmospheric pressure kPa (mmHg, inHg)	70 (525, 20.7)	80 (600, 23.6)	90 (675, 26.6)	100 (750, 29.5)
Reference pressure for judgment kPa (mmHg, inHg)	–4.5 (–34.02, –1.3)	–4.6 (–34.815, –1.4)	–4.7 (–35.618, –1.4)	–4.9 (–36.42, –1.4)

Map 6

Atmospheric pressure kPa (mmHg, inHg)	70 (525, 20.7)	80 (600, 23.6)	90 (675, 26.6)	100 (750, 29.5)
Reference pressure for judgment kPa (mmHg, inHg)	–0.8 (–6.18, –0.2)	–0.9 (–6.983, –0.3)	–1 (–7.785, –0.3)	–1.1 (–8.58, –0.3)

3. Purpose: Judge the presence of evaporative emission system leak.
Judge as NG when the following conditions are established.

Judgment Value

Malfunction Criteria	Threshold Value	DTC
<Large leak (0.04 inch)> Leak pressure lleakjdg = (Reference pressure for judgment) × 0.377 – (–45.5 Pa)	≥ lleakjdg (Pa)	P0455
<Very small leak (0.02 inch)> Leak pressure	< lleakjdg (Pa)	P0456

Time Needed for Diagnosis: Approx. 23 min

- **Abnormality Judgment**

At next engine start, confirm whether the enable conditions are satisfied even though refueling has been done during soaking, and determine the malfunction.
Malfunction Indicator Light Illumination: Illuminates when malfunction occurs in 2 continuous driving cycles.

- **Normality Judgment**

At next engine start, confirm whether the enable conditions are satisfied even though refueling has been done during soaking, then, if the following conditions are established, judge as OK and clear the NG.

Judgment Value

Malfunction Criteria	Threshold Value	DTC
NG flag	Not set	P0455 P0456 P1451 P2404

CR:DTC P0456 EVAPORATIVE EMISSION CONTROL SYSTEM LEAK DETECTED (VERY SMALL LEAK)

1. OUTLINE OF DIAGNOSIS

NOTE:
For the detection standard, refer to DTC P0455. <Ref. to GD(H4DO w/o HEV)-157, DTC P0455 EVAPORATIVE EMISSION SYSTEM LEAK DETECTED (LARGE LEAK), Diagnostic Trouble Code (DTC) Detecting Criteria.>

CS:DTC P0458 EVAPORATIVE EMISSION SYSTEM PURGE CONTROL VALVE CIRCUIT LOW

1. OUTLINE OF DIAGNOSIS

Detect open or short circuit of the purge control solenoid valve.
Judge as NG when the ECM output level differs from the actual terminal level.

2. COMPONENT DESCRIPTION

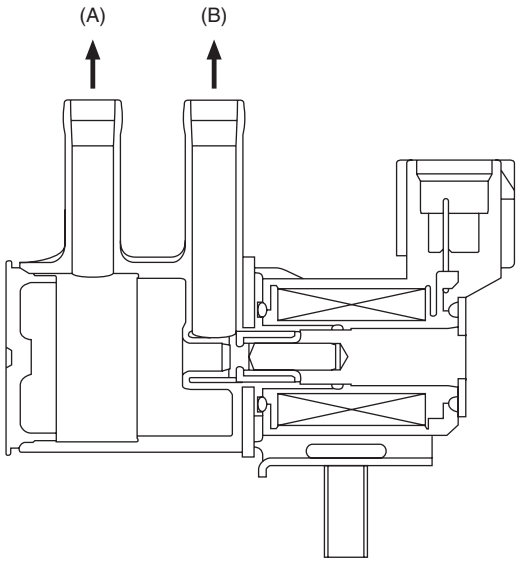

EN-08988

(A) To canister (B) To intake manifold

3. ENABLE CONDITION

Secondary Parameters	Enable Conditions
Battery voltage	≥ 10.9 V
Elapsed time after starting the engine	≥ 1 second

4. GENERAL DRIVING CYCLE

Always perform the diagnosis after starting the engine.

5. DIAGNOSTIC METHOD

- **Abnormality Judgment**

If the duration of time while the following conditions are met is longer than the time indicated, judge as NG.

Judgment Value

Malfunction Criteria	Threshold Value
Duty ratio of “ON”	< 0.75
Terminal output voltage	Low

Time Needed for Diagnosis: 2500 ms
Malfunction Indicator Light Illumination: Illuminates when malfunction occurs in 2 continuous driving cycles.

- **Normality Judgment**

Judge as OK and clear the NG if the continuous time while the following conditions are established is more than the predetermined time.

Judgment Value

Malfunction Criteria	Threshold Value
Terminal output voltage	High

Time Needed for Diagnosis: Less than 1 second

CT:DTC P0459 EVAPORATIVE EMISSION SYSTEM PURGE CONTROL VALVE CIRCUIT HIGH

1. OUTLINE OF DIAGNOSIS

Detect open or short circuit of the purge control solenoid valve.
Judge as NG when the ECM output level differs from the actual terminal level.

2. COMPONENT DESCRIPTION

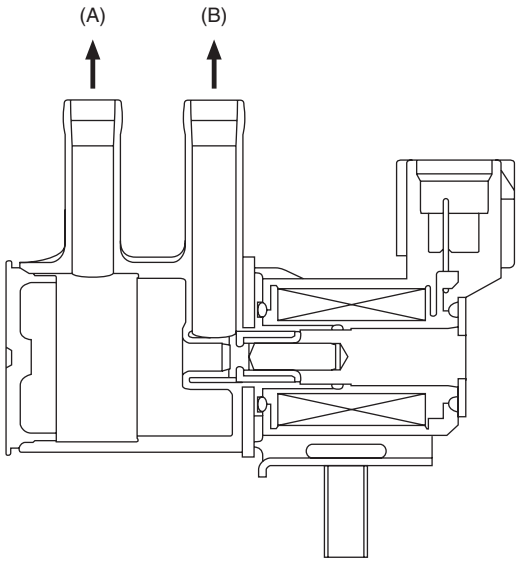

EN-08988

(A) To canister (B) To intake manifold

3. ENABLE CONDITION

Secondary Parameters	Enable Conditions
Battery voltage	≥ 10.9 V
Elapsed time after starting the engine	≥ 1 second

4. GENERAL DRIVING CYCLE

Always perform the diagnosis after starting the engine.

5. DIAGNOSTIC METHOD

- **Abnormality Judgment**

If the duration of time while the following conditions are met is longer than the time indicated, judge as NG.

Judgment Value

Malfunction Criteria	Threshold Value
Duty ratio of “ON”	≥ 0.25
Terminal output voltage	High

Time Needed for Diagnosis: 2500 ms
Malfunction Indicator Light Illumination: Illuminates when malfunction occurs in 2 continuous driving cycles.

- **Normality Judgment**

Judge as OK and clear the NG if the continuous time while the following conditions are established is more than the predetermined time.

Judgment Value

Malfunction Criteria	Threshold Value
Terminal output voltage	Low

Time Needed for Diagnosis: Less than 1 second

CU:DTC P0461 FUEL LEVEL SENSOR “A” CIRCUIT RANGE/PERFORMANCE

1. OUTLINE OF DIAGNOSIS

Detect malfunctions of the fuel level sensor output property.
If the fuel level does not vary in a particular driving condition / engine condition where it should, judge as NG.

2. COMPONENT DESCRIPTION

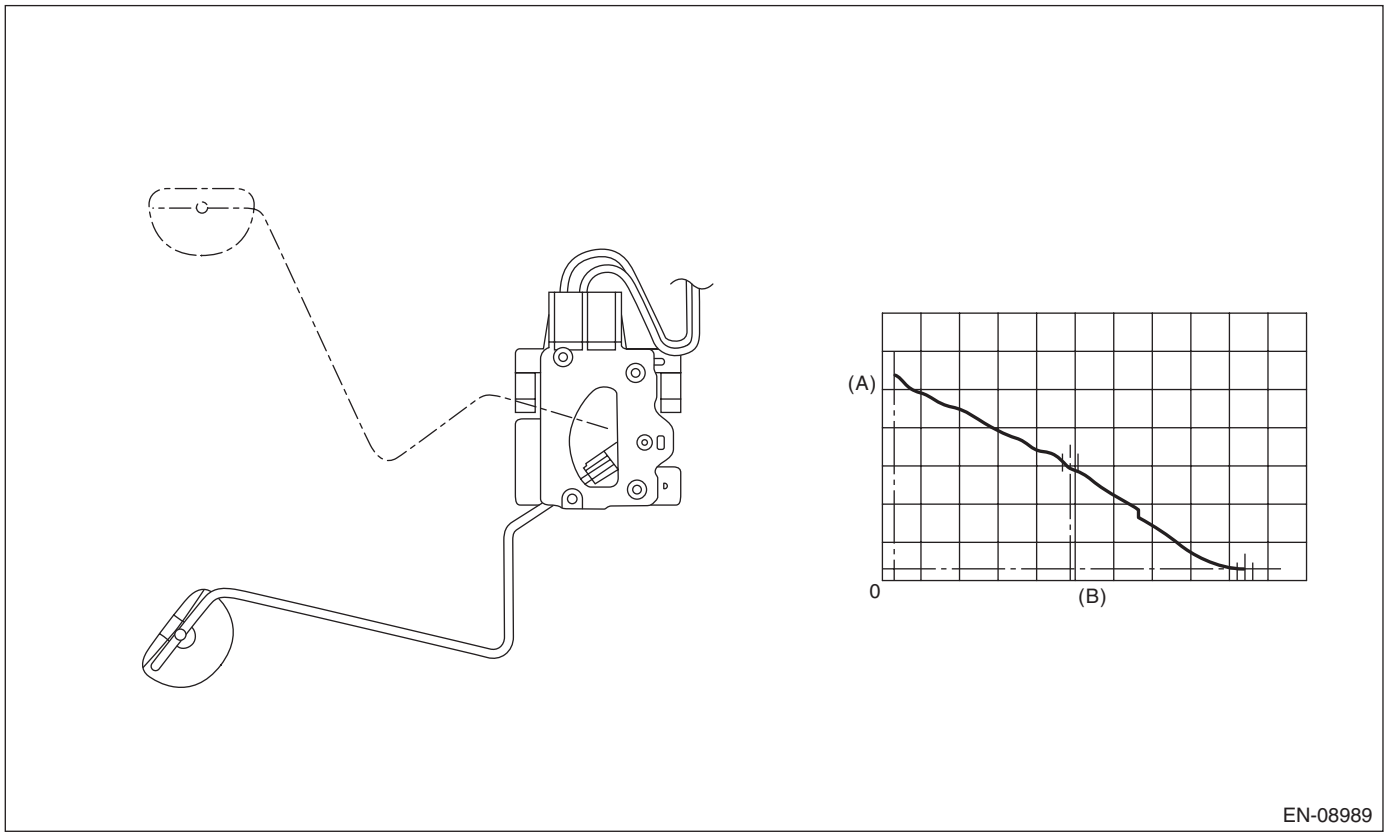

(A) Fuel level (B) Resistance

3. ENABLE CONDITION

Secondary Parameters	Enable Conditions
None	

4. GENERAL DRIVING CYCLE

Always perform the diagnosis continuously.

5. DIAGNOSTIC METHOD

- **Abnormality Judgment**

Judge as NG when the following conditions are established.

Judgment Value

Malfunction Criteria	Threshold Value
Accumulated amount of intake air	≥ 165375 g (5832.78 oz)
Max. – min. values of fuel level output	< 2.6 ℓ (0.69 US gal, 0.57 Imp gal)
Battery voltage	≥ 10.9 V
Engine speed	< 10000 rpm
Elapsed time after starting the engine	≥ 5000 ms

Time Needed for Diagnosis: Less than 1 second
Malfunction Indicator Light Illumination: Illuminates when malfunction occurs in 2 continuous driving cycles.

- **Normality Judgment**

Judge as OK and clear the NG if the following conditions are established.

Judgment Value

Malfunction Criteria	Threshold Value
Accumulated amount of intake air	≥ 165375 g (5832.78 oz)
Max. – min. values of fuel level output	≥ 2.6 ℓ (0.69 US gal, 0.57 Imp gal)
Battery voltage	≥ 10.9 V
Engine speed	< 10000 rpm
Elapsed time after starting the engine	≥ 5000 ms

Time Needed for Diagnosis: Less than 1 second

CV:DTC P0462 FUEL LEVEL SENSOR “A” CIRCUIT LOW

1. OUTLINE OF DIAGNOSIS

Detect the open or short circuit of fuel level sensor. Judge as NG if out of specification.

2. COMPONENT DESCRIPTION

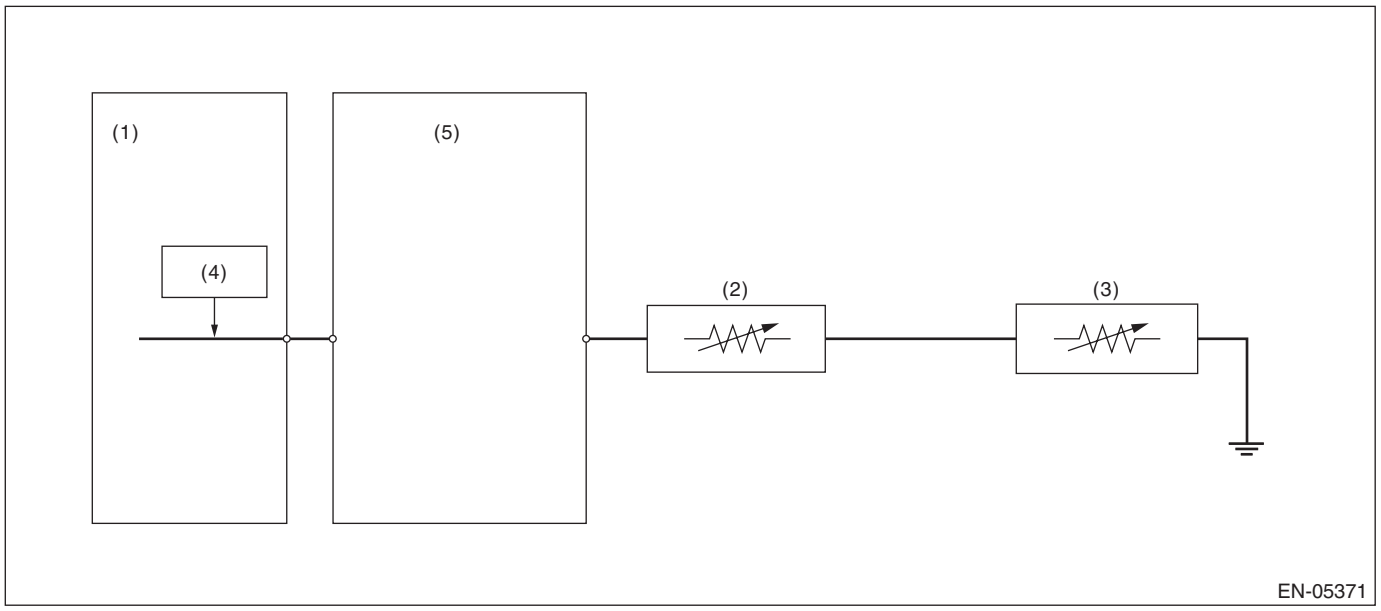

(1) Engine control module (ECM)
(2) Fuel level sensor
(3) Fuel sub level sensor
(4) Detecting circuit
(5) Body integrated unit

3. ENABLE CONDITION

Secondary Parameters	Enable Conditions
None	

4. GENERAL DRIVING CYCLE

Always perform the diagnosis continuously.

5. DIAGNOSTIC METHOD

• Abnormality Judgment

If the duration of time while the following conditions are met is longer than the time indicated, judge as NG.

Judgment Value

Malfunction Criteria	Threshold Value
Battery voltage	≥ 10.9 V
Elapsed time after starting the engine	≥ 3000 ms
Output voltage	< 0.383 V

Time Needed for Diagnosis: 2500 ms
Malfunction Indicator Light Illumination: Illuminates when malfunction occurs in 2 continuous driving cycles.

• Normality Judgment

Judge as OK and clear the NG if the continuous time while the following conditions are established is more than the predetermined time.

Judgment Value

Malfunction Criteria	Threshold Value
Battery voltage	≥ 10.9 V
Elapsed time after starting the engine	≥ 3000 ms
Output voltage	≥ 0.383 V

Time Needed for Diagnosis: Less than 1 second

CW:DTC P0463 FUEL LEVEL SENSOR “A” CIRCUIT HIGH

1. OUTLINE OF DIAGNOSIS

Detect the open or short circuit of fuel level sensor. Judge as NG if out of specification.

2. COMPONENT DESCRIPTION

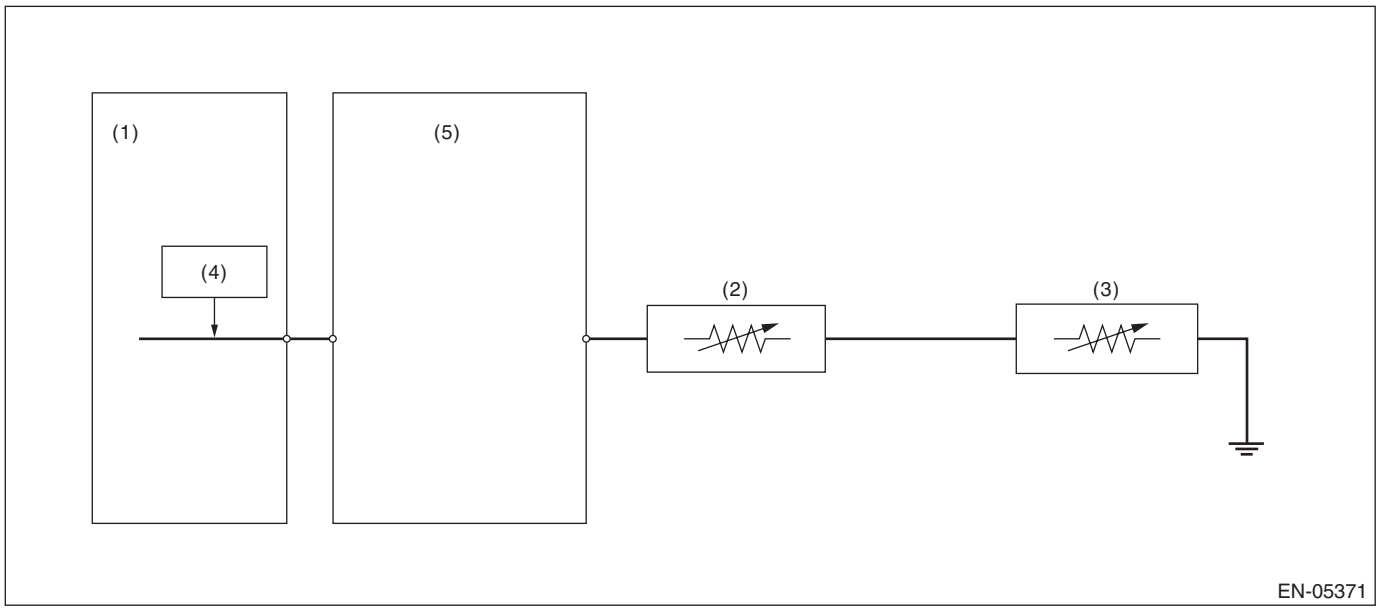

(1) Engine control module (ECM)
(2) Fuel level sensor
(3) Fuel sub level sensor
(4) Detecting circuit
(5) Body integrated unit

3. ENABLE CONDITION

Secondary Parameters	Enable Conditions
None	

4. GENERAL DRIVING CYCLE

Always perform the diagnosis continuously.

5. DIAGNOSTIC METHOD

• Abnormality Judgment

If the duration of time while the following conditions are met is longer than the time indicated, judge as NG.

Judgment Value

Malfunction Criteria	Threshold Value
Battery voltage	≥ 10.9 V
Elapsed time after starting the engine	≥ 3000 ms
Output voltage	≥ 6.632 V

Time Needed for Diagnosis: 1000 ms
Malfunction Indicator Light Illumination: Illuminates when malfunction occurs in 2 continuous driving cycles.

• Normality Judgment

Judge as OK and clear the NG if the continuous time while the following conditions are established is more than the predetermined time.

Judgment Value

Malfunction Criteria	Threshold Value
Battery voltage	≥ 10.9 V
Elapsed time after starting the engine	≥ 3000 ms
Output voltage	< 6.632 V

Time Needed for Diagnosis: Less than 1 second

CX:DTC P0500 VEHICLE SPEED SENSOR “A”

1. OUTLINE OF DIAGNOSIS

Judge as NG when outside of the judgment value.
Judge NG when the received data from VDCCM&H/U is abnormal vehicle speed, and the vehicle speed data is impossible.

2. COMPONENT DESCRIPTION

Vehicle speed signals are taken in to the VDC control module and hydraulic control unit, and normal/erroneous data of the ABS wheel speed sensor is received by CAN communication from the VDC control module and hydraulic control unit.

3. ENABLE CONDITION

Secondary Parameters	Enable Conditions
Battery voltage	≥ 10.9 V
Elapsed time after starting the engine	≥ 2000 ms

4. GENERAL DRIVING CYCLE

Always perform diagnosis more than 2000 ms after starting the engine.

5. DIAGNOSTIC METHOD

- **Abnormality Judgment**

If the duration of time while the following conditions are met is longer than the time indicated, judge as NG.

Judgment Value

Malfunction Criteria	Threshold Value
Front ABS wheel speed sensor status	Malfunction
Either of the following is established	
Front left wheel speed	≥ 300 km/h (186.4 MPH)
Front right wheel speed	≥ 300 km/h (186.4 MPH)

Time Needed for Diagnosis: 2500 ms
Malfunction Indicator Light Illumination: Illuminates as soon as a malfunction occurs.

- **Normality Judgment**

Judge as OK and clear the NG if the continuous time while the following conditions are established is more than the predetermined time.

Judgment Value

Malfunction Criteria	Threshold Value
Front left wheel speed	> 0 km/h (0 MPH) and < 300 km/h (186.4 MPH)
Front right wheel speed	> 0 km/h (0 MPH) and < 300 km/h (186.4 MPH)

Time Needed for Diagnosis: 2500 ms

CY:DTC P0506 IDLE AIR CONTROL SYSTEM RPM LOWER THAN EXPECTED

1. OUTLINE OF DIAGNOSIS

Detect the malfunction that actual engine speed is not close to target engine speed during idling. Judge as NG when actual engine speed is not close to target engine speed during idling.

2. ENABLE CONDITION

Secondary Parameters	Enable Conditions
Engine coolant temperature	≥ 60 °C (140 °F)
Battery voltage	≥ 10.9 V
Atmospheric pressure	≥ 75.1 kPa (563 mmHg, 22.2 inHg)
Fuel level	≥ 8.25 ℓ (2.18 US gal, 1.82 Imp gal) (other than XV model) ≥ 9 ℓ (2.38 US gal, 1.98 Imp gal) (XV model)
Elapsed time after starting the engine	≥ 10.49 s
Accelerator pedal position	= 0%
Lambda value (left and right)	≥ 0.85 and < 1.151
After intake manifold pressure changes by 4 kPa (30 mmHg, 1.2 inHg) or more.	> 5.1 s
Elapsed time after switching neutral position switch to ON/OFF	> 5.1 s
Vehicle speed	0 km/h (0 MPH)

3. GENERAL DRIVING CYCLE

Perform the diagnosis continuously at idling after warming up engine.

4. DIAGNOSTIC METHOD

- **Abnormality Judgment**

If the duration of time while the following conditions are met is longer than the time indicated, judge as NG.

Judgment Value

Malfunction Criteria	Threshold Value
Actual engine speed – Targeted engine speed	< –100 rpm
Feedback compensation for ISC	Max.

Time Needed for Diagnosis: 15 s × 1 time(s)
Malfunction Indicator Light Illumination: Illuminates when malfunction occurs in 2 continuous driving cycles.

- **Normality Judgment**

Judge as OK and clear the NG if the continuous time while the following conditions are established is more than the predetermined time.

Judgment Value

Malfunction Criteria	Threshold Value
Actual engine speed – Targeted engine speed	≥ –100 rpm

Time Needed for Diagnosis: 15 s

CZ:DTC P0507 IDLE AIR CONTROL SYSTEM RPM HIGHER THAN EXPECTED

1. OUTLINE OF DIAGNOSIS

Detect the malfunction that actual engine speed is not close to target engine speed during idling. Judge as NG when actual engine speed is not close to target engine speed during idling.

2. ENABLE CONDITION

Secondary Parameters	Enable Conditions
Engine coolant temperature	≥ 60 °C (140 °F)
Battery voltage	≥ 10.9 V
Atmospheric pressure	≥ 75.1 kPa (563 mmHg, 22.2 inHg)
Fuel level	≥ 8.25 ℓ (2.18 US gal, 1.82 Imp gal) (other than XV model) ≥ 9 ℓ (2.38 US gal, 1.98 Imp gal) (XV model)
Elapsed time after starting the engine	≥ 10.49 s
Accelerator pedal position	= 0%
Lambda value (left and right)	≥ 0.85 and < 1.151
After intake manifold pressure changes by 4 kPa (30 mmHg, 1.2 inHg) or more.	> 5.1 s
Elapsed time after switching neutral position switch to ON/OFF	> 5.1 s
Vehicle speed	0 km/h (0 MPH)

3. GENERAL DRIVING CYCLE

Perform the diagnosis continuously at idling after warming up engine.

4. DIAGNOSTIC METHOD

- **Abnormality Judgment**

If the duration of time while the following conditions are met is longer than the time indicated, judge as NG.

Judgment Value

Malfunction Criteria	Threshold Value
Actual – Target engine speed	≥ 200 rpm
Feedback compensation for ISC	Min.

Time Needed for Diagnosis: 15 s × 1 time(s)
Malfunction Indicator Light Illumination: Illuminates when malfunction occurs in 2 continuous driving cycles.

- **Normality Judgment**

Judge as OK and clear the NG if the continuous time while the following conditions are established is more than the predetermined time.

Judgment Value

Malfunction Criteria	Threshold Value
Actual – Target engine speed	< 200 rpm

Time Needed for Diagnosis: 15 s

DA:DTC P050A COLD START IDLE AIR CONTROL SYSTEM PERFORMANCE

1. OUTLINE OF DIAGNOSIS

• When cold, the abnormality in the control of target engine speed increase is detected. (P050A)

Judge as NG if the exhaust gas temperature diagnosis or idle speed diagnosis is NG.
• Exhaust gas temperature diagnosis
Judge as NG when the estimated exhausted gas temperature in 14 seconds after the cold start is below the specified value.
• Idle speed diagnosis
Judge as NG when actual engine speed is not close to target engine speed at cold start.

• Detect malfunctions of the catalyst advanced idling retard angle control. (P050B)

Judge as NG when ECM is not controlling the angle properly during catalyst advanced idling retard angle control.
• Final ignition timing diagnosis
Judge as NG when actual retard amount is under the specified value at cold start.

2. ENABLE CONDITIONS

Secondary Parameters	Enable Conditions
<Exhaust gas temperature diagnosis>	
Atmospheric pressure	≥ 75.1 kPa (563 mmHg, 22.2 inHg)
Battery voltage	> 10.9 V
Engine condition	In operation
Vehicle speed	≤ 2 km/h (1.2 MPH)
Elapsed time after gear position change (P ←→ D or N ←→ D)	≥ 3000 ms
ISC feedback	In operation
Throttle opening angle	< 0.37 °
Fuel property	Not extremely low volatility
Target retard amount	≥ 0 °CA (CVT model) ≥ 0 °CA (MT model)
<Idle speed diagnosis>	
Atmospheric pressure	≥ 75.1 kPa (563 mmHg, 22.2 inHg)
Battery voltage	> 10.9 V
Engine condition	In operation
Vehicle speed	≤ 2 km/h (1.2 MPH)
Engine coolant temperature	≤ 60 °C (140 °F)
Intake air amount sum value	≤ Value of Map 1
Elapsed time after gear position change (P ←→ D or N ←→ D)	≥ 3000 ms
Throttle opening angle	< 0.37 °
Fuel property	Not extremely low volatility
Elapsed time after starting the engine	≥ 2000 ms
<Final ignition timing diagnosis>	
Atmospheric pressure	≥ 75.1 kPa (563 mmHg, 22.2 inHg)
Battery voltage	> 10.9 V
Engine condition	In operation
Vehicle speed	≤ 2 km/h (1.2 MPH)
Engine coolant temperature	≤ 60 °C (140 °F)
Intake air amount sum value	≤ Value of Map 2
Elapsed time after gear position change (P ←→ D or N ←→ D)	≥ 3000 ms
Throttle opening angle	< 0.37 °
Fuel property	Not extremely low volatility
Target retard amount	≥ Value from Map 3

Map 1

Engine coolant temperature at engine starting °C (°F)	–40 (–40)	–30 (–22)	–20 (–4)	–10 (14)	0 (32)	10 (50)	20 (68)	30 (86)
Intake air amount sum value g (oz)	770 (27.16)	690 (24.34)	620 (21.87)	560 (19.75)	510 (17.99)	450 (15.87)	390 (13.76)	320 (11.29)

Engine coolant temperature at engine starting °C (°F)	40 (104)	50 (122)	60 (140)	70 (158)	80 (176)	90 (194)	100 (212)	110 (230)
Intake air amount sum value g (oz)	260 (9.17)	210 (7.41)	180 (6.35)	180 (6.35)	180 (6.35)	180 (6.35)	180 (6.35)	180 (6.35)

Map 2

Engine coolant temperature at engine starting °C (°F)	–40 (–40)	–30 (–22)	–20 (–4)	–10 (14)	0 (32)	10 (50)	20 (68)	30 (86)
Intake air amount sum value g (oz)	770 (27.16)	690 (24.34)	620 (21.87)	560 (19.75)	510 (17.99)	450 (15.87)	390 (13.76)	320 (11.29)

Engine coolant temperature at engine starting °C (°F)	40 (104)	50 (122)	60 (140)	70 (158)	80 (176)	90 (194)	100 (212)	110 (230)
Intake air amount sum value g (oz)	260 (9.17)	210 (7.41)	180 (6.35)	180 (6.35)	180 (6.35)	180 (6.35)	180 (6.35)	180 (6.35)

Map 3

Engine coolant temperature	–40 °C (–40 °F)	–30 °C (–22 °F)	–20 °C (–4 °F)	–10 °C (14 °F)	0 °C (32 °F)	10 °C (50 °F)	20 °C (68 °F)	30 °C (86 °F)	40 °C (104 °F)	50 °C (122 °F)	60 °C (140 °F)
Target retard amount (CVT model)	4 °CA	4 °CA	4 °CA	4 °CA	4 °CA	4 °CA	4 °CA	4 °CA	4 °CA	4 °CA	4 °CA
Target retard amount (MT model)	5 °CA	5 °CA	5 °CA	5 °CA	5 °CA	5 °CA	5 °CA	5 °CA	5 °CA	5 °CA	5 °CA

3. GENERAL DRIVING CYCLE

Perform the diagnosis at cold start.

4. DIAGNOSTIC METHOD

• Exhaust gas temperature diagnosis

Abnormality Judgment
Calculate the estimated exhaust gas temperature when the diagnostic enable condition is established. Judge as NG when the following conditions are established.

Judgment Value

Malfunction Criteria	Threshold Value
Estimated exhaust gas temperature	< Value of Map 4

Map 4

Engine coolant temperature at engine starting	–40 °C (–40 °F)	–30 °C (–22 °F)	–20 °C (–4 °F)	–10 °C (14 °F)	0 °C (32 °F)	10 °C (50 °F)	20 °C (68 °F)	30 °C (86 °F)	40 °C (104 °F)	50 °C (122 °F)	60 °C (140 °F)
Threshold value (CVT model)	0 °C (32 °F)	0 °C (32 °F)	0 °C (32 °F)	0 °C (32 °F)	0 °C (32 °F)	0 °C (32 °F)	0 °C (32 °F)	0 °C (32 °F)	0 °C (32 °F)	0 °C (32 °F)	0 °C (32 °F)
Threshold value (MT model)	0 °C (32 °F)	0 °C (32 °F)	0 °C (32 °F)	0 °C (32 °F)	0 °C (32 °F)	0 °C (32 °F)	0 °C (32 °F)	0 °C (32 °F)	0 °C (32 °F)	0 °C (32 °F)	0 °C (32 °F)

Time Needed for Diagnosis: 14 seconds
Malfunction Indicator Light Illumination: Illuminates when malfunction occurs in 2 continuous driving cycles.
Normality Judgment
Judge as OK and clear the NG if the following conditions are established.

Judgment Value

Malfunction Criteria	Threshold Value
Estimated exhaust gas temperature	≥ Value of Map 4

Time Needed for Diagnosis: Less than 1 second

• Idle speed diagnosis

Abnormality Judgment
Judge as NG when the following conditions are established.

Judgment Value

Malfunction Criteria	Threshold Value
Actual engine speed – Target engine speed	< – 125 rpm

Time Needed for Diagnosis: 5000 ms
Malfunction Indicator Light Illumination: Illuminates when malfunction occurs in 2 continuous driving cycles.
Normality Judgment
Judge as OK and clear the NG if the following conditions are established.

Judgment Value

Malfunction Criteria	Threshold Value
Actual engine speed – Target engine speed	≥ – 125 rpm

Time Needed for Diagnosis: 5000 ms

- **Final ignition timing diagnosis**

Abnormality Judgment
Judge as NG when the following conditions are established.

Judgment Value

Malfunction Criteria	Threshold Value
Final ignition timing – ignition timing during CSERS* *: Ignition timing during CSERS (Cold Start Emission Reduction Strategy) = Base ignition timing – retard amount	> Value of Map 5

Map 5

Engine coolant temperature	–40 °C (–40 °F)	–30 °C (–22 °F)	–20 °C (–4 °F)	–10 °C (14 °F)	0 °C (32 °F)	10 °C (50 °F)	20 °C (68 °F)	30 °C (86 °F)	40 °C (104 °F)	50 °C (122 °F)	60 °C (140 °F)
Threshold value (CVT model)	4 °CA	4 °CA	4 °CA	4 °CA	4 °CA	4 °CA	4 °CA	4 °CA	4 °CA	4 °CA	4 °CA
Threshold value (MT model)	5 °CA	5 °CA	5 °CA	5 °CA	5 °CA	5 °CA	5 °CA	5 °CA	5 °CA	5 °CA	5 °CA

Time Needed for Diagnosis: 5000 ms
Malfunction Indicator Light Illumination: Illuminates when malfunction occurs in 2 continuous driving cycles.
Normality Judgment
Judge as OK and clear the NG if the following conditions are established.

Judgment Value

Malfunction Criteria	Threshold Value
Final ignition timing – ignition timing during CSERS* *: Ignition timing during CSERS (Cold Start Emission Reduction Strategy) = Base ignition timing – retard amount	≤ Value of Map 5

Time Needed for Diagnosis: 5000 ms

DB:DTC P050B COLD START IGNITION TIMING PERFORMANCE

1. OUTLINE OF DIAGNOSIS

NOTE:
For the detection standard, refer to DTC P050A. <Ref. to GD(H4DO w/o HEV)-178, DTC P050A COLD START IDLE AIR CONTROL SYSTEM PERFORMANCE, Diagnostic Trouble Code (DTC) Detecting Criteria.>

DC:DTC P0516 BATTERY TEMPERATURE SENSOR CIRCUIT LOW

1. OUTLINE OF DIAGNOSIS

Detect the open or short circuit of battery temperature sensor.
Judge as NG if out of specification.

2. COMPONENT DESCRIPTION

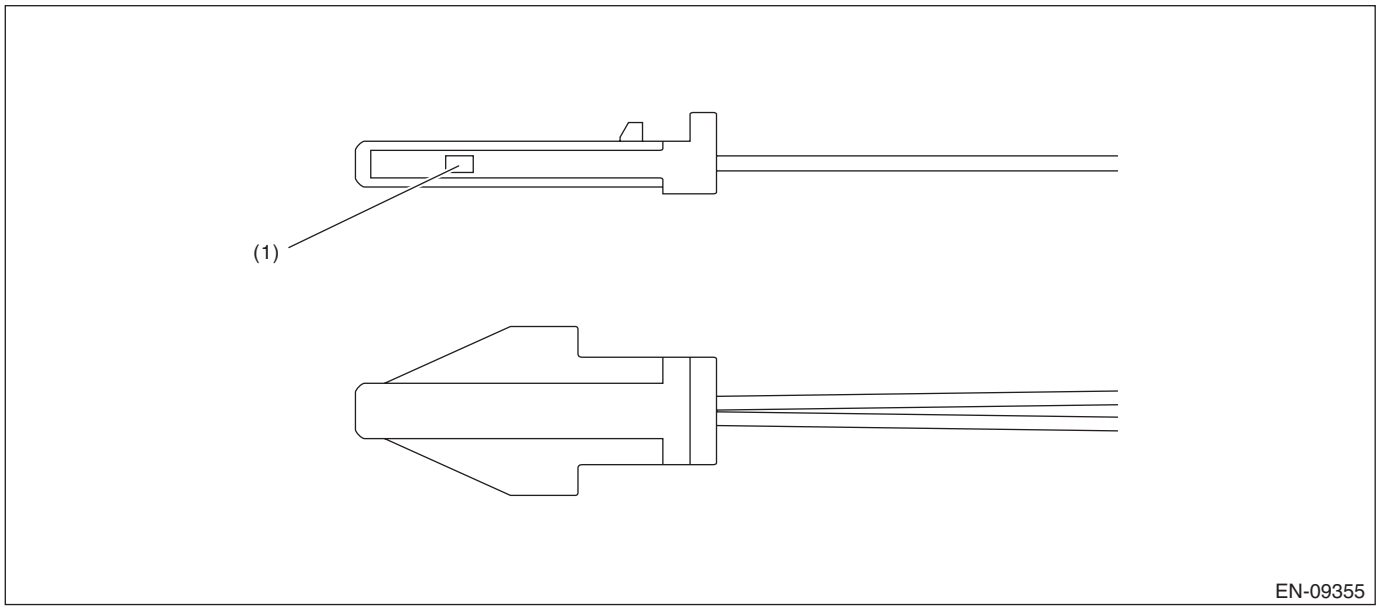

(1) Sensor element

3. ENABLE CONDITIONS

Secondary Parameters	Enable Conditions
Battery voltage	≥ 10.9 V
Elapsed time after starting the engine	> 1000 ms
Engine speed	> 500 rpm
Ignition switch	ON

4. GENERAL DRIVING CYCLE

Always perform the diagnosis continuously.

5. DIAGNOSTIC METHOD

- **Abnormality Judgment**

If the duration of time while the following conditions are met is longer than the time indicated, judge as NG.

Judgment Value

Malfunction Criteria	Threshold Value
Output voltage	< 0.136 V

Time Needed for Diagnosis: 500 ms
Malfunction Indicator Light Illumination: Does not illuminate even when malfunction occurs.

- **Normality Judgment**

Judge as OK and clear the NG if the following conditions are established.

Judgment Value

Malfunction Criteria	Threshold Value
Output voltage	≥ 0.136 V

Time Needed for Diagnosis: Less than 1 second

DD:DTC P0517 BATTERY TEMPERATURE SENSOR CIRCUIT HIGH

1. OUTLINE OF DIAGNOSIS

Detect the open or short circuit of battery temperature sensor.
Judge as NG if out of specification.

2. COMPONENT DESCRIPTION

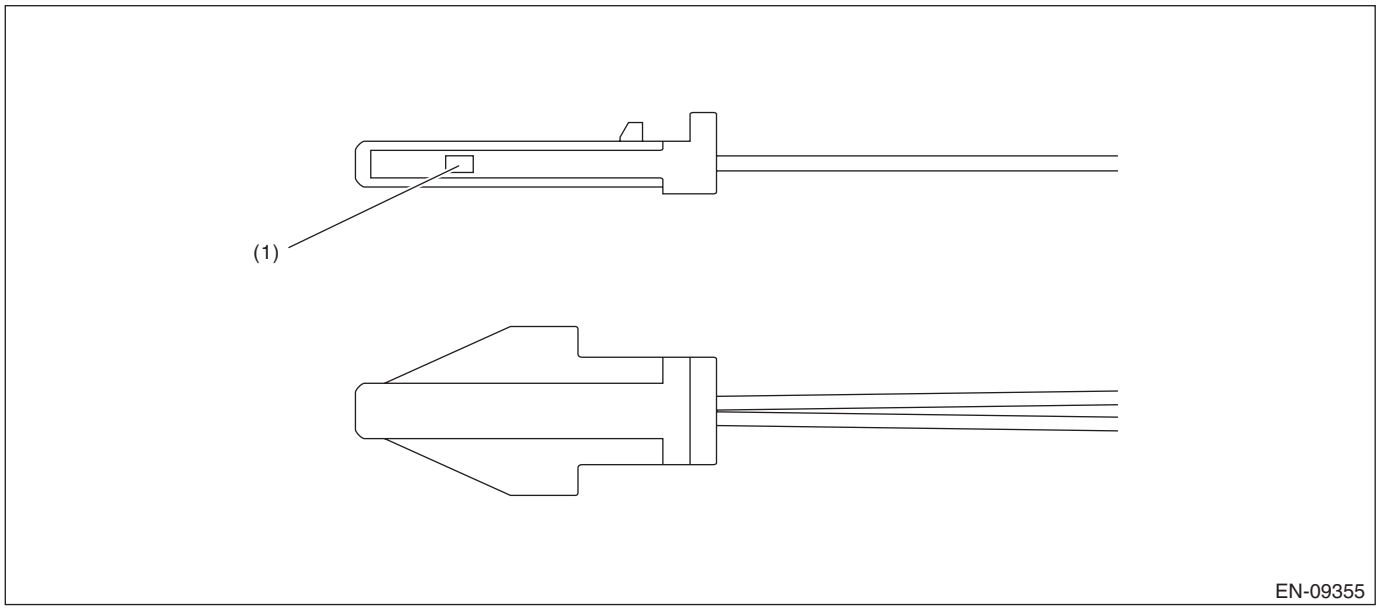

(1) Sensor element

3. ENABLE CONDITIONS

Secondary Parameters	Enable Conditions
Battery voltage	≥ 10.9 V
Elapsed time after starting the engine	> 1000 ms
Engine speed	> 500 rpm
Ignition switch	ON

4. GENERAL DRIVING CYCLE

Always perform the diagnosis continuously.

5. DIAGNOSTIC METHOD

- **Abnormality Judgment**

If the duration of time while the following conditions are met is longer than the time indicated, judge as NG.

Judgment Value

Malfunction Criteria	Threshold Value
Output voltage	≥ 4.671 V

Time Needed for Diagnosis: 500 ms
Malfunction Indicator Light Illumination: Does not illuminate even when malfunction occurs.

- **Normality Judgment**

Judge as OK and clear the NG if the following conditions are established.

Judgment Value

Malfunction Criteria	Threshold Value
Output voltage	< 4.671 V

Time Needed for Diagnosis: Less than 1 second

DE:DTC P0560 SYSTEM VOLTAGE

1. OUTLINE OF DIAGNOSIS

Detect the open/short circuit of back-up power supply circuit.
Judge as NG when the backup power voltage is low.

2. ENABLE CONDITIONS

Secondary Parameters	Enable Conditions
None	

3. GENERAL DRIVING CYCLE

Always perform the diagnosis continuously.

4. DIAGNOSTIC METHOD

- **Abnormality Judgment**

If the duration of time while the following conditions are met is longer than the time indicated, judge as NG.

Judgment Value

Malfunction Criteria	Threshold Value
Voltage of back-up power supply	Low
Battery voltage	≥ 10.9 V
Engine condition	After engine starting

Time Needed for Diagnosis: 2500 ms
Malfunction Indicator Light Illumination: Illuminates as soon as a malfunction occurs.

- **Normality Judgment**

Judge as OK and clear the NG if the continuous time while the following conditions are established is more than the predetermined time.

Judgment Value

Malfunction Criteria	Threshold Value
Voltage of back-up power supply	High
Battery voltage	≥ 10.9 V
Engine condition	After engine starting

Time Needed for Diagnosis: Less than 1 second

DF:DTC P0604 INTERNAL CONTROL MODULE RANDOM ACCESS MEMORY (RAM) ERROR

1. OUTLINE OF DIAGNOSIS

Detect the malfunction of microcomputer (RAM).
When there is a problem in the CPU normal RAM, judge as NG.
If it is possible to write data to the whole area of RAM in the initial routine, and is possible to read the same data, it is judged as OK, and if not, NG.

2. ENABLE CONDITION

Secondary Parameters	Enable Conditions
None	

Diagnosis with the initial routine.

3. GENERAL DRIVING CYCLE

Perform the diagnosis as soon as the ignition switch is turned to ON.

4. DIAGNOSTIC METHOD

- **Abnormality Judgment**

Judge as NG when the following conditions are established.

Judgment Value

Malfunction Criteria	Threshold Value
Write the specified value to RAM and then read.	The written value cannot be read.

Time Needed for Diagnosis: Less than 1 second
Malfunction Indicator Light Illumination: Illuminates as soon as a malfunction occurs.

- **Normality Judgment**

Judge as OK and clear the NG if the following conditions are established.

Judgment Value

Malfunction Criteria	Threshold Value
Write the specified value to RAM and then read.	The written value can be read.

Time Needed for Diagnosis: Less than 1 second

DG:DTC P0605 INTERNAL CONTROL MODULE READ ONLY MEMORY (ROM) ERROR

1. OUTLINE OF DIAGNOSIS

Judge as NG when SUM value of ROM is outside the standard value.

2. ENABLE CONDITION

Secondary Parameters	Enable Conditions
Ignition switch	ON

3. GENERAL DRIVING CYCLE

Always perform the diagnosis continuously.

4. DIAGNOSTIC METHOD

Abnormality Judgment

Judge as NG if the criteria below are met.

Judgment Value

Malfunction Criteria	Threshold Value
SUM value of ROM	Standard

Time Needed for Diagnosis: Undetermined
Malfunction Indicator Light Illumination: Illuminates as soon as a malfunction occurs.

DH:DTC P0606 CONTROL MODULE PROCESSOR

1. OUTLINE OF DIAGNOSIS

Judge as NG when any one of the followings is established.
(1) If the CPU operation is abnormal (instruction/flow check).
(2) If the output IC operation is abnormal (output driver malfunction).

2. COMPONENT DESCRIPTION

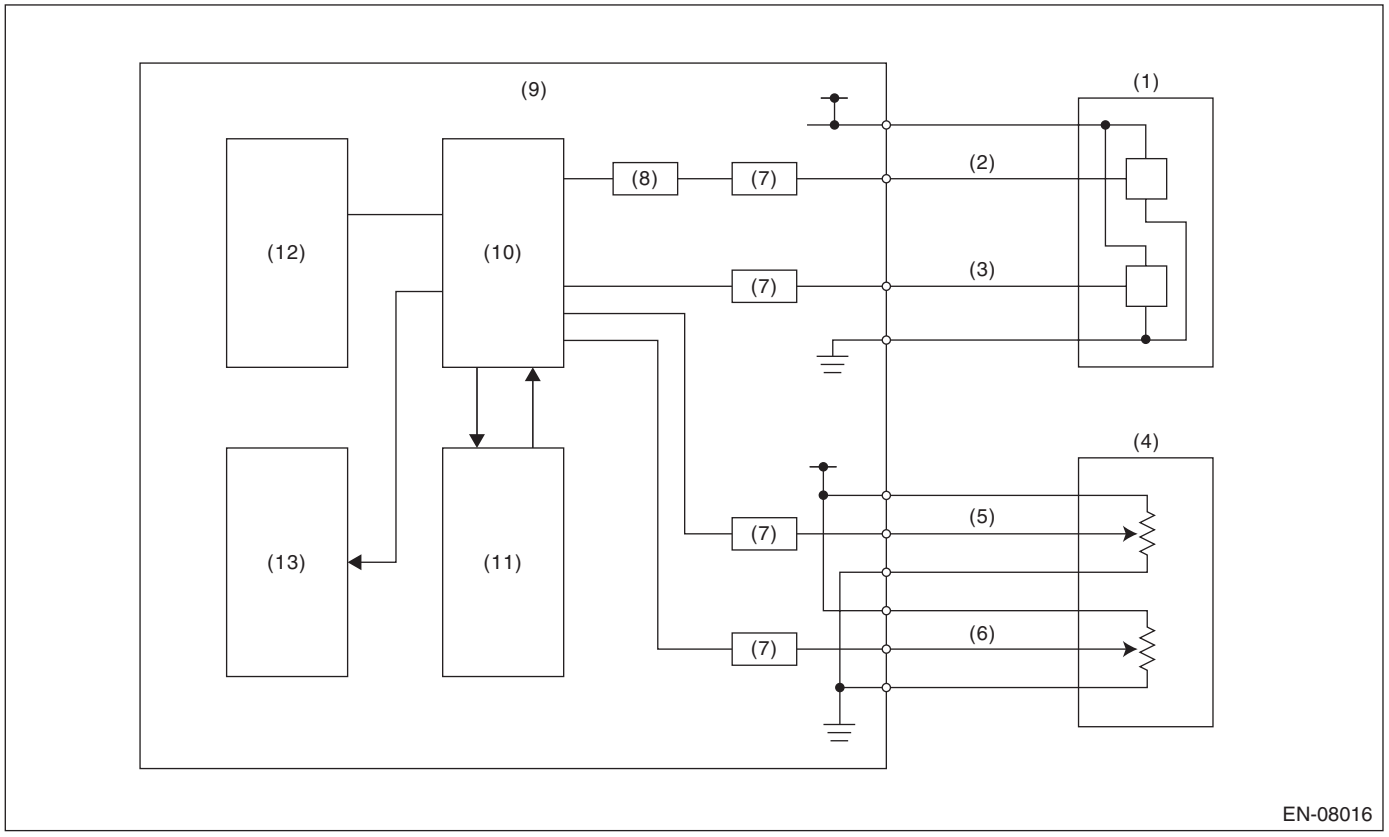

(1) Throttle position sensor
(2) Throttle position sensor 1
(3) Throttle position sensor 2
(4) Accelerator pedal position sensor
(5) Accelerator pedal position sensor 1
(6) Accelerator pedal position sensor 2
(7) I/F circuit
(8) Amplifier circuit
(9) Engine control module (ECM)
(10) CPU
(11) Monitoring IC
(12) EEPROM
(13) Output IC

3. ENABLE CONDITIONS

Secondary Parameters	Enable Conditions
(1) Ignition switch	ON
(1) ETC control	Permission
(2) Ignition switch	ON
(2) Battery voltage	≥ 10.9 V

4. GENERAL DRIVING CYCLE

Always perform the diagnosis continuously.

5. DIAGNOSTIC METHOD

Judge as OK and clear the NG when the malfunction criteria below are met.

Judgment Value

Malfunction Criteria	Threshold Value
(1) Main CPU calculation result	The result and expected value match.
(2) Communication between output ICs	Possible to communicate

Time Needed for Diagnosis:
(1): 192 ms
(2): 2500 ms
Malfunction Indicator Light Illumination: Illuminates as soon as a malfunction occurs.

DI: DTC P060A INTERNAL CONTROL MODULE MONITORING PROCESSOR PERFORMANCE

1. OUTLINE OF DIAGNOSIS

Judge as NG when the monitoring IC operation is abnormal. (Monitoring IC malfunction)

2. COMPONENT DESCRIPTION

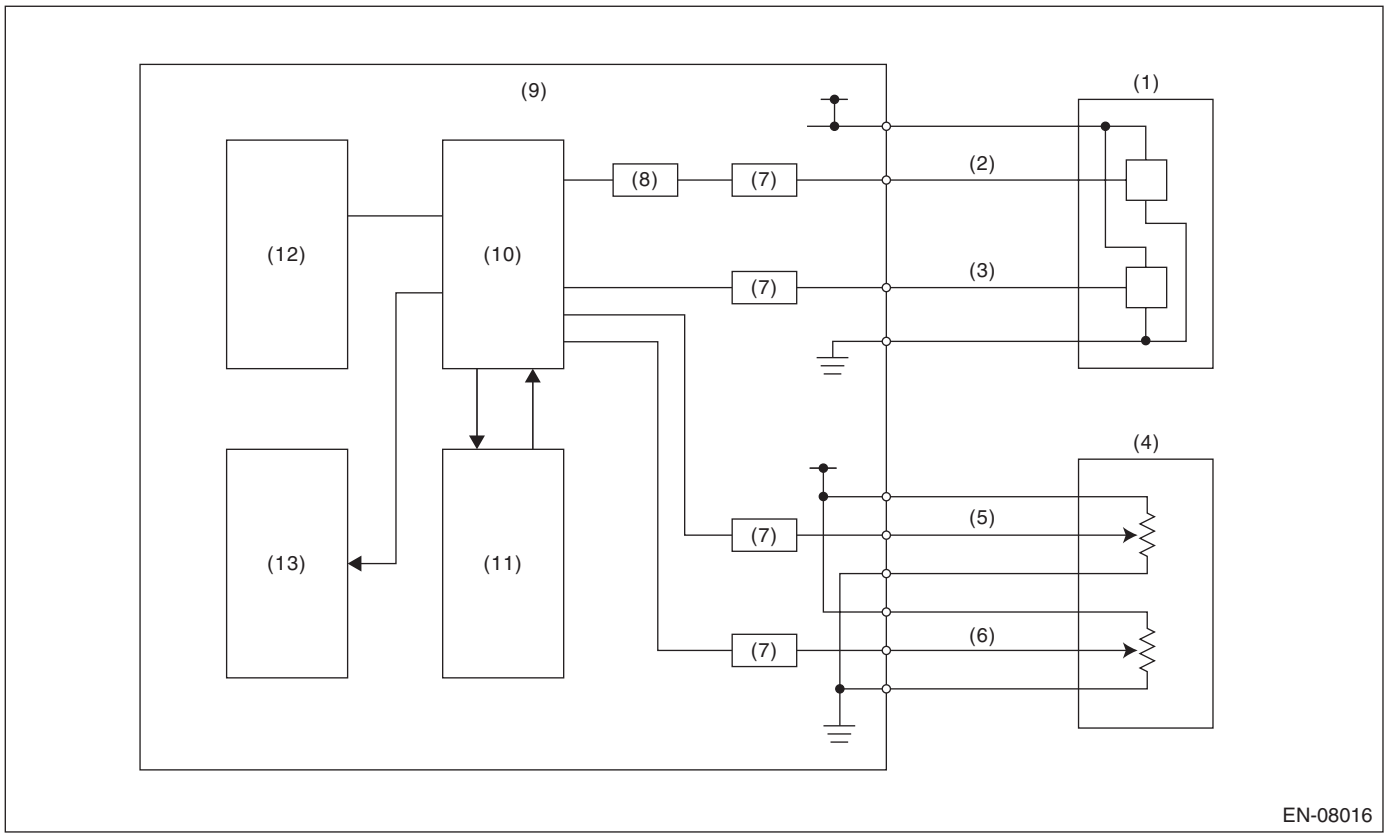

(1) Throttle position sensor
(2) Throttle position sensor 1
(3) Throttle position sensor 2
(4) Accelerator pedal position sensor
(5) Accelerator pedal position sensor 1
(6) Accelerator pedal position sensor 2
(7) I/F circuit
(8) Amplifier circuit
(9) Engine control module (ECM)
(10) CPU
(11) Monitoring IC
(12) EEPROM
(13) Output IC

3. ENABLE CONDITIONS

Secondary Parameters	Enable Conditions
Battery voltage	≥ 6 V

4. GENERAL DRIVING CYCLE

Always perform the diagnosis continuously.

5. DIAGNOSTIC METHOD

Judge as OK and clear the NG when the malfunction criteria below are met.

Judgment Value

Malfunction Criteria	Threshold Value
Monitoring IC operation	The result and expected value match.

Time Needed for Diagnosis: 200 ms
Malfunction Indicator Light Illumination: Illuminates as soon as a malfunction occurs.

DJ:DTC P060B INTERNAL CONTROL MODULE A/D PROCESSING PERFORMANCE

1. OUTLINE OF DIAGNOSIS

Judge as NG when any one of the followings is established.
(1) If the input amplifier circuit of throttle position sensor 1 is abnormal (quadruple amplification problem).
(2) If the A/D converter operation is abnormal (ADC malfunction).

2. COMPONENT DESCRIPTION

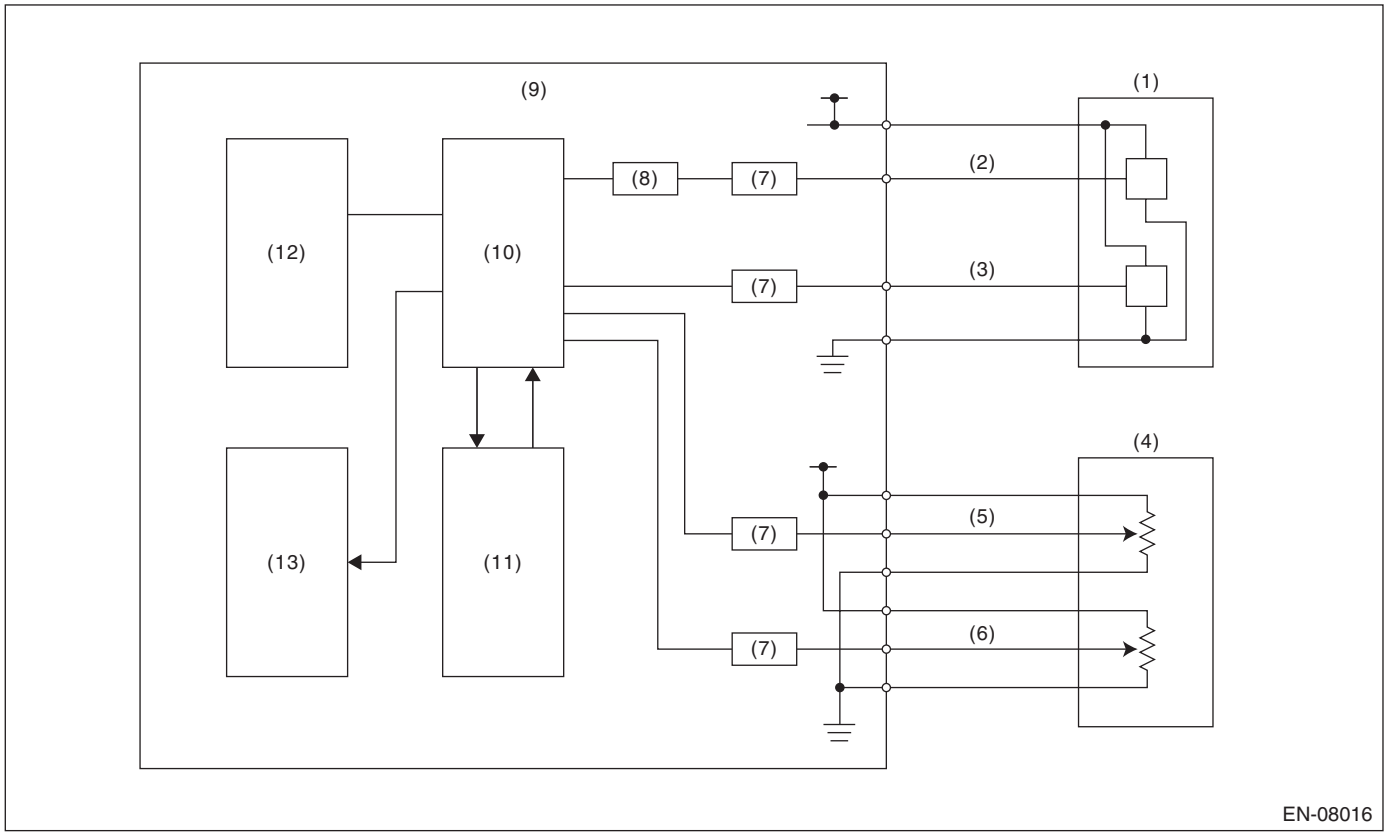

(1) Throttle position sensor
(2) Throttle position sensor 1
(3) Throttle position sensor 2
(4) Accelerator pedal position sensor
(5) Accelerator pedal position sensor 1
(6) Accelerator pedal position sensor 2
(7) I/F circuit
(8) Amplifier circuit
(9) Engine control module (ECM)
(10) CPU
(11) Monitoring IC
(12) EEPROM
(13) Output IC

3. ENABLE CONDITIONS

Secondary Parameters	Enable Conditions
Ignition switch	ON
Battery voltage	≥ 6 V

4. GENERAL DRIVING CYCLE

Always perform the diagnosis continuously.

5. DIAGNOSTIC METHOD

Judge as OK and clear the NG when the malfunction criteria below are met.

Judgment Value

Malfunction Criteria	Threshold Value
(1) |Throttle position sensor 1 opening angle – (Throttle position sensor 1 opening angle after passing amplifier/4)|	< 3 °
(2) |Standard voltage – Readings of voltage value|	< 0.078125 V

Time Needed for Diagnosis:
(1): 24 ms
(2): 200 ms
Malfunction Indicator Light Illumination: Illuminates as soon as a malfunction occurs.

DK:DTC P0616 STARTER RELAY CIRCUIT LOW

1. OUTLINE OF DIAGNOSIS

Detect abnormal continuity in the starter SW.
Judge as OFF NG when the starter SW signal remains OFF.

2. ENABLE CONDITIONS

Secondary Parameters	Enable Conditions
None	

3. GENERAL DRIVING CYCLE

Always perform the diagnosis continuously.

4. DIAGNOSTIC METHOD

- **Abnormality Judgment**

Judge as OFF NG when the following conditions are established.

Judgment Value

Malfunction Criteria	Threshold Value
Battery voltage	≥ 8 V
Vehicle speed	< 1 km/h (0.6 MPH)
Engine condition	Change from pre-start to post-start
Starter SW signal	No ON experience

Time Needed for Diagnosis: Less than 1 second
Malfunction Indicator Light Illumination: Illuminates as soon as a malfunction occurs.

- **Normality Judgment**

Judge as OFF OK and clear the NG if the following conditions are established.

Judgment Value

Malfunction Criteria	Threshold Value
Battery voltage	≥ 8 V
Vehicle speed	< 1 km/h (0.6 MPH)
Engine condition	Change from pre-start to post-start
Starter SW signal	ON Experience exists

Time Needed for Diagnosis: Less than 1 second

DL:DTC P0617 STARTER RELAY CIRCUIT HIGH

1. OUTLINE OF DIAGNOSIS

Detect abnormal continuity in the starter SW.
Judge as ON NG when the starter SW signal remains ON.

2. ENABLE CONDITIONS

Secondary Parameters	Enable Conditions
None	

3. GENERAL DRIVING CYCLE

Always perform the diagnosis continuously.

4. DIAGNOSTIC METHOD

- **Abnormality Judgment**

If the duration of time while the following conditions are met is longer than the time indicated, judge as NG.

Judgment Value

Malfunction Criteria	Threshold Value
Battery voltage	≥ 8 V
Engine condition	After engine starting
Starter SW signal	ON

Time Needed for Diagnosis: 30000 ms
Malfunction Indicator Light Illumination: Illuminates as soon as a malfunction occurs.

- **Normality Judgment**

Judge as OK and clear the NG if the continuous time while the following conditions are established is more than the predetermined time.

Judgment Value

Malfunction Criteria	Threshold Value
Battery voltage	≥ 8 V
Starter SW signal	OFF

Time Needed for Diagnosis: Less than 1 second

DM:DTC P062F INTERNAL CONTROL MODULE EEPROM ERROR

1. OUTLINE OF DIAGNOSIS

Judge as NG when the EEPROM operation is abnormal. (EEPROM malfunction)

2. COMPONENT DESCRIPTION

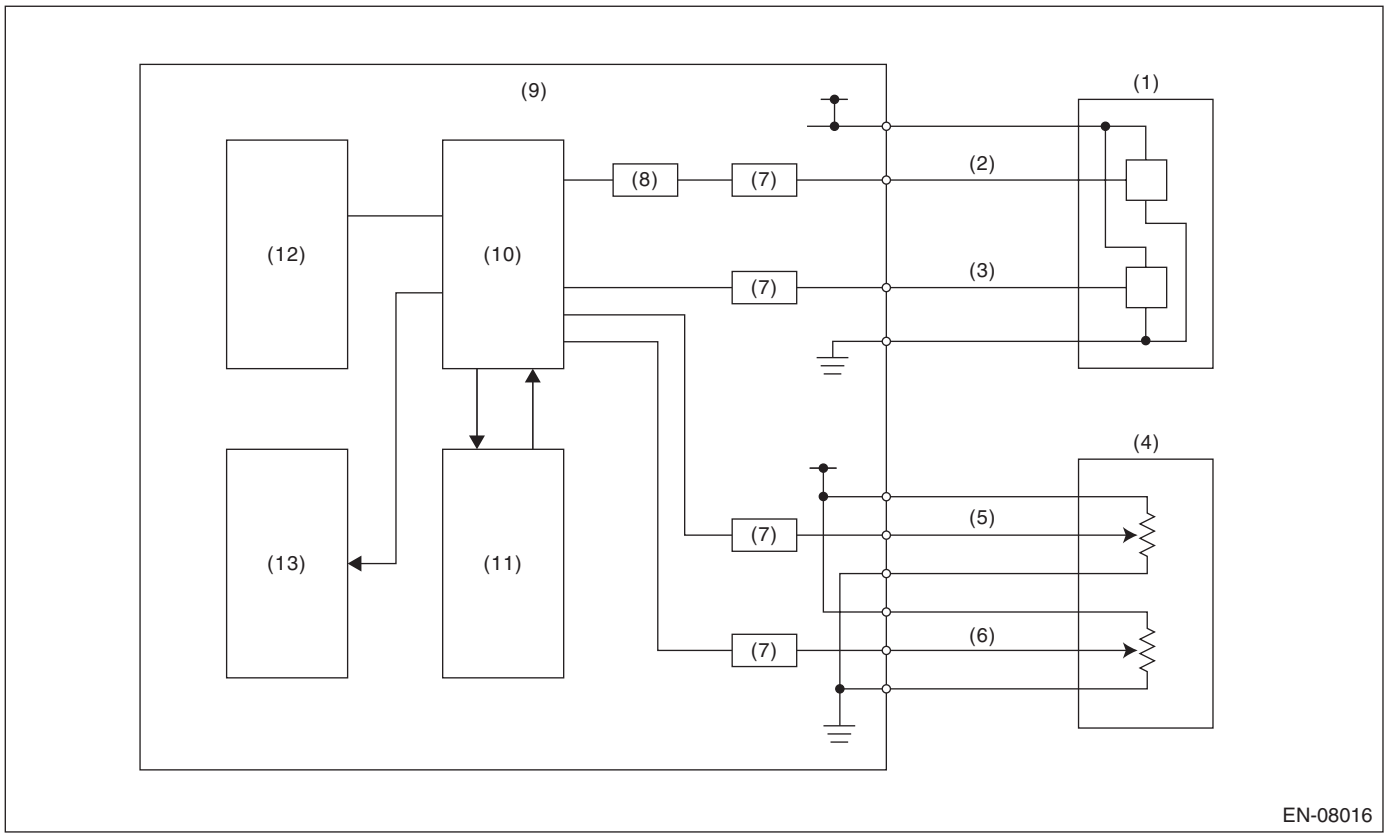

(1) Throttle position sensor
(2) Throttle position sensor 1
(3) Throttle position sensor 2
(4) Accelerator pedal position sensor
(5) Accelerator pedal position sensor 1
(6) Accelerator pedal position sensor 2
(7) I/F circuit
(8) Amplifier circuit
(9) Engine control module (ECM)
(10) CPU
(11) Monitoring IC
(12) EEPROM
(13) Output IC

3. ENABLE CONDITIONS

Secondary Parameters	Enable Conditions
Starter switch	OFF
Battery voltage	> 6 V

4. GENERAL DRIVING CYCLE

Always perform the diagnosis continuously.

5. DIAGNOSTIC METHOD

Judge as OK and clear the NG when the malfunction criteria below are met.

Judgment Value

Malfunction Criteria	Threshold Value
EEPROM writing	Writing completed

Time Needed for Diagnosis: 48 ms
Malfunction Indicator Light Illumination: Illuminates as soon as a malfunction occurs.

DN:DTC P0700 TRANSMISSION CONTROL SYSTEM (MIL REQUEST)

1. OUTLINE OF DIAGNOSIS

Judge as NG when there is CAN communication with the TCM and there is a MIL lighting request.

2. ENABLE CONDITIONS

Secondary Parameters	Enable Conditions
None	

3. GENERAL DRIVING CYCLE

Always perform the diagnosis continuously.

4. DIAGNOSTIC METHOD

- **Abnormality Judgment**

If the duration of time while the following conditions are met is longer than the time indicated, judge as NG.

Judgment Value

Malfunction Criteria	Threshold Value
Battery voltage	≥ 10.9 V
MIL lighting request from TCM	Yes

Time Needed for Diagnosis: 2500 ms
Malfunction Indicator Light Illumination: Illuminates as soon as a malfunction occurs.

- **Normality Judgment**

If the duration of time while the following conditions are met is longer than the time indicated, judge as NG.

Judgment Value

Malfunction Criteria	Threshold Value
Battery voltage	≥ 10.9 V
MIL lighting request from TCM	None

Time Needed for Diagnosis: Less than 1 second

DO:DTC P0851 PARK/NEUTRAL SWITCH INPUT CIRCUIT LOW (AT MODEL)

1. OUTLINE OF DIAGNOSIS

Detect the open or short circuit of neutral SW.
Judge as NG when the ECM neutral terminal input differs from the reception data from TCM.

2. ENABLE CONDITIONS

Secondary Parameters	Enable Conditions
Battery voltage	≥ 10.9 V
Starter relay	OFF

3. GENERAL DRIVING CYCLE

Perform the diagnosis continuously in 2 seconds after starting the engine.

4. DIAGNOSTIC METHOD

- **Abnormality Judgment**

If the duration of time while the following conditions are met is longer than the time indicated, judge as NG.

Judgment Value

Malfunction Criteria	Threshold Value
Neutral switch signal in ECM when “P”/“N” range in TCM are “OFF” and when the other switches are “ON”	LOW (ON)

Time Needed for Diagnosis: 64 ms × 100 time(s)
Malfunction Indicator Light Illumination: Illuminates when malfunction occurs in 2 continuous driving cycles.

- **Normality Judgment**

Judge as OK and clear the NG if the continuous time while the following conditions are established is more than the predetermined time.

Judgment Value

Malfunction Criteria	Threshold Value
Neutral switch signal in ECM when “P”/“N” range in TCM are “OFF” and when the other switches are “ON”	HIGH (OFF)

Time Needed for Diagnosis: Less than 1 second

DP:DTC P0851 NEUTRAL SWITCH INPUT CIRCUIT LOW (MT MODEL)

1. OUTLINE OF DIAGNOSIS

Detect the open or short circuit of neutral SW.
Judge as NG when there is no change in the neutral SW even if the driving shift was applied. (There is neutral SW ON/OFF inversion from the vehicle speed and engine speed.)

2. ENABLE CONDITION

Secondary Parameters	Enable Conditions
Battery voltage	≥ 10.9 V
Starter relay	OFF

3. GENERAL DRIVING CYCLE

Perform the diagnosis continuously in 2 seconds after starting the engine.

4. DIAGNOSTIC METHOD

- **Abnormality Judgment**

Judge as NG when times between the change of neutral SW and the establishment of standard value below is predetermined times or more.

Judgment Value

Malfunction Criteria	Threshold Value
Neutral switch signal (transit time from a to b as below)	LOW (ON) continues.
Change of driving condition	a) to b)
a) Engine speed 500 rpm — 900 rpm & vehicle speed 0 km/h (0 MPH)	
b) Engine speed 1700 rpm — 2200 rpm & vehicle speed ≥ 64 km/h (39.8 MPH)	

Time Needed for Diagnosis: 3 time(s)
Malfunction Indicator Light Illumination: Illuminates when malfunction occurs in 2 continuous driving cycles.

- **Normality Judgment**

Judge as OK and clear NG when neutral SW has changed.

Judgment Value

Malfunction Criteria	Threshold Value
Neutral switch signal (transit time from a to b as below)	Changed to HIGH (OFF)
Change of driving condition	a) to b)
a) Engine speed 500 rpm — 900 rpm & vehicle speed 0 km/h (0 MPH)	
b) Engine speed 1700 rpm — 2200 rpm & vehicle speed ≥ 64 km/h (39.8 MPH)	

Time Needed for Diagnosis: Less than 1 second

DQ:DTC P0852 PARK/NEUTRAL SWITCH INPUT CIRCUIT HIGH (AT MODEL)

1. OUTLINE OF DIAGNOSIS

Detect the open or short circuit of neutral SW.
Judge as NG when the ECM neutral terminal input differs from the reception data from TCM.

2. ENABLE CONDITIONS

Secondary Parameters	Enable Conditions
Battery voltage	≥ 10.9 V
Starter relay	OFF

3. GENERAL DRIVING CYCLE

Perform the diagnosis continuously in 2 seconds after starting the engine.

4. DIAGNOSTIC METHOD

- **Abnormality Judgment**

If the duration of time while the following conditions are met is longer than the time indicated, judge as NG.

Judgment Value

Malfunction Criteria	Threshold Value
Neutral switch signal in ECM when “P”/“N” range in TCM are “ON” and when the other switches are “OFF”	HIGH (OFF)

Time Needed for Diagnosis: 64 ms × 100 time(s)
Malfunction Indicator Light Illumination: Illuminates when malfunction occurs in 2 continuous driving cycles.

- **Normality Judgment**

Judge as OK and clear the NG if the continuous time while the following conditions are established is more than the predetermined time.

Judgment Value

Malfunction Criteria	Threshold Value
Neutral switch signal in ECM when “P”/“N” range in TCM are “ON” and when the other switches are “OFF”	LOW (ON)

Time Needed for Diagnosis: Less than 1 second

DR:DTC P0852 NEUTRAL SWITCH INPUT CIRCUIT HIGH (MT MODEL)

1. OUTLINE OF DIAGNOSIS

Detect the open or short circuit of neutral SW.
Judge as NG when there is no change in the neutral SW even if the driving shift was applied. (There is neutral SW ON/OFF inversion from the vehicle speed and engine speed.)

2. ENABLE CONDITION

Secondary Parameters	Enable Conditions
Battery voltage	≥ 10.9 V
Starter relay	OFF

3. GENERAL DRIVING CYCLE

Perform the diagnosis continuously in 2 seconds after starting the engine.

4. DIAGNOSTIC METHOD

- **Abnormality Judgment**

Judge as NG when times between the change of neutral SW and the establishment of standard value below is predetermined times or more.

Judgment Value

Malfunction Criteria	Threshold Value
Neutral switch signal (transit time from a to b as below)	HIGH (OFF) continues.
Change of driving condition	a) to b)
a) Engine speed 500 rpm — 900 rpm & vehicle speed 0 km/h (0 MPH)	
b) Engine speed 1700 rpm — 2200 rpm & vehicle speed ≥ 64 km/h (39.8 MPH)	

Time Needed for Diagnosis: 3 time(s)
Malfunction Indicator Light Illumination: Illuminates when malfunction occurs in 2 continuous driving cycles.

- **Normality Judgment**

Judge as OK and clear NG when neutral SW has changed.

Judgment Value

Malfunction Criteria	Threshold Value
Neutral switch signal (transit time from a to b as below)	Changed to LOW (ON)
Change of driving condition	a) to b)
a) Engine speed 500 rpm — 900 rpm & vehicle speed 0 km/h (0 MPH)	
b) Engine speed 1700 rpm — 2200 rpm & vehicle speed ≥ 64 km/h (39.8 MPH)	

Time Needed for Diagnosis: Less than 1 second

DS:DTC P1160 RETURN SPRING FAILURE

1. OUTLINE OF DIAGNOSIS

Judge as NG when the valve is opened more than the default opening angle, but does not move to the close direction with the motor power stopped.

2. COMPONENT DESCRIPTION

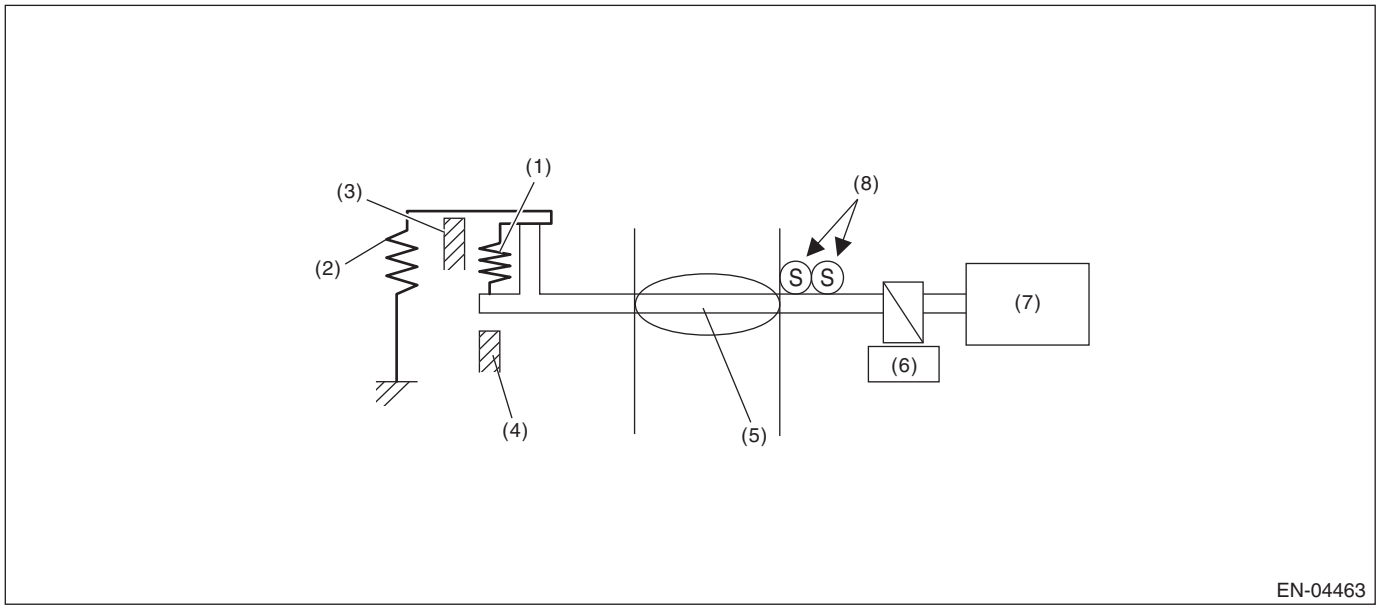

(1) Opener spring
(2) Return spring
(3) Intermediate stopper
(4) Full closed stopper
(5) Throttle valve
(6) Gear
(7) DC motor
(8) Main and sub throttle position sensor

3. ENABLE CONDITION

Secondary Parameters	Enable Conditions
Battery voltage	≥ 6 V
Throttle position sensor	Normal

4. GENERAL DRIVING CYCLE

- Ignition switch ON → OFF
- Ignition switch OFF → ON (Only after clearing memory)

5. DIAGNOSTIC METHOD

- **Abnormality Judgment**

Judge as NG when the following conditions are established.

Judgment Value

Malfunction Criteria	Threshold Value
Opening variation after continuity is set to OFF	< 2 °

Time Needed for Diagnosis: 24 ms
Malfunction Indicator Light Illumination: Illuminates as soon as a malfunction occurs.

- **Normality Judgment**

Judge as OK and clear the NG if the following conditions are established.

Judgment Value

Malfunction Criteria	Threshold Value
Opening variation after continuity is set to OFF	≥ 2 °

Time Needed for Diagnosis: 3400 ms

DT:DTC P1449 EVAPORATIVE EMISSION CONT. SYS. AIR FILTER CLOG

1. OUTLINE OF DIAGNOSIS

Detect the drain filter clogging by the pressure change during purge introduction.
Judge as drain filter clogging malfunction if the pressure in the evaporative emission system piping suddenly decreases by the purging.

2. COMPONENT DESCRIPTION

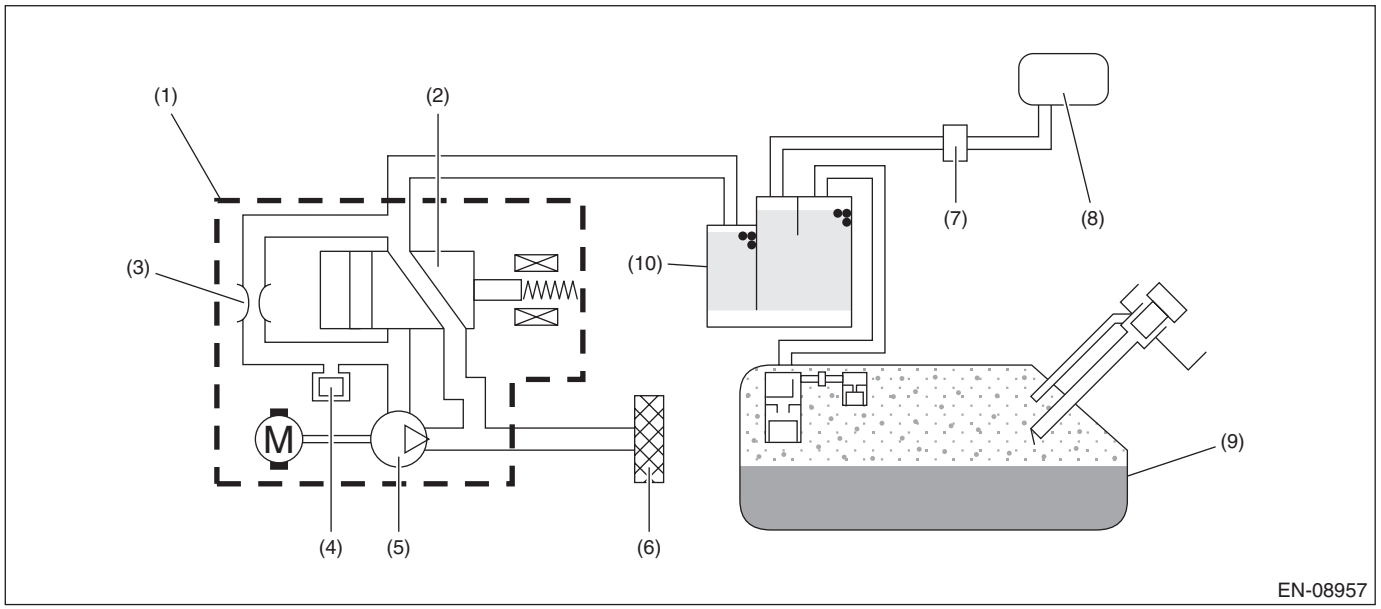

(1) ELCM
(2) Switching valve
(3) Reference orifice (0.02 inch orifice)
(4) Pressure sensor
(5) Vacuum pump
(6) Drain filter
(7) Purge control solenoid valve
(8) Intake manifold
(9) Fuel tank
(10) Canister

3. ENABLE CONDITIONS

Secondary Parameters	Enable Conditions
Battery voltage	≥ 10.9 V
Elapsed time after starting the engine	≥ 20000 ms
Continuous time of |Pressure sensor output value – Pressure sensor output value 64 ms ago| ≤ 133.3 kPa (1000 mmHg, 39.4 inHg)	≥ 5120 ms + 0 ms
Establishing time for following conditions	≥ 10000 ms
•ELCM vacuum pump	Not in operation
•ELCM switching valve	Open

4. GENERAL DRIVING CYCLE

Perform the diagnosis continuously when purging is performed after 20000 ms have passed since the engine started.

5. DIAGNOSTIC METHOD

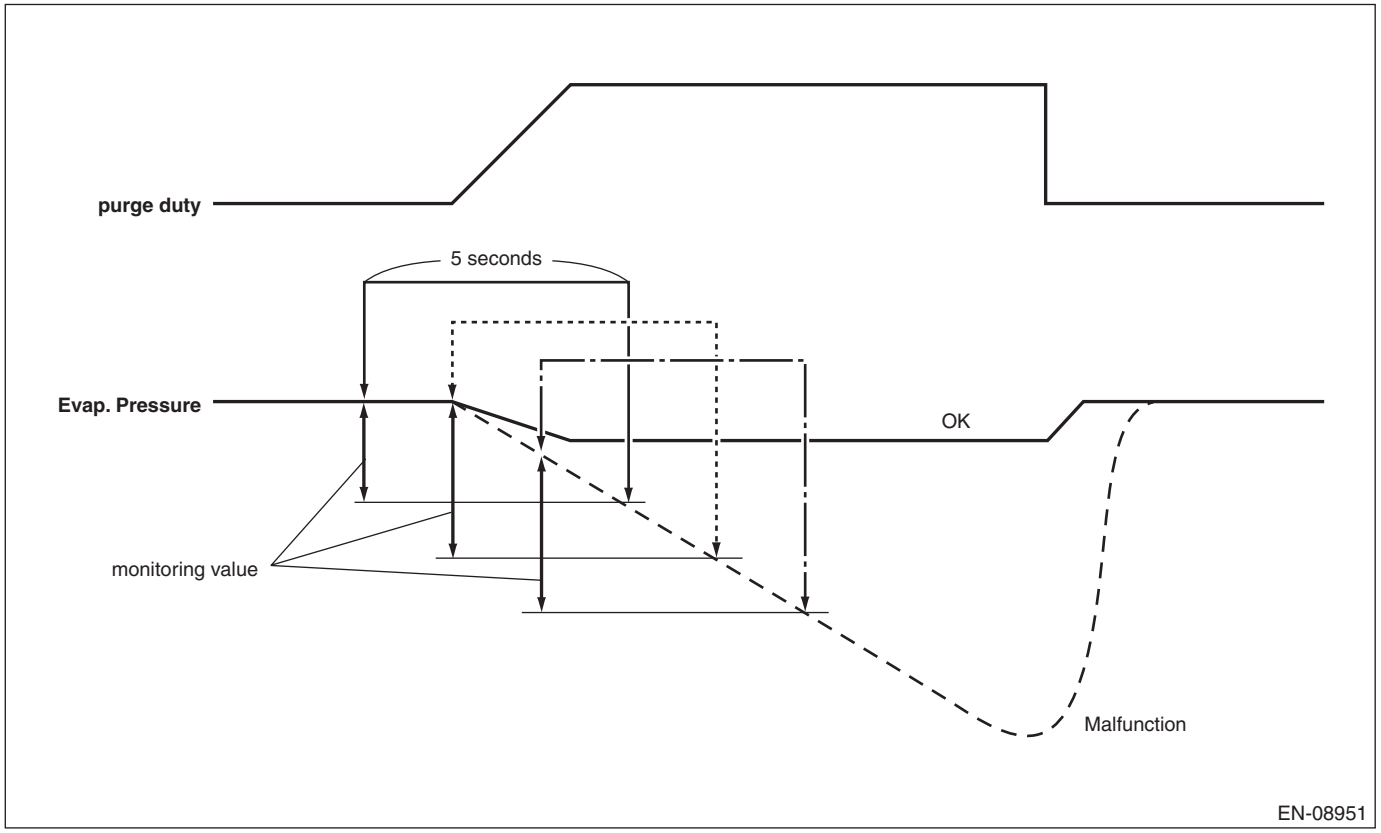

Calculate the difference between the ELCM pressure sensor output value as of 5 seconds ago and the current one, and if the value is greater than judgment value, detect and judge as filter clogging trouble.

- **Abnormality Judgment**

Judge as NG when the following conditions are established.

Judgment Value

Malfunction Criteria	Threshold Value
|Pressure sensor output value as of 5 seconds ago – Current pressure sensor output value|	> Value from Map
Number of above conditions established	> 2 time(s)

Map

Vehicle speed km/h (MPH)	0 (0)	20 (12.4)	40 (24.9)	60 (37.3)	80 (49.7)	100 (62.1)	120 (74.6)	300 (186.4)
|Pressure sensor output value as of 5 seconds ago – Current pressure sensor output value| kPa (mmHg, inHg)	0.8 (5.890 , 0.2)	0.8 (5.890 , 0.2)	0.9 (6.782 , 0.3)	1 (7.682 , 0.3)	1.1 (8.567 , 0.3)	1.3 (9.460 , 0.4)	1.4 (10.352 , 0.4)	2.4 (18.287 , 0.7)

Time Needed for Diagnosis: Approx. 5 seconds
Malfunction Indicator Light Illumination: Illuminates when malfunction occurs in 2 continuous driving cycles.

- **Normality Judgment**

Judge as OK and clear the NG if the following conditions are established.

Judgment Value

Malfunction Criteria	Threshold Value
|Pressure sensor output value as of 5 seconds ago – Current pressure sensor output value|	≤ Value from Map

DU:DTC P1451 EVAPORATIVE EMISSION CONT. SYS.

1. OUTLINE OF DIAGNOSIS

NOTE:
For the detection standard, refer to DTC P0455. <Ref. to GD(H4DO w/o HEV)-157, DTC P0455 EVAPORATIVE EMISSION SYSTEM LEAK DETECTED (LARGE LEAK), Diagnostic Trouble Code (DTC) Detecting Criteria.>

DV:DTC P1492 EGR SOLENOID VALVE SIGNAL #1 CIRCUIT MALFUNCTION (LOW INPUT)

1. OUTLINE OF DIAGNOSIS

- Detects open or short circuit of EGR.
- Judge as NG when the ECM output level differs from the actual terminal level.

2. COMPONENT DESCRIPTION

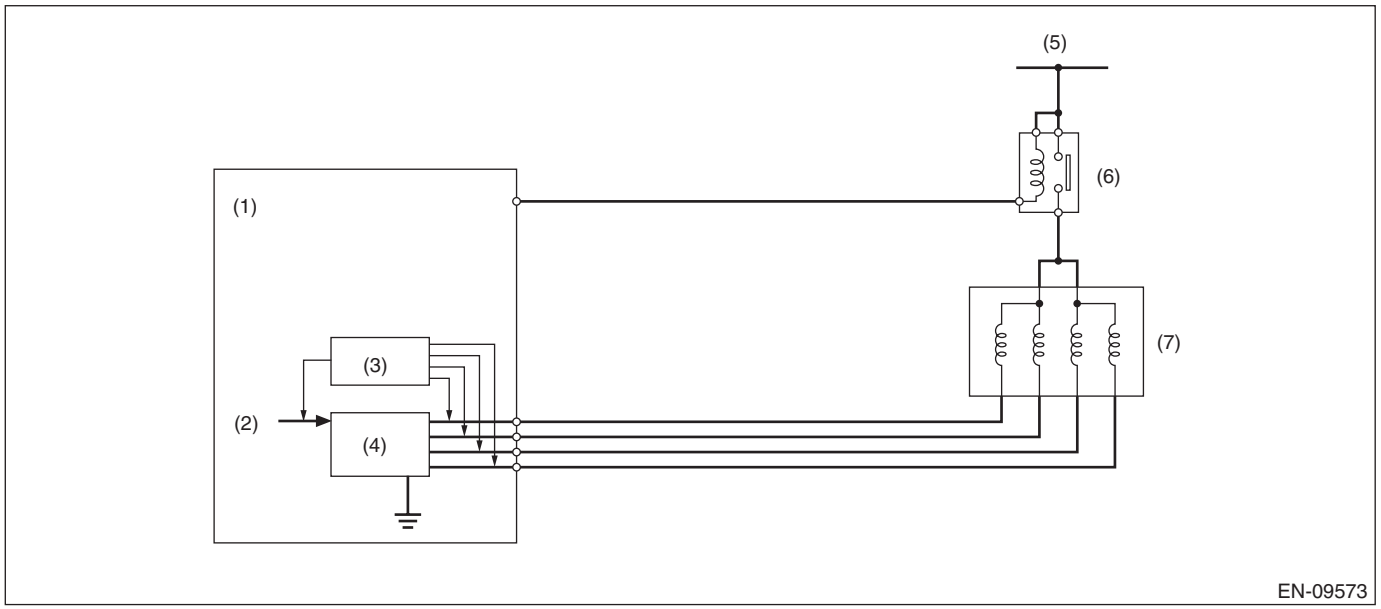

(1) Engine control module (ECM)
(2) Computer unit (CPU)
(3) Detecting circuit
(4) Switch circuit
(5) Battery voltage
(6) Main relay
(7) EGR control valve

3. ENABLE CONDITIONS

Secondary Parameters	Enable Conditions
Elapsed time after starting the engine	≥ 1 s
Battery voltage	≥ 10.9 V

4. GENERAL DRIVING CYCLE

Perform diagnosis continuously during EGR operation.

5. DIAGNOSTIC METHOD

- **Abnormality Judgment**

If the duration of time while the following conditions are met is longer than the time indicated, judge as NG.

Judgment Value

Malfunction Criteria	Threshold Value
Terminal voltage level when ECM outputs OFF signal or Terminal voltage level when EGR operates	Low level Low level

Time Needed for Diagnosis: 2500 ms
Malfunction Indicator Light Illumination: Illuminates as soon as a malfunction occurs.

- **Normality Judgment**

Judge as OK and clear the NG if the continuous time while the following conditions are established is more than the predetermined time.

Judgment Value

Malfunction Criteria	Threshold Value
Terminal voltage level when ECM outputs OFF signal	High level
Terminal voltage level when EGR operates	High level

Time Needed for Diagnosis: 256 ms

DW:DTC P1493 EGR SOLENOID VALVE SIGNAL #1 CIRCUIT MALFUNCTION (HIGH INPUT)

1. OUTLINE OF DIAGNOSIS

- Detects open or short circuit of EGR.
- Judge as NG when the ECM output level differs from the actual terminal level.

2. COMPONENT DESCRIPTION

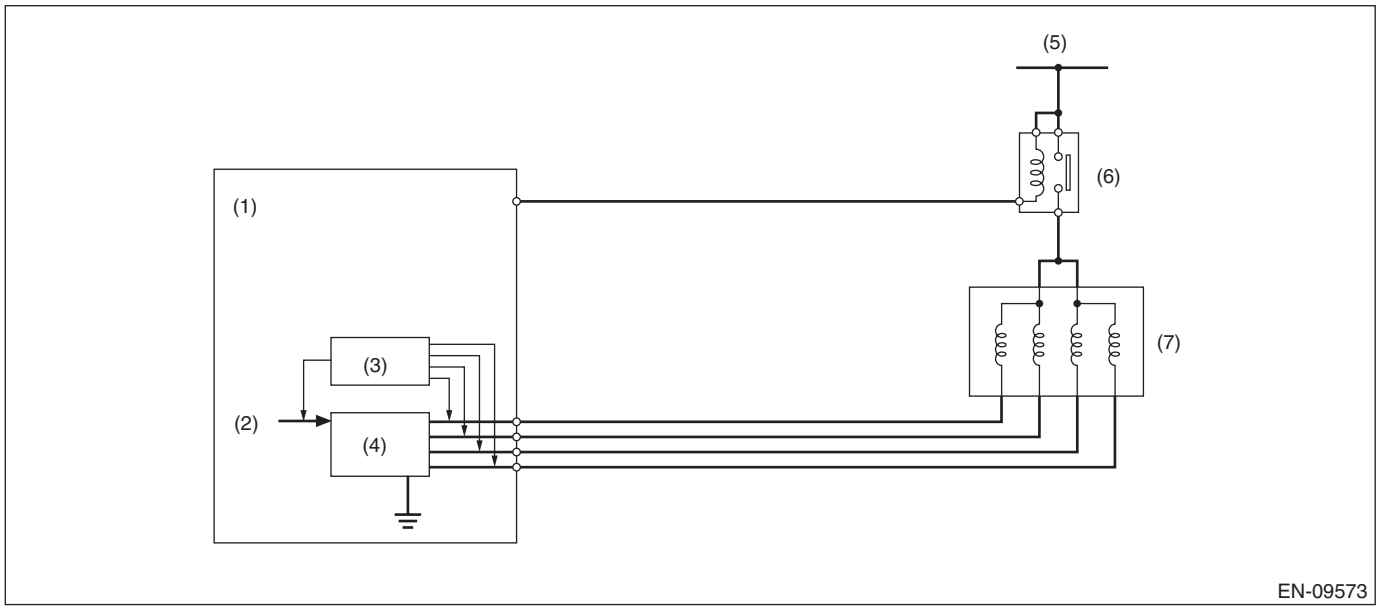

(1) Engine control module (ECM)
(2) Computer unit (CPU)
(3) Detecting circuit
(4) Switch circuit
(5) Battery voltage
(6) Main relay
(7) EGR control valve

3. ENABLE CONDITIONS

Secondary Parameters	Enable Conditions
Elapsed time after starting the engine	≥ 1 s
Battery voltage	≥ 10.9 V

4. GENERAL DRIVING CYCLE

Always perform the diagnosis continuously.

5. DIAGNOSTIC METHOD

- **Abnormality Judgment**

If the duration of time while the following conditions are met is longer than the time indicated, judge as NG.

Judgment Value

Malfunction Criteria	Threshold Value
Terminal voltage level when ECM outputs ON signal or Terminal voltage level when EGR operates	High level High level

Time Needed for Diagnosis: 2500 ms
Malfunction Indicator Light Illumination: Illuminates as soon as a malfunction occurs.

- **Normality Judgment**

Judge as OK and clear the NG if the continuous time while the following conditions are established is more than the predetermined time.

Judgment Value

Malfunction Criteria	Threshold Value
Terminal voltage level when ECM outputs ON signal Terminal voltage level when EGR operates	Low level Low level

Time Needed for Diagnosis: 256 ms

DX:DTC P1494 EGR SOLENOID VALVE SIGNAL #2 CIRCUIT MALFUNCTION (LOW INPUT)

1. OUTLINE OF DIAGNOSIS

NOTE:
For the detection standard, refer to DTC P1492. <Ref. to GD(H4DO w/o HEV)-207, DTC P1492 EGR SOLENOID VALVE SIGNAL #1 CIRCUIT MALFUNCTION (LOW INPUT), Diagnostic Trouble Code (DTC) Detecting Criteria.>

DY:DTC P1495 EGR SOLENOID VALVE SIGNAL #2 CIRCUIT MALFUNCTION (HIGH INPUT)

1. OUTLINE OF DIAGNOSIS

NOTE:
For the detection standard, refer to DTC P1493. <Ref. to GD(H4DO w/o HEV)-209, DTC P1493 EGR SOLENOID VALVE SIGNAL #1 CIRCUIT MALFUNCTION (HIGH INPUT), Diagnostic Trouble Code (DTC) Detecting Criteria.>

DZ:DTC P1496 EGR SOLENOID VALVE SIGNAL #3 CIRCUIT MALFUNCTION (LOW INPUT)

1. OUTLINE OF DIAGNOSIS

NOTE:
For the detection standard, refer to DTC P1492. <Ref. to GD(H4DO w/o HEV)-207, DTC P1492 EGR SOLENOID VALVE SIGNAL #1 CIRCUIT MALFUNCTION (LOW INPUT), Diagnostic Trouble Code (DTC) Detecting Criteria.>

EA:DTC P1497 EGR SOLENOID VALVE SIGNAL #3 CIRCUIT MALFUNCTION (HIGH INPUT)

1. OUTLINE OF DIAGNOSIS

NOTE:
For the detection standard, refer to DTC P1493. <Ref. to GD(H4DO w/o HEV)-209, DTC P1493 EGR SOLENOID VALVE SIGNAL #1 CIRCUIT MALFUNCTION (HIGH INPUT), Diagnostic Trouble Code (DTC) Detecting Criteria.>

EB:DTC P1498 EGR SOLENOID VALVE SIGNAL #4 CIRCUIT MALFUNCTION (LOW INPUT)

1. OUTLINE OF DIAGNOSIS

NOTE:
For the detection standard, refer to DTC P1492. <Ref. to GD(H4DO w/o HEV)-207, DTC P1492 EGR SOLENOID VALVE SIGNAL #1 CIRCUIT MALFUNCTION (LOW INPUT), Diagnostic Trouble Code (DTC) Detecting Criteria.>

EC:DTC P1499 EGR SOLENOID VALVE SIGNAL #4 CIRCUIT MALFUNCTION (HIGH INPUT)

1. OUTLINE OF DIAGNOSIS

NOTE:
For the detection standard, refer to DTC P1493. <Ref. to GD(H4DO w/o HEV)-209, DTC P1493 EGR SOLENOID VALVE SIGNAL #1 CIRCUIT MALFUNCTION (HIGH INPUT), Diagnostic Trouble Code (DTC) Detecting Criteria.>

ED:DTC P1530 BATTERY CURRENT SENSOR CIRCUIT LOW

1. OUTLINE OF DIAGNOSIS

Detect the open or short circuit of battery current sensor.
Judge as NG if out of specification.

2. COMPONENT DESCRIPTION

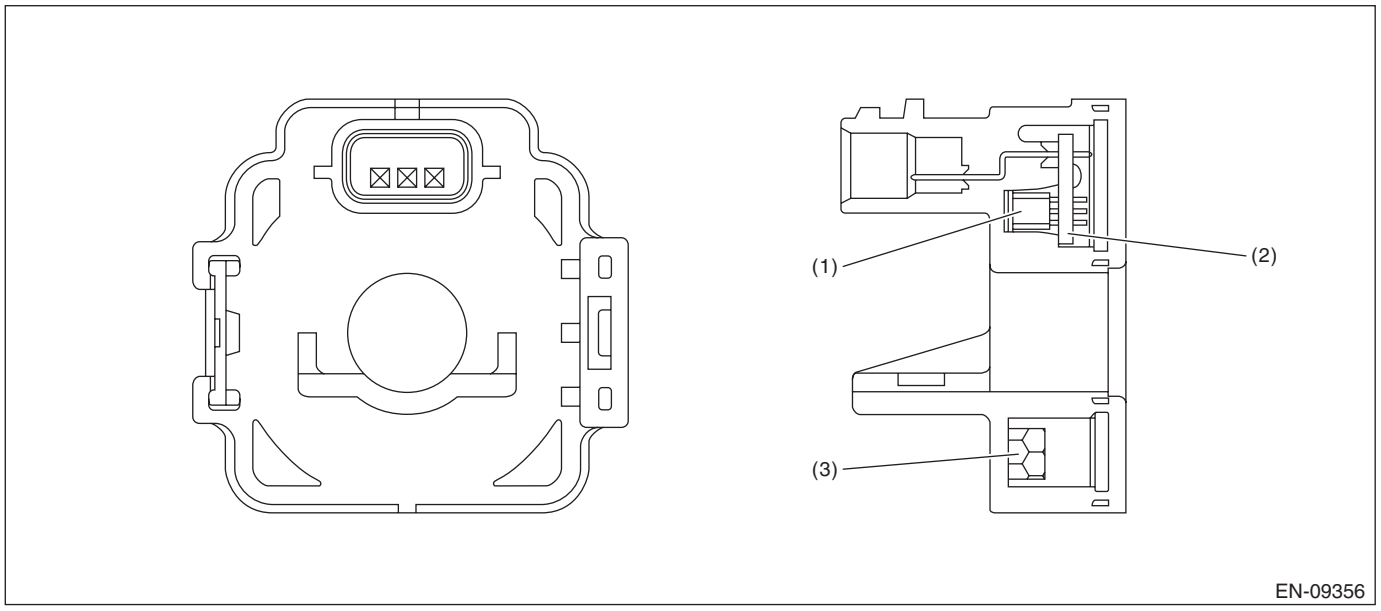

(1) Hall IC (2) Chip condenser (3) Core

3. ENABLE CONDITIONS

Secondary Parameters	Enable Conditions
Battery voltage	≥ 10.9 V
Elapsed time after starting the engine	> 1000 ms
Engine speed	> 500 rpm
Ignition switch	ON

4. GENERAL DRIVING CYCLE

Always perform the diagnosis continuously.

5. DIAGNOSTIC METHOD

- **Abnormality Judgment**

If the duration of time while the following conditions are met is longer than the time indicated, judge as NG.

Judgment Value

Malfunction Criteria	Threshold Value
Output voltage	< 0.22 V

Time Needed for Diagnosis: 500 ms
Malfunction Indicator Light Illumination: Does not illuminate even when malfunction occurs.

- **Normality Judgment**

Judge as OK and clear the NG if the following conditions are established.

Judgment Value

Malfunction Criteria	Threshold Value
Output voltage	≥ 0.22 V

Time Needed for Diagnosis: Less than 1 second

EE:DTC P1531 BATTERY CURRENT SENSOR CIRCUIT HIGH

1. OUTLINE OF DIAGNOSIS

Detect the open or short circuit of battery current sensor.
Judge as NG if out of specification.

2. COMPONENT DESCRIPTION

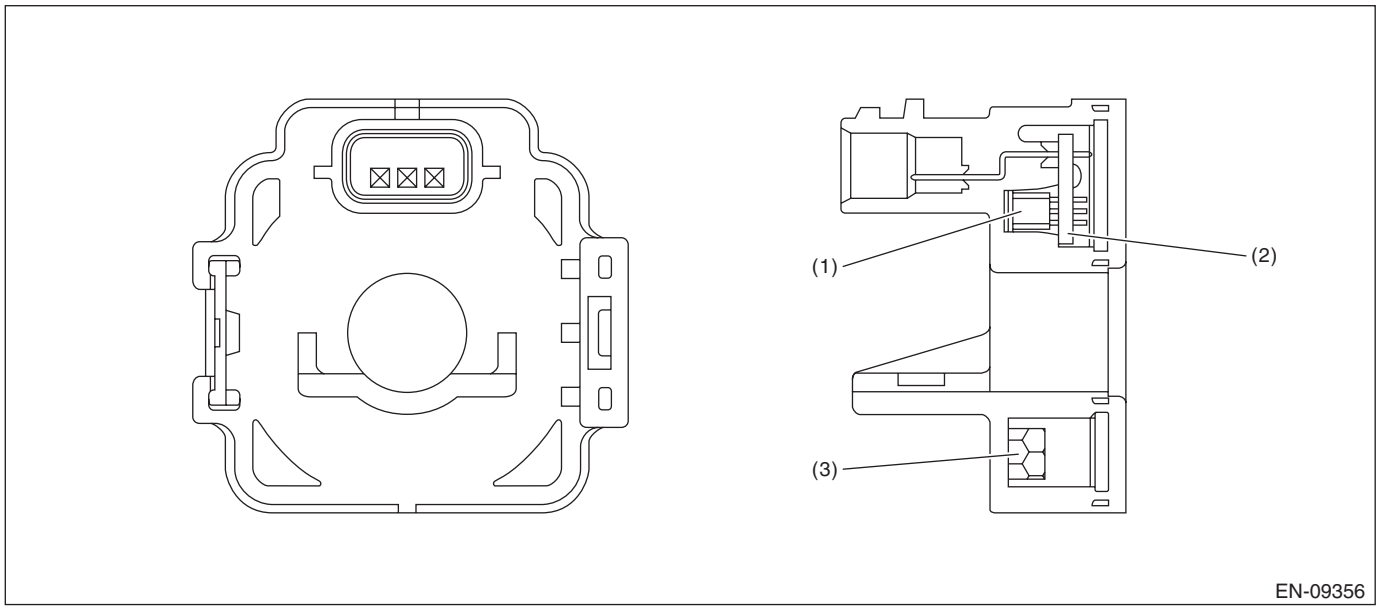

(1) Hall IC (2) Chip condenser (3) Core

3. ENABLE CONDITIONS

Secondary Parameters	Enable Conditions
Battery voltage	≥ 10.9 V
Elapsed time after starting the engine	> 1000 ms
Engine speed	> 500 rpm
Ignition switch	ON

4. GENERAL DRIVING CYCLE

Always perform the diagnosis continuously.

5. DIAGNOSTIC METHOD

- **Abnormality Judgment**

If the duration of time while the following conditions are met is longer than the time indicated, judge as NG.

Judgment Value

Malfunction Criteria	Threshold Value
Output voltage	≥ 4.722 V

Time Needed for Diagnosis: 500 ms
Malfunction Indicator Light Illumination: Does not illuminate even when malfunction occurs.

- **Normality Judgment**

Judge as OK and clear the NG if the following conditions are established.

Judgment Value

Malfunction Criteria	Threshold Value
Output voltage	< 4.722 V

Time Needed for Diagnosis: Less than 1 second

EF:DTC P1532 BATTERY CHARGING SYSTEM

1. OUTLINE OF DIAGNOSIS

Detect the output property and malfunction of battery current sensor.
Judge as NG when there is no variation (stuck) under a condition where the battery current sensor output should have changed or when difference between output and battery current value is larger than expected (characteristics malfunction).

2. COMPONENT DESCRIPTION

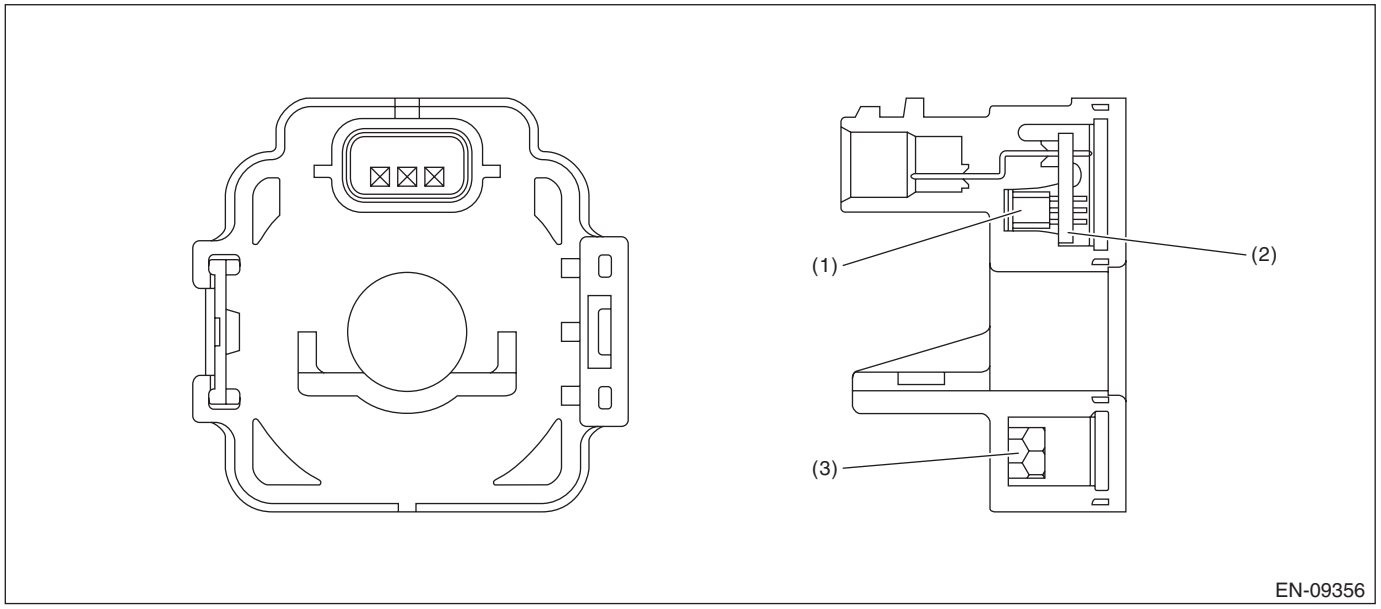

(1) Hall IC (2) Chip condenser (3) Core

3. ENABLE CONDITIONS

- Stuck

Secondary Parameters	Enable Conditions
Ignition switch	ON
During switchover of regulating voltage	High condition judgment *1 ←→ Low condition judgment *2 However, the generator target duty has not experienced the following during switchover. 40 % ≤ Generator target duty < 60 %
*1 High condition judgment	
Continuous time during which all the conditions listed below are met	≥ 5000 ms
• Battery voltage	≥ 13.7 V
• Generator final output duty	≥ 60 %
• Engine speed	≥ 600 rpm
*2 Low condition judgment	
Continuous time during which all the conditions listed below are met	≥ 5000 ms
• Battery voltage	< 13.2 V
• Generator final output duty	< 40 %
or	
• Engine speed	< 600 rpm

- Characteristics malfunction

Secondary Parameters	Enable Conditions
Ignition switch	ON
During switchover of regulating voltage	High condition judgment is established. Target duty ≥ 60 % → target duty < 40 % or Low condition judgment is established. Target duty < 40 % → target duty ≥ 60 %

4. GENERAL DRIVING CYCLE

Always perform the diagnosis continuously.

5. DIAGNOSTIC METHOD

• Abnormality Judgment

• Stuck

Judge as NG when the following conditions repeat 10 time(s) or more.

Judgment Value

Malfunction Criteria	Threshold Value
Difference between maximum and minimum value of output voltage	< 0.07 V

Time Needed for Diagnosis: Less than 1 second
Malfunction Indicator Light Illumination: Malfunction indicator light does not illuminate when malfunction occurs.

• Characteristic malfunction (charging side)

Judge as NG when time of establishment of following conditions is predetermined time or more within 30000 ms after enable conditions are not established → established.
(In case of NG judgment, NG is retained during the driving cycle.)

Judgment Value

Malfunction Criteria	Threshold Value
Output voltage	2.6 V ≤ Output voltage < 5 V
and	
Battery voltage	< 13.2 V

Time Needed for Diagnosis: 26000 ms
Malfunction Indicator Light Illumination: Malfunction indicator light does not illuminate when malfunction occurs.

• Characteristic malfunction (discharging side)

Judge as NG when time of establishment of following conditions is predetermined time or more within 30000 ms after enable conditions are not established → established.
(In this case, target duty ≥ 60 % has not been experienced within 30000 ms since enable conditions is not established → established.)

Judgment Value

Malfunction Criteria	Threshold Value
Output voltage	0 V ≤ Output voltage < 2.4 V
and	
Battery voltage	≥ 13.7 V

Time Needed for Diagnosis: 26000 ms
Malfunction Indicator Light Illumination: Malfunction indicator light does not illuminate when malfunction occurs.

- **Normality Judgment**

• Stuck

Judge as OK and clear the NG if the following conditions are established.

Judgment Value

Malfunction Criteria	Threshold Value
Difference between maximum and minimum value of output voltage	≥ 0.07 V

Time Needed for Diagnosis: Less than 1 second

• Characteristic malfunction (charging side)

Judge as OK and clear NG when time of establishment of following conditions is predetermined time or less within 30000 ms after enable conditions are not established → established.

Judgment Value

Malfunction Criteria	Threshold Value
Output voltage and Battery voltage	2.6 V ≤ Output voltage < 5 V < 13.2 V

Time Needed for Diagnosis: 26000 ms

• Characteristic malfunction (discharging side)

Judge as OK and clear NG when time of establishment of following conditions is predetermined time or less within 30000 ms after enable conditions are not established → established.

Judgment Value

Malfunction Criteria	Threshold Value
Output voltage and Battery voltage	0 V ≤ Output voltage < 2.4 V ≥ 13.7 V

Time Needed for Diagnosis: 26000 ms

EG:DTC P2004 INTAKE MANIFOLD RUNNER CONTROL STUCK OPEN (BANK 1)

1. OUTLINE OF DIAGNOSIS

Detect the malfunction of tumble generator valve motor function.
Judge open fixing malfunction when the opening degree is large even after finishing the tumble generator valve closing driving.

2. ENABLE CONDITION

Secondary Parameters	Enable Conditions
Battery voltage	≥ 10.9 V

3. GENERAL DRIVING CYCLE

Always perform the diagnosis continuously.

4. DIAGNOSTIC METHOD

- **Abnormality Judgment**

If the duration of time while the following conditions are met is longer than the time indicated, judge as NG.

Judgment Value

Malfunction Criteria	Threshold Value
Tumble generator valve opening switch	= High
Tumble generator valve “close” signal output time	≥ 1600 ms

Time Needed for Diagnosis: 4600 ms
Malfunction Indicator Light Illumination: Illuminates as soon as a malfunction occurs.

- **Normality Judgment**

Judge as OK and clear the NG if the following conditions are established.

Judgment Value

Malfunction Criteria	Threshold Value
Tumble generator valve opening switch	= Low
Tumble generator valve “close” signal output time	≥ 1600 ms

Time Needed for Diagnosis: 1600 ms

EH:DTC P2005 INTAKE MANIFOLD RUNNER CONTROL STUCK OPEN (BANK 2)

1. OUTLINE OF DIAGNOSIS

Detect the malfunction of tumble generator valve motor function.
Judge open fixing malfunction when the opening degree is large even after finishing the tumble generator valve closing driving.

2. ENABLE CONDITION

Secondary Parameters	Enable Conditions
Battery voltage	≥ 10.9 V

3. GENERAL DRIVING CYCLE

Always perform the diagnosis continuously.

4. DIAGNOSTIC METHOD

- **Abnormality Judgment**

If the duration of time while the following conditions are met is longer than the time indicated, judge as NG.

Judgment Value

Malfunction Criteria	Threshold Value
Tumble generator valve opening switch	= High
Tumble generator valve “close” signal output time	≥ 1600 ms

Time Needed for Diagnosis: 4600 ms
Malfunction Indicator Light Illumination: Illuminates as soon as a malfunction occurs.

- **Normality Judgment**

Judge as OK and clear the NG if the following conditions are established.

Judgment Value

Malfunction Criteria	Threshold Value
Tumble generator valve opening switch	= Low
Tumble generator valve “close” signal output time	≥ 1600 ms

Time Needed for Diagnosis: 1600 ms

EI: DTC P2006 INTAKE MANIFOLD RUNNER CONTROL STUCK CLOSED (BANK 1)

1. OUTLINE OF DIAGNOSIS

Detect the malfunction of tumble generator valve motor function.
Judge close fixing malfunction when the opening degree is small even after finishing the tumble generator valve open driving.

2. ENABLE CONDITION

Secondary Parameters	Enable Conditions
Battery voltage	≥ 10.9 V

3. GENERAL DRIVING CYCLE

Always perform the diagnosis continuously.

4. DIAGNOSTIC METHOD

- **Abnormality Judgment**

If the duration of time while the following conditions are met is longer than the time indicated, judge as NG.

Judgment Value

Malfunction Criteria	Threshold Value
Tumble generator valve opening switch	= Low
Tumble generator valve “open” signal output time	≥ 1600 ms

Time Needed for Diagnosis: 4600 ms
Malfunction Indicator Light Illumination: Illuminates as soon as a malfunction occurs.

- **Normality Judgment**

Judge as OK and clear the NG if the following conditions are established.

Judgment Value

Malfunction Criteria	Threshold Value
Tumble generator valve opening switch	= High
Tumble generator valve “open” signal output time	≥ 1600 ms

Time Needed for Diagnosis: 1600 ms

EJ: DTC P2007 INTAKE MANIFOLD RUNNER CONTROL STUCK CLOSED (BANK 2)

1. OUTLINE OF DIAGNOSIS

Detect the malfunction of tumble generator valve motor function.
Judge close fixing malfunction when the opening degree is small even after finishing the tumble generator valve open driving.

2. ENABLE CONDITION

Secondary Parameters	Enable Conditions
Battery voltage	≥ 10.9 V

3. GENERAL DRIVING CYCLE

Always perform the diagnosis continuously.

4. DIAGNOSTIC METHOD

- **Abnormality Judgment**

If the duration of time while the following conditions are met is longer than the time indicated, judge as NG.

Judgment Value

Malfunction Criteria	Threshold Value
Tumble generator valve opening switch	= Low
Tumble generator valve “open” signal output time	≥ 1600 ms

Time Needed for Diagnosis: 4600 ms
Malfunction Indicator Light Illumination: Illuminates as soon as a malfunction occurs.

- **Normality Judgment**

Judge as OK and clear the NG if the following conditions are established.

Judgment Value

Malfunction Criteria	Threshold Value
Tumble generator valve opening switch	= High
Tumble generator valve “open” signal output time	≥ 1600 ms

Time Needed for Diagnosis: 1600 ms

EK:DTC P2009 INTAKE MANIFOLD RUNNER CONTROL CIRCUIT LOW (BANK 1)

1. OUTLINE OF DIAGNOSIS

Detect the open or short circuit of tumble generator valve motor.
Judge as NG when the overcurrent signal is sent from IC after tumble generator valve driving IC diagnosis.

2. COMPONENT DESCRIPTION

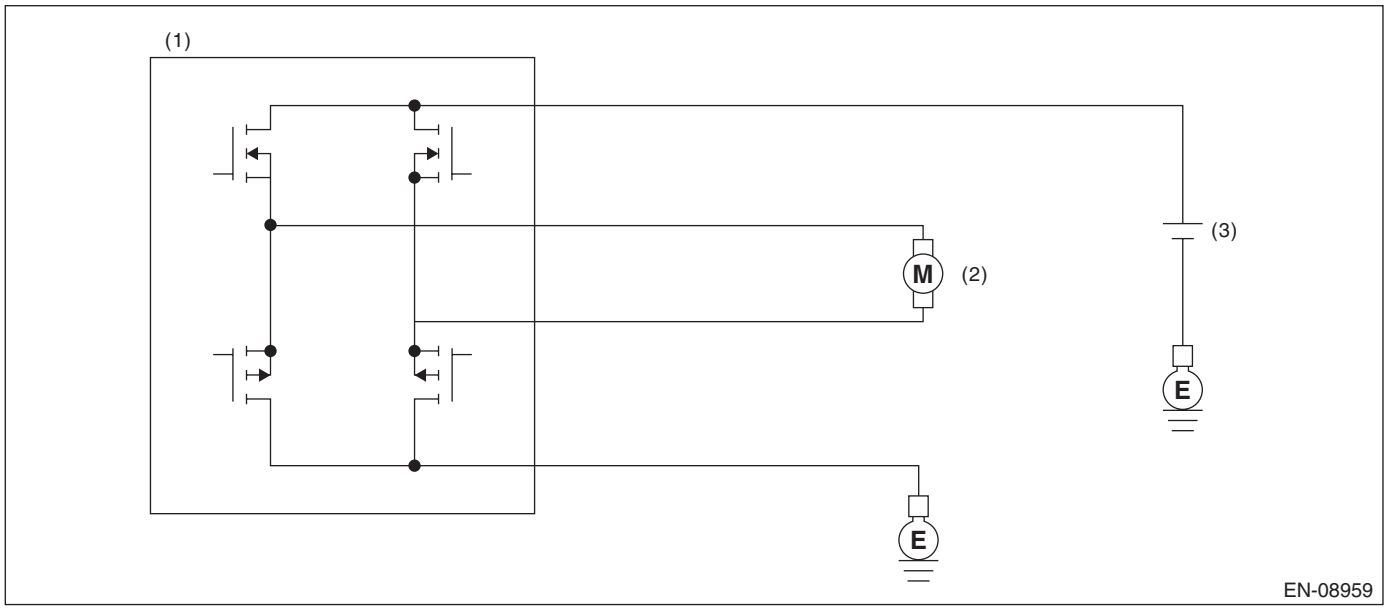

(1) Engine control module (ECM) (2) Tumble generator valve (3) Battery

3. ENABLE CONDITION

Secondary Parameters	Enable Conditions
Battery voltage	≥ 10.9 V

4. GENERAL DRIVING CYCLE

Always perform the diagnosis continuously.

5. DIAGNOSTIC METHOD

• Abnormality Judgment

At the main IC, check the sent signal at each timing which occurs just before the tumble generator valve output is set to ON → OFF, and judge open NG when the open NG signal is sent 96 ms × 10 time(s) in a row.

Judgment Value

Malfunction Criteria	Threshold Value
Overcurrent NG signal input	Low

Time Needed for Diagnosis: 96 ms × 10 time(s)
Malfunction Indicator Light Illumination: Illuminates as soon as a malfunction occurs.

• Normality Judgment

Judge as OK and clear the NG when the OK signal is sent.

Judgment Value

Malfunction Criteria	Threshold Value
Overcurrent NG signal input	High

Time Needed for Diagnosis: Less than 1 second

EL:DTC P2012 INTAKE MANIFOLD RUNNER CONTROL CIRCUIT LOW (BANK 2)

1. OUTLINE OF DIAGNOSIS

Detect the open or short circuit of tumble generator valve motor.
Judge as NG when the overcurrent signal is sent from IC after tumble generator valve driving IC diagnosis.

2. COMPONENT DESCRIPTION

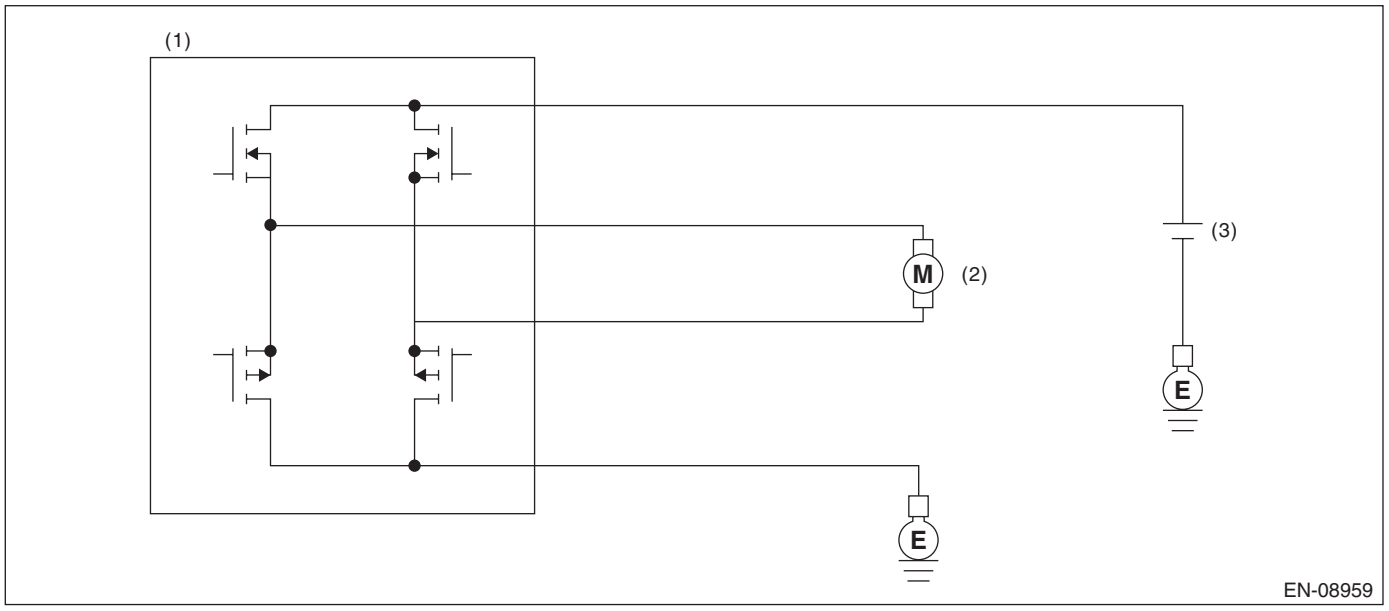

(1) Engine control module (ECM) (2) Tumble generator valve (3) Battery

3. ENABLE CONDITION

Secondary Parameters	Enable Conditions
Battery voltage	≥ 10.9 V

4. GENERAL DRIVING CYCLE

Always perform the diagnosis continuously.

5. DIAGNOSTIC METHOD

• Abnormality Judgment

At the main IC, check the sent signal at each timing which occurs just before the tumble generator valve output is set to ON → OFF, and judge open NG when the open NG signal is sent 96 ms × 10 time(s) in a row.

Judgment Value

Malfunction Criteria	Threshold Value
Overcurrent NG signal input	Low

Time Needed for Diagnosis: 96 ms × 10 time(s)
Malfunction Indicator Light Illumination: Illuminates as soon as a malfunction occurs.

• Normality Judgment

Judge as OK and clear the NG when the OK signal is sent.

Judgment Value

Malfunction Criteria	Threshold Value
Overcurrent NG signal input	High

Time Needed for Diagnosis: Less than 1 second

EM:DTC P2088 INTAKE CAMSHAFT POSITION ACTUATOR CONTROL CIRCUIT LOW (BANK 1)

1. OUTLINE OF DIAGNOSIS

Detect open or short circuit of the oil control solenoid.
Judge as NG when the current is small even though the duty signal is large.

2. ENABLE CONDITION

Secondary Parameters	Enable Conditions
None	

3. GENERAL DRIVING CYCLE

Always perform the diagnosis continuously.

4. DIAGNOSTIC METHOD

- **Abnormality Judgment**

If the duration of time while the following conditions are met is longer than the time indicated, judge as NG.

Judgment Value

Malfunction Criteria	Threshold Value
Battery voltage	≥ 10.9 V
Oil control solenoid control duty	≥ 99.61 %
Oil control solenoid control present current	< 0.306 A

Time Needed for Diagnosis: 2000 ms
Malfunction Indicator Light Illumination: Illuminates as soon as a malfunction occurs.

- **Normality Judgment**

Judge as OK and clear the NG if the continuous time while the following conditions are established is more than the predetermined time.

Judgment Value

Malfunction Criteria	Threshold Value
Battery voltage	≥ 10.9 V
Target current value of the oil control solenoid	≥ 0.14 A
|Target current value of the oil control solenoid – oil control solenoid control current value|	< 0.08 A

Time Needed for Diagnosis: 2000 ms

EN:DTC P2089 INTAKE CAMSHAFT POSITION ACTUATOR CONTROL CIRCUIT HIGH (BANK 1)

1. OUTLINE OF DIAGNOSIS

Detect open or short circuit of oil control solenoid.
Judge as NG when the current is large even though the duty signal is small.

2. ENABLE CONDITION

Secondary Parameters	Enable Conditions
None	

3. GENERAL DRIVING CYCLE

Always perform the diagnosis continuously.

4. DIAGNOSTIC METHOD

- **Abnormality Judgment**

If the duration of time while the following conditions are met is longer than the time indicated, judge as NG.

Judgment Value

Malfunction Criteria	Threshold Value
Battery voltage	≥ 10.9 V
Oil control solenoid control duty	< 8 %
Oil control solenoid control present current	≥ 0.306 A

Time Needed for Diagnosis: 2000 ms
Malfunction Indicator Light Illumination: Illuminates as soon as a malfunction occurs.

- **Normality Judgment**

Judge as OK and clear the NG if the continuous time while the following conditions are established is more than the predetermined time.

Judgment Value

Malfunction Criteria	Threshold Value
Battery voltage	≥ 10.9 V
|Target current value of the oil control solenoid – oil control solenoid control current value|	< 0.08 A

Time Needed for Diagnosis: 2000 ms

EO:DTC P2090 EXHAUST CAMSHAFT POSITION ACTUATOR CONTROL CIRCUIT LOW (BANK 1)

1. OUTLINE OF DIAGNOSIS

Detect open or short circuit of the oil control solenoid.
Judge as NG when the current is small even though the duty signal is large.

2. ENABLE CONDITIONS

Secondary Parameters	Enable Conditions
None	

3. GENERAL DRIVING CYCLE

Always perform the diagnosis continuously.

4. DIAGNOSTIC METHOD

- **Abnormality Judgment**

If the duration of time while the following conditions are met is longer than the time indicated, judge as NG.

Judgment Value

Malfunction Criteria	Threshold Value
Battery voltage	≥ 10.9 V
Oil control solenoid control duty	≥ 99.61 %
Oil control solenoid control present current	< 0.306 A

Time Needed for Diagnosis: 2000 ms
Malfunction Indicator Light Illumination: Illuminates as soon as a malfunction occurs.

- **Normality Judgment**

Judge as OK and clear the NG if the continuous time while the following conditions are established is more than the predetermined time.

Judgment Value

Malfunction Criteria	Threshold Value
Battery voltage	≥ 10.9 V
Target current value of the oil control solenoid	≥ 0.14 A
|Target current value of the oil control solenoid – oil control solenoid control current value|	< 0.08 A

Time Needed for Diagnosis: 2000 ms

EP:DTC P2091 EXHAUST CAMSHAFT POSITION ACTUATOR CONTROL CIRCUIT HIGH (BANK 1)

1. OUTLINE OF DIAGNOSIS

Detect open or short circuit of oil control solenoid.
Judge as NG when the current is large even though the duty signal is small.

2. ENABLE CONDITIONS

Secondary Parameters	Enable Conditions
None	

3. GENERAL DRIVING CYCLE

Always perform the diagnosis continuously.

4. DIAGNOSTIC METHOD

- **Abnormality Judgment**

If the duration of time while the following conditions are met is longer than the time indicated, judge as NG.

Judgment Value

Malfunction Criteria	Threshold Value
Battery voltage	≥ 10.9 V
Oil control solenoid control duty	< 8 %
Oil control solenoid control present current	≥ 0.306 A

Time Needed for Diagnosis: 2000 ms
Malfunction Indicator Light Illumination: Illuminates as soon as a malfunction occurs.

- **Normality Judgment**

Judge as OK and clear the NG if the continuous time while the following conditions are established is more than the predetermined time.

Judgment Value

Malfunction Criteria	Threshold Value
Battery voltage	≥ 10.9 V
|Target current value of the oil control solenoid – oil control solenoid control current value|	< 0.08 A

Time Needed for Diagnosis: 2000 ms

EQ:DTC P2092 INTAKE CAMSHAFT POSITION ACTUATOR CONTROL CIRCUIT LOW (BANK 2)

1. OUTLINE OF DIAGNOSIS

NOTE:
For the detection standard, refer to DTC P2088. <Ref. to GD(H4DO w/o HEV)-225, DTC P2088 INTAKE CAMSHAFT POSITION ACTUATOR CONTROL CIRCUIT LOW (BANK 1), Diagnostic Trouble Code (DTC) Detecting Criteria.>

ER:DTC P2093 INTAKE CAMSHAFT POSITION ACTUATOR CONTROL CIRCUIT HIGH (BANK 2)

1. OUTLINE OF DIAGNOSIS

NOTE:
For the detection standard, refer to DTC P2089. <Ref. to GD(H4DO w/o HEV)-226, DTC P2089 INTAKE CAMSHAFT POSITION ACTUATOR CONTROL CIRCUIT HIGH (BANK 1), Diagnostic Trouble Code (DTC) Detecting Criteria.>

ES:DTC P2094 EXHAUST CAMSHAFT POSITION ACTUATOR CONTROL CIRCUIT LOW (BANK 2)

1. OUTLINE OF DIAGNOSIS

NOTE:
For the detection standard, refer to DTC P2090. <Ref. to GD(H4DO w/o HEV)-227, DTC P2090 EXHAUST CAMSHAFT POSITION ACTUATOR CONTROL CIRCUIT LOW (BANK 1), Diagnostic Trouble Code (DTC) Detecting Criteria.>

ET:DTC P2095 EXHAUST CAMSHAFT POSITION ACTUATOR CONTROL CIRCUIT HIGH (BANK 2)

1. OUTLINE OF DIAGNOSIS

NOTE:
For the detection standard, refer to DTC P2091. <Ref. to GD(H4DO w/o HEV)-228, DTC P2091 EXHAUST CAMSHAFT POSITION ACTUATOR CONTROL CIRCUIT HIGH (BANK 1), Diagnostic Trouble Code (DTC) Detecting Criteria.>

EU:DTC P2096 POST CATALYST FUEL TRIM SYSTEM TOO LEAN (BANK 1)

1. OUTLINE OF DIAGNOSIS

Detect the malfunction of fuel system from the size of the sub feedback learning value.
Control the sub feedback learning and judge as NG when the learning value is in the lean zone.

2. COMPONENT DESCRIPTION

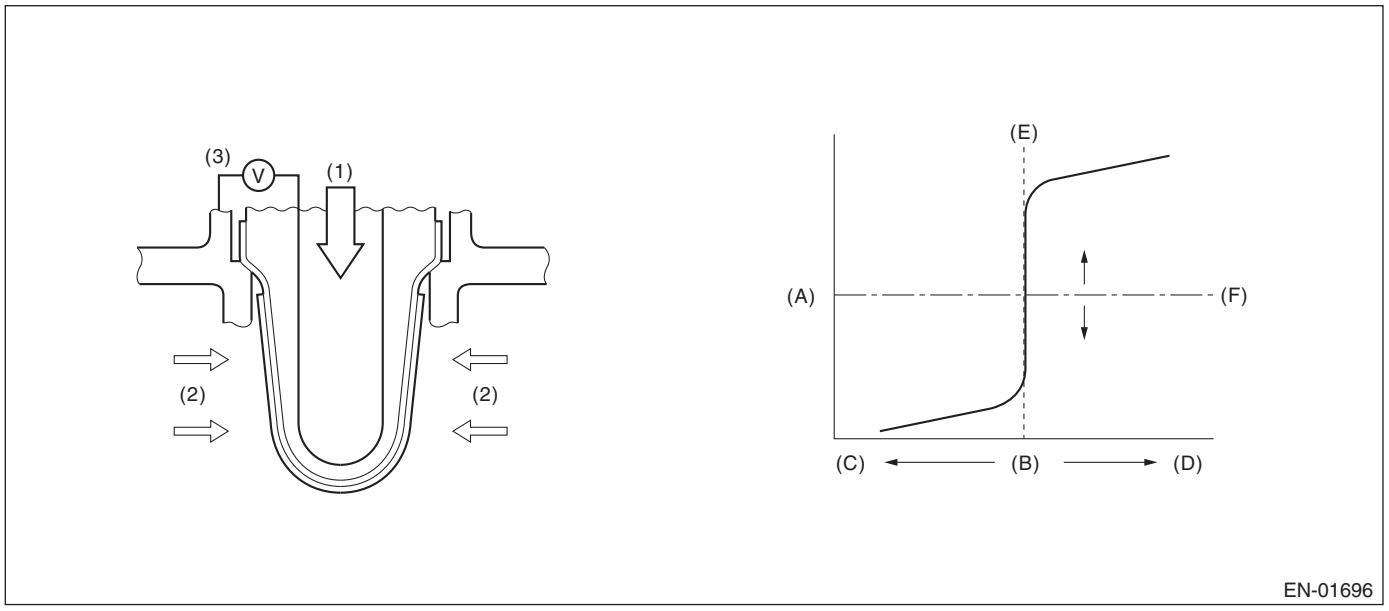

(A)	Electromotive force	(B)	Air fuel ratio	(C)	Lean
(D)	Rich	(E)	Theoretical air fuel ratio	(F)	Comparative voltage
(1)	Atmosphere	(2)	Exhaust gas	(3)	Electromotive force

3. ENABLE CONDITION

Secondary Parameters	Enable Conditions
Conditions for carrying out the sub feedback learning	Complete
Continuous time when all conditions are established.	≥ 1 s

4. GENERAL DRIVING CYCLE

Perform the diagnosis continuously when the vehicle is idling or running at a constant speed of 80 km/h (50 MPH) or more.

5. DIAGNOSTIC METHOD

• Abnormality Judgment

If the duration of time while the following conditions are met is longer than the time indicated, judge as NG.

Judgment value (other than U5 model)

Malfunction Criteria	Threshold Value
Sub feedback learning value	< –0.035 (CVT model) < –0.0295 (MT model)

Judgment value (U5 model)

Malfunction Criteria	Threshold Value
Sub feedback learning value	< –0.035

Time Needed for Diagnosis: 1 s × 1 time(s)
Malfunction Indicator Light Illumination: Illuminates when malfunction occurs in 2 continuous driving cycles.

• Normality Judgment

Judge as OK and clear the NG if the continuous time while the following conditions are established is more than the predetermined time.

Judgment value (other than U5 model)

Malfunction Criteria	Threshold Value
Sub feedback learning value	≥ –0.035 + 0.005 (CVT model) ≥ –0.0295 + 0.005 (MT model)

Judgment value (U5 model)

Malfunction Criteria	Threshold Value
Sub feedback learning value	≥ –0.035 + 0.005

Time Needed for Diagnosis: 1 s

EV:DTC P2097 POST CATALYST FUEL TRIM SYSTEM TOO RICH (BANK 1)

1. OUTLINE OF DIAGNOSIS

Detect the malfunction of fuel system from the size of the sub feedback learning value.
Sub feedback learning is being performed. When the learning value goes to the rich side, judge as NG.

2. COMPONENT DESCRIPTION

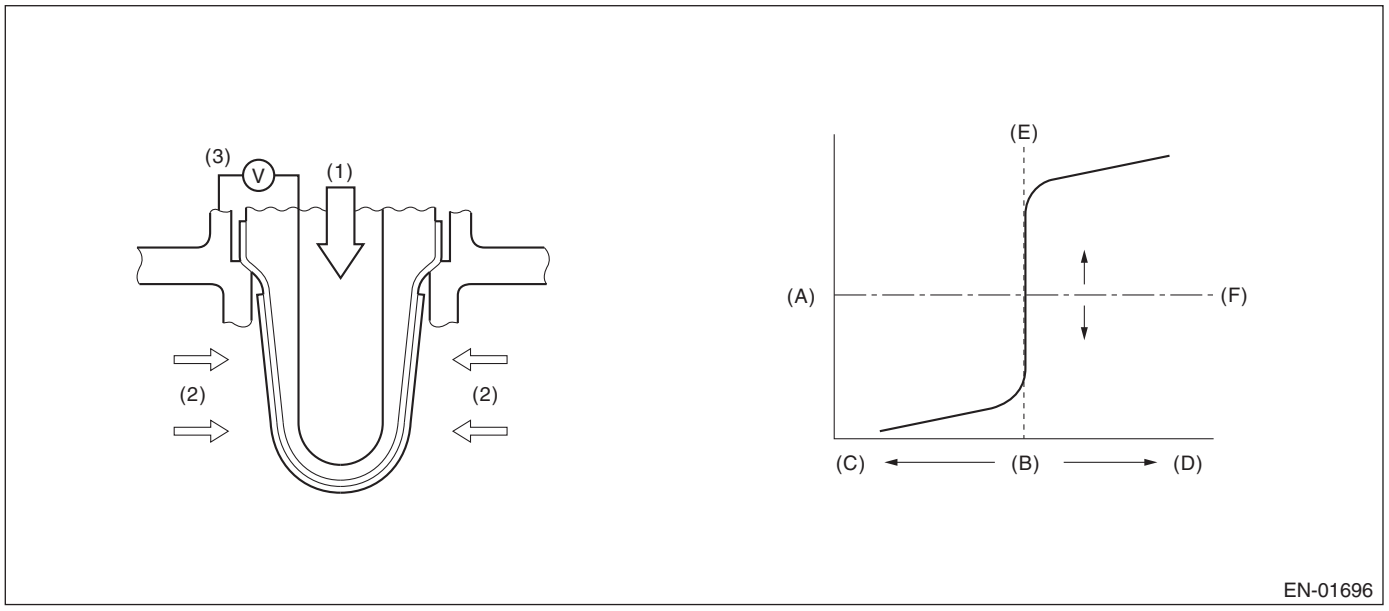

(A)	Electromotive force	(B)	Air fuel ratio	(C)	Lean
(D)	Rich	(E)	Theoretical air fuel ratio	(F)	Comparative voltage
(1)	Atmosphere	(2)	Exhaust gas	(3)	Electromotive force

3. ENABLE CONDITION

Secondary Parameters	Enable Conditions
Conditions for carrying out the sub feedback learning	Complete
Continuous time when all conditions are established.	≥ 1 s

4. GENERAL DRIVING CYCLE

Perform the diagnosis continuously when the vehicle is idling or running at a constant speed of 80 km/h (50 MPH) or more.

5. DIAGNOSTIC METHOD

• Abnormality Judgment

If the duration of time while the following conditions are met is longer than the time indicated, judge as NG.

Judgment value (Except for U5 model)

Malfunction Criteria	Threshold Value
Sub feedback learning value	≥ 0.012

Judgment value (U5 model)

Malfunction Criteria	Threshold Value
Sub feedback learning value	≥ 0.021

Time Needed for Diagnosis: 1 s × 1 time(s)
Malfunction Indicator Light Illumination: Illuminates when malfunction occurs in 2 continuous driving cycles.

• Normality Judgment

Judge as OK and clear the NG if the continuous time while the following conditions are established is more than the predetermined time.

Judgment value (Except for U5 model)

Malfunction Criteria	Threshold Value
Sub feedback learning value	< 0.012 + 0

Judgment value (U5 model)

Malfunction Criteria	Threshold Value
Sub feedback learning value	< 0.021 + 0

Time Needed for Diagnosis: 1 s

EW:DTC P2101 THROTTLE ACTUATOR CONTROL MOTOR CIRCUIT RANGE/ PERFORMANCE

1. OUTLINE OF DIAGNOSIS

Judge as NG when the motor current becomes large or drive circuit is heated.

2. COMPONENT DESCRIPTION

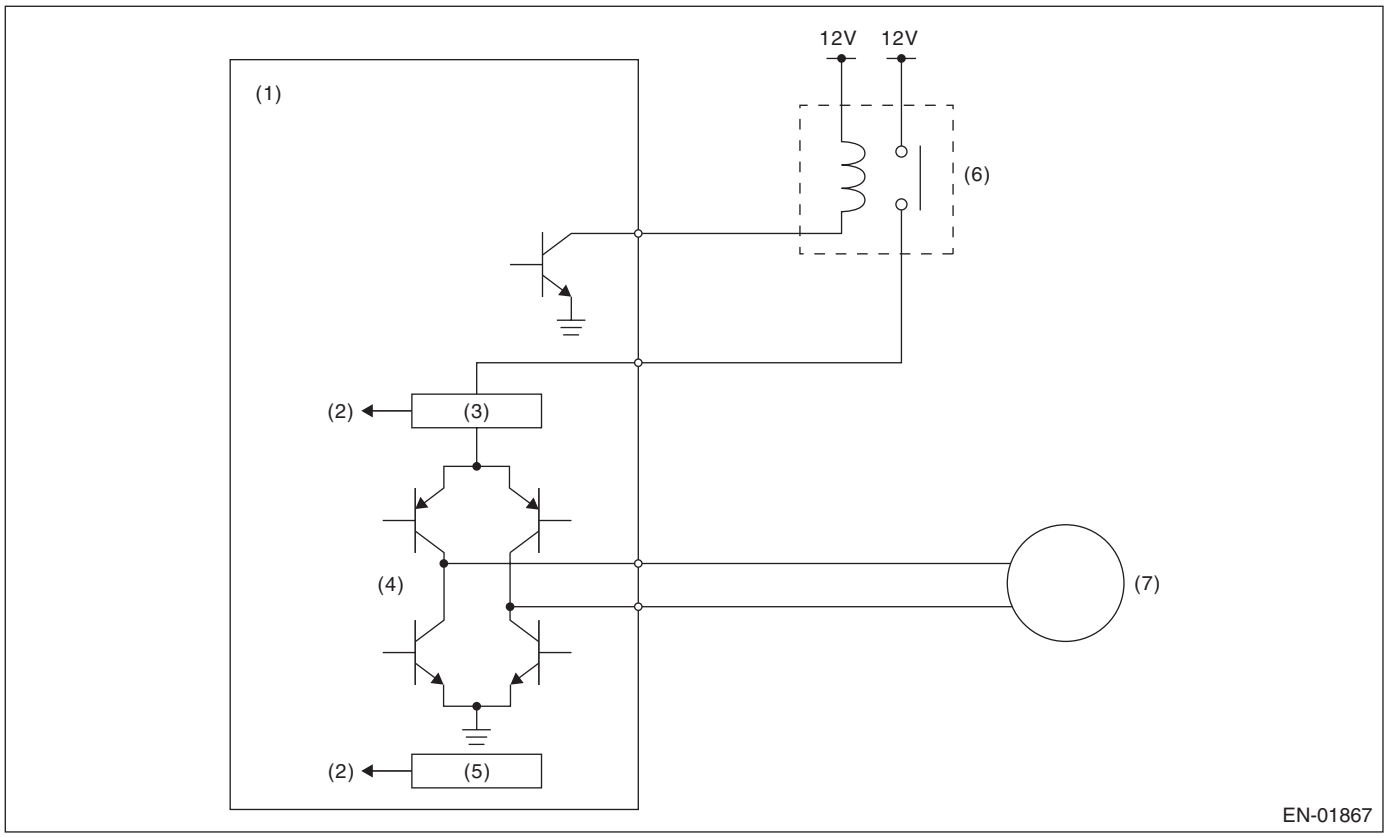

(1) Engine control module (ECM)
(2) Detecting circuit
(3) Overcurrent detection circuit
(4) Drive circuit
(5) Temperature detection circuit
(6) Electronic throttle control relay
(7) Motor

3. ENABLE CONDITION

Secondary Parameters	Enable Conditions
Under control of electronic throttle control	ON
CPU communication line sub → main normal judgment	Normal

4. GENERAL DRIVING CYCLE

Always perform the diagnosis continuously.

5. DIAGNOSTIC METHOD

- **Abnormality Judgment**

If the duration of time while the following conditions are met is longer than the time indicated, judge as NG.

Judgment Value

Malfunction Criteria	Threshold Value
Motor current	> 8 A
or	
Drive circuit inner temperature	> 175°C (347°F)

Time Needed for Diagnosis: 512 ms
Malfunction Indicator Light Illumination: Illuminates as soon as a malfunction occurs.

- **Normality Judgment**

Judge as OK and clear the NG if the continuous time while the following conditions are established is more than the predetermined time.

Judgment Value

Malfunction Criteria	Threshold Value
Motor current	≤ 8 A
Drive circuit inner temperature	≤ 175°C (347°F)

Time Needed for Diagnosis: 2000 ms

EX:DTC P2102 THROTTLE ACTUATOR CONTROL MOTOR CIRCUIT LOW

1. OUTLINE OF DIAGNOSIS

Judge as NG when the electronic throttle control power is not supplied even when ECM sets the electronic throttle control relay to ON.

2. COMPONENT DESCRIPTION

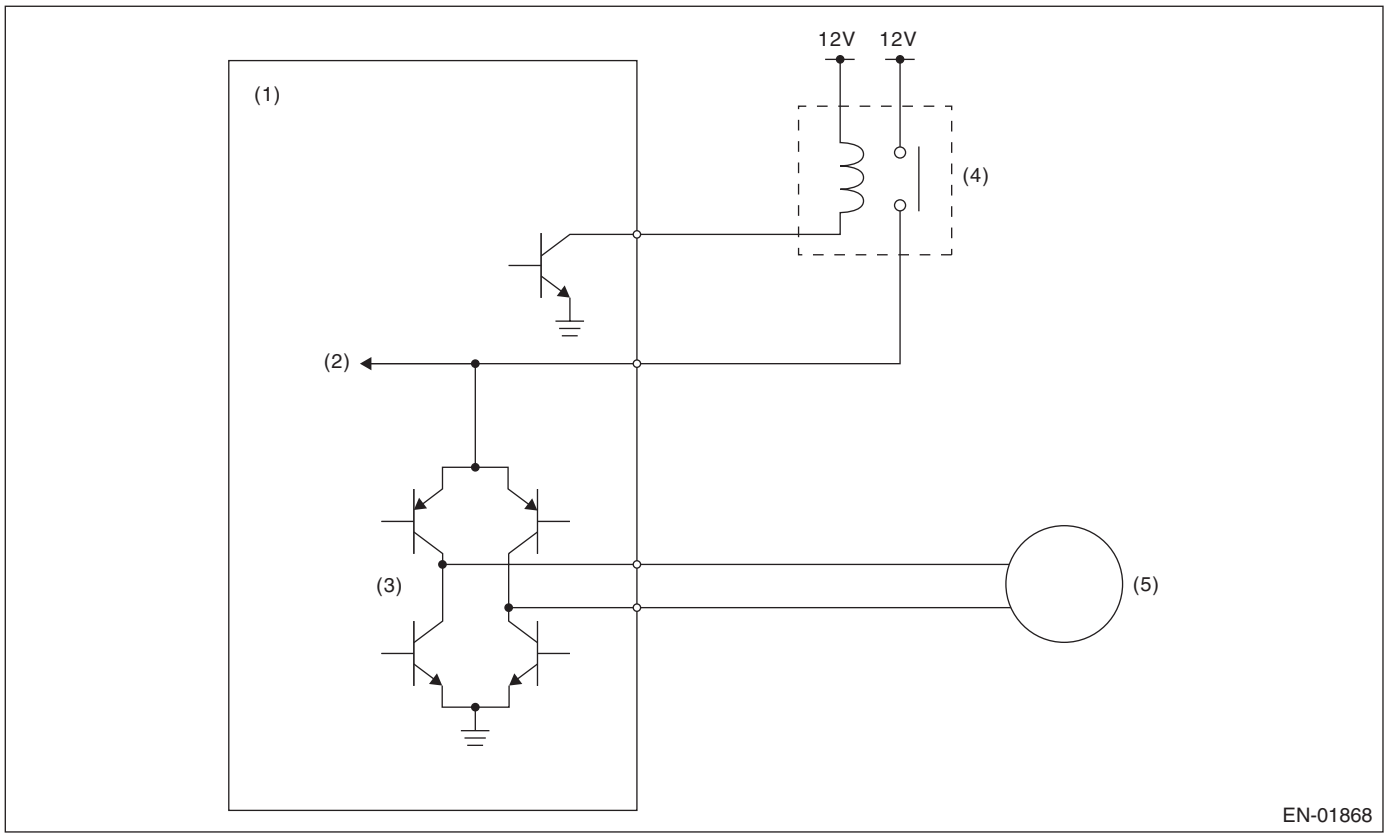

(1) Engine control module (ECM)
(2) Voltage detection circuit
(3) Drive circuit
(4) Electronic throttle control relay
(5) Motor

3. ENABLE CONDITION

Secondary Parameters	Enable Conditions
Battery voltage	≥ 11 V
Electronic throttle control relay output	ON

4. GENERAL DRIVING CYCLE

Always perform the diagnosis continuously.

5. DIAGNOSTIC METHOD

- **Abnormality Judgment**

If the duration of time while the following conditions are met is longer than the time indicated, judge as NG.

Judgment Value

Malfunction Criteria	Threshold Value
Motor power voltage	≤ 5 V

Time Needed for Diagnosis: 352 ms
Malfunction Indicator Light Illumination: Illuminates as soon as a malfunction occurs.

- **Normality Judgment**

Judge as OK and clear the NG if the continuous time while the following conditions are established is more than the predetermined time.

Judgment Value

Malfunction Criteria	Threshold Value
Motor power voltage	> 5 V

Time Needed for Diagnosis: 2000 ms

EY:DTC P2103 THROTTLE ACTUATOR CONTROL MOTOR CIRCUIT HIGH

1. OUTLINE OF DIAGNOSIS

Judge as NG when the electronic throttle control power is supplied even when ECM sets the electronic throttle control relay to OFF.

2. COMPONENT DESCRIPTION

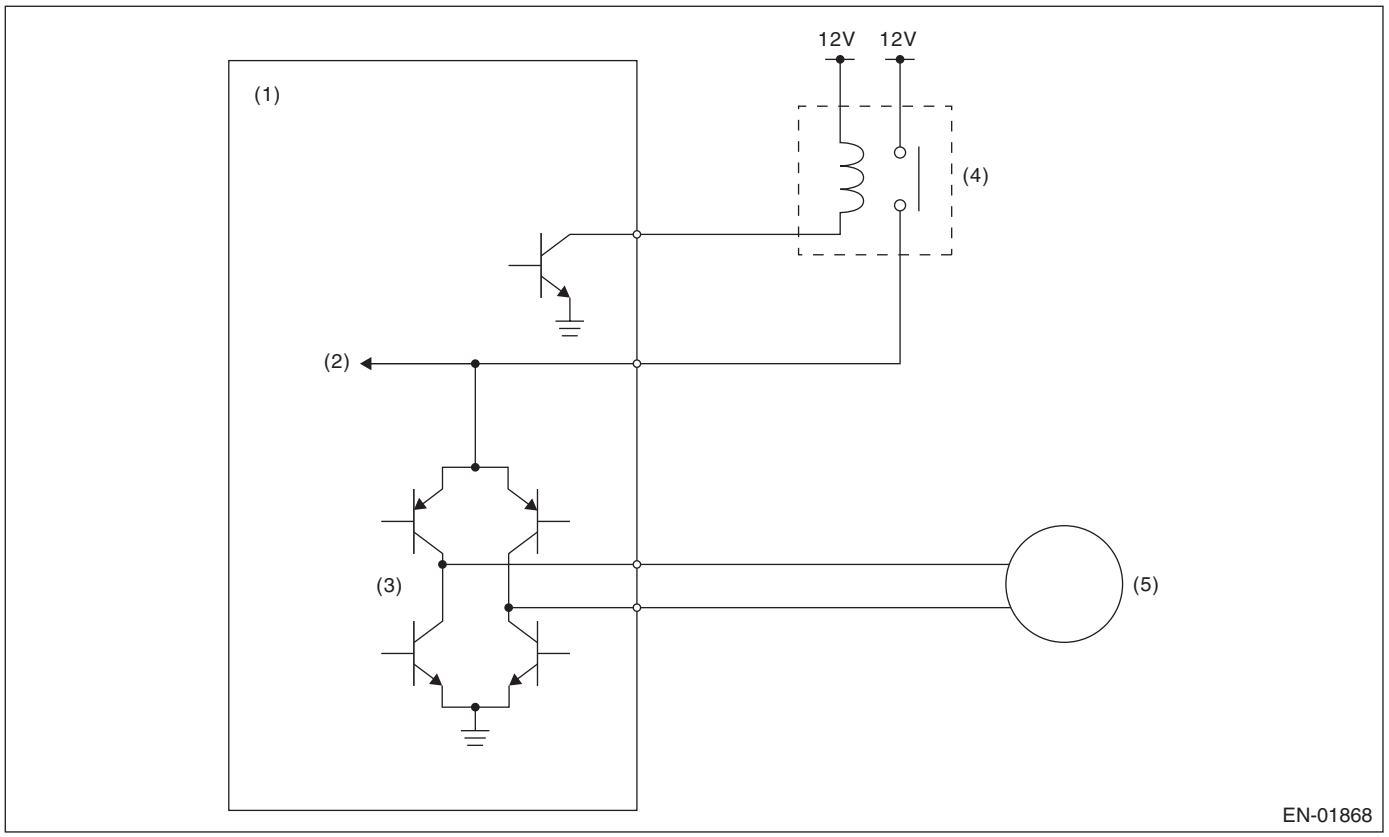

(1) Engine control module (ECM)
(2) Voltage detection circuit
(3) Drive circuit
(4) Electronic throttle control relay
(5) Motor

3. ENABLE CONDITION

Secondary Parameters	Enable Conditions
Battery voltage	≥ 6 V
Electronic throttle control relay output	OFF

4. GENERAL DRIVING CYCLE

- When ignition switch ON → OFF
- Ignition switch OFF → ON (Only after clearing memory)

5. DIAGNOSTIC METHOD

- **Abnormality Judgment**

If the duration of time while the following conditions are met is longer than the time indicated, judge as NG.

Judgment Value

Malfunction Criteria	Threshold Value
Motor power voltage	≥ 5 V

Time Needed for Diagnosis: 600 ms
Malfunction Indicator Light Illumination: Illuminates as soon as a malfunction occurs.

- **Normality Judgment**

Judge as OK and clear the NG if the continuous time while the following conditions are established is more than the predetermined time.

Judgment Value

Malfunction Criteria	Threshold Value
Motor power voltage	< 5 V

Time Needed for Diagnosis: 400 ms

EZ:DTC P2109 THROTTLE/PEDAL POSITION SENSOR “A” MINIMUM STOP PERFORMANCE

1. OUTLINE OF DIAGNOSIS

Judge as NG when full close point learning cannot conducted or abnormal value is detected.

2. COMPONENT DESCRIPTION

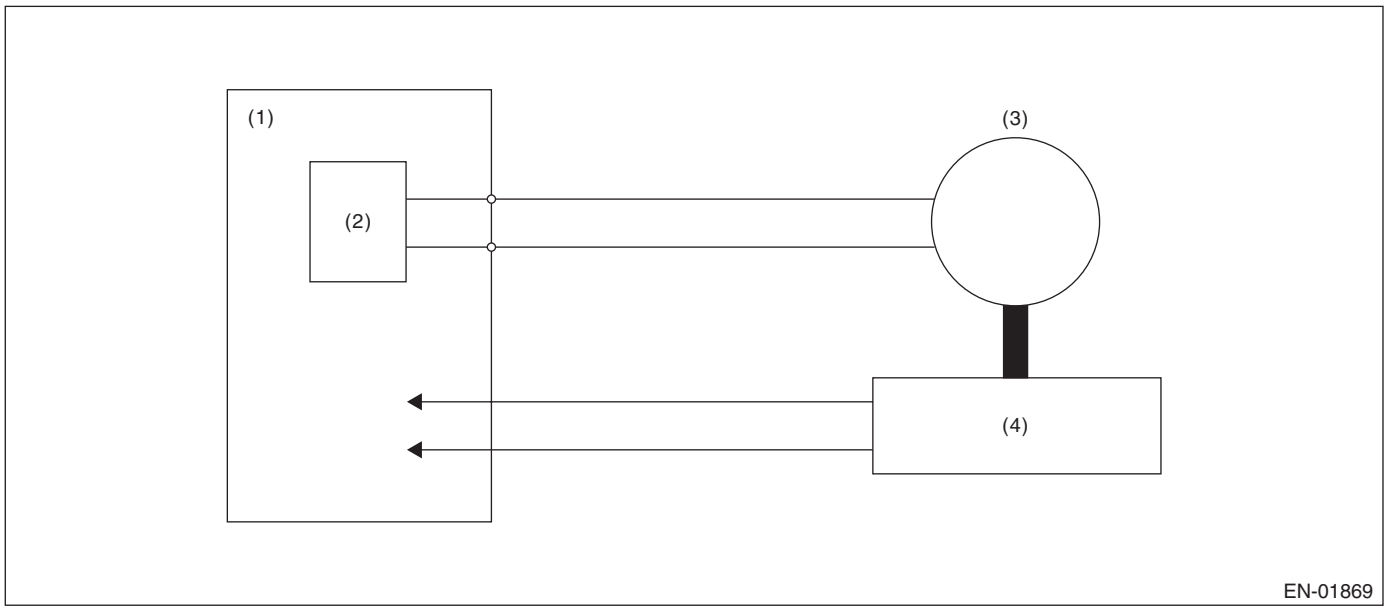

(1) Engine control module (ECM)
(2) Drive circuit
(3) Motor
(4) Throttle position sensor

3. ENABLE CONDITION

Secondary Parameters	Enable Conditions
Ignition switch	ON → OFF
Ignition switch (only after clear memory)	OFF → ON

4. GENERAL DRIVING CYCLE

Perform the diagnosis at full closed point learning.

5. DIAGNOSTIC METHOD

- **Abnormality Judgment**

If the duration of time while the following conditions are met is longer than the time indicated, judge as NG.

Judgment Value

Malfunction Criteria	Threshold Value
Throttle sensor opening angle at full close point learning	< 9.884 ° or > 20.116 °
or	
Throttle opening angle when the ignition switch is ON – Throttle minimum stop position	< 0.887 °

Time Needed for Diagnosis: 8 ms — 80 ms
Malfunction Indicator Light Illumination: Illuminates as soon as a malfunction occurs.

- **Normality Judgment**

Judge as OK and clear the NG if the continuous time while the following conditions are established is more than the predetermined time.

Judgment Value

Malfunction Criteria	Threshold Value
Throttle sensor opening angle at full close point learning	≥ 9.884 ° and ≤ 20.116 °
Throttle opening angle when the ignition switch is ON – Throttle minimum stop position	≥ 0.887 °

Time Needed for Diagnosis: 8 ms

FA:DTC P2119 THROTTLE ACTUATOR CONTROL THROTTLE BODY RANGE/ PERFORMANCE

1. OUTLINE OF DIAGNOSIS

Judge as NG when the target opening angle and actual opening angle is mismatched or the current to motor is the specified duty or more for specified time continuously.

2. COMPONENT DESCRIPTION

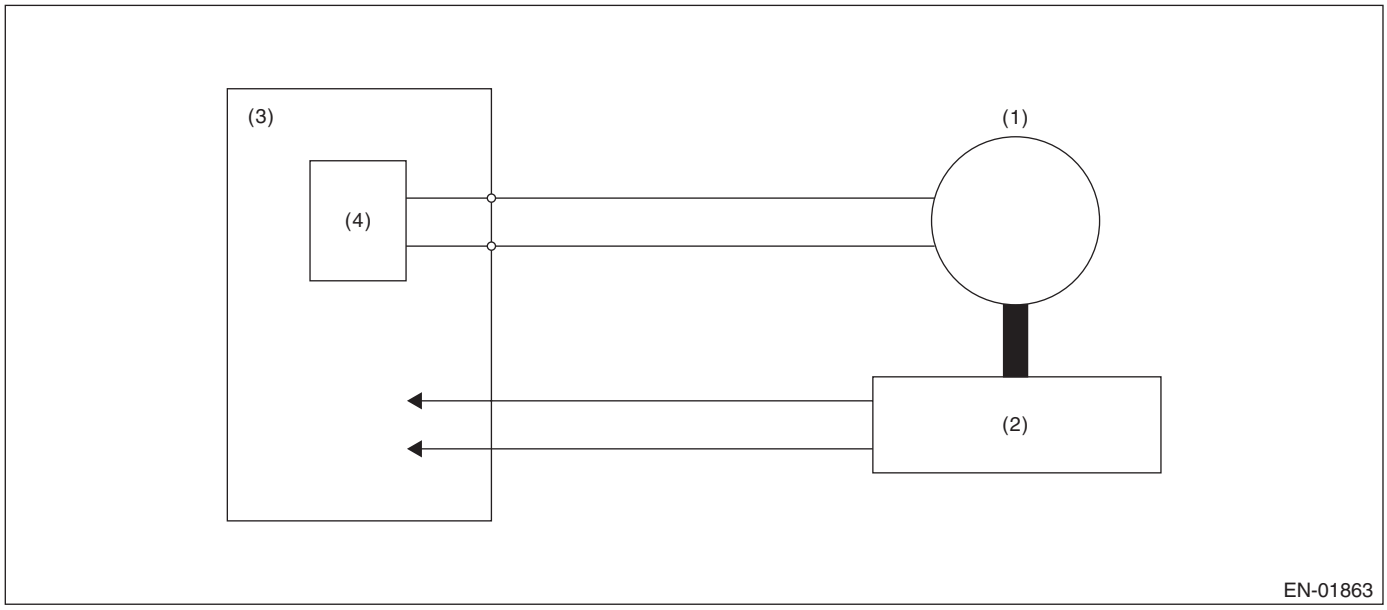

(1) Motor
(2) Throttle position sensor
(3) Engine control module (ECM)
(4) Drive circuit

3. ENABLE CONDITIONS

Secondary Parameters	Enable Conditions
Ignition switch	ON
Normal operation of electronic throttle control	ON

4. GENERAL DRIVING CYCLE

Always perform the diagnosis continuously when the electronic throttle control is operating.

5. DIAGNOSTIC METHOD

Judge as OK and clear the NG when the malfunction criteria below are met.

Judgment Value

Malfunction Criteria	Threshold Value
Difference between target opening angle and actual opening angle	Within OK range of **Details of Judgment value**
Output duty to drive circuit	< 95 %

Time Needed for Diagnosis:

- Difference between target opening angle and actual opening angle:
  - NG judgment: See **Details of Judgment time**
  - OK judgment: 2000 ms
- Output duty to driving circuit: 2000 ms

Details of Judgment Value

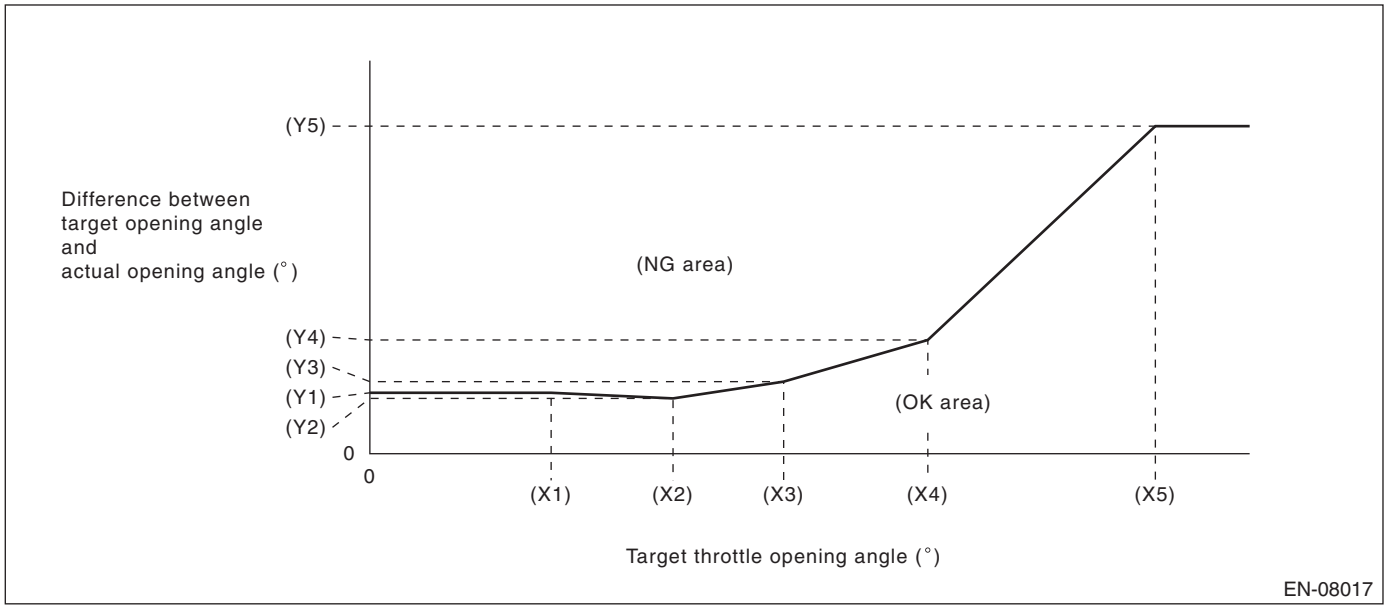

(X1) 6.915 °
(X2) 11.565 °
(X3) 15.785 °
(X4) 21.285 °
(X5) 29.965 °

(Y1) 4.65 °
(Y2) 4.22 °
(Y3) 5.5 °
(Y4) 8.68 °
(Y5) 25 °

Details of Judgment time

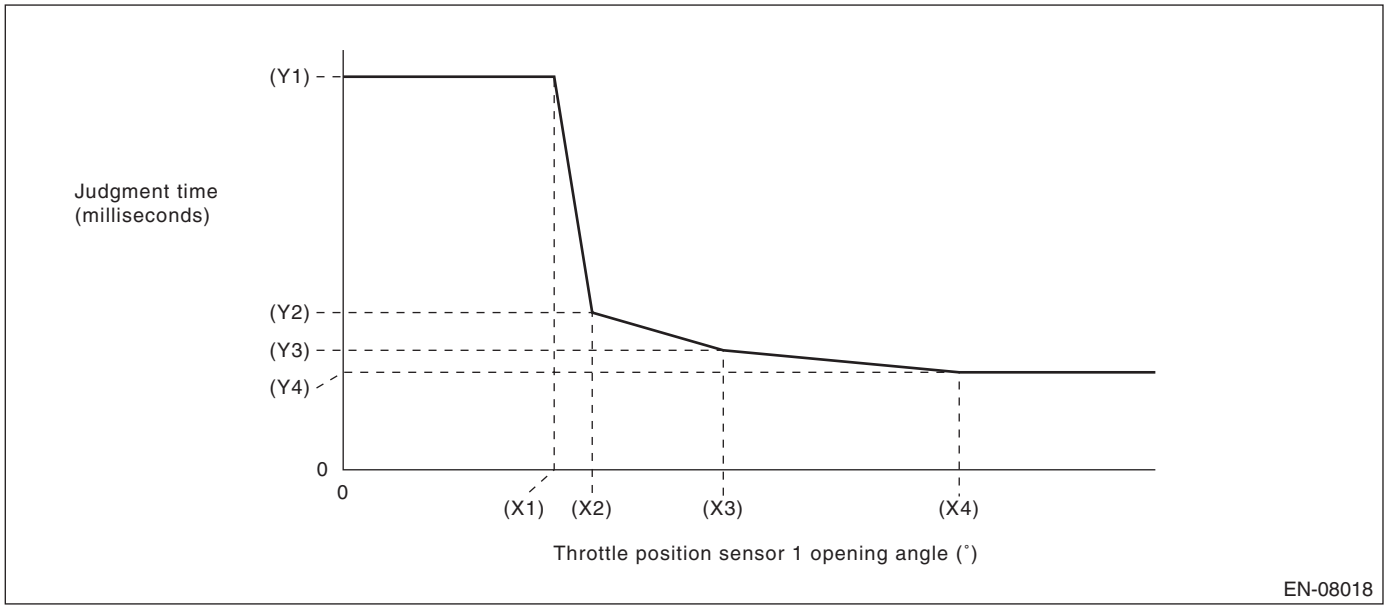

(X1) 8.049999237 °
(X2) 9.5 °
(X3) 14.5 °
(X4) 23.5 °

(Y1) 1000 ms
(Y2) 400 ms
(Y3) 304 ms
(Y4) 248 ms

NOTE:
Judgment time when actual opening angle ≤ target opening angle is always 1000 milliseconds.
Malfunction Indicator Light Illumination: Illuminates as soon as a malfunction occurs.

FB:DTC P2122 THROTTLE/PEDAL POSITION SENSOR/SWITCH “D” CIRCUIT LOW INPUT

1. OUTLINE OF DIAGNOSIS

Detect the open or short circuit of accelerator pedal position sensor 1.
Judge as NG if out of specification.

2. COMPONENT DESCRIPTION

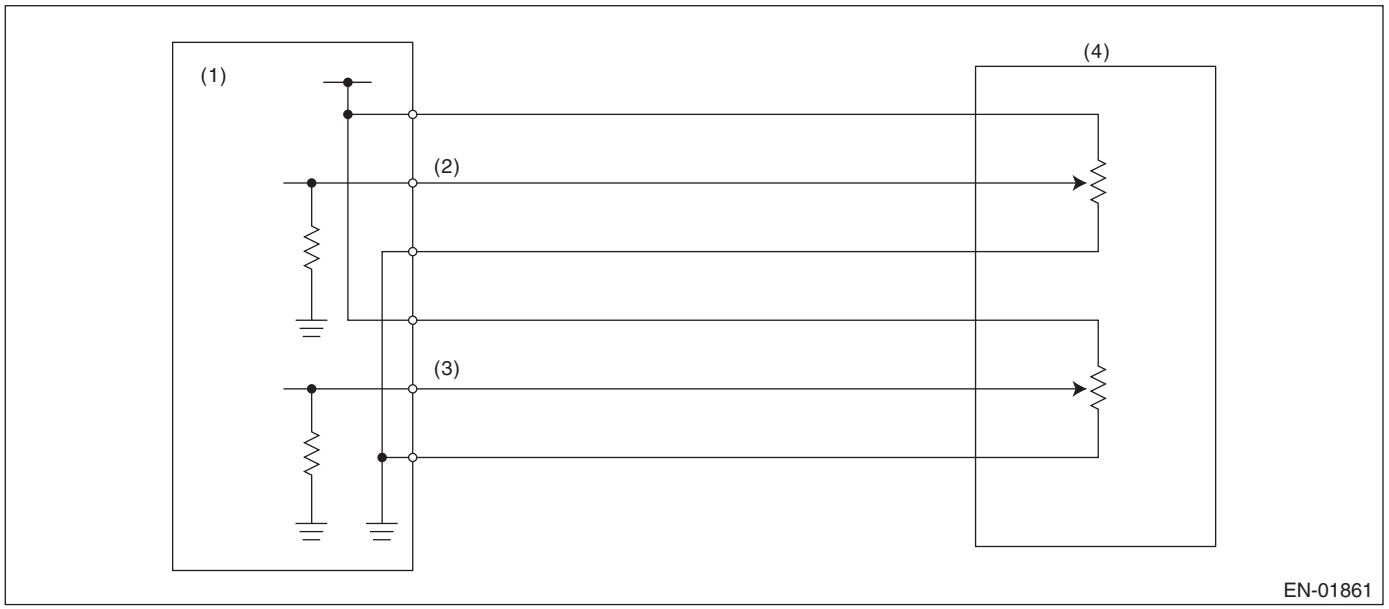

(1) Engine control module (ECM)
(2) Accelerator pedal position sensor 1 signal
(3) Accelerator pedal position sensor 2 signal
(4) Accelerator pedal position sensor

3. ENABLE CONDITION

Secondary Parameters	Enable Conditions
Ignition switch	ON
Battery voltage	≥ 6 V

4. GENERAL DRIVING CYCLE

Always perform the diagnosis continuously.

5. DIAGNOSTIC METHOD

- **Abnormality Judgment**

If the duration of time while the following conditions are met is longer than the time indicated, judge as NG.

Judgment Value

Malfunction Criteria	Threshold Value
Sensor 1 input voltage	< 0.301 V

Time Needed for Diagnosis: 100 ms
Malfunction Indicator Light Illumination: Illuminates as soon as a malfunction occurs.

- **Normality Judgment**

Judge as OK and clear the NG if the continuous time while the following conditions are established is more than the predetermined time.

Judgment Value

Malfunction Criteria	Threshold Value
Sensor 1 input voltage	≥ 0.301 V

Time Needed for Diagnosis: 100 ms

FC:DTC P2123 THROTTLE/PEDAL POSITION SENSOR/SWITCH “D” CIRCUIT HIGH INPUT

1. OUTLINE OF DIAGNOSIS

Detect the open or short circuit of accelerator pedal position sensor 1.
Judge as NG if out of specification.

2. COMPONENT DESCRIPTION

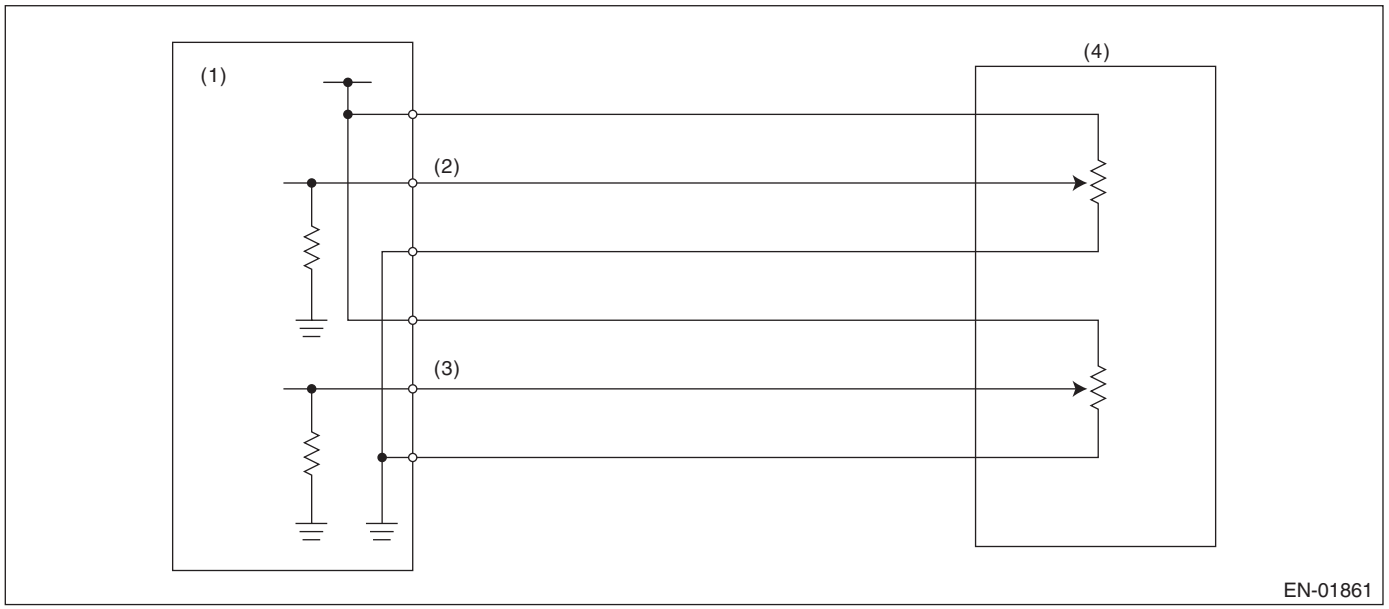

(1) Engine control module (ECM)
(2) Accelerator pedal position sensor 1 signal
(3) Accelerator pedal position sensor 2 signal
(4) Accelerator pedal position sensor

3. ENABLE CONDITION

Secondary Parameters	Enable Conditions
Ignition switch	ON
Battery voltage	≥ 6 V

4. GENERAL DRIVING CYCLE

Always perform the diagnosis continuously.

5. DIAGNOSTIC METHOD

- **Abnormality Judgment**

If the duration of time while the following conditions are met is longer than the time indicated, judge as NG.

Judgment Value

Malfunction Criteria	Threshold Value
Sensor 1 input voltage	≥ 4.783 V

Time Needed for Diagnosis: 32 ms
Malfunction Indicator Light Illumination: Illuminates as soon as a malfunction occurs.

- **Normality Judgment**

Judge as OK and clear the NG if the continuous time while the following conditions are established is more than the predetermined time.

Judgment Value

Malfunction Criteria	Threshold Value
Sensor 1 input voltage	< 4.783 V

Time Needed for Diagnosis: 32 ms

FD:DTC P2127 THROTTLE/PEDAL POSITION SENSOR/SWITCH “E” CIRCUIT LOW INPUT

1. OUTLINE OF DIAGNOSIS

Detect the open or short circuit of accelerator pedal position sensor 2.
Judge as NG if out of specification.

2. COMPONENT DESCRIPTION

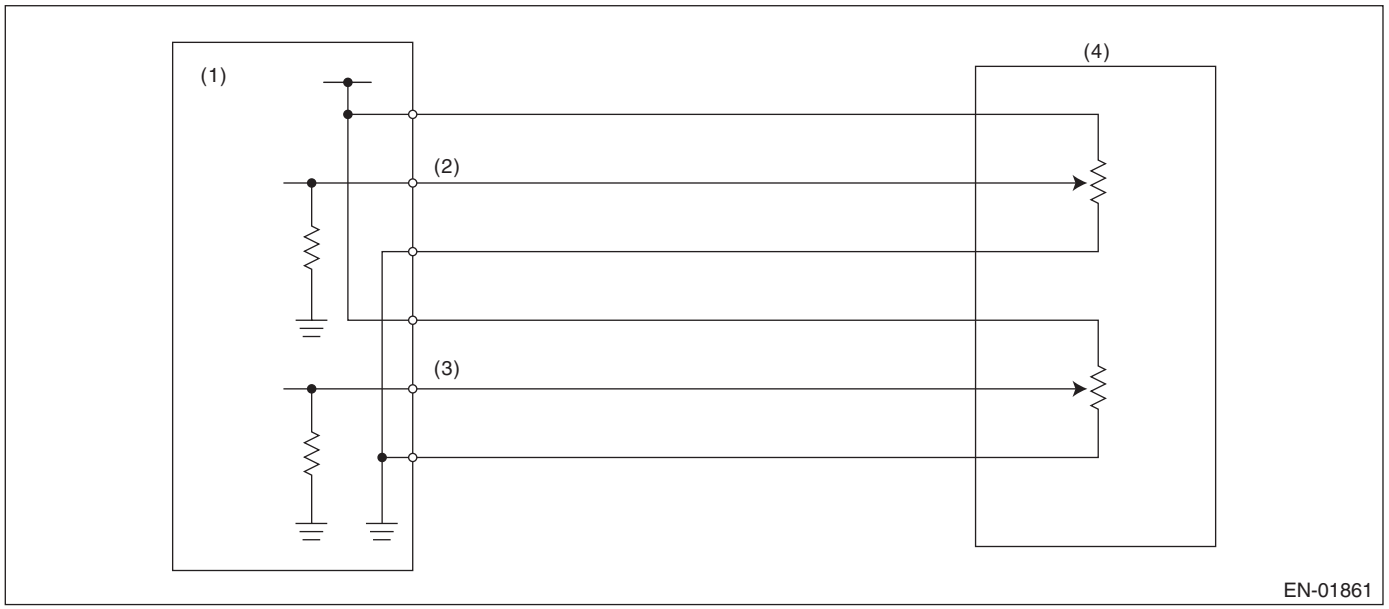

(1) Engine control module (ECM)
(2) Accelerator pedal position sensor 1 signal
(3) Accelerator pedal position sensor 2 signal
(4) Accelerator pedal position sensor

3. ENABLE CONDITION

Secondary Parameters	Enable Conditions
Ignition switch	ON
Battery voltage	≥ 6 V

4. GENERAL DRIVING CYCLE

Always perform the diagnosis continuously.

5. DIAGNOSTIC METHOD

- **Abnormality Judgment**

If the duration of time while the following conditions are met is longer than the time indicated, judge as NG.

Judgment Value

Malfunction Criteria	Threshold Value
Sensor 2 input voltage	< 0.301 V

Time Needed for Diagnosis: 100 ms
Malfunction Indicator Light Illumination: Illuminates as soon as a malfunction occurs.

- **Normality Judgment**

Judge as OK and clear the NG if the continuous time while the following conditions are established is more than the predetermined time.

Judgment Value

Malfunction Criteria	Threshold Value
Sensor 2 input voltage	≥ 0.301 V

Time Needed for Diagnosis: 100 ms

FE:DTC P2128 THROTTLE/PEDAL POSITION SENSOR/SWITCH “E” CIRCUIT HIGH INPUT

1. OUTLINE OF DIAGNOSIS

Detect the open or short circuit of accelerator pedal position sensor 2.
Judge as NG if out of specification.

2. COMPONENT DESCRIPTION

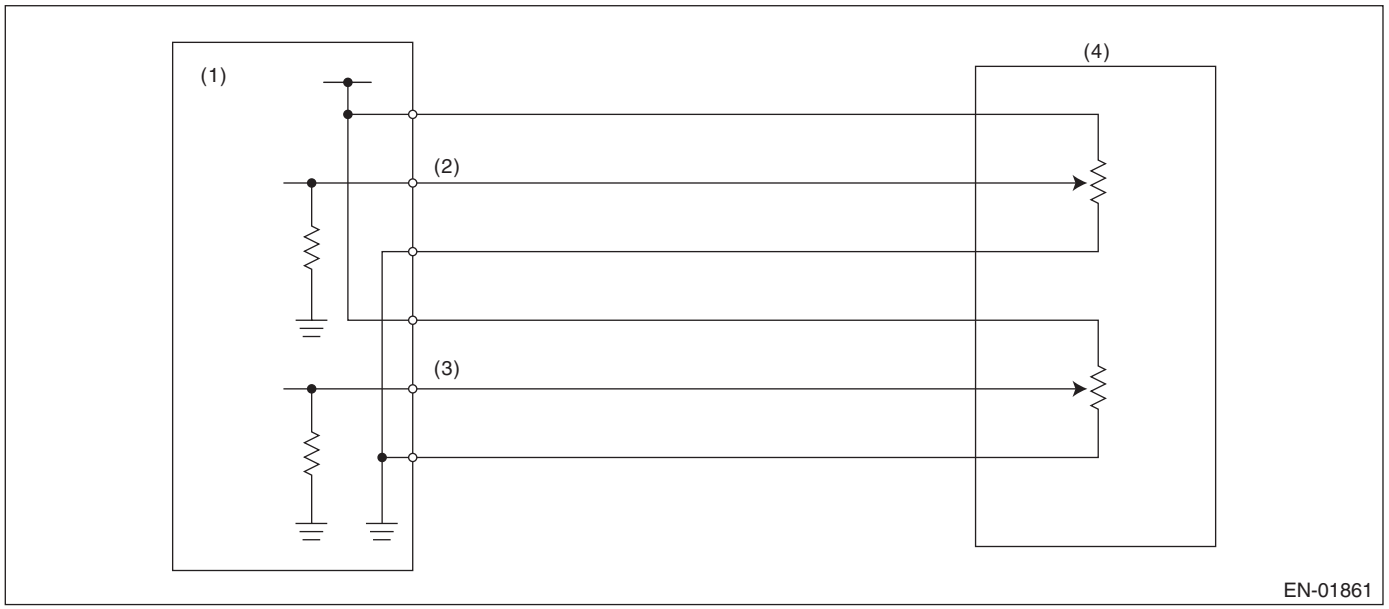

(1) Engine control module (ECM)
(2) Accelerator pedal position sensor 1 signal
(3) Accelerator pedal position sensor 2 signal
(4) Accelerator pedal position sensor

3. ENABLE CONDITION

Secondary Parameters	Enable Conditions
Ignition switch	ON
Battery voltage	≥ 6 V

4. GENERAL DRIVING CYCLE

Always perform the diagnosis continuously.

5. DIAGNOSTIC METHOD

- **Abnormality Judgment**

If the duration of time while the following conditions are met is longer than the time indicated, judge as NG.

Judgment Value

Malfunction Criteria	Threshold Value
Sensor 2 input voltage	≥ 4.783 V

Time Needed for Diagnosis: 100 ms
Malfunction Indicator Light Illumination: Illuminates as soon as a malfunction occurs.

- **Normality Judgment**

Judge as OK and clear the NG if the continuous time while the following conditions are established is more than the predetermined time.

Judgment Value

Malfunction Criteria	Threshold Value
Sensor 2 input voltage	< 4.783 V

Time Needed for Diagnosis: 100 ms

FF: DTC P2135 THROTTLE/PEDAL POSITION SENSOR/SWITCH "A"/"B" VOLTAGE CORRELATION

1. OUTLINE OF DIAGNOSIS

Judge as NG when the signal level of throttle position sensor 1 is different from the throttle position sensor 2.

2. COMPONENT DESCRIPTION

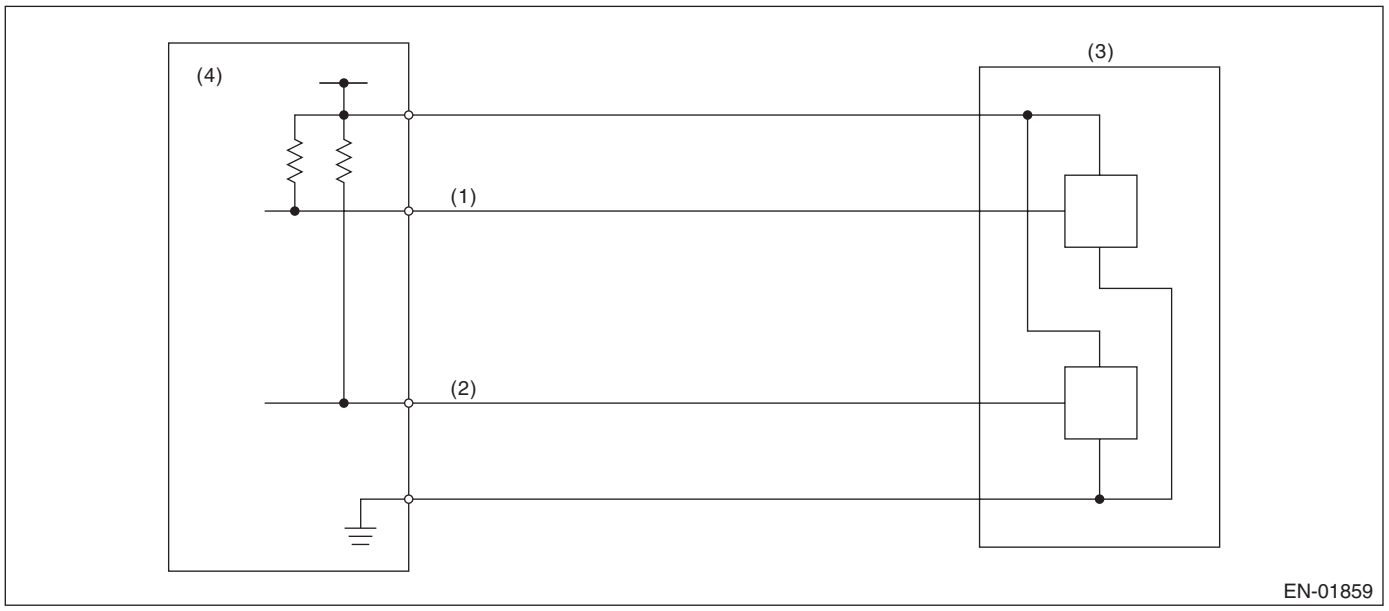

(1) Throttle position sensor 1 signal
(2) Throttle position sensor 2 signal
(3) Throttle position sensor
(4) Engine control module (ECM)

3. ENABLE CONDITION

Secondary Parameters	Enable Conditions
Ignition switch	ON
Battery voltage	≥ 6 V

4. GENERAL DRIVING CYCLE

Always perform the diagnosis continuously.

5. DIAGNOSTIC METHOD

- **Abnormality Judgment**

If the duration of time while the following conditions are met is longer than the time indicated, judge as NG.

Judgment Value

Malfunction Criteria	Threshold Value
Signal difference between two sensors	Within the NG range of **judgment value detail**

Details of Judgment Value

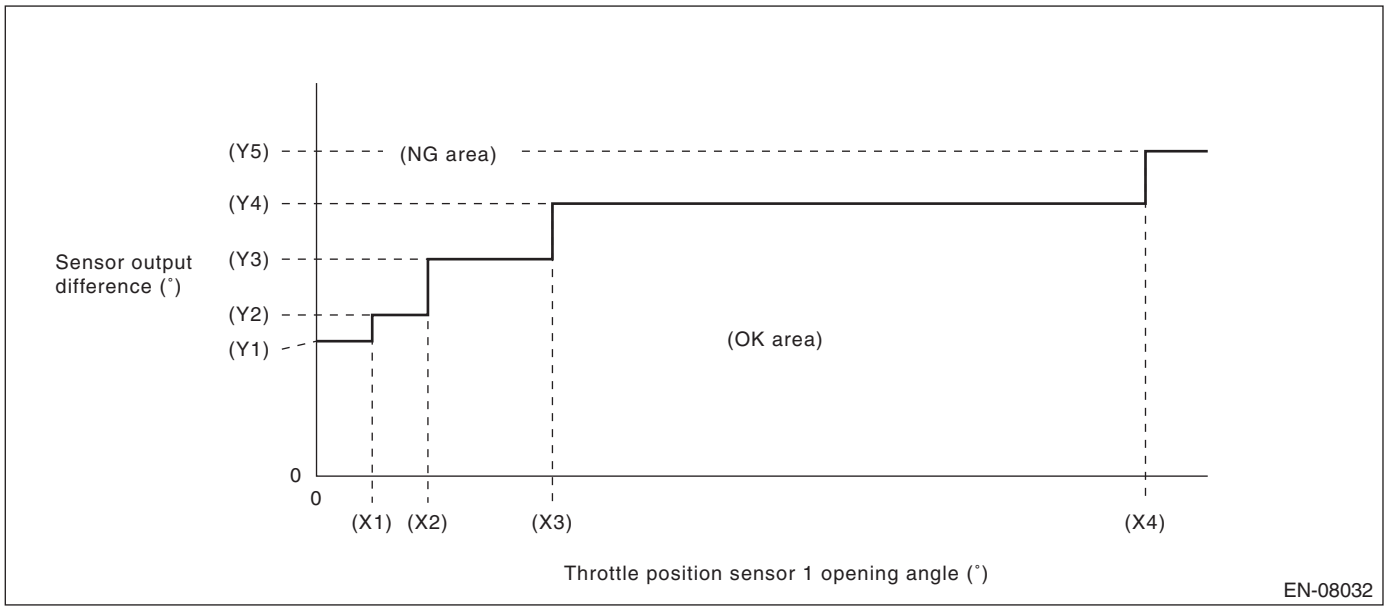

(X1) 2.125 °
(X2) 4.25 °
(X3) 9 °
(X4) 31.625 °

(Y1) 5.15 °
(Y2) 6.15 °
(Y3) 8.28 °
(Y4) 10.4 °
(Y5) 12.4 °

Time Needed for Diagnosis: 212 ms
Malfunction Indicator Light Illumination: Illuminates as soon as a malfunction occurs.

- **Normality Judgment**

Judge as OK and clear the NG if the continuous time while the following conditions are established is more than the predetermined time.

Judgment Value

Malfunction Criteria	Threshold Value
Signal difference between two sensors	Within the OK range of **judgment value detail**

Time Needed for Diagnosis: 24 ms

FG:DTC P2138 THROTTLE/PEDAL POSITION SENSOR/SWITCH “D”/“E” VOLTAGE CORRELATION

1. OUTLINE OF DIAGNOSIS

Judge as NG when the signal level of throttle position sensor 1 is different from the throttle position sensor 2.

2. COMPONENT DESCRIPTION

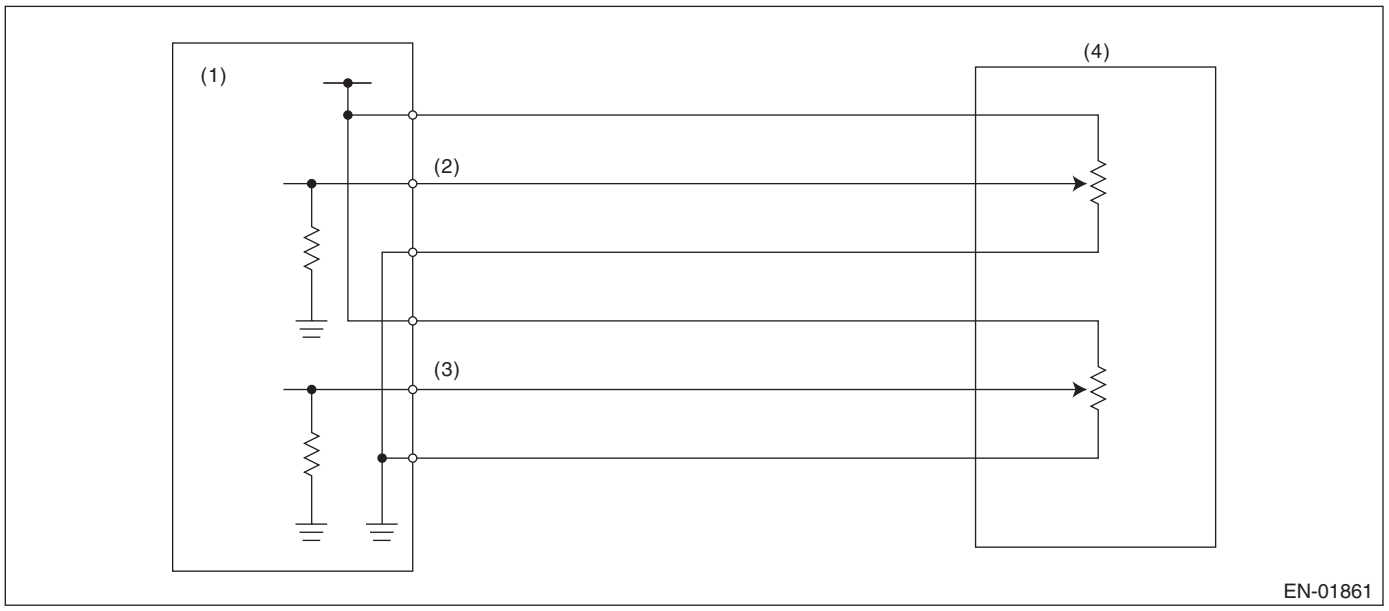

(1) Engine control module (ECM)
(2) Accelerator pedal position sensor 1 signal
(3) Accelerator pedal position sensor 2 signal
(4) Accelerator pedal position sensor

3. ENABLE CONDITION

Secondary Parameters	Enable Conditions
Ignition switch	ON
Battery voltage	≥ 6 V

4. GENERAL DRIVING CYCLE

Always perform the diagnosis continuously.

5. DIAGNOSTIC METHOD

- **Abnormality Judgment**

If the duration of time while the following conditions are met is longer than the time indicated, judge as NG.

Judgment Value

Malfunction Criteria	Threshold Value
Signal difference between two sensors	Within the NG range of **judgment value detail**

Details of Judgment Value

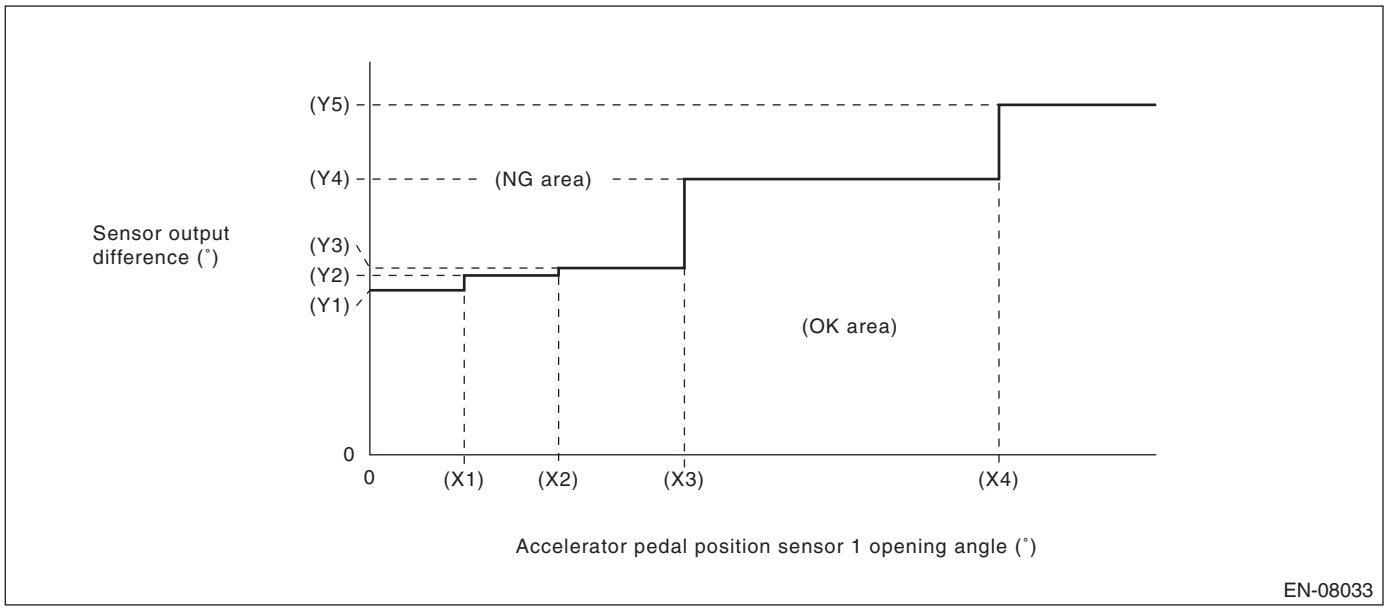

(X1) 0.6 °
(X2) 1.2 °
(X3) 2 °
(X4) 4 °

(Y1) 1.465 °
(Y2) 1.597 °
(Y3) 1.663 °
(Y4) 2.455 °
(Y5) 3.116 °

Time Needed for Diagnosis: 116 ms
Malfunction Indicator Light Illumination: Illuminates as soon as a malfunction occurs.

- **Normality Judgment**

Judge as OK and clear the NG if the continuous time while the following conditions are established is more than the predetermined time.

Judgment Value

Malfunction Criteria	Threshold Value
Signal difference between two sensors	Within the OK range of **judgment value detail**

Time Needed for Diagnosis: 116 ms

FH:DTC P2195 O2 SENSOR SIGNAL BIASED/STUCK LEAN (BANK 1 SENSOR 1)

1. OUTLINE OF DIAGNOSIS

Detect that λ value remains low.
Judge as NG when lambda value is abnormal in accordance with λ value of front oxygen (A/F) sensor and running conditions such as vehicle speed, amount of intake air, engine coolant temperature, sub feedback control, etc.

λ value = Actual air fuel ratio/Theoretical air fuel ratio
λ > 1: Lean
λ < 1: Rich

2. COMPONENT DESCRIPTION

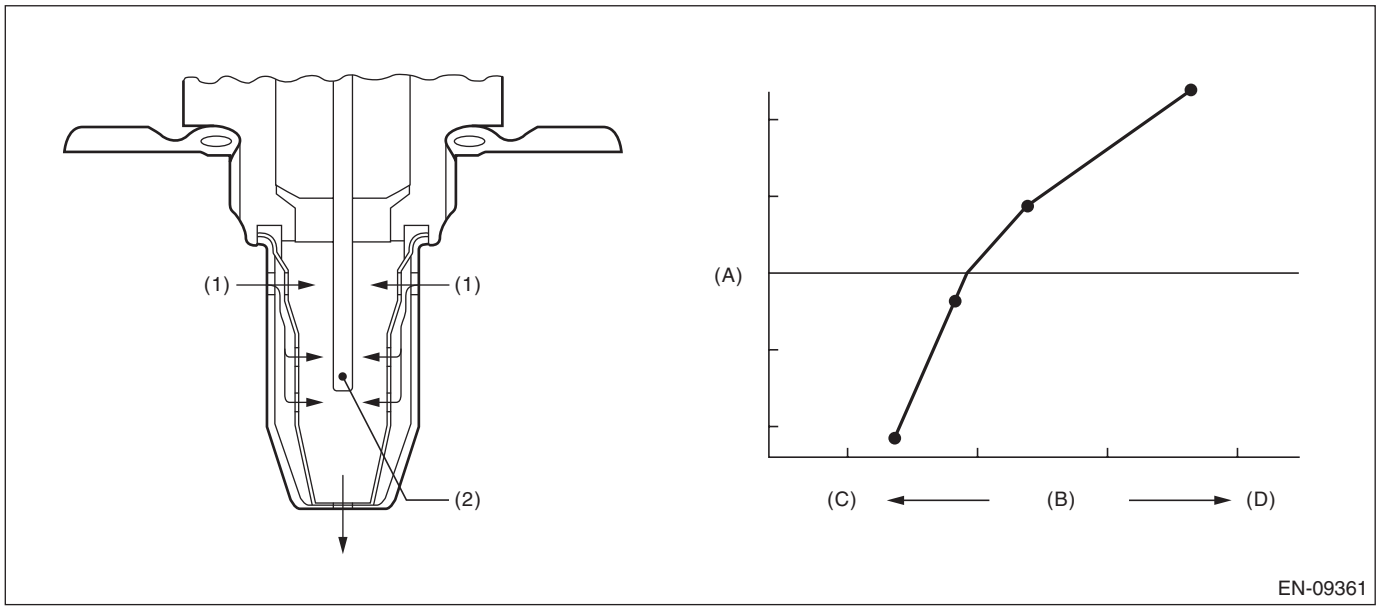

(A) Electromotive force (B) Air fuel ratio (C) Rich
(D) Lean

(1) Exhaust gas (2) ZrO_2

3. ENABLE CONDITIONS

Secondary Parameters	Enable Conditions
Time needed for all secondary parameters to be in enable conditions	≥ 4096 ms
Battery voltage	≥ 10.9 V
Atmospheric pressure	≥ 75.1 kPa (563 mmHg, 22.2 inHg)
Rear oxygen sensor sub feedback	Execution
Rear oxygen sensor output voltage – Feedback target voltage	– 0.2 V — 0.1 V
or rear oxygen sensor sub feedback compensation coefficient	On Min.
or rear oxygen sensor sub feedback compensation coefficient	On Max.
Elapsed time after starting the engine	≥ 0 ms
Engine coolant temperature	≥ –40 °C (–40 °F)
Vehicle speed	≥ 0 km/h (0 MPH)
Amount of intake air	≥ 6 g/s (0.21 oz/s)
Targeted lambda value load compensation coefficient	–1 — 1.000

4. GENERAL DRIVING CYCLE

Perform diagnosis continuously at a constant speed of 0 km/h (0 MPH) or more after 0 ms have passed since the engine started.

5. DIAGNOSTIC METHOD

- **Abnormality Judgment**

If the duration of time while the following conditions are met is longer than the time indicated, judge as NG.

Judgment Value

Malfunction Criteria	Threshold Value
λ value	< 0.85

Time Needed for Diagnosis: 10000 ms
Malfunction Indicator Light Illumination: Illuminates when malfunction occurs in 2 continuous driving cycles.

- **Normality Judgment**

Judge as OK and clear the NG if the continuous time while the following conditions are established is more than the predetermined time.

Judgment Value

Malfunction Criteria	Threshold Value
λ value	≥ 0.85

Time Needed for Diagnosis: Less than 1 second

FI: DTC P2196 O2 SENSOR SIGNAL BIASED/STUCK RICH (BANK 1 SENSOR 1)

1. OUTLINE OF DIAGNOSIS

Detect that λ value remains high.
Judge as NG when lambda value is abnormal in accordance with λ value of front oxygen (A/F) sensor and running conditions such as vehicle speed, amount of intake air, engine coolant temperature, sub feedback control, etc.

λ value = Actual air fuel ratio/Theoretical air fuel ratio
λ > 1: Lean
λ < 1: Rich

2. COMPONENT DESCRIPTION

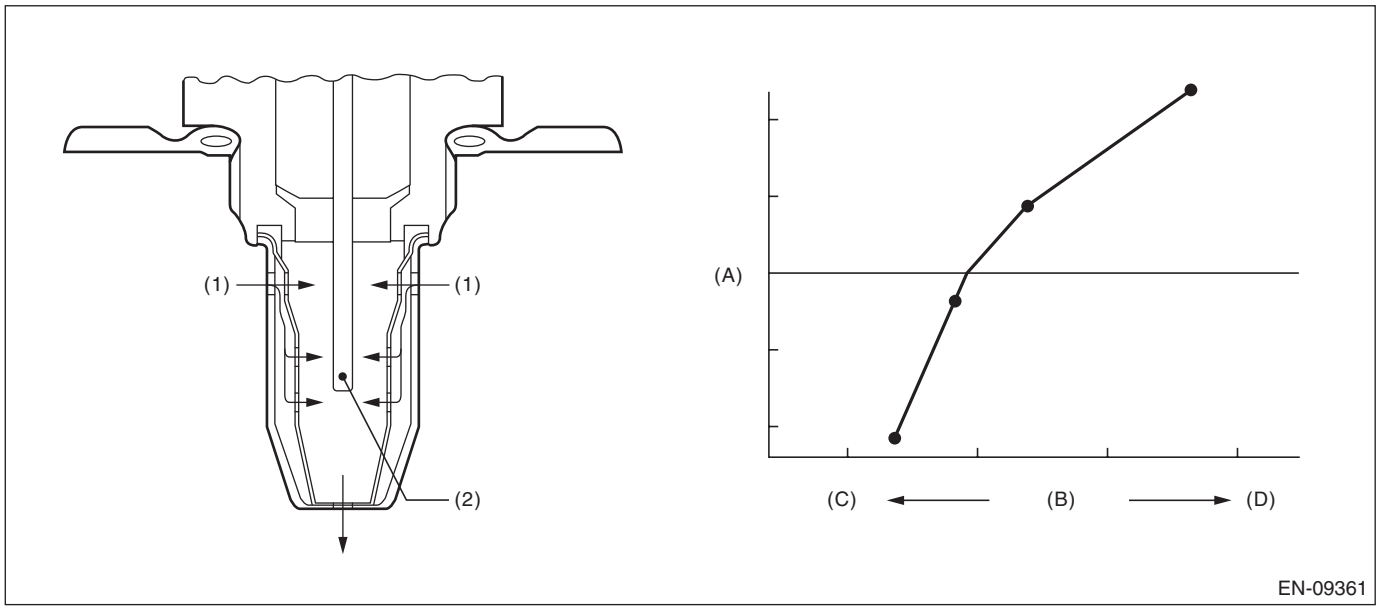

(A) Electromotive force (B) Air fuel ratio (C) Rich
(D) Lean

(1) Exhaust gas (2) ZrO_2

3. ENABLE CONDITIONS

Secondary Parameters	Enable Conditions
Time needed for all secondary parameters to be in enable conditions	≥ 4096 ms
Battery voltage	≥ 10.9 V
Atmospheric pressure	≥ 75.1 kPa (563 mmHg, 22.2 inHg)
Rear oxygen sensor sub feedback	Execution
Rear oxygen sensor output voltage – Feedback target voltage	– 0.2 V — 0.1 V
or rear oxygen sensor sub feedback compensation coefficient	On Min.
or rear oxygen sensor sub feedback compensation coefficient	On Max.
Elapsed time after starting the engine	≥ 0 ms
Engine coolant temperature	≥ –40 °C (–40 °F)
Vehicle speed	≥ 0 km/h (0 MPH)
Amount of intake air	≥ 6 g/s (0.21 oz/s)
Targeted lambda value load compensation coefficient	–1 — 1.000

4. GENERAL DRIVING CYCLE

Perform diagnosis continuously at a constant speed of 0 km/h (0 MPH) or more after 0 ms have passed since the engine started.

5. DIAGNOSTIC METHOD

- **Abnormality Judgment**

If the duration of time while the following conditions are met is longer than the time indicated, judge as NG.

Judgment Value

Malfunction Criteria	Threshold Value
λ value	> 1.15

Time Needed for Diagnosis: 10000 ms
Malfunction Indicator Light Illumination: Illuminates when malfunction occurs in 2 continuous driving cycles.

- **Normality Judgment**

Judge as OK and clear the NG if the continuous time while the following conditions are established is more than the predetermined time.

Judgment Value

Malfunction Criteria	Threshold Value
λ value	≤ 1.15

Time Needed for Diagnosis: Less than 1 second

FJ: DTC P219A BANK 1 AIR-FUEL RATIO IMBALANCE

1. OUTLINE OF DIAGNOSIS

This diagnostic monitor performs a functional check of the fuel system to determine an air-fuel ratio cylinder imbalance.
This diagnosis is composed of two monitors.
The outline of “monitor A1” is as follows. When an air-fuel ratio cylinder imbalance occurs, the primary oxygen sensor output signal will oscillate with increased amplitude. This monitor utilizes this behavior to make a diagnosis. The monitor integrates the difference between the amplification value and the mean value of the first oxygen sensor output signal and compares it to a threshold to make a judgment.
The outline of “monitor B1” is as follows. Similarly, when an imbalance occurs, the engine speed also fluctuates with increased amplitude. This monitor utilizes this behavior to make a diagnosis. For reference, it should be noted that this imbalance monitor method is actually similar to the current misfire diagnostic monitor, and the parameter “domg360” (units: degrees CA) is shared between the imbalance and misfire monitors. The imbalance monitor is performed during idle condition when the engine is warm. The monitor integrates the count of “domg360” which exceeds a threshold in 1000 revolution.
When both the “monitor A1” value and the “monitor B1” value exceed a predetermined threshold, this monitor determines a malfunction and stores a fault code.

Monitor A1

When there is an air-fuel ratio cylinder imbalance malfunction, the primary oxygen sensor output fluctuates widely compared with a normal sensor, as shown by the chain line in Figure 1 below. This monitor makes a diagnosis based on this phenomenon. Each primary oxygen sensor signal (PS) and mean value of the primary oxygen sensor signal (MS) is calculated from the primary oxygen sensor signal. The absolute values of (PS – MS) are sampled every 4 ms as shown in the figure. Diagnostic value 1 (DV1) is obtained by integrating the absolute value of (PS – MS) for 2500 times. A malfunction is determined when DV1 exceeds the threshold. The judgment values are determined experimentally.

Figure 1. Compare malfunctioned primary oxygen sensor output with a normal sensor

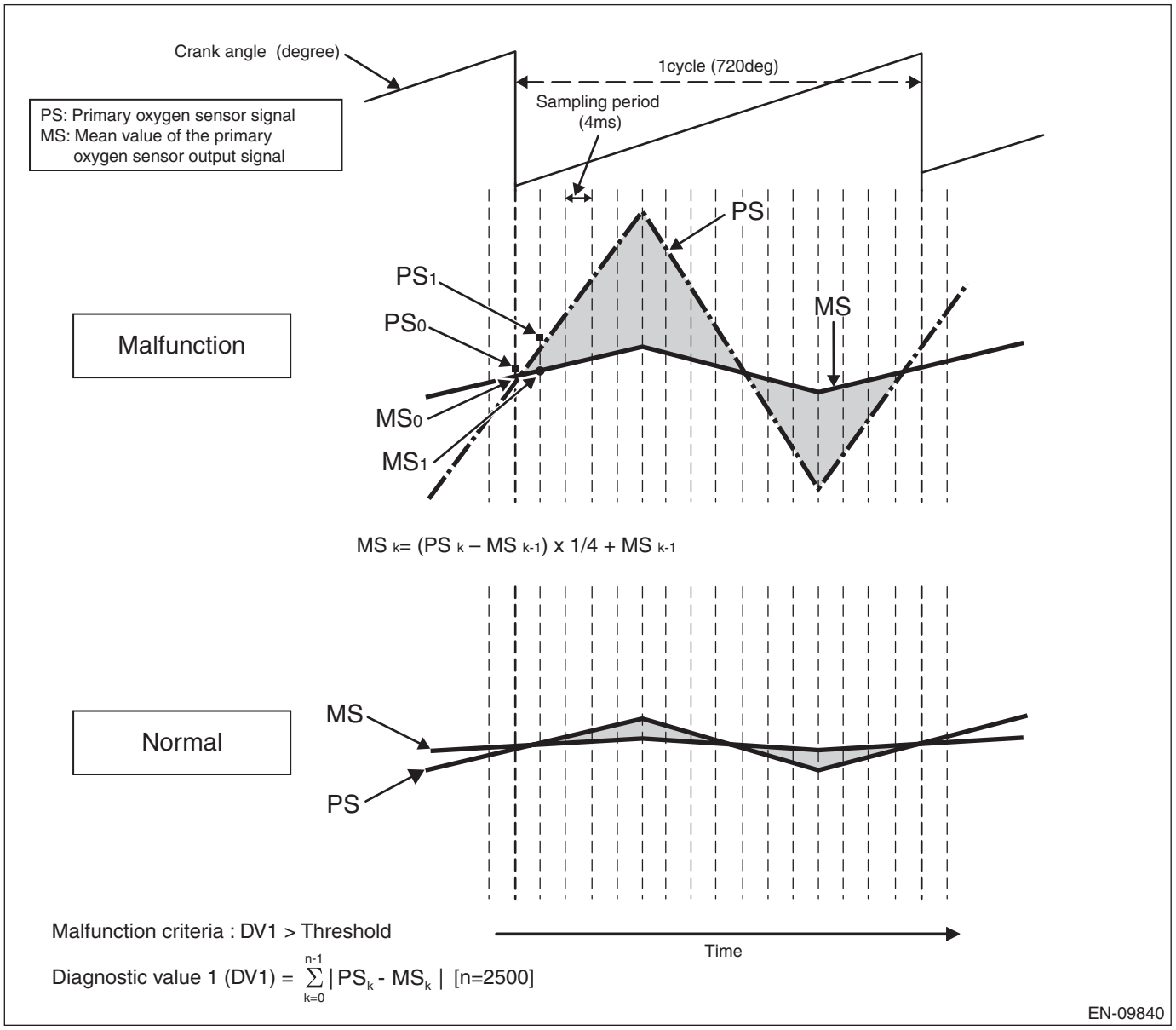

Monitor B1

Method used: Difference method of 360 degrees CA
Monitor value: domg360 = (omg 1 – omg 0) – (omg 3 – omg 2) = angular speed
Each crankshaft angular speed is defined as Figure 2 below.

Figure 2. Description of domg360 output

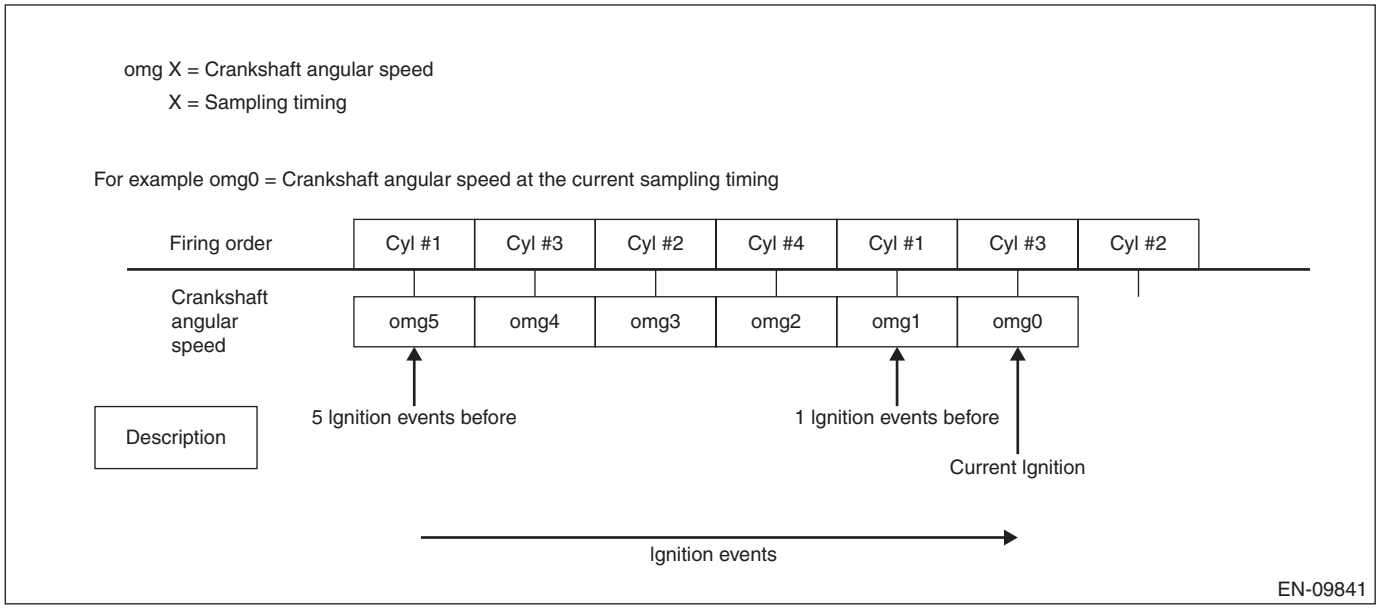

This method uses the fact that the domg360 of lean conditioned cylinder caused by imbalance malfunction indicates big value, as shown by the chain line in Figure 3 below.
The number of times for domg360 to exceed the judgment value in 1000 revolutions (500 cycles) is calculated as diagnostic value 2 (DV2). A malfunction is determined when DV2 exceeds the threshold.

Figure 3. Compare malfunctioned domg360 output with a normal output

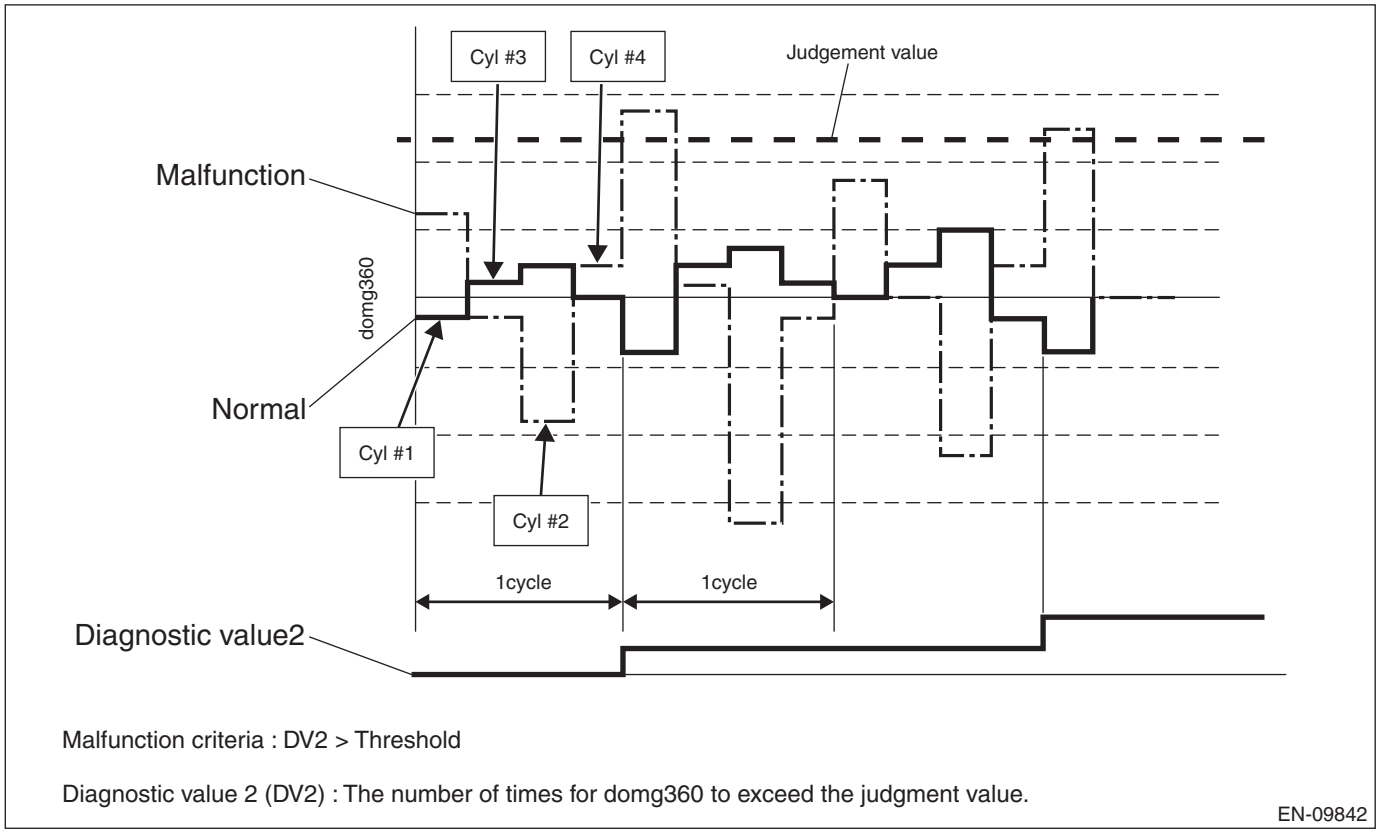

2. ENABLE CONDITIONS

Monitor A1: Primary oxygen sensor fluctuation

Secondary Parameters	Enable Conditions
Closed loop control with primary oxygen sensor	Active
Engine speed	> 1400 rpm and < 3000 rpm
Engine coolant temperature	> –40 °C (–40 °F)
Intake air mass	≥ 0.7 g/rev (0.02 oz/rev) (CVT model) ≥ 0.7 g/rev (0.02 oz/rev) (MT model)

Monitor B1: Crankshaft speed fluctuation

Secondary Parameters	Enable Conditions
Misfire diagnosis monitor	Active
Engine coolant temperature	> –40 °C (–40 °F)
Accelerator pedal position	= 0%
Vehicle speed	≤ 1.93 km/h (1.2 MPH)
Engine speed	> 0 rpm and < 10000 rpm (CVT model) > 0 rpm and < 10000 rpm (MT model)
Intake air mass per revolution	< 2 g/rev (0.07 oz/rev) (CVT model) < 2 g/rev (0.07 oz/rev) (MT model)

3. GENERAL DRIVING CYCLE

Always perform the diagnosis continuously.

4. DIAGNOSTIC METHOD

Judge as NG when Monitor A1 and Monitor B1 are both NG, and when either is OK, judge as OK.

- **Abnormality Judgment**

Monitor A1

Judge as NG when the following conditions are established.

Judgment Value

Malfunction Criteria	Threshold Value
Diagnostic value 1 (DV1)	> Threshold value 1 (TV1)

Threshold value 1 (TV1):

$$\sum_{k=0}^{n-1} Map_k \qquad [n=2500]$$

EN-09888

Map (CVT model)

		Engine load (g/rev (oz/rev))					
		0.7 (0.02)	0.8 (0.03)	0.9 (0.03)	1 (0.04)	1.1 (0.04)	1.2 (0.04)
Engine speed (rpm)	1400	0.00152	0.00212	0.00272	0.002724	0.002724	0.003632247
	1600	0.00152	0.00299	0.00299	0.002990	0.002990	0.003986476
	1800	0.00169	0.00223	0.00291	0.002911	0.002911	0.003880913
	2000	0.00147	0.00187	0.00299	0.002990	0.002990	0.003986476
	2200	0.00111	0.00131	0.00147	0.001834	0.001834	0.002444788
	2400	0.00104	0.00139	0.00167	0.001672	0.001672	0.002229427
	2600	0.00119	0.00147	0.00177	0.001772	0.001772	0.002363286
	2800	0.00105	0.00142	0.00192	0.001919	0.001919	0.002558088
	3000	0.00105	0.00136	0.00171	0.001711	0.001710623	0.002280831

Map (MT model)

		Engine load (g/rev (oz/rev))					
		0.7 (0.02)	0.8 (0.03)	0.9 (0.03)	1 (0.04)	1.1 (0.04)	1.2 (0.04)
Engine speed (rpm)	1400	0.002033	0.002829	0.003632	0.003632	0.003632	0.003632247
	1600	0.002033	0.003986	0.003986	0.003986	0.003986	0.003986476
	1800	0.002259	0.002974	0.003881	0.003881	0.003881	0.003880913
	2000	0.001962	0.002496	0.003986	0.003986	0.003986	0.003986476
	2200	0.001484	0.001753	0.001964	0.002445	0.002445	0.002444788
	2400	0.001382	0.001847	0.002229	0.002229	0.002229	0.002229427
	2600	0.001592	0.001955	0.002363	0.002363	0.002363	0.002363286
	2800	0.001405	0.001888	0.002558	0.002558	0.002558	0.002558088
	3000	0.001405	0.001808	0.002281	0.002281	0.002280831	0.002280831

Time Needed for Diagnosis:

- 4 ms × 2500 time(s) (CVT model)
- 4 ms × 2500 time(s) (MT model)

Monitor B1
Judge as NG when the following conditions are established.
Judgment Value

Malfunction Criteria	Threshold Value
Diagnostic Value2 (DV2)	> 65535 time(s) (CVT model) > 65535 time(s) (MT model)

Time Needed for Diagnosis: 1000 engine revs.
Malfunction Indicator Light Illumination: Illuminates when malfunction occurs in 2 continuous driving cycles.

- **Normality Judgment**

Monitor A1
Judge as OK and clear the NG if the following conditions are established.
Judgment Value

Malfunction Criteria	Threshold Value
Diagnostic value 1 (DV1)	≤ Threshold value 1 (TV1)

Time Needed for Diagnosis:
- 4 ms × 2500 time(s) (CVT model)
- 4 ms × 2500 time(s) (MT model)

Monitor B1
Judge as OK and clear the NG if the following conditions are established.
Judgment Value

Malfunction Criteria	Threshold Value
Diagnostic Value2 (DV2)	≤ 65535 time(s) (CVT model) ≤ 65535 time(s) (MT model)

Time Needed for Diagnosis: 1000 engine revs.

FK:DTC P2401 EVAPORATIVE EMISSION SYSTEM LEAK DETECTION PUMP CONTROL CIRCUIT LOW

1. OUTLINE OF DIAGNOSIS

Detect the open or short circuit of the ELCM vacuum pump.
Judge as NG if out of specification.

2. COMPONENT DESCRIPTION

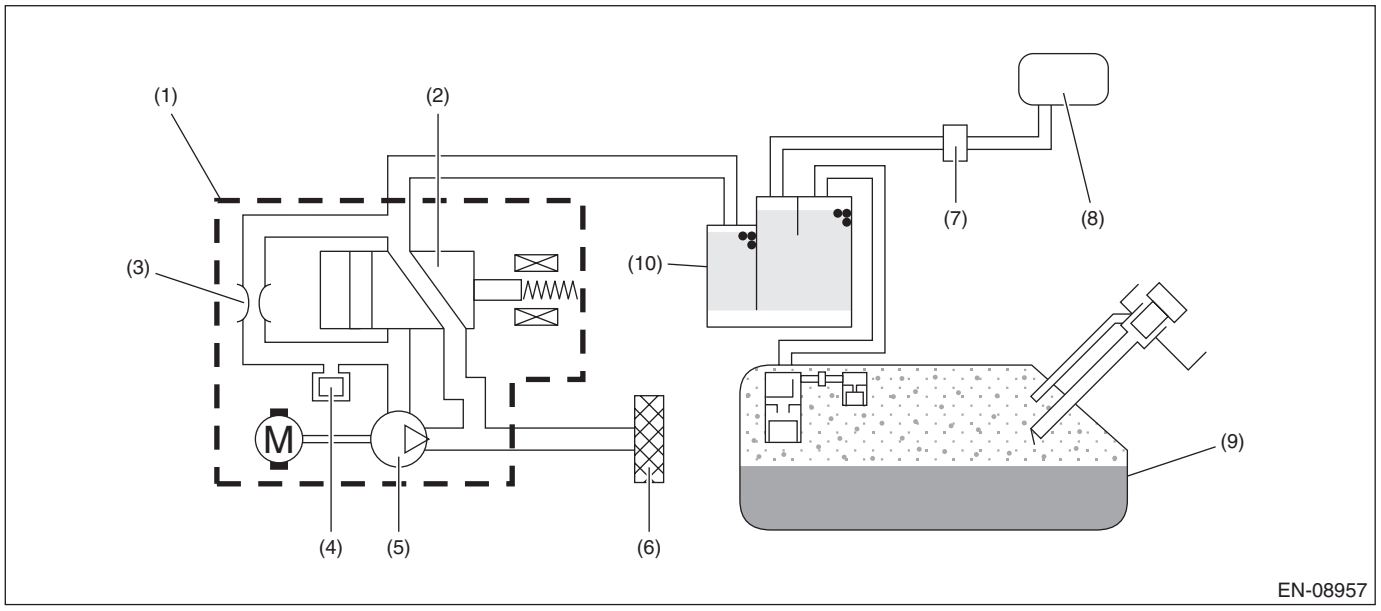

(1) ELCM
(2) Switching valve
(3) Reference orifice (0.02 inch orifice)
(4) Pressure sensor
(5) Vacuum pump
(6) Drain filter
(7) Purge control solenoid valve
(8) Intake manifold
(9) Fuel tank
(10) Canister

3. ENABLE CONDITIONS

Secondary Parameters	Enable Conditions
None	

4. GENERAL DRIVING CYCLE

Always perform the diagnosis continuously.

5. DIAGNOSTIC METHOD

• Abnormality Judgment

If the duration of time while the following conditions are met is longer than the time indicated, judge as NG.

Judgment Value

Malfunction Criteria	Threshold Value
Battery voltage	≥ 10.9
Terminal output voltage when ECM outputs OFF signal	Low

Time Needed for Diagnosis: 2500 ms
Malfunction Indicator Light Illumination: Illuminates as soon as a malfunction occurs.

• Normality Judgment

Judge as OK and clear the NG if the continuous time while the following conditions are established is more than the predetermined time.

Judgment Value

Malfunction Criteria	Threshold Value
Battery voltage	≥ 10.9
Terminal output voltage when ECM outputs OFF signal	High

Time Needed for Diagnosis: Less than 1 second

FL: DTC P2402 EVAPORATIVE EMISSION SYSTEM LEAK DETECTION PUMP CONTROL CIRCUIT HIGH

1. OUTLINE OF DIAGNOSIS

Detect the open or short circuit of the ELCM vacuum pump.
Judge as NG if out of specification.

2. COMPONENT DESCRIPTION

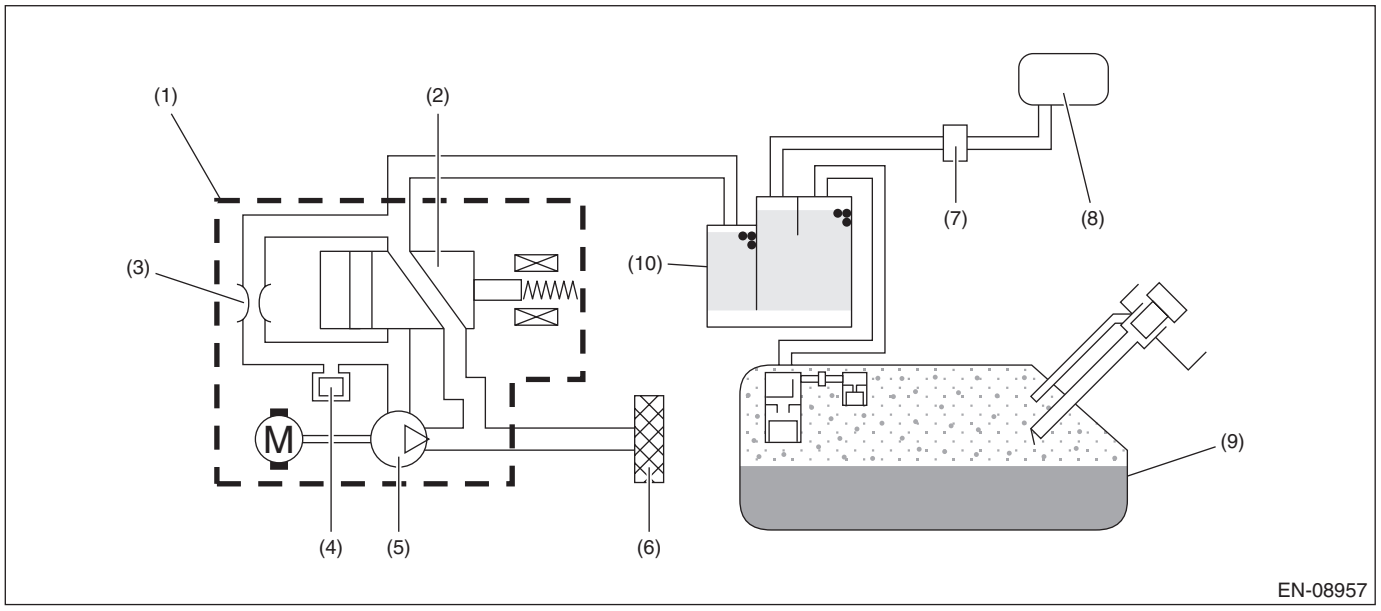

(1) ELCM
(2) Switching valve
(3) Reference orifice (0.02 inch orifice)
(4) Pressure sensor
(5) Vacuum pump
(6) Drain filter
(7) Purge control solenoid valve
(8) Intake manifold
(9) Fuel tank
(10) Canister

3. ENABLE CONDITIONS

Secondary Parameters	Enable Conditions
None	

4. GENERAL DRIVING CYCLE

Always perform the diagnosis continuously.

5. DIAGNOSTIC METHOD

• Abnormality Judgment

If the duration of time while the following conditions are met is longer than the time indicated, judge as NG.

Judgment Value

Malfunction Criteria	Threshold Value
Battery voltage	≥ 10.9
Terminal output voltage when ECM outputs ON signal	High

Time Needed for Diagnosis: 2500 ms
Malfunction Indicator Light Illumination: Illuminates as soon as a malfunction occurs.

• Normality Judgment

Judge as OK and clear the NG if the continuous time while the following conditions are established is more than the predetermined time.

Judgment Value

Malfunction Criteria	Threshold Value
Battery voltage	≥ 10.9
Terminal output voltage when ECM outputs ON signal	Low

Time Needed for Diagnosis: Less than 1 second

FM:DTC P2404 EVAPORATIVE EMISSION SYSTEM LEAK DETECTION PUMP SENSE CIRCUIT RANGE/PERFORMANCE

1. OUTLINE OF DIAGNOSIS

NOTE:
For the detection standard, refer to DTC P0455. <Ref. to GD(H4DO w/o HEV)-157, DTC P0455 EVAPORATIVE EMISSION SYSTEM LEAK DETECTED (LARGE LEAK), Diagnostic Trouble Code (DTC) Detecting Criteria.>

FN:DTC P2419 EVAPORATIVE EMISSION SYSTEM SWITCHING VALVE CONTROL CIRCUIT LOW

1. OUTLINE OF DIAGNOSIS

Detect the open or short circuit of the ELCM switching valve.
Judge as NG if out of specification.

2. COMPONENT DESCRIPTION

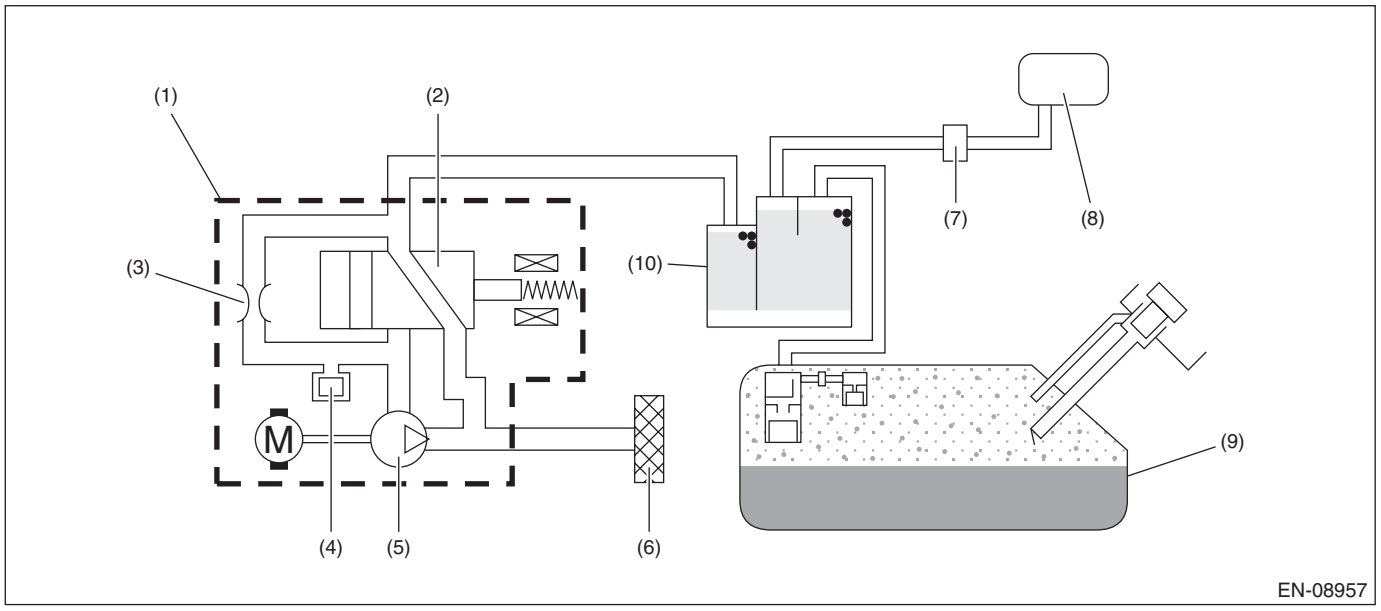

(1) ELCM
(2) Switching valve
(3) Reference orifice (0.02 inch orifice)
(4) Pressure sensor
(5) Vacuum pump
(6) Drain filter
(7) Purge control solenoid valve
(8) Intake manifold
(9) Fuel tank
(10) Canister

3. ENABLE CONDITIONS

Secondary Parameters	Enable Conditions
None	

4. GENERAL DRIVING CYCLE

Always perform the diagnosis continuously.

5. DIAGNOSTIC METHOD

- **Abnormality Judgment**

If the duration of time while the following conditions are met is longer than the time indicated, judge as NG.

Judgment Value

Malfunction Criteria	Threshold Value
Battery voltage	≥ 10.9
Terminal output voltage when ECM outputs OFF signal	Low

Time Needed for Diagnosis: 2500 ms
Malfunction Indicator Light Illumination: Illuminates as soon as a malfunction occurs.

- **Normality Judgment**

Judge as OK and clear the NG if the continuous time while the following conditions are established is more than the predetermined time.

Judgment Value

Malfunction Criteria	Threshold Value
Battery voltage	≥ 10.9
Terminal output voltage when ECM outputs OFF signal	High

Time Needed for Diagnosis: Less than 1 second

FO:DTC P2420 EVAPORATIVE EMISSION SYSTEM SWITCHING VALVE CONTROL CIRCUIT HIGH

1. OUTLINE OF DIAGNOSIS

Detect the open or short circuit of the ELCM switching valve.
Judge as NG if out of specification.

2. COMPONENT DESCRIPTION

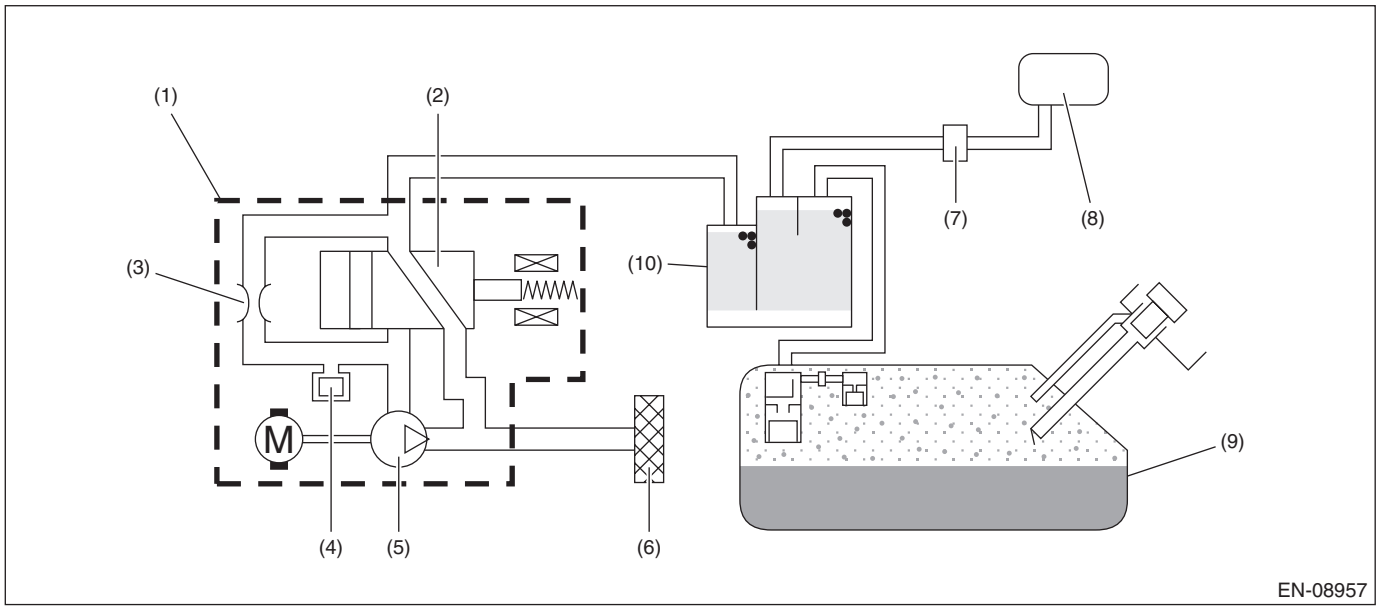

(1)	ELCM	(5)	Vacuum pump	(9)	Fuel tank
(2)	Switching valve	(6)	Drain filter	(10)	Canister
(3)	Reference orifice (0.02 inch orifice)	(7)	Purge control solenoid valve		
(4)	Pressure sensor	(8)	Intake manifold		

3. ENABLE CONDITIONS

Secondary Parameters	Enable Conditions
None	

4. GENERAL DRIVING CYCLE

Always perform the diagnosis continuously.

5. DIAGNOSTIC METHOD

- **Abnormality Judgment**

If the duration of time while the following conditions are met is longer than the time indicated, judge as NG.

Judgment Value

Malfunction Criteria	Threshold Value
Battery voltage	≥ 10.9
Terminal output voltage when ECM outputs ON signal	High

Time Needed for Diagnosis: 2500 ms
Malfunction Indicator Light Illumination: Illuminates as soon as a malfunction occurs.

- **Normality Judgment**

Judge as OK and clear the NG if the continuous time while the following conditions are established is more than the predetermined time.

Judgment Value

Malfunction Criteria	Threshold Value
Battery voltage	≥ 10.9
Terminal output voltage when ECM outputs ON signal	Low

Time Needed for Diagnosis: Less than 1 second

FP:DTC P2610 ECM/PCM INTERNAL ENGINE OFF TIMER PERFORMANCE

1. OUTLINE OF DIAGNOSIS

Detect malfunction of soaking timer IC by the five diagnoses below.

Monitor Number	Explanation	Time required for diagnosis
Monitor #1 <Timer diagnosis>	Perform diagnosis of the soaking timer IC accuracy	196 ms
Monitor #2 <Full count diagnosis>	Perform diagnosis of the soaking timer IC counter function	4000 ms
Monitor #3 <Soaking timer IC setting diagnosis>	Perform diagnosis of communication between ECM and soaking timer IC	196 ms
Monitor #4 <Timer diagnosis (during soaking)>	Perform diagnosis of the soaking timer IC accuracy during soaking	3000 ms
Monitor #5 <Wake-up diagnosis>	Perform diagnosis of wake-up function	64 ms

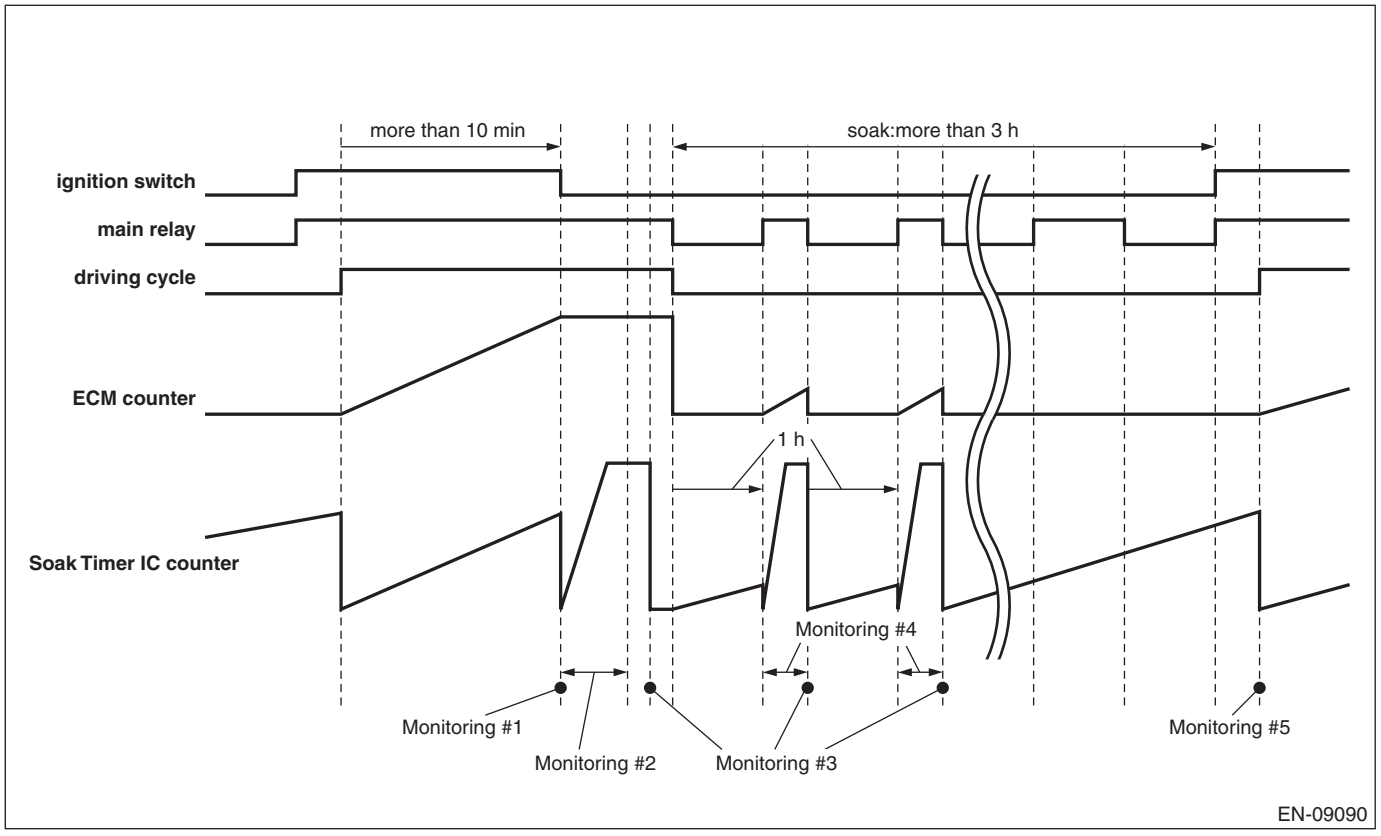

2. COMPONENT DESCRIPTION

The soaking timer IC is built into the ECM.

3. ENABLE CONDITIONS

Secondary Parameters	Enable Conditions
<Timer diagnosis>	
Battery voltage	≥ 10.9 V
Ignition switch	OFF
Elapsed time after starting the engine	> 600 s
< Full count diagnosis & soaking timer IC setting diagnosis>	
Battery voltage	≥ 10.9 V
Ignition switch	OFF
<Timer diagnosis (during soaking)>	
Battery voltage	≥ 10.9 V
Ignition switch	OFF
Number of wake-up	= 1, 2, 3, 4, 6, 8 time(s)
<Wake-up diagnosis>	
Ignition switch	ON
Wake-up activation time setting	Completed
Time in the soaking timer IC	> 3600 s

4. GENERAL DRIVING CYCLE

Perform the diagnosis only once when the ignition switch is OFF and when the ignition switch is ON after the soaking of one hour or more.

5. DIAGNOSTIC METHOD

<Timer diagnosis>

Start the count up operation of counters in ECM and in soaking timer IC when the engine is started.
Judge as timer malfunction if the difference between the counter in ECM and counter in soaking timer IC exceeds the allowable limit when the ignition switch is OFF.

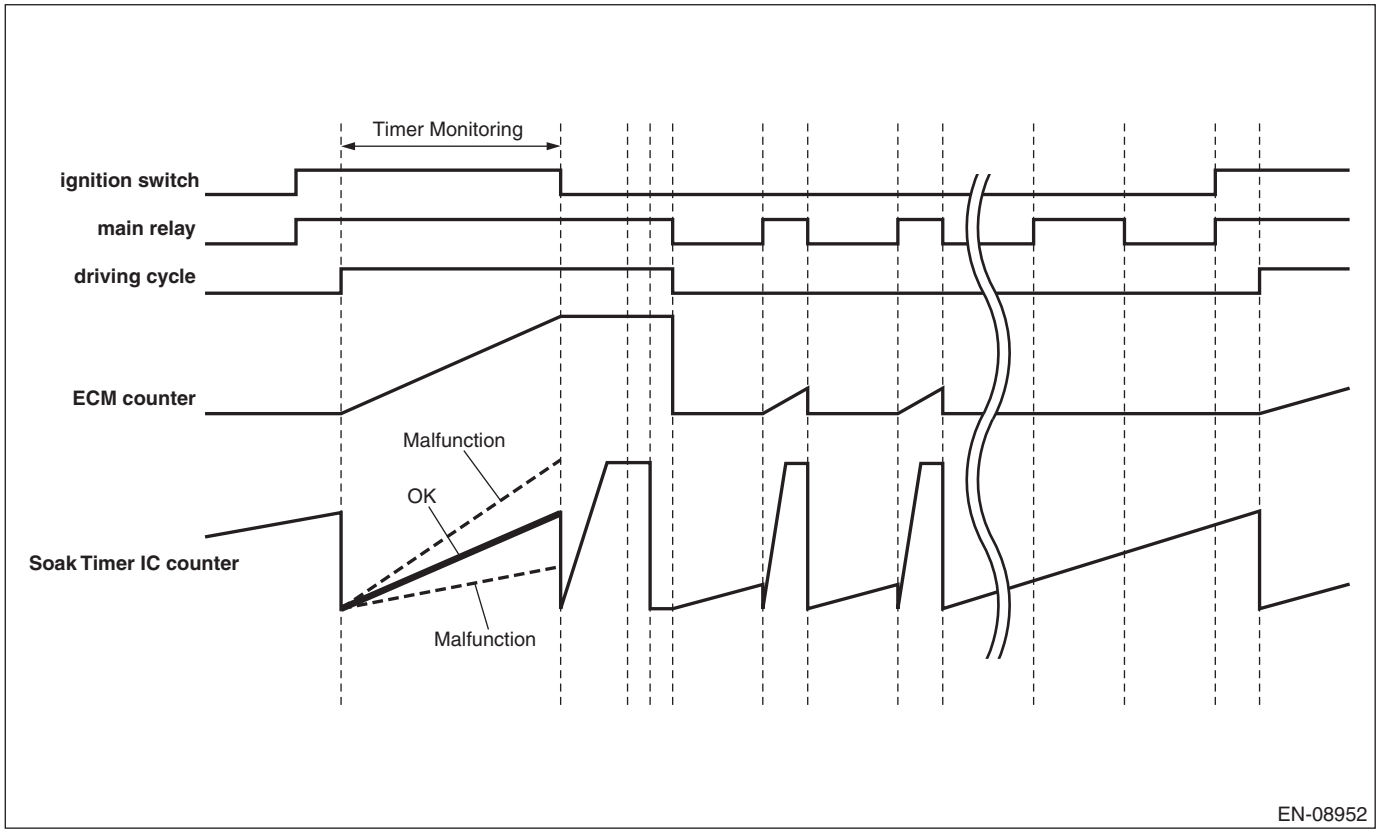

- **Abnormality Judgment**

Judge as NG when the following conditions are established.

Judgment Value

Malfunction Criteria	Threshold Value
|osoaktimcpu – osoaktimic| / osoaktimcpu osoaktimcpu = Counter in ECM osoaktimic = Counter in soaking timer IC	> 0.24

- **Normality Judgment**

Judge as OK when the following conditions are established.

Judgment Value

Malfunction Criteria	Threshold Value
|osoaktimcpu – osoaktimic| / osoaktimcpu	≤ 0.24

<Full count diagnosis>

Reset the counter in soaking timer IC and start the count up operation.
Judge as full count diagnosis malfunction if counter in soaking timer IC is not $3FF (1023 count) after 4 seconds.

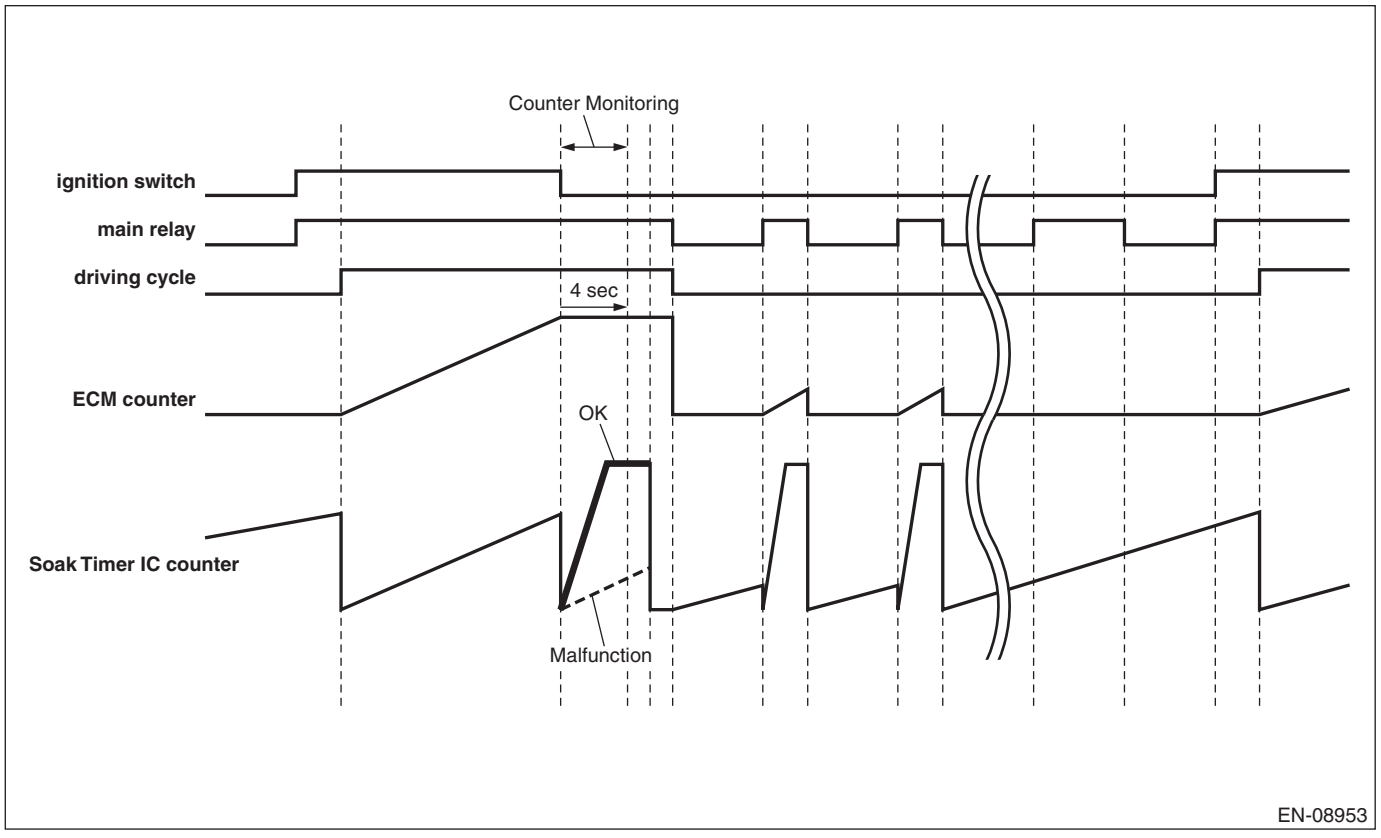

- **Abnormality Judgment**

Judge as NG when the following conditions are established.

Judgment Value

Malfunction Criteria	Threshold Value
osoakfcntic osoakfcntic = Counter in soaking timer IC	≠ $3FF (1023 count)

- **Normality Judgment**

Judge as OK when the following conditions are established.

Judgment Value

Malfunction Criteria	Threshold Value
osoakfcntic	= $3FF (1023 count)

<Soaking timer IC setting diagnosis>

When setting the activation setting time to soaking timer IC, compare the writing value to soaking timer IC with read out value. Judge as malfunction if the values do not match 3 times in a row.

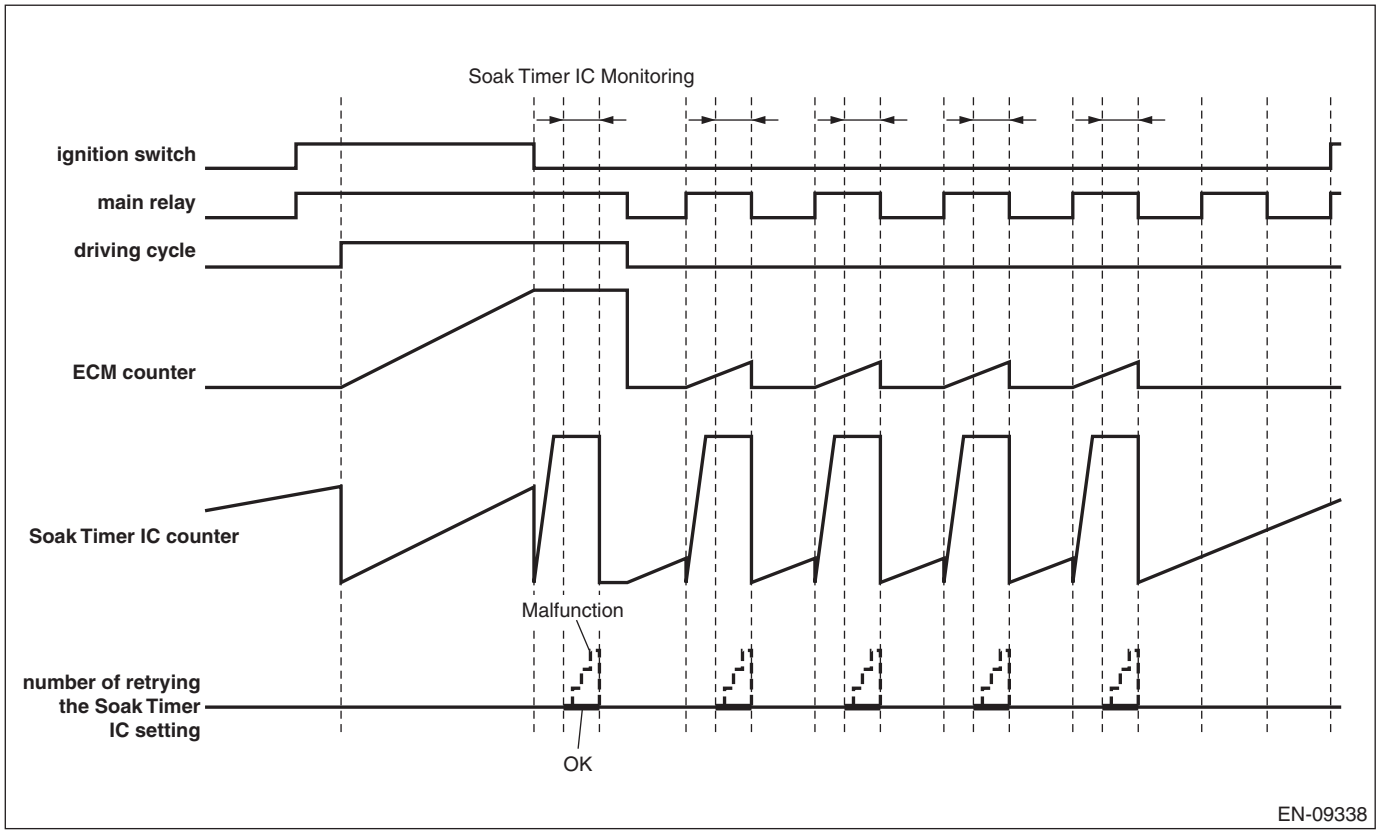

- **Abnormality Judgment**

Judge as NG when the following conditions are established.

Judgment Value

Malfunction Criteria	Threshold Value
Writing value and read out value when setting the soaking timer	Unmatch
Number of retrying the soaking timer setting	≥ 3 times

- **Normality Judgment**

Judge as OK when the following conditions are established.

Judgment Value

Malfunction Criteria	Threshold Value
Writing value and read out value when setting the soaking timer	Match

<Timer diagnosis (during soaking)>

Wake-up at the predetermined interval until 5, 7 or 9.5 hours have passed after the ignition switch is OFF, and compare the counter in soaking timer IC with the counter in ECM.
Judge as malfunction if the counter in soaking timer IC is counted up to maximum value (1023 count) when the counter in ECM is 1637 ms, or if the counter in soaking timer IC is not counted up to maximum value (1023 count) when the counter in ECM is 2455 ms.

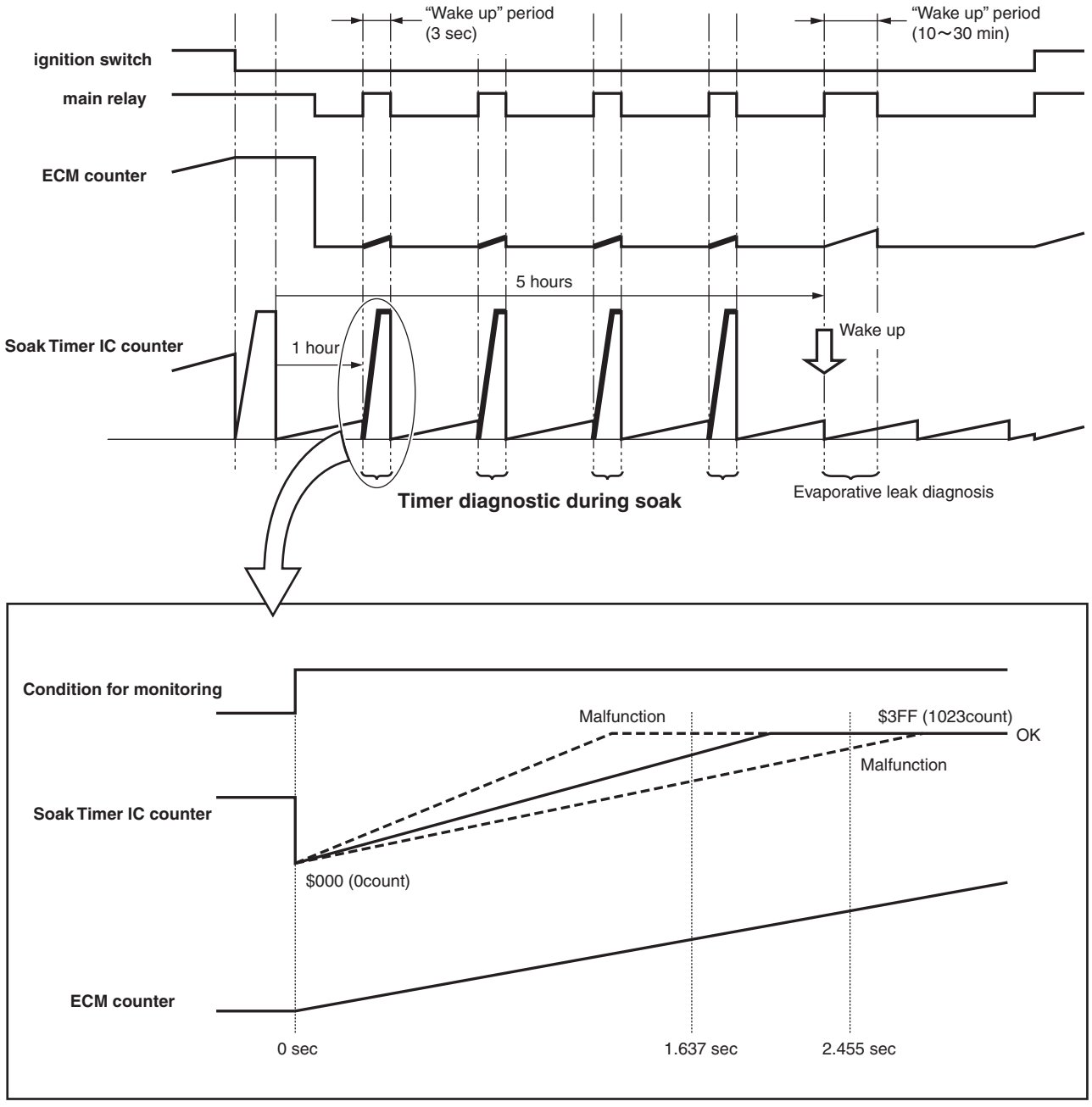

EN-08981

- **Abnormality Judgment**

Judge as NG when the following conditions are established.

Judgment Value

Malfunction Criteria	Threshold Value
When any one of the followings is established:	
• All of the following conditions are established.	
Counter in ECM	≤ 1637 ms
Counter in soaking timer IC	= $3FF (1023 count)
• All of the following conditions are established.	
Counter in ECM	≥ 2455 ms
Counter in soaking timer IC	≠ $3FF (1023 count)

- **Normality Judgment**

Judge as OK when the following conditions are established.

Judgment Value

Malfunction Criteria	Threshold Value
Following conditions are established.	
• All of the following conditions are established.	
Counter in ECM	≤ 1637 ms
Counter in soaking timer IC	≠ $3FF (1023 count)
• All of the following conditions are established.	
Counter in ECM	≥ 2455 ms
Counter in soaking timer IC	= $3FF (1023 count)

<Wake-up diagnosis>

Store the number of wake-up activation when the ECM wakes up by the soaking timer IC.
Next time when the ignition switch is ON, if the number of wake-up activation does not reach the predetermined value even though the counter in soaking timer IC operates 1 hour or more, judge as wake-up malfunction.

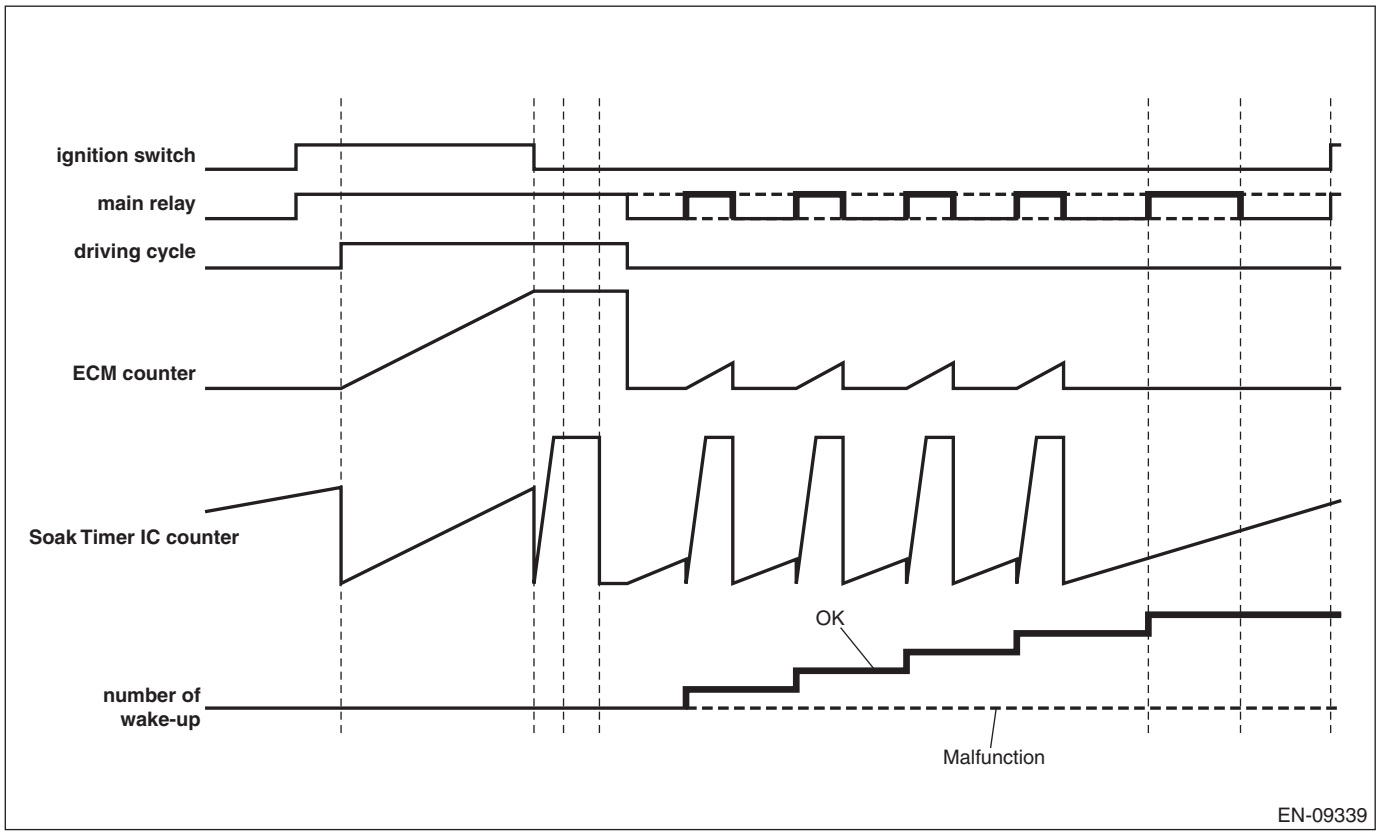

- **Abnormality Judgment**

Judge as NG when the following conditions are established.

Judgment Value

Malfunction Criteria	Threshold Value
Number of wake-up	< Wake-up indication count

- **Normality Judgment**

Judge as OK when the following conditions are established.

Judgment Value

Malfunction Criteria	Threshold Value
Number of wake-up	≥ Wake-up indication count

- **Abnormality Judgment**

Judge as NG when the following conditions are established.

Judgment Value

Malfunction Criteria	Threshold Value
Ignition switch	ON
Driving cycle	Completed
When any one of the followings is established:	
• Timer diagnosis	NG
• Full count diagnosis	NG
• Soaking timer IC setting diagnosis	NG
• Timer diagnosis (during soaking)	NG
• Wake-up diagnosis	NG

Time Needed for Diagnosis: Approx. 5 — 9.5 hours
Malfunction Indicator Light Illumination: Illuminates when malfunction occurs in 2 continuous driving cycles.

- **Normality Judgment**

Judge as OK and clear the NG if the following conditions are established.

Judgment Value

Malfunction Criteria	Threshold Value
Ignition switch	ON
Driving cycle	Completed
All of the following conditions are established.	
• Timer diagnosis	OK
• Full count diagnosis	OK
• Soaking timer IC setting diagnosis	OK
• Timer diagnosis (during soaking)	OK
• Wake-up diagnosis	OK

Time Needed for Diagnosis: Approx. 5 — 9.5 hours

FQ:DTC U0073 CONTROL MODULE COMMUNICATION BUS OFF

1. OUTLINE OF DIAGNOSIS

Detect malfunction of CAN communication.
Judge as NG when CAN communication failure has occurred.

2. COMPONENT DESCRIPTION

(Common Specifications)
CAN Protocol 2.0 B (Active)
Frame Format: 11 Bit ID Frame (Standard Frame)
Conforms to ISO11898
Communication Speed: 500 kbps

3. ENABLE CONDITIONS

Secondary Parameters	Enable Conditions
None	

4. GENERAL DRIVING CYCLE

Perform the diagnosis continuously after starting the engine.

5. DIAGNOSTIC METHOD

• Abnormality Judgment

Judge as NG when the following conditions are established.

Judgment Value

Malfunction Criteria	Threshold Value
Battery voltage	> 10.9 V
Starter switch	OFF
Engine	run
bus off flag or error warning flag	set (error)

Time Needed for Diagnosis: 436 ms
Malfunction Indicator Light Illumination: Illuminates as soon as a malfunction occurs.

• Normality Judgment

Judge as OK and clear the NG if the continuous time while the following conditions are established is more than the predetermined time.

Judgment Value

Malfunction Criteria	Threshold Value
Engine	run
bus off flag or error warning flag	clear (No error)

Time Needed for Diagnosis: 1000 ms

FR:DTC U0101 LOST COMMUNICATION WITH TCM

1. OUTLINE OF DIAGNOSIS

Detect malfunction of CAN communication.
Judge as NG when CAN communication failure between TCM, VDC CM and combination meter has occurred.

2. COMPONENT DESCRIPTION

(Common Specifications)
CAN Protocol 2.0 B (Active)
Frame Format: 11 Bit ID Frame (Standard Frame)
Conforms to ISO11898
Communication Speed: 500 kbps

3. ENABLE CONDITIONS

Secondary Parameters	Enable Conditions
None	

4. GENERAL DRIVING CYCLE

Perform the diagnosis continuously after starting the engine.

5. DIAGNOSTIC METHOD

• Abnormality Judgment

Judge as NG when the following conditions are established.

Judgment Value

Malfunction Criteria	Threshold Value
Battery voltage	> 10.9 V
Starter switch	OFF
Engine	run
ID received from control module connected to CAN	None during 500 milliseconds

Time Needed for Diagnosis: 500 ms
Malfunction Indicator Light Illumination: Illuminates as soon as a malfunction occurs.

• Normality Judgment

Judge as OK and clear the NG if the continuous time while the following conditions are established is more than the predetermined time.

Judgment Value

Malfunction Criteria	Threshold Value
Engine	run
ID received from control module connected to CAN	Yes

Time Needed for Diagnosis: 1000 ms

FS: DTC U0122 LOST COMMUNICATION WITH VEHICLE DYNAMICS CONTROL MODULE

1. OUTLINE OF DIAGNOSIS

NOTE:
For the detection standard, refer to DTC U0101. <Ref. to GD(H4DO w/o HEV)-283, DTC U0101 LOST COMMUNICATION WITH TCM, Diagnostic Trouble Code (DTC) Detecting Criteria.>

FT: DTC U0155 LOST COMMUNICATION WITH INSTRUMENT PANEL CLUSTER (IPC) CONTROL MODULE

1. OUTLINE OF DIAGNOSIS

NOTE:
For the detection standard, refer to DTC U0101. <Ref. to GD(H4DO w/o HEV)-283, DTC U0101 LOST COMMUNICATION WITH TCM, Diagnostic Trouble Code (DTC) Detecting Criteria.>

FU:DTC U0402 INVALID DATA RECEIVED FROM TCM

1. OUTLINE OF DIAGNOSIS

Detect malfunction of CAN communication.
Judge as NG when data received from TCM, VDC CM and combination meter is not normal.

2. COMPONENT DESCRIPTION

(Common Specifications)
CAN Protocol 2.0 B (Active)
Frame Format: 11 Bit ID Frame (Standard Frame)
Conforms to ISO11898
Communication Speed: 500 kbps

3. ENABLE CONDITIONS

Secondary Parameters	Enable Conditions
None	

4. GENERAL DRIVING CYCLE

Perform the diagnosis continuously after starting the engine.

5. DIAGNOSTIC METHOD

• Abnormality Judgment

Judge as NG when the following conditions are established.

Judgment Value

Malfunction Criteria	Threshold Value
Battery voltage	> 10.9 V
Starter switch	OFF
Engine	run
Data updated from control module connected to CAN	None during 2000 milliseconds

Time Needed for Diagnosis: 2 seconds
Malfunction Indicator Light Illumination: Illuminates as soon as a malfunction occurs.

• Normality Judgment

Judge as OK and clear the NG if the continuous time while the following conditions are established is more than the predetermined time.

Judgment Value

Malfunction Criteria	Threshold Value
Engine	run
Data updated from control module connected to CAN	Yes

Time Needed for Diagnosis: 1000 ms

FV:DTC U0416 INVALID DATA RECEIVED FROM VEHICLE DYNAMICS CONTROL MODULE

1. OUTLINE OF DIAGNOSIS

NOTE:
For the detection standard, refer to DTC U0402. <Ref. to GD(H4DO w/o HEV)-285, DTC U0402 INVALID DATA RECEIVED FROM TCM, Diagnostic Trouble Code (DTC) Detecting Criteria.>

FW:DTC U0423 INVALID DATA RECEIVED FROM INSTRUMENT PANEL CLUSTER CONTROL MODULE

1. OUTLINE OF DIAGNOSIS

NOTE:
For the detection standard, refer to DTC U0402. <Ref. to GD(H4DO w/o HEV)-285, DTC U0402 INVALID DATA RECEIVED FROM TCM, Diagnostic Trouble Code (DTC) Detecting Criteria.>

ENGINE 2 SECTION

This service manual has been prepared to provide SUBARU service personnel with the necessary information and data for the correct maintenance and repair of SUBARU vehicles.
This manual includes the procedures for maintenance, disassembling, reassembling, inspection and adjustment of components and diagnostics for guidance of experienced mechanics.
Please peruse and utilize this manual fully to ensure complete repair work for satisfying our customers by keeping their vehicle in optimum condition. When replacement of parts during repair work is needed, be sure to use SUBARU genuine parts.

All information, illustration and specifications contained in this manual are based on the latest product information available at the time of publication approval.

FUEL INJECTION (FUEL SYSTEMS)	FU(H4DO (HEV))
EMISSION CONTROL (AUX. EMISSION CONTROL DEVICES)	EC(H4DO (HEV))
INTAKE (INDUCTION)	IN(H4DO (HEV))
MECHANICAL	ME(H4DO (HEV))
EXHAUST	EX(H4DO (HEV))
COOLING	CO(H4DO (HEV))
LUBRICATION	LU(H4DO (HEV))
SPEED CONTROL SYSTEMS	SP(H4DO (HEV))
IGNITION	IG(H4DO (HEV))
STARTING/CHARGING SYSTEMS	SC(H4DO (HEV))
ENGINE (DIAGNOSTICS)	EN(H4DO HEV)(diag)
GENERAL DESCRIPTION	GD(H4DO HEV)

FUEL INJECTION (FUEL SYSTEMS)

FU(H4DO(HEV))

		Page
1.	General Description	2
2.	Throttle Body	15
3.	Intake Manifold	20
4.	Engine Wiring Harness	34
5.	Engine Coolant Temperature Sensor	41
6.	Engine Oil Temperature Sensor	44
7.	Crankshaft Position Sensor	46
8.	Crankshaft Position Sensor Plate	51
9.	Camshaft Position Sensor	52
10.	Oil Control Solenoid	57
11.	Knock Sensor	60
12.	Throttle Position Sensor	63
13.	Mass Air Flow and Intake Air Temperature Sensor	64
14.	Manifold Absolute Pressure Sensor	67
15.	Fuel Injector	70
16.	Tumble Generator Valve Assembly	74
17.	Tumble Generator Valve Actuator	77
18.	Front Oxygen (A/F) Sensor	79
19.	Rear Oxygen Sensor	82
20.	Engine Control Module (ECM)	85
21.	Main Relay	88
22.	IG Relay	90
23.	Oxygen Sensor Relay	92
24.	Electronic Throttle Control Relay	94
25.	Fuel Pump Relay	96
26.	Fuel	98
27.	Fuel Tank Protector	104
28.	Fuel Tank	105
29.	Fuel Filler Pipe	118
30.	Fuel Pump	122
31.	Fuel Level Sensor	128
32.	Fuel Sub Level Sensor	131
33.	Fuel Filter	138
34.	Fuel Delivery and Evaporation Lines	149
35.	Fuel System Trouble in General	155

1. General Description

A: SPECIFICATION

Fuel tank	Capacity	52 L (13.7 US gal, 11.4 Imp gal)
	Location	Under rear seat
Fuel pump	Type	Impeller
	Shutoff discharge pressure	750 kPa (7.7 kg/cm^2, 108.8 psi), or less
	Discharge rate	82 L (21.7 US gal, 18 Imp gal)/h or more [12 V at 343 kPa (3.5 kg/cm^2, 49.7 psi)]
Fuel filter		In-tank type

B: COMPONENT

1. INTAKE MANIFOLD 1

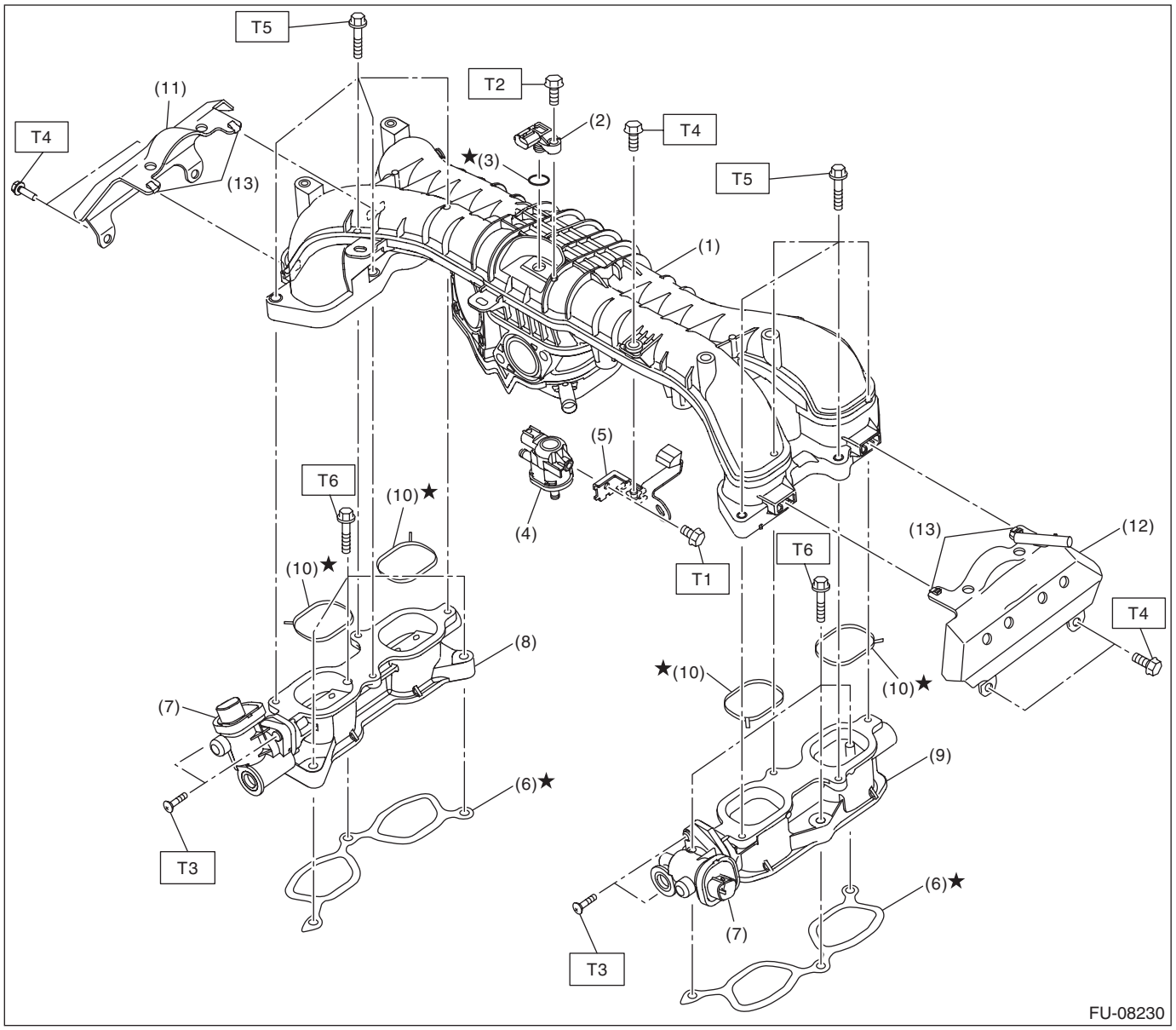

(1)	Intake manifold	(8)	Tumble generator valve LH	***Tightening torque: N·m (kgf-m, ft-lb)***
(2)	Manifold absolute pressure sensor	(9)	Tumble generator valve RH	***T1: 3.4 (0.3, 2.5)***
(3)	O-ring	(10)	Gasket	***T2: 4 (0.4, 3.0)***
(4)	Purge control solenoid valve	(11)	Intake manifold protector LH	***T3: 6 (0.6, 4.4)***
(5)	Purge control solenoid valve bracket	(12)	Intake manifold protector RH	***T4: 6.4 (0.7, 4.7)***
(6)	Gasket	(13)	Cushion	***T5: 8.3 (0.8, 6.1)***
(7)	Tumble generator valve actuator			***T6: 25 (2.5, 18.4)***

2. INTAKE MANIFOLD 2

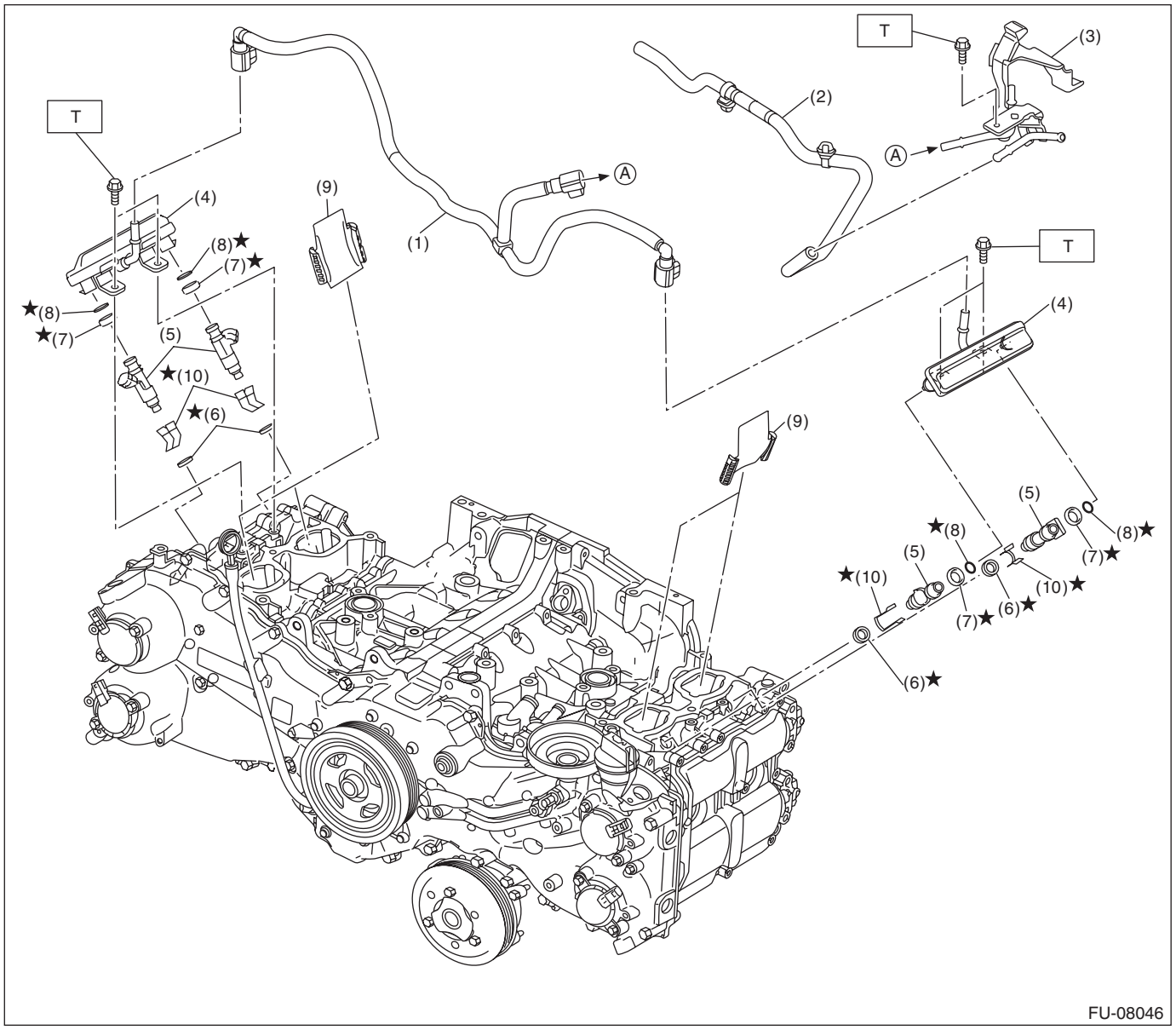

(1) Fuel delivery pipe
(2) Vacuum hose
(3) Fuel pipe ASSY
(4) Fuel pipe
(5) Fuel injector
(6) Seal ring
(7) Rubber
(8) O-ring
(9) Cylinder head plate
(10) Fuel injector holder

Tightening torque: N·m (kgf-m, ft-lb)
T: 6.4 (0.7, 4.7)

3. THROTTLE BODY

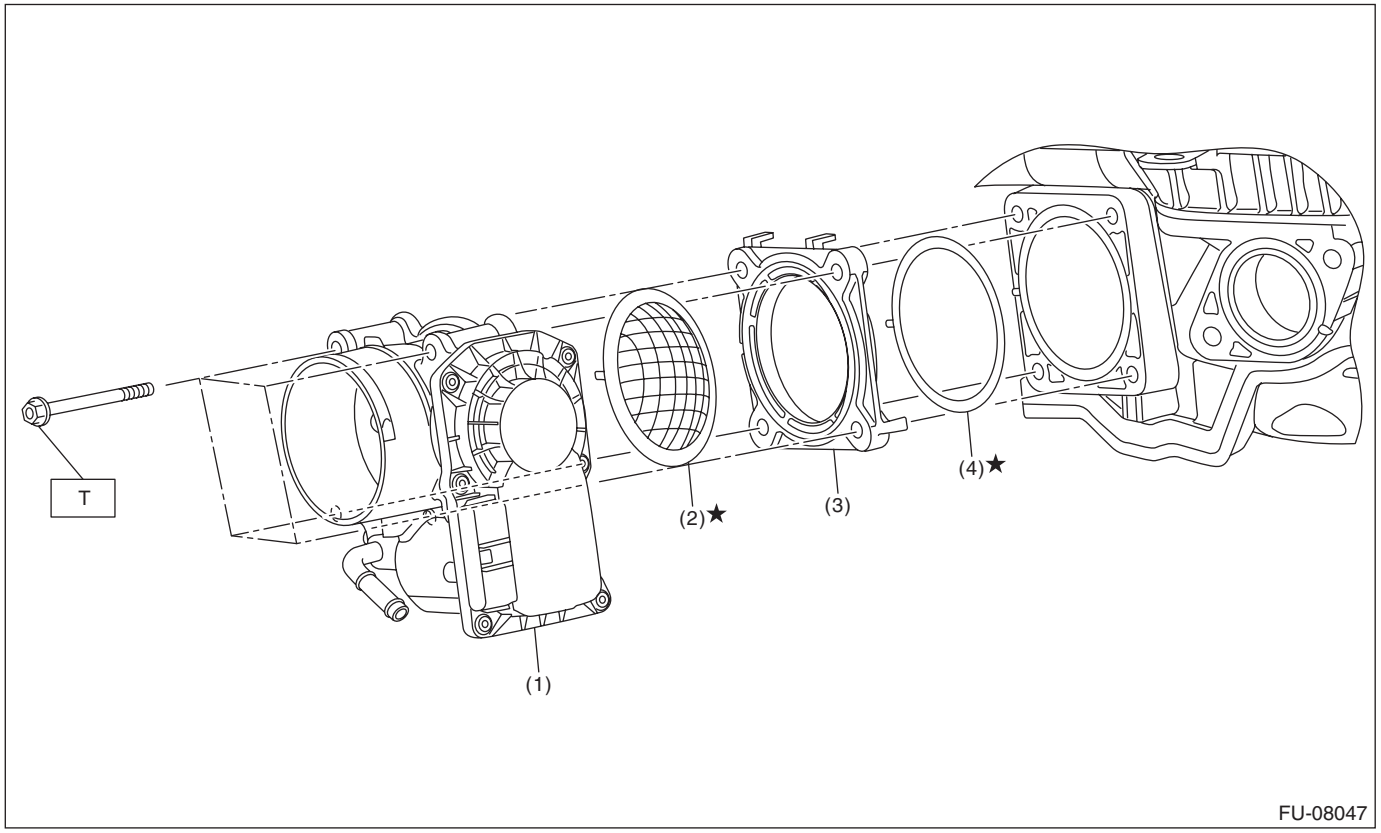

(1) Throttle body
(2) Gasket A
(3) Throttle chamber duct
(4) Gasket B

Tightening torque: N·m (kgf-m, ft-lb)
T: <Ref. to FU(H4DO(HEV))-16, INSTALLATION, Throttle Body.>

4. CRANKSHAFT POSITION, CAMSHAFT POSITION AND KNOCK SENSORS

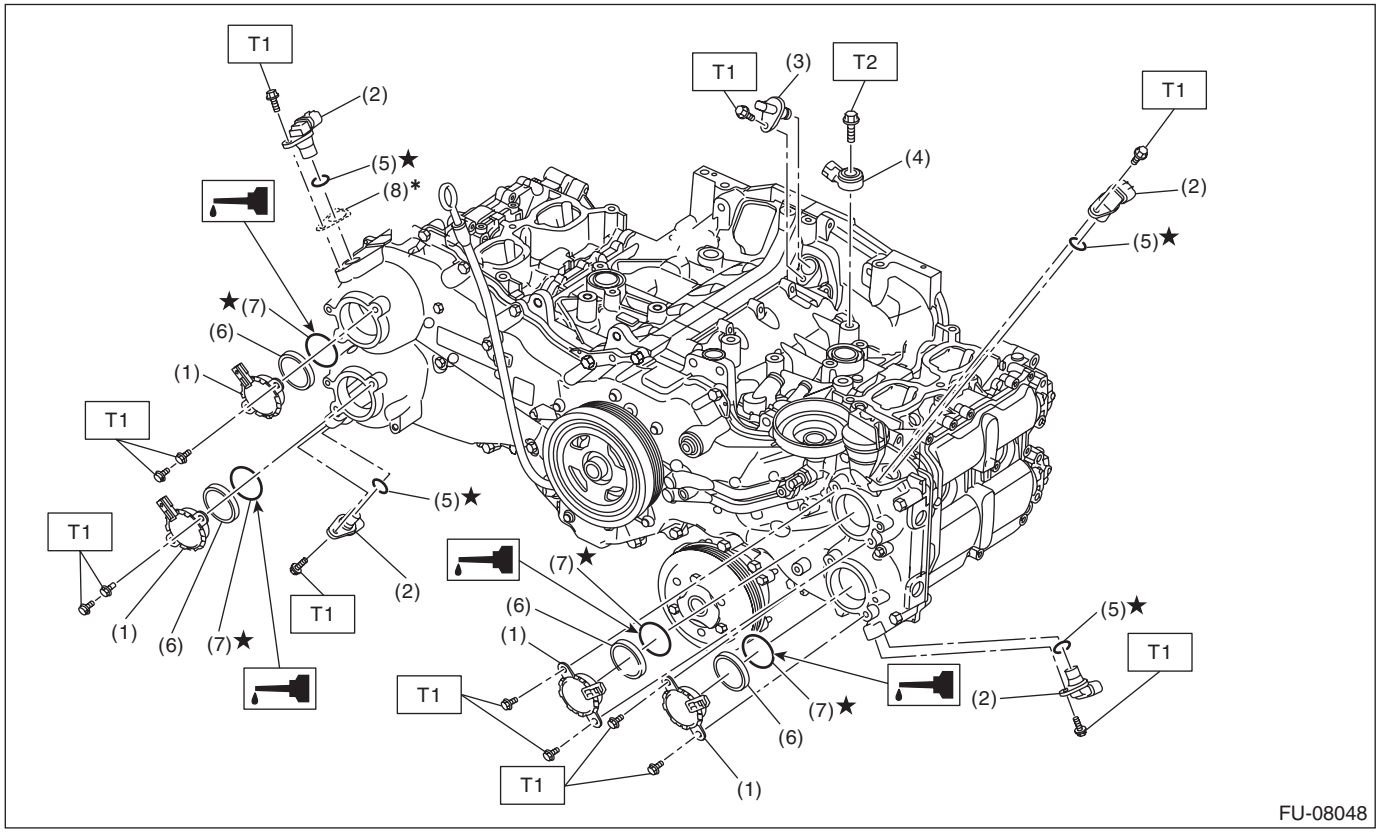

(1) Oil control solenoid
(2) Camshaft position sensor
(3) Crankshaft position sensor
(4) Knock sensor
(5) O-ring
(6) Back-up ring
(7) O-ring
(8) Spacer

* Zero or one spacer for gap adjustment.

Tightening torque: N·m (kgf-m, ft-lb)
T1: 6.4 (0.7, 4.7)
T2: 24 (2.4, 17.7)

5. FUEL TANK

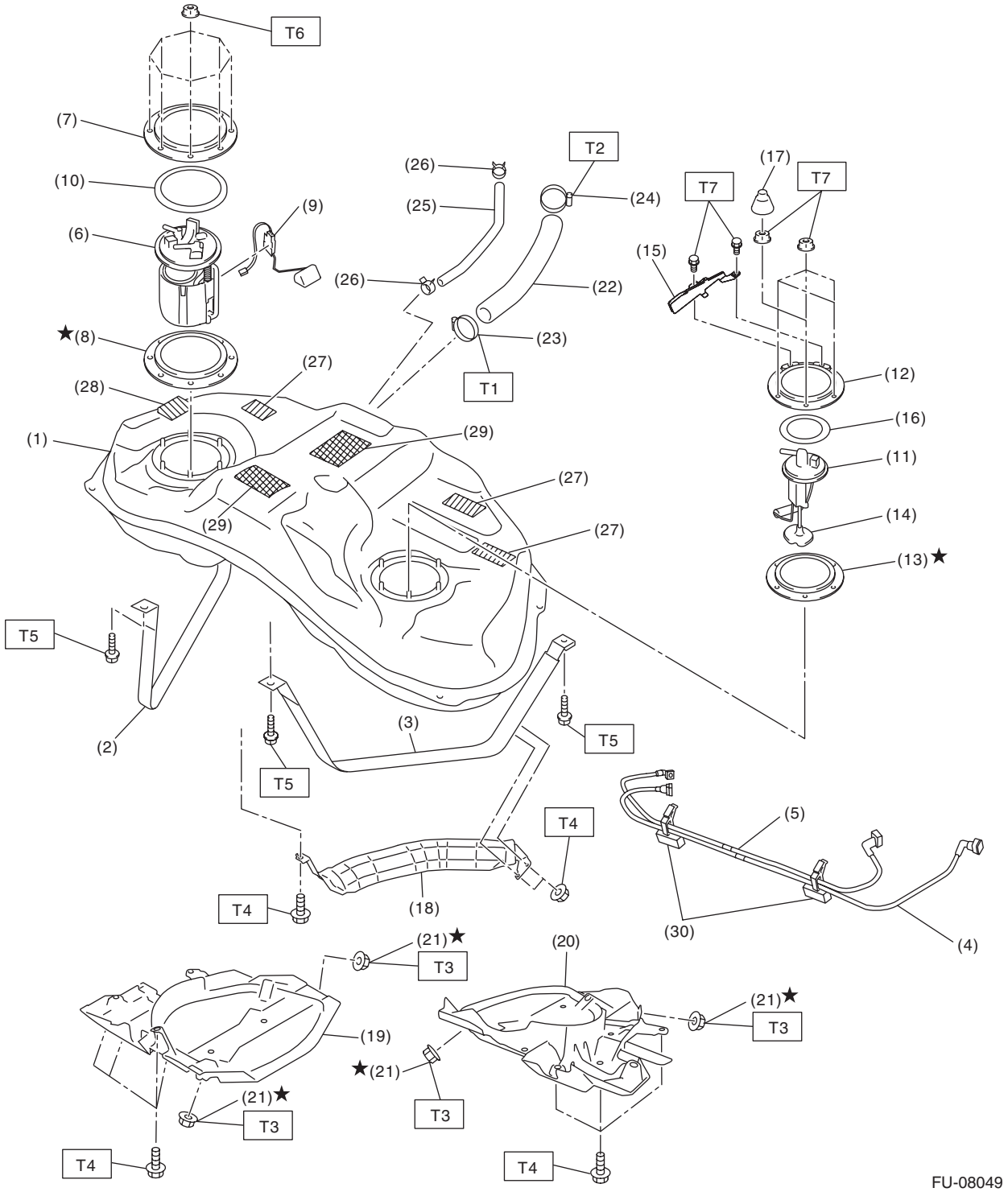
T6
(7)
(10)
(9)
(6)
★(8)
(27)
(28)
(1)
(29)
(26)
(25)
T2
(24)
(26)
(22)
(23)
T1
(17)
T7
T7
(15)
(12)
(16)
(11)
(14)
(13)★
(27)
(29)
(27)
T5
(2)
(3)
T5
T5
T4
T4
(18)
(5)
(30)
(4)
(21)★
T3
(20)
(21)★
T3
(19)
★(21)
T3
(21)★
T3
T4
T4
FU-08049

(1) Fuel tank
(2) Fuel tank band RH
(3) Fuel tank band LH
(4) Delivery tube
(5) Jet pump tube
(6) Fuel pump ASSY
(7) Fuel pump upper plate
(8) Fuel pump gasket
(9) Fuel level sensor
(10) Fuel pump upper plate cushion
(11) Fuel sub level sensor
(12) Fuel sub level sensor upper plate
(13) Fuel sub level sensor gasket
(14) Fuel sub level sensor filter
(15) Fuel sub level sensor protector
(16) Fuel sub level sensor upper plate cushion
(17) Rubber cap
(18) Heat shield cover
(19) Fuel tank protector RH
(20) Fuel tank protector LH
(21) Self-locking nut
(22) Fuel filler hose
(23) Clamp
(24) Clamp
(25) Evaporation hose
(26) Clip
(27) Cushion
(28) Cushion
(29) Cushion
(30) Tube clamp

Tightening torque: N·m (kgf-m, ft-lb)

T1: 2 (0.2, 1.5)
T2: 2.5 (0.3, 1.8)
T3: 9 (0.9, 6.6)
T4: 18 (1.8, 13.3)
T5: 33 (3.4, 24.3)
T6: <Ref. to FU(H4DO(HEV))-126, INSTALLATION, Fuel Pump.>
T7: <Ref. to FU(H4DO(HEV))-134, INSTALLATION, Fuel Sub Level Sensor.>

6. FUEL LINE

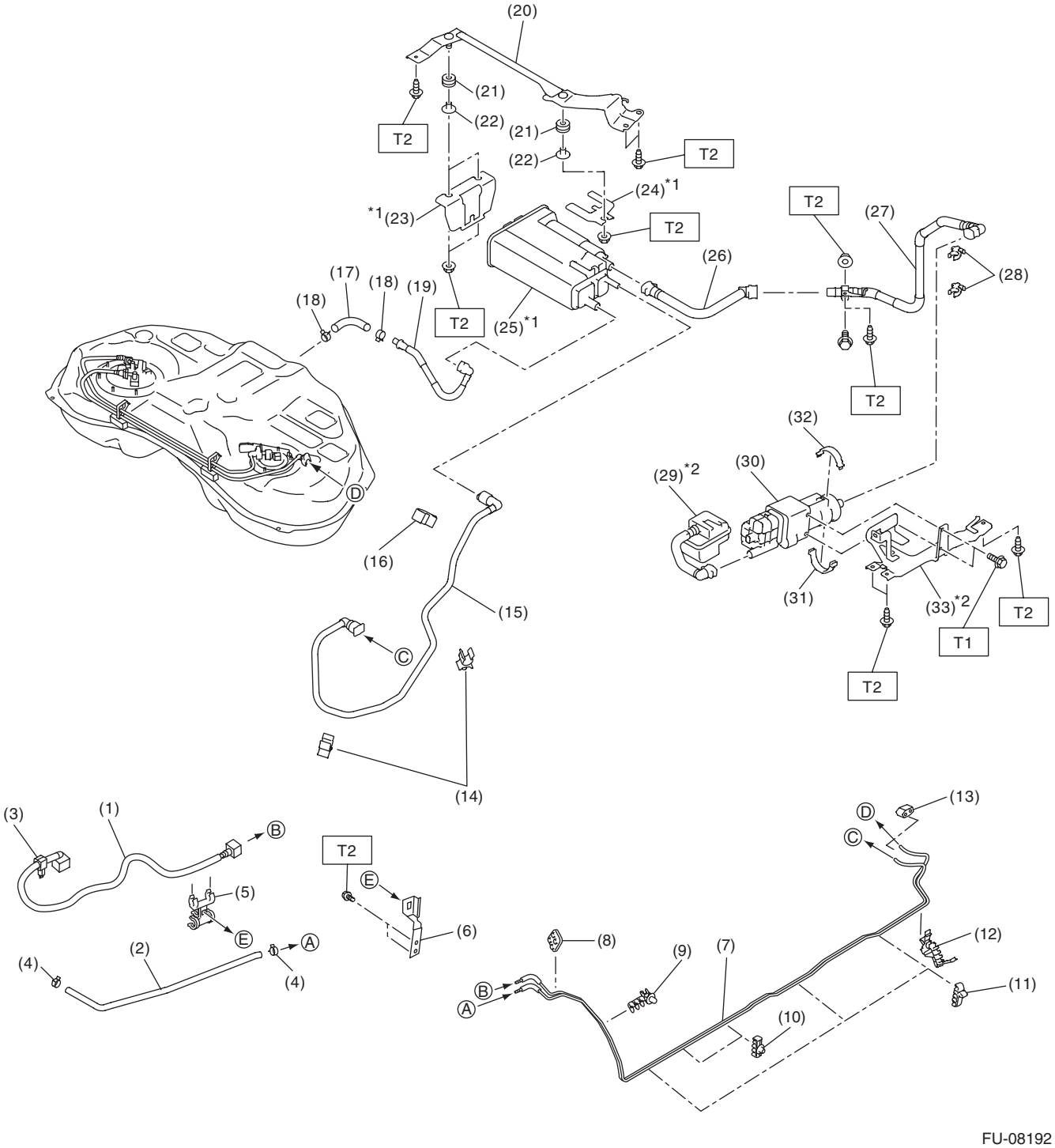
(20)
(21)
(22)
T2
(24)*1
*1(23)
(25)*1
(26)
(27)
(28)
(17)
(18)
(19)
(16)
(15)
(14)
(29)*2
(30)
(32)
(31)
(33)*2
T1
(3)
(1)
(5)
(2)
(4)
(6)
(8)
(9)
(7)
(10)
(11)
(12)
(13)
FU-08192

(1) Fuel delivery tube
(2) Evaporation hose
(3) Tube clamp
(4) Clip
(5) Hose clamp
(6) Hose clamp bracket
(7) Fuel pipe ASSY
(8) Fuel pipe front grommet
(9) Pipe clamp
(10) Pipe clamp
(11) Pipe clamp
(12) Pipe clamp
(13) Fuel pipe rear grommet
(14) Tube clamp
(15) Purge tube
(16) Clip
(17) Vent hose
(18) Clip
(19) Vent tube
(20) Canister bracket A
(21) Cushion
(22) Collar
(23) Canister bracket B
(24) Canister bracket C
(25) Canister
(26) Drain tube A
(27) Drain tube B
(28) Tube clamp
(29) Drain filter
(30) Leak check valve ASSY
(31) Clamp A
(32) Clamp B
(33) Drain bracket

Tightening torque: N·m (kgf-m, ft-lb)
T1: 5.4 (0.6, 4.0)
T2: 7.5 (0.8, 5.5)

*1 When removing the canister bracket from the canister, use the new canister and canister bracket to install.
*2 When removing the drain bracket from the drain filter, use the new drain filter and drain bracket to install.

7. FUEL FILLER PIPE

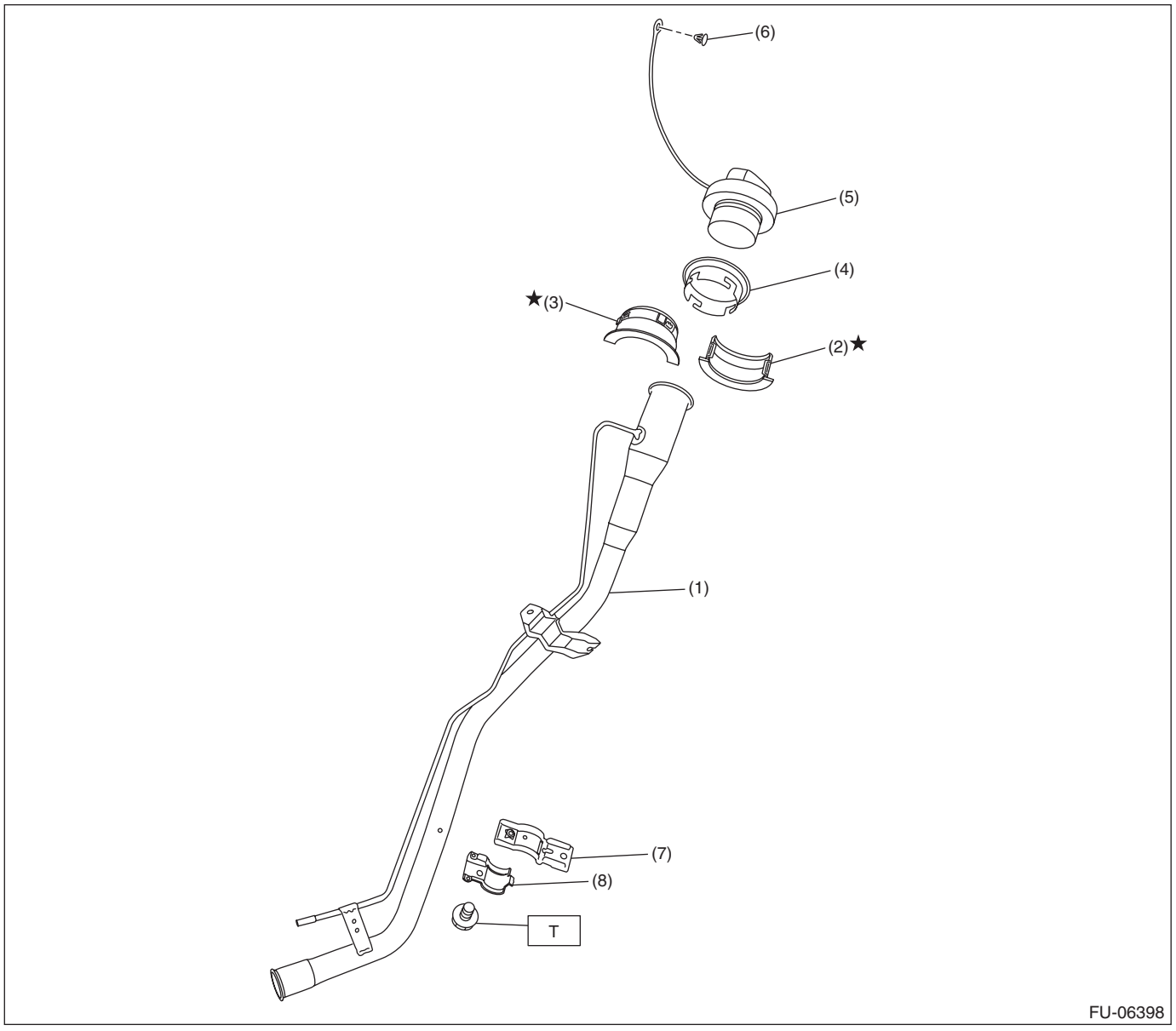

(1) Fuel filler pipe ASSY
(2) Neck holder A
(3) Neck holder B
(4) Fuel filler pipe protector
(5) Fuel filler cap
(6) Clip
(7) Upper bracket
(8) Lower bracket

Tightening torque: N·m (kgf-m, ft-lb)
T: 7.35 (0.7, 5.4)

8. FUEL PUMP

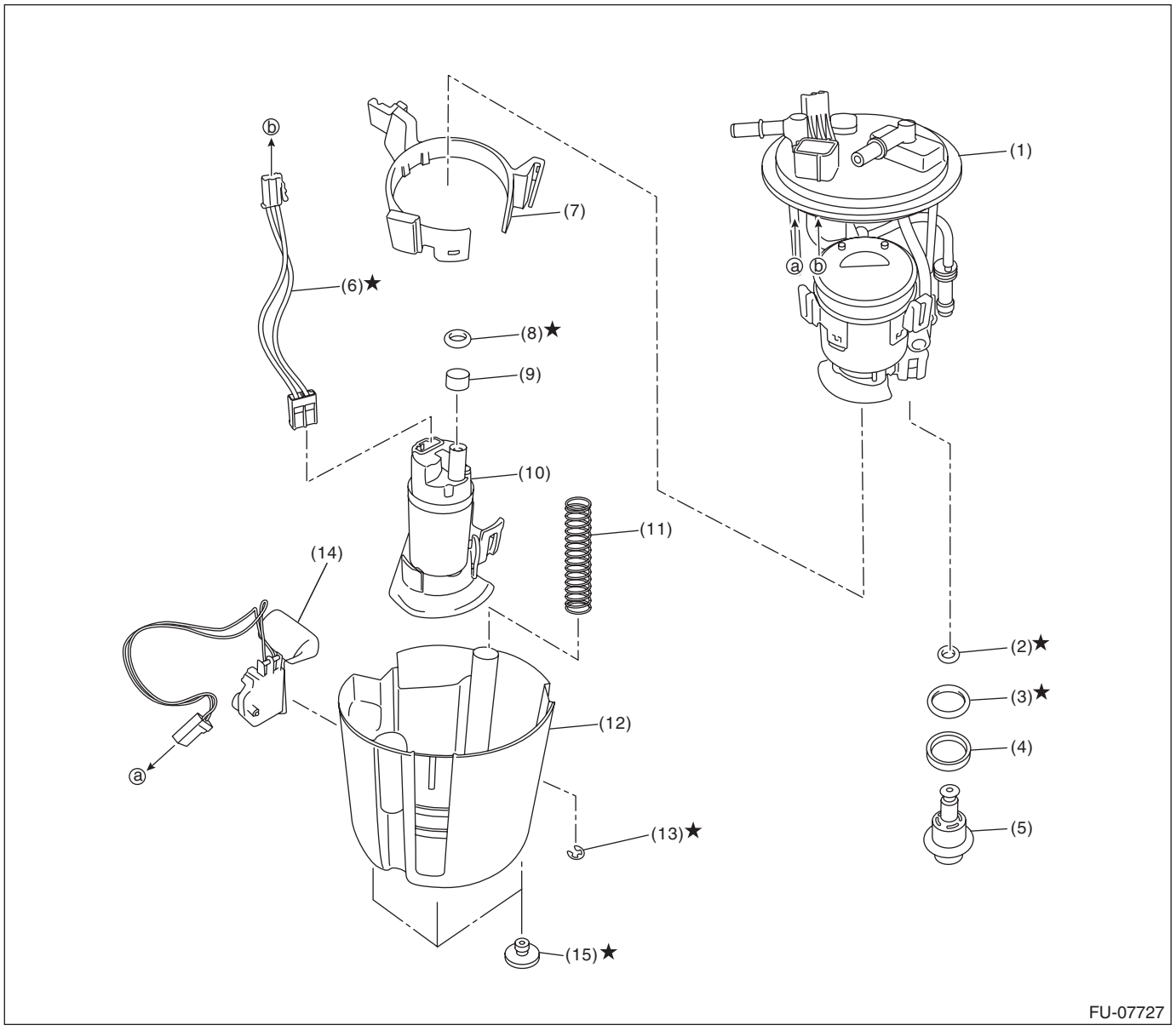

(1) Fuel filter ASSY
(2) O-ring
(3) O-ring
(4) Back-up ring
(5) Pressure regulator
(6) Connector cable
(7) Fuel pump holder
(8) O-ring
(9) Spacer
(10) Fuel pump
(11) Spring
(12) Fuel chamber ASSY
(13) Clip
(14) Fuel level sensor
(15) Cushion

C: CAUTION

- Prior to starting work, pay special attention to the following:
  1. Always wear work clothes, a work cap, and protective shoes. Additionally, wear a helmet, protective goggles, etc. if necessary.
  2. Protect the vehicle using a seat cover, fender cover, etc.
  3. Prepare the service tools, clean cloth, containers to catch grease and oil, etc.
- Place “NO OPEN FLAMES” signs near the working area.
- Prepare a container and cloth to prevent scattering of fuels when performing work where fuels can be spilled. If the oil spills, wipe it off immediately to prevent from penetrating into floor or flowing out for environmental protection.
- Vehicle components are extremely hot immediately after driving. Be wary of receiving burns from heated parts.
- When performing a repair, identify the cause of trouble and avoid unnecessary removal, disassembly and replacement.
- Before disconnecting connectors of sensors or units, be sure to disconnect the ground cable from battery.
- Always use the jack-up point when the shop jacks or rigid racks are used to support the vehicle.
- Remove contamination including dirt and corrosion before removal, installation, disassembly or assembly.
- Keep the removed parts in order and protect them from dust and dirt.
- All removed parts, if to be reused, should be reinstalled in the original positions with attention to the correct directions, etc.
- Bolts, nuts and washers should be replaced with new parts as required.
- Follow all government and local regulations concerning disposal of refuse when disposing fuel.
- When the suspension-related components have been removed and installed, be sure to adjust the steering angle sensor. <Ref. to VDC-21, ADJUSTMENT, VDC Control Module and Hydraulic Control Unit (VDC-CM&H/U).>

D: PREPARATION TOOL

1. SPECIAL TOOL

ILLUSTRATION	TOOL NUMBER	DESCRIPTION	REMARKS
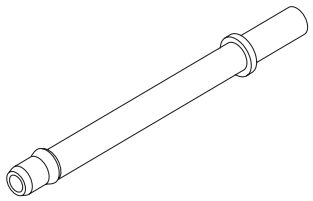 ST18471AA000	18471AA000	FUEL PIPE ADAPTER	Used for draining fuel.
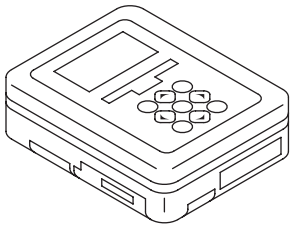 ST1B022XU0	1B022XU0	SUBARU SELECT MONITOR III KIT	Used for draining fuel and each inspection.

2. GENERAL TOOL

TOOL NAME	REMARKS
Circuit tester	Used for measuring resistance and voltage.
Oscilloscope	Used for inspecting the waveform of each sensor.

2. Throttle Body

A: REMOVAL

1) Disconnect the ground cable from battery. <Ref. to NT-5, BATTERY, NOTE, Note.>

NOTE:
For the 12 volt engine restart battery, disconnect the ground terminal from 12V engine restart battery sensor.

2) Remove the collector cover.
   (1) Pull up the two points at the front of collector cover (A).
   (2) Pull up the two points at the rear of collector cover (B) while moving them rearward.

NOTE:
Be careful not to contact the fuel delivery tube when moving the collector cover rearward.

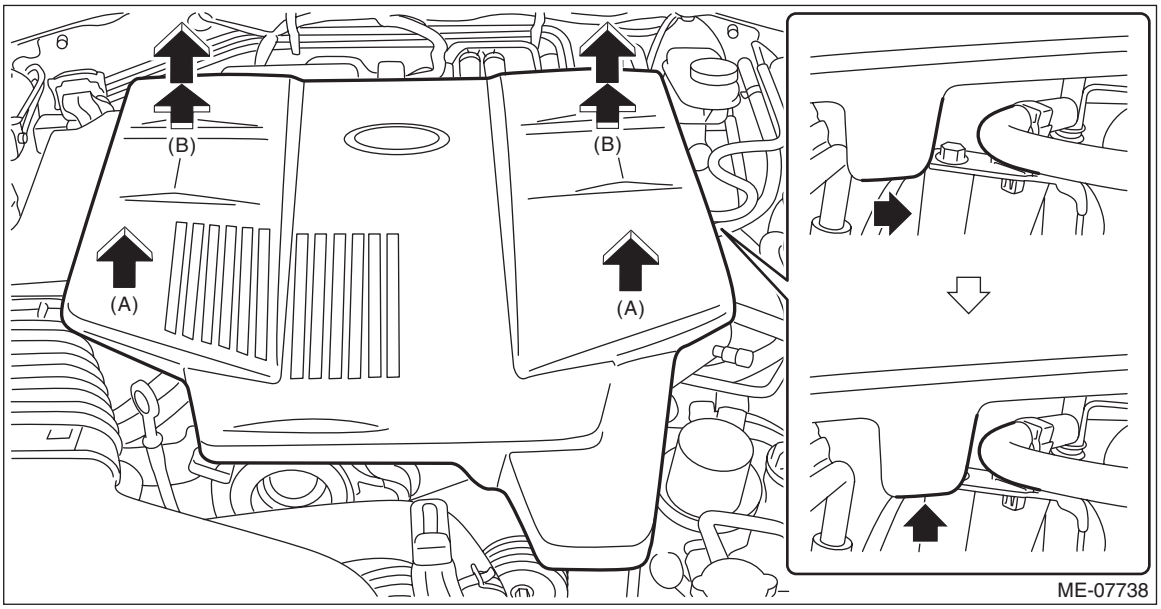

3) Lift up the vehicle.
4) Remove the under cover. <Ref. to EI-29, REMOVAL, Front Under Cover.>
5) Drain approximately 3.0 L (3.2 US qt, 2.6 Imp qt) of coolant. <Ref. to CO(H4DO(w/o HEV))-16, DRAINING OF ENGINE COOLANT, REPLACEMENT, Engine Coolant.>
6) Remove the air cleaner case. <Ref. to IN(H4DO(HEV))-6, REMOVAL, Air Cleaner Case.>
7) Remove the air intake boot No. 2. <Ref. to IN(H4DO(HEV))-11, AIR INTAKE BOOT NO. 2, REMOVAL, Air Intake Boot.>

8) Disconnect the connectors (A) from the throttle position sensor.
9) Disconnect the preheater hose (B) from the throttle body.
10) Disconnect the preheater hose (C) from the water pipe assembly LH.
11) Remove the throttle body from the intake manifold.

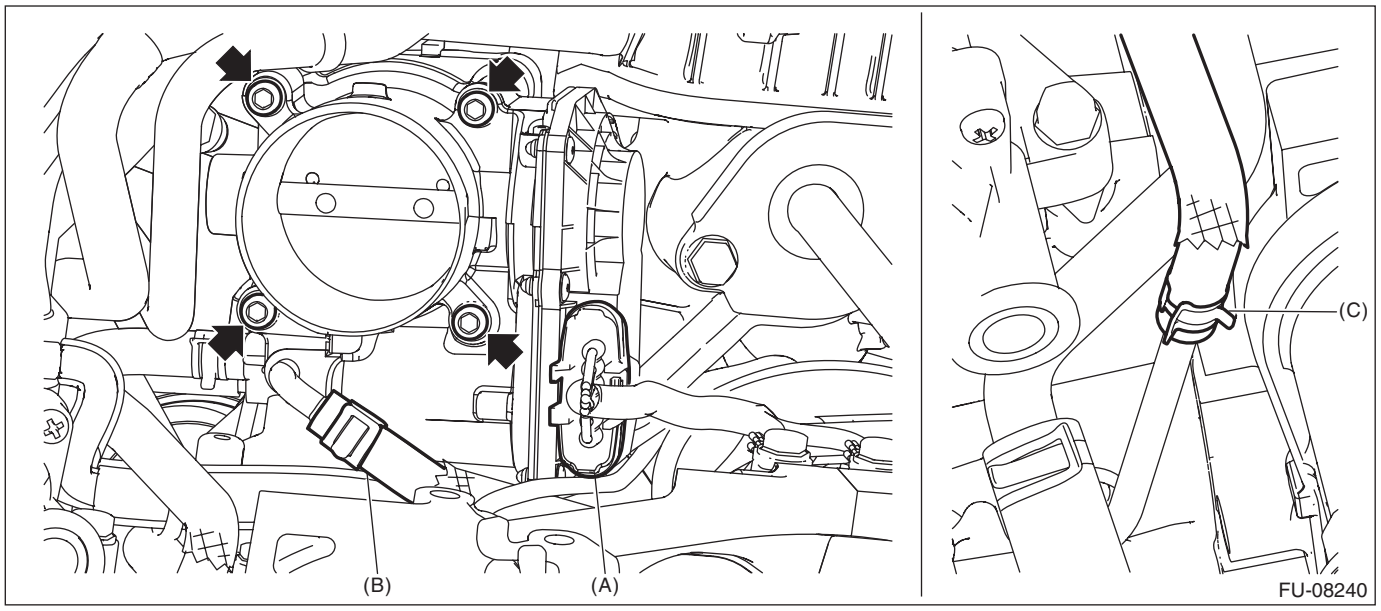

12) Disconnect the preheater hose from throttle body.

B: INSTALLATION

Install in the reverse order of removal.

NOTE:
- Use a new gasket.
- Install it by aligning the protrusion of the gasket with the groove of the throttle chamber duct or the intake manifold.

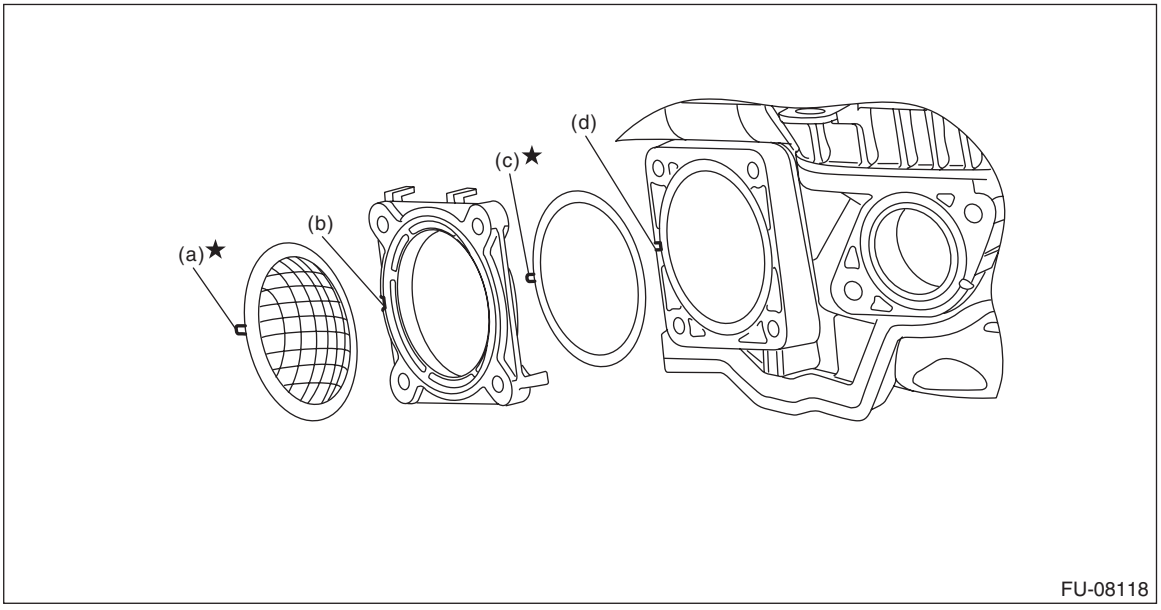

(a) Gasket A protrusion
(b) Throttle chamber duct groove
(c) Gasket B protrusion
(d) Intake manifold groove

• Tighten with the specified torque in the numerical sequence as shown in the figure, and further tighten with the specified torque in the numerical sequence as shown in the figure.

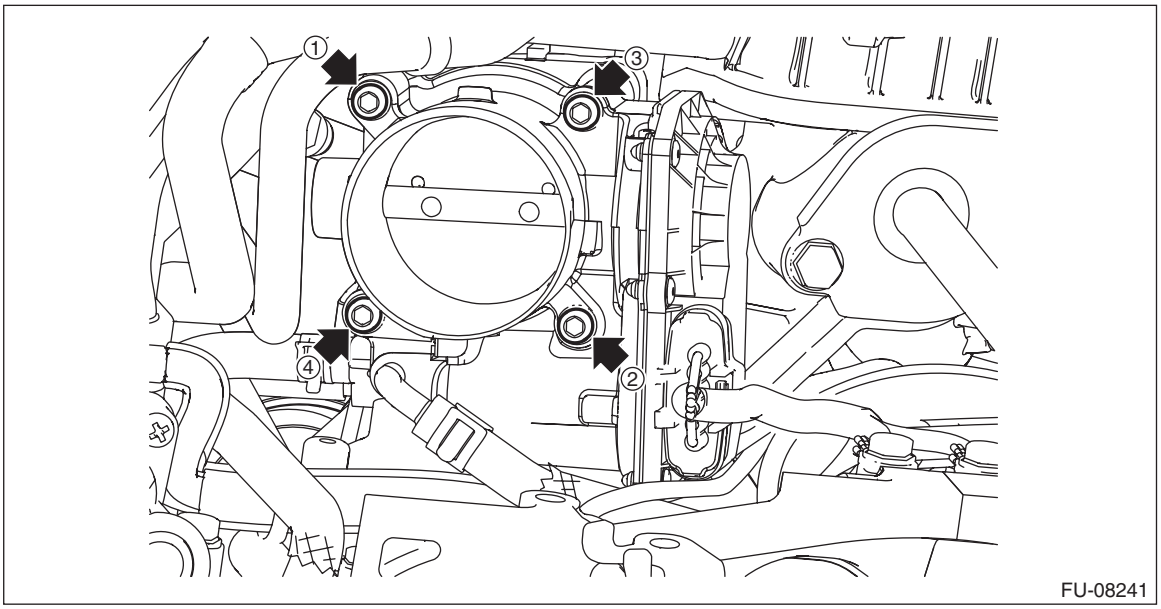

Tightening torque:
8 N·m (0.8 kgf-m, 5.9 ft-lb)

C: INSPECTION

1. THROTTLE SENSOR (METHOD WITH CIRCUIT TESTER)

1) Remove the glove box. <Ref. to EI-73, REMOVAL, Glove Box.>
2) After warming-up the engine, turn the ignition switch to OFF.
3) Turn the ignition switch to ON. (engine OFF)
4) Measure the voltage between ECM connector terminals.

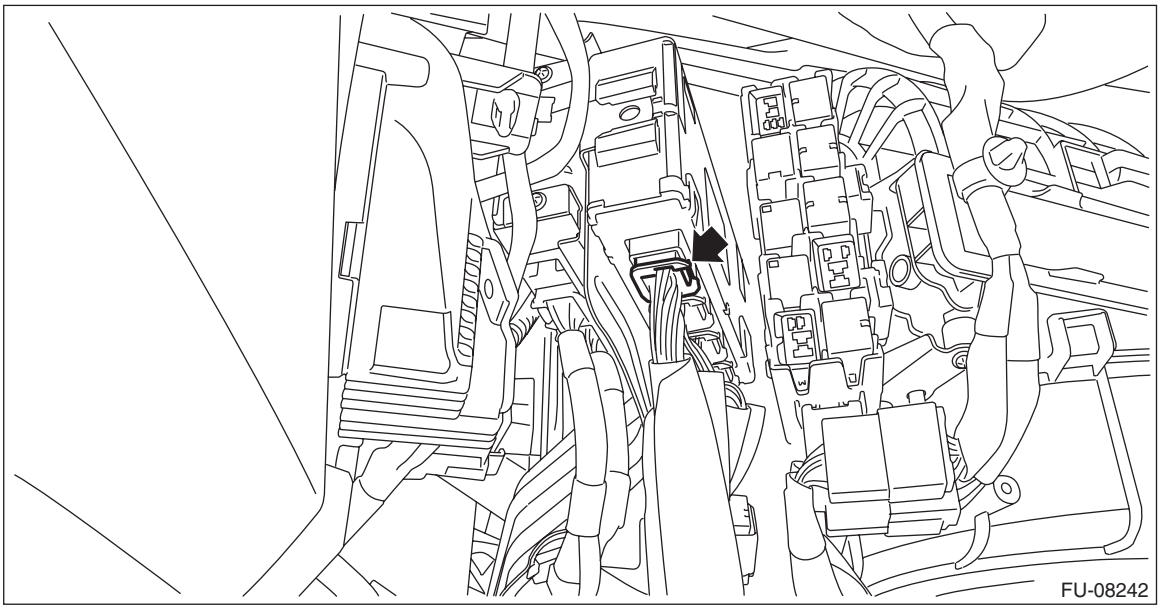

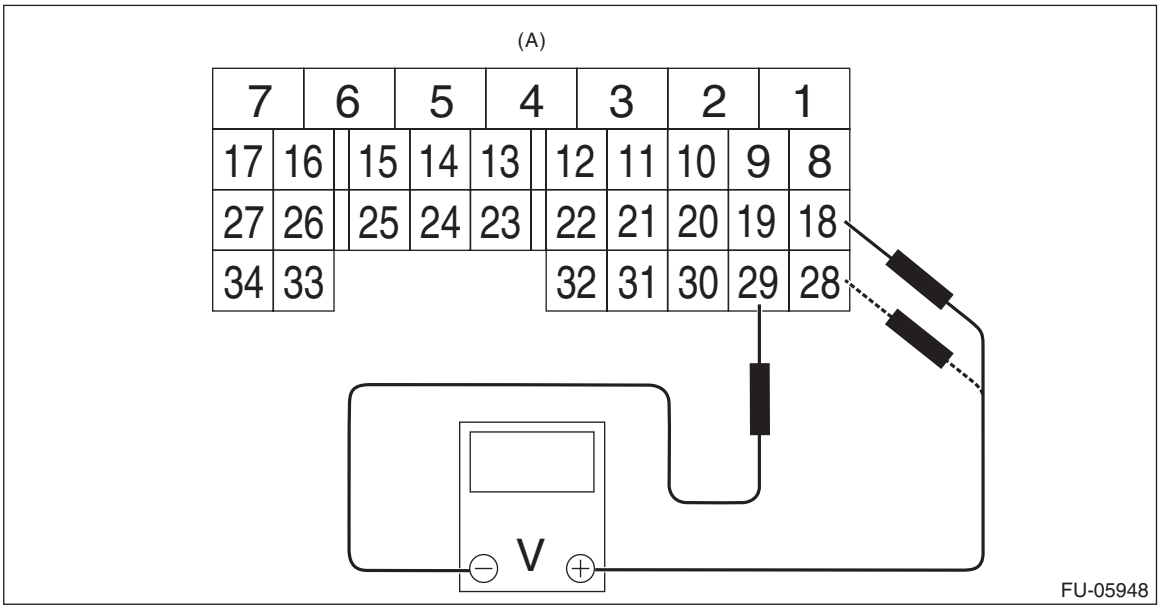

(A) To ECM connector

Throttle sensor	Accelerator pedal	Terminal No.	Standard
Main	Not depressed (full closed)	18 (+) and 29 (–)	Approx. 0.6 V
	Depressed (full opened)		Approx. 4.0 V
Sub	Not depressed (full closed)	28 (+) and 29 (–)	Approx. 1.5 V
	Depressed (full opened)		Approx. 4.2 V

5) After inspection, install the related parts in the reverse order of removal.

2. THROTTLE SENSOR (METHOD WITH SUBARU SELECT MONITOR)

1) After warming-up the engine, turn the ignition switch to OFF.
2) Turn the ignition switch to ON. (engine OFF)
3) Read the throttle opening angle signal and voltage of throttle sensor using Subaru Select Monitor. <Ref. to EN(H4DO HEV)(diag)-37, DISPLAY CURRENT ENGINE DATA, OPERATION, Subaru Select Monitor.>

Throttle sensor	Throttle opening angle signal	Standard
Main	0.0%	Approx. 0.6 V
	100.0%	Approx. 4.0 V
Sub	0.0%	Approx. 1.5 V
	100.0%	Approx. 4.2 V

3. OTHER INSPECTIONS

1) Check that the throttle body has no deformation, cracks or other damages.
2) Check that the preheater hose has no cracks, damage or loose part.

3. Intake Manifold

A: REMOVAL

1) Release the fuel pressure. <Ref. to FU(H4DO(HEV))-98, RELEASING OF FUEL PRESSURE, PROCEDURE, Fuel.>
2) Disconnect the ground cable from battery. <Ref. to NT-5, BATTERY, NOTE, Note.>

NOTE:
For the 12 volt engine restart battery, disconnect the ground terminal from 12V engine restart battery sensor.
3) Remove the collector cover.
   (1) Pull up the two points at the front of collector cover (A).
   (2) Pull up the two points at the rear of collector cover (B) while moving them rearward.

NOTE:
Be careful not to contact the fuel delivery tube when moving the collector cover rearward.

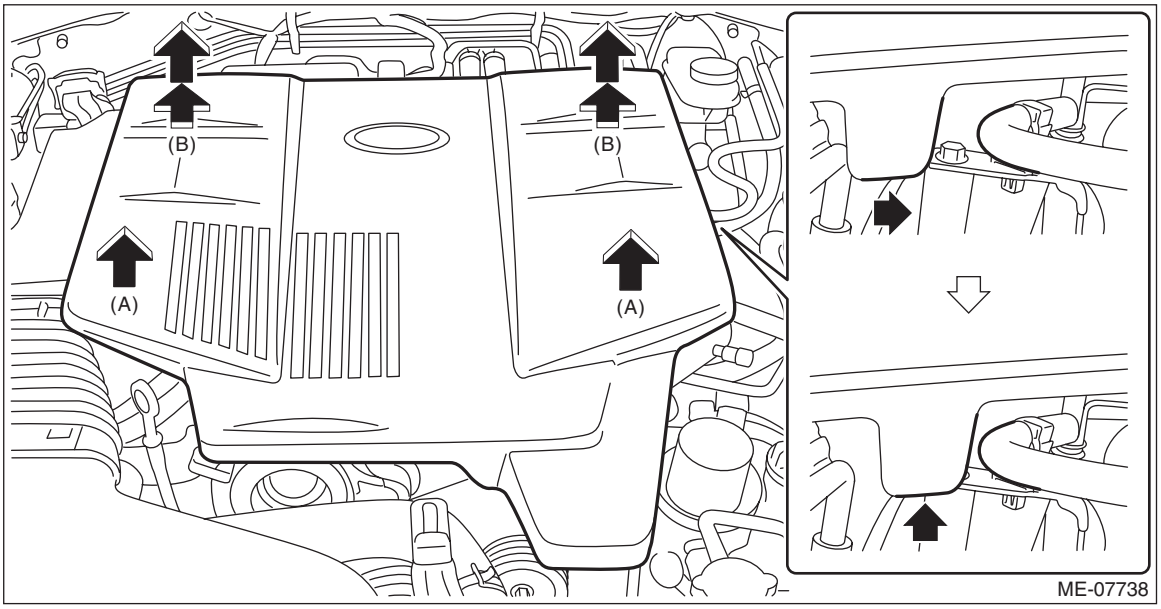

4) Open the fuel filler lid and remove the fuel filler cap.
5) Lift up the vehicle.
6) Remove the under cover. <Ref. to EI-29, REMOVAL, Front Under Cover.>
7) Drain approximately 3.0 L (3.2 US qt, 2.6 Imp qt) of coolant. <Ref. to CO(H4DO(w/o HEV))-16, DRAINING OF ENGINE COOLANT, REPLACEMENT, Engine Coolant.>
8) Remove the air cleaner case. <Ref. to IN(H4DO(HEV))-6, REMOVAL, Air Cleaner Case.>
9) Remove the air intake boot No. 2. <Ref. to IN(H4DO(HEV))-11, AIR INTAKE BOOT NO. 2, REMOVAL, Air Intake Boot.>
10) Disconnect the connectors (A) from the throttle position sensor.
11) Disconnect the preheater hose (B) from the throttle body.

12) Disconnect the preheater hose (C) from the water pipe assembly LH.

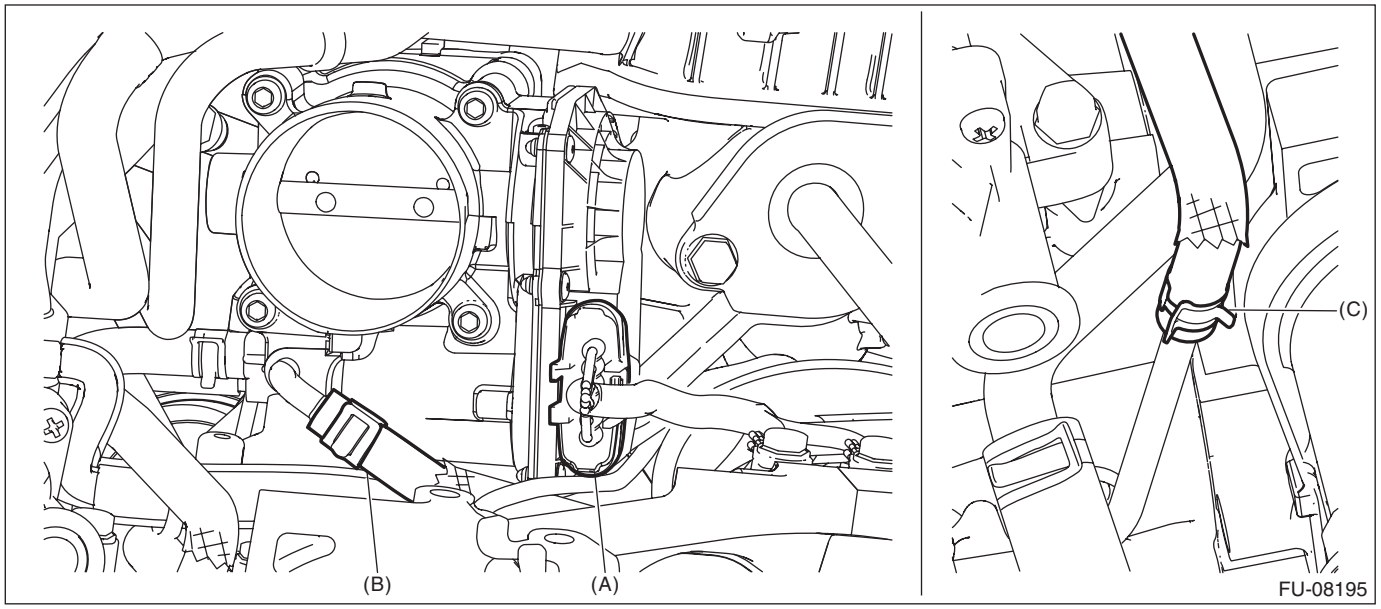

13) Disconnect the connector (A) from ISG.
14) Disconnect the connector (B) from manifold absolute pressure sensor.
15) Disconnect the PCV hose (C) from the PCV valve.

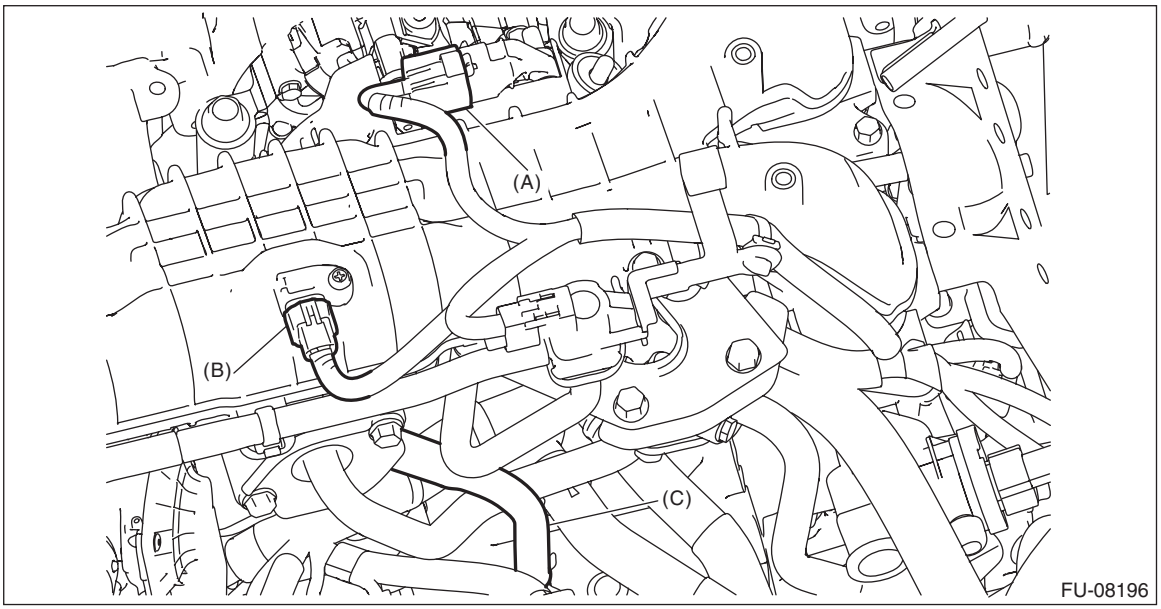

16) Remove the purge control solenoid valve. <Ref. to EC(H4DO(HEV))-21, REMOVAL, Purge Control Solenoid Valve.>

17) Remove the bolts securing the EGR cooler to the EGR control valve.

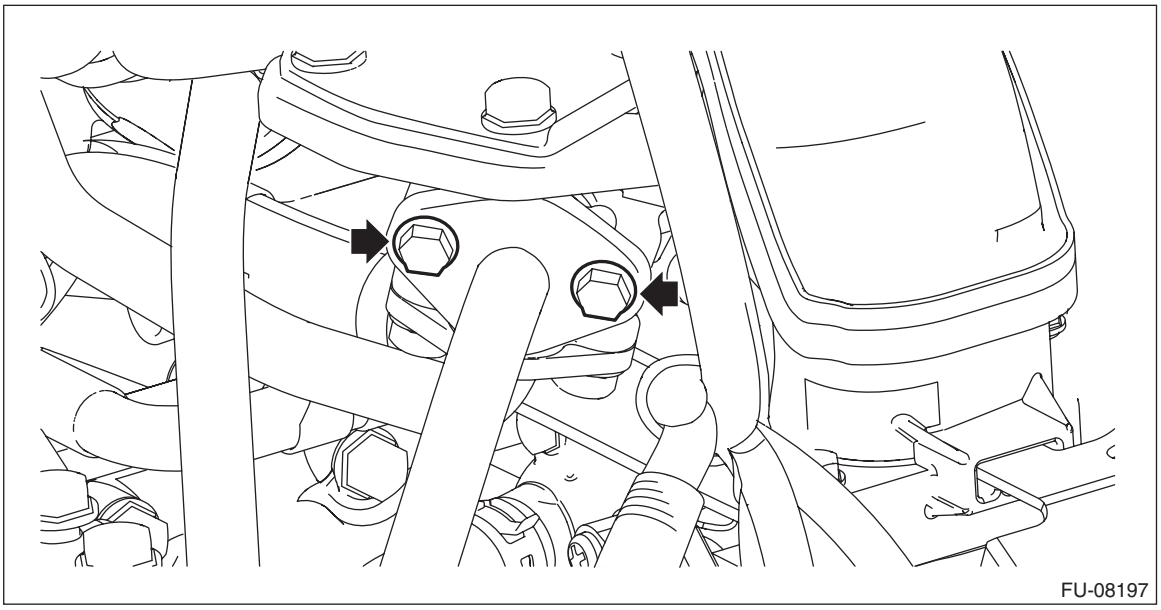

18) Remove the intake manifold protector RH.

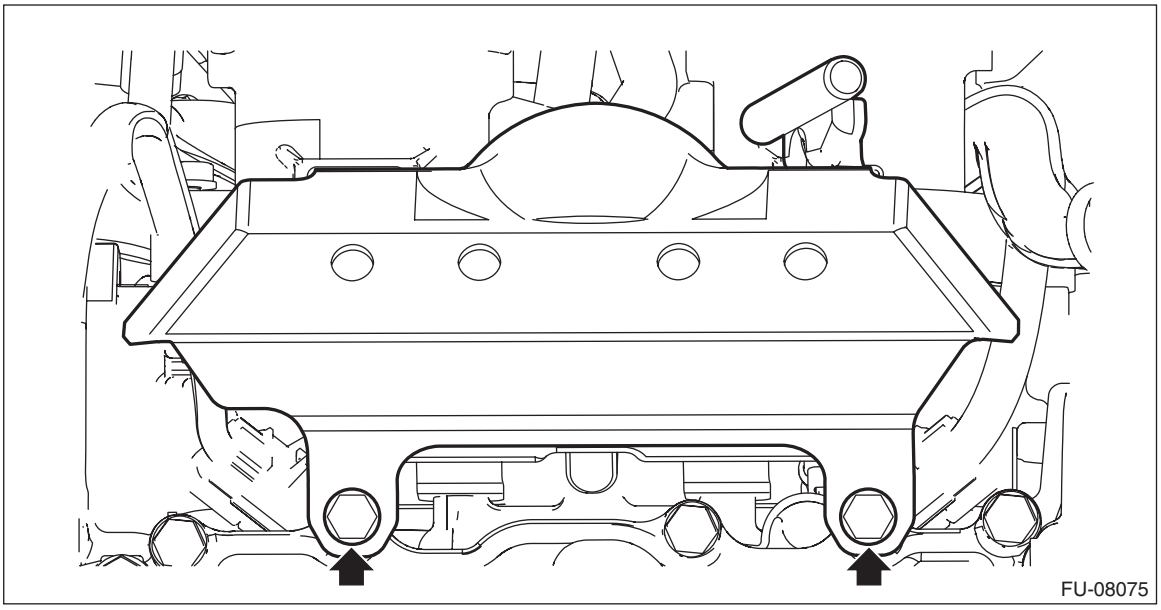

19) Disconnect the fuel delivery pipe from the fuel pipe RH.

CAUTION:
- **Be careful not to spill fuel.**
- **Catch the fuel from the pipes using a container or cloth.**

NOTE:
Disconnect the quick connector as shown in the figure.

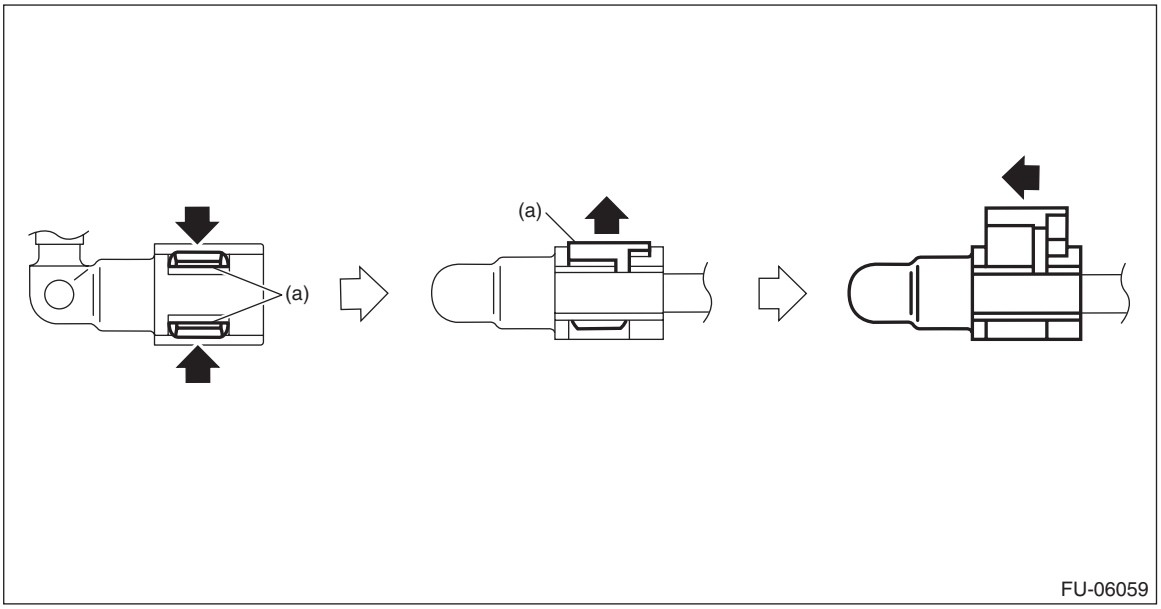

(a) Slider

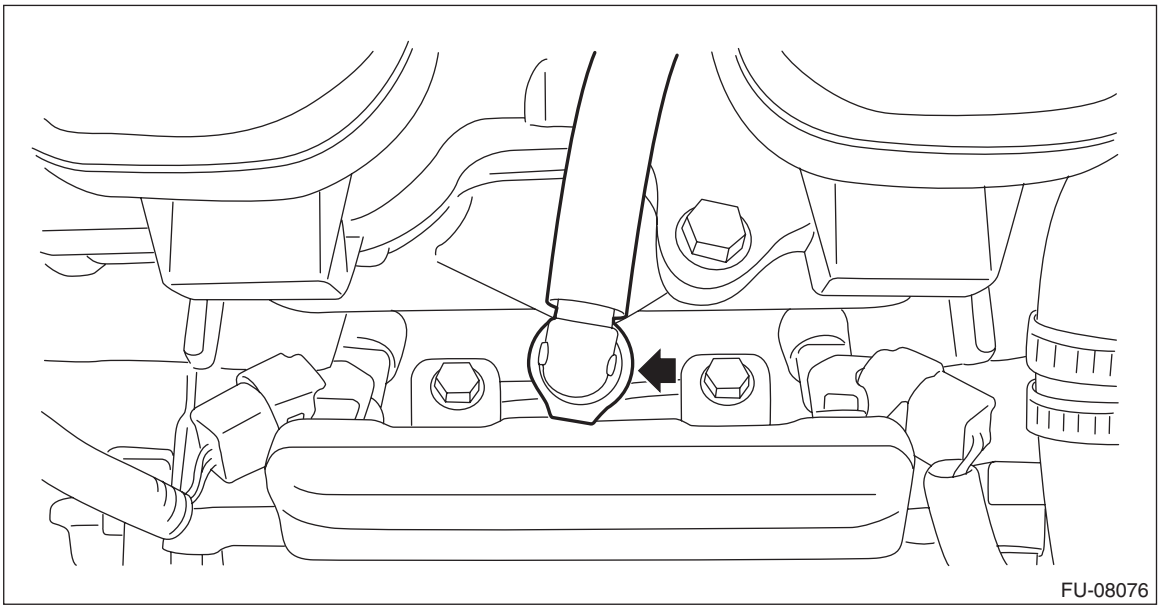

20) Remove the intake manifold protector LH in the same manner, and disconnect the fuel delivery pipe from the fuel pipe LH.

21) Disconnect the fuel delivery tube and evaporation hose.

CAUTION:
- **Be careful not to spill fuel.**
- **Catch the fuel from the tubes using a container or cloth.**

(1) Disconnect the quick connector (A) of the fuel delivery tube from the fuel pipe assembly, and remove the clip (B) securing the fuel delivery tube.

NOTE:
Disconnect the quick connector as shown in the figure.

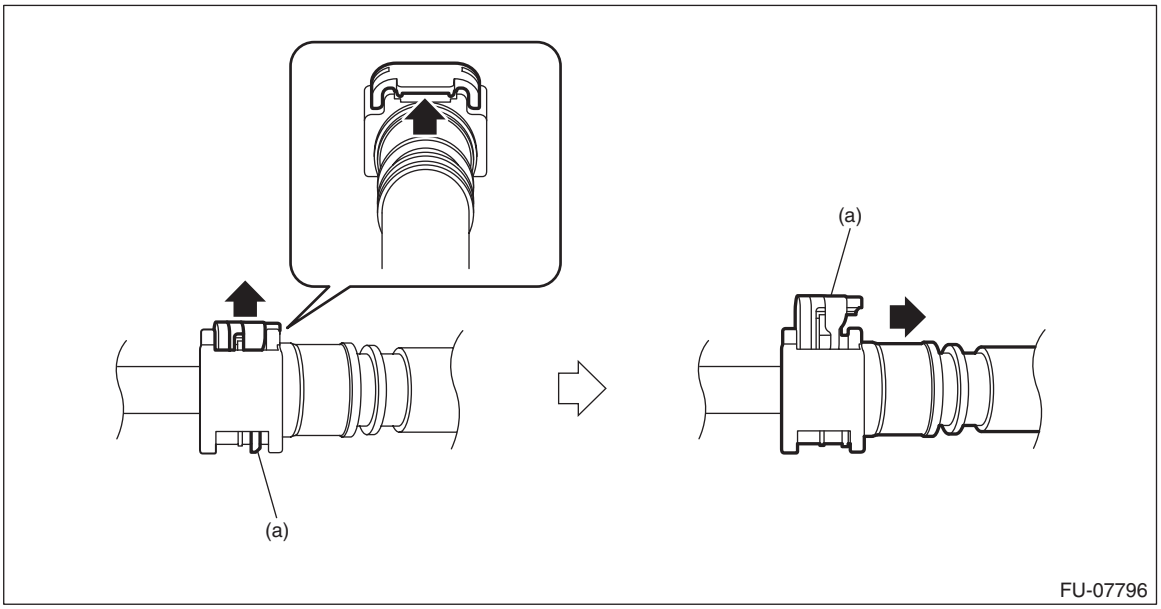

(a) Slider

(2) Disconnect the evaporation hose (C) from the fuel pipe assembly.

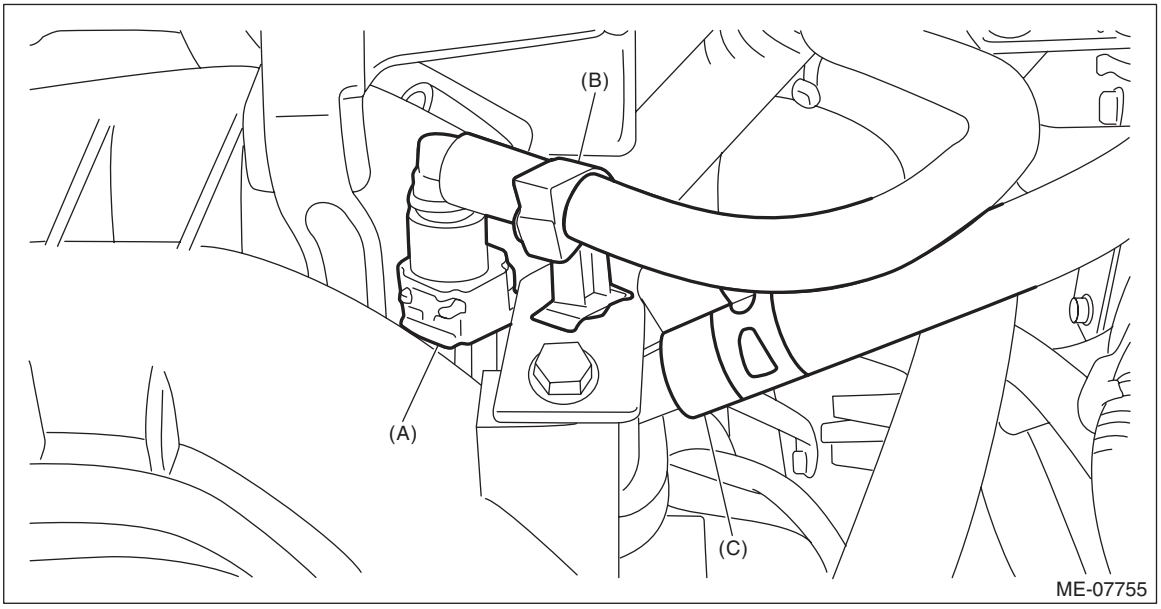

22) Remove the bolts which hold the intake manifold to the tumble generator valve assembly.

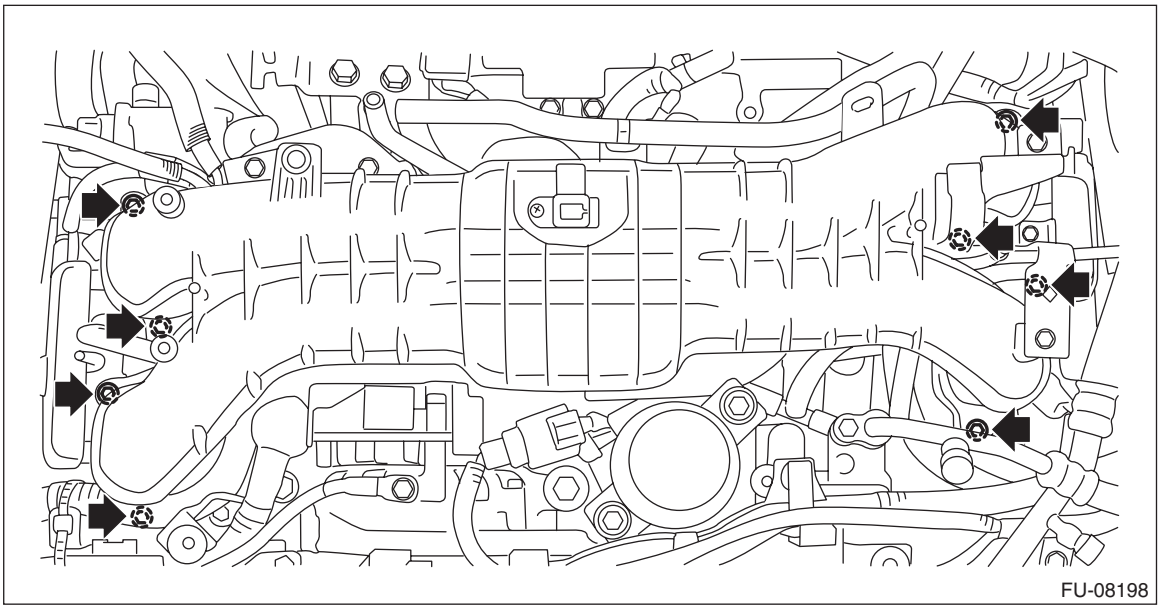

23) Lift the intake manifold, and disconnect the connector (A) from the EGR control valve.
24) Disconnect the brake vacuum hose (B) from the intake manifold, and remove the intake manifold.

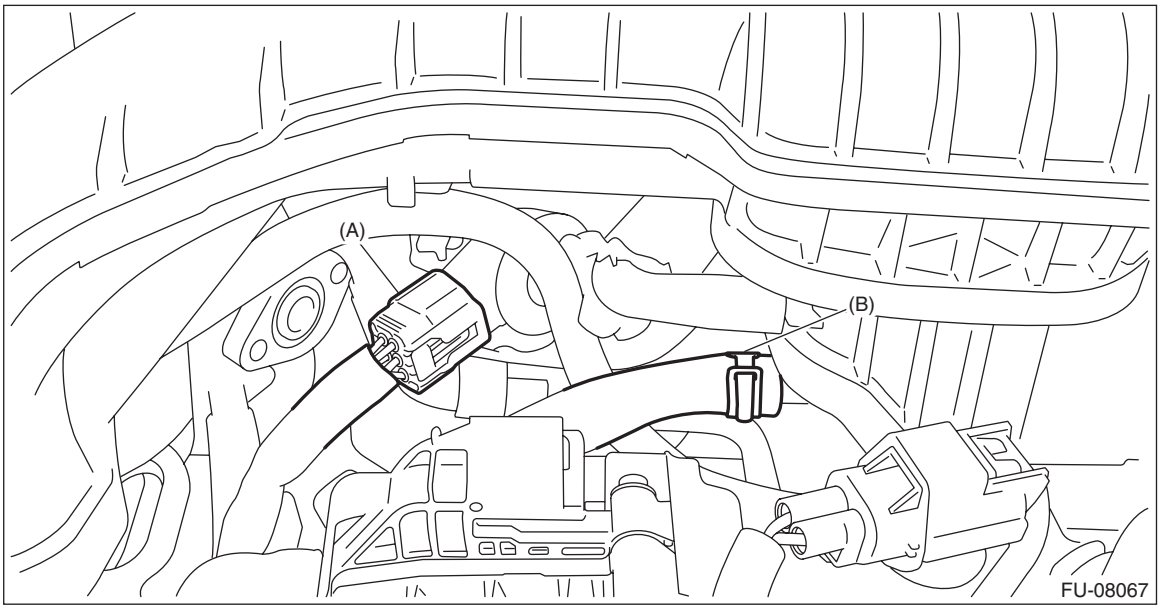

B: INSTALLATION

1) Connect the connector (A) to the EGR control valve, and connect the brake vacuum hose (B) to the intake manifold.

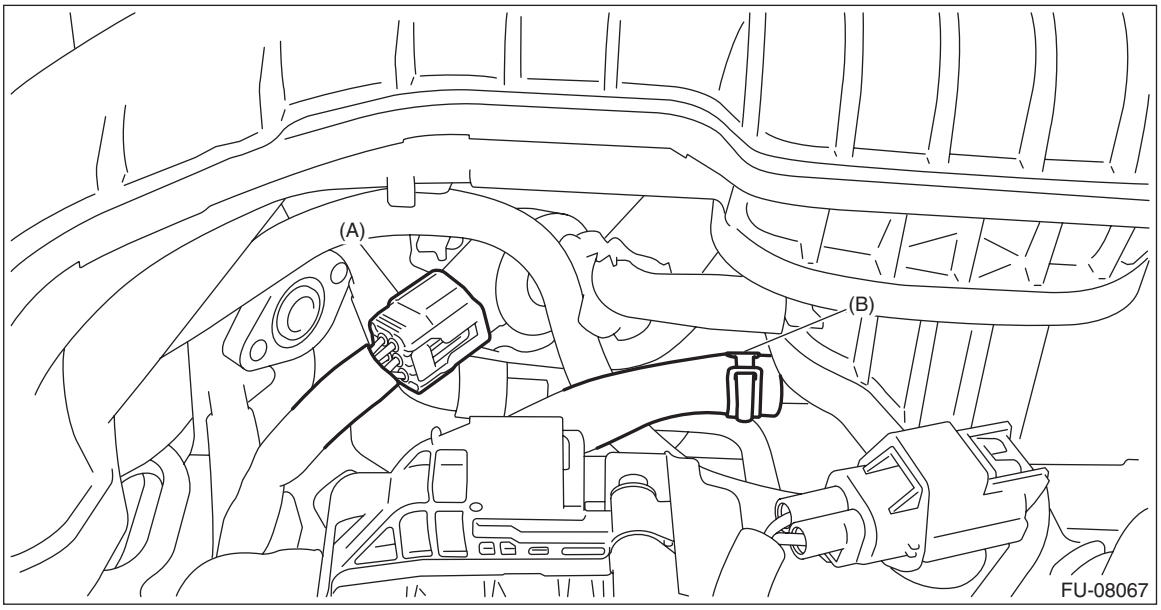

2) Install the intake manifold to the tumble generator valve assembly.

NOTE:
Use a new gasket.

Tightening torque:
8.3 N·m (0.8 kgf-m, 6.1 ft-lb)

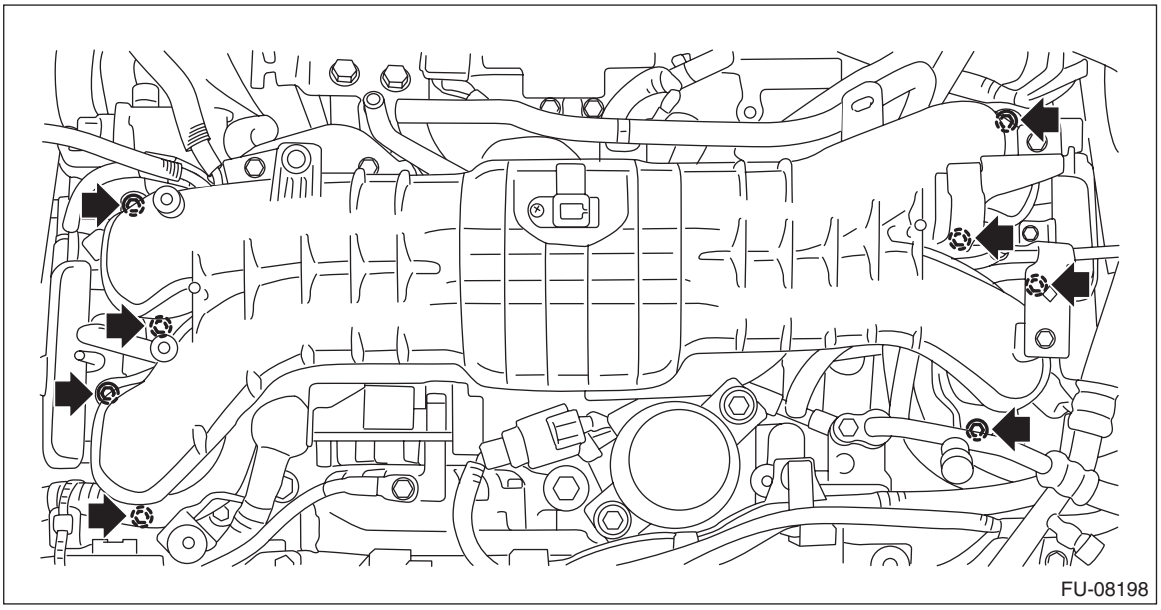

3) Connect the fuel delivery tube and evaporation hose.
(1) Connect the evaporation hose (C) to fuel pipe assembly.
(2) Connect the quick connector (A) of the fuel delivery tube to the fuel pipe assembly, and secure the fuel delivery tube using clip (B).

CAUTION:
• Check that there is no damage or dust on the quick connector. If necessary, clean the seal surface of the pipe.
• When connecting the quick connector, make sure to insert the pipe all the way in before locking the slider.
• When it is difficult to lock the slider, check that the pipe is fully inserted.
• Make sure that the quick connector is securely connected.

NOTE:
Connect the quick connector as shown in the figure.

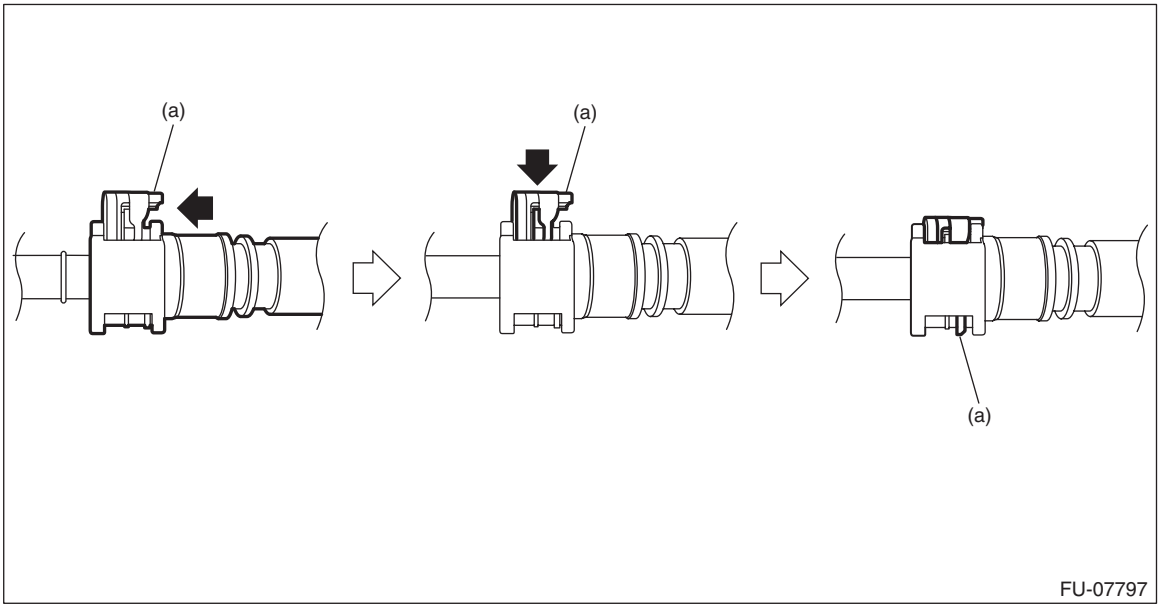

(a) Slider

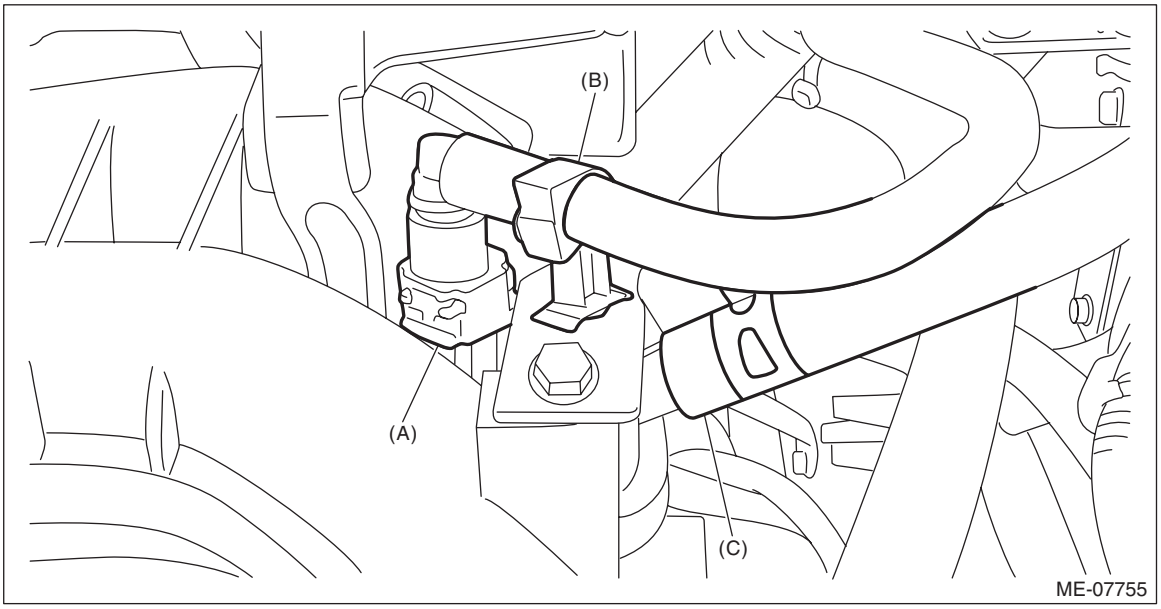

4) Connect the fuel delivery pipe to the fuel pipe RH.

CAUTION:
• Check that there is no damage or dust on the quick connector. If necessary, clean the seal surface of the pipe.
• When connecting the quick connector, make sure to insert the pipe all the way in before locking the slider.
• When it is difficult to lock the slider, check that the pipe is fully inserted.
• Make sure that the quick connector is securely connected.

NOTE:
Connect the quick connector as shown in the figure.

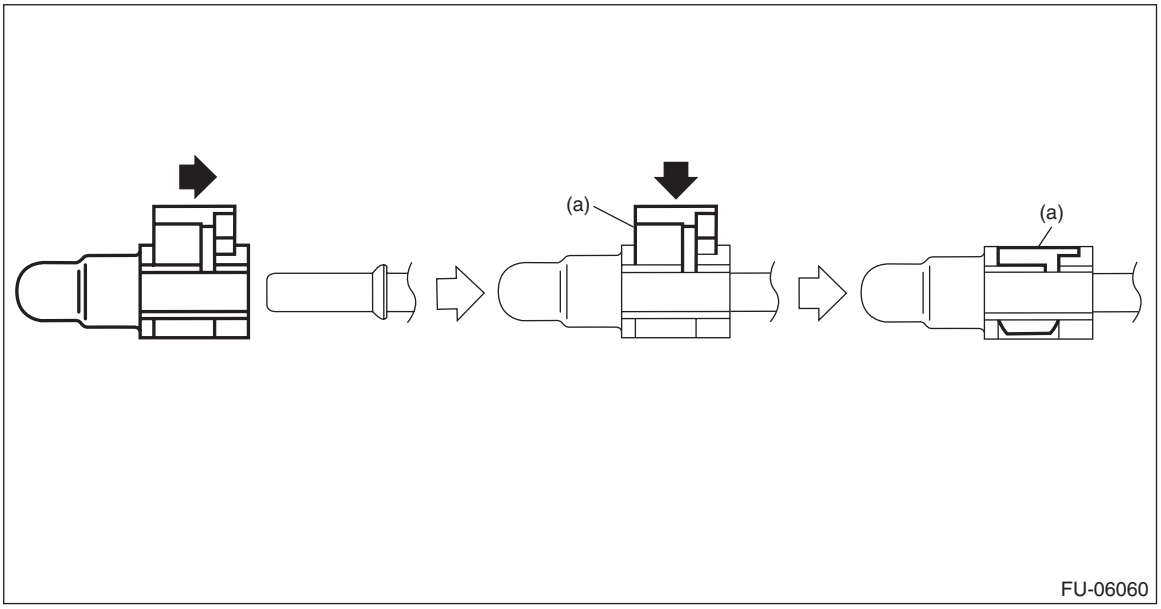

(a) Slider

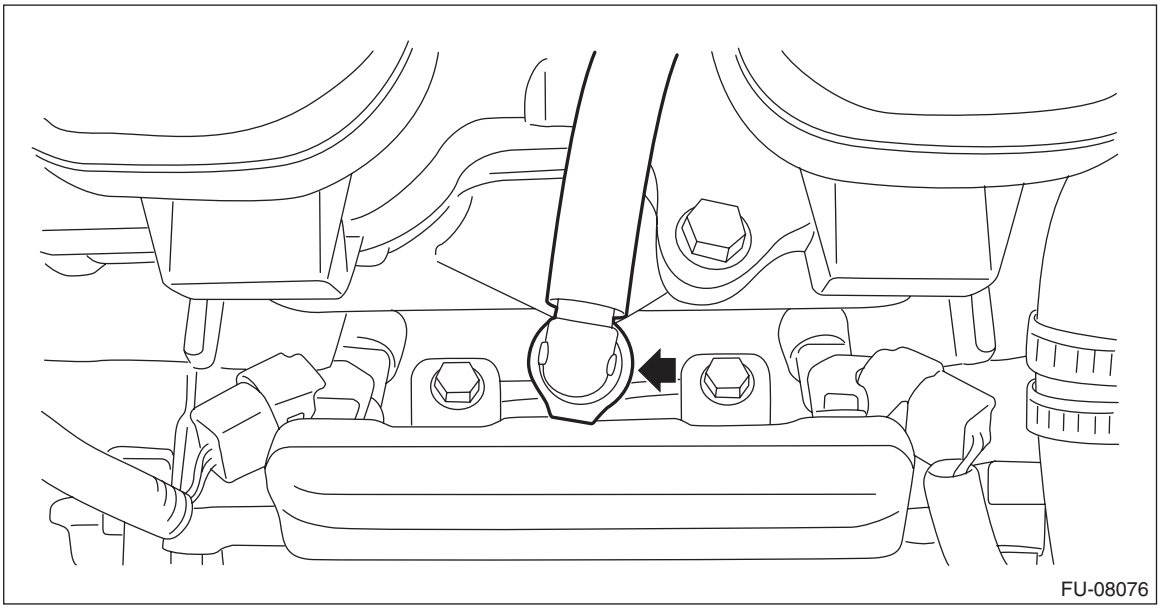

5) Install the intake manifold protector RH.

Tightening torque:
6.4 N·m (0.7 kgf-m, 4.7 ft-lb)

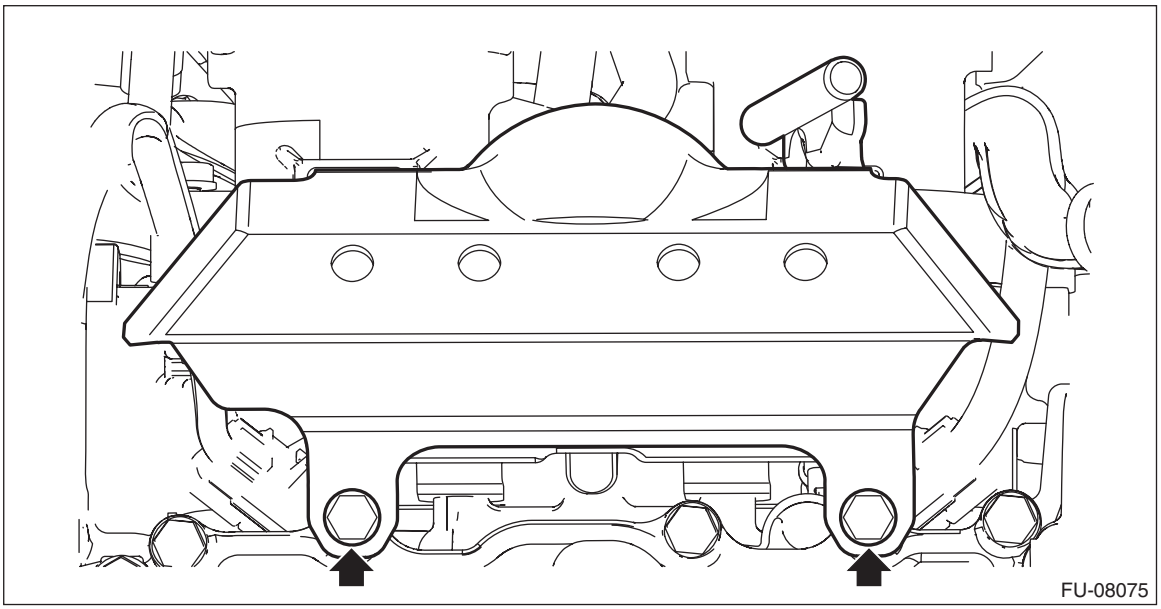

6) Connect the fuel delivery pipe to the fuel pipe LH in the same manner, and install the intake manifold protector LH.
7) Tighten the bolt which secures the EGR cooler to the EGR control valve.

NOTE:
Use a new gasket.

Tightening torque:
6.4 N·m (0.7 kgf-m, 4.7 ft-lb)

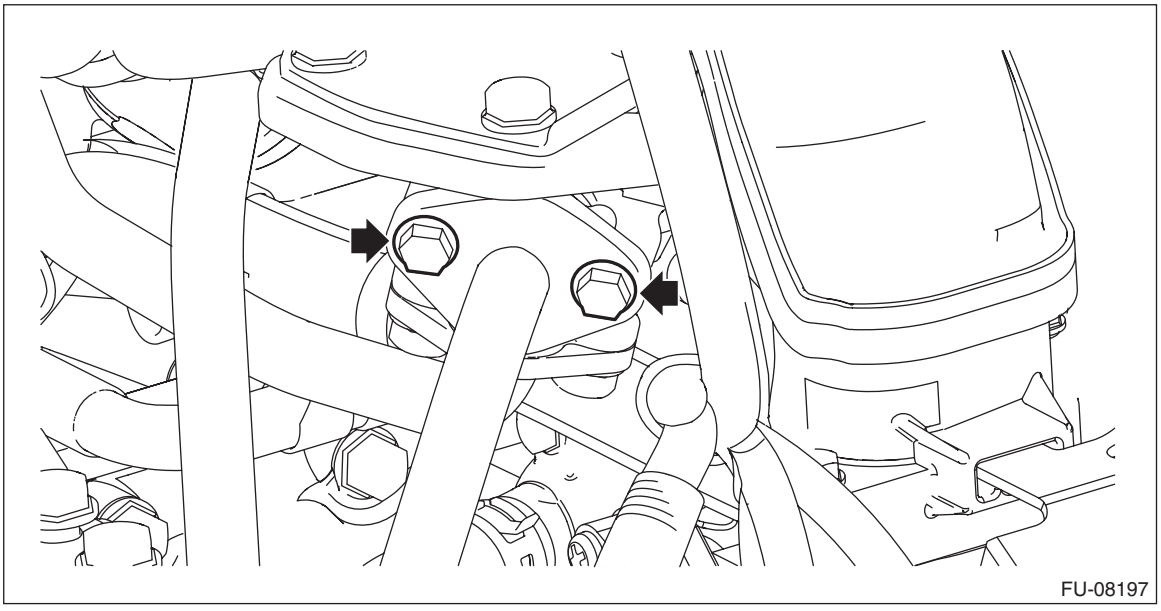

8) Install the purge control solenoid valve. <Ref. to EC(H4DO(HEV))-22, INSTALLATION, Purge Control Solenoid Valve.>

9) Connect the connector (A) to ISG.
10) Connect the connector (B) to the manifold absolute pressure sensor.
11) Install the PCV hose (C) to the PCV valve.

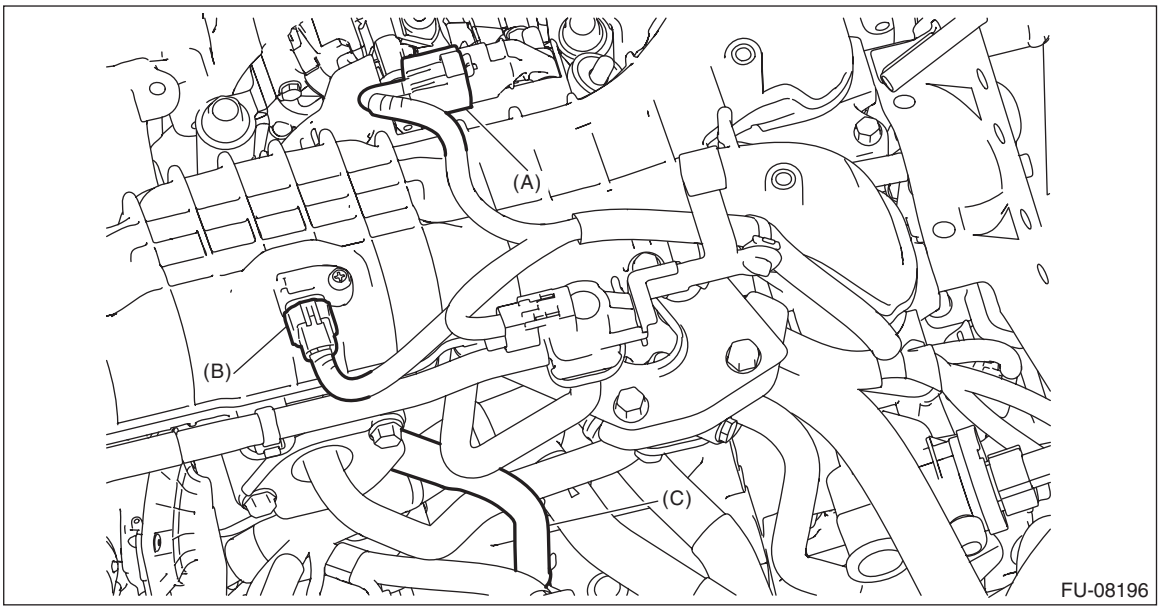

12) Connect the connector (A) to the throttle position sensor.
13) Connect the preheater hoses (B) to the throttle body.
14) Connect the preheater hose (C) to the water pipe assembly LH.

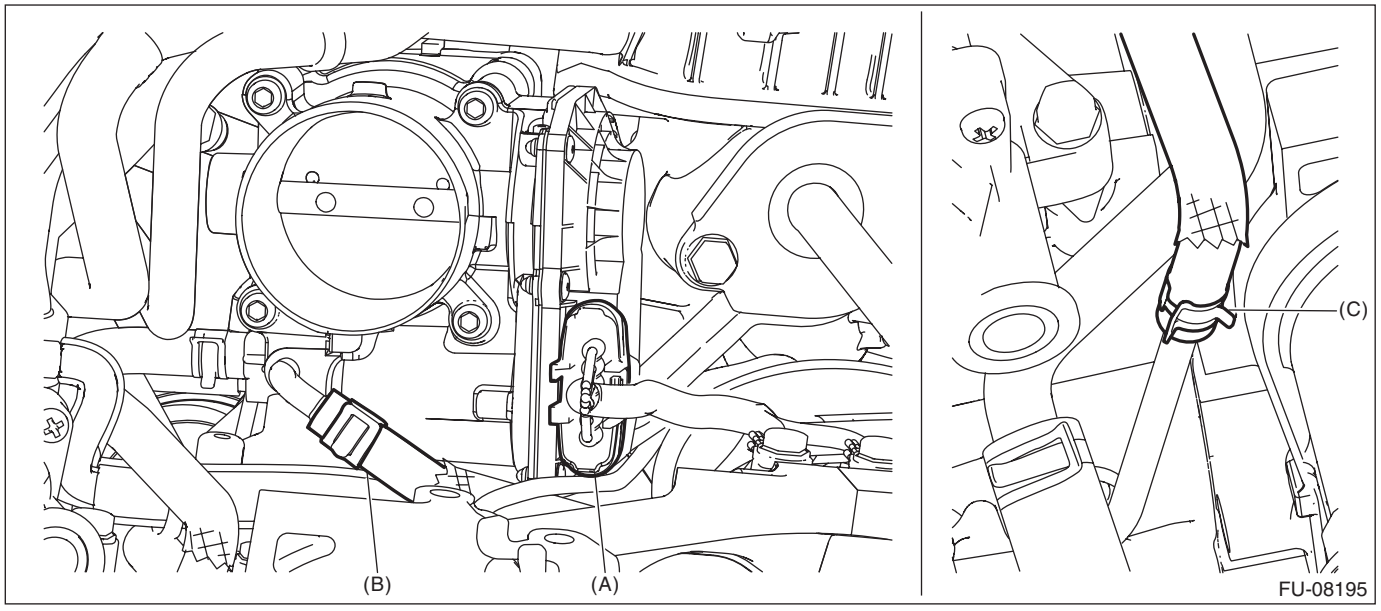

15) Install the air intake boot No. 2. <Ref. to IN(H4DO(HEV))-13, AIR INTAKE BOOT NO. 2, INSTALLATION, Air Intake Boot.>
16) Install the air cleaner case. <Ref. to IN(H4DO(HEV))-8, INSTALLATION, Air Cleaner Case.>
17) Lift up the vehicle.
18) Install the under cover. <Ref. to EI-29, INSTALLATION, Front Under Cover.>
19) Lower the vehicle.
20) Install the collector cover.
21) Connect the battery ground terminal. <Ref. to NT-5, BATTERY, NOTE, Note.>
22) Fill engine coolant. <Ref. to CO(H4DO(w/o HEV))-17, FILLING OF ENGINE COOLANT, REPLACEMENT, Engine Coolant.>

C: DISASSEMBLY

1) Remove the throttle body. <Ref. to FU(H4DO(HEV))-15, REMOVAL, Throttle Body.>
2) Remove the manifold absolute pressure sensor. <Ref. to FU(H4DO(HEV))-67, REMOVAL, Manifold Absolute Pressure Sensor.>
3) Remove the EGR pipe and the EGR control valve. <Ref. to EC(H4DO(HEV))-29, REMOVAL, EGR Pipe.> <Ref. to EC(H4DO(HEV))-26, REMOVAL, EGR Control Valve.>
4) Remove the PCV hose A. <Ref. to EC(H4DO(HEV))-50, REMOVAL, PCV Hose.>
5) Remove the vacuum hose (A) from the intake manifold.
6) Remove the clip (B) and the clip (C) securing the vacuum hose to the intake manifold, and remove the vacuum hose (D).
7) Disconnect the quick connector of the fuel delivery pipe (E) from the fuel pipe assembly, and remove the fuel delivery pipe (E) from the clip (F).

NOTE:
Disconnect the quick connector as shown in the figure.

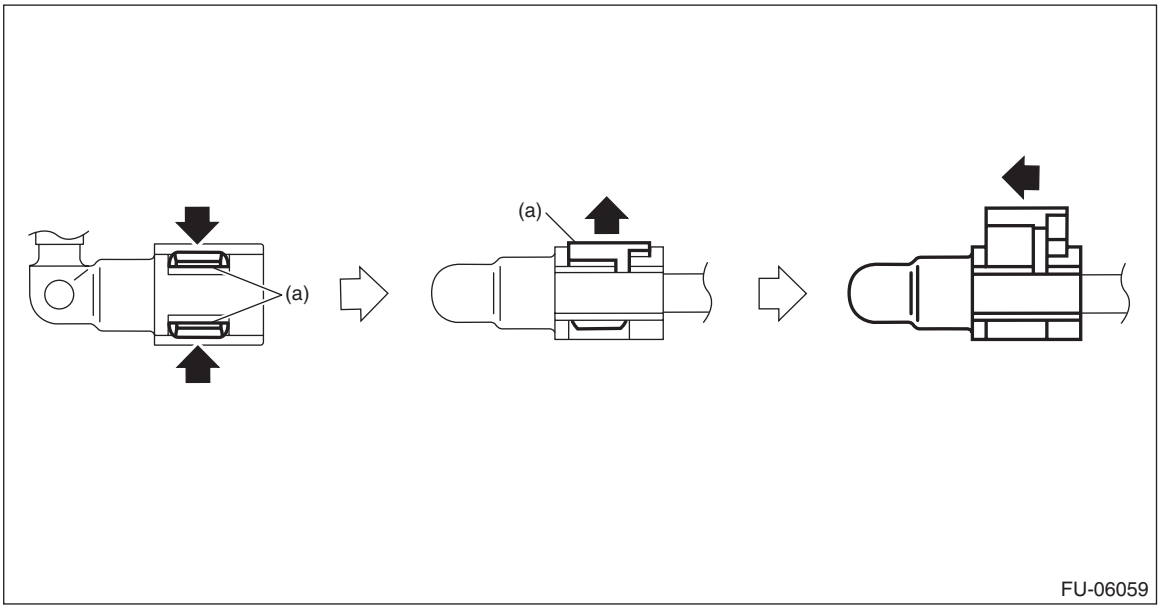

(a) Slider

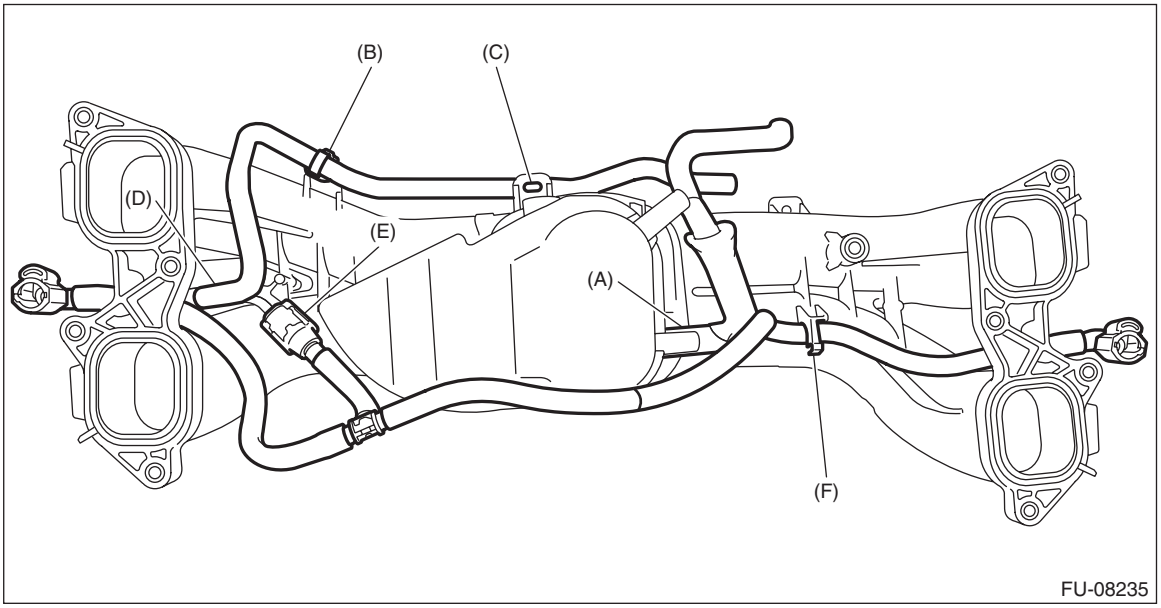

8) Remove the fuel pipe assembly from the intake manifold.

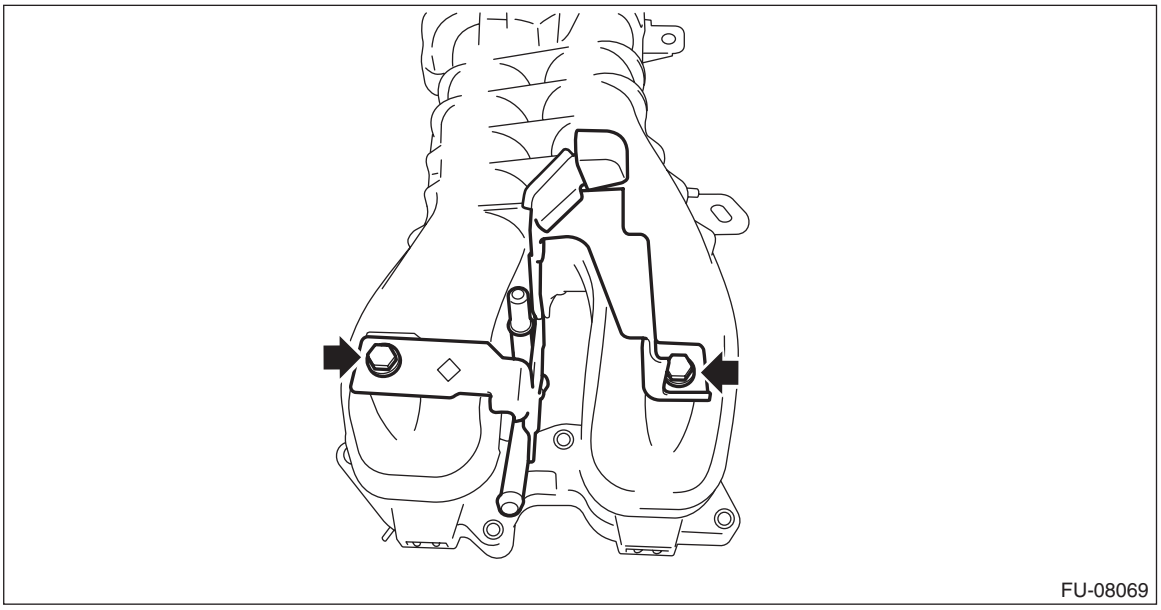

D: ASSEMBLY

1) Install the fuel pipe assembly to the intake manifold.

Tightening torque:
6.4 N·m (0.7 kgf-m, 4.7 ft-lb)

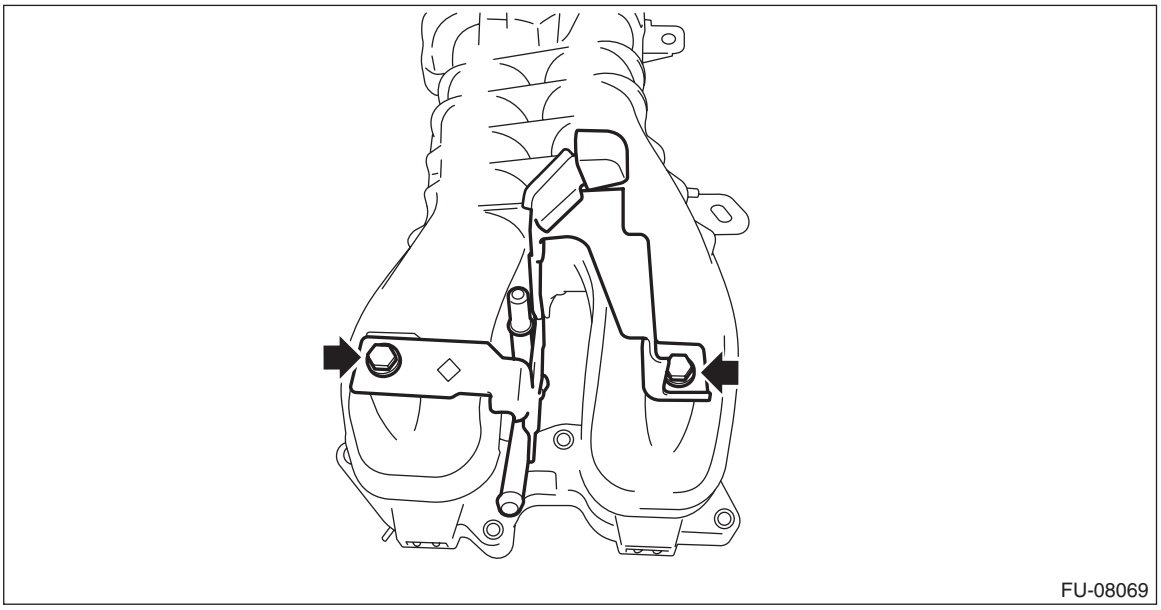

2) Install the fuel delivery pipe (E) to the clip (F), and connect the quick connector of the fuel delivery pipe (E) to the fuel pipe assembly.

CAUTION:
• Check that there is no damage or dust on the quick connector. If necessary, clean the seal surface of the pipe.
• When connecting the quick connector, make sure to insert the pipe all the way in before locking the slider.
• When it is difficult to lock the slider, check that the pipe is fully inserted.
• Make sure that the quick connector is securely connected.

NOTE:
Connect the quick connector as shown in the figure.

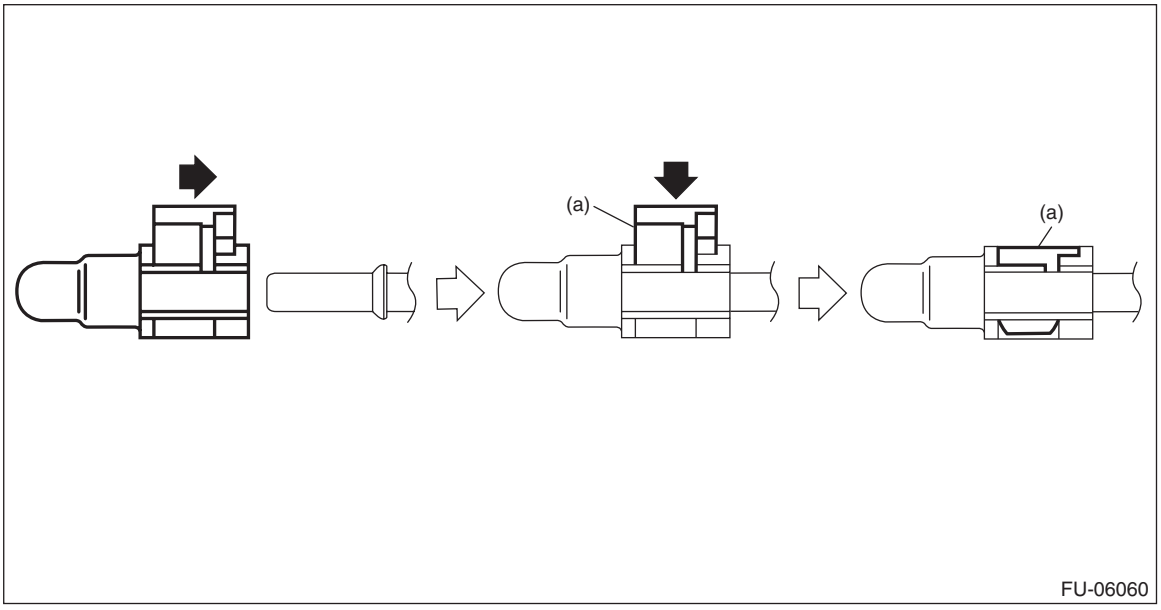

(a) Slider

3) Install the clip (B) and the clip (C) securing the vacuum hose to the intake manifold, and connect the vacuum hose (D).
4) Connect the vacuum hose (A) to the intake manifold.

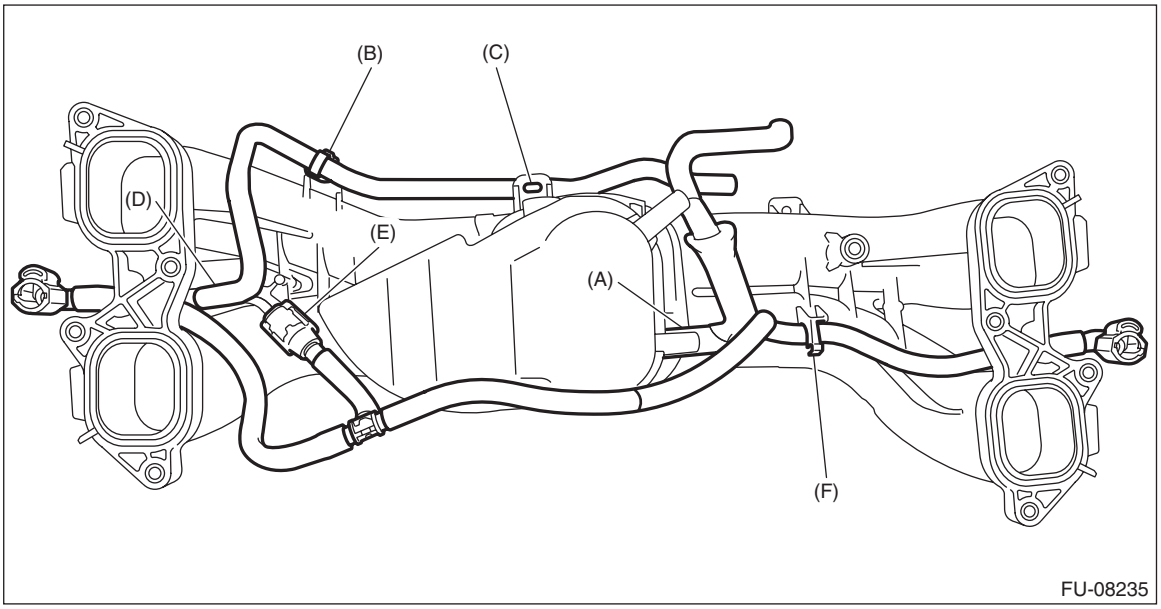

5) Install the PCV hose A. <Ref. to EC(H4DO(HEV))-51, INSTALLATION, PCV Hose.>
6) Install the EGR pipe and the EGR control valve. <Ref. to EC(H4DO(HEV))-30, INSTALLATION, EGR Pipe.> <Ref. to EC(H4DO(HEV))-27, INSTALLATION, EGR Control Valve.>
7) Install the manifold absolute pressure sensor. <Ref. to FU(H4DO(HEV))-68, INSTALLATION, Manifold Absolute Pressure Sensor.>
8) Install the throttle body. <Ref. to FU(H4DO(HEV))-16, INSTALLATION, Throttle Body.>

E: INSPECTION

1) Check that the intake manifold, fuel pipe assembly and fuel delivery pipe have no deformation, cracks and other damages.
2) Check that the hose has no cracks, damage or loose part.

4. Engine Wiring Harness

A: REMOVAL

1) Release the fuel pressure. <Ref. to FU(H4DO(HEV))-98, RELEASING OF FUEL PRESSURE, PROCEDURE, Fuel.>
2) Disconnect the ground cable from battery. <Ref. to NT-5, BATTERY, NOTE, Note.>

NOTE:
For the 12 volt engine restart battery, disconnect the ground terminal from 12V engine restart battery sensor.

3) Remove the collector cover.
   (1) Pull up the two points at the front of collector cover (A).
   (2) Pull up the two points at the rear of collector cover (B) while moving them rearward.

NOTE:
Be careful not to contact the fuel delivery tube when moving the collector cover rearward.

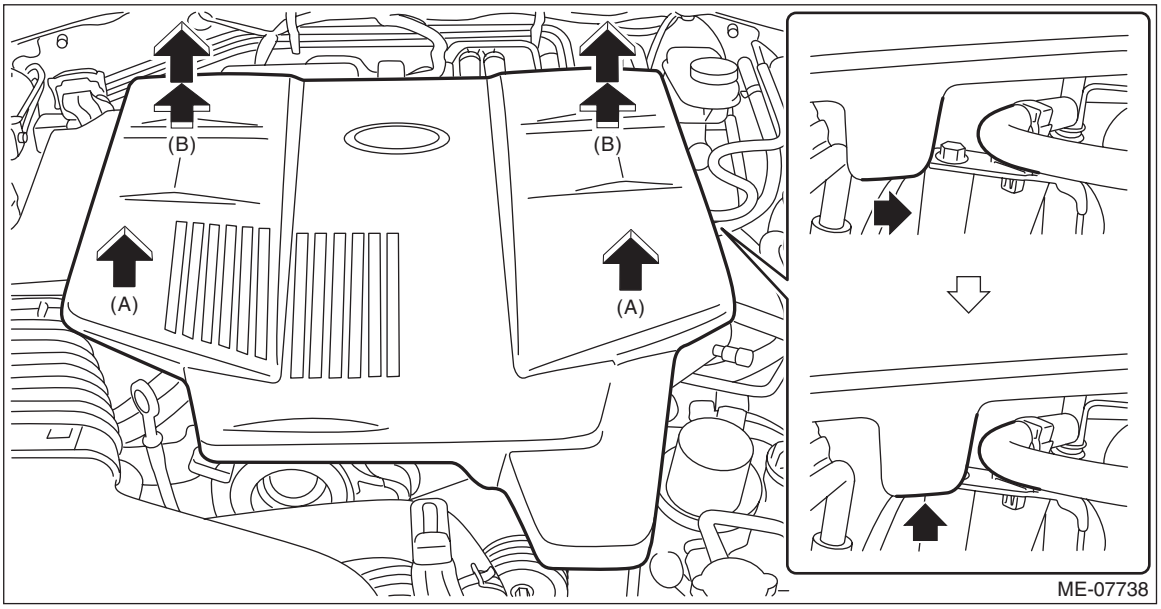

4) Open the fuel filler lid and remove the fuel filler cap.
5) Remove the intake manifold. <Ref. to FU(H4DO(HEV))-20, REMOVAL, Intake Manifold.>

6) Disconnect the connector from the engine, and then remove the engine wiring harness.

- Structural diagram 1

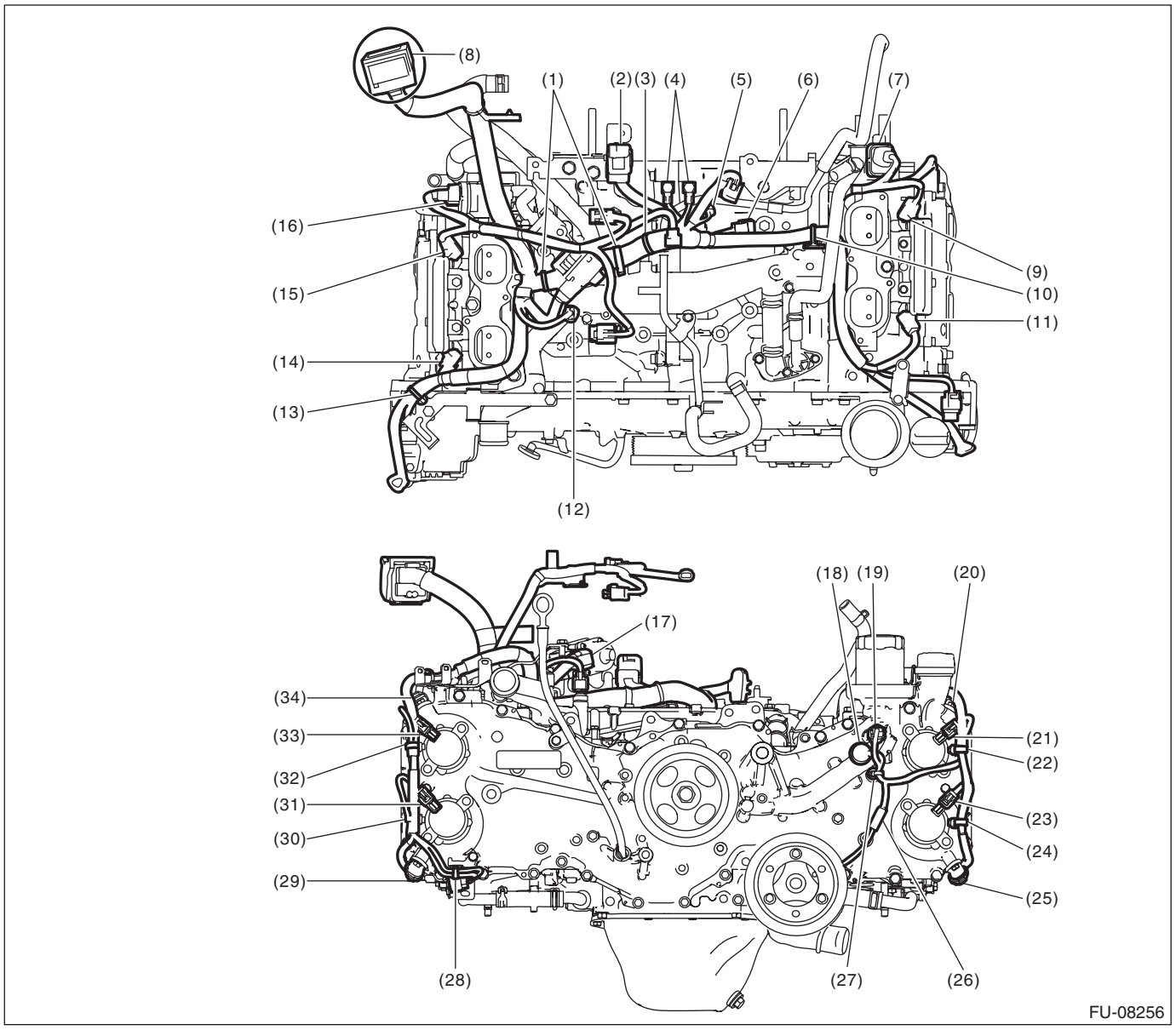

(1) Remove the clip from the screw hole.
(2) Engine harness connector (16P)
(3) Remove the clip from the brake pipe bracket.
(4) Engine ground (2 locations)
(5) Crankshaft position sensor
(6) Knock sensor
(7) Tumble generator valve actuator LH
(8) Engine harness connector (54P)
(9) Fuel injector (#4)
(10) Remove the clip from the hole of the water pipe assembly.
(11) Fuel injector (#2)
(12) Engine coolant temperature sensor
(13) Remove the clip from the bracket.
(14) Fuel injector (#1)
(15) Fuel injector (#3)
(16) Tumble generator valve actuator RH
(17) EGR control valve
(18) Oil pressure switch
(19) Engine oil temperature sensor
(20) Intake camshaft position sensor LH
(21) Intake oil control solenoid LH
(22) Remove the clip from the screw hole.
(23) Exhaust oil control solenoid LH
(24) Remove the clip from the screw hole.
(25) Exhaust camshaft position sensor LH
(26) Oil level switch connector
(27) Remove the clip from the screw hole.
(28) Remove the clip from the oval hole.
(29) Exhaust camshaft position sensor RH
(30) Remove the clip from the screw hole.
(31) Exhaust oil control solenoid RH
(32) Remove the clip from the screw hole.
(33) Intake oil control solenoid RH
(34) Intake camshaft position sensor RH

- Structural diagram 2

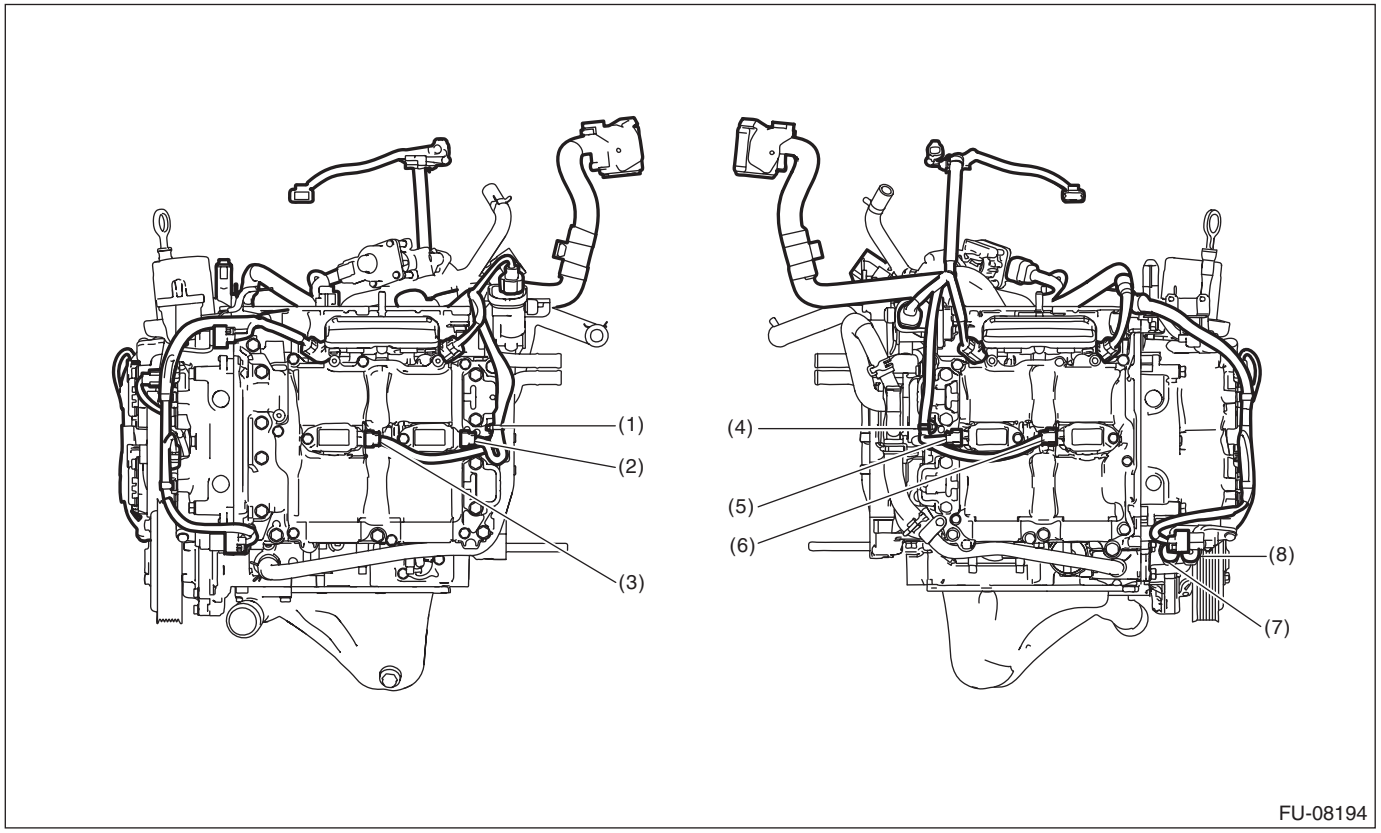

(1) Remove the clip from the screw hole.
(2) Ignition coil No. 4
(3) Ignition coil No. 2
(4) Remove the clip from the screw hole.
(5) Ignition coil No. 3
(6) Ignition coil No. 1
(7) Front oxygen (A/F) sensor
(8) Rear oxygen sensor

B: INSTALLATION

1) Route the engine wiring harness around the engine and connect connectors.

- Structural diagram 1

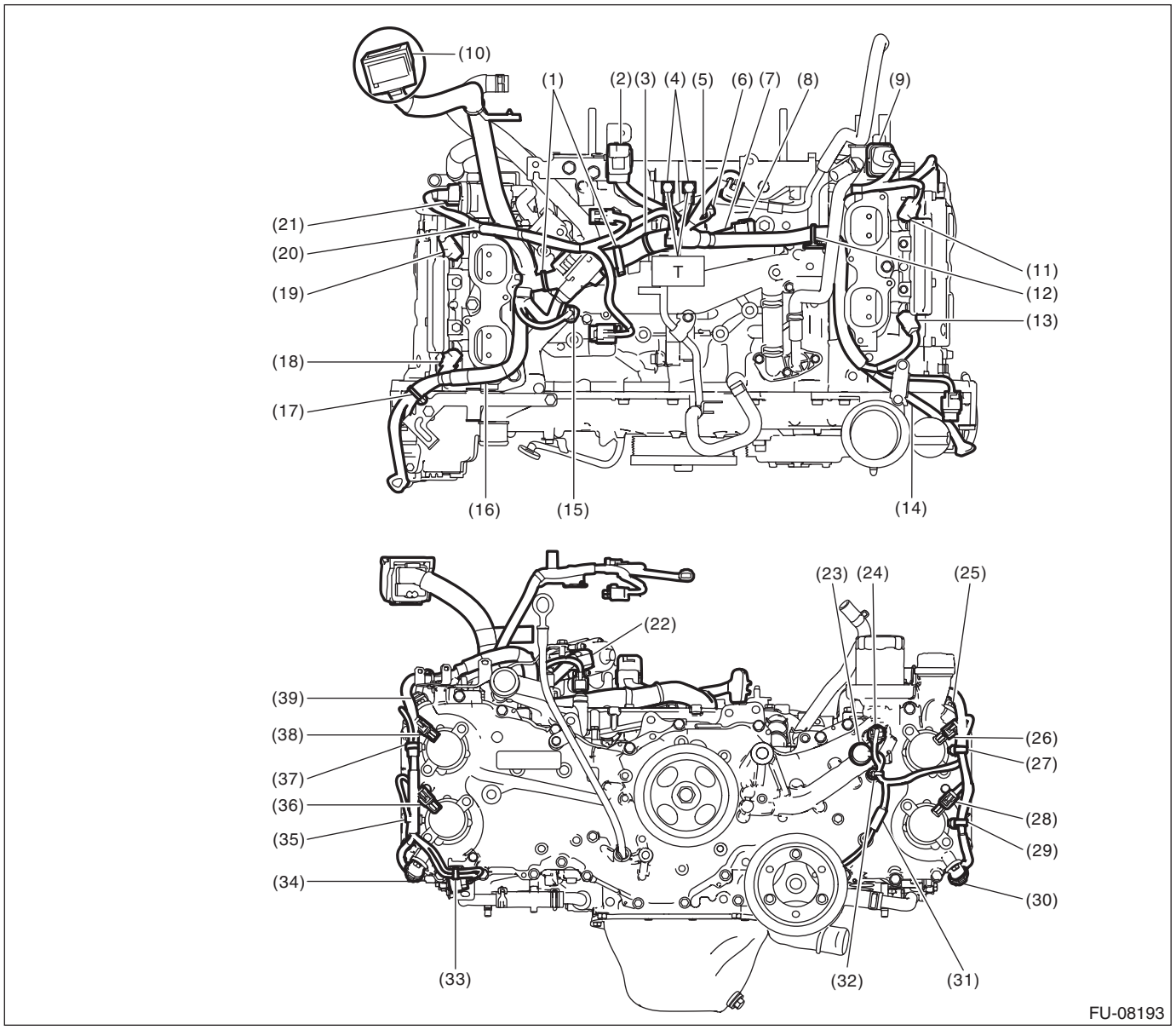

(1) Secure the clip to the screw hole.
(2) Engine harness connector (16P)
(3) Secure the clip to the brake pipe bracket.
(4) Engine ground (2 locations)
(5) Pass the crankshaft position sensor harness on the upper side of the preheater hose.
(6) Crankshaft position sensor
(7) Pass the knock sensor harness on the front side of the preheater hose.
(8) Knock sensor
(9) Tumble generator valve actuator LH
(10) Engine harness connector (54P)
(11) Fuel injector (#4)
(12) Secure the clip to the hole of the water pipe assembly.
(13) Fuel injector (#2)
(14) Pass the engine wiring harness under the bracket.
(15) Engine coolant temperature sensor
(16) Be careful of pinching when installing the intake manifold.
(17) Secure the clip to the bracket.
(18) Fuel injector (#1)
(19) Fuel injector (#3)
(20) Be careful of pinching when installing the intake manifold.
(21) Tumble generator valve actuator RH
(22) EGR control valve
(23) Oil pressure switch
(24) Engine oil temperature sensor
(25) Intake camshaft position sensor LH
(26) Intake oil control solenoid LH
(27) Secure the clip to the screw hole.
(28) Exhaust oil control solenoid LH
(29) Secure the clip to the screw hole.
(30) Exhaust camshaft position sensor LH
(31) Oil level switch connector
(32) Secure the clip to the screw hole.
(33) Secure the clip to the oval hole.
(34) Exhaust camshaft position sensor RH
(35) Secure the clip to the screw hole.
(36) Exhaust oil control solenoid RH
(37) Secure the clip to the screw hole.
(38) Intake oil control solenoid RH
(39) Intake camshaft position sensor RH

Tightening torque: N·m (kgf-m, ft-lb)
T: 19 (1.9, 14.0)

- Structural diagram 2

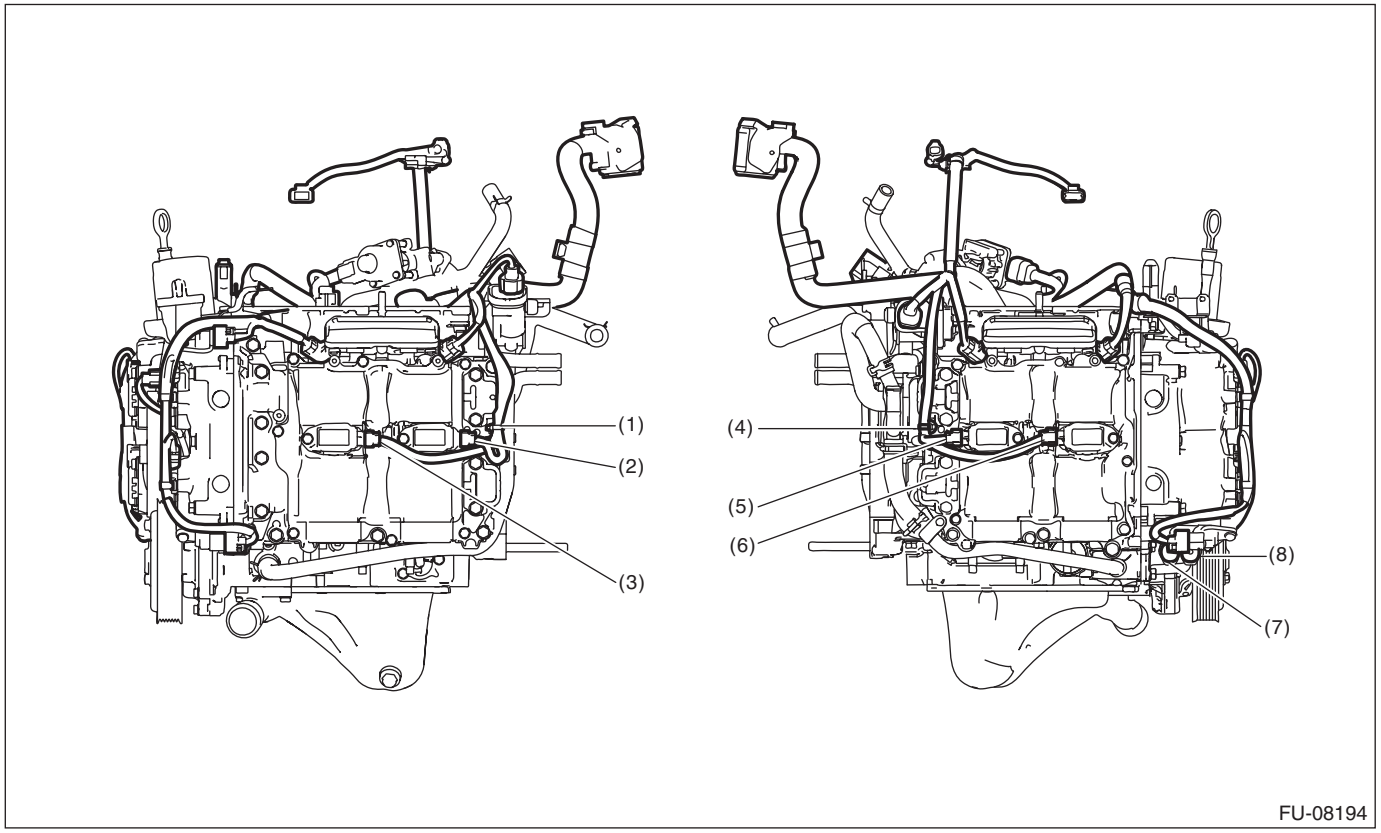

(1) Secure the clip to the screw hole.
(2) Ignition coil No. 4
(3) Ignition coil No. 2
(4) Secure the clip to the screw hole.
(5) Ignition coil No. 3
(6) Ignition coil No. 1
(7) Front oxygen (A/F) sensor
(8) Rear oxygen sensor

2) Install the intake manifold. <Ref. to FU(H4DO(HEV))-26, INSTALLATION, Intake Manifold.>
3) Install the collector cover.
4) Connect the battery ground terminal. <Ref. to NT-5, BATTERY, NOTE, Note.>

C: INSPECTION

Check that the engine wiring harness does not have deformation, cracks and any other damage.

5. Engine Coolant Temperature Sensor

A: REMOVAL

1) Disconnect the ground cable from battery. <Ref. to NT-5, BATTERY, NOTE, Note.>

NOTE:
For the 12 volt engine restart battery, disconnect the ground terminal from 12V engine restart battery sensor.

2) Remove the collector cover.
   (1) Pull up the two points at the front of collector cover (A).
   (2) Pull up the two points at the rear of collector cover (B) while moving them rearward.

NOTE:
Be careful not to contact the fuel delivery tube when moving the collector cover rearward.

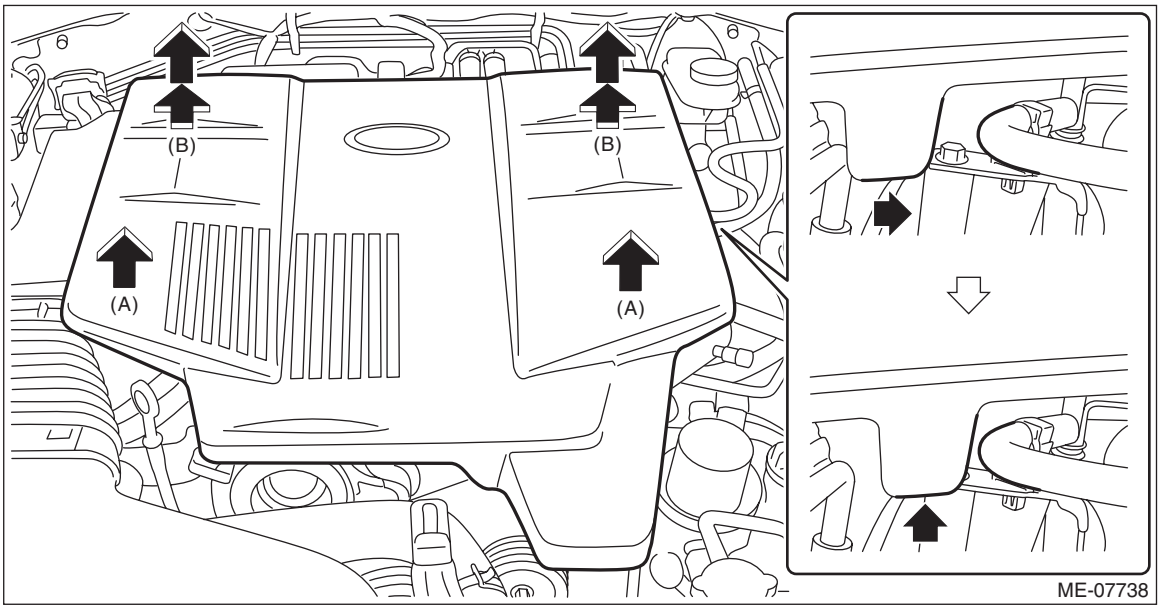

3) Drain engine coolant. <Ref. to CO(H4DO(w/o HEV))-16, DRAINING OF ENGINE COOLANT, REPLACEMENT, Engine Coolant.>
4) Remove the ISG. <Ref. to SC(H4DO(HEV))-31, REMOVAL, Integrated Starter Generator (ISG).>
5) Disconnect the connector (A) from the engine coolant temperature sensor, and remove the engine coolant temperature sensor.

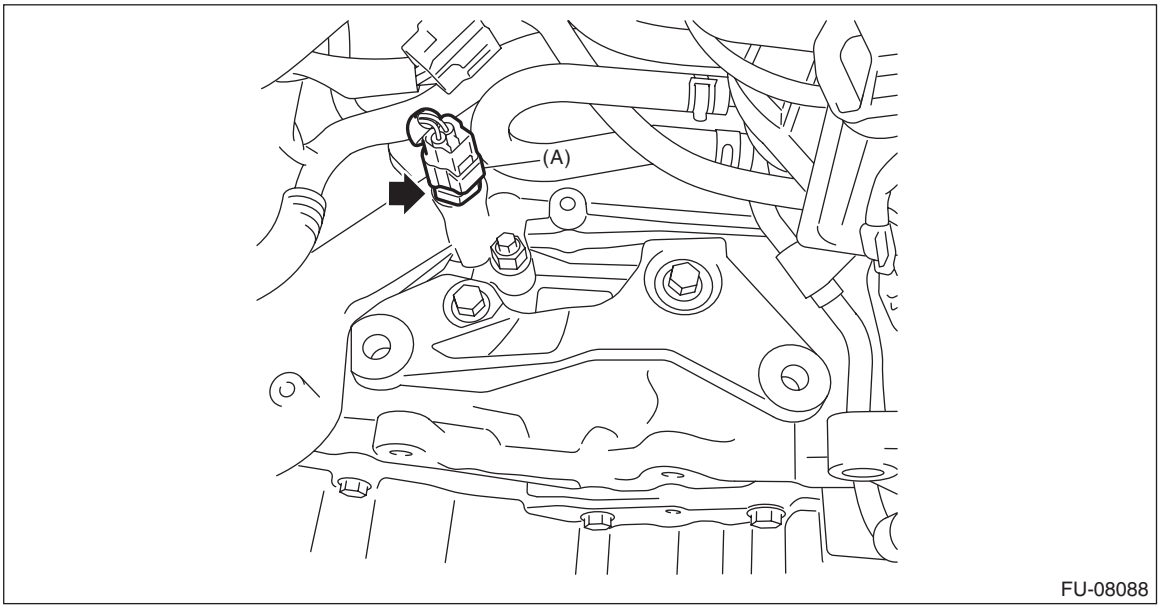

B: INSTALLATION

Install in the reverse order of removal.

NOTE:
Use a new gasket.

Tightening torque:
18 N·m (1.8 kgf-m, 13.3 ft-lb)

C: INSPECTION

1) Check that the engine coolant temperature sensor has no deformation, cracks or other damages.
2) Immerse the engine coolant temperature sensor and a thermometer in water.

CAUTION:
Take care not to allow water to get into the engine coolant temperature sensor connector. Completely remove any water inside.

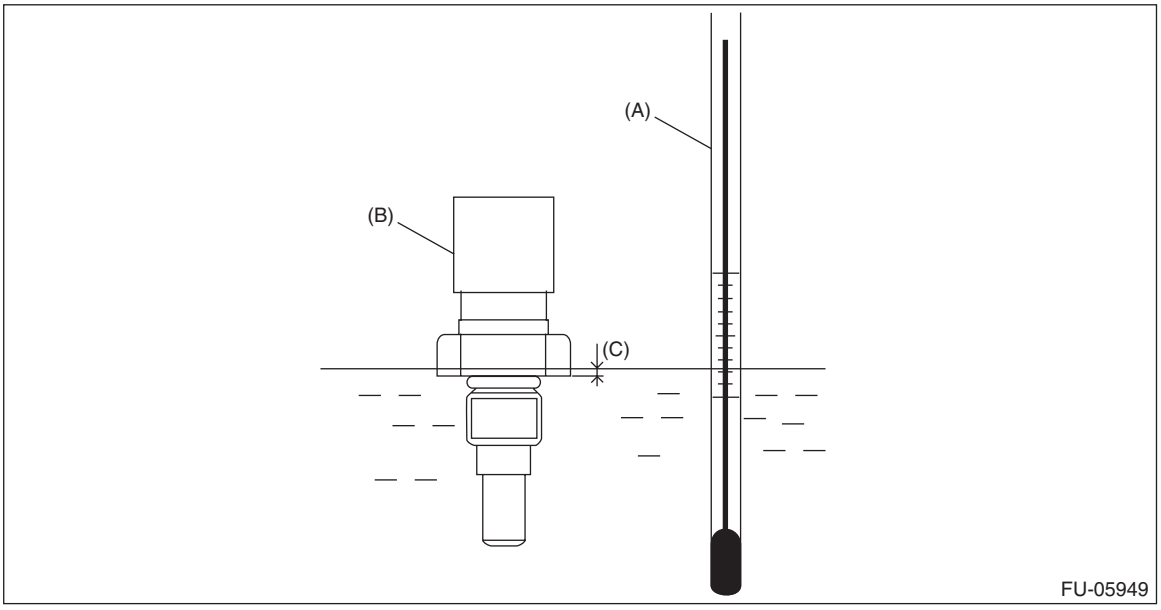

(A) Thermometer
(B) Engine coolant temperature sensor
(C) Hexagonal part height: To approx.$^{1}/_{3}$

3) Raise water temperature gradually, measure the resistance between the engine coolant temperature sensor terminals when the temperature is 20°C (68°F) and 80°C (176°F).

NOTE:
Agitate the water for even temperature distribution.

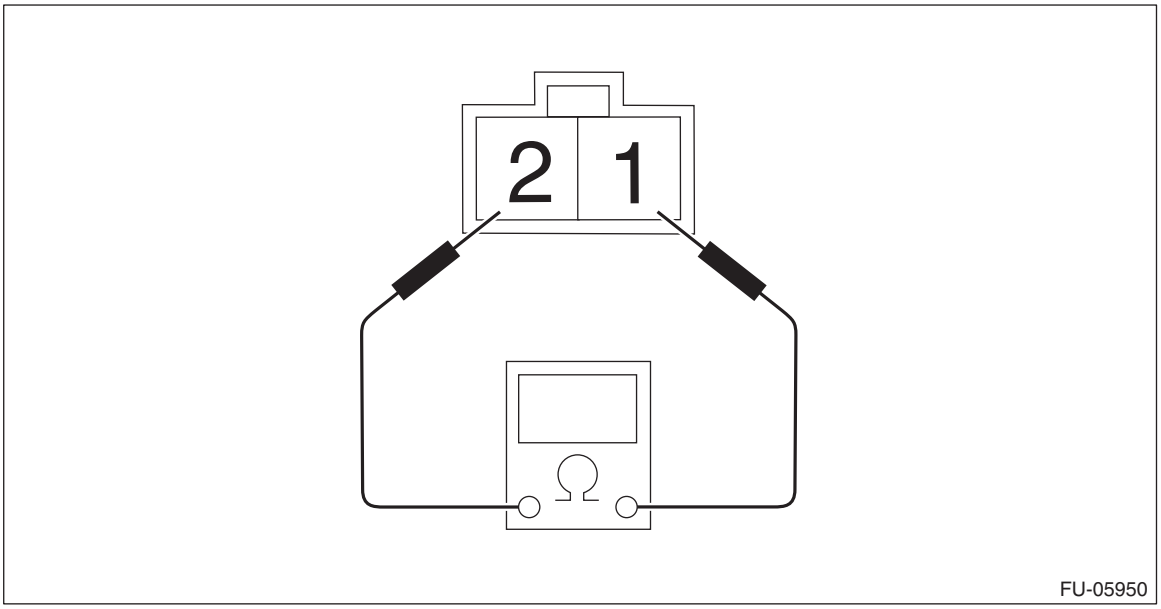

Water temperature	Terminal No.	Standard
20°C (68°F)	1 and 2	Approx. 2.45±0.2 kΩ
80°C (176°F)		Approx. 0.318±0.013 kΩ

6. Engine Oil Temperature Sensor

A: REMOVAL

1) Disconnect the ground cable from battery. <Ref. to NT-5, BATTERY, NOTE, Note.>

NOTE:
For the 12 volt engine restart battery, disconnect the ground terminal from 12V engine restart battery sensor.
2) Disconnect the connector (A) from the engine oil temperature sensor, and remove the engine oil temperature sensor from the chain cover.

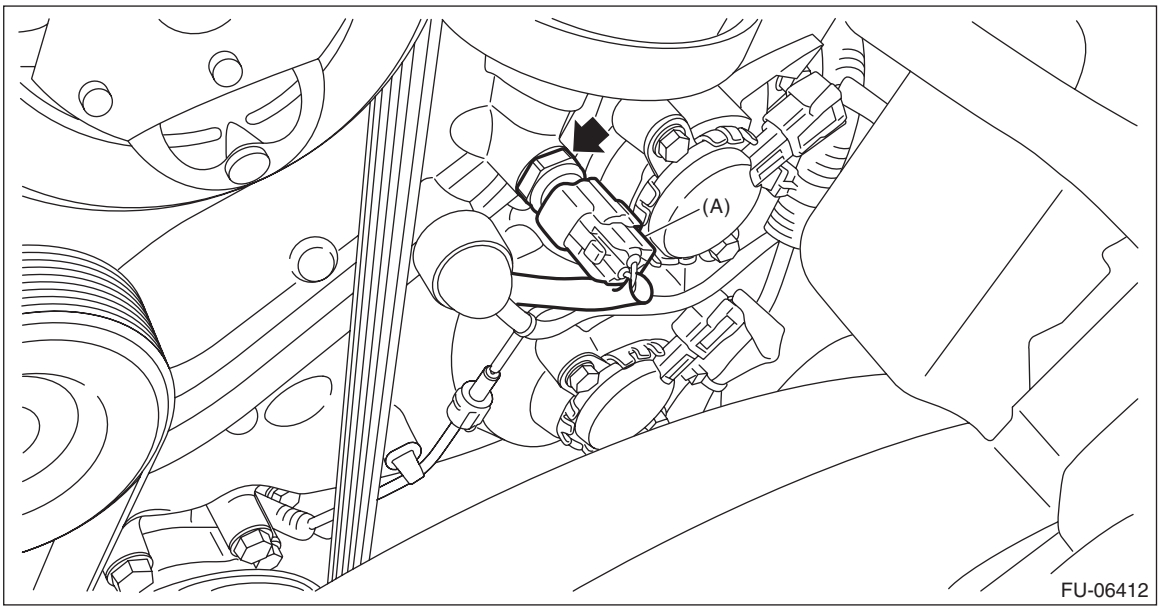

B: INSTALLATION

Install in the reverse order of removal.

NOTE:
Use a new gasket.

Tightening torque:
18 N·m (1.8 kgf-m, 13.3 ft-lb)

C: INSPECTION

1) Check that the engine oil temperature sensor has no deformation, cracks or other damages.
2) Immerse the engine oil temperature sensor and a thermometer in water.

CAUTION:
Take care not to allow water to get into the engine oil temperature sensor connector. Completely remove any water inside.

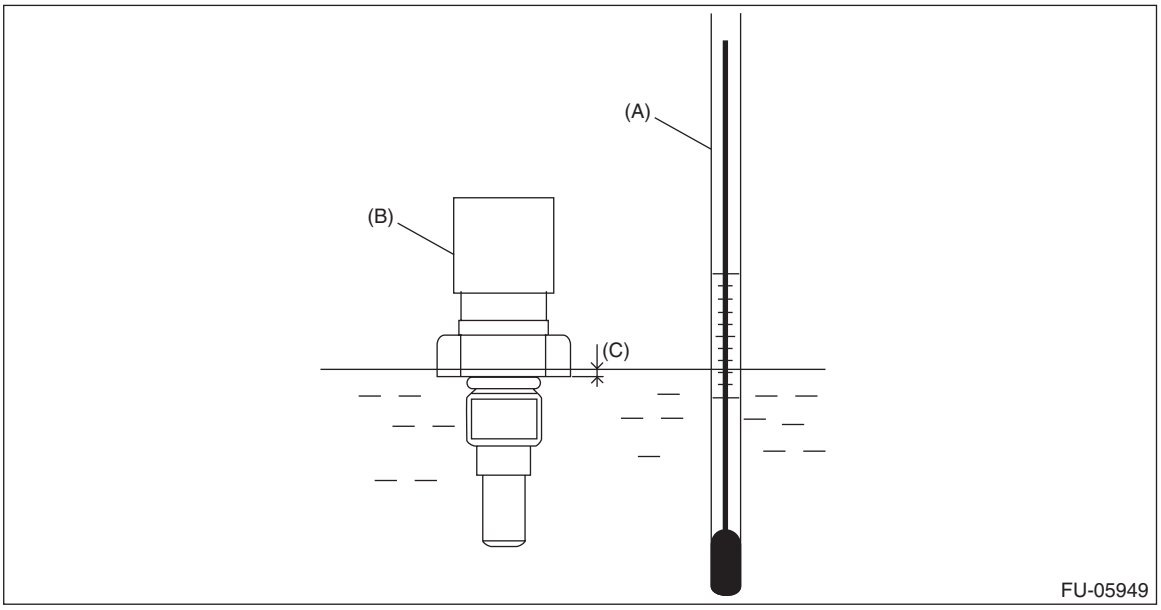

(A) Thermometer
(B) Engine oil temperature sensor
(C) Hexagonal part height: To approx. $^1/_3$

3) Raise water temperature gradually, measure the resistance between the engine oil temperature sensor terminals when the temperature is 20°C (68°F) and 80°C (176°F).

NOTE:
Agitate the water for even temperature distribution.

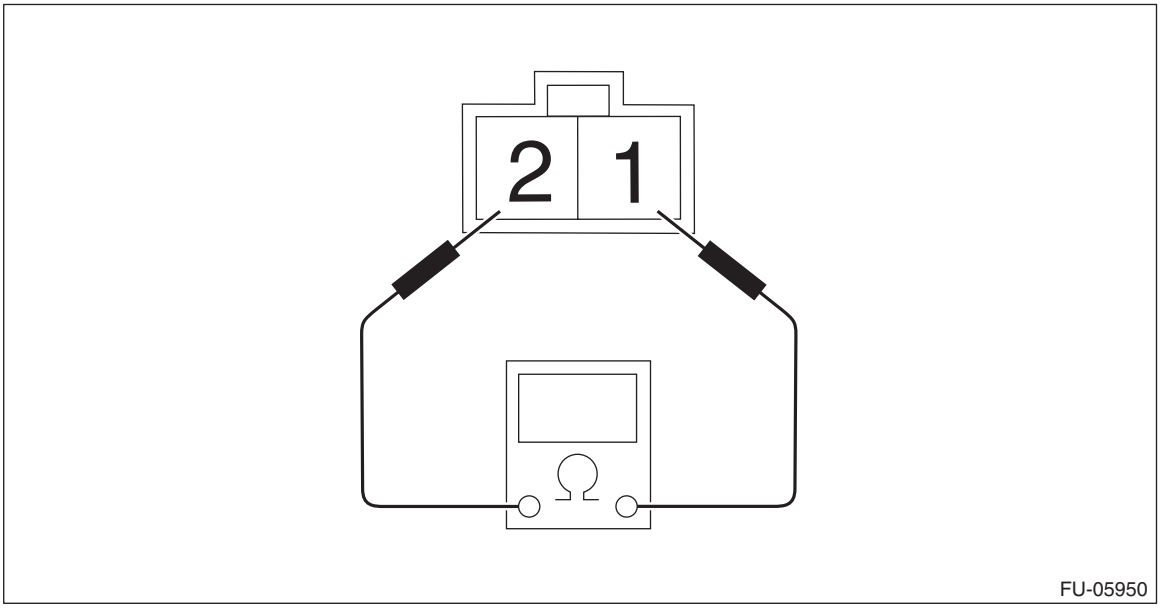

Water temperature	Terminal No.	Standard
20°C (68°F)	1 and 2	Approx. 2.45±0.2 kΩ
80°C (176°F)		Approx. 0.318±0.013 kΩ

7. Crankshaft Position Sensor

A: REMOVAL

1) Disconnect the ground cable from battery. <Ref. to NT-5, BATTERY, NOTE, Note.>

NOTE:
For the 12 volt engine restart battery, disconnect the ground terminal from 12V engine restart battery sensor.

2) Remove the collector cover.
   (1) Pull up the two points at the front of collector cover (A).
   (2) Pull up the two points at the rear of collector cover (B) while moving them rearward.

NOTE:
Be careful not to contact the fuel delivery tube when moving the collector cover rearward.

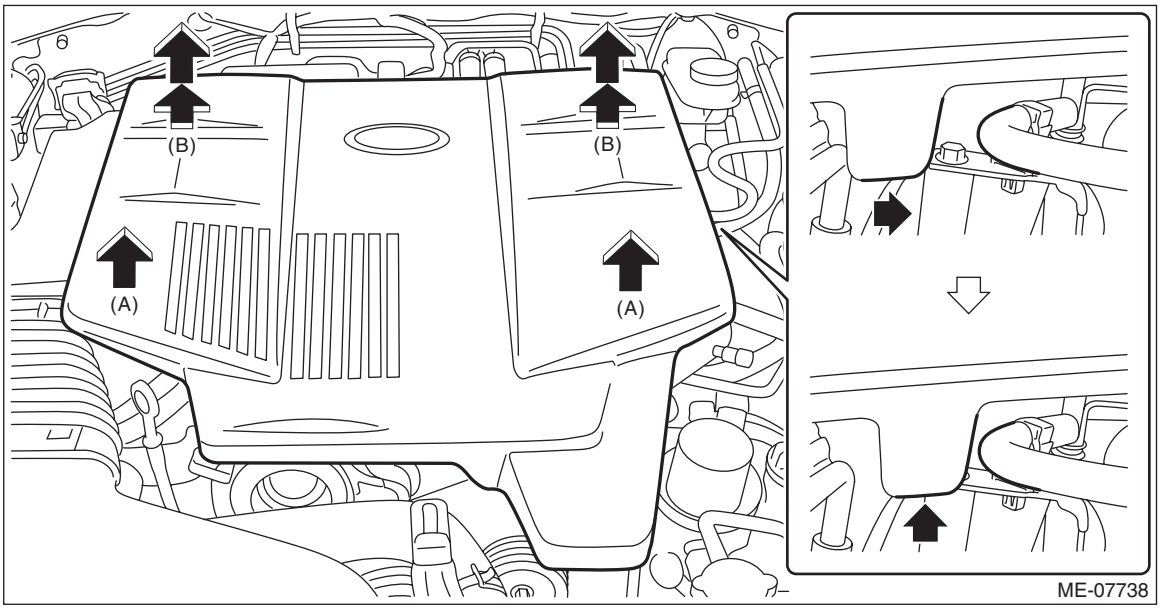

3) Remove the air cleaner case. <Ref. to IN(H4DO(HEV))-6, REMOVAL, Air Cleaner Case.>
4) Remove the air intake boot No. 2. <Ref. to IN(H4DO(HEV))-11, AIR INTAKE BOOT NO. 2, REMOVAL, Air Intake Boot.>
5) Disconnect the connector from the throttle body.

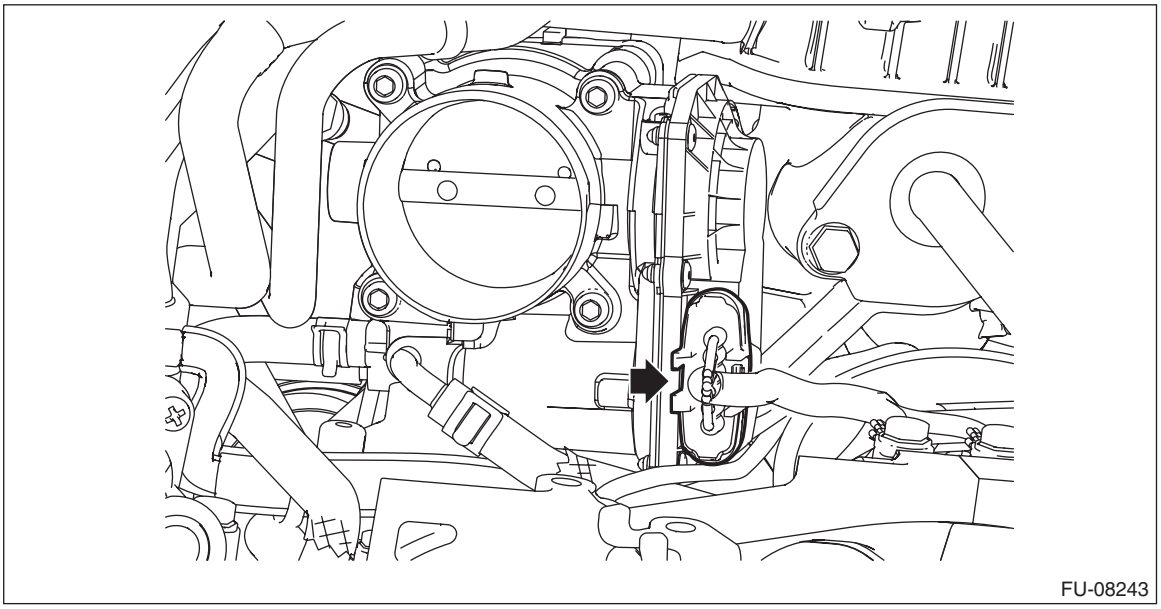

6) Disconnect the engine ground from the engine assembly.

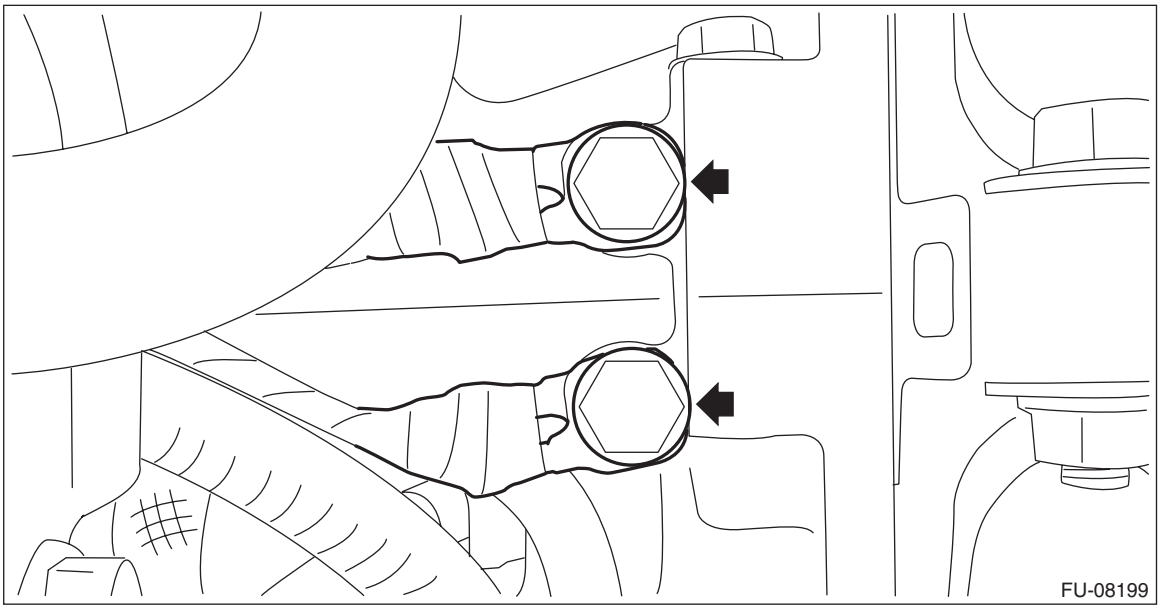

7) Disconnect the connector (A) from the crankshaft position sensor, and remove the crankshaft position sensor from the cylinder block.

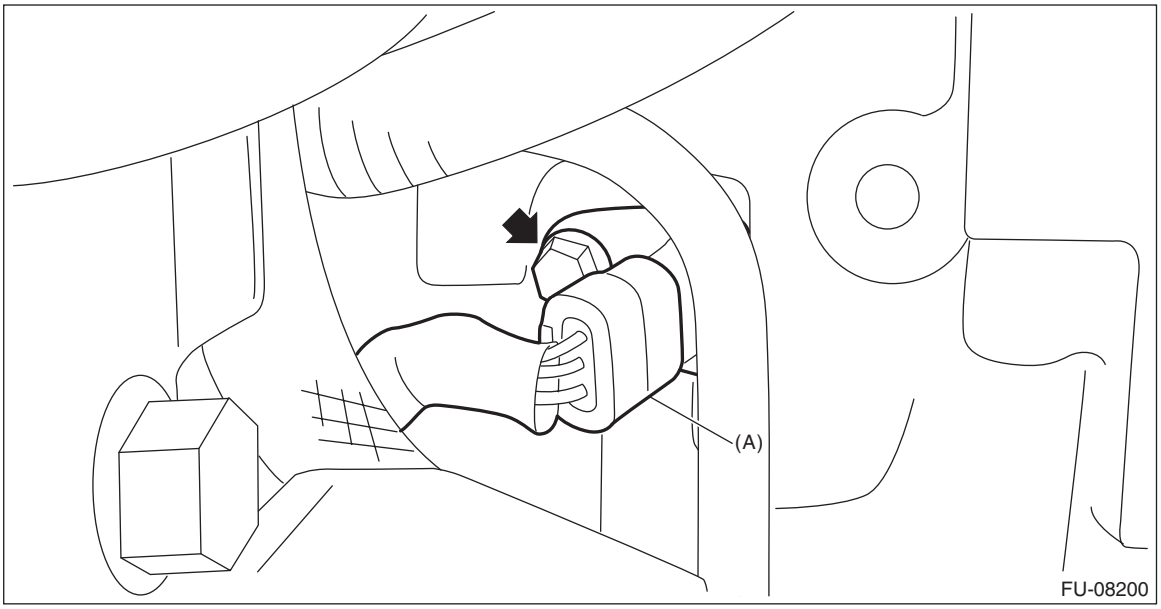

B: INSTALLATION

Install in the reverse order of removal.

Tightening torque:
6.4 N·m (0.7 kgf-m, 4.7 ft-lb)

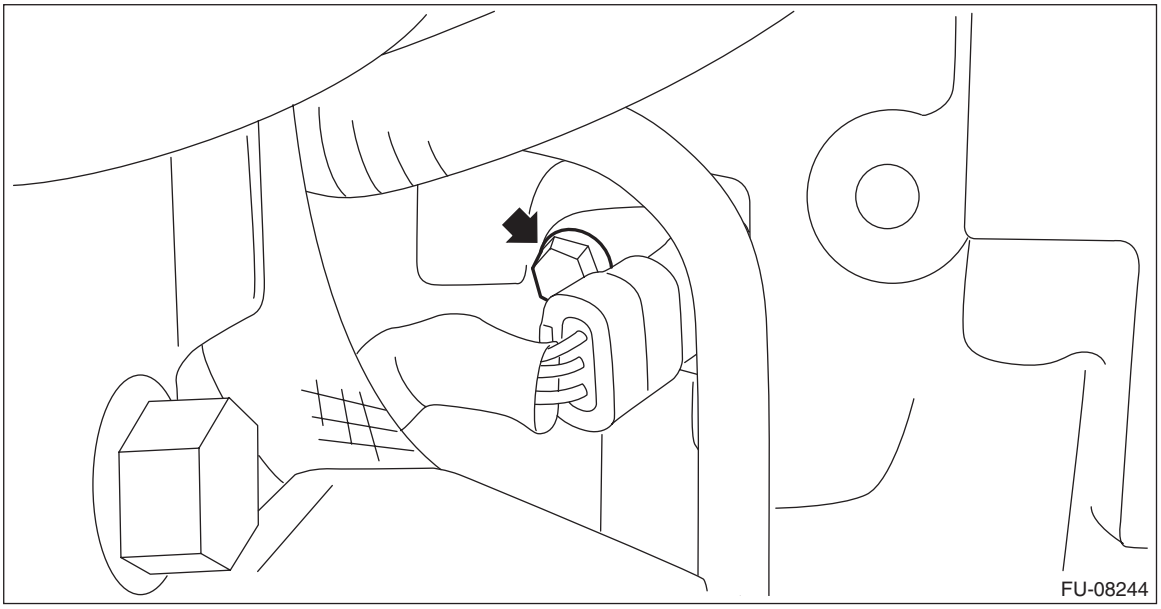

Tightening torque:
19 N·m (1.9 kgf-m, 14.0 ft-lb)

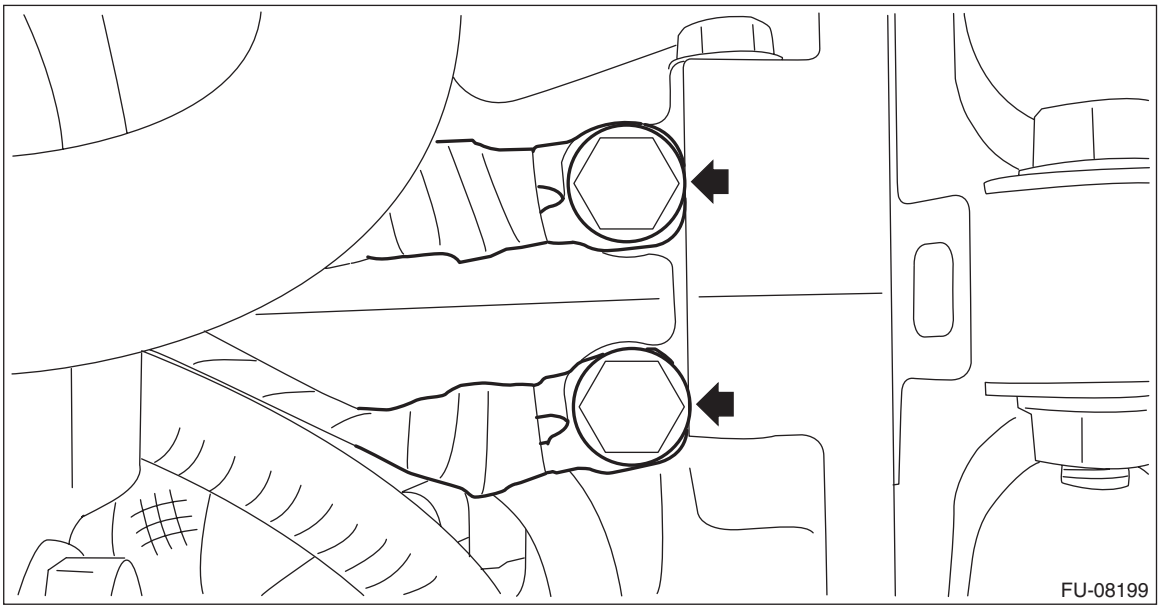

C: INSPECTION

1. CRANKSHAFT POSITION SENSOR (METHOD WITH OSCILLOSCOPE)

1) Prepare an oscilloscope.
2) Remove the glove box. <Ref. to EI-73, REMOVAL, Glove Box.>
3) Connect the probe to ECM connector.

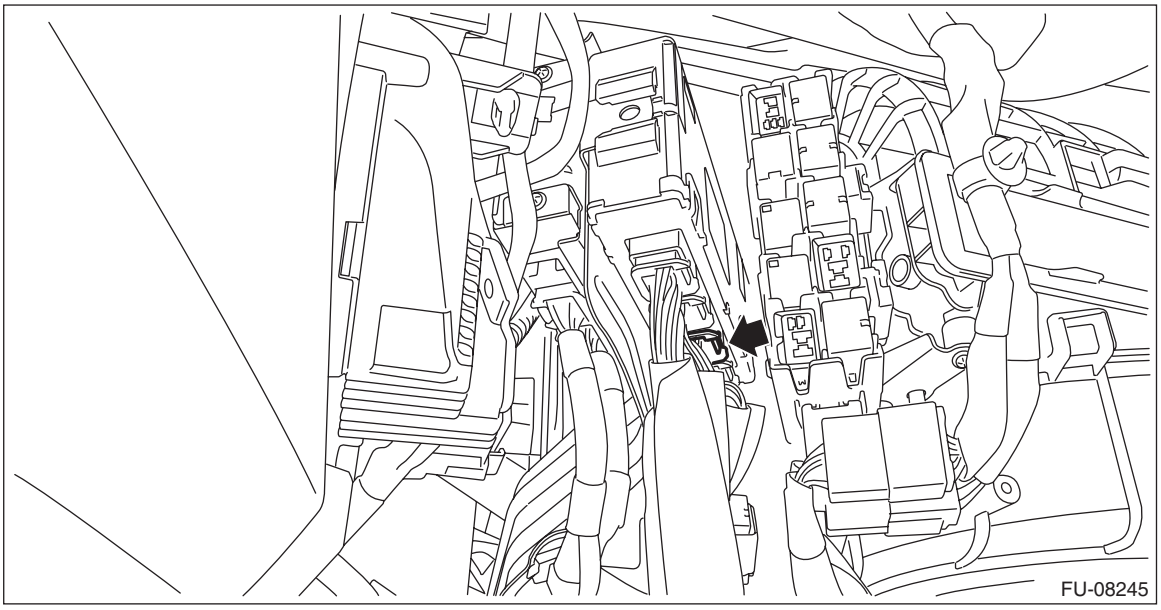

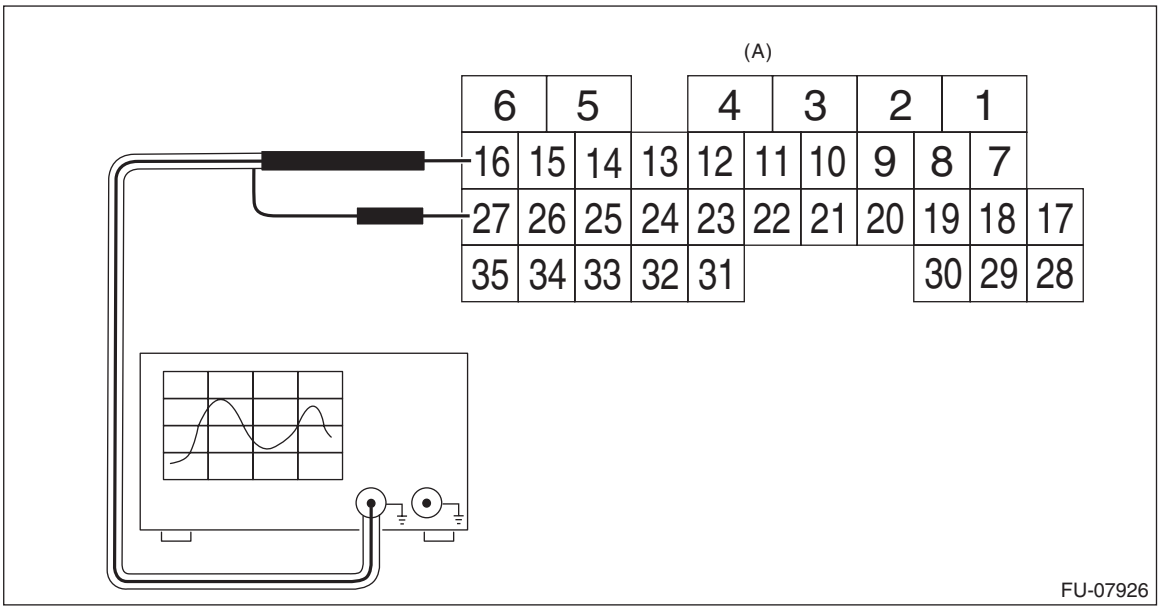

(A) To ECM connector

Terminal No.	Probe
16	+
27	–

4) Start the engine and let it idle.

5) Check the pattern is the same as the waveform and voltage shown below.

NOTE:
If an oscilloscope function of the Subaru Select Monitor is used to measure the waveform of crankshaft position sensor, the waveform might be as shown in the figure (a). This is not a malfunction of the Subaru Select Monitor or the crankshaft position sensor. It is because the unit of crankshaft position sensor output is 45 μsec, and is smaller than the minimum unit of measure of the Subaru Select Monitor, which is 50 μsec.

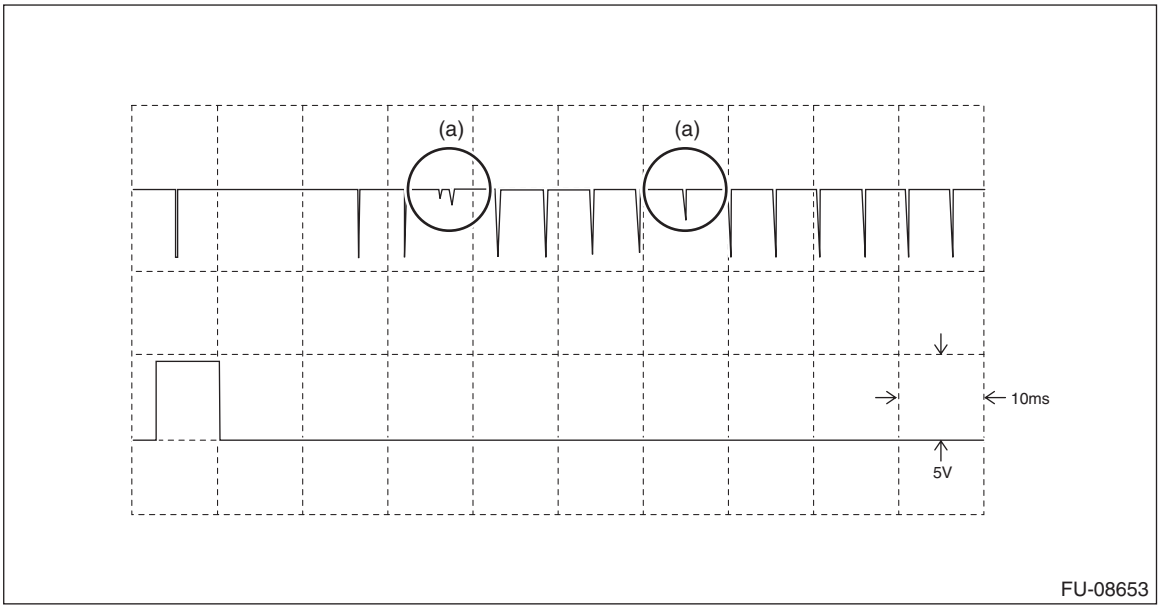

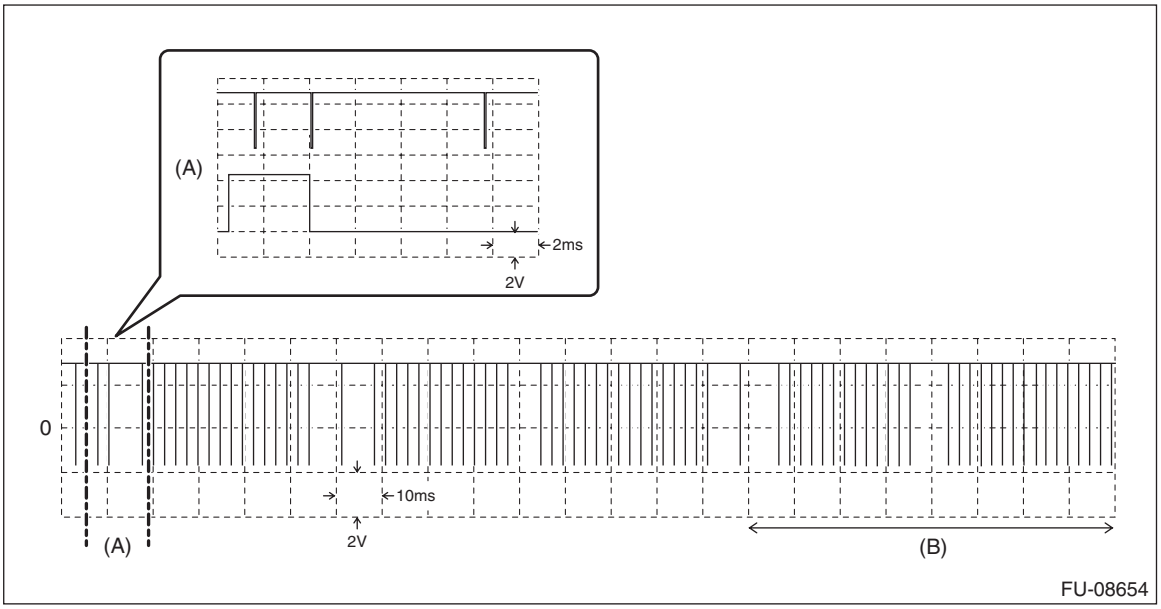

(A) Enlarged view of crankshaft position sensor waveforms
(B) One crankshaft rotation

6) After inspection, install the related parts in the reverse order of removal.

2. OTHER INSPECTIONS

Check that the crankshaft position sensor has no deformation, cracks or other damages.

8. Crankshaft Position Sensor Plate

A: REMOVAL

The crankshaft position sensor plate is tightened together with the drive plate; therefore, refer to “Drive Plate” for removal procedure. <Ref. to CVT(TH58A)-173, REMOVAL, Drive Plate.>

B: INSTALLATION

The crankshaft position sensor plate is tightened together with the drive plate; therefore, refer to “Drive Plate” for installation procedure. <Ref. to CVT(TH58A)-173, INSTALLATION, Drive Plate.>

C: INSPECTION

Check that the crankshaft position sensor plate has no deformation, cracks or other damages.

9. Camshaft Position Sensor

A: REMOVAL

1. INTAKE SIDE

1) Disconnect the ground cable from battery. <Ref. to NT-5, BATTERY, NOTE, Note.>

NOTE:
For the 12 volt engine restart battery, disconnect the ground terminal from 12V engine restart battery sensor.
2) Remove the air intake duct. (RH side only) <Ref. to IN(H4DO(HEV))-15, REMOVAL, Air Intake Duct.>
3) Remove the air intake boot No. 1. (RH side only) <Ref. to IN(H4DO(HEV))-10, AIR INTAKE BOOT NO. 1, REMOVAL, Air Intake Boot.>
4) Disconnect the connector (A) from the camshaft position sensor, and remove the camshaft position sensor from the chain cover.

- RH side

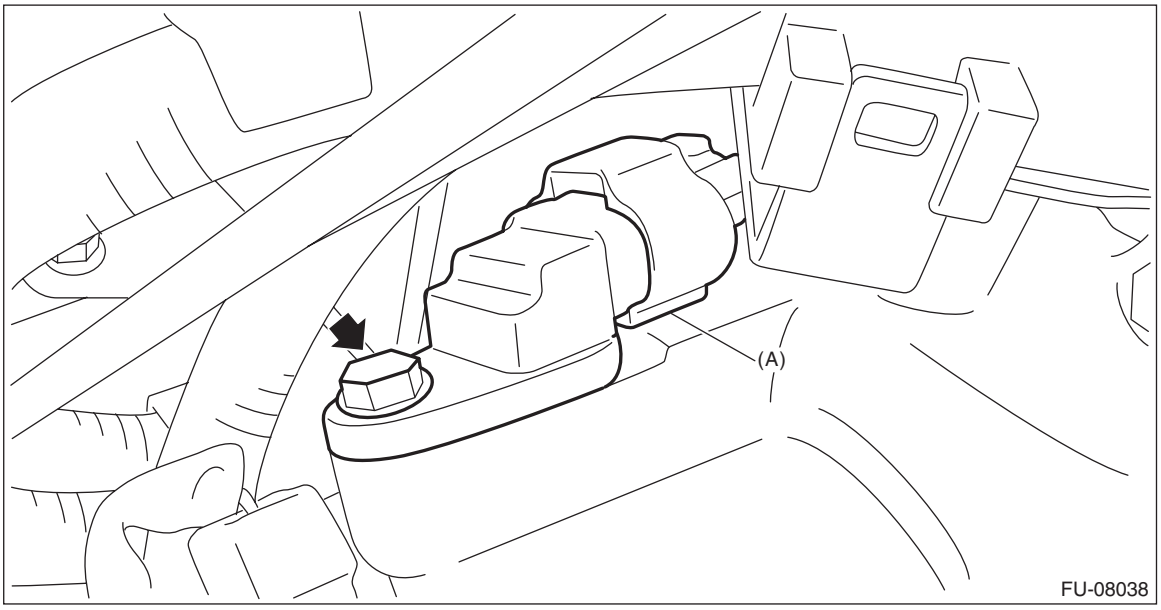

- LH side

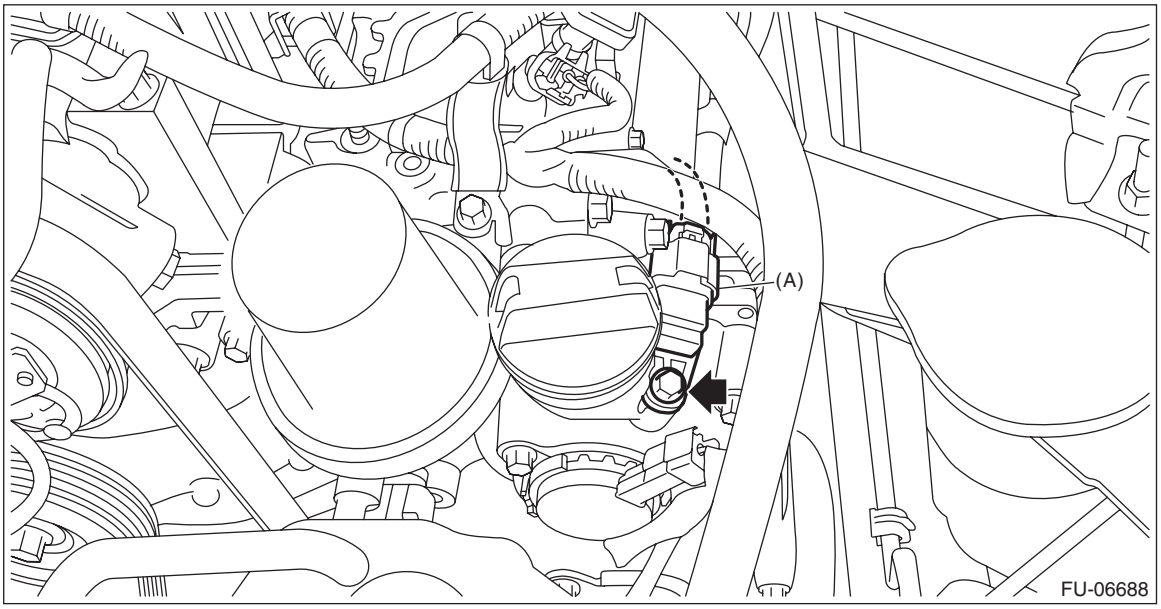

2. EXHAUST SIDE

1) Disconnect the ground cable from battery. <Ref. to NT-5, BATTERY, NOTE, Note.>

NOTE:
For the 12 volt engine restart battery, disconnect the ground terminal from 12V engine restart battery sensor.
2) Remove the under cover. <Ref. to EI-29, REMOVAL, Front Under Cover.>
3) Disconnect the connector (A) from the camshaft position sensor, and remove the camshaft position sensor from the chain cover.

- RH side

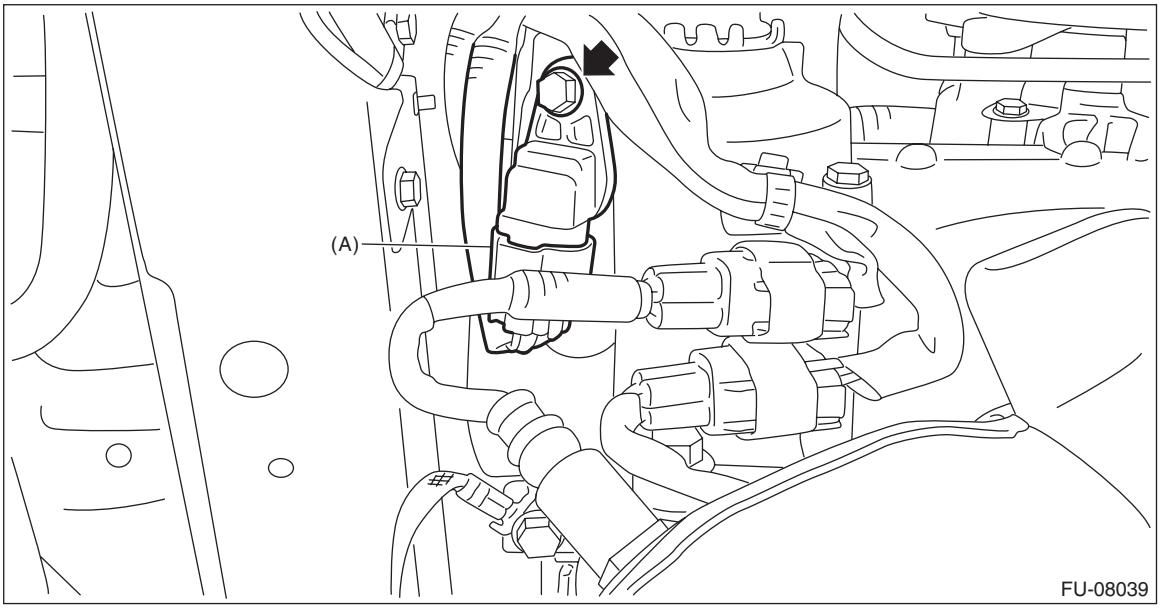

- LH side

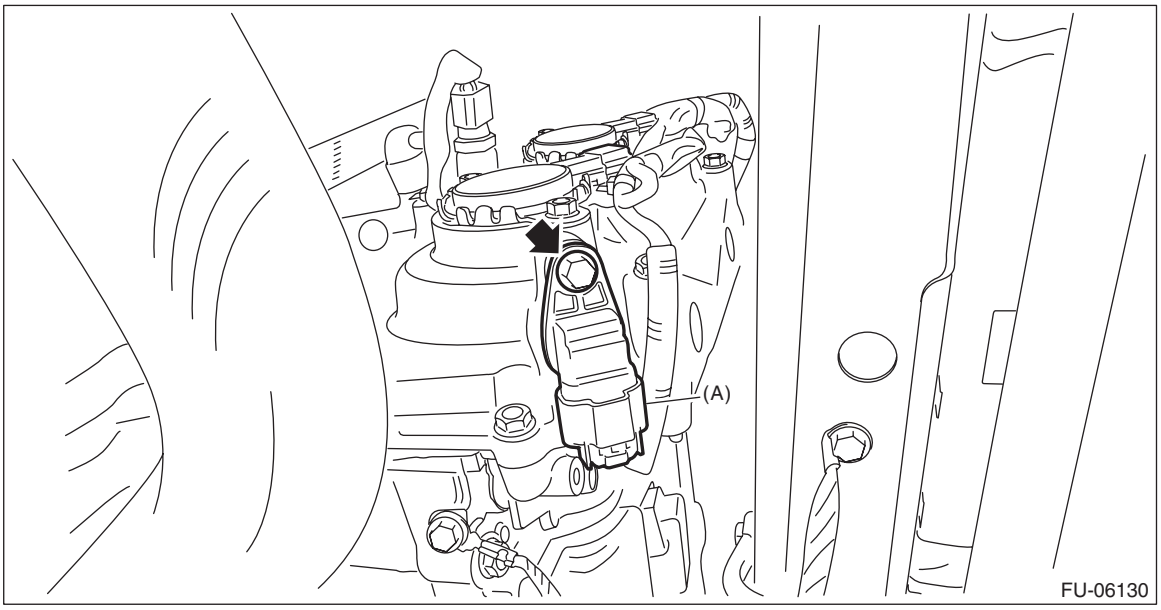

B: INSTALLATION

Install in the reverse order of removal.

NOTE:
- Use new O-rings.
- Apply engine oil to O-ring.

Tightening torque:
6.4 N·m (0.7 kgf-m, 4.7 ft-lb)

C: INSPECTION

1. CAMSHAFT POSITION SENSOR (METHOD WITH OSCILLOSCOPE)

1) Prepare an oscilloscope.
2) Remove the glove box. <Ref. to EI-73, REMOVAL, Glove Box.>
3) Connect the probe to ECM connector.

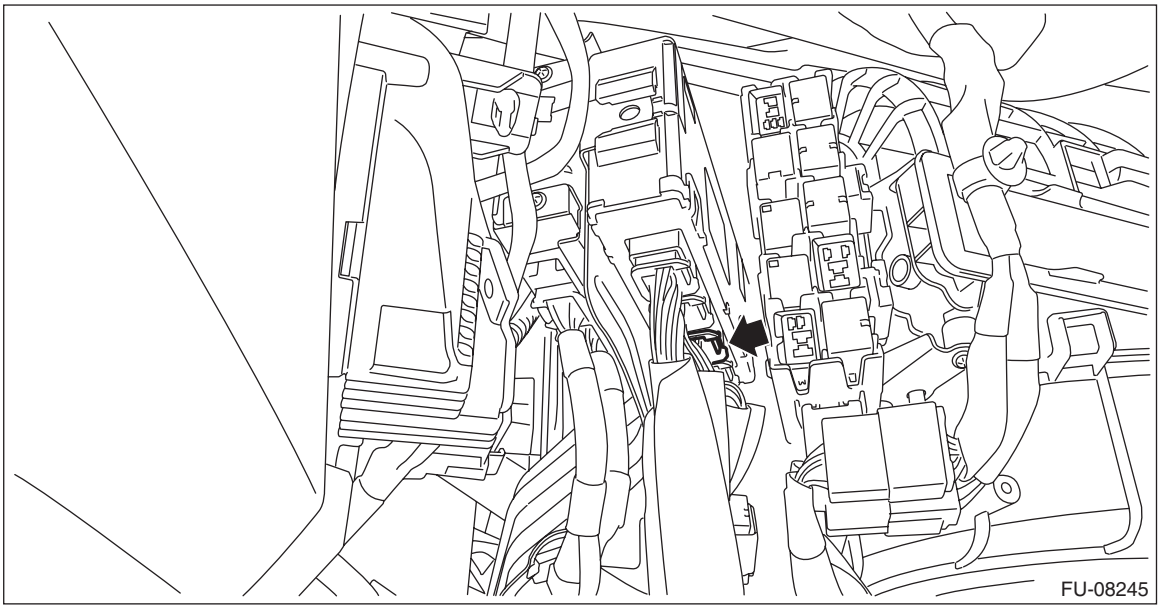

- Intake camshaft position sensor

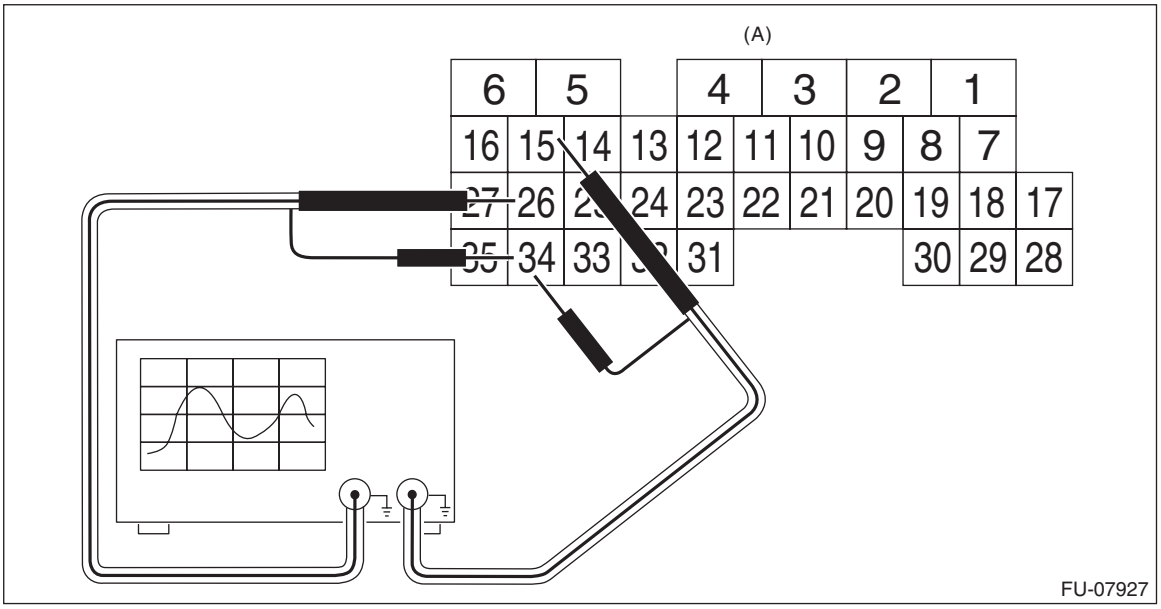

(A) To ECM connector

- Exhaust camshaft position sensor

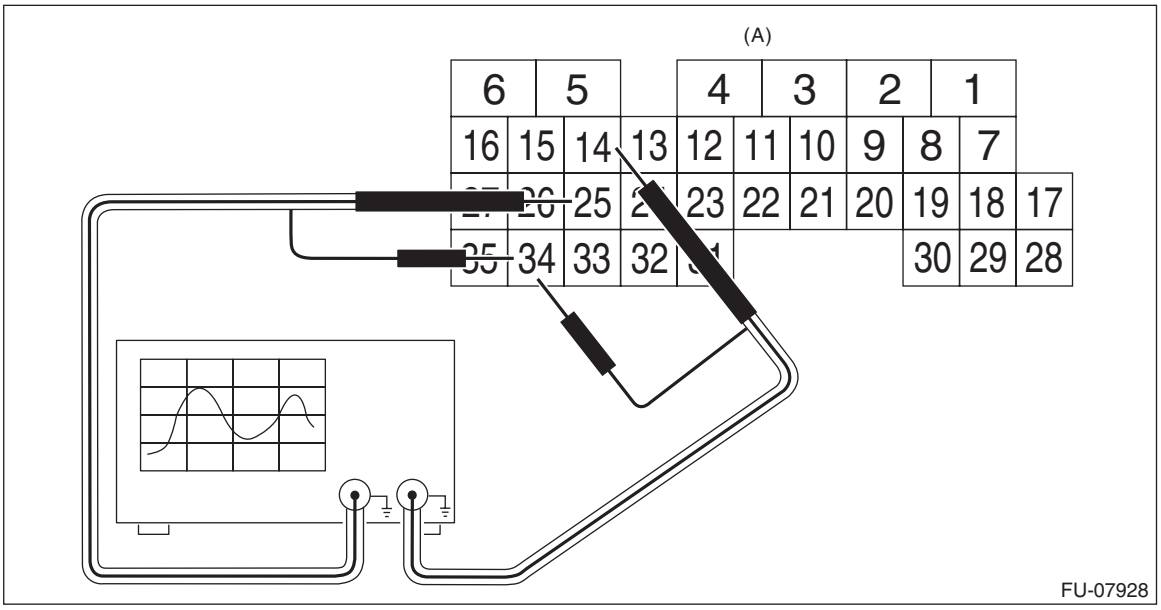

(A) To ECM connector

Camshaft position sensor		Terminal No.	Probe
Intake	RH	26	+
	LH	15	+
Exhaust	RH	14	+
	LH	25	+
RH and LH		34	–

4) Start the engine and let it idle.

5) Check the pattern is the same as the waveform and voltage shown below.

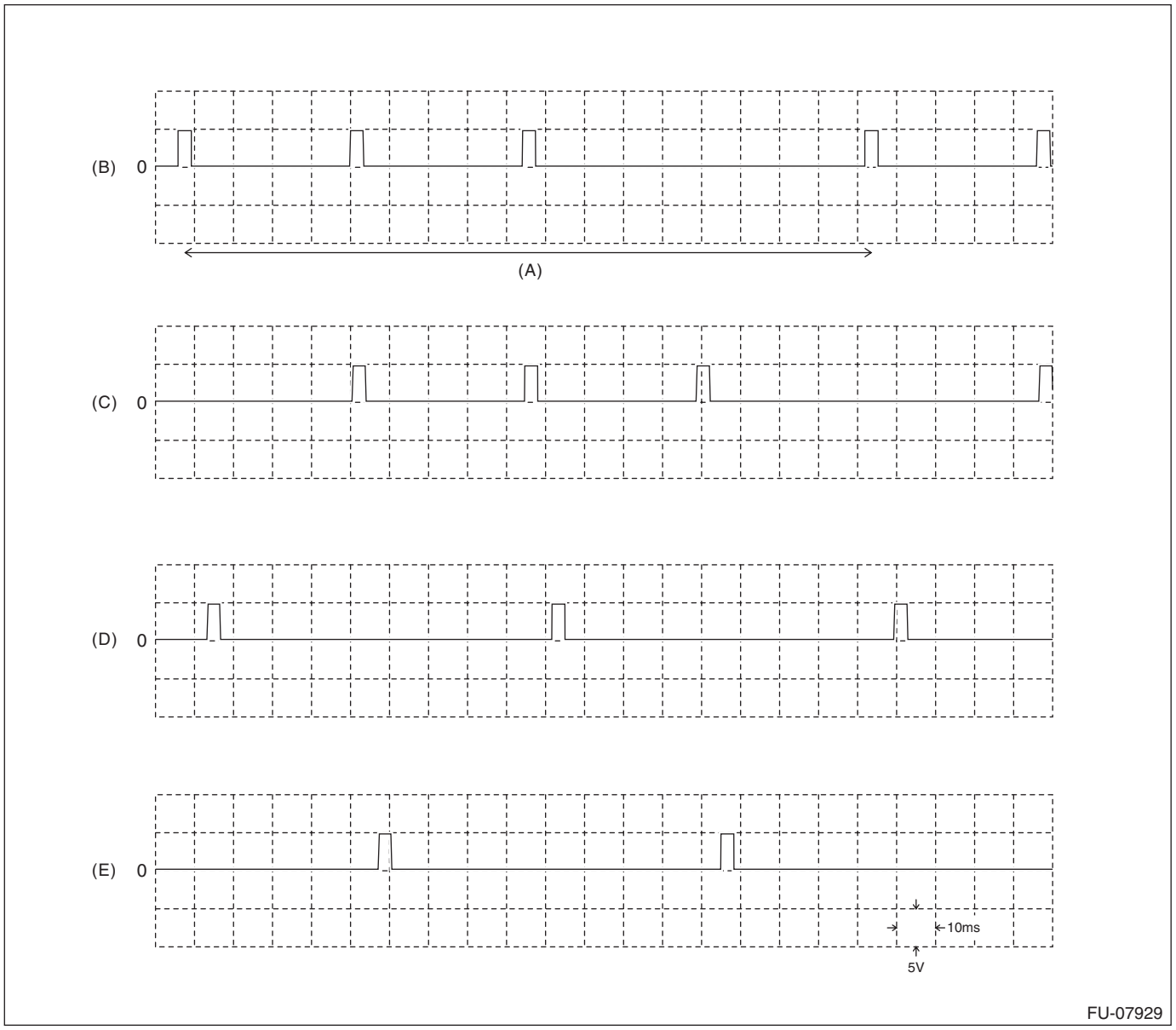

(A) One camshaft rotation
(B) Intake camshaft position sensor RH
(C) Intake camshaft position sensor LH
(D) Exhaust camshaft position sensor RH
(E) Exhaust camshaft position sensor LH

6) After inspection, install the related parts in the reverse order of removal.

2. OTHER INSPECTIONS

Check that the camshaft position sensor has no deformation, cracks or other damages.

10.Oil Control Solenoid

A: REMOVAL

1. INTAKE SIDE

1) Disconnect the ground cable from battery. <Ref. to NT-5, BATTERY, NOTE, Note.>

NOTE:
For the 12 volt engine restart battery, disconnect the ground terminal from 12V engine restart battery sensor.
2) Remove the air intake duct. (RH side only) <Ref. to IN(H4DO(HEV))-15, REMOVAL, Air Intake Duct.>
3) Remove the reservoir tank. (LH side only) <Ref. to CO(H4DO(w/o HEV))-97, REMOVAL, Reservoir Tank.>
4) Disconnect the connector (A) from the oil control solenoid, and remove the oil control solenoid from the chain cover.

- RH side

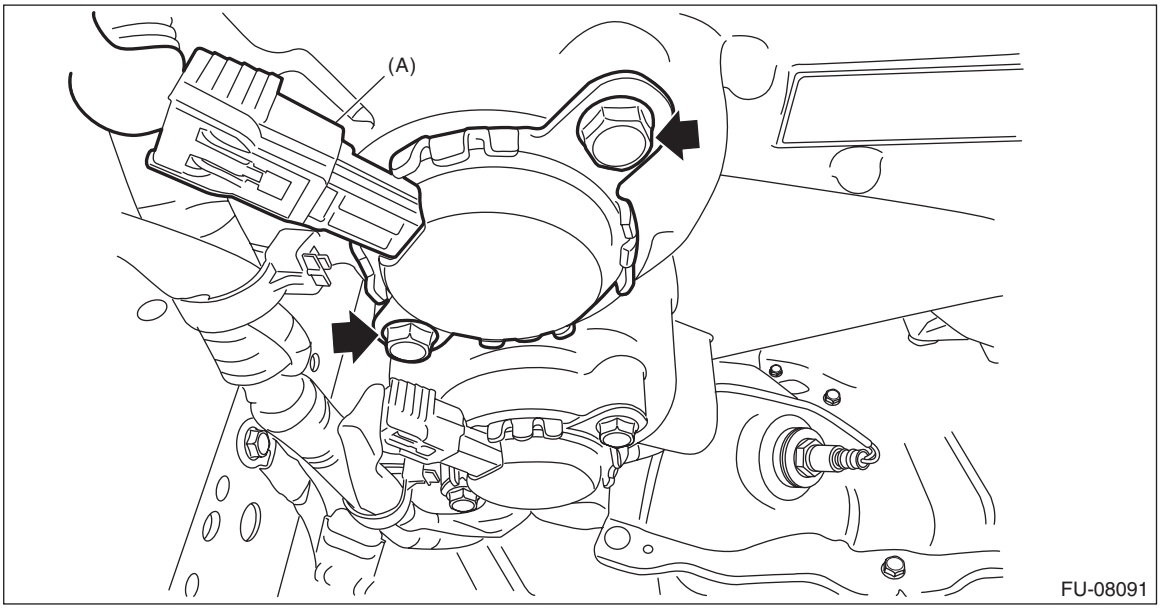

- LH side

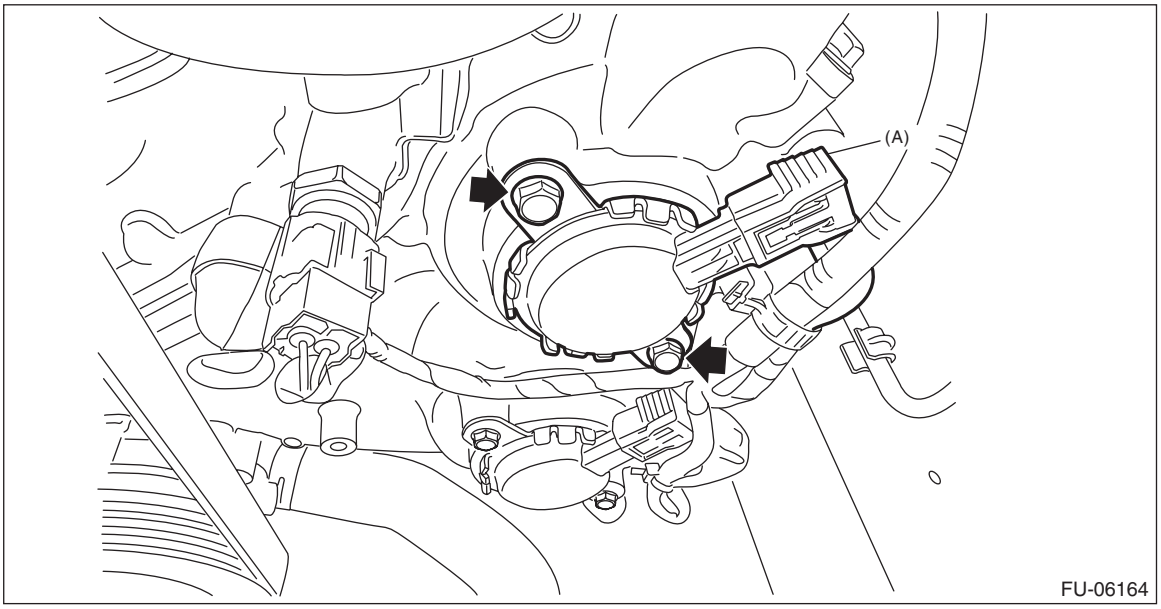

2. EXHAUST SIDE

1) Disconnect the ground cable from battery. <Ref. to NT-5, BATTERY, NOTE, Note.>

NOTE:
For the 12 volt engine restart battery, disconnect the ground terminal from 12V engine restart battery sensor.
2) Remove the air intake duct. (RH side only) <Ref. to IN(H4DO(HEV))-15, REMOVAL, Air Intake Duct.>
3) Remove the reservoir tank. (LH side only) <Ref. to CO(H4DO(w/o HEV))-97, REMOVAL, Reservoir Tank.>
4) Disconnect the connector (A) from the oil control solenoid, and remove the oil control solenoid from the chain cover.

- RH side

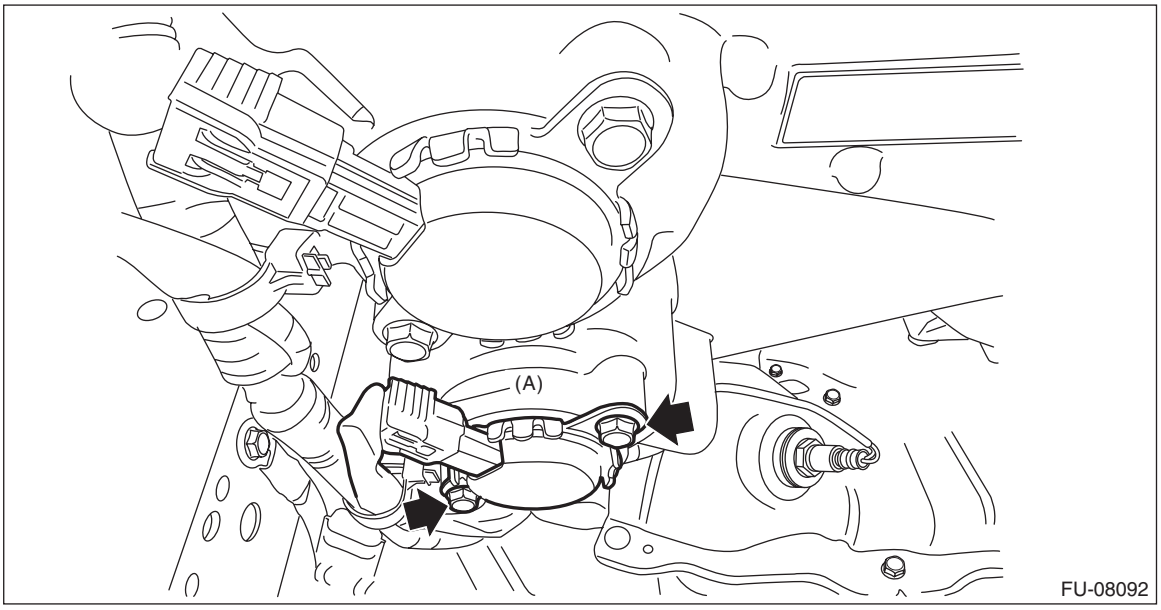

- LH side

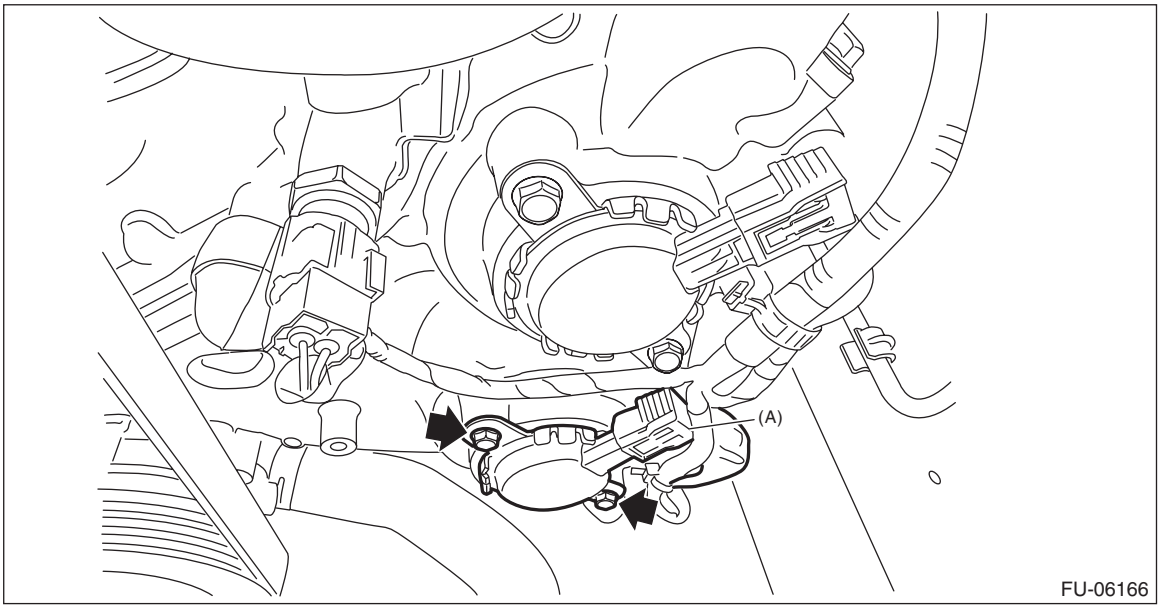

B: INSTALLATION

Install in the reverse order of removal.

NOTE:
- Use new O-rings.
- Apply engine oil to O-ring.

Tightening torque:
6.4 N·m (0.7 kgf-m, 4.7 ft-lb)

C: INSPECTION

1) Check that the oil control solenoid has no deformation, cracks or other damages.
2) Measure the resistance between the oil control solenoid terminals.

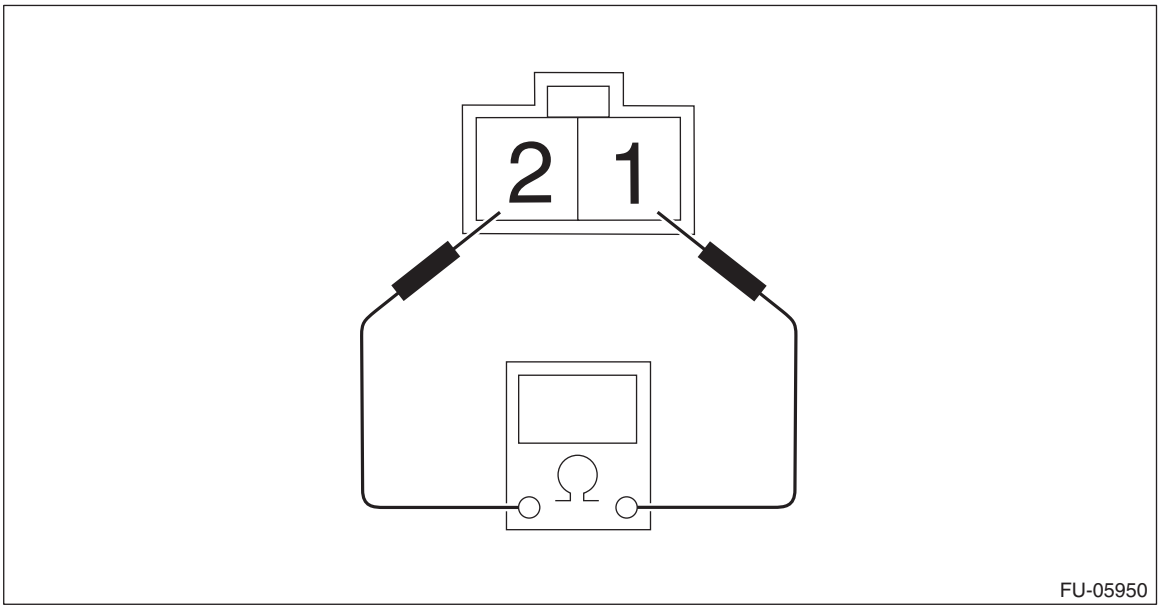

Terminal No.	Standard
1 and 2	7.25±0.4 Ω (when 20°C (68°F))

11.Knock Sensor

A: REMOVAL

1) Disconnect the ground cable from battery. <Ref. to NT-5, BATTERY, NOTE, Note.>

NOTE:
For the 12 volt engine restart battery, disconnect the ground terminal from 12V engine restart battery sensor.

2) Remove the collector cover.
   (1) Pull up the two points at the front of collector cover (A).
   (2) Pull up the two points at the rear of collector cover (B) while moving them rearward.

NOTE:
Be careful not to contact the fuel delivery tube when moving the collector cover rearward.

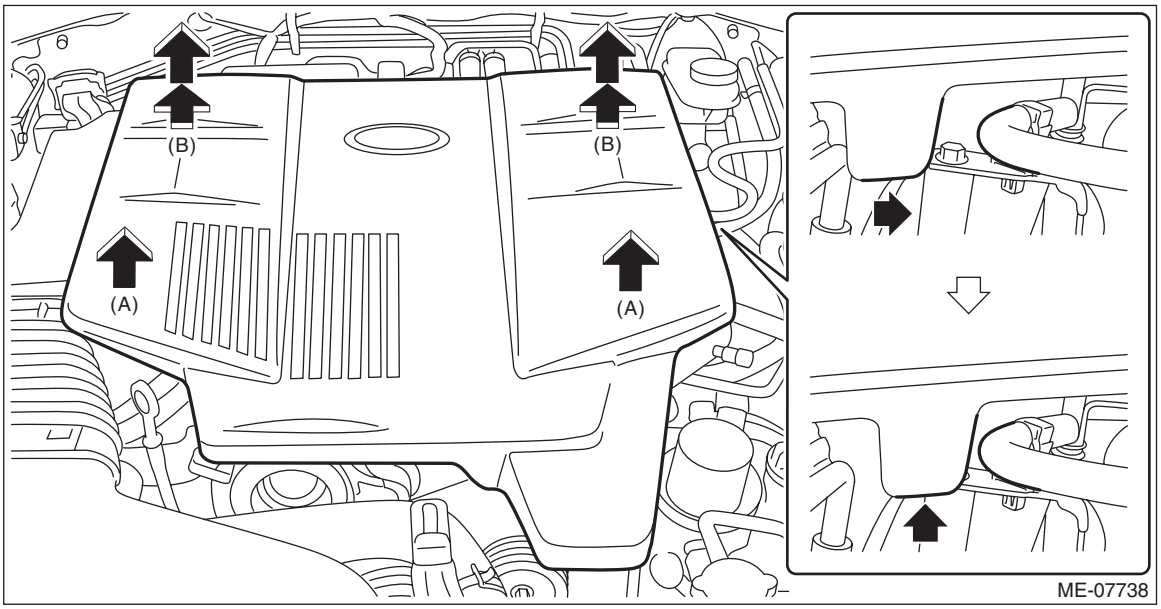

3) Remove the throttle body. <Ref. to FU(H4DO(HEV))-15, REMOVAL, Throttle Body.>
4) Disconnect the connector (A) from the knock sensor, and remove the knock sensor from the cylinder block.

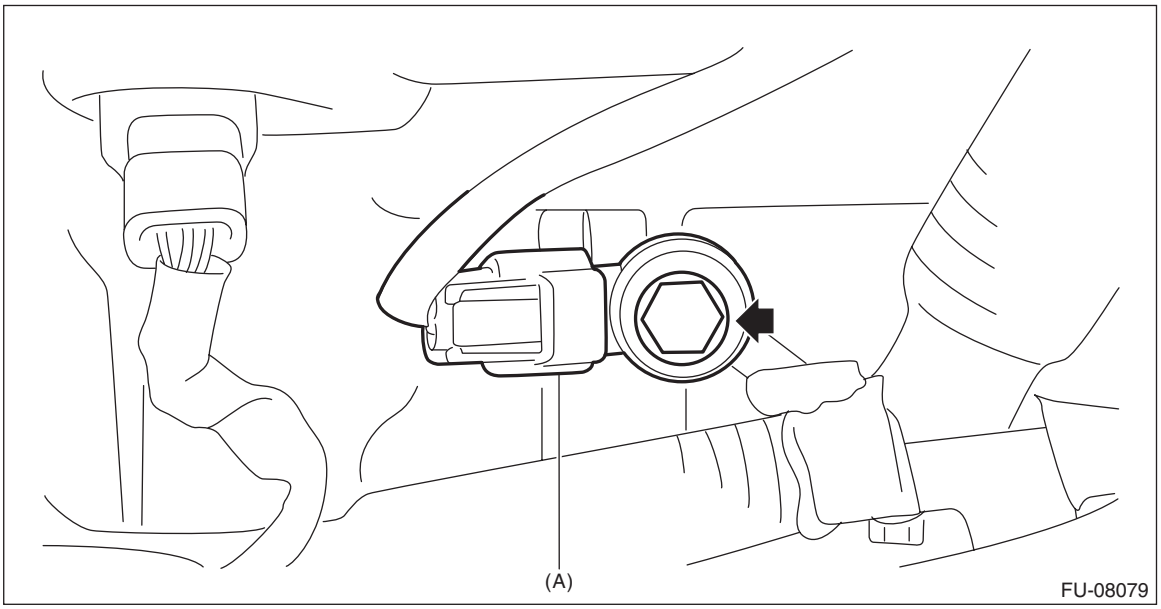

B: INSTALLATION

1) Install the knock sensor to the cylinder block.

NOTE:
The knock sensor should be installed so that the center of the connector is positioned at a 76.5 — 91.5° angle relative to the front of engine.

Tightening torque:
24 N·m (2.4 kgf-m, 17.7 ft-lb)

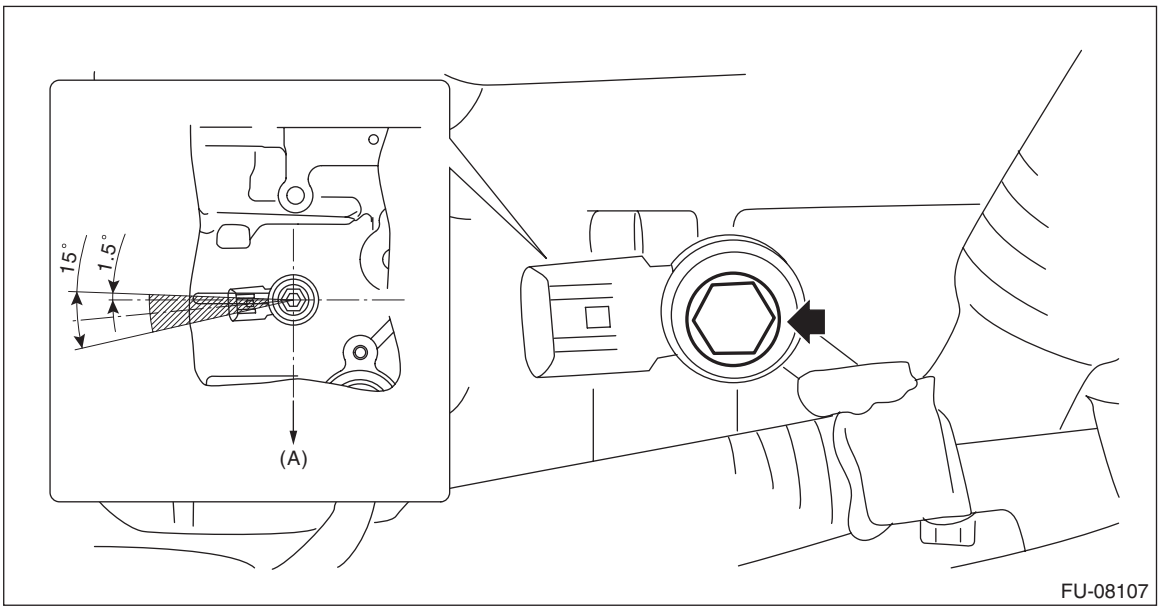

(A) Front of engine

2) Connect the connector to the knock sensor.

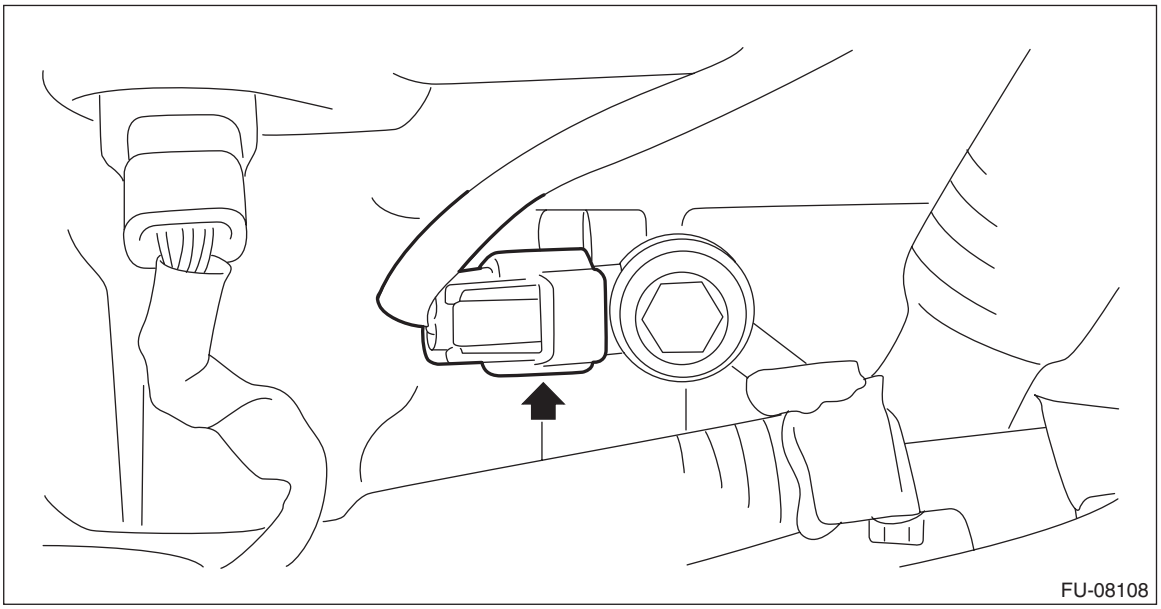

3) Install the throttle body. <Ref. to FU(H4DO(HEV))-16, INSTALLATION, Throttle Body.>
4) Install the collector cover.
5) Connect the battery ground terminal. <Ref. to NT-5, BATTERY, NOTE, Note.>

C: INSPECTION

1) Check that the knock sensor has no deformation, cracks or other damages.
2) Measure the resistance between knock sensor terminals.

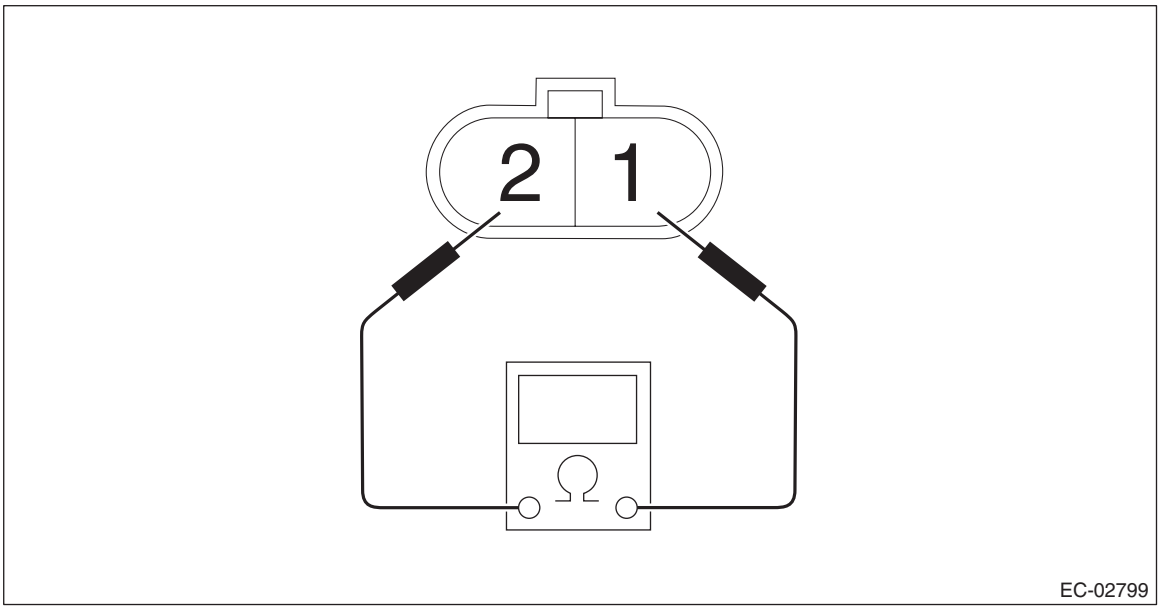

Terminal No.	Standard
1 and 2	560±28 kΩ

12.Throttle Position Sensor

A: SPECIFICATION

Throttle body is a non-disassembled part, so do not remove the throttle position sensor from throttle body. Refer to “Throttle Body” for removal and installation procedure. <Ref. to FU(H4DO(HEV))-15, REMOVAL, Throttle Body.> <Ref. to FU(H4DO(HEV))-16, INSTALLATION, Throttle Body.>

13.Mass Air Flow and Intake Air Temperature Sensor

A: REMOVAL

1) Disconnect the ground cable from battery. <Ref. to NT-5, BATTERY, NOTE, Note.>

NOTE:
For the 12 volt engine restart battery, disconnect the ground terminal from 12V engine restart battery sensor.
2) Disconnect the connector (A) from the mass air flow and intake air temperature sensor, and remove the mass air flow and intake air temperature sensor.

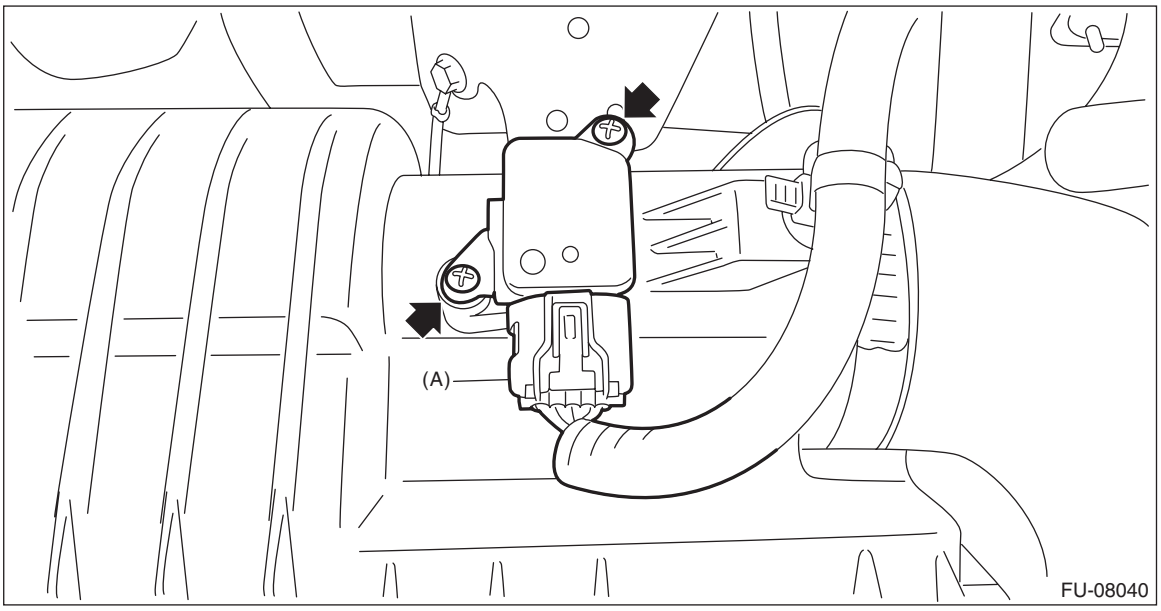

B: INSTALLATION

Install in the reverse order of removal.

Tightening torque:
1 N·m (0.1 kgf-m, 0.7 ft-lb)

C: INSPECTION

1. CHECK THE MASS AIR FLOW SENSOR UNIT

1) Connect the battery positive terminal to terminal No. 3 and the battery ground terminal to terminal No. 4, the circuit tester positive terminal to terminal No. 5 and the circuit tester ground terminal to terminal No. 4.

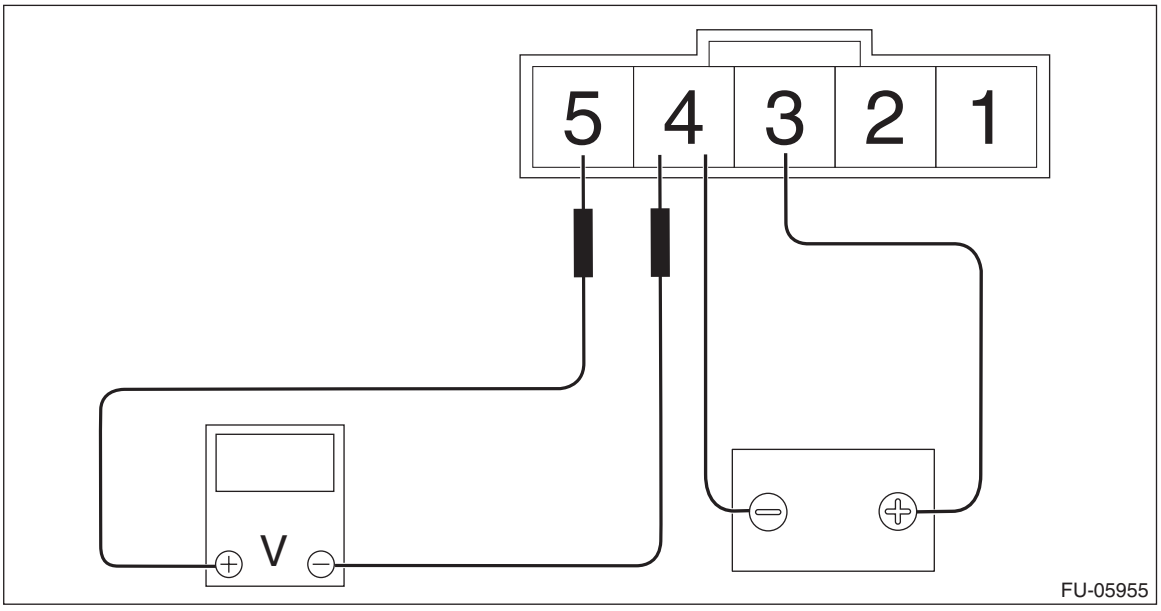

2) Check the voltage changes when air is blown from the arrow pointing area to the mass air flow sensor unit.

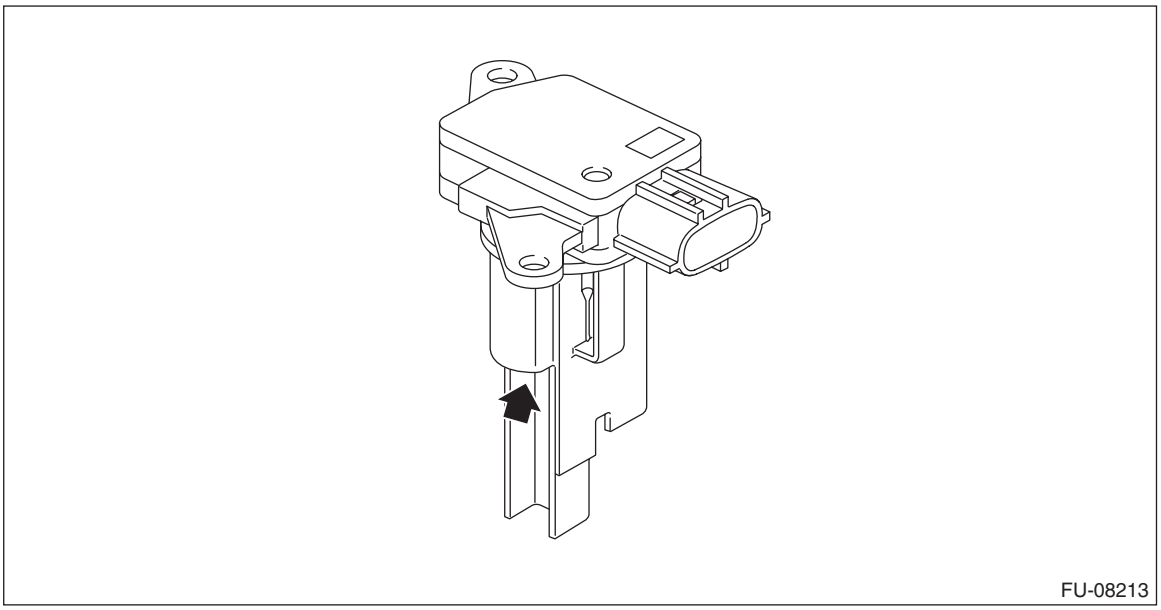

2. CHECK THE INTAKE AIR TEMPERATURE SENSOR UNIT

Measure the resistance between intake air temperature sensor terminals.

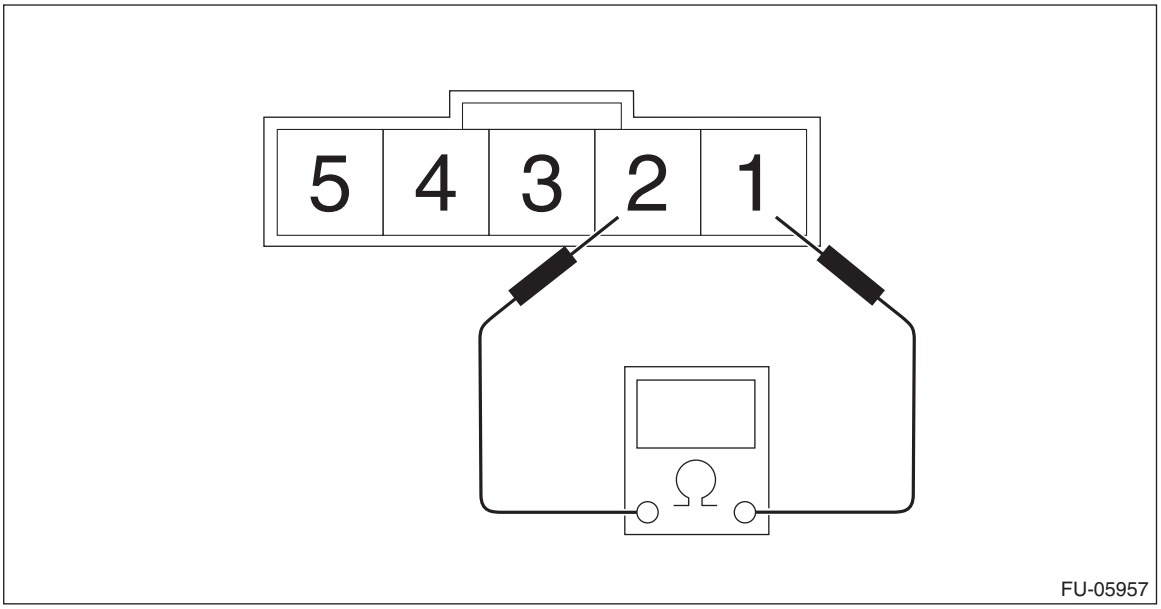

Temperature	Terminal No.	Standard
–20°C (–4°F)	1 and 2	16.0±2.4 kΩ
20°C (68°F)		2.45±0.24 kΩ
60°C (140°F)		0.58±0.087 kΩ

3. OTHER INSPECTIONS

1) Check that the mass air flow and intake air temperature sensor has no deformation, cracks or other damages.
2) Check that the mass air flow and intake air temperature sensor has no dirt.

14.Manifold Absolute Pressure Sensor

A: REMOVAL

1) Disconnect the ground cable from battery. <Ref. to NT-5, BATTERY, NOTE, Note.>

NOTE:
For the 12 volt engine restart battery, disconnect the ground terminal from 12V engine restart battery sensor.

2) Remove the collector cover.
   (1) Pull up the two points at the front of collector cover (A).
   (2) Pull up the two points at the rear of collector cover (B) while moving them rearward.

NOTE:
Be careful not to contact the fuel delivery tube when moving the collector cover rearward.

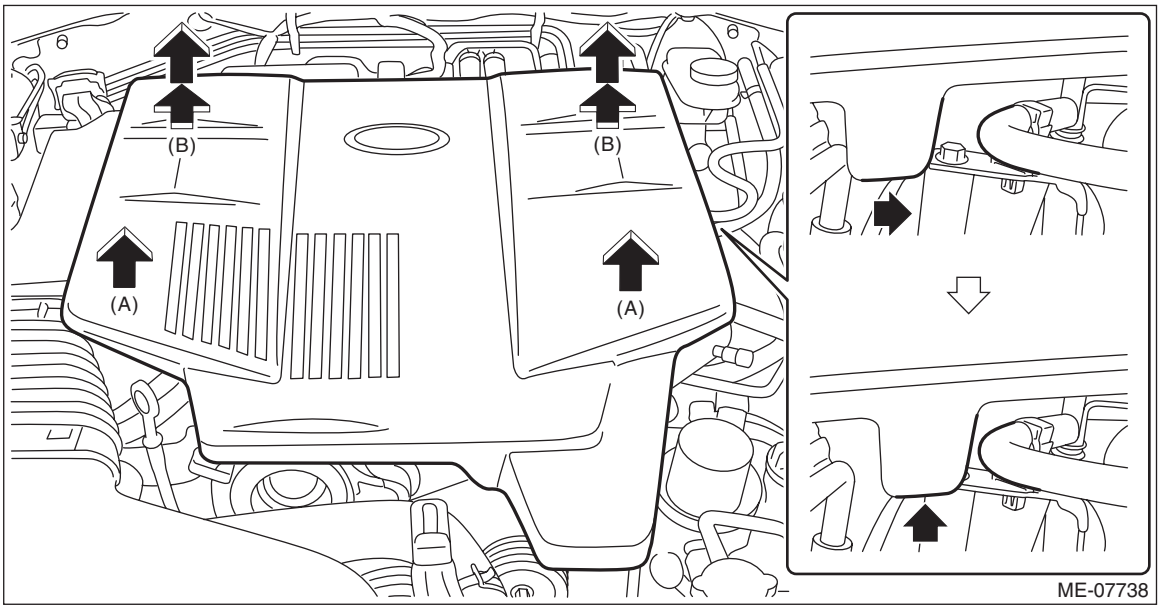

3) Disconnect the connector (A) from the manifold absolute pressure sensor, and remove the manifold absolute pressure sensor from intake manifold.

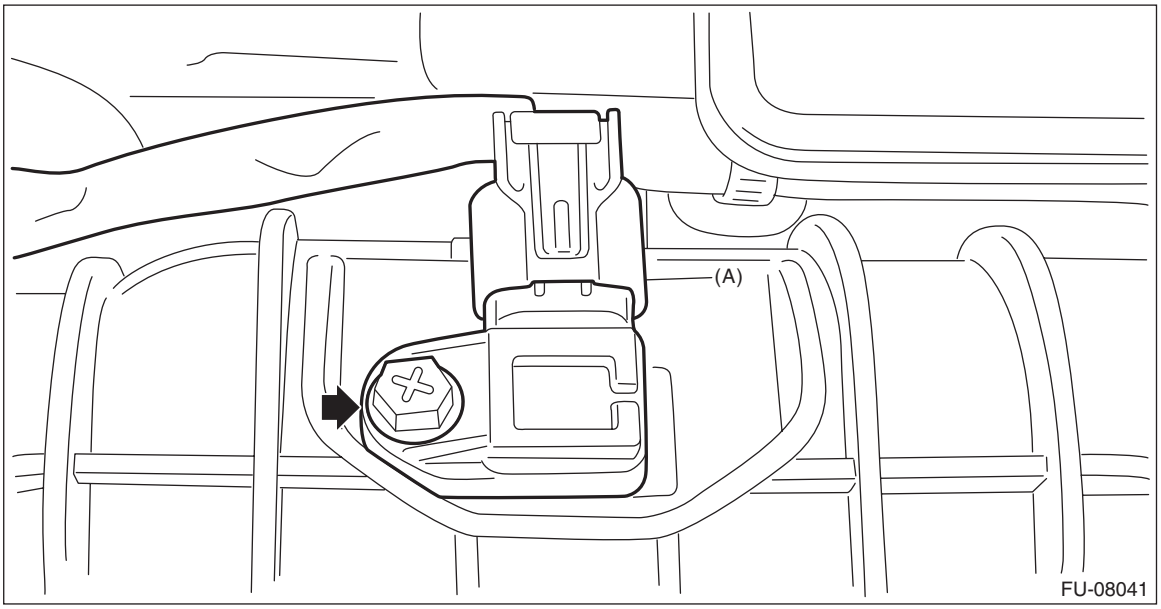

B: INSTALLATION

Install in the reverse order of removal.

NOTE:
Use new O-rings.

Tightening torque:
4 N·m (0.4 kgf-m, 3.0 ft-lb)

C: INSPECTION

1) Check that the manifold absolute pressure sensor has no deformation, cracks or other damages.
2) Connect dry-cell battery positive terminal to terminal No. 3 and dry-cell battery ground terminal to terminal No. 1, circuit tester positive terminal to terminal No. 2 and the circuit tester negative terminal to terminal No. 1.

NOTE:
- Use new dry-cell batteries.
- Using circuit tester, check the voltage of a single dry-cell battery is 1.6 V or more. And also check the voltage of three batteries in series is between 4.8 V and 5.2 V.

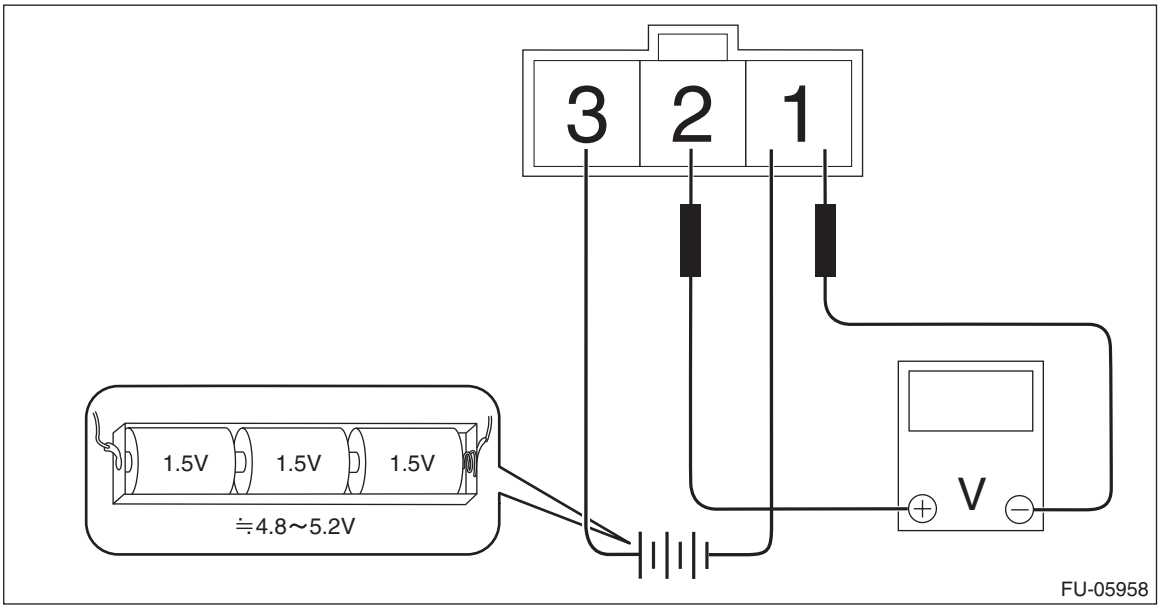

3) Check the voltage at a normal atmospheric pressure.

NOTE:
The atmospheric pressure at higher altitude is lower than normal. Therefore, the voltage is lower than the standard value.

Terminal No.	Standard
2 (+) and 1 (–)	Approx. 4.2 V (when 25°C (77°F))

4) Connect the Mighty Vac to the pressure port (A) of manifold absolute pressure sensor.

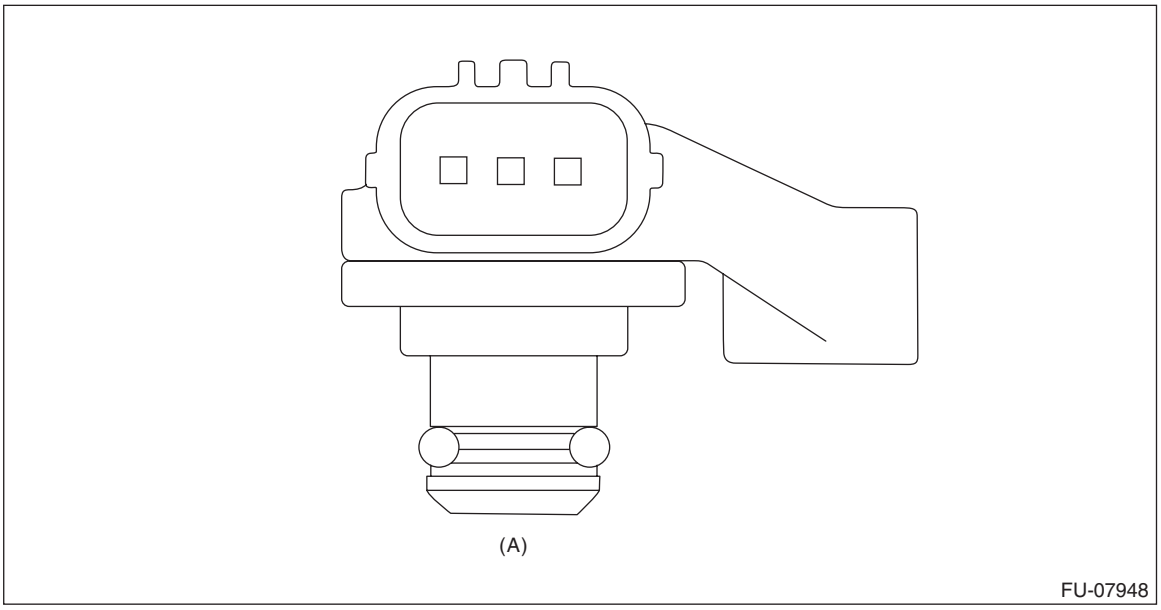

5) Check the voltage when generating vacuum using Mighty Vac.

CAUTION:
Do not apply vacuum of less than –88 kPa (–0.9 kg/cm^2, –12.8 psi). Doing so may damage the manifold absolute pressure sensor.

NOTE:
When vacuum occurs at the pressure port of manifold absolute pressure sensor, the voltage will drop from the value as in step 3).

Pressure	Terminal No.	Standard
–88 kPa (–0.9 kg/cm^2, –12.8 psi)	2 (+) and 1 (–)	Approx. 1 V (when 25°C (77°F))

15.Fuel Injector

A: REMOVAL

1) Release the fuel pressure. <Ref. to FU(H4DO(HEV))-98, RELEASING OF FUEL PRESSURE, PROCEDURE, Fuel.>
2) Disconnect the ground cable from battery. <Ref. to NT-5, BATTERY, NOTE, Note.>

NOTE:
For the 12 volt engine restart battery, disconnect the ground terminal from 12V engine restart battery sensor.
3) Remove the collector cover.
   (1) Pull up the two points at the front of collector cover (A).
   (2) Pull up the two points at the rear of collector cover (B) while moving them rearward.

NOTE:
Be careful not to contact the fuel delivery tube when moving the collector cover rearward.

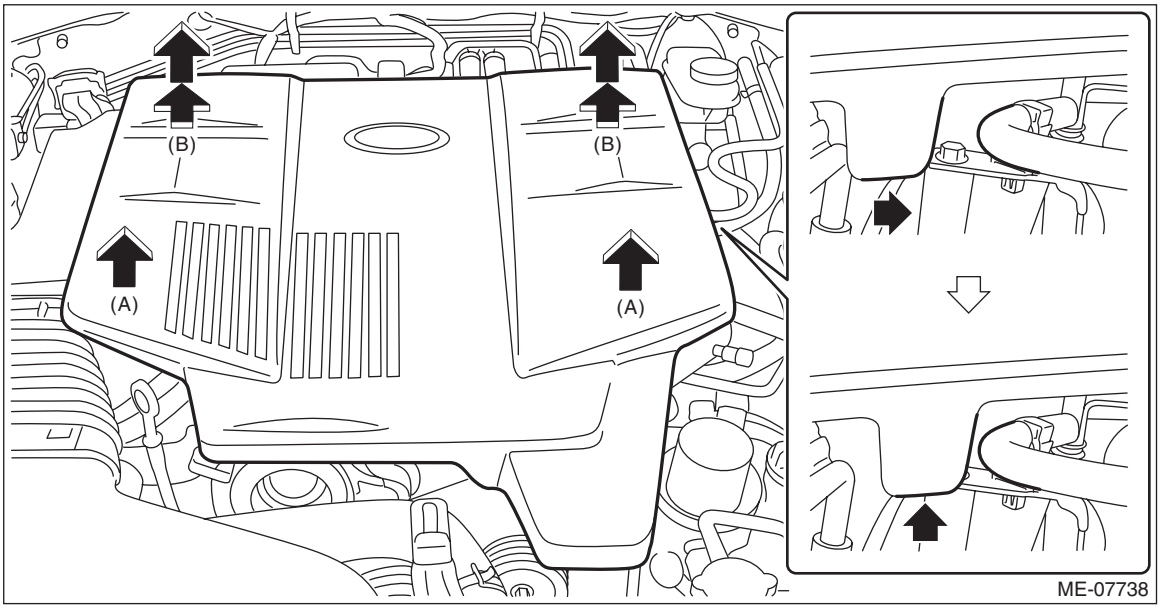

4) Open the fuel filler lid and remove the fuel filler cap.
5) Remove the intake duct. (RH side only) <Ref. to IN(H4DO(HEV))-16, REMOVAL, Intake Duct.>
6) Remove the intake manifold protector RH.

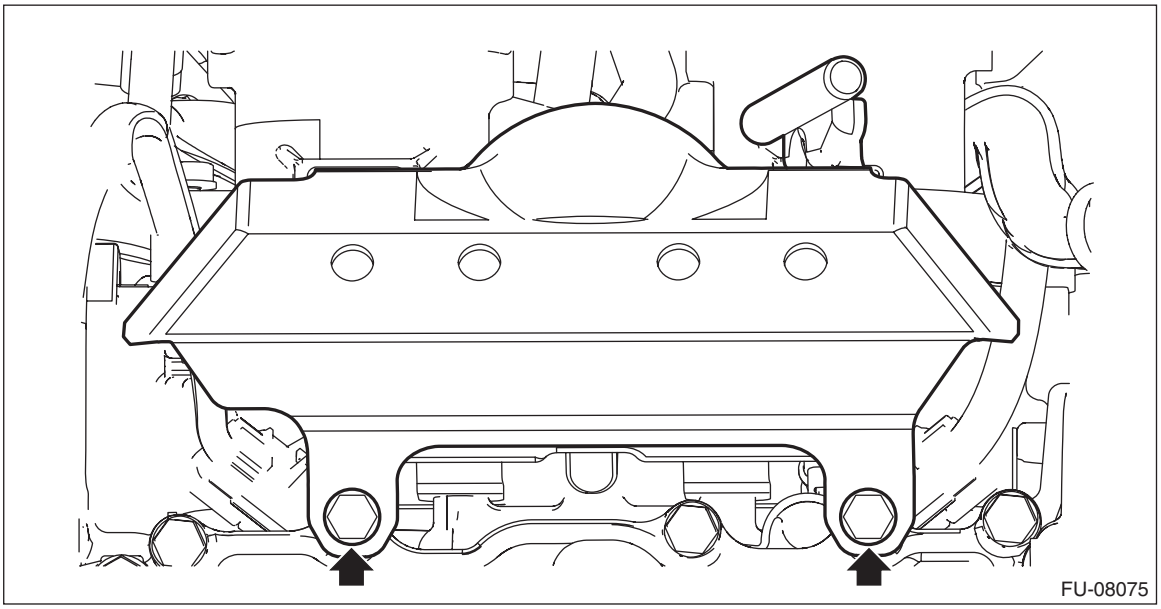

7) Disconnect the connectors (A) from fuel injector.

8) Disconnect the quick connector (B) of the fuel delivery pipe from the fuel pipe.

CAUTION:
- **Be careful not to spill fuel.**
- **Catch the fuel from the pipes using a container or cloth.**

NOTE:
Disconnect the quick connector as shown in the figure.

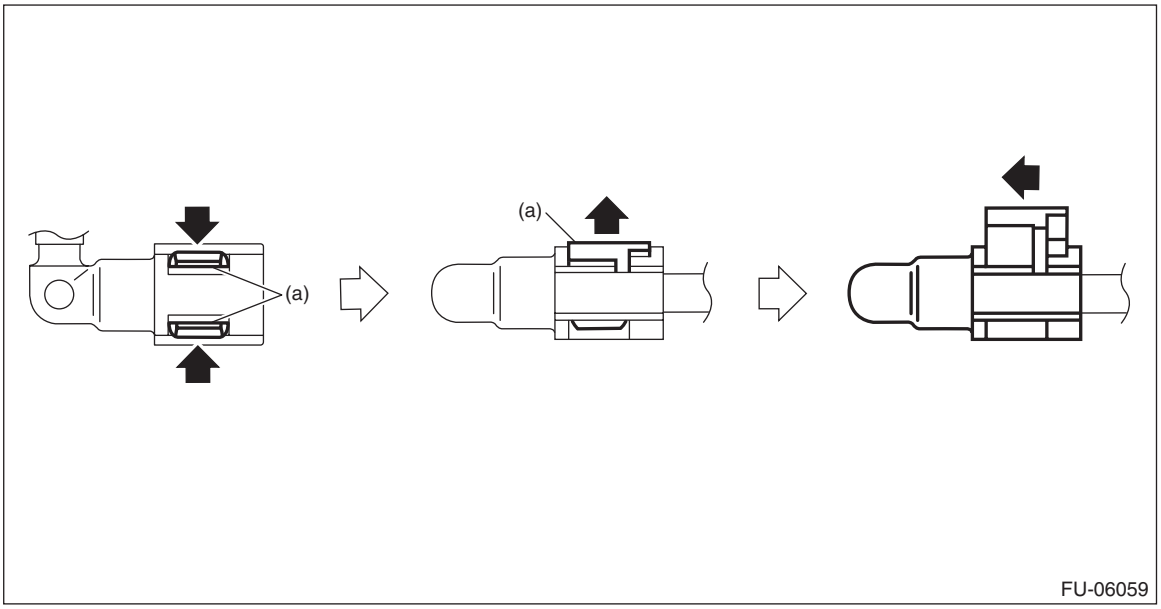

(a) Slider

9) Remove the bolts which hold fuel pipe onto the cam carrier, and remove the fuel pipe together with the fuel injector.

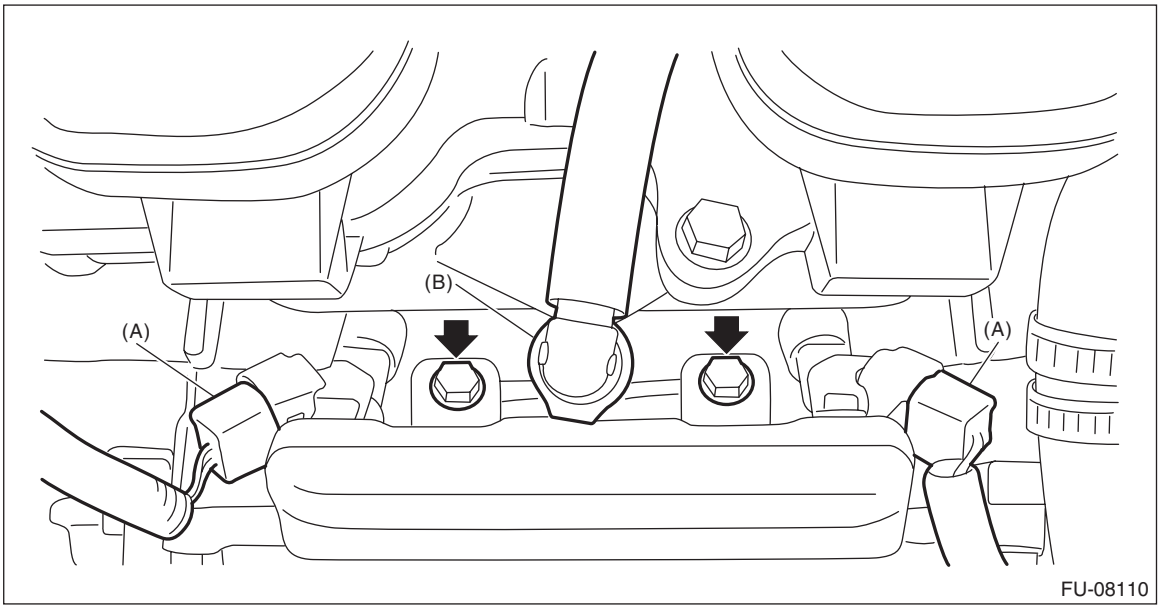

10) Remove the fuel injector from the fuel pipe.
(1) Remove the fuel injector holder from one side of flange section (A) of the fuel pipe.

(2) While holding one side of fuel injector holder (B) you removed in step (1) by finger, remove the other side of fuel injector holder from the flange section (C) of the fuel pipe.

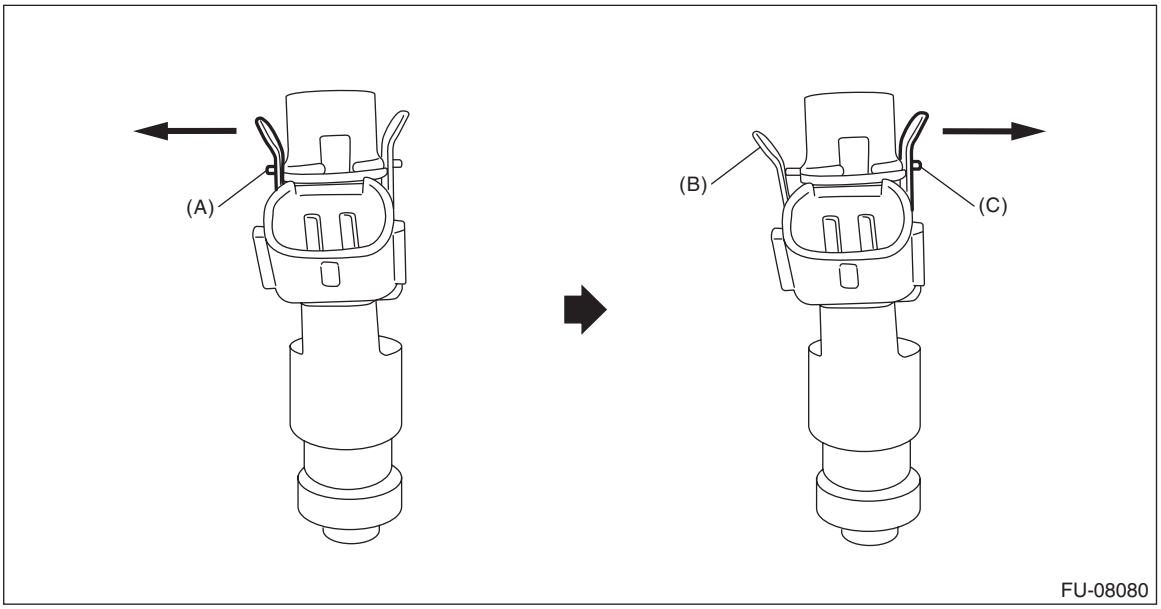

(3) Remove the fuel injector holder from the fuel pipe and fuel injector, and remove the fuel injector from the fuel pipe.
(4) Remove the fuel injector on the LH side in the same manner.

B: INSTALLATION

Install in the reverse order of removal.

NOTE:
- Use new fuel injector holder, O-rings, rubbers and seal rings.
- Install the fuel injector so that the connector joint faces the connector rotation stopper side of the fuel pipe.
- Securely put the flange section of fuel pipe into the groove of fuel injector holder.

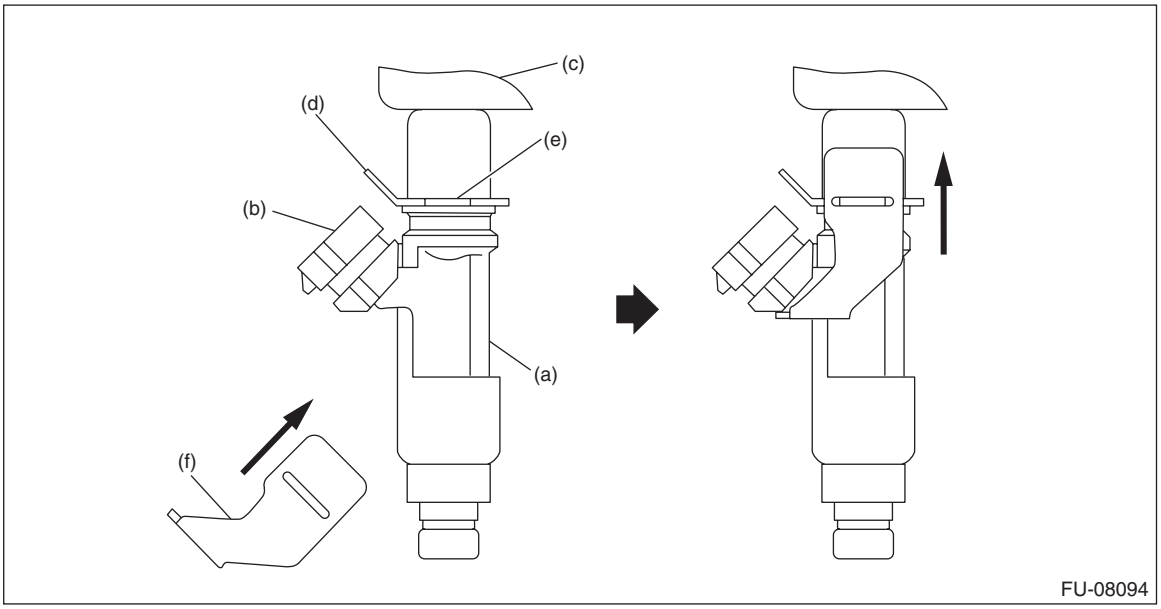

(a) Fuel injector
(b) Connector joint
(c) Fuel pipe
(d) Connector rotation stopper
(e) Flange section
(f) Fuel injector holder

Tightening torque:
6.4 N·m (0.7 kgf-m, 4.7 ft-lb)

C: INSPECTION

1) Check that the fuel injector has no deformation, cracks or other damages.
2) Measure the resistance between fuel injector terminals.

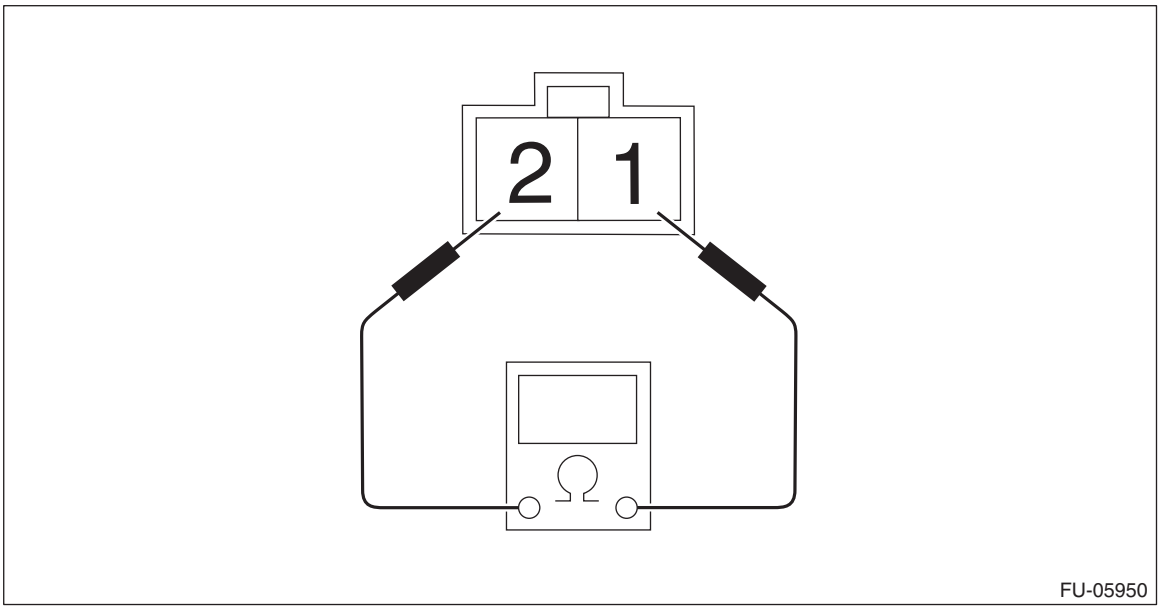

Terminal No.	Standard
1 and 2	Approx. 12.0 Ω (when 20°C (68°F))

16.Tumble Generator Valve Assembly

A: REMOVAL

1) Release the fuel pressure. <Ref. to FU(H4DO(HEV))-98, RELEASING OF FUEL PRESSURE, PROCEDURE, Fuel.>
2) Disconnect the ground cable from battery. <Ref. to NT-5, BATTERY, NOTE, Note.>

NOTE:
For the 12 volt engine restart battery, disconnect the ground terminal from 12V engine restart battery sensor.

3) Remove the collector cover.
   (1) Pull up the two points at the front of collector cover (A).
   (2) Pull up the two points at the rear of collector cover (B) while moving them rearward.

NOTE:
Be careful not to contact the fuel delivery tube when moving the collector cover rearward.

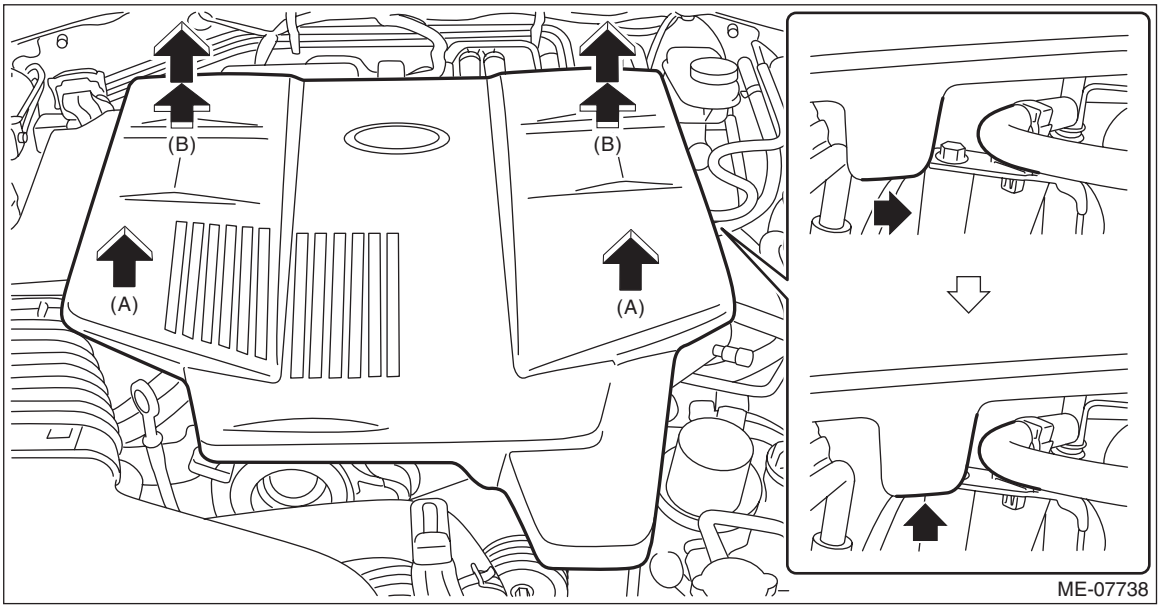

4) Open the fuel filler lid and remove the fuel filler cap.
5) Remove the intake manifold. <Ref. to FU(H4DO(HEV))-20, REMOVAL, Intake Manifold.>
6) Disconnect the connector (A) from the tumble generator valve assembly RH.
7) Remove the tumble generator valve assembly RH from the cylinder head.

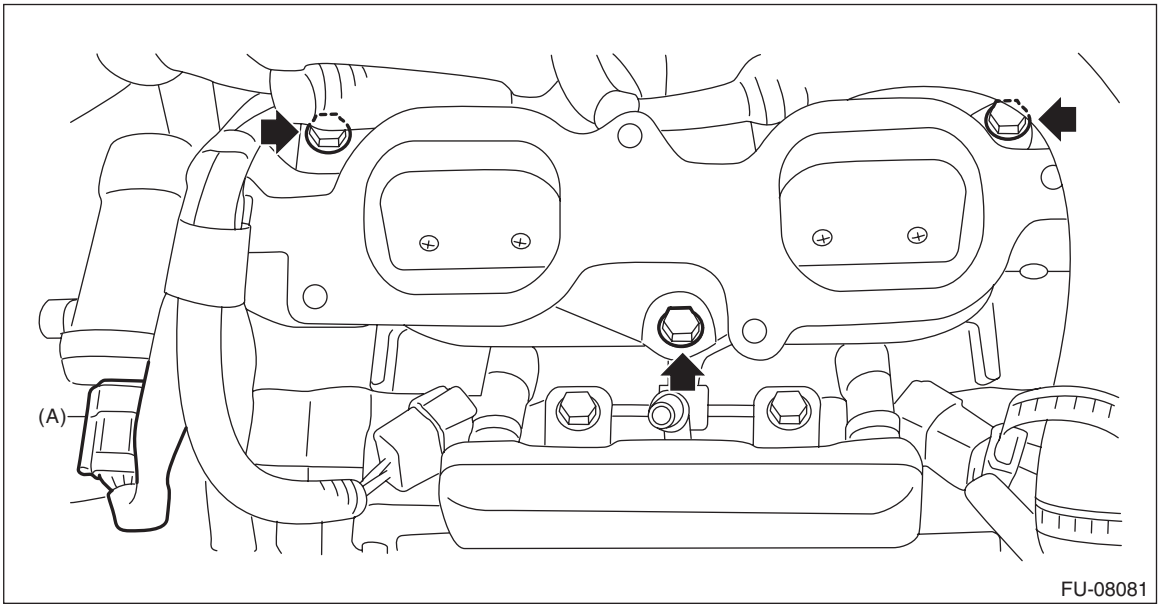

8) Remove the cylinder head plate from cylinder head RH.

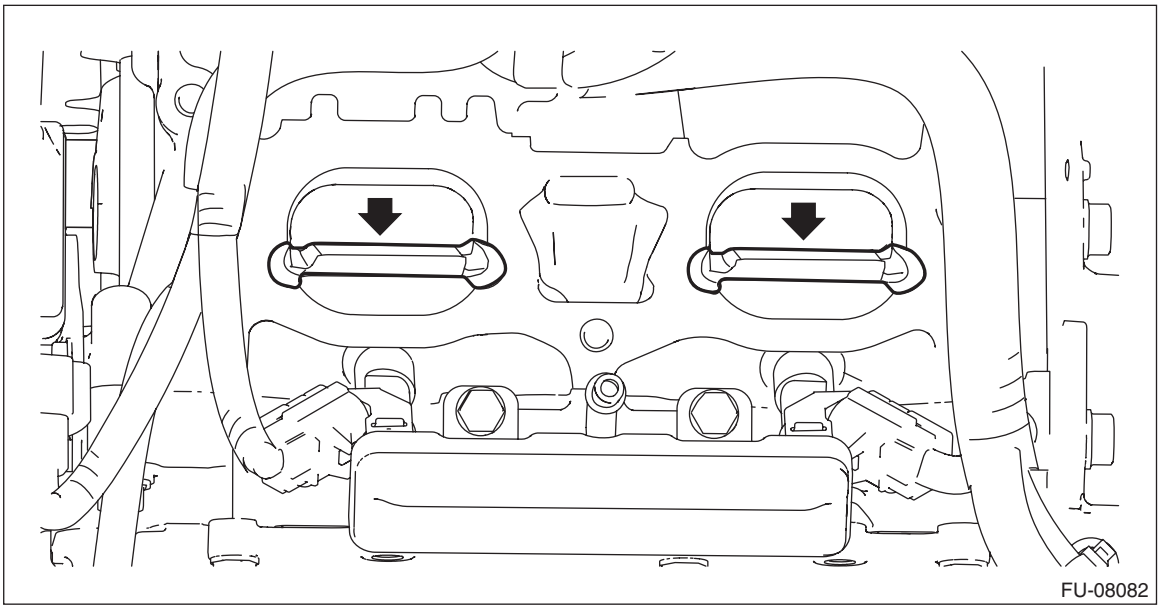

9) Remove the tumble generator valve assembly LH and cylinder head plate in the same manner.

B: INSTALLATION

Install in the reverse order of removal.

NOTE:
Use a new gasket.

Tightening torque:
25 N·m (2.5 kgf-m, 18.4 ft-lb)

C: INSPECTION

1. CHECK MOTOR

1) Connect the battery positive terminal to terminal No. 2 and the battery ground terminal to terminal No. 1, and check that the valve is fully opened on LH side and the valve is fully closed on RH side.

CAUTION:
Do not power the motor for more than 10 seconds.

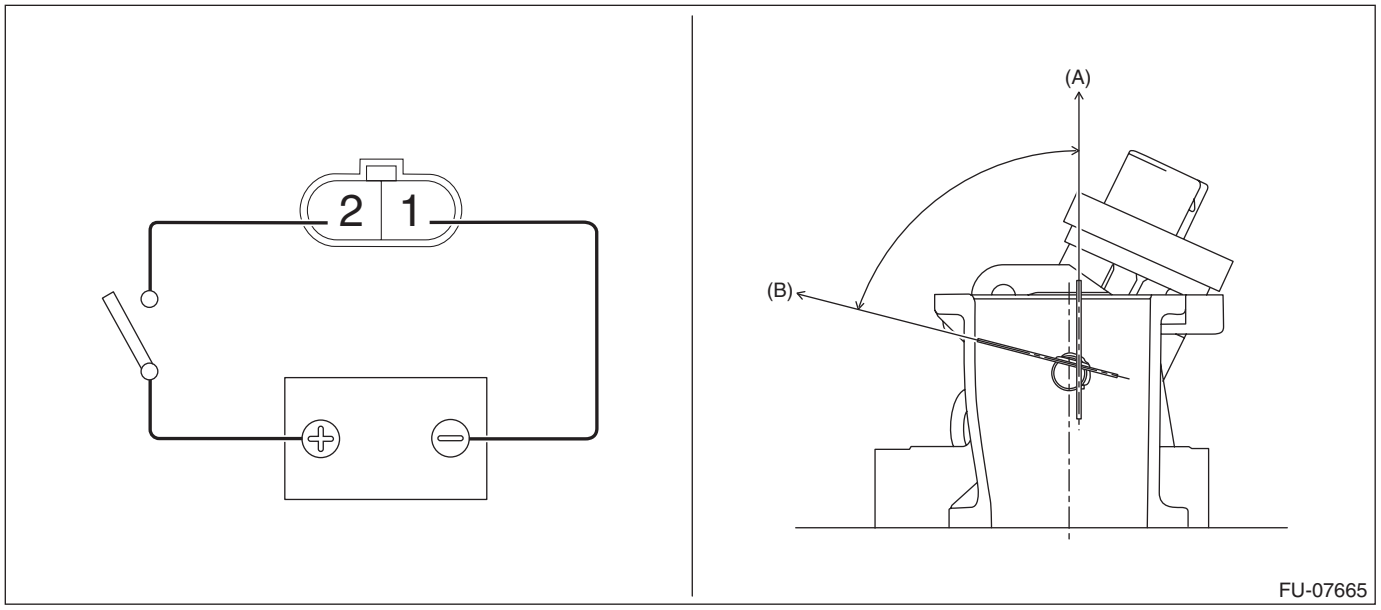

(A) Full open (B) Full closed

2) Connect the battery positive terminal to terminal No. 1 and the battery ground terminal to terminal No. 2, and check that the valve is fully closed on LH side and the valve is fully opened on RH side.

CAUTION:
Do not power the motor for more than 10 seconds.

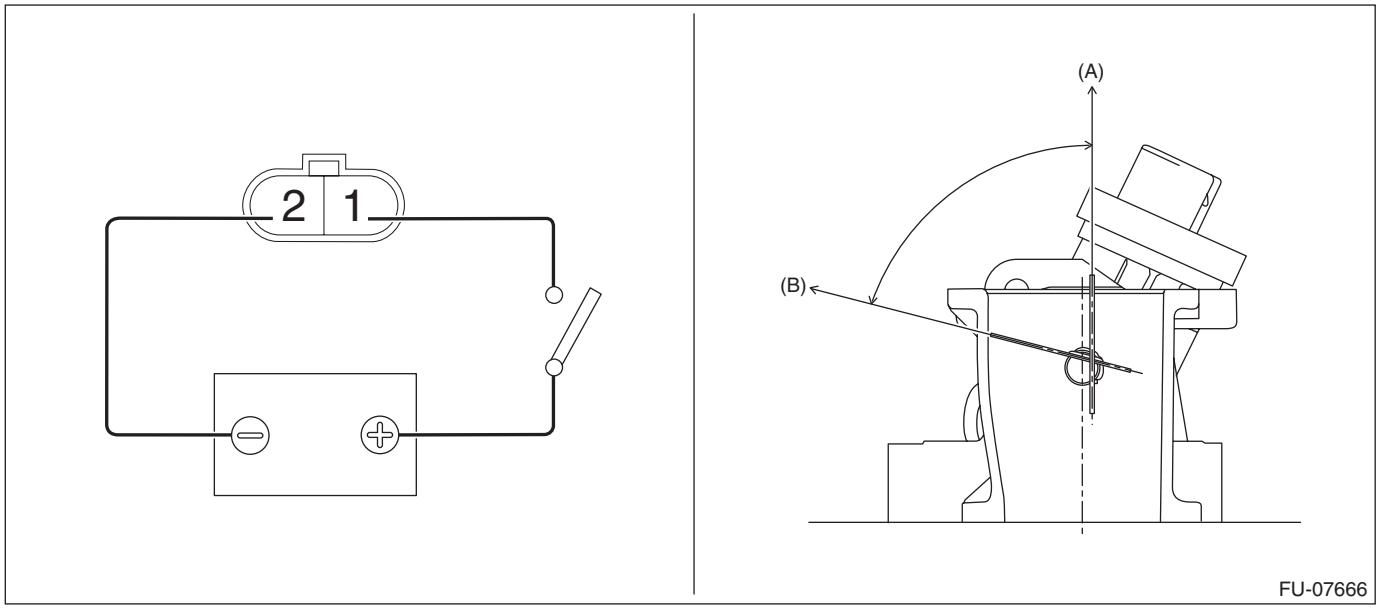

(A) Full open (B) Full closed

2. OTHER INSPECTIONS

1) Check that the tumble generator valve assembly has no deformation, cracks or other damages.
2) Check tumble generator valve assembly for contamination or clogging.

17.Tumble Generator Valve Actuator

A: REMOVAL

1) Disconnect the ground cable from battery. <Ref. to NT-5, BATTERY, NOTE, Note.>

NOTE:
For the 12 volt engine restart battery, disconnect the ground terminal from 12V engine restart battery sensor.

2) Remove the collector cover.
   (1) Pull up the two points at the front of collector cover (A).
   (2) Pull up the two points at the rear of collector cover (B) while moving them rearward.

NOTE:
Be careful not to contact the fuel delivery tube when moving the collector cover rearward.

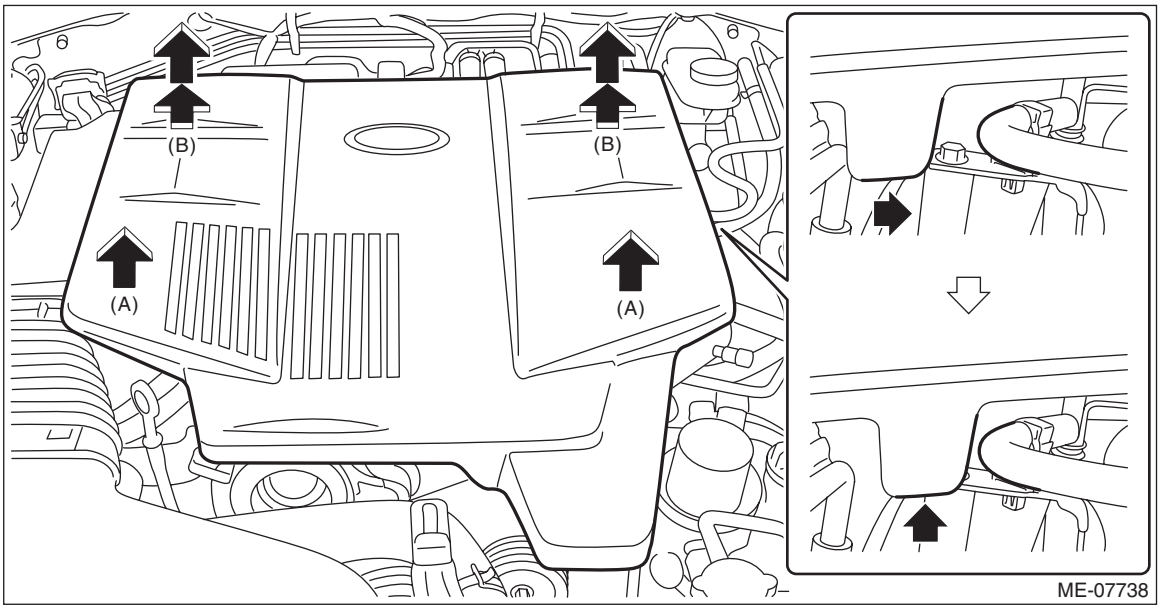

3) Disconnect the connector (A) from tumble generator valve assembly, and remove the tumble generator valve actuator.

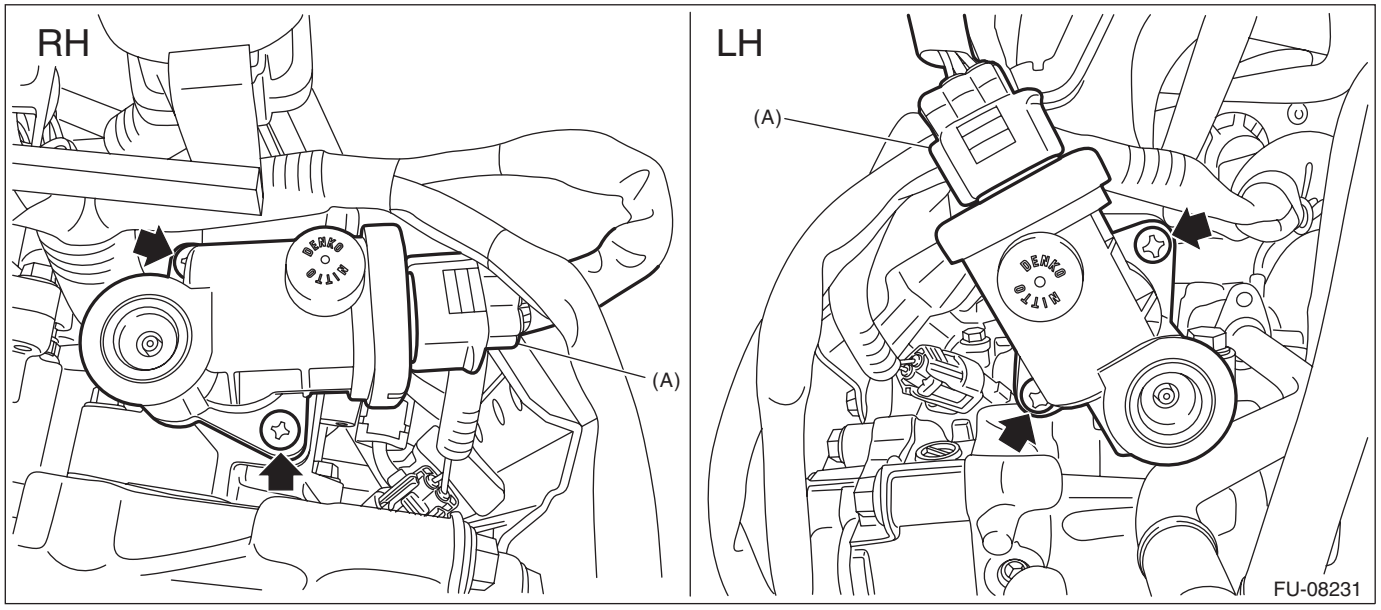

B: INSTALLATION

Install in the reverse order of removal.

NOTE:
Use a new gasket.

Tightening torque:
6 N·m (0.6 kgf-m, 4.4 ft-lb)

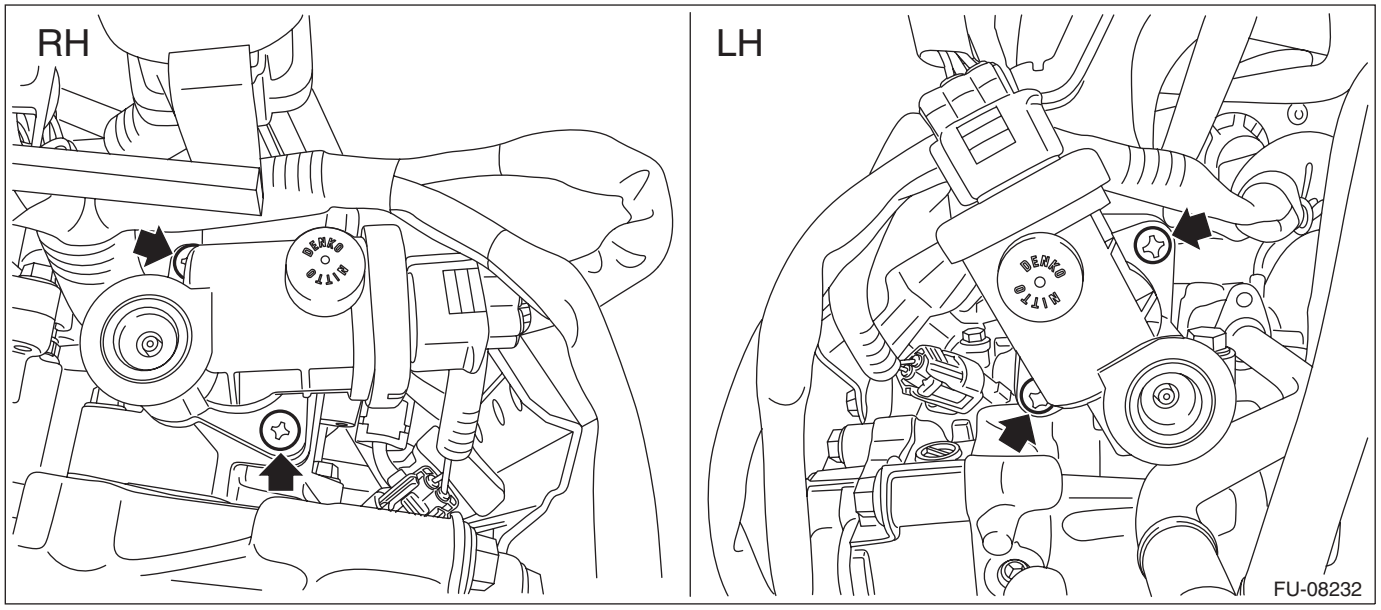

C: INSPECTION

1) Check that the tumble generator valve actuator has no deformation, cracks or other damages.
2) Check tumble generator valve actuator for contamination or clogging.

18.Front Oxygen (A/F) Sensor

A: REMOVAL

1) Disconnect the ground cable from battery. <Ref. to NT-5, BATTERY, NOTE, Note.>

NOTE:
For the 12 volt engine restart battery, disconnect the ground terminal from 12V engine restart battery sensor.
2) Remove the radiator sub fan and fan motor assembly. <Ref. to CO(H4DO(w/o HEV))-93, REMOVAL, Radiator Sub Fan and Fan Motor.>
3) Lift up the vehicle.
4) Remove the under cover. <Ref. to EI-29, REMOVAL, Front Under Cover.>
5) Disconnect the front oxygen (A/F) sensor connector, and remove the clip (A) holding the front oxygen (A/F) sensor harness.

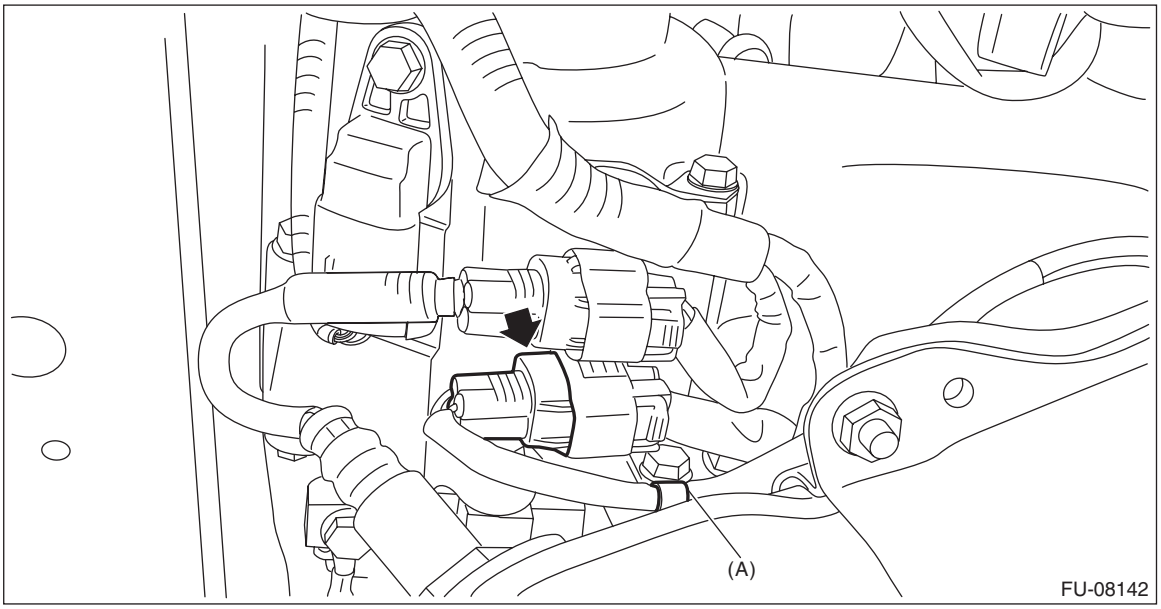

6) Lower the vehicle.
7) Apply spray-type lubricant to the threaded portion of front oxygen (A/F) sensor, and leave it for one minute or more.
8) Remove the front oxygen (A/F) sensor.

CAUTION:
When removing the front oxygen (A/F) sensor, wait until exhaust pipe cools, otherwise it will damage the exhaust pipe.

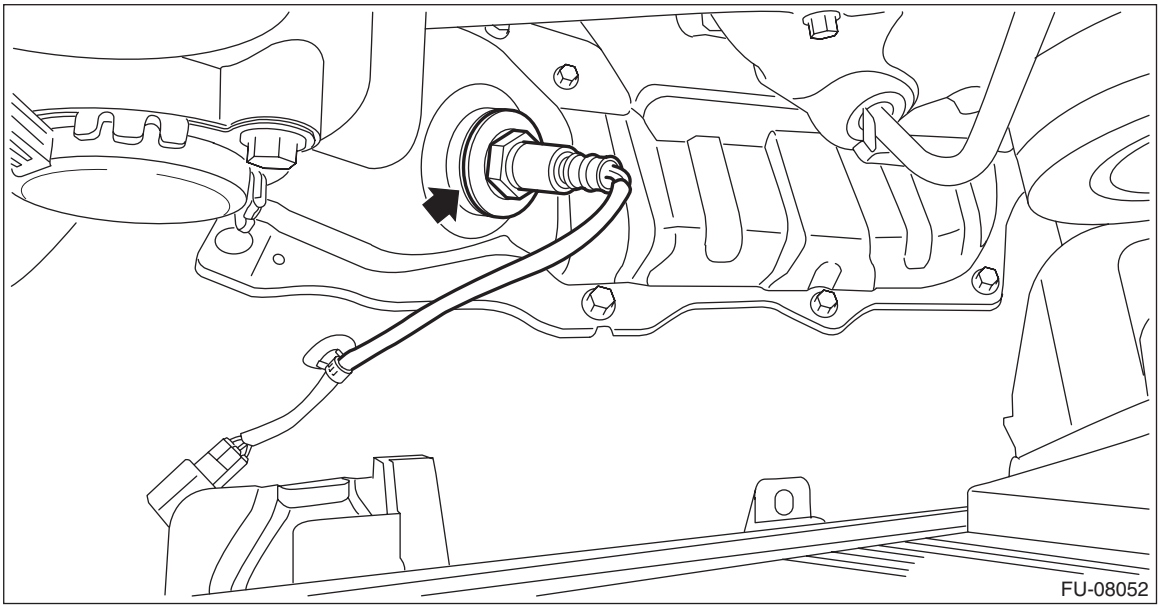

B: INSTALLATION

CAUTION:
If lubricant is spilt over the exhaust pipe, wipe it off with cloth to avoid emission of smoke or causing a fire.

1) Before installing front oxygen (A/F) sensor, apply anti-seize compound only to the threaded portion of front oxygen (A/F) sensor to make the next removal easier.

CAUTION:
Never apply anti-seize compound to the protector of front oxygen (A/F) sensor.

Anti-seize compound:
NEVER-SEEZ NSN, JET LUBE SS-30 or equivalent

2) Install the front oxygen (A/F) sensor.

Tightening torque:
21 N·m (2.1 kgf-m, 15.5 ft-lb)

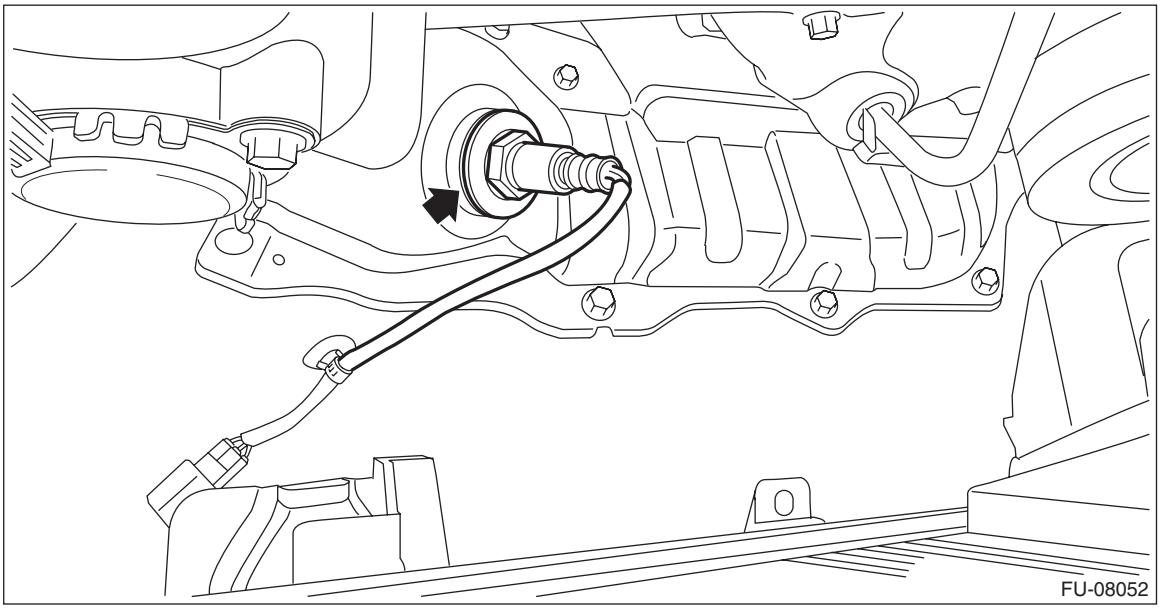

3) Lift up the vehicle.
4) Connect the front oxygen (A/F) sensor connector, and secure the front oxygen (A/F) sensor harness by using the clip (A).

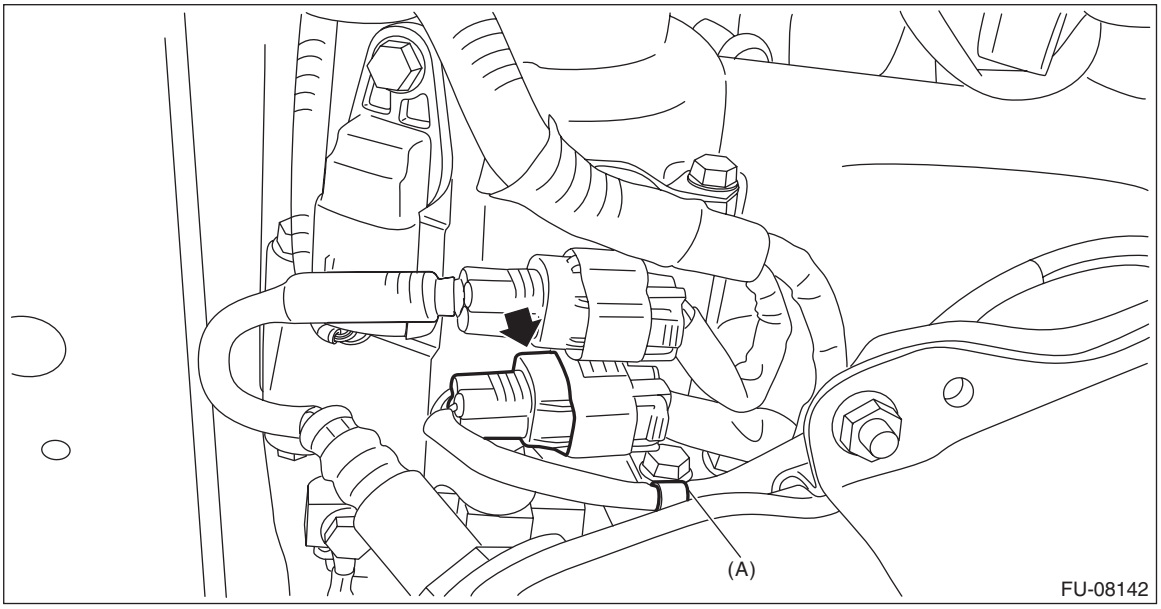

5) Install the under cover. <Ref. to EI-29, INSTALLATION, Front Under Cover.>
6) Lower the vehicle.
7) Install the radiator sub fan and fan motor assembly. <Ref. to CO(H4DO(w/o HEV))-94, INSTALLATION, Radiator Sub Fan and Fan Motor.>
8) Connect the battery ground terminal. <Ref. to NT-5, BATTERY, NOTE, Note.>

C: INSPECTION

1) Check that the front oxygen (A/F) sensor has no deformation, cracks or other damages.
2) Measure the resistance between front oxygen (A/F) sensor terminals.

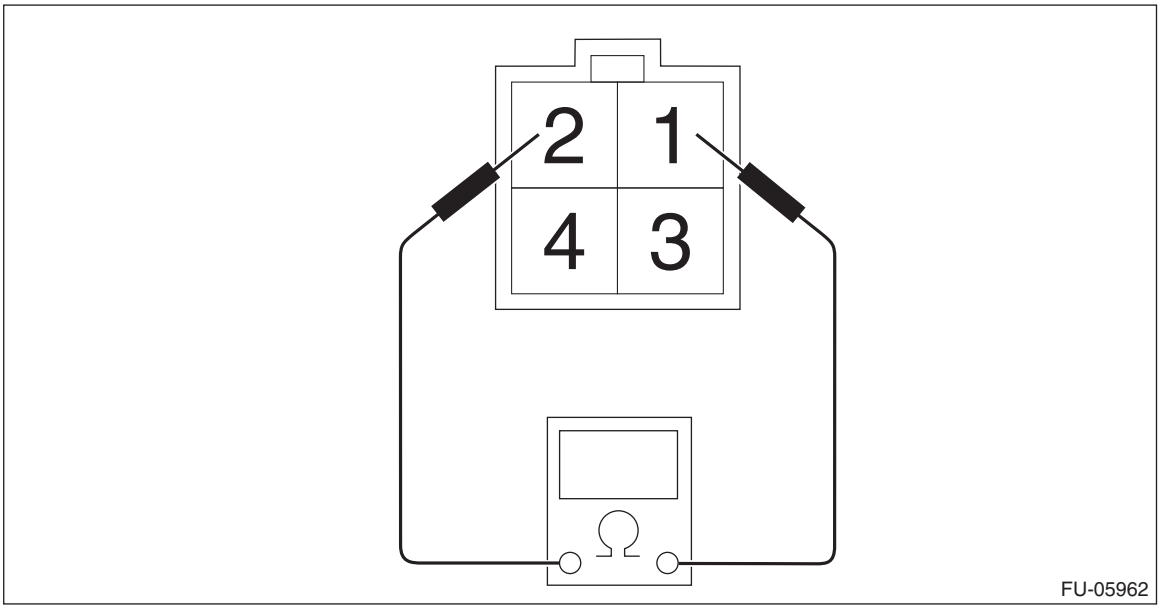

Terminal No.	Standard
1 and 2	$2.2^{+0.45}_{-0.22}$ Ω (when 20°C (68°F))

19.Rear Oxygen Sensor

A: REMOVAL

1) Disconnect the ground cable from battery. <Ref. to NT-5, BATTERY, NOTE, Note.>

NOTE:
For the 12 volt engine restart battery, disconnect the ground terminal from 12V engine restart battery sensor.
2) Lift up the vehicle.
3) Remove the under cover. <Ref. to EI-29, REMOVAL, Front Under Cover.>
4) Disconnect the rear oxygen sensor connector.

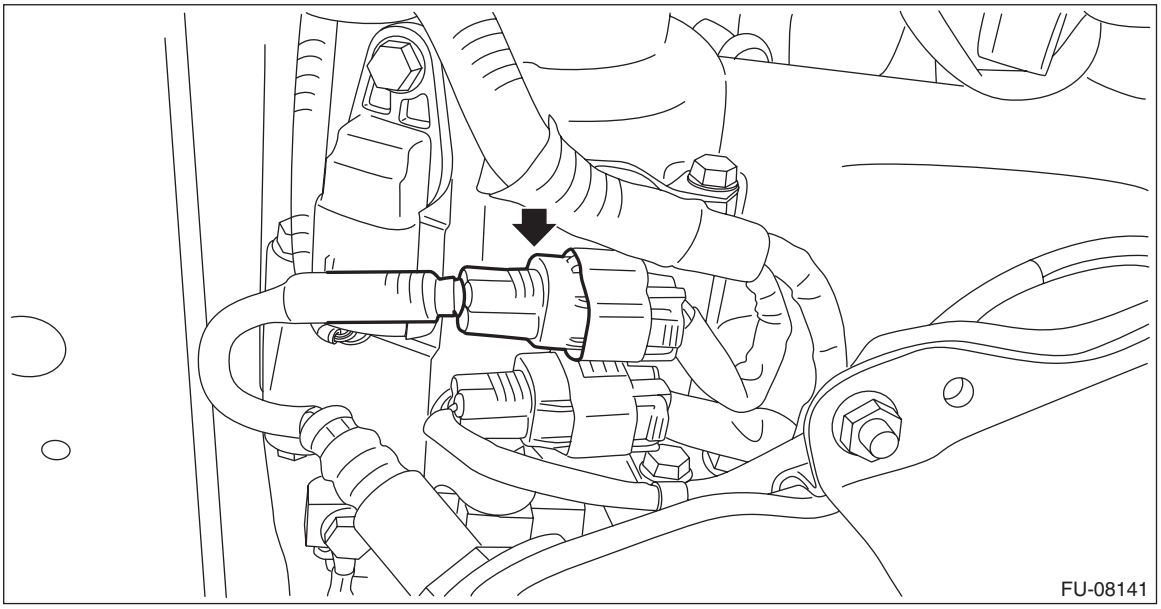

5) Apply spray-type lubricant to the threaded portion of rear oxygen sensor, and leave it for one minute or more.
6) Remove the rear oxygen sensor.

CAUTION:
When removing the rear oxygen sensor, wait until exhaust pipe cools, otherwise it will damage the exhaust pipe.

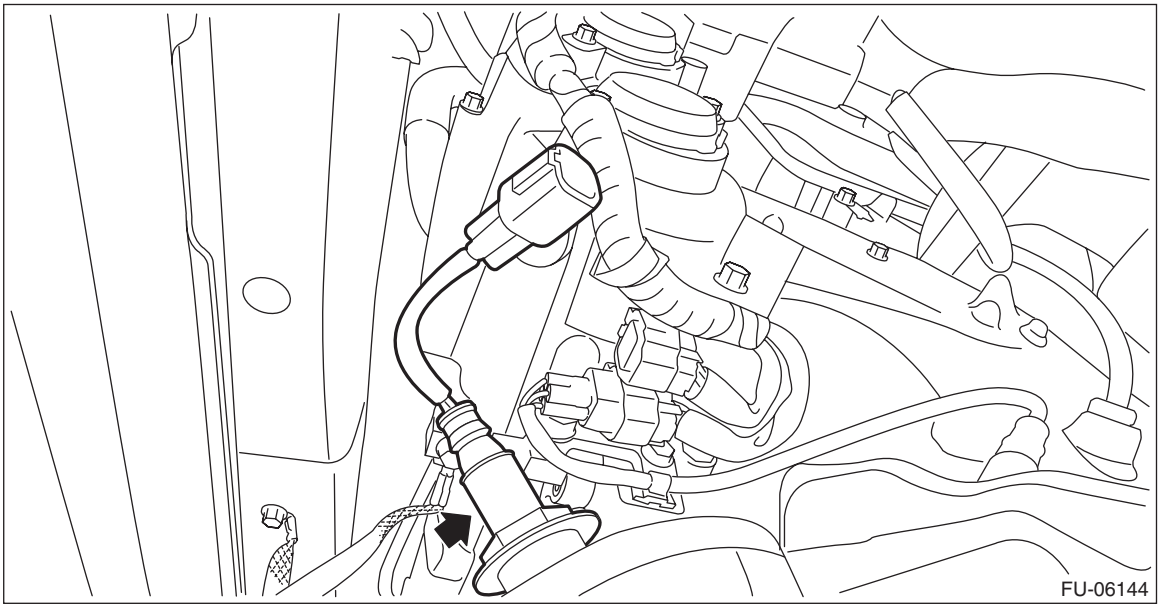

B: INSTALLATION

CAUTION:
If lubricant is spilt over the exhaust pipe, wipe it off with cloth to avoid emission of smoke or causing a fire.

1) Before installing rear oxygen sensor, apply the anti-seize compound only to the threaded portion of rear oxygen sensor to make the next removal easier.

CAUTION:
Never apply anti-seize compound to the protector of rear oxygen sensor.

Anti-seize compound:
NEVER-SEEZ NSN, JET LUBE SS-30 or equivalent

2) Install the rear oxygen sensor.

Tightening torque:
21 N·m (2.1 kgf-m, 15.5 ft-lb)

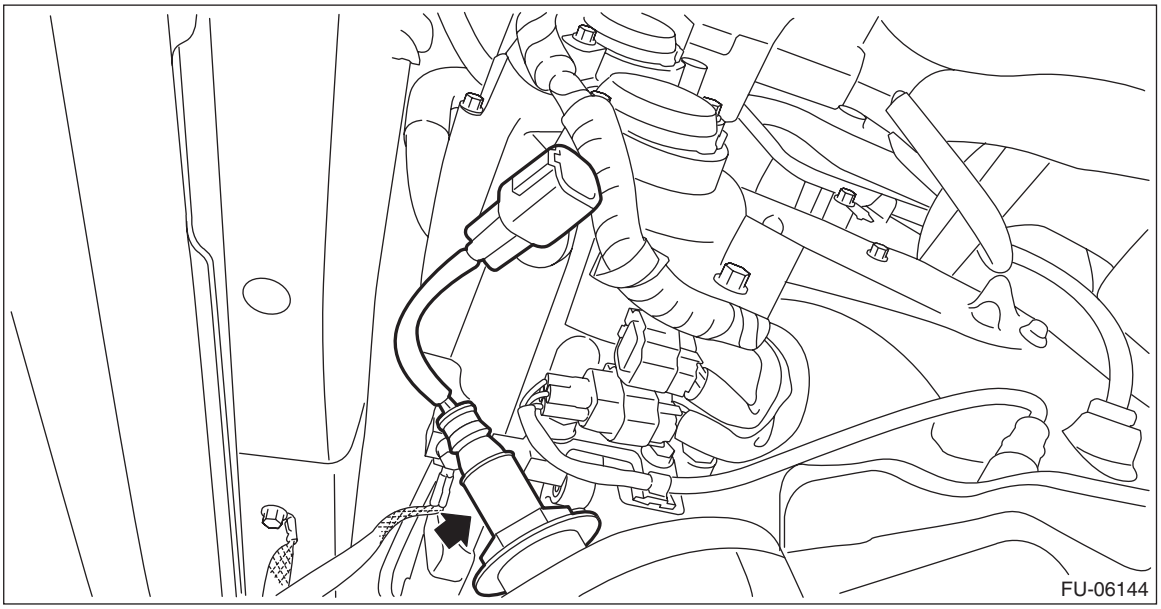

3) Connect the rear oxygen sensor connector.

NOTE:
Be careful not to allow the rear oxygen sensor harness to interfere with the sensor unit and the front oxygen (A/F) sensor harness.

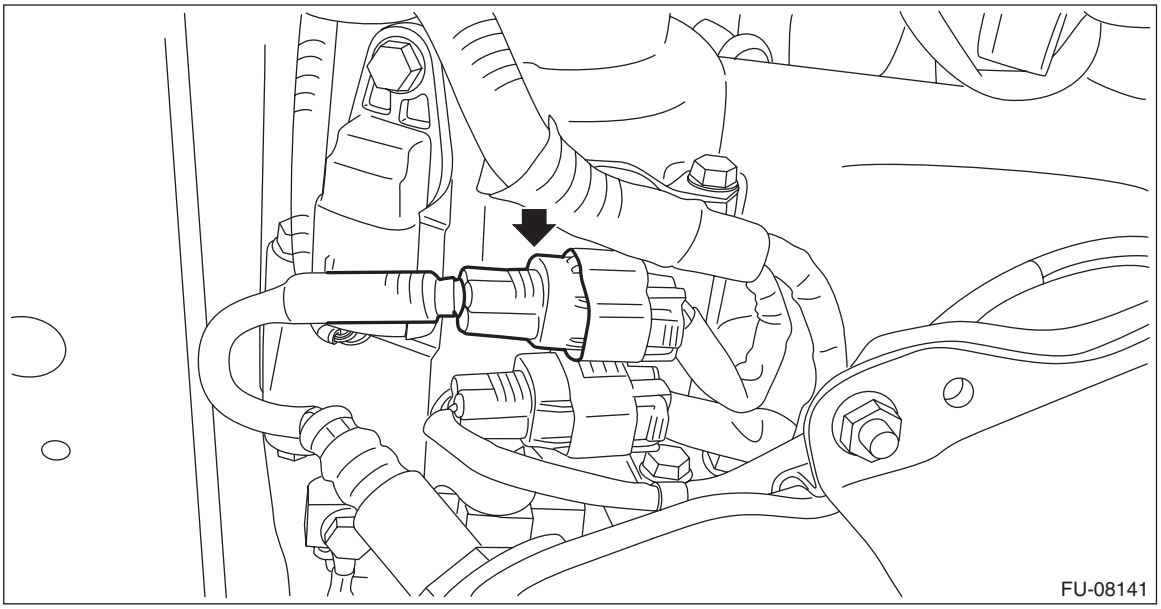

4) Install the under cover. <Ref. to EI-29, INSTALLATION, Front Under Cover.>
5) Lower the vehicle.
6) Connect the battery ground terminal. <Ref. to NT-5, BATTERY, NOTE, Note.>

C: INSPECTION

1) Check that the rear oxygen sensor has no deformation, cracks or other damages.
2) Measure the resistance between rear oxygen sensor terminals.

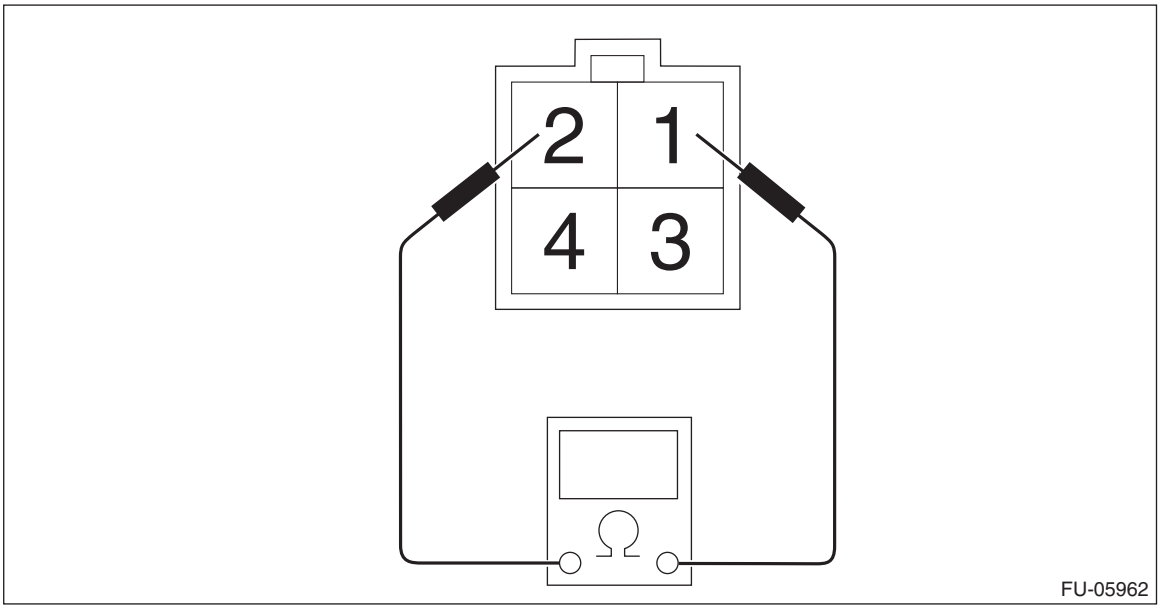

Terminal No.	Standard
1 and 2	$5.6^{+1.7}_{-0.6}$ Ω (when 20°C (68°F))

20.Engine Control Module (ECM)

A: REMOVAL

1) Disconnect the ground cable from battery. <Ref. to NT-5, BATTERY, NOTE, Note.>

NOTE:
For the 12 volt engine restart battery, disconnect the ground terminal from 12V engine restart battery sensor.

2) Remove the glove box. <Ref. to EI-73, REMOVAL, Glove Box.>
3) Disconnect the connectors from ECM and the hybrid powertrain control module.



4) Remove the clip securing the linear solenoid relay from the bracket.

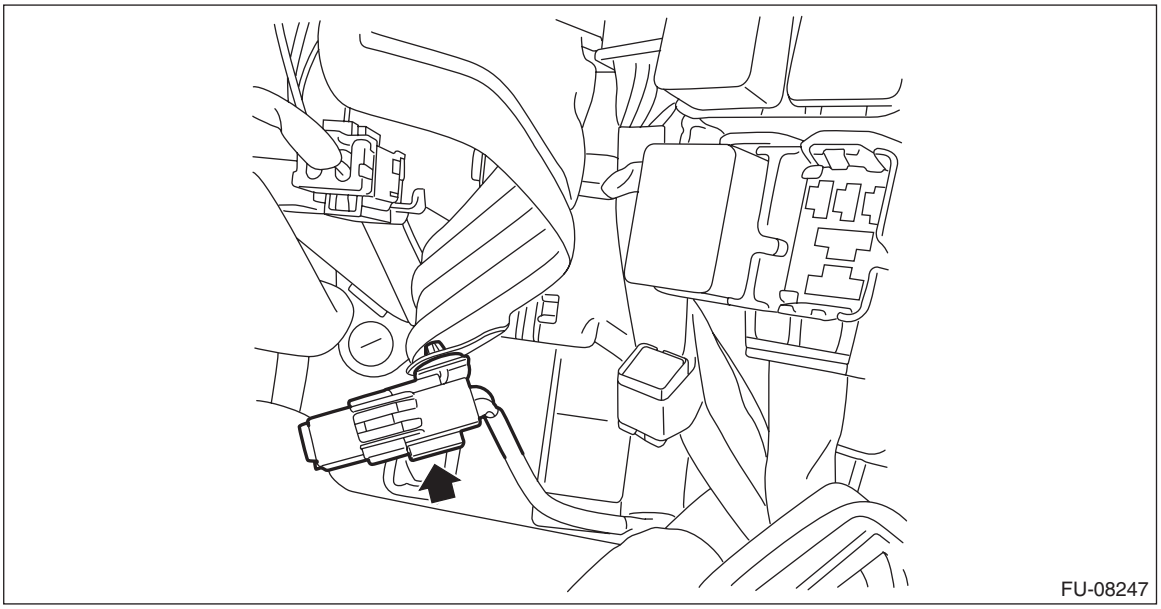

5) Push down the claws, and remove the relay block.

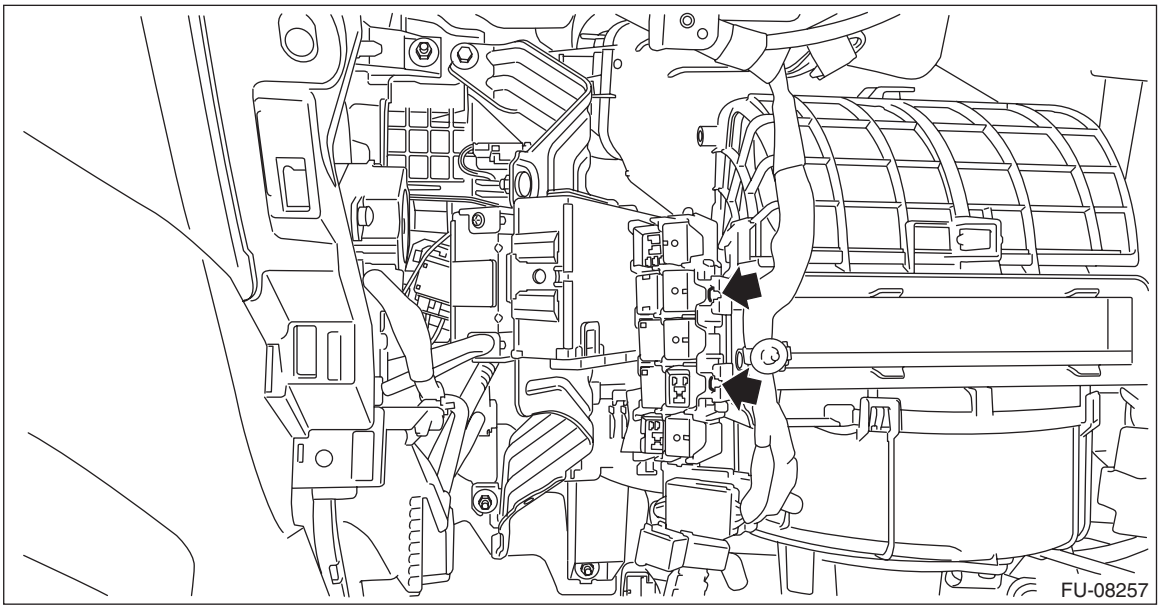

6) Remove the bolts and nuts, and remove the ECM.

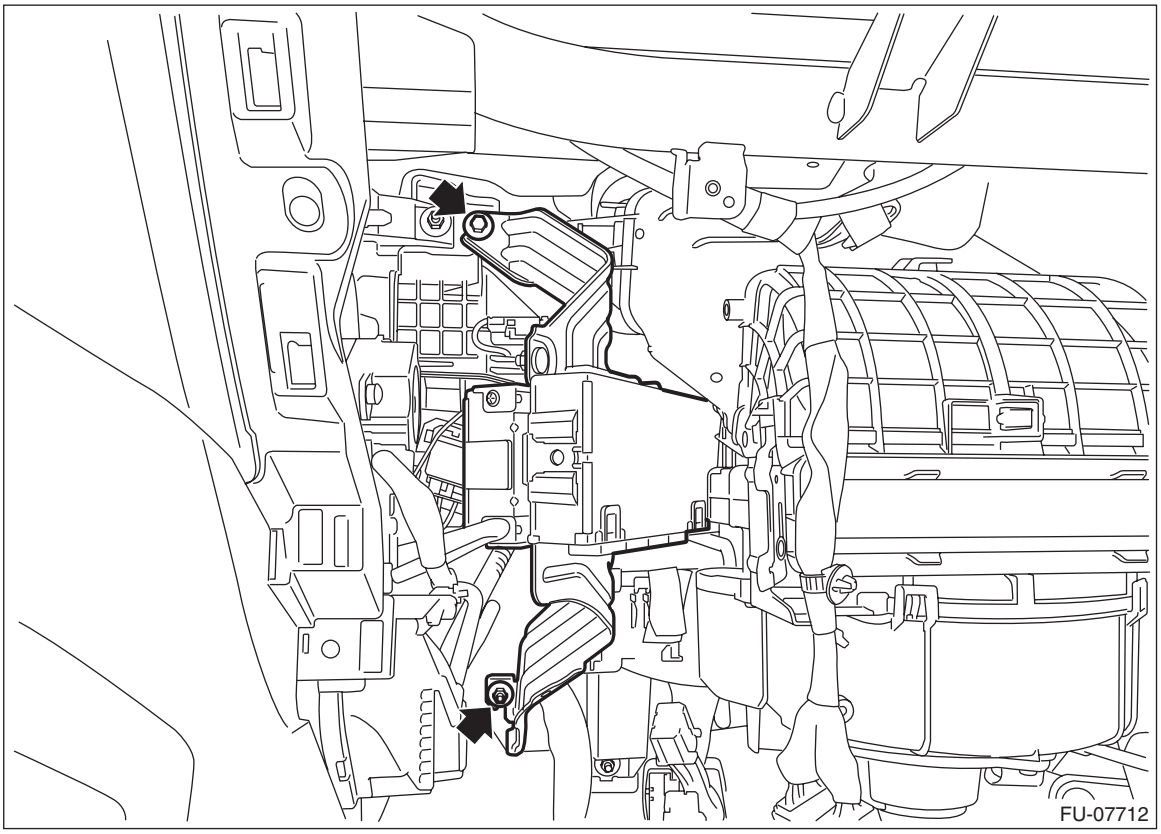

7) Remove the hybrid powertrain control module.

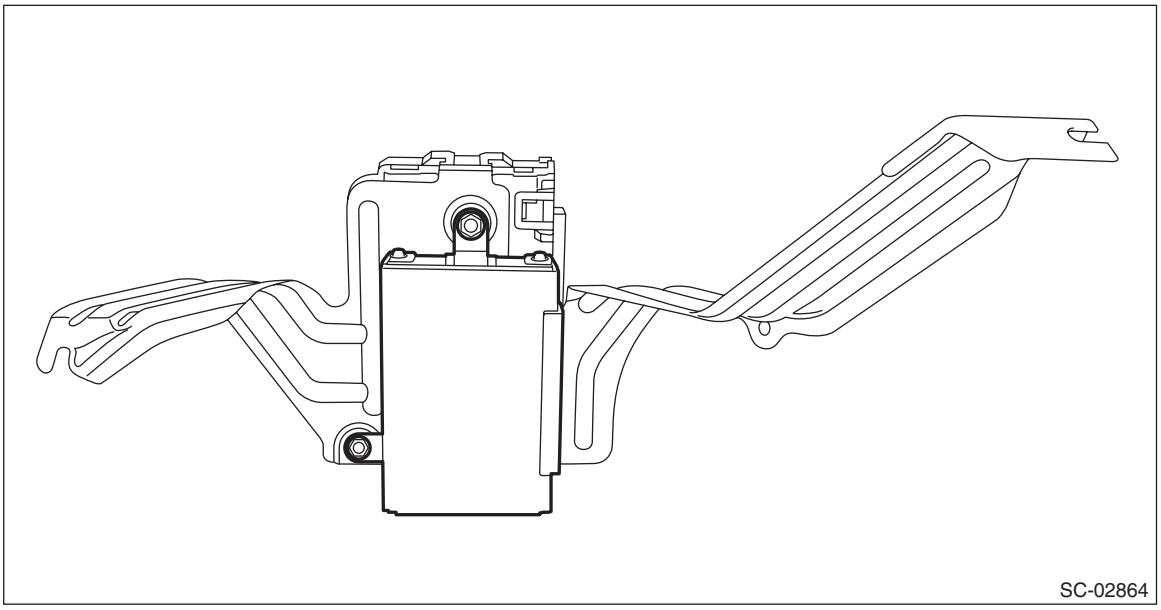

B: INSTALLATION

Install in the reverse order of removal.

CAUTION:
• When the ECM of model with immobilizer has been replaced, be sure to perform the registration of immobilizer system. (Refer to the "REGISTRATION MANUAL FOR IMMOBILIZER".)
• When the ECM has been replaced, be sure to perform the ACTGS calibration operation (perform ACTGS control system operation inspection). <Ref. to EN(H4DO HEV)(diag)-64, OPERATION, System Operation Check Mode.>
• If replacing ECM or the bracket, replace both parts with new parts at a time.
• After installing the bracket to ECM, do not separate the bracket.
• If the bracket has been installed to ECM in the wrong direction, replace both parts to new parts.

NOTE:
When replacing the ECM, be careful not to use the ECM of wrong specification to avoid any damage on the fuel injection system.

Tightening torque:
7.5 N·m (0.8 kgf-m, 5.5 ft-lb)

C: INSPECTION

Check that the ECM has no deformation, cracks or other damages.

21.Main Relay

A: REMOVAL

1) Disconnect the ground cable from battery. <Ref. to NT-5, BATTERY, NOTE, Note.>

NOTE:
For the 12 volt engine restart battery, disconnect the ground terminal from 12V engine restart battery sensor.
2) Remove the glove box. <Ref. to EI-73, REMOVAL, Glove Box.>
3) Remove the main relay from relay block.

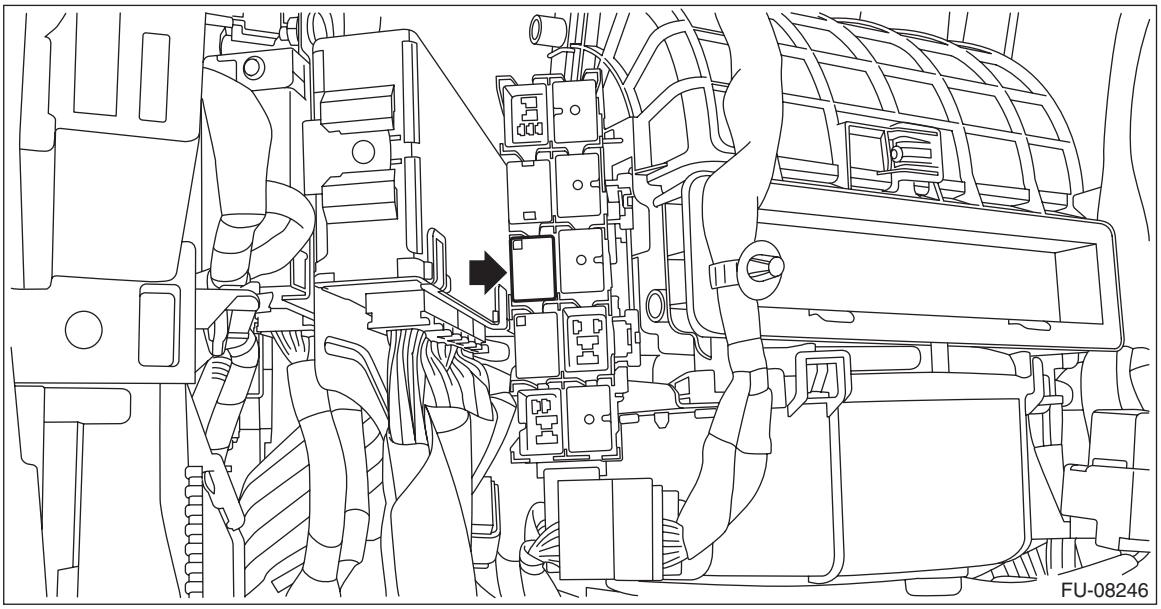

B: INSTALLATION

Install in the reverse order of removal.

C: INSPECTION

1) Check that the main relay has no deformation, cracks or other damages.
2) Measure the resistance between main relay terminals.

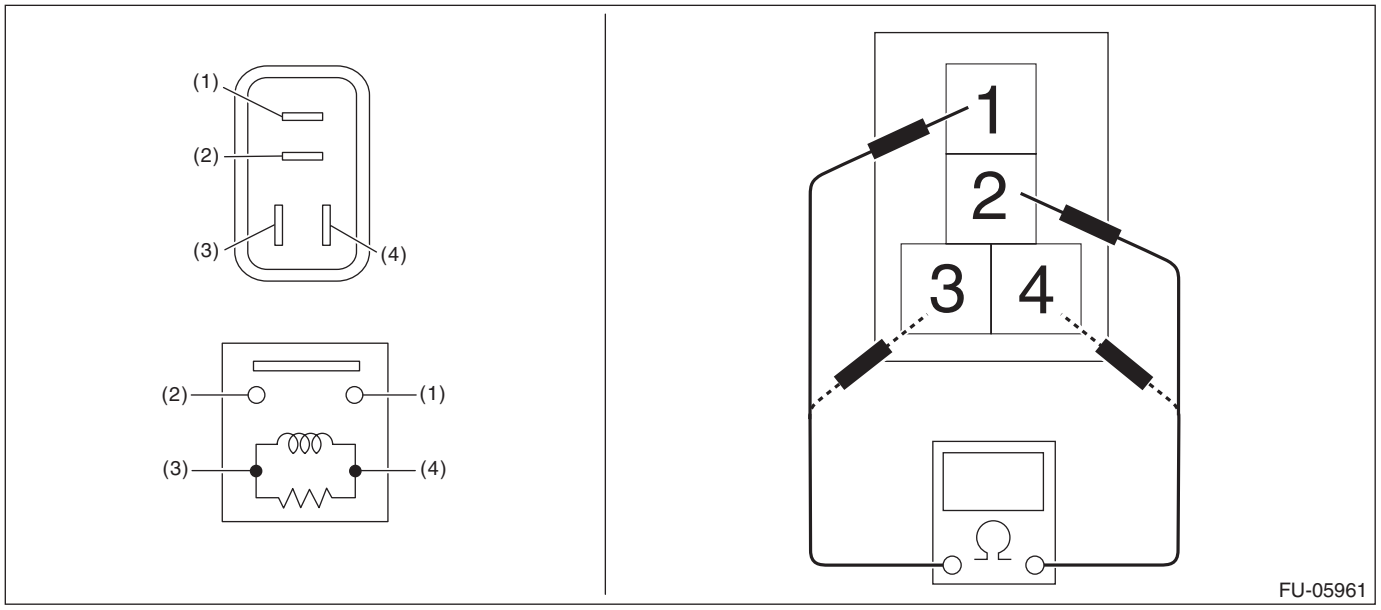

Terminal No.	Standard
1 and 2	1 MΩ or more
3 and 4	130.4 — 230.8 Ω (when 20°C (68°F))

3) Connect battery positive terminal to terminal No. 3 and battery ground terminal to terminal No. 4, and measure the resistance between the main relay terminals.

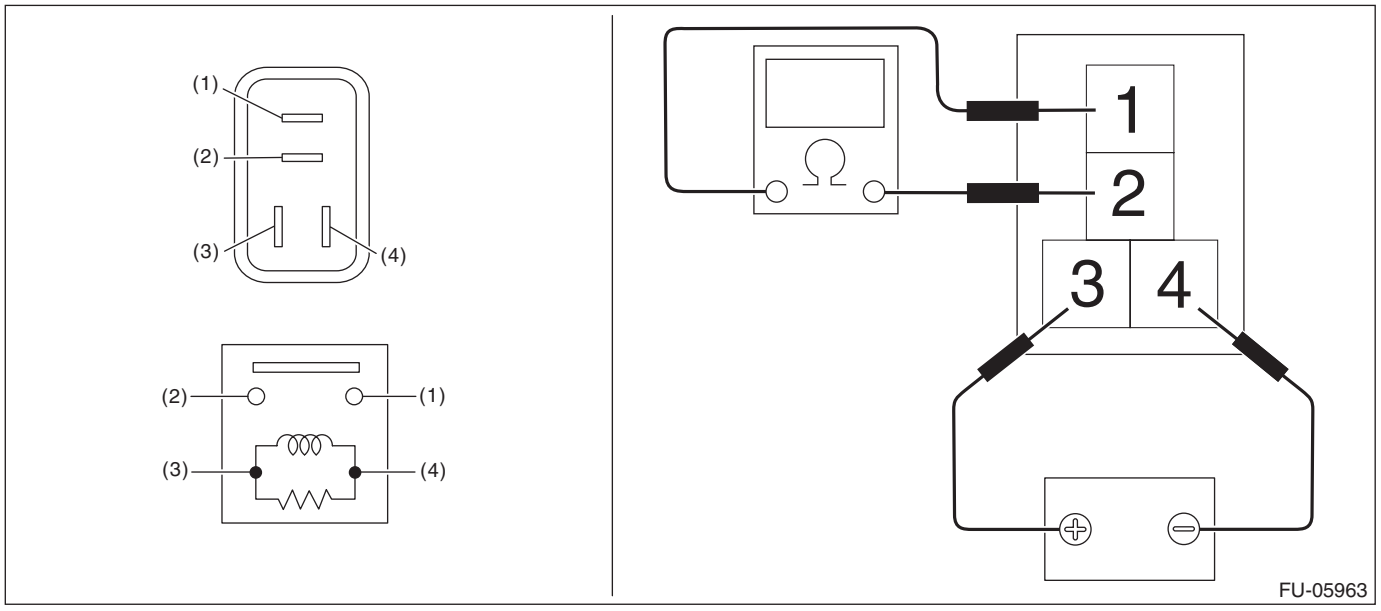

Terminal No.	Standard
1 and 2	Less than 1 Ω

22.IG Relay

A: REMOVAL

1) Disconnect the ground cable from battery. <Ref. to NT-5, BATTERY, NOTE, Note.>

NOTE:
For the 12 volt engine restart battery, disconnect the ground terminal from 12V engine restart battery sensor.
2) Remove the glove box. <Ref. to EI-73, REMOVAL, Glove Box.>
3) Remove the IG relay from the relay block.

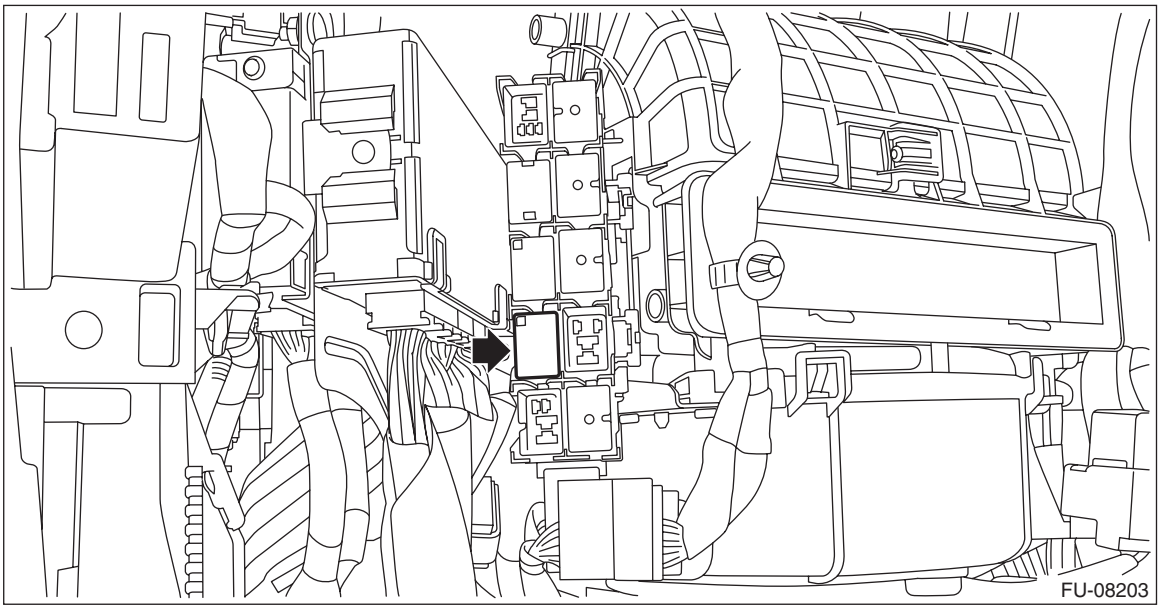

B: INSTALLATION

Install in the reverse order of removal.

C: INSPECTION

1) Check that the IG relay has no deformation, cracks or other damages.
2) Measure the resistance between the IG relay terminals.

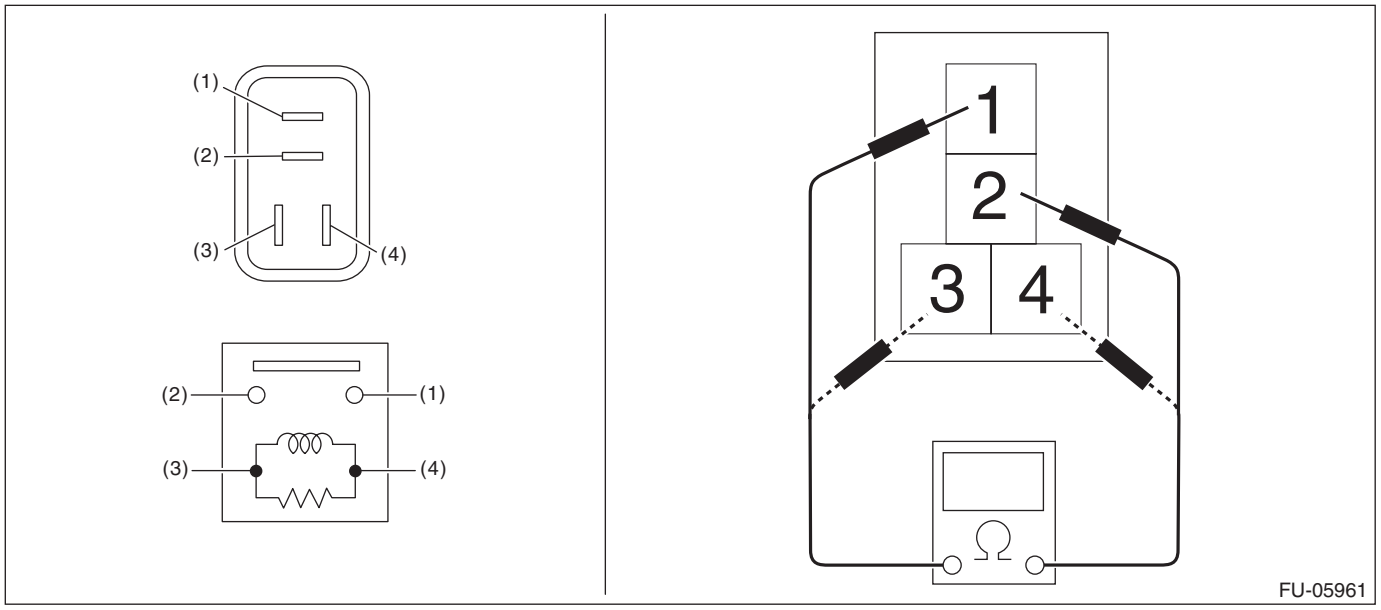

Terminal No.	Standard
1 and 2	1 MΩ or more
3 and 4	130.4 — 230.8 Ω (when 20°C (68°F))

3) Connect battery positive terminal to terminal No. 3 and battery ground terminal to terminal No. 4, and measure the resistance between IG relay terminals.

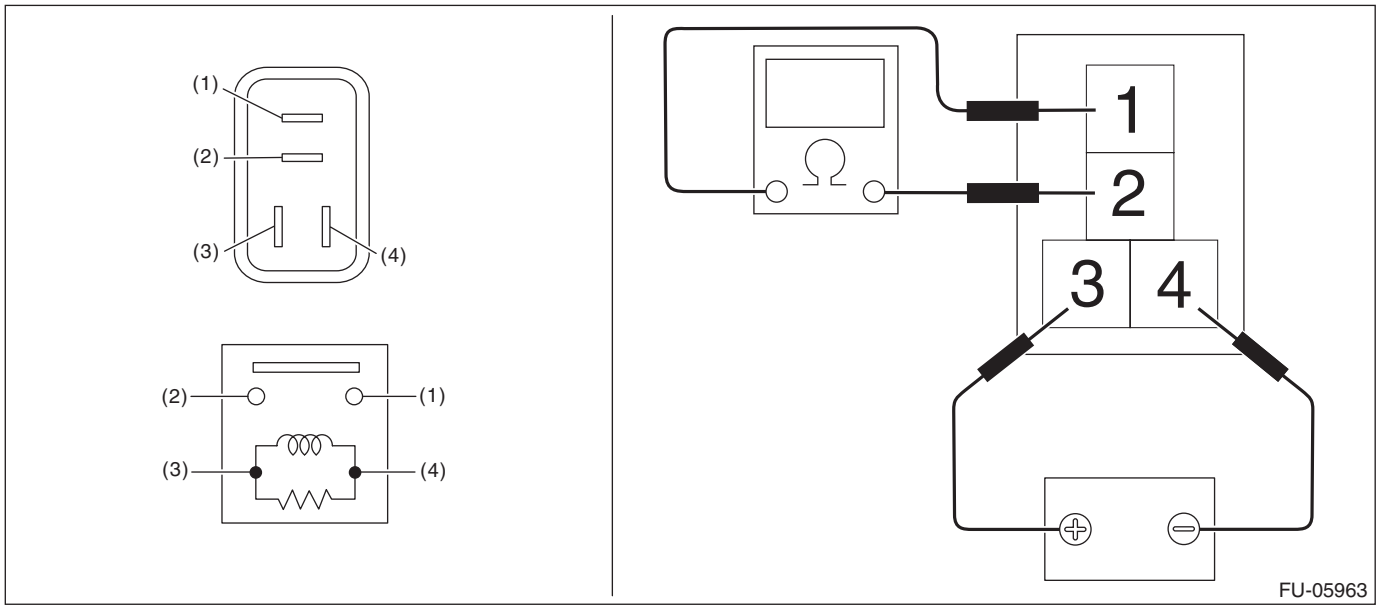

Terminal No.	Standard
1 and 2	Less than 1 Ω

23.Oxygen Sensor Relay

A: REMOVAL

1) Disconnect the ground cable from battery. <Ref. to NT-5, BATTERY, NOTE, Note.>

NOTE:
For the 12 volt engine restart battery, disconnect the ground terminal from 12V engine restart battery sensor.
2) Remove the instrument panel lower cover. <Ref. to EI-71, REMOVAL, Instrument Panel Lower Cover.>
3) Remove the bolts and nuts securing the fuse block and move down the fuse block.

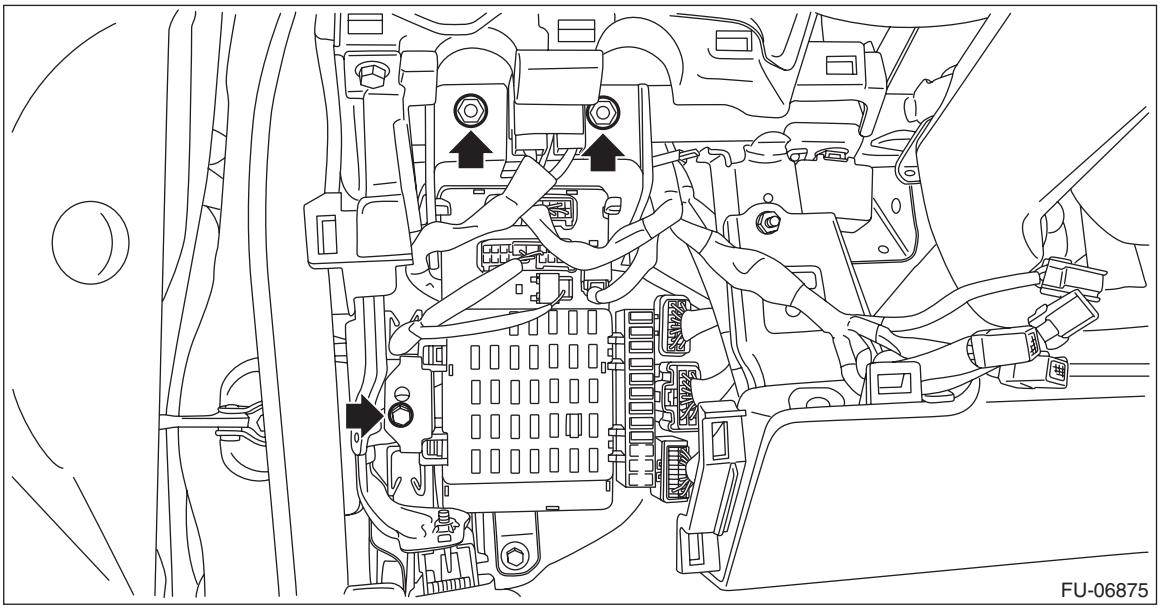

4) Remove the oxygen sensor relay from the relay block.

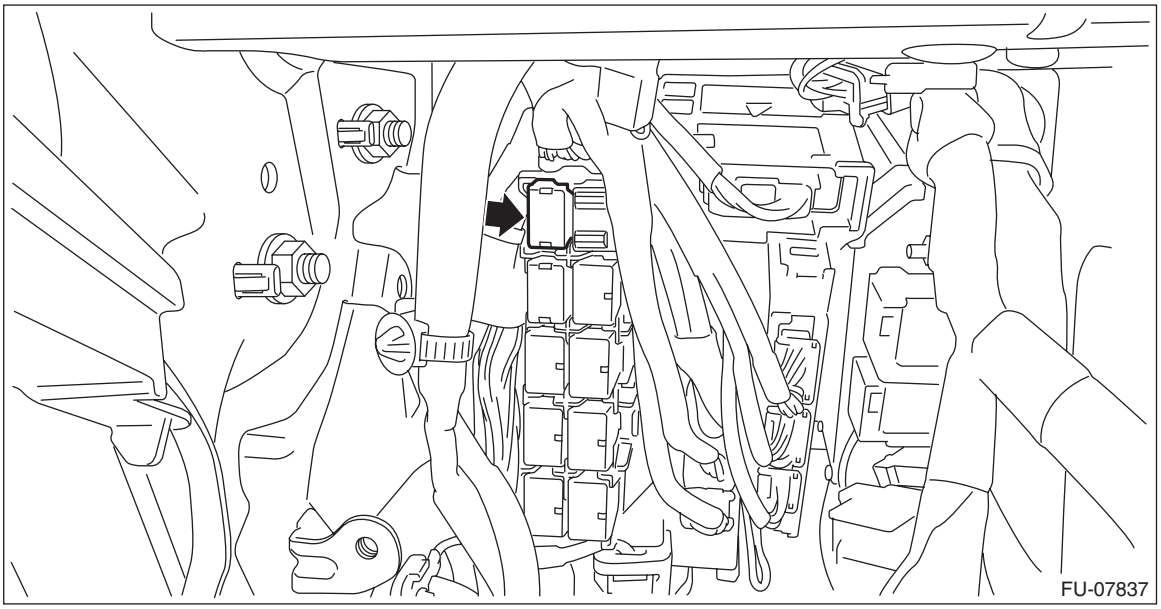

B: INSTALLATION

Install in the reverse order of removal.

Tightening torque:
7.5 N·m (0.8 kgf-m, 5.5 ft-lb)

C: INSPECTION

1) Check that the oxygen sensor relay has no deformation, cracks or other damages.
2) Measure the resistance between oxygen sensor relay terminals.

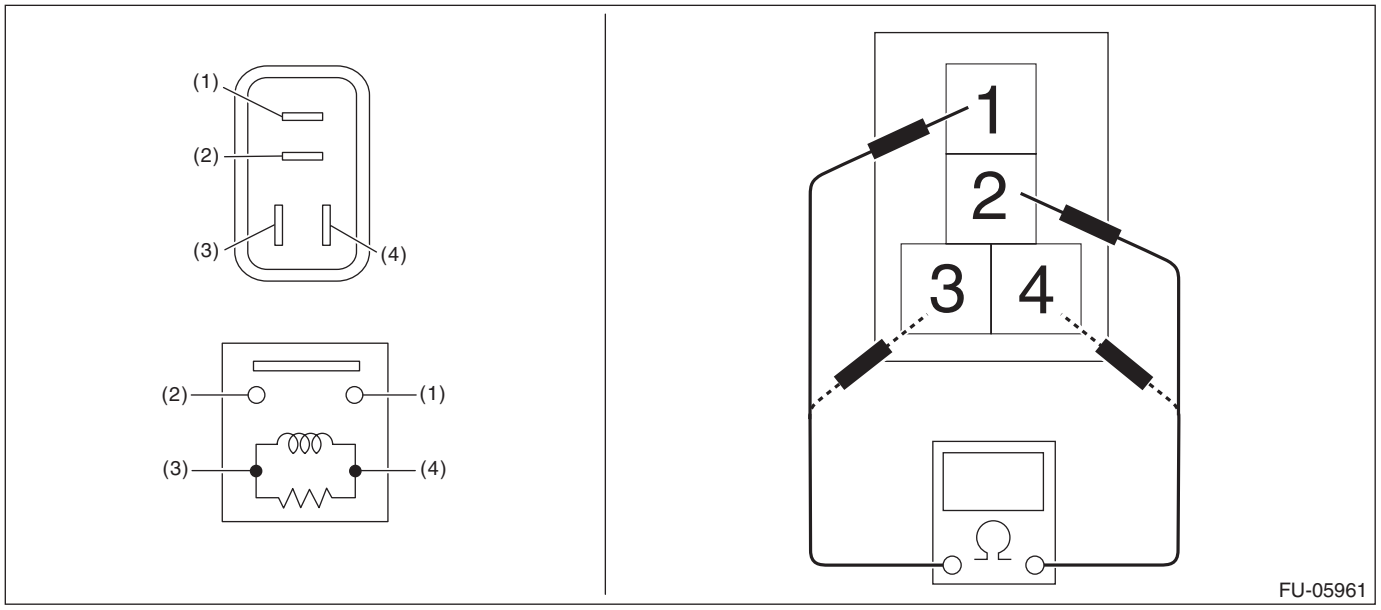

Terminal No.	Standard
1 and 2	1 MΩ or more
3 and 4	93.8 — 136.4 Ω (when 20°C (68°F))

3) Connect battery positive terminal to terminal No. 3 and battery ground terminal to terminal No. 4, and measure the resistance between oxygen sensor relay terminals.

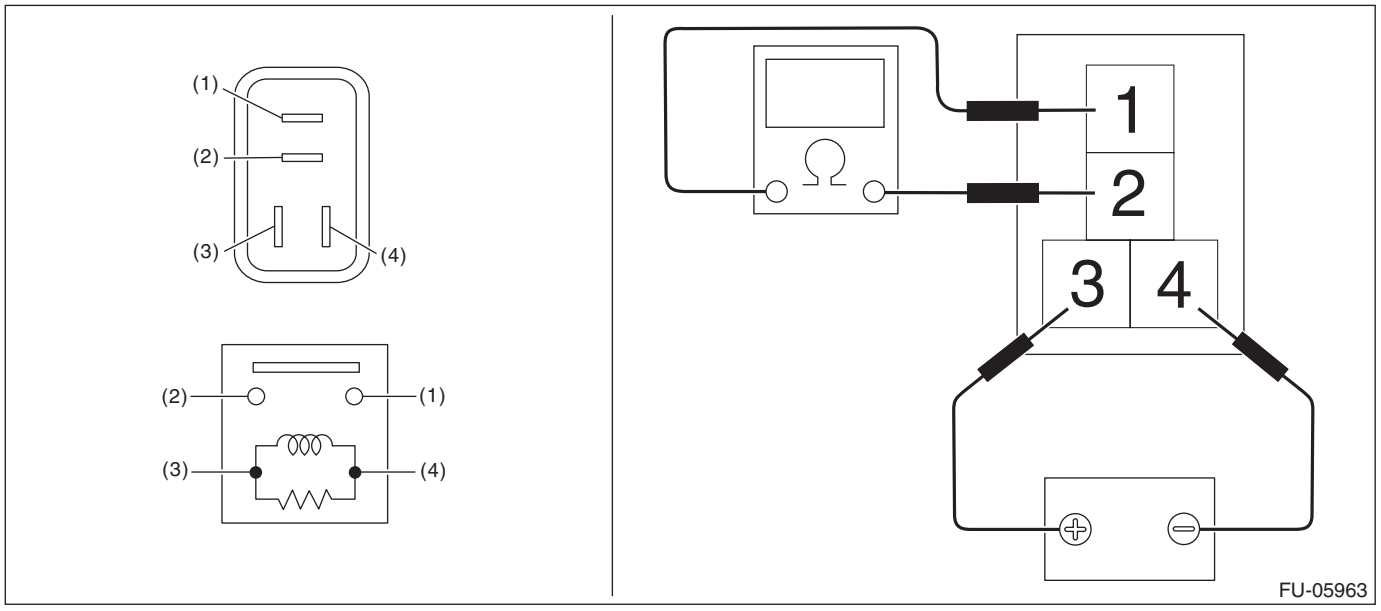

Terminal No.	Standard
1 and 2	Less than 1 Ω

24.Electronic Throttle Control Relay

A: REMOVAL

1) Disconnect the ground cable from battery. <Ref. to NT-5, BATTERY, NOTE, Note.>

NOTE:
For the 12 volt engine restart battery, disconnect the ground terminal from 12V engine restart battery sensor.
2) Remove the instrument panel lower cover. <Ref. to EI-71, REMOVAL, Instrument Panel Lower Cover.>
3) Remove the bolts and nuts securing the fuse block and move down the fuse block.

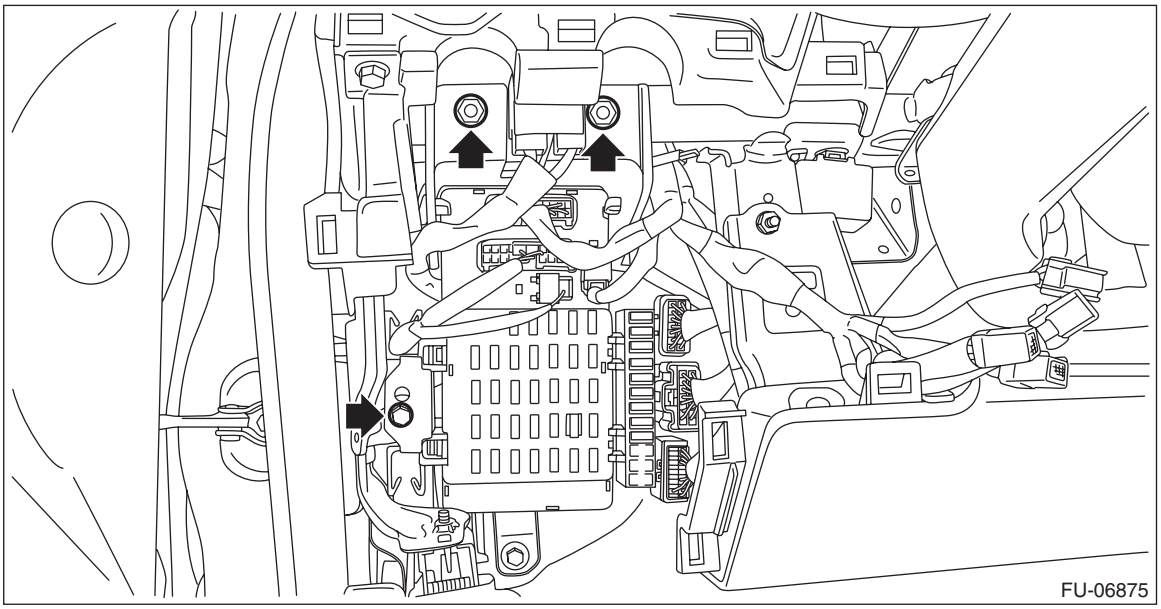

4) Remove the electronic throttle control relay from the relay block.

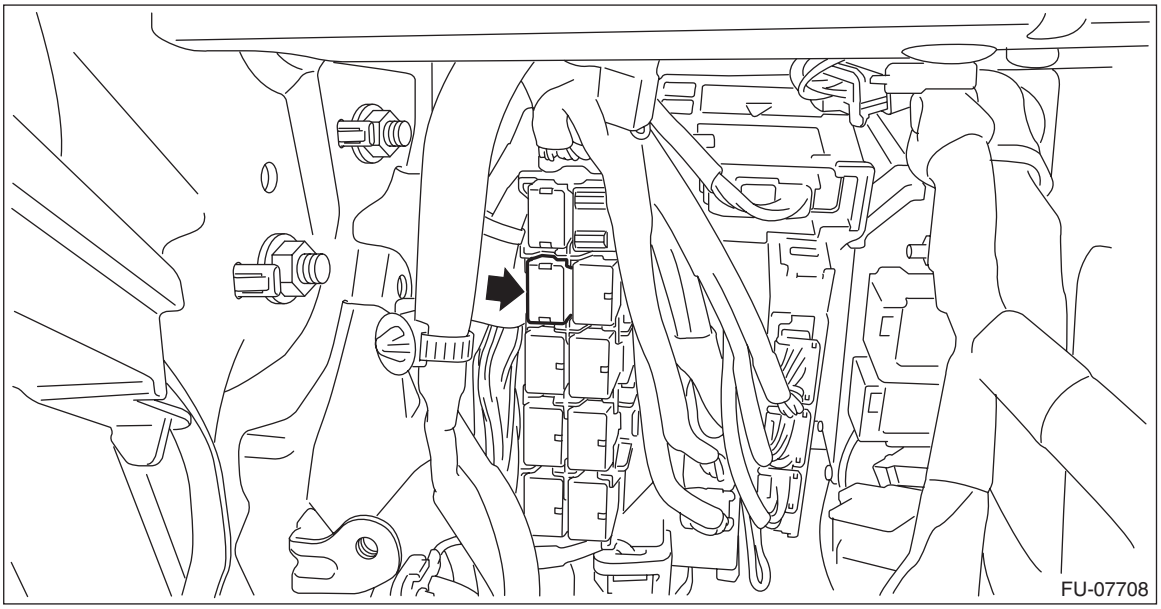

B: INSTALLATION

Install in the reverse order of removal.

Tightening torque:
7.5 N·m (0.8 kgf-m, 5.5 ft-lb)

C: INSPECTION

1) Check that the electronic throttle control relay has no deformation, cracks or other damages.
2) Measure the resistance between electronic throttle control relay terminals.

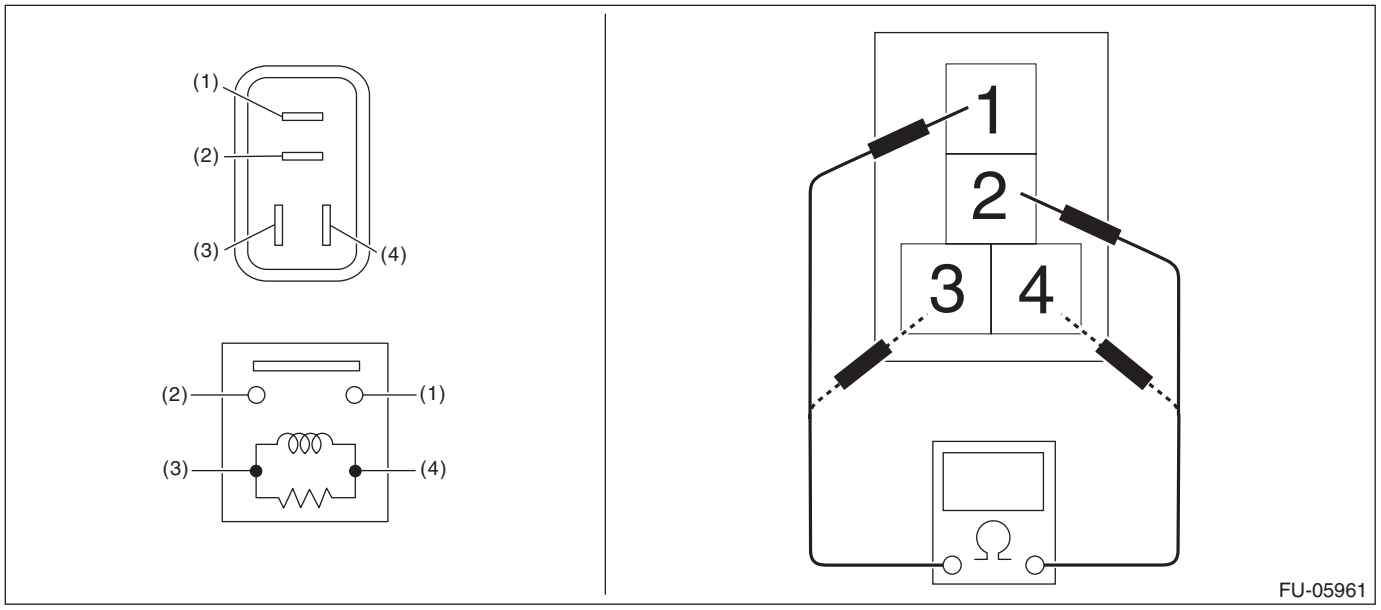

Terminal No.	Standard
1 and 2	1 MΩ or more
3 and 4	93.8 — 136.4 Ω (when 20°C (68°F))

3) Connect battery positive terminal to terminal No. 3 and battery ground terminal to terminal No. 4, and measure the resistance between the electronic throttle control relay terminals.

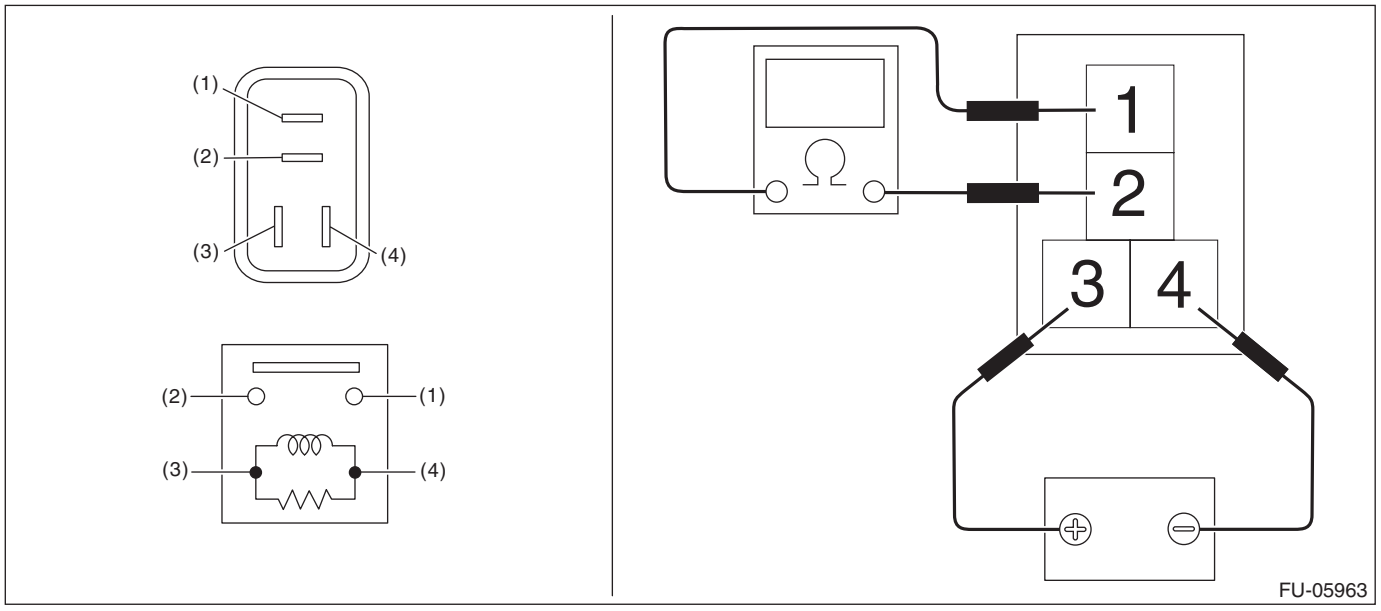

Terminal No.	Standard
1 and 2	Less than 1 Ω

25.Fuel Pump Relay

A: REMOVAL

1) Disconnect the ground cable from battery. <Ref. to NT-5, BATTERY, NOTE, Note.>

NOTE:
For the 12 volt engine restart battery, disconnect the ground terminal from 12V engine restart battery sensor.
2) Remove the fuel pump relay from the main fuse box.

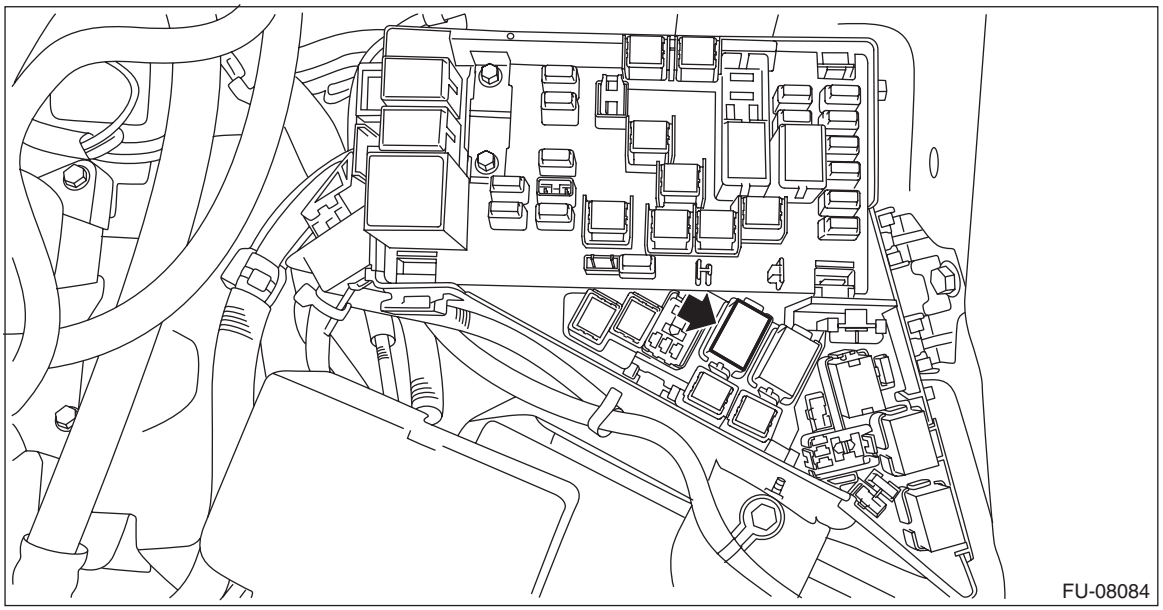

B: INSTALLATION

Install in the reverse order of removal.

C: INSPECTION

1) Check that the fuel pump relay has no deformation, cracks or other damages.
2) Measure the resistance between fuel pump relay terminals.

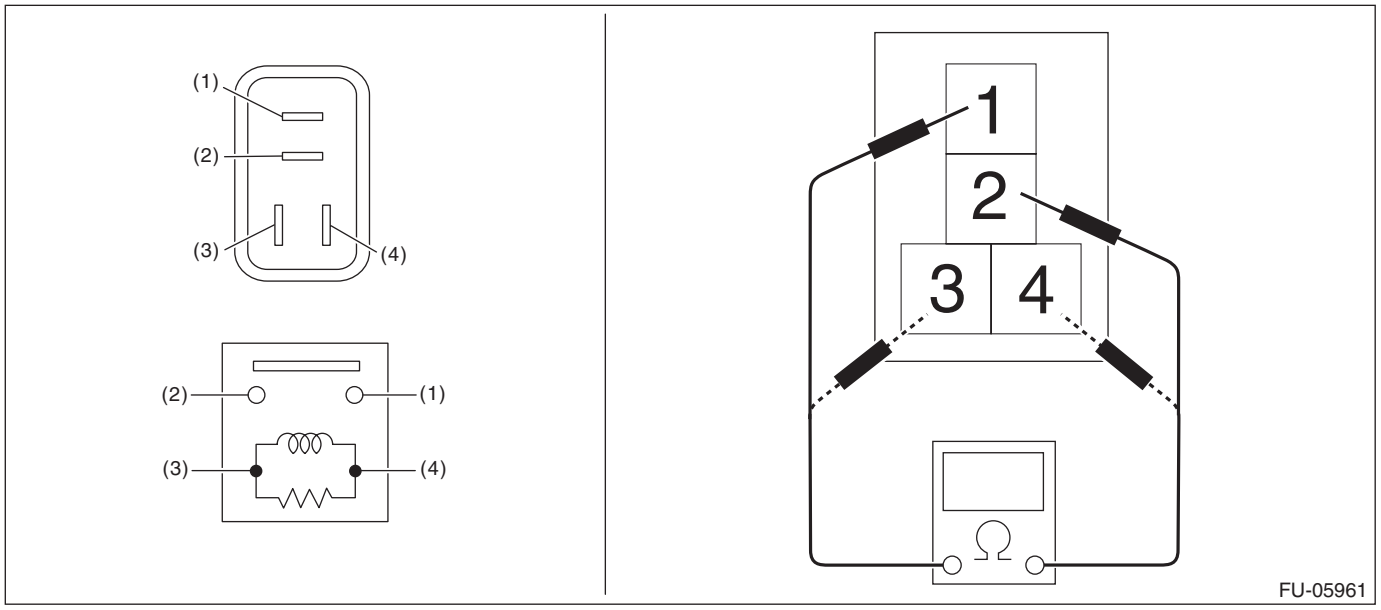

Terminal No.	Standard
1 and 2	1 MΩ or more
3 and 4	93.8 — 136.4 Ω (when 20°C (68°F))

3) Connect battery positive terminal to terminal No. 3 and battery ground terminal to terminal No. 4, and measure the resistance between the fuel pump relay terminals.

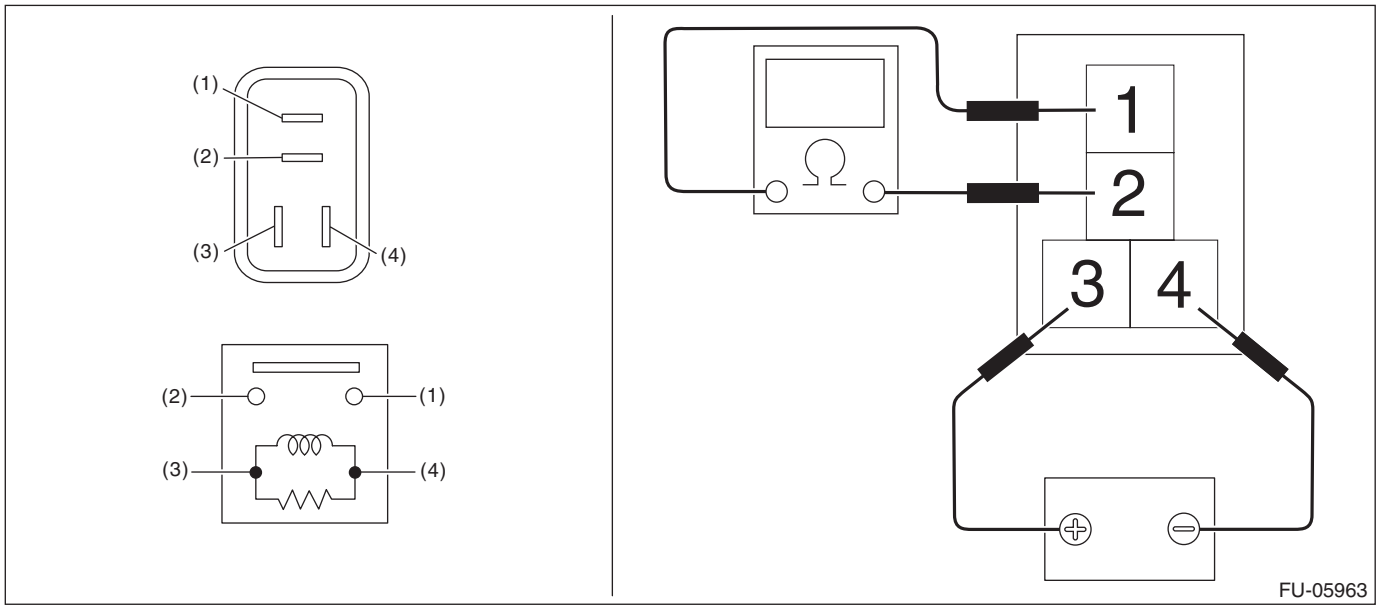

Terminal No.	Standard
1 and 2	Less than 1 Ω

26.Fuel

A: PROCEDURE

1. RELEASING OF FUEL PRESSURE

WARNING:
Place “NO OPEN FLAMES” signs near the working area.

CAUTION:
Be careful not to spill fuel.

1) Turn the ignition switch to OFF.
2) Remove the fuse of fuel pump from main fuse box.

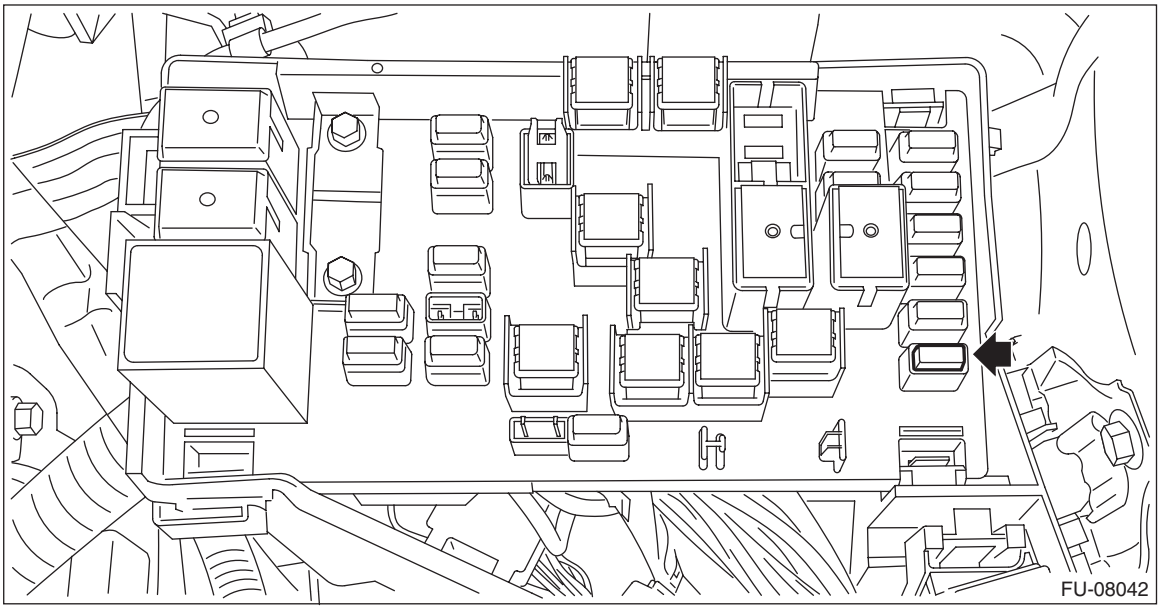

3) Start the engine and run it until it stalls.
4) After the engine stalls, crank it for five more seconds.
5) Turn the ignition switch to OFF.
6) Install the fuse of fuel pump to the main fuse box.

2. DRAINING FUEL (WITH SUBARU SELECT MONITOR)

WARNING:
Place “NO OPEN FLAMES” signs near the working area.

CAUTION:
Be careful not to spill fuel.

NOTE:
• If the fuel pump cannot be driven, refer to the procedures for draining from the fuel filler hose. <Ref. to FU(H4DO(HEV))-102, DRAINING FUEL (THROUGH THE FUEL FILLER HOSE), PROCEDURE, Fuel.>
• Be careful not to let the battery run-out.
• Be aware that the fuel may remain in the fuel tank after draining the fuel.

1) Release the fuel pressure. <Ref. to FU(H4DO(HEV))-98, RELEASING OF FUEL PRESSURE, PROCEDURE, Fuel.>
2) Remove the collector cover.
   (1) Pull up the two points at the front of collector cover (A).
   (2) Pull up the two points at the rear of collector cover (B) while moving them rearward.

NOTE:
Be careful not to contact the fuel delivery tube when moving the collector cover rearward.

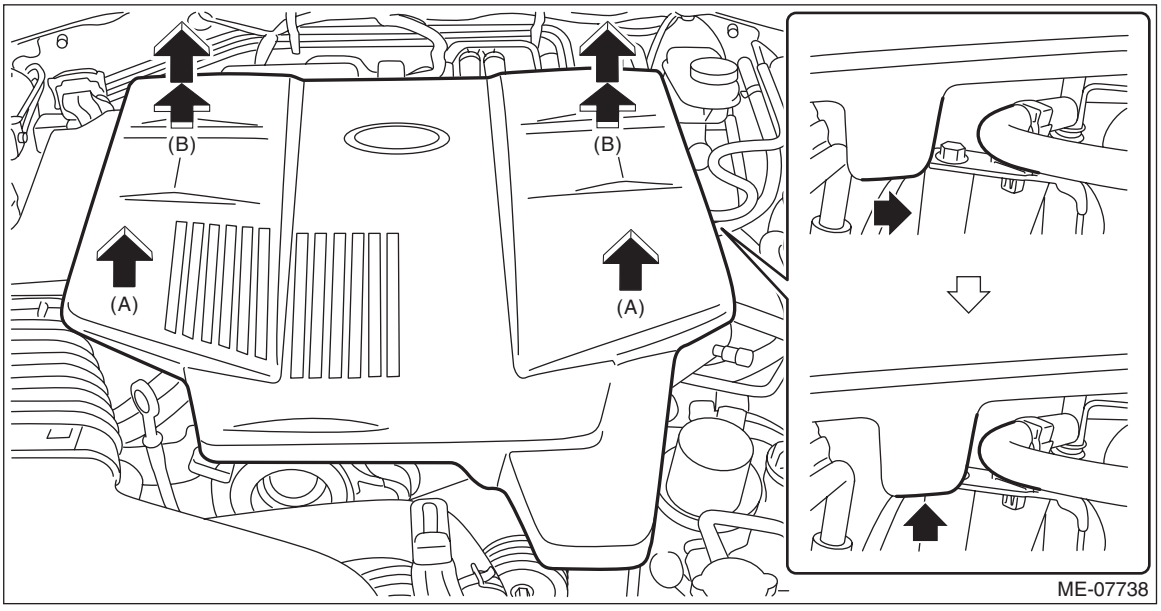

3) Disconnect the quick connector on the fuel delivery tube from the fuel pipe assembly, and remove the clip (A) securing the fuel delivery tube to the fuel pipe assembly.

CAUTION:
- **Be careful not to spill fuel.**
- **Catch the fuel from the tubes using a container or cloth.**

NOTE:
Disconnect the quick connector as shown in the figure.

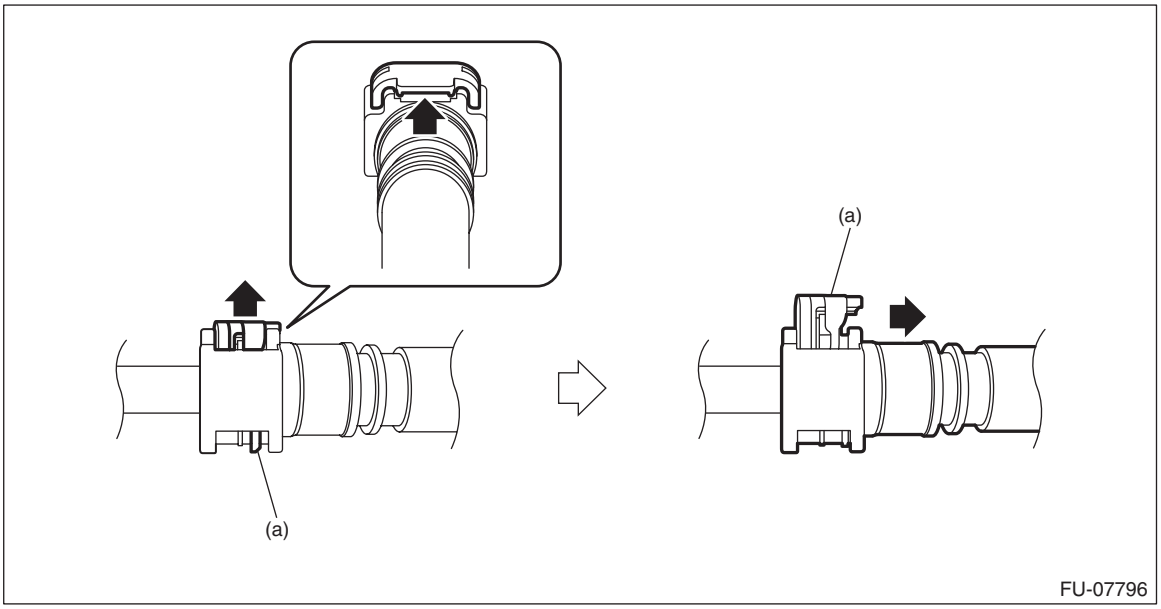

(a) Slider

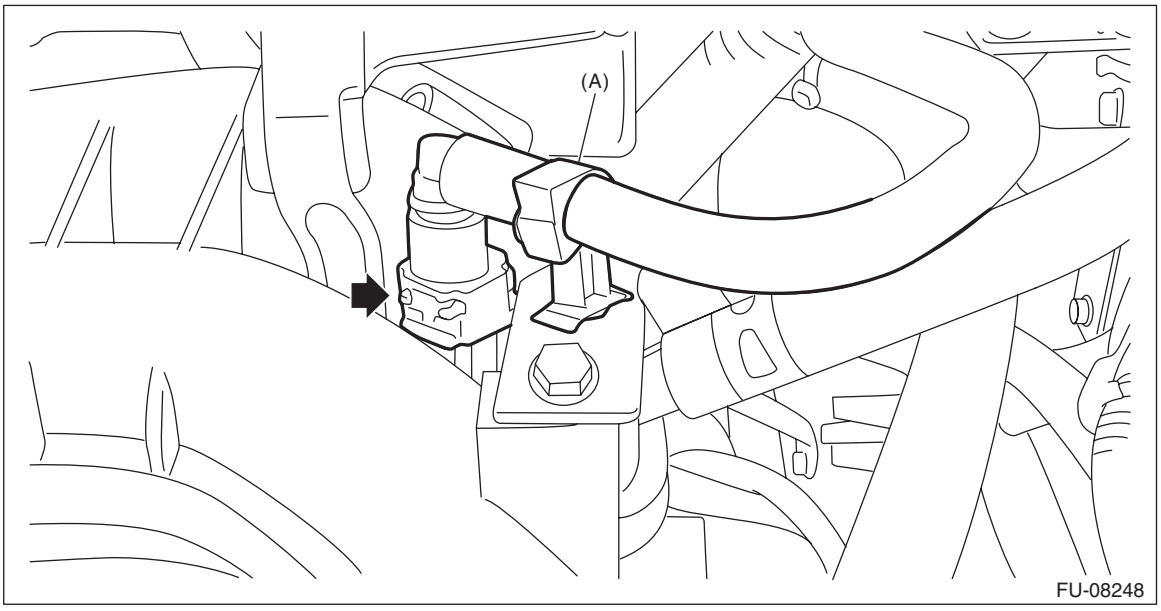

4) Connect ST to the fuel delivery tube.
ST 18471AA000 FUEL PIPE ADAPTER
5) Connect the gasoline proof hose to ST and put the end of the hose in the container.

6) Drive the fuel pump and drain the fuel using Subaru Select Monitor.

CAUTION:
Be careful not to spill fuel.

NOTE:
For detailed operation procedures, refer to “PC application help for Subaru Select Monitor”.
7) Install the related parts in the reverse order after draining the fuel.

CAUTION:
- **Be careful not to spill fuel.**
- **Catch the fuel from the tubes using a container or cloth.**
- **Check that there is no damage or dust on the quick connector. If necessary, clean the seal surface of the pipe.**
- **When connecting the quick connector with slider, make sure to insert the pipe all the way in before locking the slider.**
- **When it is difficult to lock the slider, check that the pipe is fully inserted.**
- **Make sure that the quick connector is securely connected.**

NOTE:
- Disconnect the quick connector on the fuel delivery tube as shown in the figure.

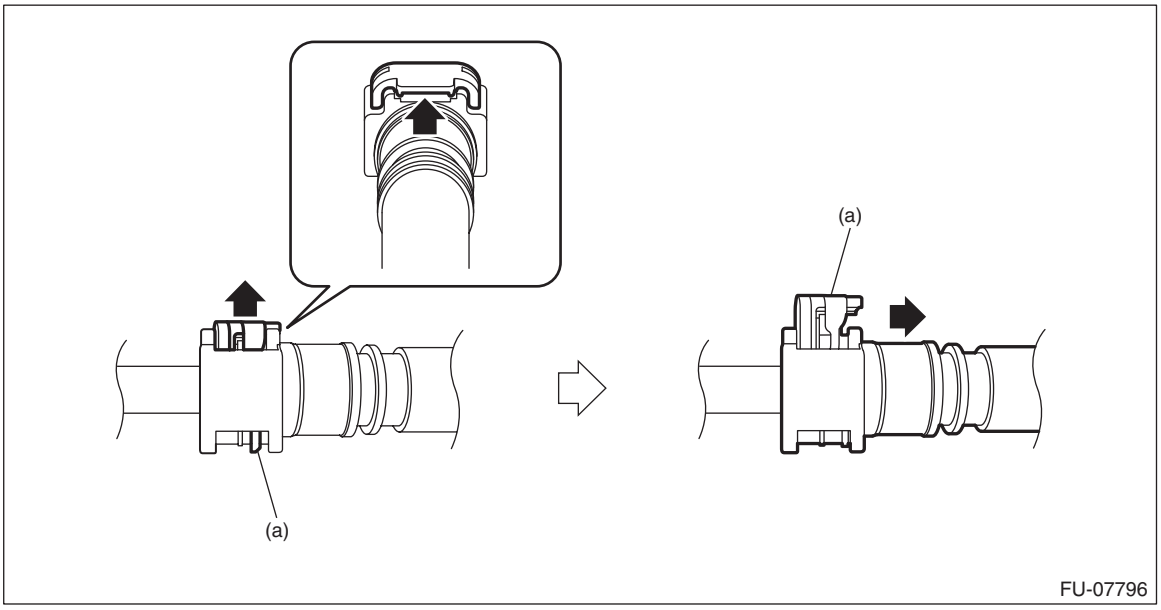

(a) Slider

- Connect the quick connector on the fuel delivery tube as shown in the figure.

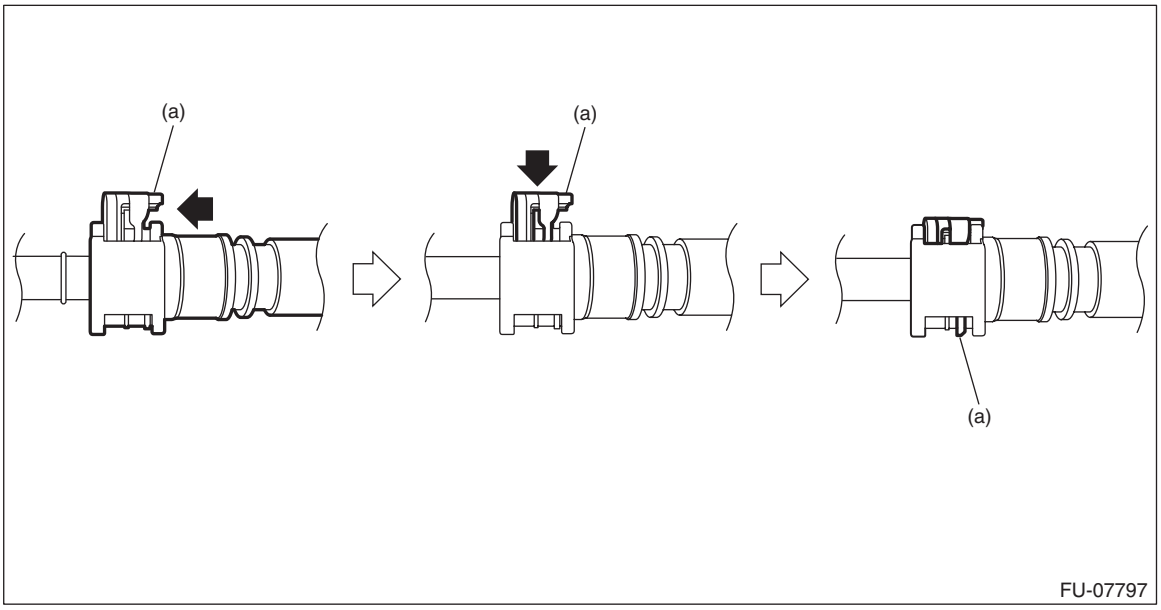

(a) Slider

3. DRAINING FUEL (THROUGH THE FUEL FILLER HOSE)

WARNING:
Place "NO OPEN FLAMES" signs near the working area.

CAUTION:
- **Be careful not to spill fuel.**
- **Fuel may remain in the fuel filler pipe. Drain the fuel from the fuel filler pipe through the fill opening using the gasoline proof pump and the gasoline proof hose (ø10 or less) before the operation.**

NOTE:
Be aware that the fuel may remain in the fuel tank after draining the fuel.
1) Lift up the vehicle.
2) Remove the rear exhaust pipe and muffler. <Ref. to EX(H4DO(w/o HEV))-18, REMOVAL, Rear Exhaust Pipe.> <Ref. to EX(H4DO(w/o HEV))-22, REMOVAL, Muffler.>
3) Open the fuel filler lid and remove the fuel filler cap.
4) Drain the fuel from the fuel filler pipe through the filler opening using the gasoline proof pump and the gasoline proof hose (ø10 or less).

5) Disconnect the fuel filler hose from the fuel filler pipe assembly.

CAUTION:
- **Be careful not to spill fuel.**
- **Catch the fuel from hoses using a container or cloth.**

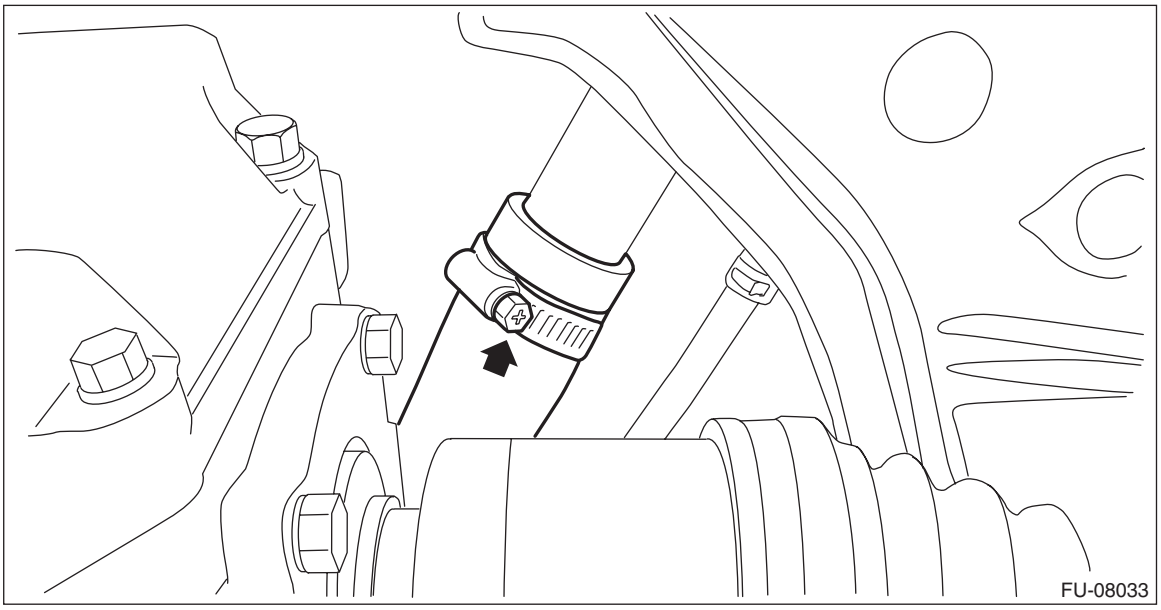

6) Set the container under the vehicle and insert the gasoline proof hose (ø10 or less) into the fuel filler hose to drain the fuel.

CAUTION:
Be careful not to spill fuel.

7) Install the related parts in the reverse order after draining the fuel.

NOTE:
Correctly insert the fuel filler hose to the spool, and then install the clamp as shown.

Tightening torque:
2.5 N·m (0.3 kgf-m, 1.8 ft-lb)

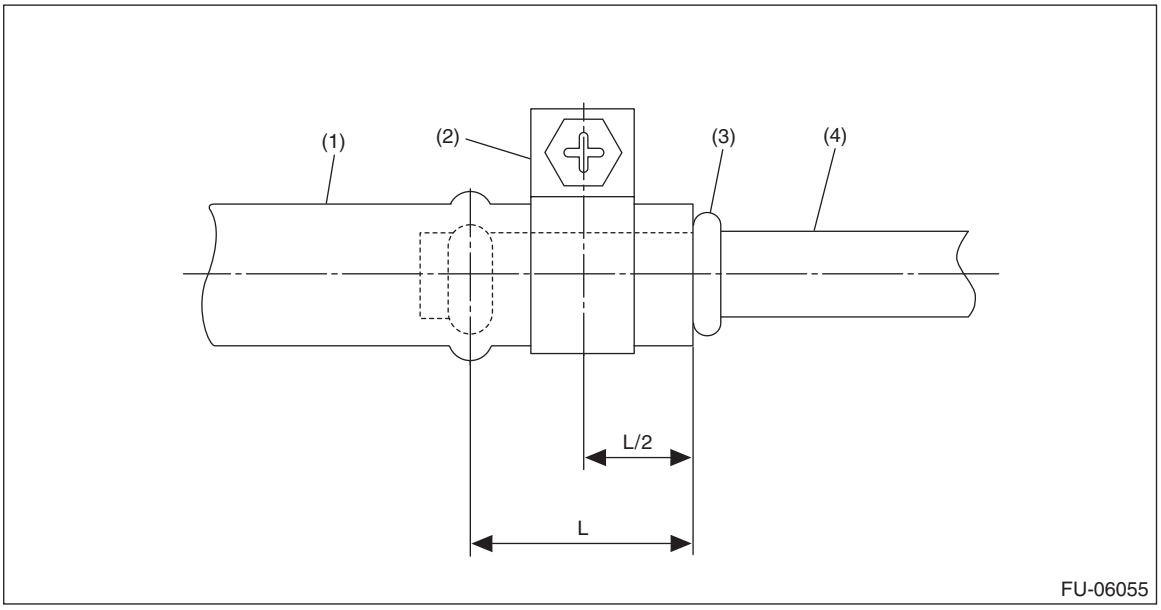

(1) Fuel filler hose
(2) Clamp
(3) Spool
(4) Fuel filler pipe

27.Fuel Tank Protector

A: REMOVAL

1) Lift up the vehicle.
2) Remove the bolt and nuts and remove the fuel tank protector.

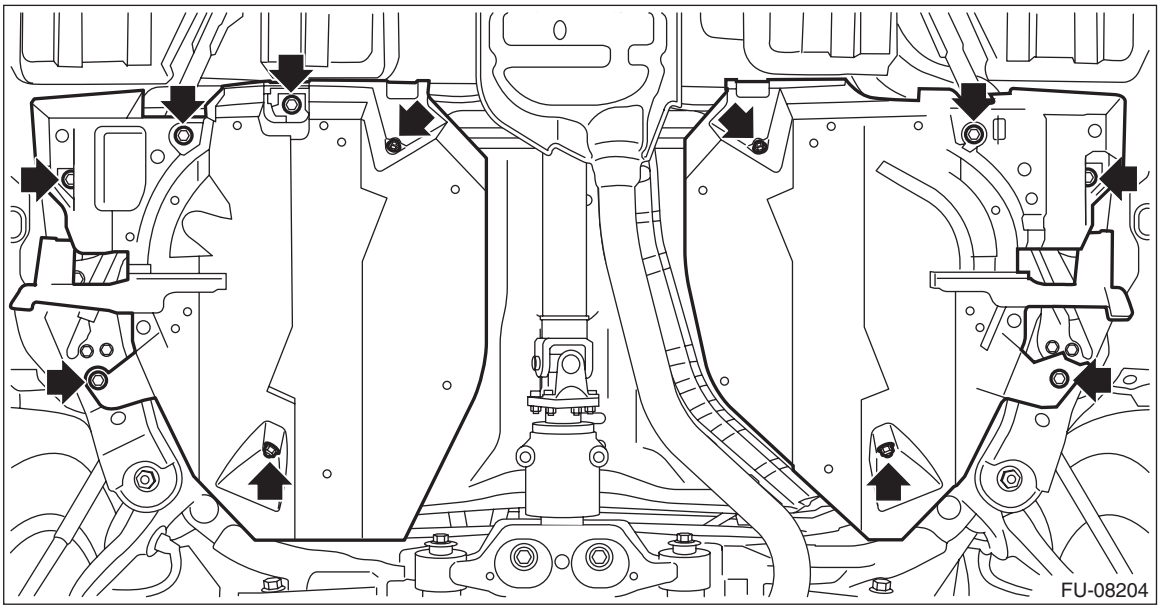

B: INSTALLATION

Install in the reverse order of removal.

NOTE:
Use a new self-locking nut.

Tightening torque:
T1: 9 N·m (0.9 kgf-m, 6.6 ft-lb)
T2: 18 N·m (1.8 kgf-m, 13.3 ft-lb)

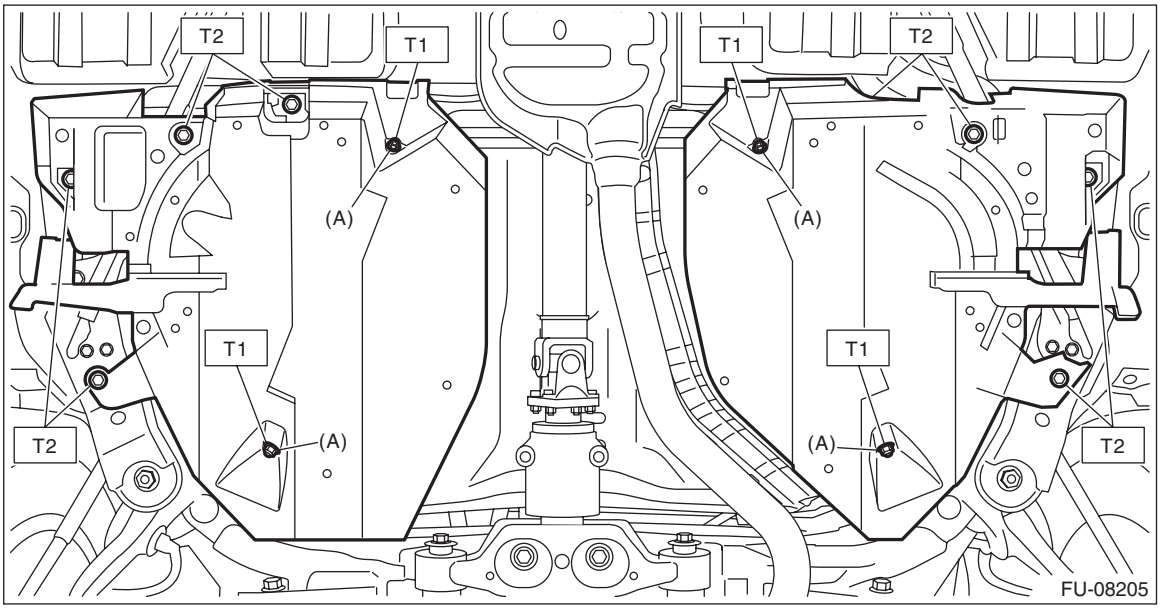

(A) Self-locking nut

28.Fuel Tank

A: REMOVAL

WARNING:
Place “NO OPEN FLAMES” signs near the working area.

CAUTION:
- **Be careful not to spill fuel.**
- **Catch the fuel from the tubes using a container or cloth.**

1) Release the fuel pressure. <Ref. to FU(H4DO(HEV))-98, RELEASING OF FUEL PRESSURE, PROCEDURE, Fuel.>
2) Drain fuel. <Ref. to FU(H4DO(HEV))-99, DRAINING FUEL (WITH SUBARU SELECT MONITOR), PROCEDURE, Fuel.>
3) Disconnect the ground cable from battery. <Ref. to NT-5, BATTERY, NOTE, Note.>

NOTE:
For the 12 volt engine restart battery, disconnect the ground terminal from 12V engine restart battery sensor.
4) Remove the rear seat cushion. <Ref. to SE-23, REMOVAL, Rear Seat.>
5) Remove the service hole cover of fuel pump.

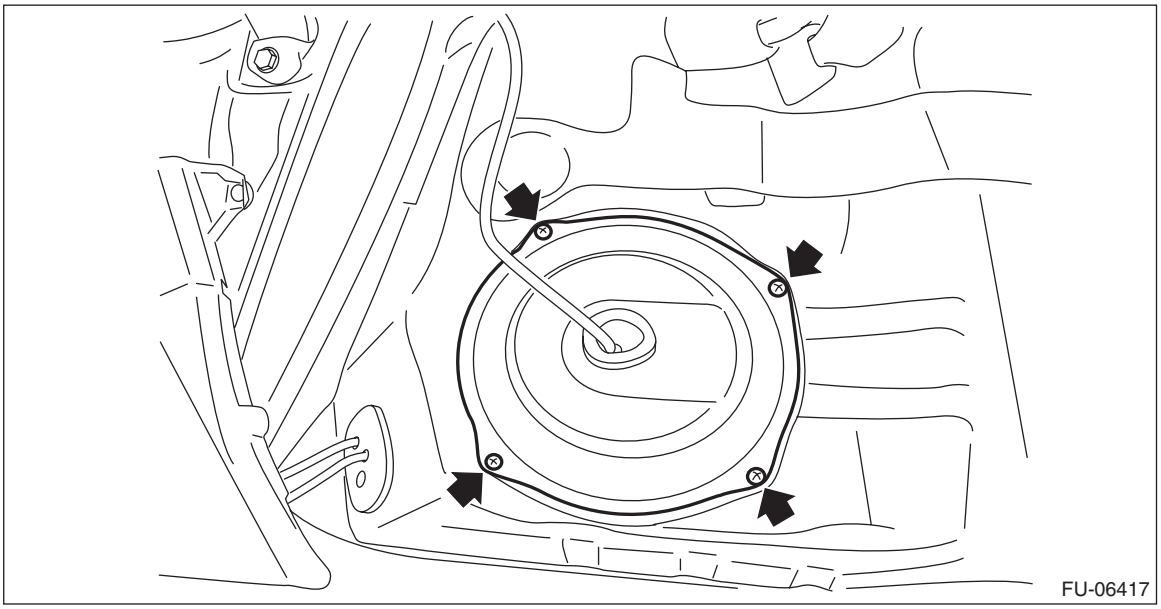

6) Disconnect connectors from the fuel pump, and move aside the service hole cover.

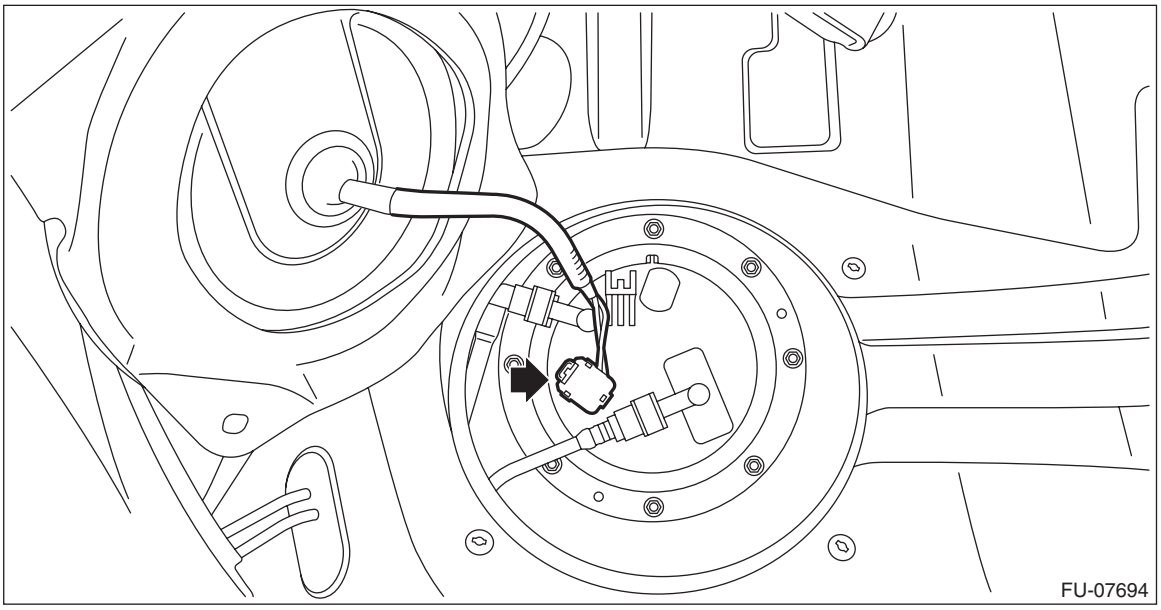

7) Remove the service hole cover of fuel sub level sensor.

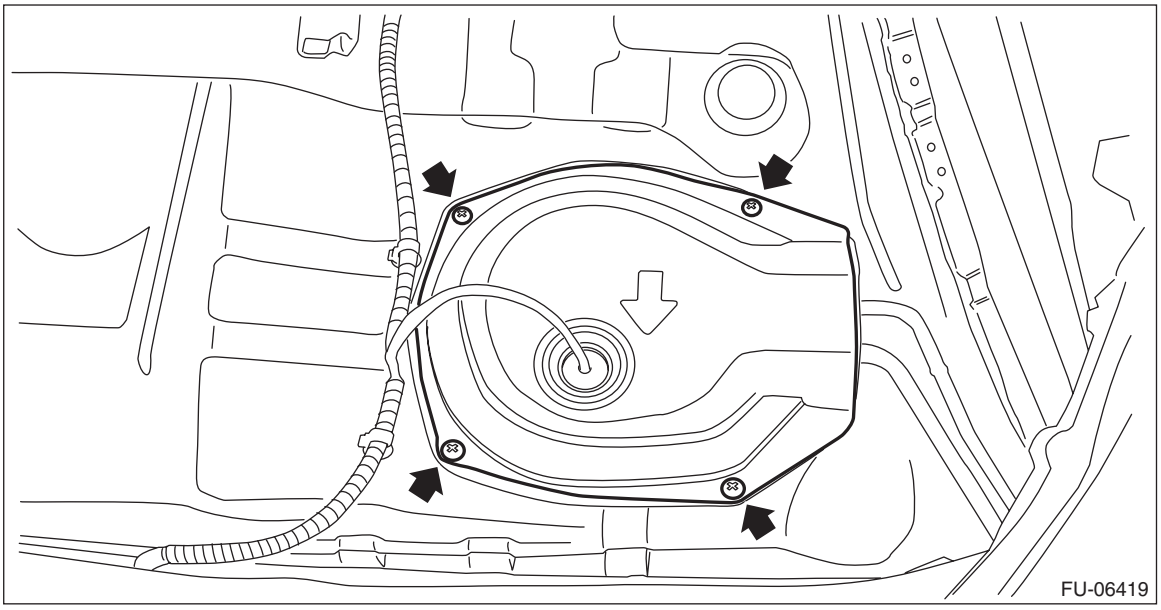

8) Disconnect the connector from the fuel sub level sensor, and move aside the service hole cover.

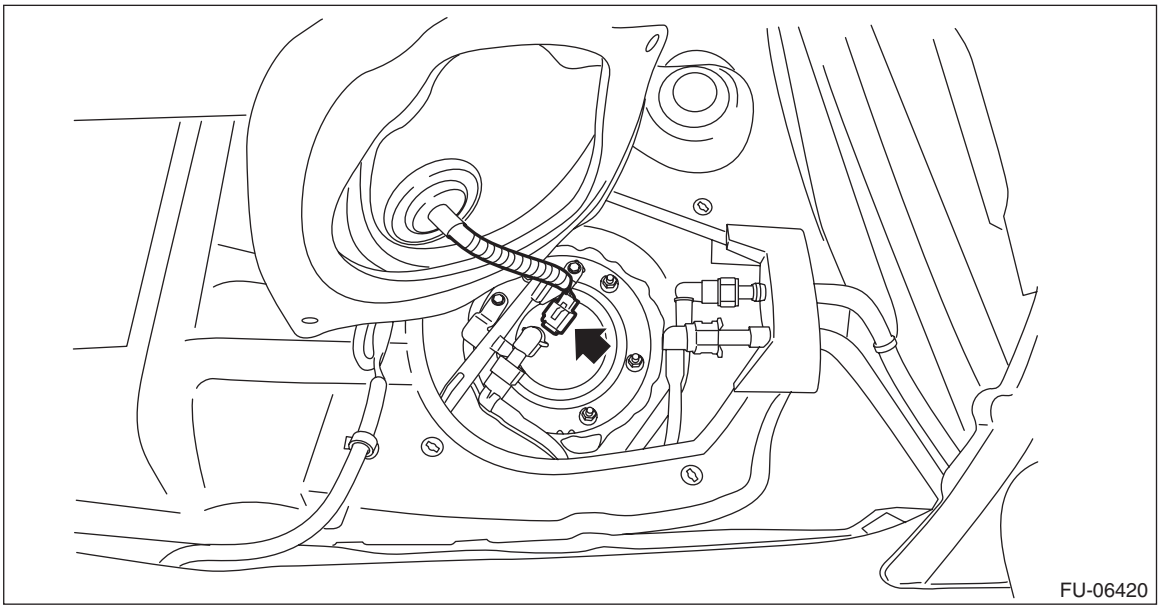

9) Disconnect the quick connector on the fuel delivery tube.

NOTE:
Disconnect the quick connector as shown in the figure.

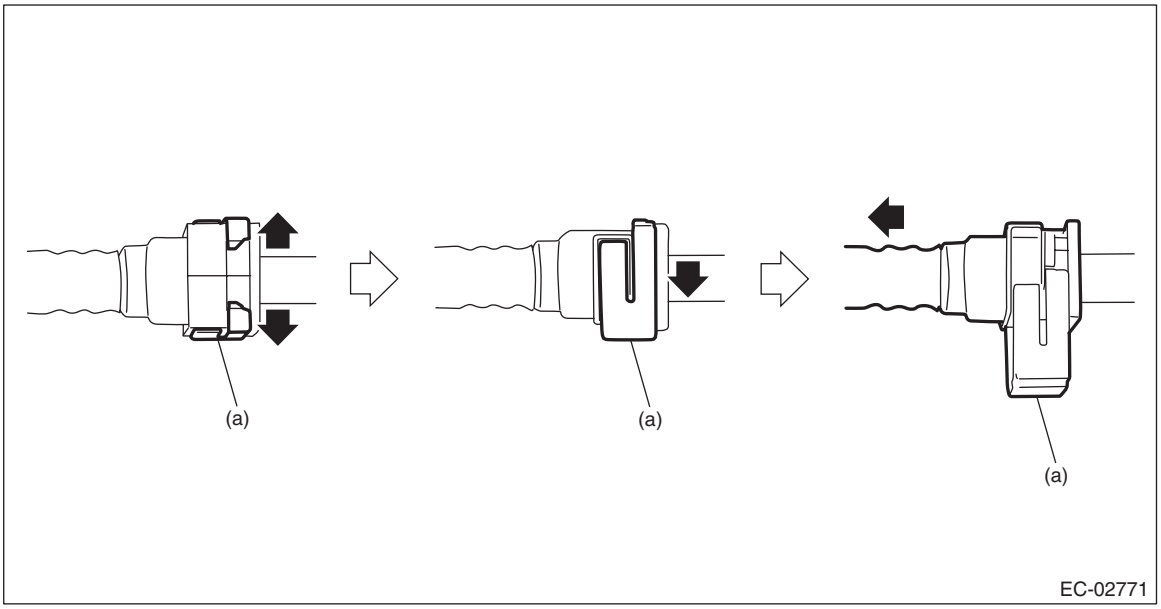

(a) Slider

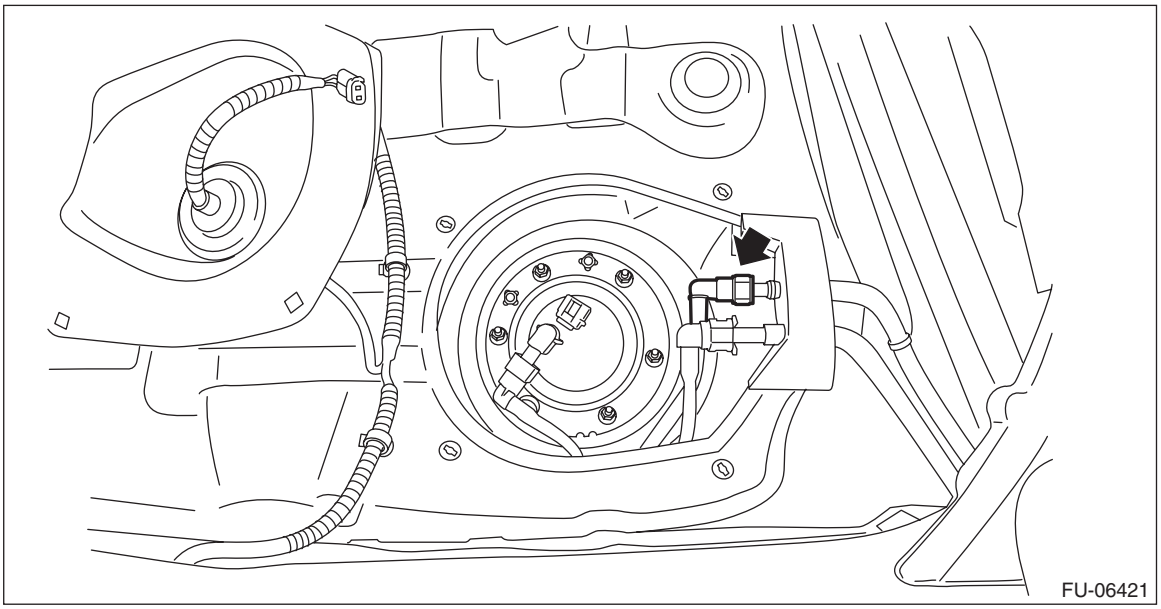

10) Lift up the vehicle.
11) Remove the rear exhaust pipe and muffler. <Ref. to EX(H4DO(w/o HEV))-18, REMOVAL, Rear Exhaust Pipe.> <Ref. to EX(H4DO(w/o HEV))-22, REMOVAL, Muffler.>
12) Remove the rear differential. <Ref. to DI-42, REMOVAL, Rear Differential (VA-type).>

13) Disconnect the fuel filler hose (A) and evaporation hose (B) from the fuel filler pipe assembly.

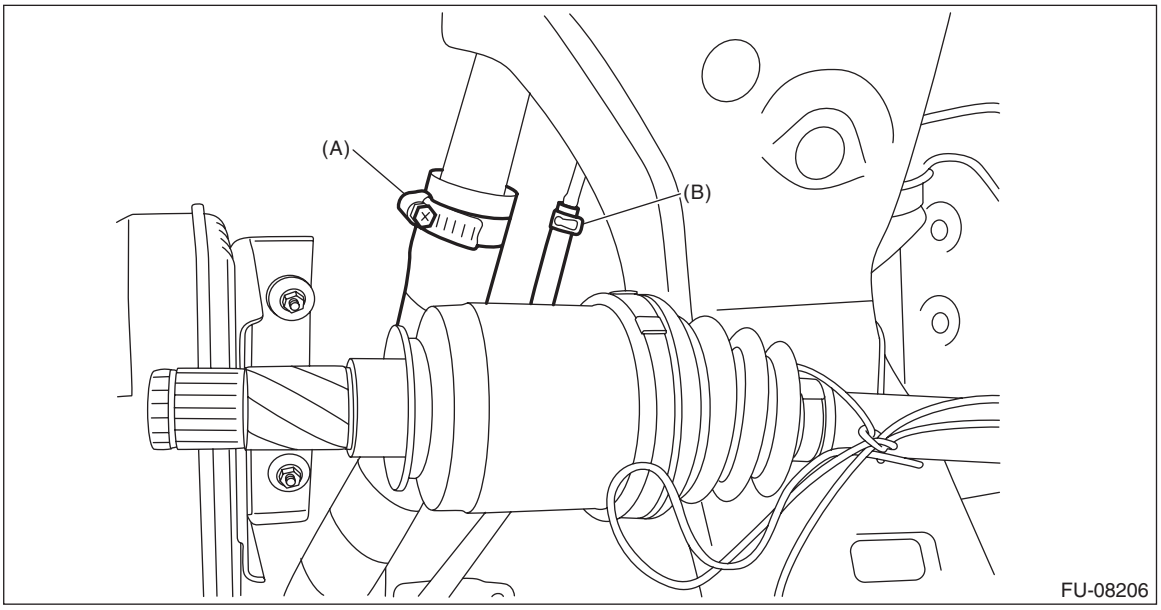

14) Remove the fuel tank protector. <Ref. to FU(H4DO(HEV))-104, REMOVAL, Fuel Tank Protector.>
15) Remove the heat shield cover and the stay - rear frame COMPL RH.

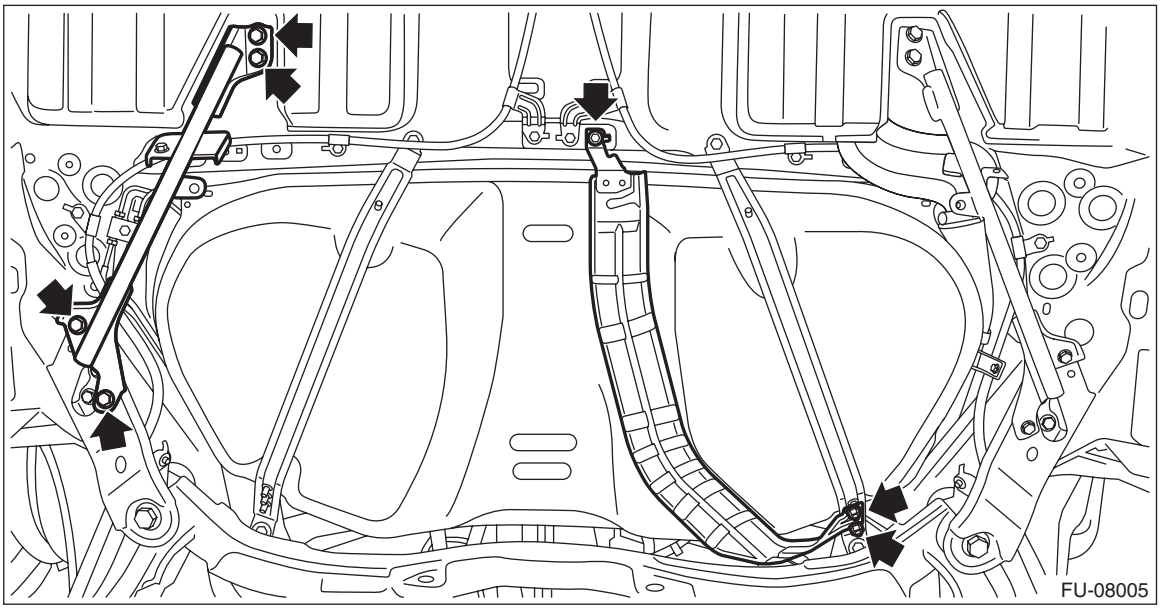

16) Disconnect the vent tube from the vent hose.

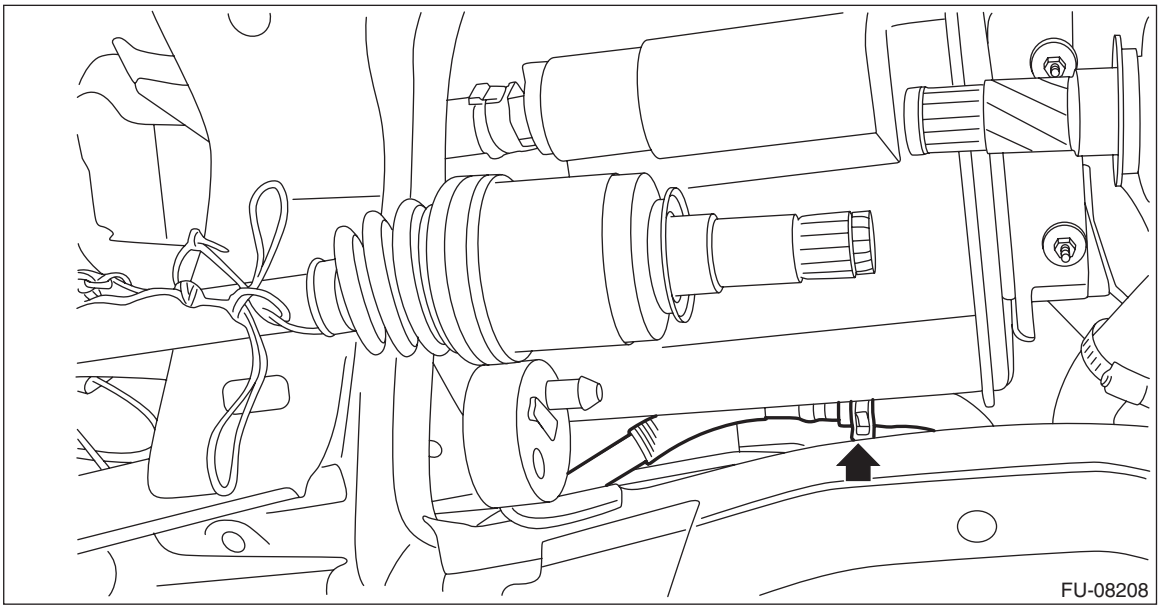

17) Remove the purge tube from the tube clamp.

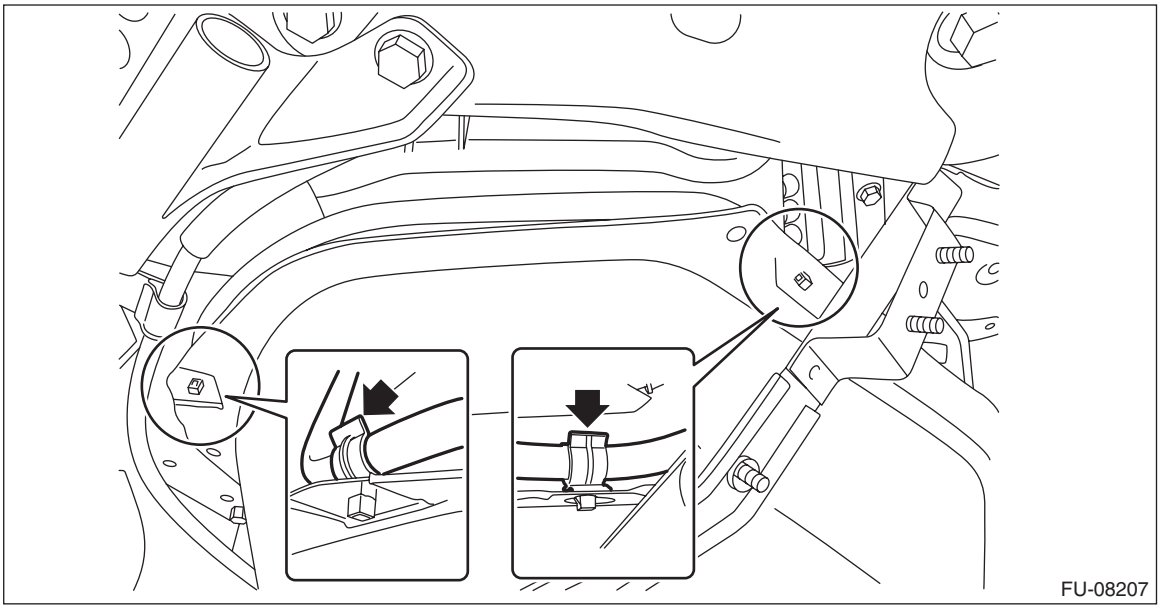

18) Support the fuel tank with a transmission jack, remove the bolts from the fuel tank band, and remove the fuel tank from the vehicle.

WARNING:
- **A helper is required to perform this work.**
- **Fuel may remain in the fuel tank. This will cause the left and right sides to be unbalanced. Be careful not to drop the fuel tank.**

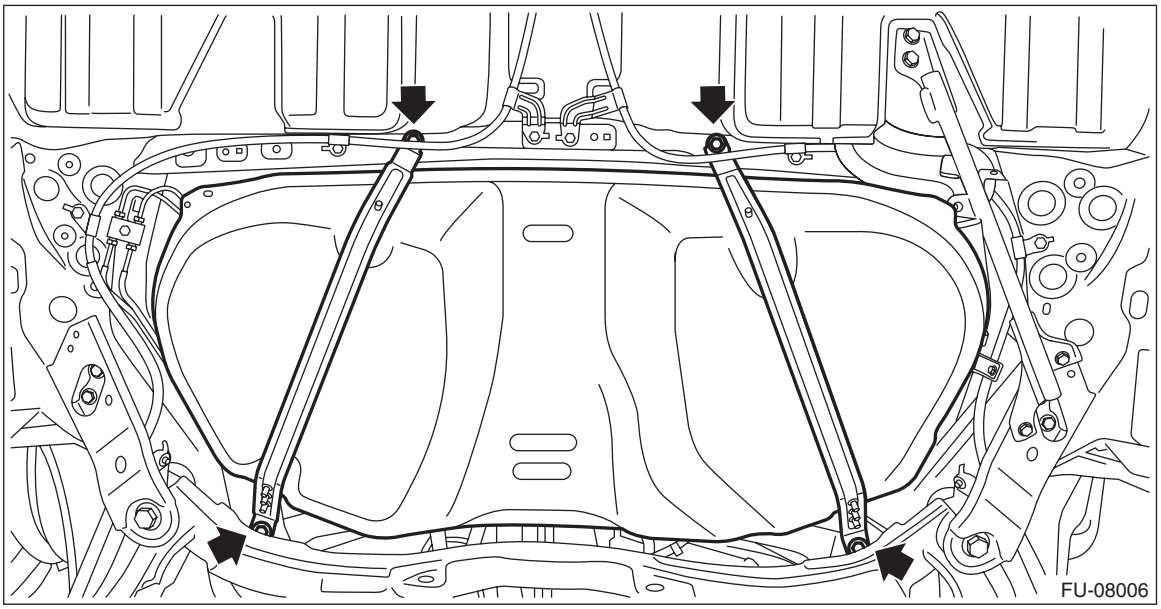

B: INSTALLATION

1) Support the fuel tank with a transmission jack, set the fuel tank in place, and temporarily tighten the bolts of the fuel tank band.

WARNING:
A helper is required to perform this work.

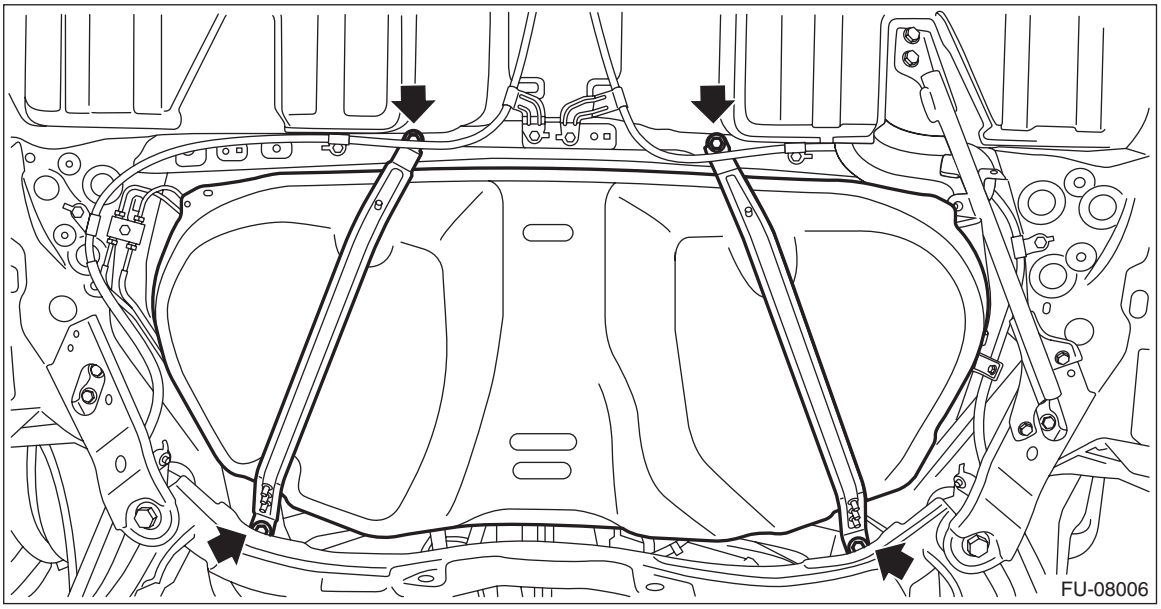

2) Tighten the bolts of the fuel tank band in the order shown in the figure.

Tightening torque:
33 N·m (3.4 kgf-m, 24.3 ft-lb)

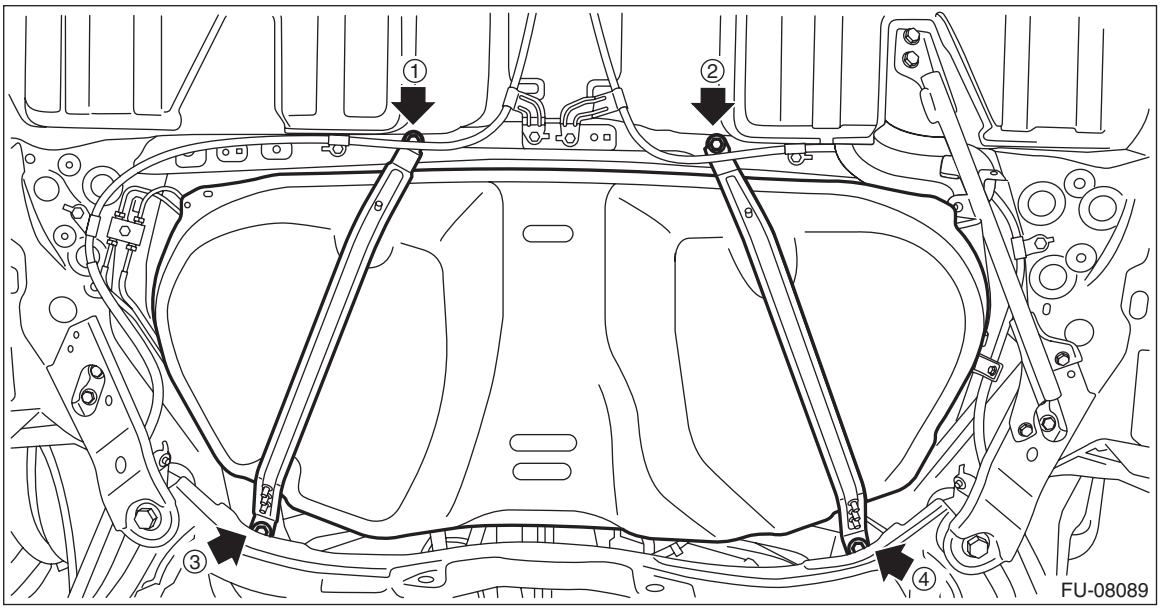

3) Install the purge tube to the tube clamp.

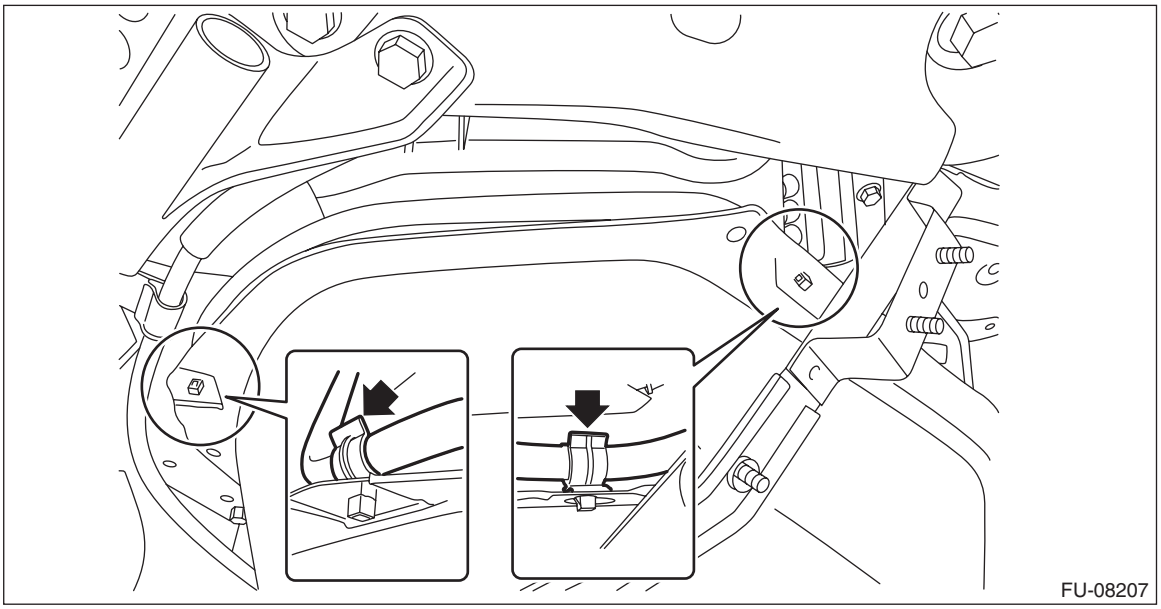

4) Connect the vent tube to the vent hose.

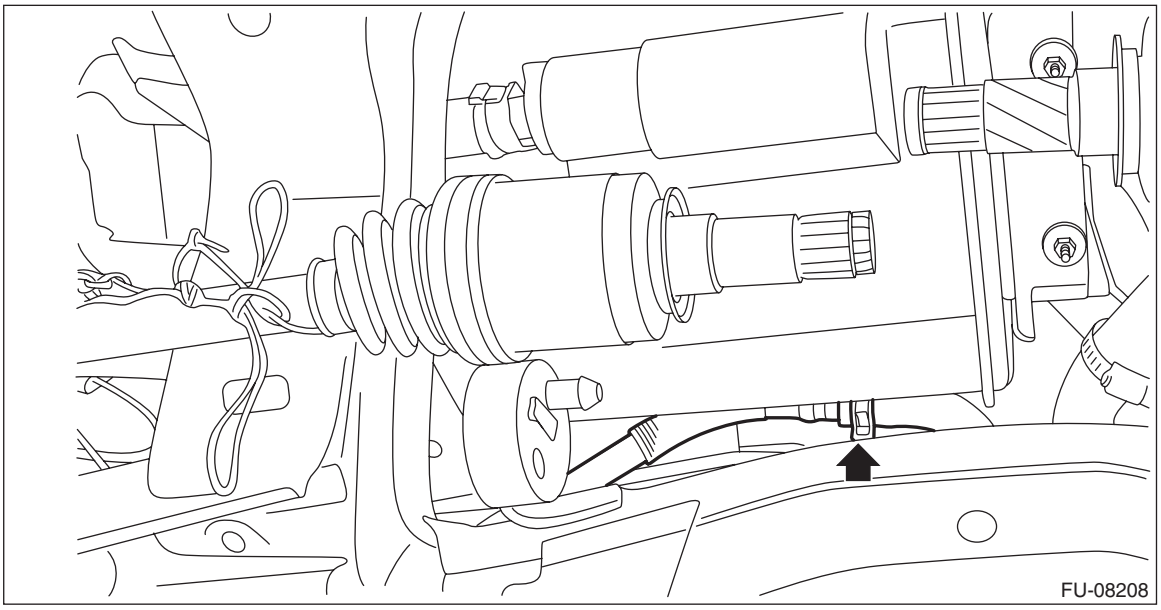

5) Install the heat shield cover and the stay - rear frame COMPL RH.

Tightening torque:
T1: 18 N·m (1.8 kgf-m, 13.3 ft-lb)
T2: 33 N·m (3.4 kgf-m, 24.3 ft-lb)

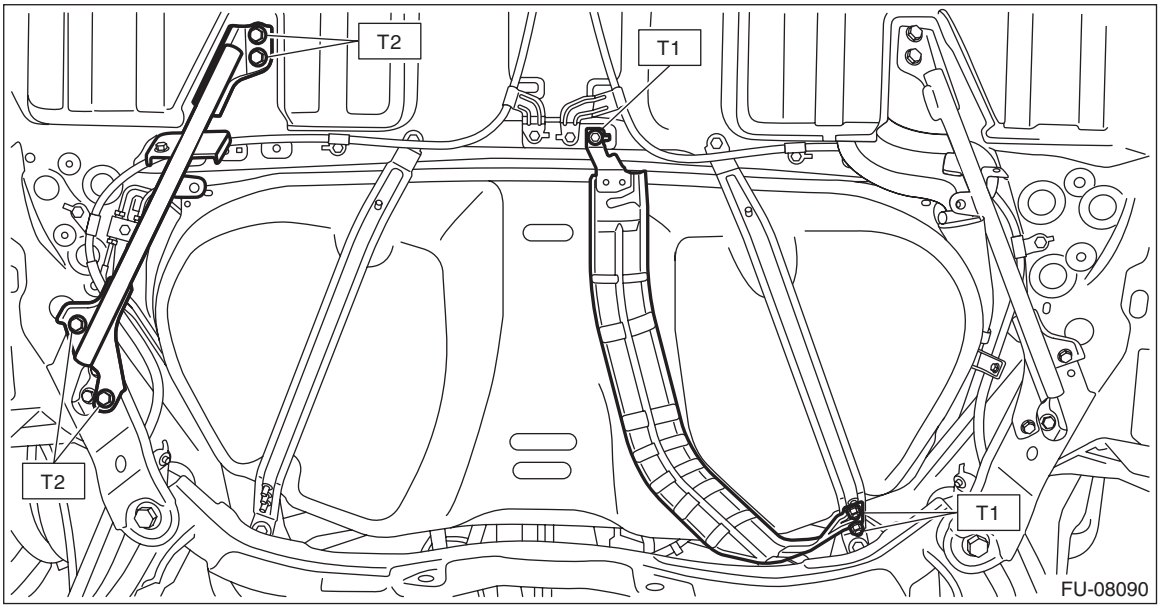

6) Securely insert the fuel filler hose (A) and evaporation hose (B) into the fuel filler pipe assembly until the hose end contacts the spool, then attach the clamp or clip as shown in the figure.

Tightening torque:
2.5 N·m (0.3 kgf-m, 1.8 ft-lb)

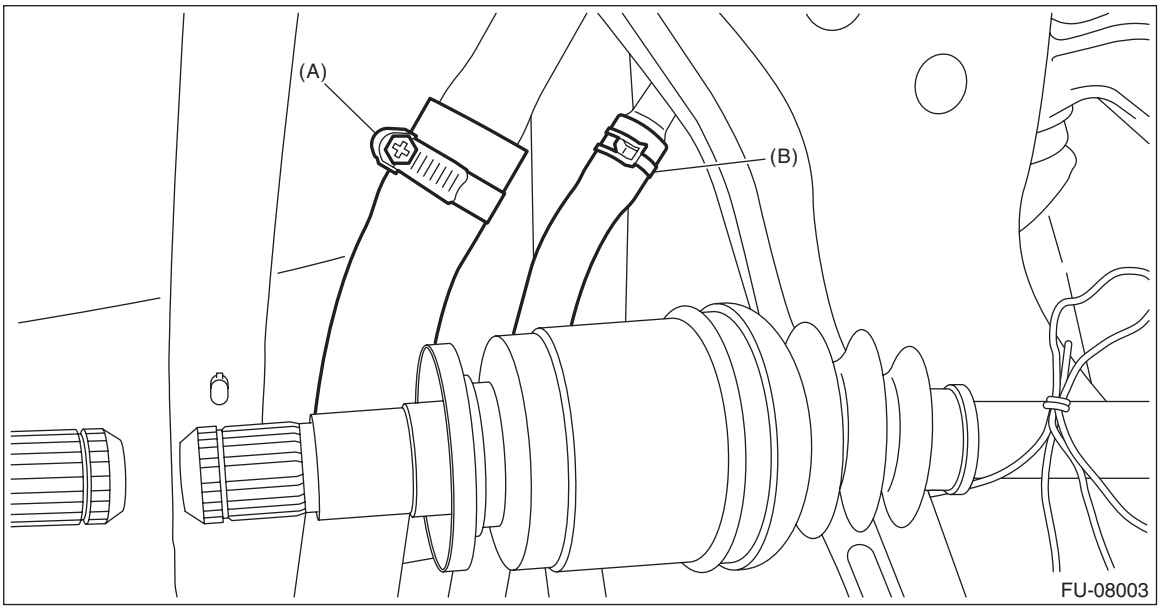

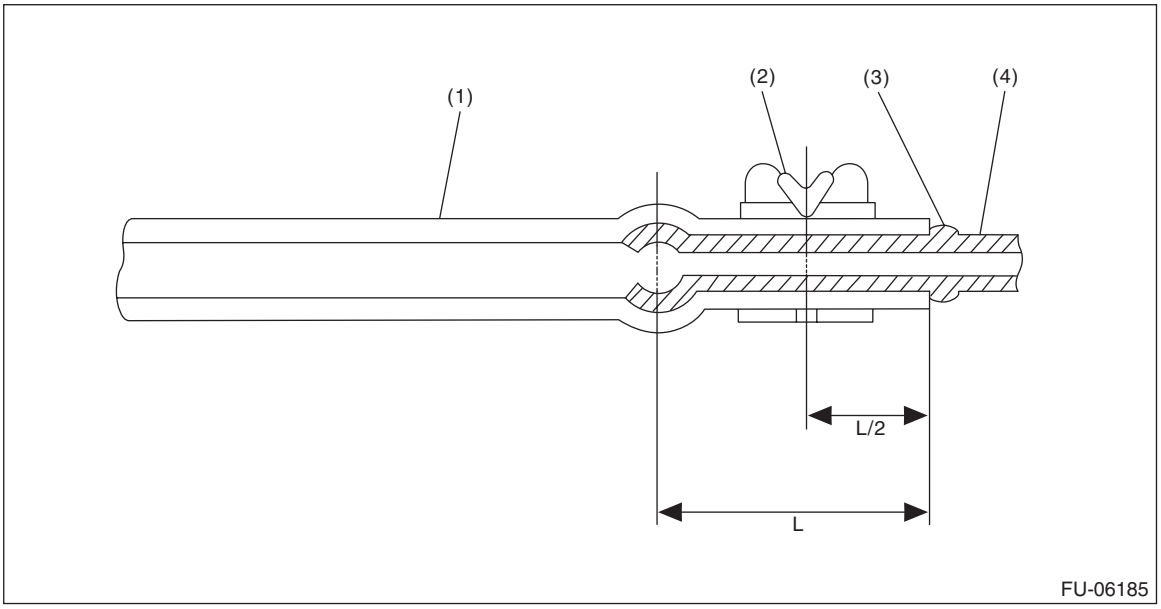

(1) Hose
(2) Clamp or clip
(3) Spool
(4) Pipe

7) Install the fuel tank protector. <Ref. to FU(H4DO(HEV))-104, INSTALLATION, Fuel Tank Protector.>
8) Install the rear differential. <Ref. to DI-42, INSTALLATION, Rear Differential (VA-type).>
9) Install the rear exhaust pipe and muffler. <Ref. to EX(H4DO(w/o HEV))-20, INSTALLATION, Rear Exhaust Pipe.> <Ref. to EX(H4DO(w/o HEV))-25, INSTALLATION, Muffler.>

10) Connect the quick connector of the fuel delivery tube.

CAUTION:
• Check that there is no damage or dust on the quick connector. If necessary, clean the seal surface of the pipe.
• When connecting the quick connector, make sure to insert the pipe all the way in before locking the slider.
• When it is difficult to lock the slider, check that the pipe is fully inserted.
• Make sure that the quick connector is securely connected.

NOTE:
Connect the quick connector as shown in the figure.

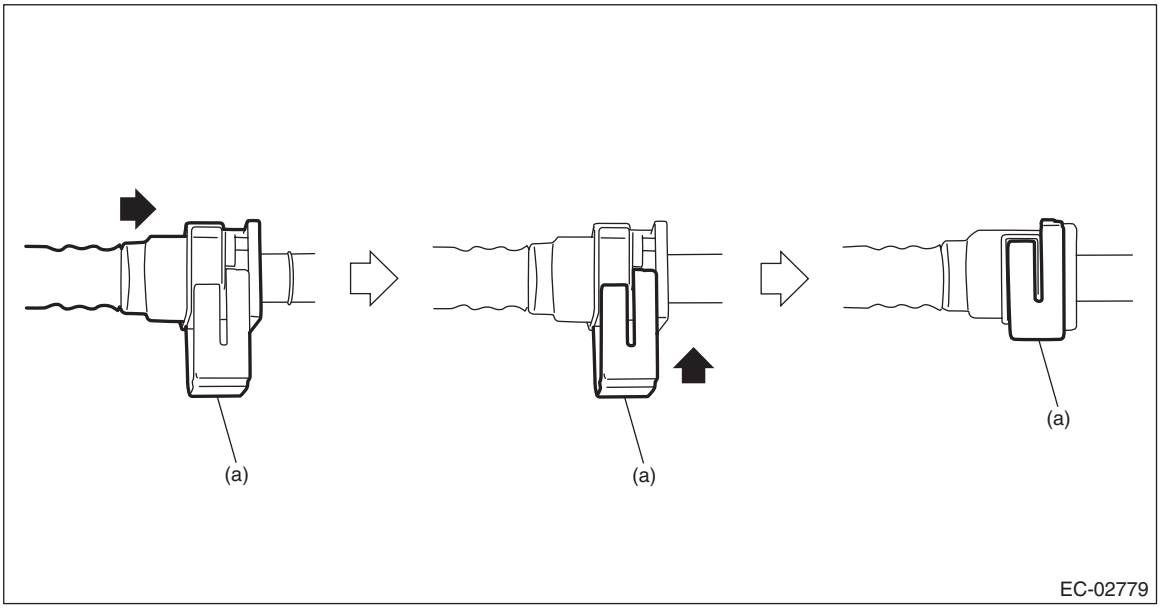

(a) Slider

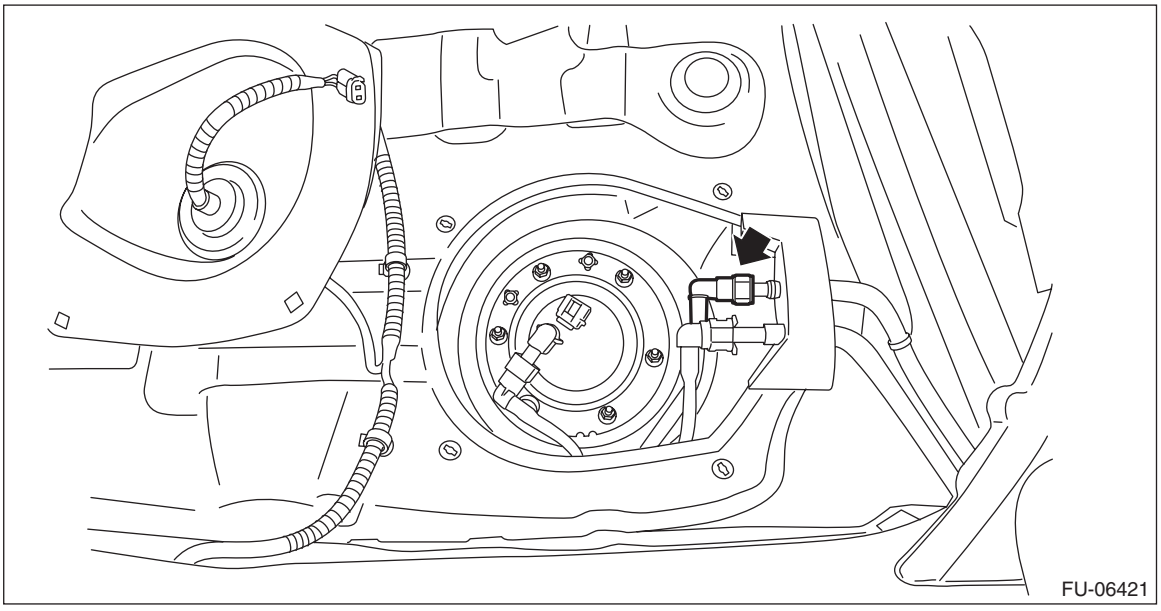

11) Connect the connector to the fuel sub level sensor.

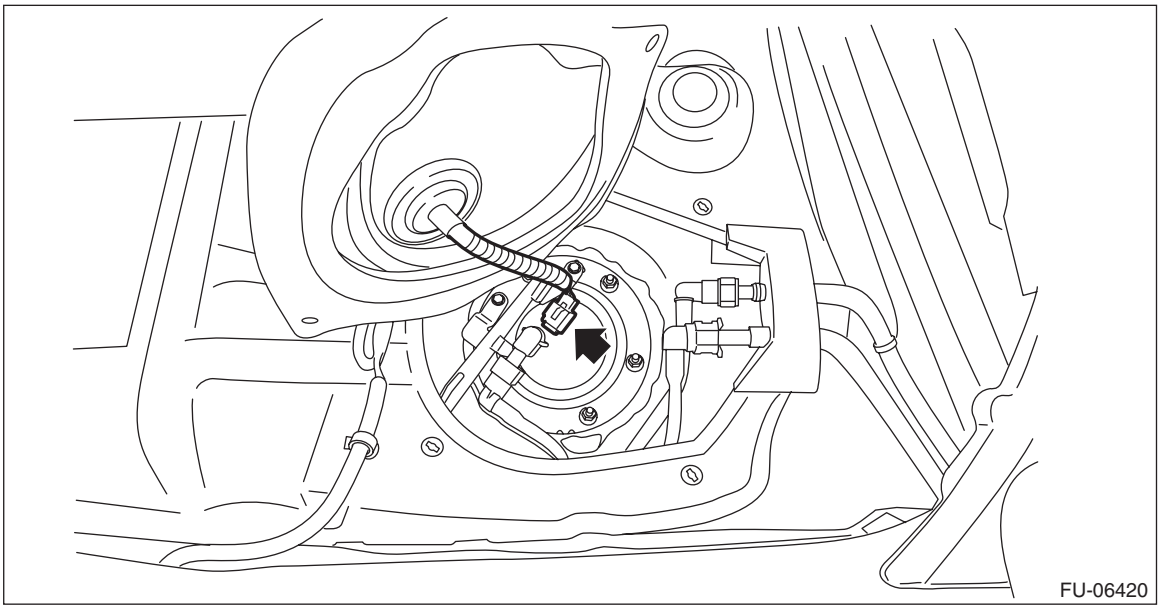

12) Install the service hole cover of fuel sub level sensor.

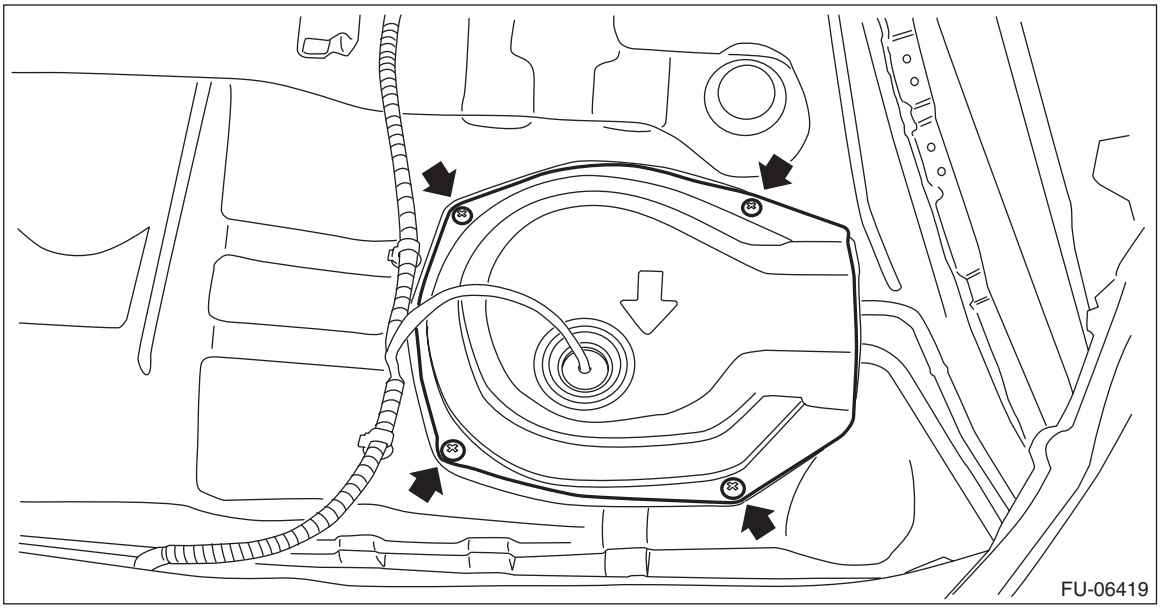

13) Connect the connector to the fuel pump.

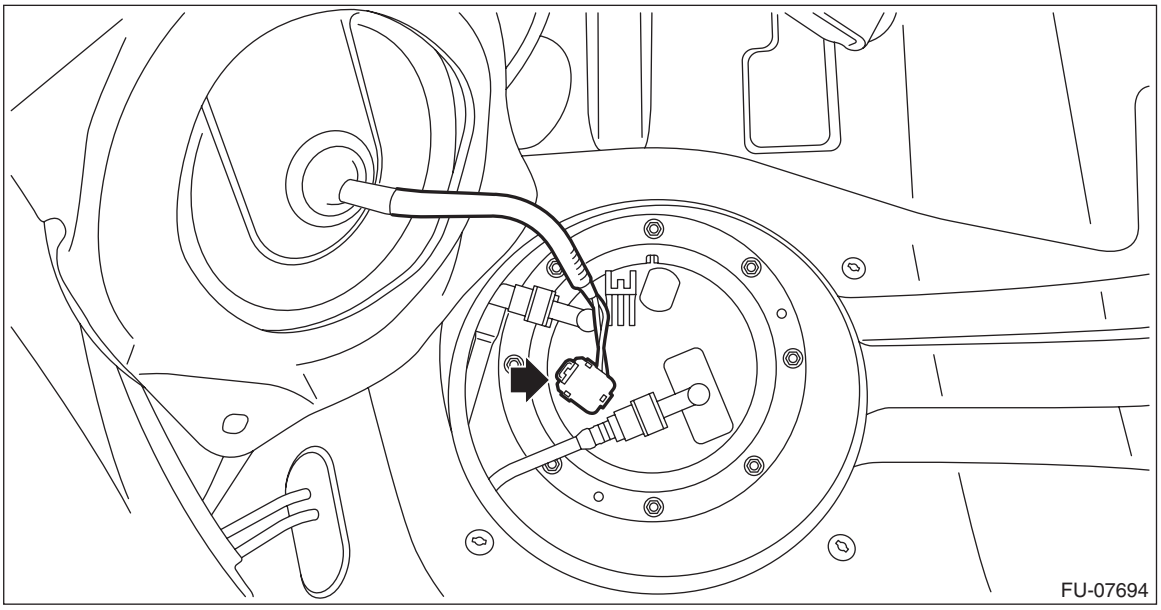

14) Install the service hole cover of fuel pump.

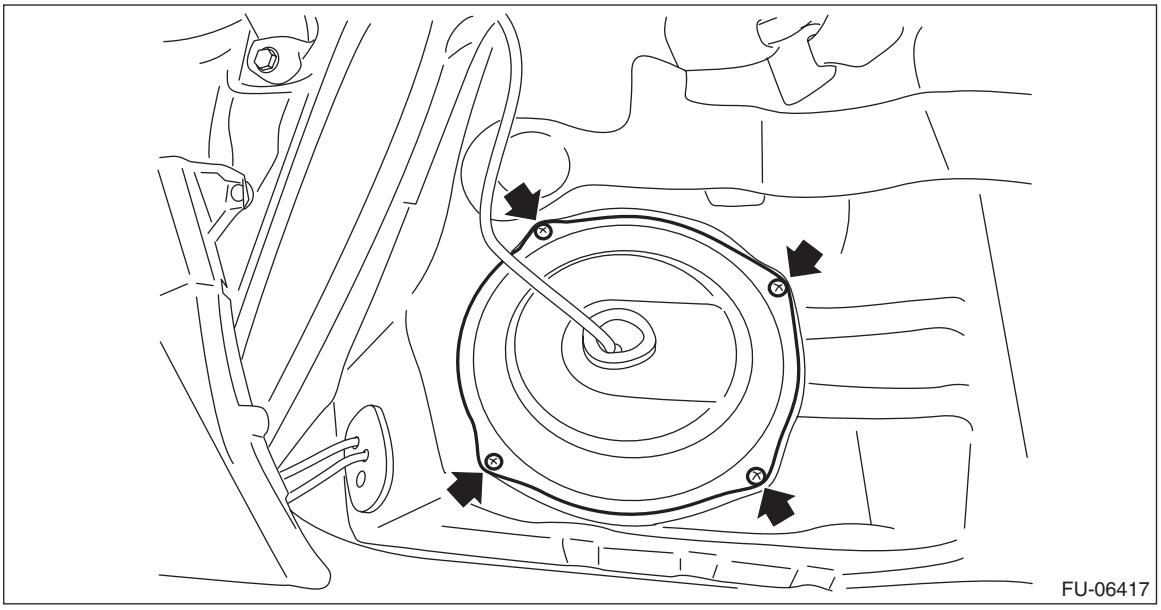

15) Install the rear seat cushion. <Ref. to SE-26, INSTALLATION, Rear Seat.>
16) Connect the battery ground terminal. <Ref. to NT-5, BATTERY, NOTE, Note.>

C: INSPECTION

1) Check that the fuel tank and fuel pipe have no deformation, cracks and other damages.
2) Check that the fuel hose and tube have no cracks, damage or loose part.

29.Fuel Filler Pipe

A: REMOVAL

WARNING:
Place “NO OPEN FLAMES” signs near the working area.

CAUTION:
Be careful not to spill fuel.
1) Release the fuel pressure. <Ref. to FU(H4DO(HEV))-98, RELEASING OF FUEL PRESSURE, PROCEDURE, Fuel.>
2) Drain fuel. <Ref. to FU(H4DO(HEV))-99, DRAINING FUEL (WITH SUBARU SELECT MONITOR), PROCEDURE, Fuel.>
3) Disconnect the ground cable from battery. <Ref. to NT-5, BATTERY, NOTE, Note.>

NOTE:
For the 12 volt engine restart battery, disconnect the ground terminal from 12V engine restart battery sensor.
4) Open the fuel filler lid and remove the fuel filler cap.
5) Turn the fuel filler pipe protector in the direction of the arrow to unlock and remove it.

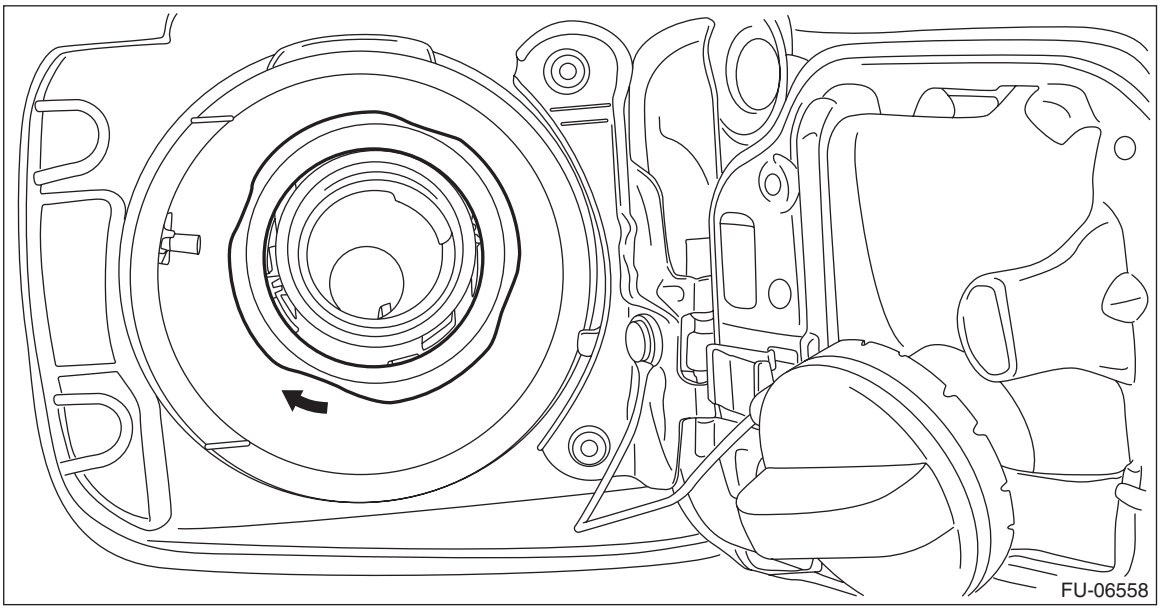

6) Remove the rear sub frame assembly. <Ref. to RS-9, REMOVAL, Rear Sub Frame.>
7) Remove the rear mud guard RH. <Ref. to EI-30, REMOVAL, Mud Guard.>

8) Disconnect the fuel filler hose (A) and evaporation hose (B) from the fuel filler pipe assembly.

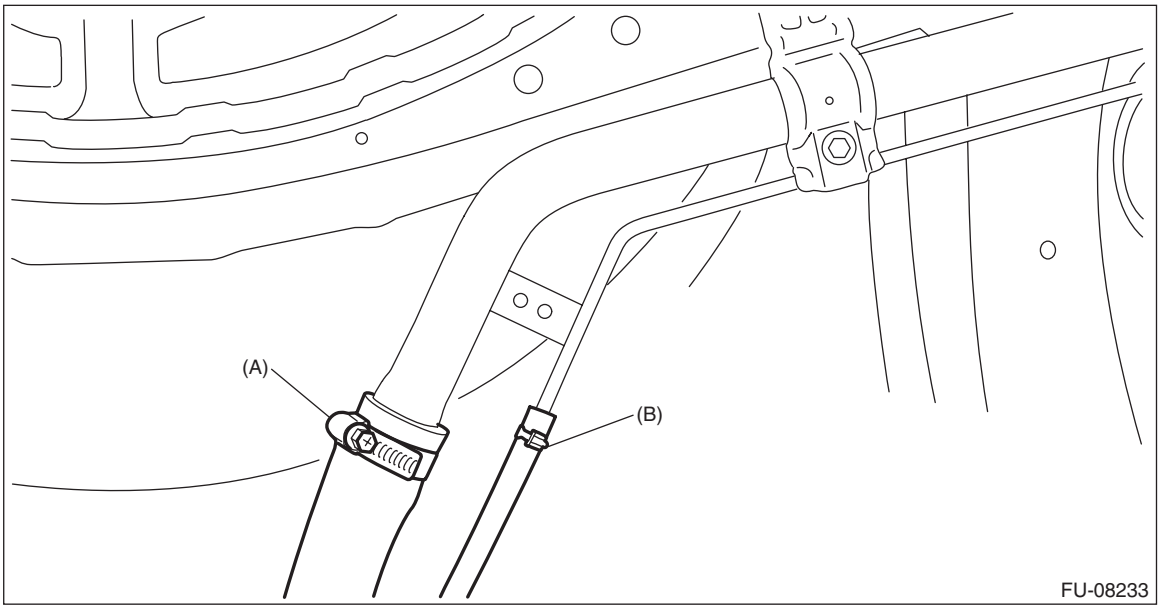

9) Remove the bolts and nuts which secure the fuel filler pipe assembly to the vehicle.

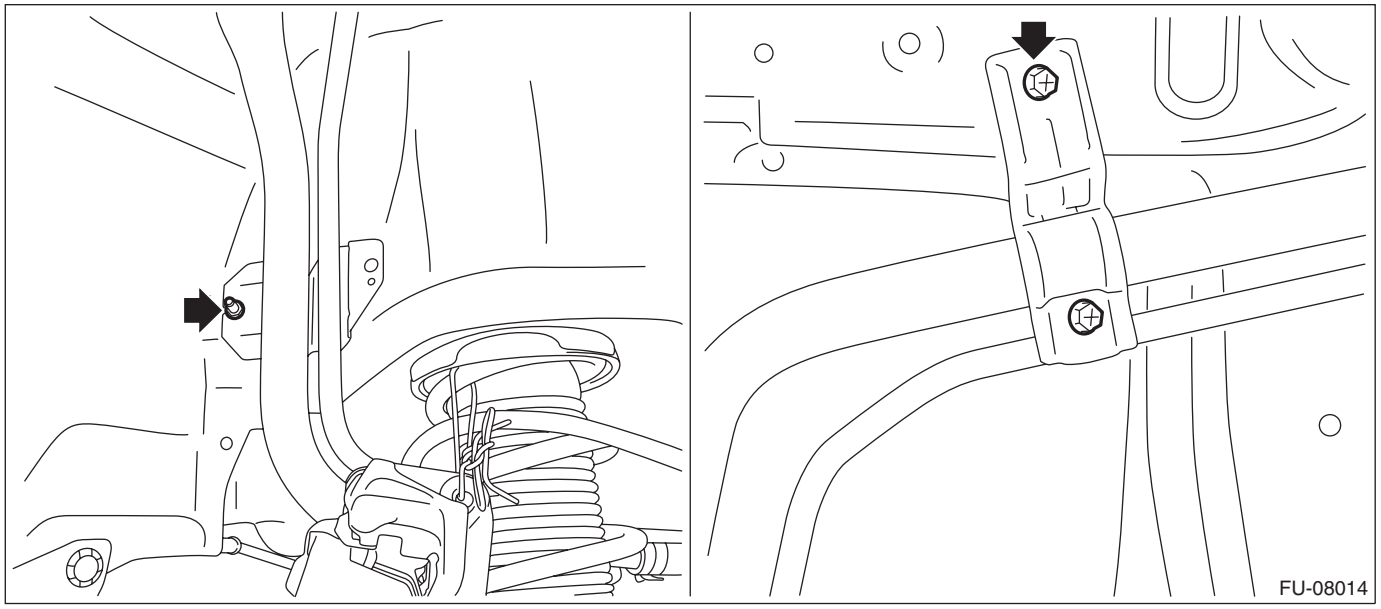

10) Remove the fuel filler pipe assembly from the underside of the vehicle.

B: INSTALLATION

1) Open the fuel filler lid.
2) Insert the fuel filler pipe assembly into the rubber saucer from inside of the rear fender.
3) Install the fuel filler pipe assembly to the vehicle.

Tightening torque:
7.5 N·m (0.8 kgf-m, 5.5 ft-lb)

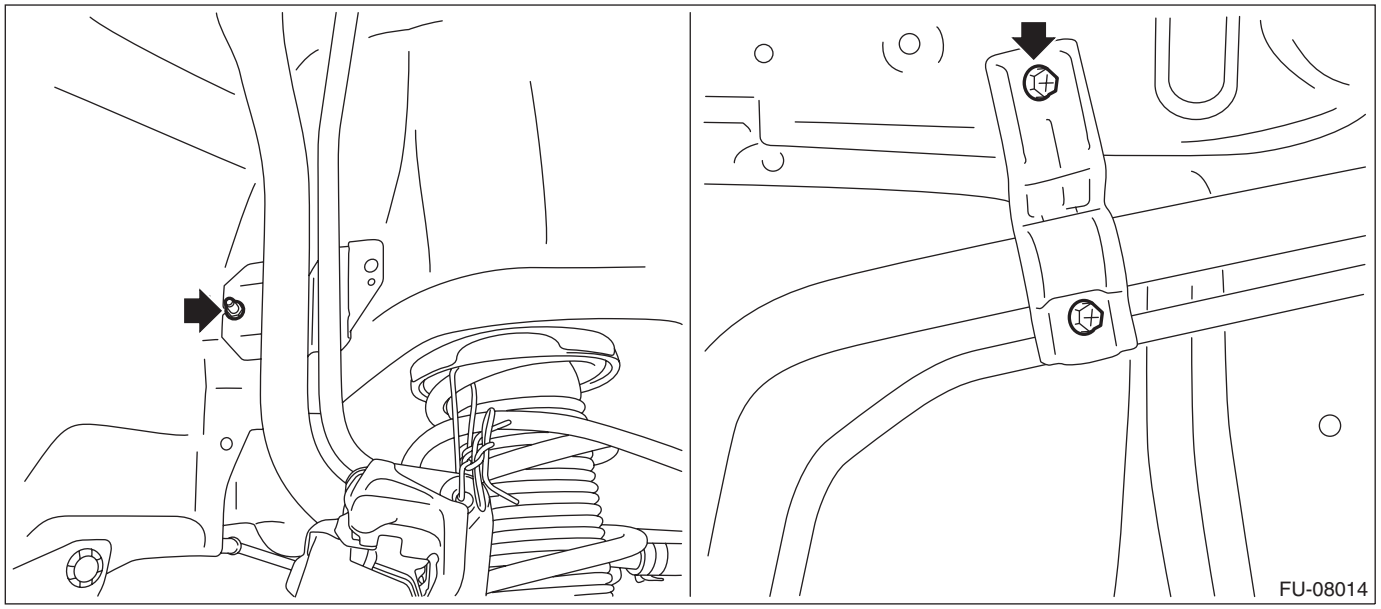

4) Securely insert the fuel filler hose (A) and evaporation hose (B) until the hose end contacts the spool, then attach the clamp or clip as shown in the figure.

Tightening torque:
2.5 N·m (0.3 kgf-m, 1.8 ft-lb)

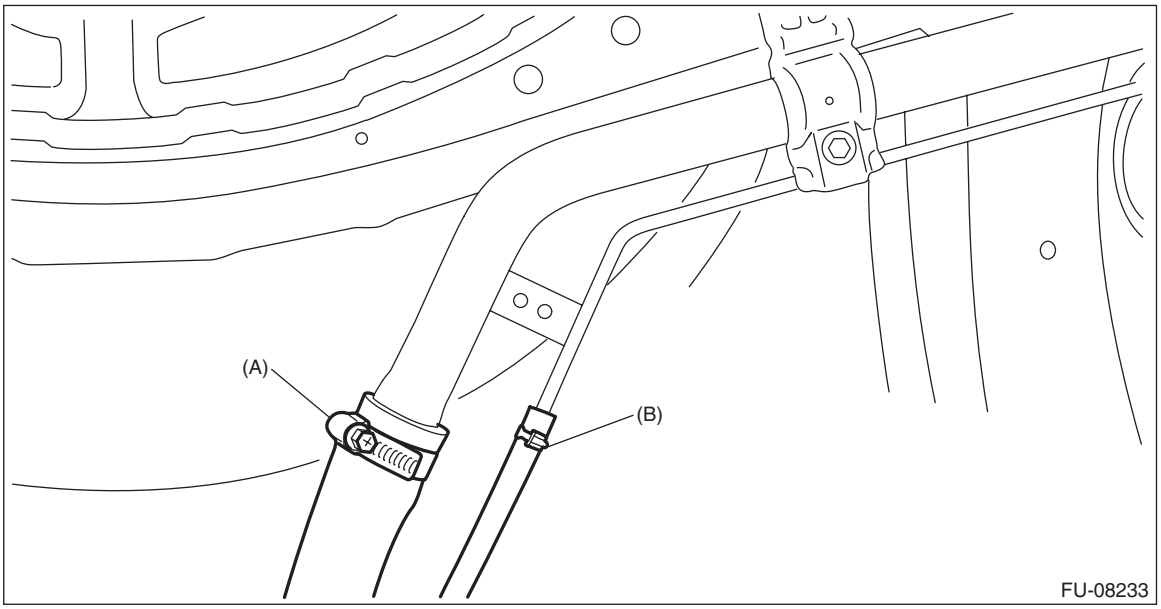

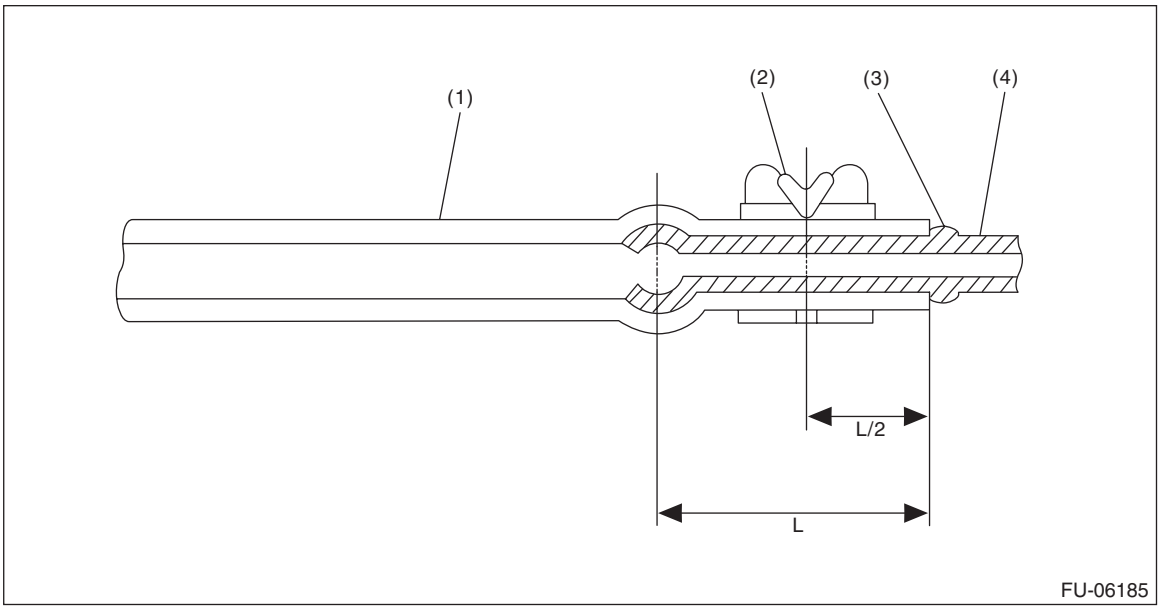

(1) Hose
(2) Clamp or clip
(3) Spool
(4) Pipe

5) Install the rear mud guard RH. <Ref. to EI-30, INSTALLATION, Mud Guard.>
6) Install the rear sub frame assembly. <Ref. to RS-15, INSTALLATION, Rear Sub Frame.>
7) Connect the battery ground terminal. <Ref. to NT-5, BATTERY, NOTE, Note.>
8) Inspect the wheel alignment and adjust if necessary. <Ref. to FS-7, Wheel Alignment.>
9) Perform reinitialization of the auto headlight beam leveler system. (Model with auto headlight beam leveler) <Ref. to LI-18, PROCEDURE, Auto Headlight Beam Leveler System.>
10) Adjust the steering angle sensor. <Ref. to VDC-21, ADJUSTMENT, VDC Control Module and Hydraulic Control Unit (VDCCM&H/U).>

C: INSPECTION

1) Check that the fuel filler pipe assembly has no deformation, cracks or other damages.
2) Check that the fuel hose has no cracks, damage or loose part.

30.Fuel Pump

A: REMOVAL

WARNING:
Place “NO OPEN FLAMES” signs near the working area.

CAUTION:
- **Be careful not to spill fuel.**
- **Catch the fuel from the tubes using a container or cloth.**
- **If the fuel gauge indicates that two thirds or more of the fuel is remaining, be sure to drain fuel before starting work to avoid the fuel to spill.**

NOTE:
Fuel pump assembly consists of fuel pump, fuel filter and fuel level sensor.
1) Release the fuel pressure. <Ref. to FU(H4DO(HEV))-98, RELEASING OF FUEL PRESSURE, PROCEDURE, Fuel.>
2) Drain fuel. <Ref. to FU(H4DO(HEV))-99, DRAINING FUEL (WITH SUBARU SELECT MONITOR), PROCEDURE, Fuel.>
3) Disconnect the ground cable from battery. <Ref. to NT-5, BATTERY, NOTE, Note.>

NOTE:
For the 12 volt engine restart battery, disconnect the ground terminal from 12V engine restart battery sensor.
4) Remove the rear seat cushion. <Ref. to SE-23, REMOVAL, Rear Seat.>
5) Remove the service hole cover of fuel pump.

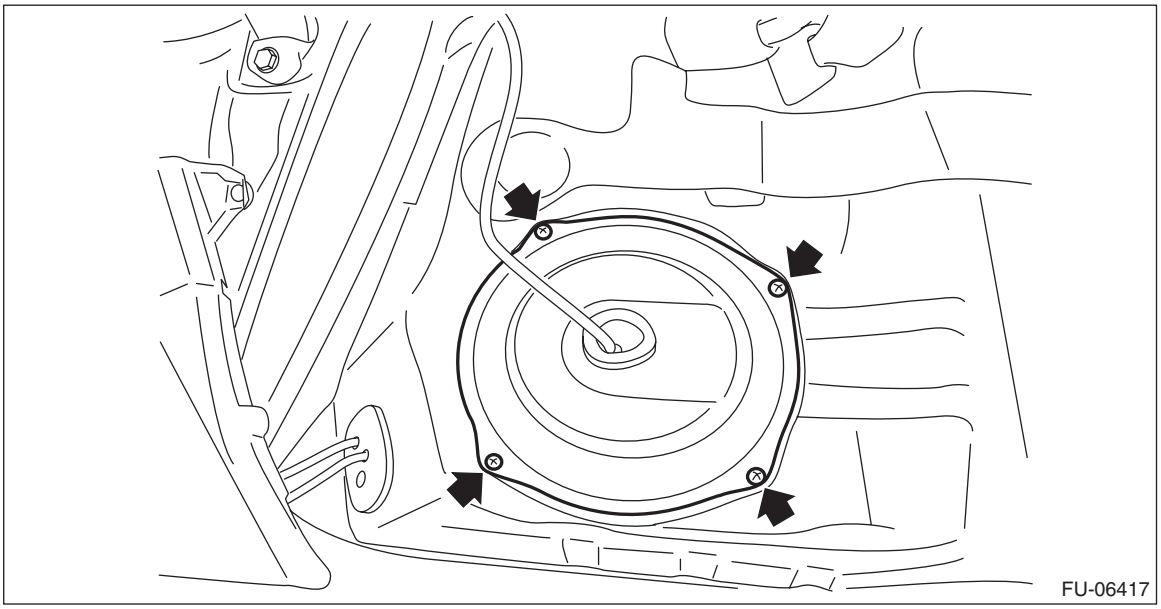

6) Disconnect connectors from the fuel pump, and move aside the service hole cover.

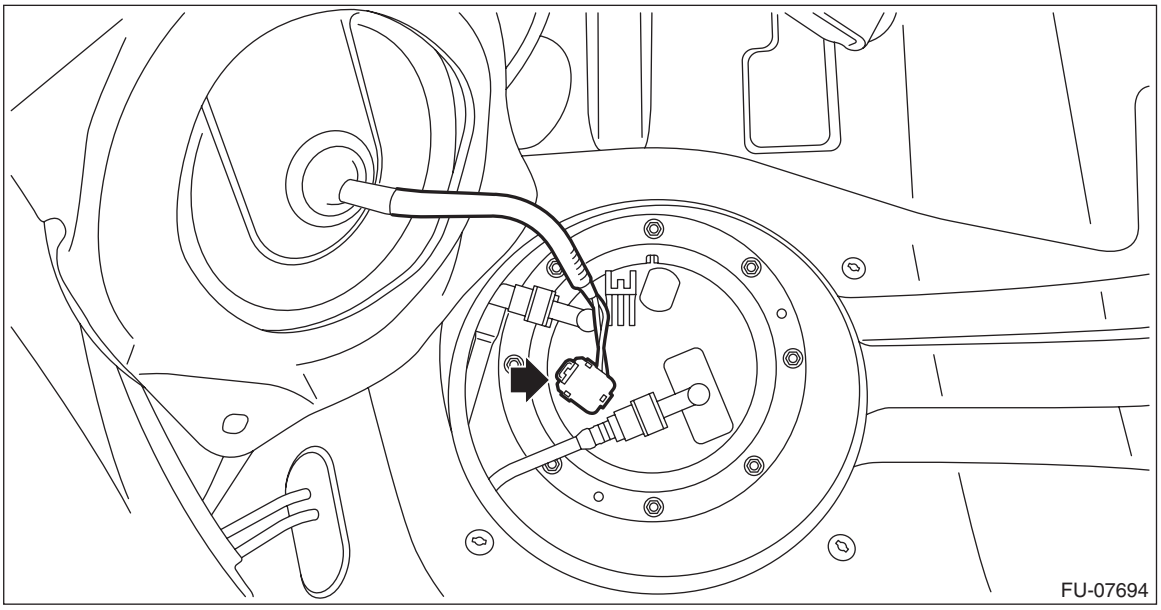

7) Disconnect the quick connector of fuel delivery tube and jet pump tube.

NOTE:
Disconnect the quick connector as shown in the figure.

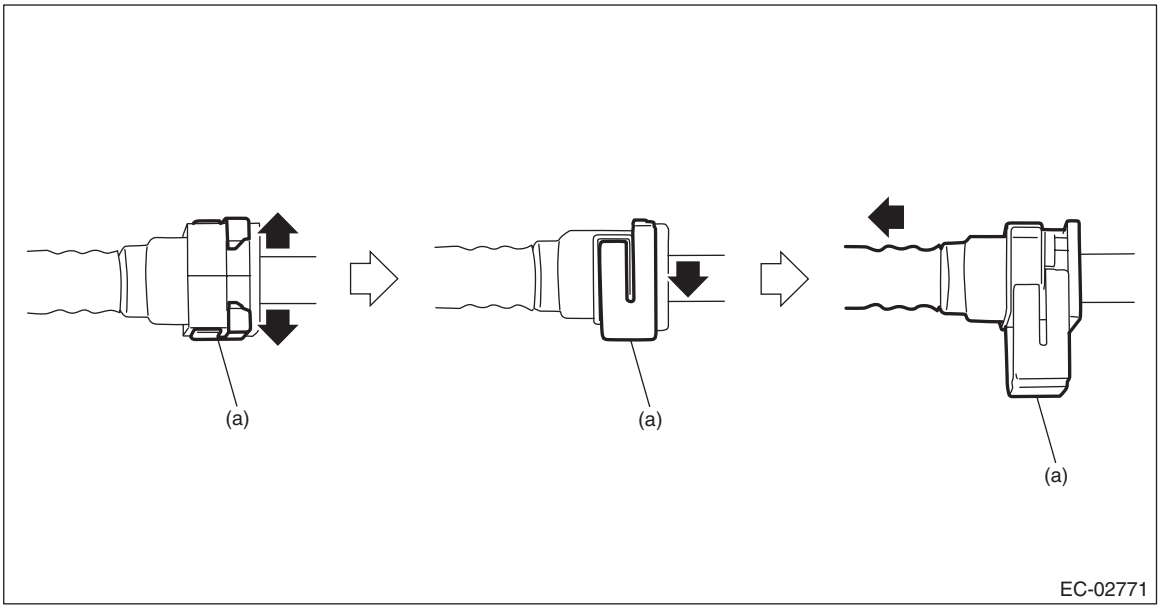

(a) Slider

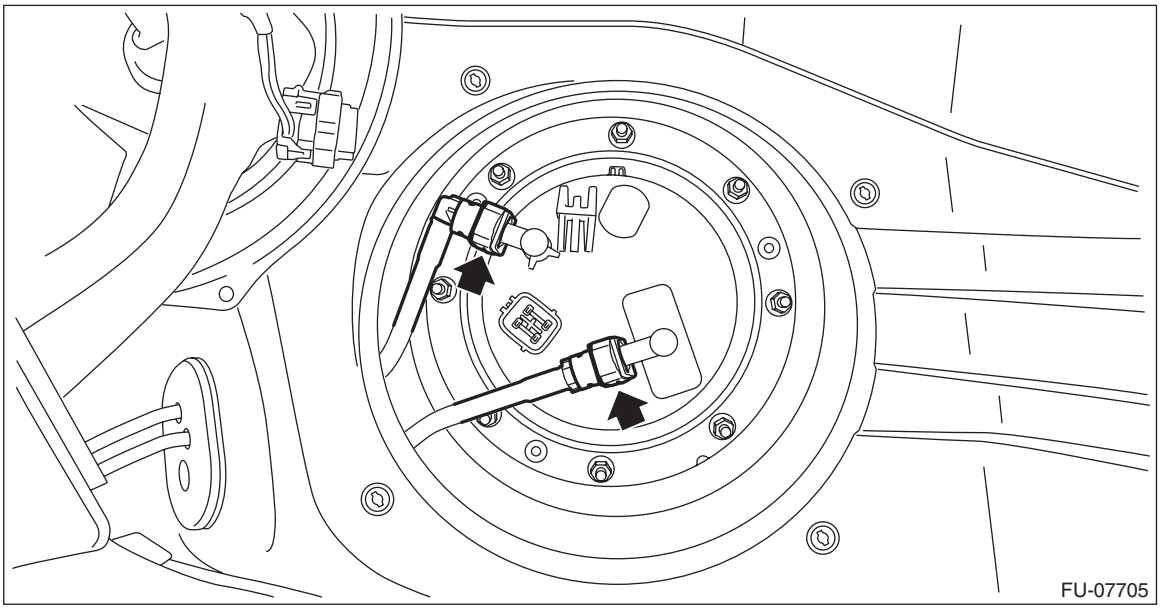

8) Remove the nuts which hold the fuel pump upper plate to the fuel tank.

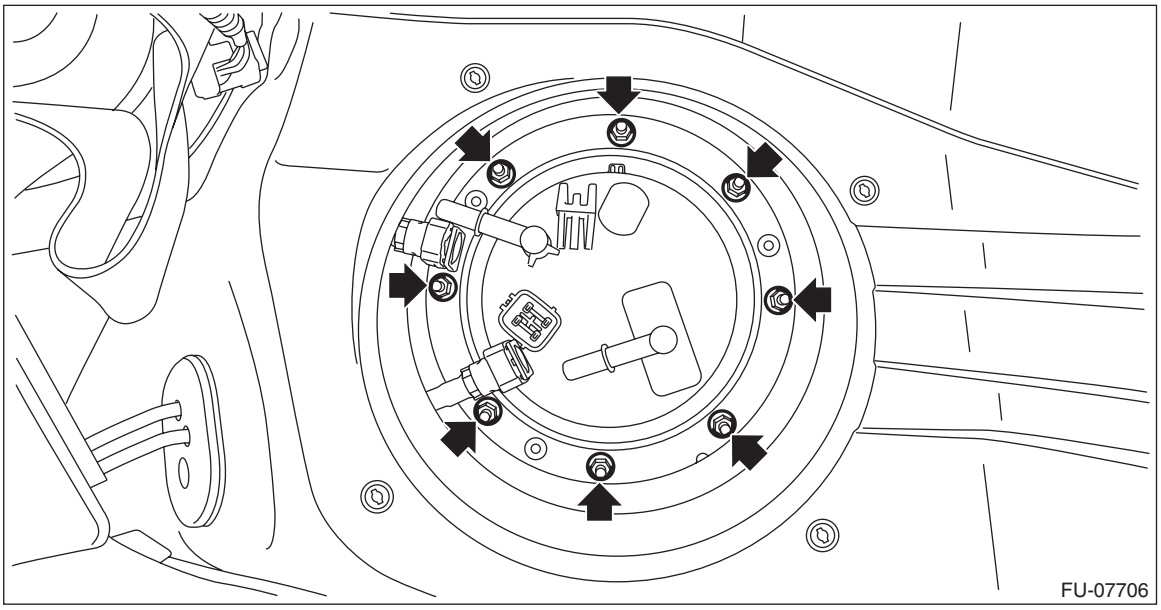

9) Remove the fuel pump assembly from the fuel tank.

CAUTION:
Be careful not to let the arm and float of fuel level sensor contact the fuel tank.

B: INSTALLATION

Install in the reverse order of removal while being careful of the following.

CAUTION:
Set the arm and float of the fuel level sensor while paying attention to prevent them from contacting the fuel tank. If the arm of the fuel level sensor is bent, the fuel gauge may not read correctly.

- Make sure the sealing portion is free from fuel or foreign matter before installation.
- Align protrusion (A) of the gasket to the position shown in the figure.
- Align the protrusion (C) of the fuel pump upper plate cushion with the protrusion (C) of fuel pump assembly.
- Align the protrusion (C) of fuel pump upper plate cushion with the cutout on the fuel pump upper plate.
- Insert the protrusion (B) of gasket to the fuel pump upper plate. (3 places)
- Tighten the nuts to the specified torque in the order as shown in the figure.

NOTE:
- Use a new gasket.

Tightening torque:
4.4 N·m (0.4 kgf-m, 3.2 ft-lb)

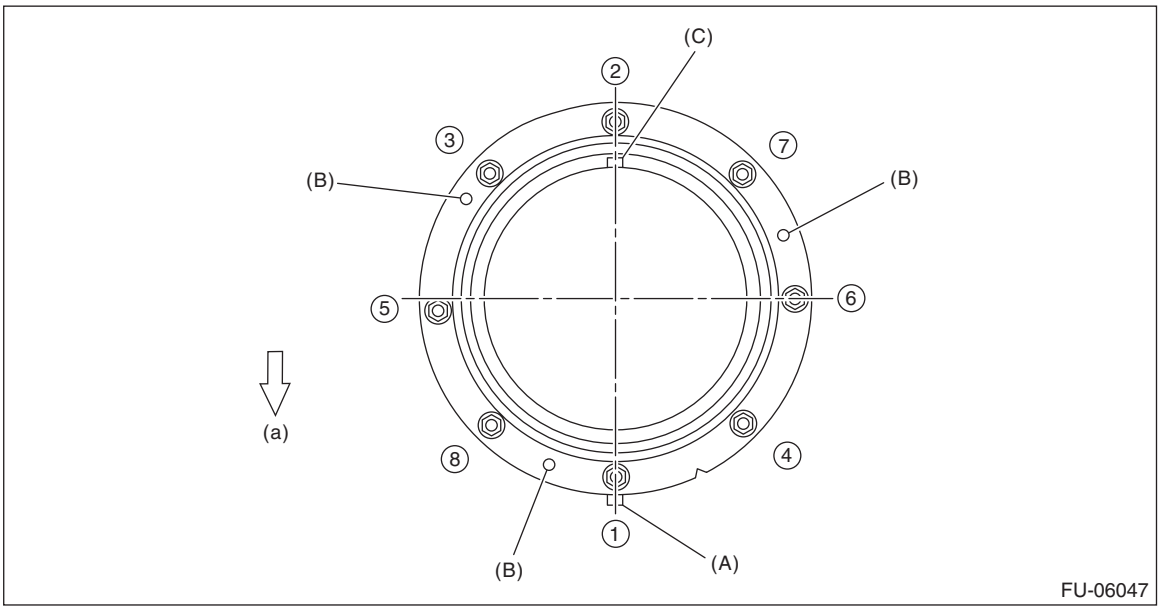

(a) Front side of vehicle

- Connect the quick connector as shown in the figure.

CAUTION:
• Check that there is no damage or dust on the quick connector. If necessary, clean the seal surface of the pipe.
• When connecting the quick connector, make sure to insert the pipe all the way in before locking the slider.
• When it is difficult to lock the slider, check that the pipe is fully inserted.

- **Make sure that the quick connector is securely connected.**

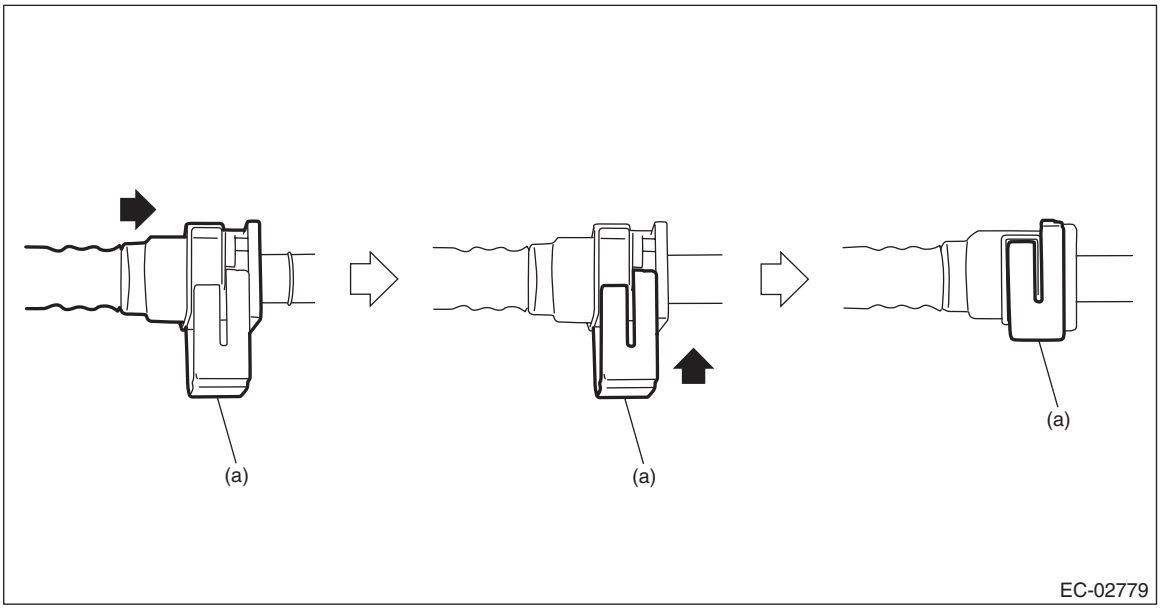

(a) Slider

C: INSPECTION

1) Check that the fuel pump has no deformation, cracks or other damages.
2) Connect the battery positive terminal to terminal No. 3 and the battery ground terminal to terminal No. 4, and inspect the fuel pump operation.

WARNING:
- **Wipe off fuel completely.**
- **Keep the battery as far apart from fuel pump as possible.**
- **Do not run the fuel pump for a long time under non-load condition.**

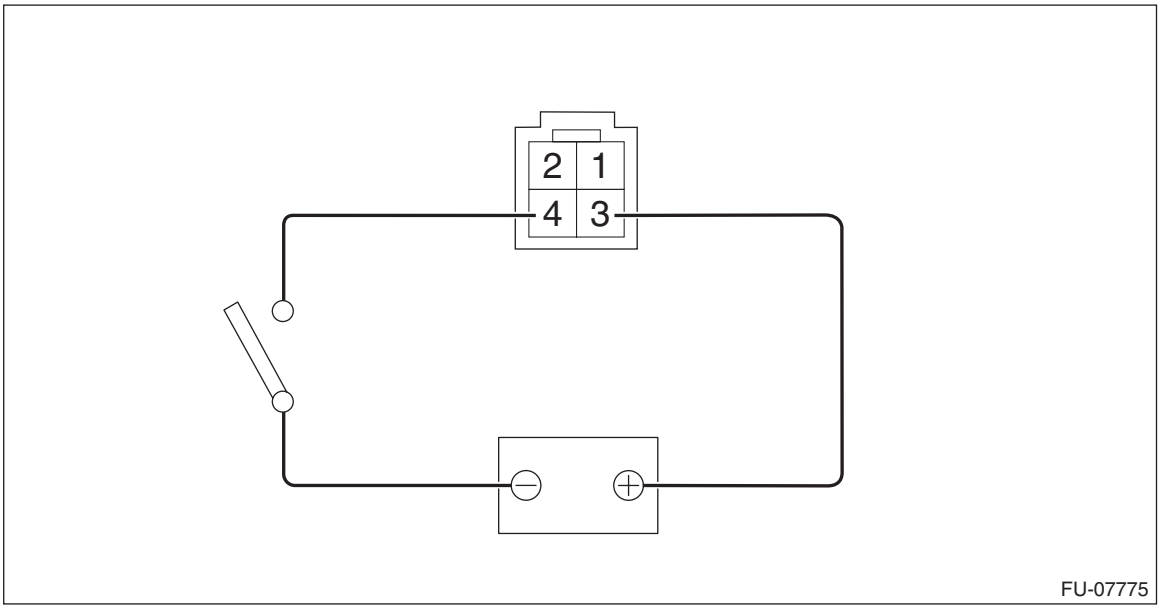

31.Fuel Level Sensor

A: REMOVAL

WARNING:
Place “NO OPEN FLAMES” signs near the working area.

CAUTION:
- **Be careful not to spill fuel.**
- **If the fuel gauge indicates that two thirds or more of the fuel is remaining, be sure to drain fuel before starting work to avoid the fuel to spill.**

NOTE:
The fuel level sensor is built in fuel pump assembly.
1) Remove the fuel pump assembly. <Ref. to FU(H4DO(HEV))-122, REMOVAL, Fuel Pump.>
2) Disconnect the fuel level sensor connector (A), and pull out the connector cable and fuel level sensor harness from the clip.

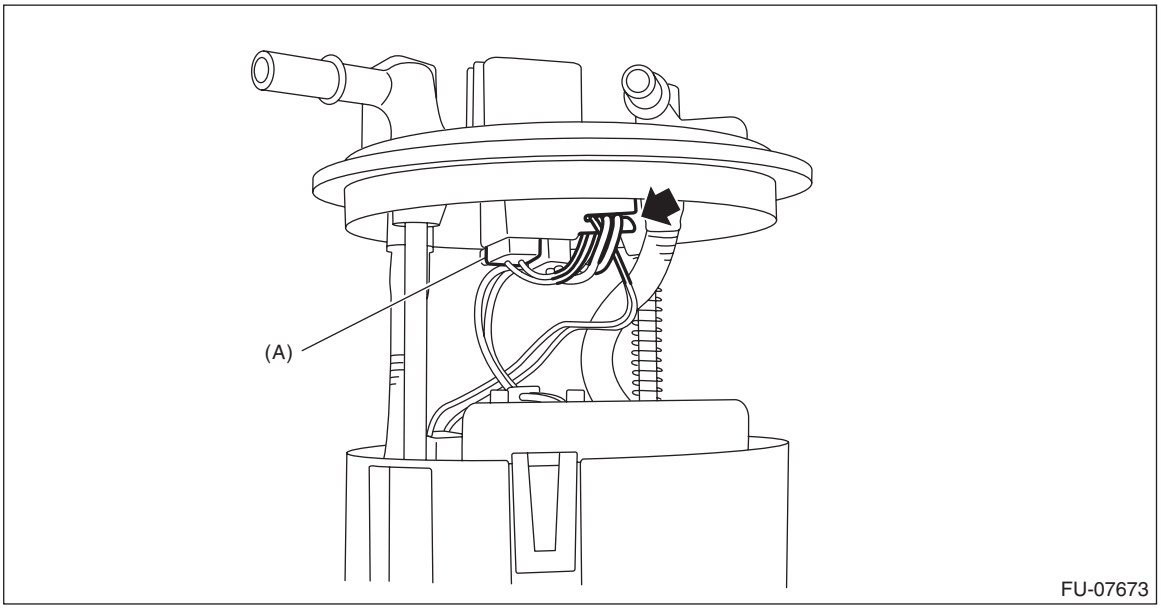

3) While pressing the claw (A) of the fuel level sensor, slide the fuel level sensor in the direction of the arrow, and remove the fuel level sensor.

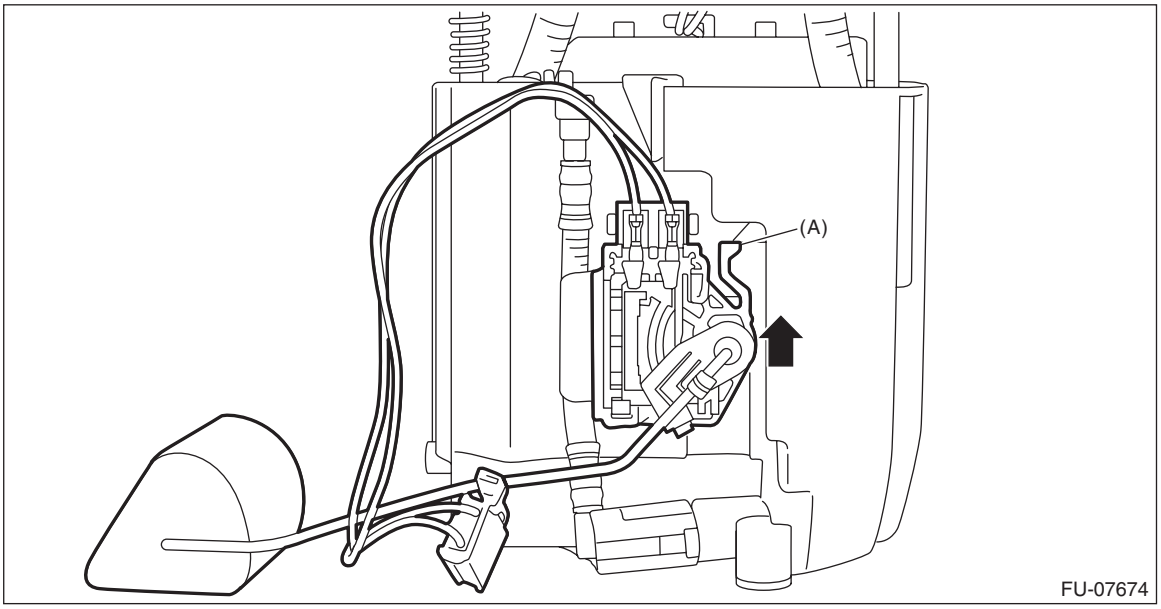

B: INSTALLATION

Install in the reverse order of removal.

CAUTION:
Be sure to install the fuel level sensor harness to the clip first, then install the connector cable. Otherwise, malfunction may occur.

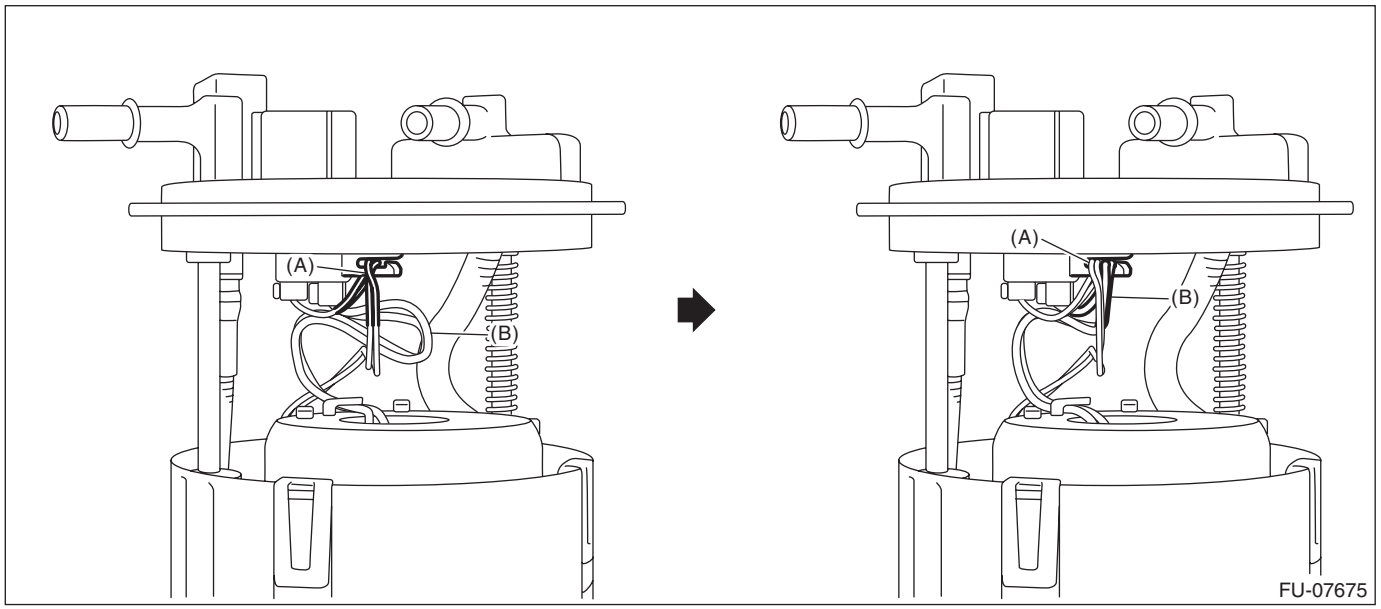

(A) Fuel level sensor harness (B) Connector cable

C: INSPECTION

1) Check that the fuel level sensor has no damage.
2) Measure the fuel level sensor float position.

NOTE:
When inspecting the fuel level sensor, perform the work with the sensor installed to the fuel pump.

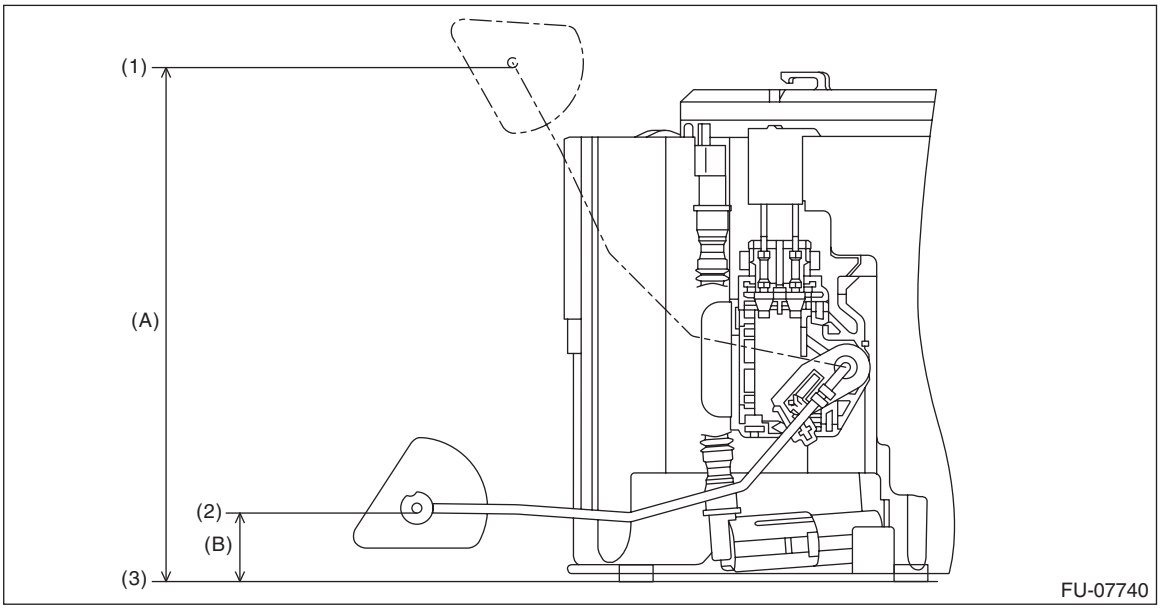

(1) FULL (2) EMPTY (3) Fuel tank seating surface

Float position	Standard
FULL to Fuel tank seating surface (A)	133.0±4 mm (5.236±0.157 in)
EMPTY to Fuel tank seating surface (B)	21.6±4 mm (0.850±0.157 in)

3) Check the resistance between fuel level sensor terminals by the connector on top of the fuel pump.

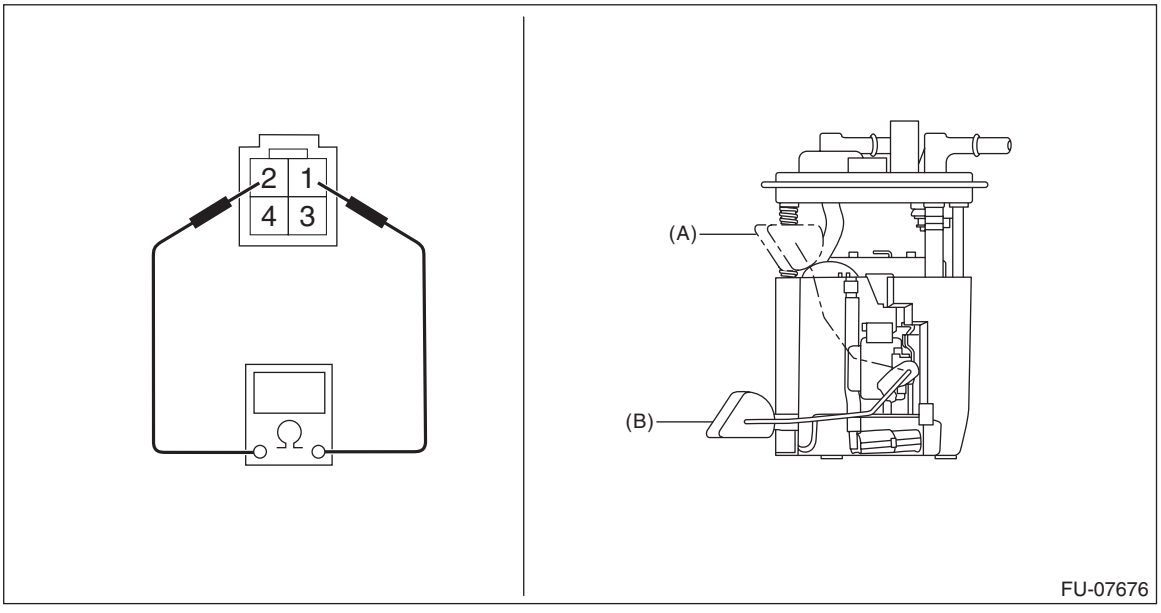

Float position	Terminal No.	Standard
FULL (A)	1 and 2	8.7±1.0 Ω
EMPTY (B)		139.1±2.0 Ω

32.Fuel Sub Level Sensor

A: REMOVAL

WARNING:
Place “NO OPEN FLAMES” signs near the working area.

CAUTION:
- **Be careful not to spill fuel.**
- **Catch the fuel from the tubes using a container or cloth.**
- **If the fuel gauge indicates that two thirds or more of the fuel is remaining, be sure to drain fuel before starting work to avoid the fuel to spill.**

1) Release the fuel pressure. <Ref. to FU(H4DO(HEV))-98, RELEASING OF FUEL PRESSURE, PROCEDURE, Fuel.>
2) Drain fuel. <Ref. to FU(H4DO(HEV))-99, DRAINING FUEL (WITH SUBARU SELECT MONITOR), PROCEDURE, Fuel.>
3) Disconnect the ground cable from battery. <Ref. to NT-5, BATTERY, NOTE, Note.>

NOTE:
For the 12 volt engine restart battery, disconnect the ground terminal from 12V engine restart battery sensor.
4) Remove the rear seat cushion. <Ref. to SE-23, REMOVAL, Rear Seat.>
5) Remove the service hole cover of fuel sub level sensor.

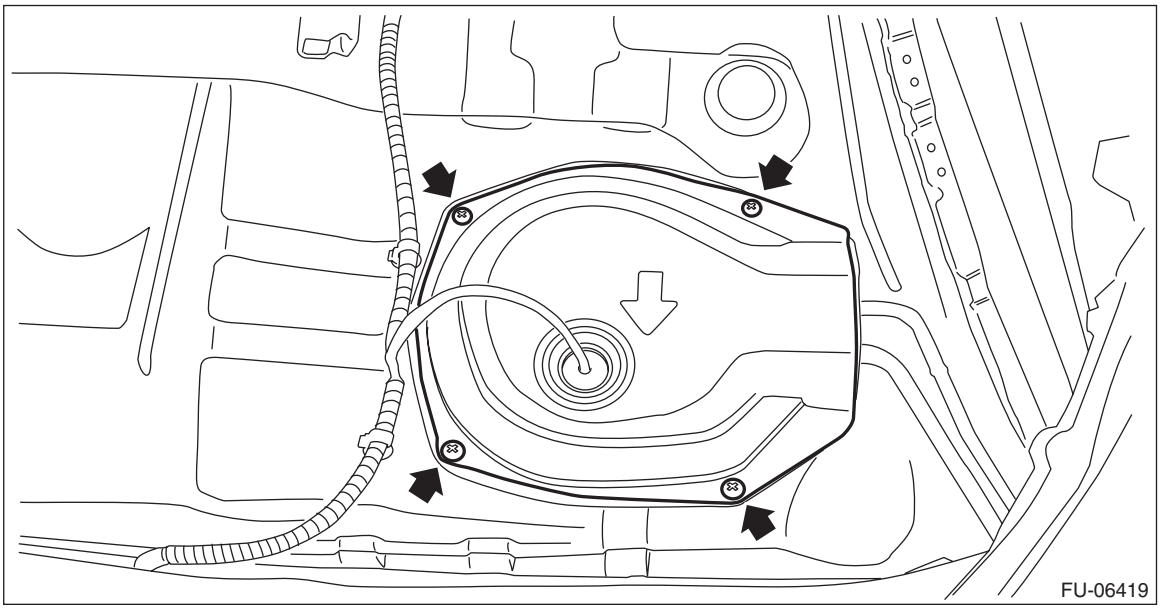

6) Disconnect the connector from the fuel sub level sensor, and move aside the service hole cover.

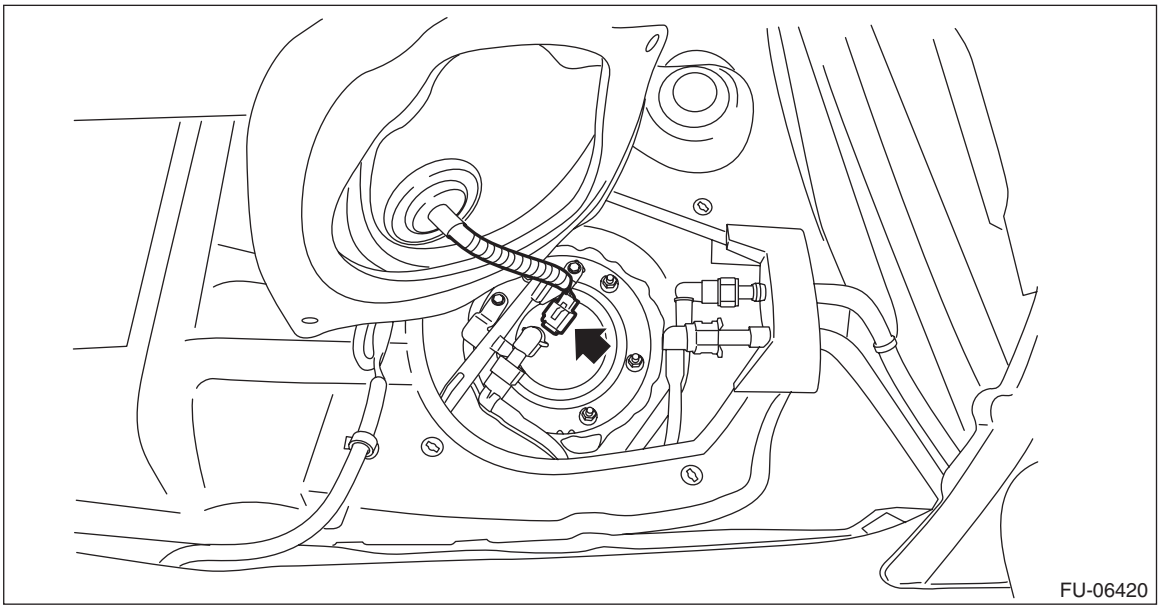

7) Disconnect the quick connector of the jet pump tube.

NOTE:
Disconnect the quick connector as shown in the figure.

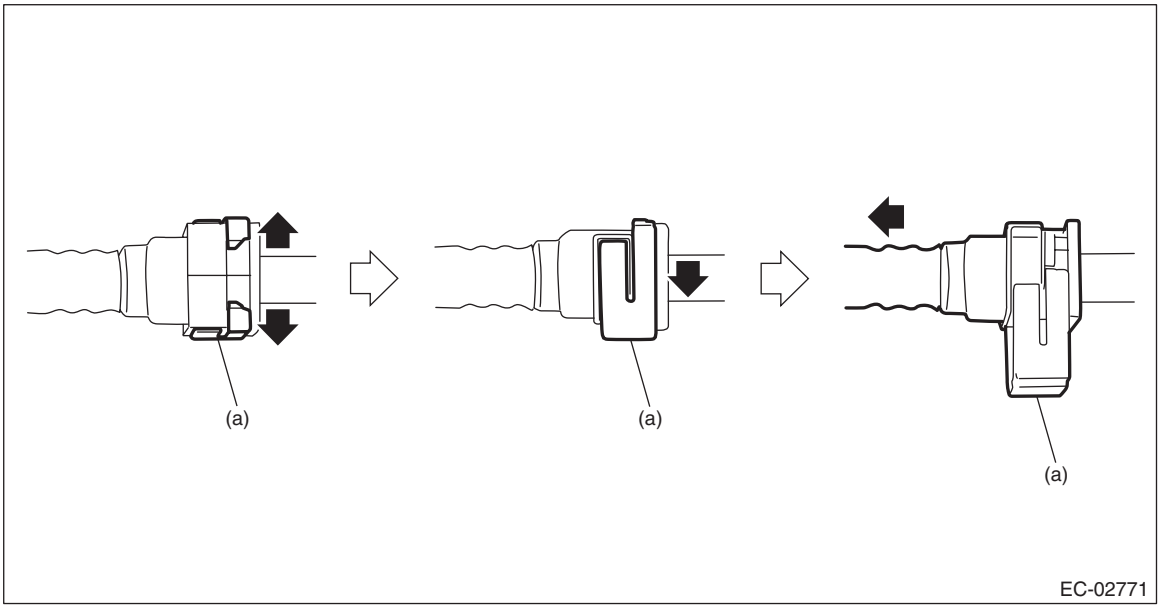

(a) Slider

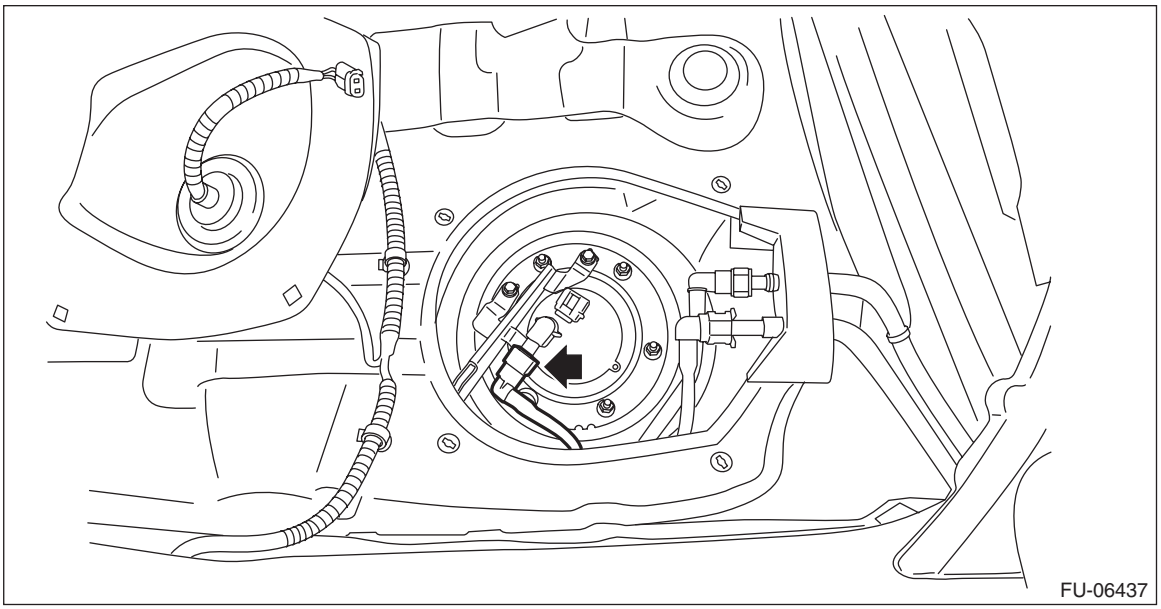

8) Remove the fuel sub level sensor protector, and remove the rubber cap (A) from nut.

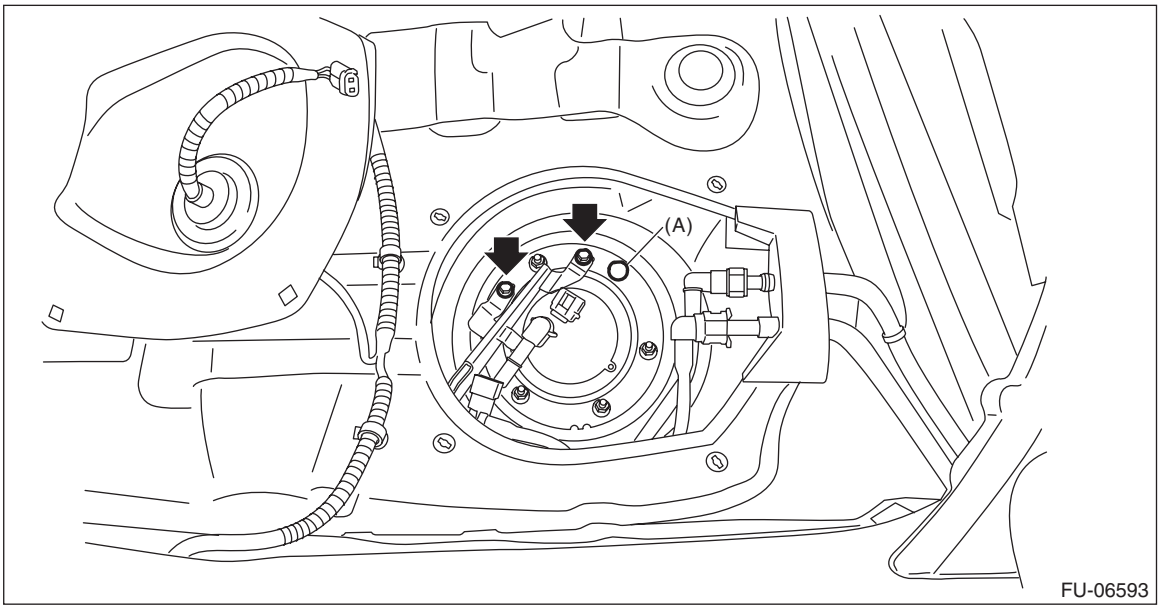

9) Remove the bolts and nuts which hold fuel sub level sensor protector and fuel sub level sensor upper plate to the fuel tank.

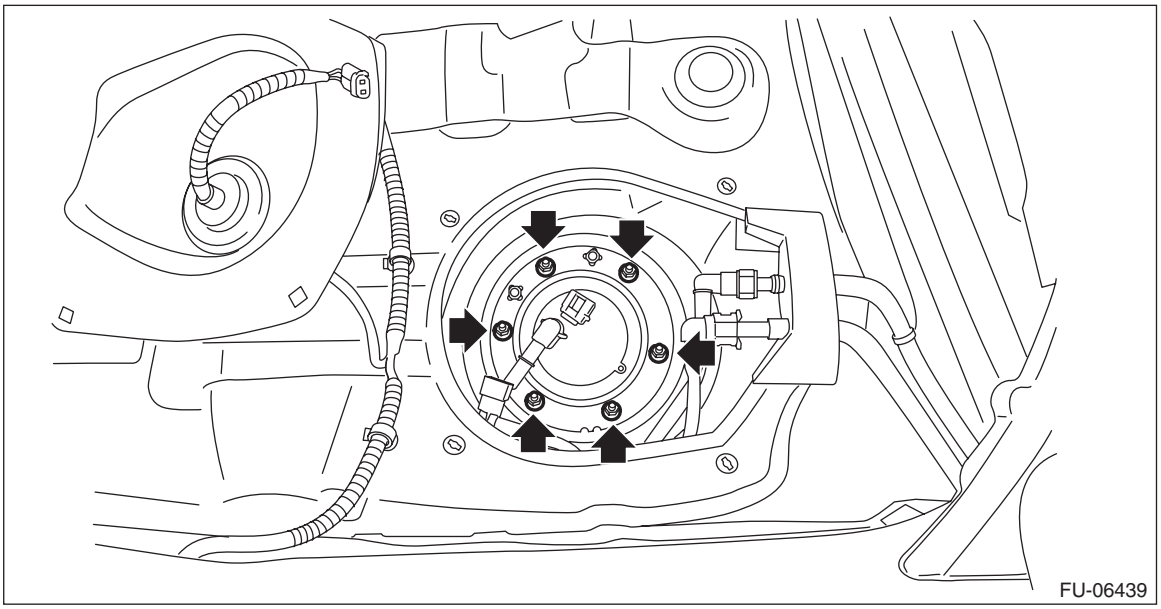

10) Remove the fuel sub level sensor from the fuel tank.

CAUTION:
Be careful not to let the arm and float of the fuel sub level sensor contact the fuel tank.

B: INSTALLATION

Install in the reverse order of removal while being careful of the following.

CAUTION:
Set the arm and float of the fuel sub level sensor while paying attention to prevent them from contacting the fuel tank. If the arm of the fuel sub level sensor is bent, the fuel gauge may not read correctly.

- Make sure the sealing portion is free from fuel or foreign matter before installation.
- Align protrusion (A) of the gasket to the position shown in the figure.
- Align the cutout in the fuel sub level sensor upper plate cushion with the protrusion (B) of the fuel sub level sensor.
- Align the protrusion (B) of the fuel sub level sensor upper plate cushion with the cutout in the fuel sub level sensor upper plate.
- Tighten the nuts and bolts to the specified torque in the order as shown in the figure.
- After tightening, install the rubber cap (C) at the position shown in the figure.

NOTE:
- Use a new gasket.
- Do not forget to install rubber cap (C).

Tightening torque:
4.4 N·m (0.4 kgf-m, 3.2 ft-lb)

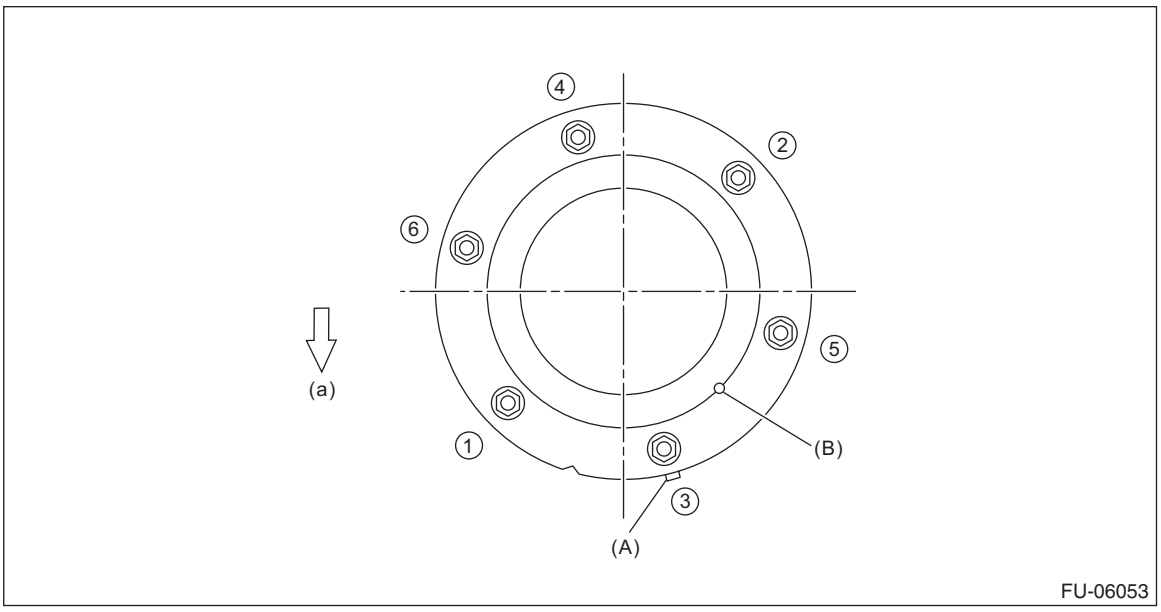

(a) Front side of vehicle

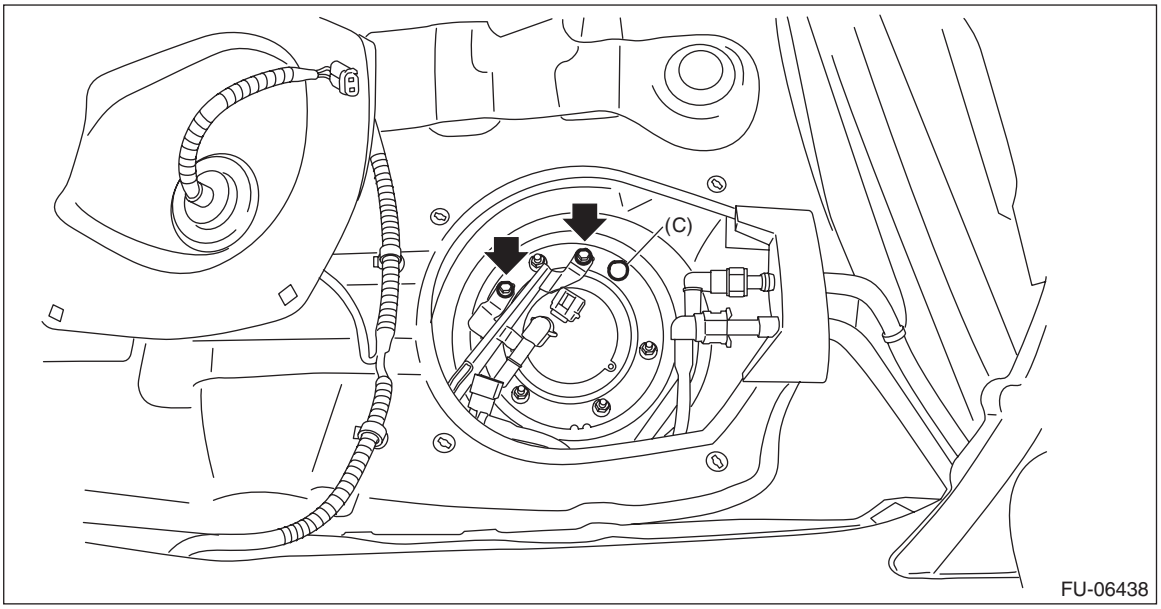

- Connect the quick connector as shown in the figure.

CAUTION:
- **Check that there is no damage or dust on the quick connector. If necessary, clean the seal surface of the pipe.**
- **When connecting the quick connector, make sure to insert the pipe all the way in before locking the slider.**
- **When it is difficult to lock the slider, check that the pipe is fully inserted.**
- **Make sure that the quick connector is securely connected.**

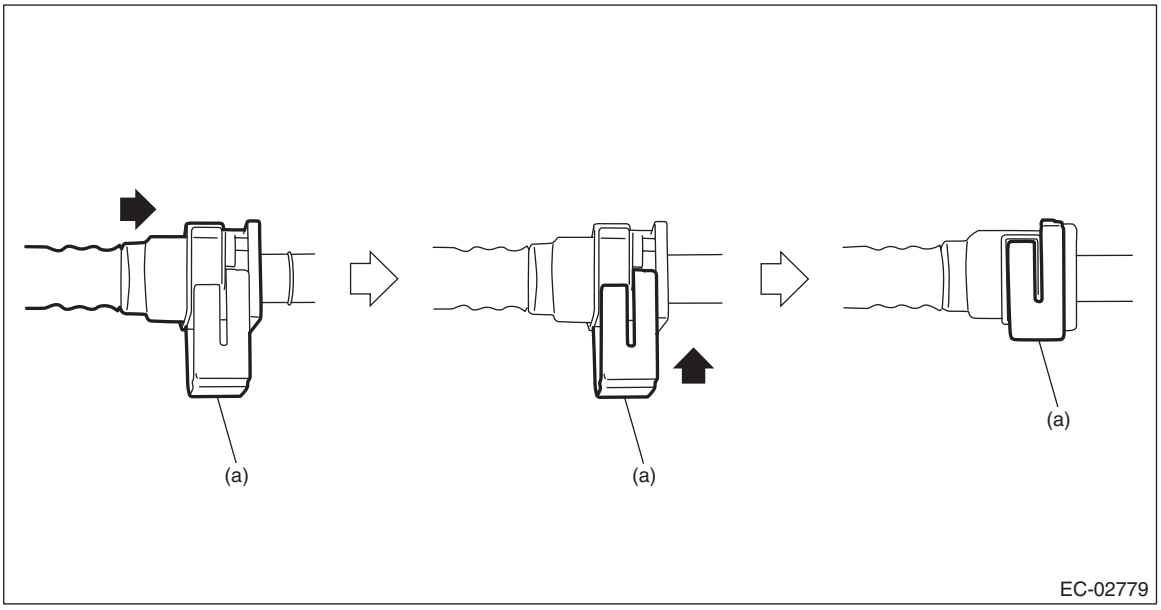

(a) Slider

C: INSPECTION

1) Check that the fuel sub level sensor has no damage.
2) Measure the fuel sub level sensor float position.

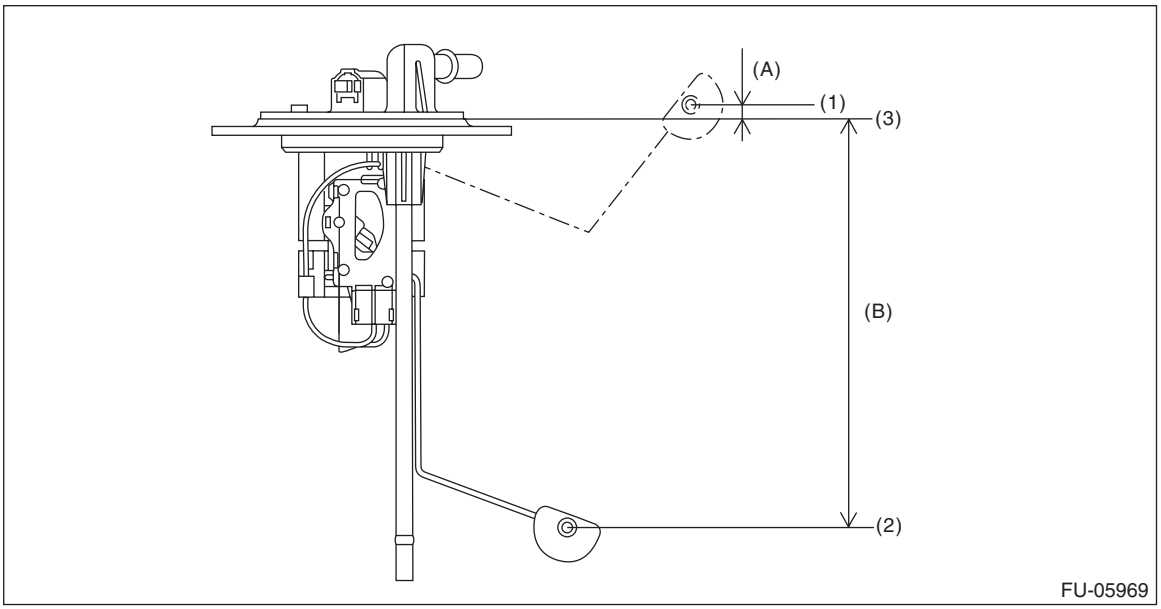

(1) FULL (2) EMPTY (3) Datum points

Float position	Standard
FULL to Datum point (A)	5.31±3.5 mm (0.209±0.138 in)
EMPTY to Datum point (B)	160.6±3.5 mm (6.32±0.138 in)

3) Measure the resistance between fuel sub level sensor terminals.

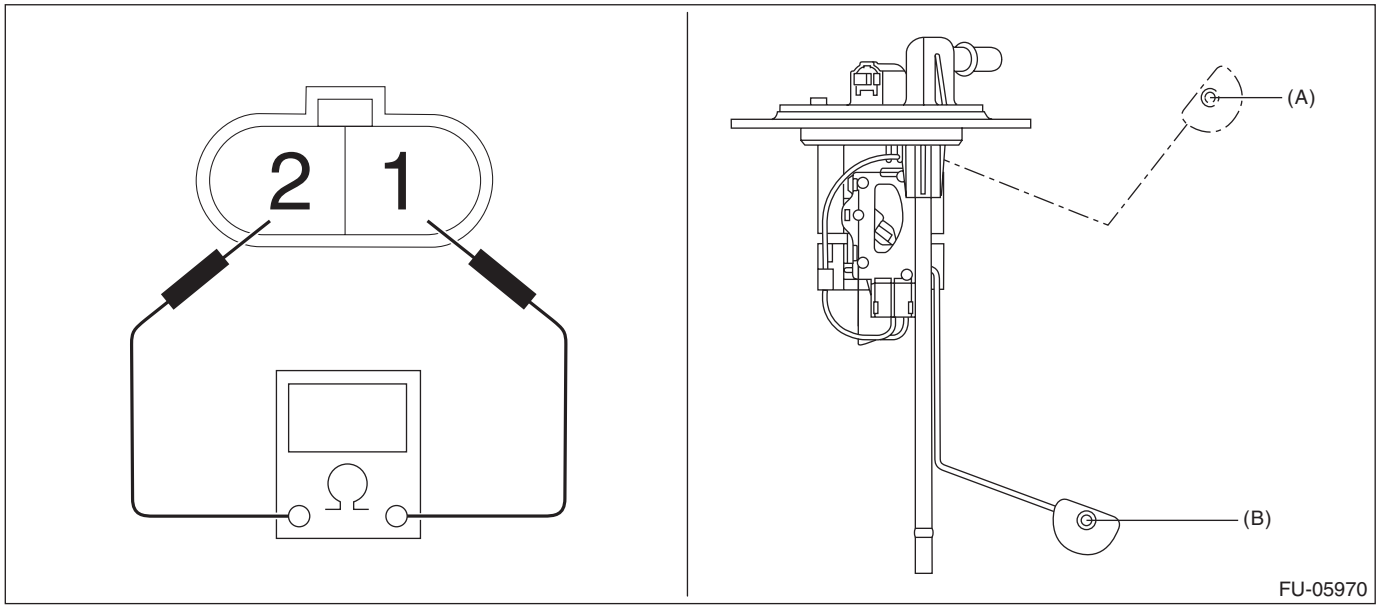

Float position	Terminal No.	Standard
FULL (A)	1 and 2	8.7±1.0 Ω
EMPTY (B)		270.9±4.0 Ω

33.Fuel Filter

A: REMOVAL

WARNING:
Place “NO OPEN FLAMES” signs near the working area.

CAUTION:
- **Be careful not to spill fuel.**
- **If the fuel gauge indicates that two thirds or more of the fuel is remaining, be sure to drain fuel before starting work to avoid the fuel to spill.**
- **Be careful not to drop or apply any impact to the fuel pump during work. This may deteriorate its performance.**

NOTE:
The fuel filter is built in fuel pump assembly.
1) Remove the fuel pump assembly. <Ref. to FU(H4DO(HEV))-122, REMOVAL, Fuel Pump.>
2) Remove the fuel level sensor. <Ref. to FU(H4DO(HEV))-128, REMOVAL, Fuel Level Sensor.>
3) Remove the connector cable from the clip, and disconnect the connector (A) of the connector cable.

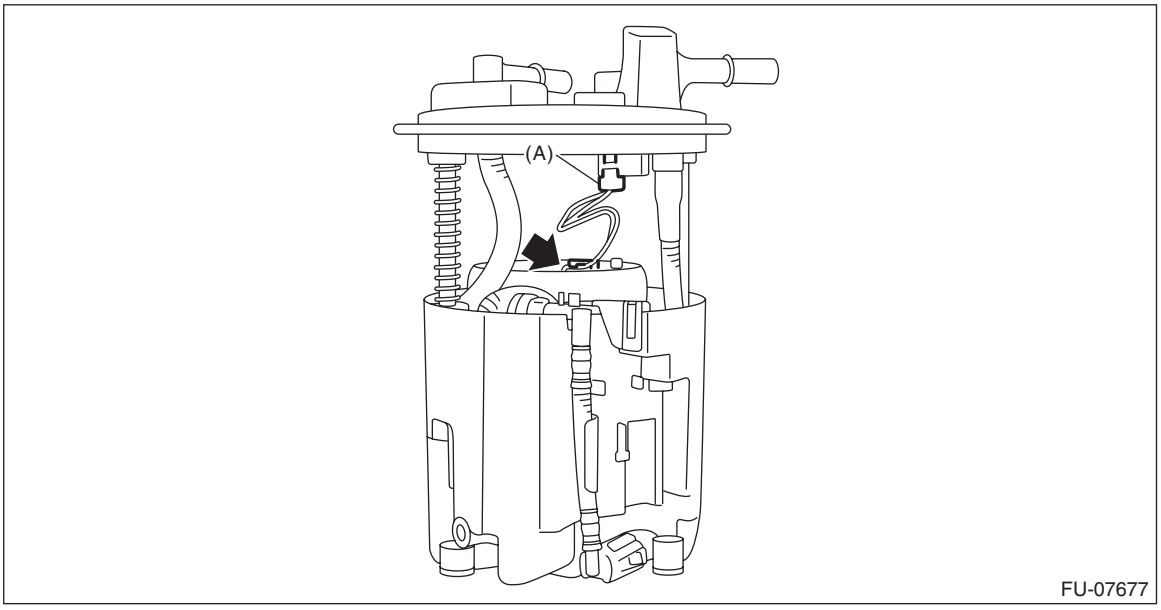

4) Push the fuel filter assembly in the direction of the arrow to compress, and detach the connecting clip.

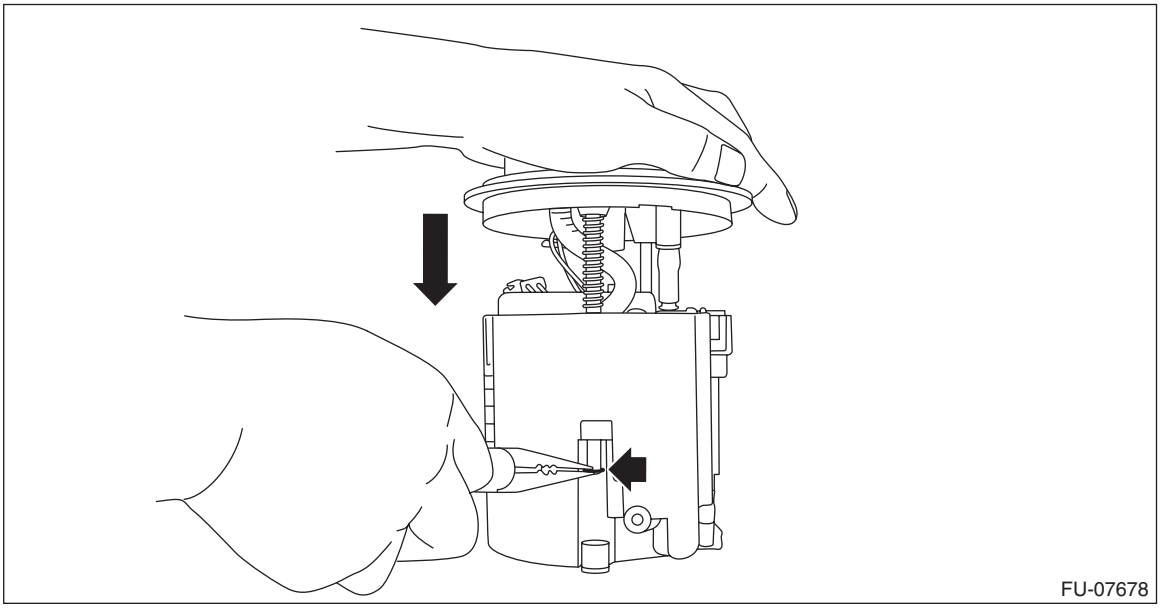

5) Release the claw using a flat tip screwdriver or similar tool wrapped with a protection tape, and remove the tube assembly from the fuel chamber assembly.

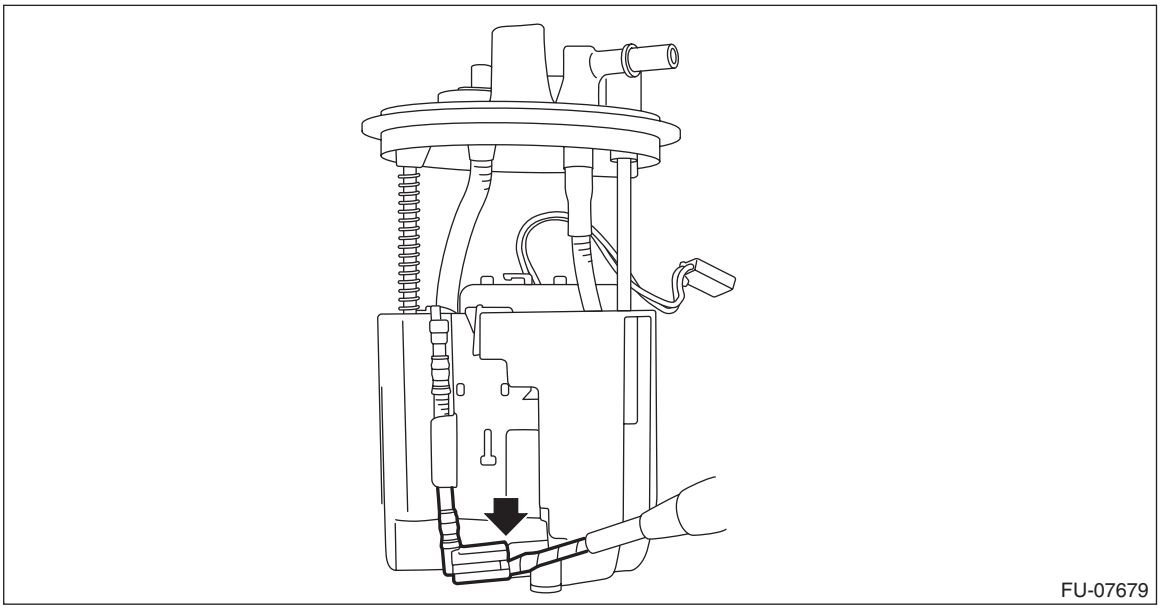

6) Release three claws on the fuel pump holder from the fuel chamber assembly, and raise the fuel filter assembly.

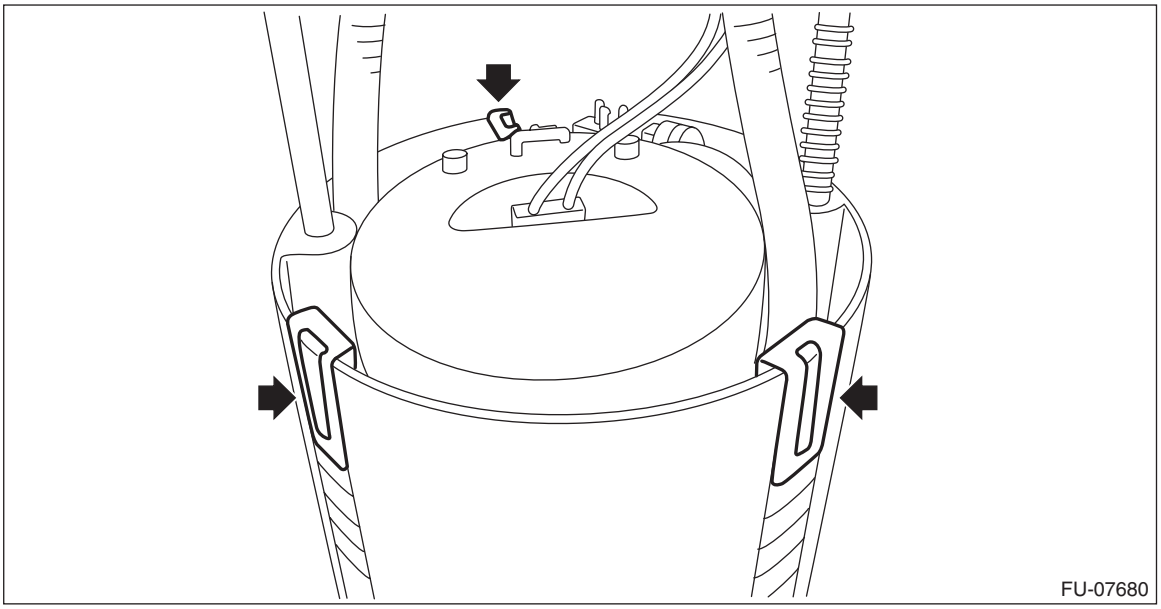

7) Using a flat tip screwdriver or similar tool wrapped with a protection tape, remove the tube assembly from the fuel chamber assembly, and separate the fuel filter assembly and fuel chamber assembly.

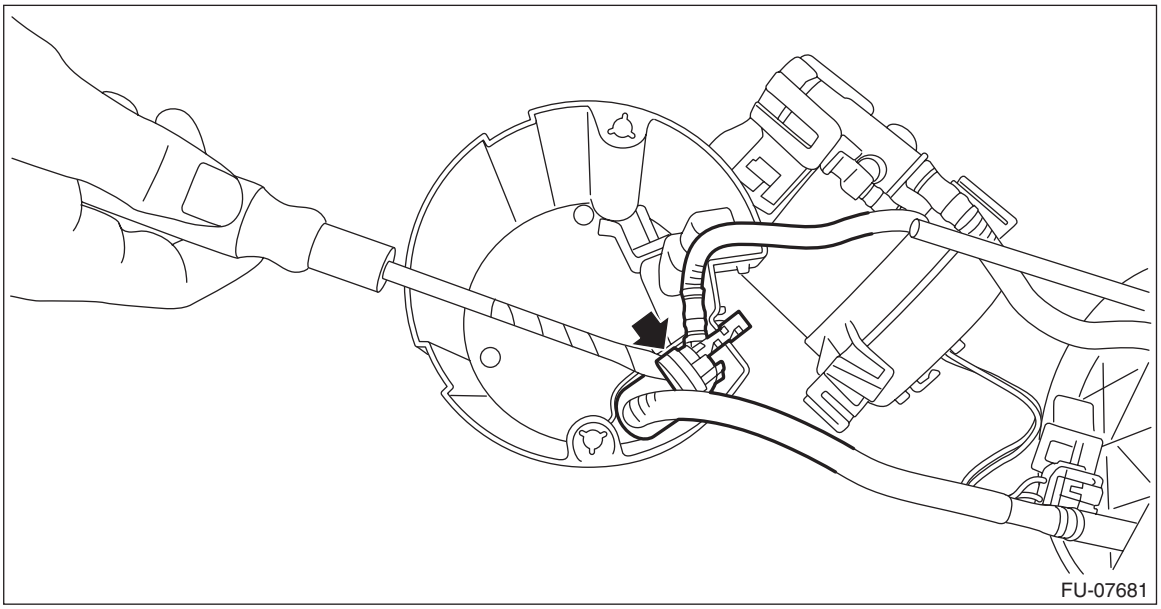

8) Using a precision driver or similar tool wrapped with a protection tape, expand the claws on the fuel pump.

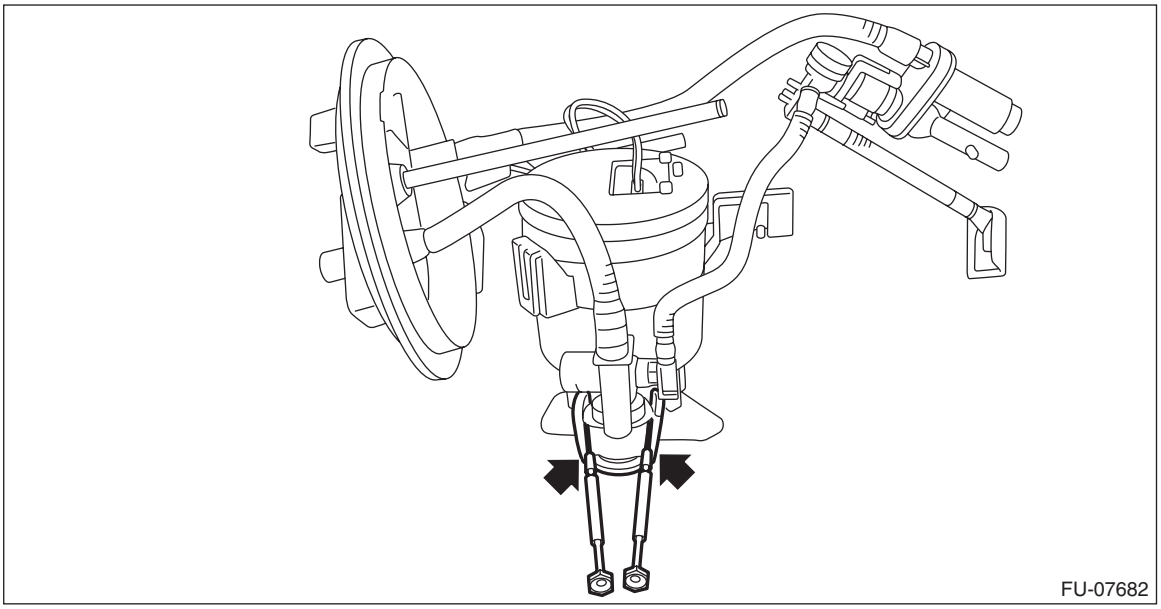

9) Release the claws on the fuel pump.

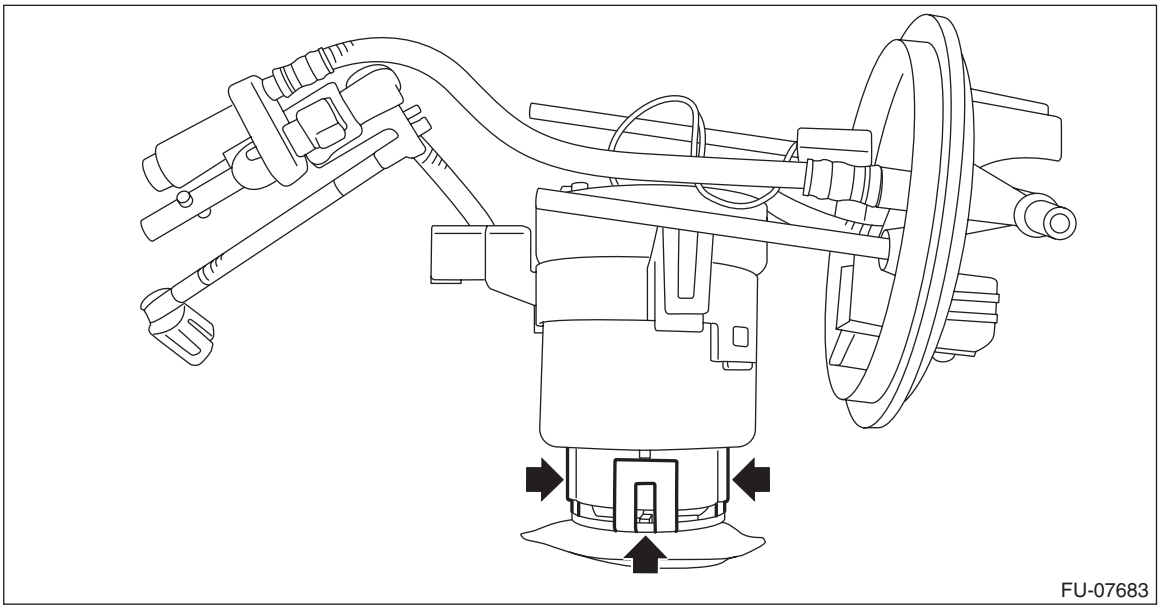

10) Using a flat tip screwdriver or similar tool wrapped with a protection tape, press on the fuel pump and remove the fuel pump together with the fuel pump holder from the fuel filter assembly.

CAUTION:
If O-rings remain on the fuel filter assembly side, carefully remove them with a precision screwdriver or similar tool wrapped with a protection tape.

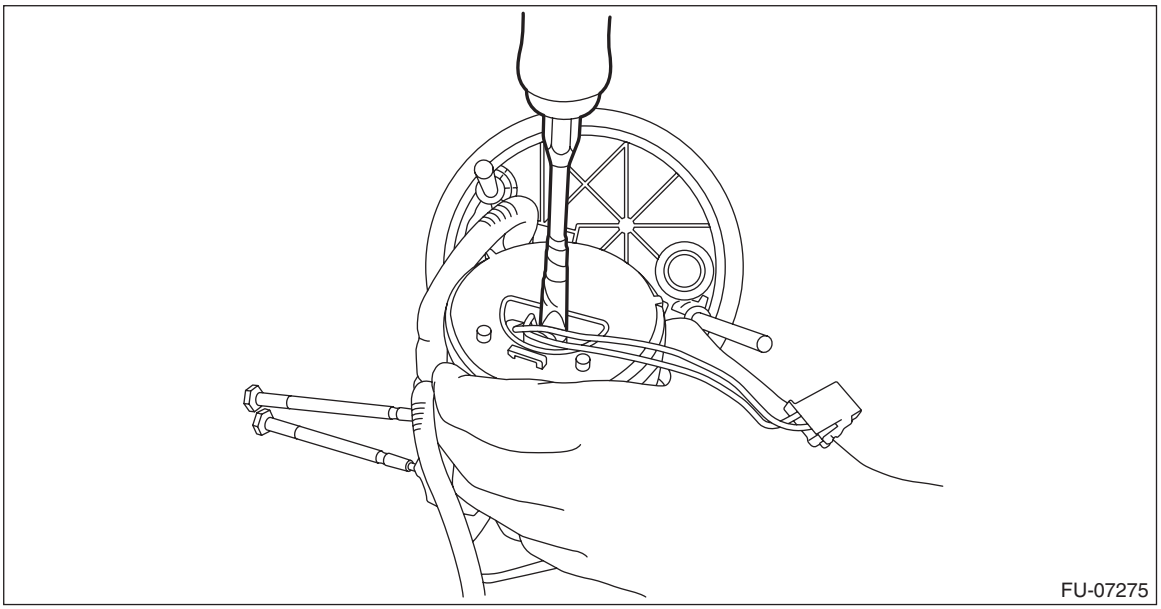

11) Remove the spacer (A) and connector cable (B) from the fuel pump.

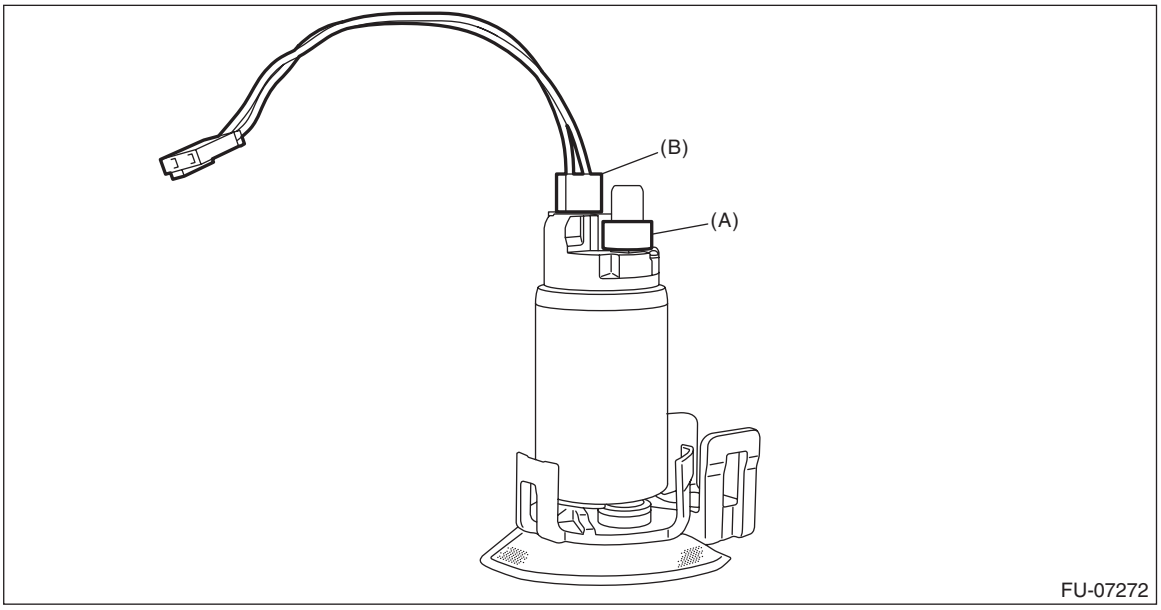

12) Remove the pressure regulator from the fuel filter assembly.

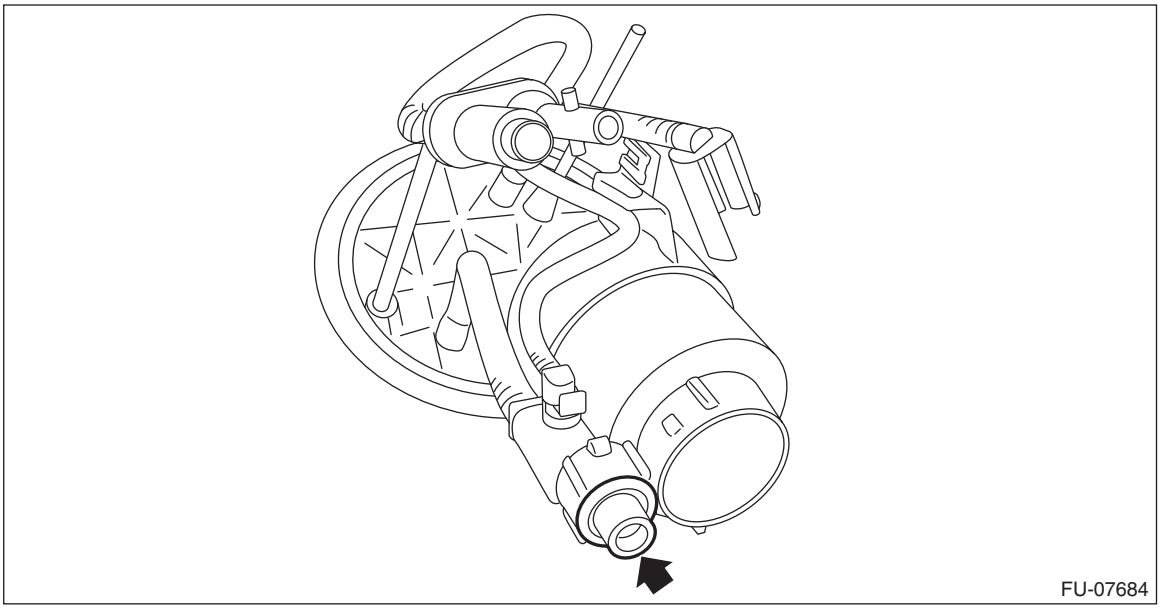

13) Remove O-ring (A), O-ring (B), and backup ring (C) from the pressure regulator.

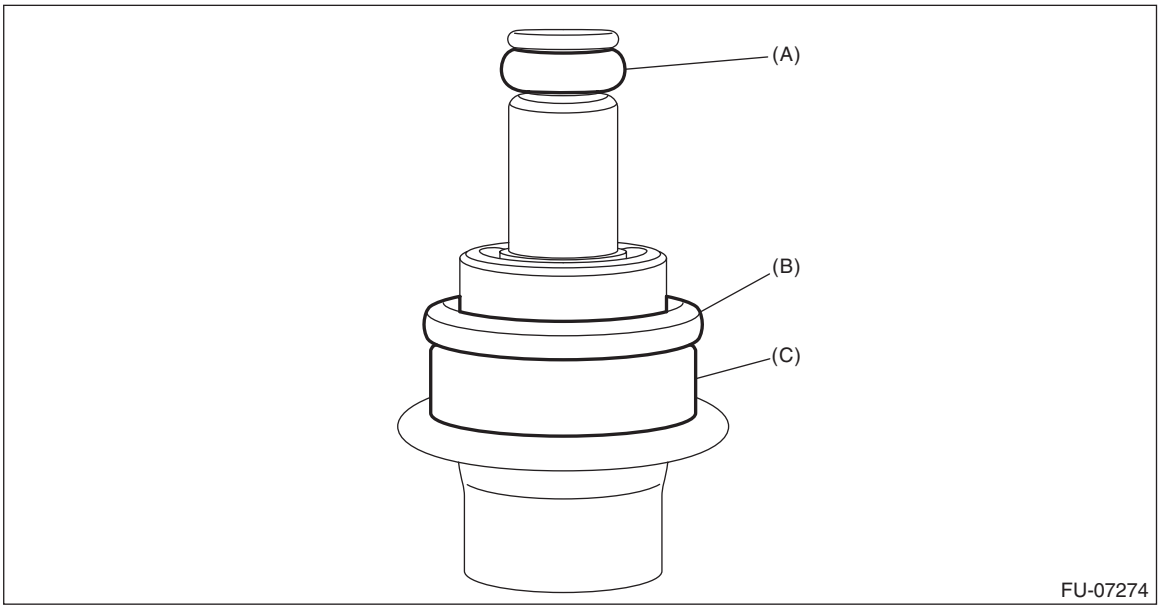

B: INSTALLATION

1) Install O-ring (A), O-ring (B), and backup ring (C) to the pressure regulator.

NOTE:
- Use new O-rings.
- Apply gasoline to the O-ring and backup ring.

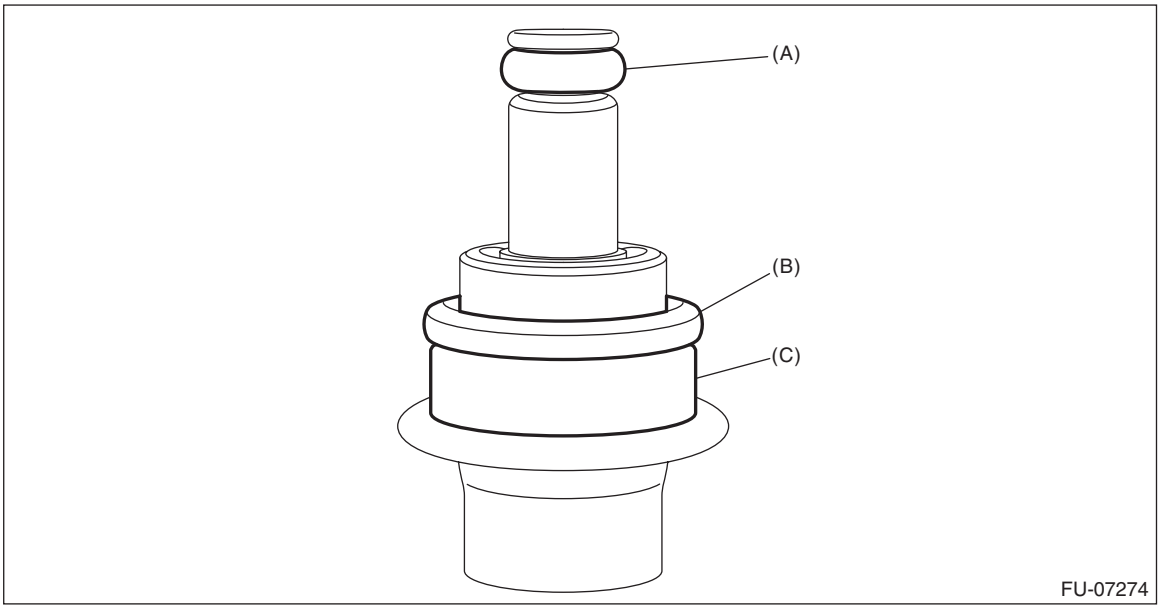

2) Install the pressure regulator to the fuel filter assembly.

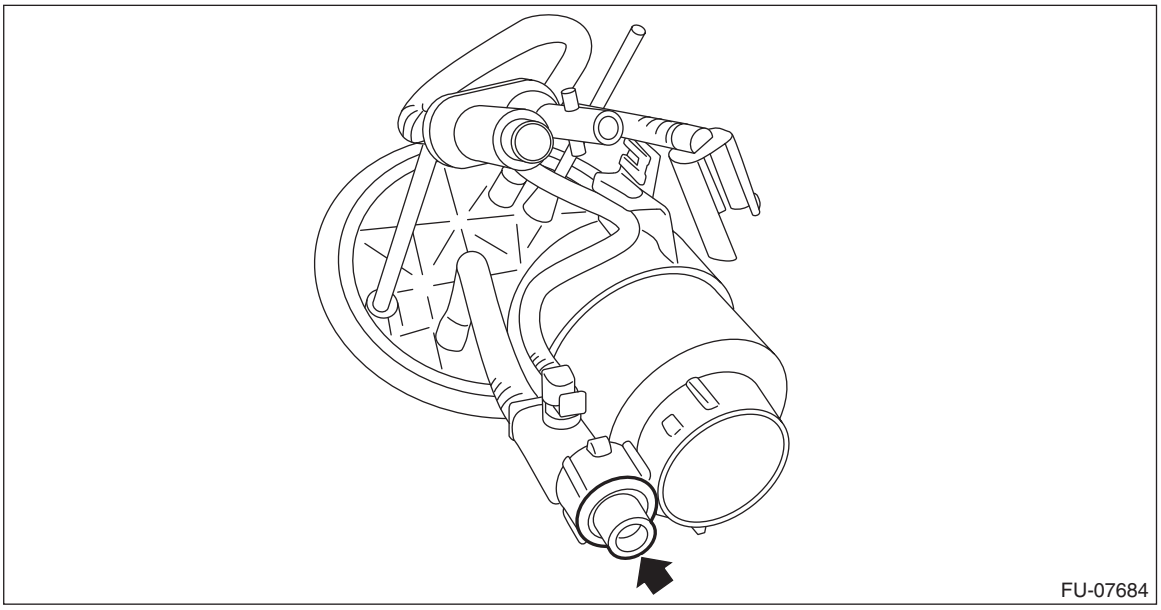

3) Install O-ring (A), spacer (B), and connector cable (C) to the fuel pump.

NOTE:
- Use new O-rings and the connector cable.
- Apply gasoline to the O-rings and the spacer.

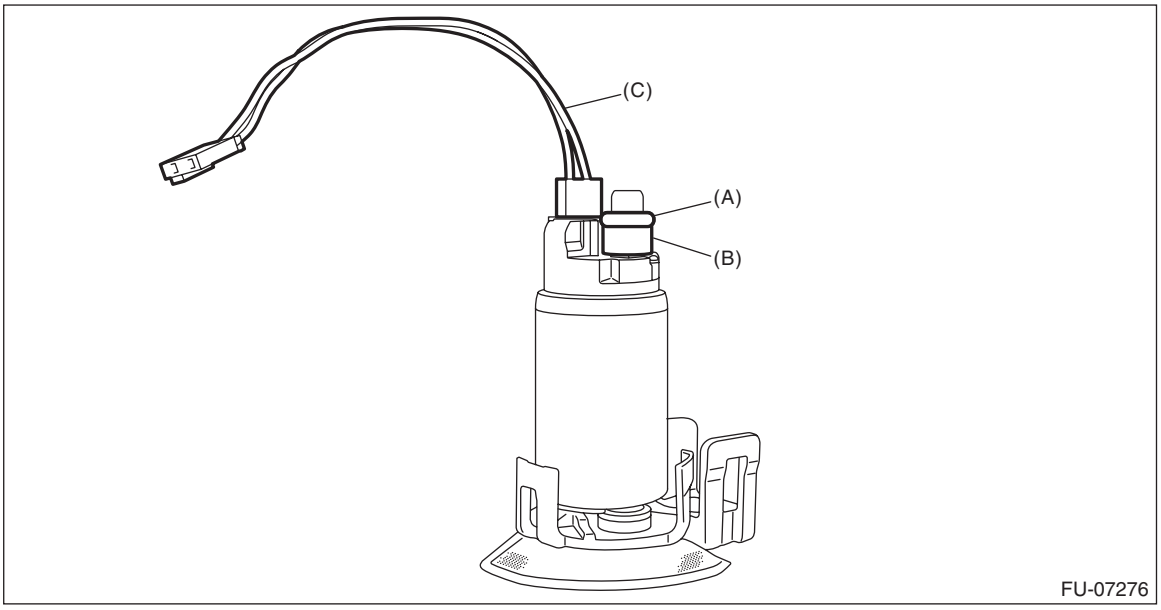

4) Install the fuel pump to the fuel filter assembly.

NOTE:
After installation, make sure five claws are correctly engaged in each position.

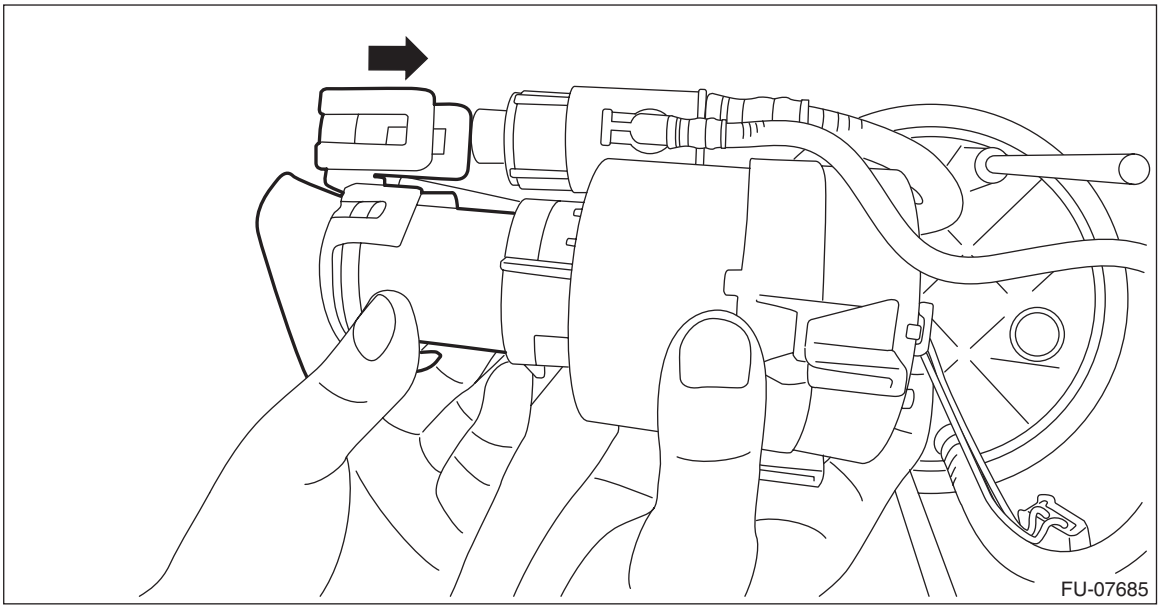

5) Check that the cushions of the fuel chamber assembly for dislocation. If any of them is dislocated, install a new cushion.

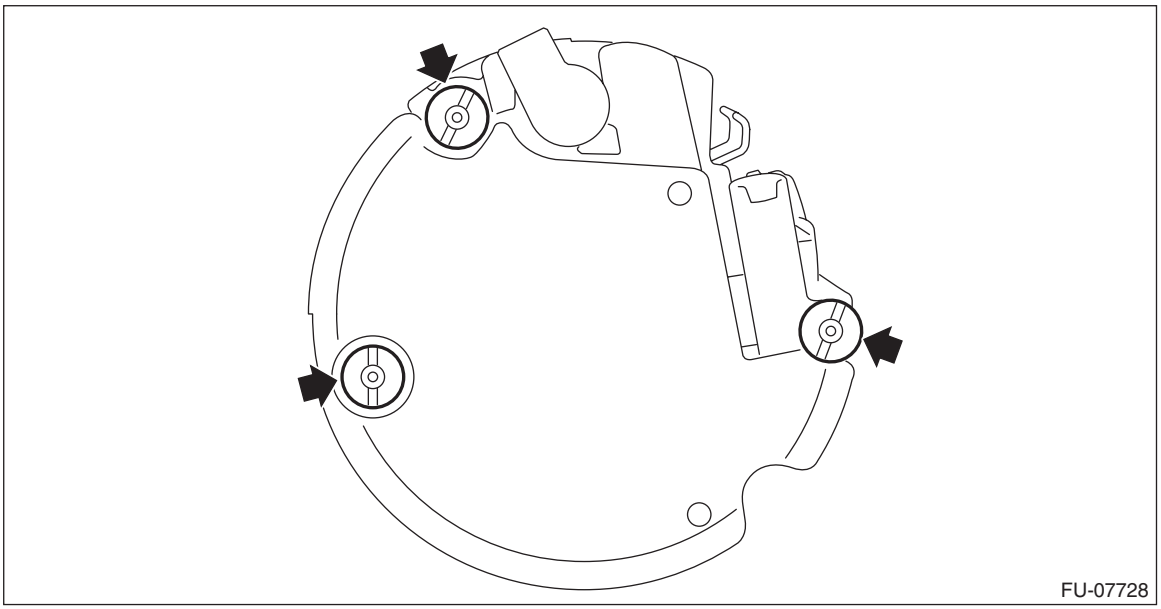

6) Slowly press in and install the tube assembly to the fuel chamber assembly until a clicking sound is heard.

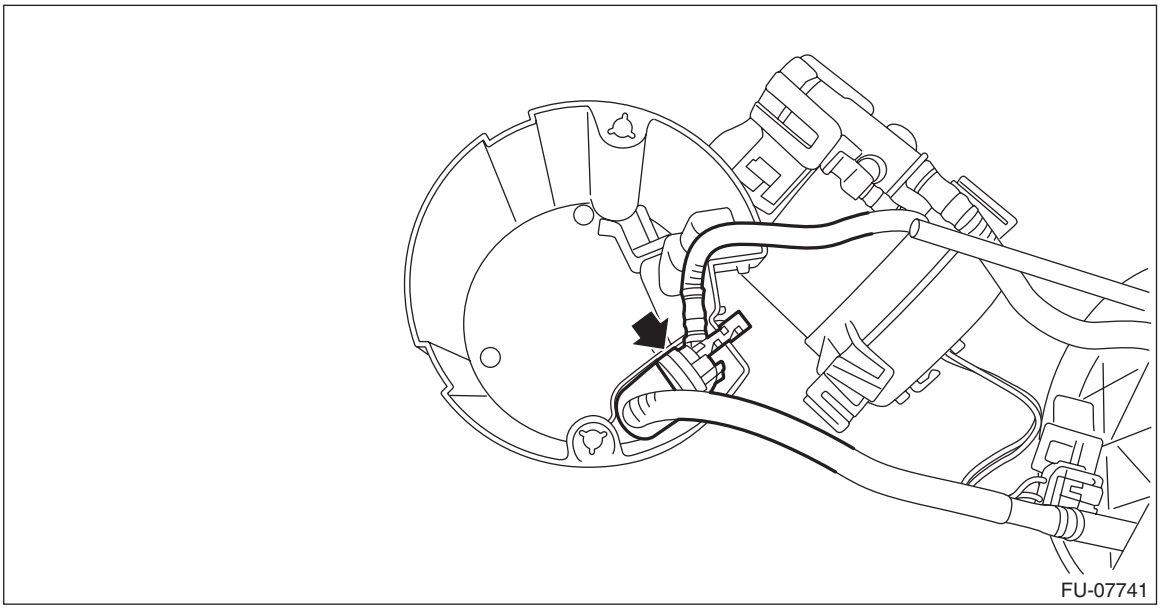

7) Connect the tube assembly to the fuel chamber assembly.

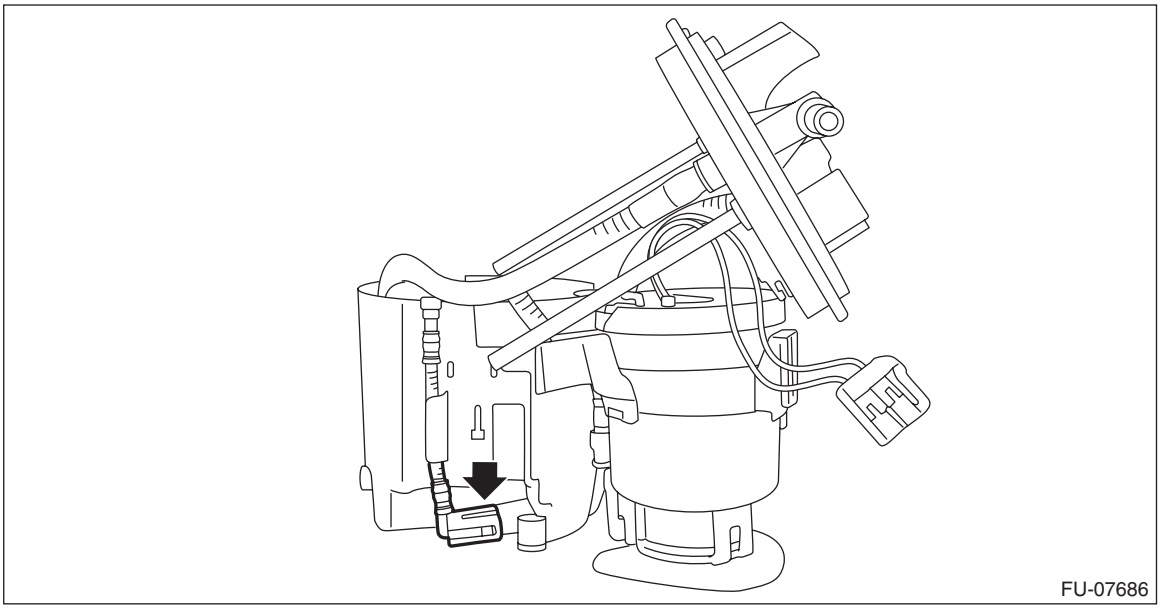

8) Install the fuel filter assembly to the fuel chamber assembly.

NOTE:

- Set the tube (A) and spring (B) for the fuel filter assembly as shown in the figure.

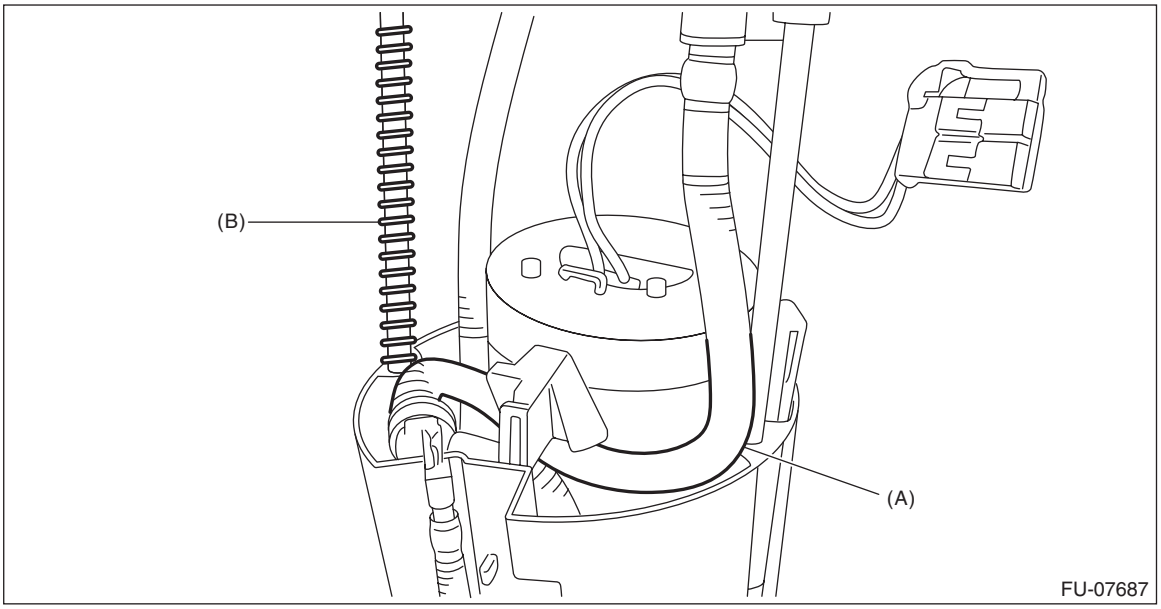

- Check that the claw connecting the fuel camber assembly and the fuel filter assembly is securely fastened.

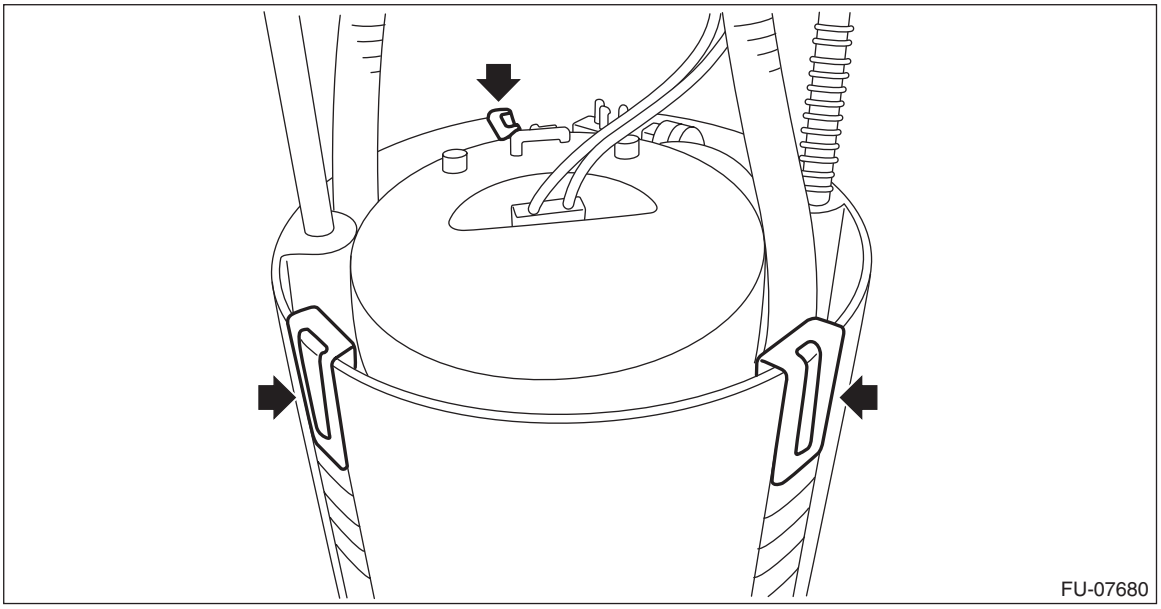

9) Push the fuel filter assembly in the direction of the arrow to compress, and attach the clip.

NOTE:
Use a new clip.

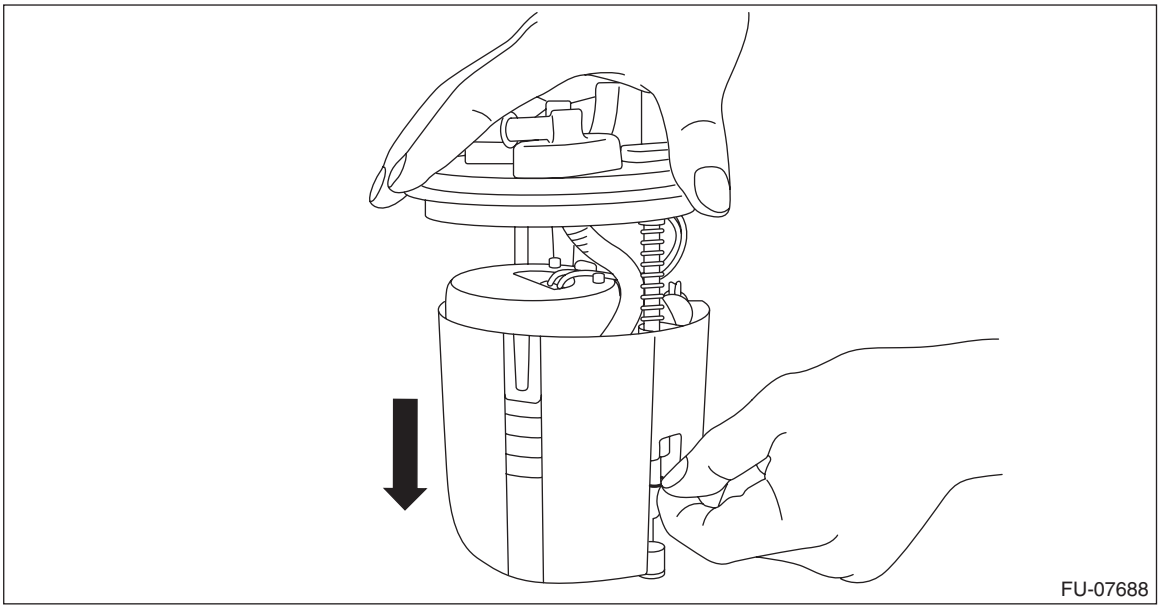

10) Secure the connector cable with the clip, and connect the connector (A) of the connector cable.

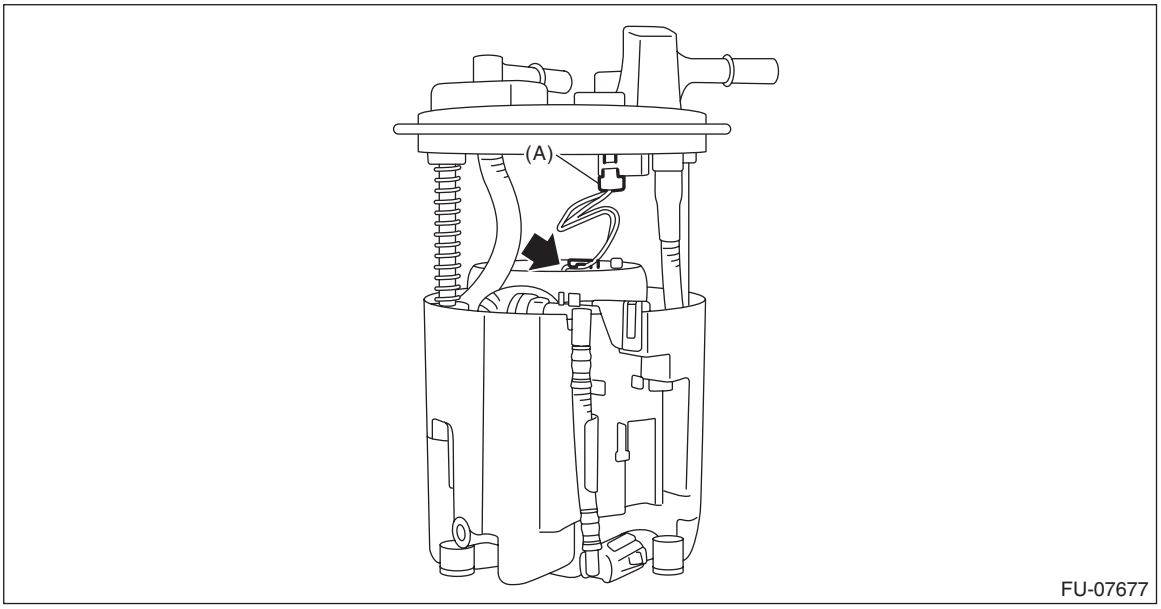

11) Install the fuel level sensor. <Ref. to FU(H4DO(HEV))-129, INSTALLATION, Fuel Level Sensor.>
12) Inspect the fuel level sensor. <Ref. to FU(H4DO(HEV))-130, INSPECTION, Fuel Level Sensor.>
13) Install the fuel pump assembly. <Ref. to FU(H4DO(HEV))-126, INSTALLATION, Fuel Pump.>

34.Fuel Delivery and Evaporation Lines

A: REMOVAL

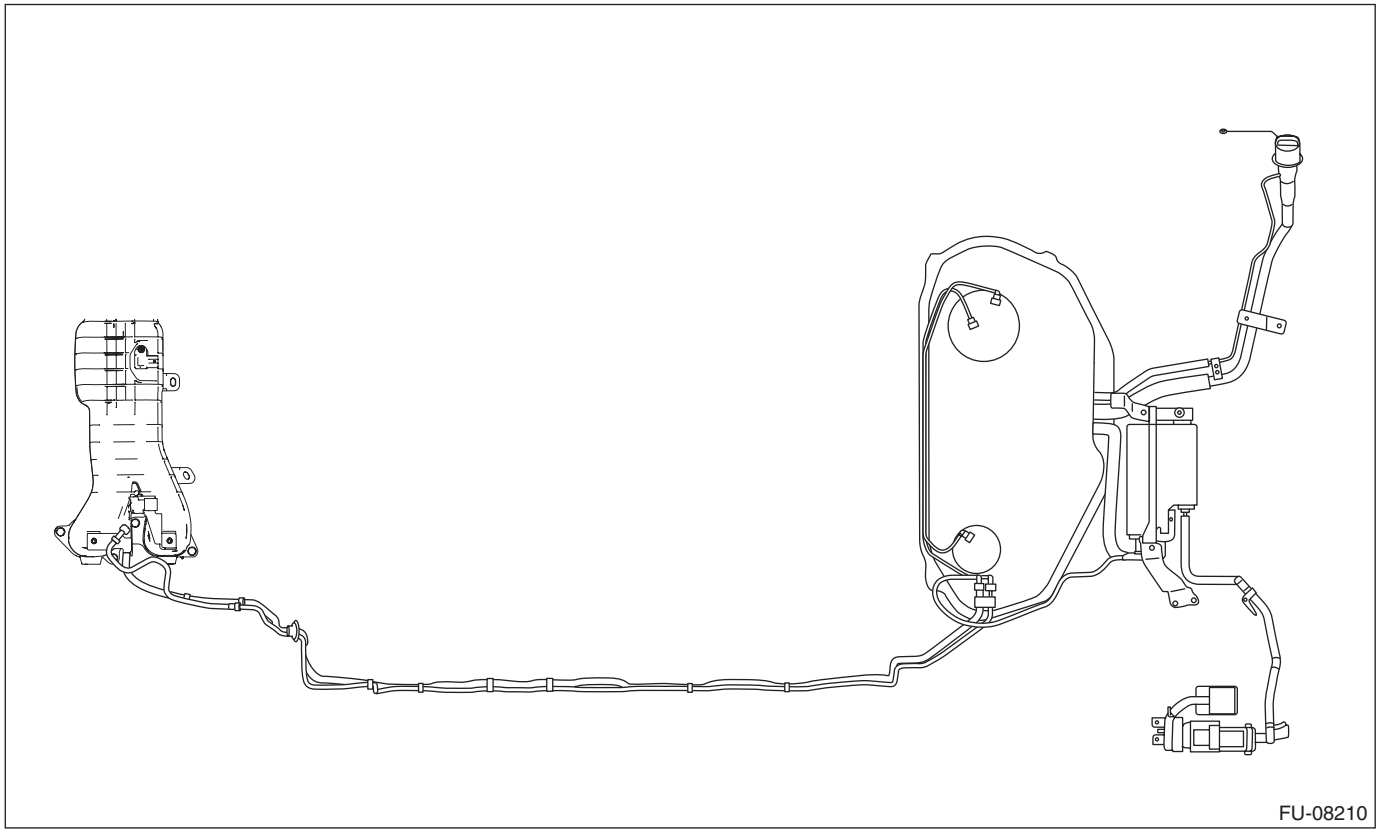

WARNING:
Place “NO OPEN FLAMES” signs near the working area.

CAUTION:
Be careful not to spill fuel.

1) Release the fuel pressure. <Ref. to FU(H4DO(HEV))-98, RELEASING OF FUEL PRESSURE, PROCEDURE, Fuel.>
2) Open the fuel filler lid and remove the fuel filler cap.
3) Remove the floor mat. <Ref. to EI-159, REMOVAL, Floor Mat.>

4) In the engine compartment, disconnect the fuel delivery tube (A) and evaporation hose (B).

CAUTION:
- **Be careful not to spill fuel.**
- **Catch the fuel from the tubes using a container or cloth.**

NOTE:
Disconnect the quick connector as shown in the figure.

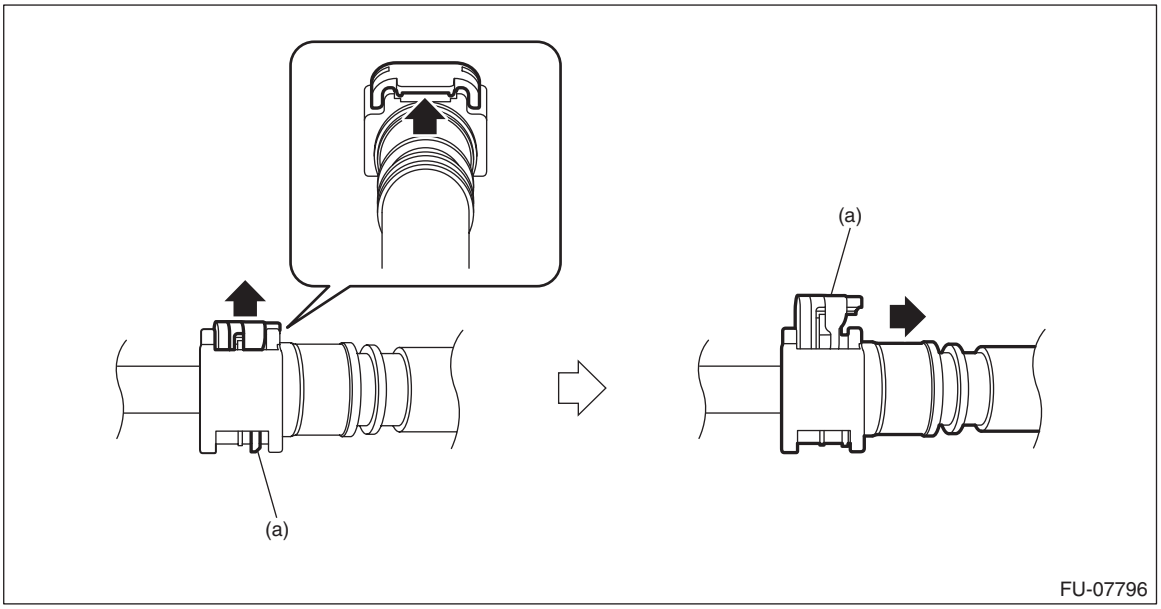

(a) Slider

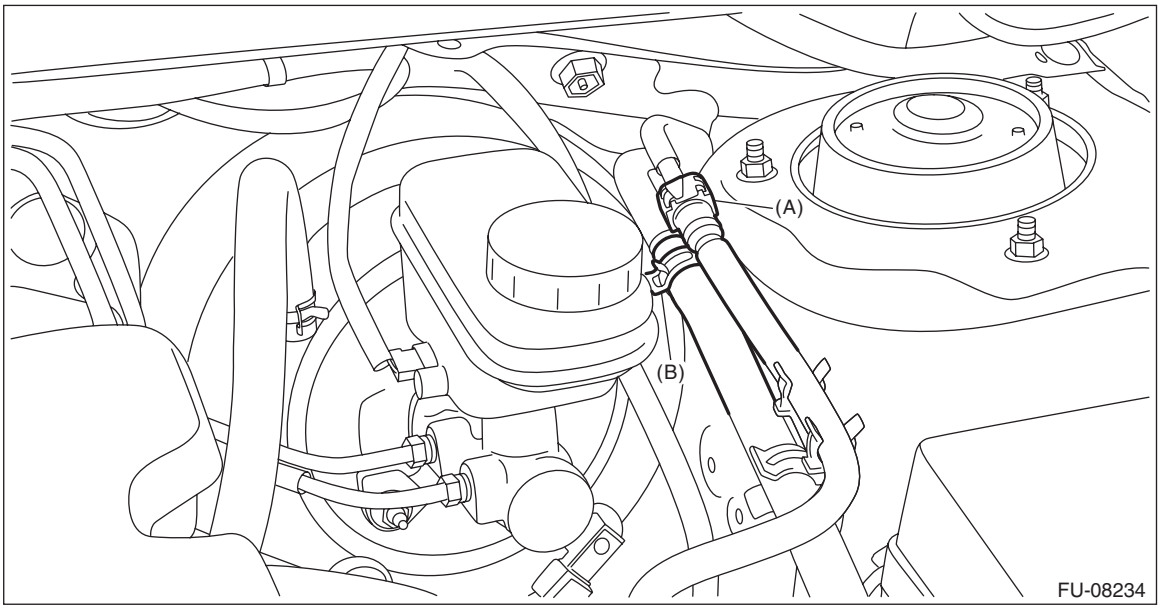

5) Remove the fuel tank. <Ref. to FU(H4DO(HEV))-105, REMOVAL, Fuel Tank.>

6) Disconnect the quick connector, and remove the fuel delivery tube and jet pump tube from the fuel tank.

CAUTION:
- **Be careful not to spill fuel.**
- **Catch the fuel from hoses using a container or cloth.**

NOTE:
Disconnect the quick connector as shown in the figure.

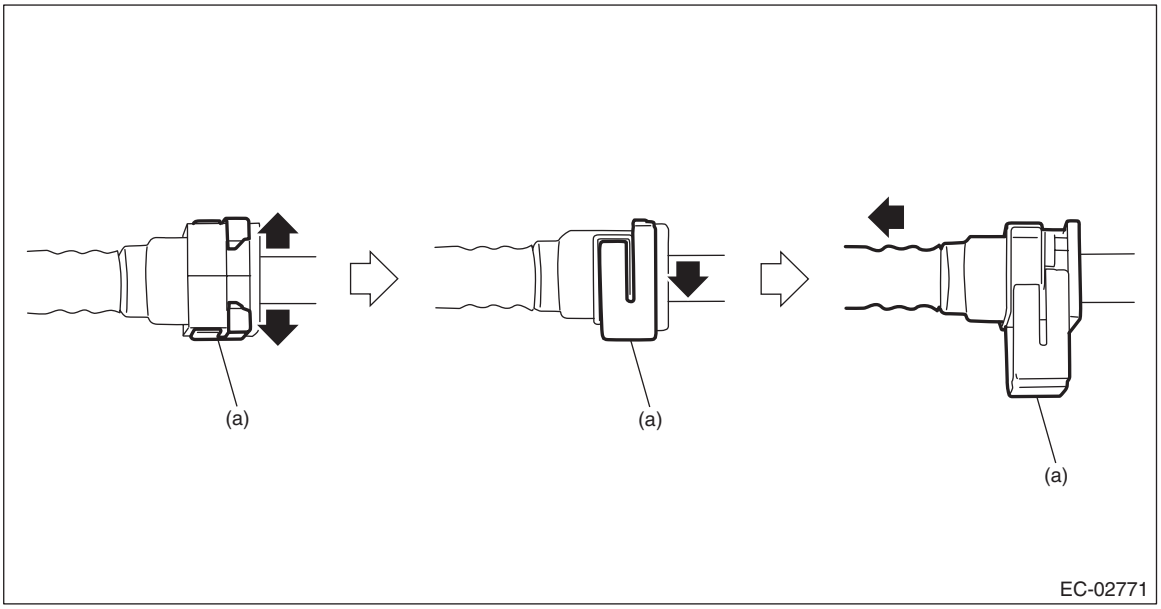

(a) Slider

7) Remove the clip (A) from the purge pipe.
8) Disconnect the quick connector and remove the purge pipe.

NOTE:
Disconnect the quick connector as shown in the figure.

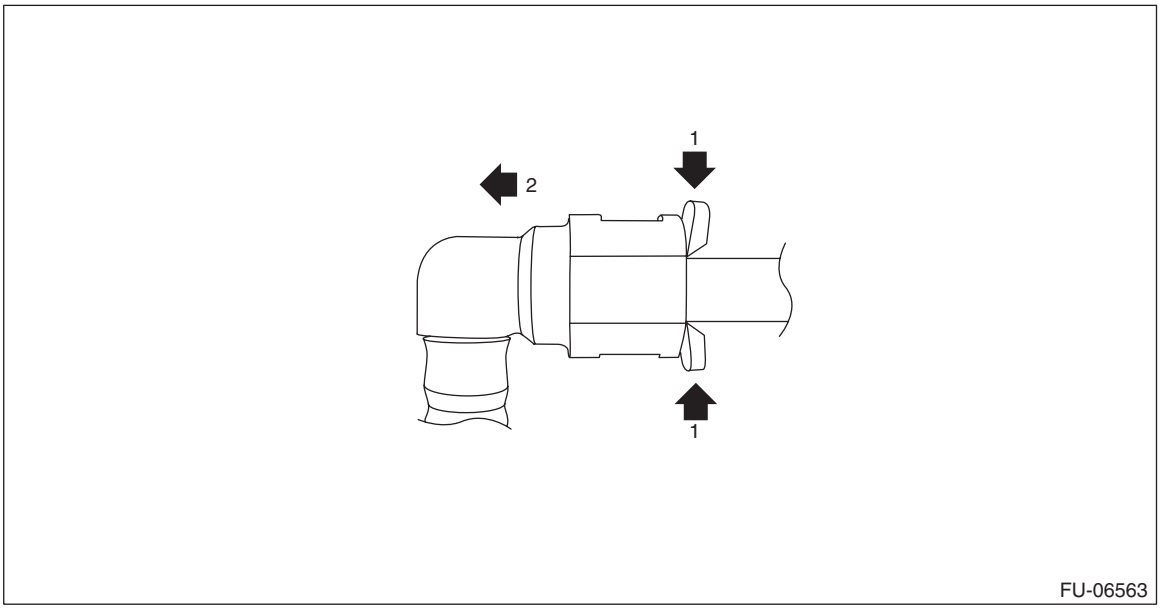

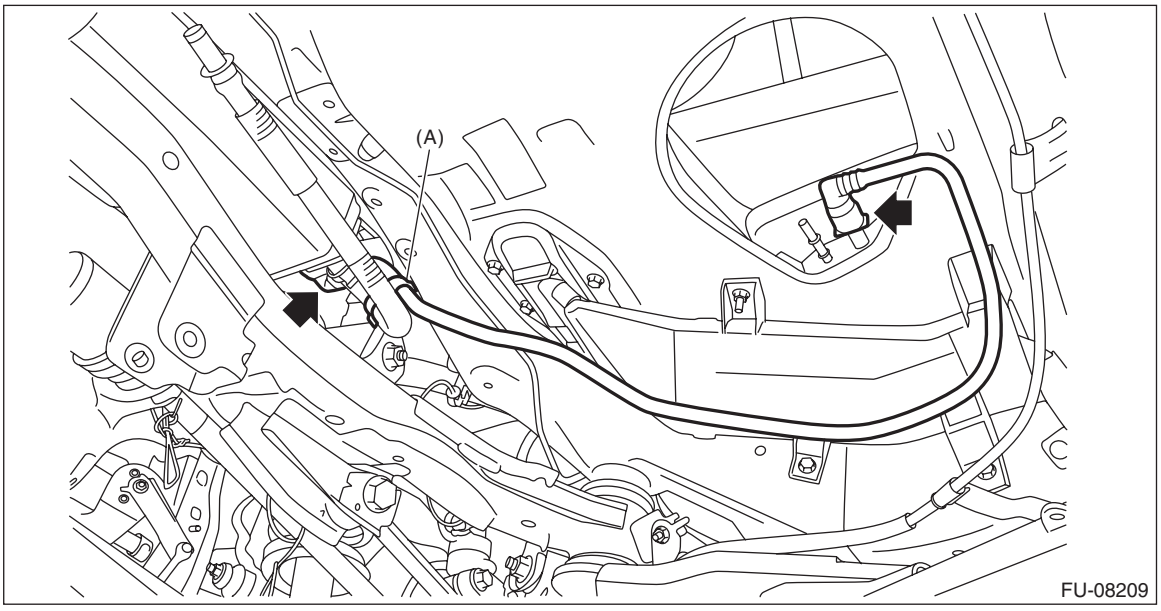

9) Remove the fuel pipe assembly from vehicle.

B: INSTALLATION

Install in the reverse order of removal while being careful of the following.

1. CONNECTING THE FUEL LINE QUICK CONNECTOR

Connect the quick connector as shown in the figure.

CAUTION:
• Check that there is no damage or dust on the quick connector. If necessary, clean the seal surface of the pipe.
• When connecting the quick connector, make sure to insert the pipe all the way in before locking the slider.
• When it is difficult to lock the slider, check that the pipe is fully inserted.

- **Make sure that the quick connector is securely connected.**

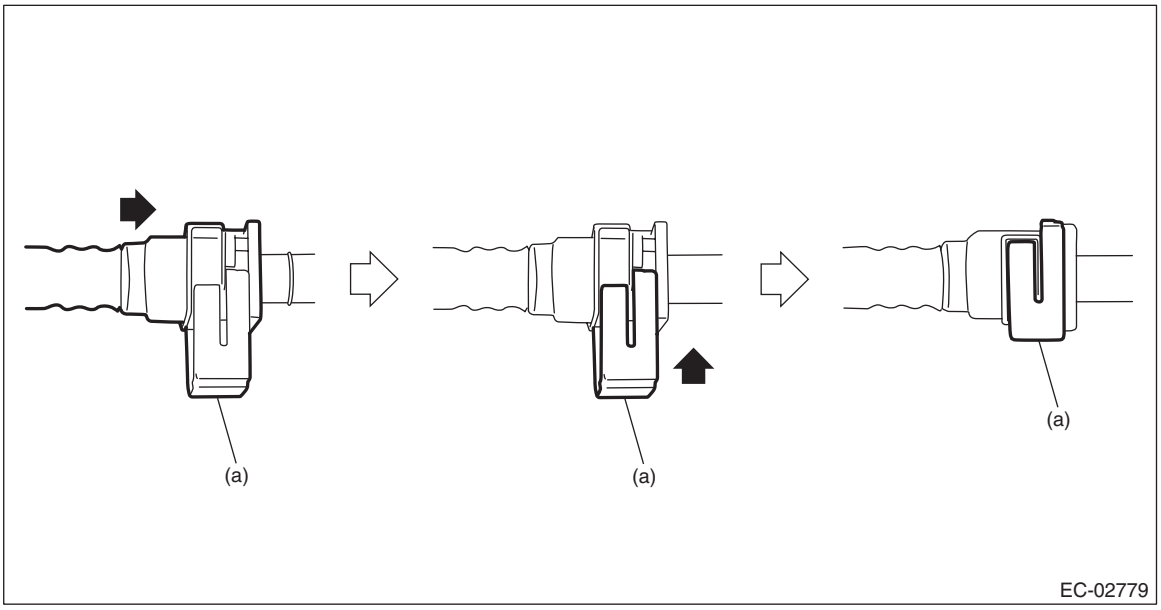

(a) Slider

2. CONNECTING THE EVAPORATION LINE QUICK CONNECTOR

Connect the quick connector as shown in the figure.

CAUTION:

- **Check that there is no damage or dust on the quick connector. If necessary, clean the seal surface of the pipe.**
- **Make sure that the quick connector is securely connected.**

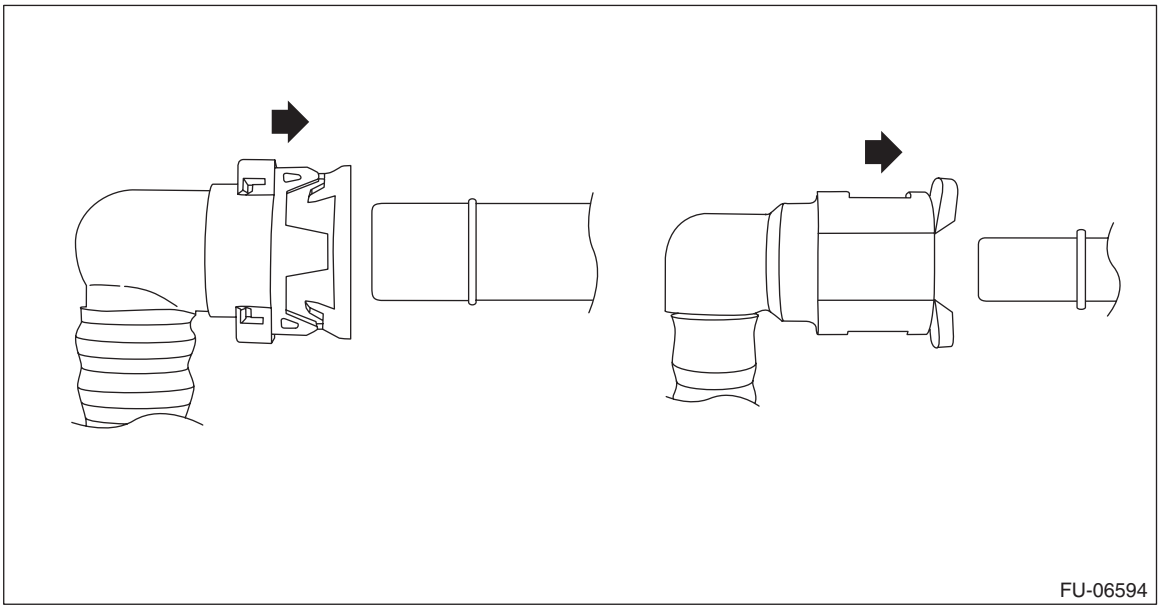

3. EVAPORATION HOSE CONNECTION

Connect the evaporation hose by inserting it to the pipe until the hose reaches the spool or bump.

NOTE:
If there is no spool nor bump, connect the evaporation hose by inserting it at 15 to 20 mm (0.6 to 0.8 in) to the pipe.

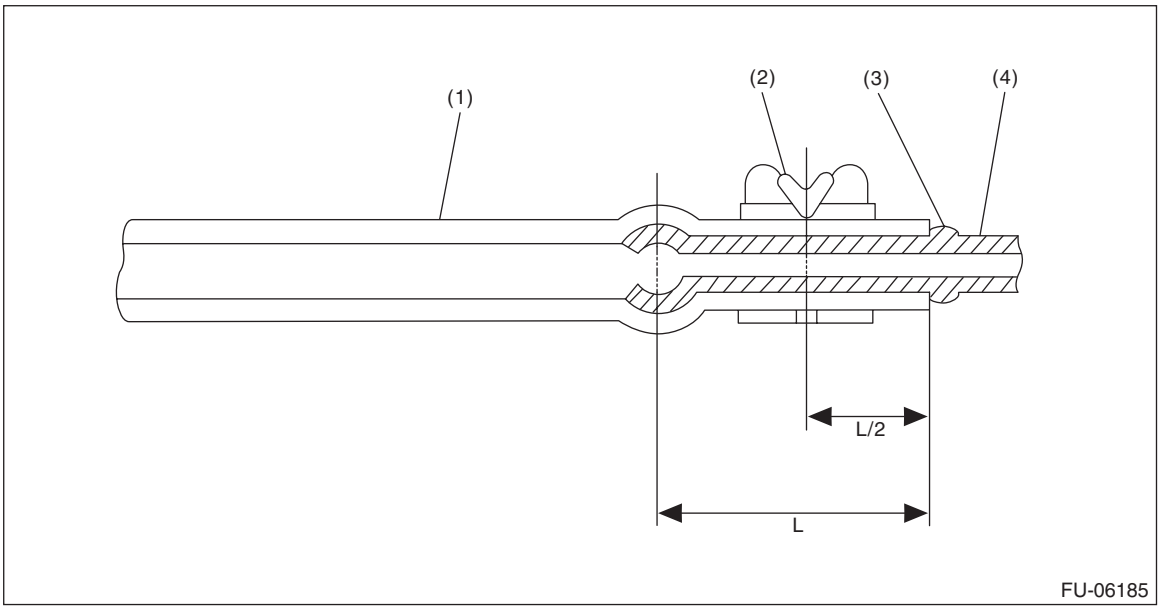

(1) Hose
(2) Clip
(3) Spool or bump
(4) Pipe

C: INSPECTION

1) Check that the fuel pipe has no deformation, cracks or other damages.
2) Check that the hose and tube have no cracks, damage or loose part.

35.Fuel System Trouble in General

A: INSPECTION

Trouble	Possible cause	Corrective action
Insufficient fuel supply to fuel injector	a. Fuel pump does not operate.	
	❍ Defective terminal contact	Inspect contact, especially ground, and tighten it securely.
	❍ Trouble in electromagnetic or electronic circuit parts	Replace the faulty parts.
	b. Decline of fuel pump function	Replace the fuel pump.
	c. Clogged fuel filter	Replace the fuel filter. Clean or replace the fuel tank if necessary.
	d. Clogged or bent fuel line pipe, hose or tube	Clean, correct or replace the fuel line pipe, hose or tube.
	e. Air is mixed in fuel system.	Check the fuel line connections, correct or replace the defective part.
	f. Damaged diaphragm of pressure regulator	Replace the fuel filter assembly.
Leakage or blow out of fuel	a. Loose connections of fuel line pipe, hose or tube	Check the fuel line connections, correct or replace the defective part.
	b. Cracked fuel line pipe, hose or tube	Replace the fuel line pipe, hose or tube.
	c. Cracked fuel tank or defective welding part	Replace the fuel tank.
	d. Clogged or bent fuel line pipe, hose or tube	Clean, correct or replace the fuel line pipe, hose or tube.
Gasoline smell inside of compartment	a. Loose connections of fuel line pipe, hose or tube	Check the fuel line connections, correct or replace the defective part.
	b. Defective gasket of fuel saucer or fuel filler pipe assembly	Correct or replace the gasket.
	c. Defective canister	Replace the canister.
Defective fuel gauge	a. Defective operation of fuel level sensor	Replace the fuel level sensor.
	b. Defective operation of combination meter <Ref. to IDI(diag)-2, COMBINATION METER, PROCEDURE, Basic Diagnostic Procedure.>	Replace the combination meter.
Noise	a. Large operation noise or vibration of fuel pump	Replace the fuel pump.

NOTE:
• When the vehicle is left unattended for an extended period of time, water may accumulate in the fuel tank. Fill fuel fully to prevent the problem.
• In snow-covered areas, mountainous areas, skiing areas, etc. where ambient temperatures drop to 0°C (32°F) or less throughout the winter season, use a water removing agent in the fuel system to prevent freezing fuel system and accumulating water.
• When water is accumulated in fuel filter, fill the water removing agent in the fuel tank.
• Before using water removing agent, follow the cautions noted on the bottle.

EMISSION CONTROL
(AUX. EMISSION CONTROL DEVICES)
EC(H4DO(HEV))

		Page
1.	General Description	2
2.	Front Catalytic Converter	6
3.	Rear Catalytic Converter	7
4.	Canister	8
5.	Purge Control Solenoid Valve	21
6.	EGR Control Valve	26
7.	EGR Pipe	29
8.	EGR Cooler	31
9.	Fuel Level Sensor	36
10.	Fuel Sub Level Sensor	37
11.	Drain Filter	38
12.	Leak Check Valve Assembly	39
13.	PCV Hose	50
14.	PCV Valve	52

1. General Description

A: COMPONENT

1. CANISTER, PURGE CONTROL SOLENOID VALVE, DRAIN FILTER AND LEAK CHECK VALVE ASSEMBLY

For components of canister, purge control solenoid valve, drain filter, and leak check valve assembly, refer to “FU (H4DO (HEV))”. <Ref. to FU(H4DO(HEV))-3, COMPONENT, General Description.>

2. EXHAUST GAS RECIRCULATION CONTROL CIRCUIT RANGE/PERFORMANCE

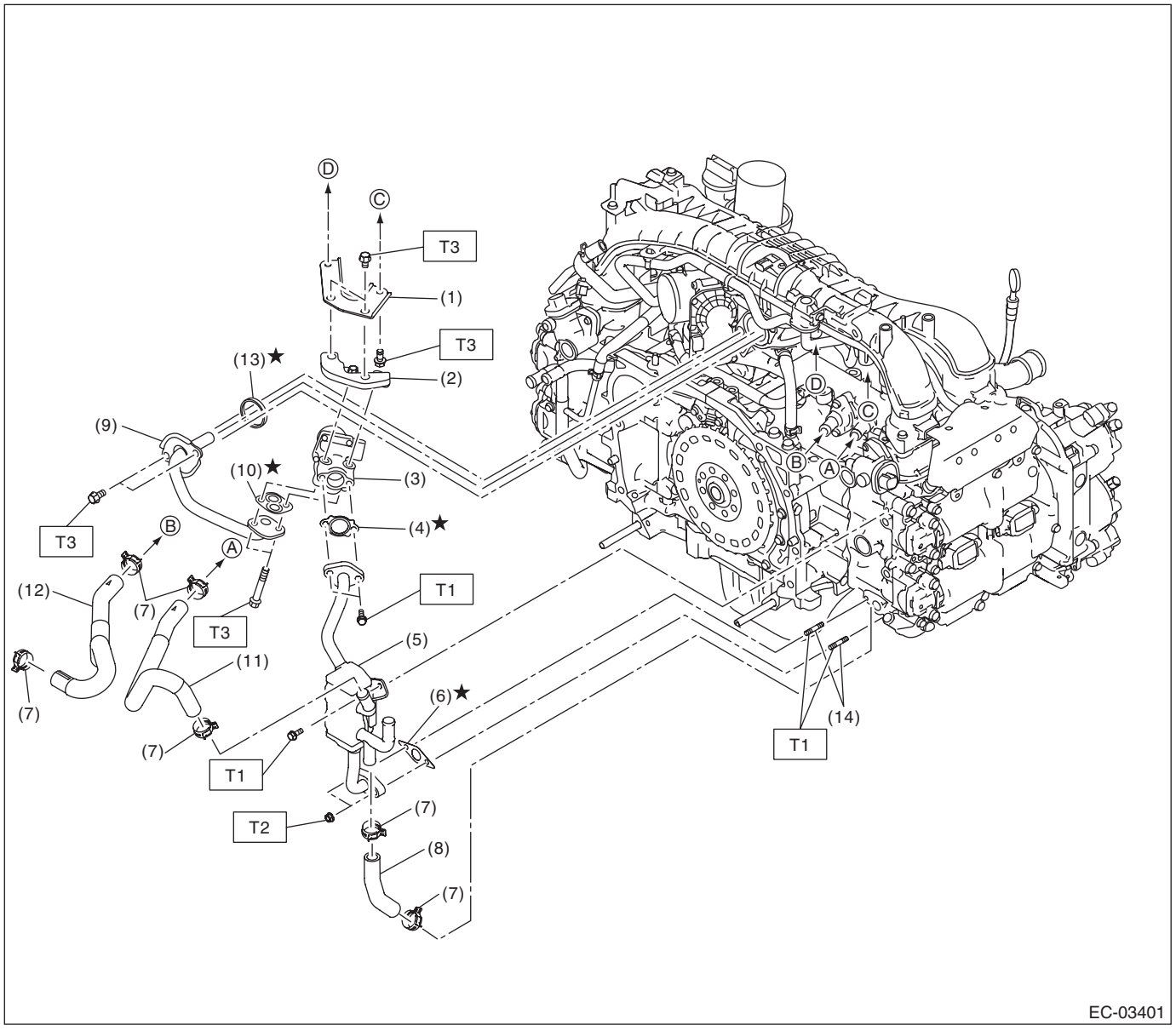

(1) EGR control valve bracket A
(2) EGR control valve bracket B
(3) EGR control valve
(4) Gasket
(5) EGR cooler
(6) Gasket
(7) Clip
(8) Engine coolant inlet hose
(9) EGR pipe
(10) Gasket
(11) Engine coolant outlet hose A
(12) Engine coolant outlet hose B
(13) Gasket
(14) Stud bolt

Tightening torque: N·m (kgf-m, ft-lb)
T1: 6.4 (0.7, 4.7)
T2: 9 (0.9, 6.6)
T3: 19 (1.9, 14.0)

3. PCV SYSTEM 1

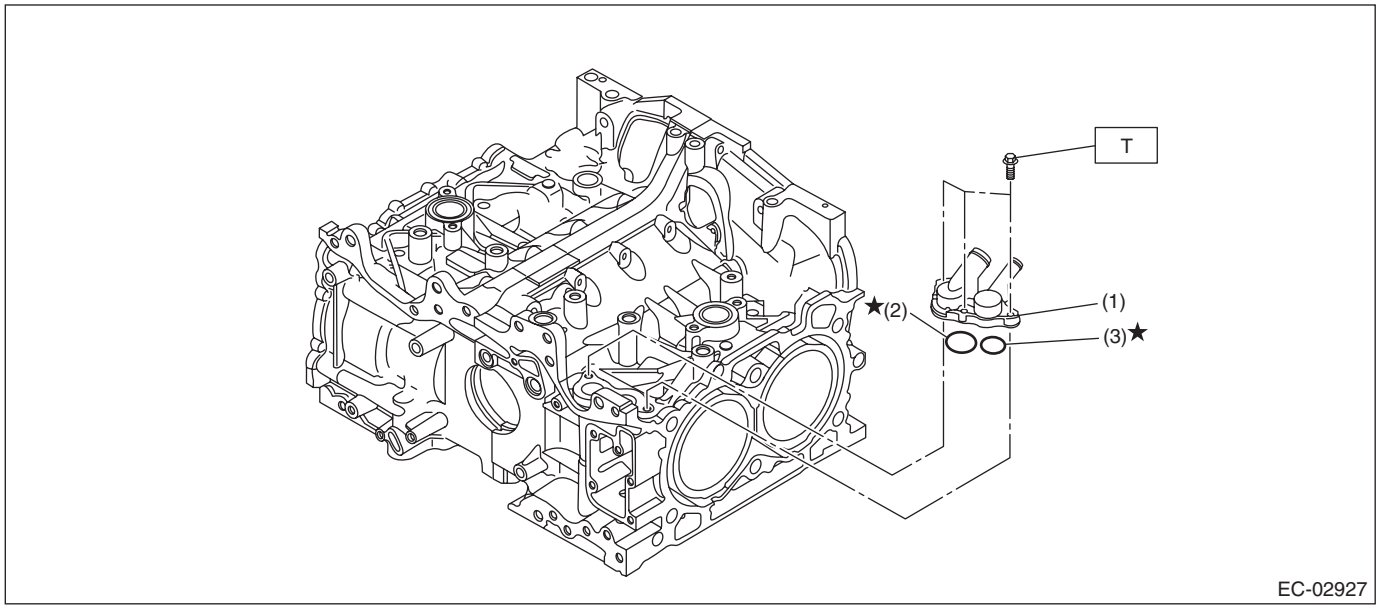

(1) PCV connector
(2) O-ring
(3) O-ring

Tightening torque: N·m (kgf-m, ft-lb)
T: 6.4 (0.7, 4.7)

4. PCV SYSTEM 2

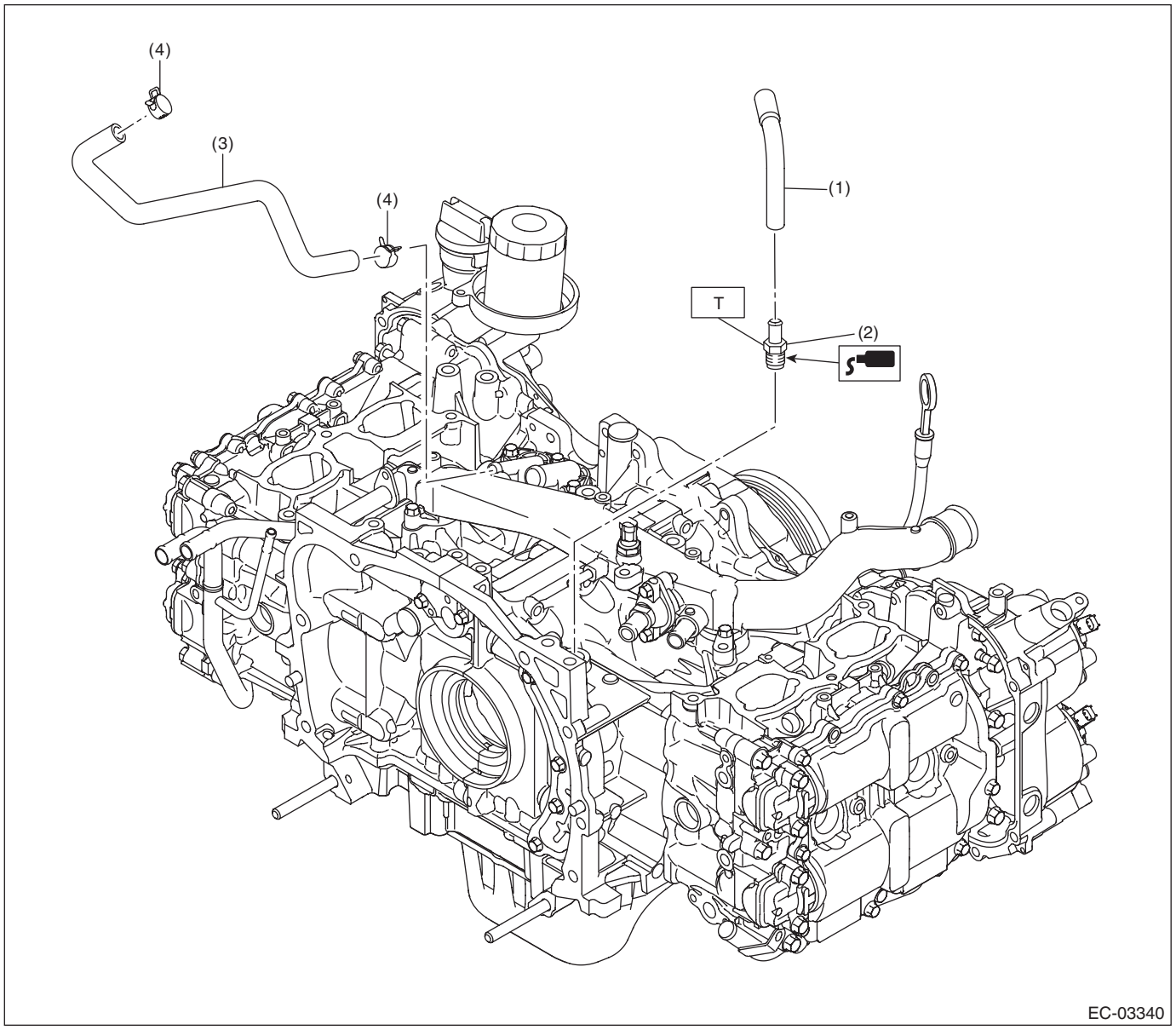

(1) PCV hose A
(2) PCV valve
(3) PCV hose B
(4) Clip

Tightening torque: N·m (kgf-m, ft-lb)
T: 23 (2.3, 17.0)

B: CAUTION

- Prior to starting work, pay special attention to the following:
  1. Always wear work clothes, a work cap, and protective shoes. Additionally, wear a helmet, protective goggles, etc. if necessary.
  2. Protect the vehicle using a seat cover, fender cover, etc.
  3. Prepare the service tools, clean cloth, containers to catch grease and oil, etc.
- Vehicle components are extremely hot immediately after driving. Be wary of receiving burns from heated parts.
- When performing a repair, identify the cause of trouble and avoid unnecessary removal, disassembly and replacement.
- Before disconnecting connectors of sensors or units, be sure to disconnect the ground cable from battery.
- Always use the jack-up point when the shop jacks or rigid racks are used to support the vehicle.
- Remove contamination including dirt and corrosion before removal, installation, disassembly or assembly.
- Keep the removed parts in order and protect them from dust and dirt.
- All removed parts, if to be reused, should be reinstalled in the original positions with attention to the correct directions, etc.
- Bolts, nuts and washers should be replaced with new parts as required.
- Be sure to tighten the fasteners including bolts and nuts to the specified torque.

C: PREPARATION TOOL

1. GENERAL TOOL

TOOL NAME	REMARKS
Circuit tester	Used for measuring resistance and voltage.

2. Front Catalytic Converter

A: REMOVAL

The front catalytic converter is integrated into the front exhaust pipe; therefore, refer to “Front Exhaust Pipe” for the removal procedure. <Ref. to EX(H4DO(w/o HEV))-6, REMOVAL, Front Exhaust Pipe.>

B: INSTALLATION

The front catalytic converter is integrated into the front exhaust pipe; therefore, refer to “Front Exhaust Pipe” for the installation procedure. <Ref. to EX(H4DO(w/o HEV))-8, INSTALLATION, Front Exhaust Pipe.>

C: INSPECTION

1) Check the connections and welded parts for exhaust leaks.
2) Make sure there are no holes or rusting.

3. Rear Catalytic Converter

A: REMOVAL

The rear catalytic converter is integrated into the center exhaust pipe; therefore, refer to “Center Exhaust Pipe” for the removal procedure. <Ref. to EX(H4DO(w/o HEV))-14, REMOVAL, Center Exhaust Pipe.>

B: INSTALLATION

The rear catalytic converter is integrated into the center exhaust pipe; therefore, refer to “Center Exhaust Pipe” for the installation procedure. <Ref. to EX(H4DO(w/o HEV))-15, INSTALLATION, Center Exhaust Pipe.>

C: INSPECTION

1) Check the connections and welded parts for exhaust leaks.
2) Make sure there are no holes or rusting.

4. Canister

A: REMOVAL

1) Remove the rear wheel LH.
2) Lift up the vehicle.
3) Remove the rear exhaust pipe. <Ref. to EX(H4DO(w/o HEV))-18, REMOVAL, Rear Exhaust Pipe.>
4) Remove the propeller shaft. <Ref. to DS-12, REMOVAL, Propeller Shaft.>
5) Support the rear differential with the transmission jack.
6) Remove the self-locking nuts which hold the rear differential to the rear sub frame assembly.

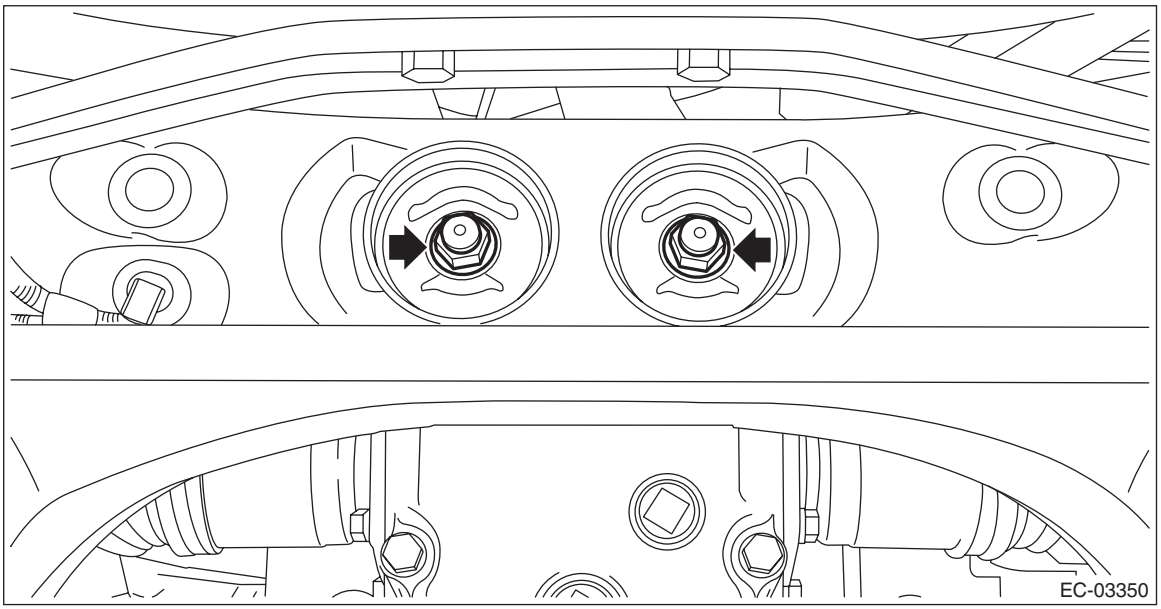

7) Remove the rear differential member from the rear sub frame assembly and the rear differential.

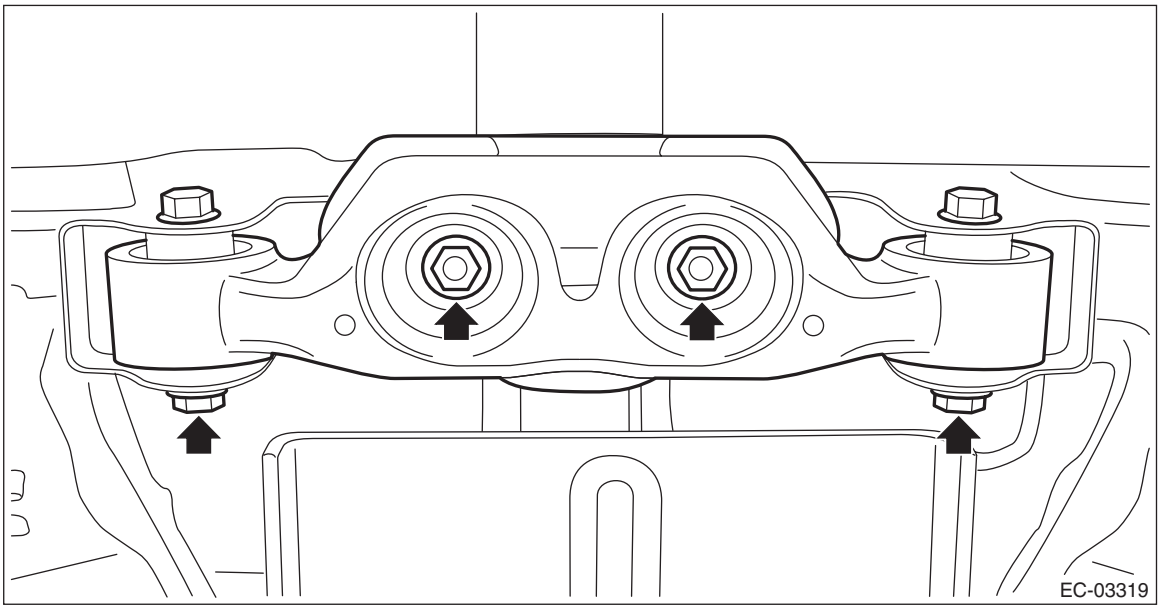

8) Lower the transmission jack gradually until the rear differential is at the position shown in the figure.

NOTE:

• When pulling out the stud bolt from the bushing portion of the rear sub frame assembly, adjust the angle and location of transmission jack and jack stand.

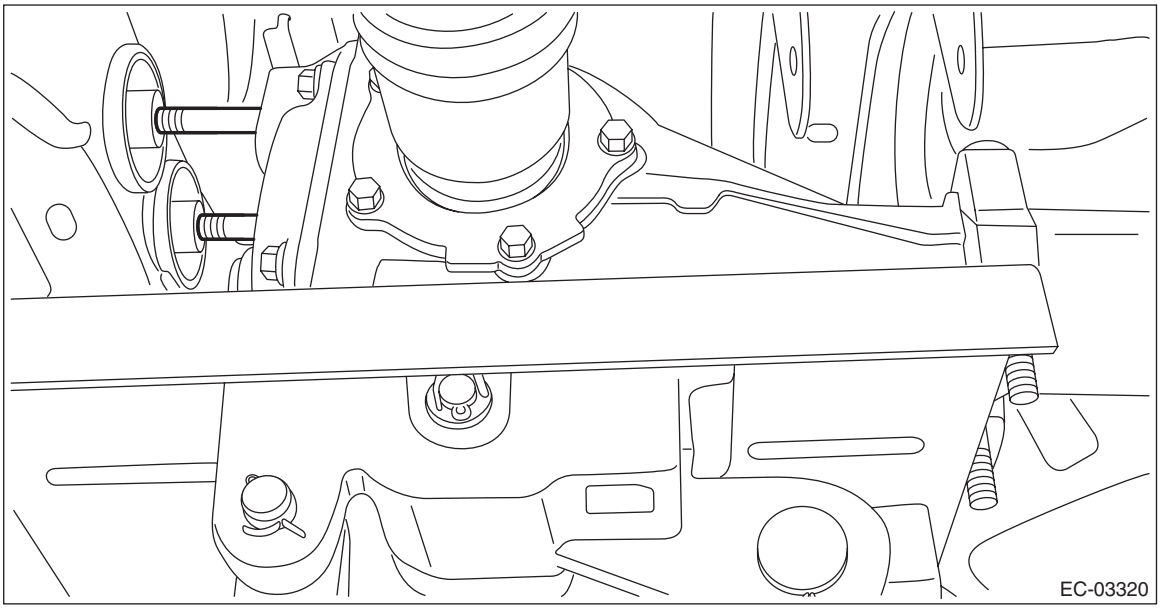

• Do not lower the rear differential excessively. Doing so may add extra load to the drive shaft or cause the falling-off of the drive shaft.

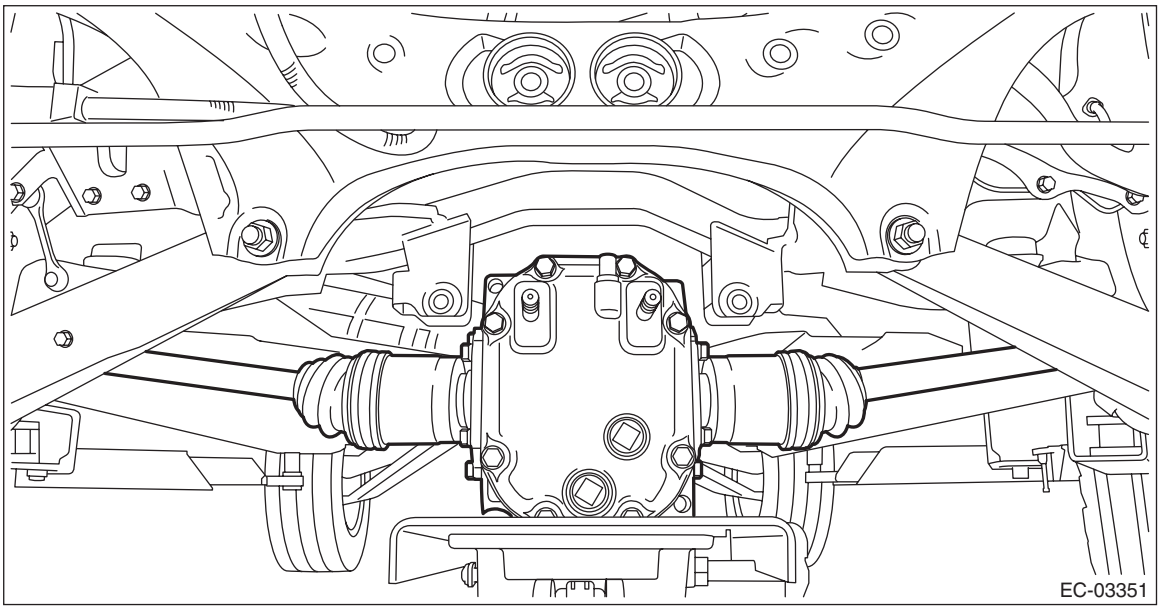

9) Remove the clips from vent tube (A) and purge tube (B).
10) Disconnect the vent tube (A), purge tube (B) and drain tube A (C) from the canister.

NOTE:
Disconnect the quick connector as shown in the figure.

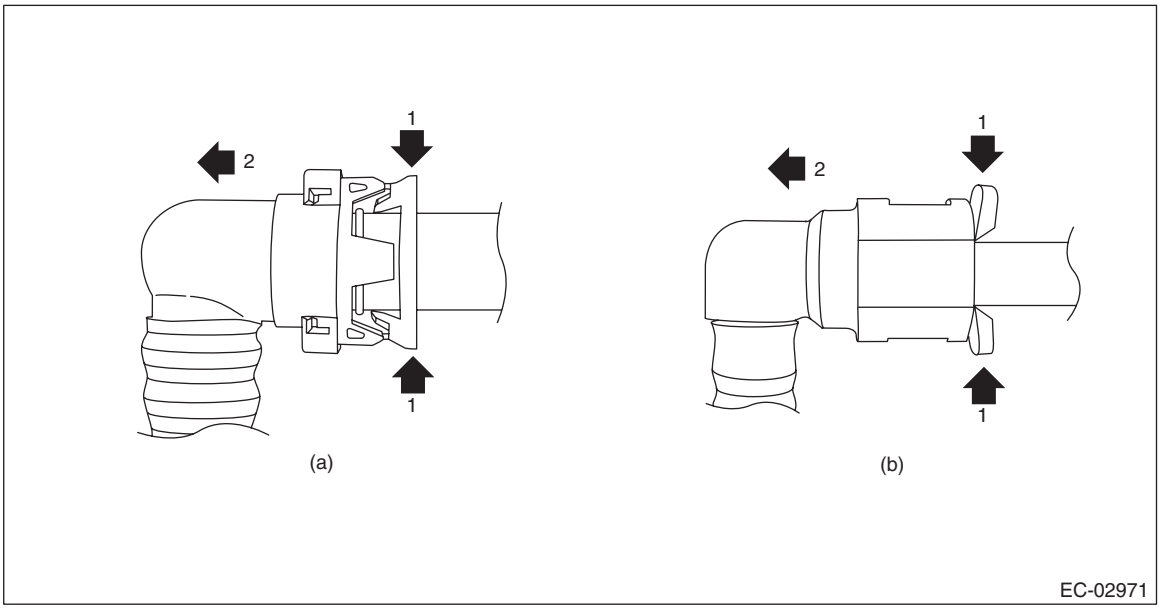

(a) Drain tube and vent tube (b) Purge tube

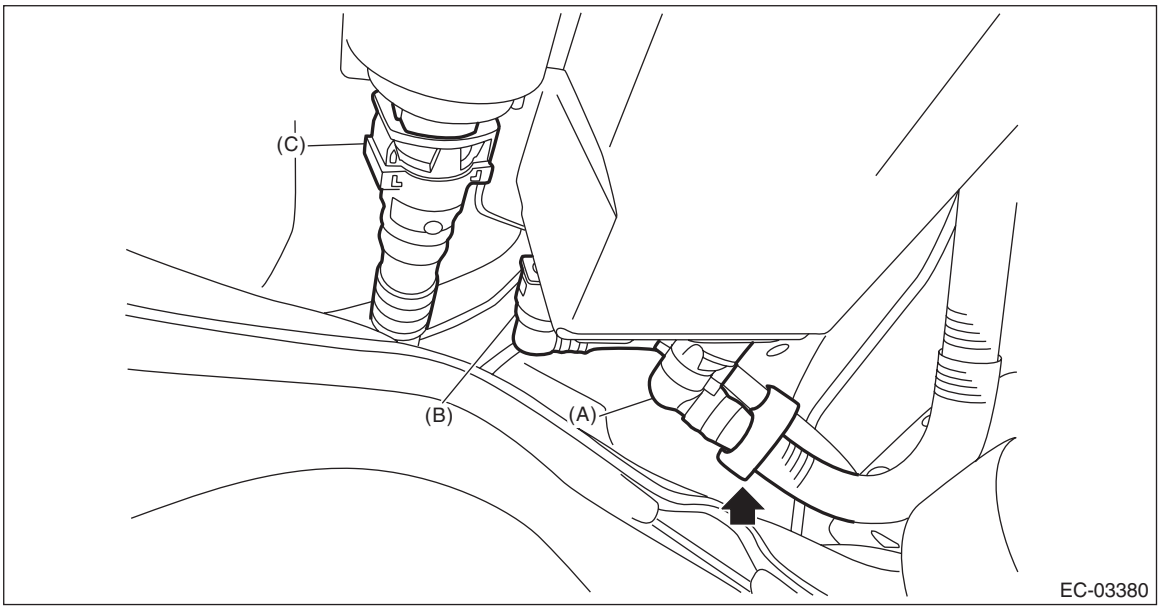

11) Remove the canister assembly from the vehicle and the canister bracket A.

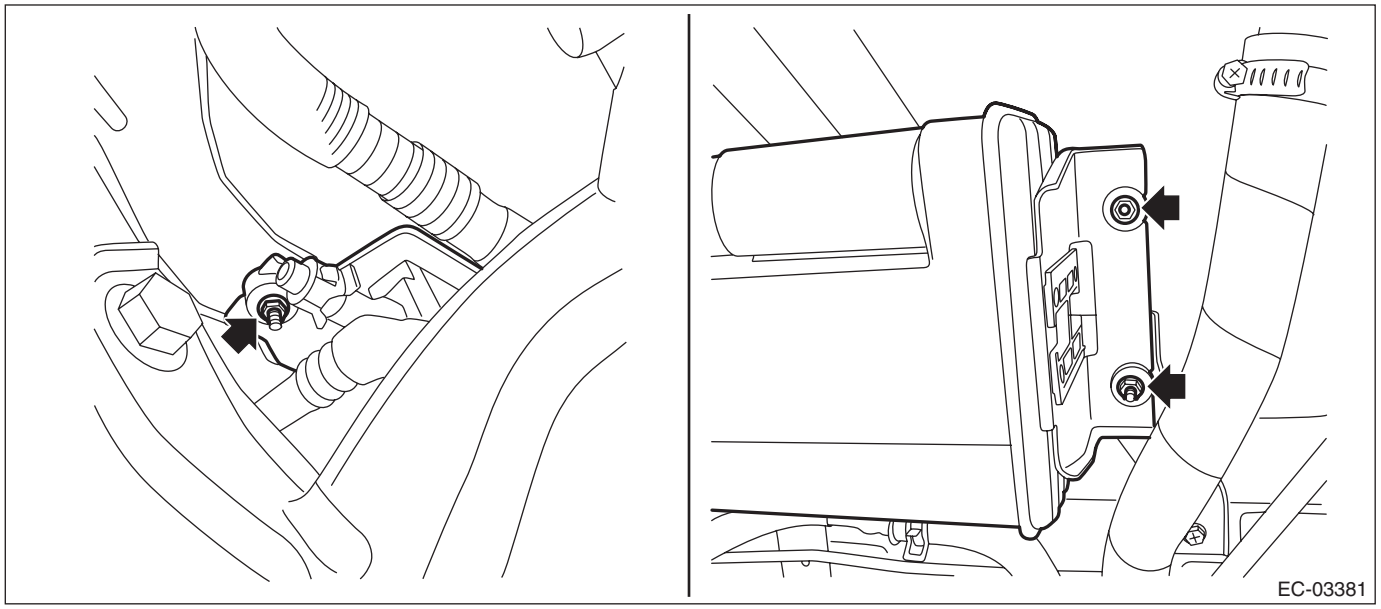

12) Release the claw (A) from the canister, slide it in the direction of the arrow, and remove the canister bracket B (B) and the canister bracket C (C).

NOTE:
When removing the canister bracket from the canister, use the new canister and canister bracket to install.

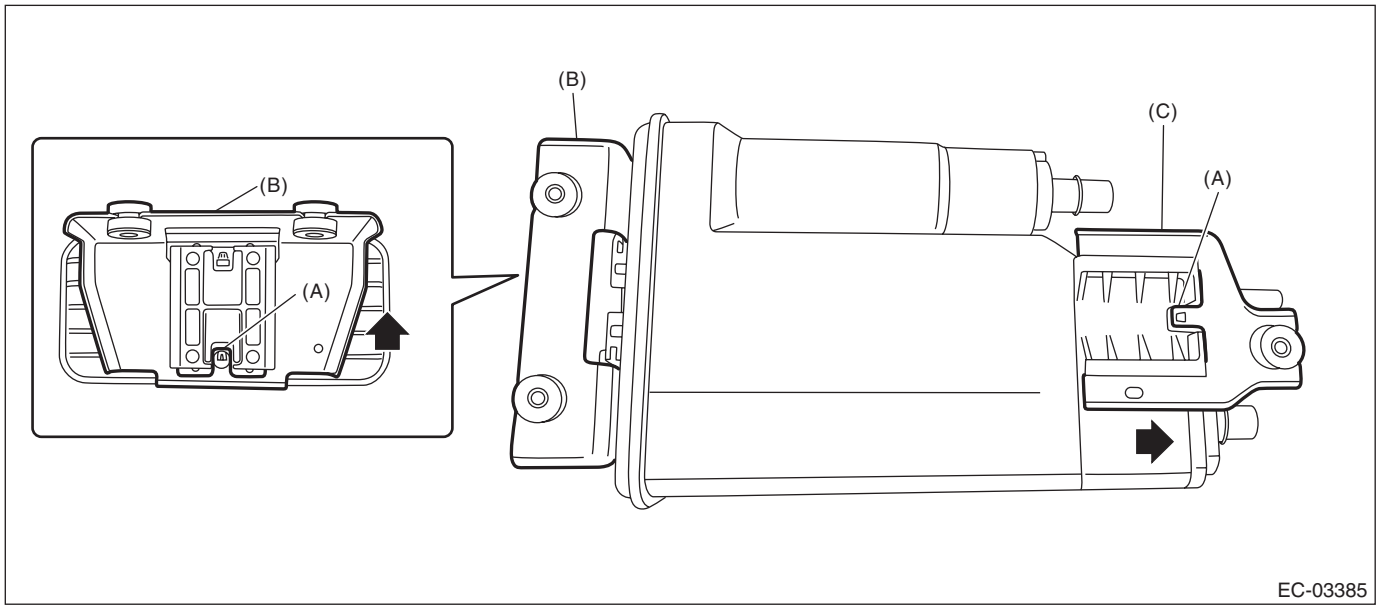

13) Remove the canister bracket A from the vehicle.

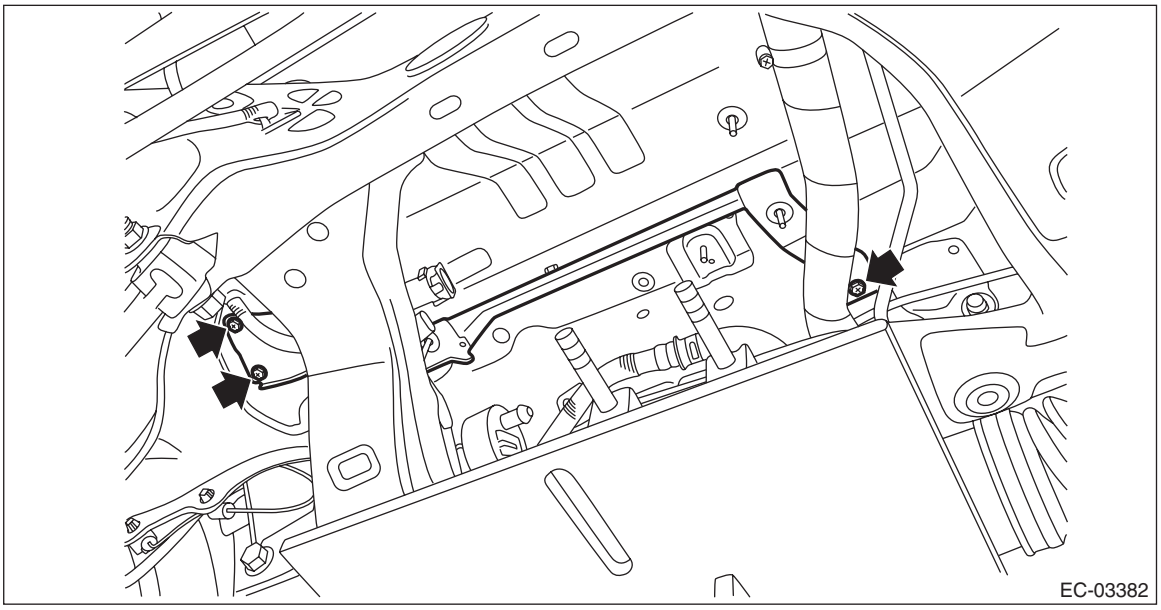

14) Disconnect the vent tube from the vent hose.

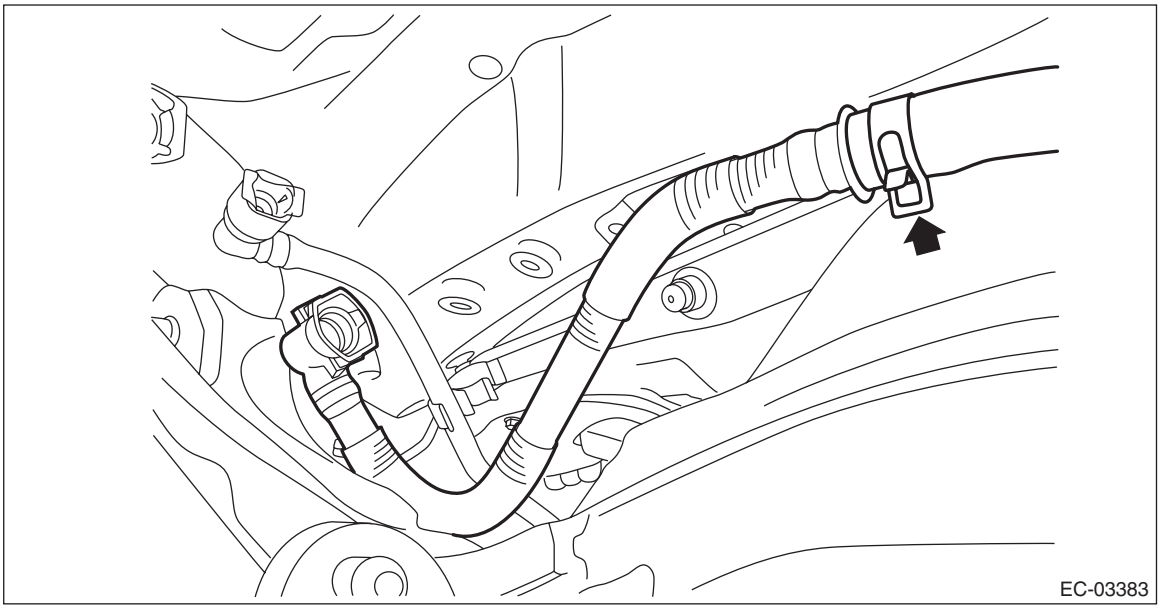

15) Disconnect the drain tube A from the drain tube B.

NOTE:
Disconnect the quick connector as shown in the figure.

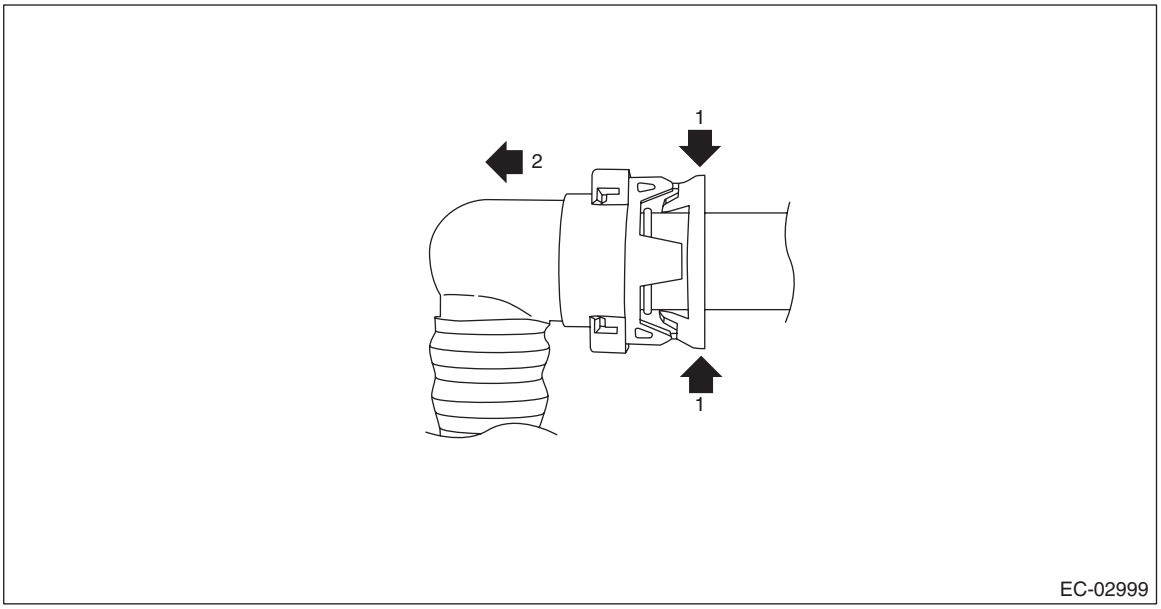

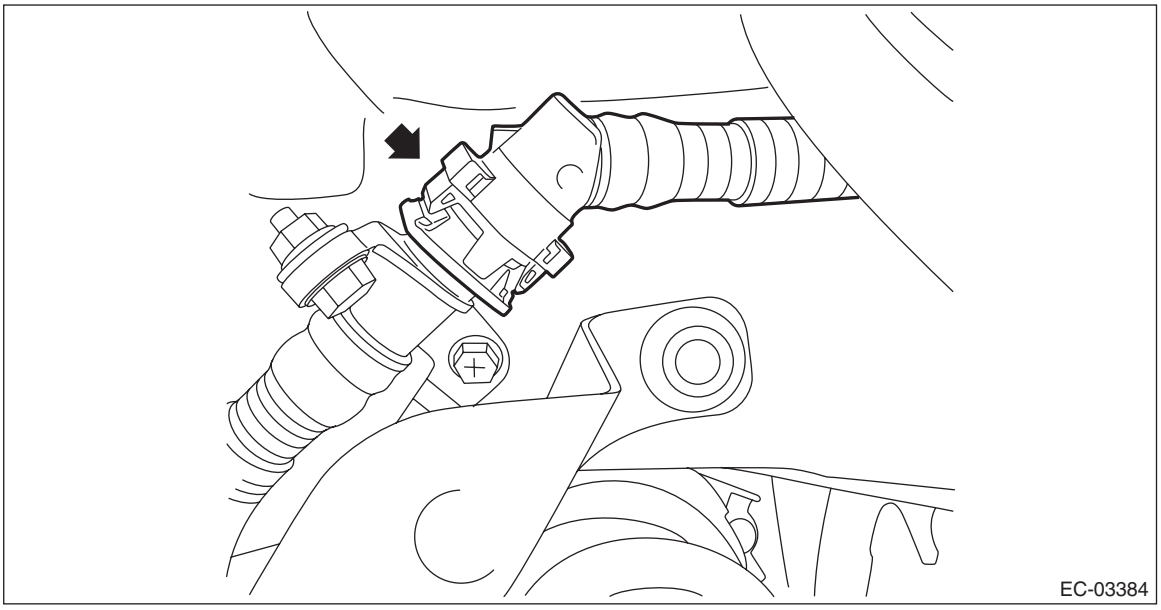

B: INSTALLATION

1) Connect the drain tube A to the drain tube B.

NOTE:
Connect the quick connector as shown in the figure.

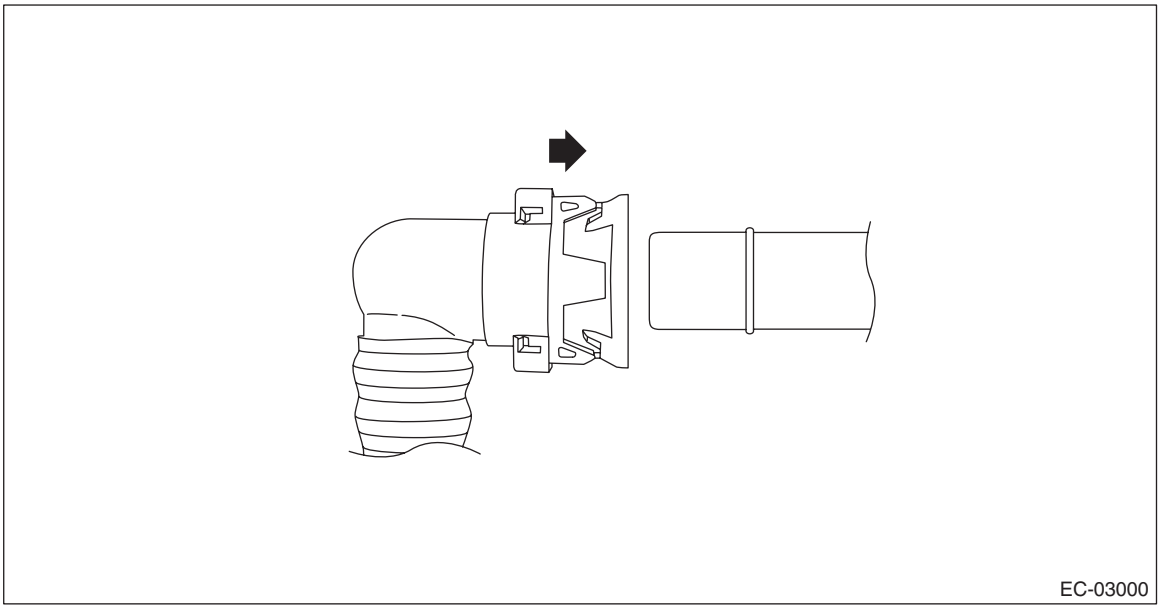

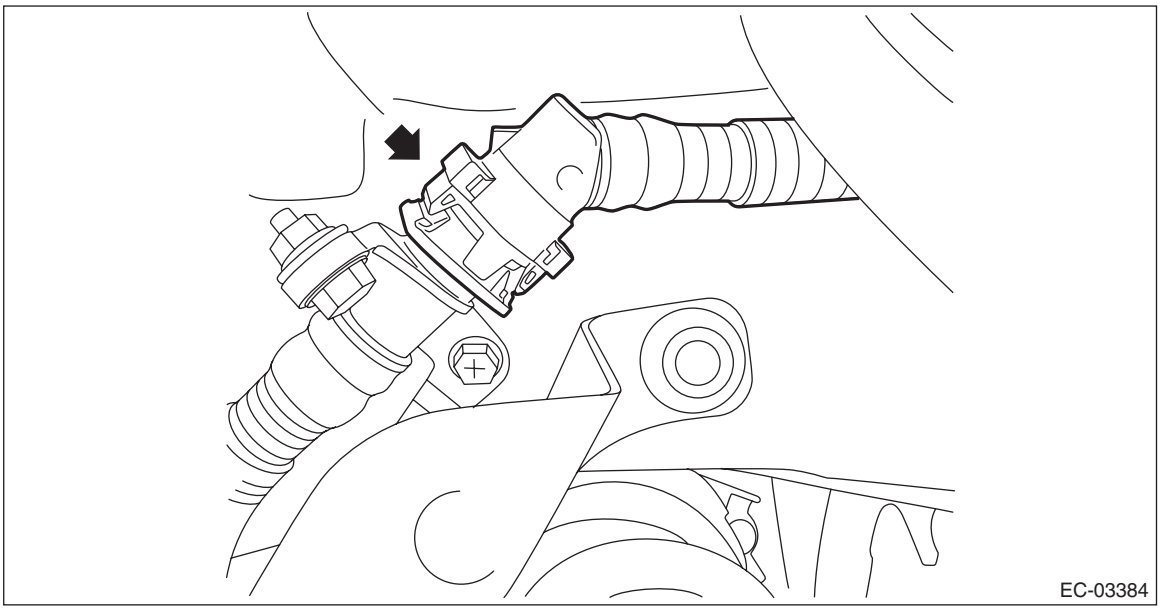

2) Connect the vent tube to the vent hose.

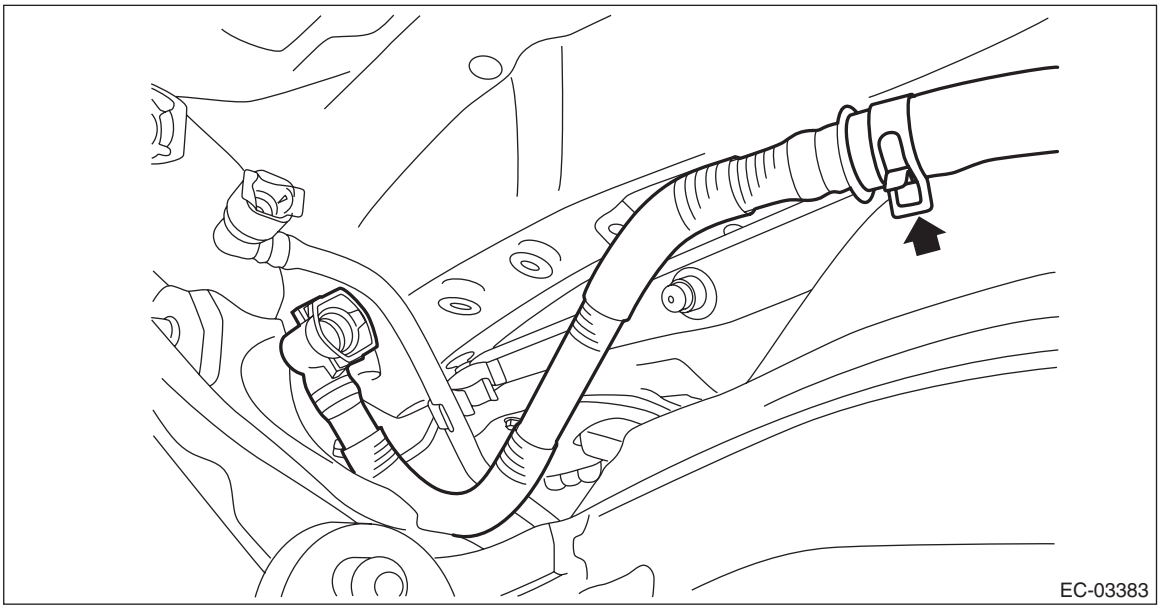

3) Install the canister bracket A to the vehicle.

Tightening torque:
7.5 N·m (0.8 kgf-m, 5.5 ft-lb)

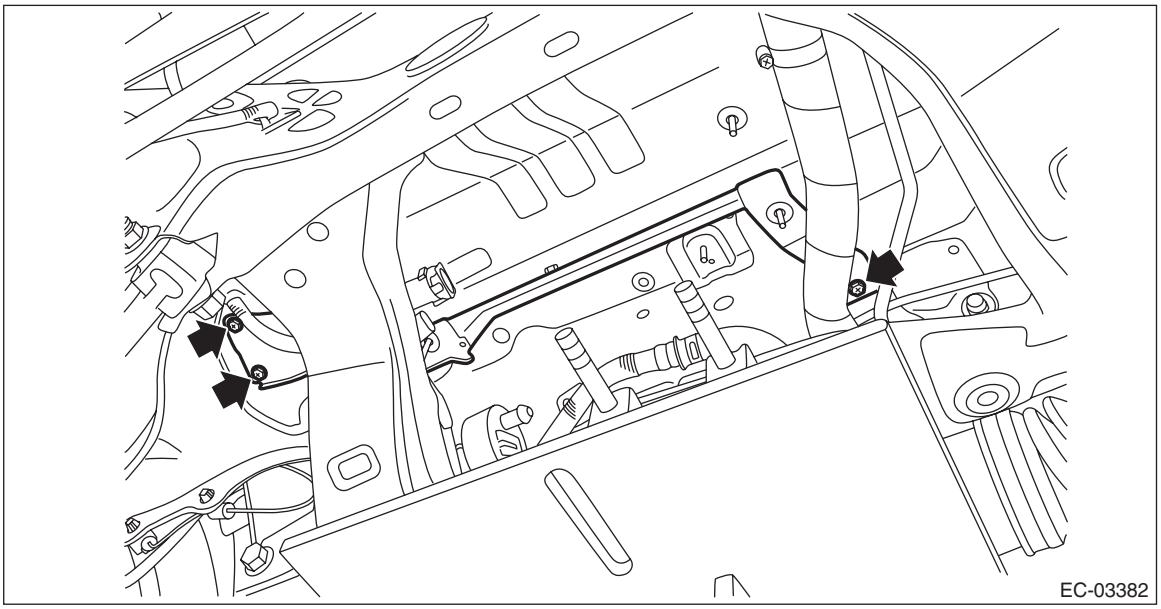

4) Slide in the direction of the arrow, and install the canister bracket B (B) and the canister bracket C (C) to the canister.

NOTE:
- Use a new canister and canister bracket.
- Check that the claw (A) is firmly secured.

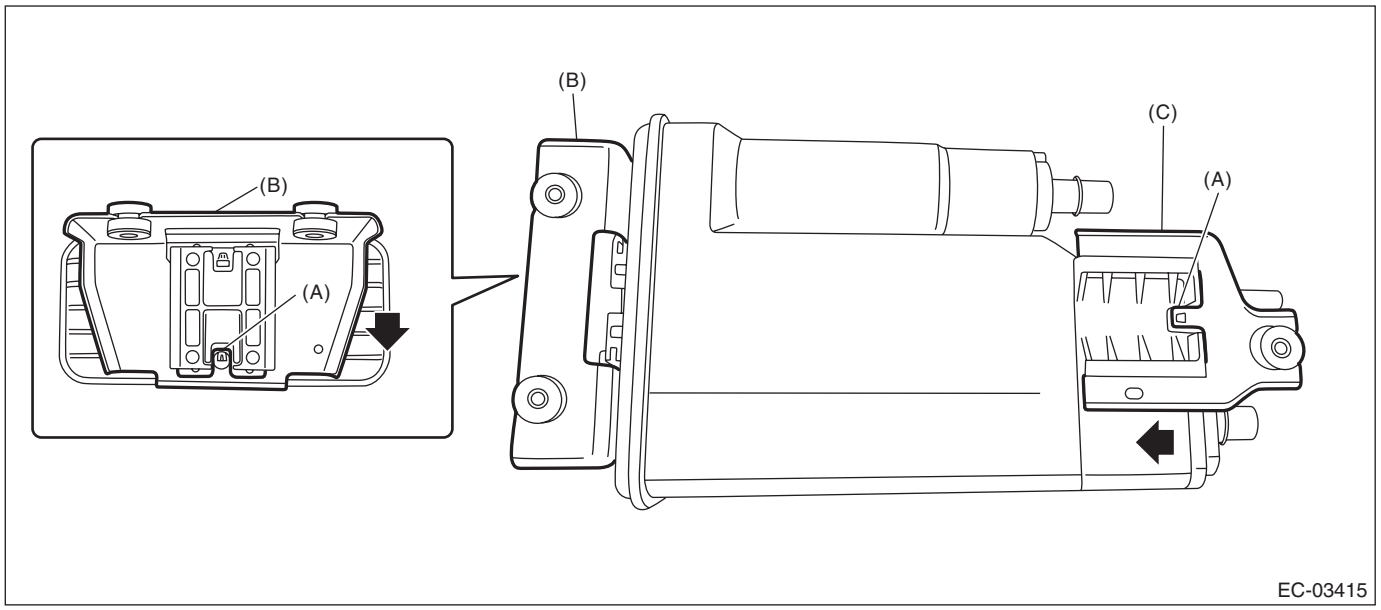

5) Install the canister assembly to the vehicle and the canister bracket A.

Tightening torque:
7.5 N·m (0.8 kgf-m, 5.5 ft-lb)

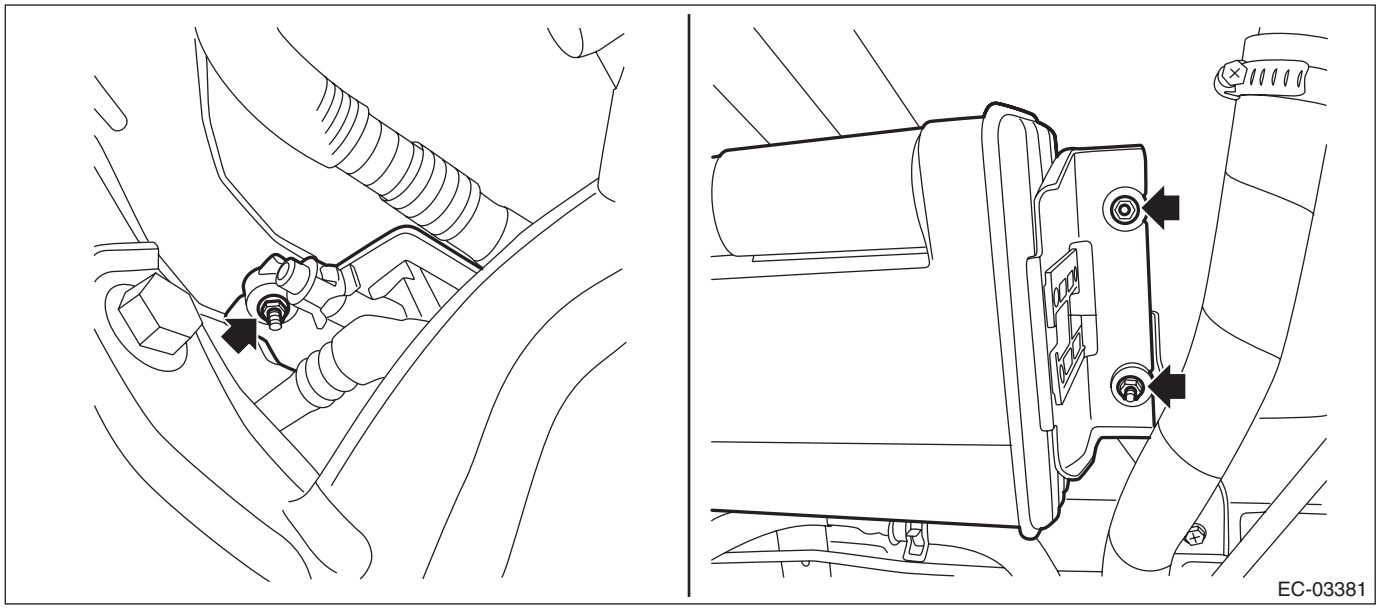

6) Connect the vent tube (A), purge tube (B), and drain tube (C) to the canister.

CAUTION:
- **Check that there is no damage or dust on the quick connector. If necessary, clean the seal surface of the pipe.**
- **Make sure that the quick connector is securely connected.**

NOTE:
Install the quick connector as shown in the figure.

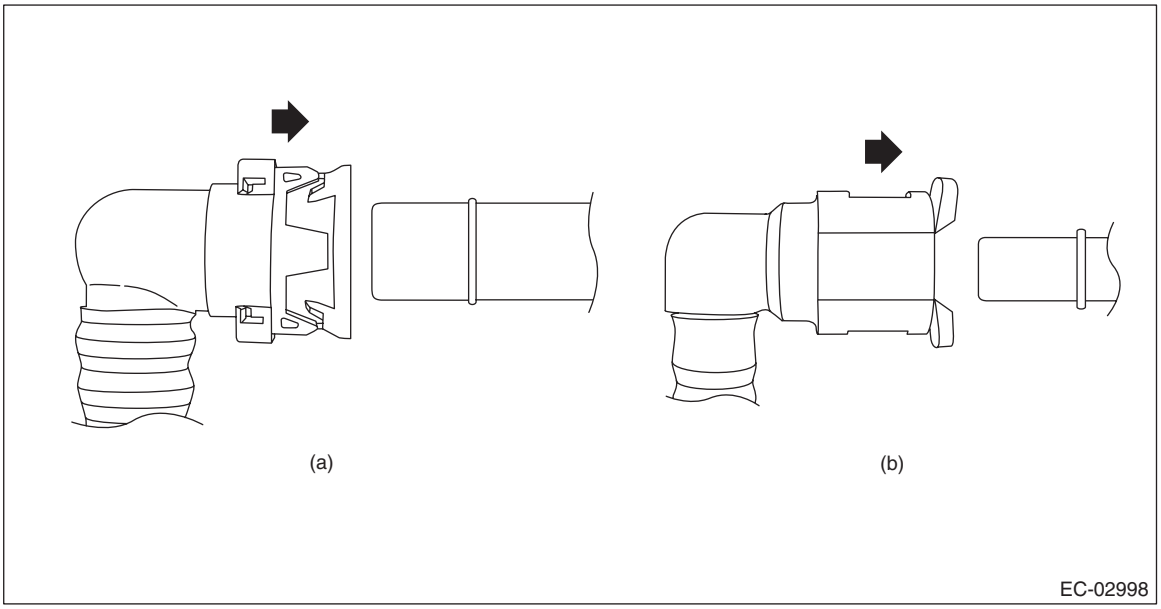

(a) Drain tube and vent tube (b) Purge tube

7) Install the clips to the vent tube (A) and purge tube (B).

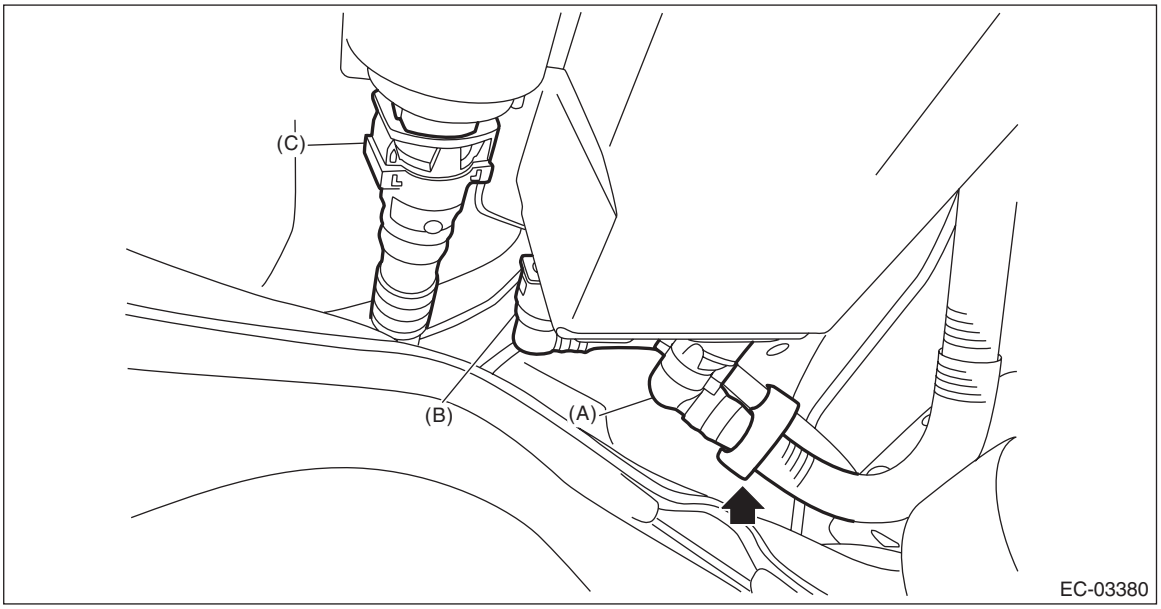

8) Lift up the transmission jack gradually, and set the rear differential to the rear sub frame assembly.

NOTE:
When inserting the stud bolt into the bushing portion of the rear sub frame assembly, adjust the angle and location of transmission jack and jack stand.

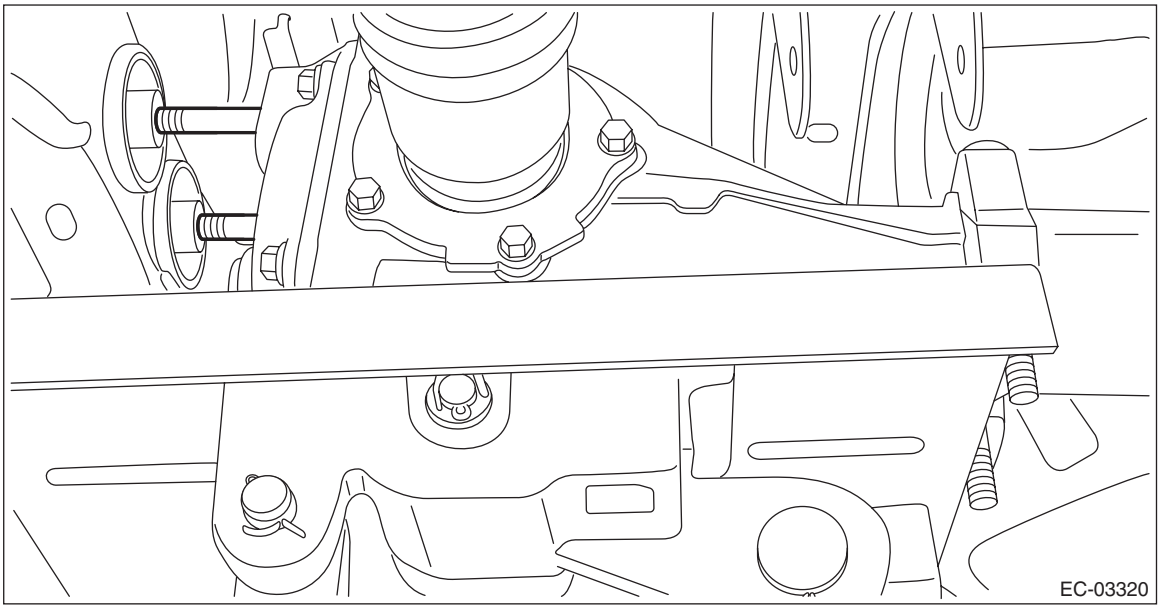

9) Temporarily tighten the self-locking nuts which hold the rear differential to the rear sub frame assembly.

NOTE:
Use a new self-locking nut.

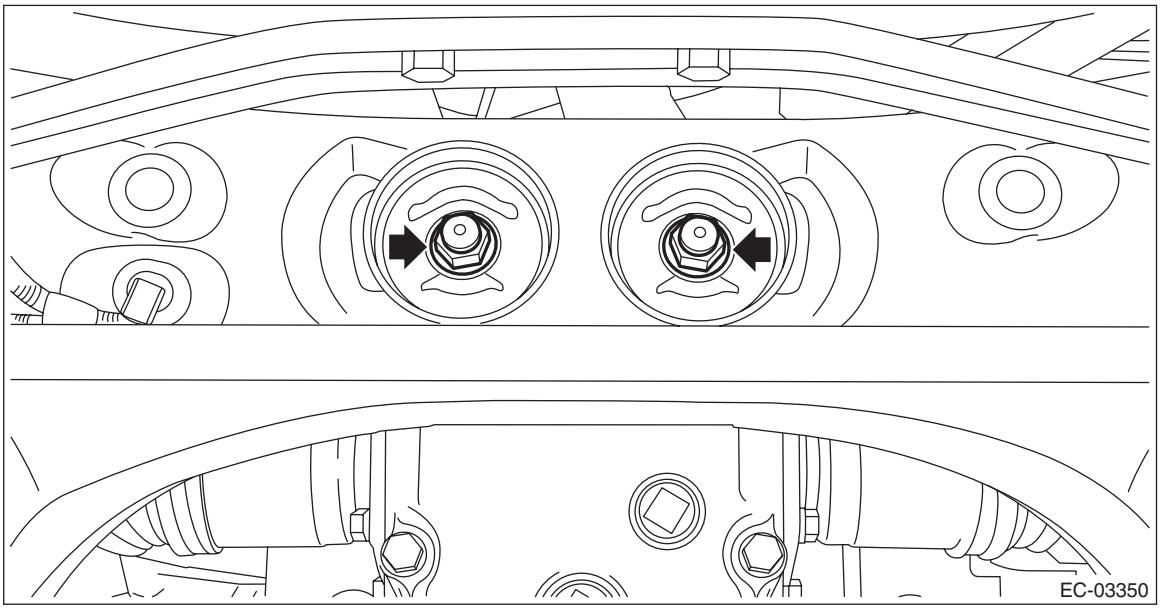

10) Set the rear differential member to the rear sub frame assembly and rear differential, and temporarily tighten the self-lock nuts which secure the rear differential member to the rear sub frame assembly and rear differential.

NOTE:
Use a new self-locking nut.

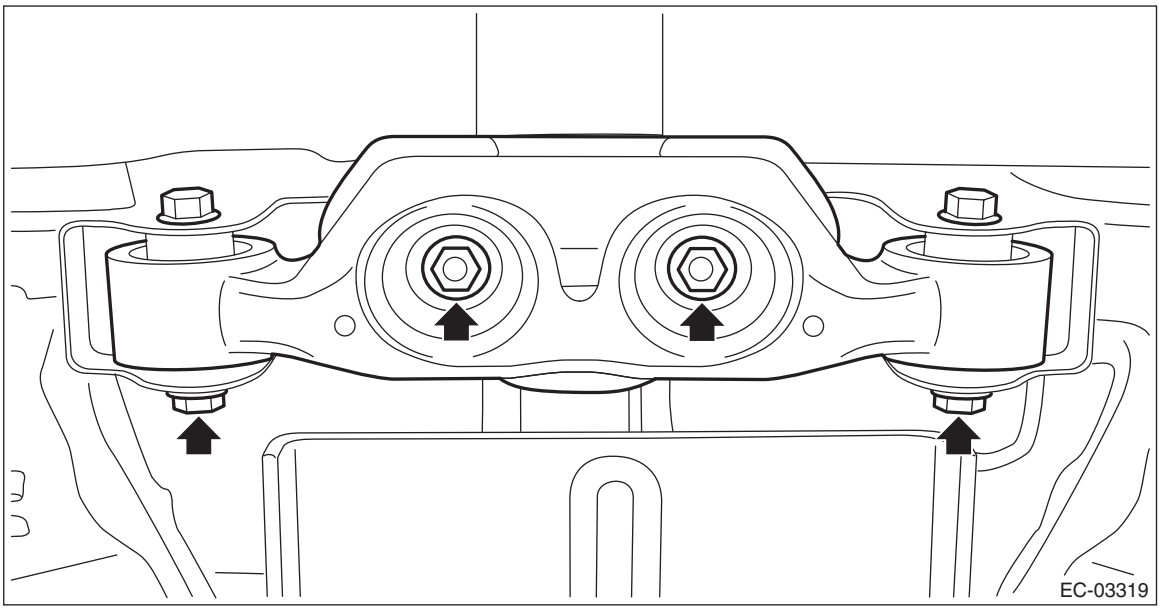

11) Remove the transmission jack from the rear differential.
12) Tighten the self-locking nuts which secure the rear differential member to the rear sub frame assembly and rear differential.

Tightening torque:
T1: 50 N·m (5.1 kgf-m, 36.9 ft-lb)
T2: 110 N·m (11.2 kgf-m, 81.1 ft-lb)

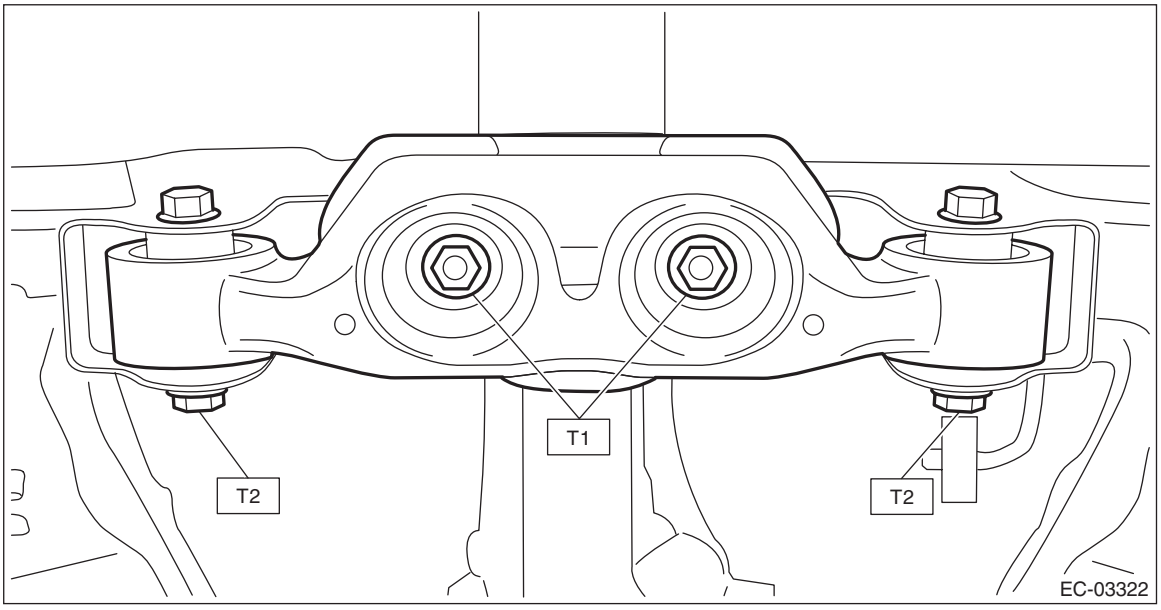

13) Tighten the self-locking nuts which secure the rear differential to the rear sub frame assembly.

Tightening torque:
70 N·m (7.1 kgf-m, 51.6 ft-lb)

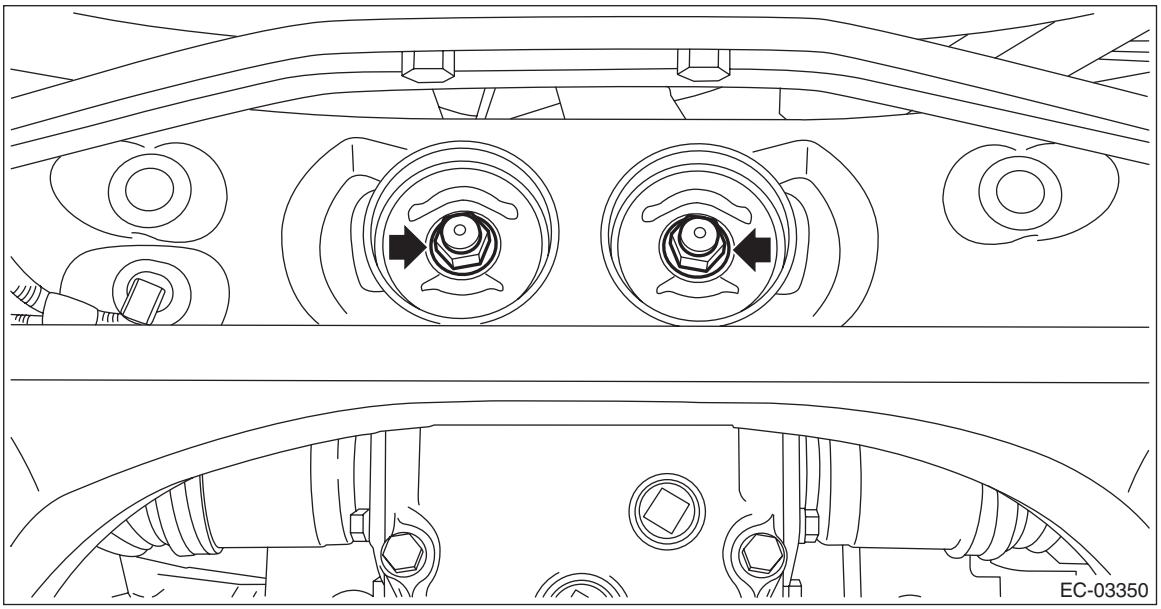

14) Install the propeller shaft. <Ref. to DS-13, INSTALLATION, Propeller Shaft.>
15) Install the rear exhaust pipe. <Ref. to EX(H4DO(w/o HEV))-20, INSTALLATION, Rear Exhaust Pipe.>
16) Lower the vehicle.

C: INSPECTION

1) Check that the canister has no deformation, cracks or other damages.
2) Check that the tube has no cracks, damage or loose part.

5. Purge Control Solenoid Valve

A: REMOVAL

1) Disconnect the ground cable from battery. <Ref. to NT-5, BATTERY, NOTE, Note.>

NOTE:
For the 12 volt engine restart battery, disconnect the ground terminal from 12V engine restart battery sensor.

2) Remove the collector cover.
   (1) Pull up the two points at the front of collector cover (A).
   (2) Pull up the two points at the rear of collector cover (B) while moving them rearward.

NOTE:
Be careful not to contact the fuel delivery tube when moving the collector cover rearward.

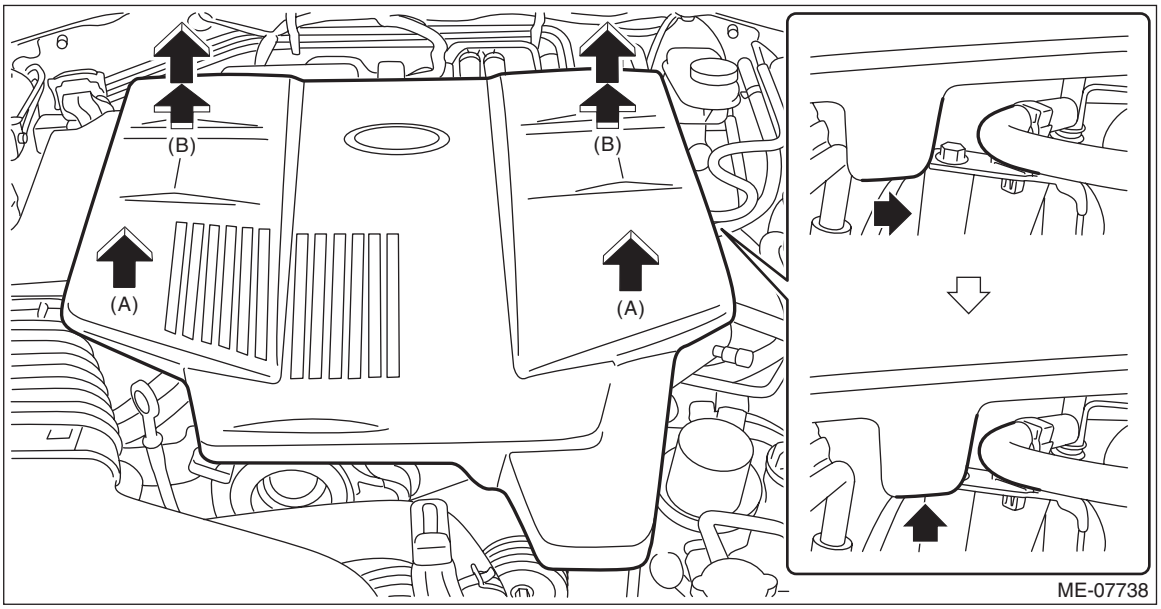

3) Disconnect the connector (A) from the purge control solenoid valve, and remove the bolt (B) which secures the purge control solenoid valve to the purge control solenoid valve bracket.

NOTE:
Hold the purge control solenoid valve unit by hand to prevent it from rotating together.

4) Disconnect the vacuum hose from the purge control solenoid valve, and then remove the purge control solenoid valve.

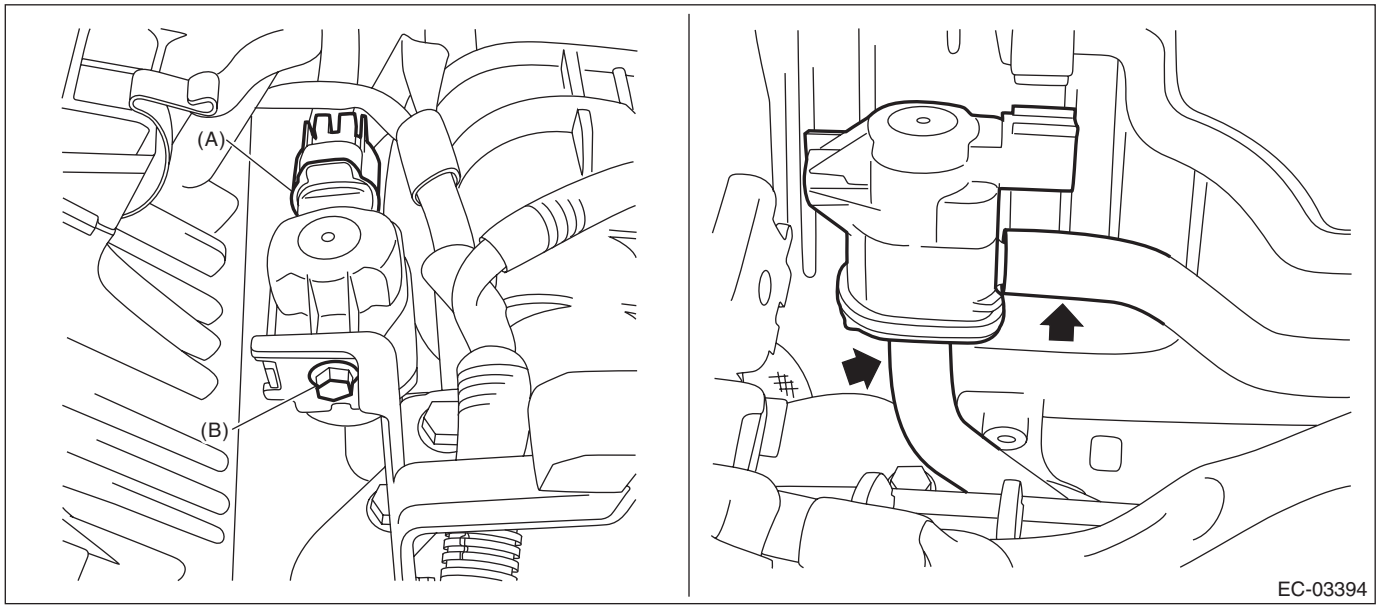

5) Remove the clip (A) securing the engine wiring harness, and remove the purge control solenoid valve bracket from the intake manifold.

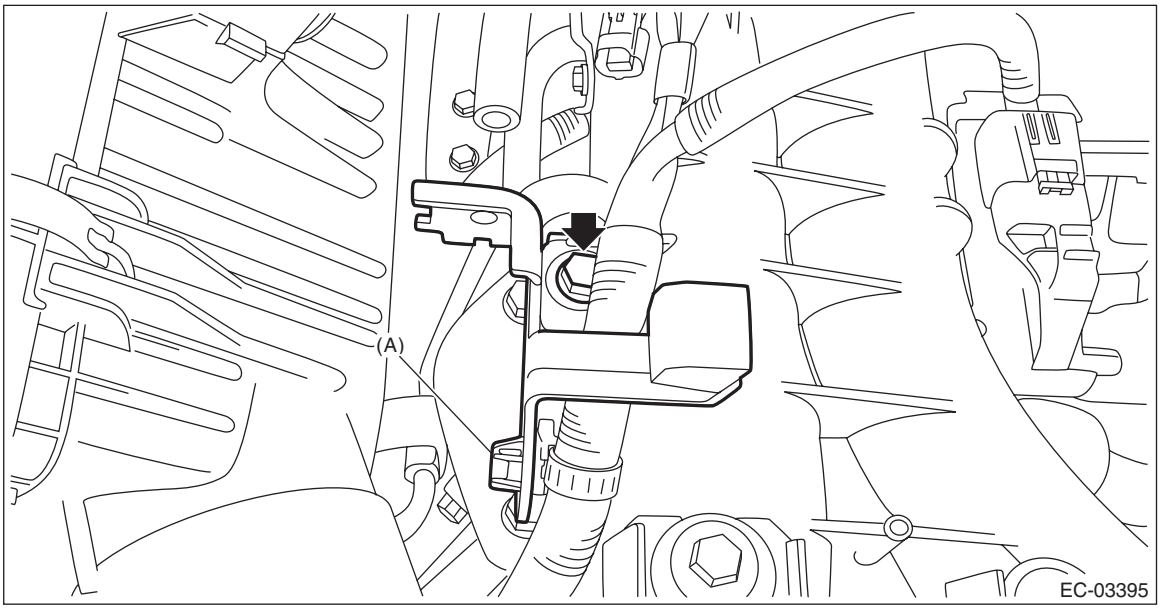

B: INSTALLATION

Install in the reverse order of removal.

NOTE:
- Hold the purge control solenoid valve unit by hand to prevent it from rotating together.
- Connect the vacuum hose as shown in the figure.

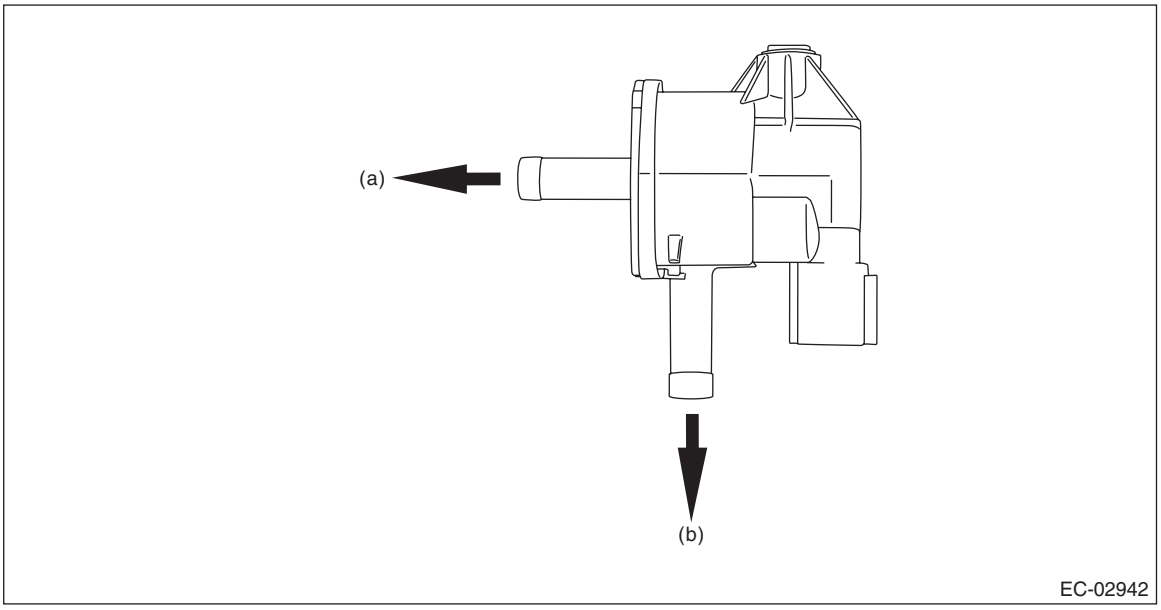

(a) To intake manifold (b) To fuel pipe

Tightening torque:
6.4 N·m (0.7 kgf-m, 4.7 ft-lb)

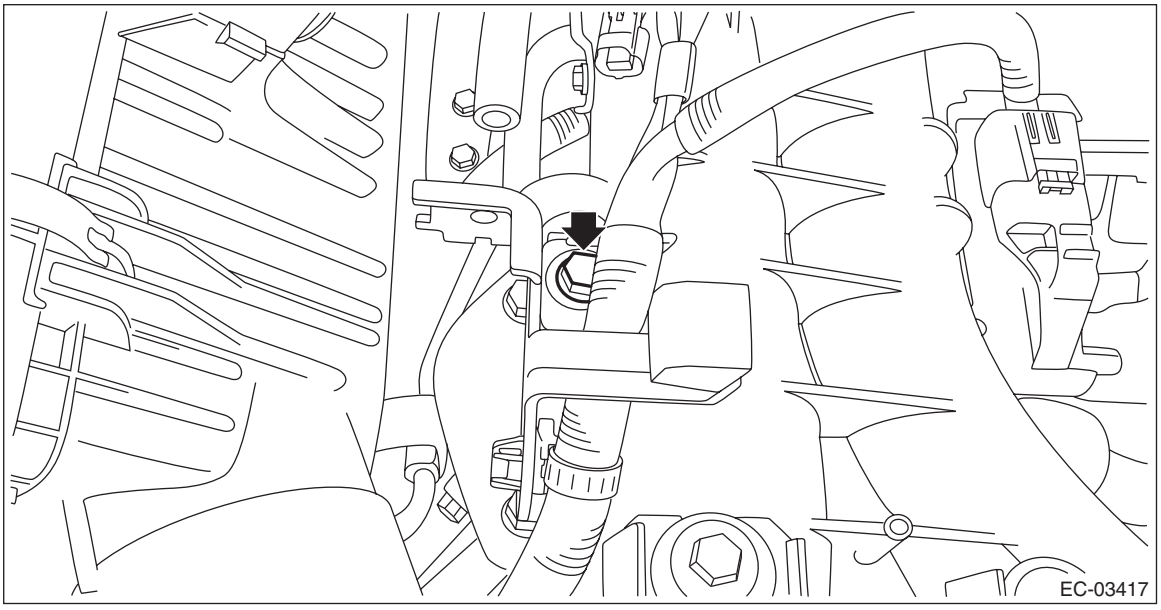

Tightening torque:
3.4 N·m (0.3 kgf-m, 2.5 ft-lb)

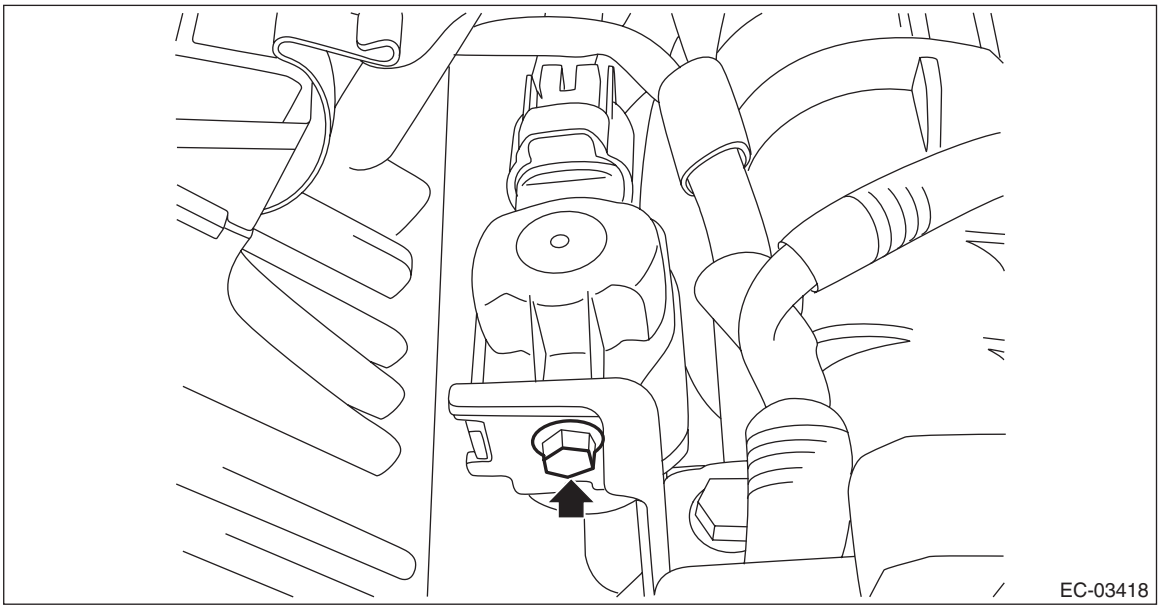

C: INSPECTION

1. PURGE CONTROL SOLENOID VALVE

1) Check that the purge control solenoid valve has no deformation, cracks or other damages.
2) Measure the resistance between the purge control solenoid valve terminals.

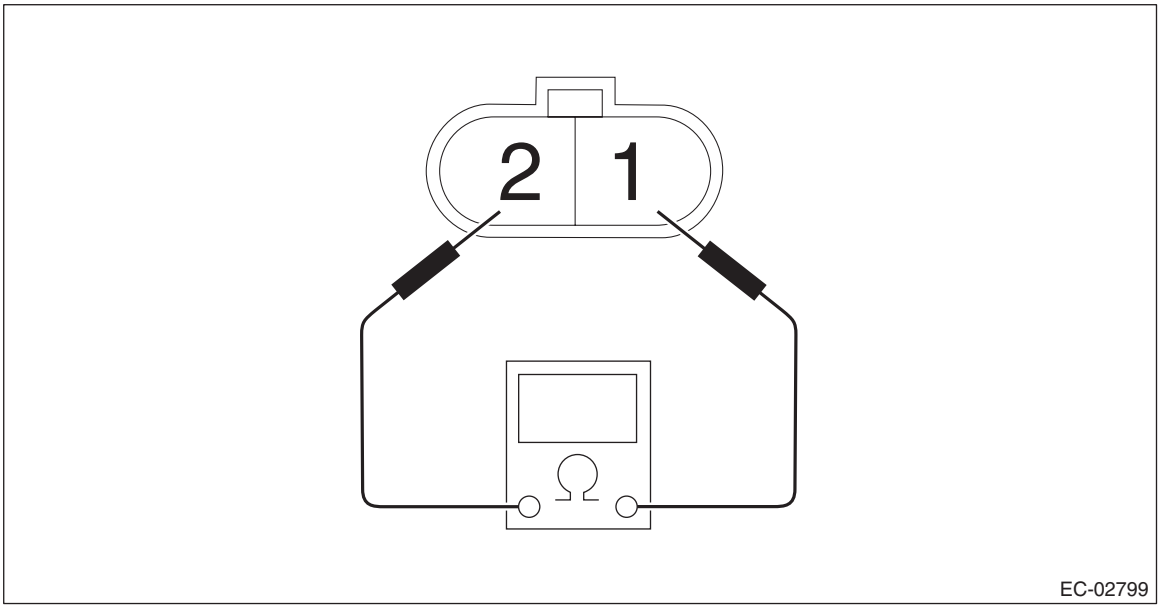

Terminal No.	Standard
1 and 2	24±3 Ω (when 20°C (68°F))

3) Check that air does not come out from (B) when air is blown into (A).

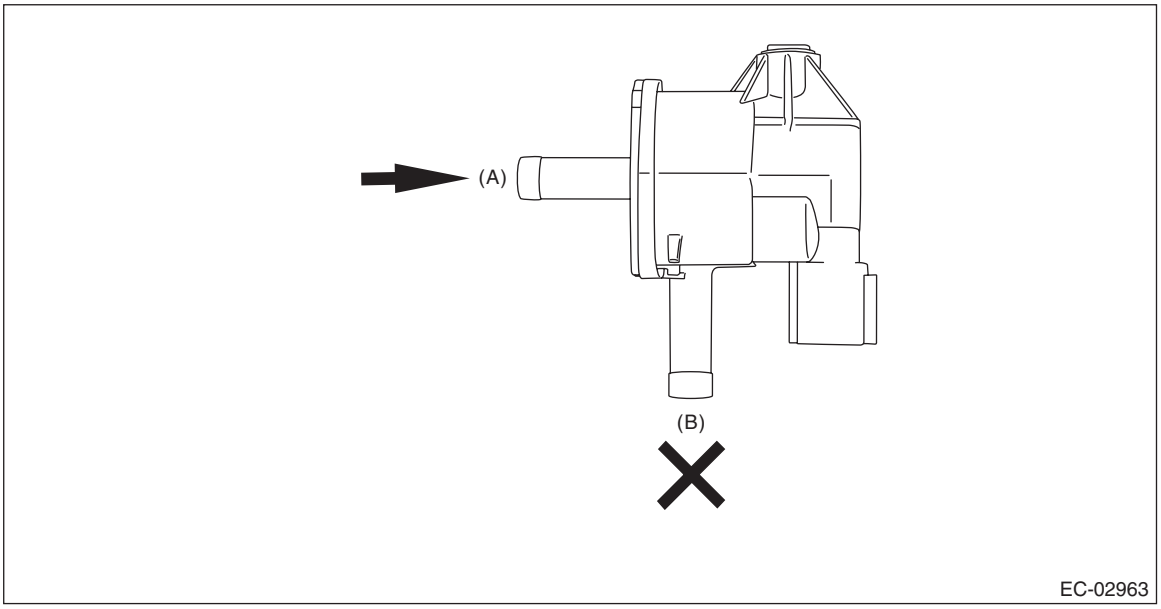

4) Connect the battery positive terminal to the terminal No. 1 and the battery negative terminal to the terminal No. 2. Check that air is discharged from (B), when supplying air to (A).

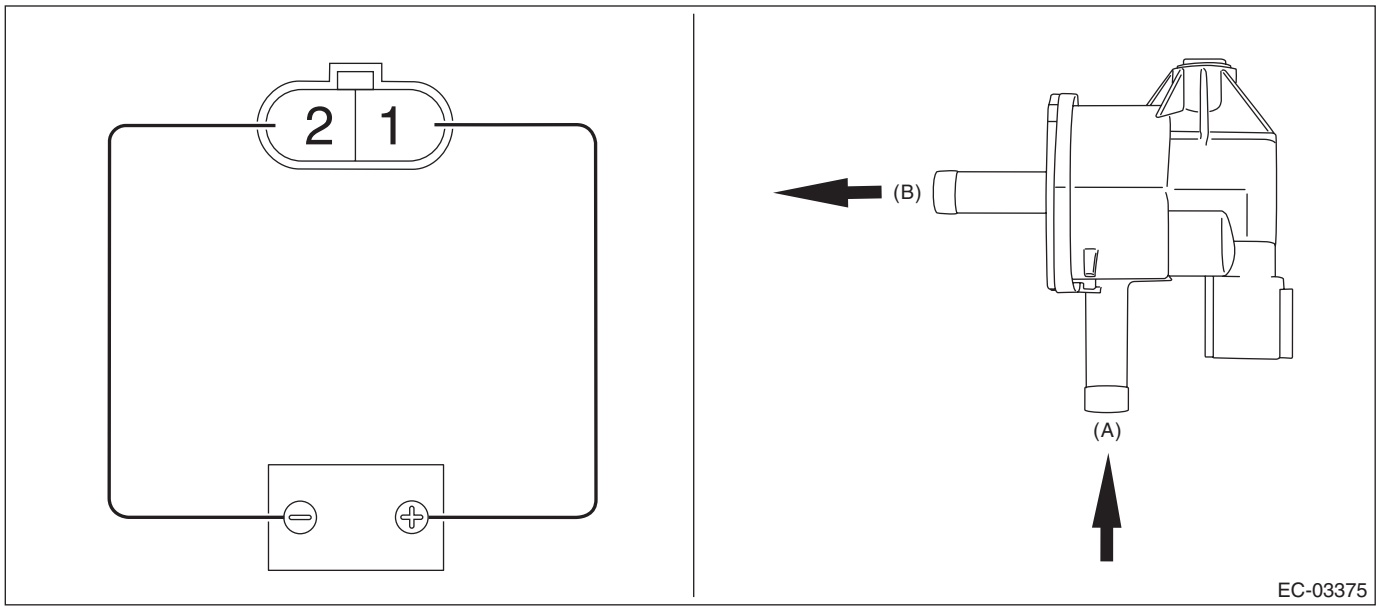

2. OTHER INSPECTIONS

Check the vacuum hose for cracks, damage or looseness.

6. EGR Control Valve

A: REMOVAL

1) Disconnect the ground cable from battery. <Ref. to NT-5, BATTERY, NOTE, Note.>

NOTE:
For the 12 volt engine restart battery, disconnect the ground terminal from 12V engine restart battery sensor.

2) Remove the collector cover.
   (1) Pull up the two points at the front of collector cover (A).
   (2) Pull up the two points at the rear of collector cover (B) while moving them rearward.

NOTE:
Be careful not to contact the fuel delivery tube when moving the collector cover rearward.

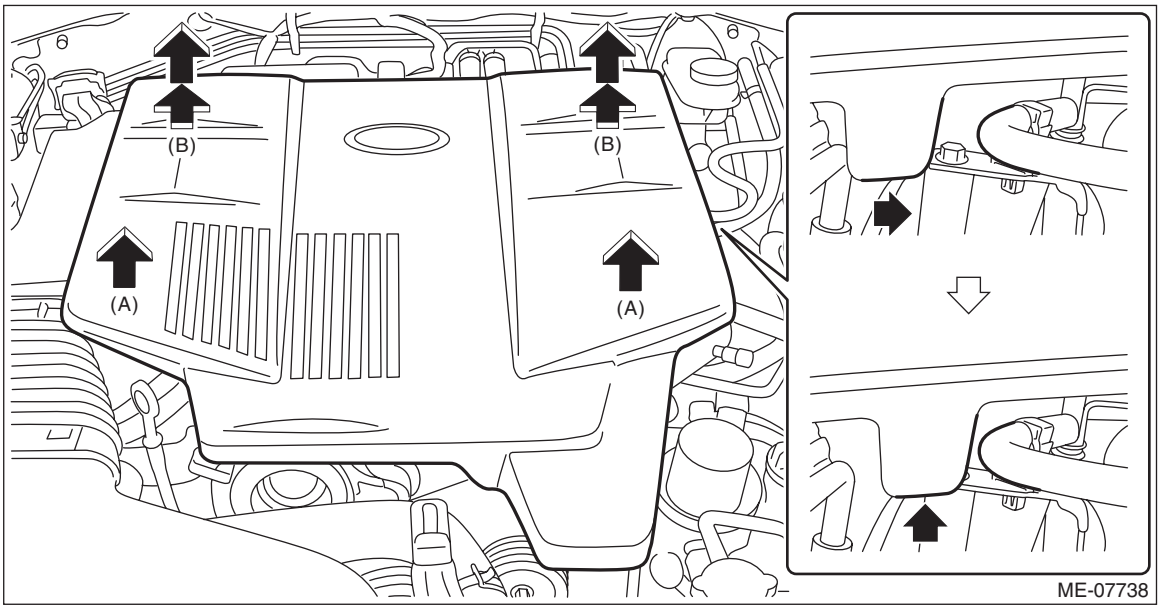

3) Remove the intake manifold. <Ref. to FU(H4DO(HEV))-20, REMOVAL, Intake Manifold.>
4) Remove the bolt (A) which holds the EGR pipe to the intake manifold.
5) Remove the bolt (B) which secures the EGR control valve bracket B to the EGR control valve bracket A, and remove the EGR control valve together with the EGR pipe from the intake manifold.

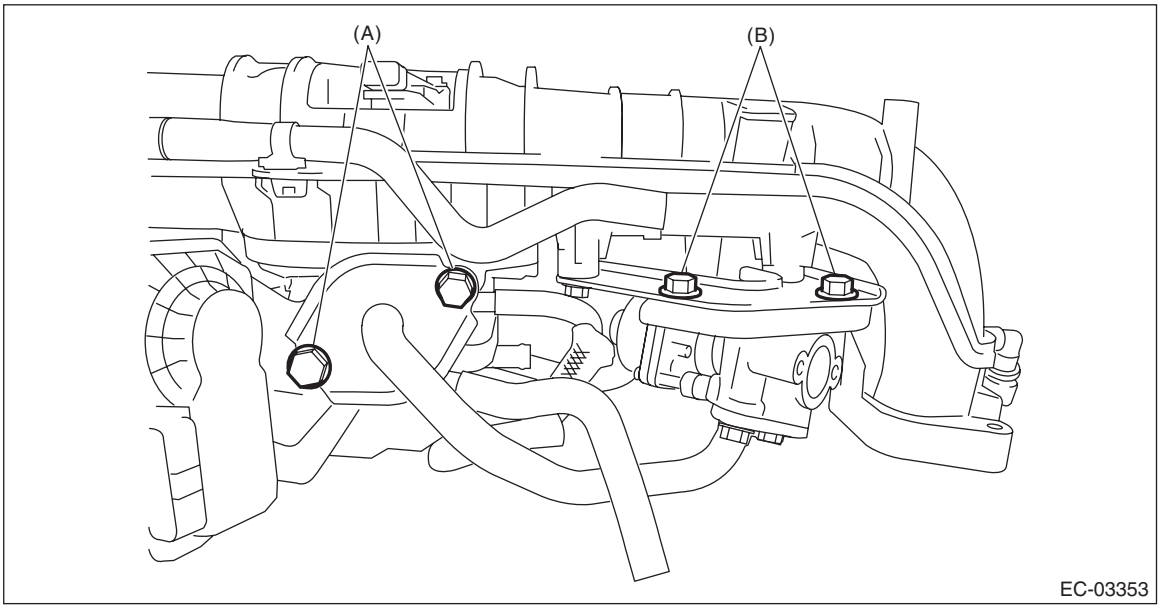

6) Remove the bolts securing the EGR pipe and the EGR control valve bracket B from the EGR control valve.

7) Remove the EGR control valve bracket A from the intake manifold.

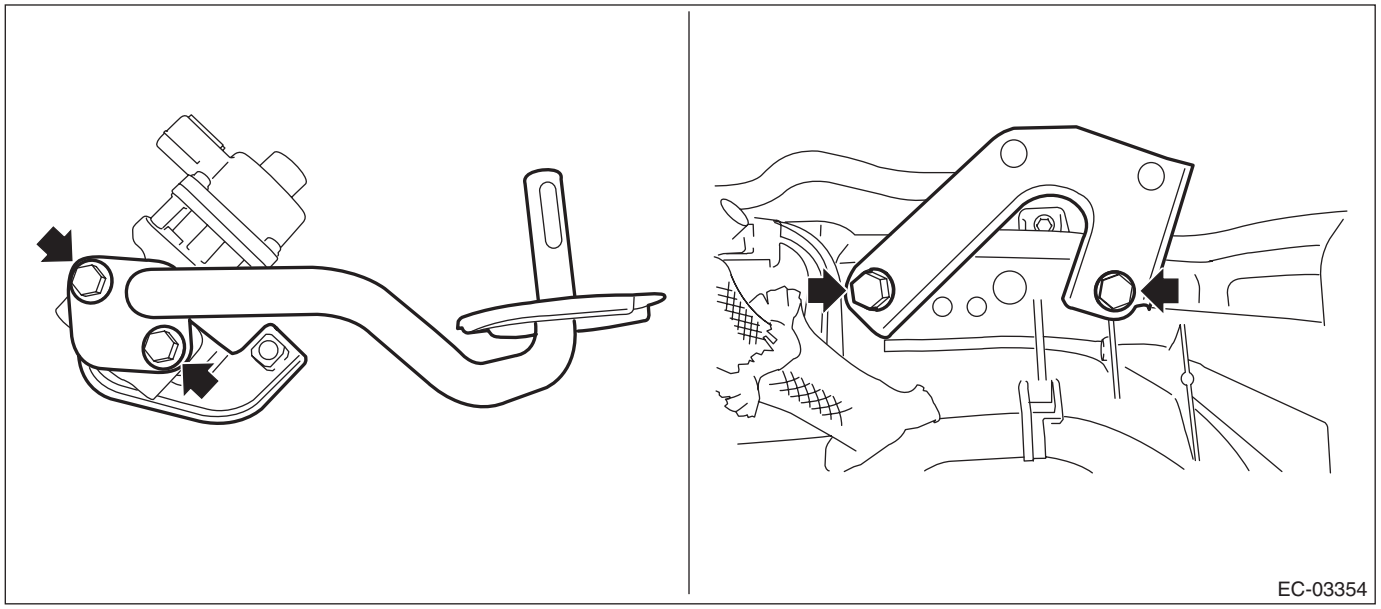

B: INSTALLATION

Install in the reverse order of removal.

NOTE:
Use a new gasket.

Tightening torque:
19 N·m (1.9 kgf-m, 14.0 ft-lb)

C: INSPECTION

1) Check that the EGR control valve and EGR control valve bracket have no deformation, cracks or other damages.
2) Measure the resistance between EGR control valve terminals.

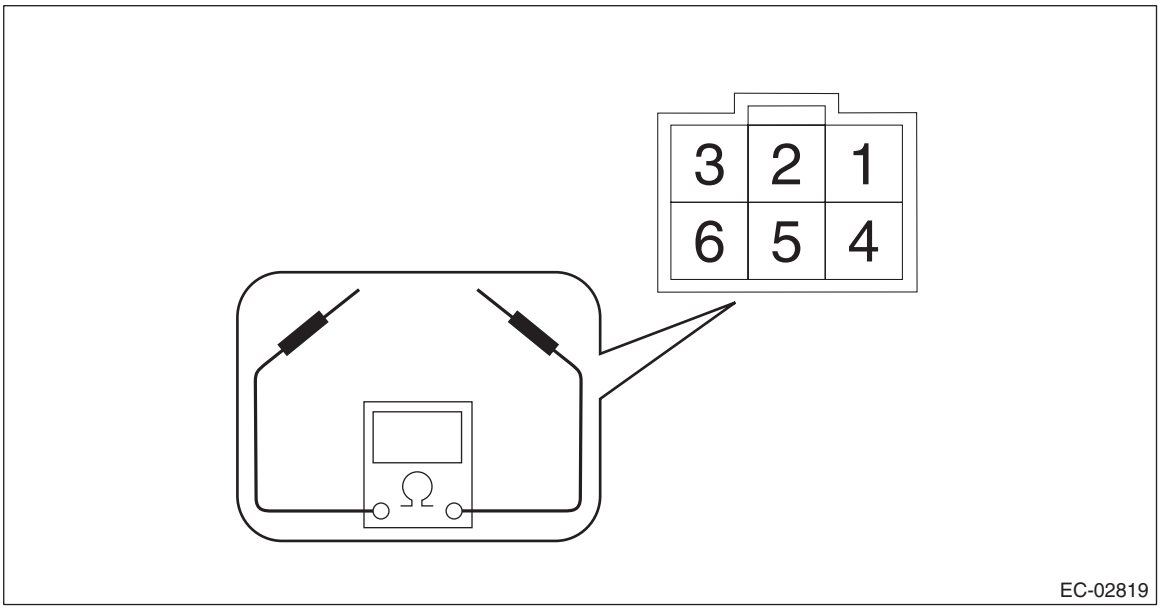

Terminal No.	Standard
2 and 1	22±2 Ω
2 and 3	22±2 Ω
5 and 4	22±2 Ω
5 and 6	22±2 Ω

7. EGR Pipe

A: REMOVAL

1) Disconnect the ground cable from battery. <Ref. to NT-5, BATTERY, NOTE, Note.>

NOTE:
For the 12 volt engine restart battery, disconnect the ground terminal from 12V engine restart battery sensor.

2) Remove the collector cover.
   (1) Pull up the two points at the front of collector cover (A).
   (2) Pull up the two points at the rear of collector cover (B) while moving them rearward.

NOTE:
Be careful not to contact the fuel delivery tube when moving the collector cover rearward.

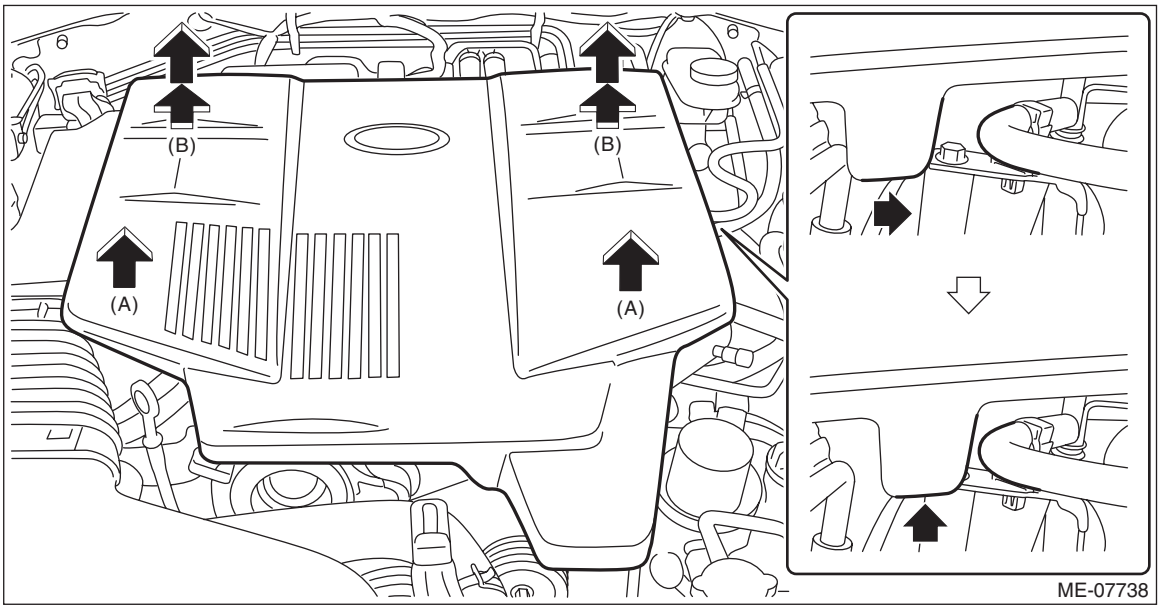

3) Remove the air cleaner case. <Ref. to IN(H4DO(HEV))-6, REMOVAL, Air Cleaner Case.>

4) Remove the bolts which secure the EGR pipe to the intake manifold and EGR control valve, and remove the EGR pipe.

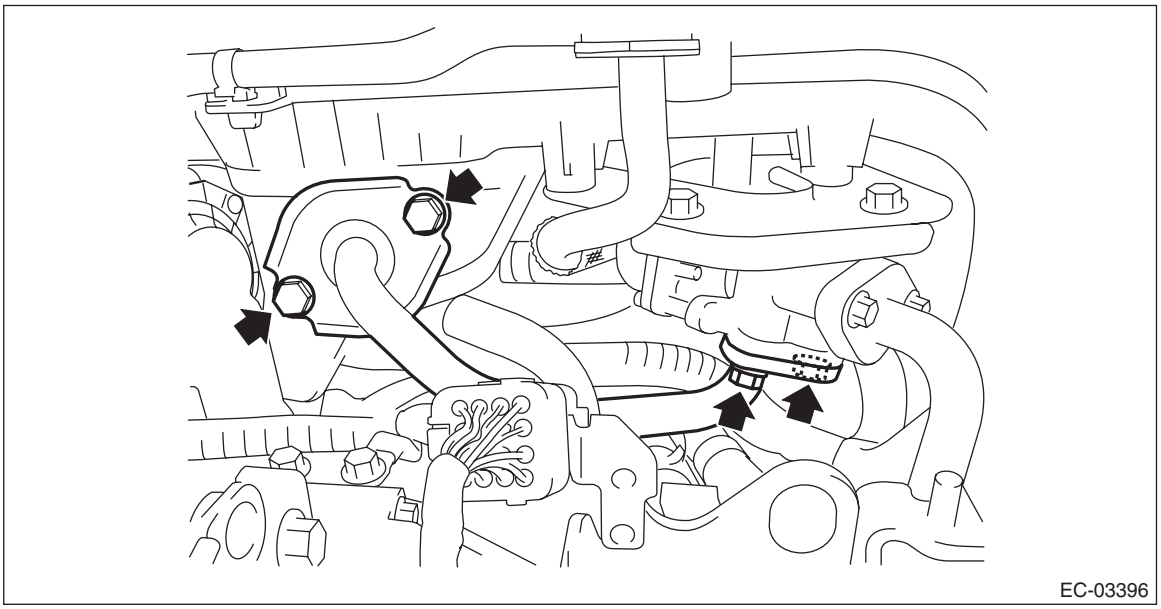

B: INSTALLATION

1) Set the EGR pipe to the intake manifold and EGR control valve, and temporarily tighten the bolts which secure the EGR pipe.

NOTE:
Use a new gasket.

2) Tighten the bolts which secure the EGR pipe to the intake manifold in numerical order as shown in the figure.

Tightening torque:
19 N·m (1.9 kgf-m, 14.0 ft-lb)

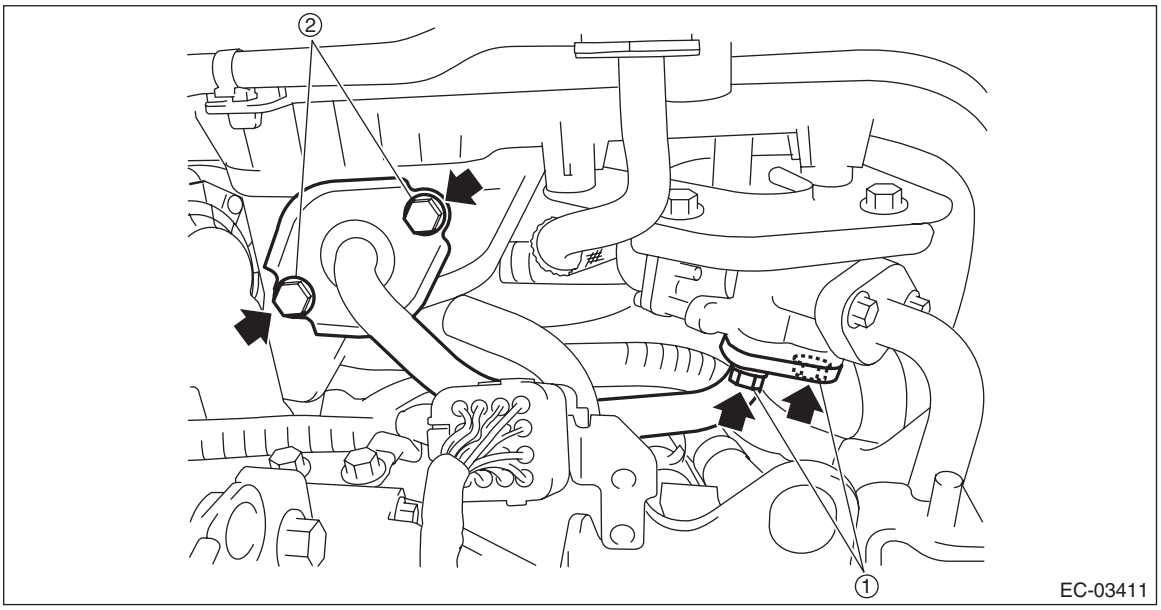

3) Install the air cleaner case. <Ref. to IN(H4DO(HEV))-8, INSTALLATION, Air Cleaner Case.>
4) Install the collector cover.
5) Connect the battery ground terminal. <Ref. to NT-5, BATTERY, NOTE, Note.>

C: INSPECTION

Check that the EGR pipe has no deformation, cracks or other damages.

8. EGR Cooler

A: REMOVAL

1) Disconnect the ground cable from battery. <Ref. to NT-5, BATTERY, NOTE, Note.>

NOTE:
For the 12 volt engine restart battery, disconnect the ground terminal from 12V engine restart battery sensor.

2) Remove the collector cover.
   (1) Pull up the two points at the front of collector cover (A).
   (2) Pull up the two points at the rear of collector cover (B) while moving them rearward.

NOTE:
Be careful not to contact the fuel delivery tube when moving the collector cover rearward.

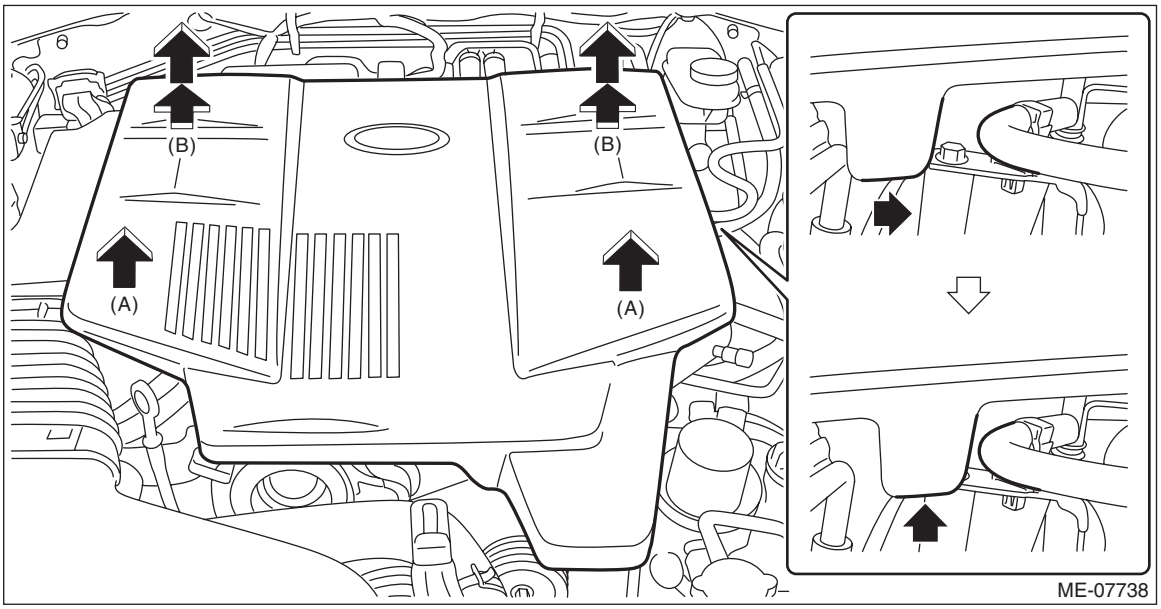

3) Drain engine coolant. <Ref. to CO(H4DO(w/o HEV))-16, DRAINING OF ENGINE COOLANT, REPLACEMENT, Engine Coolant.>
4) Remove the air cleaner case. <Ref. to IN(H4DO(HEV))-6, REMOVAL, Air Cleaner Case.>
5) Disconnect the engine coolant inlet hose A (A), engine coolant inlet hose B (B) and engine coolant outlet hose (C) from the EGR cooler.

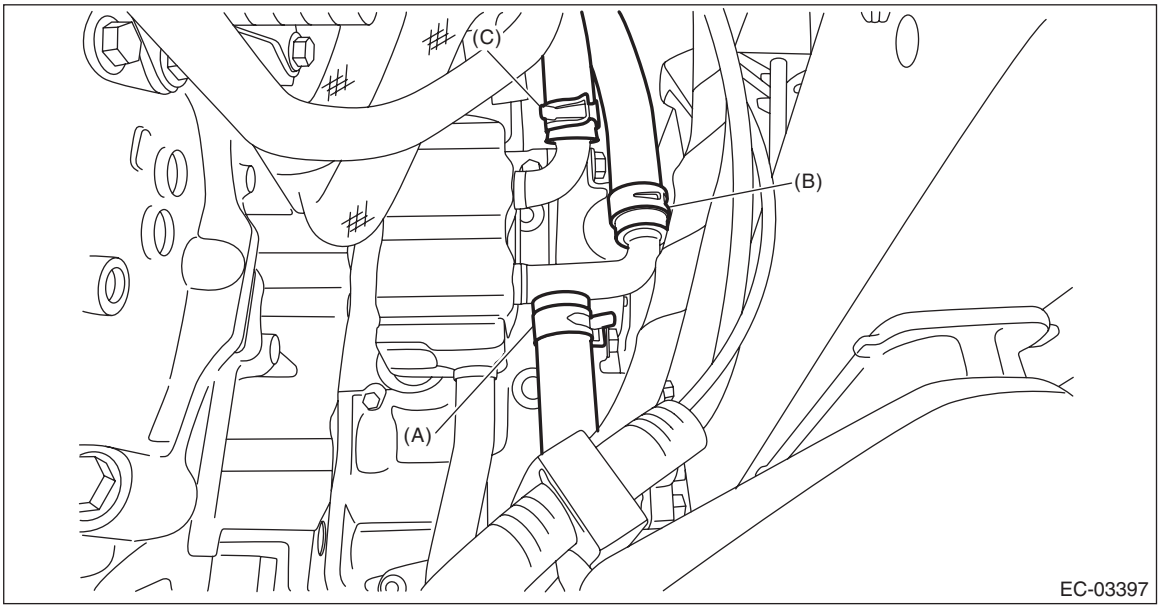

6) Remove the nut (A) which secures the EGR cooler to the cylinder head RH.
7) Remove the bolts (B) securing the EGR cooler to the EGR control valve.
8) Remove the bolt (C) which secures the EGR cooler to the cylinder head RH, and remove the EGR cooler.

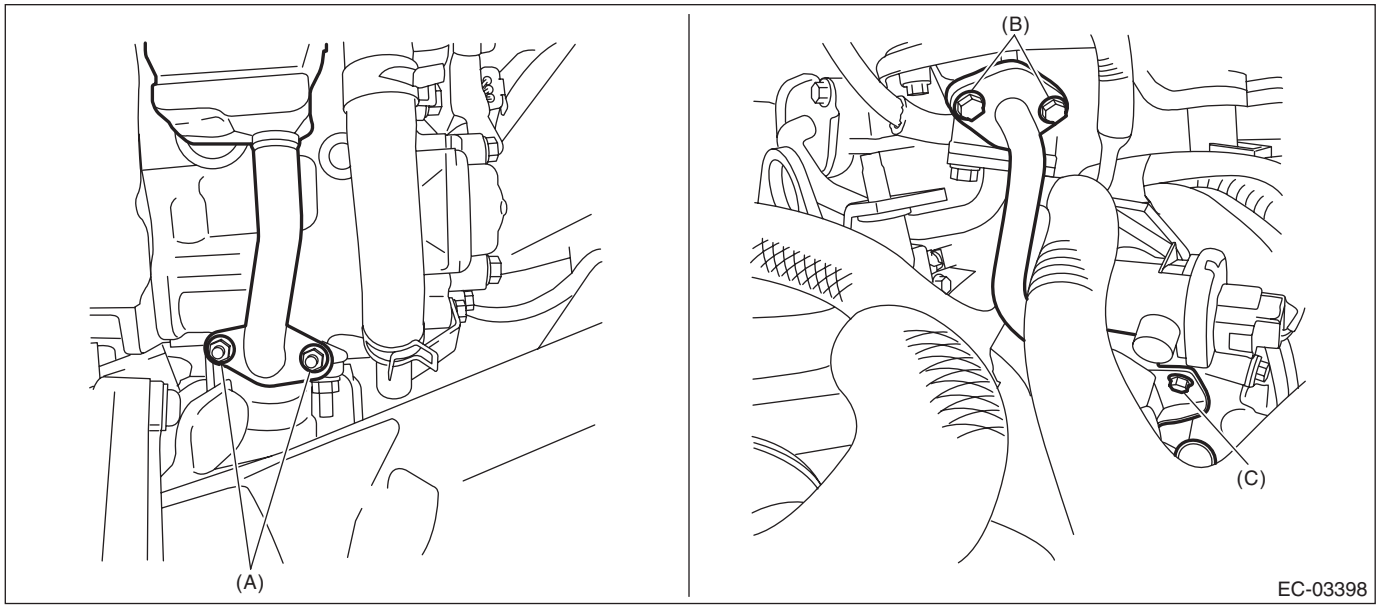

9) Remove the gasket from the stud bolt.

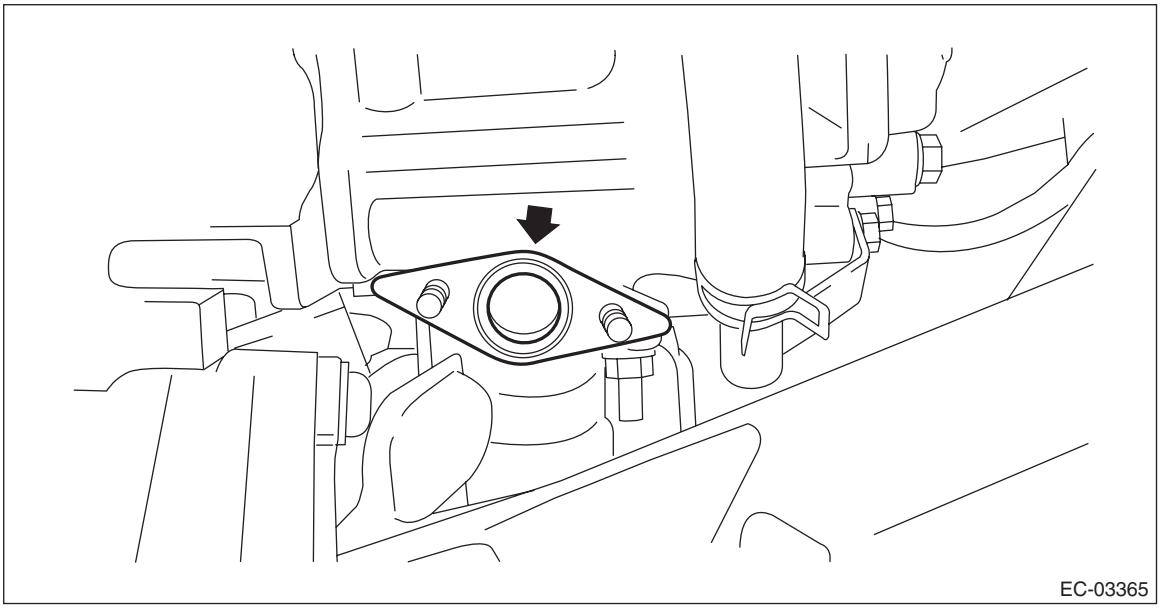

10) Disconnect the engine coolant inlet hose (A) from the water pipe RH.

11) Disconnect the engine coolant inlet hose B (B) from the CVTF cooler (with warmer feature).

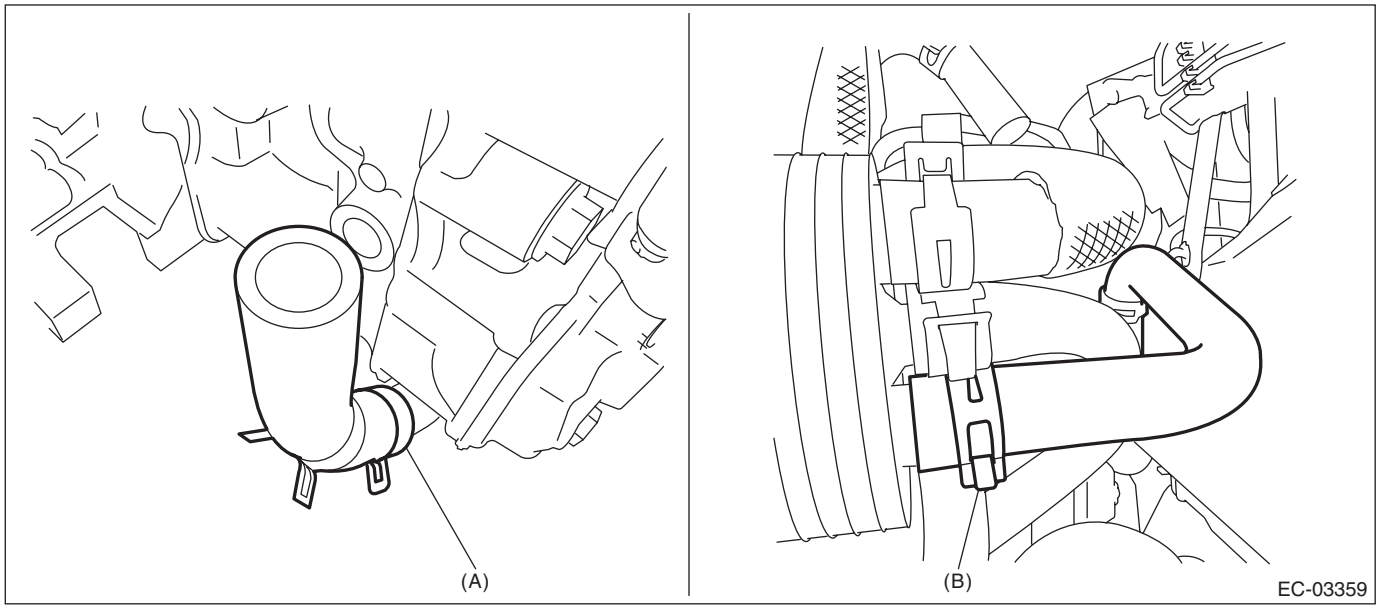

B: INSTALLATION

1) Connect the engine coolant inlet hose (A) to the water pipe RH.
2) Connect the engine coolant inlet hose B (B) to the CVTF cooler (with warmer feature).

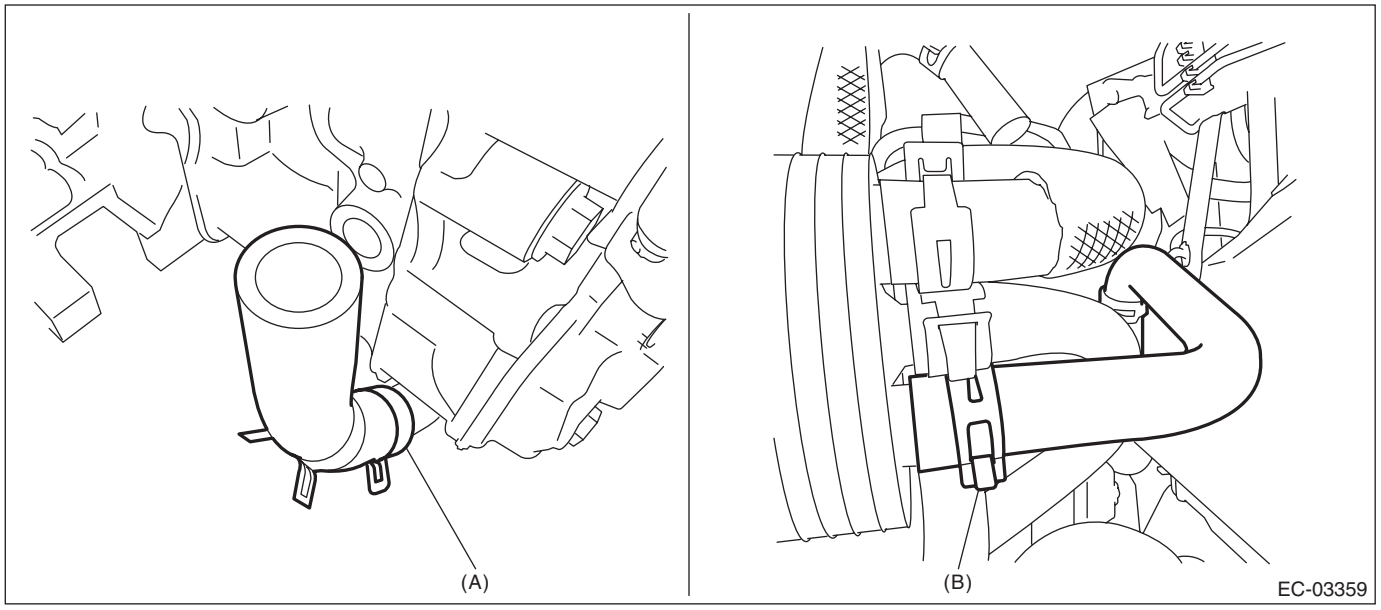

3) Set the gasket to the stud bolt.

NOTE:
Use a new gasket.

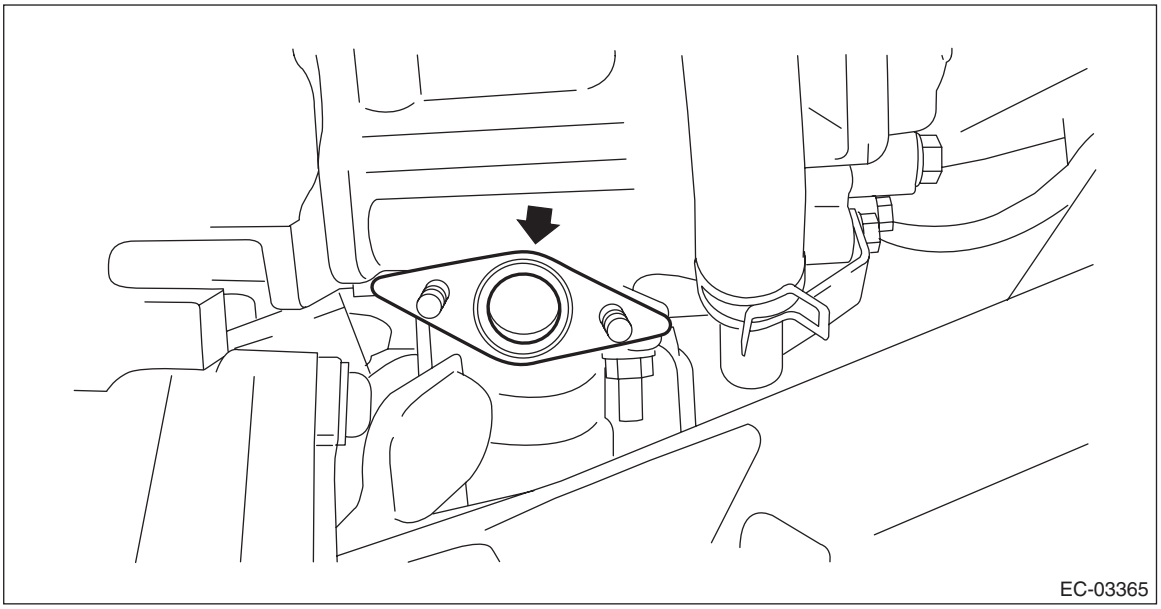

4) Set the EGR cooler on the vehicle.

NOTE:
Use a new gasket.

5) Temporarily tighten the bolt (C) which secures the EGR cooler to the cylinder head RH.
6) Temporarily tighten the bolt (B) which secures the EGR cooler to the EGR control valve.
7) Temporarily tighten the nut (A) which secures the EGR cooler to the cylinder head RH.

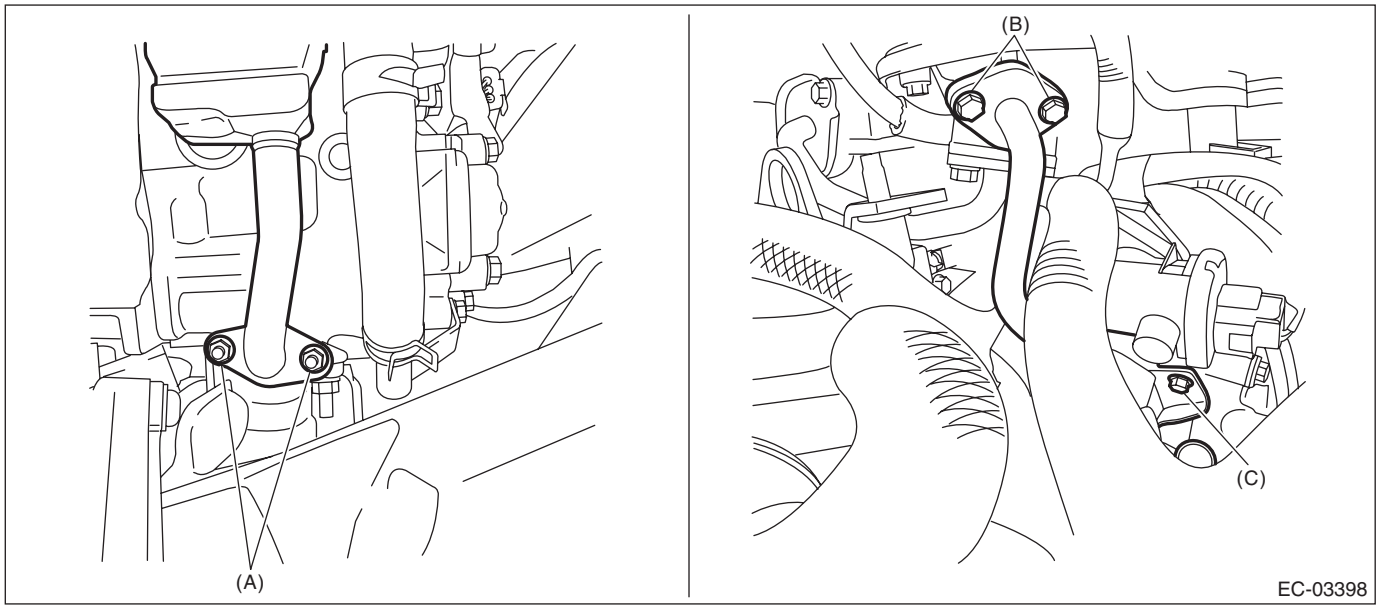

8) Tighten the nut (A) which secures the EGR cooler to the cylinder head RH.
9) Tighten the bolt (C) which secures the EGR cooler to the cylinder head RH.
10) Tighten the bolt (B) which secures the EGR cooler to the EGR control valve.

Tightening torque:
T1: 6.4 N·m (0.7 kgf-m, 4.7 ft-lb)
T2: 9 N·m (0.9 kgf-m, 6.6 ft-lb)

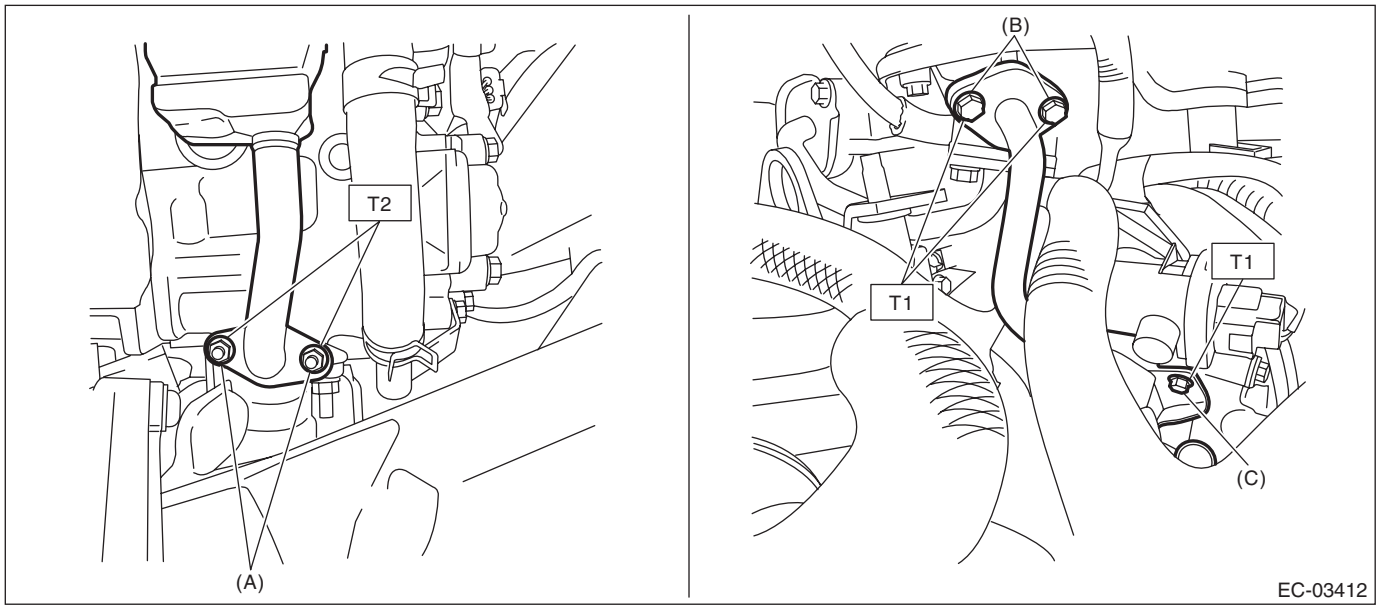

11) Connect the engine coolant inlet hose A (A), engine coolant inlet hose B (B) and engine coolant outlet hose (C) to the EGR cooler.

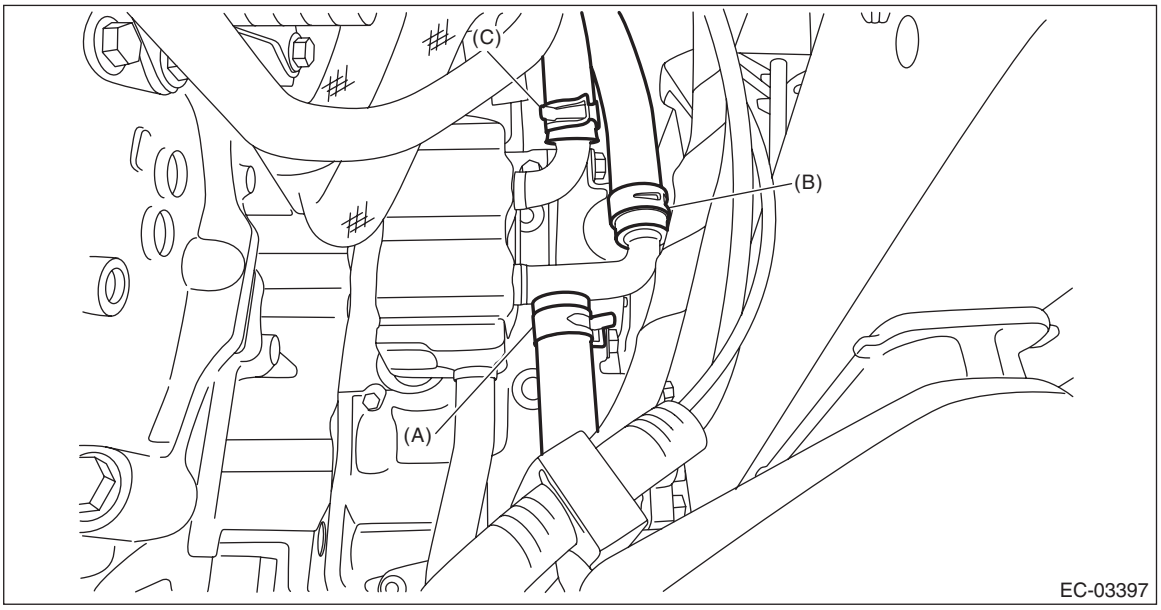

12) Install the air cleaner case. <Ref. to IN(H4DO(HEV))-8, INSTALLATION, Air Cleaner Case.>
13) Fill engine coolant. <Ref. to CO(H4DO(w/o HEV))-17, FILLING OF ENGINE COOLANT, REPLACEMENT, Engine Coolant.>
14) Install the collector cover.
15) Connect the battery ground terminal. <Ref. to NT-5, BATTERY, NOTE, Note.>

C: INSPECTION

1) Check that the EGR cooler has no deformation, cracks or other damages.
2) Check that the hose has no cracks, damage or loose part.

9. Fuel Level Sensor

A: REMOVAL

For removal procedures, refer to the “FU (H4DO (HEV))” section. <Ref. to FU(H4DO(HEV))-128, REMOVAL, Fuel Level Sensor.>

B: INSTALLATION

For installation procedures, refer to the “FU (H4DO (HEV))” section. <Ref. to FU(H4DO(HEV))-129, INSTALLATION, Fuel Level Sensor.>

C: INSPECTION

For inspection procedures, refer to the “FU (H4DO (HEV))” section. <Ref. to FU(H4DO(HEV))-130, INSPECTION, Fuel Level Sensor.>

10.Fuel Sub Level Sensor

A: REMOVAL

For removal procedures, refer to the “FU (H4DO (HEV))” section. <Ref. to FU(H4DO(HEV))-131, REMOVAL, Fuel Sub Level Sensor.>

B: INSTALLATION

For installation procedures, refer to the “FU (H4DO (HEV))” section. <Ref. to FU(H4DO(HEV))-134, INSTALLATION, Fuel Sub Level Sensor.>

C: INSPECTION

For inspection procedures, refer to the “FU (H4DO (HEV))” section. <Ref. to FU(H4DO(HEV))-137, INSPECTION, Fuel Sub Level Sensor.>

11.Drain Filter

A: REMOVAL

The drain filter is installed to the leak check valve assembly. Refer to “Leak Check Valve Assembly” for removal procedure. <Ref. to EC(H4DO(HEV))-39, REMOVAL, Leak Check Valve Assembly.>

B: INSTALLATION

The drain filter is installed to the leak check valve assembly. Refer to “Leak Check Valve Assembly” for installation procedure. <Ref. to EC(H4DO(HEV))-42, INSTALLATION, Leak Check Valve Assembly.>

C: INSPECTION

1) Check that the drain filer and drain bracket have no deformation, crack, or other damage.
2) Check that the drain tube has no cracks, damage or loose part.
3) Check that no foreign substances are clogged in the drain filter.

12.Leak Check Valve Assembly

A: REMOVAL

1) Disconnect the ground cable from battery. <Ref. to NT-5, BATTERY, NOTE, Note.>

NOTE:
For the 12 volt engine restart battery, disconnect the ground terminal from 12V engine restart battery sensor.
2) Remove the rear wheel LH.
3) Lift up the vehicle.
4) Remove the rear mud guard LH. <Ref. to EI-30, REMOVAL, Mud Guard.>
5) Remove the drain tube B from the tube clamp (A).
6) Hold the leak check valve assembly, and remove the bolts securing the leak check valve assembly.

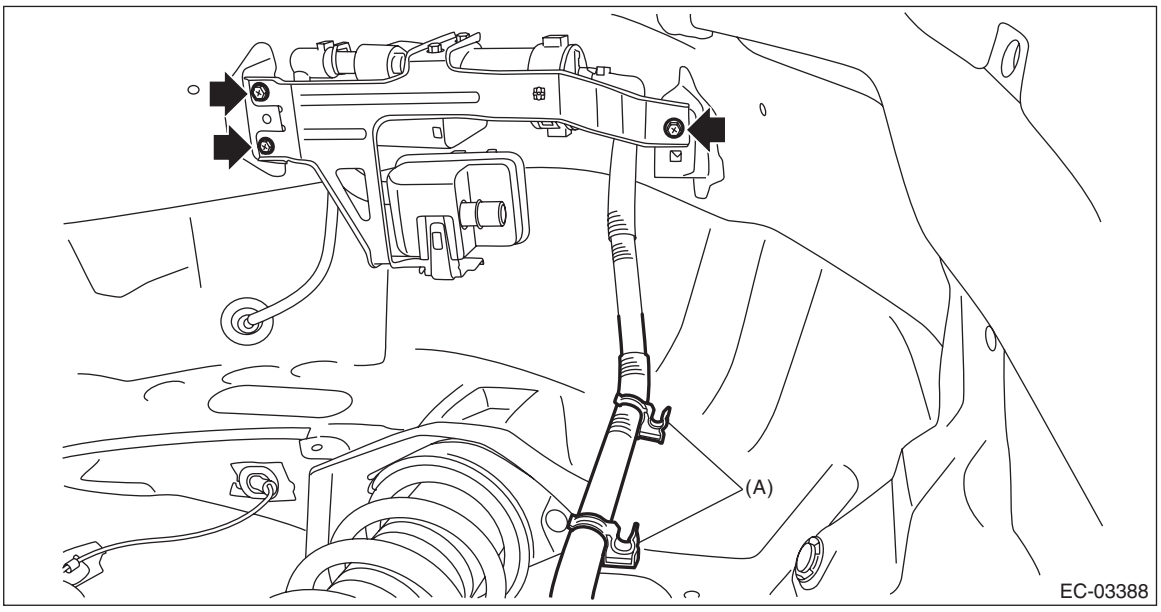

7) Disconnect the connector (A) from the leak check valve assembly, and remove the clip (B) securing the harness.
8) Disconnect the drain tube B (C) from the leak check valve assembly.

NOTE:
Disconnect the quick connector as shown in the figure.

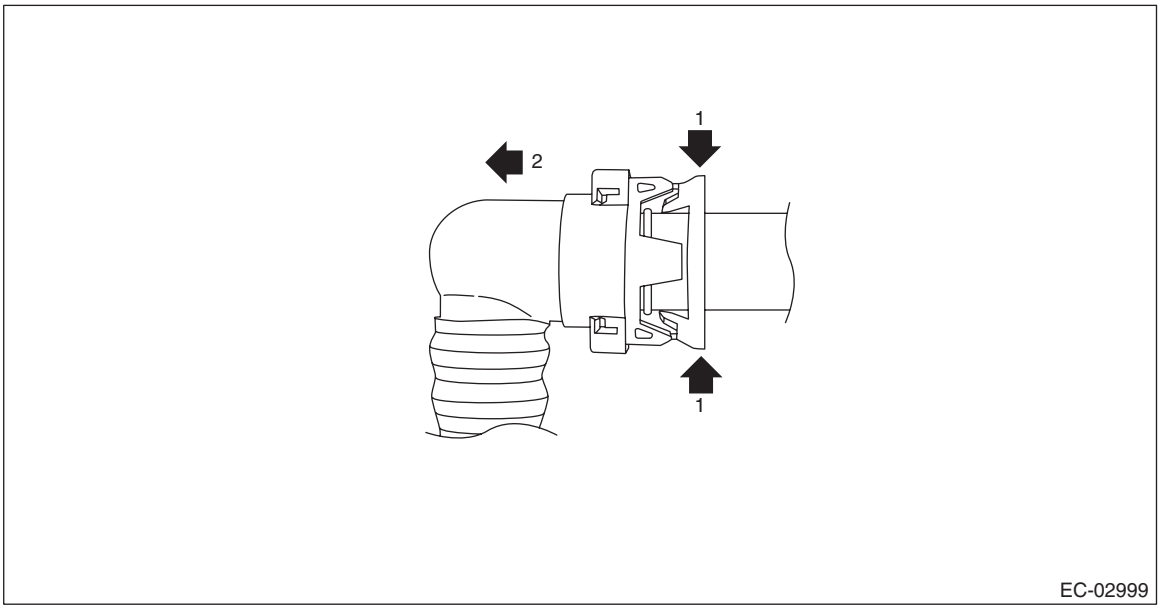

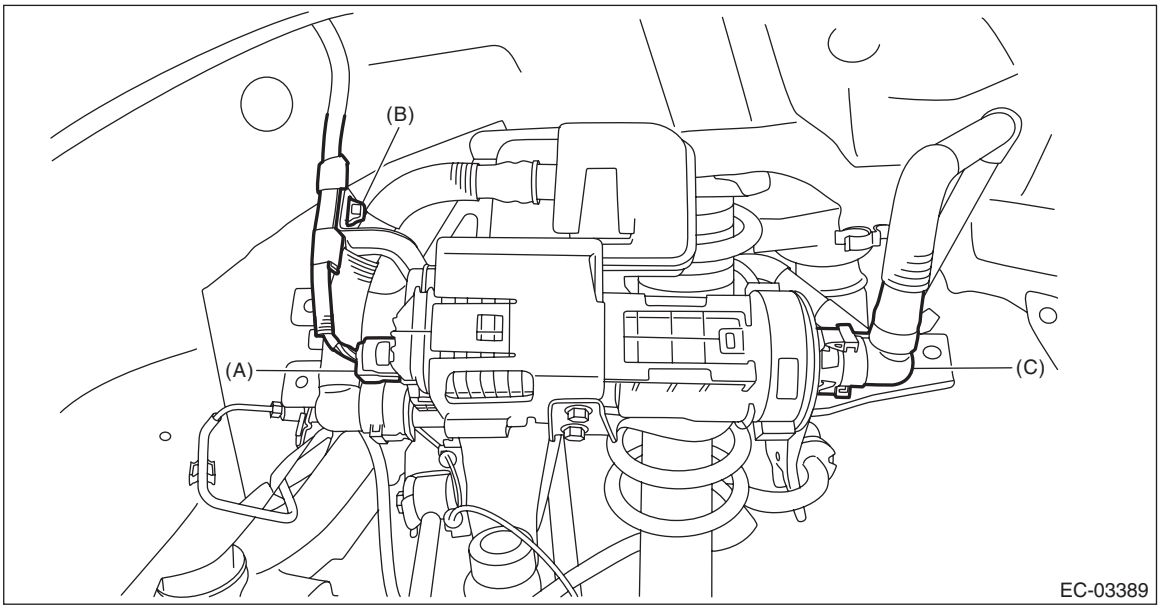

9) Disconnect the drain tube A (A) from the drain tube B (B).

NOTE:
Disconnect the quick connector as shown in the figure.

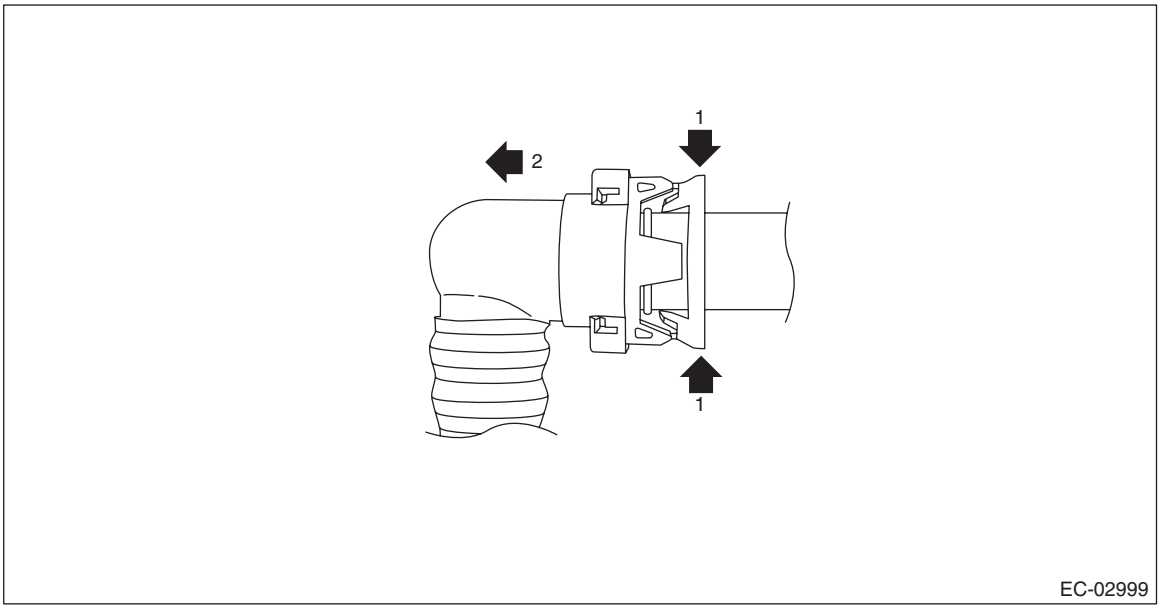

10) Remove the bolt (C) which secures to the vehicle, and remove the drain tube B (B).

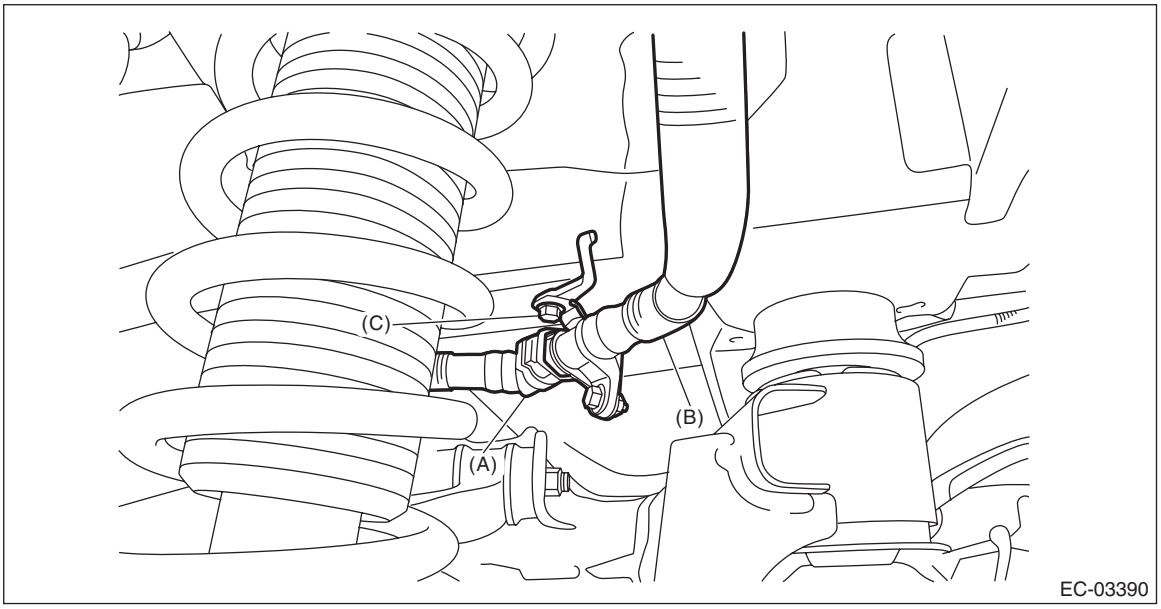

B: INSTALLATION

1) Install the drain tube B (B) to the vehicle using the bolt (C).

Tightening torque:
7.5 N·m (0.8 kgf-m, 5.5 ft-lb)

2) Connect the drain tube A (A) to the drain tube B (B).

CAUTION:
• Check that there is no damage or dust on the quick connector. If necessary, clean the seal surface of the pipe.
• Make sure that the quick connector is securely connected.

NOTE:
Connect the quick connector as shown in the figure.

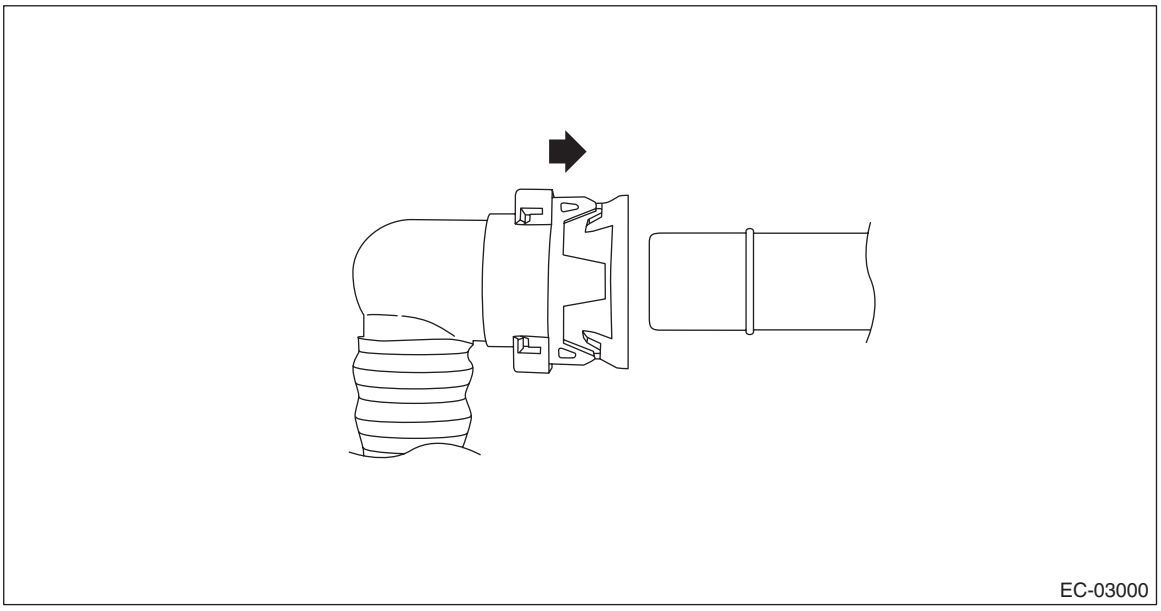
EC-03000

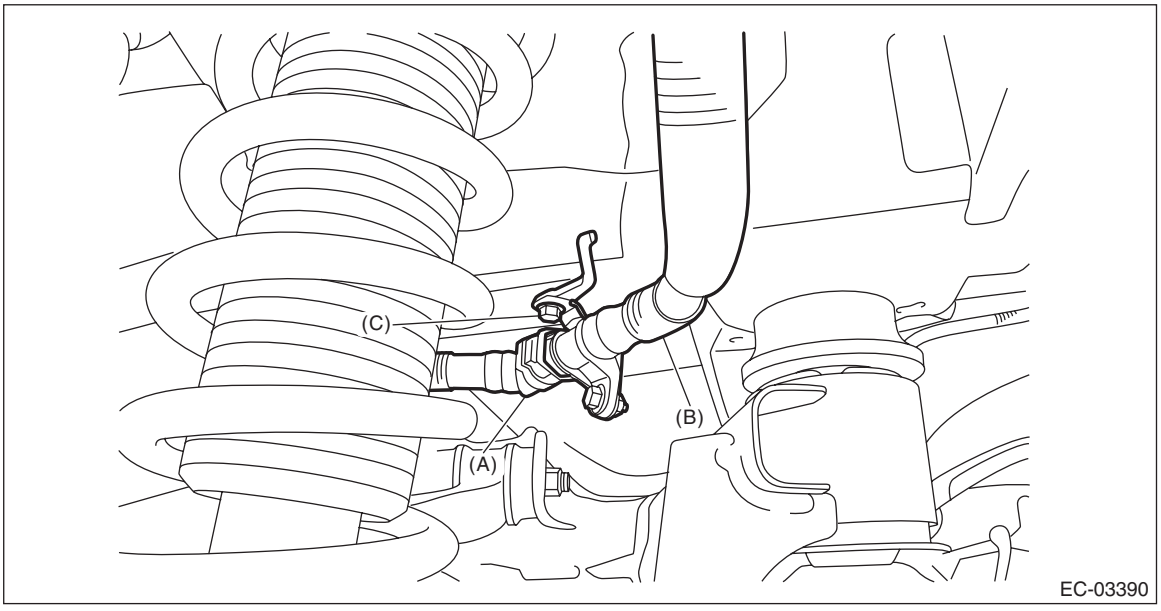

EC-03390

3) Connect the connector (A) to the leak check valve assembly, and install the clip (B) securing the harness.
4) Connect the drain tube B (C) to the leak check valve assembly.

CAUTION:
• Check that there is no damage or dust on the quick connector. If necessary, clean the seal surface of the pipe.
• Make sure that the quick connector is securely connected.

NOTE:
Connect the quick connector as shown in the figure.

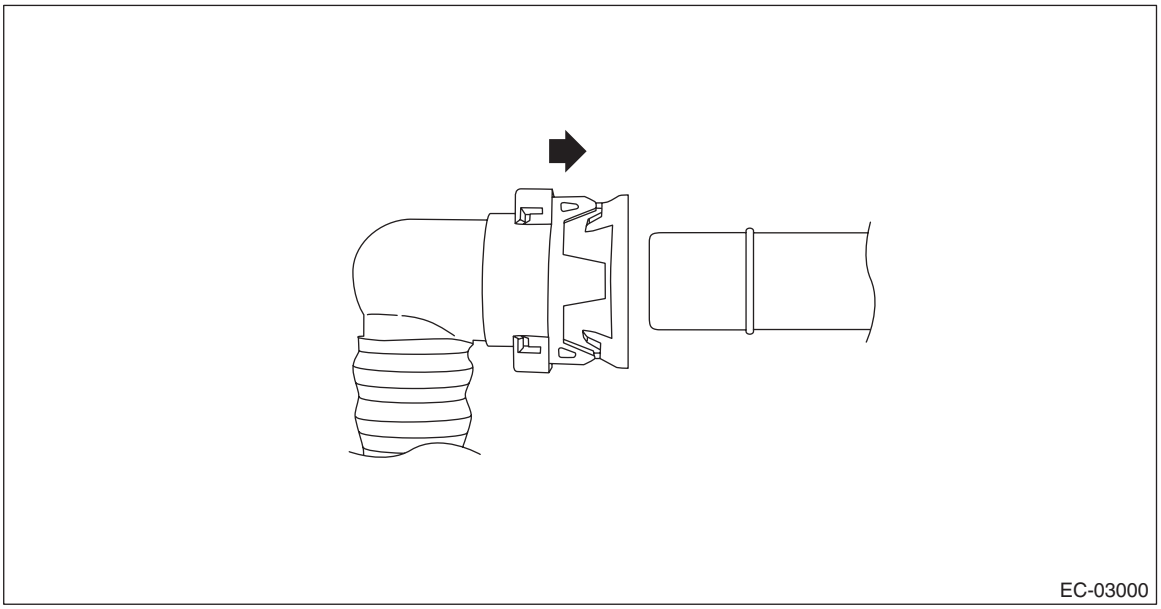
EC-03000

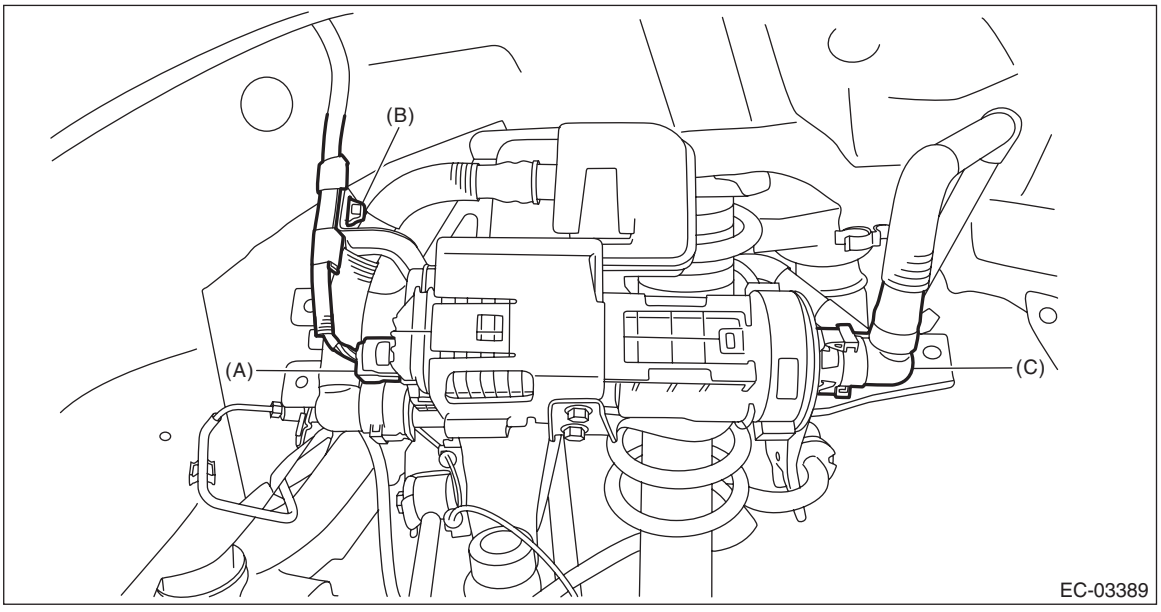

EC-03389

5) Install the leak check valve assembly to the vehicle.

Tightening torque:
7.5 N·m (0.8 kgf-m, 5.5 ft-lb)

6) Install the drain tube B to the tube clamp (A).

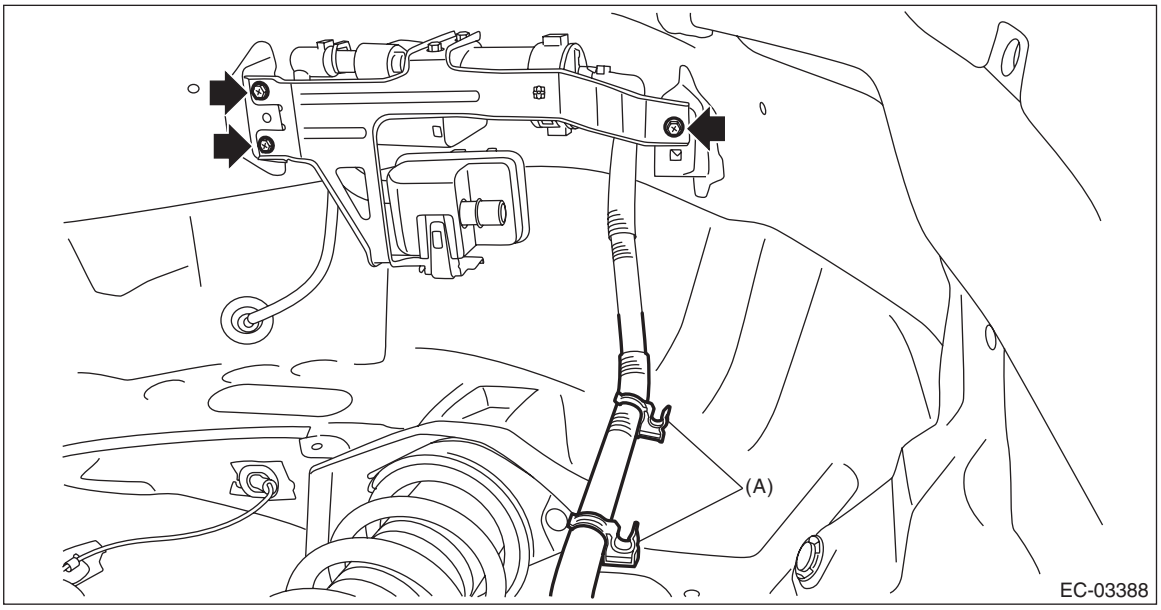

7) Install the rear mud guard LH. <Ref. to EI-30, INSTALLATION, Mud Guard.>
8) Lower the vehicle.
9) Install the rear wheel LH.
10) Connect the battery ground terminal. <Ref. to NT-5, BATTERY, NOTE, Note.>

C: DISASSEMBLY

1) Disconnect the drain tube (A) from the leak check valve assembly.

NOTE:
Disconnect the quick connector as shown in the figure.

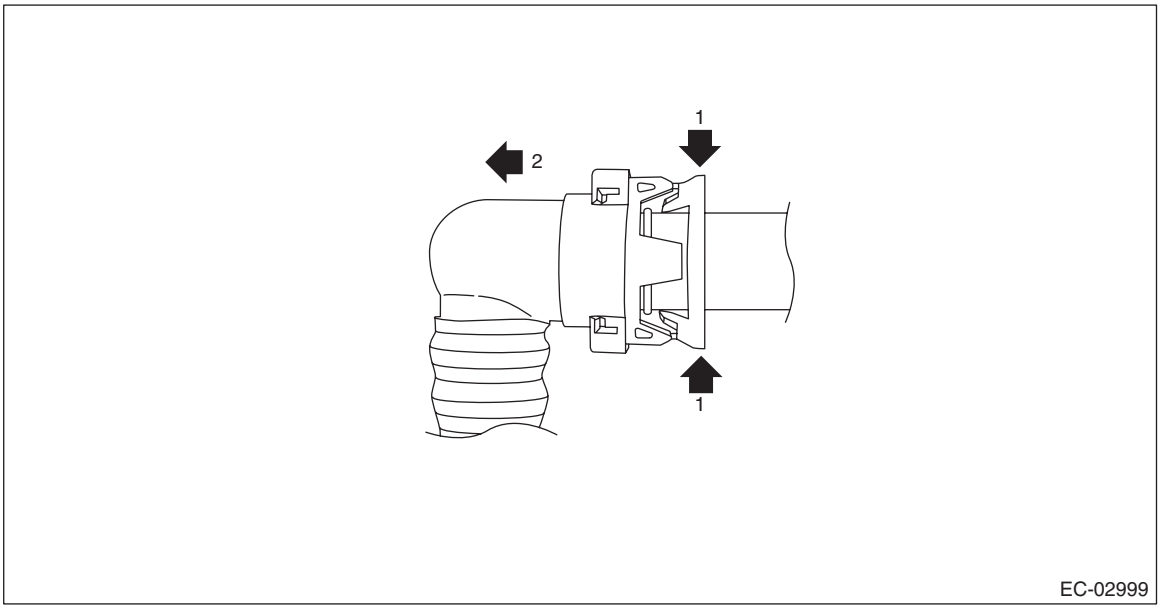

2) Remove the bolt (B) securing the leak check valve assembly to the drain bracket.
3) Remove the clamp B (C) which secures the leak check valve assembly, and remove the leak check valve assembly.

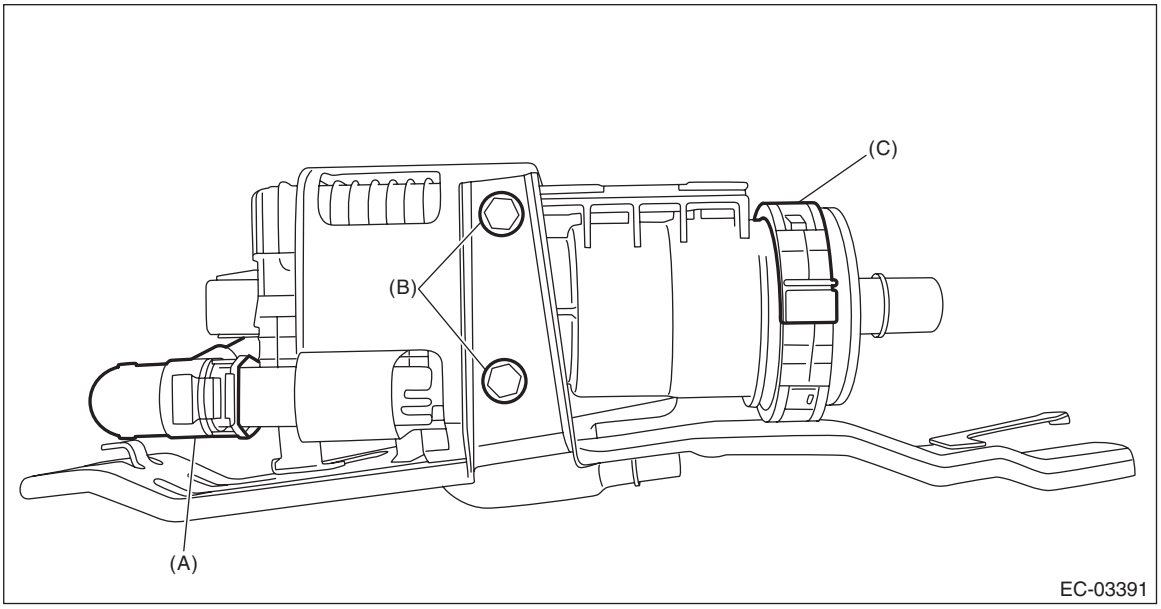

4) Release the claw (A), and slide the drain filter (B) from the drain bracket in the direction of the arrow to remove.

NOTE:
When removing the drain filter from the drain bracket, use the new drain bracket and drain filter to install.
5) Turn the clamp A (C) from the drain bracket in the direction of arrow to remove.

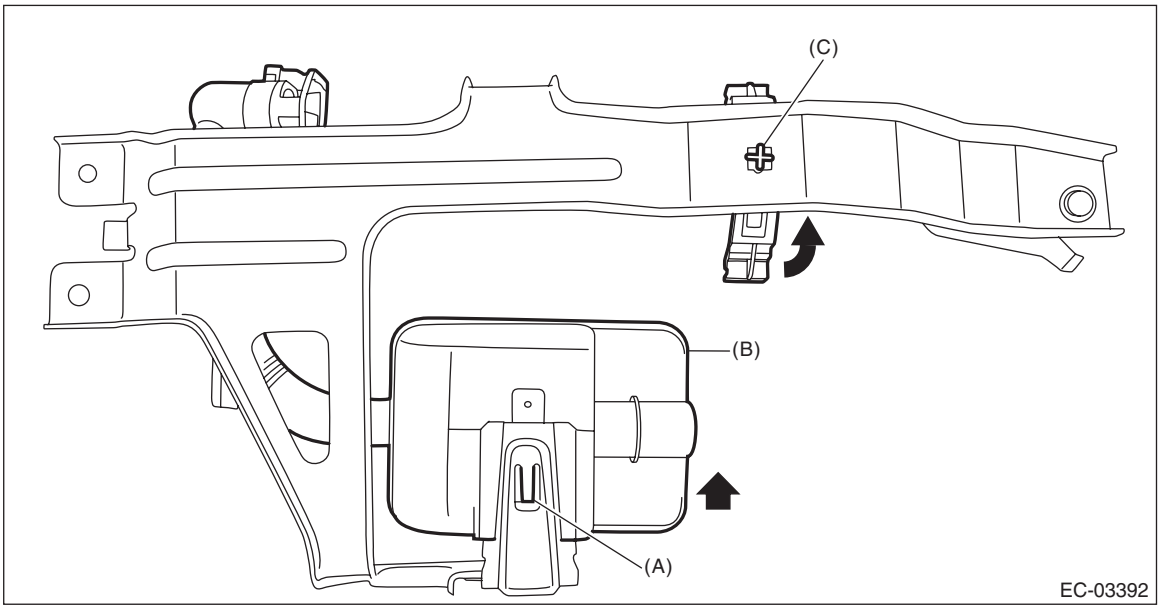

D: ASSEMBLY

Assemble in the reverse order of disassembly.

CAUTION:

- **Check that there is no damage or dust on the quick connector. If necessary, clean the seal surface of the pipe.**
- **Make sure that the quick connector is securely connected.**

NOTE:

- Use a new drain bracket and drain filter.
- Connect the quick connector as shown in the figure.

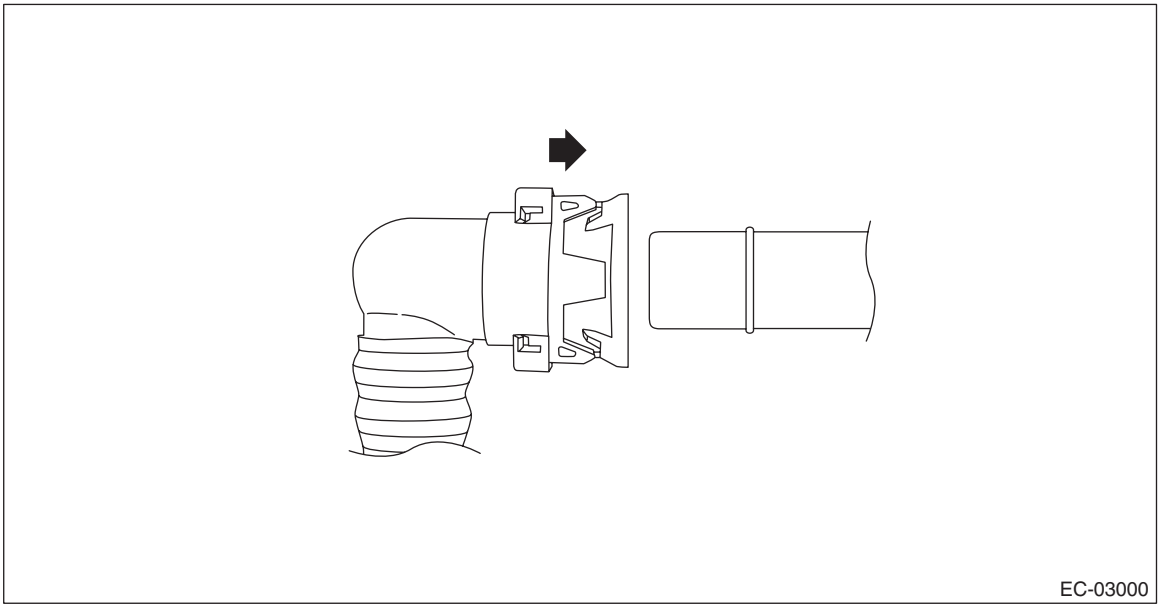

Tightening torque:
5.4 N·m (0.6 kgf-m, 4.0 ft-lb)

E: INSPECTION

1. CHECK SWITCHING VALVE

1) Check the resistance between switching valve terminals.

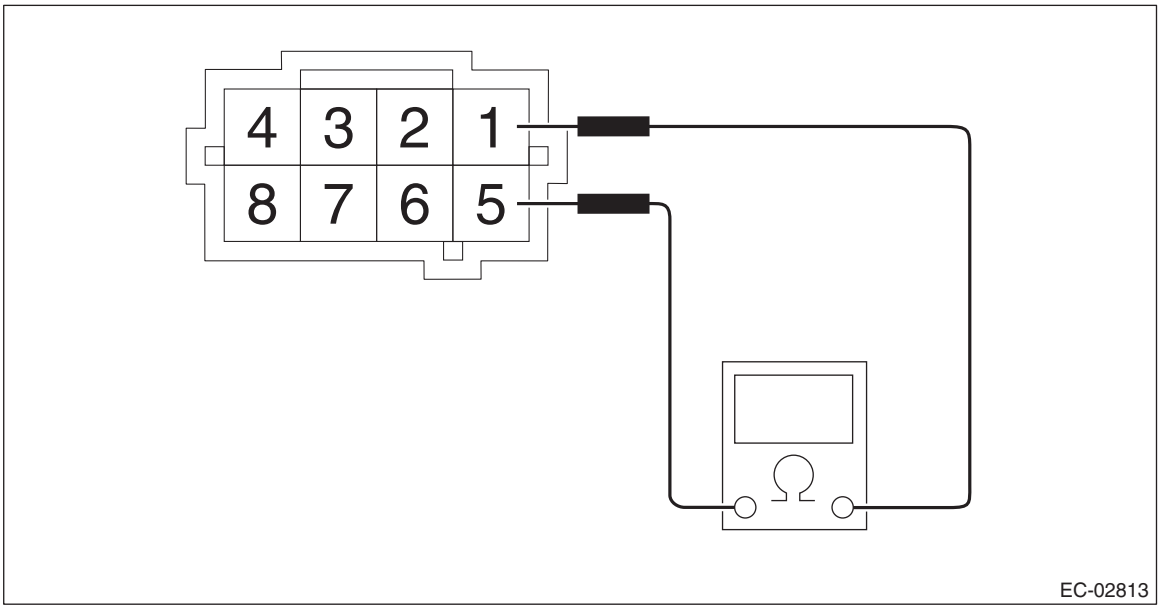

Terminal No.	Standard
1 and 5	27^{+3}_{-2} Ω (when 20°C (68°F))
	31±4 Ω (60°C (140°F))

2) Check that air is discharged from (B) when air is blown into (A).

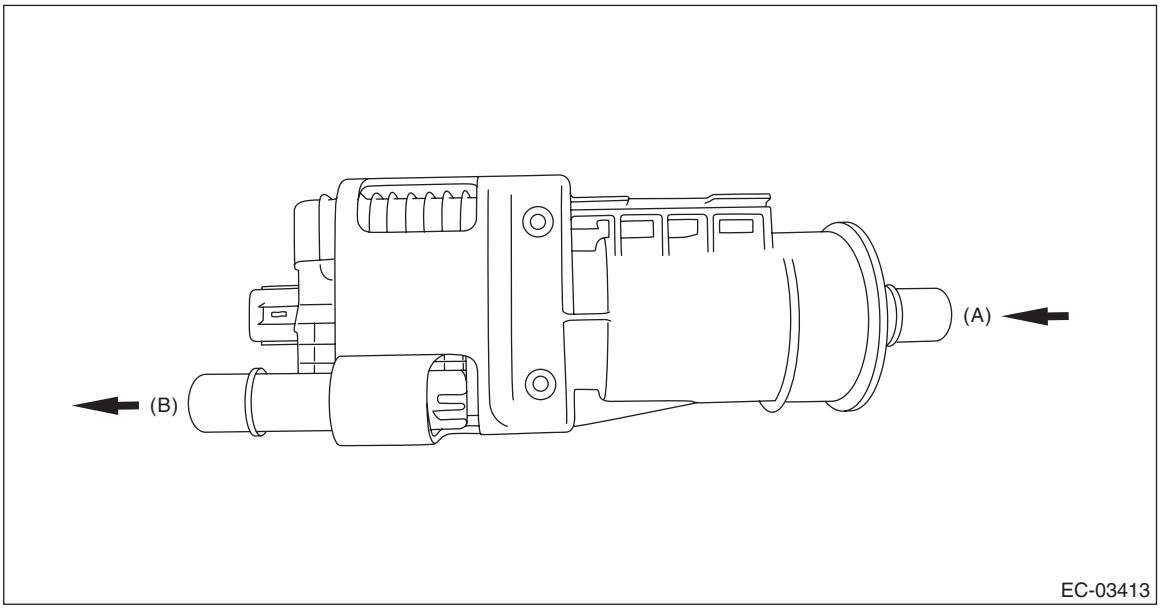

3) Connect the battery positive terminal to the terminal No. 5 and the battery negative terminal to the terminal No. 1. Check that air does not come out from (B) when air is blown into (A).

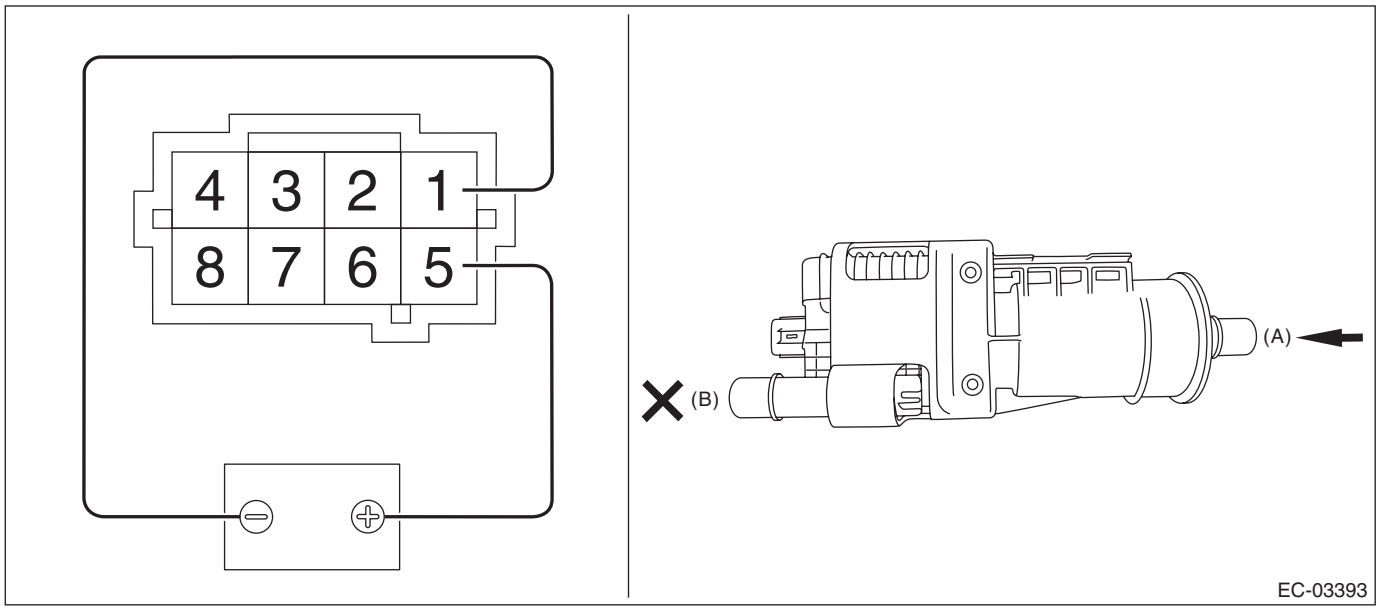

2. CHECK VACUUM PUMP

1) Connect the battery positive terminal to terminal No. 3 and the battery ground terminal to terminal No. 4, and inspect the vacuum pump operation.

CAUTION:
Do not operate the vacuum pump for 5 minutes or more.

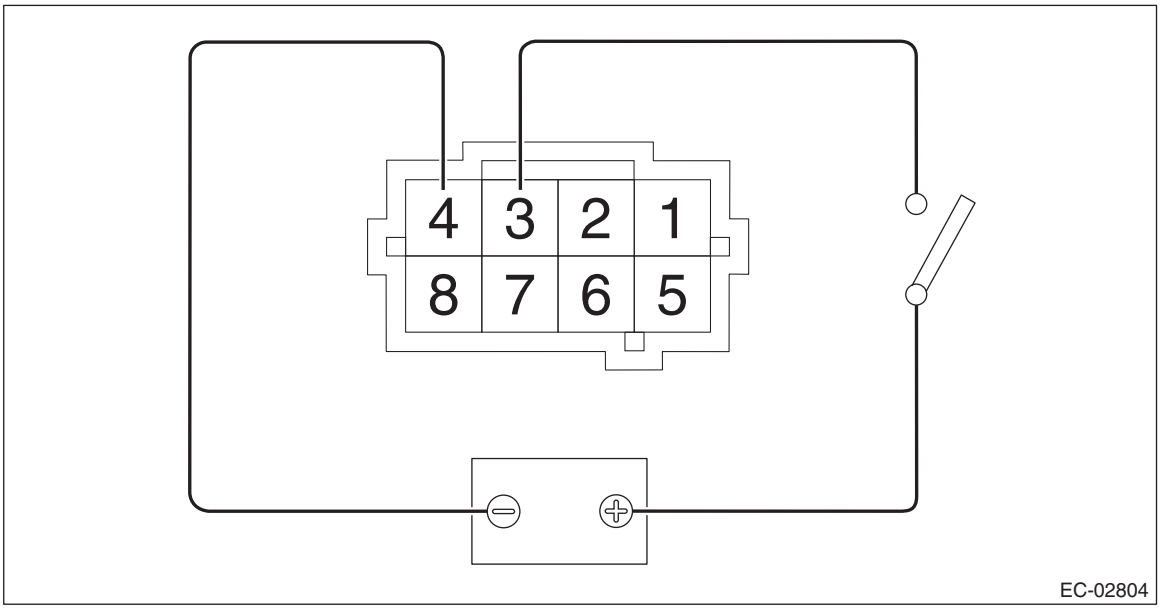

3. CHECK PRESSURE SENSOR

1) Connect dry-cell battery positive terminal to terminal No. 6 and dry-cell battery ground terminal to terminal No. 8, circuit tester positive terminal to terminal No. 7 and the circuit tester negative terminal to terminal No. 8.

NOTE:
- Use new dry-cell batteries.

• Using circuit tester, check the voltage of a single dry-cell battery is 1.6 V or more. And also check the voltage of three batteries in series is between 4.8 V and 5.2 V.

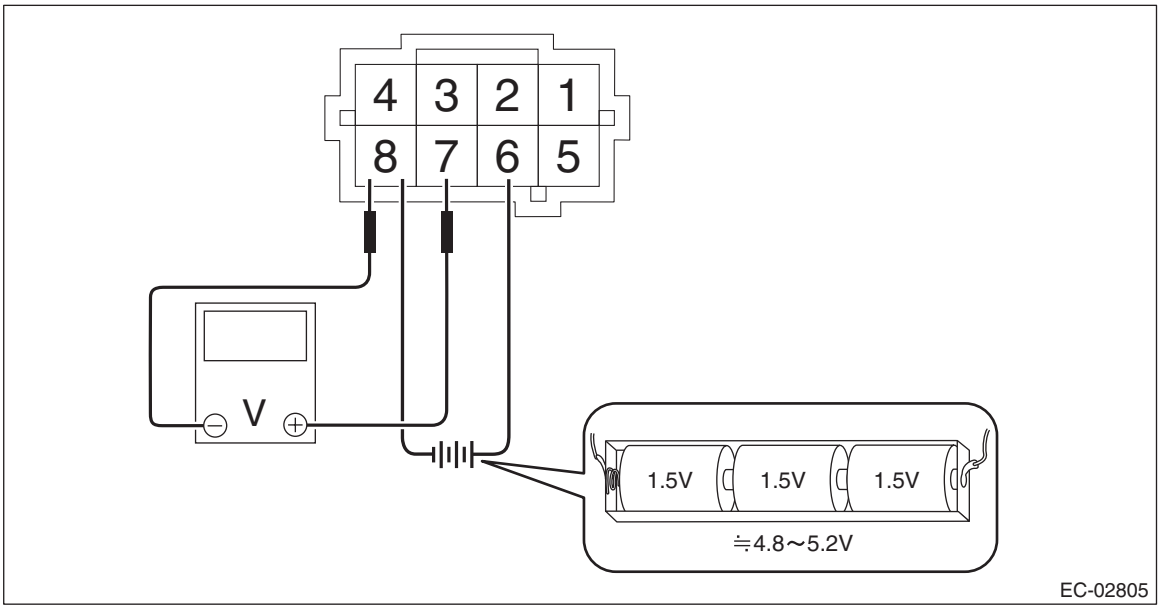

2) Check the voltage at a normal atmospheric pressure.

NOTE:
The atmospheric pressure at higher altitude is lower than normal. Therefore, the voltage is lower than the standard value.

Terminal No.	Standard
7 (+) and 8 (–)	Approx. 3.5 V (when 25°C (77°F))

3) Connect the battery positive terminal to terminal No. 3 and the battery ground terminal to terminal No. 4, and check that there is a voltage drop from the voltage measured in step 2) when the vacuum pump is operated.

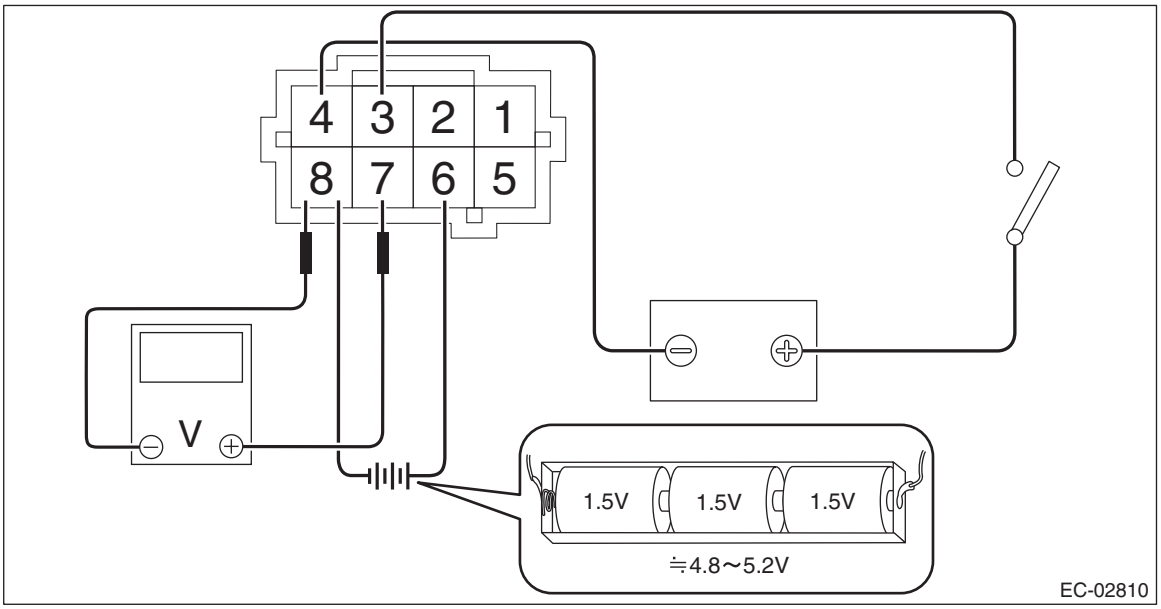

4. OTHER INSPECTIONS

1) Check that the leak check valve assembly has no deformation, cracks or other damages.
2) Check that the tube has no cracks, damage or loose part.

13.PCV Hose

A: REMOVAL

CAUTION:
Do not remove except when the PCV hose is broken.

1) Disconnect the ground cable from battery. <Ref. to NT-5, BATTERY, NOTE, Note.>

NOTE:
For the 12 volt engine restart battery, disconnect the ground terminal from 12V engine restart battery sensor.

2) Remove the collector cover.
   (1) Pull up the two points at the front of collector cover (A).
   (2) Pull up the two points at the rear of collector cover (B) while moving them rearward.

NOTE:
Be careful not to contact the fuel delivery tube when moving the collector cover rearward.

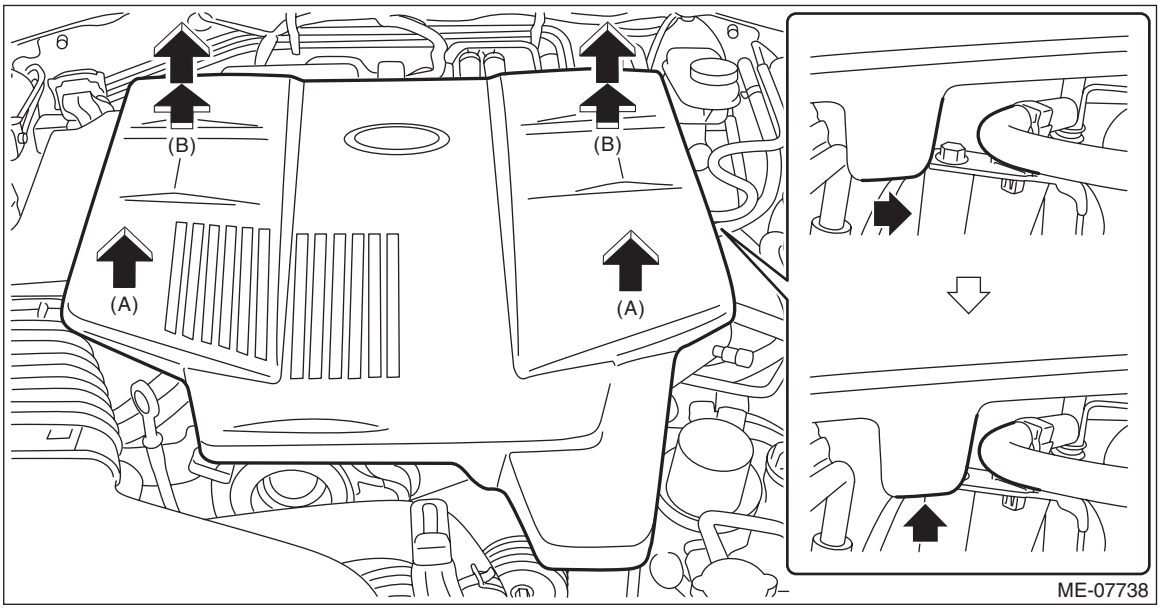

3) Remove the air cleaner case. <Ref. to IN(H4DO(HEV))-6, REMOVAL, Air Cleaner Case.>
4) Disconnect the PCV hose A from the intake manifold and the PCV valve, and then remove the PCV hose A.

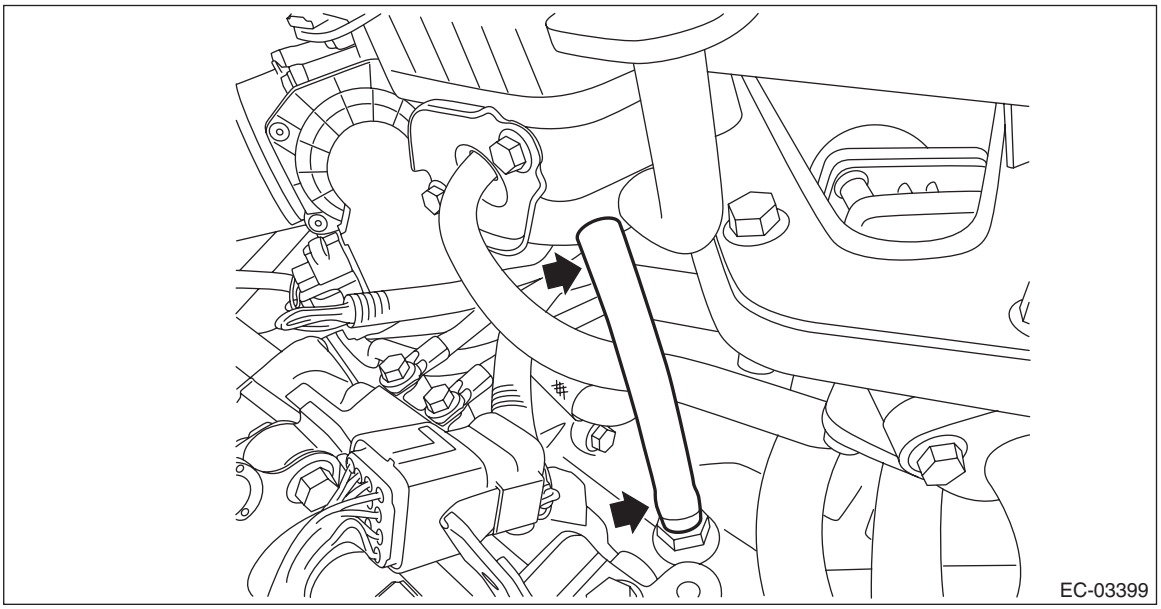

5) Remove the intake manifold. <Ref. to FU(H4DO(HEV))-20, REMOVAL, Intake Manifold.>

6) Remove the PCV hose B from the PCV connector.

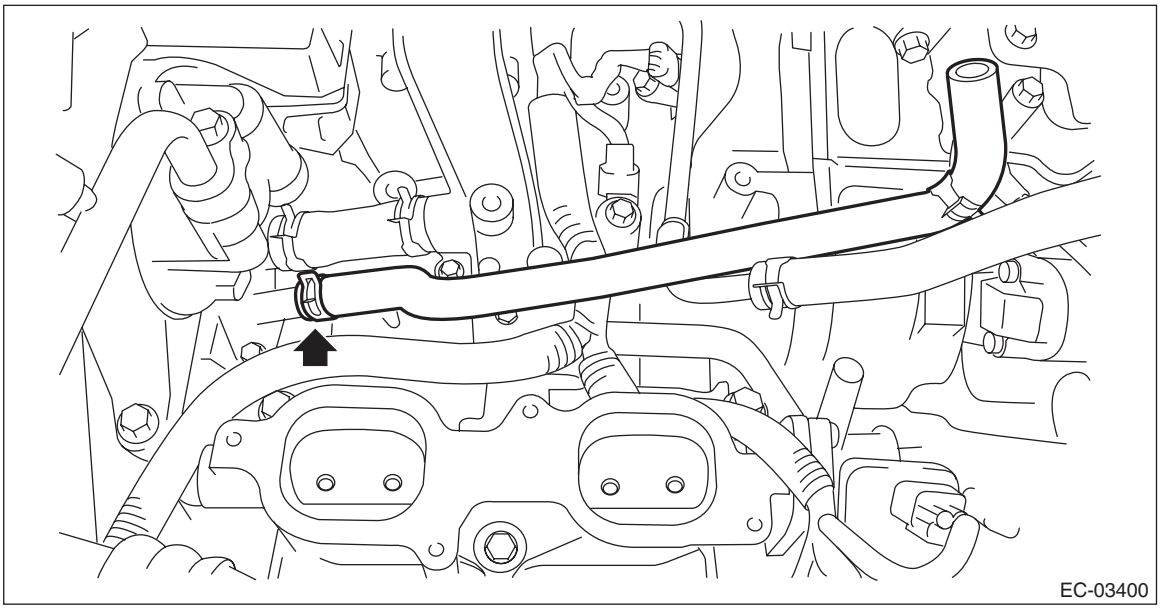

B: INSTALLATION

Install in the reverse order of removal.

C: INSPECTION

Check that the PCV hose has no cracks, damage or loose part.

14.PCV Valve

A: REMOVAL

CAUTION:
Do not remove unless the PCV valve is broken.

1) Disconnect the ground cable from battery. <Ref. to NT-5, BATTERY, NOTE, Note.>

NOTE:
For the 12 volt engine restart battery, disconnect the ground terminal from 12V engine restart battery sensor.

2) Remove the collector cover.
   (1) Pull up the two points at the front of collector cover (A).
   (2) Pull up the two points at the rear of collector cover (B) while moving them rearward.

NOTE:
Be careful not to contact the fuel delivery tube when moving the collector cover rearward.

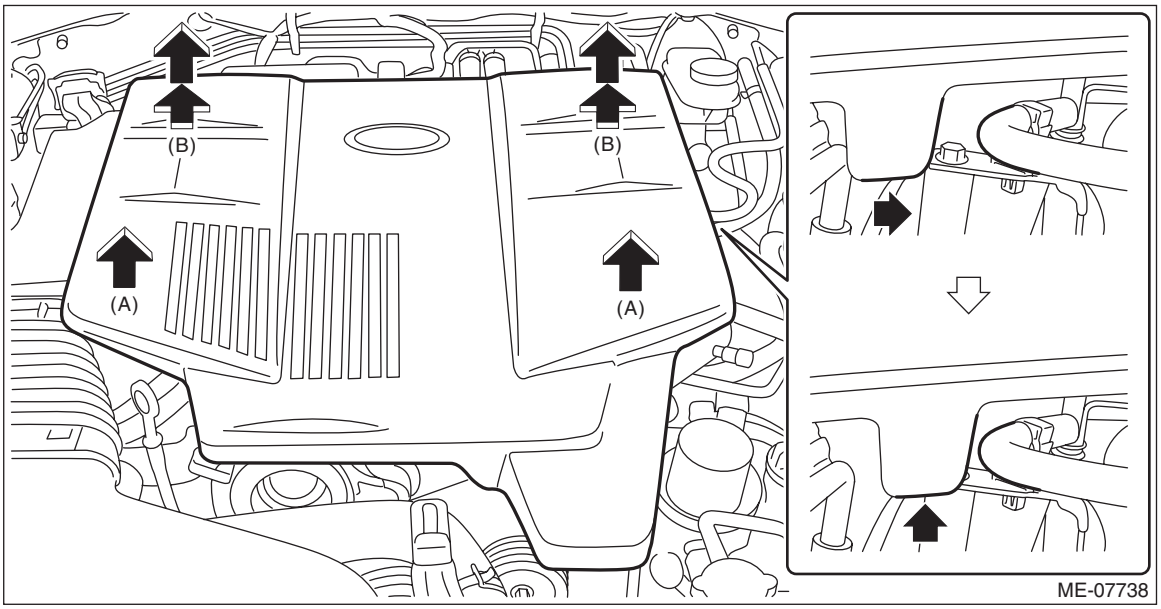

3) Remove the air cleaner case. <Ref. to IN(H4DO(HEV))-6, REMOVAL, Air Cleaner Case.>
4) Disconnect the PCV hose A (A) from the intake manifold and the PCV valve, and then remove the PCV hose A (A).
5) Remove the PCV valve (B) from the cylinder block RH.

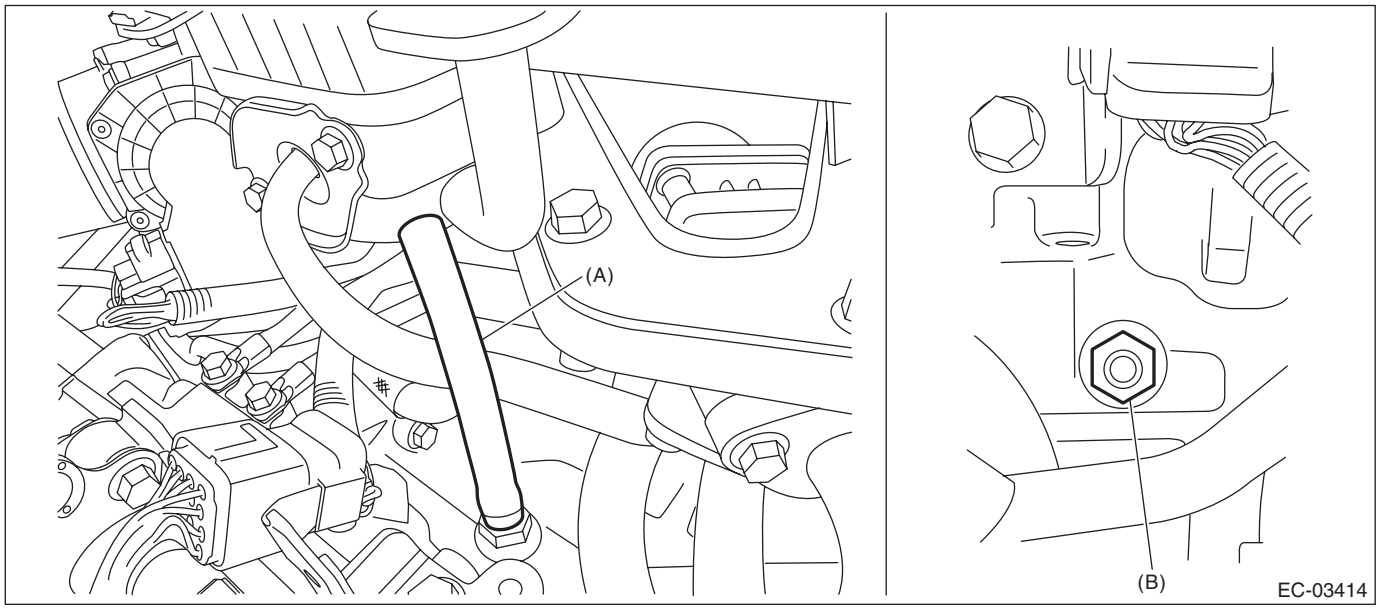

B: INSTALLATION

Install in the reverse order of removal.

NOTE:
Apply liquid gasket to the bolt threads of PCV valve.

Liquid gasket:
THREE BOND 1324 (Part No. 004403042) or equivalent

Tightening torque:
23 N·m (2.3 kgf-m, 17.0 ft-lb)

C: INSPECTION

1. PCV VALVE

1) Check that the PCV valve has no deformation, cracks or other damages.
2) Check that air is discharged from (B) when air is blown into (A).

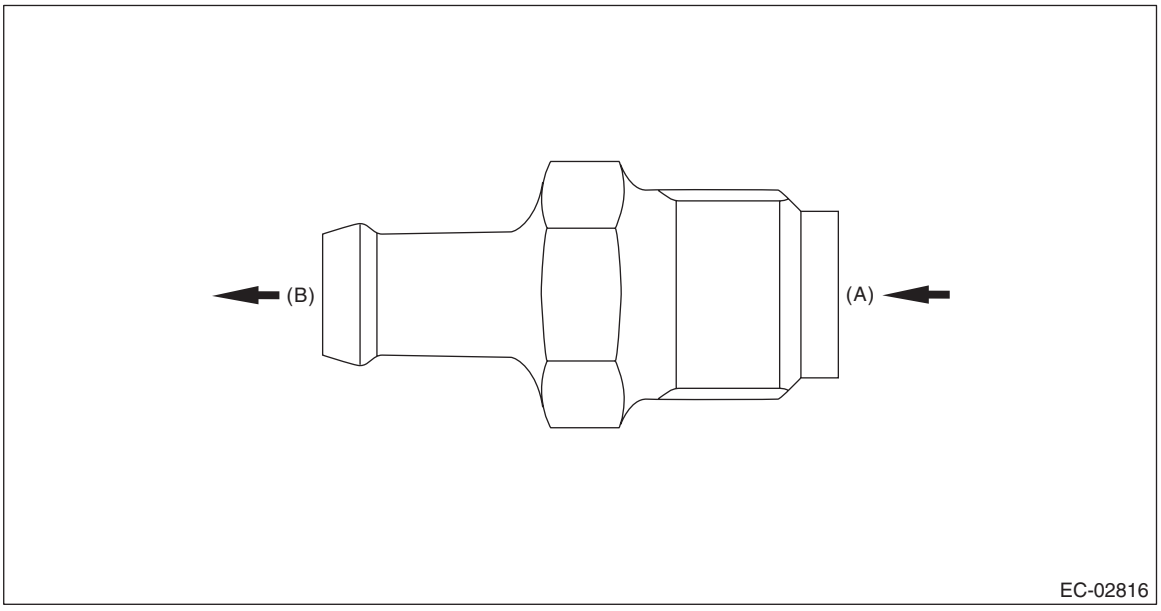

3) Check that air does not come out from (B) when air is blown into (A).

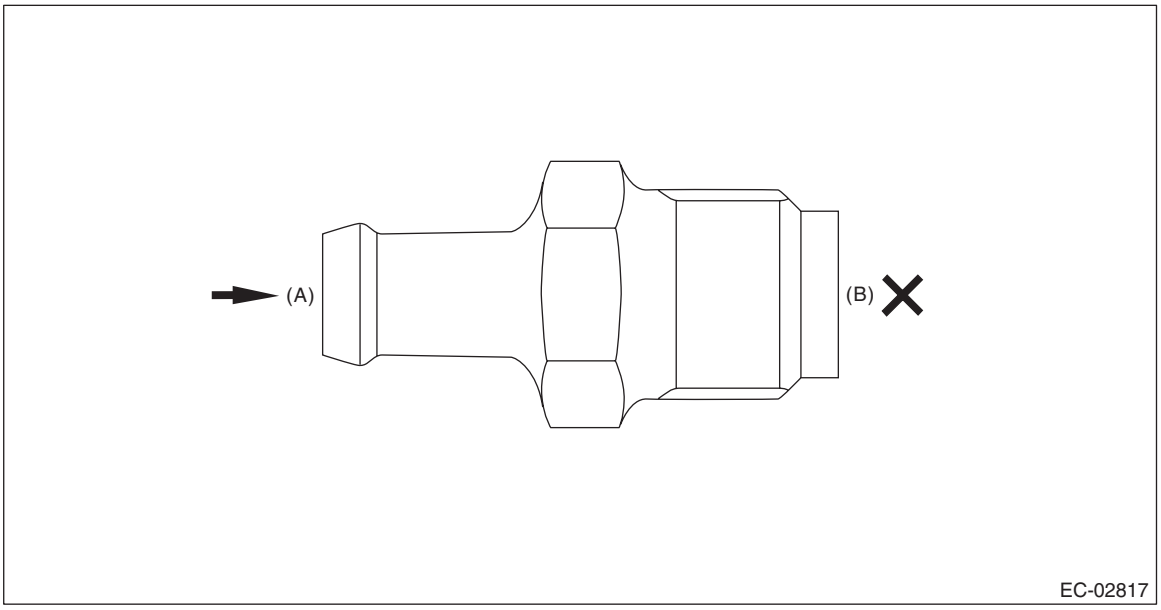

2. OTHER INSPECTIONS

Check that the PCV hose has no cracks, damage or loose part.

INTAKE (INDUCTION)

IN(H4DO(HEV))

Page

1. General Description 2
2. Air Cleaner Element 4
3. Air Cleaner Case 6
4. Air Intake Boot 10
5. Air Intake Duct 15
6. Intake Duct 16
7. Resonator Chamber 18

1. General Description

A: COMPONENT

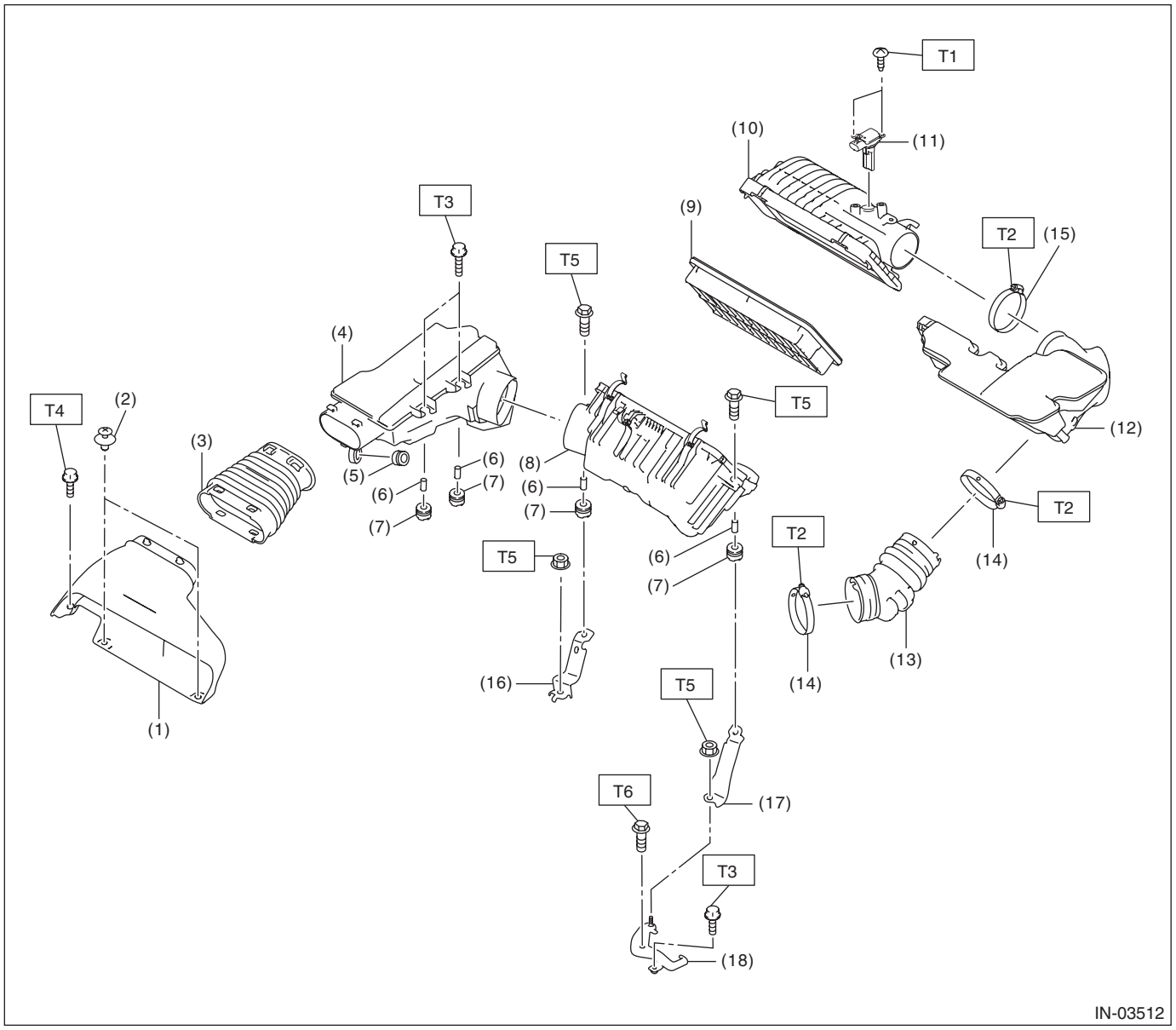

(1) Air intake duct
(2) Clip
(3) Air intake boot No. 1
(4) Intake duct
(5) Cushion
(6) Spacer
(7) Cushion
(8) Air cleaner case (front)
(9) Air cleaner element
(10) Air cleaner case (rear)
(11) Mass air flow and intake air temperature sensor
(12) Resonator chamber
(13) Air intake boot No. 2
(14) Clamp
(15) Clamp
(16) Air cleaner case bracket No. 1 RH
(17) Air cleaner case bracket No. 1 LH
(18) Air cleaner case bracket No. 2

Tightening torque: N·m (kgf-m, ft-lb)
T1: 1 (0.1, 0.7)
T2: 3 (0.3, 2.2)
T3: 6.4 (0.7, 4.7)
T4: 7.5 (0.8, 5.5)
T5: 16 (1.6, 11.8)
T6: 18 (1.8, 13.3)

B: CAUTION

- Prior to starting work, pay special attention to the following:
  1. Always wear work clothes, a work cap, and protective shoes. Additionally, wear a helmet, protective goggles, etc. if necessary.
  2. Protect the vehicle using a seat cover, fender cover, etc.
  3. Prepare the service tools, clean cloth, containers to catch grease and oil, etc.
- Vehicle components are extremely hot immediately after driving. Be wary of receiving burns from heated parts.
- When performing a repair, identify the cause of trouble and avoid unnecessary removal, disassembly and replacement.
- Before disconnecting connectors of sensors or units, be sure to disconnect the ground cable from battery.
- Always use the jack-up point when the shop jacks or rigid racks are used to support the vehicle.
- Remove contamination including dirt and corrosion before removal, installation, disassembly or assembly.
- Keep the removed parts in order and protect them from dust and dirt.
- All removed parts, if to be reused, should be reinstalled in the original positions with attention to the correct directions, etc.
- Bolts, nuts and washers should be replaced with new parts as required.
- Be sure to tighten the fasteners including bolts and nuts to the specified torque.

2. Air Cleaner Element

A: REMOVAL

1) Turn the ignition switch to OFF.
2) Remove the collector cover.
   (1) Pull up the two points at the front of collector cover (A).
   (2) Pull up the two points at the rear of collector cover (B) while moving them rearward.

NOTE:
Be careful not to contact the fuel delivery tube when moving the collector cover rearward.

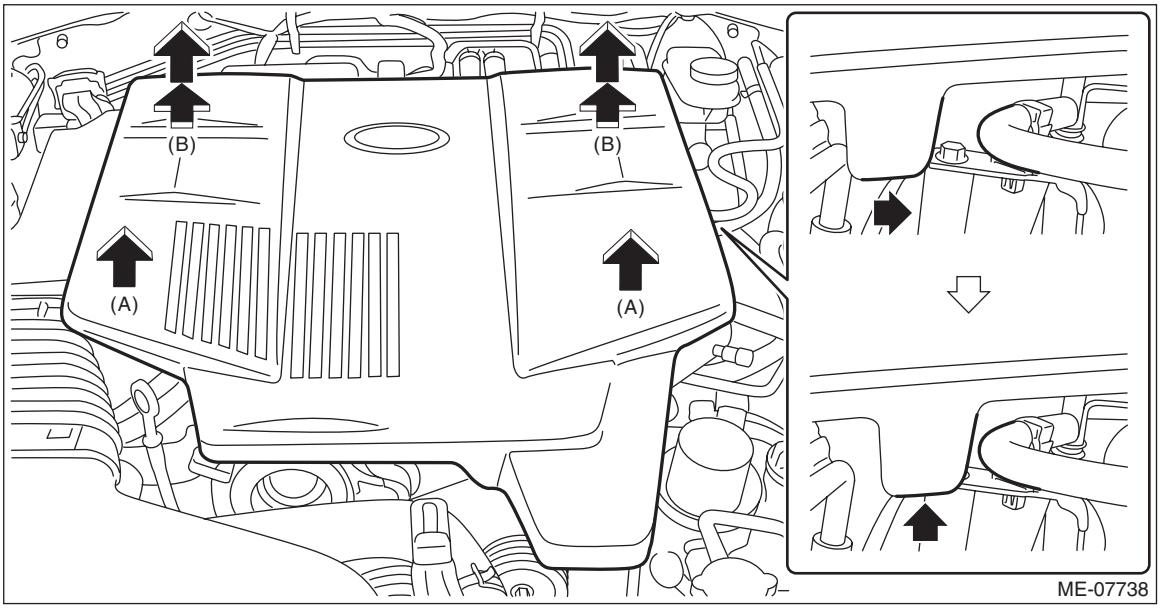

3) Remove the clip (A) from the resonator chamber, and remove the clip (B) from the air cleaner case (rear).
4) Lift the resonator chamber (C) and open the air cleaner case (rear).
5) Put aside the air cleaner case (rear) as shown in the figure, and remove the air cleaner element.

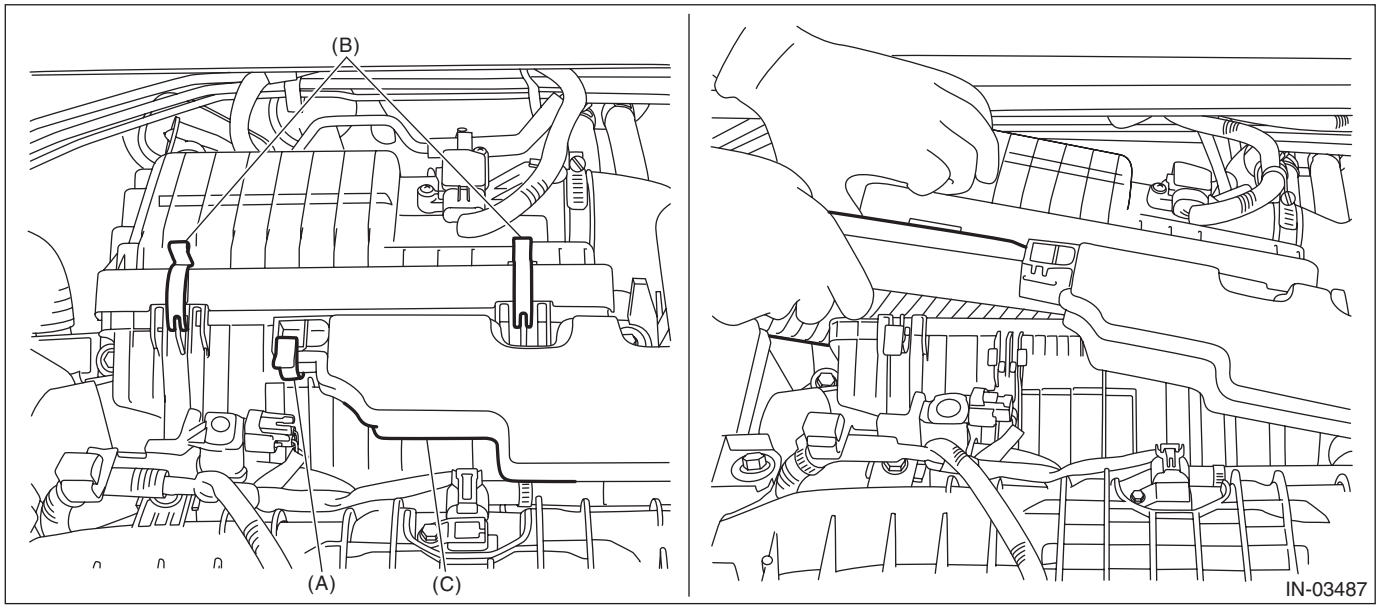

B: INSTALLATION

Install in the reverse order of removal.

CAUTION:
Be sure to use SUBARU genuine air cleaner element depending on the engine type when replacing the air cleaner elements. Using other air cleaner element may affect the engine performance.

NOTE:
- Check that there are no foreign objects in the air cleaner case.
- When installing the air cleaner case (rear), align the protrusion of the air cleaner case (rear) to the hole on the air cleaner case (front).

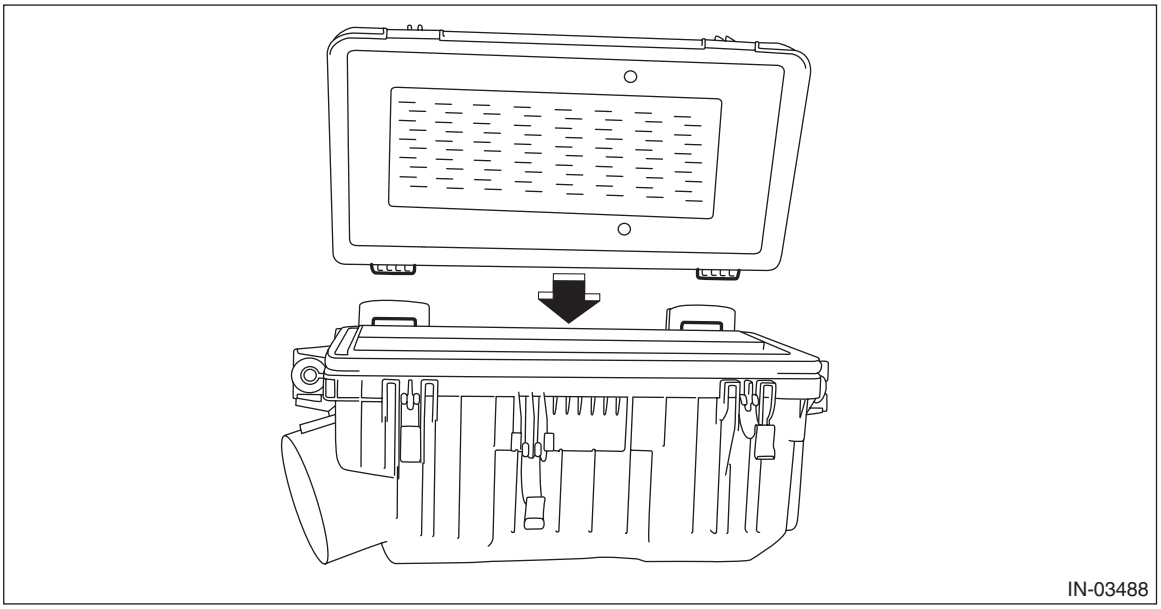

C: INSPECTION

1) Check that the air cleaner element has no deformation, cracks or other damages.
2) Check the air cleaner element for excessive dirt.
3) Replace the air cleaner case (rear) if the HC absorption filter is damaged.

3. Air Cleaner Case

A: REMOVAL

1) Disconnect the ground cable from battery. <Ref. to NT-5, BATTERY, NOTE, Note.>

NOTE:
For the 12 volt engine restart battery, disconnect the ground terminal from 12V engine restart battery sensor.

2) Remove the collector cover.
   (1) Pull up the two points at the front of collector cover (A).
   (2) Pull up the two points at the rear of collector cover (B) while moving them rearward.

NOTE:
Be careful not to contact the fuel delivery tube when moving the collector cover rearward.

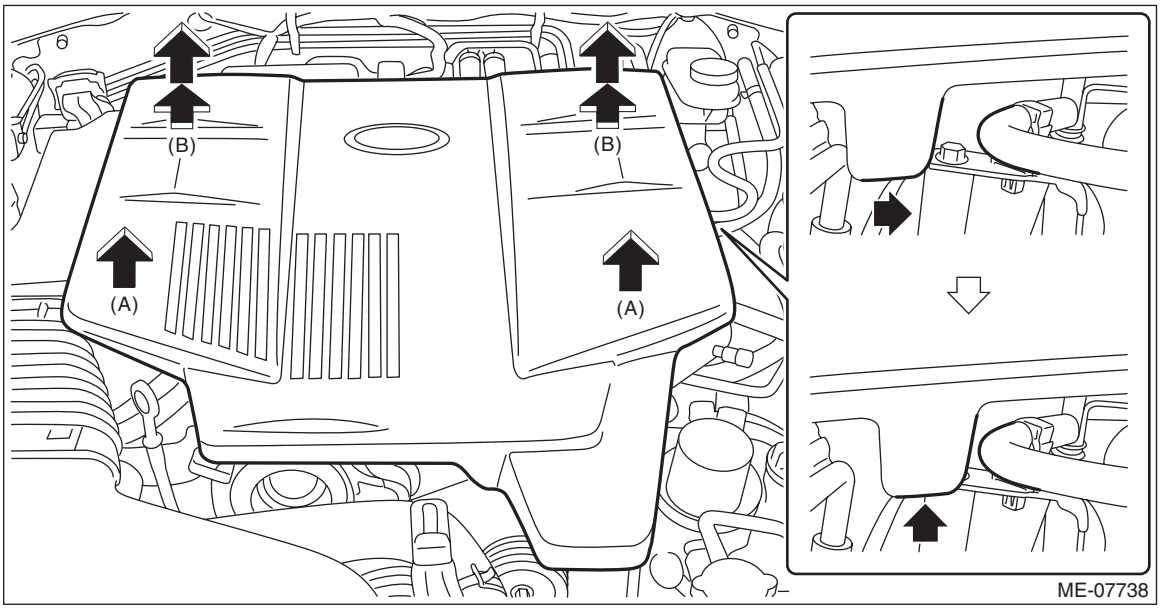

3) Remove the intake duct. <Ref. to IN(H4DO(HEV))-16, REMOVAL, Intake Duct.>

4) Remove the clip (A) which secures the resonator chamber to the air cleaner case (rear), and then loosen the clamp (B) which secures the resonator chamber to the air intake boot No. 2.

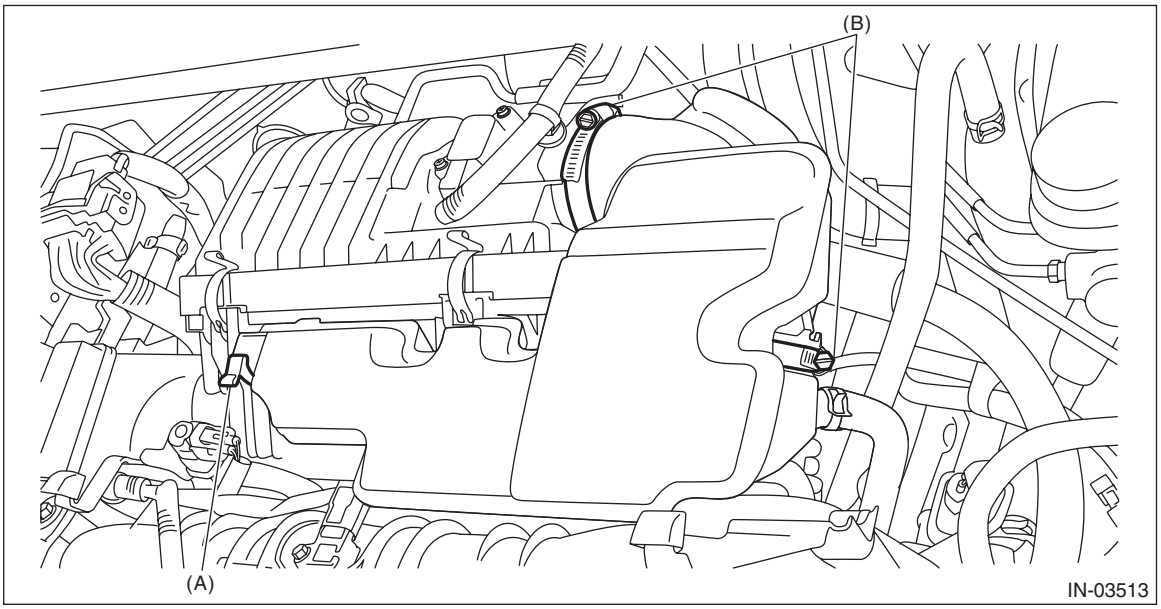

5) Remove the resonator chamber from the air cleaner case (rear) and the air intake boot No. 2, and move the resonator chamber to the left side wheel apron.

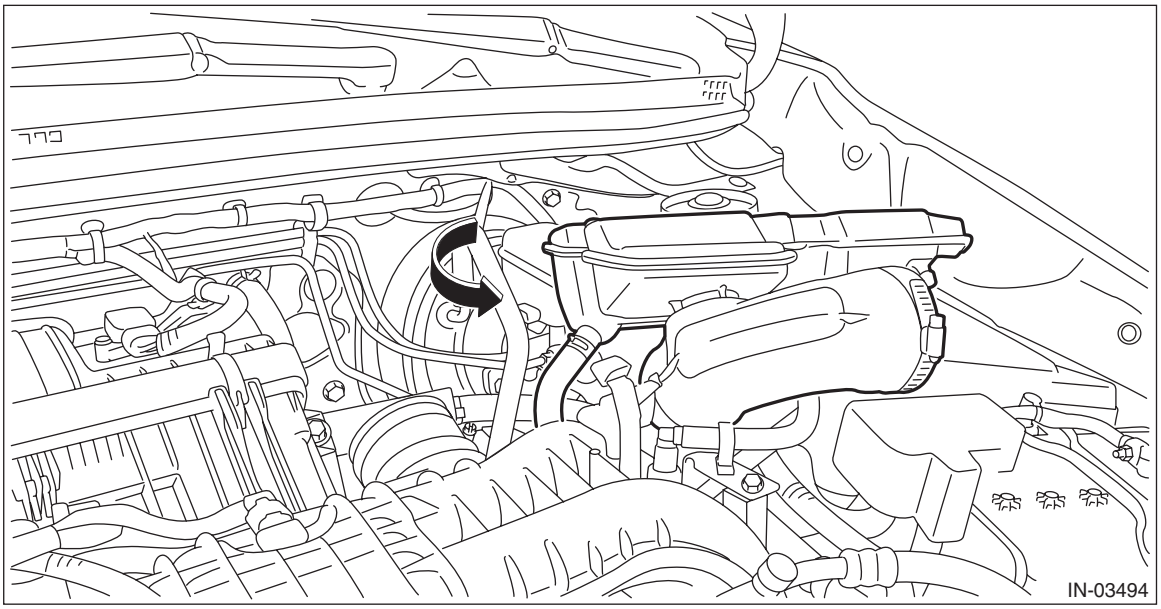

6) Remove the air intake boot No. 2. <Ref. to IN(H4DO(HEV))-11, AIR INTAKE BOOT NO. 2, REMOVAL, Air Intake Boot.>
7) Remove the clip (A) securing the bulk head wiring harness to the air cleaner case (rear), and disconnect the connector (B) from the mass air flow and intake air temperature sensor.
8) Remove the air cleaner case assembly from the air cleaner case bracket No. 1.

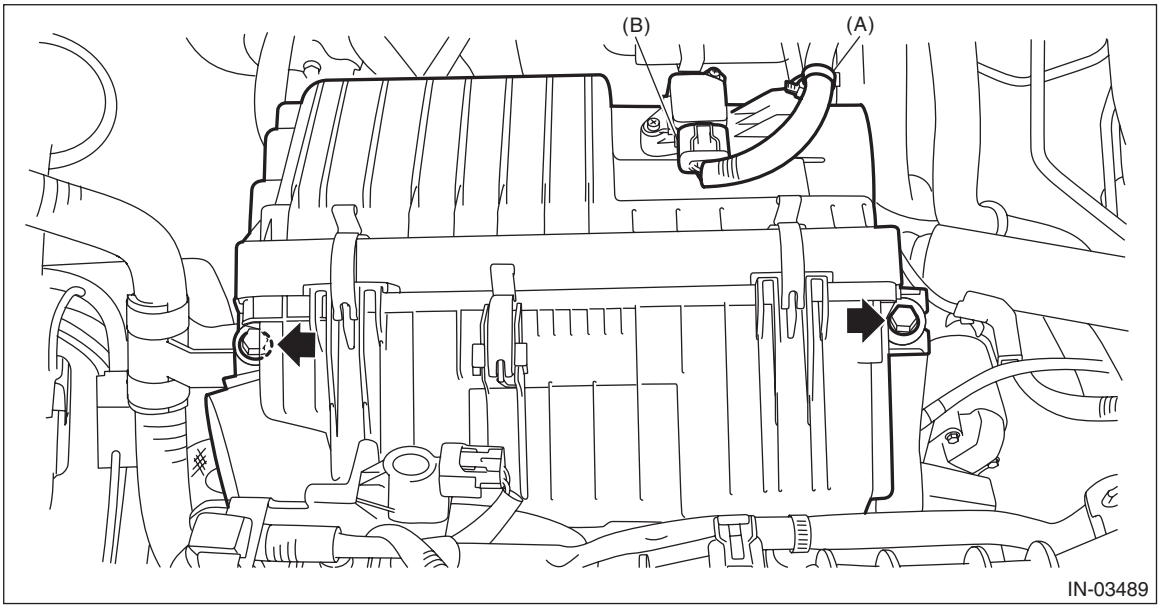

9) Remove the engine wiring harness (B) from the air cleaner case bracket No. 1 (A).
10) Remove the air cleaner case bracket No. 1 (A) from the engine rear hanger and the air cleaner case bracket No. 2 (C).
11) Remove the bolt (D) securing the brake vacuum pipe from the air cleaner case bracket No. 2 (C).
12) Remove the air cleaner case bracket No. 2 (C) from the cylinder block LH.

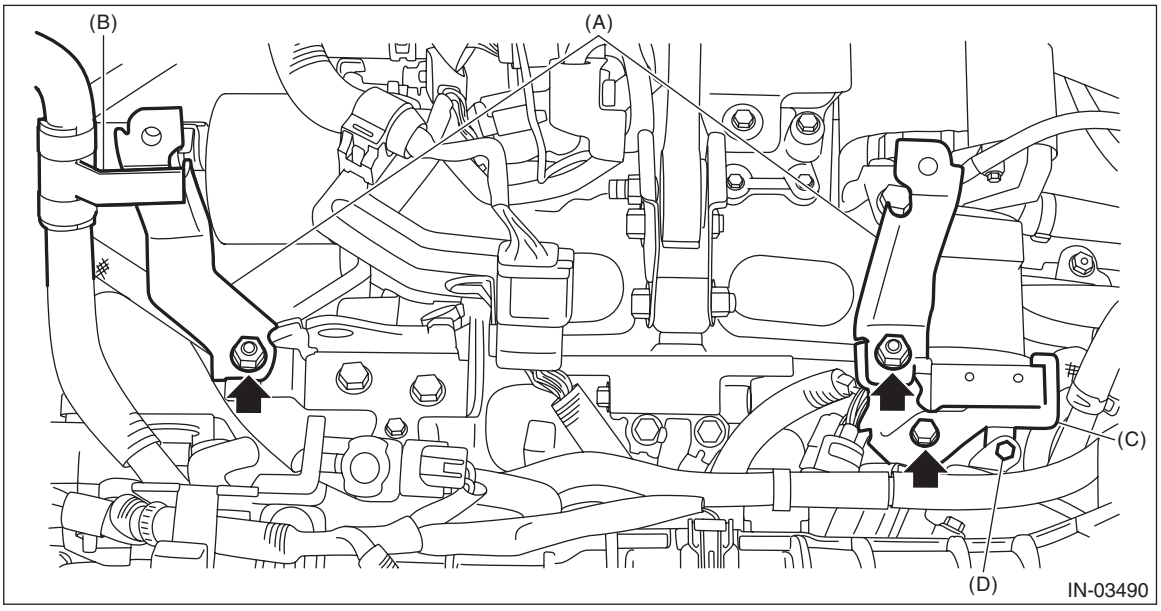

B: INSTALLATION

1) Install the air cleaner case bracket No. 2 (A) to the cylinder block LH, and install the bolt (B) which secures the brake vacuum pipe to the air cleaner case bracket No. 2 (A).
2) Install the air cleaner case bracket No. 1 (C) to the engine rear hanger and the air cleaner case bracket No. 2 (A).
3) Install the engine wiring harness (D) to the air cleaner case bracket No. 1 (C).

Tightening torque:
T1: 18 N·m (1.8 kgf-m, 13.3 ft-lb)
T2: 6.4 N·m (0.7 kgf-m, 4.7 ft-lb)
T3: 16 N·m (1.6 kgf-m, 11.8 ft-lb)

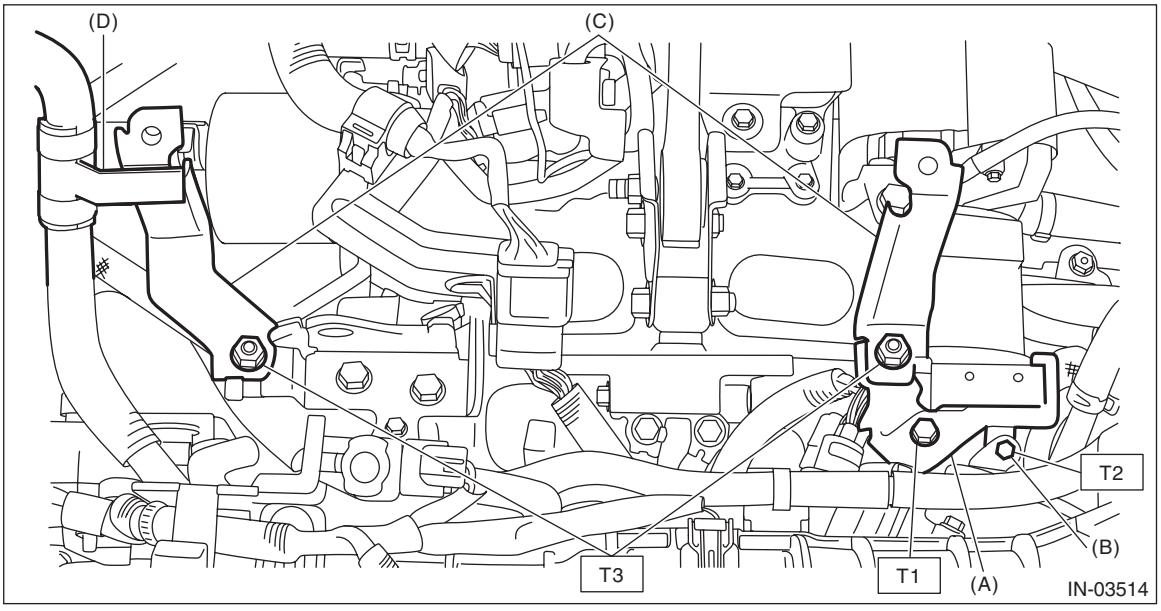

4) Install the air cleaner case assembly to the air cleaner case bracket No. 1.

Tightening torque:
16 N·m (1.6 kgf-m, 11.8 ft-lb)

5) Connect the connector (B) to the mass air flow and intake air temperature sensor, and secure the bulk head wiring harness to the air cleaner case (rear) with the clip (A).

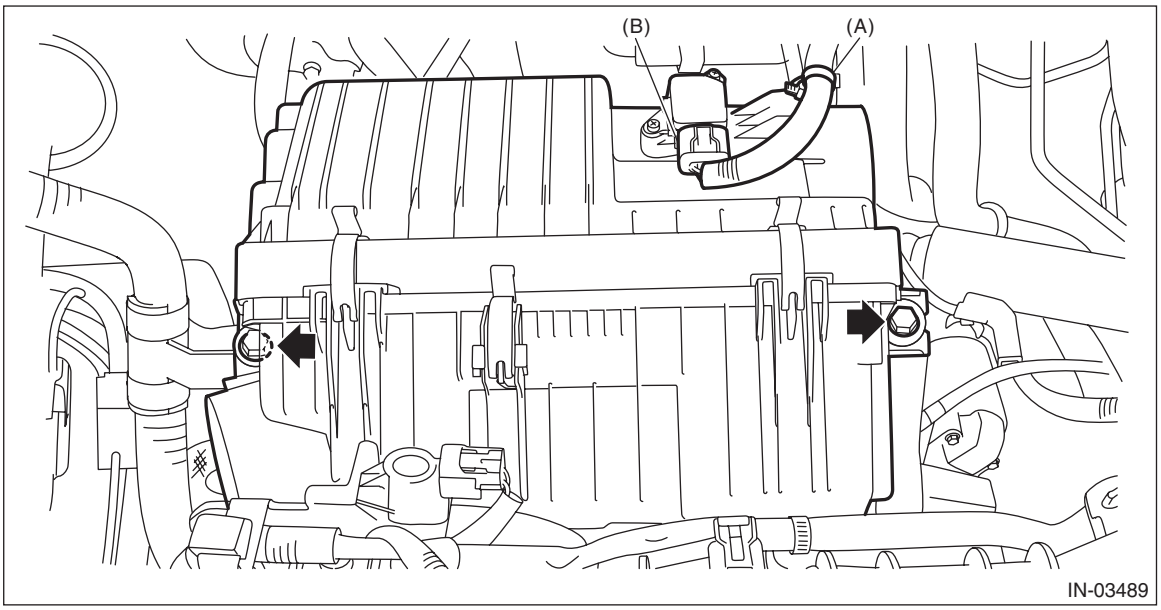

6) Install the air intake boot No. 2. <Ref. to IN(H4DO(HEV))-13, AIR INTAKE BOOT NO. 2, INSTALLATION, Air Intake Boot.>
7) Install the intake duct. <Ref. to IN(H4DO(HEV))-17, INSTALLATION, Intake Duct.>
8) Install the collector cover.
9) Connect the battery ground terminal. <Ref. to NT-5, BATTERY, NOTE, Note.>

C: DISASSEMBLY

1) Remove the air cleaner element. <Ref. to IN(H4DO(HEV))-4, REMOVAL, Air Cleaner Element.>
2) Remove the mass air flow and intake air temperature sensor. <Ref. to FU(H4DO(HEV))-64, REMOVAL, Mass Air Flow and Intake Air Temperature Sensor.>

D: ASSEMBLY

1) Install the mass air flow and intake air temperature sensor. <Ref. to FU(H4DO(HEV))-64, INSTALLATION, Mass Air Flow and Intake Air Temperature Sensor.>
2) Install the air cleaner element. <Ref. to IN(H4DO(HEV))-5, INSTALLATION, Air Cleaner Element.>

E: INSPECTION

Check that the air cleaner case has no deformation, cracks or other damages.

4. Air Intake Boot

A: REMOVAL

1. AIR INTAKE BOOT NO. 1

1) Turn the ignition switch to OFF.
2) Remove the collector cover.
   (1) Pull up the two points at the front of collector cover (A).
   (2) Pull up the two points at the rear of collector cover (B) while moving them rearward.

NOTE:
Be careful not to contact the fuel delivery tube when moving the collector cover rearward.

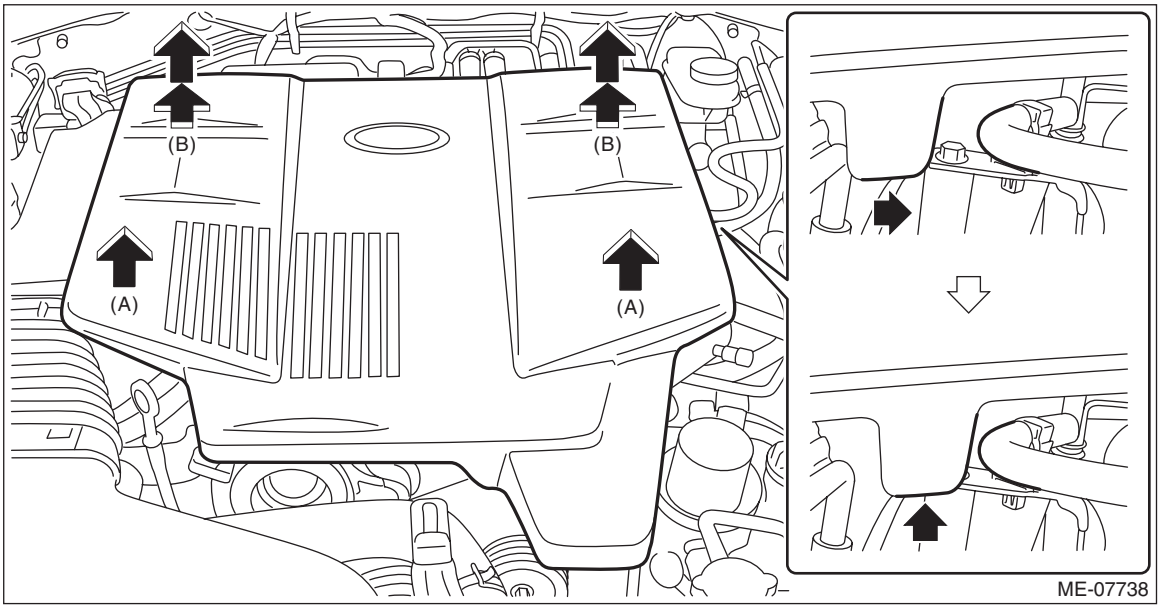

3) Remove the air intake duct. <Ref. to IN(H4DO(HEV))-15, REMOVAL, Air Intake Duct.>
4) Remove the air intake boot No. 1 from the protrusion (A) on the intake duct.

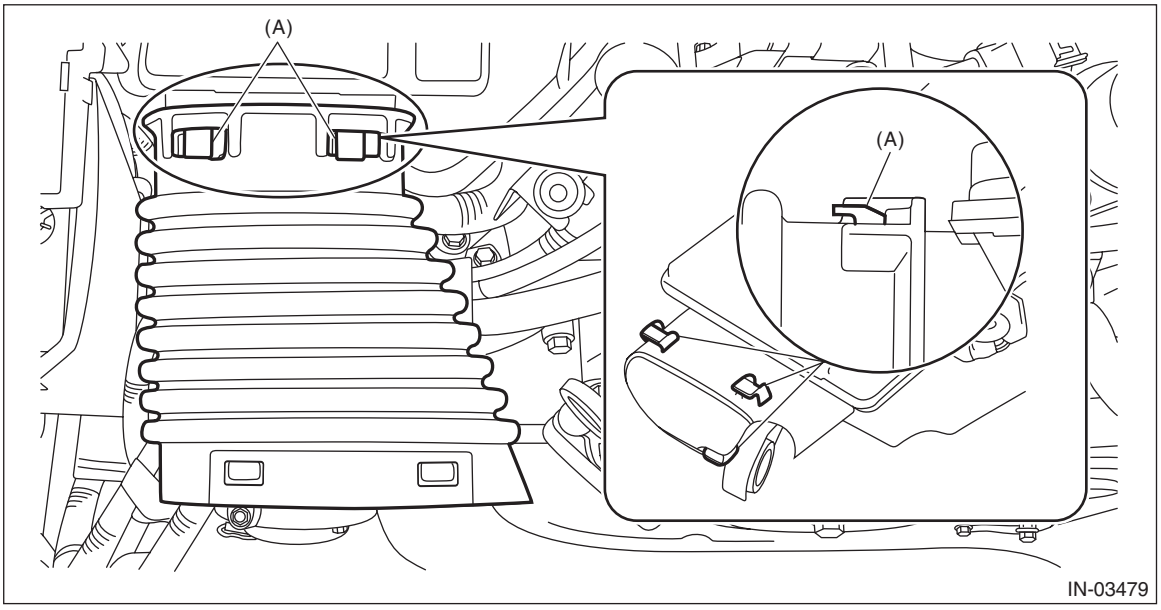

2. AIR INTAKE BOOT NO. 2

1) Turn the ignition switch to OFF.
2) Remove the collector cover.
   (1) Pull up the two points at the front of collector cover (A).
   (2) Pull up the two points at the rear of collector cover (B) while moving them rearward.

NOTE:
Be careful not to contact the fuel delivery tube when moving the collector cover rearward.

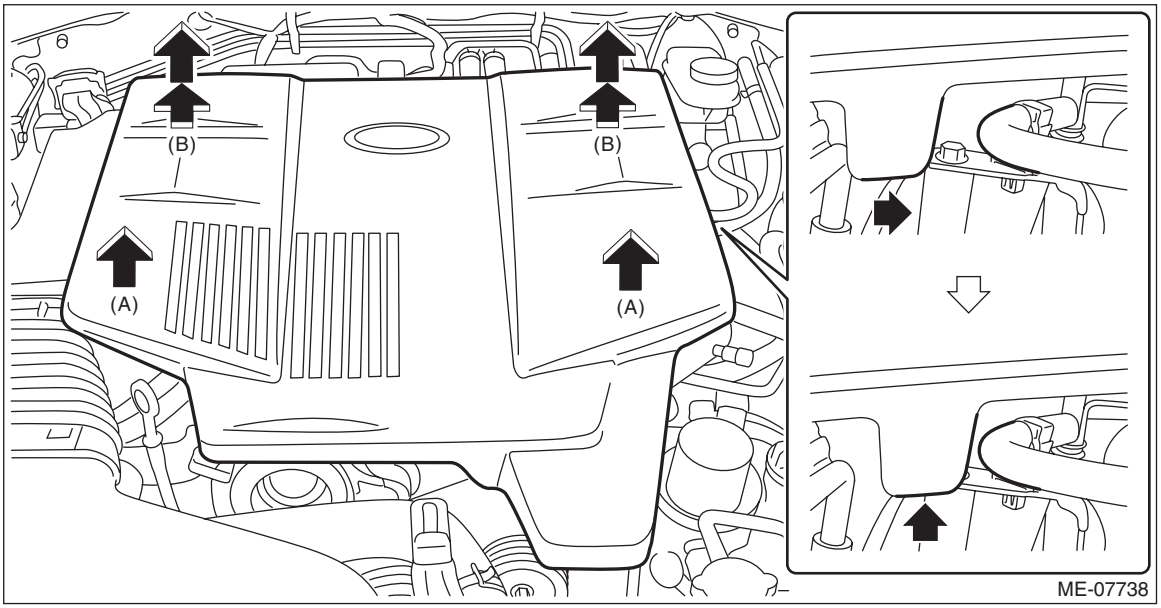

3) Remove the clip (A) which secures the resonator chamber to the air cleaner case (rear), and then loosen the clamp (B) which secures the resonator chamber to the air cleaner case (rear) and the air intake boot No. 2.

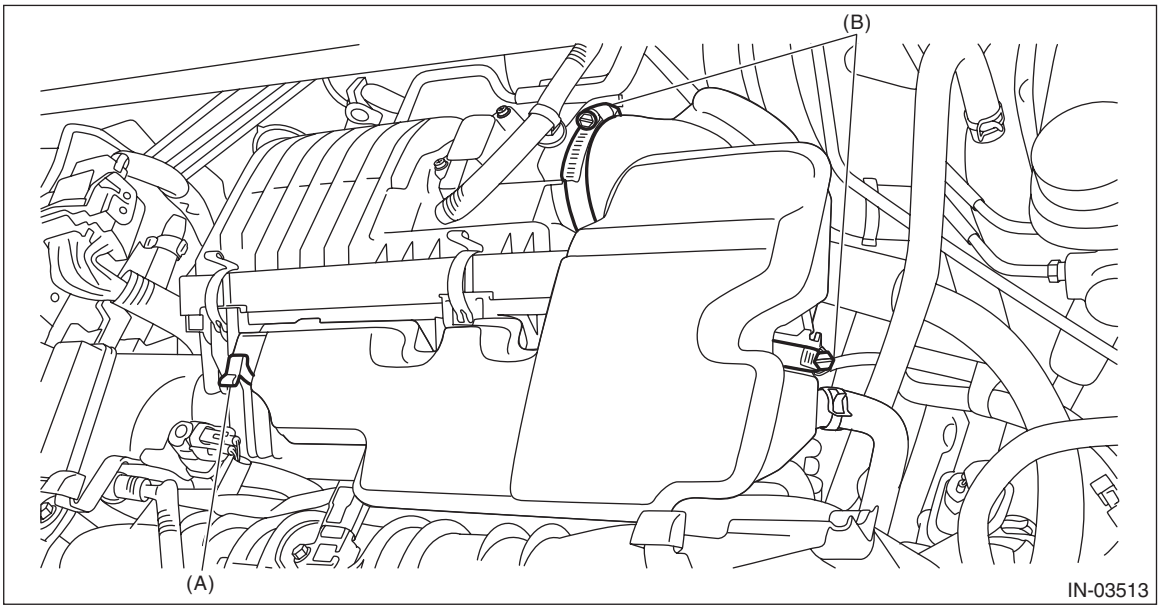

4) Remove the resonator chamber from the air cleaner case (rear) and the air intake boot No. 2, and move the resonator chamber to the left side wheel apron.

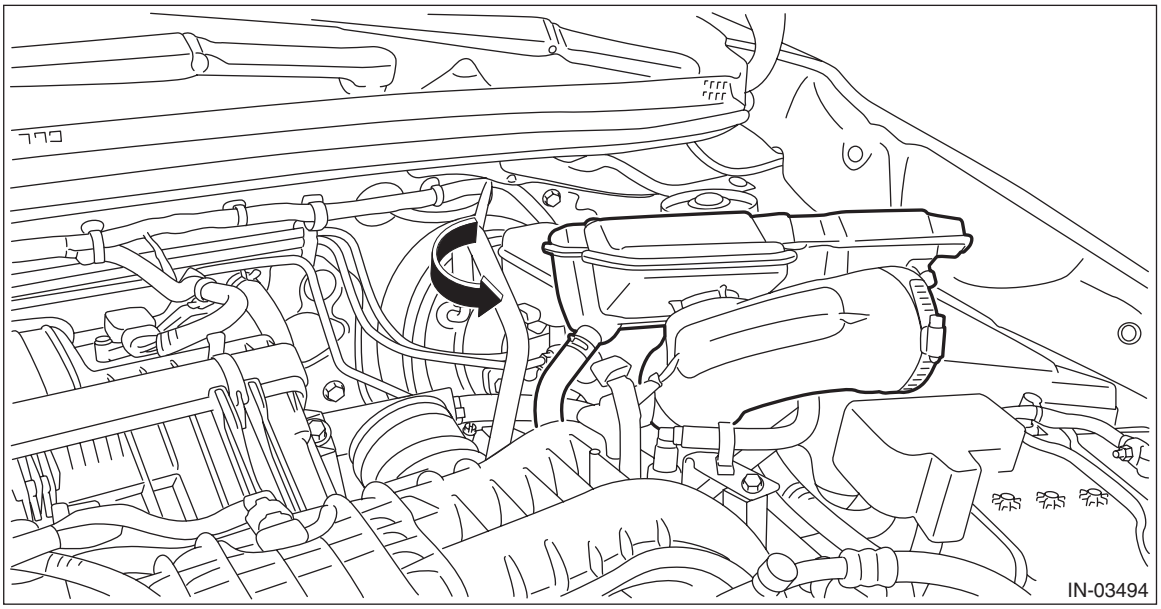

5) Remove the air intake boot No. 2 from the throttle body.

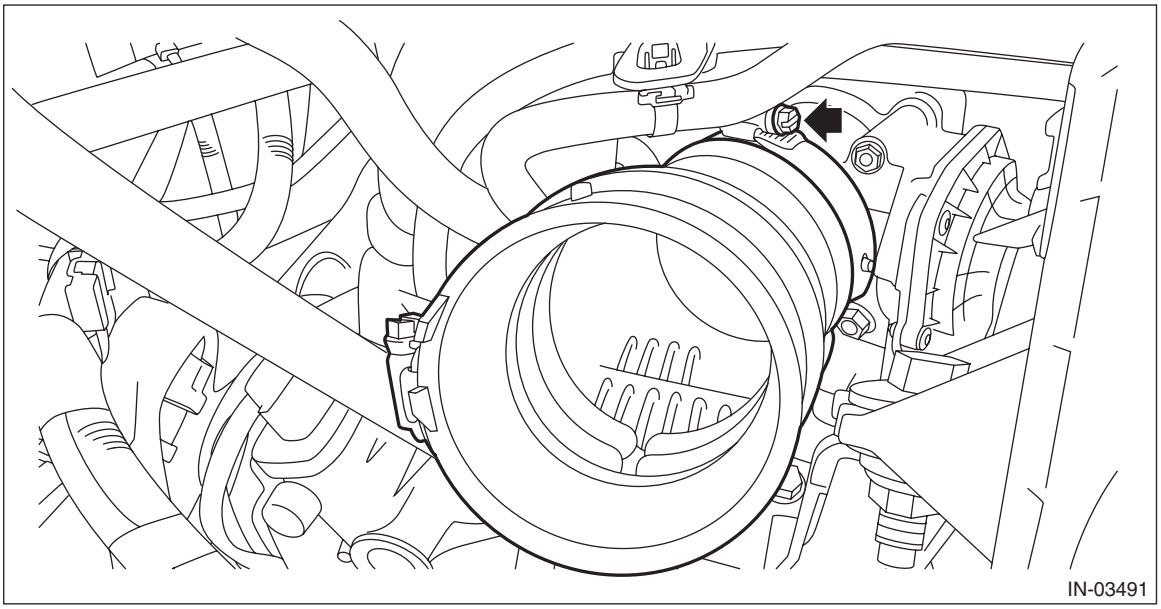

B: INSTALLATION

1. AIR INTAKE BOOT NO. 1

Install in the reverse order of removal.

NOTE:
- Make sure that the air intake boot No. 1 is securely installed to the protrusion (a) on the intake duct and the protrusion (b) on the air intake duct.
- Check the air intake boot No. 1 for peel-off.

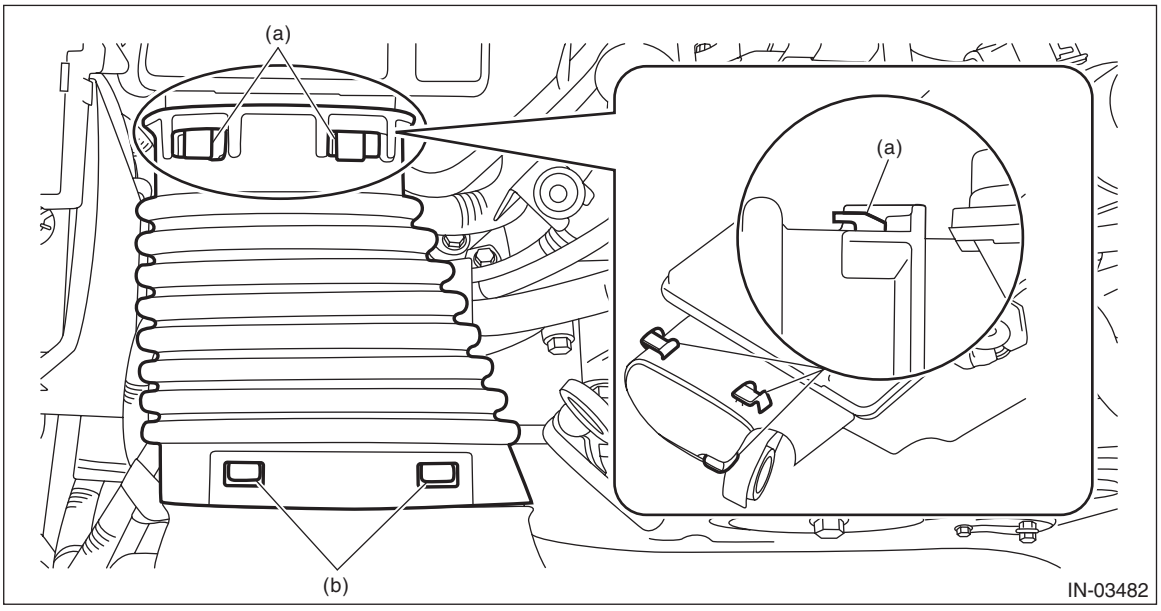

2. AIR INTAKE BOOT NO. 2

1) Install the air intake boot No. 2 to the throttle body.

NOTE:
- Align the clamp hole (a) with the protrusion of the air intake boot No. 2, and install the clamp in the direction as shown in the figure below.
- When installing the air intake boot No. 2 to the throttle body, align the air intake boot No. 2 (b) with the protrusion on the throttle body.

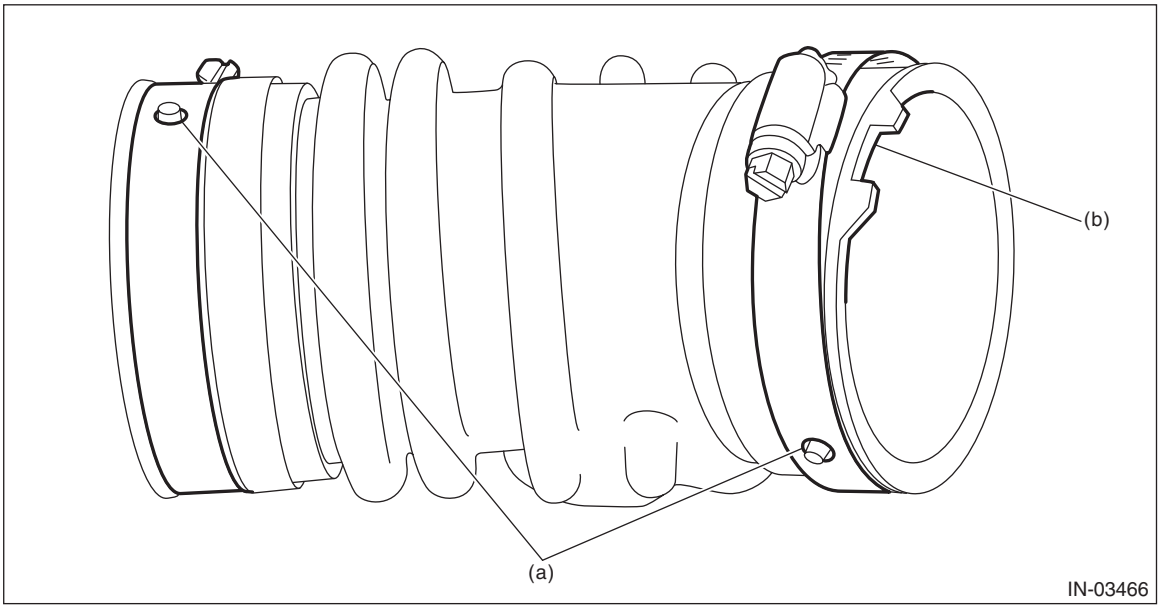

Tightening torque:
3 N·m (0.3 kgf-m, 2.2 ft-lb)

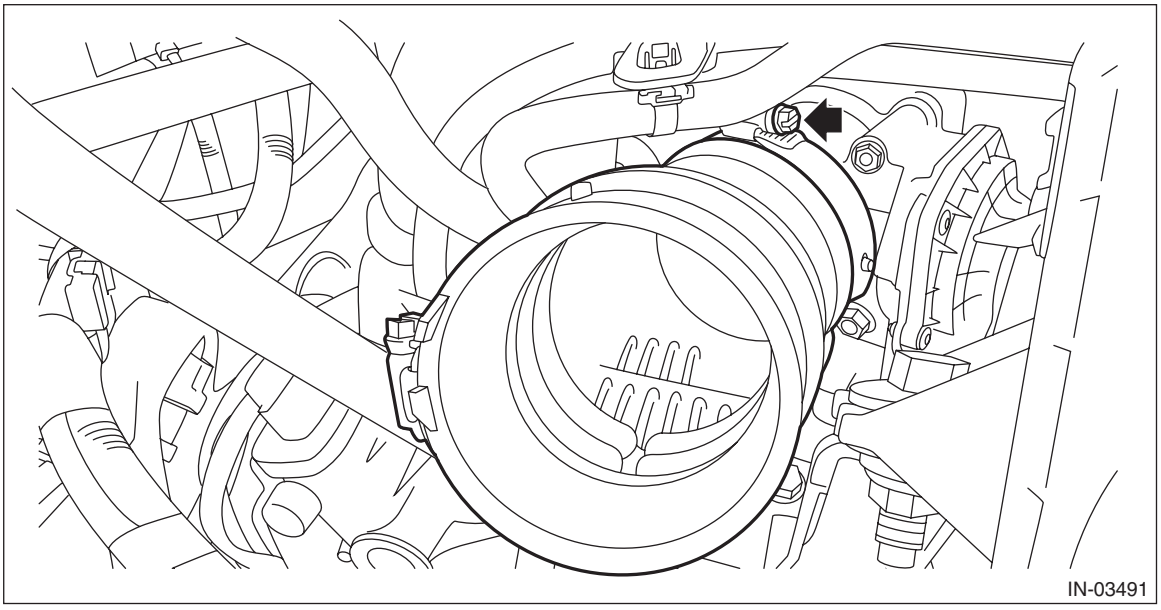

2) Install the resonator chamber. <Ref. to IN(H4DO(HEV))-19, INSTALLATION, Resonator Chamber.>
3) Install the collector cover.

C: INSPECTION

1) Check that the air intake boot has no deformation, cracks or other damages.
2) Inspect that no foreign objects are mixed in the air intake boot.

5. Air Intake Duct

A: REMOVAL

1) Turn the ignition switch to OFF.
2) Remove the clip (A) and the bolt (B) which hold the air intake duct.
3) Remove the protrusion on the air intake duct from the air intake boot No. 1, and remove the air intake duct.

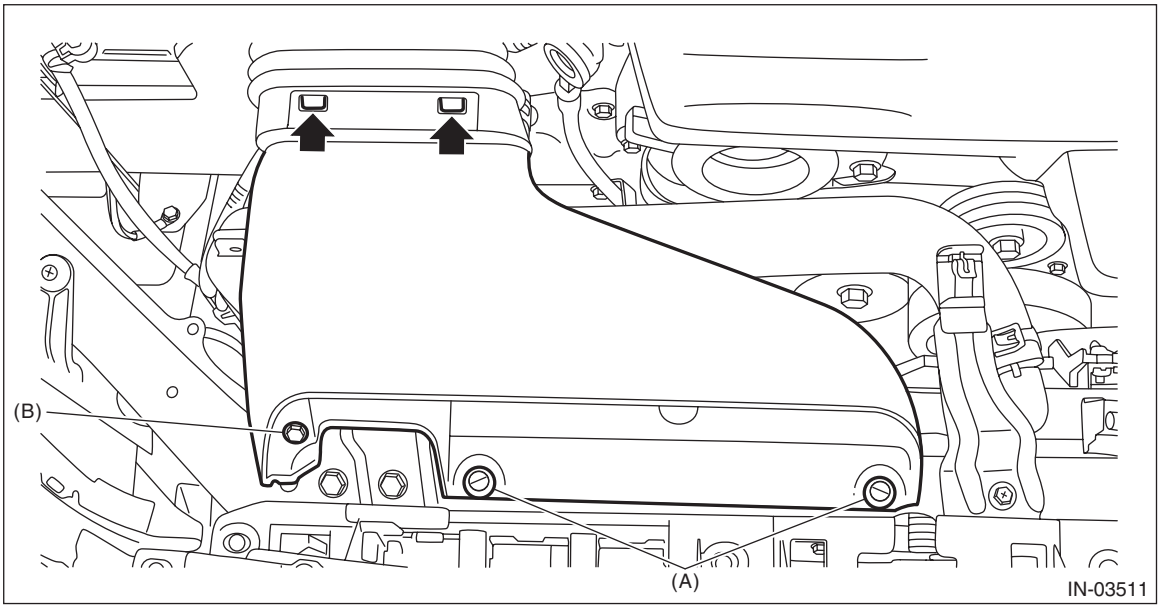

B: INSTALLATION

Install in the reverse order of removal.

NOTE:
- Make sure that the air intake boot No. 1 is securely installed to the protrusion on the air intake duct.
- Check the air intake boot No. 1 for peel-off.

Tightening torque:
7.5 N·m (0.8 kgf-m, 5.5 ft-lb)

C: INSPECTION

1) Check that the air intake duct has no deformation, cracks or other damages.
2) Inspect that no foreign objects are mixed in the air intake duct.

6. Intake Duct

A: REMOVAL

1) Turn the ignition switch to OFF.
2) Remove the collector cover.
   (1) Pull up the two points at the front of collector cover (A).
   (2) Pull up the two points at the rear of collector cover (B) while moving them rearward.

NOTE:
Be careful not to contact the fuel delivery tube when moving the collector cover rearward.

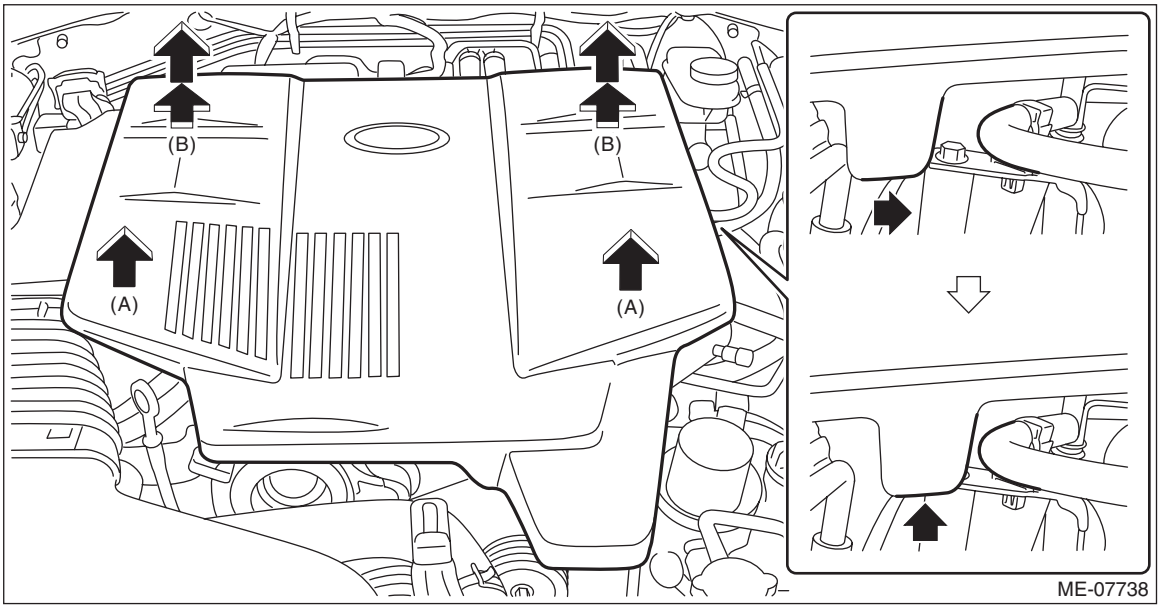

3) Remove the air intake boot No. 1. <Ref. to IN(H4DO(HEV))-10, AIR INTAKE BOOT NO. 1, REMOVAL, Air Intake Boot.>
4) Remove the bolt (A) which holds the intake duct to the intake manifold.
5) Remove the intake duct from the air cleaner case front and the protrusion (B) on the intake manifold protector RH.

NOTE:
When removing the intake duct, check the cushion (a) of the intake duct for peel-off or misalignment.

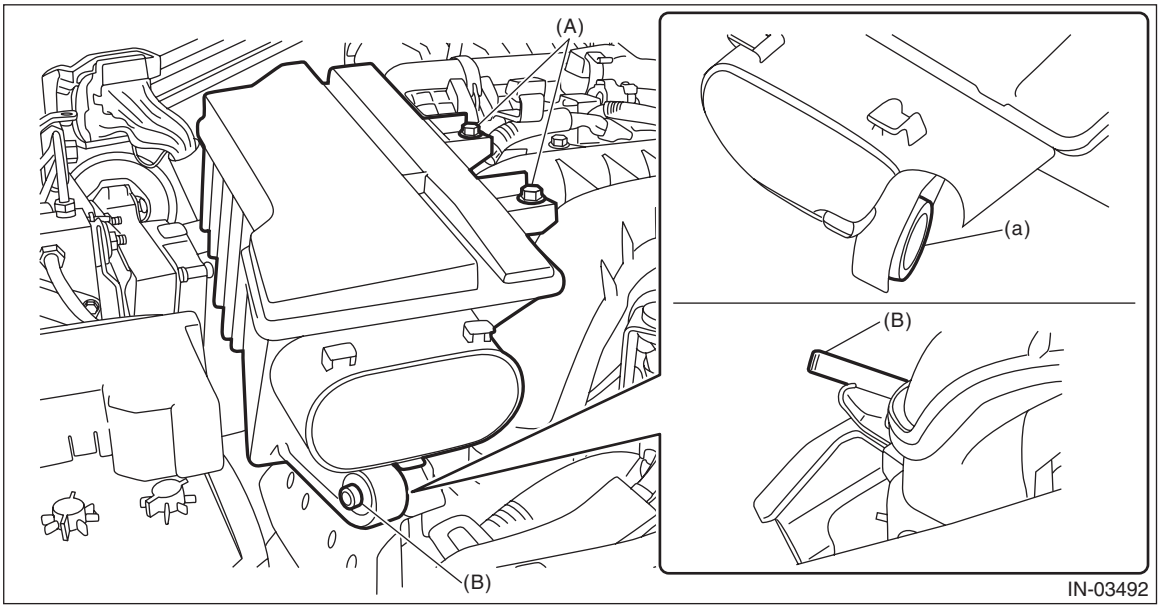

B: INSTALLATION

Install in the reverse order of removal.

NOTE:
- Check that the intake duct is firmly inserted into the protrusion (a) on the intake manifold protector RH.
- Check the cushion (b) for peel-off.

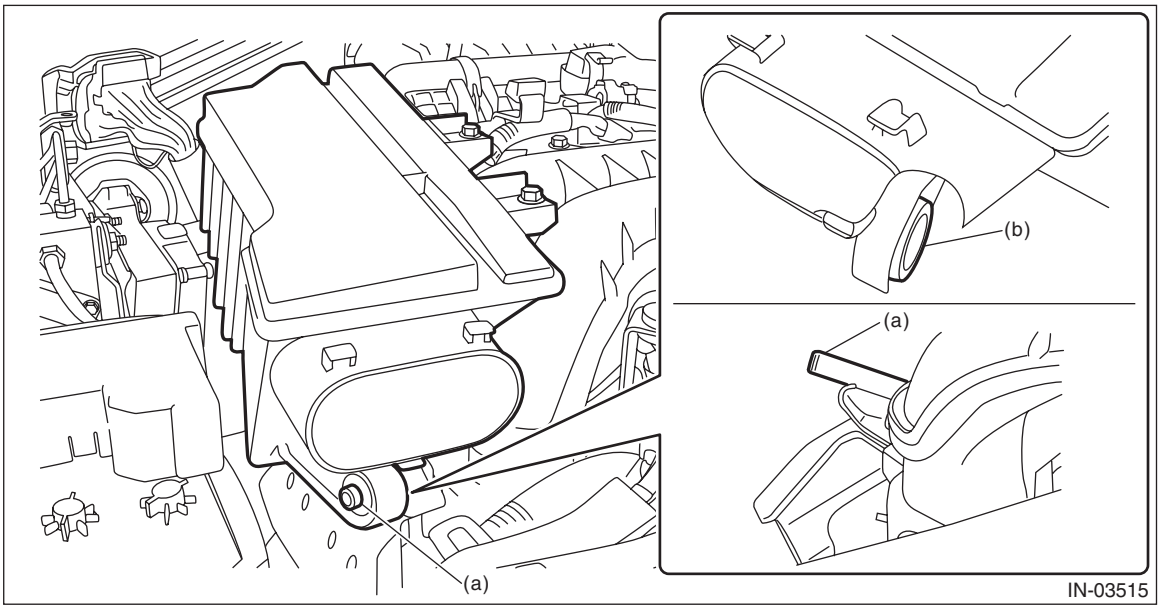

- Make sure that the air intake boot No. 1 is securely installed to the protrusion (a) on the intake duct.
- Check the air intake boot No. 1 for peel-off.

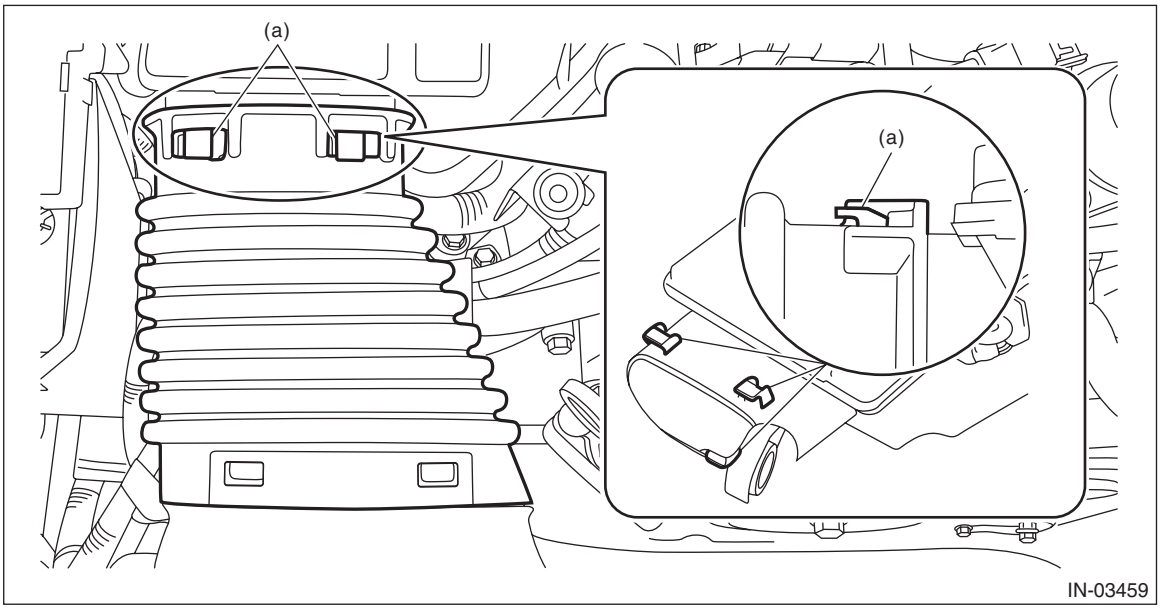

Tightening torque:
6.4 N·m (0.7 kgf-m, 4.7 ft-lb)

C: INSPECTION

1) Check that the intake duct has no deformation, cracks or other damages.
2) Inspect that no foreign objects are mixed in the intake duct.

7. Resonator Chamber

A: REMOVAL

1) Turn the ignition switch to OFF.
2) Remove the collector cover.
   (1) Pull up the two points at the front of collector cover (A).
   (2) Pull up the two points at the rear of collector cover (B) while moving them rearward.

NOTE:
Be careful not to contact the fuel delivery tube when moving the collector cover rearward.

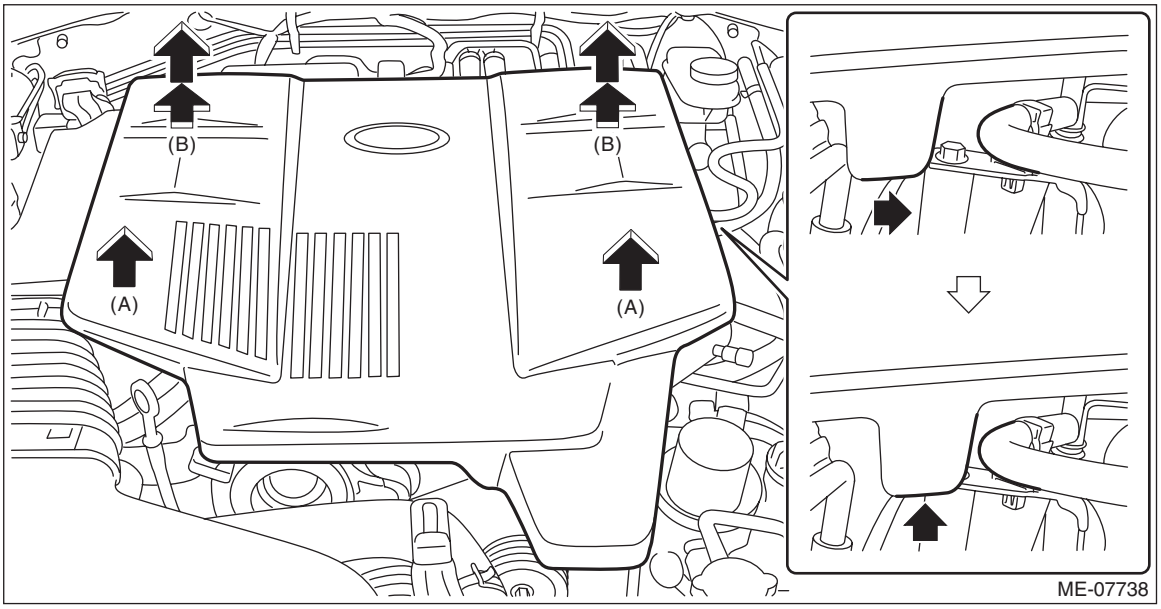

3) Remove the clip (A) from the resonator chamber, and loosen the clamp (B) securing the resonator chamber to the air cleaner case (rear).
4) Loosen the clamp (C) which secures the resonator chamber to the air intake boot No. 2.
5) Disconnect the PCV hose (D), and remove the resonator chamber from the air cleaner case (rear) and the air intake boot No. 2.

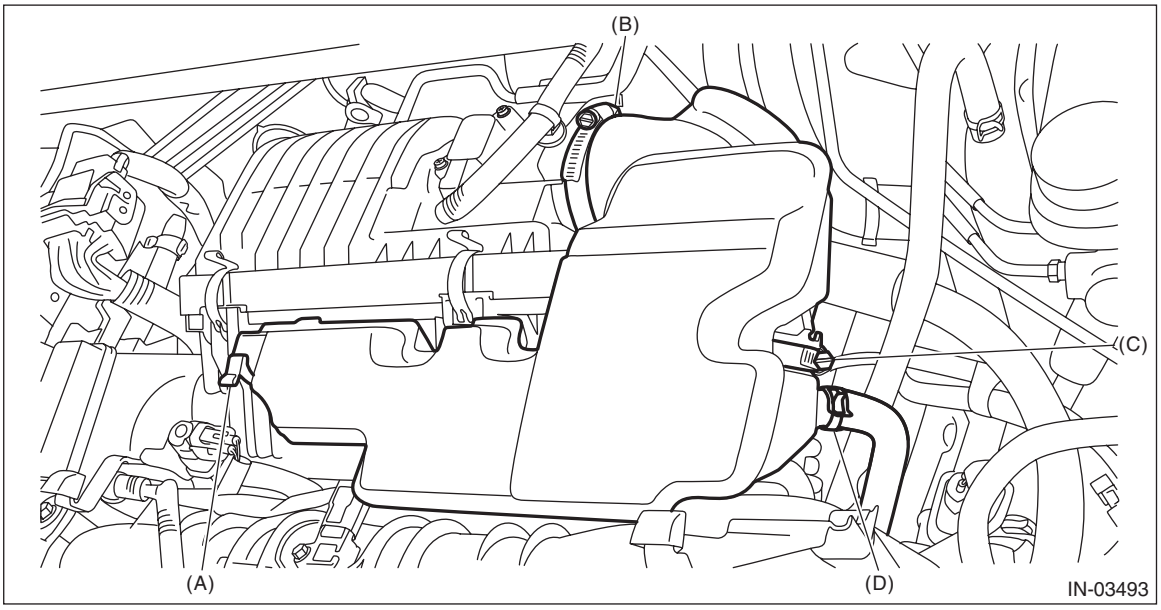

B: INSTALLATION

Install in the reverse order of removal.

NOTE:

- Align the clamp hole (a) with the protrusion of the air intake boot No. 2, and install the clamp in the direction as shown in the figure below.
- When installing the resonator chamber to the air intake boot No. 2, align the air intake boot No. 2 (b) with the protrusion on the resonator chamber.

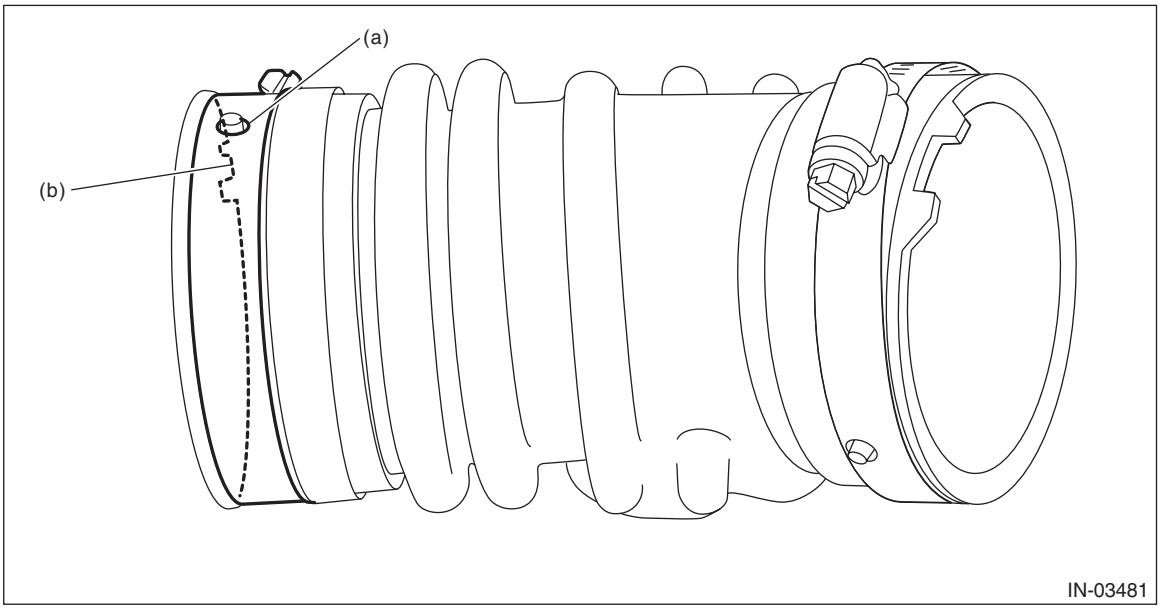

- When installing the resonator chamber to the air cleaner case (rear), align the resonator chamber (b) to the protrusion (a) of the air cleaner case (rear), and align the resonator chamber (d) to the protrusion (c) of the air cleaner case (front).

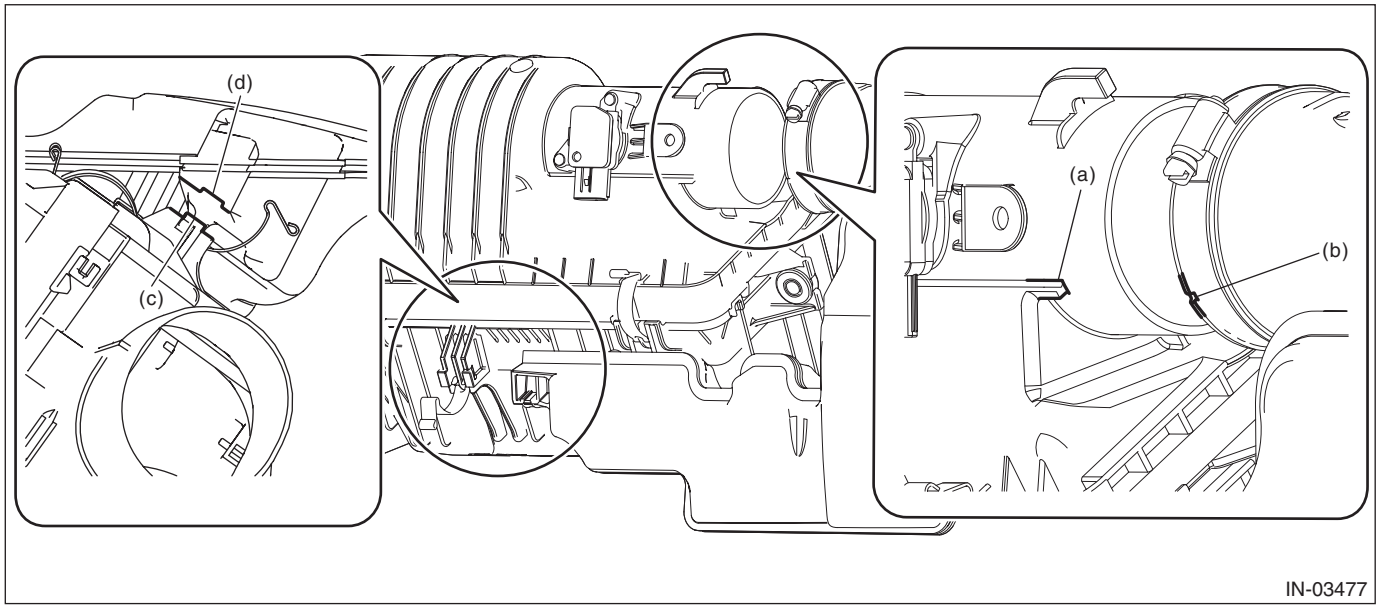

Tightening torque:
3 N·m (0.3 kgf-m, 2.2 ft-lb)

C: INSPECTION

1) Check that the resonator chamber has no deformation, cracks or other damages.
2) Inspect that no foreign objects are mixed in the resonator chamber.

MECHANICAL

ME(H4DO(HEV))

Page
1. General Description 2

1. General Description

A: SPECIFICATION

Specifications for the HEV model are included in the ME (H4DO (w/o HEV)) section. <Ref. to ME(H4DO(w/o HEV))-2, General Description.>

EXHAUST

EX(H4DO(HEV))

Page
1. General Description 2

1. General Description

A: SPECIFICATION

Specifications for the HEV model are included in the EX (H4DO (w/o HEV)) section. <Ref. to EX(H4DO(w/o HEV))-2, General Description.>

COOLING

CO(H4DO(HEV))

Page
1. General Description 2

1. General Description

A: SPECIFICATION

Specifications for the HEV model are included in the CO (H4DO (w/o HEV)) section. <Ref. to CO(H4DO(w/o HEV))-2, General Description.>

LUBRICATION

LU(H4DO(HEV))

Page
1. General Description 2

1. General Description

A: SPECIFICATION

Specifications for the HEV model are included in the LU (H4DO (w/o HEV)) section. <Ref. to LU(H4DO(w/o HEV))-2, General Description.>

SPEED CONTROL SYSTEMS

SP(H4DO(HEV))

Page

1. General Description 2

1. General Description

A: SPECIFICATION

Specifications for the HEV model are the same as those for the gasoline engine model. <Ref. to SP(H4DO(w/o HEV))-2, General Description.>

IGNITION

IG(H4DO(HEV))

Page
1. General Description 2

1. General Description

A: SPECIFICATION

Specifications for the HEV model are included in the IG (H4DO (w/o HEV)) section. <Ref. to IG(H4DO(w/o HEV))-2, General Description.>

STARTING/CHARGING SYSTEMS

SC(H4DO(HEV))

		Page
1.	General Description	2
2.	Starter	10
3.	Integrated Starter Generator (ISG)	31
4.	Battery	38
5.	Battery Cable Assembly	44
6.	Battery Sensor	54
7.	Battery Temperature Sensor	56
8.	12V Battery Relay	58
9.	DC/DC Converter	64

1. General Description

A: SPECIFICATION

Item			Specifications
Vehicle model			CVT
Starter	Type		Reduction type
	Model		M000T38571
	Manufacturer		Mitsubishi Electric
	Voltage and output		12 V — 1.2 kW
	Direction of rotation		Counterclockwise (when observed from pinion)
	Number of pinion teeth		9
	Armature commutator runout	Standard	0.05 mm (0.0020 in)
		Limit	0.10 mm (0.0039 in)
	Armature depth of segment mold	Standard	0.50 mm (0.020 in)
	Brush length	Standard	12.3 mm (0.484 in)
		Limit	7.0 mm (0.276 in)
	Brush spring force	Standard	15.9 — 19.5 N (1.62 — 1.99 kgf, 3.57 — 4.38 lbf)
		Limit	2.5 N (0.25 kgf, 0.56 lbf)
	No-load characteristics	Voltage	11 V
		Current	90 A or less
		Rotating speed	2,370 rpm or more
	Load characteristics	Voltage	7.5 V
		Current	300 A
		Torque	10.65 N·m (1.1 kgf-m, 7.8 ft-lb) or more
		Rotating speed	840 rpm or more
	Lock characteristics	Voltage	4 V
		Current	780 A or less
		Torque	20 N·m (2.0 kgf-m, 14.8 ft-lb) or more
Integrated starter generator (ISG)	Type		Rotating-field three-phase type, voltage regulator built-in type, with load response control system, with inverter mode and self-diagnosis feature via LIN communication
	Model		iST60C021
	Manufacturer		Valeo
	Voltage and output		12 V — 200A
	Polarity on ground side		Negative
	Direction of rotation		Clockwise (when observed from pulley side)
	Stator connection		3-phase △ type
	Output current		1,500 rpm — 79.7 A or more 2,500 rpm — 166.6 A or more 5,000 rpm — 196.9 A or more
	Regulated voltage		14.1 — 14.5 V [20°C (68°F)]
Battery	Type and capacity	For 12 volt auxiliary	12 V — 48 AH (55D 23L)
		For 12 volt engine restart	12 V — 41 AH (N55-R)
	CCA	For 12 volt auxiliary	390 A
		For 12 volt engine restart	450 A

B: COMPONENT

1. STARTER

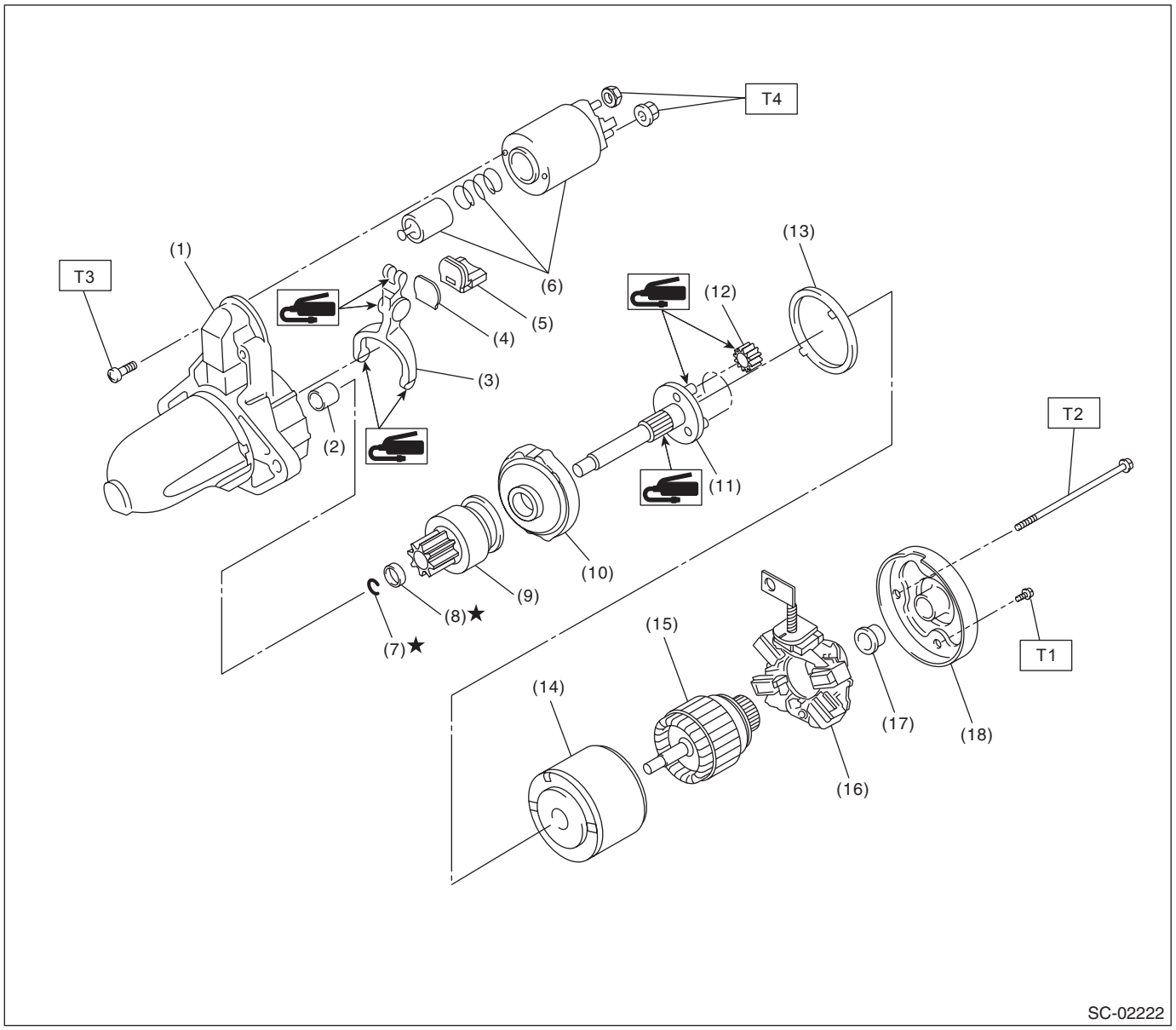

(1)	Starter housing ASSY	(9)	Overrunning clutch	(17)	Sleeve bearing
(2)	Sleeve bearing	(10)	Internal gear ASSY	(18)	Starter cover ASSY
(3)	Shift lever	(11)	Shaft		
(4)	Plate	(12)	Pinion gear	***Tightening torque: N·m (kgf-m, ft-lb)***	
(5)	Seal rubber	(13)	Seal rubber	***T1:***	***1.4 (0.1, 1.0)***
(6)	Magnet switch ASSY	(14)	Yoke ASSY	***T2:***	***6 (0.6, 4.4)***
(7)	Snap ring	(15)	Armature ASSY	***T3:***	***7.5 (0.8, 5.5)***
(8)	Stopper	(16)	Brush holder ASSY	***T4:***	***10 (1.0, 7.4)***

2. INTEGRATED STARTER GENERATOR (ISG) & ISG BRACKET

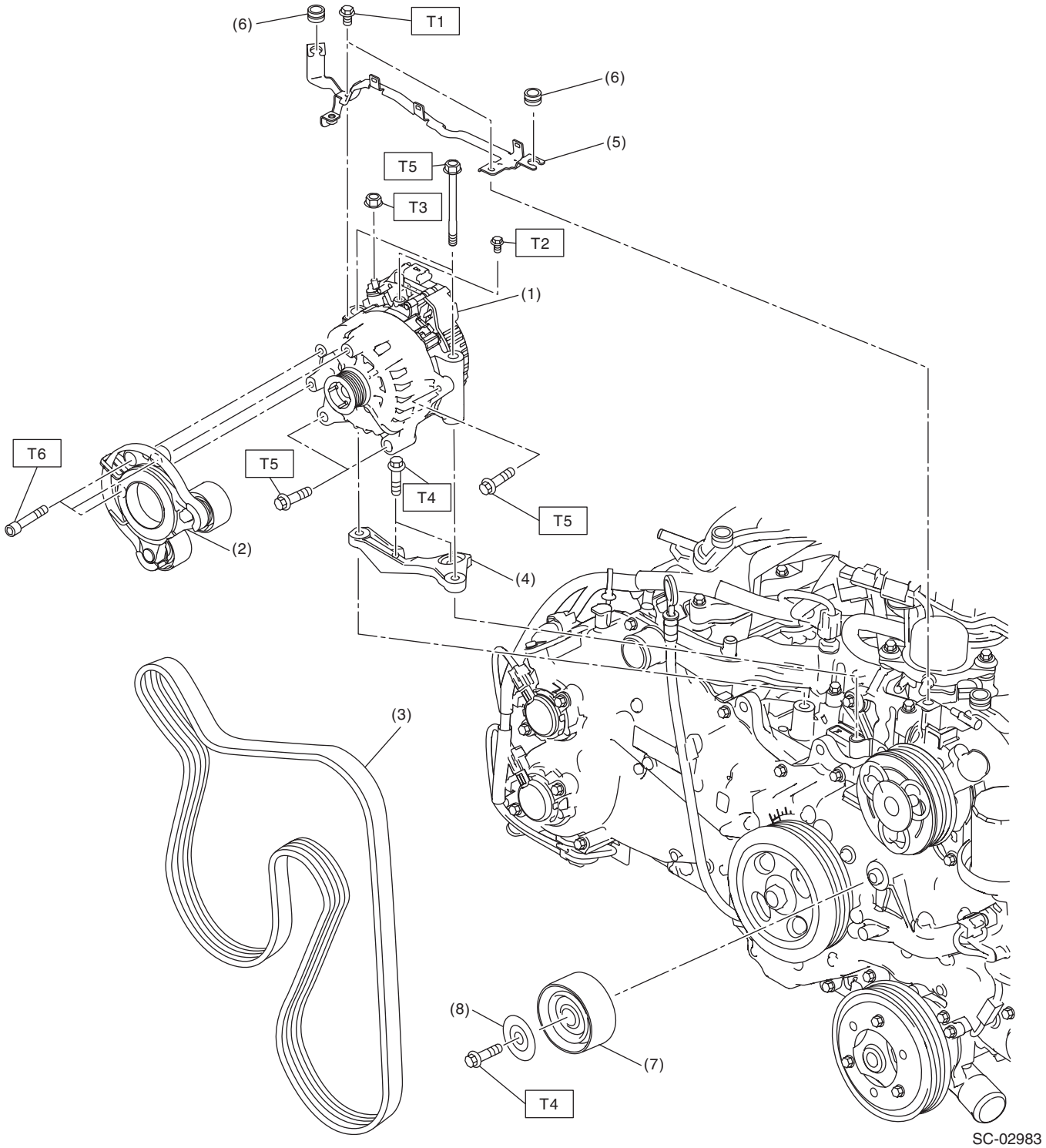

(1) Integrated starter generator (ISG)
(2) V-belt tensioner ASSY
(3) V-belt
(4) ISG bracket
(5) Collector cover bracket
(6) Cushion
(7) Idler pulley
(8) Idler pulley cover

Tightening torque: N·m (kgf-m, ft-lb)

T1: 6.4 (0.7, 4.7)
T2: 7.5 (0.8, 5.5)
T3: 15.5 (1.6, 11.4)
T4: 36 (3.7, 26.6)
T5: <Ref. to SC(H4DO(HEV))-34, INSTALLATION, Integrated Starter Generator (ISG).>
T6: <Ref. to ME(H4DO(w/o HEV))-132, HEV MODEL, INSTALLATION, V-belt.>

3. BATTERY CABLE ASSY

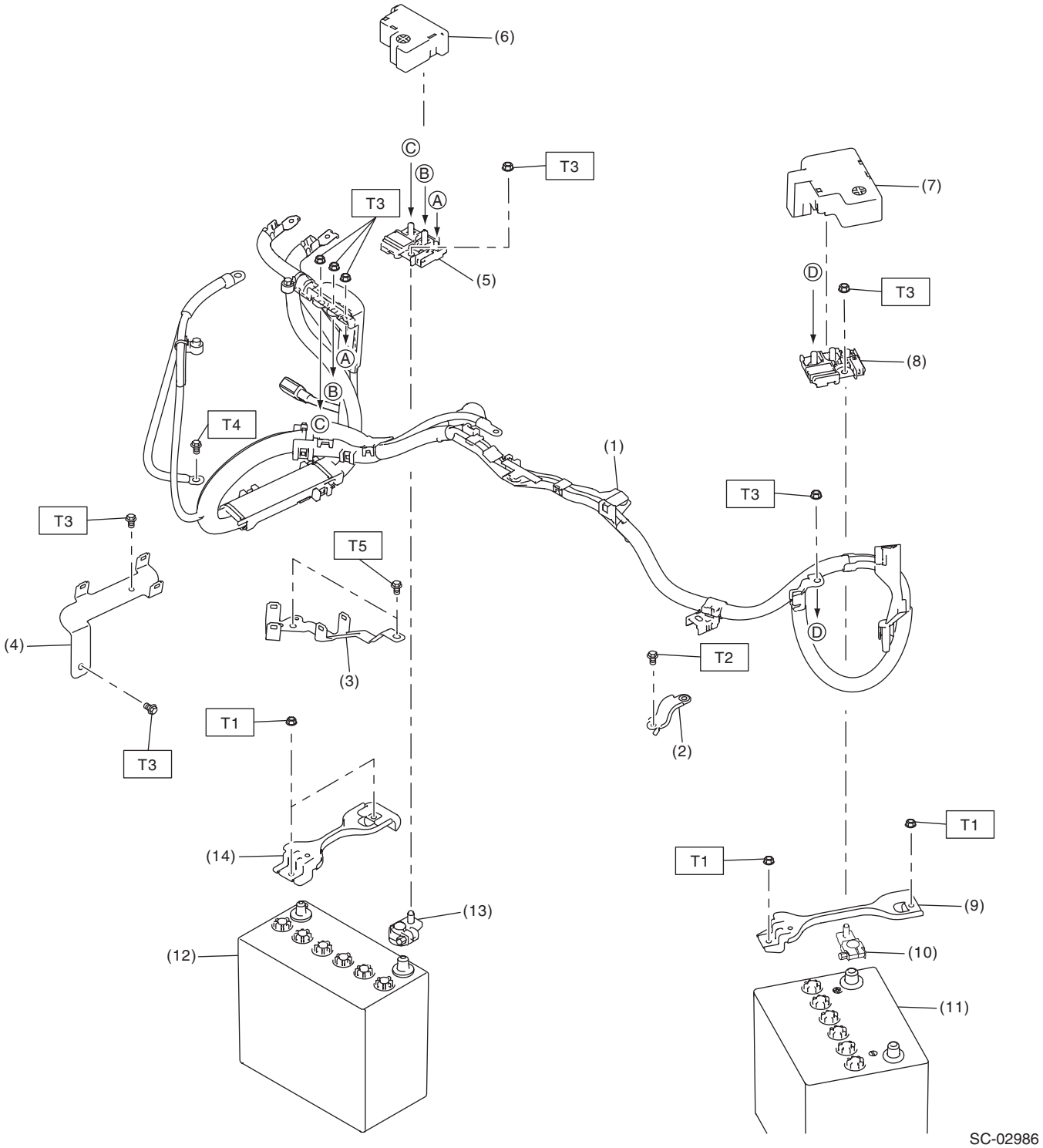

(1) Battery cable ASSY
(2) Battery cable stay
(3) Battery cable bracket No. 1
(4) Battery cable bracket No. 2
(5) Slow blow fuse (12 volt engine restart battery)
(6) Terminal boot (12 volt engine restart battery)
(7) Terminal boot (12 volt auxiliary battery)
(8) Slow blow fuse (12 volt auxiliary battery)
(9) Battery holder (12 volt auxiliary battery)
(10) Terminal base (12 volt auxiliary battery)
(11) 12 volt auxiliary battery
(12) 12 volt engine restart battery
(13) Terminal base (12 volt engine restart battery)
(14) Battery holder (12 volt engine restart battery)

Tightening torque: N·m (kgf-m, ft-lb)
T1: 3.5 (0.4, 2.6)
T2: 6.4 (0.7, 4.7)
T3: 7.5 (0.8, 5.5)
T4: 13 (1.3, 9.6)
T5: 19 (1.9, 14.0)

4. 12V ENGINE RESTART BATTERY SENSOR & BATTERY TEMPERATURE SENSOR

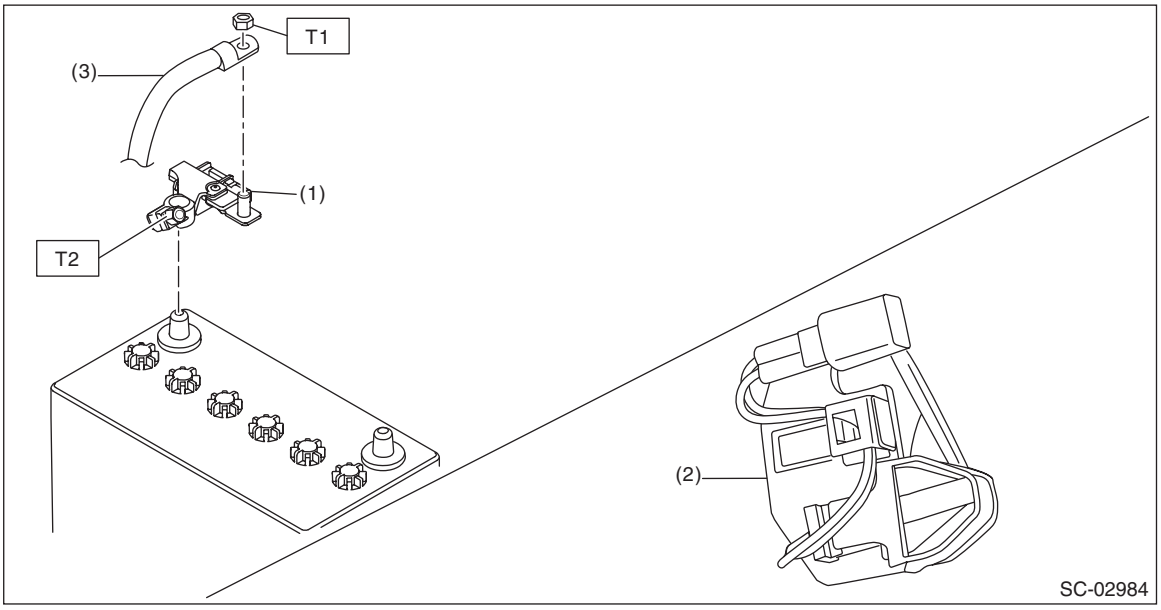

(1) 12V engine restart battery sensor
(2) Battery temperature sensor
(3) Ground terminal

Tightening torque: N·m (kgf-m, ft-lb)
T1: 7.5 (0.8, 5.5)
T2: <Ref. to SC(H4DO(HEV))-55, INSTALLATION, Battery Sensor.>

5. 12V BATTERY RELAY

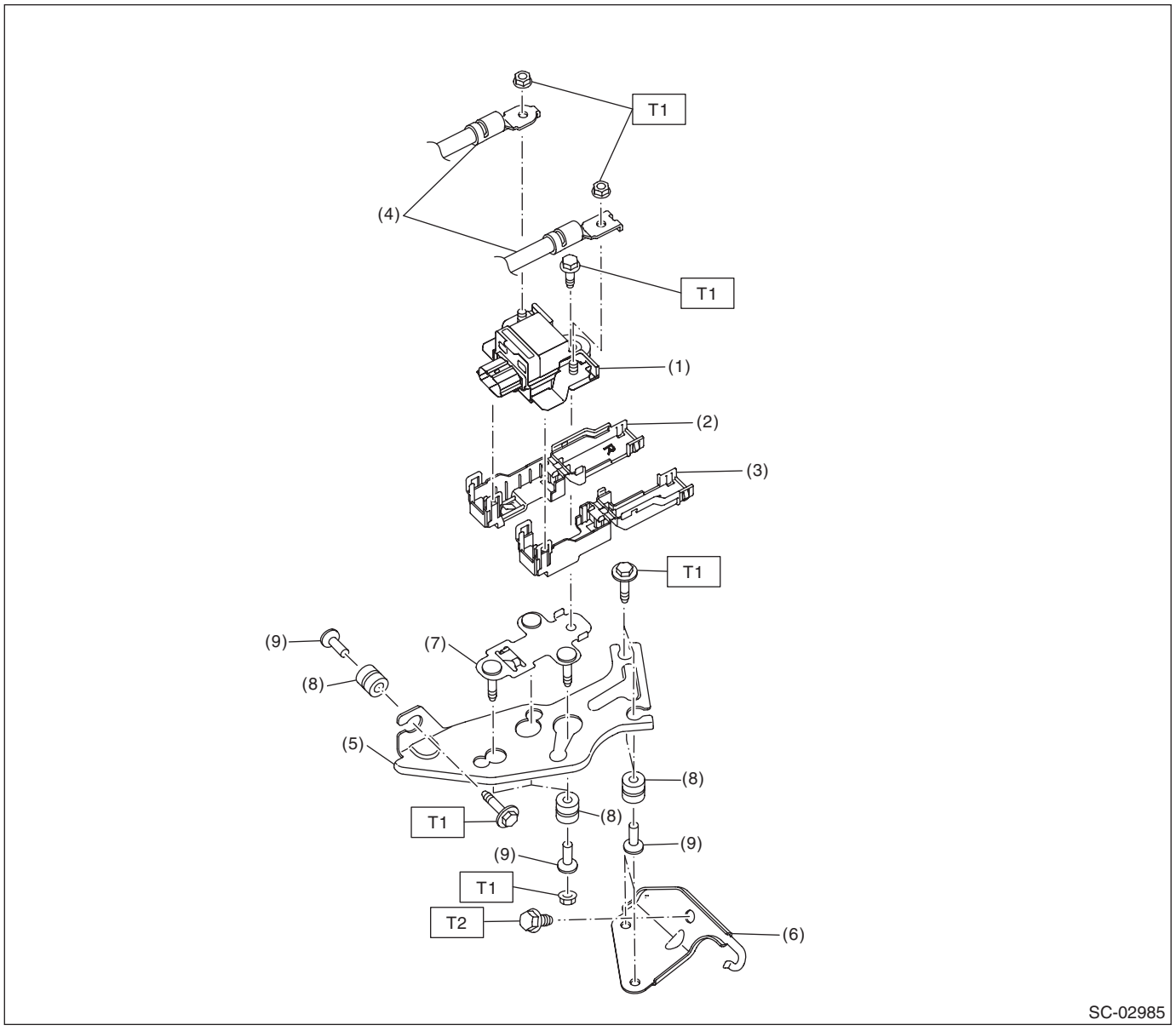

(1) 12V battery relay
(2) 12V battery relay cover RH
(3) 12V battery relay cover LH
(4) Battery cable ASSY
(5) 12V battery relay bracket No. 1
(6) 12V battery relay bracket No. 2
(7) 12V battery relay bracket No. 3
(8) Cushion
(9) Collar

Tightening torque: N·m (kgf-m, ft-lb)
T1: 7.5 (0.8, 5.5)
T2: 33 (3.4, 24.3)

C: CAUTION

- Prior to starting work, pay special attention to the following:
  1. Always wear work clothes, a work cap, and protective shoes. Additionally, wear a helmet, protective goggles, etc. if necessary.
  2. Protect the vehicle using a seat cover, fender cover, etc.
  3. Prepare the service tools, clean cloth, containers to catch grease and oil, etc.
- Vehicle components are extremely hot immediately after driving. Be wary of receiving burns from heated parts.
- When performing a repair, identify the cause of trouble and avoid unnecessary removal, disassembly and replacement.
- Before disconnecting connectors of sensors or units, be sure to disconnect the ground cable from battery.
- Always use the jack-up point when the shop jacks or rigid racks are used to support the vehicle.
- Remove contamination including dirt and corrosion before removal, installation, disassembly or assembly.
- Keep the removed parts in order and protect them from dust and dirt.
- All removed parts, if to be reused, should be reinstalled in the original positions with attention to the correct directions, etc.
- Bolts, nuts and washers should be replaced with new parts as required.
- Be sure to tighten the fasteners including bolts and nuts to the specified torque.

D: PREPARATION TOOL

1. GENERAL TOOL

TOOL NAME	REMARKS
Circuit tester	Used for measuring resistance, voltage and current.

2. Starter

A: REMOVAL

1) Disconnect the ground cable from battery. <Ref. to NT-5, BATTERY, NOTE, Note.>

NOTE:
For the 12 volt engine restart battery, disconnect the ground terminal from 12V engine restart battery sensor.

2) Remove the collector cover.
   (1) Pull up the two points at the front of collector cover (A).
   (2) Pull up the two points at the rear of collector cover (B) while moving them rearward.

NOTE:
Be careful not to contact the fuel delivery tube when moving the collector cover rearward.

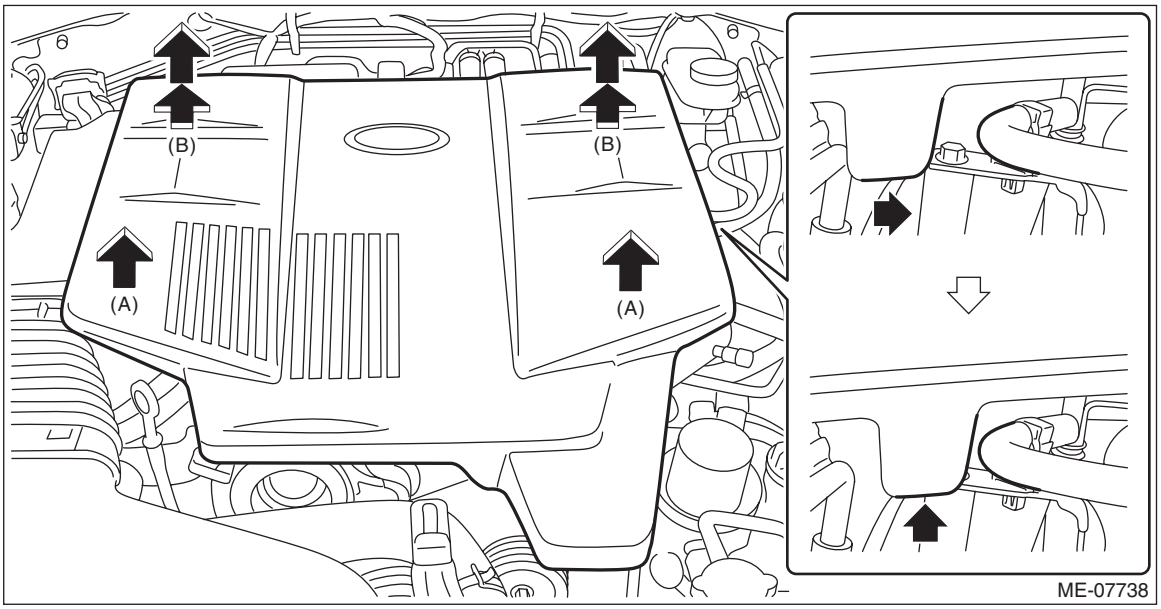

3) Remove the air cleaner case. <Ref. to IN(H4DO(HEV))-6, REMOVAL, Air Cleaner Case.>
4) Disconnect the connector (A) and terminal (B) from starter.
5) Remove the bolt (C) and the nut (D) securing the starter, and remove the starter from the transmission.

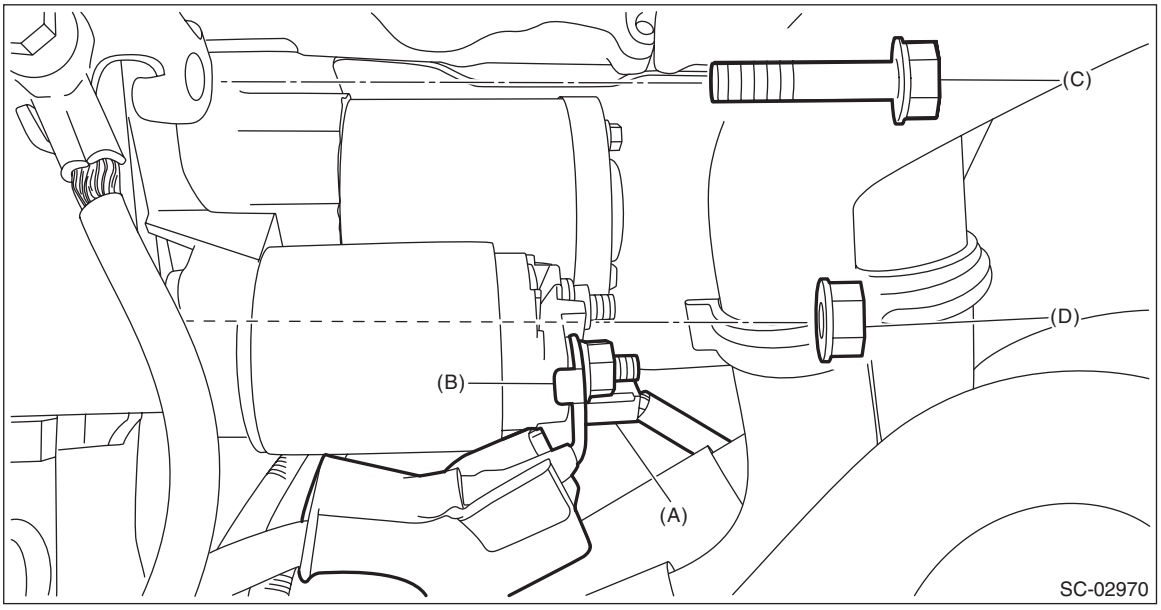

B: INSTALLATION

Install in the reverse order of removal.

Tightening torque:
T1: 50 N·m (5.1 kgf-m, 36.9 ft-lb)
T2: 11 N·m (1.1 kgf-m, 8.1 ft-lb)

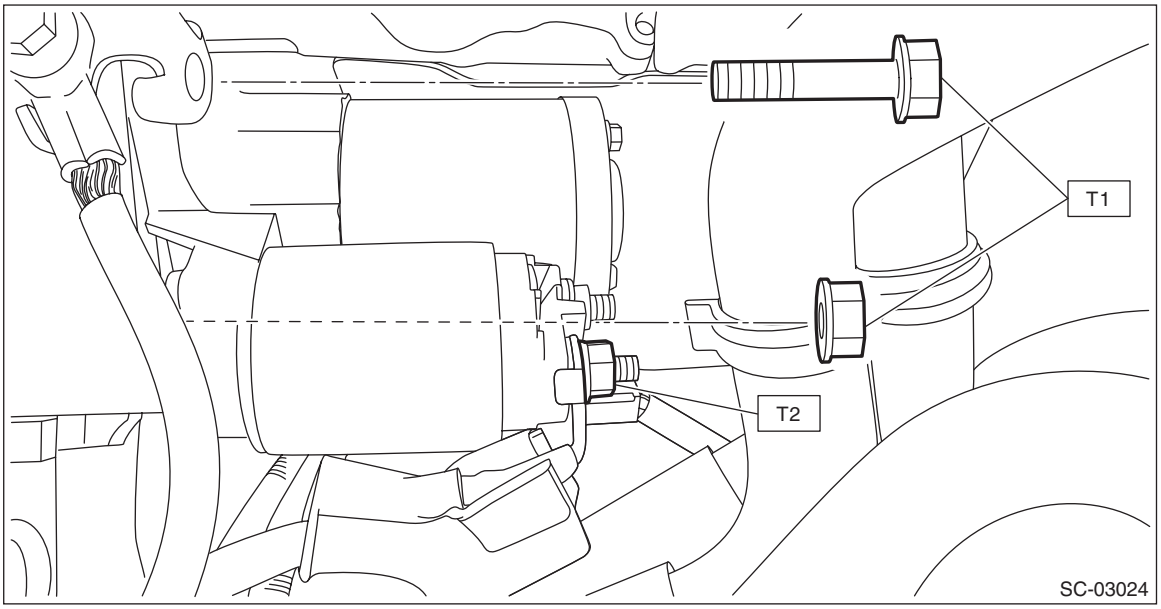

C: DISASSEMBLY

1) Disconnect the terminal M from the magnet switch assembly.

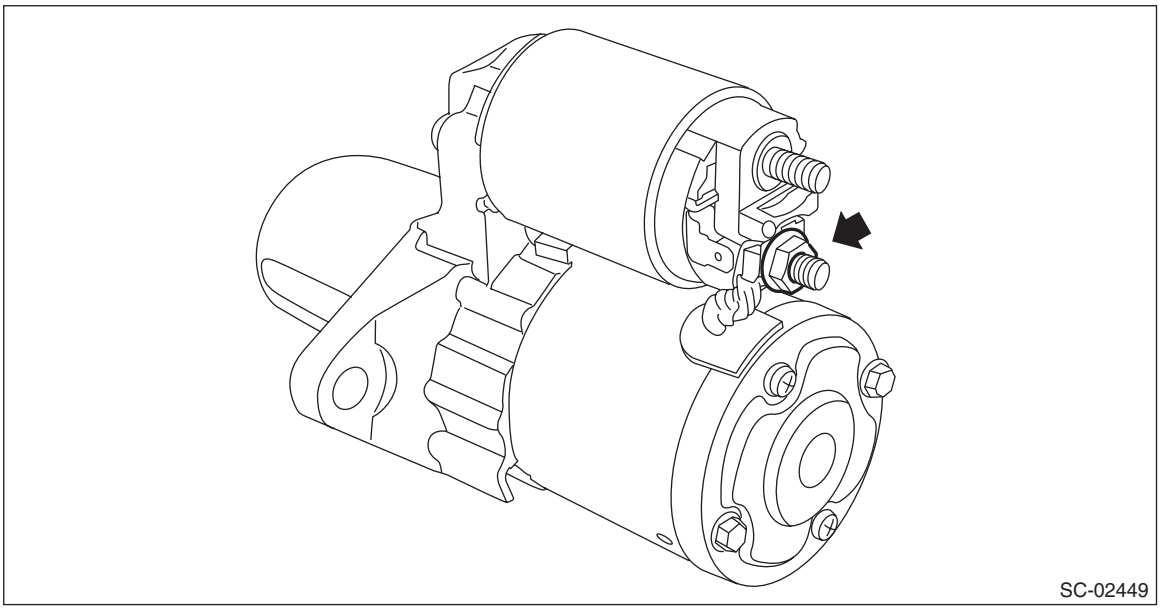

2) Remove the magnet switch assembly from the starter housing assembly.

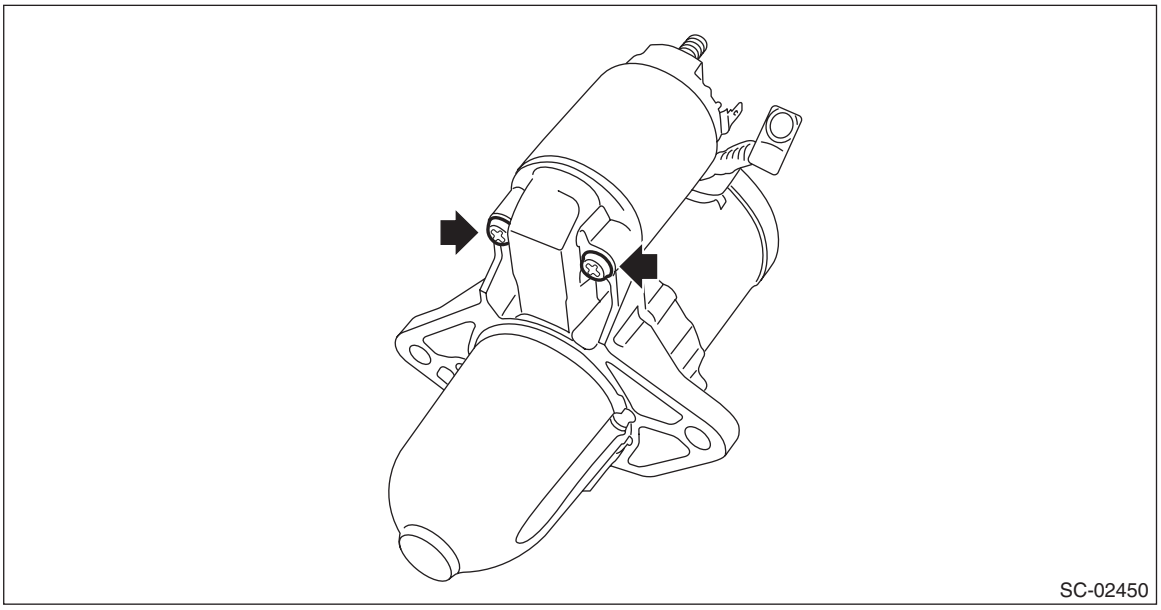

3) Remove screws (A) of the brush holder assembly, and through bolts (B) on both sides, and remove the starter cover assembly.

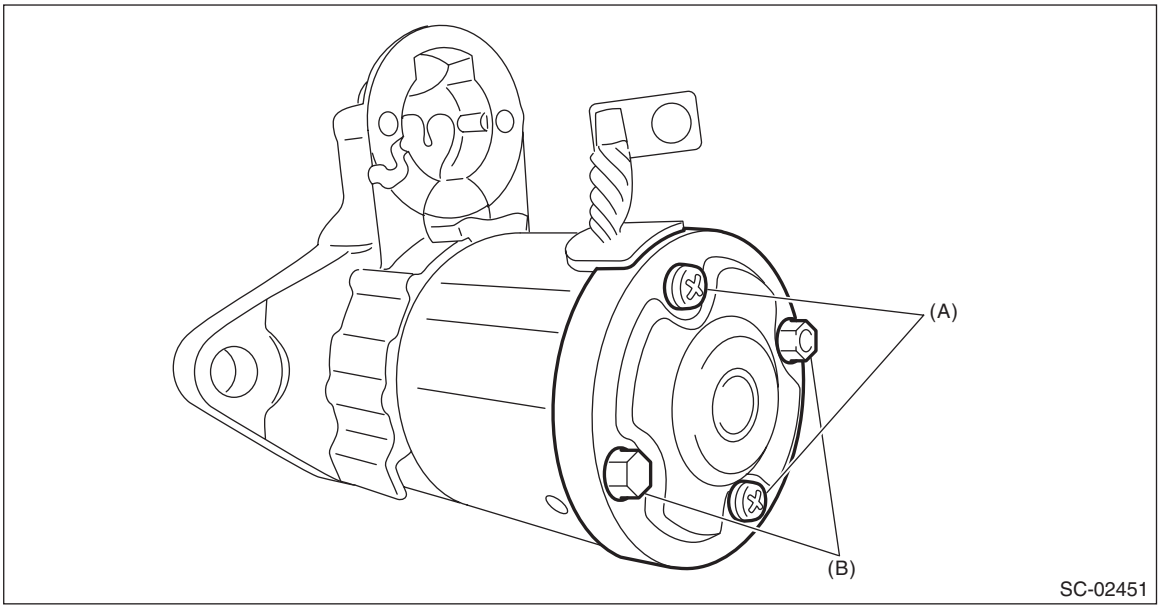

4) Remove the brush holder assembly from the armature assembly.

NOTE:
Hold the brush with your fingers so that the brush spring does not come flying out.

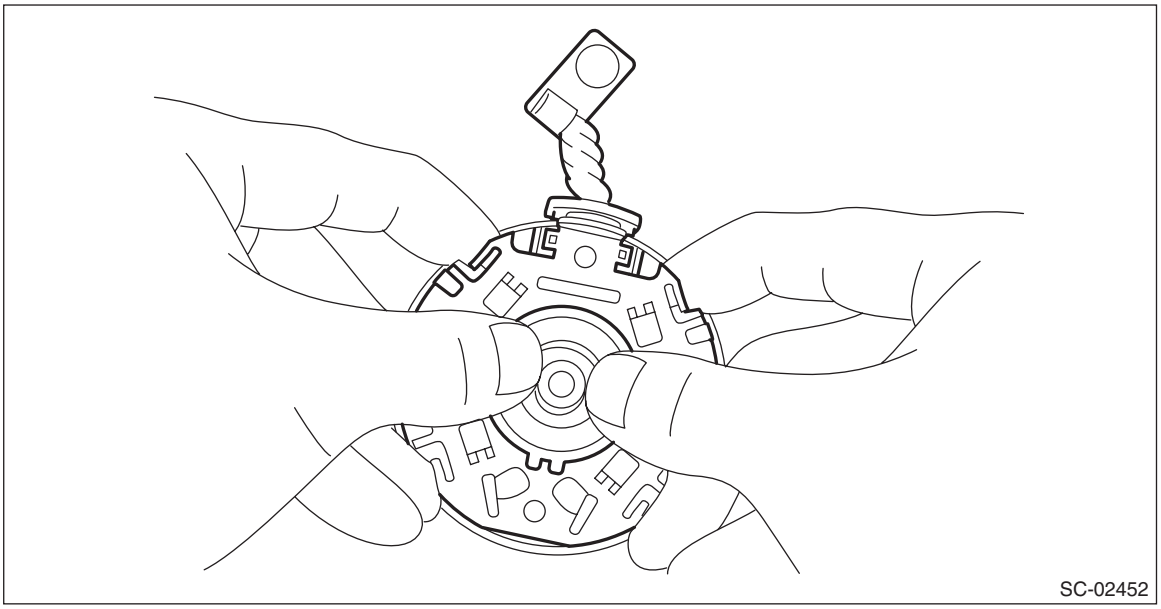
SC-02452

5) Remove the armature assembly and yoke assembly from the starter housing assembly together as a single unit.

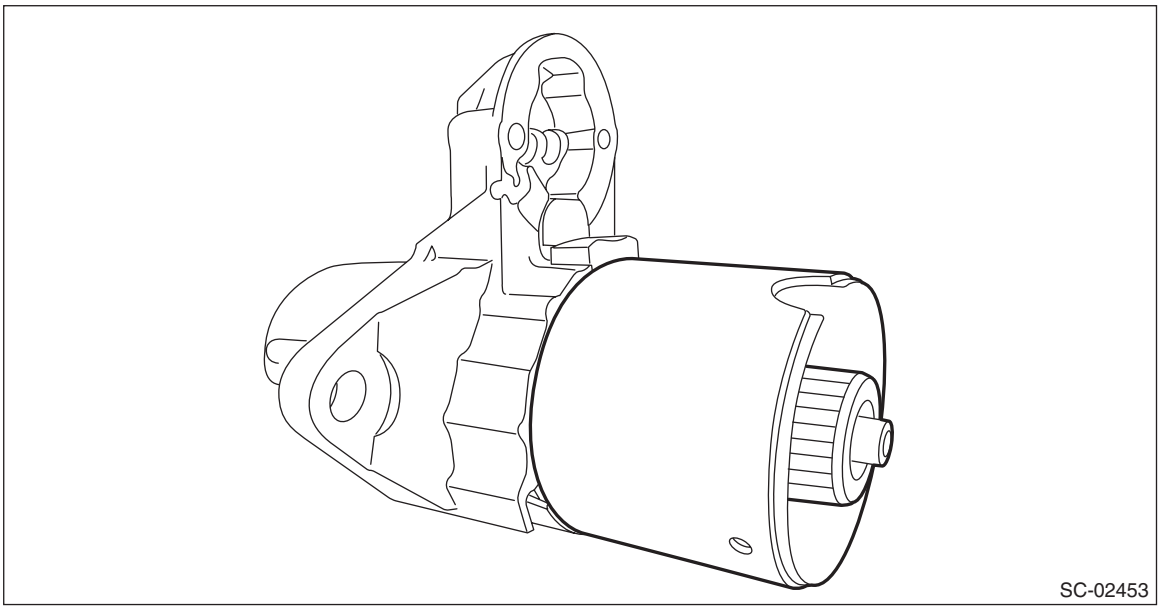
SC-02453

6) Separate the armature assembly and yoke assembly.

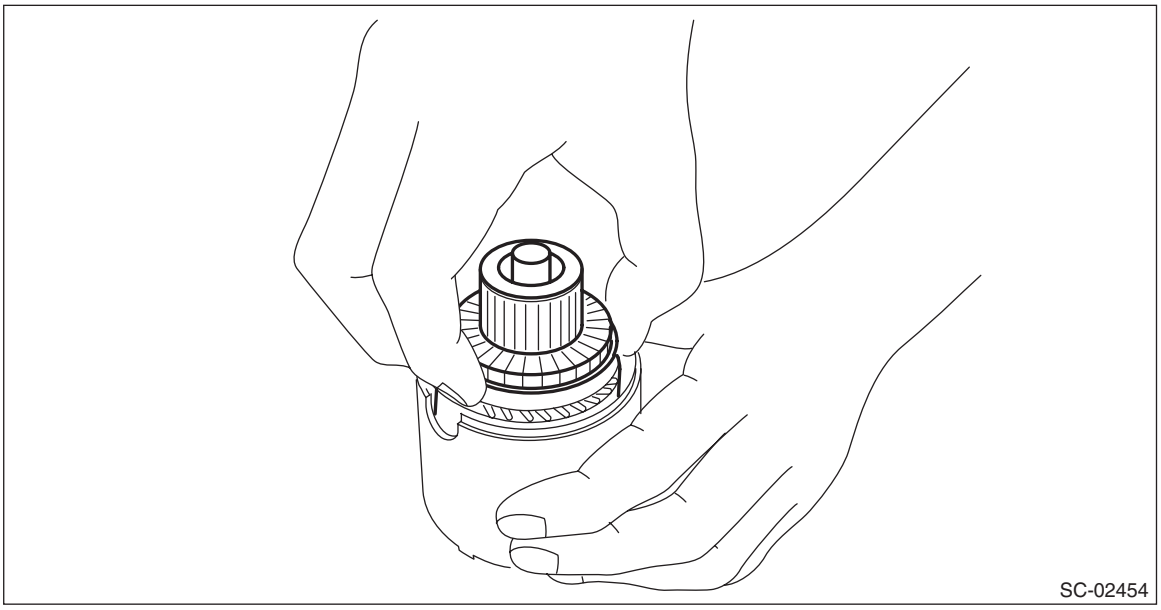
SC-02454

7) Remove the pinion gear from the internal gear assembly.

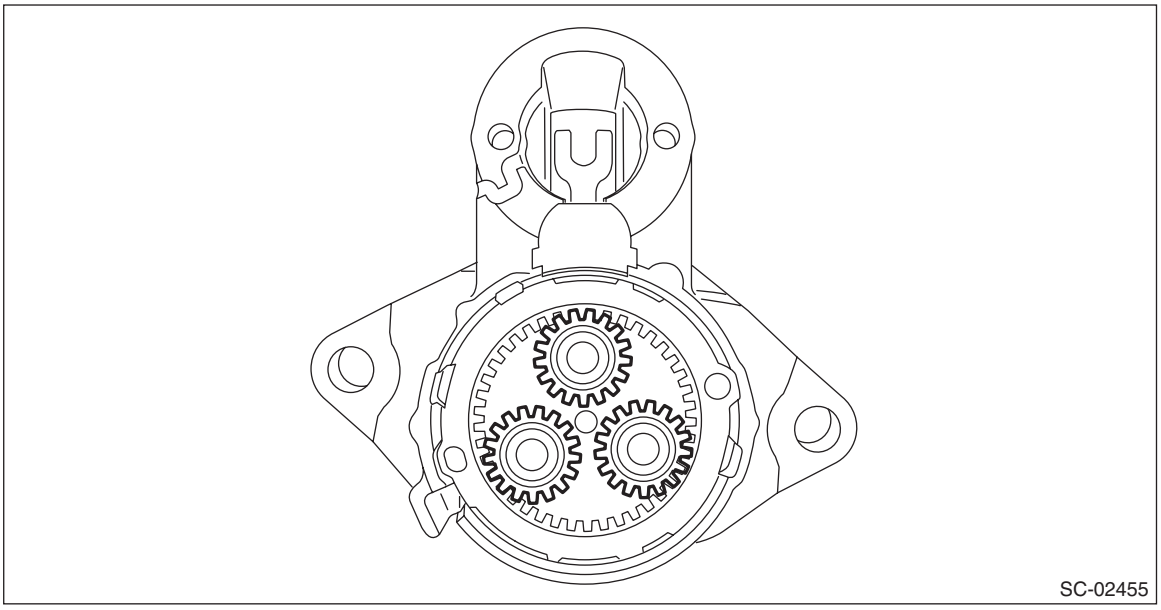
SC-02455

8) Remove seal rubber (A), plate (B), and seal rubber (C).

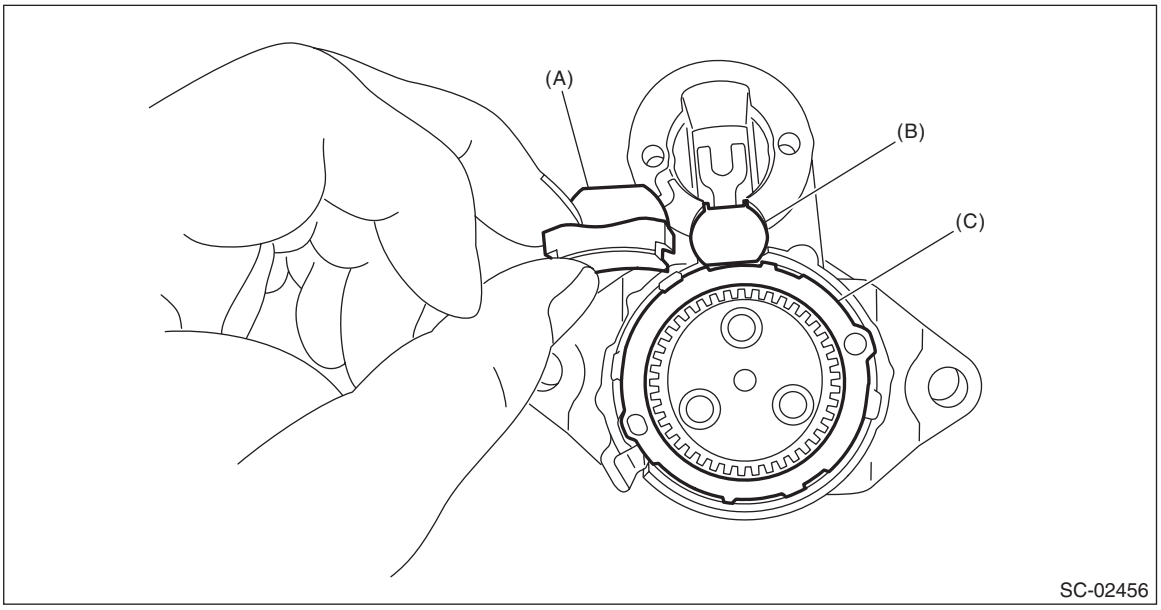

9) Lightly tap the starter housing assembly with a plastic hammer as shown in the figure, and remove the overrunning clutch, internal gear assembly, shaft and shift lever together as one unit.

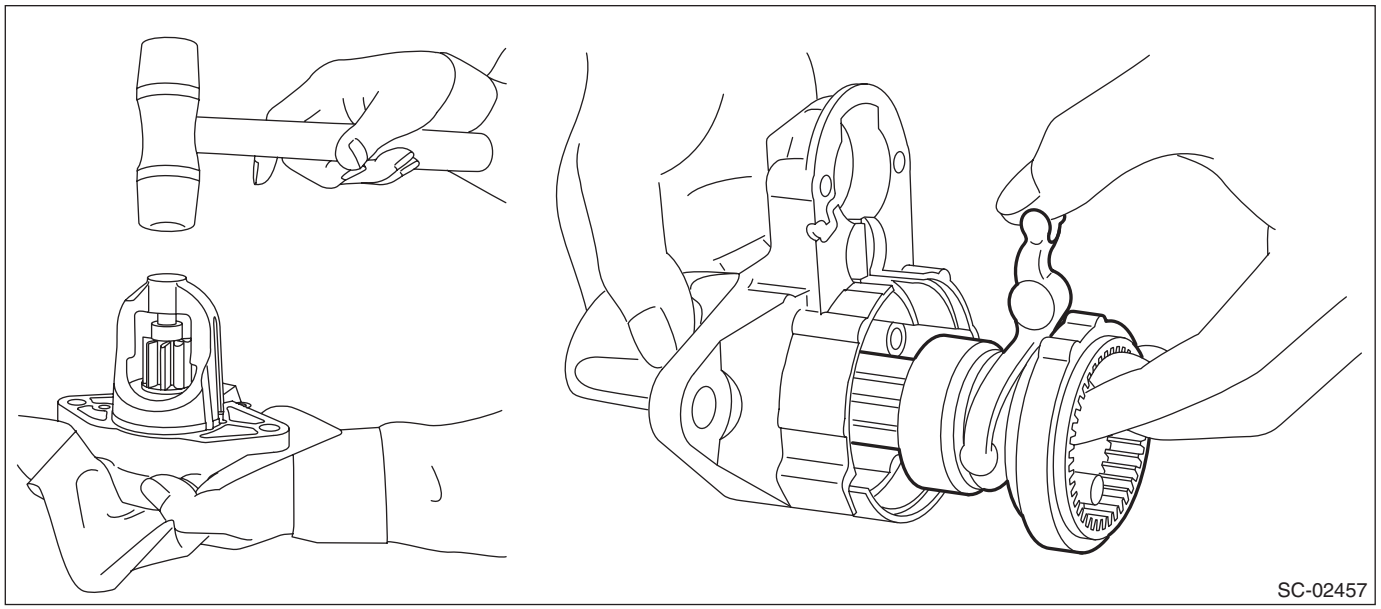

10) Use the following procedures to remove the overrunning clutch from the shaft.
(1) Use an appropriate tool (such as a fit socket wrench), and remove the stopper from snap ring by lightly tapping the stopper with a plastic hammer.

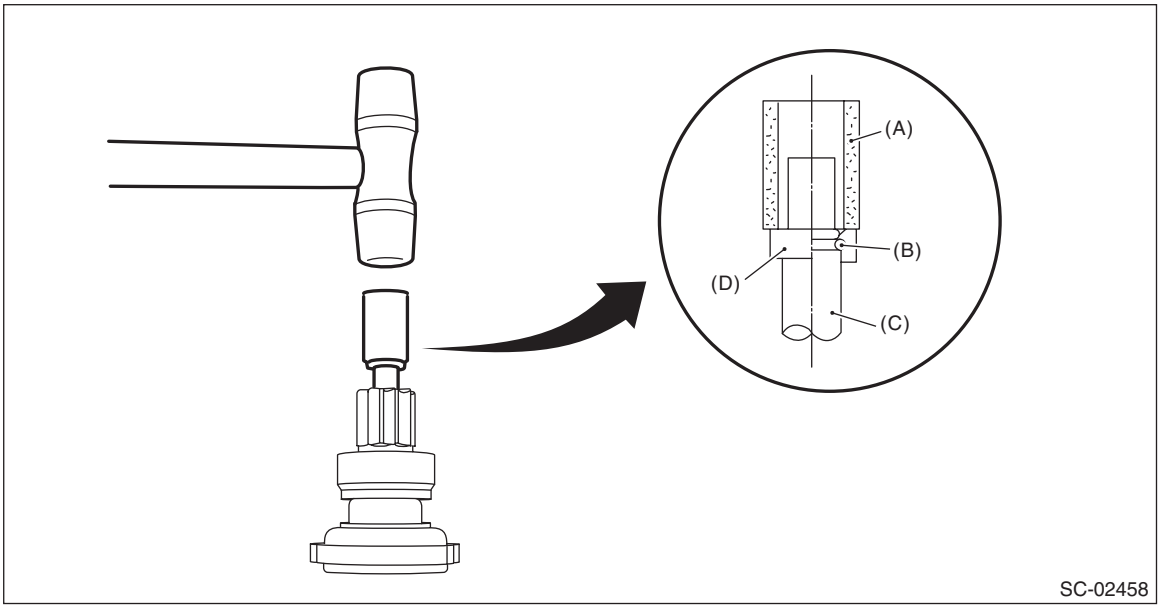

(A) Appropriate tool (B) Snap ring (C) Shaft
(D) Stopper

(2) Remove snap ring (A) from the shaft, and remove stopper (B).

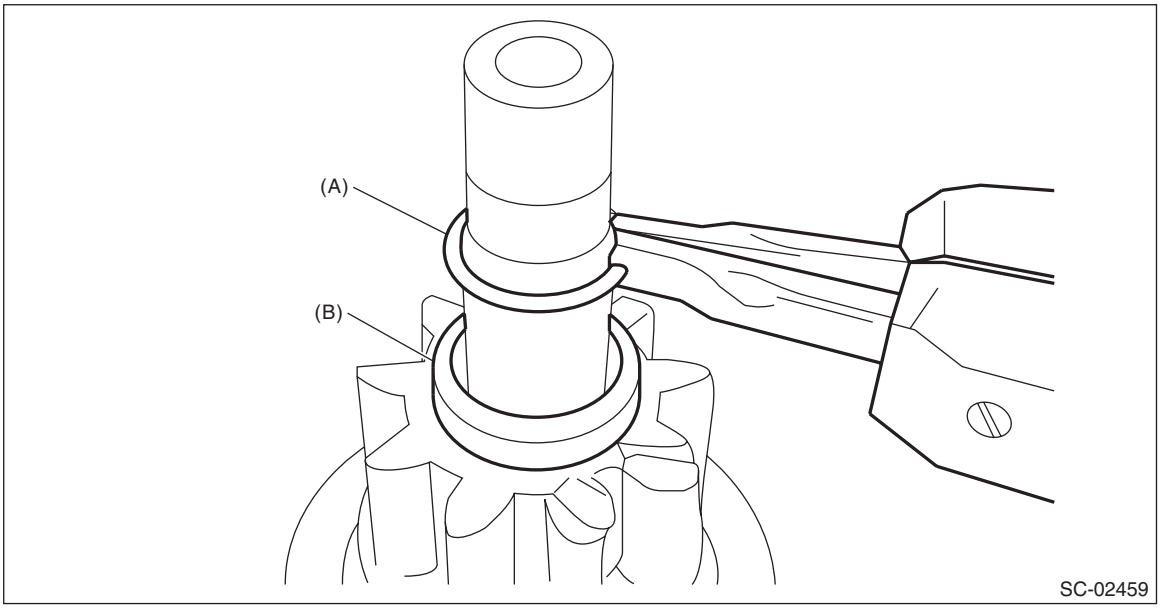

(3) Remove the overrunning clutch from the shaft.

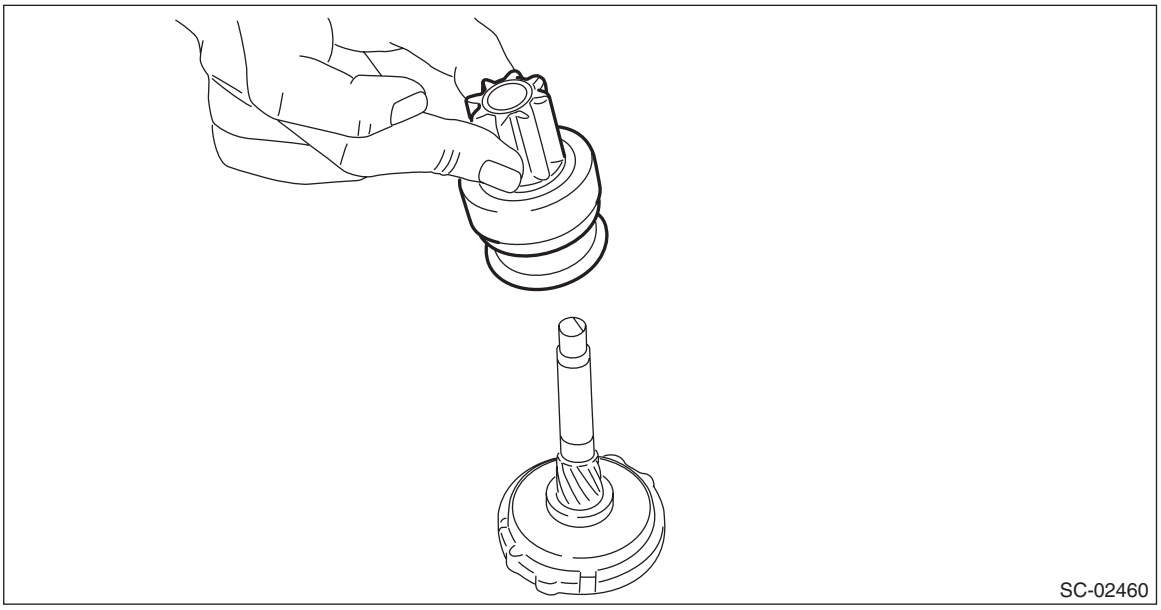
SC-02460

11) Separate the internal gear assembly and shaft.

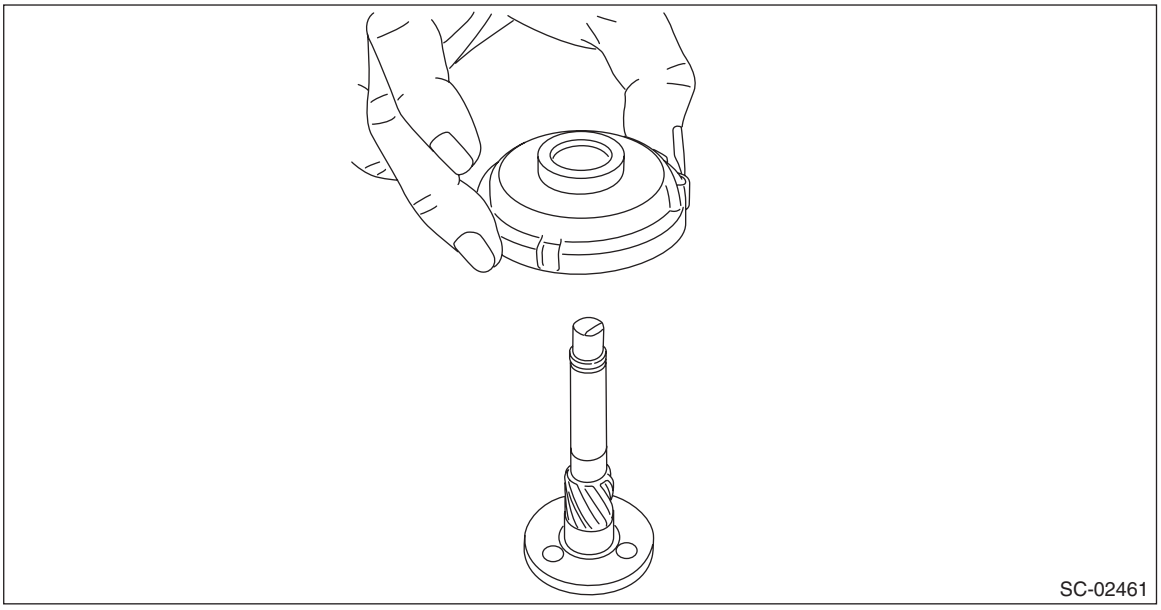
SC-02461

D: ASSEMBLY

1) Apply grease to the shaft sliding surfaces of the internal gear assembly.

Grease:
Multemp #6129 or equivalent

2) Assemble the shaft to the internal gear assembly.

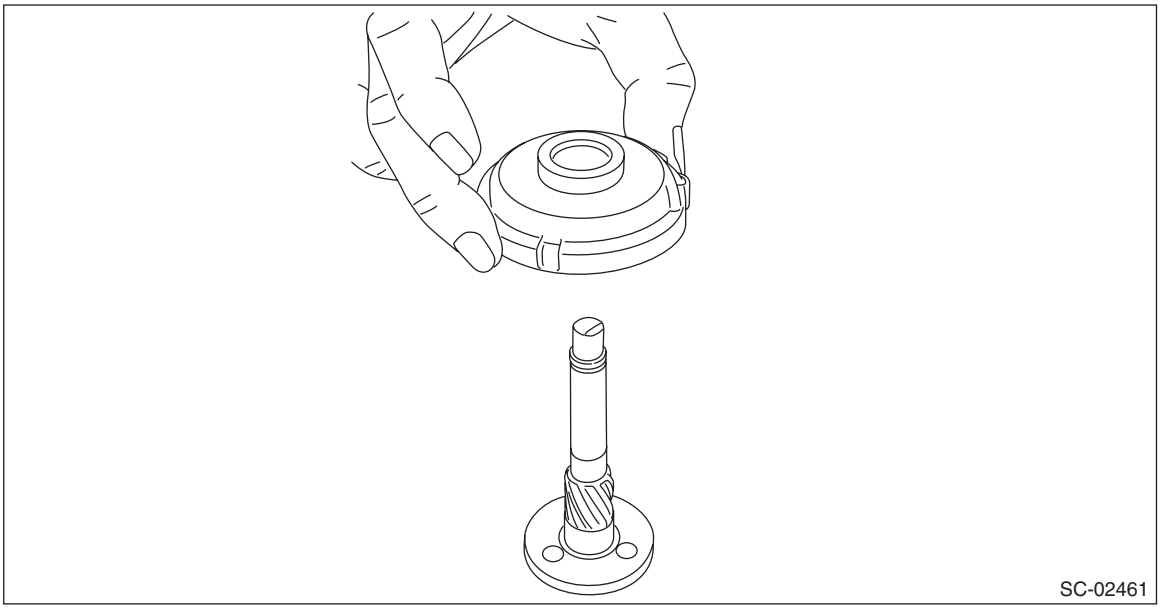

3) Assemble the overrunning clutch as follows:
(1) Apply grease to the spline portion of the shaft.

Grease:
Multemp #6129 or equivalent

(2) Install the overrunning clutch to shaft.

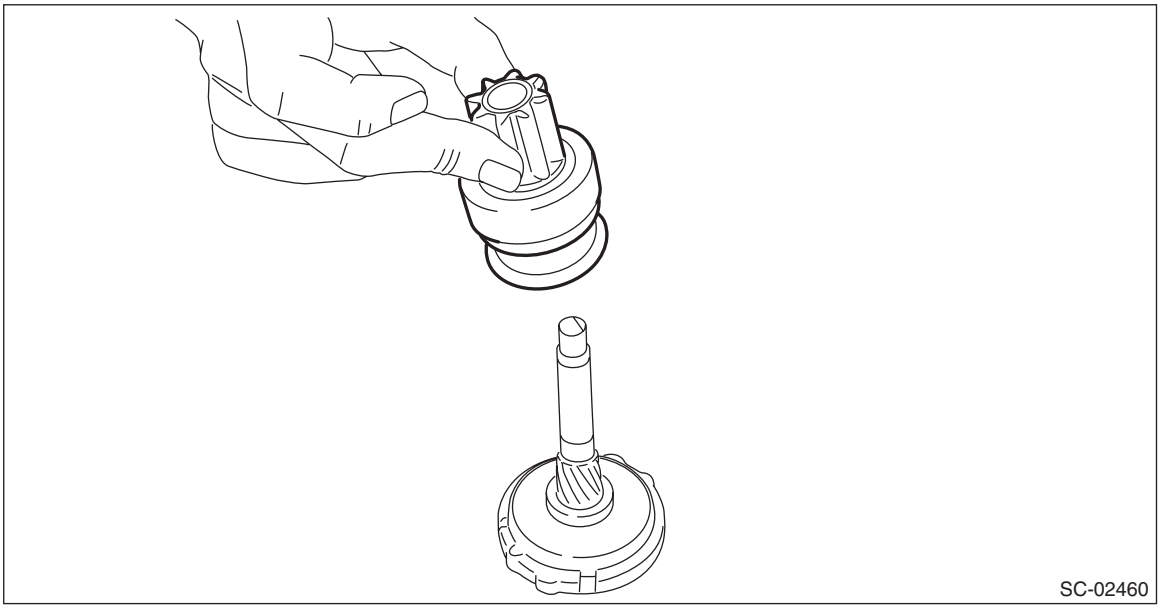

(3) Pass stopper (B) through the shaft assembly, and attach snap ring (A).

NOTE:
Use new stoppers and snap rings.

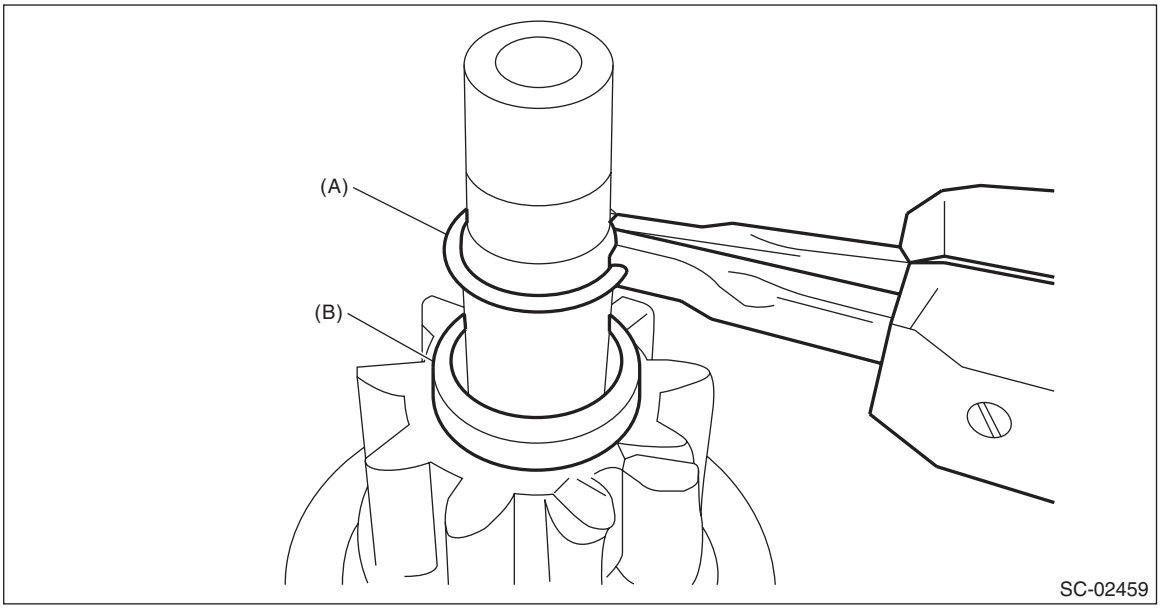

(4) Using a press, pressure fit stopper (B) into snap ring (A).

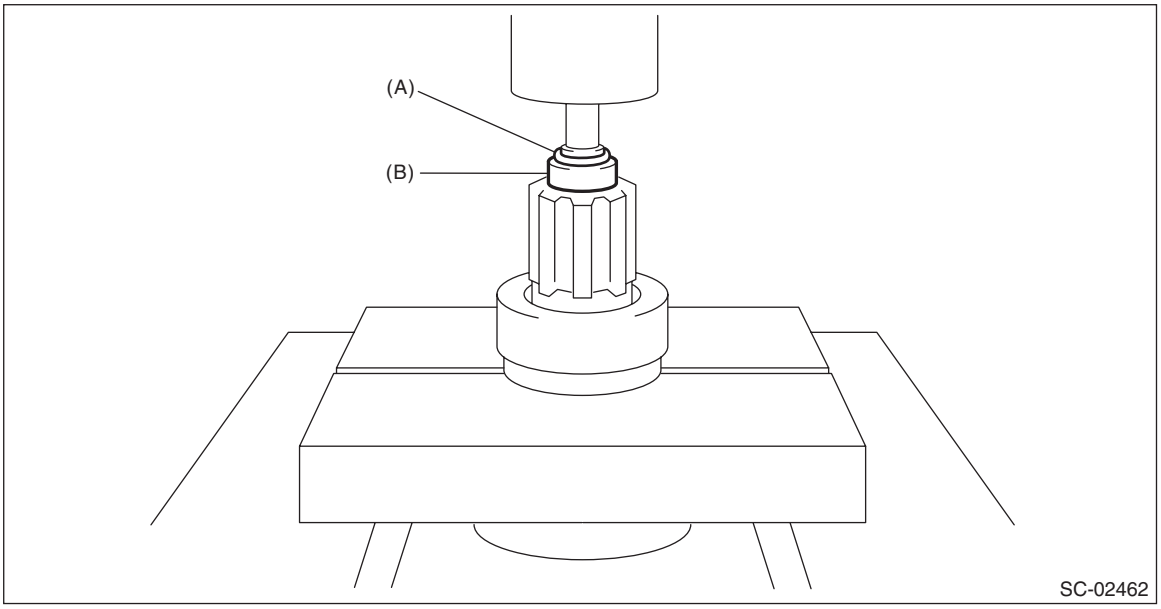

4) Assemble the overrunning clutch, internal gear assembly, shaft and shift lever as a single unit into the starter housing assembly.

NOTE:
Apply grease to the moving parts of the shift lever.

Grease:
Multemp #6129 or equivalent

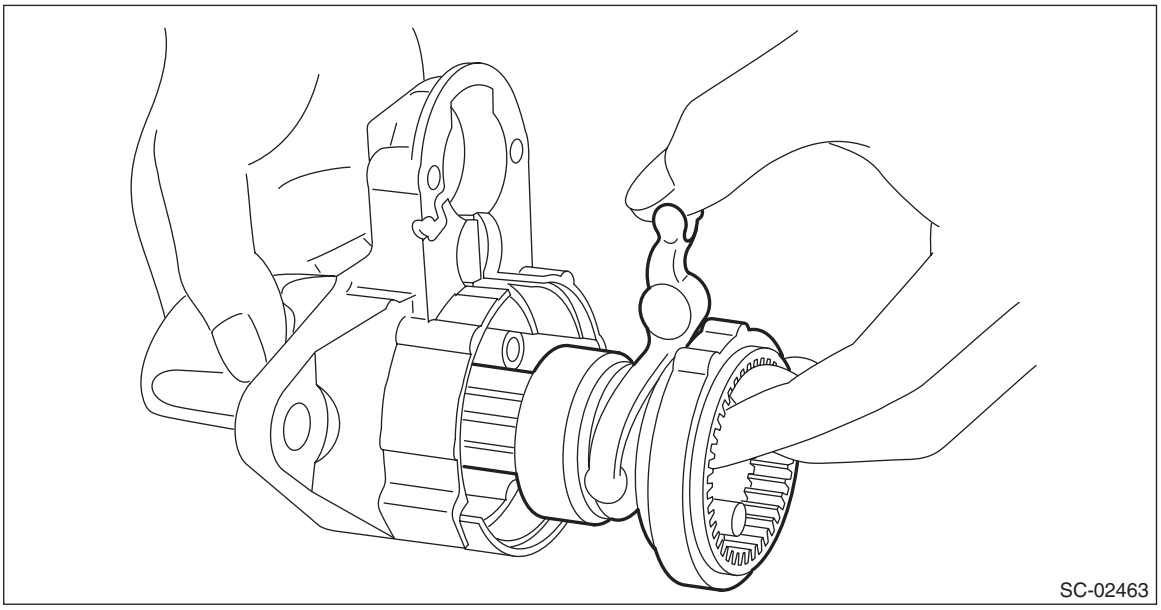

5) Apply grease to the inside of the internal gear assembly and pinion gear, and attach the pinion gear to the internal gear assembly.

NOTE:
- Apply grease evenly to the contact surfaces of each gear.
- Be careful that no debris becomes attached.

Grease:
Molykote® AG650 or equivalent

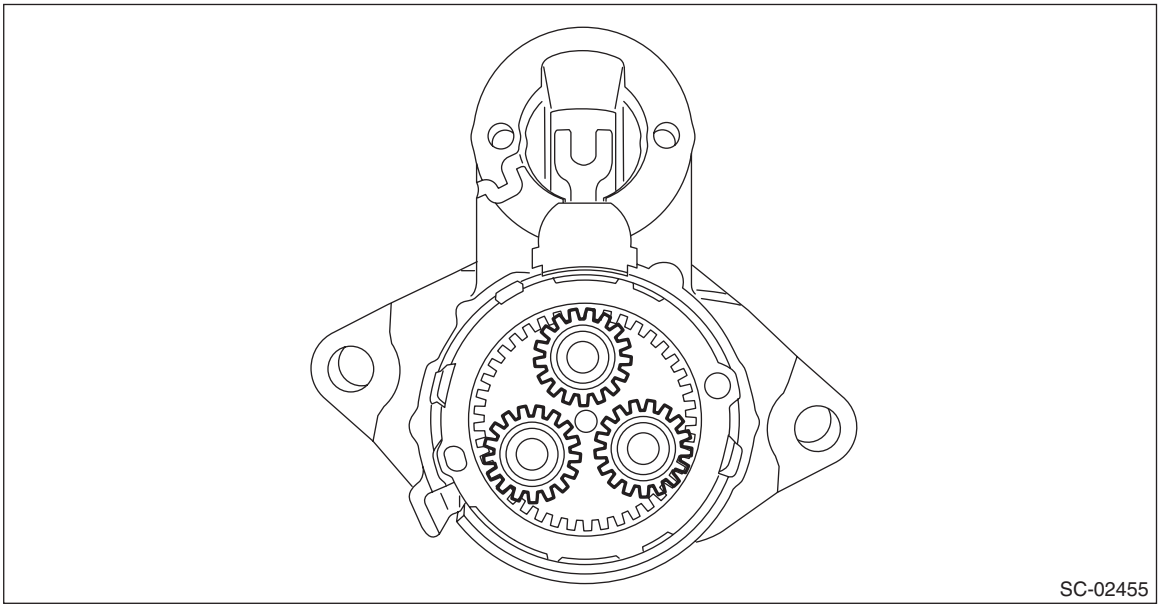

6) Install seal rubber (A), plate (B), and seal rubber (C).

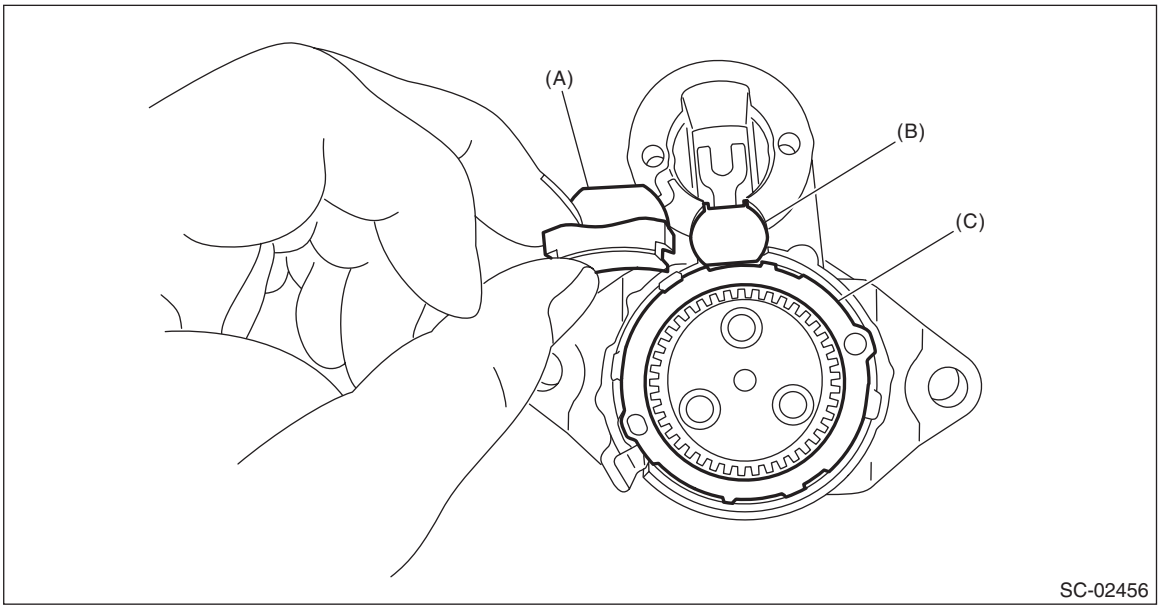

7) Assemble the armature assembly to the yoke assembly.

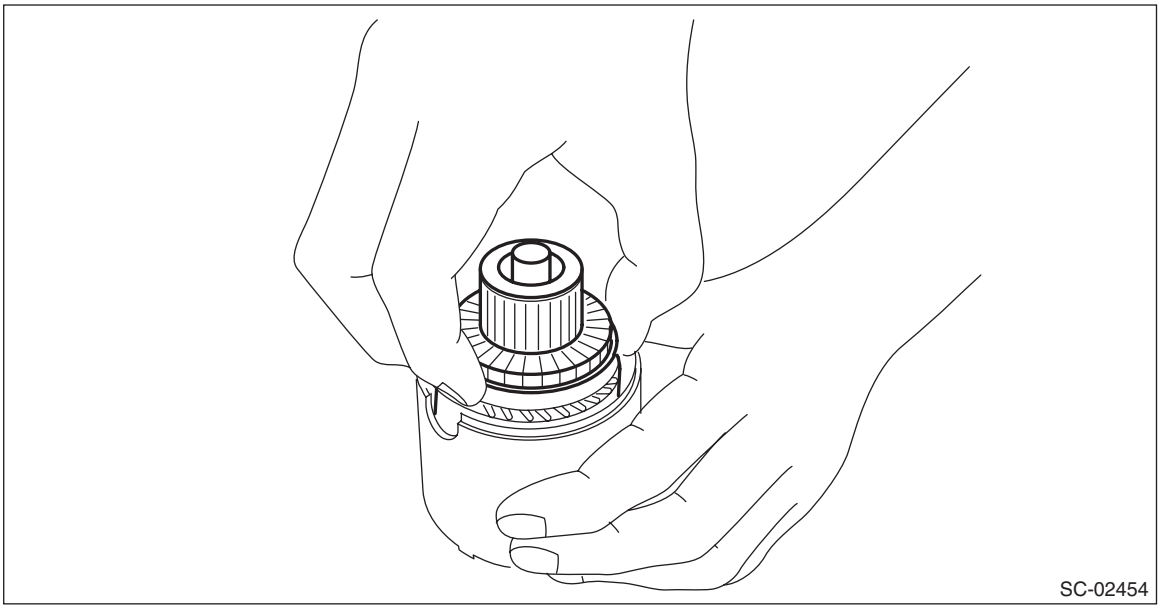

8) Attach the armature assembly and yoke assembly to the starter housing assembly together as a single unit.

NOTE:
As shown in the figure, match the protrusion of the yoke assembly to the cut out of the starter housing assembly.

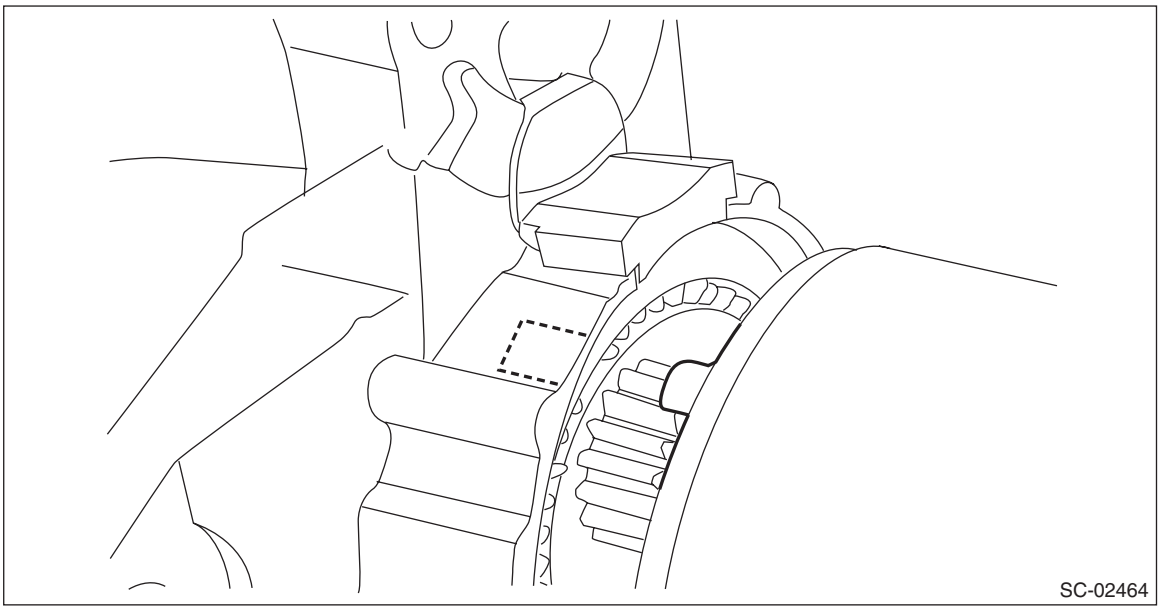
SC-02464

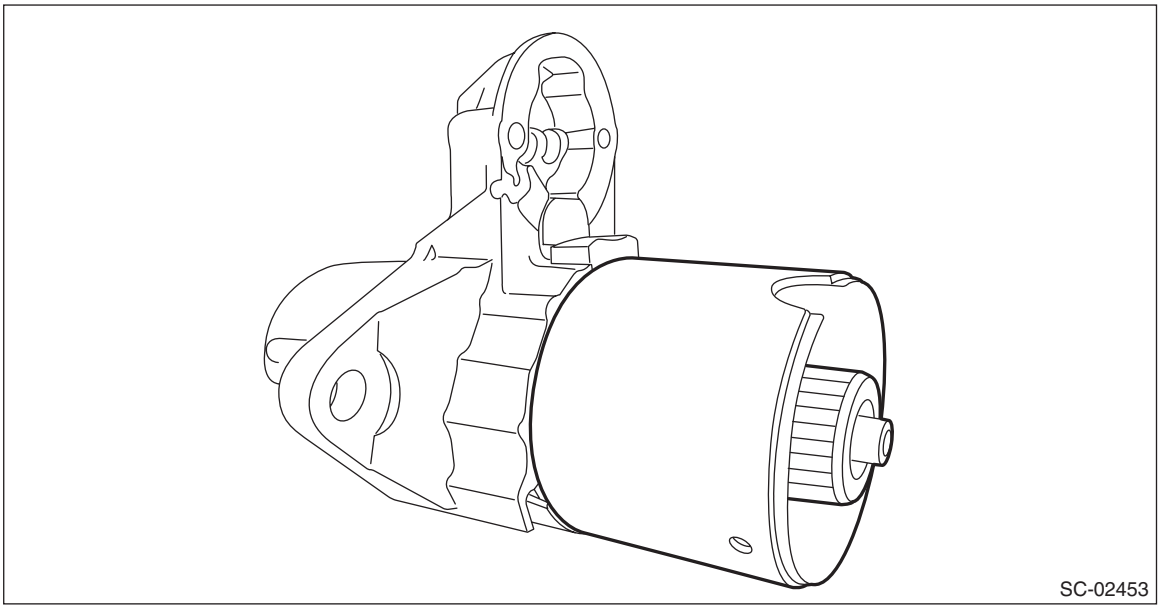
SC-02453

9) Use an appropriate tool (such as correctly sized socket wrenches) and attach the brush holder assembly to the armature assembly.

NOTE:
Be careful not to damage the brushes.

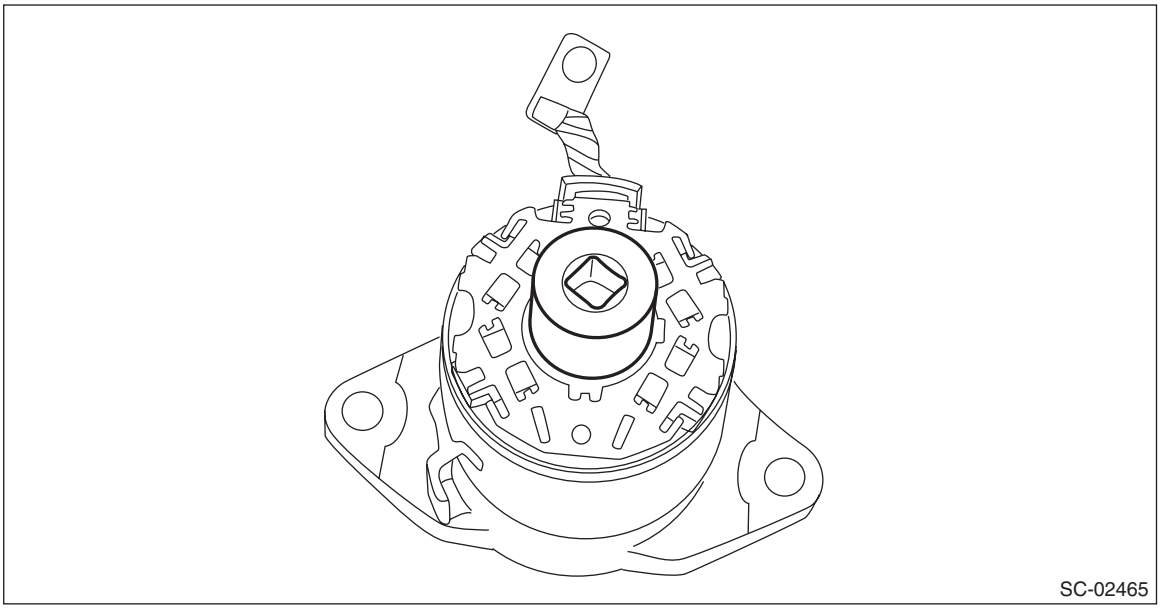

10) Secure starter cover assembly to the brush holder assembly with screws (A).

Tightening torque:
1.4 N·m (0.1 kgf-m, 1.0 ft-lb)

11) Tighten through bolts (B) on both sides.

Tightening torque:
6 N·m (0.6 kgf-m, 4.4 ft-lb)

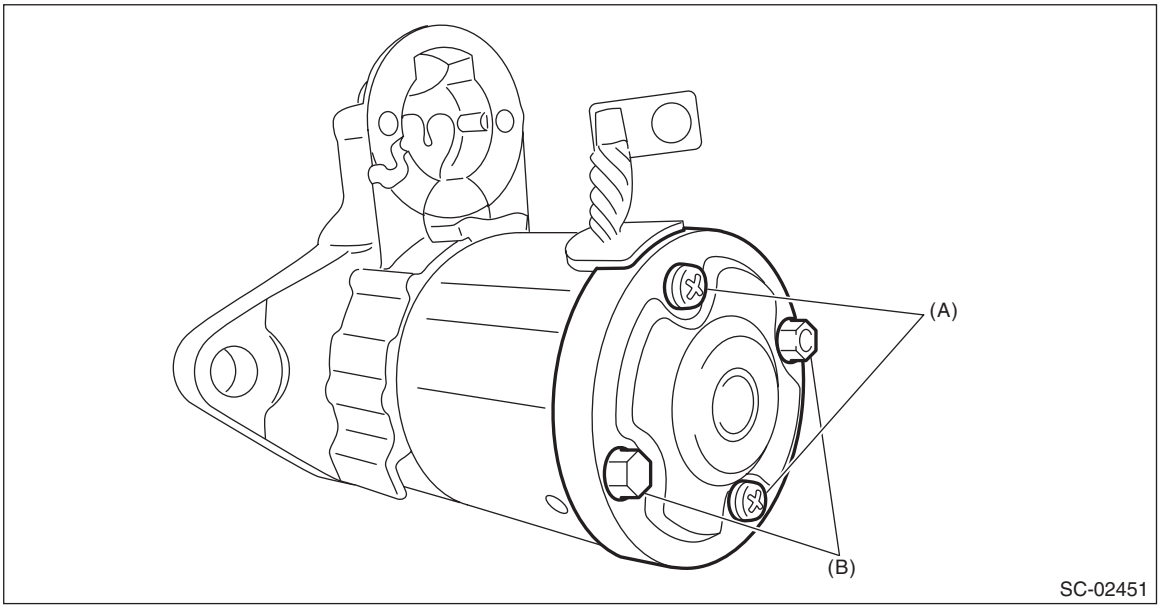

12) Attach the magnet switch assembly to the starter housing assembly.

Tightening torque:
7.5 N·m (0.8 kgf-m, 5.5 ft-lb)

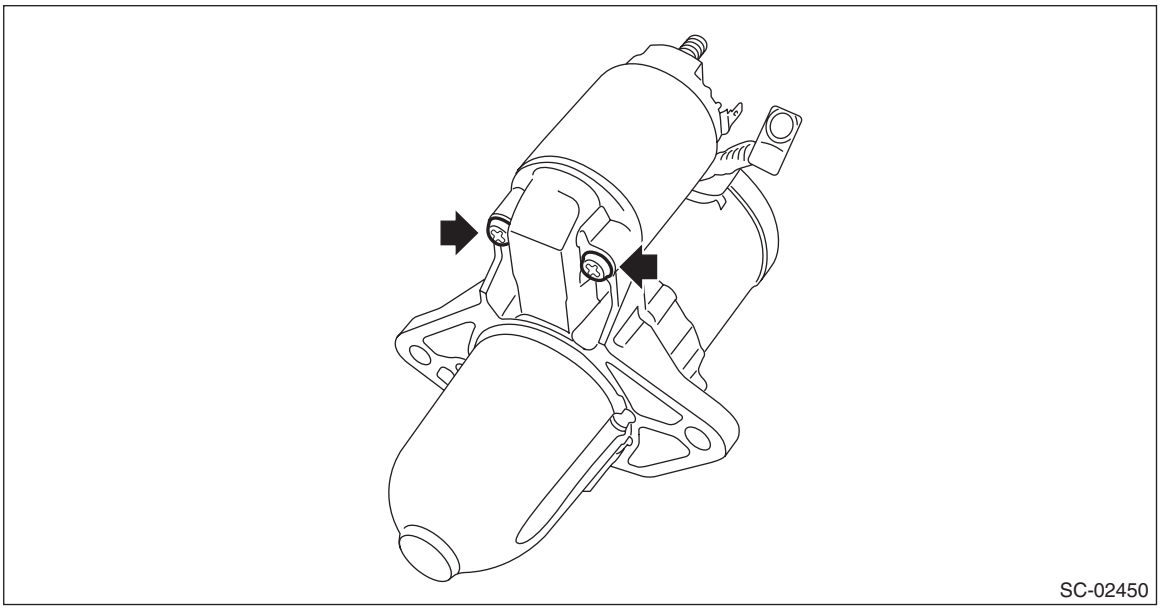

13) Attach the cable to the terminal M of the magnet switch assembly, and secure with nuts.

Tightening torque:
10 N·m (1.0 kgf-m, 7.4 ft-lb)

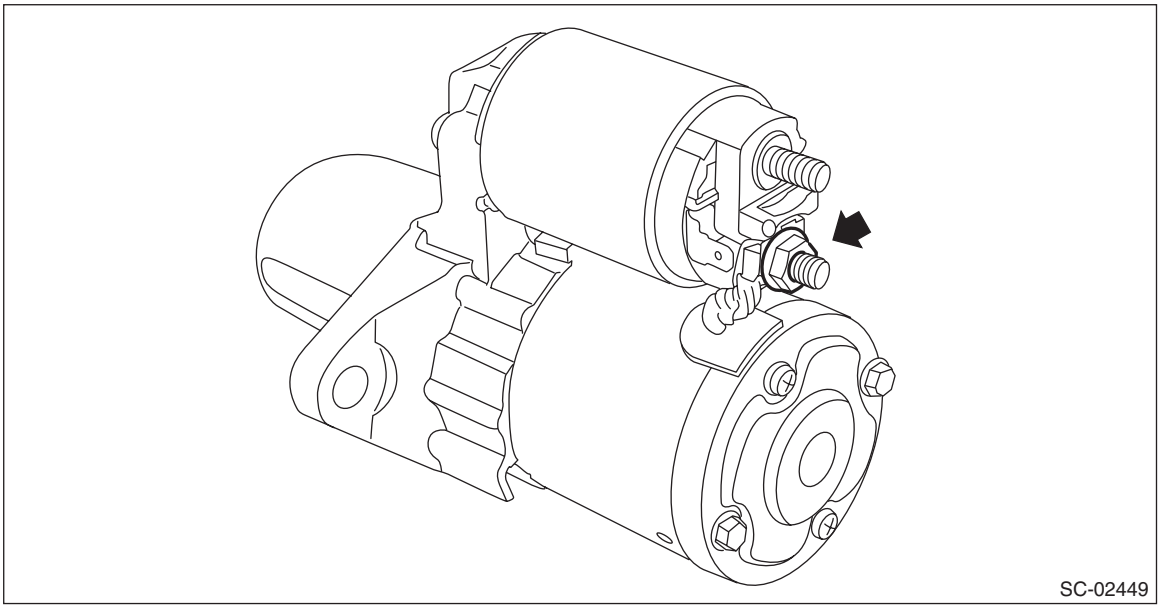

E: INSPECTION

1. ARMATURE

1) Check the commutator for signs of seizure or stepped wear caused by roughness of the surface. If there is light wear, use sandpaper to repair.

2) Check for runout on the commutator. If excessive, replace the armature.

Commutator runout:
Standard
0.05 mm (0.0020 in)
Limit
0.10 mm (0.0039 in)

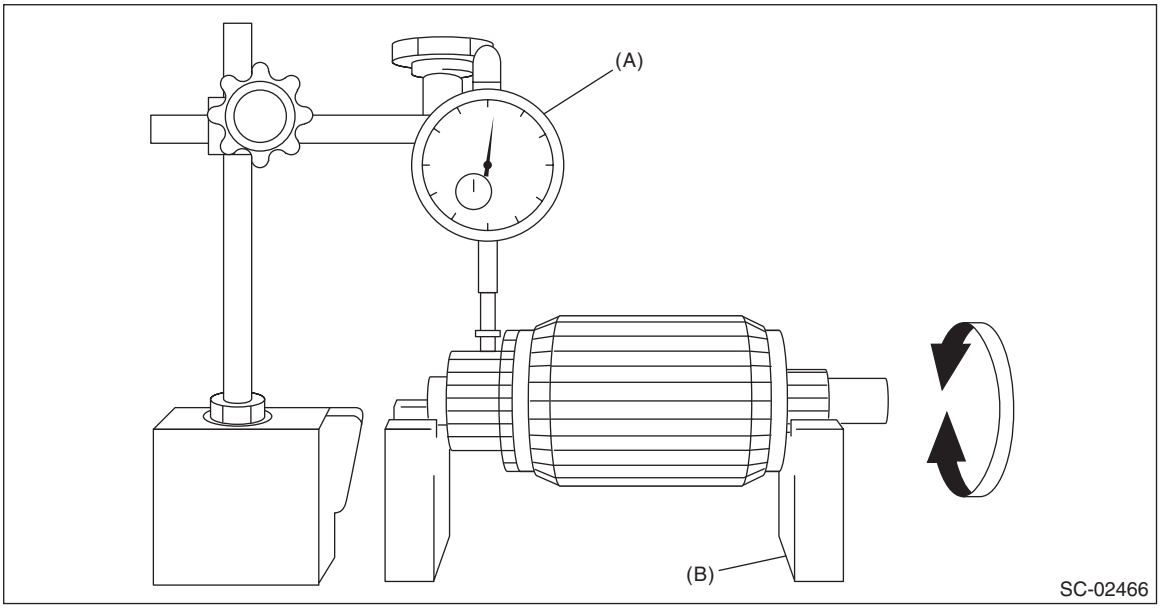

(A) Dial gauge (B) V-block

3) Check the depth of the segment mold. If it is not within the standard, replace the armature.

Depth of segment mold:
Standard
0.50 mm (0.020 in)

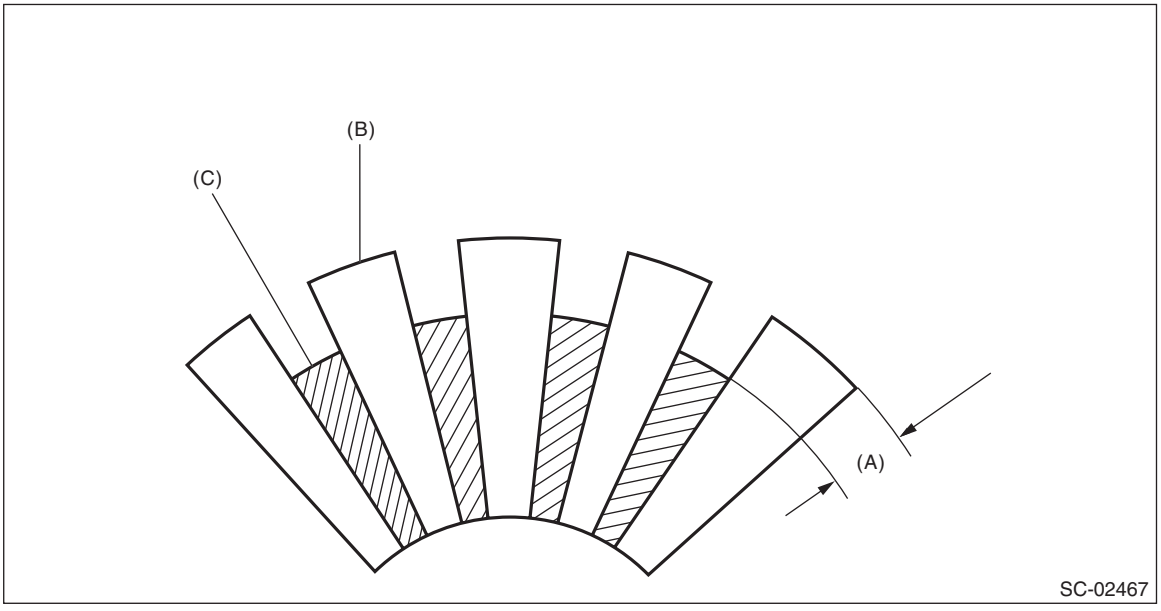

(A) Depth of mold (B) Segment (C) Mold

4) Place the armature on the growler tester to check for short circuits. While slowly turning the armature, support the steel sheet for the armature core. If the circuit of the armature is shorted, the steel sheet will vibrate, causing it to move towards the core. When the steel sheet has moved or vibrated, replace the armature.

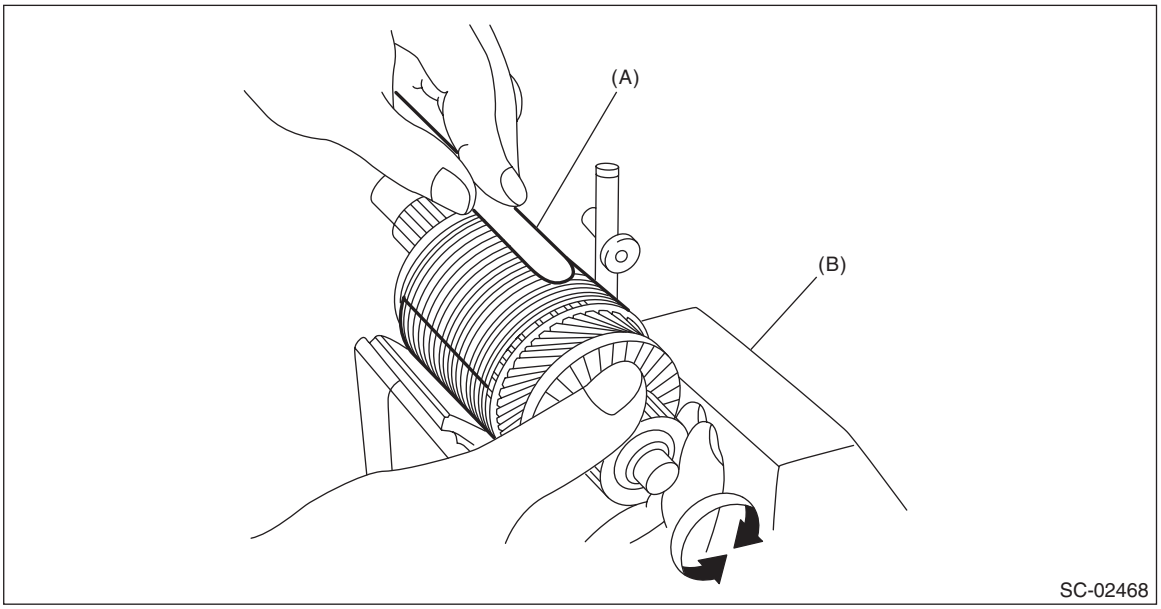

(A) Steel sheet (B) Growler tester

5) Use a circuit tester to touch the probe of one side to the commutator segment, and the other probe to the shaft. If there is continuity, replace the armature.

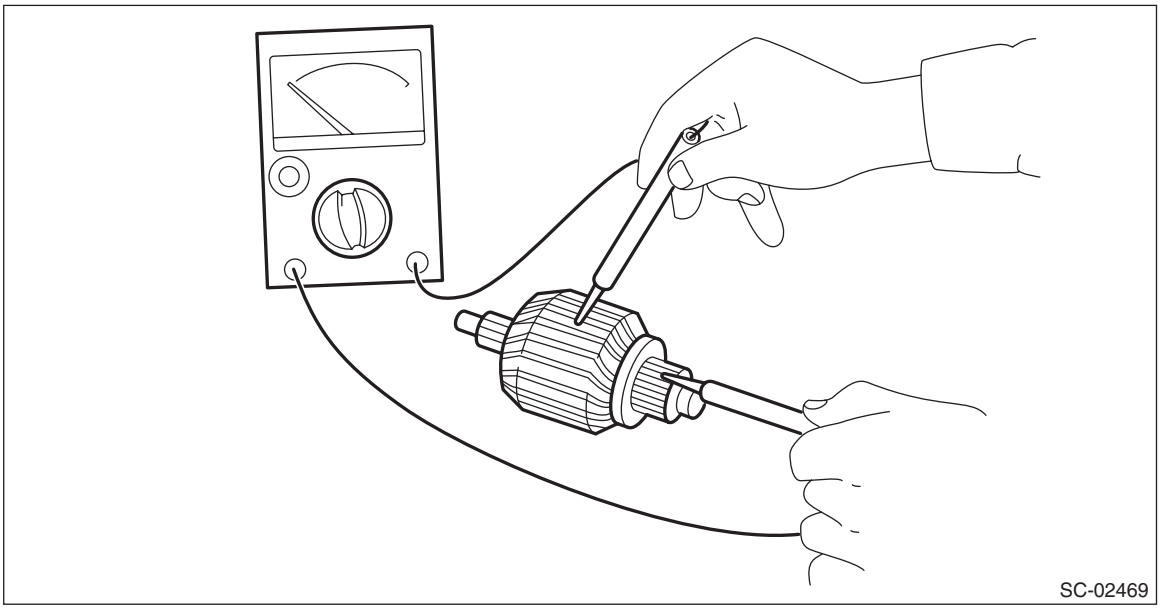

2. YOKE

Make sure that the pole is set at the predetermined position.

3. OVERRUNNING CLUTCH

Inspect the pinion, and if there is any wear or damage, replace the overrunning clutch. Also, check that the pinion rotates counterclockwise smoothly and does not rotate clockwise. If there is any fault, replace the overrunning clutch.

CAUTION:
To prevent spilling of grease, do not clean the overrunning clutch with oil.

4. BRUSH AND BRUSH HOLDER

1) Visually check the brush. If there is any abnormal wear or cracks, replace the brush.
2) Measure the length of the brush. If it exceeds service limits, replace the brush.

Brush length:
Standard
12.3 mm (0.484 in)
Limit
7.0 mm (0.276 in)

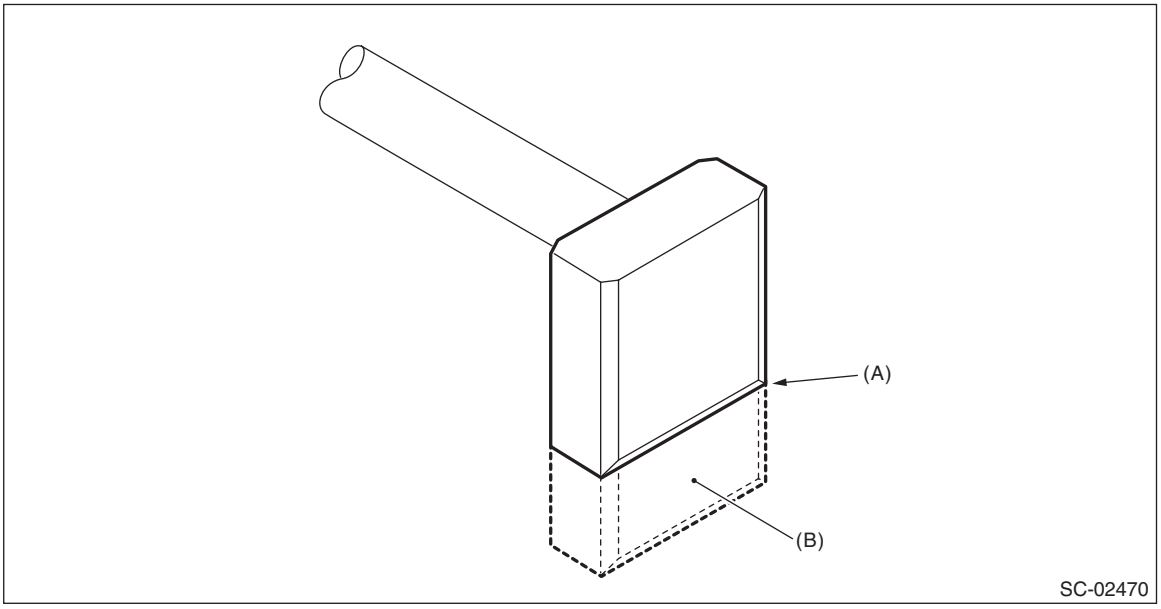

(A) Service limit line (B) Brush

3) Check that the brush moves smoothly in the brush holder.
4) Measure the brush spring force with a spring scale. Replace the brush holder if below the service limit.

Brush spring force:
Standard
15.9 — 19.5 N (1.62 — 1.99 kgf, 3.57 — 4.38 lbf) (when new)
Limit
2.5 N (0.25 kgf, 0.56 lbf)

5. SWITCH ASSEMBLY

Using a circuit tester (set to “ohm”), check that there is continuity between terminals S and M, and between terminal S and ground. Also check to be sure there is no continuity between terminal M and B.

Resistance between switch assembly terminals:

Terminals	Standard
S — M	1 Ω or less
S — Ground	1 Ω or less
M — B	1 MΩ or more

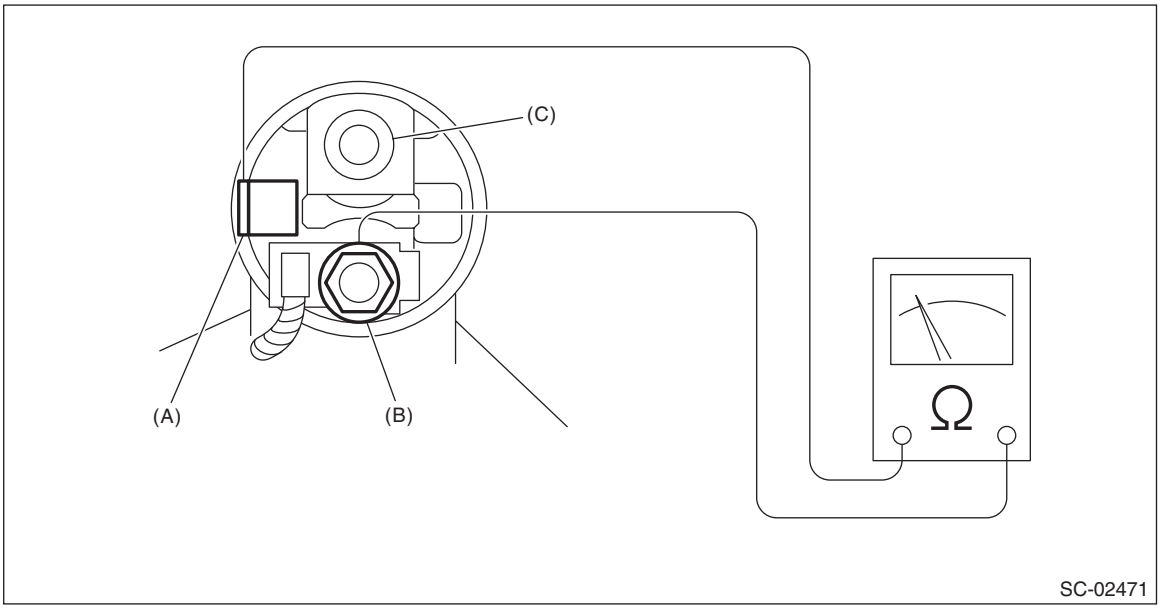

(A) Terminal S (B) Terminal M (C) Terminal B

6. SWITCH ASSEMBLY OPERATION

1) Using a lead wire, connect the switch assembly terminal S to the positive terminal of battery, and the starter body to the ground terminal of battery. The pinion should be forced endwise on shaft.

NOTE:
With the pinion forced endwise on shaft, starter motor can sometimes rotate because current flows, through pull-in coil, to motor. This is not a problem.

2) Disconnect the connector from terminal M. Then using a lead wire, connect the positive terminal of battery and terminal M, and ground terminal to starter body.
In this test set up, the pinion should return to its original position even when it is pulled out with a screwdriver.

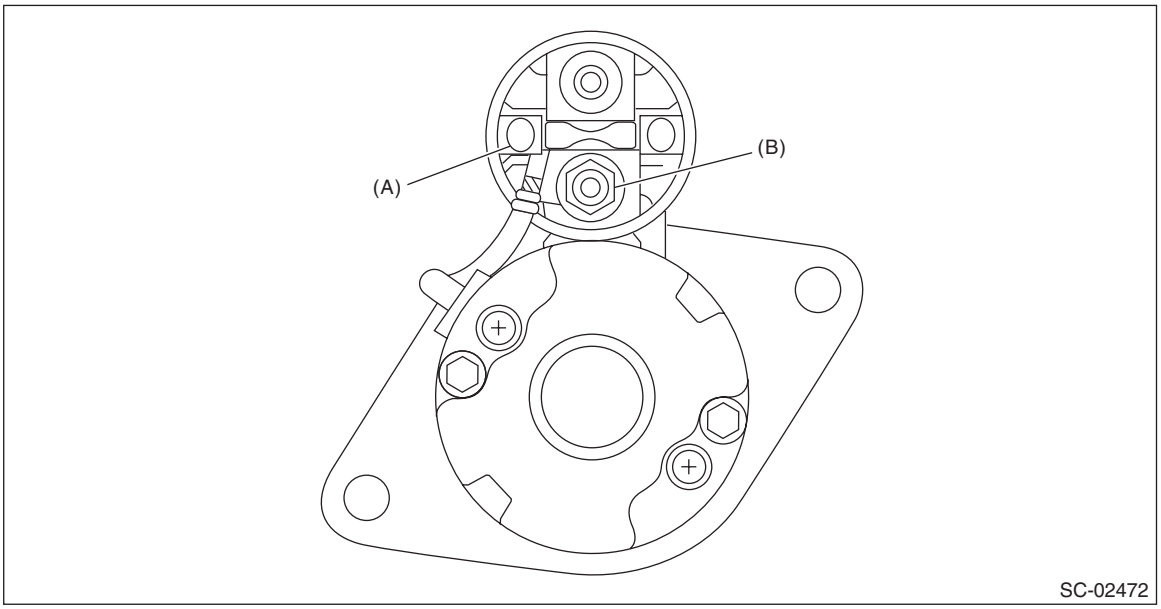

(A) Terminal S (B) Terminal M

7. PERFORMANCE TEST

The starter should be submitted to performance tests whenever it has been overhauled, to assure its satisfactory performance when installed on the engine.
Three performance tests, no-load test, load test, and lock test, are presented here; however, if the load test and lock test cannot be performed, carry out at least the no-load test.
For these performance tests, use the circuit shown in figure.

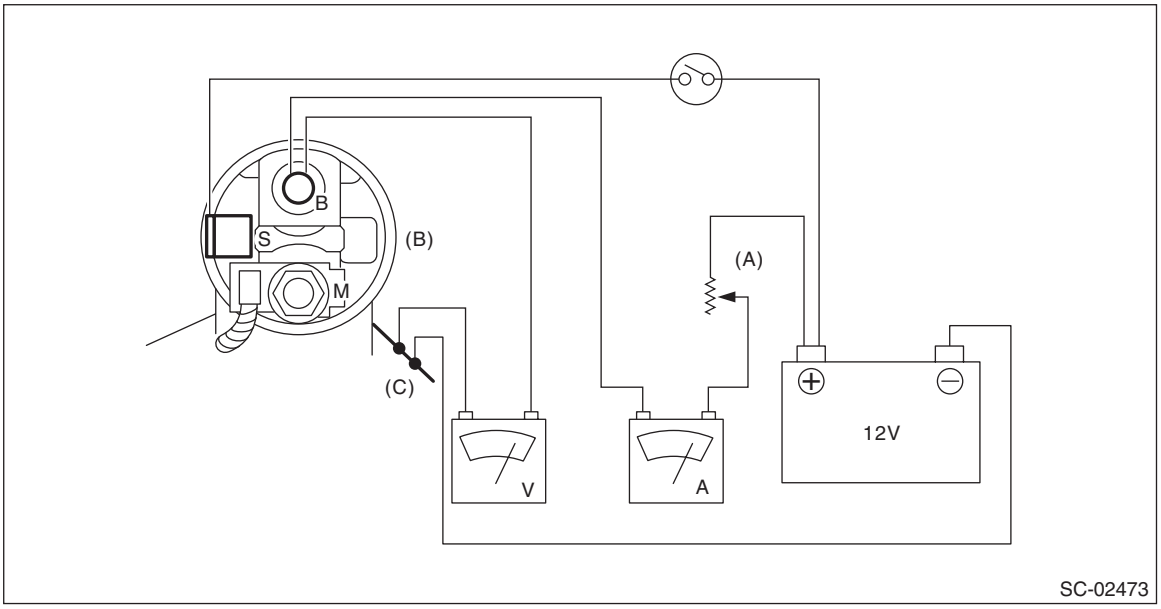

(A) Variable resistance (B) Magnet switch (C) Starter body

1) Adjust the variable resistance with the switch on until the voltage is 11 V, and read the value displayed by the ammeter to measure starter speed. Compare these values with the standard.

No-load test (standard):

Voltage/Current
Max. 11 V/90 A or less

Rotating speed
2,370 rpm or more

2) Apply the specified braking torque to starter. The condition is normal if the current draw and starter speed are within standard.

Load test (standard):

Voltage/Load
7.5 V/10.65 N·m (1.1 kgf-m, 7.8 ft-lb)

Current/Speed
300 A/840 rpm or more

3) With the starter stalled, or not rotating, measure the torque developed and current draw when the voltage is adjusted to standard voltage.

Lock test (standard):

Voltage/Current
4 V/780 A or less

Torque
20 N·m (2.0 kgf-m, 14.8 ft-lb) or more

8. OTHER INSPECTIONS

Check that the starter does not have deformation, cracks and any other damage.

3. Integrated Starter Generator (ISG)

A: REMOVAL

1) Disconnect the ground cable from battery. <Ref. to NT-5, BATTERY, NOTE, Note.>

NOTE:
For the 12 volt engine restart battery, disconnect the ground terminal from 12V engine restart battery sensor.

2) Remove the collector cover.
   (1) Pull up the two points at the front of collector cover (A).
   (2) Pull up the two points at the rear of collector cover (B) while moving them rearward.

NOTE:
Be careful not to contact the fuel delivery tube when moving the collector cover rearward.

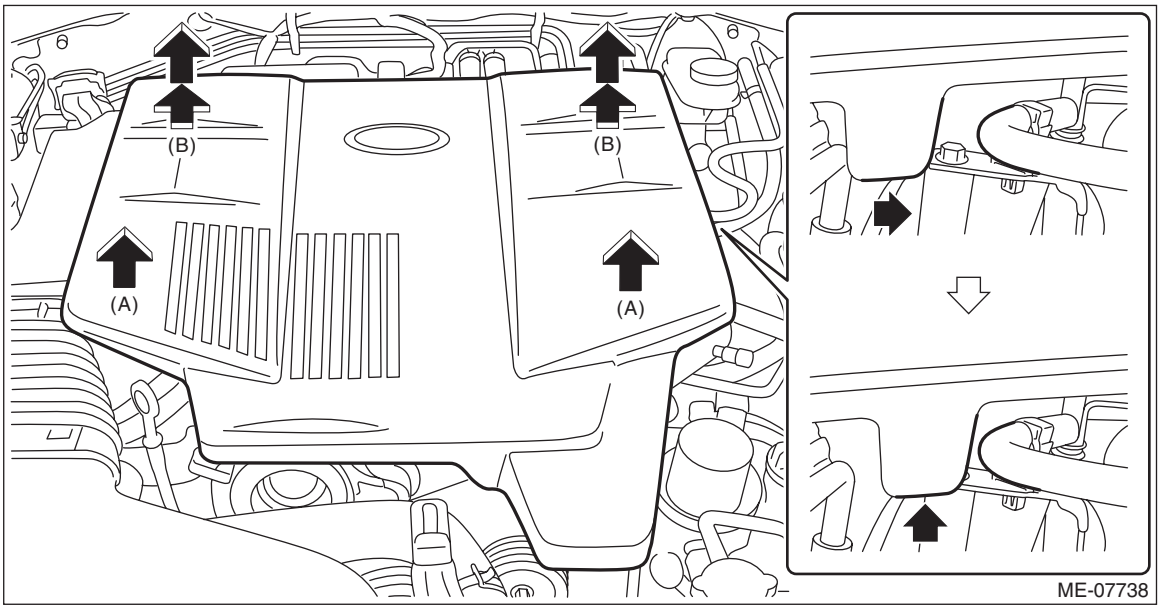

3) Remove the air intake duct. <Ref. to IN(H4DO(HEV))-15, REMOVAL, Air Intake Duct.>
4) Remove the intake duct. <Ref. to IN(H4DO(HEV))-16, REMOVAL, Intake Duct.>
5) Remove the V-belts. <Ref. to ME(H4DO(w/o HEV))-122, HEV MODEL, REMOVAL, V-belt.>
6) Disconnect the connector (A) from the brake vacuum pump, and disconnect the connector (B) from ISG.
7) Disconnect the terminal (C) and the terminal (D) from ISG.

8) Remove the clip (E) securing the battery cable assembly, and remove the battery cable assembly from the battery cable bracket No. 1 and the collector cover bracket.

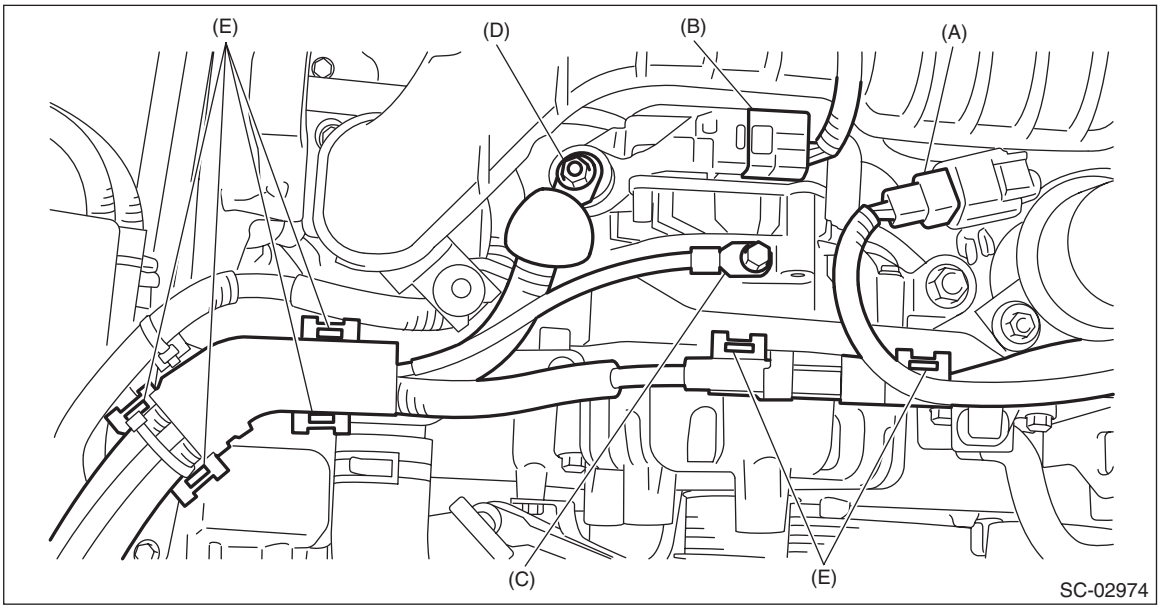

9) Disconnect the connector (A) from the A/C compressor, and remove the clip (B) securing the battery cable assembly to the collector cover bracket.
10) Remove the bolts which secure the battery cable stay (C) to the chain cover, and move the battery cable assembly to the front of the vehicle.

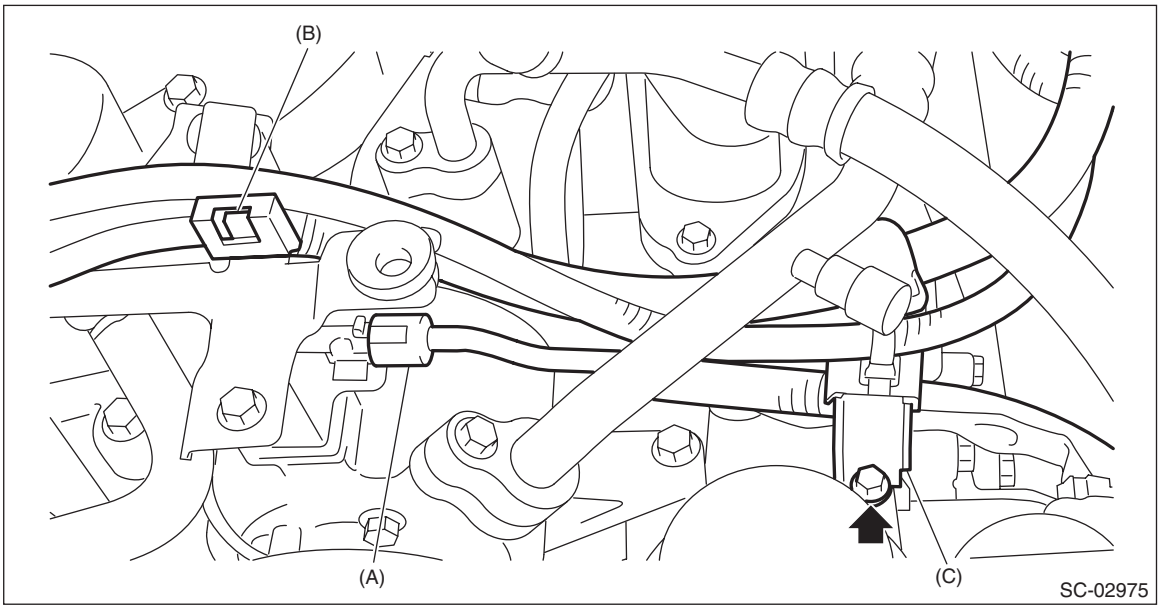

11) Remove the clip (B) which holds the engine harness to the battery cable bracket No. 1 (A).
12) Remove the battery cable bracket No. 1 (A) and collector cover bracket (C).

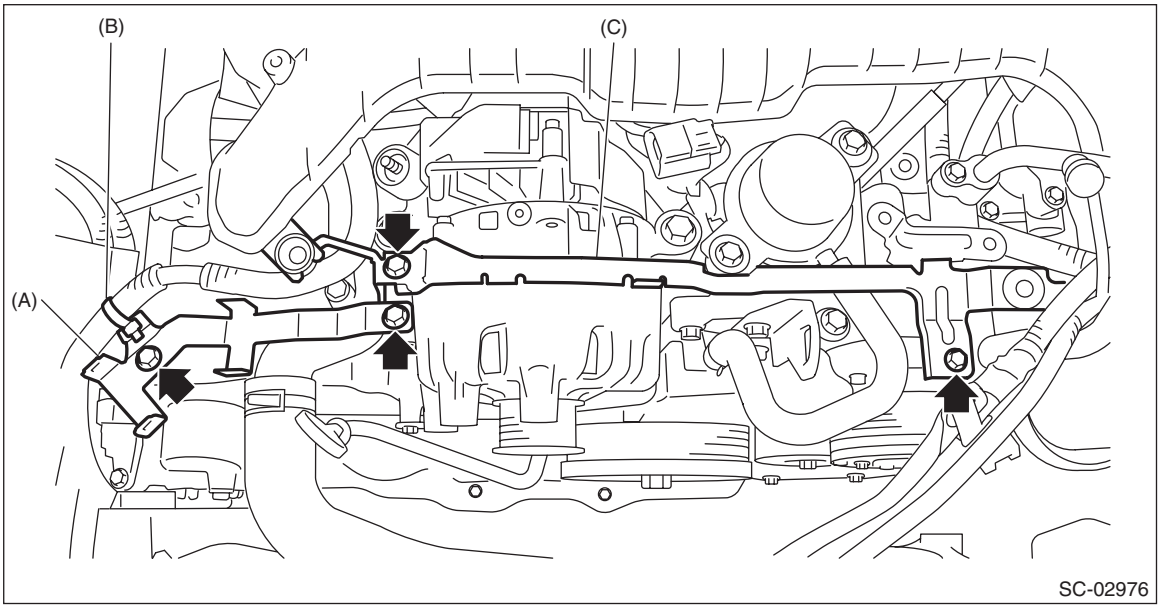

13) Remove ISG from the engine assembly, ISG bracket and brake vacuum pump bracket.
14) Remove the ISG bracket from the engine assembly.

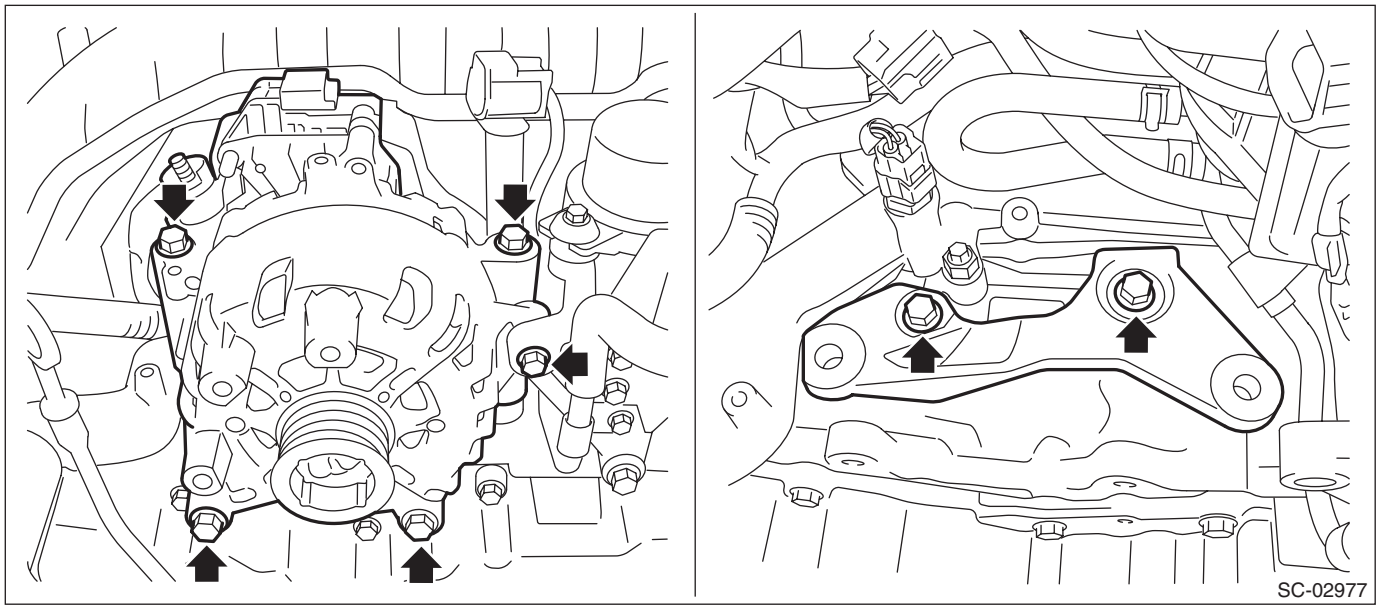

B: INSTALLATION

1) Install the ISG bracket to the engine assembly.
2) Set ISG to the engine, ISG bracket and brake vacuum pump bracket, and tighten the bolts in numerical order as shown in the figure.

Tightening torque:
T1: 18 N·m (1.8 kgf-m, 13.3 ft-lb)
T2: 36 N·m (3.7 kgf-m, 26.6 ft-lb)

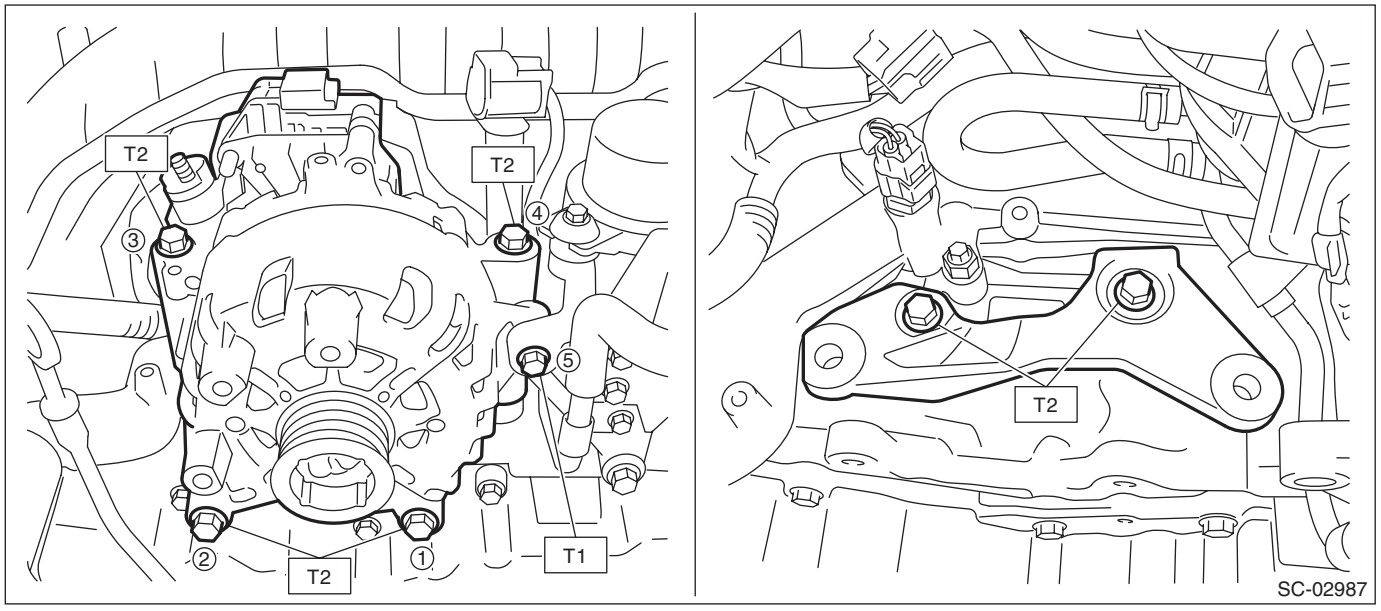

3) Install the collector cover bracket (A).
4) Install the battery cable bracket No. 1 (B), and secure the engine harness to the battery cable bracket No. 1 (B) with the clip (C).

Tightening torque:
T1: 6.4 N·m (0.7 kgf-m, 4.7 ft-lb)
T2: 19 N·m (1.9 kgf-m, 14.0 ft-lb)

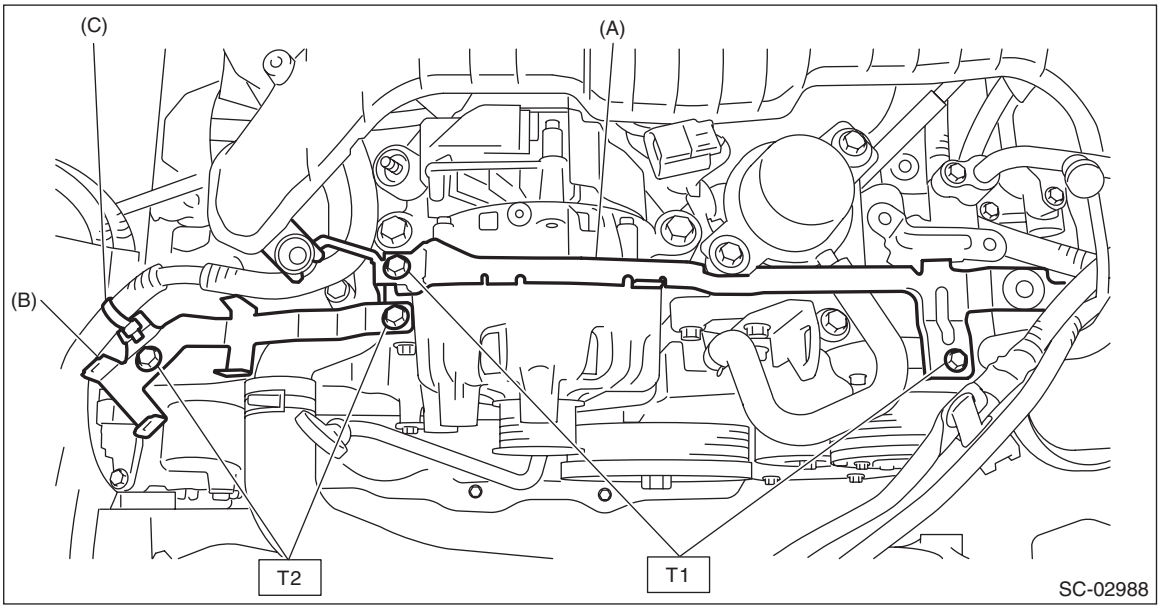

5) Set the battery cable assembly, and install the battery cable stay (C) to the chain cover.

NOTE:
When installing the battery cable stay, install it by fitting the folded end (a) of the battery cable stay to the chain cover boss.

Tightening torque:
6.4 N·m (0.7 kgf-m, 4.7 ft-lb)

6) Connect the connector (A) to the A/C compressor, and secure the battery cable assembly to the collector cover bracket with the clip (B).

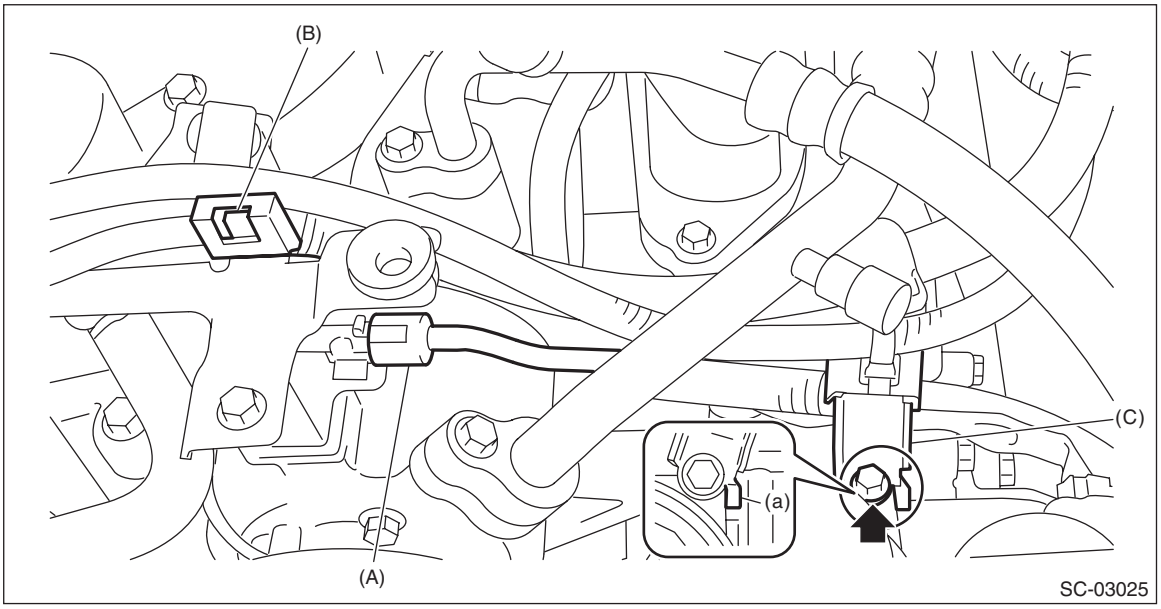

7) Secure the battery cable assembly to the battery cable bracket No. 1 and the collector cover bracket with the clip (E).
8) Connect the connector (B) to ISG, and install the terminal (D) to ISG.

Tightening torque:
15.5 N·m (1.6 kgf-m, 11.4 ft-lb)

9) Install the terminal (C) to ISG, and connect the connector (A) to the brake vacuum pump.

Tightening torque:
7.5 N·m (0.8 kgf-m, 5.5 ft-lb)

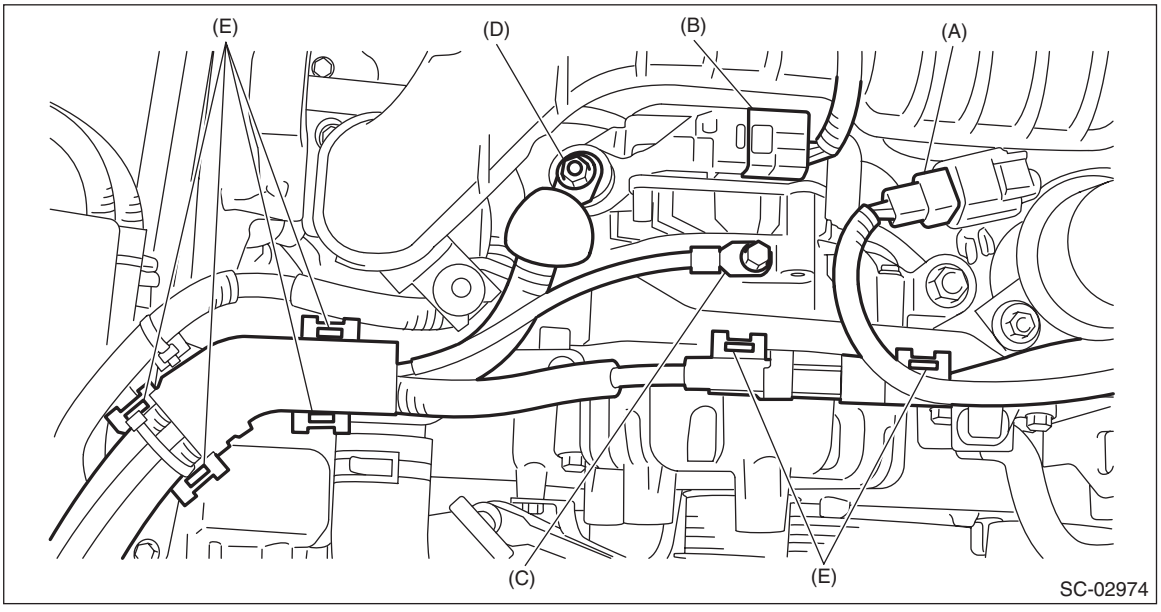

10) Install the V-belts. <Ref. to ME(H4DO(w/o HEV))-132, HEV MODEL, INSTALLATION, V-belt.>
11) Install the intake duct. <Ref. to IN(H4DO(HEV))-17, INSTALLATION, Intake Duct.>
12) Install the air intake duct. <Ref. to IN(H4DO(HEV))-15, INSTALLATION, Air Intake Duct.>
13) Install the collector cover.
14) Connect the battery ground terminal. <Ref. to NT-5, BATTERY, NOTE, Note.>

C: INSPECTION

1. CHECK ISG SENSOR

1) Check ISG for deformation, cracks or damage.
2) Check the ISG ground circuit.
   (1) Check the continuity between the ISG unit and chassis ground.

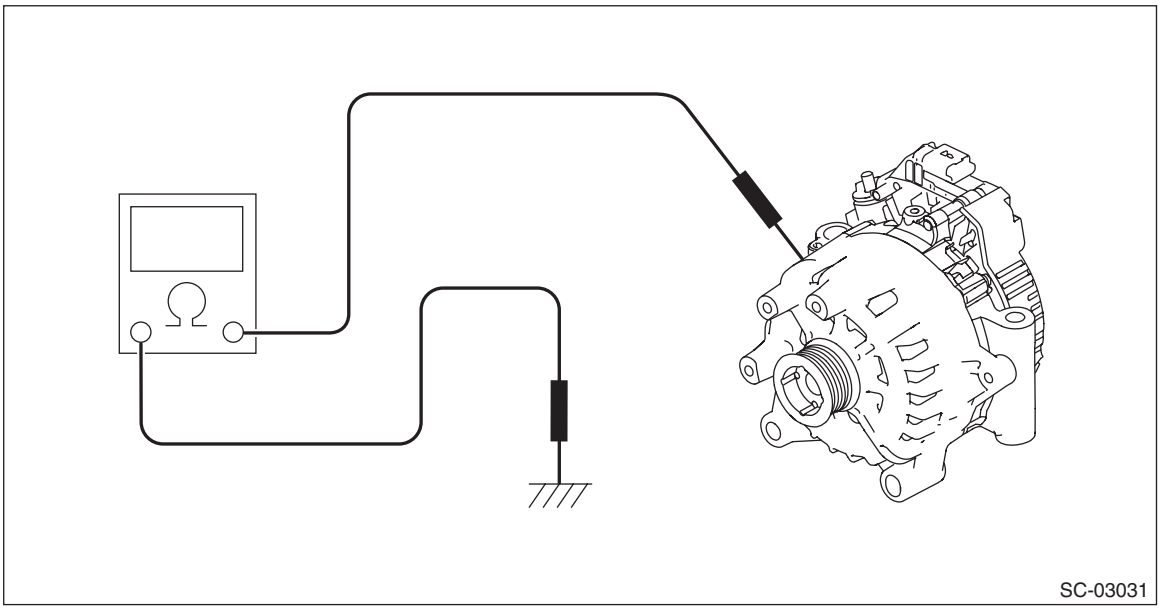

   (2) If no continuity exists, inspect the ISG installation condition, chassis ground and engine ground conditions, then repair as necessary.

2. CHECK CHARGE WARNING LIGHT

Inspect as follows, if the charge warning light illuminates.

Step		Check	Yes	No
1	**CHECK DTC.**	Is DTC of HEV and IDI displayed? <Ref. to HEV(diag)-23, Read Diagnostic Trouble Code (DTC).> <Ref. to IDI(diag)-14, Read Diagnostic Trouble Code (DTC).>	Check the appropriate DTC using the "List of Diagnostic Trouble Code (DTC)". <Ref. to HEV(diag)-74, List of Diagnostic Trouble Code (DTC).> <Ref. to IDI(diag)-23, List of Diagnostic Trouble Code (DTC).>	Go to step **2**.
2	**CHECK ISG SENSOR.** 1) Turn the ignition switch to OFF and wait for 20 minutes. 2) Start the engine. 3) Check the warning light in the combination meter.	Does the warning light illuminate?	Go to step **3**.	Temporary overheat occurs in ISG. Currently returned to normal.
3	**CHECK COMBINATION METER.** 1) Check the combination meter. <Ref. to IDI(diag)-19, OPERATION, System Operation Check Mode.>	Is combination meter OK?	Replace ISG. <Ref. to SC(H4DO(HEV))-31, REMOVAL, Integrated Starter Generator (ISG).>	Repair or replace the combination meter. <Ref. to IDI-10, INSPECTION, Combination Meter System.>

4. Battery

A: REMOVAL

1. 12 VOLT AUXILIARY BATTERY

1) Disconnect the ground cable from battery. <Ref. to NT-5, BATTERY, NOTE, Note.>

NOTE:
For the 12 volt engine restart battery, disconnect the ground terminal from 12V engine restart battery sensor.
2) Disconnect the terminal boot from the battery positive terminal, and disconnect the positive terminal.
3) Remove the battery cable holder from the battery rod.
4) Remove the flange nut from battery rod and remove battery holder.

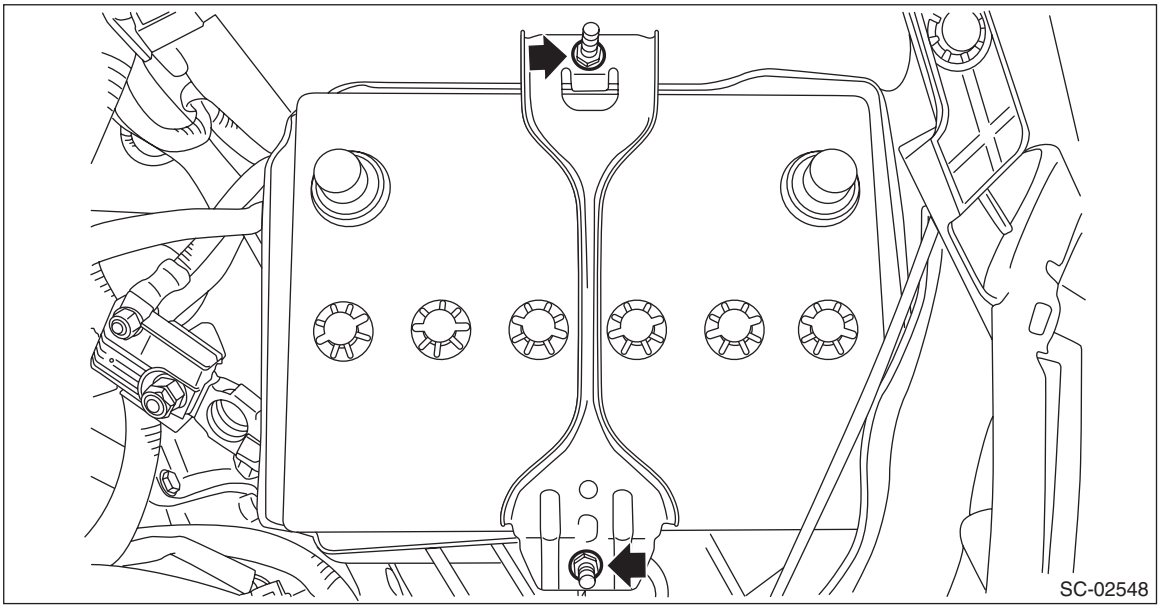

5) Remove the battery.

2. 12 VOLT ENGINE RESTART BATTERY

CAUTION:
Do not detach the 12V engine restart battery sensor from the 12 volt engine restart battery except when replacing the 12 volt engine restart battery.

1) Disconnect the ground cable from battery. <Ref. to NT-5, BATTERY, NOTE, Note.>

NOTE:
For the 12 volt engine restart battery, disconnect the ground terminal from 12V engine restart battery sensor.

2) Disconnect the positive (+) terminal after disconnecting the negative (–) terminal of battery.
3) Remove the battery cable holder from the battery rod.
4) Disconnect the connector (A) from the 12V engine restart battery sensor.
5) Remove the flange nut from battery rod and remove battery holder.

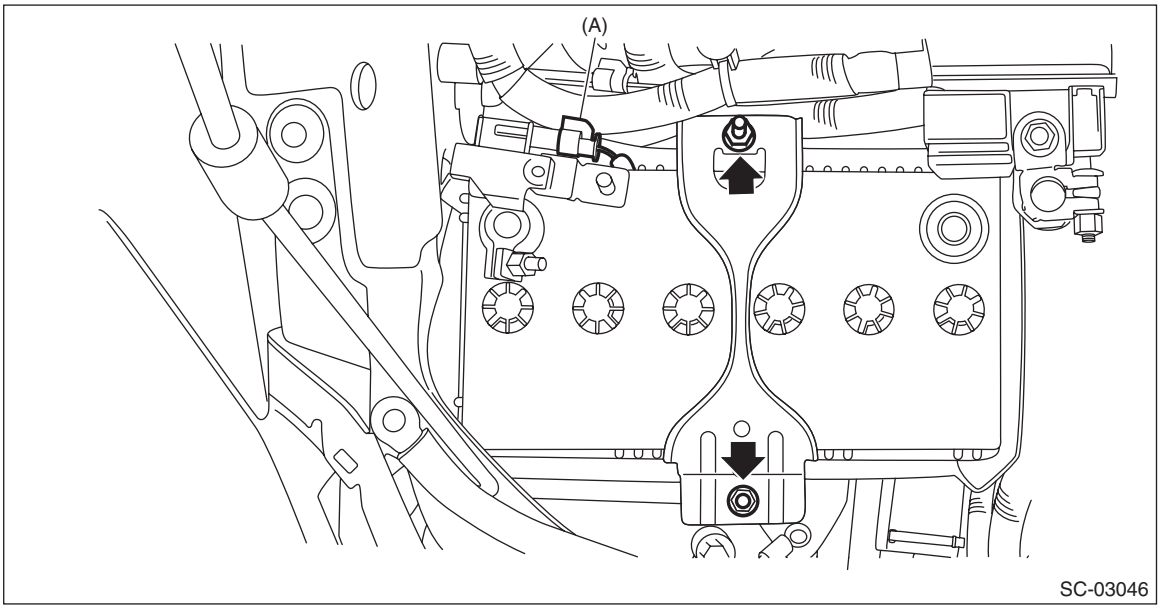

6) Remove the battery.

B: INSTALLATION

1. 12 VOLT AUXILIARY BATTERY

Install in the reverse order of removal.

NOTE:
- When installing the 12 volt auxiliary battery, install after one minute or more.
- Be careful not to contact the cable with the battery terminal during work because the power supply switches ON/OFF in a short time. Besides, in case trouble occurs in the vehicle during work, remove the 12 volt auxiliary battery again, and wait for one minute or more to install the 12 volt auxiliary battery. After that make sure there is no trouble anymore.
- Clean the battery cable terminals and apply grease to retard the formation of corrosion.
- Connect the positive (+) terminal, and then connect the negative (–) terminal of the battery.
- After connecting the battery ground terminal, the following operations are automatically performed in the vehicle.
  – Initial diagnosis of electronic throttle control
  – Learning control of brake pedal stroke sensor
  Therefore, place the select lever in the “P” position, wait for 10 seconds or more after turning the ignition switch to ON with the brake pedal released, and then start the engine.

Tightening torque:
3.5 N·m (0.4 kgf-m, 2.6 ft-lb)

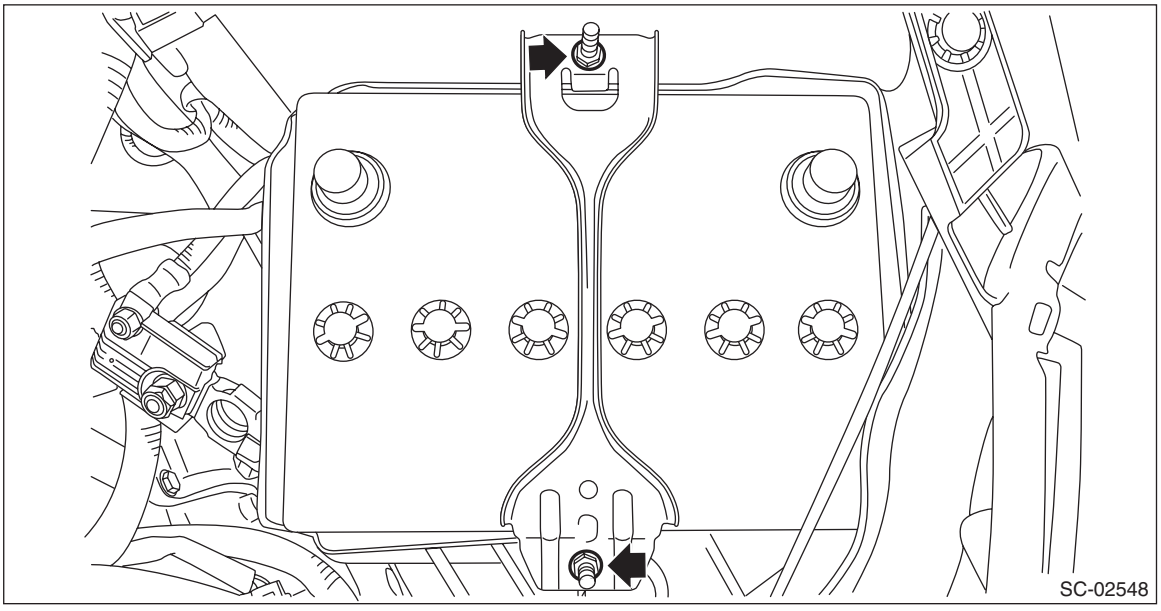

2. 12 VOLT ENGINE RESTART BATTERY

Install in the reverse order of removal.

NOTE:
- Clean the battery cable terminals and apply grease to retard the formation of corrosion.
- Connect the positive (+) terminal, and then connect the negative (–) terminal of the battery.
- After connecting the battery ground terminal, the following operations are automatically performed in the vehicle.
  – Initial diagnosis of electronic throttle control
  – Learning control of brake pedal stroke sensor
  Therefore, place the select lever in the “P” position, wait for 10 seconds or more after turning the ignition switch to ON with the brake pedal released, and then start the engine.

Tightening torque:
3.5 N·m (0.4 kgf-m, 2.6 ft-lb)

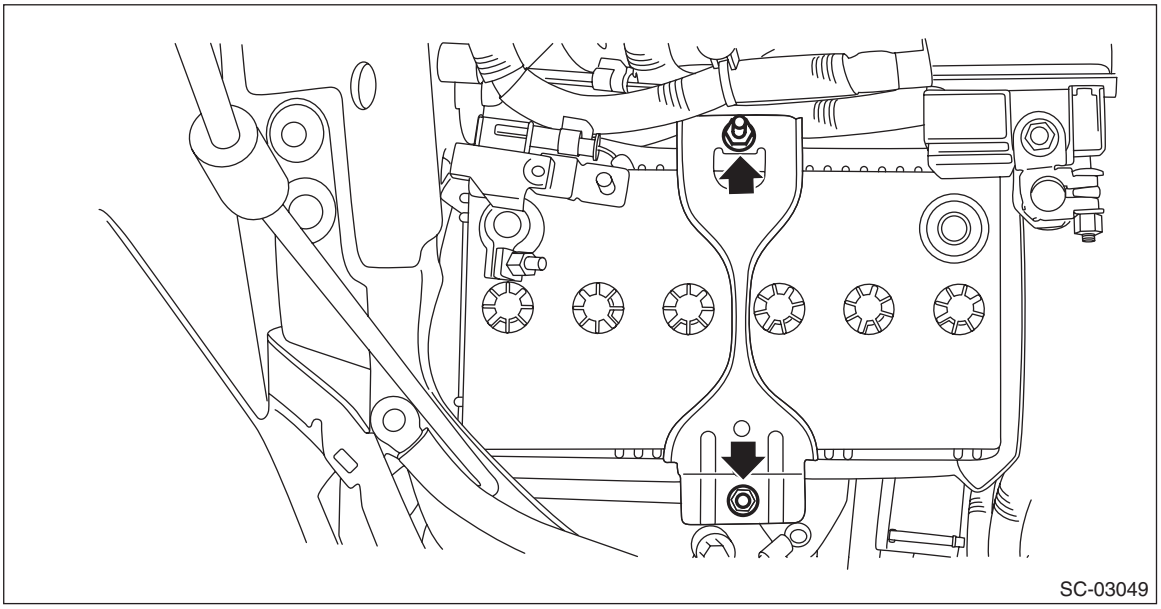
SC-03049

C: DISASSEMBLY

Remove the 12V engine restart battery sensor. <Ref. to SC(H4DO(HEV))-54, REMOVAL, Battery Sensor.>

D: ASSEMBLY

Install the 12V engine restart battery sensor. <Ref. to SC(H4DO(HEV))-55, INSTALLATION, Battery Sensor.>

E: INSPECTION

WARNING:
- **Electrolyte is corrosive acid, and has toxicity; be careful of handling the fluid.**
- **Make sure the electrode does not come into contact with skin, eyes or clothing. Especially at contact with eyes, flush with water for 15 minutes and get prompt medical attention.**
- **In addition, be careful not to let the electrode contact with the coated parts.**
- **Be careful when handling the batteries because they produce explosive gases.**
- **Be sure to keep battery away from any fire.**
- **For safety, in case an explosion does occur, wear eye protection or shield your eyes when working near any battery. In addition, never lean over the battery.**
- **Ventilate sufficiently when using or charging battery in enclosed space.**
- **Before starting work, remove rings, metal watch-bands, and other metal jewelry.**
- **Never allow metal tools to contact the positive battery terminal and anything connected to it while you are at the same time in contact with any other metallic portion of the vehicle.**

1. EXTERNAL PARTS

Check the battery case, top cover, vent plugs, and terminal posts for dirt or cracks. If necessary, clean with water and wipe with a dry cloth.
Apply a thin coat of grease on the terminal posts to prevent corrosion.

2. ELECTROLYTE LEVEL

Check the electrolyte level in each cell. If the level is below MIN level, bring the level to MAX level by pouring distilled water into the battery cell. Do not fill beyond MAX level.

3. SPECIFIC GRAVITY OF ELECTROLYTE

1) Measure specific gravity of electrolyte using a hydrometer and a thermometer.
Specific gravity varies with temperature of electrolyte so that it must be corrected at 20°C (68°F) using the following calculation:

S_{20} = St + 0.0007 × (t – 20)
S_{20}: Specific gravity corrected at electrolyte temperature of 20°C
St: Measured specific gravity
t: Measured temperature (°C)
Judge whether or not the battery requires charging according to corrected specific gravity.
Standard specific gravity: 1.220 — 1.290 [at 20°C (68°F)]

2) Measuring the specific gravity of the electrolyte in the battery will disclose the state of charge of the battery. The relation between specific gravity and state of charge is as shown in the figure.

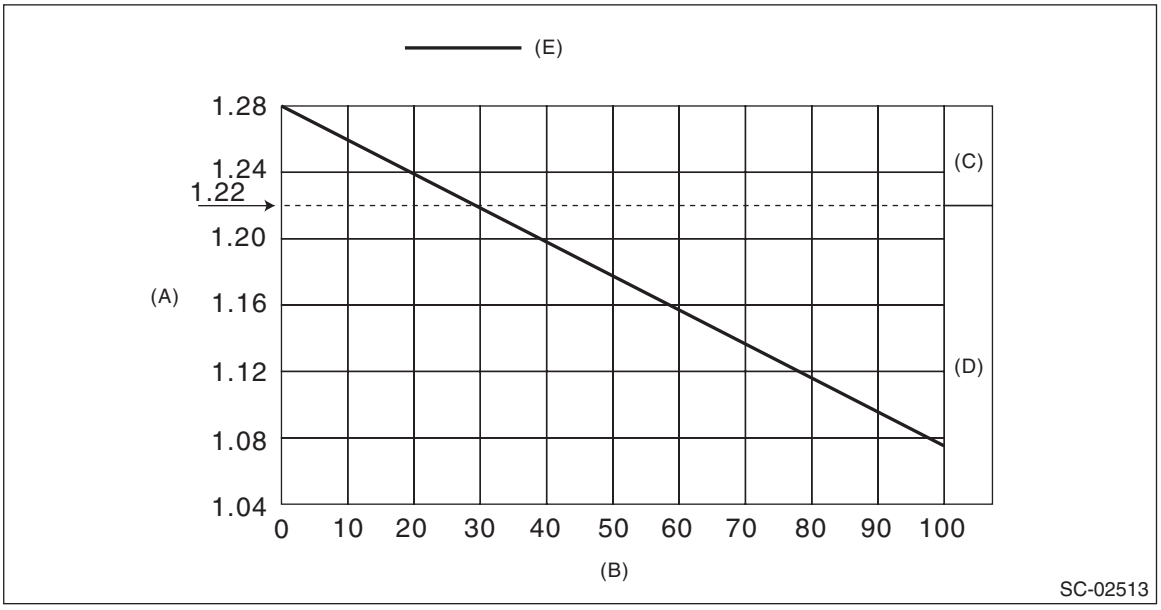

(A) Specific gravity [20°C (68°F)]
(B) Amount of discharge (%)
(C) Good
(D) Need to charge
(E) Battery with standard specific gravity 1.280 [20°C (68°F)]

F: MEASUREMENT

WARNING:
Do not bring an open flame close to the battery when working.

CAUTION:
• Prior to charging, corroded terminals should be cleaned with a brush and common caustic soda solution.
• Be careful while charging the battery because it produces flammable gasses.
• Observe instructions when handling the battery charger.
• Before charging the battery on the vehicle, disconnect the battery ground terminal to prevent damage of generator diodes or other electrical units. <Ref. to NT-5, BATTERY, NOTE, Note.>

1. JUDGMENT OF BATTERY IN CHARGED CONDITION

1) Specific gravity of electrolyte should be held within the specific range of 1.250 — 1.290 for one hour or more.
2) Voltage per battery cell should be held at a specific value in a range of 2.5 — 2.8 V for one hour or more.

2. CHECK CONDITION OF CHARGE WITH HYDROMETER

CAUTION:
• Charge the battery if the difference is 0.04 or more, even though the specific gravity of each cell is normal.
• After charging, if the difference between the specific gravity of each cell is 0.04 or more, replace the battery.

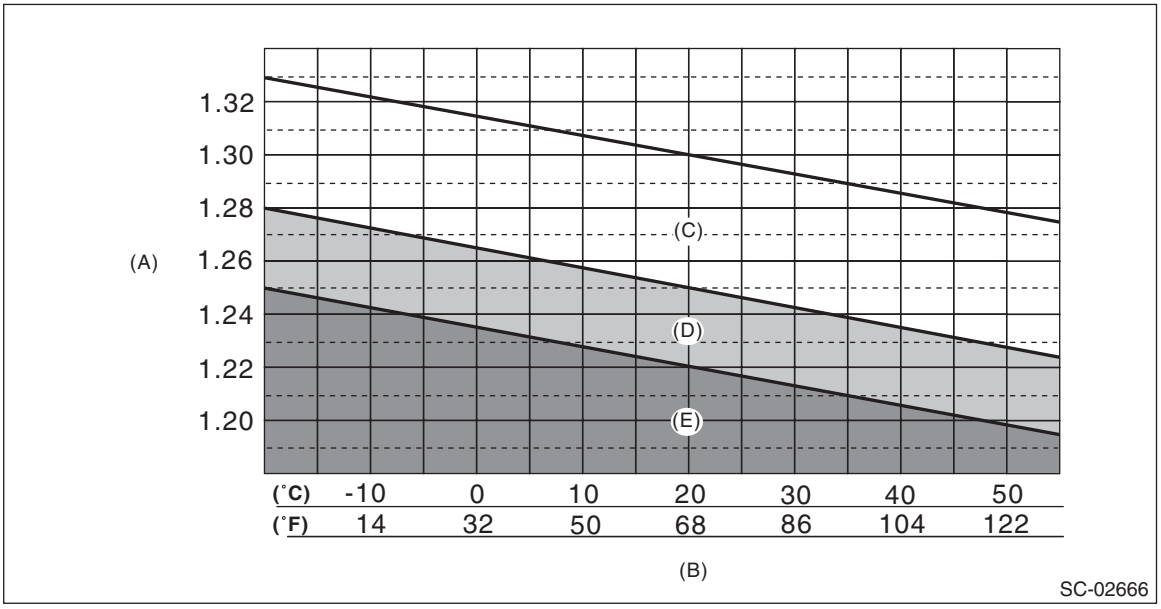

(A) Specific gravity
(B) Electrolyte temperature
(C) Good
(D) Caution
(E) Need charging

3. NORMAL CHARGING

Charge the battery at the current value specified by manufacturer or at approximately 1/10 of battery's ampere-hour rating.

4. QUICK CHARGING

CAUTION:
• Observe the items in "3. NORMAL CHARGING".
• Never use 10 A or more when charging the battery because it will shorten the battery life.

Quick charging is a method that the battery is charged in a short period of time with a relatively large current by using a quick charger.
Since a large current flow raises electrolyte temperature, the battery is subject to damage if the large current is used for prolonged time. For this reason, quick charging must be carried out within a current range that will not raise the electrolyte temperature to 40°C (104°F) or more.
Also the quick charging is a temporary mean to bring battery voltage up to some level, and battery should be charged slowly with low current as a rule.

5. Battery Cable Assembly

A: REMOVAL

1. BATTERY CABLE ASSY

1) Disconnect the ground cable from battery. <Ref. to NT-5, BATTERY, NOTE, Note.>

NOTE:
For the 12 volt engine restart battery, disconnect the ground terminal from 12V engine restart battery sensor.

2) Remove the collector cover.
   (1) Pull up the two points at the front of collector cover (A).
   (2) Pull up the two points at the rear of collector cover (B) while moving them rearward.

NOTE:
Be careful not to contact the fuel delivery tube when moving the collector cover rearward.

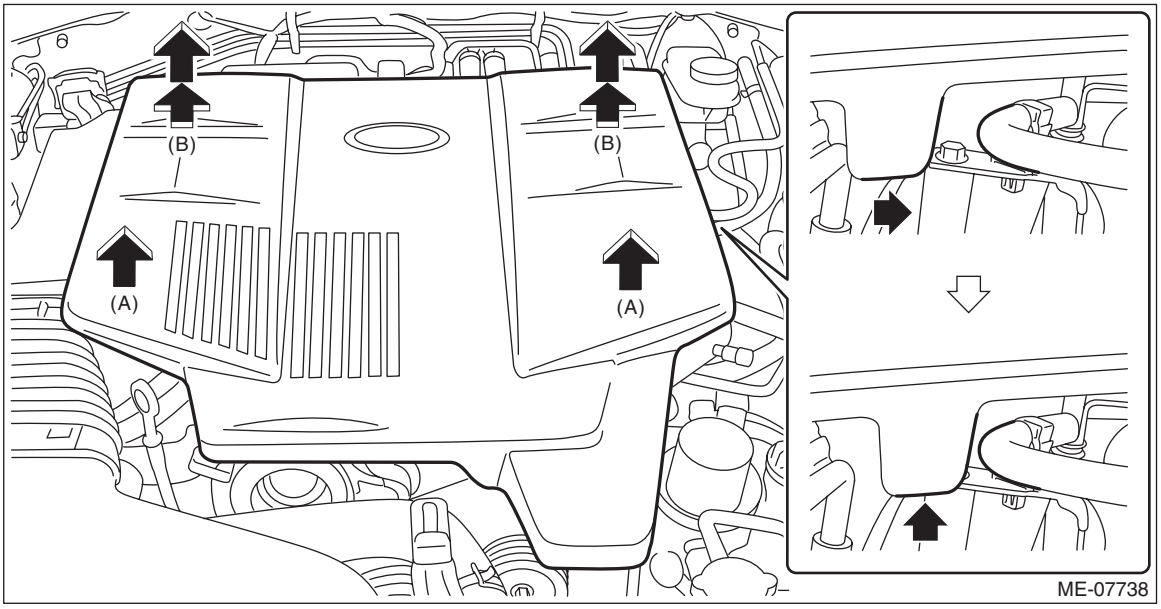

3) Remove the air intake duct. <Ref. to IN(H4DO(HEV))-15, REMOVAL, Air Intake Duct.>
4) Remove the intake duct. <Ref. to IN(H4DO(HEV))-16, REMOVAL, Intake Duct.>
5) Open the 12V battery relay cover RH and the 12V battery relay cover LH.

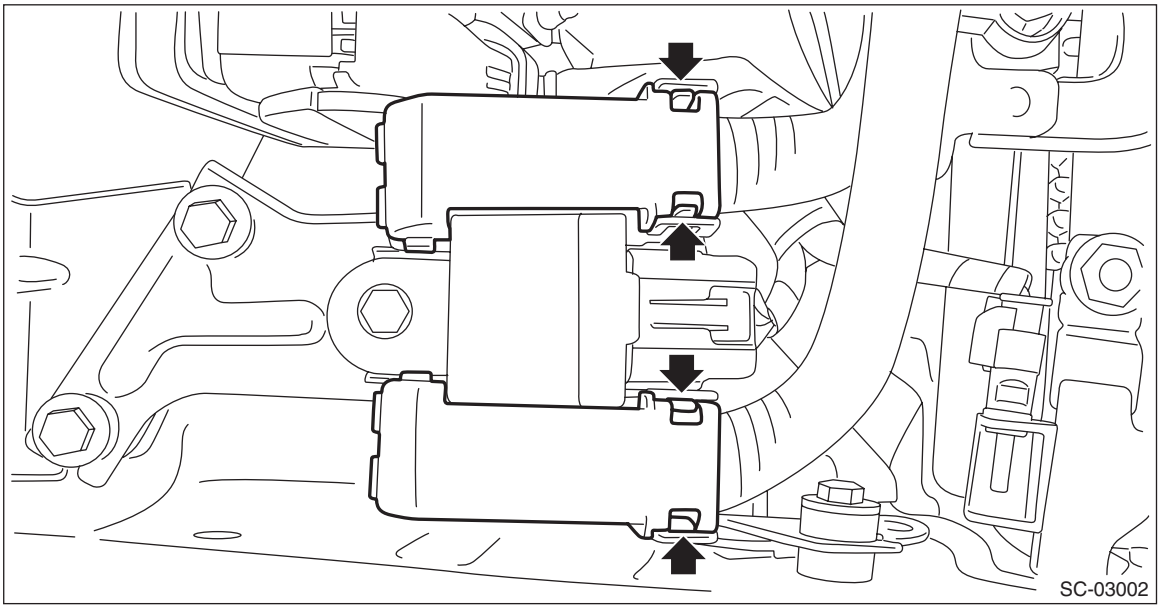

6) Remove the nuts fastening the battery cable assembly from the 12V battery relay terminal, and remove the battery cable assembly.

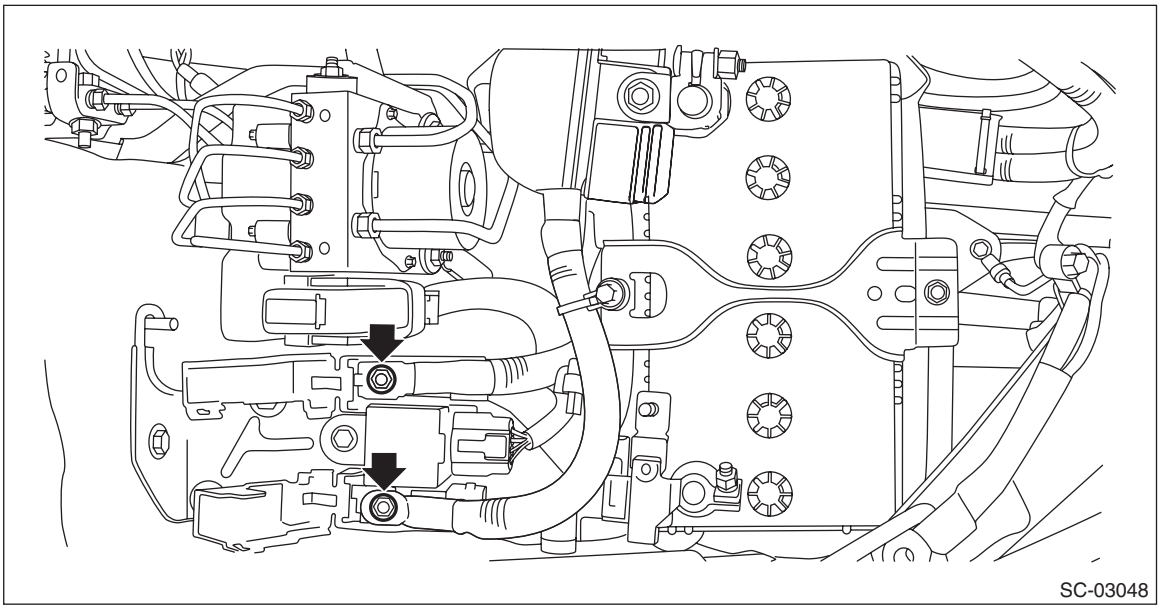

7) Remove the nuts fastening the battery cable assembly to the slow blow fuse (12 volt engine restart battery), and remove the battery cable assembly.

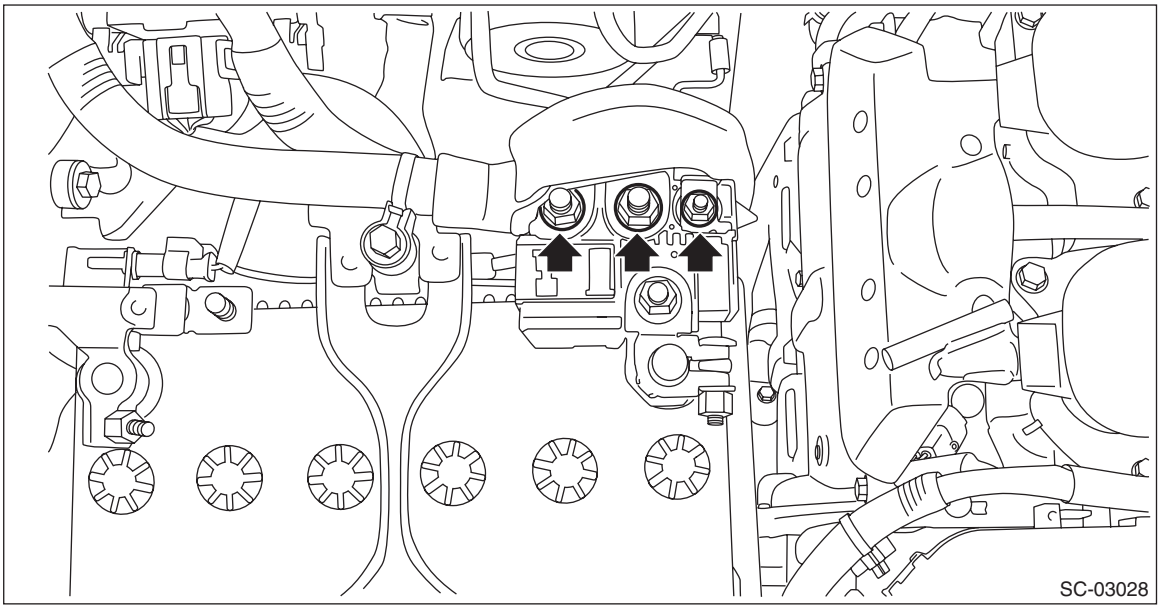

8) Remove the 12 volt engine restart battery. <Ref. to SC(H4DO(HEV))-39, 12 VOLT ENGINE RESTART BATTERY, REMOVAL, Battery.>

9) Disconnect the battery cable assembly connector from the bulk head wiring harness, and remove the battery cable assembly from the clip.

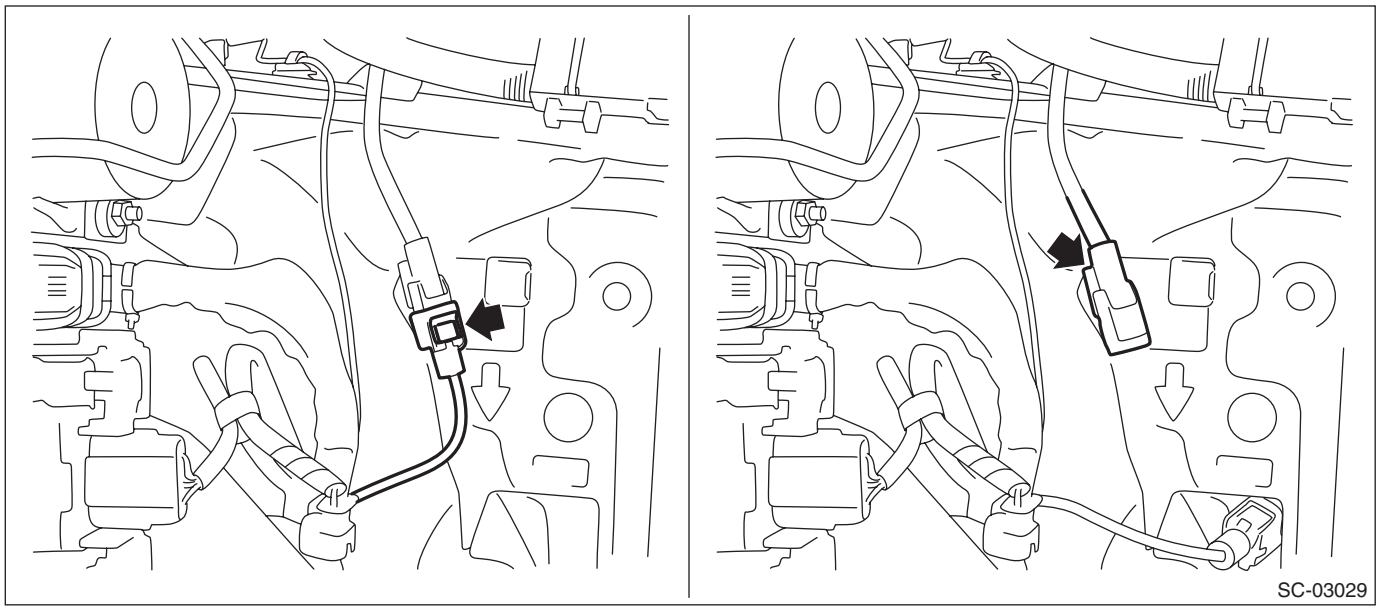

10) Disconnect the connector (A) from the brake vacuum pump, and disconnect the connector (B) from the A/C compressor.
11) Remove the clip (C) and the clip (D) securing the harness to the battery cable assembly, and move the harness to the left side wheel apron.

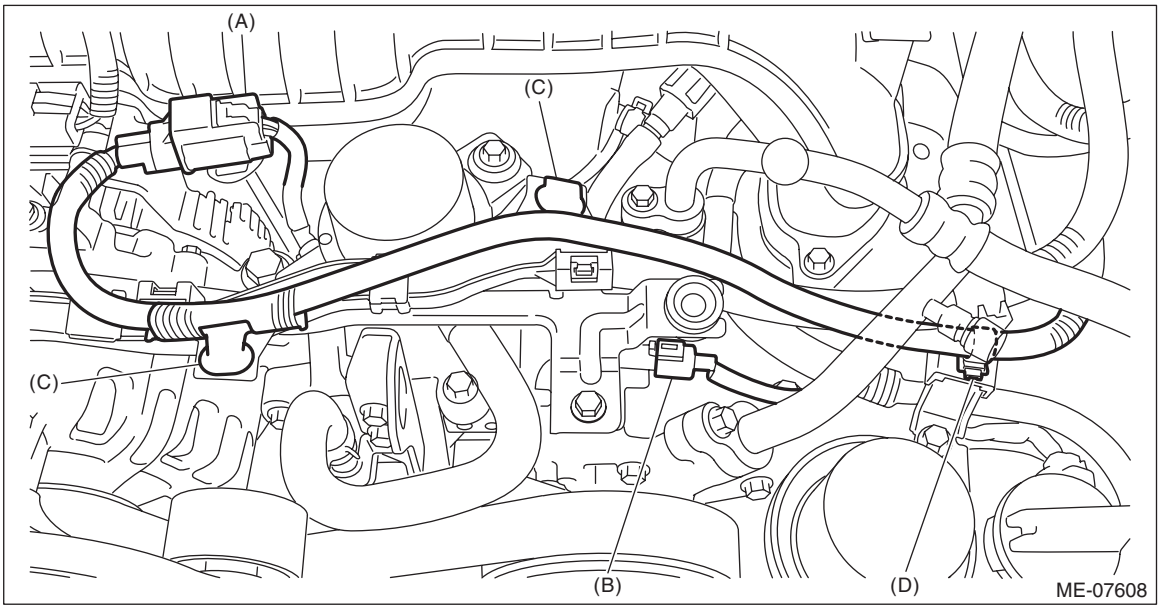

12) Remove the terminal boot from the positive terminal of the 12 volt auxiliary battery.

13) Remove the nuts fastening the battery cable assembly to the slow blow fuse (12 volt auxiliary battery), and remove the battery cable assembly from the main fuse box.

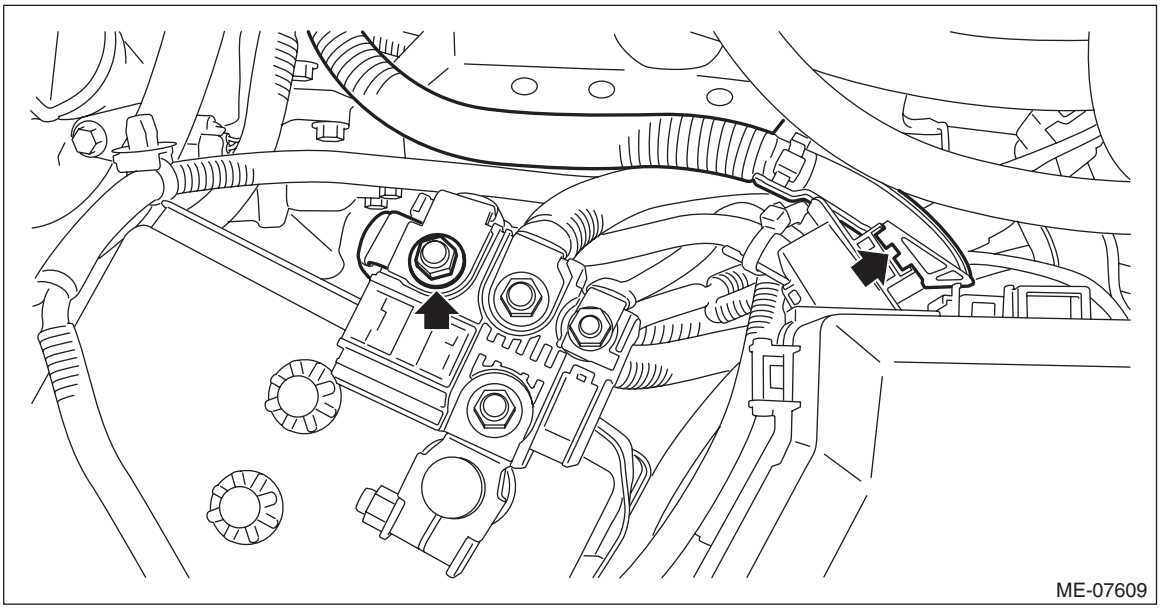

14) Remove the bolt (A) securing the battery cable stay to the chain cover, and remove the clip (B) securing the battery cable assembly to the collector cover bracket.

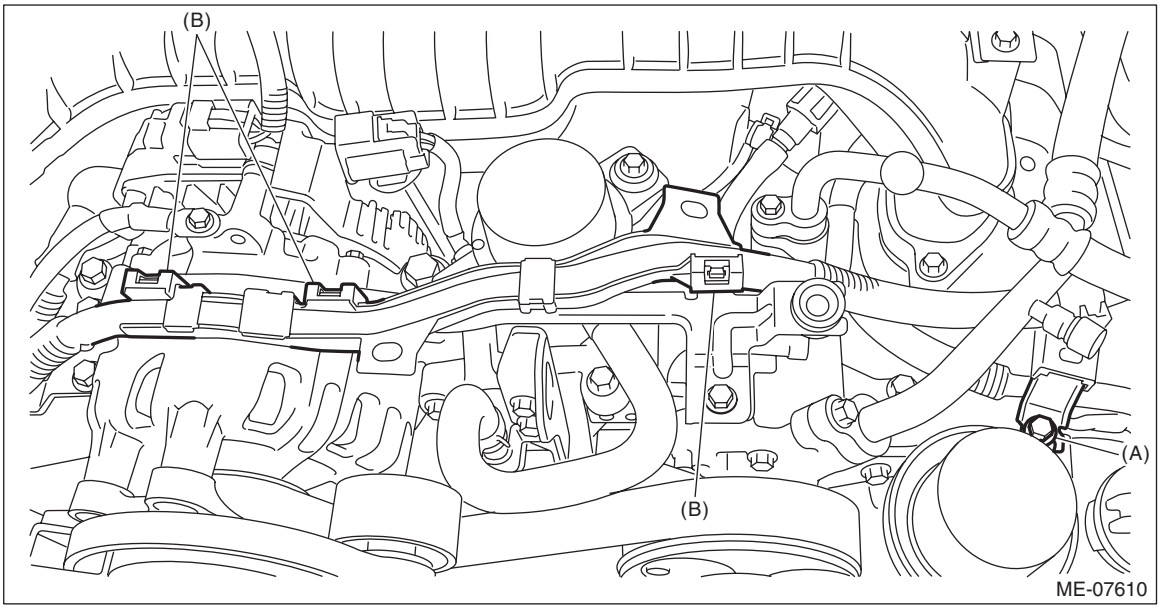

15) Disconnect the terminal (A) and the terminal (B) from ISG.
16) Remove the clip (C) which holds the battery cable assembly to the battery cable bracket No. 1.

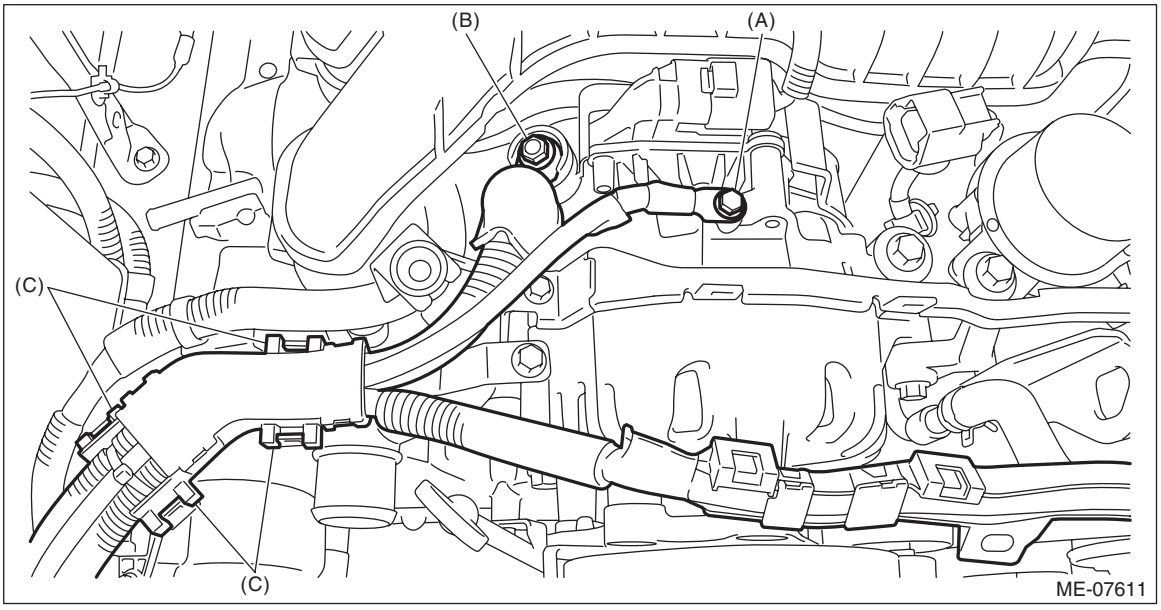

17) Remove the clip (B) which holds the engine harness from the battery cable bracket No. 1 (A).
18) Remove the battery cable bracket No. 1 (A) and collector cover bracket (C).

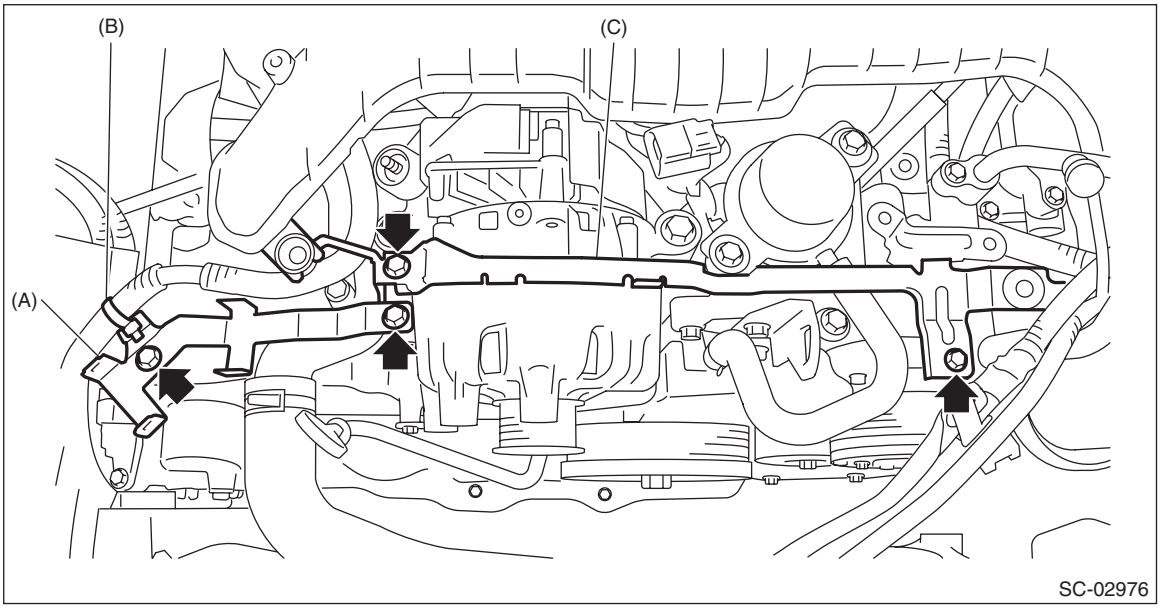

19) Remove the clip (A) securing the battery cable assembly, and remove the battery cable assembly from the battery cable bracket No. 2.
20) Remove the bolt (B) which holds the chassis ground terminal of the battery cable assembly from the vehicle.
21) Remove the bolt (C) securing the battery cable bracket No. 2 from the vehicle, and remove the battery cable bracket No. 2.

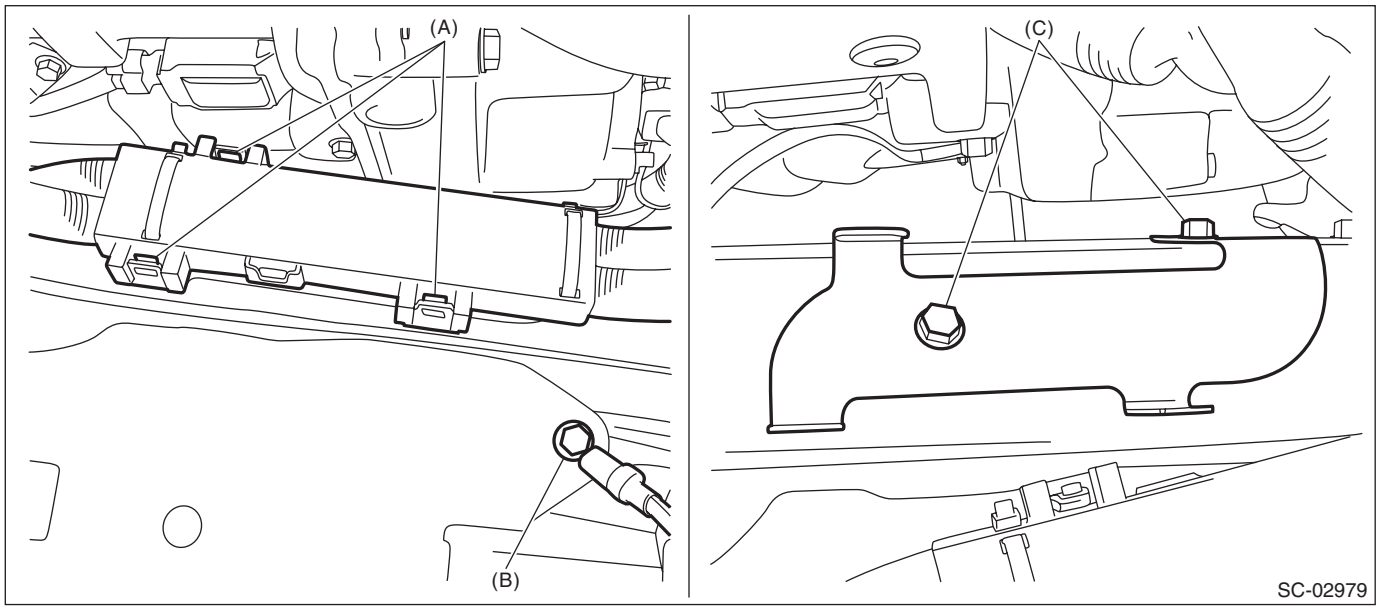

B: INSTALLATION

1) Install the bolt (C) which secures the battery cable bracket No. 2 to the vehicle, and secure the battery cable assembly to the battery cable bracket No. 2 with the clip (A).
2) Install the chassis ground terminal (B) of the battery cable assembly to the vehicle.

Tightening torque:
T1: 7.5 N·m (0.8 kgf-m, 5.5 ft-lb)
T2: 13 N·m (1.3 kgf-m, 9.6 ft-lb)

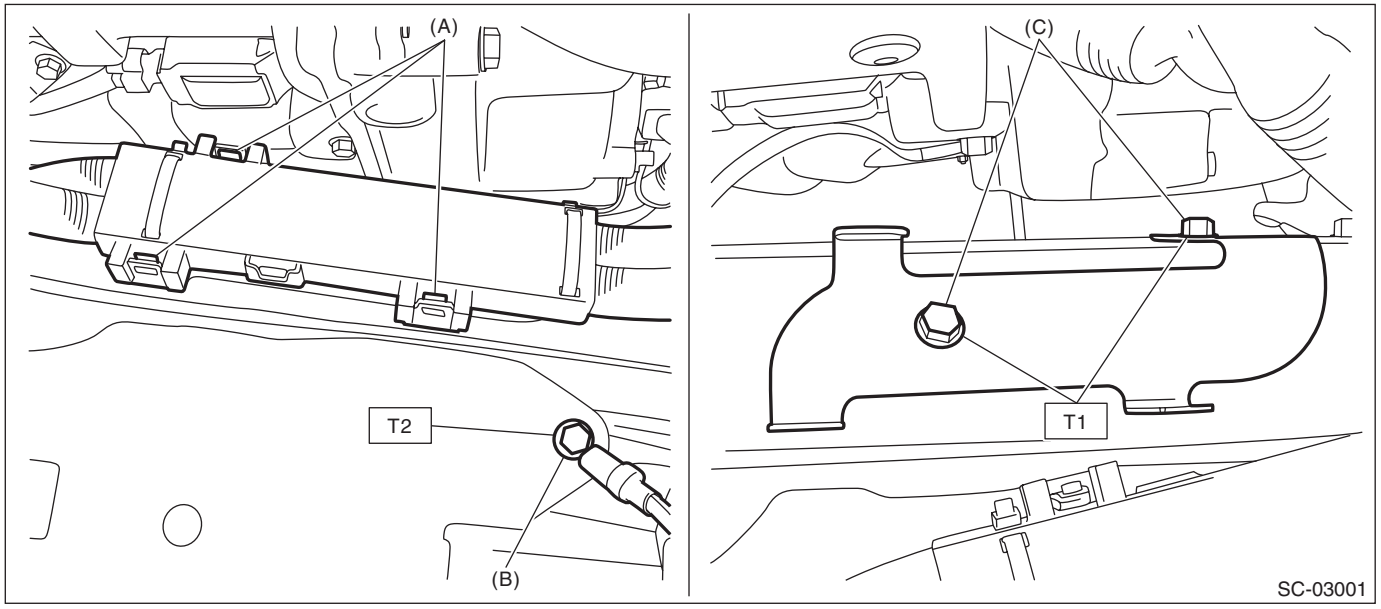

3) Install the collector cover bracket (A).
4) Install the battery cable bracket No. 1 (B), and secure the engine harness with the clip (C).

Tightening torque:
T1: 6.4 N·m (0.7 kgf-m, 4.7 ft-lb)
T2: 19 N·m (1.9 kgf-m, 14.0 ft-lb)

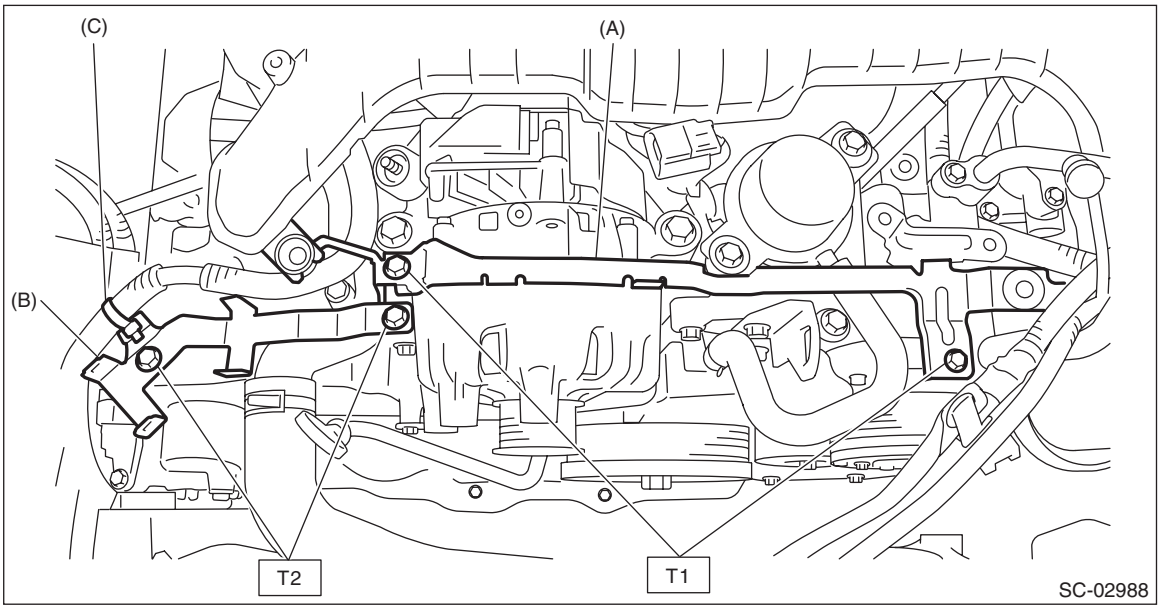

5) Set the battery cable assembly, and secure the battery cable assembly to the battery cable bracket No. 1 with the clip (C).
6) Connect the terminal (A) and the terminal (B) to ISG.

Tightening torque:
T1: 7.5 N·m (0.8 kgf-m, 5.5 ft-lb)
T2: 15.5 N·m (1.6 kgf-m, 11.4 ft-lb)

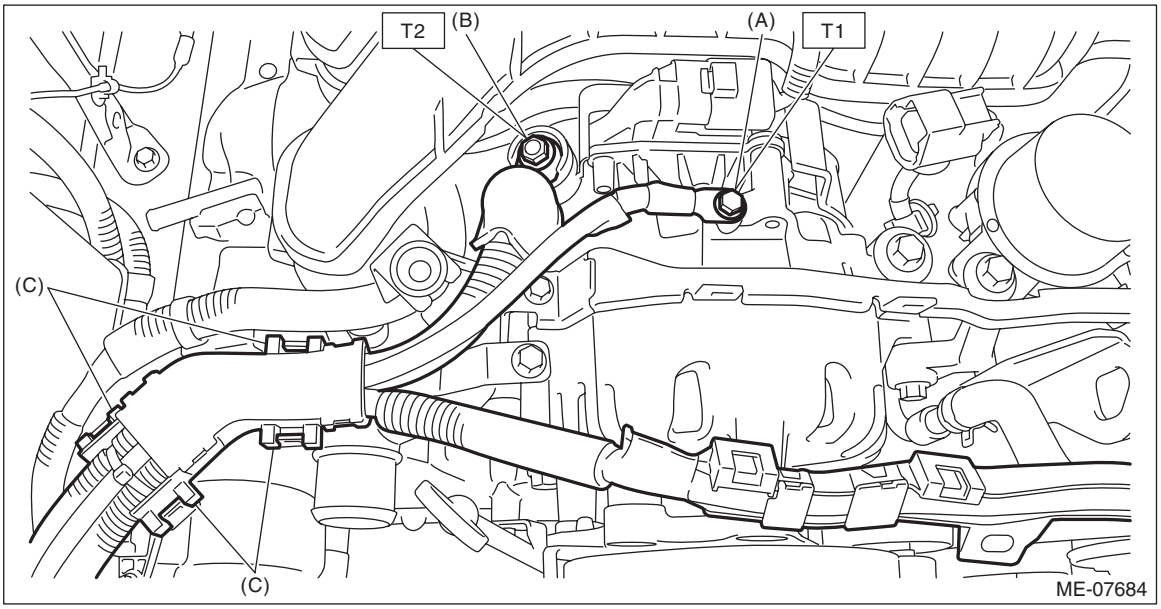

7) Secure the battery cable assembly to the collector cover bracket with the clip (B), and install the bolt (A) which secures the battery cable stay to the chain cover.

NOTE:
When installing the battery cable stay, install it by fitting the folded end (a) of the battery cable stay to the chain cover boss.

Tightening torque:
6.4 N·m (0.7 kgf-m, 4.7 ft-lb)

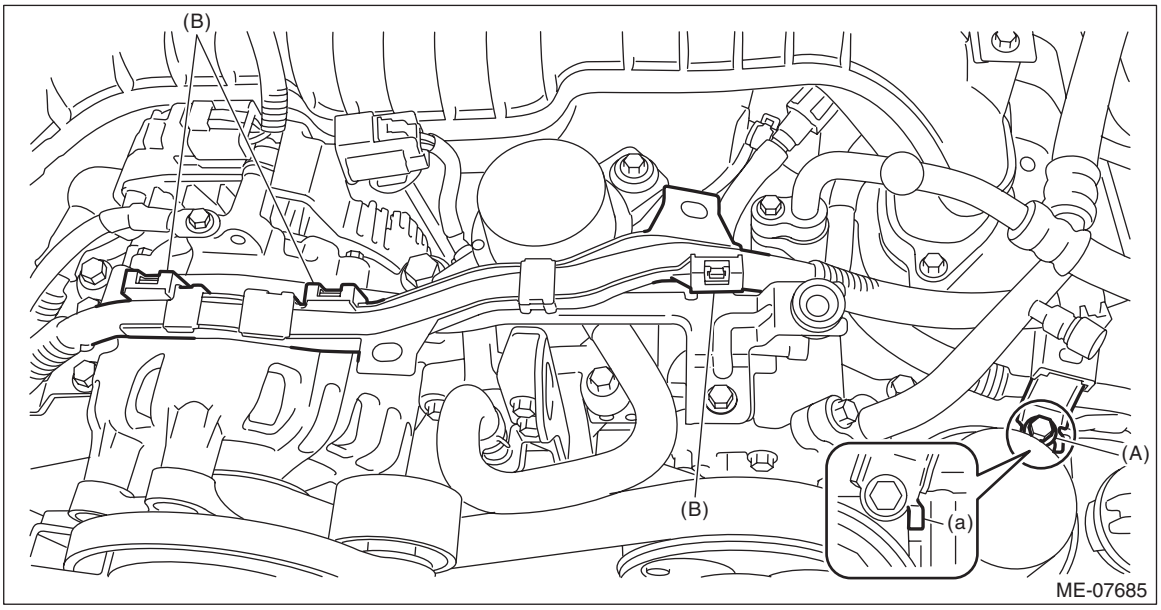

8) Install the battery cable assembly to the main fuse box, and install the nut which secures the battery cable assembly to the slow blow fuse (12 volt auxiliary battery).

Tightening torque:
7.5 N·m (0.8 kgf-m, 5.5 ft-lb)

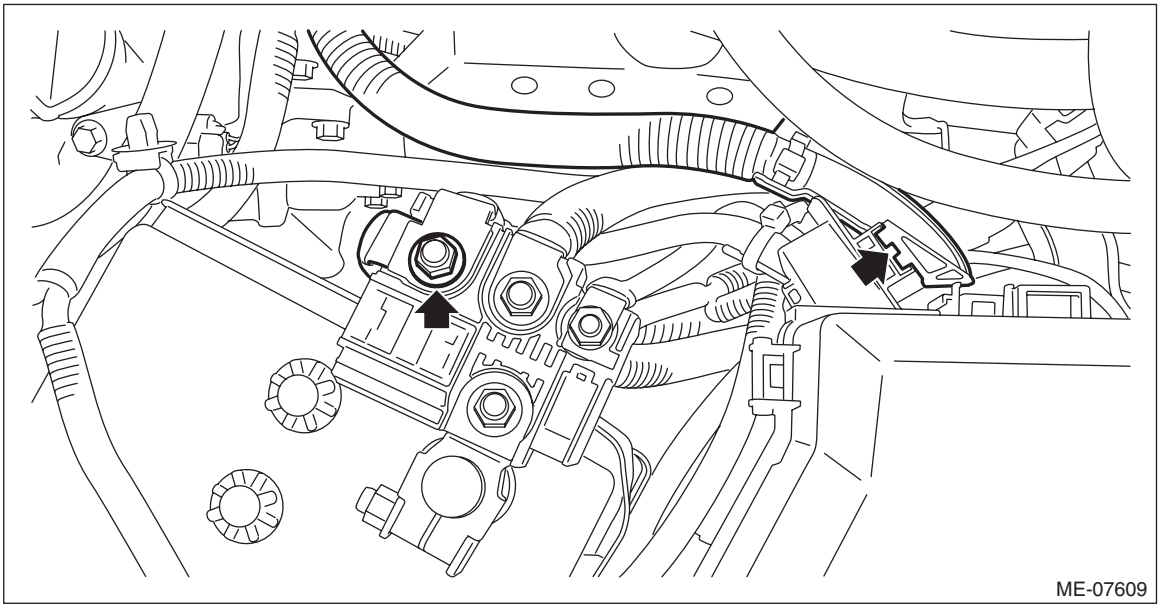

9) Install the terminal boot to the positive terminal of the 12 volt auxiliary battery.
10) Set the harness, and secure the harness to the battery cable assembly with the clip (C) and the clip (D).
11) Connect the connector (A) to the brake vacuum pump, and connect the connector (B) to the A/C compressor.

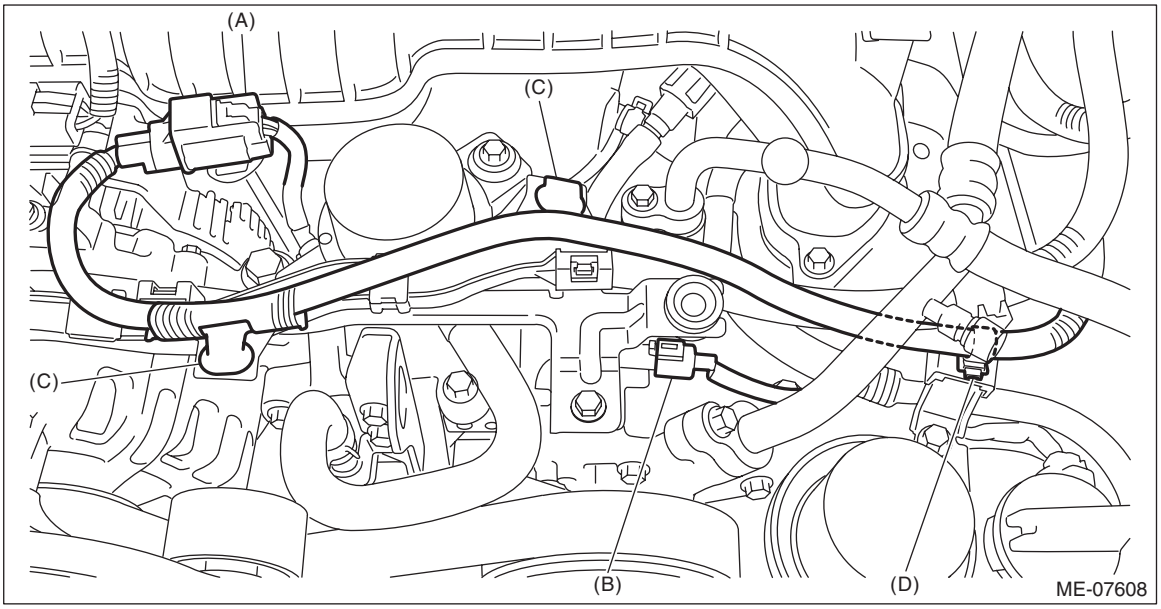

12) Install the battery cable assembly connector to the clip, and connect the battery cable assembly connector to the bulk head wiring harness.

NOTE:
If the clip is damaged, replace it with a new part.

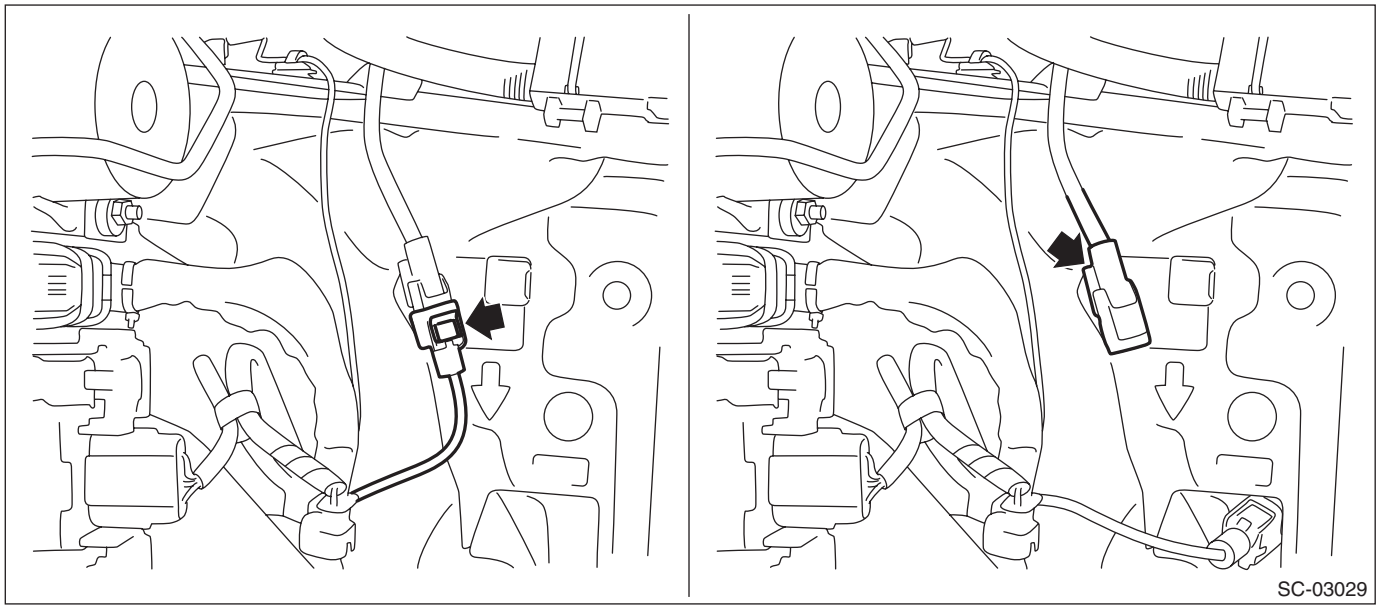

13) Install the 12 volt engine restart battery. <Ref. to SC(H4DO(HEV))-41, 12 VOLT ENGINE RESTART BATTERY, INSTALLATION, Battery.>
14) Install the battery cable assembly to the slow blow fuse (12 volt engine restart battery), and install the nut which secures the battery cable assembly.

Tightening torque:
7.5 N·m (0.8 kgf-m, 5.5 ft-lb)

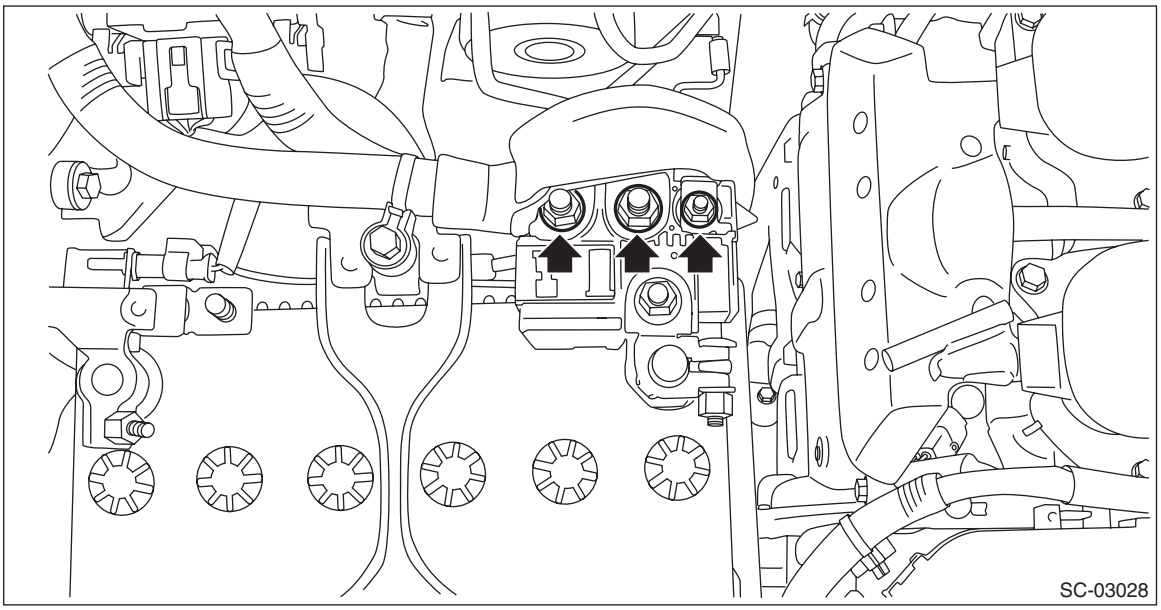

15) Install the battery cable assembly to the 12V battery relay, and close the install the 12V battery relay cover.

Tightening torque:
7.5 N·m (0.8 kgf-m, 5.5 ft-lb)

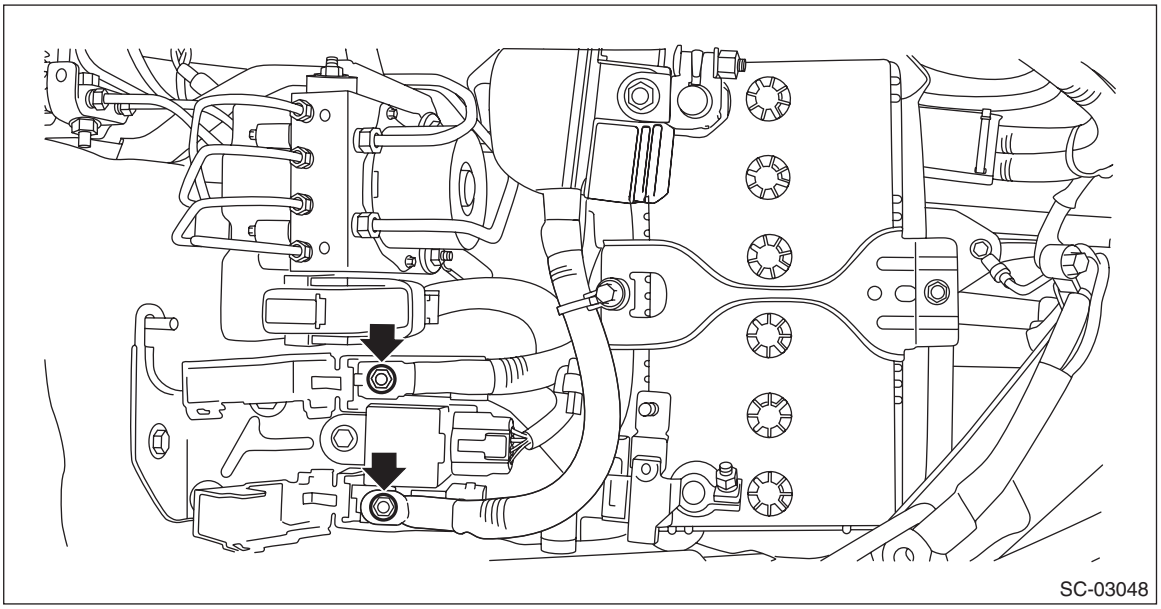

16) Install the intake duct. <Ref. to IN(H4DO(HEV))-17, INSTALLATION, Intake Duct.>
17) Install the air intake duct. <Ref. to IN(H4DO(HEV))-15, INSTALLATION, Air Intake Duct.>
18) Install the collector cover.
19) Connect the battery ground terminal. <Ref. to NT-5, BATTERY, NOTE, Note.>

C: INSPECTION

Check that the battery cable assembly has no deformation, cracks or other damages.

6. Battery Sensor

A: REMOVAL

1) Disconnect the ground cable from battery. <Ref. to NT-5, BATTERY, NOTE, Note.>

NOTE:
For the 12 volt engine restart battery, disconnect the ground terminal from 12V engine restart battery sensor.
2) Disconnect the connector from the 12V engine restart battery sensor.
3) Remove the 12V engine restart battery sensor from the 12 volt engine restart battery.

NOTE:
When removing the 12V engine restart battery sensor, pry the terminal tightening point of the 12V engine restart battery sensor using a flat tip screwdriver or similar tool wrapped with a protection tape.

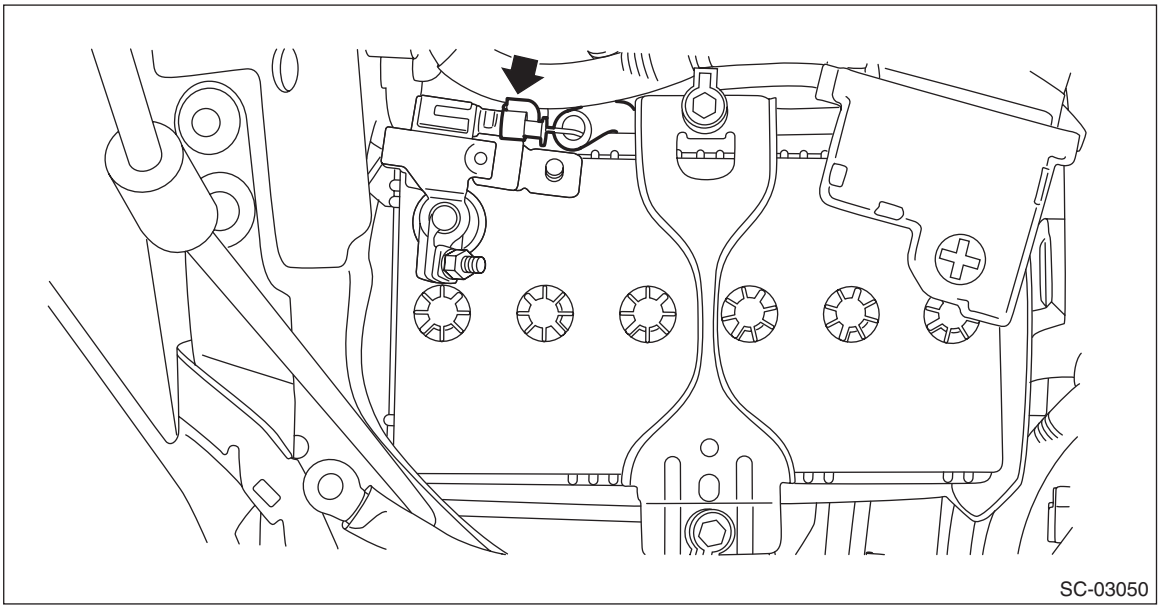
SC-03050

B: INSTALLATION

1) Pry the terminal tightening point (A) of the 12V engine restart battery sensor by approx. 45° using a flat tip screwdriver or similar tool wrapped with a protection tape, and adjust the clearance (B) to be approx. 2.5 mm (0.0984 in).
2) Adjust the clearance (C) to be 1.5 mm (0.0591 in) or less for the 12 volt engine restart battery and the 12V engine restart battery sensor, and install the 12V engine restart battery sensor to the 12 volt engine restart battery.

Tightening torque:
5 N·m (0.5 kgf-m, 3.7 ft-lb)

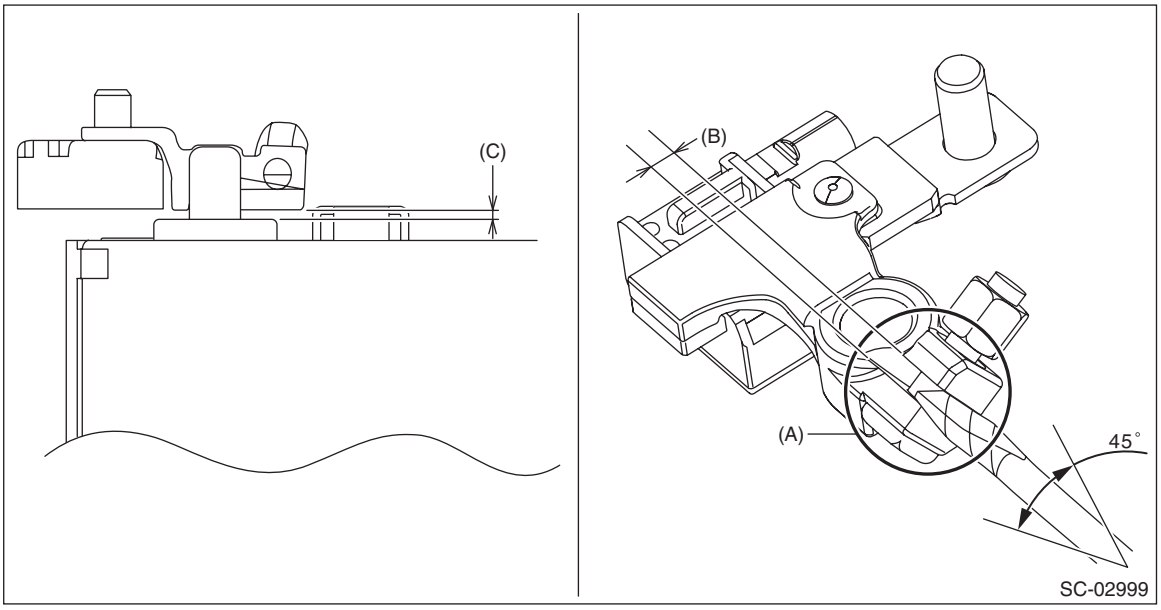

3) Connect the connector to 12V engine restart battery sensor.

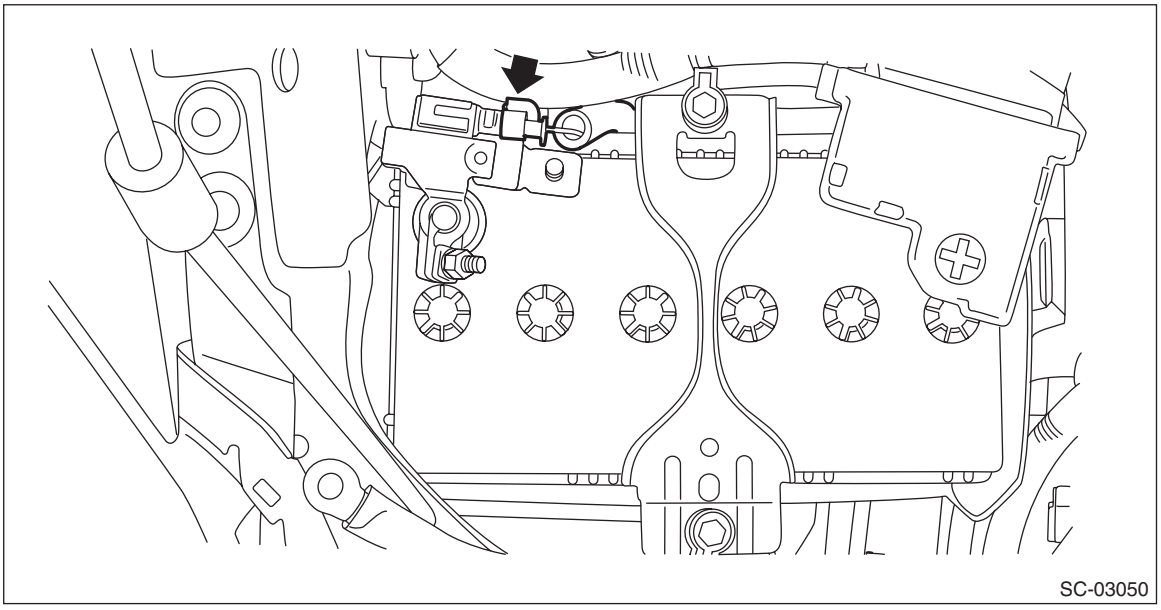

4) Connect the battery ground terminal. <Ref. to NT-5, BATTERY, NOTE, Note.>

C: INSPECTION

Check that the 12V engine restart battery sensor has no deformation, cracks or other damages.

7. Battery Temperature Sensor

A: REMOVAL

1) Disconnect the ground cable from battery. <Ref. to NT-5, BATTERY, NOTE, Note.>

NOTE:
For the 12 volt engine restart battery, disconnect the ground terminal from 12V engine restart battery sensor.
2) Remove the 12 volt auxiliary battery. <Ref. to SC(H4DO(HEV))-38, 12 VOLT AUXILIARY BATTERY, REMOVAL, Battery.>
3) Remove the battery temperature sensor from the bracket.

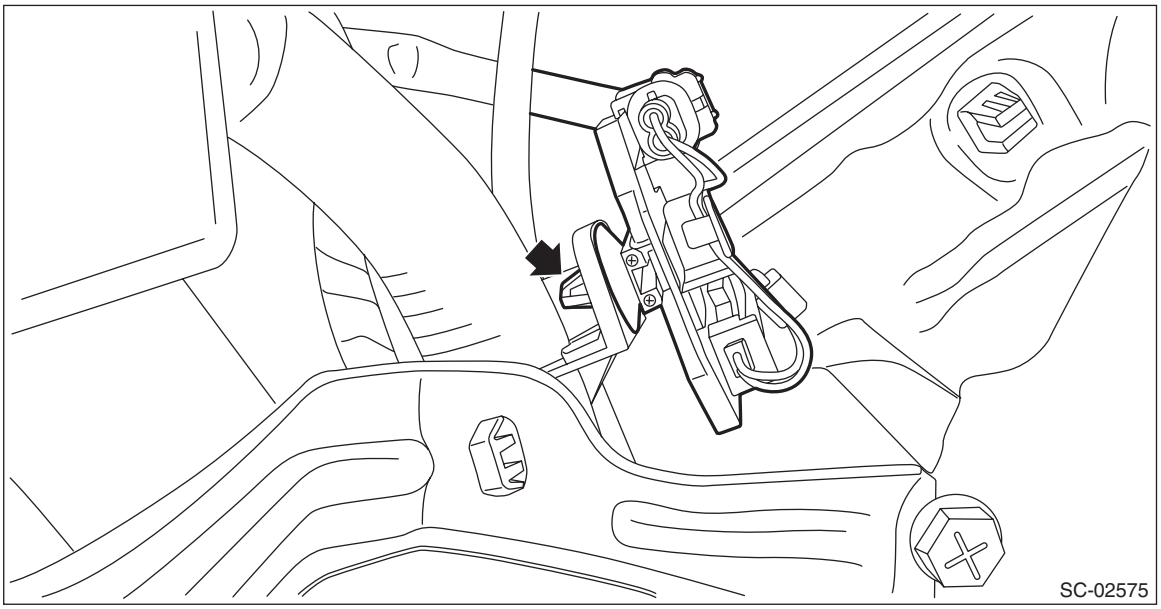

4) Disconnect the connector and remove the battery temperature sensor.

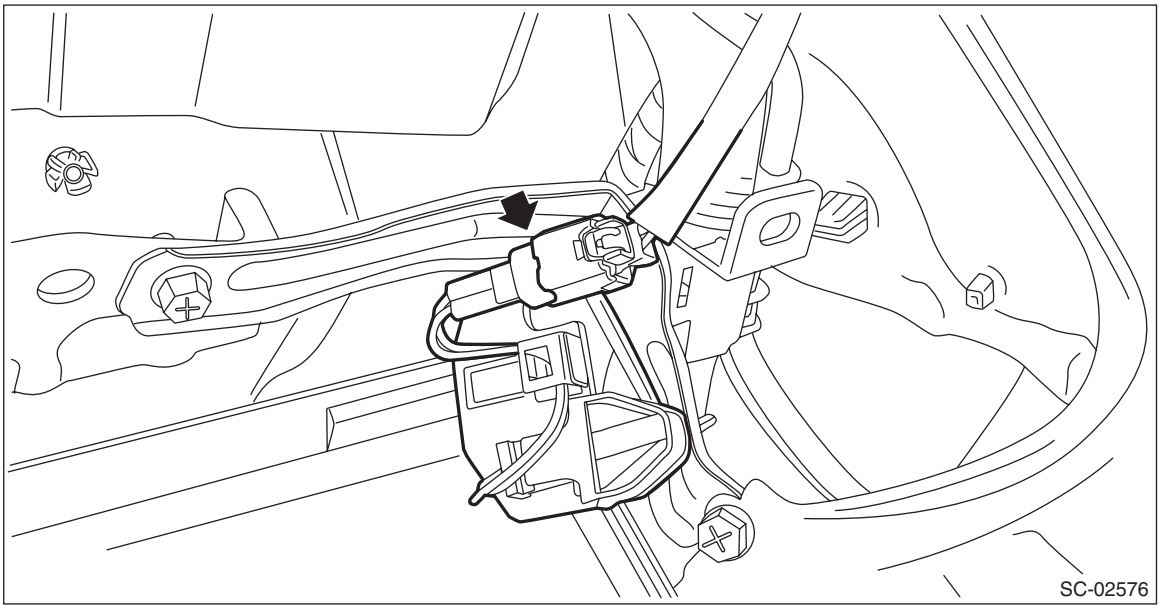

B: INSTALLATION

Install in the reverse order of removal.

C: INSPECTION

1) Check that the battery current & temperature sensor has no deformation, cracks or other damages.
2) Check the resistance between the battery temperature sensor terminals.

Temperature	Terminal No.	Standard
20 — 30°C (68 — 86°F)	1 and 2	1.5 — 2.8 kΩ

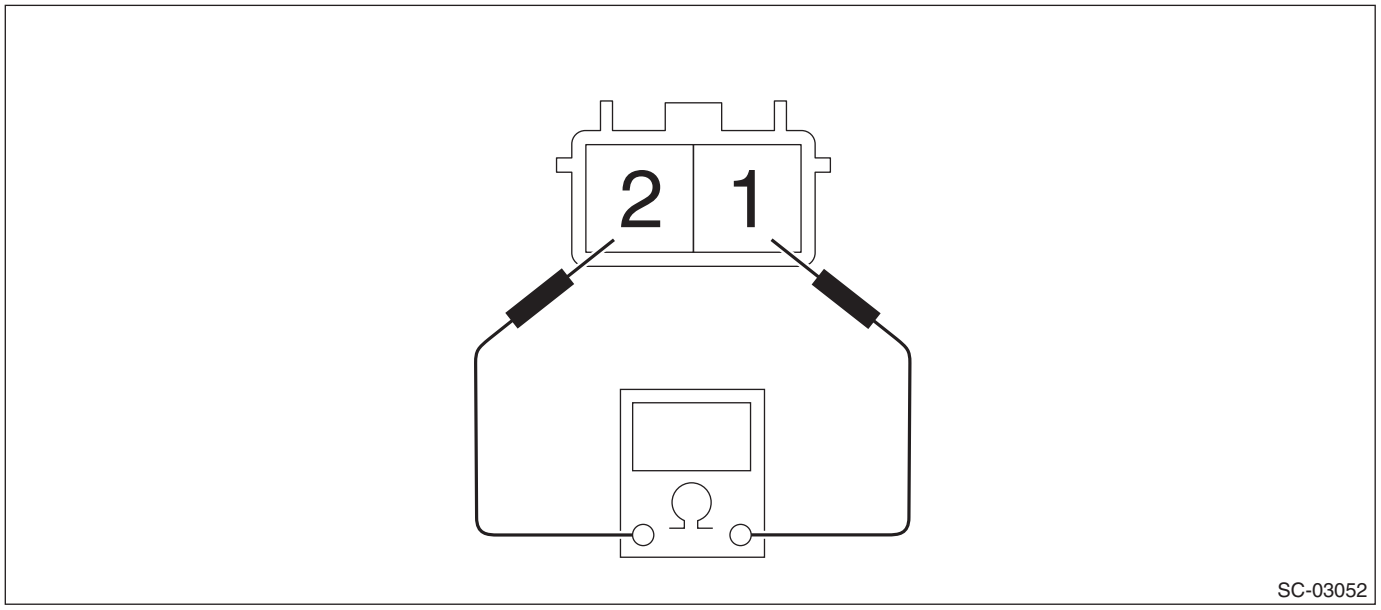

8. 12V Battery Relay

A: REMOVAL

1) Disconnect the ground cable from battery. <Ref. to NT-5, BATTERY, NOTE, Note.>

NOTE:
For the 12 volt engine restart battery, disconnect the ground terminal from 12V engine restart battery sensor.
2) Open the 12V battery relay cover RH and the 12V battery relay cover LH.

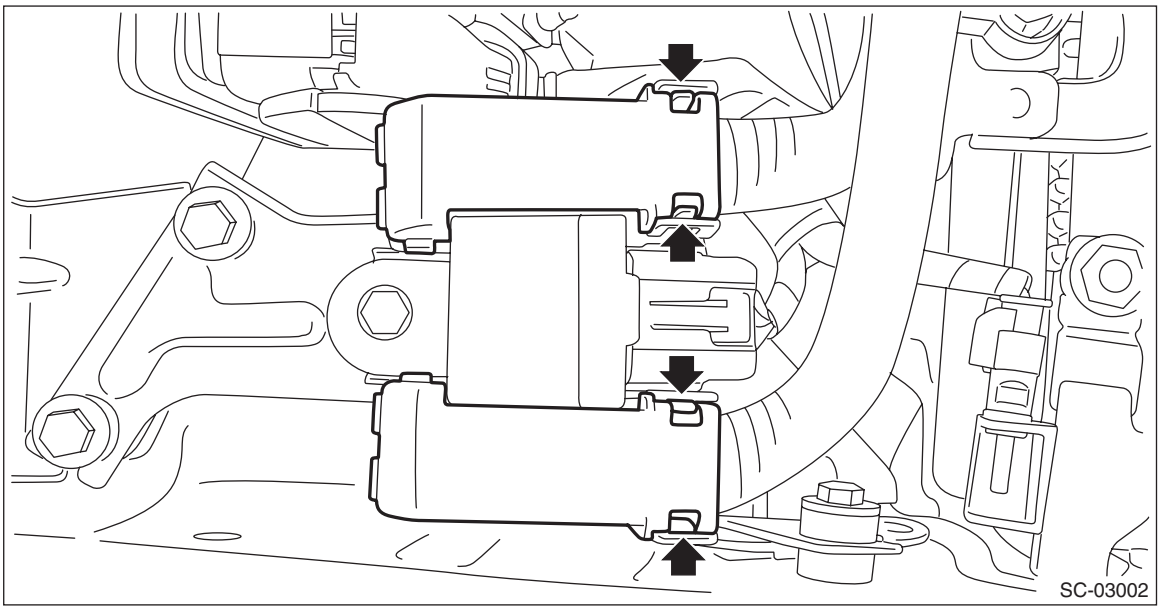

3) Disconnect the battery cable assembly terminal (A) from the 12V battery relay.
4) Disconnect the connector (B) from the 12V battery relay, and remove the bolt (C) holding the 12V battery relay.
5) Remove the 12V battery relay from the 12V battery relay bracket assembly.

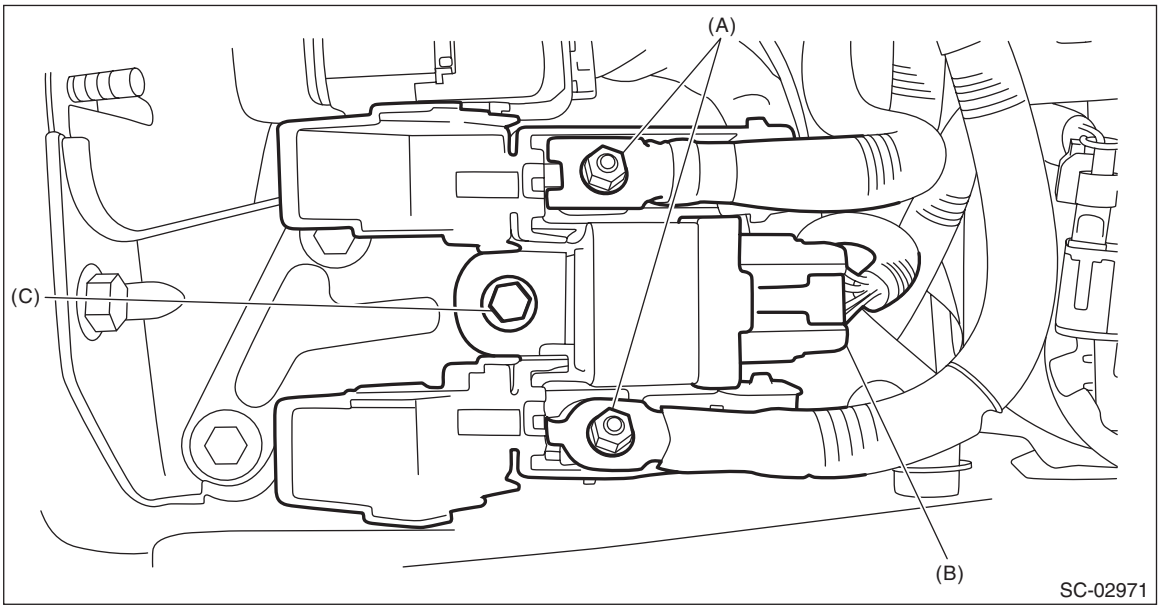

6) Remove the bolt (A) securing the 12V battery relay bracket assembly, and remove the 12V battery relay bracket assembly.
7) Remove the bolt (B) securing the 12V battery relay bracket No. 2 to the vehicle, and remove the 12V battery relay bracket No. 2.

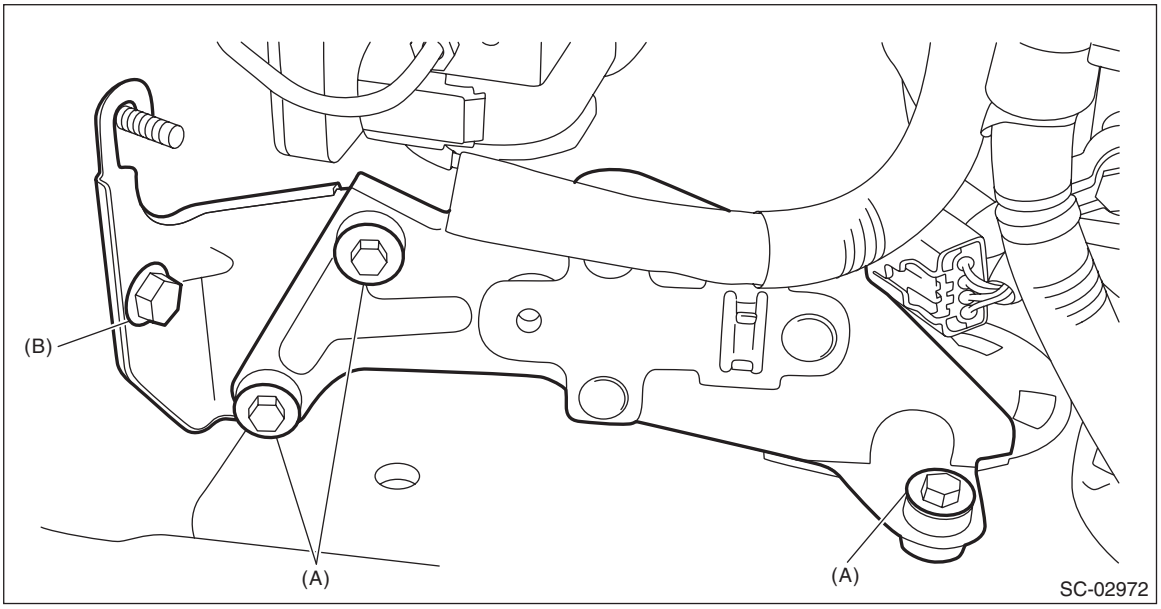

B: INSTALLATION

Install in the reverse order of removal.

Tightening torque:
T1: 7.5 N·m (0.8 kgf-m, 5.5 ft-lb)
T2: 33 N·m (3.4 kgf-m, 24.3 ft-lb)

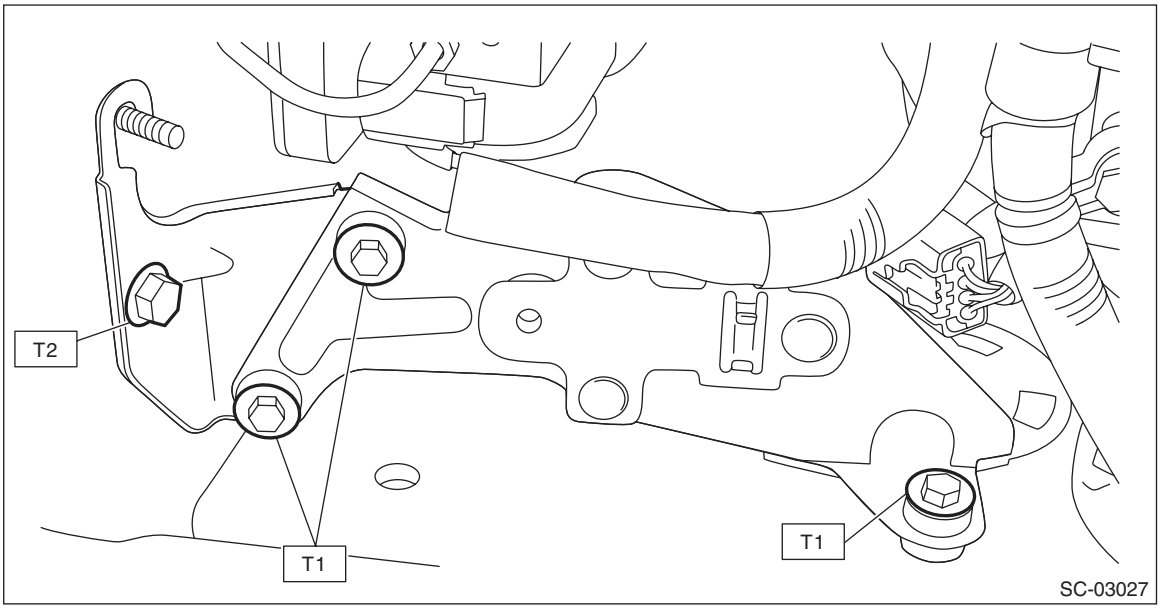

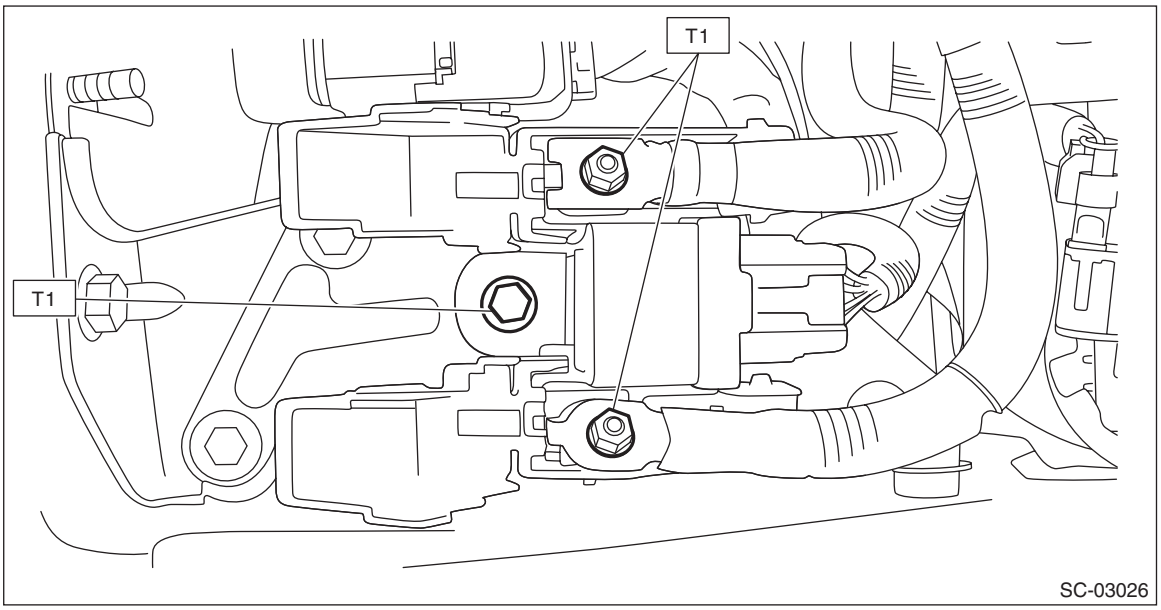

C: DISASSEMBLY

Remove the 12V battery relay bracket No. 3 from the 12V battery relay bracket No. 1.

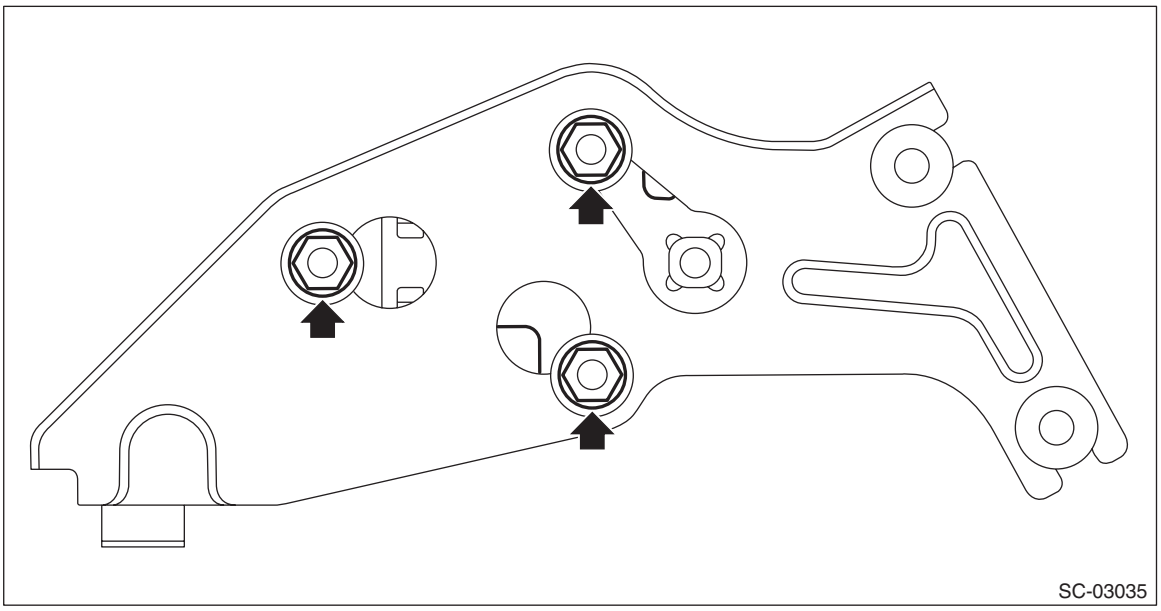

D: ASSEMBLY

Install the 12V battery relay bracket No. 3 to the 12V battery relay bracket No. 1.

Tightening torque:
7.5 N·m (0.8 kgf-m, 5.5 ft-lb)

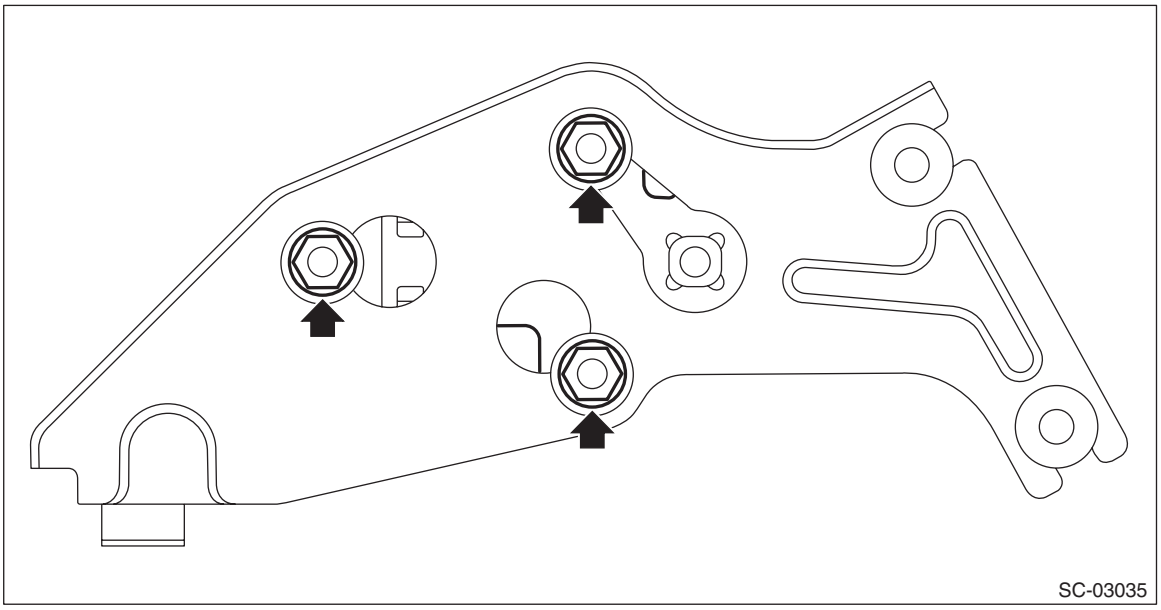

E: INSPECTION

1) Check that the 12V battery relay has no deformation, cracks or other damages.
2) Measure the resistance between the 12V battery relay terminals.

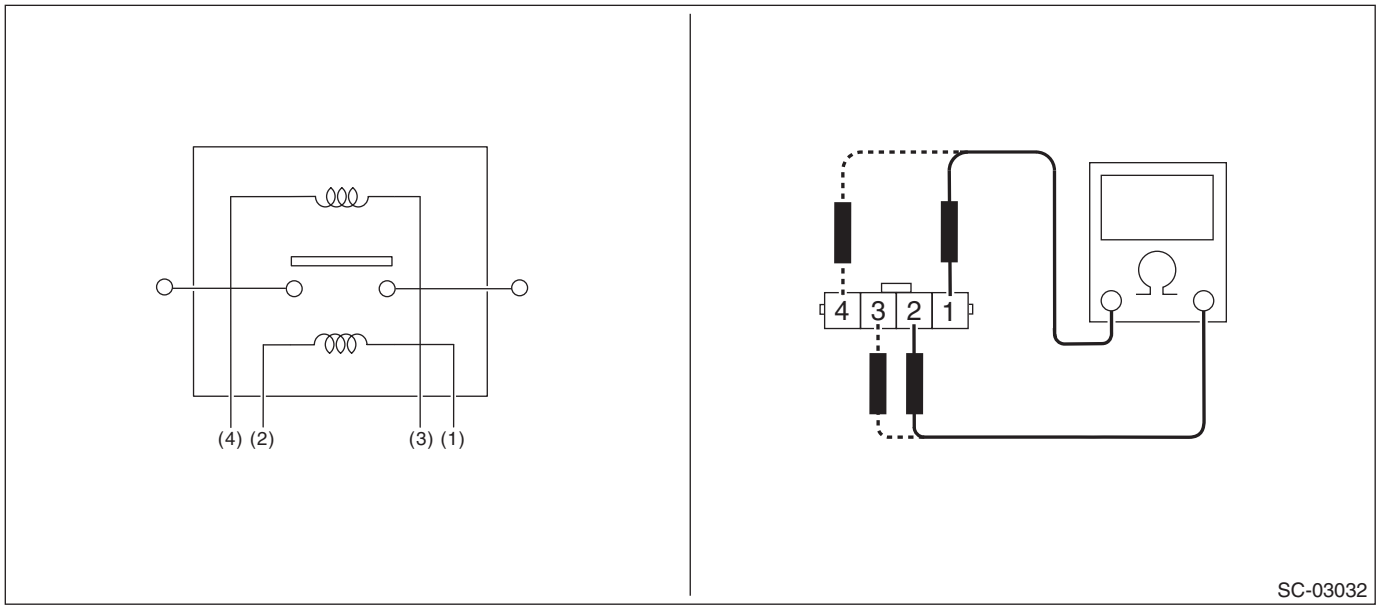

Terminal No.	Standard
1 and 2	Approx. 4.8 Ω (when 20°C (68°F))
3 and 4	Approx. 4.8 Ω (when 20°C (68°F))

3) Connect battery positive terminal to terminal No. 1 and battery ground terminal to terminal No. 2, and measure the resistance between the terminal No. 5 and the terminal No. 6.

CAUTION:
To avoid burning a magnetizing coil, continuity time should be within 1 second.

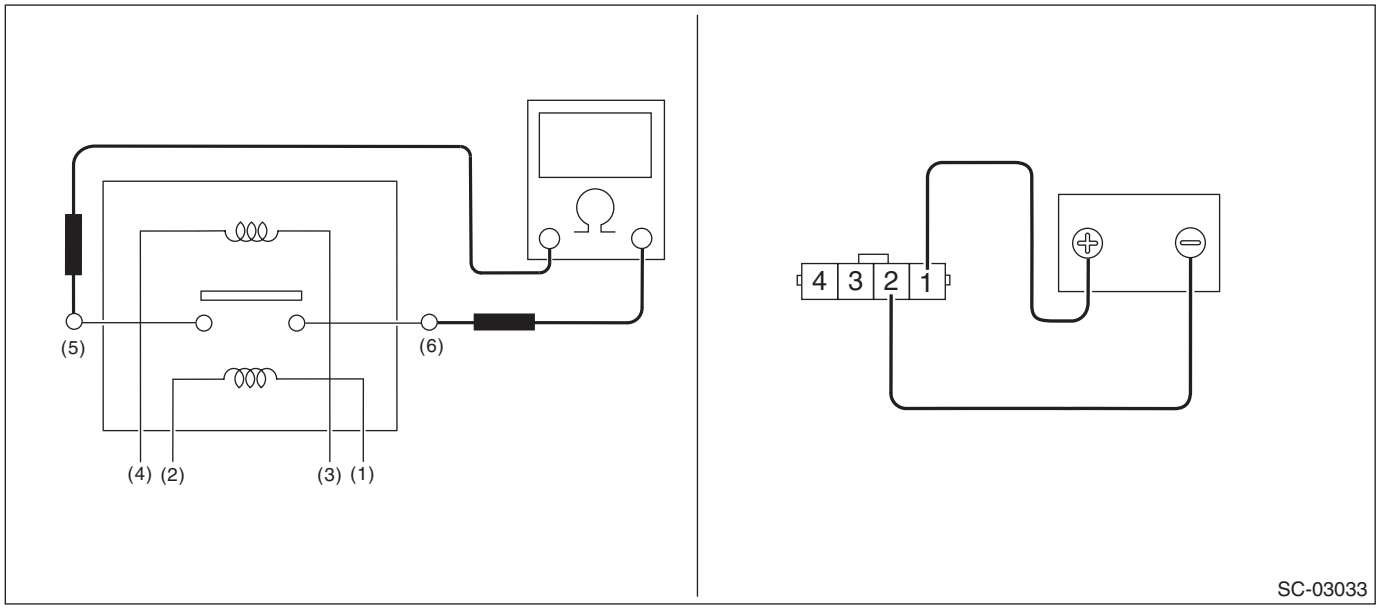

Terminal No.	Standard
5 and 6	Less than 1 Ω

4) Connect battery positive terminal to terminal No. 4 and battery ground terminal to terminal No. 3, and measure the resistance between the terminal No. 5 and the terminal No. 6.

CAUTION:
To avoid burning a magnetizing coil, continuity time should be within 1 second.

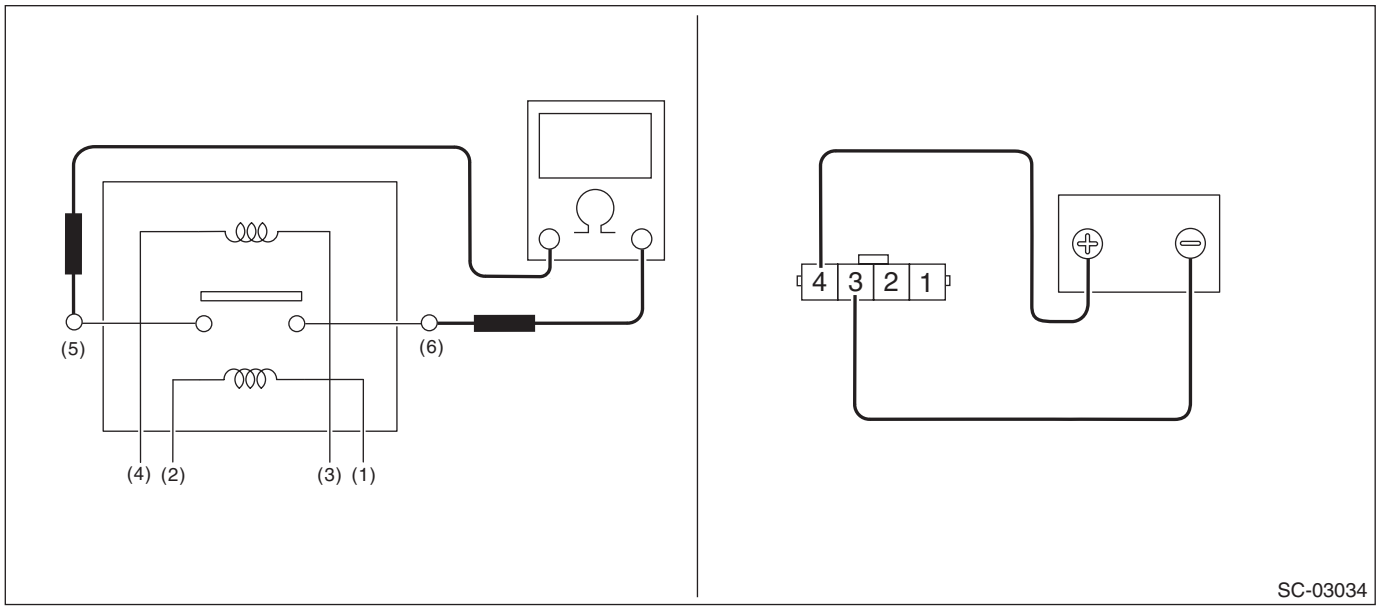

Terminal No.	Standard
5 and 6	1 MΩ or more

9. DC/DC Converter

A: SPECIFICATION

Refer to “HYBRID ELECTRIC VEHICLE” for specification. <Ref. to HEV-2, SPECIFICATION, General Description.>

B: REMOVAL

Refer to “HYBRID ELECTRIC VEHICLE” for removal procedure. <Ref. to HEV-38, REMOVAL, DC/DC Converter.>

C: INSTALLATION

Refer to “HYBRID ELECTRIC VEHICLE” for the installation procedure. <Ref. to HEV-41, INSTALLATION, DC/DC Converter.>

ENGINE (DIAGNOSTICS)

EN(H4DO HEV) (diag)

		Page
1.	Basic Diagnostic Procedure	2
2.	Check List for Interview	4
3.	General Description	6
4.	Electrical Component Location	9
5.	Control Module I/O Signal	19
6.	Engine Condition Data	30
7.	Data Link Connector	31
8.	General Scan Tool	32
9.	Subaru Select Monitor	37
10.	Read Diagnostic Trouble Code (DTC)	46
11.	Inspection Mode	47
12.	Drive Cycle	50
13.	Clear Memory Mode	63
14.	System Operation Check Mode	64
15.	Malfunction Indicator Light	65
16.	Diagnostics for Engine Starting Failure	67
17.	List of Diagnostic Trouble Code (DTC)	88
18.	Diagnostic Procedure with Diagnostic Trouble Code (DTC)	98
19.	General Diagnostic Table	383

1. Basic Diagnostic Procedure

A: PROCEDURE

1. ENGINE

	Step	Check	Yes	No
1	**CHECK ENGINE START FAILURE.** 1) Ask the customer when and how the trouble occurred using the interview check list. <Ref. to EN(H4DO HEV)(diag)-4, CHECK, Check List for Interview.> 2) Start the engine.	Does the engine start?	Go to step **2**.	Inspection using “Diagnostics for Engine Starting Failure” <Ref. to EN(H4DO HEV)(diag)-67, Diagnostics for Engine Starting Failure.>
2	**CHECK ILLUMINATION OF MALFUNCTION INDICATOR LIGHT.**	Does the malfunction indicator light illuminate?	Go to step **3**.	Inspection using “General Diagnostic Table”. <Ref. to EN(H4DO HEV)(diag)-383, INSPECTION, General Diagnostic Table.>
3	**CHECK COMMUNICATION STATUS.** 1) Turn the ignition switch to OFF. 2) Connect the Subaru Select Monitor or general scan tool to the data link connector. 3) Turn the ignition switch to ON, and run the Subaru Select Monitor or general scan tool. NOTE: • Subaru Select Monitor For detailed procedures, refer to “Subaru Select Monitor”. <Ref. to EN(H4DO HEV)(diag)-37, Subaru Select Monitor.> • General scan tool For detailed operation procedures, refer to the general scan tool operation manual.	Does Subaru Select Monitor or general scan tool communicate with vehicle normally?	Go to step **4**.	Inspection using “Basic Diagnostic Procedure” of LAN system <Ref. to LAN(HEV)(diag)-2, Basic Diagnostic Procedure.>

	Step	Check	Yes	No
4	**CHECK DTC.** Read DTC using Subaru Select Monitor or general scan tool. NOTE: • Subaru Select Monitor Refer to "Read Diagnostic Trouble Code (DTC)" for detailed operation procedure. <Ref. to EN(H4DO HEV)(diag)-46, Read Diagnostic Trouble Code (DTC).> • General scan tool For detailed operation procedures, refer to the general scan tool operation manual.	Is DTC displayed on Subaru Select Monitor or general scan tool?	Record DTC, time stamp, and freeze frame data, then repair the trouble cause. <Ref. to EN(H4DO HEV)(diag)-88, List of Diagnostic Trouble Code (DTC).> After repair, go to the next step. Go to step **5**. NOTE: • For the time stamp, refer to LAN section. <Ref. to LAN(HEV)(diag)-6, TIME STAMP, CAUTION, General Description.> • Depending on DTCs, time stamp may not be stored.	Repair the related parts. NOTE: If DTC is not shown on display although the malfunction indicator light illuminates, perform the diagnosis of malfunction indicator light circuit or combination meter. <Ref. to EN(H4DO HEV)(diag)-65, Malfunction Indicator Light.>
5	**PERFORM DIAGNOSIS.** 1) Perform the Clear Memory Mode. <Ref. to EN(H4DO HEV)(diag)-63, Clear Memory Mode.> 2) Perform the Inspection Mode or Drive Cycle. <Ref. to EN(H4DO HEV)(diag)-47, Inspection Mode.> <Ref. to EN(H4DO HEV)(diag)-50, Drive Cycle.>	Is DTC displayed on Subaru Select Monitor or general scan tool?	Inspect using "Diagnostic Procedure with Diagnostic Trouble Code (DTC)". <Ref. to EN(H4DO HEV)(diag)-98, Diagnostic Procedure with Diagnostic Trouble Code (DTC).>	Finish the diagnosis.

2. Check List for Interview

A: CHECK

1. CHECK LIST NO. 1

Check the following item when problem has occurred.

NOTE:
Use copies of this page for interviewing customers.

Customer's name		Engine No.	
Date of purchase		Fuel type	
Date of repair		Odometer reading	km
V.I.N.			miles
Weather	❑ Fine ❑ Cloudy ❑ Rainy ❑ Snowy ❑ Various/Others:		
Ambient air temperature	°C (°F)		
	❑ Hot ❑ Warm ❑ Cool ❑ Cold		
Place	❑ Highway ❑ Suburbs ❑ Inner city ❑ Uphill ❑ Downhill ❑ Rough road ❑ Others:		
Engine temperature	❑ Cold ❑ During warming-up ❑ After warming-up ❑ Any temperature ❑ Others:		
Engine speed	rpm		
Vehicle speed	km/h (MPH)		
Driving conditions	❑ Not affected ❑ At starting ❑ While idling ❑ At racing ❑ While accelerating ❑ While cruising ❑ While decelerating ❑ While turning (RH/LH)		
Headlight	❑ ON/❑ OFF	Rear defogger	❑ ON/❑ OFF
Blower	❑ ON/❑ OFF	Audio	❑ ON/❑ OFF
A/C compressor	❑ ON/❑ OFF	Rear entertainment system	❑ ON/❑ OFF
Radiator fan	❑ ON/❑ OFF	Car phone	❑ ON/❑ OFF
Front wiper	❑ ON/❑ OFF	Wireless device	❑ ON/❑ OFF
Rear wiper	❑ ON/❑ OFF		

2. CHECK LIST NO. 2

Check the following item about the vehicle's state when the malfunction indicator light turns on.

NOTE:
Use copies of this page for interviewing customers.

a) Other warning lights or indicators illuminate.: ❑ Yes / ❑ No
❑ Fuel level warning light ❑ Charge warning light ❑ Engine coolant temperature warning light ❑ Oil pressure warning light ❑ ATF temperature warning light or Sport indicator light ❑ Driver's control center differential indicator light ❑ ABS warning light ❑ VDC warning light ❑ Cruise indicator light ❑ SI-CRUISE warning light ❑ EyeSight warning light ❑ Immobilizer indicator light ❑ STEERING warning light ❑ Electronic parking brake warning light ❑ Glow indicator light ❑ Sedimenter warning light ❑ Auto Start Stop indicator light ❑ Auto Start Stop OFF indicator light ❑ Hybrid fail lamp ❑ Others:
b) Fuel level
• Lack of fuel: ❑ Yes / ❑ No • Indicator position of fuel gauge: • Experienced running out of fuel: ❑ Yes / ❑ No
c) Intentional connecting or disconnecting of harness connectors or spark plug cords: ❑ Yes / ❑ No
• What:
d) Intentional connecting or disconnecting of hoses: ❑ Yes / ❑ No
• What:
e) Installing parts other than genuine parts: ❑ Yes / ❑ No
• What: • Where:
f) Occurrence of noise: ❑ Yes / ❑ No
• From where: • What kind:
g) Occurrence of smell: ❑ Yes / ❑ No
• From where: • What kind:
h) Intrusion of water into engine compartment or passenger compartment: ❑ Yes / ❑ No
i) Troubles occurred
❑ Engine does not start. ❑ Engine stalls during idling. ❑ Engine stalls while driving. ❑ Engine speed decreases. ❑ Engine speed does not decrease. ❑ Rough idling ❑ Poor acceleration ❑ Back fire ❑ After fire ❑ Does not shift. ❑ Excessive shift shock

3. General Description

A: CAUTION

1) Airbag system wiring harness is routed near the ECM, main relay and fuel pump relay.

CAUTION:
• Do not use electrical test equipment on the airbag system circuits.
• Be careful not to damage the airbag system wiring harness when servicing the ECM, TCM, main relay and fuel pump relay.

2) Never connect the battery in reverse polarity. Doing so will damage the ECM instantly, and other parts will also be damaged.

NOTE:
• When connecting 12 volt auxiliary battery, wait for one minute or more after disconnecting connectors.
• When disconnecting or connecting 12 volt auxiliary battery, make sure to avoid battery terminal from multiple contacts with cable within one minute.
• When trouble occurs in vehicle by connection of 12 volt auxiliary battery terminal, disconnect 12 volt auxiliary battery terminal and reconnect after one minute or more. Then confirm the trouble has been solved.

3) Before connecting 12 volt auxiliary battery, make sure that no obstacles exist within the operation range of active grille shutter. Active grille shutter may be activated when 12 volt auxiliary battery is connected.

4) Do not disconnect the battery cables while the engine is running. A large counter electromotive force will be generated in the generator, and this voltage may damage electronic parts such as ECM etc.

5) When disconnecting the connectors of the electrical components, always be sure to turn the ignition switch to OFF. Perform the Clear Memory Mode after connecting the connectors. <Ref. to EN(H4DO HEV)(diag)-63, Clear Memory Mode.>

6) When measuring the voltage or resistance of individual sensor or all electrical control modules, use a tapered pin with a diameter of less than 0.6 mm (0.024 in). Do not insert the pin 4 mm (0.16 in) or more into the part.

CAUTION:
When replacing the ECM, be careful not to use the ECM of wrong specification to avoid any damage on the fuel injection system.

NOTE:
When replacing the ECM of the models with immobilizer, immobilizer system must be registered. For detailed procedures, refer to “REGISTRATION MANUAL FOR IMMOBILIZER”.

7) Take care not to allow water to get into the connectors when servicing or washing the vehicle in rainy weather. Avoid exposure to water even if the connectors are waterproof.

8) Use ECM mounting stud bolts for the grounding point when measuring voltage and resistance inside the passenger compartment.

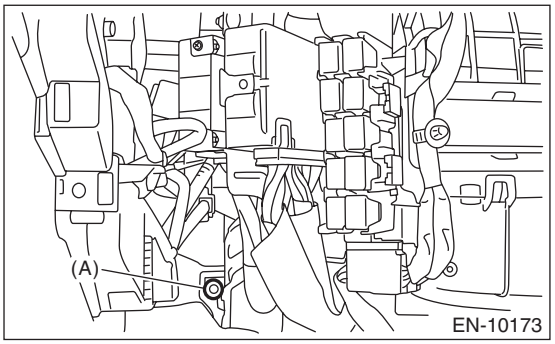

(A) Stud bolt

9) Use the engine ground terminal or engine assembly for the grounding point when measuring the voltage and resistance in engine compartment.

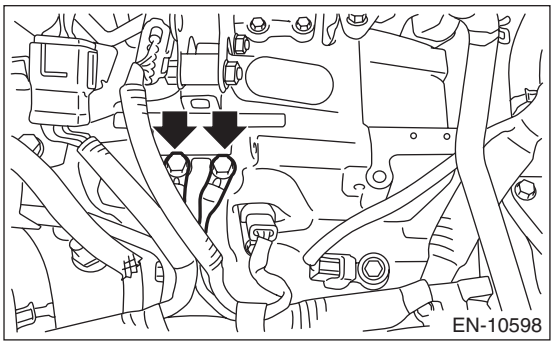

10) All parts related to the engine control system are precision parts. Do not drop or otherwise apply impact. Do not reuse the parts that are dropped accidentally.

11) Do not connect the wiring of electrical parts directly to the battery terminals. It may cause erroneous operation of the charge control, leading to early deterioration of the battery or discharged battery.

12) Observe the following cautions when installing a radio in vehicle.

CAUTION:
• The antenna must be kept as far apart as possible from the ECM. <Ref. to EN(H4DO HEV)(diag)-9, CONTROL MODULE, LOCATION, Electrical Component Location.>
• The antenna feeder must be placed as far apart as possible from the ECM and engine control system harness.
• Carefully adjust the antenna for correct matching.
• When mounting a large power type radio, pay special attention to the three items mentioned above.
• Incorrect installation of the radio may affect the operation of ECM.
13) When disconnecting the fuel hose, be sure to release the fuel pressure beforehand. <Ref. to FU(H4DO(HEV))-98, RELEASING OF FUEL PRESSURE, PROCEDURE, Fuel.>
14) Warning lights may illuminate when performing driving test with jacked-up or lifted-up condition, but this is not a system malfunction. The reason for this is the rotating speed difference between the front and rear wheels. After diagnosis of engine control system, perform the VDC memory clear procedure of self-diagnosis function. <Ref. to VDC(diag)-23, Clear Memory Mode.>

B: INSPECTION

Before performing diagnostics, check the following item which might affect engine problems.

1. 12 VOLT AUXILIARY BATTERY

1) Measure the battery voltage and specific gravity of the electrolyte.

Standard voltage: 12 V

Specific gravity: 1.260 or more
2) Check the condition of the main and other fuses, and harnesses and connectors. Also check for proper grounding.

2. ENGINE GROUND

Make sure that the engine ground terminal has no contamination, corrosion or looseness and is properly connected to the engine.

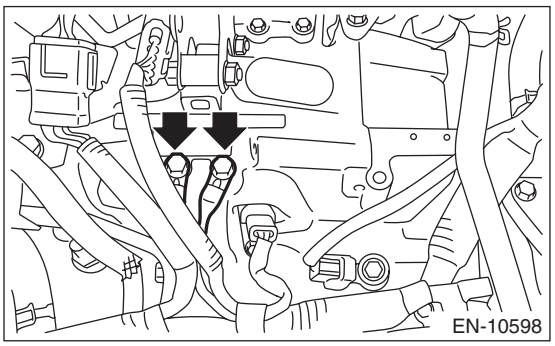

C: NOTE

• The on-board diagnostic (OBD) system detects and indicates a fault in various inputs and outputs of the complex electronic control. Malfunction indicator light in the combination meter indicates occurrence of a fault or trouble.
• Further, against any failure of sensors that would cause the vehicle to stop running, the fail-safe function is provided to ensure the minimal drivability.
• The OBD system incorporated with the vehicles within this type of engine complies with OBD-II regulations. The OBD system monitors the components and the system malfunction listed in “Engine Section” which affects on emissions.
• When the system decides that a malfunction occurs, malfunction indicator light illuminates. At the same time of the malfunction indicator light illumination or blinking, a DTC and a freeze frame engine conditions are stored into on-board computer.
• The OBD system stores freeze frame engine condition data (engine load, engine coolant temperature, fuel trim, engine speed and vehicle speed, etc.) into on-board computer when it detects a malfunction.
• Freeze frame engine condition data are stored until the DTCs are cleared. However when such malfunctions as fuel trim fault and misfire are detected with the freeze frame engine condition data stored, they are rewritten into those related to the fuel trim fault and misfire.
• When the malfunction does not occur again for three consecutive driving cycles*, malfunction indicator light is turned off, but DTC remains at on-board computer.
*: One driving cycle means the period between the ignition switch ON and the ignition switch OFF after driving.
• When performing diagnosis, connect the Subaru Select Monitor to the vehicle.

D: PREPARATION TOOL

ILLUSTRATION	TOOL NUMBER	DESCRIPTION	REMARKS
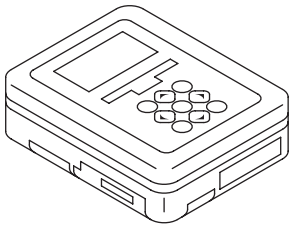 ST1B022XU0	1B022XU0	SUBARU SELECT MONITOR III KIT	Used for troubleshooting the electrical system.
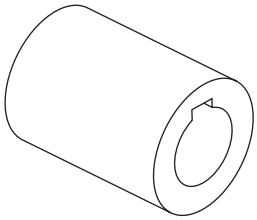 ST18252AA000	18252AA000	CRANKSHAFT SOCKET	Used for rotating crankshaft.

4. Electrical Component Location

A: LOCATION

1. CONTROL MODULE

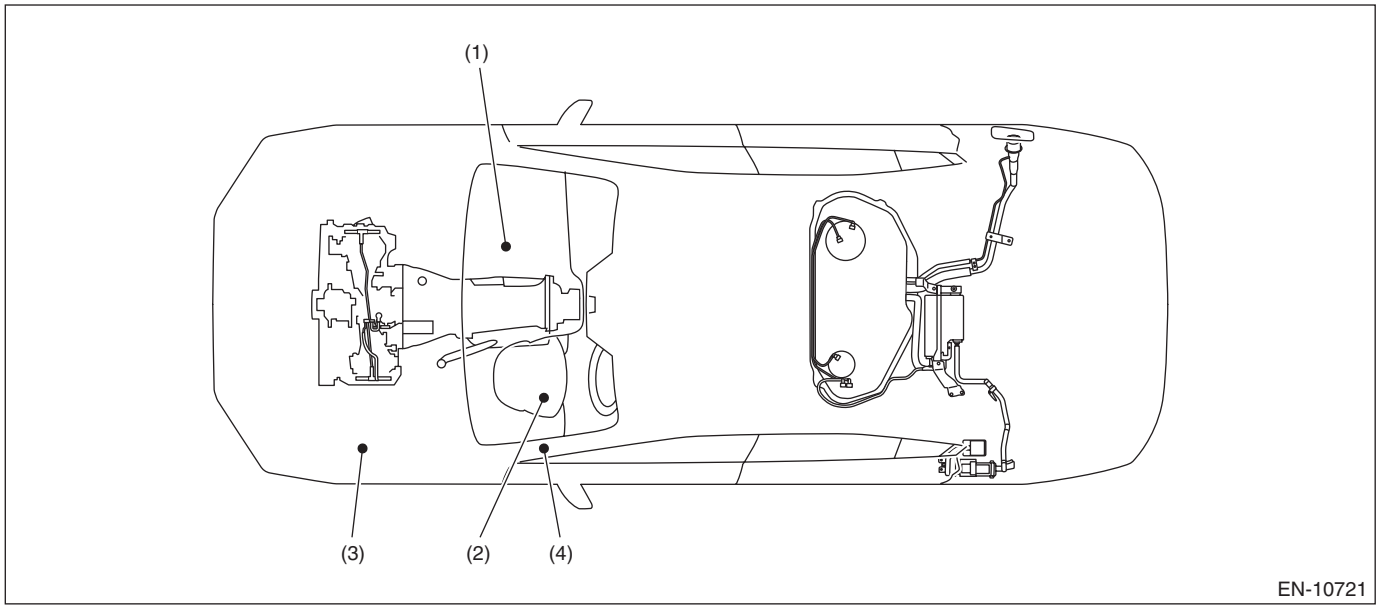

(1) Engine control module (ECM)
(2) Malfunction indicator light
(3) Delivery (test) mode fuse
(4) Data link connector

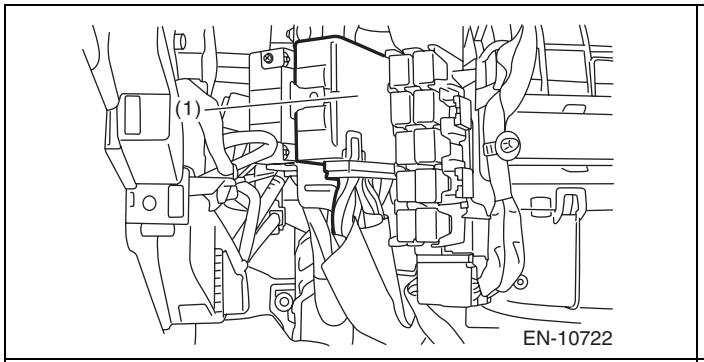

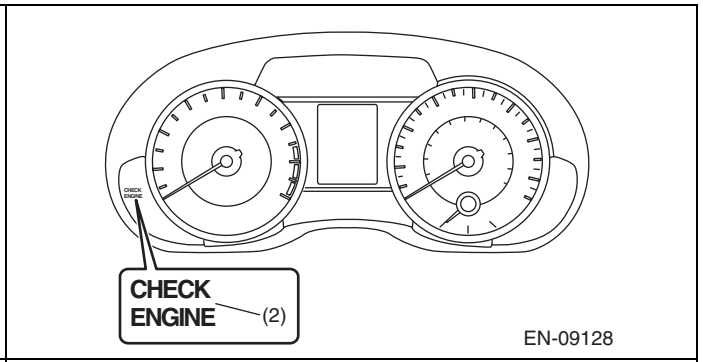

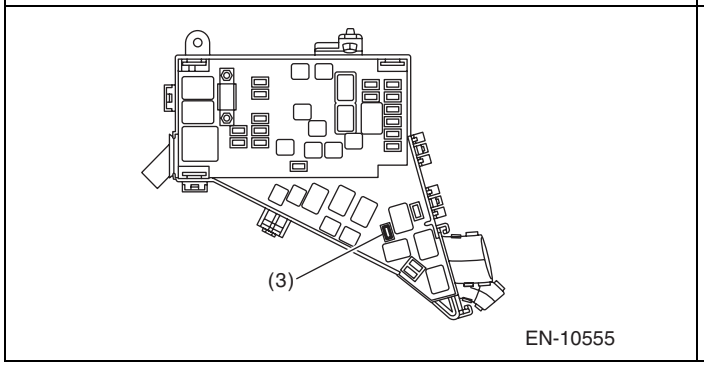

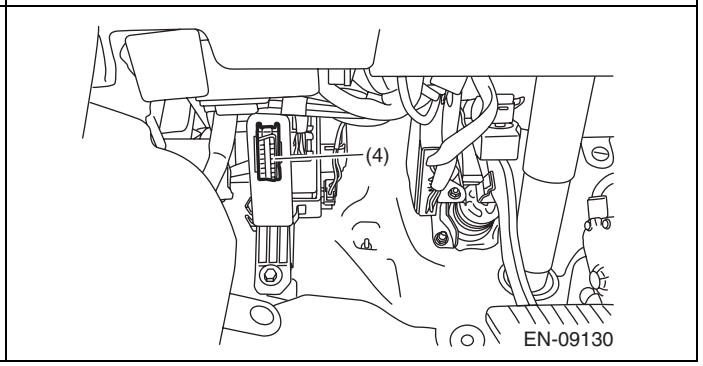

2. SENSOR

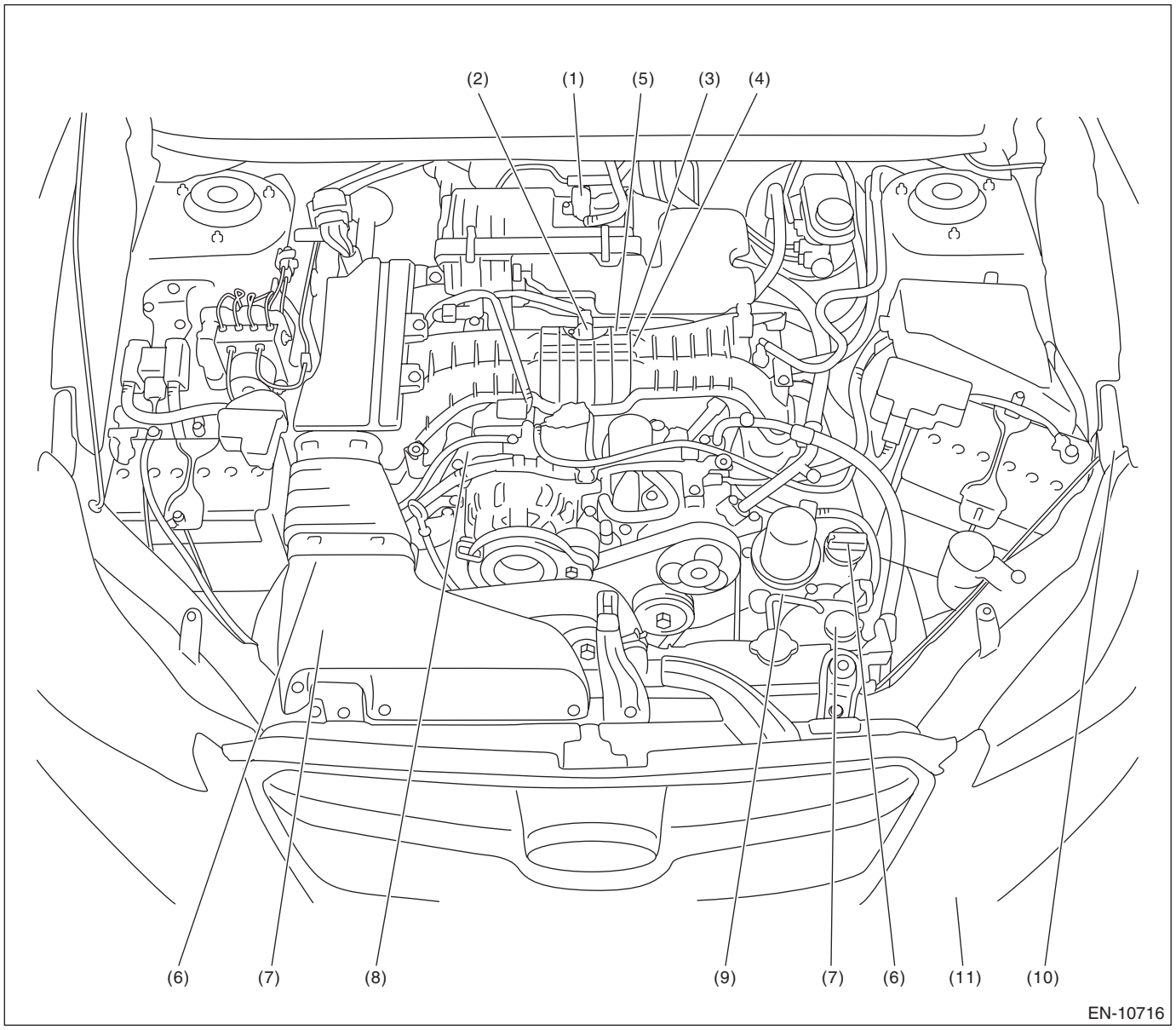

(1) Mass air flow and intake air temperature sensor
(2) Manifold absolute pressure sensor
(3) Electronic throttle control
(4) Knock sensor
(5) Crankshaft position sensor
(6) Intake camshaft position sensor
(7) Exhaust camshaft position sensor
(8) Engine coolant temperature sensor
(9) Engine oil temperature sensor
(10) Battery temperature sensor
(11) Ambient sensor

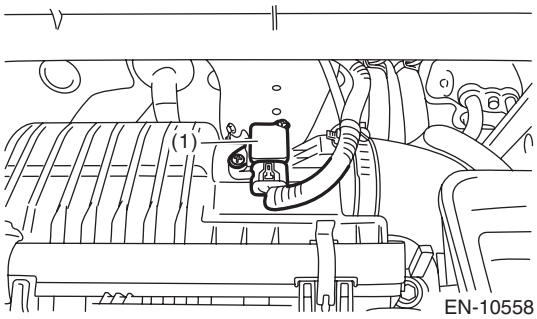
(1)
EN-10558

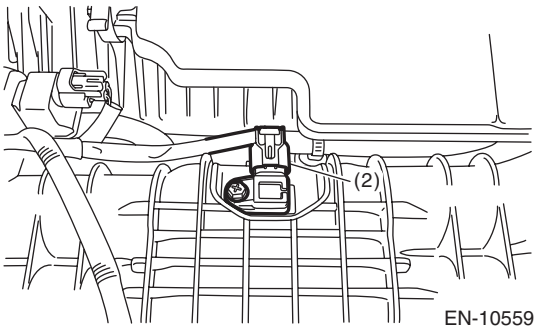
(2)
EN-10559

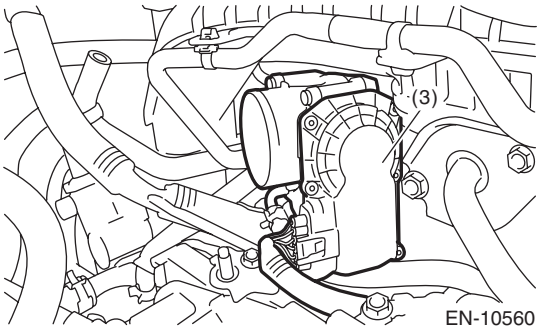
(3)
EN-10560

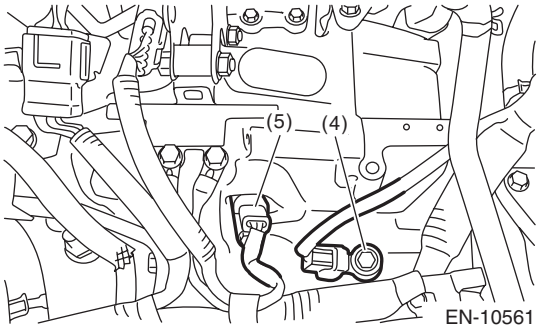
(5)
(4)
EN-10561

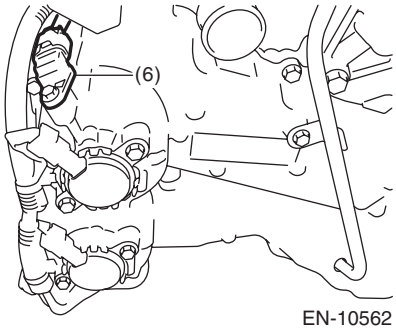
(6)
EN-10562

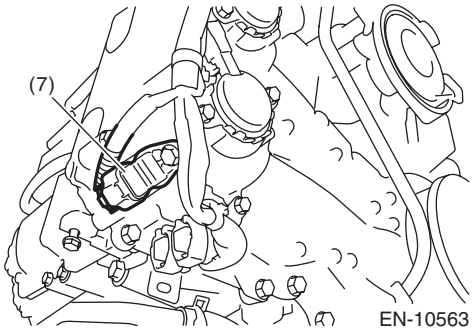
(7)
EN-10563

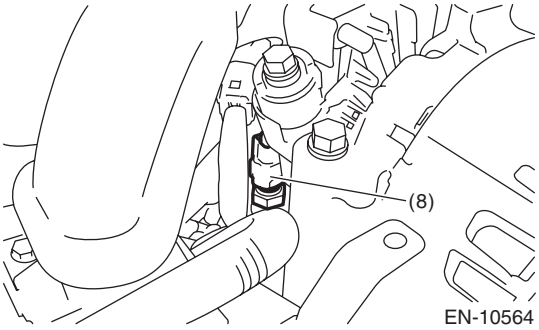
(8)
EN-10564

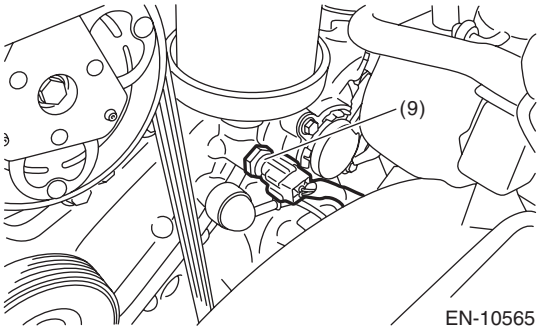
(9)
EN-10565

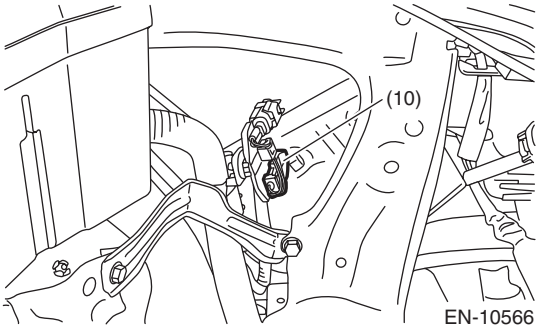
(10)
EN-10566

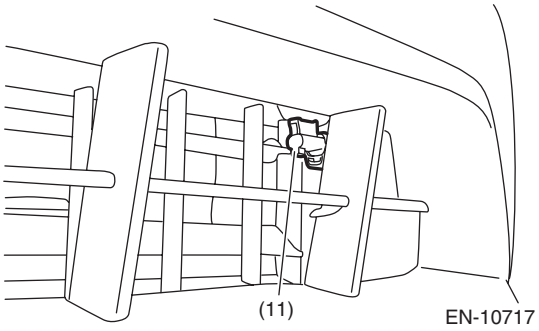
(11)
EN-10717

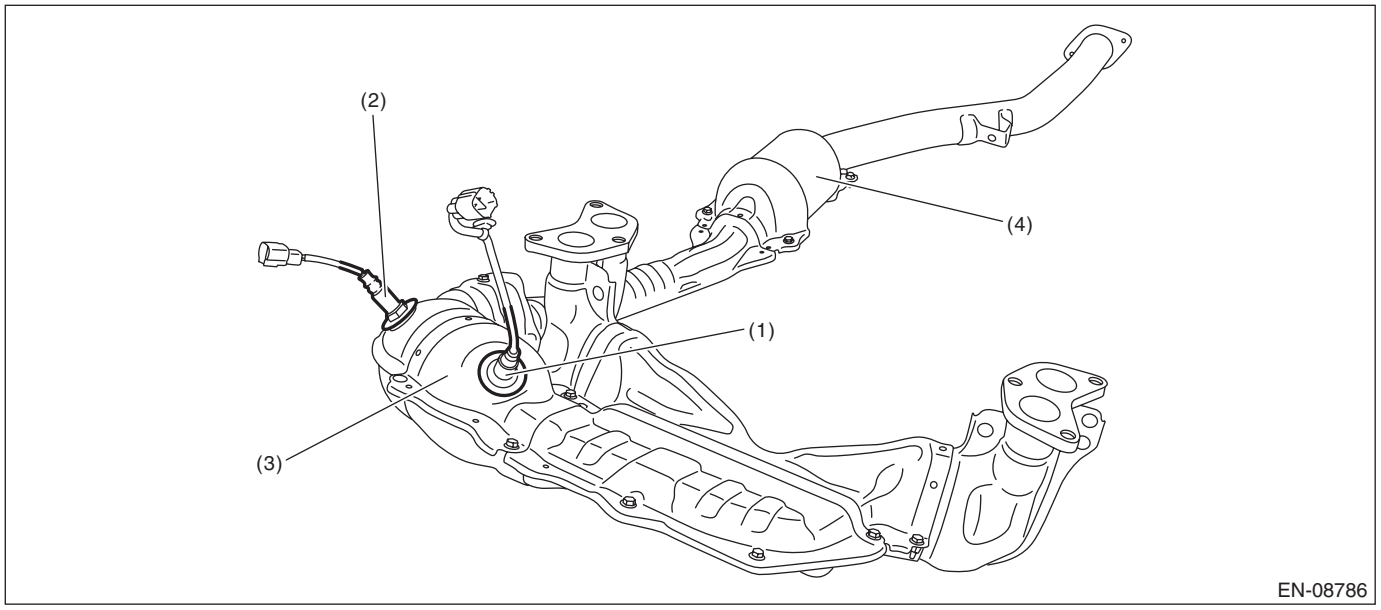

(1) Front oxygen (A/F) sensor
(2) Rear oxygen sensor
(3) Front catalytic converter
(4) Rear catalytic converter

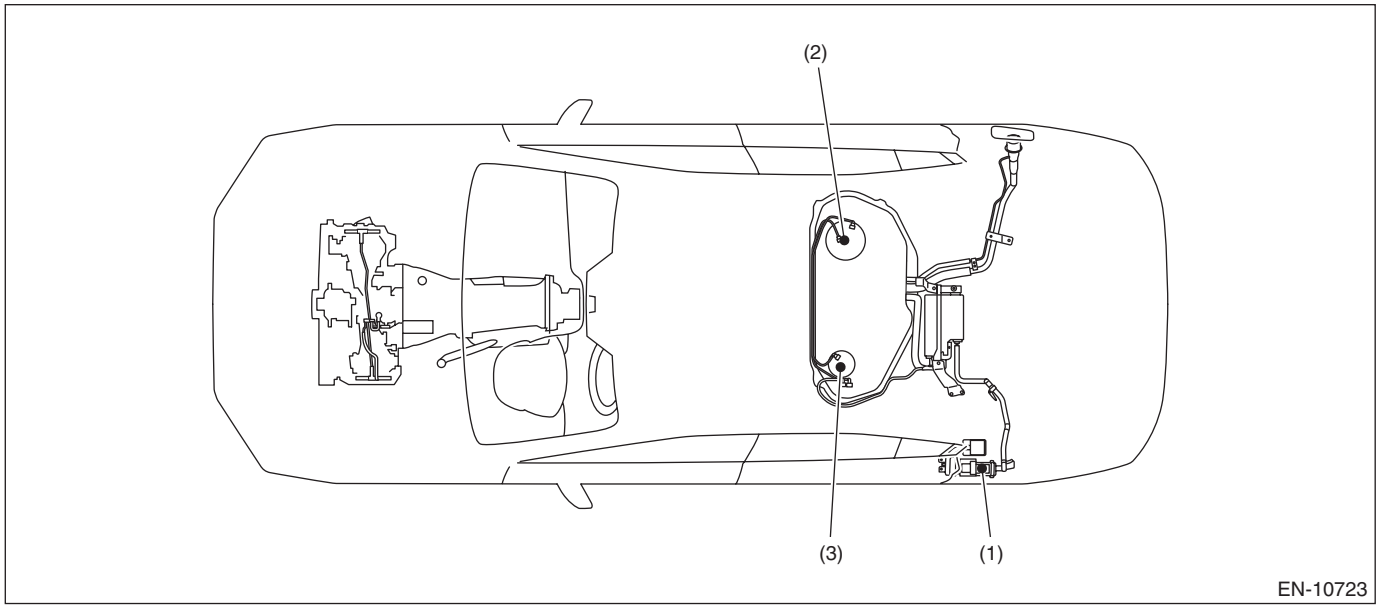

(1) Leak check valve ASSY (with built-in pressure sensor)
(2) Fuel level sensor
(3) Fuel sub level sensor

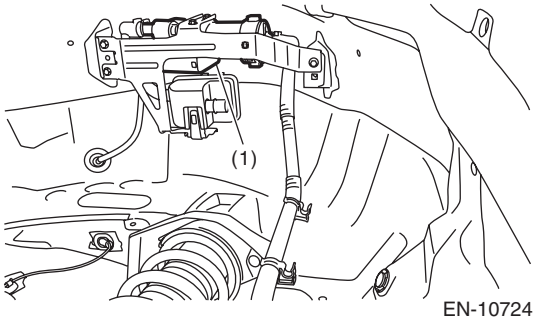

EN-10724

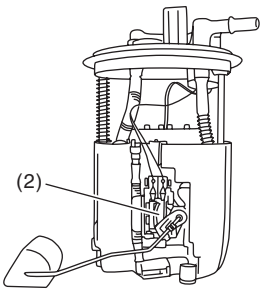

EN-10473

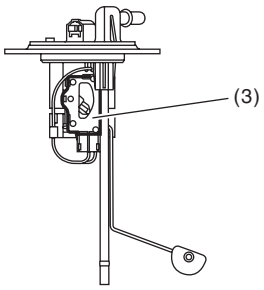

EN-08790

3. SOLENOID VALVE, ACTUATOR, EMISSION CONTROL SYSTEM PARTS AND IGNITION SYSTEM PARTS

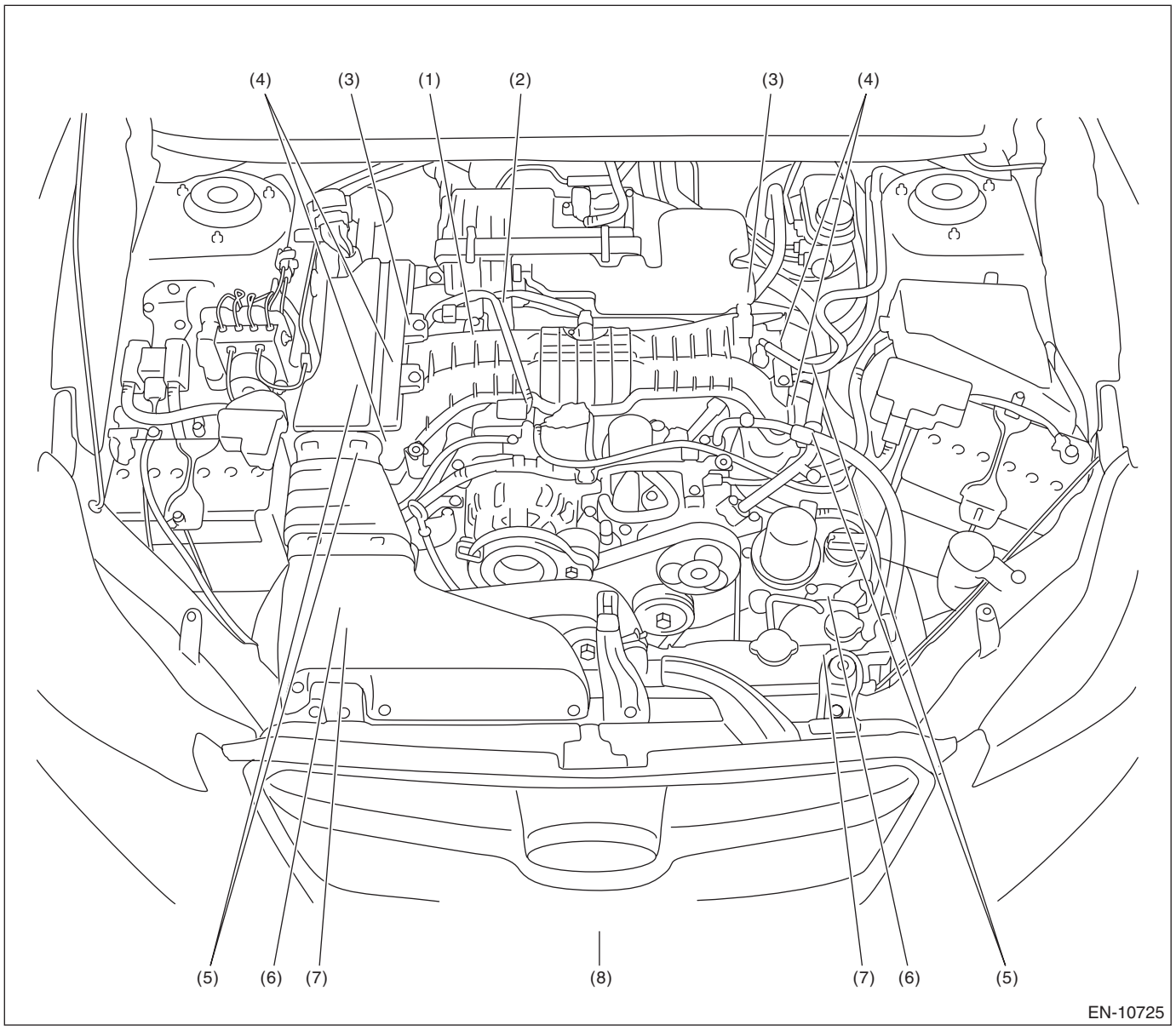

(1) EGR control valve
(2) Purge control solenoid valve
(3) Tumble generator valve actuator
(4) Fuel injector
(5) Ignition coil
(6) Intake oil control solenoid
(7) Exhaust oil control solenoid
(8) Active grille shutter

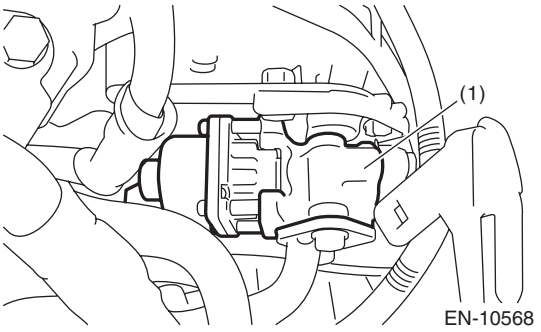
(1)
EN-10568

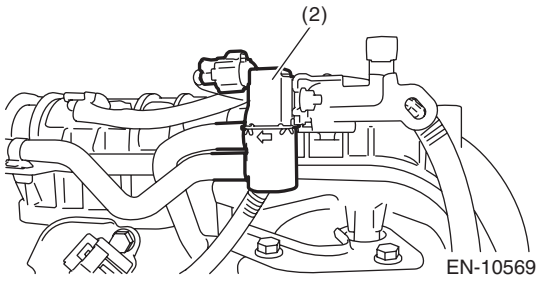
(2)
EN-10569

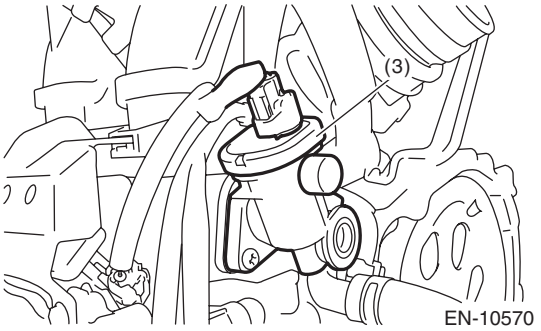
(3)
EN-10570

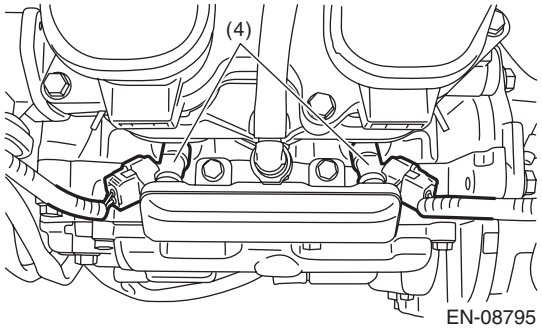
(4)
EN-08795

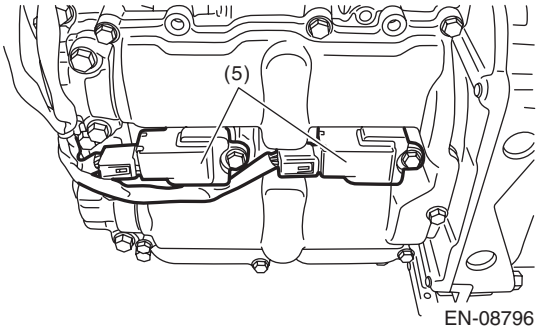
(5)
EN-08796

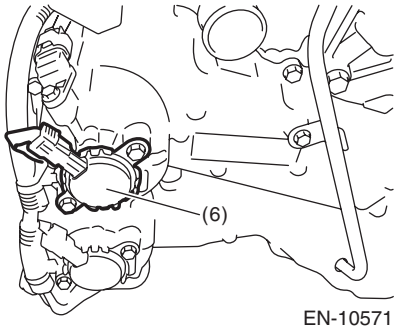
(6)
EN-10571

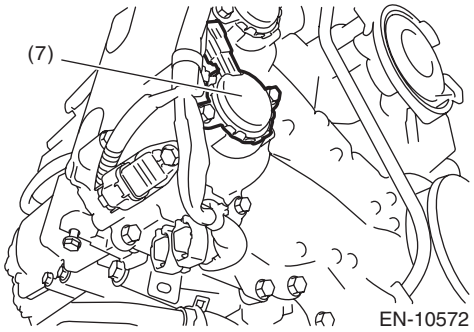
(7)
EN-10572

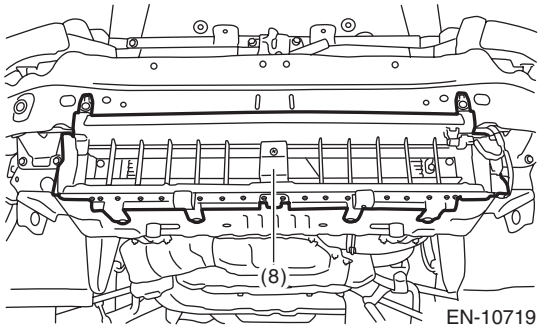
(8)
EN-10719

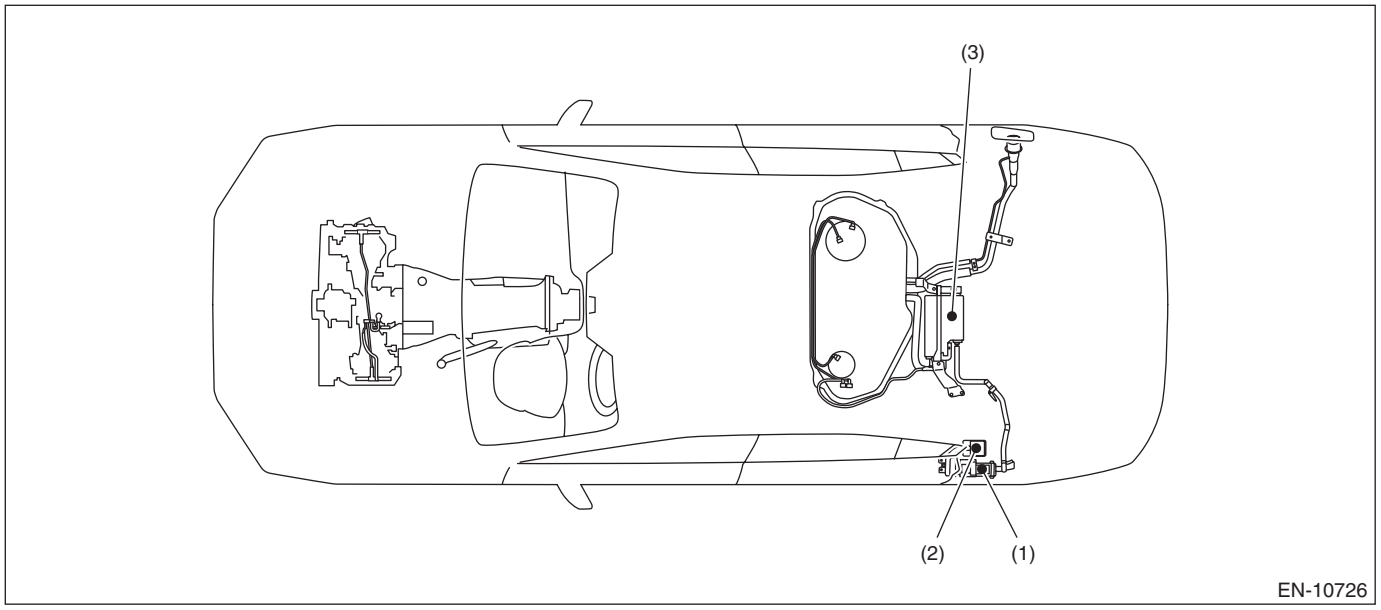

(1) Leak check valve ASSY (2) Drain filter (3) Canister

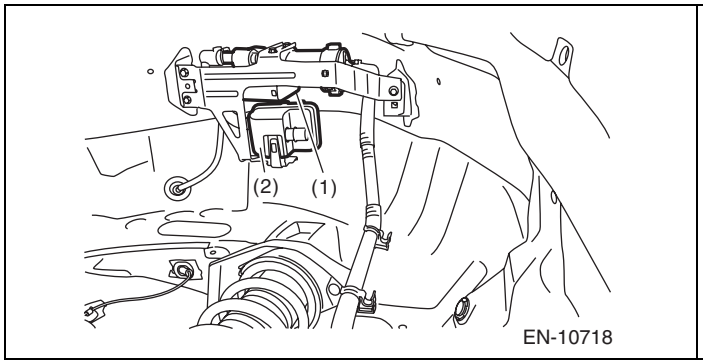

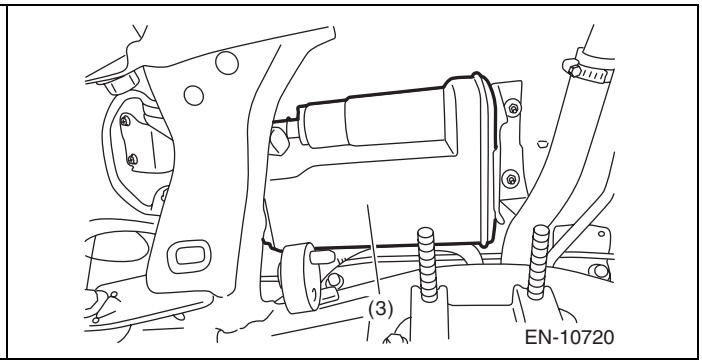

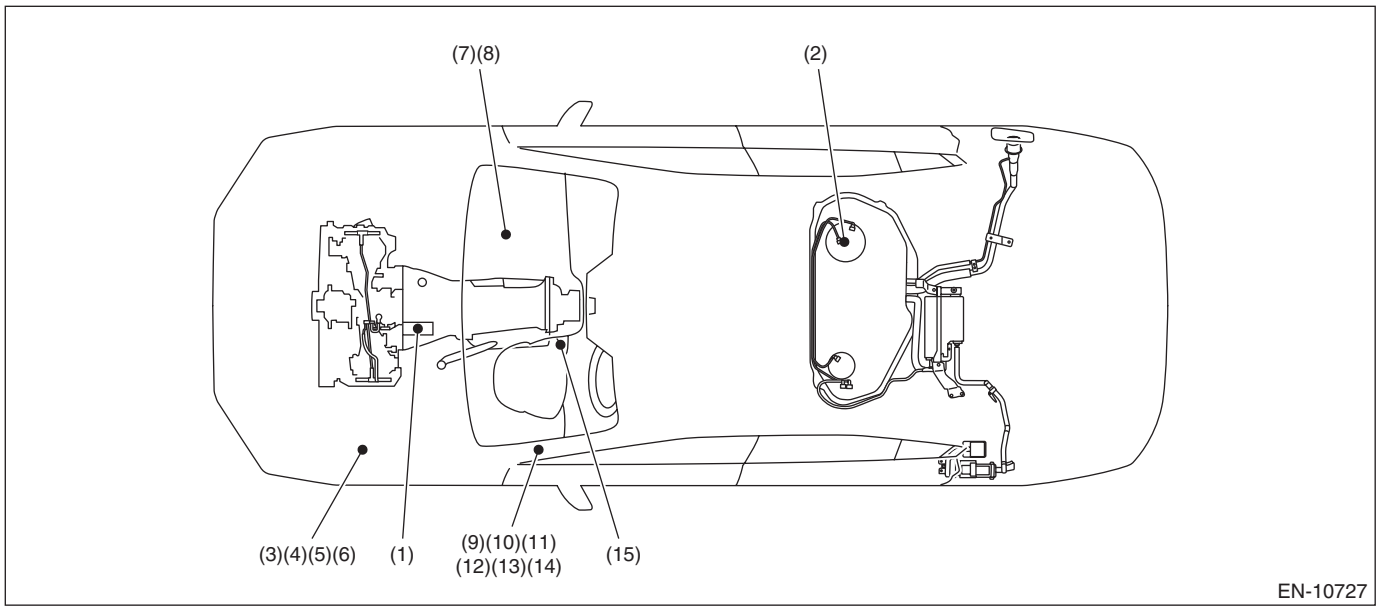

(1)	Starter	(6)	Fuel pump relay	(11)	Starter relay 1
(2)	Fuel pump	(7)	Main relay	(12)	Starter cut relay (model with push button start)
(3)	Radiator main fan relay 1	(8)	IG relay	(13)	IG relay 1 (push button start) (model with push button start)
(4)	Radiator main fan relay 2	(9)	A/F, oxygen sensor relay	(14)	Starter relay (push button start) (model with push button start)
(5)	Radiator sub fan relay	(10)	Electronic throttle control relay	(15)	Push button ignition switch (model with push button start)

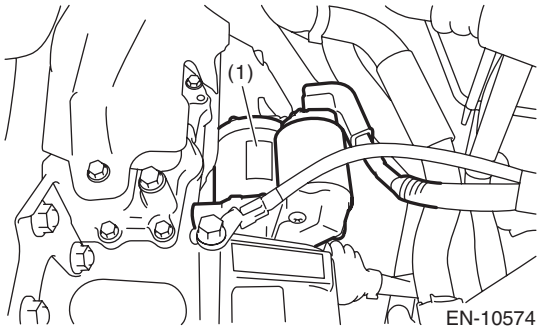

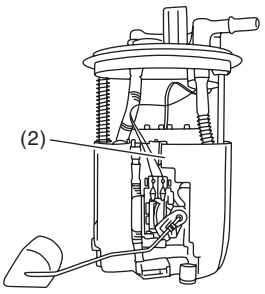

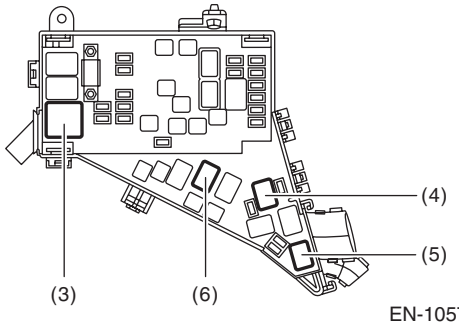

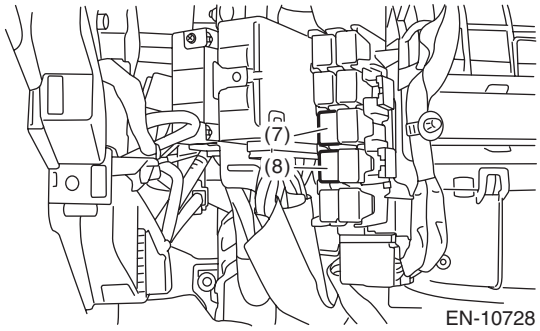

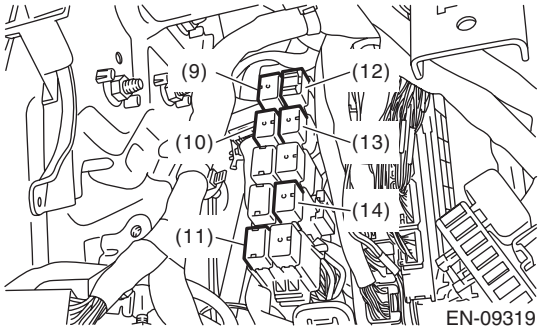

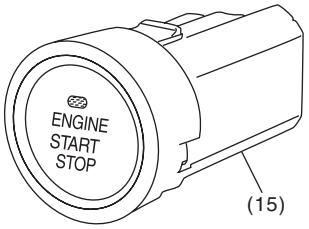

4. TRANSMISSION

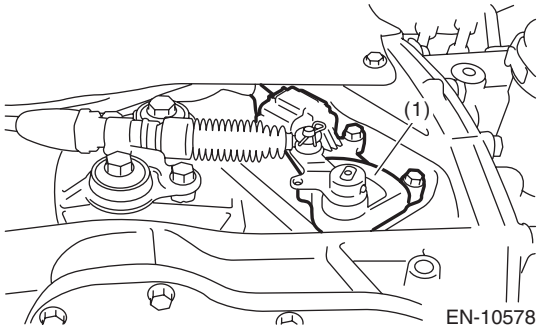

(1) Inhibitor switch

5. Control Module I/O Signal

A: ELECTRICAL SPECIFICATION

1. ENGINE CONTROL MODULE (ECM)

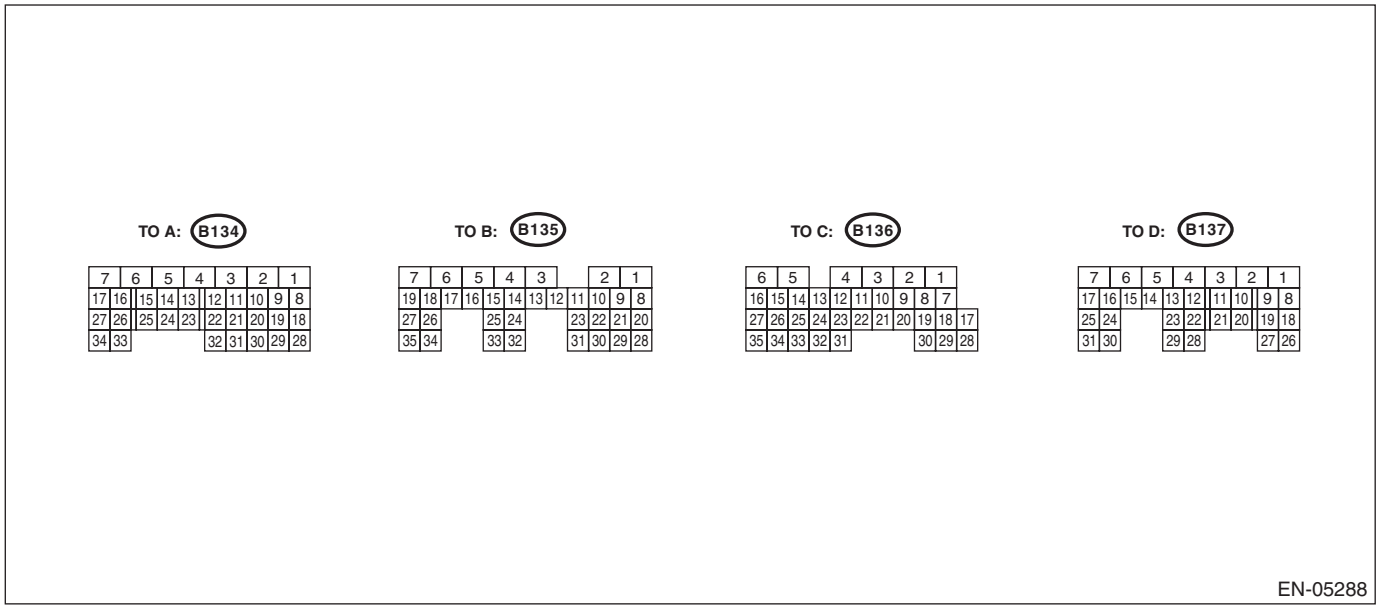

Description		Connector No.	Terminal No.	Signal (V)		Note
				Ignition SW ON (engine OFF)	Engine ON (idling)	
Crankshaft position sensor	Signal (+)	B136	16	0	0 or 5	Waveform
	Signal (–)	B136	27	0	0	—
Front oxygen (A/F) sensor	Signal (+)	B136	19	2.8 — 3.2	2.8 — 3.2	—
	Signal (–)	B136	18	2.4 — 2.7	2.4 — 2.7	—
	Shield	B136	30	0	0	—
Rear oxygen sensor	Signal	B136	21	0	0 — 0.9	—
	Shield	B136	30	0	0	—
Front oxygen (A/F) sensor heater signal		B136	5	—	—	Waveform
Rear oxygen sensor heater signal		B134	6	0 — 13	—	Waveform
Engine coolant temperature sensor	Signal	B134	30	1.0 — 1.4	1.0 — 1.4	After engine is warmed up.
Air flow sensor	Signal	B137	22	—	0.3 — 4.5	—
	Shield	B137	28	0	0	—
	Ground	B137	29	0	0	—
Intake air temperature sensor signal		B137	12	0.3 — 4.6	0.3 — 4.6	—
Engine oil temperature sensor signal		B134	20	1.0 — 1.4	1.0 — 1.4	After engine is warmed up.
Starter switch		B137	17	0	0	Model without push button start Cranking: 8 — 14 Model with push button start Cranking: waveform
Accessory cut request		B135	32	10 — 13	12 — 14	Model with push button start Cranking: 0

Control Module I/O Signal

Description		Connector No.	Terminal No.	Signal (V)		Note
				Ignition SW ON (engine OFF)	Engine ON (idling)	
Starter switch 2		B137	14	0	0	Model with push button start Cranking: 8 — 14
Starter cut relay		B135	34	0	0	Model with push button start Cranking: 8 — 14
Ignition switch		B137	27	10 — 13	12 — 14	—
Neutral position switch		B137	16	ON: 0 OFF: 10 — 13	ON: 0 OFF: 12 — 14	—
Delivery mode switch		B137	13	10 — 13	12 — 14	When fuse is installed: 0
Knock sensor	Signal	B136	28	2.5	2.5	—
	Shield	B136	29	0	0	—
Back-up power supply		B137	2	10 — 13	12 — 14	Ignition switch “OFF”: 10 — 13
Control module power supply		B136	6	10 — 13	12 — 14	—
		B137	1	10 — 13	12 — 14	—
Sensor power supply		B134	19	5	5	—
		B135	22	5	5	—
Ignition control	#1	B134	21	0	0 or 5	Waveform
	#2	B134	10	0	0 or 5	Waveform
	#3	B134	31	0	0 or 5	Waveform
	#4	B134	8	0	0 or 5	Waveform
Fuel injector	#1	B134	12	10 — 13	1 — 14	Waveform
	#2	B134	22	10 — 13	1 — 14	Waveform
	#3	B134	32	10 — 13	1 — 14	Waveform
	#4	B134	13	10 — 13	1 — 14	Waveform
Fuel pump relay control		B135	19	ON: 0.5 or less OFF: 10 — 13	ON: 0.5 or less OFF: 12 — 14	—
A/C relay control		B135	35	ON: 0.5 or less OFF: 10 — 13	ON: 0.5 or less OFF: 12 — 14	—
Pressure switch		B137	8	ON: 0 OFF: 10 — 13	ON: 0 OFF: 12 — 14	—
Main fan relay control		B135	12	ON: 0.5 or less OFF: 10 — 13	ON: 0.5 or less OFF: 12 — 14	—
Sub fan relay control		B135	11	ON: 0.5 or less OFF: 10 — 13	ON: 0.5 or less OFF: 12 — 14	—
Engine speed output		B135	15	—	0 — 13 or more	Model with push button start Waveform
Purge control solenoid valve		B134	11	ON: 1 or less OFF: 10 — 13	ON: 1 or less OFF: 12 — 14	Waveform
EGR control valve	Signal 1	B136	11	0 or 10 — 13	0 or 12 — 14	—
	Signal 2	B136	13	0 or 10 — 13	0 or 12 — 14	—
	Signal 3	B136	31	0 or 10 — 13	0 or 12 — 14	—
	Signal 4	B136	32	0 or 10 — 13	0 or 12 — 14	—
Manifold absolute pressure sensor signal		B136	20	3.4 — 3.8	1.1 — 1.6	—
Electronic throttle control	Main	B134	18	Approx. 0.7	Approx. 0.6 — 0.7 (After engine is warmed up.)	Fully closed: Approx. 0.6 Fully open: Approx. 4.0
	Sub	B134	28	Approx. 1.6	Approx. 1.5 — 1.6 (After engine is warmed up.)	Fully closed: Approx. 1.5 Fully open: Approx. 4.2

Description		Connector No.	Terminal No.	Signal (V)		Note
				Ignition SW ON (engine OFF)	Engine ON (idling)	
Electronic throttle control motor (+)		B134	2	Duty waveform	Duty waveform	Drive frequency: 500 Hz
Electronic throttle control motor (–)		B134	1	Duty waveform	Duty waveform	Drive frequency: 500 Hz
Electronic throttle control motor power supply		B135	7	10 — 13	12 — 14	—
Electronic throttle control motor relay		B135	17	ON: 0 OFF: 10 — 13	ON: 0 OFF: 12 — 14	When ignition switch is turned to ON: ON
Intake oil control solenoid (LH)		B134	16	ON: 0 OFF: 10 — 13	ON: 0 OFF: 10 — 13	—
Intake oil control solenoid (RH)		B134	17	ON: 0 OFF: 10 — 13	ON: 0 OFF: 10 — 13	—
Exhaust oil control solenoid (LH)		B134	5	ON: 0 OFF: 10 — 13	ON: 0 OFF: 10 — 13	—
Exhaust oil control solenoid (RH)		B134	7	ON: 0 OFF: 10 — 13	ON: 0 OFF: 10 — 13	—
Intake camshaft position sensor (LH)		B136	15	0 or 5	0 or 5	Waveform
Intake camshaft position sensor (RH)		B136	26	0 or 5	0 or 5	Waveform
Exhaust camshaft position sensor (LH)		B136	25	0 or 5	0 or 5	Waveform
Exhaust camshaft position sensor (RH)		B136	14	0 or 5	0 or 5	Waveform
Camshaft position sensor ground		B136	34	0	0	—
Accelerator pedal position sensor	Main sensor signal	B135	23	Fully closed: 0.4 — 1.0 Fully opened: 2.4 — 3.7	Fully closed: 0.4 — 1.0 Fully opened: 2.4 — 3.7	—
	Main power supply	B135	21	5	5	—
	Ground (main sensor)	B135	29	0	0	—
	Sub signal sensor	B135	31	Fully closed: 0.3 — 1.1 Fully opened: 2.3 — 3.8	Fully closed: 0.3 — 1.1 Fully opened: 2.3 — 3.8	—
Starter relay		B135	26	ON: 0 OFF: 10 — 13	ON: 14 OFF: 0	ON: cranking
Brake switch 1 (brake switch)		B137	7	When brake pedal is depressed: 0 When brake pedal is released: 10 — 13	When brake pedal is depressed: 0 When brake pedal is released: 12 — 14	—
Brake switch 2 (stop light switch)		B137	3	When brake pedal is depressed: 10 — 13 When brake pedal is released: 0	When brake pedal is depressed: 12 — 14 When brake pedal is released: 0	—

Control Module I/O Signal

Description		Connector No.	Terminal No.	Signal (V)		Note
				Ignition SW ON (engine OFF)	Engine ON (idling)	
Cruise control command switch		B137	30	When operating nothing: 3.5 — 4.5 When operating RES/ACC: 2.5 — 3.5 When operating following distance setting: 1.5 — 2.5 When operating SET/COAST: 0.5 — 1.5 When operating CANCEL: 0 — 0.5	When operating nothing: 3.5 — 4.5 When operating RES/ACC: 2.5 — 3.5 When operating following distance setting: 1.5 — 2.5 When operating SET/COAST: 0.5 — 1.5 When operating CANCEL: 0 — 0.5	—
Cruise control main switch		B137	23	ON: 0 OFF: 5	ON: 0 OFF: 5	—
CAN communication (MAIN-CAN)	(Hi)	B137	19	—	—	—
	(Lo)	B137	18	—	—	—
CAN communication (PU-CAN)	(Hi)	B137	10	—	—	—
	(Lo)	B137	21	—	—	—
Self-shutoff control		B135	13	0	0	—
Battery temperature sensor		B137	24	1.1 — 2.4	1.1 — 2.4	When battery temperature is 20 — 50°C (68 — 122°F)
Oil level switch		B136	24	0	0	Oil level LOW: 10 — 14
Tumble generator valve opening angle switch signal (LH)		B136	9	Fully closed: 0.5 or less Fully opened: 4.5 or more	Fully closed: 0.5 or less Fully opened: 4.5 or more	—
Tumble generator valve actuator (LH open)		B134	23	0 or 10 — 13	0 or 12 — 14	—
Tumble generator valve actuator (LH closed)		B134	24	0 or 10 — 13	0 or 12 — 14	—
Tumble generator valve opening angle switch signal (RH)		B136	23	Fully closed: 0.5 or less Fully opened: 4.5 or more	Fully closed: 0.5 or less Fully opened: 4.5 or more	—
Tumble generator valve actuator (RH open)		B134	25	0 or 10 — 13	0 or 12 — 14	—
Tumble generator valve actuator (RH closed)		B134	14	0 or 10 — 13	0 or 12 — 14	—
Immobilizer communication		B135	25	—	—	—
ELCM	Switching valve	B135	1	10 — 13	12 — 14	Operating: 0
	Pressure sensor	B135	20	1 — 4	1 — 4	When ignition switch is turned to ON: atmospheric pressure
	Vacuum pump	B135	8	10 — 13	12 — 14	Operating: 0

Description		Connector No.	Terminal No.	Signal (V)		Note
				Ignition SW ON (engine OFF)	Engine ON (idling)	
Ground	Sensor	B134	29	0	0	—
		B135	30	0	0	—
	Engine 1	B134	4	0	0	—
	Engine 2	B134	3	0	0	—
	Engine 3	B136	1	0	0	—
	Engine 4	B136	2	0	0	—
	Engine 5	B136	3	0	0	—
	Body	B137	4	0	0	—

Input/output name:
- Crankshaft position sensor
- Intake camshaft position sensor RH
- Intake camshaft position sensor LH
- Exhaust camshaft position sensor RH
- Exhaust camshaft position sensor LH

Measuring condition:

- After warming-up
- At idling

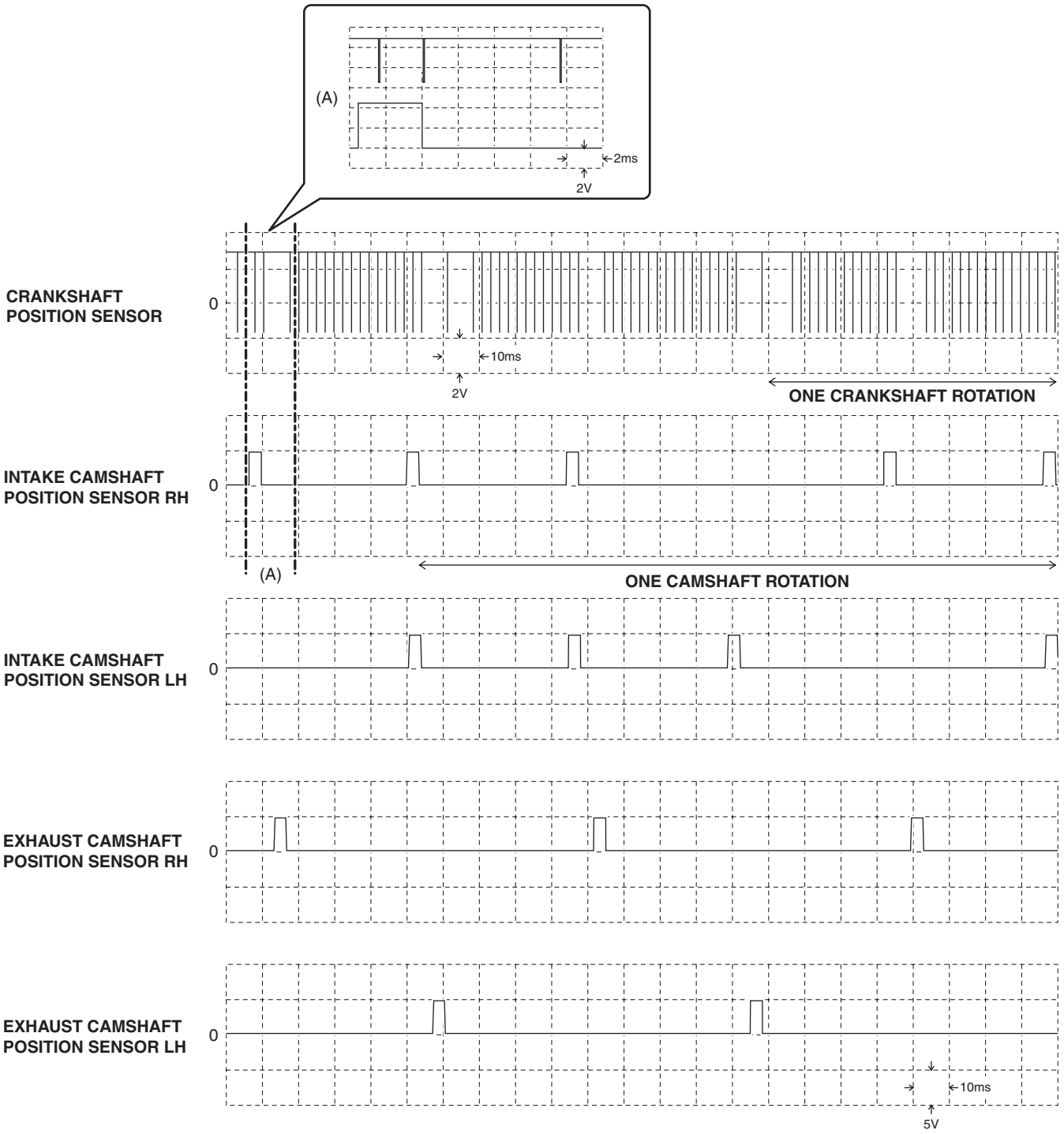

EN-10986

(A) Enlarged view of crankshaft position sensor and camshaft position sensor waveforms

NOTE:
- It is recommended to use an oscilloscope function of DST-i or a general oscilloscope when measuring the waveform of crankshaft position sensor.
- If an oscilloscope function of the Subaru Select Monitor is used to measure the waveform of crankshaft position sensor, the waveform might be as shown in the figure (B).

This is not a malfunction of the Subaru Select Monitor or the crankshaft position sensor. It is because the unit of crankshaft position sensor output is 45 μsec, and is smaller than the minimum unit of measure of the Subaru Select Monitor, which is 50 μsec.

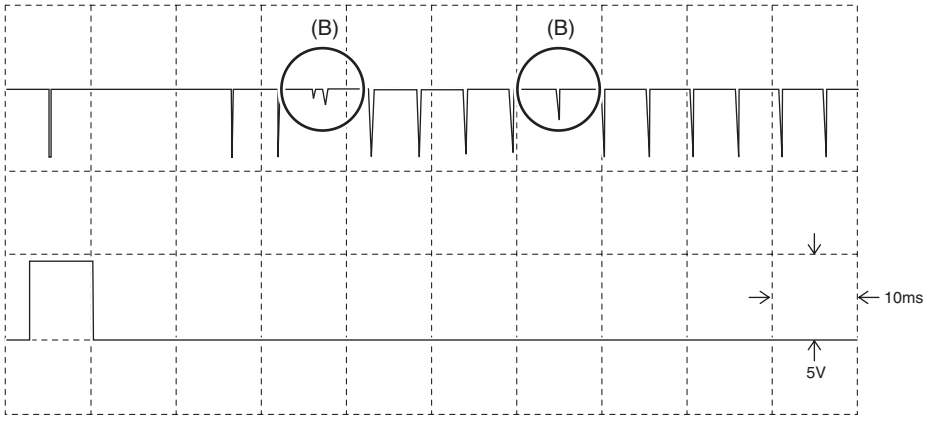

EN-11068

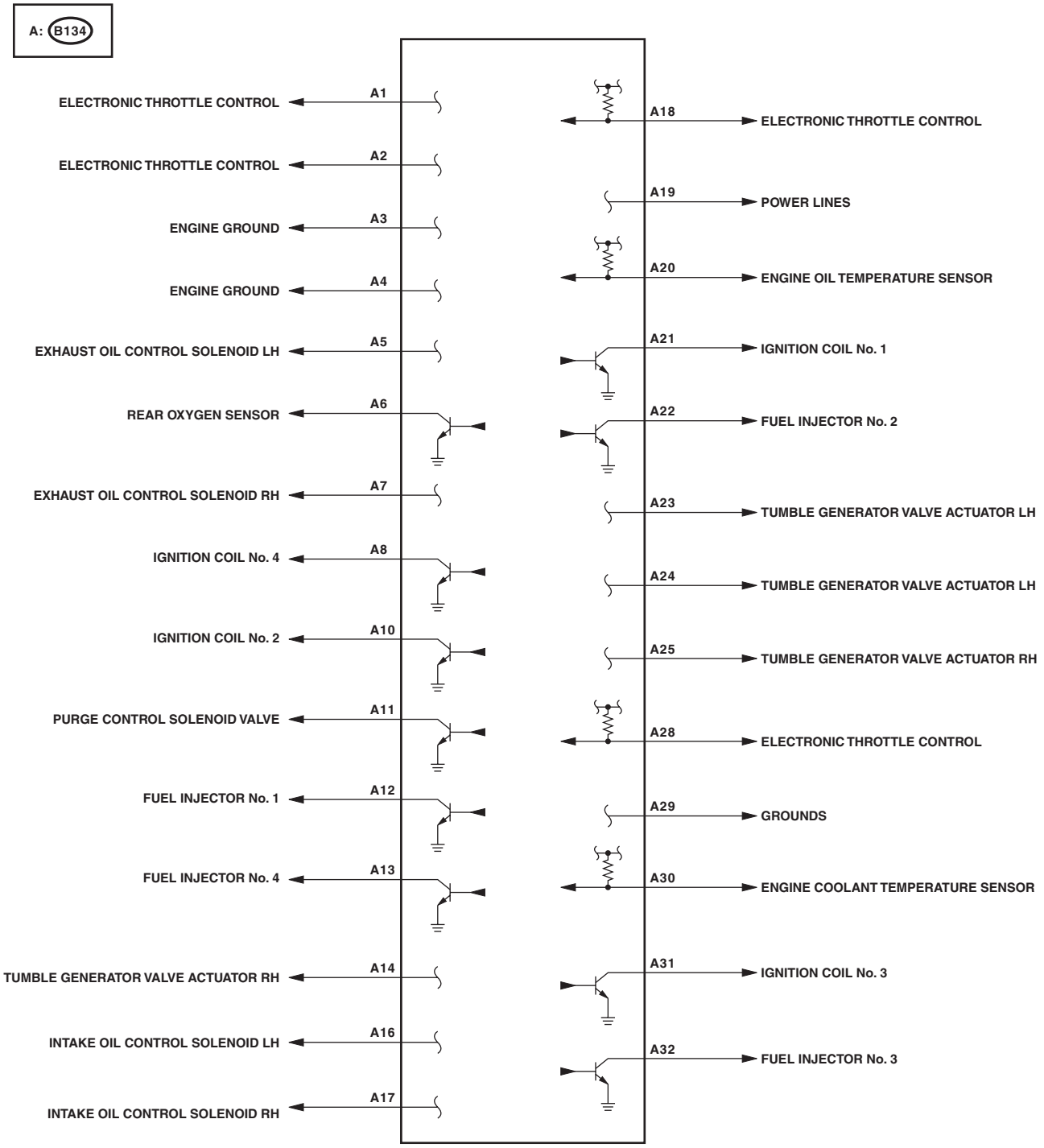
A: B134
ELECTRONIC THROTTLE CONTROL
A1
ELECTRONIC THROTTLE CONTROL
A2
ENGINE GROUND
A3
ENGINE GROUND
A4
EXHAUST OIL CONTROL SOLENOID LH
A5
REAR OXYGEN SENSOR
A6
EXHAUST OIL CONTROL SOLENOID RH
A7
IGNITION COIL No. 4
A8
IGNITION COIL No. 2
A10
PURGE CONTROL SOLENOID VALVE
A11
FUEL INJECTOR No. 1
A12
FUEL INJECTOR No. 4
A13
TUMBLE GENERATOR VALVE ACTUATOR RH
A14
INTAKE OIL CONTROL SOLENOID LH
A16
INTAKE OIL CONTROL SOLENOID RH
A17
A18
ELECTRONIC THROTTLE CONTROL
A19
POWER LINES
A20
ENGINE OIL TEMPERATURE SENSOR
A21
IGNITION COIL No. 1
A22
FUEL INJECTOR No. 2
A23
TUMBLE GENERATOR VALVE ACTUATOR LH
A24
TUMBLE GENERATOR VALVE ACTUATOR LH
A25
TUMBLE GENERATOR VALVE ACTUATOR RH
A28
ELECTRONIC THROTTLE CONTROL
A29
GROUNDS
A30
ENGINE COOLANT TEMPERATURE SENSOR
A31
IGNITION COIL No. 3
A32
FUEL INJECTOR No. 3

EN-10250

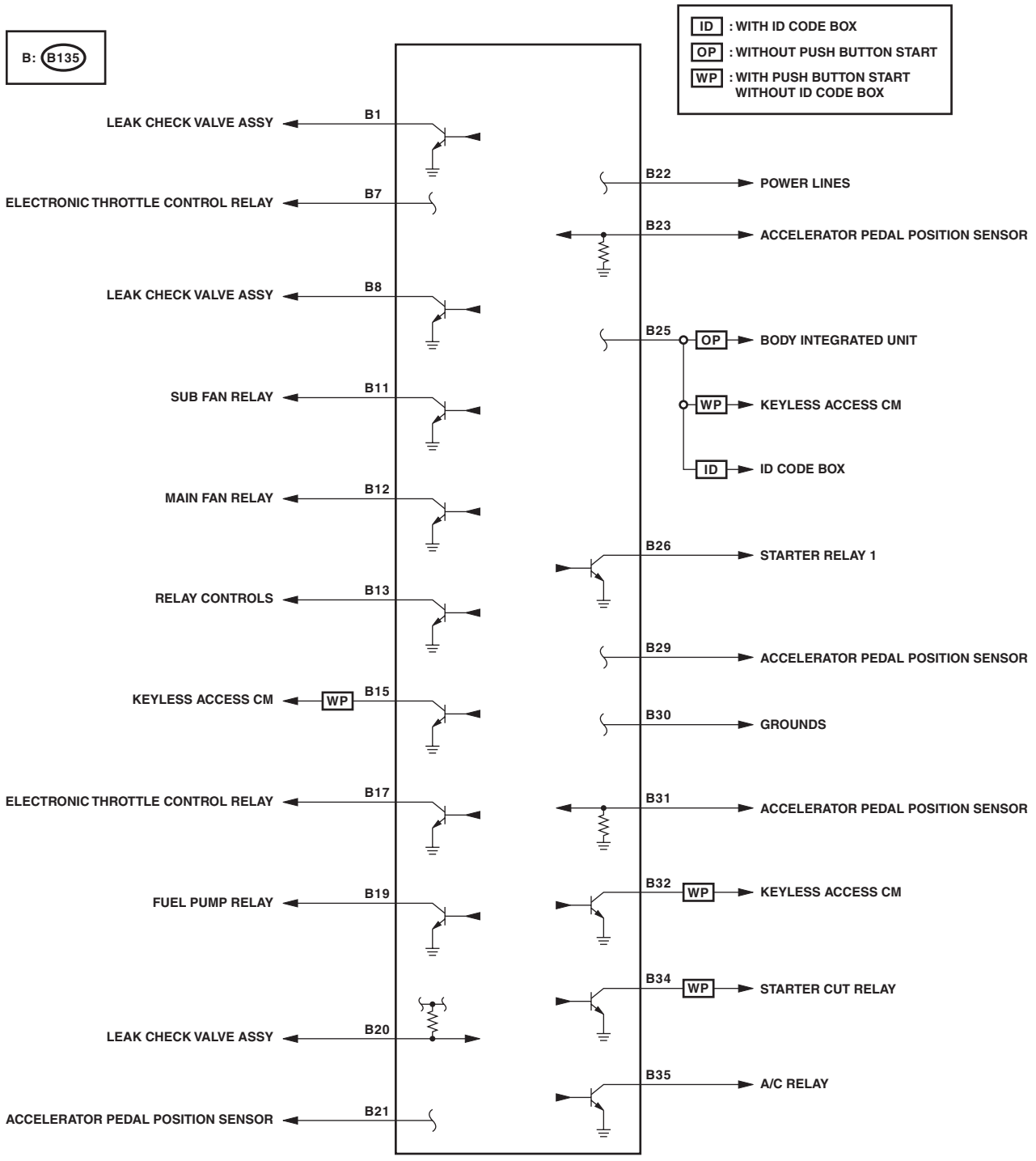
ID : WITH ID CODE BOX
OP : WITHOUT PUSH BUTTON START
WP : WITH PUSH BUTTON START WITHOUT ID CODE BOX
B: B135
LEAK CHECK VALVE ASSY
B1
ELECTRONIC THROTTLE CONTROL RELAY
B7
LEAK CHECK VALVE ASSY
B8
SUB FAN RELAY
B11
MAIN FAN RELAY
B12
RELAY CONTROLS
B13
KEYLESS ACCESS CM
WP
B15
ELECTRONIC THROTTLE CONTROL RELAY
B17
FUEL PUMP RELAY
B19
LEAK CHECK VALVE ASSY
B20
ACCELERATOR PEDAL POSITION SENSOR
B21
B22
POWER LINES
B23
ACCELERATOR PEDAL POSITION SENSOR
B25
OP
BODY INTEGRATED UNIT
WP
KEYLESS ACCESS CM
ID
ID CODE BOX
B26
STARTER RELAY 1
B29
ACCELERATOR PEDAL POSITION SENSOR
B30
GROUNDS
B31
ACCELERATOR PEDAL POSITION SENSOR
B32
WP
KEYLESS ACCESS CM
B34
WP
STARTER CUT RELAY
B35
A/C RELAY

EN-10729

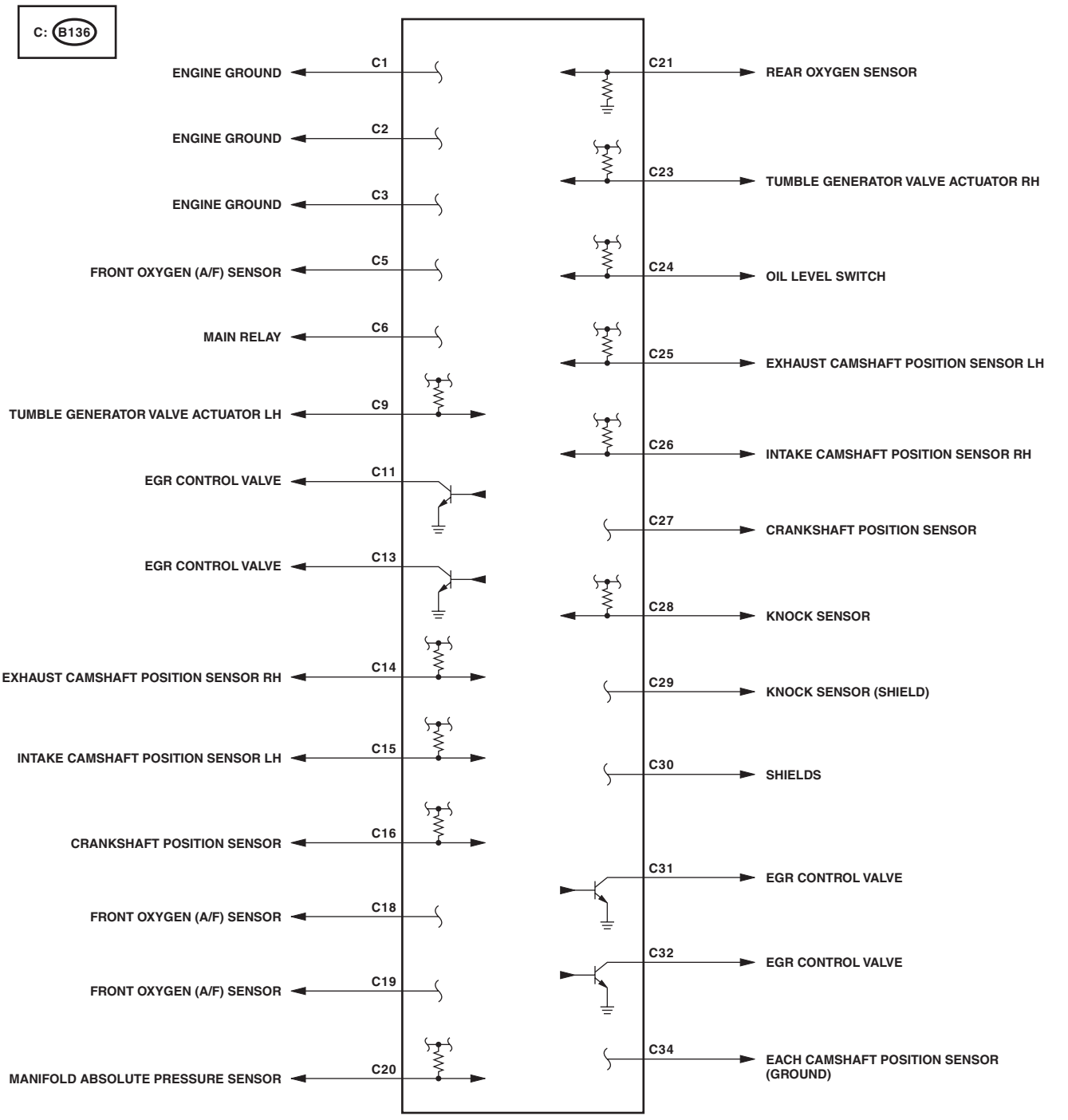
C: B136
ENGINE GROUND
C1
ENGINE GROUND
C2
ENGINE GROUND
C3
FRONT OXYGEN (A/F) SENSOR
C5
MAIN RELAY
C6
TUMBLE GENERATOR VALVE ACTUATOR LH
C9
EGR CONTROL VALVE
C11
EGR CONTROL VALVE
C13
EXHAUST CAMSHAFT POSITION SENSOR RH
C14
INTAKE CAMSHAFT POSITION SENSOR LH
C15
CRANKSHAFT POSITION SENSOR
C16
FRONT OXYGEN (A/F) SENSOR
C18
FRONT OXYGEN (A/F) SENSOR
C19
MANIFOLD ABSOLUTE PRESSURE SENSOR
C20
C21
REAR OXYGEN SENSOR
C23
TUMBLE GENERATOR VALVE ACTUATOR RH
C24
OIL LEVEL SWITCH
C25
EXHAUST CAMSHAFT POSITION SENSOR LH
C26
INTAKE CAMSHAFT POSITION SENSOR RH
C27
CRANKSHAFT POSITION SENSOR
C28
KNOCK SENSOR
C29
KNOCK SENSOR (SHIELD)
C30
SHIELDS
C31
EGR CONTROL VALVE
C32
EGR CONTROL VALVE
C34
EACH CAMSHAFT POSITION SENSOR (GROUND)

EN-10730

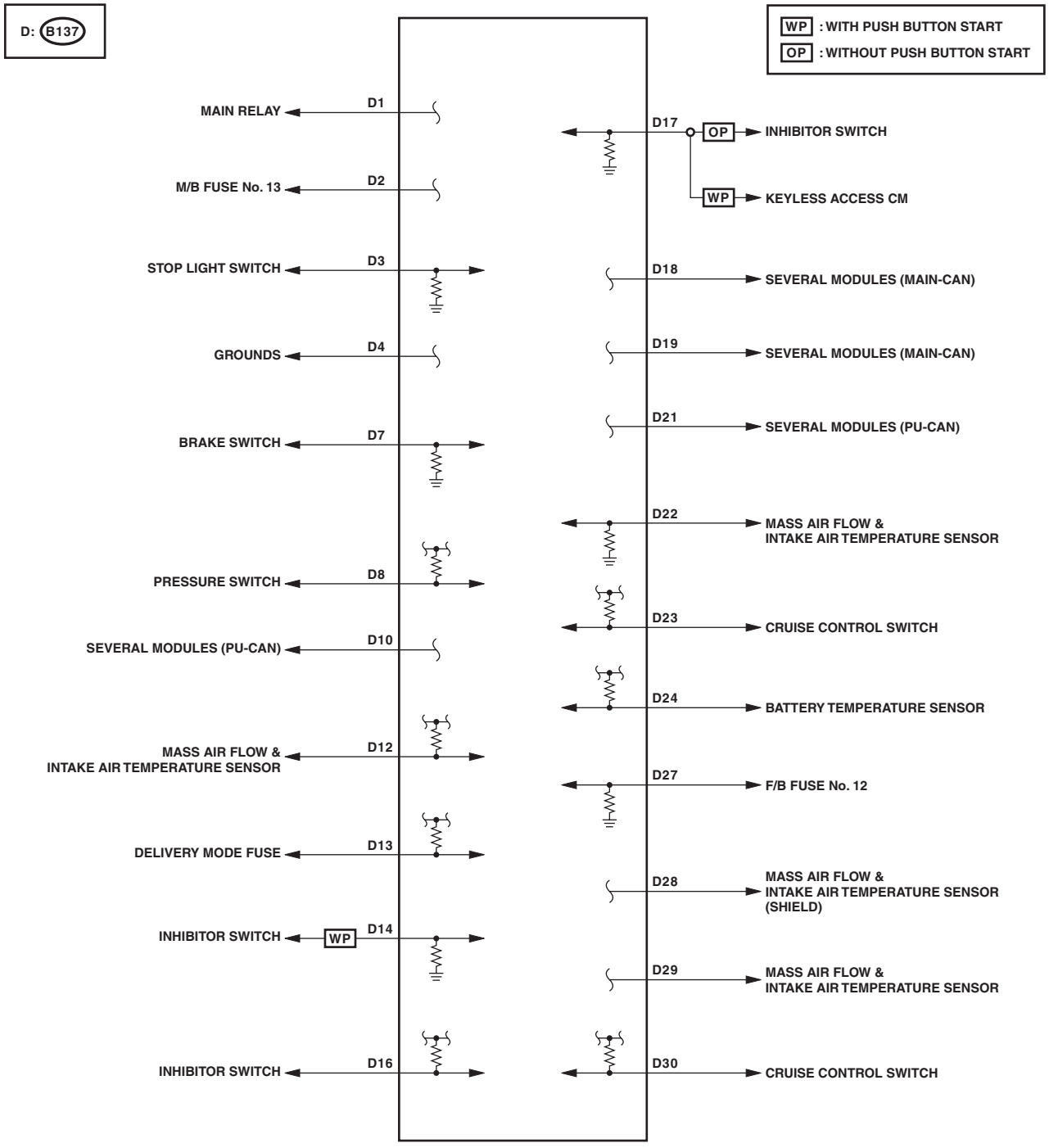
D: B137
WP : WITH PUSH BUTTON START
OP : WITHOUT PUSH BUTTON START
MAIN RELAY
D1
M/B FUSE No. 13
D2
STOP LIGHT SWITCH
D3
GROUNDS
D4
BRAKE SWITCH
D7
PRESSURE SWITCH
D8
SEVERAL MODULES (PU-CAN)
D10
MASS AIR FLOW &
INTAKE AIR TEMPERATURE SENSOR
D12
DELIVERY MODE FUSE
D13
INHIBITOR SWITCH
WP
D14
INHIBITOR SWITCH
D16
D17
OP
INHIBITOR SWITCH
WP
KEYLESS ACCESS CM
D18
SEVERAL MODULES (MAIN-CAN)
D19
SEVERAL MODULES (MAIN-CAN)
D21
SEVERAL MODULES (PU-CAN)
D22
MASS AIR FLOW &
INTAKE AIR TEMPERATURE SENSOR
D23
CRUISE CONTROL SWITCH
D24
BATTERY TEMPERATURE SENSOR
D27
F/B FUSE No. 12
D28
MASS AIR FLOW &
INTAKE AIR TEMPERATURE SENSOR
(SHIELD)
D29
MASS AIR FLOW &
INTAKE AIR TEMPERATURE SENSOR
D30
CRUISE CONTROL SWITCH

EN-10601

6. Engine Condition Data

A: ELECTRICAL SPECIFICATION

Contents	Specifications
Engine load	13.6 — 40.5 (%): Idling
	14.7 — 29.8 (%): 2,500 rpm racing

Measuring condition:
- After engine is warmed up.
- Place the select lever in “P” range or “N” range.
- Turn the A/C to OFF.
- Turn all the accessory switches to OFF.

7. Data Link Connector

A: NOTE

This connector is used for Subaru Select Monitor.

CAUTION:
Do not connect any scan tools other than Subaru Select Monitor or general scan tool because the circuit for Subaru Select Monitor may be damaged.

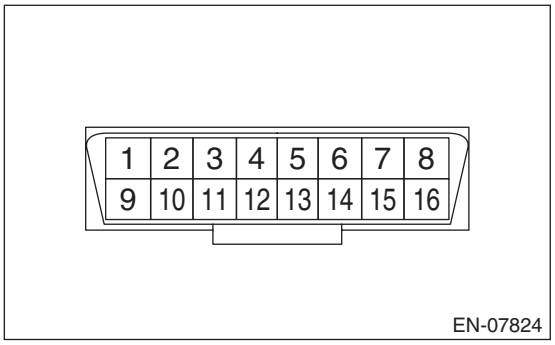

Terminal No.	Contents	Terminal No.	Contents
1	Not used	9	Not used
2	Not used	10	Not used
3	Not used	11	Not used
4	Ground	12	Not used
5	Ground	13	Not used
6	CAN communication (Hi)	14	CAN communication (Lo)
7	Not used	15	Not used
8	Not used	16	Power supply

8. General Scan Tool

A: OPERATION

1. HOW TO USE GENERAL SCAN TOOL

1) Prepare a scan tool (general scan tool) required by SAE J1978.
2) Connect the general scan tool to data link connector located in the lower portion of the instrument panel (on the driver's side).

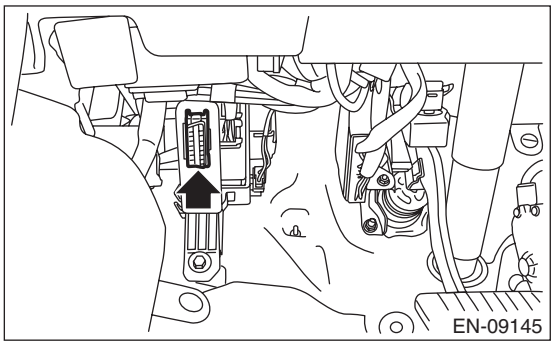

3) Using the general scan tool, call up each data. General scan tool functions consist of:
   (1) MODE $01: Current powertrain diagnostic data
   (2) MODE $02: Powertrain freeze frame data
   (3) MODE $03: Emission-related powertrain DTC
   (4) MODE $04: Clear/Reset emission-related diagnostic information
   (5) MODE $06: Request on-board monitoring test results for intermittently monitored systems
   (6) MODE $07: Request on-board monitoring test results for continuously monitored systems
   (7) MODE $08: Request control for on-board system, test, and component
   (8) MODE $09: Request vehicle information
4) Read out the data according to repair procedures. (For detailed operation procedures, refer to the general scan tool operation manual.)

NOTE:
For details concerning DTC, refer to "List of Diagnostic Trouble Code (DTC)". <Ref. to EN(H4DO HEV)(diag)-88, List of Diagnostic Trouble Code (DTC).>

2. MODE $01: (CURRENT POWERTRAIN DIAGNOSTIC DATA)

Refer to data denoting the current operating condition of analog input/output, digital input/output or the powertrain system.
A list of the support data and PID (Parameter Identification) codes are shown in the following table.

PID	Data	Unit of measure
$01	Number of emission-related powertrain DTC, and malfunction indicator light status and diagnosis support information	—
$03	Fuel system control status	—
$04	Calculated engine load value	%
$05	Engine coolant temperature	°C
$06	Short term fuel trim	%
$07	Long term fuel trim	%
$0B	Intake manifold absolute pressure	kPa
$0C	Engine speed	rpm
$0D	Vehicle speed	MPH
$0E	Ignition timing advance	°
$0F	Intake air temperature	°C
$10	Intake air amount	g/s
$11	Throttle valve opening angle	%
$13	Air fuel ratio sensor	—
$15	Oxygen sensor output voltage and short term fuel trim associated with oxygen sensor (Bank 1 Sensor 2)	V and %
$1C	Supporting OBD system	—
$1F	Elapsed time after starting the engine	sec
$21	Travel distance after the malfunction indicator light illuminates	miles
$24	A/F value and A/F sensor output voltage (Bank 1 Sensor 1)	— and V
$2C	Target EGR	%
$2D	EGR deviation	%
$2E	Evaporative purge	%
$2F	Fuel level	%
$30	Number of warm ups after DTC clear	time
$31	Travel distance after DTC clear	miles
$33	Barometric pressure	kPa
$34	A/F value and A/F sensor current (Bank 1 Sensor 1)	— and mA
$3C	Catalyst temperature #1	°C
$41	Diagnostic monitor of each drive cycle	—
$42	ECM power voltage	V
$43	Absolute load	%
$44	A/F target lambda	—
$45	Relative throttle opening angle	%
$46	Ambient temperature	°C
$47	Absolute throttle opening angle 2	%
$49	Absolute accelerator opening angle 1	%
$4A	Absolute accelerator opening angle 2	%
$4C	Target throttle opening angle	%
$4D	Engine operating time while malfunction indicator lit	min
$4E	Elapsed time after DTC clear	min
$53	ELCM pressure	—
$5A	Relative accelerator opening angle	%
$5C	Engine oil temperature	°C
$65	Neutral status	—

NOTE:
Refer to general scan tool manufacturer's operation manual to access current powertrain diagnostic data (MODE $01).

3. MODE $02 (POWERTRAIN FREEZE FRAME DATA)

Refer to data denoting the operating condition when trouble is detected by on-board diagnosis system.
A list of the support data and PID (Parameter Identification) codes are shown in the following table.

PID	Data	Unit of measure
$02	DTC that caused freeze frame data to be stored	—
$03	Fuel system control status	—
$04	Calculated engine load value	%
$05	Engine coolant temperature	°C
$06	Short term fuel trim (Bank 1 Sensor 1)	%
$07	Long term fuel trim (Bank 1 Sensor 1)	%
$0B	Intake manifold absolute pressure	kPa
$0C	Engine speed	rpm
$0D	Vehicle speed	MPH
$0E	Ignition timing advance	°
$0F	Intake air temperature	°C
$10	Intake air amount	g/s
$11	Throttle valve opening angle	%
$13	Air fuel ratio sensor	—
$15	Oxygen sensor output voltage and short term fuel trim associated with oxygen sensor (Bank 1 Sensor 2)	V and %
$1C	Supporting OBD system	—
$1F	Elapsed time after starting the engine	sec
$2C	Target EGR	%
$2D	EGR deviation	%
$2E	Evaporative purge	%
$2F	Fuel level	%
$33	Barometric pressure	kPa
$42	ECM power voltage	V
$43	Absolute load	%
$44	A/F target lambda	—
$45	Relative throttle opening angle	%
$46	Ambient temperature	°C
$47	Absolute throttle opening angle 2	%
$49	Absolute accelerator opening angle 1	%
$4A	Absolute accelerator opening angle 2	%
$4C	Target throttle opening angle	%
$65	Neutral status	—

NOTE:
Refer to general scan tool manufacturer's instruction manual to access freeze frame data (MODE $02).

4. MODE $03 (EMISSION-RELATED POWERTRAIN DTC)

Refer to "List of Diagnostic Trouble Code (DTC)" for information about data denoting emission-related powertrain DTC. <Ref. to EN(H4DO HEV)(diag)-88, List of Diagnostic Trouble Code (DTC).>

5. MODE $04 (CLEAR/RESET EMISSION-RELATED DIAGNOSTIC INFORMATION)

Refer to the mode used to clear or reset emission-related diagnostic information.

NOTE:
Refer to general scan tool manufacturer's instruction manual to clear the emission-related diagnostic information (MODE $04).

6. MODE $06

Refer to diagnostic value of troubleshooting and data of test limit indicated on the support data bit sequence table. A list of the support data is shown in the following table.

NOTE:
Some items are not displayed according to the specifications.

OBDMID	TID	SID	Diagnostic item
$01	$84	$1E	A/F sensor range failure (Bank 1 Sensor 1)
	$85	$1E	
	$86	$20	A/F sensor response failure (Bank 1 Sensor 1)
	$91	$20	
	$92	$10	
	$A3	$20	
	$A4	$10	
	$AC	$10	
	$AD	$10	
	$AE	$10	
	$AF	$10	
	$CD	$20	
	$CF	$20	
	$DF	$10	
$02	$07	$0B	Oxygen sensor drop failure (Bank 1 Sensor 2)
	$08	$0B	
	$A5	$0B	
	$05	$10	Oxygen sensor response failure (Bank 1 Sensor 2)
	$06	$10	
	$BD	$10	
	$D1	$10	Oxygen sensor delay failure (Bank 1 Sensor 2)
	$D2	$01	
$21	$89	$20	Catalyst deterioration diagnosis (Bank 1)
$31	$8A	$FD	EGR system diagnosis
$35	$8B	$9D	VVT monitor (Bank 1)
	$8C	$9D	
	$8D	$9D	
	$8E	$9D	
	$D3	$9D	
	$D4	$9D	
	$D5	$9D	
	$D6	$9D	

OBDMID	TID	SID	Diagnostic item
$36	$8B	$9D	VVT monitor (Bank 2)
	$8C	$9D	
	$8D	$9D	
	$8E	$9D	
	$D3	$9D	
	$D4	$9D	
	$D5	$9D	
	$D6	$9D	
$3C	$96	$FE	Evaporative emission control system (0.02 inch leak)
	$C1	$FE	
	$C2	$FE	
	$C3	$FE	
	$C4	$FE	
	$C5	$FE	
	$C6	$35	
	$C7	$FE	
	$C8	$FE	
	$C9	$FE	
	$CA	$FE	
$3D	$98	$FE	Evaporative emission control system (purge flow)
	$CB	$35	ELCM purge flow
	$CC	$FE	
$41	$9B	$14	A/F sensor heater characteristics failure (Bank 1 Sensor 1)
$42	$A2	$24	Oxygen sensor heater characteristics failure (Bank 1 Sensor 2)
$A1	$0B	$24	Misfire monitoring (all cylinders)
	$0C	$24	
$A2	$0B	$24	Misfire monitoring (#1 cylinder)
	$0C	$24	
$A3	$0B	$24	Misfire monitoring (#2 cylinder)
	$0C	$24	
$A4	$0B	$24	Misfire monitoring (#3 cylinder)
	$0C	$24	
$A5	$0B	$24	Misfire monitoring (#4 cylinder)
	$0C	$24	

7. MODE $07

Refer to the data of DTC (pending code) for troubleshooting result about emission in the first time.

8. MODE $08 (REQUEST CONTROL FOR ON-BOARD SYSTEM, TEST, AND COMPONENT)

Perform “Active Test” of the on-board system.

9. MODE $09

Refer to the data of the vehicle specification.

9. Subaru Select Monitor

A: OPERATION

1. HOW TO USE SUBARU SELECT MONITOR

NOTE:
For detailed operation procedures, refer to “PC application help for Subaru Select Monitor”.

2. DISPLAY CURRENT ENGINE DATA

NOTE:
- For detailed operation procedures, refer to “PC application help for Subaru Select Monitor”.
- A list of the support data is shown in the following table.
- *: For models without cruise control, the brake switch signal does not change.

Contents	Display	Note (at idling)	Unit of measure
Engine speed signal	Engine Speed	650 rpm	rpm
Intake air amount	Mass Air Flow	2.0 g/s	g/s or lb/m
Vehicle speed signal	Vehicle speed	0 km/h	km/h or MPH
Throttle position signal	Throttle Opening Angle	13%	%
Acceleration opening angle signal	Accel opening angle	0.0%	%
A/F sensor output lambda 1	A/F Sensor #1	1.00	—
#1 cylinder ignition timing	Ignition timing adv. #1	7°	°
Engine coolant temperature signal	Coolant Temperature	96°C	°C or °F
Injection 1 pulse width	Fuel Injection #1 Pulse	2.56 ms	ms
Short term fuel trim by front oxygen (A/F) sensor (bank 1)	Short term fuel trim B1	0.0%	%
Long term fuel trim by front oxygen (A/F) sensor (bank 1)	Long term fuel trim B1	0.0%	%
Learned value of ignition timing	Learned Ignition Timing	0.0 deg	deg
Intake manifold absolute pressure signal	Mani. Absolute Pressure	29 kPa	kPa, mmHg, inHg or psig
Oxygen sensor (bank 1 sensor 2)	Oxygen sensor #12	—	V
AVCS advance angle amount RH	VVT Adv. Ang. Amount R	0 deg	deg
AVCS advance angle amount LH	VVT Adv. Ang. Amount L	0 deg	deg
Exhaust AVCS retard angle amount RH	Exh. VVT Retard Ang. R	0 deg	deg
Exhaust AVCS retard angle amount LH	Exh. VVT Retard Ang. L	0 deg	deg
Intake AVCS initial position learning value (bank 1)	VVT Initial Position Learning Value #1	60°CA	°CA
Intake AVCS initial position learning value (bank 2)	VVT Initial Position Learning Value #2	60°CA	°CA
Exhaust AVCS initial position learning value (bank 1)	VVT Ex Initial Position Learning Value #1	90°CA	°CA
Exhaust AVCS initial position learning value (bank 2)	VVT Ex Initial Position Learning Value #2	90°CA	°CA
ECM power supply voltage	ECU ACC	13.3 V	V
Target engine speed	Target engine speed	650 rpm	rpm
A/F target lambda	Target Equivalence Ratio	0.996	—
Engine oil temperature signal	Oil Temperature	96°C	°C or °F
Intake air temperature signal	Intake Air Temp.	50°C	°C or °F
Ambient temperature	Ambient Temperature	—	°C or °F
Ambient temperature sensor value	Ambient Temperature Sensor Signal	—	°C or °F
Ambient temperature for control	Ambient Temperature for Control	—	°C or °F

Contents	Display	Note (at idling)	Unit of measure
Engine load data	Calculated load value	19%	%
Absolute load	Absolute Load Value	14%	%
Atmospheric pressure signal	Atmospheric pressure	—	kPa, mmHg, inHg or psig
Intake manifold relative pressure	Mani. Relative Pressure	—	kPa, mmHg, inHg or psig
Target throttle opening angle	Target Throttle Opening Angle	16 deg	deg
Actual throttle opening angle	Actual Throttle Opening Angle	16 deg	deg
Target throttle opening angle	Target Throttle Opening Angle	0.0%	%
Relative throttle opening angle	Relative Throttle Pos.	1.2%	%
Electronic throttle control motor voltage	Throttle Motor Voltage	13.4 V	V
Main throttle position sensor voltage	Main-Throttle Sensor	0.63 V	V
Sub throttle position sensor voltage	Sub-Throttle Sensor	1.52 V	V
Throttle motor duty	Throttle Motor Duty	–12.5%	%
Main accelerator pedal position sensor voltage	Main-Accelerator Sensor	0.68 V	V
Sub accelerator pedal position sensor voltage	Sub-Accelerator Sensor	0.68 V	V
Mass air flow voltage	Air Flow Sensor Voltage	1.2 V	V
Fuel level signal	Fuel Level	—	%
Fuel level sensor resistance	Fuel level resistance	—	Ω
Evaporative purge	Evap Purge	0%	%
Purge control solenoid duty ratio	CPC Valve Duty Ratio	0%	%
Knock sensor correction	Knocking Correction	0.0 deg	deg
Air fuel ratio control system for bank 1	Fuel system for Bank 1	Cl_normal	—
A/F sensor current value 1	A/F Sensor #1 Current	0.00 mA	mA
A/F sensor resistance value 1	A/F Sensor #1 Resistance	50 Ω	Ω
A/F correction #3	A/F Correction #3	0.00%	%
Number of EGR steps	No. of EGR steps	0 STEP	STEP
Target EGR	Commanded EGR	0%	%
EGR error	EGR Error	0%	%
Tumble generator valve RH opening switch signal	TGV Position SW1	Close	—
Tumble generator valve LH opening switch signal	TGV Position SW2	Close	—
Tumble generator valve output signal	TGV Output	OFF	—
Tumble generator valve driving signal	TGV Drive	Close	—
Oil control solenoid duty ratio RH	OCV Duty R	60%	%
Oil control solenoid duty ratio LH	OCV Duty L	63%	%
Oil control solenoid current RH	OCV Current R	703 mA	mA
Oil control solenoid current LH	OCV Current L	735 mA	mA
Exhaust oil control solenoid duty ratio RH	Exh. OCV Duty R	49%	%
Exhaust oil control solenoid duty ratio LH	Exh. OCV Duty L	49%	%
Exhaust oil control solenoid current value RH	Exh. OCV Current R	570 mA	mA
Exhaust oil control solenoid current value LH	Exh. OCV Current L	570 mA	mA
#1 cylinder roughness monitor	Roughness Monitor #1	0	—
#2 cylinder roughness monitor	Roughness Monitor #2	0	—
#3 cylinder roughness monitor	Roughness Monitor #3	0	—
#4 cylinder roughness monitor	Roughness Monitor #4	0	—

Contents	Display	Note (at idling)	Unit of measure
Active grille shutter position	Active Grille Shutter Position	—	—
Active grille shutter mechanical break status	Active Grille Shutter Mechanical Break Status	Normal	—
Active grille shutter sensor error status	Active Grille Shutter Sensor Error Status	Normal	—
Active grille shutter voltage error status	Active Grille Shutter Voltage Error Status	Normal	—
Active grille shutter control circuit error status	Active Grille Shutter Control Circuit Error Status	Normal	—
Active grille shutter stuck error status	Active Grille Shutter Stuck Error Status	Normal	—
Active grille shutter temperature error status	Active Grille Shutter Temperature Error Status	Normal	—
Active grille shutter communication error status	Active Grille Shutter Communication Error Status	Normal	—
Active grille shutter position commanded status	Active Grille Shutter Position Commanded Status	—	—
Active grille shutter calibration operating status	Active Grille Shutter Calibration in progress	OFF	—
Active grille shutter calibration commanded status	Active Grille Shutter Calibration Commanded Status	OFF	—
Active grille shutter calibration status	Active Grille Shutter Calibration Status	Complete	—
Active grille shutter warning status	Active Grille Shutter Warning Status	OFF	—
Active grille shutter control status 1	Active Grille Shutter Control Status 1	—	—
Total number of ignition switch ON	Trip Count	—	times
Counter	Count	Common	—
Elapsed time after ignition switch ON	Time Count	—	ms
Elapsed time after starting the engine	Time Since Engine Start	—	sec
Elapsed time after starting the engine	Elapsed Time After Engine Run	—	sec
Accumulation of elapsed time after starting the engine	Accumulation Time After Engine Run	—	sec
Travel distance after DTC clear	Meter since DTC cleared	—	km/mile
Engine operating time while malfunction indicator light lit	Time while MIL lighted	—	min
Elapsed time after DTC clear	Time since DTC cleared	—	min
Number of warm ups after DTC clear	Number of warm-ups	—	times
Travel distance after the malfunction indicator light illuminates	Lighted MI lamp history	—	km/mile
Odometer	Odometer	—	km
Catalyst temperature #1	Catalyst Temperature #11	—	°C or °F
Neutral condition	AT drive status	NEUT	—
Evaporative emission control system pressure	Absolute Evap System Vapor Pressure	101 kPa	kPa, mmHg, inHg or psig

Contents	Display	Note (at idling)	Unit of measure
Neutral position switch signal	Neutral switch	Neutral	—
Electronic throttle control motor relay signal	ETC Motor Relay	ON	—
Stop light switch signal	Stop light SW	OFF (when OFF)	—
Brake switch signal*	Brake SW	OFF (when OFF)	—
Soft idle switch signal	Idle Switch Signal	Idle	—
Ignition switch signal	Ignition switch	ON	—
Air conditioner middle pressure switch signal	A/C Mid Pressure Switch	OFF (when OFF)	—
Air conditioner compressor relay output signal	A/C Compressor Signal	OFF (when OFF)	—
Radiator fan relay 1 signal	Radiator Fan Relay #1	OFF (when OFF)	—
Radiator fan relay 2 signal	Radiator Fan Relay #2	OFF (when OFF)	—
Air conditioning switch signal	A/C Switch	OFF (when OFF)	—
Starter switch signal	Starter SW	OFF	—
Rear defogger switch signal	Rear Defogger SW	OFF (when OFF)	—
Blower fan switch signal	Blower Fan SW	OFF (when OFF)	—
Light switch signal	Light Switch	OFF (when OFF)	—
Wiper switch signal	Wiper Switch	OFF (when OFF)	—
AT/MT identification terminal	AT Vehicle ID Signal	ON	—
Delivery mode terminal	Delivery Mode Connector	OFF	—
Rear oxygen monitor	Rear O2 Rich Signal	—	—
Knocking signal	Knocking Signal	OFF	—
Crankshaft position sensor signal	Crankshaft Position Sig.	ON	—
Camshaft position sensor signal	Camshaft Position Sig.	ON	—
AT coordinate retard angle demand signal	Retard Signal from AT	OFF	—
AT coordinate fuel cut demand signal	Fuel Cut signal from AT	OFF	—
Vehicle dynamics control (VDC) torque down prohibition output	Ban of Torque Down	Allowance	—
Vehicle dynamics control (VDC) torque down demand	Request Torque Down VDC	OFF	—
Permission signal in coordination with AT	Torque Permission Signal	Allowance	—
SET/COAST switch signal	SET/COAST SW	OFF (when OFF)	—
RES/ACC switch signal	RESUME/ACCEL SW	OFF (when OFF)	—
Main switch signal	Main switch	OFF (when OFF)	—
Cruise control cancel switch signal	Cruise Control Cancel Switch Signal	OFF (when OFF)	—
Fuel pump relay signal	Fuel Pump Relay	ON	—
All cylinders fuel cut	All Cylinders Fuel cut	OFF	—
Request for shift pattern during low water temperature	Shift Pattern Demand for Low Water Temperature	OFF	—
Auto Start Stop cooperation prohibition request	Emphasized idle stop request	Allowance	—
Oil level switch signal	Oil level switch	HIGH level	—
ELCM switching valve drive signal	ELCM switching valve	Open	—
ELCM vacuum pump drive signal	ELCM pump	OFF	—
Hybrid powertrain control module control mode	HPCM Current Control Mode	—	—
Engine control status	Engine Control Status	—	—
Integrated starter generator (ISG) load torque	ISG Load Torque	—	Nm
Primary pulley speed	Primary Rev Speed	—	rpm

Contents	Display	Note (at idling)	Unit of measure
12V battery relay mode target	12V Battery Relay Target Mode	Open	—
Start control information	Start Control Check	—	—
Input clutch open request	Input Clutch Open Request	—	—
Integrated starter generator (ISG) cranking status	ISG Cranking Status	OFF	—
Idle stop fuel cut request	Idle Stop Fuel Cut Request	W/O Request	—
Starter relay ON permission signal status	Starter Relay Drive Permission Status	—	—
Engine torque information 1	Engine Torque Check 1	—	Nm
Engine torque information 2	Engine Torque Check 2	—	Nm
Engine torque information 3	Engine Torque Check 3	—	Nm
Engine torque information 4	Engine Torque Check 4	—	Nm
Engine torque information 5	Engine Torque Check 5	—	Nm
Ignition control information 1	Ignition Control Check 1	—	—
Ignition control information 2	Ignition Control Check 2	—	—
Condition of malfunction indicator light	MI(MIL)	OFF	—
Number of diagnosis code	Number of Diag. Code:	0	—
A/F correction (bank 1 sensor 2)	Short term fuel trim #12	0.0%	%
A/F lambda signal (bank 1 sensor 1)	A/F Sensor #11	1.001	—
A/F sensor output signal (bank 1 sensor 1)	A/F Sensor #11	2.193 V	V
A/F lambda signal (bank 1 sensor 1)	A/F Sensor #11	1.001	—
A/F sensor current (bank 1 sensor 1)	A/F Sensor #11	0.00	mA
Absolute throttle opening angle 2	Absolute Throttle Pos.#2	30.2%	%
Absolute accelerator opening angle 1	Accelerator Pedal Pos.#1	13.3%	%
Absolute accelerator opening angle 2	Accelerator Pedal Pos.#2	13.3%	%
Relative acceleration opening angle	Relative Accelera. Pos.	0%	%
Monitoring test of misfire	Misfire monitoring(Supp)	YES	—
Monitoring test of misfire	Misfire monitoring(Rdy)	YES	—
Monitoring test of fuel system	Fuel system monitoring(Supp)	YES	—
Monitoring test of fuel system	Fuel system monitoring(Rdy)	YES	—
Monitoring test of comprehensive component	Component monitoring(Supp)	YES	—
Monitoring test of comprehensive component	Component monitoring(Rdy)	YES	—
Test of catalyst	Catalyst Diagnosis(Supp)	YES	—
Test of catalyst	Catalyst Diagnosis(Rdy)	NO	—
Test of heating-type catalyst	Heated catalyst(Supp)	NO	—
Test of heating-type catalyst	Heated catalyst(Rdy)	N/A	—
Test of evaporative emission purge control system	Evaporative purge system(Supp)	NO	—
Test of evaporative emission purge control system	Evaporative purge system(Rdy)	N/A	—
Secondary air system test	Secondary air system(Supp)	NO	—

Contents	Display	Note (at idling)	Unit of measure
Secondary air system test	Secondary air system(Rdy)	N/A	—
Test of air conditioning system refrigerant	A/C system refrigerant(Supp)	NO	—
Test of air conditioning system refrigerant	A/C system refrigerant(Rdy)	N/A	—
Test of oxygen sensor	Oxygen sensor (Supp)	YES	—
Test of oxygen sensor	Oxygen sensor (Rdy)	NO	—
Test of oxygen sensor heater	O2 Heater Diagnosis(Supp)	YES	—
Test of oxygen sensor heater	O2 Heater Diagnosis(Rdy)	YES	—
Test of EGR system	EGR system(Supp)	YES	—
Test of EGR system	EGR system(Rdy)	NO	—
Monitoring test of misfire	Misfire monitoring(Enable)	YES	—
Monitoring test of misfire	Misfire monitoring(Comp)	YES	—
Monitoring test of fuel system	Fuel system monitoring(Enable)	YES	—
Monitoring test of fuel system	Fuel system monitoring(Comp)	YES	—
Monitoring test of comprehensive component	Component monitoring(Enable)	YES	—
Monitoring test of comprehensive component	Component monitoring(Comp)	NO	—
Test of catalyst	Catalyst Diagnosis(Enable)	YES	—
Test of catalyst	Catalyst Diagnosis(Comp)	NO	—
Test of heating-type catalyst	Heated catalyst(Enable)	N/A	—
Test of heating-type catalyst	Heated catalyst(Comp)	N/A	—
Test of evaporative emission purge control system	Evaporative purge system(Enable)	N/A	—
Test of evaporative emission purge control system	Evaporative purge system(Comp)	N/A	—
Secondary air system test	Secondary air system(Enable)	N/A	—
Secondary air system test	Secondary air system(Comp)	N/A	—
Test of air conditioning system refrigerant	A/C system refrigerant(Enable)	N/A	—
Test of air conditioning system refrigerant	A/C system refrigerant(Comp)	N/A	—
Test of oxygen sensor	Oxygen sensor(Enable)	YES	—
Test of oxygen sensor	Oxygen sensor(Comp)	NO	—
Test of oxygen sensor heater	O2 Heater Diagnosis(Enable)	YES	—
Test of oxygen sensor heater	O2 Heater Diagnosis(Comp)	YES	—
Test of EGR system	EGR system(Enable)	YES	—
Test of EGR system	EGR system(Comp)	NO	—
On-board diagnostic system	OBD System	OBD/OBD2	—

3. DISPLAY OF ENGINE FREEZE FRAME DATA

NOTE:
• ECM updates the freeze frame data every 0.5 seconds, and always keeps the last three records. Time-series freeze frame data includes the last three freeze frame data and the freeze frame data when the DTC is detected.
• In the time-series freeze frame data, the following freeze frame data are displayed: «Detect», «History1», «History2», and «History3».
• Time lag between the freeze frame data of «Detect» and the freeze frame data of «History1» changes within the range of 0 — 0.5 seconds. This is because the freeze frame data of «Detect» is recorded when the DTC is actually detected, while the freeze frame data of «History1» is updated every 0.5 seconds.

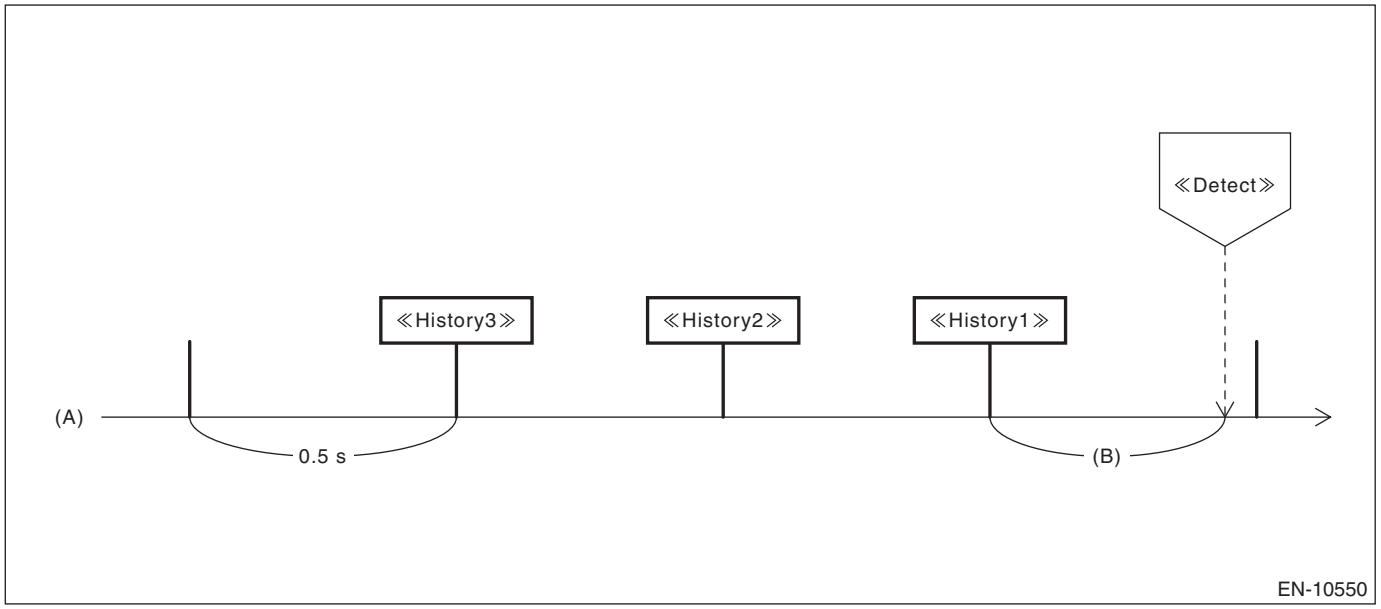

(A) 0.5 seconds timer
(B) Changes within the range of 0 — 0.5 seconds, depending on the timing of DTC detection.

• When more than one DTCs are recorded, the time-series freeze frame data is recorded only for the first-detected DTC, and for the next DTC, just the freeze frame data of «Detect» is recorded. And for the subsequent DTCs, no freeze frame data is recorded.
• When performing diagnosis, you can utilize the time-series freeze frame data to guess the vehicle status when the DTC was detected.
• For detailed operation procedures, refer to “PC application help for Subaru Select Monitor”.
• A list of the support data is shown in the following table.

Contents	Display	Unit of measure
Engine speed signal	Engine Speed	rpm
Intake air amount	Mass Air Flow	g/s or lb/m
Vehicle speed signal	Vehicle speed	km/h or MPH
Throttle position signal	Throttle Opening Angle	%
#1 cylinder ignition timing	Ignition timing adv. #1	°
Engine coolant temperature signal	Coolant Temperature	°C or °F
Short term fuel trim by front oxygen (A/F) sensor (bank 1)	Short term fuel trim B1	%
Long term fuel trim by front oxygen (A/F) sensor (bank 1)	Long term fuel trim B1	%
Intake manifold absolute pressure signal	Mani. Absolute Pressure	kPa, mmHg, inHg or psig
Oxygen sensor (bank 1 sensor 2)	Oxygen sensor #12	V
ECM power supply voltage	ECU ACC	V
A/F target lambda	Target Equivalence Ratio	—

Contents	Display	Unit of measure
Intake air temperature signal	Intake Air Temp.	°C or °F
Ambient temperature	Ambient Temperature	°C or °F
Ambient temperature sensor value	Ambient Temperature Sensor Signal	°C or °F
Ambient temperature for control	Ambient Temperature for Control	°C or °F
Engine load data	Calculated load value	%
Absolute load	Absolute Load Value	%
Atmospheric pressure signal	Atmospheric pressure	kPa, mmHg, inHg or psig
Actual throttle opening angle	Actual Throttle Opening Angle	deg
Target throttle opening angle	Target Throttle Opening Angle	%
Relative throttle opening angle	Relative Throttle Pos.	%
Fuel level signal	Fuel Level	%
Evaporative purge	Evap Purge	%
Air fuel ratio control system for bank 1	Fuel system for Bank 1	—
Target EGR	Commanded EGR	%
EGR error	EGR Error	%
Active grille shutter position	Active Grille Shutter Position	—
Active grille shutter mechanical break status	Active Grille Shutter Mechanical Break Status	—
Active grille shutter sensor error status	Active Grille Shutter Sensor Error Status	—
Active grille shutter voltage error status	Active Grille Shutter Voltage Error Status	—
Active grille shutter control circuit error status	Active Grille Shutter Control Circuit Error Status	—
Active grille shutter stuck error status	Active Grille Shutter Stuck Error Status	—
Active grille shutter temperature error status	Active Grille Shutter Temperature Error Status	—
Active grille shutter communication error status	Active Grille Shutter Communication Error Status	—
Active grille shutter position commanded status	Active Grille Shutter Position Commanded Status	—
Active grille shutter calibration operating status	Active Grille Shutter Calibration in progress	—
Active grille shutter calibration commanded status	Active Grille Shutter Calibration Commanded Status	—
Active grille shutter calibration status	Active Grille Shutter Calibration Status	—
Active grille shutter warning status	Active Grille Shutter Warning Status	—
Active grille shutter control status 1	Active Grille Shutter Control Status 1	—
Total number of ignition switch ON	IGN Counter	times
Counter	Count	—
Elapsed time after ignition switch ON	past time after IG on	ms
Elapsed time after starting the engine	Time Since Engine Start	sec
Neutral condition	AT drive status	—
Engine control status	Engine Control Status	—
Idle stop fuel cut request	Idle Stop Fuel Cut Request	—
Engine torque information 1	Engine Torque Check 1	Nm
Engine torque information 2	Engine Torque Check 2	Nm
Engine torque information 3	Engine Torque Check 3	Nm
A/F correction (bank 1 sensor 2)	Short term fuel trim #12	%
Absolute throttle opening angle 2	Absolute Throttle Pos.#2	%
Absolute accelerator opening angle 1	Accelerator Pedal Pos.#1	%
Absolute accelerator opening angle 2	Accelerator Pedal Pos.#2	%
On-board diagnostic system	OBD System	—

4. V.I.N REGISTRATION

1) On «Main Menu» display, select {Each System Check}.
2) On «System Selection Menu» display, select {Engine Control System}.
3) Click the [OK] button after the information of engine type has been displayed.
4) On «Engine Diagnosis» display, select {Work Support}.
5) On «Work Support» display, select {Entry VIN}.
6) Perform the procedures shown on the display screen.

10.Read Diagnostic Trouble Code (DTC)

A: OPERATION

1. SUBARU SELECT MONITOR

NOTE:
• For detailed operation procedures, refer to “PC application help for Subaru Select Monitor”.
• For details concerning DTC, refer to “List of Diagnostic Trouble Code (DTC)”. <Ref. to EN(H4DO HEV)(diag)-88, List of Diagnostic Trouble Code (DTC).>

2. GENERAL SCAN TOOL

Refer to data denoting emission-related powertrain DTC.
For details concerning DTC, refer to “List of Diagnostic Trouble Code (DTC)”. <Ref. to EN(H4DO HEV)(diag)-88, List of Diagnostic Trouble Code (DTC).>

NOTE:
Refer to general scan tool manufacturer’s instruction manual to access powertrain DTC (MODE $03).

11.Inspection Mode

A: PROCEDURE

Perform the diagnosis shown in the following DTC table.
When performing the diagnosis not listed in “List of Diagnostic Trouble Code (DTC)”, refer to the item on the drive cycle. <Ref. to EN(H4DO HEV)(diag)-50, Drive Cycle.>

DTC	Item	Condition
B1570	Antenna	—
B1571	Reference Code Incompatibility	—
B1572	IMM Circuit Failure (Except Antenna Circuit)	—
B1574	Key Communication Failure	—
B1575	Incorrect Immobilizer Key	—
B1576	EGI Control Module EEPROM	—
B1577	IMM Control Module EEPROM	—
B1578	Meter Failure	—
P0013	B Camshaft Position Actuator Circuit/Open (Bank 1)	—
P0023	B Camshaft Position Actuator Circuit/Open (Bank 2)	—
P0031	HO2S Heater Control Circuit Low (Bank 1 Sensor 1)	—
P0032	HO2S Heater Control Circuit High (Bank 1 Sensor 1)	—
P0037	HO2S Heater Control Circuit Low (Bank 1 Sensor 2)	—
P0038	HO2S Heater Control Circuit High (Bank 1 Sensor 2)	—
P0072	Ambient Temperature Sensor Circuit "A" Low	—
P0073	Ambient Temperature Sensor Circuit "A" High	—
P0102	Mass or Volume Air Flow Circuit Low Input	—
P0103	Mass or Volume Air Flow Circuit High Input	—
P0107	Manifold Absolute Pressure/Barometric Pressure Circuit Low Input	—
P0108	Manifold Absolute Pressure/Barometric Pressure Circuit High Input	—
P0112	Intake Air Temperature Sensor 1 Circuit Low	—
P0113	Intake Air Temperature Sensor 1 Circuit High	—
P0117	Engine Coolant Temperature Circuit Low	—
P0118	Engine Coolant Temperature Circuit High	—
P0122	Throttle/Pedal Position Sensor/Switch “A” Circuit Low	—
P0123	Throttle/Pedal Position Sensor/Switch “A” Circuit High	—
P0131	O2 Sensor Circuit Low Voltage (Bank 1 Sensor 1)	—
P0132	O2 Sensor Circuit High Voltage (Bank 1 Sensor 1)	—
P0197	Engine Oil Temperature Sensor Low	—
P0198	Engine Oil Temperature Sensor High	—
P0222	Throttle/Pedal Position Sensor/Switch “B” Circuit Low	—
P0223	Throttle/Pedal Position Sensor/Switch “B” Circuit High	—
P0327	Knock Sensor 1 Circuit Low (Bank 1 or Single Sensor)	—
P0328	Knock Sensor 1 Circuit High (Bank 1 or Single Sensor)	—
P0335	Crankshaft Position Sensor “A” Circuit	—
P0336	Crankshaft Position Sensor “A” Circuit Range/Performance	—
P0340	Camshaft Position Sensor “A” Circuit (Bank 1 or Single Sensor)	—
P0341	Camshaft Position Sensor "A" Circuit Range/Performance (Bank 1 or Single Sensor)	—
P0345	Camshaft Position Sensor “A” Circuit (Bank 2)	—
P0346	Camshaft Position Sensor "A" Circuit Range/Performance (Bank 2)	—
P0365	Camshaft Position Sensor “B” Circuit (Bank 1)	—
P0366	Camshaft Position Sensor B Circuit Range/Performance (Bank 1)	—
P0390	Camshaft Position Sensor “B” Circuit (Bank 2)	—
P0391	Camshaft Position Sensor B Circuit Range/Performance (Bank 2)	—

DTC	Item	Condition
P0452	Evaporative Emission System Pressure Sensor/Switch Low	—
P0453	Evaporative Emission System Pressure Sensor/Switch High	—
P0462	Fuel Level Sensor “A” Circuit Low	—
P0463	Fuel Level Sensor “A” Circuit High	—
P0512	Starter Request Circuit	—
P0560	System Voltage	—
P0604	Internal Control Module Random Access Memory (RAM) Error	—
P0605	Internal Control Module Read Only Memory (ROM) Error	—
P0606	Control Module Processor	—
P060A	Internal Control Module Monitoring Processor Performance	—
P060B	Internal Control Module A/D Processing Performance	—
P0616	Starter Relay Circuit Low	—
P0617	Starter Relay Circuit High	—
P062F	Internal Control Module EEPROM Error	—
P081A	Starter Disable Circuit Low	—
P0A7B	Battery Energy Control Module Request MIL Illumination	—
P0AC4	Hybrid Powertrain Control Module Request MIL Illumination	—
P0CA1	Drive Motor Control Module Request MIL Illumination	—
P1160	Return Spring Failure	—
P2101	Throttle Actuator Control Motor Circuit Range/Performance	—
P2102	Throttle Actuator Control Motor Circuit Low	—
P2103	Throttle Actuator Control Motor Circuit High	—
P2109	Throttle/Pedal Position Sensor “A” Minimum Stop Performance	—
P2119	Throttle Actuator Control Throttle Body Range/Performance	—
P2122	Throttle/Pedal Position Sensor/Switch “D” Circuit Low Input	—
P2123	Throttle/Pedal Position Sensor/Switch “D” Circuit High Input	—
P2127	Throttle/Pedal Position Sensor/Switch “E” Circuit Low Input	—
P2128	Throttle/Pedal Position Sensor/Switch “E” Circuit High Input	—
U0073	Control Module Communication Bus Off	—
U0075	Control Module Communication Bus "PU-CAN" Off	—
U0101	Lost Communication With TCM	—
U0122	Lost Communication With Vehicle Dynamics Control Module	—
U0155	Lost Communication With Instrument Panel Cluster (IPC) Control Module	—
U0284	Lost Communication With Active Grille Shutter Module "A"	—
U0293	Lost Communication With Hybrid Powertrain Control Module	—
U0402	Invalid Data Received From TCM	—
U0416	Invalid Data Received From Vehicle Dynamics Control Module	—
U0423	Invalid Data Received From Instrument Panel Cluster Control Module	—
U0594	Invalid Data Received From Hybrid Powertrain Control Module	—
U1101	Lost Communication With TCM PU-CAN	—
U1293	Lost Communication With Hybrid Powertrain Control Module PU-CAN	—
U1402	Invalid Data Received From TCM PU-CAN	—
U1594	Invalid Data Received From Hybrid Powertrain Control Module PU-CAN	—

1) Check that the 12 volt auxiliary battery voltage is 12 V or more and fuel remains approx. half [20 — 40 L (5.3 — 10.6 US gal, 4.4 — 8.8 Imp gal)].
2) Perform the Clear Memory Mode. <Ref. to EN(H4DO HEV)(diag)-63, Clear Memory Mode.>
3) Read the diagnostic trouble code (DTC) and check that no DTC is displayed. <Ref. to EN(H4DO HEV)(diag)-46, Read Diagnostic Trouble Code (DTC).>

NOTE:
If the DTC is displayed on the screen, the trouble is still present. Perform the diagnosis using “Diagnostic Procedure with Diagnostic Trouble Code (DTC)”. <Ref. to EN(H4DO HEV)(diag)-98, Diagnostic Procedure with Diagnostic Trouble Code (DTC).> After solving the DTC, repeat from step 2).
4) Start the engine, and run the engine at idle for 10 seconds or more.
5) Read the readiness code using Subaru Select Monitor and check that the concerned DTC is not displayed. For detailed operation procedures, refer to “PC application help for Subaru Select Monitor”.

NOTE:
If the concerned DTC is displayed, the self-diagnosis of the DTC is not complete. Repeat from step 4).
6) Read the diagnostic trouble code (DTC) and check the DTC. <Ref. to EN(H4DO HEV)(diag)-46, Read Diagnostic Trouble Code (DTC).>

NOTE:
If the DTC is displayed on the screen, the trouble is still present. Perform the diagnosis using “Diagnostic Procedure with Diagnostic Trouble Code (DTC)”. <Ref. to EN(H4DO HEV)(diag)-98, Diagnostic Procedure with Diagnostic Trouble Code (DTC).> After solving the DTC, repeat from step 2).

12.Drive Cycle

A: PROCEDURE

It is necessary to perform the drive cycle listed below if DTC is not found in the Inspection Mode. It is possible to complete diagnosis of the DTC by performing the indicated drive cycle. After the repair for the DTC, perform a necessary drive cycle and make sure the function recovers and the DTC is recorded.

1. PREPARATION FOR DRIVE CYCLE

1) Check that the 12 volt auxiliary battery voltage is 12 V or more and fuel remains approx. half [20 — 40 L (5.3 — 10.6 US gal, 4.4 — 8.8 Imp gal)].
2) After performing the diagnostics and Clear Memory Mode, check that no DTC remains. <Ref. to EN(H4DO HEV)(diag)-63, Clear Memory Mode.>

NOTE:
Perform the drive cycle after warming up the engine except when the engine coolant temperature at engine start is specified.

2. DRIVE CYCLE A

DTC	Item	Condition
P0128	Coolant Thermostat (Engine Coolant Temperature Below Thermostat Regulating Temperature)	—
P0141	O2 Sensor Heater Circuit (Bank1 Sensor2)	—
P014C	O2 Sensor Slow Response - Rich to Lean (Bank 1 Sensor 1)	—
P014D	O2 Sensor Slow Response - Lean to Rich (Bank 1 Sensor 1)	—
P015A	O2 Sensor Delayed Response - Rich to Lean (Bank 1 Sensor 1)	—
P015B	O2 Sensor Delayed Response - Lean to Rich (Bank 1 Sensor 1)	—
P0171	System Too Lean (Bank 1)	Complete diagnosis with drive cycle B or C as well.
P0172	System Too Rich (Bank 1)	Complete diagnosis with drive cycle B or C as well.
P0300	Random/Multiple Cylinder Misfire Detected	Complete diagnosis with drive cycle B or C as well.
P0301	Cylinder 1 Misfire Detected	Complete diagnosis with drive cycle B or C as well.
P0302	Cylinder 2 Misfire Detected	Complete diagnosis with drive cycle B or C as well.
P0303	Cylinder 3 Misfire Detected	Complete diagnosis with drive cycle B or C as well.
P0304	Cylinder 4 Misfire Detected	Complete diagnosis with drive cycle B or C as well.
P0420	Catalyst System Efficiency Below Threshold (Bank 1)	—
P0459	Evaporative Emission System Purge Control Valve Circuit High	—
P2096	Post Catalyst Fuel Trim System Too Lean (Bank 1)	Complete diagnosis with drive cycle B or C as well.
P2097	Post Catalyst Fuel Trim System Too Rich (Bank 1)	Complete diagnosis with drive cycle B or C as well.
P2195	O2 Sensor Signal Biased/Stuck Lean (Bank 1 Sensor 1)	—
P2196	O2 Sensor Signal Biased/Stuck Rich (Bank 1 Sensor 1)	—

Diagnostic procedure:
1) Drive for 20 minutes or more at a constant speed of 80 km/h (50 MPH) or more.
2) Stop the vehicle and idle for one minute.
3) Read the temporary code using the Subaru Select Monitor or general scan tool. <Ref. to EN(H4DO HEV)(diag)-46, OPERATION, Read Diagnostic Trouble Code (DTC).>

3. DRIVE CYCLE B

DTC	Item	Condition
P0010	"A" Camshaft Position Actuator Circuit/Open (Bank 1)	—
P0020	"A" Camshaft Position Actuator Circuit/Open (Bank 2)	—
P0125	Insufficient Coolant Temperature for Closed Loop Fuel Control	«Coolant Temp.» at engine start: Less than –15°C (5°F)
P0137	O2 Sensor Circuit Low Voltage (Bank 1 Sensor 2)	—
P0138	O2 Sensor Circuit High Voltage (Bank 1 Sensor 2)	—
P0171	System Too Lean (Bank 1)	Complete diagnosis with drive cycle A or C as well.
P0172	System Too Rich (Bank 1)	Complete diagnosis with drive cycle A or C as well.
P0201	Injector #1	—
P0202	Injector #2	—
P0203	Injector #3	—
P0204	Injector #4	—
P0300	Random/Multiple Cylinder Misfire Detected	Complete diagnosis with drive cycle A or C as well.
P0301	Cylinder 1 Misfire Detected	Complete diagnosis with drive cycle A or C as well.
P0302	Cylinder 2 Misfire Detected	Complete diagnosis with drive cycle A or C as well.
P0303	Cylinder 3 Misfire Detected	Complete diagnosis with drive cycle A or C as well.
P0304	Cylinder 4 Misfire Detected	Complete diagnosis with drive cycle A or C as well.
P0351	Ignition Coil A Primary/Secondary Circuit	—
P0352	Ignition Coil B Primary/Secondary Circuit	—
P0353	Ignition Coil C Primary/Secondary Circuit	—
P0354	Ignition Coil D Primary/Secondary Circuit	—
P0500	Vehicle Speed Sensor “A”	—
P0506	Idle Air Control System RPM Lower Than Expected	—
P0507	Idle Air Control System RPM Higher Than Expected	—
P0700	Transmission Control System (MIL Request)	—
P2006	Intake Manifold Runner Control Stuck Closed (Bank 1)	—
P2007	Intake Manifold Runner Control Stuck Closed (Bank 2)	—
P2009	Intake Manifold Runner Control Circuit Low (Bank 1)	—
P2012	Intake Manifold Runner Control Circuit Low (Bank 2)	—
P2096	Post Catalyst Fuel Trim System Too Lean (Bank 1)	Complete diagnosis with drive cycle A or C as well.
P2097	Post Catalyst Fuel Trim System Too Rich (Bank 1)	Complete diagnosis with drive cycle A or C as well.
P2135	Throttle/Pedal Position Sensor/Switch “A”/“B” Voltage Correlation	—
P2138	Throttle/Pedal Position Sensor/Switch “D”/“E” Voltage Correlation	—
P219A	Bank 1 Air-Fuel Ratio Imbalance	Complete diagnosis with drive cycle C as well.

Diagnostic procedure:
1) Drive at 10 km/h (6 MPH) or more.
2) Stop the vehicle and idle for ten minutes.
3) Read the temporary code using the Subaru Select Monitor or general scan tool. <Ref. to EN(H4DO HEV)(diag)-46, OPERATION, Read Diagnostic Trouble Code (DTC).>

4. DRIVE CYCLE C

DTC	Item	Condition
P000A	A Camshaft Position Slow Response (Bank 1)	—
P000B	B Camshaft Position Slow Response (Bank 1)	—
P000C	A Camshaft Position Slow Response (Bank 2)	—
P000D	B Camshaft Position Slow Response (Bank 2)	—
P0011	Intake Camshaft Position - Timing Over-Advanced or System Performance (Bank 1)	—
P0014	Exhaust AVCS System 1 (Range/Performance)	—
P0021	Intake Camshaft Position - Timing Over-Advanced or System Performance (Bank 2)	—
P0024	Exhaust AVCS System 2 (Range/Performance)	—
P0030	HO2S Heater Control Circuit (Bank 1 Sensor 1)	—
P0068	MAP/MAF - Throttle Position Correlation	—
P0101	Mass or Volume Air Flow Circuit Range/Performance	—
P0134	O2 Sensor Circuit No Activity Detected (Bank 1 Sensor 1)	—
P013A	O2 Sensor Slow Response - Rich to Lean (Bank 1 Sensor 2)	—
P013B	O2 Sensor Slow Response - Lean to Rich (Bank 1 Sensor 2)	—
P013E	O2 Sensor Delayed Response - Rich to Lean (Bank 1 Sensor 2)	—
P013F	O2 Sensor Delayed Response - Lean to Rich (Bank 1 Sensor 2)	—
P0140	O2 Sensor Circuit No Activity Detected (Bank1 Sensor2)	—
P0171	System Too Lean (Bank 1)	Complete diagnosis with drive cycle A or B as well.
P0172	System Too Rich (Bank 1)	Complete diagnosis with drive cycle A or B as well.
P0300	Random/Multiple Cylinder Misfire Detected	Complete diagnosis with drive cycle A or B as well.
P0301	Cylinder 1 Misfire Detected	Complete diagnosis with drive cycle A or B as well.
P0302	Cylinder 2 Misfire Detected	Complete diagnosis with drive cycle A or B as well.
P0303	Cylinder 3 Misfire Detected	Complete diagnosis with drive cycle A or B as well.
P0304	Cylinder 4 Misfire Detected	Complete diagnosis with drive cycle A or B as well.
P0400	Exhaust Gas Recirculation Flow	—
P0441	Evaporative Emission Cont. Sys. Incorrect Purge Flow	—
P0851	Park/Neutral Switch Input Circuit Low	—
P0852	Park/Neutral Switch Input Circuit High	—
P1449	Evaporative Emission Cont. Sys. Air Filter Clog	—
P1492	EGR Solenoid Valve Signal #1 Circuit Malfunction (Low Input)	—
P1493	EGR Solenoid Valve Signal #1 Circuit Malfunction (High Input)	—
P1494	EGR Solenoid Valve Signal #2 Circuit Malfunction (Low Input)	—
P1495	EGR Solenoid Valve Signal #2 Circuit Malfunction (High Input)	—
P1496	EGR Solenoid Valve Signal #3 Circuit Malfunction (Low Input)	—
P1497	EGR Solenoid Valve Signal #3 Circuit Malfunction (High Input)	—
P1498	EGR Solenoid Valve Signal #4 Circuit Malfunction (Low Input)	—
P1499	EGR Solenoid Valve Signal #4 Circuit Malfunction (High Input)	—
P2004	Intake Manifold Runner Control Stuck Open (Bank 1)	—
P2005	Intake Manifold Runner Control Stuck Open (Bank 2)	—
P2096	Post Catalyst Fuel Trim System Too Lean (Bank 1)	Complete diagnosis with drive cycle A or B as well.
P2097	Post Catalyst Fuel Trim System Too Rich (Bank 1)	Complete diagnosis with drive cycle A or B as well.
P219A	Bank 1 Air-Fuel Ratio Imbalance	Complete diagnosis with drive cycle B as well.

Diagnostic procedure:
1) Drive according to the drive pattern described below.

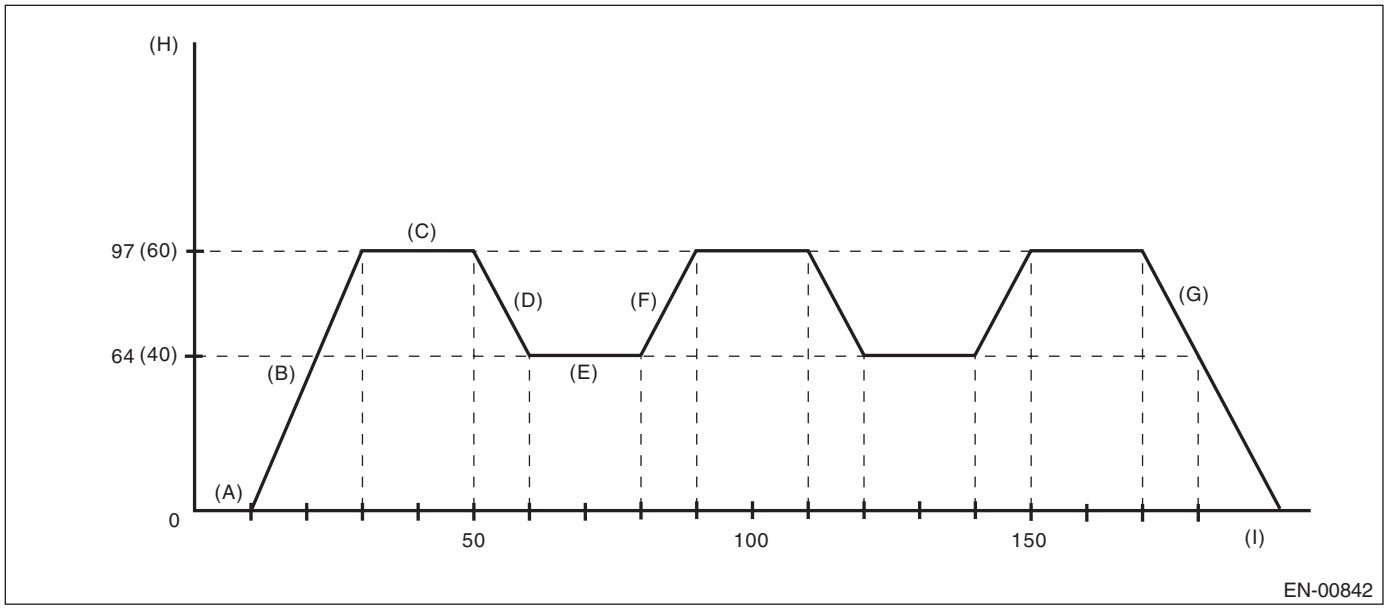

(A)	Shift the select lever to “P” range, and let the engine idle for 10 seconds or more.	(D)	Decelerate with fully closed throttle to 64 km/h (40 MPH) or less.	(G)	Stop vehicle with the throttle fully closed.
(B)	Accelerate to 97 km/h (60 MPH) or more within 20 seconds.	(E)	Drive for 20 seconds or more at 64 km/h (40 MPH) or less.	(H)	Vehicle speed km/h (MPH)
(C)	Drive for 20 seconds or more at 97 km/h (60 MPH) or more.	(F)	Accelerate to 97 km/h (60 MPH) or more within 10 seconds.	(I)	Sec.

2) Read the temporary code using the Subaru Select Monitor or general scan tool. <Ref. to EN(H4DO HEV)(diag)-46, OPERATION, Read Diagnostic Trouble Code (DTC).>

5. DRIVE CYCLE E

DTC	Item	Condition
P0461	Fuel Level Sensor “A” Circuit Range/Performance	—

Diagnostic procedure:
1) Make sure that the battery voltage is 10.9 V or more.
2) Perform the Clear Memory Mode. <Ref. to EN(H4DO HEV)(diag)-63, Clear Memory Mode.>
3) Drive for approximately 30 L (7.9 US gal, 6.6 Imp gal) of fuel.

NOTE:
- It is acceptable to drive the vehicle intermittently.
- Do not disconnect the battery terminals while diagnosing. (Data will be cleared by disconnecting the battery terminals.)

4) Read the temporary code using the Subaru Select Monitor or general scan tool. <Ref. to EN(H4DO HEV)(diag)-46, OPERATION, Read Diagnostic Trouble Code (DTC).>

6. DRIVE CYCLE F

DTC	Item	Condition
P0111	Intake Air Temperature Sensor Range/Performance Problem	• 6 hours have elapsed since ignition switch is OFF under a completely warmed up condition. • For vehicle with block heater, wait for 6 hours without operating the block heater.

Diagnostic procedure:
1) With the ignition switch ON (engine stopped), read the values in «Coolant Temp.» and «Intake Air Temp.». <Ref. to EN(H4DO HEV)(diag)-37, DISPLAY CURRENT ENGINE DATA, OPERATION, Subaru Select Monitor.>
2) If the values from step 1) satisfy the following conditions, idle the engine for two minute or more.

Condition:
|Engine coolant temperature — Intake air temperature| ≤ 5°C (9°F)

NOTE:
- If the conditions are not satisfied, turn the ignition switch to OFF and wait until the parameters are satisfied.
- Hold the select lever in “P” range or “N” range at idling.

3) Drive according to the drive pattern described below.

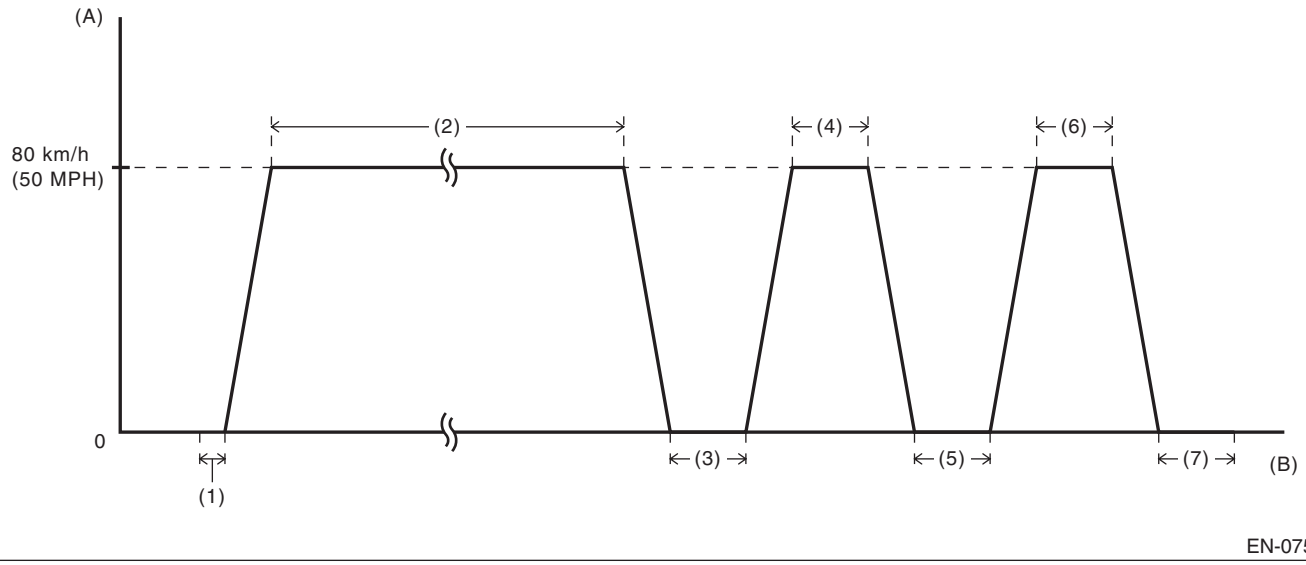

(A) Vehicle speed
(B) Elapsed time
(1) Idle the engine for 2 minutes or more.
(2) Drive for 15 minutes or more in total at a speed of 80 km/h (50 MPH) or more.
(3) Stop the vehicle and idle for 30 seconds or more.
(4) Drive for 30 seconds or more at a constant speed of 80 km/h (50 MPH) or more.
(5) Stop the vehicle and idle for 30 seconds or more.
(6) Drive for 30 seconds or more at a constant speed of 80 km/h (50 MPH) or more.
(7) Stop the vehicle and idle for 30 seconds.

NOTE:
• While performing (2), depending on the traffic condition, it is possible to decrease the vehicle speed to less than 80 km/h (50 MPH), or to stop the vehicle. Drive the vehicle until the total time of driving with speed of 80 km/h (50 MPH) or more becomes 15 minutes or more.
• There is no given transition time between idling and cruising.
• Driving at constant speed only on a downhill causes smaller engine load and may result in failure to obtain a right diagnostic result.
• If the ignition switch is turned off while performing the drive cycle F, perform it again after condition in the table is met.
4) Read the temporary code using the Subaru Select Monitor or general scan tool. <Ref. to EN(H4DO HEV)(diag)-46, OPERATION, Read Diagnostic Trouble Code (DTC).>

7. DRIVE CYCLE H

DTC	Item	Condition
P0071	Ambient Temperature Sensor Circuit "A" Range/Performance	• 6 hours have elapsed since ignition switch is OFF under a completely warmed up condition. • For vehicle with block heater, wait for 6 hours without operating the block heater.
P0116	Engine Coolant Temperature Sensor 1 Circuit Range/Performance	• 6 hours have elapsed since ignition switch is OFF under a completely warmed up condition. • For vehicle with block heater, wait for 6 hours without operating the block heater.
P0451	Evaporative Emission System Pressure Sensor/Switch Range/Performance	60 seconds have elapsed since ignition switch is OFF.
P050A	Cold Start Idle Air Control System Performance	—
P050B	Cold Start Ignition Timing Performance	—

Diagnostic procedure:
1) With the ignition switch ON (engine stopped), read the values in «Coolant Temp.» and «Intake Air Temp.». <Ref. to EN(H4DO HEV)(diag)-37, DISPLAY CURRENT ENGINE DATA, OPERATION, Subaru Select Monitor.>
2) If the values from step 1) satisfy the following conditions, idle the engine for two minute or more.

Condition:
|Engine coolant temperature — Intake air temperature| ≤ 5°C (9°F)

NOTE:
• If the conditions are not satisfied, turn the ignition switch to OFF and wait until the parameters are satisfied.
• Hold the select lever in “P” range or “N” range at idling.
3) Read the temporary code using the Subaru Select Monitor or general scan tool. <Ref. to EN(H4DO HEV)(diag)-46, OPERATION, Read Diagnostic Trouble Code (DTC).>

8. DRIVE CYCLE I

DTC	Item	Condition
P0455	Evaporative Emission System Leak Detected (Large Leak)	«Coolant Temp.»: 5 — 45°C (41 — 113°F) «Intake Air Temp.»: 5 — 50°C (41 — 122°F)
P0456	Evaporative Emission Control System Leak Detected (Very Small Leak)	
P1451	Evaporative Emission Cont. Sys.	
P2402	Evaporative Emission System Leak Detection Pump Control Circuit High	
P2404	Evaporative Emission System Leak Detection Pump Sense Circuit Range/Performance	
P2420	Evaporative Emission System Switching Valve Control Circuit High	

CAUTION:
Be careful of the state of the battery when performing the drive cycle I consecutively. Performing the drive cycle I consecutively without the engine running may cause a low battery voltage and battery discharge.

NOTE:
- If it is necessary to perform drive cycle I consecutively, drive the vehicle under the following conditions to release accumulated evaporating gas. Performing the drive cycle I consecutively without starting the engine causes a large amount of evaporating gas to accumulate in the canister, which hinders an accurate diagnosis.
  - After engine is warmed up.
  - Drive for 10 minutes or more at a speed of 48 km/h (30 MPH) or more (duration of drive can be an accumulation)
- To obtain an accurate diagnostic result, perform the procedures according to the following points.
  - Do not refuel gas immediately before performing drive cycle I. There will be a large amount of evaporating gas immediately after refuel, which may cause a less accurate diagnostic performance.
  - Do not shake the vehicle while performing drive cycle I. Shaking the vehicle causes evaporating gas to increase inside the fuel tank, which may cause a less accurate diagnostic performance.
  - Do not perform any service operation including installation or removal of parts or connectors while performing drive cycle I. Performing service operation could affect on the functions of related parts, which may cause a less accurate diagnostic performance.
- Perform MODE $08 when using a general scan tool.

Diagnostic procedure:
1) Prepare the Subaru Select Monitor kit. <Ref. to EN(H4DO HEV)(diag)-8, PREPARATION TOOL, General Description.>

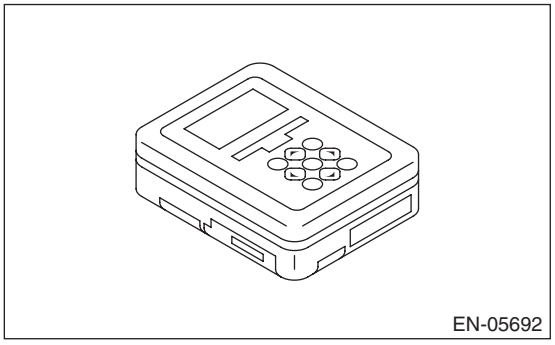
EN-05692

2) Prepare PC with Subaru Select Monitor installed.
3) Connect the USB cable to SDI (Subaru Diagnosis Interface) and USB port on the personal computer (dedicated port for the Subaru Select Monitor).

NOTE:
The dedicated port for the Subaru Select Monitor means the USB port which was used to install the Subaru Select Monitor.
4) Connect the diagnosis cable to SDI.

5) Connect SDI to data link connector located in the lower portion of the instrument panel (on the driver's side).

CAUTION:
Do not connect the scan tools except for Subaru Select Monitor and general scan tool.

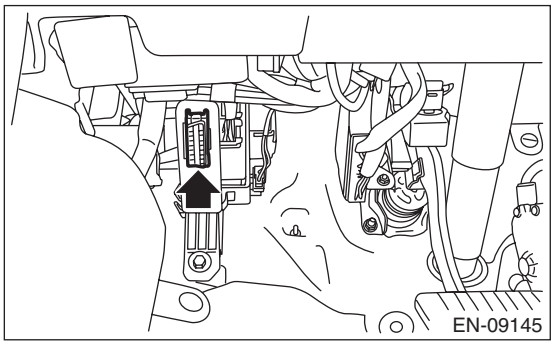

6) Start the PC.
7) Turn the ignition switch to ON (engine OFF) and run the "PC application for Subaru Select Monitor".
8) On «Main Menu» display, select {Each System Check}.
9) On «System Selection Menu» display, select {Engine Control System}.
10) Click the [OK] button after the information of engine type has been displayed.
11) On «Engine Diagnosis» display, select {OBD System}.
12) On «OBD Menu» display, select {Evaporative System Leak Test}.
13) On «Evaporative System Leak Test» display, select {Evaporative System Leak Test}.
14) On «Evaporative System Leak Test is running. Press Cancel to exit this function.» display, click the [OK] button to perform evaporative system leak test.
15) When «Conditions have been enabled to control this function. Turn the ignition switch off to terminate the test.» display appears, wait for 30 minutes without clicking the [OK] button.

CAUTION:
Do not leave the vehicle for an extended period of time after the test is complete. This may cause early deterioration of the battery or discharged battery.

NOTE:
• Clicking the [OK] button bring the «Evaporative System Leak Test» display back, although the test is continuing.
• The Subaru Select Monitor screen does not change after the evaporative system leak test is complete or when the test is aborted by turning off the ignition switch.
• If «Test conditions are not correct» display appears, use Subaru Select Monitor to check that the values in «Coolant Temp.» and «Intake Air Temp.» are within the specified range. If the conditions are satisfied, make the necessary preparation for the drive cycle again. <Ref. to EN(H4DO HEV)(diag)-50, PREPARATION FOR DRIVE CYCLE, PROCEDURE, Drive Cycle.>
16) After 30 minutes passed from the start of step 14), click the [OK] button to return to the «Evaporative System Leak Test» display.
17) Click buttons until the «OBD Menu» display appears, then select {Result of on-board monitor test}.

18) In the {Result of on-board monitor test}, check TID $C1 — $CA of MID $3C.

NOTE:
Perform MODE $06 and check when using a general scan tool.

Result of on-board monitor test

Display	Details	Remarks
$0000 is stored in all Val.	During the evaporative system leak test, the test conditions were not met and the test was canceled.	Once the test conditions are met, perform the test again.
All Val. are stored with values and OK is set to all the results.	Evaporative system leak test is completed correctly.	While the ignition switch is ON, read the pending code using the Subaru Select Monitor.
Some results were no good.	The evaporative system leak test completed successfully but the results were faulty.	While the ignition switch is ON, read the pending code using the Subaru Select Monitor.

19) When the evaporative system leak test is completed correctly, read the pending code with the ignition switch turned to ON position. If the DTC is recorded, check the appropriate DTC. <Ref. to EN(H4DO HEV)(diag)-46, OPERATION, Read Diagnostic Trouble Code (DTC).>

NOTE:
- Perform MODE $07 when using a general scan tool.
- The pending code will be cleared by turning ignition switch to OFF.

9. DRIVE CYCLE J

DTC	Item	Condition
P2610	ECM/PCM Internal Engine Off Timer Performance	—

Diagnostic procedure:
1) Idle the engine for 15 minutes or more.
2) Turn the ignition switch to OFF.
3) After 10 hours passed from the start of step 2), read the temporary code using the Subaru Select Monitor or general scan tool. <Ref. to EN(H4DO HEV)(diag)-46, OPERATION, Read Diagnostic Trouble Code (DTC).>

10.DRIVE CYCLE K

DTC	Item	Condition
P0458	Evaporative Emission System Purge Control Valve Circuit Low	—
P2401	Evaporative Emission System Leak Detection Pump Control Circuit Low	«Coolant Temp.»: 5 — 45°C (41 — 113°F) «Intake Air Temp.»: 5 — 50°C (41 — 122°F)
P2419	Evaporative Emission System Switching Valve Control Circuit Low	

Diagnostic procedure:
1) Lift up the vehicle using a garage jack and place it on rigid racks, or drive the vehicle onto free rollers.

WARNING:
- **Before lifting up the vehicle, ensure parking brake is applied.**
- **Do not use a pantograph jack in place of a rigid rack.**
- **Secure a rope or wire to the front or rear towing hooks to prevent the lateral runout of front wheels.**
- **Before rotating the wheels, make sure that there is no one in front of the vehicle. Besides while the wheels are rotating, make sure that no one approaches the vehicle front side.**
- **Make sure that there is nothing around the wheels. For AWD model, pay attention to all four wheels.**
- **While servicing, do not depress or release the clutch pedal or accelerator pedal quickly regardless of the engine speed. Quick operation may cause the vehicle to drop off the free roller.**

• To prevent the vehicle from slipping due to vibration, do not place anything between rigid rack and the vehicle.

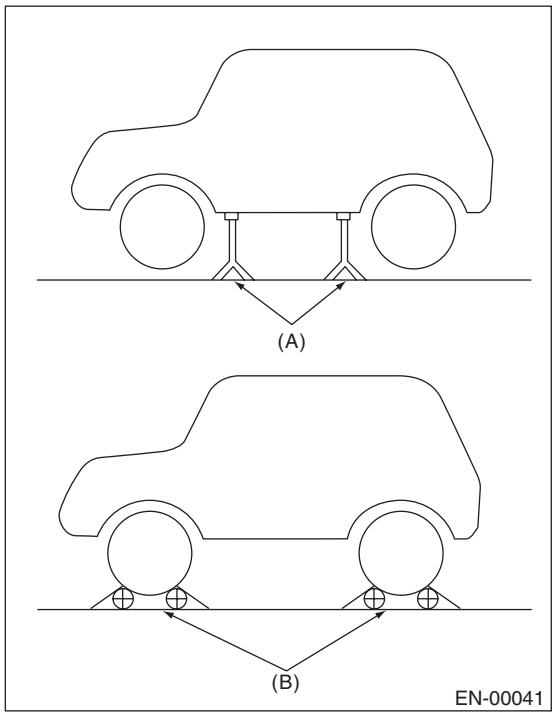

(A) Rigid rack
(B) Free roller

2) Connect the Subaru Select Monitor or general scan tool to data link connector located in the lower portion of the instrument panel (on the driver's side).

CAUTION:
Do not connect the scan tools except for Subaru Select Monitor and general scan tool.

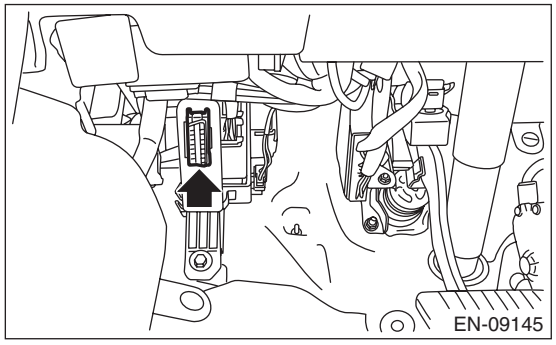

3) Start the engine.

NOTE:
Ensure the select lever is placed in the "P" range before starting.
4) Turn the neutral position switch to ON using select lever or shift lever.
5) Depress the brake pedal to turn the brake switch ON.
6) Keep the engine speed in 2,500 — 3,000 rpm range for 40 seconds.
7) Shift the select lever in the "D" range and drive the vehicle at 5 to 10 km/h (3 to 6 MPH).

NOTE:
• For AWD model, release the parking brake.
• The rotating speed difference between front and rear wheels may illuminate the ABS warning light, but this does not indicate a malfunction. When engine control system diagnosis is finished, perform the VDC memory clearance procedure of self-diagnosis function. <Ref. to VDC(diag)-23, Clear Memory Mode.>

8) Read the temporary code using the Subaru Select Monitor or general scan tool. <Ref. to EN(H4DO HEV)(diag)-46, OPERATION, Read Diagnostic Trouble Code (DTC).>

11.DRIVE CYCLE L

DTC	Item	Condition
P0196	Engine Oil Temperature Sensor Circuit Range/Performance	• 6 hours have elapsed since ignition switch is OFF under a completely warmed up condition. • For vehicle with block heater, wait for 6 hours without operating the block heater.

Diagnostic procedure:
1) With the ignition switch ON (engine stopped), read the values in «Coolant Temp.» and «Intake Air Temp.». <Ref. to EN(H4DO HEV)(diag)-37, DISPLAY CURRENT ENGINE DATA, OPERATION, Subaru Select Monitor.>
2) If the values from step 1) satisfy the following conditions, idle the engine for two minute or more.

Condition:
|Engine coolant temperature — Intake air temperature| ≤ 5°C (9°F)

NOTE:
- If the conditions are not satisfied, turn the ignition switch to OFF and wait until the parameters are satisfied.
- Hold the select lever in “P” range or “N” range at idling.

3) Drive the vehicle 10 minutes or more and also until the engine oil temperature exceeds 50°C (122°F).

NOTE:
- Diagnosis continues even if the vehicle stops depending on the traffic condition. However the diagnosis may not be finished if the vehicle tends to stop frequently.
- The diagnosis continues even during EV traveling and also during engine stops by Auto Start Stop.

4) Read the temporary code using the Subaru Select Monitor or general scan tool. <Ref. to EN(H4DO HEV)(diag)-46, OPERATION, Read Diagnostic Trouble Code (DTC).>

12.DRIVE CYCLE M

DTC	Item	Condition
P059A	Active Grille Shutter "A" Position Sensor Circuit	«Ambient Temperature»: 3 — 33°C (37.4 — 91.4°F)
P059F	Active Grille Shutter "A" Performance	
P05A0	Active Grille Shutter "A" Stuck	
P05A1	Active Grille Shutter "A" Range Over	
P05A2	Active Grille Shutter "A" Control Circuit	
P05A6	Active Grille Shutter "A" Supply Voltage Circuit/Open	
P05C0	Active Grille Shutter "A" Over Temperature	

Diagnostic procedure:
1) Idle the engine for 20 seconds or more after engine start.
2) Stop the vehicle after accelerating to 15 km/h (9.3 MPH) or more.
3) Read the temporary code using the Subaru Select Monitor or general scan tool. <Ref. to EN(H4DO HEV)(diag)-46, OPERATION, Read Diagnostic Trouble Code (DTC).>

13.DRIVE CYCLE N

DTC	Item	Condition
P0016	Crankshaft Position - Camshaft Position Correlation (Bank1)	«Coolant Temp.»: 80°C (176°F) or more
P0017	Crank and Cam Timing B System Failure (Bank 1)	
P0018	Crankshaft Position - Camshaft Position Correlation (Bank2)	
P0019	Crank and Cam Timing B System Failure (Bank 2)	

WARNING:
When performing drive cycle N on the road, pay great attention to traffic conditions and place top priority on safety drive.
1) Using Subaru Select Monitor or general scan tool, confirm the data in the condition field of the table.

NOTE:
• Subaru Select Monitor
For detailed operation procedures, refer to “Current Data Display For Engine”. <Ref. to EN(H4DO HEV)(diag)-37, DISPLAY CURRENT ENGINE DATA, OPERATION, Subaru Select Monitor.>
• General scan tool
For detailed operation procedures, refer to the general scan tool operation manual.
2) Race up the engine at approx. 2500 rpm of engine speed for 40 seconds or more from a status where the conditions in the table are established.
3) Start the vehicle and accelerate up to 50 km/h (31.1 MPH) or more.
4) When the speed reaches 50 km/h (31.1 MPH) or more, release the accelerator pedal and brake pedal and decelerate without shifting operation. At this time, select an appropriate gear in advance so that the engine speed keeps between 2500 rpm and 1900 rpm for 5 seconds or more.

NOTE:
• As long as the engine speed keeps between 2500 rpm and 1900 rpm for 5 seconds or more, it does not matter how much speed the vehicle runs.
Example) On downhill, this could be performed at low vehicle speed and in lower gear.
• To keep continuous time longer, turn electrical load (A/C, etc.) to OFF or drive on downhill because the engine speed decreases more slowly.
5) Stop the vehicle at a safe place and let it idle for 5 minutes or more.

NOTE:
There is no special rule for driving operation until the vehicle is stopped at a safe place.

6) Read temporary DTC codes using Subaru Select Monitor or general scan tool at idling.

NOTE:
• Refer to “Read Diagnostic Trouble Code (DTC)” for detailed operation procedure. <Ref. to EN(H4DO HEV)(diag)-46, Read Diagnostic Trouble Code (DTC).>
• In step 6), if no DTC is shown on the screen of Subaru Select Monitor or general scan tool, the trouble has been solved.

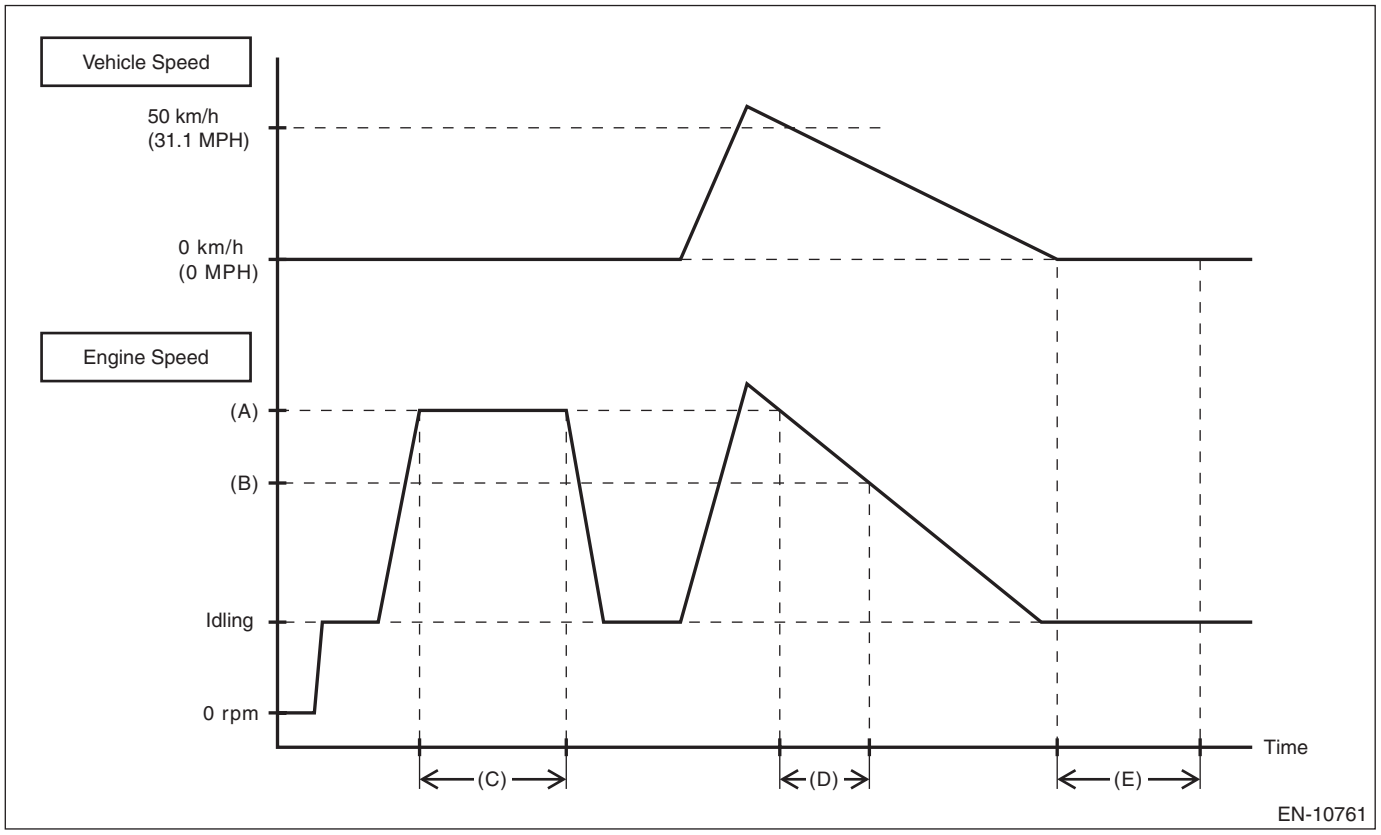

(A) 2500 rpm
(B) 1900 rpm
(C) 40 seconds or more
(D) 5 seconds or more
(E) 5 minutes or more

13.Clear Memory Mode

A: OPERATION

1. SUBARU SELECT MONITOR

NOTE:
• Initial diagnosis of electronic throttle control is performed after memory clearance. Wait for 10 seconds or more after turning the ignition switch to ON, and then start the engine.
• For detailed operation procedures, refer to “PC application help for Subaru Select Monitor”.

2. GENERAL SCAN TOOL

For clear memory procedures using the general scan tool, refer to “General Scan Tool Instruction Manual”.

NOTE:
Initial diagnosis of electronic throttle control is performed after memory clearance. Wait for 10 seconds or more after turning the ignition switch to ON, and then start the engine.

14.System Operation Check Mode

A: OPERATION

CAUTION:
After executing the system operation check mode, execute the Clear Memory Mode <Ref. to EN(H4DO HEV)(diag)-63, OPERATION, Clear Memory Mode.>.

NOTE:
- *: When the ECM, HPCM or the active grille shutter has been replaced, be sure to perform this.
- For detailed operation procedures, refer to “PC application help for Subaru Select Monitor”.

Item		SSM display		Execution condition
Activating the actuator ON/OFF	Activating the fuel pump ON/OFF	Fuel Pump	ON ←→ OFF	Ignition switch is ON (engine OFF)
	Activating the purge control solenoid valve ON/OFF	CPC Solenoid Valve	ON ←→ OFF	
	Activating the radiator fan relay ON/OFF	Radiator Fan Relay	ON ←→ OFF	
	Activating the A/C relay ON/OFF	A/C Relay	ON ←→ OFF	
	Activating the ELCM switching valve ON/OFF	ELCM switching valve	ON ←→ OFF	
	Activating the ELCM vacuum pump ON/OFF	ELCM pump	ON ←→ OFF	
Fuel pump control	Fuel pump OFF operation	OFF drive	OFF	At idling
Fixing the timing of idle ignition		Fixed Idle Ignition Timing	16.0°	At idling
Idle speed control		Idle Speed Control	500 — 2000 rpm	At idling
Injector control	Stopping fuel injection (Cylinder selection)	Injection Stop Mode	Injector 1 Injector 2 Injector 3 Injector 4	At idling
	Fuel injection amount control (All cylinders)	Injection Quantity Control	0 — 20%	At idling
EGR control valve control		EGR Valve Control	0 — 255 STEP	At idling
Active grille shutter control*		Active Grille Shutter Control	Open Close	• Ignition switch is ON (engine OFF) • Elapsed time after starting the engine exceeds 20 seconds (When the ECM is replaced)

15.Malfunction Indicator Light

A: PROCEDURE

1. Activation of malfunction indicator light. <Ref. to EN(H4DO HEV)(diag)-65, ACTIVATION OF MALFUNCTION INDICATOR LIGHT, Malfunction Indicator Light.>
↓
2. Malfunction indicator light does not come on. <Ref. to EN(H4DO HEV)(diag)-65, MALFUNCTION INDICATOR LIGHT DOES NOT COME ON, Malfunction Indicator Light.>
↓
3. Malfunction indicator light does not go off <Ref. to EN(H4DO HEV)(diag)-66, MALFUNCTION INDICATOR LIGHT DOES NOT GO OFF, Malfunction Indicator Light.>

B: ACTIVATION OF MALFUNCTION INDICATOR LIGHT

1) When the ignition switch is turned to ON (engine OFF), the malfunction indicator light (A) in the combination meter illuminates.

NOTE:
If the malfunction indicator light does not illuminate, perform diagnostics of the malfunction indicator light circuit or the combination meter circuit. <Ref. to EN(H4DO HEV)(diag)-65, MALFUNCTION INDICATOR LIGHT DOES NOT COME ON, Malfunction Indicator Light.>

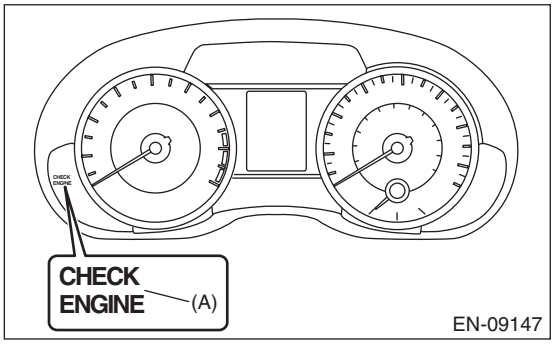

2) After starting the engine, the malfunction indicator light goes out. If it does not go off, any of the engine and emission control system has malfunction.

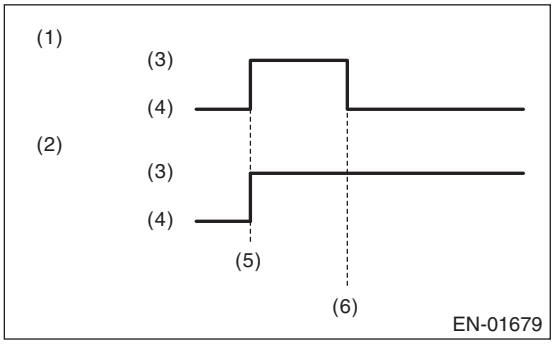

(1) No faulty
(2) Trouble occurs
(3) ON
(4) OFF
(5) Ignition switch ON
(6) Engine start

3) If the diagnostic system detects a misfire which could damage the catalyst, the malfunction indicator light will blink at a cycle of 1 Hz.

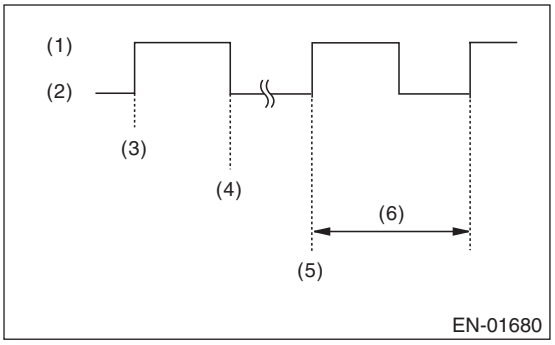

(1) ON
(2) OFF
(3) Ignition switch ON
(4) Engine start
(5) Misfire start
(6) 1 seconds

C: MALFUNCTION INDICATOR LIGHT DOES NOT COME ON

TROUBLE SYMPTOM:
When the ignition switch is turned to ON (engine OFF), malfunction indicator light does not illuminate.

NOTE:
Refer to IDI section for diagnostic procedure. <Ref. to IDI(diag)-2, Basic Diagnostic Procedure.>

D: MALFUNCTION INDICATOR LIGHT DOES NOT GO OFF

TROUBLE SYMPTOM:
Although malfunction indicator light comes on when the engine runs, DTC is not shown on the Subaru Select Monitor display.

Step		Check	Yes	No
1	**CHECK DTC.**	Is DTC of engine or LAN system displayed? <Ref. to EN(H4DO HEV)(diag)-46, OPERATION, Read Diagnostic Trouble Code (DTC).>	Check the appropriate DTC using the “List of Diagnostic Trouble Code (DTC)”. <Ref. to EN(H4DO HEV)(diag)-88, List of Diagnostic Trouble Code (DTC).> <Ref. to LAN(HEV)(diag)-87, List of Diagnostic Trouble Code (DTC).>	Check the combination meter system. <Ref. to IDI(diag)-2, Basic Diagnostic Procedure.>

16.Diagnostics for Engine Starting Failure

A: PROCEDURE

1. Check of the fuel amount
↓
2. Inspection of starter motor circuit <Ref. to EN(H4DO HEV)(diag)-68, STARTER MOTOR CIRCUIT, Diagnostics for Engine Starting Failure.>
↓
3. Inspection of ECM power supply and ground line <Ref. to EN(H4DO HEV)(diag)-78, CHECK POWER SUPPLY AND GROUND LINE OF ENGINE CONTROL MODULE (ECM), Diagnostics for Engine Starting Failure.>
↓
4. Inspection of ignition control system <Ref. to EN(H4DO HEV)(diag)-81, IGNITION CONTROL SYSTEM, Diagnostics for Engine Starting Failure.>
↓
5. Inspection of fuel pump circuit <Ref. to EN(H4DO HEV)(diag)-83, FUEL PUMP CIRCUIT, Diagnostics for Engine Starting Failure.>
↓
6. Inspection of fuel injector circuit <Ref. to EN(H4DO HEV)(diag)-86, FUEL INJECTOR CIRCUIT, Diagnostics for Engine Starting Failure.>

B: STARTER MOTOR CIRCUIT

1. MODEL WITHOUT PUSH BUTTON START

CAUTION:
After servicing or replacing faulty parts, perform Clear Memory Mode <Ref. to EN(H4DO HEV)(diag)-63, Clear Memory Mode.>, and Inspection Mode <Ref. to EN(H4DO HEV)(diag)-47, Inspection Mode.>.
WIRING DIAGRAM:
Engine electrical system (without push button start) <Ref. to WI(HEV)-100, WITHOUT PUSH BUTTON START, WIRING DIAGRAM, Engine Electrical System.>

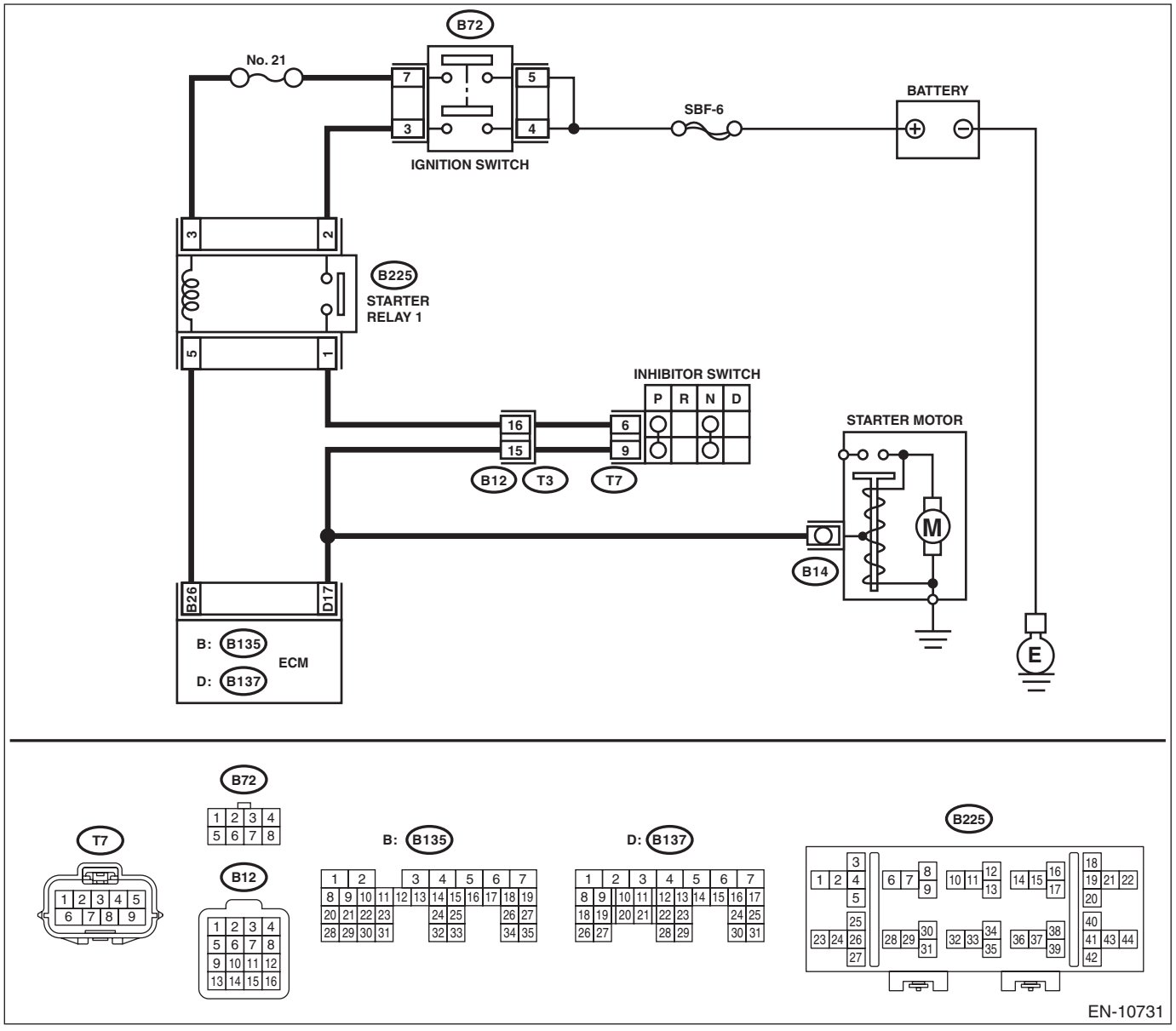

Step		Check	Yes	No
1	**CHECK FOR MALFUNCTION OCCURRENCE.**	Has the start failure occurred during Auto Start Stop or during EV traveling?	Inspection using “Basic Diagnostic Procedure” of hybrid system. <Ref. to HEV(diag)-2, Basic Diagnostic Procedure.>	Go to step **2**.

	Step	Check	Yes	No
2	**CHECK DTC.**	Is DTC displayed? <Ref. to EN(H4DO HEV)(diag)-46, OPERATION, Read Diagnostic Trouble Code (DTC).>	Check the appropriate DTC using the "List of Diagnostic Trouble Code (DTC)". <Ref. to EN(H4DO HEV)(diag)-88, List of Diagnostic Trouble Code (DTC).>	Go to step **3**.
3	**CHECK CURRENT DATA.** 1) Turn the ignition switch to ON. 2) Read the value of «Starter Relay Drive Permission Status» using the Subaru Select Monitor. NOTE: For detailed operation procedures, refer to "Current Data Display For Engine". <Ref. to EN(H4DO HEV)(diag)-37, Subaru Select Monitor.>	Is «OK» displayed?	Go to step **4**.	Inspection using "Basic Diagnostic Procedure" of hybrid system. <Ref. to HEV(diag)-2, Basic Diagnostic Procedure.>
4	**CHECK NEUTRAL POSITION SWITCH SIGNAL.** 1) Read the value of «Neutral Position Switch» using the Subaru Select Monitor. NOTE: For detailed operation procedures, refer to "Current Data Display For Engine". <Ref. to EN(H4DO HEV)(diag)-37, Subaru Select Monitor.> 2) Turn the ignition to ON. 3) Place the select lever in "P" range or "N" range.	Is «Neutral» displayed?	Go to step **5**.	Go to step **9**.
5	**CHECK 12 VOLT AUXILIARY BATTERY.** Check the battery. <Ref. to SC(H4DO(HEV))-38, Battery.>	Is the battery OK?	Go to step **6**.	Charge or replace the battery. <Ref. to SC(H4DO(HEV))-38, Battery.>
6	**CHECK OPERATION OF STARTER MOTOR.**	Does the starter motor operate?	Check ignition control system. <Ref. to EN(H4DO HEV)(diag)-81, IGNITION CONTROL SYSTEM, Diagnostics for Engine Starting Failure.>	Go to step **7**.
7	**CHECK INPUT SIGNAL FOR STARTER MOTOR.** 1) Turn the ignition switch to OFF. 2) Disconnect the connector from starter motor. 3) Turn the ignition switch to START. 4) Measure the voltage between the starter motor connector and the engine ground. ***Connector & terminal*** ***(B14) No. 1 (+) — Engine ground (–):*** NOTE: Place the select lever in "P" range or "N" range.	Is the voltage 10 V or more?	Check the starter motor. <Ref. to SC(H4DO(HEV))-10, Starter.>	Go to step **8**.

	Step	Check	Yes	No
8	**CHECK HARNESS BETWEEN 12 VOLT AUXILIARY BATTERY AND STARTER MOTOR.** 1) Turn the ignition switch to OFF. 2) Measure the voltage between starter motor terminal B and engine ground. ***Terminals*** ***Terminal B (+) — Engine ground (–):***	Is the voltage 10 V or more?	Go to step **9**.	Repair the power supply circuit.
9	**CHECK HARNESS BETWEEN 12 VOLT AUXILIARY BATTERY AND IGNITION SWITCH CONNECTOR.** 1) Turn the ignition switch to OFF. 2) Disconnect the connector from ignition switch. 3) Measure the power supply voltage between ignition switch connector and chassis ground. ***Connector & terminal*** ***(B72) No. 4 (+) — Chassis ground (–):*** ***(B72) No. 5 (+) — Chassis ground (–):***	Is the voltage 10 V or more?	Go to step **10**.	Repair the power supply circuit.
10	**CHECK IGNITION SWITCH.** Measure the resistance between ignition switch terminals after turning the ignition switch to START position. ***Terminals*** ***No. 3 — No. 4:*** ***No. 5 — No. 7:***	Is the resistance less than 1 Ω?	Go to step **11**.	Replace the ignition switch. <Ref. to SL-65, REPLACEMENT, Ignition Key Lock.>
11	**CHECK INPUT VOLTAGE OF STARTER RELAY 1.** 1) Turn the ignition switch to OFF. 2) Remove the starter relay 1. 3) Connect the connector to ignition switch. 4) Measure the voltage between starter relay 1 connector and chassis ground after turning the ignition switch to START position. ***Connector & terminal*** ***(B225) No. 2 (+) — Chassis ground (–):*** ***(B225) No. 3 (+) — Chassis ground (–):***	Is the voltage 10 V or more?	Go to step **12**.	Check the following item and repair if necessary. • Blown out of fuse • Open or short circuit to ground in harness between starter relay 1 and ignition switch connector
12	**CHECK HARNESS BETWEEN ECM AND STARTER RELAY 1 CONNECTOR.** 1) Turn the ignition switch to OFF. 2) Disconnect the connector from ECM. 3) Measure the resistance of harness between ECM connector and starter relay 1 connector. ***Connector & terminal*** ***(B135) No. 26 — (B225) No. 5:***	Is the resistance less than 1 Ω?	Go to step **13**.	Repair the open circuit of harness between ECM connector and starter relay 1 connector.
13	**CHECK STARTER RELAY 1.** 1) Connect the battery to starter relay 1 terminals No. 3 and No. 5. 2) Measure the resistance between starter relay 1 terminals. ***Terminals*** ***No. 1 — No. 2:***	Is the resistance less than 1 Ω?	Go to step **14**.	Replace the starter relay 1. <Ref. to EN(H4DO HEV)(diag)-9, Electrical Component Location.>

	Step	Check	Yes	No
14	**CHECK HARNESS BETWEEN STARTER RELAY 1 AND INHIBITOR SWITCH CONNECTOR.** 1) Turn the ignition switch to OFF. 2) Disconnect the connector from inhibitor switch. 3) Measure the resistance of harness between starter relay 1 connector and inhibitor switch connector. ***Connector & terminal*** ***(B225) No. 1 — (T7) No. 6:***	Is the resistance less than 1 Ω?	Go to step **15**.	Repair the harness and connector. NOTE: In this case, repair the following item: • Open circuit in harness between starter relay 1 connector and inhibitor switch connector • Poor contact of coupling connector
15	**CHECK HARNESS BETWEEN INHIBITOR SWITCH AND STARTER MOTOR.** Measure the resistance of harness between the inhibitor switch connector and starter motor. ***Connector & terminal*** ***(T7) No. 9 — (B14) No. 1:***	Is the resistance less than 1 Ω?	Go to step **16**.	Repair the harness and connector. NOTE: In this case, repair the following item: • Open circuit in harness between inhibitor switch connector and starter motor • Poor contact of coupling connector
16	**CHECK INHIBITOR SWITCH.** 1) Place the select lever in “P” range and “N” range. 2) Measure the resistance between inhibitor switch terminals. ***Terminals*** ***No. 6 — No. 9:***	Is the resistance less than 1 Ω?	Check the engine control module (ECM) power supply and ground line. <Ref. to EN(H4DO HEV)(diag)-78, CHECK POWER SUPPLY AND GROUND LINE OF ENGINE CONTROL MODULE (ECM), Diagnostics for Engine Starting Failure.>	Replace the inhibitor switch. <Ref. to CVT(TH58A)-96, Inhibitor Switch.>

2. MODEL WITH PUSH BUTTON START

CAUTION:
After servicing or replacing faulty parts, perform Clear Memory Mode <Ref. to EN(H4DO HEV)(diag)-63, Clear Memory Mode.>, and Inspection Mode <Ref. to EN(H4DO HEV)(diag)-47, Inspection Mode.>.
WIRING DIAGRAM:
Engine electrical system (with push button start) <Ref. to WI(HEV)-114, WITH PUSH BUTTON START, WIRING DIAGRAM, Engine Electrical System.>

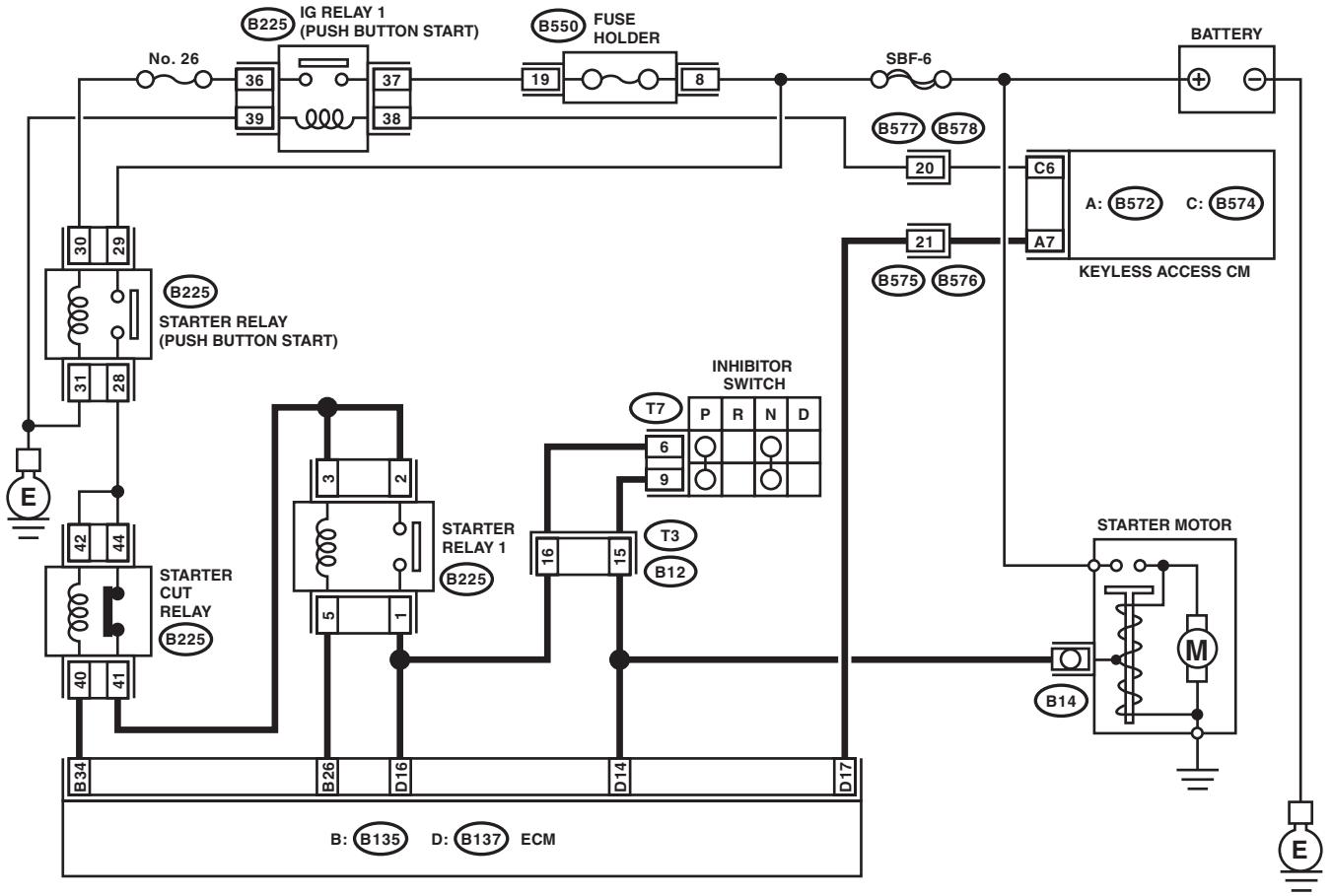

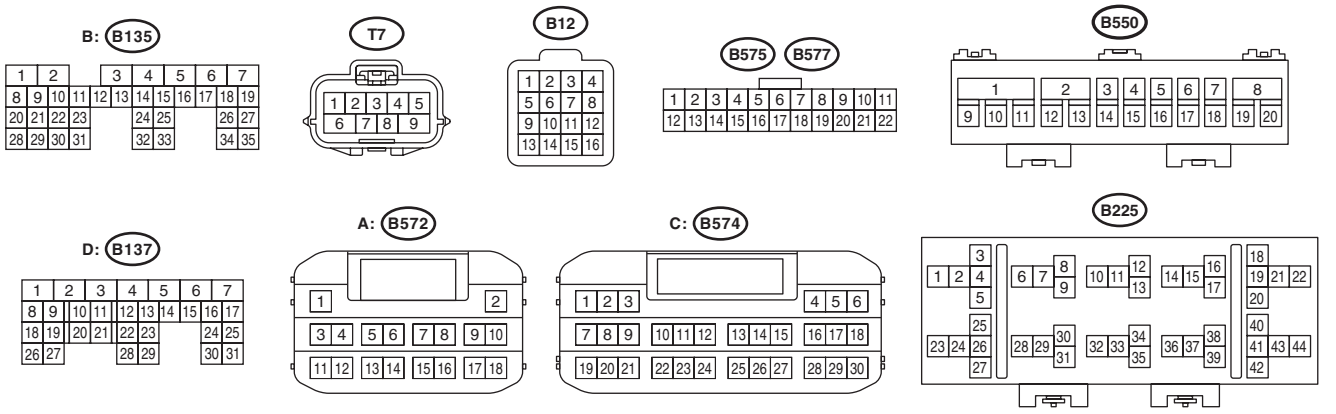

EN-10732

	Step	Check	Yes	No
1	**CHECK FOR MALFUNCTION OCCURRENCE.**	Has the start failure occurred during Auto Start Stop or during EV traveling?	Inspection using “Basic Diagnostic Procedure” of hybrid system. <Ref. to HEV(diag)-2, Basic Diagnostic Procedure.>	Go to step **2**.
2	**CHECK DTC.**	Is DTC displayed? <Ref. to EN(H4DO HEV)(diag)-46, OPERATION, Read Diagnostic Trouble Code (DTC).>	Check the appropriate DTC using the “List of Diagnostic Trouble Code (DTC)”. <Ref. to EN(H4DO HEV)(diag)-88, List of Diagnostic Trouble Code (DTC).>	Go to step **3**.
3	**CHECK CURRENT DATA.** 1) Turn the ignition to ON. 2) Read the value of «Starter Relay Drive Permission Status» using the Subaru Select Monitor. NOTE: For detailed operation procedures, refer to “Current Data Display For Engine”. <Ref. to EN(H4DO HEV)(diag)-37, Subaru Select Monitor.>	Is «OK» displayed?	Go to step **4**.	Inspection using “Basic Diagnostic Procedure” of hybrid system. <Ref. to HEV(diag)-2, Basic Diagnostic Procedure.>
4	**CHECK NEUTRAL POSITION SWITCH SIGNAL.** 1) Read the value of «Neutral Position Switch» using the Subaru Select Monitor. NOTE: For detailed operation procedures, refer to “Current Data Display For Engine”. <Ref. to EN(H4DO HEV)(diag)-37, Subaru Select Monitor.> 2) Turn the ignition to ON. 3) Place the select lever in “P” range or “N” range.	Is «Neutral» displayed?	Go to step **5**.	Go to step **10**.
5	**CHECK 12 VOLT AUXILIARY BATTERY.** Check the battery. <Ref. to SC(H4DO(HEV))-38, Battery.>	Is the battery OK?	Go to step **6**.	Charge or replace the battery. <Ref. to SC(H4DO(HEV))-38, Battery.>
6	**CHECK OPERATION OF STARTER MOTOR.**	Does the starter motor operate?	Check ignition control system. <Ref. to EN(H4DO HEV)(diag)-81, IGNITION CONTROL SYSTEM, Diagnostics for Engine Starting Failure.>	Go to step **7**.

	Step	Check	Yes	No
7	**CHECK PUSH BUTTON IGNITION SWITCH.** Press the push button ignition switch twice with the ignition OFF (ACC OFF). NOTE: Release the brake pedal.	Does the ignition turn to ON?	Go to step **8**.	Check the push button start system. <Ref. to KPS(diag)-99, POWER SUPPLY SWITCHING SYSTEM, INSPECTION, General Diagnostic Table.>
8	**CHECK PUSH BUTTON IGNITION SWITCH.** 1) Depress the brake pedal. NOTE: Shift the select lever to “P” range. 2) Check the push button ignition switch indicator.	Does the indicator turn to green?	Go to step **9**.	Check the push button start system. <Ref. to KPS(diag)-123, ENGINE DOES NOT START, INSPECTION, Diagnostics with Phenomenon.>
9	**CHECK START SWITCH SIGNAL.** 1) Read the waveform of «Starter SW» using the Subaru Select Monitor. NOTE: For detailed operation procedures, refer to “Current Data Display For Engine”. <Ref. to EN(H4DO HEV)(diag)-37, Subaru Select Monitor.> 2) Press the push button ignition switch once with the brake pedal depressed.	Does waveform of the «Starter SW» occur?	Go to step **13**.	Go to step **10**.
10	**CHECK HARNESS BETWEEN ECM AND KEYLESS ACCESS CM.** 1) Turn the ignition to OFF. 2) Disconnect the connectors from ECM and keyless access CM. 3) Measure the resistance of harness between ECM connector and keyless access CM. ***Connector & terminal*** ***(B137) No. 17 — (B572) No. 7:***	Is the resistance less than 1 Ω?	Go to step **11**.	Repair the harness and connector. NOTE: In this case, repair the following item: • Open circuit of harness between ECM connector and keyless access CM connector • Poor contact of coupling connector
11	**CHECK HARNESS BETWEEN ECM AND KEYLESS ACCESS CM.** Measure the resistance between ECM connector and chassis ground. ***Connector & terminal*** ***(B137) No. 17 — Chassis ground:***	Is the resistance 1 MΩ or more?	Go to step **12**.	Repair the short circuit to ground in harness between ECM connector and keyless access CM connector.
12	**CHECK START SWITCH SIGNAL.** 1) Connect the connector to ECM and keyless access CM. 2) Read the waveform of start switch signal using an oscilloscope. 3) Press the push button ignition switch once with the brake pedal depressed. ***Connector & terminal*** ***(B137) No. 17 (+) — Chassis ground (–):***	Does waveform of the start switch signal occur?	Repair the poor contact of ECM connector.	Repair the poor contact of keyless access CM connector.

	Step	Check	Yes	No
13	**CHECK INPUT SIGNAL FOR STARTER MOTOR.** 1) Turn the ignition to OFF. 2) Disconnect the connector from starter motor. 3) Place the select lever in “P” range or “N” range. 4) Press the push button ignition switch once with the brake pedal depressed. 5) Measure the voltage between the starter motor connector and the engine ground. ***Connector & terminal*** ***(B14) No. 1 (+) — Engine ground (–):***	Is the voltage 10 V or more?	Check the starter motor. <Ref. to SC(H4DO(HEV))-10, Starter.>	Go to step **14**.
14	**CHECK HARNESS BETWEEN 12 VOLT AUXILIARY BATTERY AND STARTER MOTOR.** 1) Turn the ignition to OFF. 2) Measure the voltage between starter motor terminal B and engine ground. ***Terminals*** ***Terminal B (+) — Engine ground (–):***	Is the voltage 10 V or more?	Go to step **15**.	Repair the power supply circuit.
15	**CHECK IG RELAY 1 (PUSH BUTTON START) POWER SUPPLY.** 1) Remove the IG relay 1 (push button start). 2) Turn the ignition to ON. 3) Measure the voltage between the IG relay 1 (push button start) connector and chassis ground. ***Connector & terminal*** ***(B225) No. 37 (+) — Chassis ground (–):*** ***(B225) No. 38 (+) — Chassis ground (–):***	Is the voltage 10 V or more?	Go to step **16**.	Check the following item and repair or replace if necessary. • Blown out of fuse • Open circuit or short circuit to ground in harness between IG relay 1 (push button start) connector and keyless access CM connector • Open circuit or short circuit to ground in harness between IG relay 1 (push button start) connector and 12 volt auxiliary battery • Poor contact of coupling connector
16	**CHECK HARNESS BETWEEN IG RELAY 1 (PUSH BUTTON START) CONNECTOR AND CHASSIS GROUND.** 1) Turn the ignition to OFF. 2) Measure the resistance of harness between the IG relay 1 (push button start) connector and chassis ground. ***Connector & terminal*** ***(B225) No. 39 — Chassis ground:***	Is the resistance less than 5 Ω?	Go to step **17**.	Repair the open circuit in harness between the IG relay 1 (push button start) connector and chassis ground.
17	**CHECK IG RELAY 1 (PUSH BUTTON START).** 1) Connect the battery to IG relay 1 (push button start) terminals No. 38 and No. 39. 2) Measure the resistance between IG relay 1 (push button start) terminals. ***Terminals*** ***No. 36 — No. 37:***	Is the resistance less than 1 Ω?	Go to step **18**.	Replace the IG relay 1 (push button start). <Ref. to SL-111, IG Relay1 (Push Button Start).>

	Step	Check	Yes	No
18	**CHECK STARTER RELAY (PUSH BUTTON START) POWER SUPPLY.** 1) Install the IG relay 1 (push button start). 2) Remove the starter relay (push button start). 3) Turn the ignition to ON. 4) Measure the voltage between starter relay (push button start) connector and chassis ground. ***Connector & terminal*** ***(B225) No. 29 (+) — Chassis ground (–):*** ***(B225) No. 30 (+) — Chassis ground (–):***	Is the voltage 10 V or more?	Go to step **19**.	Check the following item and repair or replace if necessary. • Blown out of fuse (F/B No. 26) • Open circuit or short circuit to ground in harness between starter relay (push button start) connector and IG relay 1 (push button start) connector • Open circuit or short circuit to ground in harness between starter relay (push button start) connector and 12 volt auxiliary battery
19	**CHECK HARNESS BETWEEN STARTER RELAY (PUSH BUTTON START) CONNECTOR AND CHASSIS GROUND.** 1) Turn the ignition to OFF. 2) Measure the resistance of harness between starter relay (push button start) connector and chassis ground. ***Connector & terminal*** ***(B225) No. 31 — Chassis ground:***	Is the resistance less than 5 Ω?	Go to step **20**.	Repair the open circuit in harness between starter relay (push button start) connector and chassis ground.
20	**CHECK STARTER RELAY (PUSH BUTTON START).** 1) Connect the battery to starter relay (push button start) terminals No. 30 and No. 31. 2) Measure the resistance between starter relay (push button start) terminals. ***Terminals*** ***No. 28 — No. 29:***	Is the resistance less than 1 Ω?	Go to step **21**.	Replace the starter relay (push button start). <Ref. to SL-109, Starter Relay (Push Button Start).>
21	**CHECK HARNESS BETWEEN STARTER RELAY (PUSH BUTTON START) CONNECTOR AND STARTER CUT RELAY CONNECTOR.** 1) Remove the starter cut relay. 2) Measure the resistance of harness between starter relay (push button start) connector and starter cut relay connector. ***Connector & terminal*** ***(B225) No. 28 — (B225) No. 42:*** ***(B225) No. 28 — (B225) No. 44:***	Is the resistance less than 1 Ω?	Go to step **22**.	Repair the open circuit in harness between starter relay (push button start) connector and starter cut relay connector.
22	**CHECK HARNESS BETWEEN ECM AND STARTER CUT RELAY CONNECTOR.** 1) Disconnect the connector from ECM. 2) Measure the resistance between starter cut relay connector and chassis ground. ***Connector & terminal*** ***(B225) No. 40 — Chassis ground:***	Is the resistance 1 MΩ or more?	Go to step **23**.	Repair the short circuit to ground in harness between ECM connector and starter cut relay connector.

	Step	Check	Yes	No
23	**CHECK STARTER CUT RELAY.** Measure the resistance between starter cut relay terminals. ***Terminals*** ***No. 41 — No. 44:***	Is the resistance less than 1 Ω?	Go to step **24**.	Replace the starter cut relay. <Ref. to SL-116, Starter Cut Relay.>
24	**CHECK HARNESS BETWEEN STARTER CUT RELAY CONNECTOR AND STARTER RELAY 1 CONNECTOR.** 1) Remove the starter relay 1. 2) Measure the resistance of harness between starter cut relay connector and starter relay 1 connector. ***Connector & terminal*** ***(B225) No. 41 — (B225) No. 2:*** ***(B225) No. 41 — (B225) No. 3:***	Is the resistance less than 1 Ω?	Go to step **25**.	Repair the open circuit of harness between starter cut relay connector and starter relay 1 connector.
25	**CHECK HARNESS BETWEEN ECM AND STARTER RELAY 1 CONNECTOR.** Measure the resistance of harness between ECM connector and starter relay 1 connector. ***Connector & terminal*** ***(B135) No. 26 — (B225) No. 5:***	Is the resistance less than 1 Ω?	Go to step **26**.	Repair the open circuit of harness between ECM connector and starter relay 1 connector.
26	**CHECK STARTER RELAY 1.** 1) Connect the battery to starter relay 1 terminals No. 3 and No. 5. 2) Measure the resistance between starter relay 1 terminals. ***Terminals*** ***No. 1 — No. 2:***	Is the resistance less than 1 Ω?	Go to step **27**.	Replace the starter relay 1. <Ref. to EN(H4DO HEV)(diag)-9, LOCATION, Electrical Component Location.>
27	**CHECK HARNESS BETWEEN STARTER RELAY 1 CONNECTOR AND INHIBITOR SWITCH CONNECTOR.** 1) Disconnect the connector from inhibitor switch. 2) Measure the resistance of harness between starter relay 1 connector and inhibitor switch connector. ***Connector & terminal*** ***(B225) No. 1 — (T7) No. 6:***	Is the resistance less than 1 Ω?	Go to step **28**.	Repair the harness and connector. NOTE: In this case, repair the following item: • Open circuit in harness between starter relay 1 connector and inhibitor switch connector • Poor contact of coupling connector
28	**CHECK INHIBITOR SWITCH.** 1) Place the select lever in “P” range and “N” range. 2) Measure the resistance between inhibitor switch terminals. ***Terminals*** ***No. 6 — No. 9:***	Is the resistance less than 1 Ω?	Go to step **29**.	Replace the inhibitor switch. <Ref. to CVT(TH58A)-96, Inhibitor Switch.>
29	**CHECK HARNESS BETWEEN ECM AND INHIBITOR SWITCH CONNECTOR.** 1) Disconnect the connector from ECM. 2) Measure the resistance of harness between ECM connector and inhibitor switch connector. ***Connector & terminal*** ***(B137) No. 16 — (T7) No. 6:***	Is the resistance less than 1 Ω?	Go to step **30**.	Repair the harness and connector. NOTE: In this case, repair the following item: • Open circuit in harness between ECM connector and inhibitor switch connector • Poor contact of coupling connector

	Step	Check	Yes	No
30	**CHECK HARNESS BETWEEN INHIBITOR SWITCH AND STARTER MOTOR.** Measure the resistance of harness between the inhibitor switch connector and starter motor. ***Connector & terminal*** ***(T7) No. 9 — (B14) No. 1:***	Is the resistance less than 1 Ω?	Check the engine control module (ECM) power supply and ground line. <Ref. to EN(H4DO HEV)(diag)-78, CHECK POWER SUPPLY AND GROUND LINE OF ENGINE CONTROL MODULE (ECM), Diagnostics for Engine Starting Failure.>	Repair the harness and connector. NOTE: In this case, repair the following item: • Open circuit in harness between inhibitor switch connector and starter motor connector • Poor contact of coupling connector

C: CHECK POWER SUPPLY AND GROUND LINE OF ENGINE CONTROL MODULE (ECM)

CAUTION:
After servicing or replacing faulty parts, perform Clear Memory Mode <Ref. to EN(H4DO HEV)(diag)-63, OPERATION, Clear Memory Mode.>, and Inspection Mode <Ref. to EN(H4DO HEV)(diag)-47, PROCEDURE, Inspection Mode.>.

WIRING DIAGRAM:

- Engine electrical system (without push button start) <Ref. to WI(HEV)-100, WITHOUT PUSH BUTTON START, WIRING DIAGRAM, Engine Electrical System.>
- Engine electrical system (with push button start) <Ref. to WI(HEV)-114, WITH PUSH BUTTON START, WIRING DIAGRAM, Engine Electrical System.>

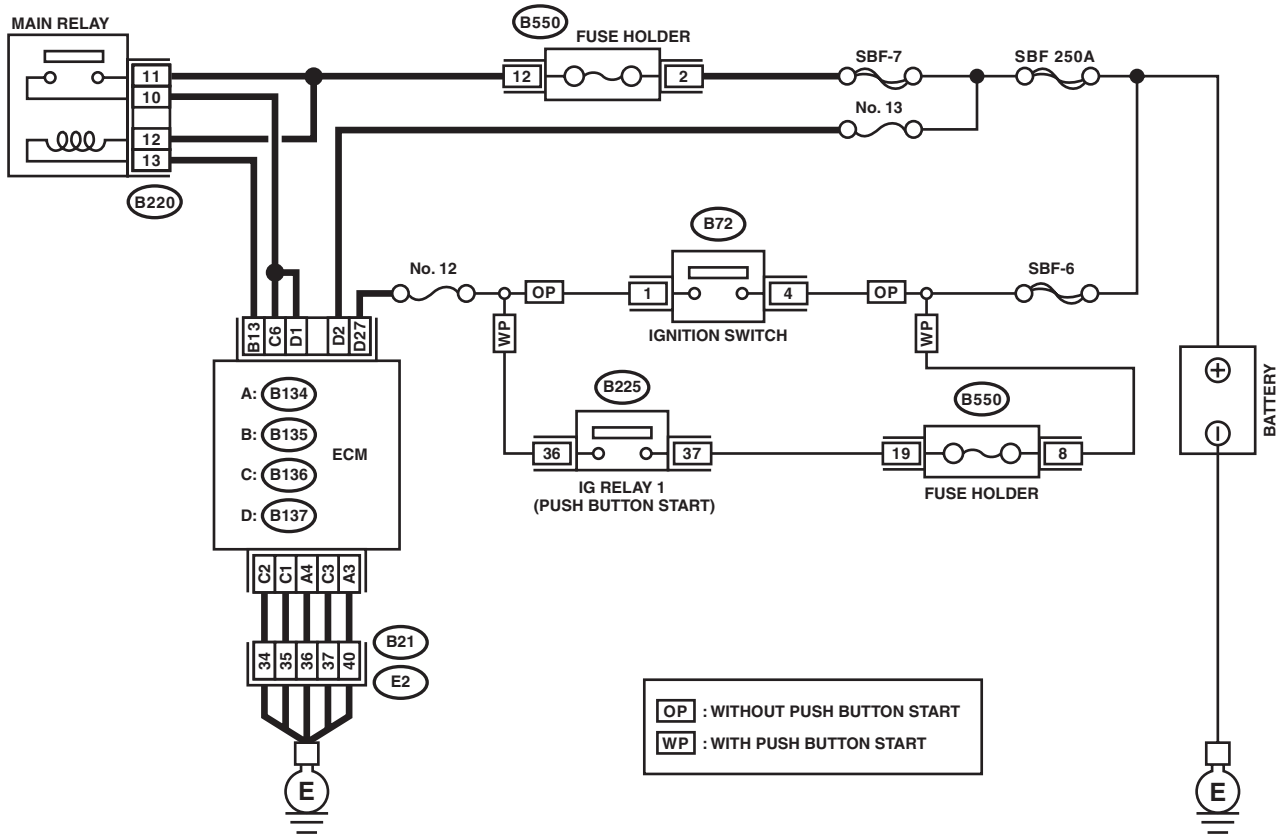

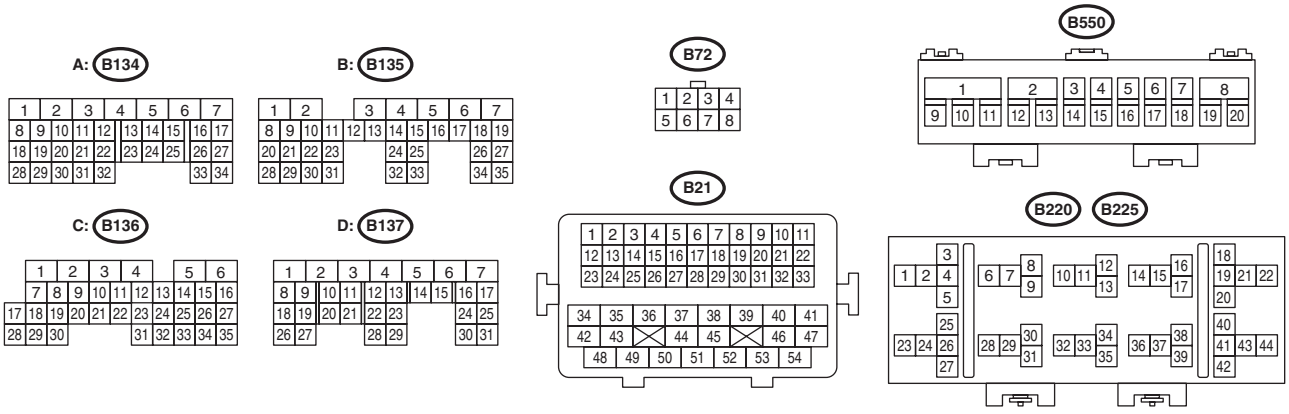

EN-10733

	Step	Check	Yes	No
1	**CHECK MAIN RELAY.** 1) Turn the ignition switch to OFF. 2) Remove the main relay. 3) Connect the battery to main relay terminals No. 12 and No. 13. 4) Measure the resistance between main relay terminals. ***Terminals*** ***No. 10 — No. 11:***	Is the resistance less than 1 Ω?	Go to step **2**.	Replace the main relay. <Ref. to FU(H4DO(HEV))-88, Main Relay.>
2	**CHECK GROUND CIRCUIT FOR ECM.** 1) Disconnect the connector from ECM. 2) Measure the resistance of harness between ECM connector and chassis ground. ***Connector & terminal*** ***(B134) No. 3 — Chassis ground:*** ***(B134) No. 4 — Chassis ground:*** ***(B136) No. 1 — Chassis ground:*** ***(B136) No. 2 — Chassis ground:*** ***(B136) No. 3 — Chassis ground:***	Is the resistance less than 5 Ω?	Go to step **3**.	Repair the harness and connector. NOTE: In this case, repair the following item: • Open circuit of harness between ECM connector and engine ground terminal • Poor contact of coupling connector
3	**CHECK INPUT VOLTAGE OF ECM.** 1) Turn the ignition switch to ON. 2) Measure the voltage between ECM connector and chassis ground. ***Connector & terminal*** ***(B137) No. 2 (+) — Chassis ground (–):*** ***(B137) No. 27 (+) — Chassis ground (–):***	Is the voltage 10 V or more?	Go to step **4**.	Repair the open or ground short circuit of harness of power supply circuit.
4	**CHECK INPUT VOLTAGE OF MAIN RELAY.** Measure the voltage between main relay connector and chassis ground. ***Connector & terminal*** ***(B220) No. 11 (+) — Chassis ground (–):*** ***(B220) No. 12 (+) — Chassis ground (–):***	Is the voltage 10 V or more?	Go to step **5**.	Repair the open or ground short circuit of harness of power supply circuit.
5	**CHECK INPUT VOLTAGE OF ECM.** 1) Turn the ignition switch to OFF. 2) Install the main relay. 3) Turn the ignition switch to ON. 4) Measure the voltage between ECM connector and chassis ground. ***Connector & terminal*** ***(B135) No. 13 (+) — Chassis ground (–):***	Is the voltage 10 V or more?	Go to step **6**.	Repair the open circuit of harness between ECM connector and main relay connector.
6	**CHECK INPUT VOLTAGE OF ECM.** 1) Turn the ignition switch to OFF. 2) Connect the connector to ECM. 3) Turn the ignition switch to ON. 4) Measure the voltage between ECM connector and chassis ground. ***Connector & terminal*** ***(B136) No. 6 (+) — Chassis ground (–):*** ***(B137) No. 1 (+) — Chassis ground (–):***	Is the voltage 10 V or more?	Check ignition control system. <Ref. to EN(H4DO HEV)(diag)-81, IGNITION CONTROL SYSTEM, Diagnostics for Engine Starting Failure.>	Repair the harness and connector. NOTE: In this case, repair the following item: • Open circuit in harness between ECM connector and main relay connector • Poor contact of main relay connector • Poor contact of ECM connector

D: IGNITION CONTROL SYSTEM

CAUTION:
After servicing or replacing faulty parts, perform Clear Memory Mode <Ref. to EN(H4DO HEV)(diag)-63, Clear Memory Mode.>, and Inspection Mode <Ref. to EN(H4DO HEV)(diag)-47, Inspection Mode.>.
WIRING DIAGRAM:

- Engine electrical system (without push button start) <Ref. to WI(HEV)-100, WITHOUT PUSH BUTTON START, WIRING DIAGRAM, Engine Electrical System.>
- Engine electrical system (with push button start) <Ref. to WI(HEV)-114, WITH PUSH BUTTON START, WIRING DIAGRAM, Engine Electrical System.>

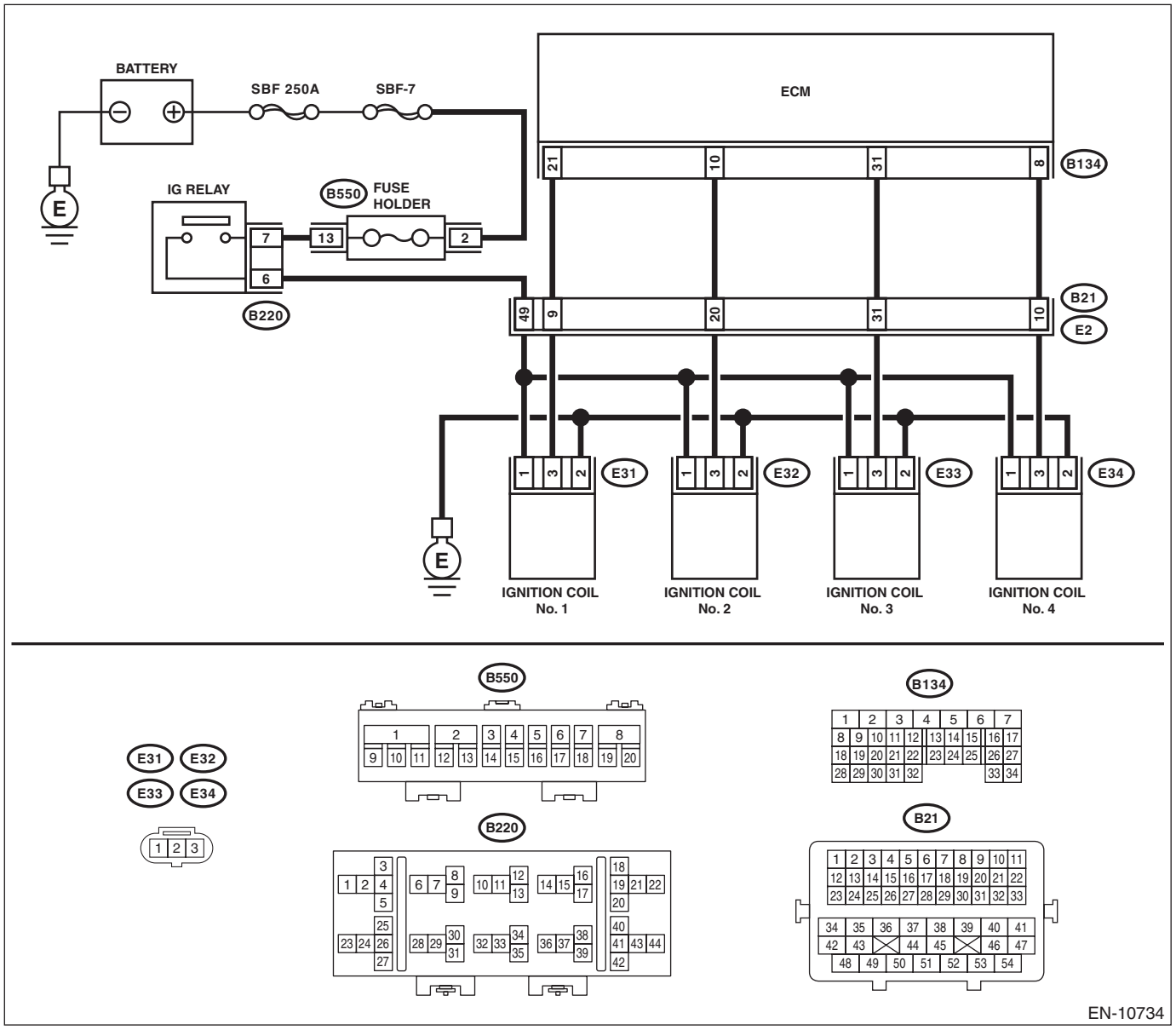

Step		Check	Yes	No
1	**CHECK SPARK PLUG CONDITION.** 1) Remove the spark plug. <Ref. to IG(H4DO(w/o HEV))-4, REMOVAL, Spark Plug.> 2) Check the spark plug condition. <Ref. to IG(H4DO(w/o HEV))-6, INSPECTION, Spark Plug.>	Is the spark plug condition normal?	Go to step **2**.	Replace the spark plug. <Ref. to IG(H4DO(w/o HEV))-4, Spark Plug.>

	Step	Check	Yes	No
2	**CHECK IGNITION SYSTEM FOR SPARKS.** 1) Connect the spark plug to ignition coil. 2) Release the fuel pressure. <Ref. to FU(H4DO(HEV))-98, RELEASING OF FUEL PRESSURE, PROCEDURE, Fuel.> 3) Contact the spark plug thread portion to engine. 4) While opening the throttle valve fully, crank the engine to check that spark occurs at each cylinder.	Does spark occur at each cylinder?	Check fuel pump system. <Ref. to EN(H4DO HEV)(diag)-83, FUEL PUMP CIRCUIT, Diagnostics for Engine Starting Failure.>	Go to step **3**.
3	**CHECK IGNITION COIL POWER SUPPLY CIRCUIT.** 1) Turn the ignition switch to OFF. 2) Disconnect the connector from ignition coil. 3) Turn the ignition switch to ON. 4) Measure the voltage between ignition coil connector and engine ground. ***Connector & terminal*** ***(E31) No. 1 (+) — Engine ground (–):*** ***(E32) No. 1 (+) — Engine ground (–):*** ***(E33) No. 1 (+) — Engine ground (–):*** ***(E34) No. 1 (+) — Engine ground (–):***	Is the voltage 10 V or more?	Go to step **4**.	Repair the harness and connector. NOTE: In this case, repair the following item: • Open circuit or short circuit to ground in harness of power supply circuit • Poor contact of coupling connector • Blown out of fuse
4	**CHECK HARNESS OF IGNITION COIL GROUND CIRCUIT.** 1) Turn the ignition switch to OFF. 2) Measure the resistance of harness between ignition coil connector and engine ground. ***Connector & terminal*** ***(E31) No. 2 — Engine ground:*** ***(E32) No. 2 — Engine ground:*** ***(E33) No. 2 — Engine ground:*** ***(E34) No. 2 — Engine ground:***	Is the resistance less than 5 Ω?	Go to step **5**.	Repair the open circuit in harness between ignition coil connector and engine grounding terminal.
5	**CHECK HARNESS BETWEEN ECM AND IGNITION COIL CONNECTOR.** 1) Disconnect the connector from ECM. 2) Measure the resistance of harness between ECM connector and ignition coil connector. ***Connector & terminal*** ***(B134) No. 21 — (E31) No. 3:*** ***(B134) No. 10 — (E32) No. 3:*** ***(B134) No. 31 — (E33) No. 3:*** ***(B134) No. 8 — (E34) No. 3:***	Is the resistance less than 1 Ω?	Go to step **6**.	Repair the harness and connector. NOTE: In this case, repair the following item: • Open circuit of harness between ECM connector and the ignition coil connector • Poor contact of coupling connector
6	**CHECK HARNESS BETWEEN ECM AND IGNITION COIL CONNECTOR.** Measure the resistance of harness between ECM connector and engine ground. ***Connector & terminal:*** ***(B134) No. 21 — Engine ground:*** ***(B134) No. 10 — Engine ground:*** ***(B134) No. 31 — Engine ground:*** ***(B134) No. 8 — Engine ground:***	Is the resistance 1 MΩ or more?	Go to step **7**.	Repair the ground short circuit of harness between ECM connector and ignition coil connector.
7	**CHECK FOR POOR CONTACT.** Check for poor contact of ECM connector.	Is there poor contact of ECM connector?	Repair the poor contact of ECM connector.	Replace the ignition coil. <Ref. to IG(H4DO(w/o HEV))-11, Ignition Coil.>

E: FUEL PUMP CIRCUIT

CAUTION:
After servicing or replacing faulty parts, perform Clear Memory Mode <Ref. to EN(H4DO HEV)(diag)-63, OPERATION, Clear Memory Mode.>, and Inspection Mode <Ref. to EN(H4DO HEV)(diag)-47, PROCEDURE, Inspection Mode.>.

WIRING DIAGRAM:

- Engine electrical system (without push button start) <Ref. to WI(HEV)-100, WITHOUT PUSH BUTTON START, WIRING DIAGRAM, Engine Electrical System.>
- Engine electrical system (with push button start) <Ref. to WI(HEV)-114, WITH PUSH BUTTON START, WIRING DIAGRAM, Engine Electrical System.>

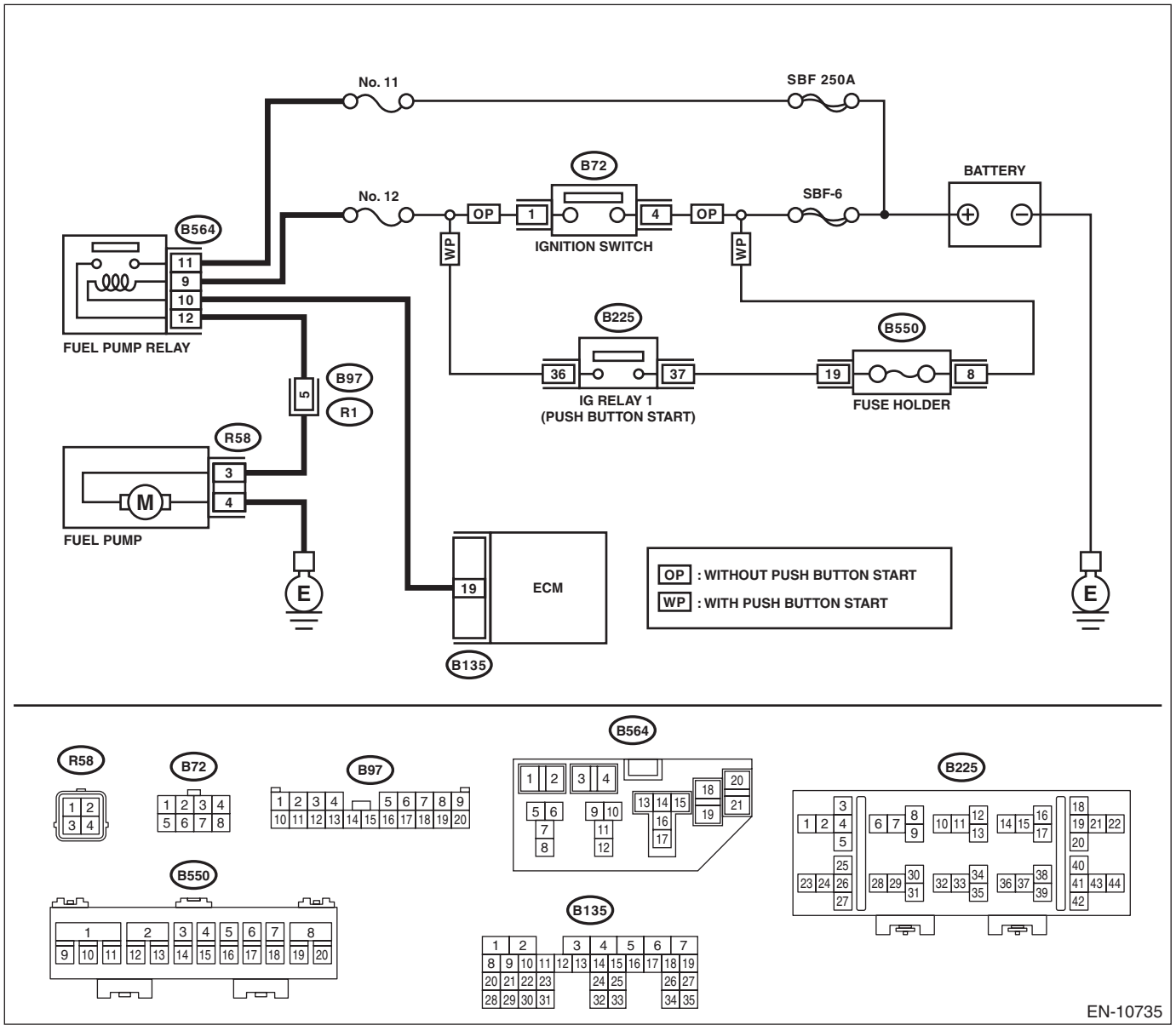

	Step	Check	Yes	No
1	**CHECK OPERATING SOUND OF FUEL PUMP.** Check if the fuel pump operates for two seconds when turning the ignition switch to ON. NOTE: Fuel pump operation can be executed using the Subaru Select Monitor. For detailed procedures, refer to "System Operation Check Mode". <Ref. to EN(H4DO HEV)(diag)-64, System Operation Check Mode.>	Does the fuel pump emit operating sound?	Check the fuel injector circuit. <Ref. to EN(H4DO HEV)(diag)-86, FUEL INJECTOR CIRCUIT, Diagnostics for Engine Starting Failure.>	Go to step **2**.
2	**CHECK GROUND CIRCUIT OF FUEL PUMP.** 1) Turn the ignition switch to OFF. 2) Remove the fuel pump access hole lid. 3) Disconnect the connector from fuel pump. 4) Measure the resistance of harness between fuel pump connector and chassis ground. ***Connector & terminal*** ***(R58) No. 4 — Chassis ground:***	Is the resistance less than 5 Ω?	Go to step **3**.	Repair the open circuit in harness between fuel pump connector and chassis ground terminal.
3	**CHECK POWER SUPPLY TO FUEL PUMP.** 1) Turn the ignition switch to ON. 2) Measure the voltage of power supply circuit between fuel pump connector and chassis ground. ***Connector & terminal*** ***(R58) No. 3 (+) — Chassis ground (–):***	Is the voltage 10 V or more?	Replace the fuel pump. <Ref. to FU(H4DO(HEV))-122, Fuel Pump.>	Go to step **4**.
4	**CHECK HARNESS BETWEEN FUEL PUMP CONNECTOR AND FUEL PUMP RELAY CONNECTOR.** 1) Turn the ignition switch to OFF. 2) Remove the fuel pump relay. 3) Measure the resistance of harness between fuel pump connector and fuel pump relay connector. ***Connector & terminal*** ***(R58) No. 3 — (B564) No. 12:***	Is the resistance less than 1 Ω?	Go to step **5**.	Repair the harness and connector. NOTE: In this case, repair the following item: • Open circuit in harness between fuel pump connector and fuel pump relay connector • Poor contact of coupling connector
5	**CHECK HARNESS BETWEEN FUEL PUMP CONNECTOR AND FUEL PUMP RELAY CONNECTOR.** Measure the resistance between fuel pump connector and chassis ground. ***Connector & terminal*** ***(R58) No. 3 — Chassis ground:***	Is the resistance 1 MΩ or more?	Go to step **6**.	Repair the short circuit to ground in harness between fuel pump connector and fuel pump relay connector.
6	**CHECK FUEL PUMP RELAY.** 1) Connect the battery to fuel pump relay terminals No. 9 and No. 10. 2) Measure the resistance between fuel pump relay terminals. ***Terminals*** ***No. 11 — No. 12:***	Is the resistance less than 1 Ω?	Go to step **7**.	Replace the fuel pump relay. <Ref. to FU(H4DO(HEV))-96, Fuel Pump Relay.>
7	**CHECK HARNESS BETWEEN ECM AND FUEL PUMP RELAY CONNECTOR.** 1) Disconnect the connector from ECM. 2) Measure the resistance of harness between ECM connector and fuel pump relay connector. ***Connector & terminal*** ***(B135) No. 19 — (B564) No. 10:***	Is the resistance less than 1 Ω?	Go to step **8**.	Repair the open circuit of harness between ECM connector and fuel pump relay connector.

Step		Check	Yes	No
8	**CHECK POWER SUPPLY OF FUEL PUMP RELAY.** 1) Turn the ignition switch to ON. 2) Measure the voltage between fuel pump relay connector and chassis ground. ***Connector & terminal*** ***(B564) No. 9 (+) — Chassis ground (–):*** ***(B564) No. 11 (+) — Chassis ground (–):***	Is the voltage 10 V or more?	Repair the poor contact of ECM connector.	Repair the open or ground short circuit of harness of power supply circuit.

F: FUEL INJECTOR CIRCUIT

CAUTION:
- **Check or repair only faulty parts.**
- **After servicing or replacing faulty parts, perform Clear Memory Mode <Ref. to EN(H4DO HEV)(diag)-63, OPERATION, Clear Memory Mode.>, and Inspection Mode <Ref. to EN(H4DO HEV)(diag)-47, PROCEDURE, Inspection Mode.>.**

WIRING DIAGRAM:
- Engine electrical system (without push button start) <Ref. to WI(HEV)-100, WITHOUT PUSH BUTTON START, WIRING DIAGRAM, Engine Electrical System.>
- Engine electrical system (with push button start) <Ref. to WI(HEV)-114, WITH PUSH BUTTON START, WIRING DIAGRAM, Engine Electrical System.>

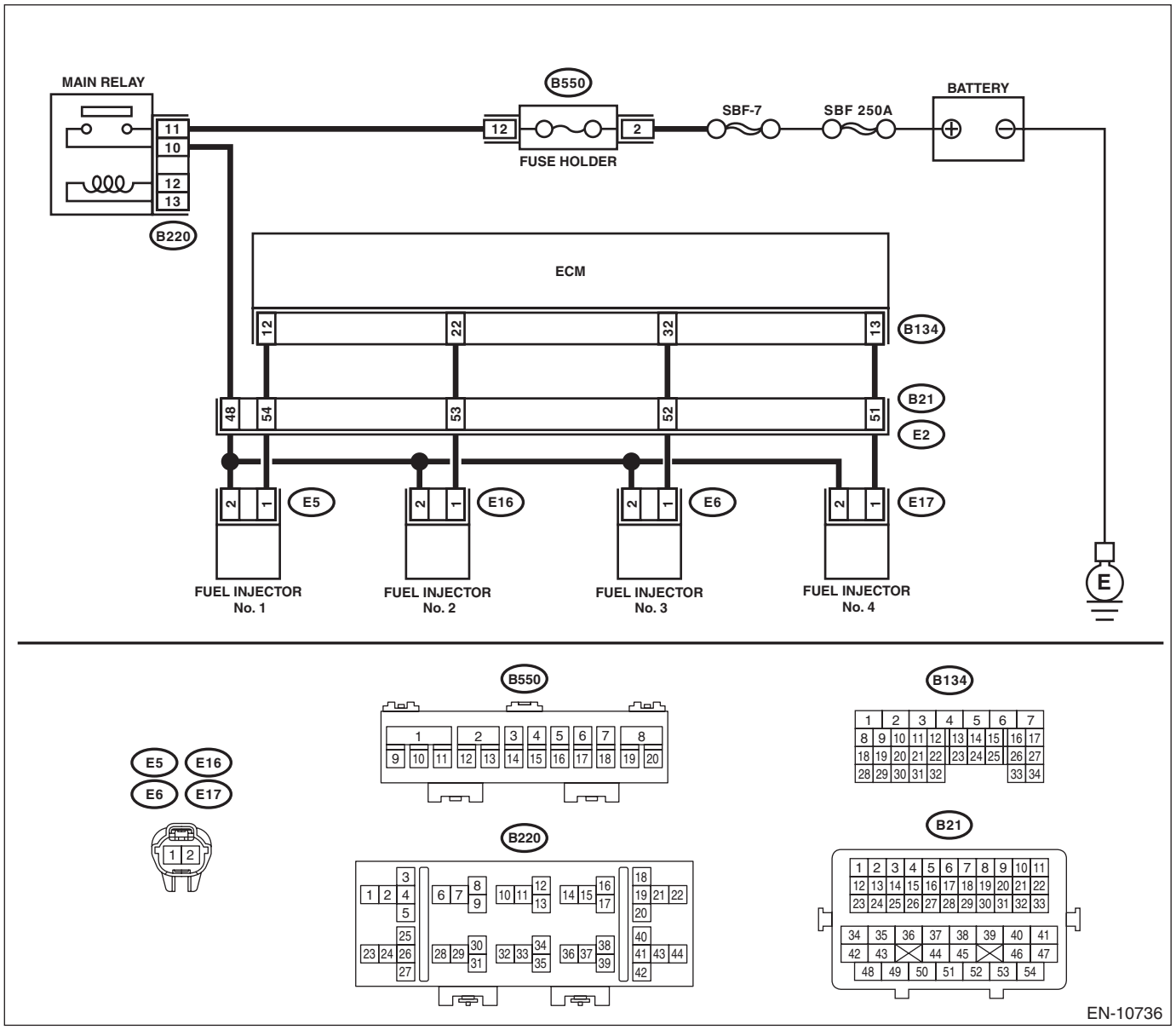

Step		Check	Yes	No
1	**CHECK OPERATION OF EACH FUEL INJECTOR.** While cranking the engine, check each fuel injector emits operating sound. Use a sound scope or attach a screwdriver to the injector to listen to sounds for this check.	Does the fuel injector emit operating sound?	Check the fuel pressure. <Ref. to ME(H4DO(w/o HEV))-35, INSPECTION, Fuel Pressure.>	Go to step **2**.

	Step	Check	Yes	No
2	**CHECK POWER SUPPLY TO EACH FUEL INJECTOR.** 1) Turn the ignition switch to OFF. 2) Disconnect the connector from fuel injector. 3) Turn the ignition switch to ON. 4) Measure the power supply voltage between fuel injector terminal and engine ground. ***Connector & terminal*** ***#1 (E5) No. 2 (+) — Engine ground (–):*** ***#2 (E16) No. 2 (+) — Engine ground (–):*** ***#3 (E6) No. 2 (+) — Engine ground (–):*** ***#4 (E17) No. 2 (+) — Engine ground (–):***	Is the voltage 10 V or more?	Go to step **3**.	Repair the harness and connector. NOTE: In this case, repair the following item: • Open circuit in harness between main relay connector and fuel injector connector • Poor contact of main relay connector • Poor contact of coupling connector
3	**CHECK HARNESS BETWEEN ECM AND FUEL INJECTOR CONNECTOR.** 1) Turn the ignition switch to OFF. 2) Disconnect the connector from ECM. 3) Measure the resistance of harness between ECM connector and fuel injector connector. ***Connector & terminal*** ***#1 (B134) No. 12 — (E5) No. 1:*** ***#2 (B134) No. 22 — (E16) No. 1:*** ***#3 (B134) No. 32 — (E6) No. 1:*** ***#4 (B134) No. 13 — (E17) No. 1:***	Is the resistance less than 1 Ω?	Go to step **4**.	Repair the harness and connector. NOTE: In this case, repair the following item: • Open circuit in harness between ECM connector and fuel injector connector • Poor contact of coupling connector
4	**CHECK HARNESS BETWEEN ECM AND FUEL INJECTOR CONNECTOR.** Measure the resistance between ECM connector and chassis ground. ***Connector & terminal*** ***#1 (B134) No. 12 — Chassis ground:*** ***#2 (B134) No. 22 — Chassis ground:*** ***#3 (B134) No. 32 — Chassis ground:*** ***#4 (B134) No. 13 — Chassis ground:***	Is the resistance 1 MΩ or more?	Go to step **5**.	Repair the short circuit to ground in harness between ECM connector and fuel injector connector.
5	**CHECK EACH FUEL INJECTOR.** Measure the resistance between each fuel injector terminals. ***Terminals*** ***No. 1 — No. 2:***	Is the resistance 5 — 20 Ω?	Go to step **6**.	Replace the faulty fuel injector. <Ref. to FU(H4DO(HEV))-70, Fuel Injector.>
6	**CHECK FOR POOR CONTACT.** Check for poor contact of ECM connector.	Is there poor contact of ECM connector?	Repair the poor contact of ECM connector.	Inspection using “General Diagnostic Table” <Ref. to EN(H4DO HEV)(diag)-383, INSPECTION, General Diagnostic Table.>

17.List of Diagnostic Trouble Code (DTC)

A: LIST

DTC	Item	Note
B1570	Antenna	<Ref. to IM(diag)-17, DTC B1570 ANTENNA, Diagnostic Procedure with Diagnostic Trouble Code (DTC).>
B1571	Reference Code Incompatibility	<Ref. to IM(diag)-20, DTC B1571 REFERENCE CODE INCOMPATIBILITY, Diagnostic Procedure with Diagnostic Trouble Code (DTC).> <Ref. to KPS(diag)-93, DTC B1571 REFERENCE CODE INCOMPATIBILITY, Diagnostic Procedure with Diagnostic Trouble Code (DTC).>
B1572	IMM Circuit Failure (Except Antenna Circuit)	<Ref. to IM(diag)-21, DTC B1572 IMM CIRCUIT FAILURE (EXCEPT ANTENNA CIRCUIT), Diagnostic Procedure with Diagnostic Trouble Code (DTC).> <Ref. to KPS(diag)-94, DTC B1572 IMM CIRCUIT FAILURE (EXCEPT ANTENNA CIRCUIT), Diagnostic Procedure with Diagnostic Trouble Code (DTC).>
B1574	Key Communication Failure	<Ref. to IM(diag)-25, DTC B1574 KEY COMMUNICATION FAILURE, Diagnostic Procedure with Diagnostic Trouble Code (DTC).>
B1575	Incorrect Immobilizer Key	<Ref. to IM(diag)-25, DTC B1575 INCORRECT IMMOBILIZER KEY, Diagnostic Procedure with Diagnostic Trouble Code (DTC).>
B1576	EGI Control Module EEPROM	<Ref. to IM(diag)-26, DTC B1576 EGI CONTROL MODULE EEPROM, Diagnostic Procedure with Diagnostic Trouble Code (DTC).> <Ref. to KPS(diag)-97, DTC B1576 EGI CONTROL MODULE EEPROM, Diagnostic Procedure with Diagnostic Trouble Code (DTC).>
B1577	IMM Control Module EEPROM	<Ref. to IM(diag)-26, DTC B1577 IMM CONTROL MODULE EEPROM, Diagnostic Procedure with Diagnostic Trouble Code (DTC).> <Ref. to KPS(diag)-97, DTC B1577 IMM CONTROL MODULE EEPROM, Diagnostic Procedure with Diagnostic Trouble Code (DTC).>
B1578	Meter Failure	<Ref. to IM(diag)-27, DTC B1578 METER FAILURE, Diagnostic Procedure with Diagnostic Trouble Code (DTC).>
P000A	A Camshaft Position Slow Response (Bank 1)	<Ref. to EN(H4DO HEV)(diag)-98, DTC P000A A CAMSHAFT POSITION SLOW RESPONSE (BANK 1), Diagnostic Procedure with Diagnostic Trouble Code (DTC).>
P000B	B Camshaft Position Slow Response (Bank 1)	<Ref. to EN(H4DO HEV)(diag)-98, DTC P000B B CAMSHAFT POSITION SLOW RESPONSE (BANK 1), Diagnostic Procedure with Diagnostic Trouble Code (DTC).>
P000C	A Camshaft Position Slow Response (Bank 2)	<Ref. to EN(H4DO HEV)(diag)-98, DTC P000C A CAMSHAFT POSITION SLOW RESPONSE (BANK 2), Diagnostic Procedure with Diagnostic Trouble Code (DTC).>
P000D	B Camshaft Position Slow Response (Bank 2)	<Ref. to EN(H4DO HEV)(diag)-98, DTC P000D B CAMSHAFT POSITION SLOW RESPONSE (BANK 2), Diagnostic Procedure with Diagnostic Trouble Code (DTC).>
P0010	"A" Camshaft Position Actuator Circuit/Open (Bank 1)	<Ref. to EN(H4DO HEV)(diag)-99, DTC P0010 "A" CAMSHAFT POSITION ACTUATOR CIRCUIT/OPEN (BANK 1), Diagnostic Procedure with Diagnostic Trouble Code (DTC).>
P0011	Intake Camshaft Position - Timing Over-Advanced or System Performance (Bank 1)	<Ref. to EN(H4DO HEV)(diag)-101, DTC P0011 INTAKE CAMSHAFT POSITION - TIMING OVER-ADVANCED OR SYSTEM PERFORMANCE (BANK 1), Diagnostic Procedure with Diagnostic Trouble Code (DTC).>
P0013	B Camshaft Position Actuator Circuit/Open (Bank 1)	<Ref. to EN(H4DO HEV)(diag)-102, DTC P0013 B CAMSHAFT POSITION ACTUATOR CIRCUIT/OPEN (BANK 1), Diagnostic Procedure with Diagnostic Trouble Code (DTC).>
P0014	Exhaust AVCS System 1 (Range/Performance)	<Ref. to EN(H4DO HEV)(diag)-105, DTC P0014 EXHAUST AVCS SYSTEM 1 (RANGE/PERFORMANCE), Diagnostic Procedure with Diagnostic Trouble Code (DTC).>
P0016	Crankshaft Position - Camshaft Position Correlation (Bank1)	<Ref. to EN(H4DO HEV)(diag)-106, DTC P0016 CRANKSHAFT POSITION - CAMSHAFT POSITION CORRELATION (BANK1), Diagnostic Procedure with Diagnostic Trouble Code (DTC).>

DTC	Item	Note
P0017	Crank and Cam Timing B System Failure (Bank 1)	<Ref. to EN(H4DO HEV)(diag)-108, DTC P0017 CRANK AND CAM TIMING B SYSTEM FAILURE (BANK 1), Diagnostic Procedure with Diagnostic Trouble Code (DTC).>
P0018	Crankshaft Position - Camshaft Position Correlation (Bank2)	<Ref. to EN(H4DO HEV)(diag)-110, DTC P0018 CRANKSHAFT POSITION - CAMSHAFT POSITION CORRELATION (BANK2), Diagnostic Procedure with Diagnostic Trouble Code (DTC).>
P0019	Crank and Cam Timing B System Failure (Bank 2)	<Ref. to EN(H4DO HEV)(diag)-112, DTC P0019 CRANK AND CAM TIMING B SYSTEM FAILURE (BANK 2), Diagnostic Procedure with Diagnostic Trouble Code (DTC).>
P0020	"A" Camshaft Position Actuator Circuit/Open (Bank 2)	<Ref. to EN(H4DO HEV)(diag)-114, DTC P0020 "A" CAMSHAFT POSITION ACTUATOR CIRCUIT/OPEN (BANK 2), Diagnostic Procedure with Diagnostic Trouble Code (DTC).>
P0021	Intake Camshaft Position - Timing Over-Advanced or System Performance (Bank 2)	<Ref. to EN(H4DO HEV)(diag)-116, DTC P0021 INTAKE CAMSHAFT POSITION - TIMING OVER-ADVANCED OR SYSTEM PERFORMANCE (BANK 2), Diagnostic Procedure with Diagnostic Trouble Code (DTC).>
P0023	B Camshaft Position Actuator Circuit/Open (Bank 2)	<Ref. to EN(H4DO HEV)(diag)-117, DTC P0023 B CAMSHAFT POSITION ACTUATOR CIRCUIT/OPEN (BANK 2), Diagnostic Procedure with Diagnostic Trouble Code (DTC).>
P0024	Exhaust AVCS System 2 (Range/Performance)	<Ref. to EN(H4DO HEV)(diag)-120, DTC P0024 EXHAUST AVCS SYSTEM 2 (RANGE/PERFORMANCE), Diagnostic Procedure with Diagnostic Trouble Code (DTC).>
P0030	HO2S Heater Control Circuit (Bank 1 Sensor 1)	<Ref. to EN(H4DO HEV)(diag)-121, DTC P0030 HO2S HEATER CONTROL CIRCUIT (BANK 1 SENSOR 1), Diagnostic Procedure with Diagnostic Trouble Code (DTC).>
P0031	HO2S Heater Control Circuit Low (Bank 1 Sensor 1)	<Ref. to EN(H4DO HEV)(diag)-123, DTC P0031 HO2S HEATER CONTROL CIRCUIT LOW (BANK 1 SENSOR 1), Diagnostic Procedure with Diagnostic Trouble Code (DTC).>
P0032	HO2S Heater Control Circuit High (Bank 1 Sensor 1)	<Ref. to EN(H4DO HEV)(diag)-125, DTC P0032 HO2S HEATER CONTROL CIRCUIT HIGH (BANK 1 SENSOR 1), Diagnostic Procedure with Diagnostic Trouble Code (DTC).>
P0037	HO2S Heater Control Circuit Low (Bank 1 Sensor 2)	<Ref. to EN(H4DO HEV)(diag)-127, DTC P0037 HO2S HEATER CONTROL CIRCUIT LOW (BANK 1 SENSOR 2), Diagnostic Procedure with Diagnostic Trouble Code (DTC).>
P0038	HO2S Heater Control Circuit High (Bank 1 Sensor 2)	<Ref. to EN(H4DO HEV)(diag)-129, DTC P0038 HO2S HEATER CONTROL CIRCUIT HIGH (BANK 1 SENSOR 2), Diagnostic Procedure with Diagnostic Trouble Code (DTC).>
P0068	MAP/MAF - Throttle Position Correlation	<Ref. to EN(H4DO HEV)(diag)-131, DTC P0068 MAP/MAF - THROTTLE POSITION CORRELATION, Diagnostic Procedure with Diagnostic Trouble Code (DTC).>
P0071	Ambient Temperature Sensor Circuit "A" Range/Performance	<Ref. to EN(H4DO HEV)(diag)-132, DTC P0071 AMBIENT TEMPERATURE SENSOR CIRCUIT "A" RANGE/PERFORMANCE, Diagnostic Procedure with Diagnostic Trouble Code (DTC).>
P0072	Ambient Temperature Sensor Circuit "A" Low	<Ref. to EN(H4DO HEV)(diag)-134, DTC P0072 AMBIENT TEMPERATURE SENSOR CIRCUIT "A" LOW, Diagnostic Procedure with Diagnostic Trouble Code (DTC).>
P0073	Ambient Temperature Sensor Circuit "A" High	<Ref. to EN(H4DO HEV)(diag)-134, DTC P0073 AMBIENT TEMPERATURE SENSOR CIRCUIT "A" HIGH, Diagnostic Procedure with Diagnostic Trouble Code (DTC).>
P0101	Mass or Volume Air Flow Circuit Range/Performance	<Ref. to EN(H4DO HEV)(diag)-135, DTC P0101 MASS OR VOLUME AIR FLOW CIRCUIT RANGE/PERFORMANCE, Diagnostic Procedure with Diagnostic Trouble Code (DTC).>
P0102	Mass or Volume Air Flow Circuit Low Input	<Ref. to EN(H4DO HEV)(diag)-136, DTC P0102 MASS OR VOLUME AIR FLOW CIRCUIT LOW INPUT, Diagnostic Procedure with Diagnostic Trouble Code (DTC).>
P0103	Mass or Volume Air Flow Circuit High Input	<Ref. to EN(H4DO HEV)(diag)-138, DTC P0103 MASS OR VOLUME AIR FLOW CIRCUIT HIGH INPUT, Diagnostic Procedure with Diagnostic Trouble Code (DTC).>

DTC	Item	Note
P0107	Manifold Absolute Pressure/Barometric Pressure Circuit Low Input	<Ref. to EN(H4DO HEV)(diag)-140, DTC P0107 MANIFOLD ABSOLUTE PRESSURE/BAROMETRIC PRESSURE CIRCUIT LOW INPUT, Diagnostic Procedure with Diagnostic Trouble Code (DTC).>
P0108	Manifold Absolute Pressure/Barometric Pressure Circuit High Input	<Ref. to EN(H4DO HEV)(diag)-142, DTC P0108 MANIFOLD ABSOLUTE PRESSURE/BAROMETRIC PRESSURE CIRCUIT HIGH INPUT, Diagnostic Procedure with Diagnostic Trouble Code (DTC).>
P0111	Intake Air Temperature Sensor Range/Performance Problem	<Ref. to EN(H4DO HEV)(diag)-144, DTC P0111 INTAKE AIR TEMPERATURE SENSOR RANGE/PERFORMANCE PROBLEM, Diagnostic Procedure with Diagnostic Trouble Code (DTC).>
P0112	Intake Air Temperature Sensor 1 Circuit Low	<Ref. to EN(H4DO HEV)(diag)-146, DTC P0112 INTAKE AIR TEMPERATURE SENSOR 1 CIRCUIT LOW, Diagnostic Procedure with Diagnostic Trouble Code (DTC).>
P0113	Intake Air Temperature Sensor 1 Circuit High	<Ref. to EN(H4DO HEV)(diag)-148, DTC P0113 INTAKE AIR TEMPERATURE SENSOR 1 CIRCUIT HIGH, Diagnostic Procedure with Diagnostic Trouble Code (DTC).>
P0116	Engine Coolant Temperature Sensor 1 Circuit Range/Performance	<Ref. to EN(H4DO HEV)(diag)-150, DTC P0116 ENGINE COOLANT TEMPERATURE SENSOR 1 CIRCUIT RANGE/PERFORMANCE, Diagnostic Procedure with Diagnostic Trouble Code (DTC).>
P0117	Engine Coolant Temperature Circuit Low	<Ref. to EN(H4DO HEV)(diag)-153, DTC P0117 ENGINE COOLANT TEMPERATURE CIRCUIT LOW, Diagnostic Procedure with Diagnostic Trouble Code (DTC).>
P0118	Engine Coolant Temperature Circuit High	<Ref. to EN(H4DO HEV)(diag)-155, DTC P0118 ENGINE COOLANT TEMPERATURE CIRCUIT HIGH, Diagnostic Procedure with Diagnostic Trouble Code (DTC).>
P0122	Throttle/Pedal Position Sensor/Switch “A” Circuit Low	<Ref. to EN(H4DO HEV)(diag)-157, DTC P0122 THROTTLE/PEDAL POSITION SENSOR/SWITCH “A” CIRCUIT LOW, Diagnostic Procedure with Diagnostic Trouble Code (DTC).>
P0123	Throttle/Pedal Position Sensor/Switch “A” Circuit High	<Ref. to EN(H4DO HEV)(diag)-160, DTC P0123 THROTTLE/PEDAL POSITION SENSOR/SWITCH “A” CIRCUIT HIGH, Diagnostic Procedure with Diagnostic Trouble Code (DTC).>
P0125	Insufficient Coolant Temperature for Closed Loop Fuel Control	<Ref. to EN(H4DO HEV)(diag)-163, DTC P0125 INSUFFICIENT COOLANT TEMPERATURE FOR CLOSED LOOP FUEL CONTROL, Diagnostic Procedure with Diagnostic Trouble Code (DTC).>
P0128	Coolant Thermostat (Engine Coolant Temperature Below Thermostat Regulating Temperature)	<Ref. to EN(H4DO HEV)(diag)-164, DTC P0128 COOLANT THERMOSTAT (ENGINE COOLANT TEMPERATURE BELOW THERMOSTAT REGULATING TEMPERATURE), Diagnostic Procedure with Diagnostic Trouble Code (DTC).>
P0131	O2 Sensor Circuit Low Voltage (Bank 1 Sensor 1)	<Ref. to EN(H4DO HEV)(diag)-165, DTC P0131 O2 SENSOR CIRCUIT LOW VOLTAGE (BANK 1 SENSOR 1), Diagnostic Procedure with Diagnostic Trouble Code (DTC).>
P0132	O2 Sensor Circuit High Voltage (Bank 1 Sensor 1)	<Ref. to EN(H4DO HEV)(diag)-167, DTC P0132 O2 SENSOR CIRCUIT HIGH VOLTAGE (BANK 1 SENSOR 1), Diagnostic Procedure with Diagnostic Trouble Code (DTC).>
P0134	O2 Sensor Circuit No Activity Detected (Bank 1 Sensor 1)	<Ref. to EN(H4DO HEV)(diag)-169, DTC P0134 O2 SENSOR CIRCUIT NO ACTIVITY DETECTED (BANK 1 SENSOR 1), Diagnostic Procedure with Diagnostic Trouble Code (DTC).>
P0137	O2 Sensor Circuit Low Voltage (Bank 1 Sensor 2)	<Ref. to EN(H4DO HEV)(diag)-171, DTC P0137 O2 SENSOR CIRCUIT LOW VOLTAGE (BANK 1 SENSOR 2), Diagnostic Procedure with Diagnostic Trouble Code (DTC).>
P0138	O2 Sensor Circuit High Voltage (Bank 1 Sensor 2)	<Ref. to EN(H4DO HEV)(diag)-173, DTC P0138 O2 SENSOR CIRCUIT HIGH VOLTAGE (BANK 1 SENSOR 2), Diagnostic Procedure with Diagnostic Trouble Code (DTC).>
P013A	O2 Sensor Slow Response - Rich to Lean (Bank 1 Sensor 2)	<Ref. to EN(H4DO HEV)(diag)-175, DTC P013A O2 SENSOR SLOW RESPONSE - RICH TO LEAN (BANK 1 SENSOR 2), Diagnostic Procedure with Diagnostic Trouble Code (DTC).>

DTC	Item	Note
P013B	O2 Sensor Slow Response - Lean to Rich (Bank 1 Sensor 2)	<Ref. to EN(H4DO HEV)(diag)-176, DTC P013B O2 SENSOR SLOW RESPONSE - LEAN TO RICH (BANK 1 SENSOR 2), Diagnostic Procedure with Diagnostic Trouble Code (DTC).>
P013E	O2 Sensor Delayed Response - Rich to Lean (Bank 1 Sensor 2)	<Ref. to EN(H4DO HEV)(diag)-176, DTC P013E O2 SENSOR DELAYED RESPONSE - RICH TO LEAN (BANK 1 SENSOR 2), Diagnostic Procedure with Diagnostic Trouble Code (DTC).>
P013F	O2 Sensor Delayed Response - Lean to Rich (Bank 1 Sensor 2)	<Ref. to EN(H4DO HEV)(diag)-176, DTC P013F O2 SENSOR DELAYED RESPONSE - LEAN TO RICH (BANK 1 SENSOR 2), Diagnostic Procedure with Diagnostic Trouble Code (DTC).>
P0140	O2 Sensor Circuit No Activity Detected (Bank1 Sensor2)	<Ref. to EN(H4DO HEV)(diag)-177, DTC P0140 O2 SENSOR CIRCUIT NO ACTIVITY DETECTED (BANK1 SENSOR2), Diagnostic Procedure with Diagnostic Trouble Code (DTC).>
P0141	O2 Sensor Heater Circuit (Bank1 Sensor2)	<Ref. to EN(H4DO HEV)(diag)-179, DTC P0141 O2 SENSOR HEATER CIRCUIT (BANK1 SENSOR2), Diagnostic Procedure with Diagnostic Trouble Code (DTC).>
P014C	O2 Sensor Slow Response - Rich to Lean (Bank 1 Sensor 1)	<Ref. to EN(H4DO HEV)(diag)-180, DTC P014C O2 SENSOR SLOW RESPONSE - RICH TO LEAN (BANK 1 SENSOR 1), Diagnostic Procedure with Diagnostic Trouble Code (DTC).>
P014D	O2 Sensor Slow Response - Lean to Rich (Bank 1 Sensor 1)	<Ref. to EN(H4DO HEV)(diag)-180, DTC P014D O2 SENSOR SLOW RESPONSE - LEAN TO RICH (BANK 1 SENSOR 1), Diagnostic Procedure with Diagnostic Trouble Code (DTC).>
P015A	O2 Sensor Delayed Response - Rich to Lean (Bank 1 Sensor 1)	<Ref. to EN(H4DO HEV)(diag)-180, DTC P015A O2 SENSOR DELAYED RESPONSE - RICH TO LEAN (BANK 1 SENSOR 1), Diagnostic Procedure with Diagnostic Trouble Code (DTC).>
P015B	O2 Sensor Delayed Response - Lean to Rich (Bank 1 Sensor 1)	<Ref. to EN(H4DO HEV)(diag)-180, DTC P015B O2 SENSOR DELAYED RESPONSE - LEAN TO RICH (BANK 1 SENSOR 1), Diagnostic Procedure with Diagnostic Trouble Code (DTC).>
P0171	System Too Lean (Bank 1)	<Ref. to EN(H4DO HEV)(diag)-180, DTC P0171 SYSTEM TOO LEAN (BANK 1), Diagnostic Procedure with Diagnostic Trouble Code (DTC).>
P0172	System Too Rich (Bank 1)	<Ref. to EN(H4DO HEV)(diag)-181, DTC P0172 SYSTEM TOO RICH (BANK 1), Diagnostic Procedure with Diagnostic Trouble Code (DTC).>
P0196	Engine Oil Temperature Sensor Circuit Range/Performance	<Ref. to EN(H4DO HEV)(diag)-183, DTC P0196 ENGINE OIL TEMPERATURE SENSOR CIRCUIT RANGE/PERFORMANCE, Diagnostic Procedure with Diagnostic Trouble Code (DTC).>
P0197	Engine Oil Temperature Sensor Low	<Ref. to EN(H4DO HEV)(diag)-186, DTC P0197 ENGINE OIL TEMPERATURE SENSOR LOW, Diagnostic Procedure with Diagnostic Trouble Code (DTC).>
P0198	Engine Oil Temperature Sensor High	<Ref. to EN(H4DO HEV)(diag)-188, DTC P0198 ENGINE OIL TEMPERATURE SENSOR HIGH, Diagnostic Procedure with Diagnostic Trouble Code (DTC).>
P0201	Injector #1	<Ref. to EN(H4DO HEV)(diag)-190, DTC P0201 INJECTOR #1, Diagnostic Procedure with Diagnostic Trouble Code (DTC).>
P0202	Injector #2	<Ref. to EN(H4DO HEV)(diag)-192, DTC P0202 INJECTOR #2, Diagnostic Procedure with Diagnostic Trouble Code (DTC).>
P0203	Injector #3	<Ref. to EN(H4DO HEV)(diag)-192, DTC P0203 INJECTOR #3, Diagnostic Procedure with Diagnostic Trouble Code (DTC).>
P0204	Injector #4	<Ref. to EN(H4DO HEV)(diag)-192, DTC P0204 INJECTOR #4, Diagnostic Procedure with Diagnostic Trouble Code (DTC).>
P0222	Throttle/Pedal Position Sensor/Switch “B” Circuit Low	<Ref. to EN(H4DO HEV)(diag)-193, DTC P0222 THROTTLE/PEDAL POSITION SENSOR/SWITCH “B” CIRCUIT LOW, Diagnostic Procedure with Diagnostic Trouble Code (DTC).>
P0223	Throttle/Pedal Position Sensor/Switch “B” Circuit High	<Ref. to EN(H4DO HEV)(diag)-196, DTC P0223 THROTTLE/PEDAL POSITION SENSOR/SWITCH “B” CIRCUIT HIGH, Diagnostic Procedure with Diagnostic Trouble Code (DTC).>

DTC	Item	Note
P0300	Random/Multiple Cylinder Misfire Detected	<Ref. to EN(H4DO HEV)(diag)-199, DTC P0300 RANDOM/MULTIPLE CYLINDER MISFIRE DETECTED, Diagnostic Procedure with Diagnostic Trouble Code (DTC).>
P0301	Cylinder 1 Misfire Detected	<Ref. to EN(H4DO HEV)(diag)-204, DTC P0301 CYLINDER 1 MISFIRE DETECTED, Diagnostic Procedure with Diagnostic Trouble Code (DTC).>
P0302	Cylinder 2 Misfire Detected	<Ref. to EN(H4DO HEV)(diag)-204, DTC P0302 CYLINDER 2 MISFIRE DETECTED, Diagnostic Procedure with Diagnostic Trouble Code (DTC).>
P0303	Cylinder 3 Misfire Detected	<Ref. to EN(H4DO HEV)(diag)-204, DTC P0303 CYLINDER 3 MISFIRE DETECTED, Diagnostic Procedure with Diagnostic Trouble Code (DTC).>
P0304	Cylinder 4 Misfire Detected	<Ref. to EN(H4DO HEV)(diag)-205, DTC P0304 CYLINDER 4 MISFIRE DETECTED, Diagnostic Procedure with Diagnostic Trouble Code (DTC).>
P0327	Knock Sensor 1 Circuit Low (Bank 1 or Single Sensor)	<Ref. to EN(H4DO HEV)(diag)-210, DTC P0327 KNOCK SENSOR 1 CIRCUIT LOW (BANK 1 OR SINGLE SENSOR), Diagnostic Procedure with Diagnostic Trouble Code (DTC).>
P0328	Knock Sensor 1 Circuit High (Bank 1 or Single Sensor)	<Ref. to EN(H4DO HEV)(diag)-212, DTC P0328 KNOCK SENSOR 1 CIRCUIT HIGH (BANK 1 OR SINGLE SENSOR), Diagnostic Procedure with Diagnostic Trouble Code (DTC).>
P0335	Crankshaft Position Sensor “A” Circuit	<Ref. to EN(H4DO HEV)(diag)-214, DTC P0335 CRANKSHAFT POSITION SENSOR “A” CIRCUIT, Diagnostic Procedure with Diagnostic Trouble Code (DTC).>
P0336	Crankshaft Position Sensor “A” Circuit Range/Performance	<Ref. to EN(H4DO HEV)(diag)-217, DTC P0336 CRANKSHAFT POSITION SENSOR “A” CIRCUIT RANGE/PERFORMANCE, Diagnostic Procedure with Diagnostic Trouble Code (DTC).>
P0340	Camshaft Position Sensor “A” Circuit (Bank 1 or Single Sensor)	<Ref. to EN(H4DO HEV)(diag)-218, DTC P0340 CAMSHAFT POSITION SENSOR “A” CIRCUIT (BANK 1 OR SINGLE SENSOR), Diagnostic Procedure with Diagnostic Trouble Code (DTC).>
P0341	Camshaft Position Sensor "A" Circuit Range/Performance (Bank 1 or Single Sensor)	<Ref. to EN(H4DO HEV)(diag)-220, DTC P0341 CAMSHAFT POSITION SENSOR "A" CIRCUIT RANGE/PERFORMANCE (BANK 1 OR SINGLE SENSOR), Diagnostic Procedure with Diagnostic Trouble Code (DTC).>
P0345	Camshaft Position Sensor “A” Circuit (Bank 2)	<Ref. to EN(H4DO HEV)(diag)-221, DTC P0345 CAMSHAFT POSITION SENSOR “A” CIRCUIT (BANK 2), Diagnostic Procedure with Diagnostic Trouble Code (DTC).>
P0346	Camshaft Position Sensor "A" Circuit Range/Performance (Bank 2)	<Ref. to EN(H4DO HEV)(diag)-223, DTC P0346 CAMSHAFT POSITION SENSOR "A" CIRCUIT RANGE/PERFORMANCE (BANK 2), Diagnostic Procedure with Diagnostic Trouble Code (DTC).>
P0351	Ignition Coil A Primary/Secondary Circuit	<Ref. to EN(H4DO HEV)(diag)-224, DTC P0351 IGNITION COIL A PRIMARY/SECONDARY CIRCUIT, Diagnostic Procedure with Diagnostic Trouble Code (DTC).>
P0352	Ignition Coil B Primary/Secondary Circuit	<Ref. to EN(H4DO HEV)(diag)-226, DTC P0352 IGNITION COIL B PRIMARY/SECONDARY CIRCUIT, Diagnostic Procedure with Diagnostic Trouble Code (DTC).>
P0353	Ignition Coil C Primary/Secondary Circuit	<Ref. to EN(H4DO HEV)(diag)-226, DTC P0353 IGNITION COIL C PRIMARY/SECONDARY CIRCUIT, Diagnostic Procedure with Diagnostic Trouble Code (DTC).>
P0354	Ignition Coil D Primary/Secondary Circuit	<Ref. to EN(H4DO HEV)(diag)-226, DTC P0354 IGNITION COIL D PRIMARY/SECONDARY CIRCUIT, Diagnostic Procedure with Diagnostic Trouble Code (DTC).>
P0365	Camshaft Position Sensor “B” Circuit (Bank 1)	<Ref. to EN(H4DO HEV)(diag)-227, DTC P0365 CAMSHAFT POSITION SENSOR “B” CIRCUIT (BANK 1), Diagnostic Procedure with Diagnostic Trouble Code (DTC).>
P0366	Camshaft Position Sensor B Circuit Range/Performance (Bank 1)	<Ref. to EN(H4DO HEV)(diag)-229, DTC P0366 CAMSHAFT POSITION SENSOR B CIRCUIT RANGE/PERFORMANCE (BANK 1), Diagnostic Procedure with Diagnostic Trouble Code (DTC).>
P0390	Camshaft Position Sensor “B” Circuit (Bank 2)	<Ref. to EN(H4DO HEV)(diag)-230, DTC P0390 CAMSHAFT POSITION SENSOR “B” CIRCUIT (BANK 2), Diagnostic Procedure with Diagnostic Trouble Code (DTC).>

DTC	Item	Note
P0391	Camshaft Position Sensor B Circuit Range/Performance (Bank 2)	<Ref. to EN(H4DO HEV)(diag)-232, DTC P0391 CAMSHAFT POSITION SENSOR B CIRCUIT RANGE/PERFORMANCE (BANK 2), Diagnostic Procedure with Diagnostic Trouble Code (DTC).>
P0400	Exhaust Gas Recirculation Flow	<Ref. to EN(H4DO HEV)(diag)-233, DTC P0400 EXHAUST GAS RECIRCULATION FLOW, Diagnostic Procedure with Diagnostic Trouble Code (DTC).>
P0420	Catalyst System Efficiency Below Threshold (Bank 1)	<Ref. to EN(H4DO HEV)(diag)-234, DTC P0420 CATALYST SYSTEM EFFICIENCY BELOW THRESHOLD (BANK 1), Diagnostic Procedure with Diagnostic Trouble Code (DTC).>
P0441	Evaporative Emission Cont. Sys. Incorrect Purge Flow	<Ref. to EN(H4DO HEV)(diag)-239, DTC P0441 EVAPORATIVE EMISSION CONT. SYS. INCORRECT PURGE FLOW, Diagnostic Procedure with Diagnostic Trouble Code (DTC).>
P0451	Evaporative Emission System Pressure Sensor/Switch Range/Performance	<Ref. to EN(H4DO HEV)(diag)-240, DTC P0451 EVAPORATIVE EMISSION SYSTEM PRESSURE SENSOR/SWITCH RANGE/PERFORMANCE, Diagnostic Procedure with Diagnostic Trouble Code (DTC).>
P0452	Evaporative Emission System Pressure Sensor/Switch Low	<Ref. to EN(H4DO HEV)(diag)-241, DTC P0452 EVAPORATIVE EMISSION SYSTEM PRESSURE SENSOR/SWITCH LOW, Diagnostic Procedure with Diagnostic Trouble Code (DTC).>
P0453	Evaporative Emission System Pressure Sensor/Switch High	<Ref. to EN(H4DO HEV)(diag)-243, DTC P0453 EVAPORATIVE EMISSION SYSTEM PRESSURE SENSOR/SWITCH HIGH, Diagnostic Procedure with Diagnostic Trouble Code (DTC).>
P0455	Evaporative Emission System Leak Detected (Large Leak)	<Ref. to EN(H4DO HEV)(diag)-245, DTC P0455 EVAPORATIVE EMISSION SYSTEM LEAK DETECTED (LARGE LEAK), Diagnostic Procedure with Diagnostic Trouble Code (DTC).>
P0456	Evaporative Emission Control System Leak Detected (Very Small Leak)	<Ref. to EN(H4DO HEV)(diag)-246, DTC P0456 EVAPORATIVE EMISSION CONTROL SYSTEM LEAK DETECTED (VERY SMALL LEAK), Diagnostic Procedure with Diagnostic Trouble Code (DTC).>
P0458	Evaporative Emission System Purge Control Valve Circuit Low	<Ref. to EN(H4DO HEV)(diag)-247, DTC P0458 EVAPORATIVE EMISSION SYSTEM PURGE CONTROL VALVE CIRCUIT LOW, Diagnostic Procedure with Diagnostic Trouble Code (DTC).>
P0459	Evaporative Emission System Purge Control Valve Circuit High	<Ref. to EN(H4DO HEV)(diag)-250, DTC P0459 EVAPORATIVE EMISSION SYSTEM PURGE CONTROL VALVE CIRCUIT HIGH, Diagnostic Procedure with Diagnostic Trouble Code (DTC).>
P0461	Fuel Level Sensor “A” Circuit Range/Performance	<Ref. to EN(H4DO HEV)(diag)-252, DTC P0461 FUEL LEVEL SENSOR “A” CIRCUIT RANGE/PERFORMANCE, Diagnostic Procedure with Diagnostic Trouble Code (DTC).>
P0462	Fuel Level Sensor “A” Circuit Low	<Ref. to EN(H4DO HEV)(diag)-252, DTC P0462 FUEL LEVEL SENSOR “A” CIRCUIT LOW, Diagnostic Procedure with Diagnostic Trouble Code (DTC).>
P0463	Fuel Level Sensor “A” Circuit High	<Ref. to EN(H4DO HEV)(diag)-253, DTC P0463 FUEL LEVEL SENSOR “A” CIRCUIT HIGH, Diagnostic Procedure with Diagnostic Trouble Code (DTC).>
P0500	Vehicle Speed Sensor “A”	<Ref. to EN(H4DO HEV)(diag)-253, DTC P0500 VEHICLE SPEED SENSOR “A”, Diagnostic Procedure with Diagnostic Trouble Code (DTC).>
P0506	Idle Air Control System RPM Lower Than Expected	<Ref. to EN(H4DO HEV)(diag)-254, DTC P0506 IDLE AIR CONTROL SYSTEM RPM LOWER THAN EXPECTED, Diagnostic Procedure with Diagnostic Trouble Code (DTC).>
P0507	Idle Air Control System RPM Higher Than Expected	<Ref. to EN(H4DO HEV)(diag)-255, DTC P0507 IDLE AIR CONTROL SYSTEM RPM HIGHER THAN EXPECTED, Diagnostic Procedure with Diagnostic Trouble Code (DTC).>
P050A	Cold Start Idle Air Control System Performance	<Ref. to EN(H4DO HEV)(diag)-256, DTC P050A COLD START IDLE AIR CONTROL SYSTEM PERFORMANCE, Diagnostic Procedure with Diagnostic Trouble Code (DTC).>
P050B	Cold Start Ignition Timing Performance	<Ref. to EN(H4DO HEV)(diag)-264, DTC P050B COLD START IGNITION TIMING PERFORMANCE, Diagnostic Procedure with Diagnostic Trouble Code (DTC).>
P0512	Starter Request Circuit	<Ref. to EN(H4DO HEV)(diag)-265, DTC P0512 STARTER REQUEST CIRCUIT, Diagnostic Procedure with Diagnostic Trouble Code (DTC).>

List of Diagnostic Trouble Code (DTC)

DTC	Item	Note
P0560	System Voltage	<Ref. to EN(H4DO HEV)(diag)-268, DTC P0560 SYSTEM VOLTAGE, Diagnostic Procedure with Diagnostic Trouble Code (DTC).>
P059A	Active Grille Shutter "A" Position Sensor Circuit	<Ref. to EN(H4DO HEV)(diag)-271, DTC P059A ACTIVE GRILLE SHUTTER "A" POSITION SENSOR CIRCUIT, Diagnostic Procedure with Diagnostic Trouble Code (DTC).>
P059F	Active Grille Shutter "A" Performance	<Ref. to EN(H4DO HEV)(diag)-272, DTC P059F ACTIVE GRILLE SHUTTER "A" PERFORMANCE, Diagnostic Procedure with Diagnostic Trouble Code (DTC).>
P05A0	Active Grille Shutter "A" Stuck	<Ref. to EN(H4DO HEV)(diag)-274, DTC P05A0 ACTIVE GRILLE SHUTTER "A" STUCK, Diagnostic Procedure with Diagnostic Trouble Code (DTC).>
P05A1	Active Grille Shutter "A" Range Over	<Ref. to EN(H4DO HEV)(diag)-275, DTC P05A1 ACTIVE GRILLE SHUTTER "A" RANGE OVER, Diagnostic Procedure with Diagnostic Trouble Code (DTC).>
P05A2	Active Grille Shutter "A" Control Circuit	<Ref. to EN(H4DO HEV)(diag)-276, DTC P05A2 ACTIVE GRILLE SHUTTER "A" CONTROL CIRCUIT, Diagnostic Procedure with Diagnostic Trouble Code (DTC).>
P05A6	Active Grille Shutter "A" Supply Voltage Circuit/Open	<Ref. to EN(H4DO HEV)(diag)-277, DTC P05A6 ACTIVE GRILLE SHUTTER "A" SUPPLY VOLTAGE CIRCUIT/OPEN, Diagnostic Procedure with Diagnostic Trouble Code (DTC).>
P05C0	Active Grille Shutter "A" Over Temperature	<Ref. to EN(H4DO HEV)(diag)-279, DTC P05C0 ACTIVE GRILLE SHUTTER "A" OVER TEMPERATURE, Diagnostic Procedure with Diagnostic Trouble Code (DTC).>
P0604	Internal Control Module Random Access Memory (RAM) Error	<Ref. to EN(H4DO HEV)(diag)-280, DTC P0604 INTERNAL CONTROL MODULE RANDOM ACCESS MEMORY (RAM) ERROR, Diagnostic Procedure with Diagnostic Trouble Code (DTC).>
P0605	Internal Control Module Read Only Memory (ROM) Error	<Ref. to EN(H4DO HEV)(diag)-280, DTC P0605 INTERNAL CONTROL MODULE READ ONLY MEMORY (ROM) ERROR, Diagnostic Procedure with Diagnostic Trouble Code (DTC).>
P0606	Control Module Processor	<Ref. to EN(H4DO HEV)(diag)-281, DTC P0606 CONTROL MODULE PROCESSOR, Diagnostic Procedure with Diagnostic Trouble Code (DTC).>
P060A	Internal Control Module Monitoring Processor Performance	<Ref. to EN(H4DO HEV)(diag)-282, DTC P060A INTERNAL CONTROL MODULE MONITORING PROCESSOR PERFORMANCE, Diagnostic Procedure with Diagnostic Trouble Code (DTC).>
P060B	Internal Control Module A/D Processing Performance	<Ref. to EN(H4DO HEV)(diag)-282, DTC P060B INTERNAL CONTROL MODULE A/D PROCESSING PERFORMANCE, Diagnostic Procedure with Diagnostic Trouble Code (DTC).>
P0616	Starter Relay Circuit Low	<Ref. to EN(H4DO HEV)(diag)-283, DTC P0616 STARTER RELAY CIRCUIT LOW, Diagnostic Procedure with Diagnostic Trouble Code (DTC).>
P0617	Starter Relay Circuit High	<Ref. to EN(H4DO HEV)(diag)-287, DTC P0617 STARTER RELAY CIRCUIT HIGH, Diagnostic Procedure with Diagnostic Trouble Code (DTC).>
P062F	Internal Control Module EEPROM Error	<Ref. to EN(H4DO HEV)(diag)-291, DTC P062F INTERNAL CONTROL MODULE EEPROM ERROR, Diagnostic Procedure with Diagnostic Trouble Code (DTC).>
P0700	Transmission Control System (MIL Request)	<Ref. to EN(H4DO HEV)(diag)-291, DTC P0700 TRANSMISSION CONTROL SYSTEM (MIL REQUEST), Diagnostic Procedure with Diagnostic Trouble Code (DTC).>
P081A	Starter Disable Circuit Low	<Ref. to EN(H4DO HEV)(diag)-292, DTC P081A STARTER DISABLE CIRCUIT LOW, Diagnostic Procedure with Diagnostic Trouble Code (DTC).>
P0851	Park/Neutral Switch Input Circuit Low (AT Model)	<Ref. to EN(H4DO HEV)(diag)-295, DTC P0851 PARK/NEUTRAL SWITCH INPUT CIRCUIT LOW (AT MODEL), Diagnostic Procedure with Diagnostic Trouble Code (DTC).>
P0852	Park/Neutral Switch Input Circuit High (AT Model)	<Ref. to EN(H4DO HEV)(diag)-297, DTC P0852 PARK/NEUTRAL SWITCH INPUT CIRCUIT HIGH (AT MODEL), Diagnostic Procedure with Diagnostic Trouble Code (DTC).>

DTC	Item	Note
P0A7B	Battery Energy Control Module Request MIL Illumination	<Ref. to EN(H4DO HEV)(diag)-298, DTC P0A7B BATTERY ENERGY CONTROL MODULE REQUEST MIL ILLUMINATION, Diagnostic Procedure with Diagnostic Trouble Code (DTC).>
P0AC4	Hybrid Powertrain Control Module Request MIL Illumination	<Ref. to EN(H4DO HEV)(diag)-298, DTC P0AC4 HYBRID POWERTRAIN CONTROL MODULE REQUEST MIL ILLUMINATION, Diagnostic Procedure with Diagnostic Trouble Code (DTC).>
P0CA1	Drive Motor Control Module Request MIL Illumination	<Ref. to EN(H4DO HEV)(diag)-298, DTC P0CA1 DRIVE MOTOR CONTROL MODULE REQUEST MIL ILLUMINATION, Diagnostic Procedure with Diagnostic Trouble Code (DTC).>
P1160	Return Spring Failure	<Ref. to EN(H4DO HEV)(diag)-298, DTC P1160 RETURN SPRING FAILURE, Diagnostic Procedure with Diagnostic Trouble Code (DTC).>
P1449	Evaporative Emission Cont. Sys. Air Filter Clog	<Ref. to EN(H4DO HEV)(diag)-299, DTC P1449 EVAPORATIVE EMISSION CONT. SYS. AIR FILTER CLOG, Diagnostic Procedure with Diagnostic Trouble Code (DTC).>
P1451	Evaporative Emission Cont. Sys.	<Ref. to EN(H4DO HEV)(diag)-300, DTC P1451 EVAPORATIVE EMISSION CONT. SYS., Diagnostic Procedure with Diagnostic Trouble Code (DTC).>
P1492	EGR Solenoid Valve Signal #1 Circuit Malfunction (Low Input)	<Ref. to EN(H4DO HEV)(diag)-301, DTC P1492 EGR SOLENOID VALVE SIGNAL #1 CIRCUIT MALFUNCTION (LOW INPUT), Diagnostic Procedure with Diagnostic Trouble Code (DTC).>
P1493	EGR Solenoid Valve Signal #1 Circuit Malfunction (High Input)	<Ref. to EN(H4DO HEV)(diag)-301, DTC P1493 EGR SOLENOID VALVE SIGNAL #1 CIRCUIT MALFUNCTION (HIGH INPUT), Diagnostic Procedure with Diagnostic Trouble Code (DTC).>
P1494	EGR Solenoid Valve Signal #2 Circuit Malfunction (Low Input)	<Ref. to EN(H4DO HEV)(diag)-301, DTC P1494 EGR SOLENOID VALVE SIGNAL #2 CIRCUIT MALFUNCTION (LOW INPUT), Diagnostic Procedure with Diagnostic Trouble Code (DTC).>
P1495	EGR Solenoid Valve Signal #2 Circuit Malfunction (High Input)	<Ref. to EN(H4DO HEV)(diag)-301, DTC P1495 EGR SOLENOID VALVE SIGNAL #2 CIRCUIT MALFUNCTION (HIGH INPUT), Diagnostic Procedure with Diagnostic Trouble Code (DTC).>
P1496	EGR Solenoid Valve Signal #3 Circuit Malfunction (Low Input)	<Ref. to EN(H4DO HEV)(diag)-301, DTC P1496 EGR SOLENOID VALVE SIGNAL #3 CIRCUIT MALFUNCTION (LOW INPUT), Diagnostic Procedure with Diagnostic Trouble Code (DTC).>
P1497	EGR Solenoid Valve Signal #3 Circuit Malfunction (High Input)	<Ref. to EN(H4DO HEV)(diag)-301, DTC P1497 EGR SOLENOID VALVE SIGNAL #3 CIRCUIT MALFUNCTION (HIGH INPUT), Diagnostic Procedure with Diagnostic Trouble Code (DTC).>
P1498	EGR Solenoid Valve Signal #4 Circuit Malfunction (Low Input)	<Ref. to EN(H4DO HEV)(diag)-302, DTC P1498 EGR SOLENOID VALVE SIGNAL #4 CIRCUIT MALFUNCTION (LOW INPUT), Diagnostic Procedure with Diagnostic Trouble Code (DTC).>
P1499	EGR Solenoid Valve Signal #4 Circuit Malfunction (High Input)	<Ref. to EN(H4DO HEV)(diag)-305, DTC P1499 EGR SOLENOID VALVE SIGNAL #4 CIRCUIT MALFUNCTION (HIGH INPUT), Diagnostic Procedure with Diagnostic Trouble Code (DTC).>
P2004	Intake Manifold Runner Control Stuck Open (Bank 1)	<Ref. to EN(H4DO HEV)(diag)-308, DTC P2004 INTAKE MANIFOLD RUNNER CONTROL STUCK OPEN (BANK 1), Diagnostic Procedure with Diagnostic Trouble Code (DTC).>
P2005	Intake Manifold Runner Control Stuck Open (Bank 2)	<Ref. to EN(H4DO HEV)(diag)-308, DTC P2005 INTAKE MANIFOLD RUNNER CONTROL STUCK OPEN (BANK 2), Diagnostic Procedure with Diagnostic Trouble Code (DTC).>
P2006	Intake Manifold Runner Control Stuck Closed (Bank 1)	<Ref. to EN(H4DO HEV)(diag)-309, DTC P2006 INTAKE MANIFOLD RUNNER CONTROL STUCK CLOSED (BANK 1), Diagnostic Procedure with Diagnostic Trouble Code (DTC).>
P2007	Intake Manifold Runner Control Stuck Closed (Bank 2)	<Ref. to EN(H4DO HEV)(diag)-310, DTC P2007 INTAKE MANIFOLD RUNNER CONTROL STUCK CLOSED (BANK 2), Diagnostic Procedure with Diagnostic Trouble Code (DTC).>
P2009	Intake Manifold Runner Control Circuit Low (Bank 1)	<Ref. to EN(H4DO HEV)(diag)-311, DTC P2009 INTAKE MANIFOLD RUNNER CONTROL CIRCUIT LOW (BANK 1), Diagnostic Procedure with Diagnostic Trouble Code (DTC).>

List of Diagnostic Trouble Code (DTC)

DTC	Item	Note
P2012	Intake Manifold Runner Control Circuit Low (Bank 2)	<Ref. to EN(H4DO HEV)(diag)-313, DTC P2012 INTAKE MANIFOLD RUNNER CONTROL CIRCUIT LOW (BANK 2), Diagnostic Procedure with Diagnostic Trouble Code (DTC).>
P2096	Post Catalyst Fuel Trim System Too Lean (Bank 1)	<Ref. to EN(H4DO HEV)(diag)-315, DTC P2096 POST CATALYST FUEL TRIM SYSTEM TOO LEAN (BANK 1), Diagnostic Procedure with Diagnostic Trouble Code (DTC).>
P2097	Post Catalyst Fuel Trim System Too Rich (Bank 1)	<Ref. to EN(H4DO HEV)(diag)-321, DTC P2097 POST CATALYST FUEL TRIM SYSTEM TOO RICH (BANK 1), Diagnostic Procedure with Diagnostic Trouble Code (DTC).>
P2101	Throttle Actuator Control Motor Circuit Range/Performance	<Ref. to EN(H4DO HEV)(diag)-327, DTC P2101 THROTTLE ACTUATOR CONTROL MOTOR CIRCUIT RANGE/PERFORMANCE, Diagnostic Procedure with Diagnostic Trouble Code (DTC).>
P2102	Throttle Actuator Control Motor Circuit Low	<Ref. to EN(H4DO HEV)(diag)-333, DTC P2102 THROTTLE ACTUATOR CONTROL MOTOR CIRCUIT LOW, Diagnostic Procedure with Diagnostic Trouble Code (DTC).>
P2103	Throttle Actuator Control Motor Circuit High	<Ref. to EN(H4DO HEV)(diag)-335, DTC P2103 THROTTLE ACTUATOR CONTROL MOTOR CIRCUIT HIGH, Diagnostic Procedure with Diagnostic Trouble Code (DTC).>
P2109	Throttle/Pedal Position Sensor “A” Minimum Stop Performance	<Ref. to EN(H4DO HEV)(diag)-336, DTC P2109 THROTTLE/PEDAL POSITION SENSOR “A” MINIMUM STOP PERFORMANCE, Diagnostic Procedure with Diagnostic Trouble Code (DTC).>
P2119	Throttle Actuator Control Throttle Body Range/Performance	<Ref. to EN(H4DO HEV)(diag)-336, DTC P2119 THROTTLE ACTUATOR CONTROL THROTTLE BODY RANGE/PERFORMANCE, Diagnostic Procedure with Diagnostic Trouble Code (DTC).>
P2122	Throttle/Pedal Position Sensor/Switch “D” Circuit Low Input	<Ref. to EN(H4DO HEV)(diag)-337, DTC P2122 THROTTLE/PEDAL POSITION SENSOR/SWITCH “D” CIRCUIT LOW INPUT, Diagnostic Procedure with Diagnostic Trouble Code (DTC).>
P2123	Throttle/Pedal Position Sensor/Switch “D” Circuit High Input	<Ref. to EN(H4DO HEV)(diag)-339, DTC P2123 THROTTLE/PEDAL POSITION SENSOR/SWITCH “D” CIRCUIT HIGH INPUT, Diagnostic Procedure with Diagnostic Trouble Code (DTC).>
P2127	Throttle/Pedal Position Sensor/Switch “E” Circuit Low Input	<Ref. to EN(H4DO HEV)(diag)-341, DTC P2127 THROTTLE/PEDAL POSITION SENSOR/SWITCH “E” CIRCUIT LOW INPUT, Diagnostic Procedure with Diagnostic Trouble Code (DTC).>
P2128	Throttle/Pedal Position Sensor/Switch “E” Circuit High Input	<Ref. to EN(H4DO HEV)(diag)-343, DTC P2128 THROTTLE/PEDAL POSITION SENSOR/SWITCH “E” CIRCUIT HIGH INPUT, Diagnostic Procedure with Diagnostic Trouble Code (DTC).>
P2135	Throttle/Pedal Position Sensor/Switch “A”/“B” Voltage Correlation	<Ref. to EN(H4DO HEV)(diag)-345, DTC P2135 THROTTLE/PEDAL POSITION SENSOR/SWITCH “A”/“B” VOLTAGE CORRELATION, Diagnostic Procedure with Diagnostic Trouble Code (DTC).>
P2138	Throttle/Pedal Position Sensor/Switch “D”/“E” Voltage Correlation	<Ref. to EN(H4DO HEV)(diag)-348, DTC P2138 THROTTLE/PEDAL POSITION SENSOR/SWITCH “D”/“E” VOLTAGE CORRELATION, Diagnostic Procedure with Diagnostic Trouble Code (DTC).>
P2195	O2 Sensor Signal Biased/Stuck Lean (Bank 1 Sensor 1)	<Ref. to EN(H4DO HEV)(diag)-350, DTC P2195 O2 SENSOR SIGNAL BIASED/STUCK LEAN (BANK 1 SENSOR 1), Diagnostic Procedure with Diagnostic Trouble Code (DTC).>
P2196	O2 Sensor Signal Biased/Stuck Rich (Bank 1 Sensor 1)	<Ref. to EN(H4DO HEV)(diag)-352, DTC P2196 O2 SENSOR SIGNAL BIASED/STUCK RICH (BANK 1 SENSOR 1), Diagnostic Procedure with Diagnostic Trouble Code (DTC).>
P219A	Bank 1 Air-Fuel Ratio Imbalance	<Ref. to EN(H4DO HEV)(diag)-354, DTC P219A BANK 1 AIR-FUEL RATIO IMBALANCE, Diagnostic Procedure with Diagnostic Trouble Code (DTC).>
P2401	Evaporative Emission System Leak Detection Pump Control Circuit Low	<Ref. to EN(H4DO HEV)(diag)-364, DTC P2401 EVAPORATIVE EMISSION SYSTEM LEAK DETECTION PUMP CONTROL CIRCUIT LOW, Diagnostic Procedure with Diagnostic Trouble Code (DTC).>
P2402	Evaporative Emission System Leak Detection Pump Control Circuit High	<Ref. to EN(H4DO HEV)(diag)-367, DTC P2402 EVAPORATIVE EMISSION SYSTEM LEAK DETECTION PUMP CONTROL CIRCUIT HIGH, Diagnostic Procedure with Diagnostic Trouble Code (DTC).>

DTC	Item	Note
P2404	Evaporative Emission System Leak Detection Pump Sense Circuit Range/ Performance	<Ref. to EN(H4DO HEV)(diag)-369, DTC P2404 EVAPORATIVE EMISSION SYSTEM LEAK DETECTION PUMP SENSE CIRCUIT RANGE/PERFORMANCE, Diagnostic Procedure with Diagnostic Trouble Code (DTC).>
P2419	Evaporative Emission System Switching Valve Control Circuit Low	<Ref. to EN(H4DO HEV)(diag)-373, DTC P2419 EVAPORATIVE EMISSION SYSTEM SWITCHING VALVE CONTROL CIRCUIT LOW, Diagnostic Procedure with Diagnostic Trouble Code (DTC).>
P2420	Evaporative Emission System Switching Valve Control Circuit High	<Ref. to EN(H4DO HEV)(diag)-376, DTC P2420 EVAPORATIVE EMISSION SYSTEM SWITCHING VALVE CONTROL CIRCUIT HIGH, Diagnostic Procedure with Diagnostic Trouble Code (DTC).>
P2610	ECM/PCM Internal Engine Off Timer Performance	<Ref. to EN(H4DO HEV)(diag)-378, DTC P2610 ECM/PCM INTERNAL ENGINE OFF TIMER PERFORMANCE, Diagnostic Procedure with Diagnostic Trouble Code (DTC).>
U0073	Control Module Communication Bus Off	<Ref. to EN(H4DO HEV)(diag)-378, DTC U0073 CONTROL MODULE COMMUNICATION BUS OFF, Diagnostic Procedure with Diagnostic Trouble Code (DTC).>
U0075	Control Module Communication Bus "PU-CAN" Off	<Ref. to EN(H4DO HEV)(diag)-378, DTC U0075 CONTROL MODULE COMMUNICATION BUS "PU-CAN" OFF, Diagnostic Procedure with Diagnostic Trouble Code (DTC).>
U0101	Lost Communication With TCM	<Ref. to EN(H4DO HEV)(diag)-378, DTC U0101 LOST COMMUNICATION WITH TCM, Diagnostic Procedure with Diagnostic Trouble Code (DTC).>
U0122	Lost Communication With Vehicle Dynamics Control Module	<Ref. to EN(H4DO HEV)(diag)-378, DTC U0122 LOST COMMUNICATION WITH VEHICLE DYNAMICS CONTROL MODULE, Diagnostic Procedure with Diagnostic Trouble Code (DTC).>
U0155	Lost Communication With Instrument Panel Cluster (IPC) Control Module	<Ref. to EN(H4DO HEV)(diag)-378, DTC U0155 LOST COMMUNICATION WITH INSTRUMENT PANEL CLUSTER (IPC) CONTROL MODULE, Diagnostic Procedure with Diagnostic Trouble Code (DTC).>
U0284	Lost Communication With Active Grille Shutter Module "A"	<Ref. to EN(H4DO HEV)(diag)-379, DTC U0284 LOST COMMUNICATION WITH ACTIVE GRILLE SHUTTER MODULE "A", Diagnostic Procedure with Diagnostic Trouble Code (DTC).>
U0293	Lost Communication With Hybrid Powertrain Control Module	<Ref. to EN(H4DO HEV)(diag)-382, DTC U0293 LOST COMMUNICATION WITH HYBRID POWERTRAIN CONTROL MODULE, Diagnostic Procedure with Diagnostic Trouble Code (DTC).>
U0402	Invalid Data Received From TCM	<Ref. to EN(H4DO HEV)(diag)-382, DTC U0402 INVALID DATA RECEIVED FROM TCM, Diagnostic Procedure with Diagnostic Trouble Code (DTC).>
U0416	Invalid Data Received From Vehicle Dynamics Control Module	<Ref. to EN(H4DO HEV)(diag)-382, DTC U0416 INVALID DATA RECEIVED FROM VEHICLE DYNAMICS CONTROL MODULE, Diagnostic Procedure with Diagnostic Trouble Code (DTC).>
U0423	Invalid Data Received From Instrument Panel Cluster Control Module	<Ref. to EN(H4DO HEV)(diag)-382, DTC U0423 INVALID DATA RECEIVED FROM INSTRUMENT PANEL CLUSTER CONTROL MODULE, Diagnostic Procedure with Diagnostic Trouble Code (DTC).>
U0594	Invalid Data Received From Hybrid Powertrain Control Module	<Ref. to EN(H4DO HEV)(diag)-382, DTC U0594 INVALID DATA RECEIVED FROM HYBRID POWERTRAIN CONTROL MODULE, Diagnostic Procedure with Diagnostic Trouble Code (DTC).>
U1101	Lost Communication With TCM PU-CAN	<Ref. to EN(H4DO HEV)(diag)-382, DTC U1101 LOST COMMUNICATION WITH TCM PU-CAN, Diagnostic Procedure with Diagnostic Trouble Code (DTC).>
U1293	Lost Communication With Hybrid Powertrain Control Module PU-CAN	<Ref. to EN(H4DO HEV)(diag)-382, DTC U1293 LOST COMMUNICATION WITH HYBRID POWERTRAIN CONTROL MODULE PU-CAN, Diagnostic Procedure with Diagnostic Trouble Code (DTC).>
U1402	Invalid Data Received From TCM PU-CAN	<Ref. to EN(H4DO HEV)(diag)-382, DTC U1402 INVALID DATA RECEIVED FROM TCM PU-CAN, Diagnostic Procedure with Diagnostic Trouble Code (DTC).>
U1594	Invalid Data Received From Hybrid Powertrain Control Module PU-CAN	<Ref. to EN(H4DO HEV)(diag)-382, DTC U1594 INVALID DATA RECEIVED FROM HYBRID POWERTRAIN CONTROL MODULE PU-CAN, Diagnostic Procedure with Diagnostic Trouble Code (DTC).>

18.Diagnostic Procedure with Diagnostic Trouble Code (DTC)

A: DTC P000A A CAMSHAFT POSITION SLOW RESPONSE (BANK 1)

NOTE:
For the diagnostic procedure, refer to DTC P0011. <Ref. to EN(H4DO HEV)(diag)-101, DTC P0011 INTAKE CAMSHAFT POSITION - TIMING OVER-ADVANCED OR SYSTEM PERFORMANCE (BANK 1), Diagnostic Procedure with Diagnostic Trouble Code (DTC).>

B: DTC P000B B CAMSHAFT POSITION SLOW RESPONSE (BANK 1)

NOTE:
For the diagnostic procedure, refer to DTC P0014. <Ref. to EN(H4DO HEV)(diag)-105, DTC P0014 EXHAUST AVCS SYSTEM 1 (RANGE/PERFORMANCE), Diagnostic Procedure with Diagnostic Trouble Code (DTC).>

C: DTC P000C A CAMSHAFT POSITION SLOW RESPONSE (BANK 2)

NOTE:
For the diagnostic procedure, refer to DTC P0021. <Ref. to EN(H4DO HEV)(diag)-116, DTC P0021 INTAKE CAMSHAFT POSITION - TIMING OVER-ADVANCED OR SYSTEM PERFORMANCE (BANK 2), Diagnostic Procedure with Diagnostic Trouble Code (DTC).>

D: DTC P000D B CAMSHAFT POSITION SLOW RESPONSE (BANK 2)

NOTE:
For the diagnostic procedure, refer to DTC P0024. <Ref. to EN(H4DO HEV)(diag)-120, DTC P0024 EXHAUST AVCS SYSTEM 2 (RANGE/PERFORMANCE), Diagnostic Procedure with Diagnostic Trouble Code (DTC).>

E: DTC P0010 "A" CAMSHAFT POSITION ACTUATOR CIRCUIT/OPEN (BANK 1)

DTC DETECTING CONDITION:

- Immediately at fault recognition
- GENERAL DESCRIPTION <Ref. to GD(H4DO HEV)-16, DTC P0010 "A" CAMSHAFT POSITION ACTUATOR CIRCUIT/OPEN (BANK 1), Diagnostic Trouble Code (DTC) Detecting Criteria.>

TROUBLE SYMPTOM:

Improper idling

CAUTION:

After servicing or replacing faulty parts, perform Clear Memory Mode <Ref. to EN(H4DO HEV)(diag)-63, OPERATION, Clear Memory Mode.>, and Inspection Mode <Ref. to EN(H4DO HEV)(diag)-47, PROCEDURE, Inspection Mode.>.

WIRING DIAGRAM:

- Engine electrical system (without push button start) <Ref. to WI(HEV)-100, WITHOUT PUSH BUTTON START, WIRING DIAGRAM, Engine Electrical System.>
- Engine electrical system (with push button start) <Ref. to WI(HEV)-114, WITH PUSH BUTTON START, WIRING DIAGRAM, Engine Electrical System.>

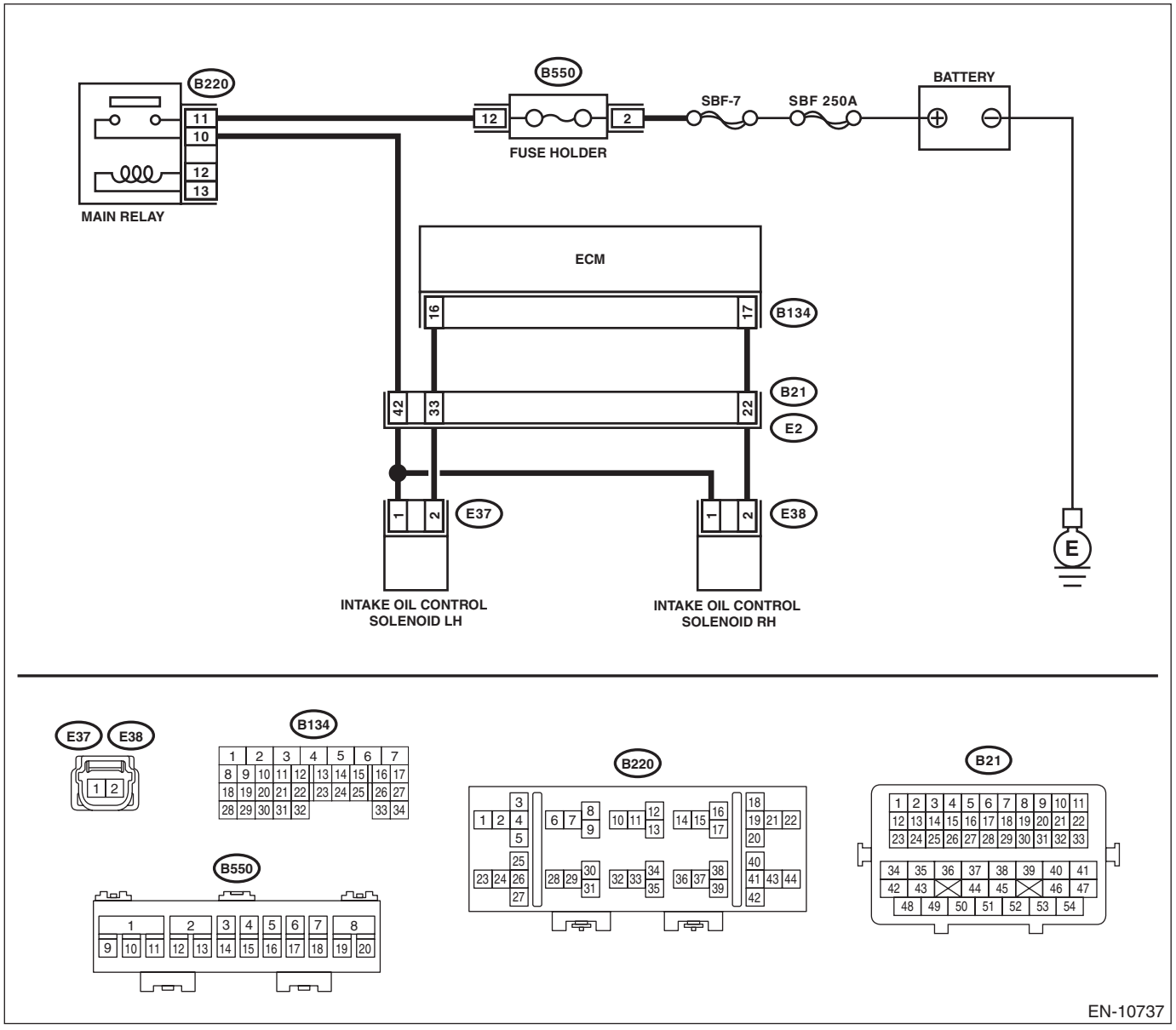

	Step	Check	Yes	No
1	**CHECK OUTPUT SIGNAL OF ECM.** 1) Turn the ignition switch to ON. 2) Measure the voltage between ECM connector and chassis ground. ***Connector & terminal*** ***(B134) No. 17 (+) — Chassis ground (–):***	Is the voltage 10 V or more?	Go to step **2**.	Go to step **3**.
2	**CHECK FOR POOR CONTACT.** Check for poor contact of ECM connector.	Is there poor contact of ECM connector?	Repair the poor contact of ECM connector.	Even if DTC is detected, the circuit has returned to a normal condition at this time. Reproduce the failure, and then perform the diagnosis again. NOTE: In this case, temporary poor contact of connector, temporary open or short circuit of harness may be the cause.
3	**CHECK POWER SUPPLY TO THE INTAKE OIL CONTROL SOLENOID RH.** Measure the voltage between intake oil control solenoid RH connector and engine ground. ***Connector & terminal*** ***(E38) No. 1 (+) — Engine ground (–):***	Is the voltage 10 V or more?	Go to step **4**.	Repair the power supply circuit.
4	**CHECK HARNESS BETWEEN ECM AND INTAKE OIL CONTROL SOLENOID RH CONNECTOR.** 1) Turn the ignition switch to OFF. 2) Disconnect the connectors from the ECM and intake oil control solenoid RH. 3) Measure the resistance between intake oil control solenoid RH connector and engine ground. ***Connector & terminal*** ***(E38) No. 2 — Engine ground:***	Is the resistance 1 MΩ or more?	Go to step **5**.	Repair the short circuit to ground in harness between ECM connector and intake oil control solenoid RH connector.
5	**CHECK HARNESS BETWEEN ECM AND INTAKE OIL CONTROL SOLENOID RH CONNECTOR.** Measure the resistance of harness between ECM connector and intake oil control solenoid RH. ***Connector & terminal*** ***(B134) No. 17 — (E38) No. 2:***	Is the resistance less than 1 Ω?	Go to step **6**.	Repair the harness and connector. NOTE: In this case, repair the following item: • Open circuit in harness between ECM connector and intake oil control solenoid RH connector • Poor contact of coupling connector
6	**CHECK INTAKE OIL CONTROL SOLENOID RH.** Measure the resistance between intake oil control solenoid RH terminals. ***Terminals*** ***No. 1 — No. 2:***	Is the resistance 6 — 12 Ω?	Repair the poor contact of intake oil control solenoid RH connector.	Replace the intake oil control solenoid RH. <Ref. to FU(H4DO(HEV))-57, Oil Control Solenoid.>

F: DTC P0011 INTAKE CAMSHAFT POSITION - TIMING OVER-ADVANCED OR SYSTEM PERFORMANCE (BANK 1)

DTC DETECTING CONDITION:

- Detected when two consecutive driving cycles with fault occur.
- GENERAL DESCRIPTION <Ref. to GD(H4DO HEV)-17, DTC P0011 INTAKE CAMSHAFT POSITION - TIMING OVER-ADVANCED OR SYSTEM PERFORMANCE (BANK 1), Diagnostic Trouble Code (DTC) Detecting Criteria.>

TROUBLE SYMPTOM:

- Engine stalls.
- Improper idling

CAUTION:

After servicing or replacing faulty parts, perform Clear Memory Mode <Ref. to EN(H4DO HEV)(diag)-63, OPERATION, Clear Memory Mode.>, and Inspection Mode <Ref. to EN(H4DO HEV)(diag)-47, PROCEDURE, Inspection Mode.>.

	Step	Check	Yes	No
1	**IDENTIFYING FAULTY PART.** 1) Perform the Clear Memory Mode. <Ref. to EN(H4DO HEV)(diag)-63, Clear Memory Mode.> 2) Replace the defective oil control solenoid by the other (RH or LH, intake side or exhaust side) oil control solenoid. 3) Perform appropriate drive cycle test. <Ref. to EN(H4DO HEV)(diag)-50, Drive Cycle.> 4) Make sure that the fault occurrence (DTC and incorrect advancing) has shifted to the other location.	Did the detected DTC shift to the location where the oil control solenoid was replaced?	Replace the faulty oil control solenoid.	Go to step **2**.
2	**CHECK CURRENT DATA.** 1) Start the engine and let it idle. 2) Read the value of «VVT Adv. Ang. Amount R» using the Subaru Select Monitor. NOTE: For detailed operation procedures, refer to “Current Data Display For Engine”. <Ref. to EN(H4DO HEV)(diag)-37, Subaru Select Monitor.>	Is the value of «VVT Adv. Ang. Amount R» approx. 0 deg?	Go to step **3**.	Check the following item and repair or replace if necessary. • Intake cam sprocket (clog or dirt of oil routing, setting of spring) • Intake camshaft (dirt, damage of camshaft)
3	**CHECK CURRENT DATA.** 1) Drive with acceleration and deceleration at 80 km/h (50 MPH) or less. NOTE: Drive to an extent that the duty output of oil flow control solenoid valve increases. 2) Read the values of «OCV Duty R» and «VVT Adv. Ang. Amount R» using the Subaru Select Monitor. NOTE: For detailed operation procedures, refer to “Current Data Display For Engine”. <Ref. to EN(H4DO HEV)(diag)-37, Subaru Select Monitor.>	When the value of «OCV Duty R» increases more than 10%, is the value of «VVT Adv. Ang. Amount R» approx. 0 deg?	Check the following item and repair or replace if necessary. • Intake cam sprocket (clog or dirt of oil routing, setting of spring) • Intake camshaft (dirt, damage of camshaft)	Perform the following procedures, and clean the oil routing. Replace the engine oil and idle the engine for 5 minutes, and then replace the oil filter and engine oil. <Ref. to LU(H4DO(w/o HEV))-13, REPLACEMENT, Engine Oil.> <Ref. to LU(H4DO(w/o HEV))-28, Engine Oil Filter.>

G: DTC P0013 B CAMSHAFT POSITION ACTUATOR CIRCUIT/OPEN (BANK 1)

DTC DETECTING CONDITION:

- Immediately at fault recognition
- GENERAL DESCRIPTION <Ref. to GD(H4DO HEV)-19, DTC P0013 B CAMSHAFT POSITION ACTUATOR CIRCUIT/OPEN (BANK 1), Diagnostic Trouble Code (DTC) Detecting Criteria.>

TROUBLE SYMPTOM:

Improper idling

CAUTION:

After servicing or replacing faulty parts, perform Clear Memory Mode <Ref. to EN(H4DO HEV)(diag)-63, OPERATION, Clear Memory Mode.>, and Inspection Mode <Ref. to EN(H4DO HEV)(diag)-47, PROCEDURE, Inspection Mode.>.

WIRING DIAGRAM:

- Engine electrical system (without push button start) <Ref. to WI(HEV)-100, WITHOUT PUSH BUTTON START, WIRING DIAGRAM, Engine Electrical System.>
- Engine electrical system (with push button start) <Ref. to WI(HEV)-114, WITH PUSH BUTTON START, WIRING DIAGRAM, Engine Electrical System.>

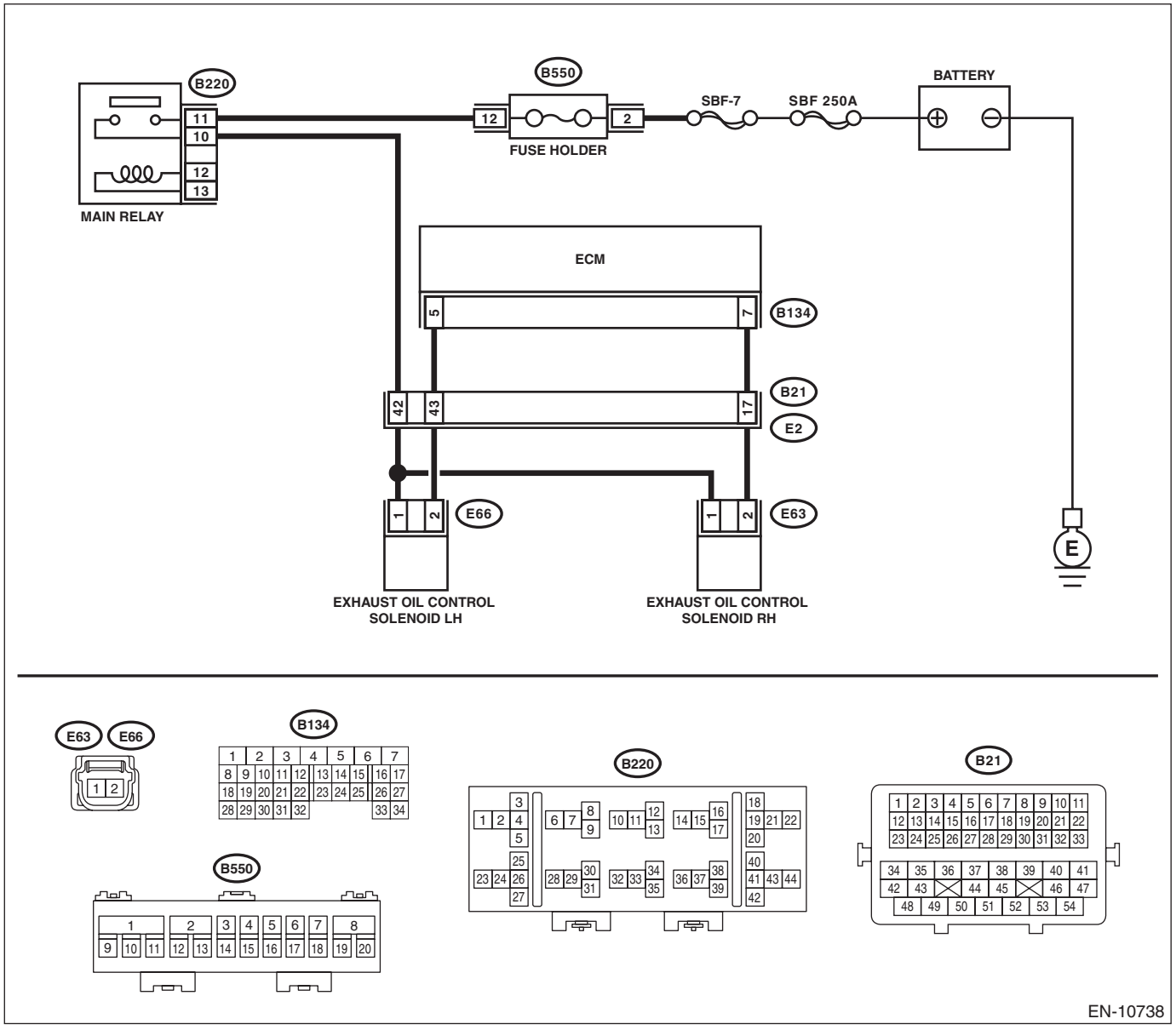

	Step	Check	Yes	No
1	**CHECK OUTPUT SIGNAL OF ECM.** 1) Turn the ignition switch to ON. 2) Measure the voltage between ECM connector and chassis ground. ***Connector & terminal*** ***(B134) No. 7 (+) — Chassis ground (–):***	Is the voltage 10 V or more?	Go to step **2**.	Go to step **3**.
2	**CHECK FOR POOR CONTACT.** Check for poor contact of ECM connector.	Is there poor contact of ECM connector?	Repair the poor contact of ECM connector.	Even if DTC is detected, the circuit has returned to a normal condition at this time. Reproduce the failure, and then perform the diagnosis again. NOTE: In this case, temporary poor contact of connector, temporary open or short circuit of harness may be the cause.
3	**CHECK POWER SUPPLY TO THE EXHAUST OIL CONTROL SOLENOID RH.** Measure the voltage between exhaust oil control solenoid RH connector and engine ground. ***Connector & terminal*** ***(E63) No. 1 (+) — Engine ground (–):***	Is the voltage 10 V or more?	Go to step **4**.	Repair the power supply circuit.
4	**CHECK HARNESS BETWEEN ECM AND EXHAUST OIL CONTROL SOLENOID RH CONNECTOR.** 1) Turn the ignition switch to OFF. 2) Disconnect the connectors from ECM and exhaust oil control solenoid RH. 3) Measure the resistance between exhaust oil control solenoid RH connector and engine ground. ***Connector & terminal*** ***(E63) No. 2 — Engine ground:***	Is the resistance 1 MΩ or more?	Go to step **5**.	Repair the short circuit to ground in harness between ECM connector and exhaust oil control solenoid RH connector.
5	**CHECK HARNESS BETWEEN ECM AND EXHAUST OIL CONTROL SOLENOID RH CONNECTOR.** Measure the resistance of harness between ECM connector and exhaust oil control solenoid RH. ***Connector & terminal*** ***(B134) No. 7 — (E63) No. 2:***	Is the resistance less than 1 Ω?	Go to step **6**.	Repair the harness and connector. NOTE: In this case, repair the following item: • Open circuit in harness between ECM connector and exhaust oil control solenoid RH connector • Poor contact of coupling connector

Step		Check	Yes	No
6	**CHECK EXHAUST OIL CONTROL SOLENOID RH.** Measure the resistance between exhaust oil control solenoid RH terminals. ***Terminals*** ***No. 1 — No. 2:***	Is the resistance 6 — 12 Ω?	Repair the poor contact of exhaust oil control solenoid RH connector.	Replace the exhaust oil control solenoid RH. <Ref. to FU(H4DO(HEV))-57, Oil Control Solenoid.>

H: DTC P0014 EXHAUST AVCS SYSTEM 1 (RANGE/PERFORMANCE)

DTC DETECTING CONDITION:

- Detected when two consecutive driving cycles with fault occur.
- GENERAL DESCRIPTION <Ref. to GD(H4DO HEV)-20, DTC P0014 EXHAUST AVCS SYSTEM 1 (RANGE/PERFORMANCE), Diagnostic Trouble Code (DTC) Detecting Criteria.>

TROUBLE SYMPTOM:

- Engine stalls.
- Improper idling

CAUTION:
After servicing or replacing faulty parts, perform Clear Memory Mode <Ref. to EN(H4DO HEV)(diag)-63, OPERATION, Clear Memory Mode.>, and Inspection Mode <Ref. to EN(H4DO HEV)(diag)-47, PROCEDURE, Inspection Mode.>.

	Step	Check	Yes	No
1	**IDENTIFYING FAULTY PART.** 1) Perform the Clear Memory Mode. <Ref. to EN(H4DO HEV)(diag)-63, Clear Memory Mode.> 2) Replace the defective oil control solenoid by the other (RH or LH, intake side or exhaust side) oil control solenoid. 3) Perform appropriate drive cycle test. <Ref. to EN(H4DO HEV)(diag)-50, Drive Cycle.> 4) Make sure that the fault occurrence (DTC and incorrect advancing) has shifted to the other location.	Did the detected DTC shift to the location where the oil control solenoid was replaced?	Replace the faulty oil control solenoid.	Go to step **2**.
2	**CHECK CURRENT DATA.** 1) Start the engine and let it idle. 2) Read the value of «Exh. VVT Retard Ang. R» using the Subaru Select Monitor. NOTE: For detailed operation procedures, refer to “Current Data Display For Engine”. <Ref. to EN(H4DO HEV)(diag)-37, Subaru Select Monitor.>	Is the value of «Exh. VVT Retard Ang. R» approx. 0 deg?	Go to step **3**.	Check the following item and repair or replace if necessary. • Exhaust cam sprocket (clog or dirt of oil routing, setting of spring) • Exhaust camshaft (dirt, damage of camshaft)
3	**CHECK CURRENT DATA.** 1) Drive with acceleration and deceleration at 80 km/h (50 MPH) or less. NOTE: Drive to an extent that the duty output of oil flow control solenoid valve increases. 2) Read the values of «Exh. OCV Duty R» and «Exh. VVT Retard Ang. R» using the Subaru Select Monitor. NOTE: For detailed operation procedures, refer to “Current Data Display For Engine”. <Ref. to EN(H4DO HEV)(diag)-37, Subaru Select Monitor.>	When the value of «Exh. OCV Duty R» increases more than 10%, is the value of «Exh. VVT Retard Ang. R» approx. 0 deg?	Check the following item and repair or replace if necessary. • Exhaust cam sprocket (clog or dirt of oil routing, setting of spring) • Exhaust camshaft (dirt, damage of camshaft)	Perform the following procedures, and clean the oil routing. Replace the engine oil and idle the engine for 5 minutes, and then replace the oil filter and engine oil. <Ref. to LU(H4DO(w/o HEV))-13, REPLACEMENT, Engine Oil.> <Ref. to LU(H4DO(w/o HEV))-28, Engine Oil Filter.>

I: DTC P0016 CRANKSHAFT POSITION - CAMSHAFT POSITION CORRELATION (BANK1)

DTC DETECTING CONDITION:

- Detected when two consecutive driving cycles with fault occur.
- GENERAL DESCRIPTION <Ref. to GD(H4DO HEV)-21, DTC P0016 CRANKSHAFT POSITION - CAMSHAFT POSITION CORRELATION (BANK1), Diagnostic Trouble Code (DTC) Detecting Criteria.>

TROUBLE SYMPTOM:

- Engine stalls.
- Improper idling

CAUTION:
After servicing or replacing faulty parts, perform Clear Memory Mode <Ref. to EN(H4DO HEV)(diag)-63, OPERATION, Clear Memory Mode.>, and Inspection Mode <Ref. to EN(H4DO HEV)(diag)-47, PROCEDURE, Inspection Mode.>.

	Step	Check	Yes	No
1	**CHECK FOR ANY OTHER DTC ON DISPLAY.**	Are DTCs other than P0016, P0017, P0018 or P0019 displayed?	Check the appropriate DTC using the "List of Diagnostic Trouble Code (DTC)". <Ref. to EN(H4DO HEV)(diag)-88, List of Diagnostic Trouble Code (DTC).>	Go to step **2**.
2	**CHECK INTAKE OIL CONTROL SOLENOID RH.** Check the intake oil control solenoid RH. <Ref. to FU(H4DO(HEV))-59, INSPECTION, Oil Control Solenoid.>	Is intake oil control solenoid RH normal?	Go to step **3**.	Replace the intake oil control solenoid RH. <Ref. to FU(H4DO(HEV))-57, Oil Control Solenoid.>
3	**CHECK INSTALLATION CONDITION OF TIMING CHAIN.** Using ST and by turning the crankshaft, align the alignment marks of crank sprocket, intake cam sprocket and exhaust cam sprocket. <Ref. to ME(H4DO(w/o HEV))-163, Timing Chain Assembly.> ST 18252AA000 CRANKSHAFT SOCKET	Is timing chain installed to the appropriate position?	Go to step **4**.	Correct the installation condition of timing chain. <Ref. to ME(H4DO(w/o HEV))-163, Timing Chain Assembly.>
4	**CHECK CAM CARRIER FILTER.** Check the filter installed to cam carrier. <Ref. to ME(H4DO(w/o HEV))-250, INSPECTION, Cam Carrier.>	Is filter of cam carrier normal?	Replace the intake cam sprocket RH. <Ref. to ME(H4DO(w/o HEV))-183, Cam Sprocket.> After the operation is complete, go to the next step. Go to step **5**.	Replace the filter of cam carrier. <Ref. to ME(H4DO(w/o HEV))-209, Cam Carrier.>

	Step	Check	Yes	No
5	**CHECK CURRENT DATA.** 1) Clear the memory using the Subaru Select Monitor or general scan tool. <Ref. to EN(H4DO HEV)(diag)-63, OPERATION, Clear Memory Mode.> 2) Start the engine and warm up completely. 3) Using Subaru Select Monitor, read the value of «VVT Initial Position Learning Value #1» and «VVT Adv. Ang. Amount R» when idling condition is stable for 30 seconds or more. NOTE: For detailed operation procedures, refer to "Current Data Display For Engine". <Ref. to EN(H4DO HEV)(diag)-37, Subaru Select Monitor.> 4) Calculate the read value according to the following formula. At this time, ignore the unit. |«VVT Initial Position Learning Value #1» – (60 + «VVT Adv. Ang. Amount R»)|	Is the calculation result less than 10?	Go to step **6**.	Replace the ECM. <Ref. to FU(H4DO(HEV))-85, Engine Control Module (ECM).>
6	**CHECK DTC.** 1) Clear the memory using the Subaru Select Monitor or general scan tool. <Ref. to EN(H4DO HEV)(diag)-63, OPERATION, Clear Memory Mode.> 2) Perform drive cycle N. <Ref. to EN(H4DO HEV)(diag)-61, DRIVE CYCLE N, PROCEDURE, Drive Cycle.>	Is the same DTC as current diagnosis displayed?	Replace the ECM. <Ref. to FU(H4DO(HEV))-85, Engine Control Module (ECM).>	End.

J: DTC P0017 CRANK AND CAM TIMING B SYSTEM FAILURE (BANK 1)

DTC DETECTING CONDITION:

- Detected when two consecutive driving cycles with fault occur.
- GENERAL DESCRIPTION <Ref. to GD(H4DO HEV)-22, DTC P0017 CRANK AND CAM TIMING B SYSTEM FAILURE (BANK 1), Diagnostic Trouble Code (DTC) Detecting Criteria.>

TROUBLE SYMPTOM:

- Engine stalls.
- Improper idling

CAUTION:
After servicing or replacing faulty parts, perform Clear Memory Mode <Ref. to EN(H4DO HEV)(diag)-63, OPERATION, Clear Memory Mode.>, and Inspection Mode <Ref. to EN(H4DO HEV)(diag)-47, PROCEDURE, Inspection Mode.>.

	Step	Check	Yes	No
1	**CHECK FOR ANY OTHER DTC ON DISPLAY.**	Are DTCs other than P0016, P0017, P0018 or P0019 displayed?	Check the appropriate DTC using the "List of Diagnostic Trouble Code (DTC)". <Ref. to EN(H4DO HEV)(diag)-88, List of Diagnostic Trouble Code (DTC).>	Go to step **2**.
2	**CHECK EXHAUST OIL CONTROL SOLENOID RH.** Check the exhaust oil control solenoid RH. <Ref. to FU(H4DO(HEV))-59, INSPECTION, Oil Control Solenoid.>	Is exhaust oil control solenoid RH normal?	Go to step **3**.	Replace the exhaust oil control solenoid RH. <Ref. to FU(H4DO(HEV))-57, Oil Control Solenoid.>
3	**CHECK INSTALLATION CONDITION OF TIMING CHAIN.** Using ST and by turning the crankshaft, align the alignment marks of crank sprocket, intake cam sprocket and exhaust cam sprocket. <Ref. to ME(H4DO(w/o HEV))-163, Timing Chain Assembly.> ST 18252AA000 CRANKSHAFT SOCKET	Is timing chain installed to the appropriate position?	Go to step **4**.	Correct the installation condition of timing chain. <Ref. to ME(H4DO(w/o HEV))-163, Timing Chain Assembly.>
4	**CHECK CAM CARRIER FILTER.** Check the filter installed to cam carrier. <Ref. to ME(H4DO(w/o HEV))-250, INSPECTION, Cam Carrier.>	Is filter of cam carrier normal?	Replace the exhaust cam sprocket RH. <Ref. to ME(H4DO(w/o HEV))-183, Cam Sprocket.> After the operation is complete, go to the next step. Go to step **5**.	Replace the filter of cam carrier. <Ref. to ME(H4DO(w/o HEV))-209, Cam Carrier.>

	Step	Check	Yes	No
5	**CHECK CURRENT DATA.** 1) Clear the memory using the Subaru Select Monitor or general scan tool. <Ref. to EN(H4DO HEV)(diag)-63, OPERATION, Clear Memory Mode.> 2) Start the engine and warm up completely. 3) Using Subaru Select Monitor, read the value of «VVT Ex Initial Position Learning Value #1» and «Exh. VVT Retard Ang. R» when idling condition is stable for 30 seconds or more. NOTE: For detailed operation procedures, refer to "Current Data Display For Engine". <Ref. to EN(H4DO HEV)(diag)-37, Subaru Select Monitor.> 4) Calculate the read value according to the following formula. At this time, ignore the unit. |«VVT Ex Initial Position Learning Value #1» – (90 – «Exh. VVT Retard Ang. R»)|	Is the calculation result less than 10?	Go to step **6**.	Replace the ECM. <Ref. to FU(H4DO(HEV))-85, Engine Control Module (ECM).>
6	**CHECK DTC.** 1) Clear the memory using the Subaru Select Monitor or general scan tool. <Ref. to EN(H4DO HEV)(diag)-63, OPERATION, Clear Memory Mode.> 2) Perform drive cycle N. <Ref. to EN(H4DO HEV)(diag)-61, DRIVE CYCLE N, PROCEDURE, Drive Cycle.>	Is the same DTC as current diagnosis displayed?	Replace the ECM. <Ref. to FU(H4DO(HEV))-85, Engine Control Module (ECM).>	End.

K: DTC P0018 CRANKSHAFT POSITION - CAMSHAFT POSITION CORRELATION (BANK2)

DTC DETECTING CONDITION:

- Detected when two consecutive driving cycles with fault occur.
- GENERAL DESCRIPTION <Ref. to GD(H4DO HEV)-23, DTC P0018 CRANKSHAFT POSITION - CAMSHAFT POSITION CORRELATION (BANK2), Diagnostic Trouble Code (DTC) Detecting Criteria.>

TROUBLE SYMPTOM:

- Engine stalls.
- Improper idling

CAUTION:

After servicing or replacing faulty parts, perform Clear Memory Mode <Ref. to EN(H4DO HEV)(diag)-63, OPERATION, Clear Memory Mode.>, and Inspection Mode <Ref. to EN(H4DO HEV)(diag)-47, PROCEDURE, Inspection Mode.>.

	Step	Check	Yes	No
1	**CHECK FOR ANY OTHER DTC ON DISPLAY.**	Are DTCs other than P0016, P0017, P0018 or P0019 displayed?	Check the appropriate DTC using the "List of Diagnostic Trouble Code (DTC)". <Ref. to EN(H4DO HEV)(diag)-88, List of Diagnostic Trouble Code (DTC).>	Go to step **2**.
2	**CHECK INTAKE OIL CONTROL SOLENOID LH.** Check the intake oil control solenoid LH. <Ref. to FU(H4DO(HEV))-59, INSPECTION, Oil Control Solenoid.>	Is intake oil control solenoid LH normal?	Go to step **3**.	Replace the intake oil control solenoid LH. <Ref. to FU(H4DO(HEV))-57, Oil Control Solenoid.>
3	**CHECK INSTALLATION CONDITION OF TIMING CHAIN.** Using ST and by turning the crankshaft, align the alignment marks of crank sprocket, intake cam sprocket and exhaust cam sprocket. <Ref. to ME(H4DO(w/o HEV))-163, Timing Chain Assembly.> ST 18252AA000 CRANKSHAFT SOCKET	Is timing chain installed to the appropriate position?	Go to step **4**.	Correct the installation condition of timing chain. <Ref. to ME(H4DO(w/o HEV))-163, Timing Chain Assembly.>
4	**CHECK CAM CARRIER FILTER.** Check the filter installed to cam carrier. <Ref. to ME(H4DO(w/o HEV))-250, INSPECTION, Cam Carrier.>	Is filter of cam carrier normal?	Replace the intake cam sprocket LH. <Ref. to ME(H4DO(w/o HEV))-183, Cam Sprocket.> After the operation is complete, go to the next step. Go to step **5**.	Replace the filter of cam carrier. <Ref. to ME(H4DO(w/o HEV))-209, Cam Carrier.>

	Step	Check	Yes	No
5	**CHECK CURRENT DATA.** 1) Clear the memory using the Subaru Select Monitor or general scan tool. <Ref. to EN(H4DO HEV)(diag)-63, OPERATION, Clear Memory Mode.> 2) Start the engine and warm up completely. 3) Using Subaru Select Monitor, read the value of «VVT Initial Position Learning Value #2» and «VVT Adv. Ang. Amount L» when idling condition is stable for 30 seconds or more. NOTE: For detailed operation procedures, refer to "Current Data Display For Engine". <Ref. to EN(H4DO HEV)(diag)-37, Subaru Select Monitor.> 4) Calculate the read value according to the following formula. At this time, ignore the unit. |«VVT Initial Position Learning Value #2» – (60 + «VVT Adv. Ang. Amount L»)|	Is the calculation result less than 10?	Go to step **6**.	Replace the ECM. <Ref. to FU(H4DO(HEV))-85, Engine Control Module (ECM).>
6	**CHECK DTC.** 1) Clear the memory using the Subaru Select Monitor or general scan tool. <Ref. to EN(H4DO HEV)(diag)-63, OPERATION, Clear Memory Mode.> 2) Perform drive cycle N. <Ref. to EN(H4DO HEV)(diag)-61, DRIVE CYCLE N, PROCEDURE, Drive Cycle.>	Is the same DTC as current diagnosis displayed?	Replace the ECM. <Ref. to FU(H4DO(HEV))-85, Engine Control Module (ECM).>	End.

L: DTC P0019 CRANK AND CAM TIMING B SYSTEM FAILURE (BANK 2)

DTC DETECTING CONDITION:

- Detected when two consecutive driving cycles with fault occur.
- GENERAL DESCRIPTION <Ref. to GD(H4DO HEV)-23, DTC P0019 CRANK AND CAM TIMING B SYSTEM FAILURE (BANK 2), Diagnostic Trouble Code (DTC) Detecting Criteria.>

TROUBLE SYMPTOM:

- Engine stalls.
- Improper idling

CAUTION:
After servicing or replacing faulty parts, perform Clear Memory Mode <Ref. to EN(H4DO HEV)(diag)-63, OPERATION, Clear Memory Mode.>, and Inspection Mode <Ref. to EN(H4DO HEV)(diag)-47, PROCEDURE, Inspection Mode.>.

	Step	Check	Yes	No
1	**CHECK FOR ANY OTHER DTC ON DISPLAY.**	Are DTCs other than P0016, P0017, P0018 or P0019 displayed?	Check the appropriate DTC using the "List of Diagnostic Trouble Code (DTC)". <Ref. to EN(H4DO HEV)(diag)-88, List of Diagnostic Trouble Code (DTC).>	Go to step **2**.
2	**CHECK EXHAUST OIL CONTROL SOLENOID LH.** Check the exhaust oil control solenoid LH. <Ref. to FU(H4DO(HEV))-59, INSPECTION, Oil Control Solenoid.>	Is exhaust oil control solenoid LH normal?	Go to step **3**.	Replace the exhaust oil control solenoid LH. <Ref. to FU(H4DO(HEV))-57, Oil Control Solenoid.>
3	**CHECK INSTALLATION CONDITION OF TIMING CHAIN.** Using ST and by turning the crankshaft, align the alignment marks of crank sprocket, intake cam sprocket and exhaust cam sprocket. <Ref. to ME(H4DO(w/o HEV))-163, Timing Chain Assembly.> ST 18252AA000 CRANKSHAFT SOCKET	Is timing chain installed to the appropriate position?	Go to step **4**.	Correct the installation condition of timing chain. <Ref. to ME(H4DO(w/o HEV))-163, Timing Chain Assembly.>
4	**CHECK CAM CARRIER FILTER.** Check the filter installed to cam carrier. <Ref. to ME(H4DO(w/o HEV))-250, INSPECTION, Cam Carrier.>	Is filter of cam carrier normal?	Replace the exhaust cam sprocket LH. <Ref. to ME(H4DO(w/o HEV))-183, Cam Sprocket.> After the operation is complete, go to the next step. Go to step **5**.	Replace the filter of cam carrier. <Ref. to ME(H4DO(w/o HEV))-209, Cam Carrier.>

	Step	Check	Yes	No
5	**CHECK CURRENT DATA.** 1) Clear the memory using the Subaru Select Monitor or general scan tool. <Ref. to EN(H4DO HEV)(diag)-63, OPERATION, Clear Memory Mode.> 2) Start the engine and warm up completely. 3) Using Subaru Select Monitor, read the value of «VVT Ex Initial Position Learning Value #2» and «Exh. VVT Retard Ang. L» when idling condition is stable for 30 seconds or more. NOTE: For detailed operation procedures, refer to "Current Data Display For Engine". <Ref. to EN(H4DO HEV)(diag)-37, Subaru Select Monitor.> 4) Calculate the read value according to the following formula. At this time, ignore the unit. |«VVT Ex Initial Position Learning Value #2» – (90 – «Exh. VVT Retard Ang. L»)|	Is the calculation result less than 10?	Go to step **6**.	Replace the ECM. <Ref. to FU(H4DO(HEV))-85, Engine Control Module (ECM).>
6	**CHECK DTC.** 1) Clear the memory using the Subaru Select Monitor or general scan tool. <Ref. to EN(H4DO HEV)(diag)-63, OPERATION, Clear Memory Mode.> 2) Perform drive cycle N. <Ref. to EN(H4DO HEV)(diag)-61, DRIVE CYCLE N, PROCEDURE, Drive Cycle.>	Is the same DTC as current diagnosis displayed?	Replace the ECM. <Ref. to FU(H4DO(HEV))-85, Engine Control Module (ECM).>	End.

M: DTC P0020 "A" CAMSHAFT POSITION ACTUATOR CIRCUIT/OPEN (BANK 2)

DTC DETECTING CONDITION:

- Immediately at fault recognition
- GENERAL DESCRIPTION <Ref. to GD(H4DO HEV)-23, DTC P0020 "A" CAMSHAFT POSITION ACTUATOR CIRCUIT/OPEN (BANK 2), Diagnostic Trouble Code (DTC) Detecting Criteria.>

TROUBLE SYMPTOM:

Improper idling

CAUTION:

After servicing or replacing faulty parts, perform Clear Memory Mode <Ref. to EN(H4DO HEV)(diag)-63, OPERATION, Clear Memory Mode.>, and Inspection Mode <Ref. to EN(H4DO HEV)(diag)-47, PROCEDURE, Inspection Mode.>.

WIRING DIAGRAM:

- Engine electrical system (without push button start) <Ref. to WI(HEV)-100, WITHOUT PUSH BUTTON START, WIRING DIAGRAM, Engine Electrical System.>
- Engine electrical system (with push button start) <Ref. to WI(HEV)-114, WITH PUSH BUTTON START, WIRING DIAGRAM, Engine Electrical System.>

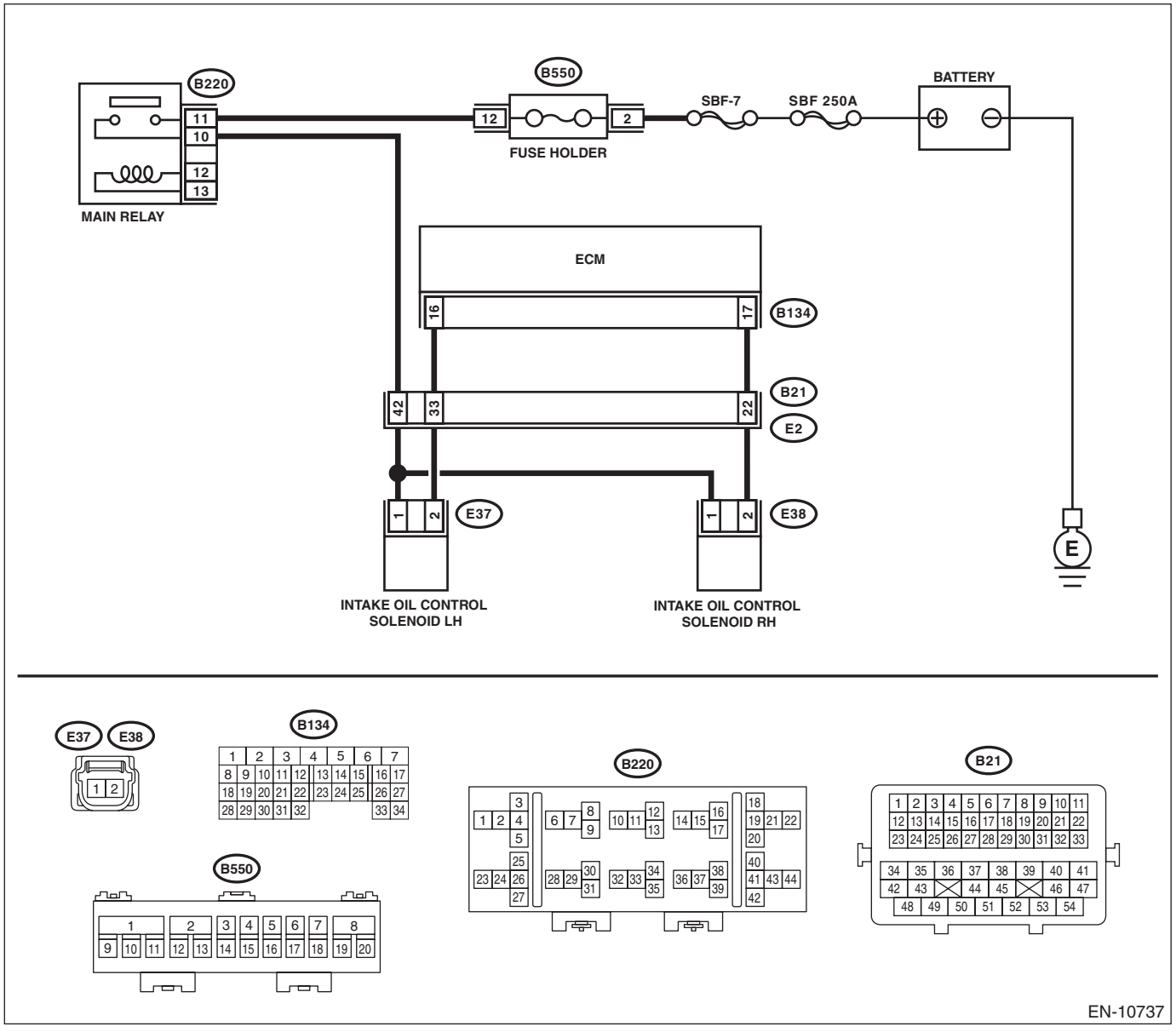

	Step	Check	Yes	No
1	**CHECK OUTPUT SIGNAL OF ECM.** 1) Turn the ignition switch to ON. 2) Measure the voltage between ECM connector and chassis ground. ***Connector & terminal*** ***(B134) No. 16 (+) — Chassis ground (–):***	Is the voltage 10 V or more?	Go to step **2**.	Go to step **3**.
2	**CHECK FOR POOR CONTACT.** Check for poor contact of ECM connector.	Is there poor contact of ECM connector?	Repair the poor contact of ECM connector.	Even if DTC is detected, the circuit has returned to a normal condition at this time. Reproduce the failure, and then perform the diagnosis again. NOTE: In this case, temporary poor contact of connector, temporary open or short circuit of harness may be the cause.
3	**CHECK POWER SUPPLY TO THE INTAKE OIL CONTROL SOLENOID LH.** Measure the voltage between intake oil control solenoid LH connector and engine ground. ***Connector & terminal*** ***(E37) No. 1 (+) — Engine ground (–):***	Is the voltage 10 V or more?	Go to step **4**.	Repair the power supply circuit.
4	**CHECK HARNESS BETWEEN ECM AND INTAKE OIL CONTROL SOLENOID LH CONNECTOR.** 1) Turn the ignition switch to OFF. 2) Disconnect the connectors from ECM and intake oil control solenoid LH. 3) Measure the resistance between intake oil control solenoid LH connector and engine ground. ***Connector & terminal*** ***(E37) No. 2 — Engine ground:***	Is the resistance 1 MΩ or more?	Go to step **5**.	Repair the short circuit to ground in harness between ECM connector and intake oil control solenoid LH connector.
5	**CHECK HARNESS BETWEEN ECM AND INTAKE OIL CONTROL SOLENOID LH CONNECTOR.** Measure the resistance of harness between ECM connector and intake oil control solenoid LH. ***Connector & terminal*** ***(B134) No. 16 — (E37) No. 2:***	Is the resistance less than 1 Ω?	Go to step **6**.	Repair the harness and connector. NOTE: In this case, repair the following item: • Open circuit in harness between ECM connector and intake oil control solenoid LH connector • Poor contact of coupling connector
6	**CHECK INTAKE OIL CONTROL SOLENOID LH.** Measure the resistance between intake oil control solenoid LH terminals. ***Terminals*** ***No. 1 — No. 2:***	Is the resistance 6 — 12 Ω?	Repair the poor contact of intake oil control solenoid LH connector.	Replace the intake oil control solenoid LH. <Ref. to FU(H4DO(HEV))-57, Oil Control Solenoid.>

N: DTC P0021 INTAKE CAMSHAFT POSITION - TIMING OVER-ADVANCED OR SYSTEM PERFORMANCE (BANK 2)

DTC DETECTING CONDITION:

- Detected when two consecutive driving cycles with fault occur.
- GENERAL DESCRIPTION <Ref. to GD(H4DO HEV)-23, DTC P0021 INTAKE CAMSHAFT POSITION - TIMING OVER-ADVANCED OR SYSTEM PERFORMANCE (BANK 2), Diagnostic Trouble Code (DTC) Detecting Criteria.>

TROUBLE SYMPTOM:

- Engine stalls.
- Improper idling

CAUTION:

After servicing or replacing faulty parts, perform Clear Memory Mode <Ref. to EN(H4DO HEV)(diag)-63, OPERATION, Clear Memory Mode.>, and Inspection Mode <Ref. to EN(H4DO HEV)(diag)-47, PROCEDURE, Inspection Mode.>.

	Step	Check	Yes	No
1	**IDENTIFYING FAULTY PART.** 1) Perform the Clear Memory Mode. <Ref. to EN(H4DO HEV)(diag)-63, Clear Memory Mode.> 2) Replace the defective oil control solenoid by the other (RH or LH, intake side or exhaust side) oil control solenoid. 3) Perform appropriate drive cycle test. <Ref. to EN(H4DO HEV)(diag)-50, Drive Cycle.> 4) Make sure that the fault occurrence (DTC and incorrect advancing) has shifted to the other location.	Did the detected DTC shift to the location where the oil control solenoid was replaced?	Replace the faulty oil control solenoid.	Go to step **2**.
2	**CHECK CURRENT DATA.** 1) Start the engine and let it idle. 2) Read the value of «VVT Adv. Ang. Amount L» using the Subaru Select Monitor. NOTE: For detailed operation procedures, refer to “Current Data Display For Engine”. <Ref. to EN(H4DO HEV)(diag)-37, Subaru Select Monitor.>	Is the value of «VVT Adv. Ang. Amount L» approx. 0 deg?	Go to step **3**.	Check the following item and repair or replace if necessary. • Intake cam sprocket (clog or dirt of oil routing, setting of spring) • Intake camshaft (dirt, damage of camshaft)
3	**CHECK CURRENT DATA.** 1) Drive with acceleration and deceleration at 80 km/h (50 MPH) or less. NOTE: Drive to an extent that the duty output of oil flow control solenoid valve increases. 2) Read the values of «OCV Duty L» and «VVT Adv. Ang. Amount L» using the Subaru Select Monitor. NOTE: For detailed operation procedures, refer to “Current Data Display For Engine”. <Ref. to EN(H4DO HEV)(diag)-37, Subaru Select Monitor.>	When the value of «OCV Duty L» increases more than 10%, is the value of «VVT Adv. Ang. Amount L» approx. 0 deg?	Check the following item and repair or replace if necessary. • Intake cam sprocket (clog or dirt of oil routing, setting of spring) • Intake camshaft (dirt, damage of camshaft)	Perform the following procedures, and clean the oil routing. Replace the engine oil and idle the engine for 5 minutes, and then replace the oil filter and engine oil. <Ref. to LU(H4DO(w/o HEV))-13, REPLACEMENT, Engine Oil.> <Ref. to LU(H4DO(w/o HEV))-28, Engine Oil Filter.>

O: DTC P0023 B CAMSHAFT POSITION ACTUATOR CIRCUIT/OPEN (BANK 2)

DTC DETECTING CONDITION:

- Immediately at fault recognition
- GENERAL DESCRIPTION <Ref. to GD(H4DO HEV)-23, DTC P0023 B CAMSHAFT POSITION ACTUATOR CIRCUIT/OPEN (BANK 2), Diagnostic Trouble Code (DTC) Detecting Criteria.>

TROUBLE SYMPTOM:

Improper idling

CAUTION:

After servicing or replacing faulty parts, perform Clear Memory Mode <Ref. to EN(H4DO HEV)(diag)-63, OPERATION, Clear Memory Mode.>, and Inspection Mode <Ref. to EN(H4DO HEV)(diag)-47, PROCEDURE, Inspection Mode.>.

WIRING DIAGRAM:

- Engine electrical system (without push button start) <Ref. to WI(HEV)-100, WITHOUT PUSH BUTTON START, WIRING DIAGRAM, Engine Electrical System.>
- Engine electrical system (with push button start) <Ref. to WI(HEV)-114, WITH PUSH BUTTON START, WIRING DIAGRAM, Engine Electrical System.>

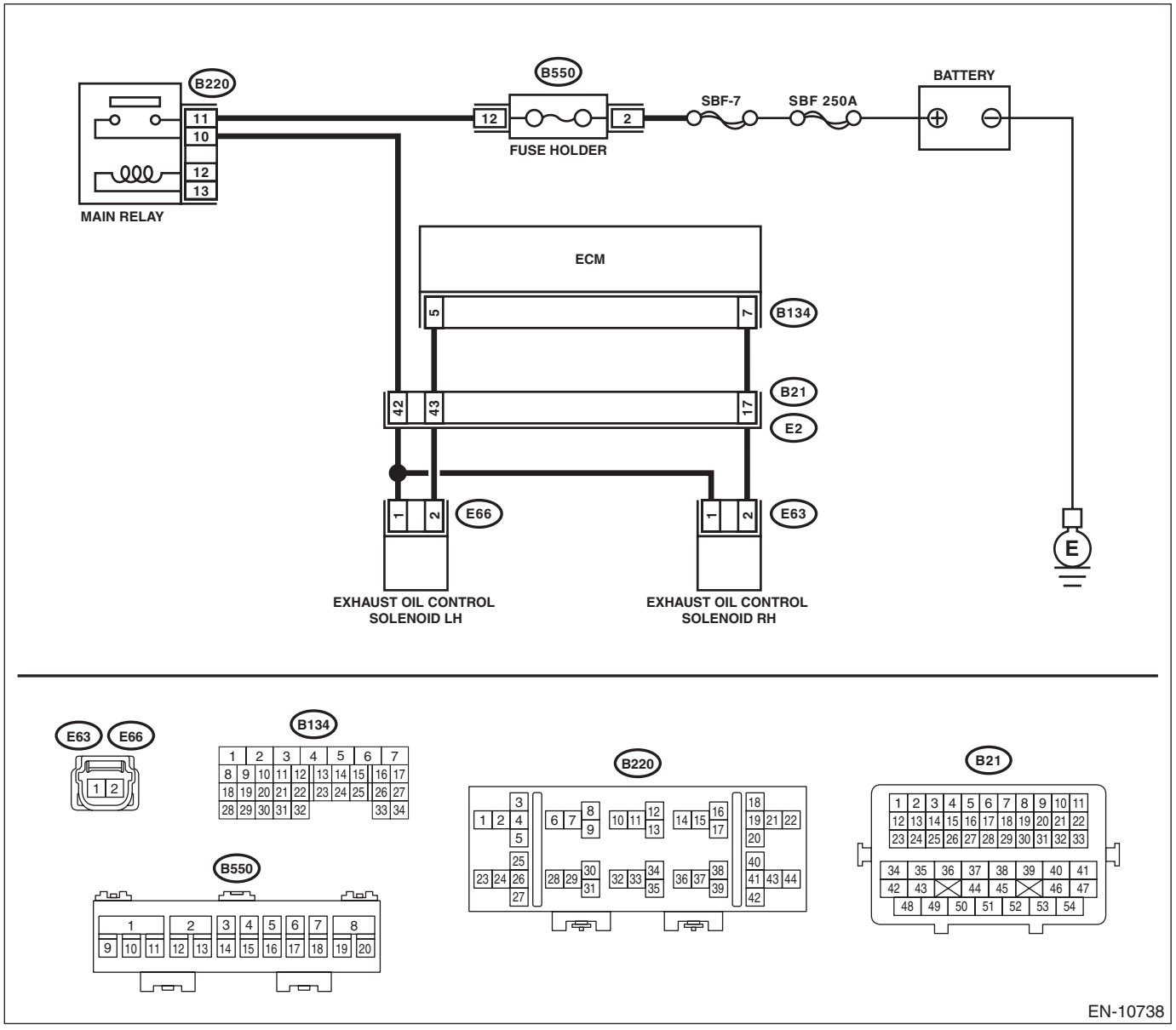

EN-10738

	Step	Check	Yes	No
1	**CHECK OUTPUT SIGNAL OF ECM.** 1) Turn the ignition switch to ON. 2) Measure the voltage between ECM connector and chassis ground. ***Connector & terminal*** ***(B134) No. 5 (+) — Chassis ground (–):***	Is the voltage 10 V or more?	Go to step **2**.	Go to step **3**.
2	**CHECK FOR POOR CONTACT.** Check for poor contact of ECM connector.	Is there poor contact of ECM connector?	Repair the poor contact of ECM connector.	Even if DTC is detected, the circuit has returned to a normal condition at this time. Reproduce the failure, and then perform the diagnosis again. NOTE: In this case, temporary poor contact of connector, temporary open or short circuit of harness may be the cause.
3	**CHECK POWER SUPPLY TO THE EXHAUST OIL CONTROL SOLENOID LH.** Measure the voltage between exhaust oil control solenoid LH connector and engine ground. ***Connector & terminal*** ***(E66) No. 1 (+) — Engine ground (–):***	Is the voltage 10 V or more?	Go to step **4**.	Repair the power supply circuit.
4	**CHECK HARNESS BETWEEN ECM AND EXHAUST OIL CONTROL SOLENOID LH CONNECTOR.** 1) Turn the ignition switch to OFF. 2) Disconnect the connectors from ECM and exhaust oil control solenoid LH. 3) Measure the resistance between exhaust oil control solenoid LH connector and engine ground. ***Connector & terminal*** ***(E66) No. 2 — Engine ground:***	Is the resistance 1 MΩ or more?	Go to step **5**.	Repair the short circuit to ground in harness between ECM connector and exhaust oil control solenoid LH connector.
5	**CHECK HARNESS BETWEEN ECM AND EXHAUST OIL CONTROL SOLENOID LH CONNECTOR.** Measure the resistance of harness between ECM connector and exhaust oil control solenoid LH. ***Connector & terminal*** ***(B134) No. 5 — (E66) No. 2:***	Is the resistance less than 1 Ω?	Go to step **6**.	Repair the harness and connector. NOTE: In this case, repair the following item: • Open circuit in harness between ECM connector and exhaust oil control solenoid LH connector • Poor contact of coupling connector

Step		Check	Yes	No
6	**CHECK EXHAUST OIL CONTROL SOLENOID LH.** Measure the resistance between exhaust oil control solenoid LH terminals. ***Terminals*** ***No. 1 — No. 2:***	Is the resistance 6 — 12 Ω?	Repair the poor contact of exhaust oil control solenoid LH connector.	Replace the exhaust oil control solenoid LH. <Ref. to FU(H4DO(HEV))-57, Oil Control Solenoid.>

P: DTC P0024 EXHAUST AVCS SYSTEM 2 (RANGE/PERFORMANCE)

DTC DETECTING CONDITION:

- Detected when two consecutive driving cycles with fault occur.
- GENERAL DESCRIPTION <Ref. to GD(H4DO HEV)-23, DTC P0024 EXHAUST AVCS SYSTEM 2 (RANGE/PERFORMANCE), Diagnostic Trouble Code (DTC) Detecting Criteria.>

TROUBLE SYMPTOM:

- Engine stalls.
- Improper idling

CAUTION:
After servicing or replacing faulty parts, perform Clear Memory Mode <Ref. to EN(H4DO HEV)(diag)-63, OPERATION, Clear Memory Mode.>, and Inspection Mode <Ref. to EN(H4DO HEV)(diag)-47, PROCEDURE, Inspection Mode.>.

	Step	Check	Yes	No
1	**IDENTIFYING FAULTY PART.** 1) Perform the Clear Memory Mode. <Ref. to EN(H4DO HEV)(diag)-63, Clear Memory Mode.> 2) Replace the defective oil control solenoid by the other (RH or LH, intake side or exhaust side) oil control solenoid. 3) Perform appropriate drive cycle test. <Ref. to EN(H4DO HEV)(diag)-50, Drive Cycle.> 4) Make sure that the fault occurrence (DTC and incorrect advancing) has shifted to the other location.	Did the detected DTC shift to the location where the oil control solenoid was replaced?	Replace the faulty oil control solenoid.	Go to step **2**.
2	**CHECK CURRENT DATA.** 1) Start the engine and let it idle. 2) Read the value of «Exh. VVT Retard Ang. L» using the Subaru Select Monitor. NOTE: For detailed operation procedures, refer to “Current Data Display For Engine”. <Ref. to EN(H4DO HEV)(diag)-37, Subaru Select Monitor.>	Is the value of «Exh. VVT Retard Ang. L» approx. 0 deg?	Go to step **3**.	Check the following item and repair or replace if necessary. • Exhaust cam sprocket (clog or dirt of oil routing, setting of spring) • Exhaust camshaft (dirt, damage of camshaft)
3	**CHECK CURRENT DATA.** 1) Drive with acceleration and deceleration at 80 km/h (50 MPH) or less. NOTE: Drive to an extent that the duty output of oil flow control solenoid valve increases. 2) Read the values of «Exh. OCV Duty L» and «Exh. VVT Retard Ang. L» using the Subaru Select Monitor. NOTE: For detailed operation procedures, refer to “Current Data Display For Engine”. <Ref. to EN(H4DO HEV)(diag)-37, Subaru Select Monitor.>	When the value of «Exh. OCV Duty L» increases more than 10%, is the value of «Exh. VVT Retard Ang. L» approx. 0 deg?	Check the following item and repair or replace if necessary. • Exhaust cam sprocket (clog or dirt of oil routing, setting of spring) • Exhaust camshaft (dirt, damage of camshaft)	Perform the following procedures, and clean the oil routing. Replace the engine oil and idle the engine for 5 minutes, and then replace the oil filter and engine oil. <Ref. to LU(H4DO(w/o HEV))-13, REPLACEMENT, Engine Oil.> <Ref. to LU(H4DO(w/o HEV))-28, Engine Oil Filter.>

Q: DTC P0030 HO2S HEATER CONTROL CIRCUIT (BANK 1 SENSOR 1)

DTC DETECTING CONDITION:

- Detected when two consecutive driving cycles with fault occur.
- GENERAL DESCRIPTION <Ref. to GD(H4DO HEV)-24, DTC P0030 HO2S HEATER CONTROL CIRCUIT (BANK 1 SENSOR 1), Diagnostic Trouble Code (DTC) Detecting Criteria.>

CAUTION:

After servicing or replacing faulty parts, perform Clear Memory Mode <Ref. to EN(H4DO HEV)(diag)-63, OPERATION, Clear Memory Mode.>, and Inspection Mode <Ref. to EN(H4DO HEV)(diag)-47, PROCEDURE, Inspection Mode.>.

WIRING DIAGRAM:

- Engine electrical system (without push button start) <Ref. to WI(HEV)-100, WITHOUT PUSH BUTTON START, WIRING DIAGRAM, Engine Electrical System.>
- Engine electrical system (with push button start) <Ref. to WI(HEV)-114, WITH PUSH BUTTON START, WIRING DIAGRAM, Engine Electrical System.>

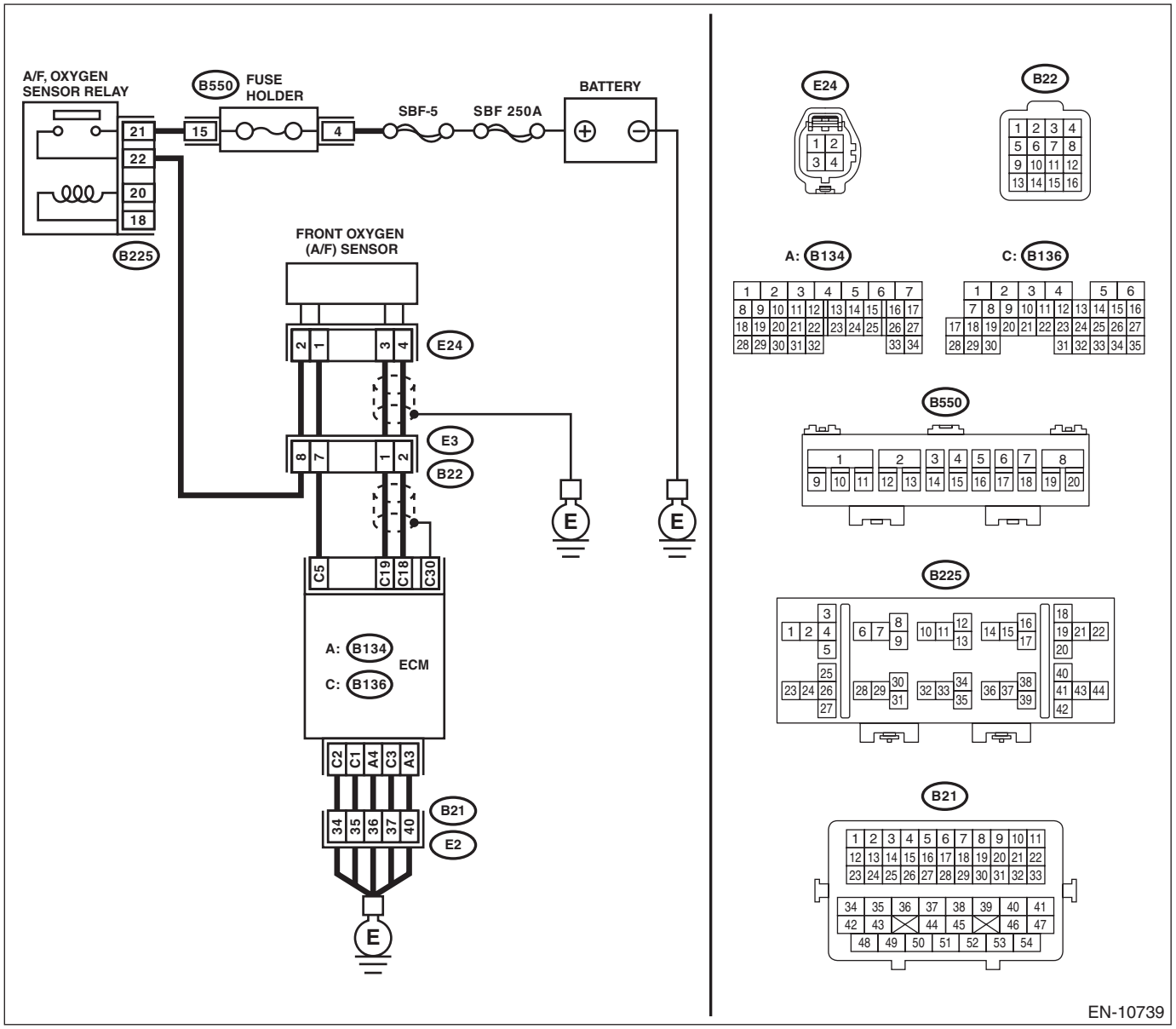

	Step	Check	Yes	No
1	**CHECK HARNESS BETWEEN ECM AND FRONT OXYGEN (A/F) SENSOR CONNECTOR.** 1) Start and warm up the engine. 2) Turn the ignition switch to OFF. 3) Disconnect the connectors from ECM and front oxygen (A/F) sensor. 4) Measure the resistance of harness between ECM connector and front oxygen (A/F) sensor connector. ***Connector & terminal*** ***(B136) No. 5 — (E24) No. 1:*** ***(B136) No. 19 — (E24) No. 3:*** ***(B136) No. 18 — (E24) No. 4:***	Is the resistance less than 1 Ω?	Go to step **2**.	Repair the harness and connector. NOTE: In this case, repair the following item: • Open circuit in harness between ECM connector and front oxygen (A/F) sensor connector • Poor contact of coupling connector
2	**CHECK FRONT OXYGEN (A/F) SENSOR.** Measure the resistance between front oxygen (A/F) sensor terminals. ***Terminals*** ***No. 1 — No. 2:***	Is the resistance 1.8 — 2.2 Ω?	Go to step **3**.	Replace the front oxygen (A/F) sensor. <Ref. to FU(H4DO(HEV))-79, Front Oxygen (A/F) Sensor.>
3	**CHECK FOR POOR CONTACT.** Check for poor contact of ECM and front oxygen (A/F) sensor connector.	Is there poor contact of ECM or front oxygen (A/F) sensor connector?	Repair the poor contact of ECM or front oxygen (A/F) sensor connector.	Replace the front oxygen (A/F) sensor. <Ref. to FU(H4DO(HEV))-79, Front Oxygen (A/F) Sensor.>

R: DTC P0031 HO2S HEATER CONTROL CIRCUIT LOW (BANK 1 SENSOR 1)

DTC DETECTING CONDITION:

- Immediately at fault recognition
- GENERAL DESCRIPTION <Ref. to GD(H4DO HEV)-26, DTC P0031 HO2S HEATER CONTROL CIRCUIT LOW (BANK 1 SENSOR 1), Diagnostic Trouble Code (DTC) Detecting Criteria.>

CAUTION:

After servicing or replacing faulty parts, perform Clear Memory Mode <Ref. to EN(H4DO HEV)(diag)-63, OPERATION, Clear Memory Mode.>, and Inspection Mode <Ref. to EN(H4DO HEV)(diag)-47, PROCEDURE, Inspection Mode.>.

WIRING DIAGRAM:

- Engine electrical system (without push button start) <Ref. to WI(HEV)-100, WITHOUT PUSH BUTTON START, WIRING DIAGRAM, Engine Electrical System.>
- Engine electrical system (with push button start) <Ref. to WI(HEV)-114, WITH PUSH BUTTON START, WIRING DIAGRAM, Engine Electrical System.>

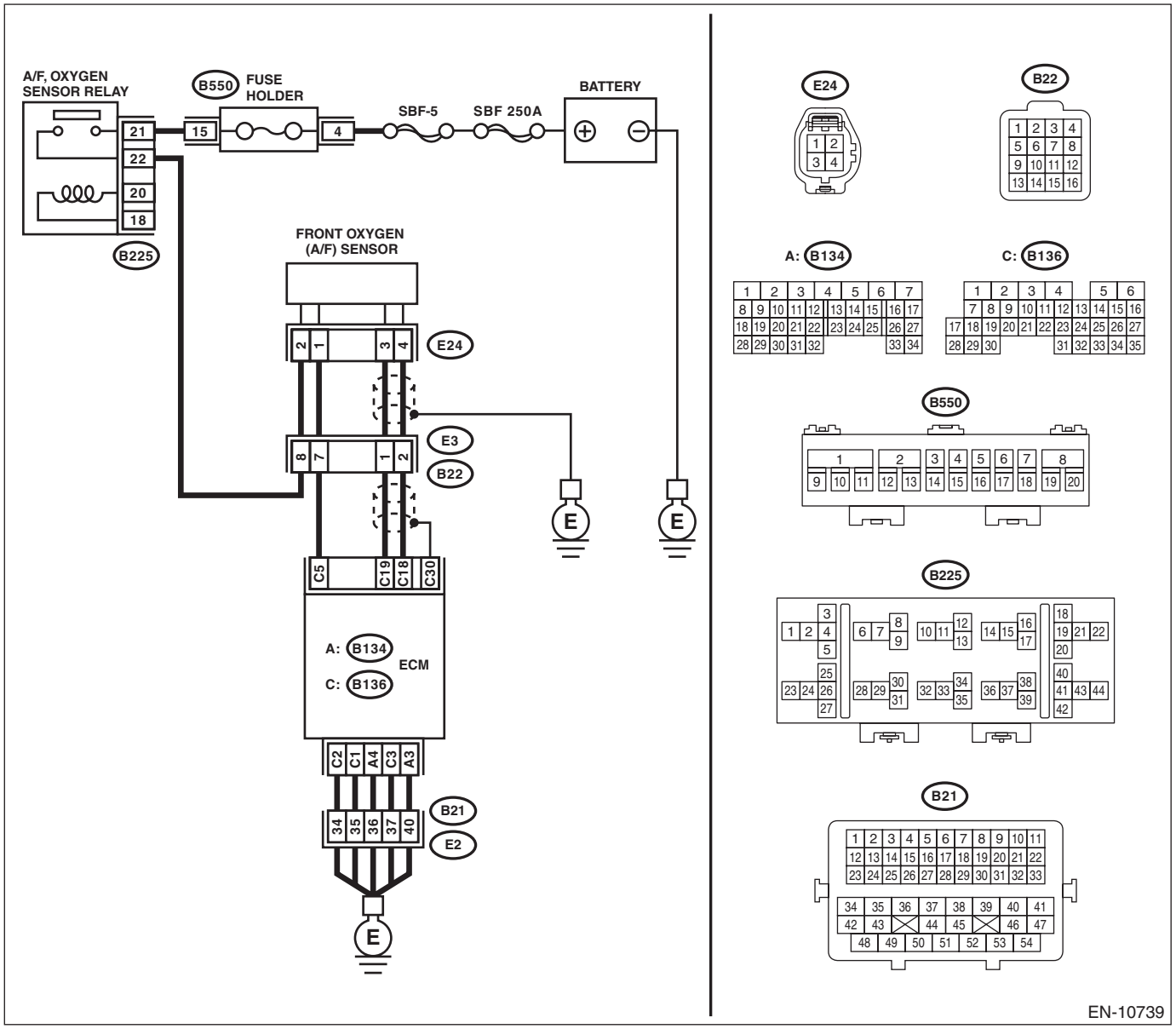

	Step	Check	Yes	No
1	**CHECK POWER SUPPLY TO FRONT OXYGEN (A/F) SENSOR.** 1) Turn the ignition switch to OFF. 2) Disconnect the connectors from front oxygen (A/F) sensor. 3) Turn the ignition switch to ON. 4) Measure the voltage between front oxygen (A/F) sensor connector and engine ground. ***Connector & terminal*** ***(E24) No. 2 (+) — Engine ground (–):***	Is the voltage 10 V or more?	Go to step **2**.	Repair the power supply line. NOTE: In this case, repair the following item: • Open circuit in harness between A/F, oxygen sensor relay connector and front oxygen (A/F) sensor connector • Poor contact of A/F, oxygen sensor relay connector • Poor contact of coupling connector • Malfunction of A/F, oxygen sensor relay
2	**CHECK HARNESS BETWEEN ECM AND FRONT OXYGEN (A/F) SENSOR CONNECTOR.** 1) Turn the ignition switch to OFF. 2) Disconnect the connector from ECM. 3) Measure the resistance between ECM connector and front oxygen (A/F) sensor connector. ***Connector & terminal*** ***(B136) No. 5 — (E24) No. 1:***	Is the resistance less than 1 Ω?	Go to step **3**.	Repair the harness and connector. NOTE: In this case, repair the following item: • Open circuit in harness between ECM connector and front oxygen (A/F) sensor connector • Poor contact of coupling connector
3	**CHECK GROUND CIRCUIT FOR ECM.** Measure the resistance of harness between ECM connector and chassis ground. ***Connector & terminal*** ***(B134) No. 3 — Chassis ground:*** ***(B134) No. 4 — Chassis ground:*** ***(B136) No. 1 — Chassis ground:*** ***(B136) No. 2 — Chassis ground:*** ***(B136) No. 3 — Chassis ground:***	Is the resistance less than 5 Ω?	Go to step **4**.	Repair the harness and connector. NOTE: In this case, repair the following item: • Open circuit of harness between ECM connector and engine ground • Poor contact of coupling connector
4	**CHECK FRONT OXYGEN (A/F) SENSOR.** Measure the resistance between front oxygen (A/F) sensor terminals. ***Terminals*** ***No. 1 — No. 2:***	Is the resistance 1.8 — 2.2 Ω?	Repair the poor contact of ECM connector.	Replace the front oxygen (A/F) sensor. <Ref. to FU(H4DO(HEV))-79, Front Oxygen (A/F) Sensor.>

S: DTC P0032 HO2S HEATER CONTROL CIRCUIT HIGH (BANK 1 SENSOR 1)

DTC DETECTING CONDITION:

- Immediately at fault recognition
- GENERAL DESCRIPTION <Ref. to GD(H4DO HEV)-28, DTC P0032 HO2S HEATER CONTROL CIRCUIT HIGH (BANK 1 SENSOR 1), Diagnostic Trouble Code (DTC) Detecting Criteria.>

CAUTION:

After servicing or replacing faulty parts, perform Clear Memory Mode <Ref. to EN(H4DO HEV)(diag)-63, OPERATION, Clear Memory Mode.>, and Inspection Mode <Ref. to EN(H4DO HEV)(diag)-47, PROCEDURE, Inspection Mode.>.

WIRING DIAGRAM:

- Engine electrical system (without push button start) <Ref. to WI(HEV)-100, WITHOUT PUSH BUTTON START, WIRING DIAGRAM, Engine Electrical System.>
- Engine electrical system (with push button start) <Ref. to WI(HEV)-114, WITH PUSH BUTTON START, WIRING DIAGRAM, Engine Electrical System.>

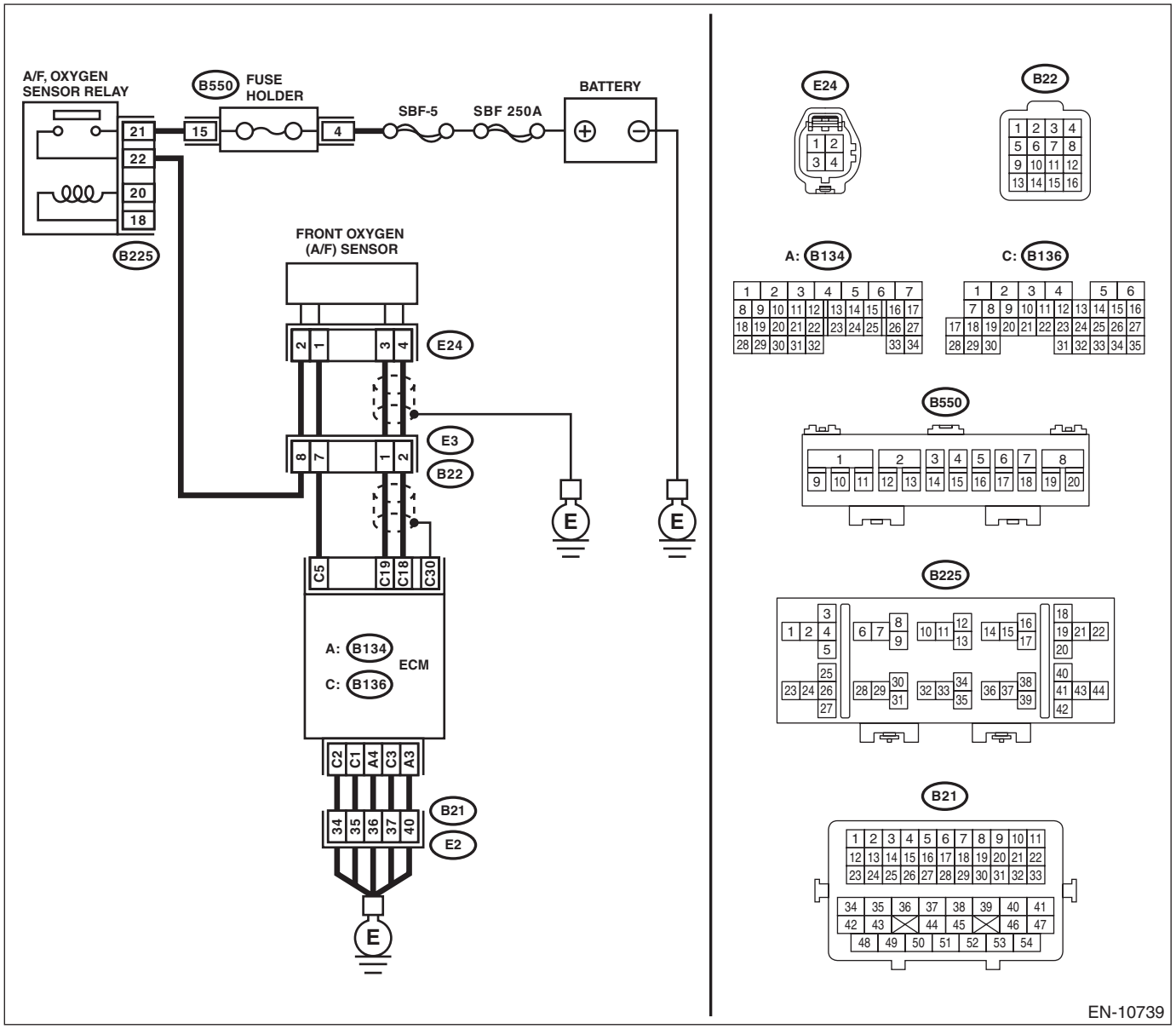

	Step	Check	Yes	No
1	**CHECK HARNESS BETWEEN ECM AND FRONT OXYGEN (A/F) SENSOR CONNECTOR.** 1) Turn the ignition switch to OFF. 2) Measure the voltage between ECM connector and chassis ground. ***Connector & terminal*** ***(B136) No. 5 (+) — Chassis ground (–):***	Is the voltage 10 V or more?	Repair the short circuit to power in the harness between ECM connector and front oxygen (A/F) sensor connector.	Go to step **2**.
2	**CHECK GROUND CIRCUIT FOR ECM.** 1) Disconnect the connector from ECM. 2) Measure the resistance between ECM connector and chassis ground. ***Connector & terminal*** ***(B134) No. 3 — Chassis ground:*** ***(B134) No. 4 — Chassis ground:*** ***(B136) No. 1 — Chassis ground:*** ***(B136) No. 2 — Chassis ground:*** ***(B136) No. 3 — Chassis ground:***	Is the resistance less than 5 Ω?	Repair the poor contact of ECM connector.	Repair the harness and connector. NOTE: In this case, repair the following item: • Open circuit of harness between ECM connector and engine ground • Poor contact of coupling connector

T: DTC P0037 HO2S HEATER CONTROL CIRCUIT LOW (BANK 1 SENSOR 2)

DTC DETECTING CONDITION:

- Detected when two consecutive driving cycles with fault occur.
- GENERAL DESCRIPTION <Ref. to GD(H4DO HEV)-30, DTC P0037 HO2S HEATER CONTROL CIRCUIT LOW (BANK 1 SENSOR 2), Diagnostic Trouble Code (DTC) Detecting Criteria.>

CAUTION:

After servicing or replacing faulty parts, perform Clear Memory Mode <Ref. to EN(H4DO HEV)(diag)-63, OPERATION, Clear Memory Mode.>, and Inspection Mode <Ref. to EN(H4DO HEV)(diag)-47, PROCEDURE, Inspection Mode.>.

WIRING DIAGRAM:

- Engine electrical system (without push button start) <Ref. to WI(HEV)-100, WITHOUT PUSH BUTTON START, WIRING DIAGRAM, Engine Electrical System.>
- Engine electrical system (with push button start) <Ref. to WI(HEV)-114, WITH PUSH BUTTON START, WIRING DIAGRAM, Engine Electrical System.>

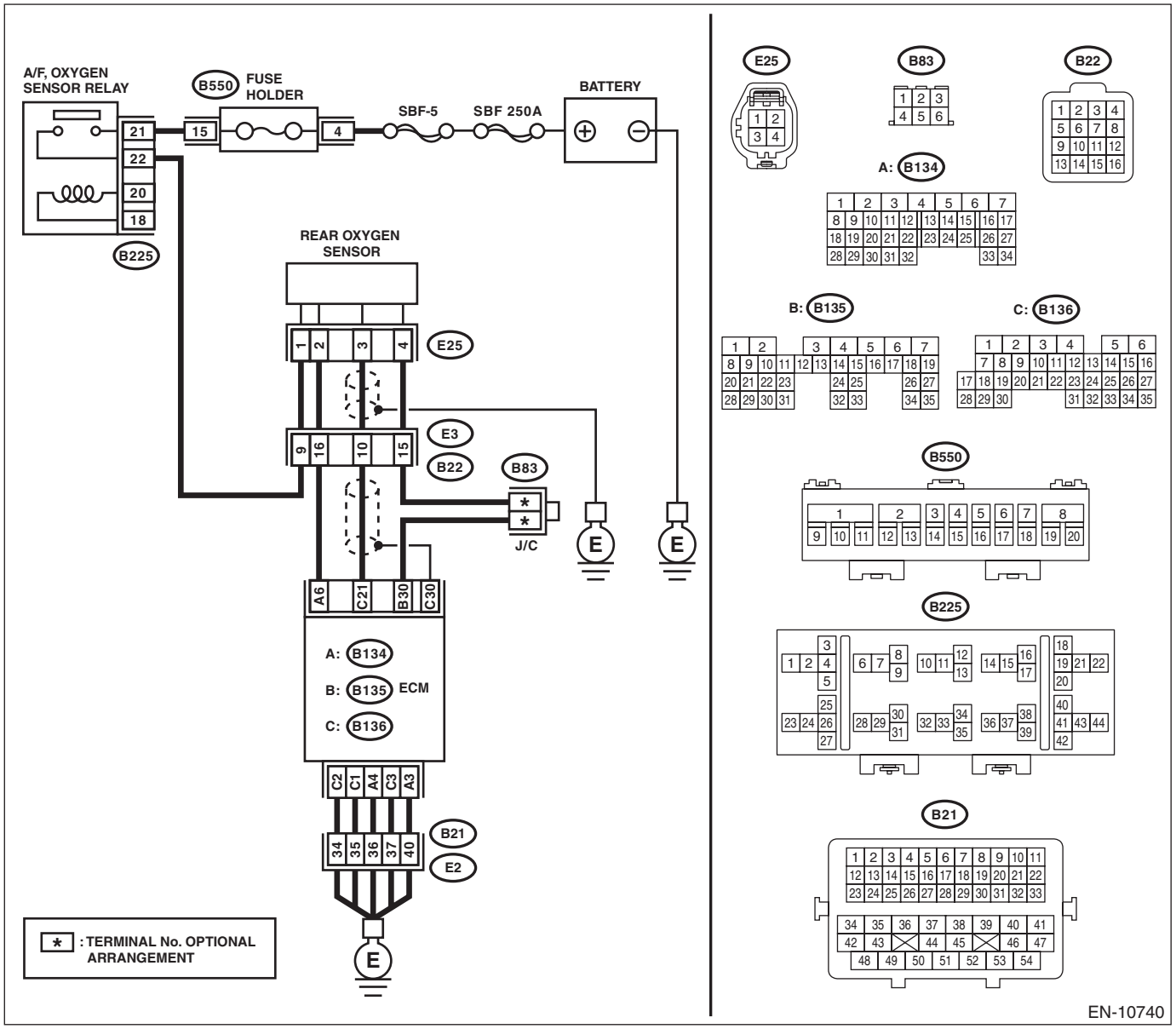

	Step	Check	Yes	No
1	**CHECK POWER SUPPLY TO REAR OXYGEN SENSOR.** 1) Turn the ignition switch to OFF. 2) Disconnect the connector from rear oxygen sensor. 3) Turn the ignition switch to ON. 4) Measure the voltage between rear oxygen sensor connector and engine ground. ***Connector & terminal*** ***(E25) No. 1 (+) — Engine ground (–):***	Is the voltage 10 V or more?	Go to step **2**.	Repair the power supply line. Or replace the main relay. NOTE: In this case, repair the following item: • Open circuit in harness between A/F, oxygen sensor relay connector and rear oxygen sensor connector • Poor contact of A/F, oxygen sensor relay connector • Poor contact of coupling connector • Malfunction of A/F, oxygen sensor relay
2	**CHECK HARNESS BETWEEN ECM AND REAR OXYGEN SENSOR CONNECTOR.** 1) Turn the ignition switch to OFF. 2) Disconnect the connector from ECM. 3) Measure the resistance between ECM connector and oxygen sensor connector. ***Connector & terminal*** ***(B134) No. 6 — (E25) No. 2:***	Is the resistance less than 1 Ω?	Go to step **3**.	Repair the harness and connector. NOTE: In this case, repair the following item: • Open circuit in harness between ECM connector and rear oxygen sensor connector • Poor contact of coupling connector
3	**CHECK GROUND CIRCUIT FOR ECM.** Measure the resistance of harness between ECM connector and chassis ground. ***Connector & terminal*** ***(B134) No. 3 — Chassis ground:*** ***(B134) No. 4 — Chassis ground:*** ***(B136) No. 1 — Chassis ground:*** ***(B136) No. 2 — Chassis ground:*** ***(B136) No. 3 — Chassis ground:***	Is the resistance less than 5 Ω?	Go to step **4**.	Repair the harness and connector. NOTE: In this case, repair the following item: • Open circuit of harness between ECM connector and engine ground • Poor contact of coupling connector
4	**CHECK REAR OXYGEN SENSOR.** Measure the resistance between rear oxygen sensor terminals. ***Terminals*** ***No. 2 — No. 1:***	Is the resistance 5 — 6.4 Ω?	Repair the poor contact of ECM connector.	Replace the rear oxygen sensor. <Ref. to FU(H4DO(HEV))-82, Rear Oxygen Sensor.>

U: DTC P0038 HO2S HEATER CONTROL CIRCUIT HIGH (BANK 1 SENSOR 2)

DTC DETECTING CONDITION:

- Detected when two consecutive driving cycles with fault occur.
- GENERAL DESCRIPTION <Ref. to GD(H4DO HEV)-32, DTC P0038 HO2S HEATER CONTROL CIRCUIT HIGH (BANK 1 SENSOR 2), Diagnostic Trouble Code (DTC) Detecting Criteria.>

CAUTION:

After servicing or replacing faulty parts, perform Clear Memory Mode <Ref. to EN(H4DO HEV)(diag)-63, OPERATION, Clear Memory Mode.>, and Inspection Mode <Ref. to EN(H4DO HEV)(diag)-47, PROCEDURE, Inspection Mode.>.

WIRING DIAGRAM:

- Engine electrical system (without push button start) <Ref. to WI(HEV)-100, WITHOUT PUSH BUTTON START, WIRING DIAGRAM, Engine Electrical System.>
- Engine electrical system (with push button start) <Ref. to WI(HEV)-114, WITH PUSH BUTTON START, WIRING DIAGRAM, Engine Electrical System.>

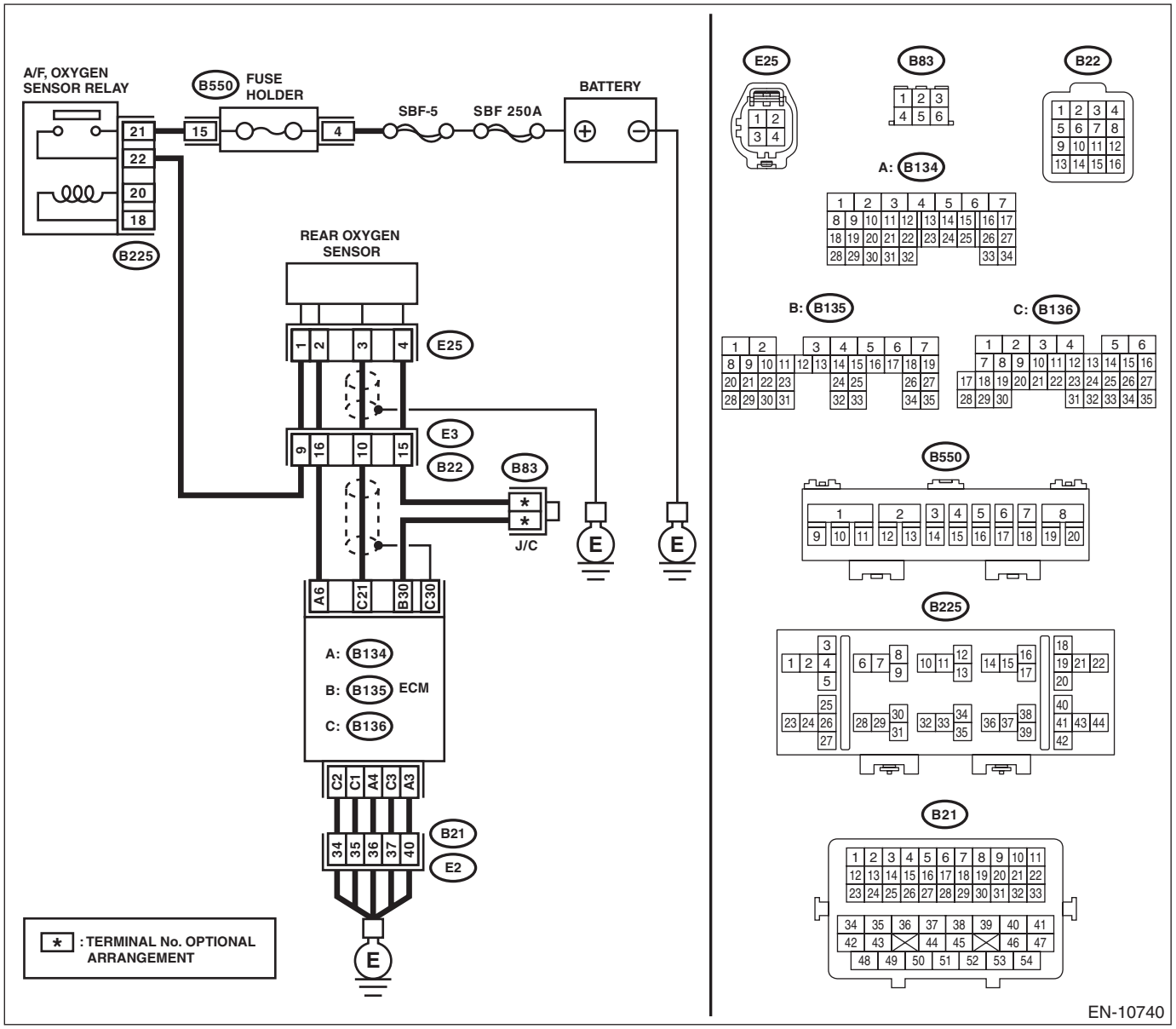

	Step	Check	Yes	No
1	**CHECK HARNESS BETWEEN ECM AND REAR OXYGEN SENSOR CONNECTOR.** 1) Turn the ignition switch to OFF. 2) Measure the voltage between ECM connector and chassis ground. ***Connector & terminal*** ***(B134) No. 6 (+) — Chassis ground (–):***	Is the voltage 10 V or more?	Repair the short circuit to power in the harness between ECM connector and rear oxygen sensor connector.	Go to step **2**.
2	**CHECK GROUND CIRCUIT FOR ECM.** 1) Disconnect the connector from ECM. 2) Measure the resistance between ECM connector and chassis ground. ***Connector & terminal*** ***(B134) No. 3 — Chassis ground:*** ***(B134) No. 4 — Chassis ground:*** ***(B136) No. 1 — Chassis ground:*** ***(B136) No. 2 — Chassis ground:*** ***(B136) No. 3 — Chassis ground:***	Is the resistance less than 5 Ω?	Repair the poor contact of ECM connector.	Repair the harness and connector. NOTE: In this case, repair the following item: • Open circuit of harness between ECM connector and engine ground • Poor contact of coupling connector

V: DTC P0068 MAP/MAF - THROTTLE POSITION CORRELATION

DTC DETECTING CONDITION:

- Detected when two consecutive driving cycles with fault occur.
- GENERAL DESCRIPTION <Ref. to GD(H4DO HEV)-34, DTC P0068 MAP/MAF - THROTTLE POSITION CORRELATION, Diagnostic Trouble Code (DTC) Detecting Criteria.>

CAUTION:
After servicing or replacing faulty parts, perform Clear Memory Mode <Ref. to EN(H4DO HEV)(diag)-63, OPERATION, Clear Memory Mode.>, and Inspection Mode <Ref. to EN(H4DO HEV)(diag)-47, PROCEDURE, Inspection Mode.>.

	Step	Check	Yes	No
1	**CHECK AIR INTAKE SYSTEM.**	Are there holes, loose bolts or disconnection of hose on air intake system?	Repair the air intake system.	Go to step **2**.
2	**CHECK MANIFOLD ABSOLUTE PRESSURE SENSOR.** 1) Start the engine and warm up engine until coolant temperature is higher than 75°C (167°F). 2) Place the select lever in “P” range or “N” range. 3) Turn the A/C switch to OFF. 4) Turn all the accessory switches to OFF. 5) Read the value of «Mani. Absolute Pressure» using the Subaru Select Monitor or a general scan tool. NOTE: • Subaru Select Monitor For detailed operation procedures, refer to “Current Data Display For Engine”. <Ref. to EN(H4DO HEV)(diag)-37, Subaru Select Monitor.> • General scan tool For detailed operation procedures, refer to the “General Scan Tool Instruction Manual”.	Is the value in «Mani. Absolute Pressure» 73.3 — 106.6 kPa (550 — 800 mmHg, 21.65 — 31.50 inHg) when the ignition is turned ON, and 20.0 — 46.7 kPa (150 — 350 mmHg, 5.91 — 13.78 inHg) during idling?	Go to step **3**.	Replace the manifold absolute pressure sensor. <Ref. to FU(H4DO(HEV))-67, Manifold Absolute Pressure Sensor.>
3	**CHECK THROTTLE OPENING ANGLE.** Using the Subaru Select Monitor or a general scan tool, read the value in «Throttle Opening Angle». NOTE: • Subaru Select Monitor For detailed operation procedures, refer to “Current Data Display For Engine”. <Ref. to EN(H4DO HEV)(diag)-37, Subaru Select Monitor.> • General scan tool For detailed operation procedures, refer to the “General Scan Tool Instruction Manual”.	Is the value in «Throttle Opening Angle» with the throttle fully closed less than 5%?	Go to step **4**.	Replace the electronic throttle control. <Ref. to FU(H4DO(HEV))-15, Throttle Body.>
4	**CHECK THROTTLE OPENING ANGLE.**	Is the value in «Throttle Opening Angle» with the throttle fully open 85% or more?	Replace the manifold absolute pressure sensor. <Ref. to FU(H4DO(HEV))-67, Manifold Absolute Pressure Sensor.>	Replace the electronic throttle control. <Ref. to FU(H4DO(HEV))-15, Throttle Body.>

W: DTC P0071 AMBIENT TEMPERATURE SENSOR CIRCUIT "A" RANGE/PERFORMANCE

DTC DETECTING CONDITION:

- Detected when two consecutive driving cycles with fault occur.
- GENERAL DESCRIPTION <Ref. to GD(H4DO HEV)-36, DTC P0071 AMBIENT TEMPERATURE SENSOR CIRCUIT "A" RANGE/PERFORMANCE, Diagnostic Trouble Code (DTC) Detecting Criteria.>

CAUTION:
After servicing or replacing faulty parts, perform Clear Memory Mode <Ref. to EN(H4DO HEV)(diag)-63, OPERATION, Clear Memory Mode.>, and Inspection Mode <Ref. to EN(H4DO HEV)(diag)-47, PROCEDURE, Inspection Mode.>.

WIRING DIAGRAM:
Air conditioning system <Ref. to WI(HEV)-55, WIRING DIAGRAM, Air Conditioning System.>

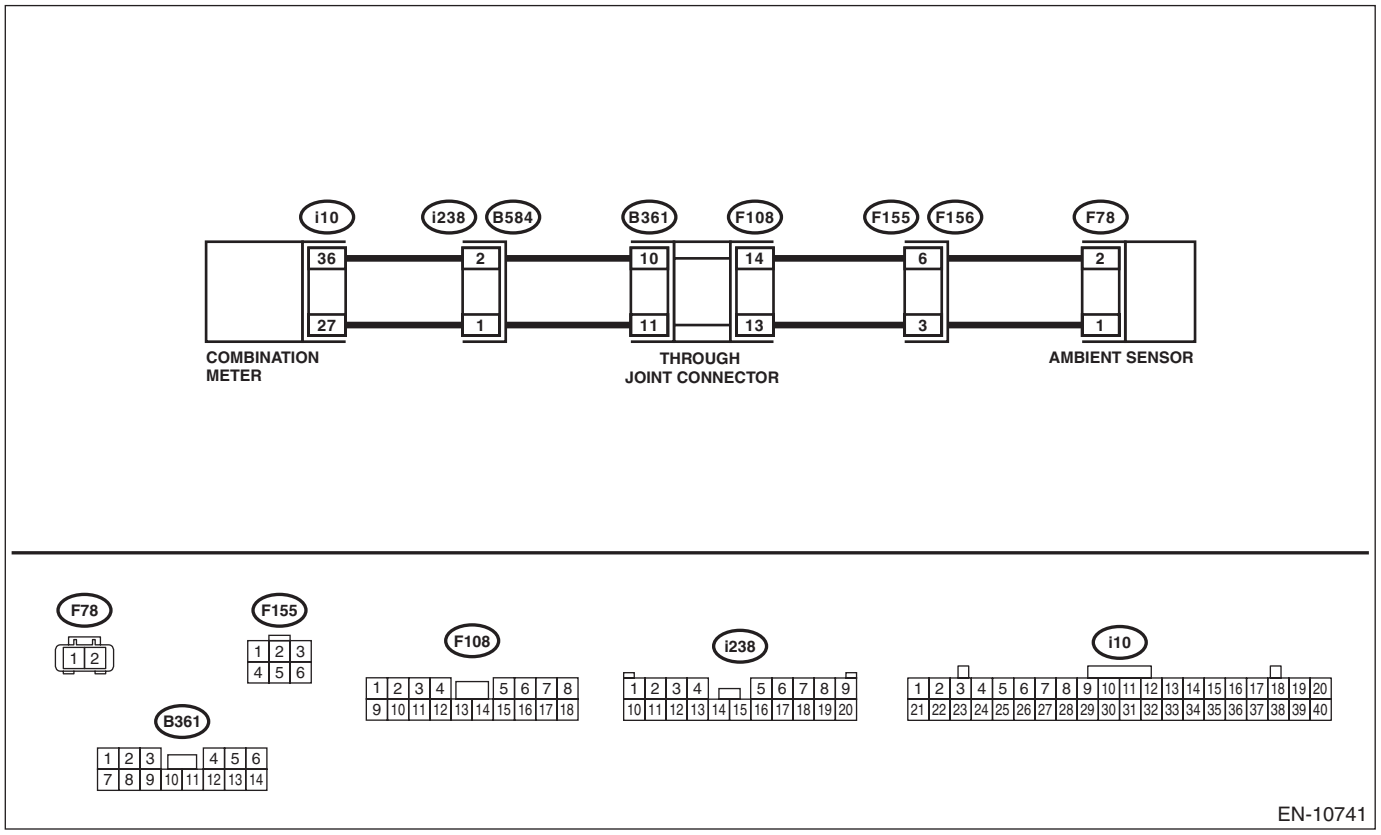

Step		Check	Yes	No
1	**CHECK FOR ANY OTHER DTC ON DISPLAY.**	Is any other DTC displayed?	Check the appropriate DTC using the “List of Diagnostic Trouble Code (DTC)”. <Ref. to EN(H4DO HEV)(diag)-88, List of Diagnostic Trouble Code (DTC).>	Go to step **2**.

	Step	Check	Yes	No
2	**CHECK AMBIENT SENSOR.** 1) Turn the ignition switch to OFF. 2) Disconnect the connector from ambient sensor. 3) Measure the resistance between ambient sensor terminals while heating and cooling the ambient sensor using a hair drier. **CAUTION:** **Do not heat the part to the temperature where you cannot touch it with your bare hand in order to prevent burning yourself and protect the part.** ***Terminals*** ***No. 1 — No. 2:***	Is the resistance of ambient sensor different between during heating and during cooling?	Repair the poor contact of ECM connector.	Replace the ambient sensor. <Ref. to AC-79, Ambient Sensor.>

X: DTC P0072 AMBIENT TEMPERATURE SENSOR CIRCUIT "A" LOW

DTC DETECTING CONDITION:

- Immediately at fault recognition
- GENERAL DESCRIPTION <Ref. to GD(H4DO HEV)-38, DTC P0072 AMBIENT TEMPERATURE SENSOR CIRCUIT "A" LOW, Diagnostic Trouble Code (DTC) Detecting Criteria.>

CAUTION:
After servicing or replacing faulty parts, perform Clear Memory Mode <Ref. to EN(H4DO HEV)(diag)-63, OPERATION, Clear Memory Mode.>, and Inspection Mode <Ref. to EN(H4DO HEV)(diag)-47, PROCEDURE, Inspection Mode.>.

	Step	Check	Yes	No
1	**CHECK DTC.** Check for DTC. <Ref. to EN(H4DO HEV)(diag)-46, Read Diagnostic Trouble Code (DTC).>	Is DTC P0072 or P0073 displayed in «Present fault»?	Go to step **2**.	Even if DTC is detected, the circuit has returned to a normal condition at this time. Reproduce the failure, and then perform the diagnosis again. NOTE: In this case, temporary poor contact of connector, temporary open or short circuit of harness may be the cause.
2	**CHECK COMBINATION METER.** Check the combination meter system. <Ref. to IDI(diag)-2, Basic Diagnostic Procedure.>	Is combination meter system OK?	Replace the ambient sensor. <Ref. to AC-79, Ambient Sensor.>	Repair the combination meter system. <Ref. to IDI(diag)-2, Basic Diagnostic Procedure.>

Y: DTC P0073 AMBIENT TEMPERATURE SENSOR CIRCUIT "A" HIGH

NOTE:
For the diagnostic procedure, refer to DTC P0072. <Ref. to EN(H4DO HEV)(diag)-134, DTC P0072 AMBIENT TEMPERATURE SENSOR CIRCUIT "A" LOW, Diagnostic Procedure with Diagnostic Trouble Code (DTC).>

Z: DTC P0101 MASS OR VOLUME AIR FLOW CIRCUIT RANGE/PERFORMANCE

DTC DETECTING CONDITION:

- Detected when two consecutive driving cycles with fault occur.
- GENERAL DESCRIPTION <Ref. to GD(H4DO HEV)-40, DTC P0101 MASS OR VOLUME AIR FLOW CIRCUIT RANGE/PERFORMANCE, Diagnostic Trouble Code (DTC) Detecting Criteria.>

TROUBLE SYMPTOM:

- Improper idling
- Engine stalls.
- Poor driving performance

CAUTION:
After servicing or replacing faulty parts, perform Clear Memory Mode <Ref. to EN(H4DO HEV)(diag)-63, OPERATION, Clear Memory Mode.>, and Inspection Mode <Ref. to EN(H4DO HEV)(diag)-47, PROCEDURE, Inspection Mode.>.

Step		Check	Yes	No
1	CHECK FOR ANY OTHER DTC ON DISPLAY.	Is any other DTC displayed?	Check the appropriate DTC using the “List of Diagnostic Trouble Code (DTC)”. <Ref. to EN(H4DO HEV)(diag)-88, List of Diagnostic Trouble Code (DTC).>	Replace the mass air flow and intake air temperature sensor. <Ref. to FU(H4DO(HEV))-64, Mass Air Flow and Intake Air Temperature Sensor.>

AA:DTC P0102 MASS OR VOLUME AIR FLOW CIRCUIT LOW INPUT

DTC DETECTING CONDITION:

- Immediately at fault recognition
- GENERAL DESCRIPTION <Ref. to GD(H4DO HEV)-42, DTC P0102 MASS OR VOLUME AIR FLOW CIRCUIT LOW INPUT, Diagnostic Trouble Code (DTC) Detecting Criteria.>

TROUBLE SYMPTOM:

- Improper idling
- Engine stalls.
- Poor driving performance

CAUTION:

After servicing or replacing faulty parts, perform Clear Memory Mode <Ref. to EN(H4DO HEV)(diag)-63, OPERATION, Clear Memory Mode.>, and Inspection Mode <Ref. to EN(H4DO HEV)(diag)-47, PROCEDURE, Inspection Mode.>.

WIRING DIAGRAM:

- Engine electrical system (without push button start) <Ref. to WI(HEV)-100, WITHOUT PUSH BUTTON START, WIRING DIAGRAM, Engine Electrical System.>
- Engine electrical system (with push button start) <Ref. to WI(HEV)-114, WITH PUSH BUTTON START, WIRING DIAGRAM, Engine Electrical System.>

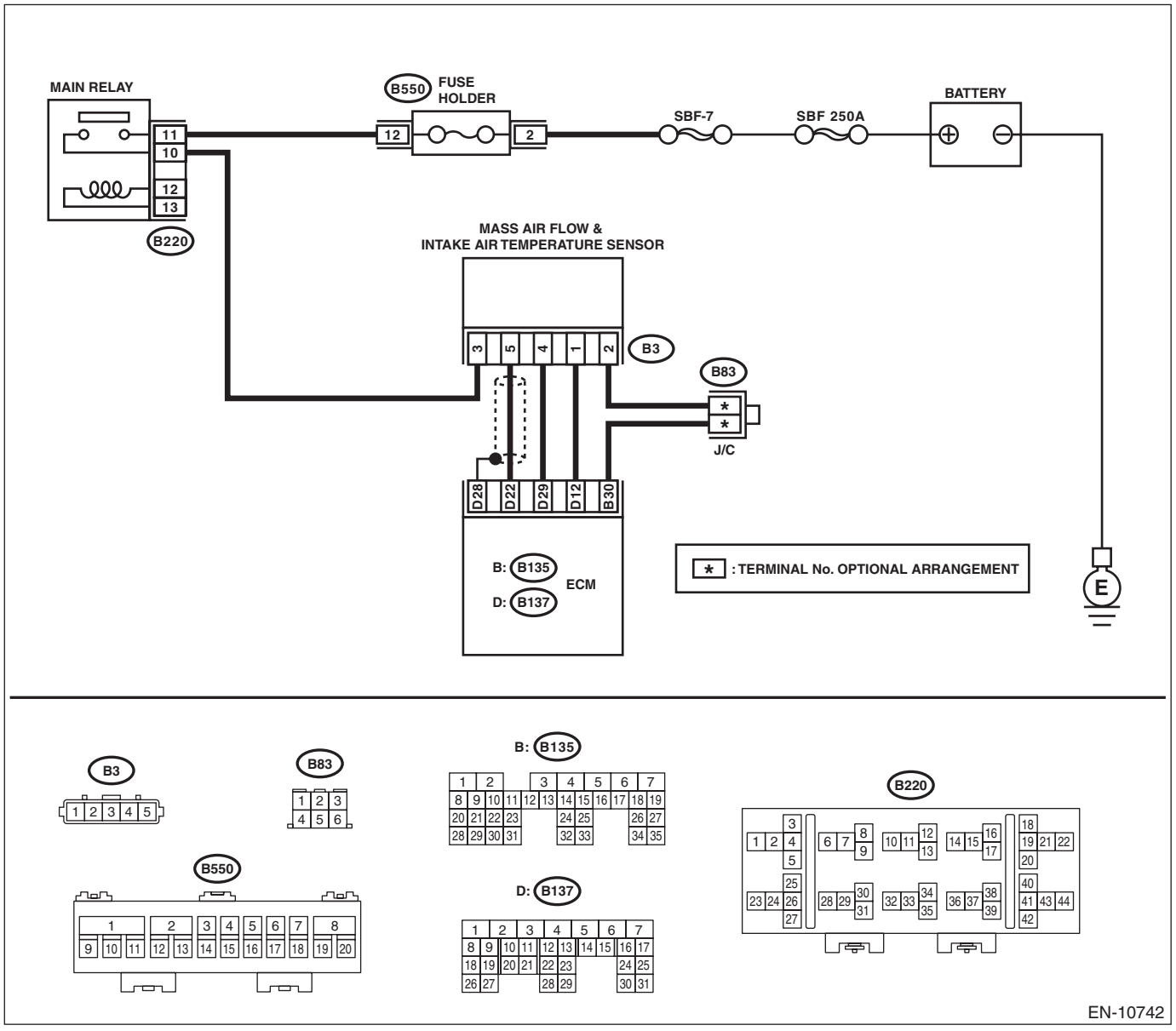

	Step	Check	Yes	No
1	**CHECK CURRENT DATA.** 1) Start the engine. 2) Read the value of «Air Flow Sensor Voltage» using Subaru Select Monitor. NOTE: For detailed operation procedures, refer to "Current Data Display For Engine". <Ref. to EN(H4DO HEV)(diag)-37, Subaru Select Monitor.>	Is the value of «Air Flow Sensor Voltage» less than 0.2 V?	Go to step **2**.	Even if DTC is detected, the circuit has returned to a normal condition at this time. Reproduce the failure, and then perform the diagnosis again. NOTE: In this case, temporary poor contact of connector, temporary open or short circuit of harness may be the cause.
2	**CHECK POWER SUPPLY OF MASS AIR FLOW AND INTAKE AIR TEMPERATURE SENSOR.** 1) Turn the ignition switch to OFF. 2) Disconnect the connectors from the mass air flow and intake air temperature sensor. 3) Turn the ignition switch to ON. 4) Measure the voltage between mass air flow and intake air temperature sensor connector and engine ground. ***Connector & terminal*** ***(B3) No. 3 (+) — Engine ground (–):***	Is the voltage 10 V or more?	Go to step **3**.	Repair the harness and connector. NOTE: In this case, repair the following item: • Open circuit in harness between main relay and mass air flow and intake air temperature sensor connector • Poor contact of main relay connector
3	**CHECK HARNESS BETWEEN ECM AND MASS AIR FLOW AND INTAKE AIR TEMPERATURE SENSOR CONNECTOR.** 1) Turn the ignition switch to OFF. 2) Disconnect the connector from ECM. 3) Measure the resistance of harness between ECM connector and the mass air flow and intake air temperature sensor connector. ***Connector & terminal*** ***(B137) No. 22 — (B3) No. 5:***	Is the resistance less than 1 Ω?	Go to step **4**.	Repair the open circuit of harness between ECM connector and the mass air flow and intake air temperature sensor connector.
4	**CHECK HARNESS BETWEEN ECM AND MASS AIR FLOW AND INTAKE AIR TEMPERATURE SENSOR CONNECTOR.** Measure the resistance between ECM connector and chassis ground. ***Connector & terminal*** ***(B137) No. 22 — Chassis ground:***	Is the resistance 1 MΩ or more?	Go to step **5**.	Repair the ground short circuit of harness between ECM connector and the mass air flow and intake air temperature sensor connector.
5	**CHECK FOR POOR CONTACT.** Check for poor contact of ECM and mass air flow and intake air temperature sensor connector.	Is there poor contact of ECM or mass air flow and intake air temperature sensor connector?	Repair the poor contact of ECM or mass air flow and intake air temperature sensor connector.	Replace the mass air flow and intake air temperature sensor. <Ref. to FU(H4DO(HEV))-64, Mass Air Flow and Intake Air Temperature Sensor.>

AB:DTC P0103 MASS OR VOLUME AIR FLOW CIRCUIT HIGH INPUT

DTC DETECTING CONDITION:

- Immediately at fault recognition
- GENERAL DESCRIPTION <Ref. to GD(H4DO HEV)-44, DTC P0103 MASS OR VOLUME AIR FLOW CIRCUIT HIGH INPUT, Diagnostic Trouble Code (DTC) Detecting Criteria.>

TROUBLE SYMPTOM:

- Improper idling
- Engine stalls.
- Poor driving performance

CAUTION:
After servicing or replacing faulty parts, perform Clear Memory Mode <Ref. to EN(H4DO HEV)(diag)-63, OPERATION, Clear Memory Mode.>, and Inspection Mode <Ref. to EN(H4DO HEV)(diag)-47, PROCEDURE, Inspection Mode.>.

WIRING DIAGRAM:

- Engine electrical system (without push button start) <Ref. to WI(HEV)-100, WITHOUT PUSH BUTTON START, WIRING DIAGRAM, Engine Electrical System.>
- Engine electrical system (with push button start) <Ref. to WI(HEV)-114, WITH PUSH BUTTON START, WIRING DIAGRAM, Engine Electrical System.>

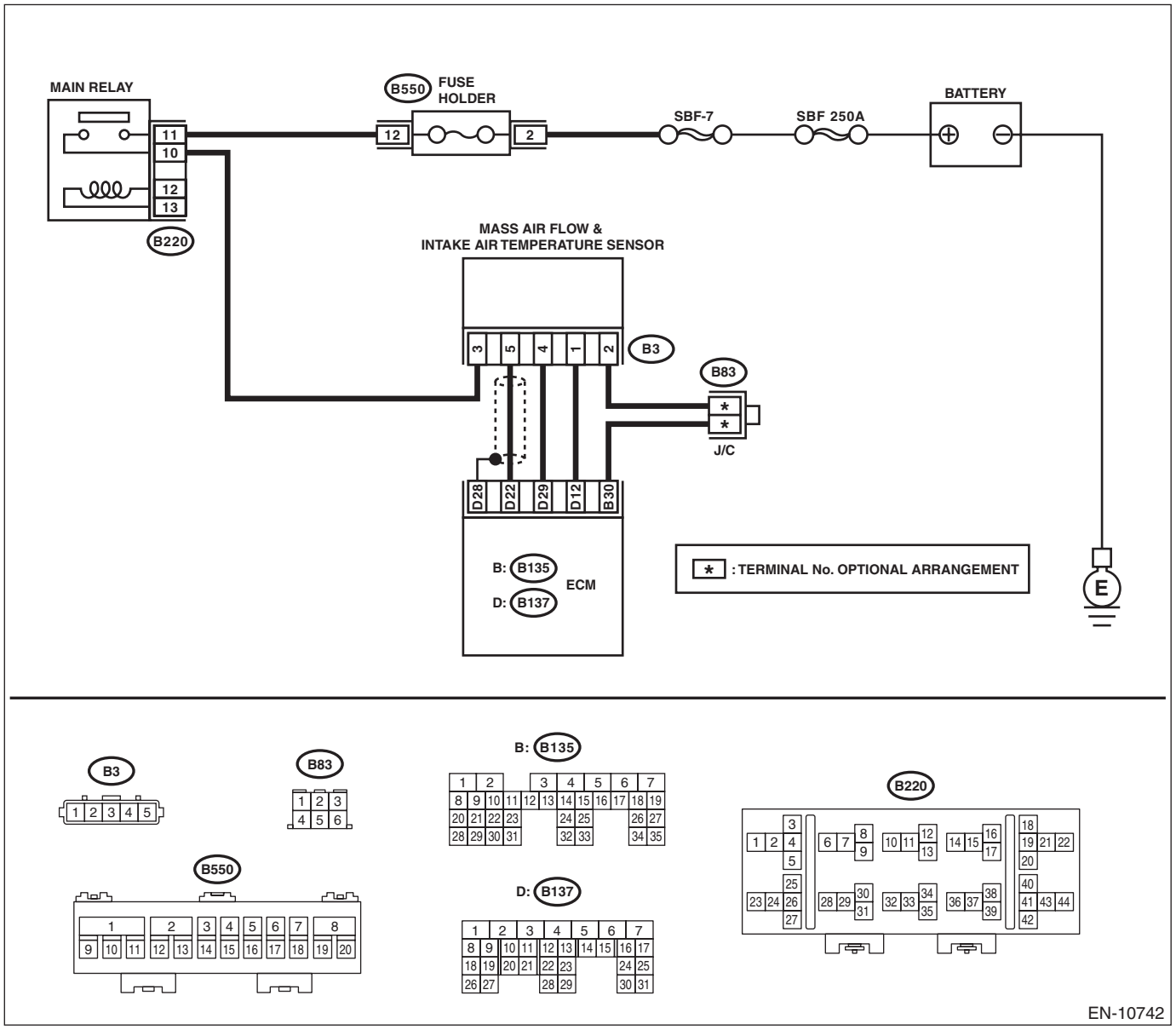

	Step	Check	Yes	No
1	**CHECK CURRENT DATA.** 1) Start the engine. 2) Read the value of «Air Flow Sensor Voltage» using Subaru Select Monitor. NOTE: For detailed operation procedures, refer to "Current Data Display For Engine". <Ref. to EN(H4DO HEV)(diag)-37, Subaru Select Monitor.>	Is the value of «Air Flow Sensor Voltage» 5 V or more?	Go to step **2**.	Even if DTC is detected, the circuit has returned to a normal condition at this time. Reproduce the failure, and then perform the diagnosis again. NOTE: In this case, temporary poor contact of connector, temporary open or short circuit of harness may be the cause.
2	**CHECK HARNESS BETWEEN ECM AND MASS AIR FLOW AND INTAKE AIR TEMPERATURE SENSOR CONNECTOR.** 1) Turn the ignition switch to OFF. 2) Disconnect the connectors from the mass air flow and intake air temperature sensor. 3) Start the engine. 4) Read the value of «Air Flow Sensor Voltage» using Subaru Select Monitor. NOTE: For detailed operation procedures, refer to "Current Data Display For Engine". <Ref. to EN(H4DO HEV)(diag)-37, Subaru Select Monitor.>	Is the value of «Air Flow Sensor Voltage» 5 V or more?	Repair the short circuit of harness to power supply between ECM connector and the mass air flow and intake air temperature sensor connector.	Go to step **3**.
3	**CHECK HARNESS BETWEEN ECM AND MASS AIR FLOW AND INTAKE AIR TEMPERATURE SENSOR CONNECTOR.** 1) Turn the ignition switch to OFF. 2) Measure the resistance of harness between mass air flow and intake air temperature sensor connector and engine ground. ***Connector & terminal*** ***(B3) No. 4 — Engine ground:***	Is the resistance less than 5 Ω?	Go to step **4**.	Repair the harness and connector. NOTE: In this case, repair the following item: • Open circuit in harness between ECM connector and the mass air flow and intake air temperature sensor connector • Poor contact of ECM connector
4	**CHECK FOR POOR CONTACT.** Check for poor contact of mass air flow and intake air temperature sensor connector.	Is there poor contact of mass air flow and intake air temperature sensor connector?	Repair the poor contact of mass air flow and intake air temperature sensor connector.	Replace the mass air flow and intake air temperature sensor. <Ref. to FU(H4DO(HEV))-64, Mass Air Flow and Intake Air Temperature Sensor.>

AC:DTC P0107 MANIFOLD ABSOLUTE PRESSURE/BAROMETRIC PRESSURE CIRCUIT LOW INPUT

DTC DETECTING CONDITION:

- Immediately at fault recognition
- GENERAL DESCRIPTION <Ref. to GD(H4DO HEV)-46, DTC P0107 MANIFOLD ABSOLUTE PRESSURE/BAROMETRIC PRESSURE CIRCUIT LOW INPUT, Diagnostic Trouble Code (DTC) Detecting Criteria.>

CAUTION:

After servicing or replacing faulty parts, perform Clear Memory Mode <Ref. to EN(H4DO HEV)(diag)-63, OPERATION, Clear Memory Mode.>, and Inspection Mode <Ref. to EN(H4DO HEV)(diag)-47, PROCEDURE, Inspection Mode.>.

WIRING DIAGRAM:

- Engine electrical system (without push button start) <Ref. to WI(HEV)-100, WITHOUT PUSH BUTTON START, WIRING DIAGRAM, Engine Electrical System.>
- Engine electrical system (with push button start) <Ref. to WI(HEV)-114, WITH PUSH BUTTON START, WIRING DIAGRAM, Engine Electrical System.>

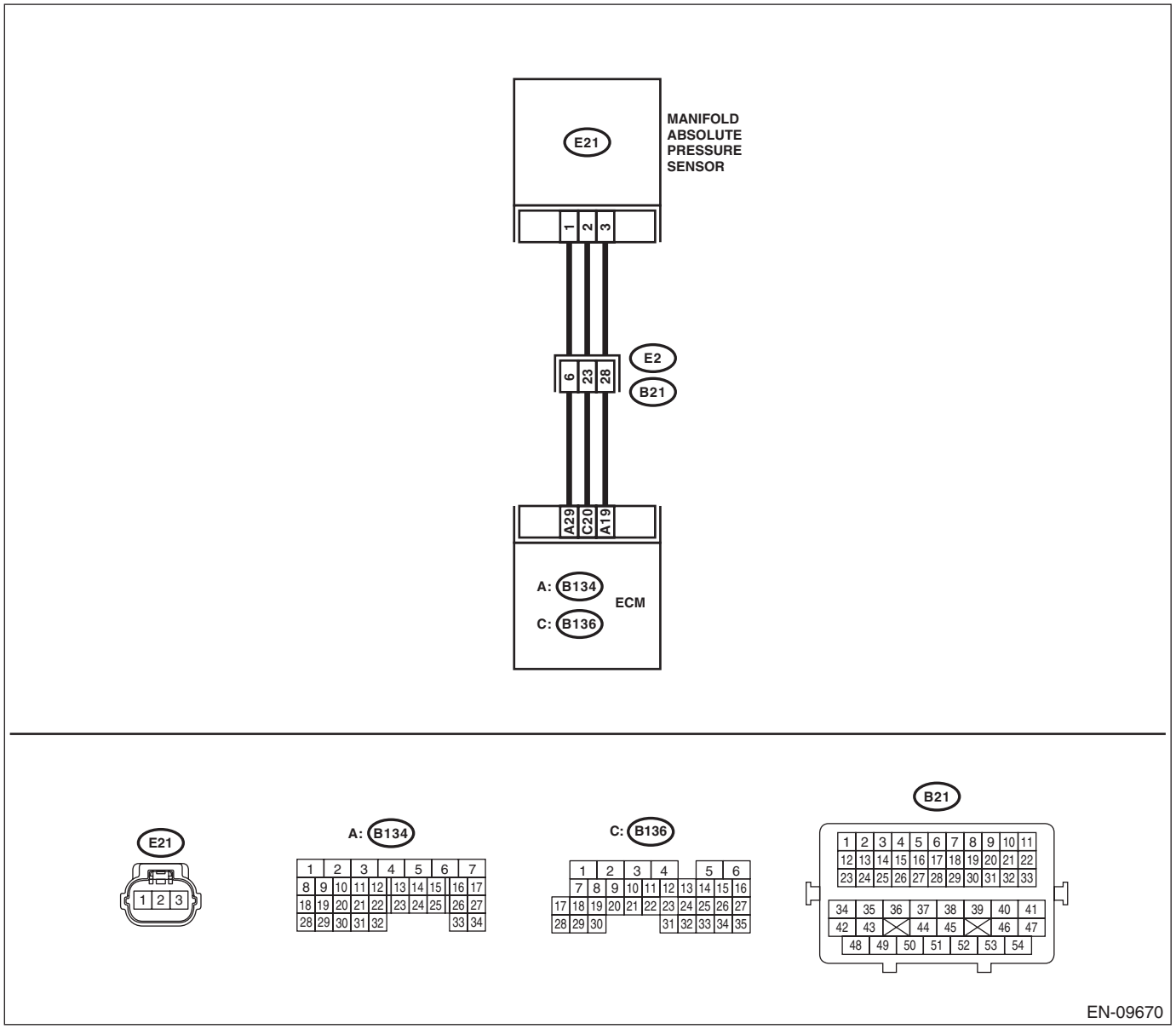

	Step	Check	Yes	No
1	**CHECK CURRENT DATA.** 1) Start the engine. 2) Read the value of «Mani. Absolute Pressure» using the Subaru Select Monitor or a general scan tool. NOTE: • Subaru Select Monitor For detailed operation procedures, refer to "Current Data Display For Engine". <Ref. to EN(H4DO HEV)(diag)-37, Subaru Select Monitor.> • General scan tool For detailed operation procedures, refer to the "General Scan Tool Instruction Manual".	Is the value of «Mani. Absolute Pressure» less than 13.3 kPa (100 mmHg, 3.94 inHg)?	Go to step **2**.	Even if DTC is detected, the circuit has returned to a normal condition at this time. Reproduce the failure, and then perform the diagnosis again. NOTE: In this case, temporary poor contact of connector, temporary open or short circuit of harness may be the cause.
2	**CHECK POWER SUPPLY OF MANIFOLD ABSOLUTE PRESSURE SENSOR.** 1) Turn the ignition switch to OFF. 2) Disconnect the connector from manifold absolute pressure sensor. 3) Turn the ignition switch to ON. 4) Measure the voltage between manifold absolute pressure sensor connector and engine ground. ***Connector & terminal*** ***(E21) No. 3 (+) — Engine ground (–):***	Is the voltage 4.5 V or more?	Go to step **3**.	Repair the harness and connector. NOTE: In this case, repair the following item: • Open circuit of harness between ECM connector and manifold absolute pressure sensor connector • Poor contact of ECM connector • Poor contact of coupling connector
3	**CHECK HARNESS BETWEEN ECM AND MANIFOLD ABSOLUTE PRESSURE SENSOR CONNECTOR.** 1) Turn the ignition switch to OFF. 2) Disconnect the connector from ECM. 3) Measure the resistance of harness between ECM connector and manifold absolute pressure sensor connector. ***Connector & terminal*** ***(B136) No. 20 — (E21) No. 2:***	Is the resistance less than 1 Ω?	Go to step **4**.	Repair the harness and connector. NOTE: In this case, repair the following item: • Open circuit of harness between ECM connector and manifold absolute pressure sensor connector • Poor contact of coupling connector
4	**CHECK HARNESS BETWEEN ECM AND MANIFOLD ABSOLUTE PRESSURE SENSOR CONNECTOR.** Measure the resistance between ECM connector and chassis ground. ***Connector & terminal*** ***(B136) No. 20 — Chassis ground:***	Is the resistance 1 MΩ or more?	Go to step **5**.	Repair short circuit to ground in harness between ECM connector and manifold absolute pressure sensor connector.
5	**CHECK FOR POOR CONTACT.** Check for poor contact of ECM and manifold absolute pressure sensor connector.	Is there poor contact of ECM or manifold absolute pressure sensor connector?	Repair the poor contact of ECM or manifold absolute pressure sensor connector.	Replace the manifold absolute pressure sensor. <Ref. to FU(H4DO(HEV))-67, Manifold Absolute Pressure Sensor.>

AD:DTC P0108 MANIFOLD ABSOLUTE PRESSURE/BAROMETRIC PRESSURE CIRCUIT HIGH INPUT

DTC DETECTING CONDITION:

- Immediately at fault recognition
- GENERAL DESCRIPTION <Ref. to GD(H4DO HEV)-48, DTC P0108 MANIFOLD ABSOLUTE PRESSURE/BAROMETRIC PRESSURE CIRCUIT HIGH INPUT, Diagnostic Trouble Code (DTC) Detecting Criteria.>

CAUTION:

After servicing or replacing faulty parts, perform Clear Memory Mode <Ref. to EN(H4DO HEV)(diag)-63, OPERATION, Clear Memory Mode.>, and Inspection Mode <Ref. to EN(H4DO HEV)(diag)-47, PROCEDURE, Inspection Mode.>.

WIRING DIAGRAM:

- Engine electrical system (without push button start) <Ref. to WI(HEV)-100, WITHOUT PUSH BUTTON START, WIRING DIAGRAM, Engine Electrical System.>
- Engine electrical system (with push button start) <Ref. to WI(HEV)-114, WITH PUSH BUTTON START, WIRING DIAGRAM, Engine Electrical System.>

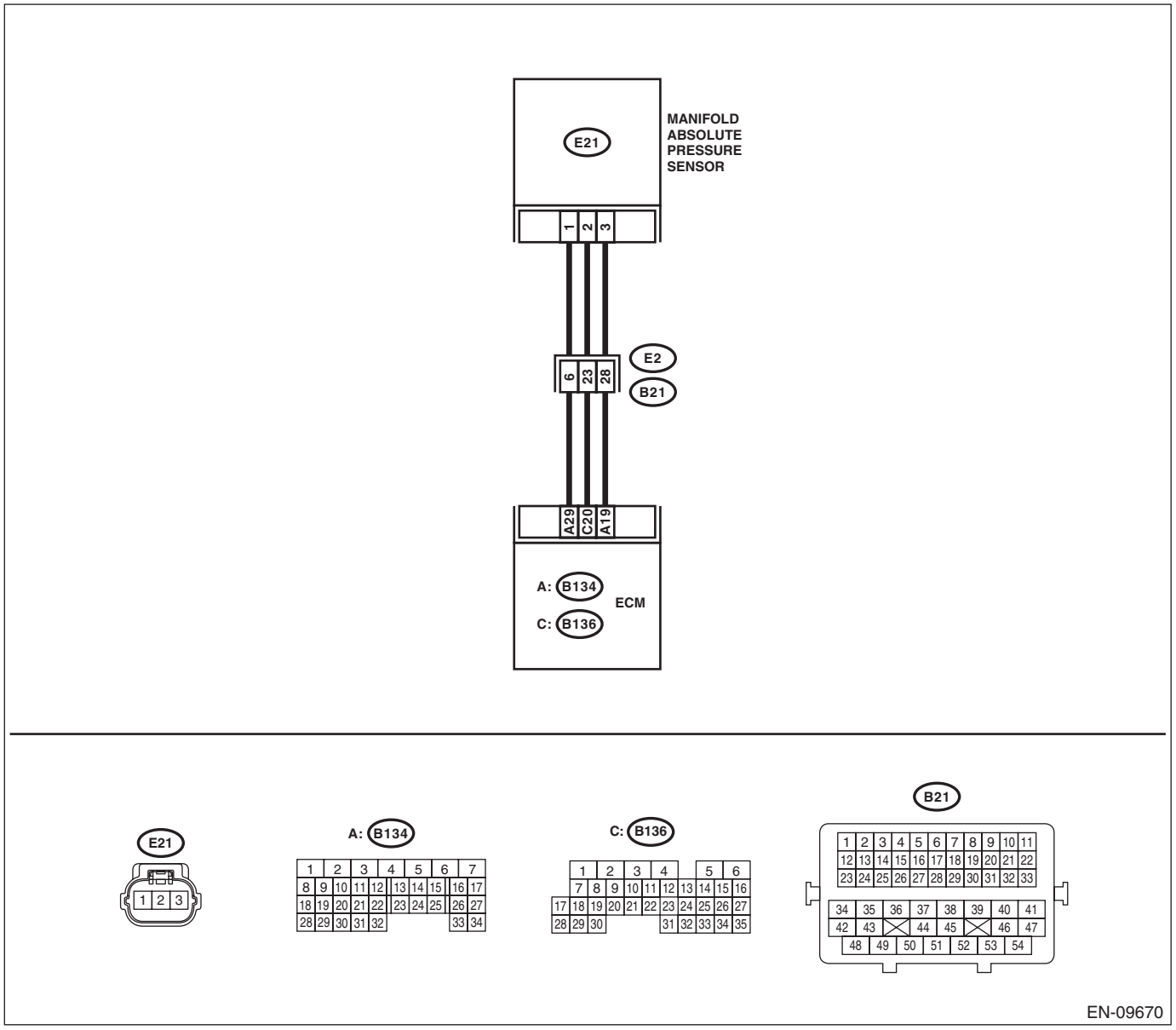

	Step	Check	Yes	No
1	**CHECK CURRENT DATA.** 1) Start the engine. 2) Read the value of «Mani. Absolute Pressure» using the Subaru Select Monitor or a general scan tool. NOTE: • Subaru Select Monitor For detailed operation procedures, refer to "Current Data Display For Engine". <Ref. to EN(H4DO HEV)(diag)-37, Subaru Select Monitor.> • General scan tool For detailed operation procedures, refer to the "General Scan Tool Instruction Manual".	Is the value of «Mani. Absolute Pressure» 119.5 kPa (896.5 mmHg, 35.29 inHg) or more?	Go to step **2**.	Even if DTC is detected, the circuit has returned to a normal condition at this time. Reproduce the failure, and then perform the diagnosis again. NOTE: In this case, temporary poor contact of connector, temporary open or short circuit of harness may be the cause.
2	**CHECK HARNESS BETWEEN ECM AND MANIFOLD ABSOLUTE PRESSURE SENSOR CONNECTOR.** 1) Turn the ignition switch to OFF. 2) Disconnect the connector from manifold absolute pressure sensor. 3) Start the engine. 4) Read the value of «Mani. Absolute Pressure» using the Subaru Select Monitor or a general scan tool. NOTE: • Subaru Select Monitor For detailed operation procedures, refer to "Current Data Display For Engine". <Ref. to EN(H4DO HEV)(diag)-37, Subaru Select Monitor.> • General scan tool For detailed operation procedures, refer to the "General Scan Tool Instruction Manual".	Is the value of «Mani. Absolute Pressure» 119.5 kPa (896.5 mmHg, 35.29 inHg) or more?	Repair the short circuit to power in harness between ECM connector and manifold absolute pressure sensor connector.	Go to step **3**.
3	**CHECK HARNESS BETWEEN ECM AND MANIFOLD ABSOLUTE PRESSURE SENSOR CONNECTOR.** 1) Turn the ignition switch to OFF. 2) Measure the resistance of harness between manifold absolute pressure sensor connector and engine ground. ***Connector & terminal*** ***(E21) No. 1 — Engine ground:***	Is the resistance less than 5 Ω?	Go to step **4**.	Repair the harness and connector. NOTE: In this case, repair the following item: • Open circuit of harness between ECM connector and manifold absolute pressure sensor connector • Poor contact of ECM connector • Poor contact of coupling connector
4	**CHECK FOR POOR CONTACT.** Check for poor contact of manifold absolute pressure sensor connector.	Is there poor contact of manifold absolute pressure sensor connector?	Repair the poor contact of manifold absolute pressure sensor connector.	Replace the manifold absolute pressure sensor. <Ref. to FU(H4DO(HEV))-67, Manifold Absolute Pressure Sensor.>

AE:DTC P0111 INTAKE AIR TEMPERATURE SENSOR RANGE/PERFORMANCE PROBLEM

DTC DETECTING CONDITION:

- Detected when two consecutive driving cycles with fault occur.
- GENERAL DESCRIPTION <Ref. to GD(H4DO HEV)-50, DTC P0111 INTAKE AIR TEMPERATURE SENSOR RANGE/PERFORMANCE PROBLEM, Diagnostic Trouble Code (DTC) Detecting Criteria.>

TROUBLE SYMPTOM:

- Improper idling
- Poor driving performance

CAUTION:

After servicing or replacing faulty parts, perform Clear Memory Mode <Ref. to EN(H4DO HEV)(diag)-63, OPERATION, Clear Memory Mode.>, and Inspection Mode <Ref. to EN(H4DO HEV)(diag)-47, PROCEDURE, Inspection Mode.>.

WIRING DIAGRAM:

- Engine electrical system (without push button start) <Ref. to WI(HEV)-100, WITHOUT PUSH BUTTON START, WIRING DIAGRAM, Engine Electrical System.>
- Engine electrical system (with push button start) <Ref. to WI(HEV)-114, WITH PUSH BUTTON START, WIRING DIAGRAM, Engine Electrical System.>

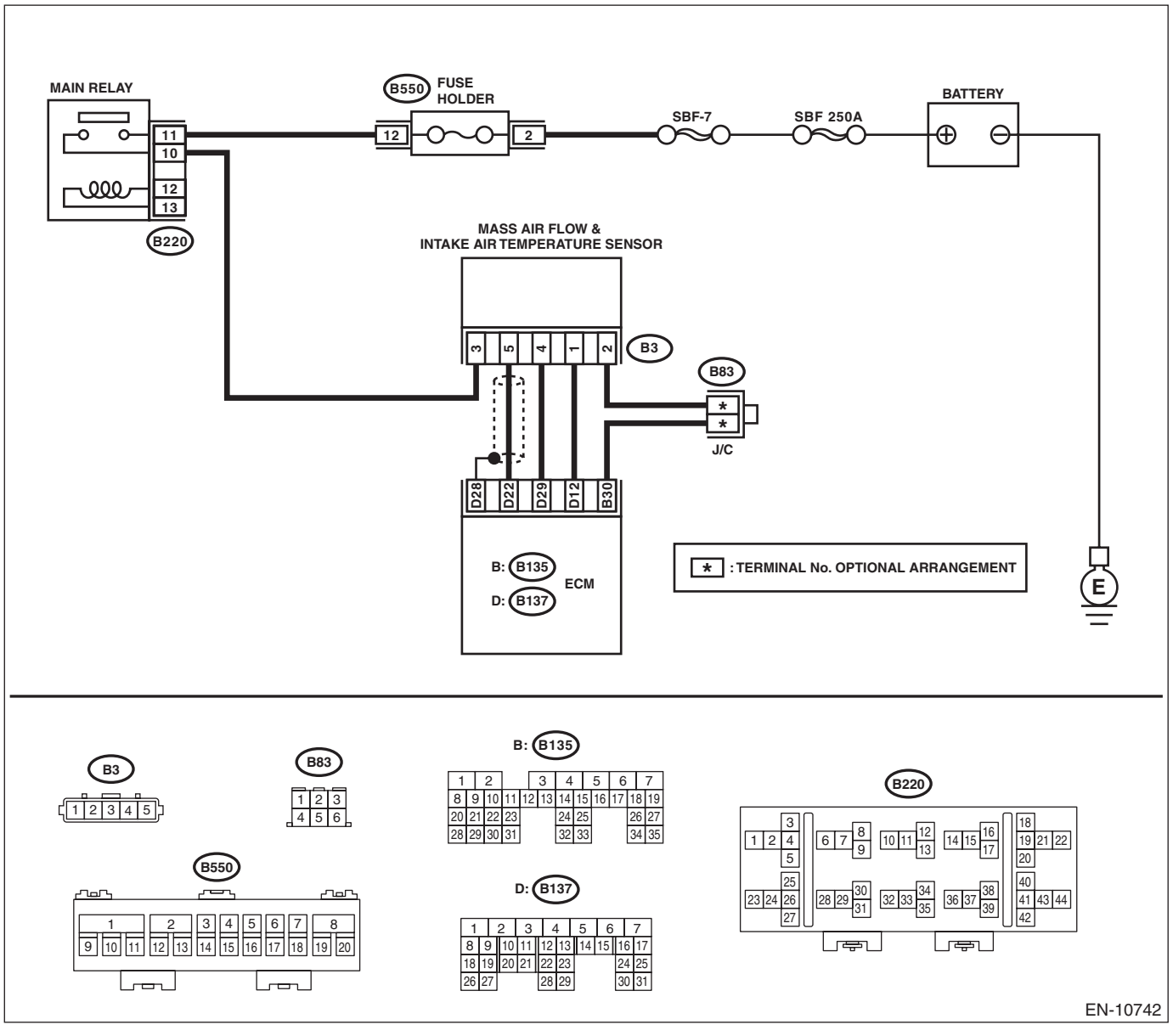

	Step	Check	Yes	No
1	**CHECK FOR ANY OTHER DTC ON DISPLAY.**	Is any other DTC displayed?	Check the appropriate DTC using the “List of Diagnostic Trouble Code (DTC)”. <Ref. to EN(H4DO HEV)(diag)-88, List of Diagnostic Trouble Code (DTC).>	Go to step **2**.
2	**CHECK MASS AIR FLOW AND INTAKE AIR TEMPERATURE SENSOR.** 1) Disconnect the connectors from the mass air flow and intake air temperature sensor. 2) Measure the resistance between mass air flow and intake air temperature sensor terminals when the engine coolant is cold and after warmed up. ***Terminals*** ***No. 1 — No. 2:***	Is the resistance of mass air flow and intake air temperature sensor different between when engine coolant is cold and after warmed up?	Repair the poor contact of ECM connector.	Replace the mass air flow and intake air temperature sensor. <Ref. to FU(H4DO(HEV))-64, Mass Air Flow and Intake Air Temperature Sensor.>

AF:DTC P0112 INTAKE AIR TEMPERATURE SENSOR 1 CIRCUIT LOW

DTC DETECTING CONDITION:

- Immediately at fault recognition
- GENERAL DESCRIPTION <Ref. to GD(H4DO HEV)-54, DTC P0112 INTAKE AIR TEMPERATURE SENSOR 1 CIRCUIT LOW, Diagnostic Trouble Code (DTC) Detecting Criteria.>

TROUBLE SYMPTOM:

- Improper idling
- Poor driving performance

CAUTION:

After servicing or replacing faulty parts, perform Clear Memory Mode <Ref. to EN(H4DO HEV)(diag)-63, OPERATION, Clear Memory Mode.>, and Inspection Mode <Ref. to EN(H4DO HEV)(diag)-47, PROCEDURE, Inspection Mode.>.

WIRING DIAGRAM:

- Engine electrical system (without push button start) <Ref. to WI(HEV)-100, WITHOUT PUSH BUTTON START, WIRING DIAGRAM, Engine Electrical System.>
- Engine electrical system (with push button start) <Ref. to WI(HEV)-114, WITH PUSH BUTTON START, WIRING DIAGRAM, Engine Electrical System.>

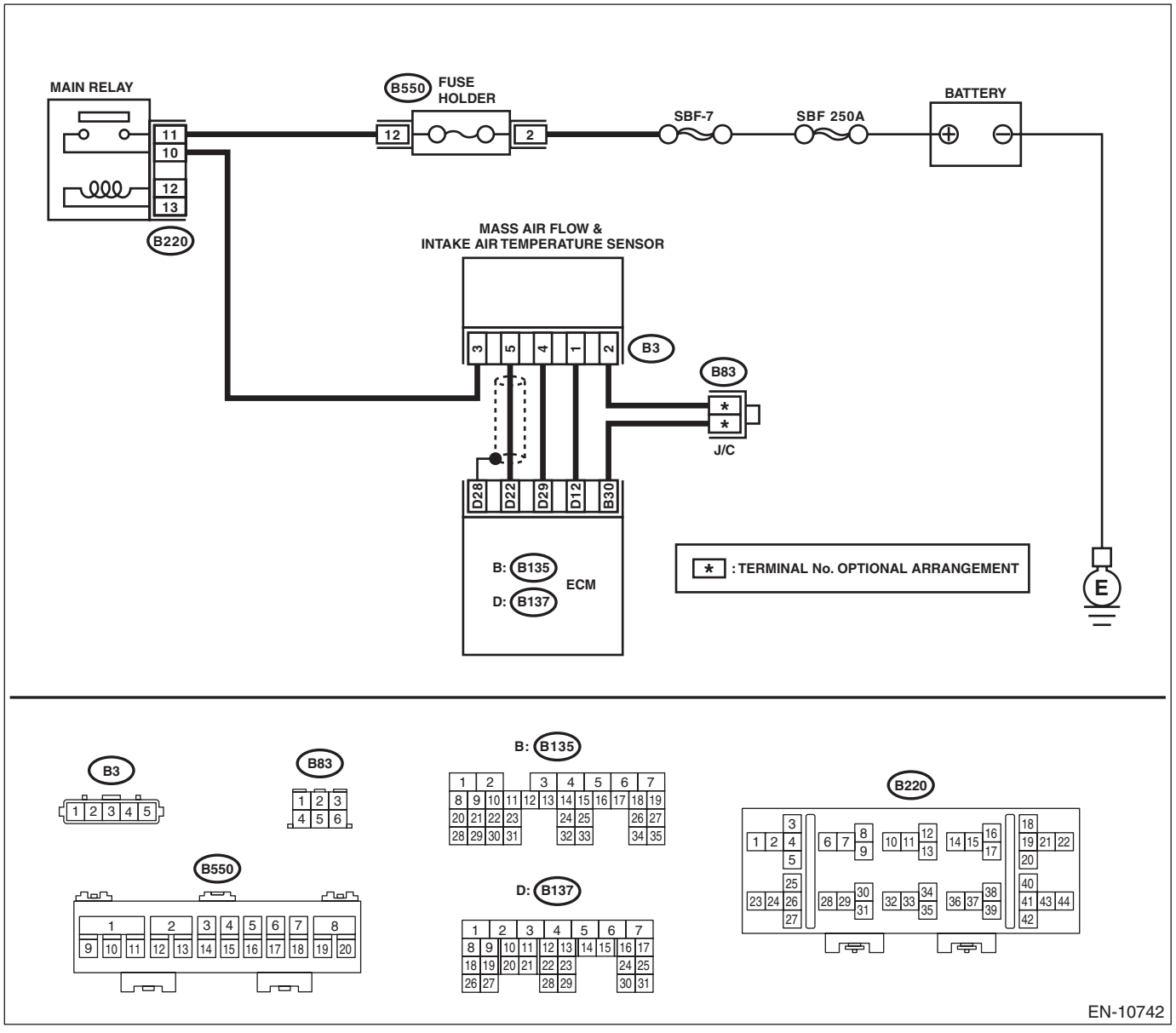

	Step	Check	Yes	No
1	**CHECK CURRENT DATA.** 1) Start the engine. 2) Read the value of «Intake Air Temp.» using the Subaru Select Monitor or a general scan tool. NOTE: • Subaru Select Monitor For detailed operation procedures, refer to “Current Data Display For Engine”. <Ref. to EN(H4DO HEV)(diag)-37, Subaru Select Monitor.> • General scan tool For detailed operation procedures, refer to the general scan tool operation manual.	Is the value of «Intake Air Temp.» 120°C (248°F) or more?	Go to step **2**.	Even if DTC is detected, the circuit has returned to a normal condition at this time. Reproduce the failure, and then perform the diagnosis again. NOTE: In this case, temporary poor contact of connector, temporary open or short circuit of harness may be the cause.
2	**CHECK HARNESS BETWEEN ECM AND MASS AIR FLOW AND INTAKE AIR TEMPERATURE SENSOR CONNECTOR.** 1) Turn the ignition switch to OFF. 2) Disconnect the connector from ECM and the mass air flow and intake air temperature sensor. 3) Measure the resistance between ECM connector and chassis ground. ***Connector & terminal*** ***(B137) No. 12 — Chassis ground:***	Is the resistance 1 MΩ or more?	Replace the mass air flow and intake air temperature sensor. <Ref. to FU(H4DO(HEV))-64, Mass Air Flow and Intake Air Temperature Sensor.>	Repair the ground short circuit of harness between ECM connector and the mass air flow and intake air temperature sensor connector.

AG:DTC P0113 INTAKE AIR TEMPERATURE SENSOR 1 CIRCUIT HIGH

DTC DETECTING CONDITION:

- Immediately at fault recognition
- GENERAL DESCRIPTION <Ref. to GD(H4DO HEV)-56, DTC P0113 INTAKE AIR TEMPERATURE SENSOR 1 CIRCUIT HIGH, Diagnostic Trouble Code (DTC) Detecting Criteria.>

TROUBLE SYMPTOM:

- Improper idling
- Poor driving performance

CAUTION:

After servicing or replacing faulty parts, perform Clear Memory Mode <Ref. to EN(H4DO HEV)(diag)-63, OPERATION, Clear Memory Mode.>, and Inspection Mode <Ref. to EN(H4DO HEV)(diag)-47, PROCEDURE, Inspection Mode.>.

WIRING DIAGRAM:

- Engine electrical system (without push button start) <Ref. to WI(HEV)-100, WITHOUT PUSH BUTTON START, WIRING DIAGRAM, Engine Electrical System.>
- Engine electrical system (with push button start) <Ref. to WI(HEV)-114, WITH PUSH BUTTON START, WIRING DIAGRAM, Engine Electrical System.>

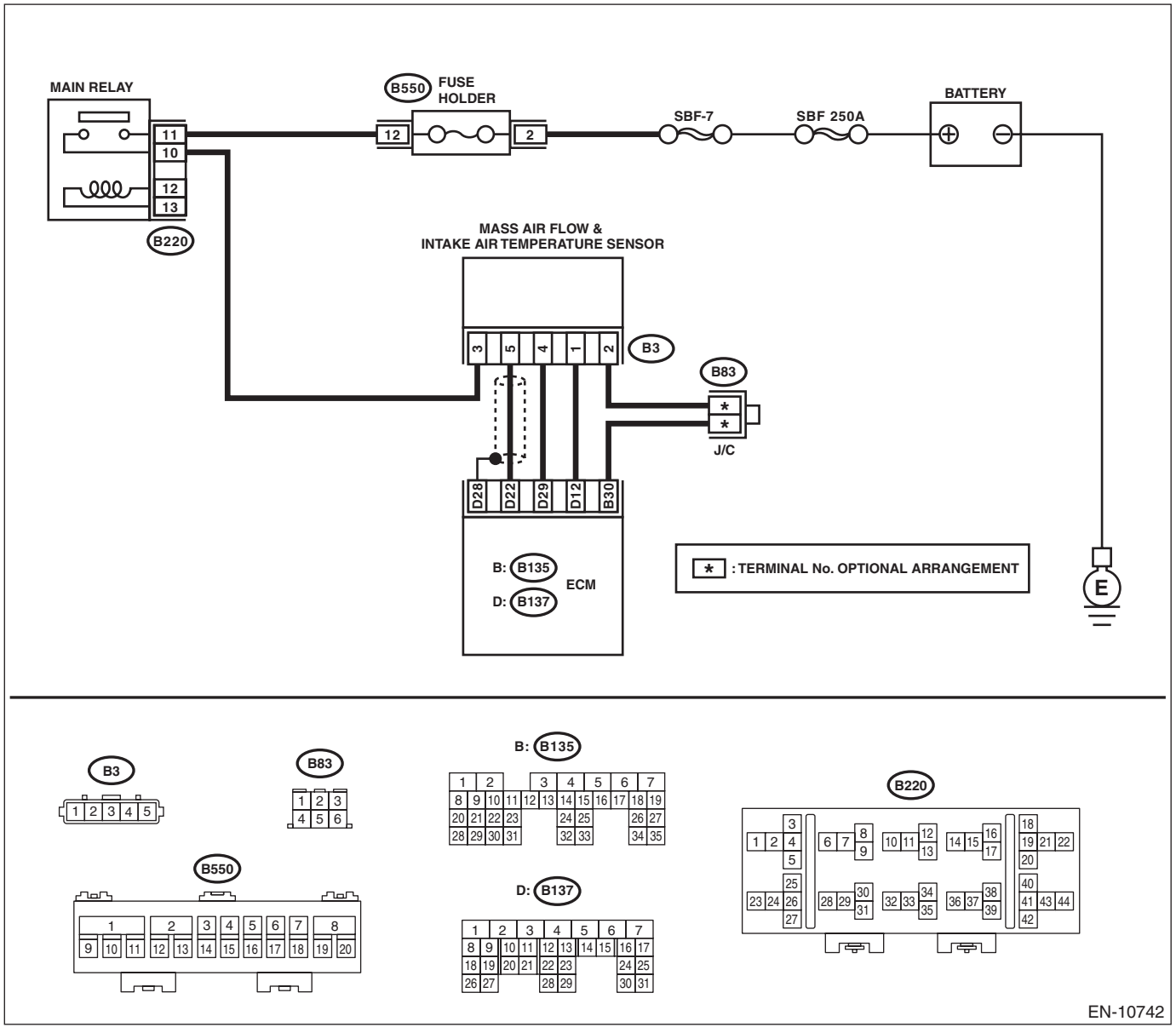

	Step	Check	Yes	No
1	**CHECK CURRENT DATA.** 1) Start the engine. 2) Read the value of «Intake Air Temp.» using the Subaru Select Monitor or a general scan tool. NOTE: • Subaru Select Monitor For detailed operation procedures, refer to "Current Data Display For Engine". <Ref. to EN(H4DO HEV)(diag)-37, Subaru Select Monitor.> • General scan tool For detailed operation procedures, refer to the general scan tool operation manual.	Is the value of «Intake Air Temp.» –40°C (–40°F) or less?	Go to step **2**.	Even if DTC is detected, the circuit has returned to a normal condition at this time. Reproduce the failure, and then perform the diagnosis again. NOTE: In this case, temporary poor contact of connector, temporary open or short circuit of harness may be the cause.
2	**CHECK FOR POOR CONTACT.** Check for poor contact of ECM and mass air flow and intake air temperature sensor connector.	Is there poor contact of ECM or mass air flow and intake air temperature sensor connector?	Repair the poor contact of ECM or mass air flow and intake air temperature sensor connector.	Go to step **3**.
3	**CHECK HARNESS BETWEEN ECM AND MASS AIR FLOW AND INTAKE AIR TEMPERATURE SENSOR CONNECTOR.** 1) Turn the ignition switch to OFF. 2) Disconnect the connector from ECM and the mass air flow and intake air temperature sensor. 3) Measure the resistance of harness between ECM connector and the mass air flow and intake air temperature sensor connector. ***Connector & terminal*** ***(B137) No. 12 — (B3) No. 1:*** ***(B135) No. 30 — (B3) No. 2:***	Is the resistance less than 1 Ω?	Go to step **4**.	Repair the harness and connector. NOTE: In this case, repair the following item: • Open circuit in harness between ECM connector and the mass air flow and intake air temperature sensor connector • Poor contact of joint connector
4	**CHECK HARNESS BETWEEN ECM AND MASS AIR FLOW AND INTAKE AIR TEMPERATURE SENSOR CONNECTOR.** 1) Connect all connectors. 2) Turn the ignition switch to ON. 3) Measure the voltage between ECM connector and chassis ground. ***Connector & terminal*** ***(B137) No. 12 (+) — Chassis ground (–):***	Is the voltage 5 V or more?	Repair the short circuit of harness to power supply between ECM connector and the mass air flow and intake air temperature sensor connector.	Replace the mass air flow and intake air temperature sensor. <Ref. to FU(H4DO(HEV))-64, Mass Air Flow and Intake Air Temperature Sensor.>

AH:DTC P0116 ENGINE COOLANT TEMPERATURE SENSOR 1 CIRCUIT RANGE/PERFORMANCE

DTC DETECTING CONDITION:

- Detected when two consecutive driving cycles with fault occur.
- GENERAL DESCRIPTION <Ref. to GD(H4DO HEV)-58, DTC P0116 ENGINE COOLANT TEMPERATURE SENSOR 1 CIRCUIT RANGE/PERFORMANCE, Diagnostic Trouble Code (DTC) Detecting Criteria.>

TROUBLE SYMPTOM:

- Hard to start
- Improper idling
- Poor driving performance

CAUTION:

After servicing or replacing faulty parts, perform Clear Memory Mode <Ref. to EN(H4DO HEV)(diag)-63, OPERATION, Clear Memory Mode.>, and Inspection Mode <Ref. to EN(H4DO HEV)(diag)-47, PROCEDURE, Inspection Mode.>.

WIRING DIAGRAM:

- Engine electrical system (without push button start) <Ref. to WI(HEV)-100, WITHOUT PUSH BUTTON START, WIRING DIAGRAM, Engine Electrical System.>
- Engine electrical system (with push button start) <Ref. to WI(HEV)-114, WITH PUSH BUTTON START, WIRING DIAGRAM, Engine Electrical System.>

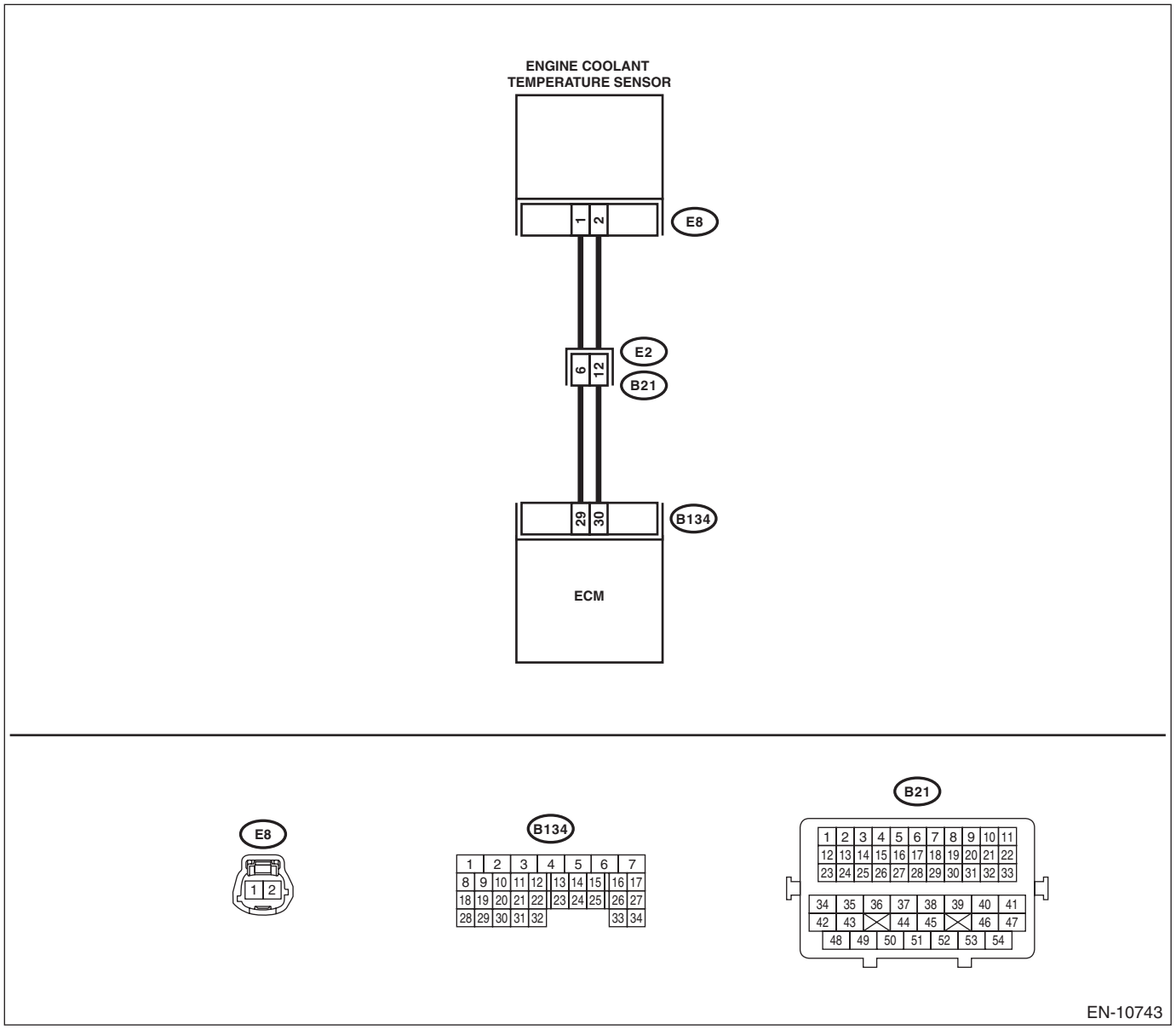

Step		Check	Yes	No
1	**CHECK FOR ANY OTHER DTC ON DISPLAY.**	Is any other DTC displayed?	Check the appropriate DTC using the “List of Diagnostic Trouble Code (DTC)”. <Ref. to EN(H4DO HEV)(diag)-88, List of Diagnostic Trouble Code (DTC).>	Go to step **2**.

	Step	Check	Yes	No
2	**CHECK ENGINE COOLANT TEMPERATURE SENSOR.** 1) Disconnect the connectors from the engine coolant temperature sensor. 2) Measure the resistance between engine coolant temperature sensor terminals when the engine coolant is cold and after warmed up. ***Terminals*** ***No. 1 — No. 2:***	Is the resistance of engine coolant temperature sensor different between when engine coolant is cold and after warmed up?	Repair the poor contact of ECM connector.	Replace the engine coolant temperature sensor. <Ref. to FU(H4DO(HEV))-41, Engine Coolant Temperature Sensor.>

AI: DTC P0117 ENGINE COOLANT TEMPERATURE CIRCUIT LOW

DTC DETECTING CONDITION:

- Immediately at fault recognition
- GENERAL DESCRIPTION <Ref. to GD(H4DO HEV)-60, DTC P0117 ENGINE COOLANT TEMPERATURE CIRCUIT LOW, Diagnostic Trouble Code (DTC) Detecting Criteria.>

TROUBLE SYMPTOM:

- Hard to start
- Improper idling
- Poor driving performance

CAUTION:
After servicing or replacing faulty parts, perform Clear Memory Mode <Ref. to EN(H4DO HEV)(diag)-63, OPERATION, Clear Memory Mode.>, and Inspection Mode <Ref. to EN(H4DO HEV)(diag)-47, PROCEDURE, Inspection Mode.>.

WIRING DIAGRAM:

- Engine electrical system (without push button start) <Ref. to WI(HEV)-100, WITHOUT PUSH BUTTON START, WIRING DIAGRAM, Engine Electrical System.>
- Engine electrical system (with push button start) <Ref. to WI(HEV)-114, WITH PUSH BUTTON START, WIRING DIAGRAM, Engine Electrical System.>

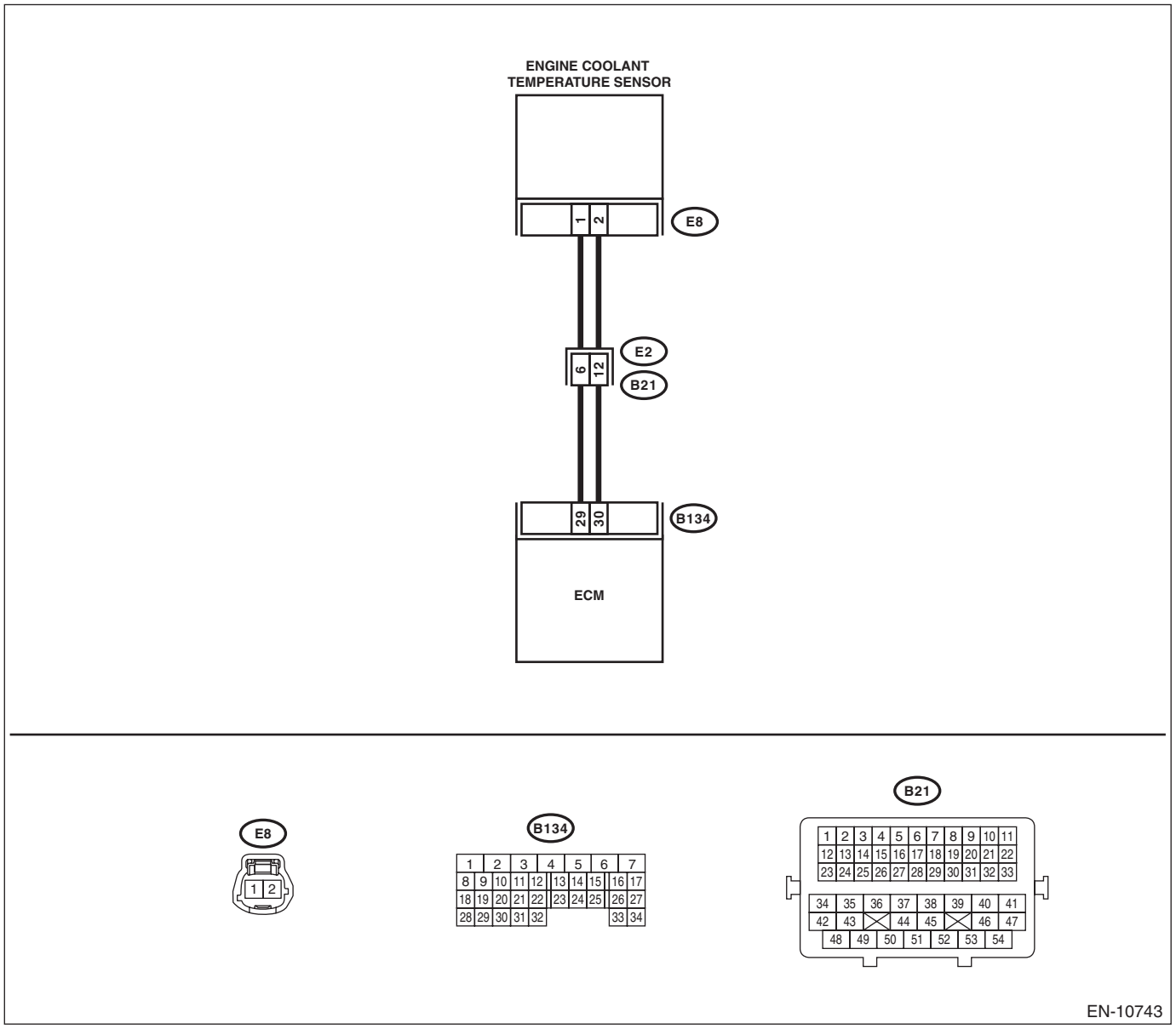

	Step	Check	Yes	No
1	**CHECK CURRENT DATA.** 1) Start the engine. 2) Read the value of «Coolant Temp.» using the Subaru Select Monitor or a general scan tool. NOTE: • Subaru Select Monitor For detailed operation procedures, refer to “Current Data Display For Engine”. <Ref. to EN(H4DO HEV)(diag)-37, Subaru Select Monitor.> • General scan tool For detailed operation procedures, refer to the general scan tool operation manual.	Is the value of «Coolant Temp.» 120°C (248°F) or more?	Go to step **2**.	Even if DTC is detected, the circuit has returned to a normal condition at this time. Reproduce the failure, and then perform the diagnosis again. NOTE: In this case, temporary poor contact of connector, temporary open or short circuit of harness may be the cause.
2	**CHECK HARNESS BETWEEN ECM AND ENGINE COOLANT TEMPERATURE SENSOR CONNECTOR.** 1) Turn the ignition switch to OFF. 2) Disconnect the connectors from ECM and engine coolant temperature sensor. 3) Measure the resistance between ECM connector and chassis ground. ***Connector & terminal*** ***(B134) No. 30 — Chassis ground:***	Is the resistance 1 MΩ or more?	Replace the engine coolant temperature sensor. <Ref. to FU(H4DO(HEV))-41, Engine Coolant Temperature Sensor.>	Repair the short circuit to ground in harness between ECM connector and engine coolant temperature sensor connector.

AJ:DTC P0118 ENGINE COOLANT TEMPERATURE CIRCUIT HIGH

DTC DETECTING CONDITION:

- Immediately at fault recognition
- GENERAL DESCRIPTION <Ref. to GD(H4DO HEV)-62, DTC P0118 ENGINE COOLANT TEMPERATURE CIRCUIT HIGH, Diagnostic Trouble Code (DTC) Detecting Criteria.>

TROUBLE SYMPTOM:

- Hard to start
- Improper idling
- Poor driving performance

CAUTION:
After servicing or replacing faulty parts, perform Clear Memory Mode <Ref. to EN(H4DO HEV)(diag)-63, OPERATION, Clear Memory Mode.>, and Inspection Mode <Ref. to EN(H4DO HEV)(diag)-47, PROCEDURE, Inspection Mode.>.

WIRING DIAGRAM:

- Engine electrical system (without push button start) <Ref. to WI(HEV)-100, WITHOUT PUSH BUTTON START, WIRING DIAGRAM, Engine Electrical System.>
- Engine electrical system (with push button start) <Ref. to WI(HEV)-114, WITH PUSH BUTTON START, WIRING DIAGRAM, Engine Electrical System.>

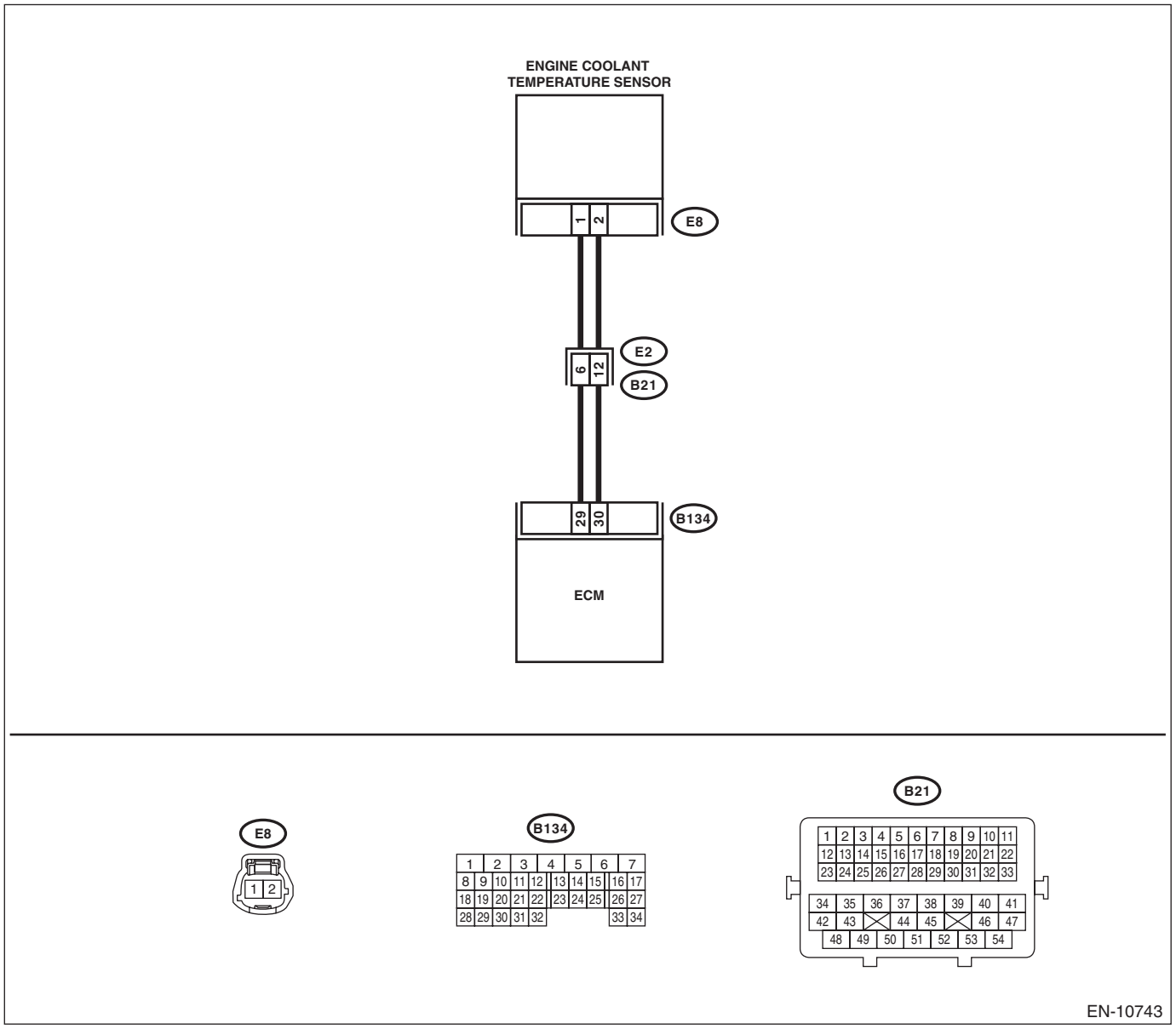

	Step	Check	Yes	No
1	**CHECK CURRENT DATA.** 1) Start the engine. 2) Read the value of «Coolant Temp.» using the Subaru Select Monitor or a general scan tool. NOTE: • Subaru Select Monitor For detailed operation procedures, refer to "Current Data Display For Engine". <Ref. to EN(H4DO HEV)(diag)-37, Subaru Select Monitor.> • General scan tool For detailed operation procedures, refer to the general scan tool operation manual.	Is the value of «Coolant Temp.» –40°C (–40°F) or less?	Go to step **2**.	Even if DTC is detected, the circuit has returned to a normal condition at this time. Reproduce the failure, and then perform the diagnosis again. NOTE: In this case, temporary poor contact of connector, temporary open or short circuit of harness may be the cause.
2	**CHECK FOR POOR CONTACT.** Check for poor contact of ECM and engine coolant temperature sensor connector.	Is there poor contact of ECM or engine coolant temperature sensor connector?	Repair the poor contact of ECM or engine coolant temperature sensor connector.	Go to step **3**.
3	**CHECK HARNESS BETWEEN ECM AND ENGINE COOLANT TEMPERATURE SENSOR CONNECTOR.** 1) Turn the ignition switch to OFF. 2) Disconnect the connectors from ECM and engine coolant temperature sensor. 3) Measure the resistance of harness between ECM connector and engine coolant temperature sensor connector. ***Connector & terminal*** ***(B134) No. 29 — (E8) No. 1:*** ***(B134) No. 30 — (E8) No. 2:***	Is the resistance less than 1 Ω?	Go to step **4**.	Repair the harness and connector. NOTE: In this case, repair the following item: • Open circuit in harness between ECM connector and engine coolant temperature sensor connector • Poor contact of coupling connector
4	**CHECK HARNESS BETWEEN ECM AND ENGINE COOLANT TEMPERATURE SENSOR CONNECTOR.** 1) Connect all connectors. 2) Turn the ignition switch to ON. 3) Measure the voltage between ECM connector and chassis ground. ***Connector & terminal*** ***(B134) No. 30 (+) — Chassis ground (–):***	Is the voltage 5 V or more?	Repair the short circuit of harness to power supply between ECM connector and engine coolant temperature sensor connector.	Replace the engine coolant temperature sensor. <Ref. to FU(H4DO(HEV))-41, Engine Coolant Temperature Sensor.>

AK:DTC P0122 THROTTLE/PEDAL POSITION SENSOR/SWITCH “A” CIRCUIT LOW

DTC DETECTING CONDITION:

- Immediately at fault recognition
- GENERAL DESCRIPTION <Ref. to GD(H4DO HEV)-64, DTC P0122 THROTTLE/PEDAL POSITION SENSOR/SWITCH “A” CIRCUIT LOW, Diagnostic Trouble Code (DTC) Detecting Criteria.>

TROUBLE SYMPTOM:

- Improper idling
- Engine stalls.
- Poor driving performance

CAUTION:

After servicing or replacing faulty parts, perform Clear Memory Mode <Ref. to EN(H4DO HEV)(diag)-63, OPERATION, Clear Memory Mode.>, and Inspection Mode <Ref. to EN(H4DO HEV)(diag)-47, PROCEDURE, Inspection Mode.>.

WIRING DIAGRAM:

- Engine electrical system (without push button start) <Ref. to WI(HEV)-100, WITHOUT PUSH BUTTON START, WIRING DIAGRAM, Engine Electrical System.>
- Engine electrical system (with push button start) <Ref. to WI(HEV)-114, WITH PUSH BUTTON START, WIRING DIAGRAM, Engine Electrical System.>

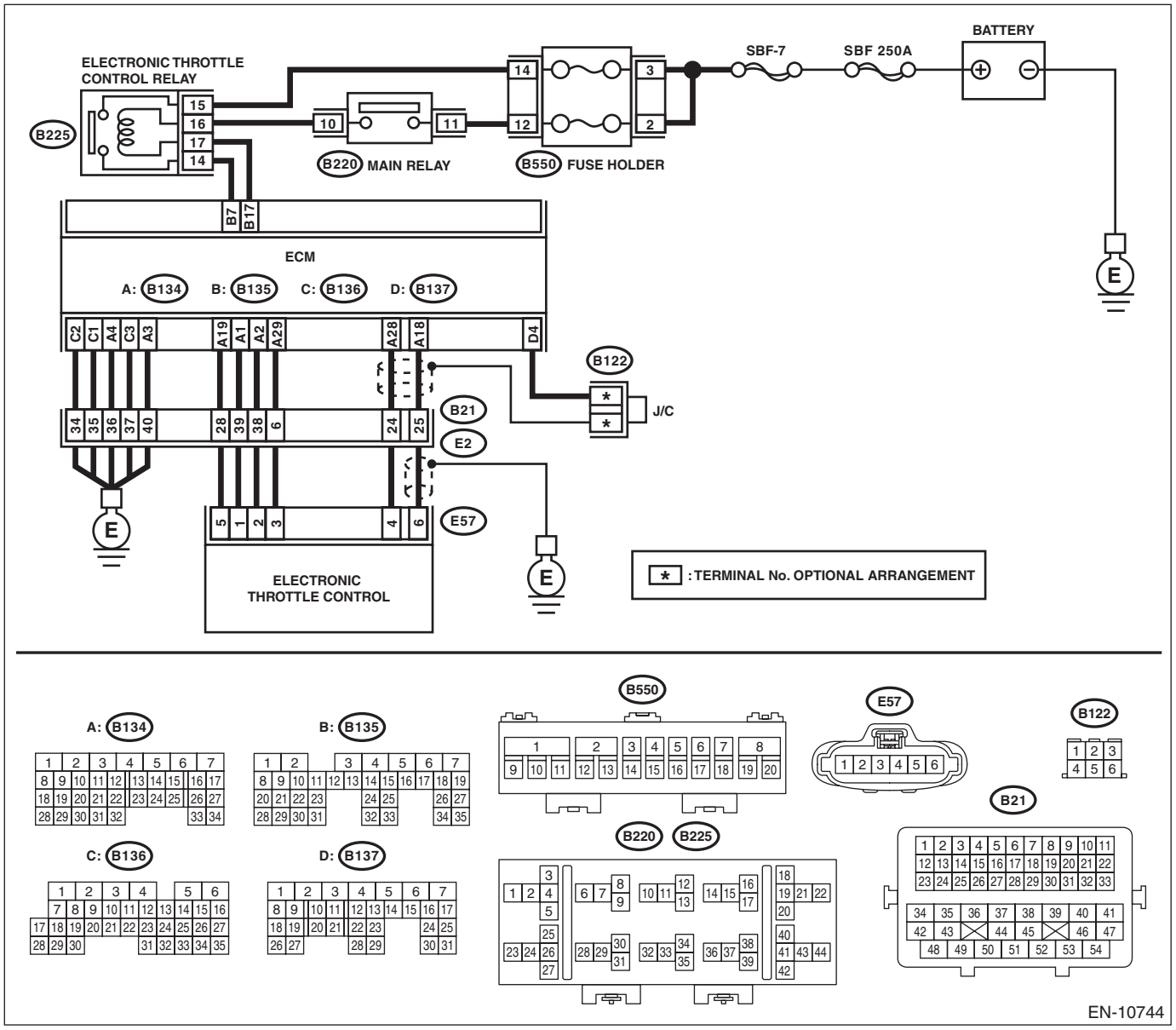

Step		Check	Yes	No
1	**CHECK HARNESS BETWEEN ECM AND ELECTRONIC THROTTLE CONTROL CONNECTOR.** 1) Turn the ignition switch to OFF. 2) Disconnect the connectors from ECM and electronic throttle control. 3) Measure the resistance between ECM connector and chassis ground. ***Connector & terminal*** ***(B134) No. 19 — Chassis ground:*** ***(B134) No. 18 — Chassis ground:*** ***(B134) No. 18 — (B137) No. 4:***	Is the resistance 1 MΩ or more?	Go to step **2**.	Repair the ground short circuit of harness between ECM connector and electronic throttle control connector.

	Step	Check	Yes	No
2	**CHECK SHORT CIRCUIT INSIDE THE ECM.** 1) Connect the connector to ECM. 2) Measure the resistance between electronic throttle control connector and engine ground. ***Connector & terminal*** ***(E57) No. 6 — Engine ground:***	Is the resistance 1 MΩ or more?	Replace the electronic throttle control. <Ref. to FU(H4DO(HEV))-15, Throttle Body.>	Repair the ground short circuit of harness between ECM connector and electronic throttle control connector. Replace the ECM if defective. <Ref. to FU(H4DO(HEV))-85, Engine Control Module (ECM).>

AL:DTC P0123 THROTTLE/PEDAL POSITION SENSOR/SWITCH “A” CIRCUIT HIGH

DTC DETECTING CONDITION:

- Immediately at fault recognition
- GENERAL DESCRIPTION <Ref. to GD(H4DO HEV)-66, DTC P0123 THROTTLE/PEDAL POSITION SENSOR/SWITCH “A” CIRCUIT HIGH, Diagnostic Trouble Code (DTC) Detecting Criteria.>

TROUBLE SYMPTOM:

- Improper idling
- Engine stalls.
- Poor driving performance

CAUTION:

After servicing or replacing faulty parts, perform Clear Memory Mode <Ref. to EN(H4DO HEV)(diag)-63, OPERATION, Clear Memory Mode.>, and Inspection Mode <Ref. to EN(H4DO HEV)(diag)-47, PROCEDURE, Inspection Mode.>.

WIRING DIAGRAM:

- Engine electrical system (without push button start) <Ref. to WI(HEV)-100, WITHOUT PUSH BUTTON START, WIRING DIAGRAM, Engine Electrical System.>
- Engine electrical system (with push button start) <Ref. to WI(HEV)-114, WITH PUSH BUTTON START, WIRING DIAGRAM, Engine Electrical System.>

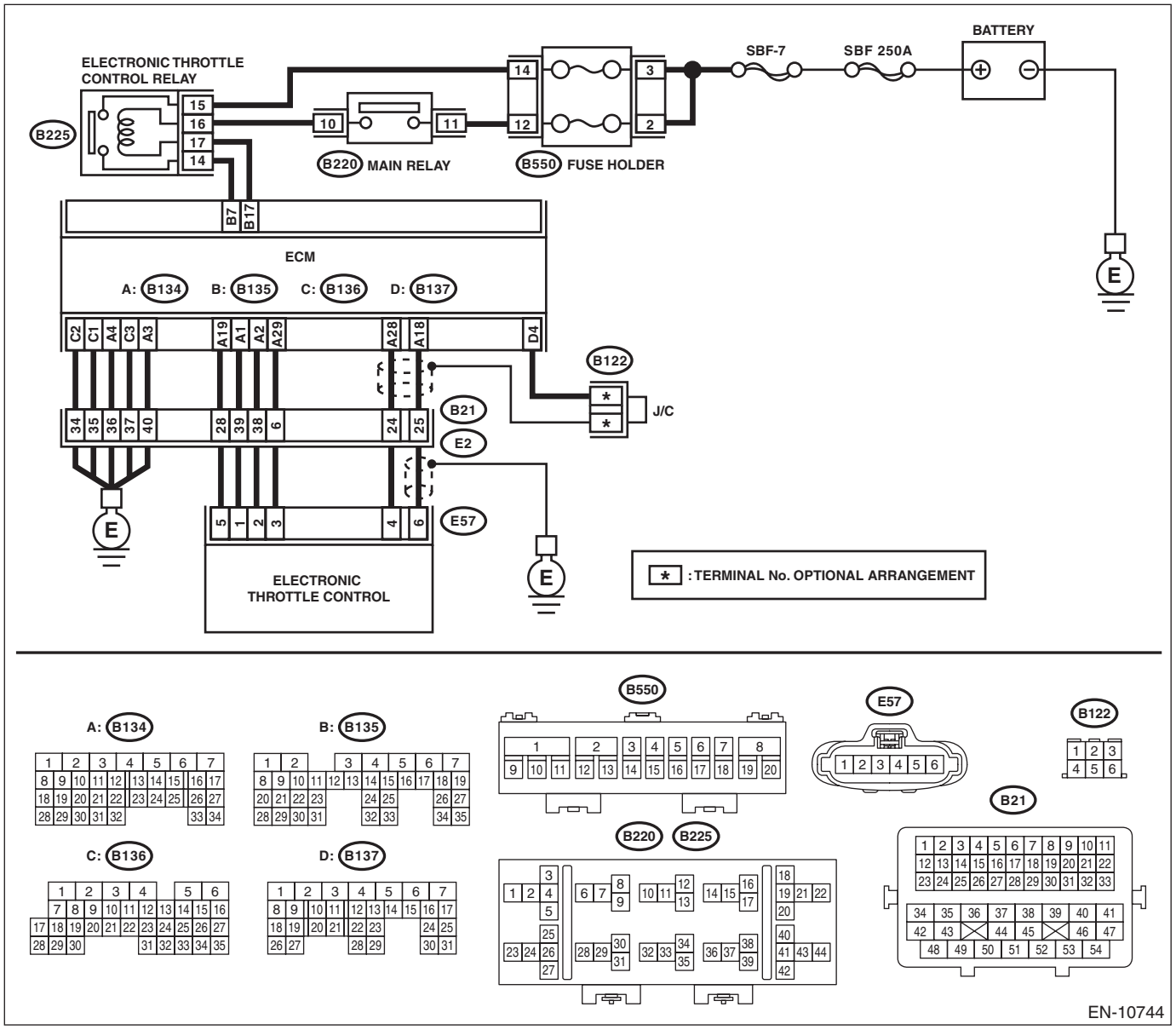

Step		Check	Yes	No
1	**CHECK HARNESS BETWEEN ECM AND ELECTRONIC THROTTLE CONTROL CONNECTOR.** 1) Turn the ignition switch to OFF. 2) Disconnect the connectors from ECM and electronic throttle control. 3) Measure the resistance of harness between ECM connector and electronic throttle control connector. ***Connector & terminal*** ***(B134) No. 18 — (E57) No. 6:*** ***(B134) No. 29 — (E57) No. 3:***	Is the resistance less than 1 Ω?	Go to step **2**.	Repair the harness and connector. NOTE: In this case, repair the following item: • Open circuit in harness between ECM connector and electronic throttle control connector • Poor contact of coupling connector

	Step	Check	Yes	No
2	**CHECK HARNESS BETWEEN ECM AND ELECTRONIC THROTTLE CONTROL CONNECTOR.** 1) Connect the connector to ECM. 2) Measure the resistance between electronic throttle control connector and engine ground. ***Connector & terminal*** ***(E57) No. 3 — Engine ground:***	Is the resistance less than 5 Ω?	Go to step **3**.	Repair the harness and connector. NOTE: In this case, repair the following item: • Open circuit of harness between ECM connector and engine ground • Poor contact of ECM connector • Poor contact of coupling connector
3	**CHECK HARNESS BETWEEN ECM AND ELECTRONIC THROTTLE CONTROL CONNECTOR.** 1) Turn the ignition switch to ON. 2) Measure the voltage between electronic throttle control connector and engine ground. ***Connector & terminal*** ***(E57) No. 6 (+) — Engine ground (–):***	Is the voltage 5 V or more?	Repair the short circuit to power in the harness between ECM connector and electronic throttle control connector.	Go to step **4**.
4	**CHECK HARNESS BETWEEN ECM AND ELECTRONIC THROTTLE CONTROL CONNECTOR.** 1) Turn the ignition switch to OFF. 2) Disconnect the connector from ECM. 3) Measure the resistance between ECM connectors. ***Connector & terminal*** ***(B134) No. 19 — (B134) No. 18:***	Is the resistance 1 MΩ or more?	Repair the poor contact of electronic throttle control connector. Replace the electronic throttle control if defective. <Ref. to FU(H4DO(HEV))-15, Throttle Body.>	Repair the short circuit to power in the harness between ECM connector and electronic throttle control connector.

AM:DTC P0125 INSUFFICIENT COOLANT TEMPERATURE FOR CLOSED LOOP FUEL CONTROL

DTC DETECTING CONDITION:

- Detected when two consecutive driving cycles with fault occur.
- GENERAL DESCRIPTION <Ref. to GD(H4DO HEV)-68, DTC P0125 INSUFFICIENT COOLANT TEMPERATURE FOR CLOSED LOOP FUEL CONTROL, Diagnostic Trouble Code (DTC) Detecting Criteria.>

TROUBLE SYMPTOM:

Engine does not return to idle.

CAUTION:

After servicing or replacing faulty parts, perform Clear Memory Mode <Ref. to EN(H4DO HEV)(diag)-63, OPERATION, Clear Memory Mode.>, and Inspection Mode <Ref. to EN(H4DO HEV)(diag)-47, PROCEDURE, Inspection Mode.>.

	Step	Check	Yes	No
1	**CHECK TIRE SIZE.**	Is the tire size as specified and the same size as three other wheels?	Go to step **2**.	Replace the tire.
2	**CHECK ENGINE COOLANT.** Check the following items: • Amount of engine coolant • Engine coolant freeze • Contamination of engine coolant	Is the engine coolant normal?	Go to step **3**.	Fill or replace the engine coolant. <Ref. to CO(H4DO(w/o HEV))-16, REPLACEMENT, Engine Coolant.>
3	**CHECK THERMOSTAT.**	Does the thermostat remain opened?	Replace the thermostat. <Ref. to CO(H4DO(w/o HEV))-64, Thermostat.>	Replace the engine coolant temperature sensor. <Ref. to FU(H4DO(HEV))-41, Engine Coolant Temperature Sensor.>

AN:DTC P0128 COOLANT THERMOSTAT (ENGINE COOLANT TEMPERATURE BELOW THERMOSTAT REGULATING TEMPERATURE)

DTC DETECTING CONDITION:

- Detected when two consecutive driving cycles with fault occur.
- GENERAL DESCRIPTION <Ref. to GD(H4DO HEV)-70, DTC P0128 COOLANT THERMOSTAT (ENGINE COOLANT TEMPERATURE BELOW THERMOSTAT REGULATING TEMPERATURE), Diagnostic Trouble Code (DTC) Detecting Criteria.>

TROUBLE SYMPTOM:

Thermostat remains open.

CAUTION:

After servicing or replacing faulty parts, perform Clear Memory Mode <Ref. to EN(H4DO HEV)(diag)-63, OPERATION, Clear Memory Mode.>, and Inspection Mode <Ref. to EN(H4DO HEV)(diag)-47, PROCEDURE, Inspection Mode.>.

	Step	Check	Yes	No
1	**CHECK FOR ANY OTHER DTC ON DISPLAY.**	Is any other DTC displayed?	Check the appropriate DTC using the “List of Diagnostic Trouble Code (DTC)”. <Ref. to EN(H4DO HEV)(diag)-88, List of Diagnostic Trouble Code (DTC).>	Go to step **2**.
2	**CHECK ENGINE COOLANT.**	Is the engine coolant amount normal?	Go to step **3**.	Refill the engine coolant. <Ref. to CO(H4DO(w/o HEV))-16, Engine Coolant.>
3	**CHECK RADIATOR FAN.** 1) Start the engine. 2) Check the radiator fan operation.	Does the radiator fan continuously rotate for 3 minutes or more during idling?	Repair radiator fan circuit. <Ref. to CO(H4DO(w/o HEV))-89, Radiator Main Fan and Fan Motor.> and <Ref. to CO(H4DO(w/o HEV))-93, Radiator Sub Fan and Fan Motor.>	Replace the thermostat. <Ref. to CO(H4DO(w/o HEV))-64, Thermostat.>

AO:DTC P0131 O2 SENSOR CIRCUIT LOW VOLTAGE (BANK 1 SENSOR 1)

DTC DETECTING CONDITION:

- Immediately at fault recognition
- GENERAL DESCRIPTION <Ref. to GD(H4DO HEV)-74, DTC P0131 O2 SENSOR CIRCUIT LOW VOLTAGE (BANK 1 SENSOR 1), Diagnostic Trouble Code (DTC) Detecting Criteria.>

CAUTION:

After servicing or replacing faulty parts, perform Clear Memory Mode <Ref. to EN(H4DO HEV)(diag)-63, OPERATION, Clear Memory Mode.>, and Inspection Mode <Ref. to EN(H4DO HEV)(diag)-47, PROCEDURE, Inspection Mode.>.

WIRING DIAGRAM:

- Engine electrical system (without push button start) <Ref. to WI(HEV)-100, WITHOUT PUSH BUTTON START, WIRING DIAGRAM, Engine Electrical System.>
- Engine electrical system (with push button start) <Ref. to WI(HEV)-114, WITH PUSH BUTTON START, WIRING DIAGRAM, Engine Electrical System.>

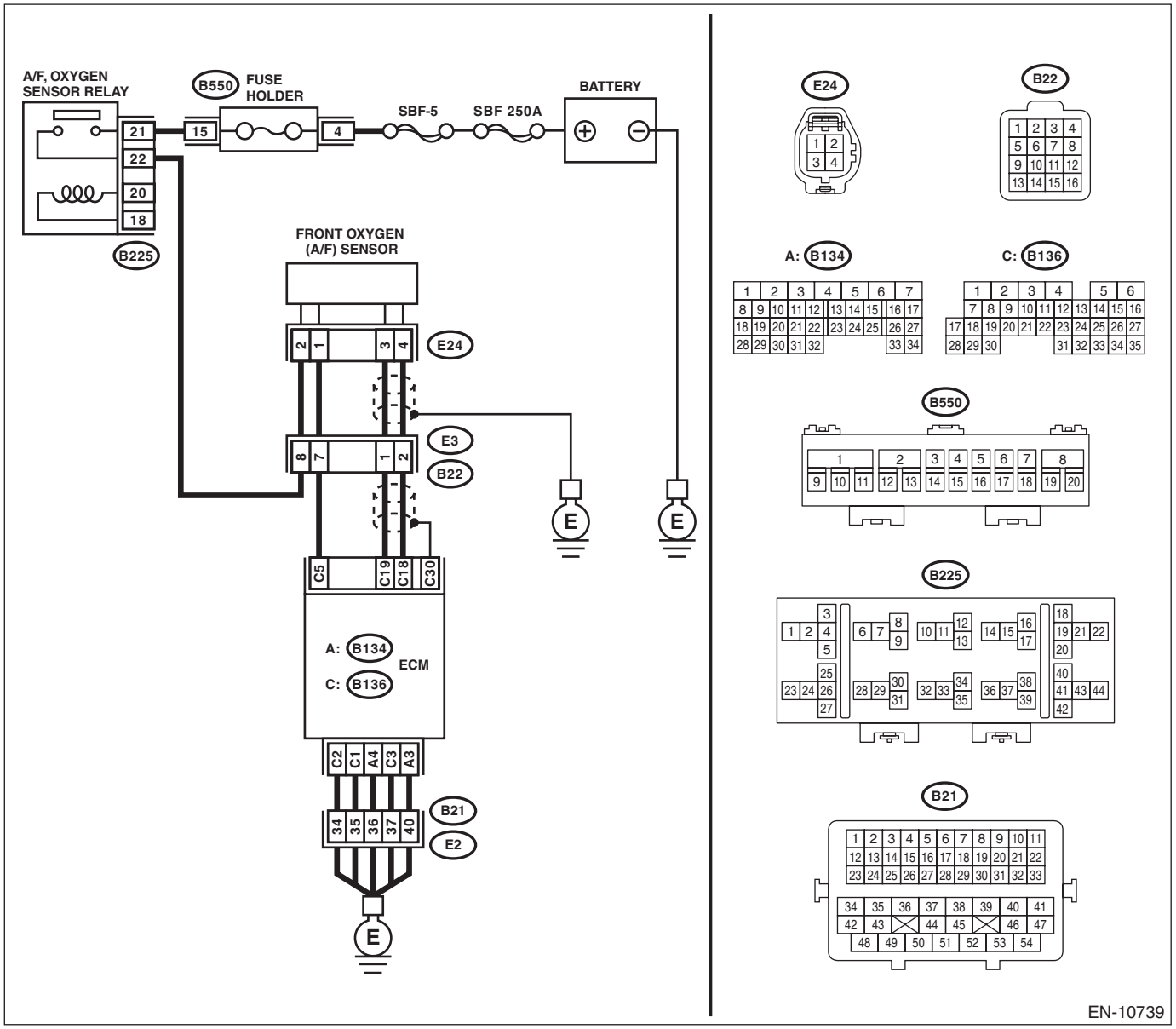

	Step	Check	Yes	No
1	**CHECK FRONT OXYGEN (A/F) SENSOR CONNECTOR AND COUPLING CONNECTOR.**	Has water entered the connector?	Completely remove any water inside.	Go to step **2**.
2	**CHECK HARNESS BETWEEN ECM AND FRONT OXYGEN (A/F) SENSOR CONNECTOR.** 1) Turn the ignition switch to OFF. 2) Disconnect the connectors from ECM and front oxygen (A/F) sensor. 3) Measure the resistance between ECM connector and chassis ground. ***Connector & terminal*** ***(B136) No. 18 — Chassis ground:*** ***(B136) No. 19 — Chassis ground:***	Is the resistance 1 MΩ or more?	Go to step **3**.	Repair the short circuit to ground in harness between ECM connector and front oxygen (A/F) sensor connector.
3	**CHECK FOR POOR CONTACT.** Check for poor contact of the front oxygen (A/F) sensor connector.	Is there poor contact of front oxygen (A/F) sensor connector?	Repair the poor contact of front oxygen (A/F) sensor connector.	Replace the front oxygen (A/F) sensor. <Ref. to FU(H4DO(HEV))-79, Front Oxygen (A/F) Sensor.>

AP:DTC P0132 O2 SENSOR CIRCUIT HIGH VOLTAGE (BANK 1 SENSOR 1)

DTC DETECTING CONDITION:

- Immediately at fault recognition
- GENERAL DESCRIPTION <Ref. to GD(H4DO HEV)-76, DTC P0132 O2 SENSOR CIRCUIT HIGH VOLTAGE (BANK 1 SENSOR 1), Diagnostic Trouble Code (DTC) Detecting Criteria.>

CAUTION:

After servicing or replacing faulty parts, perform Clear Memory Mode <Ref. to EN(H4DO HEV)(diag)-63, OPERATION, Clear Memory Mode.>, and Inspection Mode <Ref. to EN(H4DO HEV)(diag)-47, PROCEDURE, Inspection Mode.>.

WIRING DIAGRAM:

- Engine electrical system (without push button start) <Ref. to WI(HEV)-100, WITHOUT PUSH BUTTON START, WIRING DIAGRAM, Engine Electrical System.>
- Engine electrical system (with push button start) <Ref. to WI(HEV)-114, WITH PUSH BUTTON START, WIRING DIAGRAM, Engine Electrical System.>

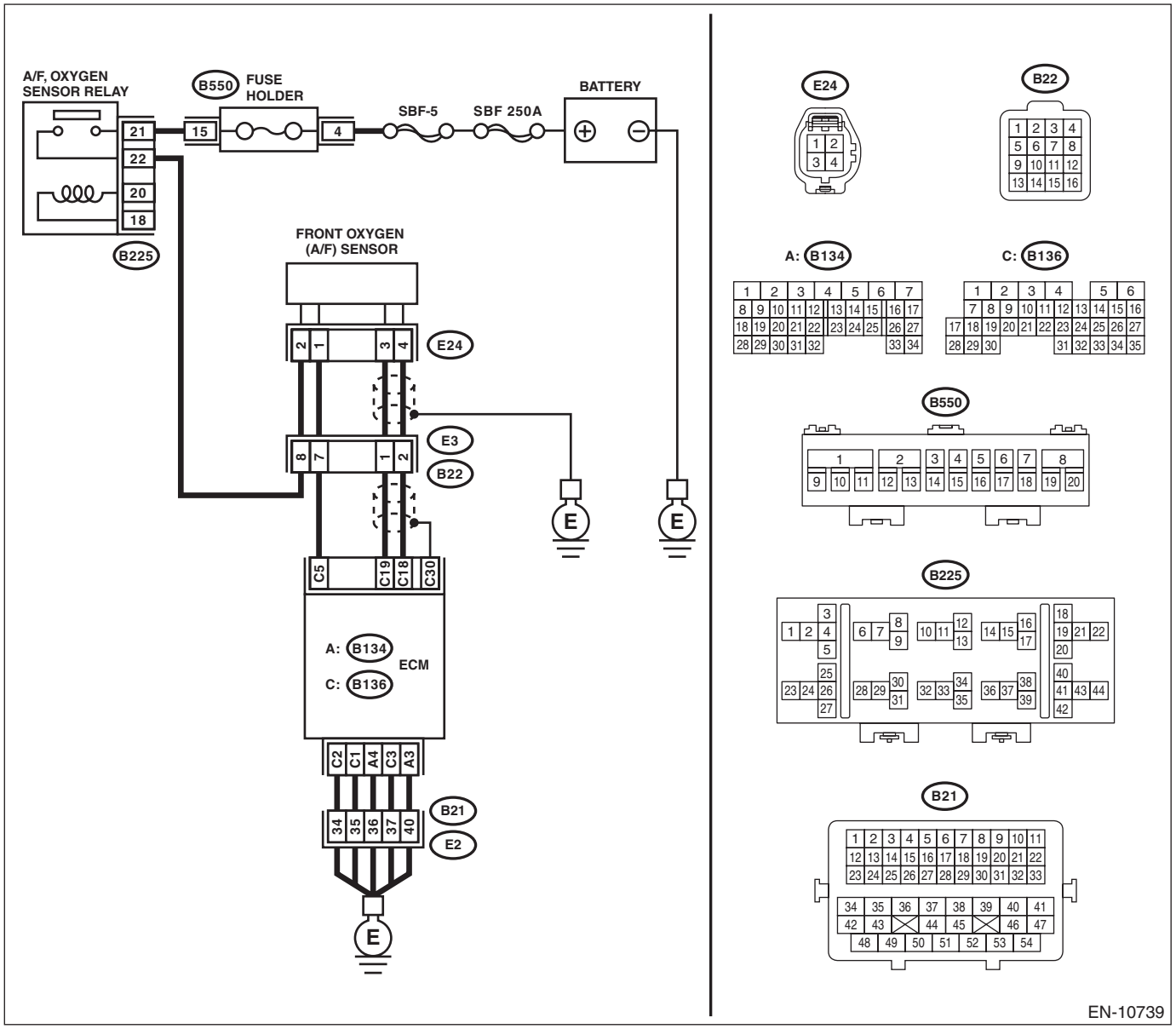

	Step	Check	Yes	No
1	**CHECK FRONT OXYGEN (A/F) SENSOR CONNECTOR AND COUPLING CONNECTOR.**	Has water entered the connector?	Completely remove any water inside.	Go to step **2**.
2	**CHECK HARNESS BETWEEN ECM AND FRONT OXYGEN (A/F) SENSOR CONNECTOR.** 1) Turn the ignition switch to OFF. 2) Disconnect the connectors from front oxygen (A/F) sensor. 3) Turn the ignition switch to ON. 4) Measure the voltage between ECM connector and chassis ground. ***Connector & terminal*** ***(B136) No. 18 (+) — Chassis ground (–):*** ***(B136) No. 19 (+) — Chassis ground (–):***	Is the voltage 8 V or more?	Repair the short circuit to power in the harness between ECM connector and front oxygen (A/F) sensor connector.	Replace the front oxygen (A/F) sensor. <Ref. to FU(H4DO(HEV))-79, Front Oxygen (A/F) Sensor.>

AQ:DTC P0134 O2 SENSOR CIRCUIT NO ACTIVITY DETECTED (BANK 1 SENSOR 1)

DTC DETECTING CONDITION:

- Immediately at fault recognition
- GENERAL DESCRIPTION <Ref. to GD(H4DO HEV)-78, DTC P0134 O2 SENSOR CIRCUIT NO ACTIVITY DETECTED (BANK 1 SENSOR 1), Diagnostic Trouble Code (DTC) Detecting Criteria.>

CAUTION:

After servicing or replacing faulty parts, perform Clear Memory Mode <Ref. to EN(H4DO HEV)(diag)-63, OPERATION, Clear Memory Mode.>, and Inspection Mode <Ref. to EN(H4DO HEV)(diag)-47, PROCEDURE, Inspection Mode.>.

WIRING DIAGRAM:

- Engine electrical system (without push button start) <Ref. to WI(HEV)-100, WITHOUT PUSH BUTTON START, WIRING DIAGRAM, Engine Electrical System.>
- Engine electrical system (with push button start) <Ref. to WI(HEV)-114, WITH PUSH BUTTON START, WIRING DIAGRAM, Engine Electrical System.>

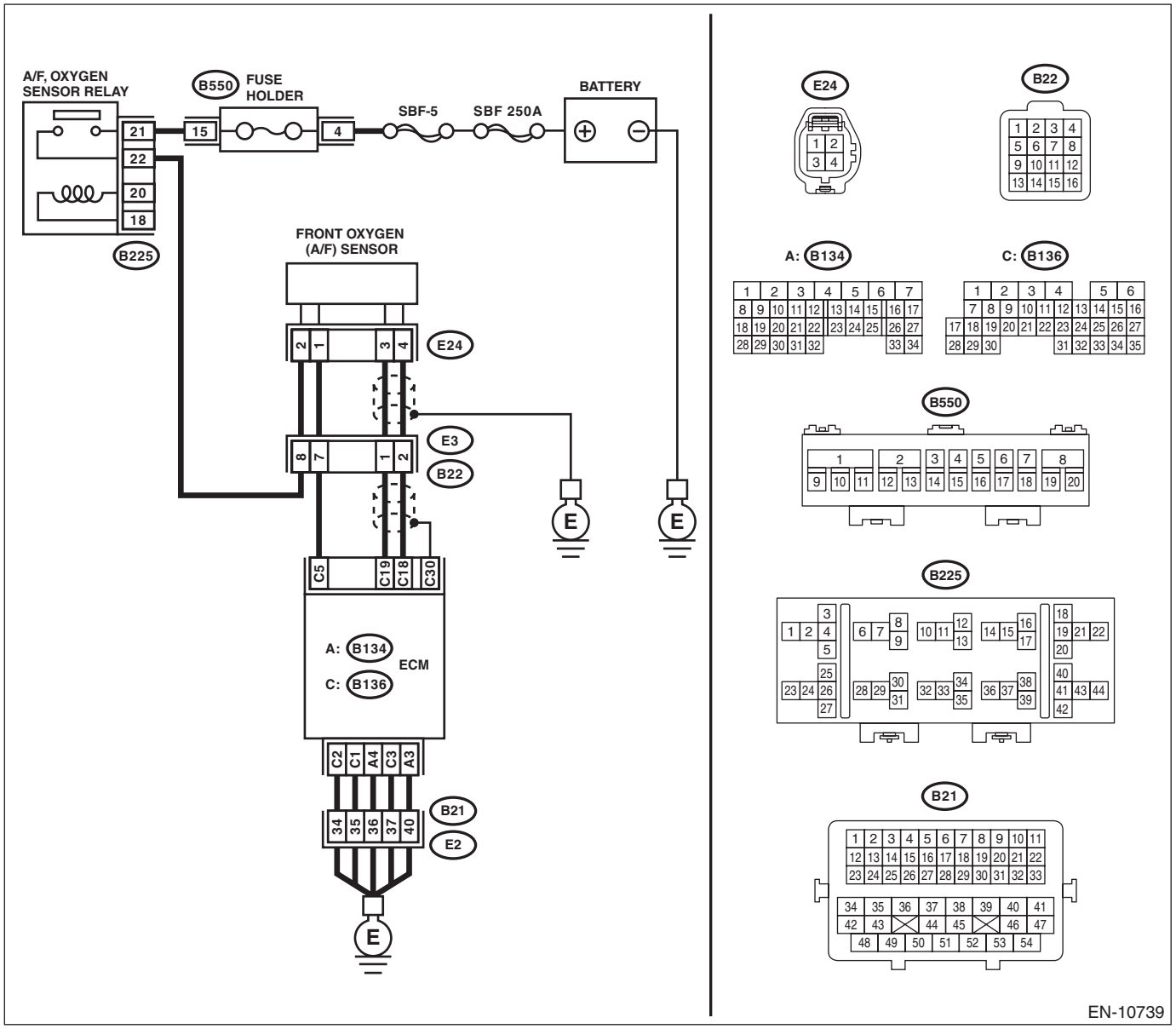

	Step	Check	Yes	No
1	**CHECK HARNESS BETWEEN ECM AND FRONT OXYGEN (A/F) SENSOR CONNECTOR.** 1) Turn the ignition switch to OFF. 2) Disconnect the connectors from ECM and front oxygen (A/F) sensor. 3) Measure the resistance of harness between ECM connector and front oxygen (A/F) sensor connector. ***Connector & terminal*** ***(B136) No. 19 — (E24) No. 3:*** ***(B136) No. 18 — (E24) No. 4:***	Is the resistance less than 1 Ω?	Go to step **2**.	Repair the harness and connector. NOTE: In this case, repair the following item: • Open circuit in harness between ECM connector and front oxygen (A/F) sensor connector • Poor contact of coupling connector
2	**CHECK FOR POOR CONTACT.** Check for poor contact of ECM and front oxygen (A/F) sensor connector.	Is there poor contact of ECM or front oxygen (A/F) sensor connector?	Repair the poor contact of ECM or front oxygen (A/F) sensor connector.	Replace the front oxygen (A/F) sensor. <Ref. to FU(H4DO(HEV))-79, Front Oxygen (A/F) Sensor.>

AR:DTC P0137 O2 SENSOR CIRCUIT LOW VOLTAGE (BANK 1 SENSOR 2)

DTC DETECTING CONDITION:

- Detected when two consecutive driving cycles with fault occur.
- GENERAL DESCRIPTION <Ref. to GD(H4DO HEV)-80, DTC P0137 O2 SENSOR CIRCUIT LOW VOLTAGE (BANK 1 SENSOR 2), Diagnostic Trouble Code (DTC) Detecting Criteria.>

CAUTION:

After servicing or replacing faulty parts, perform Clear Memory Mode <Ref. to EN(H4DO HEV)(diag)-63, OPERATION, Clear Memory Mode.>, and Inspection Mode <Ref. to EN(H4DO HEV)(diag)-47, PROCEDURE, Inspection Mode.>.

WIRING DIAGRAM:

- Engine electrical system (without push button start) <Ref. to WI(HEV)-100, WITHOUT PUSH BUTTON START, WIRING DIAGRAM, Engine Electrical System.>
- Engine electrical system (with push button start) <Ref. to WI(HEV)-114, WITH PUSH BUTTON START, WIRING DIAGRAM, Engine Electrical System.>

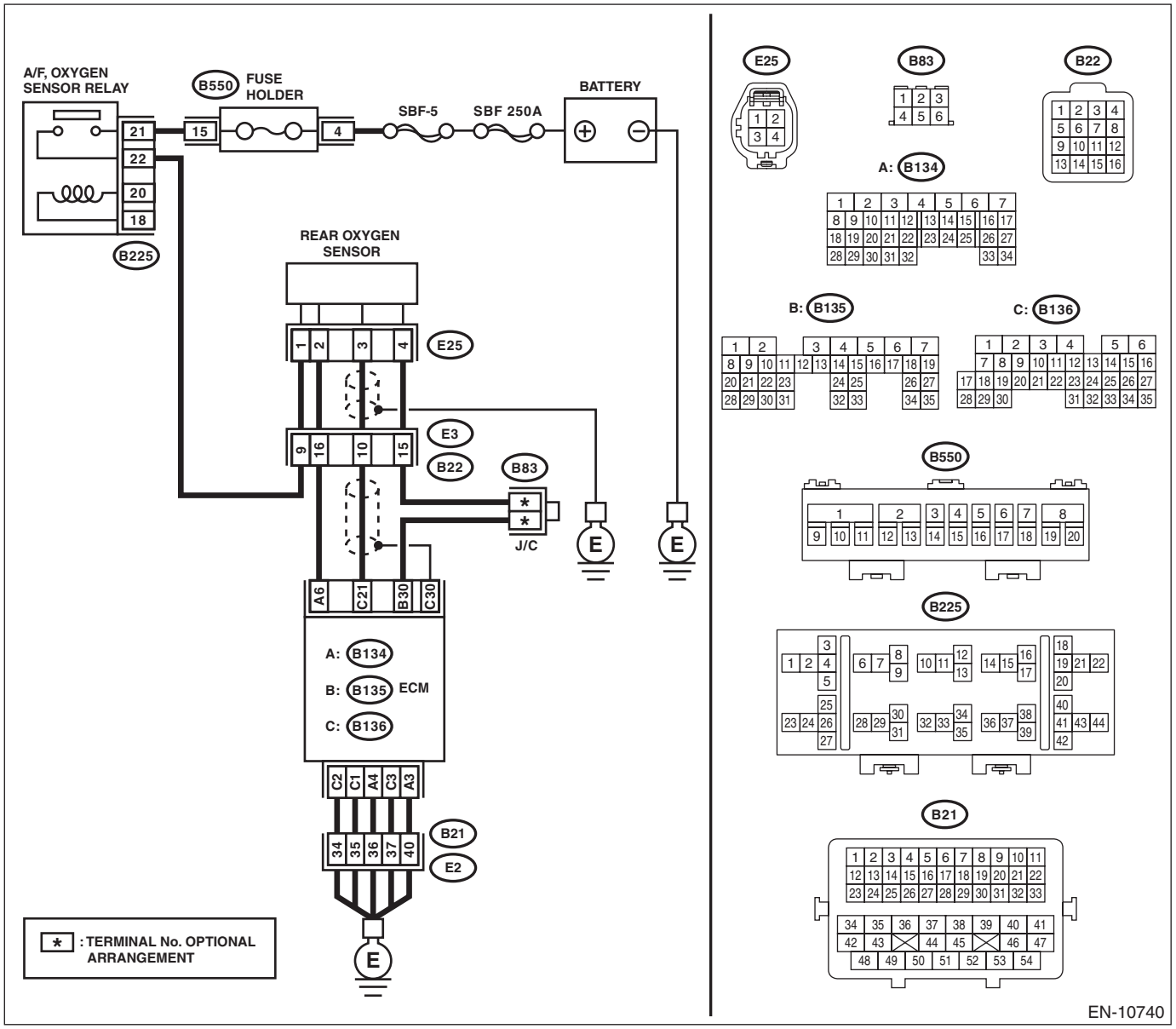

	Step	Check	Yes	No
1	**CHECK REAR OXYGEN SENSOR DATA.** 1) Warm up the engine until engine coolant temperature is higher than 75°C (167°F), and keep the engine speed at 3,000 rpm. (2 minutes maximum) 2) Read the value of «Oxygen sensor #12» using the Subaru Select Monitor or a general scan tool. NOTE: • Subaru Select Monitor For detailed operation procedures, refer to "Current Data Display For Engine". <Ref. to EN(H4DO HEV)(diag)-37, Subaru Select Monitor.> • General scan tool For detailed operation procedures, refer to the general scan tool operation manual.	Is the value of «Oxygen sensor #12» 0.490 V or more?	Go to step **5**.	Go to step **2**.
2	**CHECK REAR OXYGEN SENSOR CONNECTOR AND COUPLING CONNECTOR.**	Has water entered the connector?	Completely remove any water inside.	Go to step **3**.
3	**CHECK HARNESS BETWEEN ECM AND REAR OXYGEN SENSOR CONNECTOR.** 1) Turn the ignition switch to OFF. 2) Disconnect the connector from ECM and rear oxygen sensor. 3) Measure the resistance of harness between ECM connector and rear oxygen sensor connector. ***Connector & terminal*** ***(B136) No. 21 — (E25) No. 3:*** ***(B135) No. 30 — (E25) No. 4:***	Is the resistance less than 1 Ω?	Go to step **4**.	Repair the harness and connector. NOTE: In this case, repair the following item: • Open circuit in harness between ECM connector and rear oxygen sensor connector • Poor contact of coupling connector
4	**CHECK HARNESS BETWEEN ECM AND REAR OXYGEN SENSOR CONNECTOR.** 1) Connect the connector to ECM. 2) Turn the ignition switch to ON. 3) Measure the voltage between rear oxygen sensor connector and chassis ground. ***Connector & terminal*** ***(E25) No. 3 (+) — Chassis ground (–):***	Is the voltage 0.2 — 0.5 V?	Replace the rear oxygen sensor. <Ref. to FU(H4DO(HEV))-82, Rear Oxygen Sensor.>	Repair the harness and connector. NOTE: In this case, repair the following item: • Open circuit in harness between ECM connector and rear oxygen sensor connector • Poor contact of coupling connector • Poor contact of ECM connector
5	**CHECK EXHAUST SYSTEM.** Check exhaust system parts. NOTE: Check the following items. • Looseness and improper fitting of exhaust system parts • Damage (crack, hole etc.) of parts • Loose part and improper installation between front oxygen (A/F) sensor and rear oxygen sensor	Is there any fault in exhaust system?	Repair or replace faulty parts.	Replace the rear oxygen sensor. <Ref. to FU(H4DO(HEV))-82, Rear Oxygen Sensor.>

AS:DTC P0138 O2 SENSOR CIRCUIT HIGH VOLTAGE (BANK 1 SENSOR 2)

DTC DETECTING CONDITION:

- Detected when two consecutive driving cycles with fault occur.
- GENERAL DESCRIPTION <Ref. to GD(H4DO HEV)-81, DTC P0138 O2 SENSOR CIRCUIT HIGH VOLTAGE (BANK 1 SENSOR 2), Diagnostic Trouble Code (DTC) Detecting Criteria.>

CAUTION:

After servicing or replacing faulty parts, perform Clear Memory Mode <Ref. to EN(H4DO HEV)(diag)-63, OPERATION, Clear Memory Mode.>, and Inspection Mode <Ref. to EN(H4DO HEV)(diag)-47, PROCEDURE, Inspection Mode.>.

WIRING DIAGRAM:

- Engine electrical system (without push button start) <Ref. to WI(HEV)-100, WITHOUT PUSH BUTTON START, WIRING DIAGRAM, Engine Electrical System.>
- Engine electrical system (with push button start) <Ref. to WI(HEV)-114, WITH PUSH BUTTON START, WIRING DIAGRAM, Engine Electrical System.>

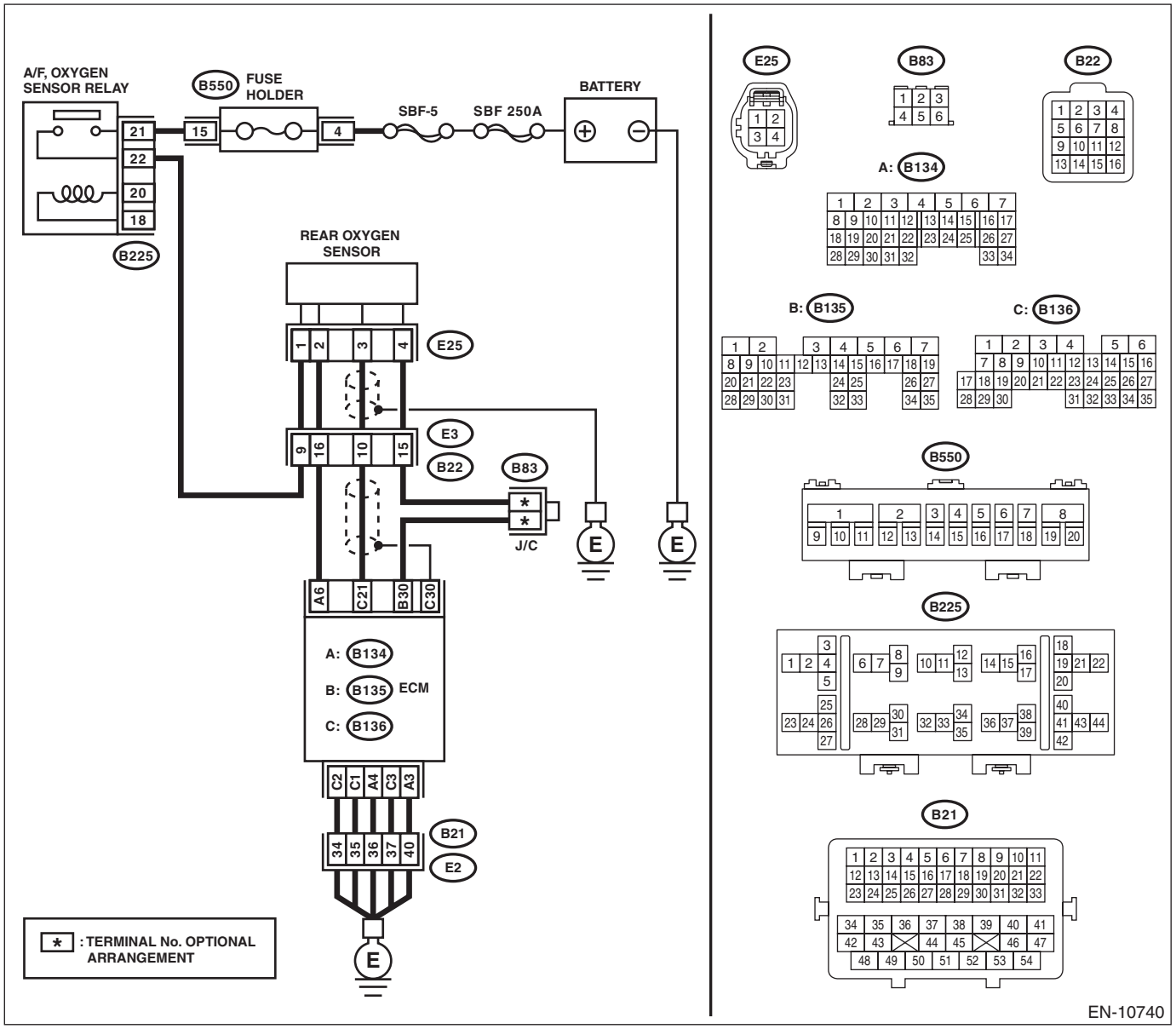

	Step	Check	Yes	No
1	**CHECK REAR OXYGEN SENSOR DATA.** 1) Warm up the engine until engine coolant temperature is higher than 75°C (167°F), and rapidly reduce the engine speed from 3,000 rpm. 2) Read the value of «Oxygen sensor #12» using the Subaru Select Monitor or a general scan tool. NOTE: • Subaru Select Monitor For detailed operation procedures, refer to "Current Data Display For Engine". <Ref. to EN(H4DO HEV)(diag)-37, Subaru Select Monitor.> • General scan tool For detailed operation procedures, refer to the general scan tool operation manual.	Is the value of «Oxygen sensor #12» 0.250 V or less?	Go to step **5**.	Go to step **2**.
2	**CHECK REAR OXYGEN SENSOR CONNECTOR AND COUPLING CONNECTOR.**	Has water entered the connector?	Completely remove any water inside.	Go to step **3**.
3	**CHECK HARNESS BETWEEN ECM AND REAR OXYGEN SENSOR CONNECTOR.** 1) Turn the ignition switch to OFF. 2) Disconnect the connector from ECM and rear oxygen sensor. 3) Measure the resistance of harness between ECM connector and rear oxygen sensor connector. ***Connector & terminal*** ***(B136) No. 21 — (E25) No. 3:*** ***(B135) No. 30 — (E25) No. 4:***	Is the resistance less than 1 Ω?	Go to step **4**.	Repair the harness and connector. NOTE: In this case, repair the following item: • Open circuit in harness between ECM connector and rear oxygen sensor connector • Poor contact of coupling connector
4	**CHECK HARNESS BETWEEN ECM AND REAR OXYGEN SENSOR CONNECTOR.** 1) Connect the connector to ECM. 2) Turn the ignition switch to ON. 3) Measure the voltage between rear oxygen sensor connector and chassis ground. ***Connector & terminal*** ***(E25) No. 3 (+) — Chassis ground (–):***	Is the voltage 0.2 — 0.5 V?	Replace the rear oxygen sensor. <Ref. to FU(H4DO(HEV))-82, Rear Oxygen Sensor.>	Repair the harness and connector. NOTE: In this case, repair the following item: • Open circuit in harness between ECM connector and rear oxygen sensor connector • Poor contact of coupling connector • Poor contact of ECM connector
5	**CHECK EXHAUST SYSTEM.** Check exhaust system parts. NOTE: Check the following items. • Looseness and improper fitting of exhaust system parts • Damage (crack, hole etc.) of parts • Loose part and improper installation between front oxygen (A/F) sensor and rear oxygen sensor	Is there any fault in exhaust system?	Repair or replace faulty parts.	Replace the rear oxygen sensor. <Ref. to FU(H4DO(HEV))-82, Rear Oxygen Sensor.>

AT:DTC P013A O2 SENSOR SLOW RESPONSE - RICH TO LEAN (BANK 1 SENSOR 2)

DTC DETECTING CONDITION:

- Detected when two consecutive driving cycles with fault occur.
- GENERAL DESCRIPTION <Ref. to GD(H4DO HEV)-82, DTC P013A O2 SENSOR SLOW RESPONSE - RICH TO LEAN (BANK 1 SENSOR 2), Diagnostic Trouble Code (DTC) Detecting Criteria.>

CAUTION:

After servicing or replacing faulty parts, perform Clear Memory Mode <Ref. to EN(H4DO HEV)(diag)-63, OPERATION, Clear Memory Mode.>, and Inspection Mode <Ref. to EN(H4DO HEV)(diag)-47, PROCEDURE, Inspection Mode.>.

WIRING DIAGRAM:

- Engine electrical system (without push button start) <Ref. to WI(HEV)-100, WITHOUT PUSH BUTTON START, WIRING DIAGRAM, Engine Electrical System.>
- Engine electrical system (with push button start) <Ref. to WI(HEV)-114, WITH PUSH BUTTON START, WIRING DIAGRAM, Engine Electrical System.>

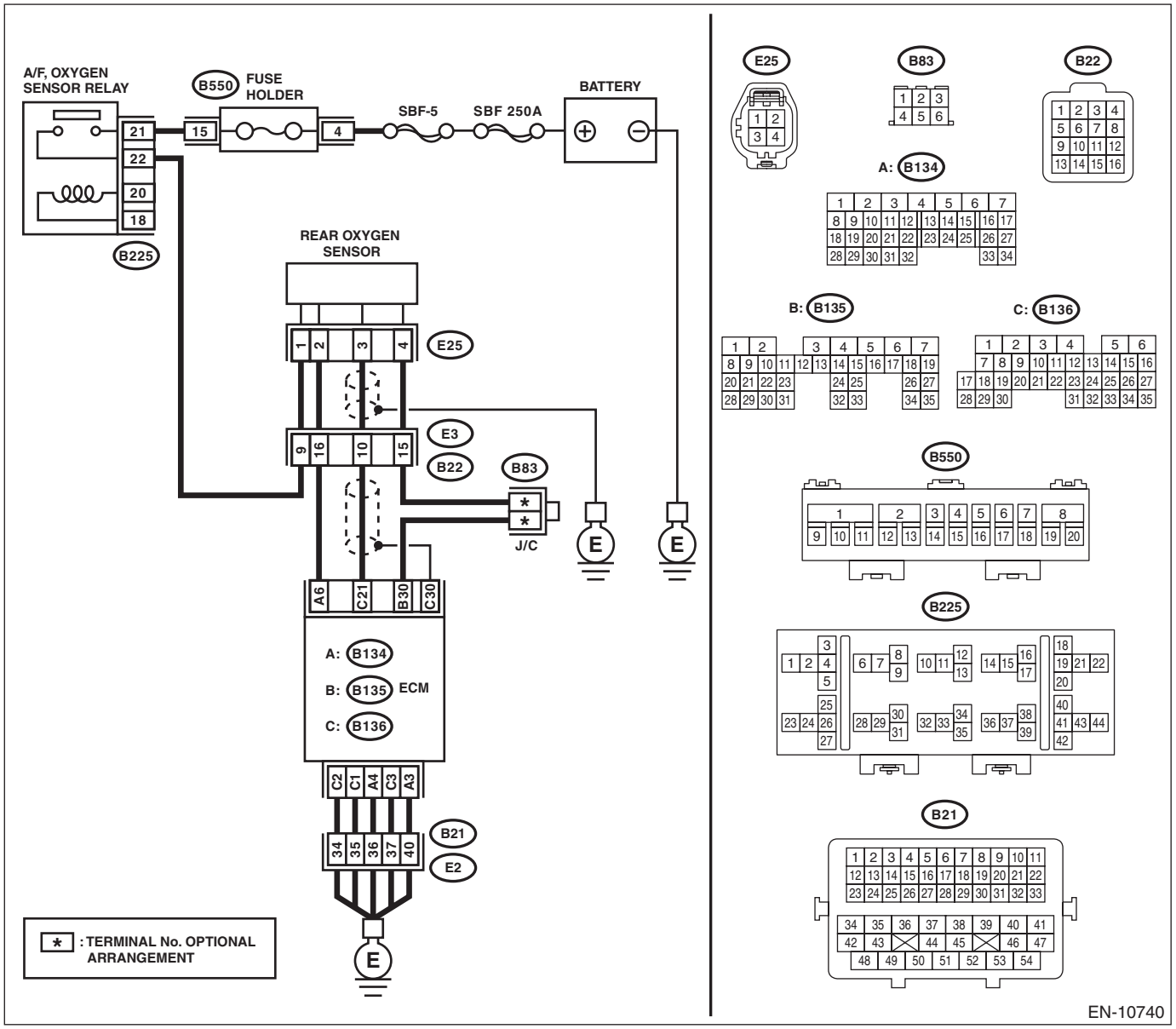

	Step	Check	Yes	No
1	**CHECK HARNESS BETWEEN ECM AND REAR OXYGEN SENSOR CONNECTOR.** 1) Turn the ignition switch to OFF. 2) Disconnect the connector from ECM and rear oxygen sensor. 3) Measure the resistance of harness between ECM connector and rear oxygen sensor connector. ***Connector & terminal*** ***(B136) No. 21 — (E25) No. 3:***	Is the resistance less than 1 Ω?	Go to step **2**.	Repair the harness and connector. NOTE: In this case, repair the following item: • Open circuit in harness between ECM connector and rear oxygen sensor connector • Poor contact of coupling connector
2	**CHECK HARNESS BETWEEN ECM AND REAR OXYGEN SENSOR CONNECTOR.** Measure the resistance between rear oxygen sensor connector and chassis ground. ***Connector & terminal*** ***(E25) No. 3 — Chassis ground:***	Is the resistance 1 MΩ or more?	Go to step **3**.	Repair the short circuit to ground in harness between ECM connector and rear oxygen sensor connector.
3	**CHECK REAR OXYGEN SENSOR.** Measure the resistance between rear oxygen sensor terminals. ***Terminals*** ***No. 3 — No. 4***	Is the resistance less than 1 Ω?	Replace the rear oxygen sensor. <Ref. to FU(H4DO(HEV))-82, Rear Oxygen Sensor.>	Even if DTC is detected, the circuit has returned to a normal condition at this time. Reproduce the failure, and then perform the diagnosis again. NOTE: In this case, temporary poor contact of connector, temporary open or short circuit of harness may be the cause.

AU:DTC P013B O2 SENSOR SLOW RESPONSE - LEAN TO RICH (BANK 1 SENSOR 2)

NOTE:
For the diagnostic procedure, refer to DTC P013A. <Ref. to EN(H4DO HEV)(diag)-175, DTC P013A O2 SENSOR SLOW RESPONSE - RICH TO LEAN (BANK 1 SENSOR 2), Diagnostic Procedure with Diagnostic Trouble Code (DTC).>

AV:DTC P013E O2 SENSOR DELAYED RESPONSE - RICH TO LEAN (BANK 1 SENSOR 2)

NOTE:
For the diagnostic procedure, refer to DTC P013A. <Ref. to EN(H4DO HEV)(diag)-175, DTC P013A O2 SENSOR SLOW RESPONSE - RICH TO LEAN (BANK 1 SENSOR 2), Diagnostic Procedure with Diagnostic Trouble Code (DTC).>

AW:DTC P013F O2 SENSOR DELAYED RESPONSE - LEAN TO RICH (BANK 1 SENSOR 2)

NOTE:
For the diagnostic procedure, refer to DTC P013A. <Ref. to EN(H4DO HEV)(diag)-175, DTC P013A O2 SENSOR SLOW RESPONSE - RICH TO LEAN (BANK 1 SENSOR 2), Diagnostic Procedure with Diagnostic Trouble Code (DTC).>

AX:DTC P0140 O2 SENSOR CIRCUIT NO ACTIVITY DETECTED (BANK1 SENSOR2)

DTC DETECTING CONDITION:

- Detected when two consecutive driving cycles with fault occur.
- GENERAL DESCRIPTION <Ref. to GD(H4DO HEV)-90, DTC P0140 O2 SENSOR CIRCUIT NO ACTIVITY DETECTED (BANK1 SENSOR2), Diagnostic Trouble Code (DTC) Detecting Criteria.>

CAUTION:

After servicing or replacing faulty parts, perform Clear Memory Mode <Ref. to EN(H4DO HEV)(diag)-63, OPERATION, Clear Memory Mode.>, and Inspection Mode <Ref. to EN(H4DO HEV)(diag)-47, PROCEDURE, Inspection Mode.>.

WIRING DIAGRAM:

- Engine electrical system (without push button start) <Ref. to WI(HEV)-100, WITHOUT PUSH BUTTON START, WIRING DIAGRAM, Engine Electrical System.>
- Engine electrical system (with push button start) <Ref. to WI(HEV)-114, WITH PUSH BUTTON START, WIRING DIAGRAM, Engine Electrical System.>

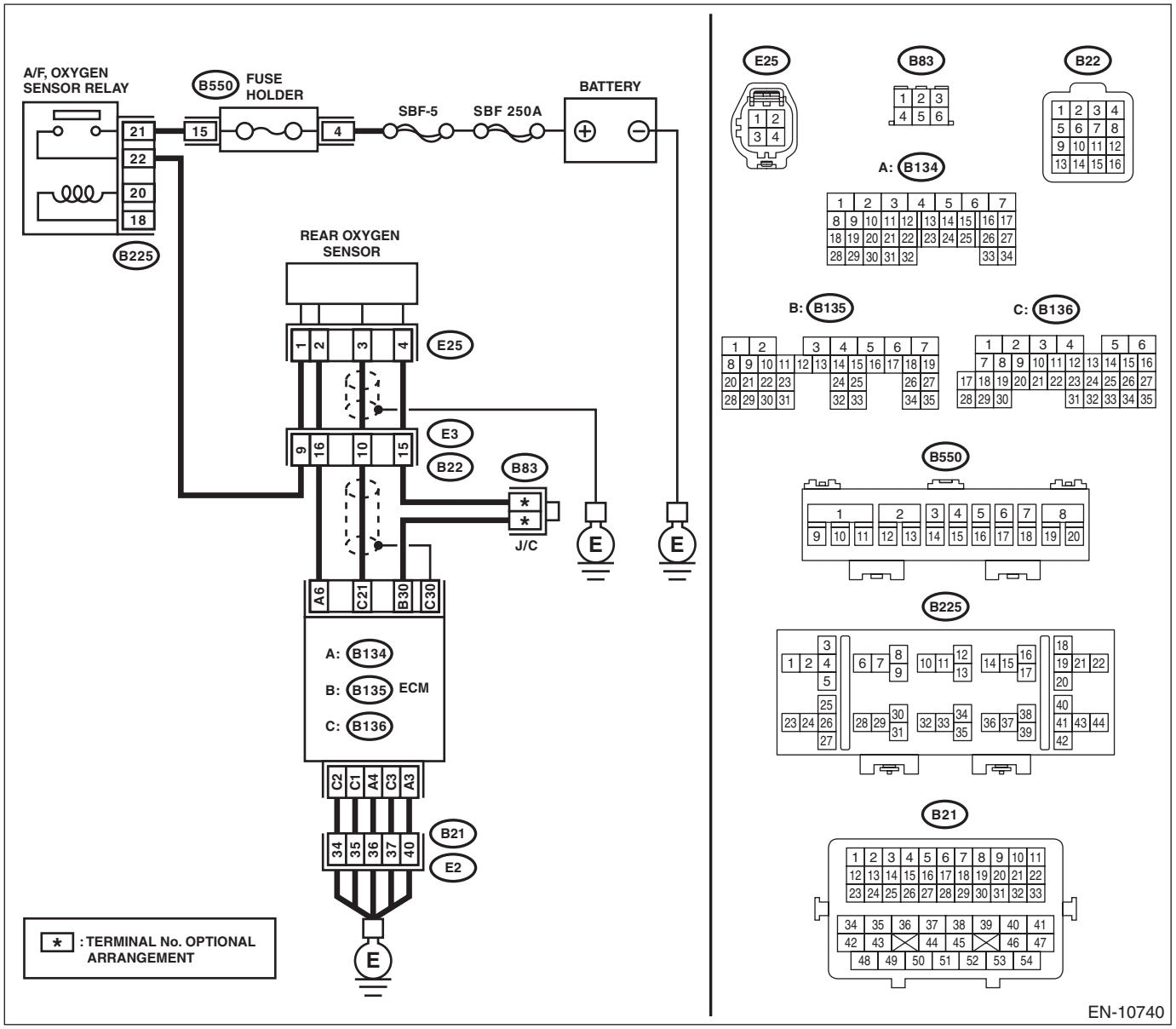

	Step	Check	Yes	No
1	**CHECK REAR OXYGEN SENSOR DATA.** 1) Warm up the engine until engine coolant temperature is higher than 75°C (167°F), and keep the engine speed at 3,000 rpm. (2 minutes maximum) 2) Read the value of «Oxygen sensor #12» using the Subaru Select Monitor or a general scan tool. NOTE: • Subaru Select Monitor For detailed operation procedures, refer to "Current Data Display For Engine". <Ref. to EN(H4DO HEV)(diag)-37, Subaru Select Monitor.> • General scan tool For detailed operation procedures, refer to the general scan tool operation manual.	Is the value of «Oxygen sensor #12» 0.490 V or more?	Go to step **6**.	Go to step **2**.
2	**CHECK REAR OXYGEN SENSOR DATA.** 1) Warm up the engine until engine coolant temperature is higher than 75°C (167°F), and rapidly reduce the engine speed from 3,000 rpm. 2) Read the value of «Oxygen sensor #12» using the Subaru Select Monitor or a general scan tool. NOTE: • Subaru Select Monitor For detailed operation procedures, refer to "Current Data Display For Engine". <Ref. to EN(H4DO HEV)(diag)-37, Subaru Select Monitor.> • General scan tool For detailed operation procedures, refer to the general scan tool operation manual.	Is the value of «Oxygen sensor #12» 0.250 V or less?	Go to step **6**.	Go to step **3**.
3	**CHECK REAR OXYGEN SENSOR CONNECTOR AND COUPLING CONNECTOR.**	Has water entered the connector?	Completely remove any water inside.	Go to step **4**.
4	**CHECK HARNESS BETWEEN ECM AND REAR OXYGEN SENSOR CONNECTOR.** 1) Turn the ignition switch to OFF. 2) Disconnect the connector from ECM and rear oxygen sensor. 3) Measure the resistance of harness between ECM connector and rear oxygen sensor connector. ***Connector & terminal*** ***(B136) No. 21 — (E25) No. 3:*** ***(B135) No. 30 — (E25) No. 4:***	Is the resistance less than 1 Ω?	Go to step **5**.	Repair the harness and connector. NOTE: In this case, repair the following item: • Open circuit in harness between ECM connector and rear oxygen sensor connector • Poor contact of coupling connector

	Step	Check	Yes	No
5	**CHECK HARNESS BETWEEN ECM AND REAR OXYGEN SENSOR CONNECTOR.** 1) Connect the connector to ECM. 2) Turn the ignition switch to ON. 3) Measure the voltage between rear oxygen sensor connector and chassis ground. ***Connector & terminal*** ***(E25) No. 3 (+) — Chassis ground (–):***	Is the voltage 0.2 — 0.5 V?	Replace the rear oxygen sensor. <Ref. to FU(H4DO(HEV))-82, Rear Oxygen Sensor.>	Repair the harness and connector. NOTE: In this case, repair the following item: • Open circuit in harness between ECM connector and rear oxygen sensor connector • Poor contact of coupling connector • Poor contact of ECM connector
6	**CHECK EXHAUST SYSTEM.** Check exhaust system parts. NOTE: Check the following items. • Looseness and improper fitting of exhaust system parts • Damage (crack, hole etc.) of parts • Loose part and improper installation between front oxygen (A/F) sensor and rear oxygen sensor	Is there any fault in exhaust system?	Repair or replace faulty parts.	Replace the rear oxygen sensor. <Ref. to FU(H4DO(HEV))-82, Rear Oxygen Sensor.>

AY:DTC P0141 O2 SENSOR HEATER CIRCUIT (BANK1 SENSOR2)

Refer to DTC P0037 for diagnostic procedure. <Ref. to EN(H4DO HEV)(diag)-127, DTC P0037 HO2S HEATER CONTROL CIRCUIT LOW (BANK 1 SENSOR 2), Diagnostic Procedure with Diagnostic Trouble Code (DTC).>

AZ:DTC P014C O2 SENSOR SLOW RESPONSE - RICH TO LEAN (BANK 1 SENSOR 1)

DTC DETECTING CONDITION:

- Detected when two consecutive driving cycles with fault occur.
- GENERAL DESCRIPTION <Ref. to GD(H4DO HEV)-94, DTC P014C O2 SENSOR SLOW RESPONSE - RICH TO LEAN (BANK 1 SENSOR 1), Diagnostic Trouble Code (DTC) Detecting Criteria.>

CAUTION:
After servicing or replacing faulty parts, perform Clear Memory Mode <Ref. to EN(H4DO HEV)(diag)-63, OPERATION, Clear Memory Mode.>, and Inspection Mode <Ref. to EN(H4DO HEV)(diag)-47, PROCEDURE, Inspection Mode.>.

	Step	Check	Yes	No
1	**CHECK EXHAUST SYSTEM.** NOTE: Check the following items. • Loose installation of front portion of exhaust pipe onto cylinder heads • Loose connection between front exhaust pipe and front catalytic converter • Damage of exhaust pipe resulting in a hole	Is there any fault in exhaust system?	Repair the exhaust system.	Replace the front oxygen (A/F) sensor. <Ref. to FU(H4DO(HEV))-79, Front Oxygen (A/F) Sensor.>

BA:DTC P014D O2 SENSOR SLOW RESPONSE - LEAN TO RICH (BANK 1 SENSOR 1)

NOTE:
For the diagnostic procedure, refer to DTC P014C. <Ref. to EN(H4DO HEV)(diag)-180, DTC P014C O2 SENSOR SLOW RESPONSE - RICH TO LEAN (BANK 1 SENSOR 1), Diagnostic Procedure with Diagnostic Trouble Code (DTC).>

BB:DTC P015A O2 SENSOR DELAYED RESPONSE - RICH TO LEAN (BANK 1 SENSOR 1)

NOTE:
For the diagnostic procedure, refer to DTC P014C. <Ref. to EN(H4DO HEV)(diag)-180, DTC P014C O2 SENSOR SLOW RESPONSE - RICH TO LEAN (BANK 1 SENSOR 1), Diagnostic Procedure with Diagnostic Trouble Code (DTC).>

BC:DTC P015B O2 SENSOR DELAYED RESPONSE - LEAN TO RICH (BANK 1 SENSOR 1)

NOTE:
For the diagnostic procedure, refer to DTC P014C. <Ref. to EN(H4DO HEV)(diag)-180, DTC P014C O2 SENSOR SLOW RESPONSE - RICH TO LEAN (BANK 1 SENSOR 1), Diagnostic Procedure with Diagnostic Trouble Code (DTC).>

BD:DTC P0171 SYSTEM TOO LEAN (BANK 1)

Refer to DTC P0172 for diagnostic procedure. <Ref. to EN(H4DO HEV)(diag)-181, DTC P0172 SYSTEM TOO RICH (BANK 1), Diagnostic Procedure with Diagnostic Trouble Code (DTC).>

BE:DTC P0172 SYSTEM TOO RICH (BANK 1)

DTC DETECTING CONDITION:

- Detected when two consecutive driving cycles with fault occur.
- GENERAL DESCRIPTION <Ref. to GD(H4DO HEV)-101, DTC P0172 SYSTEM TOO RICH (BANK 1), Diagnostic Trouble Code (DTC) Detecting Criteria.>

TROUBLE SYMPTOM:

- Improper idling
- Engine stalls.
- Poor driving performance

CAUTION:
After servicing or replacing faulty parts, perform Clear Memory Mode <Ref. to EN(H4DO HEV)(diag)-63, OPERATION, Clear Memory Mode.>, and Inspection Mode <Ref. to EN(H4DO HEV)(diag)-47, PROCEDURE, Inspection Mode.>.

	Step	Check	Yes	No
1	**CHECK EXHAUST SYSTEM.**	Are there holes or loose bolts on exhaust system?	Repair the exhaust system.	Go to step **2**.
2	**CHECK AIR INTAKE SYSTEM.**	Are there holes, loose bolts or disconnection of hose on air intake system?	Repair the air intake system.	Go to step **3**.
3	**CHECK FUEL PRESSURE.** **WARNING:** **Place "NO OPEN FLAMES" signs near the working area.** **CAUTION:** **Be careful not to spill fuel.** Measure the fuel pressure. <Ref. to ME(H4DO(w/o HEV))-35, INSPECTION, Fuel Pressure.> **CAUTION:** **Release fuel pressure before removing the fuel pressure gauge.**	Is the measured value 340 — 400 kPa (3.5 — 4.1 kg/cm^2, 49 — 58 psi)?	Go to step **4**.	Check the fuel pump and fuel delivery line. <Ref. to FU(H4DO(HEV))-127, INSPECTION, Fuel Pump.> <Ref. to FU(H4DO(HEV))-154, INSPECTION, Fuel Delivery and Evaporation Lines.>
4	**CHECK ENGINE COOLANT TEMPERATURE SENSOR.** 1) Start the engine and warm up completely. 2) Read the value of «Coolant Temp.» using the Subaru Select Monitor or a general scan tool. NOTE: • Subaru Select Monitor For detailed operation procedures, refer to "Current Data Display For Engine". <Ref. to EN(H4DO HEV)(diag)-37, Subaru Select Monitor.> • General scan tool For detailed operation procedures, refer to the general scan tool operation manual.	Is the value of «Coolant Temp.» 75°C (167°F) or more?	Go to step **5**.	Replace the engine coolant temperature sensor. <Ref. to FU(H4DO(HEV))-41, Engine Coolant Temperature Sensor.>

	Step	Check	Yes	No
5	**CHECK MASS AIR FLOW AND INTAKE AIR TEMPERATURE SENSOR.** 1) Start the engine and warm up engine until coolant temperature is higher than 75°C (167°F). 2) Place the select lever in “P” range or “N” range. 3) Turn the A/C switch to OFF. 4) Turn all the accessory switches to OFF. 5) Read the value of «Mass Air Flow» using the Subaru Select Monitor or a general scan tool. NOTE: • Subaru Select Monitor For detailed operation procedures, refer to “Current Data Display For Engine”. <Ref. to EN(H4DO HEV)(diag)-37, Subaru Select Monitor.> • General scan tool For detailed operation procedures, refer to the general scan tool operation manual.	Is the value of «Mass Air Flow» 1.0 — 5.0 g/s (0.13 — 0.66 lb/m)?	Go to step **6**.	Replace the mass air flow and intake air temperature sensor. <Ref. to FU(H4DO(HEV))-64, Mass Air Flow and Intake Air Temperature Sensor.>
6	**CHECK MASS AIR FLOW AND INTAKE AIR TEMPERATURE SENSOR.** 1) Start the engine and warm up engine until coolant temperature is higher than 75°C (167°F). 2) Place the select lever in “P” range or “N” range. 3) Turn the A/C switch to OFF. 4) Turn all the accessory switches to OFF. 5) Open the front hood. 6) Measure the ambient temperature. 7) Read the value of «Intake Air Temp.» using the Subaru Select Monitor or a general scan tool. NOTE: • Subaru Select Monitor For detailed operation procedures, refer to “Current Data Display For Engine”. <Ref. to EN(H4DO HEV)(diag)-37, Subaru Select Monitor.> • General scan tool For detailed operation procedures, refer to the general scan tool operation manual.	Subtract ambient temperature from «Intake Air Temp.». Is the obtained value –10 — 50°C (–18 — 90°F)?	Repair the poor contact of ECM connector.	Check the mass air flow and intake air temperature sensor. <Ref. to FU(H4DO(HEV))-64, Mass Air Flow and Intake Air Temperature Sensor.>

BF:DTC P0196 ENGINE OIL TEMPERATURE SENSOR CIRCUIT RANGE/PERFORMANCE

DTC DETECTING CONDITION:

- Detected when two consecutive driving cycles with fault occur.
- GENERAL DESCRIPTION <Ref. to GD(H4DO HEV)-103, DTC P0196 ENGINE OIL TEMPERATURE SENSOR CIRCUIT RANGE/PERFORMANCE, Diagnostic Trouble Code (DTC) Detecting Criteria.>

TROUBLE SYMPTOM:

- Hard to start
- Improper idling
- Poor driving performance

CAUTION:

After servicing or replacing faulty parts, perform Clear Memory Mode <Ref. to EN(H4DO HEV)(diag)-63, OPERATION, Clear Memory Mode.>, and Inspection Mode <Ref. to EN(H4DO HEV)(diag)-47, PROCEDURE, Inspection Mode.>.

WIRING DIAGRAM:

- Engine electrical system (without push button start) <Ref. to WI(HEV)-100, WITHOUT PUSH BUTTON START, WIRING DIAGRAM, Engine Electrical System.>
- Engine electrical system (with push button start) <Ref. to WI(HEV)-114, WITH PUSH BUTTON START, WIRING DIAGRAM, Engine Electrical System.>

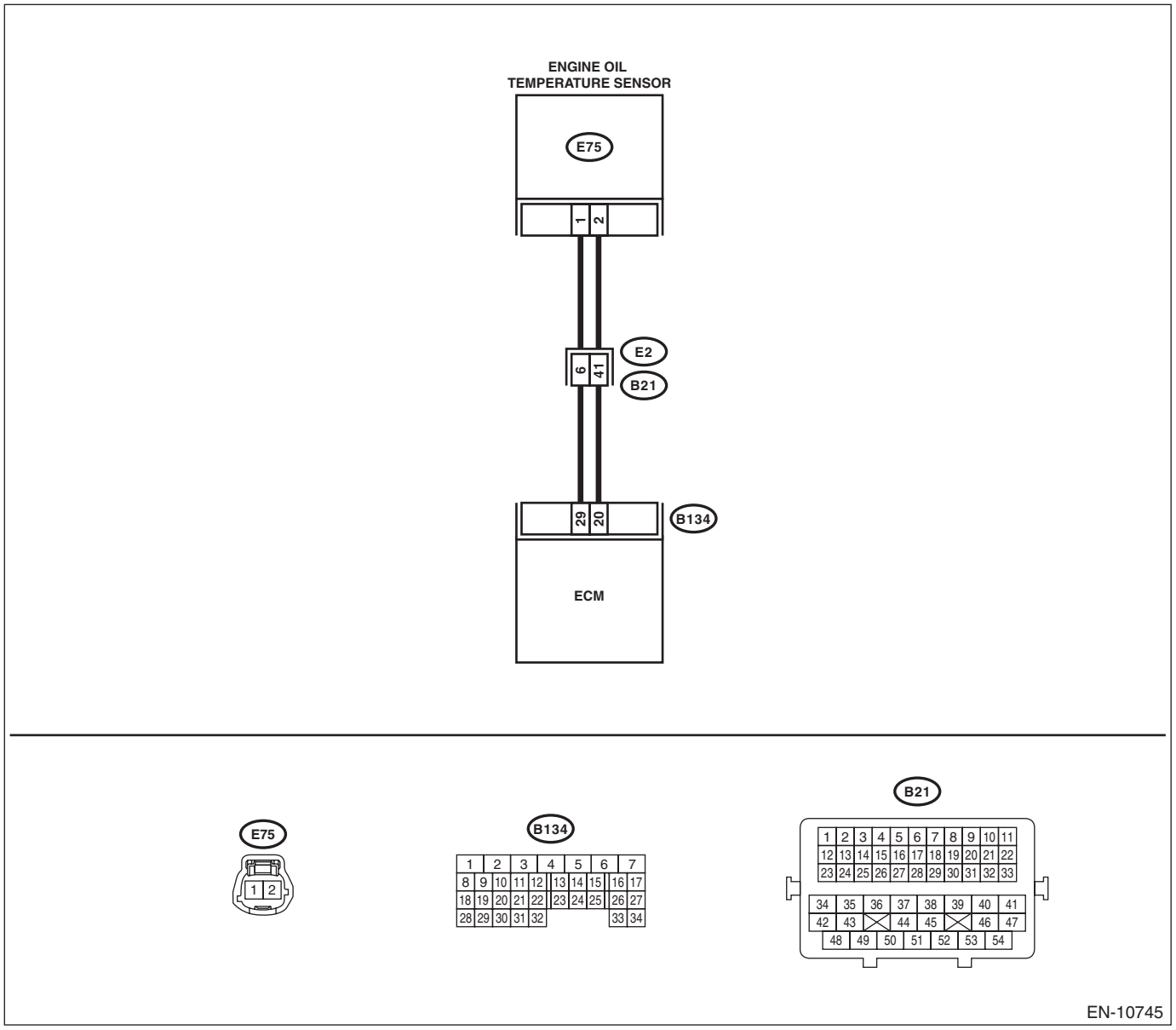

Step	Check	Yes	No
1 **CHECK FOR ANY OTHER DTC ON DISPLAY.**	Is any other DTC displayed?	Check the appropriate DTC using the “List of Diagnostic Trouble Code (DTC)”. <Ref. to EN(H4DO HEV)(diag)-88, List of Diagnostic Trouble Code (DTC).>	Go to step **2**.

	Step	Check	Yes	No
2	**CHECK ENGINE OIL TEMPERATURE SENSOR.** 1) Disconnect the connectors from the engine oil temperature sensor. 2) Measure the resistance between engine oil temperature sensor terminals when the engine coolant is cold and after warmed up. ***Terminals*** ***No. 1 — No. 2:***	Is the resistance of engine oil temperature sensor different between when engine coolant is cold and after warmed up?	Repair the poor contact of ECM connector.	Replace the engine oil temperature sensor. <Ref. to FU(H4DO(HEV))-44, Engine Oil Temperature Sensor.>

BG:DTC P0197 ENGINE OIL TEMPERATURE SENSOR LOW

DTC DETECTING CONDITION:

- Immediately at fault recognition
- GENERAL DESCRIPTION <Ref. to GD(H4DO HEV)-106, DTC P0197 ENGINE OIL TEMPERATURE SENSOR LOW, Diagnostic Trouble Code (DTC) Detecting Criteria.>

TROUBLE SYMPTOM:

- Hard to start
- Improper idling
- Poor driving performance

CAUTION:
After servicing or replacing faulty parts, perform Clear Memory Mode <Ref. to EN(H4DO HEV)(diag)-63, OPERATION, Clear Memory Mode.>, and Inspection Mode <Ref. to EN(H4DO HEV)(diag)-47, PROCEDURE, Inspection Mode.>.

WIRING DIAGRAM:

- Engine electrical system (without push button start) <Ref. to WI(HEV)-100, WITHOUT PUSH BUTTON START, WIRING DIAGRAM, Engine Electrical System.>
- Engine electrical system (with push button start) <Ref. to WI(HEV)-114, WITH PUSH BUTTON START, WIRING DIAGRAM, Engine Electrical System.>

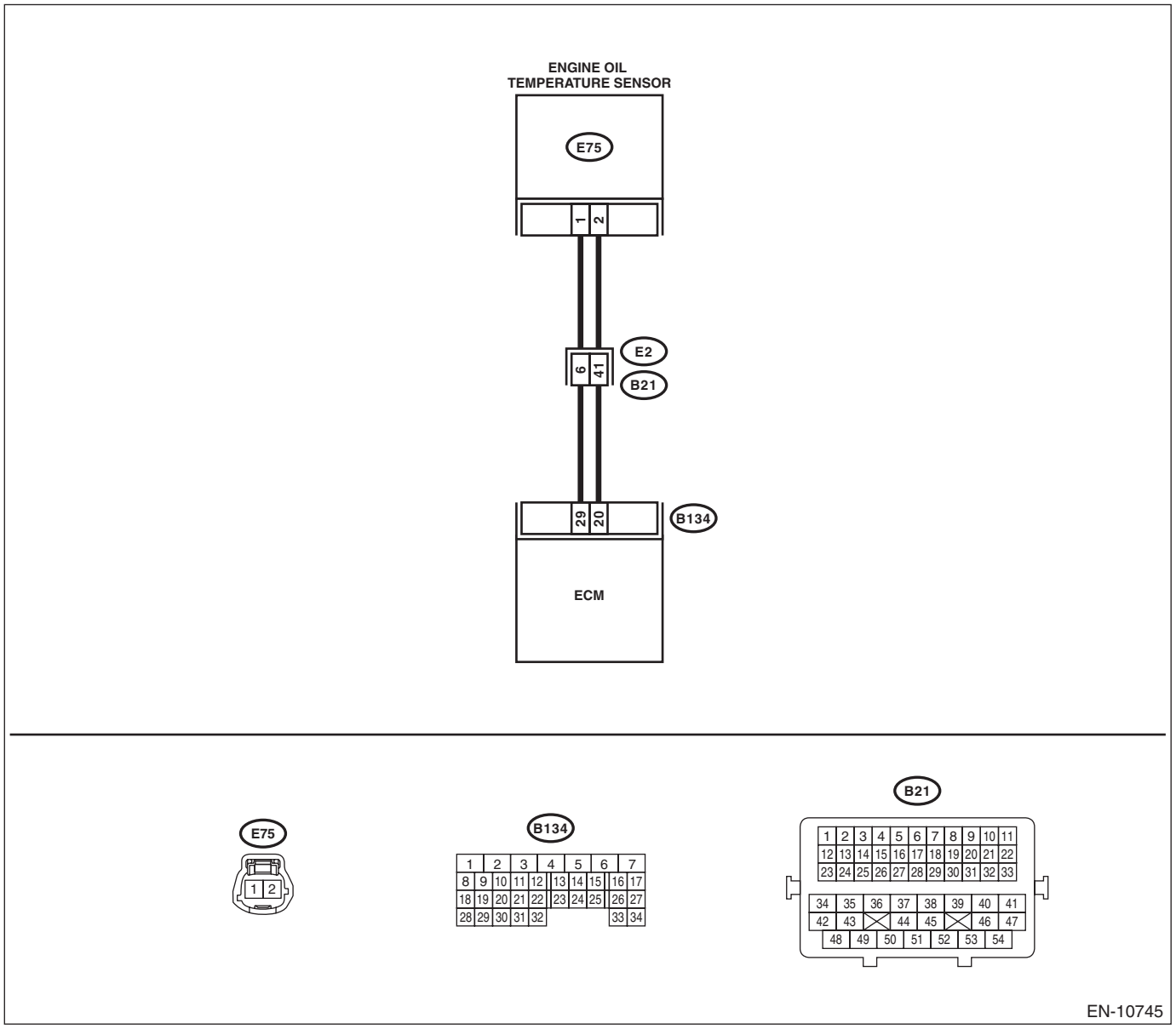

	Step	Check	Yes	No
1	**CHECK CURRENT DATA.** 1) Start the engine. 2) Read the value of «Oil Temperature» using the Subaru Select Monitor or a general scan tool. NOTE: • Subaru Select Monitor For detailed operation procedures, refer to "Current Data Display For Engine". <Ref. to EN(H4DO HEV)(diag)-37, Subaru Select Monitor.> • General scan tool For detailed operation procedures, refer to the general scan tool operation manual.	Is the value of «Oil Temperature» 150°C (302°F) or more?	Go to step **2**.	Even if DTC is detected, the circuit has returned to a normal condition at this time. Reproduce the failure, and then perform the diagnosis again. NOTE: In this case, temporary poor contact of connector, temporary open or short circuit of harness may be the cause.
2	**CHECK HARNESS BETWEEN ECM AND ENGINE OIL TEMPERATURE SENSOR CONNECTOR.** 1) Turn the ignition switch to OFF. 2) Disconnect the connectors from the ECM and engine oil temperature sensor. 3) Measure the resistance between ECM connector and chassis ground. ***Connector & terminal*** ***(B134) No. 20 — Chassis ground:***	Is the resistance 1 MΩ or more?	Replace the engine oil temperature sensor. <Ref. to FU(H4DO(HEV))-44, Engine Oil Temperature Sensor.>	Repair the short circuit to ground in the harness between the ECM connector and engine oil temperature sensor connector.

BH:DTC P0198 ENGINE OIL TEMPERATURE SENSOR HIGH

DTC DETECTING CONDITION:

- Immediately at fault recognition
- GENERAL DESCRIPTION <Ref. to GD(H4DO HEV)-108, DTC P0198 ENGINE OIL TEMPERATURE SENSOR HIGH, Diagnostic Trouble Code (DTC) Detecting Criteria.>

TROUBLE SYMPTOM:

- Hard to start
- Improper idling
- Poor driving performance

CAUTION:
After servicing or replacing faulty parts, perform Clear Memory Mode <Ref. to EN(H4DO HEV)(diag)-63, OPERATION, Clear Memory Mode.>, and Inspection Mode <Ref. to EN(H4DO HEV)(diag)-47, PROCEDURE, Inspection Mode.>.

WIRING DIAGRAM:

- Engine electrical system (without push button start) <Ref. to WI(HEV)-100, WITHOUT PUSH BUTTON START, WIRING DIAGRAM, Engine Electrical System.>
- Engine electrical system (with push button start) <Ref. to WI(HEV)-114, WITH PUSH BUTTON START, WIRING DIAGRAM, Engine Electrical System.>

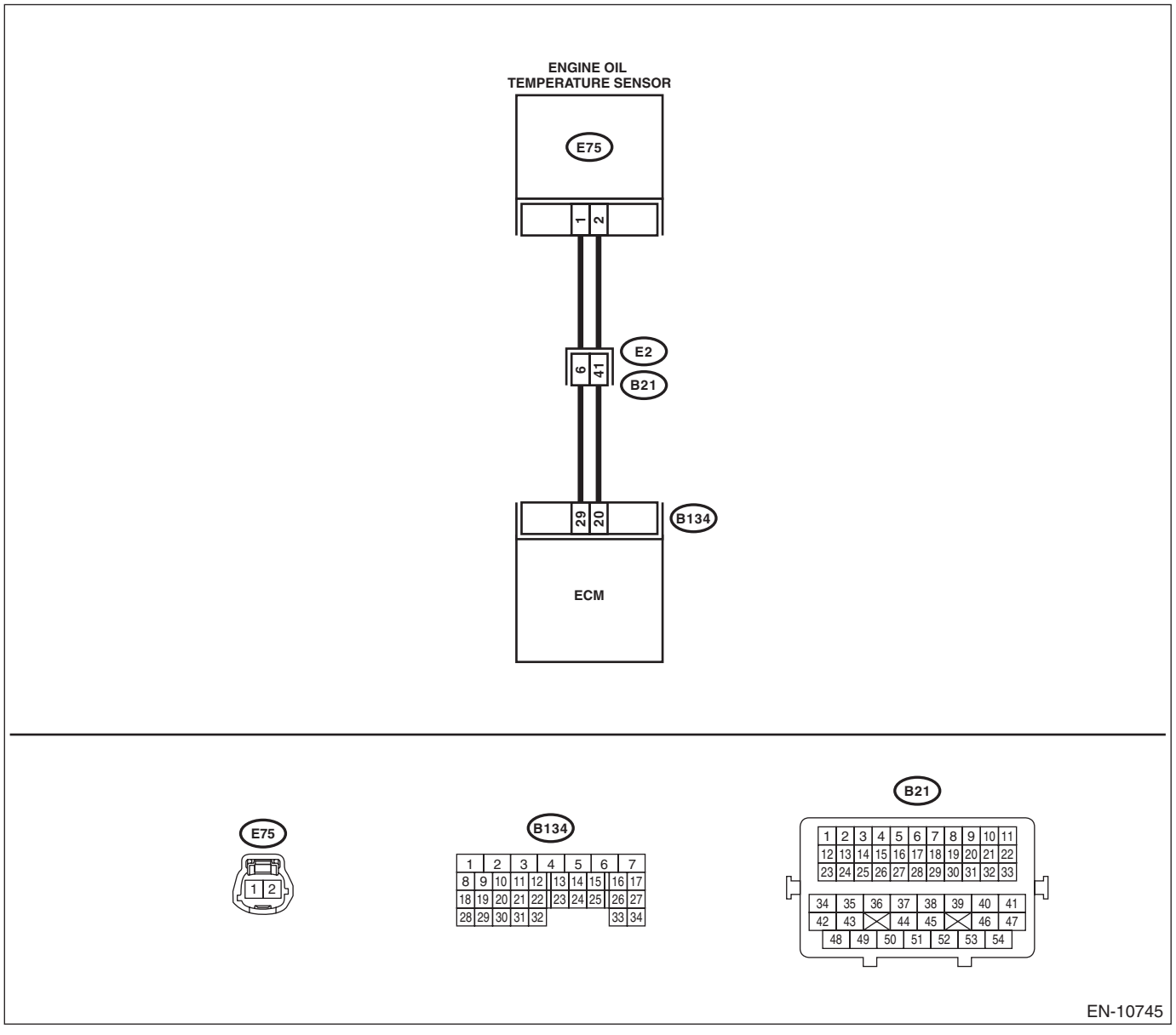

	Step	Check	Yes	No
1	**CHECK CURRENT DATA.** 1) Start the engine. 2) Read the value of «Oil Temperature» using the Subaru Select Monitor or a general scan tool. NOTE: • Subaru Select Monitor For detailed operation procedures, refer to "Current Data Display For Engine". <Ref. to EN(H4DO HEV)(diag)-37, Subaru Select Monitor.> • General scan tool For detailed operation procedures, refer to the general scan tool operation manual.	Is the value of «Oil Temperature» –40°C (–40°F) or less?	Go to step **2**.	Even if DTC is detected, the circuit has returned to a normal condition at this time. Reproduce the failure, and then perform the diagnosis again. NOTE: In this case, temporary poor contact of connector, temporary open or short circuit of harness may be the cause.
2	**CHECK FOR POOR CONTACT.** Check for poor contact between the ECM and engine oil temperature sensor connectors.	Is there poor contact of the ECM or engine oil temperature sensor connectors?	Repair the poor contact of ECM or engine oil temperature sensor connector.	Go to step **3**.
3	**CHECK HARNESS BETWEEN ECM AND ENGINE OIL TEMPERATURE SENSOR CONNECTOR.** 1) Turn the ignition switch to OFF. 2) Disconnect the connectors from the ECM and engine oil temperature sensor. 3) Measure the resistance of the harness between the ECM connector and engine oil temperature sensor connector. ***Connector & terminal*** ***(B134) No. 29 — (E75) No. 1:*** ***(B134) No. 20 — (E75) No. 2:***	Is the resistance less than 1 Ω?	Go to step **4**.	Repair the harness and connector. NOTE: In this case, repair the following item: • Open circuit in harness between ECM connector and engine oil temperature sensor connector • Poor contact of coupling connector
4	**CHECK HARNESS BETWEEN ECM AND ENGINE OIL TEMPERATURE SENSOR CONNECTOR.** 1) Connect all connectors. 2) Turn the ignition switch to ON. 3) Measure the voltage between ECM connector and chassis ground. ***Connector & terminal*** ***(B134) No. 20 (+) — Chassis ground (–):***	Is the voltage 5 V or more?	Repair the short circuit to power in harness between ECM connector and engine oil temperature sensor connector.	Replace the engine oil temperature sensor. <Ref. to FU(H4DO(HEV))-44, Engine Oil Temperature Sensor.>

BI: DTC P0201 INJECTOR #1

DTC DETECTING CONDITION:

- Immediately at fault recognition
- GENERAL DESCRIPTION <Ref. to GD(H4DO HEV)-110, DTC P0201 INJECTOR #1, Diagnostic Trouble Code (DTC) Detecting Criteria.>

TROUBLE SYMPTOM:

- Improper idling
- Poor driving performance

CAUTION:

After servicing or replacing faulty parts, perform Clear Memory Mode <Ref. to EN(H4DO HEV)(diag)-63, OPERATION, Clear Memory Mode.>, and Inspection Mode <Ref. to EN(H4DO HEV)(diag)-47, PROCEDURE, Inspection Mode.>.

WIRING DIAGRAM:

- Engine electrical system (without push button start) <Ref. to WI(HEV)-100, WITHOUT PUSH BUTTON START, WIRING DIAGRAM, Engine Electrical System.>
- Engine electrical system (with push button start) <Ref. to WI(HEV)-114, WITH PUSH BUTTON START, WIRING DIAGRAM, Engine Electrical System.>

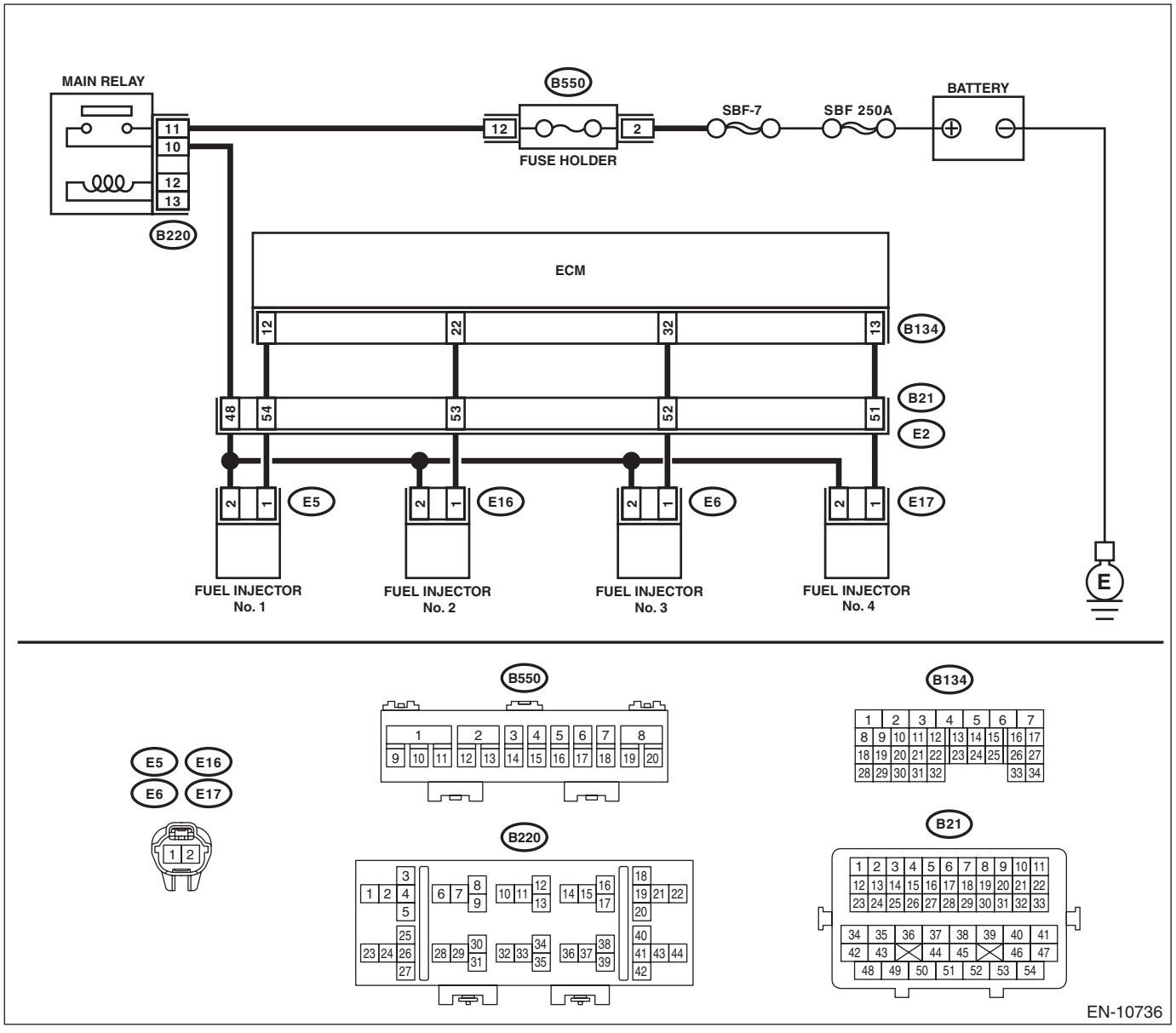

	Step	Check	Yes	No
1	**CHECK POWER SUPPLY TO FUEL INJECTOR.** 1) Turn the ignition switch to OFF. 2) Disconnect the connector from fuel injector. 3) Turn the ignition switch to ON. 4) Measure the voltage between fuel injector connector and the engine ground. ***Connector & terminal*** ***DTC P0201; (E5) No. 2 (+) — Engine ground (–):*** ***DTC P0202; (E16) No. 2 (+) — Engine ground (–):*** ***DTC P0203; (E6) No. 2 (+) — Engine ground (–):*** ***DTC P0204; (E17) No. 2 (+) — Engine ground (–):***	Is the voltage 10 V or more?	Go to step **2**.	Repair the harness and connector. NOTE: In this case, repair the following item: • Open circuit in harness between main relay and fuel injector connector • Poor contact of main relay connector • Poor contact of coupling connector
2	**CHECK HARNESS BETWEEN ECM AND FUEL INJECTOR CONNECTOR.** 1) Turn the ignition switch to OFF. 2) Disconnect the connector from ECM. 3) Measure the resistance between fuel injector connector and engine ground. ***Connector & terminal*** ***DTC P0201; (E5) No. 1 — Engine ground:*** ***DTC P0202; (E16) No. 1 — Engine ground:*** ***DTC P0203; (E6) No. 1 — Engine ground:*** ***DTC P0204; (E17) No. 1 — Engine ground:***	Is the resistance 1 MΩ or more?	Go to step **3**.	Repair the short circuit to ground in harness between ECM connector and fuel injector connector.
3	**CHECK HARNESS BETWEEN ECM AND FUEL INJECTOR CONNECTOR.** Measure the resistance of harness between ECM connector and fuel injector connector. ***Connector & terminal*** ***DTC P0201; (B134) No. 12 — (E5) No. 1:*** ***DTC P0202; (B134) No. 22 — (E16) No. 1:*** ***DTC P0203; (B134) No. 32 — (E6) No. 1:*** ***DTC P0204; (B134) No. 13 — (E17) No. 1:***	Is the resistance less than 1 Ω?	Go to step **4**.	Repair the harness and connector. NOTE: In this case, repair the following item: • Open circuit in harness between ECM connector and fuel injector connector • Poor contact of coupling connector
4	**CHECK FUEL INJECTOR.** Measure the resistance between fuel injector terminals on the corresponding cylinder. ***Terminals*** ***No. 1 — No. 2:***	Is the resistance 5 — 20 Ω?	Go to step **5**.	Replace the fuel injector. <Ref. to FU(H4DO(HEV))-70, Fuel Injector.>
5	**CHECK FOR POOR CONTACT.** Check for poor contact of ECM connector.	Is there poor contact of ECM connector?	Repair the poor contact of ECM connector.	Go to step **6**.

	Step	Check	Yes	No
6	**CHECK FUEL INJECTOR OPERATION.** 1) Connect all connectors. 2) Start the engine. 3) Check if the corresponding fuel injector emits operating sound. NOTE: Use a sound scope to check the operating sound.	Does the fuel injector emit operating sound?	Even if DTC is detected, the circuit has returned to a normal condition at this time. Reproduce the failure, and then perform the diagnosis again. NOTE: In this case, temporary poor contact of connector, temporary open or short circuit of harness may be the cause.	Repair the poor contact of fuel injector connector.

BJ:DTC P0202 INJECTOR #2

NOTE:
For the diagnostic procedure, refer to DTC P0201. <Ref. to EN(H4DO HEV)(diag)-190, DTC P0201 INJECTOR #1, Diagnostic Procedure with Diagnostic Trouble Code (DTC).>

BK:DTC P0203 INJECTOR #3

NOTE:
For the diagnostic procedure, refer to DTC P0201. <Ref. to EN(H4DO HEV)(diag)-190, DTC P0201 INJECTOR #1, Diagnostic Procedure with Diagnostic Trouble Code (DTC).>

BL:DTC P0204 INJECTOR #4

NOTE:
For the diagnostic procedure, refer to DTC P0201. <Ref. to EN(H4DO HEV)(diag)-190, DTC P0201 INJECTOR #1, Diagnostic Procedure with Diagnostic Trouble Code (DTC).>

BM:DTC P0222 THROTTLE/PEDAL POSITION SENSOR/SWITCH “B” CIRCUIT LOW

DTC DETECTING CONDITION:

- Immediately at fault recognition
- GENERAL DESCRIPTION <Ref. to GD(H4DO HEV)-111, DTC P0222 THROTTLE/PEDAL POSITION SENSOR/SWITCH “B” CIRCUIT LOW, Diagnostic Trouble Code (DTC) Detecting Criteria.>

TROUBLE SYMPTOM:

- Improper idling
- Poor driving performance
- Engine stalls.

CAUTION:
After servicing or replacing faulty parts, perform Clear Memory Mode <Ref. to EN(H4DO HEV)(diag)-63, OPERATION, Clear Memory Mode.>, and Inspection Mode <Ref. to EN(H4DO HEV)(diag)-47, PROCEDURE, Inspection Mode.>.

WIRING DIAGRAM:

- Engine electrical system (without push button start) <Ref. to WI(HEV)-100, WITHOUT PUSH BUTTON START, WIRING DIAGRAM, Engine Electrical System.>
- Engine electrical system (with push button start) <Ref. to WI(HEV)-114, WITH PUSH BUTTON START, WIRING DIAGRAM, Engine Electrical System.>

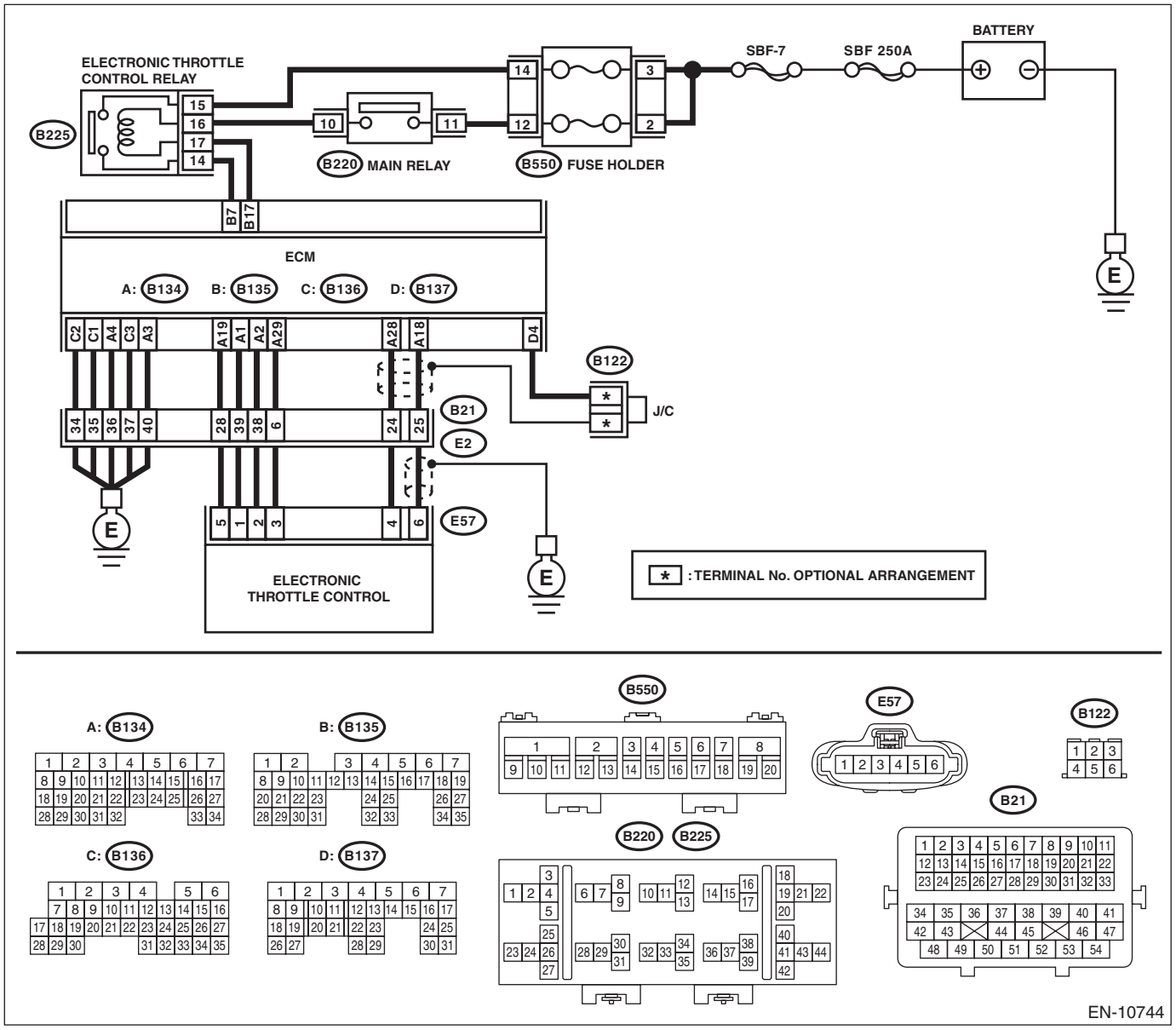

Step		Check	Yes	No
1	**CHECK HARNESS BETWEEN ECM AND ELECTRONIC THROTTLE CONTROL CONNECTOR.** 1) Turn the ignition switch to OFF. 2) Disconnect the connectors from ECM and electronic throttle control. 3) Measure the resistance between ECM connector and chassis ground. ***Connector & terminal*** ***(B134) No. 19 — Chassis ground:*** ***(B134) No. 28 — Chassis ground:*** ***(B134) No. 28 — (B137) No. 4:***	Is the resistance 1 MΩ or more?	Go to step **2**.	Repair the ground short circuit of harness between ECM connector and electronic throttle control connector.

	Step	Check	Yes	No
2	**CHECK SHORT CIRCUIT INSIDE THE ECM.** 1) Connect the connector to ECM. 2) Measure the resistance between electronic throttle control connector and engine ground. ***Connector & terminal*** ***(E57) No. 4 — Engine ground:***	Is the resistance 1 MΩ or more?	Replace the electronic throttle control. <Ref. to FU(H4DO(HEV))-15, Throttle Body.>	Repair the ground short circuit of harness between ECM connector and electronic throttle control connector. Replace the ECM if defective. <Ref. to FU(H4DO(HEV))-85, Engine Control Module (ECM).>

BN:DTC P0223 THROTTLE/PEDAL POSITION SENSOR/SWITCH “B” CIRCUIT HIGH

DTC DETECTING CONDITION:

- Immediately at fault recognition
- GENERAL DESCRIPTION <Ref. to GD(H4DO HEV)-113, DTC P0223 THROTTLE/PEDAL POSITION SENSOR/SWITCH “B” CIRCUIT HIGH, Diagnostic Trouble Code (DTC) Detecting Criteria.>

TROUBLE SYMPTOM:

- Improper idling
- Poor driving performance
- Engine stalls.

CAUTION:
After servicing or replacing faulty parts, perform Clear Memory Mode <Ref. to EN(H4DO HEV)(diag)-63, OPERATION, Clear Memory Mode.>, and Inspection Mode <Ref. to EN(H4DO HEV)(diag)-47, PROCEDURE, Inspection Mode.>.

WIRING DIAGRAM:

- Engine electrical system (without push button start) <Ref. to WI(HEV)-100, WITHOUT PUSH BUTTON START, WIRING DIAGRAM, Engine Electrical System.>
- Engine electrical system (with push button start) <Ref. to WI(HEV)-114, WITH PUSH BUTTON START, WIRING DIAGRAM, Engine Electrical System.>

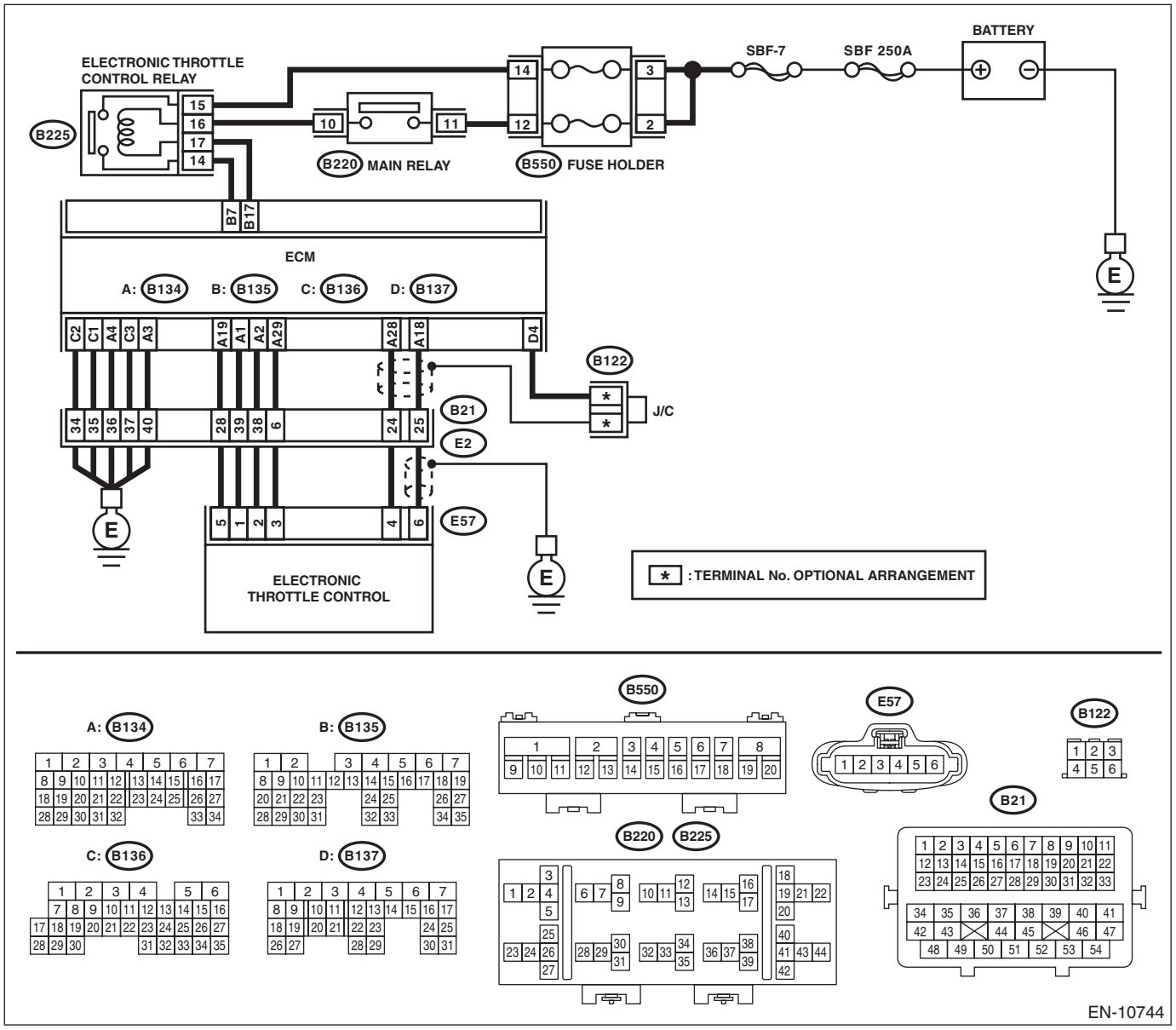

Step		Check	Yes	No
1	**CHECK HARNESS BETWEEN ECM AND ELECTRONIC THROTTLE CONTROL CONNECTOR.** 1) Turn the ignition switch to OFF. 2) Disconnect the connectors from ECM and electronic throttle control. 3) Measure the resistance of harness between ECM connector and electronic throttle control connector. ***Connector & terminal*** ***(B134) No. 28 — (E57) No. 4:*** ***(B134) No. 29 — (E57) No. 3:***	Is the resistance less than 1 Ω?	Go to step **2**.	Repair the harness and connector. NOTE: In this case, repair the following item: • Open circuit in harness between ECM connector and electronic throttle control connector • Poor contact of coupling connector

	Step	Check	Yes	No
2	**CHECK HARNESS BETWEEN ECM AND ELECTRONIC THROTTLE CONTROL CONNECTOR.** 1) Connect the connector to ECM. 2) Measure the resistance between electronic throttle control connector and engine ground. ***Connector & terminal*** ***(E57) No. 3 — Engine ground:***	Is the resistance less than 5 Ω?	Go to step **3**.	Repair the harness and connector. NOTE: In this case, repair the following item: • Open circuit of harness between ECM connector and engine ground • Poor contact of ECM connector • Poor contact of coupling connector
3	**CHECK HARNESS BETWEEN ECM AND ELECTRONIC THROTTLE CONTROL CONNECTOR.** 1) Turn the ignition switch to ON. 2) Measure the voltage between electronic throttle control connector and engine ground. ***Connector & terminal*** ***(E57) No. 4 (+) — Engine ground (–):***	Is the voltage 5 V or more?	Repair the short circuit to power in the harness between ECM connector and electronic throttle control connector.	Go to step **4**.
4	**CHECK HARNESS BETWEEN ECM AND ELECTRONIC THROTTLE CONTROL CONNECTOR.** 1) Turn the ignition switch to OFF. 2) Disconnect the connector from ECM. 3) Measure the resistance between ECM connectors. ***Connector & terminal*** ***(B134) No. 19 — (B134) No. 28:***	Is the resistance 1 MΩ or more?	Repair the poor contact of electronic throttle control connector. Replace the electronic throttle control if defective. <Ref. to FU(H4DO(HEV))-15, Throttle Body.>	Repair the short circuit to power in the harness between ECM connector and electronic throttle control connector.

BO:DTC P0300 RANDOM/MULTIPLE CYLINDER MISFIRE DETECTED

DTC DETECTING CONDITION:

- Detected when two consecutive driving cycles with fault occur.
- Immediately at fault recognition (A misfire which could damage catalyst occurs.)
- GENERAL DESCRIPTION <Ref. to GD(H4DO HEV)-114, DTC P0300 RANDOM/MULTIPLE CYLINDER MISFIRE DETECTED, Diagnostic Trouble Code (DTC) Detecting Criteria.>

TROUBLE SYMPTOM:

- Engine stalls.
- Improper idling
- Rough driving

CAUTION:

After servicing or replacing faulty parts, perform Clear Memory Mode <Ref. to EN(H4DO HEV)(diag)-63, OPERATION, Clear Memory Mode.>, and Inspection Mode <Ref. to EN(H4DO HEV)(diag)-47, PROCEDURE, Inspection Mode.>.

WIRING DIAGRAM:

- Engine electrical system (without push button start) <Ref. to WI(HEV)-100, WITHOUT PUSH BUTTON START, WIRING DIAGRAM, Engine Electrical System.>
- Engine electrical system (with push button start) <Ref. to WI(HEV)-114, WITH PUSH BUTTON START, WIRING DIAGRAM, Engine Electrical System.>

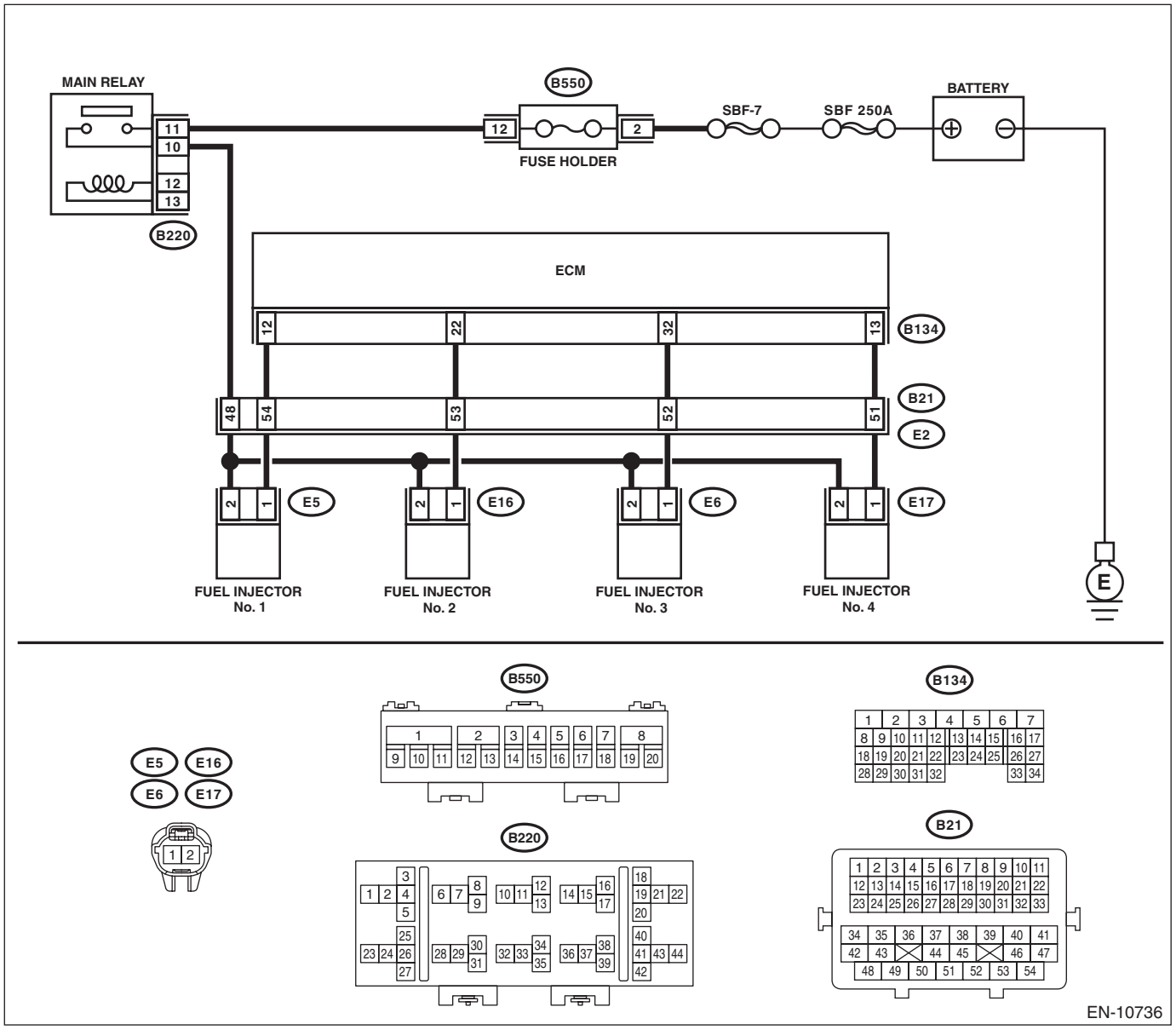

Step		Check	Yes	No
1	**CHECK OUTPUT SIGNAL OF ECM.** 1) Turn the ignition switch to ON. 2) Measure the voltage between ECM and chassis ground on all cylinders. ***Connector & terminal*** ***#1 (B134) No. 12 (+) — Chassis ground (–):*** ***#2 (B134) No. 22 (+) — Chassis ground (–):*** ***#3 (B134) No. 32 (+) — Chassis ground (–):*** ***#4 (B134) No. 13 (+) — Chassis ground (–):***	Is the voltage 10 V or more?	Go to step **6**.	Go to step **2**.

	Step	Check	Yes	No
2	**CHECK HARNESS BETWEEN ECM AND FUEL INJECTOR CONNECTOR.** 1) Turn the ignition switch to OFF. 2) Disconnect the connector from all fuel injectors. 3) Measure the resistance between all fuel injector connectors and engine ground. ***Connector & terminal*** ***#1 (E5) No. 1 — Engine ground:*** ***#2 (E16) No. 1 — Engine ground:*** ***#3 (E6) No. 1 — Engine ground:*** ***#4 (E17) No. 1 — Engine ground:***	Is the resistance 1 MΩ or more?	Go to step **3**.	Repair the short circuit to ground in harness between ECM connector and fuel injector connector.
3	**CHECK HARNESS BETWEEN ECM AND FUEL INJECTOR CONNECTOR.** Measure the resistance of harness between ECM and fuel injector connector on all cylinders. ***Connector & terminal*** ***#1 (B134) No. 12 — (E5) No. 1:*** ***#2 (B134) No. 22 — (E16) No. 1:*** ***#3 (B134) No. 32 — (E6) No. 1:*** ***#4 (B134) No. 13 — (E17) No. 1:***	Is the resistance less than 1 Ω?	Go to step **4**.	Repair the harness and connector. NOTE: In this case, repair the following item: • Open circuit in harness between ECM connector and fuel injector connector • Poor contact of coupling connector
4	**CHECK FUEL INJECTOR.** Measure the resistance between all fuel injector terminals. ***Terminals*** ***No. 1 — No. 2:***	Is the resistance 5 — 20 Ω?	Go to step **5**.	Replace the faulty fuel injector. <Ref. to FU(H4DO(HEV))-70, Fuel Injector.>
5	**CHECK POWER SUPPLY LINE.** 1) Turn the ignition switch to ON. 2) Measure the voltage between all fuel injector connectors and the engine ground. ***Connector & terminal*** ***#1 (E5) No. 2 (+) — Engine ground (–):*** ***#2 (E16) No. 2 (+) — Engine ground (–):*** ***#3 (E6) No. 2 (+) — Engine ground (–):*** ***#4 (E17) No. 2 (+) — Engine ground (–):***	Is the voltage 10 V or more?	Repair the poor contact of all connectors in fuel injector circuit.	Repair the harness and connector. NOTE: In this case, repair the following item: • Open circuit in harness between main relay connector and fuel injector connector • Poor contact of coupling connector • Poor contact of main relay connector
6	**CHECK HARNESS BETWEEN ECM AND FUEL INJECTOR CONNECTOR.** 1) Turn the ignition switch to OFF. 2) Disconnect the connector from all fuel injectors. 3) Turn the ignition switch to ON. 4) Measure the voltage between ECM and chassis ground on all cylinders. ***Connector & terminal*** ***#1 (B134) No. 12 (+) — Chassis ground (–):*** ***#2 (B134) No. 22 (+) — Chassis ground (–):*** ***#3 (B134) No. 32 (+) — Chassis ground (–):*** ***#4 (B134) No. 13 (+) — Chassis ground (–):***	Is the voltage 10 V or more?	Repair the short circuit to power in harness between ECM connector and fuel injector connectors.	Go to step **7**.

	Step	Check	Yes	No
7	**CHECK FUEL INJECTOR.** 1) Turn the ignition switch to OFF. 2) Measure the resistance between all fuel injector terminals. ***Terminals*** ***No. 1 — No. 2:***	Is the resistance 5 — 20 Ω?	Go to step **8**.	Replace the faulty fuel injector. <Ref. to FU(H4DO(HEV))-70, Fuel Injector.>
8	**CHECK INSTALLATION CONDITION OF CAMSHAFT POSITION SENSOR/CRANKSHAFT POSITION SENSOR.**	Is the camshaft position sensor or crankshaft position sensor loosely installed?	Tighten the camshaft position sensor or crankshaft position sensor. <Ref. to FU(H4DO(HEV))-53, INSTALLATION, Camshaft Position Sensor.> <Ref. to FU(H4DO(HEV))-48, INSTALLATION, Crankshaft Position Sensor.>	Go to step **9**.
9	**CHECK CRANKSHAFT POSITION SENSOR PLATE.**	Is the crankshaft position sensor plate rusted or does it have broken teeth?	Replace the crankshaft position sensor plate. <Ref. to ME(H4DO(w/o HEV))-299, Cylinder Block.>	Go to step **10**.
10	**CHECK INSTALLATION CONDITION OF TIMING CHAIN.** Turn the crankshaft using ST, and align the alignment mark on crank sprocket with alignment mark on cylinder block. ST 18252AA000 CRANKSHAFT SOCKET	Is the timing chain dislocated from its proper position?	Correct the installation condition of timing chain. <Ref. to ME(H4DO(w/o HEV))-163, Timing Chain Assembly.>	Go to step **11**.
11	**CHECK FUEL LEVEL.**	Is the fuel meter indication higher than the “Lower” level?	Go to step **12**.	Refill the fuel so that the fuel meter indication is higher than the “Lower” level, and proceed to the next step. Go to step **12**.
12	**CHECK STATUS OF MALFUNCTION INDICATOR LIGHT.** 1) Clear the memory using the Subaru Select Monitor. <Ref. to EN(H4DO HEV)(diag)-63, Clear Memory Mode.> 2) Start the engine, and drive the vehicle 10 minutes or more.	Does the malfunction indicator light illuminate or blink?	Go to step **14**.	Go to step **13**.

Step		Check	Yes	No
13	**CHECK CAUSE OF MISFIRE.**	Was the cause of misfire identified when the engine is running?	Finish diagnostics operation, if the engine has no abnormality.	Repair the poor contact of connector. NOTE: In this case, repair the following item: • Poor contact of ignition coil connector • Poor contact of fuel injector connector on faulty cylinders • Poor contact of ECM connector • Poor contact of coupling connector
14	**CHECK AIR INTAKE SYSTEM.**	Is there any fault in air intake system?	Repair the air intake system. NOTE: Check the following items. • Are there air leaks or air suction caused by loose or dislocated nuts and bolts? • Are there cracks or any disconnection of hoses?	Go to step **15**.
15	**CHECK ALL CYLINDERS.**	Is there a fault in any cylinder?	Repair or replace the faulty part of the faulty cylinder. NOTE: Check the following items. • Spark plug • Ignition coil • Fuel injector • Compression ratio • Skipping timing chain teeth	Go to DTC P0171. <Ref. to EN(H4DO HEV)(diag)-180, DTC P0171 SYSTEM TOO LEAN (BANK 1), Diagnostic Procedure with Diagnostic Trouble Code (DTC).>

BP:DTC P0301 CYLINDER 1 MISFIRE DETECTED

NOTE:
For the diagnostic procedure, refer to DTC P0304. <Ref. to EN(H4DO HEV)(diag)-205, DTC P0304 CYLINDER 4 MISFIRE DETECTED, Diagnostic Procedure with Diagnostic Trouble Code (DTC).>

BQ:DTC P0302 CYLINDER 2 MISFIRE DETECTED

NOTE:
For the diagnostic procedure, refer to DTC P0304. <Ref. to EN(H4DO HEV)(diag)-205, DTC P0304 CYLINDER 4 MISFIRE DETECTED, Diagnostic Procedure with Diagnostic Trouble Code (DTC).>

BR:DTC P0303 CYLINDER 3 MISFIRE DETECTED

NOTE:
For the diagnostic procedure, refer to DTC P0304. <Ref. to EN(H4DO HEV)(diag)-205, DTC P0304 CYLINDER 4 MISFIRE DETECTED, Diagnostic Procedure with Diagnostic Trouble Code (DTC).>

BS:DTC P0304 CYLINDER 4 MISFIRE DETECTED

DTC DETECTING CONDITION:

- Detected when two consecutive driving cycles with fault occur.
- Immediately at fault recognition (A misfire which could damage catalyst occurs.)
- GENERAL DESCRIPTION <Ref. to GD(H4DO HEV)-122, DTC P0304 CYLINDER 4 MISFIRE DETECTED, Diagnostic Trouble Code (DTC) Detecting Criteria.>

TROUBLE SYMPTOM:

- Engine stalls.
- Improper idling
- Rough driving

CAUTION:

After servicing or replacing faulty parts, perform Clear Memory Mode <Ref. to EN(H4DO HEV)(diag)-63, OPERATION, Clear Memory Mode.>, and Inspection Mode <Ref. to EN(H4DO HEV)(diag)-47, PROCEDURE, Inspection Mode.>.

WIRING DIAGRAM:

- Engine electrical system (without push button start) <Ref. to WI(HEV)-100, WITHOUT PUSH BUTTON START, WIRING DIAGRAM, Engine Electrical System.>
- Engine electrical system (with push button start) <Ref. to WI(HEV)-114, WITH PUSH BUTTON START, WIRING DIAGRAM, Engine Electrical System.>

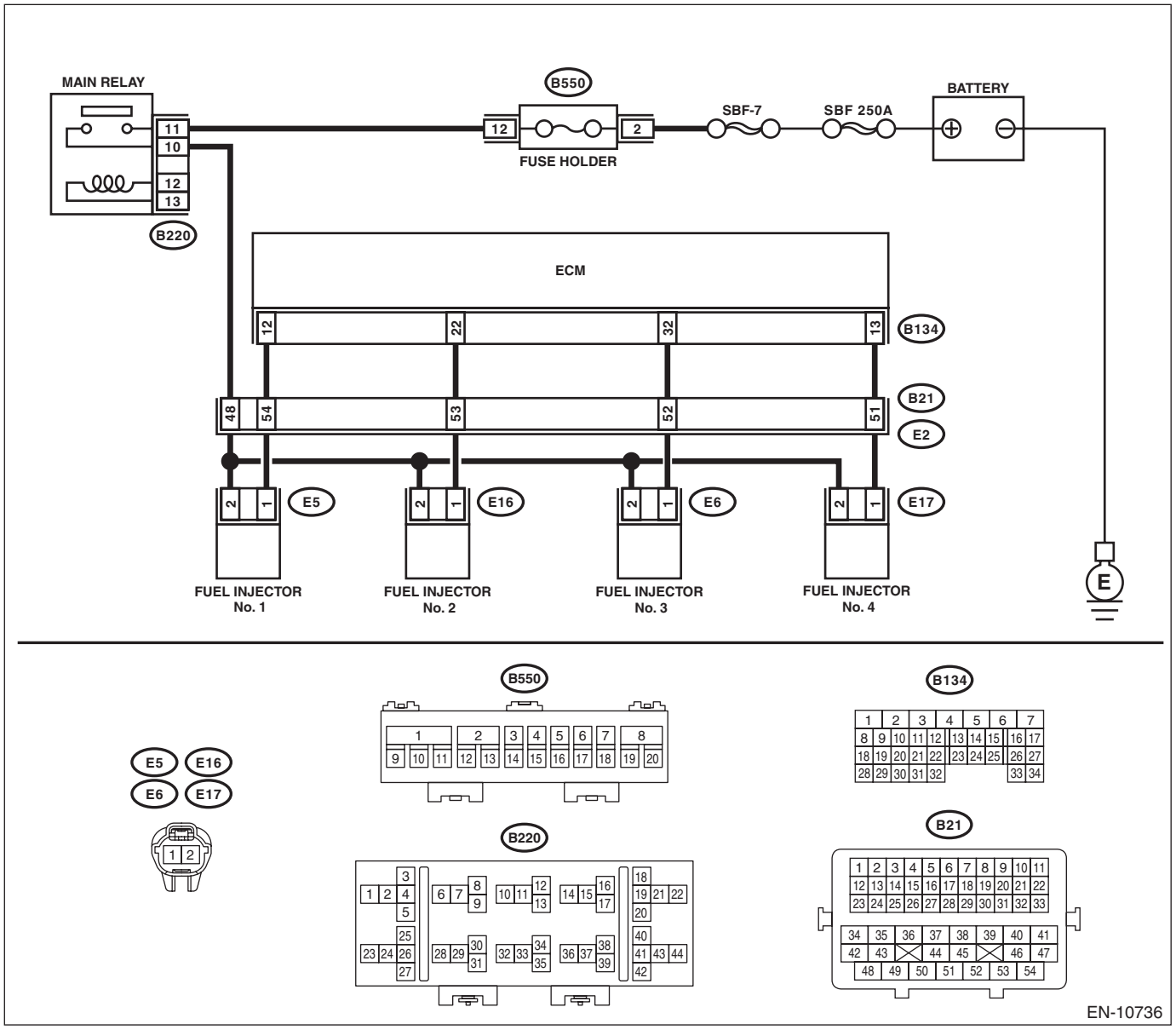

Step		Check	Yes	No
1	**CHECK OUTPUT SIGNAL OF ECM.** 1) Turn the ignition switch to ON. 2) Measure the voltage between ECM and chassis ground on faulty cylinders. ***Connector & terminal*** ***#1 (B134) No. 12 (+) — Chassis ground (–):*** ***#2 (B134) No. 22 (+) — Chassis ground (–):*** ***#3 (B134) No. 32 (+) — Chassis ground (–):*** ***#4 (B134) No. 13 (+) — Chassis ground (–):***	Is the voltage 10 V or more?	Go to step **6**.	Go to step **2**.

	Step	Check	Yes	No
2	**CHECK HARNESS BETWEEN ECM AND FUEL INJECTOR CONNECTOR.** 1) Turn the ignition switch to OFF. 2) Disconnect the connector from fuel injector on faulty cylinders. 3) Measure the resistance between fuel injector connector and engine ground on faulty cylinders. ***Connector & terminal*** ***#1 (E5) No. 1 — Engine ground:*** ***#2 (E16) No. 1 — Engine ground:*** ***#3 (E6) No. 1 — Engine ground:*** ***#4 (E17) No. 1 — Engine ground:***	Is the resistance 1 MΩ or more?	Go to step **3**.	Repair the short circuit to ground in harness between ECM connector and fuel injector connector.
3	**CHECK HARNESS BETWEEN ECM AND FUEL INJECTOR CONNECTOR.** Measure the resistance of harness between ECM and fuel injector connector on faulty cylinders. ***Connector & terminal*** ***#1 (B134) No. 12 — (E5) No. 1:*** ***#2 (B134) No. 22 — (E16) No. 1:*** ***#3 (B134) No. 32 — (E6) No. 1:*** ***#4 (B134) No. 13 — (E17) No. 1:***	Is the resistance less than 1 Ω?	Go to step **4**.	Repair the harness and connector. NOTE: In this case, repair the following item: • Open circuit in harness between ECM connector and fuel injector connector • Poor contact of coupling connector
4	**CHECK FUEL INJECTOR.** Measure the resistance between fuel injector terminals on faulty cylinder. ***Terminals*** ***No. 1 — No. 2:***	Is the resistance 5 — 20 Ω?	Go to step **5**.	Replace the faulty fuel injector. <Ref. to FU(H4DO(HEV))-70, Fuel Injector.>
5	**CHECK POWER SUPPLY LINE.** 1) Turn the ignition switch to ON. 2) Measure the voltage between fuel injector and engine ground on faulty cylinders. ***Connector & terminal*** ***#1 (E5) No. 2 (+) — Engine ground (–):*** ***#2 (E16) No. 2 (+) — Engine ground (–):*** ***#3 (E6) No. 2 (+) — Engine ground (–):*** ***#4 (E17) No. 2 (+) — Engine ground (–):***	Is the voltage 10 V or more?	Repair the poor contact of all connectors in fuel injector circuit.	Repair the harness and connector. NOTE: In this case, repair the following item: • Open circuit in harness between the main relay connector and fuel injector connector on faulty cylinders • Poor contact of coupling connector • Poor contact of main relay connector
6	**CHECK HARNESS BETWEEN ECM AND FUEL INJECTOR CONNECTOR.** 1) Turn the ignition switch to OFF. 2) Disconnect the connector from fuel injector on faulty cylinders. 3) Turn the ignition switch to ON. 4) Measure the voltage between ECM and chassis ground on faulty cylinders. ***Connector & terminal*** ***#1 (B134) No. 12 (+) — Chassis ground (–):*** ***#2 (B134) No. 22 (+) — Chassis ground (–):*** ***#3 (B134) No. 32 (+) — Chassis ground (–):*** ***#4 (B134) No. 13 (+) — Chassis ground (–):***	Is the voltage 10 V or more?	Repair the short circuit to power in harness between ECM connector and fuel injector connectors.	Go to step **7**.

	Step	Check	Yes	No
7	**CHECK FUEL INJECTOR.** 1) Turn the ignition switch to OFF. 2) Measure the resistance between fuel injector terminals on faulty cylinder. ***Terminals*** ***No. 1 — No. 2:***	Is the resistance 5 — 20 Ω?	Go to step **8**.	Replace the faulty fuel injector. <Ref. to FU(H4DO(HEV))-70, Fuel Injector.>
8	**CHECK INSTALLATION CONDITION OF CAMSHAFT POSITION SENSOR/CRANKSHAFT POSITION SENSOR.**	Is the camshaft position sensor or crankshaft position sensor loosely installed?	Tighten the camshaft position sensor or crankshaft position sensor. <Ref. to FU(H4DO(HEV))-53, INSTALLATION, Camshaft Position Sensor.> <Ref. to FU(H4DO(HEV))-48, INSTALLATION, Crankshaft Position Sensor.>	Go to step **9**.
9	**CHECK CRANKSHAFT POSITION SENSOR PLATE.**	Is the crankshaft position sensor plate rusted or does it have broken teeth?	Replace the crankshaft position sensor plate. <Ref. to ME(H4DO(w/o HEV))-299, Cylinder Block.>	Go to step **10**.
10	**CHECK INSTALLATION CONDITION OF TIMING CHAIN.** Turn the crankshaft using ST, and align the alignment mark on crank sprocket with alignment mark on cylinder block. ST 18252AA000 CRANKSHAFT SOCKET	Is the timing chain dislocated from its proper position?	Correct the installation condition of timing chain. <Ref. to ME(H4DO(w/o HEV))-163, Timing Chain Assembly.>	Go to step **11**.
11	**CHECK FUEL LEVEL.**	Is the fuel meter indication higher than the “Lower” level?	Go to step **12**.	Refill the fuel so that the fuel meter indication is higher than the “Lower” level, and proceed to the next step. Go to step **12**.
12	**CHECK STATUS OF MALFUNCTION INDICATOR LIGHT.** 1) Clear the memory using the Subaru Select Monitor. <Ref. to EN(H4DO HEV)(diag)-63, Clear Memory Mode.> 2) Start the engine, and drive the vehicle 10 minutes or more.	Does the malfunction indicator light illuminate or blink?	Go to step **14**.	Go to step **13**.

Step		Check	Yes	No
13	CHECK CAUSE OF MISFIRE.	Was the cause of misfire identified when the engine is running?	Finish diagnostics operation, if the engine has no abnormality.	Repair the poor contact of connector. NOTE: In this case, repair the following item: • Poor contact of ignition coil connector • Poor contact of fuel injector connector on faulty cylinders • Poor contact of ECM connector • Poor contact of coupling connector
14	CHECK AIR INTAKE SYSTEM.	Is there any fault in air intake system?	Repair the air intake system. NOTE: Check the following items. • Are there air leaks or air suction caused by loose or dislocated nuts and bolts? • Are there cracks or any disconnection of hoses?	Go to step **15**.
15	CHECK CYLINDER.	Is there any fault in the cylinder?	Repair or replace faulty parts. NOTE: Check the following items. • Spark plug • Ignition coil • Fuel injector • Compression ratio • Skipping timing chain teeth	Go to DTC P0171. <Ref. to EN(H4DO HEV)(diag)-180, DTC P0171 SYSTEM TOO LEAN (BANK 1), Diagnostic Procedure with Diagnostic Trouble Code (DTC).>

BT:DTC P0327 KNOCK SENSOR 1 CIRCUIT LOW (BANK 1 OR SINGLE SENSOR)

DTC DETECTING CONDITION:

- Immediately at fault recognition
- GENERAL DESCRIPTION <Ref. to GD(H4DO HEV)-123, DTC P0327 KNOCK SENSOR 1 CIRCUIT LOW (BANK 1 OR SINGLE SENSOR), Diagnostic Trouble Code (DTC) Detecting Criteria.>

TROUBLE SYMPTOM:

- Poor driving performance
- Knocking occurs

CAUTION:

After servicing or replacing faulty parts, perform Clear Memory Mode <Ref. to EN(H4DO HEV)(diag)-63, OPERATION, Clear Memory Mode.>, and Inspection Mode <Ref. to EN(H4DO HEV)(diag)-47, PROCEDURE, Inspection Mode.>.

WIRING DIAGRAM:

- Engine electrical system (without push button start) <Ref. to WI(HEV)-100, WITHOUT PUSH BUTTON START, WIRING DIAGRAM, Engine Electrical System.>
- Engine electrical system (with push button start) <Ref. to WI(HEV)-114, WITH PUSH BUTTON START, WIRING DIAGRAM, Engine Electrical System.>

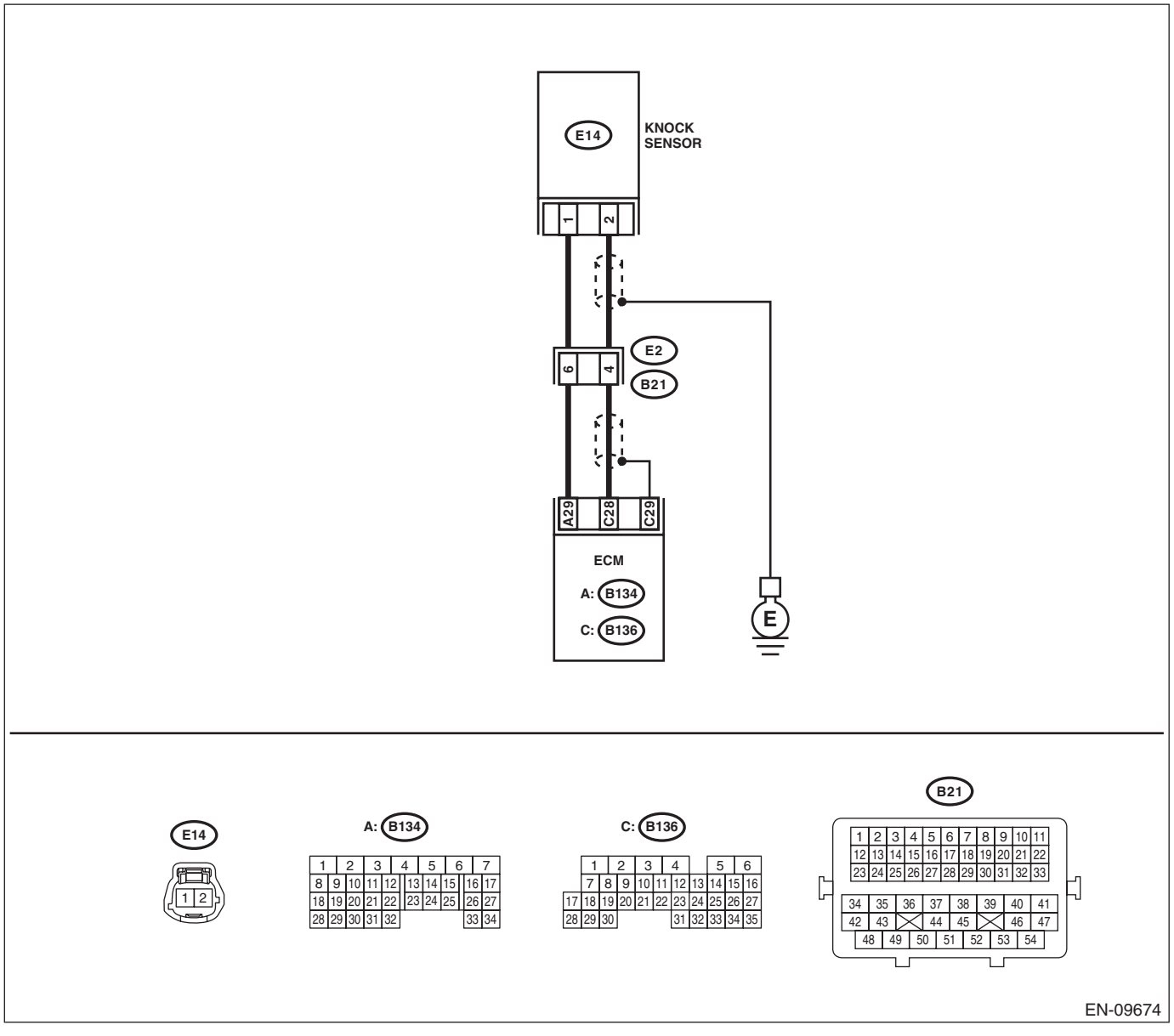

	Step	Check	Yes	No
1	**CHECK HARNESS BETWEEN ECM AND KNOCK SENSOR CONNECTOR.** 1) Turn the ignition switch to OFF. 2) Disconnect the connector from ECM. 3) Measure the resistance between ECM connectors. ***Connector & terminal*** ***(B136) No. 28 — (B134) No. 29:***	Is the resistance less than 500 kΩ?	Go to step **2**.	Go to step **3**.
2	**CHECK KNOCK SENSOR.** 1) Disconnect the connector from the knock sensor. 2) Measure the resistance between knock sensor terminals. ***Terminals*** ***No. 1 — No. 2:***	Is the resistance less than 500 kΩ?	Replace the knock sensor. <Ref. to FU(H4DO(HEV))-60, Knock Sensor.>	Repair the short circuit to ground in harness between ECM connector and knock sensor connector. NOTE: The harness between both connectors are shielded. Remove the shield and repair the short circuit of harness.
3	**CHECK INPUT SIGNAL OF ECM.** 1) Connect the connector to ECM. 2) Turn the ignition switch to ON. 3) Measure the voltage between ECM connector and chassis ground. ***Connector & terminal*** ***(B136) No. 28 (+) — Chassis ground (–):***	Is the voltage 2 V or more?	Even if DTC is detected, the circuit has returned to a normal condition at this time. Reproduce the failure, and then perform the diagnosis again. NOTE: In this case, temporary poor contact of connector, temporary open or short circuit of harness may be the cause.	Repair the short circuit to ground in harness between ECM connector and knock sensor connector. NOTE: The harness between both connectors are shielded. Remove the shield and repair the short circuit of harness.

BU:DTC P0328 KNOCK SENSOR 1 CIRCUIT HIGH (BANK 1 OR SINGLE SENSOR)

DTC DETECTING CONDITION:

- Immediately at fault recognition
- GENERAL DESCRIPTION <Ref. to GD(H4DO HEV)-125, DTC P0328 KNOCK SENSOR 1 CIRCUIT HIGH (BANK 1 OR SINGLE SENSOR), Diagnostic Trouble Code (DTC) Detecting Criteria.>

TROUBLE SYMPTOM:

- Poor driving performance
- Knocking occurs

CAUTION:

After servicing or replacing faulty parts, perform Clear Memory Mode <Ref. to EN(H4DO HEV)(diag)-63, OPERATION, Clear Memory Mode.>, and Inspection Mode <Ref. to EN(H4DO HEV)(diag)-47, PROCEDURE, Inspection Mode.>.

WIRING DIAGRAM:

- Engine electrical system (without push button start) <Ref. to WI(HEV)-100, WITHOUT PUSH BUTTON START, WIRING DIAGRAM, Engine Electrical System.>
- Engine electrical system (with push button start) <Ref. to WI(HEV)-114, WITH PUSH BUTTON START, WIRING DIAGRAM, Engine Electrical System.>

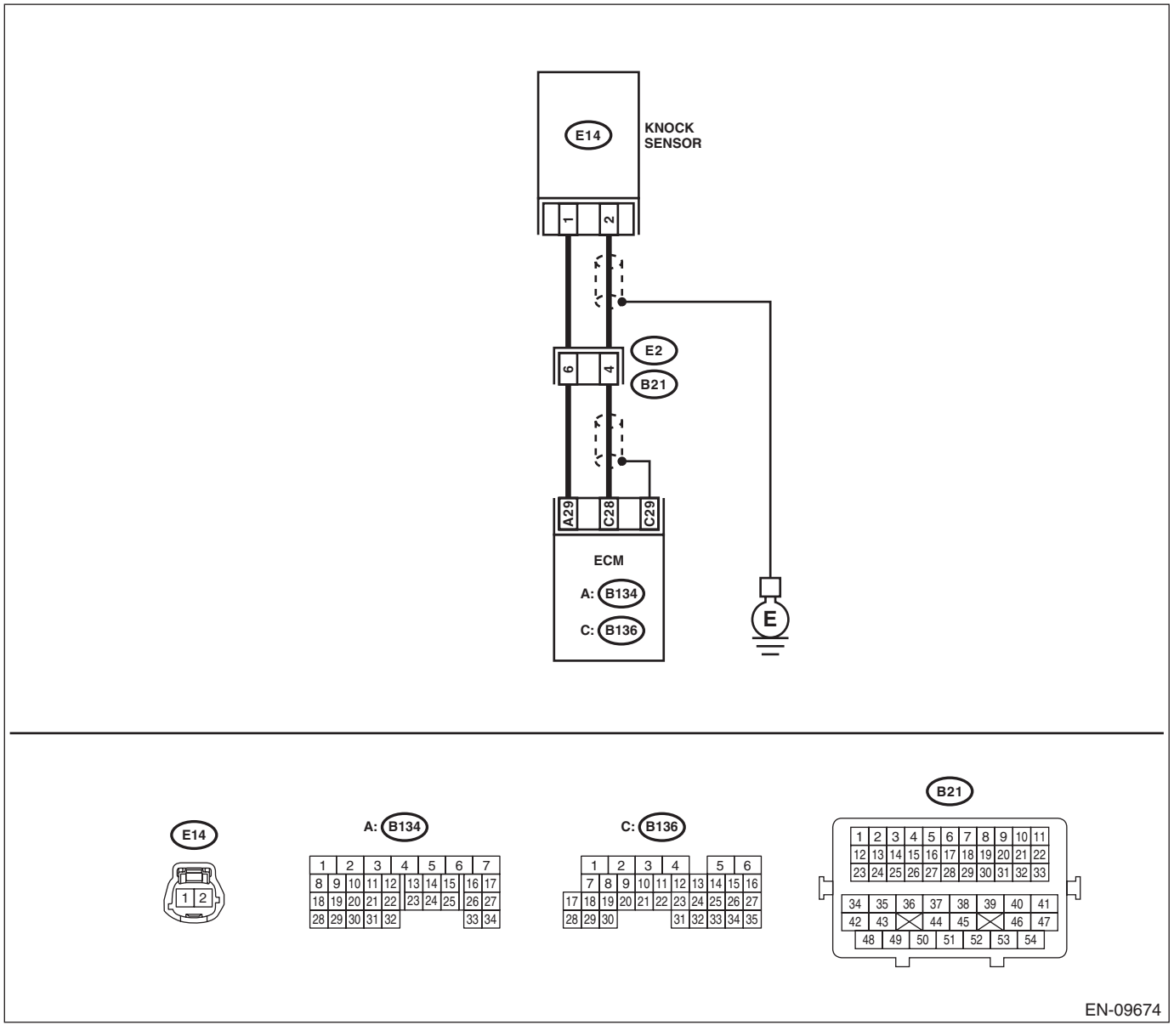

	Step	Check	Yes	No
1	**CHECK HARNESS BETWEEN ECM AND KNOCK SENSOR CONNECTOR.** 1) Turn the ignition switch to OFF. 2) Disconnect the connector from ECM. 3) Measure the resistance between ECM connectors. ***Connector & terminal*** ***(B136) No. 28 — (B134) No. 29:***	Is the resistance 600 kΩ or more?	Go to step **2**.	Repair the poor contact of ECM connector.
2	**CHECK KNOCK SENSOR.** 1) Disconnect the connector from the knock sensor. 2) Measure the resistance between knock sensor terminals. ***Terminals*** ***No. 1 — No. 2:***	Is the resistance 600 kΩ or more?	Replace the knock sensor. <Ref. to FU(H4DO(HEV))-60, Knock Sensor.>	Repair the harness and connector. NOTE: In this case, repair the following item: • Open circuit in harness between ECM connector and knock sensor connector • Poor contact of knock sensor connector • Poor contact of coupling connector

BV:DTC P0335 CRANKSHAFT POSITION SENSOR “A” CIRCUIT

DTC DETECTING CONDITION:

- Immediately at fault recognition
- GENERAL DESCRIPTION <Ref. to GD(H4DO HEV)-127, DTC P0335 CRANKSHAFT POSITION SENSOR “A” CIRCUIT, Diagnostic Trouble Code (DTC) Detecting Criteria.>

TROUBLE SYMPTOM:

- Engine stalls.
- Failure of engine to start

CAUTION:

After servicing or replacing faulty parts, perform Clear Memory Mode <Ref. to EN(H4DO HEV)(diag)-63, OPERATION, Clear Memory Mode.>, and Inspection Mode <Ref. to EN(H4DO HEV)(diag)-47, PROCEDURE, Inspection Mode.>.

WIRING DIAGRAM:

- Engine electrical system (without push button start) <Ref. to WI(HEV)-100, WITHOUT PUSH BUTTON START, WIRING DIAGRAM, Engine Electrical System.>
- Engine electrical system (with push button start) <Ref. to WI(HEV)-114, WITH PUSH BUTTON START, WIRING DIAGRAM, Engine Electrical System.>

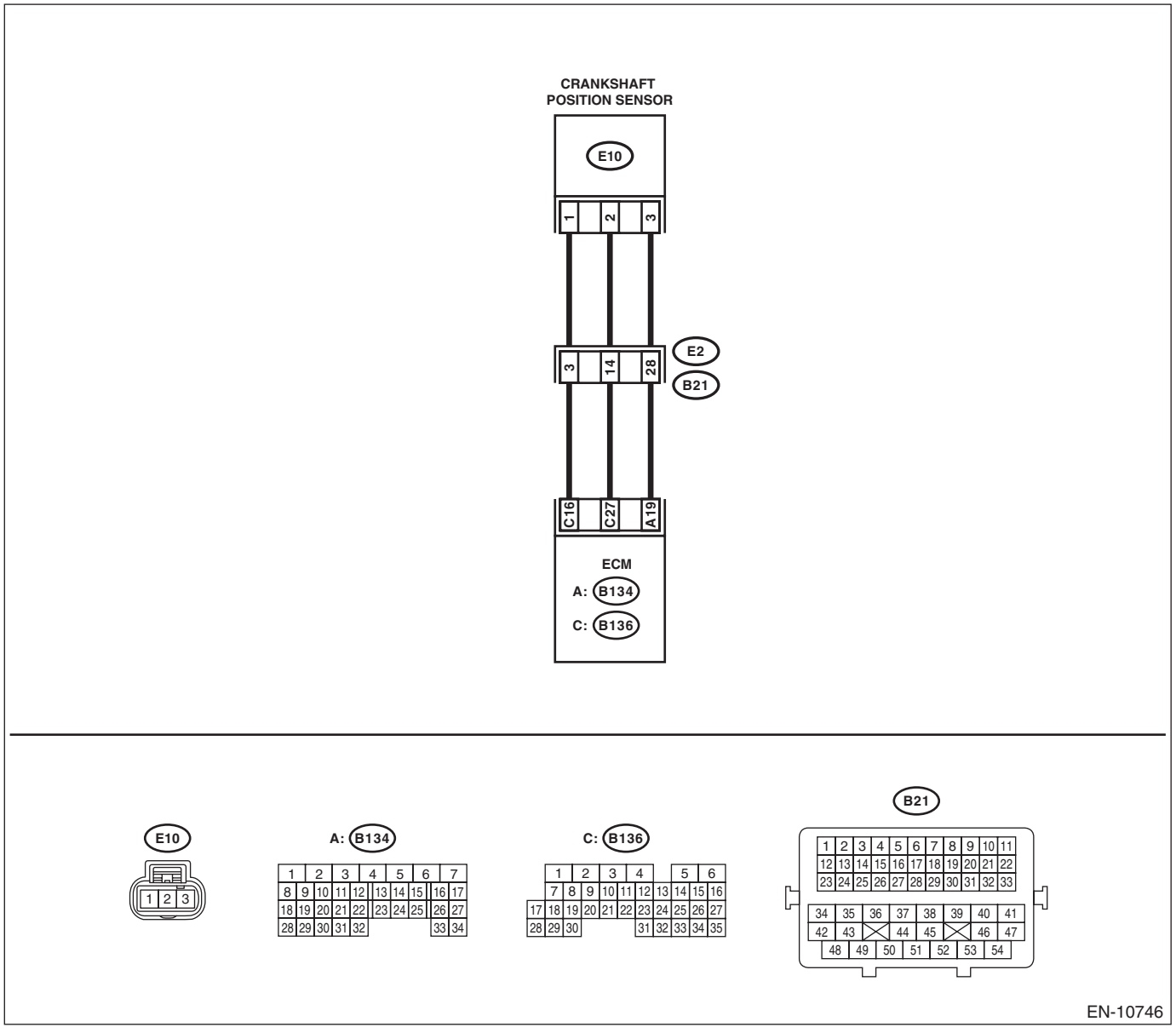

	Step	Check	Yes	No
1	**CHECK CONDITION OF CRANKSHAFT POSITION SENSOR.**	Is the crankshaft position sensor installation bolt tightened securely?	Go to step **2**.	Tighten the crankshaft position sensor installation bolt securely. <Ref. to FU(H4DO(HEV))-48, INSTALLATION, Crankshaft Position Sensor.>
2	**CHECK POWER SUPPLY OF CRANKSHAFT POSITION SENSOR.** 1) Turn the ignition switch to OFF. 2) Disconnect the connector from the crankshaft position sensor. 3) Turn the ignition switch to ON. 4) Measure the voltage between crankshaft position sensor connector and engine ground. ***Connector & terminal*** ***(E10) No. 3 (+) — Engine ground (–):***	Is the voltage 4.5 V or more?	Go to step **3**.	Repair the harness and connector. NOTE: In this case, repair the following item: • Open circuit in harness between ECM connector and crankshaft position sensor connector • Poor contact of ECM connector • Poor contact of coupling connector
3	**CHECK HARNESS BETWEEN ECM AND CRANKSHAFT POSITION SENSOR CONNECTOR.** 1) Turn the ignition switch to OFF. 2) Disconnect the connector from ECM. 3) Measure the resistance between ECM connector and crankshaft position sensor connector. ***Connector & terminal*** ***(B136) No. 16 — (E10) No. 1:*** ***(B136) No. 27 — (E10) No. 2:***	Is the resistance less than 1 Ω?	Go to step **4**.	Repair the harness and connector. NOTE: In this case, repair the following item: • Open circuit in harness between ECM connector and crankshaft position sensor connector • Poor contact of coupling connector
4	**CHECK HARNESS BETWEEN ECM AND CRANKSHAFT POSITION SENSOR CONNECTOR.** Measure the resistance between crankshaft position sensor connector and engine ground. ***Connector & terminal*** ***(E10) No. 1 — Engine ground:*** ***(E10) No. 2 — Engine ground:***	Is the resistance 1 MΩ or more?	Go to step **5**.	Repair short circuit to ground in harness between ECM connector and crankshaft position sensor connector.
5	**CHECK HARNESS BETWEEN ECM AND CRANKSHAFT POSITION SENSOR CONNECTOR.** Measure the voltage between crankshaft position sensor connector and engine ground. ***Connector & terminal*** ***(E10) No. 1 (+) — Engine ground (–):*** ***(E10) No. 2 (+) — Engine ground (–):***	Is the voltage 5 V or more?	Repair the short circuit to power in the harness between ECM connector and crankshaft position sensor connector.	Go to step **6**.

Step		Check	Yes	No
6	**CHECK CRANKSHAFT POSITION SENSOR.** Check waveform of crankshaft position sensor. <Ref. to EN(H4DO HEV)(diag)-19, Control Module I/O Signal.>	Is there any abnormality in waveform?	Replace the crankshaft position sensor. <Ref. to FU(H4DO(HEV))-46, Crankshaft Position Sensor.>	Repair the following item. • Poor contact of ECM connector • Poor contact of crankshaft position sensor connector • Poor contact of coupling connector

BW:DTC P0336 CRANKSHAFT POSITION SENSOR “A” CIRCUIT RANGE/PERFORMANCE

DTC DETECTING CONDITION:

- Detected when two consecutive driving cycles with fault occur.
- GENERAL DESCRIPTION <Ref. to GD(H4DO HEV)-129, DTC P0336 CRANKSHAFT POSITION SENSOR “A” CIRCUIT RANGE/PERFORMANCE, Diagnostic Trouble Code (DTC) Detecting Criteria.>

TROUBLE SYMPTOM:

- Engine stalls.
- Failure of engine to start

CAUTION:
After servicing or replacing faulty parts, perform Clear Memory Mode <Ref. to EN(H4DO HEV)(diag)-63, OPERATION, Clear Memory Mode.>, and Inspection Mode <Ref. to EN(H4DO HEV)(diag)-47, PROCEDURE, Inspection Mode.>.

	Step	Check	Yes	No
1	**CHECK CONDITION OF CRANKSHAFT POSITION SENSOR.** Turn the ignition switch to OFF.	Is the crankshaft position sensor installation bolt tightened securely?	Go to step **2**.	Tighten the crankshaft position sensor installation bolt securely. <Ref. to FU(H4DO(HEV))-48, INSTALLATION, Crankshaft Position Sensor.>
2	**CHECK CRANKSHAFT POSITION SENSOR PLATE.**	Is there crack or damage in the crankshaft position sensor plate teeth?	Replace the crankshaft position sensor plate. <Ref. to ME(H4DO(w/o HEV))-299, Cylinder Block.>	Go to step **3**.
3	**CHECK INSTALLATION CONDITION OF TIMING CHAIN.** Turn the crankshaft, and align alignment mark on crank sprocket with alignment mark on cylinder block. ST 18252AA000 CRANKSHAFT SOCKET	Is the timing chain dislocated from its proper position?	Correct the installation condition of timing chain. <Ref. to ME(H4DO(w/o HEV))-163, Timing Chain Assembly.>	Replace the crankshaft position sensor. <Ref. to FU(H4DO(HEV))-46, Crankshaft Position Sensor.>

BX:DTC P0340 CAMSHAFT POSITION SENSOR “A” CIRCUIT (BANK 1 OR SINGLE SENSOR)

DTC DETECTING CONDITION:

- Immediately at fault recognition
- GENERAL DESCRIPTION <Ref. to GD(H4DO HEV)-131, DTC P0340 CAMSHAFT POSITION SENSOR “A” CIRCUIT (BANK 1 OR SINGLE SENSOR), Diagnostic Trouble Code (DTC) Detecting Criteria.>

TROUBLE SYMPTOM:

- Engine stalls.
- Failure of engine to start

CAUTION:

After servicing or replacing faulty parts, perform Clear Memory Mode <Ref. to EN(H4DO HEV)(diag)-63, OPERATION, Clear Memory Mode.>, and Inspection Mode <Ref. to EN(H4DO HEV)(diag)-47, PROCEDURE, Inspection Mode.>.

WIRING DIAGRAM:

- Engine electrical system (without push button start) <Ref. to WI(HEV)-100, WITHOUT PUSH BUTTON START, WIRING DIAGRAM, Engine Electrical System.>
- Engine electrical system (with push button start) <Ref. to WI(HEV)-114, WITH PUSH BUTTON START, WIRING DIAGRAM, Engine Electrical System.>

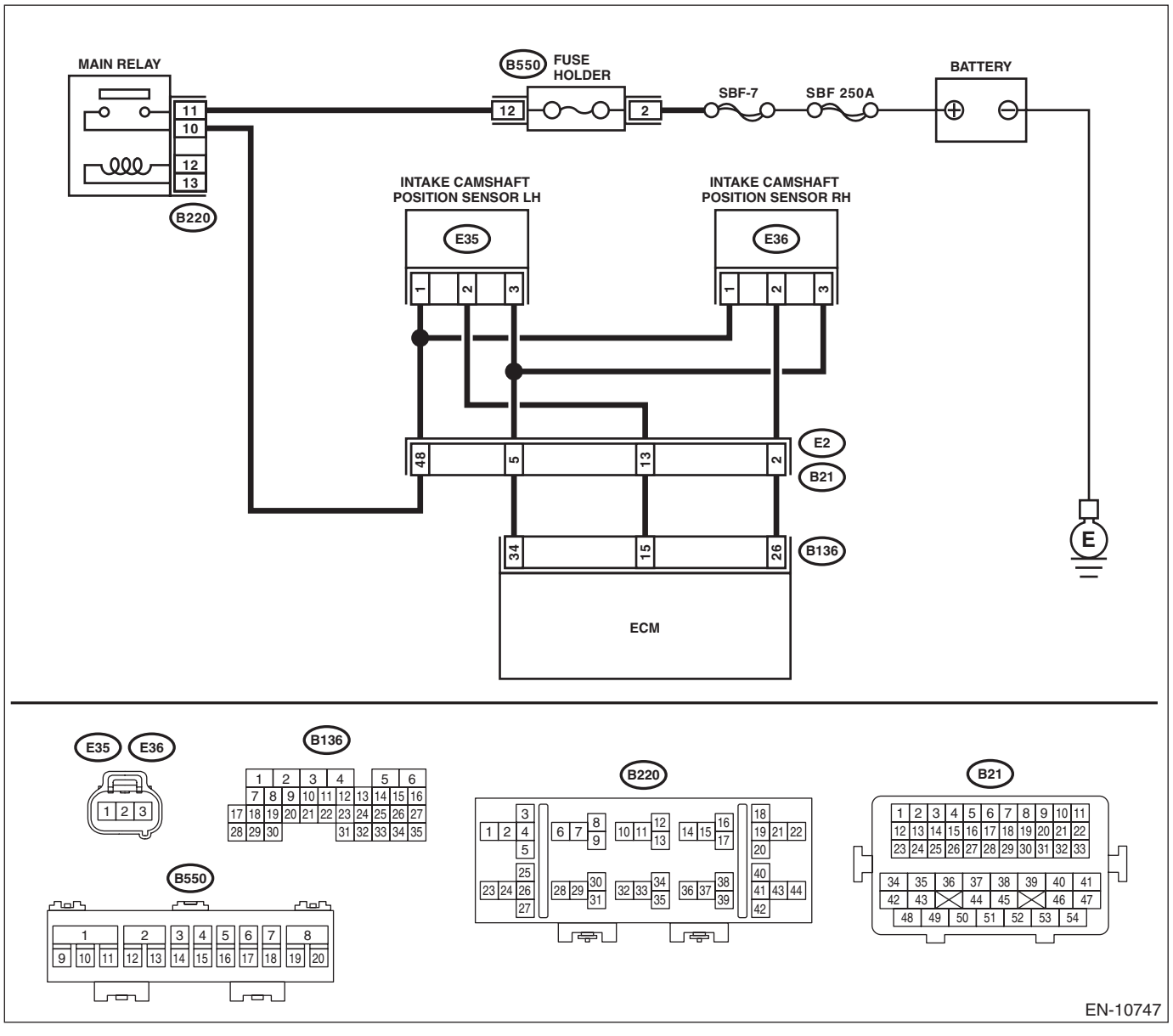

	Step	Check	Yes	No
1	**CHECK POWER SUPPLY OF CAMSHAFT POSITION SENSOR.** 1) Turn the ignition switch to OFF. 2) Disconnect the connector from camshaft position sensor. 3) Turn the ignition switch to ON. 4) Measure the voltage between camshaft position sensor connector and engine ground. ***Connector & terminal*** ***(E36) No. 1 (+) — Engine ground (–):***	Is the voltage 10 V or more?	Go to step **2**.	Repair the harness and connector. NOTE: In this case, repair the following item: • Open circuit or short circuit to ground in harness between main relay connector and camshaft position sensor connector • Poor contact of coupling connector
2	**CHECK HARNESS BETWEEN ECM AND CAMSHAFT POSITION SENSOR CONNECTOR.** 1) Turn the ignition switch to OFF. 2) Disconnect the connector from ECM. 3) Measure the resistance between ECM connector and camshaft position sensor connector. ***Connector & terminal*** ***(B136) No. 26 — (E36) No. 2:*** ***(B136) No. 34 — (E36) No. 3:***	Is the resistance less than 1 Ω?	Go to step **3**.	Repair the harness and connector. NOTE: In this case, repair the following item: • Open circuit in harness between ECM connector and camshaft position sensor connector • Poor contact of coupling connector
3	**CHECK HARNESS BETWEEN ECM AND CAMSHAFT POSITION SENSOR CONNECTOR.** Measure the resistance between camshaft position sensor connector and engine ground. ***Connector & terminal*** ***(E36) No. 2 — Engine ground:***	Is the resistance 1 MΩ or more?	Go to step **4**.	Repair short circuit to ground in harness between ECM connector and camshaft position sensor connector.
4	**CHECK HARNESS BETWEEN ECM AND CAMSHAFT POSITION SENSOR CONNECTOR.** Measure the voltage between camshaft position sensor connector and engine ground. ***Connector & terminal*** ***(E36) No. 2 (+) — Engine ground (–):***	Is the voltage 5 V or more?	Repair the short circuit to power in the harness between ECM connector and camshaft position sensor connector.	Go to step **5**.
5	**CHECK CONDITION OF CAMSHAFT POSITION SENSOR.**	Is the camshaft position sensor installation bolt tightened securely?	Go to step **6**.	Tighten the camshaft position sensor installation bolt securely. <Ref. to FU(H4DO(HEV))-53, INSTALLATION, Camshaft Position Sensor.>
6	**CHECK CAMSHAFT POSITION SENSOR.** Check the waveform of the camshaft position sensor. <Ref. to EN(H4DO HEV)(diag)-19, ENGINE CONTROL MODULE (ECM), ELECTRICAL SPECIFICATION, Control Module I/O Signal.>	Is there any abnormality in waveform?	Replace the camshaft position sensor. <Ref. to FU(H4DO(HEV))-52, Camshaft Position Sensor.>	Repair the following item. • Poor contact of ECM connector • Poor contact of camshaft position sensor connector • Poor contact of coupling connector

BY:DTC P0341 CAMSHAFT POSITION SENSOR "A" CIRCUIT RANGE/PERFORMANCE (BANK 1 OR SINGLE SENSOR)

NOTE:
For the diagnostic procedure, refer to DTC P0340. <Ref. to EN(H4DO HEV)(diag)-218, DTC P0340 CAMSHAFT POSITION SENSOR “A” CIRCUIT (BANK 1 OR SINGLE SENSOR), Diagnostic Procedure with Diagnostic Trouble Code (DTC).>

BZ:DTC P0345 CAMSHAFT POSITION SENSOR “A” CIRCUIT (BANK 2)

DTC DETECTING CONDITION:

- Immediately at fault recognition
- GENERAL DESCRIPTION <Ref. to GD(H4DO HEV)-134, DTC P0345 CAMSHAFT POSITION SENSOR “A” CIRCUIT (BANK 2), Diagnostic Trouble Code (DTC) Detecting Criteria.>

TROUBLE SYMPTOM:

- Engine stalls.
- Failure of engine to start

CAUTION:

After servicing or replacing faulty parts, perform Clear Memory Mode <Ref. to EN(H4DO HEV)(diag)-63, OPERATION, Clear Memory Mode.>, and Inspection Mode <Ref. to EN(H4DO HEV)(diag)-47, PROCEDURE, Inspection Mode.>.

WIRING DIAGRAM:

- Engine electrical system (without push button start) <Ref. to WI(HEV)-100, WITHOUT PUSH BUTTON START, WIRING DIAGRAM, Engine Electrical System.>
- Engine electrical system (with push button start) <Ref. to WI(HEV)-114, WITH PUSH BUTTON START, WIRING DIAGRAM, Engine Electrical System.>

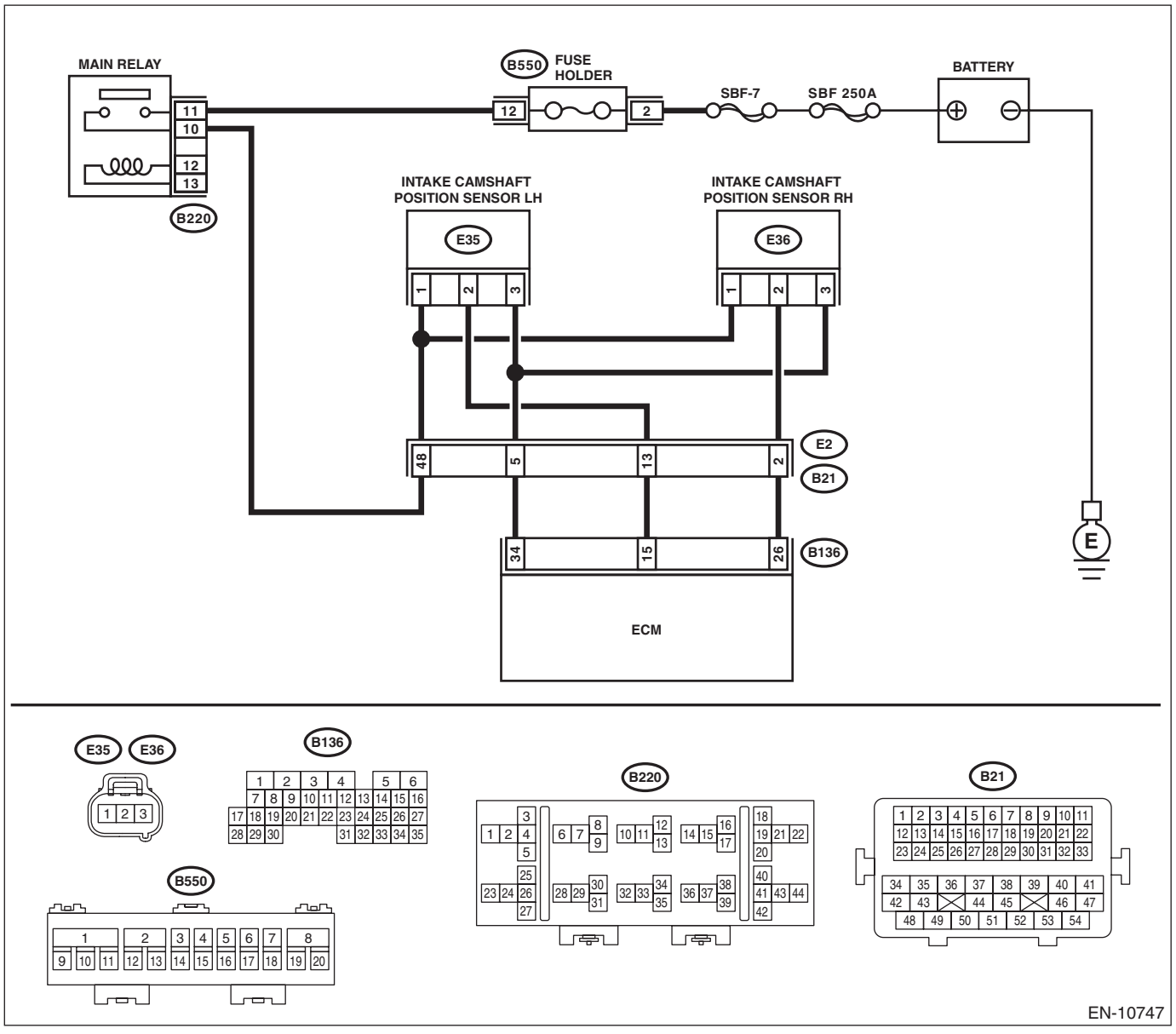

	Step	Check	Yes	No
1	**CHECK POWER SUPPLY OF CAMSHAFT POSITION SENSOR.** 1) Turn the ignition switch to OFF. 2) Disconnect the connector from camshaft position sensor. 3) Turn the ignition switch to ON. 4) Measure the voltage between camshaft position sensor connector and engine ground. ***Connector & terminal*** ***(E35) No. 1 (+) — Engine ground (–):***	Is the voltage 10 V or more?	Go to step **2**.	Repair the harness and connector. NOTE: In this case, repair the following item: • Open circuit or short circuit to ground in harness between main relay connector and camshaft position sensor connector • Poor contact of coupling connector
2	**CHECK HARNESS BETWEEN ECM AND CAMSHAFT POSITION SENSOR CONNECTOR.** 1) Turn the ignition switch to OFF. 2) Disconnect the connector from ECM. 3) Measure the resistance between ECM connector and camshaft position sensor connector. ***Connector & terminal*** ***(B136) No. 15 — (E35) No. 2:*** ***(B136) No. 34 — (E35) No. 3:***	Is the resistance less than 1 Ω?	Go to step **3**.	Repair the harness and connector. NOTE: In this case, repair the following item: • Open circuit in harness between ECM connector and camshaft position sensor connector • Poor contact of coupling connector
3	**CHECK HARNESS BETWEEN ECM AND CAMSHAFT POSITION SENSOR CONNECTOR.** Measure the resistance between camshaft position sensor connector and engine ground. ***Connector & terminal*** ***(E35) No. 2 — Engine ground:***	Is the resistance 1 MΩ or more?	Go to step **4**.	Repair short circuit to ground in harness between ECM connector and camshaft position sensor connector.
4	**CHECK HARNESS BETWEEN ECM AND CAMSHAFT POSITION SENSOR CONNECTOR.** Measure the voltage between camshaft position sensor connector and engine ground. ***Connector & terminal*** ***(E35) No. 2 (+) — Engine ground (–):***	Is the voltage 5 V or more?	Repair the short circuit to power in the harness between ECM connector and camshaft position sensor connector.	Go to step **5**.
5	**CHECK CONDITION OF CAMSHAFT POSITION SENSOR.**	Is the camshaft position sensor installation bolt tightened securely?	Go to step **6**.	Tighten the camshaft position sensor installation bolt securely. <Ref. to FU(H4DO(HEV))-53, INSTALLATION, Camshaft Position Sensor.>
6	**CHECK CAMSHAFT POSITION SENSOR.** Check the waveform of the camshaft position sensor. <Ref. to EN(H4DO HEV)(diag)-19, ENGINE CONTROL MODULE (ECM), ELECTRICAL SPECIFICATION, Control Module I/O Signal.>	Is there any abnormality in waveform?	Replace the camshaft position sensor. <Ref. to FU(H4DO(HEV))-52, Camshaft Position Sensor.>	Repair the following item. • Poor contact of ECM connector • Poor contact of camshaft position sensor connector • Poor contact of coupling connector

CA:DTC P0346 CAMSHAFT POSITION SENSOR "A" CIRCUIT RANGE/PERFORMANCE (BANK 2)

NOTE:
For the diagnostic procedure, refer to DTC P0345. <Ref. to EN(H4DO HEV)(diag)-221, DTC P0345 CAMSHAFT POSITION SENSOR “A” CIRCUIT (BANK 2), Diagnostic Procedure with Diagnostic Trouble Code (DTC).>

CB:DTC P0351 IGNITION COIL A PRIMARY/SECONDARY CIRCUIT

DTC DETECTING CONDITION:

- Immediately at fault recognition
- GENERAL DESCRIPTION <Ref. to GD(H4DO HEV)-135, DTC P0351 IGNITION COIL A PRIMARY/SECONDARY CIRCUIT, Diagnostic Trouble Code (DTC) Detecting Criteria.>

TROUBLE SYMPTOM:

- Improper idling
- Poor driving performance

CAUTION:

After servicing or replacing faulty parts, perform Clear Memory Mode <Ref. to EN(H4DO HEV)(diag)-63, OPERATION, Clear Memory Mode.>, and Inspection Mode <Ref. to EN(H4DO HEV)(diag)-47, PROCEDURE, Inspection Mode.>.

WIRING DIAGRAM:

- Engine electrical system (without push button start) <Ref. to WI(HEV)-100, WITHOUT PUSH BUTTON START, WIRING DIAGRAM, Engine Electrical System.>
- Engine electrical system (with push button start) <Ref. to WI(HEV)-114, WITH PUSH BUTTON START, WIRING DIAGRAM, Engine Electrical System.>

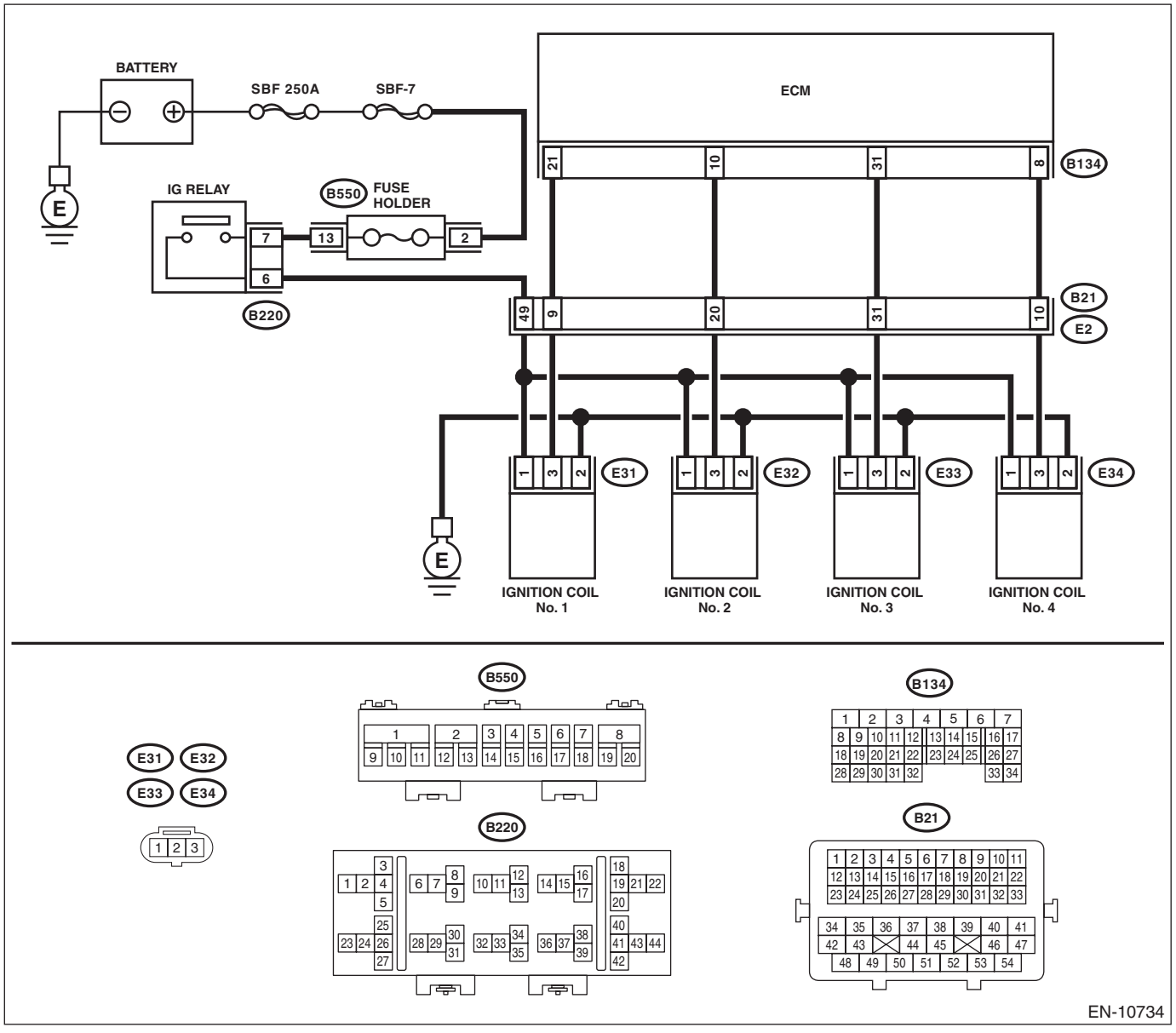

	Step	Check	Yes	No
1	**CHECK IGNITION COIL POWER SUPPLY CIRCUIT.** 1) Turn the ignition switch to OFF. 2) Disconnect the connector from ignition coil. 3) Turn the ignition switch to ON. 4) Measure the voltage between ignition coil connector and engine ground. ***Connector & terminal*** ***DTC P0351; (E31) No. 1 (+) — Engine ground (–):*** ***DTC P0352; (E32) No. 1 (+) — Engine ground (–):*** ***DTC P0353; (E33) No. 1 (+) — Engine ground (–):*** ***DTC P0354; (E34) No. 1 (+) — Engine ground (–):***	Is the voltage 10 V or more?	Go to step **2**.	Repair the harness and connector. NOTE: In this case, repair the following item: • Open circuit or short circuit to ground in harness of power supply circuit • Blown out of fuse • Poor contact of IG relay connector • Poor contact of coupling connector • Faulty IG relay
2	**CHECK HARNESS OF IGNITION COIL GROUND CIRCUIT.** 1) Turn the ignition switch to OFF. 2) Measure the resistance of harness between ignition coil connector and engine ground. ***Connector & terminal*** ***DTC P0351; (E31) No. 2 — Engine ground:*** ***DTC P0352; (E32) No. 2 — Engine ground:*** ***DTC P0353; (E33) No. 2 — Engine ground:*** ***DTC P0354; (E34) No. 2 — Engine ground:***	Is the resistance less than 5 Ω?	Go to step **3**.	Repair the open circuit in harness between ignition coil connector and engine grounding terminal.
3	**CHECK HARNESS BETWEEN ECM AND IGNITION COIL CONNECTOR.** 1) Disconnect the connector from ECM. 2) Measure the resistance between ignition coil connector and engine ground. ***Connector & terminal*** ***DTC P0351; (E31) No. 3 — Engine ground:*** ***DTC P0352; (E32) No. 3 — Engine ground:*** ***DTC P0353; (E33) No. 3 — Engine ground:*** ***DTC P0354; (E34) No. 3 — Engine ground:***	Is the resistance 1 MΩ or more?	Go to step **4**.	Repair the ground short circuit of harness between ECM connector and ignition coil connector.
4	**CHECK HARNESS BETWEEN ECM AND IGNITION COIL CONNECTOR.** Measure the resistance of harness between ECM connector and ignition coil connector. ***Connector & terminal*** ***DTC P0351; (B134) No. 21 — (E31) No. 3:*** ***DTC P0352; (B134) No. 10 — (E32) No. 3:*** ***DTC P0353; (B134) No. 31 — (E33) No. 3:*** ***DTC P0354; (B134) No. 8 — (E34) No. 3:***	Is the resistance less than 1 Ω?	Go to step **5**.	Repair the harness and connector. NOTE: In this case, repair the following item: • Open circuit of harness between ECM connector and the ignition coil connector • Poor contact of coupling connector
5	**CHECK FOR POOR CONTACT.** Check for poor contact of ECM connector.	Is there poor contact of ECM connector?	Repair the poor contact of ECM connector.	Go to step **6**.
6	**CHECK SPARK PLUG CONDITION.** 1) Remove the spark plug of the corresponding cylinder. <Ref. to IG(H4DO(w/o HEV))-4, REMOVAL, Spark Plug.> 2) Check the spark plug condition. <Ref. to IG(H4DO(w/o HEV))-6, INSPECTION, Spark Plug.>	Is the spark plug condition normal?	Replace the ignition coil. <Ref. to IG(H4DO(w/o HEV))-11, Ignition Coil.>	Replace the spark plug. <Ref. to IG(H4DO(w/o HEV))-4, Spark Plug.>

CC:DTC P0352 IGNITION COIL B PRIMARY/SECONDARY CIRCUIT

NOTE:
For the diagnostic procedure, refer to DTC P0351. <Ref. to EN(H4DO HEV)(diag)-224, DTC P0351 IGNITION COIL A PRIMARY/SECONDARY CIRCUIT, Diagnostic Procedure with Diagnostic Trouble Code (DTC).>

CD:DTC P0353 IGNITION COIL C PRIMARY/SECONDARY CIRCUIT

NOTE:
For the diagnostic procedure, refer to DTC P0351. <Ref. to EN(H4DO HEV)(diag)-224, DTC P0351 IGNITION COIL A PRIMARY/SECONDARY CIRCUIT, Diagnostic Procedure with Diagnostic Trouble Code (DTC).>

CE:DTC P0354 IGNITION COIL D PRIMARY/SECONDARY CIRCUIT

NOTE:
For the diagnostic procedure, refer to DTC P0351. <Ref. to EN(H4DO HEV)(diag)-224, DTC P0351 IGNITION COIL A PRIMARY/SECONDARY CIRCUIT, Diagnostic Procedure with Diagnostic Trouble Code (DTC).>

CF:DTC P0365 CAMSHAFT POSITION SENSOR “B” CIRCUIT (BANK 1)

DTC DETECTING CONDITION:

- Immediately at fault recognition
- GENERAL DESCRIPTION <Ref. to GD(H4DO HEV)-136, DTC P0365 CAMSHAFT POSITION SENSOR “B” CIRCUIT (BANK 1), Diagnostic Trouble Code (DTC) Detecting Criteria.>

TROUBLE SYMPTOM:

- Engine stalls.
- Failure of engine to start

CAUTION:

After servicing or replacing faulty parts, perform Clear Memory Mode <Ref. to EN(H4DO HEV)(diag)-63, OPERATION, Clear Memory Mode.>, and Inspection Mode <Ref. to EN(H4DO HEV)(diag)-47, PROCEDURE, Inspection Mode.>.

WIRING DIAGRAM:

- Engine electrical system (without push button start) <Ref. to WI(HEV)-100, WITHOUT PUSH BUTTON START, WIRING DIAGRAM, Engine Electrical System.>
- Engine electrical system (with push button start) <Ref. to WI(HEV)-114, WITH PUSH BUTTON START, WIRING DIAGRAM, Engine Electrical System.>

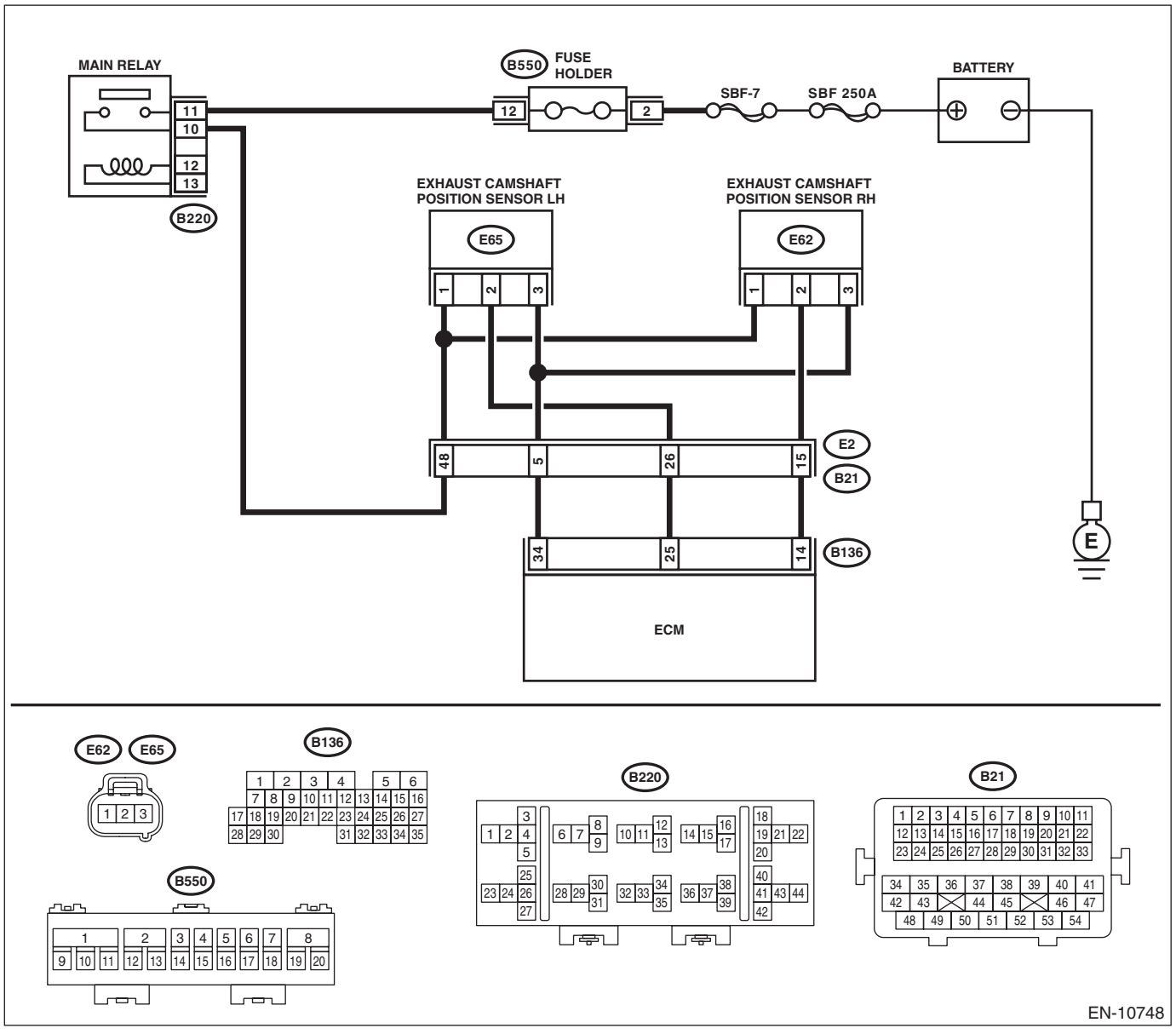

	Step	Check	Yes	No
1	**CHECK POWER SUPPLY OF CAMSHAFT POSITION SENSOR.** 1) Turn the ignition switch to OFF. 2) Disconnect the connector from camshaft position sensor. 3) Turn the ignition switch to ON. 4) Measure the voltage between camshaft position sensor connector and engine ground. ***Connector & terminal*** ***(E62) No. 1 (+) — Engine ground (–):***	Is the voltage 10 V or more?	Go to step **2**.	Repair the harness and connector. NOTE: In this case, repair the following item: • Open circuit or short circuit to ground in harness between main relay connector and camshaft position sensor connector • Poor contact of coupling connector
2	**CHECK HARNESS BETWEEN ECM AND CAMSHAFT POSITION SENSOR CONNECTOR.** 1) Turn the ignition switch to OFF. 2) Disconnect the connector from ECM. 3) Measure the resistance between ECM connector and camshaft position sensor connector. ***Connector & terminal*** ***(B136) No. 14 — (E62) No. 2:*** ***(B136) No. 34 — (E62) No. 3:***	Is the resistance less than 1 Ω?	Go to step **3**.	Repair the harness and connector. NOTE: In this case, repair the following item: • Open circuit in harness between ECM connector and camshaft position sensor connector • Poor contact of coupling connector
3	**CHECK HARNESS BETWEEN ECM AND CAMSHAFT POSITION SENSOR CONNECTOR.** Measure the resistance between camshaft position sensor connector and engine ground. ***Connector & terminal*** ***(E62) No. 2 — Engine ground:***	Is the resistance 1 MΩ or more?	Go to step **4**.	Repair short circuit to ground in harness between ECM connector and camshaft position sensor connector.
4	**CHECK HARNESS BETWEEN ECM AND CAMSHAFT POSITION SENSOR CONNECTOR.** Measure the voltage between camshaft position sensor connector and engine ground. ***Connector & terminal*** ***(E62) No. 2 (+) — Engine ground (–):***	Is the voltage 5 V or more?	Repair the short circuit to power in the harness between ECM connector and camshaft position sensor connector.	Go to step **5**.
5	**CHECK CONDITION OF CAMSHAFT POSITION SENSOR.**	Is the camshaft position sensor installation bolt tightened securely?	Go to step **6**.	Tighten the camshaft position sensor installation bolt securely. <Ref. to FU(H4DO(HEV))-53, INSTALLATION, Camshaft Position Sensor.>
6	**CHECK CAMSHAFT POSITION SENSOR.** Check the waveform of the camshaft position sensor. <Ref. to EN(H4DO HEV)(diag)-19, ENGINE CONTROL MODULE (ECM), ELECTRICAL SPECIFICATION, Control Module I/O Signal.>	Is there any abnormality in waveform?	Replace the camshaft position sensor. <Ref. to FU(H4DO(HEV))-52, Camshaft Position Sensor.>	Repair the following item. • Poor contact of ECM connector • Poor contact of camshaft position sensor connector • Poor contact of coupling connector

CG:DTC P0366 CAMSHAFT POSITION SENSOR B CIRCUIT RANGE/PERFORMANCE (BANK 1)

NOTE:
For the diagnostic procedure, refer to DTC P0365. <Ref. to EN(H4DO HEV)(diag)-227, DTC P0365 CAMSHAFT POSITION SENSOR “B” CIRCUIT (BANK 1), Diagnostic Procedure with Diagnostic Trouble Code (DTC).>

CH:DTC P0390 CAMSHAFT POSITION SENSOR “B” CIRCUIT (BANK 2)

DTC DETECTING CONDITION:

- Immediately at fault recognition
- GENERAL DESCRIPTION <Ref. to GD(H4DO HEV)-139, DTC P0390 CAMSHAFT POSITION SENSOR “B” CIRCUIT (BANK 2), Diagnostic Trouble Code (DTC) Detecting Criteria.>

TROUBLE SYMPTOM:

- Engine stalls.
- Failure of engine to start

CAUTION:

After servicing or replacing faulty parts, perform Clear Memory Mode <Ref. to EN(H4DO HEV)(diag)-63, OPERATION, Clear Memory Mode.>, and Inspection Mode <Ref. to EN(H4DO HEV)(diag)-47, PROCEDURE, Inspection Mode.>.

WIRING DIAGRAM:

- Engine electrical system (without push button start) <Ref. to WI(HEV)-100, WITHOUT PUSH BUTTON START, WIRING DIAGRAM, Engine Electrical System.>
- Engine electrical system (with push button start) <Ref. to WI(HEV)-114, WITH PUSH BUTTON START, WIRING DIAGRAM, Engine Electrical System.>

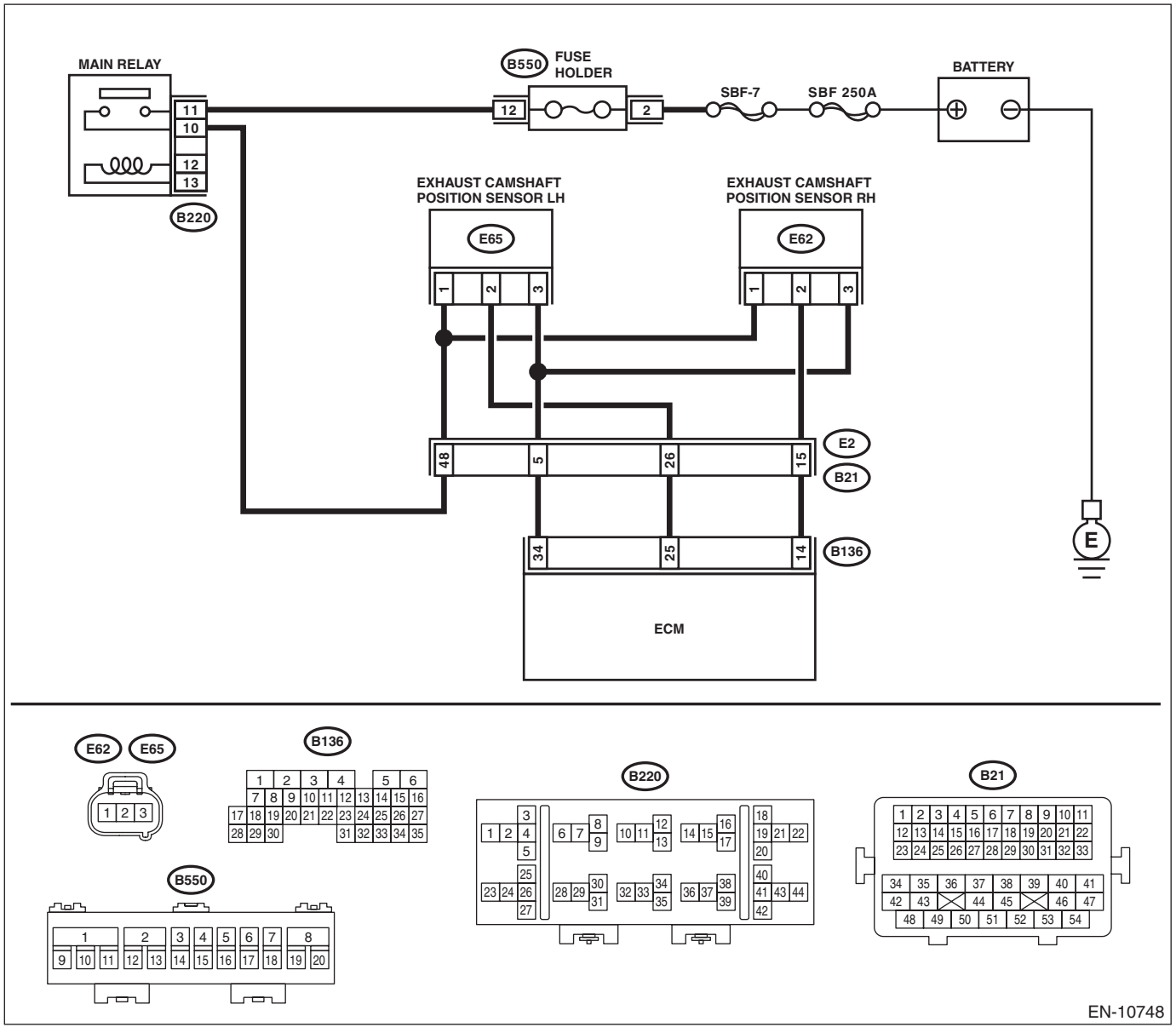

	Step	Check	Yes	No
1	**CHECK POWER SUPPLY OF CAMSHAFT POSITION SENSOR.** 1) Turn the ignition switch to OFF. 2) Disconnect the connector from camshaft position sensor. 3) Turn the ignition switch to ON. 4) Measure the voltage between camshaft position sensor connector and engine ground. ***Connector & terminal*** ***(E65) No. 1 (+) — Engine ground (–):***	Is the voltage 10 V or more?	Go to step **2**.	Repair the harness and connector. NOTE: In this case, repair the following item: • Open circuit or short circuit to ground in harness between main relay connector and camshaft position sensor connector • Poor contact of coupling connector
2	**CHECK HARNESS BETWEEN ECM AND CAMSHAFT POSITION SENSOR CONNECTOR.** 1) Turn the ignition switch to OFF. 2) Disconnect the connector from ECM. 3) Measure the resistance between ECM connector and camshaft position sensor connector. ***Connector & terminal*** ***(B136) No. 25 — (E65) No. 2:*** ***(B136) No. 34 — (E65) No. 3:***	Is the resistance less than 1 Ω?	Go to step **3**.	Repair the harness and connector. NOTE: In this case, repair the following item: • Open circuit in harness between ECM connector and camshaft position sensor connector • Poor contact of coupling connector
3	**CHECK HARNESS BETWEEN ECM AND CAMSHAFT POSITION SENSOR CONNECTOR.** Measure the resistance between camshaft position sensor connector and engine ground. ***Connector & terminal*** ***(E65) No. 2 — Engine ground:***	Is the resistance 1 MΩ or more?	Go to step **4**.	Repair short circuit to ground in harness between ECM connector and camshaft position sensor connector.
4	**CHECK HARNESS BETWEEN ECM AND CAMSHAFT POSITION SENSOR CONNECTOR.** Measure the voltage between camshaft position sensor connector and engine ground. ***Connector & terminal*** ***(E65) No. 2 (+) — Engine ground (–):***	Is the voltage 5 V or more?	Repair the short circuit to power in the harness between ECM connector and camshaft position sensor connector.	Go to step **5**.
5	**CHECK CONDITION OF CAMSHAFT POSITION SENSOR.**	Is the camshaft position sensor installation bolt tightened securely?	Go to step **6**.	Tighten the camshaft position sensor installation bolt securely. <Ref. to FU(H4DO(HEV))-53, INSTALLATION, Camshaft Position Sensor.>
6	**CHECK CAMSHAFT POSITION SENSOR.** Check the waveform of the camshaft position sensor. <Ref. to EN(H4DO HEV)(diag)-19, ENGINE CONTROL MODULE (ECM), ELECTRICAL SPECIFICATION, Control Module I/O Signal.>	Is there any abnormality in waveform?	Replace the camshaft position sensor. <Ref. to FU(H4DO(HEV))-52, Camshaft Position Sensor.>	Repair the following item. • Poor contact of ECM connector • Poor contact of camshaft position sensor connector • Poor contact of coupling connector

CI: DTC P0391 CAMSHAFT POSITION SENSOR B CIRCUIT RANGE/PERFORMANCE (BANK 2)

NOTE:
For the diagnostic procedure, refer to DTC P0390. <Ref. to EN(H4DO HEV)(diag)-230, DTC P0390 CAMSHAFT POSITION SENSOR “B” CIRCUIT (BANK 2), Diagnostic Procedure with Diagnostic Trouble Code (DTC).>

CJ:DTC P0400 EXHAUST GAS RECIRCULATION FLOW

DTC DETECTING CONDITION:

- Detected when two consecutive driving cycles with fault occur.
- GENERAL DESCRIPTION <Ref. to GD(H4DO HEV)-140, DTC P0400 EXHAUST GAS RECIRCULATION FLOW, Diagnostic Trouble Code (DTC) Detecting Criteria.>

TROUBLE SYMPTOM:

- Movement performance problem when engine is low speed
- Improper idling
- Movement performance problem

CAUTION:
After servicing or replacing faulty parts, perform Clear Memory Mode <Ref. to EN(H4DO HEV)(diag)-63, OPERATION, Clear Memory Mode.>, and Inspection Mode <Ref. to EN(H4DO HEV)(diag)-47, PROCEDURE, Inspection Mode.>.

	Step	Check	Yes	No
1	**CHECK CURRENT DATA.** 1) Start the engine. 2) Read the value of «Mani. Absolute Pressure» using the Subaru Select Monitor or a general scan tool. NOTE: • Subaru Select Monitor For detailed operation procedures, refer to “Current Data Display For Engine”. <Ref. to EN(H4DO HEV)(diag)-37, Subaru Select Monitor.> • General scan tool For detailed operation procedures, refer to the general scan tool operation manual.	Is the value of «Mani. Absolute Pressure» 53.3 kPa (400 mmHg, 15.75 inHg) or more?	Make sure that the EGR control valve, manifold absolute pressure sensor and throttle body are installed securely.	Go to step **2**.
2	**CHECK EGR CONTROL VALVE.** Remove the EGR control valve.	Are there any holes, clogged lines or foreign matters in the EGR system?	Repair the EGR system.	Replace EGR control valve. <Ref. to EC(H4DO(HEV))-26, EGR Control Valve.>

CK:DTC P0420 CATALYST SYSTEM EFFICIENCY BELOW THRESHOLD (BANK 1)

DTC DETECTING CONDITION:

- Detected when two consecutive driving cycles with fault occur.
- GENERAL DESCRIPTION <Ref. to GD(H4DO HEV)-143, DTC P0420 CATALYST SYSTEM EFFICIENCY BELOW THRESHOLD (BANK 1), Diagnostic Trouble Code (DTC) Detecting Criteria.>

TROUBLE SYMPTOM:

- Engine stalls.
- Idle mixture is out of specifications.

CAUTION:

After servicing or replacing faulty parts, perform Clear Memory Mode <Ref. to EN(H4DO HEV)(diag)-63, OPERATION, Clear Memory Mode.>, and Inspection Mode <Ref. to EN(H4DO HEV)(diag)-47, PROCEDURE, Inspection Mode.>.

WIRING DIAGRAM:

- Engine electrical system (without push button start) <Ref. to WI(HEV)-100, WITHOUT PUSH BUTTON START, WIRING DIAGRAM, Engine Electrical System.>
- Engine electrical system (with push button start) <Ref. to WI(HEV)-114, WITH PUSH BUTTON START, WIRING DIAGRAM, Engine Electrical System.>

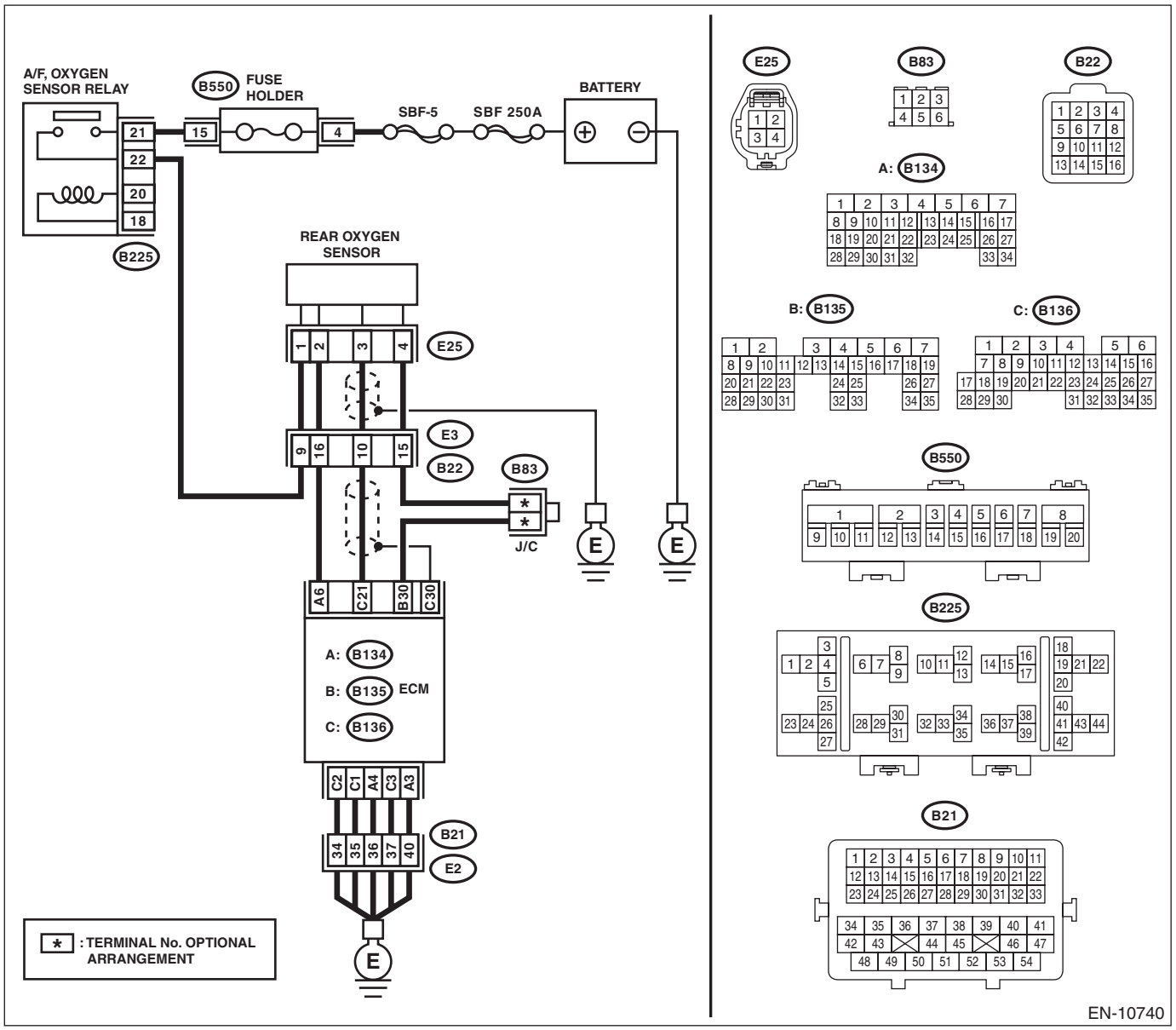

	Step	Check	Yes	No
1	**CHECK EXHAUST SYSTEM.** Check for gas leaks or air suction caused by loose or dislocated nuts and bolts, and open hole at exhaust pipes. NOTE: Check the following positions. • Between cylinder head and front exhaust pipe • Between front exhaust pipe and front catalytic converter • Between front catalytic converter and rear catalytic converter • Loose or improperly attached front oxygen (A/F) sensor or rear oxygen sensor	Is there any fault in exhaust system?	Repair or replace the exhaust system. <Ref. to EX(H4DO(w/o HEV))-2, General Description.>	Go to step **2**.
2	**CHECK WAVEFORM DATA ON THE SUBARU SELECT MONITOR (WHILE DRIVING).** 1) Drive at a constant speed between 80 — 112 km/h (50 — 70 MPH). 2) After 5 minutes have elapsed in the condition of step 1), use the Subaru Select Monitor while still driving to read the waveform data. • At normal condition 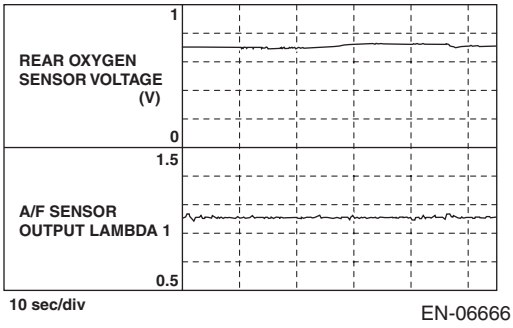 EN-06666 • At abnormal condition (numerous inversion) 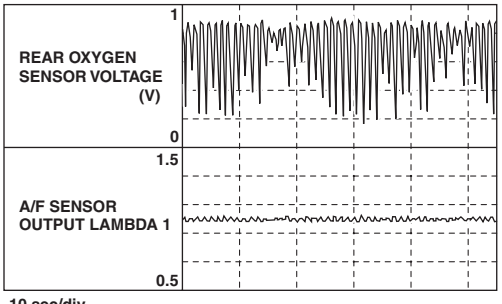 EN-06667	Is a normal waveform displayed?	Even if DTC is detected, the circuit has returned to a normal condition at this time. Reproduce the failure, and then perform the diagnosis again. NOTE: In this case, temporary poor contact of connector, temporary open or short circuit of harness may be the cause.	Go to step **3**.

	Step	Check	Yes	No
3	**CHECK WAVEFORM DATA ON THE SUBARU SELECT MONITOR (WHILE IDLING).** 1) Run the engine at idle. 2) In the condition of step 1), use the Subaru Select Monitor to read the waveform data. • At normal condition 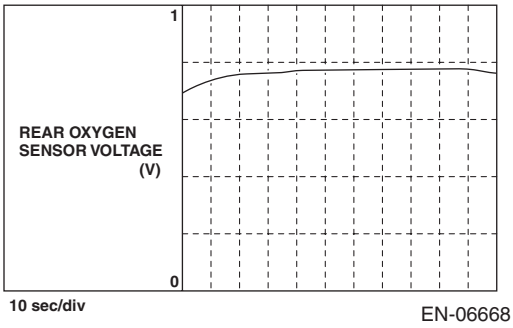 EN-06668 • At abnormal condition 1 (numerous inversion) 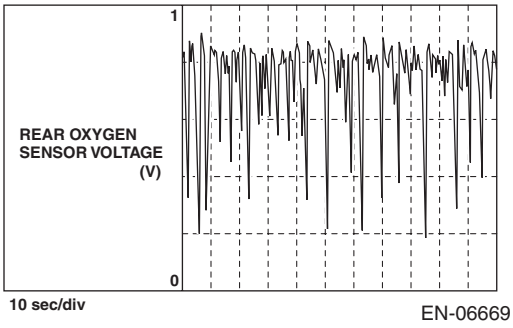 EN-06669 • At abnormal condition 2 (noise input) 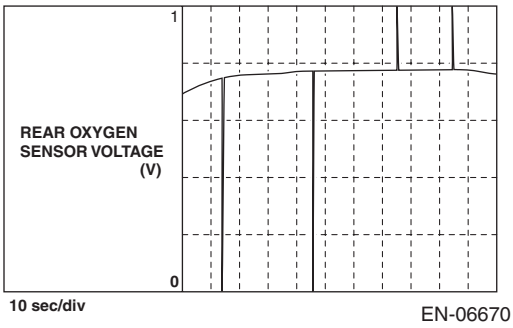 EN-06670	Is a normal waveform displayed?	Go to step **4**.	• The waveform is displayed at abnormal condition 1: Go to step **4**. • The waveform is displayed at abnormal condition 2: Go to step **5**.
4	**CHECK CATALYTIC CONVERTER.**	Is the catalytic converter damaged?	Replace the catalytic converter. <Ref. to EC(H4DO(HEV))-6, Front Catalytic Converter.>	Go to step **5**.
5	**CHECK REAR OXYGEN SENSOR CONNECTOR AND COUPLING CONNECTOR.**	Has water entered the connector?	Completely remove any water inside.	Go to step **6**.

	Step	Check	Yes	No
6	**CHECK HARNESS BETWEEN ECM AND REAR OXYGEN SENSOR CONNECTOR.** 1) Turn the ignition switch to OFF. 2) Disconnect the connector from ECM and rear oxygen sensor. 3) Measure the resistance of harness between ECM connector and rear oxygen sensor connector. ***Connector & terminal*** ***(B136) No. 21 — (E25) No. 3:*** ***(B135) No. 30 — (E25) No. 4:***	Is the resistance less than 1 Ω?	Go to step **7**.	Repair the harness and connector. NOTE: Repair the following locations. • Open circuit in harness between ECM connector and rear oxygen sensor connector • Poor contact of coupling connector
7	**CHECK REAR OXYGEN SENSOR SHIELD.** 1) Turn the ignition switch to OFF. 2) Expose the rear oxygen sensor connector body side harness sensor shield. 3) Measure the resistance between sensor shield and chassis ground.	Is the resistance less than 1 Ω?	Go to step **8**.	Repair the open circuit of rear oxygen sensor harness.
8	**CHECK ENGINE OIL AMOUNT AND EXHAUST GAS.** 1) Check the engine oil amount. <Ref. to LU(H4DO(w/o HEV))-12, INSPECTION, Engine Oil.> 2) Check exhaust gas during idling.	Does the engine oil amount drop or white smoke emit from the muffler?	Check the engine, and repair the defective part. <Ref. to ME(H4DO(w/o HEV))-418, INSPECTION, Engine Trouble in General.> After repairing the engine, replace the front catalytic converter. <Ref. to EX(H4DO(w/o HEV))-6, Front Exhaust Pipe.> After the catalytic converter is replaced, perform step 2 to check the normal waveform is displayed, and then exit the procedure.	Go to step **9**.
9	**CHECK IGNITION SYSTEM.** 1) Check the spark plug. <Ref. to IG(H4DO(w/o HEV))-6, INSPECTION, Spark Plug.> 2) Check the status of the ignition coil connector and the spark plug terminal.	Is there any fault in the ignition system?	After repairing the ignition system, replace the front catalytic converter. <Ref. to EX(H4DO(w/o HEV))-6, Front Exhaust Pipe.> After the catalytic converter is replaced, perform step 2 to check the normal waveform is displayed, and then exit the procedure.	Go to step **10**.

	Step	Check	Yes	No
10	**CHECK FUEL SYSTEM.** 1) Refer to and check the items in “Insufficient fuel supply to fuel injector (except for “a. Fuel pump does not operate.”)” and “Leakage or blow out of fuel”. <Ref. to FU(H4DO(HEV))-155, INSPECTION, Fuel System Trouble in General.> 2) Check throttle body. <Ref. to FU(H4DO(HEV))-18, INSPECTION, Throttle Body.> 3) Check intake manifold. <Ref. to FU(H4DO(HEV))-33, INSPECTION, Intake Manifold.>	Is there any fault in the fuel system?	After repairing the fuel system, replace the front catalytic converter. <Ref. to EX(H4DO(w/o HEV))-6, Front Exhaust Pipe.> After the catalytic converter is replaced, perform step 2 to check the normal waveform is displayed, and then exit the procedure.	Go to step **11**.
11	**CHECK DTC.**	Is any other DTC displayed?	Check the appropriate DTC using the “List of Diagnostic Trouble Code (DTC)”. <Ref. to EN(H4DO HEV)(diag)-88, List of Diagnostic Trouble Code (DTC).> After checking the DTC, replace the front catalytic converter. <Ref. to EX(H4DO(w/o HEV))-6, Front Exhaust Pipe.> After the catalytic converter is replaced, perform step 2 to check the normal waveform is displayed, and then exit the procedure.	Replace the rear oxygen sensor. <Ref. to FU(H4DO(HEV))-82, Rear Oxygen Sensor.>

CL:DTC P0441 EVAPORATIVE EMISSION CONT. SYS. INCORRECT PURGE FLOW

DTC DETECTING CONDITION:

- Detected when two consecutive driving cycles with fault occur.
- GENERAL DESCRIPTION <Ref. to GD(H4DO HEV)-145, DTC P0441 EVAPORATIVE EMISSION CONT. SYS. INCORRECT PURGE FLOW, Diagnostic Trouble Code (DTC) Detecting Criteria.>

TROUBLE SYMPTOM:

Improper idling

CAUTION:

After servicing or replacing faulty parts, perform Clear Memory Mode <Ref. to EN(H4DO HEV)(diag)-63, OPERATION, Clear Memory Mode.>, and Inspection Mode <Ref. to EN(H4DO HEV)(diag)-47, PROCEDURE, Inspection Mode.>.

	Step	Check	Yes	No
1	**CHECK FOR ANY OTHER DTC ON DISPLAY.**	Is any other DTC displayed?	Check the appropriate DTC using the "List of Diagnostic Trouble Code (DTC)". <Ref. to EN(H4DO HEV)(diag)-88, List of Diagnostic Trouble Code (DTC).>	Go to step **2**.
2	**CHECK PURGE CONTROL SOLENOID VALVE.** Operate the purge control solenoid valve using the Subaru Select Monitor. NOTE: For detailed procedures, refer to "System Operation Check Mode". <Ref. to EN(H4DO HEV)(diag)-64, System Operation Check Mode.>	Does the purge control solenoid valve operate?	Go to step **3**.	Replace the purge control solenoid valve. <Ref. to EC(H4DO(HEV))-21, Purge Control Solenoid Valve.>
3	**CHECK EVAPORATIVE EMISSION CONTROL SYSTEM LINE.** Turn the ignition switch to OFF.	Are there holes, cracks, clogging, or disconnection, misconnection of hoses or pipes in evaporative emission control system?	Repair or replace the hoses or pipes.	Repair the poor contact of ECM connector.

CM:DTC P0451 EVAPORATIVE EMISSION SYSTEM PRESSURE SENSOR/ SWITCH RANGE/PERFORMANCE

DTC DETECTING CONDITION:

- Detected when two consecutive driving cycles with fault occur.
- GENERAL DESCRIPTION <Ref. to GD(H4DO HEV)-148, DTC P0451 EVAPORATIVE EMISSION SYSTEM PRESSURE SENSOR/SWITCH RANGE/PERFORMANCE, Diagnostic Trouble Code (DTC) Detecting Criteria.>

CAUTION:
After servicing or replacing faulty parts, perform Clear Memory Mode <Ref. to EN(H4DO HEV)(diag)-63, OPERATION, Clear Memory Mode.>, and Inspection Mode <Ref. to EN(H4DO HEV)(diag)-47, PROCEDURE, Inspection Mode.>.

	Step	Check	Yes	No
1	**CHECK FOR ANY OTHER DTC ON DISPLAY.**	Is any other DTC displayed?	Check the appropriate DTC using the “List of Diagnostic Trouble Code (DTC)”. <Ref. to EN(H4DO HEV)(diag)-88, List of Diagnostic Trouble Code (DTC).>	Go to step **2**.
2	**CHECK CURRENT DATA.** 1) Turn the ignition switch to ON (engine OFF). 2) Using the Subaru Select Monitor or general scan tool, read the value in «Absolute Evap Sys. Pressure» and «Mani. Absolute Pressure», and compare them with the actual atmospheric pressure. NOTE: • Subaru Select Monitor For detailed operation procedures, refer to “Current Data Display For Engine”. <Ref. to EN(H4DO HEV)(diag)-37, Subaru Select Monitor.> • General scan tool For detailed operation procedures, refer to the general scan tool operation manual. • To read the actual atmospheric pressure, connect the Subaru Select Monitor or general scan tool to the other known good vehicle.	Is the difference with the actual atmospheric pressure 2.4 kPa (17.8 mmHg, 0.7 inHg) or more?	Replace the part that showed larger deviation from the actual atmospheric pressure than the other. • If deviations in value for «Absolute Evap Sys. Pressure» is larger: Replace the leak check valve assembly. <Ref. to EC(H4DO(HEV))-39, Leak Check Valve Assembly.> • If deviations in value for «Mani. Absolute Pressure» is larger: Replace the manifold absolute pressure sensor. <Ref. to FU(H4DO(HEV))-67, Manifold Absolute Pressure Sensor.>	Even if DTC is detected, the circuit has returned to a normal condition at this time. Reproduce the failure, and then perform the diagnosis again. NOTE: In this case, temporary poor contact of connector, temporary open or short circuit of harness may be the cause.

CN:DTC P0452 EVAPORATIVE EMISSION SYSTEM PRESSURE SENSOR/ SWITCH LOW

DTC DETECTING CONDITION:

- Immediately at fault recognition
- GENERAL DESCRIPTION <Ref. to GD(H4DO HEV)-150, DTC P0452 EVAPORATIVE EMISSION SYSTEM PRESSURE SENSOR/SWITCH LOW, Diagnostic Trouble Code (DTC) Detecting Criteria.>

CAUTION:

After servicing or replacing faulty parts, perform Clear Memory Mode <Ref. to EN(H4DO HEV)(diag)-63, OPERATION, Clear Memory Mode.>, and Inspection Mode <Ref. to EN(H4DO HEV)(diag)-47, PROCEDURE, Inspection Mode.>.

WIRING DIAGRAM:

- Engine electrical system (without push button start) <Ref. to WI(HEV)-100, WITHOUT PUSH BUTTON START, WIRING DIAGRAM, Engine Electrical System.>
- Engine electrical system (with push button start) <Ref. to WI(HEV)-114, WITH PUSH BUTTON START, WIRING DIAGRAM, Engine Electrical System.>

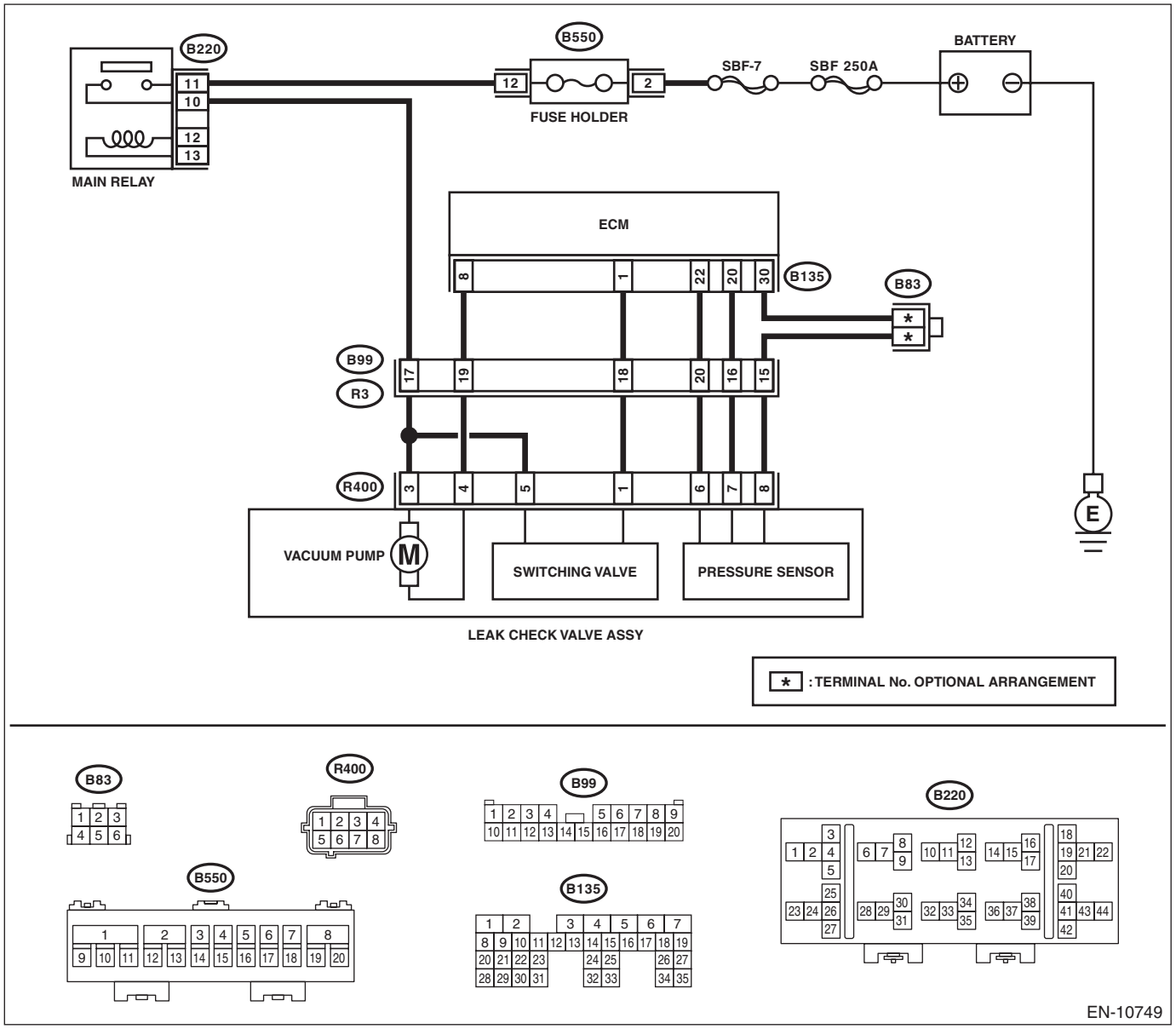

	Step	Check	Yes	No
1	**CHECK CURRENT DATA.** 1) Turn the ignition switch to ON. 2) Read the value of «Atmosphere Pressure» using the Subaru Select Monitor or a general scan tool. NOTE: • Subaru Select Monitor For detailed operation procedures, refer to "Current Data Display For Engine". <Ref. to EN(H4DO HEV)(diag)-37, Subaru Select Monitor.> • General scan tool For detailed operation procedures, refer to the general scan tool operation manual.	Is the value in «Atmosphere Pressure» 34 kPa (255 mmHg, 10 inHg) or less?	Go to step **2**.	Even if DTC is detected, the circuit has returned to a normal condition at this time. Reproduce the failure, and then perform the diagnosis again. NOTE: In this case, temporary poor contact of connector, temporary open or short circuit of harness may be the cause.
2	**CHECK POWER SUPPLY OF LEAK CHECK VALVE ASSEMBLY.** 1) Turn the ignition switch to OFF. 2) Disconnect the connector from the leak check valve assembly. 3) Turn the ignition switch to ON. 4) Measure the voltage between the leak check valve assembly connector and chassis ground. ***Connector & terminal*** ***(R400) No. 6 (+) — Chassis ground (–):***	Is the voltage 4.5 V or more?	Go to step **3**.	Repair the harness and connector. NOTE: In this case, repair the following item: • Open circuit in harness between ECM connector and the leak check valve assembly connector • Poor contact of ECM connector • Poor contact of coupling connector
3	**CHECK HARNESS BETWEEN ECM AND LEAK CHECK VALVE ASSEMBLY CONNECTOR.** 1) Turn the ignition switch to OFF. 2) Disconnect the connector from ECM. 3) Measure the resistance between ECM connector and chassis ground. ***Connector & terminal*** ***(B135) No. 20 — Chassis ground:***	Is the resistance 1 MΩ or more?	Go to step **4**.	Repair the short circuit to ground in harness between ECM connector and leak check valve assembly connector.
4	**CHECK FOR POOR CONTACT.** Check for poor contact of leak check valve assembly connector.	Is there poor contact in the leak check valve assembly connector?	Repair the poor contact in the leak check valve assembly connector.	Replace the leak check valve assembly. <Ref. to EC(H4DO(HEV))-39, Leak Check Valve Assembly.>

CO:DTC P0453 EVAPORATIVE EMISSION SYSTEM PRESSURE SENSOR/ SWITCH HIGH

DTC DETECTING CONDITION:

- Immediately at fault recognition
- GENERAL DESCRIPTION <Ref. to GD(H4DO HEV)-152, DTC P0453 EVAPORATIVE EMISSION SYSTEM PRESSURE SENSOR/SWITCH HIGH, Diagnostic Trouble Code (DTC) Detecting Criteria.>

CAUTION:

After servicing or replacing faulty parts, perform Clear Memory Mode <Ref. to EN(H4DO HEV)(diag)-63, OPERATION, Clear Memory Mode.>, and Inspection Mode <Ref. to EN(H4DO HEV)(diag)-47, PROCEDURE, Inspection Mode.>.

WIRING DIAGRAM:

- Engine electrical system (without push button start) <Ref. to WI(HEV)-100, WITHOUT PUSH BUTTON START, WIRING DIAGRAM, Engine Electrical System.>
- Engine electrical system (with push button start) <Ref. to WI(HEV)-114, WITH PUSH BUTTON START, WIRING DIAGRAM, Engine Electrical System.>

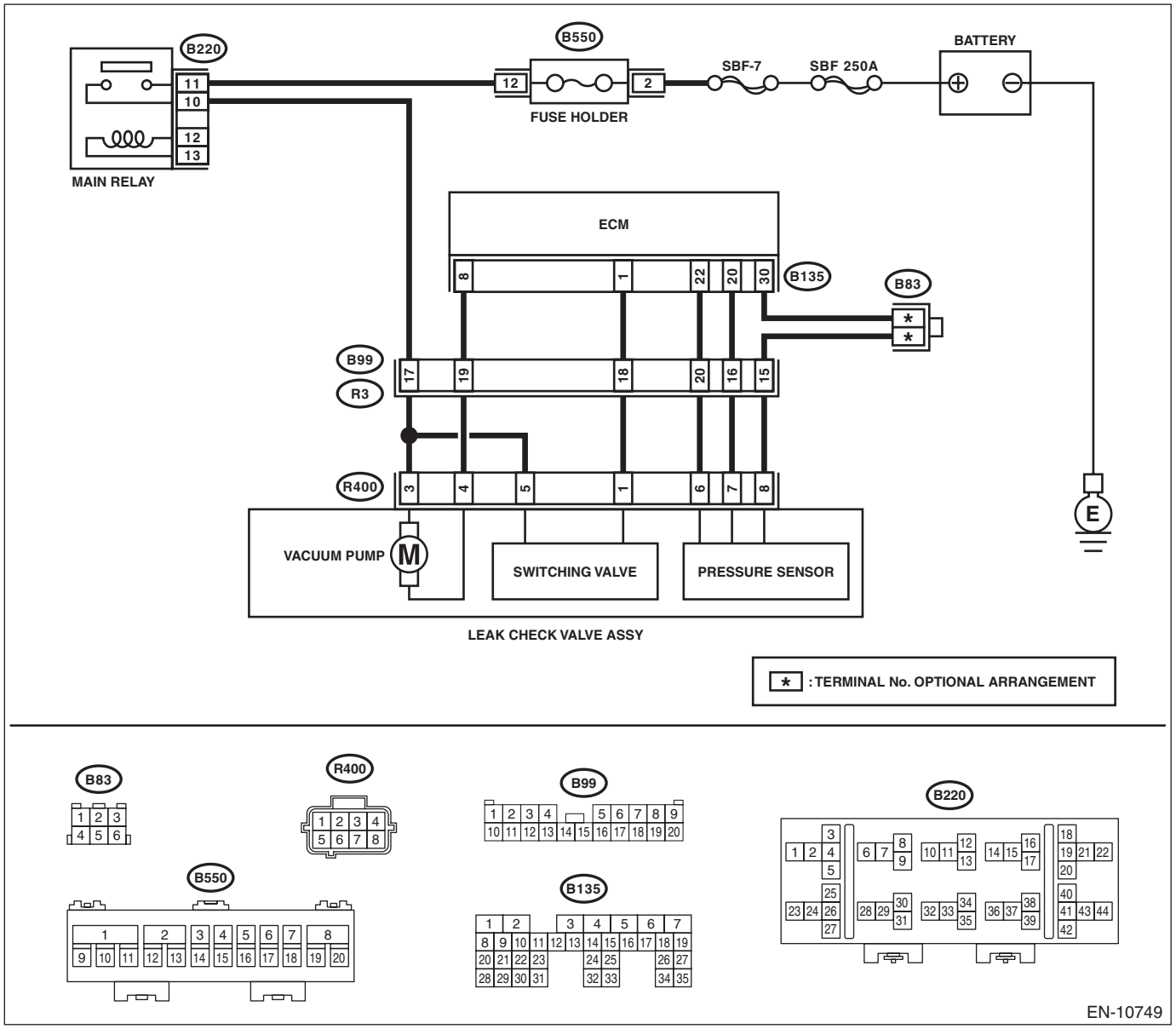

	Step	Check	Yes	No
1	**CHECK CURRENT DATA.** 1) Turn the ignition switch to ON. 2) Read the value of «Atmosphere Pressure» using the Subaru Select Monitor or a general scan tool. NOTE: • Subaru Select Monitor For detailed operation procedures, refer to "Current Data Display For Engine". <Ref. to EN(H4DO HEV)(diag)-37, Subaru Select Monitor.> • General scan tool For detailed operation procedures, refer to the general scan tool operation manual.	Is the value in «Atmosphere Pressure» 125 kPa (938 mmHg, 36.9 inHg) or more?	Go to step **2**.	Even if DTC is detected, the circuit has returned to a normal condition at this time. Reproduce the failure, and then perform the diagnosis again. NOTE: In this case, temporary poor contact of connector, temporary open or short circuit of harness may be the cause.
2	**CHECK HARNESS BETWEEN ECM AND LEAK CHECK VALVE ASSEMBLY CONNECTOR.** 1) Turn the ignition switch to OFF. 2) Disconnect the connector from ECM and the leak check valve assembly. 3) Measure the resistance of harness between ECM connector and the leak check valve assembly connector. ***Connector & terminal*** ***(B135) No. 20 — (R400) No. 7:*** ***(B135) No. 30 — (R400) No. 8:***	Is the resistance less than 1 Ω?	Go to step **3**.	Repair the harness and connector. NOTE: In this case, repair the following item: • Open circuit in harness between ECM connector and the leak check valve assembly connector • Poor contact of coupling connector • Poor contact of joint connector
3	**CHECK FOR POOR CONTACT.** Check for poor contact of ECM and the leak check valve assembly connector.	Is there poor contact in ECM and the leak check valve assembly connector?	Repair the poor contact of ECM and the leak check valve assembly connector.	Go to step **4**.
4	**CHECK LEAK CHECK VALVE ASSEMBLY.** Check the pressure sensor of the leak check valve assembly. <Ref. to EC(H4DO(HEV))-48, CHECK PRESSURE SENSOR, INSPECTION, Leak Check Valve Assembly.>	Is the pressure sensor of the leak check valve assembly OK?	Repair the short circuit to power in harness between ECM connector and leak check valve assembly connector.	Replace the leak check valve assembly. <Ref. to EC(H4DO(HEV))-39, Leak Check Valve Assembly.>

CP:DTC P0455 EVAPORATIVE EMISSION SYSTEM LEAK DETECTED (LARGE LEAK)

DTC DETECTING CONDITION:

- Detected when two consecutive driving cycles with fault occur.
- GENERAL DESCRIPTION <Ref. to GD(H4DO HEV)-154, DTC P0455 EVAPORATIVE EMISSION SYSTEM LEAK DETECTED (LARGE LEAK), Diagnostic Trouble Code (DTC) Detecting Criteria.>

TROUBLE SYMPTOM:

- Fuel odor
- There is a hole of more than 1.0 mm (0.04 in) dia. in evaporation system or fuel tank.
- Fuel filler cap loose or lost

CAUTION:

After servicing or replacing faulty parts, perform Clear Memory Mode <Ref. to EN(H4DO HEV)(diag)-63, OPERATION, Clear Memory Mode.>, and Inspection Mode <Ref. to EN(H4DO HEV)(diag)-47, PROCEDURE, Inspection Mode.>.

	Step	Check	Yes	No
1	**CHECK FUEL FILLER CAP.** 1) Turn the ignition switch to OFF. 2) Check the fuel filler cap. NOTE: The DTC is stored in memory if fuel filler cap is or was loose or if the cap chain has caught while tightening.	Is the fuel filler cap tightened securely?	Go to step **2**.	Tighten fuel filler cap securely.
2	**CHECK FUEL FILLER CAP.**	Is the fuel filler cap genuine?	Go to step **3**.	Replace with a genuine fuel filler cap.
3	**CHECK FUEL FILLER PIPE GASKET.**	Is there any damage to the seal between fuel filler cap and fuel filler pipe?	Repair or replace the fuel filler cap and fuel filler pipe. <Ref. to FU(H4DO(HEV))-118, Fuel Filler Pipe.>	Go to step **4**.
4	**CHECK PURGE CONTROL SOLENOID VALVE.** Check air-tightness of the purge control solenoid valve. <Ref. to EC(H4DO(HEV))-24, INSPECTION, Purge Control Solenoid Valve.>	Is the purge control solenoid valve OK?	Go to step **5**.	Replace the purge control solenoid valve. <Ref. to EC(H4DO(HEV))-21, Purge Control Solenoid Valve.>
5	**CHECK EVAPORATIVE EMISSION CONTROL SYSTEM LINE.**	Are there holes on the evaporation line?	Repair or replace the evaporation line. <Ref. to FU(H4DO(HEV))-149, Fuel Delivery and Evaporation Lines.>	Go to step **6**.
6	**CHECK CANISTER.**	Are there holes on the canister?	Replace the canister. <Ref. to EC(H4DO(HEV))-8, Canister.>	Go to step **7**.
7	**CHECK LEAK CHECK VALVE ASSEMBLY.**	Are there damage or holes on the leak check valve assembly?	Replace the leak check valve assembly. <Ref. to EC(H4DO(HEV))-39, Leak Check Valve Assembly.>	Go to step **8**.

	Step	Check	Yes	No
8	**CHECK FUEL TANK.** Remove the fuel tank. <Ref. to FU(H4DO(HEV))-105, Fuel Tank.>	Are there damage or holes on the fuel tank?	Repair or replace the fuel tank. <Ref. to FU(H4DO(HEV))-105, Fuel Tank.>	Go to step **9**.
9	**CHECK ANY OTHER MECHANICAL TROUBLE IN EVAPORATIVE EMISSION CONTROL SYSTEM.**	Are there holes, cracks, clogging, or disconnection, misconnection of hoses or pipes in evaporative emission control system?	Repair or replace the hoses or pipes.	Repair the poor contact of ECM connector.

CQ:DTC P0456 EVAPORATIVE EMISSION CONTROL SYSTEM LEAK DETECTED (VERY SMALL LEAK)

NOTE:
For the diagnostic procedure, refer to DTC P0455. <Ref. to EN(H4DO HEV)(diag)-245, DTC P0455 EVAPORATIVE EMISSION SYSTEM LEAK DETECTED (LARGE LEAK), Diagnostic Procedure with Diagnostic Trouble Code (DTC).>

CR:DTC P0458 EVAPORATIVE EMISSION SYSTEM PURGE CONTROL VALVE CIRCUIT LOW

DTC DETECTING CONDITION:

- Detected when two consecutive driving cycles with fault occur.
- GENERAL DESCRIPTION <Ref. to GD(H4DO HEV)-161, DTC P0458 EVAPORATIVE EMISSION SYSTEM PURGE CONTROL VALVE CIRCUIT LOW, Diagnostic Trouble Code (DTC) Detecting Criteria.>

TROUBLE SYMPTOM:

Improper idling

CAUTION:

After servicing or replacing faulty parts, perform Clear Memory Mode <Ref. to EN(H4DO HEV)(diag)-63, OPERATION, Clear Memory Mode.>, and Inspection Mode <Ref. to EN(H4DO HEV)(diag)-47, PROCEDURE, Inspection Mode.>.

WIRING DIAGRAM:

- Engine electrical system (without push button start) <Ref. to WI(HEV)-100, WITHOUT PUSH BUTTON START, WIRING DIAGRAM, Engine Electrical System.>
- Engine electrical system (with push button start) <Ref. to WI(HEV)-114, WITH PUSH BUTTON START, WIRING DIAGRAM, Engine Electrical System.>

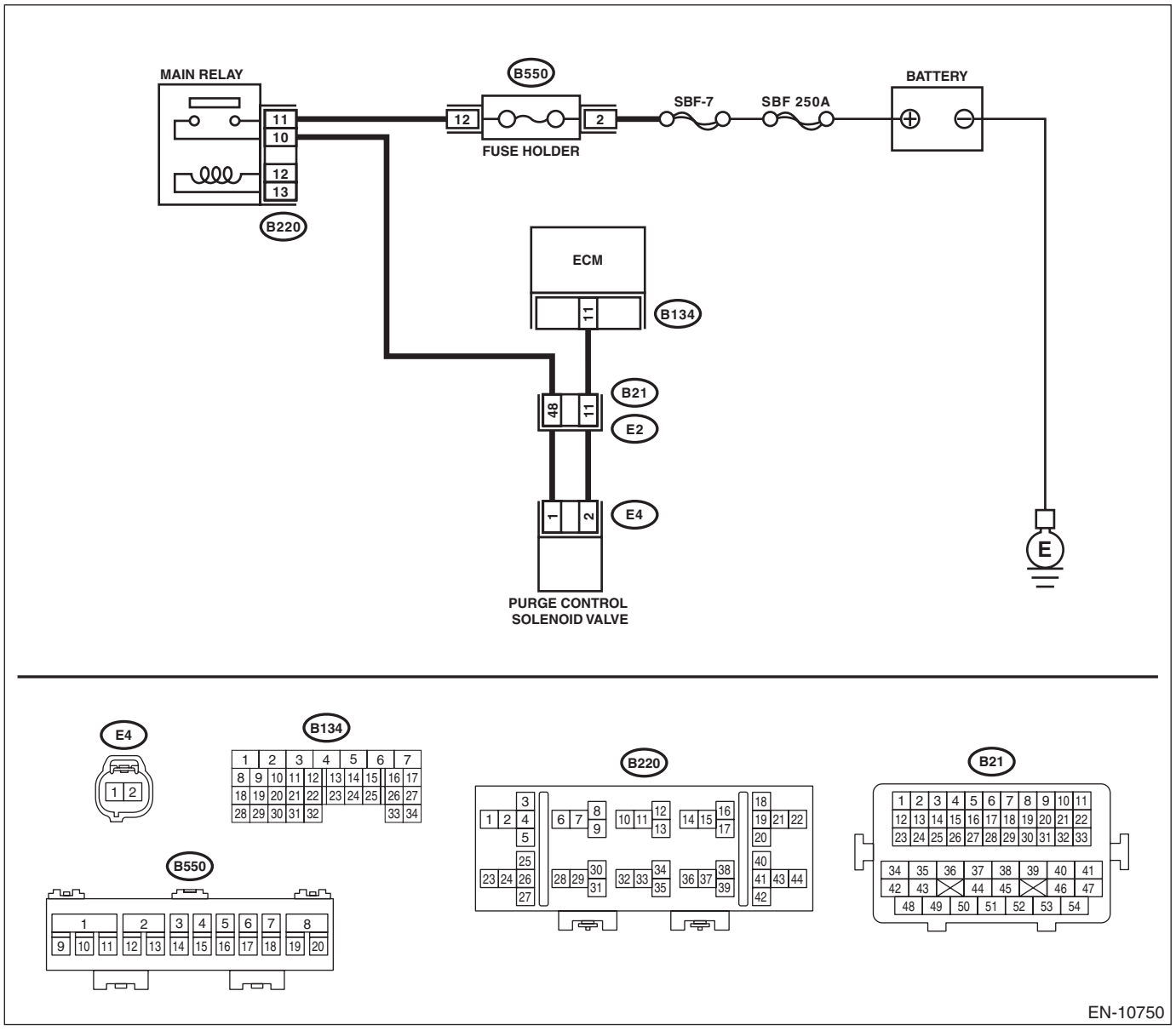

	Step	Check	Yes	No
1	**CHECK OUTPUT SIGNAL OF ECM.** 1) Turn the ignition switch to ON. 2) Measure the voltage between ECM connector and chassis ground. ***Connector & terminal*** ***(B134) No. 11 (+) — Chassis ground (–):***	Is the voltage 10 V or more?	Go to step **2**.	Go to step **3**.
2	**CHECK FOR POOR CONTACT.** Check for poor contact of ECM connector.	Is there poor contact of ECM connector?	Repair the poor contact of ECM connector.	Even if DTC is detected, the circuit has returned to a normal condition at this time. Reproduce the failure, and then perform the diagnosis again. NOTE: In this case, temporary poor contact of connector, temporary open or short circuit of harness may be the cause.
3	**CHECK POWER SUPPLY TO PURGE CONTROL SOLENOID VALVE.** Measure the voltage between purge control solenoid valve connector and engine ground. ***Connector & terminal*** ***(E4) No. 1 (+) — Engine ground (–):***	Is the voltage 10 V or more?	Go to step **4**.	Repair the power supply circuit.
4	**CHECK HARNESS BETWEEN ECM AND PURGE CONTROL SOLENOID VALVE CONNECTOR.** 1) Turn the ignition switch to OFF. 2) Disconnect the connectors from ECM and purge control solenoid valve. 3) Measure the resistance between the purge control solenoid valve connector and engine ground. ***Connector & terminal*** ***(E4) No. 2 — Engine ground:***	Is the resistance 1 MΩ or more?	Go to step **5**.	Repair the short circuit to ground in harness between ECM connector and purge control solenoid valve connector.
5	**CHECK HARNESS BETWEEN ECM AND PURGE CONTROL SOLENOID VALVE CONNECTOR.** Measure the resistance of harness between ECM connector and purge control solenoid valve. ***Connector & terminal*** ***(B134) No. 11 — (E4) No. 2:***	Is the resistance less than 1 Ω?	Go to step **6**.	Repair the harness and connector. NOTE: In this case, repair the following item: • Open circuit in harness between ECM connector and purge control solenoid valve connector • Poor contact of coupling connector

	Step	Check	Yes	No
6	**CHECK PURGE CONTROL SOLENOID VALVE.** 1) Remove the purge control solenoid valve. 2) Measure the resistance between purge control solenoid valve terminals. ***Terminals*** ***No. 1 — No. 2:***	Is the resistance 10 — 100 Ω?	Repair the poor contact of purge control solenoid valve connector.	Replace the purge control solenoid valve. <Ref. to EC(H4DO(HEV))-21, Purge Control Solenoid Valve.>

CS:DTC P0459 EVAPORATIVE EMISSION SYSTEM PURGE CONTROL VALVE CIRCUIT HIGH

DTC DETECTING CONDITION:

- Detected when two consecutive driving cycles with fault occur.
- GENERAL DESCRIPTION <Ref. to GD(H4DO HEV)-163, DTC P0459 EVAPORATIVE EMISSION SYSTEM PURGE CONTROL VALVE CIRCUIT HIGH, Diagnostic Trouble Code (DTC) Detecting Criteria.>

TROUBLE SYMPTOM:

Improper idling

CAUTION:

After servicing or replacing faulty parts, perform Clear Memory Mode <Ref. to EN(H4DO HEV)(diag)-63, OPERATION, Clear Memory Mode.>, and Inspection Mode <Ref. to EN(H4DO HEV)(diag)-47, PROCEDURE, Inspection Mode.>.

WIRING DIAGRAM:

- Engine electrical system (without push button start) <Ref. to WI(HEV)-100, WITHOUT PUSH BUTTON START, WIRING DIAGRAM, Engine Electrical System.>
- Engine electrical system (with push button start) <Ref. to WI(HEV)-114, WITH PUSH BUTTON START, WIRING DIAGRAM, Engine Electrical System.>

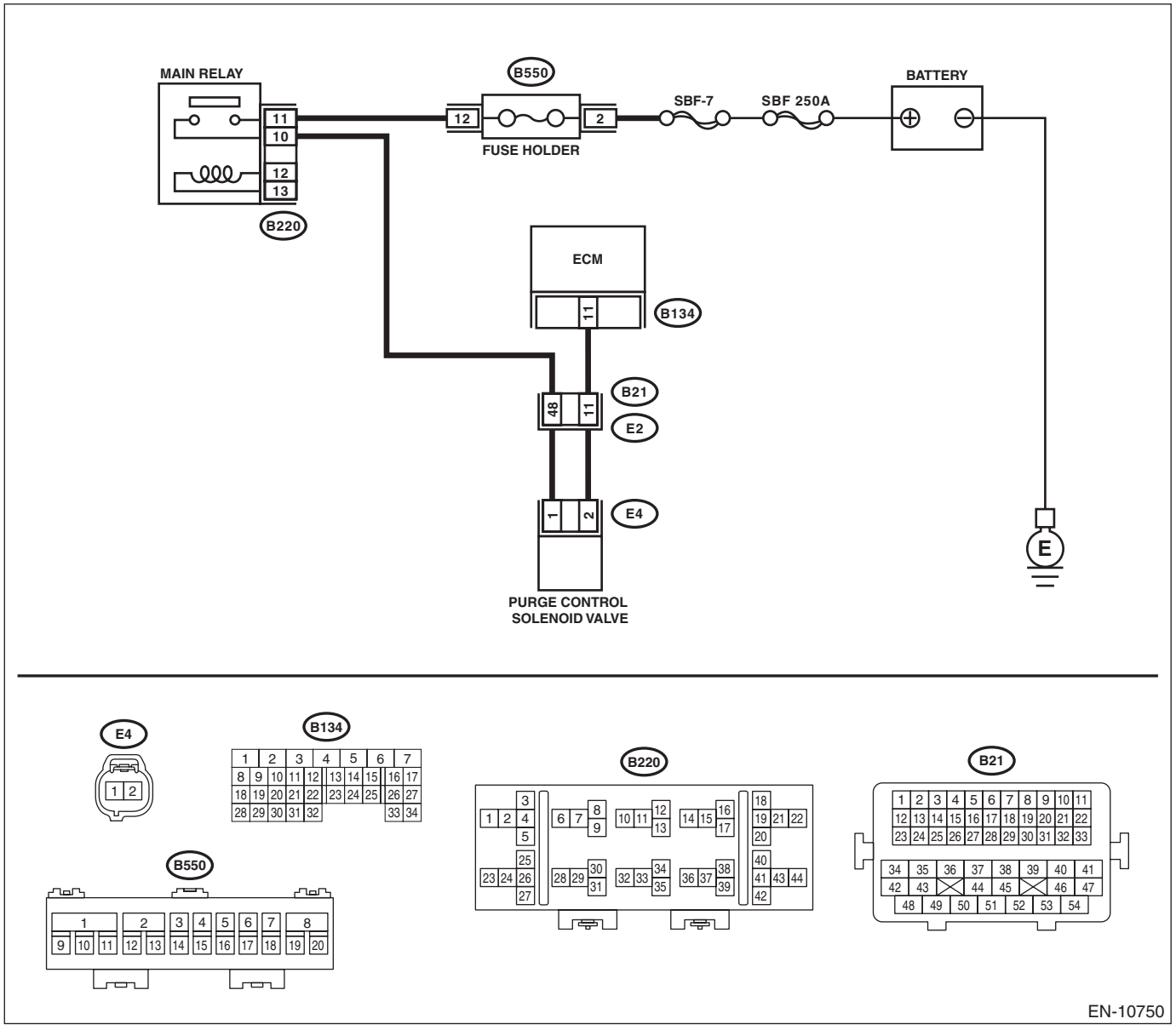

	Step	Check	Yes	No
1	**CHECK HARNESS BETWEEN ECM AND PURGE CONTROL SOLENOID VALVE CONNECTOR.** 1) Turn the ignition switch to OFF. 2) Disconnect the connectors from ECM and purge control solenoid valve. 3) Turn the ignition switch to ON. 4) Measure the voltage between ECM connector and chassis ground. ***Connector & terminal*** ***(B134) No. 11 (+) — Chassis ground (–):***	Is the voltage 10 V or more?	Repair the short circuit to power in the harness between ECM connector and purge control solenoid valve connector.	Go to step **2**.
2	**CHECK PURGE CONTROL SOLENOID VALVE.** 1) Turn the ignition switch to OFF. 2) Measure the resistance between purge control solenoid valve terminals. ***Terminals*** ***No. 1 — No. 2:***	Is the resistance less than 1 Ω?	Replace the purge control solenoid valve. <Ref. to EC(H4DO(HEV))-21, Purge Control Solenoid Valve.>	Repair the poor contact of ECM connector.

CT:DTC P0461 FUEL LEVEL SENSOR “A” CIRCUIT RANGE/PERFORMANCE

DTC DETECTING CONDITION:

- Detected when two consecutive driving cycles with fault occur.
- GENERAL DESCRIPTION <Ref. to GD(H4DO HEV)-165, DTC P0461 FUEL LEVEL SENSOR “A” CIRCUIT RANGE/PERFORMANCE, Diagnostic Trouble Code (DTC) Detecting Criteria.>

CAUTION:
After servicing or replacing faulty parts, perform Clear Memory Mode <Ref. to EN(H4DO HEV)(diag)-63, OPERATION, Clear Memory Mode.>, and Inspection Mode <Ref. to EN(H4DO HEV)(diag)-47, PROCEDURE, Inspection Mode.>.

Step		Check	Yes	No
1	**CHECK FOR ANY OTHER DTC ON DISPLAY.**	Is any other DTC displayed?	Check the appropriate DTC using the “List of Diagnostic Trouble Code (DTC)”. <Ref. to EN(H4DO HEV)(diag)-88, List of Diagnostic Trouble Code (DTC).>	Replace the fuel level sensor and fuel sub level sensor. <Ref. to FU(H4DO(HEV))-128, Fuel Level Sensor.> <Ref. to FU(H4DO(HEV))-131, Fuel Sub Level Sensor.>

CU:DTC P0462 FUEL LEVEL SENSOR “A” CIRCUIT LOW

NOTE:
For the diagnostic procedure, refer to DTC P0463. <Ref. to EN(H4DO HEV)(diag)-253, DTC P0463 FUEL LEVEL SENSOR “A” CIRCUIT HIGH, Diagnostic Procedure with Diagnostic Trouble Code (DTC).>

CV:DTC P0463 FUEL LEVEL SENSOR “A” CIRCUIT HIGH

DTC DETECTING CONDITION:

- Detected when two consecutive driving cycles with fault occur.
- GENERAL DESCRIPTION <Ref. to GD(H4DO HEV)-169, DTC P0463 FUEL LEVEL SENSOR “A” CIRCUIT HIGH, Diagnostic Trouble Code (DTC) Detecting Criteria.>

CAUTION:
After servicing or replacing faulty parts, perform Clear Memory Mode <Ref. to EN(H4DO HEV)(diag)-63, OPERATION, Clear Memory Mode.>, and Inspection Mode <Ref. to EN(H4DO HEV)(diag)-47, PROCEDURE, Inspection Mode.>.

Step		Check	Yes	No
1	**CHECK FOR ANY OTHER DTC ON DISPLAY.**	Is DTC P0462 or P0463 displayed on the Subaru Select Monitor?	Perform the diagnosis from step 2 in DTC B1500 of the combination meter. <Ref. to IDI(diag)-32, DTC B1500 FUEL SENDER OPEN/SHORT-CIRCUIT DETECTION, Diagnostic Procedure with Diagnostic Trouble Code (DTC).>	Even if DTC is detected, the circuit has returned to a normal condition at this time. Reproduce the failure, and then perform the diagnosis again. NOTE: In this case, temporary poor contact of connector, temporary open or short circuit of harness may be the cause.

CW:DTC P0500 VEHICLE SPEED SENSOR “A”

DTC DETECTING CONDITION:

- Immediately at fault recognition
- GENERAL DESCRIPTION <Ref. to GD(H4DO HEV)-170, DTC P0500 VEHICLE SPEED SENSOR “A”, Diagnostic Trouble Code (DTC) Detecting Criteria.>

CAUTION:
After servicing or replacing faulty parts, perform Clear Memory Mode <Ref. to EN(H4DO HEV)(diag)-63, OPERATION, Clear Memory Mode.>, and Inspection Mode <Ref. to EN(H4DO HEV)(diag)-47, PROCEDURE, Inspection Mode.>.

Step		Check	Yes	No
1	**CHECK DTC OF VDC.** Check DTC of VDC.	Is DTC of VDC displayed?	Perform the diagnosis according to DTC. <Ref. to VDC(diag)-37, List of Diagnostic Trouble Code (DTC).>	Repair the poor contact of ECM connector.

CX:DTC P0506 IDLE AIR CONTROL SYSTEM RPM LOWER THAN EXPECTED

DTC DETECTING CONDITION:

- Detected when two consecutive driving cycles with fault occur.
- GENERAL DESCRIPTION <Ref. to GD(H4DO HEV)-171, DTC P0506 IDLE AIR CONTROL SYSTEM RPM LOWER THAN EXPECTED, Diagnostic Trouble Code (DTC) Detecting Criteria.>

TROUBLE SYMPTOM:

- Hard to start the engine.
- Engine does not start.
- Improper idling
- Engine stalls.

CAUTION:

After servicing or replacing faulty parts, perform Clear Memory Mode <Ref. to EN(H4DO HEV)(diag)-63, OPERATION, Clear Memory Mode.>, and Inspection Mode <Ref. to EN(H4DO HEV)(diag)-47, PROCEDURE, Inspection Mode.>.

	Step	Check	Yes	No
1	**CHECK FOR ANY OTHER DTC ON DISPLAY.**	Is any other DTC displayed?	Check the appropriate DTC using the "List of Diagnostic Trouble Code (DTC)". <Ref. to EN(H4DO HEV)(diag)-88, List of Diagnostic Trouble Code (DTC).>	Go to step **2**.
2	**CHECK AIR CLEANER ELEMENT.** 1) Turn the ignition switch to OFF. 2) Check the air cleaner element.	Is there excessive clogging on air cleaner element?	Replace the air cleaner element. <Ref. to IN(H4DO(HEV))-4, Air Cleaner Element.>	Go to step **3**.
3	**CHECK ELECTRONIC THROTTLE CONTROL.** 1) Remove the electronic throttle control. <Ref. to FU(H4DO(HEV))-15, REMOVAL, Throttle Body.> 2) Check the electronic throttle control.	Are foreign matter found inside electronic throttle control?	Remove foreign matter from electronic throttle control.	Perform the diagnosis of DTC P2101. <Ref. to EN(H4DO HEV)(diag)-327, DTC P2101 THROTTLE ACTUATOR CONTROL MOTOR CIRCUIT RANGE/PERFORMANCE, Diagnostic Procedure with Diagnostic Trouble Code (DTC).>

CY:DTC P0507 IDLE AIR CONTROL SYSTEM RPM HIGHER THAN EXPECTED

DTC DETECTING CONDITION:

- Detected when two consecutive driving cycles with fault occur.
- GENERAL DESCRIPTION <Ref. to GD(H4DO HEV)-172, DTC P0507 IDLE AIR CONTROL SYSTEM RPM HIGHER THAN EXPECTED, Diagnostic Trouble Code (DTC) Detecting Criteria.>

TROUBLE SYMPTOM:

Engine keeps running at higher speed than specified idle speed.

CAUTION:

After servicing or replacing faulty parts, perform Clear Memory Mode <Ref. to EN(H4DO HEV)(diag)-63, OPERATION, Clear Memory Mode.>, and Inspection Mode <Ref. to EN(H4DO HEV)(diag)-47, PROCEDURE, Inspection Mode.>.

	Step	Check	Yes	No
1	**CHECK FOR ANY OTHER DTC ON DISPLAY.**	Is any other DTC displayed?	Check the appropriate DTC using the "List of Diagnostic Trouble Code (DTC)". <Ref. to EN(H4DO HEV)(diag)-88, List of Diagnostic Trouble Code (DTC).>	Go to step **2**.
2	**CHECK AIR INTAKE SYSTEM.** 1) Start and idle the engine. 2) Check the following items. • Loose installation of intake manifold and throttle body • Cracks of intake manifold gasket and throttle body gasket • Disconnection of vacuum hoses	Is there any fault in air intake system?	Repair air suction and leaks.	Go to step **3**.
3	**CHECK ELECTRONIC THROTTLE CONTROL.** 1) Turn the ignition switch to OFF. 2) Remove the electronic throttle control. <Ref. to FU(H4DO(HEV))-15, REMOVAL, Throttle Body.> 3) Check the electronic throttle control.	Are foreign matter found inside electronic throttle control?	Remove foreign matter from electronic throttle control.	Perform the diagnosis of DTC P2101. <Ref. to EN(H4DO HEV)(diag)-327, DTC P2101 THROTTLE ACTUATOR CONTROL MOTOR CIRCUIT RANGE/PERFORMANCE, Diagnostic Procedure with Diagnostic Trouble Code (DTC).>

CZ:DTC P050A COLD START IDLE AIR CONTROL SYSTEM PERFORMANCE

DTC DETECTING CONDITION:

- Detected when two consecutive driving cycles with fault occur.
- GENERAL DESCRIPTION <Ref. to GD(H4DO HEV)-173, DTC P050A COLD START IDLE AIR CONTROL SYSTEM PERFORMANCE, Diagnostic Trouble Code (DTC) Detecting Criteria.>

TROUBLE SYMPTOM:

- Engine keeps running at higher speed than specified idle speed.
- Engine keeps running at a lower speed than the specified idle speed.
- Engine stalls.

CAUTION:

After servicing or replacing faulty parts, perform Clear Memory Mode <Ref. to EN(H4DO HEV)(diag)-63, OPERATION, Clear Memory Mode.>, and Inspection Mode <Ref. to EN(H4DO HEV)(diag)-47, PROCEDURE, Inspection Mode.>.

WIRING DIAGRAM:

- Engine electrical system (without push button start) <Ref. to WI(HEV)-100, WITHOUT PUSH BUTTON START, WIRING DIAGRAM, Engine Electrical System.>
- Engine electrical system (with push button start) <Ref. to WI(HEV)-114, WITH PUSH BUTTON START, WIRING DIAGRAM, Engine Electrical System.>

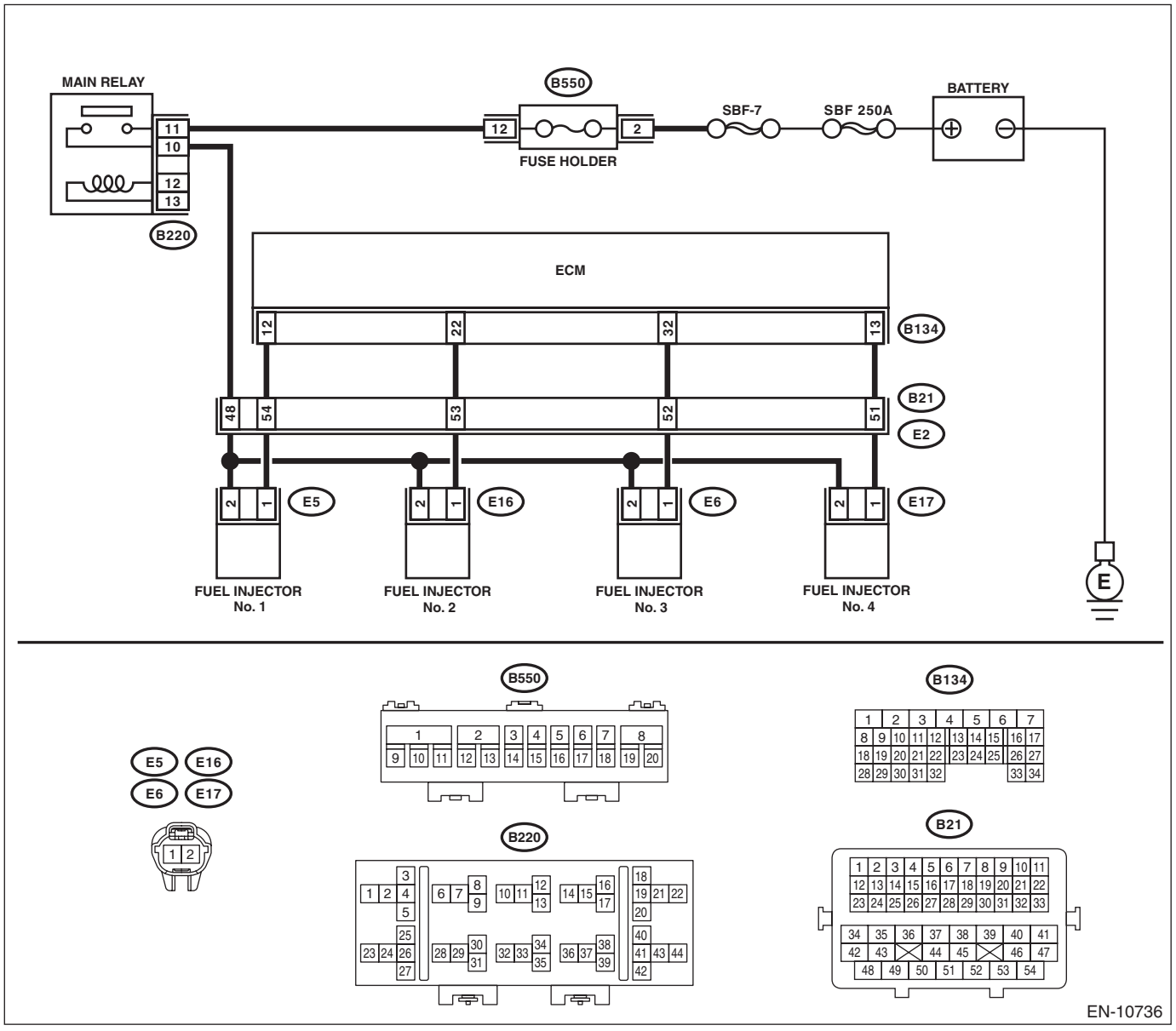

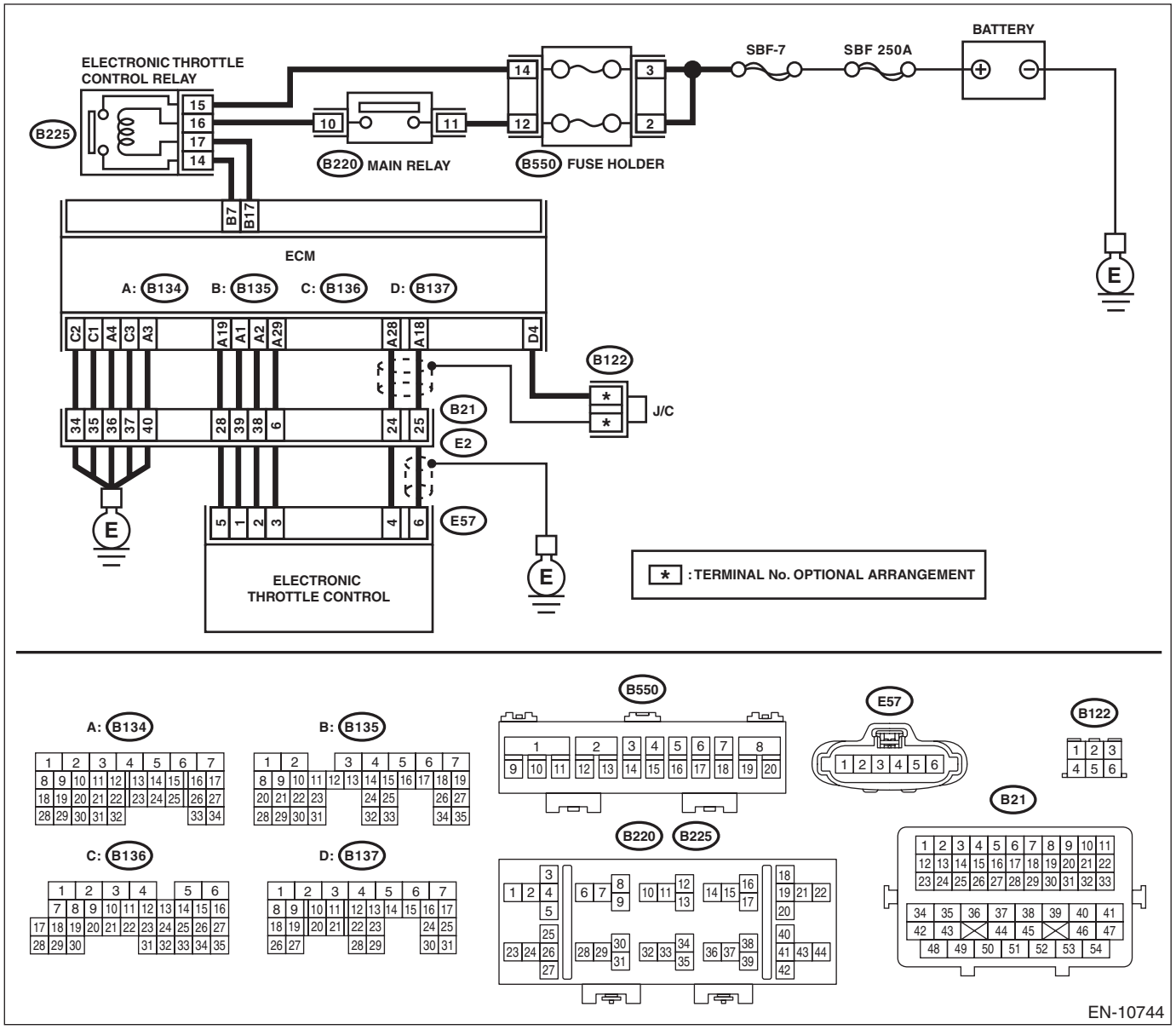

Step		Check	Yes	No
1	**CHECK FOR ANY OTHER DTC ON DISPLAY.**	Is any other DTC displayed?	Check the appropriate DTC using the "List of Diagnostic Trouble Code (DTC)". <Ref. to EN(H4DO HEV)(diag)-88, List of Diagnostic Trouble Code (DTC).>	Go to step **2**.
2	**CHECK ENGINE OIL.**	Is there a proper amount of engine oil?	Go to step **3**.	Replace engine oil. <Ref. to LU(H4DO(w/o HEV))-13, REPLACEMENT, Engine Oil.>
3	**CHECK EXHAUST SYSTEM.**	Are there holes or loose bolts on exhaust system?	Repair the exhaust system.	Go to step **4**.

	Step	Check	Yes	No
4	**CHECK AIR INTAKE SYSTEM.**	Are there holes, loose bolts or disconnection of hose on air intake system?	Repair the air intake system.	Go to step **5**.
5	**CHECK FUEL PRESSURE.** **WARNING:** **Place "NO OPEN FLAMES" signs near the working area.** **CAUTION:** **Be careful not to spill fuel.** Measure the fuel pressure. <Ref. to ME(H4DO(w/o HEV))-35, INSPECTION, Fuel Pressure.> **CAUTION:** **Release fuel pressure before removing the fuel pressure gauge.**	Is the measured value 340 — 400 kPa (3.5 — 4.1 kg/cm^2, 49 — 58 psi)?	Go to step **6**.	Check the fuel pump and fuel delivery line. <Ref. to FU(H4DO(HEV))-127, INSPECTION, Fuel Pump.> <Ref. to FU(H4DO(HEV))-154, INSPECTION, Fuel Delivery and Evaporation Lines.>
6	**CHECK ENGINE COOLANT TEMPERATURE SENSOR.** 1) Start the engine and warm up completely. 2) Read the value of «Coolant Temp.» using the Subaru Select Monitor or a general scan tool. NOTE: • Subaru Select Monitor For detailed operation procedures, refer to "Current Data Display For Engine". <Ref. to EN(H4DO HEV)(diag)-37, Subaru Select Monitor.> • General scan tool For detailed operation procedures, refer to the general scan tool operation manual.	Is the value of «Coolant Temp.» 75°C (167°F) or more?	Go to step **7**.	Replace the engine coolant temperature sensor. <Ref. to FU(H4DO(HEV))-41, Engine Coolant Temperature Sensor.>
7	**CHECK MASS AIR FLOW AND INTAKE AIR TEMPERATURE SENSOR.** 1) Start the engine and warm up engine until coolant temperature is higher than 75°C (167°F). 2) Place the select lever in "P" range or "N" range. 3) Turn the A/C switch to OFF. 4) Turn all the accessory switches to OFF. 5) Read the value of «Mass Air Flow» using the Subaru Select Monitor or a general scan tool. NOTE: • Subaru Select Monitor For detailed operation procedures, refer to "Current Data Display For Engine". <Ref. to EN(H4DO HEV)(diag)-37, Subaru Select Monitor.> • General scan tool For detailed operation procedures, refer to the general scan tool operation manual.	Is the value of «Mass Air Flow» 2.0 — 5.0 g/s (0.26 — 0.66 lb/m)?	Go to step **8**.	Replace the mass air flow and intake air temperature sensor. <Ref. to FU(H4DO(HEV))-64, Mass Air Flow and Intake Air Temperature Sensor.>

	Step	Check	Yes	No
8	**CHECK MASS AIR FLOW AND INTAKE AIR TEMPERATURE SENSOR.** 1) Start the engine and warm up engine until coolant temperature is higher than 75°C (167°F). 2) Place the select lever in "P" range or "N" range. 3) Turn the A/C switch to OFF. 4) Turn all the accessory switches to OFF. 5) Open the front hood. 6) Measure the ambient temperature. 7) Read the value of «Intake Air Temp.» using the Subaru Select Monitor or a general scan tool. NOTE: • Subaru Select Monitor For detailed operation procedures, refer to "Current Data Display For Engine". <Ref. to EN(H4DO HEV)(diag)-37, Subaru Select Monitor.> • General scan tool For detailed operation procedures, refer to the general scan tool operation manual.	Subtract ambient temperature from «Intake Air Temp.». Is the obtained value –10 — 50°C (–18 — 90°F)?	Go to step **9**.	Check the mass air flow and intake air temperature sensor. <Ref. to FU(H4DO(HEV))-64, Mass Air Flow and Intake Air Temperature Sensor.>
9	**CHECK OUTPUT SIGNAL OF ECM.** 1) Turn the ignition switch to ON. 2) Measure the voltage between ECM and chassis ground on faulty cylinders. ***Connector & terminal*** ***#1 (B134) No. 12 (+) — Chassis ground (–):*** ***#2 (B134) No. 22 (+) — Chassis ground (–):*** ***#3 (B134) No. 32 (+) — Chassis ground (–):*** ***#4 (B134) No. 13 (+) — Chassis ground (–):***	Is the voltage 10 V or more?	Go to step **14**.	Go to step **10**.
10	**CHECK HARNESS BETWEEN ECM AND FUEL INJECTOR CONNECTOR.** 1) Turn the ignition switch to OFF. 2) Disconnect the connector from fuel injector on faulty cylinders. 3) Measure the resistance between fuel injector connector and engine ground on faulty cylinders. ***Connector & terminal*** ***#1 (E5) No. 1 — Engine ground:*** ***#2 (E16) No. 1 — Engine ground:*** ***#3 (E6) No. 1 — Engine ground:*** ***#4 (E17) No. 1 — Engine ground:***	Is the resistance 1 MΩ or more?	Go to step **11**.	Repair the short circuit to ground in harness between ECM connector and fuel injector connector.
11	**CHECK HARNESS BETWEEN ECM AND FUEL INJECTOR CONNECTOR.** Measure the resistance of harness between ECM and fuel injector connector on faulty cylinders. ***Connector & terminal*** ***#1 (B134) No. 12 — (E5) No. 1:*** ***#2 (B134) No. 22 — (E16) No. 1:*** ***#3 (B134) No. 32 — (E6) No. 1:*** ***#4 (B134) No. 13 — (E17) No. 1:***	Is the resistance less than 1 Ω?	Go to step **12**.	Repair the harness and connector. NOTE: In this case, repair the following item: • Open circuit in harness between ECM connector and fuel injector connector • Poor contact of coupling connector

	Step	Check	Yes	No
12	**CHECK FUEL INJECTOR.** Measure the resistance between fuel injector terminals on faulty cylinder. ***Terminals*** ***No. 1 — No. 2:***	Is the resistance 5 — 20 Ω?	Go to step **13**.	Replace the faulty fuel injector. <Ref. to FU(H4DO(HEV))-70, Fuel Injector.>
13	**CHECK POWER SUPPLY LINE.** 1) Turn the ignition switch to ON. 2) Measure the voltage between fuel injector and engine ground on faulty cylinders. ***Connector & terminal*** ***#1 (E5) No. 2 (+) — Engine ground (–):*** ***#2 (E16) No. 2 (+) — Engine ground (–):*** ***#3 (E6) No. 2 (+) — Engine ground (–):*** ***#4 (E17) No. 2 (+) — Engine ground (–):***	Is the voltage 10 V or more?	Repair the poor contact of all connectors in fuel injector circuit.	Repair the harness and connector. NOTE: In this case, repair the following item: • Open circuit in harness between the main relay connector and fuel injector connector on faulty cylinders • Poor contact of coupling connector • Poor contact of main relay connector
14	**CHECK HARNESS BETWEEN ECM AND FUEL INJECTOR CONNECTOR.** 1) Turn the ignition switch to OFF. 2) Disconnect the connector from fuel injector on faulty cylinders. 3) Turn the ignition switch to ON. 4) Measure the voltage between ECM and chassis ground on faulty cylinders. ***Connector & terminal*** ***#1 (B134) No. 12 (+) — Chassis ground (–):*** ***#2 (B134) No. 22 (+) — Chassis ground (–):*** ***#3 (B134) No. 32 (+) — Chassis ground (–):*** ***#4 (B134) No. 13 (+) — Chassis ground (–):***	Is the voltage 10 V or more?	Repair the short circuit to power in harness between ECM connector and fuel injector.	Go to step **15**.
15	**CHECK FUEL INJECTOR.** 1) Turn the ignition switch to OFF. 2) Measure the resistance between fuel injector terminals on faulty cylinder. ***Terminals*** ***No. 1 — No. 2:***	Is the resistance 5 — 20 Ω?	Go to step **16**.	Replace the faulty fuel injector. <Ref. to FU(H4DO(HEV))-70, Fuel Injector.>
16	**CHECK INSTALLATION CONDITION OF CAMSHAFT POSITION SENSOR/CRANKSHAFT POSITION SENSOR.**	Is the camshaft position sensor or crankshaft position sensor loosely installed?	Tighten the camshaft position sensor or crankshaft position sensor. <Ref. to FU(H4DO(HEV))-53, INSTALLATION, Camshaft Position Sensor.> <Ref. to FU(H4DO(HEV))-48, INSTALLATION, Crankshaft Position Sensor.>	Go to step **17**.
17	**CHECK CRANKSHAFT POSITION SENSOR PLATE.**	Is the crankshaft position sensor plate rusted or does it have broken teeth?	Replace the crankshaft position sensor plate. <Ref. to ME(H4DO(w/o HEV))-299, Cylinder Block.>	Go to step **18**.

	Step	Check	Yes	No
18	**CHECK INSTALLATION CONDITION OF TIMING CHAIN.** Turn the crankshaft using ST, and align the alignment mark on crank sprocket with alignment mark on cylinder block. ST 18252AA000 CRANKSHAFT SOCKET	Is the timing chain dislocated from its proper position?	Correct the installation condition of timing chain. <Ref. to ME(H4DO(w/o HEV))-163, Timing Chain Assembly.>	Go to step **19**.
19	**CHECK ELECTRONIC THROTTLE CONTROL RELAY.** 1) Turn the ignition switch to OFF. 2) Remove the electronic throttle control relay. 3) Connect the battery to terminals No. 16 and No. 17 of electronic throttle control relay. 4) Measure the resistance between electronic throttle control relay terminals. ***Terminals*** ***No. 14 — No. 15:***	Is the resistance less than 1 Ω?	Go to step **20**.	Replace the electronic throttle control relay. <Ref. to FU(H4DO(HEV))-94, Electronic Throttle Control Relay.>
20	**CHECK POWER SUPPLY OF ELECTRONIC THROTTLE CONTROL RELAY.** Measure the voltage between electronic throttle control relay connector and chassis ground. ***Connector & terminal*** ***(B225) No. 15 (+) — Chassis ground (–):***	Is the voltage 10 V or more?	Go to step **21**.	Repair the open or ground short circuit of power supply circuit.
21	**CHECK HARNESS BETWEEN ECM AND ELECTRONIC THROTTLE CONTROL RELAY CONNECTOR.** 1) Disconnect the connector from ECM. 2) Turn the ignition switch to ON. 3) Measure the voltage between electronic throttle control relay connector and chassis ground. ***Connector & terminal*** ***(B225) No. 17 (+) — Chassis ground (–):***	Is the voltage 10 V or more?	Repair the short circuit to power in the harness between ECM connector and electronic throttle control relay connector.	Go to step **22**.
22	**CHECK HARNESS BETWEEN ECM AND ELECTRONIC THROTTLE CONTROL RELAY CONNECTOR.** 1) Turn the ignition switch to OFF. 2) Measure the resistance between electronic throttle control relay connector and chassis ground. ***Connector & terminal*** ***(B225) No. 14 — Chassis ground:*** ***(B225) No. 17 — Chassis ground:***	Is the resistance 1 MΩ or more?	Go to step **23**.	Repair the short circuit to ground in harness between ECM connector and electronic throttle control relay connector.
23	**CHECK HARNESS BETWEEN ECM AND ELECTRONIC THROTTLE CONTROL RELAY CONNECTOR.** Measure the resistance of harness between ECM connector and electronic throttle control relay connector. ***Connector & terminal*** ***(B135) No. 17 — (B225) No. 17:*** ***(B135) No. 7 — (B225) No. 14:***	Is the resistance less than 1 Ω?	Go to step **24**.	Repair the open circuit in harness between ECM connector and electronic throttle control relay connector.

	Step	Check	Yes	No
24	**CHECK HARNESS BETWEEN ECM AND ELECTRONIC THROTTLE CONTROL CONNECTOR.** 1) Turn the ignition switch to OFF. 2) Disconnect the connectors from ECM and electronic throttle control. 3) Measure the resistance between ECM connector and chassis ground. ***Connector & terminal*** ***(B134) No. 19 — Chassis ground:*** ***(B134) No. 18 — Chassis ground:*** ***(B134) No. 18 — (B137) No. 4:*** ***(B134) No. 28 — Chassis ground:*** ***(B134) No. 28 — (B137) No. 4:***	Is the resistance 1 MΩ or more?	Go to step **25**.	Repair the ground short circuit of harness between ECM connector and electronic throttle control connector.
25	**CHECK SHORT CIRCUIT INSIDE THE ECM.** 1) Connect the connector to ECM. 2) Measure the resistance between electronic throttle control connector and engine ground. ***Connector & terminal*** ***(E57) No. 6 — Engine ground:*** ***(E57) No. 4 — Engine ground:***	Is the resistance 1 MΩ or more?	Go to step **26**.	Repair the ground short circuit of harness between ECM connector and electronic throttle control connector. Replace the ECM if defective. <Ref. to FU(H4DO(HEV))-85, Engine Control Module (ECM).>
26	**CHECK HARNESS BETWEEN ECM AND ELECTRONIC THROTTLE CONTROL CONNECTOR.** 1) Disconnect the connector from ECM. 2) Measure the resistance of harness between ECM connector and electronic throttle control connector. ***Connector & terminal*** ***(B134) No. 18 — (E57) No. 6:*** ***(B134) No. 28 — (E57) No. 4:*** ***(B134) No. 29 — (E57) No. 3:***	Is the resistance less than 1 Ω?	Go to step **27**.	Repair the harness and connector. NOTE: In this case, repair the following item: • Open circuit in harness between ECM connector and electronic throttle control connector • Poor contact of coupling connector
27	**CHECK HARNESS BETWEEN ECM AND ELECTRONIC THROTTLE CONTROL CONNECTOR.** 1) Connect the connector to ECM. 2) Measure the resistance between electronic throttle control connector and engine ground. ***Connector & terminal*** ***(E57) No. 3 — Engine ground:***	Is the resistance less than 5 Ω?	Go to step **28**.	Repair the harness and connector. NOTE: In this case, repair the following item: • Open circuit of harness between ECM connector and engine ground • Poor contact of ECM connector • Poor contact of coupling connector

	Step	Check	Yes	No
28	**CHECK HARNESS BETWEEN ECM AND ELECTRONIC THROTTLE CONTROL CONNECTOR.** 1) Turn the ignition switch to ON. 2) Measure the voltage between electronic throttle control connector and engine ground. ***Connector & terminal*** ***(E57) No. 6 (+) — Engine ground (–):*** ***(E57) No. 4 (+) — Engine ground (–):***	Is the voltage 5 V or more?	Repair the short circuit to power in the harness between ECM connector and electronic throttle control connector.	Go to step **29**.
29	**CHECK HARNESS BETWEEN ECM AND ELECTRONIC THROTTLE CONTROL CONNECTOR.** 1) Turn the ignition switch to OFF. 2) Disconnect the connector from ECM. 3) Measure the resistance between ECM connectors. ***Connector & terminal*** ***(B134) No. 19 — (B134) No. 18:*** ***(B134) No. 19 — (B134) No. 28:***	Is the resistance 1 MΩ or more?	Go to step **30**.	Repair the short circuit to power in the harness between ECM connector and electronic throttle control connector.
30	**CHECK SENSOR OUTPUT.** 1) Connect all connectors. 2) Turn the ignition switch to ON. 3) Read the value of «Main-Throttle Sensor» using Subaru Select Monitor. NOTE: For detailed operation procedures, refer to “Current Data Display For Engine”. <Ref. to EN(H4DO HEV)(diag)-37, Subaru Select Monitor.>	Is the value of «Main-Throttle Sensor» 0.81 — 0.87 V?	Go to step **31**.	Repair the poor contact of electronic throttle control connector. Replace the electronic throttle control if defective. <Ref. to FU(H4DO(HEV))-15, Throttle Body.>
31	**CHECK SENSOR OUTPUT.** Read the value of «Sub-Throttle Sensor» using Subaru Select Monitor. NOTE: For detailed operation procedures, refer to “Current Data Display For Engine”. <Ref. to EN(H4DO HEV)(diag)-37, Subaru Select Monitor.>	Is the value of «Sub-Throttle Sensor» 1.64 — 1.70 V?	Go to step **32**.	Repair the poor contact of electronic throttle control connector. Replace the electronic throttle control if defective. <Ref. to FU(H4DO(HEV))-15, Throttle Body.>
32	**CHECK HARNESS BETWEEN ECM AND ELECTRONIC THROTTLE CONTROL CONNECTOR.** 1) Turn the ignition switch to OFF. 2) Disconnect the connectors from ECM and electronic throttle control. 3) Measure the resistance between ECM connector and electronic throttle control connector. ***Connector & terminal*** ***(B134) No. 2 — (E57) No. 2:*** ***(B134) No. 1 — (E57) No. 1:***	Is the resistance less than 1 Ω?	Go to step **33**.	Repair the harness and connector. NOTE: In this case, repair the following item: • Open circuit in harness between ECM connector and electronic throttle control connector • Poor contact of coupling connector

	Step	Check	Yes	No
33	**CHECK HARNESS BETWEEN ECM AND ELECTRONIC THROTTLE CONTROL CONNECTOR.** 1) Connect the connector to ECM. 2) Turn the ignition switch to ON. 3) Measure the voltage between electronic throttle control connector and engine ground. ***Connector & terminal*** ***(E57) No. 2 (+) — Engine ground (–):*** ***(E57) No. 1 (+) — Engine ground (–):***	Is the voltage 5 V or more?	Repair the short circuit to power in the harness between ECM connector and electronic throttle control connector.	Go to step **34**.
34	**CHECK HARNESS BETWEEN ECM AND ELECTRONIC THROTTLE CONTROL CONNECTOR.** 1) Turn the ignition switch to OFF. 2) Disconnect the connector from ECM. 3) Measure the resistance between electronic throttle control connector and engine ground. ***Connector & terminal*** ***(E57) No. 2 — Engine ground:*** ***(E57) No. 1 — Engine ground:***	Is the resistance 1 MΩ or more?	Go to step **35**.	Repair the ground short circuit of harness between ECM connector and electronic throttle control connector.
35	**CHECK HARNESS BETWEEN ELECTRONIC THROTTLE CONTROL CONNECTOR.** Measure the resistance between electronic throttle control connectors. ***Connector & terminal*** ***(E57) No. 2 — (E57) No. 1:***	Is the resistance 1 MΩ or more?	Go to step **36**.	Repair the short circuit in harness between ECM connector and electronic throttle control connector.
36	**CHECK ELECTRONIC THROTTLE CONTROL GROUND CIRCUIT.** Measure the resistance between ECM connector and chassis ground. ***Connector & terminal*** ***(B134) No. 3 — Chassis ground:*** ***(B134) No. 4 — Chassis ground:*** ***(B136) No. 1 — Chassis ground:*** ***(B136) No. 2 — Chassis ground:*** ***(B136) No. 3 — Chassis ground:***	Is the resistance less than 5 Ω?	Go to step **37**.	Repair the harness and connector. NOTE: In this case, repair the following item: • Open circuit of harness between ECM connector and engine ground • Poor contact of coupling connector
37	**CHECK ELECTRONIC THROTTLE CONTROL.** Measure the resistance between electronic throttle control terminals. ***Terminals*** ***No. 2 — No. 1:***	Is the resistance 50 Ω or less?	Go to step **38**.	Replace the electronic throttle control. <Ref. to FU(H4DO(HEV))-15, Throttle Body.>
38	**CHECK ELECTRONIC THROTTLE CONTROL.** Move the throttle valve to the fully open and fully closed positions with fingers. Check that the valve returns to the specified position when releasing fingers.	Does the valve return to the specified position? Standard value: 3 mm (0.12 in) from fully closed position	Repair the poor contact of ECM connector.	Replace the electronic throttle control. <Ref. to FU(H4DO(HEV))-15, Throttle Body.>

DA:DTC P050B COLD START IGNITION TIMING PERFORMANCE

NOTE:
For the diagnostic procedure, refer to DTC P050A. <Ref. to EN(H4DO HEV)(diag)-256, DTC P050A COLD START IDLE AIR CONTROL SYSTEM PERFORMANCE, Diagnostic Procedure with Diagnostic Trouble Code (DTC).>

DB:DTC P0512 STARTER REQUEST CIRCUIT

DTC DETECTING CONDITION:

- Immediately at fault recognition
- GENERAL DESCRIPTION <Ref. to GD(H4DO HEV)-176, DTC P0512 STARTER REQUEST CIRCUIT, Diagnostic Trouble Code (DTC) Detecting Criteria.>

TROUBLE SYMPTOM:

Failure of engine to start

CAUTION:

After servicing or replacing faulty parts, perform Clear Memory Mode <Ref. to EN(H4DO HEV)(diag)-63, OPERATION, Clear Memory Mode.>, and Inspection Mode <Ref. to EN(H4DO HEV)(diag)-47, PROCEDURE, Inspection Mode.>.

WIRING DIAGRAM:

Engine electrical system (with push button start) <Ref. to WI(HEV)-114, WITH PUSH BUTTON START, WIRING DIAGRAM, Engine Electrical System.>

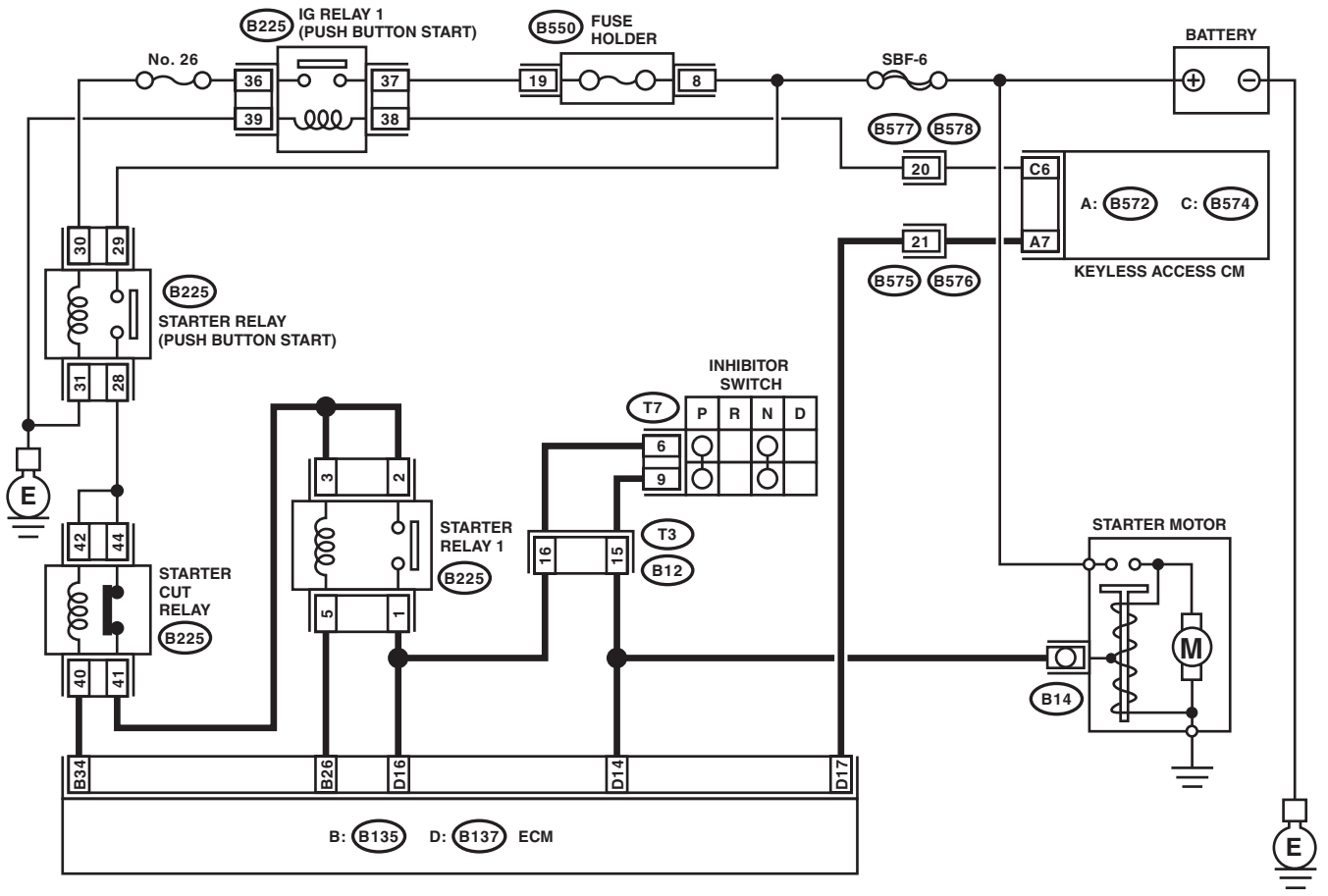

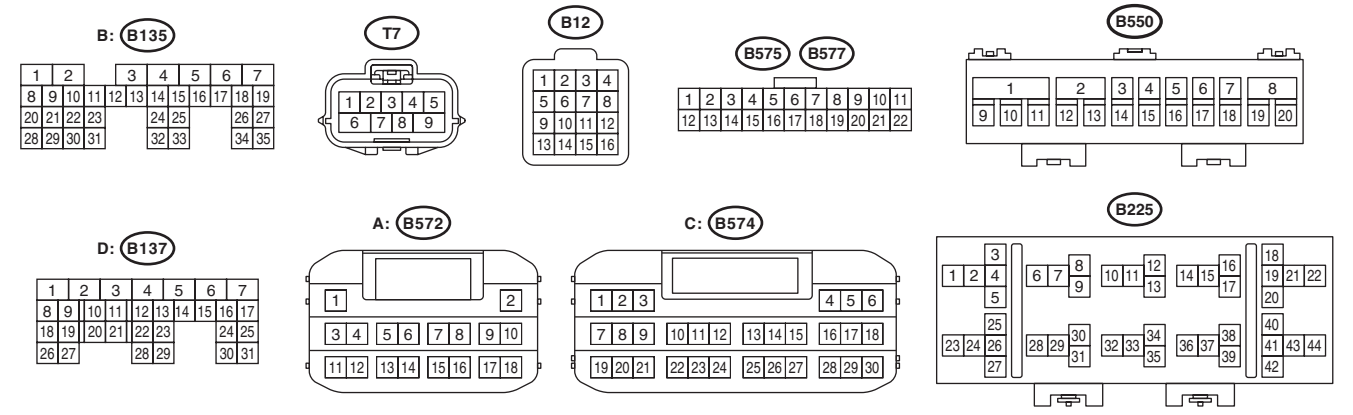

EN-10732

	Step	Check	Yes	No
1	**CHECK PUSH BUTTON IGNITION SWITCH.** Operate the push button ignition switch.	Does it operate smoothly without catch?	Go to step **2**.	Replace the push button ignition switch. <Ref. to SL-106, Push Button Ignition Switch.>
2	**CHECK DTC.** 1) Clear the memory using the Subaru Select Monitor. <Ref. to EN(H4DO HEV)(diag)-63, Clear Memory Mode.> 2) Start and idle the engine for three minutes or more.	Is the same DTC as current diagnosis output?	Go to step **3**.	Even if DTC is detected, the circuit has returned to a normal condition at this time. Reproduce the failure, and then perform the diagnosis again. NOTE: In this case, temporary poor contact of connector, temporary open or short circuit of harness may be the cause.
3	**CHECK HARNESS BETWEEN ECM AND KEYLESS ACCESS CM.** 1) Turn the ignition to OFF. 2) Disconnect the connector from ECM. 3) Turn the ignition to ON. 4) Measure the voltage between ECM connector and chassis ground. ***Connector & terminal*** ***(B137) No. 17 (+) — Chassis ground (–):***	Is the voltage 10 V or more?	Repair the short circuit to power supply in harness between ECM connector and keyless access CM connector.	Repair the poor contact of ECM connector.

DC:DTC P0560 SYSTEM VOLTAGE

DTC DETECTING CONDITION:

- Immediately at fault recognition
- GENERAL DESCRIPTION <Ref. to GD(H4DO HEV)-177, DTC P0560 SYSTEM VOLTAGE, Diagnostic Trouble Code (DTC) Detecting Criteria.>

CAUTION:
After servicing or replacing faulty parts, perform Clear Memory Mode <Ref. to EN(H4DO HEV)(diag)-63, OPERATION, Clear Memory Mode.>, and Inspection Mode <Ref. to EN(H4DO HEV)(diag)-47, PROCEDURE, Inspection Mode.>.

WIRING DIAGRAM:

- Engine electrical system (without push button start) <Ref. to WI(HEV)-100, WITHOUT PUSH BUTTON START, WIRING DIAGRAM, Engine Electrical System.>
- Engine electrical system (with push button start) <Ref. to WI(HEV)-114, WITH PUSH BUTTON START, WIRING DIAGRAM, Engine Electrical System.>

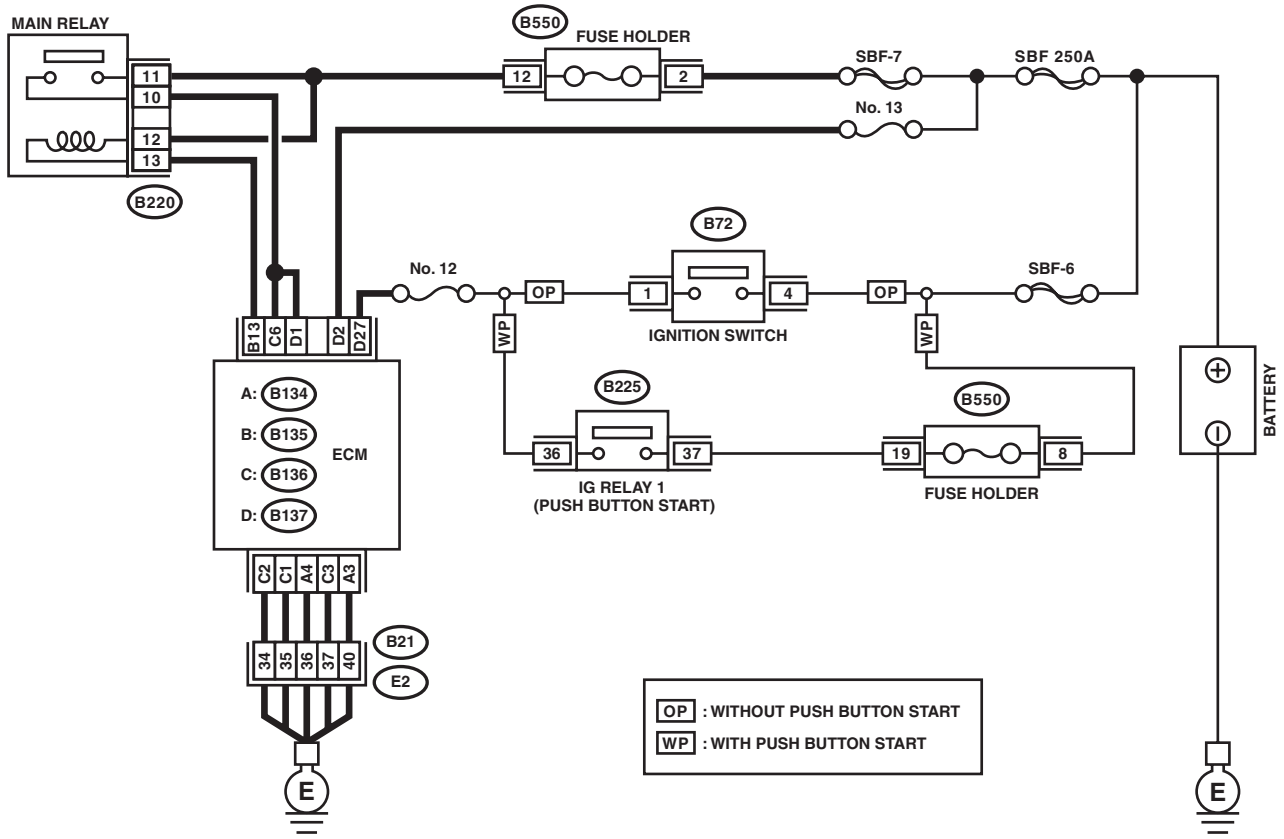

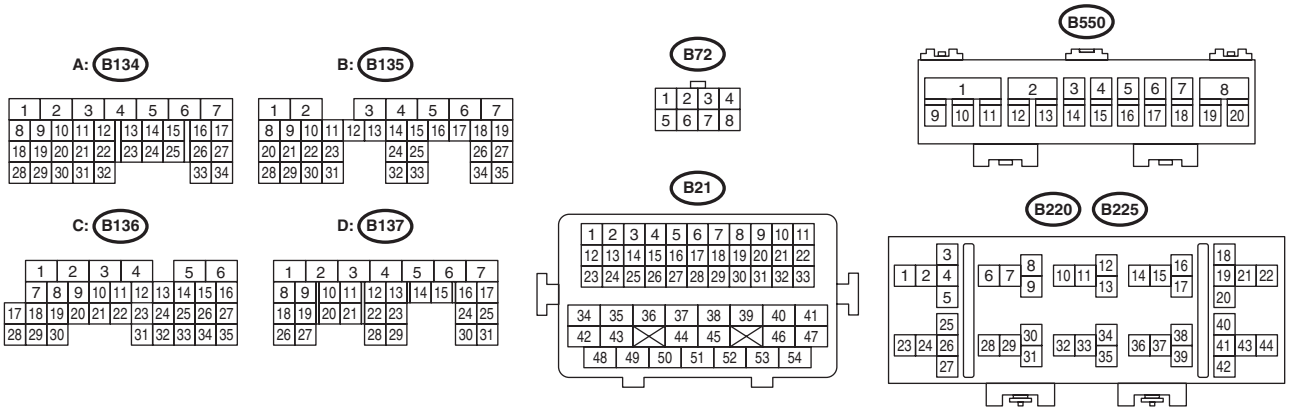

EN-10733

	Step	Check	Yes	No
1	**CHECK INPUT SIGNAL OF ECM.** 1) Turn the ignition switch to OFF. 2) Measure the voltage between ECM connector and chassis ground. ***Connector & terminal*** ***(B137) No. 2 (+) — Chassis ground (–):***	Is the voltage 10 V or more?	Repair the poor contact of ECM connector.	Go to step **2**.
2	**CHECK HARNESS BETWEEN ECM AND MAIN FUSE BOX CONNECTOR.** 1) Disconnect the connector from ECM. 2) Measure the resistance between ECM connector and chassis ground. ***Connector & terminal*** ***(B137) No. 2 — Chassis ground:***	Is the resistance 1 MΩ or more?	Go to step **3**.	Repair the short circuit to ground in harness between ECM connector and 12 volt auxiliary battery terminal.
3	**CHECK FUSE NO. 13 (MAIN FUSE BOX).**	Is the fuse blown out?	Replace the fuse.	Repair the harness and connector. NOTE: In this case, repair the following item: • Open circuit in harness between ECM connector and 12 volt auxiliary battery • Poor contact of ECM connector • Poor contact of 12 volt auxiliary battery terminal

DD:DTC P059A ACTIVE GRILLE SHUTTER "A" POSITION SENSOR CIRCUIT

DTC DETECTING CONDITION:

- Immediately at fault recognition
- GENERAL DESCRIPTION <Ref. to GD(H4DO HEV)-178, DTC P059A ACTIVE GRILLE SHUTTER "A" POSITION SENSOR CIRCUIT, Diagnostic Trouble Code (DTC) Detecting Criteria.>

CAUTION:
After servicing or replacing faulty parts, perform Clear Memory Mode <Ref. to EN(H4DO HEV)(diag)-63, OPERATION, Clear Memory Mode.>, and Inspection Mode <Ref. to EN(H4DO HEV)(diag)-47, PROCEDURE, Inspection Mode.>.

	Step	Check	Yes	No
1	**CHECK ACTIVE GRILLE SHUTTER.** 1) Turn the ignition switch to OFF and then wait for around 30 seconds. 2) Turn the ignition switch to ON. 3) Perform operation check for the active grille shutter using the Subaru Select Monitor. NOTE: For detailed procedures, refer to “System Operation Check Mode”. <Ref. to EN(H4DO HEV)(diag)-64, System Operation Check Mode.>	Are the closing and opening operations finished normally?	Even if DTC is detected, it has returned to a normal condition at this time. NOTE: In this case, the possible causes are the tentative adhering and biting of foreign matter to the active grille shutter or freezing.	Replace the active grille shutter. <Ref. to HEV-76, Active Grille Shutter.>

DE:DTC P059F ACTIVE GRILLE SHUTTER "A" PERFORMANCE

DTC DETECTING CONDITION:

- Detected when two consecutive driving cycles with fault occur.
- GENERAL DESCRIPTION <Ref. to GD(H4DO HEV)-179, DTC P059F ACTIVE GRILLE SHUTTER "A" PERFORMANCE, Diagnostic Trouble Code (DTC) Detecting Criteria.>

CAUTION:
After servicing or replacing faulty parts, perform Clear Memory Mode <Ref. to EN(H4DO HEV)(diag)-63, OPERATION, Clear Memory Mode.>, and Inspection Mode <Ref. to EN(H4DO HEV)(diag)-47, PROCEDURE, Inspection Mode.>.

	Step	Check	Yes	No
1	**CHECK DTC.** Check for DTC. <Ref. to EN(H4DO HEV)(diag)-46, Read Diagnostic Trouble Code (DTC).>	Is DTC P059F displayed in «Present fault»?	Go to step **2**.	Even if DTC is detected, it has returned to a normal condition at this time. Reproduce the failure, and then perform the diagnosis again. NOTE: In this case, the possible causes are the tentative adhering and biting of foreign matter to the active grille shutter or freezing.
2	**CHECK ACTIVE GRILLE SHUTTER.** Check the louver area of active grille shutter, louver link area and actuator part.	Is there any trouble such as foreign matter adhesion, biting or freezing?	Remove the foreign matter from active grille shutter and go to the next step. Go to step **3**.	Go to step **3**.
3	**CHECK ACTIVE GRILLE SHUTTER.** 1) Turn the ignition switch to ON (engine OFF). 2) Perform the active grille shutter operation check using Subaru Select Monitor to measure the time required for closing and opening operations. NOTE: For detailed procedures, refer to “System Operation Check Mode”. <Ref. to EN(H4DO HEV)(diag)-64, System Operation Check Mode.>	Is the time less than 15 seconds?	Even if DTC is detected, it has returned to a normal condition at this time. Reproduce the failure, and then perform the diagnosis again.	Go to step **4**.
4	**CHECK CURRENT DATA.** Using the Subaru Select Monitor, read the value of «Active Grille Shutter Voltage Error Status». NOTE: For detailed operation procedures, refer to “Current Data Display For Engine”. <Ref. to EN(H4DO HEV)(diag)-37, Subaru Select Monitor.>	Is «Normal» displayed?	Go to step **5**.	Check the power supply circuit. Replace the active grille shutter if the power supply circuit is normal. <Ref. to HEV-76, Active Grille Shutter.>

	Step	Check	Yes	No
5	**CHECK CURRENT DATA.** 1) Cool down the engine sufficiently after turning the ignition switch OFF. NOTE: Cool until you do not feel heat when touching the engine body. 2) Turn the ignition switch to ON. 3) Using the Subaru Select Monitor, read the value of «Active Grille Shutter Temperature Error Status». NOTE: For detailed operation procedures, refer to “Current Data Display For Engine”. <Ref. to EN(H4DO HEV)(diag)-37, Subaru Select Monitor.>	Is «Normal» displayed?	Even if DTC is detected, it has returned to a normal condition at this time. Reproduce the failure, and then perform the diagnosis again.	Replace the active grille shutter. <Ref. to HEV-76, Active Grille Shutter.>

DF:DTC P05A0 ACTIVE GRILLE SHUTTER "A" STUCK

DTC DETECTING CONDITION:

- Detected when two consecutive driving cycles with fault occur.
- GENERAL DESCRIPTION <Ref. to GD(H4DO HEV)-180, DTC P05A0 ACTIVE GRILLE SHUTTER "A" STUCK, Diagnostic Trouble Code (DTC) Detecting Criteria.>

CAUTION:
After servicing or replacing faulty parts, perform Clear Memory Mode <Ref. to EN(H4DO HEV)(diag)-63, OPERATION, Clear Memory Mode.>, and Inspection Mode <Ref. to EN(H4DO HEV)(diag)-47, PROCEDURE, Inspection Mode.>.

	Step	Check	Yes	No
1	**CHECK ACTIVE GRILLE SHUTTER.** Check the louver area of active grille shutter, louver link area and actuator part.	Is there any trouble such as foreign matter adhesion, biting or freezing?	Remove the foreign matter from active grille shutter.	Go to step **2**.
2	**CHECK ACTIVE GRILLE SHUTTER.** Check the louver area of active grille shutter, louver link area and actuator part.	Is each part of active grille shutter damaged?	Replace the active grille shutter. <Ref. to HEV-76, Active Grille Shutter.>	Go to step **3**.
3	**CHECK ACTIVE GRILLE SHUTTER.** 1) Turn the ignition switch to OFF and then wait for around 30 seconds. 2) Turn the ignition switch to ON. 3) Perform operation check for the active grille shutter using the Subaru Select Monitor. NOTE: For detailed procedures, refer to “System Operation Check Mode”. <Ref. to EN(H4DO HEV)(diag)-64, System Operation Check Mode.>	Are the closing and opening operations finished normally?	Even if DTC is detected, it has returned to a normal condition at this time. NOTE: In this case, the possible causes are the tentative adhering and biting of foreign matter to the active grille shutter or freezing.	Replace the active grille shutter. <Ref. to HEV-76, Active Grille Shutter.>

DG:DTC P05A1 ACTIVE GRILLE SHUTTER "A" RANGE OVER

DTC DETECTING CONDITION:

- Detected when two consecutive driving cycles with fault occur.
- GENERAL DESCRIPTION <Ref. to GD(H4DO HEV)-182, DTC P05A1 ACTIVE GRILLE SHUTTER "A" RANGE OVER, Diagnostic Trouble Code (DTC) Detecting Criteria.>

CAUTION:

After servicing or replacing faulty parts, perform Clear Memory Mode <Ref. to EN(H4DO HEV)(diag)-63, OPERATION, Clear Memory Mode.>, and Inspection Mode <Ref. to EN(H4DO HEV)(diag)-47, PROCEDURE, Inspection Mode.>.

	Step	Check	Yes	No
1	**CHECK ACTIVE GRILLE SHUTTER.** Check the louver area of active grille shutter, louver link area and actuator part.	Is there any trouble such as foreign matter adhesion, biting or freezing?	Remove the foreign matter from active grille shutter.	Go to step **2**.
2	**CHECK ACTIVE GRILLE SHUTTER.** Check the louver area of active grille shutter, louver link area and actuator part.	Is each part of active grille shutter damaged?	Replace the active grille shutter. <Ref. to HEV-76, Active Grille Shutter.>	Go to step **3**.
3	**CHECK ACTIVE GRILLE SHUTTER.** 1) Turn the ignition switch to OFF and then wait for around 30 seconds. 2) Turn the ignition switch to ON. 3) Perform operation check for the active grille shutter using the Subaru Select Monitor. NOTE: For detailed procedures, refer to “System Operation Check Mode”. <Ref. to EN(H4DO HEV)(diag)-64, System Operation Check Mode.>	Are the closing and opening operations finished normally?	Even if DTC is detected, it has returned to a normal condition at this time. NOTE: In this case, the possible causes are the tentative adhering and biting of foreign matter to the active grille shutter or freezing.	Replace the active grille shutter. <Ref. to HEV-76, Active Grille Shutter.>

DH:DTC P05A2 ACTIVE GRILLE SHUTTER "A" CONTROL CIRCUIT

DTC DETECTING CONDITION:

- Immediately at fault recognition
- GENERAL DESCRIPTION <Ref. to GD(H4DO HEV)-184, DTC P05A2 ACTIVE GRILLE SHUTTER "A" CONTROL CIRCUIT, Diagnostic Trouble Code (DTC) Detecting Criteria.>

CAUTION:
After servicing or replacing faulty parts, perform Clear Memory Mode <Ref. to EN(H4DO HEV)(diag)-63, OPERATION, Clear Memory Mode.>, and Inspection Mode <Ref. to EN(H4DO HEV)(diag)-47, PROCEDURE, Inspection Mode.>.

	Step	Check	Yes	No
1	**CHECK DTC.** 1) Turn the ignition switch to OFF and then wait for around 30 seconds. 2) Turn the ignition switch to ON. 3) Check for DTC. <Ref. to EN(H4DO HEV)(diag)-46, Read Diagnostic Trouble Code (DTC).>	Is DTC P05A2 displayed in «Present fault» or «Past faults»?	Replace the active grille shutter. <Ref. to HEV-76, Active Grille Shutter.>	Perform the active grille shutter operation check using Subaru Select Monitor to confirm that closing and opening operations finish normally. NOTE: For detailed procedures, refer to “System Operation Check Mode”. <Ref. to EN(H4DO HEV)(diag)-64, System Operation Check Mode.>

DI: DTC P05A6 ACTIVE GRILLE SHUTTER "A" SUPPLY VOLTAGE CIRCUIT/ OPEN

DTC DETECTING CONDITION:

- Immediately at fault recognition
- GENERAL DESCRIPTION <Ref. to GD(H4DO HEV)-186, DTC P05A6 ACTIVE GRILLE SHUTTER "A" SUPPLY VOLTAGE CIRCUIT/OPEN, Diagnostic Trouble Code (DTC) Detecting Criteria.>

CAUTION:

After servicing or replacing faulty parts, perform Clear Memory Mode <Ref. to EN(H4DO HEV)(diag)-63, OPERATION, Clear Memory Mode.>, and Inspection Mode <Ref. to EN(H4DO HEV)(diag)-47, PROCEDURE, Inspection Mode.>.

WIRING DIAGRAM:

Active grille shutter <Ref. to WI(HEV)-49, Active Grille Shutter.>

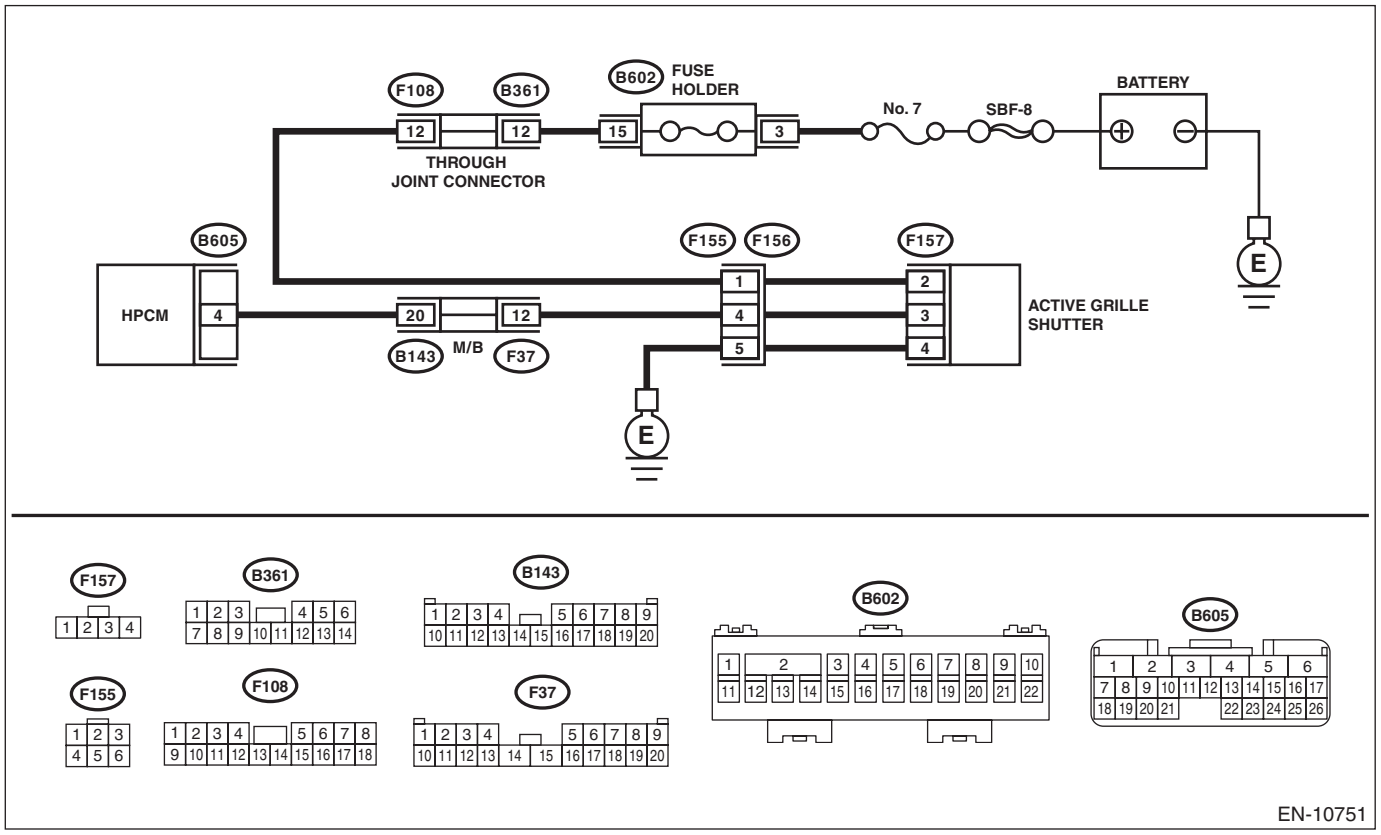

EN-10751

	Step	Check	Yes	No
1	**CHECK DTC.** 1) Turn the ignition switch to OFF and then wait for around 30 seconds. 2) Turn the ignition switch to ON. 3) Check for DTC. <Ref. to EN(H4DO HEV)(diag)-46, Read Diagnostic Trouble Code (DTC).>	Is DTC P05A6 displayed in «Present fault»?	Go to step **2**.	Even if DTC is detected, the circuit has returned to a normal condition at this time. Reproduce the failure, and then perform the diagnosis again. NOTE: In this case, temporary battery voltage drop, temporary poor contact of connector or temporary open or short circuit of harness or may be the cause.
2	**CHECK 12 VOLT AUXILIARY BATTERY.** Check the battery. <Ref. to SC(H4DO(HEV))-38, Battery.>	Is the battery OK?	Go to step **3**.	Charge or replace the battery. <Ref. to SC(H4DO(HEV))-38, Battery.>
3	**CHECK ACTIVE GRILLE SHUTTER POWER SUPPLY.** 1) Turn the ignition switch to OFF. 2) Disconnect the 12 volt auxiliary battery. <Ref. to NT-5, BATTERY, NOTE, Note.> 3) Disconnect the connector from the active grille shutter. 4) Measure the voltage between active grille shutter connector and chassis ground. ***Connector & terminal*** ***(F157) No. 2 (+) — Chassis ground (–):***	Is the voltage 9 V or more?	Replace the active grille shutter. <Ref. to HEV-76, Active Grille Shutter.>	Repair the power supply circuit.

DJ:DTC P05C0 ACTIVE GRILLE SHUTTER "A" OVER TEMPERATURE

DTC DETECTING CONDITION:

- Immediately at fault recognition
- GENERAL DESCRIPTION <Ref. to GD(H4DO HEV)-187, DTC P05C0 ACTIVE GRILLE SHUTTER "A" OVER TEMPERATURE, Diagnostic Trouble Code (DTC) Detecting Criteria.>

CAUTION:
After servicing or replacing faulty parts, perform Clear Memory Mode <Ref. to EN(H4DO HEV)(diag)-63, OPERATION, Clear Memory Mode.>, and Inspection Mode <Ref. to EN(H4DO HEV)(diag)-47, PROCEDURE, Inspection Mode.>.

	Step	Check	Yes	No
1	**CHECK DTC.** 1) Cool down the engine sufficiently after turning the ignition switch OFF. NOTE: Cool until you do not feel heat when touching the engine body. 2) Turn the ignition switch to ON. 3) Check for DTC. <Ref. to EN(H4DO HEV)(diag)-46, Read Diagnostic Trouble Code (DTC).>	Is DTC P05C0 displayed in «Present fault»?	Replace the active grille shutter. <Ref. to HEV-76, Active Grille Shutter.>	Even if DTC is detected, it has returned to a normal condition at this time. NOTE: In this case, temporary temperature rise in engine compartment may be the cause.

DK:DTC P0604 INTERNAL CONTROL MODULE RANDOM ACCESS MEMORY (RAM) ERROR

DTC DETECTING CONDITION:

- Immediately at fault recognition
- GENERAL DESCRIPTION <Ref. to GD(H4DO HEV)-188, DTC P0604 INTERNAL CONTROL MODULE RANDOM ACCESS MEMORY (RAM) ERROR, Diagnostic Trouble Code (DTC) Detecting Criteria.>

TROUBLE SYMPTOM:

- Engine does not start.
- Engine stalls.

CAUTION:
After servicing or replacing faulty parts, perform Clear Memory Mode <Ref. to EN(H4DO HEV)(diag)-63, OPERATION, Clear Memory Mode.>, and Inspection Mode <Ref. to EN(H4DO HEV)(diag)-47, PROCEDURE, Inspection Mode.>.

Step		Check	Yes	No
1	CHECK FOR ANY OTHER DTC ON DISPLAY.	Is any other DTC displayed?	Check the appropriate DTC using the “List of Diagnostic Trouble Code (DTC)”. <Ref. to EN(H4DO HEV)(diag)-88, List of Diagnostic Trouble Code (DTC).>	Even if DTC is detected, the circuit has returned to a normal condition at this time. Reproduce the failure, and then perform the diagnosis again. NOTE: In this case, temporary poor contact of connector, temporary open or short circuit of harness may be the cause.

DL:DTC P0605 INTERNAL CONTROL MODULE READ ONLY MEMORY (ROM) ERROR

NOTE:
For the diagnostic procedure, refer to DTC P0606. <Ref. to EN(H4DO HEV)(diag)-281, DTC P0606 CONTROL MODULE PROCESSOR, Diagnostic Procedure with Diagnostic Trouble Code (DTC).>

DM:DTC P0606 CONTROL MODULE PROCESSOR

DTC DETECTING CONDITION:

- Immediately at fault recognition
- GENERAL DESCRIPTION <Ref. to GD(H4DO HEV)-190, DTC P0606 CONTROL MODULE PROCESSOR, Diagnostic Trouble Code (DTC) Detecting Criteria.>

TROUBLE SYMPTOM:

- Improper idling
- Poor driving performance

CAUTION:

After servicing or replacing faulty parts, perform Clear Memory Mode <Ref. to EN(H4DO HEV)(diag)-63, OPERATION, Clear Memory Mode.>, and Inspection Mode <Ref. to EN(H4DO HEV)(diag)-47, PROCEDURE, Inspection Mode.>.

WIRING DIAGRAM:

- Engine electrical system (without push button start) <Ref. to WI(HEV)-100, WITHOUT PUSH BUTTON START, WIRING DIAGRAM, Engine Electrical System.>
- Engine electrical system (with push button start) <Ref. to WI(HEV)-114, WITH PUSH BUTTON START, WIRING DIAGRAM, Engine Electrical System.>

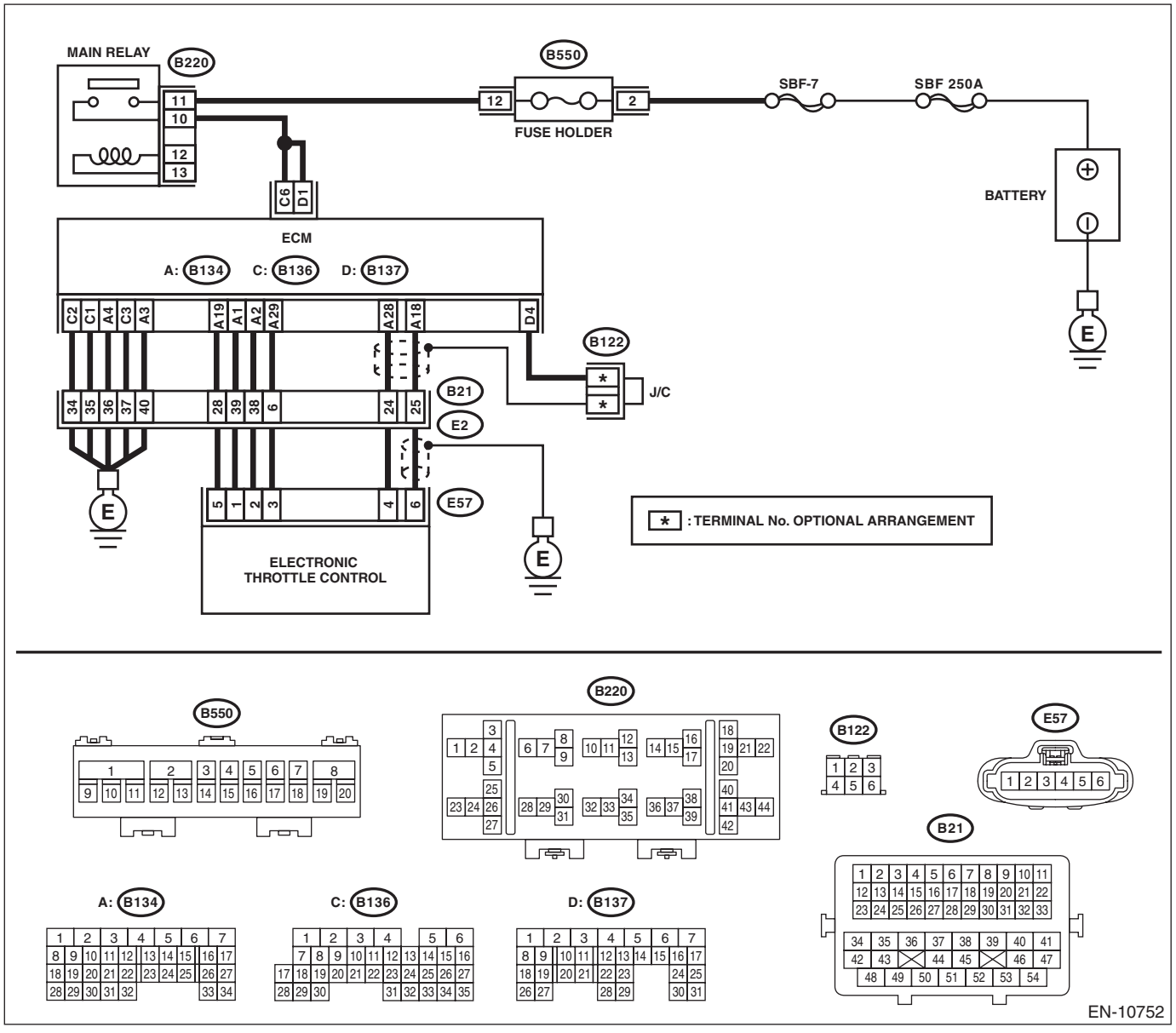

	Step	Check	Yes	No
1	**CHECK INPUT VOLTAGE OF ECM.** 1) Turn the ignition switch to ON. 2) Measure the voltage between ECM connector and chassis ground. ***Connector & terminal*** ***(B136) No. 6 (+) — Chassis ground (–):*** ***(B137) No. 1 (+) — Chassis ground (–):***	Is the voltage 10 — 13 V?	Go to step **2**.	Repair the open or ground short circuit of power supply circuit.
2	**CHECK INPUT VOLTAGE OF ECM.** 1) Start the engine. 2) Measure the voltage between ECM connector and chassis ground. ***Connector & terminal*** ***(B136) No. 6 (+) — Chassis ground (–):*** ***(B137) No. 1 (+) — Chassis ground (–):***	Is the voltage 13 — 15 V?	Go to step **3**.	Repair the open or ground short circuit of power supply circuit.
3	**CHECK HARNESS BETWEEN ECM AND ELECTRONIC THROTTLE CONTROL CONNECTOR.** 1) Turn the ignition switch to OFF. 2) Disconnect the connectors from ECM and electronic throttle control. 3) Measure the resistance of harness between ECM connector and electronic throttle control connector. ***Connector & terminal*** ***(B134) No. 19 — (E57) No. 5:*** ***(B134) No. 29 — (E57) No. 3:***	Is the resistance less than 1 Ω?	Go to step **4**.	Repair the harness and connector. NOTE: In this case, repair the following item: • Open circuit in harness between ECM connector and electronic throttle control connector • Poor contact of coupling connector
4	**CHECK ECM GROUND HARNESS.** 1) Connect all connectors. 2) Turn the ignition to ON. 3) Measure the voltage between ECM connector and chassis ground. ***Connector & terminal*** ***(B134) No. 3 (+) — Chassis ground (–):*** ***(B134) No. 4 (+) — Chassis ground (–):*** ***(B136) No. 1 (+) — Chassis ground (–):*** ***(B136) No. 2 (+) — Chassis ground (–):*** ***(B136) No. 3 (+) — Chassis ground (–):***	Is the voltage less than 1 V?	Repair the poor contact of ECM connector.	Repair the harness and connector. NOTE: In this case, repair the following item: • Open circuit in ground circuit • Loose engine ground terminal • Poor contact of coupling connector

DN:DTC P060A INTERNAL CONTROL MODULE MONITORING PROCESSOR PERFORMANCE

NOTE:
For the diagnostic procedure, refer to DTC P0606. <Ref. to EN(H4DO HEV)(diag)-281, DTC P0606 CONTROL MODULE PROCESSOR, Diagnostic Procedure with Diagnostic Trouble Code (DTC).>

DO:DTC P060B INTERNAL CONTROL MODULE A/D PROCESSING PERFORMANCE

NOTE:
For the diagnostic procedure, refer to DTC P0606. <Ref. to EN(H4DO HEV)(diag)-281, DTC P0606 CONTROL MODULE PROCESSOR, Diagnostic Procedure with Diagnostic Trouble Code (DTC).>

DP:DTC P0616 STARTER RELAY CIRCUIT LOW

1. MODEL WITHOUT PUSH BUTTON START

DTC DETECTING CONDITION:

- Immediately at fault recognition
- GENERAL DESCRIPTION <Ref. to GD(H4DO HEV)-197, DTC P0616 STARTER RELAY CIRCUIT LOW, Diagnostic Trouble Code (DTC) Detecting Criteria.>

CAUTION:

After servicing or replacing faulty parts, perform Clear Memory Mode <Ref. to EN(H4DO HEV)(diag)-63, OPERATION, Clear Memory Mode.>, and Inspection Mode <Ref. to EN(H4DO HEV)(diag)-47, PROCEDURE, Inspection Mode.>.

WIRING DIAGRAM:

Engine electrical system (without push button start) <Ref. to WI(HEV)-100, WITHOUT PUSH BUTTON START, WIRING DIAGRAM, Engine Electrical System.>

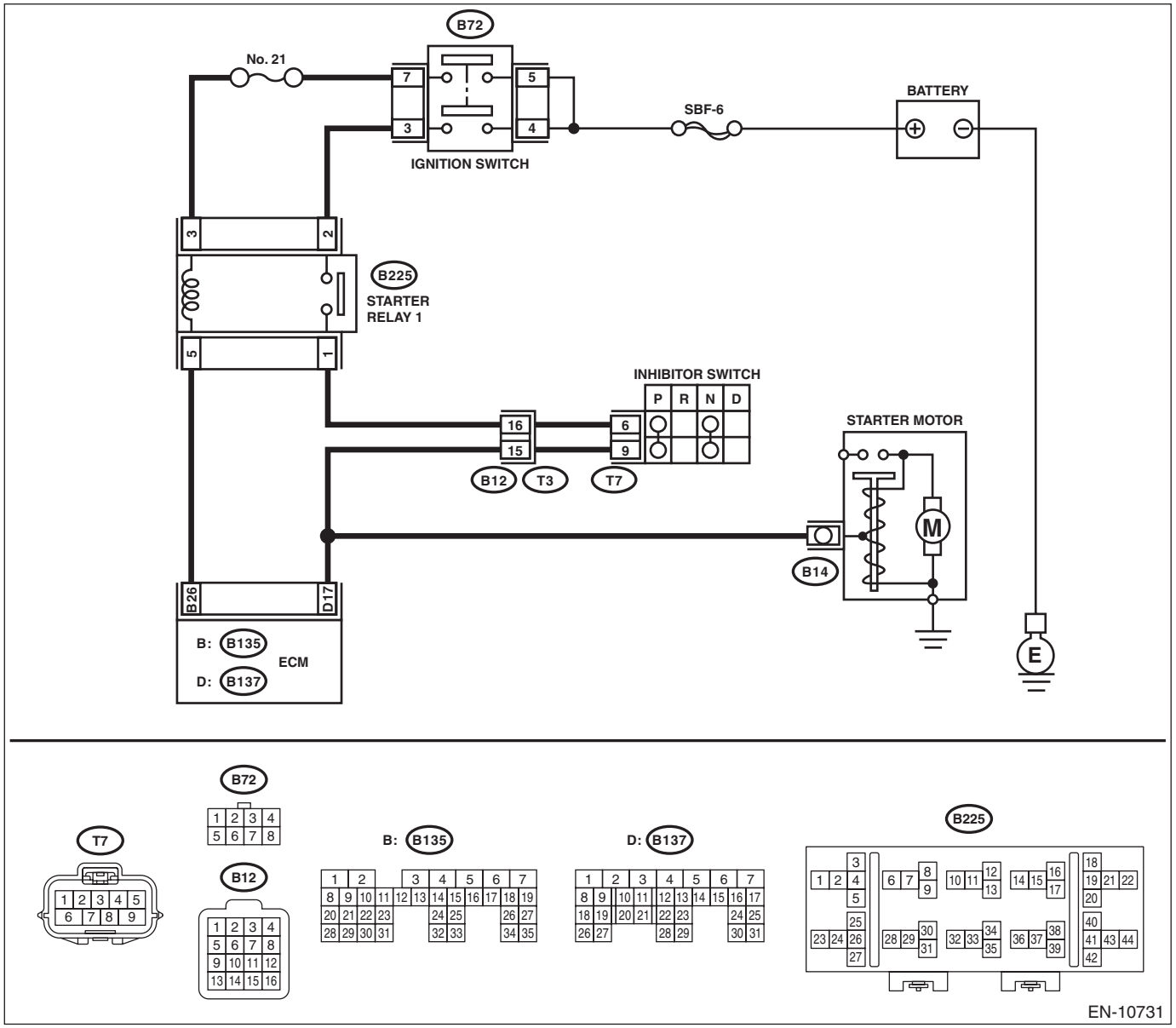

	Step	Check	Yes	No
1	**CHECK FOR ANY OTHER DTC ON DISPLAY.**	Is any other DTC displayed?	Check DTC using "List of Diagnostic Trouble Code (DTC)". <Ref. to EN(H4DO HEV)(diag)-88, List of Diagnostic Trouble Code (DTC).>	Go to step **2**.
2	**CHECK HARNESS BETWEEN ECM AND STARTER RELAY 1 CONNECTOR.** 1) Turn the ignition switch to OFF. 2) Remove the starter relay 1. 3) Disconnect the connectors from ECM and starter motor. 4) Measure the resistance of harness between ECM connector and starter relay 1 connector. ***Connector & terminal*** ***(B137) No. 17 — (B225) No. 1:*** NOTE: Place the select lever in "P" range or "N" range.	Is the resistance less than 1 Ω?	Go to step **3**.	NOTE: Check the following item and repair or replace if necessary. • Open circuit of harness between ECM connector and starter relay 1 connector • Poor contact of coupling connector
3	**CHECK HARNESS BETWEEN ECM AND STARTER RELAY 1 CONNECTOR.** Measure the resistance between ECM connector and chassis ground. ***Connector & terminal*** ***(B137) No. 17 — Chassis ground:***	Is the resistance 1 MΩ or more?	Repair the poor contact of ECM connector.	Repair the short circuit to ground in harness between ECM connector and starter relay 1 connector.

2. MODEL WITH PUSH BUTTON START

DTC DETECTING CONDITION:

- Immediately at fault recognition
- GENERAL DESCRIPTION <Ref. to GD(H4DO HEV)-197, DTC P0616 STARTER RELAY CIRCUIT LOW, Diagnostic Trouble Code (DTC) Detecting Criteria.>

TROUBLE SYMPTOM:

Failure of engine to start

CAUTION:

After servicing or replacing faulty parts, perform Clear Memory Mode <Ref. to EN(H4DO HEV)(diag)-63, OPERATION, Clear Memory Mode.>, and Inspection Mode <Ref. to EN(H4DO HEV)(diag)-47, PROCEDURE, Inspection Mode.>.

WIRING DIAGRAM:

Engine electrical system (with push button start) <Ref. to WI(HEV)-114, WITH PUSH BUTTON START, WIRING DIAGRAM, Engine Electrical System.>

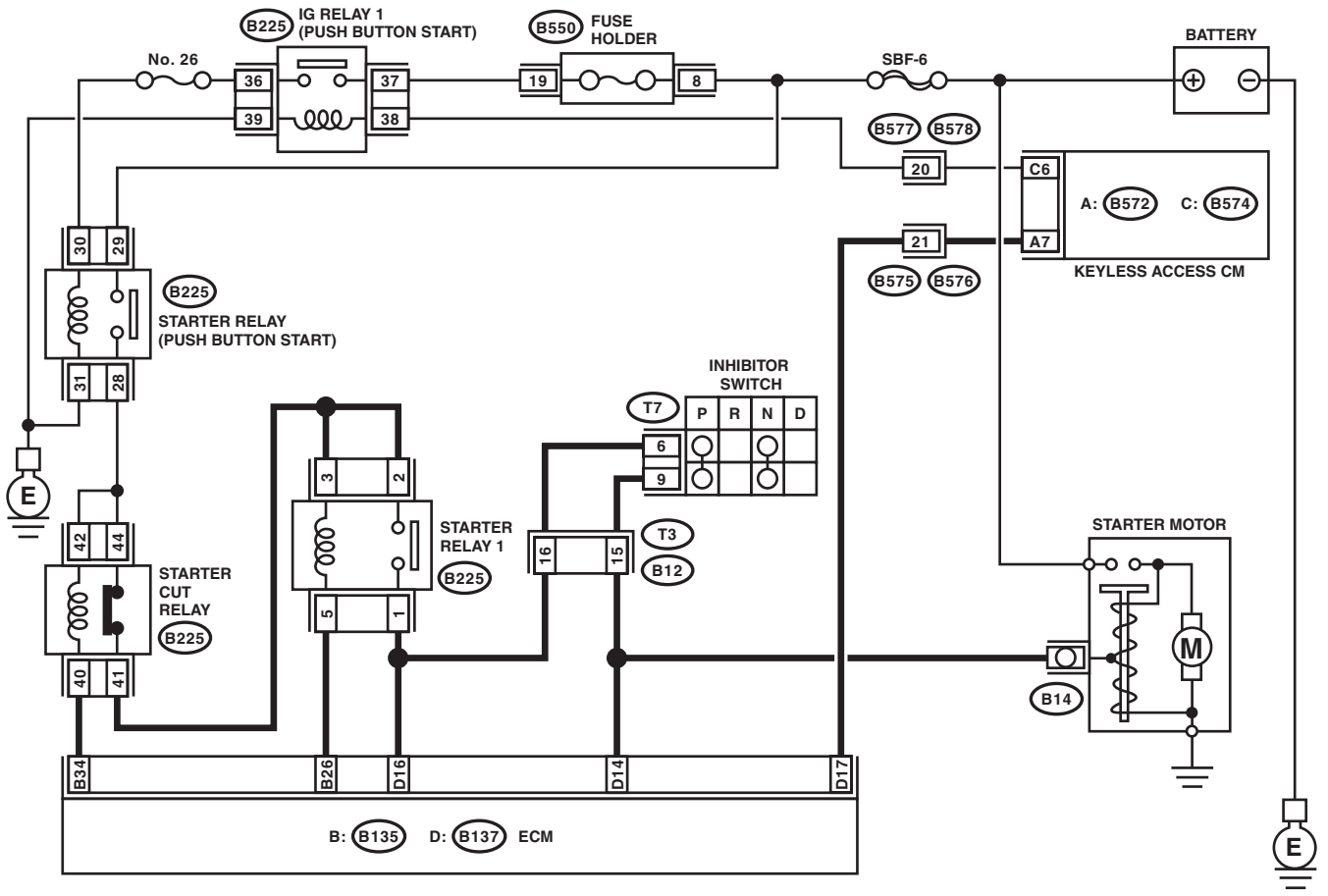

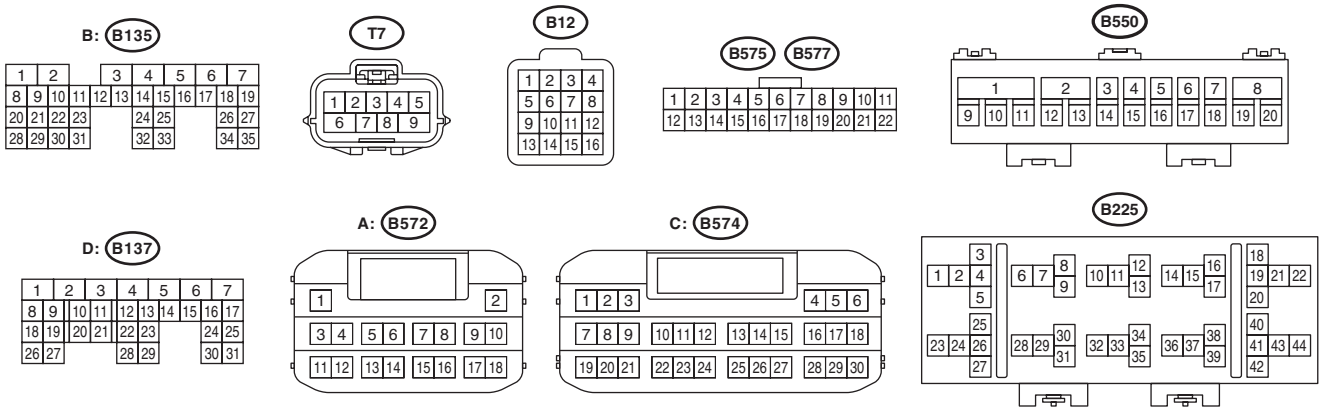

EN-10732

	Step	Check	Yes	No
1	**CHECK HARNESS BETWEEN ECM AND STARTER RELAY 1 CONNECTOR.** 1) Turn the ignition to OFF. 2) Disconnect the connector from ECM. 3) Remove the starter relay 1. 4) Measure the resistance of harness between ECM connector and starter relay 1 connector. NOTE: Place the select lever in “P” range or “N” range. ***Connector & terminal*** ***(B137) No. 14 — (B225) No. 1:***	Is the resistance less than 1 Ω?	Go to step **2**.	Repair the harness and connector. NOTE: In this case, repair the following item: • Open circuit of harness between ECM connector and starter relay 1 connector • Poor contact of coupling connector
2	**CHECK HARNESS BETWEEN ECM AND STARTER RELAY 1 CONNECTOR.** 1) Disconnect the connector from starter motor. 2) Measure the resistance between ECM connector and chassis ground. ***Connector & terminal*** ***(B137) No. 14 — Chassis ground:***	Is the resistance 1 MΩ or more?	Repair the poor contact of ECM connector.	Repair the short circuit to ground in harness between ECM connector and starter relay 1 connector.

DQ:DTC P0617 STARTER RELAY CIRCUIT HIGH

1. MODEL WITHOUT PUSH BUTTON START

DTC DETECTING CONDITION:

- Immediately at fault recognition
- GENERAL DESCRIPTION <Ref. to GD(H4DO HEV)-198, DTC P0617 STARTER RELAY CIRCUIT HIGH, Diagnostic Trouble Code (DTC) Detecting Criteria.>

TROUBLE SYMPTOM:

Failure of engine to start

CAUTION:

After servicing or replacing faulty parts, perform Clear Memory Mode <Ref. to EN(H4DO HEV)(diag)-63, OPERATION, Clear Memory Mode.>, and Inspection Mode <Ref. to EN(H4DO HEV)(diag)-47, PROCEDURE, Inspection Mode.>.

WIRING DIAGRAM:

Engine electrical system (without push button start) <Ref. to WI(HEV)-100, WITHOUT PUSH BUTTON START, WIRING DIAGRAM, Engine Electrical System.>

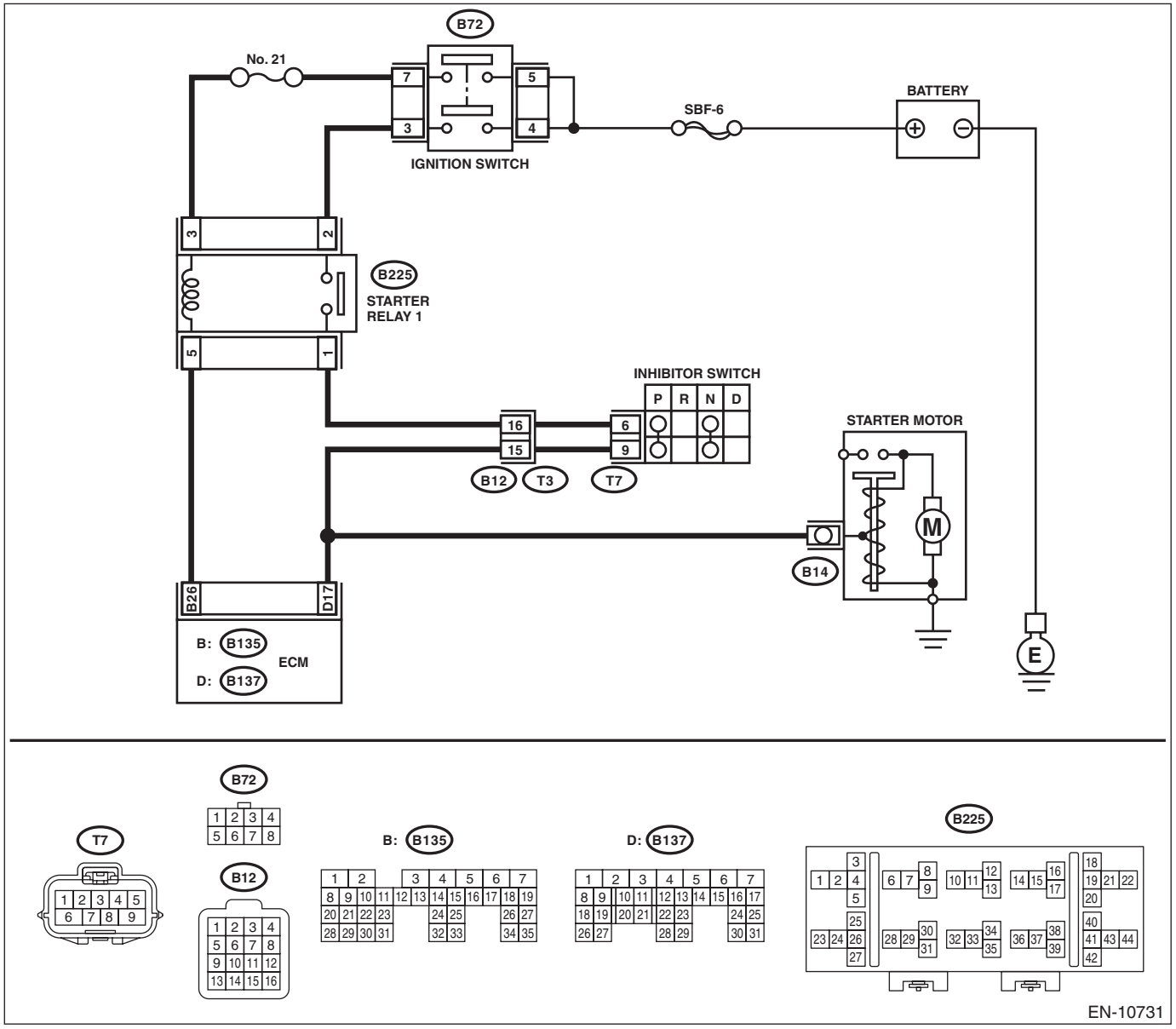

	Step	Check	Yes	No
1	**CHECK FOR ANY OTHER DTC ON DISPLAY.**	Is any other DTC displayed?	Check the appropriate DTC using the "List of Diagnostic Trouble Code (DTC)". <Ref. to EN(H4DO HEV)(diag)-88, List of Diagnostic Trouble Code (DTC).>	Go to step **2**.
2	**CHECK HARNESS BETWEEN ECM AND STARTER RELAY 1 CONNECTOR.** 1) Turn the ignition switch to OFF. 2) Disconnect the connector from ECM. 3) Turn the ignition switch to ON. 4) Measure the voltage between ECM connector and chassis ground. ***Connector & terminal*** ***(B137) No. 17 (+) — Chassis ground (–):*** NOTE: Place the select lever in "P" range or "N" range.	Is the voltage 10 V or more?	Repair the short circuit to power in harness between ECM connector and starter relay 1 connector.	Repair the poor contact of ECM connector.

2. MODEL WITH PUSH BUTTON START

DTC DETECTING CONDITION:

- Immediately at fault recognition
- GENERAL DESCRIPTION <Ref. to GD(H4DO HEV)-198, DTC P0617 STARTER RELAY CIRCUIT HIGH, Diagnostic Trouble Code (DTC) Detecting Criteria.>

TROUBLE SYMPTOM:

Failure of engine to start

CAUTION:

After servicing or replacing faulty parts, perform Clear Memory Mode <Ref. to EN(H4DO HEV)(diag)-63, OPERATION, Clear Memory Mode.>, and Inspection Mode <Ref. to EN(H4DO HEV)(diag)-47, PROCEDURE, Inspection Mode.>.

WIRING DIAGRAM:

Engine electrical system (with push button start) <Ref. to WI(HEV)-114, WITH PUSH BUTTON START, WIRING DIAGRAM, Engine Electrical System.>

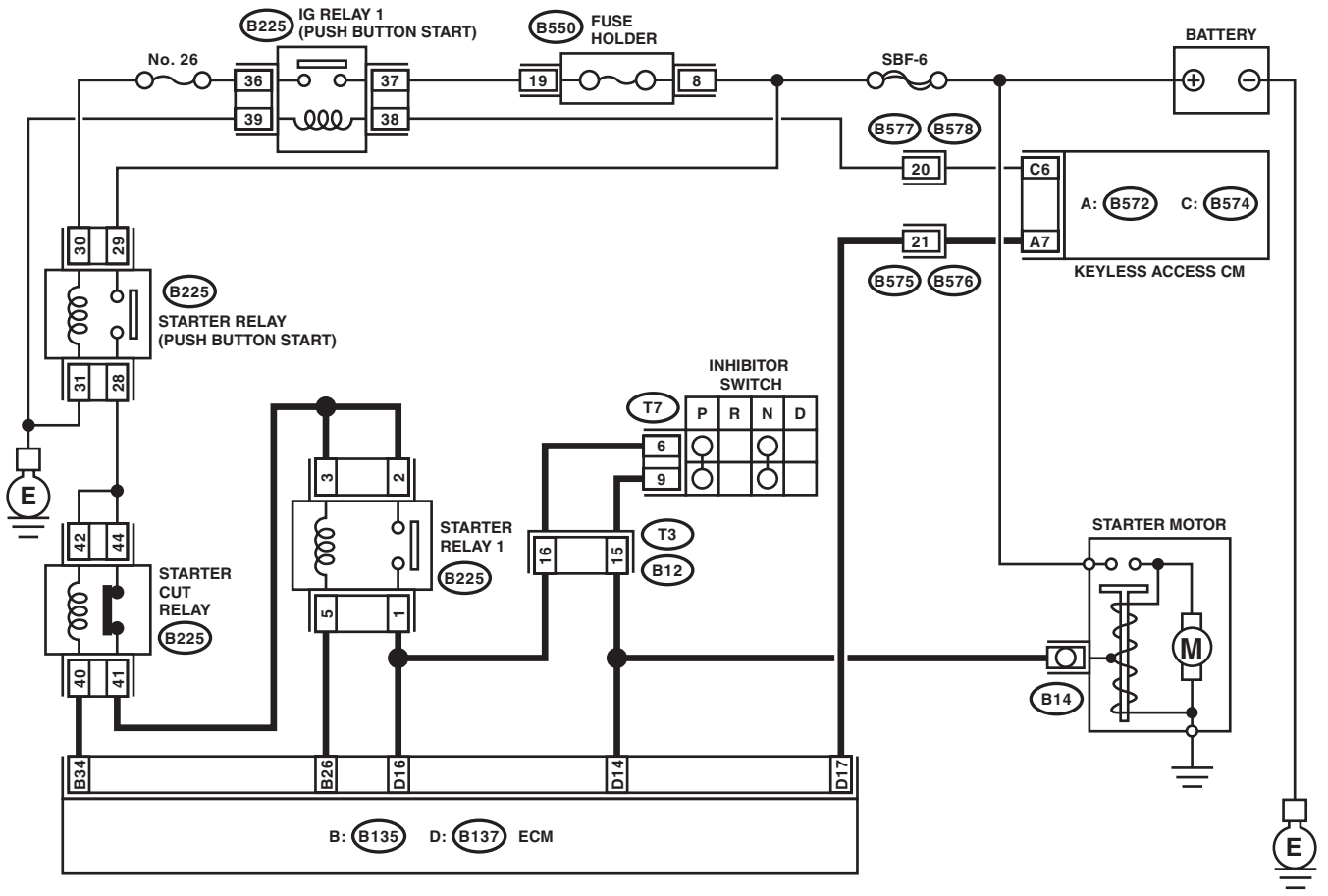

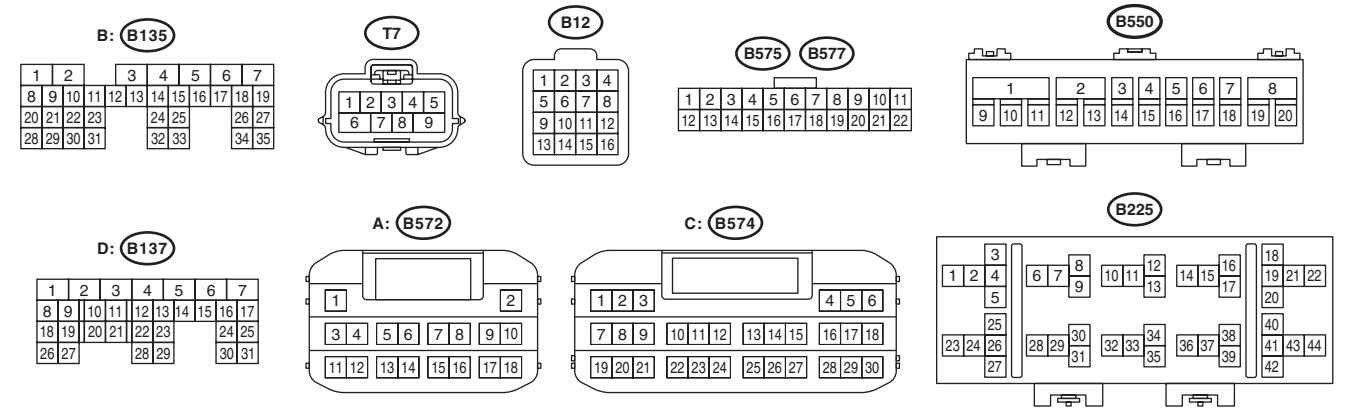

EN-10732

	Step	Check	Yes	No
1	**CHECK STARTER MOTOR.** 1) Turn the ignition to ON. 2) Check the starter motor condition.	Is the starter motor rotating?	Go to step **2**.	Repair the short circuit to power supply. NOTE: In this case, repair the following harnesses: • Short circuit to power supply in harness between ECM connector and starter relay 1 connector • Short circuit to power supply in harness between ECM connector and starter motor • Short circuit to power supply in harness between starter relay 1 connector and starter motor
2	**CHECK HARNESS BETWEEN STARTER CUT RELAY CONNECTOR AND STARTER RELAY 1 CONNECTOR.** 1) Turn the ignition to OFF. 2) Disconnect the connector from starter motor. 3) Remove the starter cut relay and starter relay 1. 4) Turn the ignition to ON. 5) Measure the voltage between starter relay 1 connector and chassis ground. ***Connector & terminal*** ***(B225) No. 2 (+) — Chassis ground (–):***	Is the voltage 10 V or more?	Repair the short circuit to power in harness between starter cut relay connector and starter relay 1 connector.	Go to step **3**.
3	**CHECK STARTER CUT RELAY.** 1) Connect the battery to starter cut relay terminals No. 40 and No. 42. 2) Measure the resistance between starter cut relay terminals. ***Terminals*** ***No. 41 — No. 44:***	Is the resistance 1 MΩ or more?	Go to step **6**.	Replace the starter cut relay. <Ref. to SL-116, Starter Cut Relay.> Go to step **4**.
4	**CHECK HARNESS BETWEEN ECM AND STARTER RELAY 1 CONNECTOR.** 1) Disconnect the connector from ECM. 2) Measure the resistance between ECM connector and chassis ground. ***Connector & terminal*** ***(B135) No. 26 — Chassis ground:***	Is the resistance 1 MΩ or more?	Go to step **5**.	Repair the short circuit to ground in harness between ECM connector and starter relay 1 connector.
5	**CHECK STARTER RELAY 1.** Measure the resistance between starter relay 1 terminals. ***Terminals*** ***No. 1 — No. 2:***	Is the resistance 1 MΩ or more?	Go to step **6**.	Replace the starter relay 1. <Ref. to EN(H4DO HEV)(diag)-9, LOCATION, Electrical Component Location.>

Step		Check	Yes	No
6	**CHECK HARNESS BETWEEN ECM, STARTER RELAY 1 CONNECTOR AND STARTER MOTOR.** 1) Disconnect the connector from ECM. 2) Turn the ignition to ON. 3) Measure the voltage between ECM connector and chassis ground. ***Connector & terminal*** ***(B137) No. 14 (+) — Chassis ground (–):***	Is the voltage 10 V or more?	Repair the short circuit to power supply. NOTE: In this case, repair the following harnesses: • Short circuit to power supply in harness between ECM connector and starter relay 1 connector • Short circuit to power supply in harness between ECM connector and starter motor • Short circuit to power supply in harness between starter relay 1 connector and starter motor	Repair the poor contact of ECM connector.

DR:DTC P062F INTERNAL CONTROL MODULE EEPROM ERROR

NOTE:
For the diagnostic procedure, refer to DTC P0606. <Ref. to EN(H4DO HEV)(diag)-281, DTC P0606 CONTROL MODULE PROCESSOR, Diagnostic Procedure with Diagnostic Trouble Code (DTC).>

DS:DTC P0700 TRANSMISSION CONTROL SYSTEM (MIL REQUEST)

NOTE:
For the diagnostic procedure, refer to CVT section. <Ref. to CVT(w/o HEV)(diag)-2, Basic Diagnostic Procedure.>

DT:DTC P081A STARTER DISABLE CIRCUIT LOW

DTC DETECTING CONDITION:

- Immediately at fault recognition
- GENERAL DESCRIPTION <Ref. to GD(H4DO HEV)-202, DTC P081A STARTER DISABLE CIRCUIT LOW, Diagnostic Trouble Code (DTC) Detecting Criteria.>

TROUBLE SYMPTOM:

Failure of engine to start

CAUTION:

After servicing or replacing faulty parts, perform Clear Memory Mode <Ref. to EN(H4DO HEV)(diag)-63, OPERATION, Clear Memory Mode.>, and Inspection Mode <Ref. to EN(H4DO HEV)(diag)-47, PROCEDURE, Inspection Mode.>.

WIRING DIAGRAM:

Engine electrical system (with push button start) <Ref. to WI(HEV)-114, WITH PUSH BUTTON START, WIRING DIAGRAM, Engine Electrical System.>

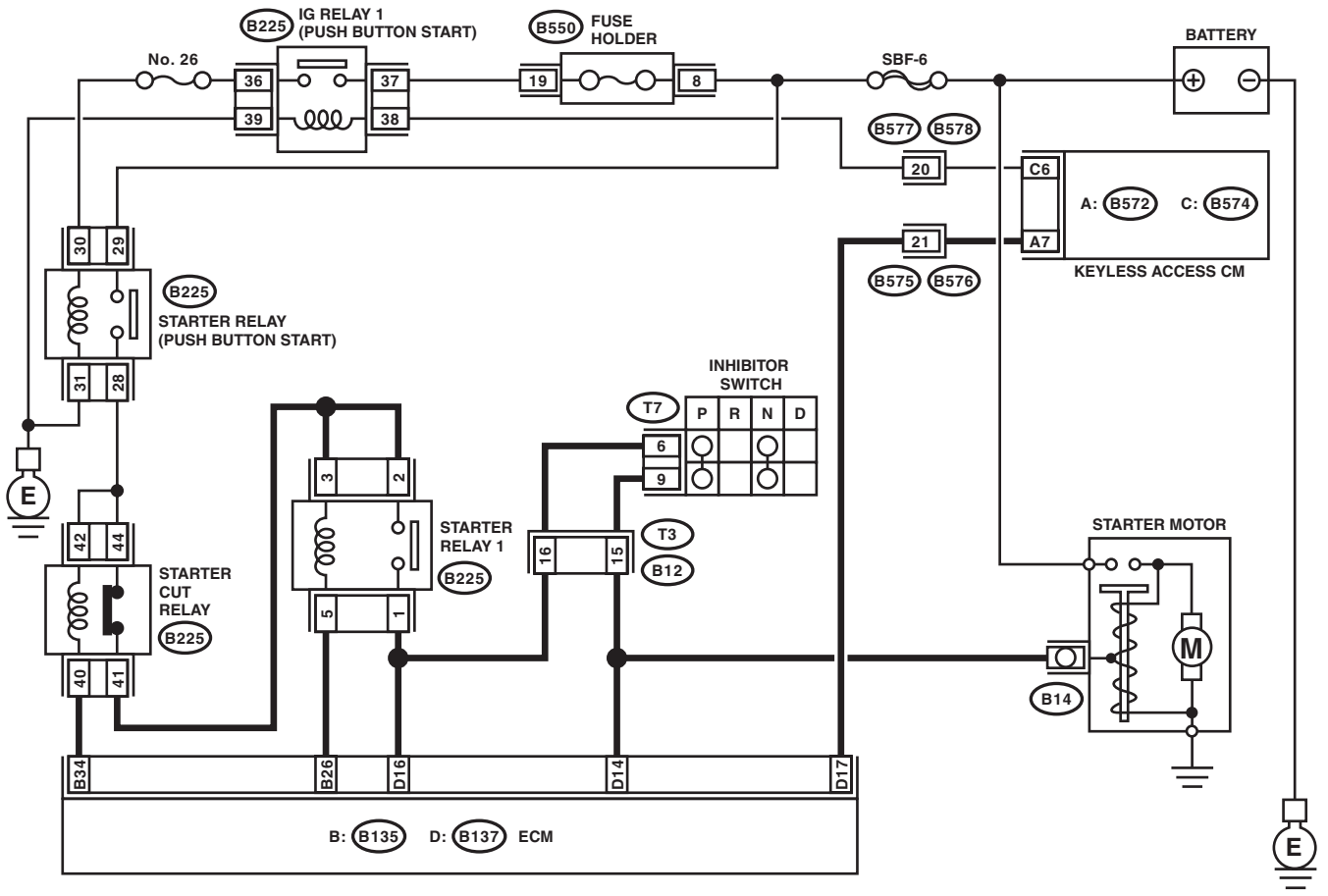

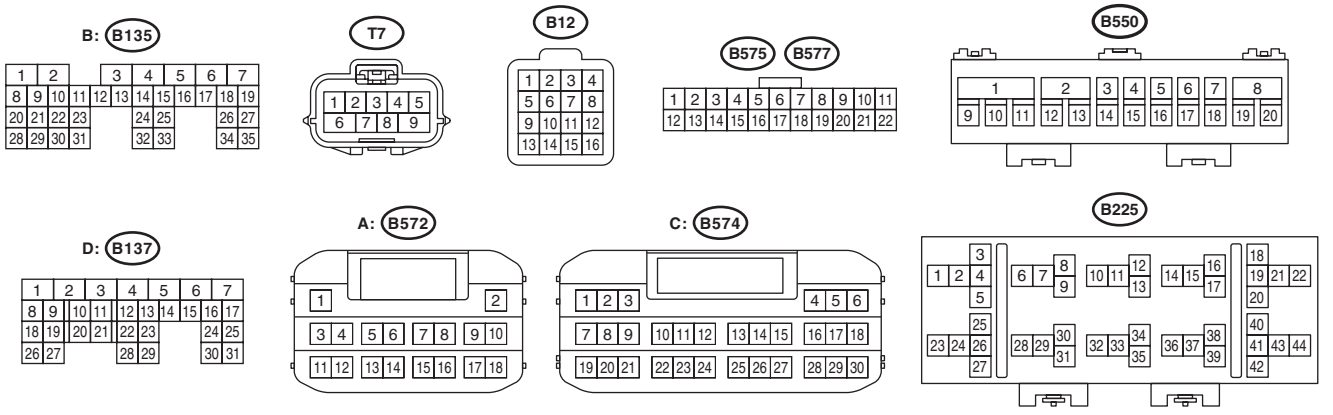

EN-10732

	Step	Check	Yes	No
1	**CHECK HARNESS BETWEEN STARTER RELAY (PUSH BUTTON START) CONNECTOR AND STARTER CUT RELAY CONNECTOR.** 1) Turn the ignition to OFF. 2) Remove the starter relay (push button start) and starter cut relay. 3) Measure the resistance of harness between starter relay (push button start) connector and starter cut relay connector. ***Connector & terminal*** ***(B225) No. 28 — (B225) No. 42:***	Is the resistance less than 1 Ω?	Go to step **2**.	Repair the open circuit in harness between starter relay (push button start) connector and starter cut relay connector.
2	**CHECK HARNESS BETWEEN ECM AND STARTER CUT RELAY CONNECTOR.** 1) Disconnect the connector from ECM. 2) Measure the resistance of harness between ECM connector and starter cut relay connector. ***Connector & terminal*** ***(B135) No. 34 — (B225) No. 40:***	Is the resistance less than 1 Ω?	Go to step **3**.	Repair the open circuit of harness between ECM connector and starter cut relay connector.
3	**CHECK STARTER CUT RELAY.** 1) Connect the battery to starter cut relay terminals No. 40 and No. 42. 2) Measure the resistance between starter cut relay terminals. ***Terminals*** ***No. 41 — No. 44:***	Is the resistance 1 MΩ or more?	Repair the poor contact of ECM connector.	Replace the starter cut relay. <Ref. to SL-116, Starter Cut Relay.>

DU:DTC P0851 PARK/NEUTRAL SWITCH INPUT CIRCUIT LOW (AT MODEL)

DTC DETECTING CONDITION:

- Detected when two consecutive driving cycles with fault occur.
- GENERAL DESCRIPTION <Ref. to GD(H4DO HEV)-203, DTC P0851 PARK/NEUTRAL SWITCH INPUT CIRCUIT LOW (AT MODEL), Diagnostic Trouble Code (DTC) Detecting Criteria.>

TROUBLE SYMPTOM:

Improper idling

CAUTION:

After servicing or replacing faulty parts, perform Clear Memory Mode <Ref. to EN(H4DO HEV)(diag)-63, OPERATION, Clear Memory Mode.>, and Inspection Mode <Ref. to EN(H4DO HEV)(diag)-47, PROCEDURE, Inspection Mode.>.

WIRING DIAGRAM:

- Engine electrical system (without push button start) <Ref. to WI(HEV)-100, WITHOUT PUSH BUTTON START, WIRING DIAGRAM, Engine Electrical System.>
- Engine electrical system (with push button start) <Ref. to WI(HEV)-114, WITH PUSH BUTTON START, WIRING DIAGRAM, Engine Electrical System.>

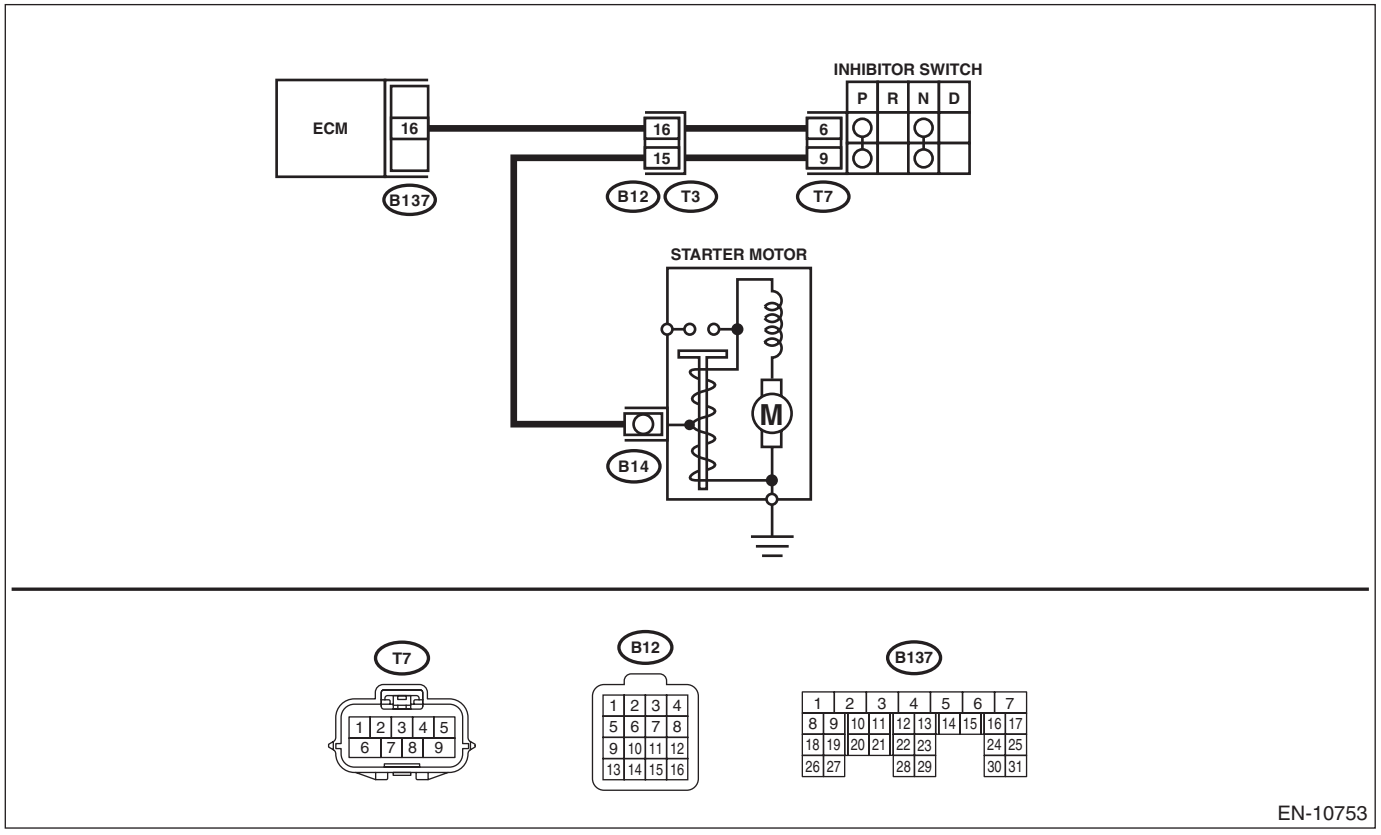

Step		Check	Yes	No
1	**CHECK SELECT CABLE.**	Is there any fault in select cable?	Repair or adjust the select cable. <Ref. to CS-47, Select Cable.>	Go to step **2**.
2	**CHECK INPUT SIGNAL OF ECM.** 1) Turn the ignition switch to ON. 2) Place the select lever in other than "P" range and "N" range. 3) Measure the voltage between ECM connector and chassis ground. ***Connector & terminal*** ***(B137) No. 16 (+) — Chassis ground (–):***	Is the voltage 10 V or more?	Repair the poor contact of ECM connector.	Go to step **3**.

	Step	Check	Yes	No
3	**CHECK HARNESS BETWEEN ECM AND TRANSMISSION HARNESS CONNECTOR.** 1) Turn the ignition switch to OFF. 2) Disconnect the connectors from ECM and transmission harness connector (T3). 3) Measure the resistance between ECM connector and chassis ground. ***Connector & terminal*** ***(B137) No. 16 — Chassis ground:***	Is the resistance 1 MΩ or more?	Go to step **4**.	Repair the short circuit to ground in harness between ECM connector and transmission harness connector.
4	**CHECK TRANSMISSION HARNESS CONNECTOR.** 1) Disconnect the connector from inhibitor switch. 2) Measure the resistance between transmission harness connector and engine ground. ***Connector & terminal*** ***(T3) No. 16 — Engine ground:***	Is the resistance 1 MΩ or more?	Replace the inhibitor switch. <Ref. to CVT(TH58A)-96, Inhibitor Switch.>	Repair short circuit to ground in harness between transmission harness connector and inhibitor switch connector.

DV:DTC P0852 PARK/NEUTRAL SWITCH INPUT CIRCUIT HIGH (AT MODEL)

DTC DETECTING CONDITION:

- Detected when two consecutive driving cycles with fault occur.
- GENERAL DESCRIPTION <Ref. to GD(H4DO HEV)-204, DTC P0852 PARK/NEUTRAL SWITCH INPUT CIRCUIT HIGH (AT MODEL), Diagnostic Trouble Code (DTC) Detecting Criteria.>

TROUBLE SYMPTOM:

Improper idling

CAUTION:

After servicing or replacing faulty parts, perform Clear Memory Mode <Ref. to EN(H4DO HEV)(diag)-63, OPERATION, Clear Memory Mode.>, and Inspection Mode <Ref. to EN(H4DO HEV)(diag)-47, PROCEDURE, Inspection Mode.>.

WIRING DIAGRAM:

- Engine electrical system (without push button start) <Ref. to WI(HEV)-100, WITHOUT PUSH BUTTON START, WIRING DIAGRAM, Engine Electrical System.>
- Engine electrical system (with push button start) <Ref. to WI(HEV)-114, WITH PUSH BUTTON START, WIRING DIAGRAM, Engine Electrical System.>

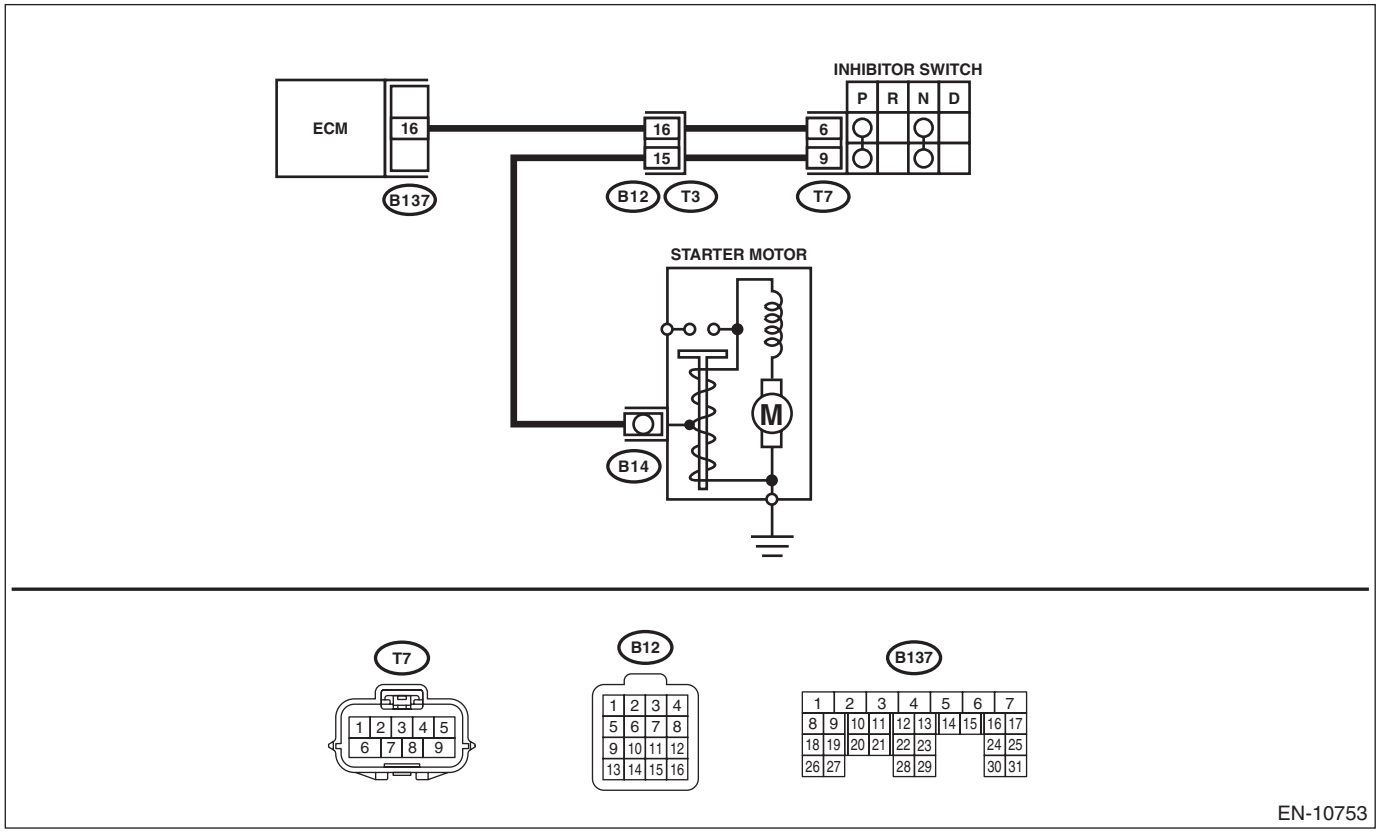

Step		Check	Yes	No
1	**CHECK SELECT CABLE.**	Is there any fault in select cable?	Repair or adjust the select cable. <Ref. to CS-47, Select Cable.>	Go to step **2**.
2	**CHECK INPUT SIGNAL OF ECM.** 1) Turn the ignition switch to ON. 2) Measure the voltage between ECM and chassis ground with select lever at “P” range and “N” range. ***Connector & terminal*** ***(B137) No. 16 (+) — Chassis ground (–):***	Is the voltage less than 1 V?	Repair the poor contact of ECM connector.	Go to step **3**.

	Step	Check	Yes	No
3	**CHECK HARNESS BETWEEN ECM AND INHIBITOR SWITCH CONNECTOR.** 1) Turn the ignition switch to OFF. 2) Disconnect the connectors from ECM and inhibitor switch. 3) Measure the resistance of harness between ECM connector and inhibitor switch connector. ***Connector & terminal*** ***(B137) No. 16 — (T7) No. 6:***	Is the resistance less than 1 Ω?	Go to step **4**.	Repair the harness and connector. NOTE: In this case, repair the following item: • Open circuit in harness between ECM connector and inhibitor switch connector • Poor contact of coupling connector
4	**CHECK INHIBITOR SWITCH GROUND LINE.** Measure the resistance of harness between inhibitor switch connector and engine ground. ***Connector & terminal*** ***(T7) No. 9 — Engine ground:***	Is the resistance less than 5 Ω?	Replace the inhibitor switch. <Ref. to CVT(TH58A)-96, Inhibitor Switch.>	Repair the harness and connector. NOTE: In this case, repair the following item: • Open circuit of harness between inhibitor switch connector and starter motor ground line • Poor contact of coupling connector • Poor contact of starter motor connector • Poor contact of starter motor ground • Starter motor

DW:DTC P0A7B BATTERY ENERGY CONTROL MODULE REQUEST MIL ILLUMINATION

NOTE:
Refer to HEV section for diagnostic procedure. <Ref. to HEV(diag)-2, Basic Diagnostic Procedure.>

DX:DTC P0AC4 HYBRID POWERTRAIN CONTROL MODULE REQUEST MIL ILLUMINATION

NOTE:
Refer to HEV section for diagnostic procedure. <Ref. to HEV(diag)-2, Basic Diagnostic Procedure.>

DY:DTC P0CA1 DRIVE MOTOR CONTROL MODULE REQUEST MIL ILLUMINATION

NOTE:
Refer to HEV section for diagnostic procedure. <Ref. to HEV(diag)-2, Basic Diagnostic Procedure.>

DZ:DTC P1160 RETURN SPRING FAILURE

NOTE:
For the diagnostic procedure, refer to DTC P2101. <Ref. to EN(H4DO HEV)(diag)-327, DTC P2101 THROTTLE ACTUATOR CONTROL MOTOR CIRCUIT RANGE/PERFORMANCE, Diagnostic Procedure with Diagnostic Trouble Code (DTC).>

EA:DTC P1449 EVAPORATIVE EMISSION CONT. SYS. AIR FILTER CLOG

DTC DETECTING CONDITION:

- Detected when two consecutive driving cycles with fault occur.
- GENERAL DESCRIPTION <Ref. to GD(H4DO HEV)-210, DTC P1449 EVAPORATIVE EMISSION CONT. SYS. AIR FILTER CLOG, Diagnostic Trouble Code (DTC) Detecting Criteria.>

CAUTION:
After servicing or replacing faulty parts, perform Clear Memory Mode <Ref. to EN(H4DO HEV)(diag)-63, OPERATION, Clear Memory Mode.>, and Inspection Mode <Ref. to EN(H4DO HEV)(diag)-47, PROCEDURE, Inspection Mode.>.

Step		Check	Yes	No
1	CHECK FOR ANY OTHER DTC ON DISPLAY.	Is any other DTC displayed?	Check the appropriate DTC using the “List of Diagnostic Trouble Code (DTC)”. <Ref. to EN(H4DO HEV)(diag)-88, List of Diagnostic Trouble Code (DTC).>	Go to step **2**.
2	CHECK DRAIN FILTER AND DRAIN TUBE.	Is the drain filter or drain tube clogged?	Replace the drain filter. <Ref. to EC(H4DO(HEV))-38, Drain Filter.>	Replace the leak check valve assembly. <Ref. to EC(H4DO(HEV))-39, Leak Check Valve Assembly.>

EB:DTC P1451 EVAPORATIVE EMISSION CONT. SYS.

DTC DETECTING CONDITION:

- Detected when two consecutive driving cycles with fault occur.
- GENERAL DESCRIPTION <Ref. to GD(H4DO HEV)-212, DTC P1451 EVAPORATIVE EMISSION CONT. SYS., Diagnostic Trouble Code (DTC) Detecting Criteria.>

CAUTION:
After servicing or replacing faulty parts, perform Clear Memory Mode <Ref. to EN(H4DO HEV)(diag)-63, OPERATION, Clear Memory Mode.>, and Inspection Mode <Ref. to EN(H4DO HEV)(diag)-47, PROCEDURE, Inspection Mode.>.

	Step	Check	Yes	No
1	**CHECK DRAIN TUBE BETWEEN CANISTER AND LEAK CHECK VALVE ASSEMBLY.**	Is the drain tube between canister and leak check valve assembly clogged?	Replace the drain tube between the canister and leak check valve assembly. <Ref. to EC(H4DO(HEV))-8, Canister.> <Ref. to EC(H4DO(HEV))-39, Leak Check Valve Assembly.>	Go to step **2**.
2	**CHECK HOSES BETWEEN CANISTER AND FUEL TANK.**	Are the hoses between the canister and fuel tank clogged?	Replace the hoses between the canister and fuel tank. <Ref. to EC(H4DO(HEV))-8, Canister.> <Ref. to FU(H4DO(HEV))-105, Fuel Tank.>	Replace the canister. <Ref. to EC(H4DO(HEV))-8, Canister.> After the operation is complete, go to the next step. Go to step **3**.
3	**CHECK EVAPORATIVE EMISSION CONTROL SYSTEM.** Perform drive cycle I. <Ref. to EN(H4DO HEV)(diag)-56, DRIVE CYCLE I, PROCEDURE, Drive Cycle.>	Is DTC P1451 displayed on the display?	Replace the leak check valve assembly. <Ref. to EC(H4DO(HEV))-39, Leak Check Valve Assembly.>	End.

EC:DTC P1492 EGR SOLENOID VALVE SIGNAL #1 CIRCUIT MALFUNCTION (LOW INPUT)

NOTE:
For the diagnostic procedure, refer to DTC P1498. <Ref. to EN(H4DO HEV)(diag)-302, DTC P1498 EGR SOLENOID VALVE SIGNAL #4 CIRCUIT MALFUNCTION (LOW INPUT), Diagnostic Procedure with Diagnostic Trouble Code (DTC).>

ED:DTC P1493 EGR SOLENOID VALVE SIGNAL #1 CIRCUIT MALFUNCTION (HIGH INPUT)

NOTE:
For the diagnostic procedure, refer to DTC P1499. <Ref. to EN(H4DO HEV)(diag)-305, DTC P1499 EGR SOLENOID VALVE SIGNAL #4 CIRCUIT MALFUNCTION (HIGH INPUT), Diagnostic Procedure with Diagnostic Trouble Code (DTC).>

EE:DTC P1494 EGR SOLENOID VALVE SIGNAL #2 CIRCUIT MALFUNCTION (LOW INPUT)

NOTE:
For the diagnostic procedure, refer to DTC P1498. <Ref. to EN(H4DO HEV)(diag)-302, DTC P1498 EGR SOLENOID VALVE SIGNAL #4 CIRCUIT MALFUNCTION (LOW INPUT), Diagnostic Procedure with Diagnostic Trouble Code (DTC).>

EF:DTC P1495 EGR SOLENOID VALVE SIGNAL #2 CIRCUIT MALFUNCTION (HIGH INPUT)

NOTE:
For the diagnostic procedure, refer to DTC P1499. <Ref. to EN(H4DO HEV)(diag)-305, DTC P1499 EGR SOLENOID VALVE SIGNAL #4 CIRCUIT MALFUNCTION (HIGH INPUT), Diagnostic Procedure with Diagnostic Trouble Code (DTC).>

EG:DTC P1496 EGR SOLENOID VALVE SIGNAL #3 CIRCUIT MALFUNCTION (LOW INPUT)

NOTE:
For the diagnostic procedure, refer to DTC P1498. <Ref. to EN(H4DO HEV)(diag)-302, DTC P1498 EGR SOLENOID VALVE SIGNAL #4 CIRCUIT MALFUNCTION (LOW INPUT), Diagnostic Procedure with Diagnostic Trouble Code (DTC).>

EH:DTC P1497 EGR SOLENOID VALVE SIGNAL #3 CIRCUIT MALFUNCTION (HIGH INPUT)

NOTE:
For the diagnostic procedure, refer to DTC P1499. <Ref. to EN(H4DO HEV)(diag)-305, DTC P1499 EGR SOLENOID VALVE SIGNAL #4 CIRCUIT MALFUNCTION (HIGH INPUT), Diagnostic Procedure with Diagnostic Trouble Code (DTC).>

EI: DTC P1498 EGR SOLENOID VALVE SIGNAL #4 CIRCUIT MALFUNCTION (LOW INPUT)

DTC DETECTING CONDITION:

- Immediately at fault recognition
- GENERAL DESCRIPTION <Ref. to GD(H4DO HEV)-217, DTC P1498 EGR SOLENOID VALVE SIGNAL #4 CIRCUIT MALFUNCTION (LOW INPUT), Diagnostic Trouble Code (DTC) Detecting Criteria.>

TROUBLE SYMPTOM:

- Improper idling
- Poor driving performance
- Engine breathing

CAUTION:
After servicing or replacing faulty parts, perform Clear Memory Mode <Ref. to EN(H4DO HEV)(diag)-63, OPERATION, Clear Memory Mode.>, and Inspection Mode <Ref. to EN(H4DO HEV)(diag)-47, PROCEDURE, Inspection Mode.>.

WIRING DIAGRAM:

- Engine electrical system (without push button start) <Ref. to WI(HEV)-100, WITHOUT PUSH BUTTON START, WIRING DIAGRAM, Engine Electrical System.>
- Engine electrical system (with push button start) <Ref. to WI(HEV)-114, WITH PUSH BUTTON START, WIRING DIAGRAM, Engine Electrical System.>

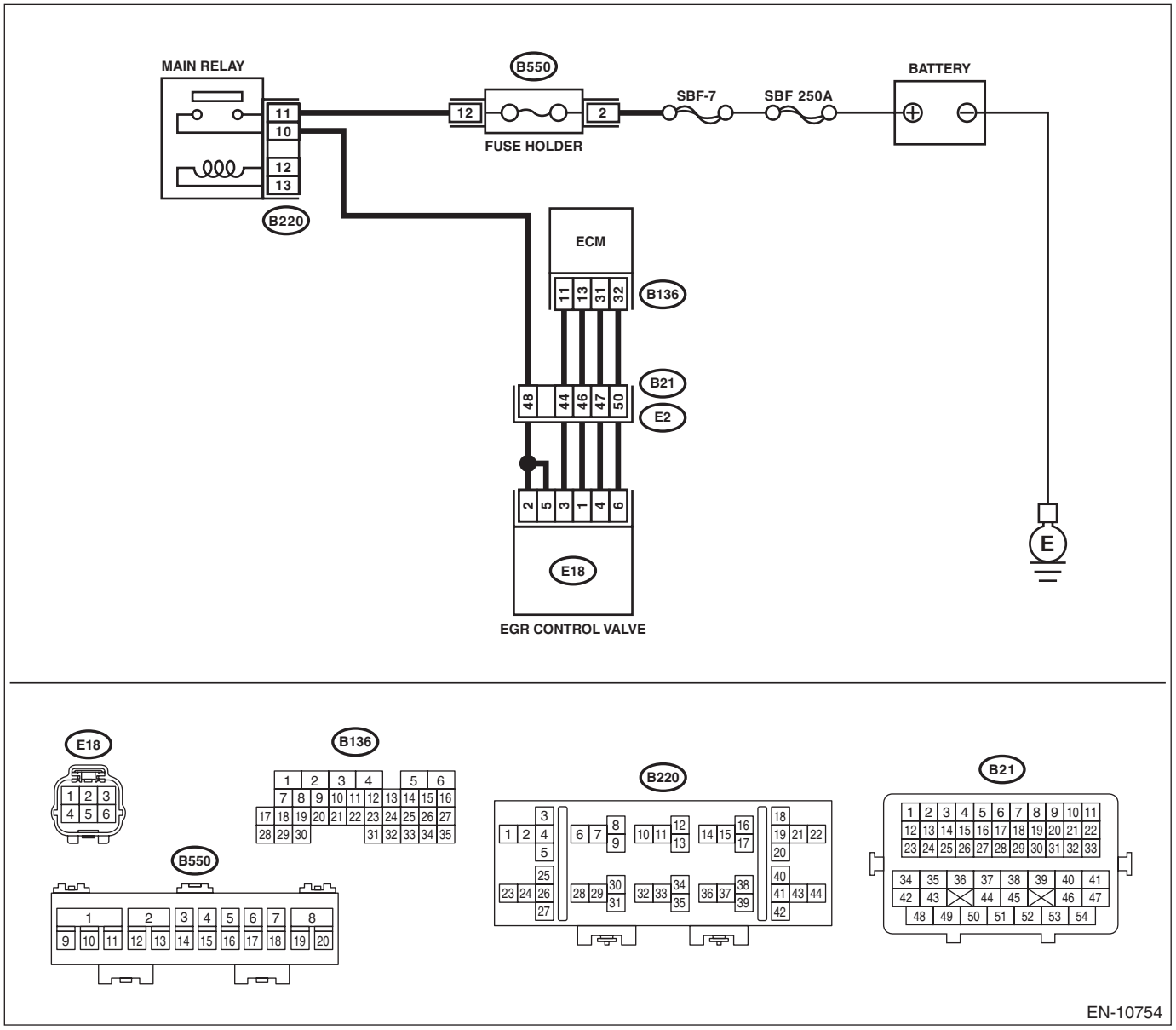

Step		Check	Yes	No
1	**CHECK POWER SUPPLY TO EGR CONTROL VALVE.** 1) Turn the ignition switch to OFF. 2) Disconnect the connector from the EGR control valve. 3) Turn the ignition switch to ON. 4) Measure the voltage between EGR control valve connector and engine ground. ***Connector & terminal*** ***(E18) No. 2 (+) — Engine ground (–):*** ***(E18) No. 5 (+) — Engine ground (–):***	Is the voltage 10 V or more?	Go to step **2**.	Repair the harness and connector. NOTE: In this case, repair the following item: • Open circuit in harness between EGR control valve and main relay connector • Poor contact of coupling connector

	Step	Check	Yes	No
2	**CHECK HARNESS BETWEEN ECM AND EGR CONTROL VALVE CONNECTOR.** 1) Turn the ignition switch to OFF. 2) Disconnect the connector from ECM. 3) Measure the resistance between ECM connector and EGR control valve connector. ***Connector & terminal*** ***DTC P1492; (B136) No. 11 — (E18) No. 3:*** ***DTC P1494; (B136) No. 13 — (E18) No. 1:*** ***DTC P1496; (B136) No. 31 — (E18) No. 4:*** ***DTC P1498; (B136) No. 32 — (E18) No. 6:***	Is the resistance less than 1 Ω?	Go to step **3**.	Repair the harness and connector. NOTE: In this case, repair the following item: • Open circuit of harness between ECM connector and EGR control valve connector • Poor contact of coupling connector
3	**CHECK HARNESS BETWEEN ECM AND EGR CONTROL VALVE CONNECTOR.** 1) Disconnect the connector from ECM. 2) Measure the resistance between ECM connector and chassis ground. ***Connector & terminal*** ***DTC P1492; (B136) No. 11 — Chassis ground:*** ***DTC P1494; (B136) No. 13 — Chassis ground:*** ***DTC P1496; (B136) No. 31 — Chassis ground:*** ***DTC P1498; (B136) No. 32 — Chassis ground:***	Is the resistance 1 MΩ or more?	Go to step **4**.	Repair ground short circuit of harness between ECM connector and EGR control valve connector.
4	**CHECK FOR POOR CONTACT.** Check for poor contact between ECM connector and EGR control valve connector.	Is there poor contact in ECM or EGR control valve connector?	Repair the poor contact of ECM or EGR control valve connector.	Replace EGR control valve. <Ref. to EC(H4DO(HEV))-26, EGR Control Valve.>

EJ: DTC P1499 EGR SOLENOID VALVE SIGNAL #4 CIRCUIT MALFUNCTION (HIGH INPUT)

DTC DETECTING CONDITION:

- Immediately at fault recognition
- GENERAL DESCRIPTION <Ref. to GD(H4DO HEV)-217, DTC P1499 EGR SOLENOID VALVE SIGNAL #4 CIRCUIT MALFUNCTION (HIGH INPUT), Diagnostic Trouble Code (DTC) Detecting Criteria.>

TROUBLE SYMPTOM:

- Improper idling
- Poor driving performance
- Engine breathing

CAUTION:

After servicing or replacing faulty parts, perform Clear Memory Mode <Ref. to EN(H4DO HEV)(diag)-63, OPERATION, Clear Memory Mode.>, and Inspection Mode <Ref. to EN(H4DO HEV)(diag)-47, PROCEDURE, Inspection Mode.>.

WIRING DIAGRAM:

- Engine electrical system (without push button start) <Ref. to WI(HEV)-100, WITHOUT PUSH BUTTON START, WIRING DIAGRAM, Engine Electrical System.>
- Engine electrical system (with push button start) <Ref. to WI(HEV)-114, WITH PUSH BUTTON START, WIRING DIAGRAM, Engine Electrical System.>

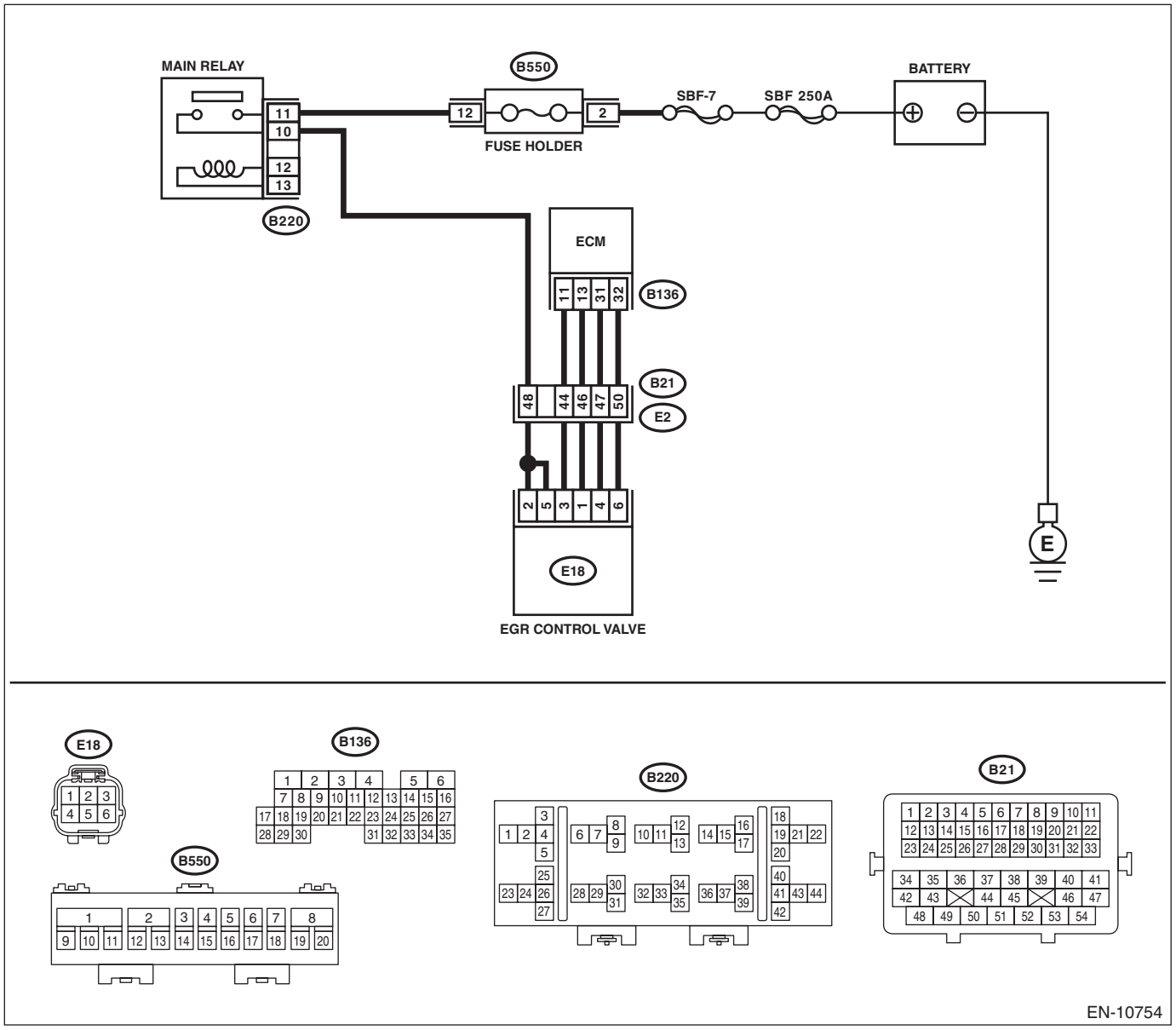

	Step	Check	Yes	No
1	**CHECK HARNESS BETWEEN ECM AND EGR CONTROL VALVE CONNECTOR.** 1) Turn the ignition switch to OFF. 2) Disconnect the connector from ECM and EGR control valve. 3) Turn the ignition switch to ON. 4) Measure the voltage between ECM connector and chassis ground. ***Connector & terminal*** ***DTC P1493; (B136) No. 11 (+) — Chassis ground (–):*** ***DTC P1495; (B136) No. 13 (+) — Chassis ground (–):*** ***DTC P1497; (B136) No. 31 (+) — Chassis ground (–):*** ***DTC P1499; (B136) No. 32 (+) — Chassis ground (–):***	Is the voltage 10 V or more?	Repair the short circuit to power supply in the harness between the ECM connector and EGR control valve connector.	Go to step **2**.
2	**CHECK EGR CONTROL VALVE.** Measure the resistance between EGR control valve terminals. ***Terminals*** ***DTC P1493; No. 2 — No. 3:*** ***DTC P1495; No. 2 — No. 1:*** ***DTC P1497; No. 5 — No. 4:*** ***DTC P1499; No. 5 — No. 6:***	Is the resistance 20 Ω or more?	Repair the poor contact of ECM connector.	Replace EGR control valve. <Ref. to EC(H4DO(HEV))-26, EGR Control Valve.>

EK:DTC P2004 INTAKE MANIFOLD RUNNER CONTROL STUCK OPEN (BANK 1)

DTC DETECTING CONDITION:

- Immediately at fault recognition
- GENERAL DESCRIPTION <Ref. to GD(H4DO HEV)-218, DTC P2004 INTAKE MANIFOLD RUNNER CONTROL STUCK OPEN (BANK 1), Diagnostic Trouble Code (DTC) Detecting Criteria.>

CAUTION:
After servicing or replacing faulty parts, perform Clear Memory Mode <Ref. to EN(H4DO HEV)(diag)-63, OPERATION, Clear Memory Mode.>, and Inspection Mode <Ref. to EN(H4DO HEV)(diag)-47, PROCEDURE, Inspection Mode.>.

	Step	Check	Yes	No
1	**CHECK FOR ANY OTHER DTC ON DISPLAY.**	Is any other DTC displayed?	Check the appropriate DTC using the "List of Diagnostic Trouble Code (DTC)". <Ref. to EN(H4DO HEV)(diag)-88, List of Diagnostic Trouble Code (DTC).>	Go to step **2**.
2	**CHECK TUMBLE GENERATOR VALVE RH.** 1) Remove the tumble generator valve assembly RH. 2) Check the tumble generator valve.	Is there any dirt or clogging with foreign objects in the tumble generator valve?	Clean the tumble generator valve.	Replace the tumble generator valve RH. <Ref. to FU(H4DO(HEV))-74, Tumble Generator Valve Assembly.>

EL:DTC P2005 INTAKE MANIFOLD RUNNER CONTROL STUCK OPEN (BANK 2)

DTC DETECTING CONDITION:

- Immediately at fault recognition
- GENERAL DESCRIPTION <Ref. to GD(H4DO HEV)-219, DTC P2005 INTAKE MANIFOLD RUNNER CONTROL STUCK OPEN (BANK 2), Diagnostic Trouble Code (DTC) Detecting Criteria.>

CAUTION:
After servicing or replacing faulty parts, perform Clear Memory Mode <Ref. to EN(H4DO HEV)(diag)-63, OPERATION, Clear Memory Mode.>, and Inspection Mode <Ref. to EN(H4DO HEV)(diag)-47, PROCEDURE, Inspection Mode.>.

	Step	Check	Yes	No
1	**CHECK FOR ANY OTHER DTC ON DISPLAY.**	Is any other DTC displayed?	Check the appropriate DTC using the "List of Diagnostic Trouble Code (DTC)". <Ref. to EN(H4DO HEV)(diag)-88, List of Diagnostic Trouble Code (DTC).>	Go to step **2**.
2	**CHECK TUMBLE GENERATOR VALVE LH.** 1) Remove the tumble generator valve assembly LH. 2) Check the tumble generator valve.	Is there any dirt or clogging with foreign objects in the tumble generator valve?	Clean the tumble generator valve.	Replace the tumble generator valve LH. <Ref. to FU(H4DO(HEV))-74, Tumble Generator Valve Assembly.>

EM:DTC P2006 INTAKE MANIFOLD RUNNER CONTROL STUCK CLOSED (BANK 1)

DTC DETECTING CONDITION:

- Immediately at fault recognition
- GENERAL DESCRIPTION <Ref. to GD(H4DO HEV)-220, DTC P2006 INTAKE MANIFOLD RUNNER CONTROL STUCK CLOSED (BANK 1), Diagnostic Trouble Code (DTC) Detecting Criteria.>

CAUTION:

After servicing or replacing faulty parts, perform Clear Memory Mode <Ref. to EN(H4DO HEV)(diag)-63, OPERATION, Clear Memory Mode.>, and Inspection Mode <Ref. to EN(H4DO HEV)(diag)-47, PROCEDURE, Inspection Mode.>.

	Step	Check	Yes	No
1	**CHECK FOR ANY OTHER DTC ON DISPLAY.**	Is any other DTC displayed?	Check the appropriate DTC using the "List of Diagnostic Trouble Code (DTC)". <Ref. to EN(H4DO HEV)(diag)-88, List of Diagnostic Trouble Code (DTC).>	Go to step **2**.
2	**CHECK TUMBLE GENERATOR VALVE RH.** 1) Remove the tumble generator valve assembly RH. 2) Check the tumble generator valve.	Is there any dirt or clogging with foreign objects in the tumble generator valve?	Clean the tumble generator valve.	Replace the tumble generator valve RH. <Ref. to FU(H4DO(HEV))-74, Tumble Generator Valve Assembly.>

EN:DTC P2007 INTAKE MANIFOLD RUNNER CONTROL STUCK CLOSED (BANK 2)

DTC DETECTING CONDITION:

- Immediately at fault recognition
- GENERAL DESCRIPTION <Ref. to GD(H4DO HEV)-221, DTC P2007 INTAKE MANIFOLD RUNNER CONTROL STUCK CLOSED (BANK 2), Diagnostic Trouble Code (DTC) Detecting Criteria.>

CAUTION:

After servicing or replacing faulty parts, perform Clear Memory Mode <Ref. to EN(H4DO HEV)(diag)-63, OPERATION, Clear Memory Mode.>, and Inspection Mode <Ref. to EN(H4DO HEV)(diag)-47, PROCEDURE, Inspection Mode.>.

	Step	Check	Yes	No
1	**CHECK FOR ANY OTHER DTC ON DISPLAY.**	Is any other DTC displayed?	Check the appropriate DTC using the "List of Diagnostic Trouble Code (DTC)". <Ref. to EN(H4DO HEV)(diag)-88, List of Diagnostic Trouble Code (DTC).>	Go to step **2**.
2	**CHECK TUMBLE GENERATOR VALVE LH.** 1) Remove the tumble generator valve assembly LH. 2) Check the tumble generator valve.	Is there any dirt or clogging with foreign objects in the tumble generator valve?	Clean the tumble generator valve.	Replace the tumble generator valve LH. <Ref. to FU(H4DO(HEV))-74, Tumble Generator Valve Assembly.>

EO:DTC P2009 INTAKE MANIFOLD RUNNER CONTROL CIRCUIT LOW (BANK 1)

DTC DETECTING CONDITION:

- Immediately at fault recognition
- GENERAL DESCRIPTION <Ref. to GD(H4DO HEV)-222, DTC P2009 INTAKE MANIFOLD RUNNER CONTROL CIRCUIT LOW (BANK 1), Diagnostic Trouble Code (DTC) Detecting Criteria.>

CAUTION:

After servicing or replacing faulty parts, perform Clear Memory Mode <Ref. to EN(H4DO HEV)(diag)-63, OPERATION, Clear Memory Mode.>, and Inspection Mode <Ref. to EN(H4DO HEV)(diag)-47, PROCEDURE, Inspection Mode.>.

WIRING DIAGRAM:

- Engine electrical system (without push button start) <Ref. to WI(HEV)-100, WITHOUT PUSH BUTTON START, WIRING DIAGRAM, Engine Electrical System.>
- Engine electrical system (with push button start) <Ref. to WI(HEV)-114, WITH PUSH BUTTON START, WIRING DIAGRAM, Engine Electrical System.>

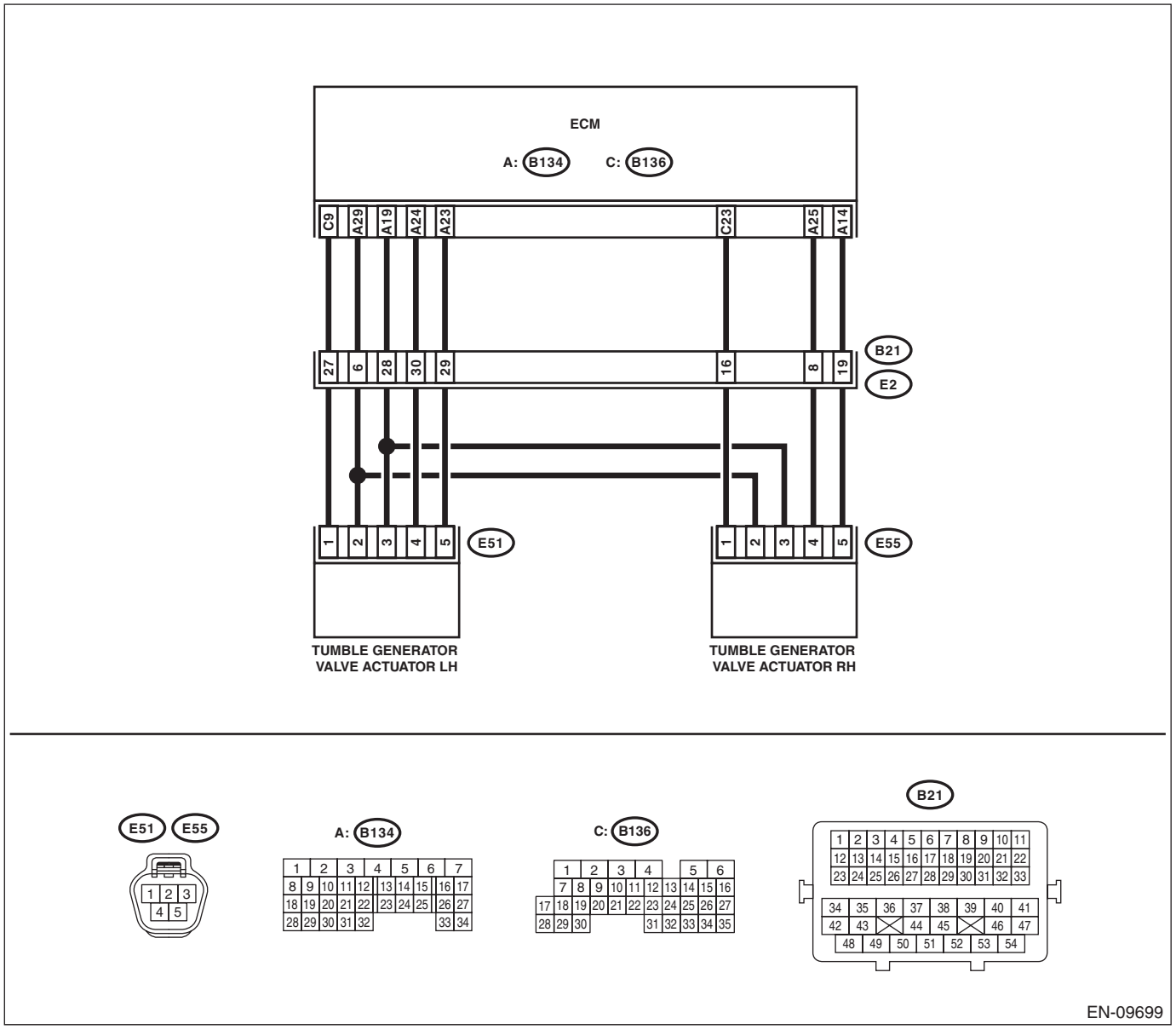

	Step	Check	Yes	No
1	**CHECK HARNESS BETWEEN ECM AND TUMBLE GENERATOR VALVE ACTUATOR RH CONNECTOR.** 1) Turn the ignition switch to OFF. 2) Disconnect the connector from ECM. 3) Measure the voltage between ECM connector and chassis ground. ***Connector & terminal*** ***(B134) No. 25 (+) — Chassis ground (–):*** ***(B134) No. 14 (+) — Chassis ground (–):***	Is the voltage 5 V or more?	Repair the short circuit to power in harness between ECM connector and tumble generator valve actuator RH connector.	Replace the tumble generator valve actuator RH. <Ref. to FU(H4DO(HEV))-77, Tumble Generator Valve Actuator.>

EP:DTC P2012 INTAKE MANIFOLD RUNNER CONTROL CIRCUIT LOW (BANK 2)

DTC DETECTING CONDITION:

- Immediately at fault recognition
- GENERAL DESCRIPTION <Ref. to GD(H4DO HEV)-224, DTC P2012 INTAKE MANIFOLD RUNNER CONTROL CIRCUIT LOW (BANK 2), Diagnostic Trouble Code (DTC) Detecting Criteria.>

CAUTION:

After servicing or replacing faulty parts, perform Clear Memory Mode <Ref. to EN(H4DO HEV)(diag)-63, OPERATION, Clear Memory Mode.>, and Inspection Mode <Ref. to EN(H4DO HEV)(diag)-47, PROCEDURE, Inspection Mode.>.

WIRING DIAGRAM:

- Engine electrical system (without push button start) <Ref. to WI(HEV)-100, WITHOUT PUSH BUTTON START, WIRING DIAGRAM, Engine Electrical System.>
- Engine electrical system (with push button start) <Ref. to WI(HEV)-114, WITH PUSH BUTTON START, WIRING DIAGRAM, Engine Electrical System.>

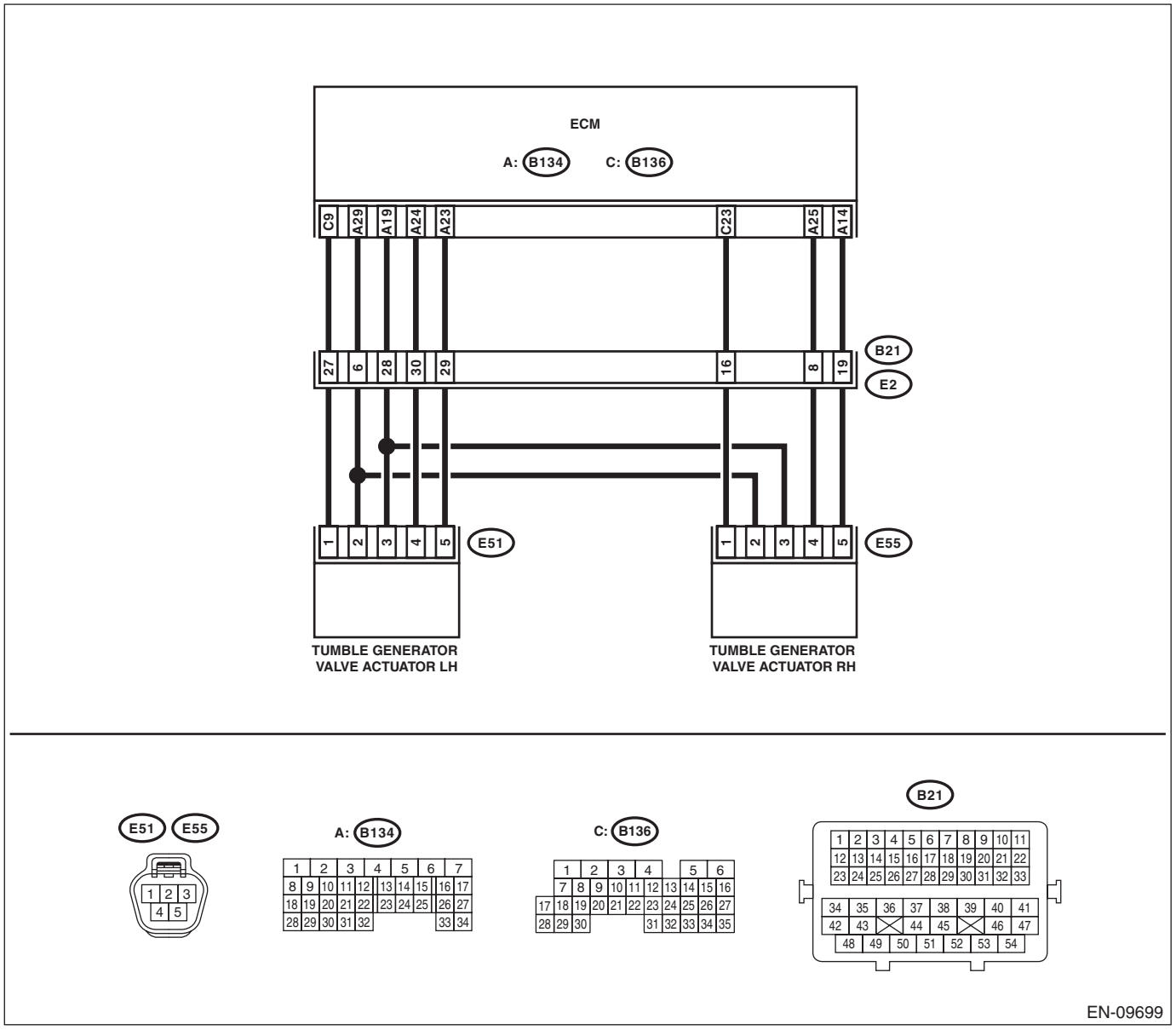

	Step	Check	Yes	No
1	**CHECK HARNESS BETWEEN ECM AND TUMBLE GENERATOR VALVE ACTUATOR LH CONNECTOR.** 1) Turn the ignition switch to OFF. 2) Disconnect the connector from ECM. 3) Measure the voltage between ECM connector and chassis ground. ***Connector & terminal*** ***(B134) No. 23 (+) — Chassis ground (–):*** ***(B134) No. 24 (+) — Chassis ground (–):***	Is the voltage 5 V or more?	Repair the short circuit to power in harness between ECM connector and tumble generator valve actuator LH connector.	Replace the tumble generator valve actuator LH. <Ref. to FU(H4DO(HEV))-77, Tumble Generator Valve Actuator.>

EQ:DTC P2096 POST CATALYST FUEL TRIM SYSTEM TOO LEAN (BANK 1)

DTC DETECTING CONDITION:

- Detected when two consecutive driving cycles with fault occur.
- GENERAL DESCRIPTION <Ref. to GD(H4DO HEV)-226, DTC P2096 POST CATALYST FUEL TRIM SYSTEM TOO LEAN (BANK 1), Diagnostic Trouble Code (DTC) Detecting Criteria.>

CAUTION:

After servicing or replacing faulty parts, perform Clear Memory Mode <Ref. to EN(H4DO HEV)(diag)-63, OPERATION, Clear Memory Mode.>, and Inspection Mode <Ref. to EN(H4DO HEV)(diag)-47, PROCEDURE, Inspection Mode.>.

WIRING DIAGRAM:

- Engine electrical system (without push button start) <Ref. to WI(HEV)-100, WITHOUT PUSH BUTTON START, WIRING DIAGRAM, Engine Electrical System.>
- Engine electrical system (with push button start) <Ref. to WI(HEV)-114, WITH PUSH BUTTON START, WIRING DIAGRAM, Engine Electrical System.>

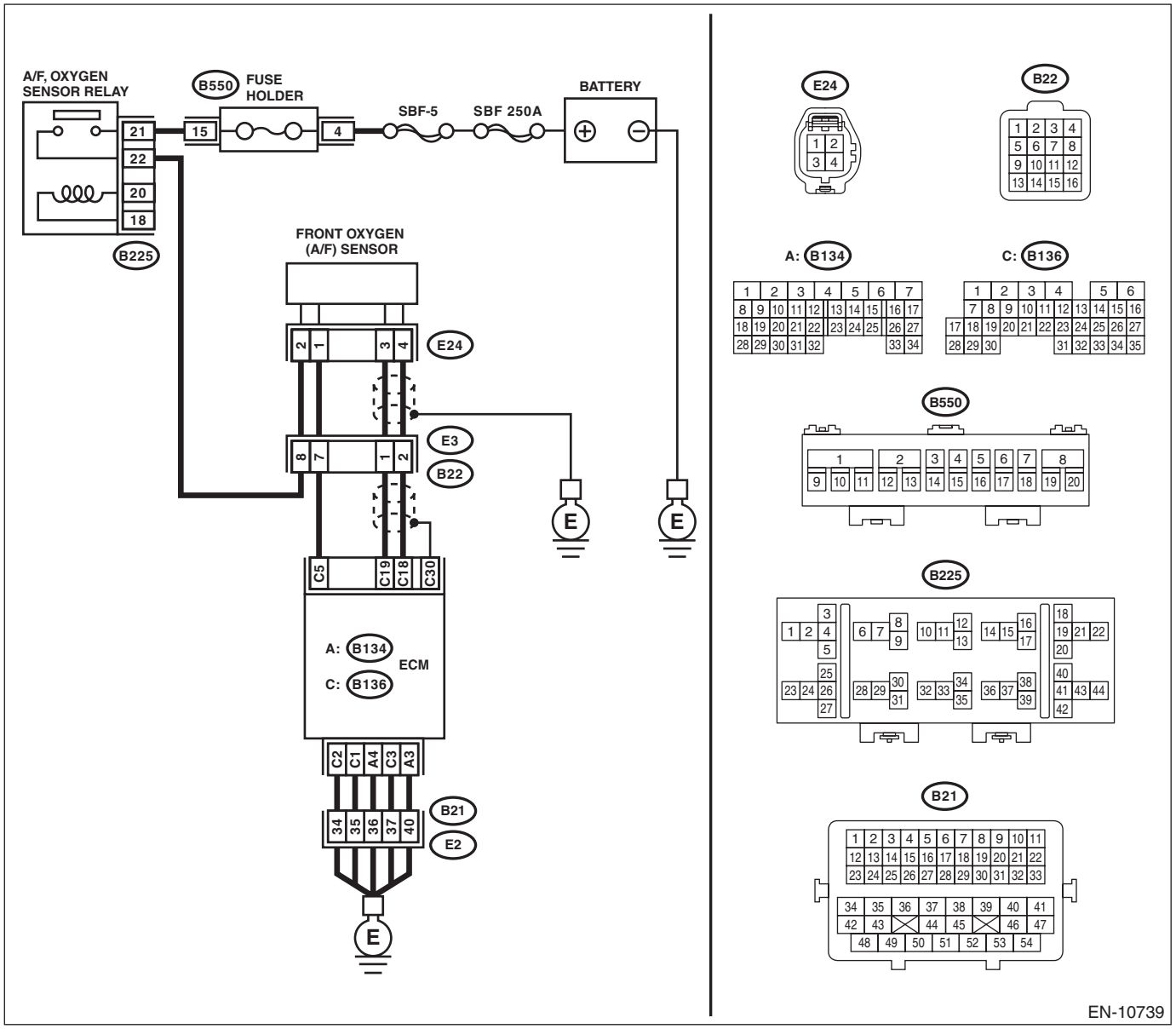

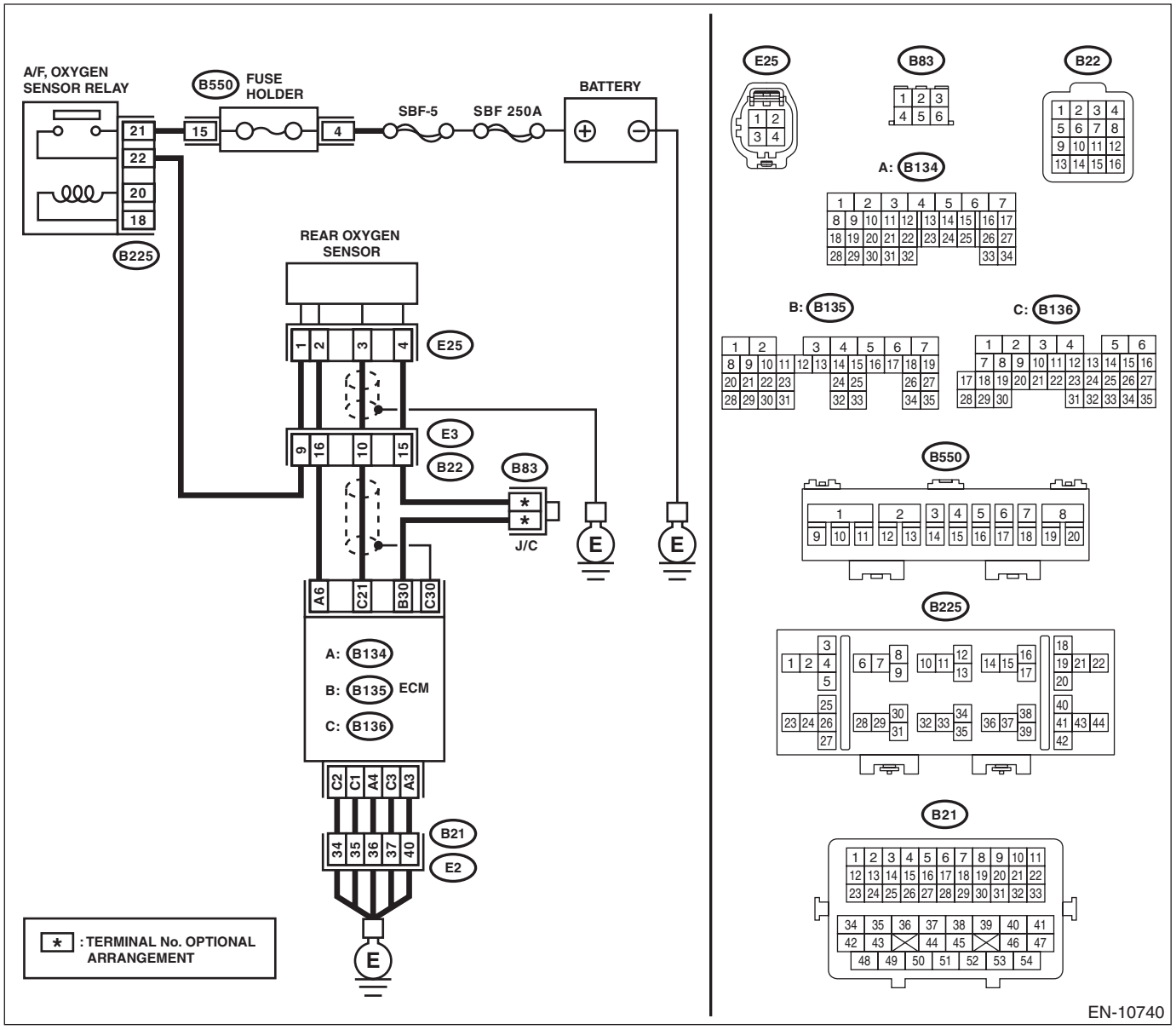

Step		Check	Yes	No
1	**CHECK FOR ANY OTHER DTC ON DISPLAY.**	Is any other DTC displayed?	Check DTC using "List of Diagnostic Trouble Code (DTC)". <Ref. to EN(H4DO HEV)(diag)-88, List of Diagnostic Trouble Code (DTC).>	Go to step **2**.
2	**CHECK FRONT OXYGEN (A/F) SENSOR CONNECTOR AND COUPLING CONNECTOR.**	Has water entered the connector?	Completely remove any water inside.	Go to step **3**.

	Step	Check	Yes	No
3	**CHECK HARNESS BETWEEN ECM AND FRONT OXYGEN (A/F) SENSOR CONNECTOR.** 1) Turn the ignition switch to OFF. 2) Disconnect the connectors from ECM and front oxygen (A/F) sensor. 3) Measure the resistance of harness between ECM connector and front oxygen (A/F) sensor connector. ***Connector & terminal*** ***(B136) No. 19 — (E24) No. 3:*** ***(B136) No. 18 — (E24) No. 4:***	Is the resistance less than 1 Ω?	Go to step **4**.	Repair the harness and connector. NOTE: In this case, repair the following item: • Open circuit in harness between ECM connector and front oxygen (A/F) sensor connector • Poor contact of coupling connector
4	**CHECK HARNESS BETWEEN ECM AND FRONT OXYGEN (A/F) SENSOR CONNECTOR.** Measure the resistance between ECM connector and chassis ground. ***Connector & terminal*** ***(B136) No. 19 — Chassis ground:*** ***(B136) No. 18 — Chassis ground:***	Is the resistance 1 MΩ or more?	Go to step **5**.	Repair the short circuit to ground in harness between ECM connector and front oxygen (A/F) sensor connector.
5	**CHECK OUTPUT SIGNAL FOR ECM.** 1) Connect the connector to ECM. 2) Turn the ignition switch to ON. 3) Measure the voltage between front oxygen (A/F) sensor connector and chassis ground. ***Connector & terminal*** ***(E24) No. 3 (+) — Chassis ground (–):***	Is the voltage 4.5 V or more?	Go to step **7**.	Go to step **6**.
6	**CHECK OUTPUT SIGNAL FOR ECM.** Measure the voltage between front oxygen (A/F) sensor connector and chassis ground. ***Connector & terminal*** ***(E24) No. 4 (+) — Chassis ground (–):***	Is the voltage 4.95 V or more?	Go to step **7**.	Go to step **8**.
7	**CHECK OUTPUT SIGNAL FOR ECM.** Measure the voltage between front oxygen (A/F) sensor connector and chassis ground. ***Connector & terminal*** ***(E24) No. 3 (+) — Chassis ground (–):*** ***(E24) No. 4 (+) — Chassis ground (–):***	Is the voltage 8 V or more?	Repair the short circuit to power in the harness between ECM connector and front oxygen (A/F) sensor connector. After repair, replace the ECM. <Ref. to FU(H4DO(HEV))-85, Engine Control Module (ECM).>	Repair the poor contact of ECM connector.
8	**CHECK EXHAUST SYSTEM.**	Are there holes or loose bolts on exhaust system?	Repair the exhaust system.	Go to step **9**.
9	**CHECK AIR INTAKE SYSTEM.**	Are there holes, loose bolts or disconnection of hose on air intake system?	Repair the air intake system.	Go to step **10**.

	Step	Check	Yes	No
10	**CHECK FUEL PRESSURE.** **WARNING:** **Place "NO OPEN FLAMES" signs near the working area.** **CAUTION:** **Be careful not to spill fuel.** 1) Connect the front oxygen (A/F) sensor connector. 2) Measure the fuel pressure. <Ref. to ME(H4DO(w/o HEV))-35, INSPECTION, Fuel Pressure.> **CAUTION:** **Release fuel pressure before removing the fuel pressure gauge.**	Is the measured value 340 — 400 kPa (3.5 — 4.1 kg/cm^2, 49 — 58 psi)?	Go to step **11**.	Check the fuel pump and fuel delivery line. <Ref. to FU(H4DO(HEV))-127, INSPECTION, Fuel Pump.> <Ref. to FU(H4DO(HEV))-154, INSPECTION, Fuel Delivery and Evaporation Lines.>
11	**CHECK ENGINE COOLANT TEMPERATURE SENSOR.** 1) Start the engine and warm up completely. 2) Read the value of «Coolant Temp.» using the Subaru Select Monitor or a general scan tool. NOTE: • Subaru Select Monitor For detailed operation procedures, refer to "Current Data Display For Engine". <Ref. to EN(H4DO HEV)(diag)-37, Subaru Select Monitor.> • General scan tool For detailed operation procedures, refer to the general scan tool operation manual.	Is the value of «Coolant Temp.» 75°C (167°F) or more?	Go to step **12**.	Replace the engine coolant temperature sensor. <Ref. to FU(H4DO(HEV))-41, Engine Coolant Temperature Sensor.>
12	**CHECK MASS AIR FLOW AND INTAKE AIR TEMPERATURE SENSOR.** 1) Start the engine and warm up engine until coolant temperature is higher than 75°C (167°F). 2) Place the select lever in "P" range or "N" range. 3) Turn the A/C switch to OFF. 4) Turn all the accessory switches to OFF. 5) Read the value of «Mass Air Flow» using the Subaru Select Monitor or a general scan tool. NOTE: • Subaru Select Monitor For detailed operation procedures, refer to "Current Data Display For Engine". <Ref. to EN(H4DO HEV)(diag)-37, Subaru Select Monitor.> • General scan tool For detailed operation procedures, refer to the general scan tool operation manual.	Is the value of «Mass Air Flow» 2.0 — 5.0 g/s (0.26 — 0.66 lb/m)?	Go to step **13**.	Replace the mass air flow and intake air temperature sensor. <Ref. to FU(H4DO(HEV))-64, Mass Air Flow and Intake Air Temperature Sensor.>

	Step	Check	Yes	No
13	**CHECK MASS AIR FLOW AND INTAKE AIR TEMPERATURE SENSOR.** 1) Start the engine and warm up engine until coolant temperature is higher than 75°C (167°F). 2) Place the select lever in "P" range or "N" range. 3) Turn the A/C switch to OFF. 4) Turn all the accessory switches to OFF. 5) Open the front hood. 6) Measure the ambient temperature. 7) Read the value of «Intake Air Temp.» using the Subaru Select Monitor or a general scan tool. NOTE: • Subaru Select Monitor For detailed operation procedures, refer to "Current Data Display For Engine". <Ref. to EN(H4DO HEV)(diag)-37, Subaru Select Monitor.> • General scan tool For detailed operation procedures, refer to the general scan tool operation manual.	Subtract ambient temperature from «Intake Air Temp.». Is the obtained value –10 — 50°C (–18 — 90°F)?	Go to step **14**.	Check the mass air flow and intake air temperature sensor. <Ref. to FU(H4DO(HEV))-64, Mass Air Flow and Intake Air Temperature Sensor.>
14	**CHECK REAR OXYGEN SENSOR DATA.** 1) Warm up the engine until engine coolant temperature is higher than 75°C (167°F), and keep the engine speed at 3,000 rpm. (2 minutes maximum) 2) Read the value of «Oxygen sensor #12» using the Subaru Select Monitor or a general scan tool. NOTE: • Subaru Select Monitor For detailed operation procedures, refer to "Current Data Display For Engine". <Ref. to EN(H4DO HEV)(diag)-37, Subaru Select Monitor.> • General scan tool For detailed operation procedures, refer to the general scan tool operation manual.	Is the value of «Oxygen sensor #12» 0.490 V or more?	Go to step **15**.	Go to step **16**.
15	**CHECK REAR OXYGEN SENSOR DATA.** 1) Warm up the engine until engine coolant temperature is higher than 75°C (167°F), and rapidly reduce the engine speed from 3,000 rpm. 2) Read the value of «Oxygen sensor #12» using the Subaru Select Monitor or a general scan tool. NOTE: • Subaru Select Monitor For detailed operation procedures, refer to "Current Data Display For Engine". <Ref. to EN(H4DO HEV)(diag)-37, Subaru Select Monitor.> • General scan tool For detailed operation procedures, refer to the general scan tool operation manual.	Is the value of «Oxygen sensor #12» 0.250 V or less?	Go to step **17**.	Go to step **16**.
16	**CHECK REAR OXYGEN SENSOR CONNECTOR AND COUPLING CONNECTOR.**	Has water entered the connector?	Completely remove any water inside.	Go to step **18**.

	Step	Check	Yes	No
17	**CHECK FRONT OXYGEN (A/F) SENSOR USING REAR OXYGEN SENSOR SIGNAL.** 1) Warm up the engine until engine coolant temperature is higher than 75°C (167°F), then keep the engine idling for 5 minutes or more. 2) Read the value of «Oxygen sensor #12» using the Subaru Select Monitor or a general scan tool. NOTE: • Subaru Select Monitor For detailed operation procedures, refer to "Current Data Display For Engine". <Ref. to EN(H4DO HEV)(diag)-37, Subaru Select Monitor.> • General scan tool For detailed operation procedures, refer to the general scan tool operation manual.	Is the value of «Oxygen sensor #12» 0.250 V or less for 5 minutes or more?	Replace the front oxygen (A/F) sensor. <Ref. to FU(H4DO(HEV))-79, Front Oxygen (A/F) Sensor.>	Go to step **18**.
18	**CHECK HARNESS BETWEEN ECM AND REAR OXYGEN SENSOR CONNECTOR.** 1) Turn the ignition switch to OFF. 2) Disconnect the connector from ECM and rear oxygen sensor. 3) Measure the resistance of harness between ECM connector and rear oxygen sensor connector. ***Connector & terminal*** ***(B136) No. 21 — (E25) No. 3:*** ***(B135) No. 30 — (E25) No. 4:***	Is the resistance less than 1 Ω?	Go to step **19**.	Repair the harness and connector. NOTE: In this case, repair the following item: • Open circuit in harness between ECM connector and rear oxygen sensor connector • Poor contact of coupling connector
19	**CHECK HARNESS BETWEEN ECM AND REAR OXYGEN SENSOR CONNECTOR.** 1) Connect the connector to ECM. 2) Turn the ignition switch to ON. 3) Measure the voltage between rear oxygen sensor connector and chassis ground. ***Connector & terminal*** ***(E25) No. 3 (+) — Chassis ground (–):***	Is the voltage 0.2 — 0.5 V?	Replace the rear oxygen sensor. <Ref. to FU(H4DO(HEV))-82, Rear Oxygen Sensor.>	Repair the harness and connector. NOTE: In this case, repair the following item: • Open circuit in harness between ECM connector and rear oxygen sensor connector • Poor contact of ECM connector • Poor contact of coupling connector

ER:DTC P2097 POST CATALYST FUEL TRIM SYSTEM TOO RICH (BANK 1)

DTC DETECTING CONDITION:

- Detected when two consecutive driving cycles with fault occur.
- GENERAL DESCRIPTION <Ref. to GD(H4DO HEV)-228, DTC P2097 POST CATALYST FUEL TRIM SYSTEM TOO RICH (BANK 1), Diagnostic Trouble Code (DTC) Detecting Criteria.>

CAUTION:

After servicing or replacing faulty parts, perform Clear Memory Mode <Ref. to EN(H4DO HEV)(diag)-63, OPERATION, Clear Memory Mode.>, and Inspection Mode <Ref. to EN(H4DO HEV)(diag)-47, PROCEDURE, Inspection Mode.>.

WIRING DIAGRAM:

- Engine electrical system (without push button start) <Ref. to WI(HEV)-100, WITHOUT PUSH BUTTON START, WIRING DIAGRAM, Engine Electrical System.>
- Engine electrical system (with push button start) <Ref. to WI(HEV)-114, WITH PUSH BUTTON START, WIRING DIAGRAM, Engine Electrical System.>

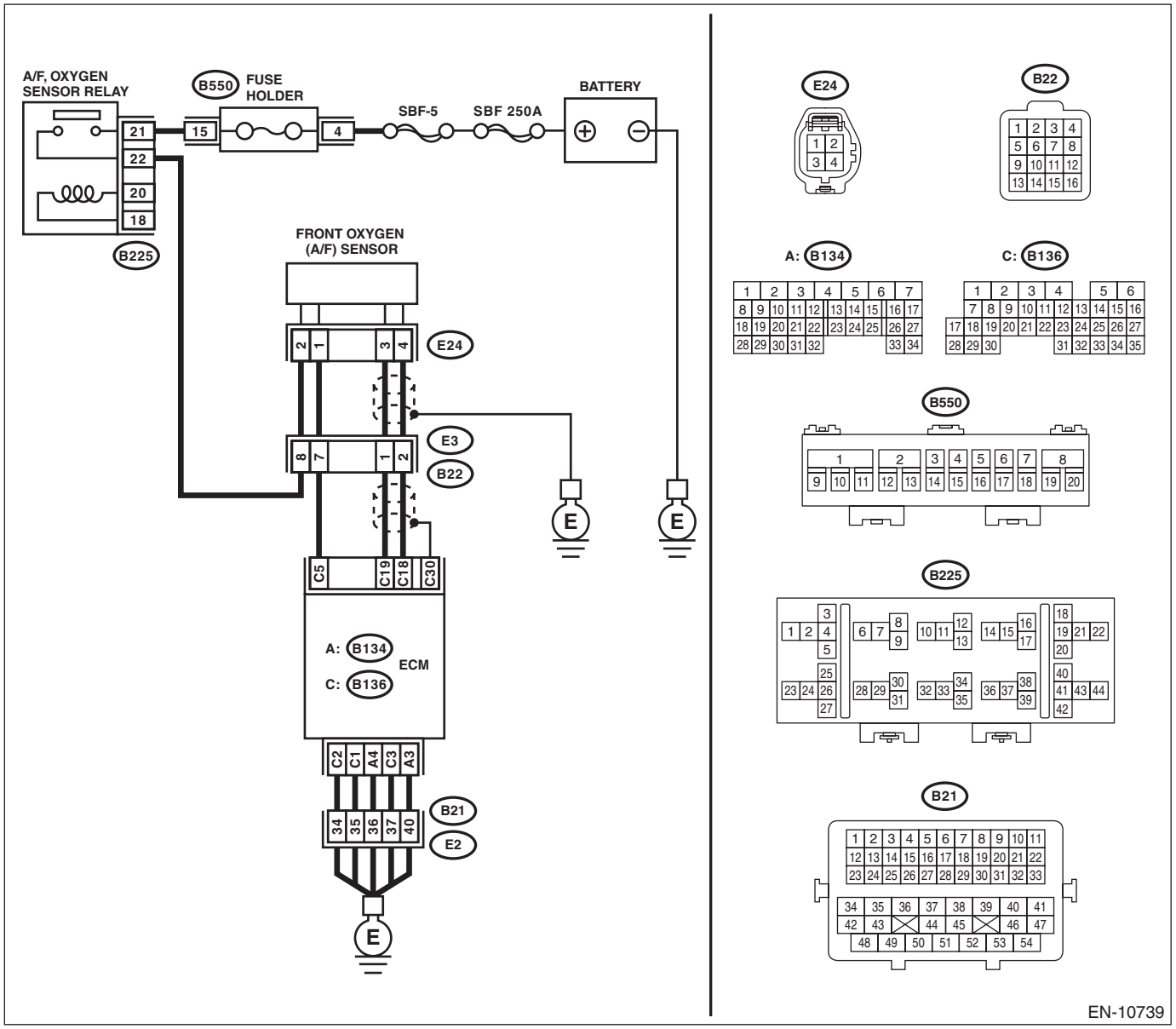

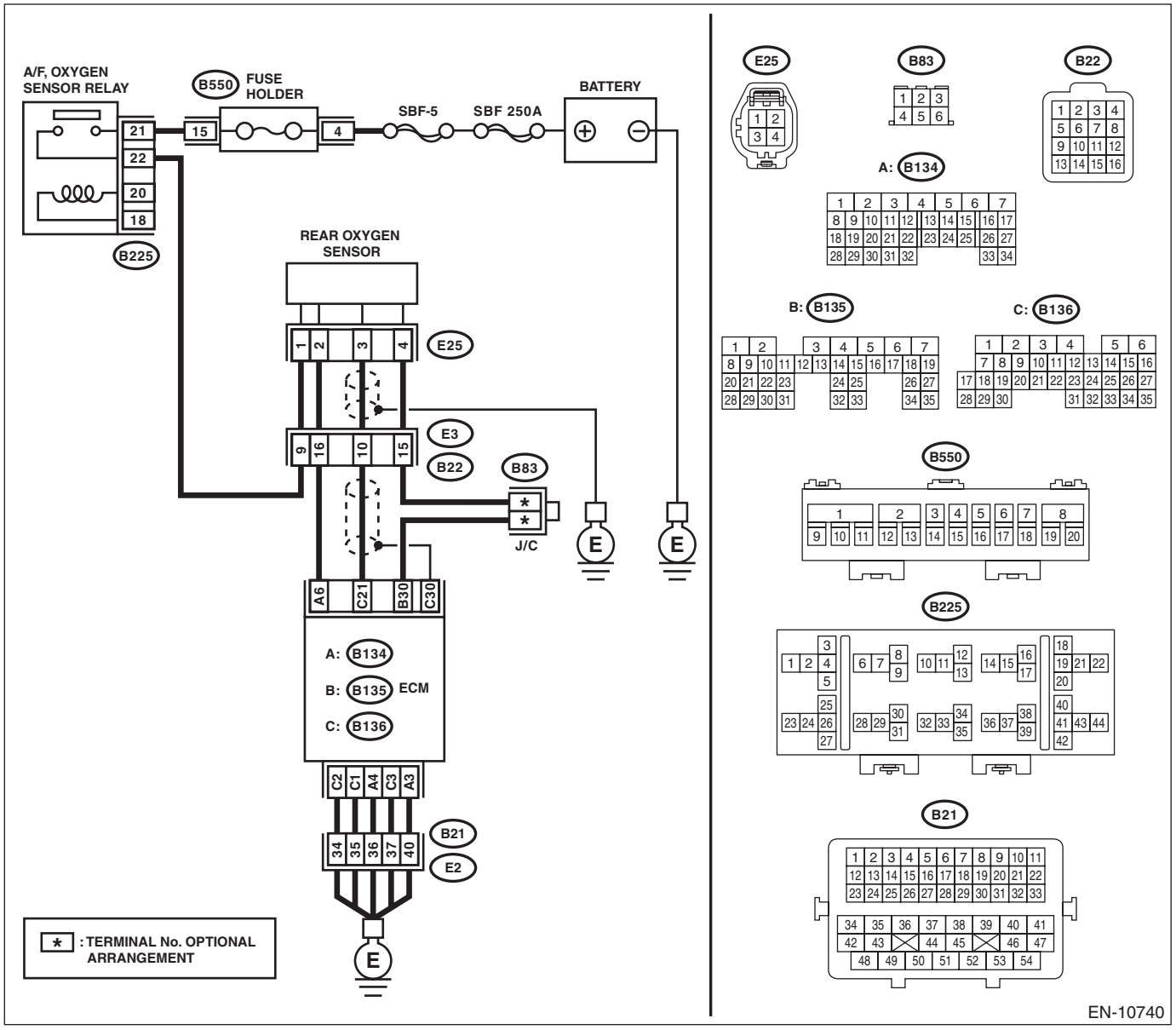

Step		Check	Yes	No
1	**CHECK FOR ANY OTHER DTC ON DISPLAY.**	Is any other DTC displayed?	Check DTC using "List of Diagnostic Trouble Code (DTC)". <Ref. to EN(H4DO HEV)(diag)-88, List of Diagnostic Trouble Code (DTC).>	Go to step **2**.
2	**CHECK FRONT OXYGEN (A/F) SENSOR CONNECTOR AND COUPLING CONNECTOR.**	Has water entered the connector?	Completely remove any water inside.	Go to step **3**.

	Step	Check	Yes	No
3	**CHECK HARNESS BETWEEN ECM AND FRONT OXYGEN (A/F) SENSOR CONNECTOR.** 1) Turn the ignition switch to OFF. 2) Disconnect the connectors from ECM and front oxygen (A/F) sensor. 3) Measure the resistance of harness between ECM connector and front oxygen (A/F) sensor connector. ***Connector & terminal*** ***(B136) No. 19 — (E24) No. 3:*** ***(B136) No. 18 — (E24) No. 4:***	Is the resistance less than 1 Ω?	Go to step **4**.	Repair the harness and connector. NOTE: In this case, repair the following item: • Open circuit in harness between ECM connector and front oxygen (A/F) sensor connector • Poor contact of coupling connector
4	**CHECK HARNESS BETWEEN ECM AND FRONT OXYGEN (A/F) SENSOR CONNECTOR.** Measure the resistance between ECM connector and chassis ground. ***Connector & terminal*** ***(B136) No. 19 — Chassis ground:*** ***(B136) No. 18 — Chassis ground:***	Is the resistance 1 MΩ or more?	Go to step **5**.	Repair the short circuit to ground in harness between ECM connector and front oxygen (A/F) sensor connector.
5	**CHECK OUTPUT SIGNAL FOR ECM.** 1) Connect the connector to ECM. 2) Turn the ignition switch to ON. 3) Measure the voltage between front oxygen (A/F) sensor connector and chassis ground. ***Connector & terminal*** ***(E24) No. 3 (+) — Chassis ground (–):***	Is the voltage 4.5 V or more?	Go to step **7**.	Go to step **6**.
6	**CHECK OUTPUT SIGNAL FOR ECM.** Measure the voltage between front oxygen (A/F) sensor connector and chassis ground. ***Connector & terminal*** ***(E24) No. 4 (+) — Chassis ground (–):***	Is the voltage 4.95 V or more?	Go to step **7**.	Go to step **8**.
7	**CHECK OUTPUT SIGNAL FOR ECM.** Measure the voltage between front oxygen (A/F) sensor connector and chassis ground. ***Connector & terminal*** ***(E24) No. 3 (+) — Chassis ground (–):*** ***(E24) No. 4 (+) — Chassis ground (–):***	Is the voltage 8 V or more?	Repair the short circuit to power in the harness between ECM connector and front oxygen (A/F) sensor connector. After repair, replace the ECM. <Ref. to FU(H4DO(HEV))-85, Engine Control Module (ECM).>	Repair the poor contact of ECM connector.
8	**CHECK EXHAUST SYSTEM.**	Are there holes or loose bolts on exhaust system?	Repair the exhaust system.	Go to step **9**.
9	**CHECK AIR INTAKE SYSTEM.**	Are there holes, loose bolts or disconnection of hose on air intake system?	Repair the air intake system.	Go to step **10**.

	Step	Check	Yes	No
10	**CHECK FUEL PRESSURE.** **WARNING:** **Place "NO OPEN FLAMES" signs near the working area.** **CAUTION:** **Be careful not to spill fuel.** 1) Connect the front oxygen (A/F) sensor connector. 2) Measure the fuel pressure. <Ref. to ME(H4DO(w/o HEV))-35, INSPECTION, Fuel Pressure.> **CAUTION:** **Release fuel pressure before removing the fuel pressure gauge.**	Is the measured value 340 — 400 kPa (3.5 — 4.1 kg/cm^2, 49 — 58 psi)?	Go to step **11**.	Check the fuel pump and fuel delivery line. <Ref. to FU(H4DO(HEV))-127, INSPECTION, Fuel Pump.> <Ref. to FU(H4DO(HEV))-154, INSPECTION, Fuel Delivery and Evaporation Lines.>
11	**CHECK ENGINE COOLANT TEMPERATURE SENSOR.** 1) Start the engine and warm up completely. 2) Read the value of «Coolant Temp.» using the Subaru Select Monitor or a general scan tool. NOTE: • Subaru Select Monitor For detailed operation procedures, refer to "Current Data Display For Engine". <Ref. to EN(H4DO HEV)(diag)-37, Subaru Select Monitor.> • General scan tool For detailed operation procedures, refer to the general scan tool operation manual.	Is the value of «Coolant Temp.» 75°C (167°F) or more?	Go to step **12**.	Replace the engine coolant temperature sensor. <Ref. to FU(H4DO(HEV))-41, Engine Coolant Temperature Sensor.>
12	**CHECK MASS AIR FLOW AND INTAKE AIR TEMPERATURE SENSOR.** 1) Start the engine and warm up engine until coolant temperature is higher than 75°C (167°F). 2) Place the select lever in "P" range or "N" range. 3) Turn the A/C switch to OFF. 4) Turn all the accessory switches to OFF. 5) Read the value of «Mass Air Flow» using the Subaru Select Monitor or a general scan tool. NOTE: • Subaru Select Monitor For detailed operation procedures, refer to "Current Data Display For Engine". <Ref. to EN(H4DO HEV)(diag)-37, Subaru Select Monitor.> • General scan tool For detailed operation procedures, refer to the general scan tool operation manual.	Is the value of «Mass Air Flow» 2.0 — 5.0 g/s (0.26 — 0.66 lb/m)?	Go to step **13**.	Replace the mass air flow and intake air temperature sensor. <Ref. to FU(H4DO(HEV))-64, Mass Air Flow and Intake Air Temperature Sensor.>

	Step	Check	Yes	No
13	**CHECK MASS AIR FLOW AND INTAKE AIR TEMPERATURE SENSOR.** 1) Start the engine and warm up engine until coolant temperature is higher than 75°C (167°F). 2) Place the select lever in "P" range or "N" range. 3) Turn the A/C switch to OFF. 4) Turn all the accessory switches to OFF. 5) Open the front hood. 6) Measure the ambient temperature. 7) Read the value of «Intake Air Temp.» using the Subaru Select Monitor or a general scan tool. NOTE: • Subaru Select Monitor For detailed operation procedures, refer to "Current Data Display For Engine". <Ref. to EN(H4DO HEV)(diag)-37, Subaru Select Monitor.> • General scan tool For detailed operation procedures, refer to the general scan tool operation manual.	Subtract ambient temperature from «Intake Air Temp.». Is the obtained value –10 — 50°C (–18 — 90°F)?	Go to step **14**.	Check the mass air flow and intake air temperature sensor. <Ref. to FU(H4DO(HEV))-64, Mass Air Flow and Intake Air Temperature Sensor.>
14	**CHECK REAR OXYGEN SENSOR DATA.** 1) Warm up the engine until engine coolant temperature is higher than 75°C (167°F), and keep the engine speed at 3,000 rpm. (2 minutes maximum) 2) Read the value of «Oxygen sensor #12» using the Subaru Select Monitor or a general scan tool. NOTE: • Subaru Select Monitor For detailed operation procedures, refer to "Current Data Display For Engine". <Ref. to EN(H4DO HEV)(diag)-37, Subaru Select Monitor.> • General scan tool For detailed operation procedures, refer to the general scan tool operation manual.	Is the value of «Oxygen sensor #12» 0.490 V or more?	Go to step **15**.	Go to step **16**.
15	**CHECK REAR OXYGEN SENSOR DATA.** 1) Warm up the engine until engine coolant temperature is higher than 75°C (167°F), and rapidly reduce the engine speed from 3,000 rpm. 2) Read the value of «Oxygen sensor #12» using the Subaru Select Monitor or a general scan tool. NOTE: • Subaru Select Monitor For detailed operation procedures, refer to "Current Data Display For Engine". <Ref. to EN(H4DO HEV)(diag)-37, Subaru Select Monitor.> • General scan tool For detailed operation procedures, refer to the general scan tool operation manual.	Is the value of «Oxygen sensor #12» 0.250 V or less?	Go to step **17**.	Go to step **16**.
16	**CHECK REAR OXYGEN SENSOR CONNECTOR AND COUPLING CONNECTOR.**	Has water entered the connector?	Completely remove any water inside.	Go to step **18**.

	Step	Check	Yes	No
17	**CHECK FRONT OXYGEN (A/F) SENSOR USING REAR OXYGEN SENSOR SIGNAL.** 1) Warm up the engine until engine coolant temperature is higher than 75°C (167°F), then keep the engine idling for 5 minutes or more. 2) Read the value of «Oxygen sensor #12» using the Subaru Select Monitor or a general scan tool. NOTE: • Subaru Select Monitor For detailed operation procedures, refer to "Current Data Display For Engine". <Ref. to EN(H4DO HEV)(diag)-37, Subaru Select Monitor.> • General scan tool For detailed operation procedures, refer to the general scan tool operation manual.	Is the value of «Oxygen sensor #12» 0.8 V or more for 5 minutes or more?	Replace the front oxygen (A/F) sensor. <Ref. to FU(H4DO(HEV))-79, Front Oxygen (A/F) Sensor.>	Go to step **18**.
18	**CHECK HARNESS BETWEEN ECM AND REAR OXYGEN SENSOR CONNECTOR.** 1) Turn the ignition switch to OFF. 2) Disconnect the connector from ECM and rear oxygen sensor. 3) Measure the resistance of harness between ECM connector and rear oxygen sensor connector. ***Connector & terminal*** ***(B136) No. 21 — (E25) No. 3:*** ***(B135) No. 30 — (E25) No. 4:***	Is the resistance less than 1 Ω?	Go to step **19**.	Repair the harness and connector. NOTE: In this case, repair the following item: • Open circuit in harness between ECM connector and rear oxygen sensor connector • Poor contact of coupling connector
19	**CHECK HARNESS BETWEEN ECM AND REAR OXYGEN SENSOR CONNECTOR.** 1) Connect the connector to ECM. 2) Turn the ignition switch to ON. 3) Measure the voltage between rear oxygen sensor connector and chassis ground. ***Connector & terminal*** ***(E25) No. 3 (+) — Chassis ground (–):***	Is the voltage 0.2 — 0.5 V?	Replace the rear oxygen sensor. <Ref. to FU(H4DO(HEV))-82, Rear Oxygen Sensor.>	Repair the harness and connector. NOTE: In this case, repair the following item: • Open circuit in harness between ECM connector and rear oxygen sensor connector • Poor contact of ECM connector • Poor contact of coupling connector

ES:DTC P2101 THROTTLE ACTUATOR CONTROL MOTOR CIRCUIT RANGE/ PERFORMANCE

DTC DETECTING CONDITION:

- Immediately at fault recognition
- GENERAL DESCRIPTION <Ref. to GD(H4DO HEV)-230, DTC P2101 THROTTLE ACTUATOR CONTROL MOTOR CIRCUIT RANGE/PERFORMANCE, Diagnostic Trouble Code (DTC) Detecting Criteria.>

TROUBLE SYMPTOM:

- Improper idling
- Poor driving performance
- Engine stalls.

CAUTION:

After servicing or replacing faulty parts, perform Clear Memory Mode <Ref. to EN(H4DO HEV)(diag)-63, OPERATION, Clear Memory Mode.>, and Inspection Mode <Ref. to EN(H4DO HEV)(diag)-47, PROCEDURE, Inspection Mode.>.

WIRING DIAGRAM:

- Engine electrical system (without push button start) <Ref. to WI(HEV)-100, WITHOUT PUSH BUTTON START, WIRING DIAGRAM, Engine Electrical System.>
- Engine electrical system (with push button start) <Ref. to WI(HEV)-114, WITH PUSH BUTTON START, WIRING DIAGRAM, Engine Electrical System.>

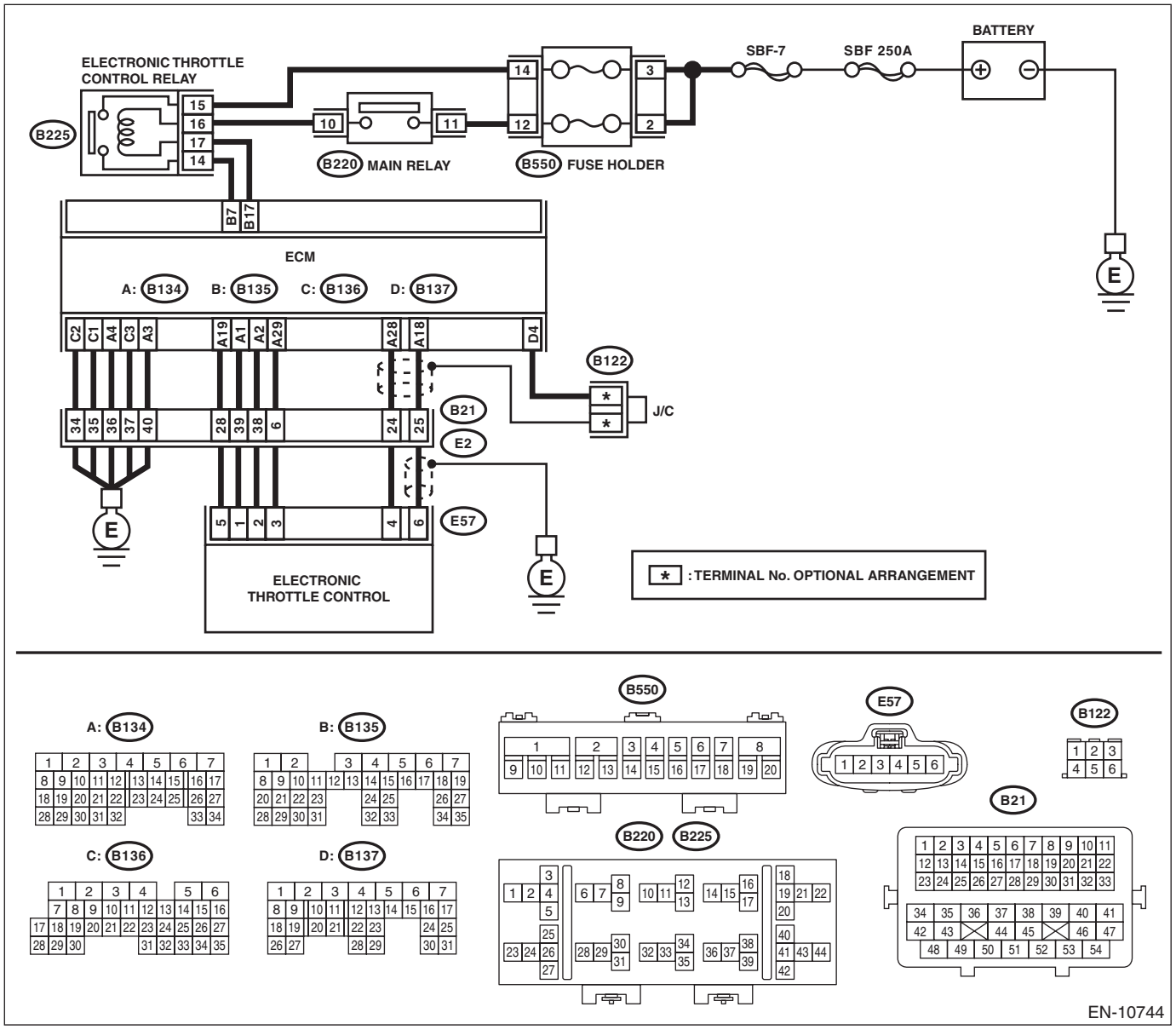

Step		Check	Yes	No
1	**CHECK ELECTRONIC THROTTLE CONTROL RELAY.** 1) Turn the ignition switch to OFF. 2) Remove the electronic throttle control relay. 3) Connect the battery to terminals No. 16 and No. 17 of electronic throttle control relay. 4) Measure the resistance between electronic throttle control relay terminals. ***Terminals*** ***No. 14 — No. 15:***	Is the resistance less than 1 Ω?	Go to step **2**.	Replace the electronic throttle control relay. <Ref. to FU(H4DO(HEV))-94, Electronic Throttle Control Relay.>

	Step	Check	Yes	No
2	**CHECK POWER SUPPLY OF ELECTRONIC THROTTLE CONTROL RELAY.** Measure the voltage between electronic throttle control relay connector and chassis ground. ***Connector & terminal*** ***(B225) No. 15 (+) — Chassis ground (–):***	Is the voltage 10 V or more?	Go to step **3**.	Repair the open or ground short circuit of power supply circuit.
3	**CHECK HARNESS BETWEEN ECM AND ELECTRONIC THROTTLE CONTROL RELAY CONNECTOR.** 1) Disconnect the connector from ECM. 2) Turn the ignition switch to ON. 3) Measure the voltage between electronic throttle control relay connector and chassis ground. ***Connector & terminal*** ***(B225) No. 17 (+) — Chassis ground (–):***	Is the voltage 10 V or more?	Repair the short circuit to power in the harness between ECM connector and electronic throttle control relay connector.	Go to step **4**.
4	**CHECK HARNESS BETWEEN ECM AND ELECTRONIC THROTTLE CONTROL RELAY CONNECTOR.** 1) Turn the ignition switch to OFF. 2) Measure the resistance between electronic throttle control relay connector and chassis ground. ***Connector & terminal*** ***(B225) No. 14 — Chassis ground:*** ***(B225) No. 17 — Chassis ground:***	Is the resistance 1 MΩ or more?	Go to step **5**.	Repair the short circuit to ground in harness between ECM connector and electronic throttle control relay connector.
5	**CHECK HARNESS BETWEEN ECM AND ELECTRONIC THROTTLE CONTROL RELAY CONNECTOR.** Measure the resistance between ECM connector and electronic throttle control relay connector. ***Connector & terminal*** ***(B135) No. 7 — (B225) No. 14:*** ***(B135) No. 17 — (B225) No. 17:***	Is the resistance less than 1 Ω?	Go to step **6**.	Repair the open circuit in harness between ECM connector and electronic throttle control relay connector.
6	**CHECK HARNESS BETWEEN ECM AND ELECTRONIC THROTTLE CONTROL CONNECTOR.** 1) Turn the ignition switch to OFF. 2) Disconnect the connectors from electronic throttle control. 3) Measure the resistance between ECM connector and chassis ground. ***Connector & terminal*** ***(B134) No. 19 — Chassis ground:*** ***(B134) No. 18 — Chassis ground:*** ***(B134) No. 18 — (B137) No. 4:*** ***(B134) No. 28 — Chassis ground:*** ***(B134) No. 28 — (B137) No. 4:***	Is the resistance 1 MΩ or more?	Go to step **7**.	Repair the ground short circuit of harness between ECM connector and electronic throttle control connector.

	Step	Check	Yes	No
7	**CHECK SHORT CIRCUIT INSIDE THE ECM.** 1) Connect the connector to ECM. 2) Measure the resistance between electronic throttle control connector and engine ground. ***Connector & terminal*** ***(E57) No. 6 — Engine ground:*** ***(E57) No. 4 — Engine ground:***	Is the resistance 1 MΩ or more?	Go to step **8**.	Repair the ground short circuit of harness between ECM connector and electronic throttle control connector. Replace the ECM if defective. <Ref. to FU(H4DO(HEV))-85, Engine Control Module (ECM).>
8	**CHECK HARNESS BETWEEN ECM AND ELECTRONIC THROTTLE CONTROL CONNECTOR.** 1) Disconnect the connector from ECM. 2) Measure the resistance of harness between ECM connector and electronic throttle control connector. ***Connector & terminal*** ***(B134) No. 18 — (E57) No. 6:*** ***(B134) No. 28 — (E57) No. 4:*** ***(B134) No. 29 — (E57) No. 3:***	Is the resistance less than 1 Ω?	Go to step **9**.	Repair the harness and connector. NOTE: In this case, repair the following item: • Open circuit in harness between ECM connector and electronic throttle control connector • Poor contact of coupling connector
9	**CHECK HARNESS BETWEEN ECM AND ELECTRONIC THROTTLE CONTROL CONNECTOR.** 1) Connect the connector to ECM. 2) Measure the resistance between electronic throttle control connector and engine ground. ***Connector & terminal*** ***(E57) No. 3 — Engine ground:***	Is the resistance less than 5 Ω?	Go to step **10**.	Repair the harness and connector. NOTE: In this case, repair the following item: • Open circuit of harness between ECM connector and engine ground • Poor contact of ECM connector • Poor contact of coupling connector
10	**CHECK HARNESS BETWEEN ECM AND ELECTRONIC THROTTLE CONTROL CONNECTOR.** 1) Turn the ignition switch to ON. 2) Measure the voltage between electronic throttle control connector and engine ground. ***Connector & terminal*** ***(E57) No. 6 (+) — Engine ground (–):*** ***(E57) No. 4 (+) — Engine ground (–):***	Is the voltage 5 V or more?	Repair the short circuit to power in the harness between ECM connector and electronic throttle control connector.	Go to step **11**.
11	**CHECK HARNESS BETWEEN ECM AND ELECTRONIC THROTTLE CONTROL CONNECTOR.** 1) Turn the ignition switch to OFF. 2) Disconnect the connector from ECM. 3) Measure the resistance between ECM connectors. ***Connector & terminal*** ***(B134) No. 19 — (B134) No. 18:*** ***(B134) No. 19 — (B134) No. 28:***	Is the resistance 1 MΩ or more?	Go to step **12**.	Repair the short circuit to power in the harness between ECM connector and electronic throttle control connector.

	Step	Check	Yes	No
12	**CHECK SENSOR OUTPUT.** 1) Connect all connectors. 2) Start the engine and warm up completely. 3) Stop the engine, and then turn the ignition switch to ON (engine OFF). 4) Read the value of «Main-Throttle Sensor» using Subaru Select Monitor. NOTE: For detailed operation procedures, refer to "Current Data Display For Engine". <Ref. to EN(H4DO HEV)(diag)-37, Subaru Select Monitor.>	Is the value of «Main-Throttle Sensor» 0.81 — 0.87 V?	Go to step **13**.	Repair the poor contact of electronic throttle control connector. Replace the electronic throttle control if defective. <Ref. to FU(H4DO(HEV))-15, Throttle Body.>
13	**CHECK SENSOR OUTPUT.** Read the value of «Sub-Throttle Sensor» using Subaru Select Monitor. NOTE: For detailed operation procedures, refer to "Current Data Display For Engine". <Ref. to EN(H4DO HEV)(diag)-37, Subaru Select Monitor.>	Is the value of «Sub-Throttle Sensor» 1.64 — 1.70 V?	Go to step **14**.	Repair the poor contact of electronic throttle control connector. Replace the electronic throttle control if defective. <Ref. to FU(H4DO(HEV))-15, Throttle Body.>
14	**CHECK HARNESS BETWEEN ECM AND ELECTRONIC THROTTLE CONTROL CONNECTOR.** 1) Turn the ignition switch to OFF. 2) Disconnect the connectors from ECM and electronic throttle control. 3) Measure the resistance between ECM connector and electronic throttle control connector. ***Connector & terminal*** ***(B134) No. 2 — (E57) No. 2:*** ***(B134) No. 1 — (E57) No. 1:***	Is the resistance less than 1 Ω?	Go to step **15**.	Repair the harness and connector. NOTE: In this case, repair the following item: • Open circuit in harness between ECM connector and electronic throttle control connector • Poor contact of coupling connector
15	**CHECK HARNESS BETWEEN ECM AND ELECTRONIC THROTTLE CONTROL CONNECTOR.** 1) Connect the connector to ECM. 2) Turn the ignition switch to ON. 3) Measure the voltage between electronic throttle control connector and engine ground. ***Connector & terminal*** ***(E57) No. 2 (+) — Engine ground (–):*** ***(E57) No. 1 (+) — Engine ground (–):***	Is the voltage 5 V or more?	Repair the short circuit to power in the harness between ECM connector and electronic throttle control connector.	Go to step **16**.
16	**CHECK HARNESS BETWEEN ECM AND ELECTRONIC THROTTLE CONTROL CONNECTOR.** 1) Turn the ignition switch to OFF. 2) Disconnect the connector from ECM. 3) Measure the resistance between electronic throttle control connector and engine ground. ***Connector & terminal*** ***(E57) No. 2 — Engine ground:*** ***(E57) No. 1 — Engine ground:***	Is the resistance 1 MΩ or more?	Go to step **17**.	Repair the ground short circuit of harness between ECM connector and electronic throttle control connector.

	Step	Check	Yes	No
17	**CHECK ELECTRONIC THROTTLE CONTROL CONNECTOR HARNESS.** Measure the resistance between electronic throttle control connectors. ***Connector & terminal*** ***(E57) No. 2 — (E57) No. 1:***	Is the resistance 1 MΩ or more?	Go to step **18**.	Repair the short circuit in harness between ECM connector and electronic throttle control connector.
18	**CHECK ELECTRONIC THROTTLE CONTROL GROUND CIRCUIT.** Measure the resistance between ECM connector and chassis ground. ***Connector & terminal*** ***(B134) No. 3 — Chassis ground:*** ***(B134) No. 4 — Chassis ground:*** ***(B136) No. 1 — Chassis ground:*** ***(B136) No. 2 — Chassis ground:*** ***(B136) No. 3 — Chassis ground:***	Is the resistance less than 5 Ω?	Go to step **19**.	Repair the harness and connector. NOTE: In this case, repair the following item: • Open circuit of harness between ECM connector and engine ground • Poor contact of coupling connector
19	**CHECK ELECTRONIC THROTTLE CONTROL.** Measure the resistance between electronic throttle control terminals. ***Terminals*** ***No. 2 — No. 1:***	Is the resistance 50 Ω or less?	Go to step **20**.	Replace the electronic throttle control. <Ref. to FU(H4DO(HEV))-15, Throttle Body.>
20	**CHECK ELECTRONIC THROTTLE CONTROL.** Move the throttle valve to the fully open and fully closed positions with fingers. Check that the valve returns to the specified position when releasing fingers.	Does the valve return to the specified position? Standard value: 3 mm (0.12 in) from fully closed position	Repair the poor contact of ECM connector.	Replace the electronic throttle control. <Ref. to FU(H4DO(HEV))-15, Throttle Body.>

ET:DTC P2102 THROTTLE ACTUATOR CONTROL MOTOR CIRCUIT LOW

DTC DETECTING CONDITION:

- Immediately at fault recognition
- GENERAL DESCRIPTION <Ref. to GD(H4DO HEV)-232, DTC P2102 THROTTLE ACTUATOR CONTROL MOTOR CIRCUIT LOW, Diagnostic Trouble Code (DTC) Detecting Criteria.>

TROUBLE SYMPTOM:

- Improper idling
- Poor driving performance
- Engine stalls.

CAUTION:

After servicing or replacing faulty parts, perform Clear Memory Mode <Ref. to EN(H4DO HEV)(diag)-63, OPERATION, Clear Memory Mode.>, and Inspection Mode <Ref. to EN(H4DO HEV)(diag)-47, PROCEDURE, Inspection Mode.>.

WIRING DIAGRAM:

- Engine electrical system (without push button start) <Ref. to WI(HEV)-100, WITHOUT PUSH BUTTON START, WIRING DIAGRAM, Engine Electrical System.>
- Engine electrical system (with push button start) <Ref. to WI(HEV)-114, WITH PUSH BUTTON START, WIRING DIAGRAM, Engine Electrical System.>

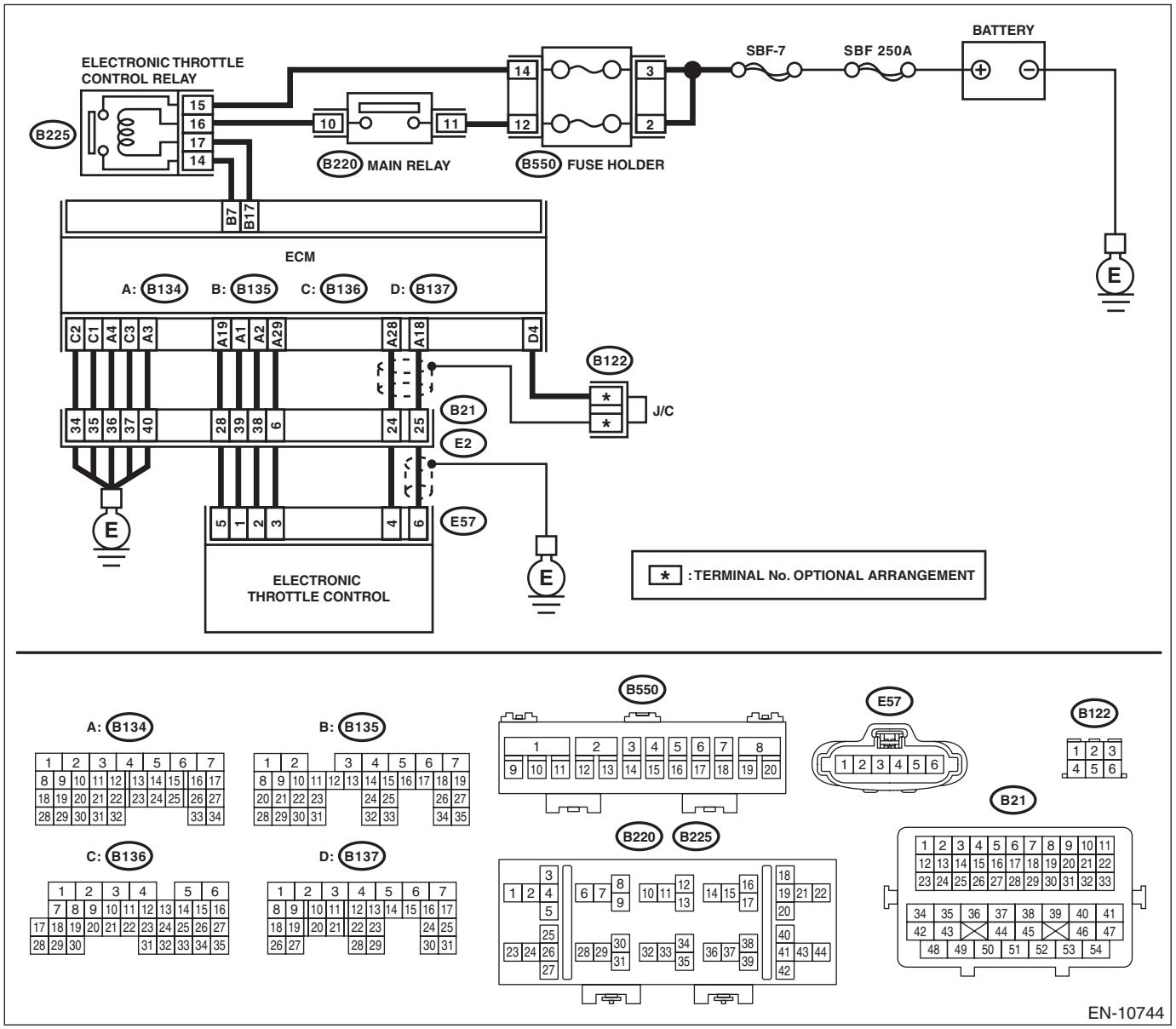

	Step	Check	Yes	No
1	**CHECK ELECTRONIC THROTTLE CONTROL RELAY.** 1) Turn the ignition switch to OFF. 2) Remove the electronic throttle control relay. 3) Connect the battery to terminals No. 16 and No. 17 of electronic throttle control relay. 4) Measure the resistance between electronic throttle control relay terminals. ***Terminals*** ***No. 14 — No. 15:***	Is the resistance less than 1 Ω?	Go to step **2**.	Replace the electronic throttle control relay. <Ref. to FU(H4DO(HEV))-94, Electronic Throttle Control Relay.>
2	**CHECK POWER SUPPLY OF ELECTRONIC THROTTLE CONTROL RELAY.** Measure the voltage between electronic throttle control relay connector and chassis ground. ***Connector & terminal*** ***(B225) No. 15 (+) — Chassis ground (–):***	Is the voltage 10 V or more?	Go to step **3**.	Repair the open or ground short circuit of power supply circuit.
3	**CHECK HARNESS BETWEEN ECM AND ELECTRONIC THROTTLE CONTROL RELAY CONNECTOR.** 1) Disconnect the connector from ECM. 2) Turn the ignition switch to ON. 3) Measure the voltage between electronic throttle control relay connector and chassis ground. ***Connector & terminal*** ***(B225) No. 17 (+) — Chassis ground (–):***	Is the voltage 10 V or more?	Repair the short circuit to power in the harness between ECM connector and electronic throttle control relay connector.	Go to step **4**.
4	**CHECK HARNESS BETWEEN ECM AND ELECTRONIC THROTTLE CONTROL RELAY CONNECTOR.** 1) Turn the ignition switch to OFF. 2) Measure the resistance between electronic throttle control relay connector and chassis ground. ***Connector & terminal*** ***(B225) No. 14 — Chassis ground:*** ***(B225) No. 17 — Chassis ground:***	Is the resistance 1 MΩ or more?	Go to step **5**.	Repair the short circuit to ground in harness between ECM connector and electronic throttle control relay connector.
5	**CHECK HARNESS BETWEEN ECM AND ELECTRONIC THROTTLE CONTROL RELAY CONNECTOR.** Measure the resistance between ECM connector and electronic throttle control relay connector. ***Connector & terminal*** ***(B135) No. 7 — (B225) No. 14:*** ***(B135) No. 17 — (B225) No. 17:***	Is the resistance less than 1 Ω?	Repair the poor contact of ECM connector.	Repair the open circuit in harness between ECM connector and electronic throttle control relay connector.

EU:DTC P2103 THROTTLE ACTUATOR CONTROL MOTOR CIRCUIT HIGH

DTC DETECTING CONDITION:

- Immediately at fault recognition
- GENERAL DESCRIPTION <Ref. to GD(H4DO HEV)-234, DTC P2103 THROTTLE ACTUATOR CONTROL MOTOR CIRCUIT HIGH, Diagnostic Trouble Code (DTC) Detecting Criteria.>

CAUTION:

After servicing or replacing faulty parts, perform Clear Memory Mode <Ref. to EN(H4DO HEV)(diag)-63, OPERATION, Clear Memory Mode.>, and Inspection Mode <Ref. to EN(H4DO HEV)(diag)-47, PROCEDURE, Inspection Mode.>.

WIRING DIAGRAM:

- Engine electrical system (without push button start) <Ref. to WI(HEV)-100, WITHOUT PUSH BUTTON START, WIRING DIAGRAM, Engine Electrical System.>
- Engine electrical system (with push button start) <Ref. to WI(HEV)-114, WITH PUSH BUTTON START, WIRING DIAGRAM, Engine Electrical System.>

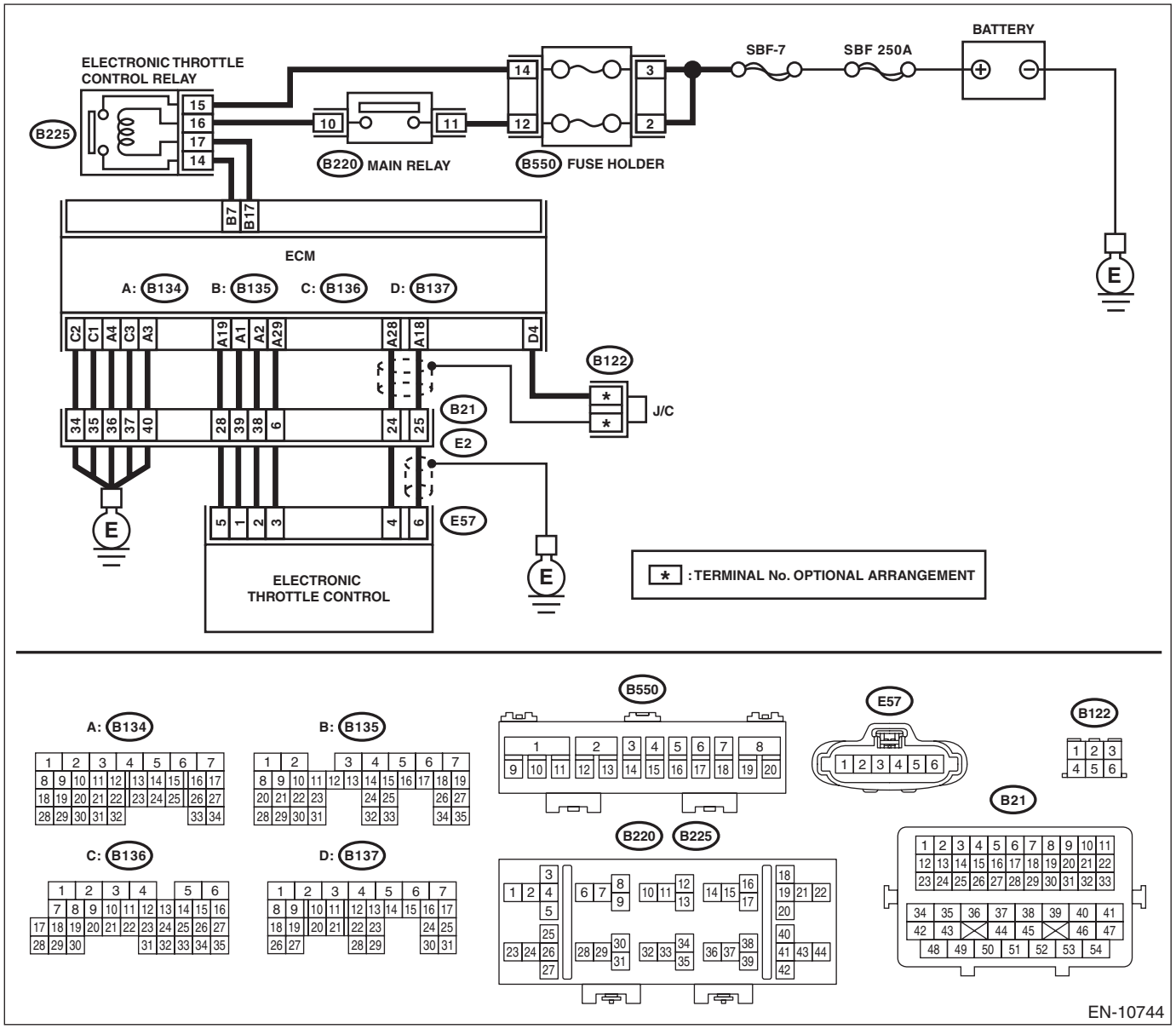

	Step	Check	Yes	No
1	**CHECK ELECTRONIC THROTTLE CONTROL RELAY.** 1) Turn the ignition switch to OFF. 2) Remove the electronic throttle control relay. 3) Measure the resistance between electronic throttle control relay terminals. ***Terminals*** ***No. 14 — No. 15:***	Is the resistance 1 MΩ or more?	Go to step **2**.	Replace the electronic throttle control relay. <Ref. to FU(H4DO(HEV))-94, Electronic Throttle Control Relay.>
2	**CHECK SHORT CIRCUIT OF ELECTRONIC THROTTLE CONTROL RELAY POWER SUPPLY.** 1) Turn the ignition switch to ON. 2) Measure the voltage between electronic throttle control relay connector and chassis ground. ***Connector & terminal*** ***(B225) No. 14 (+) — Chassis ground (–):***	Is the voltage 10 V or more?	Repair the short circuit to power in the harness between ECM connector and electronic throttle control relay connector.	Go to step **3**.
3	**CHECK HARNESS BETWEEN ECM AND ELECTRONIC THROTTLE CONTROL RELAY CONNECTOR.** 1) Turn the ignition switch to OFF. 2) Disconnect the connector from ECM. 3) Measure the resistance between ECM connector and chassis ground. ***Connector & terminal*** ***(B135) No. 17 — Chassis ground:***	Is the resistance 1 MΩ or more?	Repair the poor contact of ECM connector.	Repair the short circuit to ground in harness between ECM connector and electronic throttle control relay connector.

EV:DTC P2109 THROTTLE/PEDAL POSITION SENSOR “A” MINIMUM STOP PERFORMANCE

NOTE:
For the diagnostic procedure, refer to DTC P2101. <Ref. to EN(H4DO HEV)(diag)-327, DTC P2101 THROTTLE ACTUATOR CONTROL MOTOR CIRCUIT RANGE/PERFORMANCE, Diagnostic Procedure with Diagnostic Trouble Code (DTC).>

EW:DTC P2119 THROTTLE ACTUATOR CONTROL THROTTLE BODY RANGE/PERFORMANCE

NOTE:
For the diagnostic procedure, refer to DTC P2101. <Ref. to EN(H4DO HEV)(diag)-327, DTC P2101 THROTTLE ACTUATOR CONTROL MOTOR CIRCUIT RANGE/PERFORMANCE, Diagnostic Procedure with Diagnostic Trouble Code (DTC).>

EX:DTC P2122 THROTTLE/PEDAL POSITION SENSOR/SWITCH “D” CIRCUIT LOW INPUT

DTC DETECTING CONDITION:

- Immediately at fault recognition
- GENERAL DESCRIPTION <Ref. to GD(H4DO HEV)-241, DTC P2122 THROTTLE/PEDAL POSITION SENSOR/SWITCH “D” CIRCUIT LOW INPUT, Diagnostic Trouble Code (DTC) Detecting Criteria.>

TROUBLE SYMPTOM:

- Improper idling
- Poor driving performance

CAUTION:

After servicing or replacing faulty parts, perform Clear Memory Mode <Ref. to EN(H4DO HEV)(diag)-63, OPERATION, Clear Memory Mode.>, and Inspection Mode <Ref. to EN(H4DO HEV)(diag)-47, PROCEDURE, Inspection Mode.>.

WIRING DIAGRAM:

- Engine electrical system (without push button start) <Ref. to WI(HEV)-100, WITHOUT PUSH BUTTON START, WIRING DIAGRAM, Engine Electrical System.>
- Engine electrical system (with push button start) <Ref. to WI(HEV)-114, WITH PUSH BUTTON START, WIRING DIAGRAM, Engine Electrical System.>

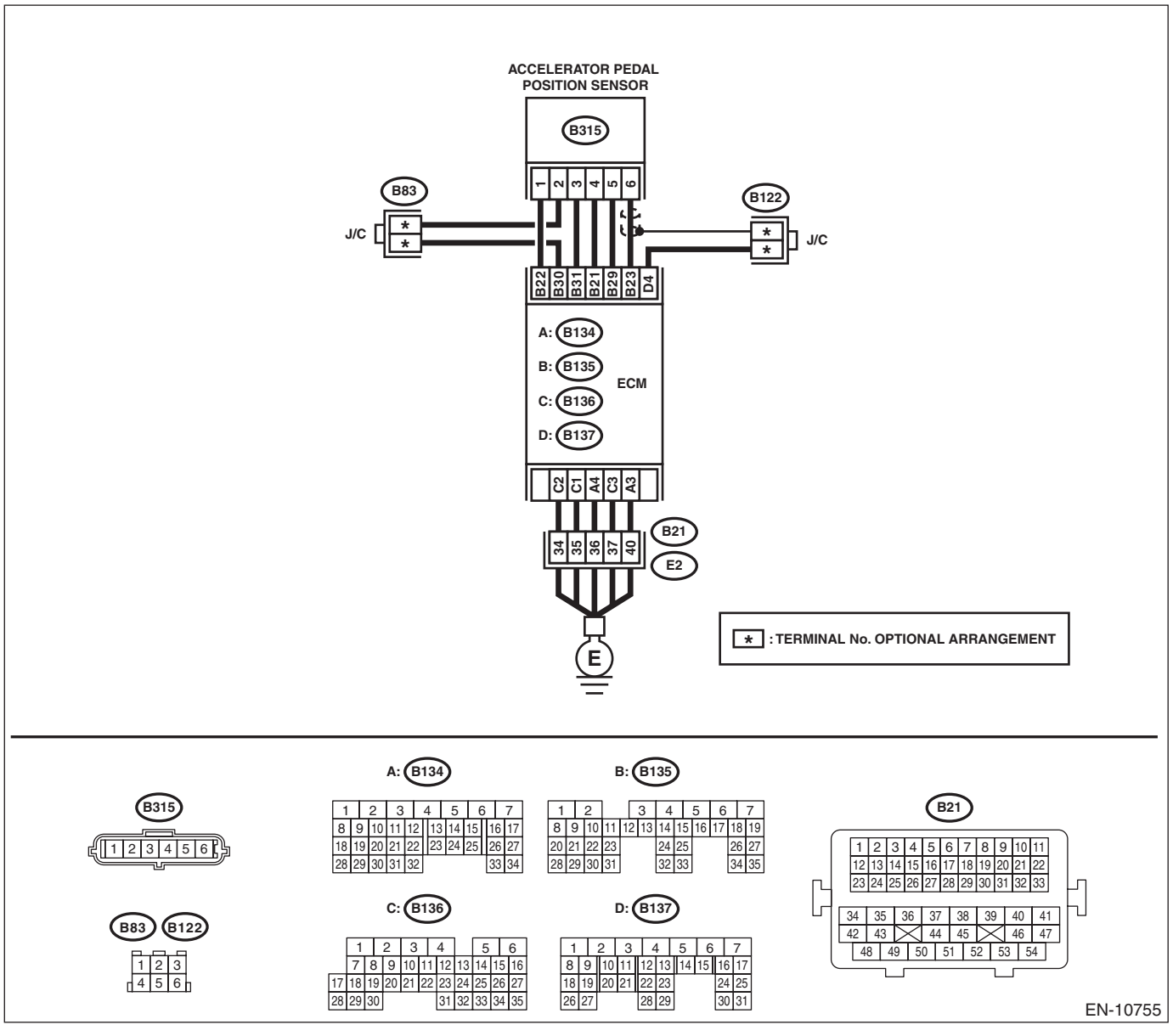

	Step	Check	Yes	No
1	**CHECK HARNESS BETWEEN ECM AND ACCELERATOR PEDAL POSITION SENSOR CONNECTOR.** 1) Turn the ignition switch to OFF. 2) Disconnect the connectors from ECM and accelerator pedal position sensor. 3) Measure the resistance between ECM connector and chassis ground. ***Connector & terminal*** ***(B135) No. 21 — Chassis ground:*** ***(B135) No. 23 — Chassis ground:*** ***(B135) No. 23 — (B137) No. 4:***	Is the resistance 1 MΩ or more?	Go to step **2**.	Repair the short circuit to ground in harness between ECM connector and accelerator pedal position sensor connector.
2	**CHECK SHORT CIRCUIT INSIDE THE ECM.** 1) Connect the connector to ECM. 2) Measure the resistance between accelerator pedal position sensor connector and chassis ground. ***Connector & terminal*** ***(B315) No. 6 — Chassis ground:***	Is the resistance 1 MΩ or more?	Replace the accelerator pedal. <Ref. to SP(H4DO(w/o HEV))-4, Accelerator Pedal.>	Repair the short circuit to ground in harness between ECM connector and accelerator pedal position sensor connector. Replace the ECM if defective. <Ref. to FU(H4DO(HEV))-85, Engine Control Module (ECM).>

EY:DTC P2123 THROTTLE/PEDAL POSITION SENSOR/SWITCH "D" CIRCUIT HIGH INPUT

DTC DETECTING CONDITION:

- Immediately at fault recognition
- GENERAL DESCRIPTION <Ref. to GD(H4DO HEV)-243, DTC P2123 THROTTLE/PEDAL POSITION SENSOR/SWITCH "D" CIRCUIT HIGH INPUT, Diagnostic Trouble Code (DTC) Detecting Criteria.>

TROUBLE SYMPTOM:

- Improper idling
- Poor driving performance

CAUTION:

After servicing or replacing faulty parts, perform Clear Memory Mode <Ref. to EN(H4DO HEV)(diag)-63, OPERATION, Clear Memory Mode.>, and Inspection Mode <Ref. to EN(H4DO HEV)(diag)-47, PROCEDURE, Inspection Mode.>.

WIRING DIAGRAM:

- Engine electrical system (without push button start) <Ref. to WI(HEV)-100, WITHOUT PUSH BUTTON START, WIRING DIAGRAM, Engine Electrical System.>
- Engine electrical system (with push button start) <Ref. to WI(HEV)-114, WITH PUSH BUTTON START, WIRING DIAGRAM, Engine Electrical System.>

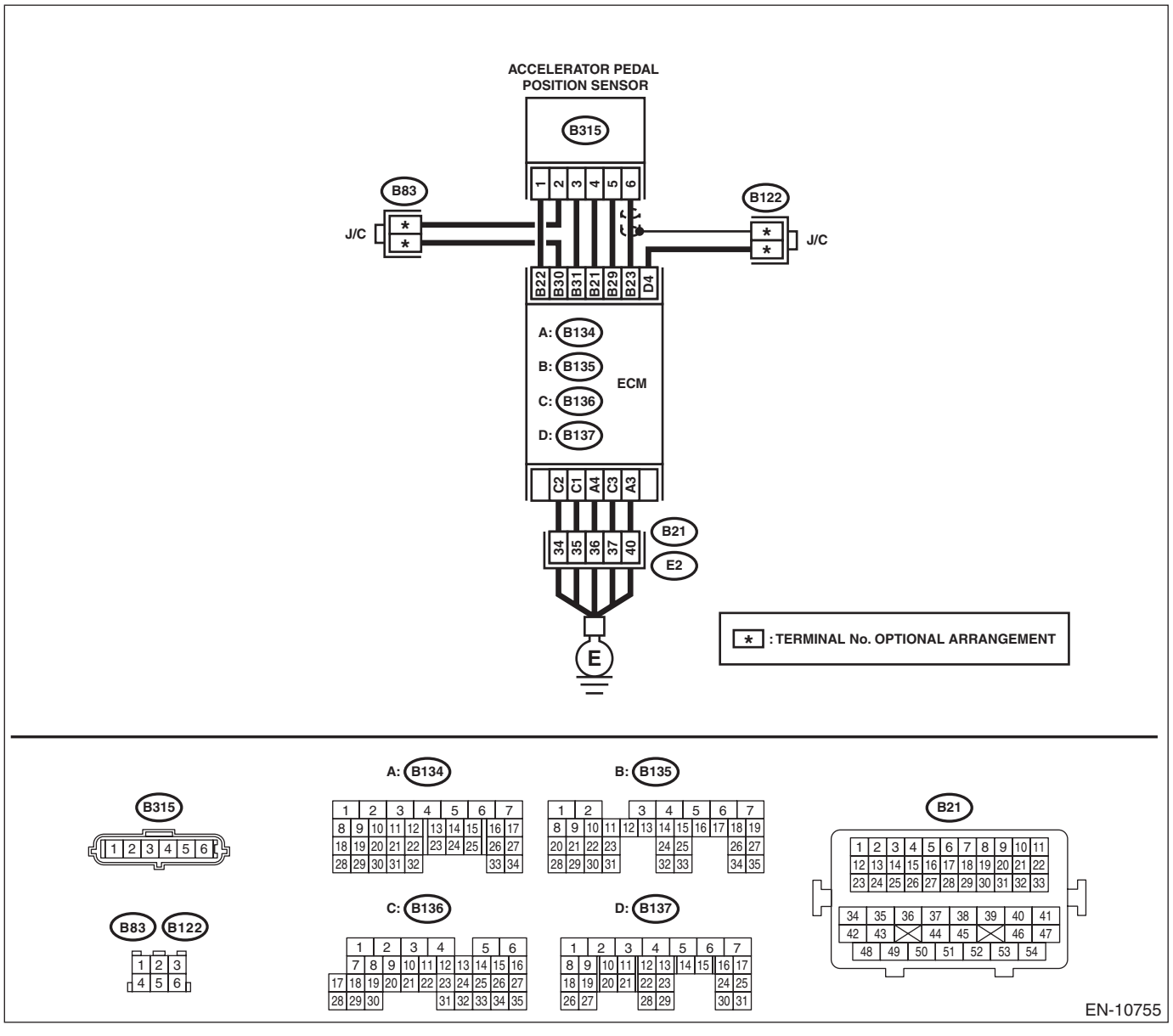

	Step	Check	Yes	No
1	**CHECK HARNESS BETWEEN ECM AND ACCELERATOR PEDAL POSITION SENSOR CONNECTOR.** 1) Turn the ignition switch to OFF. 2) Disconnect the connectors from ECM and accelerator pedal position sensor. 3) Measure the resistance of harness between ECM connector and accelerator pedal position sensor connector. ***Connector & terminal*** ***(B135) No. 23 — (B315) No. 6:*** ***(B135) No. 29 — (B315) No. 5:***	Is the resistance less than 1 Ω?	Go to step **2**.	Repair the open circuit of harness between ECM connector and accelerator pedal position sensor connector.
2	**CHECK HARNESS BETWEEN ECM AND ACCELERATOR PEDAL POSITION SENSOR CONNECTOR.** 1) Connect the connector to ECM. 2) Measure the resistance between accelerator pedal position sensor connector and chassis ground. ***Connector & terminal*** ***(B315) No. 5 — Chassis ground:***	Is the resistance less than 5 Ω?	Go to step **3**.	Repair the harness and connector. NOTE: In this case, repair the following item: • Open circuit of harness between ECM connector and engine ground • Poor contact of ECM connector • Poor contact of coupling connector
3	**CHECK HARNESS BETWEEN ECM AND ACCELERATOR PEDAL POSITION SENSOR CONNECTOR.** 1) Turn the ignition switch to ON. 2) Measure the voltage between accelerator pedal position sensor connector and chassis ground. ***Connector & terminal*** ***(B315) No. 6 (+) — Chassis ground (–):***	Is the voltage 5 V or more?	Repair the short circuit to power supply in harness between ECM connector and accelerator pedal position sensor connector.	Go to step **4**.
4	**CHECK HARNESS BETWEEN ECM AND ACCELERATOR PEDAL POSITION SENSOR CONNECTOR.** 1) Turn the ignition switch to OFF. 2) Disconnect the connector from ECM. 3) Measure the resistance between ECM connectors. ***Connector & terminal*** ***(B135) No. 21 — (B135) No. 23:***	Is the resistance 1 MΩ or more?	Repair the poor contact of accelerator pedal position sensor connector. Replace the accelerator pedal if defective. <Ref. to SP(H4DO(w/o HEV))-4, Accelerator Pedal.>	Repair the short circuit to power supply in harness between ECM connector and accelerator pedal position sensor connector.

EZ:DTC P2127 THROTTLE/PEDAL POSITION SENSOR/SWITCH “E” CIRCUIT LOW INPUT

DTC DETECTING CONDITION:

- Immediately at fault recognition
- GENERAL DESCRIPTION <Ref. to GD(H4DO HEV)-245, DTC P2127 THROTTLE/PEDAL POSITION SENSOR/SWITCH “E” CIRCUIT LOW INPUT, Diagnostic Trouble Code (DTC) Detecting Criteria.>

TROUBLE SYMPTOM:

- Improper idling
- Poor driving performance

CAUTION:

After servicing or replacing faulty parts, perform Clear Memory Mode <Ref. to EN(H4DO HEV)(diag)-63, OPERATION, Clear Memory Mode.>, and Inspection Mode <Ref. to EN(H4DO HEV)(diag)-47, PROCEDURE, Inspection Mode.>.

WIRING DIAGRAM:

- Engine electrical system (without push button start) <Ref. to WI(HEV)-100, WITHOUT PUSH BUTTON START, WIRING DIAGRAM, Engine Electrical System.>
- Engine electrical system (with push button start) <Ref. to WI(HEV)-114, WITH PUSH BUTTON START, WIRING DIAGRAM, Engine Electrical System.>

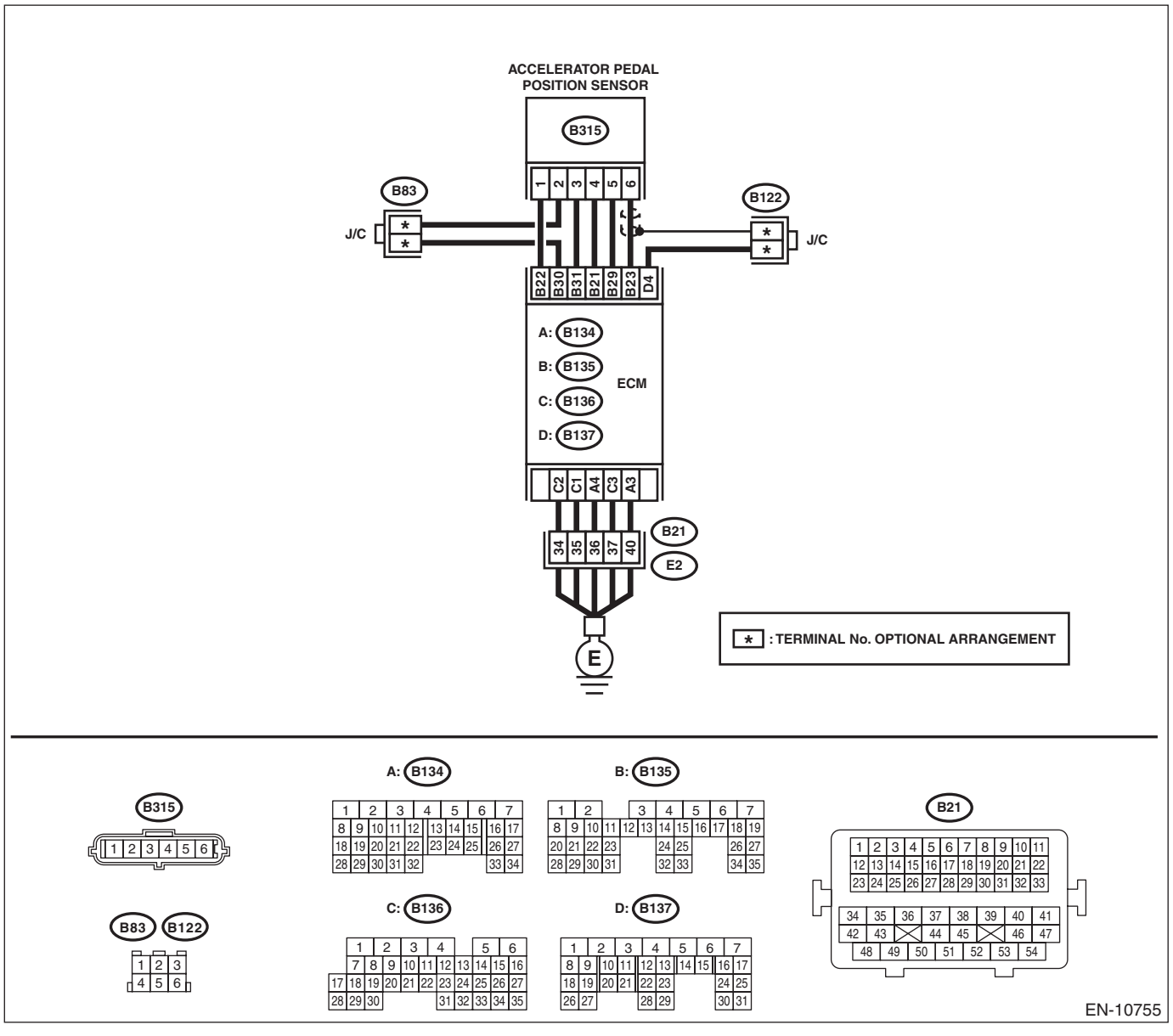

	Step	Check	Yes	No
1	**CHECK HARNESS BETWEEN ECM AND ACCELERATOR PEDAL POSITION SENSOR CONNECTOR.** 1) Turn the ignition switch to OFF. 2) Disconnect the connectors from ECM and accelerator pedal position sensor. 3) Measure the resistance between ECM connector and chassis ground. ***Connector & terminal*** ***(B135) No. 22 — Chassis ground:*** ***(B135) No. 31 — Chassis ground:***	Is the resistance 1 MΩ or more?	Go to step **2**.	Repair the short circuit to ground in harness between ECM connector and accelerator pedal position sensor connector.
2	**CHECK SHORT CIRCUIT INSIDE THE ECM.** 1) Connect the connector to ECM. 2) Measure the resistance between accelerator pedal position sensor connector and chassis ground. ***Connector & terminal*** ***(B315) No. 3 — Chassis ground:***	Is the resistance 1 MΩ or more?	Replace the accelerator pedal. <Ref. to SP(H4DO(w/o HEV))-4, Accelerator Pedal.>	Repair the short circuit to ground in harness between ECM connector and accelerator pedal position sensor connector. Replace the ECM if defective. <Ref. to FU(H4DO(HEV))-85, Engine Control Module (ECM).>

FA:DTC P2128 THROTTLE/PEDAL POSITION SENSOR/SWITCH “E” CIRCUIT HIGH INPUT

DTC DETECTING CONDITION:

- Immediately at fault recognition
- GENERAL DESCRIPTION <Ref. to GD(H4DO HEV)-247, DTC P2128 THROTTLE/PEDAL POSITION SENSOR/SWITCH “E” CIRCUIT HIGH INPUT, Diagnostic Trouble Code (DTC) Detecting Criteria.>

TROUBLE SYMPTOM:

- Improper idling
- Poor driving performance

CAUTION:

After servicing or replacing faulty parts, perform Clear Memory Mode <Ref. to EN(H4DO HEV)(diag)-63, OPERATION, Clear Memory Mode.>, and Inspection Mode <Ref. to EN(H4DO HEV)(diag)-47, PROCEDURE, Inspection Mode.>.

WIRING DIAGRAM:

- Engine electrical system (without push button start) <Ref. to WI(HEV)-100, WITHOUT PUSH BUTTON START, WIRING DIAGRAM, Engine Electrical System.>
- Engine electrical system (with push button start) <Ref. to WI(HEV)-114, WITH PUSH BUTTON START, WIRING DIAGRAM, Engine Electrical System.>

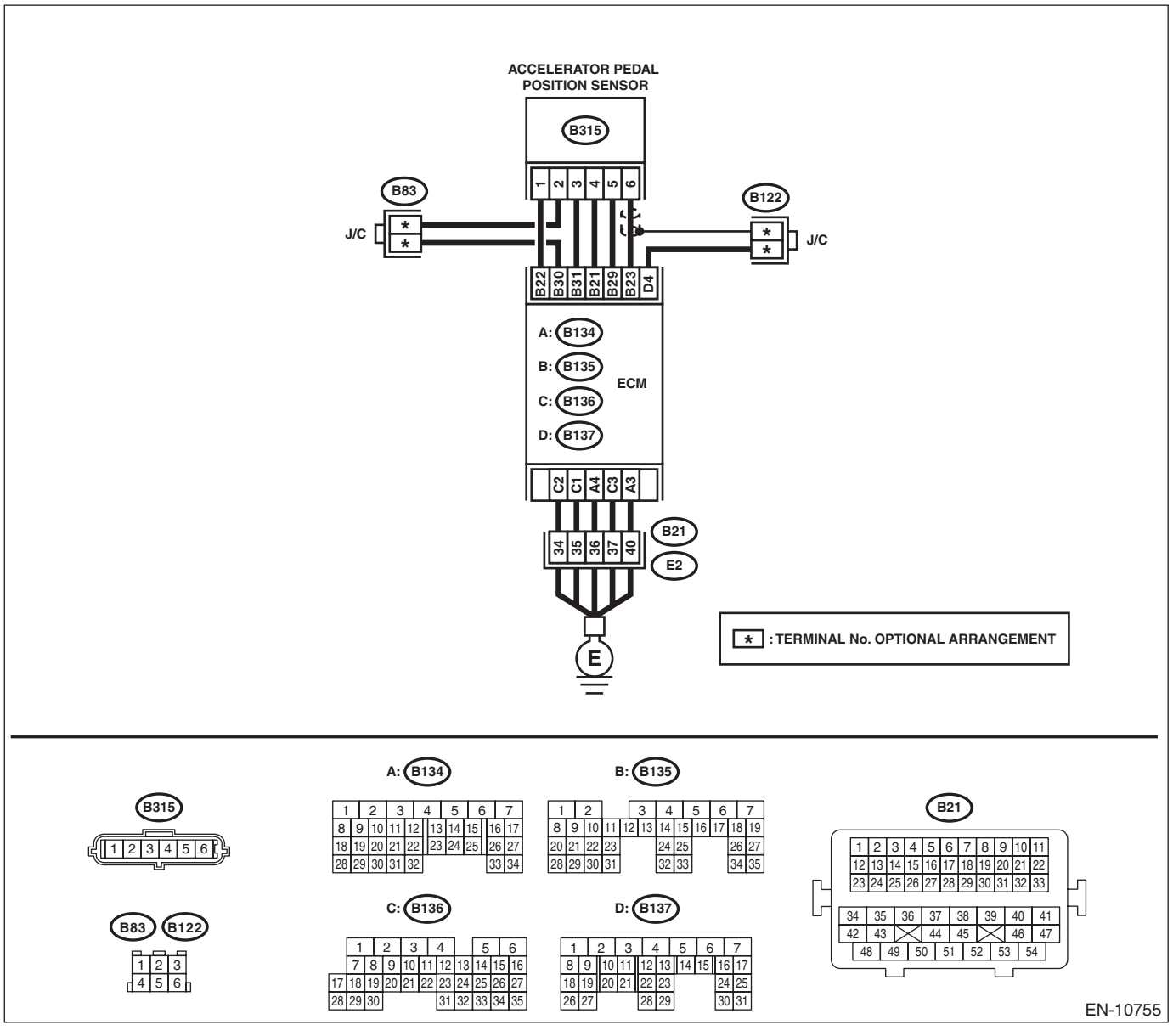

	Step	Check	Yes	No
1	**CHECK HARNESS BETWEEN ECM AND ACCELERATOR PEDAL POSITION SENSOR CONNECTOR.** 1) Turn the ignition switch to OFF. 2) Disconnect the connectors from ECM and accelerator pedal position sensor. 3) Measure the resistance of harness between ECM connector and accelerator pedal position sensor connector. ***Connector & terminal*** ***(B135) No. 31 — (B315) No. 3:*** ***(B135) No. 30 — (B315) No. 2:***	Is the resistance less than 1 Ω?	Go to step **2**.	Repair the harness and connector. NOTE: In this case, repair the following item: • Open circuit of harness between ECM connector and accelerator pedal position sensor connector • Poor contact of joint connector
2	**CHECK HARNESS BETWEEN ECM AND ACCELERATOR PEDAL POSITION SENSOR CONNECTOR.** 1) Connect the connector to ECM. 2) Measure the resistance between accelerator pedal position sensor connector and chassis ground. ***Connector & terminal*** ***(B315) No. 2 — Chassis ground:***	Is the resistance less than 1 Ω?	Go to step **3**.	Repair the harness and connector. NOTE: In this case, repair the following item: • Open circuit of harness between ECM connector and engine ground • Poor contact of ECM connector • Poor contact of coupling connector
3	**CHECK HARNESS BETWEEN ECM AND ACCELERATOR PEDAL POSITION SENSOR CONNECTOR.** 1) Turn the ignition switch to ON. 2) Measure the voltage between accelerator pedal position sensor connector and chassis ground. ***Connector & terminal*** ***(B315) No. 3 (+) — Chassis ground (–):***	Is the voltage 5 V or more?	Repair the short circuit to power supply in harness between ECM connector and accelerator pedal position sensor connector.	Go to step **4**.
4	**CHECK HARNESS BETWEEN ECM AND ACCELERATOR PEDAL POSITION SENSOR CONNECTOR.** 1) Turn the ignition switch to OFF. 2) Disconnect the connector from ECM. 3) Measure the resistance between ECM connectors. ***Connector & terminal*** ***(B135) No. 22 — (B135) No. 31:***	Is the resistance 1 MΩ or more?	Repair the poor contact of accelerator pedal position sensor connector. Replace the accelerator pedal if defective. <Ref. to SP(H4DO(w/o HEV))-4, Accelerator Pedal.>	Repair the short circuit to power supply in harness between ECM connector and accelerator pedal position sensor connector.

FB:DTC P2135 THROTTLE/PEDAL POSITION SENSOR/SWITCH "A"/"B" VOLTAGE CORRELATION

DTC DETECTING CONDITION:

- Immediately at fault recognition
- GENERAL DESCRIPTION <Ref. to GD(H4DO HEV)-249, DTC P2135 THROTTLE/PEDAL POSITION SENSOR/SWITCH "A"/"B" VOLTAGE CORRELATION, Diagnostic Trouble Code (DTC) Detecting Criteria.>

TROUBLE SYMPTOM:

- Improper idling
- Poor driving performance

CAUTION:

After servicing or replacing faulty parts, perform Clear Memory Mode <Ref. to EN(H4DO HEV)(diag)-63, OPERATION, Clear Memory Mode.>, and Inspection Mode <Ref. to EN(H4DO HEV)(diag)-47, PROCEDURE, Inspection Mode.>.

WIRING DIAGRAM:

- Engine electrical system (without push button start) <Ref. to WI(HEV)-100, WITHOUT PUSH BUTTON START, WIRING DIAGRAM, Engine Electrical System.>
- Engine electrical system (with push button start) <Ref. to WI(HEV)-114, WITH PUSH BUTTON START, WIRING DIAGRAM, Engine Electrical System.>

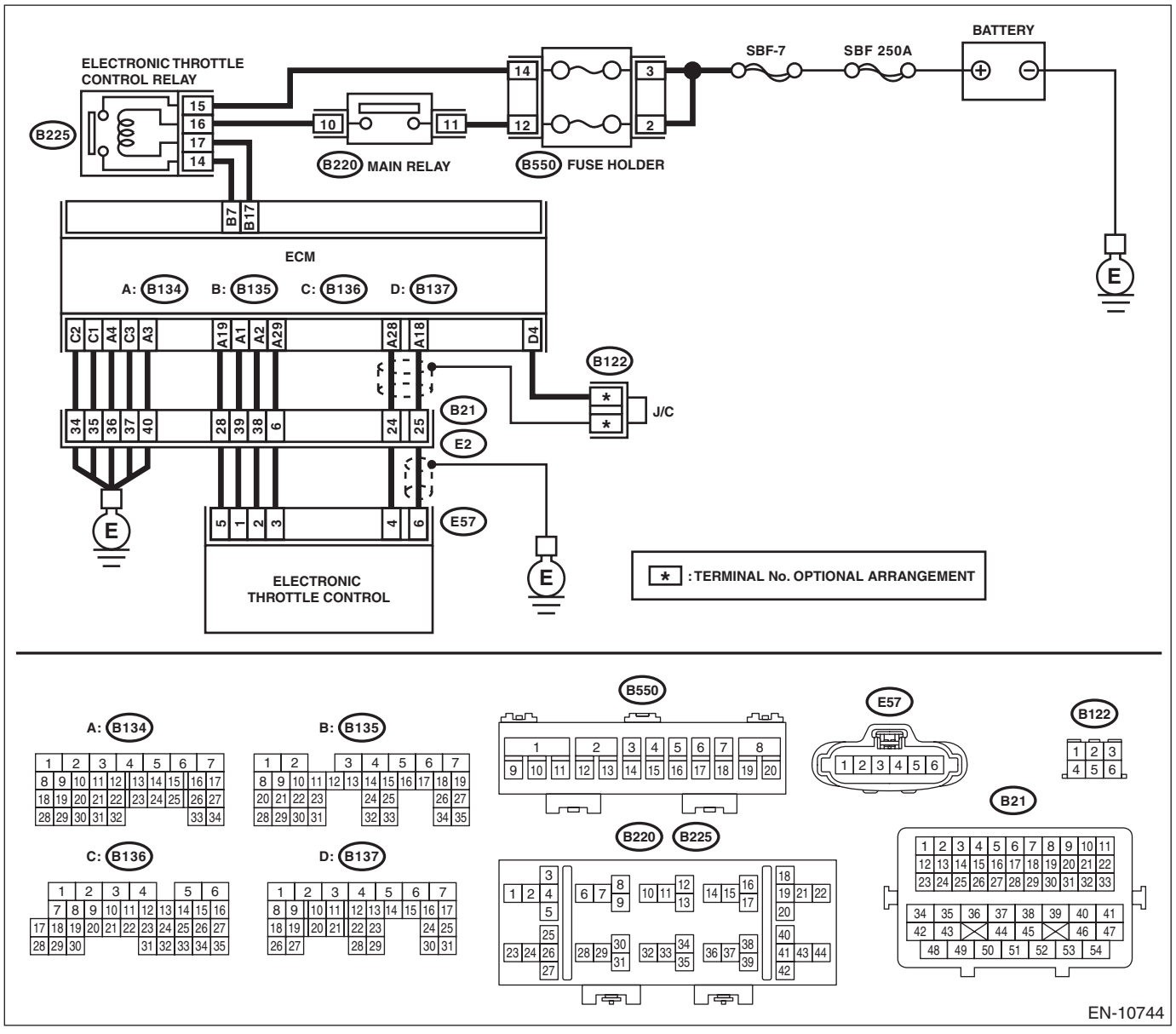

	Step	Check	Yes	No
1	**CHECK HARNESS BETWEEN ECM AND ELECTRONIC THROTTLE CONTROL CONNECTOR.** 1) Turn the ignition switch to OFF. 2) Disconnect the connectors from ECM and electronic throttle control. 3) Measure the resistance between ECM connector and chassis ground. ***Connector & terminal*** ***(B134) No. 19 — Chassis ground:*** ***(B134) No. 18 — Chassis ground:*** ***(B134) No. 18 — (B137) No. 4:*** ***(B134) No. 28 — Chassis ground:*** ***(B134) No. 28 — (B137) No. 4:***	Is the resistance 1 MΩ or more?	Go to step **2**.	Repair the ground short circuit of harness between ECM connector and electronic throttle control connector.
2	**CHECK SHORT CIRCUIT INSIDE THE ECM.** 1) Connect the connector to ECM. 2) Measure the resistance between electronic throttle control connector and engine ground. ***Connector & terminal*** ***(E57) No. 6 — Engine ground:*** ***(E57) No. 4 — Engine ground:***	Is the resistance 1 MΩ or more?	Go to step **3**.	Repair the ground short circuit of harness between ECM connector and electronic throttle control connector. Replace the ECM if defective. <Ref. to FU(H4DO(HEV))-85, Engine Control Module (ECM).>
3	**CHECK HARNESS BETWEEN ECM AND ELECTRONIC THROTTLE CONTROL CONNECTOR.** 1) Disconnect the connector from ECM. 2) Measure the resistance of harness between ECM connector and electronic throttle control connector. ***Connector & terminal*** ***(B134) No. 18 — (E57) No. 6:*** ***(B134) No. 28 — (E57) No. 4:*** ***(B134) No. 29 — (E57) No. 3:***	Is the resistance less than 1 Ω?	Go to step **4**.	Repair the harness and connector. NOTE: In this case, repair the following item: • Open circuit in harness between ECM connector and electronic throttle control connector • Poor contact of coupling connector
4	**CHECK HARNESS BETWEEN ECM AND ELECTRONIC THROTTLE CONTROL CONNECTOR.** 1) Connect the connector to ECM. 2) Measure the resistance between electronic throttle control connector and engine ground. ***Connector & terminal*** ***(E57) No. 3 — Engine ground:***	Is the resistance less than 5 Ω?	Go to step **5**.	Repair the harness and connector. NOTE: In this case, repair the following item: • Open circuit of harness between ECM connector and engine ground • Poor contact of ECM connector • Poor contact of coupling connector

	Step	Check	Yes	No
5	**CHECK HARNESS BETWEEN ECM AND ELECTRONIC THROTTLE CONTROL CONNECTOR.** 1) Turn the ignition switch to ON. 2) Measure the voltage between electronic throttle control connector and engine ground. ***Connector & terminal*** ***(E57) No. 6 (+) — Engine ground (–):*** ***(E57) No. 4 (+) — Engine ground (–):***	Is the voltage 5 V or more?	Repair the short circuit to power in the harness between ECM connector and electronic throttle control connector.	Go to step **6**.
6	**CHECK HARNESS BETWEEN ECM AND ELECTRONIC THROTTLE CONTROL CONNECTOR.** 1) Turn the ignition switch to OFF. 2) Disconnect the connector from ECM. 3) Measure the resistance between ECM connectors. ***Connector & terminal*** ***(B134) No. 19 — (B134) No. 18:*** ***(B134) No. 19 — (B134) No. 28:***	Is the resistance 1 MΩ or more?	Repair the poor contact of electronic throttle control connector. Replace the electronic throttle control if defective. <Ref. to FU(H4DO(HEV))-15, Throttle Body.>	Repair the short circuit to power in the harness between ECM connector and electronic throttle control connector.

FC:DTC P2138 THROTTLE/PEDAL POSITION SENSOR/SWITCH “D”/“E” VOLTAGE CORRELATION

DTC DETECTING CONDITION:

- Immediately at fault recognition
- GENERAL DESCRIPTION <Ref. to GD(H4DO HEV)-251, DTC P2138 THROTTLE/PEDAL POSITION SENSOR/SWITCH “D”/“E” VOLTAGE CORRELATION, Diagnostic Trouble Code (DTC) Detecting Criteria.>

TROUBLE SYMPTOM:

- Improper idling
- Poor driving performance

CAUTION:

After servicing or replacing faulty parts, perform Clear Memory Mode <Ref. to EN(H4DO HEV)(diag)-63, OPERATION, Clear Memory Mode.>, and Inspection Mode <Ref. to EN(H4DO HEV)(diag)-47, PROCEDURE, Inspection Mode.>.

WIRING DIAGRAM:

- Engine electrical system (without push button start) <Ref. to WI(HEV)-100, WITHOUT PUSH BUTTON START, WIRING DIAGRAM, Engine Electrical System.>
- Engine electrical system (with push button start) <Ref. to WI(HEV)-114, WITH PUSH BUTTON START, WIRING DIAGRAM, Engine Electrical System.>

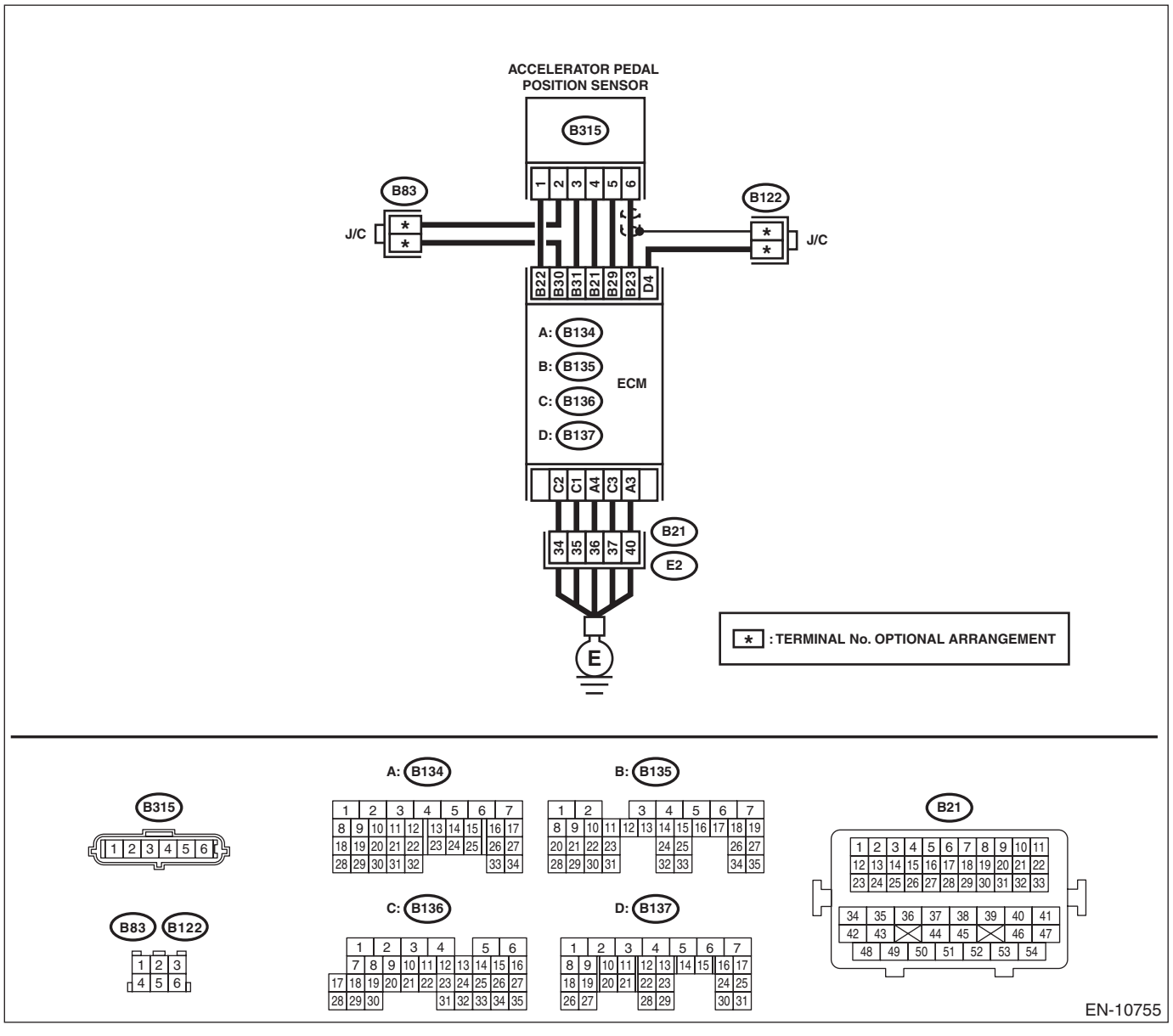

	Step	Check	Yes	No
1	**CHECK ACCELERATOR PEDAL POSITION SENSOR OUTPUT.** 1) Turn the ignition switch to ON. 2) Measure the voltage between ECM connector and chassis ground. ***Connector & terminal*** ***Main accelerator pedal position sensor signal*** ***(B135) No. 23 (+) — Chassis ground (–):*** ***Sub accelerator pedal position sensor signal*** ***(B135) No. 31 (+) — Chassis ground (–):***	Is the difference in measured values for the main accelerator pedal position sensor signal and the sub accelerator pedal position sensor signal 0 V?	Go to step **3**.	Go to step **2**.
2	**CHECK ACCELERATOR PEDAL POSITION SENSOR OUTPUT.** 1) Measure the voltage between accelerator pedal position sensor connector and chassis ground. ***Connector & terminal*** ***(B315) No. 6 (+) — Chassis ground (–):*** ***(B315) No. 3 (+) — Chassis ground (–):***	Is the difference in measured values for the main accelerator pedal position sensor signal and the sub accelerator pedal position sensor signal 0 V?	Replace the accelerator pedal. <Ref. to SP(H4DO(w/o HEV))-4, Accelerator Pedal.>	Repair the harness and connector. NOTE: In this case, repair the following item: • Open circuit of harness between ECM connector and accelerator pedal position sensor connector • Short circuit to ground in harness between ECM connector and accelerator pedal position sensor connector
3	**CHECK HARNESS BETWEEN ECM AND ACCELERATOR PEDAL POSITION SENSOR CONNECTOR.** Measure the resistance of harness between accelerator pedal position sensor connector and chassis ground. ***Connector & terminal*** ***(B315) No. 5 — Chassis ground:*** ***(B315) No. 2 — Chassis ground:***	Is the resistance less than 5 Ω?	Repair the poor contact of ECM connector.	Repair the harness and connector. NOTE: In this case, repair the following item: • Open circuit of harness between ECM connector and accelerator pedal position sensor connector • Open circuit of harness between ECM connector and engine ground • Poor contact of ECM connector • Poor contact of joint connector

FD:DTC P2195 O2 SENSOR SIGNAL BIASED/STUCK LEAN (BANK 1 SENSOR 1)

DTC DETECTING CONDITION:

- Detected when two consecutive driving cycles with fault occur.
- GENERAL DESCRIPTION <Ref. to GD(H4DO HEV)-253, DTC P2195 O2 SENSOR SIGNAL BIASED/ STUCK LEAN (BANK 1 SENSOR 1), Diagnostic Trouble Code (DTC) Detecting Criteria.>

CAUTION:

After servicing or replacing faulty parts, perform Clear Memory Mode <Ref. to EN(H4DO HEV)(diag)-63, OPERATION, Clear Memory Mode.>, and Inspection Mode <Ref. to EN(H4DO HEV)(diag)-47, PROCEDURE, Inspection Mode.>.

WIRING DIAGRAM:

- Engine electrical system (without push button start) <Ref. to WI(HEV)-100, WITHOUT PUSH BUTTON START, WIRING DIAGRAM, Engine Electrical System.>
- Engine electrical system (with push button start) <Ref. to WI(HEV)-114, WITH PUSH BUTTON START, WIRING DIAGRAM, Engine Electrical System.>

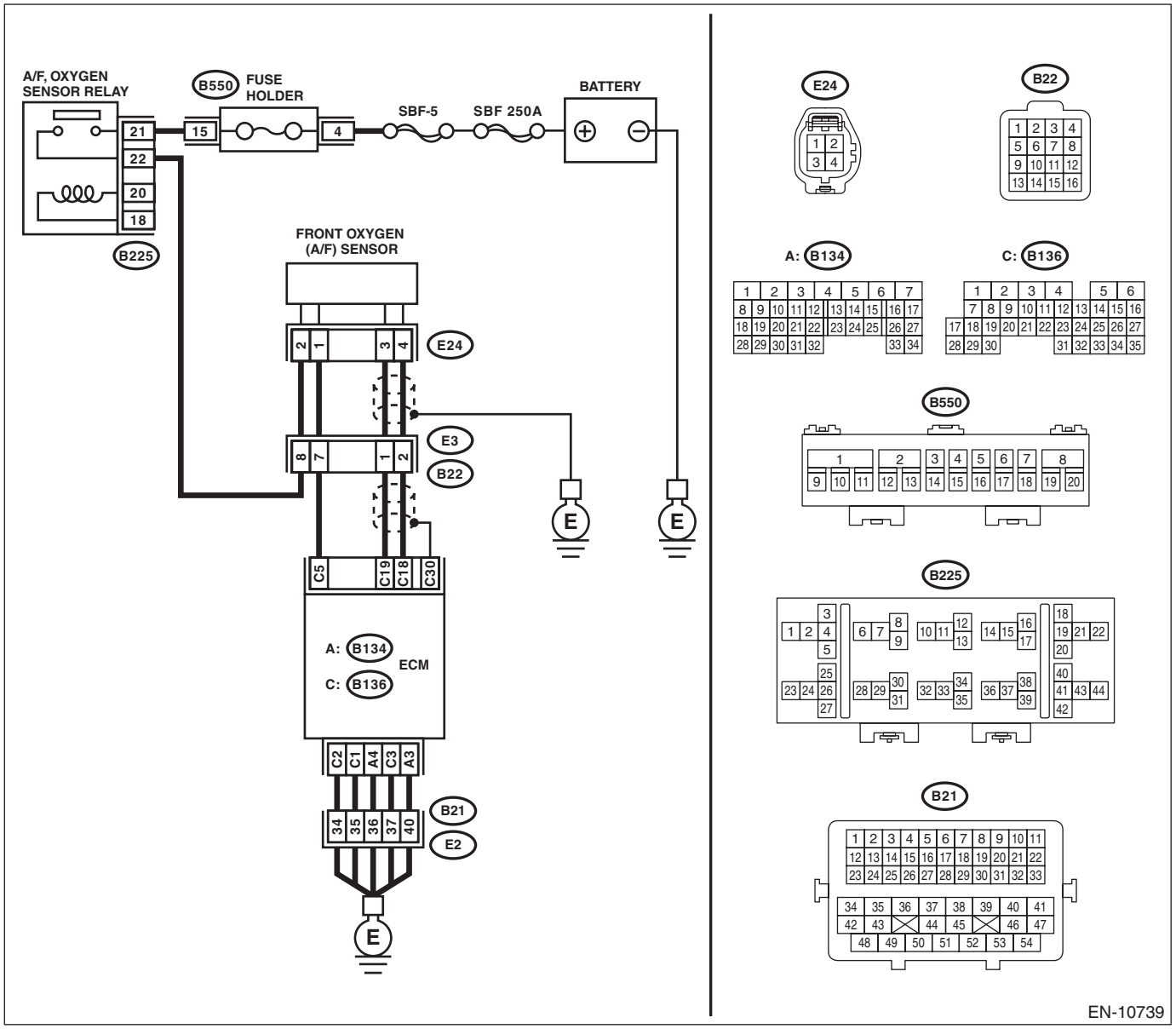

	Step	Check	Yes	No
1	**CHECK FRONT OXYGEN (A/F) SENSOR CONNECTOR AND COUPLING CONNECTOR.**	Has water entered the connector?	Completely remove any water inside.	Go to step **2**.
2	**CHECK HARNESS BETWEEN ECM AND FRONT OXYGEN (A/F) SENSOR CONNECTOR.** 1) Turn the ignition switch to OFF. 2) Disconnect the connectors from ECM and front oxygen (A/F) sensor. 3) Measure the resistance of harness between ECM connector and front oxygen (A/F) sensor connector. ***Connector & terminal*** ***(B136) No. 19 — (E24) No. 3:*** ***(B136) No. 18 — (E24) No. 4:***	Is the resistance less than 1 Ω?	Go to step **3**.	Repair the harness and connector. NOTE: In this case, repair the following item: • Open circuit in harness between ECM connector and front oxygen (A/F) sensor connector • Poor contact of coupling connector
3	**CHECK FOR POOR CONTACT.** Check for poor contact of the front oxygen (A/F) sensor connector.	Is there poor contact of front oxygen (A/F) sensor connector?	Repair the poor contact of front oxygen (A/F) sensor connector.	Replace the front oxygen (A/F) sensor. <Ref. to FU(H4DO(HEV))-79, Front Oxygen (A/F) Sensor.>

FE:DTC P2196 O2 SENSOR SIGNAL BIASED/STUCK RICH (BANK 1 SENSOR 1)

DTC DETECTING CONDITION:

- Detected when two consecutive driving cycles with fault occur.
- GENERAL DESCRIPTION <Ref. to GD(H4DO HEV)-255, DTC P2196 O2 SENSOR SIGNAL BIASED/ STUCK RICH (BANK 1 SENSOR 1), Diagnostic Trouble Code (DTC) Detecting Criteria.>

CAUTION:

After servicing or replacing faulty parts, perform Clear Memory Mode <Ref. to EN(H4DO HEV)(diag)-63, OPERATION, Clear Memory Mode.>, and Inspection Mode <Ref. to EN(H4DO HEV)(diag)-47, PROCEDURE, Inspection Mode.>.

WIRING DIAGRAM:

- Engine electrical system (without push button start) <Ref. to WI(HEV)-100, WITHOUT PUSH BUTTON START, WIRING DIAGRAM, Engine Electrical System.>
- Engine electrical system (with push button start) <Ref. to WI(HEV)-114, WITH PUSH BUTTON START, WIRING DIAGRAM, Engine Electrical System.>

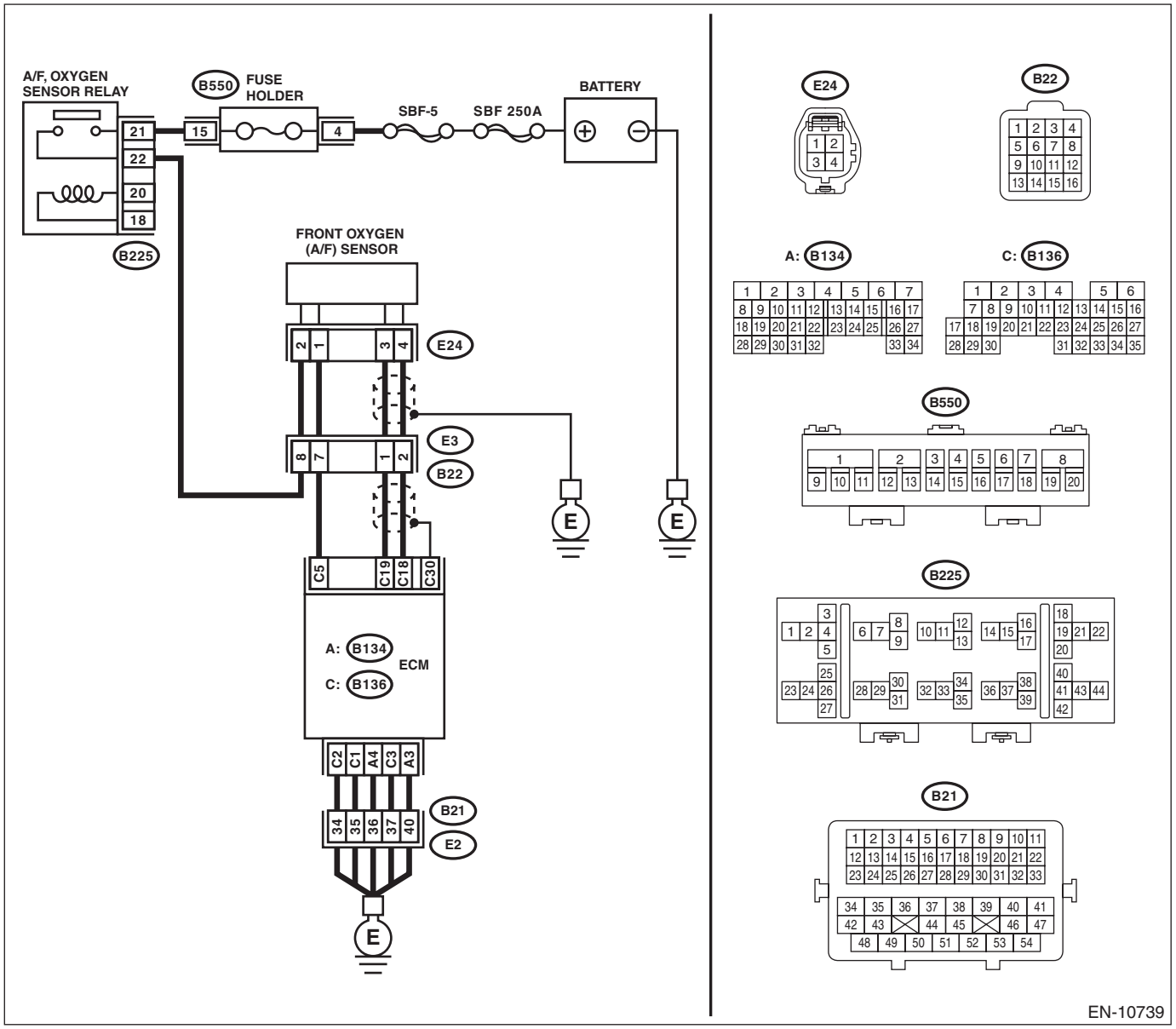

	Step	Check	Yes	No
1	**CHECK FRONT OXYGEN (A/F) SENSOR CONNECTOR AND COUPLING CONNECTOR.**	Has water entered the connector?	Completely remove any water inside.	Go to step **2**.
2	**CHECK HARNESS BETWEEN ECM AND FRONT OXYGEN (A/F) SENSOR CONNECTOR.** 1) Turn the ignition switch to OFF. 2) Disconnect the connector from ECM. 3) Measure the resistance between ECM connector and chassis ground. ***Connector & terminal*** ***(B136) No. 19 — Chassis ground:*** ***(B136) No. 18 — Chassis ground:***	Is the resistance 1 MΩ or more?	Go to step **3**.	Repair the short circuit to ground in harness between ECM connector and front oxygen (A/F) sensor connector.
3	**CHECK OUTPUT SIGNAL FOR ECM.** 1) Connect the connector to ECM. 2) Turn the ignition switch to ON. 3) Measure the voltage between ECM connector and chassis ground. ***Connector & terminal*** ***(B136) No. 19 (+) — Chassis ground (–):***	Is the voltage 4.5 V or more?	Go to step **5**.	Go to step **4**.
4	**CHECK OUTPUT SIGNAL FOR ECM.** Measure the voltage between ECM connector and chassis ground. ***Connector & terminal*** ***(B136) No. 18 (+) — Chassis ground (–):***	Is the voltage 4.95 V or more?	Go to step **5**.	Replace the front oxygen (A/F) sensor. <Ref. to FU(H4DO(HEV))-79, Front Oxygen (A/F) Sensor.>
5	**CHECK OUTPUT SIGNAL FOR ECM.** Measure the voltage between ECM connector and chassis ground. ***Connector & terminal*** ***(B136) No. 19 (+) — Chassis ground (–):*** ***(B136) No. 18 (+) — Chassis ground (–):***	Is the voltage 8 V or more?	Repair the short circuit to power in the harness between ECM connector and front oxygen (A/F) sensor connector. After repair, replace the ECM. <Ref. to FU(H4DO(HEV))-85, Engine Control Module (ECM).>	Repair the poor contact of ECM connector.

FF: DTC P219A BANK 1 AIR-FUEL RATIO IMBALANCE

DTC DETECTING CONDITION:

- Detected when two consecutive driving cycles with fault occur.
- GENERAL DESCRIPTION <Ref. to GD(H4DO HEV)-257, DTC P219A BANK 1 AIR-FUEL RATIO IMBALANCE, Diagnostic Trouble Code (DTC) Detecting Criteria.>

TROUBLE SYMPTOM:

- Engine stalls.
- Improper idling

CAUTION:

After servicing or replacing faulty parts, perform Clear Memory Mode <Ref. to EN(H4DO HEV)(diag)-63, OPERATION, Clear Memory Mode.>, and Inspection Mode <Ref. to EN(H4DO HEV)(diag)-47, PROCEDURE, Inspection Mode.>.

WIRING DIAGRAM:

- Engine electrical system (without push button start) <Ref. to WI(HEV)-100, WITHOUT PUSH BUTTON START, WIRING DIAGRAM, Engine Electrical System.>
- Engine electrical system (with push button start) <Ref. to WI(HEV)-114, WITH PUSH BUTTON START, WIRING DIAGRAM, Engine Electrical System.>

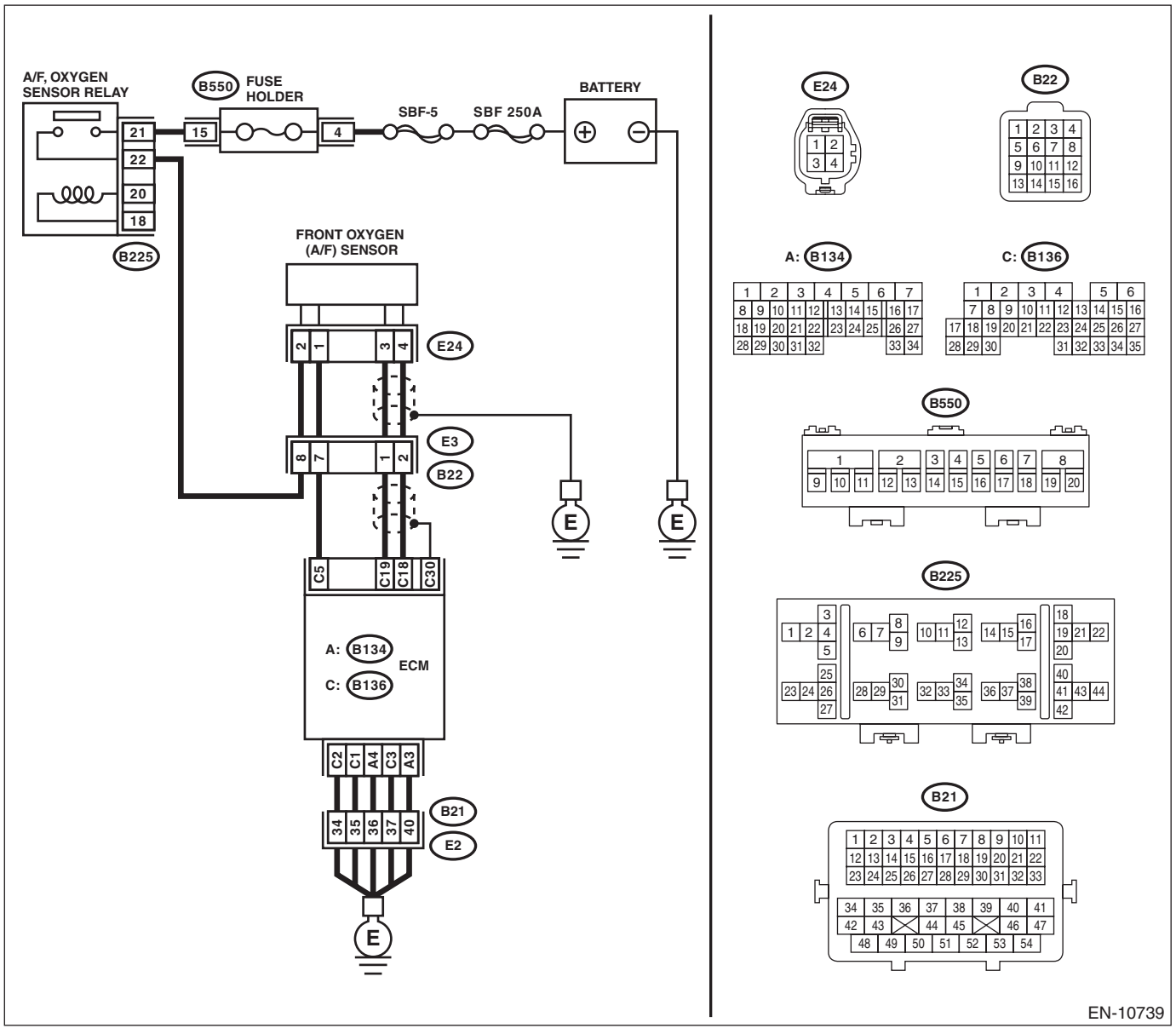

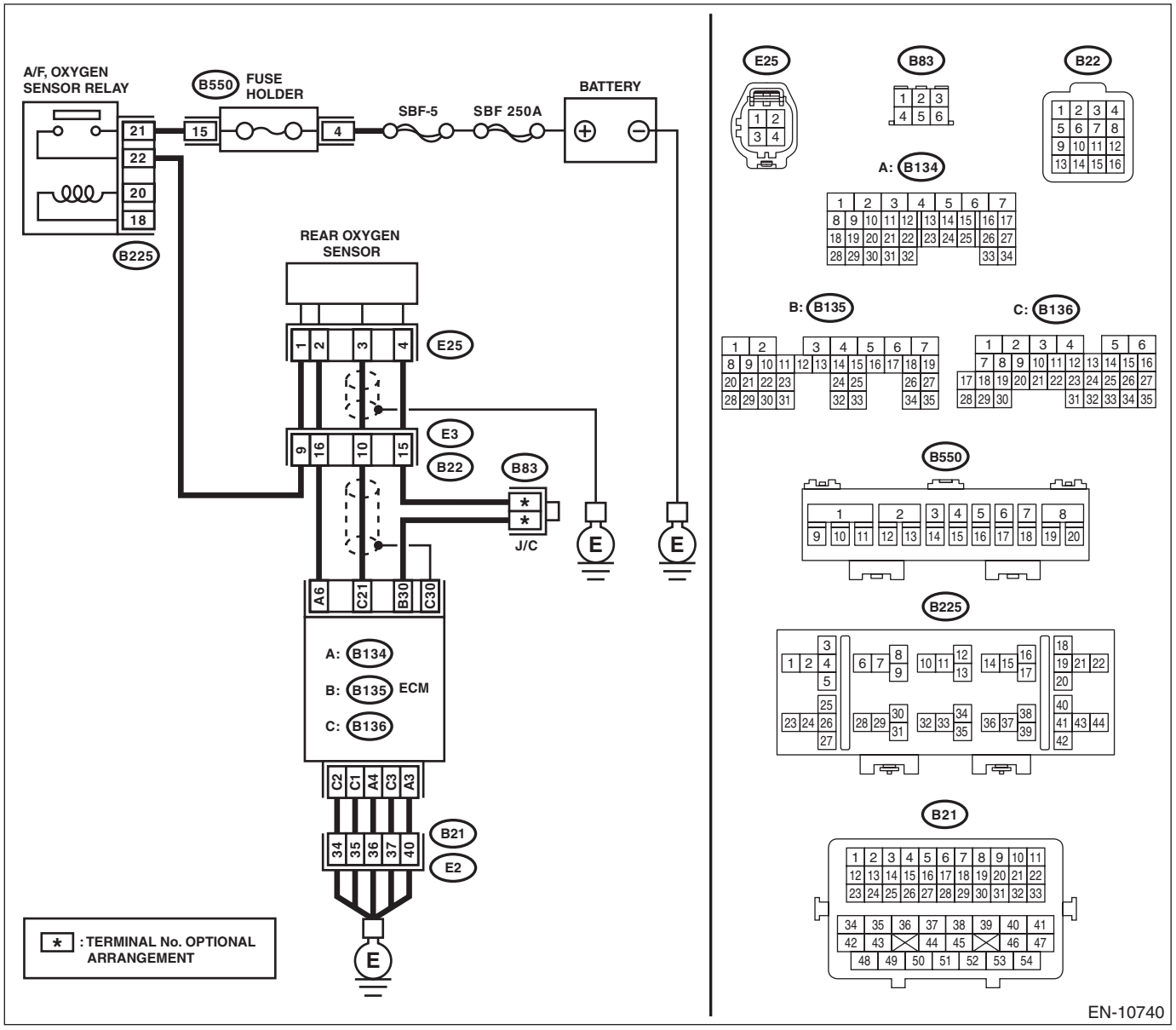
A/F, OXYGEN SENSOR RELAY
B550
FUSE HOLDER
BATTERY
SBF-5
SBF 250A
21
22
20
18
15
4
B225
REAR OXYGEN SENSOR
E25
E3
B22
B83
J/C
A6
C21
B30
C30
A: B134
B: B135
C: B136
ECM
C2
C1
A4
C3
A3
B21
E2
34
35
36
37
40
E
* : TERMINAL No. OPTIONAL ARRANGEMENT
B550
B225
EN-10740

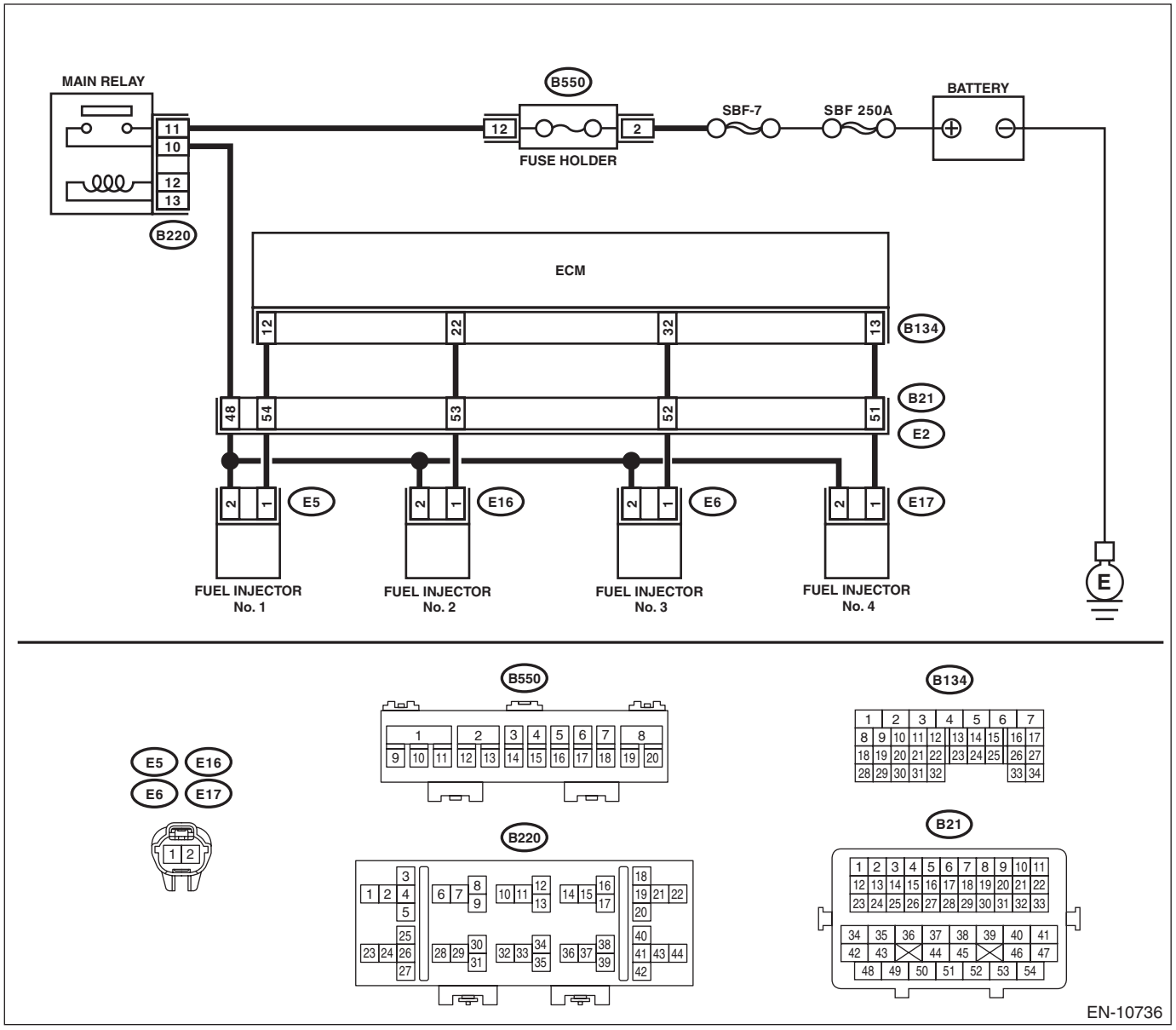

Step		Check	Yes	No
1	**CHECK FRONT OXYGEN (A/F) SENSOR CONNECTOR AND COUPLING CONNECTOR.**	Has water entered the connector?	Completely remove any water inside.	Go to step **2**.
2	**CHECK HARNESS BETWEEN ECM AND FRONT OXYGEN (A/F) SENSOR CONNECTOR.** 1) Turn the ignition switch to OFF. 2) Disconnect the connectors from ECM and front oxygen (A/F) sensor. 3) Measure the resistance of harness between ECM connector and front oxygen (A/F) sensor connector. ***Connector & terminal*** ***(B136) No. 19 — (E24) No. 3:*** ***(B136) No. 18 — (E24) No. 4:***	Is the resistance less than 1 Ω?	Go to step **3**.	Repair the harness and connector. NOTE: In this case, repair the following item: • Open circuit in harness between ECM connector and front oxygen (A/F) sensor connector • Poor contact of coupling connector

	Step	Check	Yes	No
3	**CHECK HARNESS BETWEEN ECM AND FRONT OXYGEN (A/F) SENSOR CONNECTOR.** Measure the resistance between ECM connector and chassis ground. ***Connector & terminal*** ***(B136) No. 19 — Chassis ground:*** ***(B136) No. 18 — Chassis ground:***	Is the resistance 1 MΩ or more?	Go to step **4**.	Repair the short circuit to ground in harness between ECM connector and front oxygen (A/F) sensor connector.
4	**CHECK OUTPUT SIGNAL FOR ECM.** 1) Connect the connector to ECM. 2) Turn the ignition switch to ON. 3) Measure the voltage between front oxygen (A/F) sensor connector and chassis ground. ***Connector & terminal*** ***(E24) No. 3 (+) — Chassis ground (–):***	Is the voltage 4.5 V or more?	Go to step **6**.	Go to step **5**.
5	**CHECK OUTPUT SIGNAL FOR ECM.** Measure the voltage between front oxygen (A/F) sensor connector and chassis ground. ***Connector & terminal*** ***(E24) No. 4 (+) — Chassis ground (–):***	Is the voltage 4.95 V or more?	Go to step **6**.	Go to step **7**.
6	**CHECK OUTPUT SIGNAL FOR ECM.** Measure the voltage between front oxygen (A/F) sensor connector and chassis ground. ***Connector & terminal*** ***(E24) No. 3 (+) — Chassis ground (–):*** ***(E24) No. 4 (+) — Chassis ground (–):***	Is the voltage 8 V or more?	Repair the short circuit to power in the harness between ECM connector and front oxygen (A/F) sensor connector. After repair, replace the ECM. <Ref. to FU(H4DO(HEV))-85, Engine Control Module (ECM).>	Repair the poor contact of ECM connector.
7	**CHECK EXHAUST SYSTEM.**	Are there holes or loose bolts on exhaust system?	Repair the exhaust system.	Go to step **8**.
8	**CHECK AIR INTAKE SYSTEM.**	Are there holes, loose bolts or disconnection of hose on air intake system?	Repair the air intake system.	Go to step **9**.
9	**CHECK FUEL PRESSURE.** **WARNING:** **Place "NO OPEN FLAMES" signs near the working area.** **CAUTION:** **Be careful not to spill fuel.** 1) Connect the front oxygen (A/F) sensor connector. 2) Measure the fuel pressure. <Ref. to ME(H4DO(w/o HEV))-35, INSPECTION, Fuel Pressure.> **CAUTION:** **Release fuel pressure before removing the fuel pressure gauge.**	Is the measured value 340 — 400 kPa (3.5 — 4.1 kg/cm^2, 49 — 58 psi)?	Go to step **10**.	Check the fuel pump and fuel delivery line. <Ref. to FU(H4DO(HEV))-127, INSPECTION, Fuel Pump.> <Ref. to FU(H4DO(HEV))-154, INSPECTION, Fuel Delivery and Evaporation Lines.>

	Step	Check	Yes	No
10	**CHECK ENGINE COOLANT TEMPERATURE SENSOR.** 1) Start the engine and warm up completely. 2) Read the value of «Coolant Temp.» using the Subaru Select Monitor or a general scan tool. NOTE: • Subaru Select Monitor For detailed operation procedures, refer to "Current Data Display For Engine". <Ref. to EN(H4DO HEV)(diag)-37, Subaru Select Monitor.> • General scan tool For detailed operation procedures, refer to the general scan tool operation manual.	Is the value of «Coolant Temp.» 75°C (167°F) or more?	Go to step **11**.	Replace the engine coolant temperature sensor. <Ref. to FU(H4DO(HEV))-41, Engine Coolant Temperature Sensor.>
11	**CHECK MASS AIR FLOW AND INTAKE AIR TEMPERATURE SENSOR.** 1) Start the engine and warm up engine until coolant temperature is higher than 75°C (167°F). 2) Place the select lever in "P" range or "N" range. 3) Turn the A/C switch to OFF. 4) Turn all the accessory switches to OFF. 5) Read the value of «Mass Air Flow» using the Subaru Select Monitor or a general scan tool. NOTE: • Subaru Select Monitor For detailed operation procedures, refer to "Current Data Display For Engine". <Ref. to EN(H4DO HEV)(diag)-37, Subaru Select Monitor.> • General scan tool For detailed operation procedures, refer to the general scan tool operation manual.	Is the value of «Mass Air Flow» 2.0 — 5.0 g/s (0.26 — 0.66 lb/m)?	Go to step **12**.	Replace the mass air flow and intake air temperature sensor. <Ref. to FU(H4DO(HEV))-64, Mass Air Flow and Intake Air Temperature Sensor.>
12	**CHECK MASS AIR FLOW AND INTAKE AIR TEMPERATURE SENSOR.** 1) Start the engine and warm up engine until coolant temperature is higher than 75°C (167°F). 2) Place the select lever in "P" range or "N" range. 3) Turn the A/C switch to OFF. 4) Turn all the accessory switches to OFF. 5) Open the front hood. 6) Measure the ambient temperature. 7) Read the value of «Intake Air Temp.» using the Subaru Select Monitor or a general scan tool. NOTE: • Subaru Select Monitor For detailed operation procedures, refer to "Current Data Display For Engine". <Ref. to EN(H4DO HEV)(diag)-37, Subaru Select Monitor.> • General scan tool For detailed operation procedures, refer to the general scan tool operation manual.	Subtract ambient temperature from «Intake Air Temp.». Is the obtained value –10 — 50°C (–18 — 90°F)?	Go to step **13**.	Check the mass air flow and intake air temperature sensor. <Ref. to FU(H4DO(HEV))-64, Mass Air Flow and Intake Air Temperature Sensor.>

	Step	Check	Yes	No
13	**CHECK REAR OXYGEN SENSOR DATA.** 1) Warm up the engine until engine coolant temperature is higher than 75°C (167°F), and keep the engine speed at 3,000 rpm. (2 minutes maximum) 2) Read the value of «Oxygen sensor #12» using the Subaru Select Monitor or a general scan tool. NOTE: • Subaru Select Monitor For detailed operation procedures, refer to "Current Data Display For Engine". <Ref. to EN(H4DO HEV)(diag)-37, Subaru Select Monitor.> • General scan tool For detailed operation procedures, refer to the general scan tool operation manual.	Is the value of «Oxygen sensor #12» 0.490 V or more?	Go to step **14**.	Go to step **15**.
14	**CHECK REAR OXYGEN SENSOR DATA.** 1) Warm up the engine until engine coolant temperature is higher than 75°C (167°F), and rapidly reduce the engine speed from 3,000 rpm. 2) Read the value of «Oxygen sensor #12» using the Subaru Select Monitor or a general scan tool. NOTE: • Subaru Select Monitor For detailed operation procedures, refer to "Current Data Display For Engine". <Ref. to EN(H4DO HEV)(diag)-37, Subaru Select Monitor.> • General scan tool For detailed operation procedures, refer to the general scan tool operation manual.	Is the value of «Oxygen sensor #12» 0.250 V or less?	Go to step **16**.	Go to step **15**.
15	**CHECK REAR OXYGEN SENSOR CONNECTOR AND COUPLING CONNECTOR.**	Has water entered the connector?	Completely remove any water inside.	Go to step **17**.
16	**CHECK FRONT OXYGEN (A/F) SENSOR USING REAR OXYGEN SENSOR SIGNAL.** 1) Warm up the engine until engine coolant temperature is higher than 75°C (167°F), then keep the engine idling for 5 minutes or more. 2) Read the value of «Oxygen sensor #12» using the Subaru Select Monitor or a general scan tool. NOTE: • Subaru Select Monitor For detailed operation procedures, refer to "Current Data Display For Engine". <Ref. to EN(H4DO HEV)(diag)-37, Subaru Select Monitor.> • General scan tool For detailed operation procedures, refer to the general scan tool operation manual.	Is the value of «Oxygen sensor #12» 0.250 V or less for 5 minutes or more?	Replace the front oxygen (A/F) sensor. <Ref. to FU(H4DO(HEV))-79, Front Oxygen (A/F) Sensor.>	Go to step **17**.

	Step	Check	Yes	No
17	**CHECK HARNESS BETWEEN ECM AND REAR OXYGEN SENSOR CONNECTOR.** 1) Turn the ignition switch to OFF. 2) Disconnect the connector from ECM and rear oxygen sensor. 3) Measure the resistance of harness between ECM connector and rear oxygen sensor connector. ***Connector & terminal*** ***(B136) No. 21 — (E25) No. 3:*** ***(B135) No. 30 — (E25) No. 4:***	Is the resistance less than 1 Ω?	Go to step **18**.	Repair the harness and connector. NOTE: In this case, repair the following item: • Open circuit in harness between ECM connector and rear oxygen sensor connector • Poor contact of coupling connector
18	**CHECK HARNESS BETWEEN ECM AND REAR OXYGEN SENSOR CONNECTOR.** 1) Connect the connector to ECM. 2) Turn the ignition switch to ON. 3) Measure the voltage between rear oxygen sensor connector and chassis ground. ***Connector & terminal*** ***(E25) No. 3 (+) — Chassis ground (–):***	Is the voltage 0.2 — 0.5 V?	Replace the rear oxygen sensor. <Ref. to FU(H4DO(HEV))-79, Front Oxygen (A/F) Sensor.>	Go to step **19**.
19	**CHECK OUTPUT SIGNAL OF ECM.** 1) Turn the ignition switch to ON. 2) Measure the voltage between ECM and chassis ground on faulty cylinders. ***Connector & terminal*** ***#1 (B134) No. 12 (+) — Chassis ground (–):*** ***#2 (B134) No. 22 (+) — Chassis ground (–):*** ***#3 (B134) No. 32 (+) — Chassis ground (–):*** ***#4 (B134) No. 13 (+) — Chassis ground (–):***	Is the voltage 10 V or more?	Go to step **24**.	Go to step **20**.
20	**CHECK HARNESS BETWEEN ECM AND FUEL INJECTOR CONNECTOR.** 1) Turn the ignition switch to OFF. 2) Disconnect the connector from fuel injector on faulty cylinders. 3) Measure the resistance between fuel injector connector and engine ground on faulty cylinders. ***Connector & terminal*** ***#1 (E5) No. 1 — Engine ground:*** ***#2 (E16) No. 1 — Engine ground:*** ***#3 (E6) No. 1 — Engine ground:*** ***#4 (E17) No. 1 — Engine ground:***	Is the resistance 1 MΩ or more?	Go to step **21**.	Repair the short circuit to ground in harness between ECM connector and fuel injector connector.
21	**CHECK HARNESS BETWEEN ECM AND FUEL INJECTOR CONNECTOR.** Measure the resistance of harness between ECM and fuel injector connector on faulty cylinders. ***Connector & terminal*** ***#1 (B134) No. 12 — (E5) No. 1:*** ***#2 (B134) No. 22 — (E16) No. 1:*** ***#3 (B134) No. 32 — (E6) No. 1:*** ***#4 (B134) No. 13 — (E17) No. 1:***	Is the resistance less than 1 Ω?	Go to step **22**.	Repair the harness and connector. NOTE: In this case, repair the following item: • Open circuit in harness between ECM connector and fuel injector connector • Poor contact of coupling connector
22	**CHECK FUEL INJECTOR.** Measure the resistance between fuel injector terminals on faulty cylinder. ***Terminals*** ***No. 1 — No. 2:***	Is the resistance 5 — 20 Ω?	Go to step **23**.	Replace the faulty fuel injector. <Ref. to FU(H4DO(HEV))-70, Fuel Injector.>

	Step	Check	Yes	No
23	**CHECK POWER SUPPLY LINE.** 1) Turn the ignition switch to ON. 2) Measure the voltage between fuel injector connector of faulty cylinders and engine ground. ***Connector & terminal*** ***#1 (E5) No. 2 (+) — Engine ground (–):*** ***#2 (E16) No. 2 (+) — Engine ground (–):*** ***#3 (E6) No. 2 (+) — Engine ground (–):*** ***#4 (E17) No. 2 (+) — Engine ground (–):***	Is the voltage 10 V or more?	Repair the poor contact of all connectors in fuel injector circuit.	Repair the harness and connector. NOTE: In this case, repair the following item: • Open circuit in harness between the main relay and fuel injector connector on faulty cylinders • Poor contact of coupling connector • Poor contact of main relay connector
24	**CHECK HARNESS BETWEEN ECM AND FUEL INJECTOR CONNECTOR.** 1) Turn the ignition switch to OFF. 2) Disconnect the connector from fuel injector on faulty cylinders. 3) Turn the ignition switch to ON. 4) Measure the voltage between ECM and chassis ground on faulty cylinders. ***Connector & terminal*** ***#1 (B134) No. 12 (+) — Chassis ground (–):*** ***#2 (B134) No. 22 (+) — Chassis ground (–):*** ***#3 (B134) No. 32 (+) — Chassis ground (–):*** ***#4 (B134) No. 13 (+) — Chassis ground (–):***	Is the voltage 10 V or more?	Repair the short circuit to power in harness between ECM connector and fuel injector connectors.	Go to step **25**.
25	**CHECK FUEL INJECTOR.** 1) Turn the ignition switch to OFF. 2) Measure the resistance between fuel injector terminals on faulty cylinder. ***Terminals*** ***No. 1 — No. 2:***	Is the resistance 5 — 20 Ω?	Go to step **26**.	Replace the faulty fuel injector. <Ref. to FU(H4DO(HEV))-70, Fuel Injector.>
26	**CHECK INSTALLATION CONDITION OF CAMSHAFT POSITION SENSOR/CRANKSHAFT POSITION SENSOR.**	Is the camshaft position sensor or crankshaft position sensor loosely installed?	Tighten the camshaft position sensor or crankshaft position sensor. <Ref. to FU(H4DO(HEV))-53, INSTALLATION, Camshaft Position Sensor.> <Ref. to FU(H4DO(HEV))-48, INSTALLATION, Crankshaft Position Sensor.>	Go to step **27**.
27	**CHECK CRANKSHAFT POSITION SENSOR PLATE.**	Is the crankshaft position sensor plate rusted or does it have broken teeth?	Replace the crankshaft position sensor plate. <Ref. to ME(H4DO(w/o HEV))-299, Cylinder Block.>	Go to step **28**.

	Step	Check	Yes	No
28	**CHECK INSTALLATION CONDITION OF TIMING CHAIN.** Turn the crankshaft using ST, and align the alignment mark on crank sprocket with alignment mark on cylinder block. ST 18252AA000 CRANKSHAFT SOCKET	Is the timing chain dislocated from its proper position?	Correct the installation condition of timing chain. <Ref. to ME(H4DO(w/o HEV))-163, Timing Chain Assembly.>	Go to step **29**.
29	**CHECK FUEL LEVEL.**	Is the fuel meter indication higher than the “Lower” level?	Go to step **30**.	Refill the fuel so that the fuel meter indication is higher than the “Lower” level, and proceed to the next step. Go to step **30**.
30	**CHECK STATUS OF MALFUNCTION INDICATOR LIGHT.** 1) Clear the memory using the Subaru Select Monitor or general scan tool. <Ref. to EN(H4DO HEV)(diag)-63, Clear Memory Mode.> 2) Start the engine, and drive the vehicle 10 minutes or more.	Does the malfunction indicator light illuminate or blink?	Go to step **32**.	Go to step **31**.
31	**CHECK CAUSE OF MISFIRE.**	Was the cause of misfire identified when the engine is running?	Finish diagnostics operation, if the engine has no abnormality.	Repair the poor contact of connector. NOTE: In this case, repair the following item: • Poor contact of ignition coil connector • Poor contact of fuel injector connector on faulty cylinders • Poor contact of ECM connector • Poor contact of coupling connector
32	**CHECK AIR INTAKE SYSTEM.**	Is there any fault in air intake system?	Repair the air intake system. NOTE: Check the following items. • Are there air leaks or air suction caused by loose or dislocated nuts and bolts? • Are there cracks or any disconnection of hoses?	Go to step **33**.
33	**CHECK MISFIRE SYMPTOM.** 1) Turn the ignition switch to ON. 2) Check for DTC. <Ref. to EN(H4DO HEV)(diag)-46, Read Diagnostic Trouble Code (DTC).>	Does the Subaru Select Monitor or general scan tool indicate only one DTC?	Go to step **36**.	Go to step **34**.
34	**CHECK DTC.**	Is DTC P0301 and P0303 displayed on the Subaru Select Monitor or general scan tool?	Go to step **37**.	Go to step **35**.

Step		Check	Yes	No
35	CHECK DTC.	Is DTC P0302 and P0304 displayed on the Subaru Select Monitor or general scan tool?	Go to step **38**.	Go to step **39**.
36	ONLY ONE CYLINDER.	Is there any fault in the cylinder?	Repair or replace faulty parts. NOTE: Check the following items. • Spark plug • Ignition coil • Fuel injector • Compression ratio	Go to DTC P0171. <Ref. to EN(H4DO HEV)(diag)-180, DTC P0171 SYSTEM TOO LEAN (BANK 1), Diagnostic Procedure with Diagnostic Trouble Code (DTC).>
37	GROUP OF #1 AND #3 CYLINDERS.	Are there any faults in #1 and #3 cylinders?	Repair or replace faulty parts. NOTE: Check the following items. • Spark plug • Ignition coil • Fuel injector • Compression ratio • Skipping timing chain teeth	Go to DTC P0171. <Ref. to EN(H4DO HEV)(diag)-180, DTC P0171 SYSTEM TOO LEAN (BANK 1), Diagnostic Procedure with Diagnostic Trouble Code (DTC).>
38	GROUP OF #2 AND #4 CYLINDERS.	Are there any faults in #2 and #4 cylinders?	Repair or replace faulty parts. NOTE: Check the following items. • Spark plug • Ignition coil • Fuel injector • Compression ratio • Skipping timing chain teeth	Go to DTC P0171. <Ref. to EN(H4DO HEV)(diag)-180, DTC P0171 SYSTEM TOO LEAN (BANK 1), Diagnostic Procedure with Diagnostic Trouble Code (DTC).>
39	CYLINDER AT RANDOM.	Is the engine idle rough?	Go to DTC P0171. <Ref. to EN(H4DO HEV)(diag)-180, DTC P0171 SYSTEM TOO LEAN (BANK 1), Diagnostic Procedure with Diagnostic Trouble Code (DTC).>	Repair or replace faulty parts. NOTE: Check the following items. • Spark plug • Ignition coil • Fuel injector • Compression ratio

FG:DTC P2401 EVAPORATIVE EMISSION SYSTEM LEAK DETECTION PUMP CONTROL CIRCUIT LOW

DTC DETECTING CONDITION:

- Immediately at fault recognition
- GENERAL DESCRIPTION <Ref. to GD(H4DO HEV)-262, DTC P2401 EVAPORATIVE EMISSION SYSTEM LEAK DETECTION PUMP CONTROL CIRCUIT LOW, Diagnostic Trouble Code (DTC) Detecting Criteria.>

CAUTION:

After servicing or replacing faulty parts, perform Clear Memory Mode <Ref. to EN(H4DO HEV)(diag)-63, OPERATION, Clear Memory Mode.>, and Inspection Mode <Ref. to EN(H4DO HEV)(diag)-47, PROCEDURE, Inspection Mode.>.

WIRING DIAGRAM:

- Engine electrical system (without push button start) <Ref. to WI(HEV)-100, WITHOUT PUSH BUTTON START, WIRING DIAGRAM, Engine Electrical System.>
- Engine electrical system (with push button start) <Ref. to WI(HEV)-114, WITH PUSH BUTTON START, WIRING DIAGRAM, Engine Electrical System.>

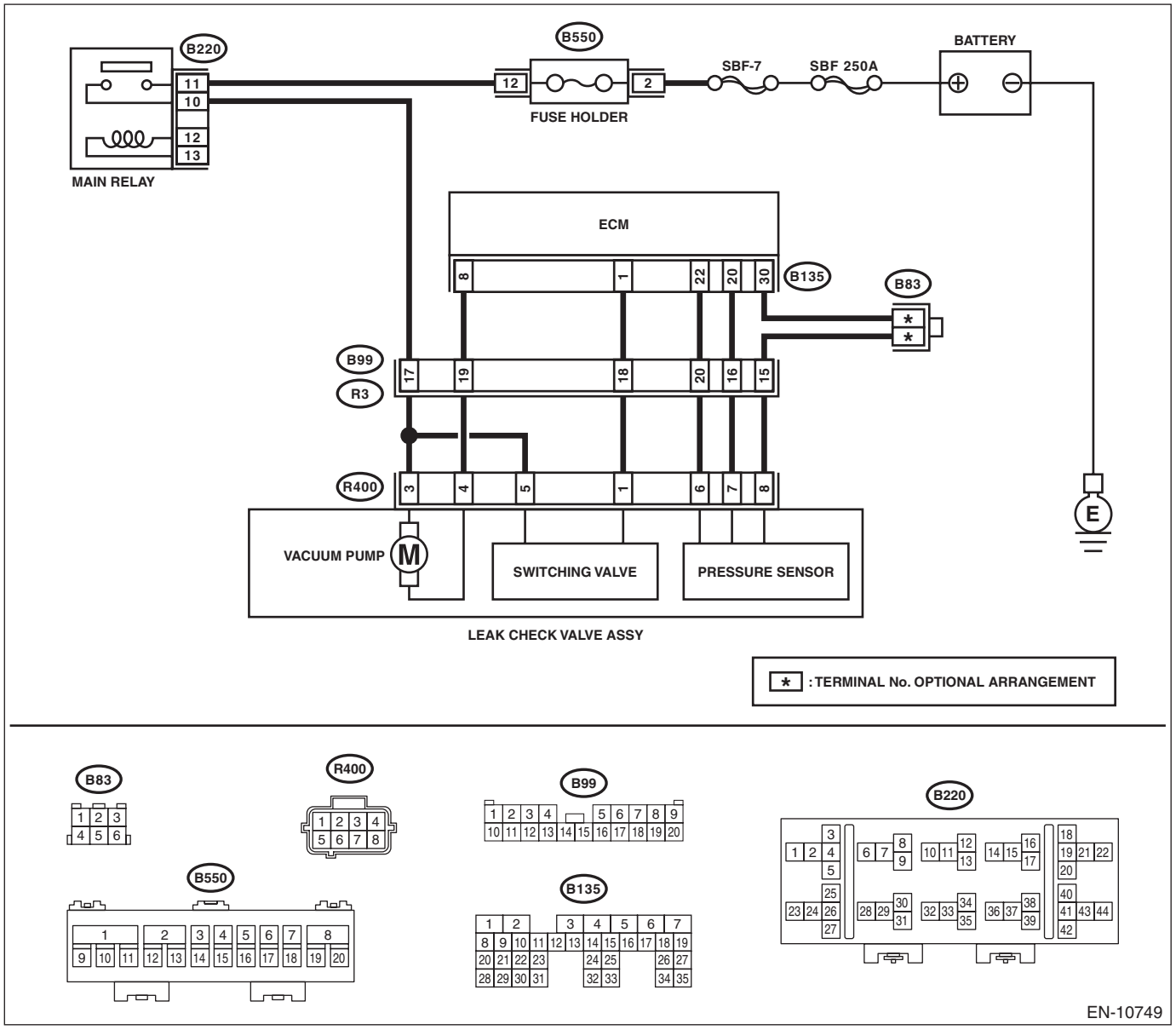

	Step	Check	Yes	No
1	**CHECK HARNESS BETWEEN ECM AND LEAK CHECK VALVE ASSEMBLY CONNECTOR.** 1) Turn the ignition switch to ON. 2) Measure the voltage between ECM connector and chassis ground. ***Connector & terminal*** ***(B135) No. 8 (+) — Chassis ground (–):***	Is the voltage 10 V or more?	Go to step **2**.	Go to step **3**.
2	**CHECK FOR POOR CONTACT.** Check for poor contact of ECM connector.	Is there poor contact of ECM connector?	Repair the poor contact of ECM connector.	Even if DTC is detected, the circuit has returned to a normal condition at this time. Reproduce the failure, and then perform the diagnosis again. NOTE: In this case, temporary open or short circuit of harness or temporary poor contact of connector may be the cause.
3	**CHECK POWER SUPPLY TO LEAK CHECK VALVE ASSEMBLY.** Measure the voltage between the leak check valve assembly connector and engine ground. ***Connector & terminal*** ***(R400) No. 3 (+) — Engine ground (–):***	Is the voltage 10 V or more?	Go to step **4**.	Repair the power supply circuit.
4	**CHECK HARNESS BETWEEN ECM AND LEAK CHECK VALVE ASSEMBLY CONNECTOR.** 1) Turn the ignition switch to OFF. 2) Disconnect the connector from ECM and the leak check valve assembly. 3) Measure the resistance between leak check valve assembly and chassis ground. ***Connector & terminal*** ***(R400) No. 4 — Chassis ground:***	Is the resistance 1 MΩ or more?	Go to step **5**.	Repair the short circuit to ground in harness between ECM connector and leak check valve assembly connector.
5	**CHECK HARNESS BETWEEN ECM AND LEAK CHECK VALVE ASSEMBLY CONNECTOR.** Measure the resistance of harness between ECM connector and the leak check valve assembly connector. ***Connector & terminal*** ***(B135) No. 8 — (R400) No. 4:***	Is the resistance less than 1 Ω?	Go to step **6**.	Repair the harness and connector. NOTE: In this case, repair the following item: • Open circuit in harness between ECM connector and the leak check valve assembly connector • Poor contact of coupling connector

Step		Check	Yes	No
6	**CHECK LEAK CHECK VALVE ASSEMBLY.** Check the vacuum pump of the leak check valve assembly. <Ref. to EC(H4DO(HEV))-48, CHECK VACUUM PUMP, INSPECTION, Leak Check Valve Assembly.>	Is the vacuum pump of the leak check valve assembly OK?	Repair the poor contact in the leak check valve assembly connector.	Replace the leak check valve assembly. <Ref. to EC(H4DO(HEV))-39, Leak Check Valve Assembly.>

FH:DTC P2402 EVAPORATIVE EMISSION SYSTEM LEAK DETECTION PUMP CONTROL CIRCUIT HIGH

DTC DETECTING CONDITION:

- Immediately at fault recognition
- GENERAL DESCRIPTION <Ref. to GD(H4DO HEV)-264, DTC P2402 EVAPORATIVE EMISSION SYSTEM LEAK DETECTION PUMP CONTROL CIRCUIT HIGH, Diagnostic Trouble Code (DTC) Detecting Criteria.>

CAUTION:

After servicing or replacing faulty parts, perform Clear Memory Mode <Ref. to EN(H4DO HEV)(diag)-63, OPERATION, Clear Memory Mode.>, and Inspection Mode <Ref. to EN(H4DO HEV)(diag)-47, PROCEDURE, Inspection Mode.>.

WIRING DIAGRAM:

- Engine electrical system (without push button start) <Ref. to WI(HEV)-100, WITHOUT PUSH BUTTON START, WIRING DIAGRAM, Engine Electrical System.>
- Engine electrical system (with push button start) <Ref. to WI(HEV)-114, WITH PUSH BUTTON START, WIRING DIAGRAM, Engine Electrical System.>

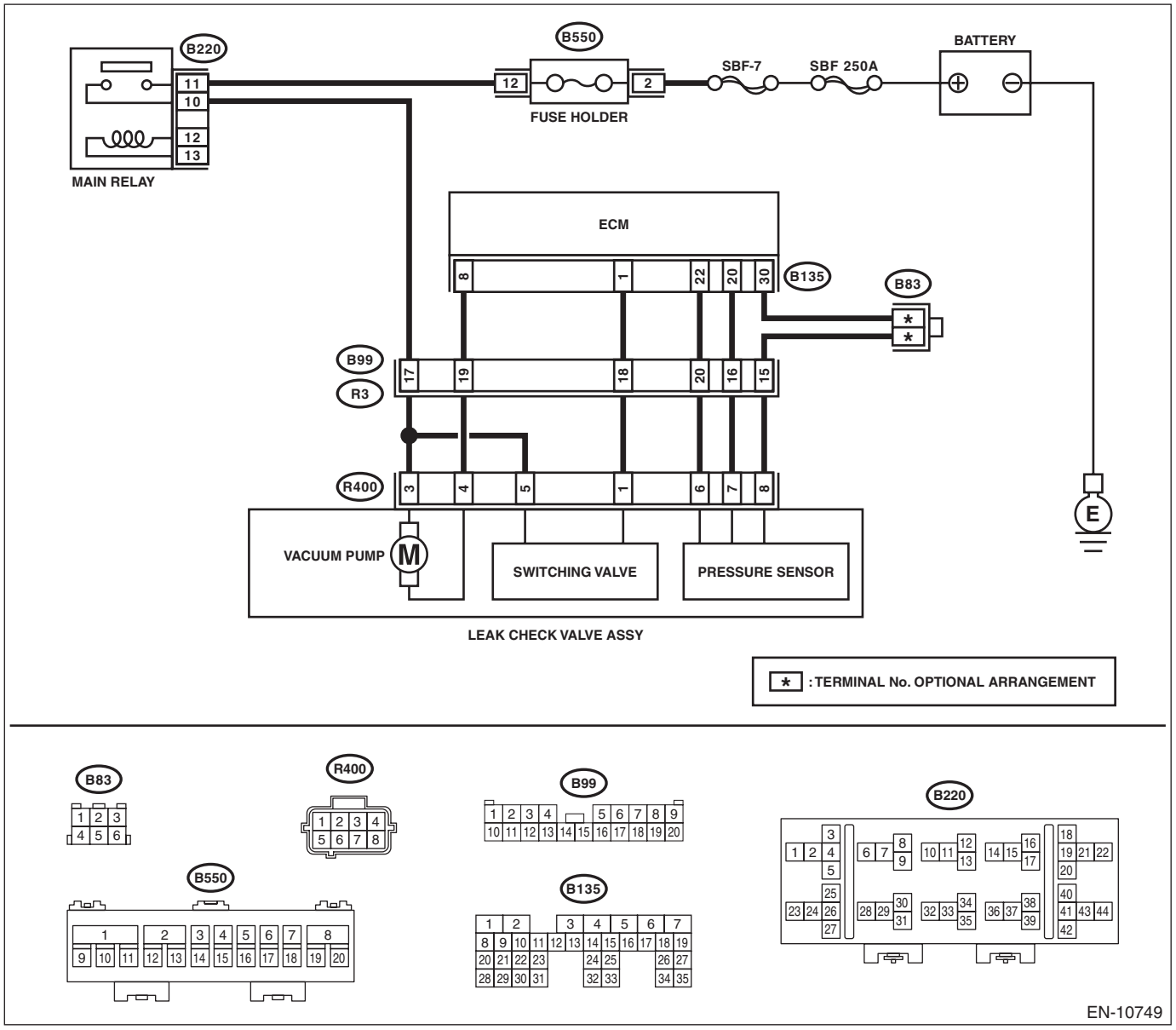

	Step	Check	Yes	No
1	**CHECK HARNESS BETWEEN ECM AND LEAK CHECK VALVE ASSEMBLY CONNECTOR.** 1) Turn the ignition switch to OFF. 2) Disconnect the connector from the leak check valve assembly. 3) Turn the ignition switch to ON. 4) Measure the voltage between leak check valve assembly and chassis ground. ***Connector & terminal*** ***(R400) No. 4 (+) — Chassis ground (–):***	Is the voltage 10 V or more?	Repair the short circuit to power in harness between ECM connector and leak check valve assembly connector.	Go to step **2**.
2	**CHECK LEAK CHECK VALVE ASSEMBLY.** 1) Turn the ignition switch to OFF. 2) Check the vacuum pump of the leak check valve assembly. <Ref. to EC(H4DO(HEV))-48, CHECK VACUUM PUMP, INSPECTION, Leak Check Valve Assembly.>	Is the vacuum pump of the leak check valve assembly OK?	Repair the poor contact in the leak check valve assembly connector.	Replace the leak check valve assembly. <Ref. to EC(H4DO(HEV))-39, Leak Check Valve Assembly.>

FI: DTC P2404 EVAPORATIVE EMISSION SYSTEM LEAK DETECTION PUMP SENSE CIRCUIT RANGE/PERFORMANCE

DTC DETECTING CONDITION:

- Detected when two consecutive driving cycles with fault occur.
- GENERAL DESCRIPTION <Ref. to GD(H4DO HEV)-265, DTC P2404 EVAPORATIVE EMISSION SYSTEM LEAK DETECTION PUMP SENSE CIRCUIT RANGE/PERFORMANCE, Diagnostic Trouble Code (DTC) Detecting Criteria.>

CAUTION:

After servicing or replacing faulty parts, perform Clear Memory Mode <Ref. to EN(H4DO HEV)(diag)-63, OPERATION, Clear Memory Mode.>, and Inspection Mode <Ref. to EN(H4DO HEV)(diag)-47, PROCEDURE, Inspection Mode.>.

WIRING DIAGRAM:

- Engine electrical system (without push button start) <Ref. to WI(HEV)-100, WITHOUT PUSH BUTTON START, WIRING DIAGRAM, Engine Electrical System.>
- Engine electrical system (with push button start) <Ref. to WI(HEV)-114, WITH PUSH BUTTON START, WIRING DIAGRAM, Engine Electrical System.>

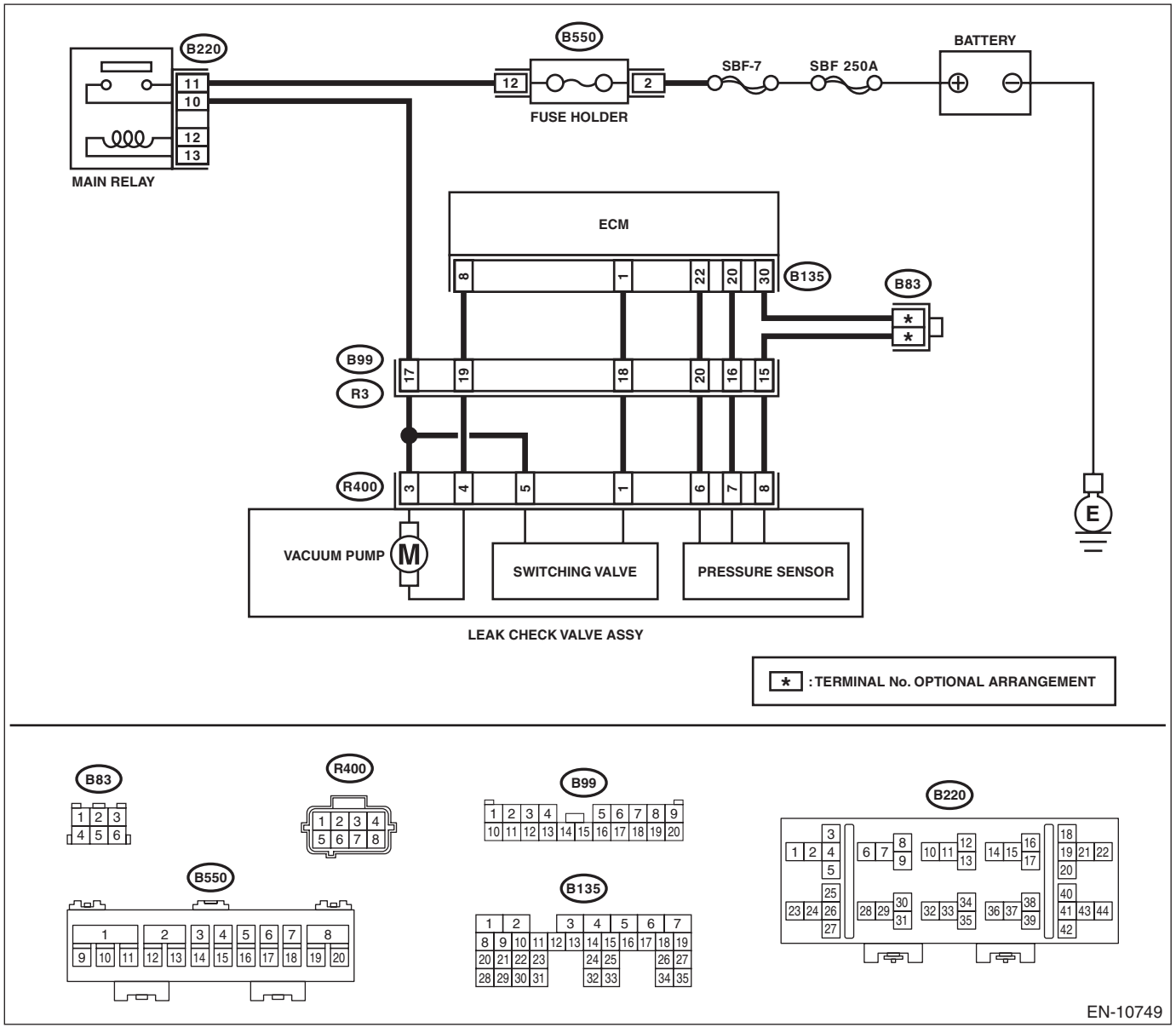

	Step	Check	Yes	No
1	**CHECK FOR ANY OTHER DTC ON DISPLAY.**	Is any other DTC displayed?	Check the appropriate DTC using the "List of Diagnostic Trouble Code (DTC)". <Ref. to EN(H4DO HEV)(diag)-88, List of Diagnostic Trouble Code (DTC).>	Go to step **2**.
2	**CHECK ELCM PUMP.** Operate the ELCM pump using the Subaru Select Monitor. NOTE: For detailed procedures, refer to "System Operation Check Mode". <Ref. to EN(H4DO HEV)(diag)-64, System Operation Check Mode.>	Does the ELCM pump operate?	Go to step **6**.	Go to step **3**.
3	**CHECK POWER SUPPLY OF LEAK CHECK VALVE ASSEMBLY.** 1) Turn the ignition switch to OFF. 2) Disconnect the connector from the leak check valve assembly. 3) Turn the ignition switch to ON. 4) Measure the voltage between the leak check valve assembly connector and chassis ground. ***Connector & terminal*** ***(R400) No. 3 (+) — Chassis ground (–):***	Is the voltage 10 V or more?	Go to step **4**.	Repair the harness and connector. NOTE: In this case, repair the following item: • Open circuit in harness between the main relay and the leak check valve assembly connector • Poor contact of main relay connector • Poor contact of coupling connector
4	**CHECK HARNESS BETWEEN ECM AND LEAK CHECK VALVE ASSEMBLY CONNECTOR.** 1) Turn the ignition switch to OFF. 2) Disconnect the connector from ECM. 3) Measure the resistance of harness between ECM connector and the leak check valve assembly connector. ***Connector & terminal*** ***(B135) No. 8 — (R400) No. 4:***	Is the resistance less than 1 Ω?	Go to step **5**.	Repair the harness and connector. NOTE: In this case, repair the following item: • Open circuit in harness between ECM connector and the leak check valve assembly connector • Poor contact of coupling connector
5	**CHECK HARNESS BETWEEN ECM AND LEAK CHECK VALVE ASSEMBLY CONNECTOR.** 1) Measure the resistance of harness between ECM connector and chassis ground. ***Connector & terminal*** ***(B135) No. 8 — Chassis ground:***	Is the resistance 1 MΩ or more?	Replace the leak check valve assembly. <Ref. to EC(H4DO(HEV))-39, Leak Check Valve Assembly.>	Repair the short circuit to ground in harness between ECM connector and leak check valve assembly connector.

	Step	Check	Yes	No
6	**CHECK ELCM SWITCHING VALVE.** Operate the ELCM switching valve using the Subaru Select Monitor. NOTE: For detailed procedures, refer to "System Operation Check Mode". <Ref. to EN(H4DO HEV)(diag)-64, System Operation Check Mode.>	Does the ELCM switching valve operate?	Go to step **10**.	Go to step **7**.
7	**CHECK POWER SUPPLY OF LEAK CHECK VALVE ASSEMBLY.** 1) Turn the ignition switch to OFF. 2) Disconnect the connector from the leak check valve assembly. 3) Turn the ignition switch to ON. 4) Measure the voltage between the leak check valve assembly connector and chassis ground. ***Connector & terminal*** ***(R400) No. 5 (+) — Chassis ground (–):***	Is the voltage 10 V or more?	Go to step **8**.	Repair the harness and connector. NOTE: In this case, repair the following item: • Open circuit in harness between the main relay and the leak check valve assembly connector • Poor contact of main relay connector • Poor contact of coupling connector
8	**CHECK HARNESS BETWEEN ECM AND LEAK CHECK VALVE ASSEMBLY CONNECTOR.** 1) Turn the ignition switch to OFF. 2) Disconnect the connector from ECM. 3) Measure the resistance of harness between ECM connector and the leak check valve assembly connector. ***Connector & terminal*** ***(B135) No. 1 — (R400) No. 1:***	Is the resistance less than 1 Ω?	Go to step **9**.	Repair the harness and connector. NOTE: In this case, repair the following item: • Open circuit in harness between ECM connector and the leak check valve assembly connector • Poor contact of coupling connector
9	**CHECK HARNESS BETWEEN ECM AND LEAK CHECK VALVE ASSEMBLY CONNECTOR.** 1) Measure the resistance of harness between ECM connector and chassis ground. ***Connector & terminal*** ***(B135) No. 1 — Chassis ground:***	Is the resistance 1 MΩ or more?	Replace the leak check valve assembly. <Ref. to EC(H4DO(HEV))-39, Leak Check Valve Assembly.>	Repair the short circuit to ground in harness between ECM connector and leak check valve assembly connector.

Step		Check	Yes	No
10	**CHECK EVAPORATIVE EMISSION CONTROL SYSTEM.** Perform drive cycle I. <Ref. to EN(H4DO HEV)(diag)-56, DRIVE CYCLE I, PROCEDURE, Drive Cycle.>	Is DTC P2404 displayed on the display?	Replace the leak check valve assembly. <Ref. to EC(H4DO(HEV))-39, Leak Check Valve Assembly.>	Even if DTC is detected, the circuit has returned to a normal condition at this time. Reproduce the failure, and then perform the diagnosis again. NOTE: In this case, temporary poor contact of connector, temporary open or short circuit of harness may be the cause.

FJ: DTC P2419 EVAPORATIVE EMISSION SYSTEM SWITCHING VALVE CONTROL CIRCUIT LOW

DTC DETECTING CONDITION:

- Immediately at fault recognition
- GENERAL DESCRIPTION <Ref. to GD(H4DO HEV)-266, DTC P2419 EVAPORATIVE EMISSION SYSTEM SWITCHING VALVE CONTROL CIRCUIT LOW, Diagnostic Trouble Code (DTC) Detecting Criteria.>

CAUTION:

After servicing or replacing faulty parts, perform Clear Memory Mode <Ref. to EN(H4DO HEV)(diag)-63, OPERATION, Clear Memory Mode.>, and Inspection Mode <Ref. to EN(H4DO HEV)(diag)-47, PROCEDURE, Inspection Mode.>.

WIRING DIAGRAM:

- Engine electrical system (without push button start) <Ref. to WI(HEV)-100, WITHOUT PUSH BUTTON START, WIRING DIAGRAM, Engine Electrical System.>
- Engine electrical system (with push button start) <Ref. to WI(HEV)-114, WITH PUSH BUTTON START, WIRING DIAGRAM, Engine Electrical System.>

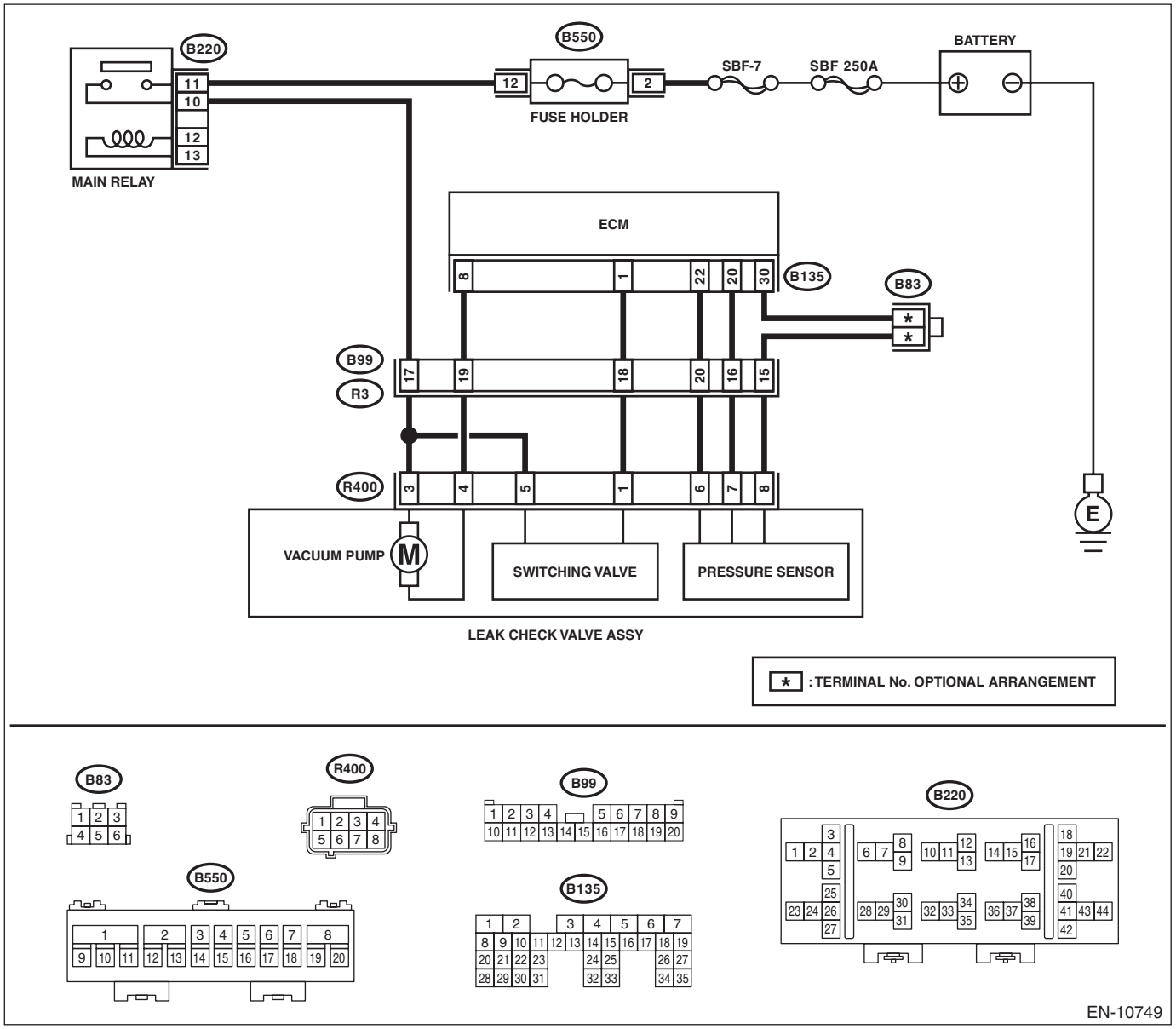

	Step	Check	Yes	No
1	**CHECK HARNESS BETWEEN ECM AND LEAK CHECK VALVE ASSEMBLY CONNECTOR.** 1) Turn the ignition switch to ON. 2) Measure the voltage between ECM connector and chassis ground. ***Connector & terminal*** ***(B135) No. 1 (+) — Chassis ground (–):***	Is the voltage 10 V or more?	Go to step **2**.	Go to step **3**.
2	**CHECK FOR POOR CONTACT.** Check for poor contact of ECM connector.	Is there poor contact of ECM connector?	Repair the poor contact of ECM connector.	Even if DTC is detected, the circuit has returned to a normal condition at this time. Reproduce the failure, and then perform the diagnosis again. NOTE: In this case, temporary open or short circuit of harness or temporary poor contact of connector may be the cause.
3	**CHECK POWER SUPPLY TO LEAK CHECK VALVE ASSEMBLY.** Measure the voltage between the leak check valve assembly connector and engine ground. ***Connector & terminal*** ***(R400) No. 5 (+) — Engine ground (–):***	Is the voltage 10 V or more?	Go to step **4**.	Repair the power supply circuit.
4	**CHECK HARNESS BETWEEN ECM AND LEAK CHECK VALVE ASSEMBLY CONNECTOR.** 1) Turn the ignition switch to OFF. 2) Disconnect the connector from ECM and the leak check valve assembly. 3) Measure the resistance between leak check valve assembly and chassis ground. ***Connector & terminal*** ***(R400) No. 1 — Chassis ground:***	Is the resistance 1 MΩ or more?	Go to step **5**.	Repair the short circuit to ground in harness between ECM connector and leak check valve assembly connector.
5	**CHECK HARNESS BETWEEN ECM AND LEAK CHECK VALVE ASSEMBLY CONNECTOR.** Measure the resistance of harness between ECM connector and the leak check valve assembly connector. ***Connector & terminal*** ***(B135) No. 1 — (R400) No. 1:***	Is the resistance less than 1 Ω?	Go to step **6**.	Repair the harness and connector. NOTE: In this case, repair the following item: • Open circuit in harness between ECM connector and the leak check valve assembly connector • Poor contact of coupling connector

	Step	Check	Yes	No
6	**CHECK LEAK CHECK VALVE ASSEMBLY.** Check the switching valve of the leak check valve assembly. <Ref. to EC(H4DO(HEV))-47, CHECK SWITCHING VALVE, INSPECTION, Leak Check Valve Assembly.>	Is the switching valve of the leak check valve assembly OK?	Repair the poor contact in the leak check valve assembly connector.	Replace the leak check valve assembly. <Ref. to EC(H4DO(HEV))-39, Leak Check Valve Assembly.>

FK:DTC P2420 EVAPORATIVE EMISSION SYSTEM SWITCHING VALVE CONTROL CIRCUIT HIGH

DTC DETECTING CONDITION:

- Immediately at fault recognition
- GENERAL DESCRIPTION <Ref. to GD(H4DO HEV)-268, DTC P2420 EVAPORATIVE EMISSION SYSTEM SWITCHING VALVE CONTROL CIRCUIT HIGH, Diagnostic Trouble Code (DTC) Detecting Criteria.>

CAUTION:

After servicing or replacing faulty parts, perform Clear Memory Mode <Ref. to EN(H4DO HEV)(diag)-63, OPERATION, Clear Memory Mode.>, and Inspection Mode <Ref. to EN(H4DO HEV)(diag)-47, PROCEDURE, Inspection Mode.>.

WIRING DIAGRAM:

- Engine electrical system (without push button start) <Ref. to WI(HEV)-100, WITHOUT PUSH BUTTON START, WIRING DIAGRAM, Engine Electrical System.>
- Engine electrical system (with push button start) <Ref. to WI(HEV)-114, WITH PUSH BUTTON START, WIRING DIAGRAM, Engine Electrical System.>

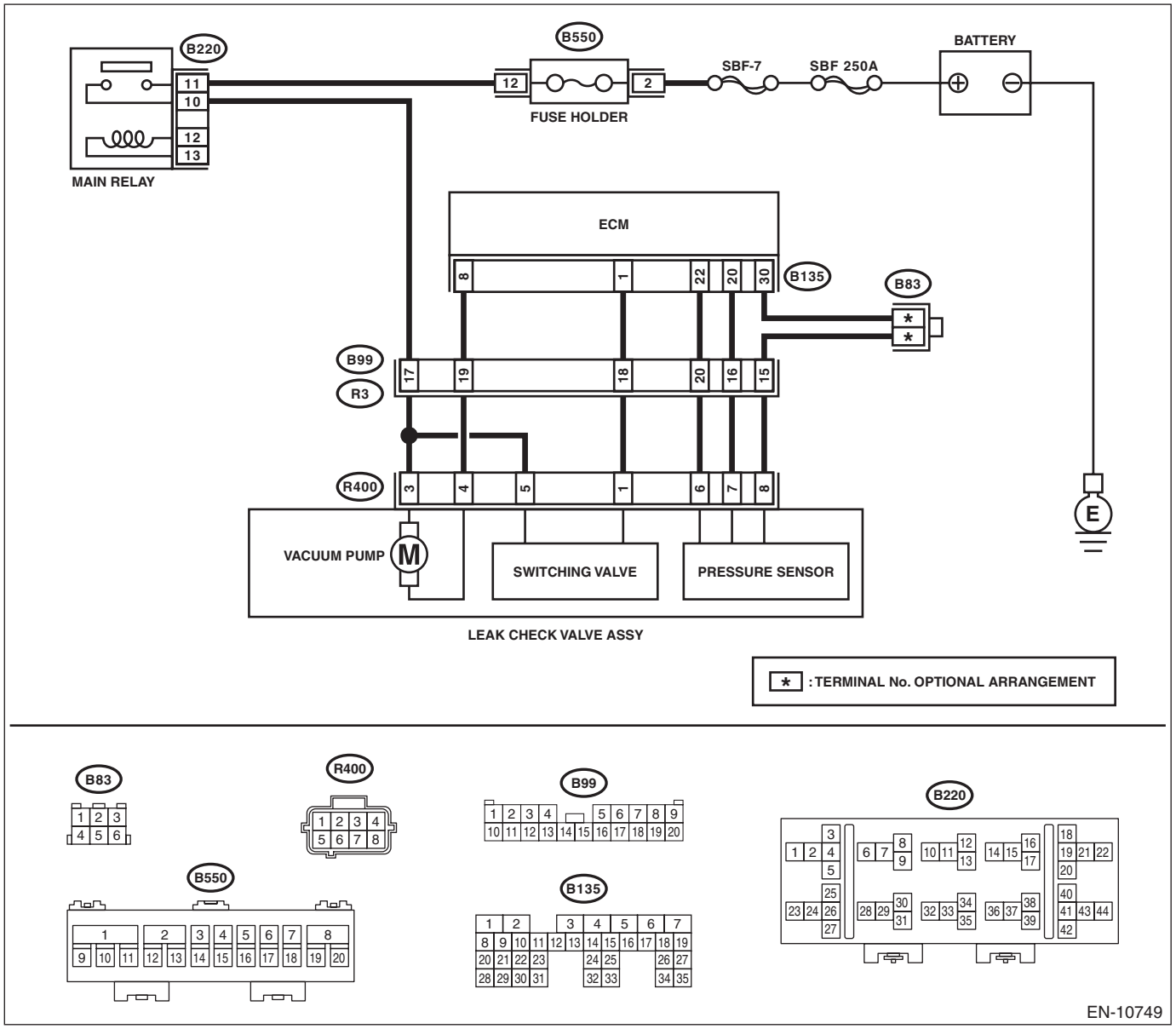

	Step	Check	Yes	No
1	**CHECK HARNESS BETWEEN ECM AND LEAK CHECK VALVE ASSEMBLY CONNECTOR.** 1) Turn the ignition switch to OFF. 2) Disconnect the connector from the leak check valve assembly. 3) Turn the ignition switch to ON. 4) Measure the voltage between leak check valve assembly and chassis ground. ***Connector & terminal*** ***(R400) No. 1 (+) — Chassis ground (–):***	Is the voltage 10 V or more?	Repair the short circuit to power in harness between ECM connector and leak check valve assembly connector.	Go to step **2**.
2	**CHECK LEAK CHECK VALVE ASSEMBLY.** 1) Turn the ignition switch to OFF. 2) Check the switching valve of the leak check valve assembly. <Ref. to EC(H4DO(HEV))-47, CHECK SWITCHING VALVE, INSPECTION, Leak Check Valve Assembly.>	Is the switching valve of the leak check valve assembly OK?	Repair the poor contact in the leak check valve assembly connector.	Replace the leak check valve assembly. <Ref. to EC(H4DO(HEV))-39, Leak Check Valve Assembly.>

FL: DTC P2610 ECM/PCM INTERNAL ENGINE OFF TIMER PERFORMANCE

DTC DETECTING CONDITION:

- Detected when two consecutive driving cycles with fault occur.
- GENERAL DESCRIPTION <Ref. to GD(H4DO HEV)-270, DTC P2610 ECM/PCM INTERNAL ENGINE OFF TIMER PERFORMANCE, Diagnostic Trouble Code (DTC) Detecting Criteria.>

CAUTION:
After servicing or replacing faulty parts, perform Clear Memory Mode <Ref. to EN(H4DO HEV)(diag)-63, OPERATION, Clear Memory Mode.>, and Inspection Mode <Ref. to EN(H4DO HEV)(diag)-47, PROCEDURE, Inspection Mode.>.

Step		Check	Yes	No
1	**CHECK FOR ANY OTHER DTC ON DISPLAY.**	Is any other DTC displayed?	Check DTC using "List of Diagnostic Trouble Code (DTC)". <Ref. to EN(H4DO HEV)(diag)-88, List of Diagnostic Trouble Code (DTC).>	Replace the ECM. <Ref. to FU(H4DO(HEV))-85, Engine Control Module (ECM).> NOTE: The soak timer IC is built into the ECM.

FM: DTC U0073 CONTROL MODULE COMMUNICATION BUS OFF

NOTE:
For the diagnostic procedure, refer to LAN section. <Ref. to LAN(HEV)(diag)-2, Basic Diagnostic Procedure.>

FN: DTC U0075 CONTROL MODULE COMMUNICATION BUS "PU-CAN" OFF

NOTE:
For the diagnostic procedure, refer to LAN section. <Ref. to LAN(HEV)(diag)-2, Basic Diagnostic Procedure.>

FO: DTC U0101 LOST COMMUNICATION WITH TCM

NOTE:
For the diagnostic procedure, refer to LAN section. <Ref. to LAN(HEV)(diag)-2, Basic Diagnostic Procedure.>

FP: DTC U0122 LOST COMMUNICATION WITH VEHICLE DYNAMICS CONTROL MODULE

NOTE:
For the diagnostic procedure, refer to LAN section. <Ref. to LAN(HEV)(diag)-2, Basic Diagnostic Procedure.>

FQ: DTC U0155 LOST COMMUNICATION WITH INSTRUMENT PANEL CLUSTER (IPC) CONTROL MODULE

NOTE:
For the diagnostic procedure, refer to LAN section. <Ref. to LAN(HEV)(diag)-2, Basic Diagnostic Procedure.>

FR:DTC U0284 LOST COMMUNICATION WITH ACTIVE GRILLE SHUTTER MODULE "A"

DTC DETECTING CONDITION:

- Immediately at fault recognition
- GENERAL DESCRIPTION <Ref. to GD(H4DO HEV)-282, DTC U0284 LOST COMMUNICATION WITH ACTIVE GRILLE SHUTTER MODULE "A", Diagnostic Trouble Code (DTC) Detecting Criteria.>

CAUTION:

After servicing or replacing faulty parts, perform Clear Memory Mode <Ref. to EN(H4DO HEV)(diag)-63, OPERATION, Clear Memory Mode.>, and Inspection Mode <Ref. to EN(H4DO HEV)(diag)-47, PROCEDURE, Inspection Mode.>.

WIRING DIAGRAM:

Active grille shutter <Ref. to WI(HEV)-49, Active Grille Shutter.>

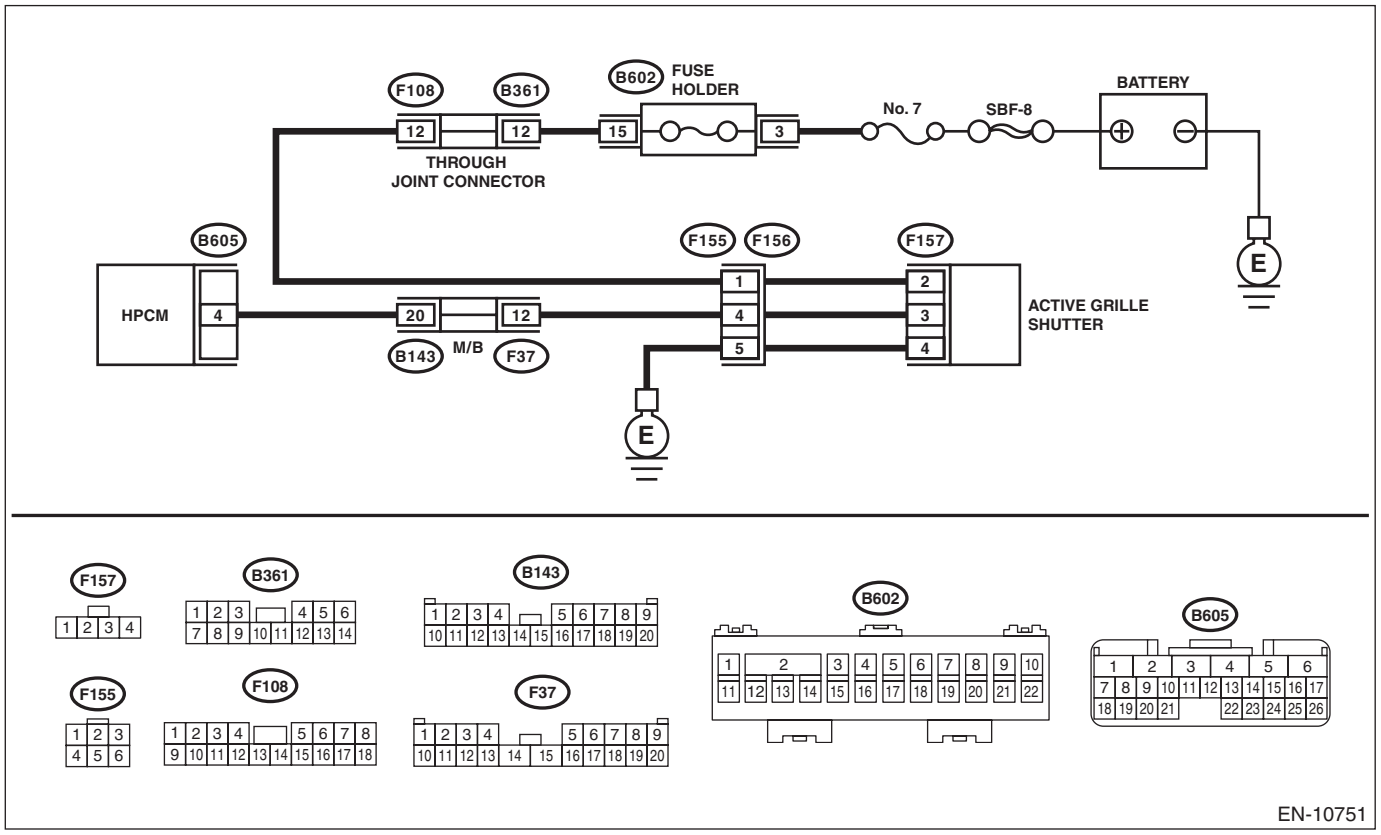

EN-10751

Step		Check	Yes	No
1	**CHECK DTC.** Check for DTC. <Ref. to EN(H4DO HEV)(diag)-46, Read Diagnostic Trouble Code (DTC).>	Is DTC U0284 displayed in «Present fault»?	Go to step **2**.	Even if DTC is detected, the circuit has returned to a normal condition at this time. Reproduce the failure, and then perform the diagnosis again. NOTE: In this case, temporary poor contact of connector, temporary open or short circuit of harness may be the cause.

	Step	Check	Yes	No
2	**CHECK FOR ANY OTHER DTC ON DISPLAY.**	Is any other DTC of engine control system displayed?	Check the appropriate DTC using the "List of Diagnostic Trouble Code (DTC)". <Ref. to EN(H4DO HEV)(diag)-88, List of Diagnostic Trouble Code (DTC).>	Go to step **3**.
3	**CHECK DTC OF HYBRID POWERTRAIN CONTROL SYSTEM, DRIVE MOTOR CONTROL SYSTEM AND BATTERY ENERGY CONTROL SYSTEM.** Check DTC of hybrid powertrain control system, drive motor control system and battery energy control system.	Are DTCs of hybrid powertrain control system, drive motor control system or battery energy control system displayed?	Check the appropriate DTC using the "List of Diagnostic Trouble Code (DTC)". <Ref. to HEV(diag)-74, List of Diagnostic Trouble Code (DTC).>	Go to step **4**.
4	**CHECK HARNESS BETWEEN HPCM AND ACTIVE GRILLE SHUTTER CONNECTOR.** 1) Turn the ignition switch to OFF. 2) Disconnect the 12 volt auxiliary battery. <Ref. to NT-5, BATTERY, NOTE, Note.> 3) Disconnect the connector from HPCM and active grille shutter. 4) Measure the resistance between active grille shutter connector and chassis ground. ***Connector & terminal*** ***(F157) No. 3 — Chassis ground:***	Is the resistance 1 MΩ or more?	Go to step **5**.	Repair the short circuit to ground in harness between HPCM and active grille shutter connector.
5	**CHECK HARNESS BETWEEN HPCM AND ACTIVE GRILLE SHUTTER CONNECTOR.** Measure the resistance between HPCM and active grille shutter connector. ***Connector & terminal*** ***(B605) No. 4 — (F157) No. 3:***	Is the resistance less than 10 Ω?	Go to step **6**.	Repair the harness and connector. NOTE: In this case, repair the following item: • Open circuit in harness between HPCM and active grille shutter connector • Poor contact of coupling connector
6	**CHECK ACTIVE GRILLE SHUTTER POWER SUPPLY.** 1) Connect the 12 volt auxiliary battery. <Ref. to NT-5, BATTERY, NOTE, Note.> 2) Measure the voltage between active grille shutter connector and chassis ground. ***Connector & terminal*** ***(F157) No. 2 (+) — Chassis ground (–):***	Is the voltage 9 V or more?	Go to step **7**.	Repair the power supply circuit.

Step		Check	Yes	No
7	**CHECK HARNESS BETWEEN ACTIVE GRILLE SHUTTER CONNECTOR AND CHASSIS GROUND.** Measure the resistance of harness between active grille shutter connector and chassis ground. ***Connector & terminal*** ***(F157) No. 4 — Chassis ground:***	Is the resistance less than 10 Ω?	Replace the active grille shutter. <Ref. to HEV-76, Active Grille Shutter.>	Repair the harness and connector. NOTE: In this case, repair the following item: • Open circuit in harness between active grille shutter connector and chassis ground • Poor contact of coupling connector

FS:DTC U0293 LOST COMMUNICATION WITH HYBRID POWERTRAIN CONTROL MODULE

NOTE:
For the diagnostic procedure, refer to LAN section. <Ref. to LAN(HEV)(diag)-2, Basic Diagnostic Procedure.>

FT:DTC U0402 INVALID DATA RECEIVED FROM TCM

NOTE:
For the diagnostic procedure, refer to LAN section. <Ref. to LAN(HEV)(diag)-2, Basic Diagnostic Procedure.>

FU:DTC U0416 INVALID DATA RECEIVED FROM VEHICLE DYNAMICS CONTROL MODULE

NOTE:
For the diagnostic procedure, refer to LAN section. <Ref. to LAN(HEV)(diag)-2, Basic Diagnostic Procedure.>

FV:DTC U0423 INVALID DATA RECEIVED FROM INSTRUMENT PANEL CLUSTER CONTROL MODULE

NOTE:
For the diagnostic procedure, refer to LAN section. <Ref. to LAN(HEV)(diag)-2, Basic Diagnostic Procedure.>

FW:DTC U0594 INVALID DATA RECEIVED FROM HYBRID POWERTRAIN CONTROL MODULE

NOTE:
For the diagnostic procedure, refer to LAN section. <Ref. to LAN(HEV)(diag)-2, Basic Diagnostic Procedure.>

FX:DTC U1101 LOST COMMUNICATION WITH TCM PU-CAN

NOTE:
For the diagnostic procedure, refer to LAN section. <Ref. to LAN(HEV)(diag)-2, Basic Diagnostic Procedure.>

FY:DTC U1293 LOST COMMUNICATION WITH HYBRID POWERTRAIN CONTROL MODULE PU-CAN

NOTE:
For the diagnostic procedure, refer to LAN section. <Ref. to LAN(HEV)(diag)-2, Basic Diagnostic Procedure.>

FZ:DTC U1402 INVALID DATA RECEIVED FROM TCM PU-CAN

NOTE:
For the diagnostic procedure, refer to LAN section. <Ref. to LAN(HEV)(diag)-2, Basic Diagnostic Procedure.>

GA:DTC U1594 INVALID DATA RECEIVED FROM HYBRID POWERTRAIN CONTROL MODULE PU-CAN

NOTE:
For the diagnostic procedure, refer to LAN section. <Ref. to LAN(HEV)(diag)-2, Basic Diagnostic Procedure.>

19.General Diagnostic Table

A: INSPECTION

1. ENGINE

NOTE:
Malfunction of parts other than those listed is also possible. <Ref. to ME(H4DO(w/o HEV))-418, Engine Trouble in General.>

Symptoms	Faulty parts
1. Engine stalls during idling.	1) Manifold absolute pressure sensor 2) Mass air flow and intake air temperature sensor 3) Ignition parts (*1) 4) Engine coolant temperature sensor (*2) 5) Crankshaft position sensor (*3) 6) Camshaft position sensor (*3) 7) Fuel injection parts (*4) 8) Electronic throttle control
2. Rough idling	1) Manifold absolute pressure sensor 2) Mass air flow and intake air temperature sensor 3) Engine coolant temperature sensor (*2) 4) Ignition parts (*1) 5) Air intake system (*5) 6) Fuel injection parts (*4) 7) Electronic throttle control 8) Crankshaft position sensor (*3) 9) Camshaft position sensor (*3) 10) Oxygen sensor 11) Fuel pump and fuel pump relay 12) EGR control valve
3. Engine does not return to idle.	1) Engine coolant temperature sensor 2) Electronic throttle control 3) Manifold absolute pressure sensor 4) Mass air flow and intake air temperature sensor 5) EGR control valve 6) Accelerator pedal position sensor 7) Engine oil temperature sensor
4. Poor acceleration	1) Manifold absolute pressure sensor 2) Mass air flow and intake air temperature sensor 3) Electronic throttle control 4) Fuel injection parts (*4) 5) Fuel pump and fuel pump relay 6) Engine coolant temperature sensor (*2) 7) Crankshaft position sensor (*3) 8) Camshaft position sensor (*3) 9) Engine torque control signal circuit 10) Ignition parts (*1) 11) EGR control valve 12) Accelerator pedal position sensor 13) Engine oil temperature sensor
5. Engine stalls, hesitates, or sputters at acceleration.	1) Manifold absolute pressure sensor 2) Mass air flow and intake air temperature sensor 3) Engine coolant temperature sensor (*2) 4) Crankshaft position sensor (*3) 5) Camshaft position sensor (*3) 6) Purge control solenoid valve 7) Fuel injection parts (*4) 8) Electronic throttle control 9) Fuel pump and fuel pump relay 10) EGR control valve

Symptoms	Faulty parts
6. Surging	1) Mass air flow and intake air temperature sensor 2) Manifold absolute pressure sensor 3) Engine coolant temperature sensor (*2) 4) Crankshaft position sensor (*3) 5) Camshaft position sensor (*3) 6) Fuel injection parts (*4) 7) Electronic throttle control 8) Fuel pump and fuel pump relay 9) EGR control valve
7. Spark knock	1) Mass air flow and intake air temperature sensor 2) Manifold absolute pressure sensor 3) Engine coolant temperature sensor 4) Knock sensor 5) Fuel injection parts (*4) 6) Fuel pump and fuel pump relay 7) EGR control valve
8. After burning in exhaust system	1) Mass air flow and intake air temperature sensor 2) Manifold absolute pressure sensor 3) Engine coolant temperature sensor (*2) 4) Fuel injection parts (*4) 5) Fuel pump and fuel pump relay

*1: Check ignition coil and spark plug.
*2: Indicate the symptom occurring only in cold temperatures.
*3: Ensure the secure installation.
*4: Check fuel injector and fuel filter.
*5: Inspect air leak in air intake system.

GENERAL DESCRIPTION

GD(H4DO HEV)

Page

1. List of Diagnostic Trouble Code (DTC) 2
2. Diagnostic Trouble Code (DTC) Detecting Criteria 11

1. List of Diagnostic Trouble Code (DTC)

A: LIST

DTC	Item	Note
B1570	Antenna	<Ref. to GD(H4DO HEV)-11, DTC B1570 ANTENNA, Diagnostic Trouble Code (DTC) Detecting Criteria.>
B1571	Reference Code Incompatibility	<Ref. to GD(H4DO HEV)-11, DTC B1571 REFERENCE CODE INCOMPATIBILITY, Diagnostic Trouble Code (DTC) Detecting Criteria.>
B1572	IMM Circuit Failure (Except Antenna Circuit)	<Ref. to GD(H4DO HEV)-11, DTC B1572 IMM CIRCUIT FAILURE (EXCEPT ANTENNA CIRCUIT), Diagnostic Trouble Code (DTC) Detecting Criteria.>
B1574	Key Communication Failure	<Ref. to GD(H4DO HEV)-11, DTC B1574 KEY COMMUNICATION FAILURE, Diagnostic Trouble Code (DTC) Detecting Criteria.>
B1575	Incorrect Immobilizer Key	<Ref. to GD(H4DO HEV)-12, DTC B1575 INCORRECT IMMOBILIZER KEY, Diagnostic Trouble Code (DTC) Detecting Criteria.>
B1576	EGI Control Module EEPROM	<Ref. to GD(H4DO HEV)-12, DTC B1576 EGI CONTROL MODULE EEPROM, Diagnostic Trouble Code (DTC) Detecting Criteria.>
B1577	IMM Control Module EEPROM	<Ref. to GD(H4DO HEV)-12, DTC B1577 IMM CONTROL MODULE EEPROM, Diagnostic Trouble Code (DTC) Detecting Criteria.>
B1578	Meter Failure	<Ref. to GD(H4DO HEV)-12, DTC B1578 METER FAILURE, Diagnostic Trouble Code (DTC) Detecting Criteria.>
P000A	A Camshaft Position Slow Response (Bank 1)	<Ref. to GD(H4DO HEV)-13, DTC P000A A CAMSHAFT POSITION SLOW RESPONSE (BANK 1), Diagnostic Trouble Code (DTC) Detecting Criteria.>
P000B	B Camshaft Position Slow Response (Bank 1)	<Ref. to GD(H4DO HEV)-14, DTC P000B B CAMSHAFT POSITION SLOW RESPONSE (BANK 1), Diagnostic Trouble Code (DTC) Detecting Criteria.>
P000C	A Camshaft Position Slow Response (Bank 2)	<Ref. to GD(H4DO HEV)-15, DTC P000C A CAMSHAFT POSITION SLOW RESPONSE (BANK 2), Diagnostic Trouble Code (DTC) Detecting Criteria.>
P000D	B Camshaft Position Slow Response (Bank 2)	<Ref. to GD(H4DO HEV)-15, DTC P000D B CAMSHAFT POSITION SLOW RESPONSE (BANK 2), Diagnostic Trouble Code (DTC) Detecting Criteria.>
P0010	"A" Camshaft Position Actuator Circuit/Open (Bank 1)	<Ref. to GD(H4DO HEV)-16, DTC P0010 "A" CAMSHAFT POSITION ACTUATOR CIRCUIT/OPEN (BANK 1), Diagnostic Trouble Code (DTC) Detecting Criteria.>
P0011	Intake Camshaft Position - Timing Over-Advanced or System Performance (Bank 1)	<Ref. to GD(H4DO HEV)-17, DTC P0011 INTAKE CAMSHAFT POSITION - TIMING OVER-ADVANCED OR SYSTEM PERFORMANCE (BANK 1), Diagnostic Trouble Code (DTC) Detecting Criteria.>
P0013	B Camshaft Position Actuator Circuit/Open (Bank 1)	<Ref. to GD(H4DO HEV)-19, DTC P0013 B CAMSHAFT POSITION ACTUATOR CIRCUIT/OPEN (BANK 1), Diagnostic Trouble Code (DTC) Detecting Criteria.>
P0014	Exhaust AVCS System 1 (Range/ Performance)	<Ref. to GD(H4DO HEV)-20, DTC P0014 EXHAUST AVCS SYSTEM 1 (RANGE/ PERFORMANCE), Diagnostic Trouble Code (DTC) Detecting Criteria.>
P0016	Crankshaft Position - Camshaft Position Correlation (Bank1)	<Ref. to GD(H4DO HEV)-21, DTC P0016 CRANKSHAFT POSITION - CAMSHAFT POSITION CORRELATION (BANK1), Diagnostic Trouble Code (DTC) Detecting Criteria.>
P0017	Crank and Cam Timing B System Failure (Bank 1)	<Ref. to GD(H4DO HEV)-22, DTC P0017 CRANK AND CAM TIMING B SYSTEM FAILURE (BANK 1), Diagnostic Trouble Code (DTC) Detecting Criteria.>
P0018	Crankshaft Position - Camshaft Position Correlation (Bank2)	<Ref. to GD(H4DO HEV)-23, DTC P0018 CRANKSHAFT POSITION - CAMSHAFT POSITION CORRELATION (BANK2), Diagnostic Trouble Code (DTC) Detecting Criteria.>
P0019	Crank and Cam Timing B System Failure (Bank 2)	<Ref. to GD(H4DO HEV)-23, DTC P0019 CRANK AND CAM TIMING B SYSTEM FAILURE (BANK 2), Diagnostic Trouble Code (DTC) Detecting Criteria.>
P0020	"A" Camshaft Position Actuator Circuit/Open (Bank 2)	<Ref. to GD(H4DO HEV)-23, DTC P0020 "A" CAMSHAFT POSITION ACTUATOR CIRCUIT/OPEN (BANK 2), Diagnostic Trouble Code (DTC) Detecting Criteria.>
P0021	Intake Camshaft Position - Timing Over-Advanced or System Performance (Bank 2)	<Ref. to GD(H4DO HEV)-23, DTC P0021 INTAKE CAMSHAFT POSITION - TIMING OVER-ADVANCED OR SYSTEM PERFORMANCE (BANK 2), Diagnostic Trouble Code (DTC) Detecting Criteria.>
P0023	B Camshaft Position Actuator Circuit/Open (Bank 2)	<Ref. to GD(H4DO HEV)-23, DTC P0023 B CAMSHAFT POSITION ACTUATOR CIRCUIT/OPEN (BANK 2), Diagnostic Trouble Code (DTC) Detecting Criteria.>
P0024	Exhaust AVCS System 2 (Range/ Performance)	<Ref. to GD(H4DO HEV)-23, DTC P0024 EXHAUST AVCS SYSTEM 2 (RANGE/ PERFORMANCE), Diagnostic Trouble Code (DTC) Detecting Criteria.>

DTC	Item	Note
P0030	HO2S Heater Control Circuit (Bank 1 Sensor 1)	<Ref. to GD(H4DO HEV)-24, DTC P0030 HO2S HEATER CONTROL CIRCUIT (BANK 1 SENSOR 1), Diagnostic Trouble Code (DTC) Detecting Criteria.>
P0031	HO2S Heater Control Circuit Low (Bank 1 Sensor 1)	<Ref. to GD(H4DO HEV)-26, DTC P0031 HO2S HEATER CONTROL CIRCUIT LOW (BANK 1 SENSOR 1), Diagnostic Trouble Code (DTC) Detecting Criteria.>
P0032	HO2S Heater Control Circuit High (Bank 1 Sensor 1)	<Ref. to GD(H4DO HEV)-28, DTC P0032 HO2S HEATER CONTROL CIRCUIT HIGH (BANK 1 SENSOR 1), Diagnostic Trouble Code (DTC) Detecting Criteria.>
P0037	HO2S Heater Control Circuit Low (Bank 1 Sensor 2)	<Ref. to GD(H4DO HEV)-30, DTC P0037 HO2S HEATER CONTROL CIRCUIT LOW (BANK 1 SENSOR 2), Diagnostic Trouble Code (DTC) Detecting Criteria.>
P0038	HO2S Heater Control Circuit High (Bank 1 Sensor 2)	<Ref. to GD(H4DO HEV)-32, DTC P0038 HO2S HEATER CONTROL CIRCUIT HIGH (BANK 1 SENSOR 2), Diagnostic Trouble Code (DTC) Detecting Criteria.>
P0068	MAP/MAF - Throttle Position Correlation	<Ref. to GD(H4DO HEV)-34, DTC P0068 MAP/MAF - THROTTLE POSITION CORRELATION, Diagnostic Trouble Code (DTC) Detecting Criteria.>
P0071	Ambient Temperature Sensor Circuit "A" Range/Performance	<Ref. to GD(H4DO HEV)-36, DTC P0071 AMBIENT TEMPERATURE SENSOR CIRCUIT "A" RANGE/PERFORMANCE, Diagnostic Trouble Code (DTC) Detecting Criteria.>
P0072	Ambient Temperature Sensor Circuit "A" Low	<Ref. to GD(H4DO HEV)-38, DTC P0072 AMBIENT TEMPERATURE SENSOR CIRCUIT "A" LOW, Diagnostic Trouble Code (DTC) Detecting Criteria.>
P0073	Ambient Temperature Sensor Circuit "A" High	<Ref. to GD(H4DO HEV)-39, DTC P0073 AMBIENT TEMPERATURE SENSOR CIRCUIT "A" HIGH, Diagnostic Trouble Code (DTC) Detecting Criteria.>
P0101	Mass or Volume Air Flow Circuit Range/Performance	<Ref. to GD(H4DO HEV)-40, DTC P0101 MASS OR VOLUME AIR FLOW CIRCUIT RANGE/PERFORMANCE, Diagnostic Trouble Code (DTC) Detecting Criteria.>
P0102	Mass or Volume Air Flow Circuit Low Input	<Ref. to GD(H4DO HEV)-42, DTC P0102 MASS OR VOLUME AIR FLOW CIRCUIT LOW INPUT, Diagnostic Trouble Code (DTC) Detecting Criteria.>
P0103	Mass or Volume Air Flow Circuit High Input	<Ref. to GD(H4DO HEV)-44, DTC P0103 MASS OR VOLUME AIR FLOW CIRCUIT HIGH INPUT, Diagnostic Trouble Code (DTC) Detecting Criteria.>
P0107	Manifold Absolute Pressure/Barometric Pressure Circuit Low Input	<Ref. to GD(H4DO HEV)-46, DTC P0107 MANIFOLD ABSOLUTE PRESSURE/BAROMETRIC PRESSURE CIRCUIT LOW INPUT, Diagnostic Trouble Code (DTC) Detecting Criteria.>
P0108	Manifold Absolute Pressure/Barometric Pressure Circuit High Input	<Ref. to GD(H4DO HEV)-48, DTC P0108 MANIFOLD ABSOLUTE PRESSURE/BAROMETRIC PRESSURE CIRCUIT HIGH INPUT, Diagnostic Trouble Code (DTC) Detecting Criteria.>
P0111	Intake Air Temperature Sensor Range/Performance Problem	<Ref. to GD(H4DO HEV)-50, DTC P0111 INTAKE AIR TEMPERATURE SENSOR RANGE/PERFORMANCE PROBLEM, Diagnostic Trouble Code (DTC) Detecting Criteria.>
P0112	Intake Air Temperature Sensor 1 Circuit Low	<Ref. to GD(H4DO HEV)-54, DTC P0112 INTAKE AIR TEMPERATURE SENSOR 1 CIRCUIT LOW, Diagnostic Trouble Code (DTC) Detecting Criteria.>
P0113	Intake Air Temperature Sensor 1 Circuit High	<Ref. to GD(H4DO HEV)-56, DTC P0113 INTAKE AIR TEMPERATURE SENSOR 1 CIRCUIT HIGH, Diagnostic Trouble Code (DTC) Detecting Criteria.>
P0116	Engine Coolant Temperature Sensor 1 Circuit Range/Performance	<Ref. to GD(H4DO HEV)-58, DTC P0116 ENGINE COOLANT TEMPERATURE SENSOR 1 CIRCUIT RANGE/PERFORMANCE, Diagnostic Trouble Code (DTC) Detecting Criteria.>
P0117	Engine Coolant Temperature Circuit Low	<Ref. to GD(H4DO HEV)-60, DTC P0117 ENGINE COOLANT TEMPERATURE CIRCUIT LOW, Diagnostic Trouble Code (DTC) Detecting Criteria.>
P0118	Engine Coolant Temperature Circuit High	<Ref. to GD(H4DO HEV)-62, DTC P0118 ENGINE COOLANT TEMPERATURE CIRCUIT HIGH, Diagnostic Trouble Code (DTC) Detecting Criteria.>
P0122	Throttle/Pedal Position Sensor/Switch “A” Circuit Low	<Ref. to GD(H4DO HEV)-64, DTC P0122 THROTTLE/PEDAL POSITION SENSOR/SWITCH “A” CIRCUIT LOW, Diagnostic Trouble Code (DTC) Detecting Criteria.>
P0123	Throttle/Pedal Position Sensor/Switch “A” Circuit High	<Ref. to GD(H4DO HEV)-66, DTC P0123 THROTTLE/PEDAL POSITION SENSOR/SWITCH “A” CIRCUIT HIGH, Diagnostic Trouble Code (DTC) Detecting Criteria.>
P0125	Insufficient Coolant Temperature for Closed Loop Fuel Control	<Ref. to GD(H4DO HEV)-68, DTC P0125 INSUFFICIENT COOLANT TEMPERATURE FOR CLOSED LOOP FUEL CONTROL, Diagnostic Trouble Code (DTC) Detecting Criteria.>

DTC	Item	Note
P0128	Coolant Thermostat (Engine Coolant Temperature Below Thermostat Regulating Temperature)	<Ref. to GD(H4DO HEV)-70, DTC P0128 COOLANT THERMOSTAT (ENGINE COOLANT TEMPERATURE BELOW THERMOSTAT REGULATING TEMPERATURE), Diagnostic Trouble Code (DTC) Detecting Criteria.>
P0131	O2 Sensor Circuit Low Voltage (Bank 1 Sensor 1)	<Ref. to GD(H4DO HEV)-74, DTC P0131 O2 SENSOR CIRCUIT LOW VOLTAGE (BANK 1 SENSOR 1), Diagnostic Trouble Code (DTC) Detecting Criteria.>
P0132	O2 Sensor Circuit High Voltage (Bank 1 Sensor 1)	<Ref. to GD(H4DO HEV)-76, DTC P0132 O2 SENSOR CIRCUIT HIGH VOLTAGE (BANK 1 SENSOR 1), Diagnostic Trouble Code (DTC) Detecting Criteria.>
P0134	O2 Sensor Circuit No Activity Detected (Bank 1 Sensor 1)	<Ref. to GD(H4DO HEV)-78, DTC P0134 O2 SENSOR CIRCUIT NO ACTIVITY DETECTED (BANK 1 SENSOR 1), Diagnostic Trouble Code (DTC) Detecting Criteria.>
P0137	O2 Sensor Circuit Low Voltage (Bank 1 Sensor 2)	<Ref. to GD(H4DO HEV)-80, DTC P0137 O2 SENSOR CIRCUIT LOW VOLTAGE (BANK 1 SENSOR 2), Diagnostic Trouble Code (DTC) Detecting Criteria.>
P0138	O2 Sensor Circuit High Voltage (Bank 1 Sensor 2)	<Ref. to GD(H4DO HEV)-81, DTC P0138 O2 SENSOR CIRCUIT HIGH VOLTAGE (BANK 1 SENSOR 2), Diagnostic Trouble Code (DTC) Detecting Criteria.>
P013A	O2 Sensor Slow Response - Rich to Lean (Bank 1 Sensor 2)	<Ref. to GD(H4DO HEV)-82, DTC P013A O2 SENSOR SLOW RESPONSE - RICH TO LEAN (BANK 1 SENSOR 2), Diagnostic Trouble Code (DTC) Detecting Criteria.>
P013B	O2 Sensor Slow Response - Lean to Rich (Bank 1 Sensor 2)	<Ref. to GD(H4DO HEV)-84, DTC P013B O2 SENSOR SLOW RESPONSE - LEAN TO RICH (BANK 1 SENSOR 2), Diagnostic Trouble Code (DTC) Detecting Criteria.>
P013E	O2 Sensor Delayed Response - Rich to Lean (Bank 1 Sensor 2)	<Ref. to GD(H4DO HEV)-86, DTC P013E O2 SENSOR DELAYED RESPONSE - RICH TO LEAN (BANK 1 SENSOR 2), Diagnostic Trouble Code (DTC) Detecting Criteria.>
P013F	O2 Sensor Delayed Response - Lean to Rich (Bank 1 Sensor 2)	<Ref. to GD(H4DO HEV)-88, DTC P013F O2 SENSOR DELAYED RESPONSE - LEAN TO RICH (BANK 1 SENSOR 2), Diagnostic Trouble Code (DTC) Detecting Criteria.>
P0140	O2 Sensor Circuit No Activity Detected (Bank1 Sensor2)	<Ref. to GD(H4DO HEV)-90, DTC P0140 O2 SENSOR CIRCUIT NO ACTIVITY DETECTED (BANK1 SENSOR2), Diagnostic Trouble Code (DTC) Detecting Criteria.>
P0141	O2 Sensor Heater Circuit (Bank1 Sensor2)	<Ref. to GD(H4DO HEV)-92, DTC P0141 O2 SENSOR HEATER CIRCUIT (BANK1 SENSOR2), Diagnostic Trouble Code (DTC) Detecting Criteria.>
P014C	O2 Sensor Slow Response - Rich to Lean (Bank 1 Sensor 1)	<Ref. to GD(H4DO HEV)-94, DTC P014C O2 SENSOR SLOW RESPONSE - RICH TO LEAN (BANK 1 SENSOR 1), Diagnostic Trouble Code (DTC) Detecting Criteria.>
P014D	O2 Sensor Slow Response - Lean to Rich (Bank 1 Sensor 1)	<Ref. to GD(H4DO HEV)-96, DTC P014D O2 SENSOR SLOW RESPONSE - LEAN TO RICH (BANK 1 SENSOR 1), Diagnostic Trouble Code (DTC) Detecting Criteria.>
P015A	O2 Sensor Delayed Response - Rich to Lean (Bank 1 Sensor 1)	<Ref. to GD(H4DO HEV)-97, DTC P015A O2 SENSOR DELAYED RESPONSE - RICH TO LEAN (BANK 1 SENSOR 1), Diagnostic Trouble Code (DTC) Detecting Criteria.>
P015B	O2 Sensor Delayed Response - Lean to Rich (Bank 1 Sensor 1)	<Ref. to GD(H4DO HEV)-99, DTC P015B O2 SENSOR DELAYED RESPONSE - LEAN TO RICH (BANK 1 SENSOR 1), Diagnostic Trouble Code (DTC) Detecting Criteria.>
P0171	System Too Lean (Bank 1)	<Ref. to GD(H4DO HEV)-100, DTC P0171 SYSTEM TOO LEAN (BANK 1), Diagnostic Trouble Code (DTC) Detecting Criteria.>
P0172	System Too Rich (Bank 1)	<Ref. to GD(H4DO HEV)-101, DTC P0172 SYSTEM TOO RICH (BANK 1), Diagnostic Trouble Code (DTC) Detecting Criteria.>
P0196	Engine Oil Temperature Sensor Circuit Range/Performance	<Ref. to GD(H4DO HEV)-103, DTC P0196 ENGINE OIL TEMPERATURE SENSOR CIRCUIT RANGE/PERFORMANCE, Diagnostic Trouble Code (DTC) Detecting Criteria.>
P0197	Engine Oil Temperature Sensor Low	<Ref. to GD(H4DO HEV)-106, DTC P0197 ENGINE OIL TEMPERATURE SENSOR LOW, Diagnostic Trouble Code (DTC) Detecting Criteria.>
P0198	Engine Oil Temperature Sensor High	<Ref. to GD(H4DO HEV)-108, DTC P0198 ENGINE OIL TEMPERATURE SENSOR HIGH, Diagnostic Trouble Code (DTC) Detecting Criteria.>
P0201	Injector #1	<Ref. to GD(H4DO HEV)-110, DTC P0201 INJECTOR #1, Diagnostic Trouble Code (DTC) Detecting Criteria.>

DTC	Item	Note
P0202	Injector #2	<Ref. to GD(H4DO HEV)-110, DTC P0202 INJECTOR #2, Diagnostic Trouble Code (DTC) Detecting Criteria.>
P0203	Injector #3	<Ref. to GD(H4DO HEV)-110, DTC P0203 INJECTOR #3, Diagnostic Trouble Code (DTC) Detecting Criteria.>
P0204	Injector #4	<Ref. to GD(H4DO HEV)-110, DTC P0204 INJECTOR #4, Diagnostic Trouble Code (DTC) Detecting Criteria.>
P0222	Throttle/Pedal Position Sensor/ Switch “B” Circuit Low	<Ref. to GD(H4DO HEV)-111, DTC P0222 THROTTLE/PEDAL POSITION SENSOR/SWITCH “B” CIRCUIT LOW, Diagnostic Trouble Code (DTC) Detecting Criteria.>
P0223	Throttle/Pedal Position Sensor/ Switch “B” Circuit High	<Ref. to GD(H4DO HEV)-113, DTC P0223 THROTTLE/PEDAL POSITION SENSOR/SWITCH “B” CIRCUIT HIGH, Diagnostic Trouble Code (DTC) Detecting Criteria.>
P0300	Random/Multiple Cylinder Misfire Detected	<Ref. to GD(H4DO HEV)-114, DTC P0300 RANDOM/MULTIPLE CYLINDER MISFIRE DETECTED, Diagnostic Trouble Code (DTC) Detecting Criteria.>
P0301	Cylinder 1 Misfire Detected	<Ref. to GD(H4DO HEV)-115, DTC P0301 CYLINDER 1 MISFIRE DETECTED, Diagnostic Trouble Code (DTC) Detecting Criteria.>
P0302	Cylinder 2 Misfire Detected	<Ref. to GD(H4DO HEV)-122, DTC P0302 CYLINDER 2 MISFIRE DETECTED, Diagnostic Trouble Code (DTC) Detecting Criteria.>
P0303	Cylinder 3 Misfire Detected	<Ref. to GD(H4DO HEV)-122, DTC P0303 CYLINDER 3 MISFIRE DETECTED, Diagnostic Trouble Code (DTC) Detecting Criteria.>
P0304	Cylinder 4 Misfire Detected	<Ref. to GD(H4DO HEV)-122, DTC P0304 CYLINDER 4 MISFIRE DETECTED, Diagnostic Trouble Code (DTC) Detecting Criteria.>
P0327	Knock Sensor 1 Circuit Low (Bank 1 or Single Sensor)	<Ref. to GD(H4DO HEV)-123, DTC P0327 KNOCK SENSOR 1 CIRCUIT LOW (BANK 1 OR SINGLE SENSOR), Diagnostic Trouble Code (DTC) Detecting Criteria.>
P0328	Knock Sensor 1 Circuit High (Bank 1 or Single Sensor)	<Ref. to GD(H4DO HEV)-125, DTC P0328 KNOCK SENSOR 1 CIRCUIT HIGH (BANK 1 OR SINGLE SENSOR), Diagnostic Trouble Code (DTC) Detecting Criteria.>
P0335	Crankshaft Position Sensor “A” Circuit	<Ref. to GD(H4DO HEV)-127, DTC P0335 CRANKSHAFT POSITION SENSOR “A” CIRCUIT, Diagnostic Trouble Code (DTC) Detecting Criteria.>
P0336	Crankshaft Position Sensor “A” Circuit Range/Performance	<Ref. to GD(H4DO HEV)-129, DTC P0336 CRANKSHAFT POSITION SENSOR “A” CIRCUIT RANGE/PERFORMANCE, Diagnostic Trouble Code (DTC) Detecting Criteria.>
P0340	Camshaft Position Sensor “A” Circuit (Bank 1 or Single Sensor)	<Ref. to GD(H4DO HEV)-131, DTC P0340 CAMSHAFT POSITION SENSOR “A” CIRCUIT (BANK 1 OR SINGLE SENSOR), Diagnostic Trouble Code (DTC) Detecting Criteria.>
P0341	Camshaft Position Sensor "A" Circuit Range/Performance (Bank 1 or Single Sensor)	<Ref. to GD(H4DO HEV)-133, DTC P0341 CAMSHAFT POSITION SENSOR "A" CIRCUIT RANGE/PERFORMANCE (BANK 1 OR SINGLE SENSOR), Diagnostic Trouble Code (DTC) Detecting Criteria.>
P0345	Camshaft Position Sensor “A” Circuit (Bank 2)	<Ref. to GD(H4DO HEV)-134, DTC P0345 CAMSHAFT POSITION SENSOR “A” CIRCUIT (BANK 2), Diagnostic Trouble Code (DTC) Detecting Criteria.>
P0346	Camshaft Position Sensor "A" Circuit Range/Performance (Bank 2)	<Ref. to GD(H4DO HEV)-134, DTC P0346 CAMSHAFT POSITION SENSOR "A" CIRCUIT RANGE/PERFORMANCE (BANK 2), Diagnostic Trouble Code (DTC) Detecting Criteria.>
P0351	Ignition Coil A Primary/Secondary Circuit	<Ref. to GD(H4DO HEV)-135, DTC P0351 IGNITION COIL A PRIMARY/SECONDARY CIRCUIT, Diagnostic Trouble Code (DTC) Detecting Criteria.>
P0352	Ignition Coil B Primary/Secondary Circuit	<Ref. to GD(H4DO HEV)-135, DTC P0352 IGNITION COIL B PRIMARY/SECONDARY CIRCUIT, Diagnostic Trouble Code (DTC) Detecting Criteria.>
P0353	Ignition Coil C Primary/Secondary Circuit	<Ref. to GD(H4DO HEV)-135, DTC P0353 IGNITION COIL C PRIMARY/SECONDARY CIRCUIT, Diagnostic Trouble Code (DTC) Detecting Criteria.>
P0354	Ignition Coil D Primary/Secondary Circuit	<Ref. to GD(H4DO HEV)-135, DTC P0354 IGNITION COIL D PRIMARY/SECONDARY CIRCUIT, Diagnostic Trouble Code (DTC) Detecting Criteria.>
P0365	Camshaft Position Sensor “B” Circuit (Bank 1)	<Ref. to GD(H4DO HEV)-136, DTC P0365 CAMSHAFT POSITION SENSOR “B” CIRCUIT (BANK 1), Diagnostic Trouble Code (DTC) Detecting Criteria.>

DTC	Item	Note
P0366	Camshaft Position Sensor B Circuit Range/Performance (Bank 1)	<Ref. to GD(H4DO HEV)-138, DTC P0366 CAMSHAFT POSITION SENSOR B CIRCUIT RANGE/PERFORMANCE (BANK 1), Diagnostic Trouble Code (DTC) Detecting Criteria.>
P0390	Camshaft Position Sensor “B” Circuit (Bank 2)	<Ref. to GD(H4DO HEV)-139, DTC P0390 CAMSHAFT POSITION SENSOR “B” CIRCUIT (BANK 2), Diagnostic Trouble Code (DTC) Detecting Criteria.>
P0391	Camshaft Position Sensor B Circuit Range/Performance (Bank 2)	<Ref. to GD(H4DO HEV)-139, DTC P0391 CAMSHAFT POSITION SENSOR B CIRCUIT RANGE/PERFORMANCE (BANK 2), Diagnostic Trouble Code (DTC) Detecting Criteria.>
P0400	Exhaust Gas Recirculation Flow	<Ref. to GD(H4DO HEV)-140, DTC P0400 EXHAUST GAS RECIRCULATION FLOW, Diagnostic Trouble Code (DTC) Detecting Criteria.>
P0420	Catalyst System Efficiency Below Threshold (Bank 1)	<Ref. to GD(H4DO HEV)-143, DTC P0420 CATALYST SYSTEM EFFICIENCY BELOW THRESHOLD (BANK 1), Diagnostic Trouble Code (DTC) Detecting Criteria.>
P0441	Evaporative Emission Cont. Sys. Incorrect Purge Flow	<Ref. to GD(H4DO HEV)-145, DTC P0441 EVAPORATIVE EMISSION CONT. SYS. INCORRECT PURGE FLOW, Diagnostic Trouble Code (DTC) Detecting Criteria.>
P0451	Evaporative Emission System Pressure Sensor/Switch Range/ Performance	<Ref. to GD(H4DO HEV)-148, DTC P0451 EVAPORATIVE EMISSION SYSTEM PRESSURE SENSOR/SWITCH RANGE/PERFORMANCE, Diagnostic Trouble Code (DTC) Detecting Criteria.>
P0452	Evaporative Emission System Pressure Sensor/Switch Low	<Ref. to GD(H4DO HEV)-150, DTC P0452 EVAPORATIVE EMISSION SYSTEM PRESSURE SENSOR/SWITCH LOW, Diagnostic Trouble Code (DTC) Detecting Criteria.>
P0453	Evaporative Emission System Pressure Sensor/Switch High	<Ref. to GD(H4DO HEV)-152, DTC P0453 EVAPORATIVE EMISSION SYSTEM PRESSURE SENSOR/SWITCH HIGH, Diagnostic Trouble Code (DTC) Detecting Criteria.>
P0455	Evaporative Emission System Leak Detected (Large Leak)	<Ref. to GD(H4DO HEV)-154, DTC P0455 EVAPORATIVE EMISSION SYSTEM LEAK DETECTED (LARGE LEAK), Diagnostic Trouble Code (DTC) Detecting Criteria.>
P0456	Evaporative Emission Control System Leak Detected (Very Small Leak)	<Ref. to GD(H4DO HEV)-160, DTC P0456 EVAPORATIVE EMISSION CONTROL SYSTEM LEAK DETECTED (VERY SMALL LEAK), Diagnostic Trouble Code (DTC) Detecting Criteria.>
P0458	Evaporative Emission System Purge Control Valve Circuit Low	<Ref. to GD(H4DO HEV)-161, DTC P0458 EVAPORATIVE EMISSION SYSTEM PURGE CONTROL VALVE CIRCUIT LOW, Diagnostic Trouble Code (DTC) Detecting Criteria.>
P0459	Evaporative Emission System Purge Control Valve Circuit High	<Ref. to GD(H4DO HEV)-163, DTC P0459 EVAPORATIVE EMISSION SYSTEM PURGE CONTROL VALVE CIRCUIT HIGH, Diagnostic Trouble Code (DTC) Detecting Criteria.>
P0461	Fuel Level Sensor “A” Circuit Range/Performance	<Ref. to GD(H4DO HEV)-165, DTC P0461 FUEL LEVEL SENSOR “A” CIRCUIT RANGE/PERFORMANCE, Diagnostic Trouble Code (DTC) Detecting Criteria.>
P0462	Fuel Level Sensor “A” Circuit Low	<Ref. to GD(H4DO HEV)-167, DTC P0462 FUEL LEVEL SENSOR “A” CIRCUIT LOW, Diagnostic Trouble Code (DTC) Detecting Criteria.>
P0463	Fuel Level Sensor “A” Circuit High	<Ref. to GD(H4DO HEV)-169, DTC P0463 FUEL LEVEL SENSOR “A” CIRCUIT HIGH, Diagnostic Trouble Code (DTC) Detecting Criteria.>
P0500	Vehicle Speed Sensor “A”	<Ref. to GD(H4DO HEV)-170, DTC P0500 VEHICLE SPEED SENSOR “A”, Diagnostic Trouble Code (DTC) Detecting Criteria.>
P0506	Idle Air Control System RPM Lower Than Expected	<Ref. to GD(H4DO HEV)-171, DTC P0506 IDLE AIR CONTROL SYSTEM RPM LOWER THAN EXPECTED, Diagnostic Trouble Code (DTC) Detecting Criteria.>
P0507	Idle Air Control System RPM Higher Than Expected	<Ref. to GD(H4DO HEV)-172, DTC P0507 IDLE AIR CONTROL SYSTEM RPM HIGHER THAN EXPECTED, Diagnostic Trouble Code (DTC) Detecting Criteria.>
P050A	Cold Start Idle Air Control System Performance	<Ref. to GD(H4DO HEV)-173, DTC P050A COLD START IDLE AIR CONTROL SYSTEM PERFORMANCE, Diagnostic Trouble Code (DTC) Detecting Criteria.>
P050B	Cold Start Ignition Timing Performance	<Ref. to GD(H4DO HEV)-175, DTC P050B COLD START IGNITION TIMING PERFORMANCE, Diagnostic Trouble Code (DTC) Detecting Criteria.>
P0512	Starter Request Circuit	<Ref. to GD(H4DO HEV)-176, DTC P0512 STARTER REQUEST CIRCUIT, Diagnostic Trouble Code (DTC) Detecting Criteria.>

DTC	Item	Note
P0560	System Voltage	<Ref. to GD(H4DO HEV)-177, DTC P0560 SYSTEM VOLTAGE, Diagnostic Trouble Code (DTC) Detecting Criteria.>
P059A	Active Grille Shutter "A" Position Sensor Circuit	<Ref. to GD(H4DO HEV)-178, DTC P059A ACTIVE GRILLE SHUTTER "A" POSITION SENSOR CIRCUIT, Diagnostic Trouble Code (DTC) Detecting Criteria.>
P059F	Active Grille Shutter "A" Performance	<Ref. to GD(H4DO HEV)-179, DTC P059F ACTIVE GRILLE SHUTTER "A" PERFORMANCE, Diagnostic Trouble Code (DTC) Detecting Criteria.>
P05A0	Active Grille Shutter "A" Stuck	<Ref. to GD(H4DO HEV)-180, DTC P05A0 ACTIVE GRILLE SHUTTER "A" STUCK, Diagnostic Trouble Code (DTC) Detecting Criteria.>
P05A1	Active Grille Shutter "A" Range Over	<Ref. to GD(H4DO HEV)-182, DTC P05A1 ACTIVE GRILLE SHUTTER "A" RANGE OVER, Diagnostic Trouble Code (DTC) Detecting Criteria.>
P05A2	Active Grille Shutter "A" Control Circuit	<Ref. to GD(H4DO HEV)-184, DTC P05A2 ACTIVE GRILLE SHUTTER "A" CONTROL CIRCUIT, Diagnostic Trouble Code (DTC) Detecting Criteria.>
P05A6	Active Grille Shutter "A" Supply Voltage Circuit/Open	<Ref. to GD(H4DO HEV)-186, DTC P05A6 ACTIVE GRILLE SHUTTER "A" SUPPLY VOLTAGE CIRCUIT/OPEN, Diagnostic Trouble Code (DTC) Detecting Criteria.>
P05C0	Active Grille Shutter "A" Over Temperature	<Ref. to GD(H4DO HEV)-187, DTC P05C0 ACTIVE GRILLE SHUTTER "A" OVER TEMPERATURE, Diagnostic Trouble Code (DTC) Detecting Criteria.>
P0604	Internal Control Module Random Access Memory (RAM) Error	<Ref. to GD(H4DO HEV)-188, DTC P0604 INTERNAL CONTROL MODULE RANDOM ACCESS MEMORY (RAM) ERROR, Diagnostic Trouble Code (DTC) Detecting Criteria.>
P0605	Internal Control Module Read Only Memory (ROM) Error	<Ref. to GD(H4DO HEV)-189, DTC P0605 INTERNAL CONTROL MODULE READ ONLY MEMORY (ROM) ERROR, Diagnostic Trouble Code (DTC) Detecting Criteria.>
P0606	Control Module Processor	<Ref. to GD(H4DO HEV)-190, DTC P0606 CONTROL MODULE PROCESSOR, Diagnostic Trouble Code (DTC) Detecting Criteria.>
P060A	Internal Control Module Monitoring Processor Performance	<Ref. to GD(H4DO HEV)-193, DTC P060A INTERNAL CONTROL MODULE MONITORING PROCESSOR PERFORMANCE, Diagnostic Trouble Code (DTC) Detecting Criteria.>
P060B	Internal Control Module A/D Processing Performance	<Ref. to GD(H4DO HEV)-195, DTC P060B INTERNAL CONTROL MODULE A/D PROCESSING PERFORMANCE, Diagnostic Trouble Code (DTC) Detecting Criteria.>
P0616	Starter Relay Circuit Low	<Ref. to GD(H4DO HEV)-197, DTC P0616 STARTER RELAY CIRCUIT LOW, Diagnostic Trouble Code (DTC) Detecting Criteria.>
P0617	Starter Relay Circuit High	<Ref. to GD(H4DO HEV)-198, DTC P0617 STARTER RELAY CIRCUIT HIGH, Diagnostic Trouble Code (DTC) Detecting Criteria.>
P062F	Internal Control Module EEPROM Error	<Ref. to GD(H4DO HEV)-199, DTC P062F INTERNAL CONTROL MODULE EEPROM ERROR, Diagnostic Trouble Code (DTC) Detecting Criteria.>
P0700	Transmission Control System (MIL Request)	<Ref. to GD(H4DO HEV)-201, DTC P0700 TRANSMISSION CONTROL SYSTEM (MIL REQUEST), Diagnostic Trouble Code (DTC) Detecting Criteria.>
P081A	Starter Disable Circuit Low	<Ref. to GD(H4DO HEV)-202, DTC P081A STARTER DISABLE CIRCUIT LOW, Diagnostic Trouble Code (DTC) Detecting Criteria.>
P0851	Park/Neutral Switch Input Circuit Low (AT Model)	<Ref. to GD(H4DO HEV)-203, DTC P0851 PARK/NEUTRAL SWITCH INPUT CIRCUIT LOW (AT MODEL), Diagnostic Trouble Code (DTC) Detecting Criteria.>
P0852	Park/Neutral Switch Input Circuit High (AT Model)	<Ref. to GD(H4DO HEV)-204, DTC P0852 PARK/NEUTRAL SWITCH INPUT CIRCUIT HIGH (AT MODEL), Diagnostic Trouble Code (DTC) Detecting Criteria.>
P0A7B	Battery Energy Control Module Request MIL Illumination	<Ref. to GD(H4DO HEV)-205, DTC P0A7B BATTERY ENERGY CONTROL MODULE REQUEST MIL ILLUMINATION, Diagnostic Trouble Code (DTC) Detecting Criteria.>
P0AC4	Hybrid Powertrain Control Module Request MIL Illumination	<Ref. to GD(H4DO HEV)-206, DTC P0AC4 HYBRID POWERTRAIN CONTROL MODULE REQUEST MIL ILLUMINATION, Diagnostic Trouble Code (DTC) Detecting Criteria.>
P0CA1	Drive Motor Control Module Request MIL Illumination	<Ref. to GD(H4DO HEV)-207, DTC P0CA1 DRIVE MOTOR CONTROL MODULE REQUEST MIL ILLUMINATION, Diagnostic Trouble Code (DTC) Detecting Criteria.>
P1160	Return Spring Failure	<Ref. to GD(H4DO HEV)-208, DTC P1160 RETURN SPRING FAILURE, Diagnostic Trouble Code (DTC) Detecting Criteria.>

DTC	Item	Note
P1449	Evaporative Emission Cont. Sys. Air Filter Clog	<Ref. to GD(H4DO HEV)-210, DTC P1449 EVAPORATIVE EMISSION CONT. SYS. AIR FILTER CLOG, Diagnostic Trouble Code (DTC) Detecting Criteria.>
P1451	Evaporative Emission Cont. Sys.	<Ref. to GD(H4DO HEV)-212, DTC P1451 EVAPORATIVE EMISSION CONT. SYS., Diagnostic Trouble Code (DTC) Detecting Criteria.>
P1492	EGR Solenoid Valve Signal #1 Circuit Malfunction (Low Input)	<Ref. to GD(H4DO HEV)-213, DTC P1492 EGR SOLENOID VALVE SIGNAL #1 CIRCUIT MALFUNCTION (LOW INPUT), Diagnostic Trouble Code (DTC) Detecting Criteria.>
P1493	EGR Solenoid Valve Signal #1 Circuit Malfunction (High Input)	<Ref. to GD(H4DO HEV)-215, DTC P1493 EGR SOLENOID VALVE SIGNAL #1 CIRCUIT MALFUNCTION (HIGH INPUT), Diagnostic Trouble Code (DTC) Detecting Criteria.>
P1494	EGR Solenoid Valve Signal #2 Circuit Malfunction (Low Input)	<Ref. to GD(H4DO HEV)-217, DTC P1494 EGR SOLENOID VALVE SIGNAL #2 CIRCUIT MALFUNCTION (LOW INPUT), Diagnostic Trouble Code (DTC) Detecting Criteria.>
P1495	EGR Solenoid Valve Signal #2 Circuit Malfunction (High Input)	<Ref. to GD(H4DO HEV)-217, DTC P1495 EGR SOLENOID VALVE SIGNAL #2 CIRCUIT MALFUNCTION (HIGH INPUT), Diagnostic Trouble Code (DTC) Detecting Criteria.>
P1496	EGR Solenoid Valve Signal #3 Circuit Malfunction (Low Input)	<Ref. to GD(H4DO HEV)-217, DTC P1496 EGR SOLENOID VALVE SIGNAL #3 CIRCUIT MALFUNCTION (LOW INPUT), Diagnostic Trouble Code (DTC) Detecting Criteria.>
P1497	EGR Solenoid Valve Signal #3 Circuit Malfunction (High Input)	<Ref. to GD(H4DO HEV)-217, DTC P1497 EGR SOLENOID VALVE SIGNAL #3 CIRCUIT MALFUNCTION (HIGH INPUT), Diagnostic Trouble Code (DTC) Detecting Criteria.>
P1498	EGR Solenoid Valve Signal #4 Circuit Malfunction (Low Input)	<Ref. to GD(H4DO HEV)-217, DTC P1498 EGR SOLENOID VALVE SIGNAL #4 CIRCUIT MALFUNCTION (LOW INPUT), Diagnostic Trouble Code (DTC) Detecting Criteria.>
P1499	EGR Solenoid Valve Signal #4 Circuit Malfunction (High Input)	<Ref. to GD(H4DO HEV)-217, DTC P1499 EGR SOLENOID VALVE SIGNAL #4 CIRCUIT MALFUNCTION (HIGH INPUT), Diagnostic Trouble Code (DTC) Detecting Criteria.>
P2004	Intake Manifold Runner Control Stuck Open (Bank 1)	<Ref. to GD(H4DO HEV)-218, DTC P2004 INTAKE MANIFOLD RUNNER CONTROL STUCK OPEN (BANK 1), Diagnostic Trouble Code (DTC) Detecting Criteria.>
P2005	Intake Manifold Runner Control Stuck Open (Bank 2)	<Ref. to GD(H4DO HEV)-219, DTC P2005 INTAKE MANIFOLD RUNNER CONTROL STUCK OPEN (BANK 2), Diagnostic Trouble Code (DTC) Detecting Criteria.>
P2006	Intake Manifold Runner Control Stuck Closed (Bank 1)	<Ref. to GD(H4DO HEV)-220, DTC P2006 INTAKE MANIFOLD RUNNER CONTROL STUCK CLOSED (BANK 1), Diagnostic Trouble Code (DTC) Detecting Criteria.>
P2007	Intake Manifold Runner Control Stuck Closed (Bank 2)	<Ref. to GD(H4DO HEV)-221, DTC P2007 INTAKE MANIFOLD RUNNER CONTROL STUCK CLOSED (BANK 2), Diagnostic Trouble Code (DTC) Detecting Criteria.>
P2009	Intake Manifold Runner Control Circuit Low (Bank 1)	<Ref. to GD(H4DO HEV)-222, DTC P2009 INTAKE MANIFOLD RUNNER CONTROL CIRCUIT LOW (BANK 1), Diagnostic Trouble Code (DTC) Detecting Criteria.>
P2012	Intake Manifold Runner Control Circuit Low (Bank 2)	<Ref. to GD(H4DO HEV)-224, DTC P2012 INTAKE MANIFOLD RUNNER CONTROL CIRCUIT LOW (BANK 2), Diagnostic Trouble Code (DTC) Detecting Criteria.>
P2096	Post Catalyst Fuel Trim System Too Lean (Bank 1)	<Ref. to GD(H4DO HEV)-226, DTC P2096 POST CATALYST FUEL TRIM SYSTEM TOO LEAN (BANK 1), Diagnostic Trouble Code (DTC) Detecting Criteria.>
P2097	Post Catalyst Fuel Trim System Too Rich (Bank 1)	<Ref. to GD(H4DO HEV)-228, DTC P2097 POST CATALYST FUEL TRIM SYSTEM TOO RICH (BANK 1), Diagnostic Trouble Code (DTC) Detecting Criteria.>
P2101	Throttle Actuator Control Motor Circuit Range/Performance	<Ref. to GD(H4DO HEV)-230, DTC P2101 THROTTLE ACTUATOR CONTROL MOTOR CIRCUIT RANGE/PERFORMANCE, Diagnostic Trouble Code (DTC) Detecting Criteria.>
P2102	Throttle Actuator Control Motor Circuit Low	<Ref. to GD(H4DO HEV)-232, DTC P2102 THROTTLE ACTUATOR CONTROL MOTOR CIRCUIT LOW, Diagnostic Trouble Code (DTC) Detecting Criteria.>

DTC	Item	Note
P2103	Throttle Actuator Control Motor Circuit High	<Ref. to GD(H4DO HEV)-234, DTC P2103 THROTTLE ACTUATOR CONTROL MOTOR CIRCUIT HIGH, Diagnostic Trouble Code (DTC) Detecting Criteria.>
P2109	Throttle/Pedal Position Sensor “A” Minimum Stop Performance	<Ref. to GD(H4DO HEV)-236, DTC P2109 THROTTLE/PEDAL POSITION SENSOR “A” MINIMUM STOP PERFORMANCE, Diagnostic Trouble Code (DTC) Detecting Criteria.>
P2119	Throttle Actuator Control Throttle Body Range/Performance	<Ref. to GD(H4DO HEV)-238, DTC P2119 THROTTLE ACTUATOR CONTROL THROTTLE BODY RANGE/PERFORMANCE, Diagnostic Trouble Code (DTC) Detecting Criteria.>
P2122	Throttle/Pedal Position Sensor/ Switch “D” Circuit Low Input	<Ref. to GD(H4DO HEV)-241, DTC P2122 THROTTLE/PEDAL POSITION SENSOR/SWITCH “D” CIRCUIT LOW INPUT, Diagnostic Trouble Code (DTC) Detecting Criteria.>
P2123	Throttle/Pedal Position Sensor/ Switch “D” Circuit High Input	<Ref. to GD(H4DO HEV)-243, DTC P2123 THROTTLE/PEDAL POSITION SENSOR/SWITCH “D” CIRCUIT HIGH INPUT, Diagnostic Trouble Code (DTC) Detecting Criteria.>
P2127	Throttle/Pedal Position Sensor/ Switch “E” Circuit Low Input	<Ref. to GD(H4DO HEV)-245, DTC P2127 THROTTLE/PEDAL POSITION SENSOR/SWITCH “E” CIRCUIT LOW INPUT, Diagnostic Trouble Code (DTC) Detecting Criteria.>
P2128	Throttle/Pedal Position Sensor/ Switch “E” Circuit High Input	<Ref. to GD(H4DO HEV)-247, DTC P2128 THROTTLE/PEDAL POSITION SENSOR/SWITCH “E” CIRCUIT HIGH INPUT, Diagnostic Trouble Code (DTC) Detecting Criteria.>
P2135	Throttle/Pedal Position Sensor/ Switch “A”/“B” Voltage Correlation	<Ref. to GD(H4DO HEV)-249, DTC P2135 THROTTLE/PEDAL POSITION SENSOR/SWITCH “A”/“B” VOLTAGE CORRELATION, Diagnostic Trouble Code (DTC) Detecting Criteria.>
P2138	Throttle/Pedal Position Sensor/ Switch “D”/“E” Voltage Correlation	<Ref. to GD(H4DO HEV)-251, DTC P2138 THROTTLE/PEDAL POSITION SENSOR/SWITCH “D”/“E” VOLTAGE CORRELATION, Diagnostic Trouble Code (DTC) Detecting Criteria.>
P2195	O2 Sensor Signal Biased/Stuck Lean (Bank 1 Sensor 1)	<Ref. to GD(H4DO HEV)-253, DTC P2195 O2 SENSOR SIGNAL BIASED/ STUCK LEAN (BANK 1 SENSOR 1), Diagnostic Trouble Code (DTC) Detecting Criteria.>
P2196	O2 Sensor Signal Biased/Stuck Rich (Bank 1 Sensor 1)	<Ref. to GD(H4DO HEV)-255, DTC P2196 O2 SENSOR SIGNAL BIASED/ STUCK RICH (BANK 1 SENSOR 1), Diagnostic Trouble Code (DTC) Detecting Criteria.>
P219A	Bank 1 Air-Fuel Ratio Imbalance	<Ref. to GD(H4DO HEV)-257, DTC P219A BANK 1 AIR-FUEL RATIO IMBALANCE, Diagnostic Trouble Code (DTC) Detecting Criteria.>
P2401	Evaporative Emission System Leak Detection Pump Control Circuit Low	<Ref. to GD(H4DO HEV)-262, DTC P2401 EVAPORATIVE EMISSION SYSTEM LEAK DETECTION PUMP CONTROL CIRCUIT LOW, Diagnostic Trouble Code (DTC) Detecting Criteria.>
P2402	Evaporative Emission System Leak Detection Pump Control Circuit High	<Ref. to GD(H4DO HEV)-264, DTC P2402 EVAPORATIVE EMISSION SYSTEM LEAK DETECTION PUMP CONTROL CIRCUIT HIGH, Diagnostic Trouble Code (DTC) Detecting Criteria.>
P2404	Evaporative Emission System Leak Detection Pump Sense Circuit Range/Performance	<Ref. to GD(H4DO HEV)-265, DTC P2404 EVAPORATIVE EMISSION SYSTEM LEAK DETECTION PUMP SENSE CIRCUIT RANGE/PERFORMANCE, Diagnostic Trouble Code (DTC) Detecting Criteria.>
P2419	Evaporative Emission System Switching Valve Control Circuit Low	<Ref. to GD(H4DO HEV)-266, DTC P2419 EVAPORATIVE EMISSION SYSTEM SWITCHING VALVE CONTROL CIRCUIT LOW, Diagnostic Trouble Code (DTC) Detecting Criteria.>
P2420	Evaporative Emission System Switching Valve Control Circuit High	<Ref. to GD(H4DO HEV)-268, DTC P2420 EVAPORATIVE EMISSION SYSTEM SWITCHING VALVE CONTROL CIRCUIT HIGH, Diagnostic Trouble Code (DTC) Detecting Criteria.>
P2610	ECM/PCM Internal Engine Off Timer Performance	<Ref. to GD(H4DO HEV)-270, DTC P2610 ECM/PCM INTERNAL ENGINE OFF TIMER PERFORMANCE, Diagnostic Trouble Code (DTC) Detecting Criteria.>
U0073	Control Module Communication Bus Off	<Ref. to GD(H4DO HEV)-279, DTC U0073 CONTROL MODULE COMMUNICATION BUS OFF, Diagnostic Trouble Code (DTC) Detecting Criteria.>
U0075	Control Module Communication Bus "PU-CAN" Off	<Ref. to GD(H4DO HEV)-280, DTC U0075 CONTROL MODULE COMMUNICATION BUS "PU-CAN" OFF, Diagnostic Trouble Code (DTC) Detecting Criteria.>

List of Diagnostic Trouble Code (DTC)

DTC	Item	Note
U0101	Lost Communication With TCM	<Ref. to GD(H4DO HEV)-281, DTC U0101 LOST COMMUNICATION WITH TCM, Diagnostic Trouble Code (DTC) Detecting Criteria.>
U0122	Lost Communication With Vehicle Dynamics Control Module	<Ref. to GD(H4DO HEV)-282, DTC U0122 LOST COMMUNICATION WITH VEHICLE DYNAMICS CONTROL MODULE, Diagnostic Trouble Code (DTC) Detecting Criteria.>
U0155	Lost Communication With Instrument Panel Cluster (IPC) Control Module	<Ref. to GD(H4DO HEV)-282, DTC U0155 LOST COMMUNICATION WITH INSTRUMENT PANEL CLUSTER (IPC) CONTROL MODULE, Diagnostic Trouble Code (DTC) Detecting Criteria.>
U0284	Lost Communication With Active Grille Shutter Module "A"	<Ref. to GD(H4DO HEV)-282, DTC U0284 LOST COMMUNICATION WITH ACTIVE GRILLE SHUTTER MODULE "A", Diagnostic Trouble Code (DTC) Detecting Criteria.>
U0293	Lost Communication With Hybrid Powertrain Control Module	<Ref. to GD(H4DO HEV)-283, DTC U0293 LOST COMMUNICATION WITH HYBRID POWERTRAIN CONTROL MODULE, Diagnostic Trouble Code (DTC) Detecting Criteria.>
U0402	Invalid Data Received From TCM	<Ref. to GD(H4DO HEV)-284, DTC U0402 INVALID DATA RECEIVED FROM TCM, Diagnostic Trouble Code (DTC) Detecting Criteria.>
U0416	Invalid Data Received From Vehicle Dynamics Control Module	<Ref. to GD(H4DO HEV)-285, DTC U0416 INVALID DATA RECEIVED FROM VEHICLE DYNAMICS CONTROL MODULE, Diagnostic Trouble Code (DTC) Detecting Criteria.>
U0423	Invalid Data Received From Instrument Panel Cluster Control Module	<Ref. to GD(H4DO HEV)-285, DTC U0423 INVALID DATA RECEIVED FROM INSTRUMENT PANEL CLUSTER CONTROL MODULE, Diagnostic Trouble Code (DTC) Detecting Criteria.>
U0594	Invalid Data Received From Hybrid Powertrain Control Module	<Ref. to GD(H4DO HEV)-286, DTC U0594 INVALID DATA RECEIVED FROM HYBRID POWERTRAIN CONTROL MODULE, Diagnostic Trouble Code (DTC) Detecting Criteria.>
U1101	Lost Communication With TCM PU-CAN	<Ref. to GD(H4DO HEV)-287, DTC U1101 LOST COMMUNICATION WITH TCM PU-CAN, Diagnostic Trouble Code (DTC) Detecting Criteria.>
U1293	Lost Communication With Hybrid Powertrain Control Module PU-CAN	<Ref. to GD(H4DO HEV)-288, DTC U1293 LOST COMMUNICATION WITH HYBRID POWERTRAIN CONTROL MODULE PU-CAN, Diagnostic Trouble Code (DTC) Detecting Criteria.>
U1402	Invalid Data Received From TCM PU-CAN	<Ref. to GD(H4DO HEV)-289, DTC U1402 INVALID DATA RECEIVED FROM TCM PU-CAN, Diagnostic Trouble Code (DTC) Detecting Criteria.>
U1594	Invalid Data Received From Hybrid Powertrain Control Module PU-CAN	<Ref. to GD(H4DO HEV)-290, DTC U1594 INVALID DATA RECEIVED FROM HYBRID POWERTRAIN CONTROL MODULE PU-CAN, Diagnostic Trouble Code (DTC) Detecting Criteria.>

2. Diagnostic Trouble Code (DTC) Detecting Criteria

A: DTC B1570 ANTENNA

1. OUTLINE OF DIAGNOSIS

DTC	Item	Outline of Diagnosis
B1570	Antenna	Faulty antenna
B1571	Reference Code Incompatibility	Reference code incompatibility between body integrated unit and ECM
B1572	IMM Circuit Failure (Except Antenna Circuit)	Communication failure between body integrated unit and ECM
B1574	Key Communication Failure	The body integrated unit to confirm the key (transponder) ID code has malfunction, of the transponder is faulty.
B1575	Incorrect Immobilizer Key	Incorrect immobilizer key (Use of unregistered key in body integrated unit)
B1576	EGI Control Module EEPROM	ECM malfunctioning
B1577	IMM Control Module EEPROM	Body integrated unit malfunctioning
B1578	Meter Failure	Reference code incompatibility between combination meter and body integrated unit

2. ENABLE CONDITIONS

When starting the engine.

3. GENERAL DRIVING CYCLE

Perform the diagnosis only after starting the engine.

4. DIAGNOSTIC METHOD

Judge as NG when the conditions for the outline of the diagnosis of the top are established.

B: DTC B1571 REFERENCE CODE INCOMPATIBILITY

1. OUTLINE OF DIAGNOSIS

NOTE:
For the detection standard, refer to DTC B1570. <Ref. to GD(H4DO HEV)-11, DTC B1570 ANTENNA, Diagnostic Trouble Code (DTC) Detecting Criteria.>

C: DTC B1572 IMM CIRCUIT FAILURE (EXCEPT ANTENNA CIRCUIT)

1. OUTLINE OF DIAGNOSIS

NOTE:
For the detection standard, refer to DTC B1570. <Ref. to GD(H4DO HEV)-11, DTC B1570 ANTENNA, Diagnostic Trouble Code (DTC) Detecting Criteria.>

D: DTC B1574 KEY COMMUNICATION FAILURE

1. OUTLINE OF DIAGNOSIS

NOTE:
For the detection standard, refer to DTC B1570. <Ref. to GD(H4DO HEV)-11, DTC B1570 ANTENNA, Diagnostic Trouble Code (DTC) Detecting Criteria.>

E: DTC B1575 INCORRECT IMMOBILIZER KEY

1. OUTLINE OF DIAGNOSIS

NOTE:
For the detection standard, refer to DTC B1570. <Ref. to GD(H4DO HEV)-11, DTC B1570 ANTENNA, Diagnostic Trouble Code (DTC) Detecting Criteria.>

F: DTC B1576 EGI CONTROL MODULE EEPROM

1. OUTLINE OF DIAGNOSIS

NOTE:
For the detection standard, refer to DTC B1570. <Ref. to GD(H4DO HEV)-11, DTC B1570 ANTENNA, Diagnostic Trouble Code (DTC) Detecting Criteria.>

G: DTC B1577 IMM CONTROL MODULE EEPROM

1. OUTLINE OF DIAGNOSIS

NOTE:
For the detection standard, refer to DTC B1570. <Ref. to GD(H4DO HEV)-11, DTC B1570 ANTENNA, Diagnostic Trouble Code (DTC) Detecting Criteria.>

H: DTC B1578 METER FAILURE

1. OUTLINE OF DIAGNOSIS

NOTE:
For the detection standard, refer to DTC B1570. <Ref. to GD(H4DO HEV)-11, DTC B1570 ANTENNA, Diagnostic Trouble Code (DTC) Detecting Criteria.>

I: DTC P000A A CAMSHAFT POSITION SLOW RESPONSE (BANK 1)

1. OUTLINE OF DIAGNOSIS

Detect the AVCS system malfunction.
Judge NG when the amount of AVCS actual timing advance does not approach to the amount of AVCS target timing advance.

2. ENABLE CONDITIONS

Secondary Parameters	Enable Conditions
Time of establishing all secondary parameter conditions	≥ 500 ms
Battery voltage	≥ 10.9 V
Engine speed	≥ 500 rpm
Engine oil temperature	≥ –40 °C (–40 °F)
AVCS control	Operation
Target timing advance change amount (per 64 ms)	< 3.2 °CA

3. GENERAL DRIVING CYCLE

Perform the diagnosis continuously when the engine speed increases and AVCS operates.

4. DIAGNOSTIC METHOD

When the differences of target timing advance amount and actual timing advance amount is calculated during AVCS control, and the difference per predetermined time is the specified value or larger.

- **Abnormality Judgment**

Judge as NG when the following conditions are established within the predetermined time.

Judgment Value

Malfunction Criteria	Threshold Value
Σ(Target position – Actual position)	> 4000 °CA (Bank 1) > 4000 °CA (Bank 2)
or	
Σ(Target position – Actual position)	< –4000 °CA (Bank 1) < –4000 °CA (Bank 2)

Time Needed for Diagnosis: 25000 ms
Malfunction Indicator Light Illumination: Illuminates when malfunction occurs in 2 continuous driving cycles.

- **Normality Judgment**

Judge as OK and clear the NG if the following conditions are established within the predetermined time.

Judgment Value

Malfunction Criteria	Threshold Value
Σ(Target position – Actual position)	≤ 4000 °CA (Bank 1) ≤ 4000 °CA (Bank 2) and ≥ –4000 °CA (Bank 1) ≥ –4000 °CA (Bank 2)

Time Needed for Diagnosis: 25000 ms

J: DTC P000B B CAMSHAFT POSITION SLOW RESPONSE (BANK 1)

1. OUTLINE OF DIAGNOSIS

Detect the exhaust AVCS system malfunction.
Judge NG when the amount of exhaust AVCS actual timing advance does not approach the amount of exhaust AVCS target timing advance.

2. ENABLE CONDITIONS

Secondary Parameters	Enable Conditions
Time of establishing all secondary parameter conditions	≥ 500 ms
Battery voltage	≥ 10.9 V
Engine speed	≥ 500 rpm
Engine oil temperature	≥ –40 °C (–40 °F)
Exhaust AVCS control	Operation
Target timing advance change amount (per 64 ms)	< 3.2 °CA

3. GENERAL DRIVING CYCLE

Perform the diagnosis continuously when the engine speed increases and exhaust AVCS operates.

4. DIAGNOSTIC METHOD

When the differences of target timing advance amount and actual timing advance amount is calculated during exhaust AVCS control, and the difference per predetermined time is the specified value or larger.

- **Abnormality Judgment**

Judge as NG when the following conditions are established within the predetermined time.

Judgment Value

Malfunction Criteria	Threshold Value
Σ(Target position – Actual position)	> 4000 °CA (Bank 1) > 4000 °CA (Bank 2)
or	
Σ(Target position – Actual position)	< –4000 °CA (Bank 1) < –4000 °CA (Bank 2)

Time Needed for Diagnosis: 25000 ms

Malfunction Indicator Light Illumination: Illuminates when malfunction occurs in 2 continuous driving cycles.

- **Normality Judgment**

Judge as OK and clear the NG if the following conditions are established within the predetermined time.

Judgment Value

Malfunction Criteria	Threshold Value
Σ(Target position – Actual position)	≤ 4000 °CA (Bank 1) ≤ 4000 °CA (Bank 2) and ≥ –4000 °CA (Bank 1) ≥ –4000 °CA (Bank 2)

Time Needed for Diagnosis: 25000 ms

K: DTC P000C A CAMSHAFT POSITION SLOW RESPONSE (BANK 2)

1. OUTLINE OF DIAGNOSIS

NOTE:
For the detection standard, refer to P000A. <Ref. to GD(H4DO HEV)-13, DTC P000A A CAMSHAFT POSITION SLOW RESPONSE (BANK 1), Diagnostic Trouble Code (DTC) Detecting Criteria.>

L: DTC P000D B CAMSHAFT POSITION SLOW RESPONSE (BANK 2)

1. OUTLINE OF DIAGNOSIS

NOTE:
For the detection standard, refer to P000B. <Ref. to GD(H4DO HEV)-14, DTC P000B B CAMSHAFT POSITION SLOW RESPONSE (BANK 1), Diagnostic Trouble Code (DTC) Detecting Criteria.>

M: DTC P0010 "A" CAMSHAFT POSITION ACTUATOR CIRCUIT/OPEN (BANK 1)

1. OUTLINE OF DIAGNOSIS

Detect open or short circuit of the oil control solenoid.
Judge as NG when the current is small even though the duty signal is large.

2. ENABLE CONDITIONS

Secondary Parameters	Enable Conditions
None	

3. GENERAL DRIVING CYCLE

Always perform the diagnosis continuously.

4. DIAGNOSTIC METHOD

- **Abnormality Judgment**

If the duration of time while the following conditions are met is longer than the time indicated, judge as NG.

Judgment Value

Malfunction Criteria	Threshold Value
Battery voltage	≥ 10.9 V
Oil control solenoid control duty	≥ 99.61 %
Oil control solenoid control present current	< 0.306 A

Time Needed for Diagnosis: 2000 ms
Malfunction Indicator Light Illumination: Illuminates as soon as a malfunction occurs.

- **Normality Judgment**

Judge as OK and clear the NG if the continuous time while the following conditions are established is more than the predetermined time.

Judgment Value

Malfunction Criteria	Threshold Value
Battery voltage	≥ 10.9 V
Target current value of the oil control solenoid	≥ 0.14 A
|Target current value of the oil control solenoid – oil control solenoid control current value|	< 0.08 A

Time Needed for Diagnosis: 2000 ms

N: DTC P0011 INTAKE CAMSHAFT POSITION - TIMING OVER-ADVANCED OR SYSTEM PERFORMANCE (BANK 1)

1. OUTLINE OF DIAGNOSIS

Detect the AVCS system malfunction.
Judge as NG when the conditions during which the differences of AVCS target timing advance amount and AVCS actual timing advance amount is large continues.

2. ENABLE CONDITION

- Normal

Secondary Parameters	Enable Conditions
Time of establishing all secondary parameter conditions	≥ 10000 ms
Battery voltage	≥ 10.9 V
Engine speed	≥ 500 rpm
Engine oil temperature	≥ –40 °C (–40 °F)
AVCS control	Operation

- Intermediate lock

Secondary Parameters	Enable Conditions
Time of establishing all secondary parameter conditions	≥ 2000 ms
Battery voltage	≥ 10.9 V
Engine speed	≥ 500 rpm
Engine oil temperature	≥ –40 °C (–40 °F)
AVCS control	Intermediate lock
Elapsed time after starting the engine	> 500 ms

3. GENERAL DRIVING CYCLE

- Normal

Perform the diagnosis continuously when the engine speed increases and AVCS operates.

- Intermediate lock

Perform the diagnosis when the AVCS is carrying out the intermediate lock control at the engine start.

4. DIAGNOSTIC METHOD

When the conditions during which the differences of AVCS target timing advance amount and AVCS actual timing advance amount is large continues for certain amount of time.

• Abnormality Judgment

Judge as NG when the following conditions are established within the predetermined time.

Judgment Value

Malfunction Criteria	Threshold Value
• Normal (Target position – Actual position)	> 10 °CA or < –10 °CA
• Intermediate lock (Target position – Actual position)	> 10 °CA or < –10 °CA

Time Needed for Diagnosis:

- Normal: 10000 ms
- Intermediate lock: 2000 ms

Malfunction Indicator Light Illumination: Illuminates when malfunction occurs in 2 continuous driving cycles.

- **Normality Judgment**

Judge as OK and clear the NG if the following conditions are established within the predetermined time.

Judgment Value

Malfunction Criteria	Threshold Value
• Normal (Target position – Actual position)	≤ 10 °CA and ≥ –10 °CA
• Intermediate lock (Target position – Actual position)	≤ 10 °CA and ≥ –10 °CA

Time Needed for Diagnosis:

- Normal: 10000 ms
- Intermediate lock: 2000 ms

O: DTC P0013 B CAMSHAFT POSITION ACTUATOR CIRCUIT/OPEN (BANK 1)

1. OUTLINE OF DIAGNOSIS

Detect open or short circuit of the oil control solenoid.
Judge as NG when the current is small even though the duty signal is large.

2. ENABLE CONDITIONS

Secondary Parameters	Enable Conditions
None	

3. GENERAL DRIVING CYCLE

Always perform the diagnosis continuously.

4. DIAGNOSTIC METHOD

- **Abnormality Judgment**

If the duration of time while the following conditions are met is longer than the time indicated, judge as NG.

Judgment Value

Malfunction Criteria	Threshold Value
Battery voltage	≥ 10.9 V
Oil control solenoid control duty	≥ 99.61 %
Oil control solenoid control present current	< 0.306 A

Time Needed for Diagnosis: 2000 ms
Malfunction Indicator Light Illumination: Illuminates as soon as a malfunction occurs.

- **Normality Judgment**

Judge as OK and clear the NG if the continuous time while the following conditions are established is more than the predetermined time.

Judgment Value

Malfunction Criteria	Threshold Value
Battery voltage	≥ 10.9 V
Target current value of the oil control solenoid	≥ 0.14 A
|Target current value of the oil control solenoid – oil control solenoid control current value|	< 0.08 A

Time Needed for Diagnosis: 2000 ms

P: DTC P0014 EXHAUST AVCS SYSTEM 1 (RANGE/PERFORMANCE)

1. OUTLINE OF DIAGNOSIS

Detect the exhaust AVCS system malfunction.
Judge as NG when the conditions during which the differences of exhaust AVCS target timing advance amount and exhaust AVCS actual timing advance amount is large continues.

2. ENABLE CONDITIONS

Secondary Parameters	Enable Conditions
Time of establishing all secondary parameter conditions	≥ 10000 ms
Battery voltage	≥ 10.9 V
Engine speed	≥ 500 rpm
Engine oil temperature	≥ –40 °C (–40 °F)
Exhaust AVCS control	Operation

3. GENERAL DRIVING CYCLE

Perform the diagnosis continuously when the engine speed increases and exhaust AVCS operates.

4. DIAGNOSTIC METHOD

When the conditions during which the differences of exhaust AVCS target timing advance amount and exhaust AVCS actual timing advance amount is large continues for certain amount of time.

- **Abnormality Judgment**

Judge as NG when the following conditions are established within the predetermined time.

Judgment Value

Malfunction Criteria	Threshold Value
(Target position – Actual position)	> 10 °CA or < –10 °CA

Time Needed for Diagnosis: 10000 ms
Malfunction Indicator Light Illumination: Illuminates when malfunction occurs in 2 continuous driving cycles.

- **Normality Judgment**

Judge as OK and clear the NG if the following conditions are established within the predetermined time.

Judgment Value

Malfunction Criteria	Threshold Value
(Target position – Actual position)	≤ 10 °CA and ≥ –10 °CA

Time Needed for Diagnosis: 10000 ms

Q: DTC P0016 CRANKSHAFT POSITION - CAMSHAFT POSITION CORRELATION (BANK1)

1. OUTLINE OF DIAGNOSIS

Detect the AVCS system malfunction.
Judge as NG when standard timing advance amount is far from learning angle.

2. ENABLE CONDITION

Secondary Parameters	Enable Conditions
Battery voltage	≥ 10.9 V
Engine speed	≥ 1500 rpm and < 3000 rpm
Engine coolant temperature	≥ 50 °C (122 °F)
AVCS control	Not in operation
Target timing advance	0°CA

3. GENERAL DRIVING CYCLE

Perform the diagnosis continuously after starting engine and while AVCS is not operating.

4. DIAGNOSTIC METHOD

Judge as NG when the absolute value of the difference between cam signal input position and learning value is out of specification.

- **Abnormality Judgment**

If the duration of time while the following conditions are met is longer than the time indicated, judge as NG.

Judgment Value

Malfunction Criteria	Threshold Value
|Crankshaft position when camshaft position sensor signal is input – Learning value|	> 10 °CA

Time Needed for Diagnosis: 400 ms
Malfunction Indicator Light Illumination: Illuminates when malfunction occurs in 2 continuous driving cycles.

NOTE:
Initial standard learning value is the value of crank angle initially input at the production plant. And then it will be updated every time normal judgment has been completed. Learning value will not be updated if NG judgment occurs because timing belt or chain derails suddenly in process or because wrong assembly occurs during servicing.

- **Normality Judgment**

Judge as OK and clear the NG if the continuous time while the following conditions are established is more than the predetermined time.

Judgment Value

Malfunction Criteria	Threshold Value
|Crankshaft position when camshaft position sensor signal is input – Learning value|	≤ 10 °CA

Time Needed for Diagnosis: Less than 1 second

R: DTC P0017 CRANK AND CAM TIMING B SYSTEM FAILURE (BANK 1)

1. OUTLINE OF DIAGNOSIS

Detect the exhaust AVCS system malfunction.
Judge as NG when standard timing advance amount is far from learning angle.

2. ENABLE CONDITIONS

Secondary Parameters	Enable Conditions
Battery voltage	≥ 10.9 V
Engine speed	≥ 500 rpm and < 1200 rpm
Engine coolant temperature	≥ 50 °C (122 °F)
Exhaust AVCS control	Not in operation
Target timing advance	0°CA

3. GENERAL DRIVING CYCLE

Perform the diagnosis continuously while the exhaust AVCS is not operating after warming up.

4. DIAGNOSTIC METHOD

Judge as NG when the absolute value of the difference between cam signal input position and learning value is out of specification.

- **Abnormality Judgment**

If the duration of time while the following conditions are met is longer than the time indicated, judge as NG.

Judgment Value

Malfunction Criteria	Threshold Value
|Crankshaft position when camshaft position sensor signal is input – Learning value|	> 10 °CA

Time Needed for Diagnosis: 400 ms
Malfunction Indicator Light Illumination: Illuminates when malfunction occurs in 2 continuous driving cycles.

NOTE:
Initial standard learning value is the value of crank angle initially input at the production plant. And then it will be updated every time normal judgment has been completed. Learning value will not be updated if NG judgment occurs because timing belt or chain derails suddenly in process or because wrong assembly occurs during servicing.

- **Normality Judgment**

Judge as OK and clear the NG if the continuous time while the following conditions are established is more than the predetermined time.

Judgment Value

Malfunction Criteria	Threshold Value
|Crankshaft position when camshaft position sensor signal is input – Learning value|	≤ 10 °CA

Time Needed for Diagnosis: Less than 1 second

S: DTC P0018 CRANKSHAFT POSITION - CAMSHAFT POSITION CORRELATION (BANK2)

1. OUTLINE OF DIAGNOSIS

NOTE:
For the detection standard, refer to DTC P0016. <Ref. to GD(H4DO HEV)-21, DTC P0016 CRANKSHAFT POSITION - CAMSHAFT POSITION CORRELATION (BANK1), Diagnostic Trouble Code (DTC) Detecting Criteria.>

T: DTC P0019 CRANK AND CAM TIMING B SYSTEM FAILURE (BANK 2)

1. OUTLINE OF DIAGNOSIS

NOTE:
For the detection standard, refer to DTC P0017. <Ref. to GD(H4DO HEV)-22, DTC P0017 CRANK AND CAM TIMING B SYSTEM FAILURE (BANK 1), Diagnostic Trouble Code (DTC) Detecting Criteria.>

U: DTC P0020 "A" CAMSHAFT POSITION ACTUATOR CIRCUIT/OPEN (BANK 2)

1. OUTLINE OF DIAGNOSIS

NOTE:
For the detection standard, refer to DTC P0010. <Ref. to GD(H4DO HEV)-16, DTC P0010 "A" CAMSHAFT POSITION ACTUATOR CIRCUIT/OPEN (BANK 1), Diagnostic Trouble Code (DTC) Detecting Criteria.>

V: DTC P0021 INTAKE CAMSHAFT POSITION - TIMING OVER-ADVANCED OR SYSTEM PERFORMANCE (BANK 2)

1. OUTLINE OF DIAGNOSIS

NOTE:
For the detection standard, refer to DTC P0011. <Ref. to GD(H4DO HEV)-17, DTC P0011 INTAKE CAMSHAFT POSITION - TIMING OVER-ADVANCED OR SYSTEM PERFORMANCE (BANK 1), Diagnostic Trouble Code (DTC) Detecting Criteria.>

W: DTC P0023 B CAMSHAFT POSITION ACTUATOR CIRCUIT/OPEN (BANK 2)

1. OUTLINE OF DIAGNOSIS

NOTE:
For the detection standard, refer to DTC P0013. <Ref. to GD(H4DO HEV)-19, DTC P0013 B CAMSHAFT POSITION ACTUATOR CIRCUIT/OPEN (BANK 1), Diagnostic Trouble Code (DTC) Detecting Criteria.>

X: DTC P0024 EXHAUST AVCS SYSTEM 2 (RANGE/PERFORMANCE)

1. OUTLINE OF DIAGNOSIS

NOTE:
For the detection standard, refer to DTC P0014. <Ref. to GD(H4DO HEV)-20, DTC P0014 EXHAUST AVCS SYSTEM 1 (RANGE/PERFORMANCE), Diagnostic Trouble Code (DTC) Detecting Criteria.>

Y: DTC P0030 HO2S HEATER CONTROL CIRCUIT (BANK 1 SENSOR 1)

1. OUTLINE OF DIAGNOSIS

Detect functional errors of the front oxygen (A/F) sensor heater.
Judge as NG when it is determined that the front oxygen (A/F) sensor impedance is large when looking at engine status such as deceleration fuel cut.

2. COMPONENT DESCRIPTION

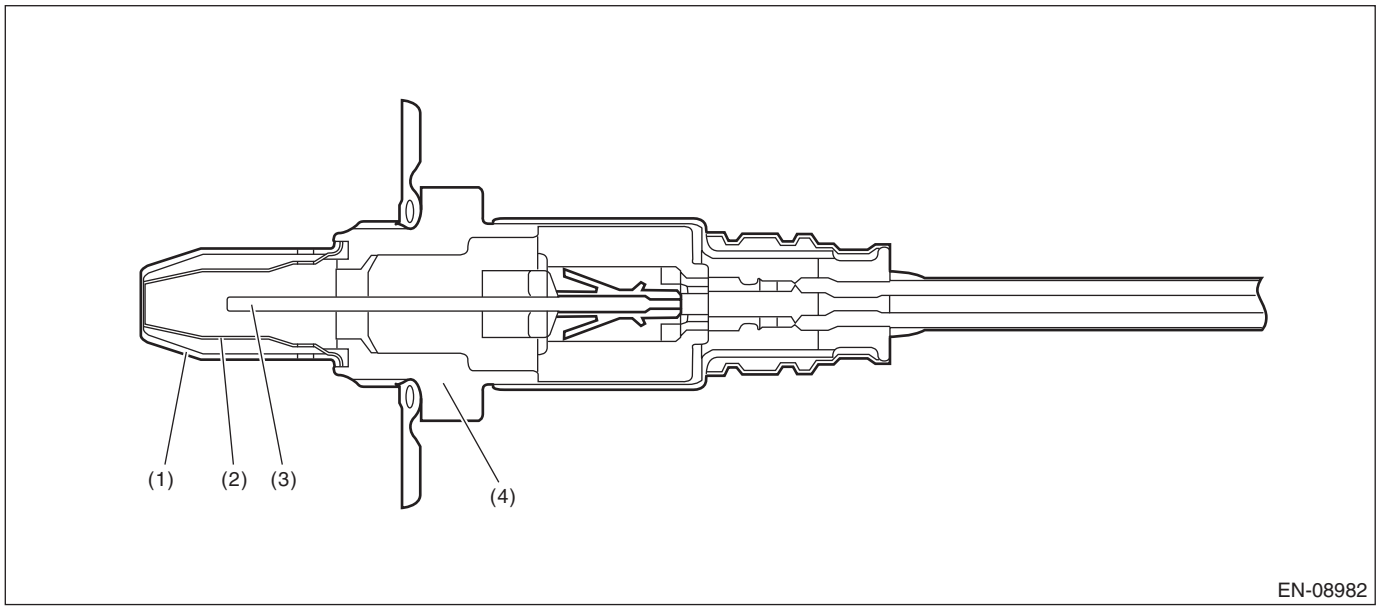

(1) Element cover (outer)
(2) Element cover (inner)
(3) Sensor element
(4) Sensor housing

3. ENABLE CONDITION

Secondary Parameters	Enable Conditions
Battery voltage	≥ 10.9 V
Heater current	Permitted
A/F sensor heater final control	Main energization status
After fuel cut	≥ 20000 ms

4. GENERAL DRIVING CYCLE

Perform the diagnosis continuously after 42000 ms or more have passed since the engine started.

5. DIAGNOSTIC METHOD

• Abnormality Judgment

If the duration of time while the following conditions are met is longer than the time indicated, judge as NG.

Judgment Value

Malfunction Criteria	Threshold Value
Front oxygen (A/F) sensor impedance	> 87 Ω

Time Needed for Diagnosis: 10000 ms
Malfunction Indicator Light Illumination: Illuminates when malfunction occurs in 2 continuous driving cycles.

• Normality Judgment

Judge as OK and clear the NG if the continuous time while the following conditions are established is more than the predetermined time.

Judgment Value

Malfunction Criteria	Threshold Value
Front oxygen (A/F) sensor impedance	≤ 87 Ω

Time Needed for Diagnosis: 10000 ms

Z: DTC P0031 HO2S HEATER CONTROL CIRCUIT LOW (BANK 1 SENSOR 1)

1. OUTLINE OF DIAGNOSIS

Detect front oxygen (A/F) sensor heater open or short circuit.
The front oxygen (A/F) sensor heater performs duty control, and the output terminal voltage at ON is 0 V, and the output terminal voltage at OFF is the battery voltage.
Judge as NG when the terminal voltage remains Low.

2. COMPONENT DESCRIPTION

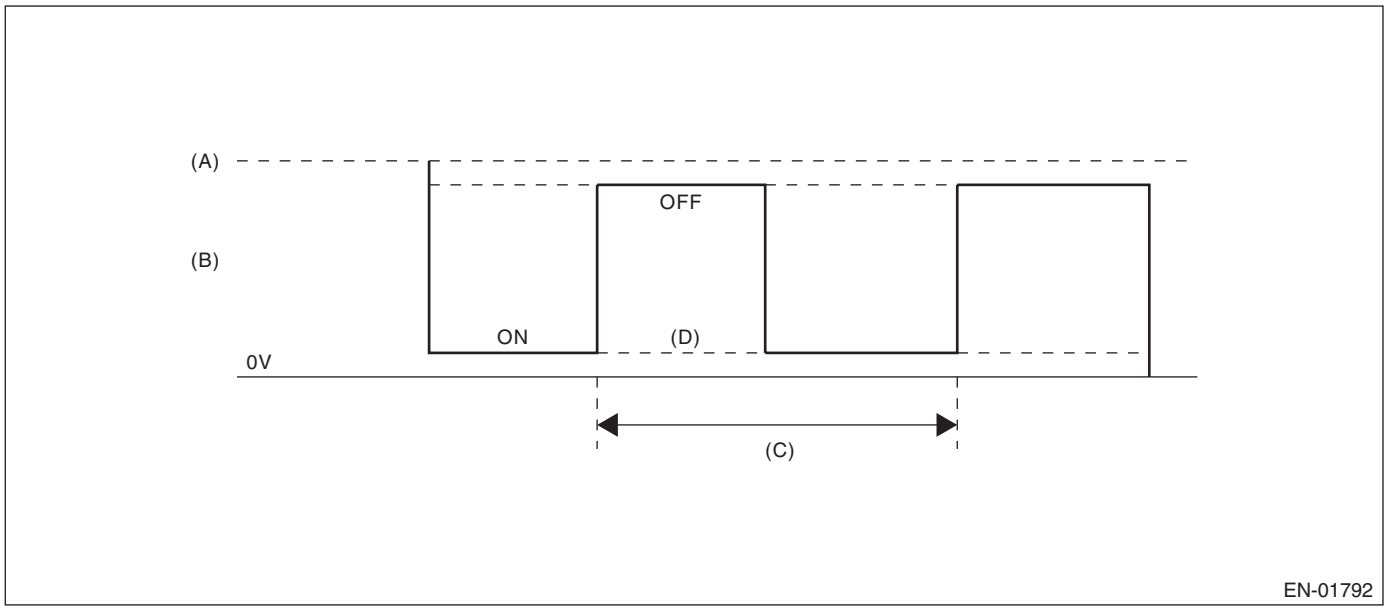

(A) Battery voltage
(B) Front oxygen (A/F) sensor heater output voltage
(C) 128 ms
(D) Low error

3. ENABLE CONDITION

Secondary Parameters	Enable Conditions
Battery voltage	≥ 10.9 V

4. GENERAL DRIVING CYCLE

Always perform the diagnosis continuously.

5. DIAGNOSTIC METHOD

- **Abnormality Judgment**

If the duration of time while the following conditions are met is longer than the time indicated, judge as NG.

Judgment Value

Malfunction Criteria	Threshold Value
Output voltage	< 1.9 V
Front oxygen (A/F) sensor heater control duty	< 87.5 %

Time Needed for Diagnosis: 4 ms × 250 time(s)
Malfunction Indicator Light Illumination: Illuminates as soon as a malfunction occurs.

- **Normality Judgment**

Judge as OK and clear the NG if the continuous time while the following conditions are established is more than the predetermined time.

Judgment Value

Malfunction Criteria	Threshold Value
Output voltage level	≥ 1.9 V

Time Needed for Diagnosis: Less than 1 second

AA:DTC P0032 HO2S HEATER CONTROL CIRCUIT HIGH (BANK 1 SENSOR 1)

1. OUTLINE OF DIAGNOSIS

Detect front oxygen (A/F) sensor heater open or short circuit.
The front oxygen (A/F) sensor heater performs duty control, and the output terminal voltage at ON is 0 V, and the output terminal voltage at OFF is the battery voltage.
Judge as NG when the terminal voltage remains High.

2. COMPONENT DESCRIPTION

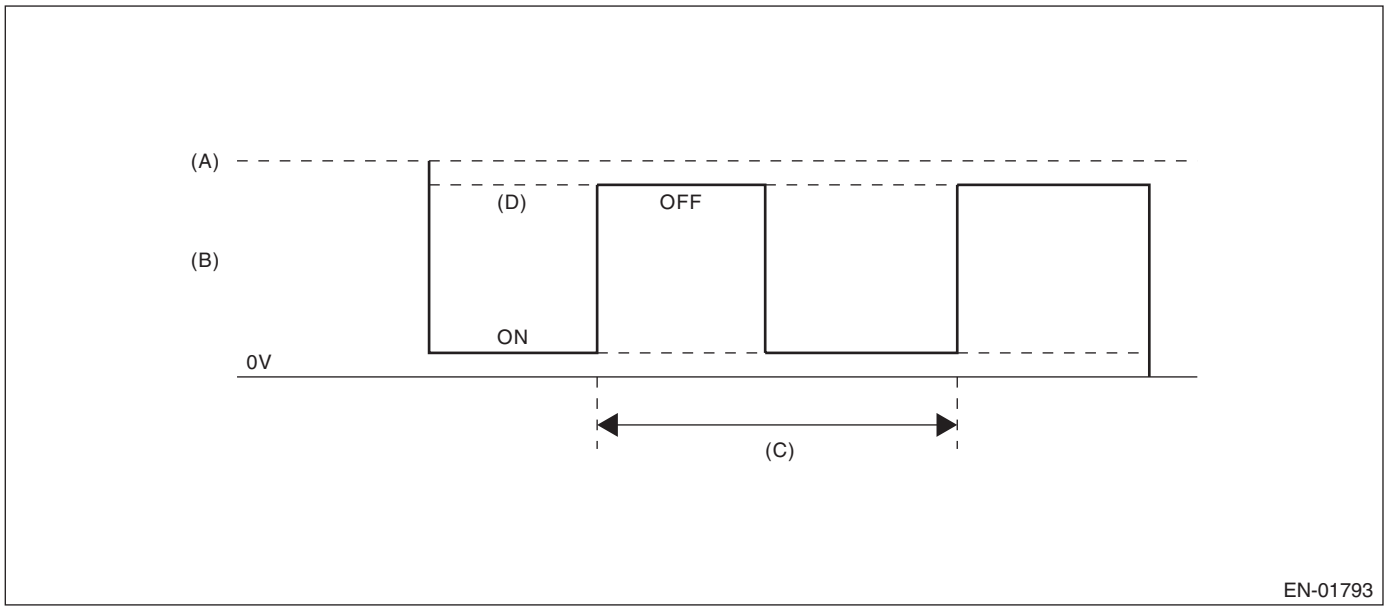

(A) Battery voltage
(B) Front oxygen (A/F) sensor heater output voltage
(C) 128 ms
(D) High error

3. ENABLE CONDITION

Secondary Parameters	Enable Conditions
Battery voltage	≥ 10.9 V

4. GENERAL DRIVING CYCLE

Always perform the diagnosis continuously.

5. DIAGNOSTIC METHOD

- **Abnormality Judgment**

If the duration of time while the following conditions are met is longer than the time indicated, judge as NG.

Judgment Value

Malfunction Criteria	Threshold Value
Output voltage	≥ 1.9 V
Front oxygen (A/F) sensor heater control duty	> 12.5 %

Time Needed for Diagnosis: 4 ms × 500 time(s)
Malfunction Indicator Light Illumination: Illuminates as soon as a malfunction occurs.

- **Normality Judgment**

Judge as OK and clear the NG if the continuous time while the following conditions are established is more than the predetermined time.

Judgment Value

Malfunction Criteria	Threshold Value
Output voltage level	< 1.9 V

Time Needed for Diagnosis: Less than 1 second

AB:DTC P0037 HO2S HEATER CONTROL CIRCUIT LOW (BANK 1 SENSOR 2)

1. OUTLINE OF DIAGNOSIS

Detect the rear oxygen sensor heater open or short circuit.
The rear oxygen sensor heater performs duty control, and the output terminal voltage at ON is 0 V, and the output terminal voltage at OFF is the battery voltage.
Judge as NG when the terminal voltage remains Low.

2. COMPONENT DESCRIPTION

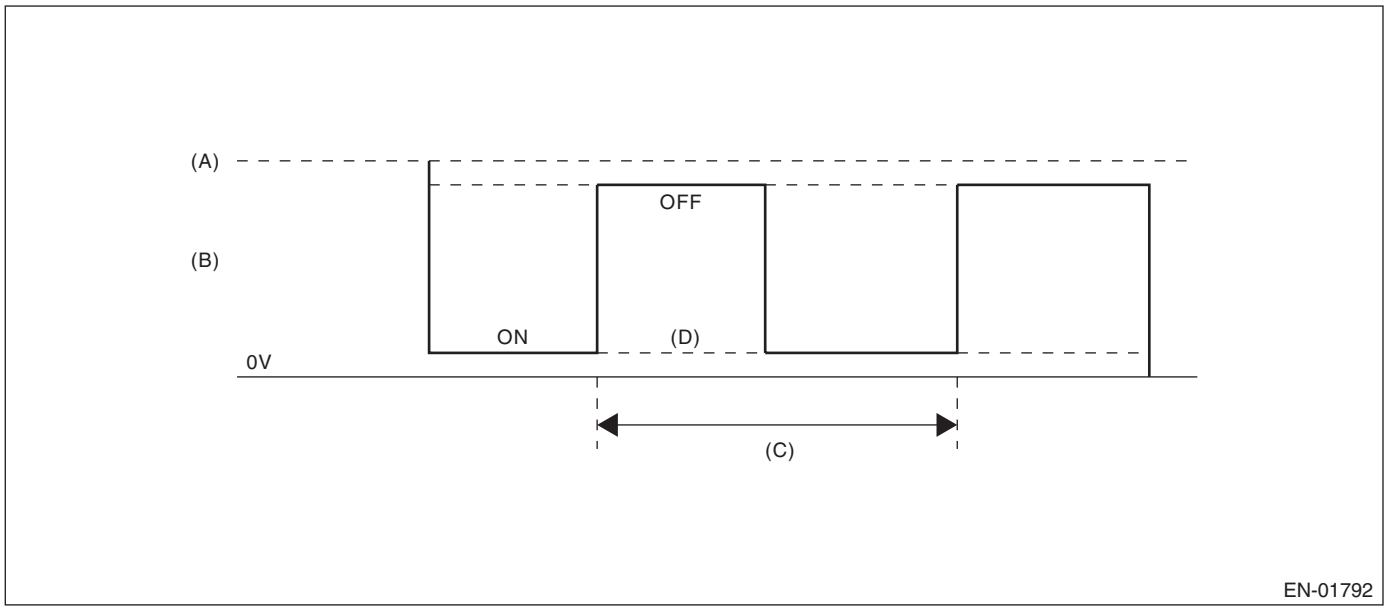

(A) Battery voltage
(B) Output voltage of the rear oxygen sensor heater
(C) 256 ms (cycle)
(D) Low error

3. ENABLE CONDITION

Secondary Parameters	Enable Conditions
Battery voltage	≥ 10.9 V
Elapsed time after starting the engine	≥ 1 s

4. GENERAL DRIVING CYCLE

After starting the engine, perform the diagnosis continuously when engine is low speed.

5. DIAGNOSTIC METHOD

• Abnormality Judgment

If the duration of time while the following conditions are met is longer than the time indicated, judge as NG.

Judgment Value

Malfunction Criteria	Threshold Value
Output voltage	< Battery voltage × 0.2
Rear oxygen sensor heater control duty	< 75 %

Time Needed for Diagnosis: 8 ms × 1250 time(s)
Malfunction Indicator Light Illumination: Illuminates when malfunction occurs in 2 continuous driving cycles.

• Normality Judgment

Judge as OK and clear the NG if the continuous time while the following conditions are established is more than the predetermined time.

Judgment Value

Malfunction Criteria	Threshold Value
Output voltage	> Battery voltage × 0.3

Time Needed for Diagnosis: Less than 1 second

AC:DTC P0038 HO2S HEATER CONTROL CIRCUIT HIGH (BANK 1 SENSOR 2)

1. OUTLINE OF DIAGNOSIS

Detect the rear oxygen sensor heater open or short circuit.
The rear oxygen sensor heater performs duty control, and the output terminal voltage at ON is 0 V, and the output terminal voltage at OFF is the battery voltage.
Judge as NG when the terminal voltage remains High.

2. COMPONENT DESCRIPTION

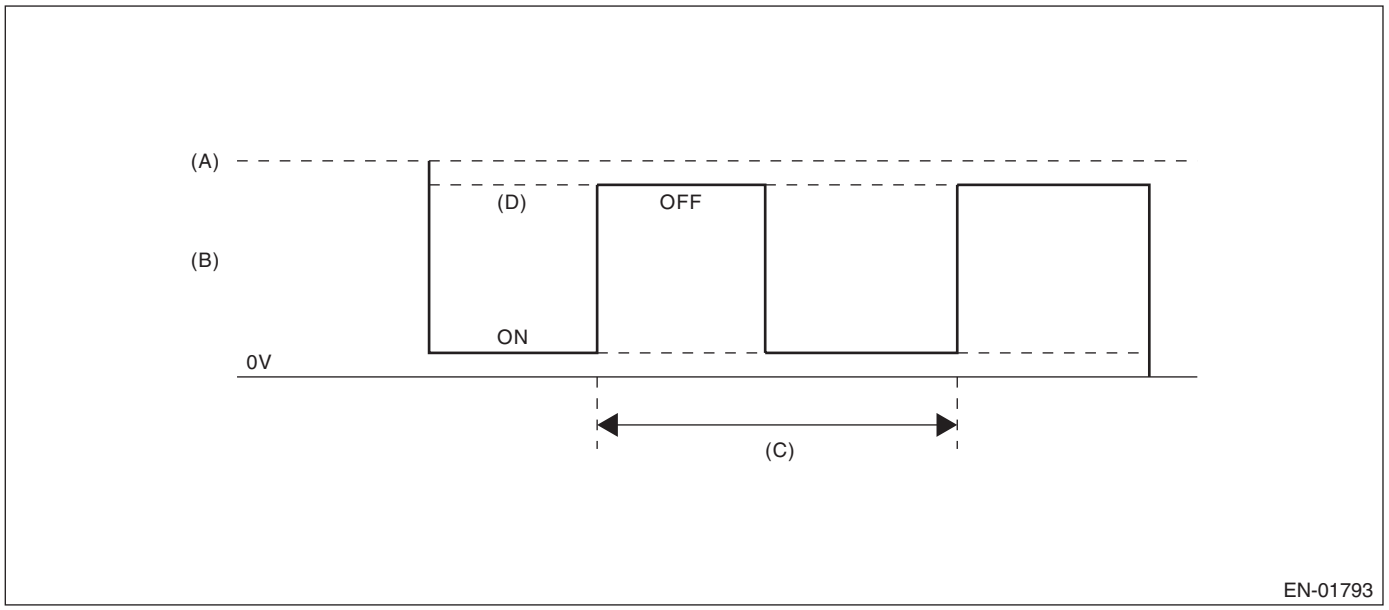

(A) Battery voltage
(B) Output voltage of the rear oxygen sensor heater
(C) 256 ms (cycle)
(D) High error

3. ENABLE CONDITION

Secondary Parameters	Enable Conditions
Battery voltage	≥ 10.9 V
Elapsed time after starting the engine	≥ 1 s

4. GENERAL DRIVING CYCLE

After starting the engine, perform the diagnosis continuously when engine is low speed.

5. DIAGNOSTIC METHOD

- **Abnormality Judgment**

If the duration of time while the following conditions are met is longer than the time indicated, judge as NG.

Judgment Value

Malfunction Criteria	Threshold Value
Output voltage	> Battery voltage × 0.3
Rear oxygen sensor heater control duty	≥ 20 %

Time Needed for Diagnosis: 8 ms × 320 time(s)
Malfunction Indicator Light Illumination: Illuminates when malfunction occurs in 2 continuous driving cycles.

- **Normality Judgment**

Judge as OK and clear the NG if the continuous time while the following conditions are established is more than the predetermined time.

Judgment Value

Malfunction Criteria	Threshold Value
Output voltage	< Battery voltage × 0.2

Time Needed for Diagnosis: Less than 1 second

AD:DTC P0068 MAP/MAF - THROTTLE POSITION CORRELATION

1. OUTLINE OF DIAGNOSIS

Detect problems in the intake manifold pressure sensor output properties.
Judge as NG when the intake air pressure AD value is Low whereas it seemed to be High from the viewpoint of engine condition, or when it is High whereas it seemed to be Low from the engine condition.

2. COMPONENT DESCRIPTION

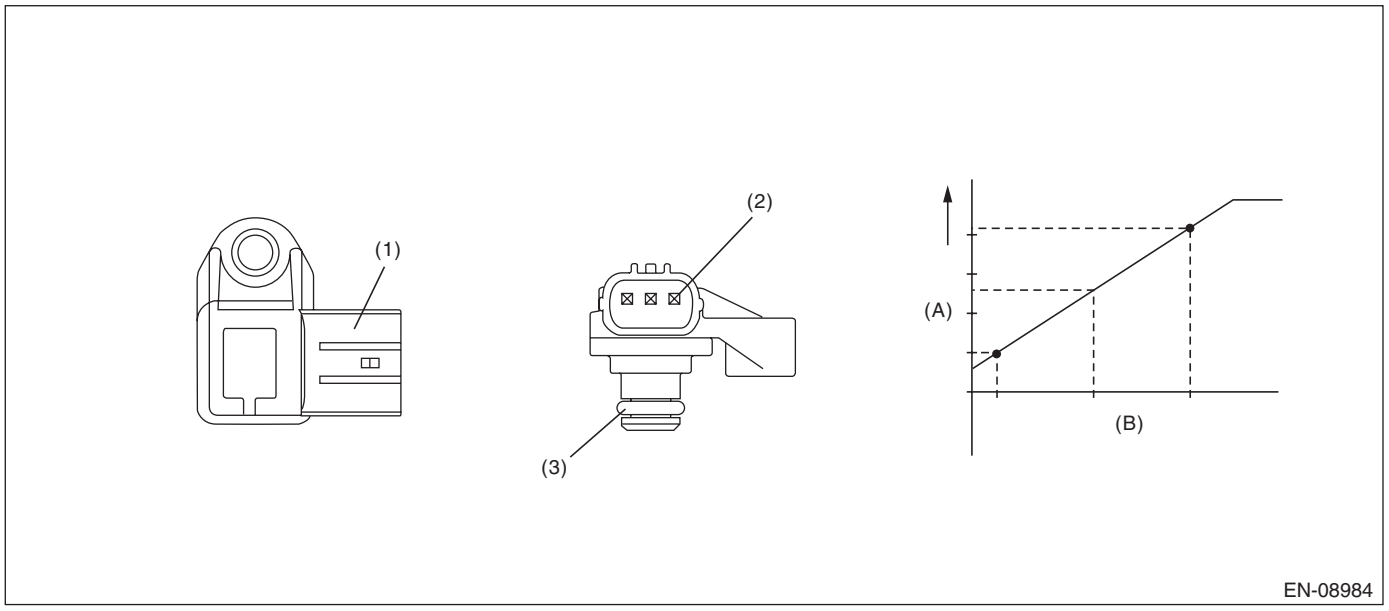

(A) Output voltage
(B) Absolute pressure
(1) Connector
(2) Terminals
(3) O-ring

3. ENABLE CONDITION

Secondary Parameters	Enable Conditions
Engine coolant temperature	≥ 60 °C (140 °F)

4. GENERAL DRIVING CYCLE

Perform the diagnosis continuously after idling.

5. DIAGNOSTIC METHOD

• Abnormality Judgment

Judge as NG when Low side or High side becomes NG.
If the duration of time while the following conditions are met is longer than the time indicated, judge as NG.

Judgment Value

Malfunction Criteria	Threshold Value
Low	
Engine speed	< 2900 rpm
Throttle position	≥ 3.4 °
Output voltage	< 1.07 V
Engine load	> 0.36 g/rev (0.01 oz/rev)
High	
Engine speed	500 rpm — 2000 rpm
Throttle position	< 9.6 °
Output voltage	≥ 2.92 V
Engine load	< 0.34 g/rev (0.01 oz/rev)

Time Needed for Diagnosis:
Low side: 5000 ms
High side: 5000 ms
Malfunction Indicator Light Illumination: Illuminates when malfunction occurs in 2 continuous driving cycles.

• Normality Judgment

Judge as OK and clear the NG when both Low side and High side become OK.
If the duration of time while the following conditions are met is longer than the time indicated, judge as OK.

Judgment Value

Malfunction Criteria	Threshold Value
Low	
Engine speed	< 2900 rpm
Throttle position	≥ 3.4 °
Output voltage	≥ 1.07 V
Engine load	> 0.36 g/rev (0.01 oz/rev)
High	
Engine speed	500 rpm — 2000 rpm
Throttle position	< 9.6 °
Output voltage	< 2.92 V
Engine load	< 0.34 g/rev (0.01 oz/rev)

Time Needed for Diagnosis:
Low side: Less than 1 second
High side: Less than 1 second

AE:DTC P0071 AMBIENT TEMPERATURE SENSOR CIRCUIT "A" RANGE/PERFORMANCE

1. OUTLINE OF DIAGNOSIS

Detect the characteristic abnormality of the ambient air temperature sensor.
Perform diagnosis in reference to the ambient air temperature sensor value, intake air temperature sensor value and engine coolant temperature sensor value after engine start after predetermined time have passed in soak time. Judge as NG when the difference is more than the specific value in comparison respectively between ambient and intake air temperature, ambient and engine coolant temperature.

2. COMPONENT DESCRIPTION

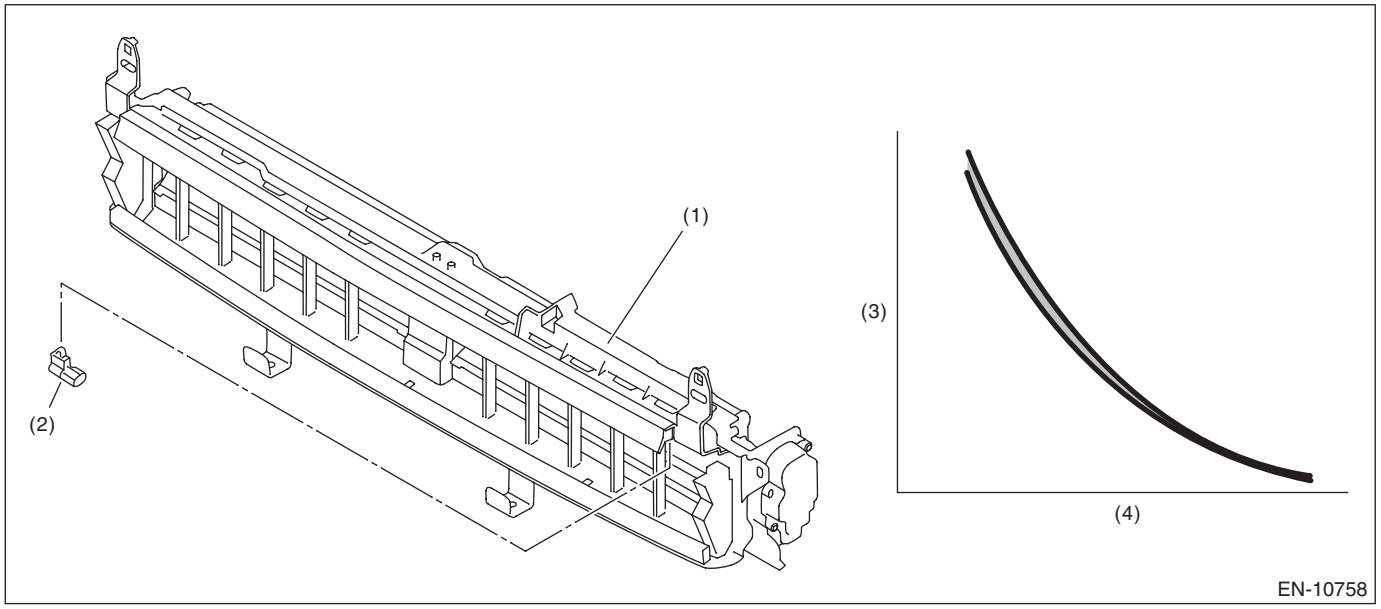

(1) Active grille shutter
(2) Ambient air temperature sensor
(3) Resistance value (kΩ)
(4) Ambient air temperature (°C (°F))

3. ENABLE CONDITIONS

Secondary Parameters	Enable Conditions
Soaking time	≥ 21600 s
Engine speed	> 500 rpm
Block heater judgment	Completed
Block heater activation	not activate

Block heater judgment

Parameter	Enable Conditions
Engine speed	> 500 rpm

Judge as “Block heater is not activate” when the following conditions are established.

Judgment Value

Judgment criteria	Threshold Value
Σ (Engine coolant temperature – Engine coolant temperature at engine start)	≥ –10 °C (–18°F)

Time Needed for Judgment: 1 s × 20 times

4. GENERAL DRIVING CYCLE

Perform diagnosis only once after engine start after constant soak time.

5. DIAGNOSTIC METHOD

• Abnormality Judgment

If the duration of time while the following conditions are met is longer than the time indicated, judge as NG.

Judgment Value

Malfunction Criteria	Threshold Value
|Ambient air temperature 30 s after engine start – Intake air temperature 30 s after engine start|	> Value from Map
|Ambient air temperature at engine start – Engine coolant temperature at engine start|	> 25 °C (45°F)

Map

Ambient air temperature °C (°F)	–30 (–22)	30 (86)	45 (113)	60 (140)
|Ambient air temperature 30 s after engine start – Intake air temperature 30 s after engine start| °C (°F)	20 (36°F)	20 (36°F)	32 (57.6°F)	32 (57.6°F)

Time Needed for Diagnosis: 64 ms
Malfunction Indicator Light Illumination: Illuminates when malfunction occurs in 2 continuous driving cycles.

• Normality Judgment

Judge as OK and clear the NG if the continuous time while the following conditions are established is more than the predetermined time.

Judgment Value

Malfunction Criteria	Threshold Value
When any one of the followings is established:	
|Ambient air temperature 30 s after engine start – Intake air temperature 30 s after engine start|	≤ Value from Map
|Ambient air temperature at engine start – Engine coolant temperature at engine start|	≤ 25 °C (45°F)

Time Needed for Diagnosis: 64 ms

AF:DTC P0072 AMBIENT TEMPERATURE SENSOR CIRCUIT "A" LOW

1. OUTLINE OF DIAGNOSIS

Detect the open or short circuit of ambient air temperature sensor installed in active grille shutter.
Judge as NG if out of specification.

2. COMPONENT DESCRIPTION

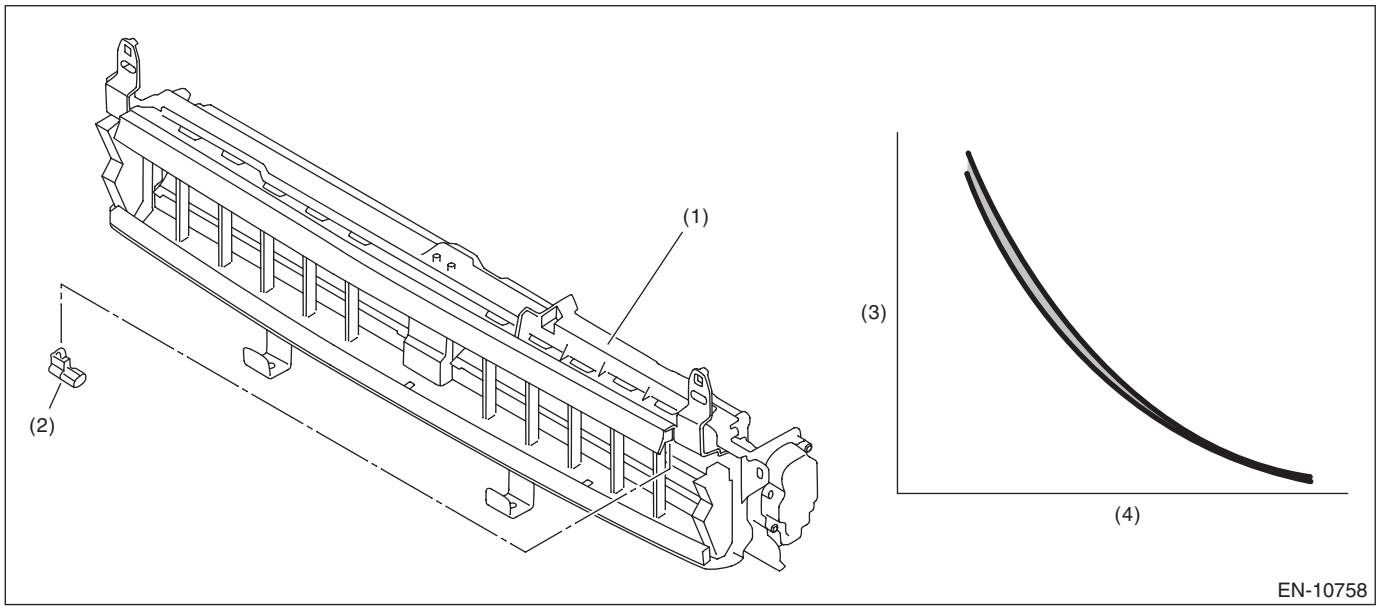

(1) Active grille shutter
(2) Ambient air temperature sensor
(3) Resistance value (kΩ)
(4) Ambient air temperature (°C (°F))

3. ENABLE CONDITIONS

Secondary Parameters	Enable Conditions
Battery voltage	> 10.9 V

4. GENERAL DRIVING CYCLE

Always perform the diagnosis continuously.

5. DIAGNOSTIC METHOD

• Abnormality Judgment

If the duration of time while the following conditions are met is longer than the time indicated, judge as NG.

Judgment Value

Malfunction Criteria	Threshold Value
Output voltage	< 0.42 V

Time Needed for Diagnosis: 2500 ms
Malfunction Indicator Light Illumination: Illuminates as soon as a malfunction occurs.

• Normality Judgment

Judge as OK and clear the NG if the continuous time while the following conditions are established is more than the predetermined time.

Judgment Value

Malfunction Criteria	Threshold Value
Output voltage	≥ 0.42 V

Time Needed for Diagnosis: 2500 ms

AG:DTC P0073 AMBIENT TEMPERATURE SENSOR CIRCUIT "A" HIGH

1. OUTLINE OF DIAGNOSIS

Detect the open or short circuit of ambient air temperature sensor installed in active grille shutter.
Judge as NG if out of specification.

2. COMPONENT DESCRIPTION

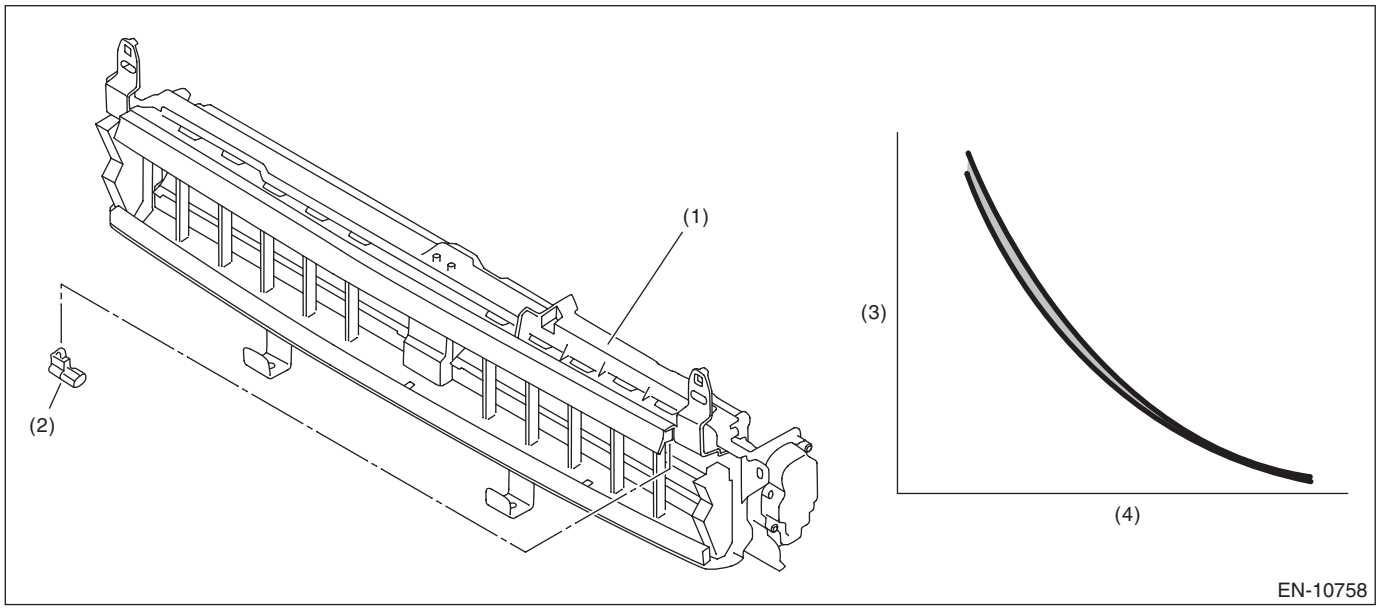

(1) Active grille shutter
(2) Ambient air temperature sensor
(3) Resistance value (kΩ)
(4) Ambient air temperature (°C (°F))

3. ENABLE CONDITIONS

Secondary Parameters	Enable Conditions
Battery voltage	> 10.9 V

4. GENERAL DRIVING CYCLE

Always perform the diagnosis continuously.

5. DIAGNOSTIC METHOD

• Abnormality Judgment

If the duration of time while the following conditions are met is longer than the time indicated, judge as NG.

Judgment Value

Malfunction Criteria	Threshold Value
Output voltage	> 4.88 V

Time Needed for Diagnosis: 2500 ms
Malfunction Indicator Light Illumination: Illuminates as soon as a malfunction occurs.

• Normality Judgment

Judge as OK and clear the NG if the continuous time while the following conditions are established is more than the predetermined time.

Judgment Value

Malfunction Criteria	Threshold Value
Output voltage	≤ 4.88 V

Time Needed for Diagnosis: 2500 ms

AH:DTC P0101 MASS OR VOLUME AIR FLOW CIRCUIT RANGE/PERFORMANCE

1. OUTLINE OF DIAGNOSIS

Detect the malfunction of air flow sensor output properties.
Judge as a low side NG when the air flow voltage indicates a small value regardless of running in a state where the air flow voltage increases. Judge as a high side NG when the air flow voltage indicates a large value regardless of running in a state where the air flow voltage decreases. Judge air flow sensor property NG when the Low side or High side becomes NG.

2. COMPONENT DESCRIPTION

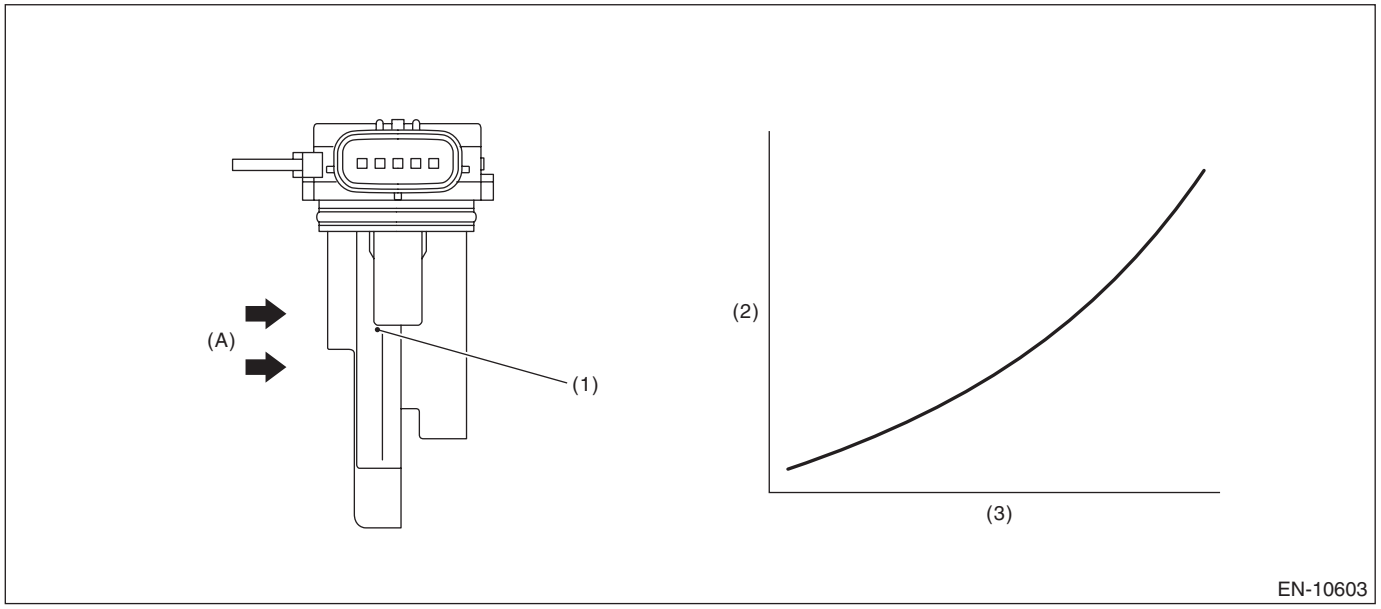

(A) Air

(1) Air flow sensor (2) Voltage (V) (3) Amount of intake air (kg (lb)/s)

3. ENABLE CONDITION

Secondary Parameters	Enable Conditions
Engine coolant temperature	≥ 60 °C (140 °F)

4. GENERAL DRIVING CYCLE

Perform the diagnosis continuously after idling.

5. DIAGNOSTIC METHOD

• Abnormality Judgment

Judge as NG when Low side or High side becomes NG.
If the duration of time while the following conditions are met is longer than the time indicated, judge as NG.

Judgment Value

Malfunction Criteria	Threshold Value
Low	
Output voltage	< 1.55 V
Engine speed	≥ 1600 rpm
Throttle opening angle	≥ 5.6 °
Intake manifold pressure	≥ 66.7 kPa (500 mmHg, 19.7 inHg)
High (1)	
Output voltage	≥ 2.6 V
Engine speed	500 rpm — 2000 rpm
Throttle opening angle	< 9.3 °
Intake manifold pressure	≥ 44.8 kPa (336.3 mmHg, 13.2 inHg)
High (2)	
Output voltage	≥ 2.6 V
Engine speed	500 rpm — 2000 rpm
Throttle opening angle	< 9.3 °
Intake manifold pressure	≥ 44.8 kPa (336.3 mmHg, 13.2 inHg)
Fuel system diagnosis	Rich side malfunction

Time Needed for Diagnosis:
Low: 5000 ms
High: 5000 ms
Malfunction Indicator Light Illumination: Illuminates when malfunction occurs in 2 continuous driving cycles.

• Normality Judgment

Judge as OK and clear the NG when both Low side and High side become OK.
Judge as OK and clear the NG if the continuous time while the following conditions are established is more than the predetermined time.

Judgment Value

Malfunction Criteria	Threshold Value
Low	
Output voltage	≥ 1.55 V
Engine speed	≥ 1600 rpm
Throttle opening angle	≥ 5.6 °
Intake manifold pressure	≥ 66.7 kPa (500 mmHg, 19.7 inHg)
High	
Output voltage	< 2.6 V
Engine speed	500 rpm — 2000 rpm
Throttle opening angle	< 9.3 °
Intake manifold pressure	< 44.8 kPa (336.3 mmHg, 13.2 inHg)
Fuel system diagnosis	Rich side normal

Time Needed for Diagnosis:
Low: Less than 1 second
High: Less than 1 second

AI: DTC P0102 MASS OR VOLUME AIR FLOW CIRCUIT LOW INPUT

1. OUTLINE OF DIAGNOSIS

Detect open or short circuits of the air flow sensor.
Judge as NG if out of specification.

2. COMPONENT DESCRIPTION

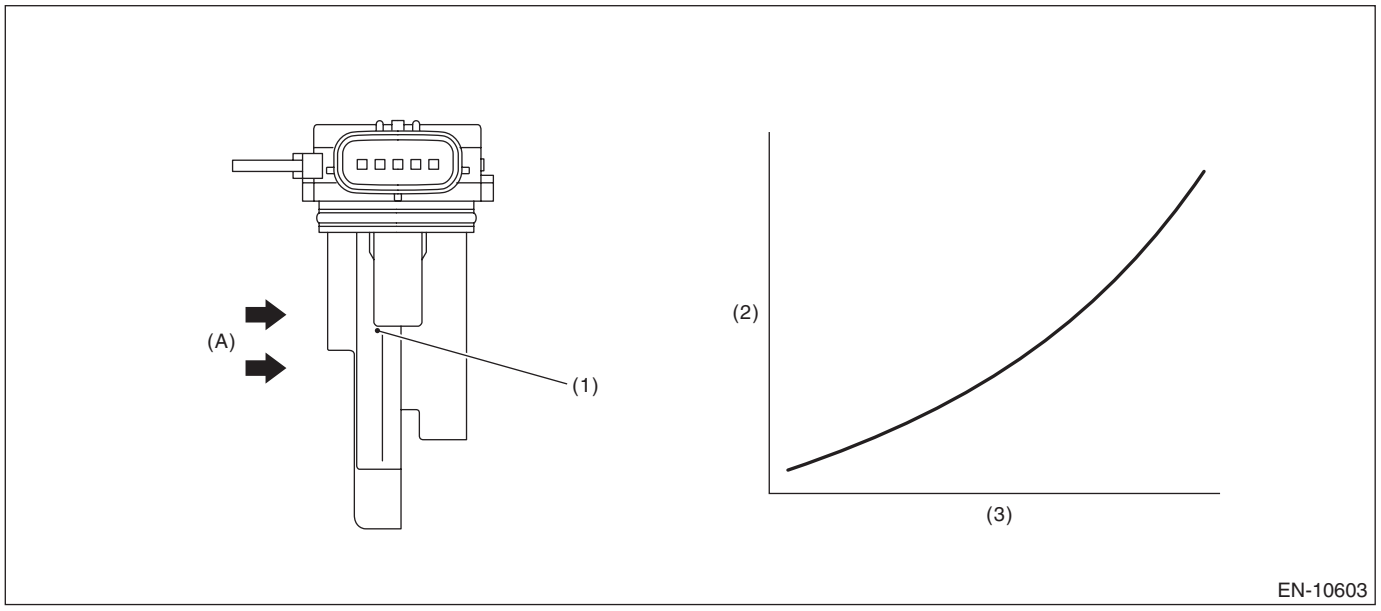

(A) Air

(1) Air flow sensor (2) Voltage (V) (3) Amount of intake air (kg (lb)/s)

3. ENABLE CONDITION

Secondary Parameters	Enable Conditions
None	

4. GENERAL DRIVING CYCLE

Always perform the diagnosis continuously.

5. DIAGNOSTIC METHOD

- **Abnormality Judgment**

If the duration of time while the following conditions are met is longer than the time indicated, judge as NG.

Judgment Value

Malfunction Criteria	Threshold Value
Output voltage	< 0.127 V

Time Needed for Diagnosis: 500 ms
Malfunction Indicator Light Illumination: Illuminates as soon as a malfunction occurs.

- **Normality Judgment**

Judge as OK and clear the NG if the continuous time while the following conditions are established is more than the predetermined time.

Judgment Value

Malfunction Criteria	Threshold Value
Output voltage	≥ 0.127 V

Time Needed for Diagnosis: Less than 1 second

AJ:DTC P0103 MASS OR VOLUME AIR FLOW CIRCUIT HIGH INPUT

1. OUTLINE OF DIAGNOSIS

Detect open or short circuits of the air flow sensor.
Judge as NG if out of specification.

2. COMPONENT DESCRIPTION

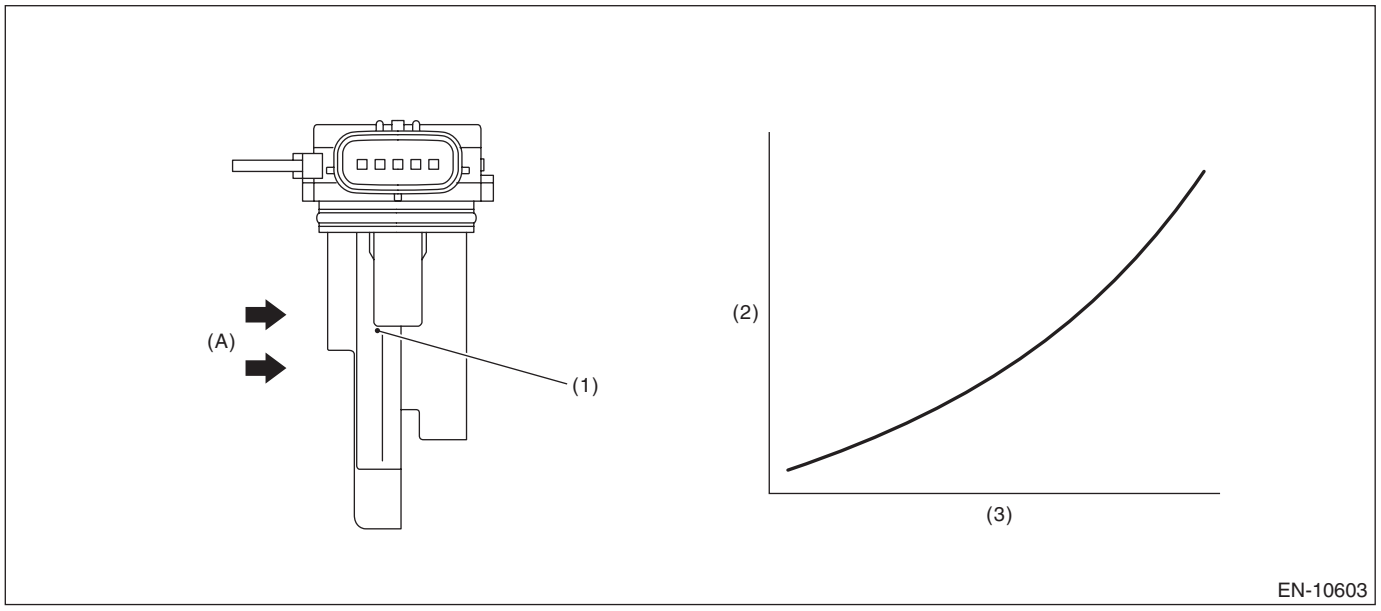

(A) Air

(1) Air flow sensor (2) Voltage (V) (3) Amount of intake air (kg (lb)/s)

3. ENABLE CONDITION

Secondary Parameters	Enable Conditions
None	

4. GENERAL DRIVING CYCLE

Always perform the diagnosis continuously.

5. DIAGNOSTIC METHOD

- **Abnormality Judgment**

If the duration of time while the following conditions are met is longer than the time indicated, judge as NG.

Judgment Value

Malfunction Criteria	Threshold Value
Output voltage	≥ 4.43 V

Time Needed for Diagnosis: 500 ms
Malfunction Indicator Light Illumination: Illuminates as soon as a malfunction occurs.

- **Normality Judgment**

Judge as OK and clear the NG if the continuous time while the following conditions are established is more than the predetermined time.

Judgment Value

Malfunction Criteria	Threshold Value
Output voltage	< 4.43 V

Time Needed for Diagnosis: Less than 1 second

AK:DTC P0107 MANIFOLD ABSOLUTE PRESSURE/BAROMETRIC PRESSURE CIRCUIT LOW INPUT

1. OUTLINE OF DIAGNOSIS

Detect the open or short circuit of intake manifold pressure sensor.
Judge as NG if out of specification.

2. COMPONENT DESCRIPTION

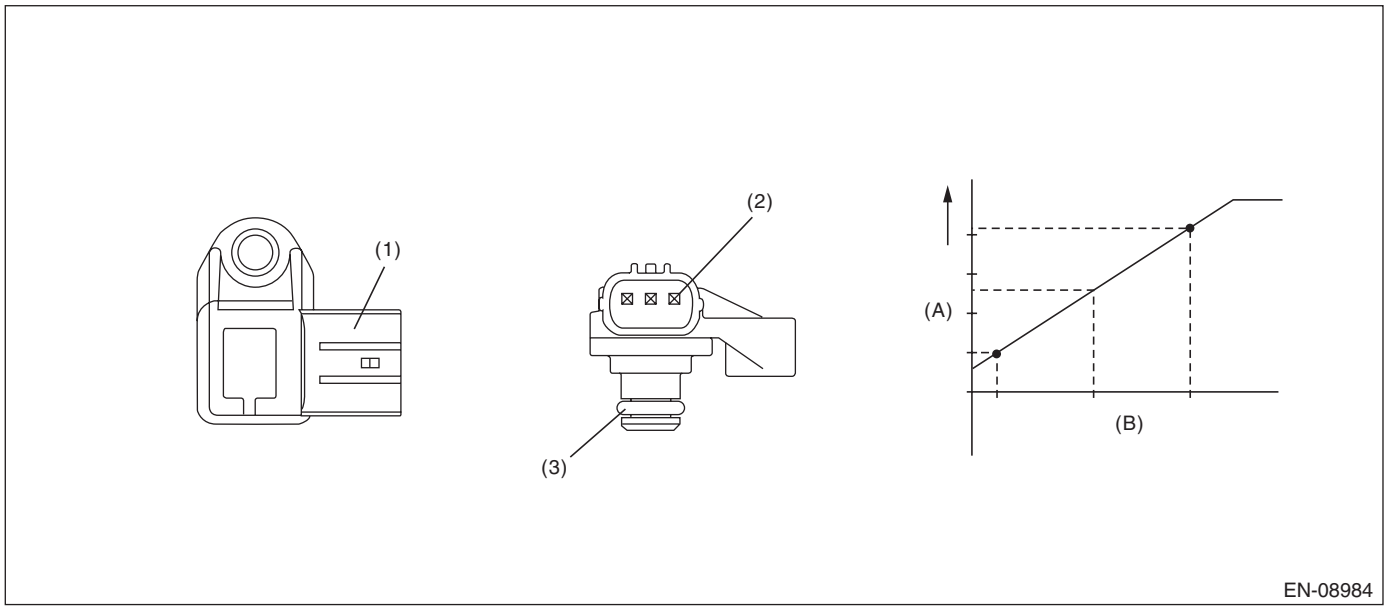

(A) Output voltage
(B) Absolute pressure
(1) Connector
(2) Terminals
(3) O-ring

3. ENABLE CONDITION

Secondary Parameters	Enable Conditions
None	

4. GENERAL DRIVING CYCLE

Always perform the diagnosis continuously.

5. DIAGNOSTIC METHOD

- **Abnormality Judgment**

If the duration of time while the following conditions are met is longer than the time indicated, judge as NG.

Judgment Value

Malfunction Criteria	Threshold Value
Output voltage	< 0.608 V

Time Needed for Diagnosis: 2000 ms
Malfunction Indicator Light Illumination: Illuminates as soon as a malfunction occurs.

- **Normality Judgment**

Judge as OK and clear the NG if the continuous time while the following conditions are established is more than the predetermined time.

Judgment Value

Malfunction Criteria	Threshold Value
Output voltage	≥ 0.608 V

Time Needed for Diagnosis: Less than 1 second

AL:DTC P0108 MANIFOLD ABSOLUTE PRESSURE/BAROMETRIC PRESSURE CIRCUIT HIGH INPUT

1. OUTLINE OF DIAGNOSIS

Detect the open or short circuit of intake manifold pressure sensor.
Judge as NG if out of specification.

2. COMPONENT DESCRIPTION

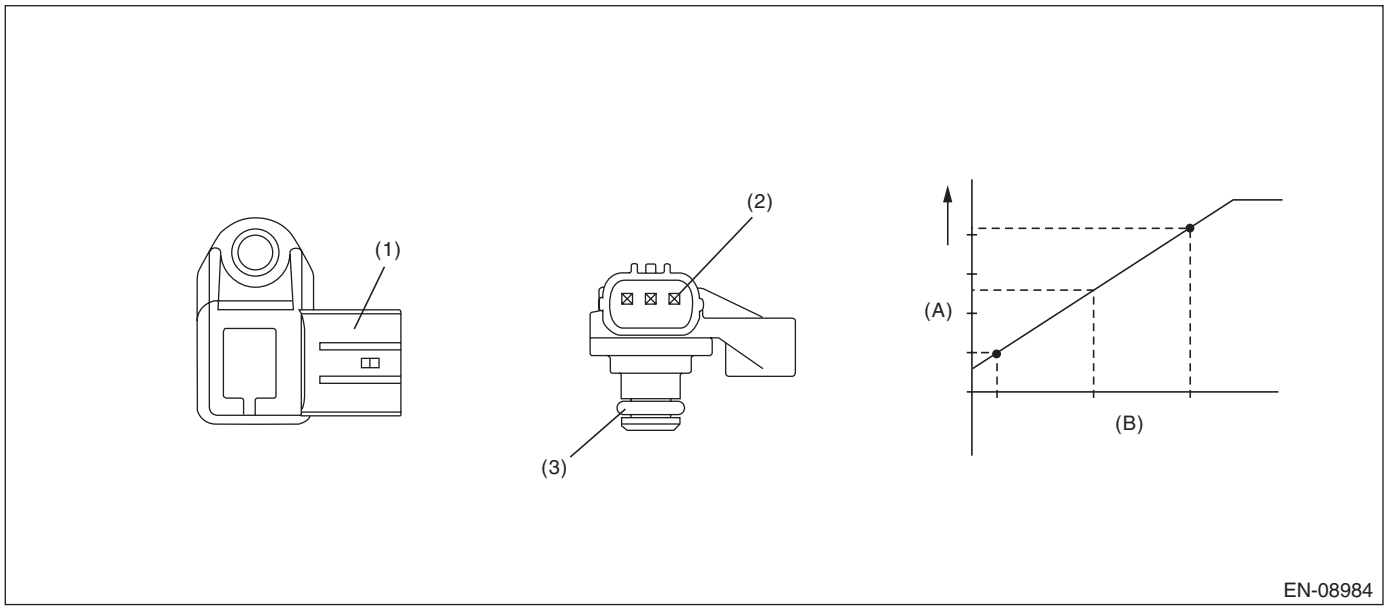

(A) Output voltage
(B) Absolute pressure
(1) Connector
(2) Terminals
(3) O-ring

3. ENABLE CONDITION

Secondary Parameters	Enable Conditions
None	

4. GENERAL DRIVING CYCLE

Always perform the diagnosis continuously.

5. DIAGNOSTIC METHOD

- **Abnormality Judgment**

If the duration of time while the following conditions are met is longer than the time indicated, judge as NG.

Judgment Value

Malfunction Criteria	Threshold Value
Output voltage	≥ 3.906 V

Time Needed for Diagnosis: 2000 ms
Malfunction Indicator Light Illumination: Illuminates as soon as a malfunction occurs.

- **Normality Judgment**

Judge as OK and clear the NG if the continuous time while the following conditions are established is more than the predetermined time.

Judgment Value

Malfunction Criteria	Threshold Value
Output voltage	< 3.906 V

Time Needed for Diagnosis: Less than 1 second

AM:DTC P0111 INTAKE AIR TEMPERATURE SENSOR RANGE/PERFORMANCE PROBLEM

1. OUTLINE OF DIAGNOSIS

Detect the abnormality of the intake air temperature sensor output characteristics. Perform the following two diagnosis, and judge as NG if either is NG.

- **Diagnosis 1 (relative diagnosis):** Perform diagnosis in reference to the intake air temperature sensor value, engine coolant temperature sensor value and ambient air temperature sensor value after engine start after predetermined time have passed in soak time. Judge as NG when the difference is more than the specific value in comparison respectively between intake air and engine coolant temperature, intake air and ambient air temperature.
- **Diagnosis 2 (stuck diagnosis):** Observe the engine condition, and if there is no variation in the driving condition under which the intake air temperature is considered to change, judge as NG.

2. COMPONENT DESCRIPTION

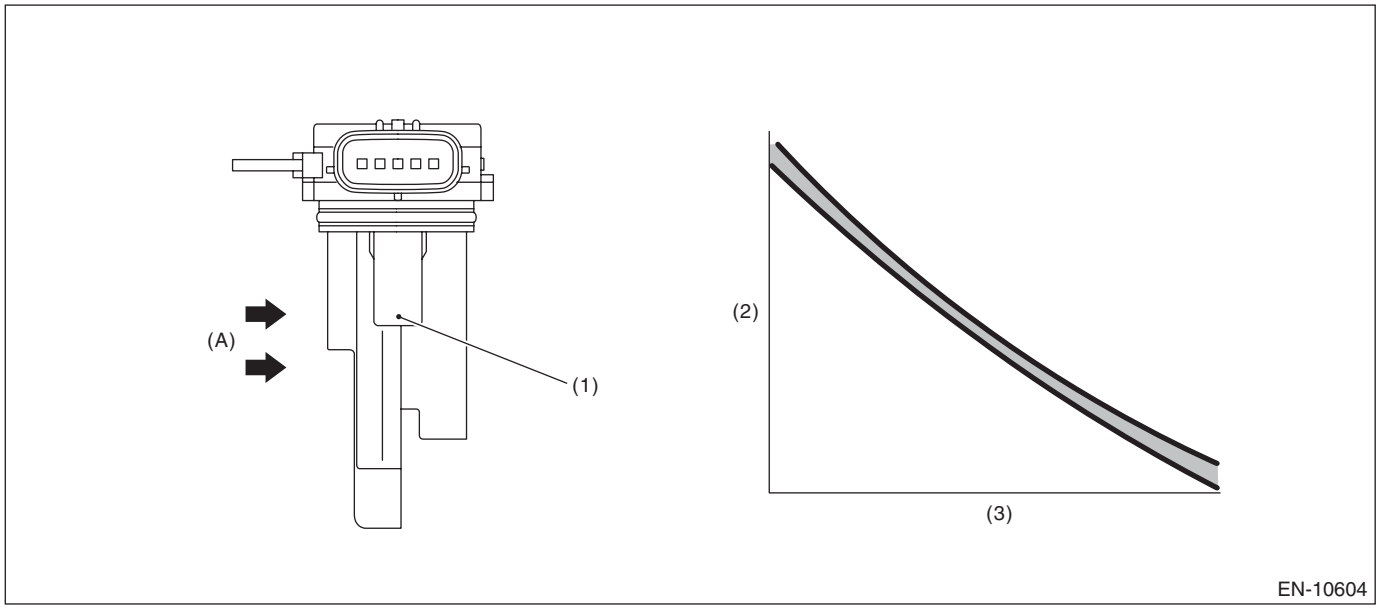

(A) Air

(1) Intake air temperature sensor (2) Resistance value (Ω) (3) Intake air temperature °C (°F)

3. ENABLE CONDITION

- **Diagnosis 1**

Secondary Parameters	Enable Conditions
Soaking time	≥ 21600 s
Engine speed	> 500 rpm
Block heater judgment	Completed
Block heater activation	not activate

Block heater judgment

Parameter	Enable Conditions
Engine speed	> 500 rpm

Judge as “Block heater is not activate” when the following conditions are established.

Judgment Value

Judgment criteria	Threshold Value
Σ (Engine coolant temperature – Engine coolant temperature at engine start)	≥ –10 °C (–18°F)

Time Needed for Judgment: 1 s × 20 times

- **Diagnosis 2**

Secondary Parameters	Enable Conditions
Battery voltage	≥ 10.9 V
Engine coolant temperature	≥ 60 °C (140 °F)
Intake air amount sum value	≥ Value of Map 1
Number of experiences under conditions below	≥ 3 time(s)
• Continuous time when vehicle speed is less than 4 km/h (2.5 MPH)	≥ Value from Map 2
• Continuous time when vehicle speed is 40 km/h (24.9 MPH) or more and intake air amount is 10 g/s (0.35 oz/s) or more.	≥ 15 s

Map 1

Engine coolant temperature °C (°F)	–30 (–22)	–10 (14)	0 (32)	10 (50)	20 (68)
Intake air amount sum value (g (oz))	60000 (2116.2)	8500 (299.8)	7500 (264.53)	7000 (246.89)	5000 (176.35)

Map 2

Engine coolant temperature °C (°F)	–30 (–22)	–10 (14)	0 (32)	10 (50)	20 (68)
Continuous time (s) when vehicle speed is less than 4 km/h (2.5 MPH)	180	100	70	45	20

4. GENERAL DRIVING CYCLE

- **Diagnosis 1:** Perform diagnosis only once after engine start after constant soak time.
- **Diagnosis 2:** Perform the diagnosis when the vehicle speed condition is met after warming up from a cold condition.

5. DIAGNOSTIC METHOD

- **Abnormality Judgment**

Judge as NG when diagnosis 1 or diagnosis 2 becomes NG.

Diagnosis 1

If the duration of time while the following conditions are met is longer than the time indicated, judge as NG.

Judgment Value

Malfunction Criteria	Threshold Value
|Intake air temperature 30 s after engine start – engine coolant temperature at engine start|	> Value of Map 3
|Intake air temperature 30 s after engine start – Ambient air temperature 30 s after engine start|	> Value of Map 4

Map 3

Ambient air temperature °C (°F)	–30 (–22)	30 (86)	45 (113)	60 (140)
|Intake air temperature 30 s after engine start – engine coolant temperature at engine start| °C (°F)	12 (21.6°F)	12 (21.6°F)	22 (39.6°F)	22 (39.6°F)

Map 4

Ambient air temperature °C (°F)	–30 (–22)	30 (86)	45 (113)	60 (140)
|Intake air temperature 30 s after engine start – Ambient air temperature 30 s after engine start| °C (°F)	20 (68)	20 (68)	32 (89.6)	32 (89.6)

Time Needed for Diagnosis: 64 ms

Diagnosis 2

Judge as NG when the following conditions are established.

Judgment Value

Malfunction Criteria	Threshold Value
Output voltage difference between Max. and Min.	< 0.02 V (Equivalent to approximately 0.5°C (0.9°F) near 25°C (77°F))

Time Needed for Diagnosis: Less than 1 second

Malfunction Indicator Light Illumination: Illuminates when malfunction occurs in 2 continuous driving cycles.

- **Normality Judgment**

Judge as OK when diagnosis 1 and diagnosis 2 is OK, and clear NG.

Diagnosis 1

If the duration of time while the following conditions are met is longer than the time indicated, judge as OK.

Judgment Value

Malfunction Criteria	Threshold Value
When any one of the followings is established:	
|Intake air temperature 30 s after engine start – engine coolant temperature at engine start|	≤ Value of Map 3
|Intake air temperature 30 s after engine start – Ambient air temperature 30 s after engine start|	≤ Value of Map 4

Time Needed for Diagnosis: 64 ms

Diagnosis 2

Judge as OK when the following conditions are established.

Judgment Value

Malfunction Criteria	Threshold Value
Output voltage difference between Max. and Min.	≥ 0.02 V

Time Needed for Diagnosis: Less than 1 second

AN:DTC P0112 INTAKE AIR TEMPERATURE SENSOR 1 CIRCUIT LOW

1. OUTLINE OF DIAGNOSIS

Detect open or short circuit of the intake air temperature sensor.
Judge as NG if out of specification.

2. COMPONENT DESCRIPTION

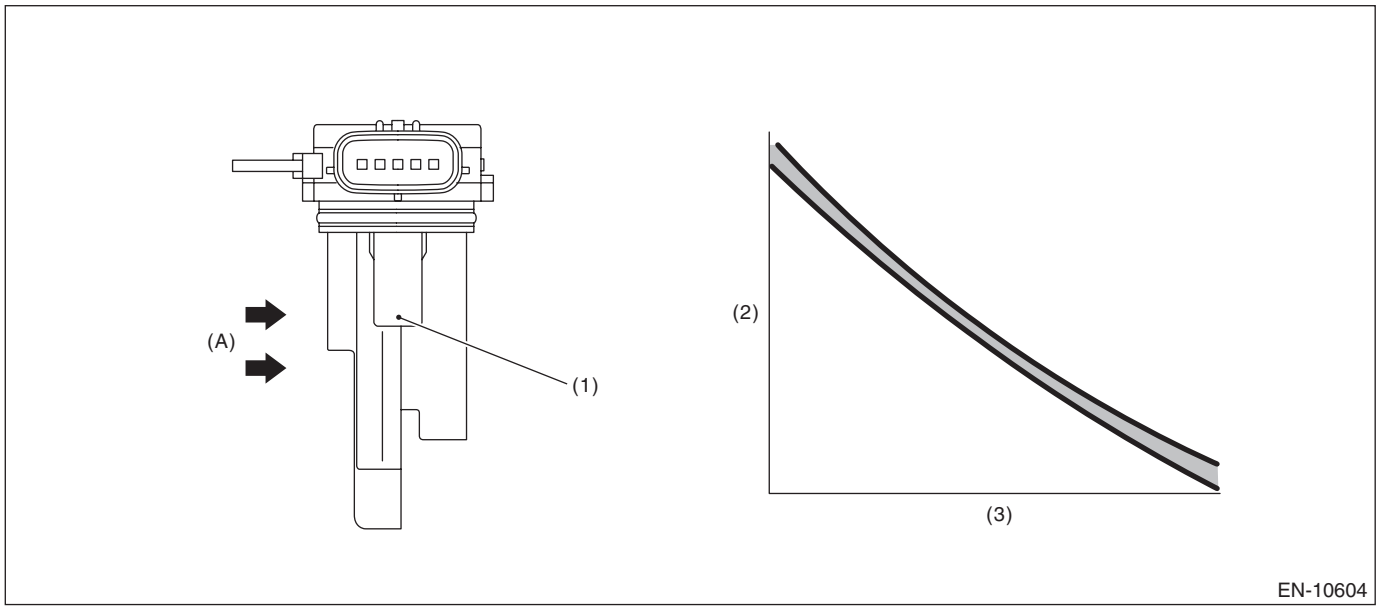

(A) Air

(1) Intake air temperature sensor (2) Resistance value (Ω) (3) Intake air temperature °C (°F)

3. ENABLE CONDITION

Secondary Parameters	Enable Conditions
None	

4. GENERAL DRIVING CYCLE

Always perform the diagnosis continuously.

5. DIAGNOSTIC METHOD

- **Abnormality Judgment**

If the duration of time while the following conditions are met is longer than the time indicated, judge as NG.

Judgment Value

Malfunction Criteria	Threshold Value
Output voltage	< 0.4 V

Time Needed for Diagnosis: 500 ms
Malfunction Indicator Light Illumination: Illuminates as soon as a malfunction occurs.

- **Normality Judgment**

Judge as OK and clear the NG if the continuous time while the following conditions are established is more than the predetermined time.

Judgment Value

Malfunction Criteria	Threshold Value
Output voltage	≥ 0.4 V

Time Needed for Diagnosis: Less than 1 second

AO:DTC P0113 INTAKE AIR TEMPERATURE SENSOR 1 CIRCUIT HIGH

1. OUTLINE OF DIAGNOSIS

Detect open or short circuit of the intake air temperature sensor.
Judge as NG if out of specification.

2. COMPONENT DESCRIPTION

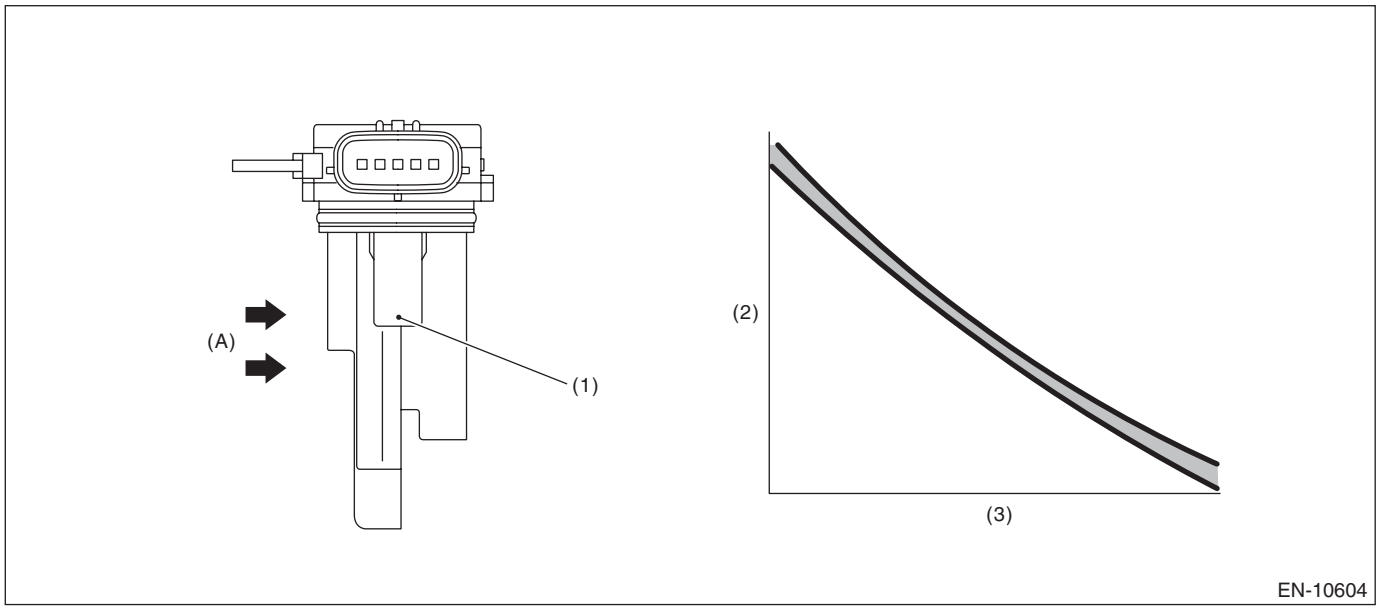

(A) Air

(1) Intake air temperature sensor (2) Resistance value (Ω) (3) Intake air temperature °C (°F)

3. ENABLE CONDITION

Secondary Parameters	Enable Conditions
None	

4. GENERAL DRIVING CYCLE

Always perform the diagnosis continuously.

5. DIAGNOSTIC METHOD

- **Abnormality Judgment**

If the duration of time while the following conditions are met is longer than the time indicated, judge as NG.

Judgment Value

Malfunction Criteria	Threshold Value
Output voltage	≥ 4.707 V

Time Needed for Diagnosis: 500 ms
Malfunction Indicator Light Illumination: Illuminates as soon as a malfunction occurs.

- **Normality Judgment**

Judge as OK and clear the NG if the continuous time while the following conditions are established is more than the predetermined time.

Judgment Value

Malfunction Criteria	Threshold Value
Output voltage	< 4.707 V

Time Needed for Diagnosis: Less than 1 second

AP:DTC P0116 ENGINE COOLANT TEMPERATURE SENSOR 1 CIRCUIT RANGE/PERFORMANCE

1. OUTLINE OF DIAGNOSIS

Detect the malfunction of the engine coolant temperature sensor characteristics.
Perform diagnosis in reference to the engine coolant temperature sensor value, intake air temperature sensor value and ambient air temperature sensor value after engine start after predetermined time have passed in soak time. Judge as NG when the difference is more than the specific value in comparison respectively between engine coolant and ambient air temperature, engine coolant and intake air temperature.

2. ENABLE CONDITIONS

Secondary Parameters	Enable Conditions
Soaking time	≥ 21600 s
Engine speed	> 500 rpm
Block heater judgment	Completed
Block heater activation	not activate

Block heater judgment

Parameter	Enable Conditions
Engine speed	> 500 rpm

Judge as “Block heater is not activate” when the following conditions are established.

Judgment Value

Judgment criteria	Threshold Value
Σ (Engine coolant temperature – Engine coolant temperature at engine start)	≥ –10 °C (–18°F)

Time Needed for Judgment: 1 s × 20 times

3. GENERAL DRIVING CYCLE

Perform diagnosis only once after engine start after constant soak time.

4. DIAGNOSTIC METHOD

- **Abnormality Judgment**

If the duration of time while the following conditions are met is longer than the time indicated, judge as NG.

Judgment Value

Malfunction Criteria	Threshold Value
|Engine coolant temperature at engine start – Intake air temperature 30 s after engine start|	> Value from Map
|Engine coolant temperature at engine start – ambient air temperature at engine start|	> 25 °C (45°F)

Map

Ambient air temperature °C (°F)	–30 (–22)	30 (86)	45 (113)	60 (140)
|Engine coolant temperature at engine start – Intake air temperature 30 s after engine start| °C (°F)	12 (21.6°F)	12 (21.6°F)	22 (39.6°F)	22 (39.6°F)

Time Needed for Diagnosis: 64 ms
Malfunction Indicator Light Illumination: Illuminates when malfunction occurs in 2 continuous driving cycles.

- **Normality Judgment**

Judge as OK and clear the NG if the continuous time while the following conditions are established is more than the predetermined time.

Judgment Value

Malfunction Criteria	Threshold Value
When any one of the followings is established:	
|Engine coolant temperature at engine start – Intake air temperature 30 s after engine start|	≤ Value from Map
|Engine coolant temperature at engine start – ambient air temperature at engine start|	≤ 25 °C (45°F)

Time Needed for Diagnosis: 64 ms

AQ:DTC P0117 ENGINE COOLANT TEMPERATURE CIRCUIT LOW

1. OUTLINE OF DIAGNOSIS

Detect the open or short circuit of the engine coolant temperature sensor.
Judge as NG if out of specification.

2. COMPONENT DESCRIPTION

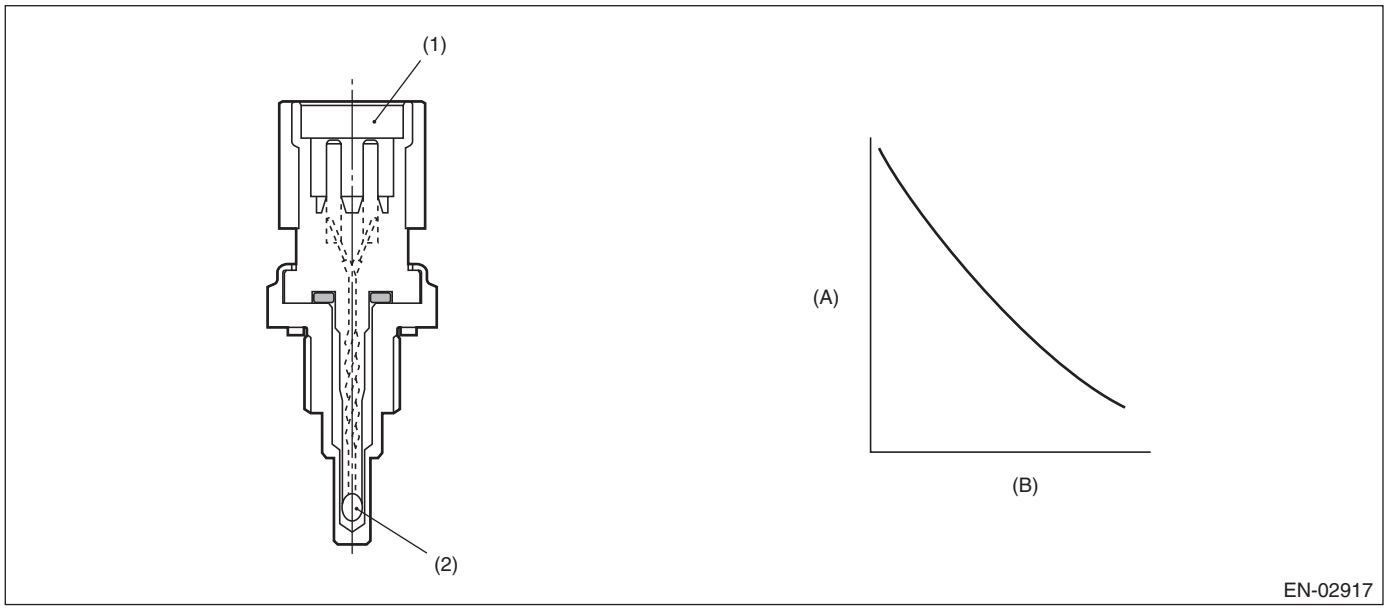

(A) Resistance value (kΩ)
(B) Temperature °C (°F)
(1) Connector
(2) Thermistor element

3. ENABLE CONDITION

Secondary Parameters	Enable Conditions
None	

4. GENERAL DRIVING CYCLE

Always perform the diagnosis continuously.

5. DIAGNOSTIC METHOD

- **Abnormality Judgment**

If the duration of time while the following conditions are met is longer than the time indicated, judge as NG.

Judgment Value

Malfunction Criteria	Threshold Value
Output voltage	< 0.47 V

Time Needed for Diagnosis: 500 ms
Malfunction Indicator Light Illumination: Illuminates as soon as a malfunction occurs.

- **Normality Judgment**

Judge as OK and clear the NG if the continuous time while the following conditions are established is more than the predetermined time.

Judgment Value

Malfunction Criteria	Threshold Value
Output voltage	≥ 0.47 V

Time Needed for Diagnosis: Less than 1 second

AR:DTC P0118 ENGINE COOLANT TEMPERATURE CIRCUIT HIGH

1. OUTLINE OF DIAGNOSIS

Detect the open or short circuit of the engine coolant temperature sensor.
Judge as NG if out of specification.

2. COMPONENT DESCRIPTION

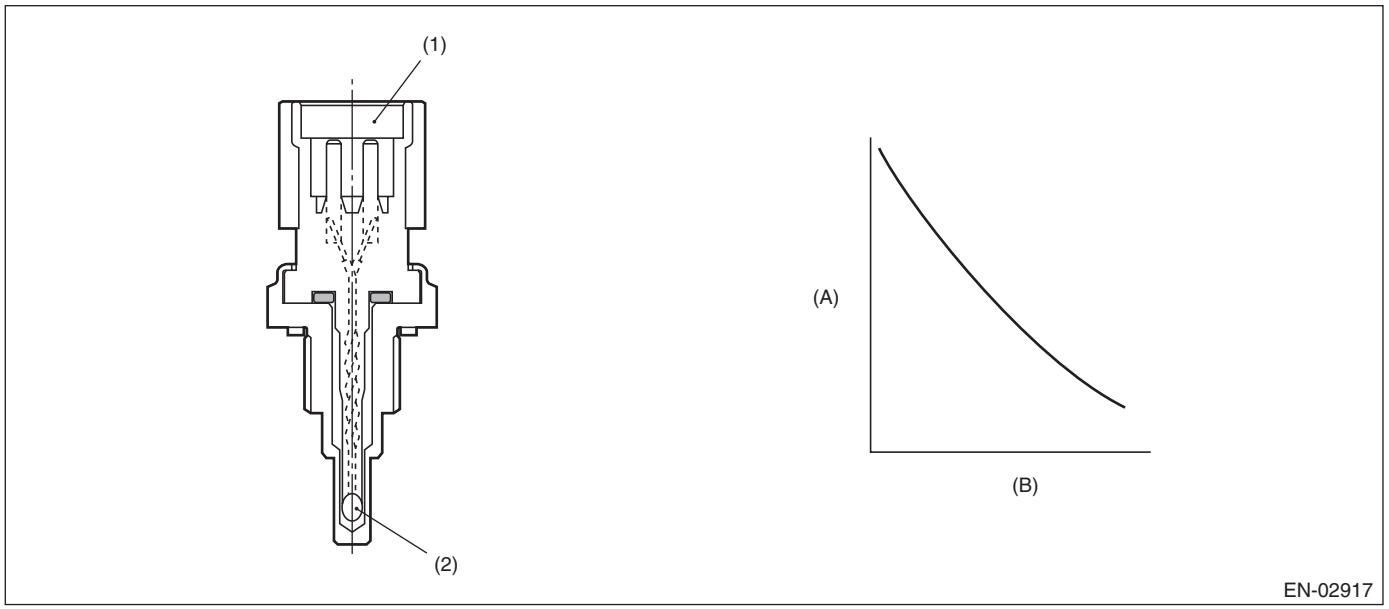

(A) Resistance value (kΩ)
(B) Temperature °C (°F)
(1) Connector
(2) Thermistor element

3. ENABLE CONDITION

Secondary Parameters	Enable Conditions
None	

4. GENERAL DRIVING CYCLE

Always perform the diagnosis continuously.

5. DIAGNOSTIC METHOD

- **Abnormality Judgment**

If the duration of time while the following conditions are met is longer than the time indicated, judge as NG.

Judgment Value

Malfunction Criteria	Threshold Value
Output voltage	≥ 4.698 V

Time Needed for Diagnosis: 500 ms
Malfunction Indicator Light Illumination: Illuminates as soon as a malfunction occurs.

- **Normality Judgment**

Judge as OK and clear the NG if the continuous time while the following conditions are established is more than the predetermined time.

Judgment Value

Malfunction Criteria	Threshold Value
Output voltage	< 4.698 V

Time Needed for Diagnosis: Less than 1 second

AS:DTC P0122 THROTTLE/PEDAL POSITION SENSOR/SWITCH “A” CIRCUIT LOW

1. OUTLINE OF DIAGNOSIS

Detect the open or short circuit of throttle position sensor 1.
Judge as NG if out of specification.

2. COMPONENT DESCRIPTION

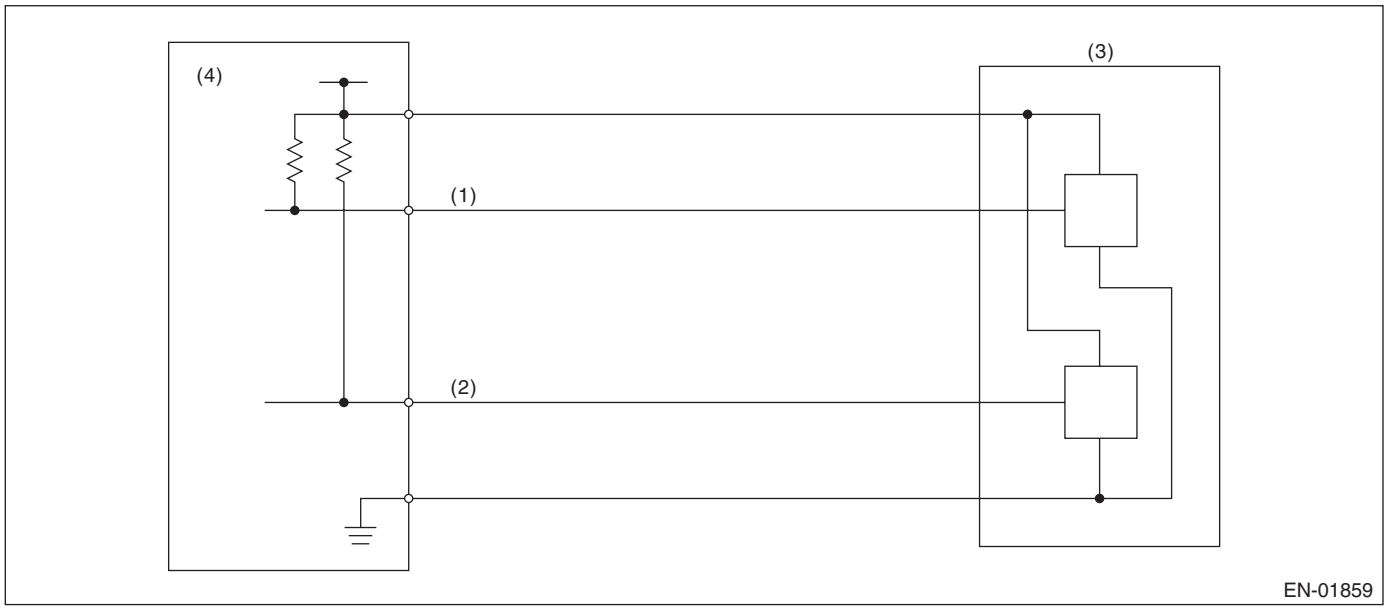

(1) Throttle position sensor 1 signal
(2) Throttle position sensor 2 signal
(3) Throttle position sensor
(4) Engine control module (ECM)

3. ENABLE CONDITION

Secondary Parameters	Enable Conditions
Ignition switch	ON
Battery voltage	≥ 6 V

4. GENERAL DRIVING CYCLE

Always perform the diagnosis continuously.

5. DIAGNOSTIC METHOD

- **Abnormality Judgment**

If the duration of time while the following conditions are met is longer than the time indicated, judge as NG.

Judgment Value

Malfunction Criteria	Threshold Value
Sensor 1 input voltage	≤ 0.267 V

Time Needed for Diagnosis: 24 ms
Malfunction Indicator Light Illumination: Illuminates as soon as a malfunction occurs.

- **Normality Judgment**

Judge as OK and clear the NG if the continuous time while the following conditions are established is more than the predetermined time.

Judgment Value

Malfunction Criteria	Threshold Value
Sensor 1 input voltage	> 0.267 V

Time Needed for Diagnosis: 24 ms

AT:DTC P0123 THROTTLE/PEDAL POSITION SENSOR/SWITCH “A” CIRCUIT HIGH

1. OUTLINE OF DIAGNOSIS

Detect the open or short circuit of throttle position sensor 1.
Judge as NG if out of specification.

2. COMPONENT DESCRIPTION

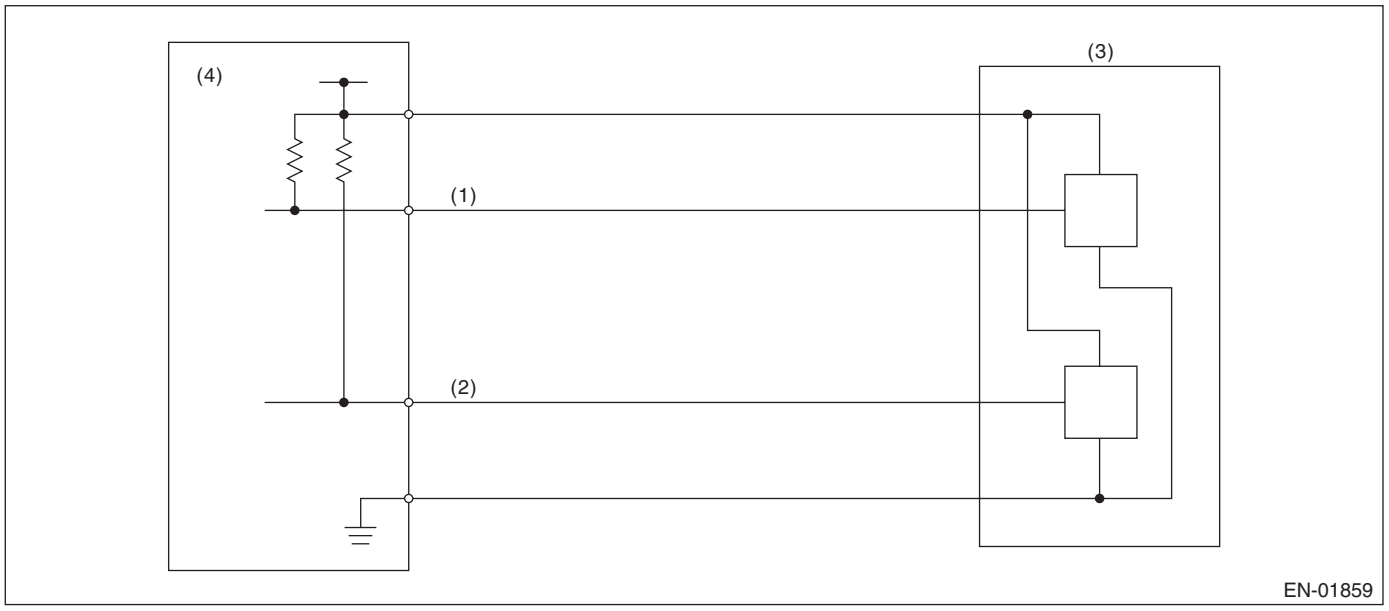

(1) Throttle position sensor 1 signal
(2) Throttle position sensor 2 signal
(3) Throttle position sensor
(4) Engine control module (ECM)

3. ENABLE CONDITION

Secondary Parameters	Enable Conditions
Ignition switch	ON
Battery voltage	≥ 6 V

4. GENERAL DRIVING CYCLE

Always perform the diagnosis continuously.

5. DIAGNOSTIC METHOD

- **Abnormality Judgment**

If the duration of time while the following conditions are met is longer than the time indicated, judge as NG.

Judgment Value

Malfunction Criteria	Threshold Value
Sensor 1 input voltage	≥ 4.727 V

Time Needed for Diagnosis: 24 ms
Malfunction Indicator Light Illumination: Illuminates as soon as a malfunction occurs.

- **Normality Judgment**

Judge as OK and clear the NG if the continuous time while the following conditions are established is more than the predetermined time.

Judgment Value

Malfunction Criteria	Threshold Value
Sensor 1 input voltage	< 4.727 V

Time Needed for Diagnosis: 24 ms

AU:DTC P0125 INSUFFICIENT COOLANT TEMPERATURE FOR CLOSED LOOP FUEL CONTROL

1. OUTLINE OF DIAGNOSIS

Detect the malfunction of engine coolant temperature sensor output property.
Judge as NG when the engine coolant temperature has not risen to the specific value after the predetermined time has passed since engine start.

2. COMPONENT DESCRIPTION

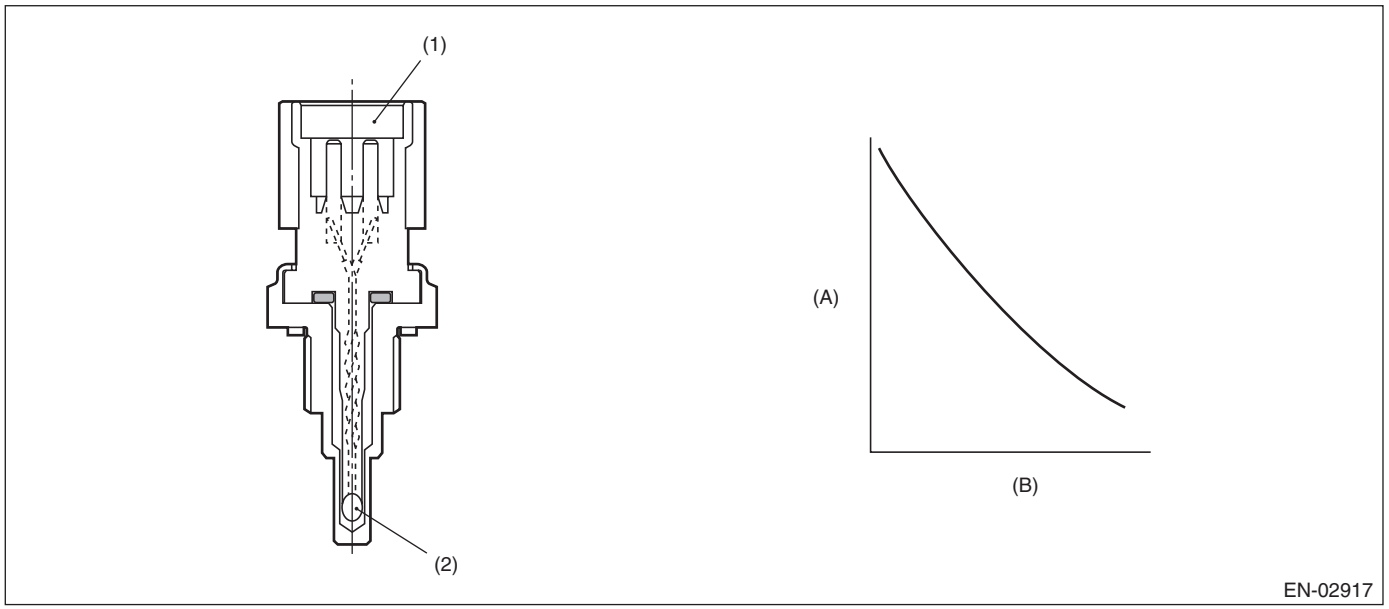

(A) Resistance value (kΩ)
(B) Temperature °C (°F)
(1) Connector
(2) Thermistor element

3. ENABLE CONDITION

Secondary Parameters	Enable Conditions
Engine coolant temperature at engine starting	< –15 °C (5 °F)
Engine speed	> 500 rpm

4. GENERAL DRIVING CYCLE

Perform the diagnosis only once after starting the engine in cold condition.

5. DIAGNOSTIC METHOD

• Abnormality Judgment

If the duration of time while the following conditions are met is longer than the time indicated, judge as NG.

Judgment Value

Malfunction Criteria	Threshold Value
Engine coolant temperature	< –15 °C (5 °F)
Elapsed time after starting the engine (When (Smaller value either engine coolant temperature or intake air temperature at engine start) ≥ –23.3°C (–9.9°F))	≥ Value of Map 1
or	
Elapsed time after starting the engine (When (Smaller value either engine coolant temperature or intake air temperature at engine start) < –23.3°C (–9.9°F))	≥ Value from Map 2

Map 1

		Smaller value either engine coolant temperature or intake air temperature at engine start °C (°F)							
		–40 (–40)	–23.4 (–10.1)	–23.3 (–9.9)	0 (32)	20 (68)	40 (104)	60 (140)	80 (176)
Ratio of time at engine stop during elapsed time after engine start	0.0	300000	300000	120000	120000	120000	120000	120000	120000
	0.3	300000	300000	120000	120000	120000	120000	120000	120000
	0.6	300000	300000	120000	120000	120000	120000	120000	120000
	1.0	300000	300000	120000	120000	120000	120000	120000	120000
ms									

Map 2

		Smaller value either engine coolant temperature or intake air temperature at engine start °C (°F)							
		–40 (–40)	–23.4 (–10.1)	–23.3 (–9.9)	0 (32)	20 (68)	40 (104)	60 (140)	80 (176)
Ratio of time at engine stop during elapsed time after engine start	0.0	300000	300000	120000	120000	120000	120000	120000	120000
	0.3	300000	300000	120000	120000	120000	120000	120000	120000
	0.6	300000	300000	120000	120000	120000	120000	120000	120000
	1.0	300000	300000	120000	120000	120000	120000	120000	120000
ms									

Time Needed for Diagnosis: 64 ms
Malfunction Indicator Light Illumination: Illuminates when malfunction occurs in 2 continuous driving cycles.

• Normality Judgment

Judge as OK and clear the NG if the continuous time while the following conditions are established is more than the predetermined time.

Judgment Value

Malfunction Criteria	Threshold Value
Engine coolant temperature	≥ –15 °C (5 °F)

Time Needed for Diagnosis: 64 ms

AV:DTC P0128 COOLANT THERMOSTAT (ENGINE COOLANT TEMPERATURE BELOW THERMOSTAT REGULATING TEMPERATURE)

1. OUTLINE OF DIAGNOSIS

Detect malfunctions of the thermostat function.
Judge as NG when any one of the following conditions is established.

- When the actual engine coolant temperature does not reach the maximum temperature necessary to perform other OBDII diagnosis and Σ (Estimated engine coolant temperature – actual engine coolant temperature) exceeded the predetermined value. (Judgment 1)
- When the actual engine coolant temperature does not reach the range within –11°C (–19.8°F) from the regulated temperature and Σ (Estimated engine coolant temperature – actual engine coolant temperature) exceeded the predetermined value. (Judgment 2)
- When the difference between the estimated coolant temperature and the actual engine coolant temperature exceeds the predetermined value, and Σ (Estimated engine coolant temperature – actual engine coolant temperature) exceeded the predetermined value. (Judgment 3)

2. COMPONENT DESCRIPTION

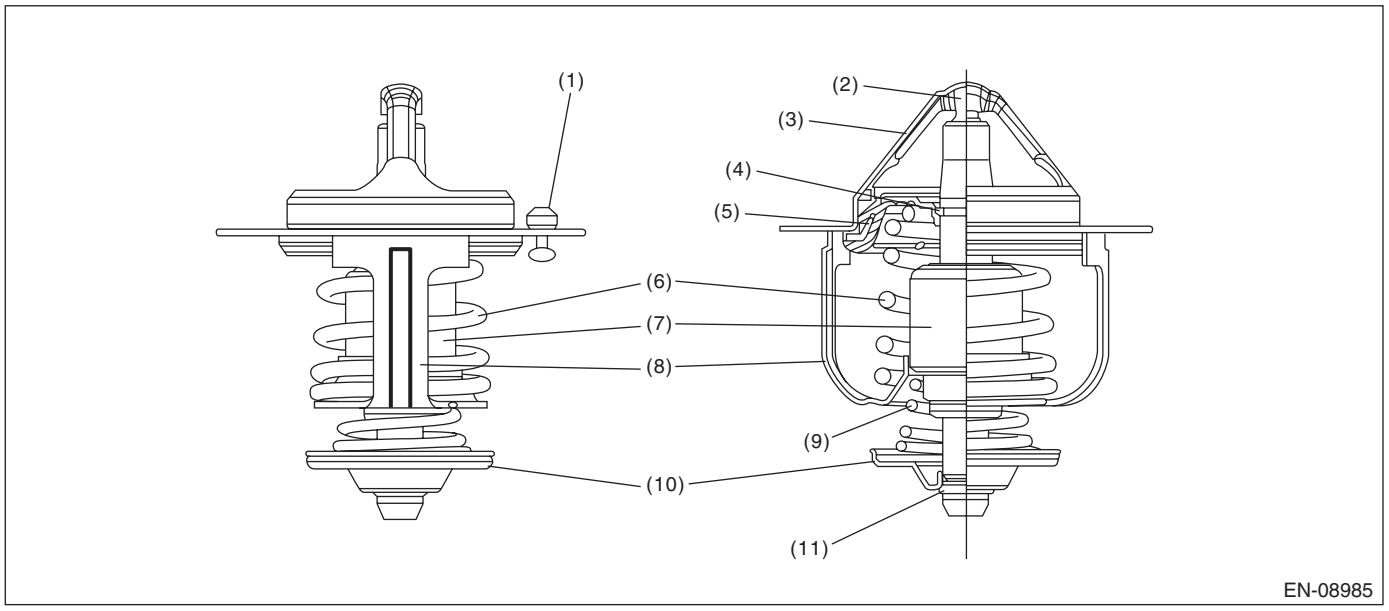

(1) Jiggle valve
(2) Piston
(3) Flange
(4) Stop ring
(5) Dust seal
(6) Main spring
(7) Wax element
(8) Frame
(9) Bypass spring
(10) Bypass valve
(11) Stop ring

3. ENABLE CONDITIONS

Secondary Parameters	Enable Conditions
<Judgment 1>	
Battery voltage	≥ 10.9 V
Estimate ambient temperature	≥ –7 °C (19.4 °F)
Vehicle speed	≥ 30 km/h (18.6 MPH)
Estimated coolant temperature	≥ Value of Map 1
Engine coolant temperature at engine starting	< 62 °C (143.6 °F)
<Judgment 2>	
Battery voltage	≥ 10.9 V
Estimate ambient temperature	≥ –7 °C (19.4 °F)
Vehicle speed	≥ 30 km/h (18.6 MPH)
Estimated coolant temperature	≥ Value from Map 2
Engine coolant temperature at engine starting	< 62 °C (143.6 °F)
<Judgment 3>	
Battery voltage	≥ 10.9 V
Estimate ambient temperature	≥ –7 °C (19.4 °F)
Vehicle speed	≥ 30 km/h (18.6 MPH)
Estimated coolant temperature	≥ Value from Map 3
Engine coolant temperature at engine starting	< 62 °C (143.6 °F)

Map 1

Engine coolant temperature at engine starting °C (°F)	–7 (19.4)	8 (46.4)	10 (50)	25 (77)
Estimated coolant temperature °C (°F)	60 (140)	60 (140)	60 (140)	60 (140)

Map 2

Engine coolant temperature at engine starting °C (°F)	–7 (19.4)	8 (46.4)	10 (50)	25 (77)
Estimated coolant temperature °C (°F)	70.2 (158.4)	80.2 (176.4)	80.2 (176.4)	80.2 (176.4)

Map 3

Engine coolant temperature at engine starting °C (°F)	–7 (19.4)	10 (50)	25 (77)	29 (84.2)
Estimated coolant temperature °C (°F)	59 (138.2)	70 (158)	78 (172.4)	80.2 (176.4)

4. GENERAL DRIVING CYCLE

Perform the diagnosis only once after starting the engine.

5. DIAGNOSTIC METHOD

• Abnormality Judgment

If the duration of time while the following conditions are met is longer than the time indicated, judge as NG.

Judgment Value

Malfunction Criteria	Threshold Value
When any one of the followings is established:	
<Judgment 1>	
Actual engine coolant temperature and Σ (Estimated engine coolant temperature – actual engine coolant temperature)	< Value of Map 4 > Value of Map 5
<Judgment 2>	
Actual engine coolant temperature and Σ (Estimated engine coolant temperature – actual engine coolant temperature)	< Regulated temperature – Value of Map 6 > Value of Map 7
<Judgment 3>	
Estimated engine coolant temperature – actual engine coolant temperature and Σ (Estimated engine coolant temperature – actual engine coolant temperature)	> Value of Map 8 > Value of Map 9

Map 4

Estimate ambient temperature °C (°F)	–7 (19.4)	8 (46.4)	10 (50)	25 (77)
Threshold Value °C (°F)	60 (140)	60 (140)	60 (140)	60 (140)

Map 5

Engine coolant temperature at engine starting °C (°F)	–7 (19.4)	0 (32)	8 (46.4)	10 (50)	25 (77)	35 (95)
Threshold Value °C (°F)	1731.6 (3116.9)	1731.6 (3116.9)	1731.6 (3116.9)	1731.6 (3116.9)	1731.6 (3116.9)	1200 (2160)

Map 6

Estimate ambient temperature °C (°F)	–7 (19.4)	8 (46.4)	10 (50)	25 (77)
Threshold Value °C (°F)	21.1 (30.1)	11.1 (20)	11.1 (20)	11.1 (20)

Map 7

Engine coolant temperature at engine starting °C (°F)	–7 (19.4)	0 (32)	8 (46.4)	10 (50)	30 (86)	35 (95)
Threshold Value °C (°F)	1731.6 (3116.9)	1731.6 (3116.9)	1731.6 (3116.9)	1731.6 (3116.9)	1731.6 (3116.9)	1500 (2700)

Map 8

Estimate ambient temperature °C (°F)	–7 (19.4)	8 (46.4)	10 (50)	25 (77)
Threshold Value °C (°F)	11.1 (20)	11.1 (20)	11.1 (20)	11.1 (20)

Map 9

Engine coolant temperature at engine starting °C (°F)	–7 (19.4)	8 (46.4)	10 (50)	25 (77)
Threshold Value °C (°F)	1731.6 (3116.9)	1731.6 (3116.9)	1731.6 (3116.9)	1731.6 (3116.9)

Time Needed for Diagnosis: 300 — 700 seconds
Malfunction Indicator Light Illumination: Illuminates when malfunction occurs in 2 continuous driving cycles.

- **Normality Judgment**

Judge as OK and clear the NG if the continuous time while the following conditions are established is more than the predetermined time.

Judgment Value

Malfunction Criteria	Threshold Value
All of the following conditions are established.	
<Judgment 1>	
Actual engine coolant temperature and Σ (Estimated engine coolant temperature – actual engine coolant temperature)	≥ Value of Map 4 ≤ Value of Map 5
<Judgment 2>	
Actual engine coolant temperature and Σ (Estimated engine coolant temperature – actual engine coolant temperature)	≥ Regulated temperature – Value of Map 6 ≤ Value of Map 7
<Judgment 3>	
Estimated engine coolant temperature – actual engine coolant temperature and Σ (Estimated engine coolant temperature – actual engine coolant temperature) and Actual engine coolant temperature	≤ Value of Map 8 ≤ Value of Map 9 ≥ Regulated temperature – Value of Map 10

Map 10

Estimate ambient temperature °C (°F)	–7 (19.4)	8 (46.4)	10 (50)	25 (77)
Threshold Value °C (°F)	21.1 (30.1)	11.1 (20)	11.1 (20)	11.1 (20)

Time Needed for Diagnosis: 300 — 700 seconds

AW:DTC P0131 O2 SENSOR CIRCUIT LOW VOLTAGE (BANK 1 SENSOR 1)

1. OUTLINE OF DIAGNOSIS

Detect the open or short circuit of sensor.
Judge as NG, when the element voltage is out of the specified range.

2. COMPONENT DESCRIPTION

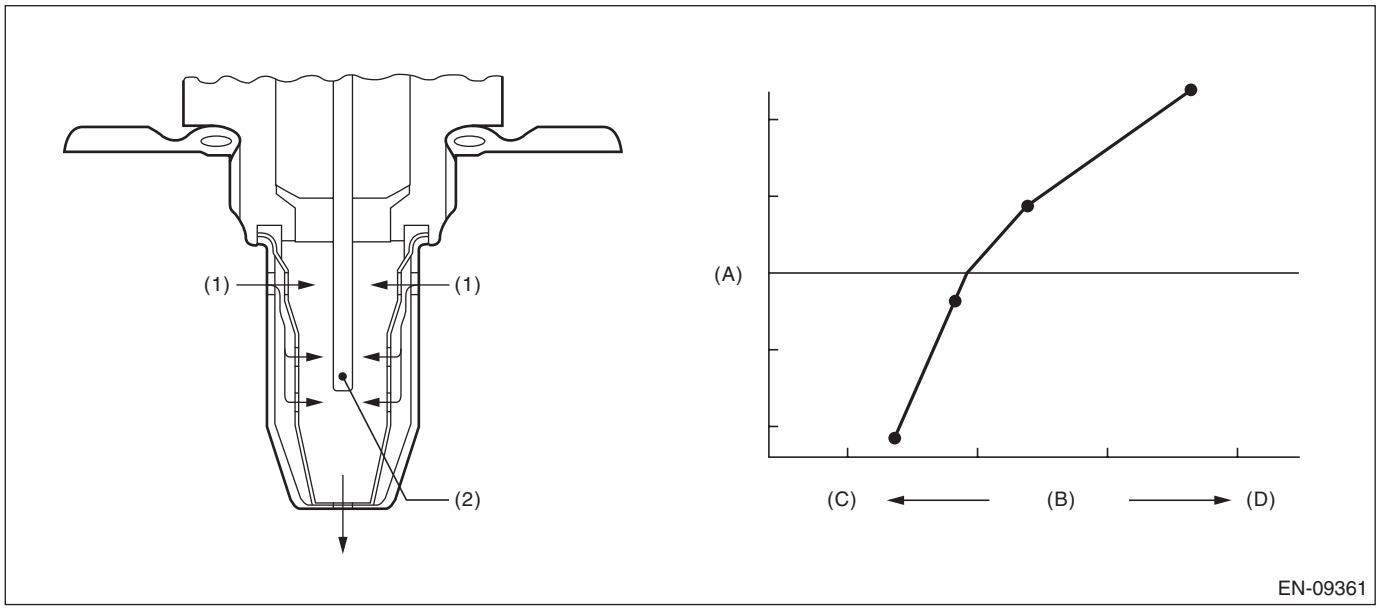

(A) Electromotive force (B) Air fuel ratio (C) Rich
(D) Lean

(1) Exhaust gas (2) ZrO_2

3. ENABLE CONDITION

Secondary Parameters	Enable Conditions
Battery voltage	≥ 10.9 V

4. GENERAL DRIVING CYCLE

Always perform the diagnosis continuously.

5. DIAGNOSTIC METHOD

• Abnormality Judgment

If the duration of time while the following conditions are met is longer than the time indicated, judge as NG.

Judgment Value

Malfunction Criteria	Threshold Value
(1) Input voltage (+)	< 0.4 V
or	
(2) Input voltage (–)	< 0.4 V
or	
(3) |Input voltage (+) – Input voltage (–)| and 3.8 V < Input voltage (–) < 4.7 V	< 0.1 V

Time Needed for Diagnosis:
(1): 1000 ms
(2): 1000 ms
(3): 1000 ms

Malfunction Indicator Light Illumination: Illuminates as soon as a malfunction occurs.

• Normality Judgment

Judge as OK and clear the NG if the continuous time while the following conditions are established is more than the predetermined time.

Judgment Value

Malfunction Criteria	Threshold Value
(1) Input voltage (+)	≥ 0.4 V
(2) Input voltage (–)	≥ 0.4 V
(3) |Input voltage (+) – Input voltage (–)|	≥ 0.1 V
or	
Input voltage (–)	≤ 3.8 V
or	
Input voltage (–)	≥ 4.7 V

Time Needed for Diagnosis:
(1): Less than 1 s
(2): Less than 1 s
(3): Less than 1 s

AX:DTC P0132 O2 SENSOR CIRCUIT HIGH VOLTAGE (BANK 1 SENSOR 1)

1. OUTLINE OF DIAGNOSIS

Detect the open or short circuit of sensor.
Judge as NG, when the element voltage is out of the specified range.

2. COMPONENT DESCRIPTION

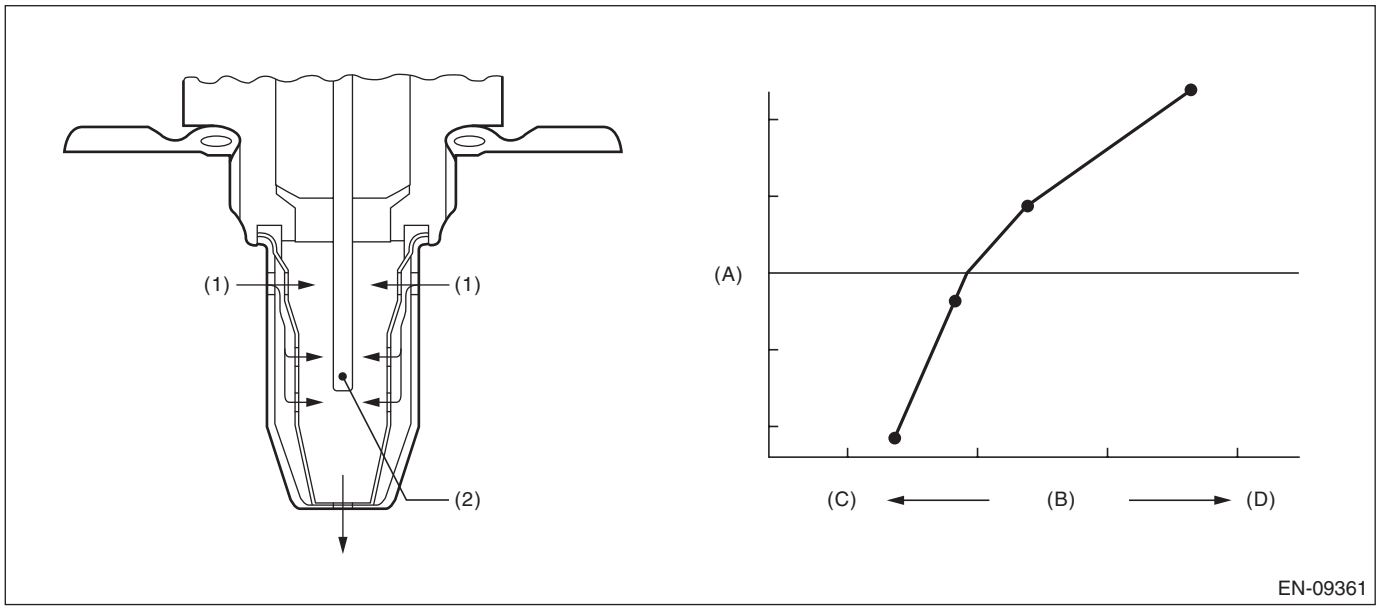

(A) Electromotive force (B) Air fuel ratio (C) Rich
(D) Lean

(1) Exhaust gas (2) ZrO_2

3. ENABLE CONDITION

Secondary Parameters	Enable Conditions
Battery voltage	≥ 10.9 V

4. GENERAL DRIVING CYCLE

Always perform the diagnosis continuously.

5. DIAGNOSTIC METHOD

- **Abnormality Judgment**

If the duration of time while the following conditions are met is longer than the time indicated, judge as NG.

Judgment Value

Malfunction Criteria	Threshold Value
(1) Input voltage (+) or (2) Input voltage (–)	> 4.7 V > 4.7 V

Time Needed for Diagnosis:
(1): 1000 ms
(2): 1000 ms
Malfunction Indicator Light Illumination: Illuminates as soon as a malfunction occurs.

- **Normality Judgment**

Judge as OK and clear the NG if the continuous time while the following conditions are established is more than the predetermined time.

Judgment Value

Malfunction Criteria	Threshold Value
(1) Input voltage (+)	≤ 4.7 V
(2) Input voltage (–)	≤ 4.7 V

Time Needed for Diagnosis: Less than 1 second

AY:DTC P0134 O2 SENSOR CIRCUIT NO ACTIVITY DETECTED (BANK 1 SENSOR 1)

1. OUTLINE OF DIAGNOSIS

Detect open circuits of the sensor.
Judge as NG when the impedance of the element is large.

2. COMPONENT DESCRIPTION

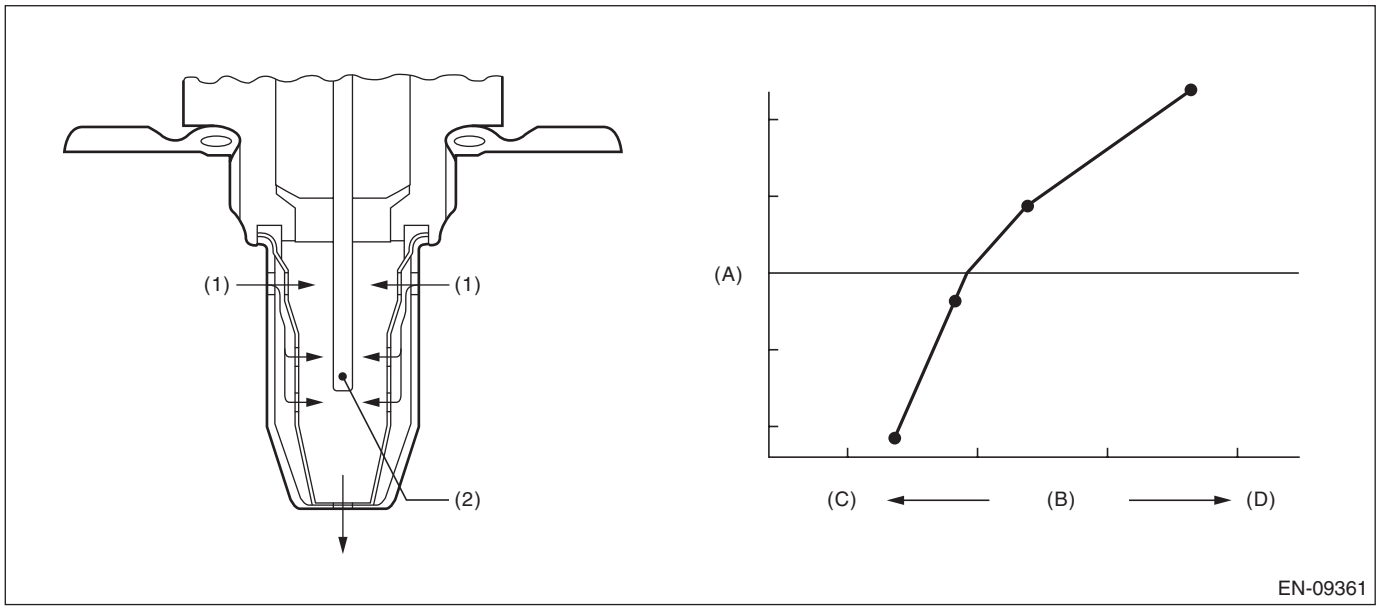

(A) Electromotive force (B) Air fuel ratio (C) Rich
(D) Lean

(1) Exhaust gas (2) ZrO_2

3. ENABLE CONDITION

Secondary Parameters	Enable Conditions
None	

4. GENERAL DRIVING CYCLE

Always perform the diagnosis continuously.

5. DIAGNOSTIC METHOD

- **Abnormality Judgment**

If the duration of time while the following conditions are met is longer than the time indicated, judge as NG.

Judgment Value

Malfunction Criteria	Threshold Value
Battery voltage	≥ 10.9 V
Time of heater control duty at 70 % or more	≥ 36000 ms
Front oxygen (A/F) sensor impedance	> 450 Ω

Time Needed for Diagnosis: 5000 ms
Malfunction Indicator Light Illumination: Illuminates as soon as a malfunction occurs.

- **Normality Judgment**

Judge as OK and clear the NG if the continuous time while the following conditions are established is more than the predetermined time.

Judgment Value

Malfunction Criteria	Threshold Value
Battery voltage	≥ 10.9 V
Front oxygen (A/F) sensor impedance	≤ 450 Ω

Time Needed for Diagnosis: Less than 1 second

AZ:DTC P0137 O2 SENSOR CIRCUIT LOW VOLTAGE (BANK 1 SENSOR 2)

1. OUTLINE OF DIAGNOSIS

Detect continuity NG of the oxygen sensor. If the oxygen sensor voltage reading is not within the probable range considering the operating conditions, judge as NG.

2. COMPONENT DESCRIPTION

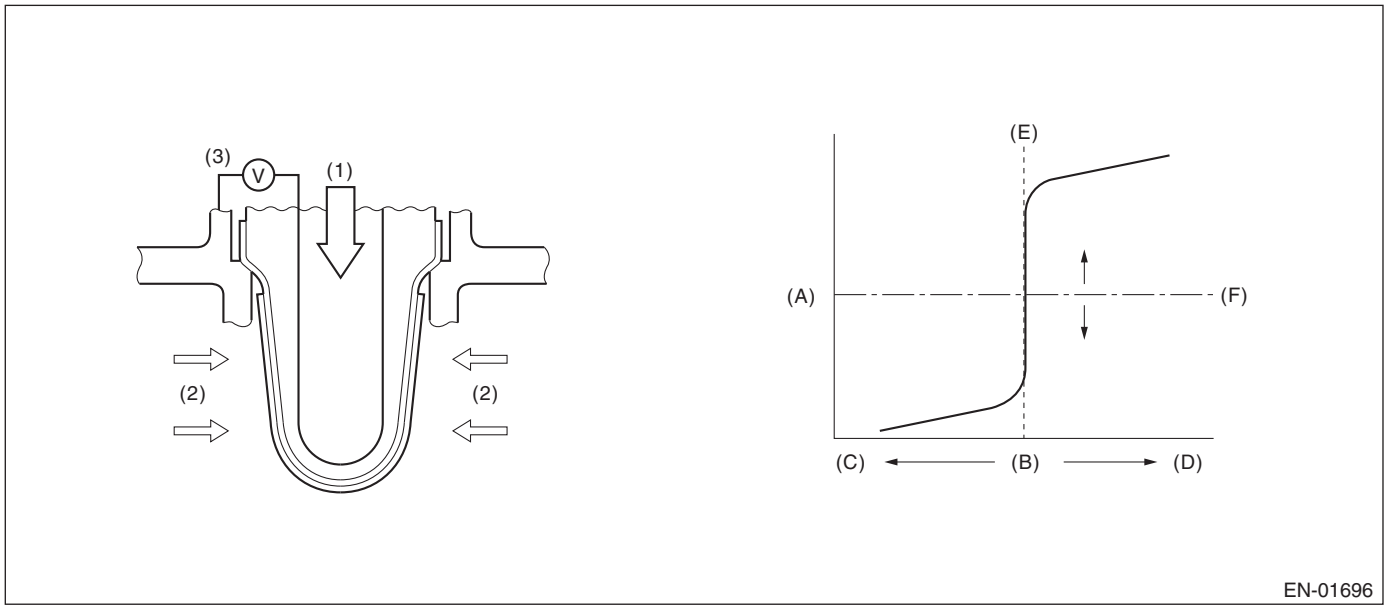

(A) Electromotive force
(B) Air fuel ratio
(C) Lean
(D) Rich
(E) Theoretical air fuel ratio
(F) Comparative voltage

(1) Atmosphere
(2) Exhaust gas
(3) Electromotive force

3. ENABLE CONDITION

Used for abnormality judgment

Secondary Parameters	Enable Conditions
High	
Battery voltage	≥ 10.9 V
Low (1)	
Closed loop control at the oxygen sensor	In operation
Battery voltage	≥ 10.9 V
Amount of intake air	≥ 10 g/s (0.35 oz/s)
Low (2)	
Closed loop control at the oxygen sensor	In operation
Battery voltage	≥ 10.9 V
Amount of intake air	< 10 g/s (0.35 oz/s)

Used for normality judgment

Secondary Parameters	Enable Conditions
Closed loop control at the oxygen sensor	In operation
Battery voltage	≥ 10.9 V

4. GENERAL DRIVING CYCLE

After starting the engine, continuously perform the diagnosis with the same engine condition.

5. DIAGNOSTIC METHOD

• Abnormality Judgment

If the duration of time while the following conditions are met is longer than the time indicated, judge as NG.

Judgment Value

Malfunction Criteria	Threshold Value	DTC
High Sensor output voltage	> 1.2 V	P0138
Low Sensor output voltage	< 0.03 V	P0137

Time Needed for Diagnosis:
High: 2500 ms
Low (1): 20000 ms
Low (2): 40000 ms

Malfunction Indicator Light Illumination: Illuminates when malfunction occurs in 2 continuous driving cycles.

• Normality Judgment

Judge as OK and clear the NG if the continuous time while the following conditions are established is more than the predetermined time.

Judgment Value

Malfunction Criteria	Threshold Value	DTC
High Sensor output voltage	≤ 1.2 V	P0138
Low Sensor output voltage	≥ 0.03 V	P0137

Time Needed for Diagnosis:
High: Less than 1 second
Low (1): Less than 1 second
Low (2): Less than 1 second

BA:DTC P0138 O2 SENSOR CIRCUIT HIGH VOLTAGE (BANK 1 SENSOR 2)

1. OUTLINE OF DIAGNOSIS

NOTE:
For the detection standard, refer to DTC P0137. <Ref. to GD(H4DO HEV)-80, DTC P0137 O2 SENSOR CIRCUIT LOW VOLTAGE (BANK 1 SENSOR 2), Diagnostic Trouble Code (DTC) Detecting Criteria.>

BB:DTC P013A O2 SENSOR SLOW RESPONSE - RICH TO LEAN (BANK 1 SENSOR 2)

1. OUTLINE OF DIAGNOSIS

Detect the slow response of rich → lean for rear oxygen sensor output.
When the deceleration fuel cut has occurred, detect the trouble by calculating the time when the rear oxygen sensor output passes through the predetermined range of voltages.
Judge as NG when the response time is larger than the threshold value.

2. COMPONENT DESCRIPTION

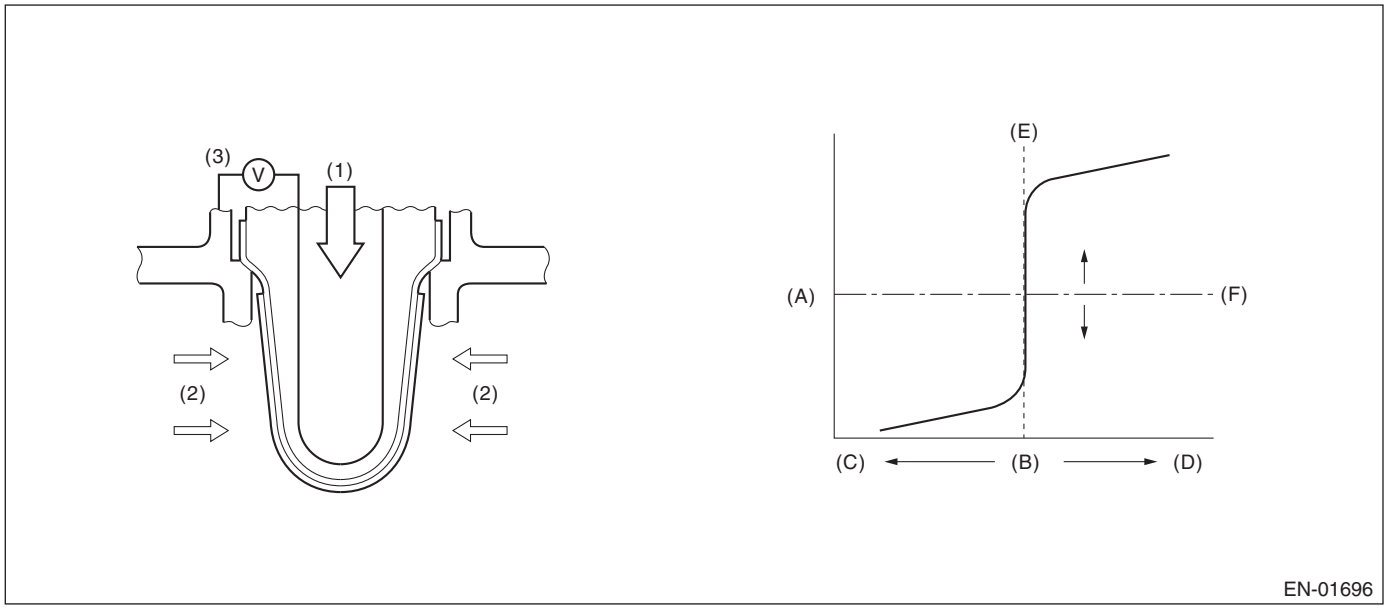

(A)	Electromotive force	(B)	Air fuel ratio	(C)	Lean
(D)	Rich	(E)	Theoretical air fuel ratio	(F)	Comparative voltage
(1)	Atmosphere	(2)	Exhaust gas	(3)	Electromotive force

3. ENABLE CONDITIONS

Secondary Parameters	Enable Conditions
Battery voltage	> 10.9 V
Current calculation time of the rear oxygen sensor heater after starting	≥ 180000 ms
Engine speed when fuel cut starts	≥ 1000 rpm
Rear oxygen sensor voltage when fuel cut starts	≥ 0.55 V
Fuel cut time	≥ 5000 ms
Engine coolant temperature when fuel cut starts	≥ –40 °C (–40 °F)
Estimated temperature of rear oxygen sensor element when fuel cut starts	≥ 500 °C (932 °F)

4. GENERAL DRIVING CYCLE

Perform diagnosis once during deceleration fuel cut from a constant and high speed driving, when rear oxygen sensor is warmed up sufficiently.

5. DIAGNOSTIC METHOD

Detect the trouble by calculating the response time of the rear oxygen sensor during fuel cut.

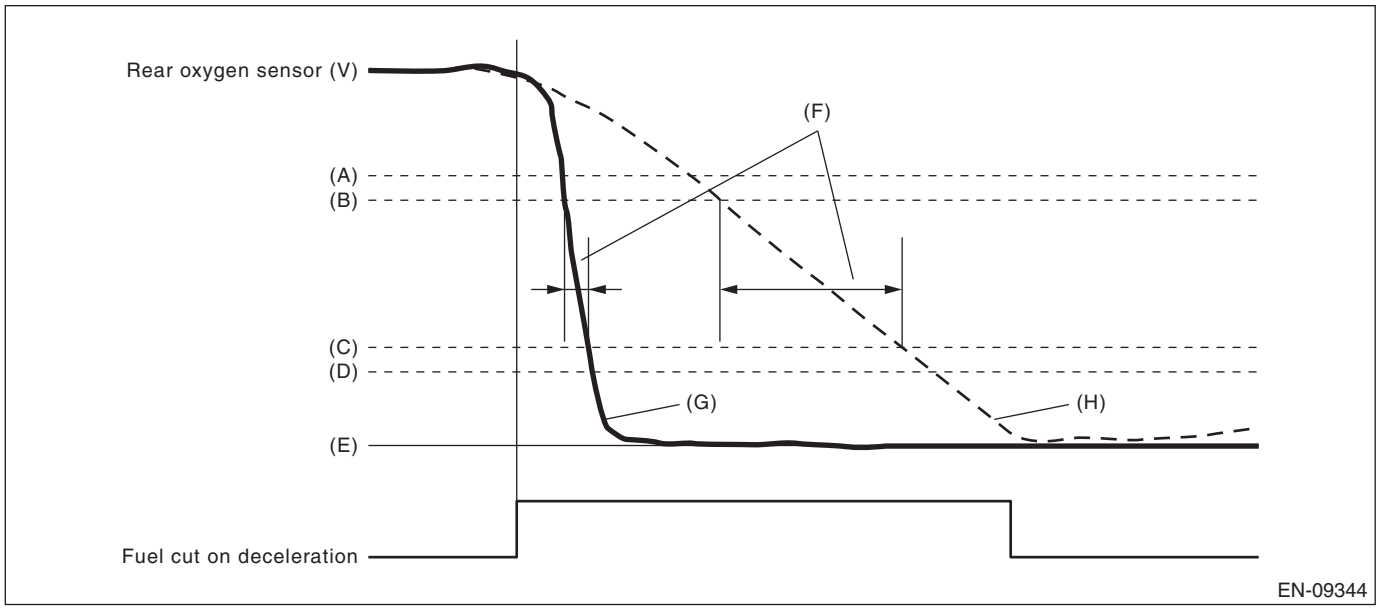

(A) 0.55 V
(B) 0.50 V
(C) 0.20 V
(D) 0.15 V
(E) 0 V
(F) Diagnostic parameter
(G) Normal
(H) Malfunction

- **Abnormality Judgment**

Judge as NG when the following conditions are established.

Judgment Value

Malfunction Criteria	Threshold Value
Time when rear oxygen sensor voltage changed from 0.5 V to 0.2 V	> 491 ms

Time Needed for Diagnosis: 491 ms
Malfunction Indicator Light Illumination: Illuminates when malfunction occurs in 2 continuous driving cycles.

- **Normality Judgment**

Judge as OK and clear the NG if the following conditions are established.

Judgment Value

Malfunction Criteria	Threshold Value
Time when rear oxygen sensor voltage changed from 0.5 V to 0.2 V	≤ 491 ms

Time Needed for Diagnosis: Less than 491 ms

BC:DTC P013B O2 SENSOR SLOW RESPONSE - LEAN TO RICH (BANK 1 SENSOR 2)

1. OUTLINE OF DIAGNOSIS

Detect the slow response of lean → rich for rear oxygen sensor output.
After the deceleration fuel cut has occurred, detect the trouble by calculating the time when the rear oxygen sensor output passes through the predetermined range of voltages.
Judge as NG when the response time is larger than the threshold value.

2. COMPONENT DESCRIPTION

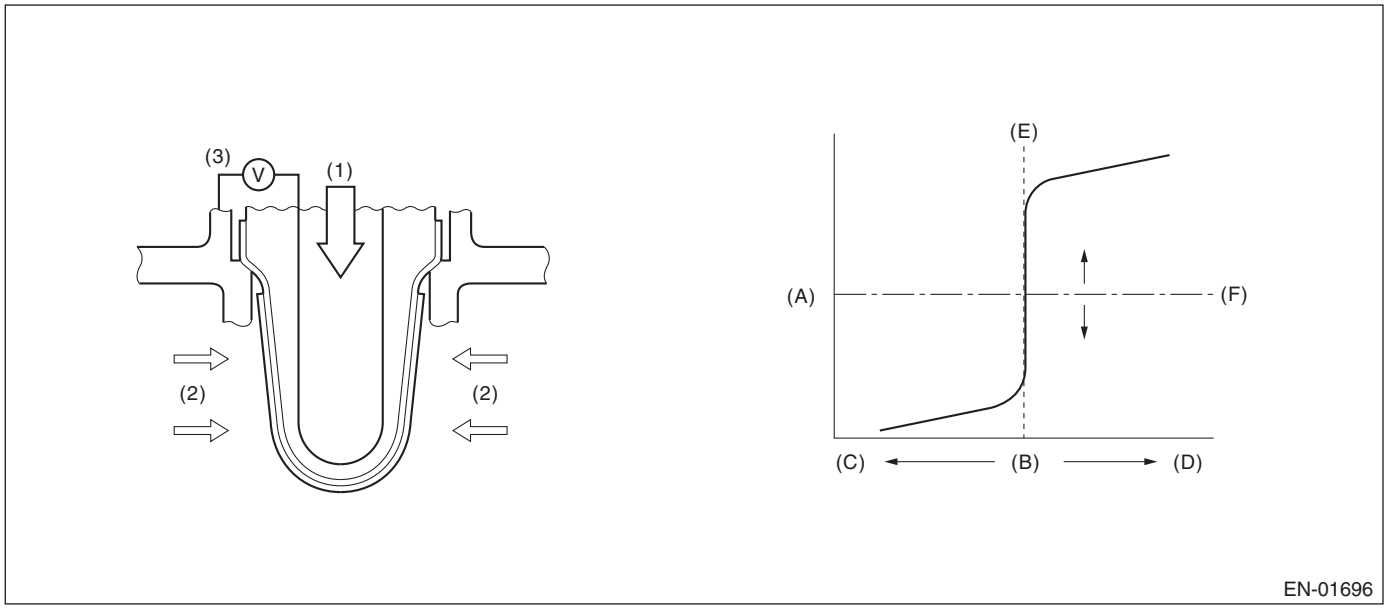

(A)	Electromotive force	(B)	Air fuel ratio	(C)	Lean
(D)	Rich	(E)	Theoretical air fuel ratio	(F)	Comparative voltage
(1)	Atmosphere	(2)	Exhaust gas	(3)	Electromotive force

3. ENABLE CONDITIONS

Secondary Parameters	Enable Conditions
Battery voltage	> 10.9 V
Front oxygen (A/F) sensor closed loop control	Operation
Fuel cut time	≥ 5000 ms

4. GENERAL DRIVING CYCLE

Perform diagnosis only once after recovering from a deceleration fuel cut continued for more than predetermined time.

5. DIAGNOSTIC METHOD

Detect the trouble by calculating the response time of the rear oxygen sensor after fuel cut.

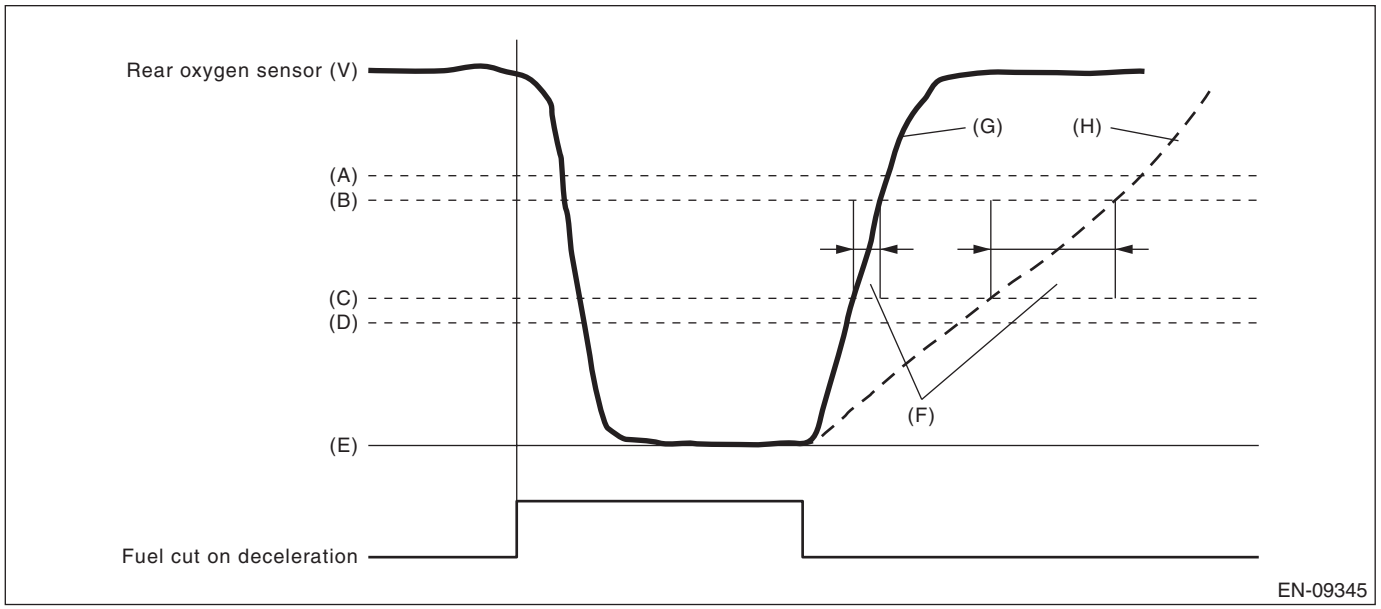

(A) 0.55 V
(B) 0.50 V
(C) 0.30 V
(D) 0.25 V
(E) 0 V
(F) Diagnostic parameter
(G) Normal
(H) Malfunction

- **Abnormality Judgment**

Judge as NG when the following conditions are established.

Judgment Value

Malfunction Criteria	Threshold Value
Time when rear oxygen sensor voltage changed from 0.3 V to 0.5 V	> 4000 ms

Time Needed for Diagnosis: 4000 ms
Malfunction Indicator Light Illumination: Illuminates when malfunction occurs in 2 continuous driving cycles.

- **Normality Judgment**

Judge as OK and clear the NG if the following conditions are established.

Judgment Value

Malfunction Criteria	Threshold Value
Time when rear oxygen sensor voltage changed from 0.3 V to 0.5 V	≤ 4000 ms

Time Needed for Diagnosis: Less than 4000 ms

BD:DTC P013E O2 SENSOR DELAYED RESPONSE - RICH TO LEAN (BANK 1 SENSOR 2)

1. OUTLINE OF DIAGNOSIS

Detect the delayed response of rear oxygen sensor output for rich → lean.
After the deceleration fuel cut has started, detect the trouble by calculating the time when the rear oxygen sensor output decreases to the predetermined voltages.
Judge as NG when the response time is larger than the threshold value.

2. COMPONENT DESCRIPTION

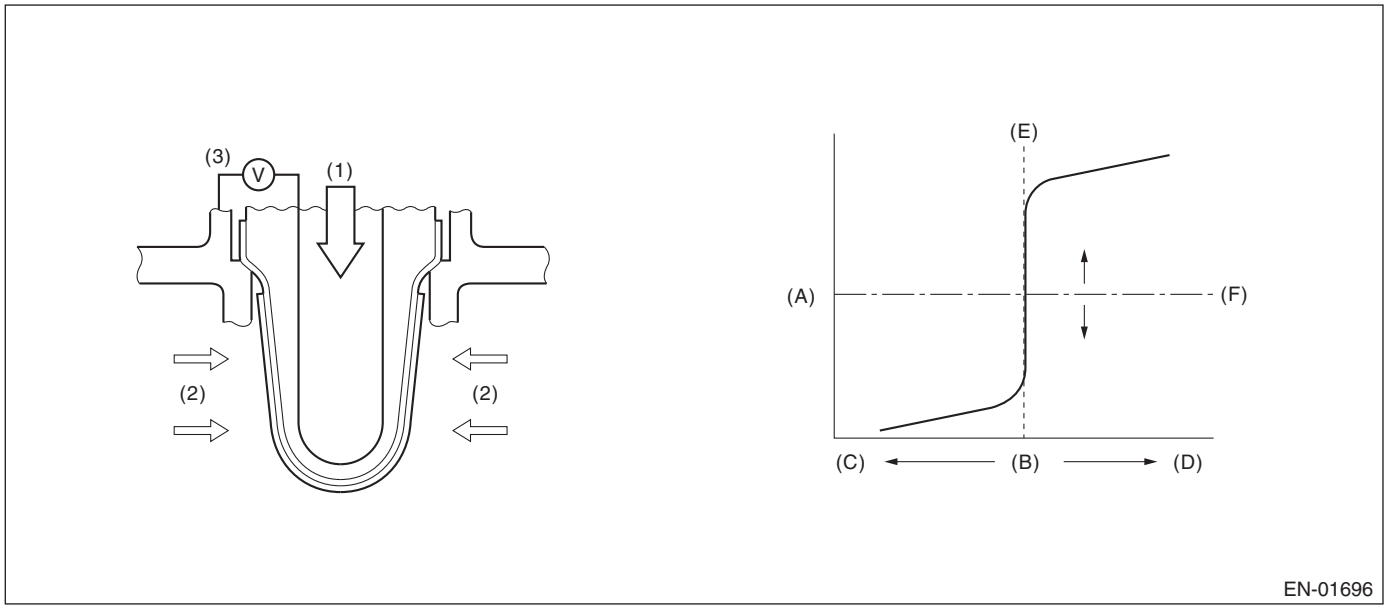

(A)	Electromotive force	(B)	Air fuel ratio	(C)	Lean
(D)	Rich	(E)	Theoretical air fuel ratio	(F)	Comparative voltage
(1)	Atmosphere	(2)	Exhaust gas	(3)	Electromotive force

3. ENABLE CONDITIONS

Secondary Parameters	Enable Conditions
Battery voltage	> 10.9 V
Engine speed when fuel cut starts	≥ 1000 rpm
Rear oxygen sensor voltage when fuel cut starts	≥ 0.55 V
Fuel cut time	≥ 5000 ms
Engine coolant temperature when fuel cut starts	≥ –40 °C (–40 °F)
Estimated temperature of rear oxygen sensor element when fuel cut starts	≥ 500 °C (932 °F)

4. GENERAL DRIVING CYCLE

Perform diagnosis once during deceleration fuel cut from a constant and high speed driving, when rear oxygen sensor is warmed up sufficiently.

5. DIAGNOSTIC METHOD

Detect the trouble by calculating the time from the beginning of the fuel cut to the beginning of the rear oxygen sensor voltage starting to drop.

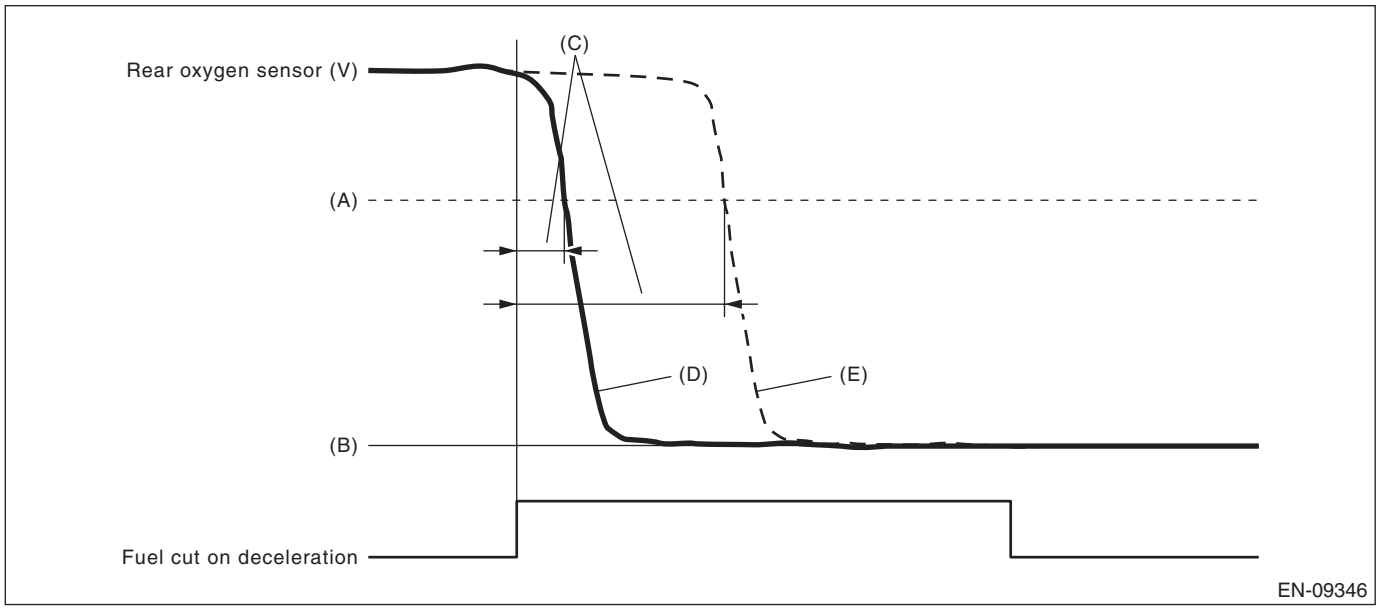

(A) 0.5 V
(B) 0 V
(C) Diagnostic parameter
(D) Normal
(E) Malfunction

- **Abnormality Judgment**

Judge as NG when the following conditions are established.

Judgment Value

Malfunction Criteria	Threshold Value
Time when rear oxygen sensor voltage changed to 0.5 V after the fuel cut started	> 4000 ms

Time Needed for Diagnosis: 4000 ms
Malfunction Indicator Light Illumination: Illuminates when malfunction occurs in 2 continuous driving cycles.

- **Normality Judgment**

Judge as OK and clear the NG if the following conditions are established.

Judgment Value

Malfunction Criteria	Threshold Value
Time when rear oxygen sensor voltage changed to 0.5 V after the fuel cut started	≤ 4000 ms

Time Needed for Diagnosis: Less than 4000 ms

BE:DTC P013F O2 SENSOR DELAYED RESPONSE - LEAN TO RICH (BANK 1 SENSOR 2)

1. OUTLINE OF DIAGNOSIS

Detect the delayed response of rear oxygen sensor output for lean → rich.
After the deceleration fuel cut has completed, detect the trouble by calculating the time when the rear oxygen sensor output increases to the predetermined voltages.
Judge as NG when the response time is larger than the threshold value.

2. COMPONENT DESCRIPTION

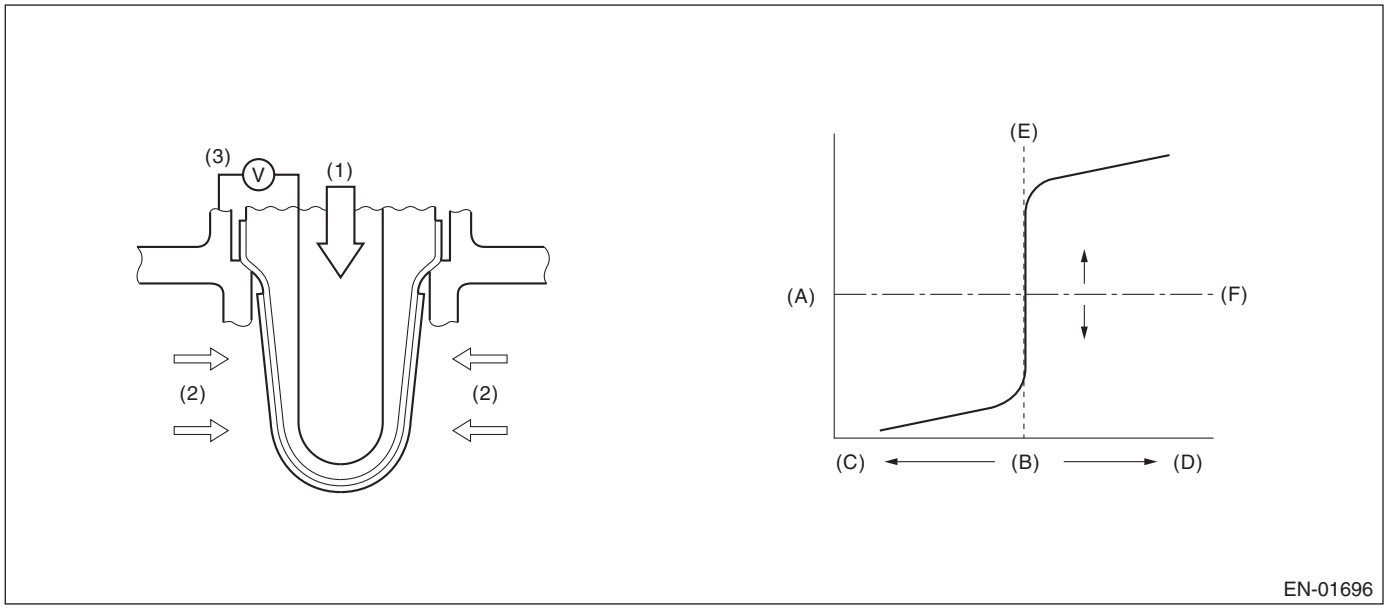

(A)	Electromotive force	(B)	Air fuel ratio	(C)	Lean
(D)	Rich	(E)	Theoretical air fuel ratio	(F)	Comparative voltage
(1)	Atmosphere	(2)	Exhaust gas	(3)	Electromotive force

3. ENABLE CONDITIONS

Secondary Parameters	Enable Conditions
Battery voltage	> 10.9 V
Front oxygen (A/F) sensor closed loop control	Operation
Engine speed	≥ 500 rpm
Rear oxygen sensor voltage when fuel cut has completed	< 0.15 V
Fuel cut time	≥ 5000 ms
Engine coolant temperature when fuel cut has completed	≥ –40 °C (–40 °F)
Estimated element temperature of rear oxygen sensor when fuel cut has completed	≥ 500 °C (932 °F)

4. GENERAL DRIVING CYCLE

Perform diagnosis only once when recovering from the deceleration fuel cut continued for more than predetermined time with the rear oxygen sensor warmed up sufficiently.

5. DIAGNOSTIC METHOD

Detect the trouble by calculating the time from the completion of the fuel cut to the beginning of the rear oxygen sensor voltage starting to rise.

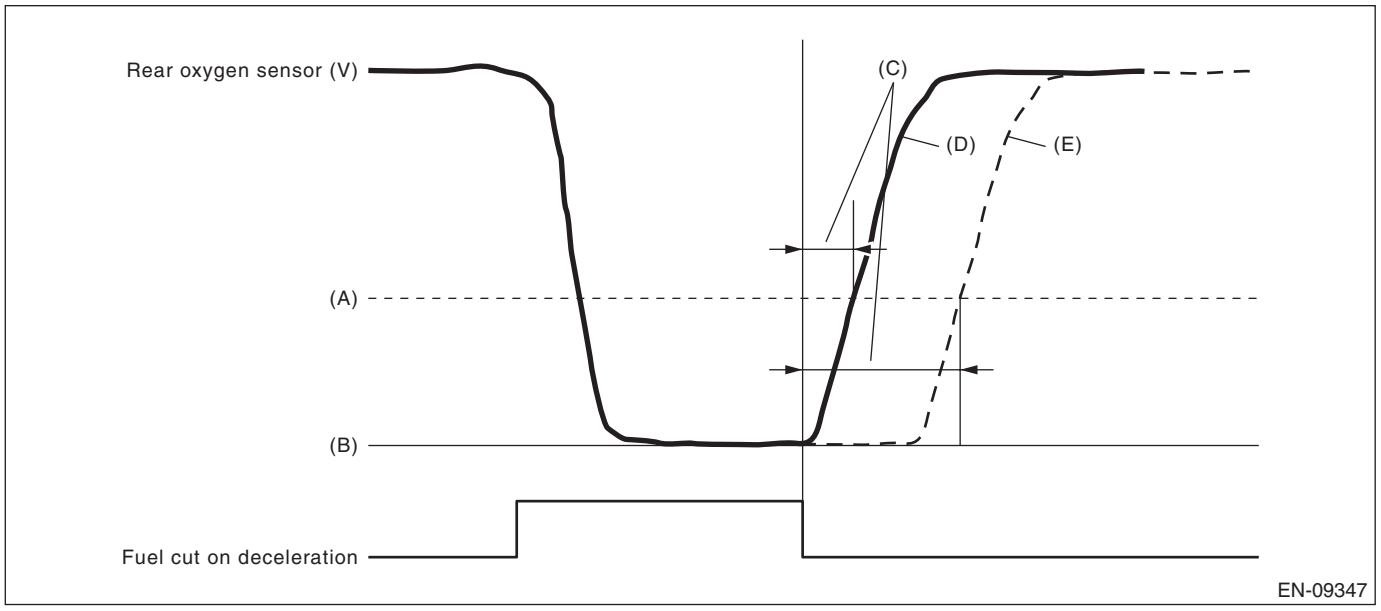

(A) 0.3 V
(B) 0 V
(C) Diagnostic parameter
(D) Normal
(E) Malfunction

• Abnormality Judgment

Judge as NG when the following conditions are established.

Judgment Value

Malfunction Criteria	Threshold Value
The number of times that the rear oxygen sensor voltage changed to 0.3 V after the fuel cut has completed (time counter)	> 3750 time(s)

Time Needed for Diagnosis: 32 ms × 3750 time(s)
Malfunction Indicator Light Illumination: Illuminates when malfunction occurs in 2 continuous driving cycles.

• Normality Judgment

Judge as OK and clear the NG if the following conditions are established.

Judgment Value

Malfunction Criteria	Threshold Value
The number of times that the rear oxygen sensor voltage changed to 0.3 V after the fuel cut has completed (time counter)	≤ 3750 time(s)

Time Needed for Diagnosis: 32 ms × less than 3750 time(s)

BF:DTC P0140 O2 SENSOR CIRCUIT NO ACTIVITY DETECTED (BANK1 SENSOR2)

1. OUTLINE OF DIAGNOSIS

Detect the rear oxygen sensor open or short circuit. Judge as NG when the rear oxygen sensor voltage can be determined to be abnormal considering conditions such as intake air amount, engine coolant temperature, main feedback control and deceleration fuel cut.

2. COMPONENT DESCRIPTION

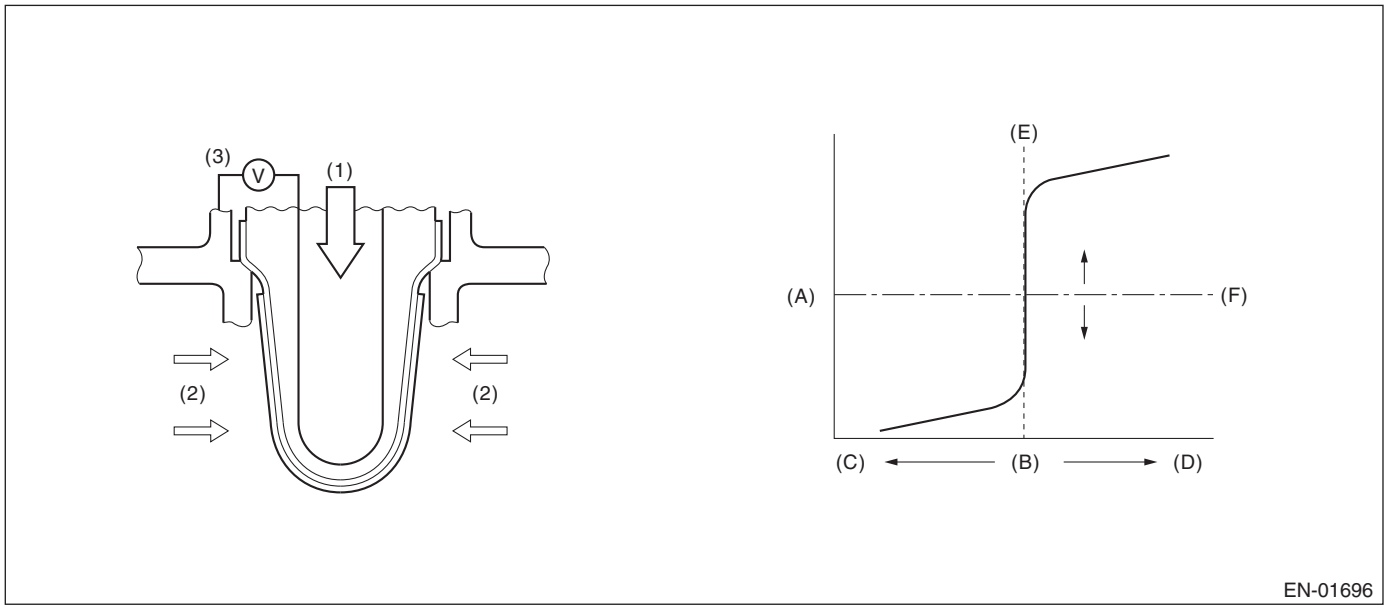

(A)	Electromotive force	(B)	Air fuel ratio	(C)	Lean
(D)	Rich	(E)	Theoretical air fuel ratio	(F)	Comparative voltage
(1)	Atmosphere	(2)	Exhaust gas	(3)	Electromotive force

3. ENABLE CONDITION (USED ONLY FOR MALFUNCTION JUDGMENT)

Secondary Parameters	Enable Conditions
Closed loop control at the rear oxygen sensor	In operation
Target output voltage of rear oxygen sensor	≥ 0.55 V + 0.05 V
Amount of intake air	≥ 10 g/s (0.35 oz/s)
Engine coolant temperature	≥ –40 °C (–40 °F)
Misfire detection every 200 rotations	< 65535 time(s)
Front oxygen (A/F) sensor compensation coefficient	Not in limit value
Battery voltage	≥ 10.9 V
Deceleration fuel cutoff 5000 ms or more.	Experienced

4. GENERAL DRIVING CYCLE

Perform the diagnosis once after starting the engine.

5. DIAGNOSTIC METHOD

- **Abnormality Judgment**

If the duration of time while the following conditions are met is longer than the time indicated, judge as NG.

Judgment Value

Malfunction Criteria	Threshold Value
Minimum output voltage	> 0.15 V
or	
Maximum output voltage	< 0.55 V

Time Needed for Diagnosis: 90000 ms
Malfunction Indicator Light Illumination: Illuminates when malfunction occurs in 2 continuous driving cycles.

- **Normality Judgment**

Judge as OK and clear the NG if the following conditions are established.

Judgment Value

Malfunction Criteria	Threshold Value
Diagnosis of the rear oxygen sensor voltage low side	Incomplete
Minimum output voltage	≤ 0.15 V
Maximum output voltage	≥ 0.55 V

BG:DTC P0141 O2 SENSOR HEATER CIRCUIT (BANK1 SENSOR2)

1. OUTLINE OF DIAGNOSIS

Detect the malfunction of rear oxygen sensor heater.
While observing the engine condition, judge as NG if the rear oxygen sensor impedance is great.

2. COMPONENT DESCRIPTION

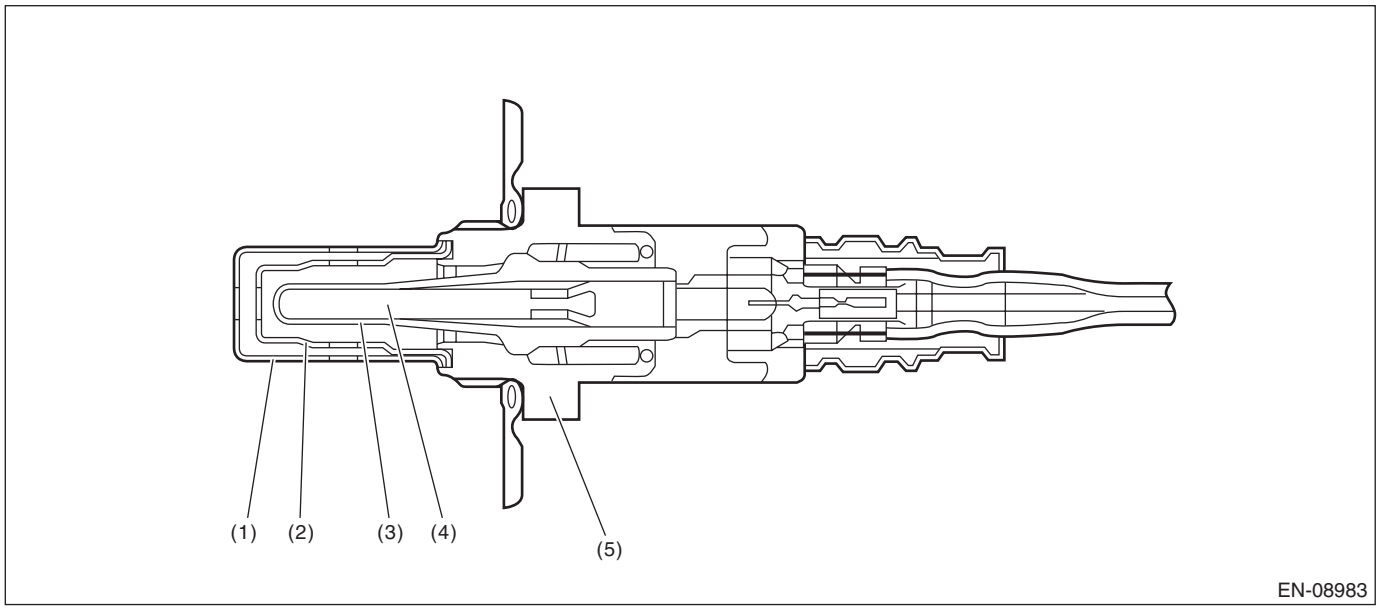

(1) Element cover (outer)
(2) Element cover (inner)
(3) Sensor element
(4) Ceramic heater
(5) Sensor housing

3. ENABLE CONDITIONS

Secondary Parameters	Enable Conditions
Battery voltage	≥ 10.9 V
Elapsed time after starting the engine	≥ 1000 ms
Engine coolant temperature	≥ –40 °C (–40 °F)
A/F sensor element impedance	≤ 87 Ω
A/F sensor heater control duty	≤ 75 %
Rear oxygen sensor heater control duty	< 70 %

4. GENERAL DRIVING CYCLE

Perform the diagnosis continuously after 1000 ms or more have passed since the engine started.

5. DIAGNOSTIC METHOD

• Abnormality Judgment

If the duration of time while the following conditions are met is longer than the time indicated, judge as NG.

Judgment Value

Malfunction Criteria	Threshold Value
Output voltage	< Battery voltage × 0.88

Time Needed for Diagnosis: 4 ms × 2500 time(s)
Malfunction Indicator Light Illumination: Illuminates when malfunction occurs in 2 continuous driving cycles.

• Normality Judgment

Judge as OK and clear the NG if the continuous time while the following conditions are established is more than the predetermined time.

Judgment Value

Malfunction Criteria	Threshold Value
Output voltage	≥ Battery voltage × 0.88

Time Needed for Diagnosis: 4 ms × 2500 time(s)

BH:DTC P014C O2 SENSOR SLOW RESPONSE - RICH TO LEAN (BANK 1 SENSOR 1)

1. OUTLINE OF DIAGNOSIS

Detect the slow response of front oxygen (A/F) sensor.
For diagnosis, detect the trouble by processing the λ waveform in normal driving without forcibly changing the target air fuel ratio.

2. COMPONENT DESCRIPTION

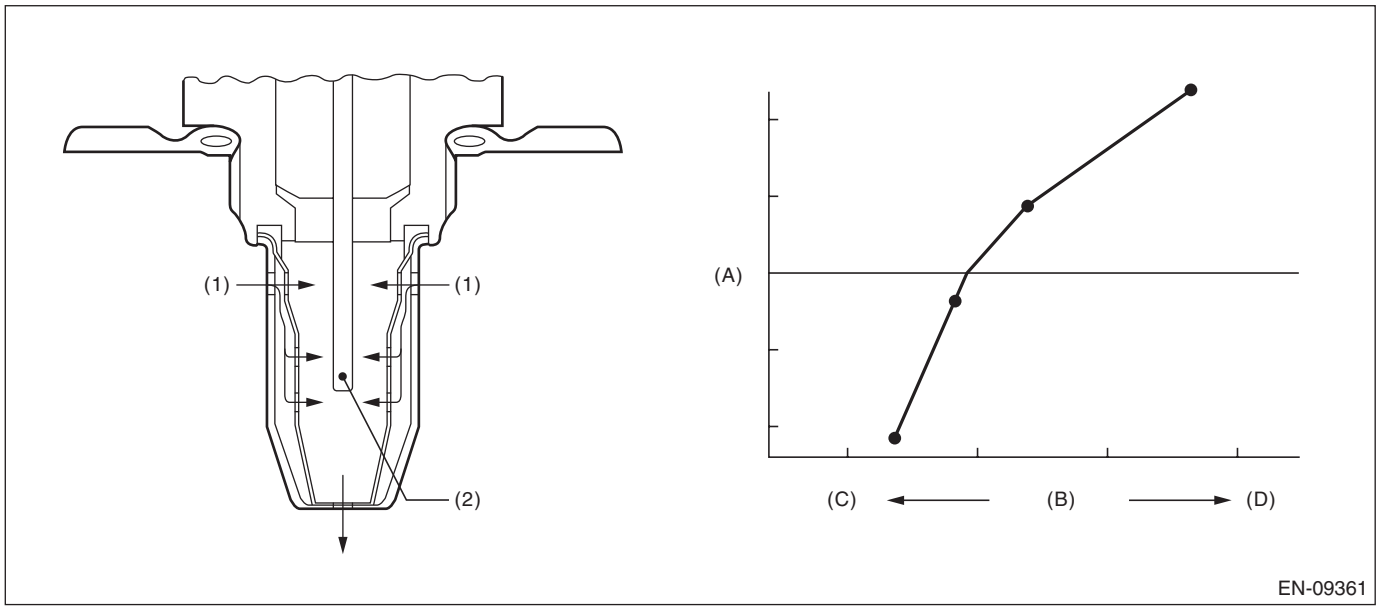

(A) Electromotive force (B) Air fuel ratio (C) Rich
(D) Lean

(1) Exhaust gas (2) ZrO_2

3. ENABLE CONDITIONS

Secondary Parameters	Enable Conditions
Battery voltage	> 10.9 V
Closed loop control with main feedback	Operation
Engine speed	≥ 1000 rpm
Amount of intake air	≥ 10 g/s (0.35 oz/s)
Elapsed time after returning from the fuel cut	≥ 3000 ms
Accelerator pedal position	≠ 0%

4. GENERAL DRIVING CYCLE

Perform diagnosis only once in a city driving including normal acceleration and deceleration.

5. DIAGNOSTIC METHOD 1

Detect the malfunction by checking “Cumulative value of time when λ changes from lean → rich” in comparison to “Time during which diagnosis is in progress”.

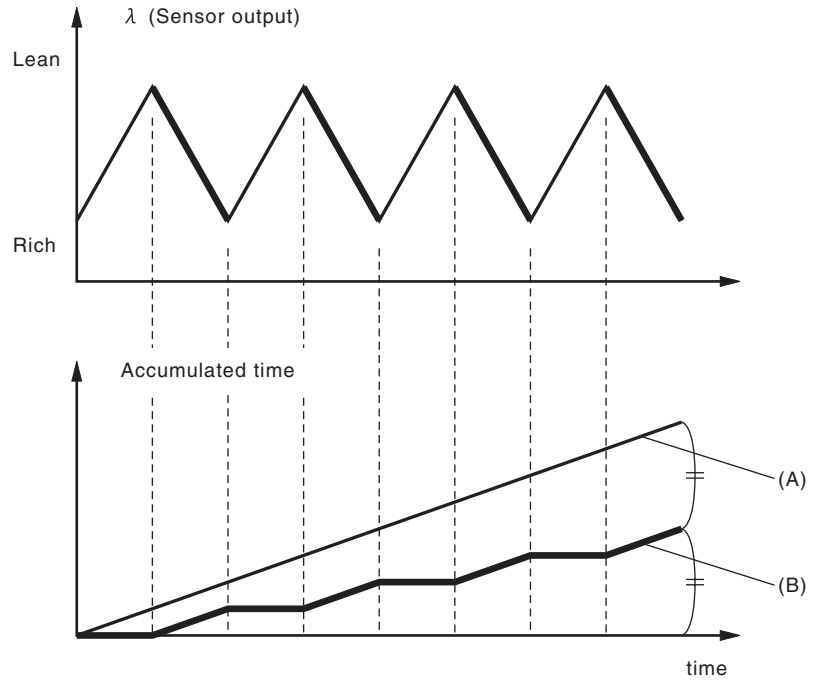

(A) Time during which diagnosis is in progress

(B) Cumulative value of time when λ changes from lean → rich

- **Abnormality Judgment**

Judge as NG when the following conditions are established.

Judgment Value

Malfunction Criteria	Threshold Value	DTC
(Cumulative value of time when λ changes from lean → rich) / (Time during which diagnosis is in progress)	< 0.39	P014C
	> 0.61	P014D

Time Needed for Diagnosis: 90 seconds
Malfunction Indicator Light Illumination: Illuminates when malfunction occurs in 2 continuous driving cycles.

- **Normality Judgment**

Judge as OK and clear the NG if the following conditions are established.

Judgment Value

Malfunction Criteria	Threshold Value	DTC
(Cumulative value of time when λ changes from lean → rich) / (Time during which diagnosis is in progress)	≥ 0.39	P014C
	≤ 0.61	P014D

Time Needed for Diagnosis: 90 seconds

6. DIAGNOSTIC METHOD 2

Detect the malfunction by the cumulative value obtained from the amount of variation in λ change.

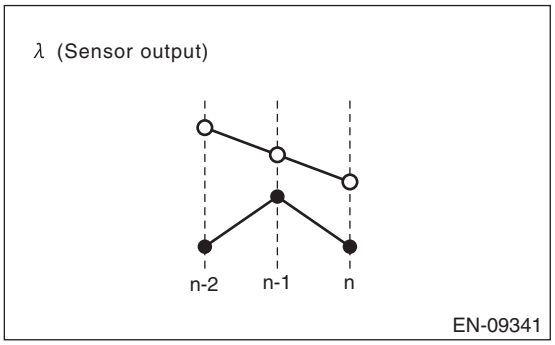

- **Abnormality Judgment**

Judge as NG when the following conditions are established.

Judgment Value

Malfunction Criteria	Threshold Value	DTC
Cumulative value obtained from the amount of variation in λ change Σ |(lambda(n) – lambda(n-1)) – (lambda(n-1) – lambda(n-2))|	< Value from Map	P014C and P014D

Map

Cumulative value obtained from the amount of variation in λ Σ |lambda(n) – lambda(n-1)|	0.00	3.50
Cumulative value obtained from the amount of variation in λ change	0.00	3.50

Time Needed for Diagnosis: 90 seconds
Malfunction Indicator Light Illumination: Illuminates when malfunction occurs in 2 continuous driving cycles.

- **Normality Judgment**

Judge as OK and clear the NG if the following conditions are established.

Judgment Value

Malfunction Criteria	Threshold Value	DTC
Cumulative value obtained from the amount of variation in λ change Σ |(lambda(n) – lambda(n-1)) – (lambda(n-1) – lambda(n-2))|	≥ Value from Map	P014C and P014D

Time Needed for Diagnosis: 90 seconds

BI: DTC P014D O2 SENSOR SLOW RESPONSE - LEAN TO RICH (BANK 1 SENSOR 1)

1. OUTLINE OF DIAGNOSIS

NOTE:
For the detection standard, refer to DTC P014C. <Ref. to GD(H4DO HEV)-94, DTC P014C O2 SENSOR SLOW RESPONSE - RICH TO LEAN (BANK 1 SENSOR 1), Diagnostic Trouble Code (DTC) Detecting Criteria.>

BJ:DTC P015A O2 SENSOR DELAYED RESPONSE - RICH TO LEAN (BANK 1 SENSOR 1)

1. OUTLINE OF DIAGNOSIS

Detect the slow response of front oxygen (A/F) sensor.
For diagnosis, detect the trouble by processing the λ waveform in normal driving without forcibly changing the target air fuel ratio.

2. COMPONENT DESCRIPTION

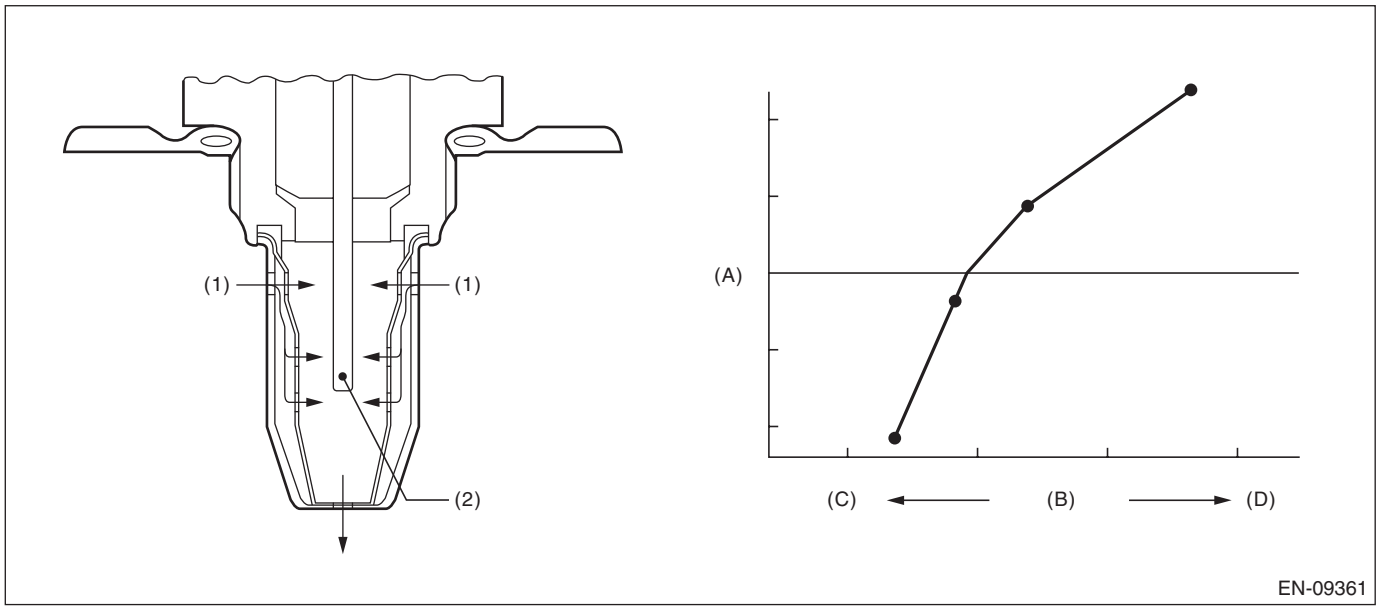

(A) Electromotive force (B) Air fuel ratio (C) Rich
(D) Lean

(1) Exhaust gas (2) ZrO_2

3. ENABLE CONDITIONS

Diagnostic method 1 and 2

Secondary Parameters	Enable Conditions
Battery voltage	> 10.9 V
Closed loop control with main feedback	Operation
Engine speed	≥ 1000 rpm
Amount of intake air	≥ 10 g/s (0.35 oz/s)
Elapsed time after returning from the fuel cut	≥ 3000 ms
Accelerator pedal position	≠ 0%

4. GENERAL DRIVING CYCLE

Perform diagnosis only once in a city driving including normal acceleration and deceleration.

5. DIAGNOSTIC METHOD 1

Detect the malfunction depending on the average value of time necessary for λ to inverse the air fuel ratio from “Lean → Rich → Lean” to “Rich → Lean → Rich”.

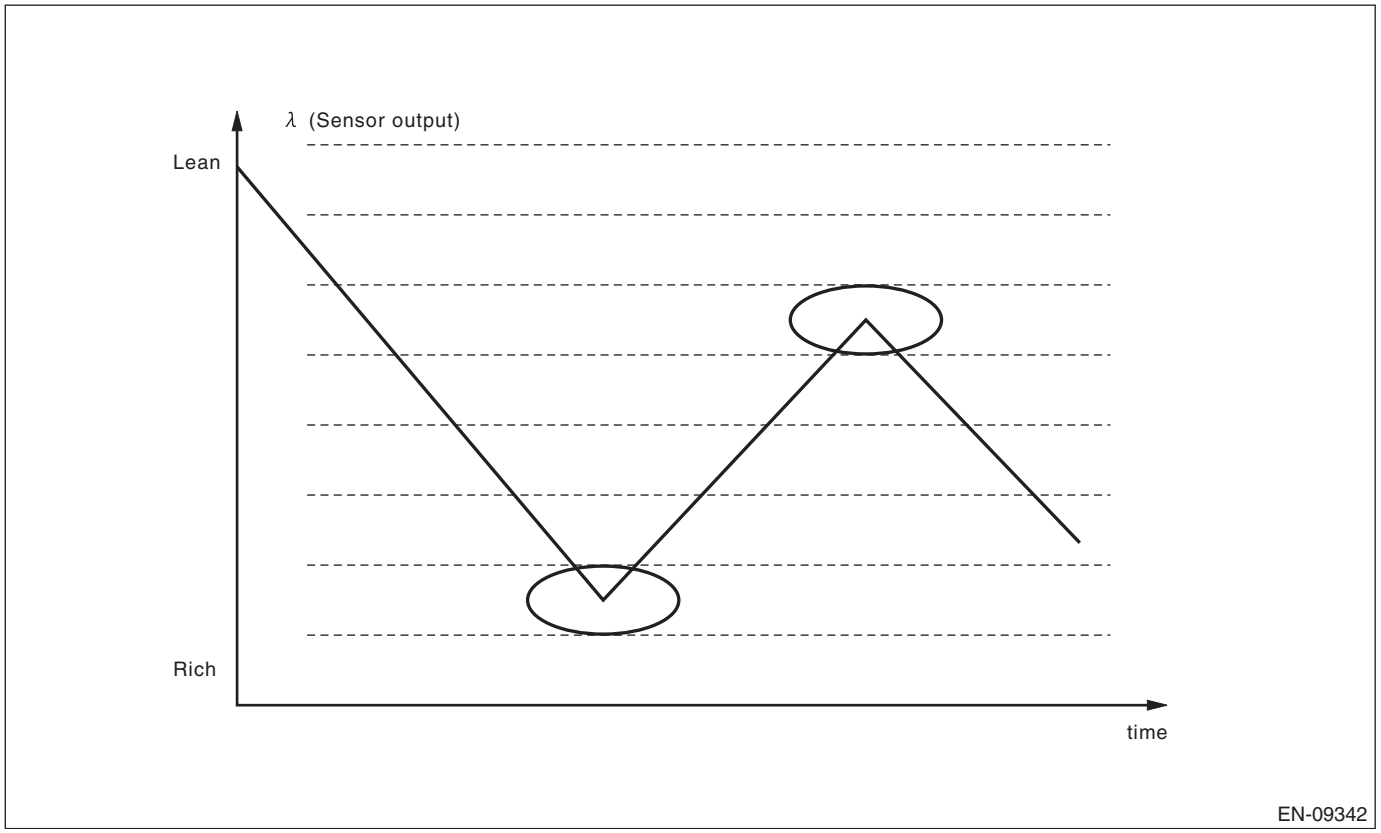

- **Abnormality Judgment**

Judge as NG when the following conditions are established.

Judgment Value

Malfunction Criteria	Threshold Value	DTC
Average value of time necessary for λ to inverse the air fuel ratio to Lean → Rich → Lean	> 150 ms	P015A
Average value of time necessary for λ to inverse the air fuel ratio to Rich → Lean → Rich	> 300 ms	P015B

Time Needed for Diagnosis: 50 times of inversion
Malfunction Indicator Light Illumination: Illuminates when malfunction occurs in 2 continuous driving cycles.

- **Normality Judgment**

Judge as OK and clear the NG if the following conditions are established.

Judgment Value

Malfunction Criteria	Threshold Value	DTC
Average value of time necessary for λ to inverse the air fuel ratio to Lean → Rich → Lean	≤ 150 ms	P015A
Average value of time necessary for λ to inverse the air fuel ratio to Rich → Lean → Rich	≤ 300 ms	P015B

Time Needed for Diagnosis: 50 times of inversion

6. DIAGNOSTIC METHOD 2

Detect the malfunction by calculating the average amplitude of λ.

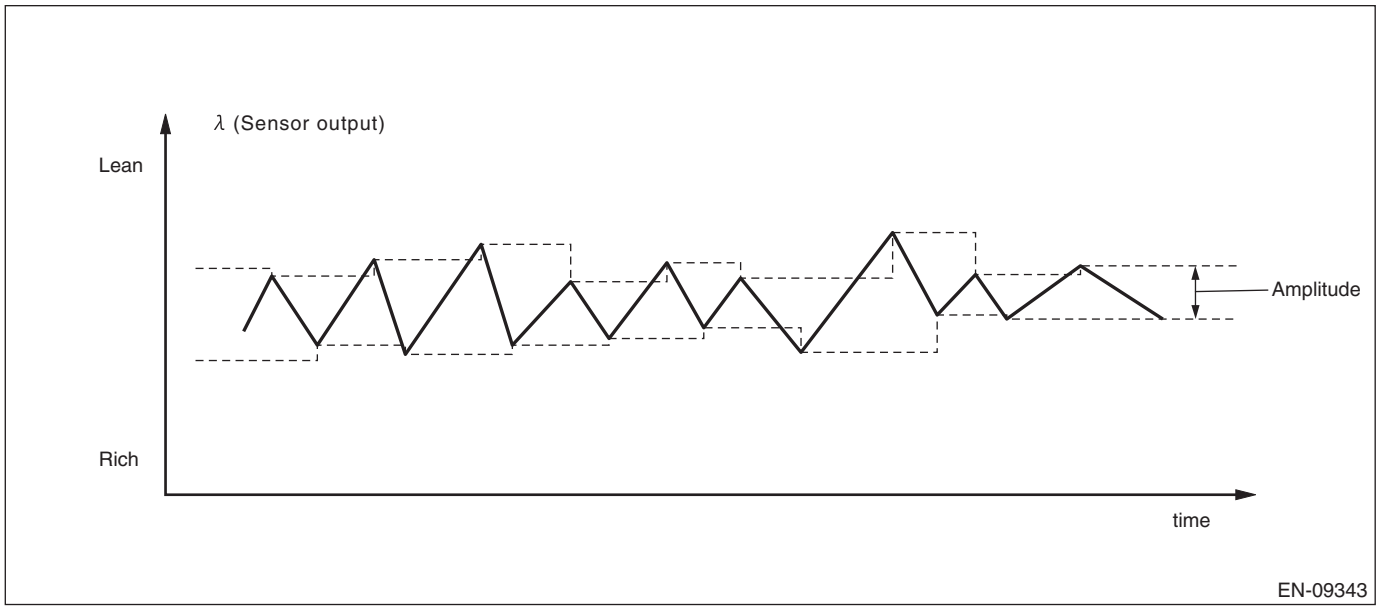

- **Abnormality Judgment**

Judge as NG when the following conditions are established.

Judgment Value

Malfunction Criteria	Threshold Value	DTC
Average value for λ amplitude	> 0.06	P015A and P015B

Time Needed for Diagnosis: 11250 time(s) × 8 ms
Malfunction Indicator Light Illumination: Illuminates when malfunction occurs in 2 continuous driving cycles.

- **Normality Judgment**

Judge as OK and clear the NG if the following conditions are established.

Judgment Value

Malfunction Criteria	Threshold Value	DTC
Average value for λ amplitude	≤ 0.06	P015A and P015B

Time Needed for Diagnosis: 11250 time(s) × 8 ms

BK:DTC P015B O2 SENSOR DELAYED RESPONSE - LEAN TO RICH (BANK 1 SENSOR 1)

1. OUTLINE OF DIAGNOSIS

NOTE:
For the detection standard, refer to DTC P015A. <Ref. to GD(H4DO HEV)-97, DTC P015A O2 SENSOR DELAYED RESPONSE - RICH TO LEAN (BANK 1 SENSOR 1), Diagnostic Trouble Code (DTC) Detecting Criteria.>

BL:DTC P0171 SYSTEM TOO LEAN (BANK 1)

1. OUTLINE OF DIAGNOSIS

Detect fuel system malfunction by the amount of main feedback control.

DIAGNOSTIC METHOD

Fuel system is diagnosed by comparing the target air fuel ratio calculated by ECM with the actual air fuel ratio measured by sensor.

2. ENABLE CONDITION

Secondary Parameters	Enable Conditions
A/F main feedback function	In operation
Engine coolant temperature	≥ –40 °C (–40 °F)
Engine load change	< 0.02 g/rev (0 oz/rev)
Engine load	≥ Value of Map 1

Map 1

Engine speed (rpm)	Idling	600	1000	1500	2000	2500	3000	3500	4000	4500
Measured value (g (oz)/rev)	na	0 (0)	0 (0)	0 (0)	0 (0)	0 (0)	0 (0)	0 (0)	0 (0)	0 (0)

3. GENERAL DRIVING CYCLE

Perform the diagnosis continuously at idling or at a constant speed after warming up the engine.

4. DIAGNOSTIC METHOD

• Abnormality Judgment

Compare the diagnostic value (fsobd) with the threshold value, and if a condition meeting the malfunction criteria below continues for 10 s × 3 time(s) or more, judge that there is a fault in the fuel system.

Judgment Value

Malfunction Criteria	Threshold Value
fsobd = (sglmd – tglmda) + faf + flaf In this case: sglmd = measured lambda tglmda = target lambda faf = main feedback compensation coefficient (every 64 milliseconds) flaf = main feedback learning compensation coefficient	≥ Value from Map 2

Map 2

Amount of air (g (oz)/s)	0 (0)	3.2 (0.11)	6.4 (0.23)	9.6 (0.34)	12.8 (0.45)	16 (0.56)	19.2 (0.68)
fsobdL1 (%)	1.33	1.33	1.33	1.33	1.33	1.33	1.33

Time Needed for Diagnosis: 10 s × 3 time(s)
Malfunction Indicator Light Illumination: Illuminates when malfunction occurs in 2 continuous driving cycles.

• Normality Judgment

Judge as OK and clear the NG if the continuous time while the following conditions are established is more than the predetermined time.

Judgment Value

Malfunction Criteria	Threshold Value
fsobd = (sglmd – tglmda) + faf + flaf	< 1.15

Time Needed for Diagnosis: 10 s

BM:DTC P0172 SYSTEM TOO RICH (BANK 1)

1. OUTLINE OF DIAGNOSIS

Detect fuel system malfunction by the amount of main feedback control.

Diagnostic method

Fuel system is diagnosed by comparing the target air fuel ratio calculated by ECM with the actual air fuel ratio measured by sensor.

2. ENABLE CONDITION

Secondary Parameters	Enable Conditions
A/F main feedback function	In operation
Engine coolant temperature	≥ –40 °C (–40 °F)
Engine load change	≤ 0.02 g/rev (0 oz/rev)
Cumulative time of canister purge after engine start	≥ 0 s
Continuous period after canister purge starting	≥ 0 ms
Engine load	≥ Value of Map 1
Compensation coefficient of warm-up increase amount	≤ 0.05

Map 1

Engine speed (rpm)	Idling	600	1000	1500	2000	2500	3000	3500	4000	4500
Measured value (g (oz)/ rev)	na	0 (0)	0 (0)	0 (0)	0 (0)	0 (0)	0 (0)	0 (0)	0 (0)	0 (0)

3. GENERAL DRIVING CYCLE

Perform the diagnosis continuously at idling or at a constant speed after warming up the engine.

4. DIAGNOSTIC METHOD

• Abnormality Judgment

Compare the diagnostic value (fsobd) with the threshold value, and if a condition meeting the malfunction criteria below continues for 10 s × 3 time(s) or more, judge that there is a fault in the fuel system.

Judgment Value

Malfunction Criteria	Threshold Value
fsobd = (sglmd – tglmda) + faf + flaf In this case: sglmd = measured lambda tglmda = target lambda faf = main feedback compensation coefficient (every 64 milliseconds) flaf = main feedback learning compensation coefficient	< Value of Map 2

Map 2

Amount of air (g (oz)/s)	0 (0)	3.2 (0.11)	6.4 (0.23)	9.6 (0.34)	12.8 (0.45)	16 (0.56)	19.2 (0.68)
fsobdL1 (%)	0.67	0.67	0.67	0.67	0.67	0.67	0.67

Time Needed for Diagnosis: 10 s × 3 time(s)
Malfunction Indicator Light Illumination: Illuminates when malfunction occurs in 2 continuous driving cycles.

- **Normality Judgment**

Judge as OK if the status that the criteria below are met continues for 10 seconds.

Judgment Value

Malfunction Criteria	Threshold Value
fsobd = (sglmd – tglmda) + faf + flaf	≥ 0.85

Time Needed for Diagnosis: 10 s

BN:DTC P0196 ENGINE OIL TEMPERATURE SENSOR CIRCUIT RANGE/PERFORMANCE

1. OUTLINE OF DIAGNOSIS

Detect the abnormality of the engine oil temperature sensor output characteristics. Perform the following two diagnosis, and judge as NG if either is NG.

- **Diagnosis 1 (relative diagnosis):** Perform diagnosis in reference to the engine oil temperature sensor value, engine coolant temperature sensor value and intake air temperature sensor value after engine start after predetermined time have passed in soak time. Judge as NG when the difference is more than the specific value in comparison respectively between engine oil and engine coolant temperature, engine oil and intake air temperature.
- **Diagnosis 2 (function diagnosis):** Judge as NG when the engine oil temperature does not rise to the specific value even if certain conditions are cleared at driving.

2. COMPONENT DESCRIPTION

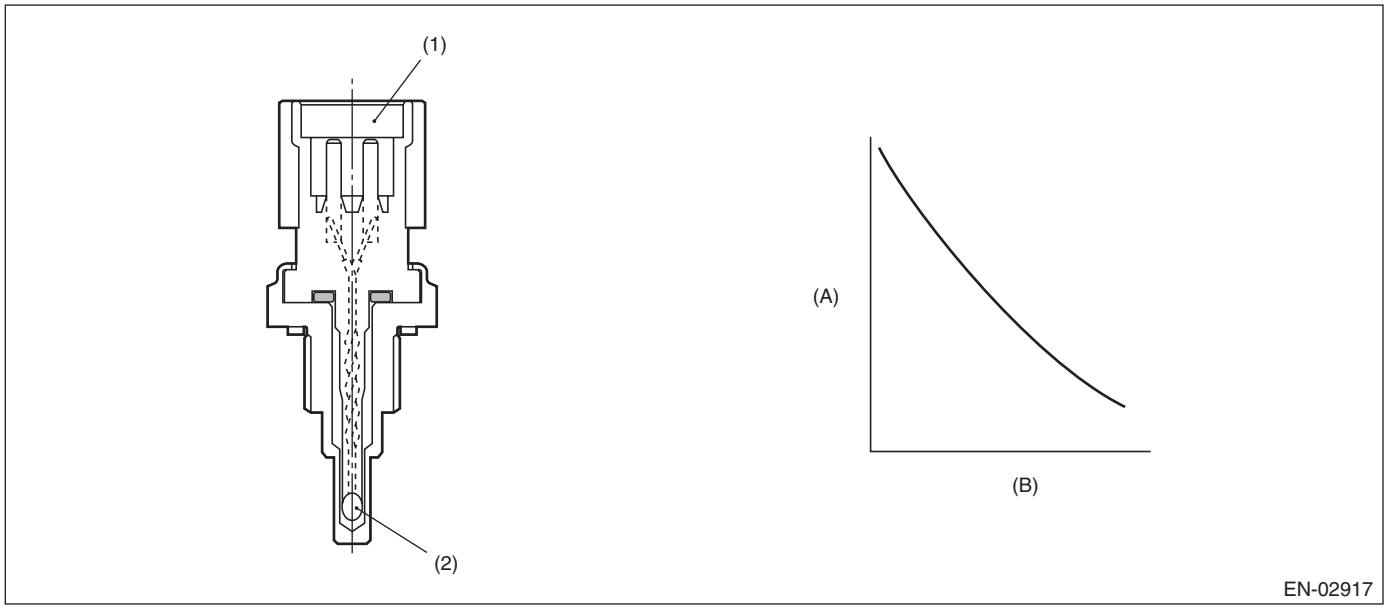

(A) Resistance value (kΩ)
(B) Temperature °C (°F)
(1) Connector
(2) Thermistor element

3. ENABLE CONDITIONS

• Diagnosis 1

Secondary Parameters	Enable Conditions
Soaking time	≥ 21600 s
Engine speed	> 500 rpm
Block heater judgment	Completed
Block heater activation	not activate

Block heater judgment

Parameter	Enable Conditions
Engine speed	> 500 rpm

Judge as “Block heater is not activate” when the following conditions are established.

Judgment Value

Judgment criteria	Threshold Value
Σ (Engine coolant temperature – Engine coolant temperature at engine start)	≥ –10 °C (–18°F)

Time Needed for Judgment: 1 s × 20 times

• Diagnosis 2

Secondary Parameters	Enable Conditions
Engine oil temperature at engine starting	≤ 50 °C (122 °F)
Engine speed	> 500 rpm
Ratio of idling	≤ 0.5

4. GENERAL DRIVING CYCLE

- **Diagnosis 1:** Perform diagnosis only once after engine start after constant soak time.
- **Diagnosis:** Perform the diagnosis only once after starting the engine in cold condition.

5. DIAGNOSTIC METHOD

• Abnormality Judgment

Judge as NG when diagnosis 1 or diagnosis 2 becomes NG.
If the duration of time while the following conditions are met is longer than the time indicated, judge as NG.

Diagnosis 1

Judgment Value

Malfunction Criteria	Threshold Value
|Engine oil temperature at engine start – Engine coolant temperature at engine start|	> 10 °C (18°F)
|Engine oil temperature at engine start – Intake air temperature 30 s after engine start|	> Value of Map 1

Map 1

Ambient air temperature °C (°F)	–30 (–22)	30 (86)	45 (113)	60 (140)
|Engine oil temperature at engine start – Intake air temperature 30 s after engine start| °C (°F)	10 (18°F)	10 (18°F)	22 (39.6°F)	22 (39.6°F)

Time Needed for Diagnosis: 64 ms
Diagnosis 2
Judgment Value

Malfunction Criteria	Threshold Value
Engine oil temperature	< 50 °C (122 °F)
Elapsed time after starting the engine	> Value of Map 2

Map 2

		Intake air temperature at engine start °C (°F)							
		–30 (–22)	–20 (–4)	–10 (14)	0 (32)	10 (50)	20 (68)	30 (86)	40 (104)
Ratio of time at engine stop during elapsed time after engine start	0.0	2800000	2100000	1500000	1000000	750000	600000	500000	400000
	0.3	2800000	2100000	1500000	1000000	750000	600000	500000	400000
	0.6	2800000	2100000	1500000	1000000	750000	600000	500000	400000
	1.0	2800000	2100000	1500000	1000000	750000	600000	500000	400000
ms									

Time Needed for Diagnosis: 64 ms
Malfunction Indicator Light Illumination: Illuminates when malfunction occurs in 2 continuous driving cycles.

- **Normality Judgment**

Judge as OK when diagnosis 1 and diagnosis 2 is OK, and clear NG.
If the duration of time while the following conditions are met is longer than the time indicated, judge as OK.
Diagnosis 1
Judgment Value

Malfunction Criteria	Threshold Value
When any one of the followings is established:	
|Engine oil temperature at engine start – Engine coolant temperature at engine start|	≤ 10 °C (18°F)
|Engine oil temperature at engine start – Intake air temperature 30 s after engine start|	≤ Value of Map 1

Time Needed for Diagnosis: 64 ms
Diagnosis 2
Judgment Value

Malfunction Criteria	Threshold Value
Engine oil temperature	≥ 50 °C (122 °F)

Time Needed for Diagnosis: 64 ms

BO:DTC P0197 ENGINE OIL TEMPERATURE SENSOR LOW

1. OUTLINE OF DIAGNOSIS

Detect the open or short circuit of the oil temperature sensor.
Judge as NG when outside of the judgment value.

2. COMPONENT DESCRIPTION

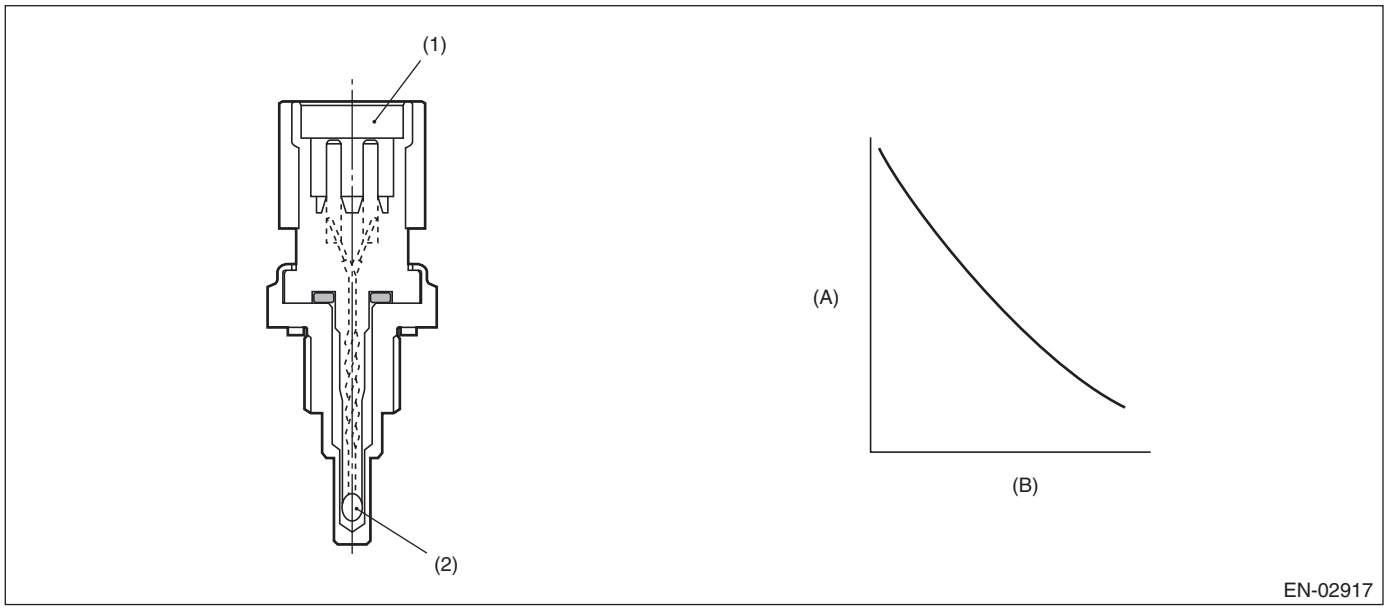

(A) Resistance value (kΩ)
(B) Temperature °C (°F)
(1) Connector
(2) Thermistor element

3. ENABLE CONDITIONS

Secondary Parameters	Enable Conditions
None	

4. GENERAL DRIVING CYCLE

Always perform the diagnosis continuously.

5. DIAGNOSTIC METHOD

- **Abnormality Judgment**

If the duration of time while the following conditions are met is longer than the time indicated, judge as NG.

Judgment Value

Malfunction Criteria	Threshold Value
Output voltage	< 0.203 V

Time Needed for Diagnosis: 500 ms
Malfunction Indicator Light Illumination: Illuminates as soon as a malfunction occurs.

- **Normality Judgment**

Judge as OK and clear the NG if the continuous time while the following conditions are established is more than the predetermined time.

Judgment Value

Malfunction Criteria	Threshold Value
Output voltage	≥ 0.203 V

Time Needed for Diagnosis: Less than 1 second

BP:DTC P0198 ENGINE OIL TEMPERATURE SENSOR HIGH

1. OUTLINE OF DIAGNOSIS

Detect the open or short circuit of the oil temperature sensor.
Judge as NG when outside of the judgment value.

2. COMPONENT DESCRIPTION

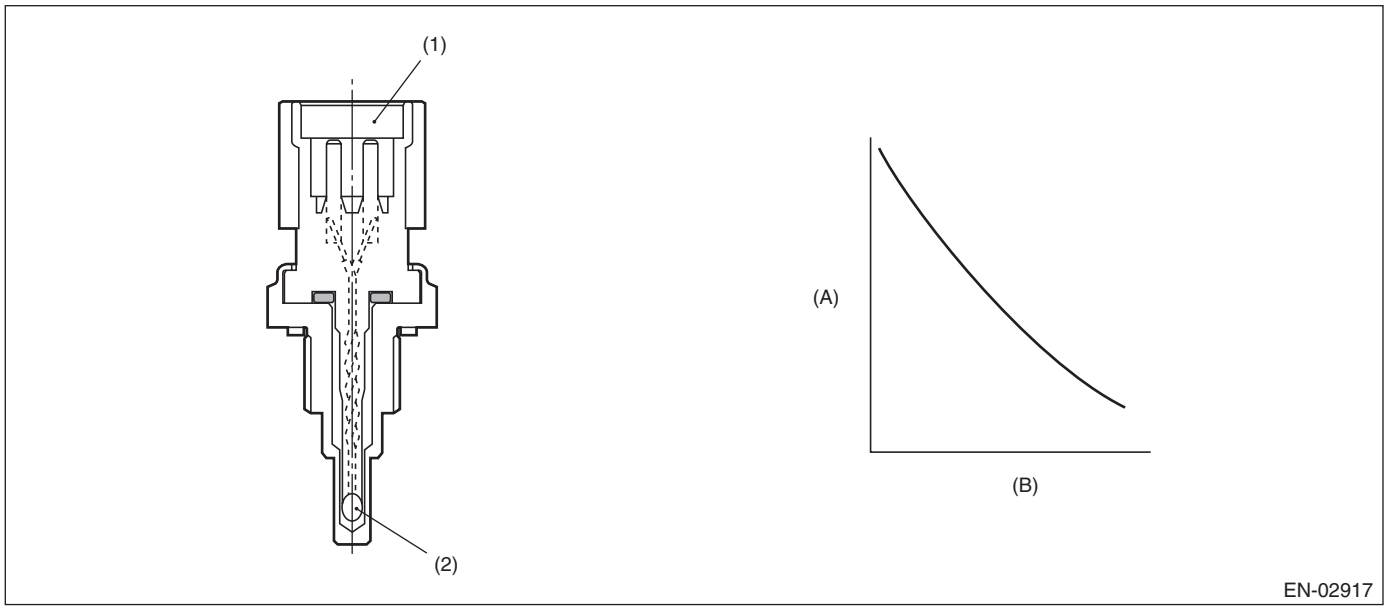

(A) Resistance value (kΩ)
(B) Temperature °C (°F)
(1) Connector
(2) Thermistor element

3. ENABLE CONDITIONS

Secondary Parameters	Enable Conditions
None	

4. GENERAL DRIVING CYCLE

Always perform the diagnosis continuously.

5. DIAGNOSTIC METHOD

- **Abnormality Judgment**

If the duration of time while the following conditions are met is longer than the time indicated, judge as NG.

Judgment Value

Malfunction Criteria	Threshold Value
Output voltage	≥ 4.698 V

Time Needed for Diagnosis: 500 ms
Malfunction Indicator Light Illumination: Illuminates as soon as a malfunction occurs.

- **Normality Judgment**

Judge as OK and clear the NG if the continuous time while the following conditions are established is more than the predetermined time.

Judgment Value

Malfunction Criteria	Threshold Value
Output voltage	< 4.698 V

Time Needed for Diagnosis: Less than 1 second

BQ:DTC P0201 INJECTOR #1

1. OUTLINE OF DIAGNOSIS

Based on the self-diagnostic result of the injector driving IC, judge the injector driving circuit as normal or abnormal.
Injector driving IC detects the status of “fuel remains injected” or “fuel is not injected” as a malfunction.

2. ENABLE CONDITIONS

Secondary Parameters	Enable Conditions
Battery voltage	≥ 10.9 V
Elapsed time after starting the engine	> 1 s
Engine speed	> 500 rpm
Injection time	≥ 1000 μs
Injection status	Not during fuel cut

3. GENERAL DRIVING CYCLE

Always perform the diagnosis continuously.

4. DIAGNOSTIC METHOD

- **Abnormality Judgment**

Judge as NG when the following conditions are established.

Judgment Value

Malfunction Criteria	Threshold Value
Injector driving IC information	Malfunction

Time Needed for Diagnosis: 2,500 ms
Malfunction Indicator Light Illumination: Illuminates as soon as a malfunction occurs.

- **Normality Judgment**

Judge as OK and clear the NG if the following conditions are established.

Judgment Value

Malfunction Criteria	Threshold Value
Injector driving IC information	Normal

Time Needed for Diagnosis: Less than 1 second

BR:DTC P0202 INJECTOR #2

1. OUTLINE OF DIAGNOSIS

NOTE:
For the detection standard, refer to DTC P0201. <Ref. to GD(H4DO HEV)-110, DTC P0201 INJECTOR #1, Diagnostic Trouble Code (DTC) Detecting Criteria.>

BS:DTC P0203 INJECTOR #3

1. OUTLINE OF DIAGNOSIS

NOTE:
For the detection standard, refer to DTC P0201. <Ref. to GD(H4DO HEV)-110, DTC P0201 INJECTOR #1, Diagnostic Trouble Code (DTC) Detecting Criteria.>

BT:DTC P0204 INJECTOR #4

1. OUTLINE OF DIAGNOSIS

NOTE:
For the detection standard, refer to DTC P0201. <Ref. to GD(H4DO HEV)-110, DTC P0201 INJECTOR #1, Diagnostic Trouble Code (DTC) Detecting Criteria.>

BU:DTC P0222 THROTTLE/PEDAL POSITION SENSOR/SWITCH “B” CIRCUIT LOW

1. OUTLINE OF DIAGNOSIS

Detect the open or short circuit of throttle position sensor 2.
Judge as NG if out of specification.

2. COMPONENT DESCRIPTION

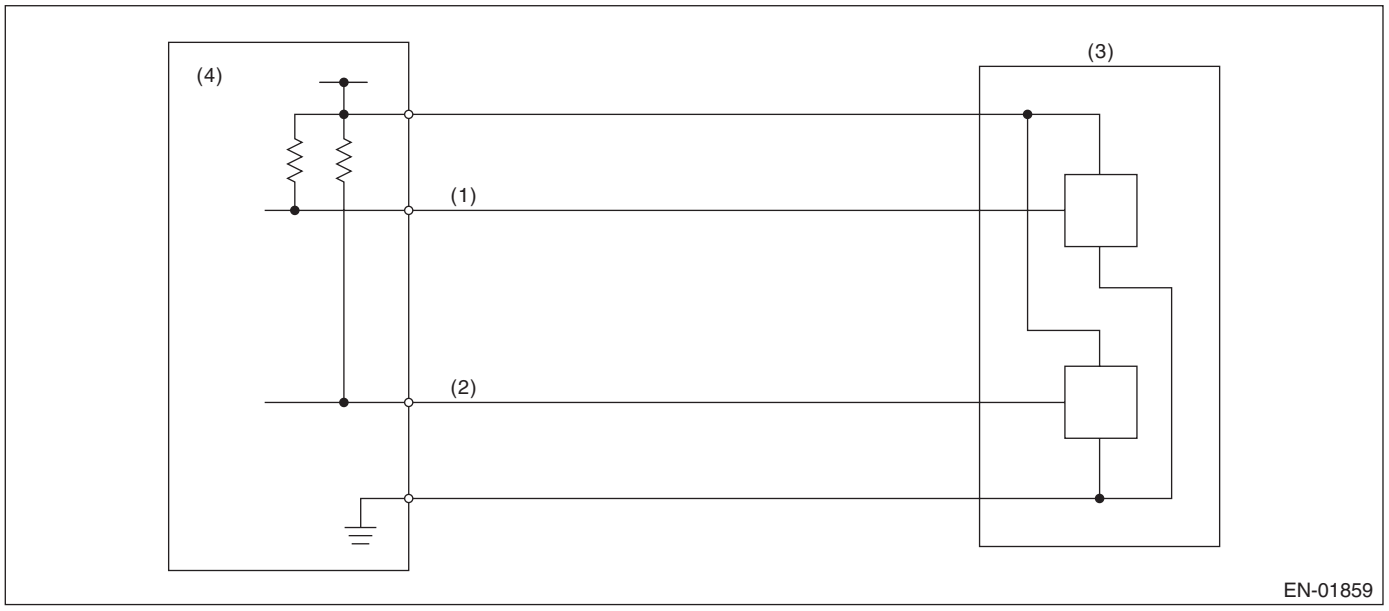

(1) Throttle position sensor 1 signal
(2) Throttle position sensor 2 signal
(3) Throttle position sensor
(4) Engine control module (ECM)

3. ENABLE CONDITION

Secondary Parameters	Enable Conditions
Ignition switch	ON
Battery voltage	≥ 6 V

4. GENERAL DRIVING CYCLE

Always perform the diagnosis continuously.

5. DIAGNOSTIC METHOD

- **Abnormality Judgment**

If the duration of time while the following conditions are met is longer than the time indicated, judge as NG.

Judgment Value

Malfunction Criteria	Threshold Value
Sensor 2 input voltage	≤ 1.133 V

Time Needed for Diagnosis: 24 ms
Malfunction Indicator Light Illumination: Illuminates as soon as a malfunction occurs.

- **Normality Judgment**

Judge as OK and clear the NG if the continuous time while the following conditions are established is more than the predetermined time.

Judgment Value

Malfunction Criteria	Threshold Value
Sensor 2 input voltage	> 1.133 V

Time Needed for Diagnosis: 24 ms

BV:DTC P0223 THROTTLE/PEDAL POSITION SENSOR/SWITCH “B” CIRCUIT HIGH

1. OUTLINE OF DIAGNOSIS

Detect the open or short circuit of throttle position sensor 2.
Judge as NG if out of specification.

2. COMPONENT DESCRIPTION

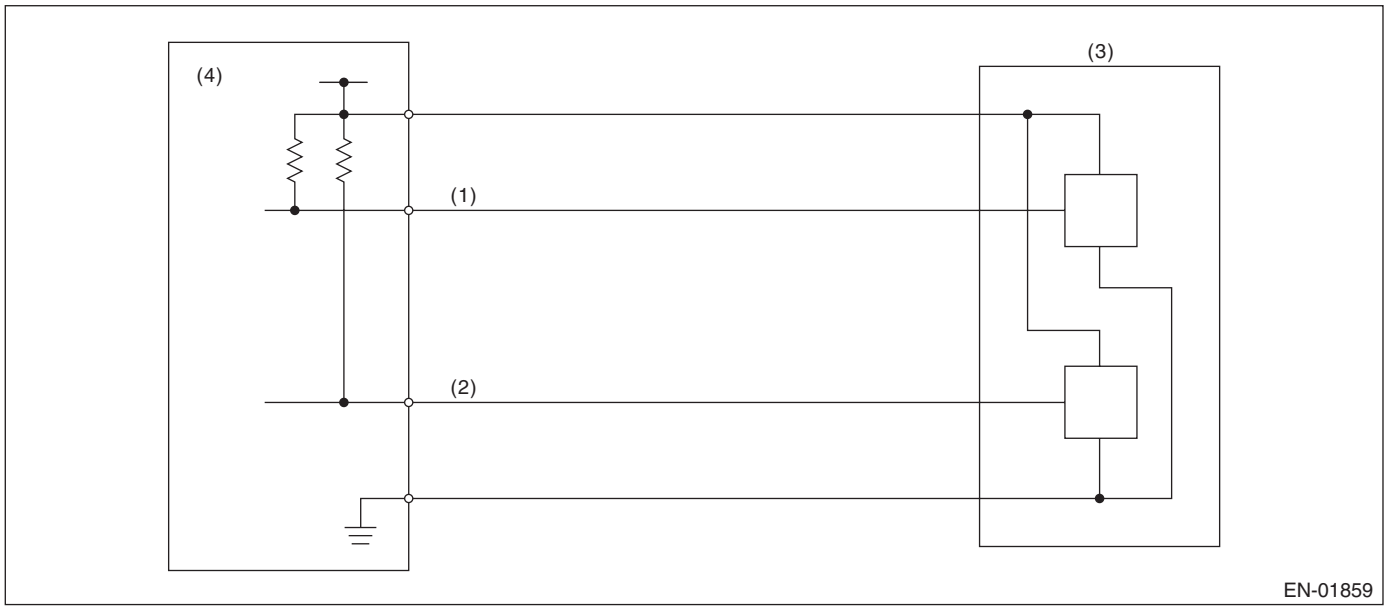

(1) Throttle position sensor 1 signal
(2) Throttle position sensor 2 signal
(3) Throttle position sensor
(4) Engine control module (ECM)

3. ENABLE CONDITION

Secondary Parameters	Enable Conditions
Ignition switch	ON
Battery voltage	≥ 6 V

4. GENERAL DRIVING CYCLE

Always perform the diagnosis continuously.

5. DIAGNOSTIC METHOD

- **Abnormality Judgment**

If the duration of time while the following conditions are met is longer than the time indicated, judge as NG.

Judgment Value

Malfunction Criteria	Threshold Value
Sensor 2 input voltage	≥ 4.772 V

Time Needed for Diagnosis: 24 ms
Malfunction Indicator Light Illumination: Illuminates as soon as a malfunction occurs.

- **Normality Judgment**

Judge as OK and clear the NG if the continuous time while the following conditions are established is more than the predetermined time.

Judgment Value

Malfunction Criteria	Threshold Value
Sensor 2 input voltage	< 4.772 V

Time Needed for Diagnosis: 24 ms

BW:DTC P0300 RANDOM/MULTIPLE CYLINDER MISFIRE DETECTED

1. OUTLINE OF DIAGNOSIS

NOTE:
For the detection standard, refer to DTC P0301. <Ref. to GD(H4DO HEV)-115, DTC P0301 CYLINDER 1 MISFIRE DETECTED, Diagnostic Trouble Code (DTC) Detecting Criteria.>

BX:DTC P0301 CYLINDER 1 MISFIRE DETECTED

1. OUTLINE OF DIAGNOSIS

Detect the presence of misfire occurrence. (Revolution fluctuation method)
Monitoring Misfire which influences exhaust deterioration (1.5 times of FTP) and catalyst damage is made obligatory by the law. Misfire affecting these two has two patterns below:

- Intermittent misfire (The same cylinder misfires in random, or different cylinders misfire in random.): FTP 1.5 times misfire
- Every time misfire (The same cylinder misfires every time.): FTP 1.5 times misfire, Catalyst damage misfire

The following detecting methods are adopted for these detection.
1) Intermittent misfire: FTP 1.5 times misfire

- 180° Interval Difference Method (MT: 1,800 rpm or less; AT: None)
- 360° Interval Difference Method (whole range)
- 720° Interval Difference Method (3,000 rpm or more)

2) Misfire every time: FTP 1.5 times misfire, Catalyst damage misfire

- 360° Interval Difference Method

2. ENABLE CONDITION

Secondary Parameters	Enable Conditions
All secondary parameters enable conditions	≥ 1024 ms
Intake manifold pressure change at 180°CA	< Value of Map 1
Throttle position change during 16 milliseconds	< 100 °
Fuel shut-off function	Not in operation
Fuel level	≥ 7.8 ℓ (2.06 US gal, 1.72 Imp gal)
Vehicle dynamic control or AT torque control	Not in operation
Evaporative system leak check	Not in operation
Engine speed	450 rpm — 6400 rpm
Intake manifold pressure	≥ Value from Map 2
Battery voltage	≥ 8 V
Fuel parameter determination	Not extremely low volatility
Elapsed time after starting the engine	≥ 0 ms
Engine speed change during 32 milliseconds	< 1000 rpm

Map 1

rpm	700	1000	1500	2000	2500	3000	3500	4000	4500	5000	5500	6000	6300
kPa (mmHg, inHg)	34 (255, 10)	34 (255, 10)	34 (255, 10)	34 (255, 10)	34 (255, 10)	34 (255, 10)	34 (255, 10)	34 (255, 10)	34 (255, 10)	34 (255, 10)	34 (255, 10)	34 (255, 10)	34 (255, 10)

Map 2

- Normal ignition

		Barometric pressure (kPa (mmHg, inHg))							
		66.4 (498 , 19.6)	72.5 (544 , 21.4)	75.7 (568 , 22.4)	79.5 (596 , 23.5)	82.3 (617 , 24.3)	84.9 (637 , 25.1)	91.6 (687 , 27)	101.1 (758, 29.8)
Engine speed (rpm)	700	17 (127.8 , 5)	17.7 (132.8 , 5.2)	18.1 (135.4 , 5.3)	18.5 (139.1 , 5.5)	19.2 (144.4 , 5.7)	20.3 (152.1 , 6)	21.2 (159.3 , 6.3)	22.8 (171.3 , 6.7)
	1000	17.8 (133.6 , 5.3)	18.5 (138.5 , 5.5)	19.2 (144.2 , 5.7)	19.8 (148.3 , 5.8)	20.3 (152.4 , 6)	20.6 (154.6 , 6.1)	21.7 (162.5 , 6.4)	23.3 (174.5 , 6.9)
	1200	17.7 (132.8 , 5.2)	18.1 (136.0 , 5.4)	19.2 (144.0 , 5.7)	19.9 (149.4 , 5.9)	20.2 (151.2 , 6)	20.8 (155.8 , 6.1)	21.9 (164.4 , 6.5)	23.4 (175.6 , 6.9)
	1600	17.7 (132.4 , 5.2)	18.2 (136.9 , 5.4)	19.2 (144.4 , 5.7)	19.6 (146.7 , 5.8)	20.3 (152.2 , 6)	20.5 (153.4 , 6)	21.6 (161.7 , 6.4)	22.8 (171.2 , 6.7)
	2000	18.1 (136.0 , 5.4)	19.5 (146.6 , 5.8)	20 (150.2 , 5.9)	20.3 (152.2 , 6)	21 (157.6 , 6.2)	21.5 (161.1 , 6.3)	22.3 (167.6 , 6.6)	23.7 (177.9 , 7)
	2400	18.2 (136.4 , 5.4)	20 (150.2 , 5.9)	20.6 (154.3 , 6.1)	21.6 (161.9 , 6.4)	21.8 (163.5 , 6.4)	22.8 (170.7 , 6.7)	23.5 (175.9 , 6.9)	25.2 (189.0 , 7.4)
	2800	18.9 (141.9 , 5.6)	20.5 (153.9 , 6.1)	21 (157.4 , 6.2)	21.6 (161.8 , 6.4)	22.4 (167.8 , 6.6)	22.7 (170.5 , 6.7)	23.7 (178.1 , 7)	24.9 (187.1 , 7.4)
	3000	19.4 (145.6 , 5.7)	20.1 (150.8 , 5.9)	20.7 (155.1 , 6.1)	21.4 (160.4 , 6.3)	22.4 (167.9 , 6.6)	22.4 (168.0 , 6.6)	23.4 (175.9 , 6.9)	24.3 (182.6 , 7.2)
	3200	21.8 (163.8 , 6.4)	22.7 (170.0 , 6.7)	22.9 (172.0 , 6.8)	23.5 (176.2 , 6.9)	24.4 (183.1 , 7.2)	24.5 (184.1 , 7.2)	25.4 (190.8 , 7.5)	26.4 (197.7 , 7.8)
	3600	23.7 (178.1 , 7)	24.8 (186.3 , 7.3)	25.5 (191.0 , 7.5)	26.2 (196.7 , 7.7)	27.4 (205.2 , 8.1)	27.5 (206.4 , 8.1)	28.1 (210.7 , 8.3)	28.7 (215.2 , 8.5)
	4000	25.4 (190.8 , 7.5)	26.7 (200.2 , 7.9)	27.4 (205.7 , 8.1)	28.7 (215.1 , 8.5)	29.7 (222.9 , 8.8)	29.8 (223.8 , 8.8)	30.1 (225.6 , 8.9)	30.1 (225.6 , 8.9)
	4400	27 (202.5 , 8)	28.3 (211.9 , 8.3)	29 (217.5 , 8.6)	30.2 (226.8 , 8.9)	31.3 (234.7 , 9.2)	31.4 (235.6 , 9.3)	31.6 (237.4 , 9.3)	31.6 (237.4 , 9.3)
	4800	28.6 (214.3 , 8.4)	29.8 (223.7 , 8.8)	30.6 (229.3 , 9)	31.8 (238.6 , 9.4)	32.9 (246.5 , 9.7)	33 (247.4 , 9.7)	33.2 (249.1 , 9.8)	33.2 (249.1 , 9.8)
	5200	30.1 (226.1 , 8.9)	31.4 (235.5 , 9.3)	32.1 (241.0 , 9.5)	33.4 (250.4 , 9.9)	34.4 (258.2 , 10.2)	34.5 (259.1 , 10.2)	34.8 (260.9 , 10.3)	34.8 (260.9 , 10.3)
	5600	31.7 (237.8 , 9.4)	33 (247.2 , 9.7)	33.7 (252.8 , 10)	34.9 (262.1 , 10.3)	36 (270.0 , 10.6)	36.1 (270.9 , 10.7)	36.4 (272.7 , 10.7)	36.4 (272.7 , 10.7)
	6000	33.3 (249.6 , 9.8)	34.5 (259.0 , 10.2)	35.3 (264.6 , 10.4)	36.5 (273.9 , 10.8)	37.6 (281.8 , 11.1)	37.7 (282.6 , 11.1)	37.9 (284.4 , 11.2)	37.9 (284.4 , 11.2)
	6400	34.8 (261.4 , 10.3)	36.1 (270.7 , 10.7)	36.8 (276.3 , 10.9)	38.1 (285.6 , 11.2)	39.1 (293.5 , 11.6)	39.3 (294.4 , 11.6)	39.5 (296.2 , 11.7)	39.5 (296.2 , 11.7)
kPa (mmHg, inHg)									

• Idling ignition

		Barometric pressure (kPa (mmHg, inHg))							
		66.4 (498 , 19.6)	72.5 (544 , 21.4)	75.7 (568 , 22.4)	79.5 (596 , 23.5)	82.3 (617 , 24.3)	84.9 (637 , 25.1)	91.6 (687 , 27)	101.1 (758, 29.8)
Engine speed (rpm)	700	17 (127.8 , 5)	17.7 (133.0 , 5.2)	18.1 (135.7 , 5.3)	18.7 (140.4 , 5.5)	19.2 (144.4 , 5.7)	20.3 (152.1 , 6)	21.2 (159.3 , 6.3)	22.8 (171.3 , 6.7)
	1000	18.6 (139.7 , 5.5)	19.5 (146.3 , 5.8)	19.9 (149.1 , 5.9)	20.9 (156.6 , 6.2)	20.9 (157.0 , 6.2)	22.1 (165.9 , 6.5)	23.4 (175.3 , 6.9)	25.1 (188.1 , 7.4)
	1200	18.5 (138.4 , 5.4)	19.3 (144.5 , 5.7)	20.2 (151.8 , 6)	20.7 (154.9 , 6.1)	21.1 (158.0 , 6.2)	23.4 (175.2 , 6.9)	25.8 (193.9 , 7.6)	31.3 (234.9 , 9.2)
	1600	18.3 (137.6 , 5.4)	19.3 (144.6 , 5.7)	19.9 (149.6 , 5.9)	20.4 (153.0 , 6)	20.9 (156.4 , 6.2)	21.9 (164.6 , 6.5)	23.7 (178.0 , 7)	24.9 (186.6 , 7.3)
	2000	18.4 (137.7 , 5.4)	20 (149.9 , 5.9)	20.4 (153.3 , 6)	20.9 (156.8 , 6.2)	21.4 (160.4 , 6.3)	22.7 (170.5 , 6.7)	24.1 (180.6 , 7.1)	24.8 (186.3 , 7.3)
	2400	18.2 (136.4 , 5.4)	20 (150.2 , 5.9)	20.6 (154.7 , 6.1)	21.6 (161.9 , 6.4)	22 (165.2 , 6.5)	23 (172.8 , 6.8)	24.7 (185.3 , 7.3)	25.2 (189.2 , 7.4)
	2800	18.9 (141.9 , 5.6)	20.5 (153.9 , 6.1)	21 (157.4 , 6.2)	22 (165.0 , 6.5)	22.4 (167.8 , 6.6)	22.7 (170.5 , 6.7)	24.3 (182.0 , 7.2)	24.9 (187.1 , 7.4)
	3000	19.4 (145.6 , 5.7)	20.1 (150.9 , 5.9)	20.7 (155.1 , 6.1)	21.5 (161.2 , 6.3)	22.4 (167.9 , 6.6)	22.4 (168.0 , 6.6)	23.7 (177.9 , 7)	24.3 (182.6 , 7.2)
	3200	21.8 (163.8 , 6.4)	22.7 (170.0 , 6.7)	22.9 (172.0 , 6.8)	23.5 (176.2 , 6.9)	24.4 (183.1 , 7.2)	24.5 (184.1 , 7.2)	25.7 (192.8 , 7.6)	26.4 (197.7 , 7.8)
	3600	24.4 (183.2 , 7.2)	25.5 (191.5 , 7.5)	25.8 (193.3 , 7.6)	26.9 (201.5 , 7.9)	28.1 (210.5 , 8.3)	28.4 (213.2 , 8.4)	29 (217.5 , 8.6)	29.1 (218.1 , 8.6)
	4000	25.8 (193.5 , 7.6)	27.1 (203.0 , 8)	27.4 (205.8 , 8.1)	28.9 (217.0 , 8.5)	30.1 (225.8 , 8.9)	30.1 (225.8 , 8.9)	30.1 (225.8 , 8.9)	30.1 (225.8 , 8.9)
	4400	27.4 (205.3 , 8.1)	28.6 (214.7 , 8.5)	29 (217.6 , 8.6)	30.5 (228.7 , 9)	31.7 (237.6 , 9.4)	31.7 (237.6 , 9.4)	31.7 (237.6 , 9.4)	31.7 (237.6 , 9.4)
	4800	28.9 (217.1 , 8.5)	30.2 (226.5 , 8.9)	30.6 (229.4 , 9)	32.1 (240.5 , 9.5)	33.2 (249.4 , 9.8)	33.2 (249.4 , 9.8)	33.2 (249.4 , 9.8)	33.2 (249.4 , 9.8)
	5200	30.5 (228.8 , 9)	31.8 (238.3 , 9.4)	32.1 (241.1 , 9.5)	33.6 (252.3 , 9.9)	34.8 (261.1 , 10.3)	34.8 (261.1 , 10.3)	34.8 (261.1 , 10.3)	34.8 (261.1 , 10.3)
	5600	32.1 (240.6 , 9.5)	33.3 (250.0 , 9.8)	33.7 (252.9 , 10)	35.2 (264.0 , 10.4)	36.4 (272.9 , 10.7)	36.4 (272.9 , 10.7)	36.4 (272.9 , 10.7)	36.4 (272.9 , 10.7)
	6000	33.6 (252.4 , 9.9)	34.9 (261.8 , 10.3)	35.3 (264.6 , 10.4)	36.8 (275.8 , 10.9)	38 (284.7 , 11.2)	38 (284.7 , 11.2)	38 (284.7 , 11.2)	38 (284.7 , 11.2)
	6400	35.2 (264.1 , 10.4)	36.5 (273.6 , 10.8)	36.9 (276.4 , 10.9)	38.3 (287.6 , 11.3)	39.5 (296.4 , 11.7)	39.5 (296.4 , 11.7)	39.5 (296.4 , 11.7)	39.5 (296.4 , 11.7)
kPa (mmHg, inHg)									

3. GENERAL DRIVING CYCLE

• If conditions are met, it is possible to detect the misfires from idling to high engine speed. However, to avoid excessive load or harm to the engine, perform diagnosis at idle.
• Perform the diagnosis continuously.

4. DIAGNOSTIC METHOD

When a misfire occurs, the engine speed will decrease and the crankshaft position speed will change. Calculate the interval difference value (diagnostic value) from crankshaft position speed by the following formula, and judge whether a misfire is occurring or not comparing the calculated result with judgment value. Count the number of misfires, if the misfire ratio is higher during 1000 revs. or 200 revs., judge corresponding cylinders as NG.

Diagnostic value calculation (Calculate from angle speed) →	Misfire detection every single ignition (Compare diagnostic value with judgment value) →	NG judgment (Misfire occurrence judgment required by the law) (Compare number of misfire with judgment value)
	• 180° Interval Difference Method • 360° Interval Difference Method • 720° Interval Difference Method	• FTP 1.5 times misfire NG judgment • Catalyst damage misfire NG judgment

As shown in the following figure, pick a cylinder as the standard and name it omg 0. And the former crankshaft position speed is named omg 1, the second former crankshaft position speed is named omg 2, the third is named omg 3, etc.

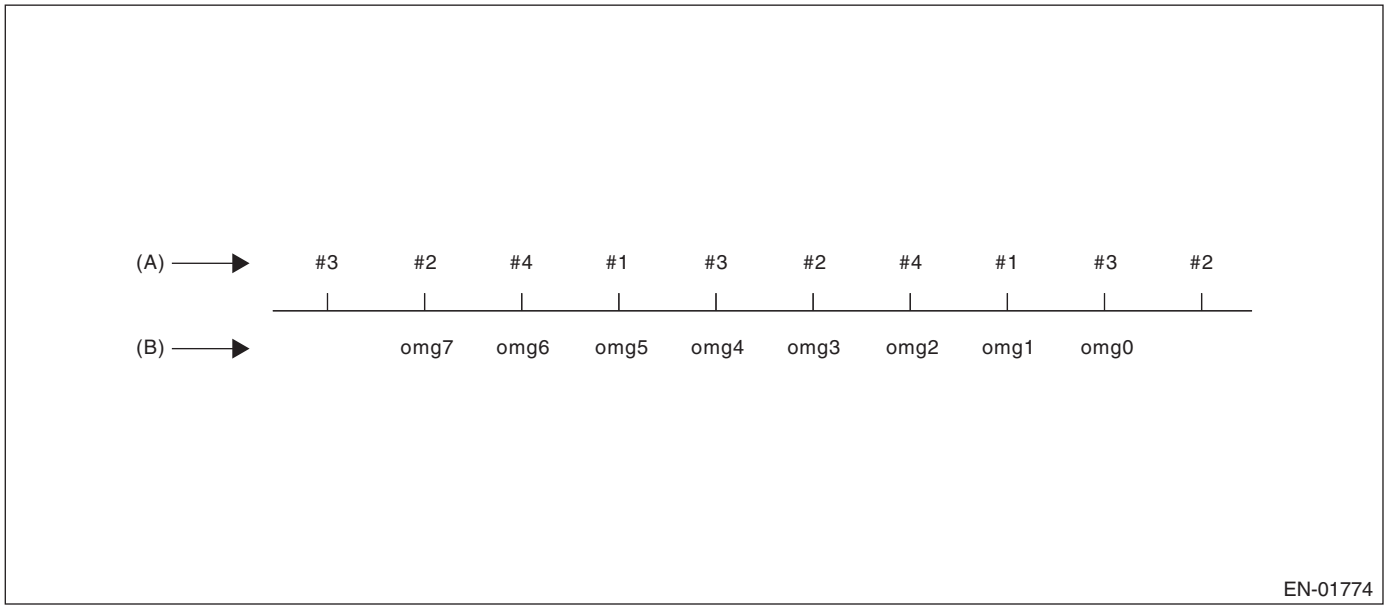

(A) Ignition order (B) Crankshaft position speed

180° Interval Difference Method

Diagnostic value	domg 180 = (omg 1 – omg 0) – (omg 5 – omg 1)/4
Judge as a misfire in the following cases. • domg 180 > judgment value of positive side • domg 180 ≤ judgment value of negative side (Diagnostic value before 180° CA)	

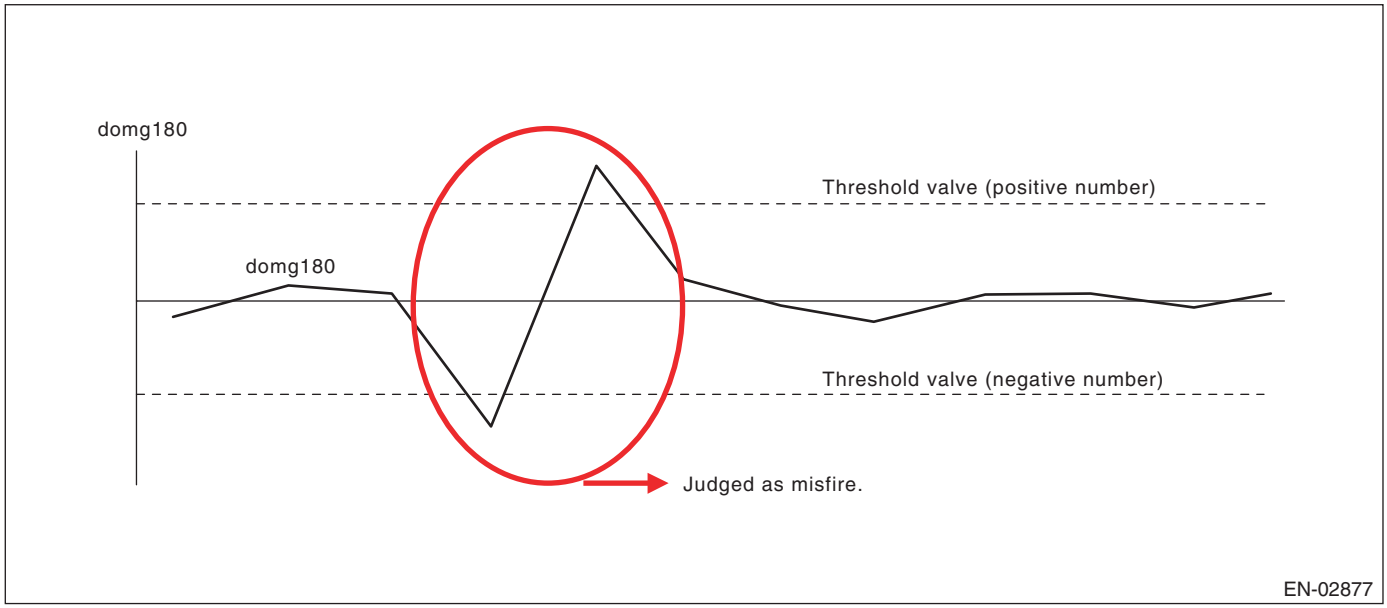

360° Interval Difference Method

Diagnostic value	domg 360 = (omg 1 – omg 0) – (omg 3 – omg 2)
Misfire judgment	domg 360 > Judgment value → Judge as misfire

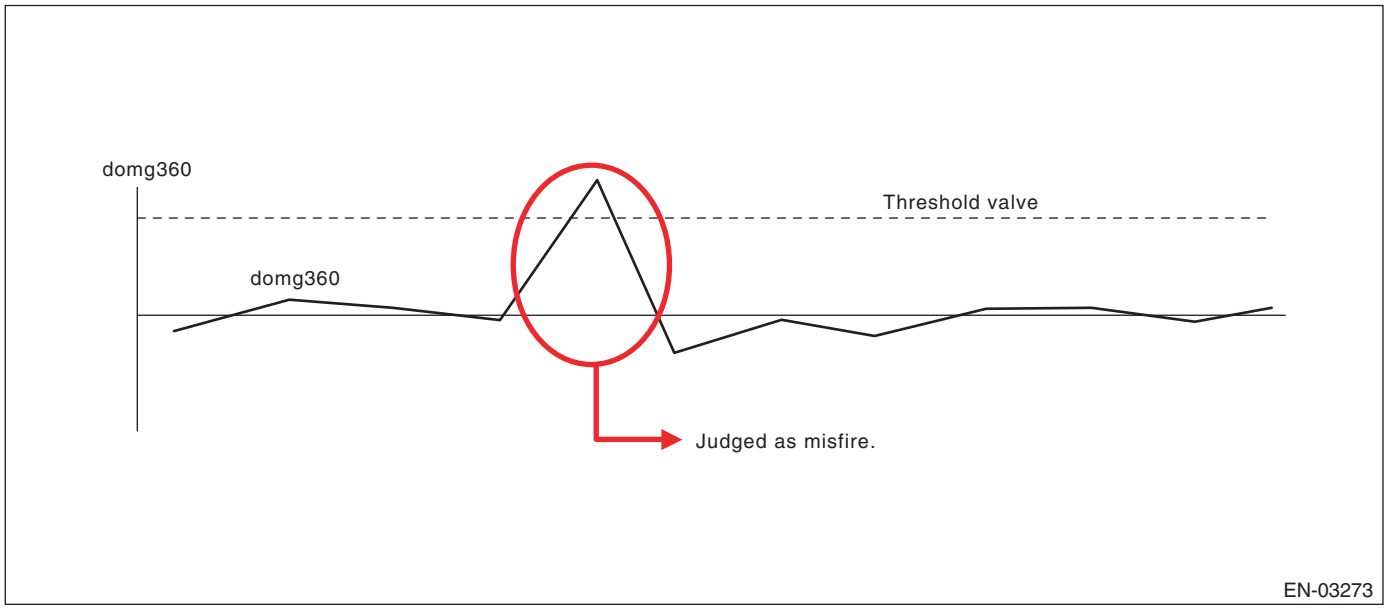

720° Interval Difference Method

Diagnostic value	domg 720 = (omg 1 – omg 0) – (omg 5 – omg 4)
Misfire judgment	domg 720 > Judgment value → Judge as misfire

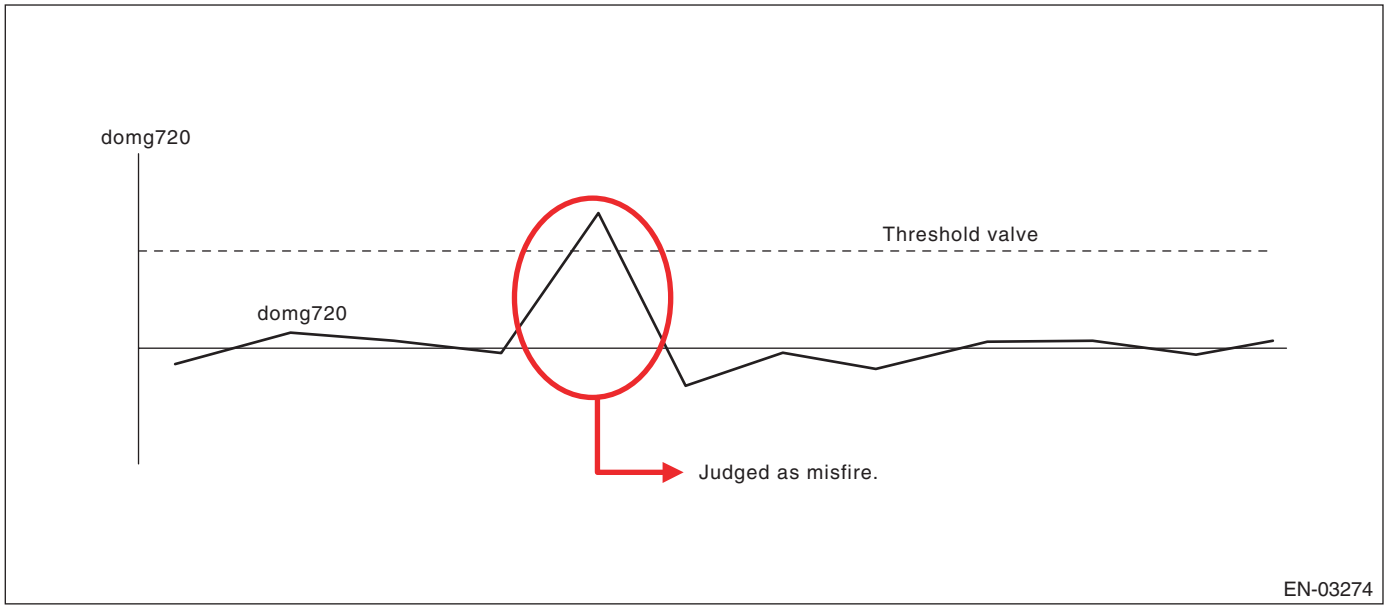

- **FTP 1.5 times misfire (Misfire occurrence level which influences exhaust gas)**
- **Abnormality Judgment**

Judgment Value (Judge that malfunction occurs when the misfire ratio is high in 1000 engine revs.)

Malfunction Criteria	Threshold Value
FTP emission diagnostic value	≥ 15 × 100/2000% in 1000 revs.

Time Needed for Diagnosis: 1000 engine revs.
Malfunction Indicator Light Illumination: Illuminates when malfunction occurs in 2 continuous driving cycles.

- **Normality Judgment**

Judgment Value

Malfunction Criteria	Threshold Value
FTP emission diagnostic value	< 15 × 100/2000% in 1000 revs.

Time Needed for Diagnosis: 1000 engine revs.

- **Catalyst damage misfire (Misfire occurrence level damaging catalyst)**
- **Abnormality Judgment**

Judgment Value

Malfunction Criteria	Threshold Value
Catalyst damage misfire diagnostic value	≥ Value from Map 3

Map 3

		Intake air (g(oz)/rev)									
		0.2 (0.01)	0.3 (0.01)	0.4 (0.01)	0.5 (0.02)	0.6 (0.02)	0.7 (0.02)	0.8 (0.03)	0.9 (0.03)	1 (0.04)	1.1 (0.04)
Engine speed (rpm)	700	100	100	100	100	80	80	80	80	80	80
	1000	100	100	100	100	80	80	57	44	80	80
	1200	100	100	100	100	100	80	67	57	57	57
	1600	100	100	80	80	80	57	44	36	44	44
	2000	100	80	80	80	80	57	44	27	44	44
	2400	100	80	80	80	80	57	31	36	36	36
	2800	80	80	80	80	57	44	44	36	36	36
	3200	80	80	57	57	44	36	36	36	36	36
	3600	57	57	57	44	44	44	44	44	44	44
	4000	57	57	57	36	36	36	44	44	44	44
	4400	44	44	44	44	44	44	44	44	44	44
	4800	44	44	44	36	36	36	36	36	36	36
	5200	36	36	36	36	36	36	36	44	44	44
	5600	27	27	27	31	36	36	36	44	44	44
	6000	44	44	44	44	44	44	44	44	36	36
	6400	24	24	24	21	21	21	25	31	31	31

Time Needed for Diagnosis: 200 engine revs.
Malfunction Indicator Light Illumination: Illuminates as soon as a malfunction occurs.

- **Normality Judgment**

Judgment Value

Malfunction Criteria	Threshold Value
Catalyst damage misfire diagnostic value	< Value of Map 3

Time Needed for Diagnosis: 200 engine revs.

BY:DTC P0302 CYLINDER 2 MISFIRE DETECTED

1. OUTLINE OF DIAGNOSIS

NOTE:
For the detection standard, refer to DTC P0301. <Ref. to GD(H4DO HEV)-115, DTC P0301 CYLINDER 1 MISFIRE DETECTED, Diagnostic Trouble Code (DTC) Detecting Criteria.>

BZ:DTC P0303 CYLINDER 3 MISFIRE DETECTED

1. OUTLINE OF DIAGNOSIS

NOTE:
For the detection standard, refer to DTC P0301. <Ref. to GD(H4DO HEV)-115, DTC P0301 CYLINDER 1 MISFIRE DETECTED, Diagnostic Trouble Code (DTC) Detecting Criteria.>

CA:DTC P0304 CYLINDER 4 MISFIRE DETECTED

1. OUTLINE OF DIAGNOSIS

NOTE:
For the detection standard, refer to DTC P0301. <Ref. to GD(H4DO HEV)-115, DTC P0301 CYLINDER 1 MISFIRE DETECTED, Diagnostic Trouble Code (DTC) Detecting Criteria.>

CB:DTC P0327 KNOCK SENSOR 1 CIRCUIT LOW (BANK 1 OR SINGLE SENSOR)

1. OUTLINE OF DIAGNOSIS

Detect the open or short circuit of knock sensor.
Judge as NG if out of specification.

2. COMPONENT DESCRIPTION

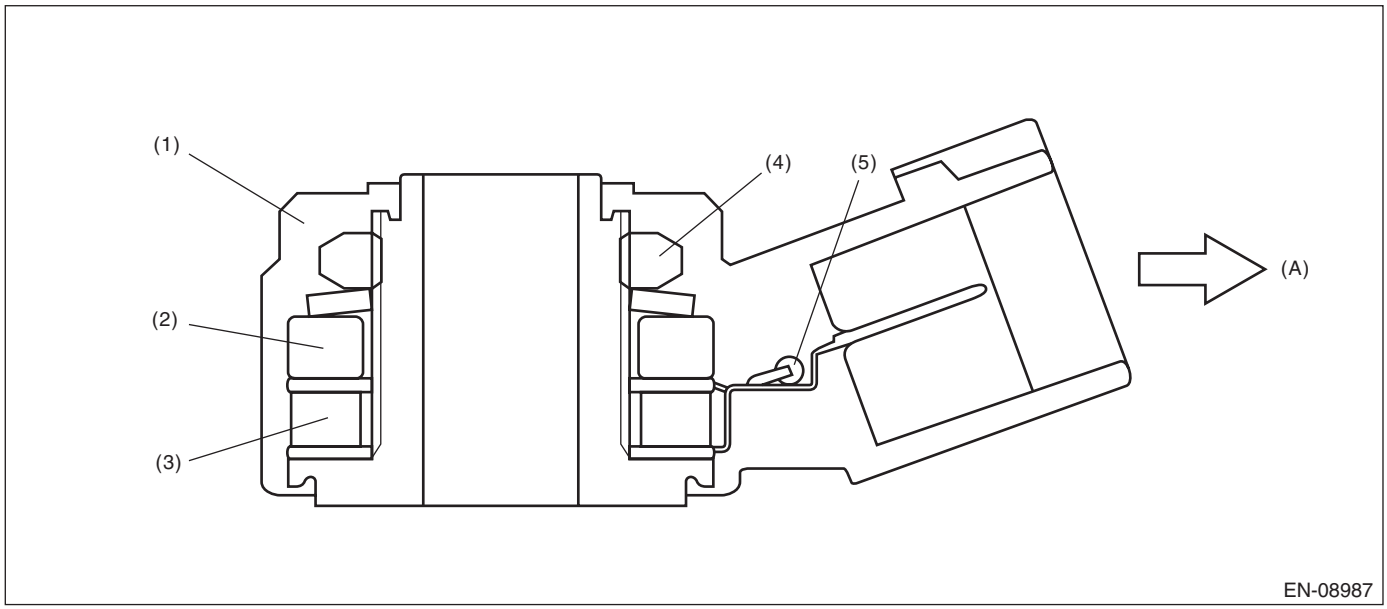

(A) To knock sensor harness

(1) Case
(2) Weight
(3) Piezoelectric element
(4) Nut
(5) Resistance

3. ENABLE CONDITION

Secondary Parameters	Enable Conditions
None	

4. GENERAL DRIVING CYCLE

Always perform the diagnosis continuously.

5. DIAGNOSTIC METHOD

- **Abnormality Judgment**

If the duration of time while the following conditions are met is longer than the time indicated, judge as NG.

Judgment Value

Malfunction Criteria	Threshold Value
Output voltage	< 0.154 V

Time Needed for Diagnosis: 1000 ms
Malfunction Indicator Light Illumination: Illuminates as soon as a malfunction occurs.

- **Normality Judgment**

Judge as OK and clear the NG if the continuous time while the following conditions are established is more than the predetermined time.

Judgment Value

Malfunction Criteria	Threshold Value
Output voltage	≥ 0.154 V

Time Needed for Diagnosis: Less than 1 second

CC:DTC P0328 KNOCK SENSOR 1 CIRCUIT HIGH (BANK 1 OR SINGLE SENSOR)

1. OUTLINE OF DIAGNOSIS

Detect the open or short circuit of knock sensor.
Judge as NG if out of specification.

2. COMPONENT DESCRIPTION

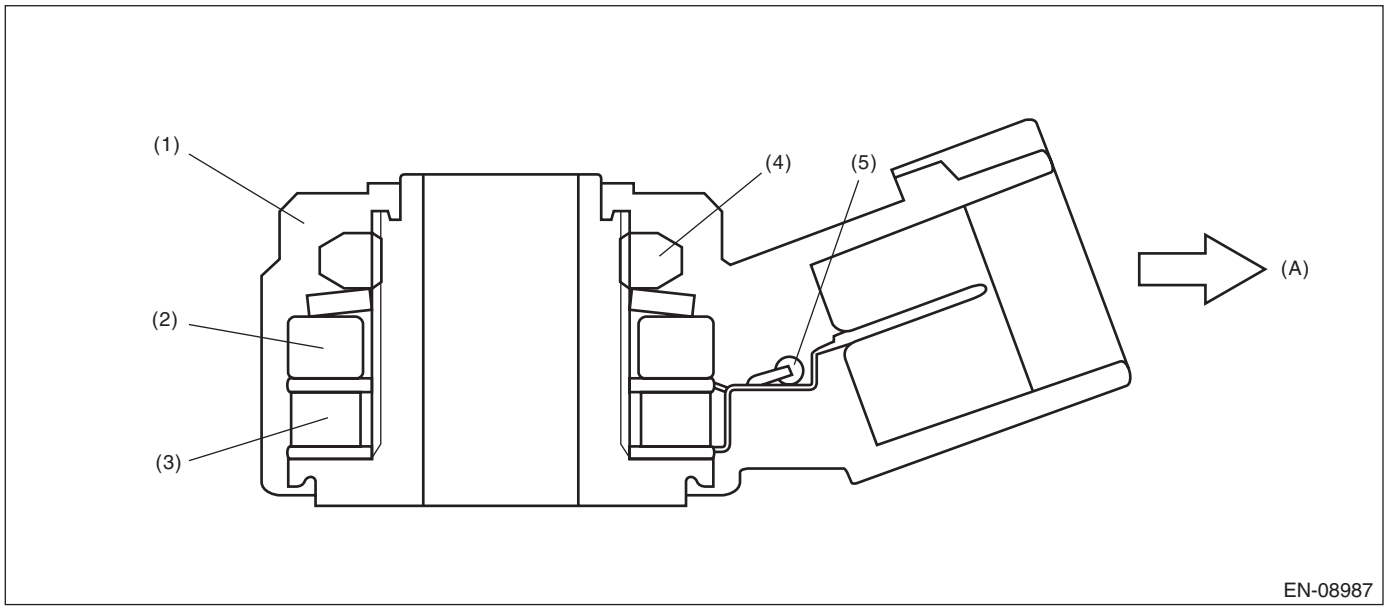

(A) To knock sensor harness

(1) Case
(2) Weight
(3) Piezoelectric element
(4) Nut
(5) Resistance

3. ENABLE CONDITION

Secondary Parameters	Enable Conditions
None	

4. GENERAL DRIVING CYCLE

Always perform the diagnosis continuously.

5. DIAGNOSTIC METHOD

- **Abnormality Judgment**

If the duration of time while the following conditions are met is longer than the time indicated, judge as NG.

Judgment Value

Malfunction Criteria	Threshold Value
Output voltage	≥ 4.838 V

Time Needed for Diagnosis: 1000 ms
Malfunction Indicator Light Illumination: Illuminates as soon as a malfunction occurs.

- **Normality Judgment**

Judge as OK and clear the NG if the continuous time while the following conditions are established is more than the predetermined time.

Judgment Value

Malfunction Criteria	Threshold Value
Output voltage	< 4.838 V

Time Needed for Diagnosis: Less than 1 second

CD:DTC P0335 CRANKSHAFT POSITION SENSOR “A” CIRCUIT

1. OUTLINE OF DIAGNOSIS

Detect the open or short circuit of the crankshaft position sensor.
Judge as NG when the crank signal is not input even though the starter was rotated.

2. COMPONENT DESCRIPTION

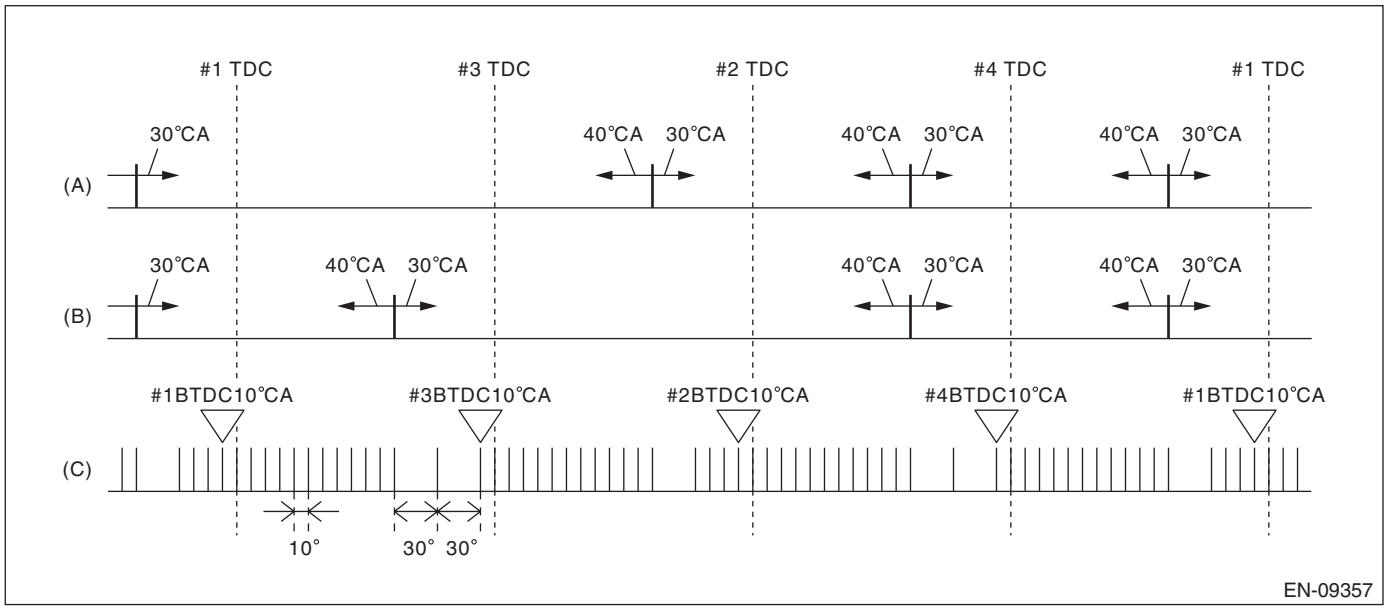

(A) Camshaft signal (RH) (B) Camshaft signal (LH) (C) Crankshaft signal

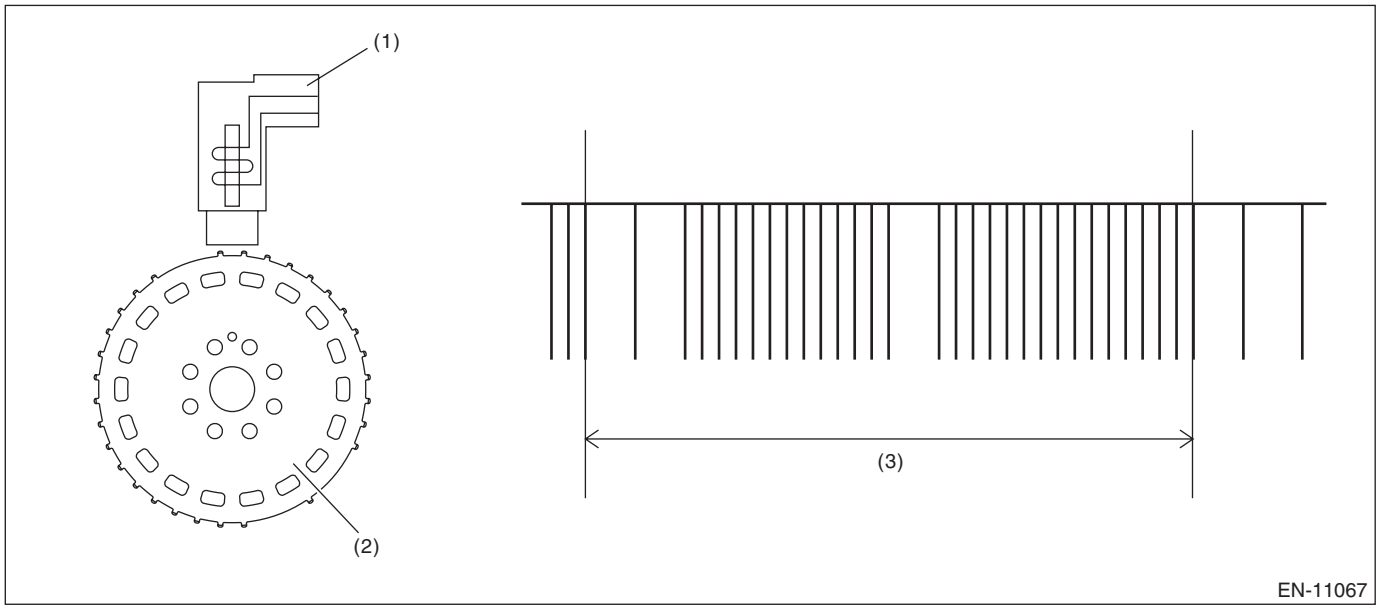

(1) Crankshaft position sensor (2) Crankshaft position sensor plate (3) Crankshaft one revolution

3. ENABLE CONDITION

Secondary Parameters	Enable Conditions
None	

4. GENERAL DRIVING CYCLE

Always perform the diagnosis continuously.

5. DIAGNOSTIC METHOD

- **Abnormality Judgment**

If the duration of time while the following conditions are met is longer than the time indicated, judge as NG.

Judgment Value

Malfunction Criteria	Threshold Value
Starter switch	ON
Crankshaft position sensor signal	Not detected
Battery voltage	≥ 8 V

Time Needed for Diagnosis: 3000 ms
Malfunction Indicator Light Illumination: Illuminates as soon as a malfunction occurs.

- **Normality Judgment**

Judge as OK and clear the NG if the continuous time while the following conditions are established is more than the predetermined time.

Judgment Value

Malfunction Criteria	Threshold Value
Crankshaft position sensor signal	Input exists
Battery voltage	≥ 8 V

Time Needed for Diagnosis: Less than 1 second

CE:DTC P0336 CRANKSHAFT POSITION SENSOR “A” CIRCUIT RANGE/PERFORMANCE

1. OUTLINE OF DIAGNOSIS

Detect for faults in crankshaft position sensor output properties.
Judge as NG when there is a problem in the number of crankshaft signals for every revolution of crankshaft.

2. COMPONENT DESCRIPTION

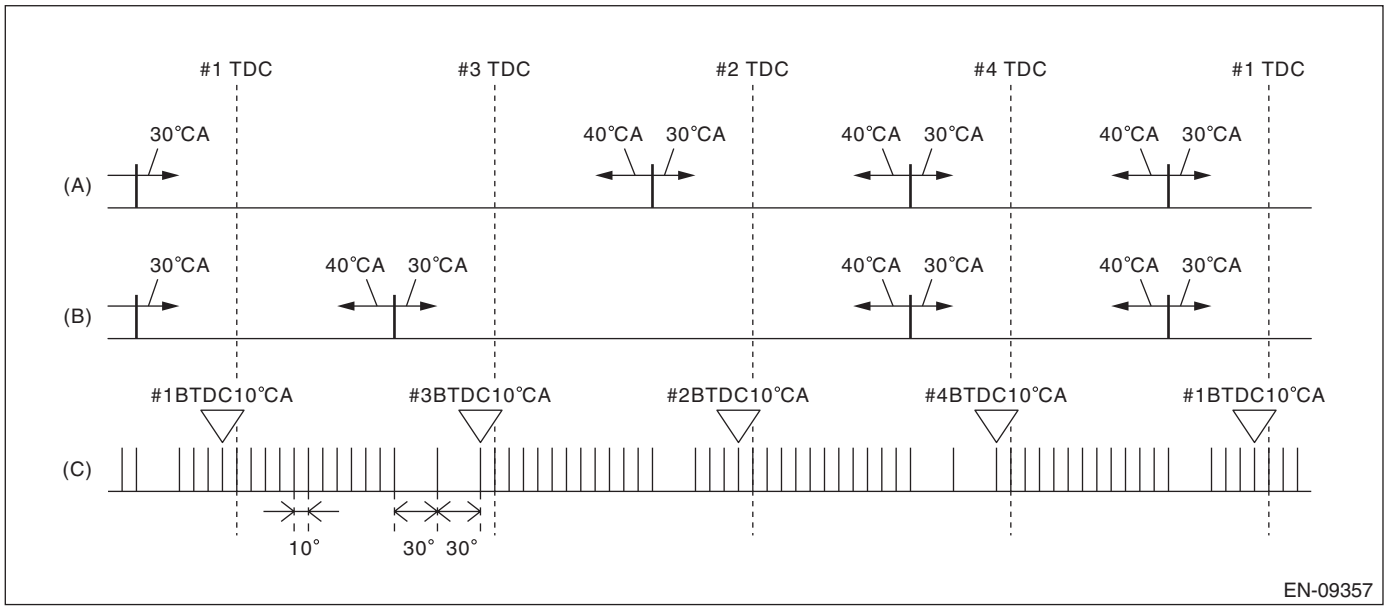

(A) Camshaft signal (RH) (B) Camshaft signal (LH) (C) Crankshaft signal

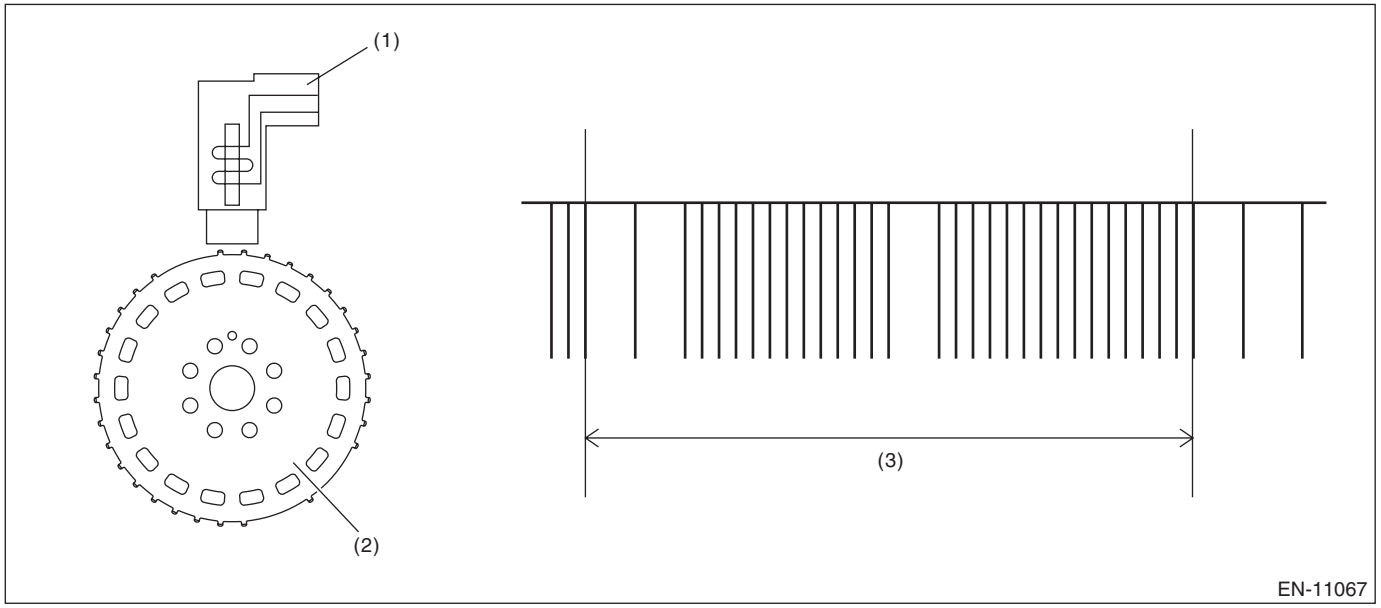

(1) Crankshaft position sensor (2) Crankshaft position sensor plate (3) Crankshaft one revolution

3. ENABLE CONDITION

Secondary Parameters	Enable Conditions
Battery voltage	≥ 8 V

4. GENERAL DRIVING CYCLE

Always perform the diagnosis continuously.

5. DIAGNOSTIC METHOD

• Abnormality Judgment

Judge as NG when the following conditions are established.

Judgment Value

Malfunction Criteria	Threshold Value
Cylinder number identification	Completed
Amount of crank sensor signal during 1 rev of crankshaft	Not = 30

Time Needed for Diagnosis: Engine speed 10 engine revs.
Malfunction Indicator Light Illumination: Illuminates when malfunction occurs in 2 continuous driving cycles.

• Normality Judgment

Judge as OK and clear the NG if the continuous time while the following conditions are established is more than the predetermined time.

Judgment Value

Malfunction Criteria	Threshold Value
Cylinder number identification	Completed
Amount of crank sensor signal during 1 rev of crankshaft	= 30

Time Needed for Diagnosis: Less than 1 second

CF:DTC P0340 CAMSHAFT POSITION SENSOR “A” CIRCUIT (BANK 1 OR SINGLE SENSOR)

1. OUTLINE OF DIAGNOSIS

Detect the open or short circuit of the camshaft position sensor.
When there is no camshaft position signal input continuously, judge as NG.

2. COMPONENT DESCRIPTION

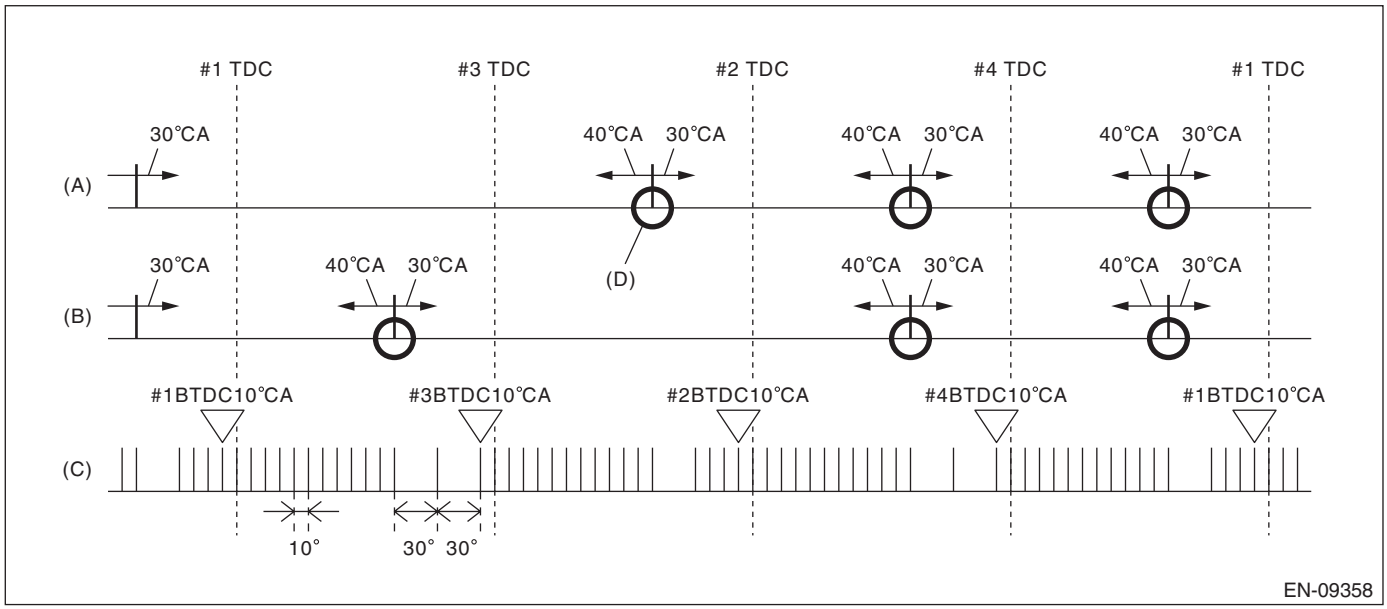

(A) Camshaft signal (RH)
(B) Camshaft signal (LH)
(C) Crankshaft signal
(D) Camshaft position signal: When normal, there will be 3 camshaft position signals for every 2 crankshaft revolutions.

3. ENABLE CONDITION

Diagnosis 1

Secondary Parameters	Enable Conditions
Battery voltage	≥ 8 V
Elapsed time after starting the engine	≥ 200 ms

Diagnosis 2

Secondary Parameters	Enable Conditions
Battery voltage	≥ 8 V
Starter	ON

4. GENERAL DRIVING CYCLE

Always perform the diagnosis continuously.

5. DIAGNOSTIC METHOD

- **Abnormality Judgment**

Diagnosis 1
Judge as NG when no input of camshaft position sensor signal in TDC remains for (10 time(s)+2)/2 engine rev.

Judgment Value

Malfunction Criteria	Threshold Value
Number of camshaft position sensor signal input in TDC	= 0

Time Needed for Diagnosis: (10 time(s) +2)/2 engine revs.
Diagnosis 2
If the duration of time while the following conditions are met is longer than the time indicated, judge as NG.

Judgment Value

Malfunction Criteria	Threshold Value
Camshaft position sensor signal	No input

Time Needed for Diagnosis: 3000 ms
Malfunction Indicator Light Illumination: Illuminates as soon as a malfunction occurs.

- **Normality Judgment**

Diagnosis 1
Judge as OK and clear the NG when the malfunction criteria below are met.

Judgment Value

Malfunction Criteria	Threshold Value
Number of camshaft position sensor signal input in TDC	≠ 0

Time Needed for Diagnosis: 2 engine revs.
Diagnosis 2
Judge as OK and clear the NG if the continuous time while the following conditions are established is more than the predetermined time.

Judgment Value

Malfunction Criteria	Threshold Value
Camshaft position sensor signal	Input exists

Time Needed for Diagnosis: 32 ms

CG:DTC P0341 CAMSHAFT POSITION SENSOR "A" CIRCUIT RANGE/PERFORMANCE (BANK 1 OR SINGLE SENSOR)

1. OUTLINE OF DIAGNOSIS

Detect the malfunction of camshaft position sensor property.
Judge as NG when the number of camshaft signals remains abnormal.

2. COMPONENT DESCRIPTION

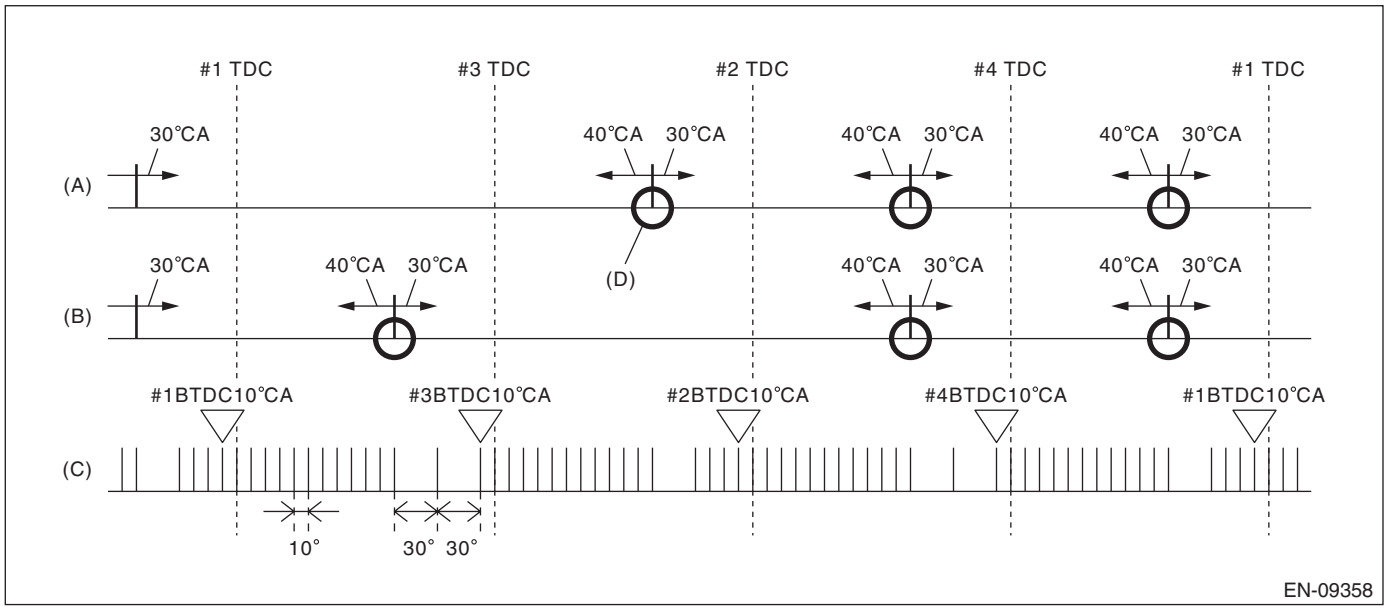

(A) Camshaft signal (RH)
(B) Camshaft signal (LH)
(C) Crankshaft signal
(D) Camshaft position signal: When normal, there will be 3 camshaft position signals for every 2 crankshaft revolutions.

3. ENABLE CONDITIONS

Secondary Parameters	Enable Conditions
Battery voltage	≥ 8 V
Elapsed time after starting the engine	≥ 200 ms

4. GENERAL DRIVING CYCLE

Always perform the diagnosis continuously.

5. DIAGNOSTIC METHOD

• Abnormality Judgment

Judge as NG when the status where the number of camshaft position sensor signals in two crankshaft revolutions is other than 3 time(s).

Judgment Value

Malfunction Criteria	Threshold Value
Amount of camshaft sensor signal during 2 revs of crankshaft	≠ 3 time(s)

Time Needed for Diagnosis: Two engine revs. × 4 time(s)
Malfunction Indicator Light Illumination: Illuminates as soon as a malfunction occurs.

• Normality Judgment

Judge as OK and clear the NG when the malfunction criteria below are met.

Judgment Value

Malfunction Criteria	Threshold Value
Camshaft position sensor signal	= 3 time(s)

Time Needed for Diagnosis: 2 engine revs.

CH:DTC P0345 CAMSHAFT POSITION SENSOR “A” CIRCUIT (BANK 2)

1. OUTLINE OF DIAGNOSIS

NOTE:
For the detection standard, refer to DTC P0340. <Ref. to GD(H4DO HEV)-131, DTC P0340 CAMSHAFT POSITION SENSOR “A” CIRCUIT (BANK 1 OR SINGLE SENSOR), Diagnostic Trouble Code (DTC) Detecting Criteria.>

CI: DTC P0346 CAMSHAFT POSITION SENSOR "A" CIRCUIT RANGE/PERFORMANCE (BANK 2)

1. OUTLINE OF DIAGNOSIS

NOTE:
For the detection standard, refer to DTC P0341. <Ref. to GD(H4DO HEV)-133, DTC P0341 CAMSHAFT POSITION SENSOR "A" CIRCUIT RANGE/PERFORMANCE (BANK 1 OR SINGLE SENSOR), Diagnostic Trouble Code (DTC) Detecting Criteria.>

CJ:DTC P0351 IGNITION COIL A PRIMARY/SECONDARY CIRCUIT

1. OUTLINE OF DIAGNOSIS

Based on the self-diagnostic result of the ignition coil driving IC, judge the ignition coil driving circuit as normal or abnormal.
The ignition coil driving IC detects “no ignition” status as a malfunction.

2. ENABLE CONDITIONS

Secondary Parameters	Enable Conditions
Battery voltage	≥ 10.9 V
Elapsed time after starting the engine	> 1 s
Engine speed	> 500 rpm
Ignition energization time	> 2000 μs

3. GENERAL DRIVING CYCLE

Always perform the diagnosis continuously.

4. DIAGNOSTIC METHOD

- **Abnormality Judgment**

Judge as NG when the following conditions are established.

Judgment Value

Malfunction Criteria	Threshold Value
Ignition driving IC information	Malfunction

Time Needed for Diagnosis: 2,500 ms
Malfunction Indicator Light Illumination: Illuminates as soon as a malfunction occurs.

- **Normality Judgment**

Judge as OK and clear the NG if the following conditions are established.

Judgment Value

Malfunction Criteria	Threshold Value
Ignition driving IC information	Normal

Time Needed for Diagnosis: Less than 1 second

CK:DTC P0352 IGNITION COIL B PRIMARY/SECONDARY CIRCUIT

1. OUTLINE OF DIAGNOSIS

NOTE:
For the detection standard, refer to DTC P0351. <Ref. to GD(H4DO HEV)-135, DTC P0351 IGNITION COIL A PRIMARY/SECONDARY CIRCUIT, Diagnostic Trouble Code (DTC) Detecting Criteria.>

CL:DTC P0353 IGNITION COIL C PRIMARY/SECONDARY CIRCUIT

1. OUTLINE OF DIAGNOSIS

NOTE:
For the detection standard, refer to DTC P0351. <Ref. to GD(H4DO HEV)-135, DTC P0351 IGNITION COIL A PRIMARY/SECONDARY CIRCUIT, Diagnostic Trouble Code (DTC) Detecting Criteria.>

CM:DTC P0354 IGNITION COIL D PRIMARY/SECONDARY CIRCUIT

1. OUTLINE OF DIAGNOSIS

NOTE:
For the detection standard, refer to DTC P0351. <Ref. to GD(H4DO HEV)-135, DTC P0351 IGNITION COIL A PRIMARY/SECONDARY CIRCUIT, Diagnostic Trouble Code (DTC) Detecting Criteria.>

CN:DTC P0365 CAMSHAFT POSITION SENSOR “B” CIRCUIT (BANK 1)

1. OUTLINE OF DIAGNOSIS

Detect the open or short circuit of the camshaft position sensor.
When there is no camshaft position signal input continuously, judge as NG.

2. COMPONENT DESCRIPTION

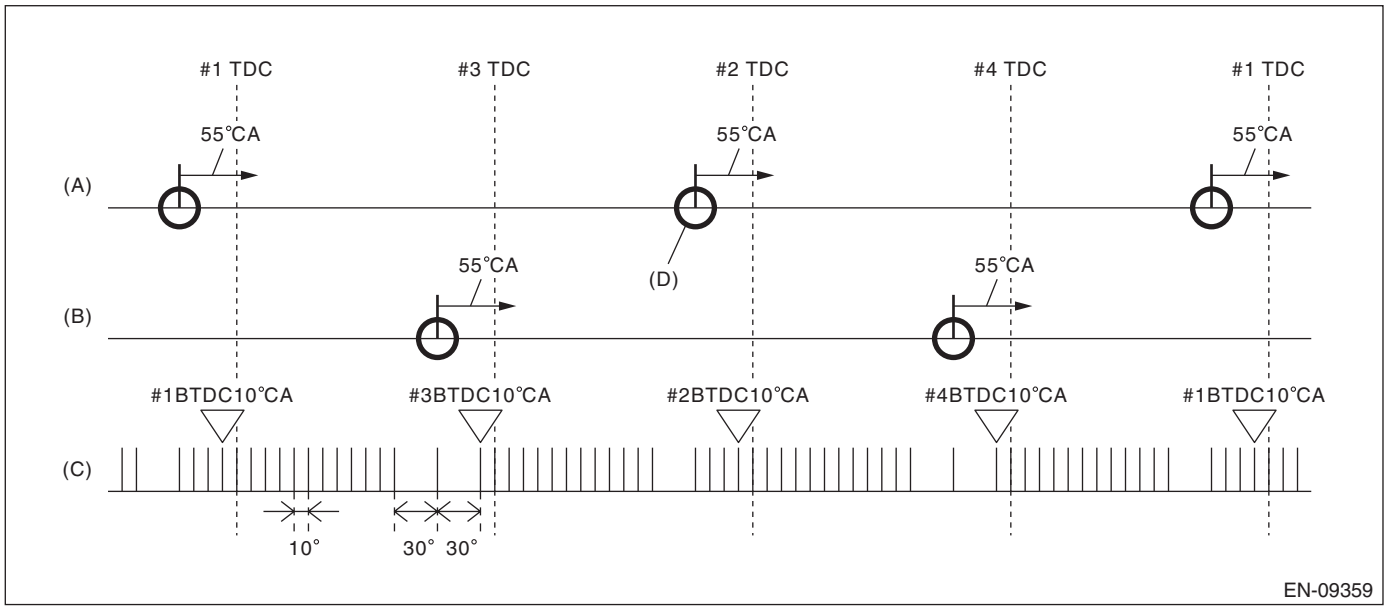

(A) Camshaft signal (RH)
(B) Camshaft signal (LH)
(C) Crankshaft signal
(D) Camshaft position signal: When normal, there will be 2 camshaft position signals for every 2 crankshaft revolutions.

3. ENABLE CONDITIONS

Secondary Parameters	Enable Conditions
Battery voltage	≥ 10.9 V
Elapsed time after starting the engine	≥ 200 ms

4. GENERAL DRIVING CYCLE

Always perform the diagnosis continuously.

5. DIAGNOSTIC METHOD

• Abnormality Judgment

Judge as NG when no input of camshaft position sensor signal in TDC remains for (10 time(s) +2)/2 engine rev.

Judgment Value

Malfunction Criteria	Threshold Value
Number of camshaft position sensor signal input in TDC	= 0

Time Needed for Diagnosis: (10 time(s) +2)/2 engine revs.
Malfunction Indicator Light Illumination: Illuminates as soon as a malfunction occurs.

• Normality Judgment

Judge as OK and clear the NG when the malfunction criteria below are met.

Judgment Value

Malfunction Criteria	Threshold Value
Number of camshaft position sensor signal input in TDC	≠ 0

Time Needed for Diagnosis: 2 engine revs.

CO:DTC P0366 CAMSHAFT POSITION SENSOR B CIRCUIT RANGE/PERFORMANCE (BANK 1)

1. OUTLINE OF DIAGNOSIS

Detect the malfunction of camshaft position sensor property.
Judge as NG when the number of camshaft signals remains abnormal.

2. COMPONENT DESCRIPTION

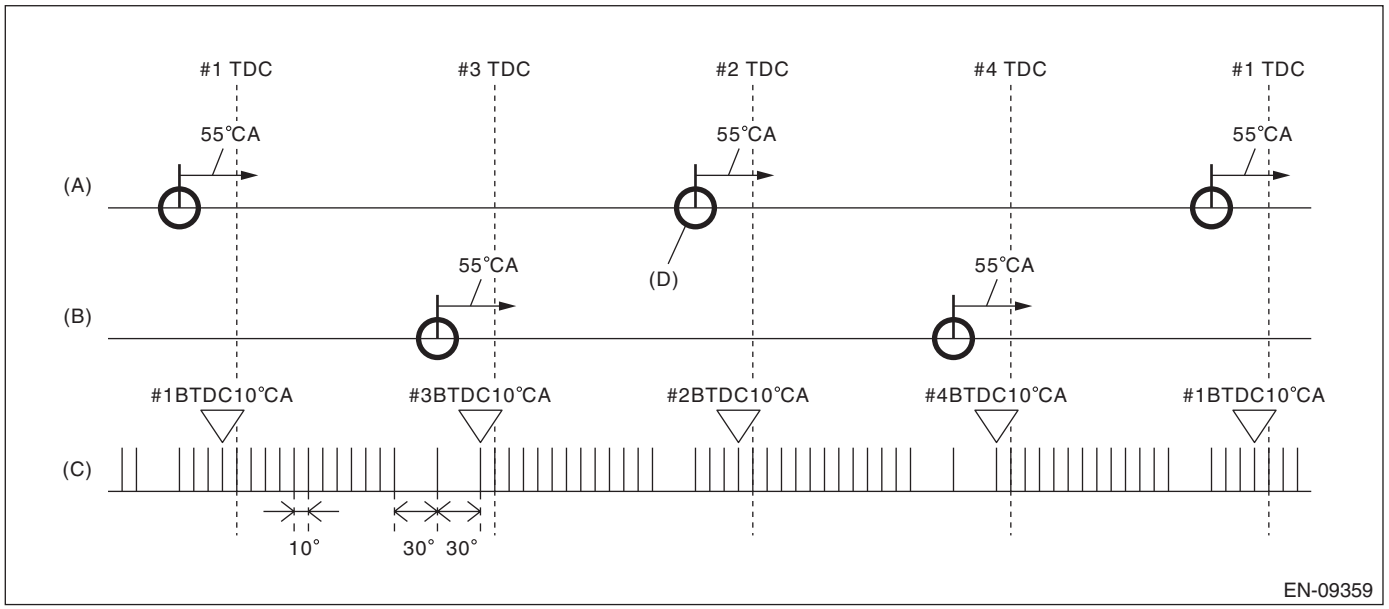

(A) Camshaft signal (RH)
(B) Camshaft signal (LH)
(C) Crankshaft signal
(D) Camshaft position signal: When normal, there will be 2 camshaft position signals for every 2 crankshaft revolutions.

3. ENABLE CONDITIONS

Secondary Parameters	Enable Conditions
Battery voltage	≥ 10.9 V
Elapsed time after starting the engine	≥ 200 ms

4. GENERAL DRIVING CYCLE

Always perform the diagnosis continuously.

5. DIAGNOSTIC METHOD

• Abnormality Judgment

Judge as NG when the status where the number of camshaft position sensor signals in two crankshaft revolutions is other than 2 time(s).

Judgment Value

Malfunction Criteria	Threshold Value
Amount of camshaft sensor signal during 2 revs of crankshaft	≠ 2 time(s)

Time Needed for Diagnosis: Two engine revs. × 4 time(s)
Malfunction Indicator Light Illumination: Illuminates as soon as a malfunction occurs.

• Normality Judgment

Judge as OK and clear the NG when the malfunction criteria below are met.

Judgment Value

Malfunction Criteria	Threshold Value
Camshaft position sensor signal	= 2 time(s)

Time Needed for Diagnosis: 2 engine revs.

CP:DTC P0390 CAMSHAFT POSITION SENSOR “B” CIRCUIT (BANK 2)

1. OUTLINE OF DIAGNOSIS

NOTE:
For the detection standard, refer to DTC P0365. <Ref. to GD(H4DO HEV)-136, DTC P0365 CAMSHAFT POSITION SENSOR “B” CIRCUIT (BANK 1), Diagnostic Trouble Code (DTC) Detecting Criteria.>

CQ:DTC P0391 CAMSHAFT POSITION SENSOR B CIRCUIT RANGE/PERFORMANCE (BANK 2)

1. OUTLINE OF DIAGNOSIS

NOTE:
For the detection standard, refer to DTC P0366. <Ref. to GD(H4DO HEV)-138, DTC P0366 CAMSHAFT POSITION SENSOR B CIRCUIT RANGE/PERFORMANCE (BANK 1), Diagnostic Trouble Code (DTC) Detecting Criteria.>

CR:DTC P0400 EXHAUST GAS RECIRCULATION FLOW

1. OUTLINE OF DIAGNOSIS

Detect EGR system malfunction.
Intake manifold pressure (negative pressure) is constant because the throttle valve is fully closed during deceleration fuel cut. At this time, when the EGR control valve is opened/closed, the intake manifold pressure will change. EGR System OK/NG is judged by the range of this change.

2. COMPONENT DESCRIPTION

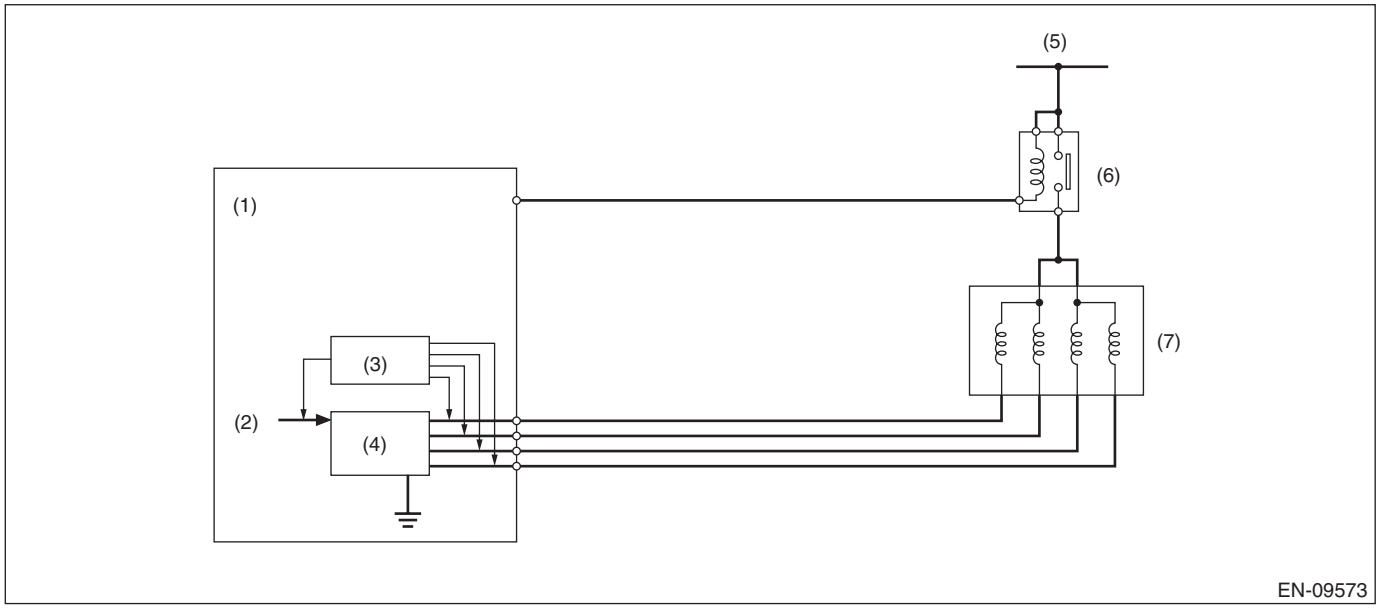

(1) Engine control module (ECM)
(2) Computer unit (CPU)
(3) Detecting circuit
(4) Switching circuit
(5) Battery voltage
(6) Main relay
(7) EGR control valve

3. ENABLE CONDITIONS

Secondary Parameters	Enable Conditions
Engine speed	1100 rpm — 5000 rpm
Intake manifold pressure (absolute pressure)	< 133.3 kPa (1000 mmHg, 39.4 inHg)
Ambient air temperature	≥ 5 °C(41 °F)
Throttle position	< 0.2442 °
Battery voltage	≥ 10.9 V
Atmospheric pressure	≥ 75.1 kPa (563 mmHg, 22.2 inHg)
Vehicle speed	≥40 km/h (24.9 MPH)
Fuel shut-off function	In operation
Neutral switch	OFF

4. GENERAL DRIVING CYCLE

During deceleration fuel cut from 53 km/h (approx. 33 MPH) or more, perform diagnosis once.
Be careful of vehicle speed and engine speed. (Diagnosis will not be completed if the vehicle speed and engine speed conditions become out of specification due to deceleration.)

5. DIAGNOSTIC METHOD

Measure the pressure values when the enable conditions are established, and perform diagnosis by calculating those results.
1. Label the intake manifold pressure value as PMOF1, which is observed when enable conditions are established, and set the EGR target step to 45 step(s) (nearly full open).
2. Label the intake manifold pressure value as PMON, which is observed after 1000 ms has passed since EGR target step was set to 45 step(s) (when the enable conditions were established), and set the EGR target step to 0.
3. Label the intake manifold pressure as PMOF2, which is observed after 1000 ms has passed since EGR target step was set to 0 (after (1000 ms + 1000 ms) have passed since the enable conditions were established).

- **Abnormality Judgment**

Judge as NG when the following conditions are established.

Judgment Value

Malfunction Criteria	Threshold Value
PMON – (PMOF1 + PMOF2)/2	< 2.5 kPa (18.63 mmHg, 0.7 inHg)

Time Needed for Diagnosis: 1 time

Malfunction Indicator Light Illumination: Illuminates when malfunction occurs in 2 continuous driving cycles.

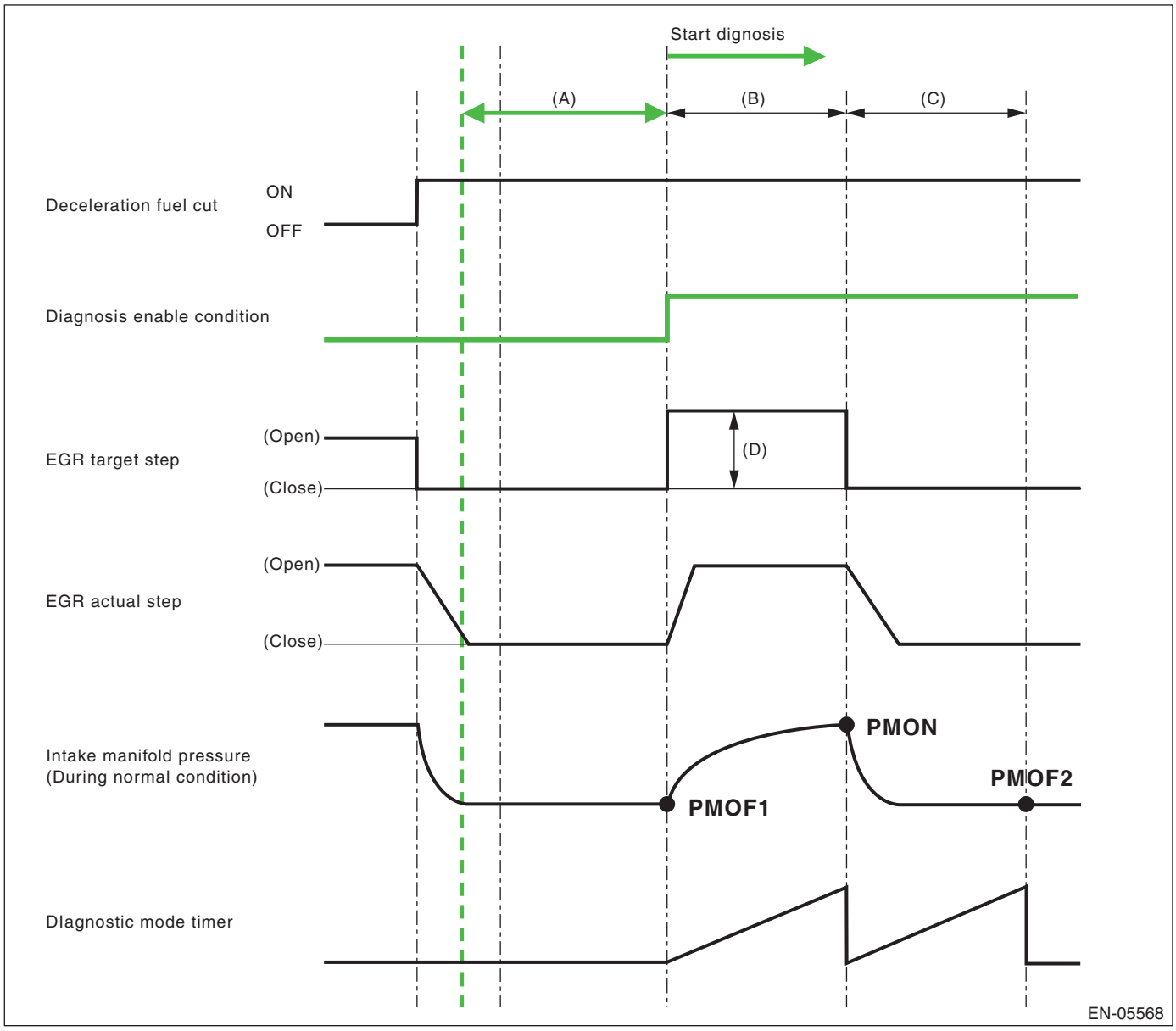

(A) 2000 ms (B) 1000 ms (C) 1000 ms
(D) 45 step(s)

- **Normality Judgment**

Judge as OK and clear the NG if the following conditions are established.

Judgment Value

Malfunction Criteria	Threshold Value
PMON – (PMOF1 + PMOF2)/2	≥ 2.5 kPa (18.63 mmHg, 0.7 inHg)

Time Needed for Diagnosis: 1 time

CS:DTC P0420 CATALYST SYSTEM EFFICIENCY BELOW THRESHOLD (BANK 1)

1. OUTLINE OF DIAGNOSIS

Detect the deterioration of the catalyst function.
Though the front oxygen sensor output would change slowly with a new catalyst, the sensor output with a deteriorated catalyst becomes high and the inversion time is shortened.
For this reason, the catalyst diagnosis is carried out by monitoring the front oxygen sensor output and comparing it with the front oxygen (A/F) sensor output.

2. COMPONENT DESCRIPTION

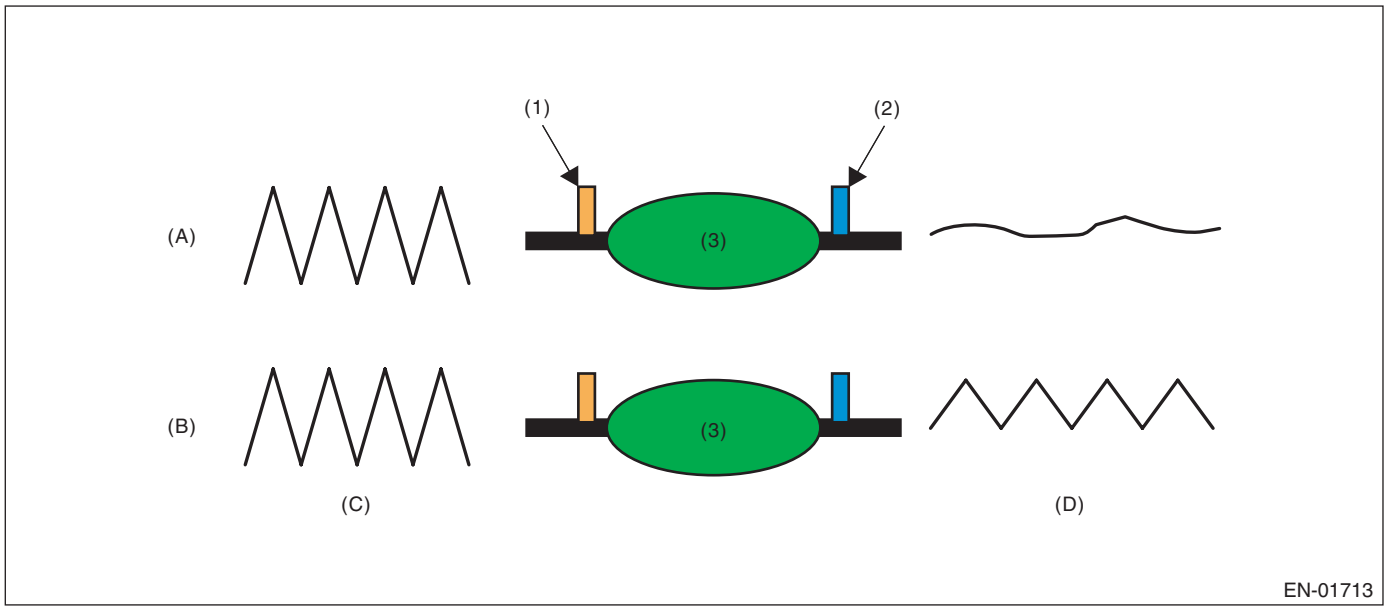

(A) Normal
(B) Deterioration
(C) Output waveform from the front oxygen (A/F) sensor
(D) Output waveform from the front oxygen sensor
(1) Front oxygen (A/F) sensor
(2) Front oxygen sensor
(3) Catalytic converter

3. ENABLE CONDITION

Secondary Parameters	Enable Conditions
Battery voltage	≥ 10.9 V
Atmospheric pressure	≥ 75.1 kPa (563 mmHg, 22.2 inHg)
Estimated catalyst temperature	≥ 480 °C (896 °F)
Misfire detection every 200 rotations	< 65535 time(s)
Sub feedback	In operation
Evaporative system diagnosis	Not in operation
Time of difference (< 0.10) between actual lambda and target lambda	≥ 0 ms
Vehicle speed	> 40 km/h (24.9 MPH)
Amount of intake air	≥ 5 g/s (0.18 oz/s) and < 40 g/s (1.41 oz/s)
Engine load change every 0.5 engine revs.	< 255 g/rev (8.99 oz/rev)
Rear oxygen output change from 660 mV or less to 660 mV or more	Experienced after fuel cut
Purge execution calculated time	≥ 0 s

4. GENERAL DRIVING CYCLE

Perform the diagnosis only once at a constant 40 km/h (24.9 MPH) or higher.

5. DIAGNOSTIC METHOD

After the enable conditions have been established, calculate the front oxygen (A/F) sensor lambda value deviation sum value (Σ |(sglmd$_n$ – sglmd$_{n-1}$)|), and rear oxygen sensor output voltage deviation sum value (Σ |(ro2sad$_n$ – ro2sad$_{n-1}$)|) in every 32 ms × 4 times. If the front oxygen (A/F) sensor lambda value deviation sum value (Σ |(sglmd$_n$ – sglmd$_{n-1}$)|) is the predetermined value or more, calculate the diagnostic value.

- **Abnormality Judgment**

If the duration of time while the following conditions are met is within the time indicated, judge as NG.

Judgment Value

Malfunction Criteria	Threshold Value
Σ |(ro2sad$_n$ – ro2sad$_{n-1}$)| / Σ |(sglmd$_n$ – sglmd$_{n-1}$)|	> 8

Time Needed for Diagnosis: 30 — 55 seconds
Malfunction Indicator Light Illumination: Illuminates when malfunction occurs in 2 continuous driving cycles.

- **Normality Judgment**

Judge as OK and clear the NG if the continuous time while the following conditions are established is within the predetermined time.

Judgment Value

Malfunction Criteria	Threshold Value
Σ |(ro2sad$_n$ – ro2sad$_{n-1}$)| / Σ |(sglmd$_n$ – sglmd$_{n-1}$)|	≤ 8

Time Needed for Diagnosis: 30 — 55 seconds

CT:DTC P0441 EVAPORATIVE EMISSION CONT. SYS. INCORRECT PURGE FLOW

1. OUTLINE OF DIAGNOSIS

Detect the malfunction of purge flow by the change of ELCM pressure sensor output value before/after purge introduction.

2. ENABLE CONDITIONS

Secondary Parameters	Enable Conditions
<Common conditions>	
Battery voltage	≥ 10.9 V
Atmospheric pressure	> 75.1 kPa (563 mmHg, 22.2 inHg)
<First diagnosis>	
Total time of canister purge operation	≥ 120 s
<Second diagnosis>	
Time after cancel of second diagnosis	≥ 60000 ms
Total time of canister purge operation	≥ 120 s
Intake manifold pressure (absolute pressure)	> 13.3 kPa (100 mmHg, 3.9 inHg)
Engine speed	≥ 0 rpm
Intake manifold pressure (relative pressure)	< 6.7 kPa (50 mmHg, 2 inHg)
Vehicle speed	≥ 30 km/h (18.6 MPH)
Closed air/fuel ratio control	In operation
Air fuel ratio	> 0 and < 2
Main feedback compensation coefficient	> 0
Estimated ambient temperature value	> –25 °C (–13 °F)

3. GENERAL DRIVING CYCLE

Perform the diagnosis only once after engine start.

4. DIAGNOSTIC METHOD

First diagnosis

Pressure decreases when the purge is introduced compared with when the purge is not performed. By using this, judge if the purge is correctly performed. If there is no pressure decrease, go to the second diagnosis.

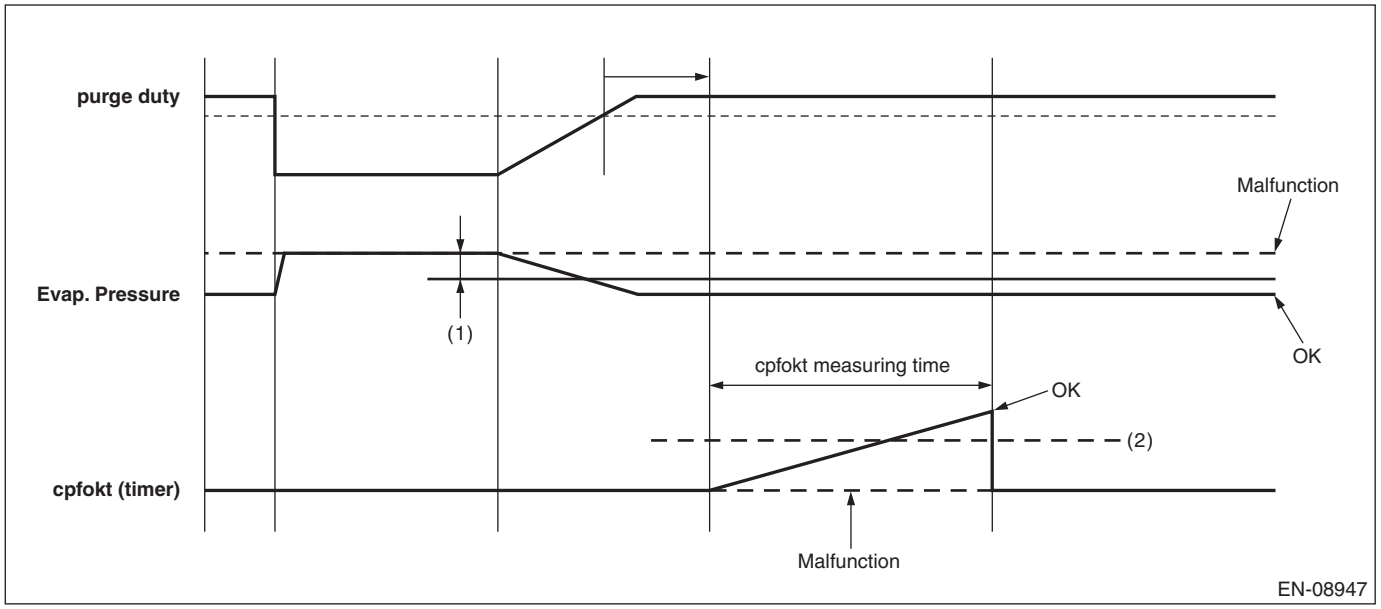

(1) 0.0025 V (2) 1000 ms

- **Abnormality Judgment**

Judge as NG when the following conditions are established.

Judgment Value

Malfunction Criteria	Threshold Value
ELCM pressure sensor output voltage when purge is not performed – ELCM pressure sensor output voltage when purge is performed	> 0.0025 V
The accumulated time while the above conditions are met: cpfokt	< 1000 ms

Time Needed for Diagnosis: 8 — 38 seconds

- **Normality Judgment**

Judge as OK and clear the NG if the following conditions are established.

Judgment Value

Malfunction Criteria	Threshold Value
ELCM pressure sensor output voltage when purge is not performed – ELCM pressure sensor output voltage when purge is performed	> 0.0025 V
The accumulated time while the above conditions are met: cpfokt	≥ 1000 ms

Time Needed for Diagnosis: 8 — 38 seconds

Second diagnosis
Close the ELCM switching valve, and close the fuel tank completely, and perform the forced purging. If pressure change amount is 0.7 kPa (5 mmHg, 0.2 inHg) or less, judge as malfunction of purge flow.

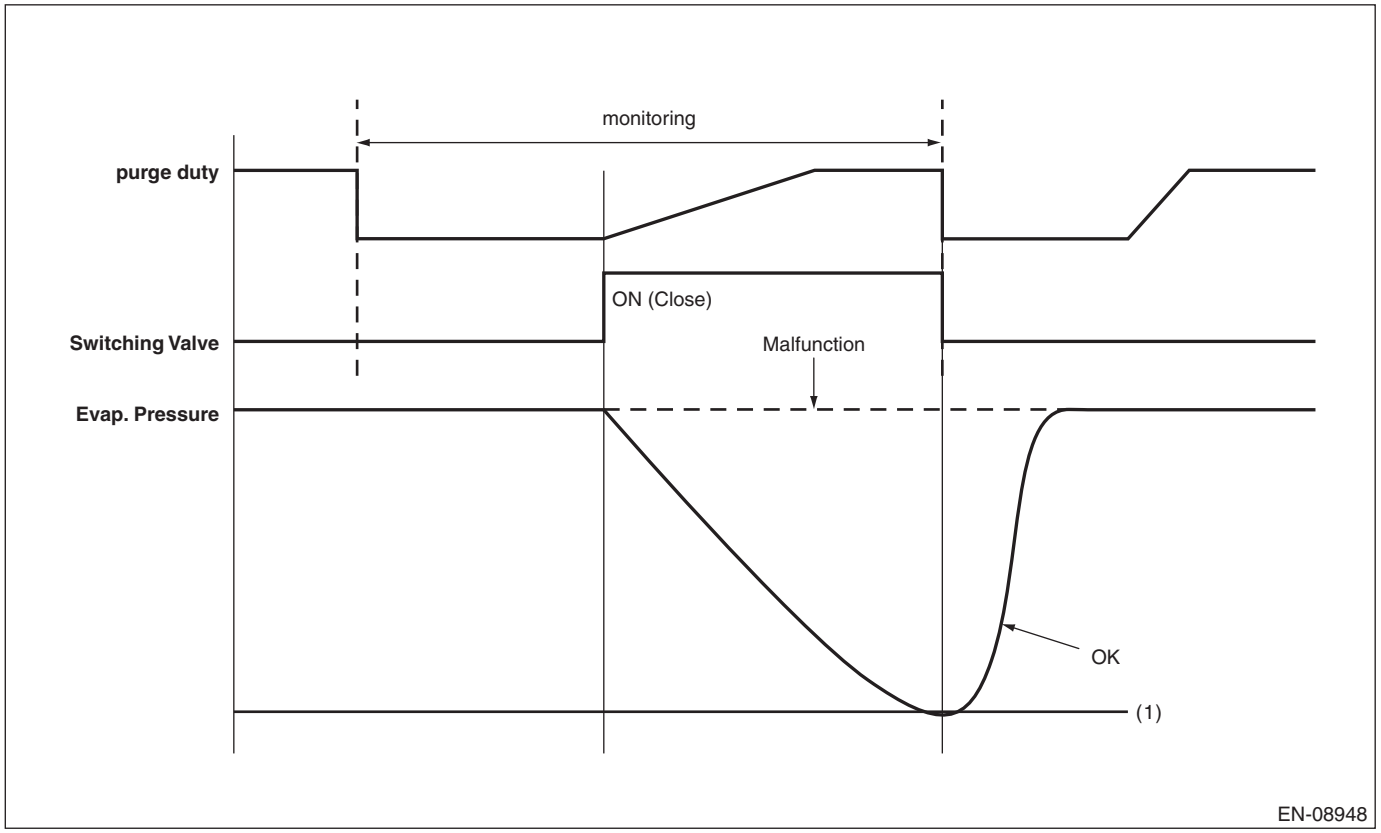

(1) 0.7 kPa (5 mmHg, 0.2 inHg)

- **Abnormality Judgment**

Judge as NG when the following conditions are established.

Judgment Value

Malfunction Criteria	Threshold Value
ELCM pressure sensor output voltage when purge is not performed – ELCM pressure sensor output voltage when purge is performed	< 0.7 kPa (5 mmHg, 0.2 inHg)
Time of negative pressure introduction	≥ 15000 ms

Time Needed for Diagnosis: 21 seconds
Malfunction Indicator Light Illumination: Illuminates when malfunction occurs in 2 continuous driving cycles.

- **Normality Judgment**

Judge as OK and clear the NG if the following conditions are established.

Judgment Value

Malfunction Criteria	Threshold Value
ELCM pressure sensor output voltage when purge is not performed – ELCM pressure sensor output voltage when purge is performed	≥ 0.7 kPa (5 mmHg, 0.2 inHg)

Time Needed for Diagnosis: Less than 21 second

CU:DTC P0451 EVAPORATIVE EMISSION SYSTEM PRESSURE SENSOR/ SWITCH RANGE/PERFORMANCE

1. OUTLINE OF DIAGNOSIS

Detect the malfunction of ELCM pressure sensor output properties.
Judge as NG when the ELCM pressure sensor output value is largely different from the intake manifold pressure when the ignition switch is ON.

2. COMPONENT DESCRIPTION

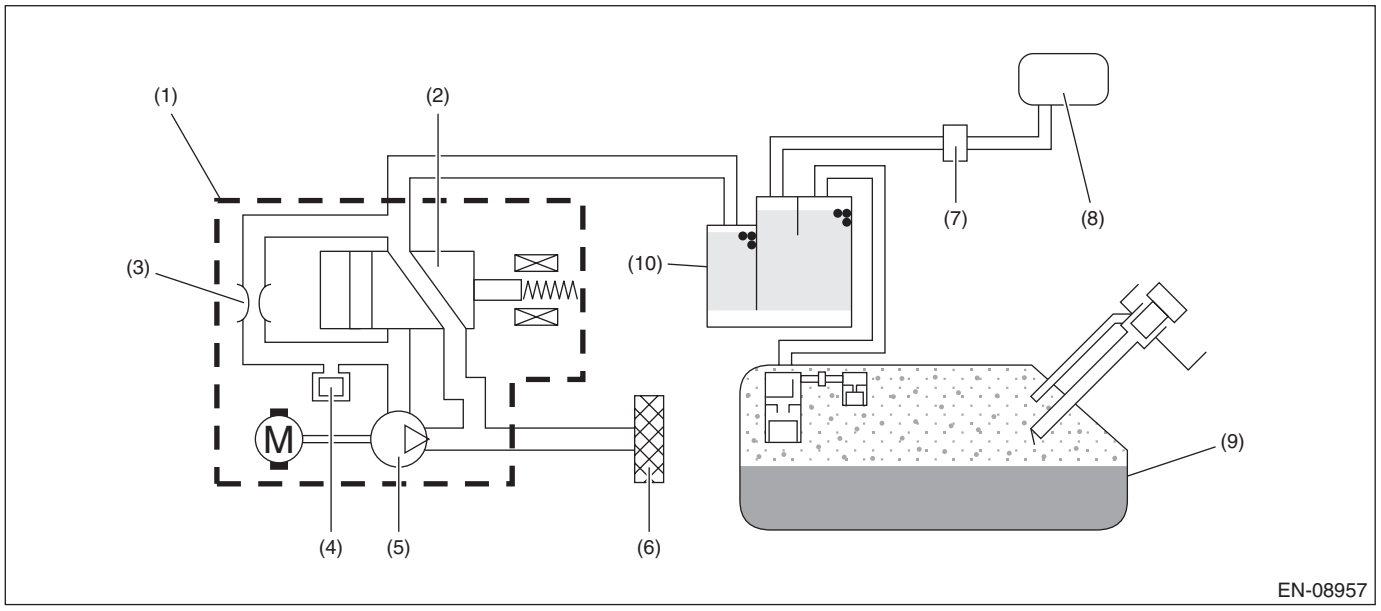

(1) ELCM
(2) Switching valve
(3) Reference orifice (0.02 inch orifice)
(4) Pressure sensor
(5) Vacuum pump
(6) Drain filter
(7) Purge control solenoid valve
(8) Intake manifold
(9) Fuel tank
(10) Canister

3. ENABLE CONDITIONS

Secondary Parameters	Enable Conditions
Elapsed time after ignition switch is turned to ON	≥ 500 ms and < 60000 ms
Vehicle speed	< 1 km/h (0.621 MPH)
Soaking time	≥ 60 s
ELCM vacuum pump	Not in operation
ELCM switching valve	Open
Purge control	Not in operation

4. GENERAL DRIVING CYCLE

Perform the diagnosis once at ignition ON.

5. DIAGNOSTIC METHOD

• Abnormality Judgment

If the duration of time while the following conditions are met is longer than the time indicated, judge as NG.

Judgment Value

Malfunction Criteria	Threshold Value
|ELCM pressure sensor output value – intake manifold pressure (absolute pressure) when ignition switch is ON|	> 4732.9 Pa (35.5 mmHg, 1.4 inHg)

Time Needed for Diagnosis: 328 ms
Malfunction Indicator Light Illumination: Illuminates when malfunction occurs in 2 continuous driving cycles.

• Normality Judgment

Judge as OK and clear the NG if the continuous time while the following conditions are established is more than the predetermined time.

Judgment Value

Malfunction Criteria	Threshold Value
|ELCM pressure sensor output value – intake manifold pressure (absolute pressure) when ignition switch is ON|	≤ 4732.9 Pa (35.5 mmHg, 1.4 inHg)

Time Needed for Diagnosis: 262 ms

CV:DTC P0452 EVAPORATIVE EMISSION SYSTEM PRESSURE SENSOR/ SWITCH LOW

1. OUTLINE OF DIAGNOSIS

Detect the open or short circuit of the ELCM pressure sensor.
Judge as NG if out of specification.

2. COMPONENT DESCRIPTION

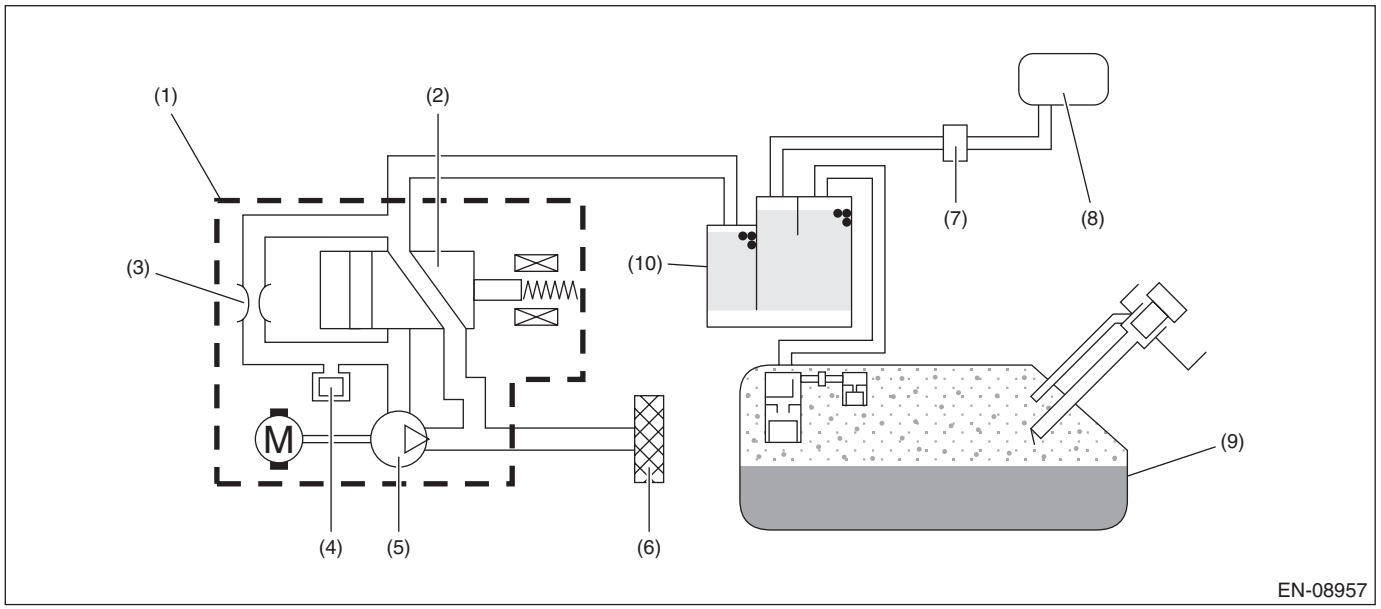

(1) ELCM
(2) Switching valve
(3) Reference orifice (0.02 inch orifice)
(4) Pressure sensor
(5) Vacuum pump
(6) Drain filter
(7) Purge control solenoid valve
(8) Intake manifold
(9) Fuel tank
(10) Canister

3. ENABLE CONDITIONS

Secondary Parameters	Enable Conditions
Battery voltage	≥ 10.9 V

4. GENERAL DRIVING CYCLE

Always perform the diagnosis continuously.

5. DIAGNOSTIC METHOD

- **Abnormality Judgment**

If the duration of time while the following conditions are met is longer than the time indicated, judge as NG.

Judgment Value

Malfunction Criteria	Threshold Value
Output voltage	< 0.973 V

Time Needed for Diagnosis: 1000 ms
Malfunction Indicator Light Illumination: Illuminates as soon as a malfunction occurs.

- **Normality Judgment**

Judge as OK and clear the NG if the continuous time while the following conditions are established is more than the predetermined time.

Judgment Value

Malfunction Criteria	Threshold Value
Output voltage	≥ 0.973 V

Time Needed for Diagnosis: Less than 1 second

CW:DTC P0453 EVAPORATIVE EMISSION SYSTEM PRESSURE SENSOR/ SWITCH HIGH

1. OUTLINE OF DIAGNOSIS

Detect the open or short circuit of the ELCM pressure sensor.
Judge as NG if out of specification.

2. COMPONENT DESCRIPTION

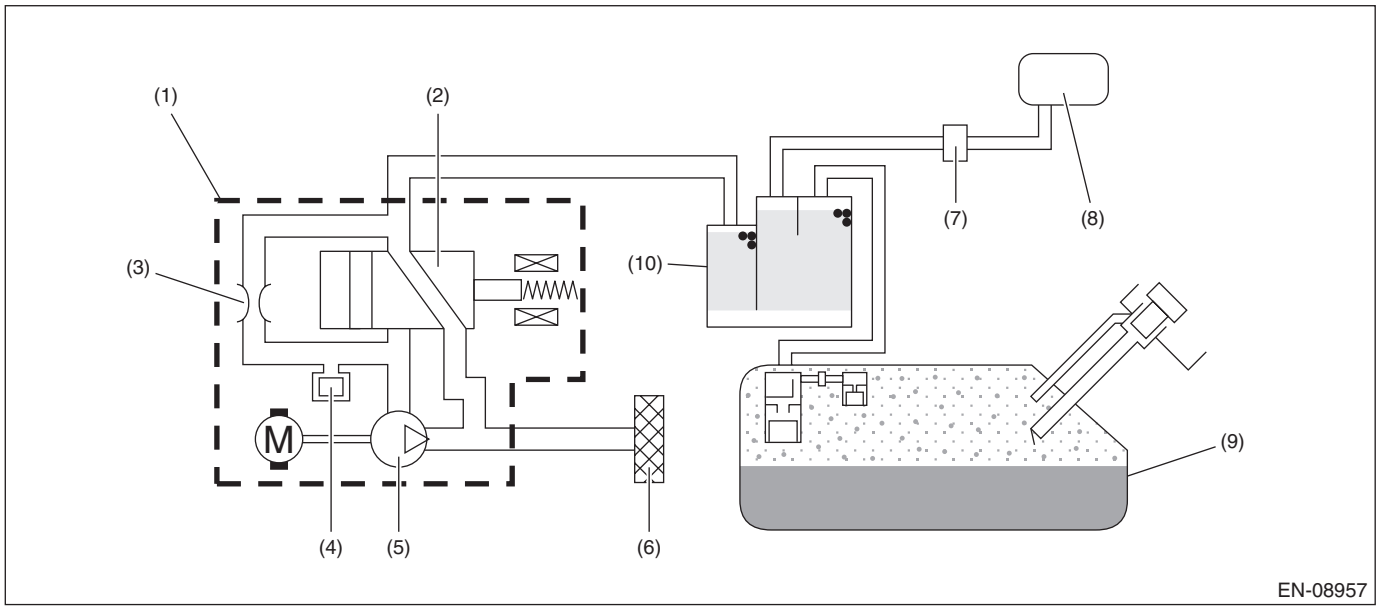

(1) ELCM
(2) Switching valve
(3) Reference orifice (0.02 inch orifice)
(4) Pressure sensor
(5) Vacuum pump
(6) Drain filter
(7) Purge control solenoid valve
(8) Intake manifold
(9) Fuel tank
(10) Canister

3. ENABLE CONDITIONS

Secondary Parameters	Enable Conditions
Battery voltage	≥ 10.9 V

4. GENERAL DRIVING CYCLE

Always perform the diagnosis continuously.

5. DIAGNOSTIC METHOD

- **Abnormality Judgment**

If the duration of time while the following conditions are met is longer than the time indicated, judge as NG.

Judgment Value

Malfunction Criteria	Threshold Value
Output voltage	≥ 4.095 V

Time Needed for Diagnosis: 1000 ms
Malfunction Indicator Light Illumination: Illuminates as soon as a malfunction occurs.

- **Normality Judgment**

Judge as OK and clear the NG if the continuous time while the following conditions are established is more than the predetermined time.

Judgment Value

Malfunction Criteria	Threshold Value
Output voltage	< 4.095 V

Time Needed for Diagnosis: Less than 1 second

CX:DTC P0455 EVAPORATIVE EMISSION SYSTEM LEAK DETECTED (LARGE LEAK)

1. OUTLINE OF DIAGNOSIS

This diagnosis judges whether the ELCM operation is normal or not, and whether the evaporative emission system has leak and clogging or not.
To purge the canister, after driving, perform the five hours soaking after ignition switch OFF in order to stabilize the evaporative gas status. * After 5, 7 or 9.5 hours passed, ECM is activated by soaking timer, and the leak check is started.
Judges whether the ELCM operation is normal or not, by measuring the reference pressure status via reference orifice (0.02 inch orifice). Judge as malfunction if the reference pressure is out of specified range. Then, judge whether there is a leak or not, by comparing the pressure (leak pressure) when the reference pressure and the evaporative emission system are in negative pressure condition. Judge as system leak in the evaporative emission system if the leak pressure is higher than reference pressure. Judge as clogging of pipe if the leak pressure becomes lower than the reference pressure within the specified amount of time.
0.02 inch leak and 0.04 inch leak can be distinguished by measuring the leak pressure.
The diagnosis results are stored inside ECM until the engine is started again.
*: When the test conditions are not met in 5 hours, perform diagnosis at elapsed time of 7 hours. When the test conditions are not met in 7 hours, perform diagnosis at elapsed time of 9.5 hours.

Diagnostic item	
ELCM system (ELCM body)	Vacuum pump stuck Switching valve stuck to open Switching valve stuck to close Reference orifice flow large Reference orifice flow small
Leak check	Large leak • 0.04 inch leak • Fuel cap loose • Fuel cap off • System malfunction
	Very small leak • 0.02 inch leak
Clogging of pipe	—

OUTLINE OF DIAGNOSIS

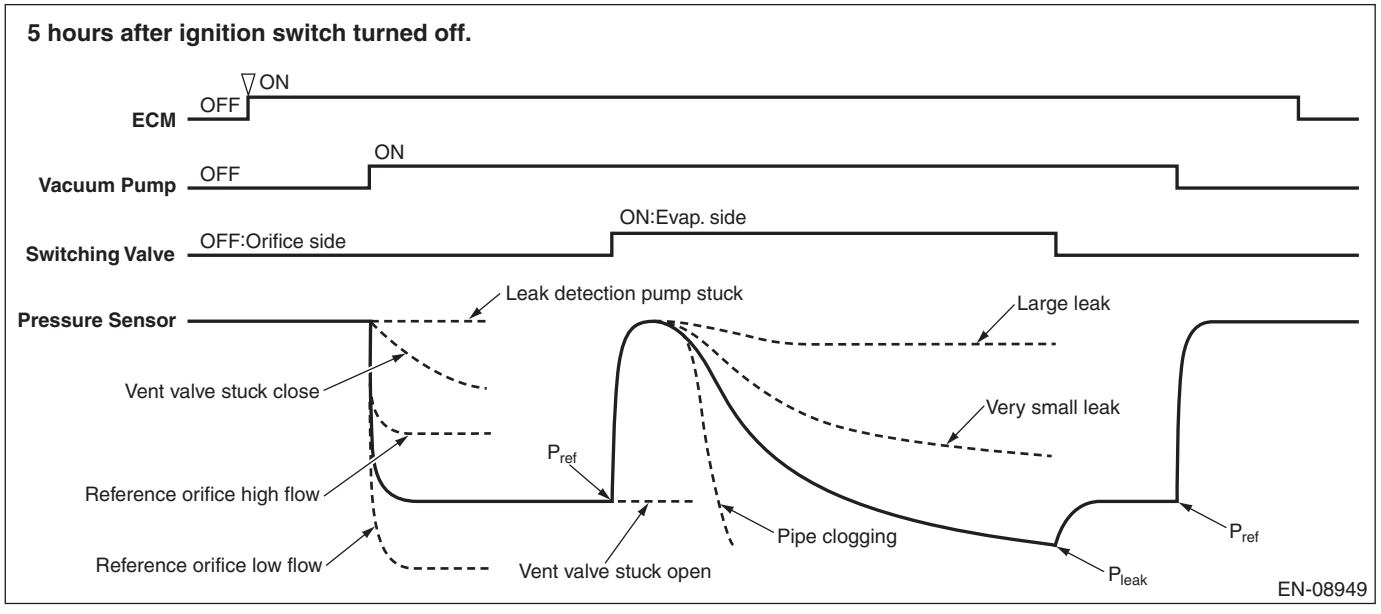

2. COMPONENT DESCRIPTION

ELCM consists of the pressure sensor, the reference orifice (diameter of 0.02 inch), the vacuum pump which introduces the negative pressure into evaporative emission system, and the switching valve which switches the passage to introduce the negative pressure.

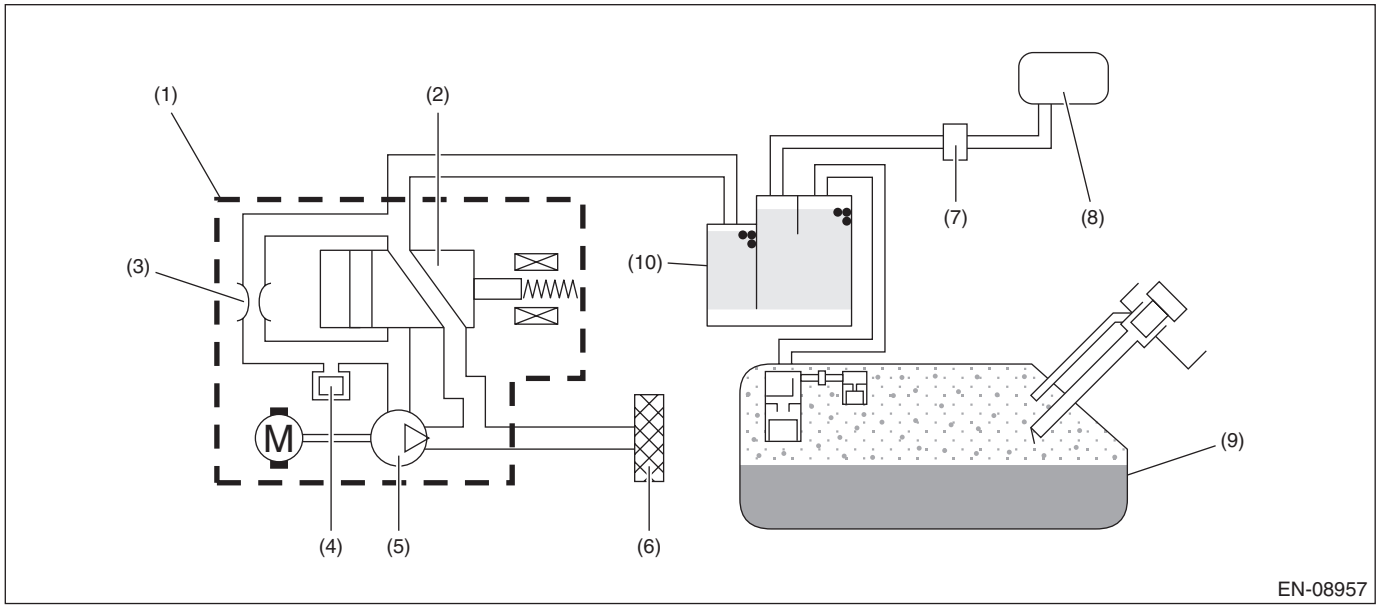

(1) ELCM
(2) Switching valve
(3) Reference orifice (0.02 inch orifice)
(4) Pressure sensor
(5) Vacuum pump
(6) Drain filter
(7) Purge control solenoid valve
(8) Intake manifold
(9) Fuel tank
(10) Canister

3. ENABLE CONDITIONS

Secondary Parameters	Enable Conditions
Activation of soaking timer	Completed
Battery voltage	≥ 10.9 V
Ignition switch	OFF
Engine coolant temperature	≥ 4.4 °C (39.9 °F) and < 45 °C (113 °F)
Atmospheric pressure	≥ 75.1 kPa (563 mmHg, 22.2 inHg) and < 110 kPa (825 mmHg, 32.5 inHg)
Accumulated purge amount during previous driving cycle	≥ Value of Map 1

Map 1

Engine coolant temperature °C (°F)	0 (32)	30 (86)	35 (95)	40 (104)	45 (113)
Accumulated purge amount during previous driving cycle g (oz)	1500 (52.91)	1500 (52.91)	15000 (529.05)	25000 (881.75)	35000 (1234.45)

4. GENERAL DRIVING CYCLE

Perform the diagnosis only once when 5, 7 or 9.5 hours has passed after ignition switch is OFF. For more detail, refer to “OUTLINE OF DIAGNOSIS”. <Ref. to GD(H4DO HEV)-154, OUTLINE OF DIAGNOSIS, DTC P0455 EVAPORATIVE EMISSION SYSTEM LEAK DETECTED (LARGE LEAK), Diagnostic Trouble Code (DTC) Detecting Criteria.>

5. DIAGNOSTIC METHOD

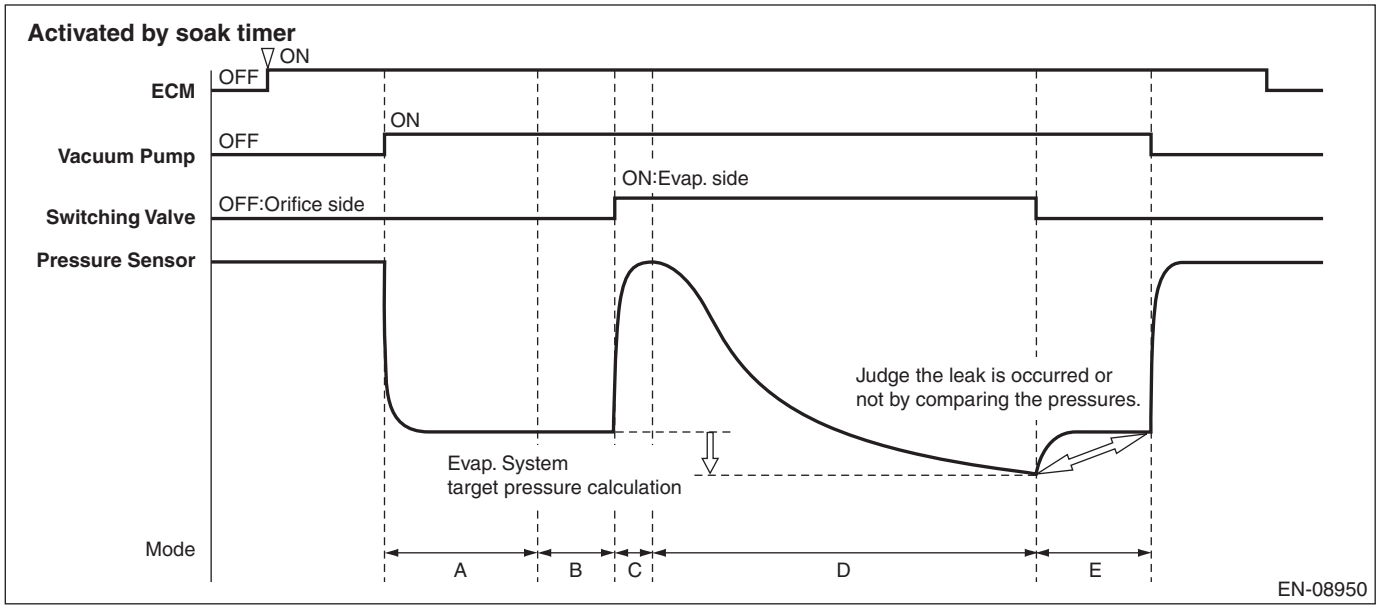

Mode	Explanation of Mode	Diagnosis Period
A	Vacuum pump operation confirmation and characteristics stability	7 s or less & 300 s
B	Measurement of reference pressure for setting the target negative pressure	40 s or less
C	Switching valve operation confirmation	12 s or less
D	Clogging of pipe diagnosis and leak pressure measurement	900 s or less
E	Reference pressure measurement for judgment	40 s or less

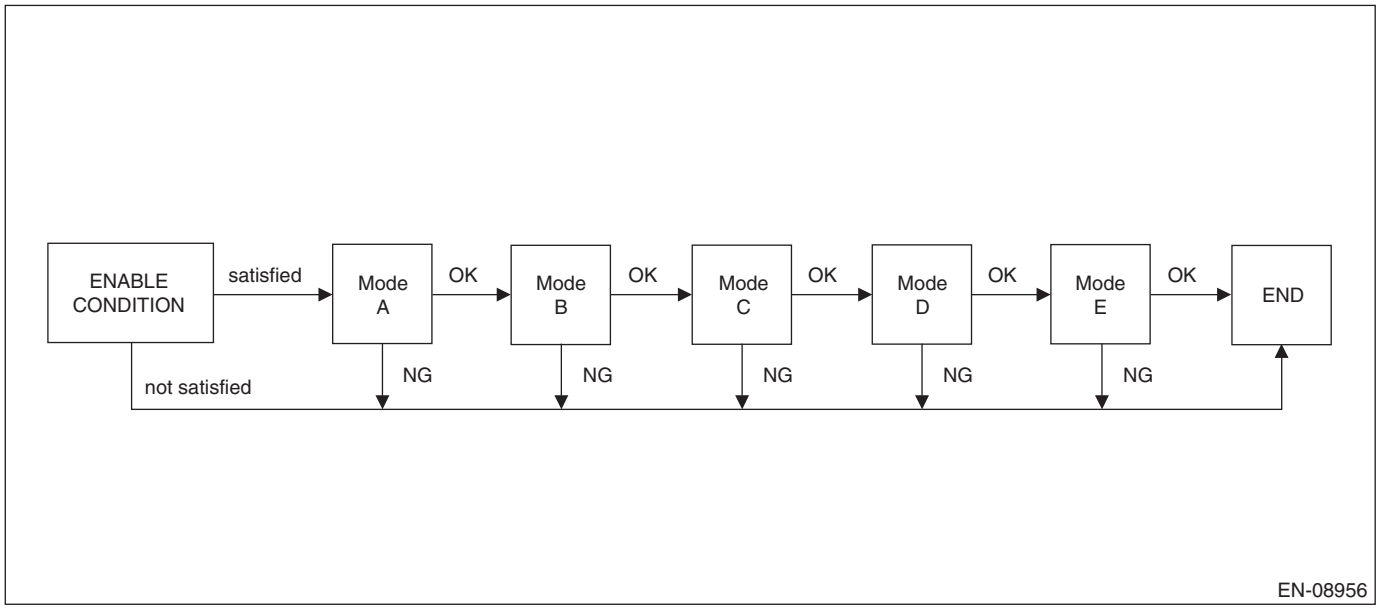

Mode A (Vacuum pump operation confirmation and characteristics stability)

Purpose: Detect the vacuum pump operation trouble.
Judge as NG when the following conditions are established.

Judge as OK if the following conditions are not established, and warm up for five minutes to stabilize the vacuum pump characteristics.

Judgment Value

Malfunction Criteria	Threshold Value	DTC
Pressure sensor output value	> –0.2 kPa (–1.68 mmHg, –0.1 inHg)	P2404

Mode B (Measurement of reference pressure for setting the target negative pressure)

1. Purpose: Judge the reference pressure stability.
Judge as NG when the following conditions are established.

Judgment Value

Malfunction Criteria	Threshold Value	DTC
|Pressure sensor maximum output value – Pressure sensor minimum output value|	> 0.3 kPa (2.355 mmHg, 0.1 inHg)	P2404

2. Purpose: Judge whether the reference pressure is within the normal range, and detect the vacuum pump and orifice malfunctions.
Judge as NG when the following conditions are established.

Judgment Value

Malfunction Criteria	Threshold Value	DTC
Reference pressure for setting the target negative pressure	< Value of Map 2 or > Value of Map 3	P2404

Map 2

Atmospheric pressure kPa (mmHg, inHg)	70 (525, 20.7)	80 (600, 23.6)	90 (675, 26.6)	100 (750, 29.5)
Reference pressure for setting the target negative pressure kPa (mmHg, inHg)	–4 (–29.79, –1.2)	–4.1 (–30.593, –1.2)	–4.2 (–31.395, –1.2)	–4.3 (–32.19, –1.3)

Map 3

Atmospheric pressure kPa (mmHg, inHg)	70 (525, 20.7)	80 (600, 23.6)	90 (675, 26.6)	100 (750, 29.5)
Reference pressure for setting the target negative pressure kPa (mmHg, inHg)	–0.9 (–7.065, –0.3)	–1 (–7.86, –0.3)	–1.2 (–8.663, –0.3)	–1.3 (–9.465, –0.4)

Mode C (Switching valve operation confirmation)

Purpose: Measure the pressure increase when switching valve is changed from open to close, and detect the stuck to open/close malfunctions of the switching valve.
Judge as NG when the following conditions are established.

Judgment Value

Malfunction Criteria	Threshold Value	DTC
Pressure sensor output value – Reference pressure for setting the target negative pressure	< 0.2 kPa (1.68 mmHg, 0.1 inHg)	P2404

Mode D (Clogging of pipe diagnosis and leak pressure measurement)

1. **Clogging of pipe**
   Purpose: Measure the time required for the evaporative emission system to reach the target negative pressure by the vacuum pump, and detect the clogging of pipe trouble.
   Judge as clogging of pipe malfunction if the evaporative emission system reaches to the target negative pressure within the specified time.

Judgment Value

Malfunction Criteria	Threshold Value	DTC
Time required to reach to the target negative pressure For target vacuum, use one of the followings. • Reference pressure for target vacuum setting – value of Map 4 • –5 kPa (–37.298 mmHg, –1.5 inHg)	≤ 25000 ms	P1451

Map 4

Time of negative pressure introduction ms	0	100000	200000	300000	400000	500000	600000	700000	800000	900000	1000000	1100000	1200000
Reference pressure for setting the target negative pressure – Pressure sensor output value kPa (mmHg, inHg)	0.9 (7.058, 0.3)	0.9 (7.058, 0.3)	0.9 (7.058, 0.3)	0.9 (7.058, 0.3)	0.9 (7.058, 0.3)	0.9 (7.058, 0.3)	0.9 (7.058, 0.3)	0.9 (7.058, 0.3)	0.9 (7.058, 0.3)	0.9 (7.058, 0.3)	0.9 (7.058, 0.3)	0.9 (7.058, 0.3)	0.9 (7.058, 0.3)

2. **Leak pressure measurement**
   Purpose: Measure the pressure (leak pressure) when the evaporative emission system becomes the negative pressure by the vacuum pump.
   Store the pressure as a leak pressure while the following conditions are met.

Judgment Value

Conditions for storing the leak pressure	Threshold Value
When any one of the followings is established:	
• Reference pressure for setting the target negative pressure – Pressure sensor output value	≥ Value of Map 4
• Pressure sensor output value	< –5 kPa (–37.298 mmHg, –1.5 inHg)
• Time of negative pressure introduction	≥ 900000 ms

Mode E (Measurement of reference pressure for judgment)

1. Purpose: Judge the reference pressure stability.

Judge as NG when the following conditions are established.

Judgment Value

Malfunction Criteria	Threshold Value	DTC
|Pressure sensor maximum output value – Pressure sensor minimum output value|	> 0.3 kPa (2.355 mmHg, 0.1 inHg)	P2404

2. Purpose: Judge whether the reference pressure is within the normal range, and detect the vacuum pump and orifice malfunctions. Judge the vacuum pump performance stability.
Judge as NG when the following conditions are established.

Judgment Value

Malfunction Criteria	Threshold Value	DTC
Reference pressure for judgment	< Value of Map 5 or > Value of Map 6	P2404

Map 5

Atmospheric pressure kPa (mmHg, inHg)	70 (525, 20.7)	80 (600, 23.6)	90 (675, 26.6)	100 (750, 29.5)
Reference pressure for judgment kPa (mmHg, inHg)	–4.5 (–34.02, –1.3)	–4.6 (–34.815, –1.4)	–4.7 (–35.618, –1.4)	–4.9 (–36.42, –1.4)

Map 6

Atmospheric pressure kPa (mmHg, inHg)	70 (525, 20.7)	80 (600, 23.6)	90 (675, 26.6)	100 (750, 29.5)
Reference pressure for judgment kPa (mmHg, inHg)	–0.8 (–6.18, –0.2)	–0.9 (–6.983, –0.3)	–1 (–7.785, –0.3)	–1.1 (–8.58, –0.3)

3. Purpose: Judge the presence of evaporative emission system leak.
Judge as NG when the following conditions are established.

Judgment Value

Malfunction Criteria	Threshold Value	DTC
<Large leak (0.04 inch)> Leak pressure lleakjdg = (Reference pressure for judgment) × 0.377 – (–45.5 Pa)	≥ lleakjdg (Pa)	P0455
<Very small leak (0.02 inch)> Leak pressure	< lleakjdg (Pa)	P0456

Time Needed for Diagnosis: Approx. 23 min

- **Abnormality Judgment**

At next engine start, confirm whether the enable conditions are satisfied even though refueling has been done during soaking, and determine the malfunction.
Malfunction Indicator Light Illumination: Illuminates when malfunction occurs in 2 continuous driving cycles.

- **Normality Judgment**

At next engine start, confirm whether the enable conditions are satisfied even though refueling has been done during soaking, then, if the following conditions are established, judge as OK and clear the NG.

Judgment Value

Malfunction Criteria	Threshold Value	DTC
NG flag	Not set	P0455 P0456 P1451 P2404

CY:DTC P0456 EVAPORATIVE EMISSION CONTROL SYSTEM LEAK DETECTED (VERY SMALL LEAK)

1. OUTLINE OF DIAGNOSIS

NOTE:
For the detection standard, refer to DTC P0455. <Ref. to GD(H4DO HEV)-154, DTC P0455 EVAPORATIVE EMISSION SYSTEM LEAK DETECTED (LARGE LEAK), Diagnostic Trouble Code (DTC) Detecting Criteria.>

CZ:DTC P0458 EVAPORATIVE EMISSION SYSTEM PURGE CONTROL VALVE CIRCUIT LOW

1. OUTLINE OF DIAGNOSIS

Detect open or short circuit of the purge control solenoid valve.
Judge as NG when the ECM output level differs from the actual terminal level.

2. COMPONENT DESCRIPTION

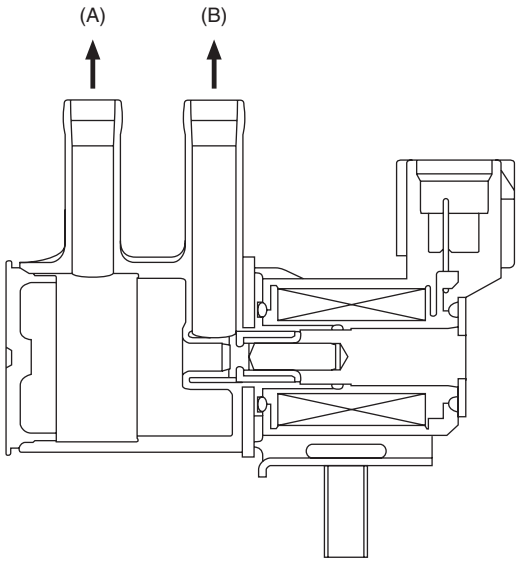

EN-08988

(A) To canister (B) To intake manifold

3. ENABLE CONDITION

Secondary Parameters	Enable Conditions
Battery voltage	≥ 10.9 V

4. GENERAL DRIVING CYCLE

Always perform the diagnosis after starting the engine.

5. DIAGNOSTIC METHOD

- **Abnormality Judgment**

If the duration of time while the following conditions are met is longer than the time indicated, judge as NG.

Judgment Value

Malfunction Criteria	Threshold Value
Duty ratio of "ON"	< 0.75
Terminal output voltage	≤ Battery voltage × 0.34

Time Needed for Diagnosis: 2500 ms
Malfunction Indicator Light Illumination: Illuminates when malfunction occurs in 2 continuous driving cycles.

- **Normality Judgment**

Judge as OK and clear the NG if the continuous time while the following conditions are established is more than the predetermined time.

Judgment Value

Malfunction Criteria	Threshold Value
Terminal output voltage	> Battery voltage × 0.34

Time Needed for Diagnosis: Less than 1 second

DA:DTC P0459 EVAPORATIVE EMISSION SYSTEM PURGE CONTROL VALVE CIRCUIT HIGH

1. OUTLINE OF DIAGNOSIS

Detect open or short circuit of the purge control solenoid valve.
Judge as NG when the ECM output level differs from the actual terminal level.

2. COMPONENT DESCRIPTION

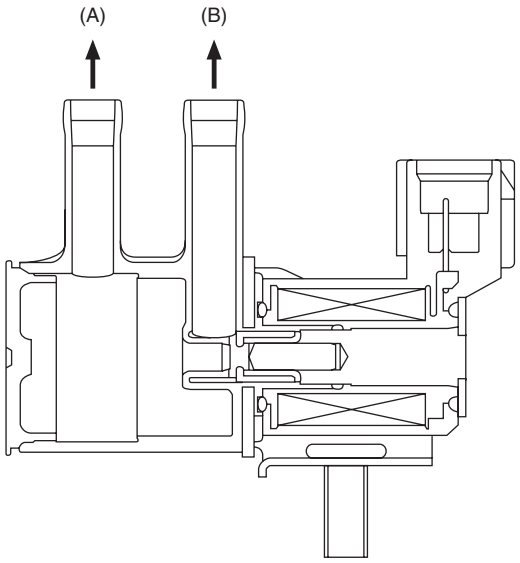

EN-08988

(A) To canister (B) To intake manifold

3. ENABLE CONDITION

Secondary Parameters	Enable Conditions
Battery voltage	≥ 10.9 V

4. GENERAL DRIVING CYCLE

Always perform the diagnosis after starting the engine.

5. DIAGNOSTIC METHOD

- **Abnormality Judgment**

If the duration of time while the following conditions are met is longer than the time indicated, judge as NG.

Judgment Value

Malfunction Criteria	Threshold Value
Duty ratio of “ON”	≥ 0.25
Terminal output current	≥ 12 A

Time Needed for Diagnosis: 2500 ms
Malfunction Indicator Light Illumination: Illuminates when malfunction occurs in 2 continuous driving cycles.

- **Normality Judgment**

Judge as OK and clear the NG if the continuous time while the following conditions are established is more than the predetermined time.

Judgment Value

Malfunction Criteria	Threshold Value
Terminal output current	< 12 A

Time Needed for Diagnosis: Less than 1 second

DB:DTC P0461 FUEL LEVEL SENSOR “A” CIRCUIT RANGE/PERFORMANCE

1. OUTLINE OF DIAGNOSIS

Detect malfunctions of the fuel level sensor output property.
If the fuel level does not vary in a particular driving condition / engine condition where it should, judge as NG.

2. COMPONENT DESCRIPTION

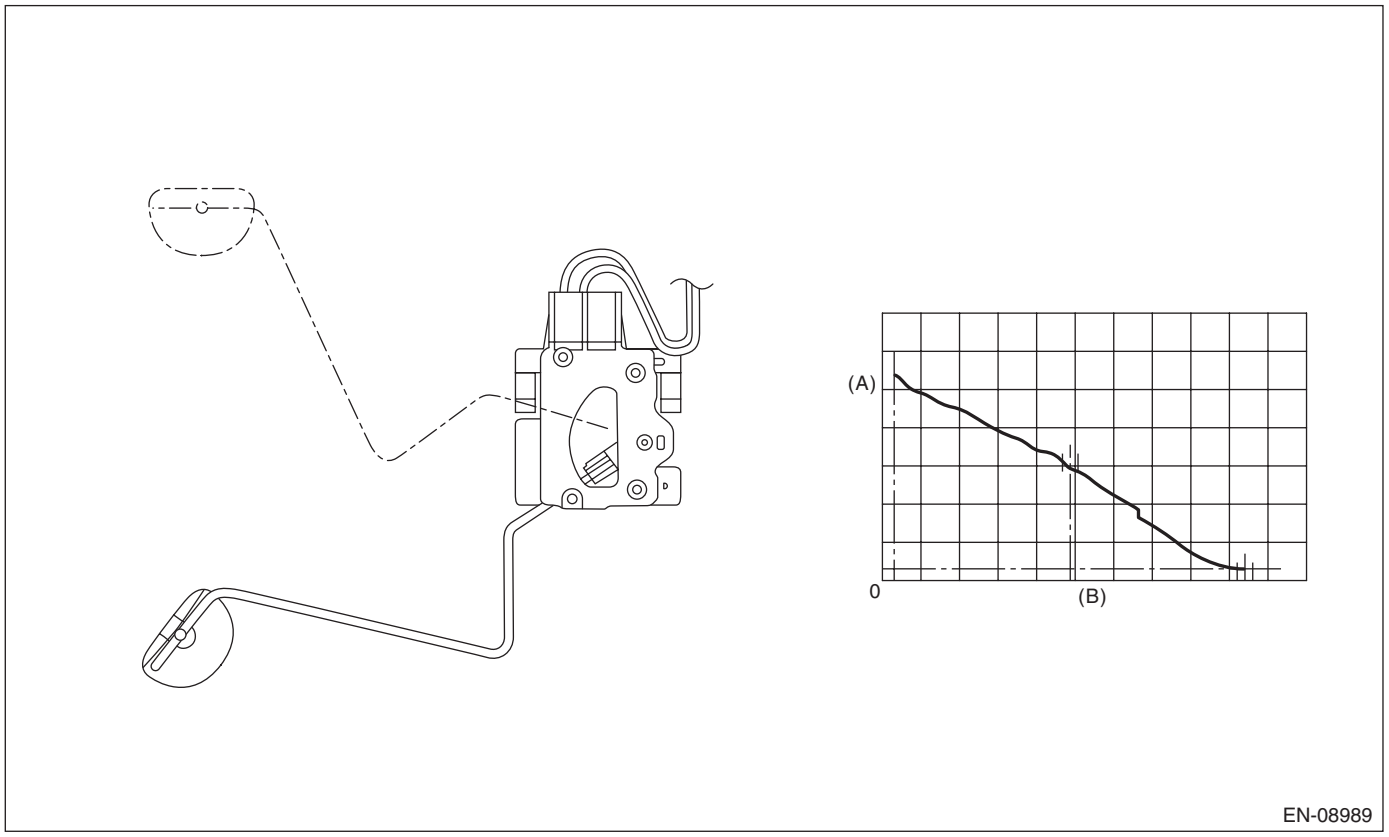

(A) Fuel level (B) Resistance

3. ENABLE CONDITION

Secondary Parameters	Enable Conditions
None	

4. GENERAL DRIVING CYCLE

Always perform the diagnosis continuously.

5. DIAGNOSTIC METHOD

• Abnormality Judgment

Judge as NG when the following conditions are established.

Judgment Value

Malfunction Criteria	Threshold Value
Accumulated amount of intake air	≥ 165375 g (5832.78 oz)
Max. – min. values of fuel level output	< 2.6 ℓ (0.69 US gal, 0.57 Imp gal)
Battery voltage	≥ 10.9 V
Engine speed	< 10000 rpm
Elapsed time after starting the engine	≥ 5000 ms

Time Needed for Diagnosis: Less than 1 second
Malfunction Indicator Light Illumination: Illuminates when malfunction occurs in 2 continuous driving cycles.

• Normality Judgment

Judge as OK and clear the NG if the following conditions are established.

Judgment Value

Malfunction Criteria	Threshold Value
Accumulated amount of intake air	≥ 165375 g (5832.78 oz)
Max. – min. values of fuel level output	≥ 2.6 ℓ (0.69 US gal, 0.57 Imp gal)
Battery voltage	≥ 10.9 V
Engine speed	< 10000 rpm
Elapsed time after starting the engine	≥ 5000 ms

Time Needed for Diagnosis: Less than 1 second

DC:DTC P0462 FUEL LEVEL SENSOR “A” CIRCUIT LOW

1. OUTLINE OF DIAGNOSIS

Detect the open or short circuit of fuel level sensor. Judge as NG if out of specification.

2. COMPONENT DESCRIPTION

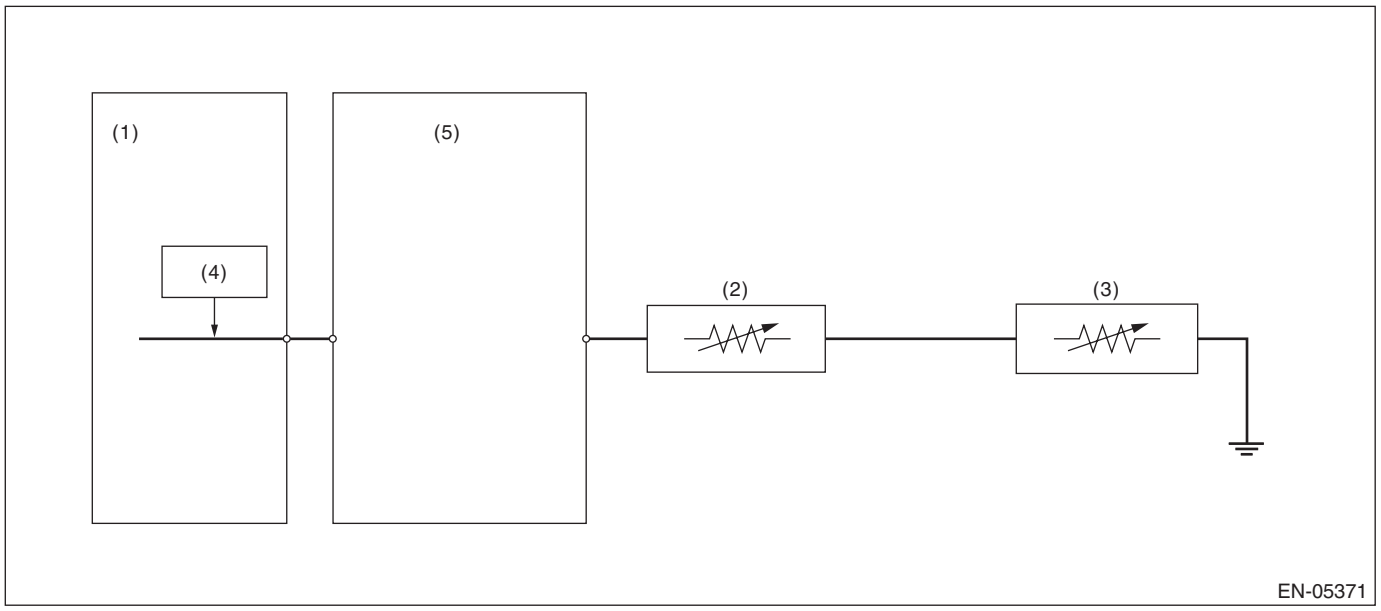

(1) Engine control module (ECM)
(2) Fuel level sensor
(3) Fuel sub level sensor
(4) Detecting circuit
(5) Body integrated unit

3. ENABLE CONDITION

Secondary Parameters	Enable Conditions
Battery voltage	≥ 10.9 V
Elapsed time after ignition switch is turned to ON	≥ 3000 ms

4. GENERAL DRIVING CYCLE

Always perform the diagnosis continuously.

5. DIAGNOSTIC METHOD

- **Abnormality Judgment**

If the duration of time while the following conditions are met is longer than the time indicated, judge as NG.

Judgment Value

Malfunction Criteria	Threshold Value
Output voltage	< 2.211 V

Time Needed for Diagnosis: 2500 ms
Malfunction Indicator Light Illumination: Illuminates when malfunction occurs in 2 continuous driving cycles.

- **Normality Judgment**

Judge as OK and clear the NG if the continuous time while the following conditions are established is more than the predetermined time.

Judgment Value

Malfunction Criteria	Threshold Value
Output voltage	≥ 2.211 V

Time Needed for Diagnosis: Less than 1 second

DD:DTC P0463 FUEL LEVEL SENSOR “A” CIRCUIT HIGH

1. OUTLINE OF DIAGNOSIS

Detect the open or short circuit of fuel level sensor. Judge as NG if out of specification.

2. COMPONENT DESCRIPTION

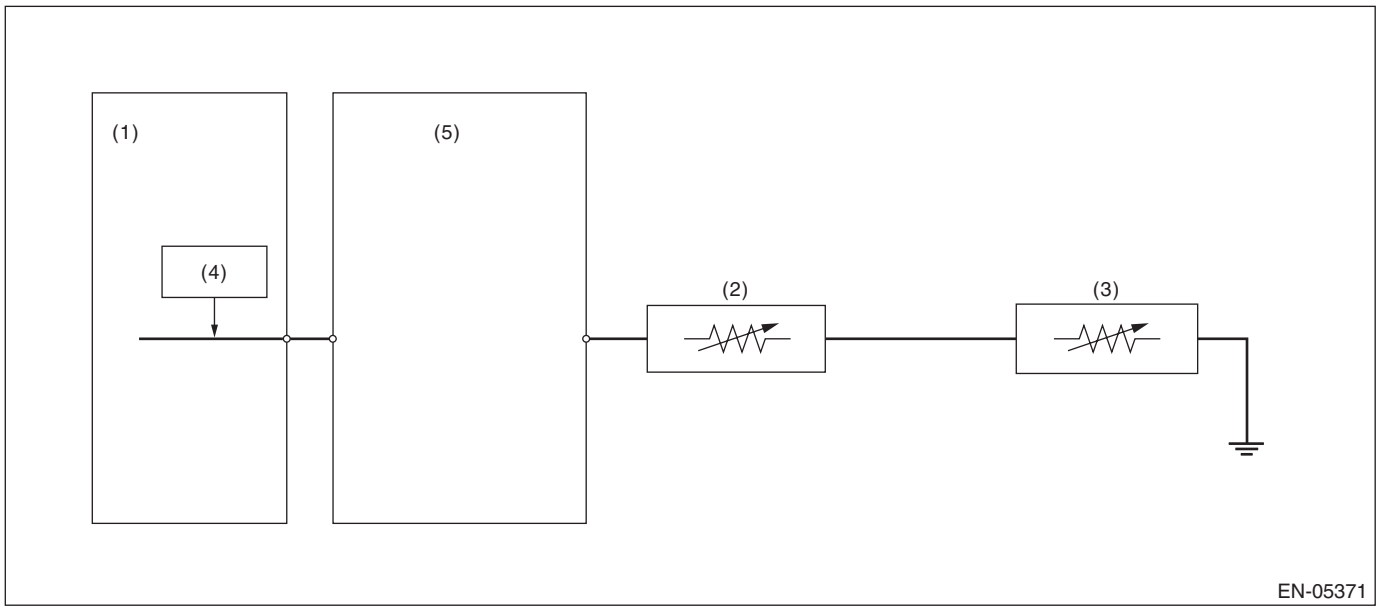

(1) Engine control module (ECM)
(2) Fuel level sensor
(3) Fuel sub level sensor
(4) Detecting circuit
(5) Body integrated unit

3. ENABLE CONDITION

Secondary Parameters	Enable Conditions
Battery voltage	≥ 10.9 V

4. GENERAL DRIVING CYCLE

Always perform the diagnosis continuously.

5. DIAGNOSTIC METHOD

• Abnormality Judgment

If the duration of time while the following conditions are met is longer than the time indicated, judge as NG.

Judgment Value

Malfunction Criteria	Threshold Value
Output voltage	≥ 12 V

Time Needed for Diagnosis: 1000 ms
Malfunction Indicator Light Illumination: Illuminates when malfunction occurs in 2 continuous driving cycles.

• Normality Judgment

Judge as OK and clear the NG if the continuous time while the following conditions are established is more than the predetermined time.

Judgment Value

Malfunction Criteria	Threshold Value
Output voltage	< 12 V

Time Needed for Diagnosis: Less than 1 second

DE:DTC P0500 VEHICLE SPEED SENSOR “A”

1. OUTLINE OF DIAGNOSIS

Judge as NG when outside of the judgment value.
Judge NG when the received data from VDCCM&H/U is abnormal vehicle speed, and the vehicle speed data is impossible.

2. COMPONENT DESCRIPTION

Vehicle speed signals are taken in to the VDC control module and hydraulic control unit, and normal/erroneous data of the ABS wheel speed sensor is received by CAN communication from the VDC control module and hydraulic control unit.

3. ENABLE CONDITION

Secondary Parameters	Enable Conditions
Battery voltage	≥ 10.9 V

4. GENERAL DRIVING CYCLE

Always perform the diagnosis continuously.

5. DIAGNOSTIC METHOD

- **Abnormality Judgment**

If the duration of time while the following conditions are met is longer than the time indicated, judge as NG.

Judgment Value

Malfunction Criteria	Threshold Value
Front ABS wheel speed sensor status	Malfunction
Either of the following is established	
Front left wheel speed	≥ 300 km/h (186.4 MPH)
Front right wheel speed	≥ 300 km/h (186.4 MPH)

Time Needed for Diagnosis: 2500 ms
Malfunction Indicator Light Illumination: Illuminates as soon as a malfunction occurs.

- **Normality Judgment**

Judge as OK and clear the NG if the continuous time while the following conditions are established is more than the predetermined time.

Judgment Value

Malfunction Criteria	Threshold Value
Front left wheel speed	> 0 km/h (0 MPH) and < 300 km/h (186.4 MPH)
Front right wheel speed	> 0 km/h (0 MPH) and < 300 km/h (186.4 MPH)

Time Needed for Diagnosis: 2500 ms

DF:DTC P0506 IDLE AIR CONTROL SYSTEM RPM LOWER THAN EXPECTED

1. OUTLINE OF DIAGNOSIS

Detect the malfunction that actual engine speed is not close to target engine speed during idling. Judge as NG when actual engine speed is not close to target engine speed during idling.

2. ENABLE CONDITION

Secondary Parameters	Enable Conditions
Engine coolant temperature	≥ 50 °C (122 °F)
Battery voltage	≥ 10.9 V
Atmospheric pressure	≥ 75.1 kPa (563 mmHg, 22.2 inHg)
Fuel level	≥ 7.8 ℓ (2.06 US gal, 1.72 Imp gal)
Elapsed time after starting the engine	≥ 10.49 s
Accelerator pedal position	= 0%
Lambda value (left and right)	≥ 0.85 and < 1.151
After intake manifold pressure changes by 4 kPa (30 mmHg, 1.2 inHg) or more.	> 5.1 s
Elapsed time after switching neutral position switch to ON/OFF	> 5.1 s
Vehicle speed	0 km/h (0 MPH)

3. GENERAL DRIVING CYCLE

Perform the diagnosis continuously at idling after warming up engine.

4. DIAGNOSTIC METHOD

- **Abnormality Judgment**

If the duration of time while the following conditions are met is longer than the time indicated, judge as NG.

Judgment Value

Malfunction Criteria	Threshold Value
Actual engine speed – Targeted engine speed	< –100 rpm

Time Needed for Diagnosis: 15 s × 1 time(s)
Malfunction Indicator Light Illumination: Illuminates when malfunction occurs in 2 continuous driving cycles.

- **Normality Judgment**

Judge as OK and clear the NG if the continuous time while the following conditions are established is more than the predetermined time.

Judgment Value

Malfunction Criteria	Threshold Value
Actual engine speed – Targeted engine speed	≥ –100 rpm

Time Needed for Diagnosis: 15 s

DG:DTC P0507 IDLE AIR CONTROL SYSTEM RPM HIGHER THAN EXPECTED

1. OUTLINE OF DIAGNOSIS

Detect the malfunction that actual engine speed is not close to target engine speed during idling. Judge as NG when actual engine speed is not close to target engine speed during idling.

2. ENABLE CONDITION

Secondary Parameters	Enable Conditions
Engine coolant temperature	≥ 50 °C (122 °F)
Battery voltage	≥ 10.9 V
Atmospheric pressure	≥ 75.1 kPa (563 mmHg, 22.2 inHg)
Fuel level	≥ 7.8 ℓ (2.06 US gal, 1.72 Imp gal)
Elapsed time after starting the engine	≥ 10.49 s
Accelerator pedal position	= 0%
Lambda value (left and right)	≥ 0.85 and < 1.151
After intake manifold pressure changes by 4 kPa (30 mmHg, 1.2 inHg) or more.	> 5.1 s
Elapsed time after switching neutral position switch to ON/OFF	> 5.1 s
Vehicle speed	0 km/h (0 MPH)

3. GENERAL DRIVING CYCLE

Perform the diagnosis continuously at idling after warming up engine.

4. DIAGNOSTIC METHOD

- **Abnormality Judgment**

If the duration of time while the following conditions are met is longer than the time indicated, judge as NG.

Judgment Value

Malfunction Criteria	Threshold Value
Actual – Target engine speed	≥ 200 rpm

Time Needed for Diagnosis: 15 s × 1 time(s)
Malfunction Indicator Light Illumination: Illuminates when malfunction occurs in 2 continuous driving cycles.

- **Normality Judgment**

Judge as OK and clear the NG if the continuous time while the following conditions are established is more than the predetermined time.

Judgment Value

Malfunction Criteria	Threshold Value
Actual – Target engine speed	< 200 rpm

Time Needed for Diagnosis: 15 s

DH:DTC P050A COLD START IDLE AIR CONTROL SYSTEM PERFORMANCE

1. OUTLINE OF DIAGNOSIS

• When cold, the abnormality in the control of target engine speed increase is detected. (P050A)

• Idle speed diagnosis

Judge as NG when actual engine speed is not close to target engine speed at cold start.

• Detect malfunctions of the catalyst advanced idling retard angle control. (P050B)

Judge as NG when ECM is not controlling the angle properly during catalyst advanced idling retard angle control.

• Final ignition timing diagnosis

Judge as NG when actual retard amount is under the specified value at cold start.

2. ENABLE CONDITIONS

Secondary Parameters	Enable Conditions
<Idle speed diagnosis>	
Atmospheric pressure	≥ 75.1 kPa (563 mmHg, 22.2 inHg)
Battery voltage	> 10.9 V
Engine condition	In operation
Vehicle speed	≤ 2 km/h (1.2 MPH)
Engine coolant temperature	≤ 60 °C (140 °F)
Intake air amount sum value	≤ Value of Map 1
Elapsed time after gear position change (P ←→ D or N ←→ D)	≥ 3000 ms
Throttle opening angle	< 0.37 °
Fuel property	Not extremely low volatility
Elapsed time after starting the engine	≥ 2000 ms
<Final ignition timing diagnosis>	
Atmospheric pressure	≥ 75.1 kPa (563 mmHg, 22.2 inHg)
Battery voltage	> 10.9 V
Engine condition	In operation
Vehicle speed	≤ 2 km/h (1.2 MPH)
Engine coolant temperature	≤ 60 °C (140 °F)
Intake air amount sum value	≤ Value of Map 2
Elapsed time after gear position change (P ←→ D or N ←→ D)	≥ 3000 ms
Throttle opening angle	< 0.37 °
Fuel property	Not extremely low volatility
Target retard amount	≥ Value from Map 3

Map 1

Engine coolant temperature at engine starting °C (°F)	–40 (–40)	–30 (–22)	–20 (–4)	–10 (14)	0 (32)	10 (50)	20 (68)	30 (86)
Intake air amount sum value g (oz)	770 (27.16)	690 (24.34)	620 (21.87)	560 (19.75)	510 (17.99)	450 (15.87)	390 (13.76)	320 (11.29)

Engine coolant temperature at engine starting °C (°F)	40 (104)	50 (122)	60 (140)	70 (158)	80 (176)	90 (194)	100 (212)	110 (230)
Intake air amount sum value g (oz)	260 (9.17)	210 (7.41)	180 (6.35)	180 (6.35)	180 (6.35)	180 (6.35)	180 (6.35)	180 (6.35)

Map 2

Engine coolant temperature at engine starting °C (°F)	–40 (–40)	–30 (–22)	–20 (–4)	–10 (14)	0 (32)	10 (50)	20 (68)	30 (86)
Intake air amount sum value g (oz)	770 (27.16)	690 (24.34)	620 (21.87)	560 (19.75)	510 (17.99)	450 (15.87)	390 (13.76)	320 (11.29)

Engine coolant temperature at engine starting °C (°F)	40 (104)	50 (122)	60 (140)	70 (158)	80 (176)	90 (194)	100 (212)	110 (230)
Intake air amount sum value g (oz)	260 (9.17)	210 (7.41)	180 (6.35)	180 (6.35)	180 (6.35)	180 (6.35)	180 (6.35)	180 (6.35)

Map 3

Engine coolant temperature	–40 °C (–40 °F)	–30 °C (–22 °F)	–20 °C (–4 °F)	–10 °C (14 °F)	0 °C (32 °F)	10 °C (50 °F)	20 °C (68 °F)	30 °C (86 °F)	40 °C (104 °F)	50 °C (122 °F)	60 °C (140 °F)
Target retard amount	5 °CA	5 °CA	5 °CA	5 °CA	5 °CA	5 °CA	5 °CA	5 °CA	5 °CA	5 °CA	5 °CA

3. GENERAL DRIVING CYCLE

Perform the diagnosis at cold start.

4. DIAGNOSTIC METHOD

- **Idle speed diagnosis**

Abnormality Judgment

Judge as NG when the following conditions are established.

Judgment Value

Malfunction Criteria	Threshold Value
Actual engine speed – Target engine speed	< Value of Map 4

Map 4

Engine coolant temperature	–40 °C (–40 °F)	–30 °C (–22 °F)	–20 °C (–4 °F)	–10 °C (14 °F)	0.00 °C (32 °F)	10.00 °C (50 °F)	20.00 °C (68 °F)	30.00 °C (86 °F)	40.00 °C (104 °F)	50.00 °C (122 °F)	60.00 °C (140 °F)
Threshold Value	–300 rpm	–300 rpm	–300 rpm	–300 rpm	–300 rpm	–300 rpm	–300 rpm	–300 rpm	–300 rpm	–300 rpm	–300 rpm

Time Needed for Diagnosis: 7000 ms

Malfunction Indicator Light Illumination: Illuminates when malfunction occurs in 2 continuous driving cycles.

Normality Judgment
Judge as OK and clear the NG if the following conditions are established.
Judgment Value

Malfunction Criteria	Threshold Value
Actual engine speed – Target engine speed	≥ Value of Map 4

Time Needed for Diagnosis: 7000 ms

- **Final ignition timing diagnosis**

Abnormality Judgment
Judge as NG when the following conditions are established.
Judgment Value

Malfunction Criteria	Threshold Value
Final ignition timing – ignition timing during CSERS* *: Ignition timing during CSERS (Cold Start Emission Reduction Strategy) = Base ignition timing – retard amount	> Value of Map 5

Map 5

Engine coolant temperature	–40 °C (–40 °F)	–30 °C (–22 °F)	–20 °C (–4 °F)	–10 °C (14 °F)	0 °C (32 °F)	10 °C (50 °F)	20 °C (68 °F)	30 °C (86 °F)	40 °C (104 °F)	50 °C (122 °F)	60 °C (140 °F)
Threshold Value	5 °CA	5 °CA	5 °CA	5 °CA	5 °CA	5 °CA	5 °CA	5 °CA	5 °CA	5 °CA	5 °CA

Time Needed for Diagnosis: 7000 ms
Malfunction Indicator Light Illumination: Illuminates when malfunction occurs in 2 continuous driving cycles.
Normality Judgment
Judge as OK and clear the NG if the following conditions are established.
Judgment Value

Malfunction Criteria	Threshold Value
Final ignition timing – ignition timing during CSERS* *: Ignition timing during CSERS (Cold Start Emission Reduction Strategy) = Base ignition timing – retard amount	≤ Value of Map 5

Time Needed for Diagnosis: 7000 ms

DI: DTC P050B COLD START IGNITION TIMING PERFORMANCE

1. OUTLINE OF DIAGNOSIS

NOTE:
For the detection standard, refer to DTC P050A. <Ref. to GD(H4DO HEV)-173, DTC P050A COLD START IDLE AIR CONTROL SYSTEM PERFORMANCE, Diagnostic Trouble Code (DTC) Detecting Criteria.>

DJ:DTC P0512 STARTER REQUEST CIRCUIT

1. OUTLINE OF DIAGNOSIS

Detect abnormal continuity in the starter SW1.
Judge as ON NG when the starter SW 1 signal remains ON.

2. ENABLE CONDITION

Secondary Parameters	Enable Conditions
Battery voltage	≥ 8 V
Engine revs (only at abnormality judgment)	> 500 rpm

3. GENERAL DRIVING CYCLE

Always perform the diagnosis continuously.

4. DIAGNOSTIC METHOD

- **Abnormality Judgment**

If the duration of time while the following conditions are met is longer than the time indicated, judge as NG.

Judgment Value

Malfunction Criteria	Threshold Value
Starter SW1 voltage	≥ Battery voltage × 0.85

Time Needed for Diagnosis: 30000 ms
Malfunction Indicator Light Illumination: Illuminates as soon as a malfunction occurs.

- **Normality Judgment**

Judge as OK and clear the NG if the following conditions are established.

Judgment Value

Malfunction Criteria	Threshold Value
Starter SW1 voltage	< Battery voltage × 0.85

Time Needed for Diagnosis: Less than 1 second

DK:DTC P0560 SYSTEM VOLTAGE

1. OUTLINE OF DIAGNOSIS

Detect the open/short circuit of back-up power supply circuit.
Judge as NG when the backup power voltage is low.

2. ENABLE CONDITIONS

Secondary Parameters	Enable Conditions
Battery voltage	≥ 10.9 V
Engine revs	≥ 500 rpm

3. GENERAL DRIVING CYCLE

Always perform the diagnosis continuously.

4. DIAGNOSTIC METHOD

- **Abnormality Judgment**

If the duration of time while the following conditions are met is longer than the time indicated, judge as NG.

Judgment Value

Malfunction Criteria	Threshold Value
Voltage of back-up power supply	≤ 3.5 V

Time Needed for Diagnosis: 2500 ms
Malfunction Indicator Light Illumination: Illuminates as soon as a malfunction occurs.

- **Normality Judgment**

Judge as OK and clear the NG if the continuous time while the following conditions are established is more than the predetermined time.

Judgment Value

Malfunction Criteria	Threshold Value
Voltage of back-up power supply	> 3.5 V

Time Needed for Diagnosis: Less than 1 second

DL:DTC P059A ACTIVE GRILLE SHUTTER "A" POSITION SENSOR CIRCUIT

1. OUTLINE OF DIAGNOSIS

Detect the malfunction of active grille shutter position sensor.
Judge as NG if out of specification.

2. COMPONENT DESCRIPTION

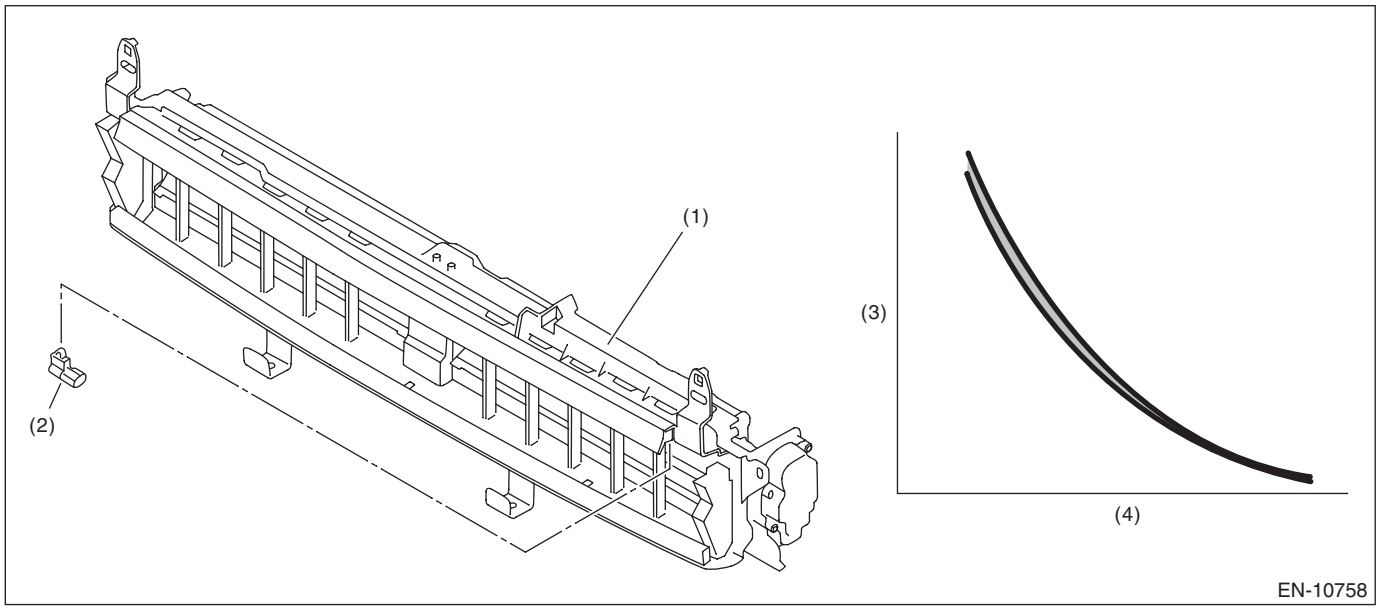

(1) Active grille shutter
(2) Ambient air temperature sensor
(3) Resistance value (kΩ)
(4) Ambient air temperature (°C (°F))

3. ENABLE CONDITIONS

Secondary Parameters	Enable Conditions
Battery voltage	≥ 10.9 V
Command to active grille shutter	Open or close

4. GENERAL DRIVING CYCLE

Always perform the diagnosis continuously.

5. DIAGNOSTIC METHOD

• Abnormality Judgment

Judge as NG when the following conditions are established.

Judgment Value

Malfunction Criteria	Threshold Value
Input pulse of active grille shutter position sensor	= 0

Time Needed for Diagnosis: 2500 ms
Malfunction Indicator Light Illumination: Illuminates as soon as a malfunction occurs.

• Normality Judgment

Judge as OK and clear the NG if the following conditions are established.

Judgment Value

Malfunction Criteria	Threshold Value
Input pulse of active grille shutter position sensor	≠ 0

Time Needed for Diagnosis: 2500 ms

DM:DTC P059F ACTIVE GRILLE SHUTTER "A" PERFORMANCE

1. OUTLINE OF DIAGNOSIS

Detect the malfunction of the response to active grille shutter open/close request.
Judge as NG if out of specification.

2. COMPONENT DESCRIPTION

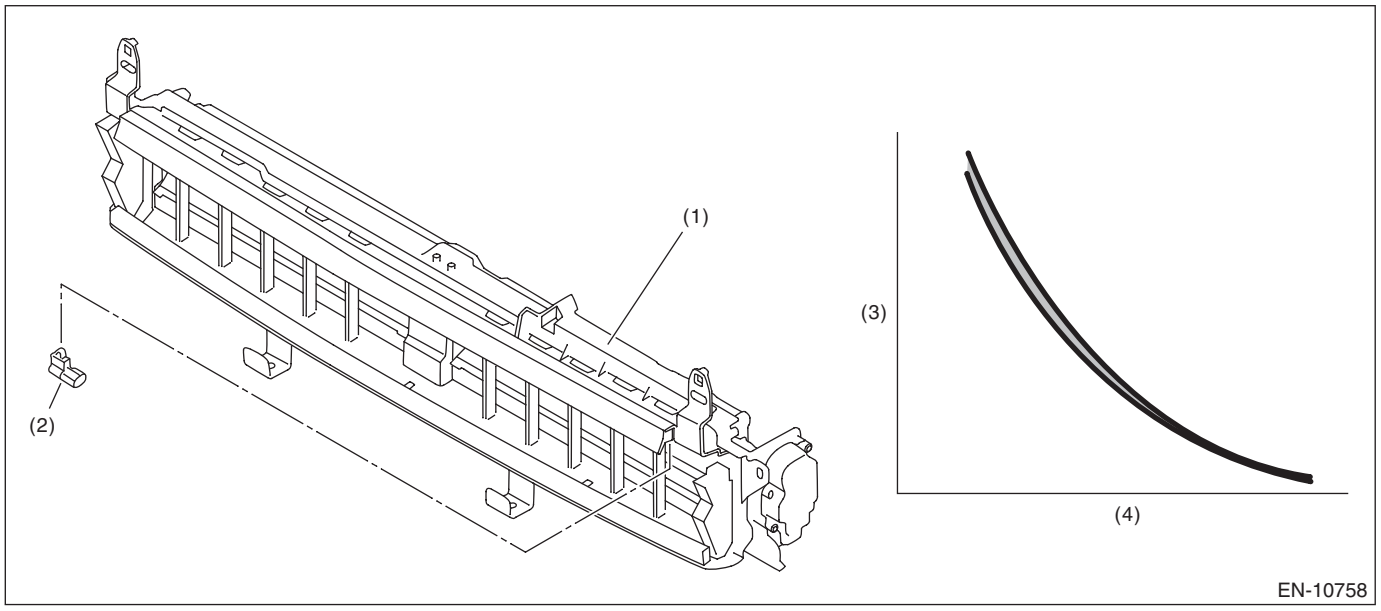

(1) Active grille shutter
(2) Ambient air temperature sensor
(3) Resistance value (kΩ)
(4) Ambient air temperature (°C (°F))

3. ENABLE CONDITIONS

Secondary Parameters	Enable Conditions
Battery voltage	≥ 10.9 V
Active grille shutter drive	Yes

4. GENERAL DRIVING CYCLE

Always perform the diagnosis continuously.

5. DIAGNOSTIC METHOD

• Abnormality Judgment

Judge as NG when the following conditions are established.

Judgment Value

Malfunction Criteria	Threshold Value
Operation angle in 15000 ms of active grille shutter	< 88%

Time Needed for Diagnosis: 15000 ms
Malfunction Indicator Light Illumination: Illuminates when malfunction occurs in 2 continuous driving cycles.

• Normality Judgment

Judge as OK and clear the NG if the following conditions are established.

Judgment Value

Malfunction Criteria	Threshold Value
Operation angle in 15000 ms of active grille shutter	≥ 88%

Time Needed for Diagnosis: 15000 ms

DN:DTC P05A0 ACTIVE GRILLE SHUTTER "A" STUCK

1. OUTLINE OF DIAGNOSIS

Detect that active grille shutter does not open/close with foreign matter jammed or a fault.
Judge as NG if out of specification.

2. COMPONENT DESCRIPTION

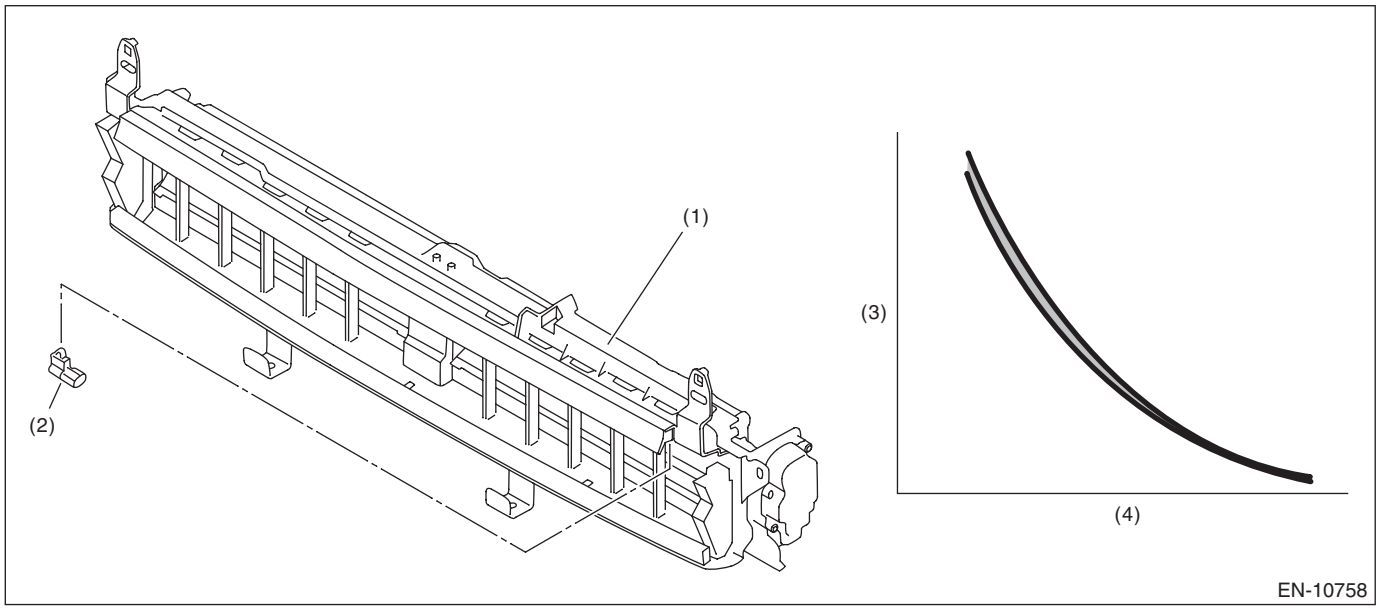

(1) Active grille shutter
(2) Ambient air temperature sensor
(3) Resistance value (kΩ)
(4) Ambient air temperature (°C (°F))

3. ENABLE CONDITIONS

Secondary Parameters	Enable Conditions
Battery voltage	≥ 10.9 V

4. GENERAL DRIVING CYCLE

Always perform the diagnosis continuously.

5. DIAGNOSTIC METHOD

- **Abnormality Judgment**

Judge as NG when the following conditions are established.

Judgment Value

Malfunction Criteria	Threshold Value
Maximum value of active grille shutter position sensor (during control at power supply ON)	< 70 deg
or	
Operation range of active grille shutter (after control at power supply ON)	< 88%

Time Needed for Diagnosis: 2500 ms
Malfunction Indicator Light Illumination: Illuminates when malfunction occurs in 2 continuous driving cycles.

- **Normality Judgment**

Judge as OK and clear the NG if the following conditions are established.

Judgment Value

Malfunction Criteria	Threshold Value
Maximum value of active grille shutter position sensor (during control at power supply ON)	≥ 70 deg
Operation range of active grille shutter (after control at power supply ON)	≥ 88%

Time Needed for Diagnosis: 2500 ms

DO:DTC P05A1 ACTIVE GRILLE SHUTTER "A" RANGE OVER

1. OUTLINE OF DIAGNOSIS

Detect the excessive rotation beyond the specific angle with active grille shutter fault.
Judge as NG if out of specification.

2. COMPONENT DESCRIPTION

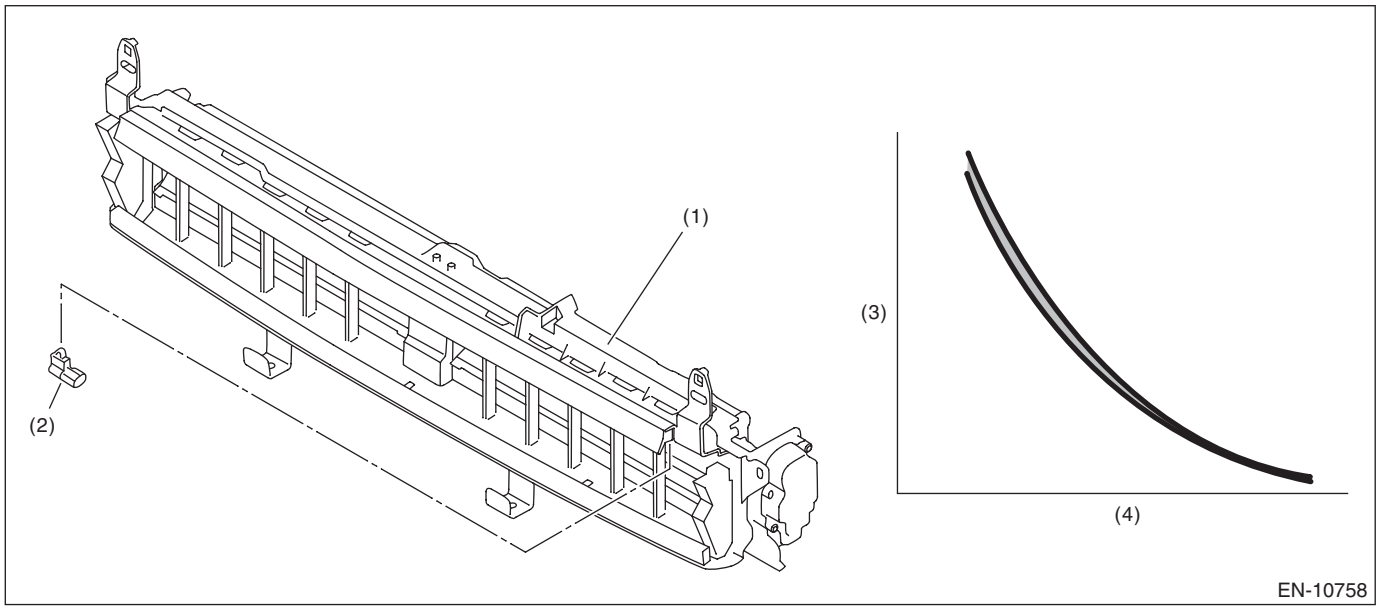

(1) Active grille shutter
(2) Ambient air temperature sensor
(3) Resistance value (kΩ)
(4) Ambient air temperature (°C (°F))

3. ENABLE CONDITIONS

Secondary Parameters	Enable Conditions
Battery voltage	≥ 10.9 V

4. GENERAL DRIVING CYCLE

Always perform the diagnosis continuously.

5. DIAGNOSTIC METHOD

• Abnormality Judgment

Judge as NG when the following conditions are established.

Judgment Value

Malfunction Criteria	Threshold Value
Maximum value of active grille shutter position sensor (during control at power supply ON)	> 155 deg
or	
Operation range of active grille shutter (after control at power supply ON)	> 112%

Time Needed for Diagnosis: 2500 ms
Malfunction Indicator Light Illumination: Illuminates when malfunction occurs in 2 continuous driving cycles.

• Normality Judgment

Judge as OK and clear the NG if the following conditions are established.

Judgment Value

Malfunction Criteria	Threshold Value
Maximum value of active grille shutter position sensor (during control at power supply ON)	≤ 155 deg
Operation range of active grille shutter (after control at power supply ON)	≤ 112%

Time Needed for Diagnosis: 2500 ms

DP:DTC P05A2 ACTIVE GRILLE SHUTTER "A" CONTROL CIRCUIT

1. OUTLINE OF DIAGNOSIS

Detect the malfunction of active grille shutter motor circuit.
Judge as NG if out of specification.

2. COMPONENT DESCRIPTION

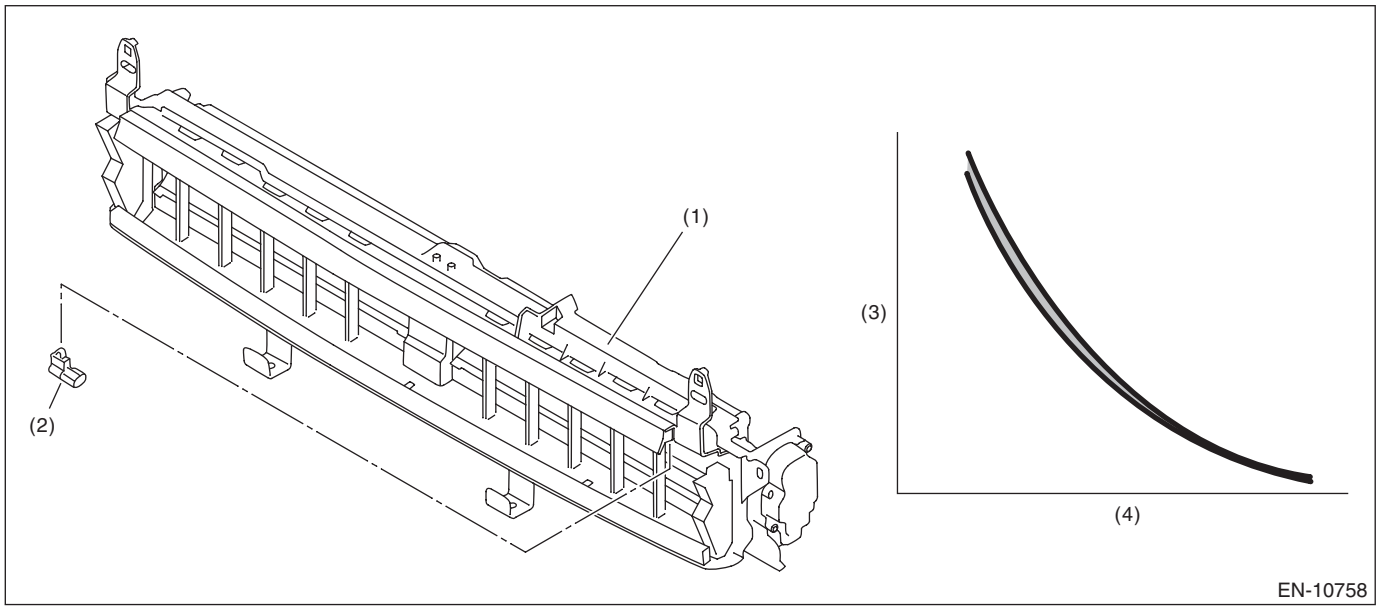

(1) Active grille shutter
(2) Ambient air temperature sensor
(3) Resistance value (kΩ)
(4) Ambient air temperature (°C (°F))

3. ENABLE CONDITIONS

Secondary Parameters	Enable Conditions
Battery voltage	≥ 10.9 V

4. GENERAL DRIVING CYCLE

Always perform the diagnosis continuously.

5. DIAGNOSTIC METHOD

• Abnormality Judgment

Judge as NG when the following conditions are established.

Judgment Value

Malfunction Criteria	Threshold Value
Motor circuit current during open or close command to active grille shutter	< 10 mA or > 650 mA

Time Needed for Diagnosis: 2500 ms
Malfunction Indicator Light Illumination: Illuminates as soon as a malfunction occurs.

• Normality Judgment

Judge as OK and clear the NG if the following conditions are established.

Judgment Value

Malfunction Criteria	Threshold Value
Motor circuit current during open or close command to active grille shutter	≥ 10 mA and ≤ 650 mA

Time Needed for Diagnosis: 2500 ms

DQ:DTC P05A6 ACTIVE GRILLE SHUTTER "A" SUPPLY VOLTAGE CIRCUIT/ OPEN

1. OUTLINE OF DIAGNOSIS

Detect the abnormality of active grille shutter power supply voltage.
Judge as NG if out of specification.

2. COMPONENT DESCRIPTION

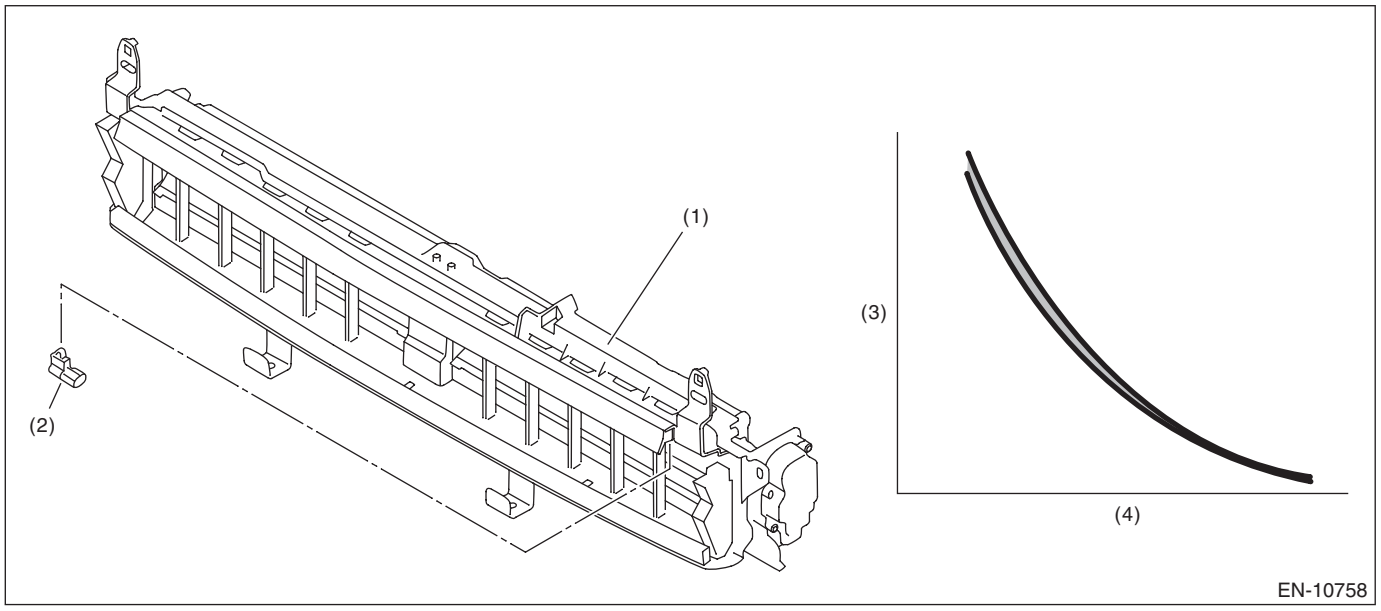

(1) Active grille shutter
(2) Ambient air temperature sensor
(3) Resistance value (kΩ)
(4) Ambient air temperature (°C (°F))

3. ENABLE CONDITIONS

Secondary Parameters	Enable Conditions
Battery voltage	≥ 10.9 V

4. GENERAL DRIVING CYCLE

Always perform the diagnosis continuously.

5. DIAGNOSTIC METHOD

• Abnormality Judgment

Judge as NG when the following conditions are established.

Judgment Value

Malfunction Criteria	Threshold Value
Malfunction judgment flag	1

Time Needed for Diagnosis: 2500 ms
Malfunction Indicator Light Illumination: Malfunction indicator light does not illuminate.

• Normality Judgment

Judge as OK and clear the NG if the following conditions are established.

Judgment Value

Malfunction Criteria	Threshold Value
Malfunction judgment flag	0

Time Needed for Diagnosis: 2500 ms

DR:DTC P05C0 ACTIVE GRILLE SHUTTER "A" OVER TEMPERATURE

1. OUTLINE OF DIAGNOSIS

Detect the abnormality of active grille shutter internal temperature.
Judge as NG if out of specification.

2. COMPONENT DESCRIPTION

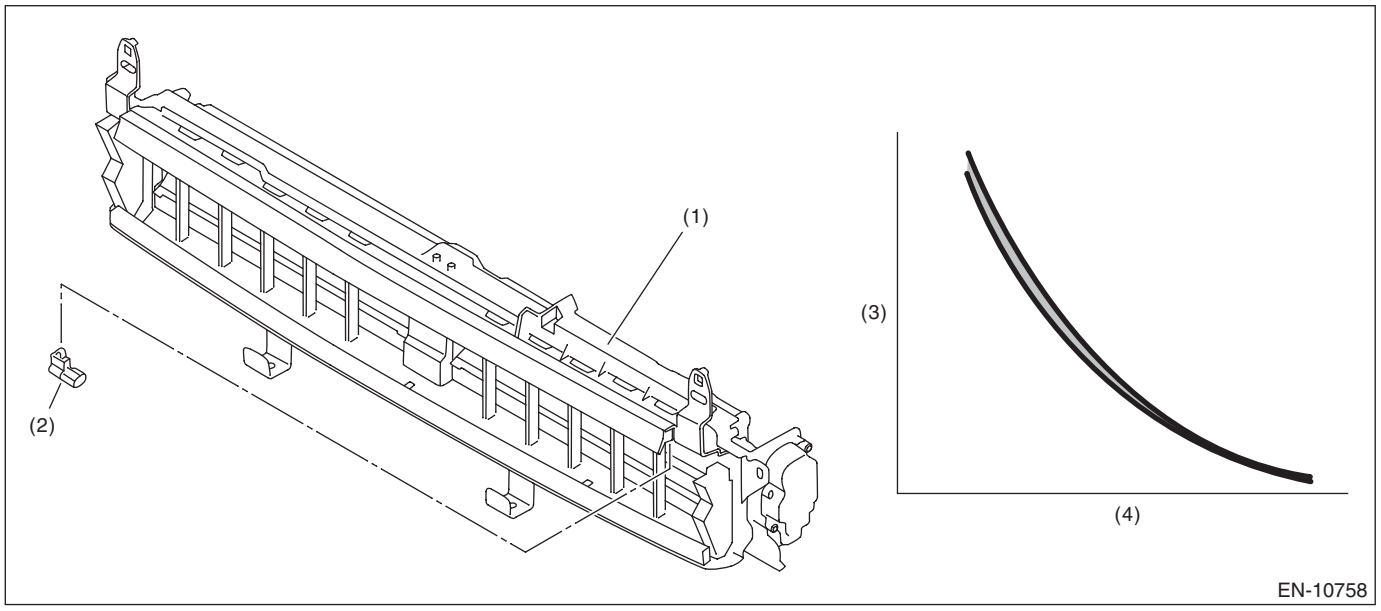

(1) Active grille shutter
(2) Ambient air temperature sensor
(3) Resistance value (kΩ)
(4) Ambient air temperature (°C (°F))

3. ENABLE CONDITIONS

Secondary Parameters	Enable Conditions
Battery voltage	≥ 10.9 V

4. GENERAL DRIVING CYCLE

Always perform the diagnosis continuously.

5. DIAGNOSTIC METHOD

• Abnormality Judgment

Judge as NG when the following conditions are established.

Judgment Value

Malfunction Criteria	Threshold Value
Malfunction judgment flag	1

Time Needed for Diagnosis: 2500 ms
Malfunction Indicator Light Illumination: Malfunction indicator light does not illuminate.

• Normality Judgment

Judge as OK and clear the NG if the following conditions are established.

Judgment Value

Malfunction Criteria	Threshold Value
Malfunction judgment flag	0

Time Needed for Diagnosis: 2500 ms

DS:DTC P0604 INTERNAL CONTROL MODULE RANDOM ACCESS MEMORY (RAM) ERROR

1. OUTLINE OF DIAGNOSIS

Detect the malfunction of microcomputer (RAM).
When there is a problem in the CPU normal RAM, judge as NG.
If it is possible to write data to the whole area of RAM in the initial routine, and is possible to read the same data, it is judged as OK, and if not, NG.

2. ENABLE CONDITION

Secondary Parameters	Enable Conditions
None	

Diagnosis with the initial routine.

3. GENERAL DRIVING CYCLE

Perform the diagnosis as soon as the ignition switch is turned to ON.

4. DIAGNOSTIC METHOD

- **Abnormality Judgment**

Judge as NG when the following conditions are established.

Judgment Value

Malfunction Criteria	Threshold Value
Write the specified value into the RAM.	Unmatch to written value

Time Needed for Diagnosis: Less than 1 second
Malfunction Indicator Light Illumination: Illuminates as soon as a malfunction occurs.

- **Normality Judgment**

Judge as OK and clear the NG if the following conditions are established.

Judgment Value

Malfunction Criteria	Threshold Value
Write the specified value into the RAM.	Match to written value

Time Needed for Diagnosis: Less than 1 second

DT:DTC P0605 INTERNAL CONTROL MODULE READ ONLY MEMORY (ROM) ERROR

1. OUTLINE OF DIAGNOSIS

Judge as NG when SUM value of ROM is outside the standard value.

2. ENABLE CONDITION

Secondary Parameters	Enable Conditions
None	

Diagnosis with the initial routine.

3. GENERAL DRIVING CYCLE

Perform the diagnosis as soon as the ignition switch is turned to ON.

4. DIAGNOSTIC METHOD

Abnormality Judgment

Judge as NG if the criteria below are met.

Judgment Value

Malfunction Criteria	Threshold Value
SUM value of ROM	Standard

Time Needed for Diagnosis: Undetermined
Malfunction Indicator Light Illumination: Illuminates as soon as a malfunction occurs.

DU:DTC P0606 CONTROL MODULE PROCESSOR

1. OUTLINE OF DIAGNOSIS

Judge as NG when the CPU operation is abnormal.
(1) Instruction check
(2) Software flow check
(3) Software monitor check
(4) CAN register check
(5) If the output IC operation is abnormal

2. COMPONENT DESCRIPTION

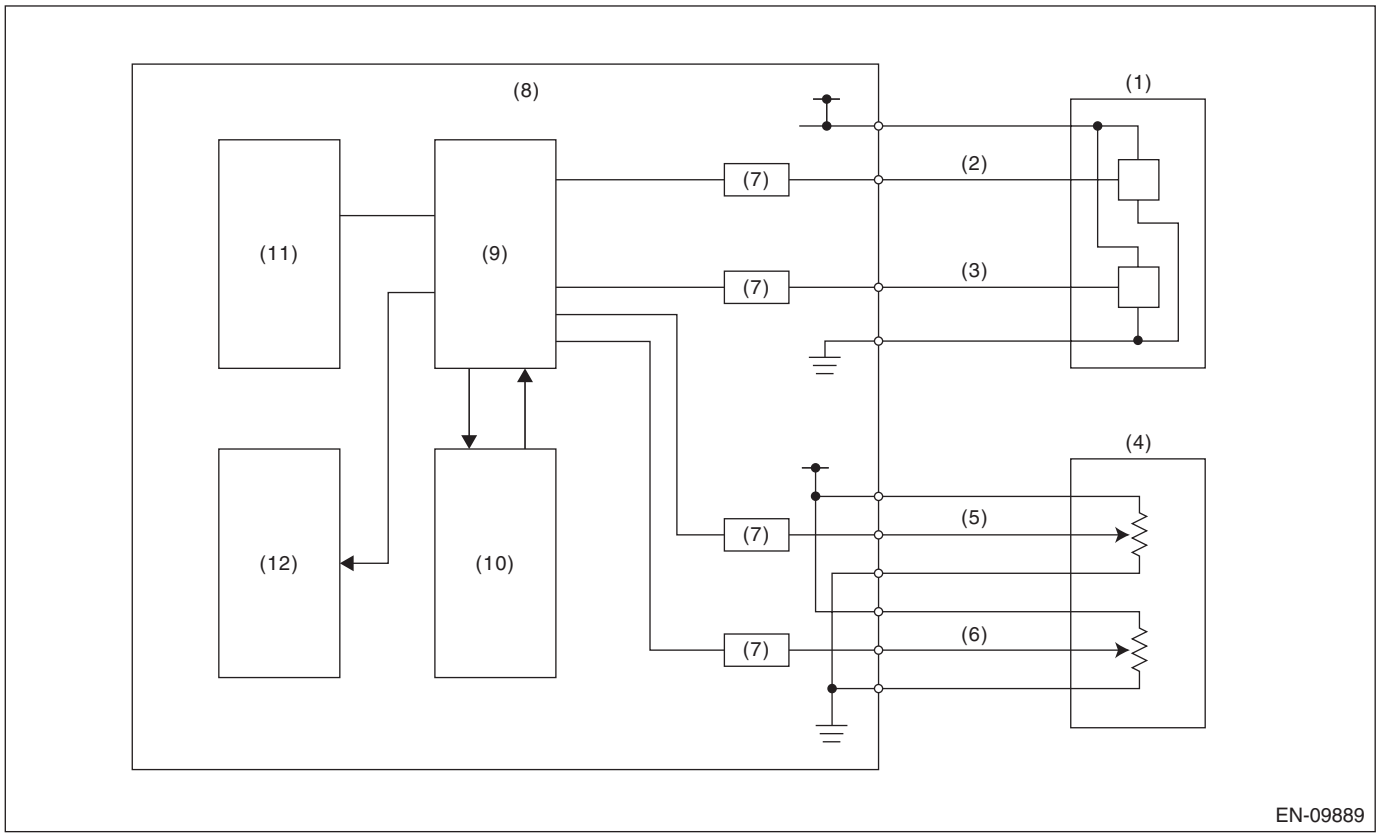

(1)	Throttle position sensor	(5)	Accelerator pedal position sensor 1	(9)	CPU
(2)	Throttle position sensor 1	(6)	Accelerator pedal position sensor 2	(10)	Monitoring IC
(3)	Throttle position sensor 2	(7)	I/F circuit	(11)	EEPROM
(4)	Accelerator pedal position sensor	(8)	Engine control module (ECM)	(12)	Output IC

3. ENABLE CONDITIONS

Secondary Parameters	Enable Conditions
(1) — 1 initial routine	
(1) — 2 Battery voltage	≥ 6.2 V
(1) — 2 Electronic throttle control relay	ON
(1) — 2 ignition switch	ON
(2) Ignition switch	ON
(3) Battery voltage	≥ 6.2 V
(3) Electronic throttle control relay	ON
(3) Ignition switch	ON
(4) Ignition switch	ON
(5) Initial routine	

4. GENERAL DRIVING CYCLE

Always perform the diagnosis continuously.

5. DIAGNOSTIC METHOD

- **Abnormality Judgment**

Judge as NG when the following conditions are established.

Judgment Value

Malfunction Criteria	Threshold Value
(1) — 1 instruction value	Unmatch to expected value
(1) — 2 calculation result of CPU and FPU	Unmatch to expected value
(2) Process flow result	The result and expected value do not match.
(3) High integrated IC motor continuity cut demand	Exist
(4) Writing value to CAN register	≠ Read out value
(5) Communication between output driver ICs	Not possible to communicate

Time Needed for Diagnosis:
(1) — 1:2 time(s)
(1) — 2:512 ms
(2): 504 ms
(3): 48 ms
(4): 2500 ms
(5): None
Malfunction Indicator Light Illumination: Illuminates as soon as a malfunction occurs.

- **Normality Judgment**

Judge as OK and clear the NG if the following conditions are established.

Judgment Value

Malfunction Criteria	Threshold Value
(1) — 1 instruction value	Match to expected value
(1) — 2 calculation result of CPU and FPU	Match to expected value
(2) Process flow result	The result and expected value match
(3) High integrated IC motor continuity cut demand	None
(4) Writing value to CAN register	= Read out value
(5) Communication between output driver ICs	Possible to communicate

Time Needed for Diagnosis:

(1) — 1: None
(1) — 2:2000 ms
(2): 2000 ms
(3): 2000 ms
(4): None
(5): None

DV:DTC P060A INTERNAL CONTROL MODULE MONITORING PROCESSOR PERFORMANCE

1. OUTLINE OF DIAGNOSIS

Judge as NG when the monitoring IC operation is abnormal.
(1) Monitoring IC Disable (motor continuity cut demand) diagnosis
(2) Monitoring IC function diagnosis
(3) Monitoring IC register diagnosis

2. COMPONENT DESCRIPTION

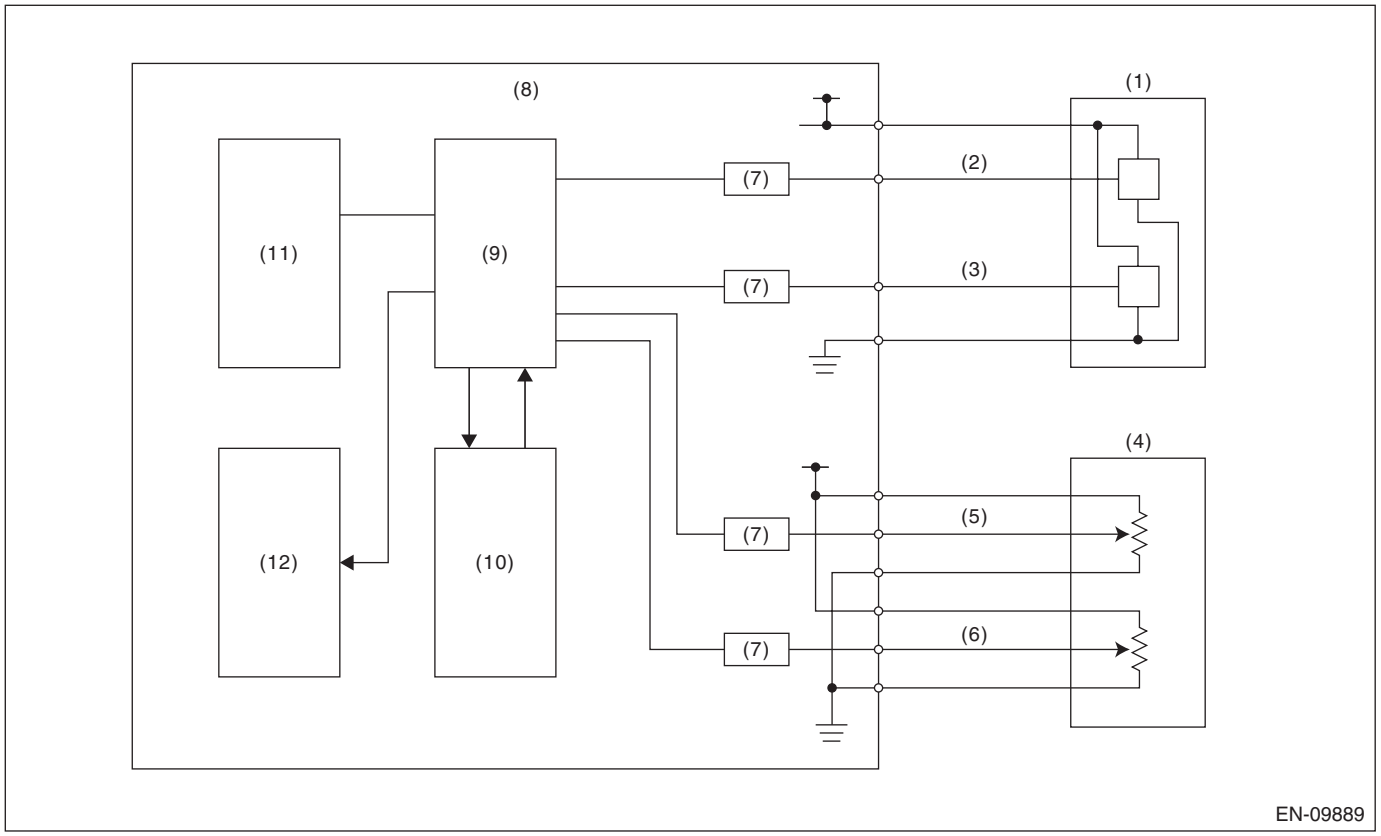

(1)	Throttle position sensor	(5)	Accelerator pedal position sensor 1	(9)	CPU
(2)	Throttle position sensor 1	(6)	Accelerator pedal position sensor 2	(10)	Monitoring IC
(3)	Throttle position sensor 2	(7)	I/F circuit	(11)	EEPROM
(4)	Accelerator pedal position sensor	(8)	Engine control module (ECM)	(12)	Output IC

3. ENABLE CONDITIONS

Secondary Parameters	Enable Conditions
(1) Battery voltage	≥ 6 V
(1) When CPU transmits incorrect data intentionally	
(2) Battery voltage	≥ 6 V
(2) When CPU transmits incorrect data intentionally	
(3) Battery voltage	≥ 6 V

4. GENERAL DRIVING CYCLE

Always perform the diagnosis continuously.

5. DIAGNOSTIC METHOD

• Abnormality Judgment

Judge as NG when one of the following conditions is established.

Judgment Value

Malfunction Criteria	Threshold Value
(1) Main throttle opening angle – Main throttle opening angle at monitoring start	≥ 1.6%
(2) Monitoring IC motor continuity cut demand	None
(3) Monitoring IC register writing value	≠ Reading value

Time Needed for Diagnosis:
(1): 24 ms
(2): 0.08 s × 2 time(s)
(3): 200 ms
Malfunction Indicator Light Illumination: Illuminates as soon as a malfunction occurs.

• Normality Judgment

Judge as OK and clear the NG if the following conditions are established.

Judgment Value

Malfunction Criteria	Threshold Value
(1) Main throttle opening angle – Main throttle opening angle at monitoring start	< 1.6%
(2) Monitoring IC motor continuity cut demand	Yes
(3) Monitoring IC register writing value	= Reading value

Time Needed for Diagnosis:
(1): 80 ms
(2): None
(3): 2000 ms

DW:DTC P060B INTERNAL CONTROL MODULE A/D PROCESSING PERFORMANCE

1. OUTLINE OF DIAGNOSIS

Judge as NG when the AD converter operation is abnormal.

2. COMPONENT DESCRIPTION

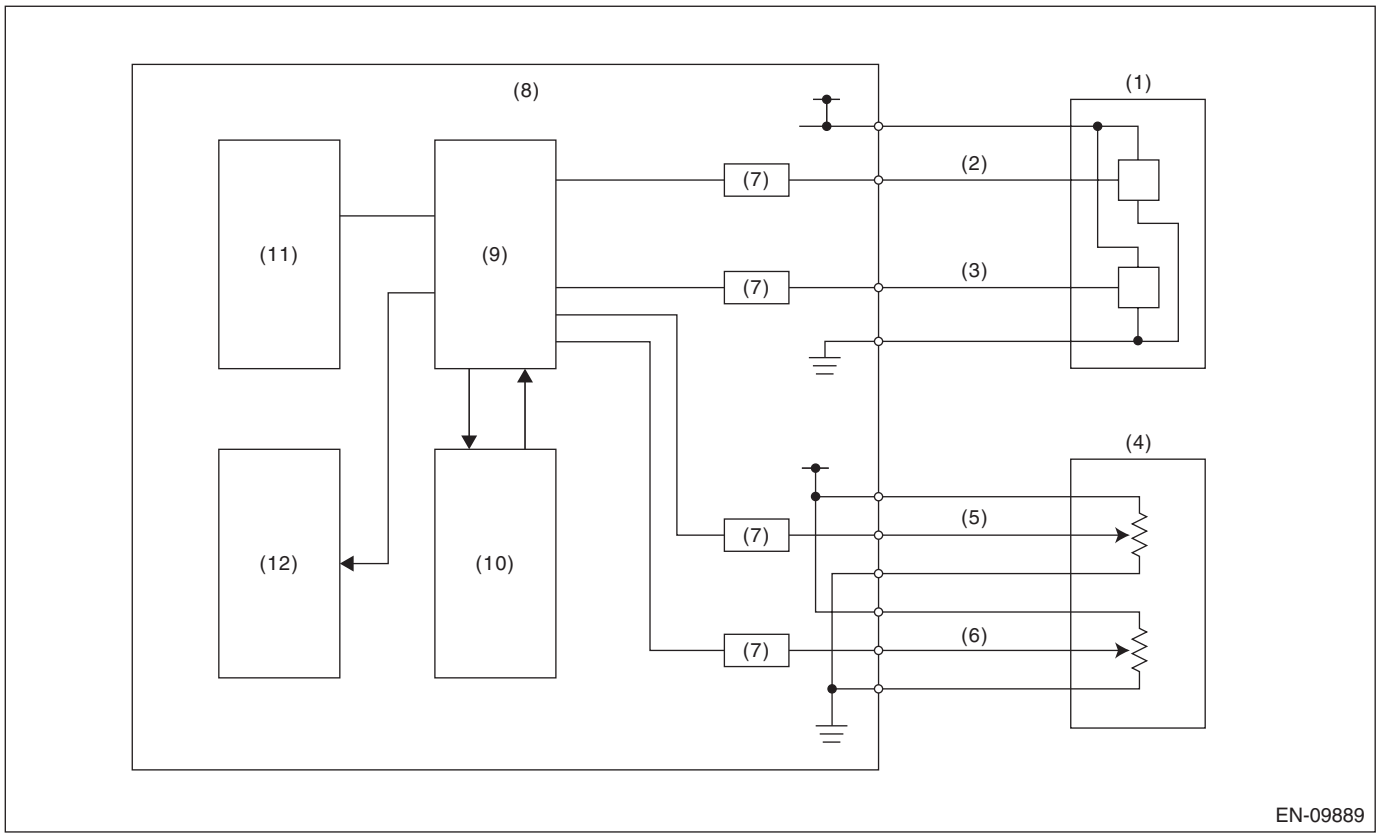

(1)	Throttle position sensor	(5)	Accelerator pedal position sensor 1	(9)	CPU
(2)	Throttle position sensor 1	(6)	Accelerator pedal position sensor 2	(10)	Monitoring IC
(3)	Throttle position sensor 2	(7)	I/F circuit	(11)	EEPROM
(4)	Accelerator pedal position sensor	(8)	Engine control module (ECM)	(12)	Output IC

3. ENABLE CONDITIONS

Secondary Parameters	Enable Conditions
Battery voltage	≥ 6 V

4. GENERAL DRIVING CYCLE

Always perform the diagnosis continuously.

5. DIAGNOSTIC METHOD

- **Abnormality Judgment**

Judge as NG when one of the following conditions is established.

Judgment Value

Malfunction Criteria	Threshold Value
Target voltage and Actual voltage	= 0 V > 0.01953125 V
Target voltage and Actual voltage	= 5 V < 4.979248047 V

Time Needed for Diagnosis: 200 ms
Malfunction Indicator Light Illumination: Illuminates as soon as a malfunction occurs.

- **Normality Judgment**

Judge as OK and clear the NG if the following conditions are established.

Judgment Value

Malfunction Criteria	Threshold Value
Target voltage and Actual voltage	= 0 V ≤ 0.01953125 V
Target voltage and Actual voltage	= 5 V ≥ 4.979248047 V

Time Needed for Diagnosis: 2000 ms

DX:DTC P0616 STARTER RELAY CIRCUIT LOW

1. OUTLINE OF DIAGNOSIS

- Model without push button start

Detect abnormal continuity in the starter SW1.
Judge as OFF NG when the starter SW 1 signal remains OFF.

- Model with push button start

Detect abnormal continuity in the starter SW 2.
Judge as OFF NG when the starter SW 2 signal remains OFF.

2. ENABLE CONDITIONS

Secondary Parameters	Enable Conditions
Battery voltage	≥ 8 V
Vehicle speed	< 1 km/h (0.6 MPH)
Starter relay command	ON
Engine speed	Change from 0 rpm to 500 rpm or more

3. GENERAL DRIVING CYCLE

Always perform the diagnosis continuously.

4. DIAGNOSTIC METHOD

- **Abnormality Judgment**

Judge as OFF NG when the following conditions are established.

Judgment Value

Malfunction Criteria	Threshold Value
Starter SW 1 signal (model without push button start) Starter SW 2 signal (model with push button start)	No ON experience

Time Needed for Diagnosis: Less than 1 second
Malfunction Indicator Light Illumination: Illuminates as soon as a malfunction occurs.

- **Normality Judgment**

Judge as OFF OK and clear the NG if the following conditions are established.

Judgment Value

Malfunction Criteria	Threshold Value
Starter SW 1 signal (model without push button start) Starter SW 2 signal (model with push button start)	ON Experience exists

Time Needed for Diagnosis: Less than 1 second

DY:DTC P0617 STARTER RELAY CIRCUIT HIGH

1. OUTLINE OF DIAGNOSIS

- Model without push button start

Detect abnormal continuity in the starter SW1.
Judge as ON NG when the starter SW 1 signal remains ON.

- Model with push button start

Detect abnormal continuity in the starter SW 2.
Judge as ON NG when the starter SW 2 signal remains ON.

2. ENABLE CONDITIONS

Secondary Parameters	Enable Conditions
Battery voltage	≥ 8 V
Engine speed	> 500 rpm
Starter relay command	OFF

3. GENERAL DRIVING CYCLE

Always perform the diagnosis continuously.

4. DIAGNOSTIC METHOD

- **Abnormality Judgment**

If the duration of time while the following conditions are met is longer than the time indicated, judge as NG.

Judgment Value

Malfunction Criteria	Threshold Value
Starter SW 1 signal (model without push button start) Starter SW 2 signal (model with push button start)	ON

Time Needed for Diagnosis: 30000 ms
Malfunction Indicator Light Illumination: Illuminates as soon as a malfunction occurs.

- **Normality Judgment**

Judge as OFF OK and clear the NG if the following conditions are established.

Judgment Value

Malfunction Criteria	Threshold Value
Starter SW 1 signal (model without push button start) Starter SW 2 signal (model with push button start)	OFF

Time Needed for Diagnosis: Less than 1 second

DZ:DTC P062F INTERNAL CONTROL MODULE EEPROM ERROR

1. OUTLINE OF DIAGNOSIS

Judge as NG when the EEPROM operation is abnormal.

2. COMPONENT DESCRIPTION

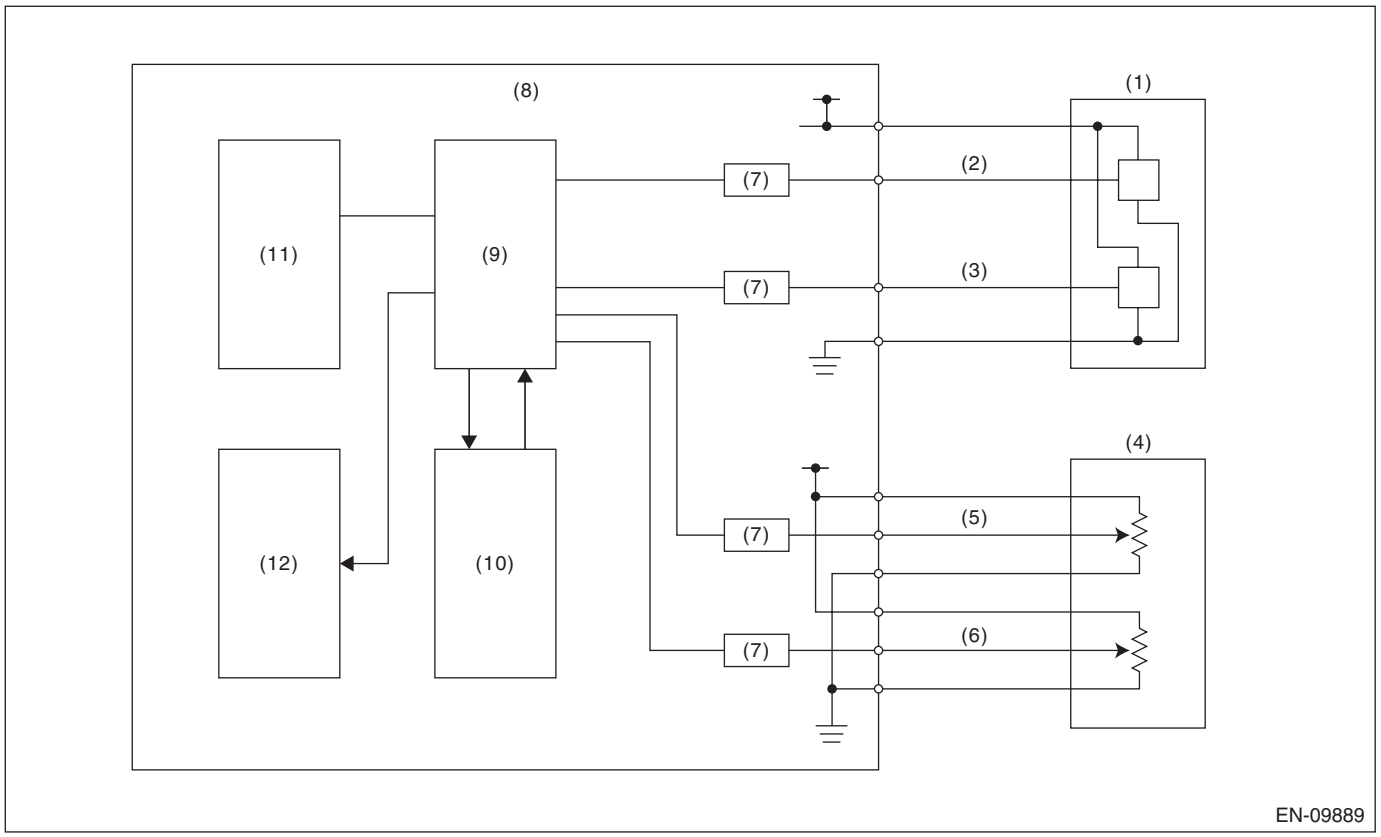

(1)	Throttle position sensor	(5)	Accelerator pedal position sensor 1	(9)	CPU
(2)	Throttle position sensor 1	(6)	Accelerator pedal position sensor 2	(10)	Monitoring IC
(3)	Throttle position sensor 2	(7)	I/F circuit	(11)	EEPROM
(4)	Accelerator pedal position sensor	(8)	Engine control module (ECM)	(12)	Output IC

3. ENABLE CONDITIONS

Secondary Parameters	Enable Conditions
Ignition switch	ON

4. GENERAL DRIVING CYCLE

Perform the diagnosis during self shut.

5. DIAGNOSTIC METHOD

- **Abnormality Judgment**

Judge as NG when the following conditions are established.

Judgment Value

Malfunction Criteria	Threshold Value
Writing result to EEPROM	Malfunction

Time Needed for Diagnosis: 2 times
Malfunction Indicator Light Illumination: Illuminates as soon as a malfunction occurs.

- **Normality Judgment**

Judge as OK and clear the NG if the following conditions are established.

Judgment Value

Malfunction Criteria	Threshold Value
Writing result to EEPROM	Normal

Time Needed for Diagnosis: None

EA:DTC P0700 TRANSMISSION CONTROL SYSTEM (MIL REQUEST)

1. OUTLINE OF DIAGNOSIS

Judge as NG when there is CAN communication with the TCM and there is a MIL lighting request.

2. ENABLE CONDITIONS

Secondary Parameters	Enable Conditions
Battery voltage	≥ 10.9 V

3. GENERAL DRIVING CYCLE

Always perform the diagnosis continuously.

4. DIAGNOSTIC METHOD

- **Abnormality Judgment**

If the duration of time while the following conditions are met is longer than the time indicated, judge as NG.

Judgment Value

Malfunction Criteria	Threshold Value
MIL lighting request from TCM	Yes

Time Needed for Diagnosis: 128 ms
Malfunction Indicator Light Illumination: Illuminates as soon as a malfunction occurs.

- **Normality Judgment**

If the duration of time while the following conditions are met is longer than the time indicated, judge as NG.

Judgment Value

Malfunction Criteria	Threshold Value
MIL lighting request from TCM	None

Time Needed for Diagnosis: Less than 1 second

EB:DTC P081A STARTER DISABLE CIRCUIT LOW

1. OUTLINE OF DIAGNOSIS

Detect abnormal continuity in the starter cut relay.
Judge as NG when the starter cut relay output line is open.

2. ENABLE CONDITIONS

Secondary Parameters	Enable Conditions
Battery voltage	≥ 8 V
Engine speed	Change from 0 rpm to 500 rpm or more
Vehicle speed	< 1 km/h (0.6 MPH)
Starter cut relay command	OFF

3. GENERAL DRIVING CYCLE

Always perform the diagnosis continuously.

4. DIAGNOSTIC METHOD

- **Abnormality Judgment**

Judge as NG when the following conditions are established.

Judgment Value

Malfunction Criteria	Threshold Value
Starter cut relay terminal voltage	> Battery voltage × 0.34 is not experienced

Time Needed for Diagnosis: Less than 1 second
Malfunction Indicator Light Illumination: Illuminates as soon as a malfunction occurs.

- **Normality Judgment**

Judge as OK and clear the NG if the following conditions are established.

Judgment Value

Malfunction Criteria	Threshold Value
Starter cut relay terminal voltage	> Battery voltage × 0.34 is experienced

Time Needed for Diagnosis: Less than 1 second

EC:DTC P0851 PARK/NEUTRAL SWITCH INPUT CIRCUIT LOW (AT MODEL)

1. OUTLINE OF DIAGNOSIS

Detect the open or short circuit of neutral SW.
Judge as NG when the ECM neutral terminal input differs from the reception data from TCM.

2. ENABLE CONDITIONS

Secondary Parameters	Enable Conditions
Battery voltage	≥ 10.9 V
Starter relay feedback voltage	< Battery voltage × 0.4
Engine speed	≥ 500 rpm
“P” range/“N” range of TCM	OFF

3. GENERAL DRIVING CYCLE

Perform the diagnosis continuously in 2 seconds after starting the engine.

4. DIAGNOSTIC METHOD

- **Abnormality Judgment**

If the duration of time while the following conditions are met is longer than the time indicated, judge as NG.

Judgment Value

Malfunction Criteria	Threshold Value
Neutral position switch signal voltage	≤ Battery voltage × 0.19

Time Needed for Diagnosis: 64 ms × 100 time(s)
Malfunction Indicator Light Illumination: Illuminates when malfunction occurs in 2 continuous driving cycles.

- **Normality Judgment**

Judge as OK and clear the NG if the continuous time while the following conditions are established is more than the predetermined time.

Judgment Value

Malfunction Criteria	Threshold Value
Neutral position switch signal voltage	> Battery voltage × 0.19

Time Needed for Diagnosis: Less than 1 second

ED:DTC P0852 PARK/NEUTRAL SWITCH INPUT CIRCUIT HIGH (AT MODEL)

1. OUTLINE OF DIAGNOSIS

Detect the open or short circuit of neutral SW.
Judge as NG when the ECM neutral terminal input differs from the reception data from TCM.

2. ENABLE CONDITIONS

Secondary Parameters	Enable Conditions
Battery voltage	≥ 10.9 V
Starter relay feedback voltage	< Battery voltage × 0.4
Engine speed	≥ 500 rpm
“P” range/“N” range of TCM	ON

3. GENERAL DRIVING CYCLE

Perform the diagnosis continuously in 2 seconds after starting the engine.

4. DIAGNOSTIC METHOD

- **Abnormality Judgment**

If the duration of time while the following conditions are met is longer than the time indicated, judge as NG.

Judgment Value

Malfunction Criteria	Threshold Value
Neutral position switch signal voltage	≥ Battery voltage × 0.6

Time Needed for Diagnosis: 64 ms × 100 time(s)
Malfunction Indicator Light Illumination: Illuminates when malfunction occurs in 2 continuous driving cycles.

- **Normality Judgment**

Judge as OK and clear the NG if the continuous time while the following conditions are established is more than the predetermined time.

Judgment Value

Malfunction Criteria	Threshold Value
Neutral position switch signal voltage	< Battery voltage × 0.6

Time Needed for Diagnosis: Less than 1 second

EE:DTC P0A7B BATTERY ENERGY CONTROL MODULE REQUEST MIL ILLUMINATION

1. OUTLINE OF DIAGNOSIS

Judge as NG when MIL lighting request comes from BECM.

2. ENABLE CONDITIONS

Secondary Parameters	Enable Conditions
Battery voltage	> 10.9 V

3. GENERAL DRIVING CYCLE

Always perform the diagnosis continuously.

4. DIAGNOSTIC METHOD

- **Abnormality Judgment**

If the duration of time while the following conditions are met is longer than the time indicated, judge as NG.

Judgment Value

Malfunction Criteria	Threshold Value
MIL lighting request from BECM	Yes

Time Needed for Diagnosis: 128 ms
Malfunction Indicator Light Illumination: Illuminates as soon as a malfunction occurs.

- **Normality Judgment**

Judge as OK and clear the NG if the continuous time while the following conditions are established is more than the predetermined time.

Judgment Value

Malfunction Criteria	Threshold Value
MIL lighting request from BECM	None

Time Needed for Diagnosis: 128 ms

EF:DTC P0AC4 HYBRID POWERTRAIN CONTROL MODULE REQUEST MIL ILLUMINATION

1. OUTLINE OF DIAGNOSIS

Judge as NG when MIL lighting request comes from HPCM.

2. ENABLE CONDITIONS

Secondary Parameters	Enable Conditions
Battery voltage	> 10.9 V

3. GENERAL DRIVING CYCLE

Always perform the diagnosis continuously.

4. DIAGNOSTIC METHOD

- **Abnormality Judgment**

If the duration of time while the following conditions are met is longer than the time indicated, judge as NG.

Judgment Value

Malfunction Criteria	Threshold Value
MIL lighting request from HPCM	Yes

Time Needed for Diagnosis: 128 ms
Malfunction Indicator Light Illumination: Illuminates as soon as a malfunction occurs.

- **Normality Judgment**

Judge as OK and clear the NG if the continuous time while the following conditions are established is more than the predetermined time.

Judgment Value

Malfunction Criteria	Threshold Value
MIL lighting request from HPCM	None

Time Needed for Diagnosis: 128 ms

EG:DTC P0CA1 DRIVE MOTOR CONTROL MODULE REQUEST MIL ILLUMINATION

1. OUTLINE OF DIAGNOSIS

Judge as NG when MIL lighting request comes from DMCM.

2. ENABLE CONDITIONS

Secondary Parameters	Enable Conditions
Battery voltage	> 10.9 V

3. GENERAL DRIVING CYCLE

Always perform the diagnosis continuously.

4. DIAGNOSTIC METHOD

- **Abnormality Judgment**

If the duration of time while the following conditions are met is longer than the time indicated, judge as NG.

Judgment Value

Malfunction Criteria	Threshold Value
MIL lighting request from DMCM	Yes

Time Needed for Diagnosis: 128 ms
Malfunction Indicator Light Illumination: Illuminates as soon as a malfunction occurs.

- **Normality Judgment**

Judge as OK and clear the NG if the continuous time while the following conditions are established is more than the predetermined time.

Judgment Value

Malfunction Criteria	Threshold Value
MIL lighting request from DMCM	None

Time Needed for Diagnosis: 128 ms

EH:DTC P1160 RETURN SPRING FAILURE

1. OUTLINE OF DIAGNOSIS

Judge as NG when the valve is opened more than the default opening angle, but does not move to the close direction with the motor power stopped.

2. COMPONENT DESCRIPTION

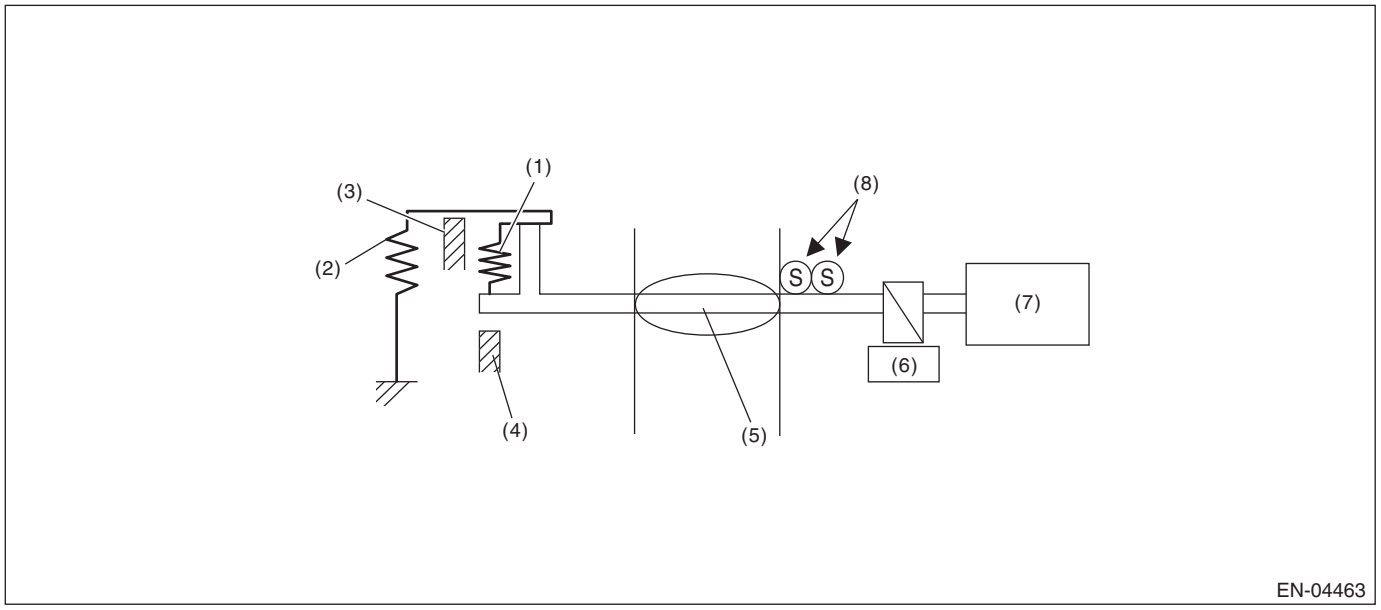

(1) Opener spring
(2) Return spring
(3) Intermediate stopper
(4) Full closed stopper
(5) Throttle valve
(6) Gear
(7) DC motor
(8) Main and sub throttle position sensor

3. ENABLE CONDITION

Secondary Parameters	Enable Conditions
Battery voltage	≥ 6 V
Ignition switch	OFF
Elapsed time after motor continuity is set to OFF	= 1.6 s

4. GENERAL DRIVING CYCLE

- Ignition switch ON → OFF
- Ignition switch OFF → ON (Only after clearing memory)

5. DIAGNOSTIC METHOD

• Abnormality Judgment

Judge as NG when the following conditions are established.

Judgment Value

Malfunction Criteria	Threshold Value
Opening variation after motor continuity is set to OFF	< 1.6%

Time Needed for Diagnosis: 24 ms
Malfunction Indicator Light Illumination: Illuminates as soon as a malfunction occurs.

- **Normality Judgment**

Judge as OK and clear the NG if the following conditions are established.

Judgment Value

Malfunction Criteria	Threshold Value
Opening variation after motor continuity is set to OFF	≥ 1.6%

Time Needed for Diagnosis: 3400 ms

EI: DTC P1449 EVAPORATIVE EMISSION CONT. SYS. AIR FILTER CLOG

1. OUTLINE OF DIAGNOSIS

Detect the drain filter clogging by the pressure change during purge introduction.
Judge as drain filter clogging malfunction if the pressure in the evaporative emission system piping suddenly decreases by the purging.

2. COMPONENT DESCRIPTION

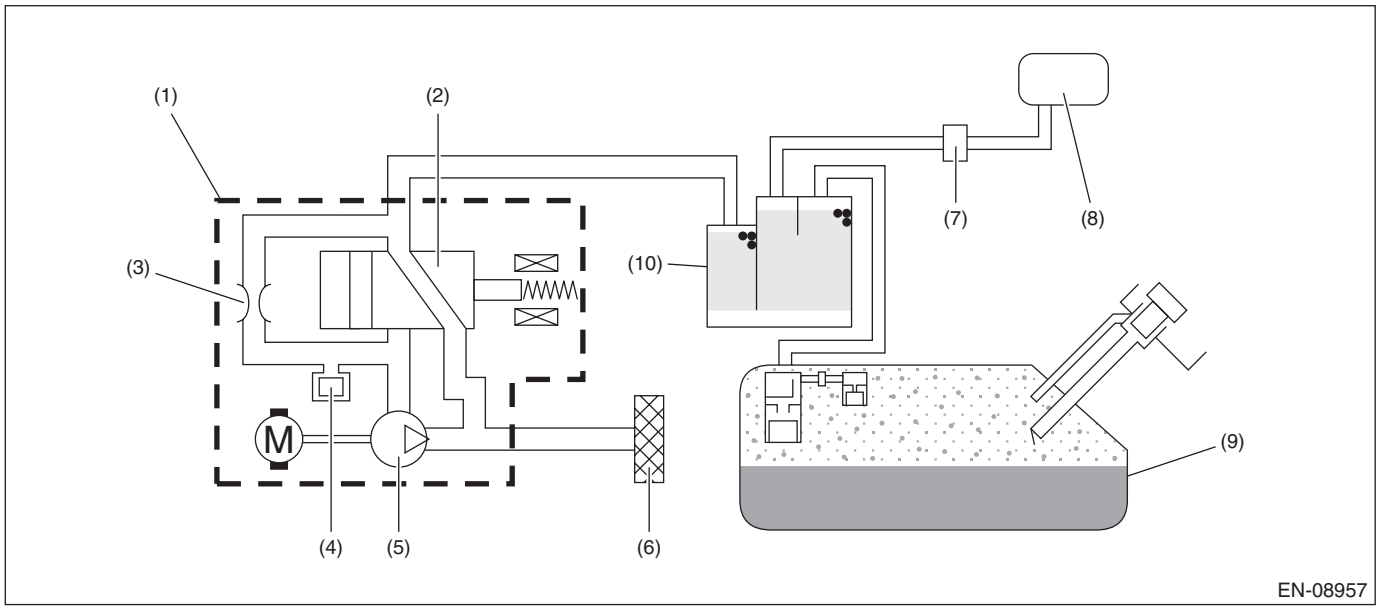

(1) ELCM
(2) Switching valve
(3) Reference orifice (0.02 inch orifice)
(4) Pressure sensor
(5) Vacuum pump
(6) Drain filter
(7) Purge control solenoid valve
(8) Intake manifold
(9) Fuel tank
(10) Canister

3. ENABLE CONDITIONS

Secondary Parameters	Enable Conditions
Battery voltage	≥ 10.9 V
Elapsed time after starting the engine	≥ 20000 ms
ELCM vacuum pump	Not in operation
ELCM switching valve	Open

4. GENERAL DRIVING CYCLE

Perform the diagnosis continuously when purging is performed after 20000 ms have passed since the engine started.

5. DIAGNOSTIC METHOD

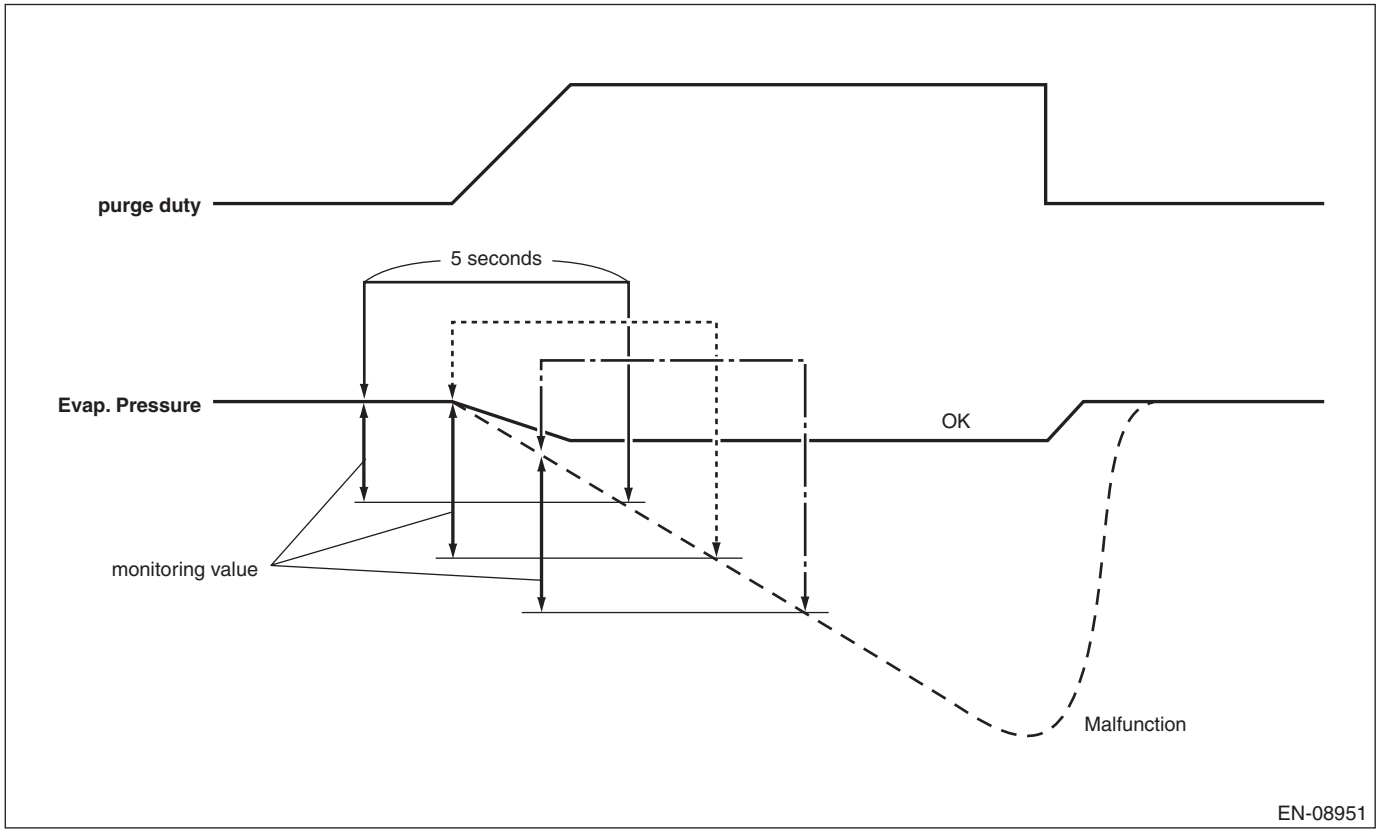

Calculate the difference between the ELCM pressure sensor output value as of 5 seconds ago and the current one, and if the value is greater than judgment value, detect and judge as filter clogging trouble.

- **Abnormality Judgment**

Judge as NG when the following conditions are established.

Judgment Value

Malfunction Criteria	Threshold Value
|Pressure sensor output value as of 5 seconds ago – Current pressure sensor output value|	> Value from Map
Number of above conditions established	> 2 time(s)

Map

Vehicle speed km/h (MPH)	0 (0)	20 (12.4)	40 (24.9)	60 (37.3)	80 (49.7)	100 (62.1)	120 (74.6)	300 (186.4)
|Pressure sensor output value as of 5 seconds ago – Current pressure sensor output value| kPa (mmHg, inHg)	1.1 (8.055, 0.3)	1.1 (8.055, 0.3)	1.1 (8.055, 0.3)	1.1 (8.055, 0.3)	1.1 (8.055, 0.3)	1.1 (8.055, 0.3)	1.1 (8.055, 0.3)	2.1 (15.99, 0.6)

Time Needed for Diagnosis: Approx. 5 seconds
Malfunction Indicator Light Illumination: Illuminates when malfunction occurs in 2 continuous driving cycles.

- **Normality Judgment**

Judge as OK and clear the NG if the following conditions are established.

Judgment Value

Malfunction Criteria	Threshold Value
|Pressure sensor output value as of 5 seconds ago – Current pressure sensor output value|	≤ Value from Map

EJ:DTC P1451 EVAPORATIVE EMISSION CONT. SYS.

1. OUTLINE OF DIAGNOSIS

NOTE:
For the detection standard, refer to DTC P0455. <Ref. to GD(H4DO HEV)-154, DTC P0455 EVAPORATIVE EMISSION SYSTEM LEAK DETECTED (LARGE LEAK), Diagnostic Trouble Code (DTC) Detecting Criteria.>

EK:DTC P1492 EGR SOLENOID VALVE SIGNAL #1 CIRCUIT MALFUNCTION (LOW INPUT)

1. OUTLINE OF DIAGNOSIS

- Detects open or short circuit of EGR.
- Judge as NG when the ECM output level differs from the actual terminal level.

2. COMPONENT DESCRIPTION

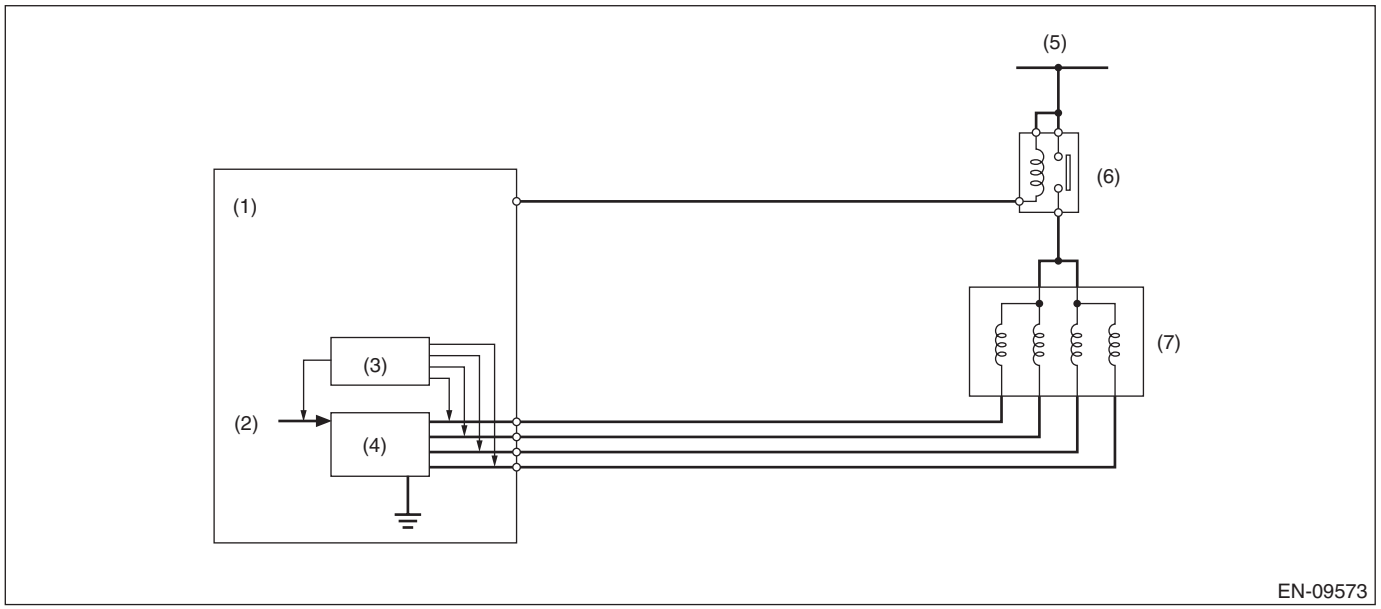

(1) Engine control module (ECM)
(2) Computer unit (CPU)
(3) Detecting circuit
(4) Switch circuit
(5) Battery voltage
(6) Main relay
(7) EGR control valve

3. ENABLE CONDITIONS

Secondary Parameters	Enable Conditions
Elapsed time after starting the engine	≥ 1 s
Battery voltage	≥ 10.9 V
EGR drive signal	OFF

4. GENERAL DRIVING CYCLE

Perform diagnosis continuously during EGR operation.

5. DIAGNOSTIC METHOD

- **Abnormality Judgment**

If the duration of time while the following conditions are met is longer than the time indicated, judge as NG.

Judgment Value

Malfunction Criteria	Threshold Value
EGR terminal voltage	≤ Battery voltage × 0.34

Time Needed for Diagnosis: 2500 ms
Malfunction Indicator Light Illumination: Illuminates as soon as a malfunction occurs.

- **Normality Judgment**

Judge as OK and clear the NG if the continuous time while the following conditions are established is more than the predetermined time.

Judgment Value

Malfunction Criteria	Threshold Value
EGR terminal voltage	> Battery voltage × 0.34

Time Needed for Diagnosis: 256 ms

EL:DTC P1493 EGR SOLENOID VALVE SIGNAL #1 CIRCUIT MALFUNCTION (HIGH INPUT)

1. OUTLINE OF DIAGNOSIS

- Detects open or short circuit of EGR.
- Judge as NG when the ECM output level differs from the actual terminal level.

2. COMPONENT DESCRIPTION

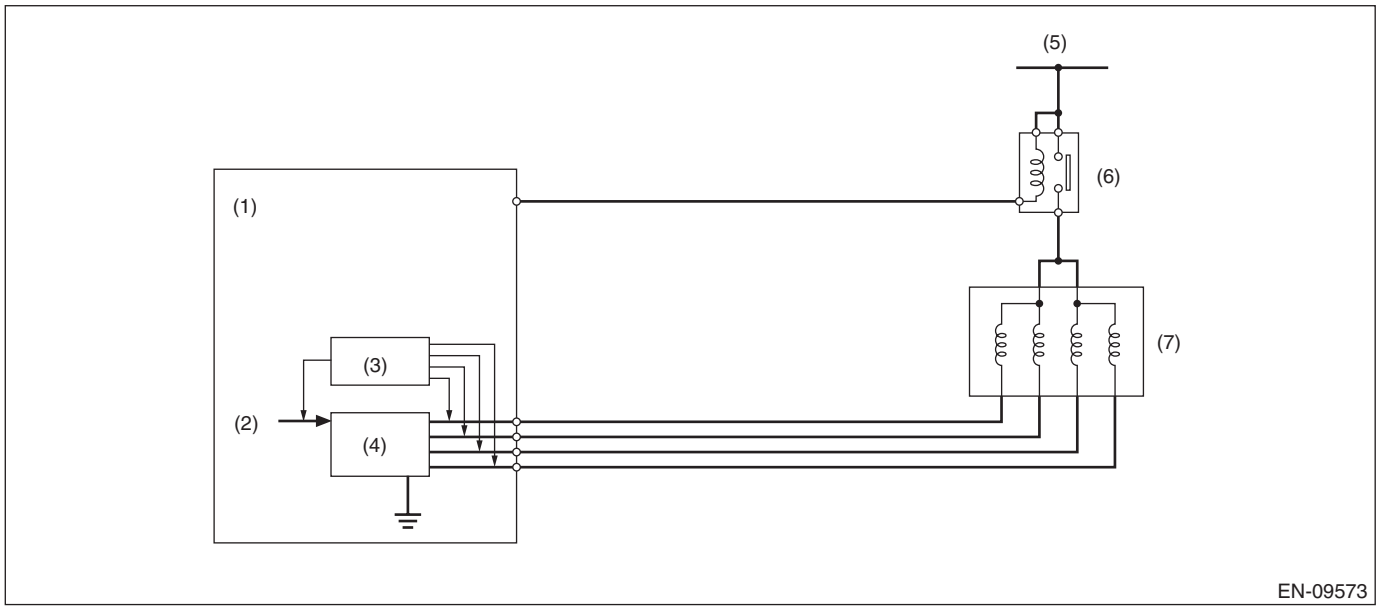

(1) Engine control module (ECM)
(2) Computer unit (CPU)
(3) Detecting circuit
(4) Switch circuit
(5) Battery voltage
(6) Main relay
(7) EGR control valve

3. ENABLE CONDITIONS

Secondary Parameters	Enable Conditions
Elapsed time after starting the engine	≥ 1 s
Battery voltage	≥ 10.9 V
EGR drive signal	ON

4. GENERAL DRIVING CYCLE

Always perform the diagnosis continuously.

5. DIAGNOSTIC METHOD

- **Abnormality Judgment**

If the duration of time while the following conditions are met is longer than the time indicated, judge as NG.

Judgment Value

Malfunction Criteria	Threshold Value
EGR terminal current	≥ 6 A

Time Needed for Diagnosis: 2500 ms
Malfunction Indicator Light Illumination: Illuminates as soon as a malfunction occurs.

- **Normality Judgment**

Judge as OK and clear the NG if the continuous time while the following conditions are established is more than the predetermined time.

Judgment Value

Malfunction Criteria	Threshold Value
EGR terminal current	< 6 A

Time Needed for Diagnosis: 256 ms

EM:DTC P1494 EGR SOLENOID VALVE SIGNAL #2 CIRCUIT MALFUNCTION (LOW INPUT)

1. OUTLINE OF DIAGNOSIS

NOTE:
For the detection standard, refer to DTC P1492. <Ref. to GD(H4DO HEV)-213, DTC P1492 EGR SOLENOID VALVE SIGNAL #1 CIRCUIT MALFUNCTION (LOW INPUT), Diagnostic Trouble Code (DTC) Detecting Criteria.>

EN:DTC P1495 EGR SOLENOID VALVE SIGNAL #2 CIRCUIT MALFUNCTION (HIGH INPUT)

1. OUTLINE OF DIAGNOSIS

NOTE:
For the detection standard, refer to DTC P1493. <Ref. to GD(H4DO HEV)-215, DTC P1493 EGR SOLENOID VALVE SIGNAL #1 CIRCUIT MALFUNCTION (HIGH INPUT), Diagnostic Trouble Code (DTC) Detecting Criteria.>

EO:DTC P1496 EGR SOLENOID VALVE SIGNAL #3 CIRCUIT MALFUNCTION (LOW INPUT)

1. OUTLINE OF DIAGNOSIS

NOTE:
For the detection standard, refer to DTC P1492. <Ref. to GD(H4DO HEV)-213, DTC P1492 EGR SOLENOID VALVE SIGNAL #1 CIRCUIT MALFUNCTION (LOW INPUT), Diagnostic Trouble Code (DTC) Detecting Criteria.>

EP:DTC P1497 EGR SOLENOID VALVE SIGNAL #3 CIRCUIT MALFUNCTION (HIGH INPUT)

1. OUTLINE OF DIAGNOSIS

NOTE:
For the detection standard, refer to DTC P1493. <Ref. to GD(H4DO HEV)-215, DTC P1493 EGR SOLENOID VALVE SIGNAL #1 CIRCUIT MALFUNCTION (HIGH INPUT), Diagnostic Trouble Code (DTC) Detecting Criteria.>

EQ:DTC P1498 EGR SOLENOID VALVE SIGNAL #4 CIRCUIT MALFUNCTION (LOW INPUT)

1. OUTLINE OF DIAGNOSIS

NOTE:
For the detection standard, refer to DTC P1492. <Ref. to GD(H4DO HEV)-213, DTC P1492 EGR SOLENOID VALVE SIGNAL #1 CIRCUIT MALFUNCTION (LOW INPUT), Diagnostic Trouble Code (DTC) Detecting Criteria.>

ER:DTC P1499 EGR SOLENOID VALVE SIGNAL #4 CIRCUIT MALFUNCTION (HIGH INPUT)

1. OUTLINE OF DIAGNOSIS

NOTE:
For the detection standard, refer to DTC P1493. <Ref. to GD(H4DO HEV)-215, DTC P1493 EGR SOLENOID VALVE SIGNAL #1 CIRCUIT MALFUNCTION (HIGH INPUT), Diagnostic Trouble Code (DTC) Detecting Criteria.>

ES:DTC P2004 INTAKE MANIFOLD RUNNER CONTROL STUCK OPEN (BANK 1)

1. OUTLINE OF DIAGNOSIS

Detect the malfunction of tumble generator valve motor function.
Judge open fixing malfunction when the opening degree is large even after finishing the tumble generator valve closing driving.

2. ENABLE CONDITION

Secondary Parameters	Enable Conditions
Battery voltage	≥ 10.9 V
Tumble generator valve “close” signal output time	≥ 1600 ms

3. GENERAL DRIVING CYCLE

Always perform the diagnosis continuously.

4. DIAGNOSTIC METHOD

- **Abnormality Judgment**

If the duration of time while the following conditions are met is longer than the time indicated, judge as NG.

Judgment Value

Malfunction Criteria	Threshold Value
Tumble generator valve	Open

Time Needed for Diagnosis: 3000 ms
Malfunction Indicator Light Illumination: Illuminates as soon as a malfunction occurs.

- **Normality Judgment**

Judge as OK and clear the NG if the following conditions are established.

Judgment Value

Malfunction Criteria	Threshold Value
Tumble generator valve	Close

Time Needed for Diagnosis: 1600 ms

ET:DTC P2005 INTAKE MANIFOLD RUNNER CONTROL STUCK OPEN (BANK 2)

1. OUTLINE OF DIAGNOSIS

Detect the malfunction of tumble generator valve motor function.
Judge open fixing malfunction when the opening degree is large even after finishing the tumble generator valve closing driving.

2. ENABLE CONDITION

Secondary Parameters	Enable Conditions
Battery voltage	≥ 10.9 V
Tumble generator valve “close” signal output time	≥ 1600 ms

3. GENERAL DRIVING CYCLE

Always perform the diagnosis continuously.

4. DIAGNOSTIC METHOD

- **Abnormality Judgment**

If the duration of time while the following conditions are met is longer than the time indicated, judge as NG.

Judgment Value

Malfunction Criteria	Threshold Value
Tumble generator valve	Open

Time Needed for Diagnosis: 3000 ms
Malfunction Indicator Light Illumination: Illuminates as soon as a malfunction occurs.

- **Normality Judgment**

Judge as OK and clear the NG if the following conditions are established.

Judgment Value

Malfunction Criteria	Threshold Value
Tumble generator valve	Close

Time Needed for Diagnosis: 1600 ms

EU:DTC P2006 INTAKE MANIFOLD RUNNER CONTROL STUCK CLOSED (BANK 1)

1. OUTLINE OF DIAGNOSIS

Detect the malfunction of tumble generator valve motor function.
Judge close fixing malfunction when the opening degree is small even after finishing the tumble generator valve open driving.

2. ENABLE CONDITION

Secondary Parameters	Enable Conditions
Battery voltage	≥ 10.9 V
Tumble generator valve “open” signal output time	≥ 1600 ms

3. GENERAL DRIVING CYCLE

Always perform the diagnosis continuously.

4. DIAGNOSTIC METHOD

- **Abnormality Judgment**

If the duration of time while the following conditions are met is longer than the time indicated, judge as NG.

Judgment Value

Malfunction Criteria	Threshold Value
Tumble generator valve	Close

Time Needed for Diagnosis: 3000 ms
Malfunction Indicator Light Illumination: Illuminates as soon as a malfunction occurs.

- **Normality Judgment**

Judge as OK and clear the NG if the following conditions are established.

Judgment Value

Malfunction Criteria	Threshold Value
Tumble generator valve	Open

Time Needed for Diagnosis: 1600 ms

EV:DTC P2007 INTAKE MANIFOLD RUNNER CONTROL STUCK CLOSED (BANK 2)

1. OUTLINE OF DIAGNOSIS

Detect the malfunction of tumble generator valve motor function.
Judge close fixing malfunction when the opening degree is small even after finishing the tumble generator valve open driving.

2. ENABLE CONDITION

Secondary Parameters	Enable Conditions
Battery voltage	≥ 10.9 V
Tumble generator valve “open” signal output time	≥ 1600 ms

3. GENERAL DRIVING CYCLE

Always perform the diagnosis continuously.

4. DIAGNOSTIC METHOD

- **Abnormality Judgment**

If the duration of time while the following conditions are met is longer than the time indicated, judge as NG.

Judgment Value

Malfunction Criteria	Threshold Value
Tumble generator valve	Close

Time Needed for Diagnosis: 3000 ms
Malfunction Indicator Light Illumination: Illuminates as soon as a malfunction occurs.

- **Normality Judgment**

Judge as OK and clear the NG if the following conditions are established.

Judgment Value

Malfunction Criteria	Threshold Value
Tumble generator valve	Open

Time Needed for Diagnosis: 1600 ms

EW:DTC P2009 INTAKE MANIFOLD RUNNER CONTROL CIRCUIT LOW (BANK 1)

1. OUTLINE OF DIAGNOSIS

Detect the open or short circuit of tumble generator valve motor.
Judge as NG when the overcurrent signal is sent from IC after tumble generator valve driving IC diagnosis.

2. COMPONENT DESCRIPTION

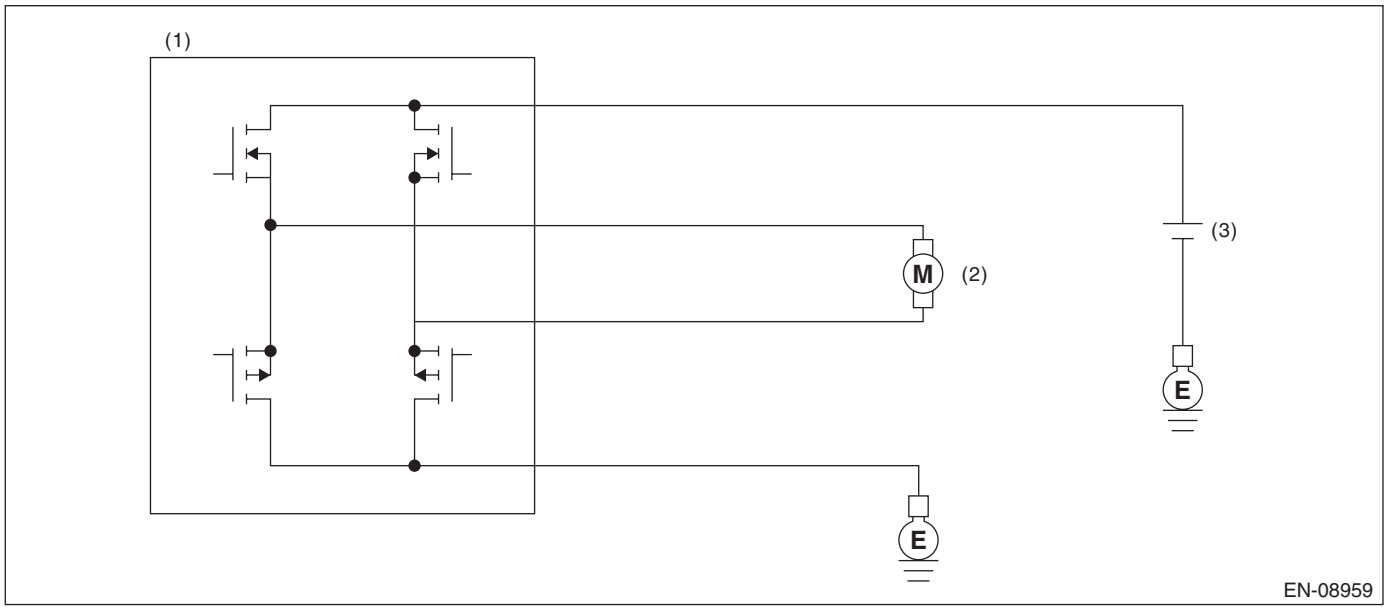

(1) Engine control module (ECM) (2) Tumble generator valve (3) Battery

3. ENABLE CONDITION

Secondary Parameters	Enable Conditions
Battery voltage	≥ 10.9 V
Tumble generator valve command	Open or close

4. GENERAL DRIVING CYCLE

Always perform the diagnosis continuously.

5. DIAGNOSTIC METHOD

• Abnormality Judgment

At the main IC, check the sent signal at each timing which occurs just before the tumble generator valve output is set to OFF → ON, and judge overcurrent NG when the overcurrent NG signal is sent 96 ms × 10 time(s) in a row.

Judgment Value

Malfunction Criteria	Threshold Value
Overcurrent NG signal input	ON

Time Needed for Diagnosis: 96 ms × 10 time(s)
Malfunction Indicator Light Illumination: Illuminates as soon as a malfunction occurs.

• Normality Judgment

Judge as OK and clear the NG when the OK signal is sent.

Judgment Value

Malfunction Criteria	Threshold Value
Overcurrent NG signal input	OFF

Time Needed for Diagnosis: Less than 1 second

EX:DTC P2012 INTAKE MANIFOLD RUNNER CONTROL CIRCUIT LOW (BANK 2)

1. OUTLINE OF DIAGNOSIS

Detect the open or short circuit of tumble generator valve motor.
Judge as NG when the overcurrent signal is sent from IC after tumble generator valve driving IC diagnosis.

2. COMPONENT DESCRIPTION

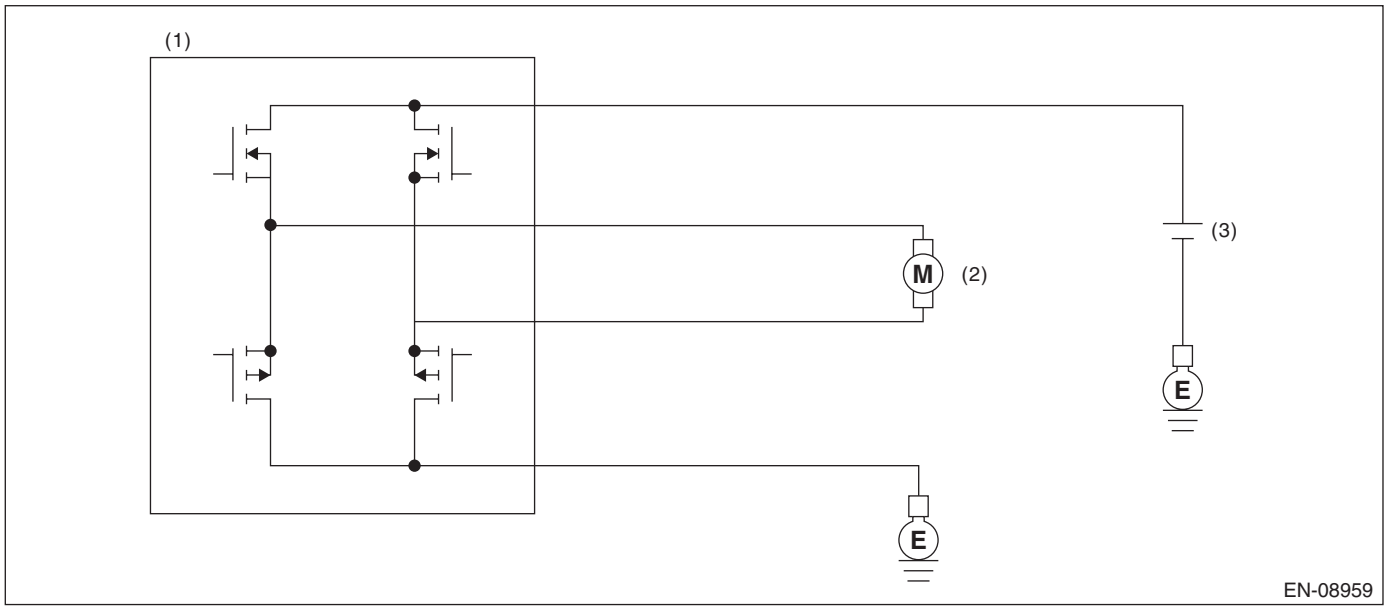

(1) Engine control module (ECM) (2) Tumble generator valve (3) Battery

3. ENABLE CONDITION

Secondary Parameters	Enable Conditions
Battery voltage	≥ 10.9 V
Tumble generator valve command	Open or close

4. GENERAL DRIVING CYCLE

Always perform the diagnosis continuously.

5. DIAGNOSTIC METHOD

• Abnormality Judgment

At the main IC, check the sent signal at each timing which occurs just before the tumble generator valve output is set to OFF → ON, and judge overcurrent NG when the overcurrent NG signal is sent 96 ms × 10 time(s) in a row.

Judgment Value

Malfunction Criteria	Threshold Value
Overcurrent NG signal input	ON

Time Needed for Diagnosis: 96 ms × 10 time(s)
Malfunction Indicator Light Illumination: Illuminates as soon as a malfunction occurs.

• Normality Judgment

Judge as OK and clear the NG when the OK signal is sent.

Judgment Value

Malfunction Criteria	Threshold Value
Overcurrent NG signal input	OFF

Time Needed for Diagnosis: Less than 1 second

EY:DTC P2096 POST CATALYST FUEL TRIM SYSTEM TOO LEAN (BANK 1)

1. OUTLINE OF DIAGNOSIS

Detect the malfunction of fuel system from the size of the sub feedback learning value.
Control the sub feedback learning and judge as NG when the learning value is in the lean zone.

2. COMPONENT DESCRIPTION

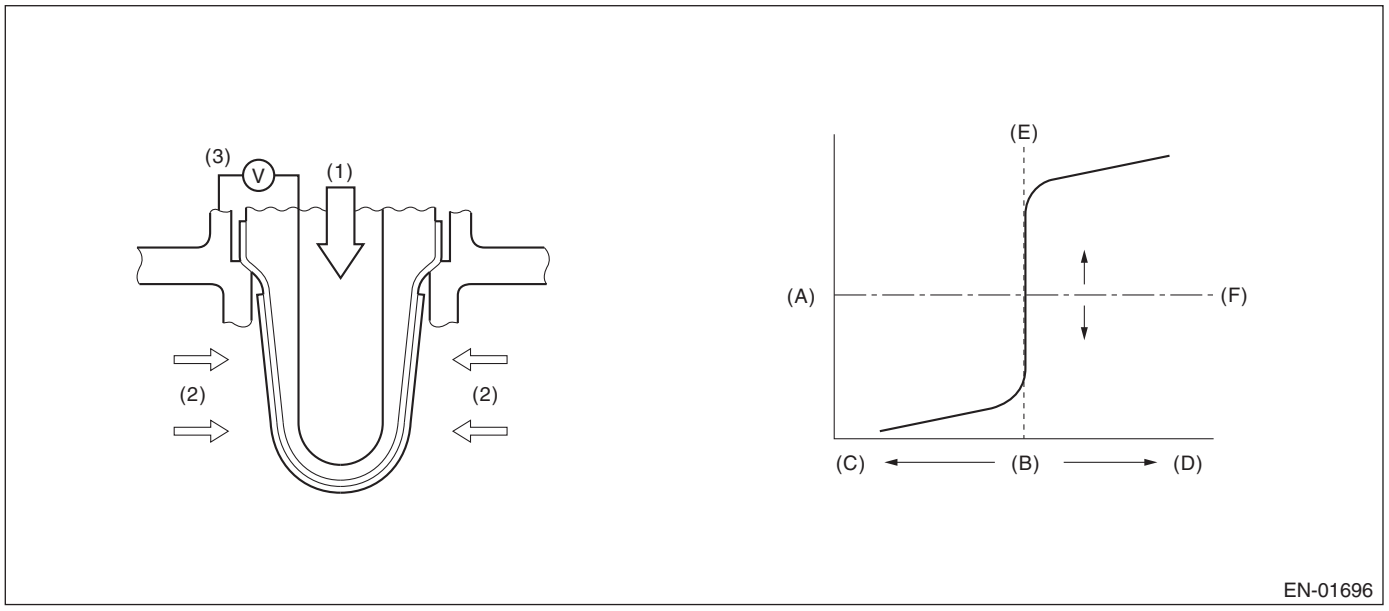

(A)	Electromotive force	(B)	Air fuel ratio	(C)	Lean
(D)	Rich	(E)	Theoretical air fuel ratio	(F)	Comparative voltage
(1)	Atmosphere	(2)	Exhaust gas	(3)	Electromotive force

3. ENABLE CONDITION

Secondary Parameters	Enable Conditions
Conditions for carrying out the sub feedback learning	Completed
Continuous time when all conditions are established.	≥ 1 s

4. GENERAL DRIVING CYCLE

Perform the diagnosis continuously when the vehicle is idling or running at a constant speed of 80 km/h (50 MPH) or more.

5. DIAGNOSTIC METHOD

• Abnormality Judgment

If the duration of time while the following conditions are met is longer than the time indicated, judge as NG.

Judgment Value

Malfunction Criteria	Threshold Value
Sub feedback learning value	< –0.065

Time Needed for Diagnosis: 1 s × 1 time(s)
Malfunction Indicator Light Illumination: Illuminates when malfunction occurs in 2 continuous driving cycles.

• Normality Judgment

Judge as OK and clear the NG if the continuous time while the following conditions are established is more than the predetermined time.

Judgment Value

Malfunction Criteria	Threshold Value
Sub feedback learning value	≥ –0.065 + 0

Time Needed for Diagnosis: 1 s

EZ:DTC P2097 POST CATALYST FUEL TRIM SYSTEM TOO RICH (BANK 1)

1. OUTLINE OF DIAGNOSIS

Detect the malfunction of fuel system from the size of the sub feedback learning value.
Sub feedback learning is being performed. When the learning value goes to the rich side, judge as NG.

2. COMPONENT DESCRIPTION

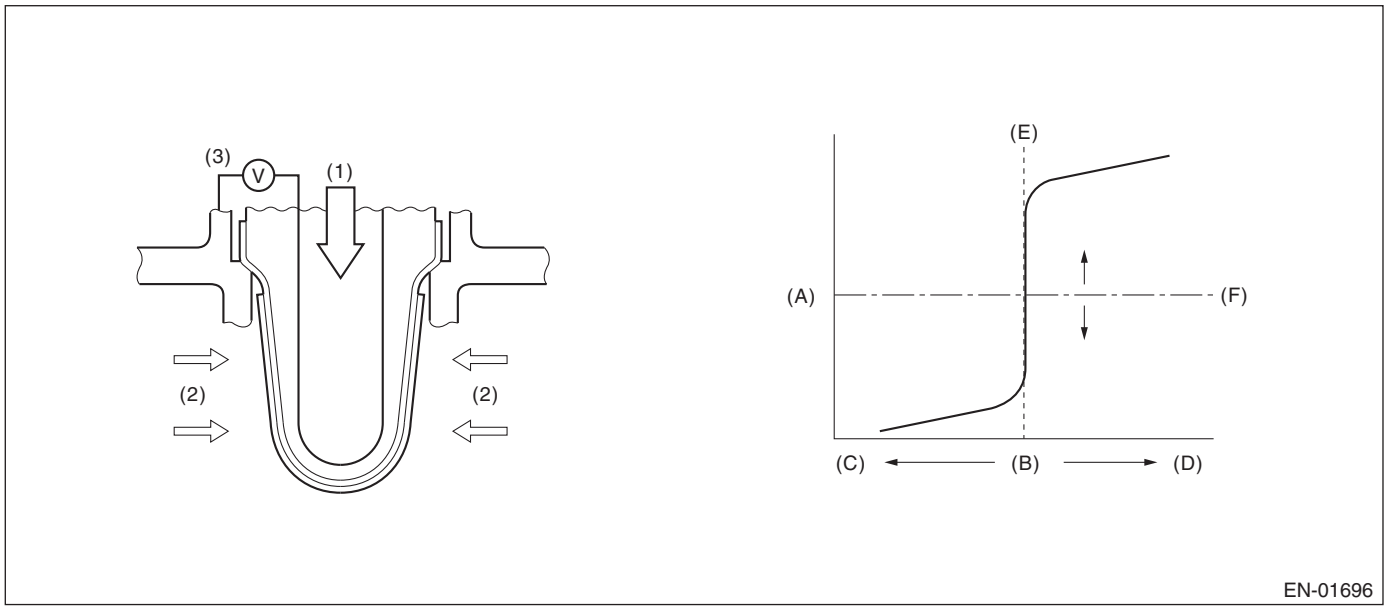

(A)	Electromotive force	(B)	Air fuel ratio	(C)	Lean
(D)	Rich	(E)	Theoretical air fuel ratio	(F)	Comparative voltage
(1)	Atmosphere	(2)	Exhaust gas	(3)	Electromotive force

3. ENABLE CONDITION

Secondary Parameters	Enable Conditions
Conditions for carrying out the sub feedback learning	Completed
Continuous time when all conditions are established.	≥ 1 s

4. GENERAL DRIVING CYCLE

Perform the diagnosis continuously when the vehicle is idling or running at a constant speed of 80 km/h (50 MPH) or more.

5. DIAGNOSTIC METHOD

• Abnormality Judgment

If the duration of time while the following conditions are met is longer than the time indicated, judge as NG.

Judgment Value

Malfunction Criteria	Threshold Value
Sub feedback learning value	≥ 0.036

Time Needed for Diagnosis: 1 s × 1 time(s)
Malfunction Indicator Light Illumination: Illuminates when malfunction occurs in 2 continuous driving cycles.

• Normality Judgment

Judge as OK and clear the NG if the continuous time while the following conditions are established is more than the predetermined time.

Judgment Value

Malfunction Criteria	Threshold Value
Sub feedback learning value	< 0.036 + 0

Time Needed for Diagnosis: 1 s

FA:DTC P2101 THROTTLE ACTUATOR CONTROL MOTOR CIRCUIT RANGE/ PERFORMANCE

1. OUTLINE OF DIAGNOSIS

Judge as NG when the motor current becomes large or drive circuit is heated.

2. COMPONENT DESCRIPTION

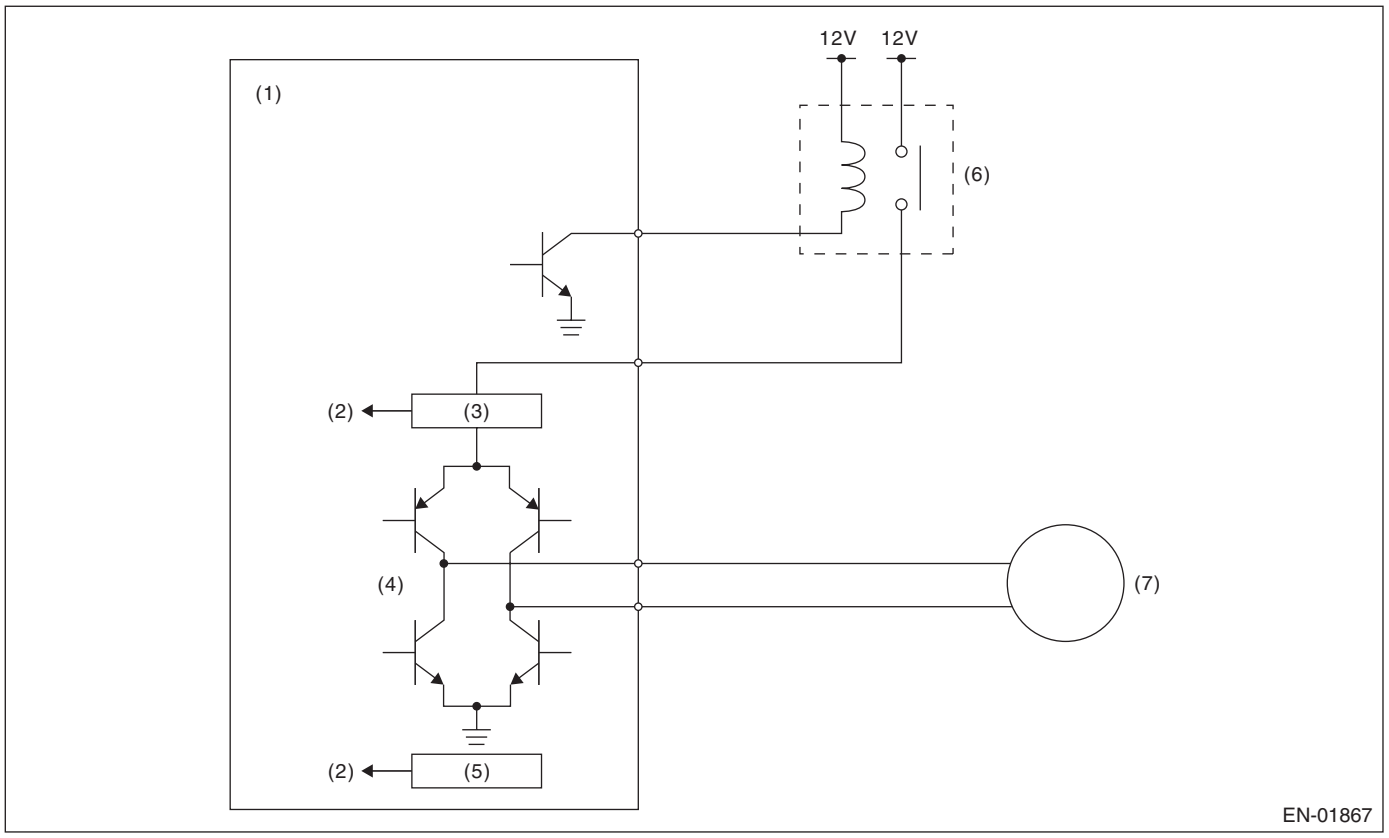

(1) Engine control module (ECM)
(2) Detecting circuit
(3) Overcurrent detection circuit
(4) Drive circuit
(5) Temperature detection circuit
(6) Electronic throttle control relay
(7) Motor

3. ENABLE CONDITION

Secondary Parameters	Enable Conditions
Under control of electronic throttle control	ON
Battery voltage	≥ 6.2 V

4. GENERAL DRIVING CYCLE

Always perform the diagnosis continuously.

5. DIAGNOSTIC METHOD

- **Abnormality Judgment**

If the duration of time while the following conditions are met is longer than the time indicated, judge as NG.

Judgment Value

Malfunction Criteria	Threshold Value
Overcurrent signal from driver	ON

Time Needed for Diagnosis: 512 ms
Malfunction Indicator Light Illumination: Illuminates as soon as a malfunction occurs.

- **Normality Judgment**

Judge as OK and clear the NG if the continuous time while the following conditions are established is more than the predetermined time.

Judgment Value

Malfunction Criteria	Threshold Value
Overcurrent signal from driver	OFF

Time Needed for Diagnosis: 2000 ms

FB:DTC P2102 THROTTLE ACTUATOR CONTROL MOTOR CIRCUIT LOW

1. OUTLINE OF DIAGNOSIS

Judge as NG when the electronic throttle control power is not supplied even when ECM sets the electronic throttle control relay to ON.

2. COMPONENT DESCRIPTION

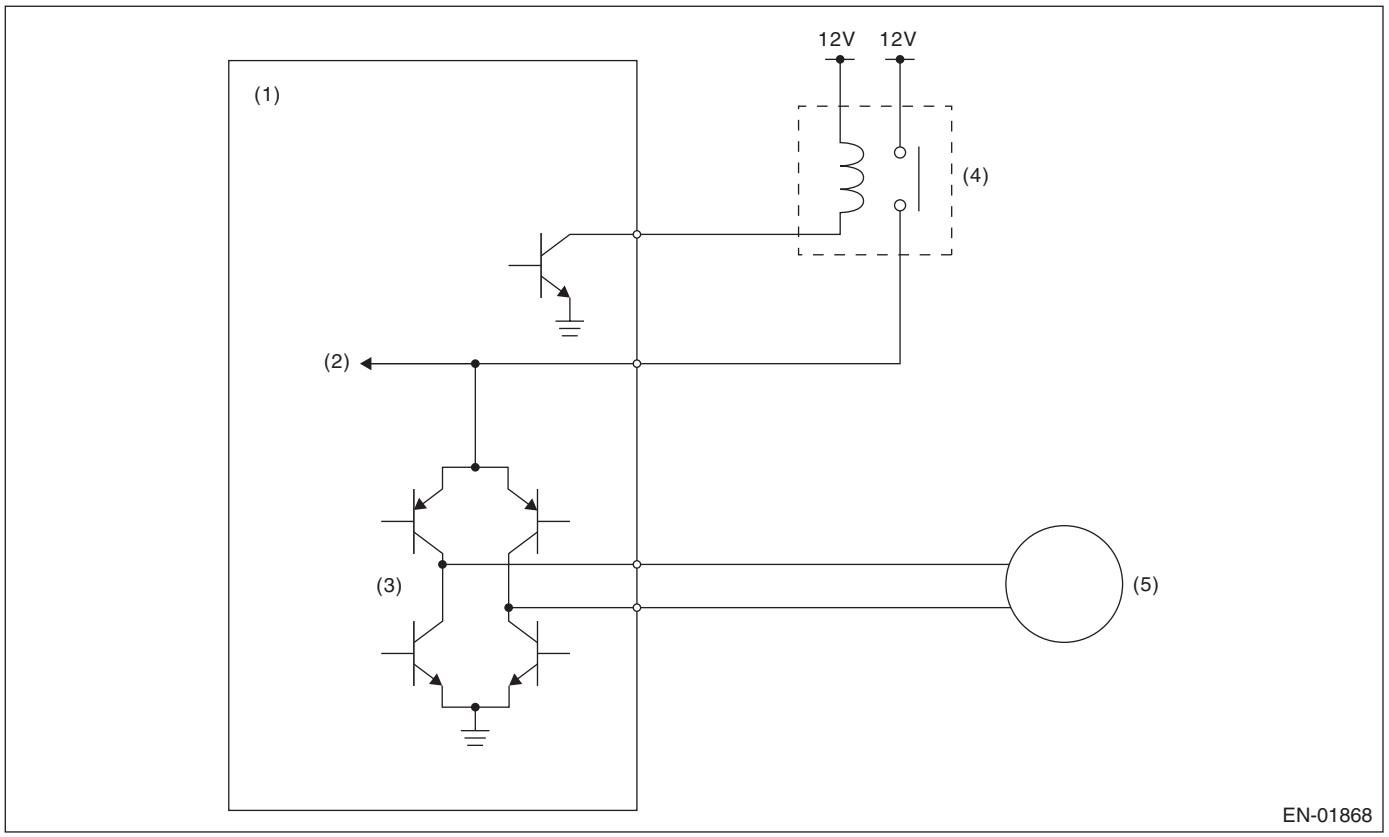

(1) Engine control module (ECM)
(2) Voltage detection circuit
(3) Drive circuit
(4) Electronic throttle control relay
(5) Motor

3. ENABLE CONDITION

Secondary Parameters	Enable Conditions
Battery voltage	≥ 11 V
Electronic throttle control relay output	ON

4. GENERAL DRIVING CYCLE

Always perform the diagnosis continuously.

5. DIAGNOSTIC METHOD

- **Abnormality Judgment**

If the duration of time while the following conditions are met is longer than the time indicated, judge as NG.

Judgment Value

Malfunction Criteria	Threshold Value
Motor power voltage	≤ 5 V

Time Needed for Diagnosis: 352 ms
Malfunction Indicator Light Illumination: Illuminates as soon as a malfunction occurs.

- **Normality Judgment**

Judge as OK and clear the NG if the continuous time while the following conditions are established is more than the predetermined time.

Judgment Value

Malfunction Criteria	Threshold Value
Motor power voltage	> 5 V

Time Needed for Diagnosis: 2000 ms

FC:DTC P2103 THROTTLE ACTUATOR CONTROL MOTOR CIRCUIT HIGH

1. OUTLINE OF DIAGNOSIS

Judge as NG when the electronic throttle control power is supplied even when ECM sets the electronic throttle control relay to OFF.

2. COMPONENT DESCRIPTION

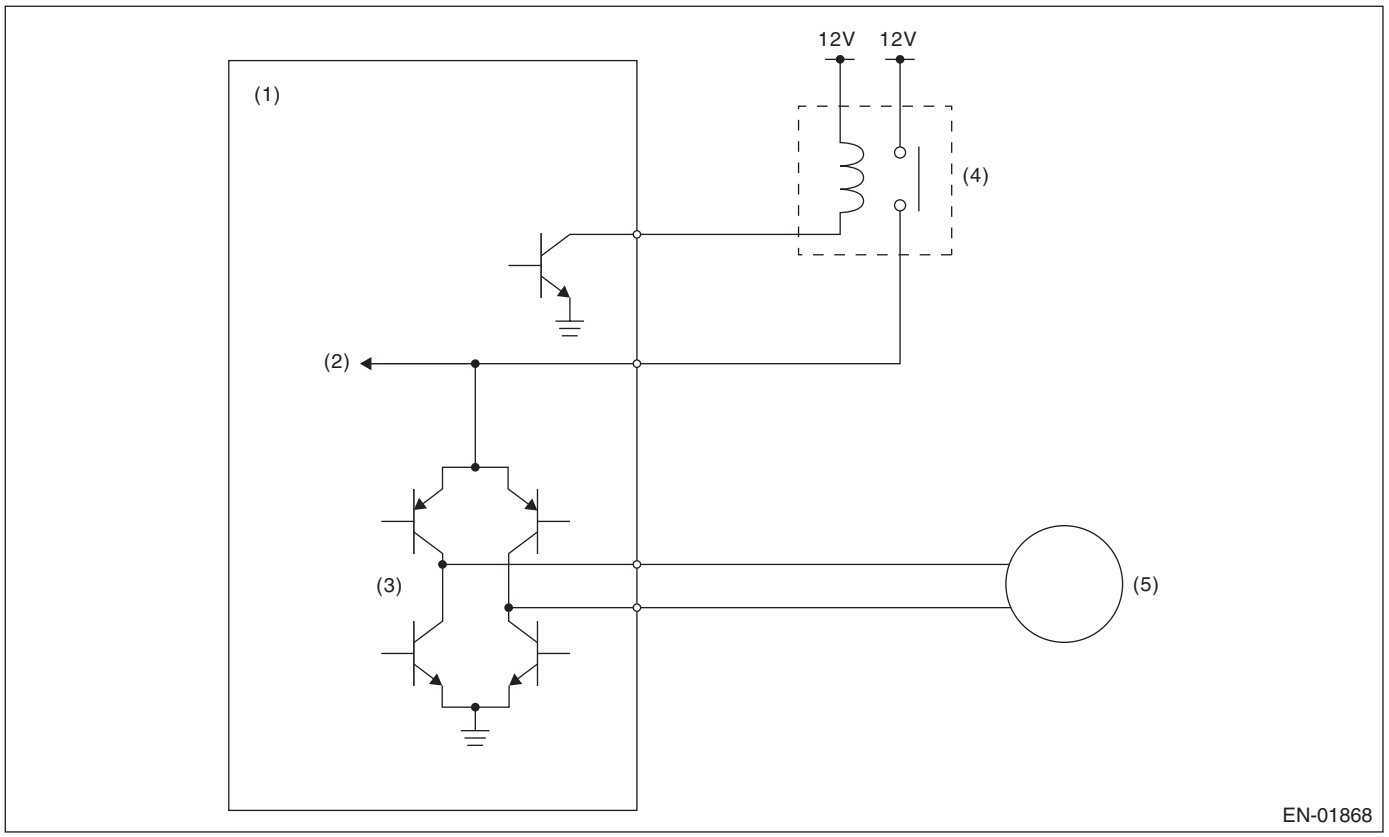

(1) Engine control module (ECM)
(2) Voltage detection circuit
(3) Drive circuit
(4) Electronic throttle control relay
(5) Motor

3. ENABLE CONDITION

Secondary Parameters	Enable Conditions
Battery voltage	≥ 6 V
Electronic throttle control relay output	OFF

4. GENERAL DRIVING CYCLE

- When ignition switch ON → OFF
- Ignition switch OFF → ON (Only after clearing memory)

5. DIAGNOSTIC METHOD

- **Abnormality Judgment**

If the duration of time while the following conditions are met is longer than the time indicated, judge as NG.

Judgment Value

Malfunction Criteria	Threshold Value
Motor power voltage	≥ 5 V

Time Needed for Diagnosis: 600 ms
Malfunction Indicator Light Illumination: Illuminates as soon as a malfunction occurs.

- **Normality Judgment**

Judge as OK and clear the NG if the continuous time while the following conditions are established is more than the predetermined time.

Judgment Value

Malfunction Criteria	Threshold Value
Motor power voltage	< 5 V

Time Needed for Diagnosis: 400 ms

FD:DTC P2109 THROTTLE/PEDAL POSITION SENSOR “A” MINIMUM STOP PERFORMANCE

1. OUTLINE OF DIAGNOSIS

Judge as NG when full close point learning cannot conducted or abnormal value is detected.

2. COMPONENT DESCRIPTION

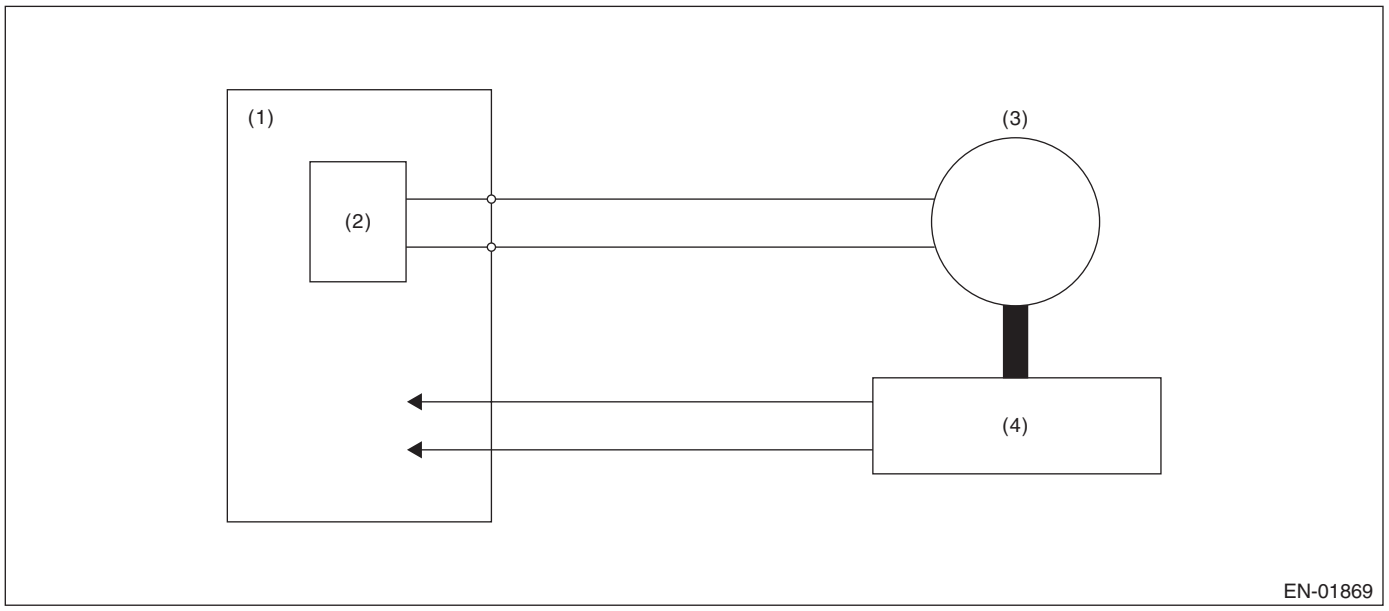

(1) Engine control module (ECM)
(2) Drive circuit
(3) Motor
(4) Throttle position sensor

3. ENABLE CONDITION

Secondary Parameters	Enable Conditions
Battery voltage	≥ 6 V

4. GENERAL DRIVING CYCLE

Perform the diagnosis at full closed point learning.

5. DIAGNOSTIC METHOD

- **Abnormality Judgment**

If the duration of time while the following conditions are met is longer than the time indicated, judge as NG.

Judgment Value

Malfunction Criteria	Threshold Value
Throttle sensor opening angle at full close point learning	< –4.02% (0.4 V) or > 4.02% (0.8 V)
or	
Throttle opening angle when the ignition switch is ON – Throttle minimum stop position	< 0.93% (0.05 V)

Time Needed for Diagnosis: 8 ms — 80 ms
Malfunction Indicator Light Illumination: Illuminates as soon as a malfunction occurs.

- **Normality Judgment**

Judge as OK and clear the NG if the continuous time while the following conditions are established is more than the predetermined time.

Judgment Value

Malfunction Criteria	Threshold Value
Throttle sensor opening angle at full close point learning	≥ –4.02% (0.4 V) and ≤ 4.02% (0.8 V)
Throttle opening angle when the ignition switch is ON – Throttle minimum stop position	≥ 0.93% (0.05 V)

Time Needed for Diagnosis: 8 ms

FE:DTC P2119 THROTTLE ACTUATOR CONTROL THROTTLE BODY RANGE/ PERFORMANCE

1. OUTLINE OF DIAGNOSIS

Judge as NG when the target opening angle and actual opening angle is mismatched or the current to motor is the specified duty or more for specified time continuously.

2. COMPONENT DESCRIPTION

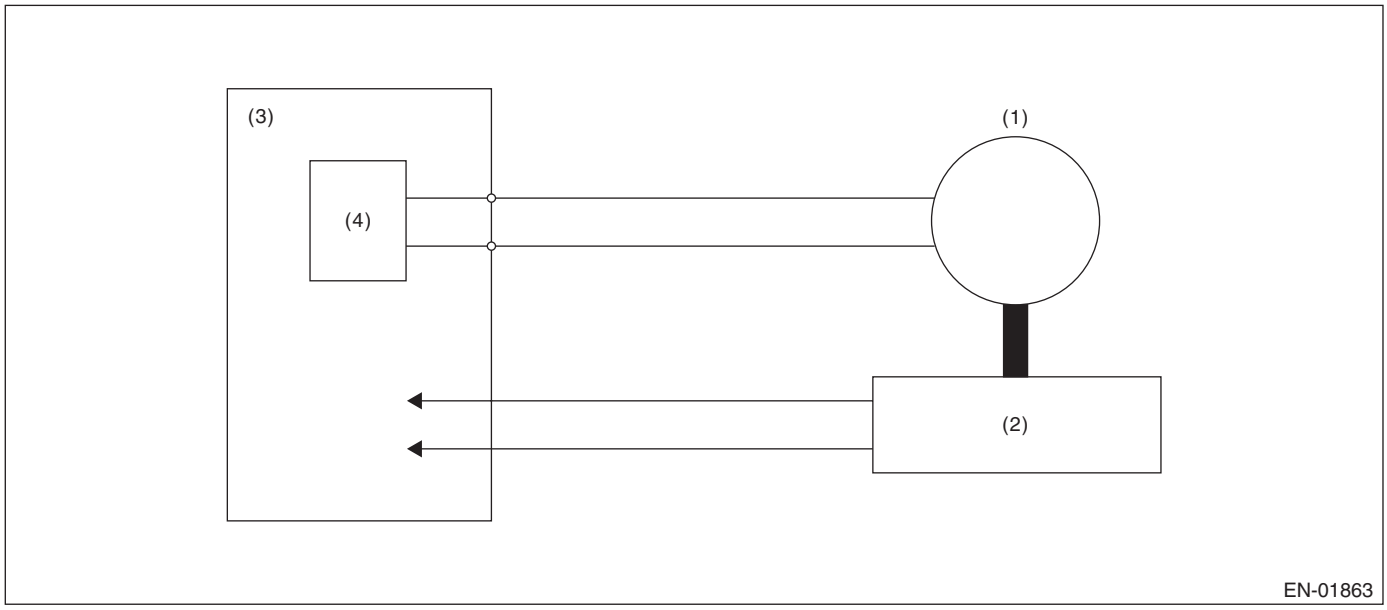

(1) Motor
(2) Throttle position sensor
(3) Engine control module (ECM)
(4) Drive circuit

3. ENABLE CONDITIONS

Secondary Parameters	Enable Conditions
Ignition switch	ON
Normal operation of electronic throttle control	ON

4. GENERAL DRIVING CYCLE

Always perform the diagnosis continuously when the electronic throttle control is operating.

5. DIAGNOSTIC METHOD

Judge as OK and clear the NG when the malfunction criteria below are met.

Judgment Value

Malfunction Criteria	Threshold Value
Difference between target opening angle and actual opening angle	Within OK range of **Details of Judgment value**
Output duty to drive circuit	< 95 %

Time Needed for Diagnosis:

- Difference between target opening angle and actual opening angle:
  - NG judgment: See **Details of Judgment time**
  - OK judgment: 2000 ms
- Output duty to drive circuit:
  - Engine speed ≥ 500 rpm: 2000 ms
  - Engine speed < 500 rpm: 5000 ms

Details of Judgment Value

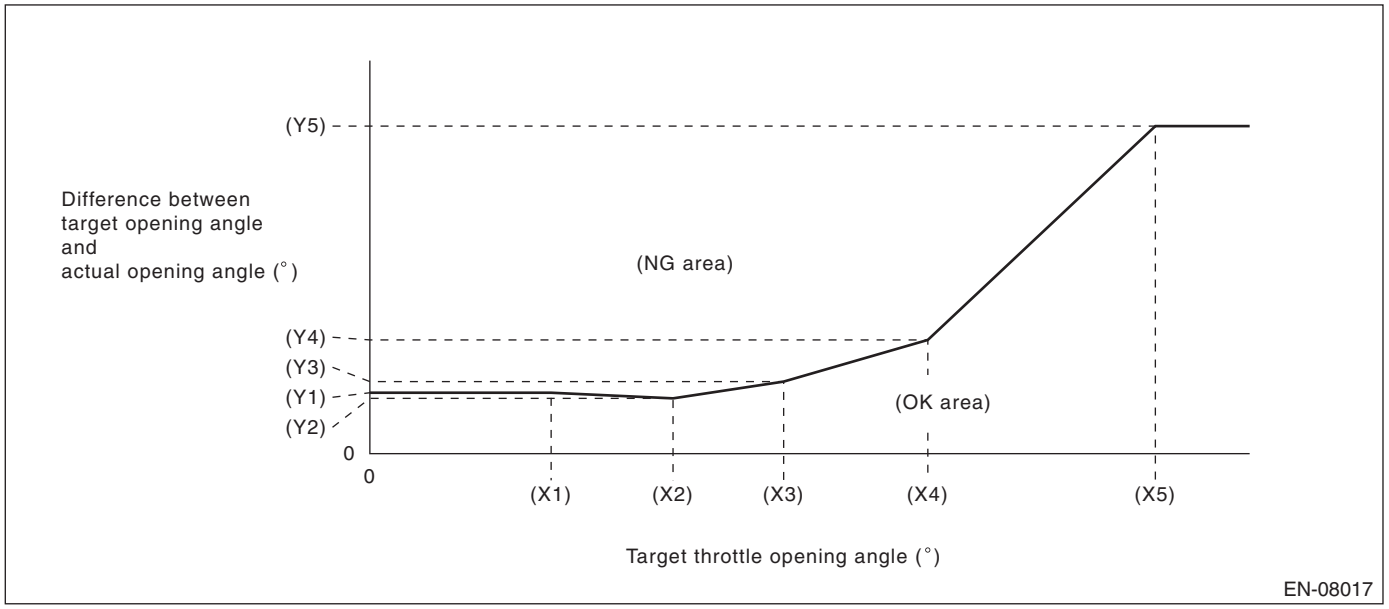

(X1) 6.915 °
(X2) 11.565 °
(X3) 15.785 °
(X4) 21.285 °
(X5) 29.965 °

(Y1) 4.65 °
(Y2) 4.22 °
(Y3) 5.5 °
(Y4) 8.68 °
(Y5) 25 °

Details of Judgment time

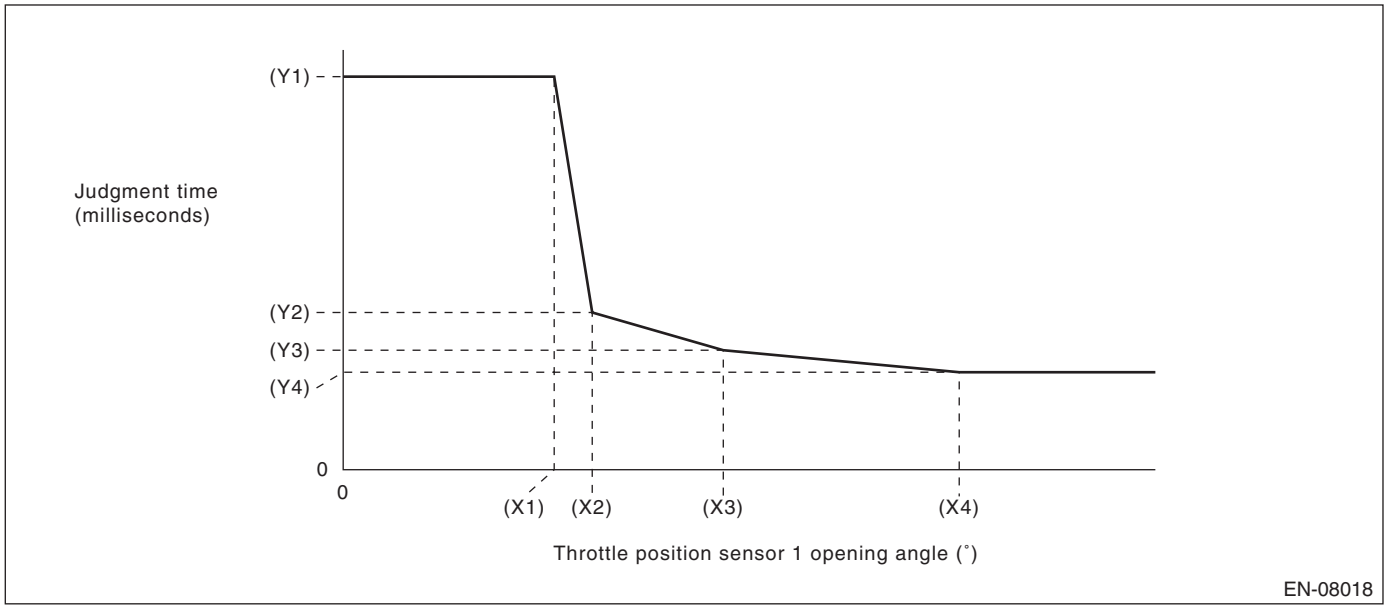

(X1) 8.049999237 °
(X2) 9.5 °
(X3) 14.5 °
(X4) 23.5 °

(Y1) 1000 ms
(Y2) 400 ms
(Y3) 304 ms
(Y4) 248 ms

NOTE:
Judgment time when actual opening angle ≤ target opening angle is always 1000 milliseconds.
Malfunction Indicator Light Illumination: Illuminates as soon as a malfunction occurs.

FF: DTC P2122 THROTTLE/PEDAL POSITION SENSOR/SWITCH "D" CIRCUIT LOW INPUT

1. OUTLINE OF DIAGNOSIS

Detect the open or short circuit of accelerator pedal position sensor 1.
Judge as NG if out of specification.

2. COMPONENT DESCRIPTION

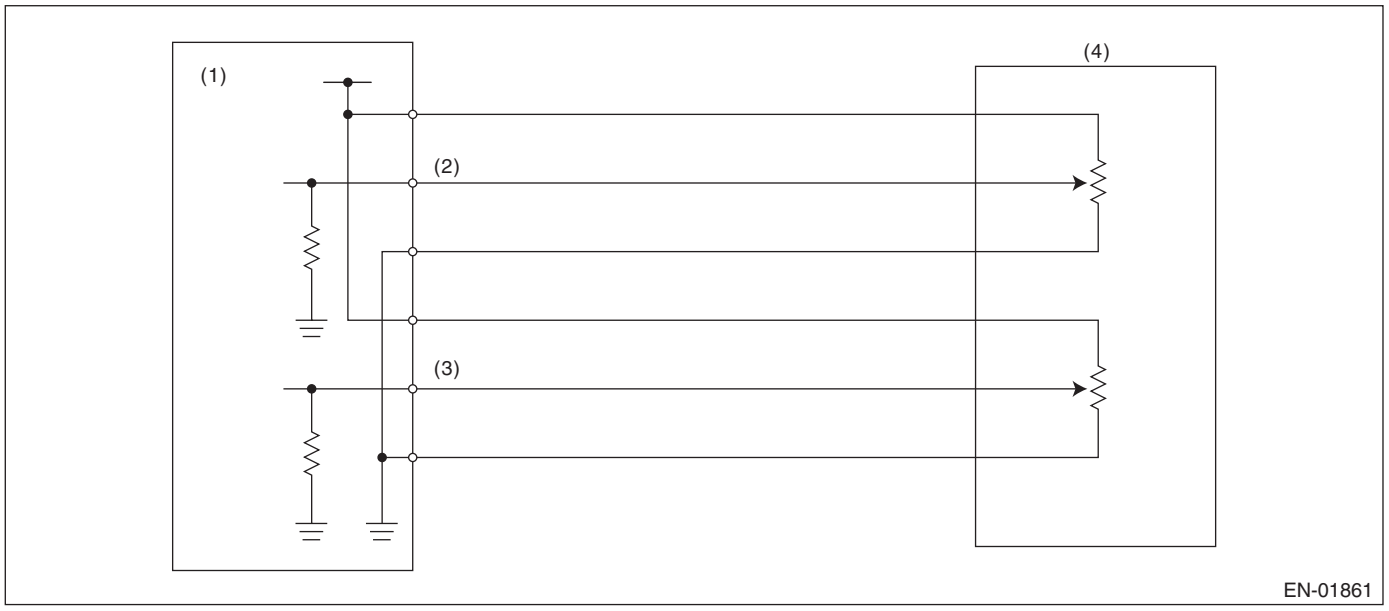

(1) Engine control module (ECM)
(2) Accelerator pedal position sensor 1 signal
(3) Accelerator pedal position sensor 2 signal
(4) Accelerator pedal position sensor

3. ENABLE CONDITION

Secondary Parameters	Enable Conditions
Battery voltage	≥ 6 V

4. GENERAL DRIVING CYCLE

Always perform the diagnosis continuously.

5. DIAGNOSTIC METHOD

- **Abnormality Judgment**

If the duration of time while the following conditions are met is longer than the time indicated, judge as NG.

Judgment Value

Malfunction Criteria	Threshold Value
Sensor 1 input voltage	< 0.298 V

Time Needed for Diagnosis: 100 ms
Malfunction Indicator Light Illumination: Illuminates as soon as a malfunction occurs.

- **Normality Judgment**

Judge as OK and clear the NG if the continuous time while the following conditions are established is more than the predetermined time.

Judgment Value

Malfunction Criteria	Threshold Value
Sensor 1 input voltage	≥ 0.298 V

Time Needed for Diagnosis: 100 ms

FG:DTC P2123 THROTTLE/PEDAL POSITION SENSOR/SWITCH “D” CIRCUIT HIGH INPUT

1. OUTLINE OF DIAGNOSIS

Detect the open or short circuit of accelerator pedal position sensor 1.
Judge as NG if out of specification.

2. COMPONENT DESCRIPTION

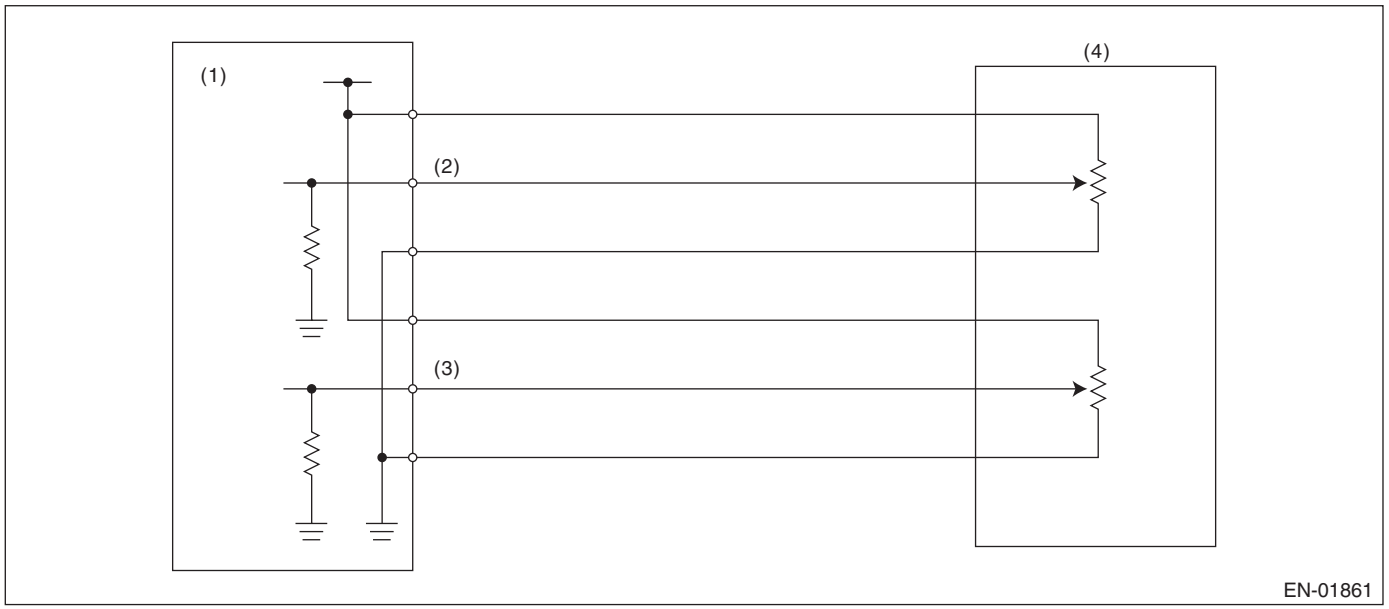

(1) Engine control module (ECM)
(2) Accelerator pedal position sensor 1 signal
(3) Accelerator pedal position sensor 2 signal
(4) Accelerator pedal position sensor

3. ENABLE CONDITION

Secondary Parameters	Enable Conditions
Battery voltage	≥ 6 V

4. GENERAL DRIVING CYCLE

Always perform the diagnosis continuously.

5. DIAGNOSTIC METHOD

- **Abnormality Judgment**

If the duration of time while the following conditions are met is longer than the time indicated, judge as NG.

Judgment Value

Malfunction Criteria	Threshold Value
Sensor 1 input voltage	≥ 4.737 V

Time Needed for Diagnosis: 32 ms
Malfunction Indicator Light Illumination: Illuminates as soon as a malfunction occurs.

- **Normality Judgment**

Judge as OK and clear the NG if the continuous time while the following conditions are established is more than the predetermined time.

Judgment Value

Malfunction Criteria	Threshold Value
Sensor 1 input voltage	< 4.737 V

Time Needed for Diagnosis: 32 ms

FH:DTC P2127 THROTTLE/PEDAL POSITION SENSOR/SWITCH “E” CIRCUIT LOW INPUT

1. OUTLINE OF DIAGNOSIS

Detect the open or short circuit of accelerator pedal position sensor 2.
Judge as NG if out of specification.

2. COMPONENT DESCRIPTION

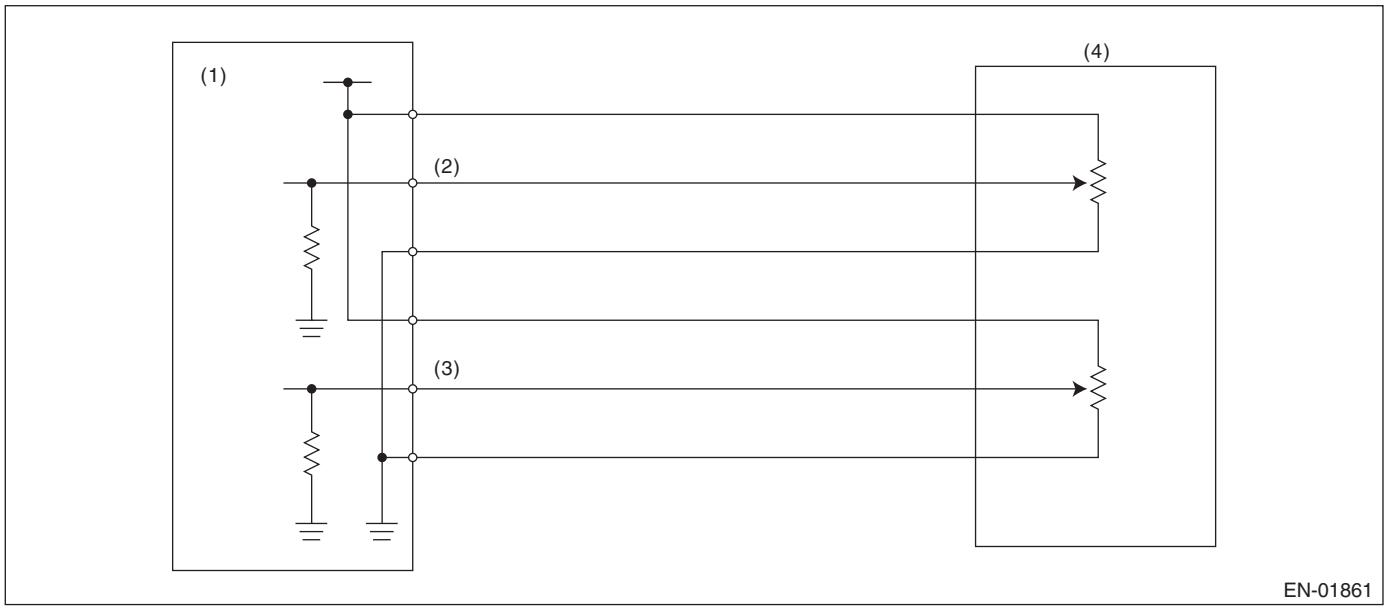

(1) Engine control module (ECM)
(2) Accelerator pedal position sensor 1 signal
(3) Accelerator pedal position sensor 2 signal
(4) Accelerator pedal position sensor

3. ENABLE CONDITION

Secondary Parameters	Enable Conditions
Battery voltage	≥ 6 V

4. GENERAL DRIVING CYCLE

Always perform the diagnosis continuously.

5. DIAGNOSTIC METHOD

- **Abnormality Judgment**

If the duration of time while the following conditions are met is longer than the time indicated, judge as NG.

Judgment Value

Malfunction Criteria	Threshold Value
Sensor 2 input voltage	< 0.298 V

Time Needed for Diagnosis: 100 ms
Malfunction Indicator Light Illumination: Illuminates as soon as a malfunction occurs.

- **Normality Judgment**

Judge as OK and clear the NG if the continuous time while the following conditions are established is more than the predetermined time.

Judgment Value

Malfunction Criteria	Threshold Value
Sensor 2 input voltage	≥ 0.298 V

Time Needed for Diagnosis: 100 ms

FI: DTC P2128 THROTTLE/PEDAL POSITION SENSOR/SWITCH “E” CIRCUIT HIGH INPUT

1. OUTLINE OF DIAGNOSIS

Detect the open or short circuit of accelerator pedal position sensor 2.
Judge as NG if out of specification.

2. COMPONENT DESCRIPTION

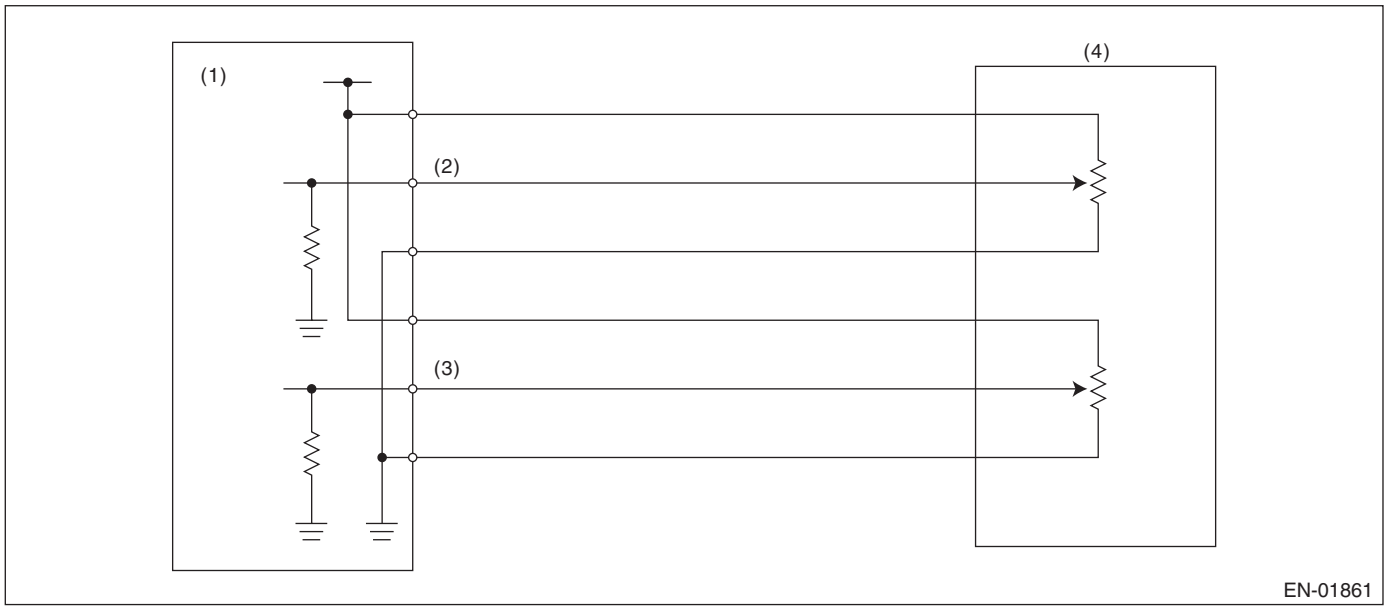

(1) Engine control module (ECM)
(2) Accelerator pedal position sensor 1 signal
(3) Accelerator pedal position sensor 2 signal
(4) Accelerator pedal position sensor

3. ENABLE CONDITION

Secondary Parameters	Enable Conditions
Battery voltage	≥ 6 V

4. GENERAL DRIVING CYCLE

Always perform the diagnosis continuously.

5. DIAGNOSTIC METHOD

- **Abnormality Judgment**

If the duration of time while the following conditions are met is longer than the time indicated, judge as NG.

Judgment Value

Malfunction Criteria	Threshold Value
Sensor 2 input voltage	≥ 4.737 V

Time Needed for Diagnosis: 100 ms
Malfunction Indicator Light Illumination: Illuminates as soon as a malfunction occurs.

- **Normality Judgment**

Judge as OK and clear the NG if the continuous time while the following conditions are established is more than the predetermined time.

Judgment Value

Malfunction Criteria	Threshold Value
Sensor 2 input voltage	< 4.737 V

Time Needed for Diagnosis: 100 ms

FJ: DTC P2135 THROTTLE/PEDAL POSITION SENSOR/SWITCH "A"/"B" VOLTAGE CORRELATION

1. OUTLINE OF DIAGNOSIS

Judge as NG when the signal level of throttle position sensor 1 is different from the throttle position sensor 2.

2. COMPONENT DESCRIPTION

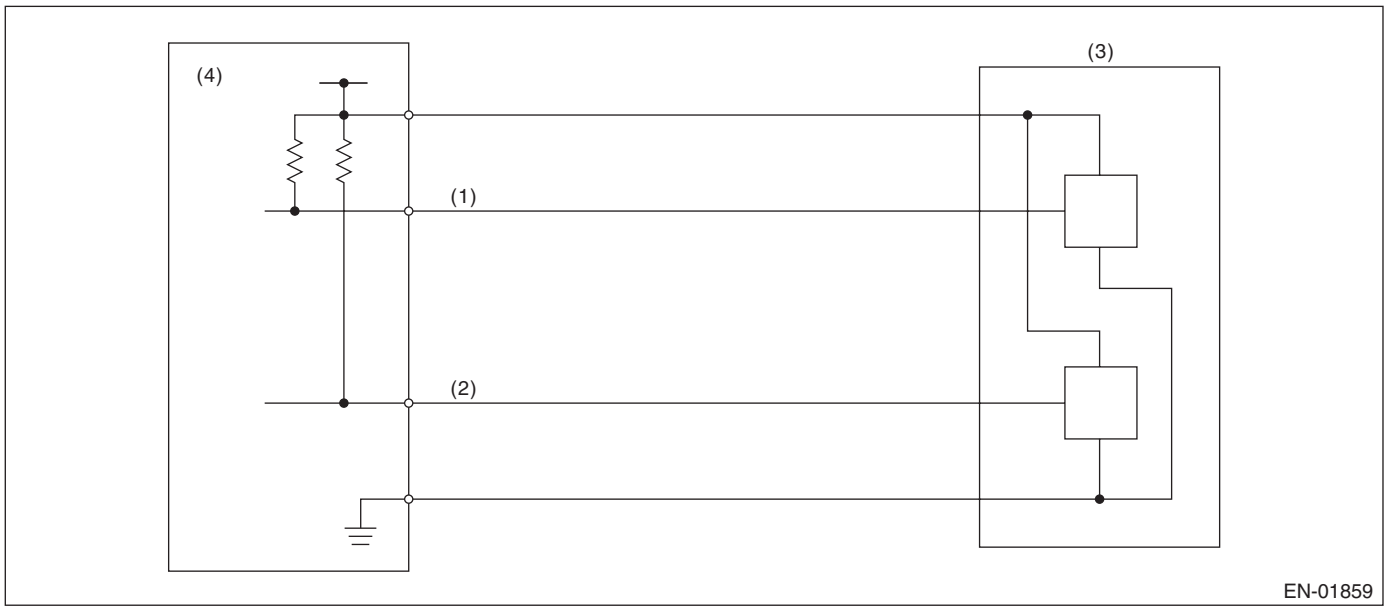

(1) Throttle position sensor 1 signal
(2) Throttle position sensor 2 signal
(3) Throttle position sensor
(4) Engine control module (ECM)

3. ENABLE CONDITION

Secondary Parameters	Enable Conditions
Battery voltage	≥ 6 V

4. GENERAL DRIVING CYCLE

Always perform the diagnosis continuously.

5. DIAGNOSTIC METHOD

- **Abnormality Judgment**

If the duration of time while the following conditions are met is longer than the time indicated, judge as NG.

Judgment Value

Malfunction Criteria	Threshold Value
Signal difference between two sensors	Within NG range of **Details of Judgment value**

Details of Judgment Value

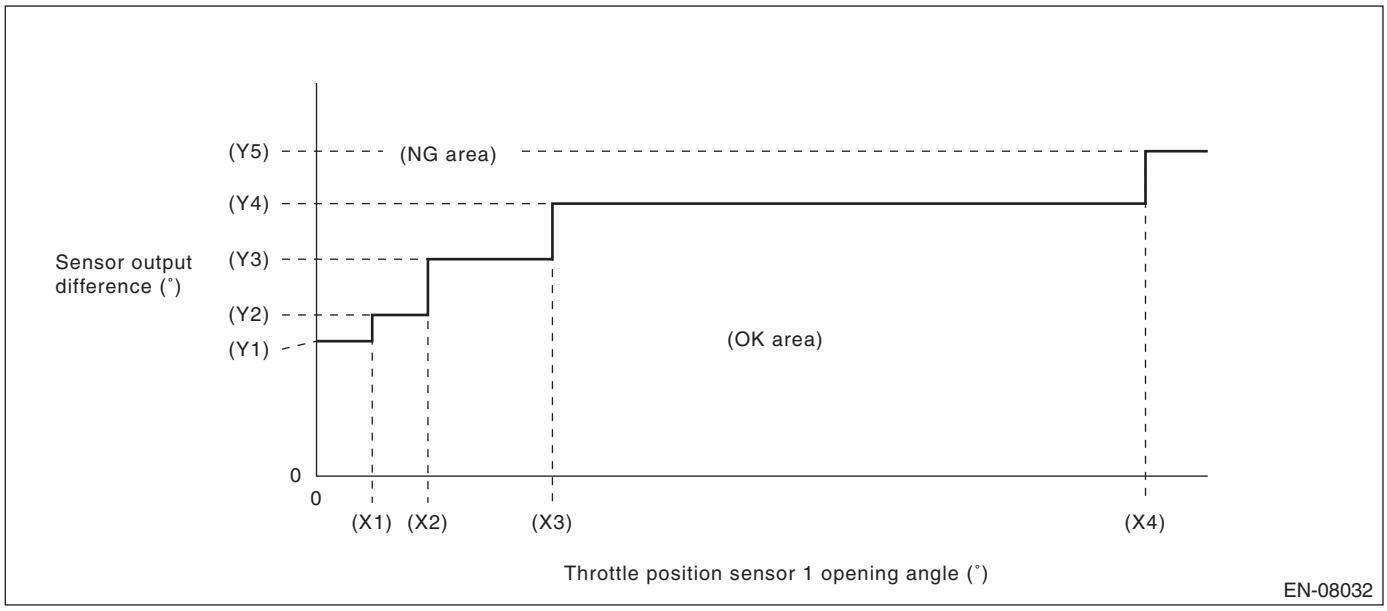

(X1) 2.125 °
(X2) 4.25 °
(X3) 9 °
(X4) 31.625 °

(Y1) 4.736 °
(Y2) 5.736 °
(Y3) 7.861 °
(Y4) 9.986 °
(Y5) 11.986 °

Time Needed for Diagnosis: 212 ms
Malfunction Indicator Light Illumination: Illuminates as soon as a malfunction occurs.

- **Normality Judgment**

Judge as OK and clear the NG if the continuous time while the following conditions are established is more than the predetermined time.

Judgment Value

Malfunction Criteria	Threshold Value
Signal difference between two sensors	Within OK range of **Details of Judgment value**

Time Needed for Diagnosis: 24 ms

FK:DTC P2138 THROTTLE/PEDAL POSITION SENSOR/SWITCH “D”/“E” VOLTAGE CORRELATION

1. OUTLINE OF DIAGNOSIS

Judge as NG when the signal level of throttle position sensor 1 is different from the throttle position sensor 2.

2. COMPONENT DESCRIPTION

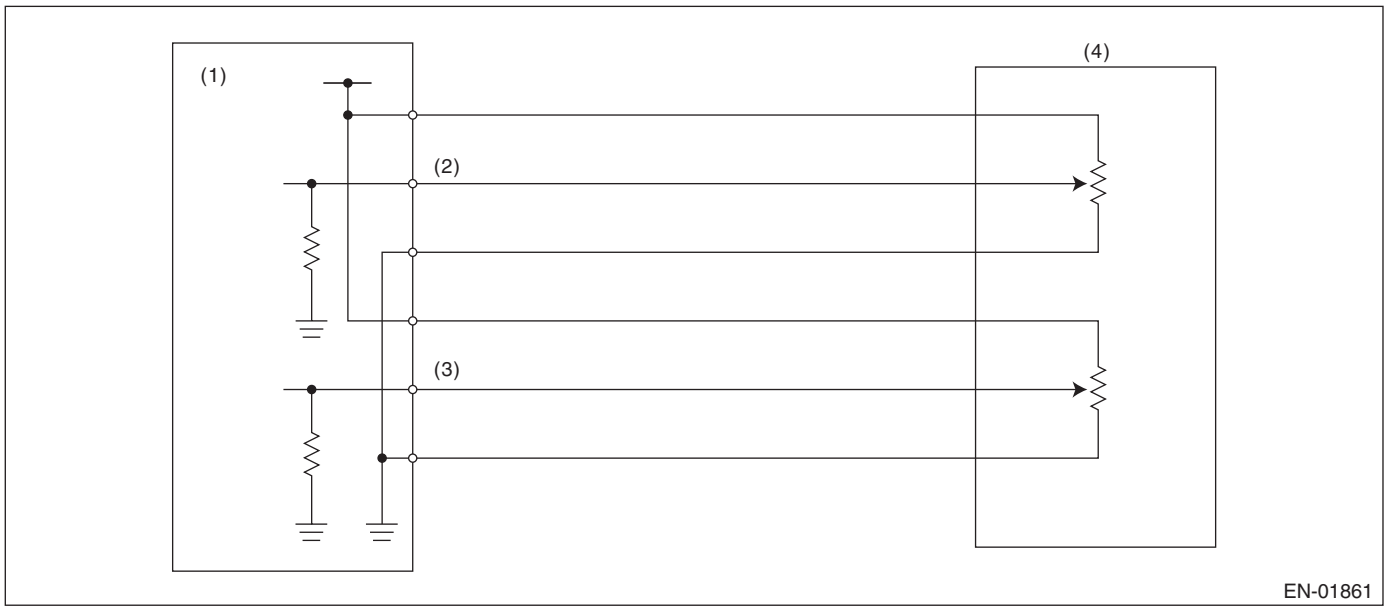

(1) Engine control module (ECM)
(2) Accelerator pedal position sensor 1 signal
(3) Accelerator pedal position sensor 2 signal
(4) Accelerator pedal position sensor

3. ENABLE CONDITION

Secondary Parameters	Enable Conditions
Battery voltage	≥ 6 V

4. GENERAL DRIVING CYCLE

Always perform the diagnosis continuously.

5. DIAGNOSTIC METHOD

- **Abnormality Judgment**

If the duration of time while the following conditions are met is longer than the time indicated, judge as NG.

Judgment Value

Malfunction Criteria	Threshold Value
Signal difference between two sensors	Within NG range of **Details of Judgment value**

Details of Judgment Value

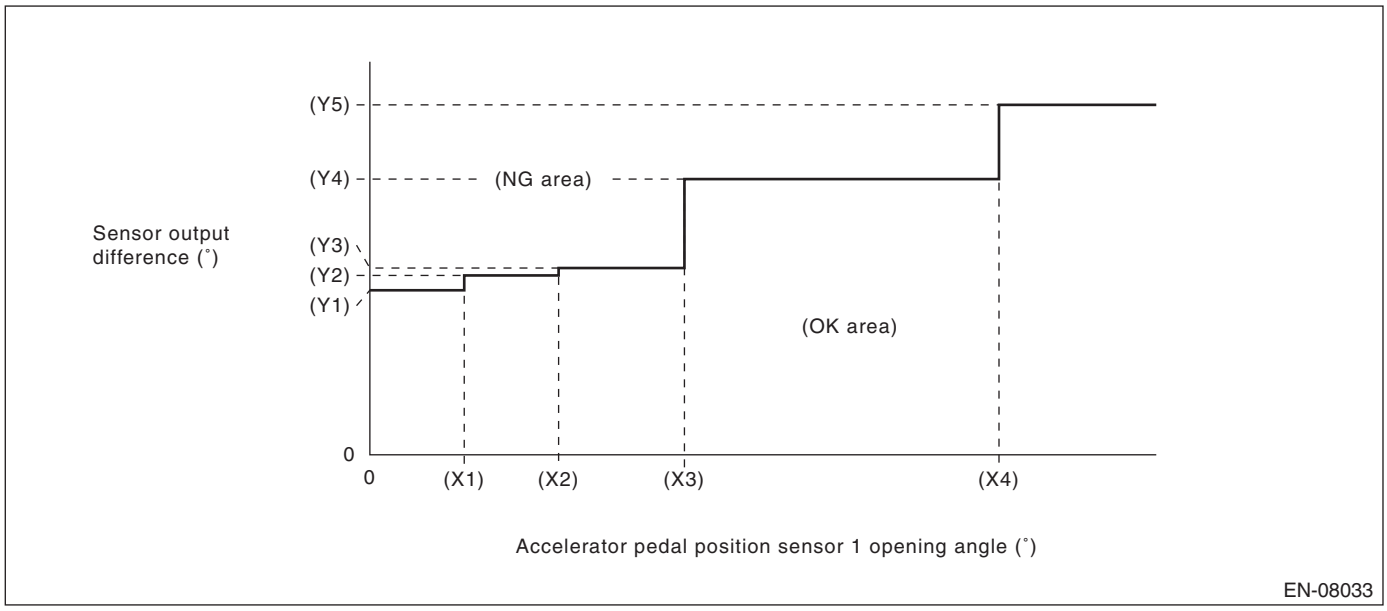

(X1) 0.6 °
(X2) 1.2 °
(X3) 2 °
(X4) 4 °

(Y1) 1.465 °
(Y2) 1.597 °
(Y3) 1.663 °
(Y4) 2.455 °
(Y5) 3.116 °

Time Needed for Diagnosis: 116 ms
Malfunction Indicator Light Illumination: Illuminates as soon as a malfunction occurs.

- **Normality Judgment**

Judge as OK and clear the NG if the continuous time while the following conditions are established is more than the predetermined time.

Judgment Value

Malfunction Criteria	Threshold Value
Signal difference between two sensors	Within OK range of **Details of Judgment value**

Time Needed for Diagnosis: 116 ms

FL: DTC P2195 O2 SENSOR SIGNAL BIASED/STUCK LEAN (BANK 1 SENSOR 1)

1. OUTLINE OF DIAGNOSIS

Detect that λ value remains low.
Judge as NG when lambda value is abnormal in accordance with λ value of front oxygen (A/F) sensor and running conditions such as vehicle speed, amount of intake air, engine coolant temperature, sub feedback control, etc.

λ value = Actual air fuel ratio/Theoretical air fuel ratio
λ > 1: Lean
λ < 1: Rich

2. COMPONENT DESCRIPTION

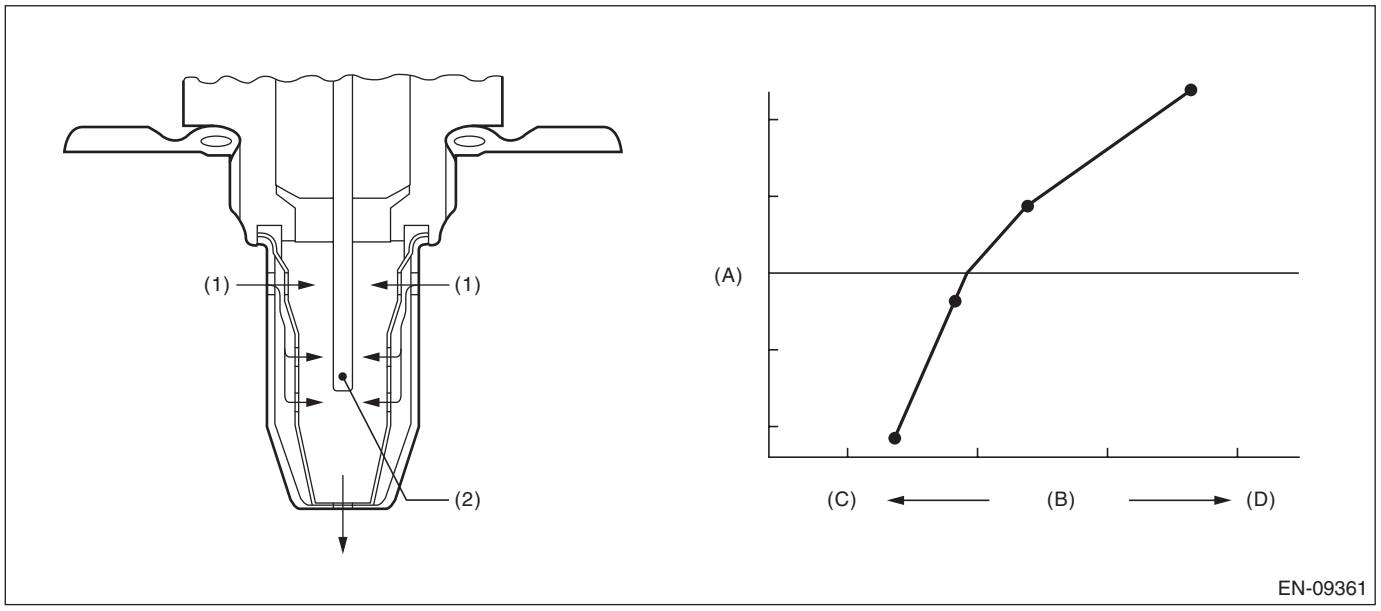

(A) Electromotive force
(B) Air fuel ratio
(C) Rich
(D) Lean

(1) Exhaust gas
(2) ZrO_2

3. ENABLE CONDITIONS

Secondary Parameters	Enable Conditions
Time needed for all secondary parameters to be in enable conditions	≥ 4096 ms
Battery voltage	≥ 10.9 V
Atmospheric pressure	≥ 75.1 kPa (563 mmHg, 22.2 inHg)
Rear oxygen sensor sub feedback	Execution
Rear oxygen sensor output voltage – Feedback target voltage	– 0.2 V — 0.1 V
or rear oxygen sensor sub feedback compensation coefficient	On Min.
or rear oxygen sensor sub feedback compensation coefficient	On Max.
Elapsed time after starting the engine	≥ 0 ms
Engine coolant temperature	≥ –40 °C (–40 °F)
Vehicle speed	≥ 0 km/h (0 MPH)
Amount of intake air	≥ 6 g/s (0.21 oz/s)
Targeted lambda value load compensation coefficient	–1 — 1.000

4. GENERAL DRIVING CYCLE

Perform diagnosis continuously at a constant speed of 0 km/h (0 MPH) or more after 0 ms have passed since the engine started.

5. DIAGNOSTIC METHOD

- **Abnormality Judgment**

If the duration of time while the following conditions are met is longer than the time indicated, judge as NG.

Judgment Value

Malfunction Criteria	Threshold Value
λ value	< 0.85

Time Needed for Diagnosis: 10000 ms
Malfunction Indicator Light Illumination: Illuminates when malfunction occurs in 2 continuous driving cycles.

- **Normality Judgment**

Judge as OK and clear the NG if the continuous time while the following conditions are established is more than the predetermined time.

Judgment Value

Malfunction Criteria	Threshold Value
λ value	≥ 0.85

Time Needed for Diagnosis: Less than 1 second

FM:DTC P2196 O2 SENSOR SIGNAL BIASED/STUCK RICH (BANK 1 SENSOR 1)

1. OUTLINE OF DIAGNOSIS

Detect that λ value remains high.
Judge as NG when lambda value is abnormal in accordance with λ value of front oxygen (A/F) sensor and running conditions such as vehicle speed, amount of intake air, engine coolant temperature, sub feedback control, etc.

λ value = Actual air fuel ratio/Theoretical air fuel ratio
λ > 1: Lean
λ < 1: Rich

2. COMPONENT DESCRIPTION

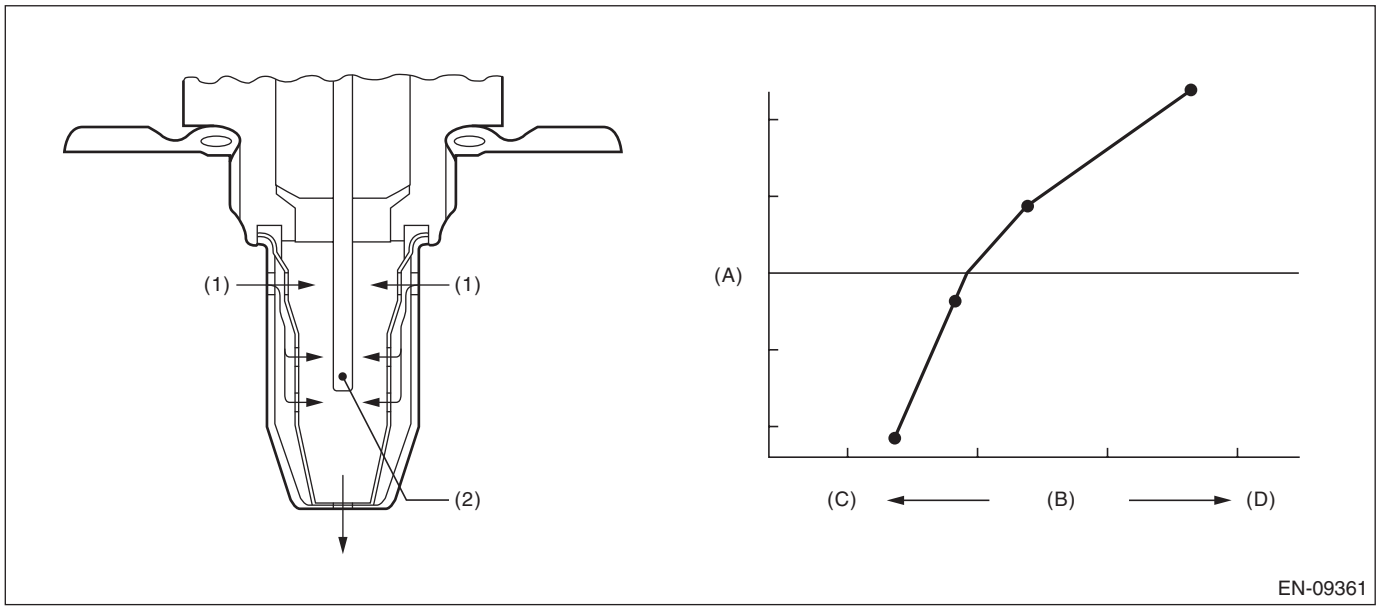

(A) Electromotive force
(B) Air fuel ratio
(C) Rich
(D) Lean

(1) Exhaust gas
(2) ZrO_2

3. ENABLE CONDITIONS

Secondary Parameters	Enable Conditions
Time needed for all secondary parameters to be in enable conditions	≥ 4096 ms
Battery voltage	≥ 10.9 V
Atmospheric pressure	≥ 75.1 kPa (563 mmHg, 22.2 inHg)
Rear oxygen sensor sub feedback	Execution
Rear oxygen sensor output voltage – Feedback target voltage	– 0.2 V — 0.1 V
or rear oxygen sensor sub feedback compensation coefficient	On Min.
or rear oxygen sensor sub feedback compensation coefficient	On Max.
Elapsed time after starting the engine	≥ 0 ms
Engine coolant temperature	≥ –40 °C (–40 °F)
Vehicle speed	≥ 0 km/h (0 MPH)
Amount of intake air	≥ 6 g/s (0.21 oz/s)
Targeted lambda value load compensation coefficient	–1 — 1.000

4. GENERAL DRIVING CYCLE

Perform diagnosis continuously at a constant speed of 0 km/h (0 MPH) or more after 0 ms have passed since the engine started.

5. DIAGNOSTIC METHOD

- **Abnormality Judgment**

If the duration of time while the following conditions are met is longer than the time indicated, judge as NG.

Judgment Value

Malfunction Criteria	Threshold Value
λ value	> 1.15

Time Needed for Diagnosis: 10000 ms
Malfunction Indicator Light Illumination: Illuminates when malfunction occurs in 2 continuous driving cycles.

- **Normality Judgment**

Judge as OK and clear the NG if the continuous time while the following conditions are established is more than the predetermined time.

Judgment Value

Malfunction Criteria	Threshold Value
λ value	≤ 1.15

Time Needed for Diagnosis: Less than 1 second

FN:DTC P219A BANK 1 AIR-FUEL RATIO IMBALANCE

1. OUTLINE OF DIAGNOSIS

This diagnostic monitor performs a functional check of the fuel system to determine an air-fuel ratio cylinder imbalance.
This diagnosis is composed of two monitors.
The outline of “monitor A1” is as follows. When an air-fuel ratio cylinder imbalance occurs, the primary oxygen sensor output signal will oscillate with increased amplitude. This monitor utilizes this behavior to make a diagnosis. The monitor integrates the difference between the amplification value and the mean value of the first oxygen sensor output signal and compares it to a threshold to make a judgment.
The outline of “monitor B1” is as follows. Similarly, when an imbalance occurs, the engine speed also fluctuates with increased amplitude. This monitor utilizes this behavior to make a diagnosis. For reference, it should be noted that this imbalance monitor method is actually similar to the current misfire diagnostic monitor, and the parameter “domg360” (units: degrees CA) is shared between the imbalance and misfire monitors. The imbalance monitor is performed during idle condition when the engine is warm. The monitor integrates the count of “domg360” which exceeds a threshold in 1,000 revolution.
When both the “monitor A1” value and the “monitor B1” value exceed a predetermined threshold, this monitor determines a malfunction and stores a fault code.

Monitor A1

When there is an air-fuel ratio cylinder imbalance malfunction, the primary oxygen sensor output fluctuates widely compared with a normal sensor, as shown by the chain line in Figure 1 below. This monitor makes a diagnosis based on this phenomenon. Each primary oxygen sensor signal (PS) and mean value of the primary oxygen sensor signal (MS) is calculated from the primary oxygen sensor signal. The absolute values of (PS – MS) are sampled every 4 ms as shown in the figure. Diagnostic value 1 (DV1) is obtained by integrating the absolute value of (PS – MS) for 2,500 times. A malfunction is determined when DV1 exceeds the threshold. The judgment values are determined experimentally.

Figure 1. Compare malfunctioned primary oxygen sensor output with a normal sensor

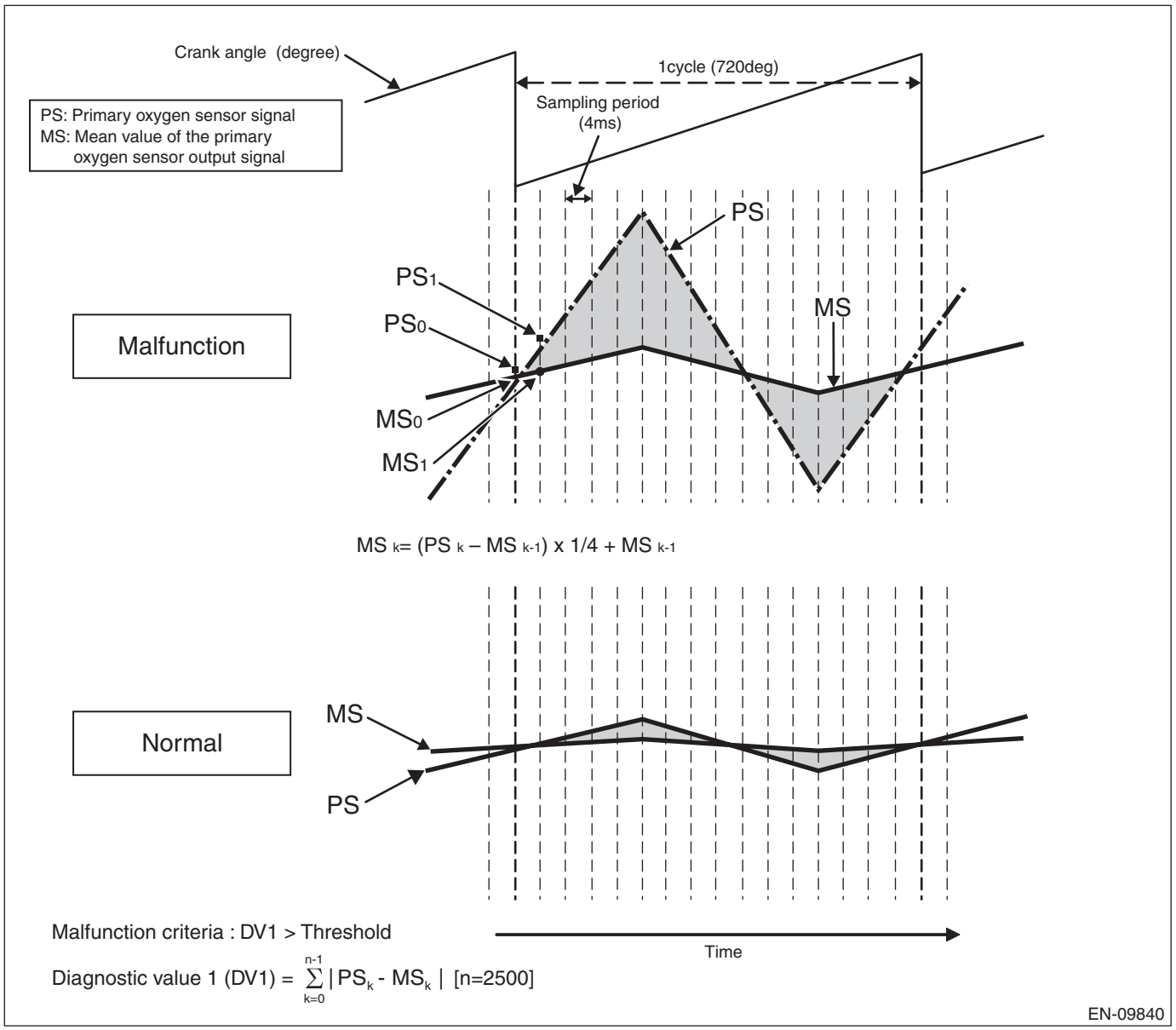

Monitor B1

Method used: Difference method of 360 degrees CA
Monitor value: domg360 = (omg 1 – omg 0) – (omg 3 – omg 2) = angular speed
Each crankshaft angular speed is defined as Figure 2 below.
Figure 2. Description of domg360 output

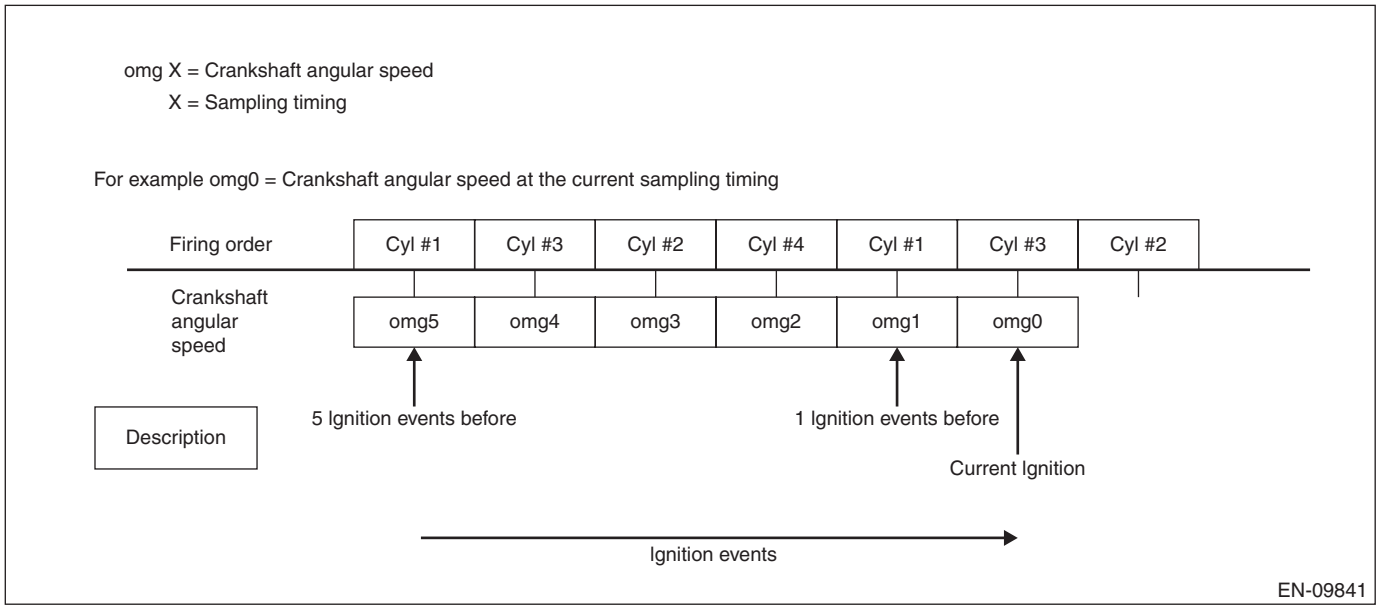

This method uses the fact that the domg360 of lean conditioned cylinder caused by imbalance malfunction indicates big value, as shown by the chain line in Figure 3 below.
The number of times for domg360 to exceed the judgment value in 1,000 revolutions (500 cycles) is calculated as diagnostic value 2 (DV2). A malfunction is determined when DV2 exceeds the threshold.
Figure 3. Compare malfunctioned domg360 output with a normal output

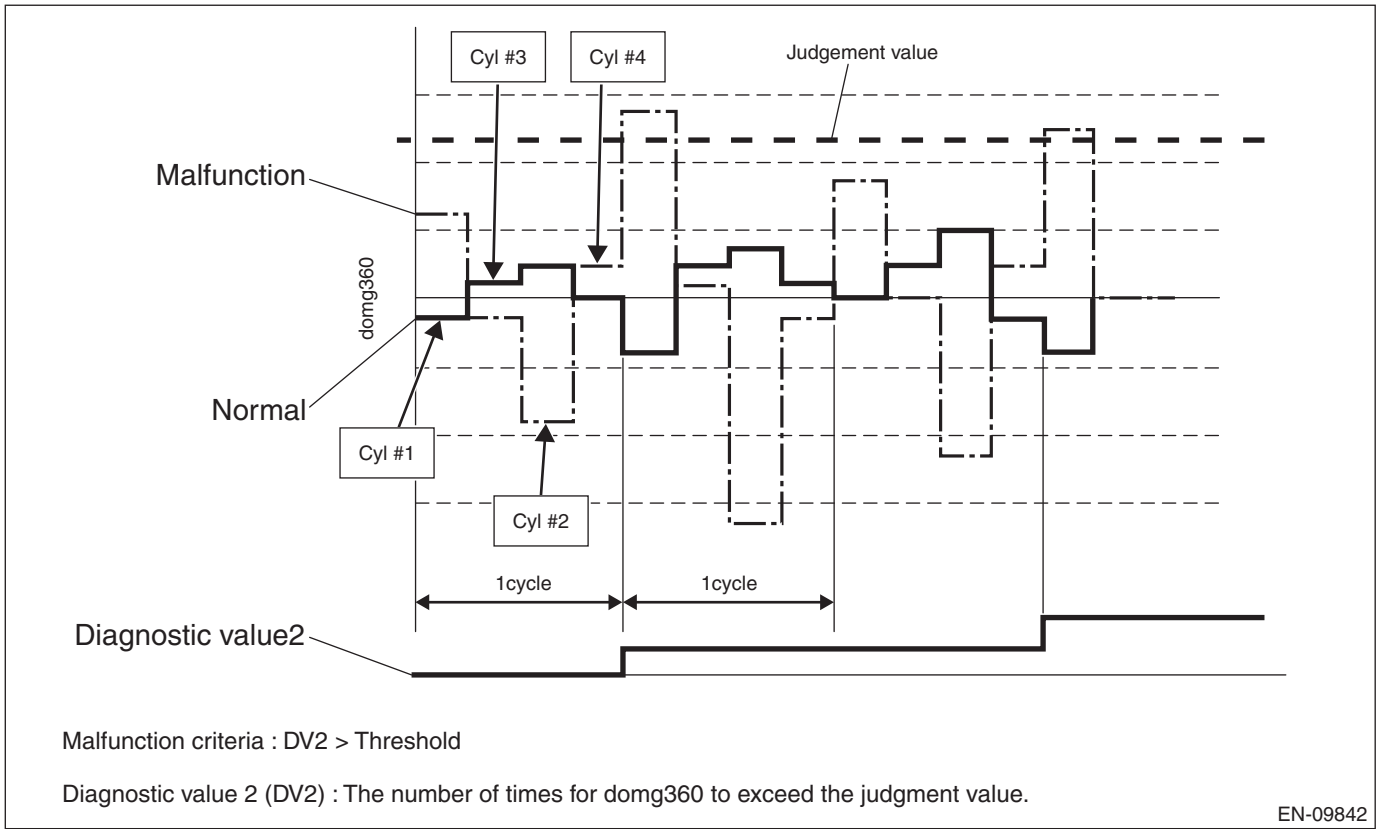

2. ENABLE CONDITIONS

Monitor A1: Primary oxygen sensor fluctuation

Secondary Parameters	Enable Conditions
Closed loop control with primary oxygen sensor	Active
Engine speed	> 1400 rpm and < 3000 rpm
Engine coolant temperature	> –40 °C (–40 °F)
Intake air mass	≥ 0.70 g/rev (0.02 oz/rev)

Monitor B1: Crankshaft speed fluctuation

Secondary Parameters	Enable Conditions
Misfire diagnosis monitor	Active
Engine coolant temperature	> –40 °C (–40 °F)
Accelerator pedal position	= 0%
Engine speed	> 1400 rpm and < 3000 rpm
Intake air mass per revolution	> 0.7 g/rev (0.02 oz/rev)

3. GENERAL DRIVING CYCLE

Always perform the diagnosis continuously.

4. DIAGNOSTIC METHOD

Judge as NG when Monitor A1 and Monitor B1 are both NG, and when either is OK, judge as OK.

- **Abnormality Judgment**

Monitor A1

Judge as NG when the following conditions are established.

Judgment Value

Malfunction Criteria	Threshold Value
Diagnostic value 1 (DV1)	> Threshold value 1 (TV1)

Threshold value 1 (TV1):

$$\sum_{k=0}^{n-1} Map_k \qquad [n=2500]$$

EN-09888

Map

		Engine load (g/rev (oz/rev))				
		0.7 (0.02)	0.8 (0.03)	0.9 (0.03)	1 (0.04)	1.1 (0.04)
Engine speed (rpm)	1400	0.0160	0.0240	0.0240	0.0240	0.0240
	1600	0.0137	0.0198	0.0224	0.0250	0.0275
	1800	0.0152	0.0162	0.0217	0.0270	0.0350
	2000	0.0127	0.0150	0.0188	0.0259	0.0367
	2200	0.0130	0.0150	0.0191	0.0279	0.0370
	2400	0.0144	0.0161	0.0212	0.0273	0.0360
	2600	0.0160	0.0161	0.0204	0.0276	0.0360
	2800	0.0132	0.0173	0.0225	0.0281	0.0360
	3000	0.018	0.0178	0.0189	0.0200	0.0220

Time Needed for Diagnosis: 4 ms × 2500 time(s)
Monitor B1
Judge as NG when the following conditions are established.
Judgment Value

Malfunction Criteria	Threshold Value
Diagnostic Value2 (DV2)	> 30 time(s)

Time Needed for Diagnosis: 1000 engine revs.
Malfunction Indicator Light Illumination: Illuminates when malfunction occurs in 2 continuous driving cycles.

- **Normality Judgment**

Monitor A1
Judge as OK and clear the NG if the following conditions are established.
Judgment Value

Malfunction Criteria	Threshold Value
Diagnostic value 1 (DV1)	≤ Threshold value 1 (TV1)

Time Needed for Diagnosis: 4 ms × 2500 time(s)
Monitor B1
Judge as OK and clear the NG if the following conditions are established.
Judgment Value

Malfunction Criteria	Threshold Value
Diagnostic Value2 (DV2)	≤ 30 time(s)

Time Needed for Diagnosis: 1000 engine revs.

FO:DTC P2401 EVAPORATIVE EMISSION SYSTEM LEAK DETECTION PUMP CONTROL CIRCUIT LOW

1. OUTLINE OF DIAGNOSIS

Detect the open or short circuit of the ELCM vacuum pump.
Judge as NG if out of specification.

2. COMPONENT DESCRIPTION

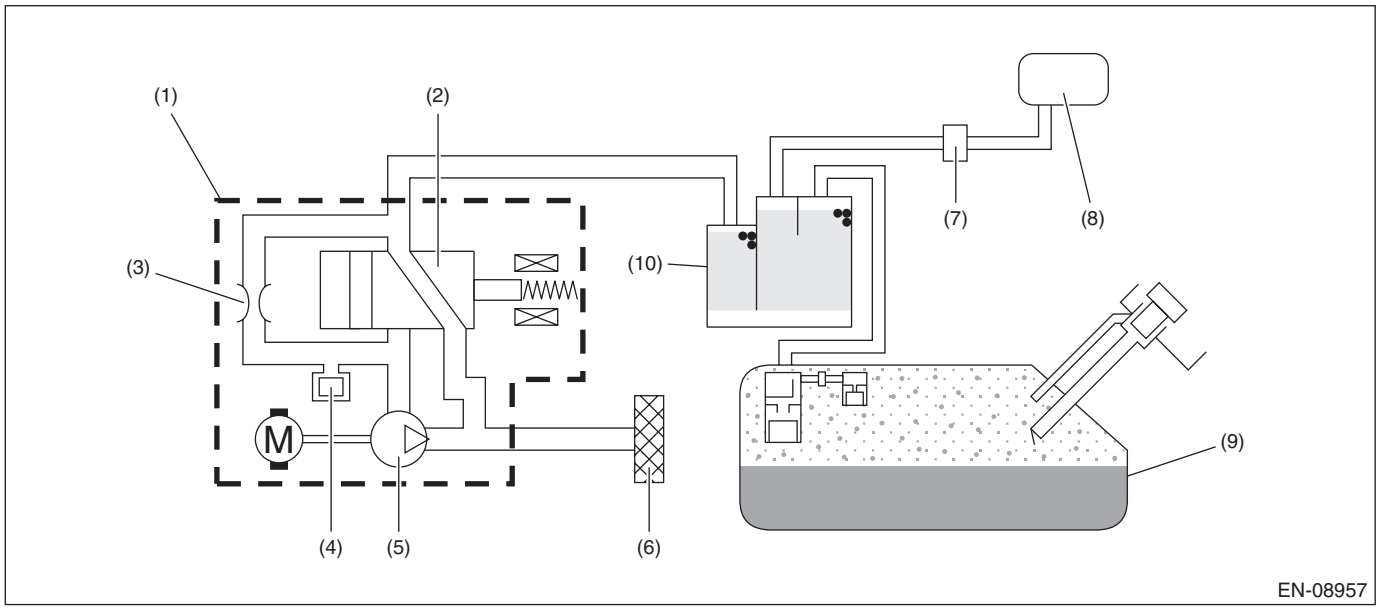

(1) ELCM
(2) Switching valve
(3) Reference orifice (0.02 inch orifice)
(4) Pressure sensor
(5) Vacuum pump
(6) Drain filter
(7) Purge control solenoid valve
(8) Intake manifold
(9) Fuel tank
(10) Canister

3. ENABLE CONDITIONS

Secondary Parameters	Enable Conditions
Battery voltage	≥ 10.9

4. GENERAL DRIVING CYCLE

Always perform the diagnosis continuously.

5. DIAGNOSTIC METHOD

• Abnormality Judgment

If the duration of time while the following conditions are met is longer than the time indicated, judge as NG.

Judgment Value

Malfunction Criteria	Threshold Value
Terminal output voltage when ECM outputs OFF signal	≤ Battery voltage × 0.34

Time Needed for Diagnosis: 2500 ms
Malfunction Indicator Light Illumination: Illuminates as soon as a malfunction occurs.

• Normality Judgment

Judge as OK and clear the NG if the continuous time while the following conditions are established is more than the predetermined time.

Judgment Value

Malfunction Criteria	Threshold Value
Terminal output voltage when ECM outputs OFF signal	> Battery voltage × 0.34

Time Needed for Diagnosis: Less than 1 second

FP:DTC P2402 EVAPORATIVE EMISSION SYSTEM LEAK DETECTION PUMP CONTROL CIRCUIT HIGH

1. OUTLINE OF DIAGNOSIS

Detect the open or short circuit of the ELCM vacuum pump.
Judge as NG if out of specification.

2. COMPONENT DESCRIPTION

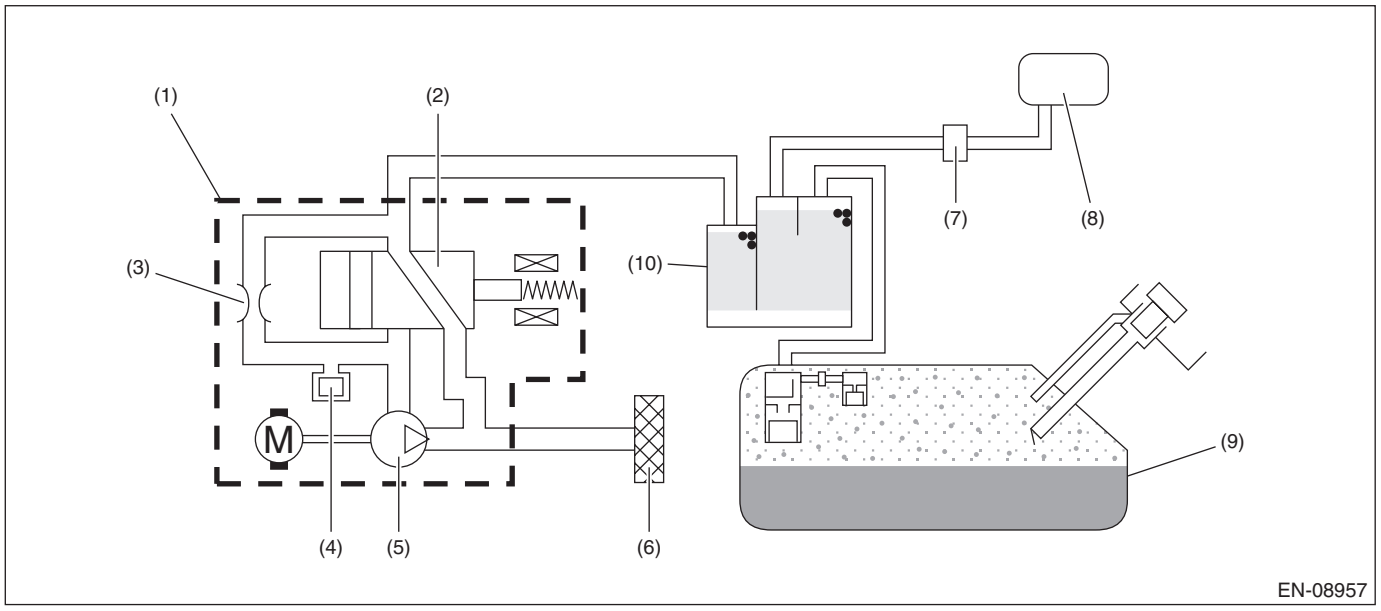

(1) ELCM
(2) Switching valve
(3) Reference orifice (0.02 inch orifice)
(4) Pressure sensor
(5) Vacuum pump
(6) Drain filter
(7) Purge control solenoid valve
(8) Intake manifold
(9) Fuel tank
(10) Canister

3. ENABLE CONDITIONS

Secondary Parameters	Enable Conditions
Battery voltage	≥ 10.9

4. GENERAL DRIVING CYCLE

Always perform the diagnosis continuously.

5. DIAGNOSTIC METHOD

- **Abnormality Judgment**

If the duration of time while the following conditions are met is longer than the time indicated, judge as NG.

Judgment Value

Malfunction Criteria	Threshold Value
Terminal output current when ECM outputs ON signal	≥ 12 A

Time Needed for Diagnosis: 2500 ms
Malfunction Indicator Light Illumination: Illuminates as soon as a malfunction occurs.

- **Normality Judgment**

Judge as OK and clear the NG if the continuous time while the following conditions are established is more than the predetermined time.

Judgment Value

Malfunction Criteria	Threshold Value
Terminal output current when ECM outputs ON signal	< 12 A

Time Needed for Diagnosis: Less than 1 second

FQ:DTC P2404 EVAPORATIVE EMISSION SYSTEM LEAK DETECTION PUMP SENSE CIRCUIT RANGE/PERFORMANCE

1. OUTLINE OF DIAGNOSIS

NOTE:
For the detection standard, refer to DTC P0455. <Ref. to GD(H4DO HEV)-154, DTC P0455 EVAPORATIVE EMISSION SYSTEM LEAK DETECTED (LARGE LEAK), Diagnostic Trouble Code (DTC) Detecting Criteria.>

FR:DTC P2419 EVAPORATIVE EMISSION SYSTEM SWITCHING VALVE CONTROL CIRCUIT LOW

1. OUTLINE OF DIAGNOSIS

Detect the open or short circuit of the ELCM switching valve.
Judge as NG if out of specification.

2. COMPONENT DESCRIPTION

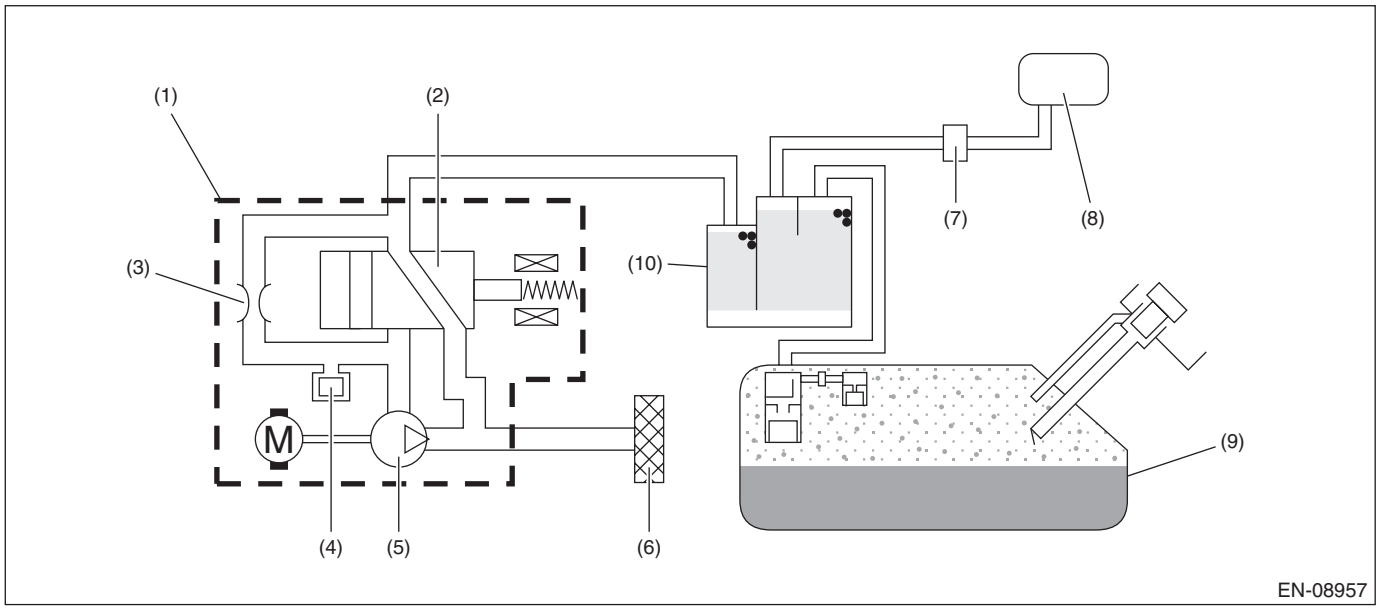

(1) ELCM
(2) Switching valve
(3) Reference orifice (0.02 inch orifice)
(4) Pressure sensor
(5) Vacuum pump
(6) Drain filter
(7) Purge control solenoid valve
(8) Intake manifold
(9) Fuel tank
(10) Canister

3. ENABLE CONDITIONS

Secondary Parameters	Enable Conditions
Battery voltage	≥ 10.9

4. GENERAL DRIVING CYCLE

Always perform the diagnosis continuously.

5. DIAGNOSTIC METHOD

- **Abnormality Judgment**

If the duration of time while the following conditions are met is longer than the time indicated, judge as NG.

Judgment Value

Malfunction Criteria	Threshold Value
Terminal output voltage when ECM outputs OFF signal	≤ Battery voltage × 0.34

Time Needed for Diagnosis: 2500 ms
Malfunction Indicator Light Illumination: Illuminates as soon as a malfunction occurs.

- **Normality Judgment**

Judge as OK and clear the NG if the continuous time while the following conditions are established is more than the predetermined time.

Judgment Value

Malfunction Criteria	Threshold Value
Terminal output voltage when ECM outputs OFF signal	> Battery voltage × 0.34

Time Needed for Diagnosis: Less than 1 second

FS:DTC P2420 EVAPORATIVE EMISSION SYSTEM SWITCHING VALVE CONTROL CIRCUIT HIGH

1. OUTLINE OF DIAGNOSIS

Detect the open or short circuit of the ELCM switching valve.
Judge as NG if out of specification.

2. COMPONENT DESCRIPTION

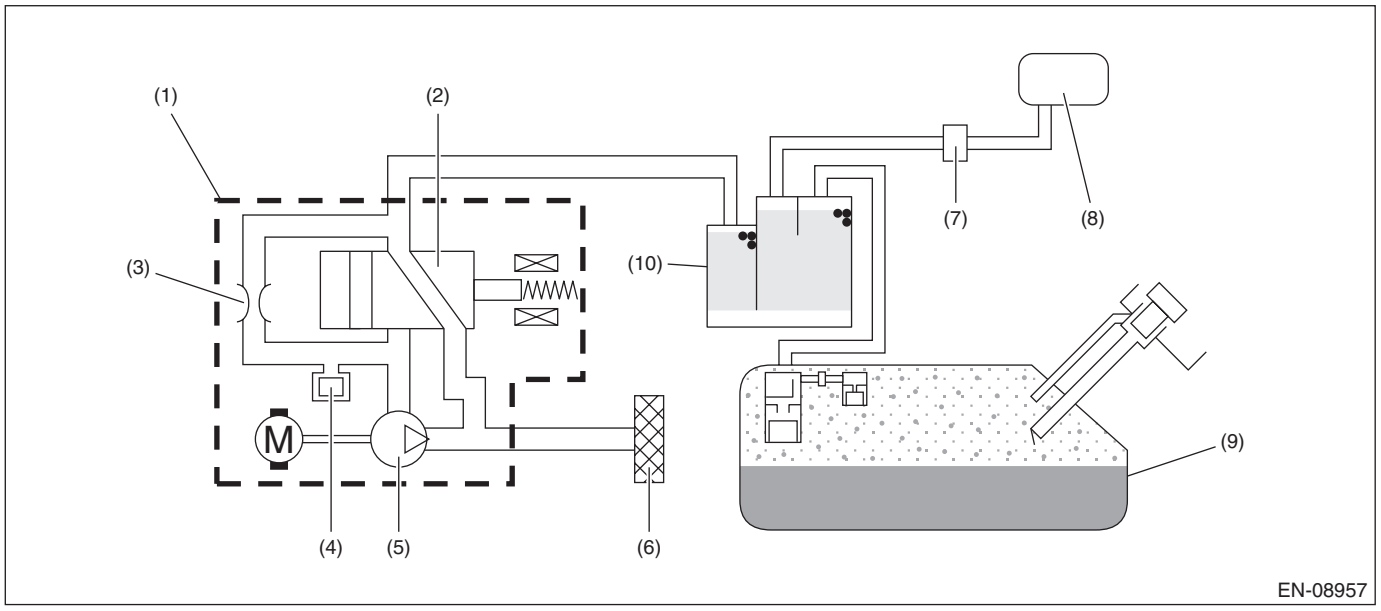

(1) ELCM
(2) Switching valve
(3) Reference orifice (0.02 inch orifice)
(4) Pressure sensor
(5) Vacuum pump
(6) Drain filter
(7) Purge control solenoid valve
(8) Intake manifold
(9) Fuel tank
(10) Canister

3. ENABLE CONDITIONS

Secondary Parameters	Enable Conditions
Battery voltage	≥ 10.9

4. GENERAL DRIVING CYCLE

Always perform the diagnosis continuously.

5. DIAGNOSTIC METHOD

- **Abnormality Judgment**

If the duration of time while the following conditions are met is longer than the time indicated, judge as NG.

Judgment Value

Malfunction Criteria	Threshold Value
Terminal output current when ECM outputs ON signal	≥ 12 A

Time Needed for Diagnosis: 2500 ms
Malfunction Indicator Light Illumination: Illuminates as soon as a malfunction occurs.

- **Normality Judgment**

Judge as OK and clear the NG if the continuous time while the following conditions are established is more than the predetermined time.

Judgment Value

Malfunction Criteria	Threshold Value
Terminal output current when ECM outputs ON signal	< 12 A

Time Needed for Diagnosis: Less than 1 second

FT: DTC P2610 ECM/PCM INTERNAL ENGINE OFF TIMER PERFORMANCE

1. OUTLINE OF DIAGNOSIS

Detect malfunction of soaking timer IC by the five diagnoses below.

Monitor Number	Explanation	Time required for diagnosis
Monitor #1 <Timer diagnosis>	Perform diagnosis of the soaking timer IC accuracy	128 ms
Monitor #2 <Full count diagnosis>	Perform diagnosis of the soaking timer IC counter function	128 ms
Monitor #3 <Soaking timer IC setting diagnosis>	Perform diagnosis of communication between ECM and soaking timer IC	128 ms
Monitor #4 <Timer diagnosis (during soaking)>	Perform diagnosis of the soaking timer IC accuracy during soaking	None
Monitor #5 <Wake-up diagnosis>	Perform diagnosis of wake-up function	None

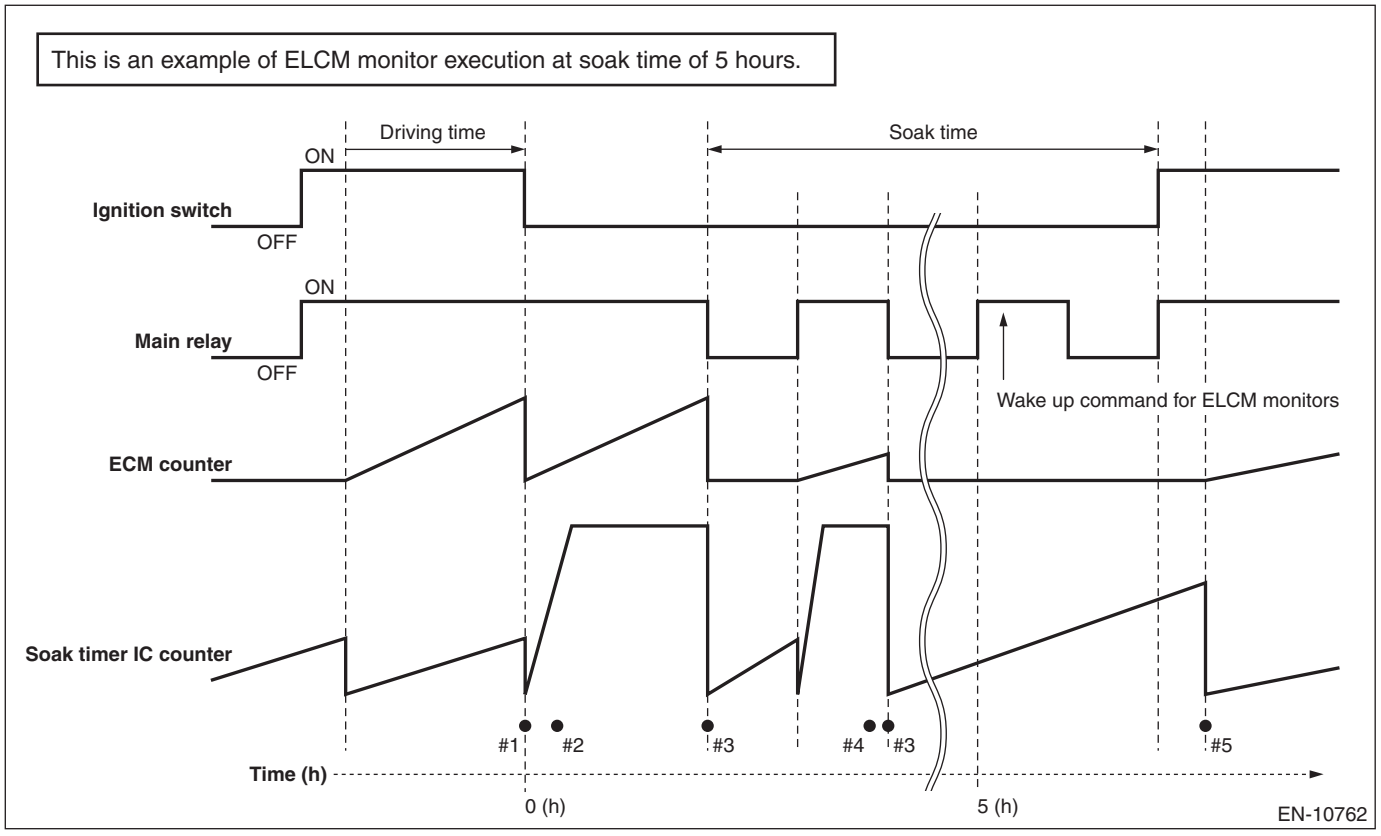

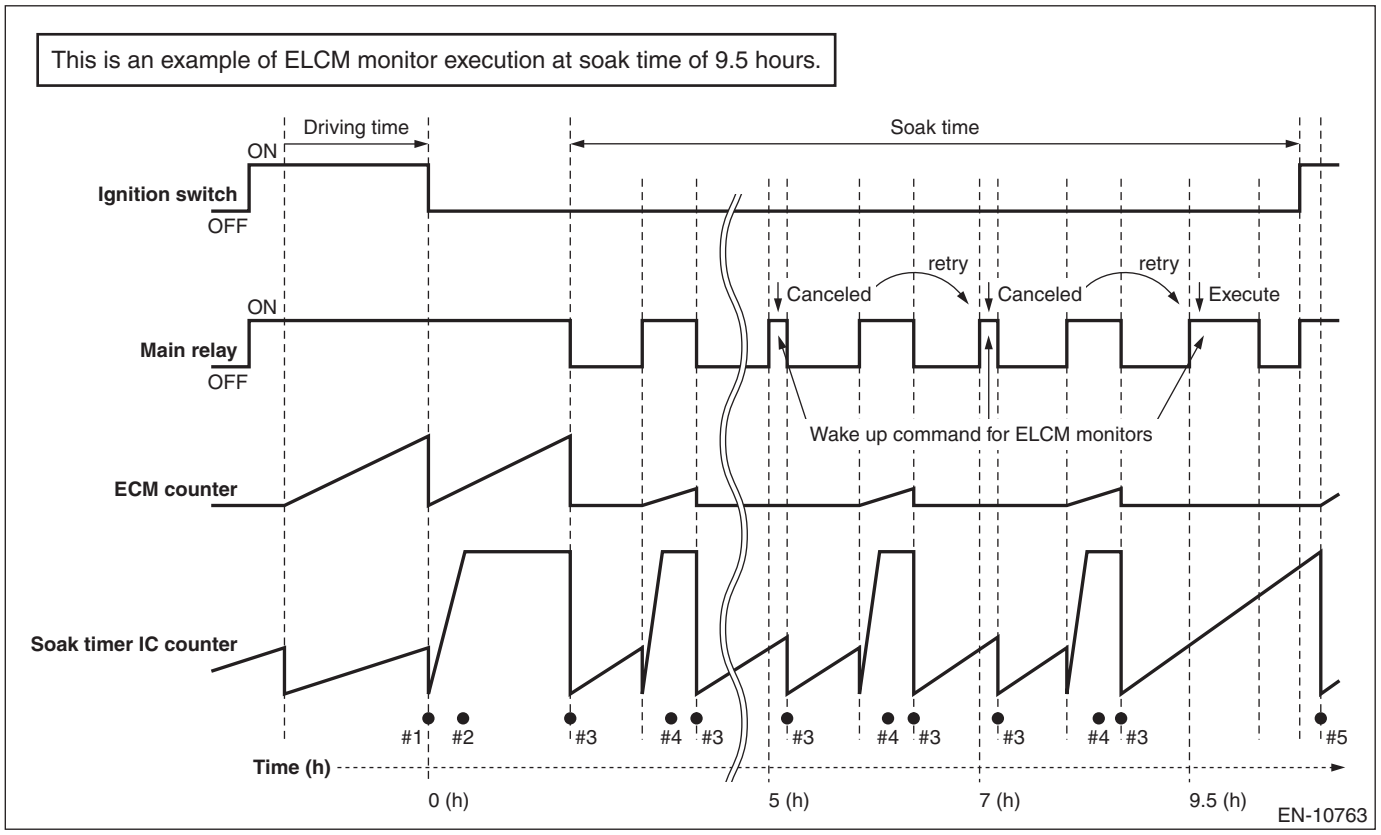

2. COMPONENT DESCRIPTION

The soaking timer IC is built into the ECM.

3. ENABLE CONDITIONS

Secondary Parameters	Enable Conditions
<Timer diagnosis>	
Battery voltage	≥ 10.9 V
Ignition switch	OFF
Elapsed time after starting the engine	> 600 s and < 61380 s
<Full count diagnosis>	
Battery voltage	≥ 10.9 V
Ignition switch	OFF
Counter in ECM	≥ 4 s
<Soaking timer IC setting diagnosis>	
Battery voltage	≥ 10.9 V
Ignition switch	OFF
<Timer diagnosis (during soaking)>	
Battery voltage	≥ 10.9 V
Ignition switch	OFF
<Wake-up diagnosis>	
Ignition switch	ON
Time in the soaking timer IC	> 3600 s

4. GENERAL DRIVING CYCLE

Perform the diagnosis only once when the ignition switch is OFF and when the ignition switch is ON after the soaking of one hour or more.

5. DIAGNOSTIC METHOD

<Timer diagnosis>

Start the count up operation of counters in ECM and in soaking timer IC when the engine is started.
Judge as timer malfunction if the difference between the counter in ECM and counter in soaking timer IC exceeds the allowable limit when the ignition switch is OFF.

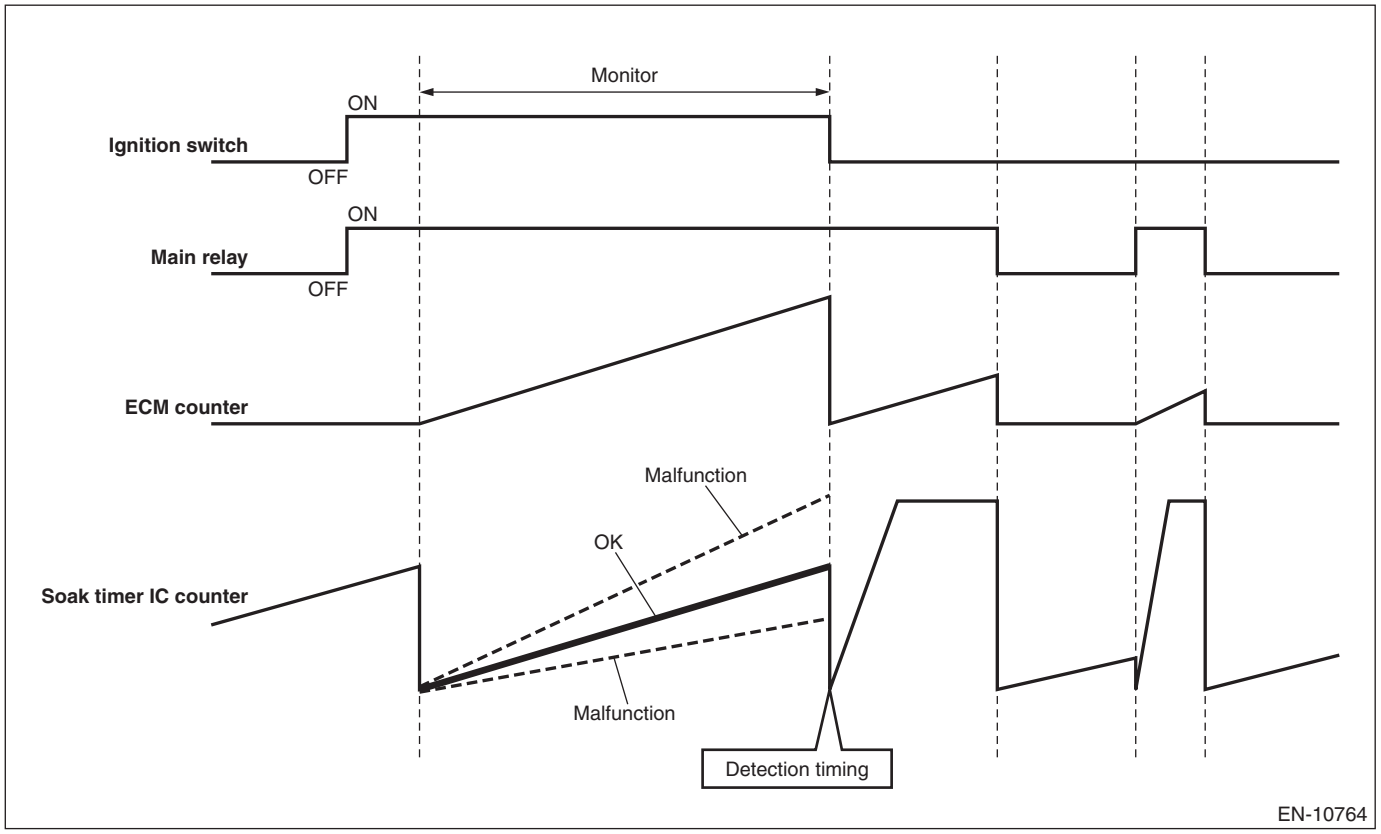

- **Abnormality Judgment**

Judge as NG when the following conditions are established.

Judgment Value

Malfunction Criteria	Threshold Value
|osoaktimcpu – osoaktimic| / osoaktimcpu osoaktimcpu = Counter in ECM osoaktimic = Counter in soaking timer IC	> 0.24

- **Normality Judgment**

Judge as OK when the following conditions are established.

Judgment Value

Malfunction Criteria	Threshold Value
|osoaktimcpu – osoaktimic| / osoaktimcpu	≤ 0.24

<Full count diagnosis>

Reset the counter in soaking timer IC and start the count up operation.
Judge as full count diagnosis malfunction if counter in soaking timer IC is not $3FF (1023 count) after 4 seconds.

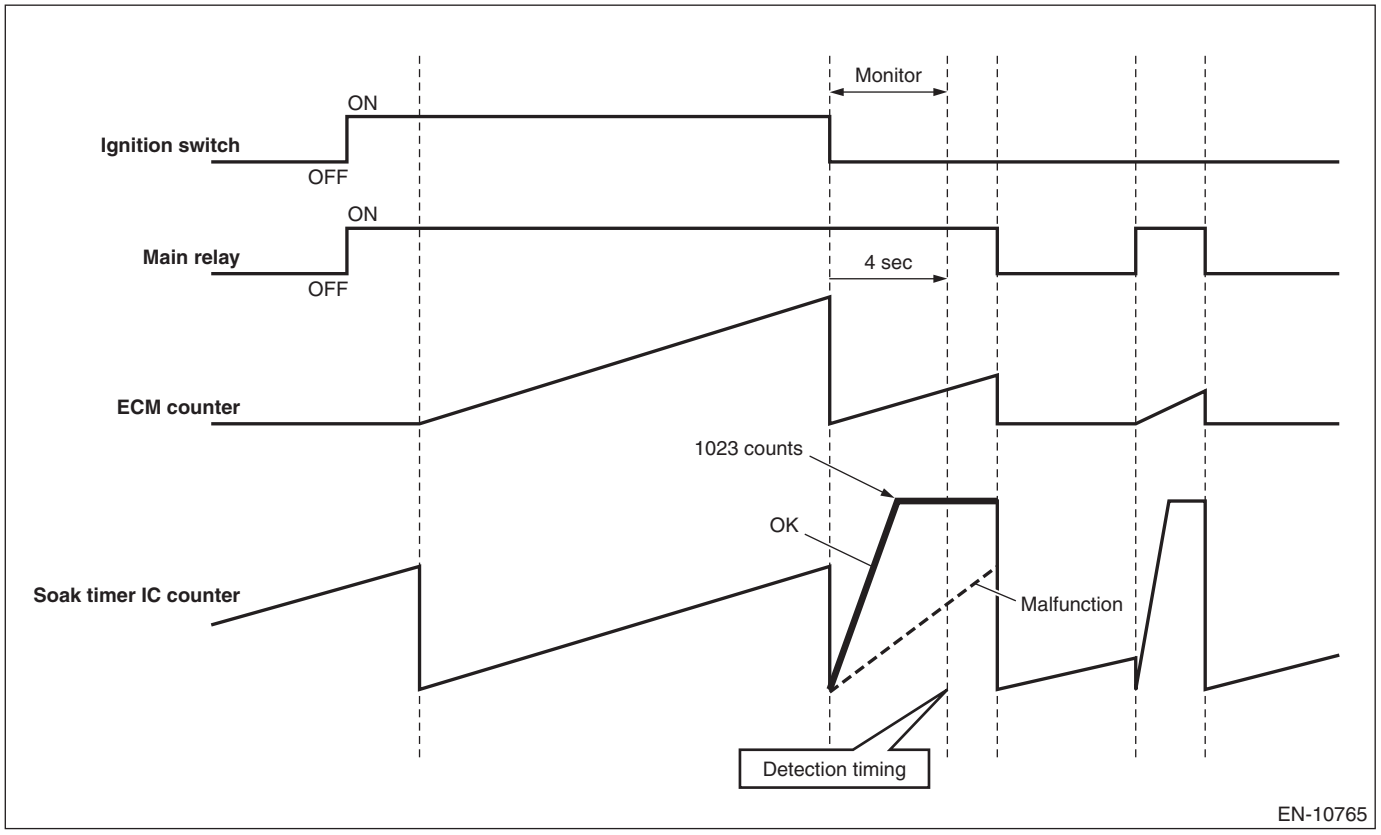

- **Abnormality Judgment**

Judge as NG when the following conditions are established.

Judgment Value

Malfunction Criteria	Threshold Value
osoakfcntic osoakfcntic = Counter in soaking timer IC	≠ $3FF (1023 count)

- **Normality Judgment**

Judge as OK when the following conditions are established.

Judgment Value

Malfunction Criteria	Threshold Value
osoakfcntic	= $3FF (1023 count)

<Soaking timer IC setting diagnosis>

When setting the activation setting time to soaking timer IC, compare the writing value to soaking timer IC with read out value. Judge as malfunction if the values do not match 3 times in a row.

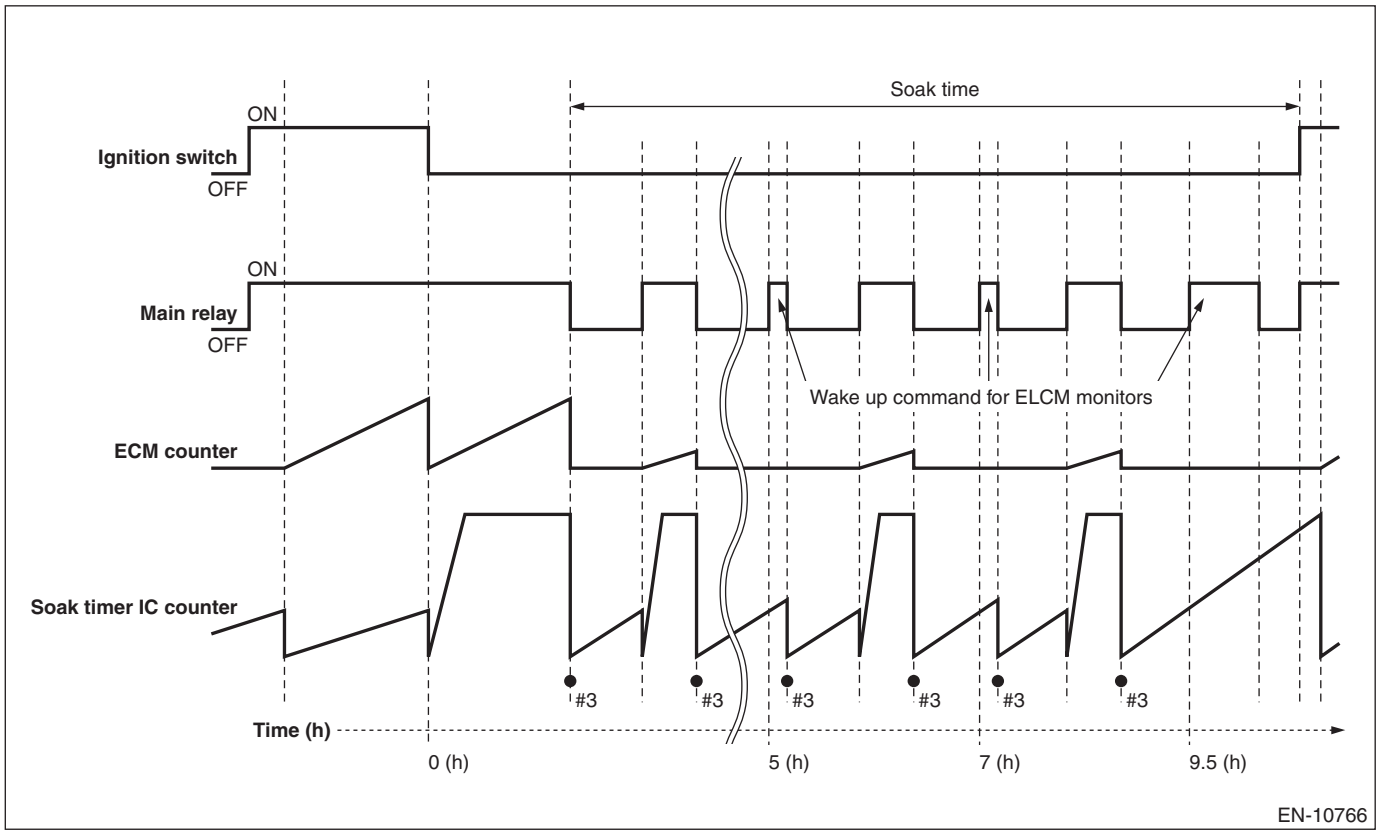

- **Abnormality Judgment**

Judge as NG when the following conditions are established.

Judgment Value

Malfunction Criteria	Threshold Value
Writing value and read out value when setting the soaking timer	Unmatch

- **Normality Judgment**

Judge as OK when the following conditions are established.

Judgment Value

Malfunction Criteria	Threshold Value
Writing value and read out value when setting the soaking timer	Match

<Timer diagnosis (during soaking)>

Wake-up at the predetermined interval until 5, 7 or 9.5 hours have passed after the ignition switch is OFF, and compare the counter in soaking timer IC with the counter in ECM.
Judge as malfunction if the counter in soaking timer IC is counted up to maximum value (1023 count) when the counter in ECM is 1636 ms, or if the counter in soaking timer IC is not counted up to maximum value (1023 count) when the counter in ECM is 2456 ms.

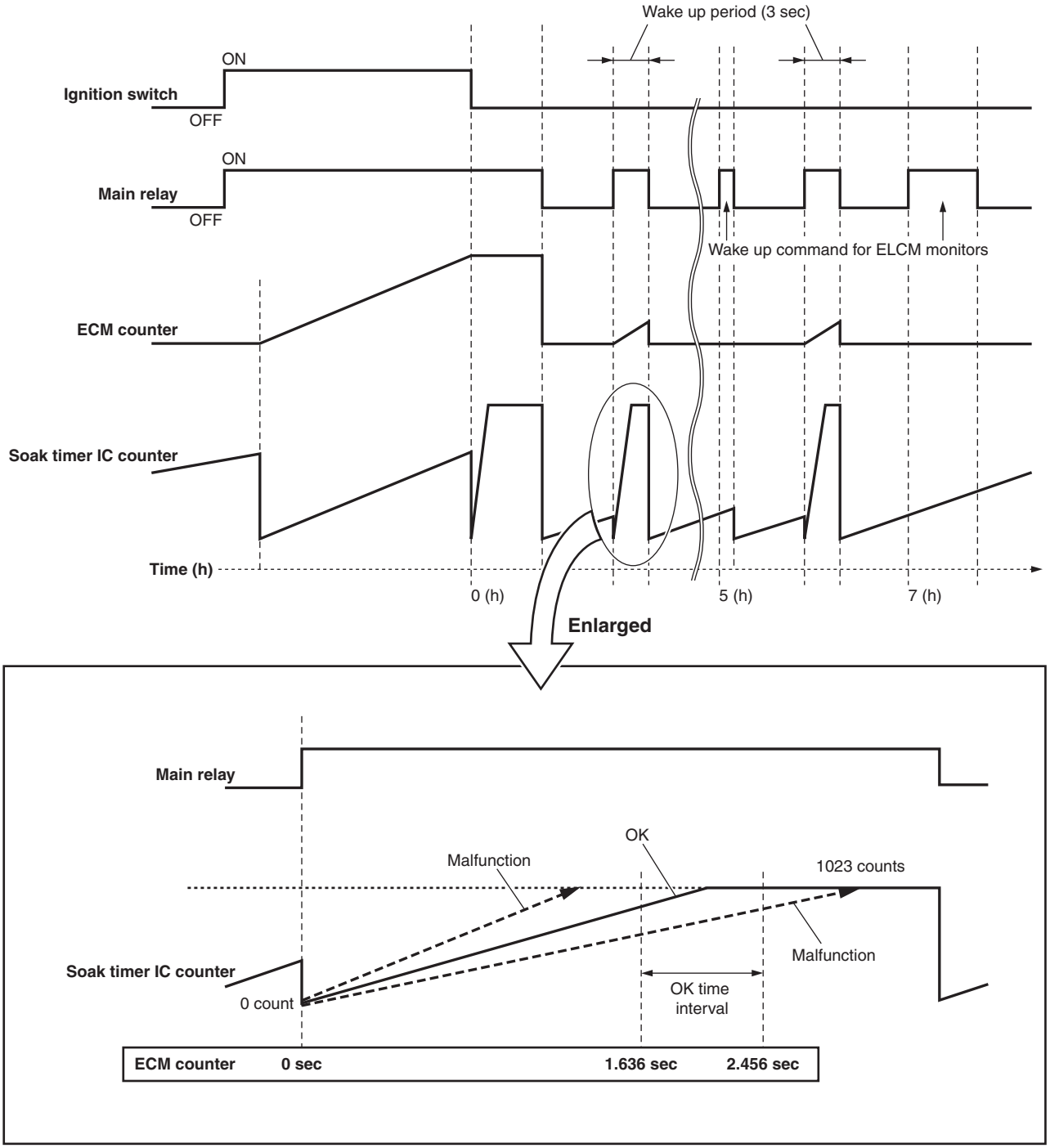

EN-10767

- **Abnormality Judgment**

Judge as NG when the following conditions are established.

Judgment Value

Malfunction Criteria	Threshold Value
When any one of the followings is established:	
• All of the following conditions are established.	
Counter in ECM	≤ 1636 ms
Counter in soaking timer IC	= $3FF (1023 count)
• All of the following conditions are established.	
Counter in ECM	≥ 2456 ms
Counter in soaking timer IC	≠ $3FF (1023 count)

- **Normality Judgment**

Judge as OK when the following conditions are established.

Judgment Value

Malfunction Criteria	Threshold Value
Following conditions are established.	
• All of the following conditions are established.	
Counter in ECM	≤ 1636 ms
Counter in soaking timer IC	≠ $3FF (1023 count)
• All of the following conditions are established.	
Counter in ECM	≥ 2456 ms
Counter in soaking timer IC	= $3FF (1023 count)

<Wake-up diagnosis>

Store the number of wake-up activation when the ECM wakes up by the soaking timer IC.
Next time when the ignition switch is ON, if the number of wake-up activation does not reach the predetermined value even though the counter in soaking timer IC operates 1 hour or more, judge as wake-up malfunction.

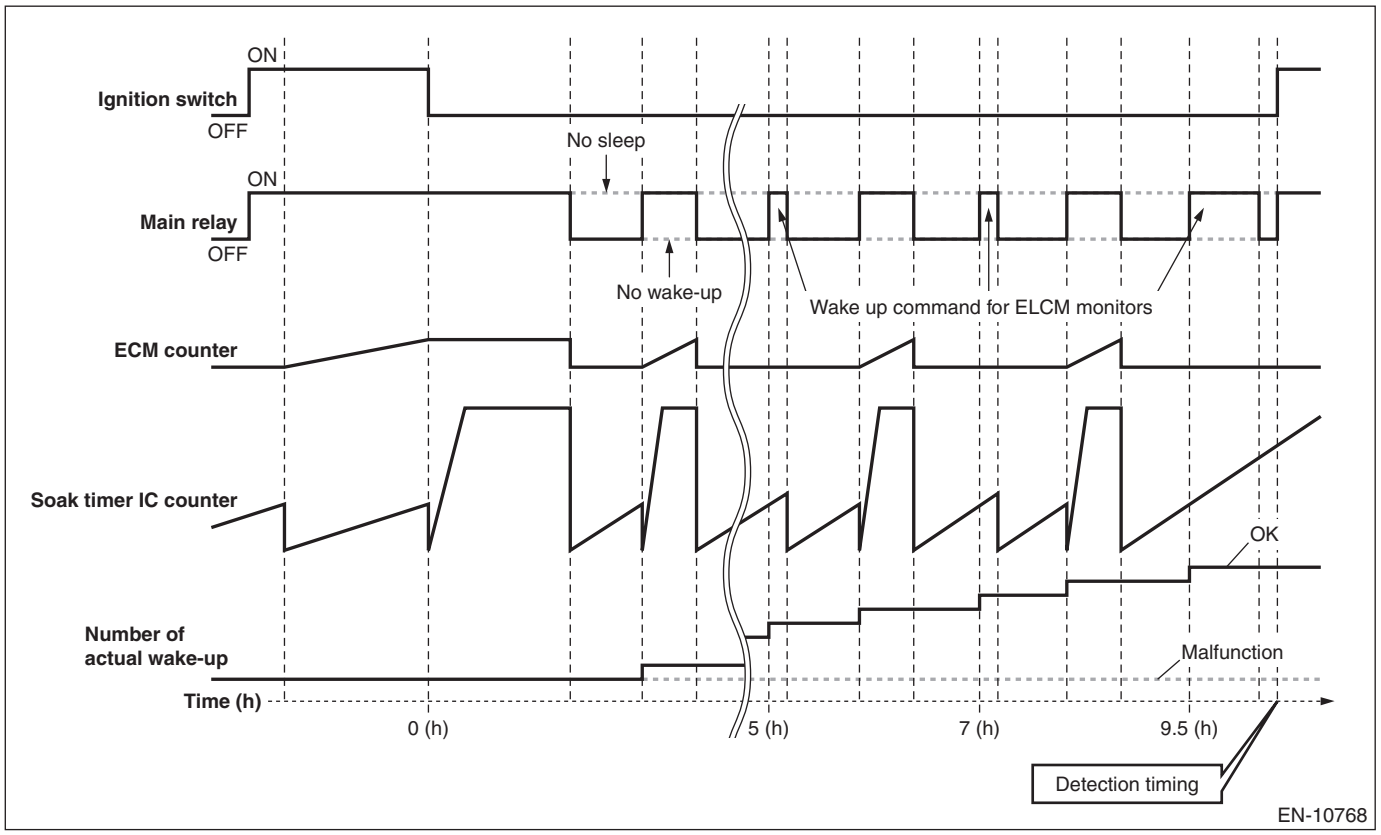

- **Abnormality Judgment**

Judge as NG when the following conditions are established.

Judgment Value

Malfunction Criteria	Threshold Value
Number of wake-up	≠ Wake-up indication count

- **Normality Judgment**

Judge as OK when the following conditions are established.

Judgment Value

Malfunction Criteria	Threshold Value
Number of wake-up	= Wake-up instruction count

- **Abnormality Judgment**

Judge as NG when the following conditions are established.

Judgment Value

Malfunction Criteria	Threshold Value
Ignition switch	ON
Driving cycle	Completed
When any one of the followings is established:	
• Timer diagnosis	NG
• Full count diagnosis	NG
• Soaking timer IC setting diagnosis	NG
• Timer diagnosis (during soaking)	NG
• Wake-up diagnosis	NG

Time Needed for Diagnosis: Approx. 5 — 9.5 hours
Malfunction Indicator Light Illumination: Illuminates when malfunction occurs in 2 continuous driving cycles.

- **Normality Judgment**

Judge as OK and clear the NG if the following conditions are established.

Judgment Value

Malfunction Criteria	Threshold Value
Ignition switch	ON
Driving cycle	Completed
All of the following conditions are established.	
• Timer diagnosis	OK
• Full count diagnosis	OK
• Soaking timer IC setting diagnosis	OK
• Timer diagnosis (during soaking)	OK
• Wake-up diagnosis	OK

Time Needed for Diagnosis: Approx. 5 — 9.5 hours

FU:DTC U0073 CONTROL MODULE COMMUNICATION BUS OFF

1. OUTLINE OF DIAGNOSIS

Detect malfunction of CAN communication.
Judge as NG when CAN communication failure has occurred.

2. COMPONENT DESCRIPTION

(Common Specifications)
CAN Protocol 2.0 B (Active)
Frame Format: 11 Bit ID Frame (Standard Frame)
Conforms to ISO11898
Communication Speed: 500 kbps

3. ENABLE CONDITIONS

Secondary Parameters	Enable Conditions
Battery voltage	≥ 10.9 V

4. GENERAL DRIVING CYCLE

Perform the diagnosis continuously after starting the engine.

5. DIAGNOSTIC METHOD

• Abnormality Judgment

Judge as NG when the following conditions are established.

Judgment Value

Malfunction Criteria	Threshold Value
bus off flag or error warning flag	set (error)

Time Needed for Diagnosis: 1000 ms
Malfunction Indicator Light Illumination: Illuminates as soon as a malfunction occurs.

• Normality Judgment

Judge as OK and clear the NG if the continuous time while the following conditions are established is more than the predetermined time.

Judgment Value

Malfunction Criteria	Threshold Value
bus off flag or error warning flag	clear (No error)

Time Needed for Diagnosis: 1000 ms

FV:DTC U0075 CONTROL MODULE COMMUNICATION BUS "PU-CAN" OFF

1. OUTLINE OF DIAGNOSIS

Detect malfunction of CAN communication.
Judge as NG when CAN communication failure has occurred.

2. COMPONENT DESCRIPTION

(Common Specifications)
CAN Protocol 2.0 B (Active)
Frame Format: 11 Bit ID Frame (Standard Frame)
Conforms to ISO11898
Communication Speed: 500 kbps

3. ENABLE CONDITIONS

Secondary Parameters	Enable Conditions
Battery voltage	≥ 10.9 V

4. GENERAL DRIVING CYCLE

Perform the diagnosis continuously after ignition switch ON.

5. DIAGNOSTIC METHOD

• Abnormality Judgment

Judge as NG when the following conditions are established.

Judgment Value

Malfunction Criteria	Threshold Value
bus off flag or error warning flag	set (error)

Time Needed for Diagnosis: 436 ms
Malfunction Indicator Light Illumination: Illuminates as soon as a malfunction occurs.

• Normality Judgment

Judge as OK and clear the NG if the continuous time while the following conditions are established is more than the predetermined time.

Judgment Value

Malfunction Criteria	Threshold Value
bus off flag or error warning flag	clear (No error)

Time Needed for Diagnosis: 1000 ms

FW:DTC U0101 LOST COMMUNICATION WITH TCM

1. OUTLINE OF DIAGNOSIS

Detect malfunction of CAN communication.
Judge as NG when CAN communication failure between TCM, VDC CM and combination meter has occurred.

2. COMPONENT DESCRIPTION

(Common Specifications)
CAN Protocol 2.0 B (Active)
Frame Format: 11 Bit ID Frame (Standard Frame)
Conforms to ISO11898
Communication Speed: 500 kbps

3. ENABLE CONDITIONS

Secondary Parameters	Enable Conditions
Battery voltage	≥ 10.9 V

4. GENERAL DRIVING CYCLE

Perform the diagnosis continuously after starting the engine.

5. DIAGNOSTIC METHOD

- **Abnormality Judgment**

Judge as NG when the following conditions are established.

Judgment Value

Malfunction Criteria	Threshold Value
ID received from control module connected to CAN	None

Time Needed for Diagnosis: 500 ms
Malfunction Indicator Light Illumination: Illuminates as soon as a malfunction occurs.

- **Normality Judgment**

Judge as OK and clear the NG if the continuous time while the following conditions are established is more than the predetermined time.

Judgment Value

Malfunction Criteria	Threshold Value
ID received from control module connected to CAN	Yes

Time Needed for Diagnosis: 1000 ms

FX: DTC U0122 LOST COMMUNICATION WITH VEHICLE DYNAMICS CONTROL MODULE

1. OUTLINE OF DIAGNOSIS

NOTE:
For the detection standard, refer to DTC U0101. <Ref. to GD(H4DO HEV)-281, DTC U0101 LOST COMMUNICATION WITH TCM, Diagnostic Trouble Code (DTC) Detecting Criteria.>

FY: DTC U0155 LOST COMMUNICATION WITH INSTRUMENT PANEL CLUSTER (IPC) CONTROL MODULE

1. OUTLINE OF DIAGNOSIS

NOTE:
For the detection standard, refer to DTC U0101. <Ref. to GD(H4DO HEV)-281, DTC U0101 LOST COMMUNICATION WITH TCM, Diagnostic Trouble Code (DTC) Detecting Criteria.>

FZ: DTC U0284 LOST COMMUNICATION WITH ACTIVE GRILLE SHUTTER MODULE "A"

1. OUTLINE OF DIAGNOSIS

Detect the malfunction of LIN communication.
Judge as NG when LIN communication failure has occurred with active grille shutter.

2. COMPONENT DESCRIPTION

(Common Specifications)
Communication protocol: LIN 2.0
Communication Speed: 19.20 kbps

3. ENABLE CONDITIONS

Secondary Parameters	Enable Conditions
Battery voltage	≥ 10.9 V

4. GENERAL DRIVING CYCLE

Always perform the diagnosis continuously.

5. DIAGNOSTIC METHOD

- **Abnormality Judgment**

Judge as NG when the following conditions are established.

Judgment Value

Malfunction Criteria	Threshold Value
ID received from control module connected to LIN	None

Time Needed for Diagnosis: 2000 ms
Malfunction Indicator Light Illumination: Illuminates as soon as a malfunction occurs.

- **Normality Judgment**

Judge as OK and clear the NG if the following conditions are established.

Judgment Value

Malfunction Criteria	Threshold Value
ID received from control module connected to LIN	Yes

Time Needed for Diagnosis: 2000 ms

GA:DTC U0293 LOST COMMUNICATION WITH HYBRID POWERTRAIN CONTROL MODULE

1. OUTLINE OF DIAGNOSIS

Detect malfunction of CAN communication.
Judge as NG when CAN communication failure occurs with HPCM MAIN-CAN.

2. COMPONENT DESCRIPTION

(Common Specifications)
CAN Protocol 2.0 B (Active)
Frame Format: 11 Bit ID Frame (Standard Frame)
Conforms to ISO11898
Communication Speed: 500 kbps

3. ENABLE CONDITIONS

Secondary Parameters	Enable Conditions
Battery voltage	> 10.9 V

4. GENERAL DRIVING CYCLE

Perform the diagnosis continuously after ignition switch ON.

5. DIAGNOSTIC METHOD

- **Abnormality Judgment**

Judge as NG when the following conditions are established.

Judgment Value

Malfunction Criteria	Threshold Value
ID received from HPCM MAIN-CAN	None

Time Needed for Diagnosis: 500 ms
Malfunction Indicator Light Illumination: Illuminates as soon as a malfunction occurs.

- **Normality Judgment**

Judge as OK and clear the NG if the continuous time while the following conditions are established is more than the predetermined time.

Judgment Value

Malfunction Criteria	Threshold Value
ID received from HPCM MAIN-CAN	Yes

Time Needed for Diagnosis: 1000 ms

GB:DTC U0402 INVALID DATA RECEIVED FROM TCM

1. OUTLINE OF DIAGNOSIS

Detect malfunction of CAN communication.
Judge as NG when data received from TCM, VDC CM and combination meter is not normal.

2. COMPONENT DESCRIPTION

(Common Specifications)
CAN Protocol 2.0 B (Active)
Frame Format: 11 Bit ID Frame (Standard Frame)
Conforms to ISO11898
Communication Speed: 500 kbps

3. ENABLE CONDITIONS

Secondary Parameters	Enable Conditions
Battery voltage	≥ 10.9 V

4. GENERAL DRIVING CYCLE

Perform the diagnosis continuously after starting the engine.

5. DIAGNOSTIC METHOD

• Abnormality Judgment

Judge as NG when the following conditions are established.

Judgment Value

Malfunction Criteria	Threshold Value
Data received from control module connected to CAN	No change or Parity error

Time Needed for Diagnosis: 2 seconds
Malfunction Indicator Light Illumination: Illuminates as soon as a malfunction occurs.

• Normality Judgment

Judge as OK and clear the NG if the continuous time while the following conditions are established is more than the predetermined time.

Judgment Value

Malfunction Criteria	Threshold Value
Data received from control module connected to CAN	Change and No parity error

Time Needed for Diagnosis: 1000 ms

GC:DTC U0416 INVALID DATA RECEIVED FROM VEHICLE DYNAMICS CONTROL MODULE

1. OUTLINE OF DIAGNOSIS

NOTE:
For the detection standard, refer to DTC U0402. <Ref. to GD(H4DO HEV)-284, DTC U0402 INVALID DATA RECEIVED FROM TCM, Diagnostic Trouble Code (DTC) Detecting Criteria.>

GD:DTC U0423 INVALID DATA RECEIVED FROM INSTRUMENT PANEL CLUSTER CONTROL MODULE

1. OUTLINE OF DIAGNOSIS

NOTE:
For the detection standard, refer to DTC U0402. <Ref. to GD(H4DO HEV)-284, DTC U0402 INVALID DATA RECEIVED FROM TCM, Diagnostic Trouble Code (DTC) Detecting Criteria.>

GE:DTC U0594 INVALID DATA RECEIVED FROM HYBRID POWERTRAIN CONTROL MODULE

1. OUTLINE OF DIAGNOSIS

Detect malfunction of CAN communication.
Judge as NG when data from HPCM MAIN-CAN is not correct.

2. COMPONENT DESCRIPTION

(Common Specifications)
CAN Protocol 2.0 B (Active)
Frame Format: 11 Bit ID Frame (Standard Frame)
Conforms to ISO11898
Communication Speed: 500 kbps

3. ENABLE CONDITIONS

Secondary Parameters	Enable Conditions
Battery voltage	> 10.9 V

4. GENERAL DRIVING CYCLE

Perform the diagnosis continuously after ignition switch ON.

5. DIAGNOSTIC METHOD

- **Abnormality Judgment 1**

Judge as NG when the following conditions are established.

Judgment Value

Malfunction Criteria	Threshold Value
Data update from HPCM MAIN-CAN	None

Time Needed for Diagnosis: 564 ms

- **Abnormality Judgment 2**

Judge as NG when the following conditions are established.

Judgment Value

Malfunction Criteria	Threshold Value
Data from HPCM MAIN-CAN	Parity error

Time Needed for Diagnosis: 64 ms
Malfunction Indicator Light Illumination: Illuminates as soon as a malfunction occurs.

- **Normality Judgment**

Judge as OK and clear the NG if the continuous time while the following conditions are established is more than the predetermined time.

Judgment Value

Malfunction Criteria	Threshold Value
Data update from HPCM MAIN-CAN	Yes
Data from HPCM MAIN-CAN	No error

Time Needed for Diagnosis: 1000 ms

GF:DTC U1101 LOST COMMUNICATION WITH TCM PU-CAN

1. OUTLINE OF DIAGNOSIS

Detect malfunction of CAN communication.
Judge as NG when CAN communication failure occurs with TCM PU-CAN.

2. COMPONENT DESCRIPTION

(Common Specifications)
CAN Protocol 2.0 B (Active)
Frame Format: 11 Bit ID Frame (Standard Frame)
Conforms to ISO11898
Communication Speed: 500 kbps

3. ENABLE CONDITIONS

Secondary Parameters	Enable Conditions
Battery voltage	> 10.9 V

4. GENERAL DRIVING CYCLE

Perform the diagnosis continuously after ignition switch ON.

5. DIAGNOSTIC METHOD

• Abnormality Judgment

Judge as NG when the following conditions are established.

Judgment Value

Malfunction Criteria	Threshold Value
ID received from TCM PU-CAN	None

Time Needed for Diagnosis: 500 ms
Malfunction Indicator Light Illumination: Illuminates as soon as a malfunction occurs.

• Normality Judgment

Judge as OK and clear the NG if the continuous time while the following conditions are established is more than the predetermined time.

Judgment Value

Malfunction Criteria	Threshold Value
ID received from TCM PU-CAN	Yes

Time Needed for Diagnosis: 1000 ms

GG:DTC U1293 LOST COMMUNICATION WITH HYBRID POWERTRAIN CONTROL MODULE PU-CAN

1. OUTLINE OF DIAGNOSIS

Detect malfunction of CAN communication.
Judge as NG when CAN communication failure occurs with HPCM PU-CAN.

2. COMPONENT DESCRIPTION

(Common Specifications)
CAN Protocol 2.0 B (Active)
Frame Format: 11 Bit ID Frame (Standard Frame)
Conforms to ISO11898
Communication Speed: 500 kbps

3. ENABLE CONDITIONS

Secondary Parameters	Enable Conditions
Battery voltage	> 10.9 V

4. GENERAL DRIVING CYCLE

Perform the diagnosis continuously after ignition switch ON.

5. DIAGNOSTIC METHOD

- **Abnormality Judgment**

Judge as NG when the following conditions are established.

Judgment Value

Malfunction Criteria	Threshold Value
ID received from HPCM PU-CAN	None

Time Needed for Diagnosis: 500 ms
Malfunction Indicator Light Illumination: Illuminates as soon as a malfunction occurs.

- **Normality Judgment**

Judge as OK and clear the NG if the continuous time while the following conditions are established is more than the predetermined time.

Judgment Value

Malfunction Criteria	Threshold Value
ID received from HPCM PU-CAN	Yes

Time Needed for Diagnosis: 1000 ms

GH:DTC U1402 INVALID DATA RECEIVED FROM TCM PU-CAN

1. OUTLINE OF DIAGNOSIS

Detect malfunction of CAN communication.
Judge as NG when data from TCM PU-CAN is not correct.

2. COMPONENT DESCRIPTION

(Common Specifications)
CAN Protocol 2.0 B (Active)
Frame Format: 11 Bit ID Frame (Standard Frame)
Conforms to ISO11898
Communication Speed: 500 kbps

3. ENABLE CONDITIONS

Secondary Parameters	Enable Conditions
Battery voltage	> 10.9 V

4. GENERAL DRIVING CYCLE

Perform the diagnosis continuously after ignition switch ON.

5. DIAGNOSTIC METHOD

- **Abnormality Judgment**

Judge as NG when the following conditions are established.

Judgment Value

Malfunction Criteria	Threshold Value
Data from TCM PU-CAN	Check sum error

Time Needed for Diagnosis: 64 ms
Malfunction Indicator Light Illumination: Illuminates as soon as a malfunction occurs.

- **Normality Judgment**

Judge as OK and clear the NG if the continuous time while the following conditions are established is more than the predetermined time.

Judgment Value

Malfunction Criteria	Threshold Value
Data from TCM PU-CAN	No error

Time Needed for Diagnosis: 1000 ms

GI: DTC U1594 INVALID DATA RECEIVED FROM HYBRID POWERTRAIN CONTROL MODULE PU-CAN

1. OUTLINE OF DIAGNOSIS

Detect malfunction of CAN communication.
Judge as NG when data from HPCM PU-CAN is not correct.

2. COMPONENT DESCRIPTION

(Common Specifications)
CAN Protocol 2.0 B (Active)
Frame Format: 11 Bit ID Frame (Standard Frame)
Conforms to ISO11898
Communication Speed: 500 kbps

3. ENABLE CONDITIONS

Secondary Parameters	Enable Conditions
Battery voltage	> 10.9 V

4. GENERAL DRIVING CYCLE

Perform the diagnosis continuously after ignition switch ON.

5. DIAGNOSTIC METHOD

- **Abnormality Judgment 1**

Judge as NG when the following conditions are established.

Judgment Value

Malfunction Criteria	Threshold Value
Data update from HPCM PU-CAN	None

Time Needed for Diagnosis: 564 ms

- **Abnormality Judgment 2**

Judge as NG when the following conditions are established.

Judgment Value

Malfunction Criteria	Threshold Value
Data from HPCM PU-CAN	Check sum error

Time Needed for Diagnosis: 64 ms
Malfunction Indicator Light Illumination: Illuminates as soon as a malfunction occurs.

- **Normality Judgment**

Judge as OK and clear the NG if the continuous time while the following conditions are established is more than the predetermined time.

Judgment Value

Malfunction Criteria	Threshold Value
Data update from HPCM PU-CAN	Yes
Data from HPCM PU-CAN	No error

Time Needed for Diagnosis: 1000 ms

TRANSMISSION SECTION

CONTROL SYSTEMS	CS
CONTINUOUSLY VARIABLE TRANSMISSION	CVT(TR580)
CONTINUOUSLY VARIABLE TRANSMISSION (DIAGNOSTICS)	CVT (w/o HEV)(diag)
GENERAL DESCRIPTION (CVT)	GD(CVT) (w/o HEV)
CONTINUOUSLY VARIABLE TRANSMISSION	CVT(TH58A)
CONTINUOUSLY VARIABLE TRANSMISSION (DIAGNOSTICS)	CVT(HEV)(diag)
GENERAL DESCRIPTION (CVT)	GD(CVT)(HEV)
MANUAL TRANSMISSION AND DIFFERENTIAL	5MT
CLUTCH SYSTEM	CL

This service manual has been prepared to provide SUBARU service personnel with the necessary information and data for the correct maintenance and repair of SUBARU vehicles.
This manual includes the procedures for maintenance, disassembling, reassembling, inspection and adjustment of components and diagnostics for guidance of experienced mechanics.
Please peruse and utilize this manual fully to ensure complete repair work for satisfying our customers by keeping their vehicle in optimum condition. When replacement of parts during repair work is needed, be sure to use SUBARU genuine parts.

All information, illustration and specifications contained in this manual are based on the latest product information available at the time of publication approval.

FUJI HEAVY INDUSTRIES LTD.

G1171BE4

CONTROL SYSTEMS

CS

Page

1. General Description 2
2. AT Shift Lock Control System 6
3. Select Lever 24
4. Select Cable 47
5. AT Shift Lock Solenoid and “P” Range Switch 55
6. Body Integrated Unit 58
7. MT Gear Shift Lever 59
8. General Diagnostic Table 80

1. General Description

A: SPECIFICATION

Item		Specifications
Swing torque of rod against lever	N (kgf, lb)	3.7 (0.38, 0.83) or less

B: COMPONENT

1. AT SELECT LEVER

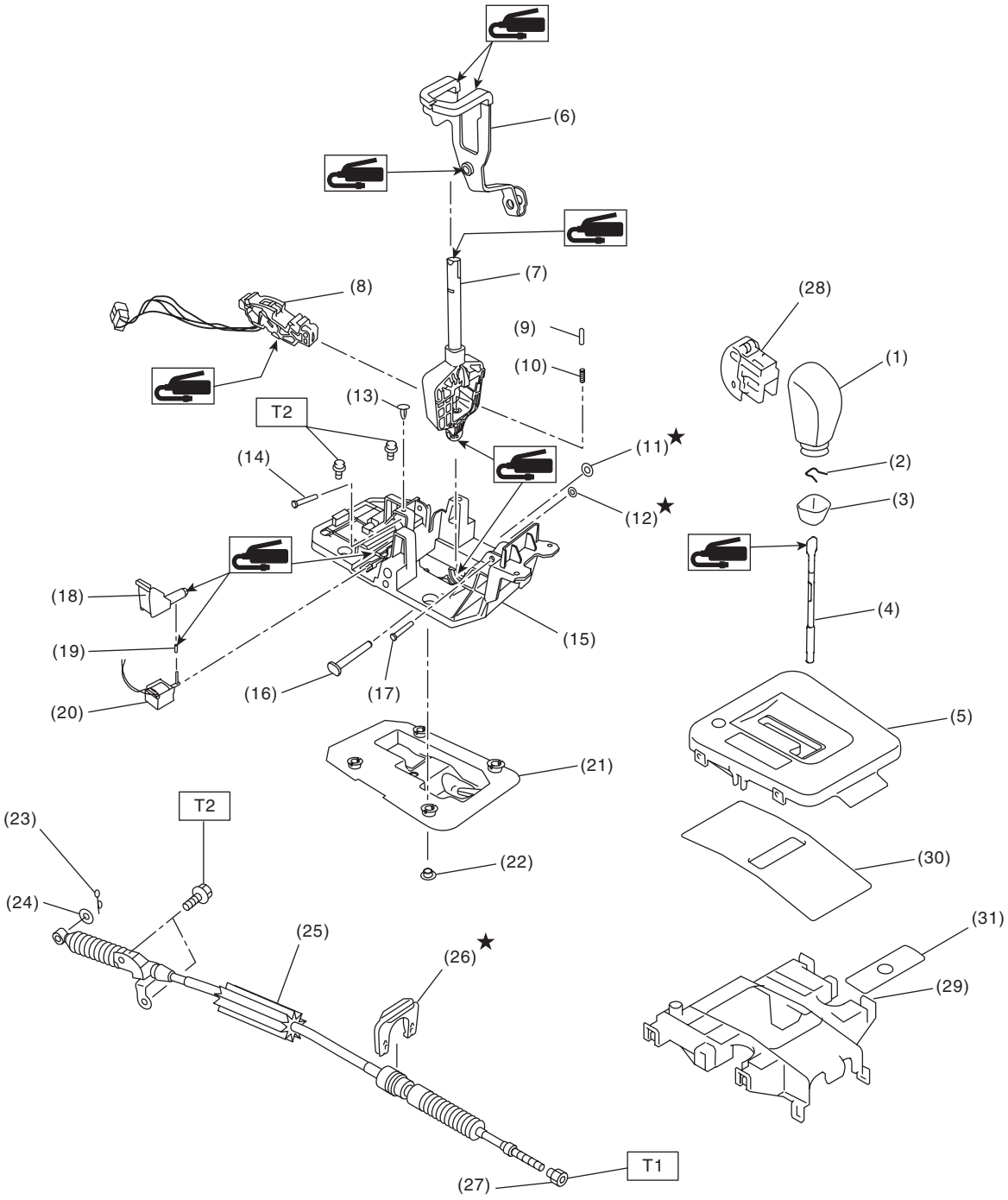

CS-01623

(1) Grip sub ASSY
(2) Clamp grip pin
(3) Cover grip AT
(4) Rod COMPL
(5) Indicator cover
(6) Arm COMPL
(7) Selector lever COMPL
(8) Plate guide
(9) Rod detent
(10) Detent spring
(11) Clamp push nut
(12) Clamp push nut
(13) Clamp pin
(14) Spacer pin guide
(15) Plate COMPL
(16) Shaft control
(17) Spacer pin guide
(18) Rod shift lock
(19) Cushion solenoid
(20) Solenoid unit
(21) Gasket
(22) Spacer plate
(23) Snap pin
(24) Washer
(25) Select cable
(26) Clamp
(27) Nut
(28) Button ASSY-AT
(29) Housing
(30) Blind A
(31) Blind B

Tightening torque: N·m (kgf-m, ft-lb)
T1: 7.5 (0.8, 5.5)
T2: 18 (1.8, 13.3)

2. 5MT GEAR SHIFT LEVER

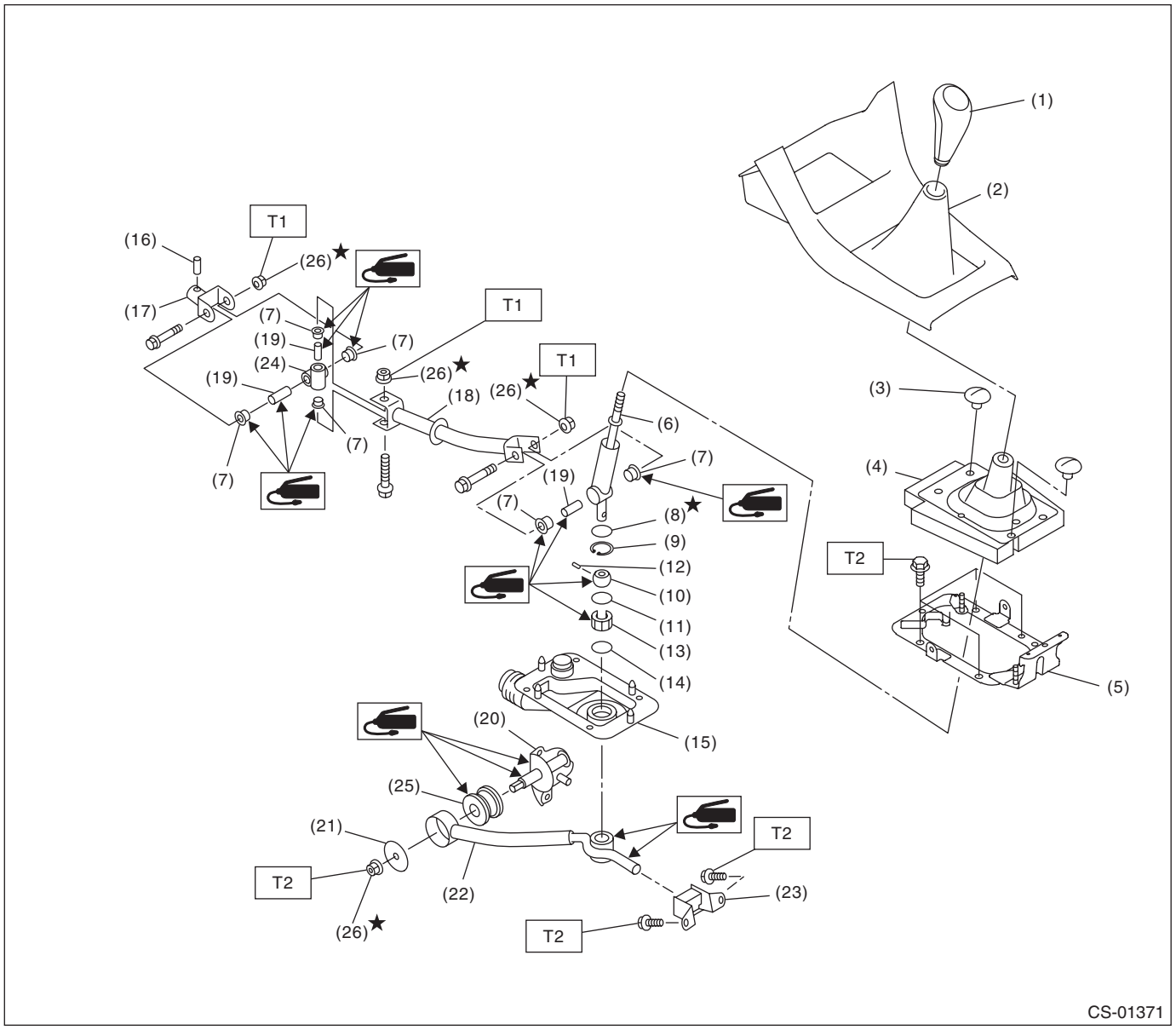

CS-01371

(1) Gear shift knob
(2) Console front cover ASSY
(3) Clamp
(4) Boot and insulator ASSY
(5) Plate COMPL
(6) Lever
(7) Bushing
(8) Lock wire
(9) Snap ring
(10) Bushing
(11) O-ring
(12) Spring pin
(13) Bushing B
(14) O-ring
(15) Boot
(16) Spring pin
(17) Joint
(18) Rod
(19) Spacer
(20) Shift bracket
(21) Plate
(22) Stay
(23) Cushion rubber
(24) Boss
(25) Bushing
(26) Self-locking nut

Tightening torque: N·m (kgf-m, ft-lb)
T1: 12 (1.2, 8.9)
T2: 18 (1.8, 13.3)

C: PREPARATION TOOL

1. SPECIAL TOOL

ILLUSTRATION	TOOL NUMBER	DESCRIPTION	REMARKS
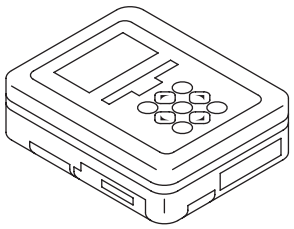 ST1B022XU0	1B022XU0	SUBARU SELECT MONITOR III KIT	Used for troubleshooting the electrical system.

2. GENERAL TOOL

TOOL NAME	REMARKS
Circuit tester	Used for measuring resistance and voltage.

D: CAUTION

- Wear appropriate work clothing, including a cap, protective goggles and protective shoes when performing any work.
- Remove contamination including dirt and corrosion before removal, installation or disassembly.
- Keep the disassembled parts in order and protect them from dust and dirt.
- Before removal, installation or disassembly, be sure to clarify the failure. Avoid unnecessary removal, installation, disassembly and replacement.
- Use SUBARU genuine fluid, grease etc. or equivalent. Do not mix fluid, grease, etc. of different grades or manufacturers.
- Be sure to tighten fasteners including bolts and nuts to the specified torque.
- Place shop jacks or rigid racks at the specified points.
- Apply grease onto sliding or revolving surfaces before installation.
- Before installing O-rings or snap rings, apply sufficient amount of fluid to avoid damage and deformation.
- Before securing a part in a vise, place cushioning material such as wood blocks, aluminum plate or cloth between the part and the vise.
- Before disconnecting electrical connectors, be sure to disconnect the negative terminal from battery.

2. AT Shift Lock Control System

A: LOCATION

1. MODEL WITHOUT PUSH BUTTON IGNITION SWITCH

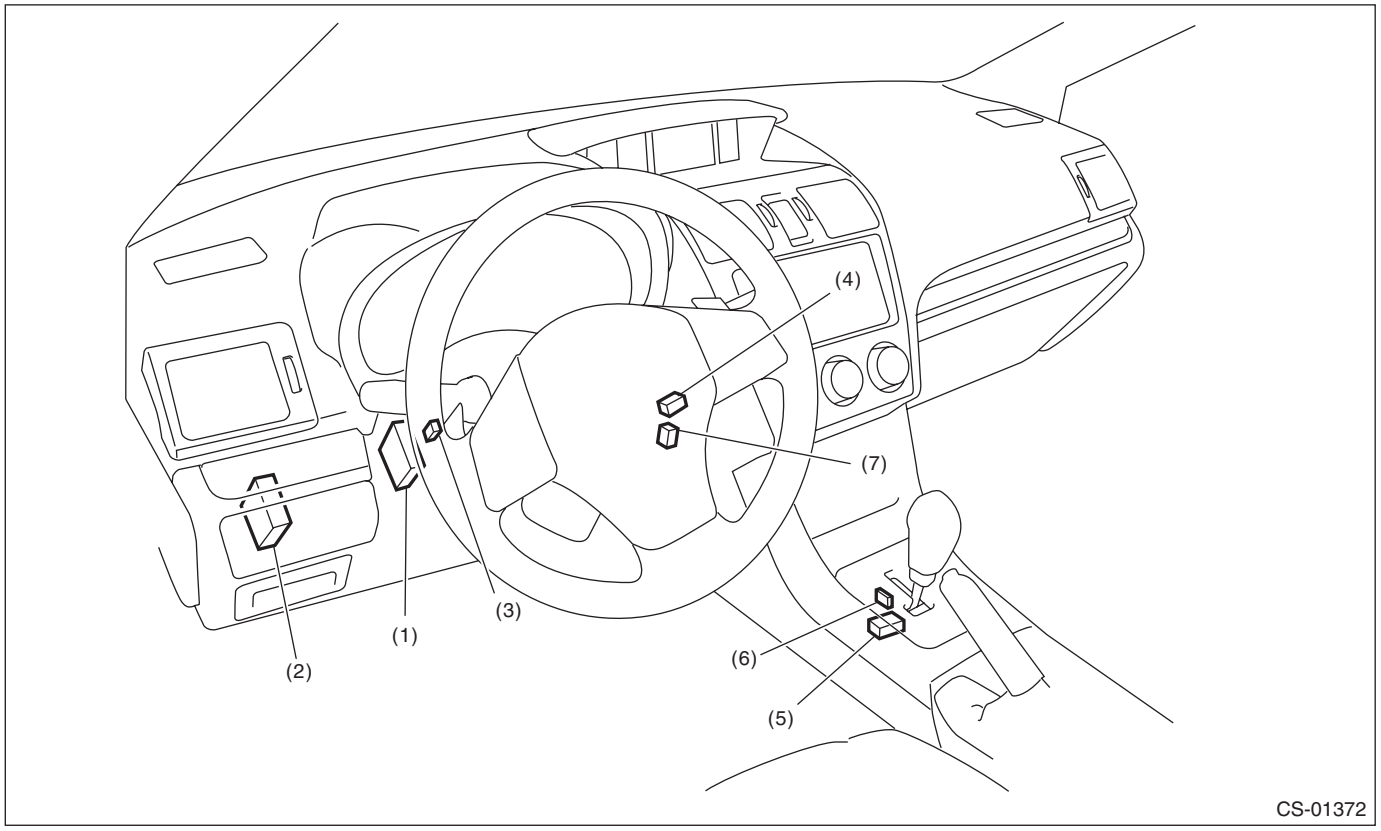

(1) TCM (“P” range)
(2) Body integrated unit
(3) Stop light and brake switch
(4) Key cylinder (with built-in key warning switch)
(5) Solenoid unit
(6) “P” range switch
(7) Key lock solenoid

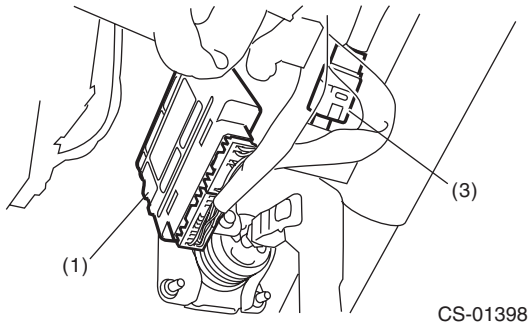

CS-01398

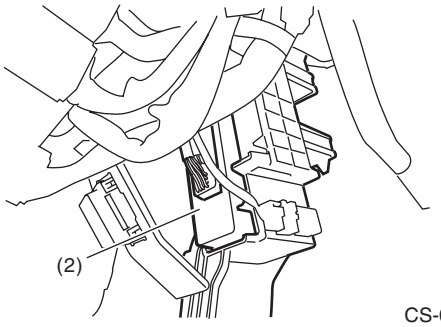

CS-01399

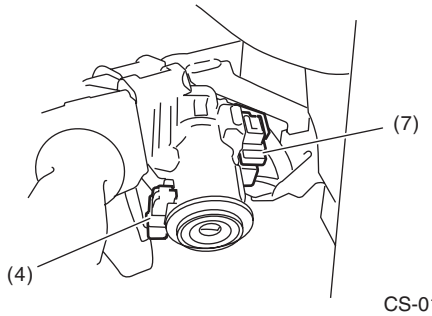

CS-01400

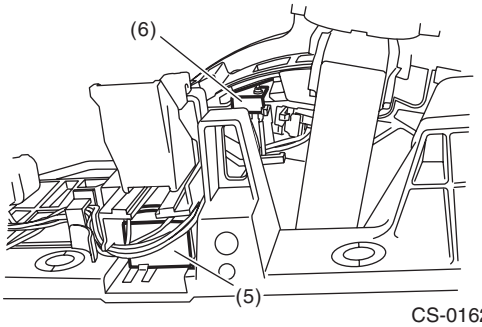

CS-01624

2. MODEL WITH PUSH BUTTON IGNITION SWITCH

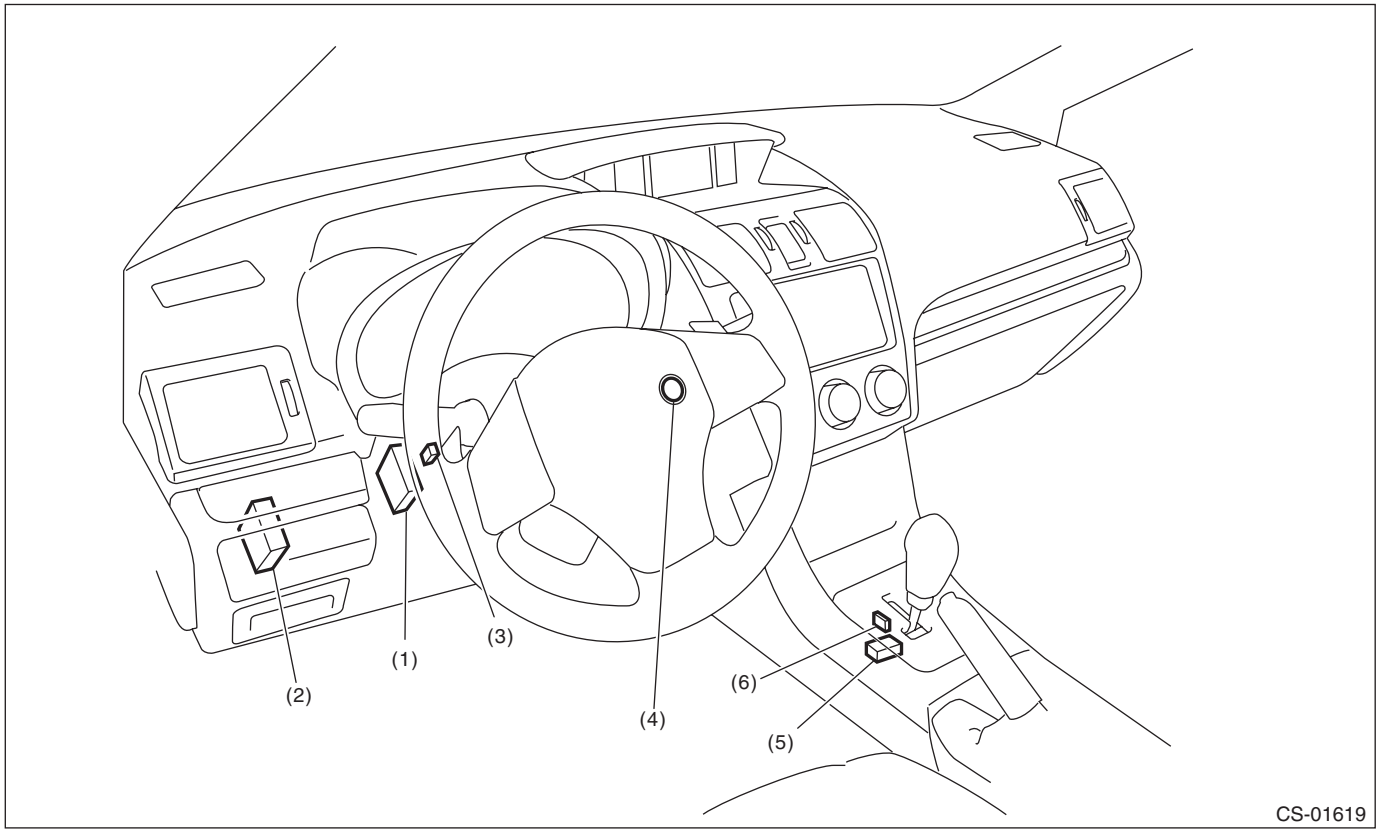

(1) TCM (“P” range)
(2) Body integrated unit
(3) Stop light and brake switch
(4) Push button ignition switch
(5) Solenoid unit
(6) “P” range switch

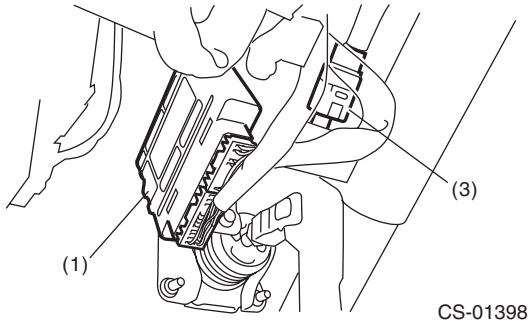

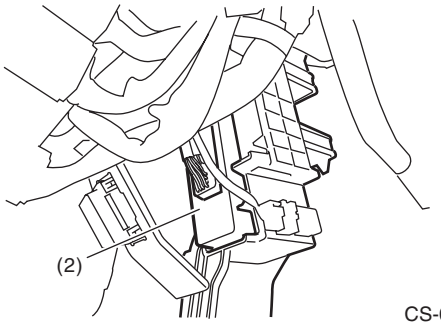

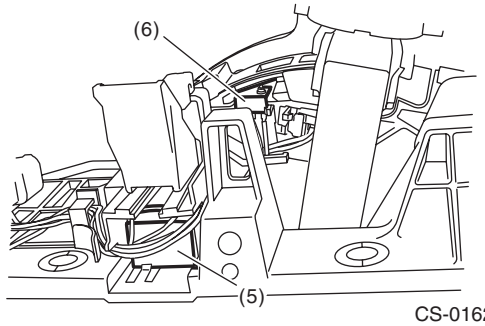

B: ELECTRICAL SPECIFICATION

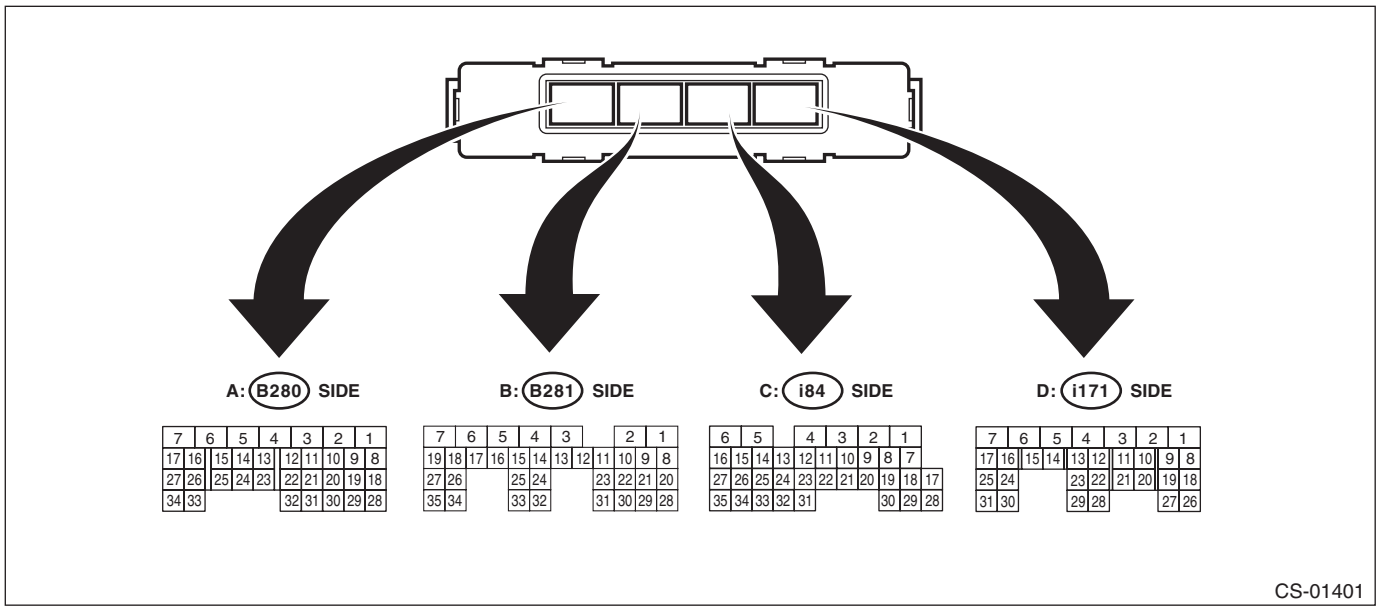

- Model without push button ignition switch

Item	Connector No.	Terminal No.	Input/Output signal
			Measured value and measuring conditions
Battery power supply	B281	6	9 — 16 V
		7	
	i84	6	
Ignition power supply	B280	32	10 — 15 V when ignition switch is at ACC.
	B281	3	10 — 15 V when ignition switch is at ON or START.
TCM (“P” range)	B281	20	Can not be measured because of digital communication
		28	
Stop light and brake switch	B280	10	9 — 16 V when the stop light & brake switch is ON. 0 V when the stop light & brake switch is OFF.
“P” range switch	B281	18	0 V when select lever is in “P” range. 9 — 16 V when select lever is in other positions than “P” range.
Solenoid unit signal	B281	5	8.5 — 16 V when shift lock is released. 0 V when shift lock is operating.
Key warning switch signal	B280	4	9 — 16 V when key is inserted. 0 V when key is removed.
Key lock solenoid signal	B281	4	7.5 — 16 V when the key is inserted with the select lever shifted in positions other than “P” range. 0 V at other conditions than above.
Ground	B280	1	—
	B281	31	
	i84	1	
	i171	29	
Delivery (test) mode signal	i84	27	Can not be measured because of digital communication
		35	

- Model with push button ignition switch

Item	Connector No.	Terminal No.	Input/Output signal Measured value and measuring conditions
Battery power supply	B281	6	9 — 16 V
		7	
	i84	6	
Ignition power supply	B280	32	10 — 15 V when ignition switch is at ACC.
	B281	3	10 — 15 V when ignition switch is at ON or START.
TCM (“P” range)	B281	20	Can not be measured because of digital communication
		28	
Stop light and brake switch	B280	10	9 — 16 V when the stop light & brake switch is ON. 0 V when the stop light & brake switch is OFF.
“P” range switch	B281	18	0 V when select lever is in “P” range. 9 — 16 V when select lever is in other positions than “P” range.
Solenoid unit signal	B281	5	8.5 — 16 V when shift lock is released. 0 V when shift lock is operating.
Ground	B280	1	—
	B281	31	
	i84	1	
	i171	29	
Delivery (test) mode signal	i84	27	Can not be measured because of digital communication
		35	

C: WIRING DIAGRAM

1. MODEL WITHOUT PUSH BUTTON IGNITION SWITCH

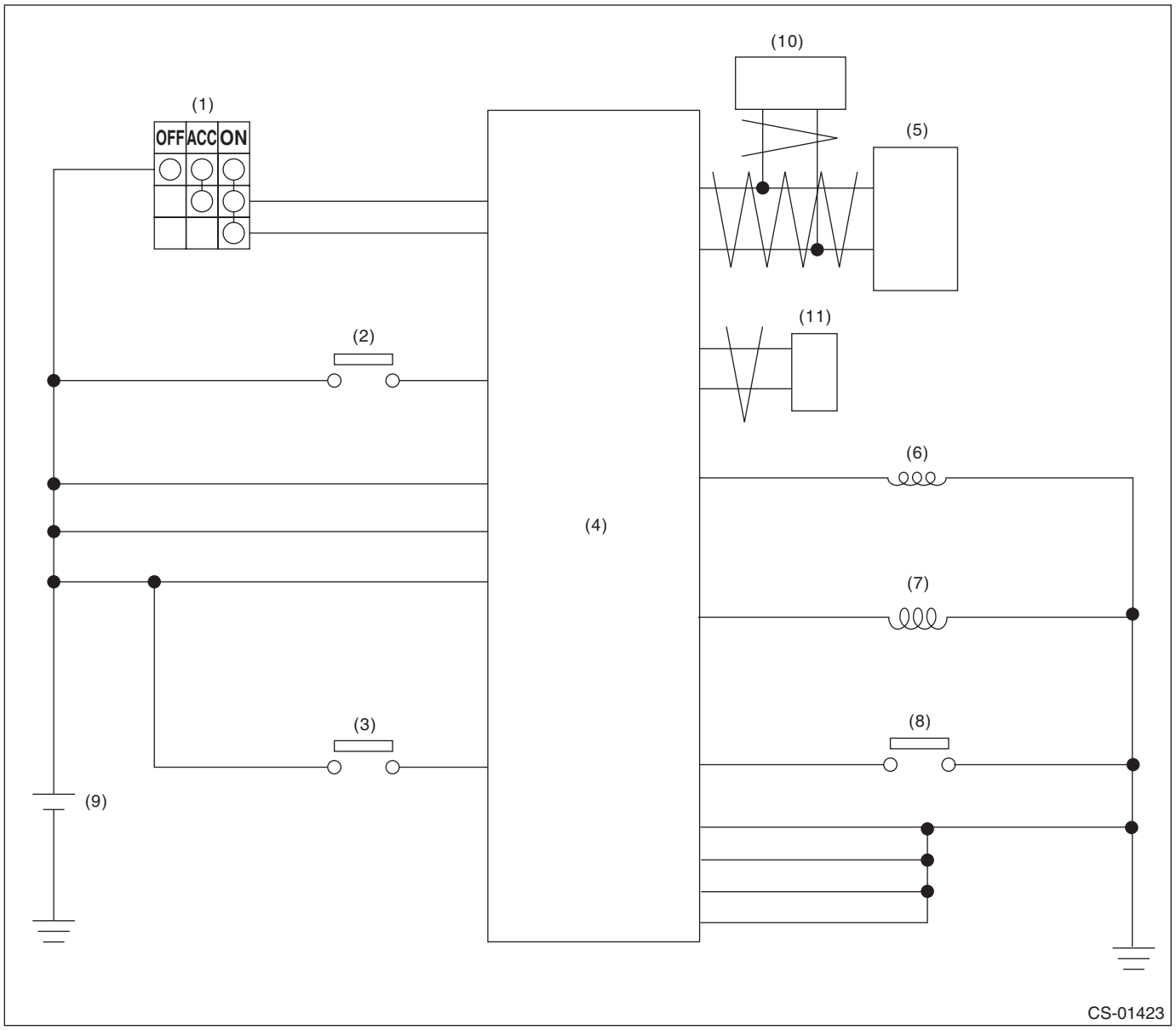

(1) Ignition switch
(2) Stop light and brake switch
(3) Key warning switch
(4) Body integrated unit
(5) TCM (shift range information)
(6) Key lock solenoid
(7) Shift lock solenoid
(8) "P" range switch
(9) Battery
(10) ECM (delivery (test) mode signal)
(11) VDC CM (vehicle speed information)

2. MODEL WITH PUSH BUTTON IGNITION SWITCH

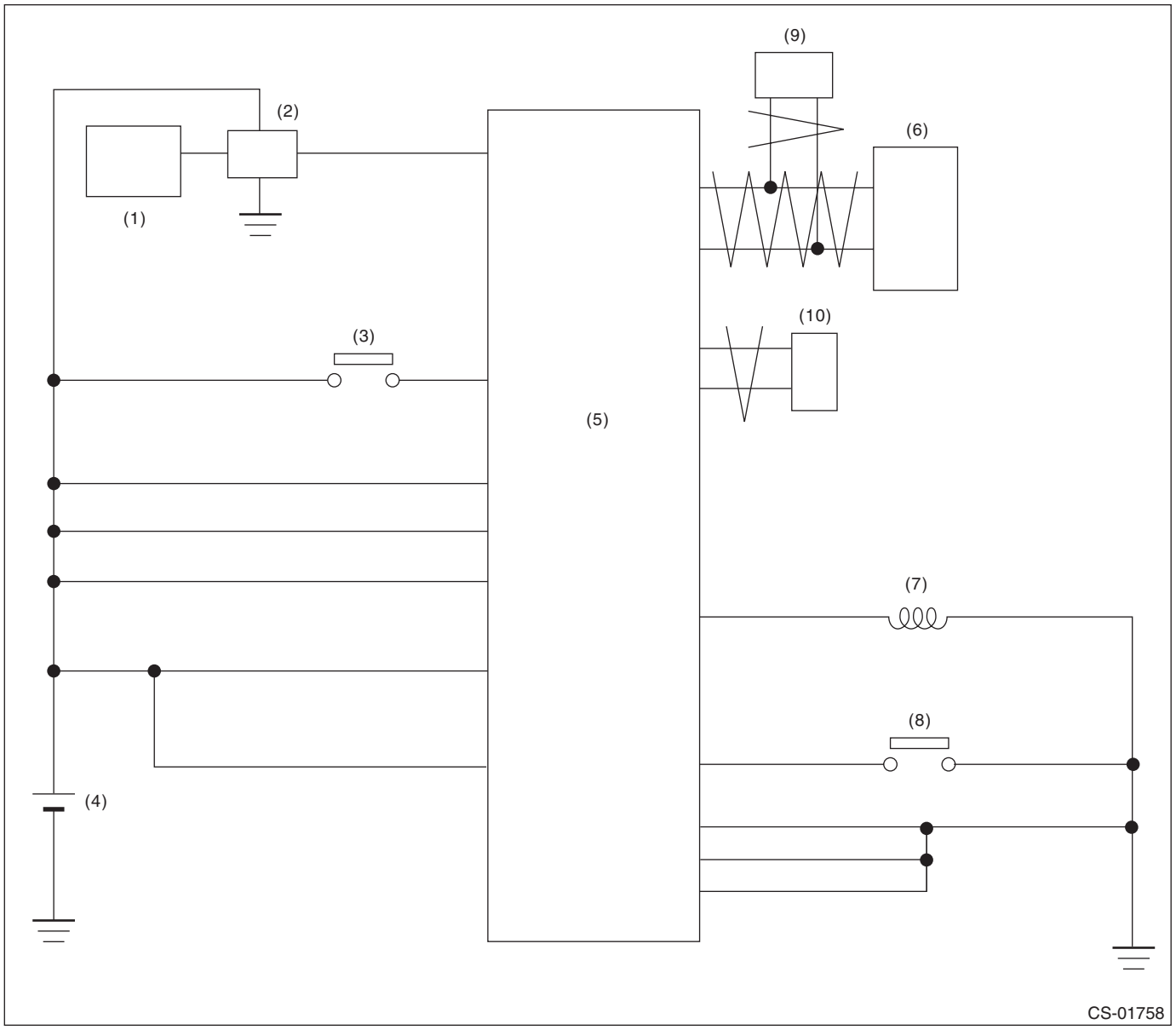

(1) Keyless access CM
(2) IG relay 1 (push button start)
(3) Stop light and brake switch
(4) Battery
(5) Body integrated unit
(6) TCM (shift range information)
(7) Shift lock solenoid
(8) “P” range switch
(9) ECM (delivery (test) mode signal)
(10) VDC CM (vehicle speed information)

D: INSPECTION

1. SHIFT LOCK OPERATION

- Model without push button ignition switch

	Step	Check	Yes	No
1	**CHECK COMMUNICATION OF SUBARU SELECT MONITOR.** 1) Turn the ignition switch to ON. 2) Using the Subaru Select Monitor, check whether communication to all systems can be executed normally.	Is the system name displayed?	Go to step **2**.	Perform the inspection following the diagnostic procedure in BODY CONTROL SYSTEM (DIAGNOSTICS) section. <Ref. to BC(diag)-2, Basic Diagnostic Procedure.>
2	**CHECK SHIFT LOCK.** 1) Turn the ignition switch to ON. 2) Shift the select lever to “P” range.	While brake pedal is not depressed, is it possible to move the select lever from the “P” range to other ranges?	Perform the inspection of “SELECT LEVER CANNOT BE LOCKED OR RELEASED”. <Ref. to CS-18, SELECT LEVER CANNOT BE LOCKED OR RELEASED, INSPECTION, AT Shift Lock Control System.>	Go to step **3**.
3	**CHECK SHIFT LOCK.**	While brake pedal is depressed, is it possible to move the select lever from the “P” range to other ranges?	Go to step **4**.	Perform the inspection of “SELECT LEVER CANNOT BE LOCKED OR RELEASED”. <Ref. to CS-18, SELECT LEVER CANNOT BE LOCKED OR RELEASED, INSPECTION, AT Shift Lock Control System.>
4	**CHECK SHIFT LOCK.** Shift the select lever to “N” range.	Is it possible to move the select lever from the “N” range to the “P” range?	Go to step **5**.	Perform the inspection of “SELECT LEVER CANNOT BE LOCKED OR RELEASED”. <Ref. to CS-18, SELECT LEVER CANNOT BE LOCKED OR RELEASED, INSPECTION, AT Shift Lock Control System.>

	Step	Check	Yes	No
5	**CHECK SHIFT LOCK.** 1) Shift the select lever to “N” range. 2) Turn the ignition switch to ACC.	While brake pedal is depressed, is it possible to move the select lever from the “N” range to the “P” range?	Go to step **6**.	Perform the inspection of “SELECT LEVER CANNOT BE LOCKED OR RELEASED”. <Ref. to CS-18, SELECT LEVER CANNOT BE LOCKED OR RELEASED, INSPECTION, AT Shift Lock Control System.>
6	**CHECK KEY INTERLOCK.** 1) Turn the ignition switch to OFF. 2) Shift the select lever to other than “P” range.	Can the ignition key be removed?	Perform the inspection of “KEY INTERLOCK CANNOT BE LOCKED OR RELEASED”. <Ref. to CS-21, KEY INTERLOCK CANNOT BE LOCKED OR RELEASED, INSPECTION, AT Shift Lock Control System.>	Go to step **7**.
7	**CHECK KEY INTERLOCK.** Shift the select lever to “P” range.	Can the ignition key be removed?	AT shift lock system is normal.	Perform the inspection of “KEY INTERLOCK CANNOT BE LOCKED OR RELEASED”. <Ref. to CS-21, KEY INTERLOCK CANNOT BE LOCKED OR RELEASED, INSPECTION, AT Shift Lock Control System.>

- Model with push button ignition switch

	Step	Check	Yes	No
1	**CHECK COMMUNICATION OF SUBARU SELECT MONITOR.** 1) Turn the ignition switch to ON. 2) Using the Subaru Select Monitor, check whether communication to all systems can be executed normally.	Is the system name displayed?	Go to step **2**.	Perform the inspection following the diagnostic procedure in BODY CONTROL SYSTEM (DIAGNOSTICS) section. <Ref. to BC(diag)-2, Basic Diagnostic Procedure.>

	Step	Check	Yes	No
2	**CHECK SHIFT LOCK.** 1) Turn the ignition switch to ON. 2) Shift the select lever to “P” range.	While brake pedal is not depressed, is it possible to move the select lever from the “P” range to other ranges?	Perform the inspection of “SELECT LEVER CANNOT BE LOCKED OR RELEASED”. <Ref. to CS-18, SELECT LEVER CANNOT BE LOCKED OR RELEASED, INSPECTION, AT Shift Lock Control System.>	Go to step **3**.
3	**CHECK SHIFT LOCK.**	While brake pedal is depressed, is it possible to move the select lever from the “P” range to other ranges?	Go to step **4**.	Perform the inspection of “SELECT LEVER CANNOT BE LOCKED OR RELEASED”. <Ref. to CS-18, SELECT LEVER CANNOT BE LOCKED OR RELEASED, INSPECTION, AT Shift Lock Control System.>
4	**CHECK SHIFT LOCK.** Shift the select lever to “N” range.	Is it possible to move the select lever from the “N” range to the “P” range?	Go to step **5**.	Perform the inspection of “SELECT LEVER CANNOT BE LOCKED OR RELEASED”. <Ref. to CS-18, SELECT LEVER CANNOT BE LOCKED OR RELEASED, INSPECTION, AT Shift Lock Control System.>
5	**CHECK SHIFT LOCK.** 1) Shift the select lever to “N” range. 2) Turn the ignition switch to ACC.	While brake pedal is depressed, is it possible to move the select lever from the “N” range to the “P” range?	AT shift lock system is normal.	Perform the inspection of “SELECT LEVER CANNOT BE LOCKED OR RELEASED”. <Ref. to CS-18, SELECT LEVER CANNOT BE LOCKED OR RELEASED, INSPECTION, AT Shift Lock Control System.>

2. BODY INTEGRATED UNIT POWER SUPPLY AND GROUND CIRCUIT

NOTE:
For the DC power supply circuit, refer to “WIRING DIAGRAMS”. <Ref. to WI(w/o HEV)-15, Power Supply Circuit.>

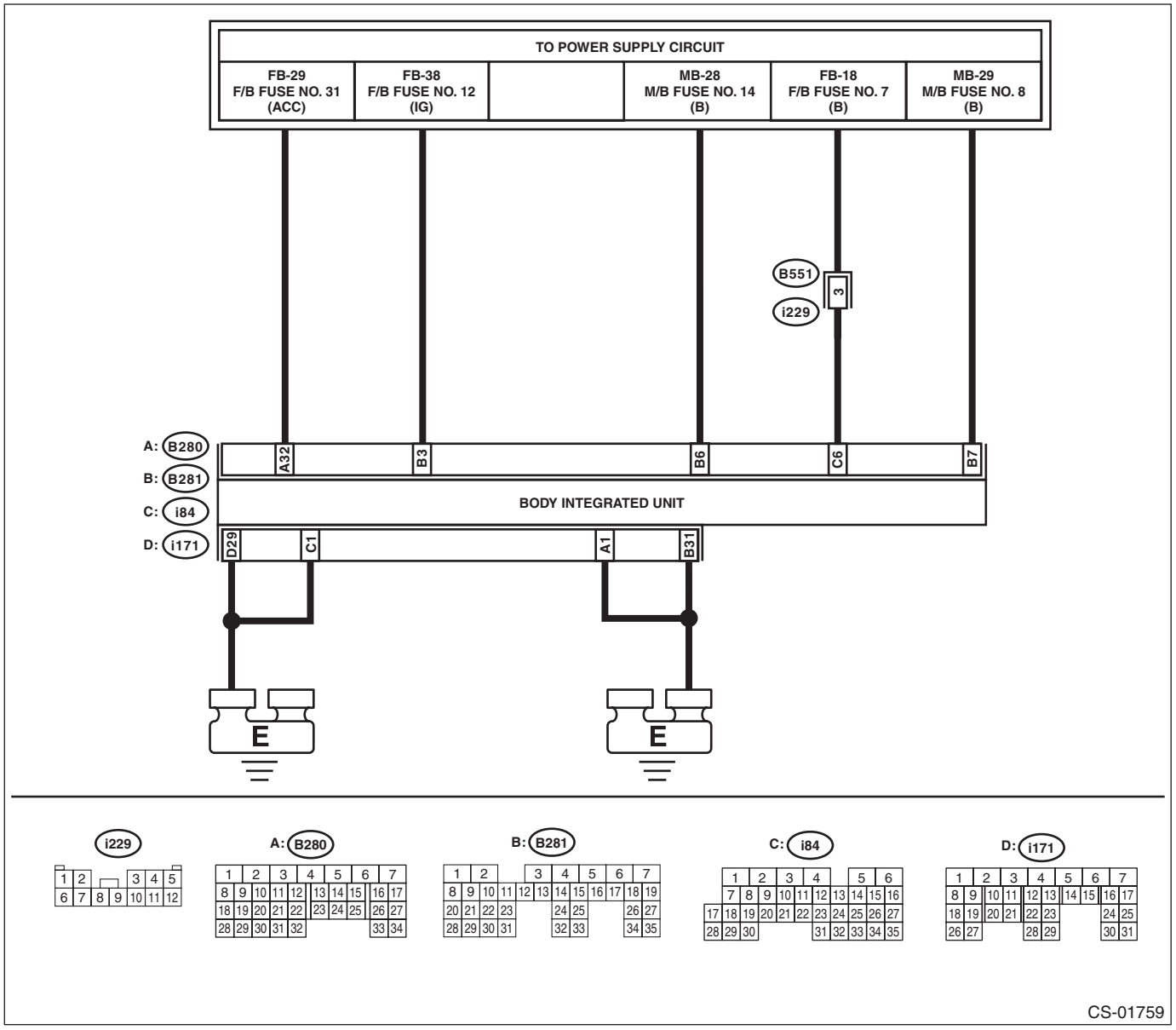

Step		Check	Yes	No
1	**CHECK DTC OF BODY INTEGRATED UNIT.** Check DTC of body integrated unit. <Ref. to BC(diag)-9, Read Diagnostic Trouble Code (DTC).>	Is the DTC of power line displayed on body integrated unit?	Repair or replace it according to the DTC.	Go to step **2**.

Step		Check	Yes	No
2	**CHECK HARNESS BETWEEN BODY INTEGRATED UNIT AND BATTERY.** 1) Turn the ignition switch to ON. 2) Measure the voltage between body integrated unit and chassis ground. ***Connector & terminal*** ***(B281) No. 3 (+) — Chassis ground (–):*** ***(B280) No. 32 (+) — Chassis ground (–):*** ***(B281) No. 6 (+) — Chassis ground (–):*** ***(B281) No. 7 (+) — Chassis ground (–):*** ***(i84) No. 6 (+) — Chassis ground (–):***	Is the voltage 9 — 16 V?	Go to step **3**.	Check harness for open circuit between the body integrated unit and the battery (for HEV model, 12 volt auxiliary battery) or a blown fuse.
3	**CHECK HARNESS BETWEEN BODY INTEGRATED UNIT AND CHASSIS GROUND.** 1) Turn the ignition switch to OFF. 2) Measure the harness resistance between the body integrated unit and chassis ground. ***Connector & terminal*** ***(B280) No. 1 — Chassis ground:*** ***(B281) No. 31 — Chassis ground:*** ***(i84) No. 1 — Chassis ground:*** ***(i171) No. 29 — Chassis ground:***	Is the resistance less than 1 Ω?	Go to step **4**.	Repair the open circuit of harness between the body integrated unit and chassis ground.
4	**CHECK FOR POOR CONTACT.**	Is there poor contact of connector?	Repair the poor contact.	Check body integrated unit.

3. SELECT LEVER CANNOT BE LOCKED OR RELEASED

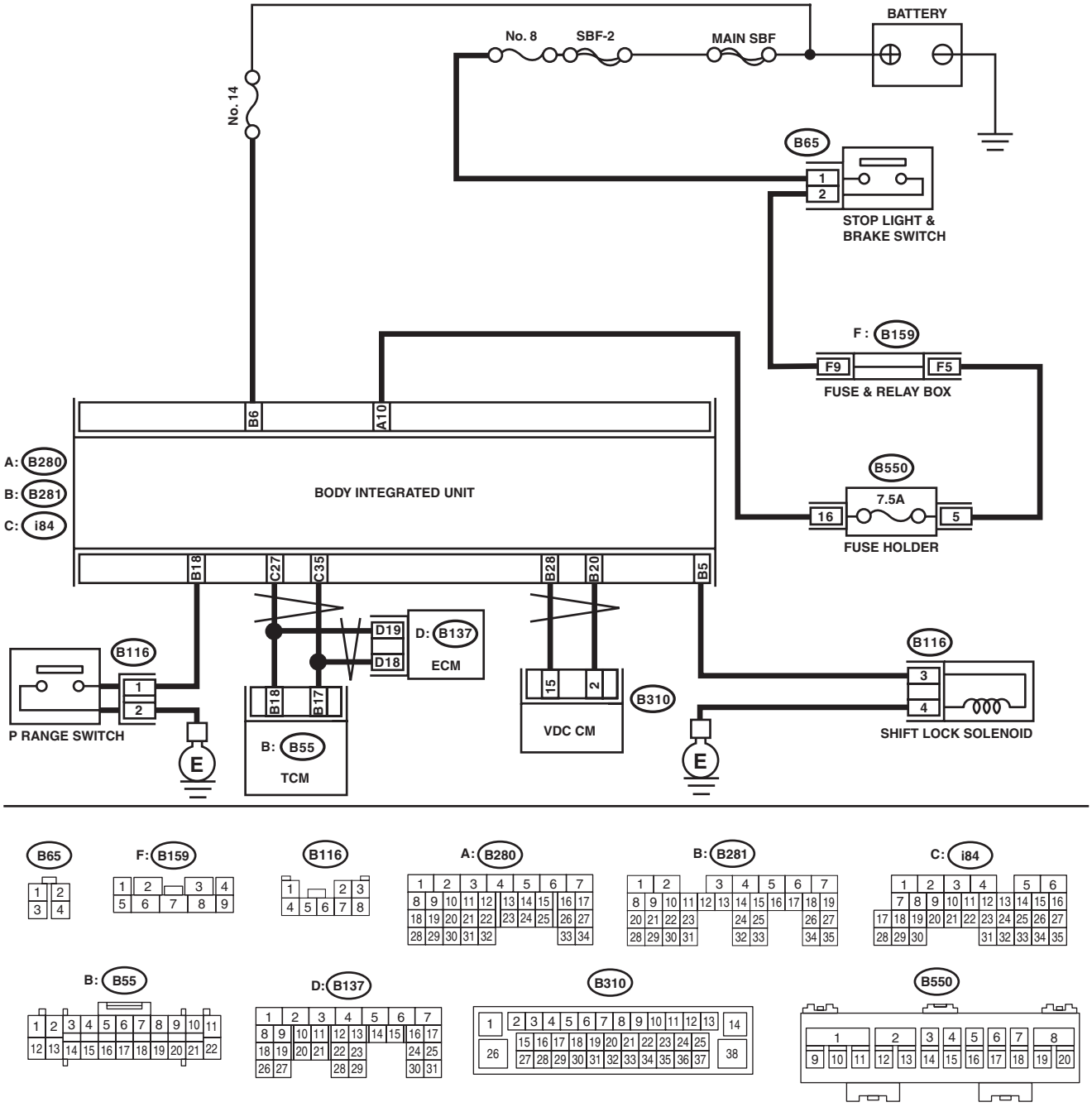

CS-01760

Step		Check	Yes	No
1	**CHECK BODY INTEGRATED UNIT POWER SUPPLY AND GROUND CIRCUIT.** <Ref. to CS-16, BODY INTEGRATED UNIT POWER SUPPLY AND GROUND CIRCUIT, INSPECTION, AT Shift Lock Control System.>	Is there any fault?	Follow the procedures to perform inspection and repair.	Go to step **2**.

	Step	Check	Yes	No
2	**CHECK CURRENT DATA.** 1) Connect the Subaru Select Monitor. 2) Shift the select lever to “P” range. 3) Turn the ignition switch to ON. 4) Select the current data display and display «P SW». <Ref. to BC(diag)-11, Read Current Data.>	Is the display “ON” in the P range and “OFF” in ranges other than P?	Go to step **3**.	Go to step **8**.
3	**CHECK CURRENT DATA.** Select the current data display and display «Stop Light Switch». <Ref. to BC(diag)-11, Read Current Data.>	Is “ON” displayed when the brake pedal is depressed and “OFF” displayed when the brake pedal is released?	Go to step **4**.	Go to step **11**.
4	**CHECK BODY INTEGRATED UNIT DTC.** Check the DTC of the body integrated unit when the brake pedal is pressed and when it is released. (Hold each condition for 5 seconds or more.)	Is there a DTC of a current malfunction?	Follow the DTC to perform inspection and repair.	Go to step **5**.
5	**CHECK CURRENT DATA.** Select the current data display and display «Shift Lock Solenoid». <Ref. to BC(diag)-11, Read Current Data.>	Is “ON” displayed when the brake pedal is depressed and “OFF” displayed when the brake pedal is released?	Go to step **6**.	Replace the body integrated unit.
6	**CHECK CURRENT DATA.** Select the current data display and display «Shift Position». <Ref. to BC(diag)-11, Read Current Data.>	Is the display “P” in the P range and other than “P” in ranges other than P?	Go to step **7**.	Check the following items. • Inhibitor switch • Harness between inhibitor switch and TCM • TCM input signal • TCM CAN communication • Body integrated unit CAN receive
7	**CHECK CURRENT DATA.** 1) Select the current data display and display «Front Wheel Speed». <Ref. to BC(diag)-11, Read Current Data.> 2) Start the engine. 3) Raise vehicle speed gradually up to approximately 20 km/h (12 MPH).	Is a figure equivalent to the speedometer being indicated?	Go to step **12**.	Check the following items. • Wheel speed sensor • CAN communication by VDC unit • Body integrated unit CAN receive Replace the wheel speed sensor, VDC unit or body integrated unit, or both.
8	**CHECK HARNESS BETWEEN BODY INTEGRATED UNIT AND “P” RANGE SWITCH.** 1) Disconnect the connector from body integrated unit. 2) Disconnect the connector of “P” range switch. 3) Check for open circuit of harness, short circuit to battery or short circuit to ground between the body integrated unit and “P” range switch. ***Connector & terminal*** ***(B281) No. 18 — (B116) No. 1:***	Is there any fault in the harness?	Repair or replace the harness between the body integrated unit and the “P” range switch.	Go to step **9**.

	Step	Check	Yes	No
9	**CHECK HARNESS BETWEEN "P" RANGE SWITCH AND CHASSIS GROUND.** Measure the resistance of harness between "P" range switch and chassis ground. ***Connector & terminal*** ***(B116) No. 2 — Chassis ground:***	Is it less than 10 Ω?	Go to step **10**.	Repair the harness between the "P" range switch and chassis ground.
10	**CHECK "P" RANGE SWITCH.** Measure the resistance between "P" range switch connector terminals. ***Terminals*** ***No. 2 — No. 1:***	Is it less than 10 Ω in the "P" range, and 1 MΩ or more in ranges other than "P"?	Replace the body integrated unit.	Replace the "P" range switch.
11	**CHECK STOP LIGHT SWITCH INPUT SIGNAL.** 1) Disconnect the connector from body integrated unit. 2) Measure the voltage between the body integrated unit connector terminal and chassis ground. ***Connector & terminal*** ***(B280) No. 10 (+) — Chassis ground (–):***	Is the voltage 9 V to 16 V when the brake pedal is depressed, and approx. 0 V when not depressed?	Replace the body integrated unit.	Check the stop light system.
12	**CHECK SOLENOID UNIT OPERATION.** Connect the battery to the solenoid unit connector terminal, and operate the solenoid unit. ***Terminals*** ***No. 3 (+) — No. 4 (–):***	Does the solenoid unit operate normally?	Check the lock mechanism of the select lever body.	Replace the solenoid unit.

4. KEY INTERLOCK CANNOT BE LOCKED OR RELEASED

NOTE:
Check of this item only applies to models without a push button ignition switch.

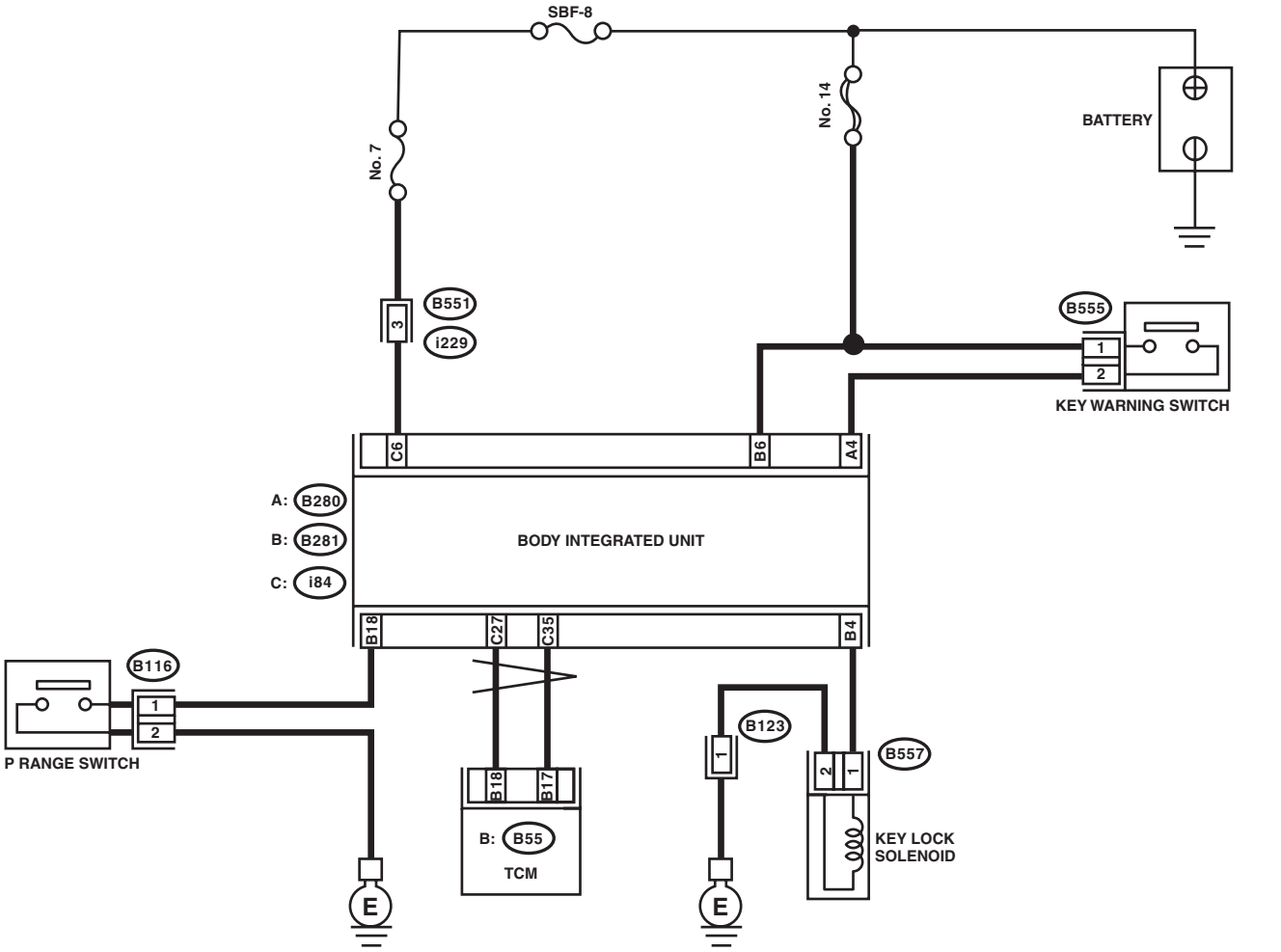

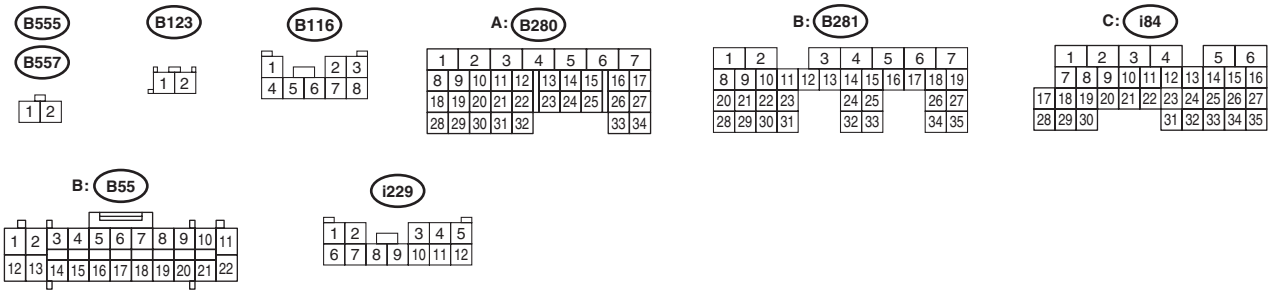

CS-01761

Step		Check	Yes	No
1	**CHECK D CHECK FUSE.** Check that the D check fuse is disconnected.	Is the D check fuse disconnected?	Go to step **2**.	Remove the D check fuse and then turn the ignition switch to ON.

	Step	Check	Yes	No
2	**CHECK BODY INTEGRATED UNIT POWER SUPPLY AND GROUND CIRCUIT.** <Ref. to CS-16, BODY INTEGRATED UNIT POWER SUPPLY AND GROUND CIRCUIT, INSPECTION, AT Shift Lock Control System.>	Is there any fault?	Follow the procedures to inspect and repair.	Go to step **3**.
3	**CHECK CURRENT DATA.** 1) Connect the Subaru Select Monitor. 2) Shift the select lever to "P" range. 3) Turn the ignition switch to ON. 4) Select the current data display and display «P SW». <Ref. to BC(diag)-11, Read Current Data.>	Is the display "ON" in the P range and "OFF" in ranges other than P?	Go to step **4**.	Go to step **7**.
4	**CHECK CURRENT DATA.** 1) Select the current data display and display the «key-lock warning SW». <Ref. to BC(diag)-11, Read Current Data.> 2) Turn the ignition switch to OFF.	Does the display change from "ON" ←→ "OFF" when the key is inserted and removed?	Go to step **5**.	Go to step **10**.
5	**CHECK CURRENT DATA.** 1) Turn the ignition switch to ON. 2) Select the current data display and display «Key locking output». <Ref. to BC(diag)-11, Read Current Data.>	Is the display "OFF" in the P range and "ON" in ranges other than P?	Go to step **11**.	Go to step **6**.
6	**CHECK DTC OF BODY INTEGRATED UNIT.** 1) Set the select lever to other than "P" range. 2) Check DTC of body integrated unit.	Is B1105 (key interlock circuit abnormal) a current malfunction?	Follow the DTC to perform inspection and repair.	Go to step **11**.
7	**CHECK HARNESS BETWEEN BODY INTEGRATED UNIT AND "P" RANGE SWITCH.** 1) Disconnect the connector from body integrated unit. 2) Disconnect the connector of "P" range switch. 3) Check for open circuit of harness, short circuit to battery or short circuit to ground between the body integrated unit and "P" range switch. ***Connector & terminal*** ***(B281) No. 18 — (B116) No. 1:***	Is there any fault in the harness?	Repair or replace the harness between the body integrated unit and the "P" range switch.	Go to step **8**.
8	**CHECK HARNESS BETWEEN "P" RANGE SWITCH AND CHASSIS GROUND.** Measure the resistance of harness between "P" range switch and chassis ground. ***Connector & terminal*** ***(B116) No. 2 — Chassis ground:***	Is it less than 10 Ω?	Go to step **9**.	Repair the harness between the "P" range switch and chassis ground.
9	**CHECK "P" RANGE SWITCH.** Measure the resistance between "P" range switch connector terminals. ***Terminals*** ***No. 2 — No. 1:***	Is it less than 10 Ω in the "P" range, and 1 MΩ or more in ranges other than "P"?	Replace the body integrated unit.	Replace the "P" range switch.
10	**CHECK HARNESS BETWEEN BATTERY AND KEY WARNING SWITCH AND BODY INTEGRATED UNIT.** 1) Disconnect the connector from body integrated unit. 2) Measure the voltage between body integrated unit and chassis ground. ***Connector & terminal*** ***(B280) No. 4 (+) — Chassis ground (–):***	Is the display 9 V or more when the key is inserted, and less than 1.5 V with the key removed?	Replace the body integrated unit.	Check the following items. • Key warning switch • Harness/fuse • Ignition circuit

	Step	Check	Yes	No
11	**CHECK HARNESS BETWEEN BODY INTEGRATED UNIT AND KEY LOCK SOLENOID.** 1) Disconnect the connector from body integrated unit. 2) Disconnect the connector of key lock solenoid. 3) Check for open circuit of harness, short circuit to battery or short circuit to ground between the body integrated unit and key lock solenoid. ***Connector & terminal*** ***(B281) No. 4 — (B557) No. 1:***	Is there any fault in the harness?	Repair or replace the harness between the body integrated unit and the key lock solenoid.	Go to step **12**.
12	**CHECK HARNESS BETWEEN KEY LOCK SOLENOID AND CHASSIS GROUND.** Measure the resistance of harness between key lock solenoid and chassis ground. ***Connector & terminal*** ***(B557) No. 2 — Chassis ground:***	Is it less than 10 Ω?	Go to step **13**.	Repair or replace the harness between the key lock solenoid and chassis ground.
13	**CHECK KEY LOCK SOLENOID OPERATION.** Connect the battery to the key lock solenoid connector terminal, and operate the solenoid. ***Terminals*** ***No. 2 (+) — No. 1 (–):***	Does the key lock solenoid operate normally?	Go to step **14**.	Replace the key lock solenoid.
14	**CHECK OUTPUT OF BODY INTEGRATED UNIT.** 1) Connect all connectors. 2) Insert the key. 3) Measure the voltage between body integrated unit and chassis ground. ***Connector & terminal*** ***(B281) No. 4 — Chassis ground:***	Is it 7.5 V to 16 V in ranges other than “P”, and 0 V in the “P” range?	Check the lock mechanism of the steering lock body.	Replace the body integrated unit.

3. Select Lever

A: REMOVAL

1) Shift the select lever to “N” range.
2) Disconnect the ground cable from battery. <Ref. to NT-5, BATTERY, NOTE, Note.>

NOTE:
For the 12 volt engine restart battery of HEV model, disconnect the ground terminal from 12V engine restart battery sensor.
3) Lift up the vehicle.
4) Remove the center exhaust pipe. <Ref. to EX(H4DO(w/o HEV))-14, REMOVAL, Center Exhaust Pipe.>
5) Remove the center exhaust cover.

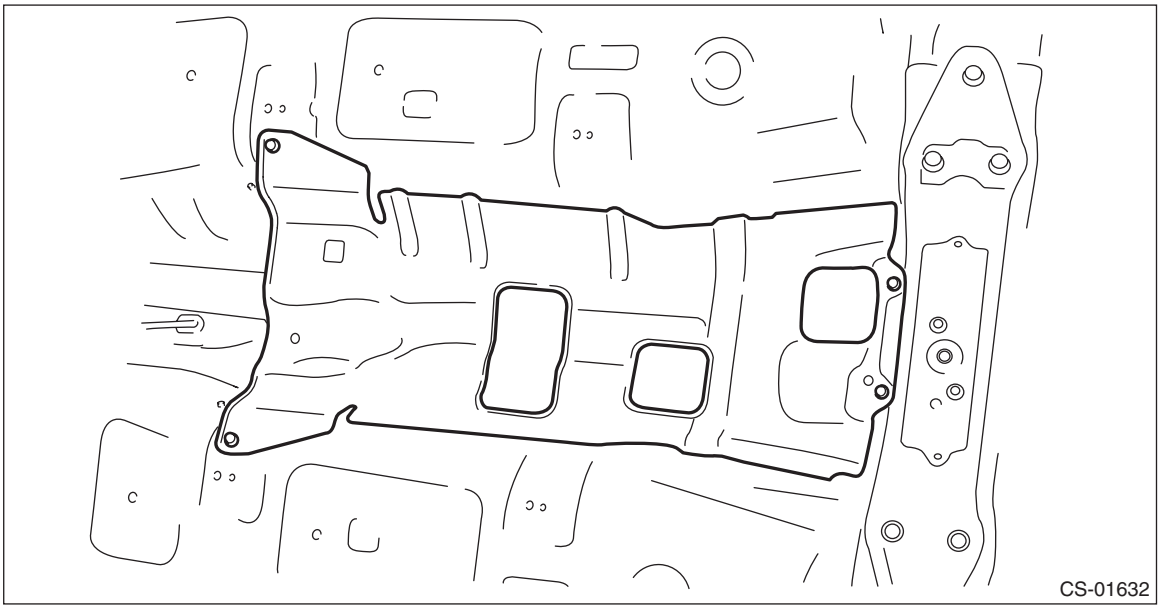

6) Disconnect the cable from the arm COMPL.

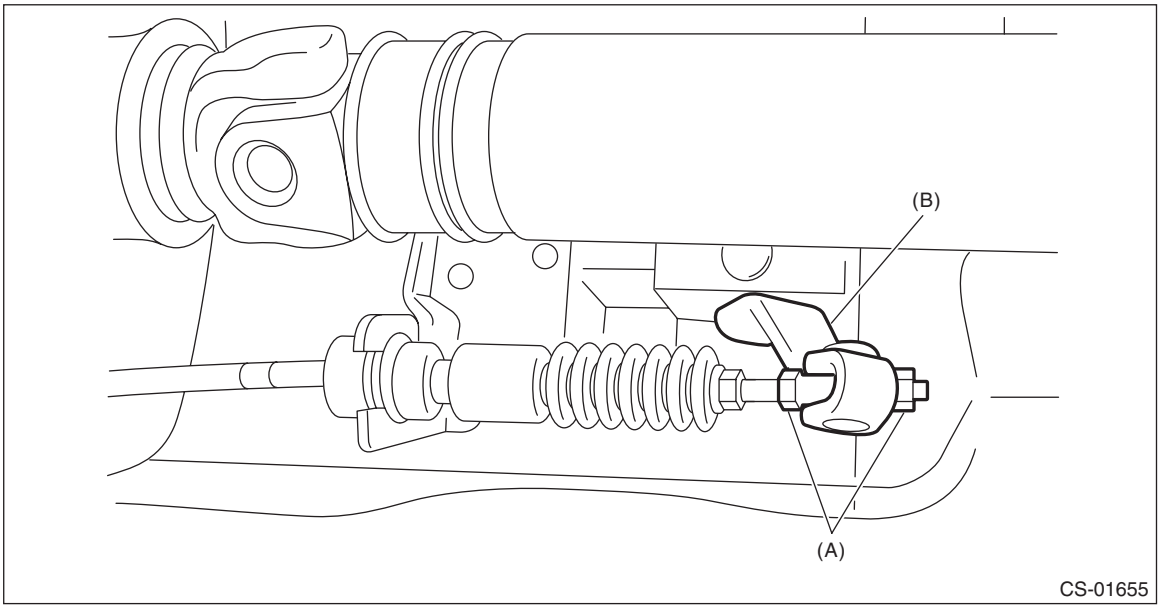

(A) Adjusting nut
(B) Arm COMPL

7) Raise the claw of clamp and remove the cable.

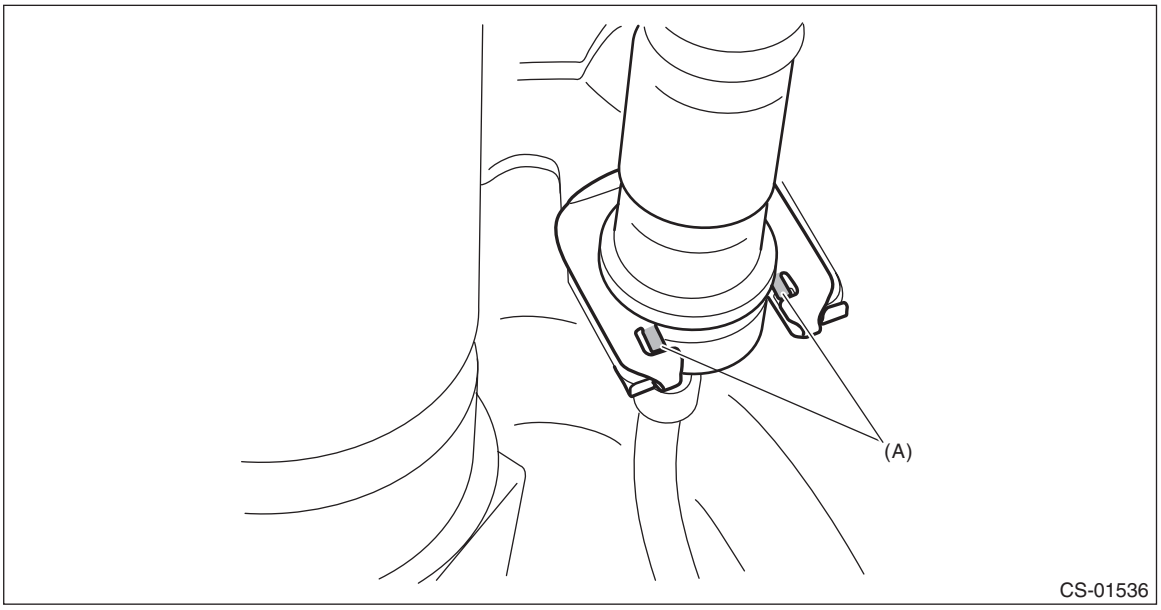

(A) Claw

8) Lower the vehicle.
9) Shift the select lever to “N” range.
10) Lower the cover grip AT vertically toward the lever.

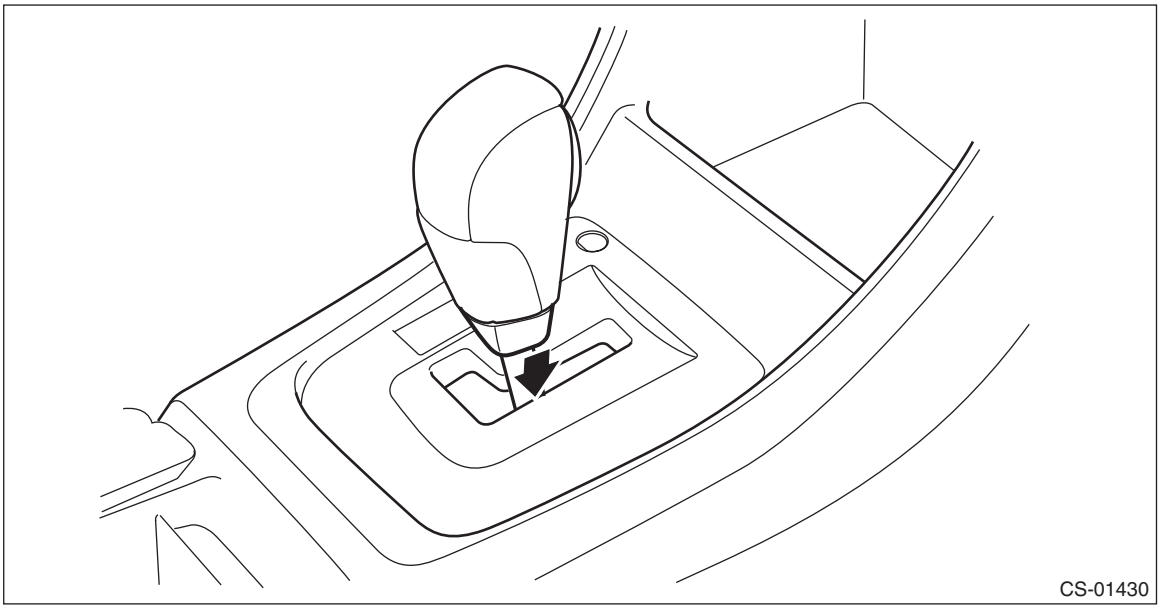

11) Remove the clamp grip pin.

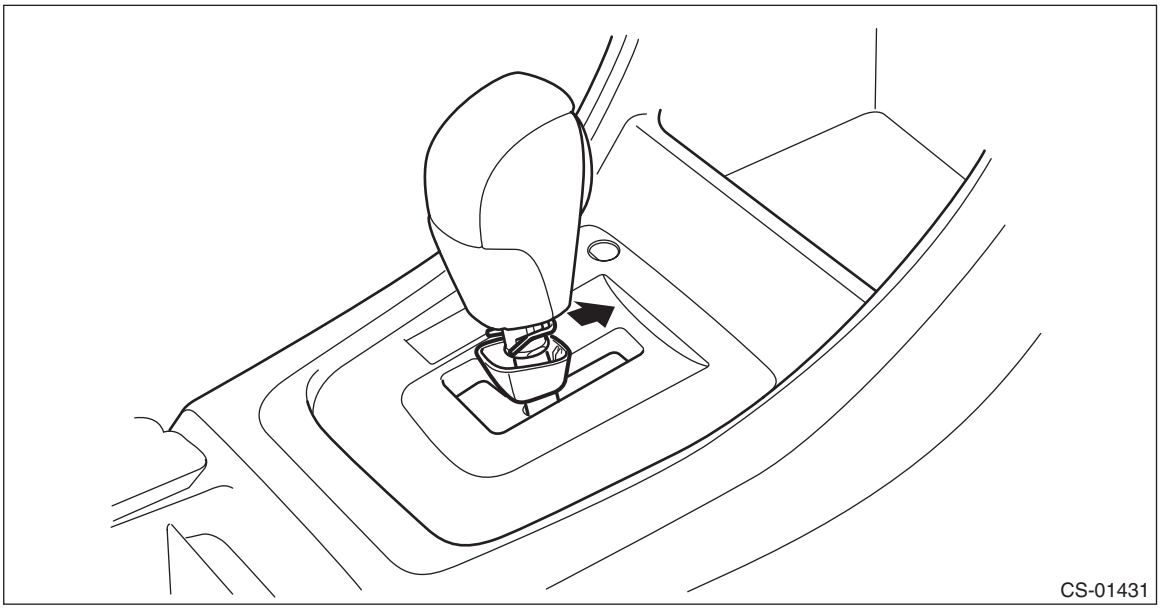

12) Remove the grip assembly.

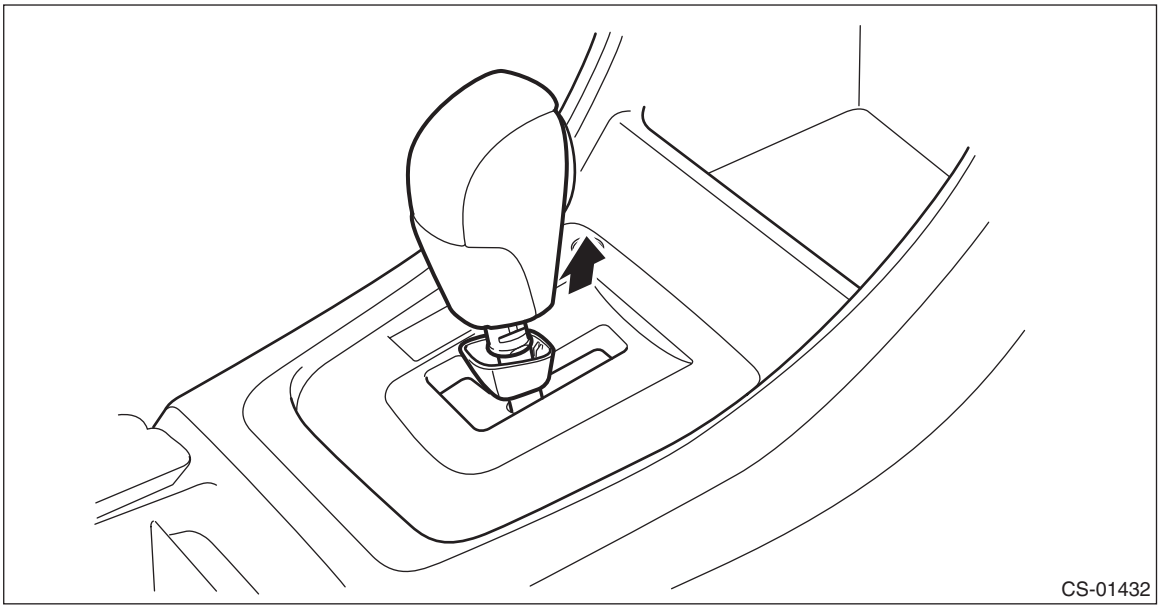

13) Remove the console box. <Ref. to EI-77, REMOVAL, Console Box.>

14) Remove the cover - shift lever.

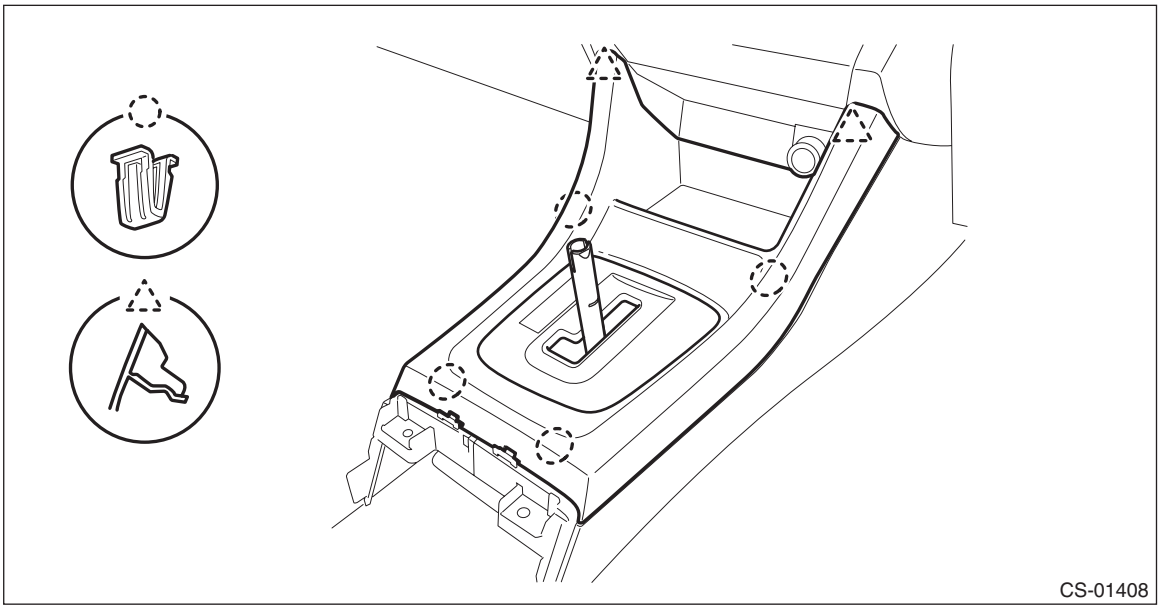

15) Disconnect the connector, and remove the indicator cover from the housing.

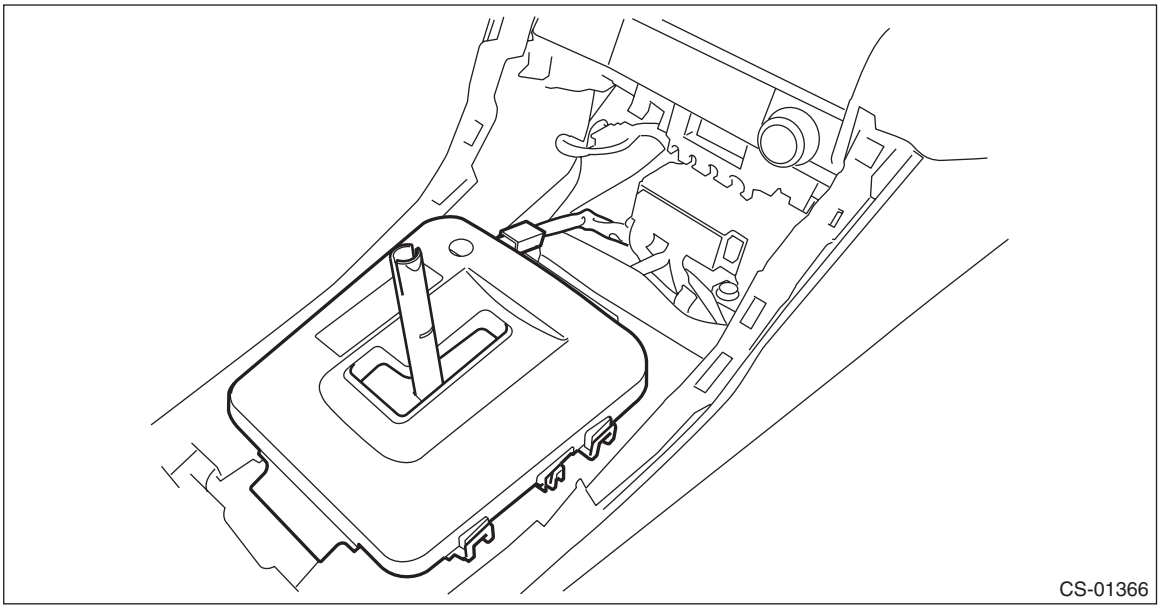

16) Remove the housing with the blind A and blind B.

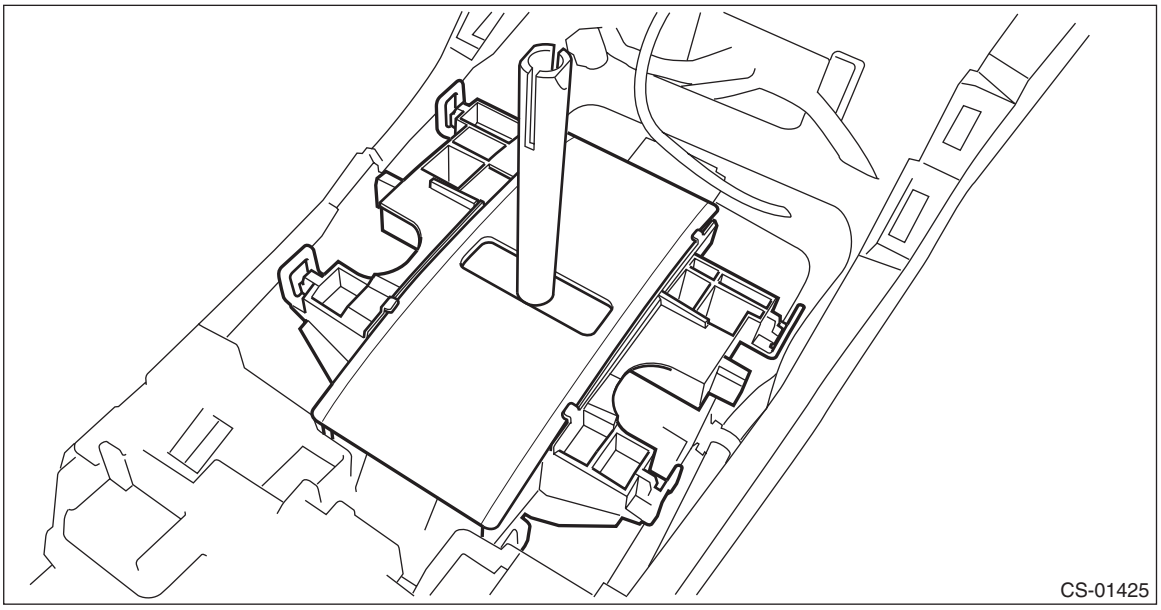

17) Remove the blind B.

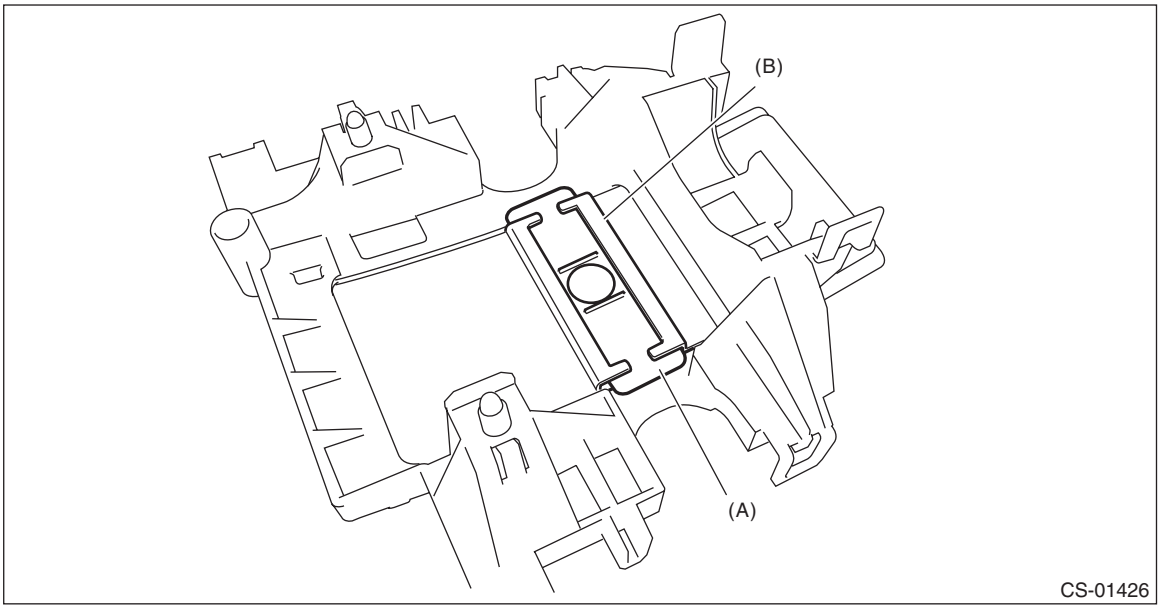

(A) Blind B
(B) Blind A

18) Remove the blind A from the housing.

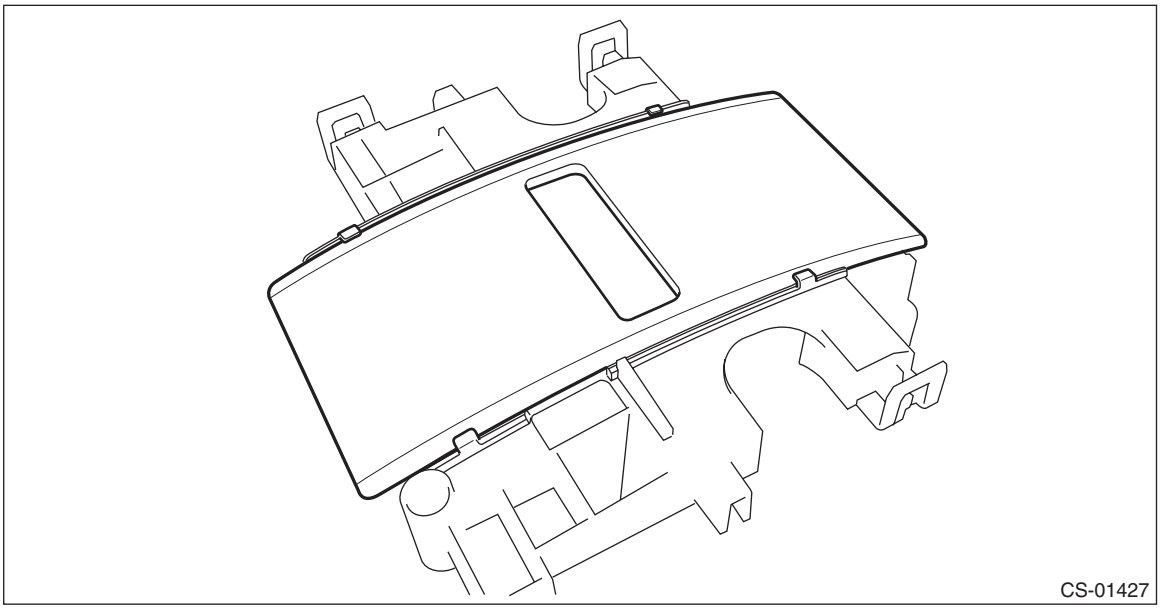

19) Remove the panel center LWR LH and RH. <Ref. to EI-77, REMOVAL, Console Box.>
20) Remove the harness clip from the select lever assembly.

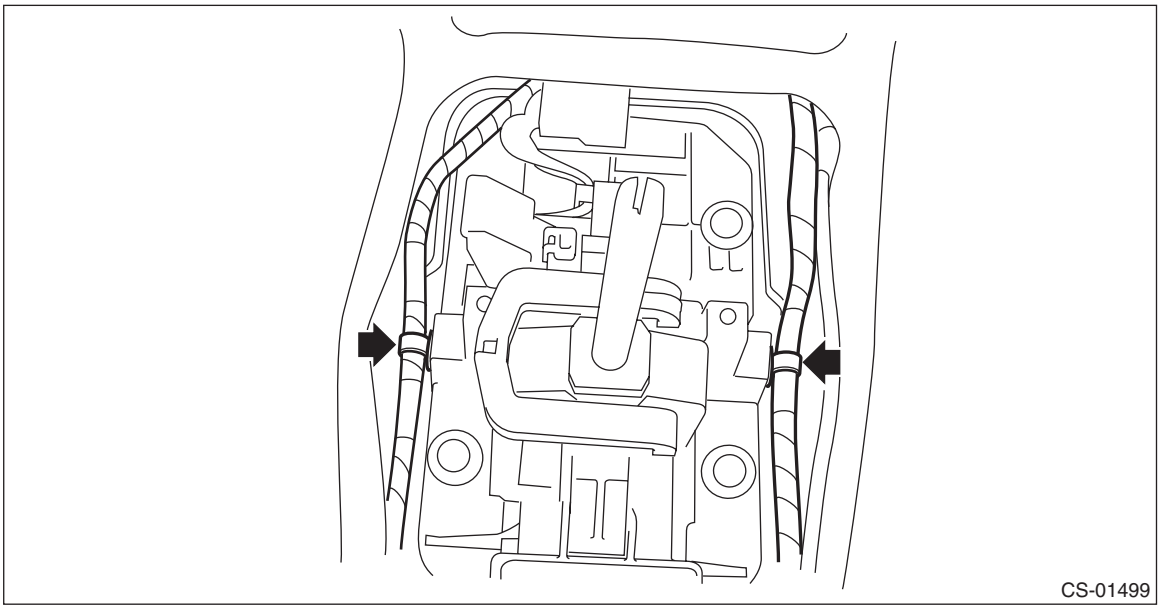

21) Disconnect the harness connector.

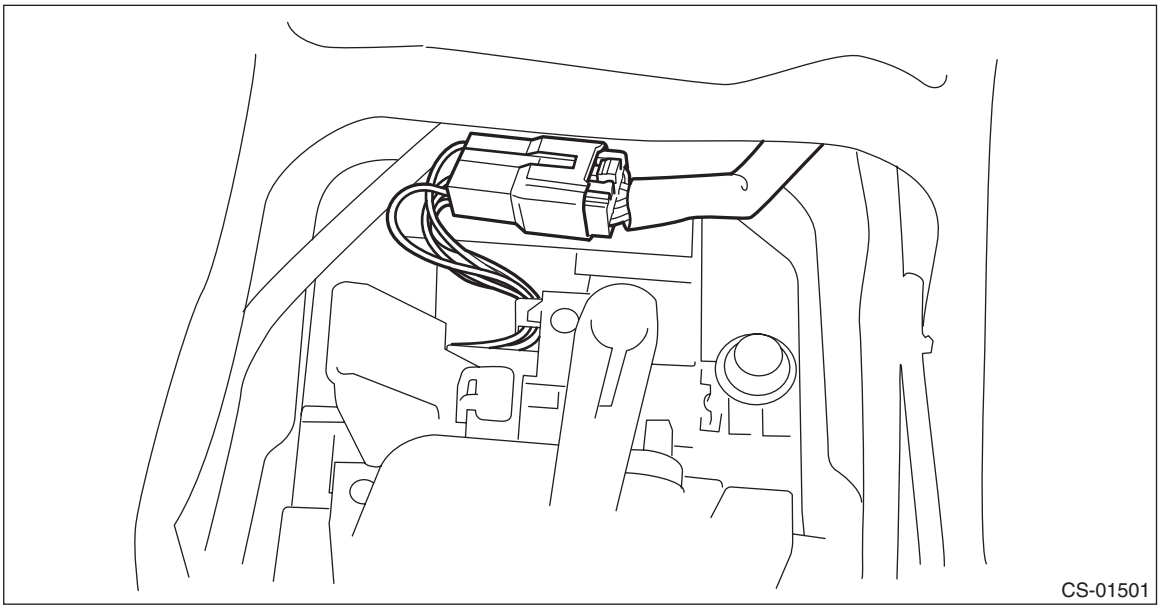

22) Remove the four bolts to remove the select lever assembly.

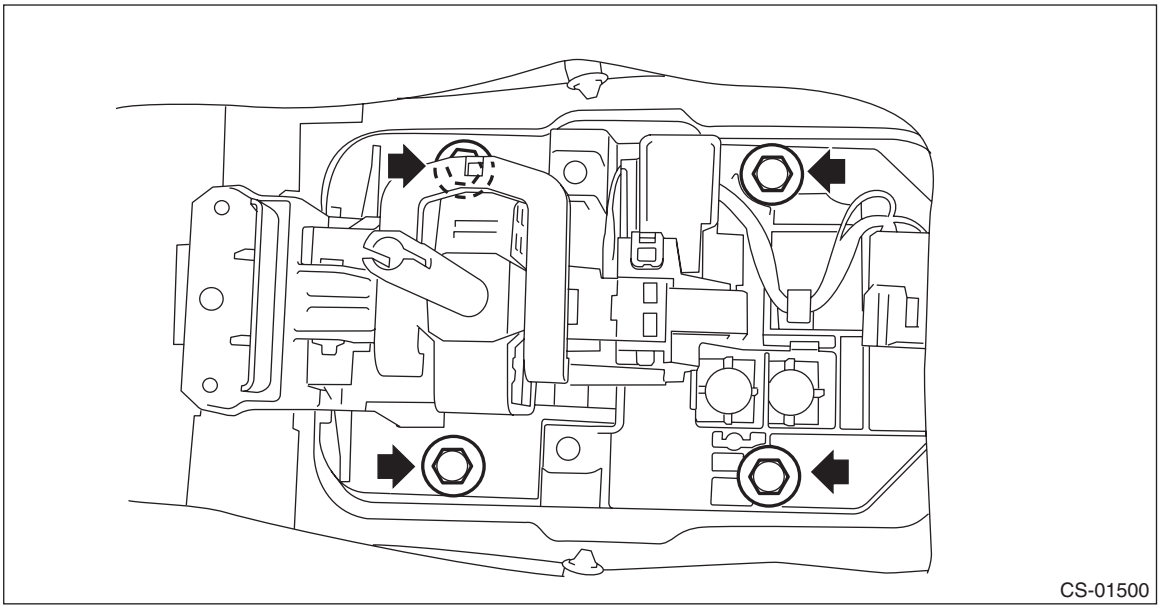

B: INSTALLATION

1) Set the select lever assembly to the vehicle body.
2) Tighten the four mounting bolts to attach the select lever assembly to the vehicle body.

Tightening torque:
18 N·m (1.8 kgf-m, 13.3 ft-lb)

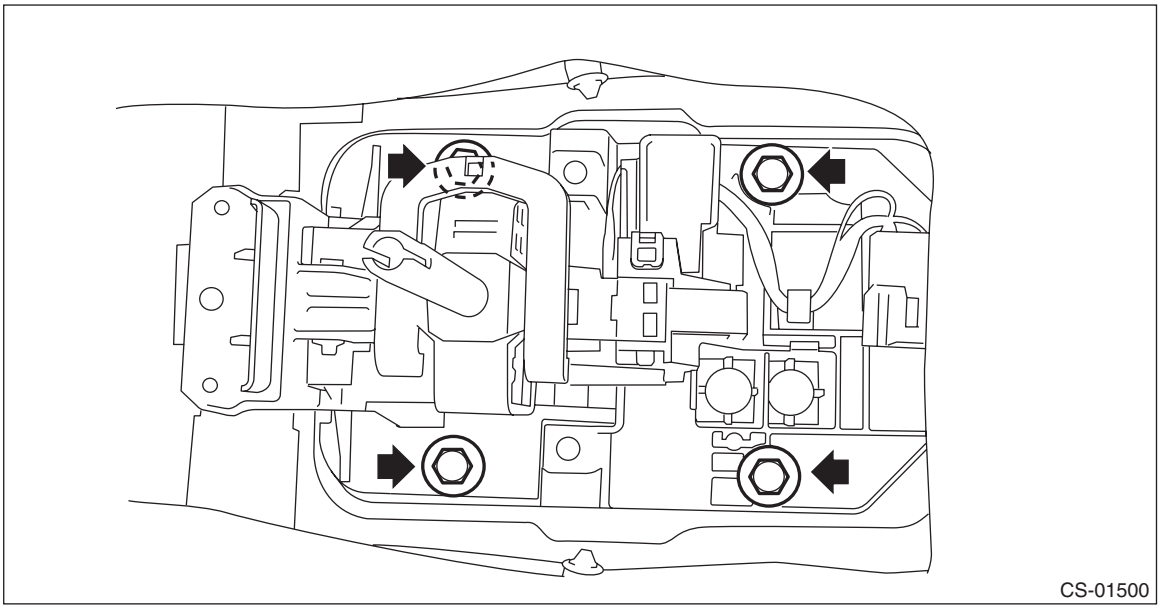

3) Connect the harness connector.

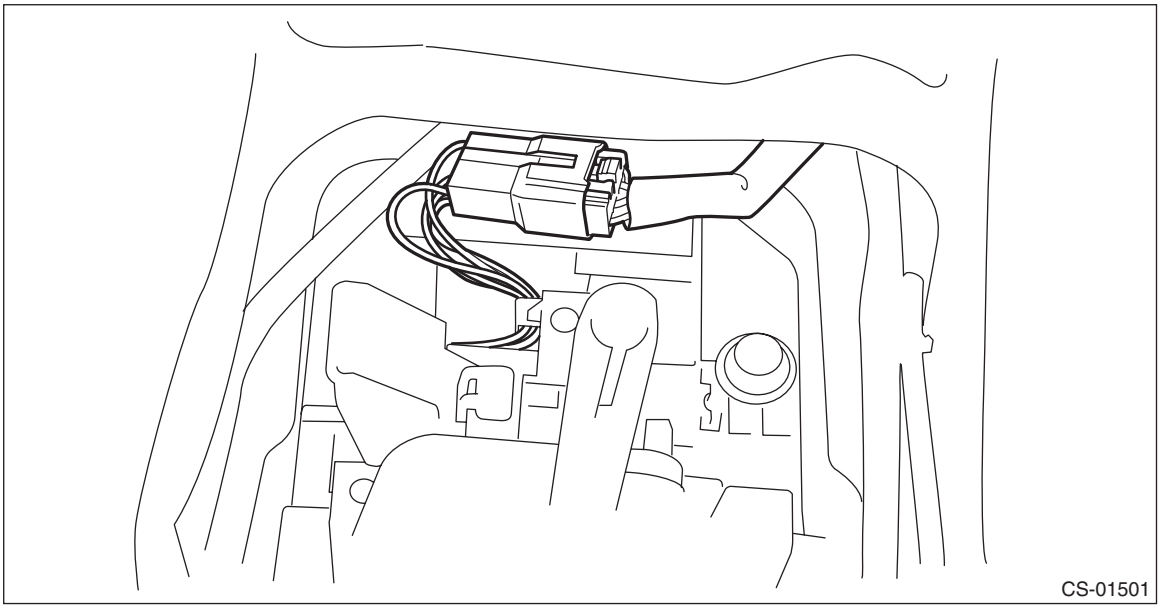

4) Install the harness clip to the select lever assembly.

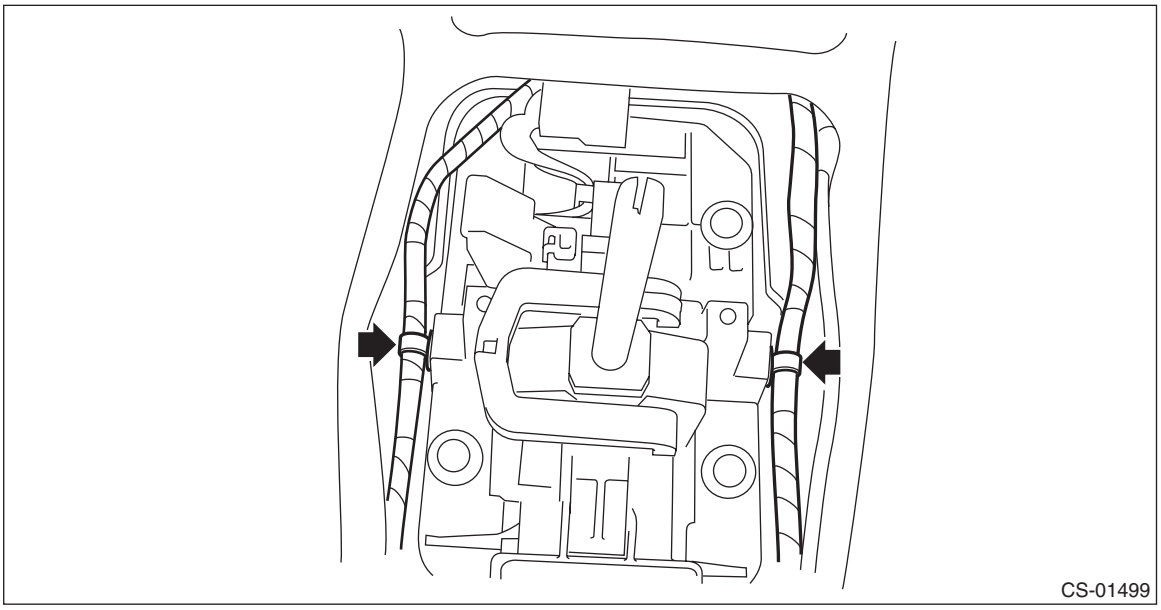

5) Install the panel center LWR LH and RH. <Ref. to EI-79, INSTALLATION, Console Box.>
6) Shift the select lever to “N” range.
7) Install the blind A to the housing.

NOTE:
The blind A should be installed so that it is securely caught inside the tab of the housing.

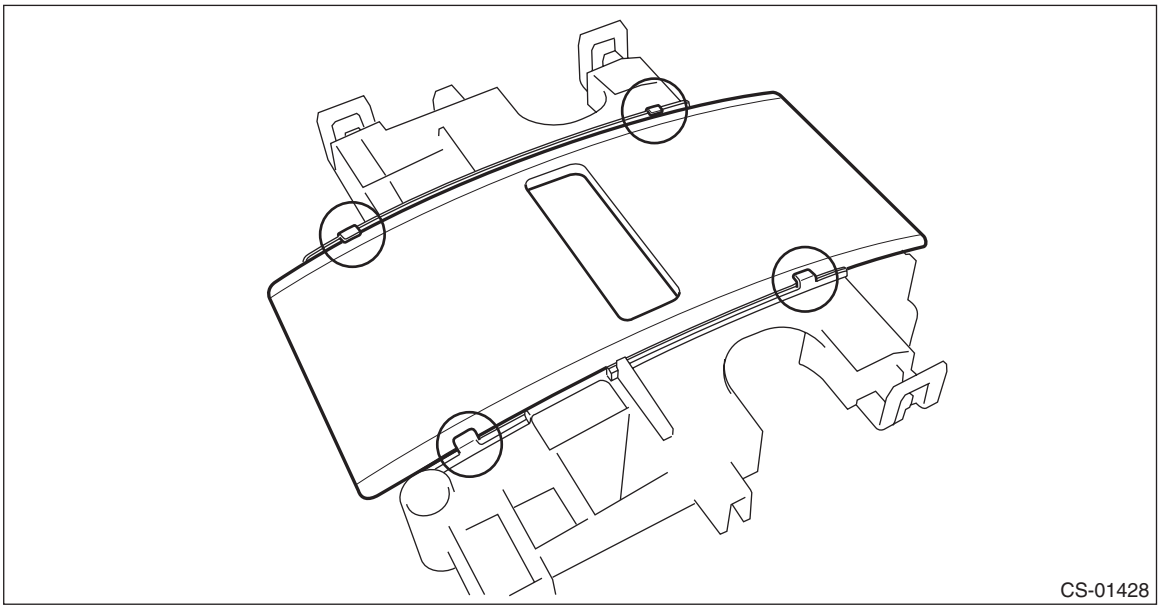

8) Install the blind B behind the blind A.

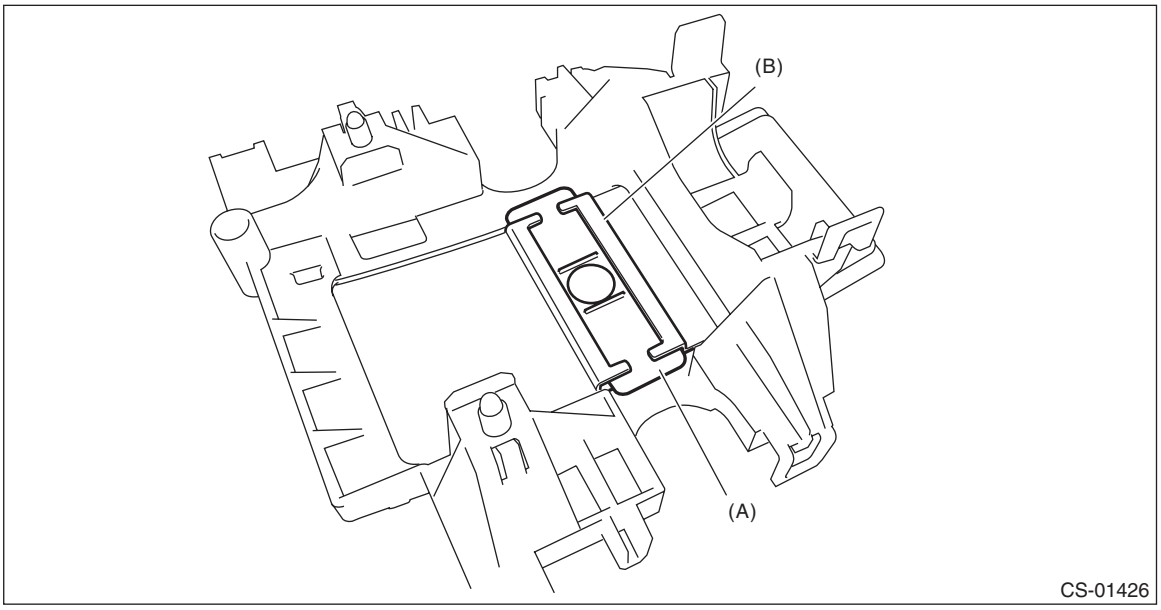

(A) Blind B
(B) Blind A

9) Install the housing.

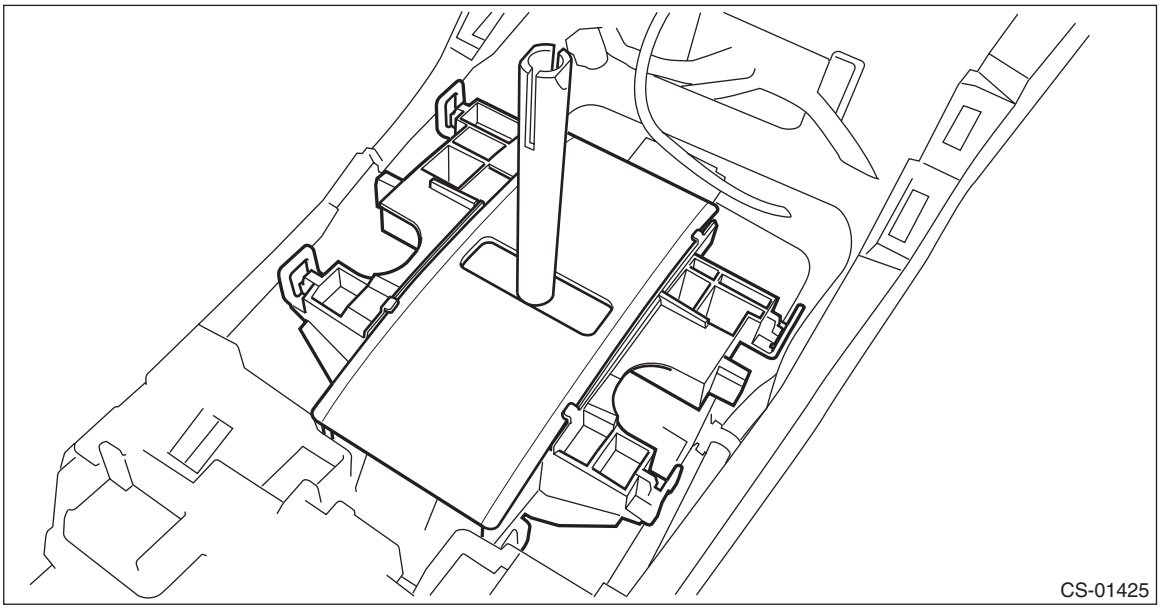

10) Install the indicator cover, then connect the connector.

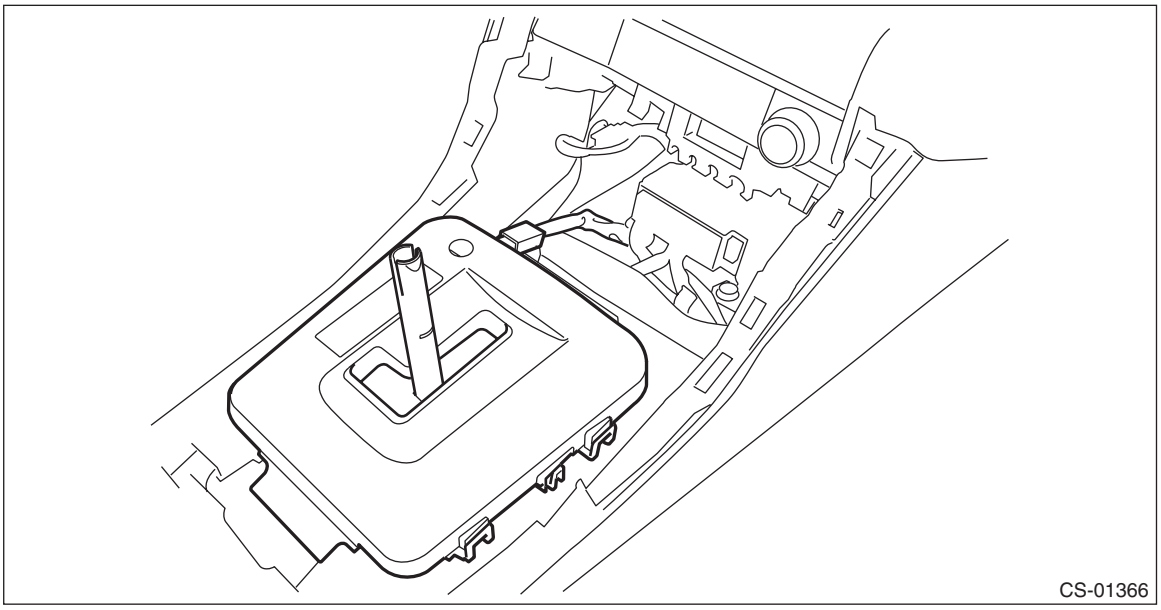

11) Install the cover shift lever.

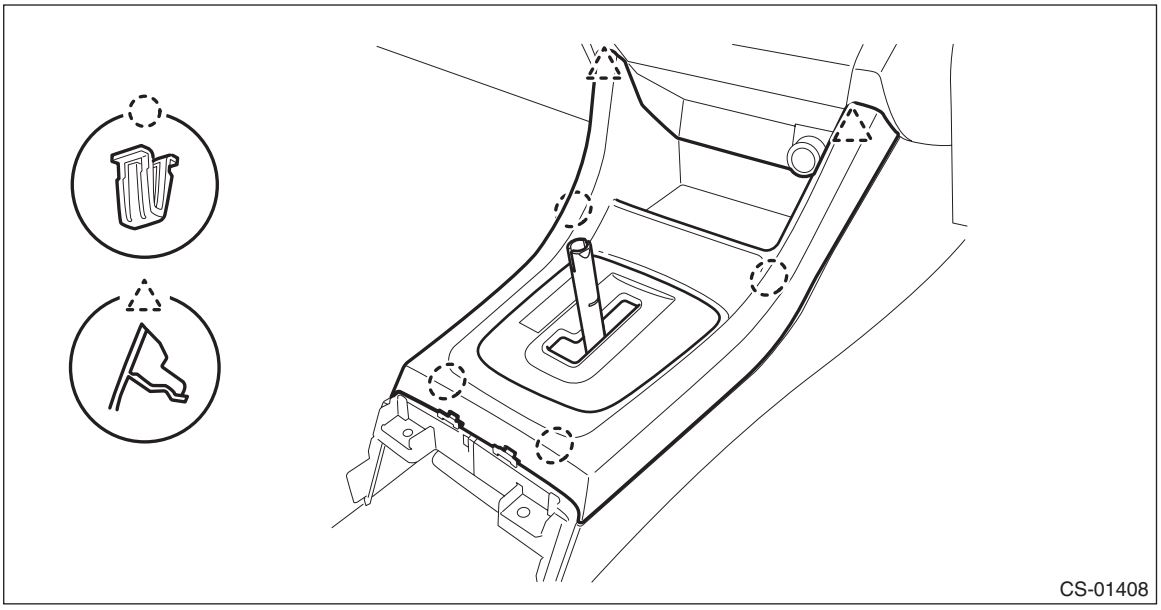

12) Accessing from the button side of the grip, attach the clamp grip pin.

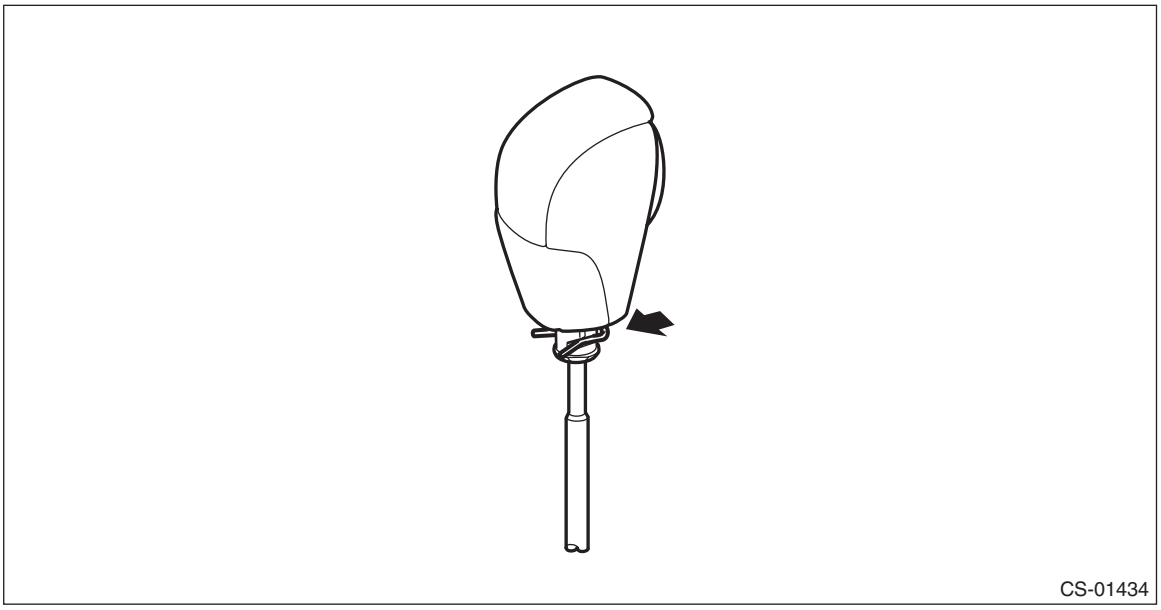

13) Install the cover grip AT securely.

NOTE:
After installation, check that the cover grip AT cannot be detached.

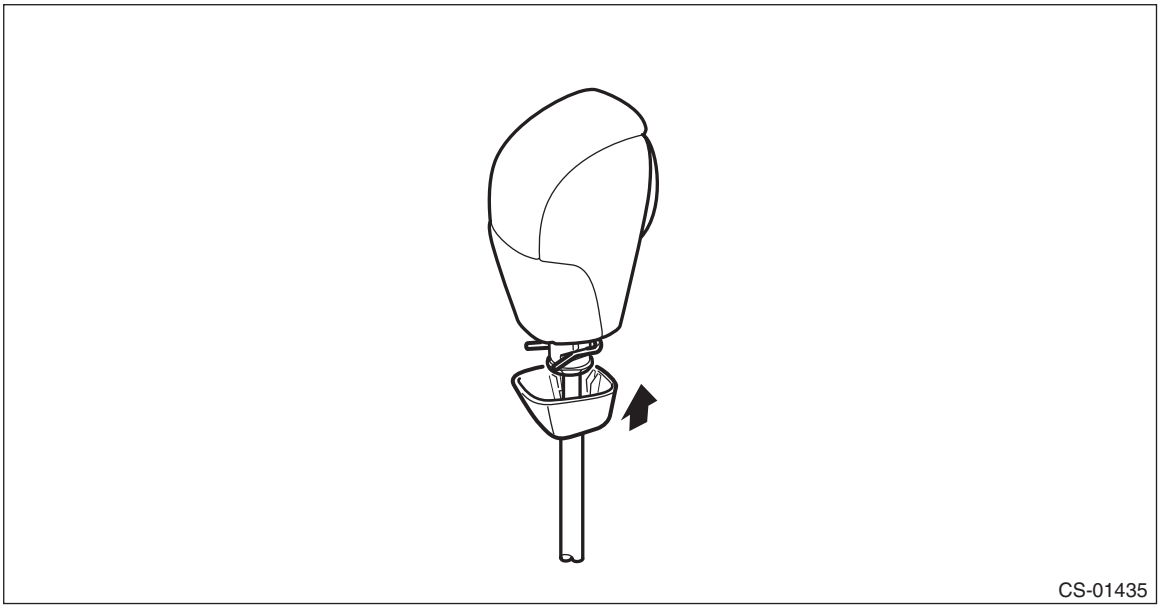

14) Insert the grip assembly to the select lever and press it down until a click is heard.

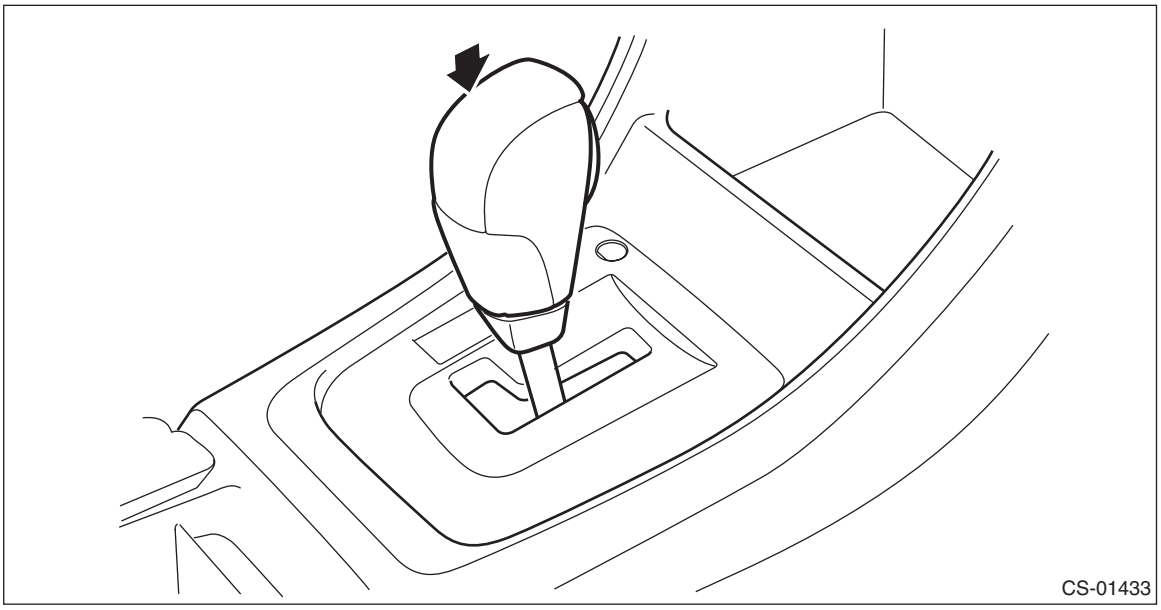

15) After installation of grip, check the following points.
- The grip will not come off.
- The button on the grip operates normally.

16) Install the console box. <Ref. to EI-79, INSTALLATION, Console Box.>
17) Shift the select lever to “N” range.
18) Lift up the vehicle.
19) Secure the cable to the bracket. <Ref. to CS-49, INSTALLATION, Select Cable.>
20) Adjust the select cable position. <Ref. to CS-53, ADJUSTMENT, Select Cable.>
21) After adjustment, confirm that the select lever operates properly at all range positions using the shift lock release button.
22) Install the center exhaust cover.

Tightening torque:
18 N·m (1.8 kgf-m, 13.3 ft-lb)

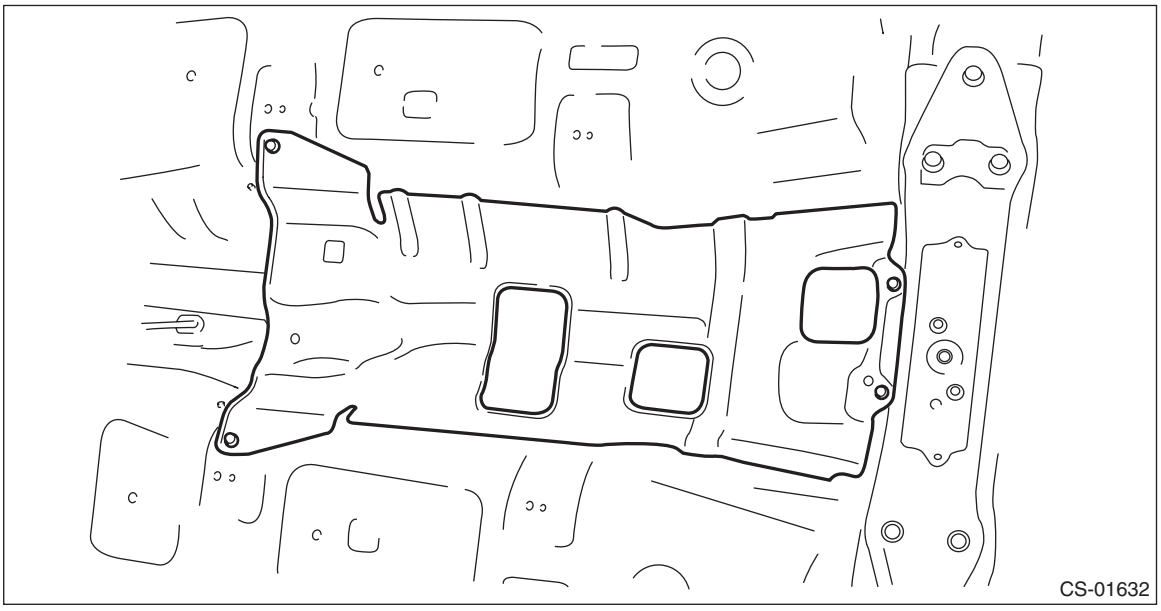

23) Install the center exhaust pipe. <Ref. to EX(H4DO(w/o HEV))-15, INSTALLATION, Center Exhaust Pipe.>
24) Lower the vehicle.
25) Connect the battery ground terminal. <Ref. to NT-5, BATTERY, NOTE, Note.>
26) Inspect the following items. If a malfunction is found in the inspection, adjust the select cable or inhibitor switch.
(1) The shift lock operates normally. <Ref. to CS-13, SHIFT LOCK OPERATION, INSPECTION, AT Shift Lock Control System.>
(2) Engine starts when the select lever is in “P” or “N” range, but not in other ranges.
(3) Back-up light illuminates when the select lever is in the “R” range, but not in other ranges.
(4) Select lever and indicator positions are matched.

C: DISASSEMBLY

1. GRIP ASSY

1) Remove the button assembly_AT.

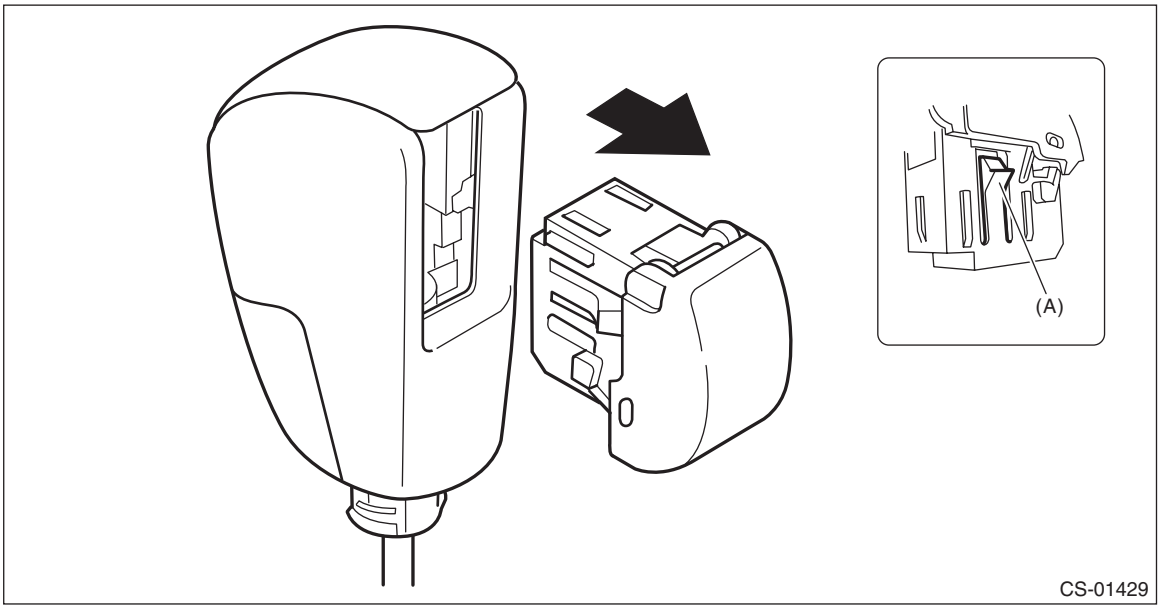

(A) Claw

2) Remove the rod COMPL.

2. AT SELECT LEVER ASSEMBLY

1) Remove the spacer plate.

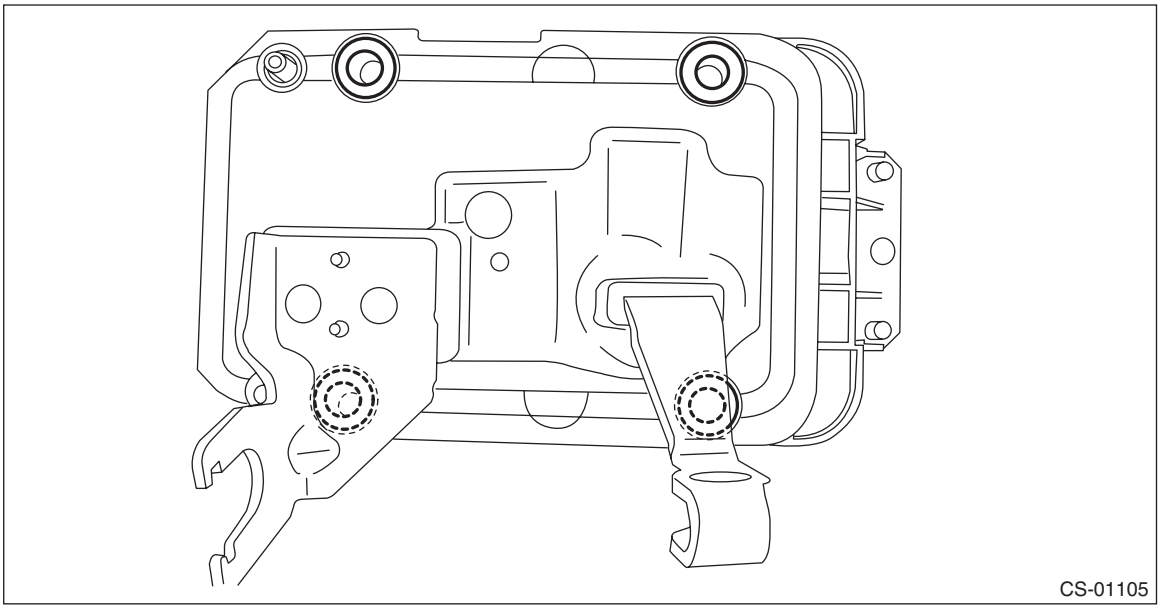

2) Remove the gasket.

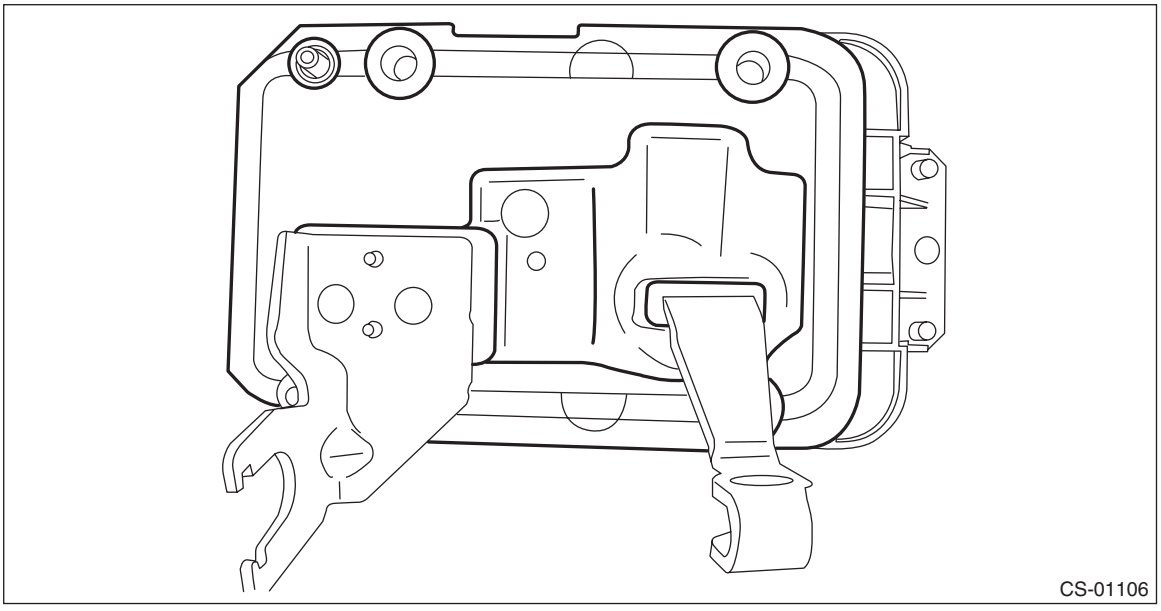

3) Insert a flat tip screwdriver with a thin tip under the connector and disconnect the harness connector from the plate COMPL.

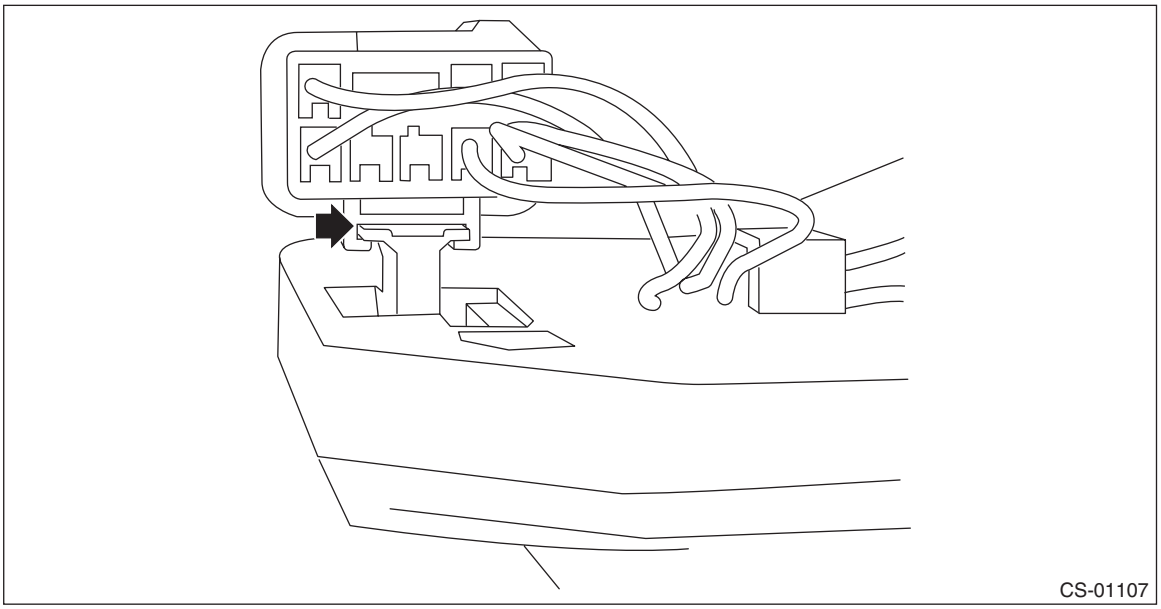

4) Remove the harness from the plate COMPL.

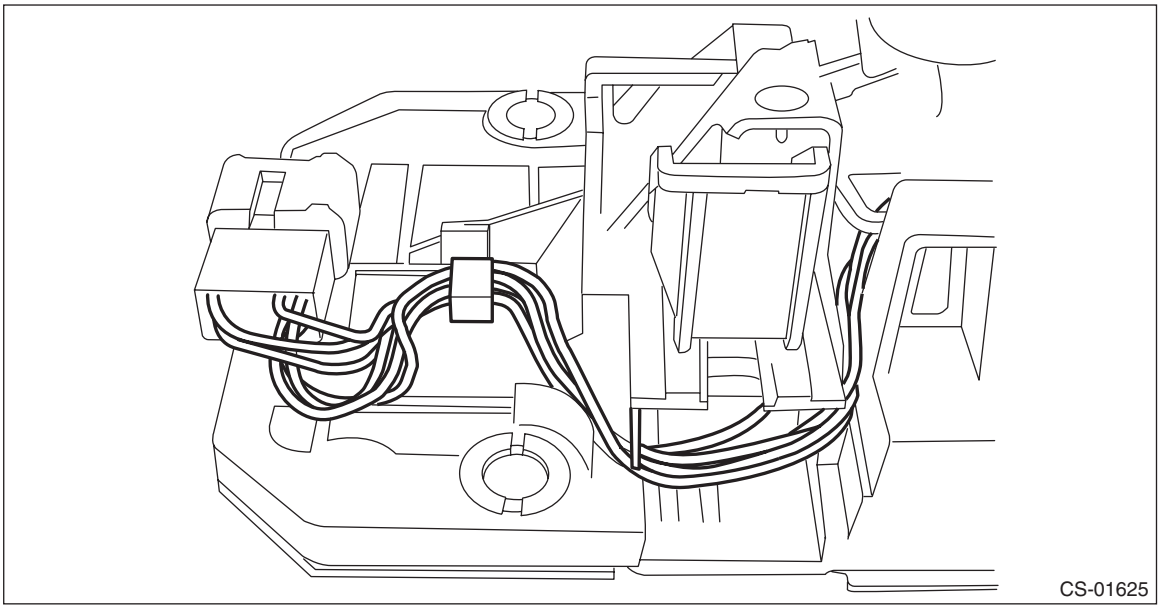

5) Raise the claw with a flat tip screwdriver with a thin tip and remove the solenoid unit.

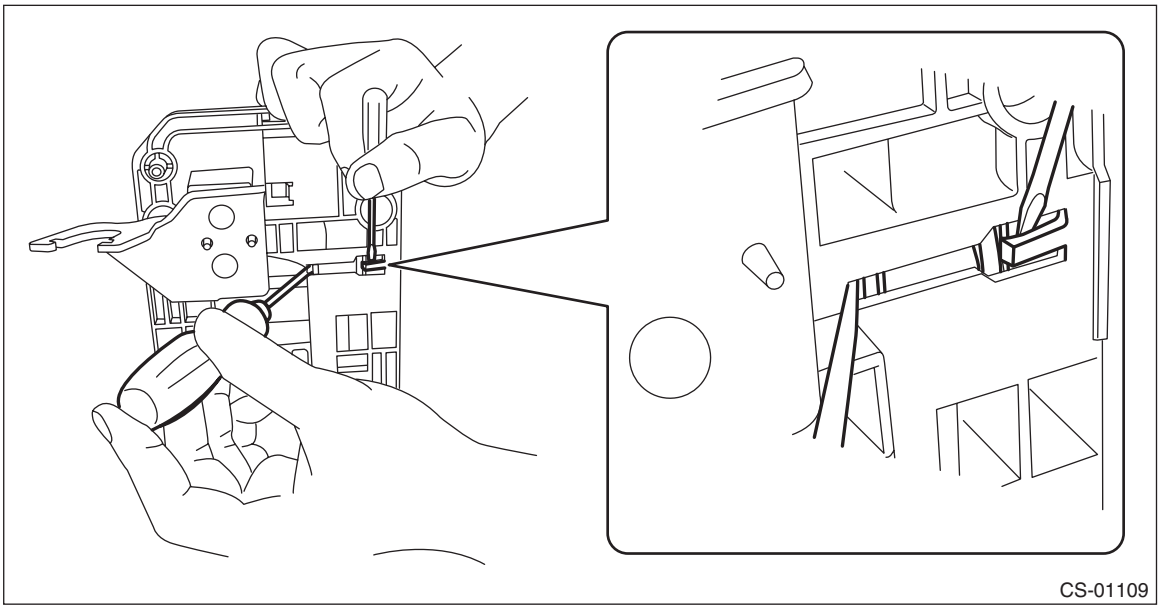

6) Using a flat tip screwdriver with a thin tip, remove the solenoid unit terminals from the connector.

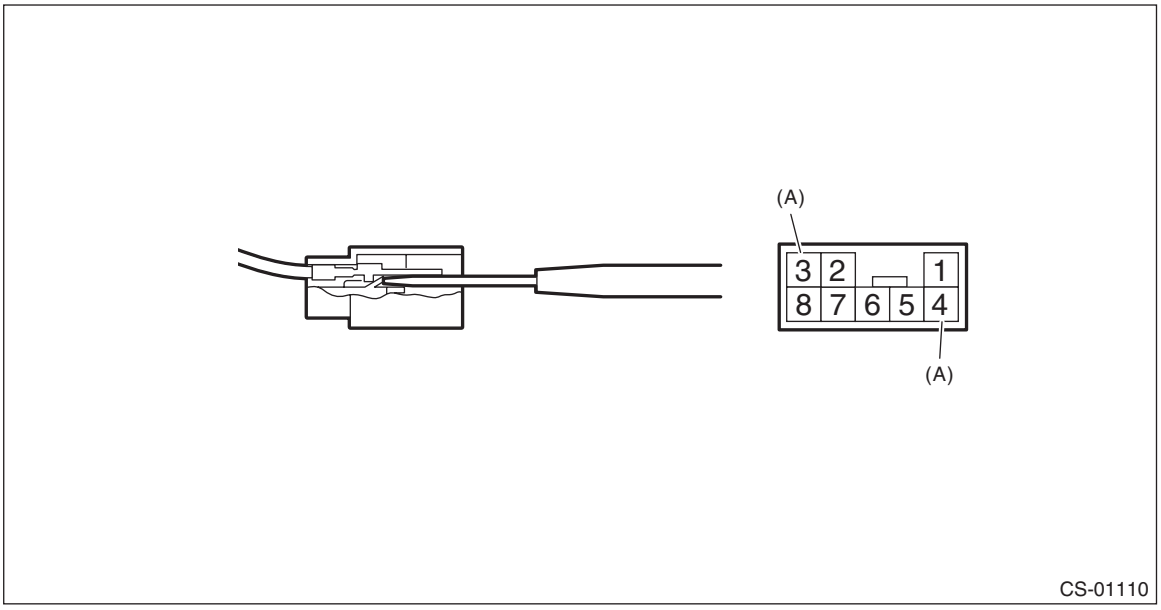

(A) Solenoid unit terminals

7) Remove the clamp push nut.

NOTE:
Replace the clamp push nut with a new part.

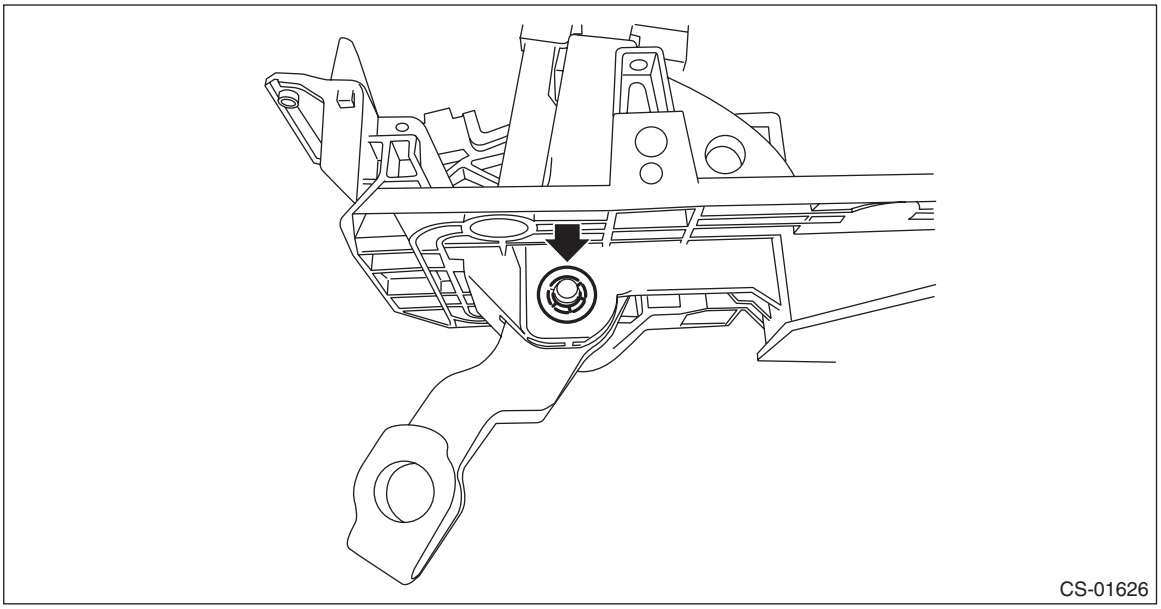

8) Pull out shaft control.

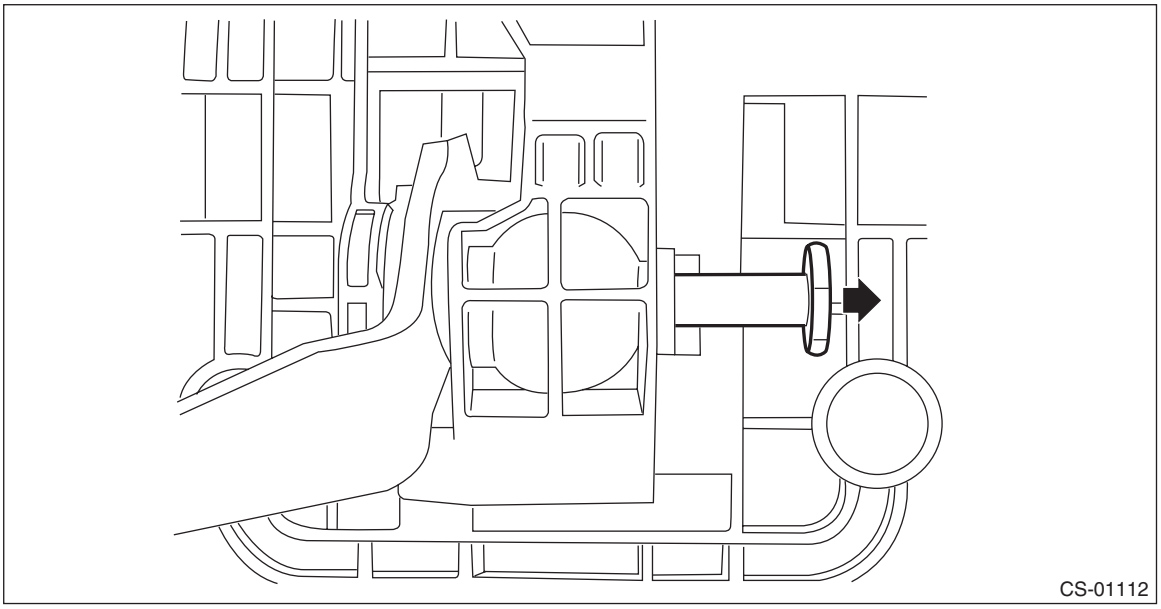

9) Remove the clamp push nut.

NOTE:
Replace the clamp push nut with a new part.

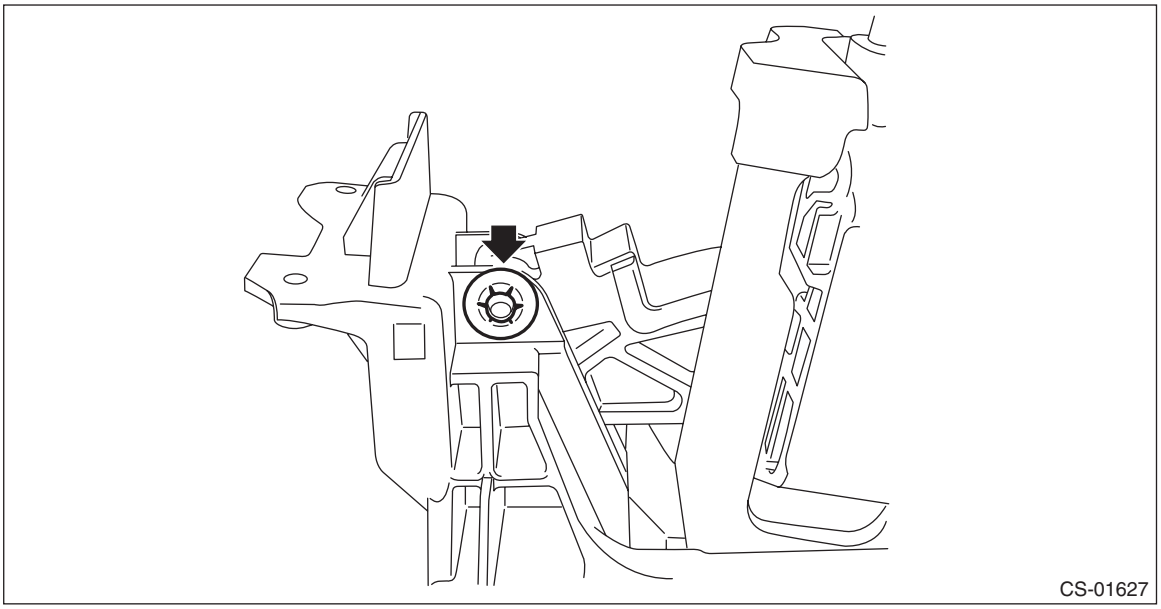

10) Pull out spacer pin guide.

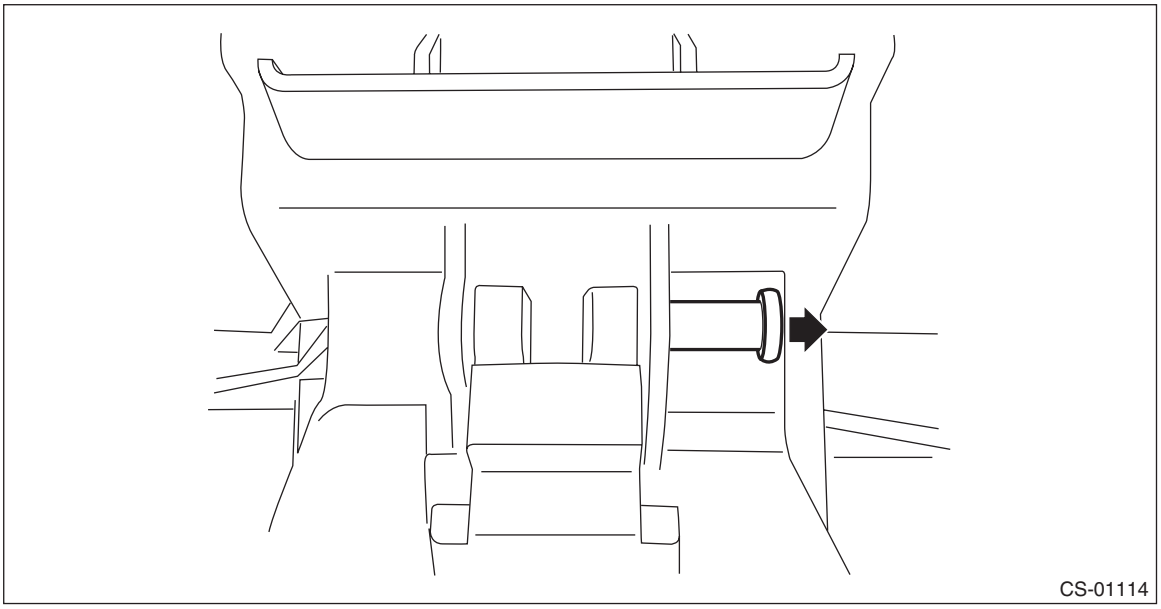

11) Remove the clamp pin.

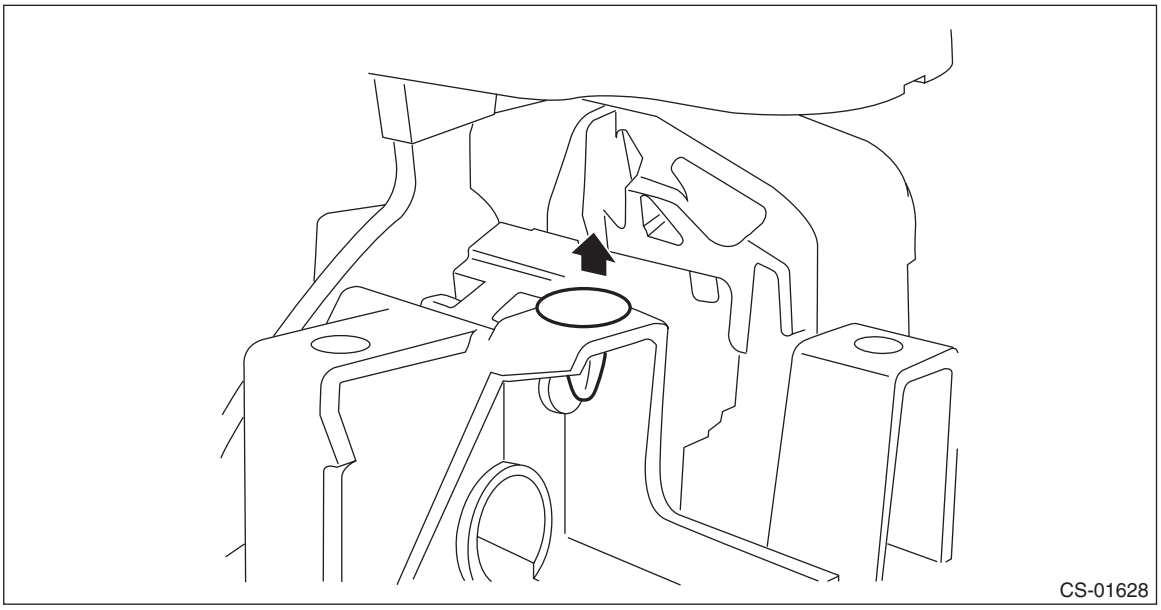

12) Remove the spacer pin guide.

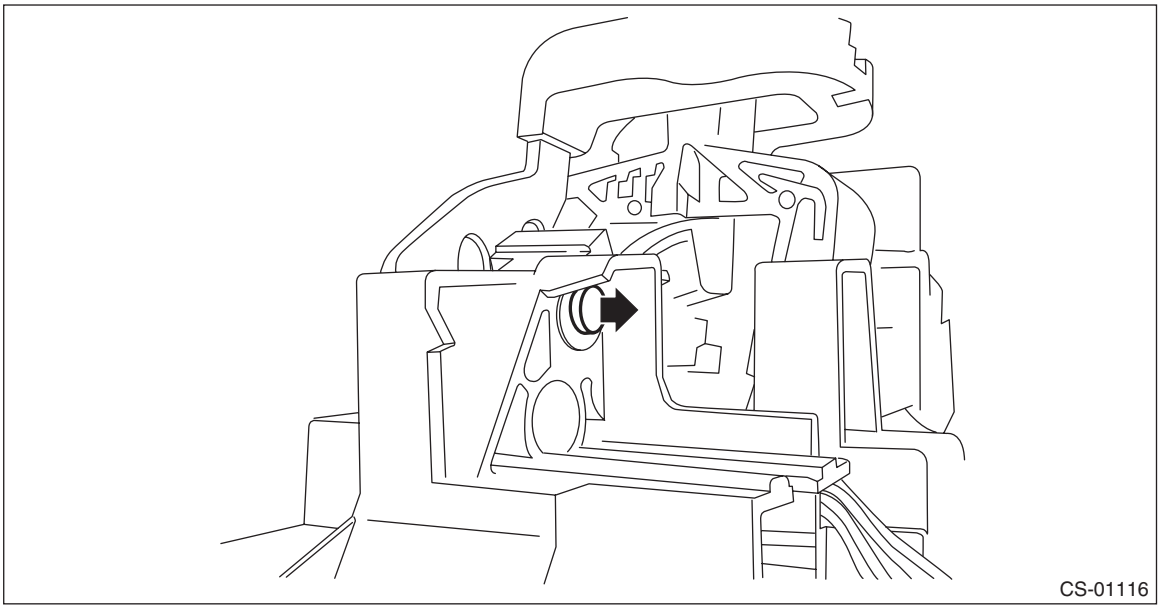

13) Remove the select lever COMPL from the plate COMPL.

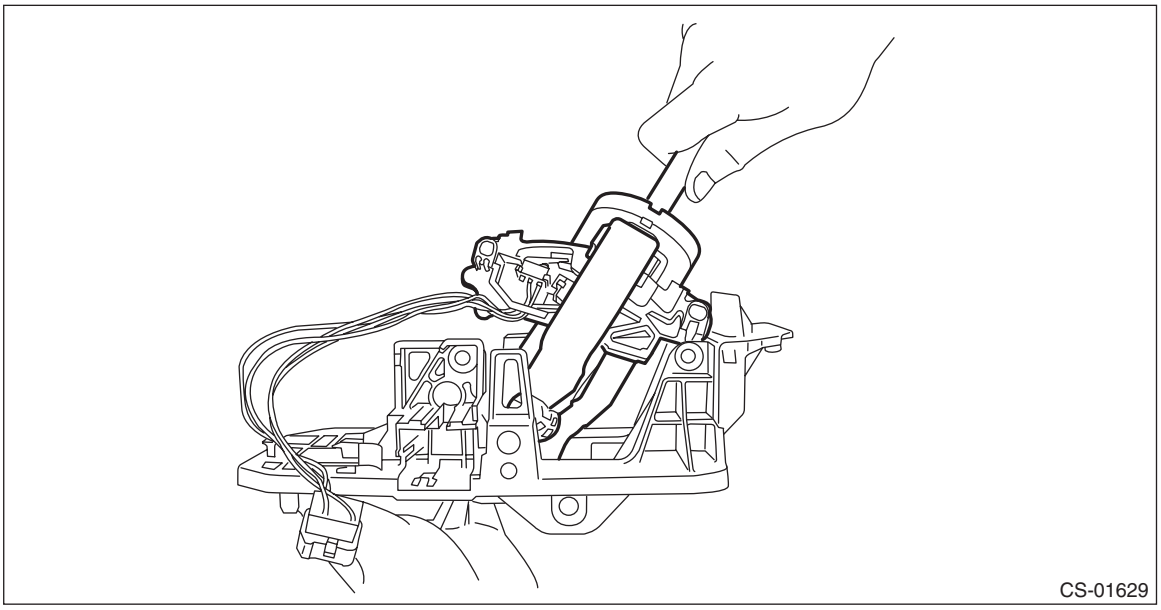

14) Remove the arm COMPL.

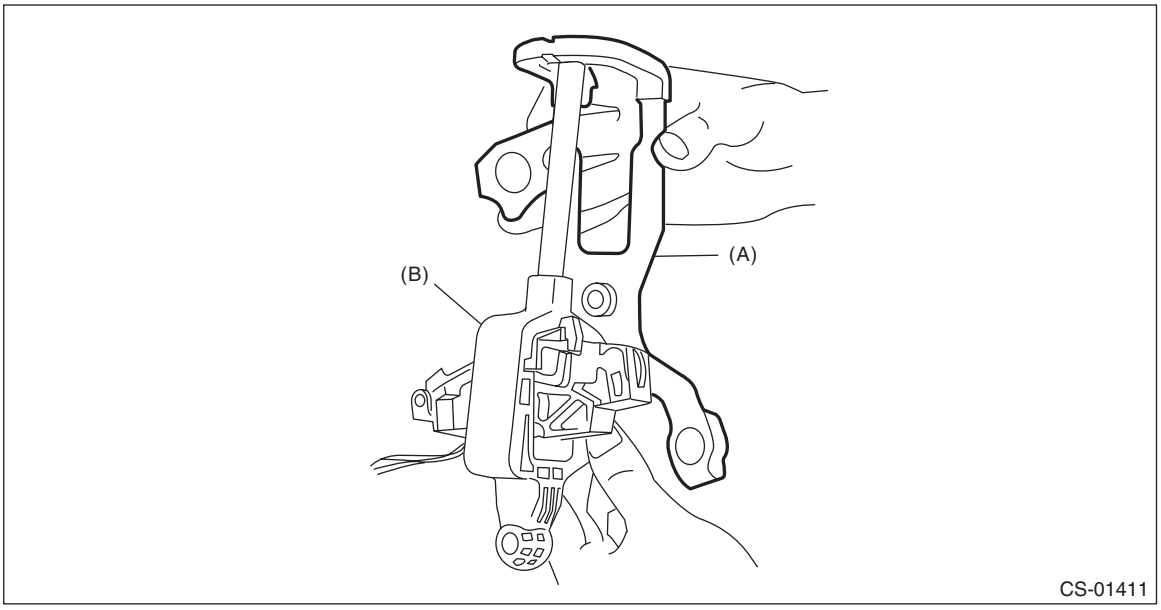

(A) Arm COMPL
(B) Selector lever COMPL

15) Remove the plate guide from the select lever COMPL.

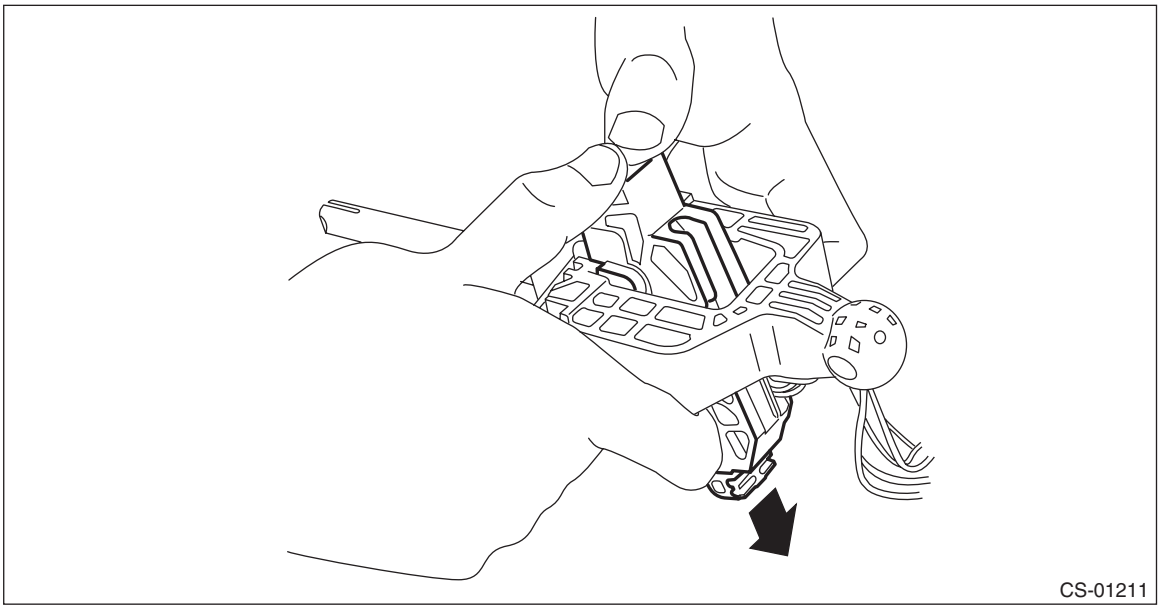

16) Remove the rod detent and detent spring from the select lever COMPL.

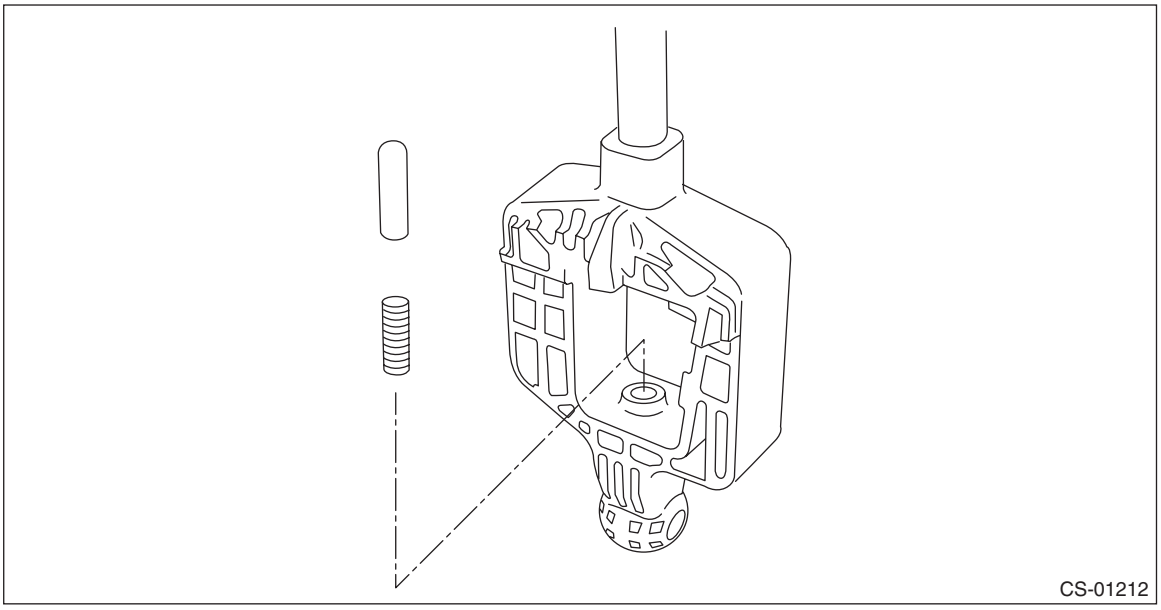

D: ASSEMBLY

1) Clean all the parts before assembly.
2) Apply Multemp D or equivalent to the sliding portion of each part.
3) Assemble in the reverse order of disassembly.

NOTE:
Insert the solenoid unit terminals to the harness connector.

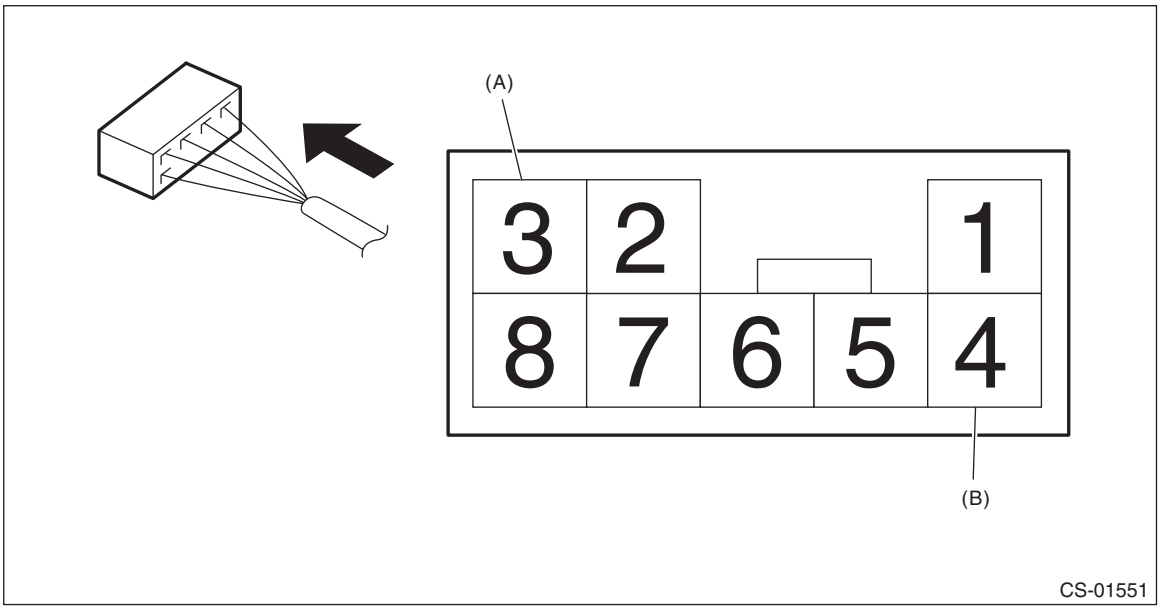

(A) Solenoid unit (color code: blue)
(B) Solenoid unit (color code: black)

4) After installation, check the following points.
• The select indicator matches the select lever position when the select lever is changed from “P” range to “D” range.
• The select lever position and the position mark match each other.
• Operating force to move the select lever from “P” to “D” range

E: INSPECTION

1) Inspect the removed parts by comparing with new parts for deformation, damage and wear. Repair or replace if defective.
2) Inspect the select lever assembly operating condition before assembly. Normal if it operates smoothly.

4. Select Cable

A: REMOVAL

1) Shift the select lever to “N” range.
2) Disconnect the ground cable from battery. <Ref. to NT-5, BATTERY, NOTE, Note.>

NOTE:
For the 12 volt engine restart battery of HEV model, disconnect the ground terminal from 12V engine restart battery sensor.
3) Lift up the vehicle.
4) Remove the center exhaust pipe. <Ref. to EX(H4DO(w/o HEV))-14, REMOVAL, Center Exhaust Pipe.>
5) Remove the center exhaust cover.

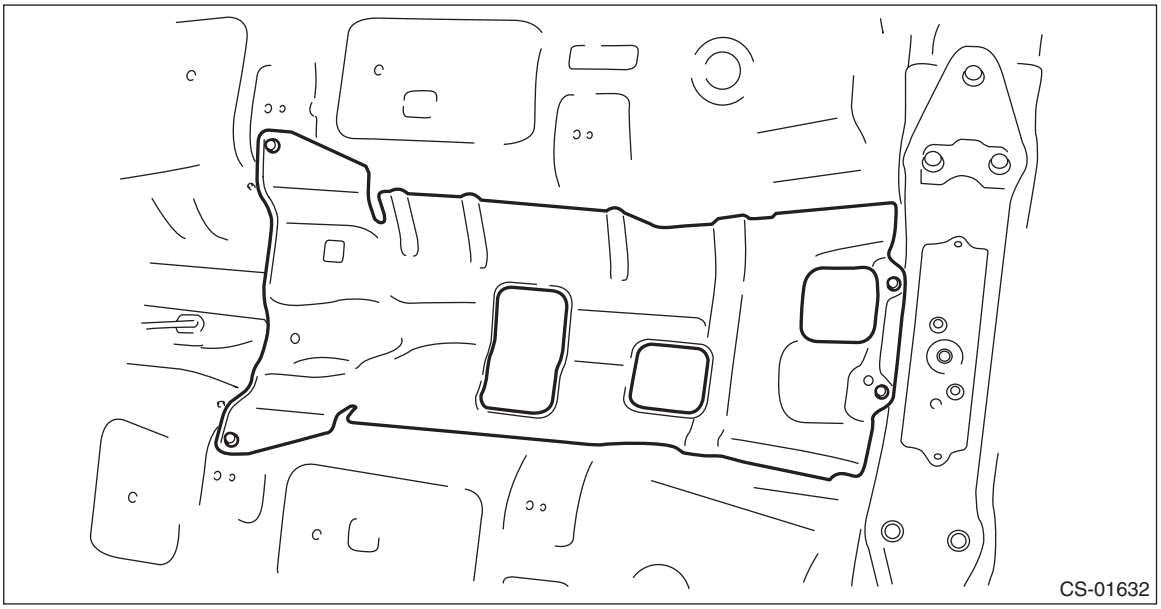

6) Remove the snap pin and washer from the shifter arm.

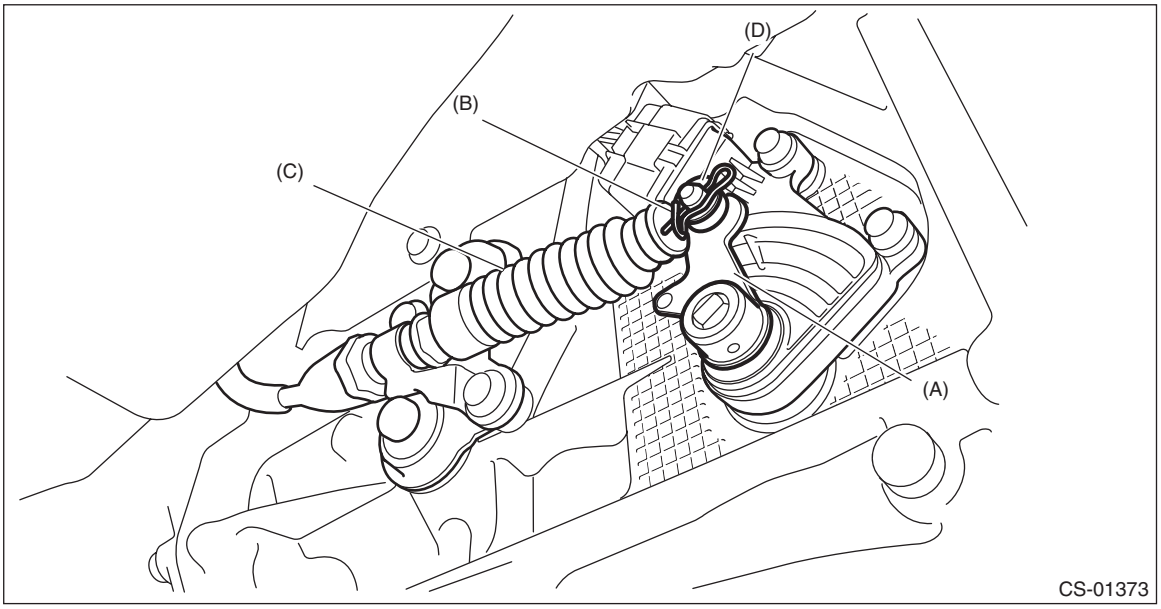

(A) Shifter arm
(B) Snap pin
(C) Select cable
(D) Washer

7) Remove the plate assembly from the transmission case.

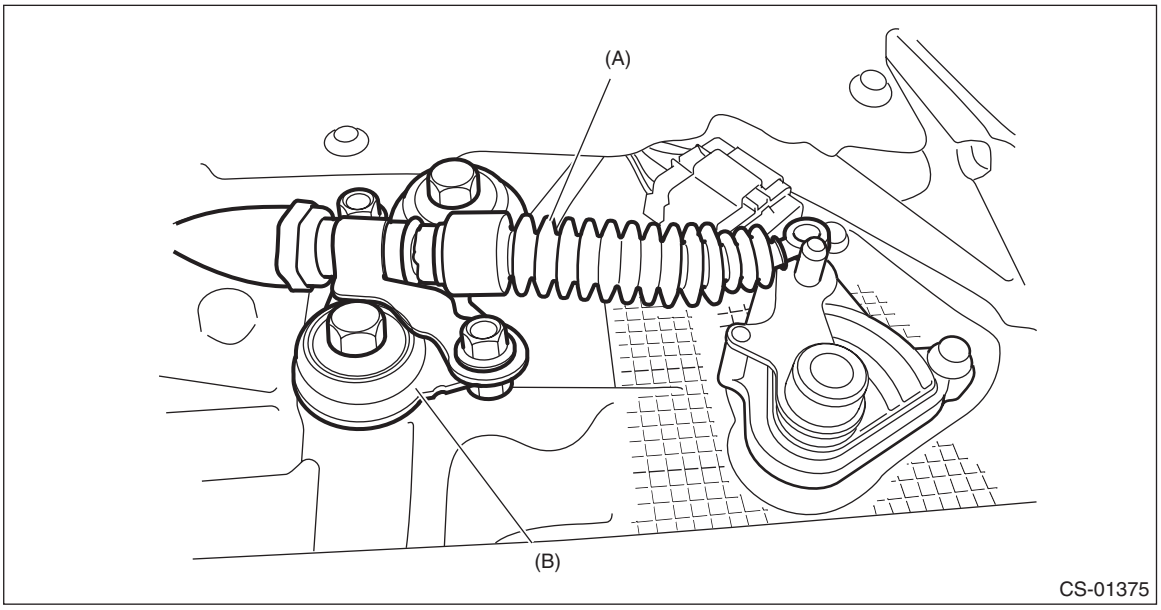

(A) Select cable
(B) Plate ASSY

8) Disconnect the cable from arm COMPL.

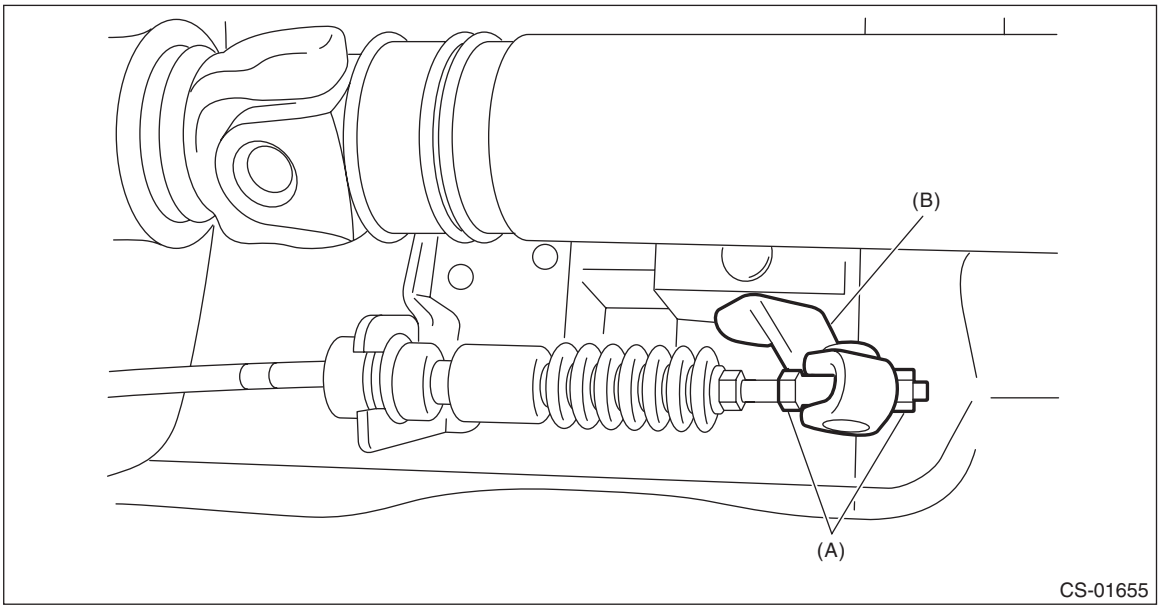

(A) Adjusting nut
(B) Arm COMPL

9) Raise the claw of clamp to remove the cable from bracket.

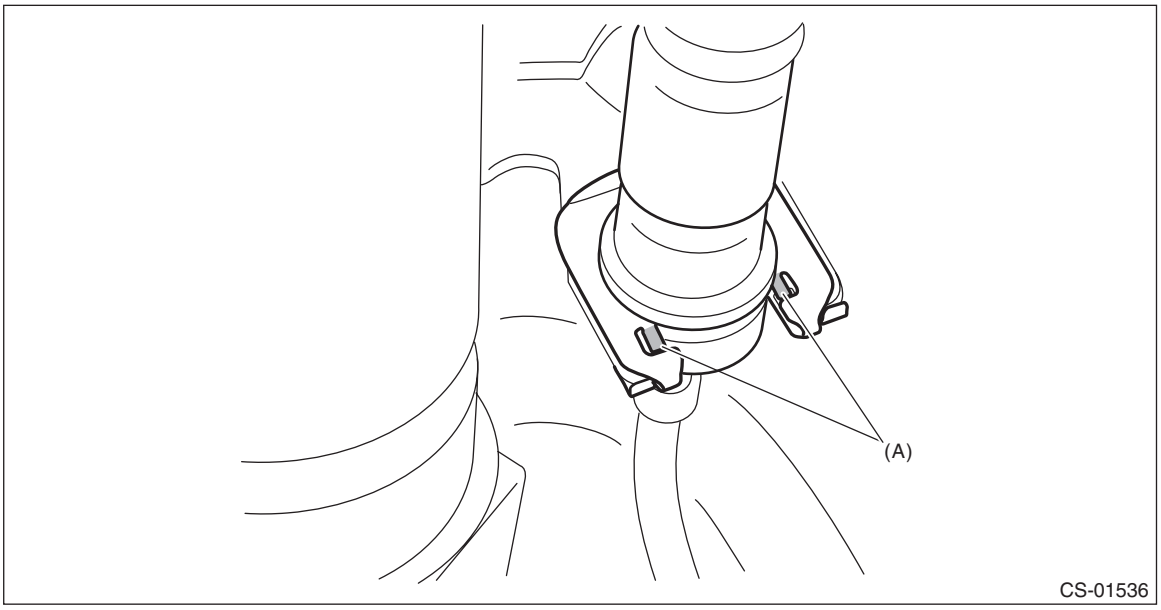

(A) Claw

10) Remove the select cable from plate assembly.

B: INSTALLATION

1) Position the select cable as shown in the figure, and install it to the plate assembly.

CAUTION:
• If the cable is installed in the wrong direction, loosen the bracket bolts, and then reinstall the cable in the correct direction.
• Do not forcibly turn the cable (wire side) to align the direction correctly.

Tightening torque:
18 N·m (1.8 kgf-m, 13.3 ft-lb)

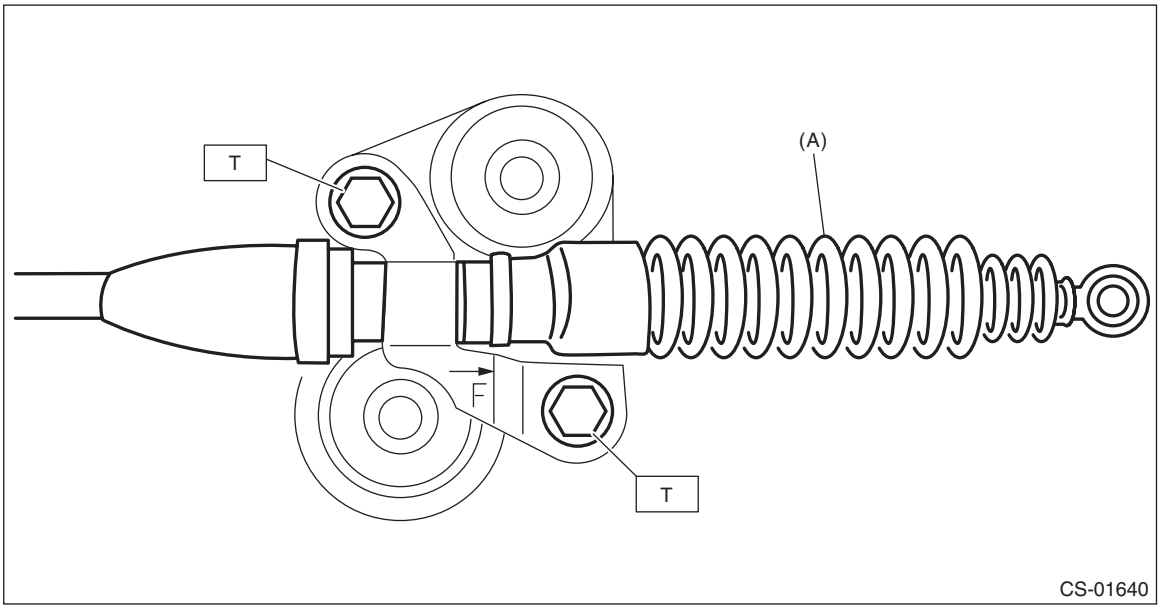

(A) Select cable

2) Install the select cable to the shifter arm.
3) Install the plate assembly to transmission.

Tightening torque:
T: 25 N·m (2.5 kgf-m, 18.4 ft-lb)

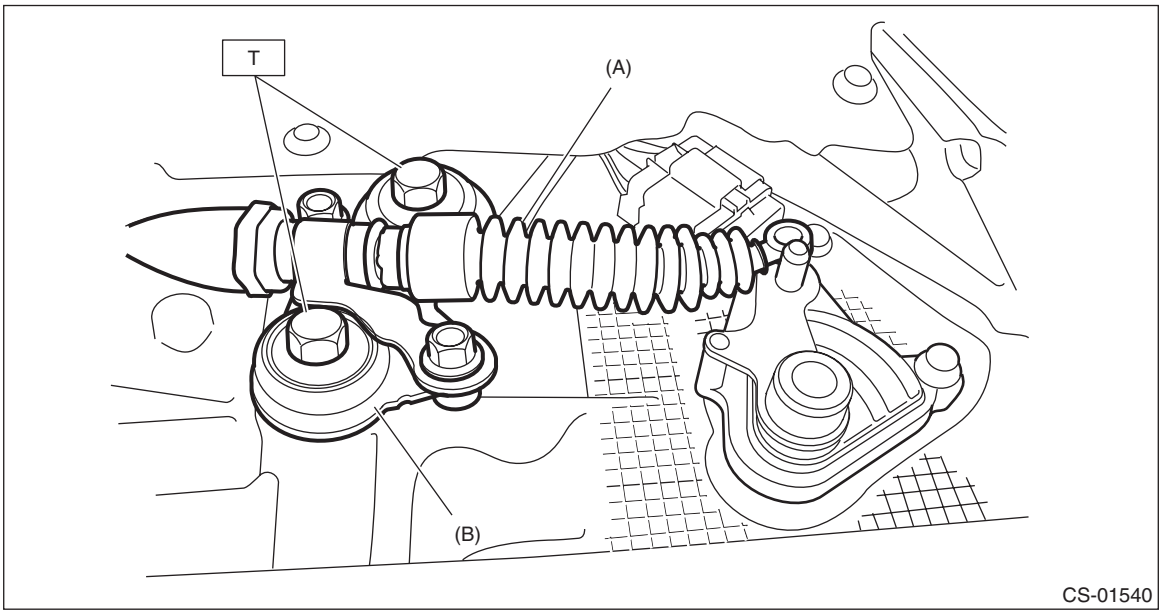

(A) Select cable
(B) Plate ASSY

4) Install the washer and snap pin to the shifter arm.

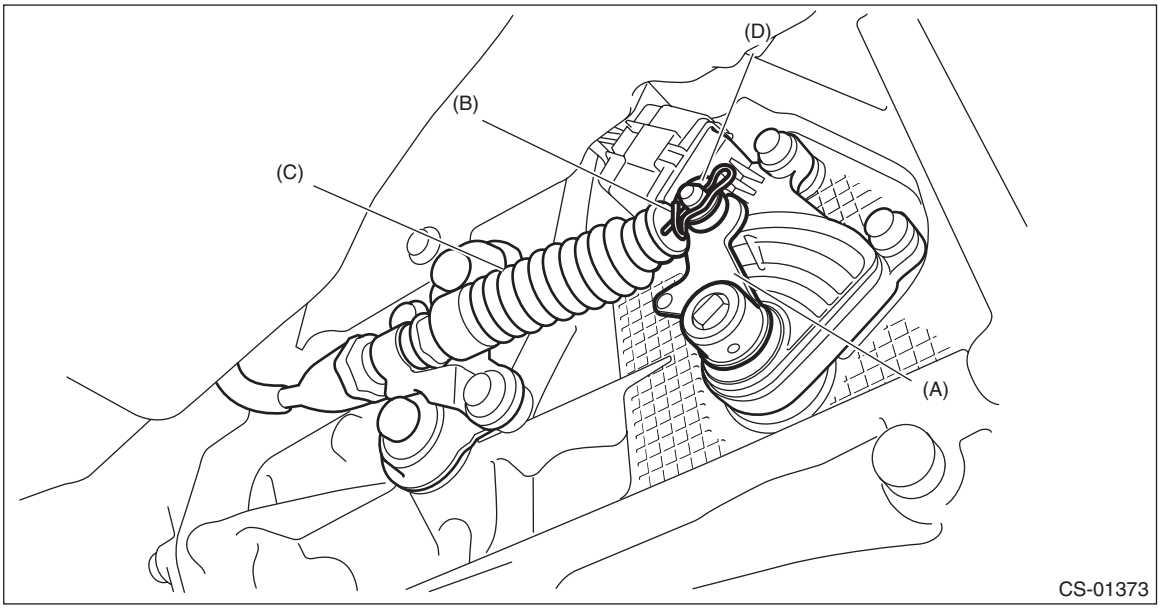

(A) Shifter arm
(B) Snap pin
(C) Select cable
(D) Washer

5) Install new clamp paying attention to the installing direction.

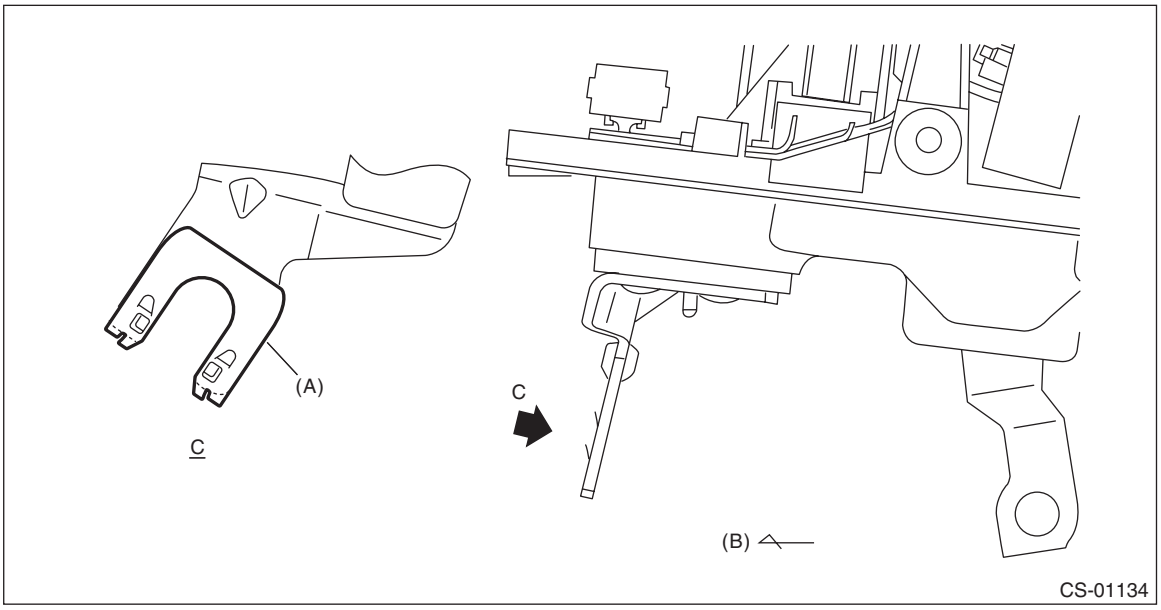

(A) Clamp
(B) Forward

6) Insert the tip of inner cable into connector hole of select lever, and fix the cable to bracket.

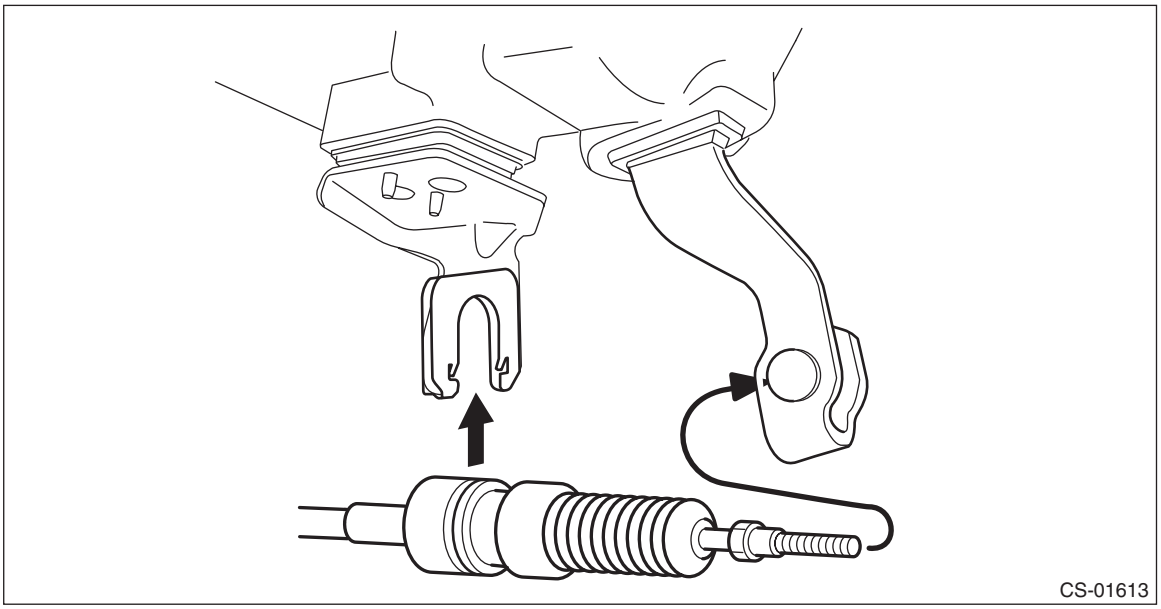

7) Shift the select lever to the “N” range, and then adjust the select cable position. <Ref. to CS-53, ADJUSTMENT, Select Cable.>

8) Install the center exhaust cover.

Tightening torque:
18 N·m (1.8 kgf-m, 13.3 ft-lb)

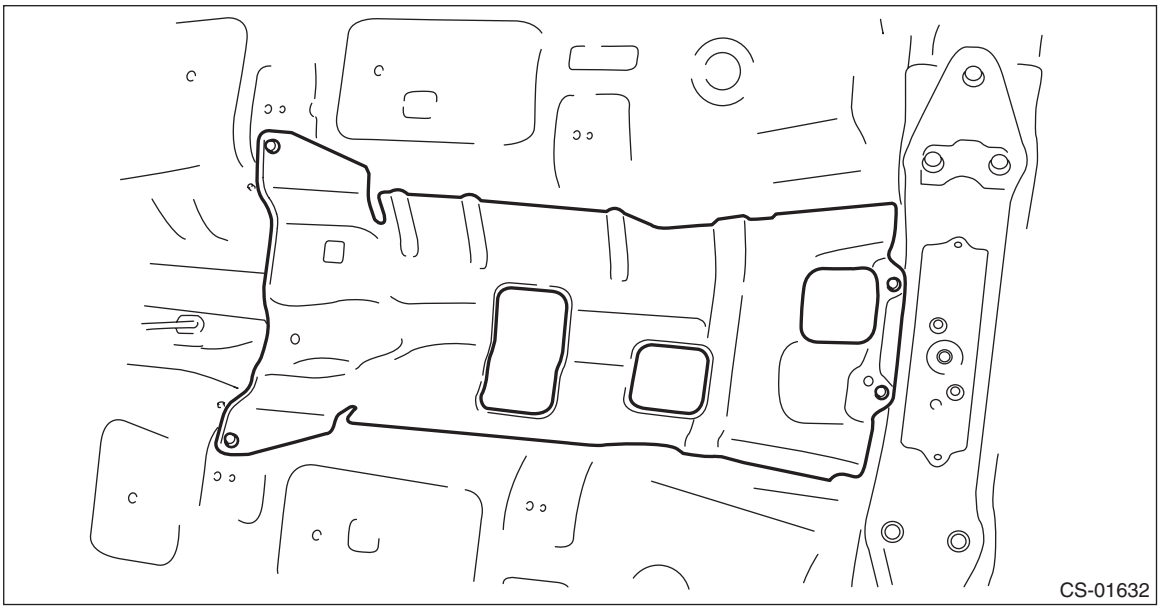

9) Install the center exhaust pipe. <Ref. to EX(H4DO(w/o HEV))-15, INSTALLATION, Center Exhaust Pipe.>
10) Lower the vehicle.
11) Connect the battery ground terminal. <Ref. to NT-5, BATTERY, NOTE, Note.>

C: INSPECTION

Check the removed cable and replace or adjust if damaged, rusty or malfunctioning.
1) Check the cable for smooth operation.
2) Check the inner cable for damage and rust.
3) Check the outer cable for damage, bends and cracks.
4) Check the boot for damage, cracks and deterioration.
5) Move the select lever from “P” to “D” range. Check the existence of feel to contact the detents in each range. If the detents cannot be felt or the position pointer is improperly aligned, adjust the cable.
6) Check if the starter motor rotates when the select lever is set to “P” range.
7) Check the back-up light illumination when the select lever is in “R” range.
8) Check the parking lock operation when the select lever is in “P” range.

D: ADJUSTMENT

1) Shift the select lever to “N” range.
2) Lift up the vehicle.
3) Remove the center exhaust pipe. <Ref. to EX(H4DO(w/o HEV))-14, REMOVAL, Center Exhaust Pipe.>
4) Remove the center exhaust cover.

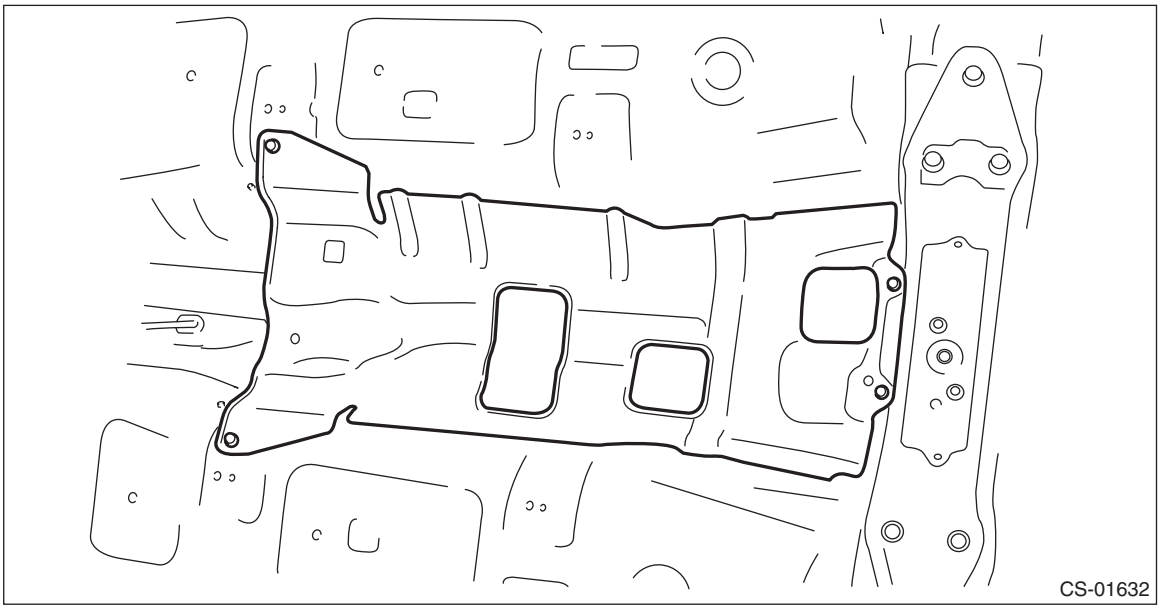

5) Loosen the adjusting nuts on both sides.

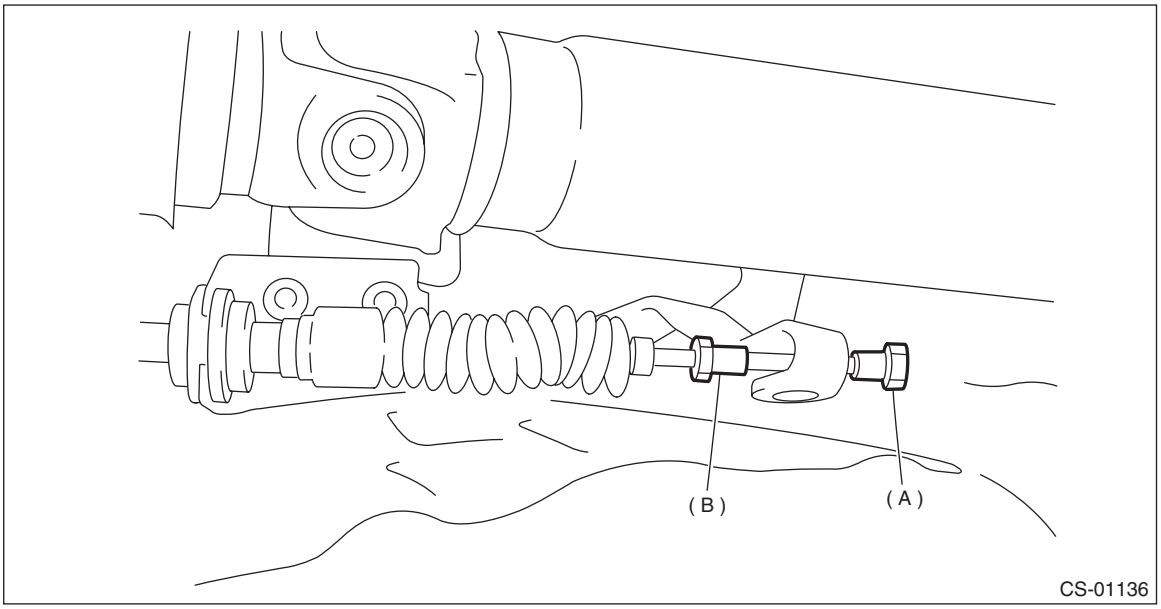

(A) Adjusting nut A
(B) Adjusting nut B

6) Turn adjusting nut B until it lightly touches the connector.

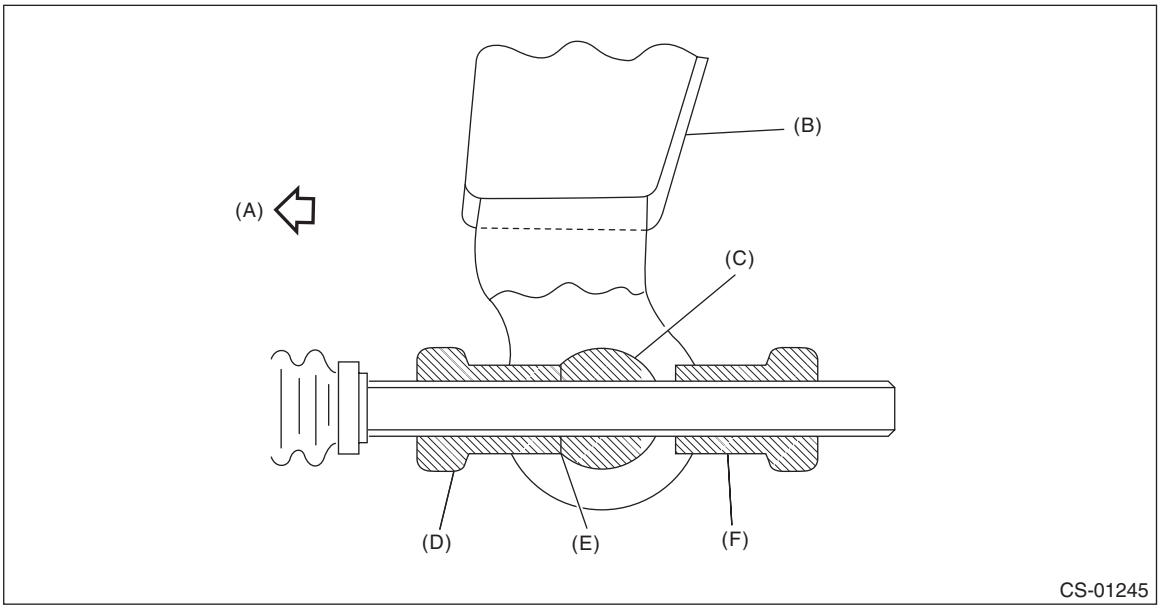

(A) Forward side
(B) Select lever
(C) Connector
(D) Adjusting nut B
(E) Contact point
(F) Adjusting nut A

7) Set a spanner wrench to adjusting nut B so that it does not rotate, and then tighten the adjusting nut A.

Tightening torque:
7.5 N·m (0.76 kgf-m, 5.5 ft-lb)

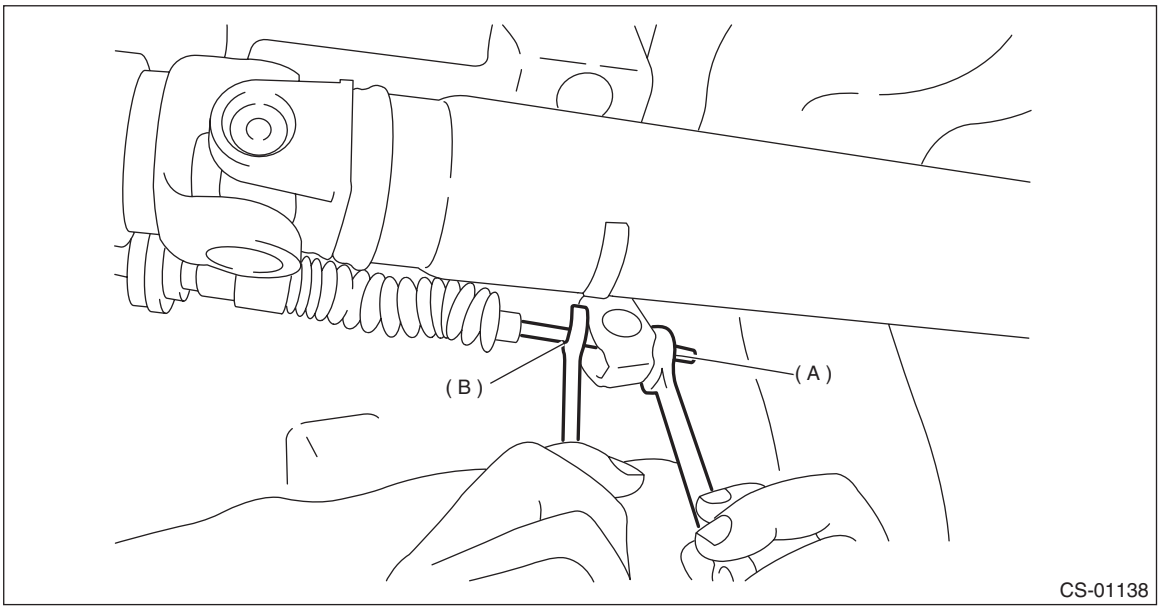

(A) Adjusting nut A
(B) Adjusting nut B

8) After the completion of adjustment, confirm that the select lever operates normally at all ranges.
9) Install in the reverse order of removal.

5. AT Shift Lock Solenoid and “P” Range Switch

A: REMOVAL

1. SOLENOID UNIT

1) Remove the AT select lever. <Ref. to CS-24, REMOVAL, Select Lever.>
2) Remove the spacer and gasket. <Ref. to CS-37, DISASSEMBLY, Select Lever.>
3) Using a flat tip screwdriver with a thin tip, remove the harness connector from the plate COMPL.

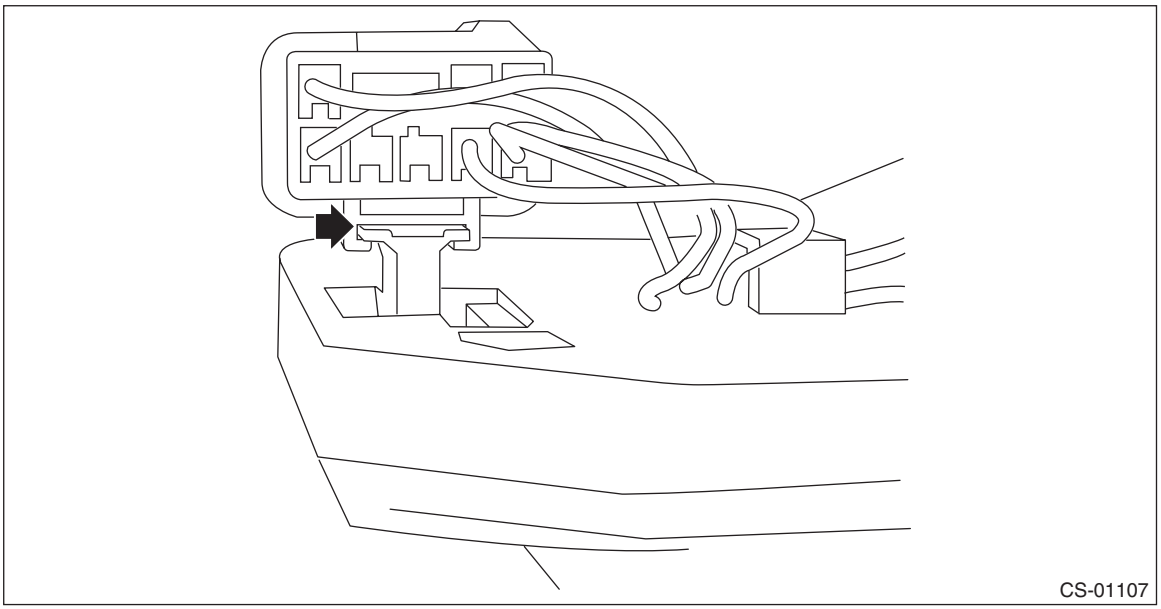

4) Raise the claw using a flat tip screwdriver with a thin tip, and remove the solenoid unit from the plate COMPL.

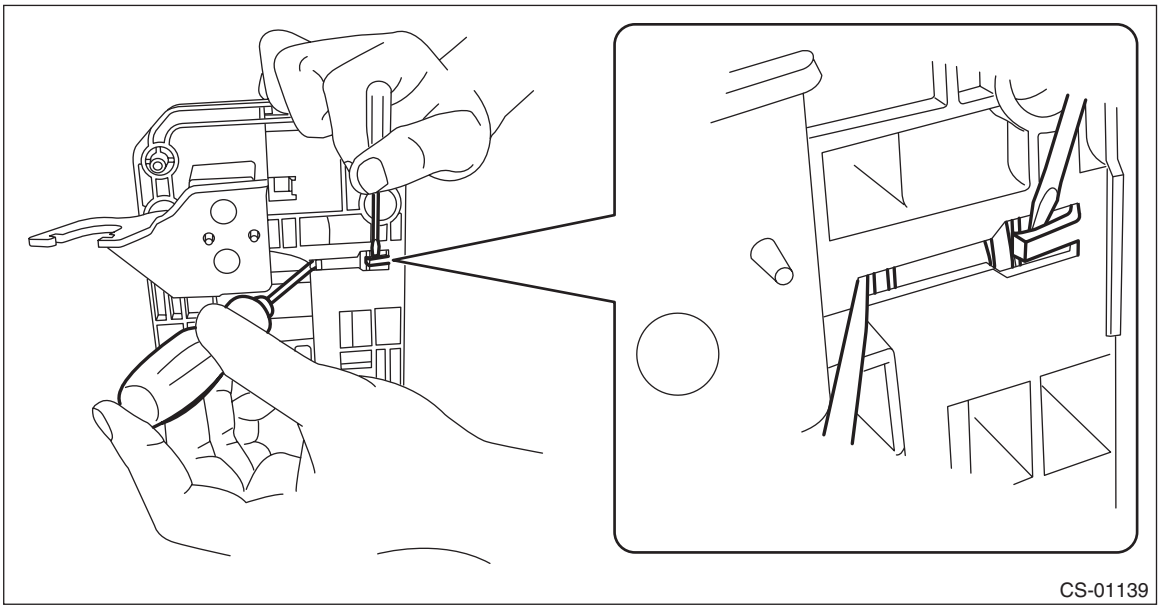

5) Using a flat tip screwdriver with a thin tip, remove the solenoid unit terminals from the harness connector.

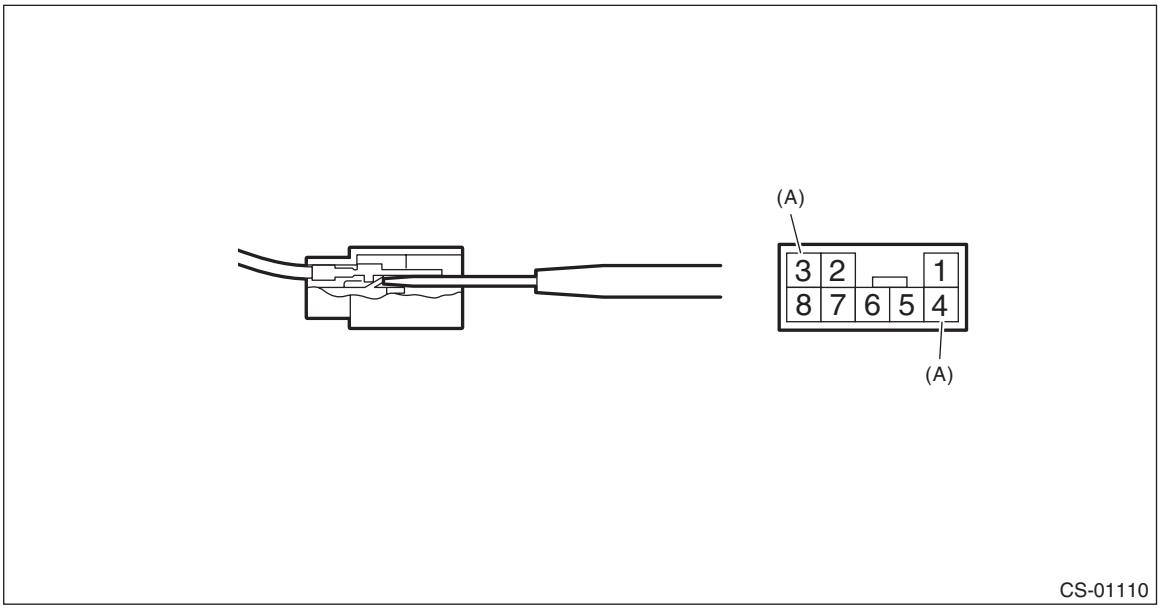

(A) Solenoid unit terminals

2. “P” RANGE SWITCH

For the removal of “P” range switch, refer to the procedure for AT select lever. <Ref. to CS-37, DISASSEMBLY, Select Lever.>

B: INSTALLATION

Install in the reverse order of removal.

NOTE:
Insert the solenoid unit terminals to the harness connector.

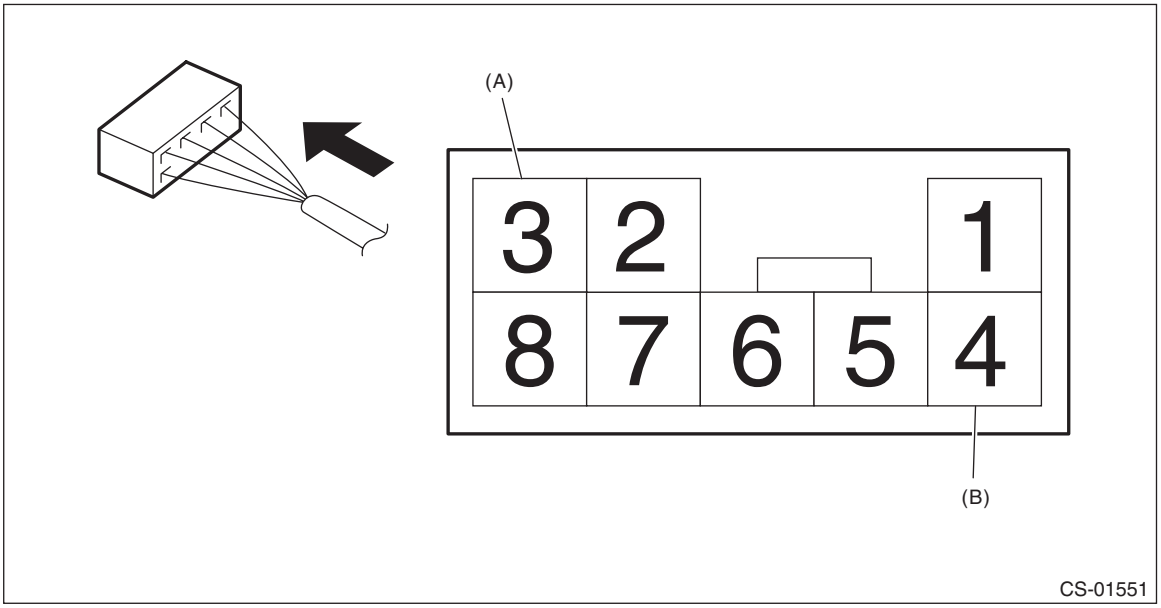

(A) Solenoid unit (color code: blue)
(B) Solenoid unit (color code: black)

C: INSPECTION

	Step	Check	Yes	No
1	**CHECK SOLENOID UNIT.** Measure the resistance of solenoid unit connector terminals. ***Terminals*** ***No. 4 — No. 3:***	Is the resistance 27.6 — 30.5 Ω?	Go to step **2**.	Replace the solenoid unit. <Ref. to CS-55, AT Shift Lock Solenoid and “P” Range Switch.>
2	**CHECK SOLENOID UNIT.** Connect the battery to the solenoid unit connector terminals, and then operate the solenoid. ***Terminals*** ***No. 3 (+) — No. 4 (–):***	Does the solenoid unit operate normally?	Go to step **3**.	Replace the solenoid unit. <Ref. to CS-55, AT Shift Lock Solenoid and “P” Range Switch.>
3	**CHECK “P” RANGE SWITCH.** 1) Shift the select lever to “P” range. 2) Measure the resistance between “P” range switch connector terminals. ***Terminals*** ***No. 1 — No. 2:***	Is the resistance less than 1 Ω?	Go to step **4**.	Replace the “P” range switch. <Ref. to CS-55, AT Shift Lock Solenoid and “P” Range Switch.>
4	**CHECK “P” RANGE SWITCH.** 1) Set the select lever to other than “P” range. 2) Measure the resistance between “P” range switch connector terminals. ***Terminals*** ***No. 1 — No. 2:***	Is the resistance 1 MΩ or more?	Normal	Replace the “P” range switch. <Ref. to CS-55, AT Shift Lock Solenoid and “P” Range Switch.>

6. Body Integrated Unit

A: NOTE

Refer to “Body Integrated Unit” for removal and installation procedure. <Ref. to SL-82, Body Integrated Unit.>

7. MT Gear Shift Lever

A: REMOVAL

1) Disconnect the ground cable from battery.
2) Remove the console box. <Ref. to EI-77, REMOVAL, Console Box.>
3) Remove the gear shift knob and remove the cover - shift lever.

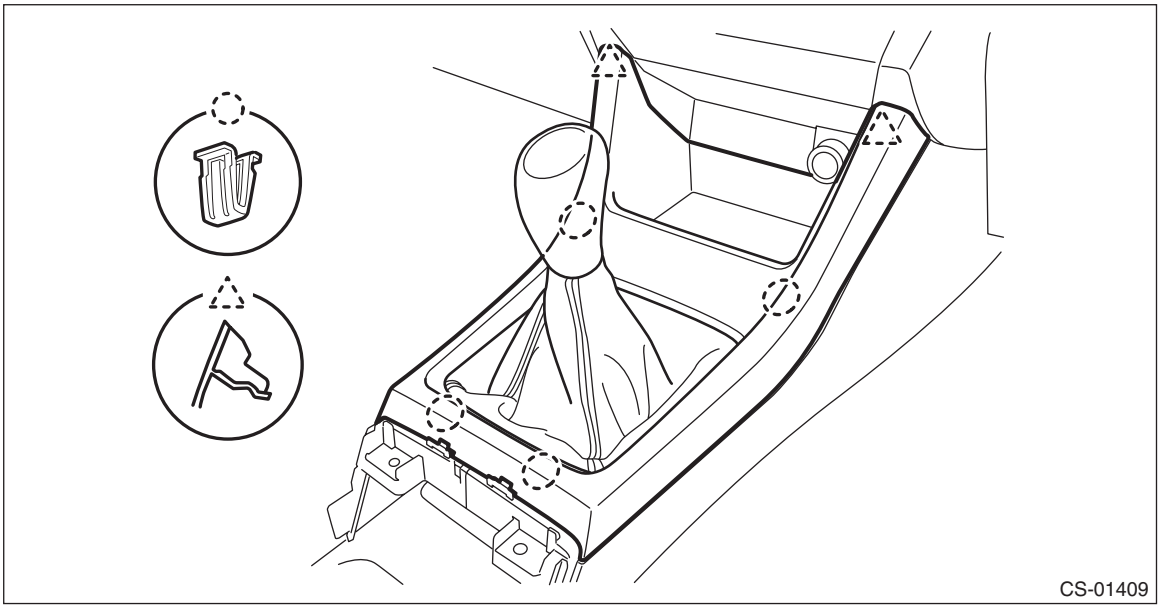

4) Remove the panel center LWR LH and RH. <Ref. to EI-77, REMOVAL, Console Box.>
5) Remove the clamp.

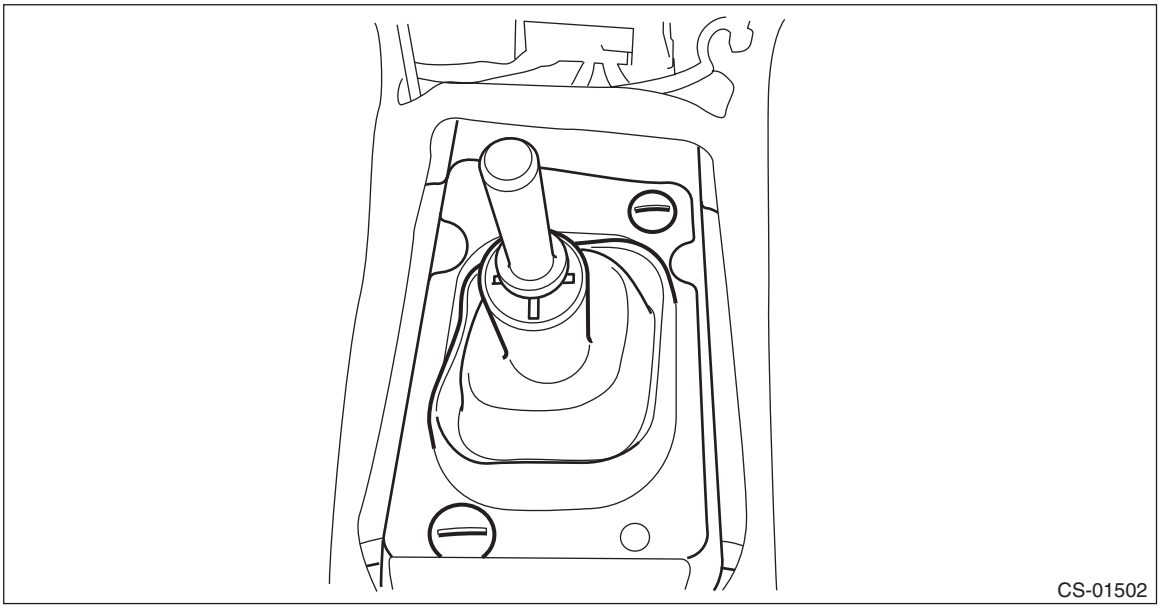

6) Remove the boot and insulator assembly.

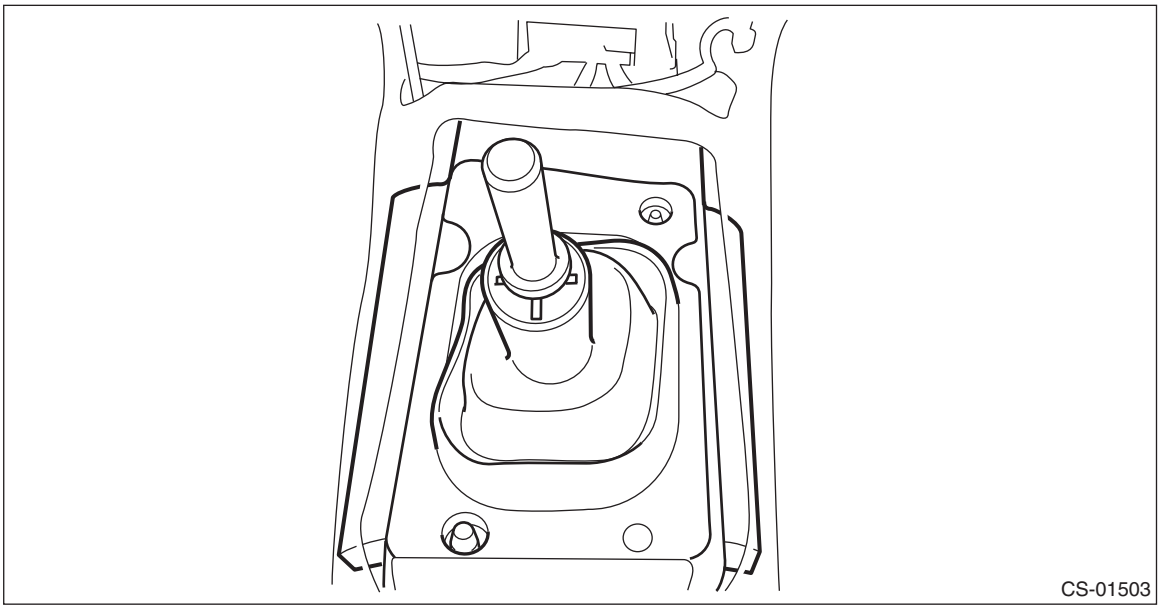

7) Remove the harness clamp from the plate COMPL.

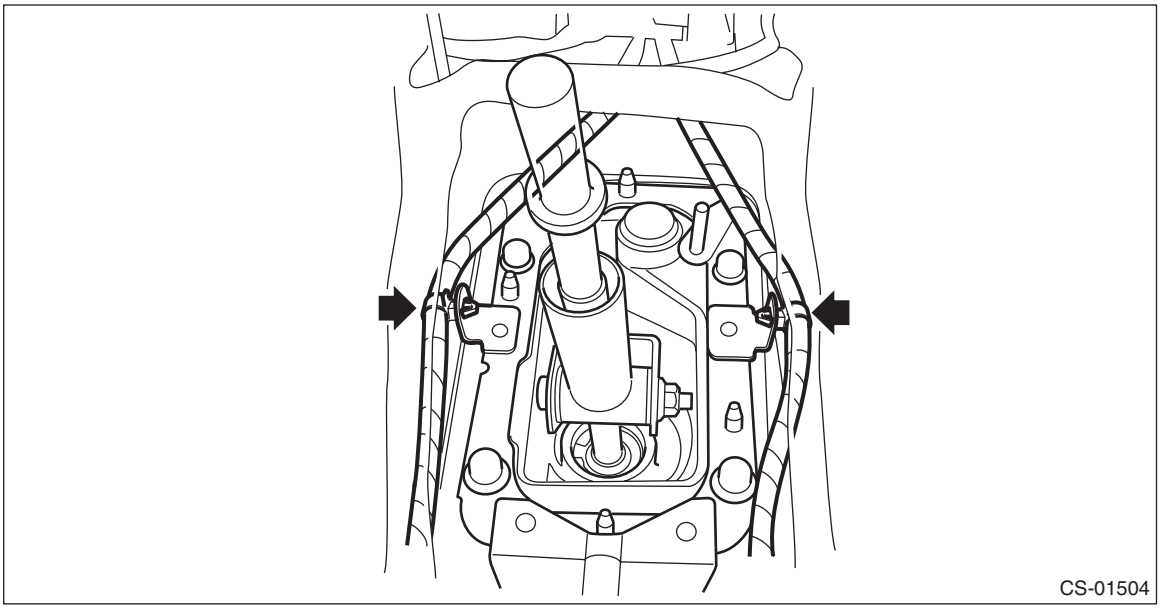

8) Remove the plate COMPL from the vehicle body.

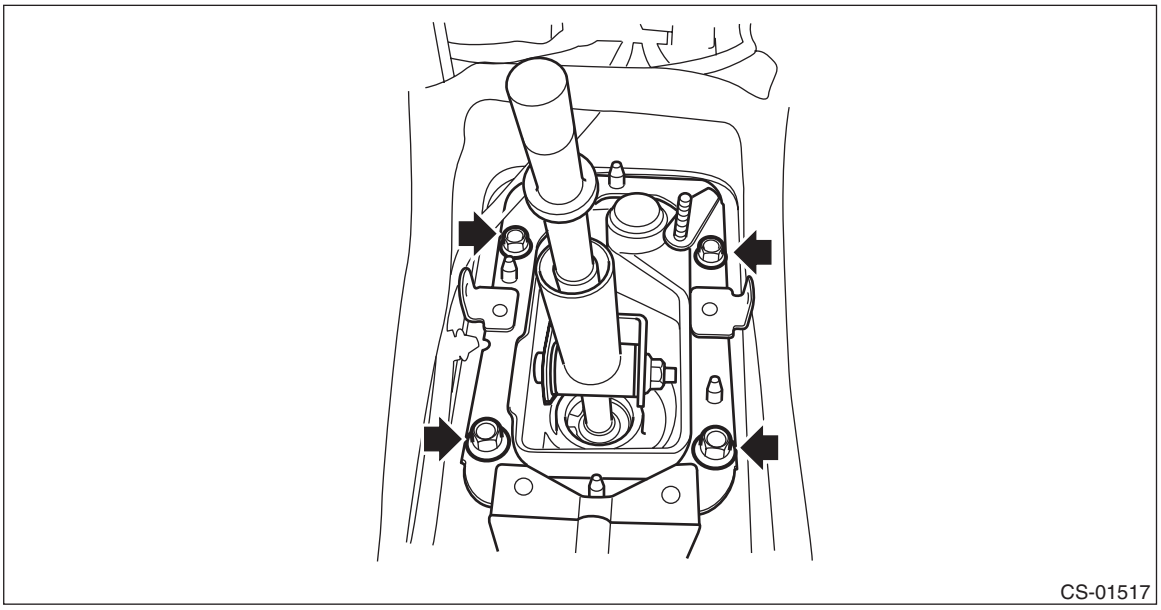

9) Lift up the vehicle.
10) Remove the center exhaust pipe. <Ref. to EX(H4DO(w/o HEV))-14, REMOVAL, Center Exhaust Pipe.>
11) Remove the center exhaust cover.



12) Remove the stay from the shift bracket.

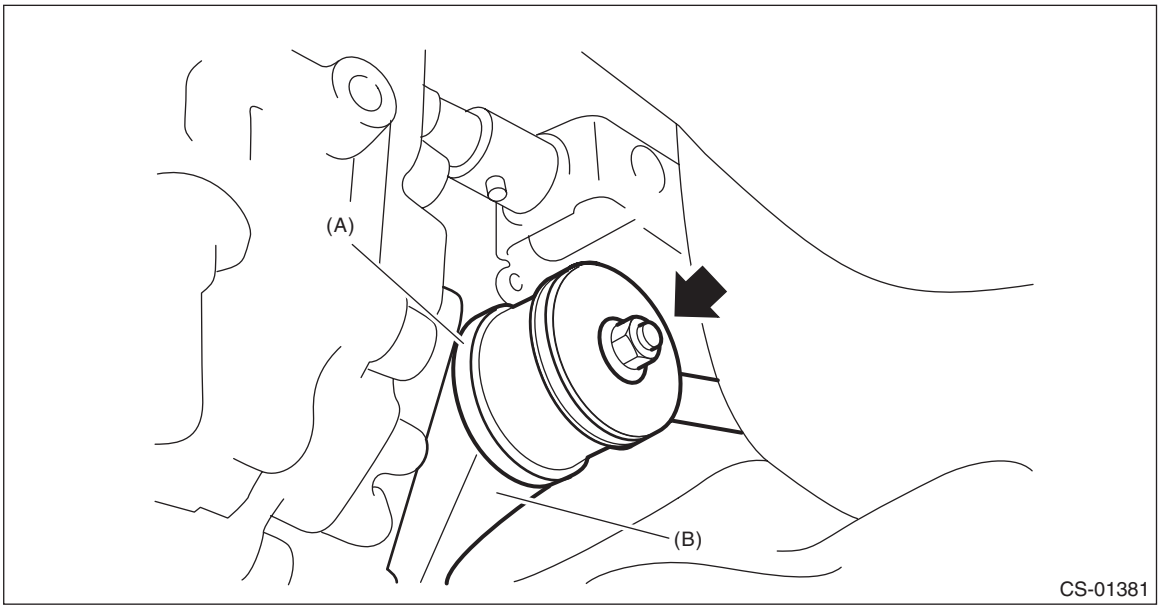

(A) Stay
(B) Shift bracket

13) Remove the rod from joint.

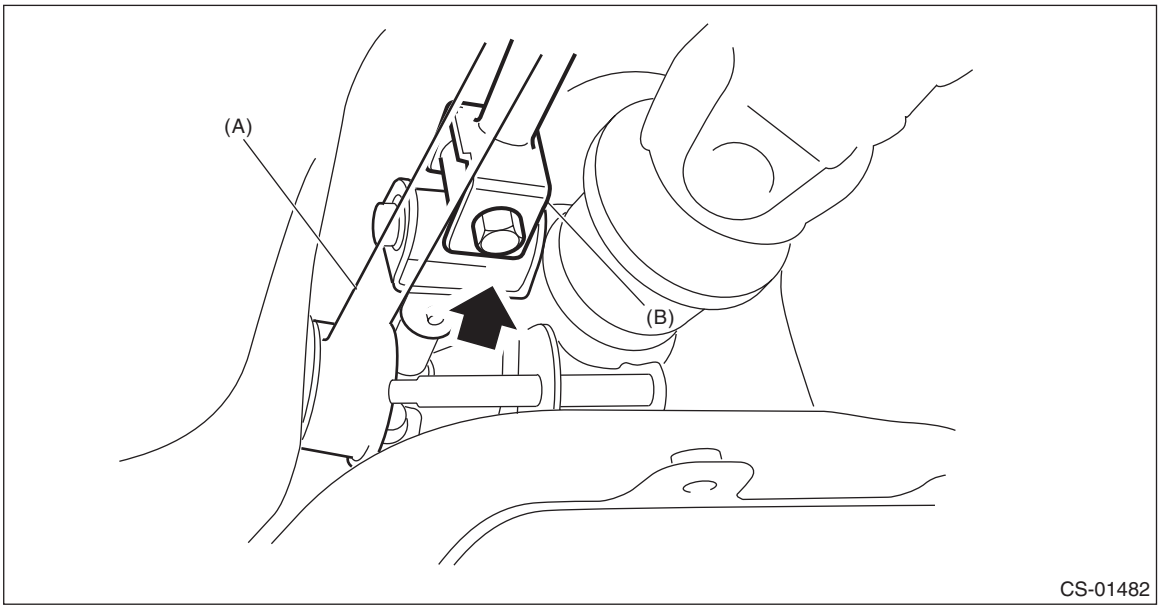

(A) Stay
(B) Rod

14) Remove the cushion rubber from the vehicle body.

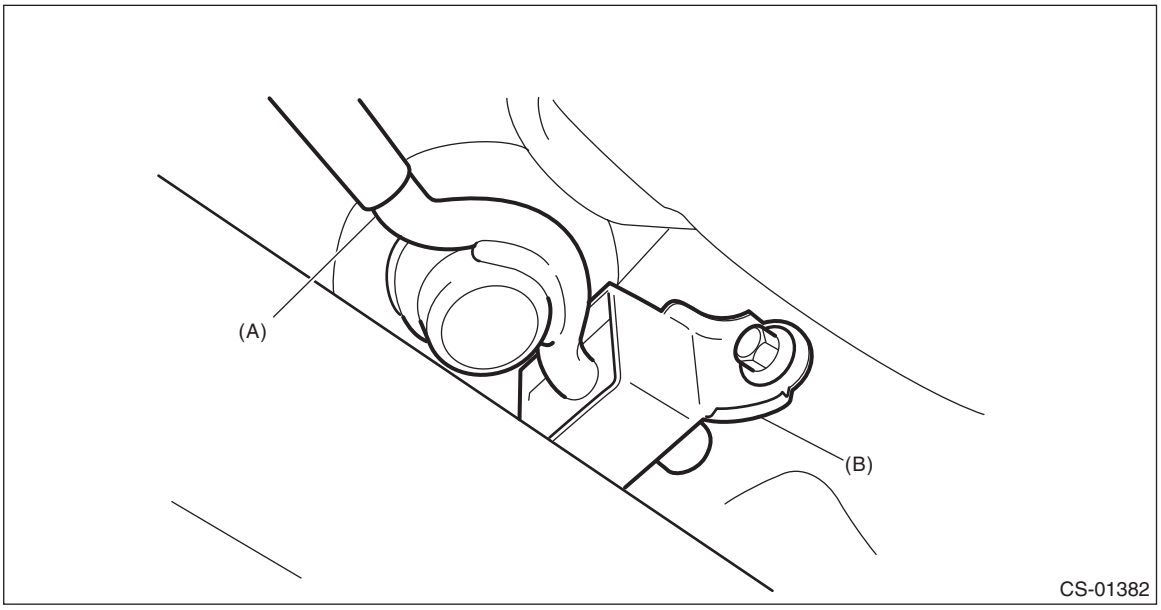

(A) Stay
(B) Cushion rubber

15) Extract the spring pin and remove the joint.

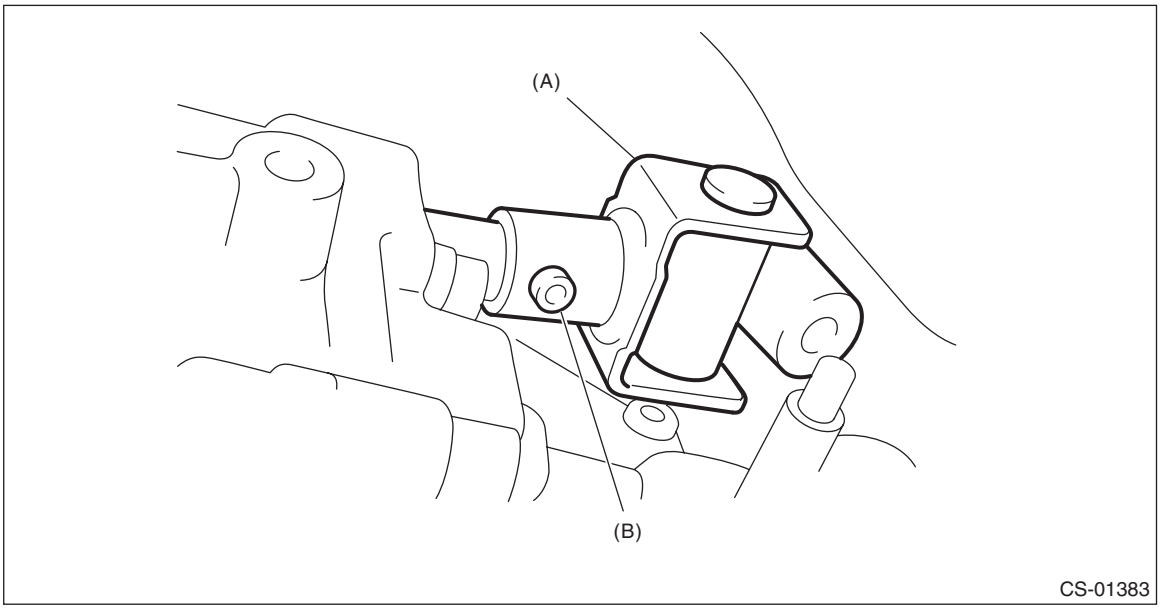

(A) Joint
(B) Spring pin

16) Lower the vehicle.

17) Remove the gear shift lever.

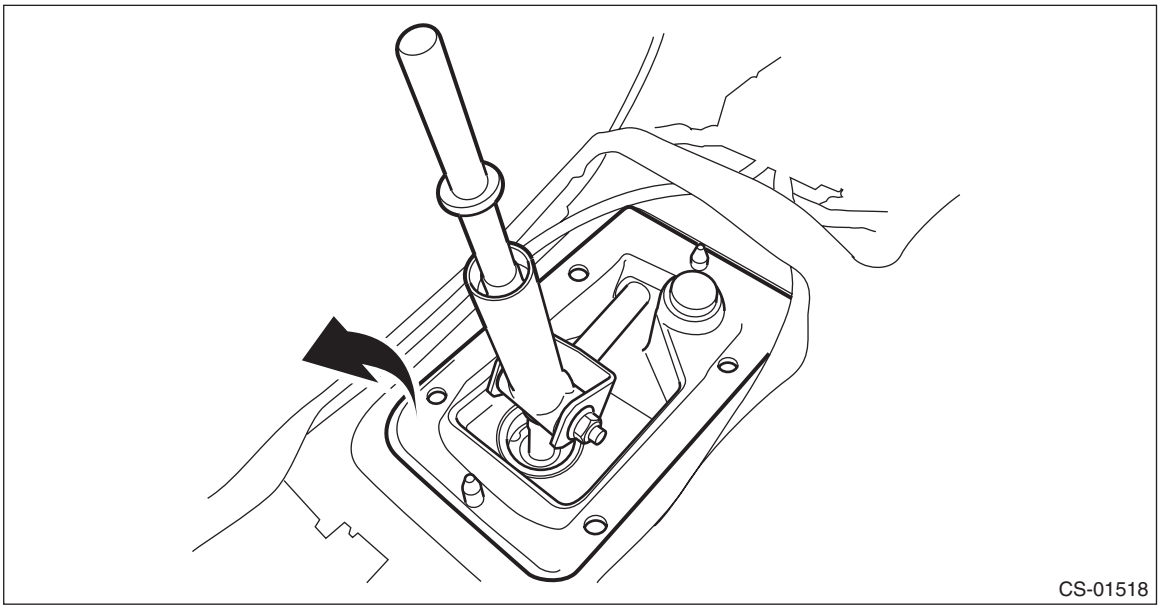

B: INSTALLATION

1) Insert the gear shift lever from the room side.

NOTE:
Insert the rod and the stay, and then temporarily set them onto the transmission mount.

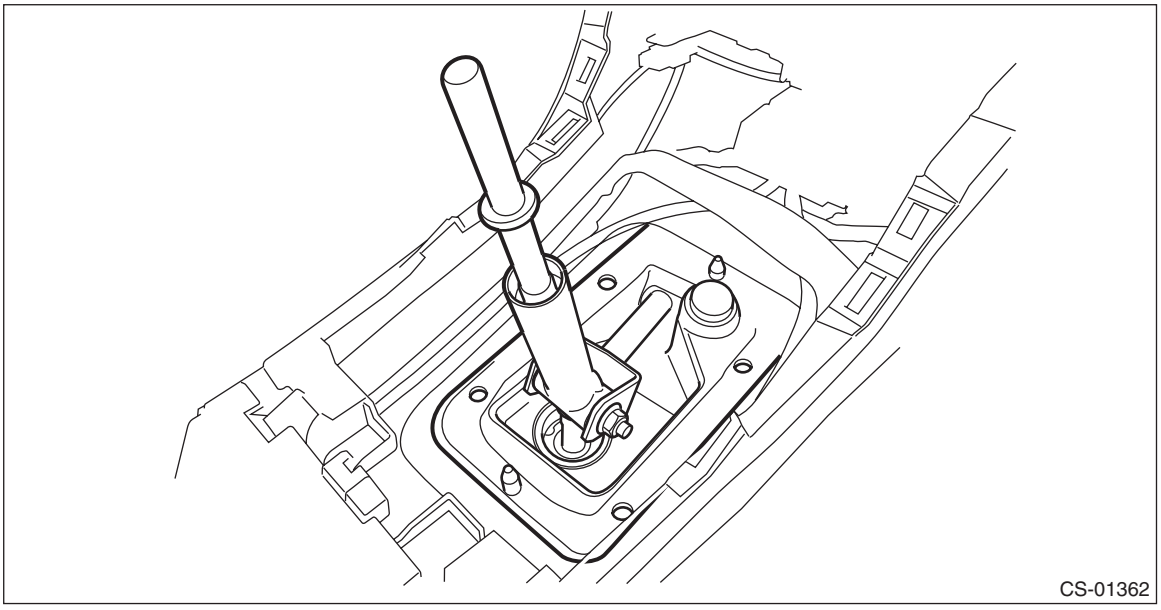

2) Lift up the vehicle.

3) Install the joint to the transmission and secure with a spring pin.

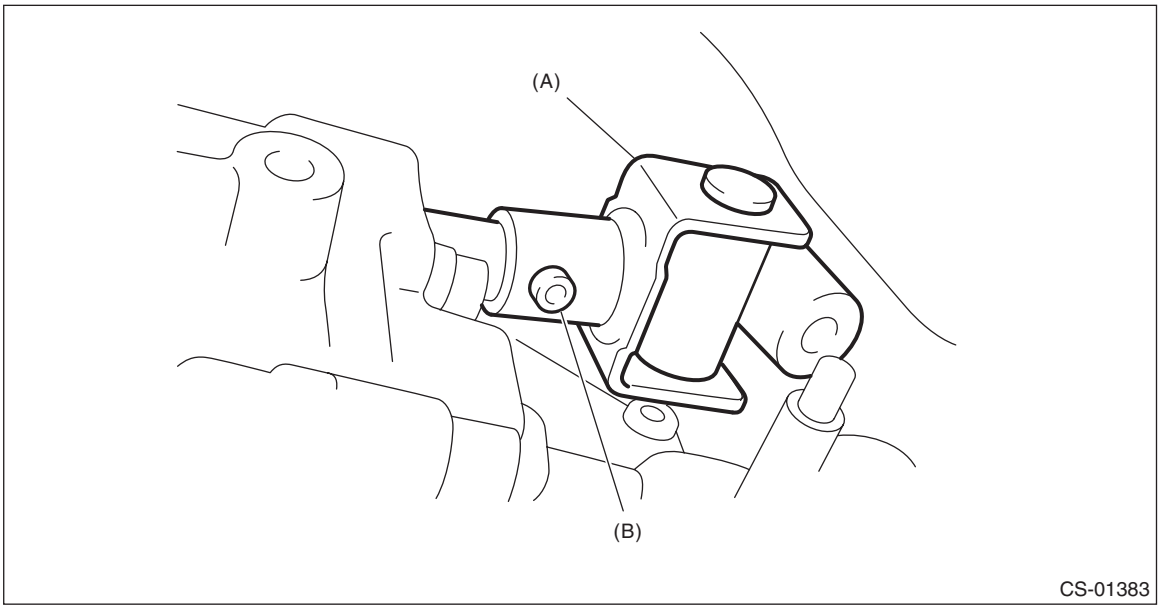

(A) Joint
(B) Spring pin

4) Mount the cushion rubber on the vehicle body.

Tightening torque:
18 N·m (1.8 kgf-m, 13.3 ft-lb)

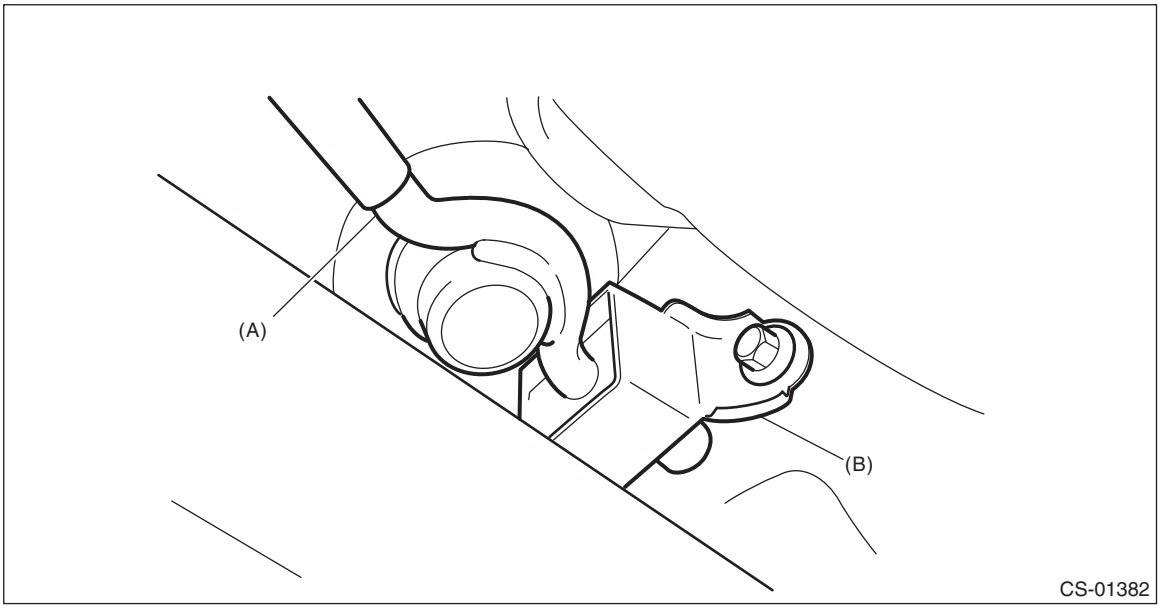

(A) Stay
(B) Cushion rubber

5) Connect the rod to the joint.

NOTE:
Use a new self-locking nut.

Tightening torque:
12 N·m (1.2 kgf-m, 8.9 ft-lb)

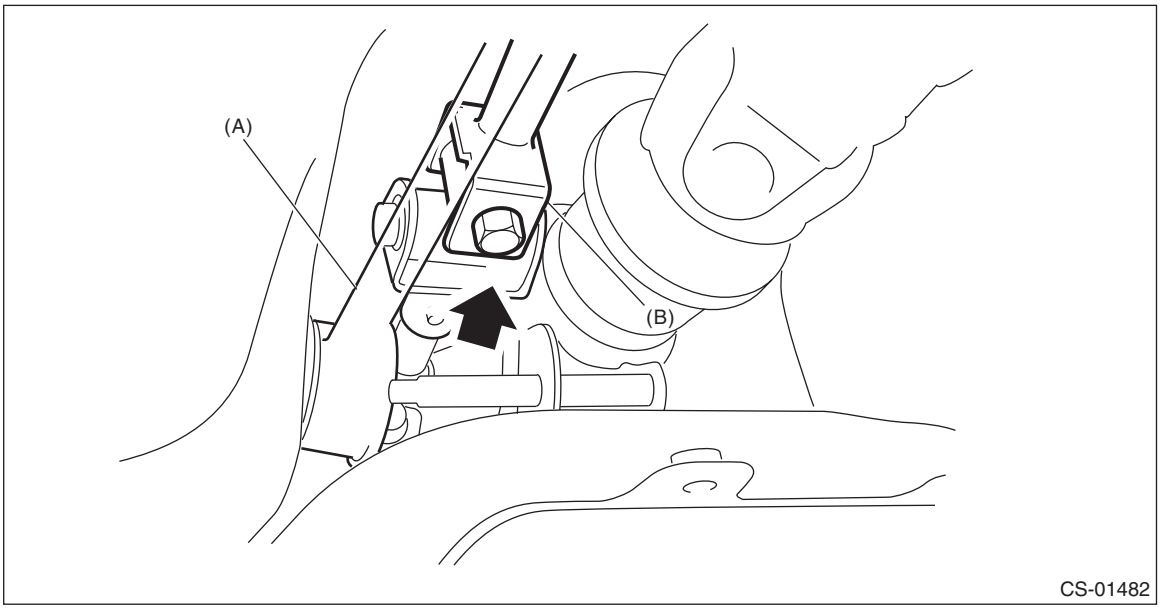

(A) Stay
(B) Rod

6) Connect the stay to the shift bracket, and tighten the self-locking nut.

NOTE:
Use a new self-locking nut.

Tightening torque:
18 N·m (1.8 kgf-m, 13.3 ft-lb)

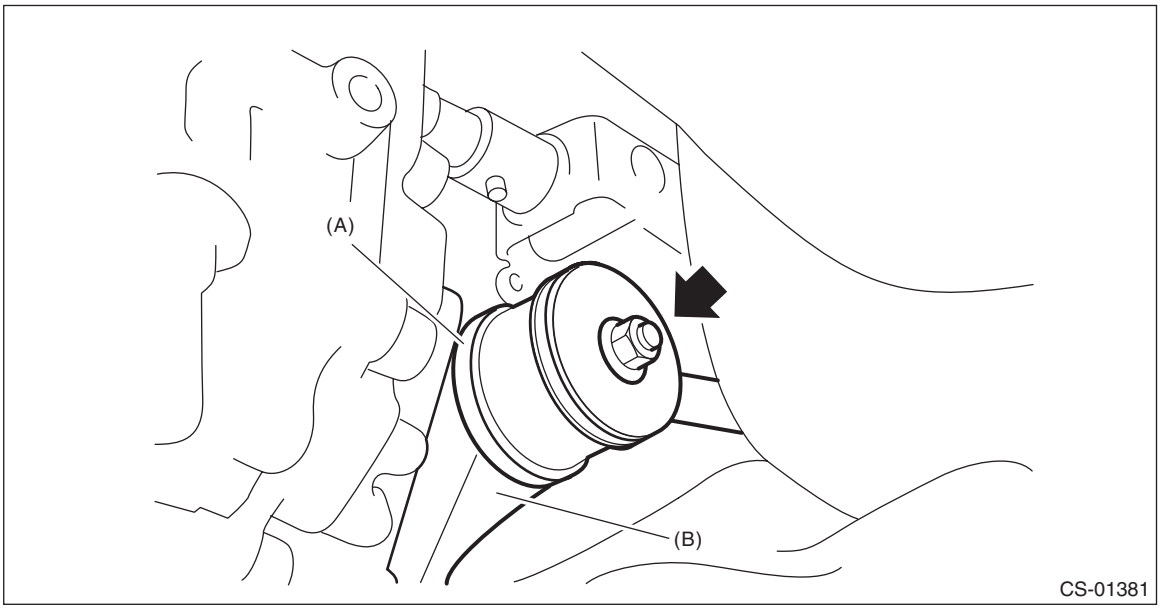

(A) Stay
(B) Shift bracket

7) Install the center exhaust cover.

Tightening torque:
18 N·m (1.8 kgf-m, 13.3 ft-lb)



8) Install the center exhaust pipe. <Ref. to EX(H4DO(w/o HEV))-15, INSTALLATION, Center Exhaust Pipe.>
9) Lower the vehicle.
10) Install the plate COMPL to the body.

Tightening torque:
18 N·m (1.8 kgf-m, 13.3 ft-lb)

(1) Set the plate COMPL to the vehicle.
(2) Temporarily tighten the bolt (A).
(3) Tighten the bolt (B).
(4) Tighten the bolt (A).
(5) Tighten the bolts (C) and (D).

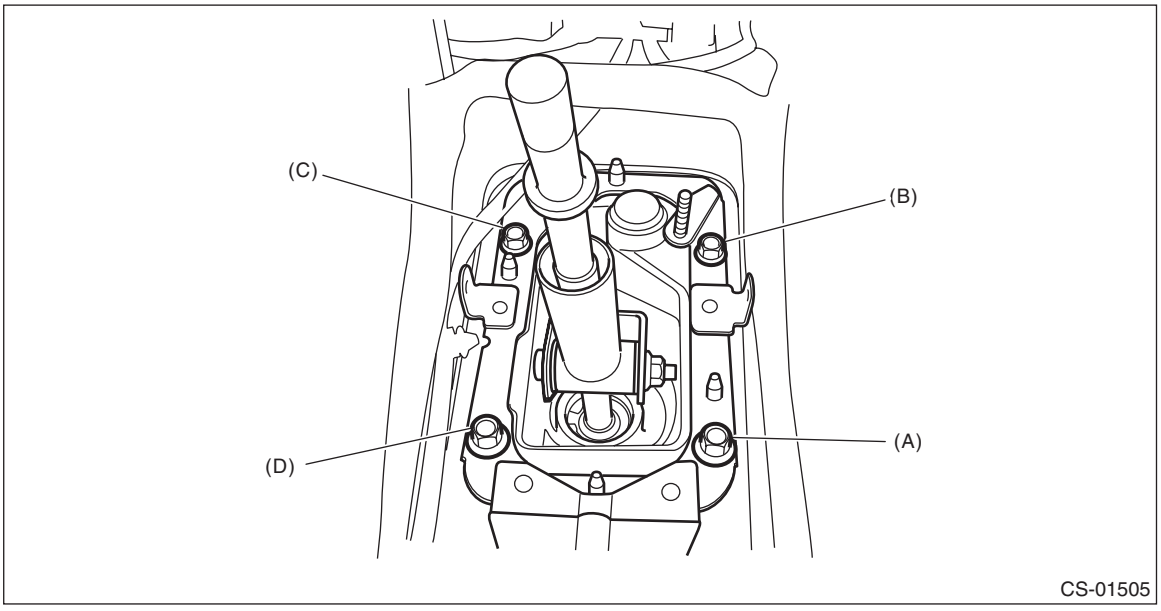

11) Install the harness clamp to the plate.

12) Install the boot and insulator assembly, and secure with a clamp.

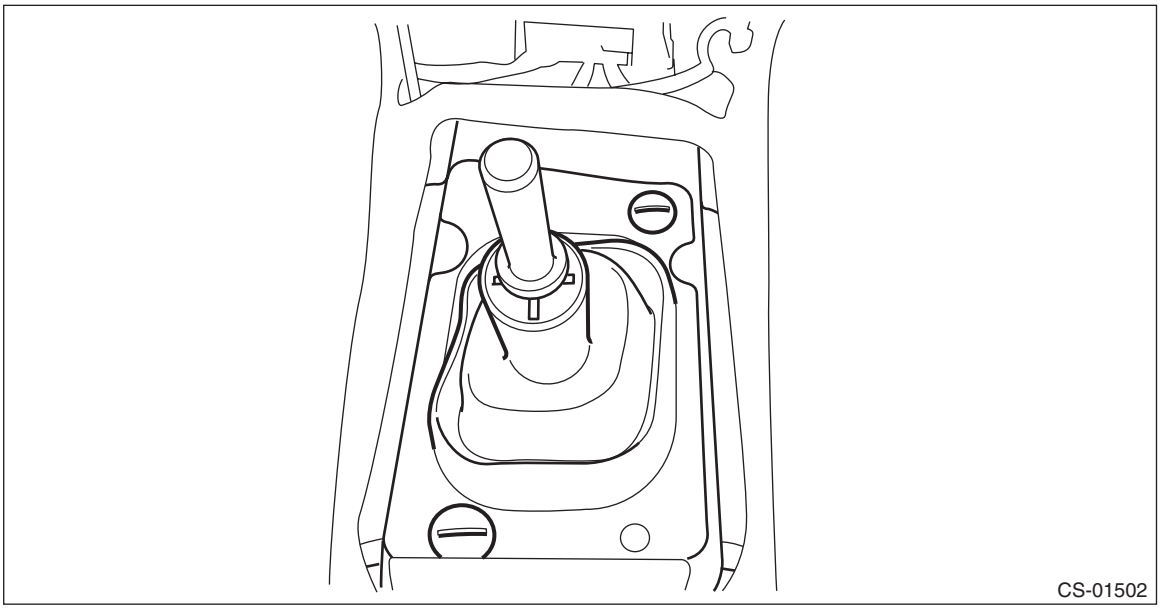

13) Install the panel center LWR LH and RH. <Ref. to EI-79, INSTALLATION, Console Box.>
14) Install the cover - shift lever, and install the gear shift knob.
15) Install the console box. <Ref. to EI-79, INSTALLATION, Console Box.>
16) Make sure the gears can be shifted accurately into each gear.
17) Connect the battery ground terminal.

C: DISASSEMBLY

1) Remove the lock wires.

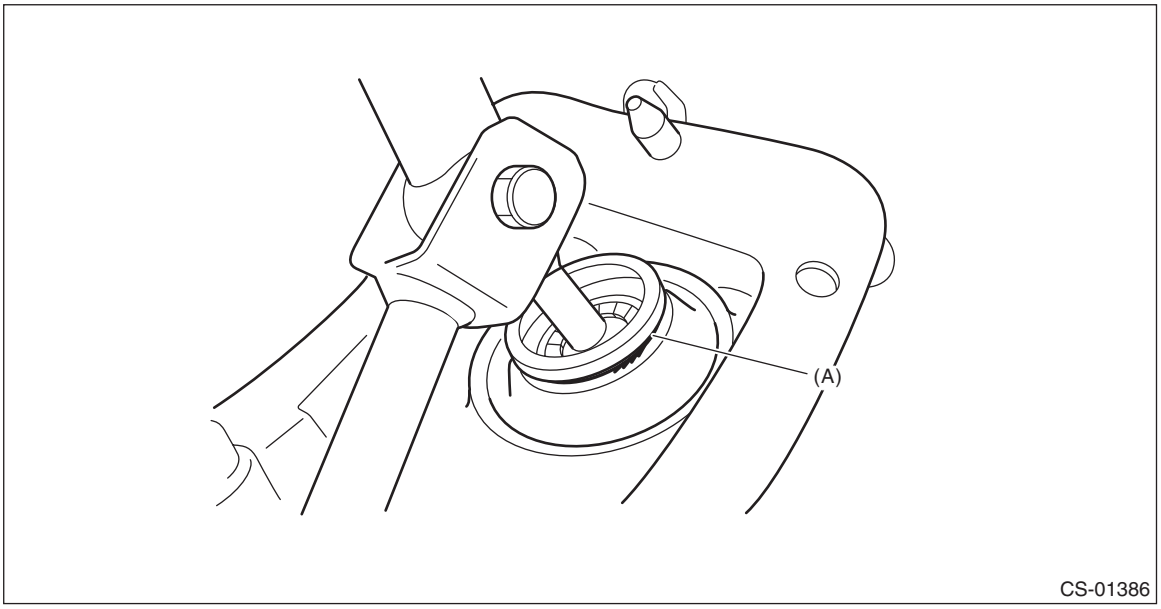

(A) Lock wire

2) Remove the rod from gear shift lever.

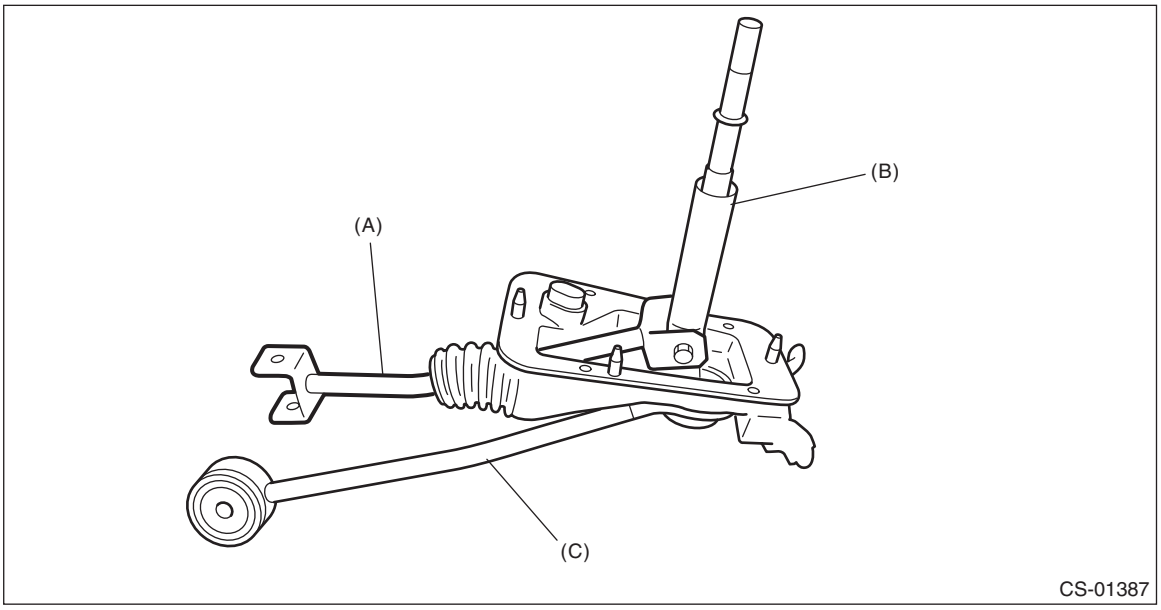

(A) Rod
(B) Lever
(C) Stay

3) Separate the rod and inner boot.
4) Remove the snap ring from the stay.

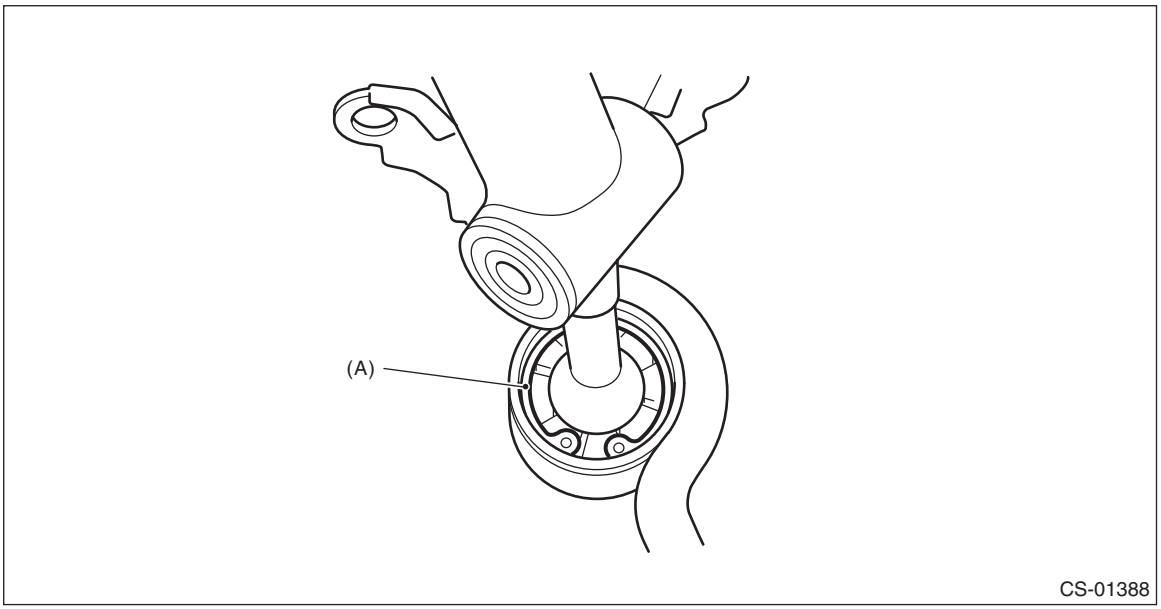

(A) Snap ring

5) Separate the gear shift lever and the stay.

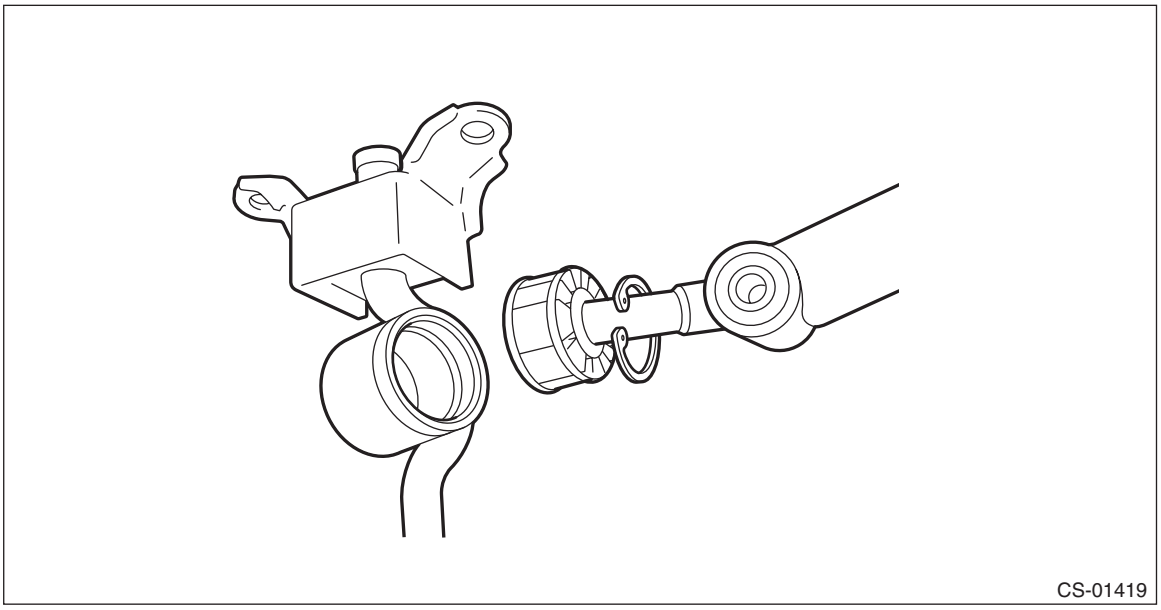
CS-01419

6) Remove the boot and bushing from the gear shift lever.

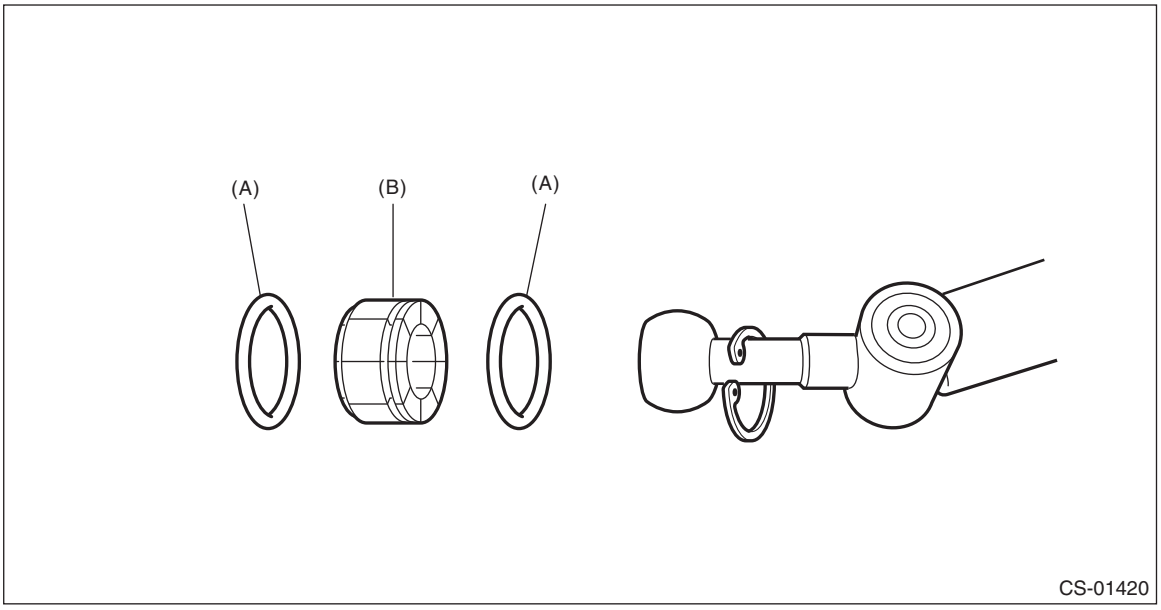

CS-01420

(A) O-ring
(B) Bushing

7) Remove the spring pin, and then remove the bushing and snap ring.

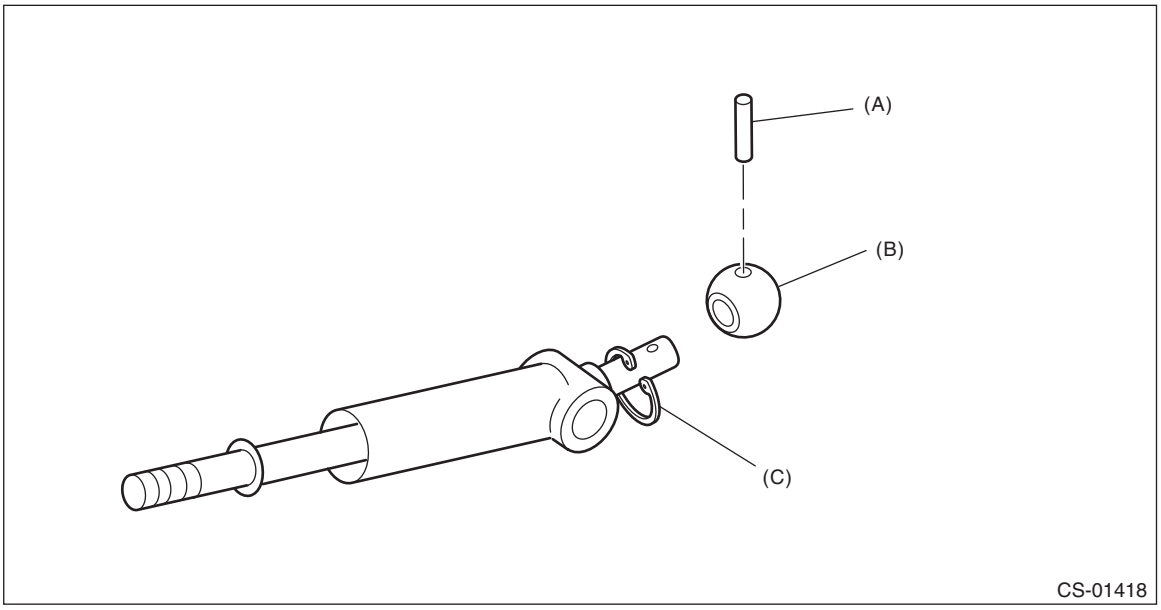

(A) Spring pin
(B) Bushing
(C) Snap ring

8) Remove the boss from the joint.

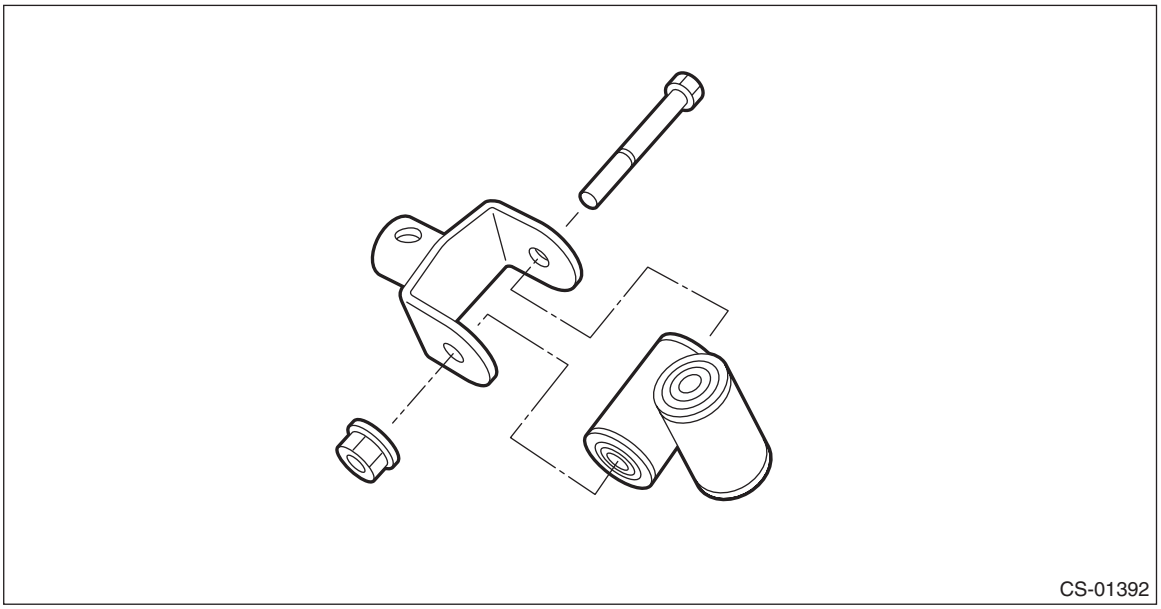

9) Remove the bushing and spacer from the boss.

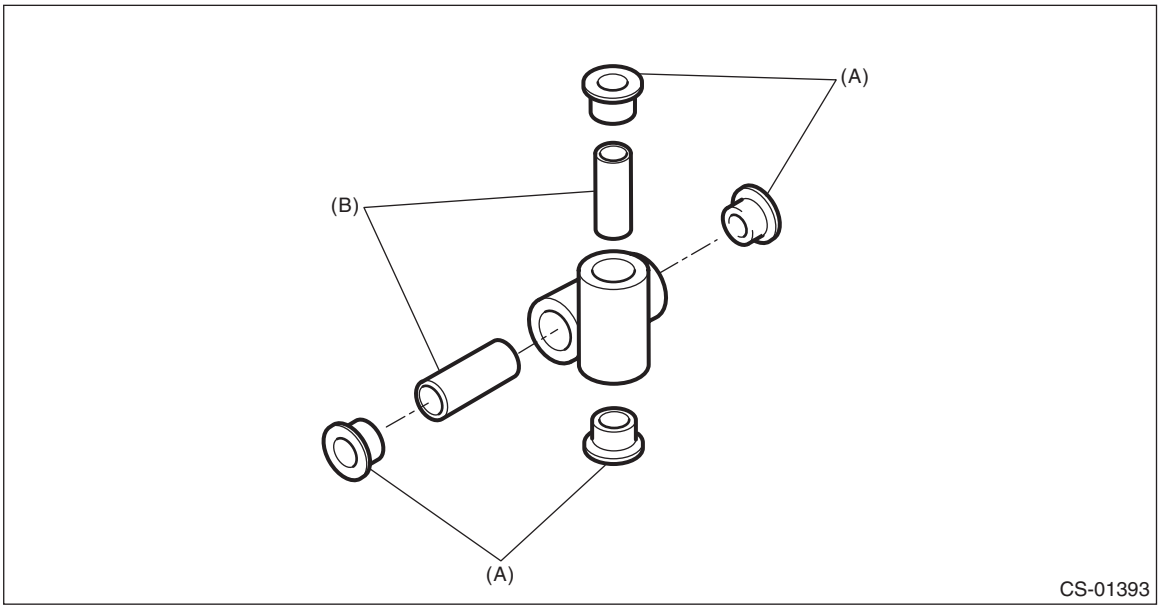

(A) Bushing
(B) Spacer

10) Remove the bushing and cushion rubber from the stay.

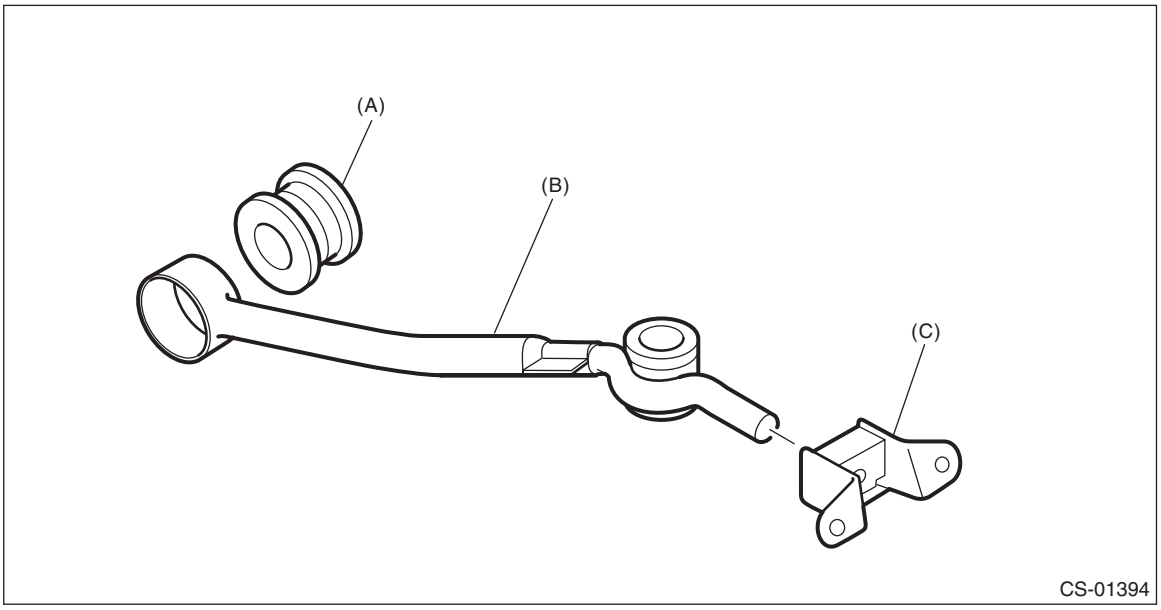

(A) Bushing B
(B) Stay
(C) Cushion rubber

D: ASSEMBLY

NOTE:
- Clean all the parts before assembly.
- Apply NIGTIGHT LYW No. 2 grease or equivalent to each part. <Ref. to CS-4, 5MT GEAR SHIFT LEVER, COMPONENT, General Description.>

1) Mount the bushing and cushion rubber to the stay.

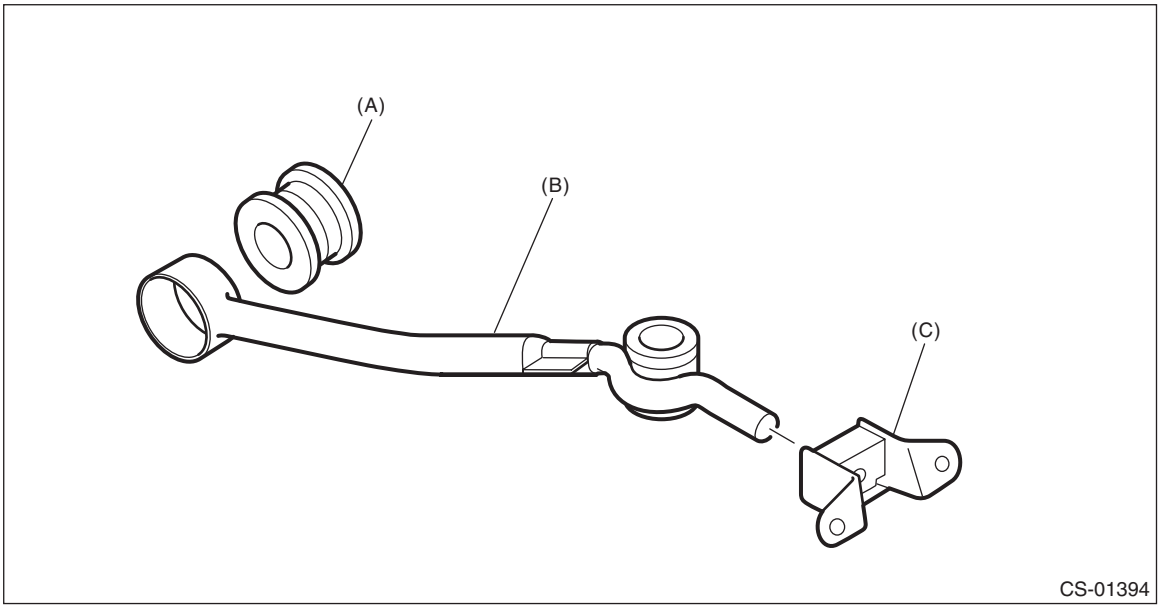

(A) Bushing
(B) Stay
(C) Cushion rubber

2) Install the bushing and spacer to boss.

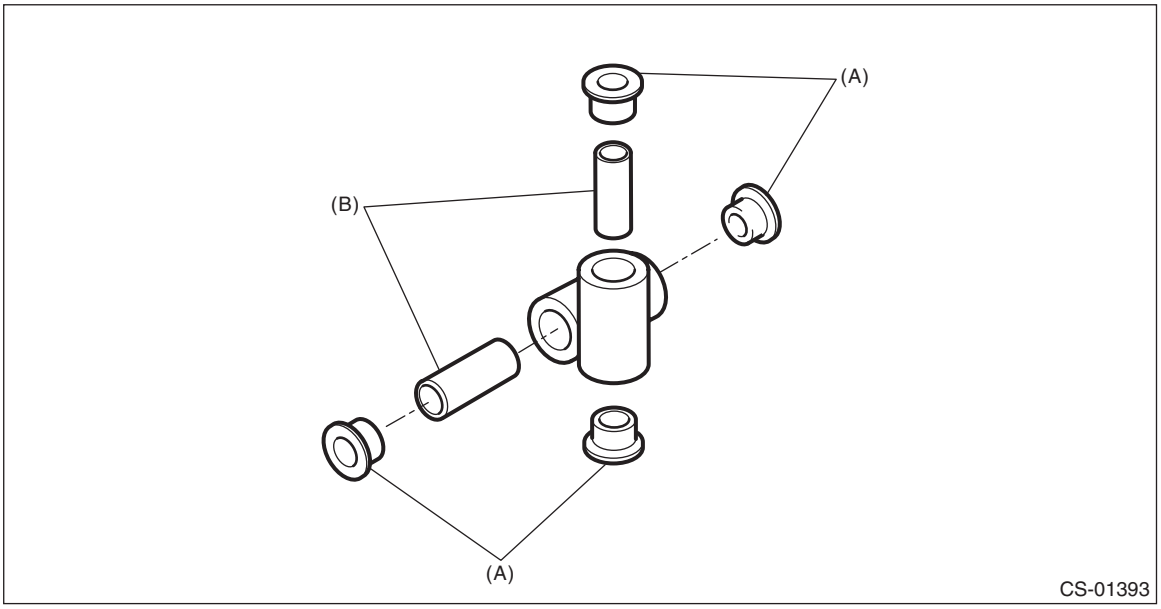

(A) Bushing
(B) Spacer

3) Install the boss to the joint.

NOTE:
Use a new self-locking nut.

Tightening torque:
12 N·m (1.2 kgf-m, 8.9 ft-lb)

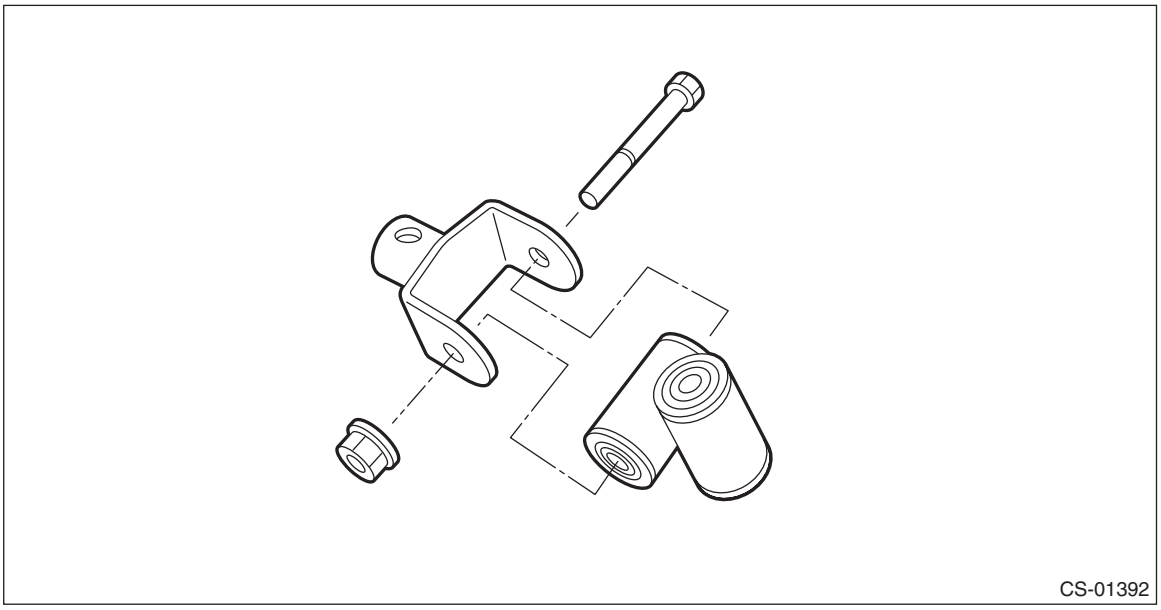

4) Install the snap ring to gear shift lever and install the bushing.

NOTE:
Apply grease to the bushing.

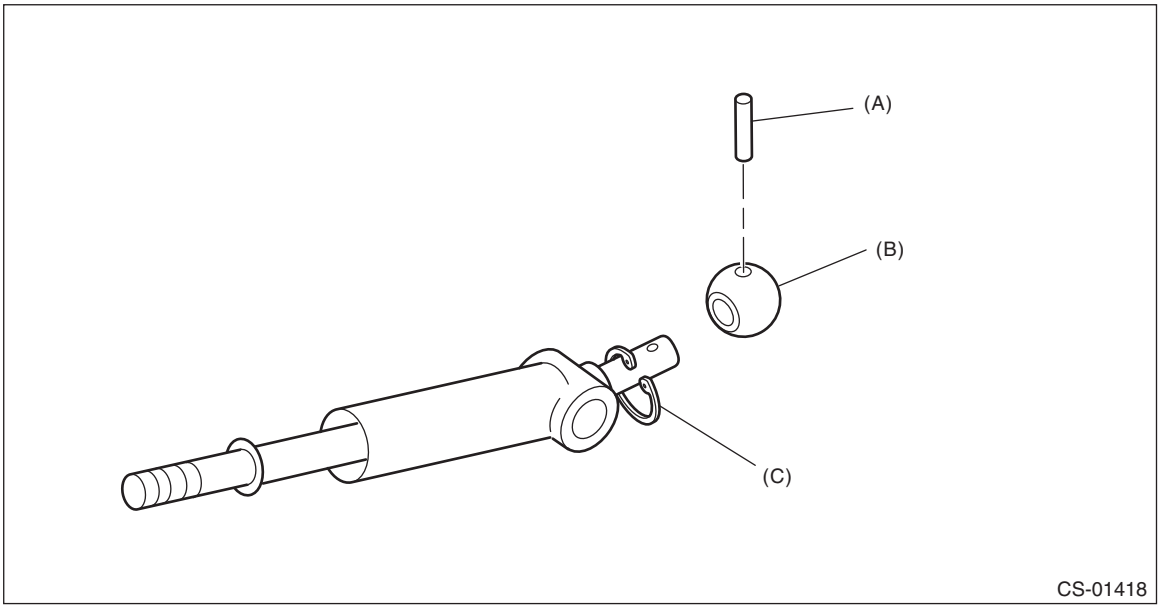

(A) Spring pin
(B) Bushing
(C) Snap ring

5) Apply grease to the bushing and O-ring, and then install to gear shift lever.

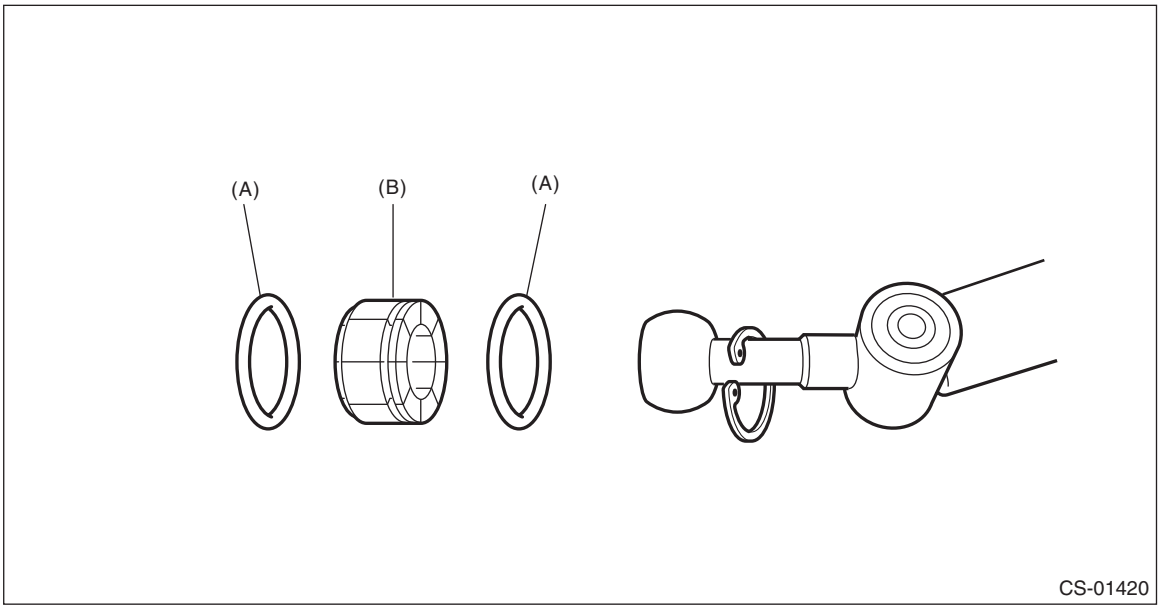

(A) O-ring
(B) Bushing

6) Apply sufficient grease into boss, and then install the gear shift lever to the stay.

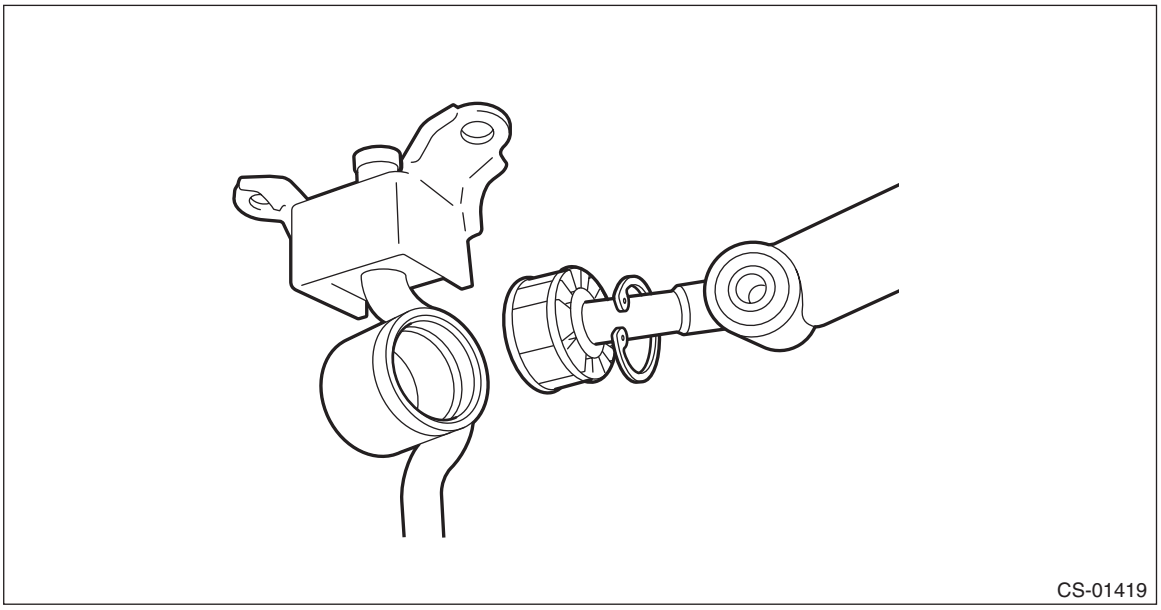

7) Install the snap ring.

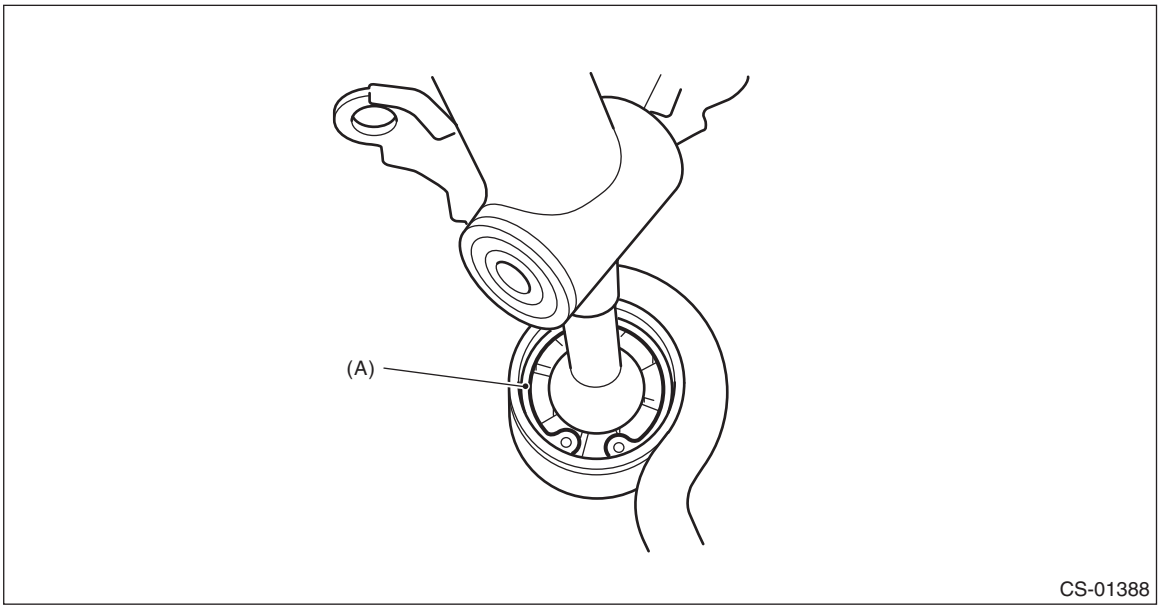

(A) Snap ring

8) Insert the gear shift lever and rod into boot hole.
9) Install the rod.

NOTE:
Use a new self-locking nut.

Tightening torque:
12 N·m (1.2 kgf-m, 8.9 ft-lb)

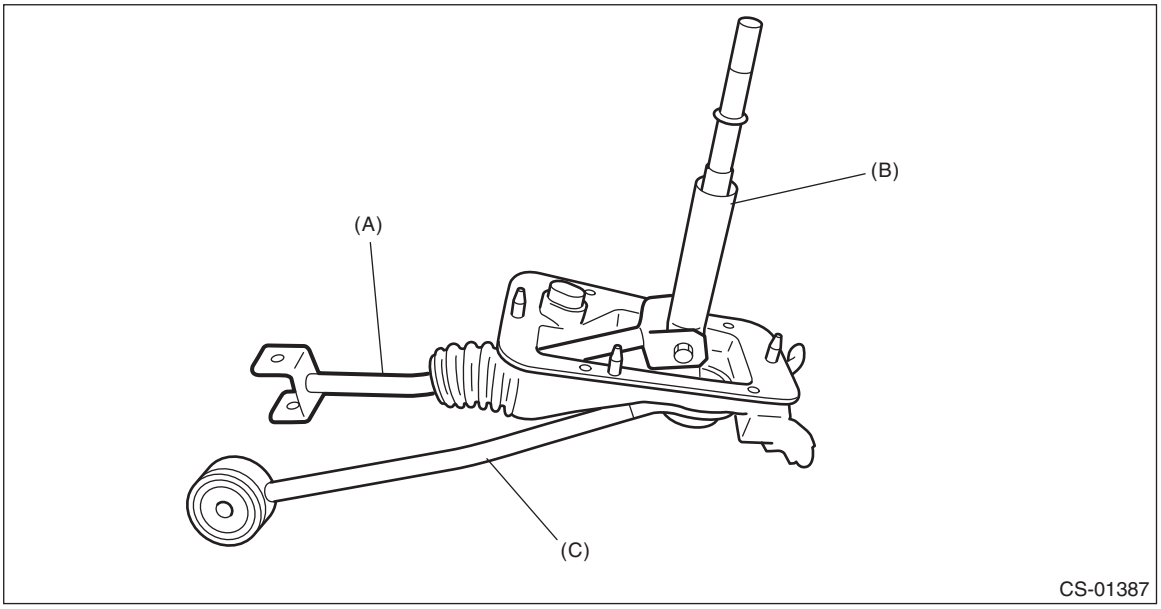

(A) Rod
(B) Lever
(C) Stay

10) Install the lock wire.

NOTE:
Use a new lock wire.

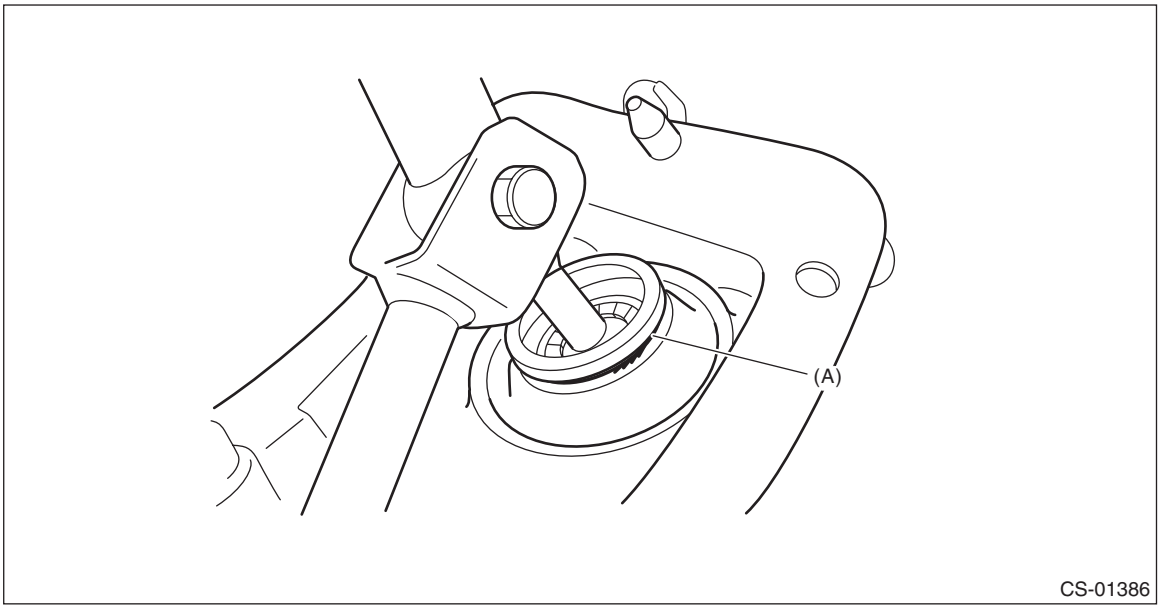

(A) Lock wire

NOTE:
- Install the lock wire to the stay groove.
- Bend the extra wire to the same direction of lock wire winding.

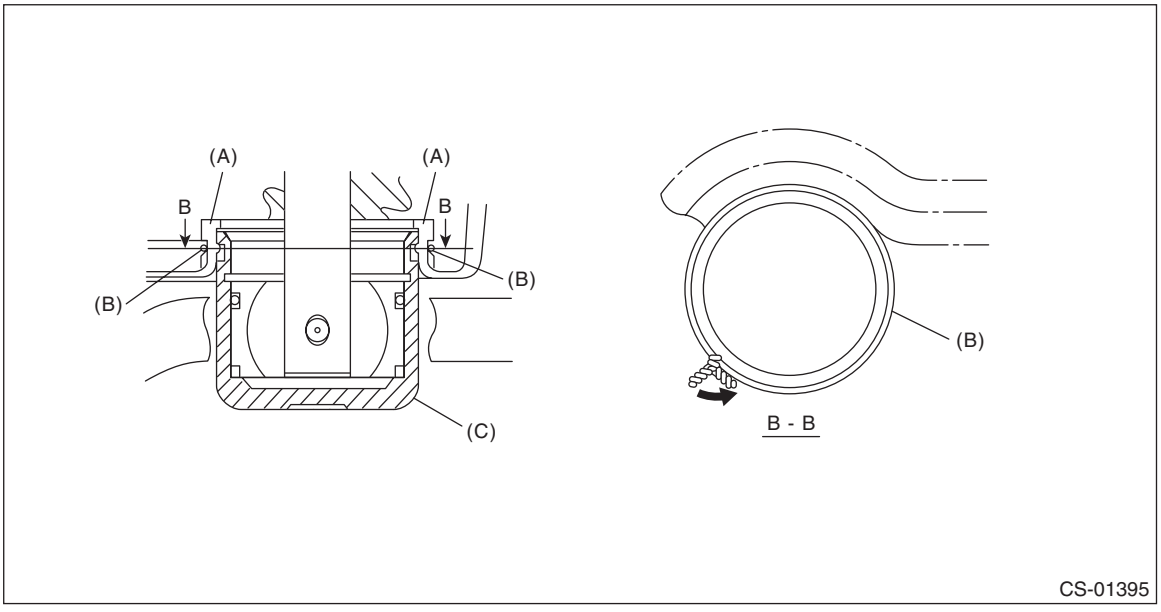

(A) Inner boot
(B) Lock wire
(C) Stay

E: INSPECTION

1) Check the parts (bushing, cushion rubber, spacer, boot, stay and rod, etc.) for deformation, damage and wear. If necessary, correct or replace faulty parts. Compare the removed parts with new parts to judge if there are damages or not.

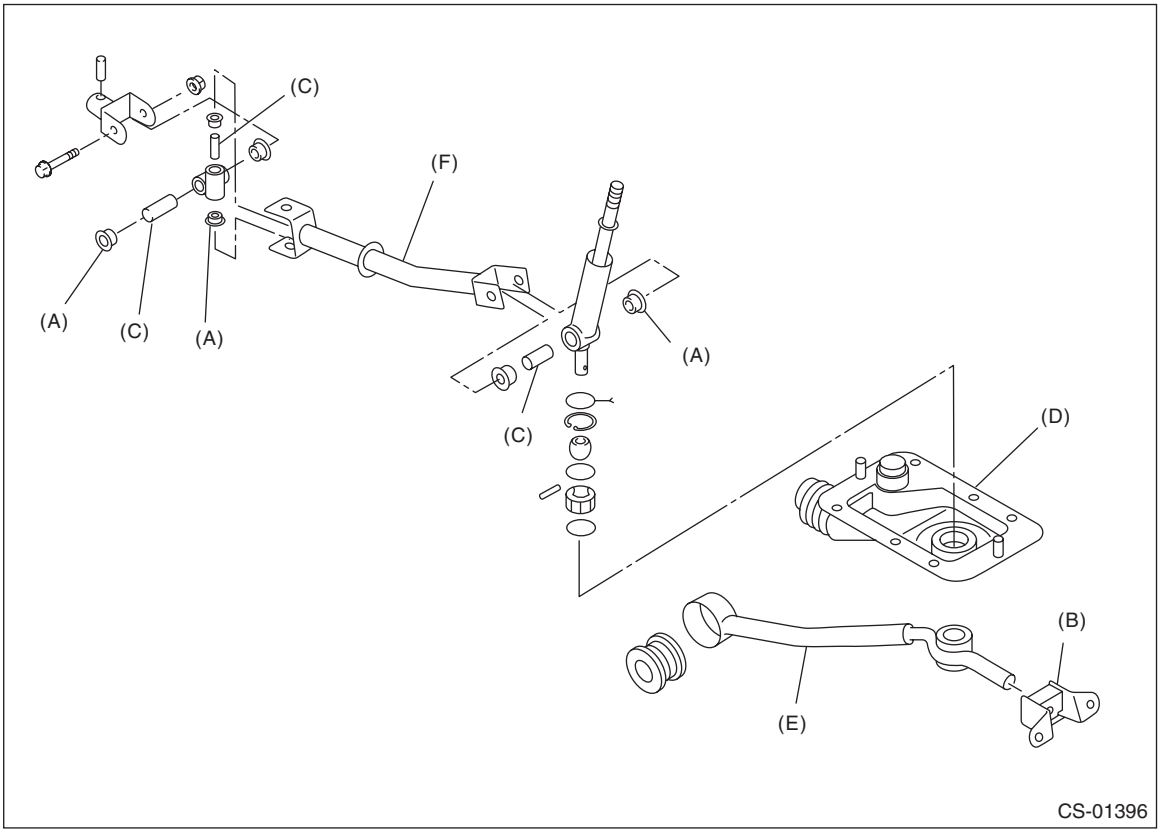

(A) Bushing
(B) Cushion rubber
(C) Spacer
(D) Boot
(E) Stay
(F) Rod

2) Check the swing torque of rod linked with the gear shift lever. If the torque exceeds the specifications, replace the bushing or retighten nuts.

Swing torque:
3.7 N (0.38 kgf, 0.83 lbf) or less

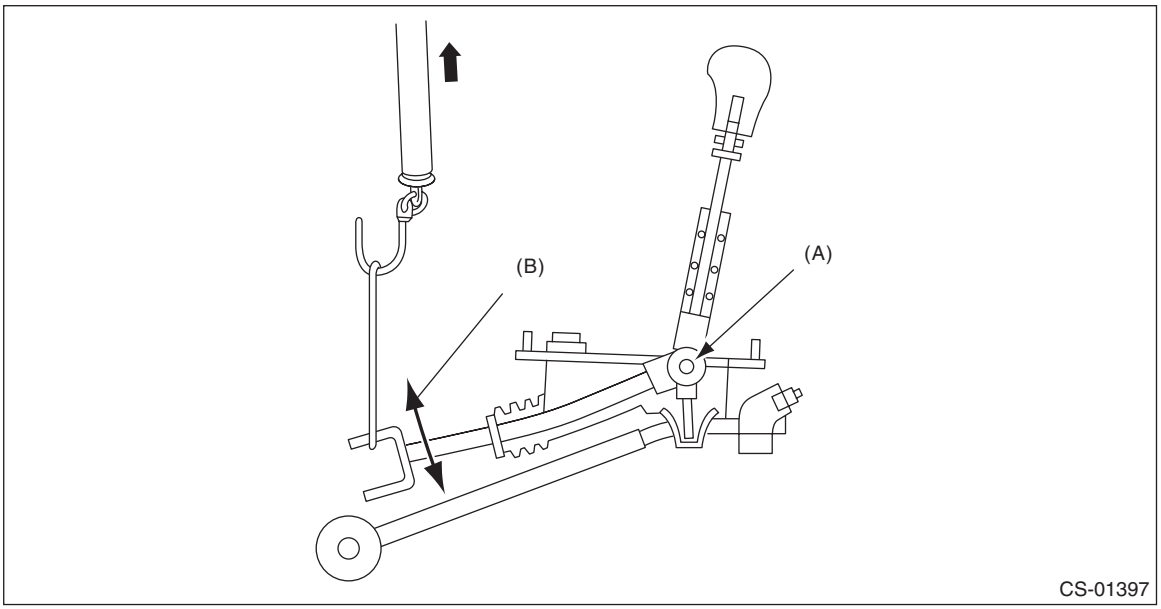

(A) Pivot
(B) Swing torque

8. General Diagnostic Table

A: INSPECTION

Symptoms	Possible cause	Corrective action
Select lever	Starter does not run.	Adjust the select cable and inhibitor switch, or inspect the circuit.
	Back-up light does not illuminate.	Adjust the select cable and inhibitor switch, or inspect the circuit.
	AT shift lock system does not operate normally.	Adjust the select cable and inhibitor switch, or inspect the circuit.
	Manual mode can not be set.	Inspect the mode switch and select lever, or inspect the circuit.
	Up-shift is not engaged at manual mode.	Check the shift-up switch and circuit.
	Down-shift is not engaged at manual mode.	Check the shift-down switch and circuit.

CONTINUOUSLY VARIABLE TRANSMISSION

CVT(TR580)

		Page
1.	General Description	3
2.	CVTF	35
3.	Differential Gear Oil	39
4.	AWD ON/OFF Switching Mode	43
5.	Road Test	44
6.	Stall Test	45
7.	Time Lag Test	46
8.	Secondary Pressure (Line Pressure) Test	47
9.	Transfer Clutch Pressure Test	50
10.	Automatic Transmission Assembly	56
11.	Transmission Mounting System	80
12.	Extension Case Oil Seal	85
13.	Differential Side Retainer Oil Seal	87
14.	Inhibitor Switch	92
15.	Turbine Speed Sensor	99
16.	Secondary Speed Sensor	101
17.	Primary Speed Sensor	103
18.	Secondary Pressure Sensor	106
19.	Oil Pan and Strainer	108
20.	Control Valve Body	112
21.	Transmission Harness	126
22.	Transmission Control Module (TCM)	139
23.	CVTF Cooler (With Warmer Function)	141
24.	Air Breather Hose	152
25.	Drive Plate	156
26.	Torque Converter Assembly	158
27.	Preparation for Overhaul	160
28.	Extension Case	162
29.	Transfer Clutch	166
30.	Transfer Driven Gear	180
31.	Parking Pawl	183
32.	Reduction Driven Gear	185
33.	Transmission Control Device	193
34.	Transmission Case	199
35.	CVTF Filter	211
36.	Reduction Drive Gear	212
37.	Primary Pulley and Secondary Pulley	217
38.	Variator Chain	237
39.	Reverse Brake Assembly	238
40.	Forward Clutch Assembly	253
41.	Drive Pinion Shaft Assembly	273
42.	Front Differential Assembly	302
43.	Oil Pump Chain	321

44. Oil Pump 330
45. Converter Case 333
46. Diagnostics with Phenomenon 336

1. General Description

A: SPECIFICATION

1. TORQUE CONVERTER

Model	DOHC non-turbo
Type	Symmetric, 3-element, single stage, 2-phase torque converter
Stall torque ratio	2.34
Nominal mm (in)	236 (9.29)
Stall speed (at sea level)	2,350 — 3,100 (D range) 2,100 — 2,800 (R range)
One-way clutch	Sprag type one-way clutch

2. OIL PUMP

Type		Internal gear pump
Driving method		Driven by chain
Number of teeth	Inner rotor	8
	Outer rotor	9

3. TRANSMISSION CONTROL ELEMENT

Type	Forward continuously variable speed change, 1 reverse, planetary gear
Multi-plate clutch	1 set
Multi-plate brake	1 set

4. TRANSMISSION GEAR RATIO

Forward	3.581 — 0.570
Rev	3.667

5. PLATE

Number of forward clutch drive plates	3
Number of reverse brake drive plates	4

6. SELECTOR POSITION

P (Park)	Transmission neutral, output shaft locked, engine start enabled
R (Reverse)	Rev
N (Neutral)	Transmission neutral, engine start enabled
D (Drive)	Forward continuously variable speed change
M (Manual mode) (paddle shift +side)	Manual gear change 1st → 2nd → 3rd → 4th → 5th → 6th
M (Manual mode) (paddle shift –side)	Manual gear change 1st ← 2nd ← 3rd ← 4th ← 5th ← 6th
L (Low)	Forward continuously variable speed change (engine brake)

7. HYDRAULIC CONTROL AND LUBRICATION

Type	Electronic hydraulic control (gear ratio is changed by signals of vehicle speed and accelerator opening angle.)
Fluid	Specified fluid: SUBARU CVT OIL FOR LINEARTRONIC **CAUTION:** **Always use specified CVTF. Using other fluid will cause malfunction.**
Fluid capacity L (US qt, Imp qt)	11.93 — 12.43 (12.6 — 13.1, 10.5 — 10.9)
Lubrication system	Forced feed lubrication with oil pump

8. COOLING AND HARNESS

Cooling system	CVTF cooler (with warmer feature)
Inhibitor switch harness	16 poles
Transmission harness	12 poles

9. TRANSFER

Transfer type	Multi-plate transfer (MP-T)
Number of transfer clutch drives & driven plates	4
Control method	Electronic hydraulic type
Reduction gear ratio	1.000 (43/43)

10.REDUCTION GEAR RATIO

Front final reduction gear ratio	3.700

11.RECOMMENDED GEAR OIL

Lubrication oil	GL-5 (75W-90)
Front differential oil capacity L (US qt, Imp qt)	1.3 — 1.4 (1.4 — 1.5, 1.1 — 1.2)

B: COMPONENT

1. TORQUE CONVERTER ASSEMBLY AND CONVERTER CASE

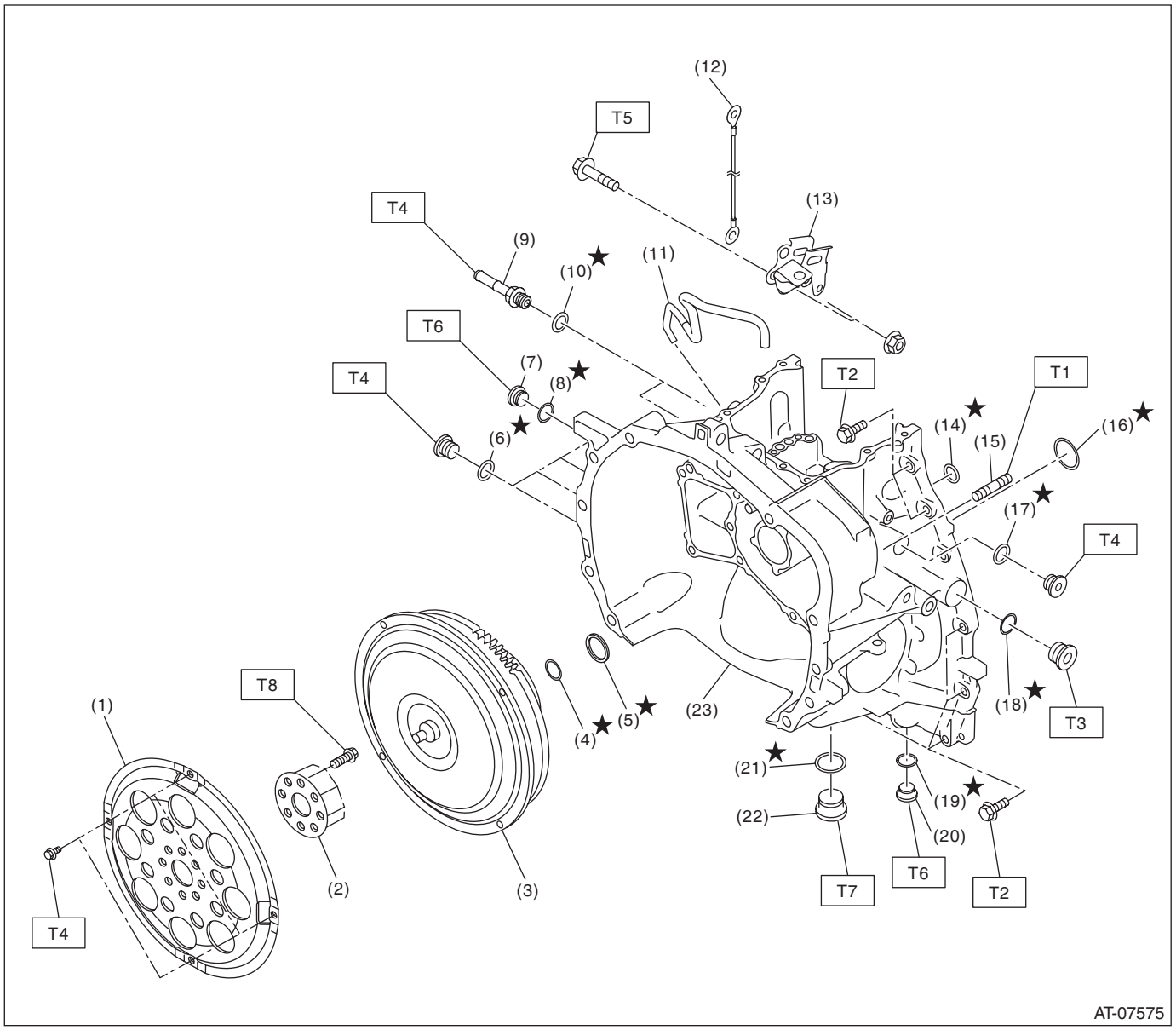

(1)	Drive plate	(13)	Pitching stopper bracket
(2)	Reinforcement drive plate	(14)	O-ring
(3)	Torque converter assembly	(15)	Stud bolt
(4)	O-ring	(16)	O-ring
(5)	Seal ring	(17)	O-ring
(6)	O-ring	(18)	O-ring
(7)	Front differential gear oil filler plug	(19)	Gasket
(8)	O-ring	(20)	Overflow drain plug
(9)	Oil cooler pipe	(21)	Gasket
(10)	O-ring	(22)	Front differential gear oil drain plug
(11)	Air breather hose	(23)	Converter case
(12)	Transmission radio ground cord		

Tightening torque: N·m (kgf-m, ft-lb)

- ***T1: 18 (1.8, 13.3)***
- ***T2: 22 (2.2, 16.2)***
- ***T3: 22.5 (2.3, 16.6)***
- ***T4: 25 (2.5, 18.4)***
- ***T5: 41 (4.2, 30.2)***
- ***T6: 50 (5.1, 36.9)***
- ***T7: 70 (7.1, 51.6)***
- ***T8: <Ref. to CVT(TR580)-156, INSTALLATION, Drive Plate.>***

2. OIL PUMP ASSY

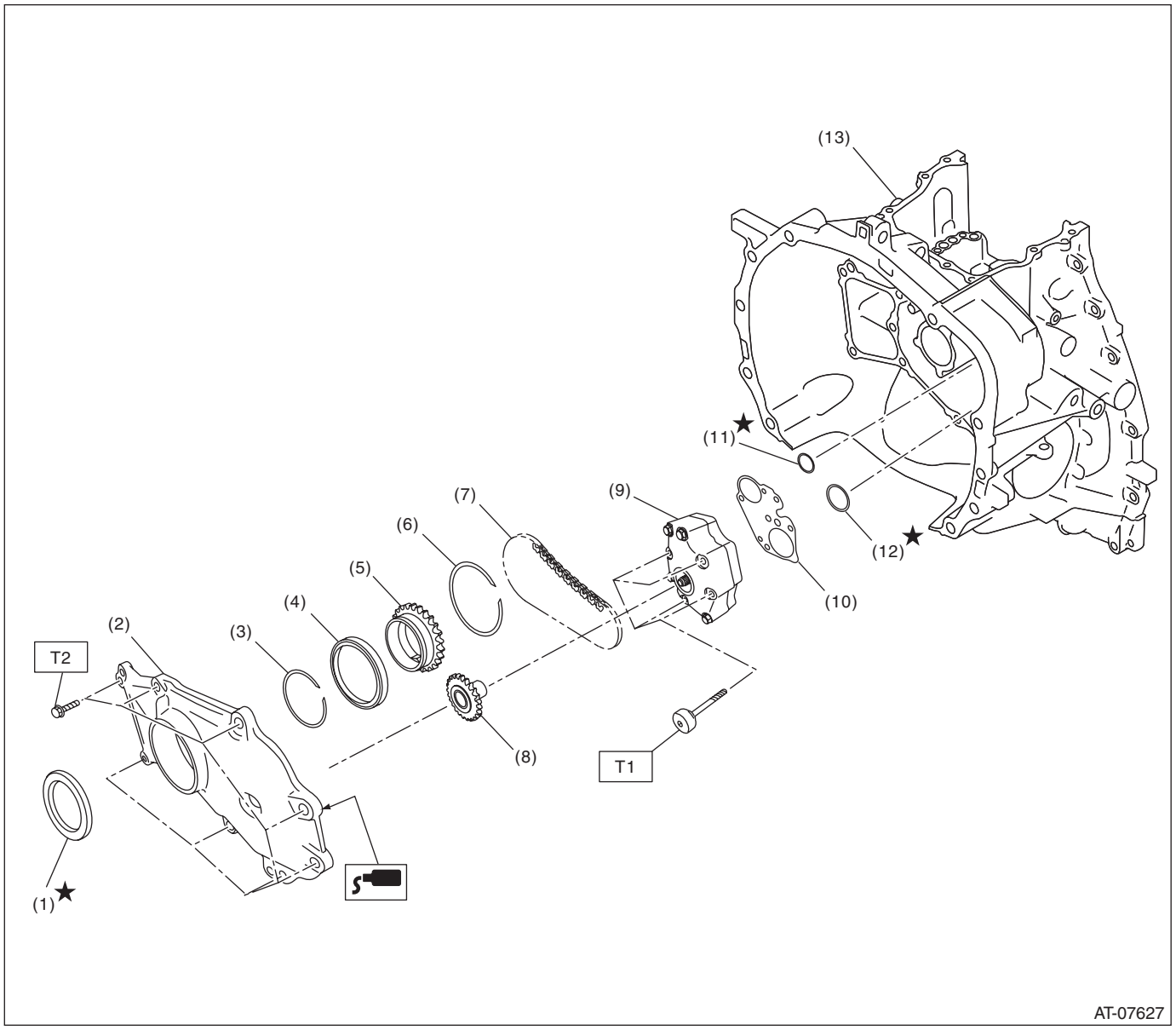

(1) Oil seal
(2) Oil pump chain cover
(3) Snap ring
(4) Ball bearing
(5) Drive sprocket
(6) Snap ring
(7) Oil pump chain
(8) Driven sprocket
(9) Oil pump ASSY
(10) Plate
(11) O-ring (small)
(12) O-ring (large)
(13) Converter case

Tightening torque: N·m (kgf-m, ft-lb)
T1: 8.5 (0.9, 6.3)
T2: 21 (2.1, 15.5)

3. TRANSMISSION CASE

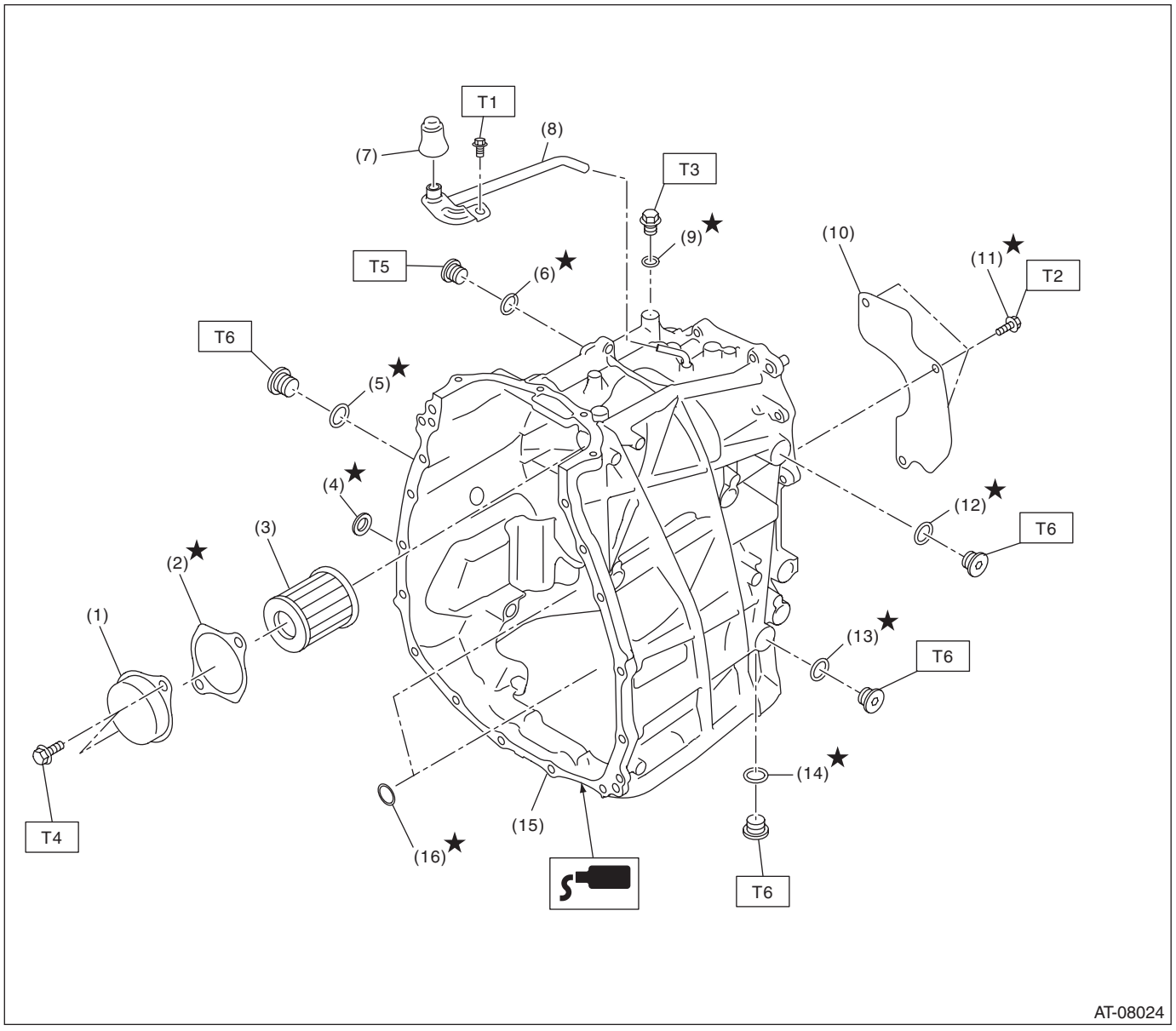

(1)	CVTF filter cover	(9)	O-ring
(2)	Gasket	(10)	Oil stopper plate
(3)	CVTF filter	(11)	Micro-encapsulated bolt
(4)	Oil seal	(12)	O-ring
(5)	Gasket	(13)	Gasket
(6)	O-ring	(14)	O-ring
(7)	Air breather cap	(15)	Transmission case
(8)	Air breather hose	(16)	Seal ring

Tightening torque: N·m (kgf-m, ft-lb)

T1: 5 (0.5, 3.7)
T2: 9 (0.9, 6.6)
T3: 13 (1.3, 9.6)
T4: 17 (1.7, 12.5)
T5: 25 (2.5, 18.4)
T6: 50 (5.1, 25.8)

4. CONTROL VALVE BODY

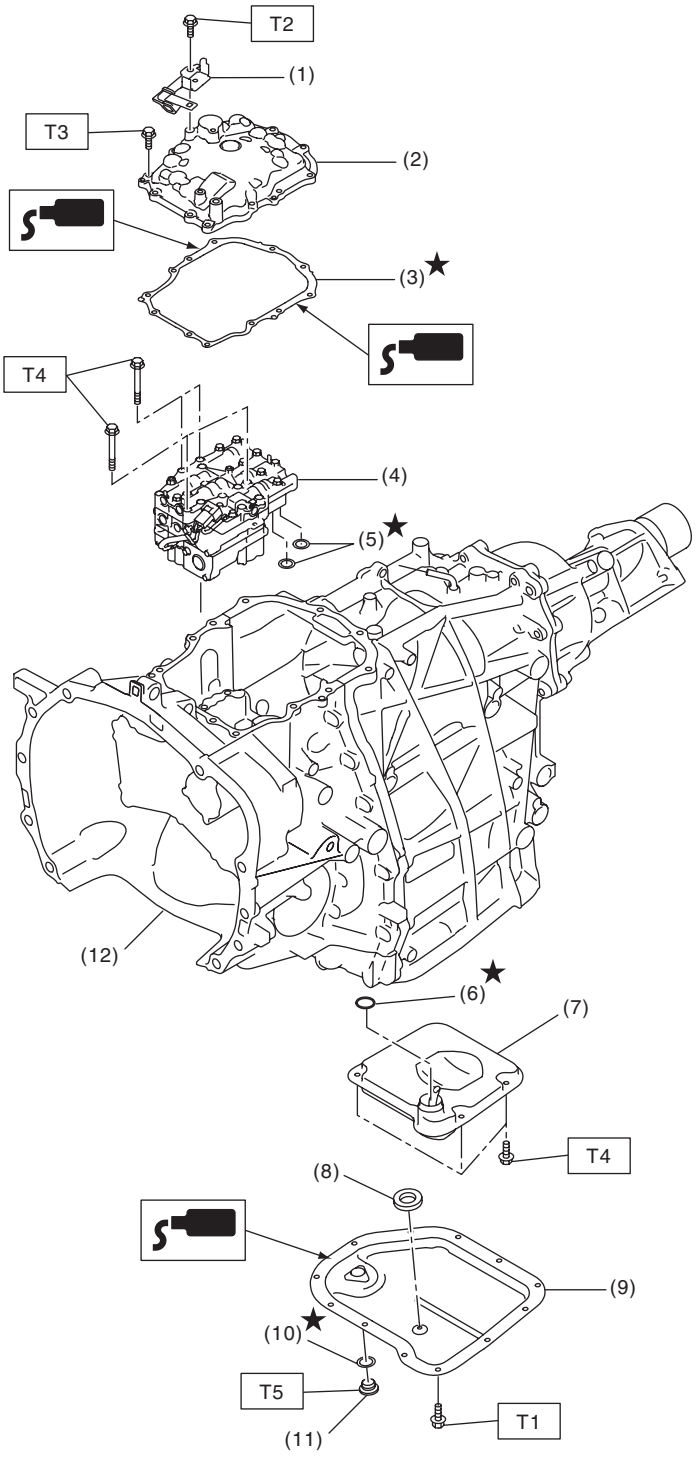

AT-06726

(1)	Transmission harness stay	(7)	Oil strainer	***Tightening torque: N·m (kgf-m, ft-lb)***
(2)	Valve cover	(8)	Magnet	***T1: 5 (0.5, 3.7)***
(3)	Gasket	(9)	Oil pan	***T2: 7 (0.7, 5.2)***
(4)	Control valve body	(10)	Gasket	***T3: 8 (0.8, 5.9)***
(5)	O-ring	(11)	CVTF drain plug	***T4: 9 (0.9, 6.6)***
(6)	O-ring	(12)	Transmission ASSY	***T5: 31 (3.2, 22.9)***

5. REVERSE BRAKE ASSEMBLY

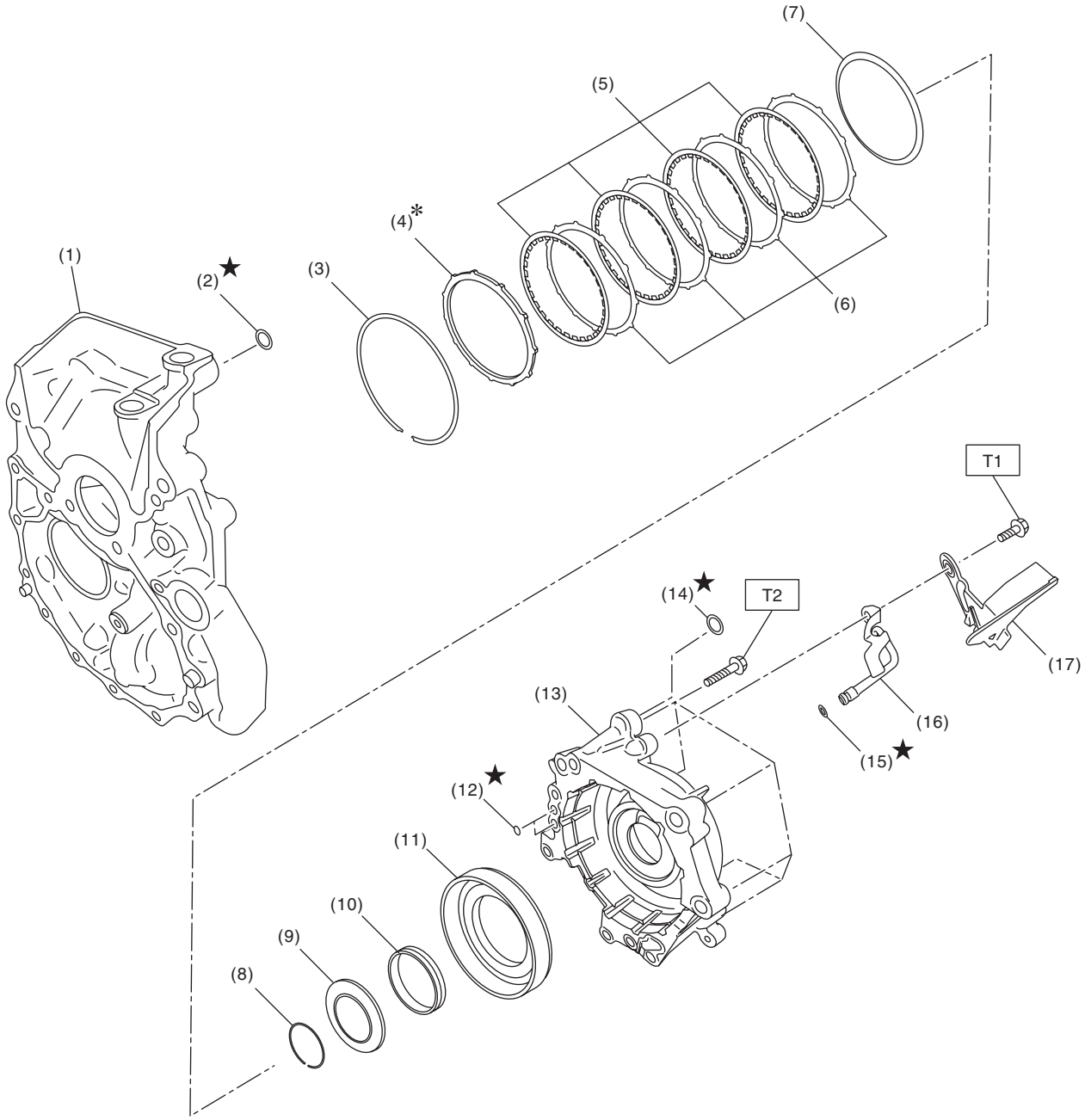

AT-07555

(1) Drive pinion retainer
(2) O-ring
(3) Snap ring
(4) Retaining plate
(5) Drive plate
(6) Driven plate
(7) Dish plate
(8) Snap ring
(9) Spring retainer
(10) Return spring
(11) Reverse brake piston
(12) O-ring
(13) Reverse brake housing
(14) O-ring
(15) O-ring
(16) Lubrication pipe
(17) Oil guide

Tightening torque: N·m (kgf-m, ft-lb)
T1: 16 (1.6, 11.8)
T2: 37 (3.8, 27.3)

6. FORWARD CLUTCH ASSEMBLY

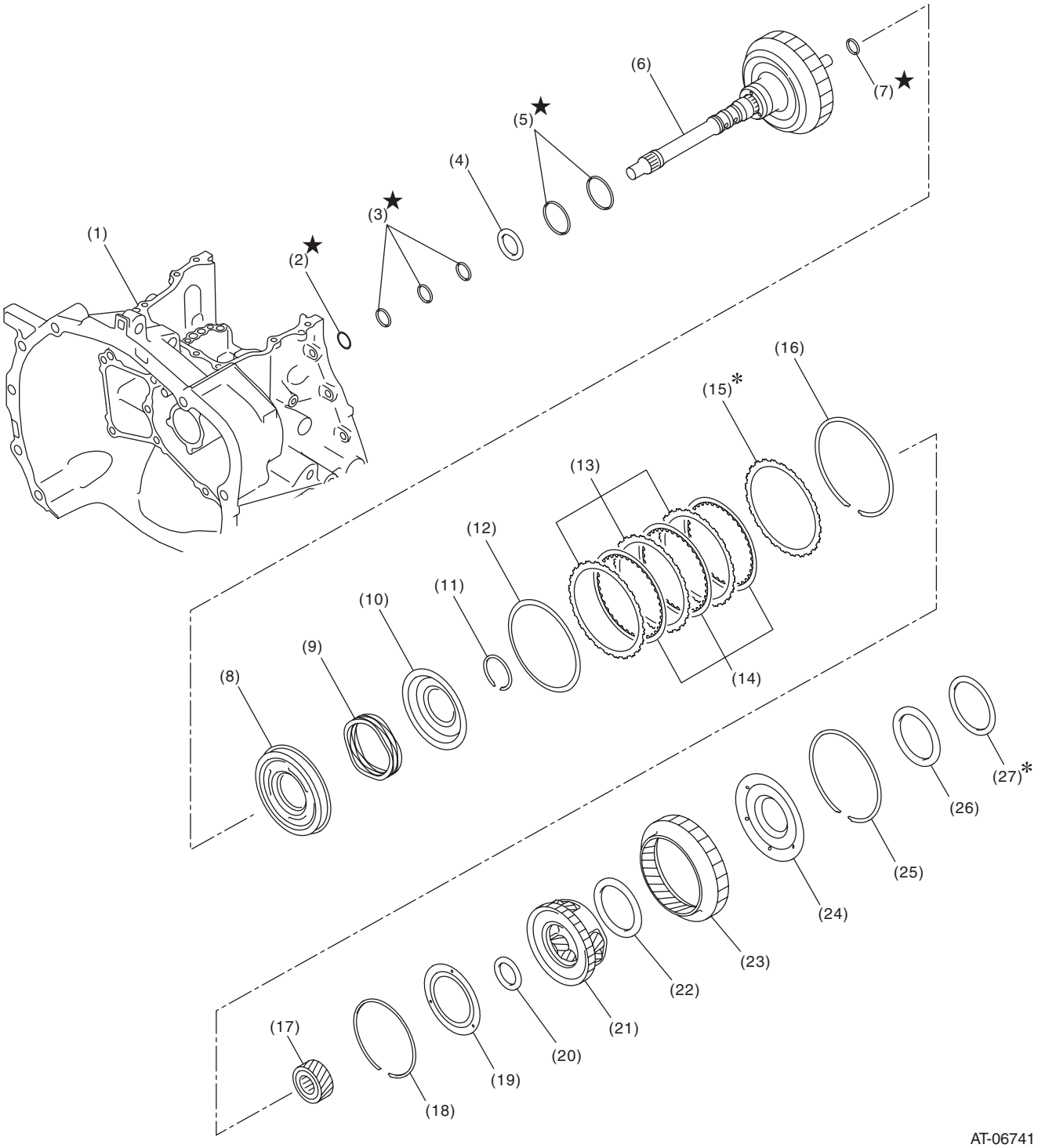

(1) Converter case
(2) O-ring
(3) Seal ring
(4) Thrust bearing
(5) Seal ring
(6) Forward clutch drum ASSY
(7) Seal ring
(8) Forward clutch piston
(9) Return spring
(10) Chamber COMPL
(11) Snap ring
(12) Dish plate
(13) Driven plate
(14) Drive plate
(15) Retaining plate
(16) Snap ring
(17) Sun gear
(18) Snap ring
(19) Balance oil guide
(20) Thrust bearing
(21) Planetary carrier ASSY
(22) Thrust bearing
(23) Internal gear
(24) Thrust gear plate
(25) Snap ring
(26) Thrust bearing
(27) Washer

7. TRANSMISSION CONTROL DEVICE

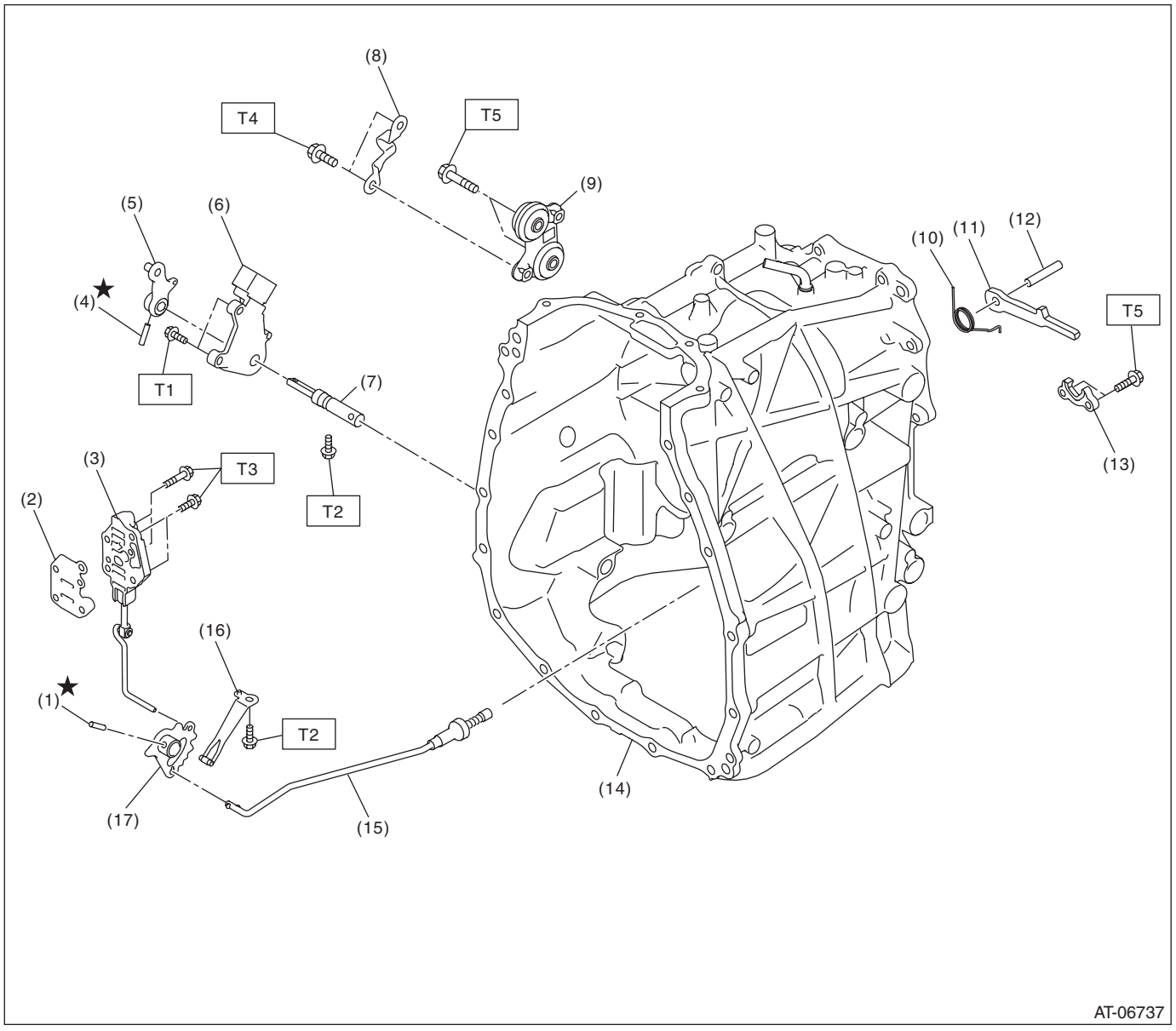

(1) Spring pin
(2) Separator plate
(3) Manual valve ASSY
(4) Spring pin
(5) Shifter arm
(6) Inhibitor switch
(7) Shifter arm shaft
(8) Cable bracket
(9) Plate ASSY
(10) Return spring
(11) Parking pawl
(12) Shaft
(13) Parking support
(14) Transmission case
(15) Parking rod
(16) Detent spring
(17) Manual plate

Tightening torque: N·m (kgf-m, ft-lb)
T1: 5 (0.5, 3.7)
T2: 7 (0.7, 5.2)
T3: 9 (0.9, 6.6)
T4: 18 (1.8, 13.3)
T5: 25 (2.5, 18.4)

8. PRIMARY PULLEY, SECONDARY PULLEY & VARIATOR CHAIN AND REDUCTION DRIVE GEAR

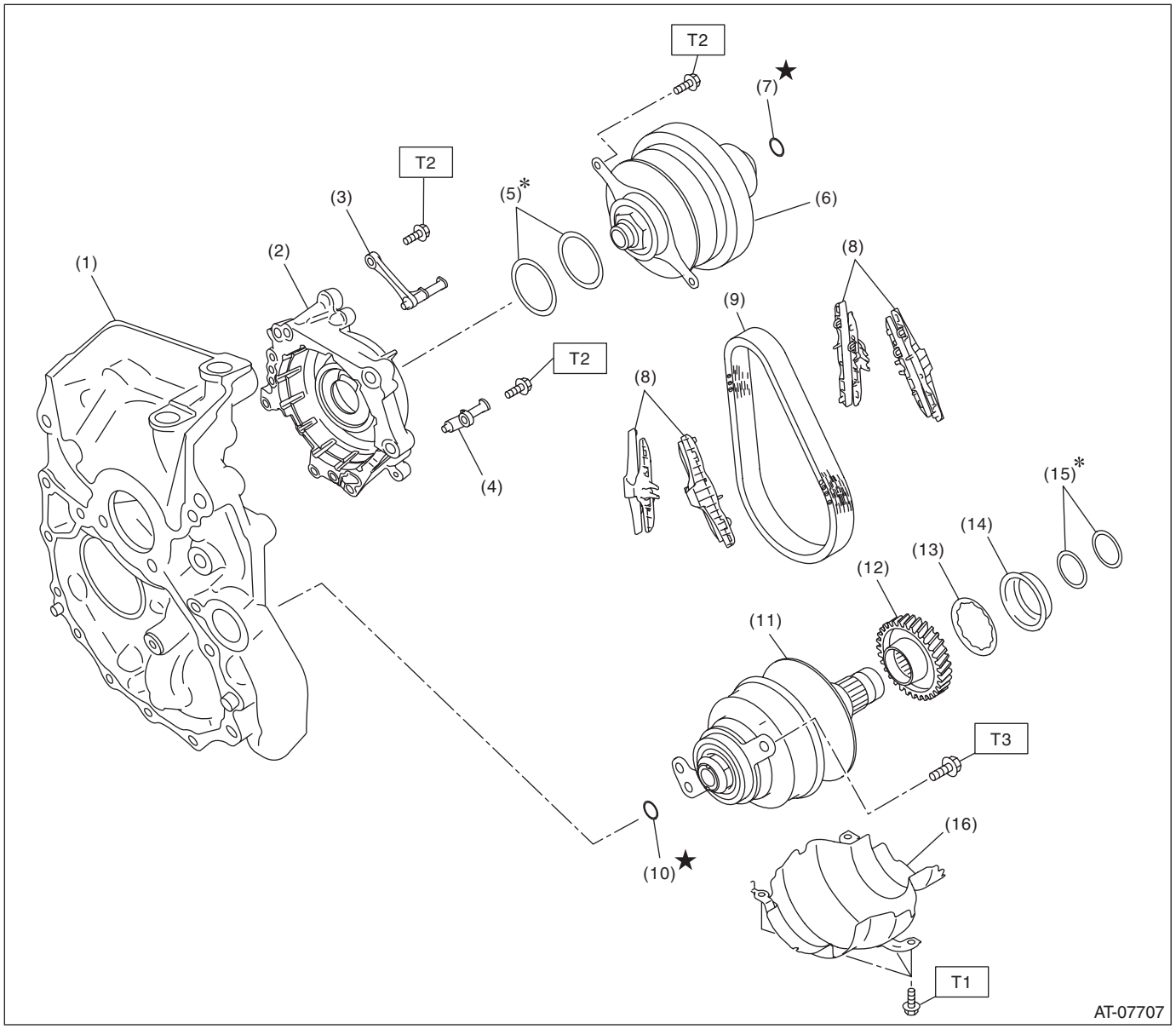

(1) Drive pinion retainer
(2) Reverse brake housing
(3) Support rod
(4) Lubrication pipe
(5) Primary pulley shim
(6) Primary pulley ASSY
(7) Seal ring
(8) Chain guide
(9) Variator chain
(10) Seal ring
(11) Secondary pulley ASSY
(12) Reduction drive gear
(13) Dish plate
(14) Spring retainer
(15) Reduction gear shim
(16) Oil baffle

Tightening torque: N·m (kgf-m, ft-lb)
T1: 16 (1.6, 11.8)
T2: 21 (2.1, 15.5)
T3: 67.5 (6.9, 49.8)

9. FRONT DIFFERENTIAL GEAR

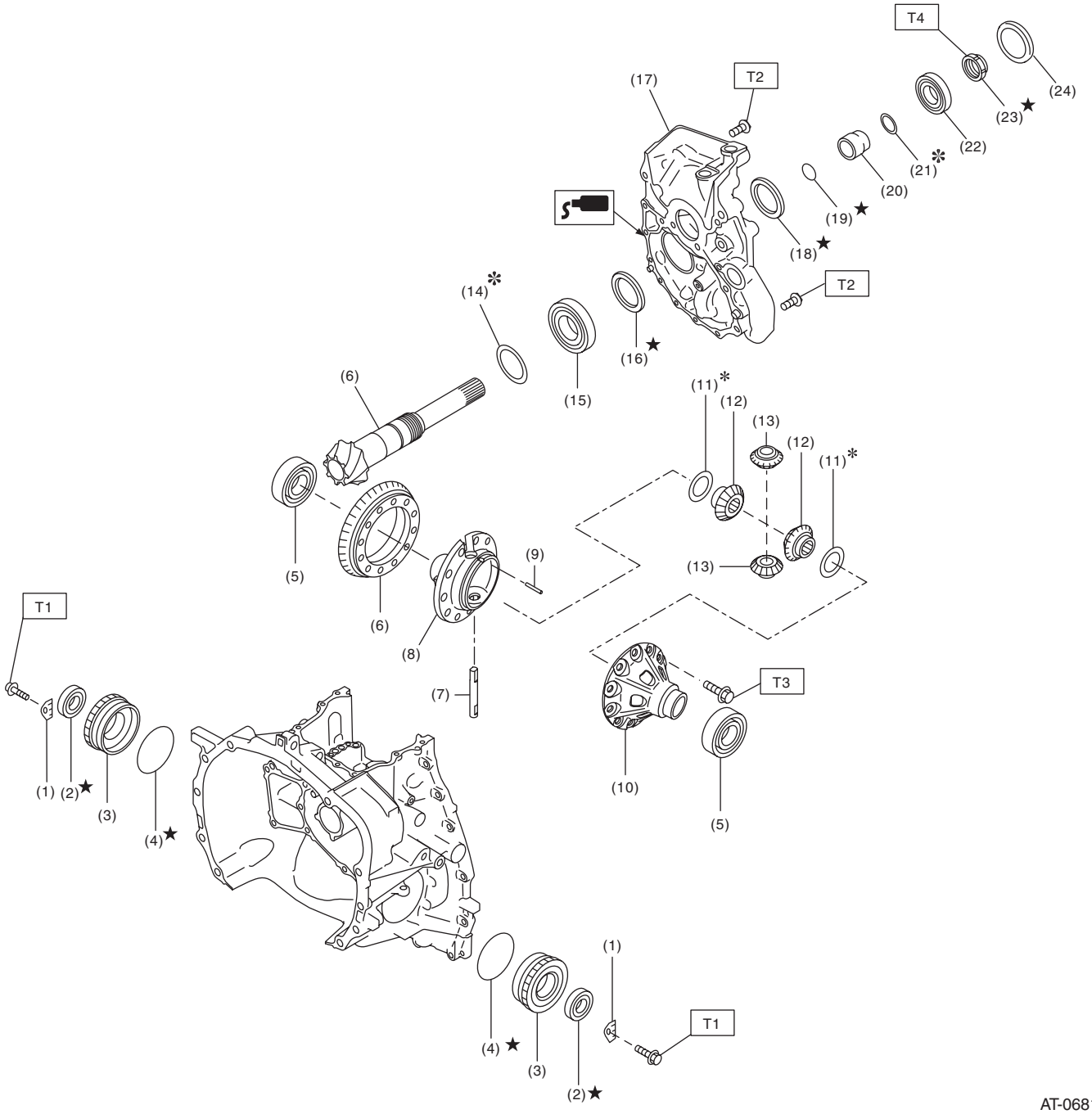

(1) Lock plate
(2) Oil seal
(3) Differential side retainer
(4) O-ring
(5) Taper roller bearing
(6) Drive pinion gear set
(7) Pinion shaft
(8) Differential case RH
(9) Straight pin
(10) Differential case LH
(11) Washer
(12) Differential bevel gear
(13) Differential bevel pinion
(14) Drive pinion shim
(15) Taper roller bearing
(16) Oil seal
(17) Drive pinion retainer
(18) Oil seal
(19) O-ring
(20) Drive pinion spacer
(21) Drive pinion washer
(22) Taper roller bearing
(23) Lock nut
(24) Plug

Tightening torque: N·m (kgf-m, ft-lb)
T1: 25 (2.5, 18.4)
T2: 43 (4.4, 31.7)
T3: 64 (6.5, 47.2)
T4: <Ref. to CVT(TR580)-281, ASSEMBLY, Drive Pinion Shaft Assembly.>

10.TRANSFER AND EXTENSION CASE

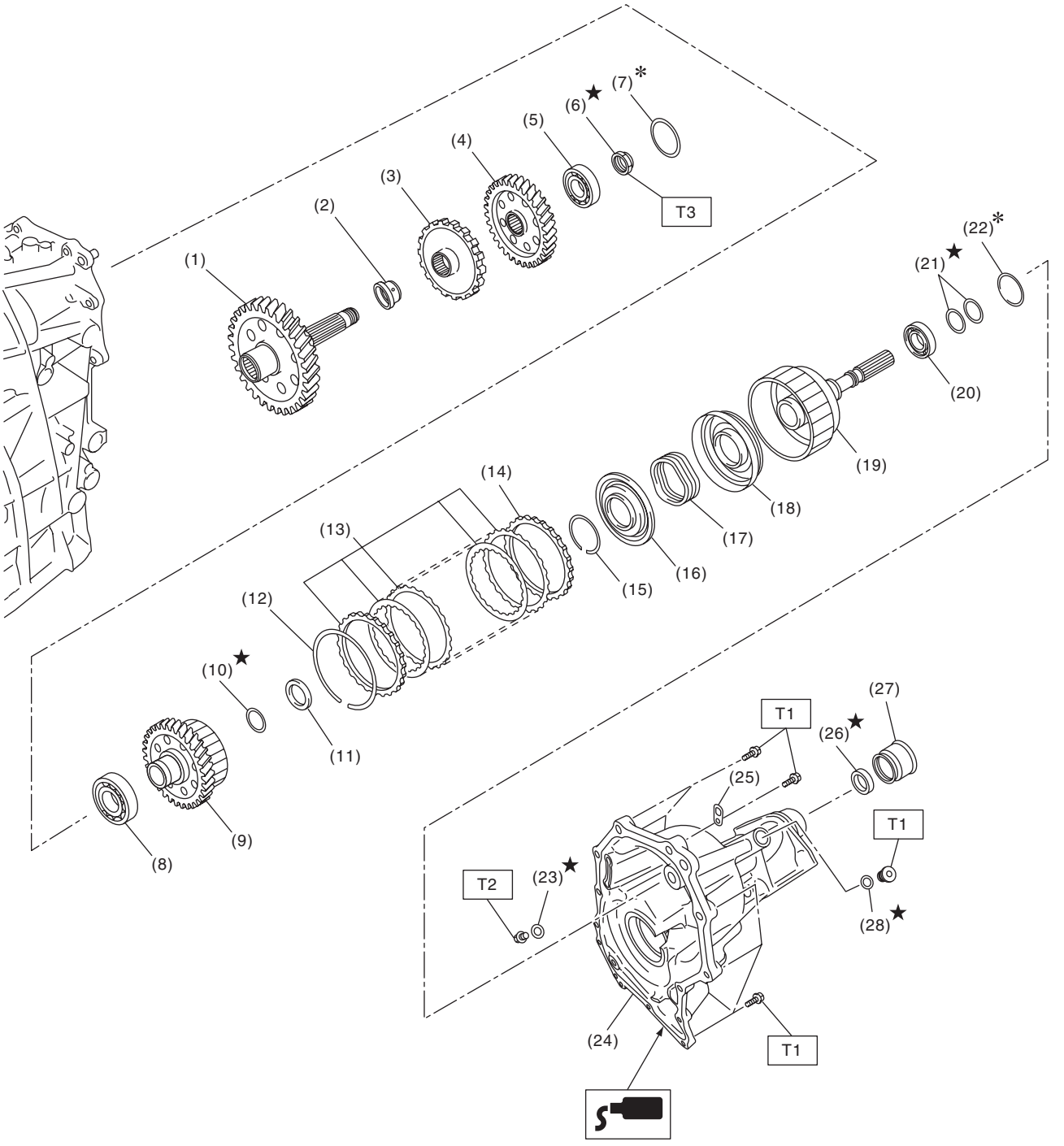

AT-06868

(1) Reduction driven gear COMPL
(2) Collar
(3) Parking gear
(4) Transfer drive gear
(5) Ball bearing
(6) Lock nut
(7) Transfer drive gear shim
(8) Ball bearing
(9) Transfer driven gear
(10) Seal ring
(11) Thrust bearing
(12) Snap ring
(13) Transfer clutch plate set
(14) Pressure plate
(15) Snap ring
(16) Transfer clutch piston seal
(17) Transfer clutch piston return spring
(18) Transfer clutch piston
(19) Rear drive shaft
(20) Ball bearing
(21) Seal ring
(22) Transfer driven gear shim
(23) Gasket
(24) Extension case
(25) Transmission hanger
(26) Oil seal
(27) Dust cover
(28) O-ring

Tightening torque: N·m (kgf-m, ft-lb)
T1: 25 (2.5, 18.4)
T2: 35 (3.6, 25.8)
T3: 95 (9.7, 70.1)

11.TRANSMISSION HARNESS AND SENSOR

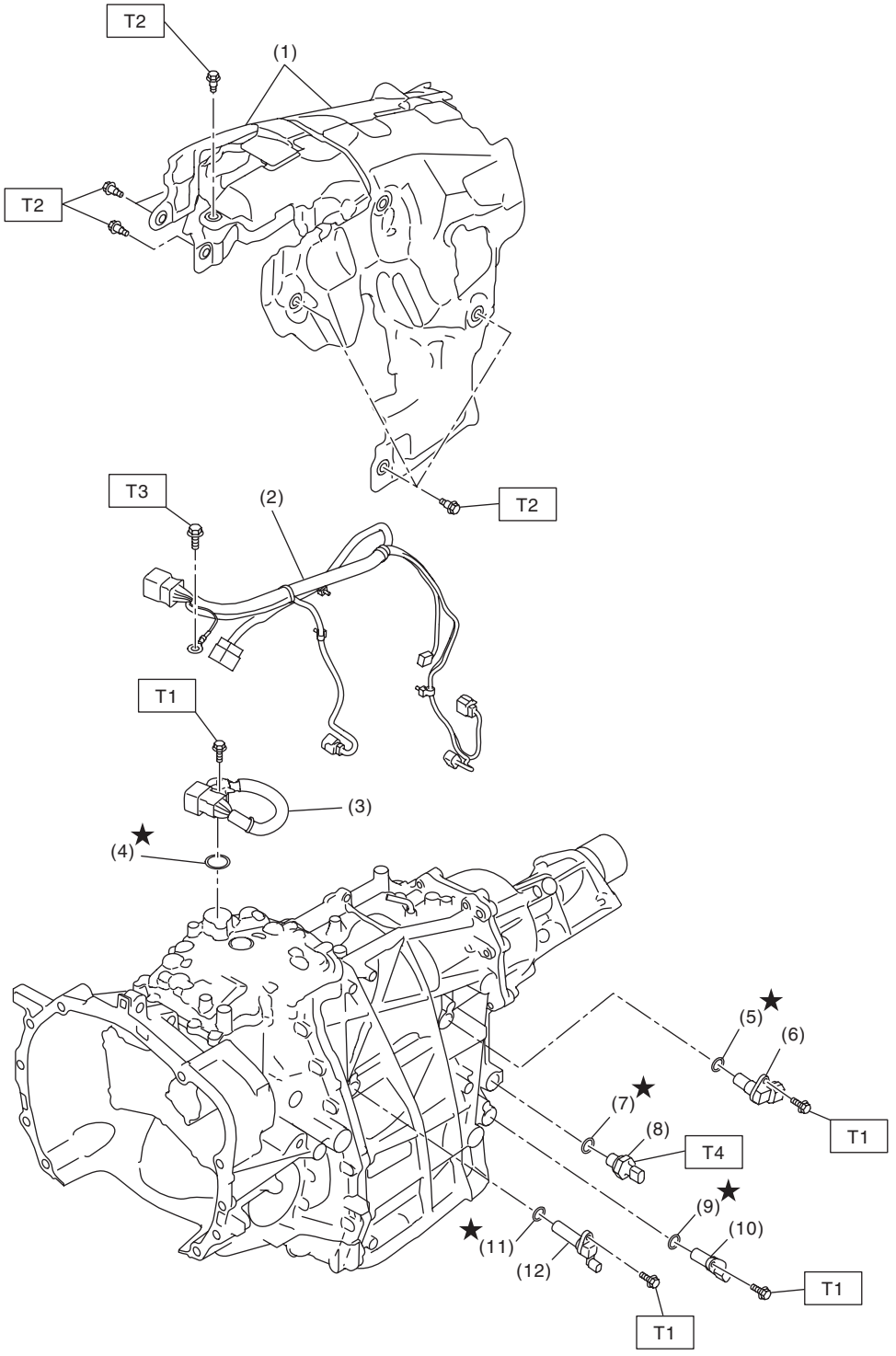

(1)	Transmission case cover	(7)	O-ring	***Tightening torque: N·m (kgf-m, ft-lb)***
(2)	Inhibitor harness	(8)	Secondary pressure sensor	***T1: 7 (0.7, 3.7)***
(3)	Transmission harness	(9)	O-ring	***T2: 8 (0.8, 5.9)***
(4)	O-ring	(10)	Secondary speed sensor	***T3: 14 (1.4, 10.3)***
(5)	O-ring	(11)	O-ring	***T4: 39 (4.0, 28.8)***
(6)	Primary speed sensor	(12)	Turbine speed sensor	

12.CVTF COOLER (WITH WARMER FEATURE)

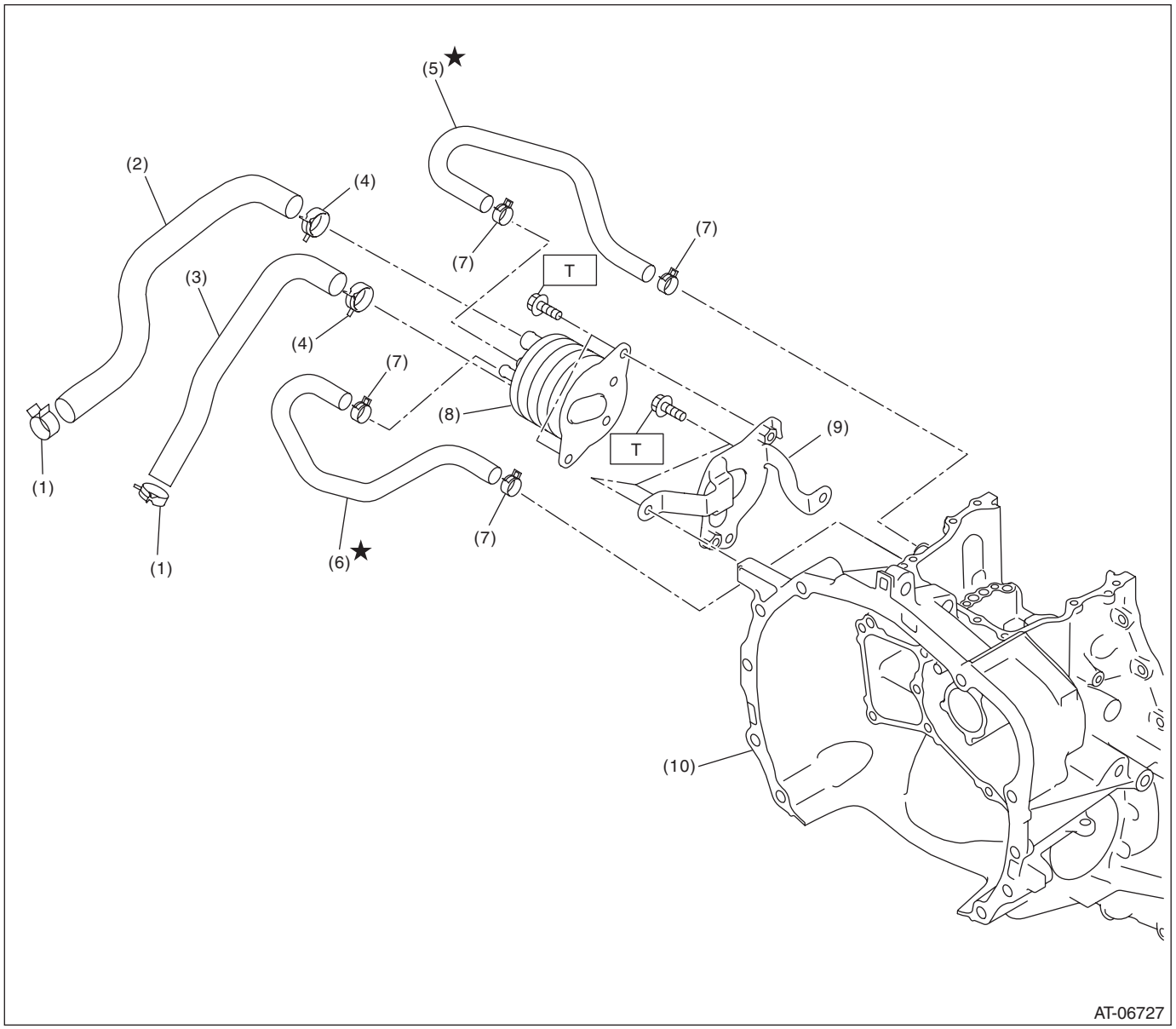

(1)	Hose clamp	(6)	CVTF cooler outlet hose
(2)	Engine coolant outlet hose	(7)	Hose clamp
(3)	Engine coolant inlet hose	(8)	CVTF cooler (with warmer feature)
(4)	Hose clamp	(9)	CVTF cooler bracket
(5)	CVTF cooler inlet hose	(10)	Converter case

Tightening torque: N·m (kgf-m, ft-lb)
T: 23 (2.3, 17.0)

13.TRANSMISSION CONTROL MODULE

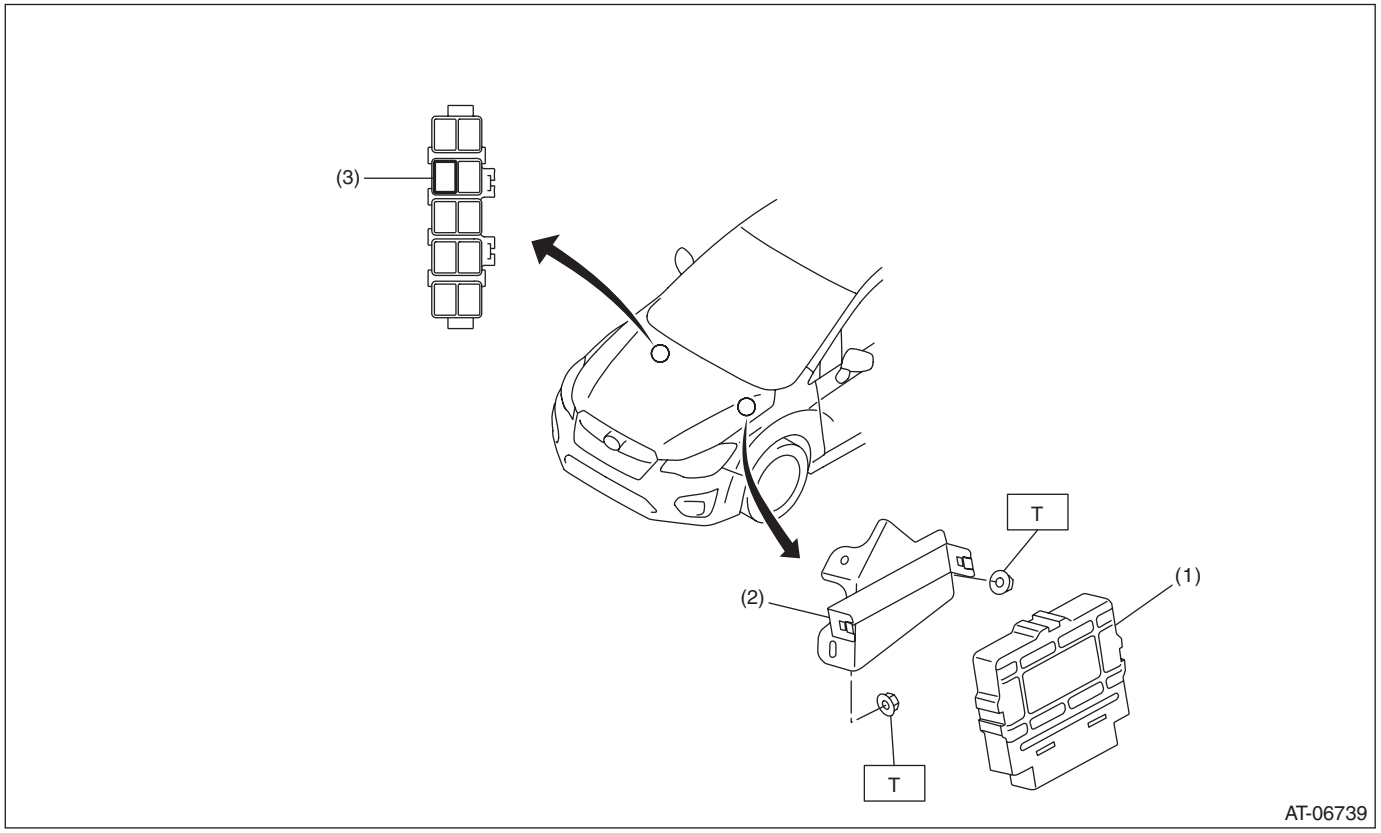

(1)	Transmission control module (TCM)	(3)	Relay	***Tightening torque: N·m (kgf-m, ft-lb)***
(2)	TCM bracket			***T: 7.5 (0.8, 5.5)***

14.TRANSMISSION MOUNTING

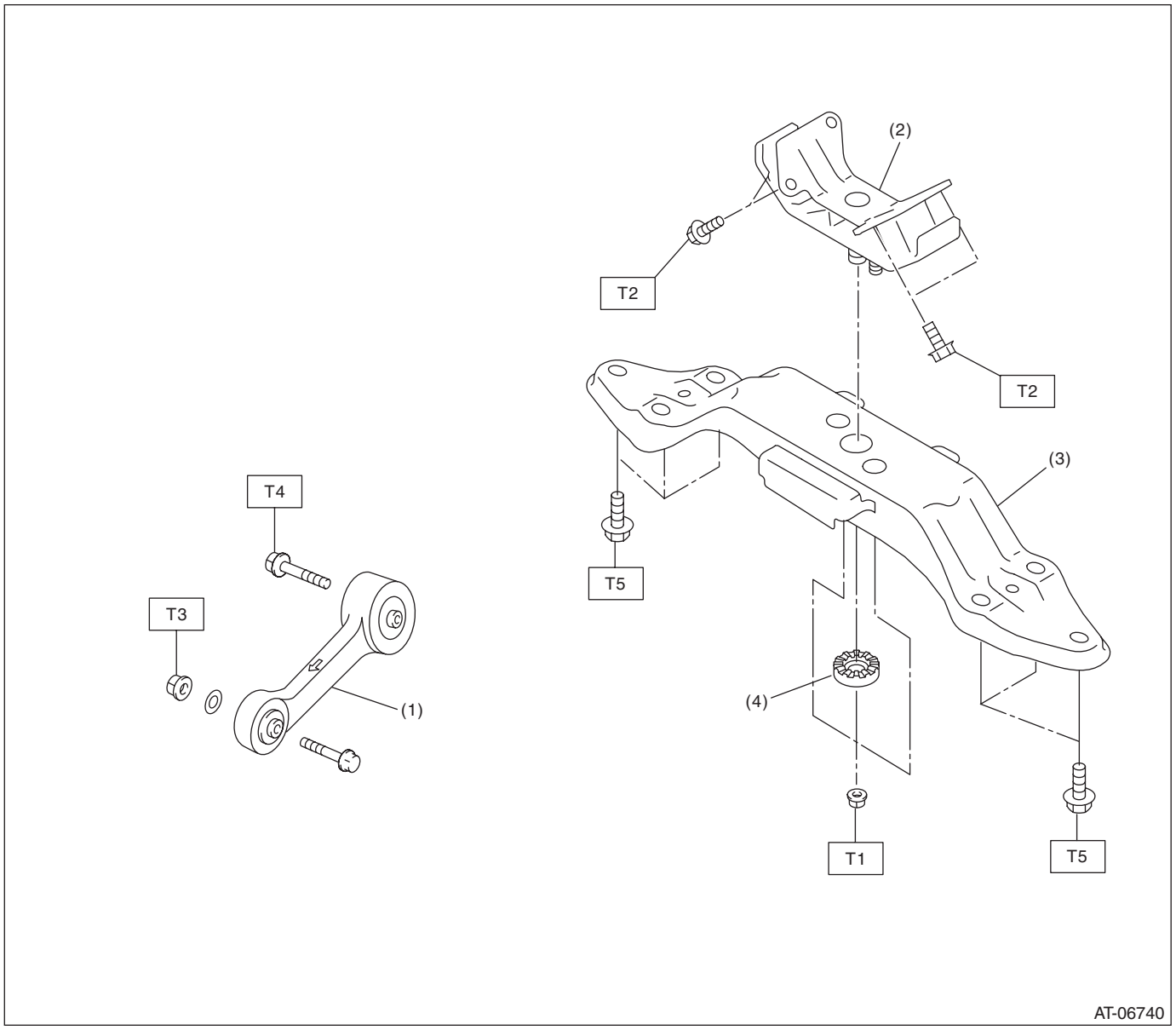

(1)	Pitching stopper	(3)	Transmission rear crossmember
(2)	Rear cushion rubber	(4)	Stopper

Tightening torque: N·m (kgf-m, ft-lb)

T1: 35 (3.6, 25.8)
T2: 40 (4.1, 29.5)
T3: 50 (5.1, 36.9)
T4: 58 (5.9, 42.8)
T5: 70 (7.1, 51.6)

C: CAUTION

- Wear appropriate work clothing, including a cap, protective goggles and protective shoes when performing any work.
- Remove contamination including dirt and corrosion before removal, installation or disassembly.
- Keep the disassembled parts in order and protect them from dust and dirt.
- Do not place the valve cover with its inner side facing up until it is installed, to prevent intrusion of foreign matter into the control valve body.
- Before removal, installation or disassembly, be sure to clarify the failure. Avoid unnecessary removal, installation, disassembly and replacement.
- When disassembling the case and other light alloy parts, use a plastic hammer to force it apart. Do not pry apart with screwdrivers or other tools.
- Vehicle components are extremely hot after driving. Be wary of receiving burns from heated parts.
- Use SUBARU genuine CVTF and recommended grease. Do not mix CVTF, grease etc. of different grades or manufacturers.
- Be sure to tighten bolts and nuts to the specified torque.
- Place lifts, shop jacks or rigid racks at specified locations.
- Apply CVTF onto sliding or revolving surfaces before installation.
- Replace deformed or damaged snap rings with new parts.
- Before installing O-rings or oil seals, apply sufficient amount of CVTF or gear oil to appropriate locations in order to avoid damage and deformation.
- Be careful not to incorrectly install or fail to install O-rings, snap rings and other such parts.
- Before securing a part on a vise, place cushioning material such as wood blocks, aluminum plate, or cloth between the part and the vise.
- Avoid damaging the mating surface of the case.
- Before applying liquid gasket, completely remove the old liquid gasket.
- After removing the sensors, breather hose and plugs, plug the holes to avoid foreign materials intruding as necessary.
- During disassembly or assembly, be sure to use nylon gloves or paper towels. Do not use cloth gloves or waste cloth.

D: PREPARATION TOOL

1. SPECIAL TOOL

ILLUSTRATION	TOOL NUMBER	DESCRIPTION	REMARKS
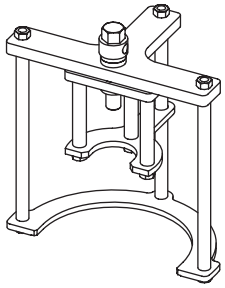 ST18769AA010	18769AA010	EXPANDER PULLEY	Used for removing and installing the secondary pulley assembly.
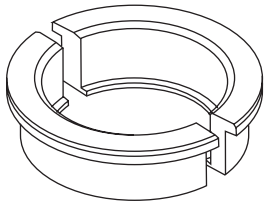 ST18767AA010	18767AA010	BEARING REMOVER	Used for removing the ball bearing of transfer clutch assembly.

ILLUSTRATION	TOOL NUMBER	DESCRIPTION	REMARKS
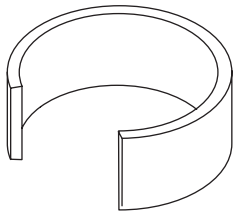 ST18762AA010	18762AA010	COMPRESSOR SPECIAL TOOL	Used for removing and installing snap ring of forward clutch assembly.
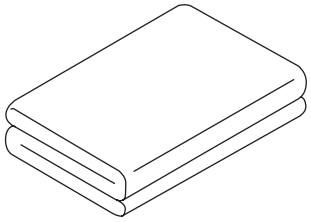 ST18761AA010	18761AA010	SHEET SPECIAL TOOL	• Used for removing and installing control valve body. • Used for removing and installing valve cover. • Used for removing and installing transmission harness.
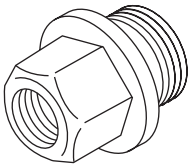 ST18681AA010	18681AA010	PRESSURE GAUGE ADAPTER	Used for measuring the secondary pressure (line pressure). NOTE: Used together with the genuine O-ring (part No. 806916050).
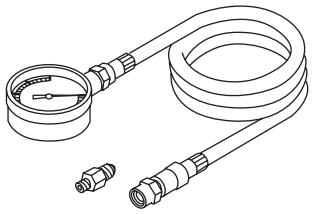 ST18801AA000	18801AA000	OIL PRESSURE GAUGE ASSY	Used for measuring the secondary pressure (line pressure).
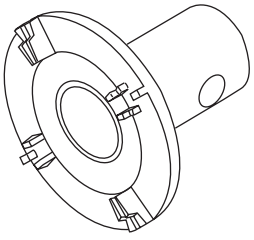 ST18658AA020	18658AA020	WRENCH COMPL RETAINER	Used for removing and installing the differential side retainer.

ILLUSTRATION	TOOL NUMBER	DESCRIPTION	REMARKS
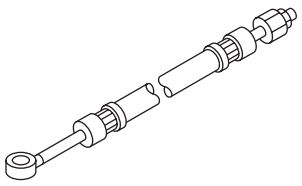 ST34099AC020	34099AC020	ADAPTER HOSE B	Used for measuring the transfer clutch hydraulic pressure. NOTE: Used with genuine union screw (Part No. 801914010) and gasket (Part No. 803914060).
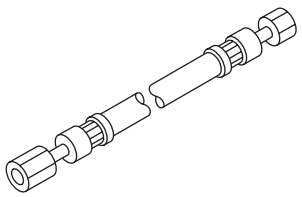 ST34099AC010	34099AC010	ADAPTER HOSE A	Used for measuring the transfer clutch hydraulic pressure.
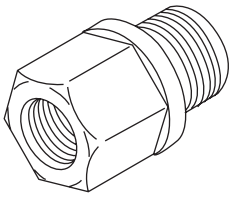 ST18681AA000	18681AA000	PRESSURE GAUGE ADAPTER	Used for measuring the transfer clutch hydraulic pressure. NOTE: Used together with the genuine O-ring (part No. 806911080).
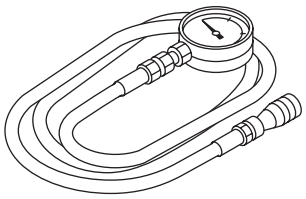 ST-498575400	498575400	OIL PRESSURE GAUGE ASSY	Used for measuring the transfer clutch hydraulic pressure.
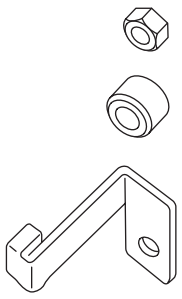 ST-498277200	498277200	STOPPER SET	• Used for removing and installing transmission assembly to engine. • Used for preventing the torque converter from dropping off.

ILLUSTRATION	TOOL NUMBER	DESCRIPTION	REMARKS
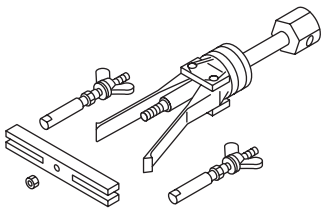 ST-398527700	398527700	PULLER ASSY	• Used for removing the extension case oil seal. • Used for removing the bearing outer race of the drive pinion shaft.
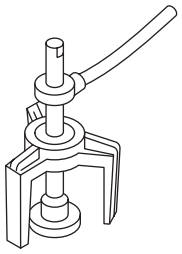 ST-398673600	398673600	COMPRESSOR	Used for removing and installing snap ring of forward clutch assembly.
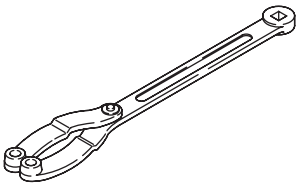 ST18355AA000	18355AA000	PULLEY WRENCH	• Used for removing and installing the lock nut of reduction driven gear. • Used together with PIN SET (18334AA000).
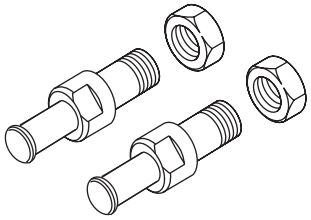 ST18334AA000	18334AA000	PIN SET	• Used for removing and installing the lock nut of reduction driven gear. • Used together with PULLEY WRENCH (18355AA000).
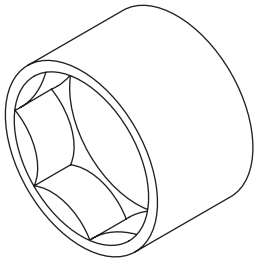 ST-499987003	499987003	SOCKET WRENCH (35)	Used for removing and installing the lock nut of reduction driven gear.

ILLUSTRATION	TOOL NUMBER	DESCRIPTION	REMARKS
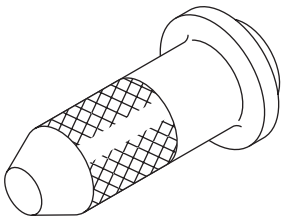 ST-498057300	498057300	OIL SEAL INSTALLER	Used for installing the extension case oil seal.
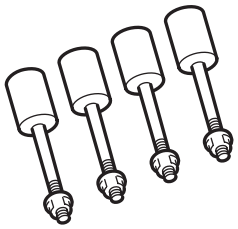 ST18632AA000	18632AA000	STAND ASSY	Used for disassembling and assembling the transmission.
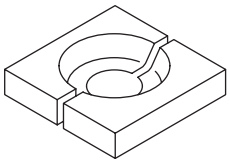 ST-498515500	498515500	REMOVER	Used for removing the bearing inner race of the drive pinion shaft.
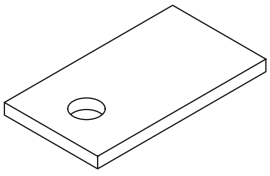 ST-498255400	498255400	PLATE	Used for measuring the backlash of hypoid gear.
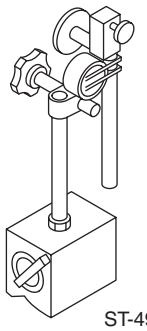 ST-498247001	498247001	MAGNET BASE	• Used for measuring the backlash of differential bevel pinion gear. • Used for measuring the backlash of hypoid gear. • Used together with DIAL GAUGE (498247100).

ILLUSTRATION	TOOL NUMBER	DESCRIPTION	REMARKS
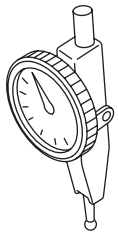 ST-498247100	498247100	DIAL GAUGE	• Used for measuring the backlash of differential bevel pinion gear. • Used for measuring the backlash of hypoid gear. • Used together with DIAL GAUGE (498247101).
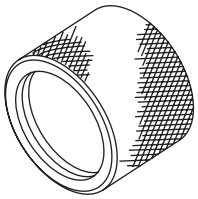 ST18675AA000	18675AA000	DIFFERENTIAL SIDE OIL SEAL INSTALLER	Used for installing the differential side retainer oil seal.
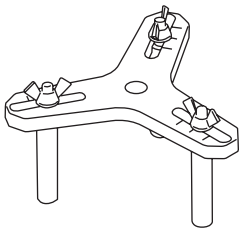 ST18762AA001	18762AA001	COMPRESSOR SPECIAL TOOL	• Used for disassembling and installing the multi-plate clutch piston. • COMPRESSOR SPECIAL TOOL (18762AA000) can also be used.
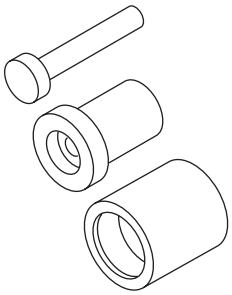 ST-927720000	927720000	HOUSING BUSHING INSTALLER AND REMOVER	• Used for installing the oil seal. • Use BUSHING SHAFT (927880000).
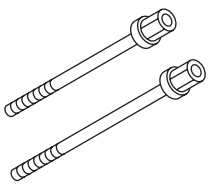 ST18763AA000	18763AA000	COMPRESSOR SHAFT	Used for measuring the backlash of hypoid gear.

ILLUSTRATION	TOOL NUMBER	DESCRIPTION	REMARKS
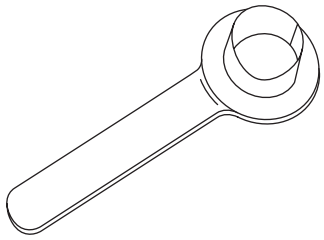 ST28399SA010	28399SA010	OIL SEAL PROTECTOR	Used for protecting oil seal when installing front drive shaft.
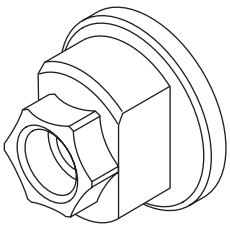 ST-498937110	498937110	HOLDER	• Used for removing and installing the drive pinion lock nut. • Used as a holder to rotate gear when checking tooth contact.
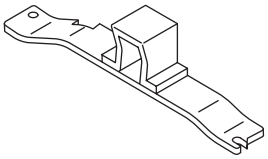 ST41099AA011	41099AA011	ENGINE SUPPORT BRACKET	• Used for supporting the engine. • ENGINE SUPPORT BRACKET (41099AA010) can also be used.
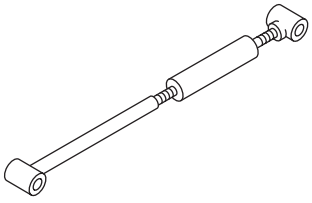 ST41099AA020	41099AA020	ENGINE SUPPORT	Used for supporting the engine.
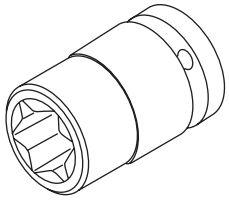 ST18270KA020	18270KA020	SOCKET (E20)	• Used for removing and installing the hypoid driven gear. • Used for removing and installing the drive pinion shaft retainer.

ILLUSTRATION	TOOL NUMBER	DESCRIPTION	REMARKS
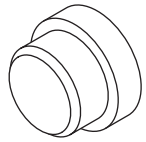 ST-398497701	398497701	SEAT	Used for removing and installing the bearing.
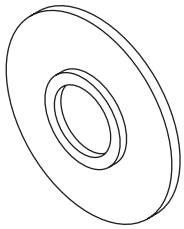 ST-398177700	398177700	INSTALLER	• Used for installing the ball bearing. • Used for installing the parking gear. • Used for installing the bearing outer race. • Used for installing the plug.
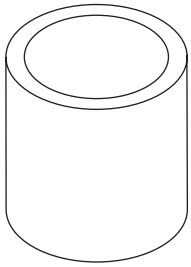 ST28499TC010	28499TC010	PRESS SNAP RING	• Used for installing the ball bearing of the transmission case. • Used for installing the bearing outer race of drive pinion shaft.
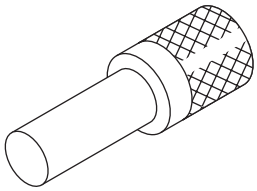 ST-899864100	899864100	REMOVER	• Used for removing and installing the ball bearing. • Used for removing the parking gear and transfer drive gear. • Used for removing the bearing inner race of the front differential.
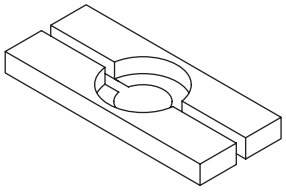 ST-498077000	498077000	REMOVER	Used for removing the bearing inner race of the front differential.

ILLUSTRATION	TOOL NUMBER	DESCRIPTION	REMARKS
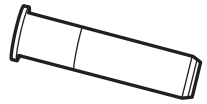 ST18657AA010	18657AA010	INSTALLER	Used for installing the oil seal at shifter arm shaft portion.
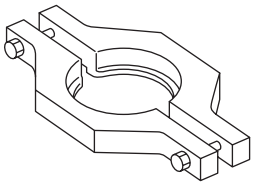 ST-498077600	498077600	REMOVER	Used for removing the ball bearing of drive sprocket.
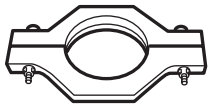 ST18720AA000	18723AA000	REMOVER	Used for removing the ball bearing of transfer clutch assembly.
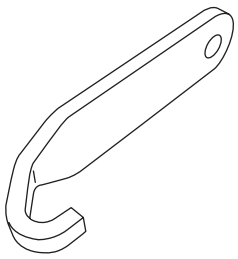 ST-498497300	498497300	CRANKSHAFT STOPPER	Used for stopping the drive plate rotation when removing and installing the drive plate.
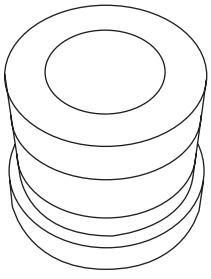 ST-399513600	399513600	INSTALLER	Used for removing the ball bearing of drive sprocket.

ILLUSTRATION	TOOL NUMBER	DESCRIPTION	REMARKS
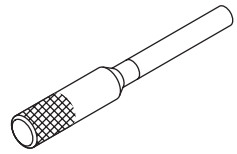 ST-499267300	499267300	STOPPER PIN	Used for adjusting the inhibitor switch.
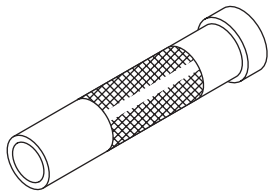 ST-499277100	499277100	BUSHING 1-2 INSTALLER	• Used for installing the bearing of the transmission case. • Used for installing the ball bearing. • Used for installing the bearing inner race.
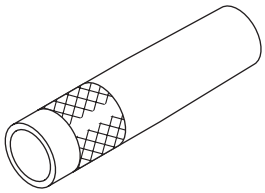 ST-499277200	499277200	INSTALLER	Used for installing the ball bearing of the transfer clutch assembly.
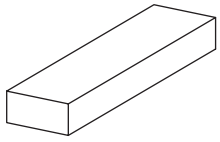 ST-499575400	499575400	GAUGE	Used for measuring height of end play.
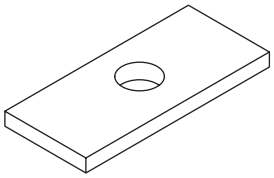 ST-499575500	499575500	GAUGE	Used for measuring height of end play.

ILLUSTRATION	TOOL NUMBER	DESCRIPTION	REMARKS
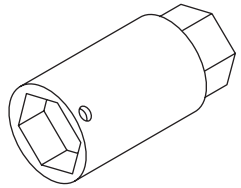 ST-499787500	499787500	ADAPTER	• Used for removing and installing the drive pinion shaft lock nut. • Used for measuring the preload of the drive pinion shaft. • Used for measuring the backlash of hypoid gear.
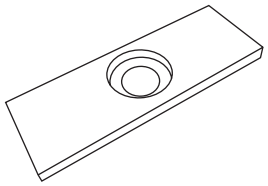 ST-499575600	499575600	GAUGE	Used for measuring height of end play.
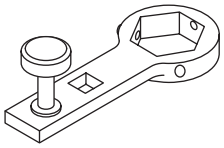 ST-499787700	499787700	WRENCH	• Used for removing and installing the drive pinion shaft lock nut. • Used for measuring the preload of the drive pinion shaft. • Used for measuring the backlash of hypoid gear.
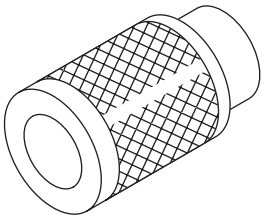 ST-499757002	499757002	INSTALLER	• Used for removing the bearing of reduction driven gear. • Used for installing the parking gear. • Used for installing the transfer drive gear.
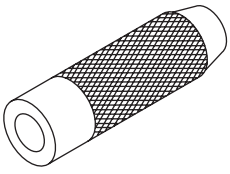 ST-899580100	899580100	INSTALLER	• Used for installing the collar of reduction driven gear. • Used for installing the ball bearing of the transfer driven gear. • Used for installing the bearing inner race of drive pinion shaft.

ILLUSTRATION	TOOL NUMBER	DESCRIPTION	REMARKS
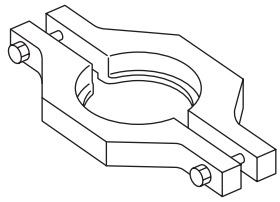 ST-498077300	498077300	REMOVER	Used for installing the ball bearing of reduction driven gear.
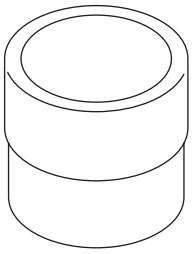 ST-499755602	499755602	PRESS SNAP RING	• Used for installing the oil seal. • Used for installing the ball bearing and roller bearing. • Used for installing the plug.
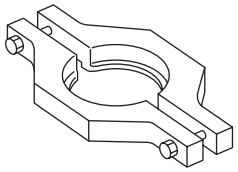 ST-498077400	498077400	REMOVER	Used for removing the ball bearing of transfer driven gear.
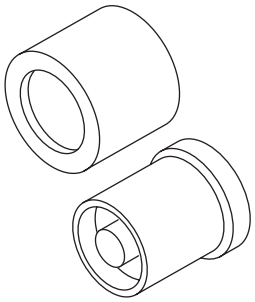 ST20099AE020	20099AE020	INSTALLER	Used for installing the bearing outer race of drive pinion shaft.
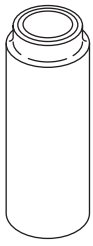 ST-927130000	927130000	EXTENSION DRIVE SHAFT	Used for installing the bearing inner race of drive pinion shaft.

ILLUSTRATION	TOOL NUMBER	DESCRIPTION	REMARKS
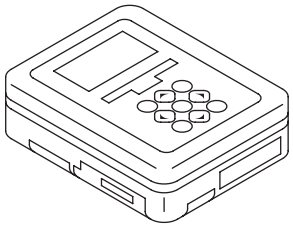 ST1B022XU0	1B022XU0	SUBARU SELECT MONITOR III KIT	Used for troubleshooting the electrical system.

2. GENERAL TOOL

TOOL NAME	REMARKS
Circuit tester	Used for measuring resistance and voltage.
Thickness gauge	Used for measuring the clearance in reverse brake, forward clutch and transfer clutch.
Caliper	Used for measuring the dimension.
Spring scale	Used for measuring the starting torque of the drive pinion.
TORX® bit T70	Used for removing and installing differential gear oil drain plug.
Straight pin remover	Used for removing and installing the straight pin.
Push/pull gauge	Used for measuring clutch clearance.
Angle gauge	Used for installing the drive plate.

2. CVTF

A: INSPECTION

Check for leakage of CVTF from transmission.

B: ADJUSTMENT

CAUTION:
• CVTF level changes along with CVTF temperature. When inspecting CVTF level, observe the specified CVTF temperature.
• Always use specified CVTF. Using other fluid will cause malfunction.

1) Idle the engine to raise CVTF temperature to 35 — 45°C (95 — 113°F) on Subaru Select Monitor.
2) Operate the select lever in P → R → N → D and D → N → R → P to circulate CVTF with the engine idling.
3) With the engine running, lift up the vehicle and remove the filler plug.

CAUTION:
Pay special attention to the following operations as the engine is at idle.

NOTE:
CVTF is at the specified level when it is up to the filler plug hole lower section.

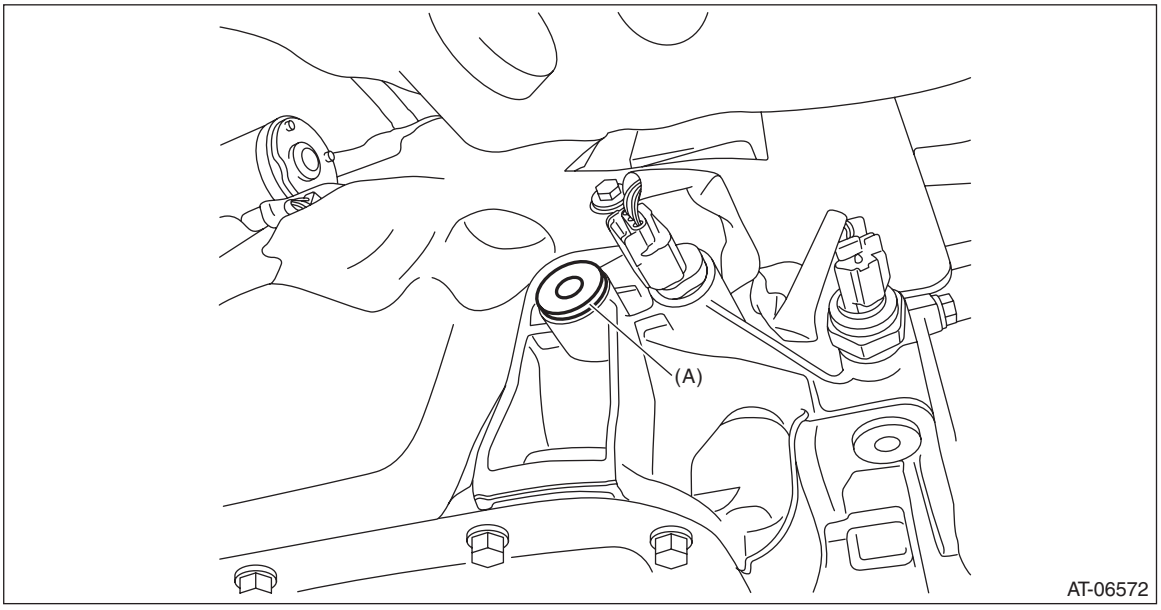

(A) Filler plug

4) When there is no CVTF leakage from the transmission, add the specified fluid up to the filler plug hole lower section.

Specified fluid:
<Ref. to CVT(TR580)-4, HYDRAULIC CONTROL AND LUBRICATION, SPECIFICATION, General Description.>

CAUTION:
Note that when CVTF is added up to the lower section of filler plug while the transmission is in cold condition, overfilling of CVTF occurs, causing the oil to spill out.

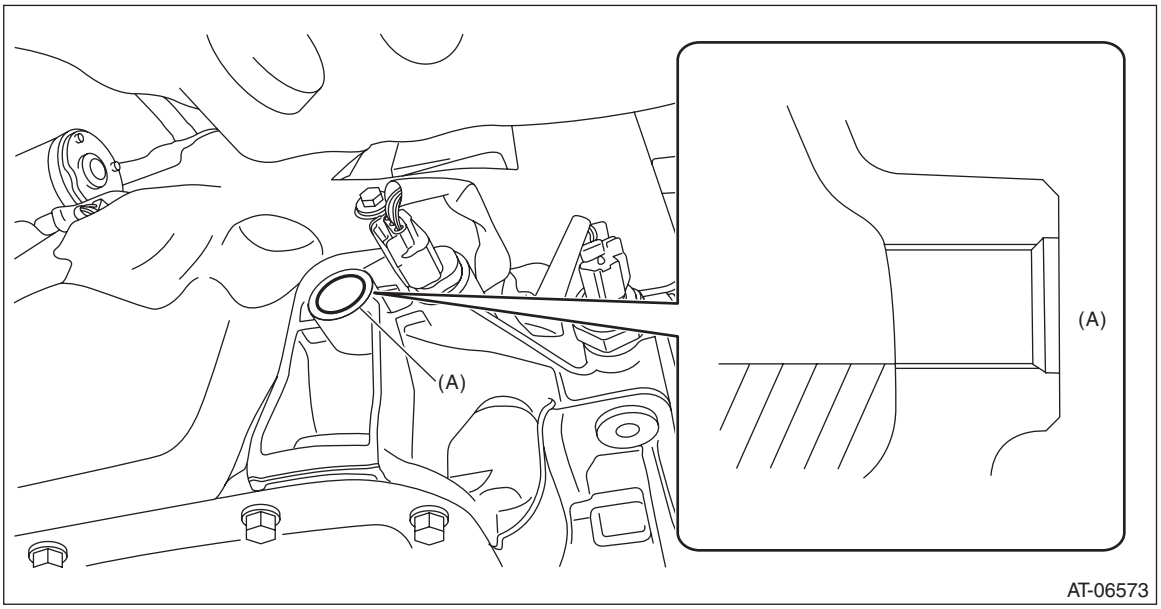

(A) Filler plug hole

5) Install the filler plug.

NOTE:
Use a new gasket.

Tightening torque:
50 N·m (5.1 kgf-m, 36.9 ft-lb)

C: REPLACEMENT

CAUTION:
• Directly after the vehicle has been running or the engine has been idling for a long time, the CVTF is hot. Be careful not to burn yourself.
• Be careful not to spill the CVTF on exhaust pipe to prevent it from emitting smoke or causing fires. If CVTF adheres, wipe it off completely.
• Always use specified CVTF. Using other fluid will cause malfunction.

1) Lift up the vehicle, and remove the CVTF drain plug.

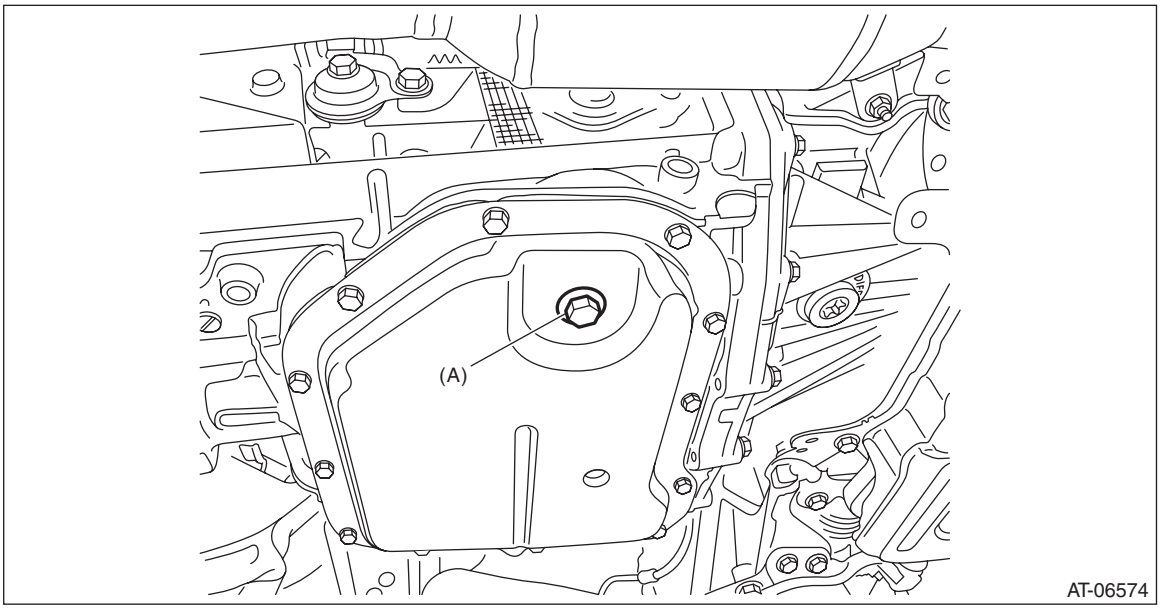

(A) CVTF drain plug

2) Check the CVTF condition. <Ref. to CVT(TR580)-38, CONDITION CHECK, CVTF.>
3) Install the CVTF drain plug and gasket.

NOTE:
- Use a new gasket.

Tightening torque:
31 N·m (3.2 kgf-m, 22.9 ft-lb)

4) Remove the filler plug.

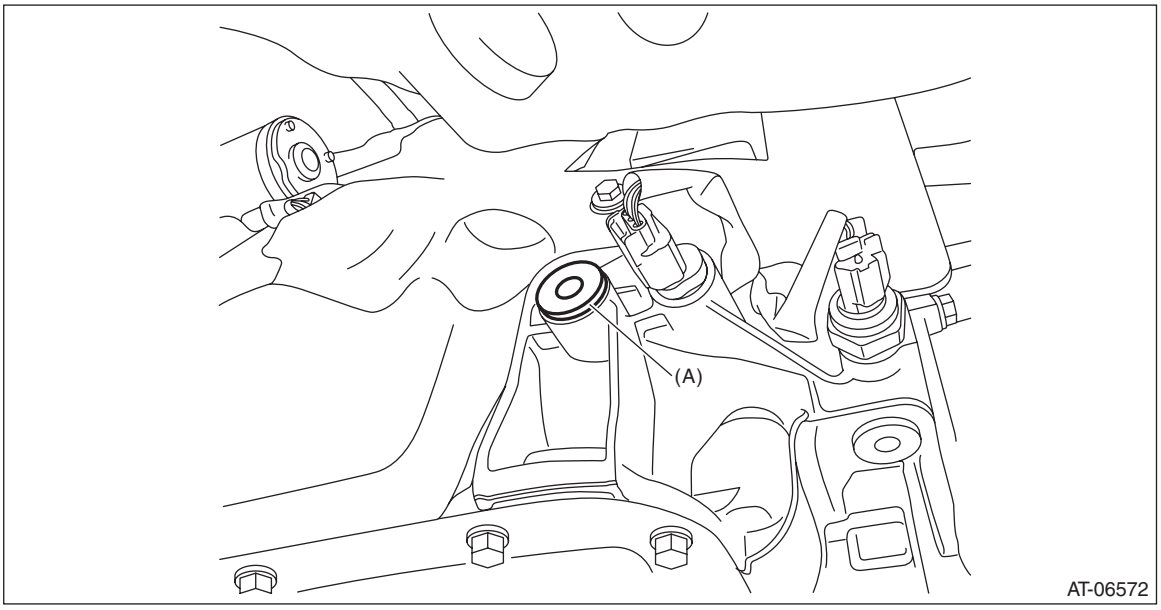

(A) Filler plug

5) Add the specified fluid up to the filler plug hole lower section.

Specified fluid:
<Ref. to CVT(TR580)-4, HYDRAULIC CONTROL AND LUBRICATION, SPECIFICATION, General Description.>
6) Temporarily tighten the filler plug.
7) Idle the engine to raise CVTF temperature to 35 — 45°C (95 — 113°F) on Subaru Select Monitor.
8) Operate the select lever in P → R → N → D and D → N → R → P to circulate CVTF with the engine idling.

CAUTION:
Pay special attention to the following operations as the engine is at idle.
9) With the select lever shifted to "P" range and the engine started, lift up the vehicle. Adjust the CVTF level and check for leakage. <Ref. to CVT(TR580)-35, ADJUSTMENT, CVTF.>
10) Replace with a new gasket, and attach the filler plug.

Tightening torque:
50 N·m (5.1 kgf-m, 36.9 ft-lb)

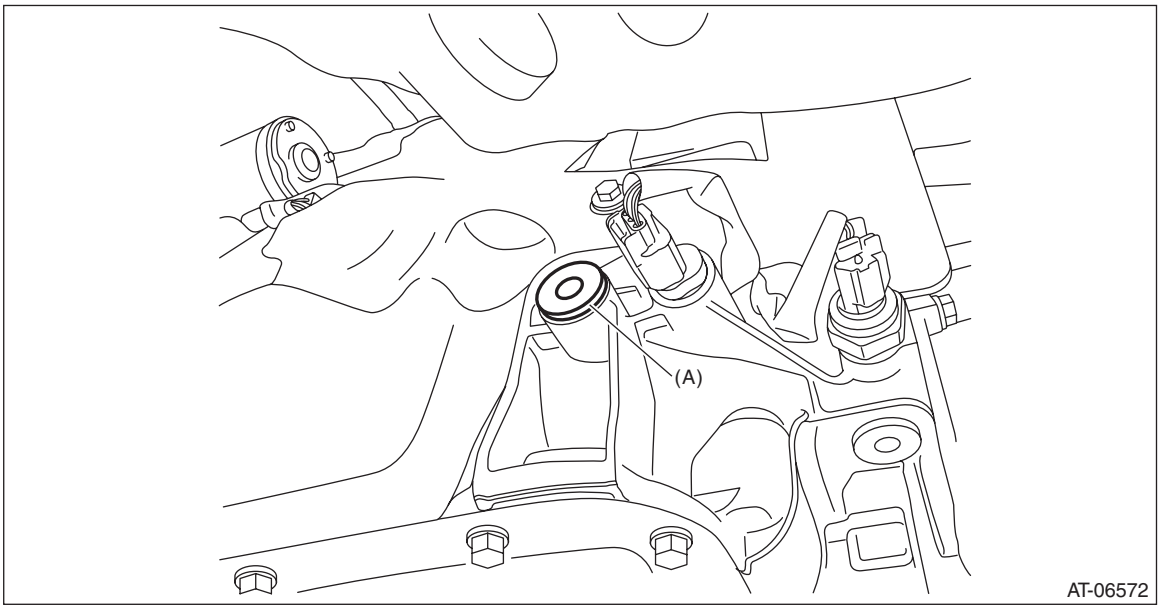

(A) Filler plug

D: CONDITION CHECK

NOTE:
When replacing CVTF, determine the condition inside the transmission body by inspecting the drained CVTF.

Fluid condition	Trouble and possible cause	Corrective action
Metal particles.	Excessive wear of the internal of the transmission body.	Replace CVTF and check if CVT operates correctly.
Thick and varnish-form fluid.	Burnt clutches	Replace CVTF and check the CVT body or vehicle for faulty.
Clouded CVTF or bubbles.	Water mixed in fluid.	Replace CVTF and check the water entering point.

3. Differential Gear Oil

A: INSPECTION

Check that there is no leakage of differential gear oil from the converter case.

B: ADJUSTMENT

NOTE:
Immediately after removing the overflow drain plug, remaining gear oil (approx. 8 cc) may come out of the overflow pipe. This is not included in the specified amount. When removing the overflow drain plug, make sure the gear oil flows out of the overflow drain plug hole by filling with gear oil.

1) Lift up the vehicle.
2) Remove the filler plug.

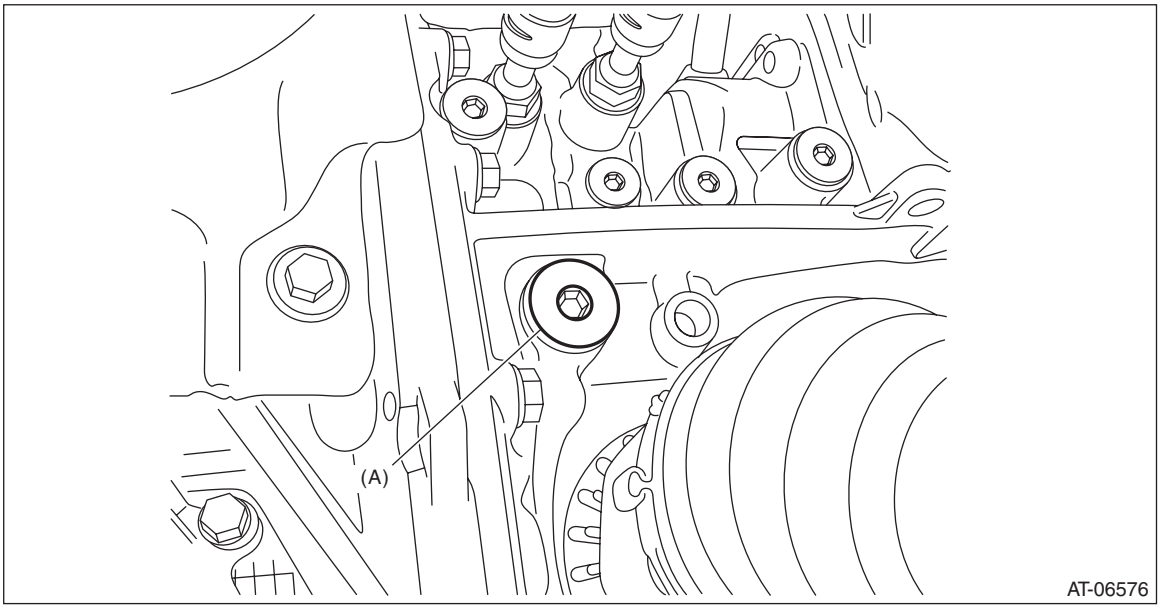

(A) Filler plug

3) Remove the overflow drain plug.

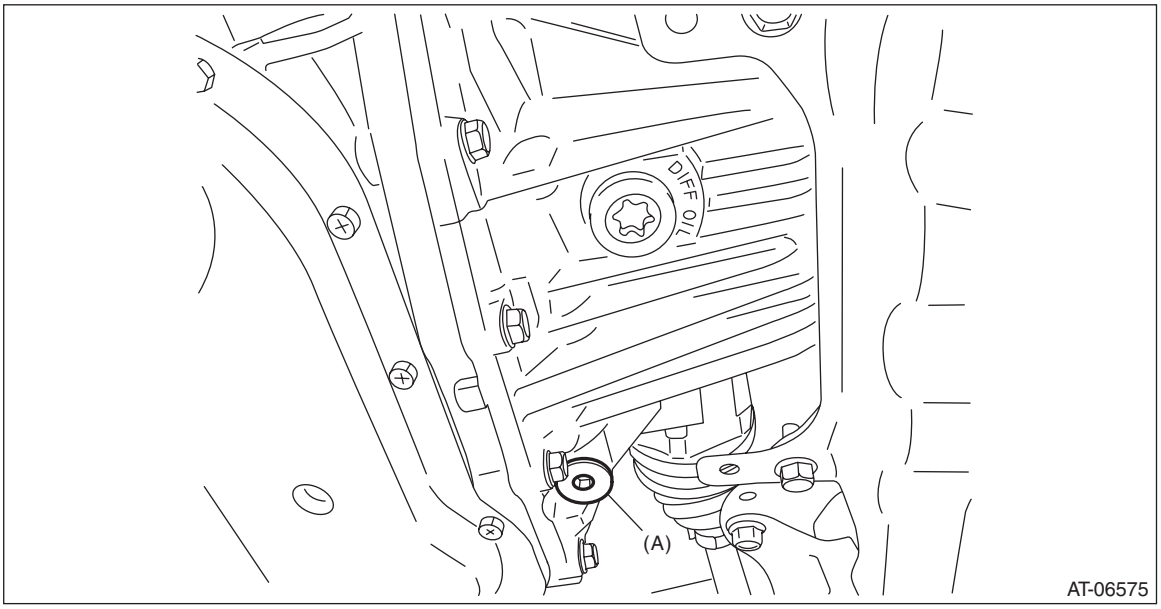

(A) Overflow drain plug

4) Fill in the differential gear oil through the filler plug hole up to where the oil flows out of the overflow drain plug.

Recommended gear oil:
<Ref. to CVT(TR580)-4, RECOMMENDED GEAR OIL, SPECIFICATION, General Description.>
5) When the flow of the differential gear oil turns into a narrow stream, install the overflow drain plug.

NOTE:
Use a new gasket.

Tightening torque:
50 N·m (5.1 kgf-m, 36.9 ft-lb)

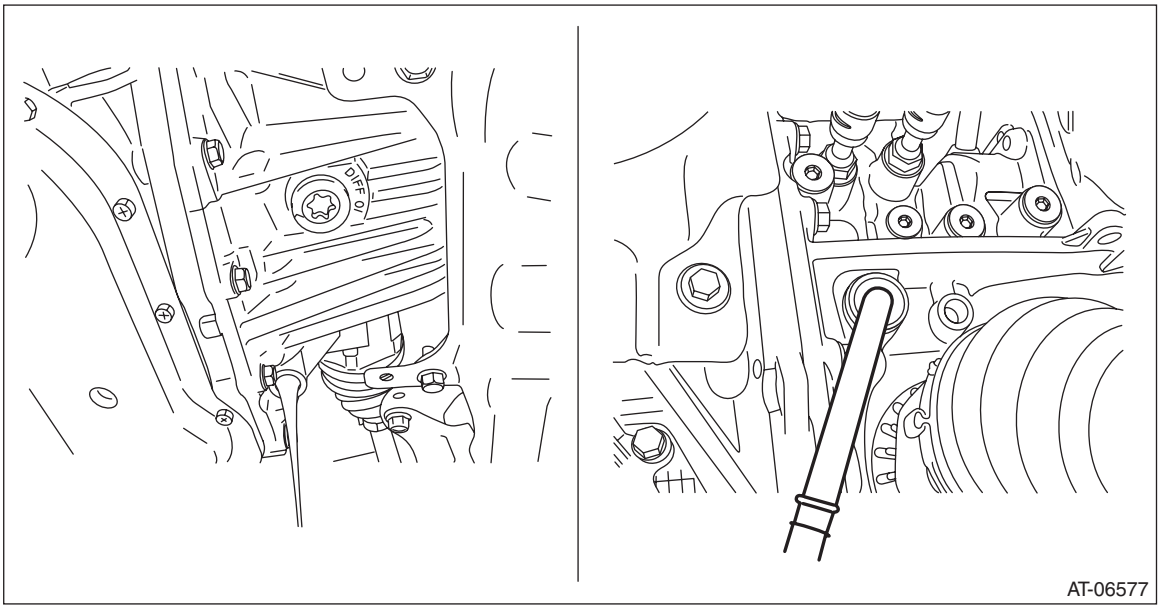

6) Install the filler plug.

NOTE:
Use a new gasket.

Tightening torque:
50 N·m (5.1 kgf-m, 36.9 ft-lb)

C: REPLACEMENT

CAUTION:
• Immediately after the vehicle has been running or after idling for a long time, the differential gear oil will be hot. Be careful not to burn yourself.
• Be careful not to spill differential gear oil on the exhaust pipe to prevent it from emitting smoke or causing a fire. If gear oil adheres, wipe it off completely.
1) Lift up the vehicle.
2) Remove the differential gear oil drain plug using TORX® bit T70. Drain differential gear oil.
3) Install the differential gear oil drain plug using TORX® bit T70.

NOTE:
Use a new gasket.

Tightening torque:
70 N·m (7.1 kgf-m, 51.6 ft-lb)

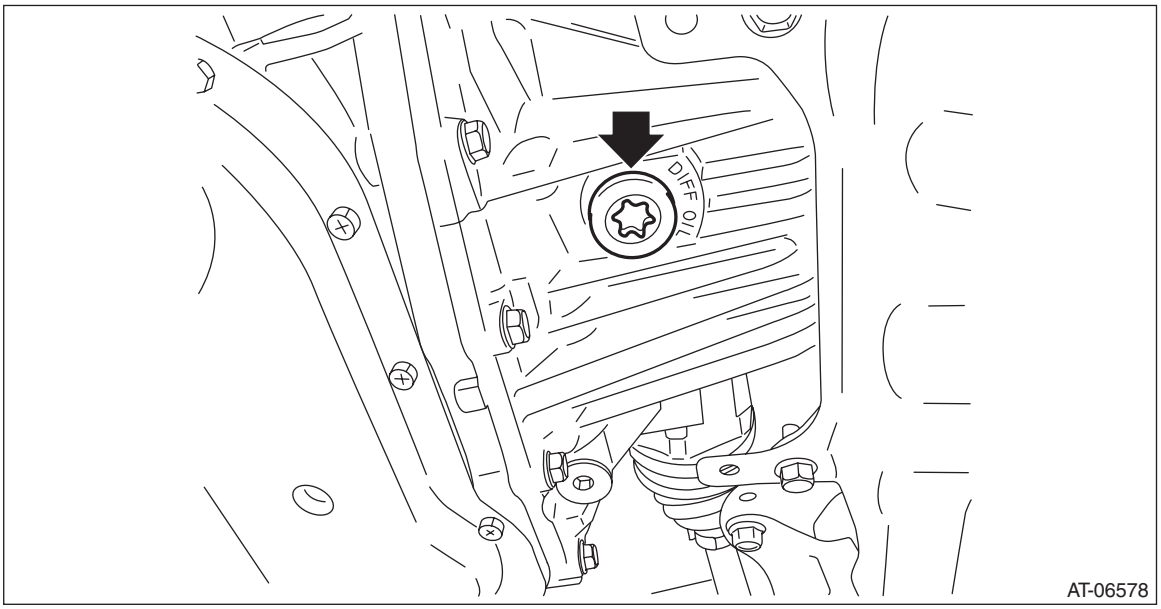

4) Remove the filler plug.

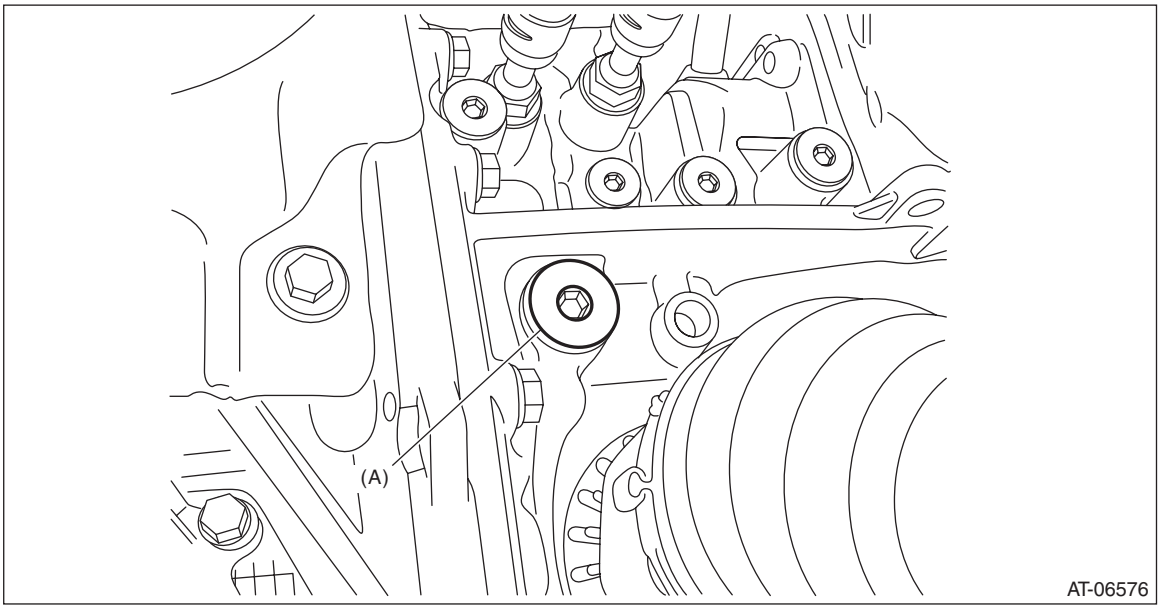

(A) Filler plug

5) Pour gear oil into the filler plug hole.

Recommended gear oil:
<Ref. to CVT(TR580)-4, RECOMMENDED GEAR OIL, SPECIFICATION, General Description.>

Gear oil capacity:
<Ref. to CVT(TR580)-4, RECOMMENDED GEAR OIL, SPECIFICATION, General Description.>

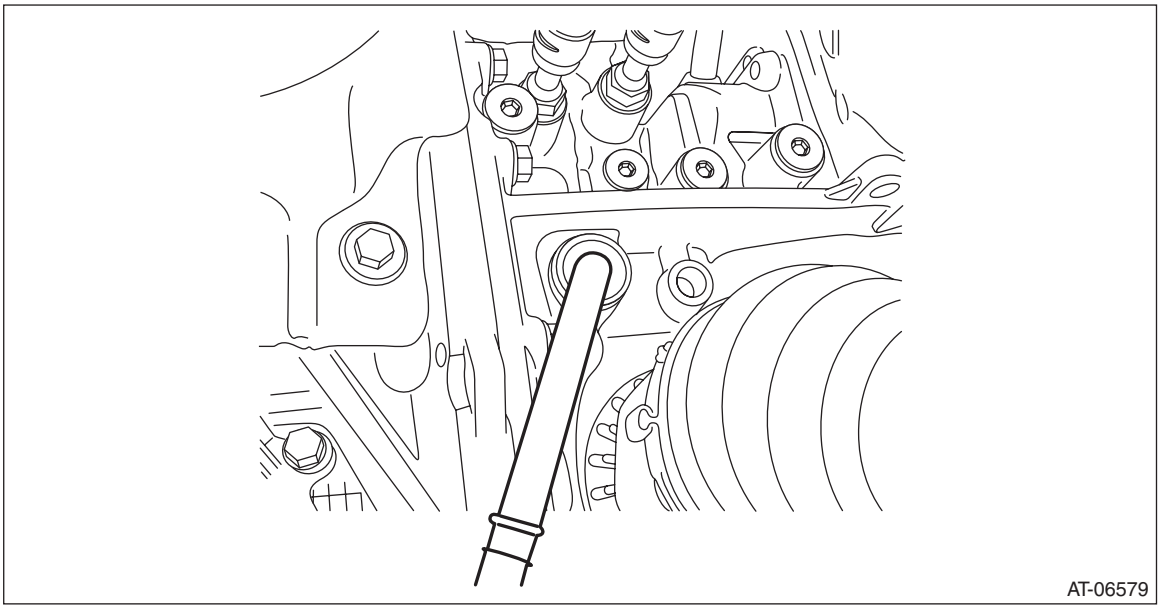

6) Adjust the level of differential gear oil. <Ref. to CVT(TR580)-39, ADJUSTMENT, Differential Gear Oil.>

4. AWD ON/OFF Switching Mode

A: GENERAL DESCRIPTION

- Follow the messages displayed on the Subaru Select Monitor when working.
- Perform as necessary in FWD mode.
- When switched to FWD, AWD light illuminates.

B: PROCEDURE

CAUTION:
• Do not turn the power of the Subaru Select Monitor OFF during work, and do not disconnect the data link connector.
• On completing the work in FWD, switch back in AWD.
1) Shift the select lever to “P” range.
2) Connect the Subaru Select Monitor to data link connector.
3) Turn the ignition switch to ON.
4) Turn off all switches causing an electrical load, such as headlights, A/C, seat heater and rear defogger.
5) Select {Work Support} in the «Transmission Diagnosis» display screen of the Subaru Select Monitor.
6) Select {Maintenance mode} in the «Work Support» screen of Subaru Select Monitor.
7) Select {AWD ON/OFF switching mode} in the «Maintenance mode» screen of the Subaru Select Monitor.
8) Follow the messages displayed on the Subaru Select Monitor screen when working.
Switching completes successfully if any of the following messages is displayed.
- When switching from AWD to FWD: {Switched to FF. To return to AWD, perform basic mode again.}
- When switching from FWD to AWD: {Switched to AWD. To return to FF, perform basic mode again.}

NOTE:
- If communication error occurs during switching mode, start in the “AWD ON/OFF switching mode” again.
- If operation is interrupted before the successful end message is displayed, perform the {AWD ON/OFF switching mode} from the beginning until confirming the operation is successfully ended. If this mode fails to complete successfully, the cause is as follows.
  - Select lever is not in “P” range.
  - Engine is running.
- For detailed operation procedures, refer to “PC application help for Subaru Select Monitor”.

5. Road Test

A: INSPECTION

1. GENERAL PRECAUTION

Road tests should be conducted to properly diagnose the condition of CVT.

CAUTION:
Always observe the local traffic laws when performing the test.

2. D RANGE SHIFT FUNCTION

Make sure the engine speed is 1,100 — 1,300 rpm while driving on the level road at 50 km/h (31 MPH) after accelerating from halting to 1/4 of accelerator opening angle. Then stop the vehicle. Check normal gear change has occurred while the vehicle speed changes from a constant speed to zero.

3. KICK-DOWN FUNCTION

Check if engine speed will rise by operating the accelerator opening angle to the full from a constant speed of 50 km/h (31 MPH) or more.

4. ENGINE BRAKE OPERATION

• Model with manual mode

• Drive in “6th speed of manual mode” [70 — 80 km/h (43 — 50 MPH)], and shift down from 6th to 5th. Check if the indicator of combination meter switches “6” → “5”. At the same time, check the engine brake in 5th gear.
• Drive in “5th speed of manual mode” [60 — 70 km/h (37 — 43 MPH)], and shift down from 5th to 4th. Check if the indicator of combination meter switches “5” → “4”. At the same time, check the engine brake in 4th gear.
• Drive in “4th speed of manual mode” [50 — 60 km/h (31 — 37 MPH)], and shift down from 4th to 3rd. Check if the indicator of combination meter switches “4” → “3”. At the same time, check the engine brake in 3rd gear.
• Drive in “3rd speed of manual mode” [40 — 50 km/h (25 — 31 MPH)], and shift down from 3rd to 2nd. Check if the indicator of combination meter switches “3” → “2”. At the same time, check the engine brake in 2nd gear.
• Drive in “2nd speed of manual mode” [20 — 30 km/h (12 — 19 MPH)], and shift down from 2nd to 1st. Check if the indicator of combination meter switches “2” → “1”. At the same time, check the engine brake in 1st gear.

• Model without manual mode

Drive in D range at [50 — 60 km/h (31 — 37 MPH)], and shift to “L” range. Check if the indicator of combination meter switches “D” → “L”. At the same time, check the engine brake in L range.

5. LOCK-UP FUNCTION

When the accelerator is lightly depressed while driving on a flat road in “D” range, check that rpm does not change abruptly.

6. P RANGE OPERATION

Stop the vehicle on an uphill grade of 5% or more and shift to the “P” range and apply the parking brake. Check that the vehicle does not move when the parking brake is released.

7. NOISE AND VIBRATION

Check for noise and vibration during a constant driving, accelerating, decelerating and manual shift operation.

8. OIL LEAKAGE

After the driving test, inspect for leakage of CVTF and differential gear oil from the transmission body.

6. Stall Test

A: INSPECTION

CAUTION:
Make sure no other person is around the vehicle during stall test measurement.

NOTE:
Stall test is extremely important in diagnosing the condition of CVT and engine. The test is necessary to measure the engine stall speeds in “R” and “D” range.
Purposes of the stall test:
- Operational check of forward clutch and reverse brake
- Operational check of the torque converter assembly
- Engine performance check

1) Place wheel chocks at the front and rear of all wheels and engage the parking brake.
2) Turn the A/C OFF.
3) Using the Subaru Select Monitor, check if the throttle valve operates when you depress the accelerator pedal. <Ref. to EN(H4DO w/o HEV)(diag)-36, READ CURRENT DATA FOR ENGINE (NORMAL MODE), OPERATION, Subaru Select Monitor.>
4) Check the engine oil level. <Ref. to LU(H4DO(w/o HEV))-12, Engine Oil.>
5) Check the coolant level. <Ref. to CO(H4DO(w/o HEV))-16, Engine Coolant.>
6) Adjust the CVTF level. <Ref. to CVT(TR580)-35, ADJUSTMENT, CVTF.>
7) Increase the CVTF temperature to 60 — 80°C (140 — 176°F) with the engine running and the select lever shifted to “N” or “P” range.
8) Shift the select lever to “D” range.
9) Depress the accelerator pedal to the full while fully depressing the foot brake pedal with your left foot.
10) When the engine speed stabilizes, quickly record the engine speed and release accelerator pedal. Shift the select lever to “N” range. Let the engine idle for one minute or more to cool it down.
11) Shift to “R” range and perform the same stall test.

NOTE:
- Do not perform a stall test for over 5 seconds at a time. (From closed throttle, fully open throttle to stall speed reading.) Failure to follow this instruction will cause the engine oil and CVTF to deteriorate and the clutch and brake to be adversely affected.
- Be sure to cool down the engine for at least one minute after each stall test with the select lever set in the “P” or “N” range and with the idle speed of 1,200 rpm or less.
- If the stall speed is higher than the specified range, attempt to finish the stall test in as short a time as possible, in order to prevent the CVT from sustaining damage.

Stall speed standard:
D range: 2,350 — 3,100 rpm
R range: 2,100 — 2,800 rpm

Stall test judgment

Range	Range	Probable cause
Lower than standard value	D, R	• Insufficient engine output • Torque converter malfunction
Higher than standard value	D	• Forward clutch slippage • Secondary pressure (line pressure) is low. • Variator chain malfunction
	R	• Reverse brake slippage • Secondary pressure (line pressure) is low. • Variator chain malfunction
	D, R	• Torque converter malfunction • Control valve body malfunction • TCM malfunction • Damaged harness and harness connector

7. Time Lag Test

A: INSPECTION

NOTE:
When the select lever is shifted while the engine is idling, there will be a certain time elapse or lag before shock is felt. This symptom helps to check the condition of forward clutch and reverse brake.
- Perform the test at normal operation CVTF temperature of 60 — 80°C (140 — 176°F).
- Be sure to allow one minute or more interval between tests.
- Make three measurements and take the average value.

1) Apply the parking brake.
2) Start the engine. Check the idle speed. (A/C OFF)
3) Shift the select lever from “N” to “D” range. Using a stop watch, measure the time elapsed from shifting the lever until the shock is felt.

Time lag standard:
1.5 seconds or less

If “N” → “D” time lag is longer than specified:
- Secondary pressure (line pressure) is too low.
- Forward clutch worn
- Forward clutch piston malfunction
- Control valve body malfunction
- Learning incomplete

4) In the same manner, measure the time lag when shifting from “N” range to “R” range.

Time lag standard:
1.5 seconds or less

If “N” → “R” time lag is longer than specified:
- Secondary pressure (line pressure) is too low.
- Reverse brake worn
- Reverse brake piston malfunction
- Control valve body malfunction
- Learning incomplete

8. Secondary Pressure (Line Pressure) Test

A: INSPECTION

CAUTION:
• Directly after the vehicle has been running or the engine has been idling for a long time, the CVTF is hot. Be careful not to burn yourself.
• Make sure no other person is around the vehicle during secondary pressure (line pressure) test measurement.
• After performing the secondary pressure (line pressure) test measurement, adjust the CVTF level.

NOTE:
• If the pulley and variator chain, clutch or brake show signs of slipping or shift feel is not correct, check the secondary pressure (line pressure).
• Connect Subaru Select Monitor to vehicle so as to measure the engine speed and actual secondary pressure (secondary pressure (line pressure)).
• In many cases, slippage or inability to operate the vehicle may be due to insufficient oil pressure for the operation of clutch, brake or control valve.
1) Lift up the vehicle.
2) Remove the secondary pressure (line pressure) test plug, and install ST1 and ST2.

CAUTION:
Removal of the test plug and installation of the ST shall be both performed quickly.

NOTE:
Use ST2 PRESSURE GAUGE ADAPTER with genuine O-ring (part No. 806916050) attached.
ST1 18801AA000 OIL PRESSURE GAUGE ASSY
ST2 18681AA010 PRESSURE GAUGE ADAPTER

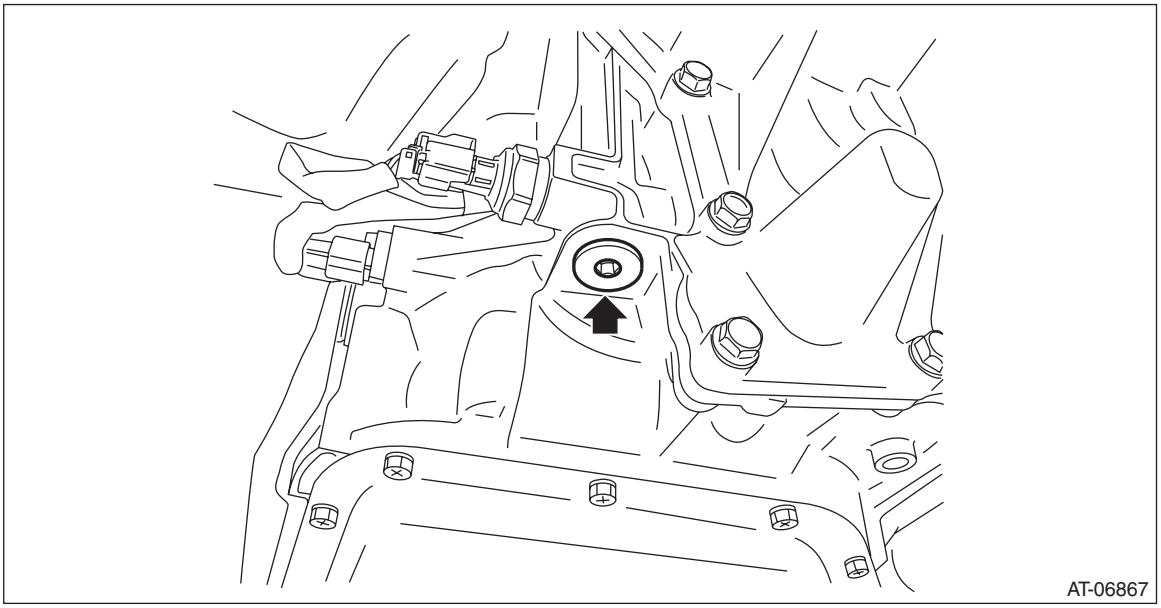

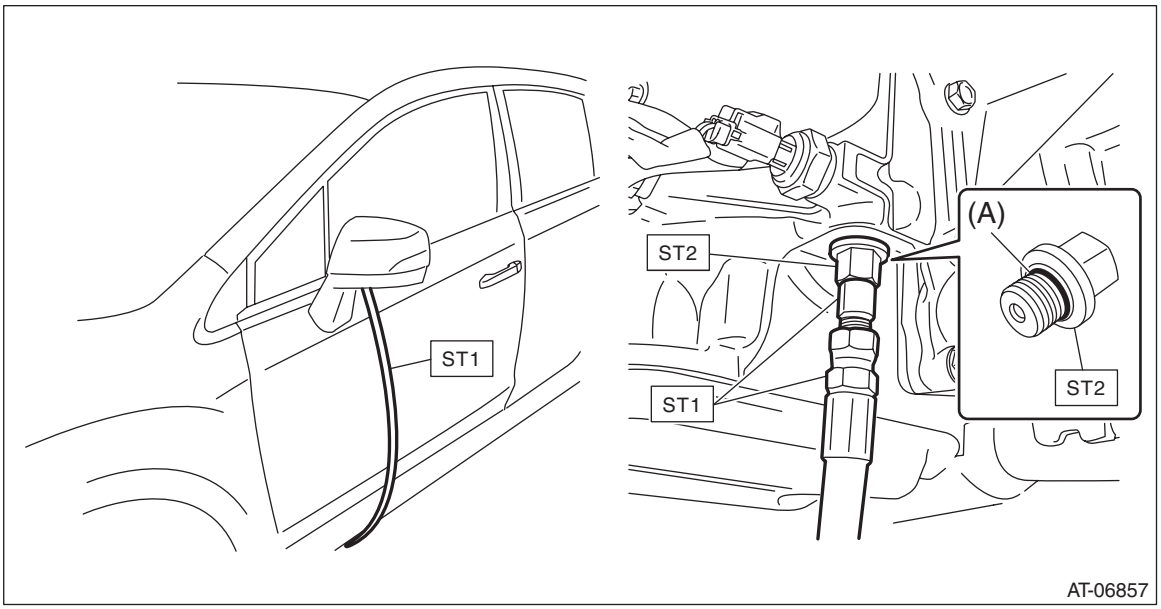

(A) O-ring (genuine part)

3) Lower the vehicle.
4) Set the gauge so that it can be seen from the driver's seat.
5) Using the Subaru Select Monitor, check if the throttle valve operates when you depress the accelerator pedal. <Ref. to EN(H4DO w/o HEV)(diag)-36, READ CURRENT DATA FOR ENGINE (NORMAL MODE), OPERATION, Subaru Select Monitor.>
6) Check the engine oil level. <Ref. to LU(H4DO(w/o HEV))-12, Engine Oil.>
7) Check the coolant level. <Ref. to CO(H4DO(w/o HEV))-16, Engine Coolant.>
8) Adjust the CVTF level. <Ref. to CVT(TR580)-35, ADJUSTMENT, CVTF.>
9) Increase the CVTF temperature to 60 — 80°C (140 — 176°F) with the engine running and the select lever shifted to "N" or "P" range.
10) Shift the select lever to "D" range.
11) Depress the accelerator pedal to the full while fully depressing the foot brake pedal with your left foot.

12) Immediately after the engine speed becomes steady, record the reading of the secondary pressure (line pressure), engine speed and actual secondary pressure on Subaru Select Monitor. And then release the accelerator pedal. Shift the select lever to “N” range. Let the engine idle for one minute or more to cool it down.

NOTE:
• Do not continue the stall test for 5 seconds or more at a time (from fully closed throttle, fully open throttle to secondary pressure (line pressure) reading). Failure to follow this instruction will cause the engine oil and CVTF to deteriorate and the clutch and brake to be adversely affected.
• After performing the secondary pressure (line pressure) test, be sure to cool down the engine for at least one minute with the select lever set in “P” or “N” range and with the idle speed at 1,200 rpm or less.
• Under each condition, check that the measured pressure matches almost totally with actual secondary pressure.
• When both measured pressure and actual secondary pressure are out of specification, judge as control valve malfunction.
• The value at stall is for reference because the pressure changes under different conditions or circumstances.
• The value at idling is steady because it is not affected by any condition or circumstance.

Secondary pressure (line pressure) standard				
	Range	Throttle	Brake	Secondary pressure (line pressure) (MPa (kgf/cm^2, psi))
Stall	D, R	Full open	ON	4.5 — 6.0 (45.9 — 61.2, 652 — 870)
Idling	P, N	Full closed	OFF	0.5 — 1.5 (5.1 — 15.3, 72 — 218)

13) Remove the ST and install the plug after measurement.

CAUTION:
Removal of the ST and installation of the test plug shall be both performed quickly.

NOTE:
• Use new O-rings.
• Apply CVTF to the O-ring.

Tightening torque:
50 N·m (5.1 kgf-m, 36.9 ft-lb)

14) Adjust the CVTF level. <Ref. to CVT(TR580)-35, ADJUSTMENT, CVTF.>

9. Transfer Clutch Pressure Test

A: INSPECTION

1) Lift up the vehicle.
2) Remove the rear exhaust pipe from center exhaust pipe.

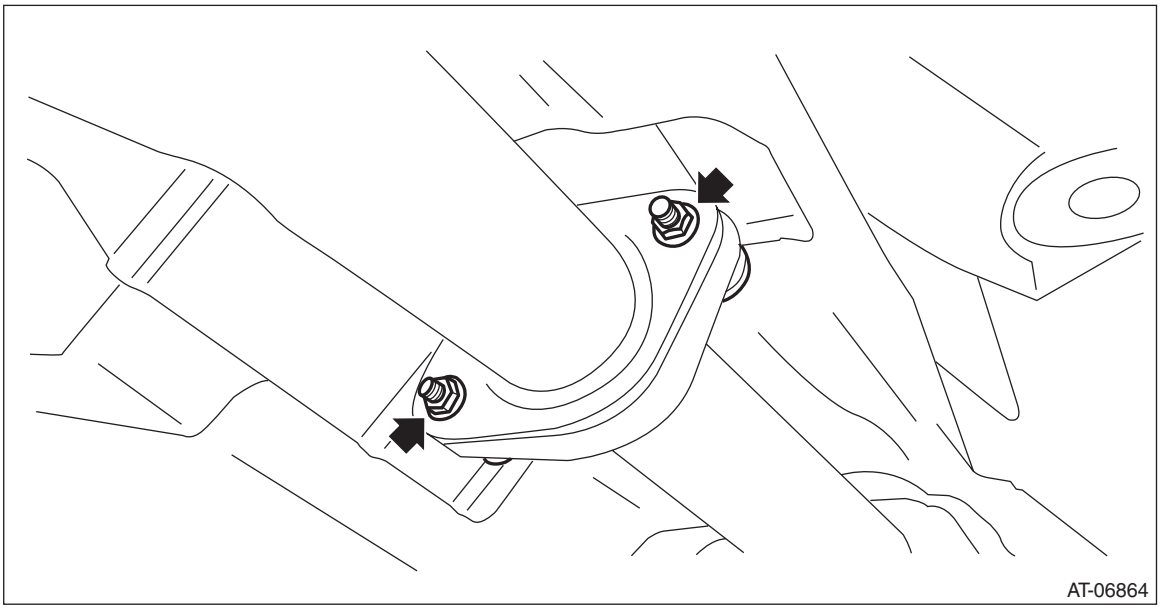

3) Remove the center exhaust cover.
4) Set the transmission jack under the transmission.
5) Remove the mounting bolt of rear crossmember.

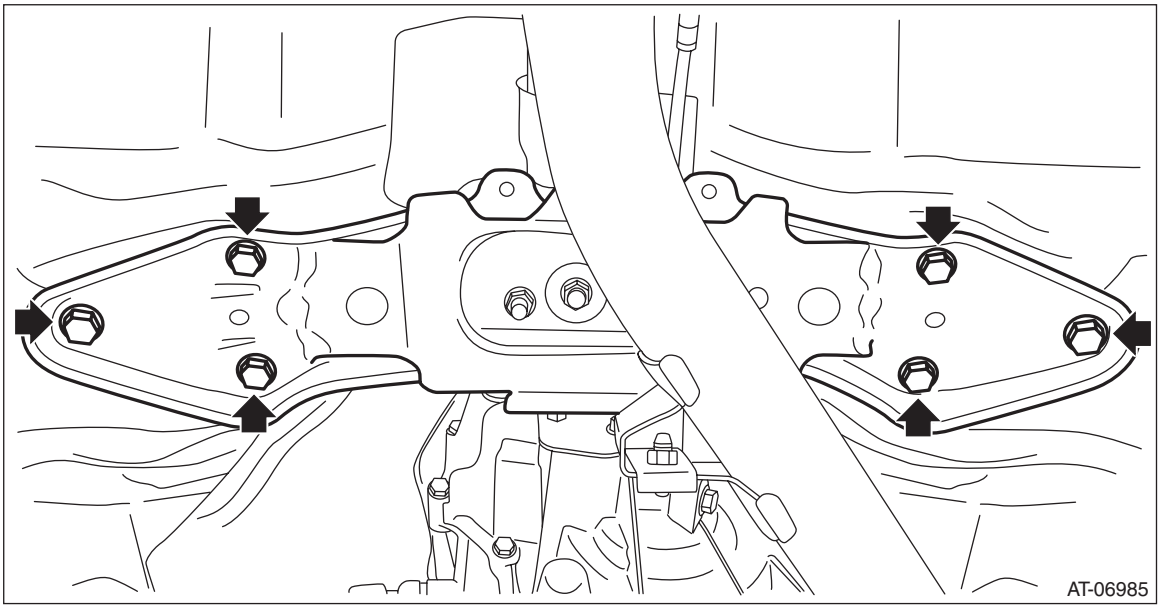

6) Lower the rear side of transmission until the transfer clutch pressure test plug can be removed.
7) Remove the transfer clutch pressure test plug.

8) Set the ST1, ST2, ST3 and ST4 to the transmission.

NOTE:
• Use ST1 ADAPTER HOSE B with genuine union screw (part No. 801914010) and gasket (part No. 803914060) attached.
• Use ST3 PRESSURE GAUGE ADAPTER with genuine O-ring (part No. 806911080) attached.

ST1 34099AC020 ADAPTER HOSE B
ST2 34099AC010 ADAPTER HOSE A
ST3 18681AA000 PRESSURE GAUGE ADAPTER
ST4 498575400 OIL PRESSURE GAUGE ASSY

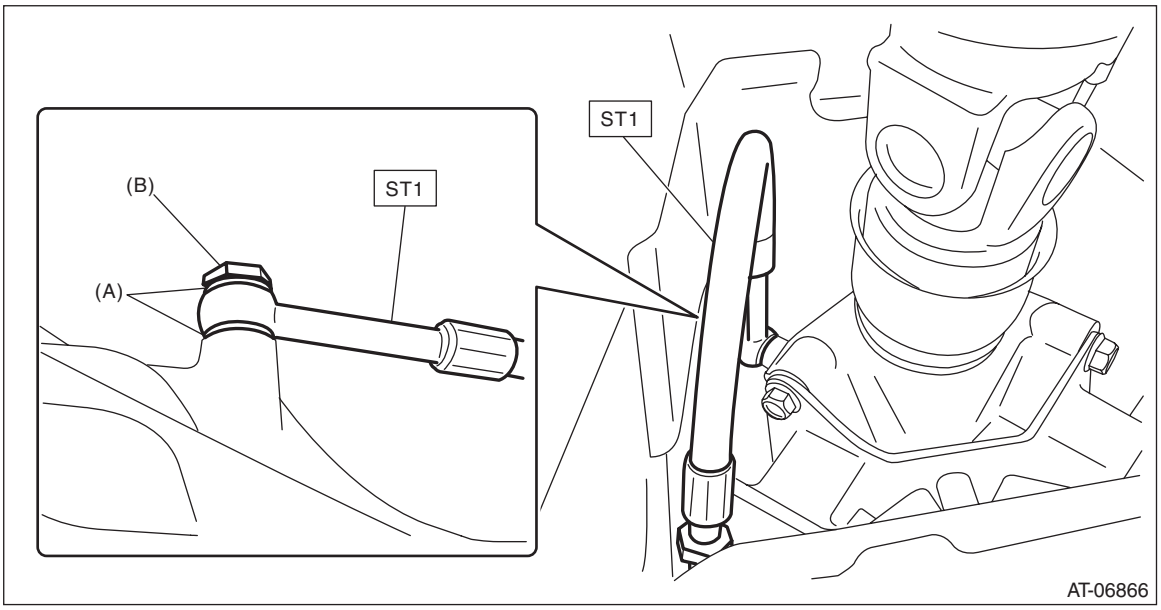

(A) Gasket (genuine part)
(B) Union screw (genuine part)

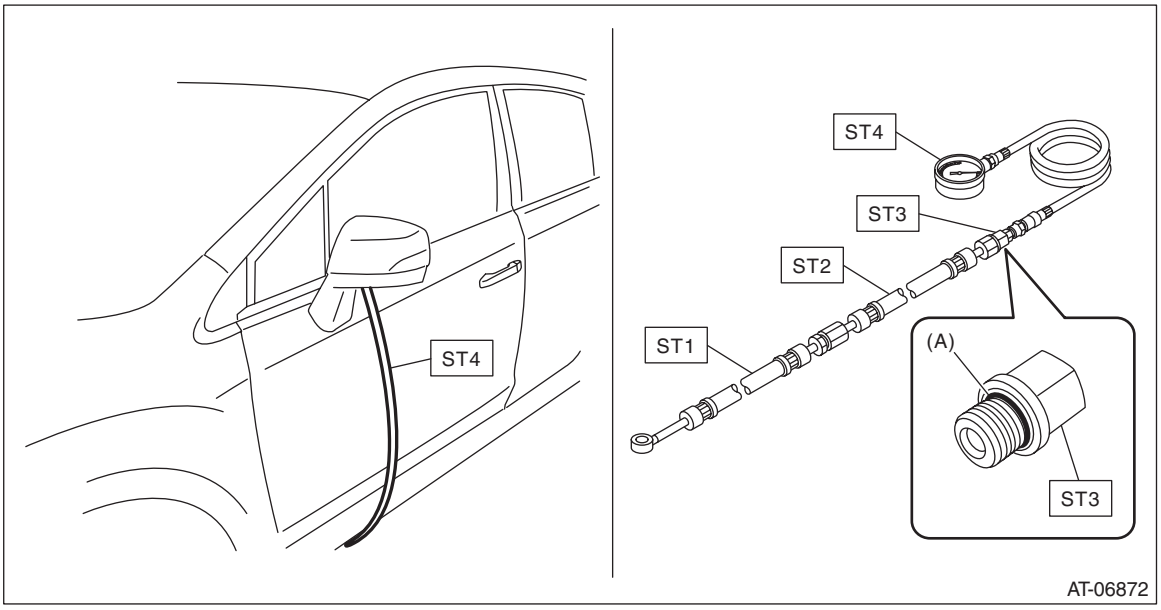

(A) O-ring (genuine part)

9) Raise the transmission, and install the rear crossmember.

Tightening torque:
70 N·m (7.1 kgf-m, 51.6 ft-lb)

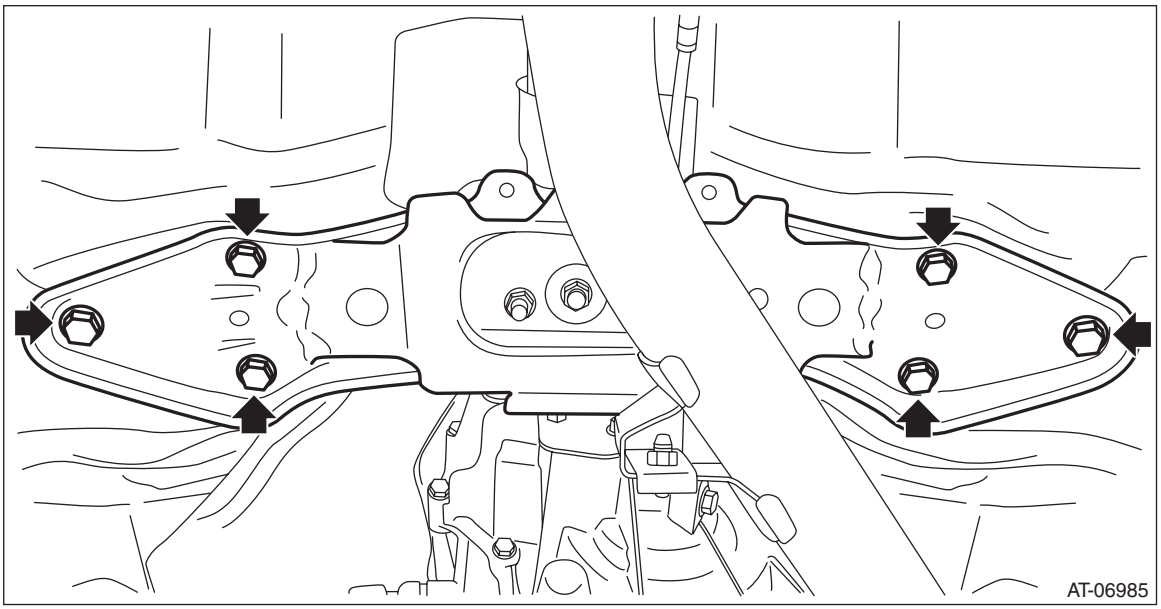

10) Install the rear exhaust pipe to center exhaust pipe.

Tightening torque:
18 N·m (1.8 kgf-m, 13.3 ft-lb)

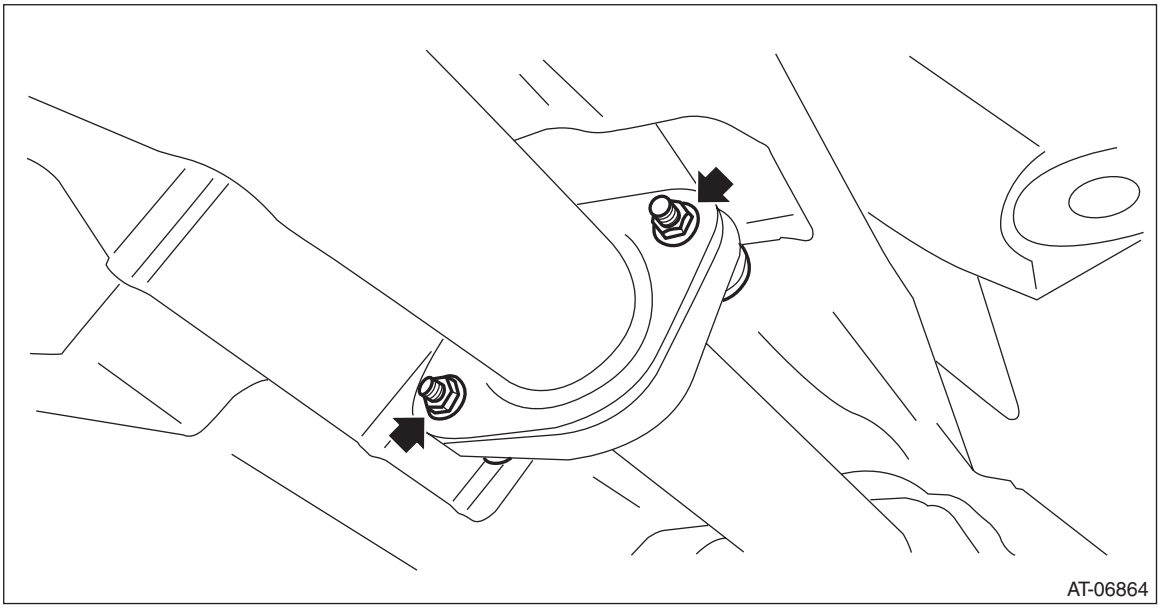

11) Lower the vehicle.
12) Connect the Subaru Select Monitor to the data link connector and read the current data.
13) Check the transfer clutch pressure as in secondary pressure (line pressure) test. <Ref. to CVT(TR580)-47, Secondary Pressure (Line Pressure) Test.>

NOTE:
• Use Subaru Select Monitor for switching to FWD mode. <Ref. to CVT(TR580)-43, AWD ON/OFF Switching Mode.>
• If no oil pressure is produced, if it does not change in AWD mode or if oil pressure is produced in FWD mode, there may be a problem in the control valve body.

Range position	ON Duty ratio (%)	Accelerator pedal opening angle (%)	Standard transfer clutch pressure kPa (kgf/cm^2, psi)	
			AWD mode	FWD mode
D	95 — 100	Fully opened (100)	1,000 — 1,200 (10.2 — 12.2, 145 — 174)	—
	60	Adjust ON Duty ratio to 60%.	400 — 700 (4.1 — 7.1, 58 — 102)	—
	0	Fully closed (0)	—	0 (0, 0)
N or P	0	Fully closed (0)	0	—

14) Lift up the vehicle.
15) Remove the rear exhaust pipe from center exhaust pipe.

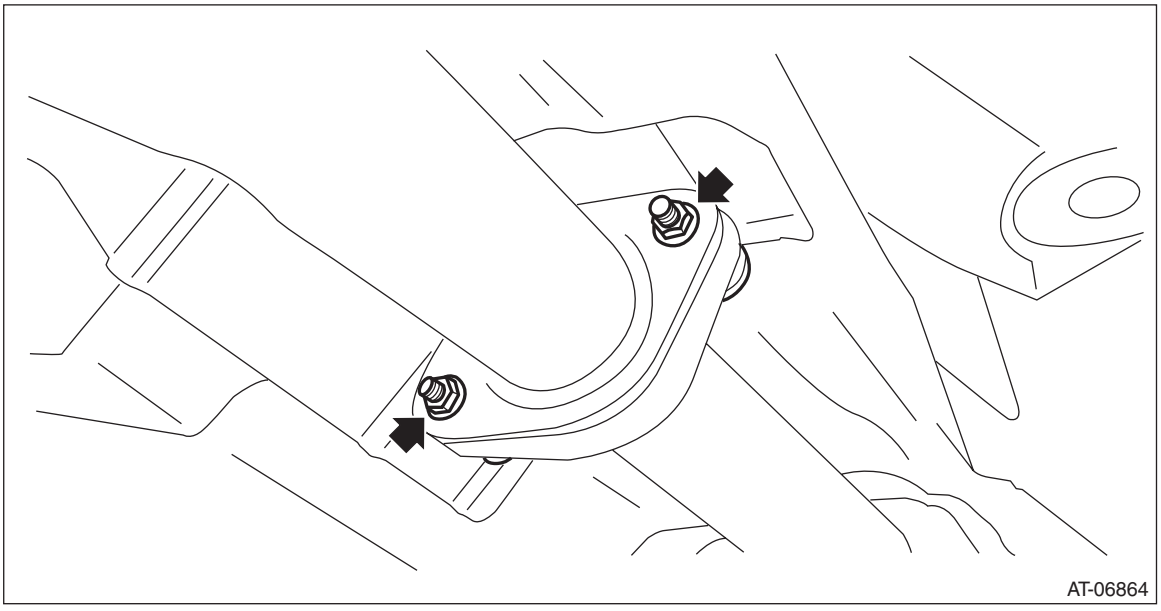

16) Set the transmission jack under the transmission.

17) Remove the mounting bolt of rear crossmember.

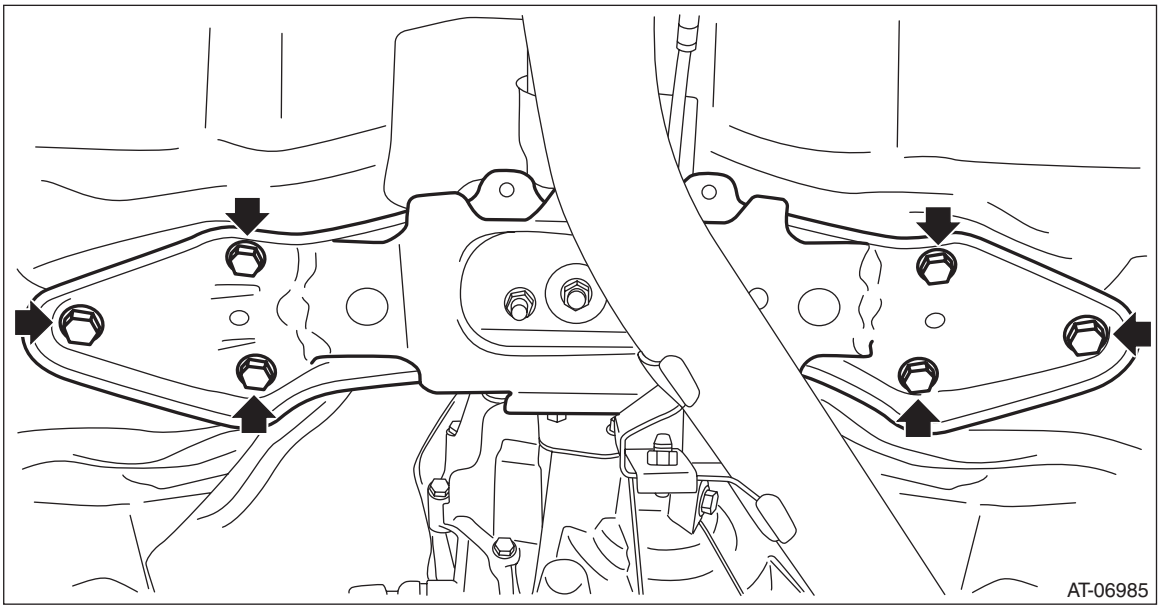

18) Lower the rear side of transmission until the ST can be removed.
19) Remove the ST and install the plug.

NOTE:
- Use new O-rings.
- Apply CVTF to the O-ring.

Tightening torque:
25 N·m (2.5 kgf-m, 18.4 ft-lb)

20) Raise the transmission, and install the rear crossmember.

Tightening torque:
70 N·m (7.1 kgf-m, 51.6 ft-lb)

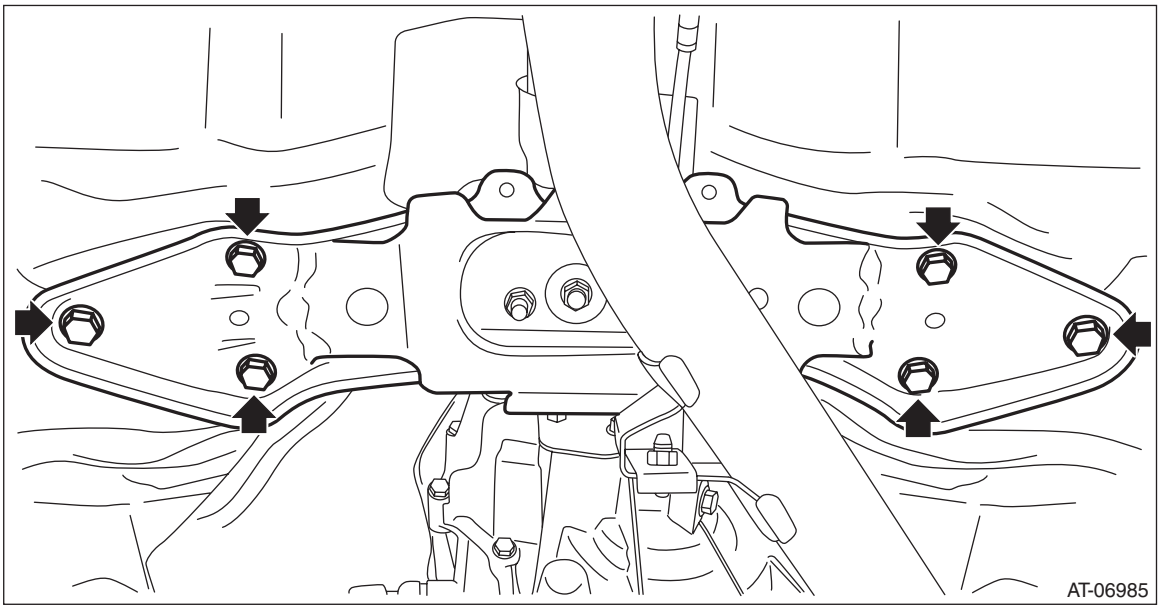

21) Install the center exhaust cover.

Tightening torque:
18 N·m (1.8 kgf-m, 13.3 ft-lb)

22) Install the rear exhaust pipe to center exhaust pipe.

NOTE:
Use a new gasket.

Tightening torque:
18 N·m (1.8 kgf-m, 13.3 ft-lb)

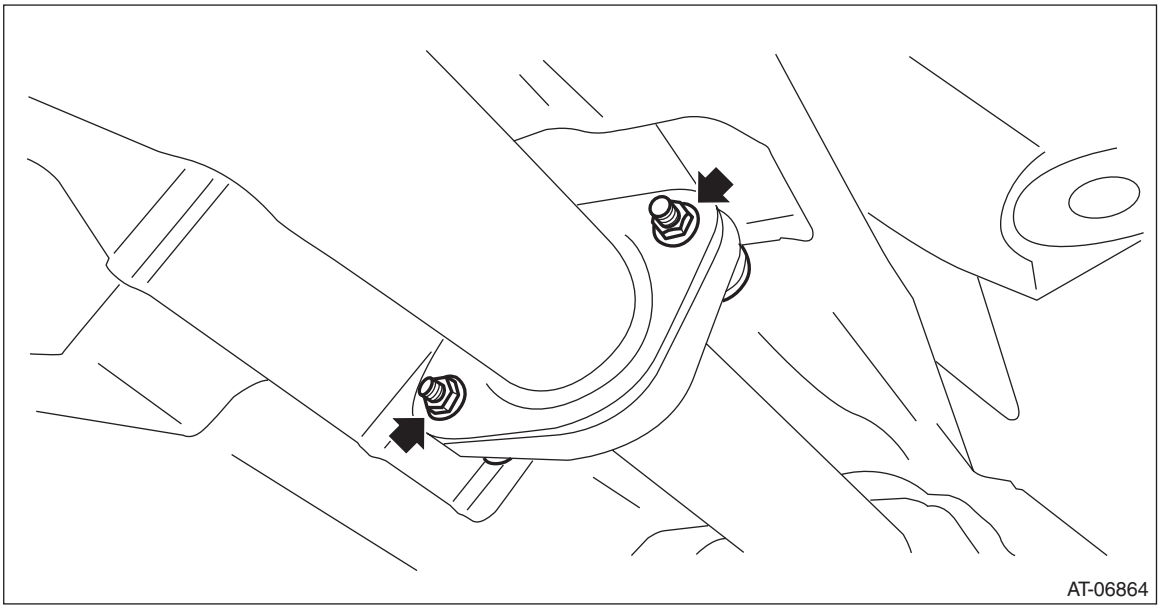

23) Lower the vehicle.

10.Automatic Transmission Assembly

A: REMOVAL

1) Disconnect the ground cable from battery.
2) Remove the clip (A) from the air intake boot.
3) Loosen the clamp (B) connecting the air intake boot and air cleaner case (rear).
4) Loosen the clamp (C) which connects the air intake boot and throttle body.

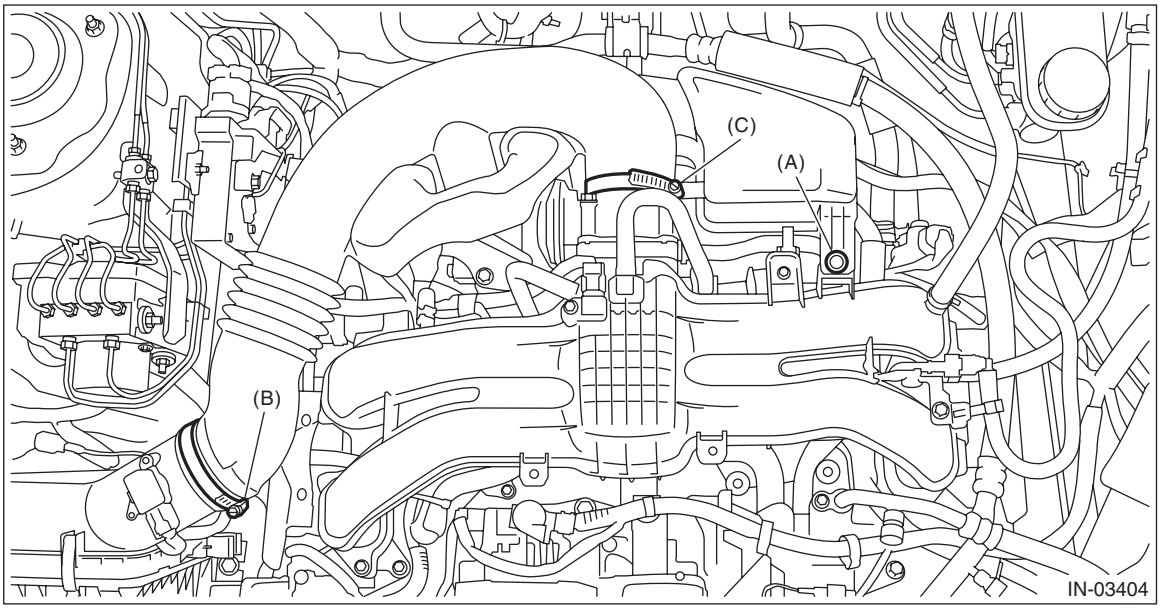

5) Remove the air intake boot from the throttle body, and move it to the left side wheel apron.

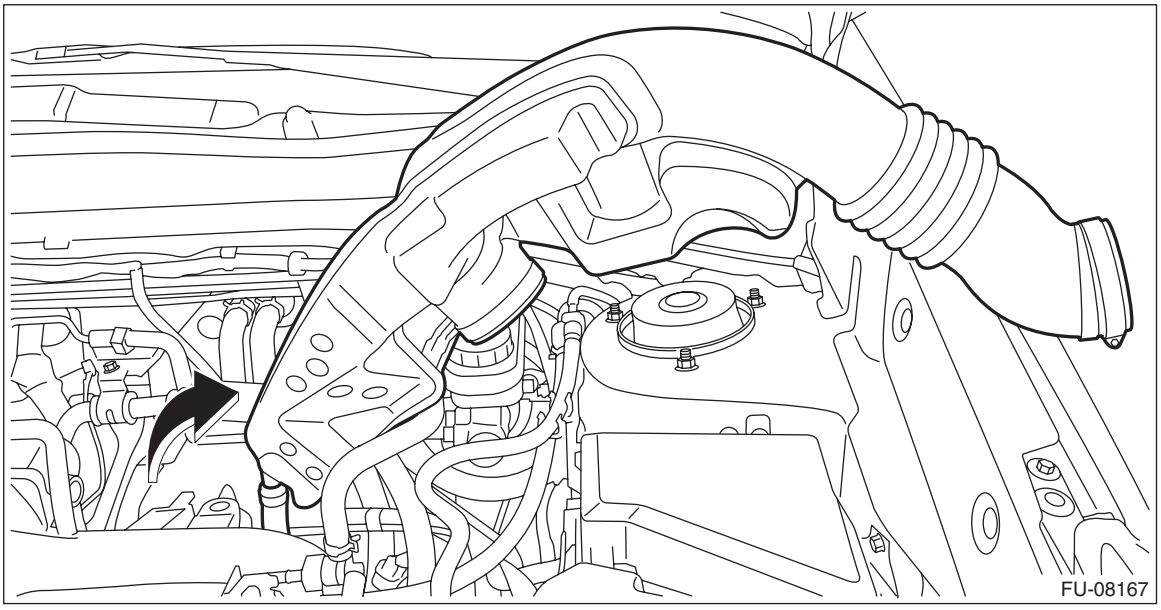

6) Disconnect the following connectors.
- Transmission harness connectors
- Inhibitor harness connector
- Transmission radio ground terminal

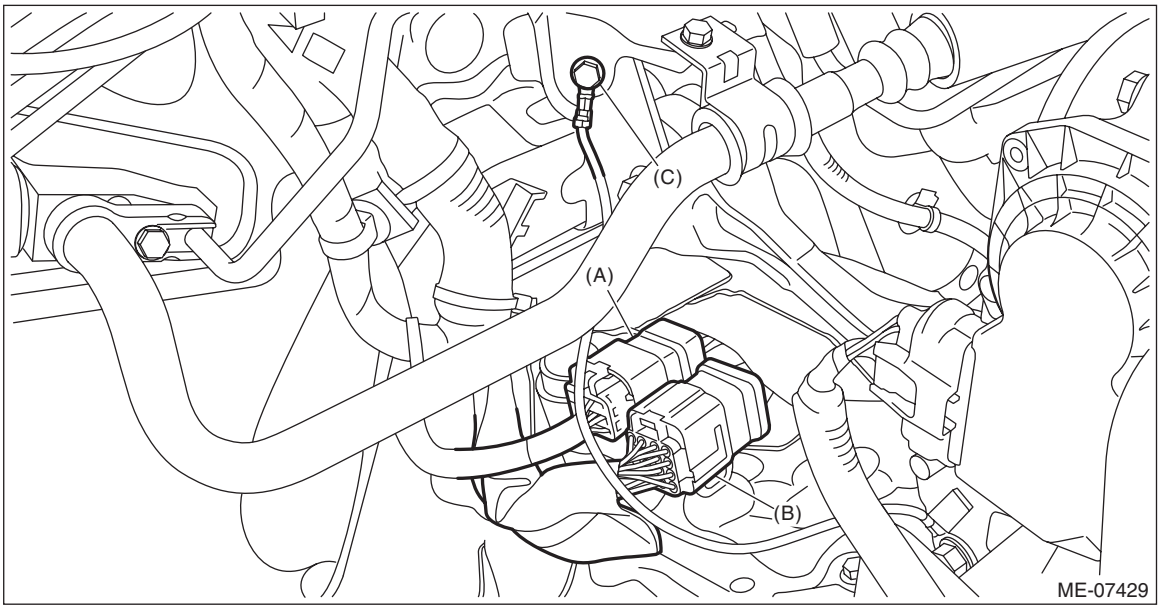

(A) Transmission harness connectors
(B) Inhibitor harness connector
(C) Transmission radio ground terminal

7) Remove the starter. <Ref. to SC(H4DO(w/o HEV))-9, REMOVAL, Starter.>
8) Remove the pitching stopper.

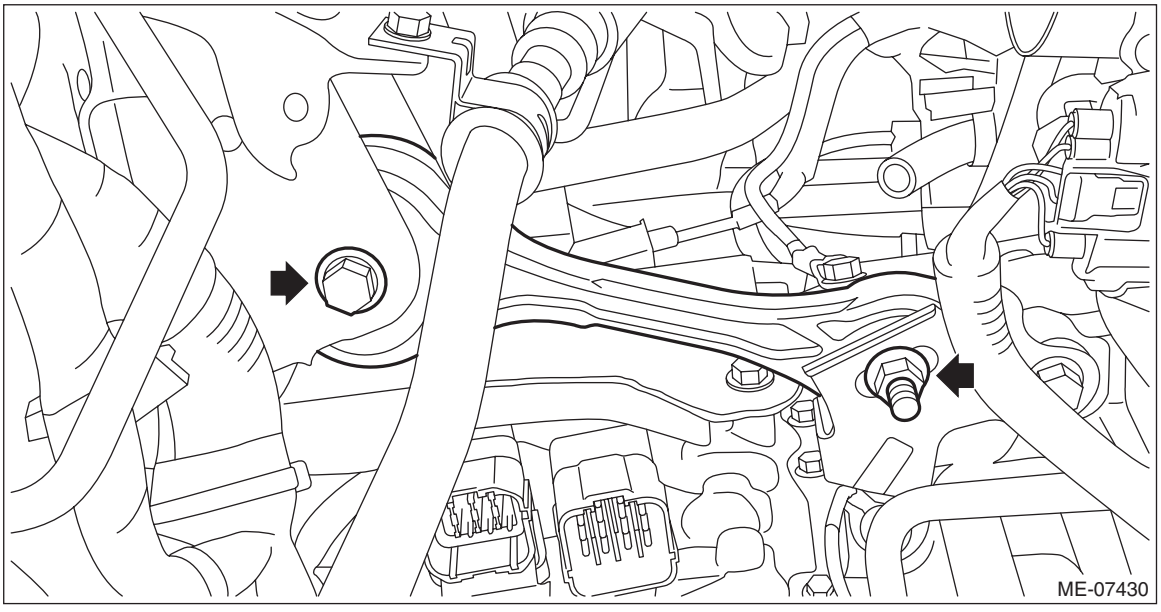

9) Remove the harness bracket, and then remove the engine harness.

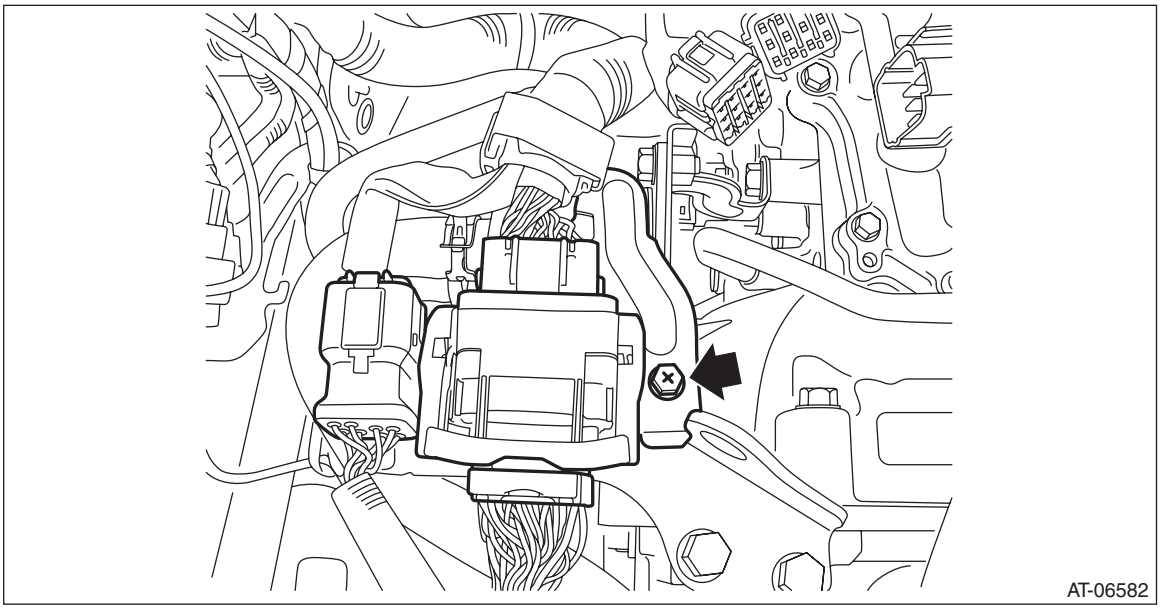

10) Disconnect the EGR control valve harness connector, throttle position sensor harness connector and manifold absolute pressure sensor harness connector.
11) Remove the engine hanger rear.

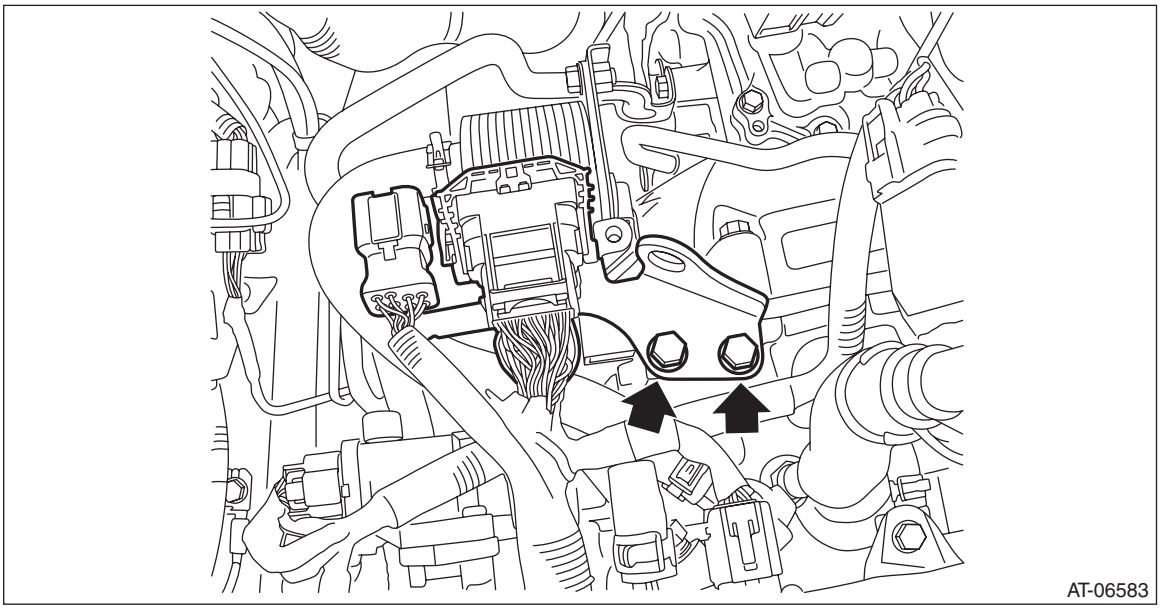

12) Remove the service hole plug.

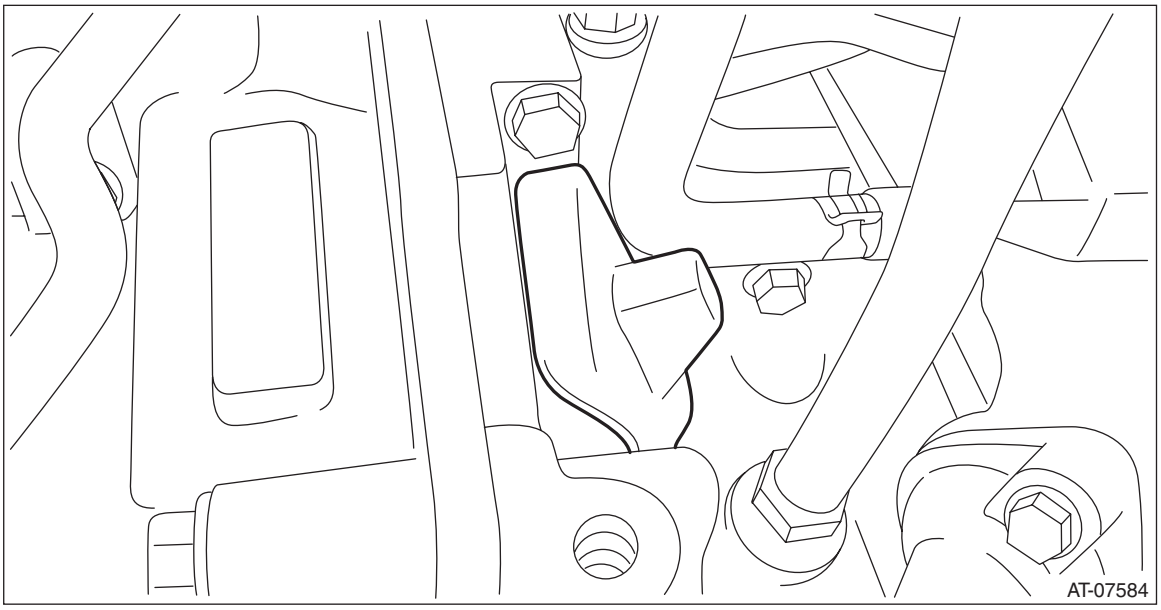

13) Remove the four bolts combining the torque converter and drive plate while rotating the crank pulley a little at a time in the same direction as engine revolution.

CAUTION:
- **Be careful not to drop bolts into the converter housing.**
- **Be careful not to damage the mounting bolts.**

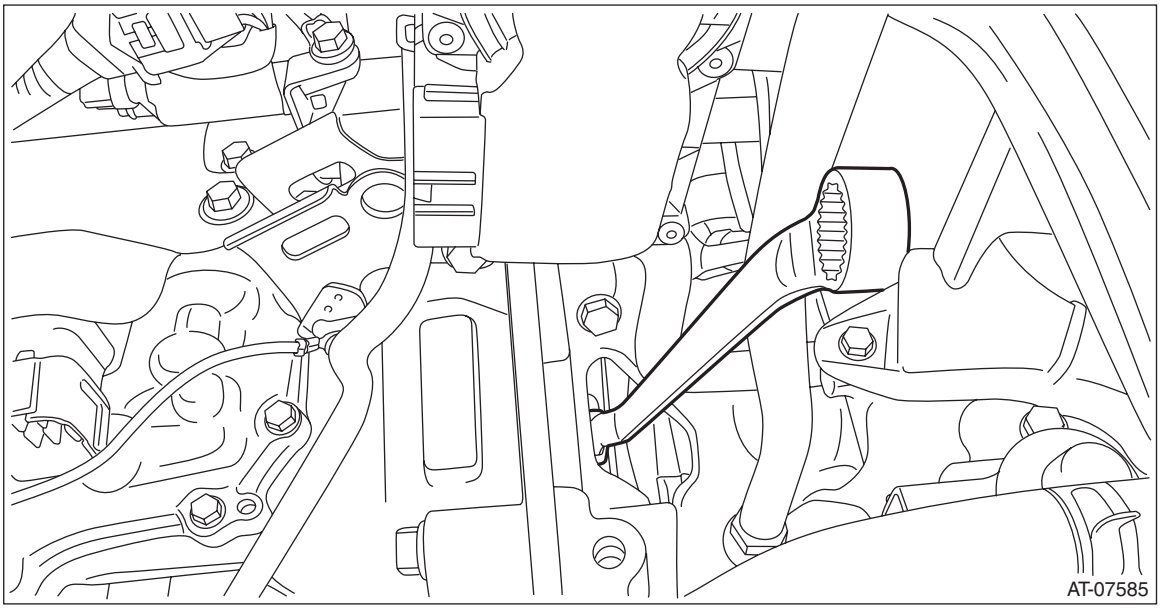

14) Make sure the torque converter moves freely by rotating with finger through the starter installation hole.

15) Attach the ST to the converter case.
ST 498277200 STOPPER SET

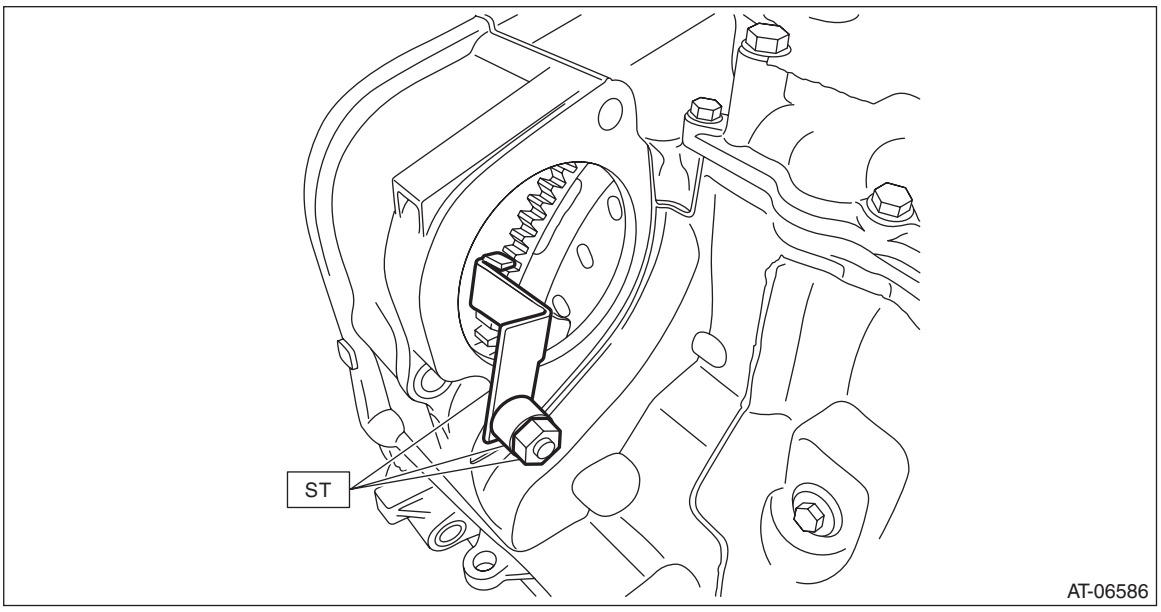

16) Remove the air breather hose from the pitching stopper bracket, and then remove the pitching stopper bracket and transmission radio ground cord.

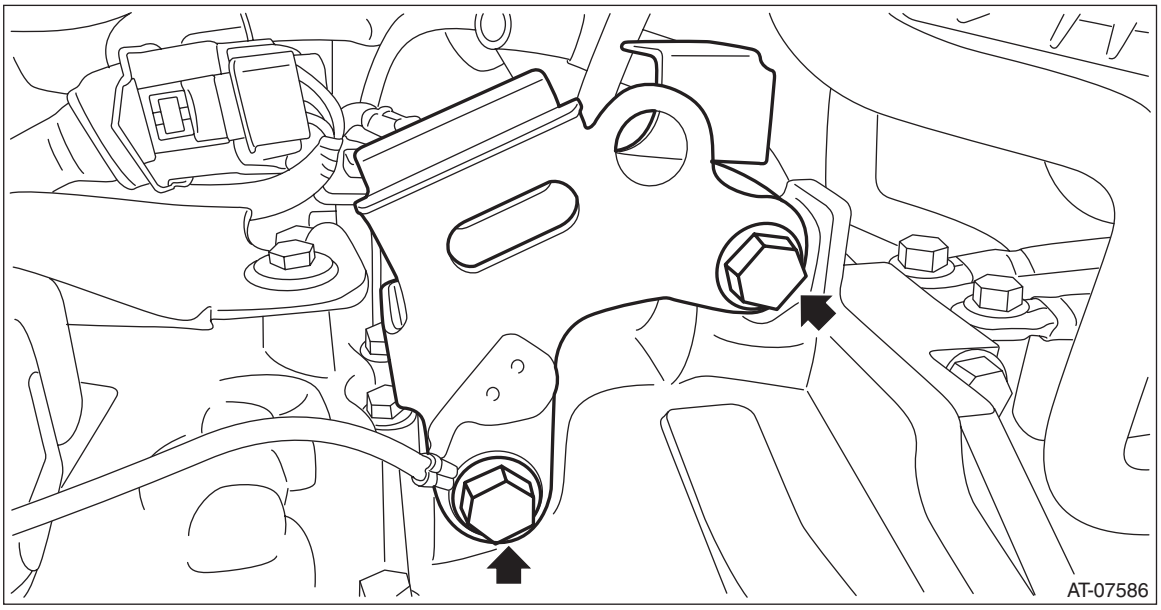

17) Remove the engine ground terminal.

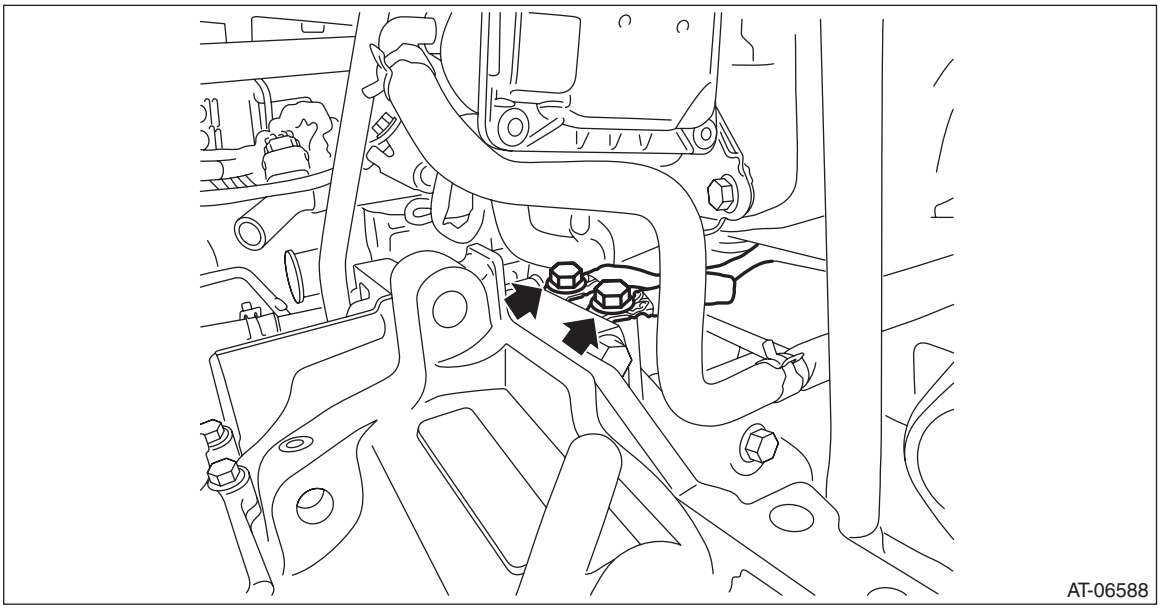

18) Remove the CVTF cooler (with warmer feature) from the transmission, and using a piece of wire, affix to a location of the body where it will not interfere with the removal of the transmission.

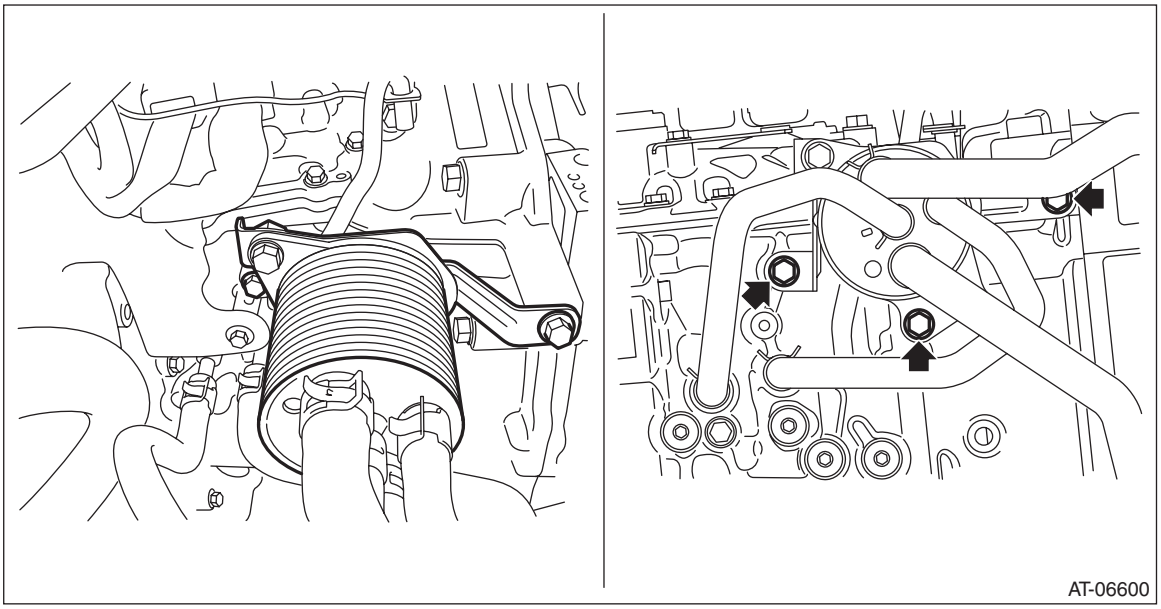

19) Remove the CVTF inlet hose and outlet hose from the pipe.

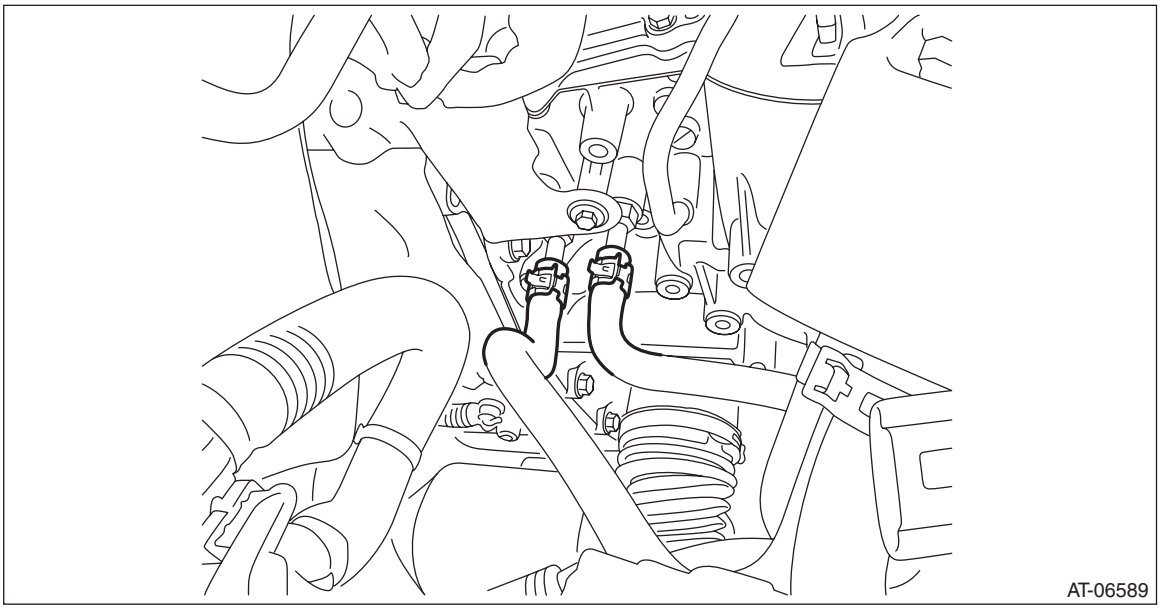

20) Set the ST.

ST1 41099AA010 ENGINE SUPPORT BRACKET (or 41099AA011)
ST2 41099AA020 ENGINE SUPPORT

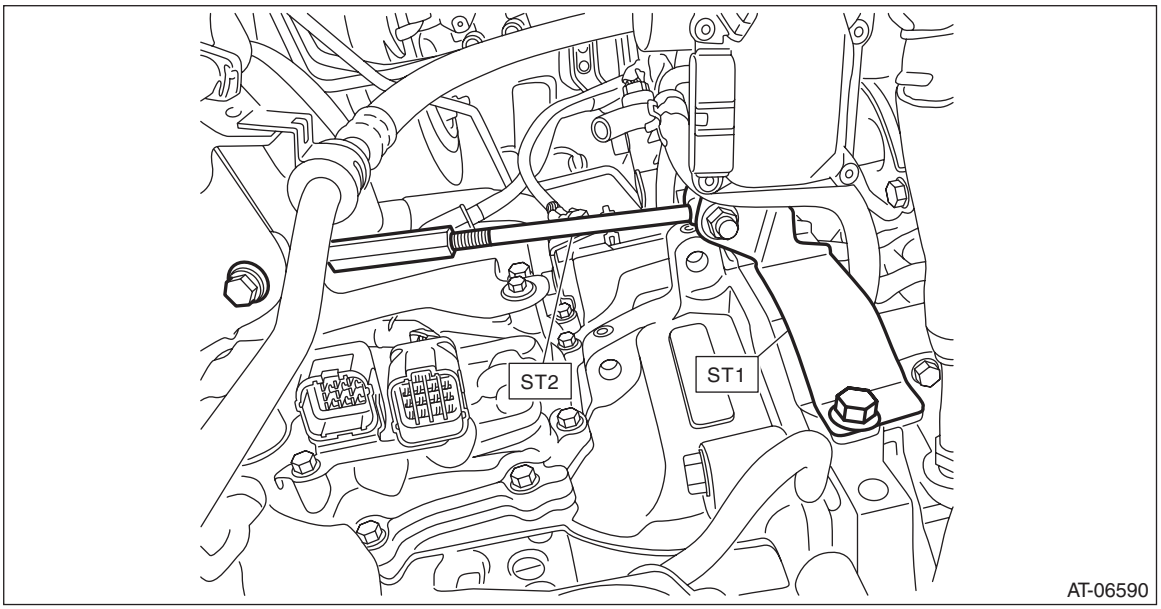

21) Remove the three transmission connecting bolts.

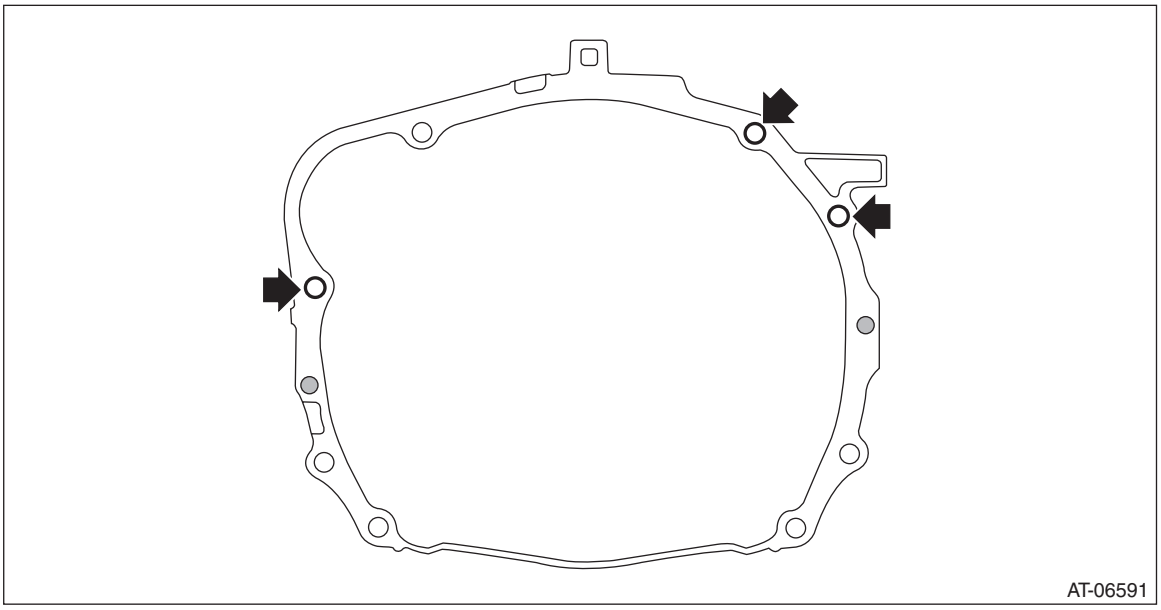

22) Lift up the vehicle.
23) Remove the front tires. <Ref. to WT-4, REMOVAL, Tire and Wheel.>
24) Remove the under cover.
25) Remove the center exhaust pipe. <Ref. to EX(H4DO(w/o HEV))-18, REMOVAL, Rear Exhaust Pipe.>
26) Remove the center exhaust cover.

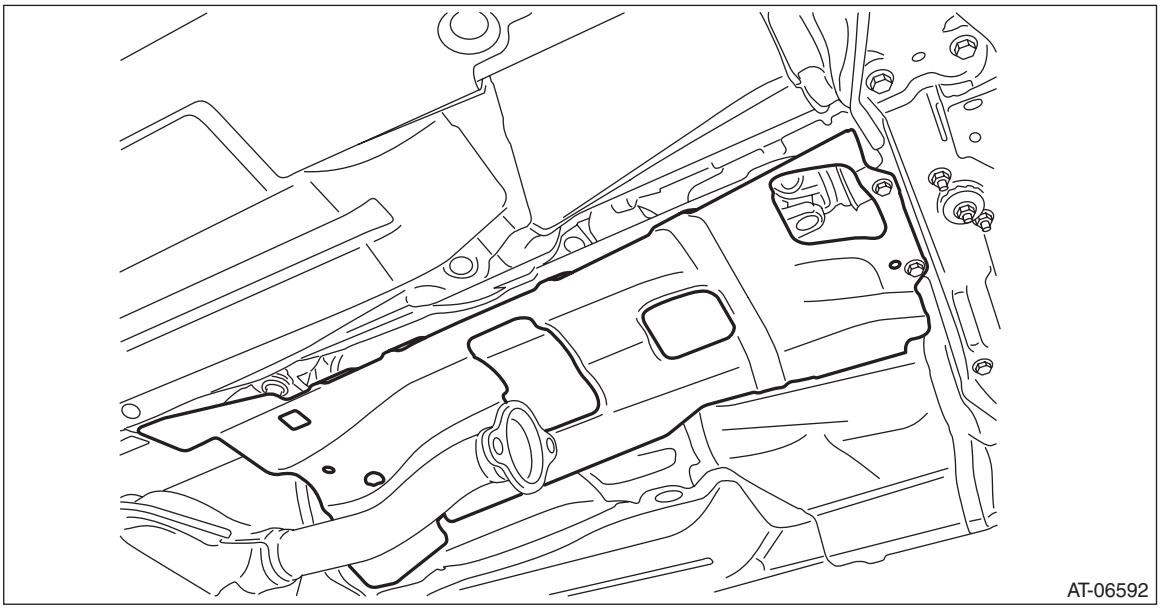

27) Remove the CVTF drain plug to drain CVTF. <Ref. to CVT(TR580)-36, REPLACEMENT, CVTF.>
28) Drain differential gear oil. <Ref. to CVT(TR580)-41, REPLACEMENT, Differential Gear Oil.>

29) Remove the snap pin and washer from shifter arm and remove the select cable from shifter arm.

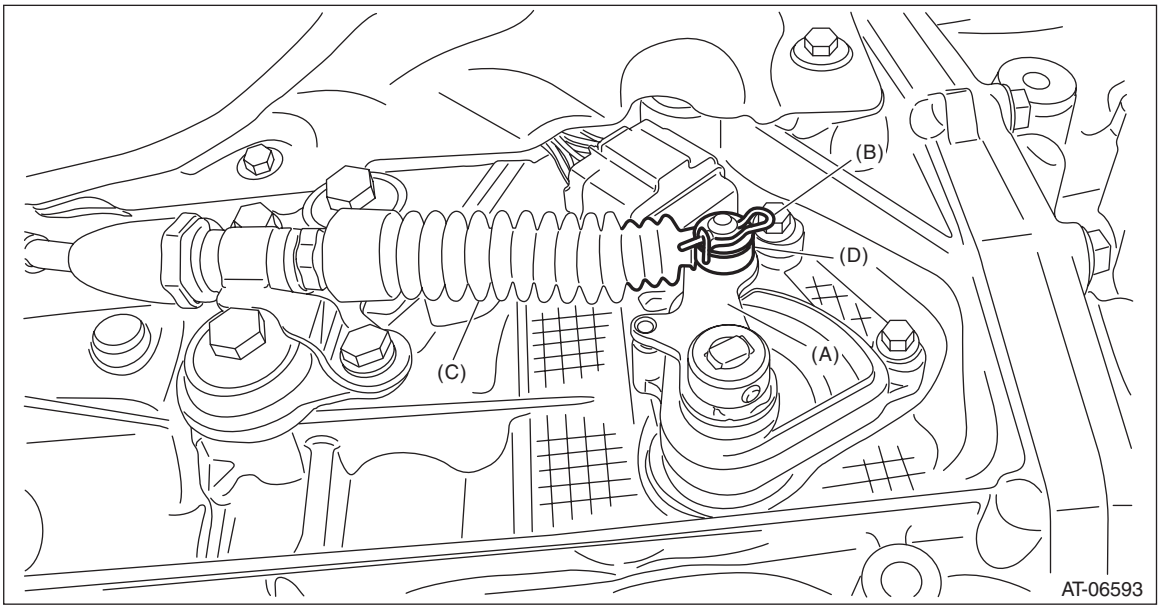

(A) Shifter arm
(B) Snap pin
(C) Select cable
(D) Washer

30) Remove the plate assembly from the transmission case.

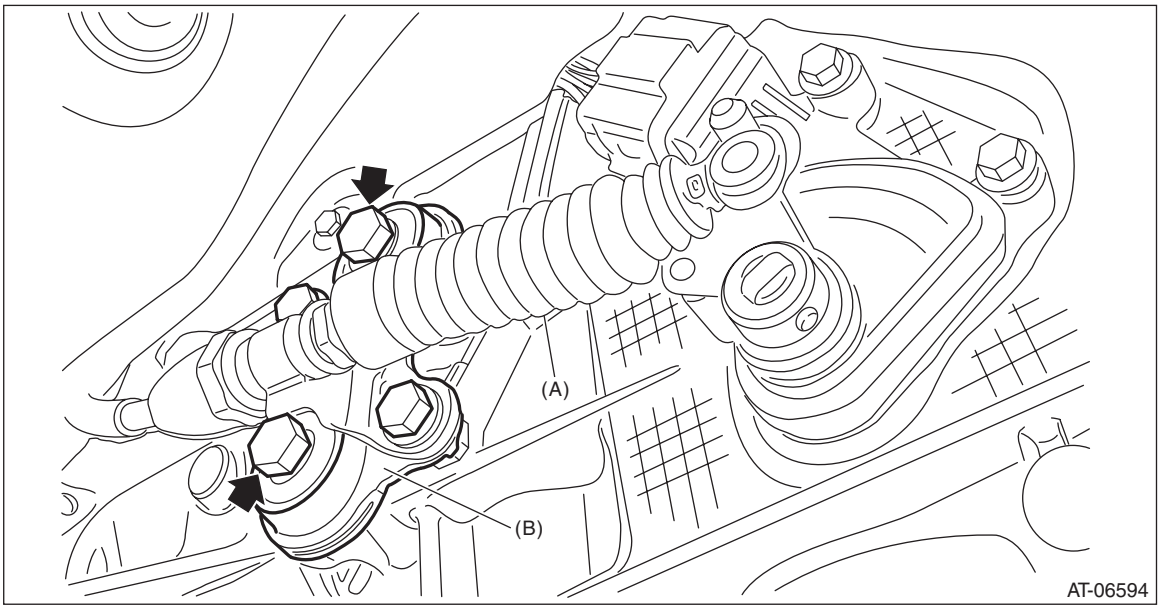

(A) Select cable
(B) Plate ASSY

31) Remove the propeller shaft. <Ref. to DS-12, REMOVAL, Propeller Shaft.>

32) Remove the jack-up plate.

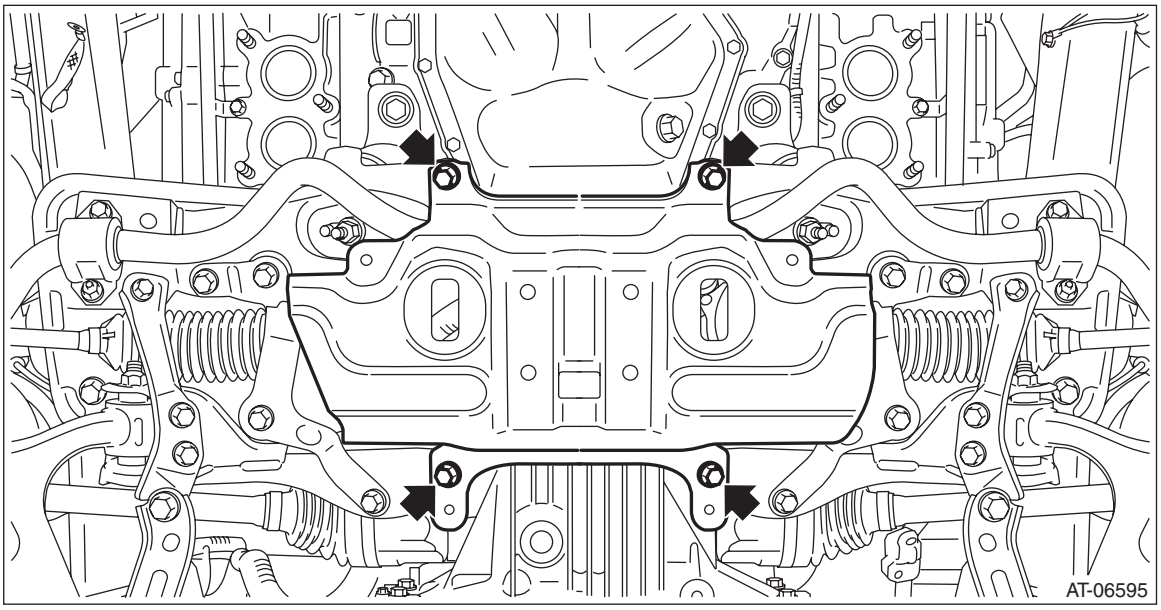

33) Remove the stabilizer bracket.

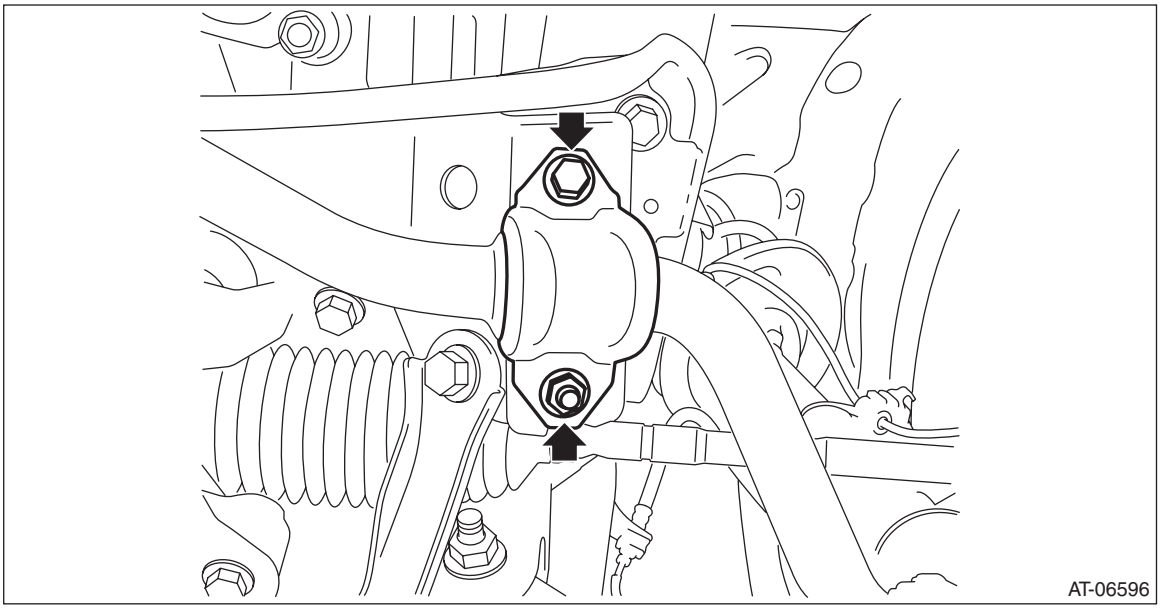

34) Remove the bolts which secure to the front housing, and separate the front arm and housing.

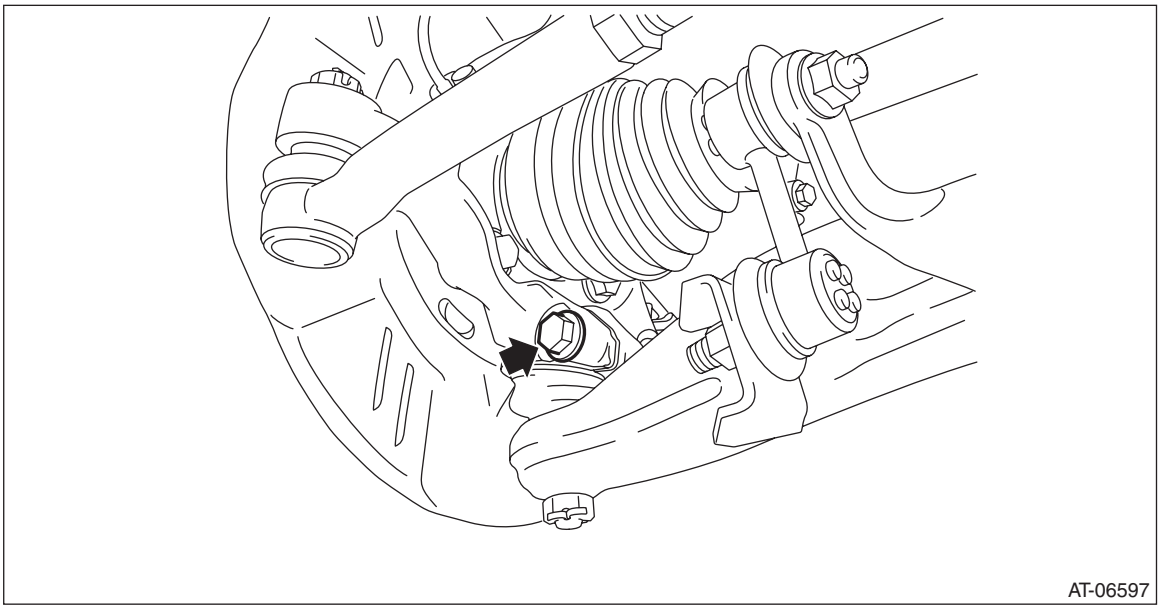

35) Using a tire lever or a crow bar, etc., pull out until the front drive shaft transmission side joint slides move smoothly.

NOTE:
Place cloth between the tire lever or bar and the transmission in order to avoid damaging the transmission side retainer.

36) Hold the transmission side joint of the front drive shaft by hand and extract the housing from the transmission while pressing the housing outward, so as not to stretch the boot.

NOTE:
- Before pulling RH front drive shaft from transmission, turn the steering wheel to left hand full lock.
- Before pulling LH front drive shaft from transmission, turn the steering wheel to right hand full lock.

37) Remove the two transmission connecting bolts and two nuts (lower side).

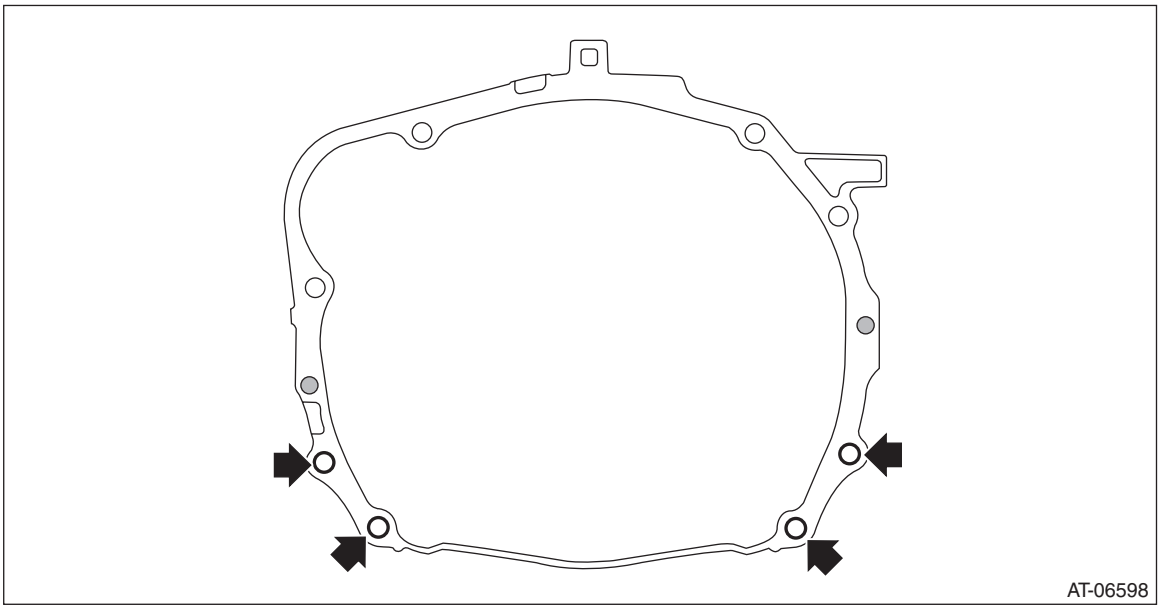

38) Set the transmission jack under the transmission.

NOTE:
Make sure that the support plates of transmission jack do not touch the oil pan.

39) Remove the transmission rear crossmember from the vehicle.

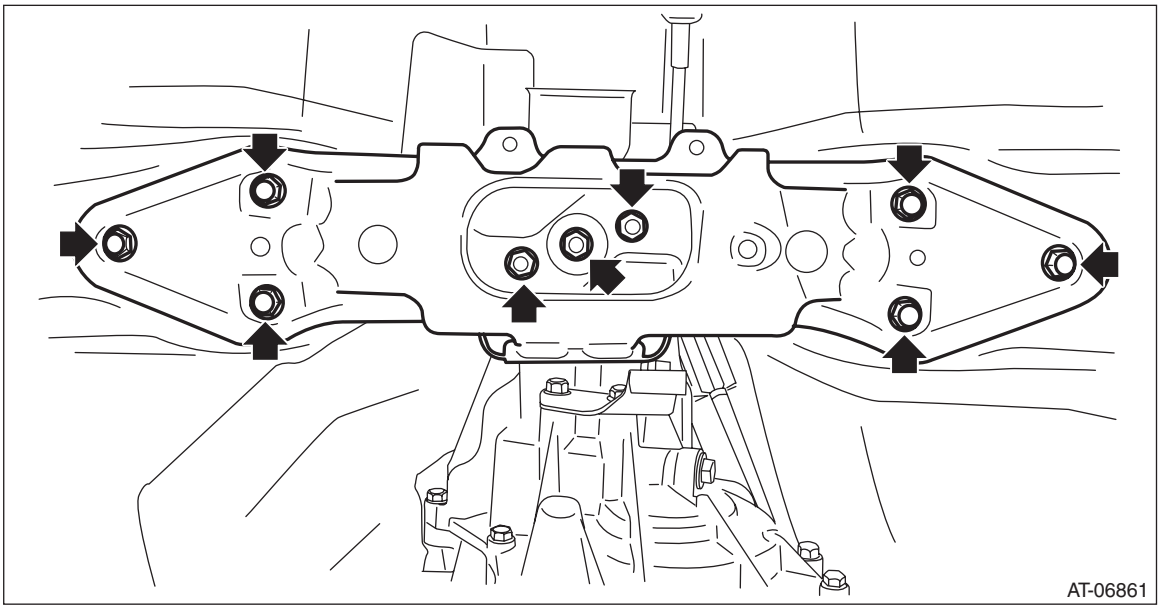

40) While lowering the transmission jack gradually, fully retract the engine support, and then tilt the engine rearward.
41) Remove the transmission assembly.

NOTE:
Remove it while moving the transmission jack up and down so that the engine and transmission remain directly aligned.

42) Remove the rear cushion rubber.

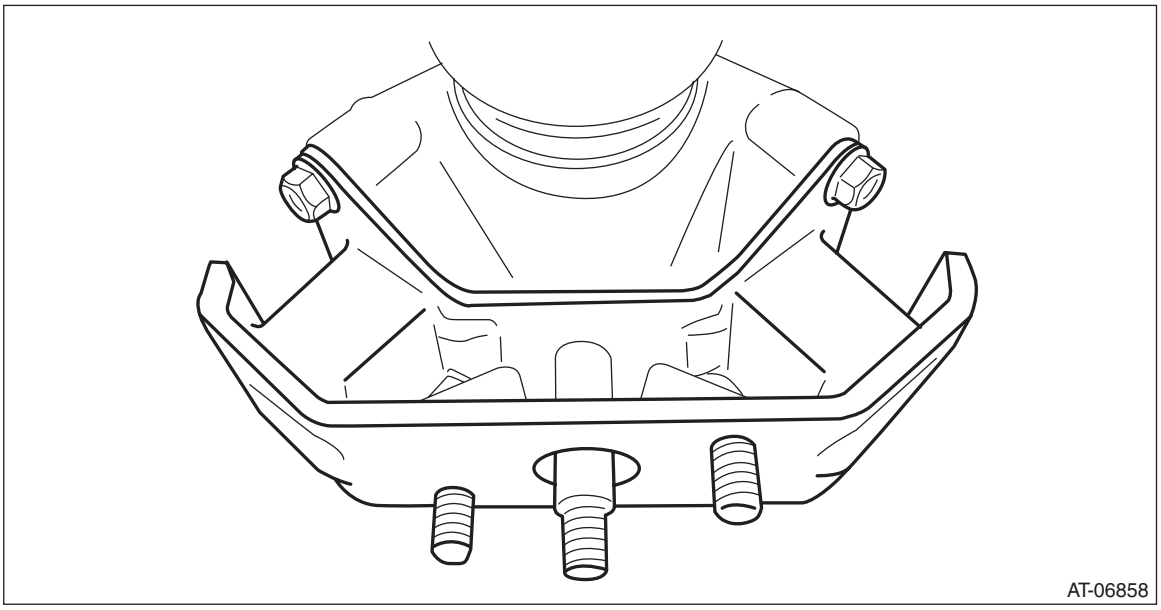

B: INSTALLATION

1) Attach the ST to converter case.
ST 498277200 STOPPER SET

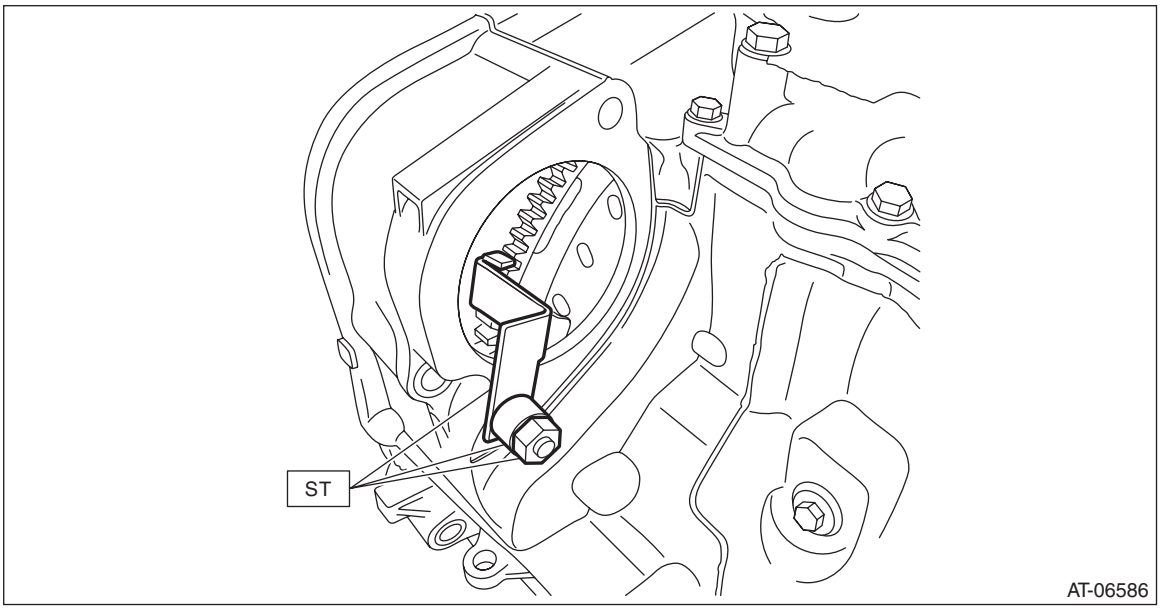

2) When completely overhauling the transmission, refill CVTF through the transmission right side plug. <Ref. to CVT(TR580)-160, Preparation for Overhaul.>
3) Replace the front differential side retainer oil seal. <Ref. to CVT(TR580)-87, REPLACEMENT, Differential Side Retainer Oil Seal.>

NOTE:
- Be sure to replace the differential side retainer oil seal with a new part whenever the front drive shaft is removed from the transmission.
- When a new differential side retainer oil seal has been installed, replacement is not required.

4) Install the rear cushion rubber on the transmission.

Tightening torque:
40 N·m (4.1 kgf-m, 29.5 ft-lb)

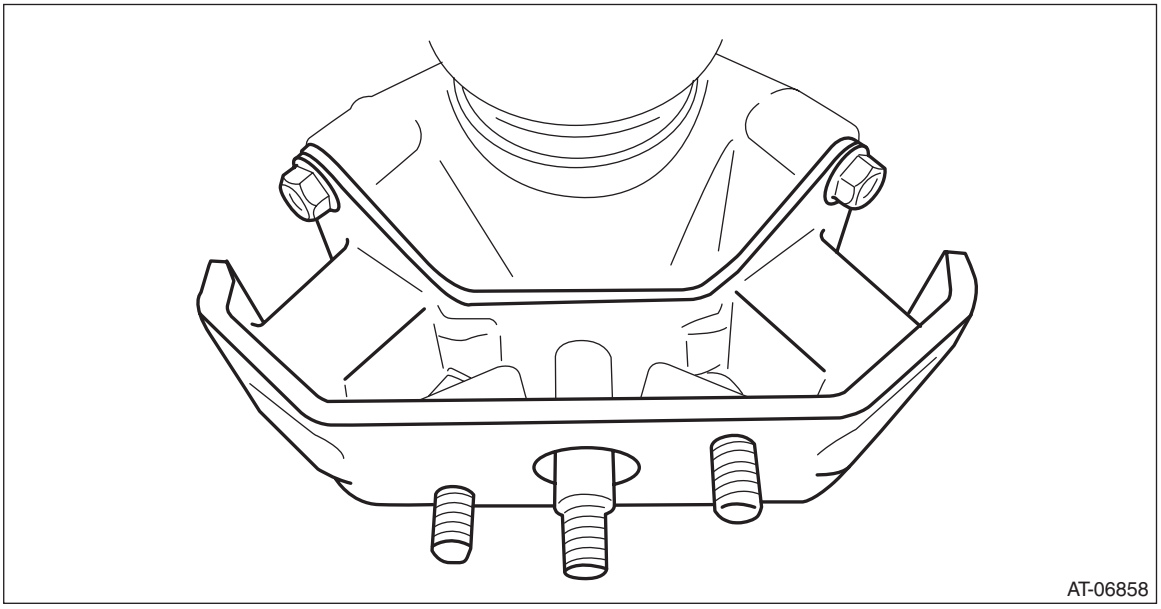

5) Mount the transmission onto the transmission jack.
6) Strike and bend the transmission hanger of transmission rear with a rubber hammer etc. so that it gets in contact with the transmission case.

CAUTION:
Do not apply extra overload or impact to the transmission case.

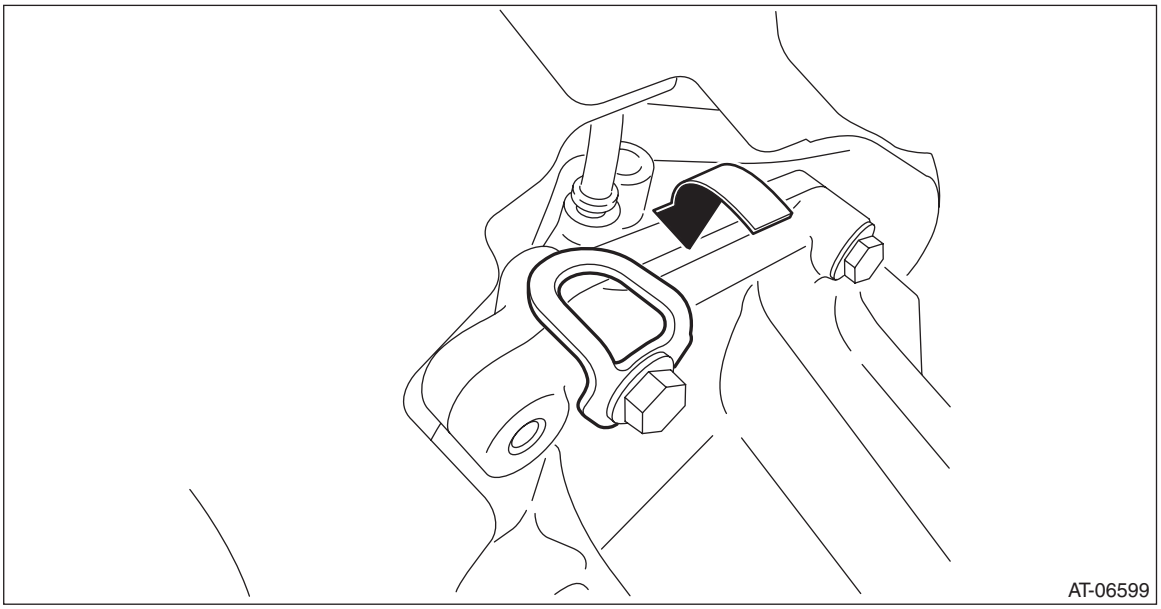

7) Remove the pitching stopper bracket, if mounted.
8) Install the transmission onto the engine.

NOTE:
- While raising the transmission jack gradually, turn the screw of engine support, then tilt the engine forward.
- Temporarily attach the two engine connecting bolts and two nuts (lower side).

9) Install the transmission rear crossmember.

Tightening torque:
T1: 35 N·m (3.6 kgf-m, 25.8 ft-lb)
T2: 70 N·m (7.1 kgf-m, 51.6 ft-lb)

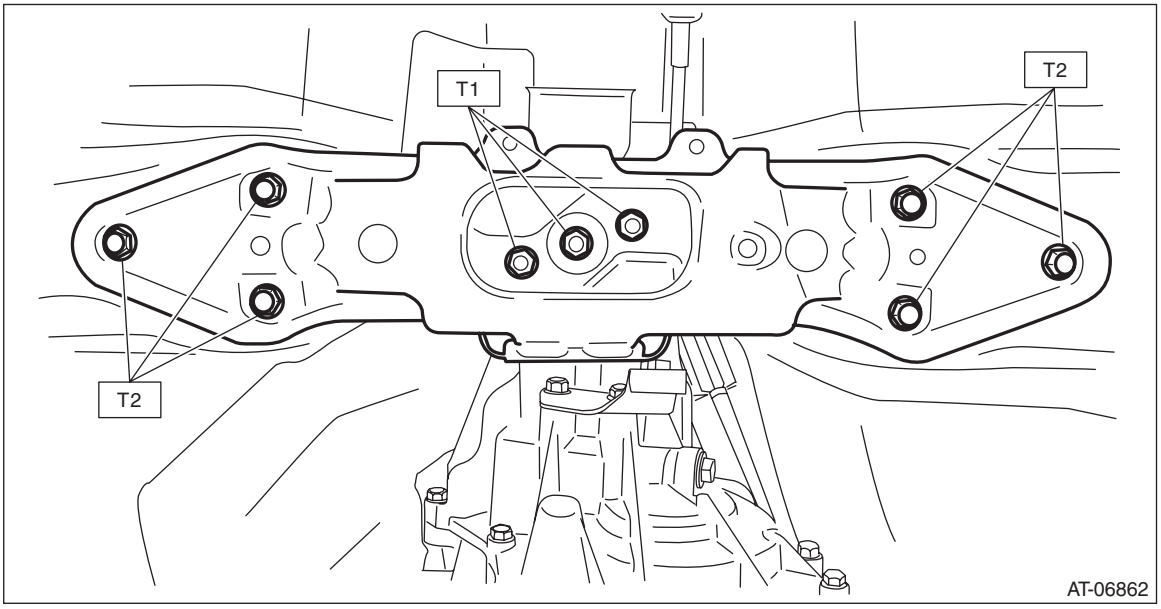

10) Tighten the two engine connecting bolts and two nuts (lower side).

Tightening torque:
50 N·m (5.1 kgf-m, 36.9 ft-lb)

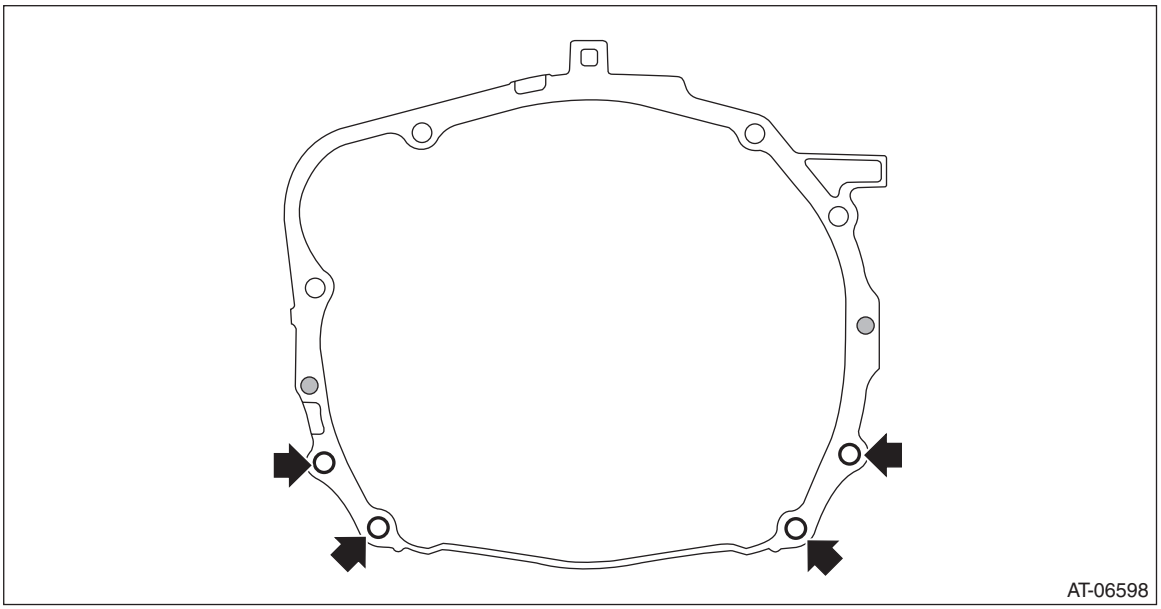

11) Remove the transmission jack.
12) Lower the vehicle.
13) Install the three engine mounting bolts (upper side).

Tightening torque:
50 N·m (5.1 kgf-m, 36.9 ft-lb)

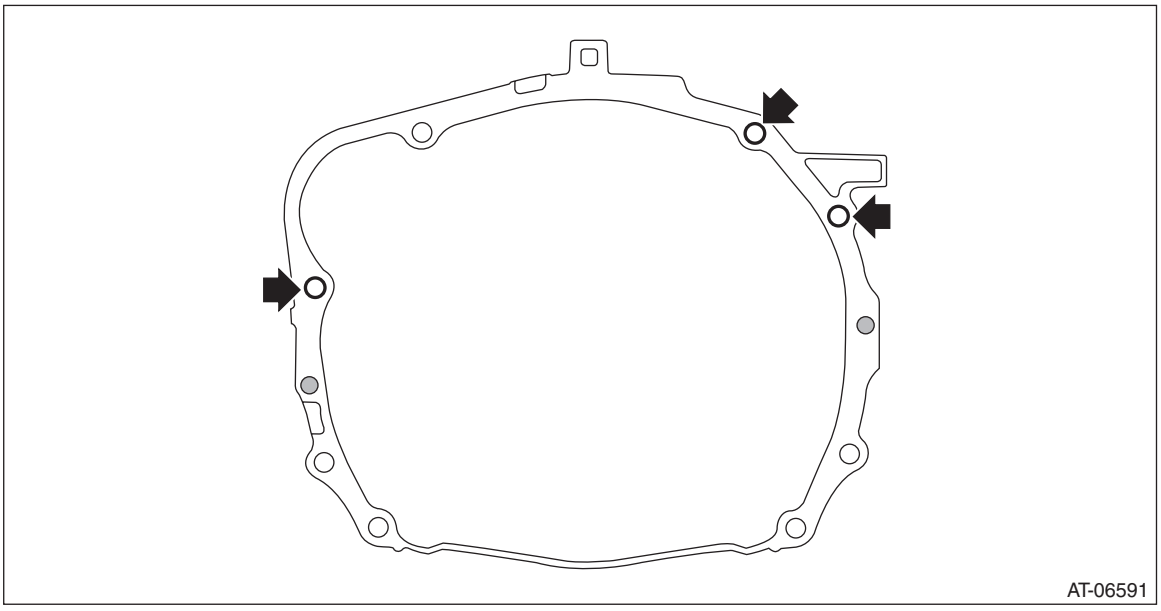

14) Remove the ST (STOPPER SET) from converter case.

15) Remove the ST (ENGINE SUPPORT BRACKET and ENGINE SUPPORT).
ST1 41099AA010 ENGINE SUPPORT BRACKET (or 41099AA011)
ST2 41099AA020 ENGINE SUPPORT

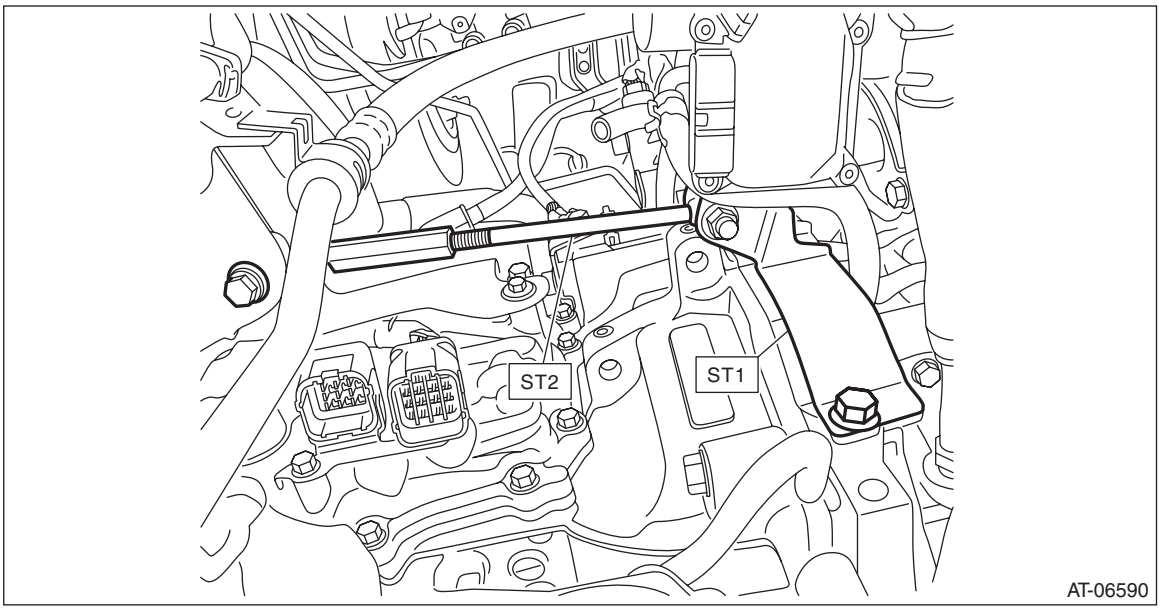

16) Match the torque converter screw hole with drive plate hole to install the bolt.

CAUTION:
- **Do not drop the mounting bolt in the converter housing.**
- **Do not damage the mounting bolt.**

Tightening torque:
25 N·m (2.5 kgf-m, 18.4 ft-lb)

17) Install the remaining three bolts by rotating the crank pulley a little at a time in the same direction as engine revolution.

Tightening torque:
25 N·m (2.5 kgf-m, 18.4 ft-lb)

18) Install the service hole plug.

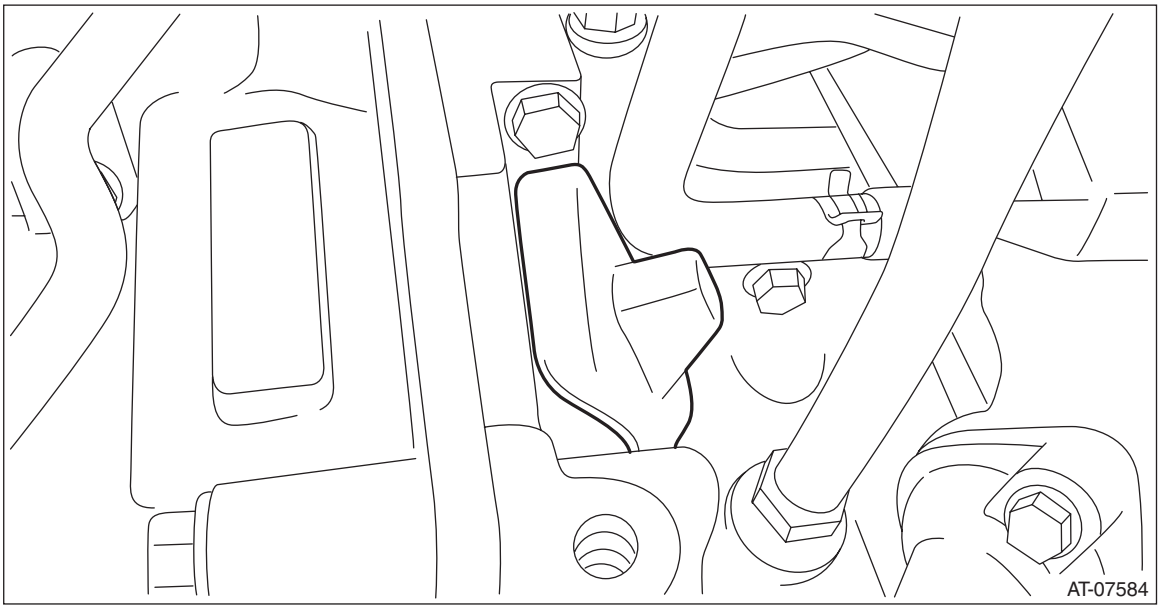

19) Install the engine ground terminals.

Tightening torque:
19 N·m (1.9 kgf-m, 14.0 ft-lb)

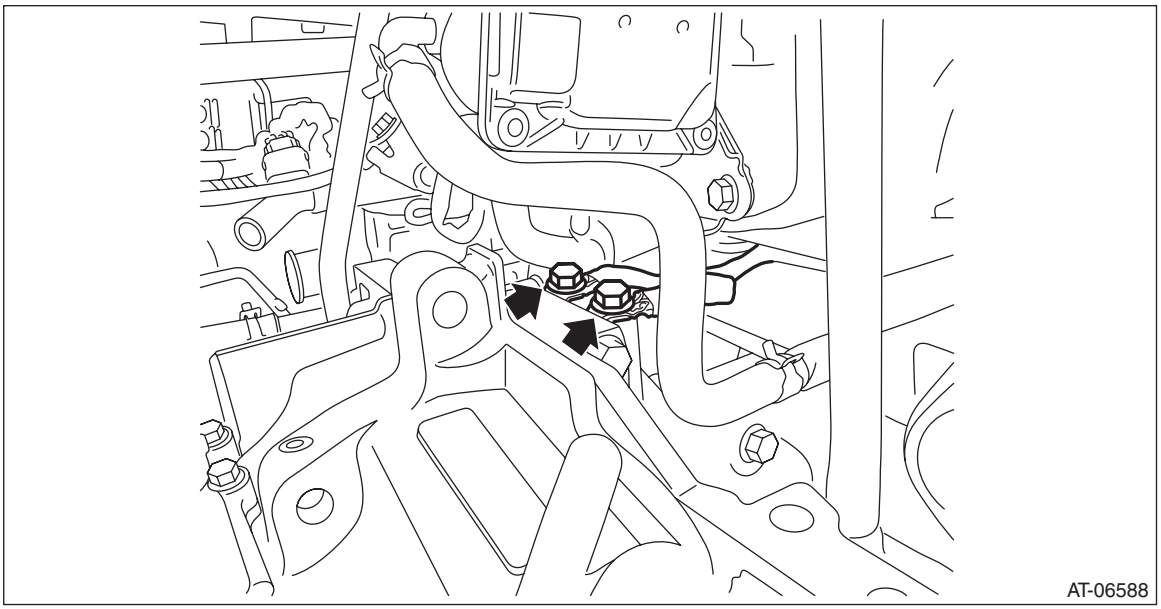

20) Replace the CVTF inlet hose and CVTF outlet hose. <Ref. to CVT(TR580)-149, DISASSEMBLY, CVTF Cooler (With Warmer Function).> <Ref. to CVT(TR580)-150, ASSEMBLY, CVTF Cooler (With Warmer Function).>
21) Install the CVTF inlet hose and CVTF outlet hose to transmission.

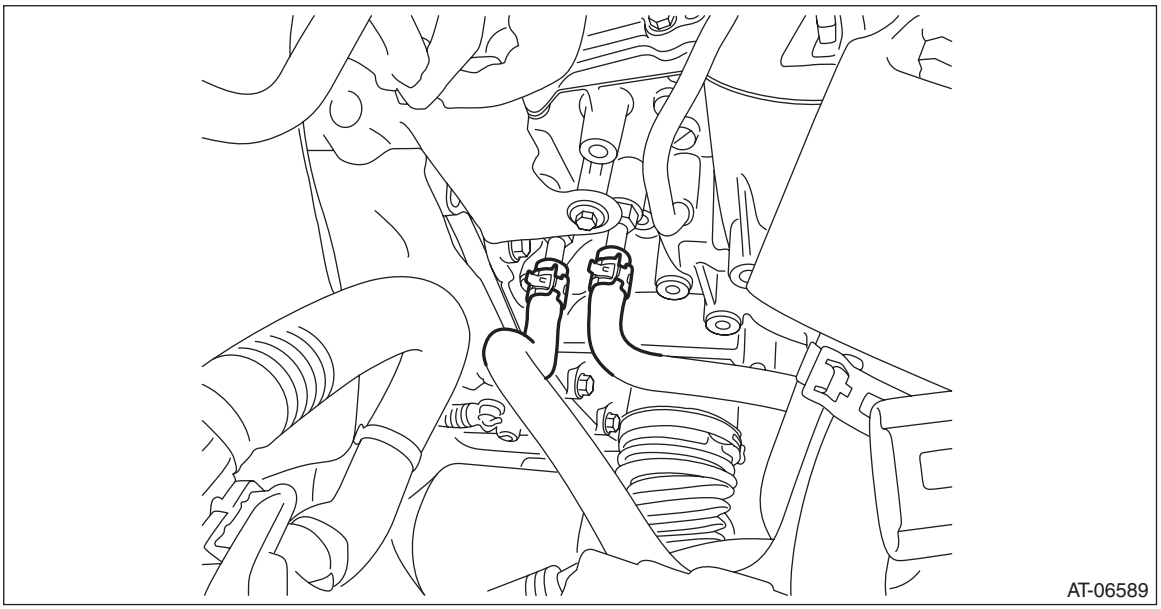

22) Install the CVTF cooler (with warmer feature) to the transmission.

Tightening torque:
23 N·m (2.3 kgf-m, 17.0 ft-lb)

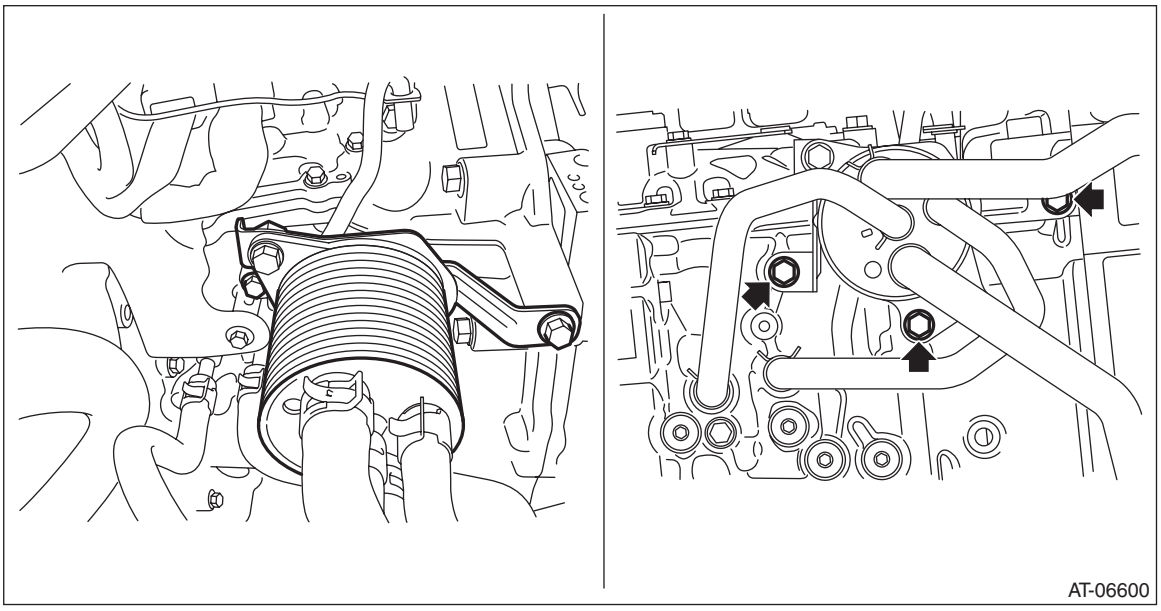

23) Install the starter. <Ref. to SC(H4DO(w/o HEV))-11, INSTALLATION, Starter.>
24) Install the engine hanger rear.

Tightening torque:
21 N·m (2.1 kgf-m, 15.5 ft-lb)

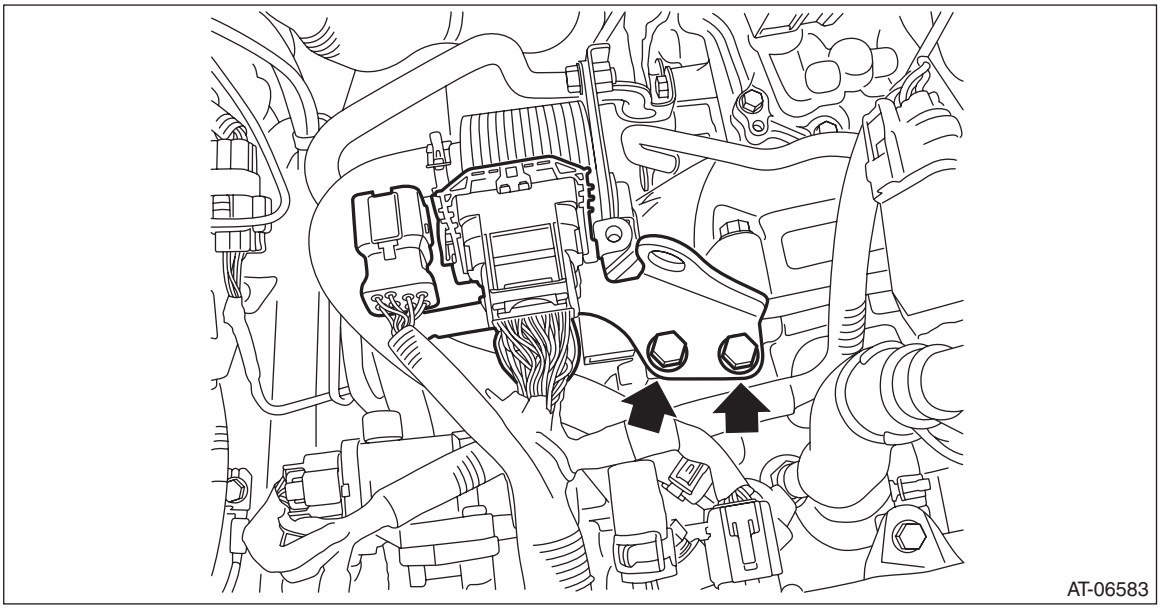

25) Install the pitching stopper bracket and transmission radio ground cord.

Tightening torque:
41 N·m (4.2 kgf-m, 30.2 ft-lb)

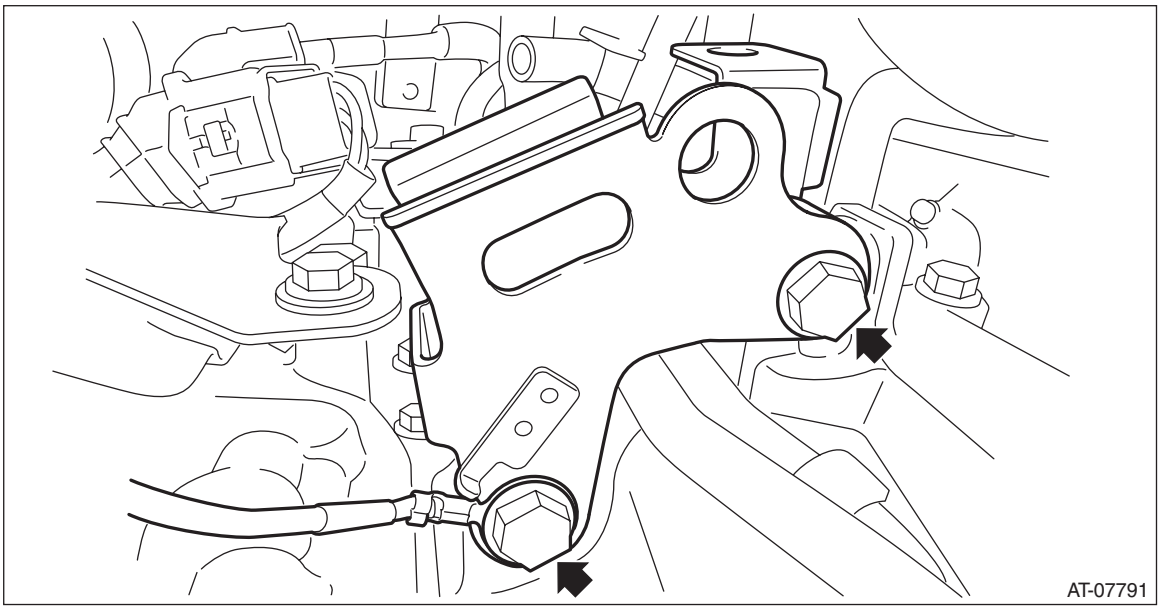

26) Install the air breather hose to the pitching stopper bracket.
27) Install the pitching stopper.

Tightening torque:
T1: 50 N·m (5.1 kgf-m, 36.9 ft-lb)
T2: 58 N·m (5.9 kgf-m, 42.8 ft-lb)

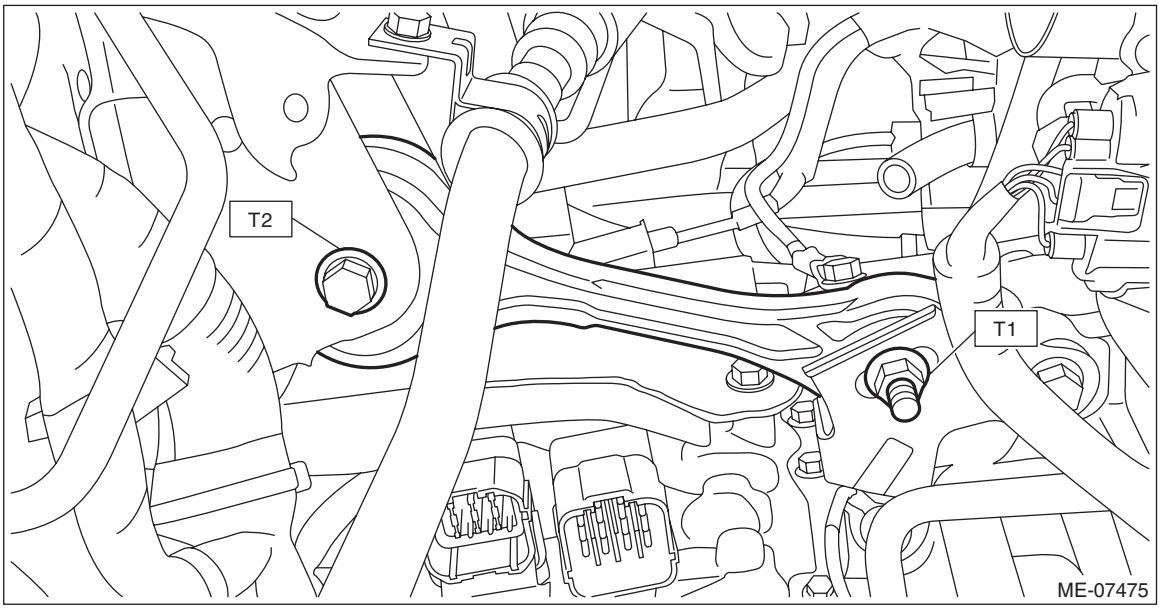

28) Connect the EGR control valve harness connector, throttle position sensor harness connector and manifold absolute pressure sensor harness connector.
29) Connect the engine harness connectors, then install the harness connector bracket.

Tightening torque:
7.5 N·m (0.8 kgf-m, 5.5 ft-lb)
30) Lift up the vehicle.
31) Apply grease to the side retainer oil seal lip.

32) Set the ST to side retainer.
ST 28399SA010 OIL SEAL PROTECTOR

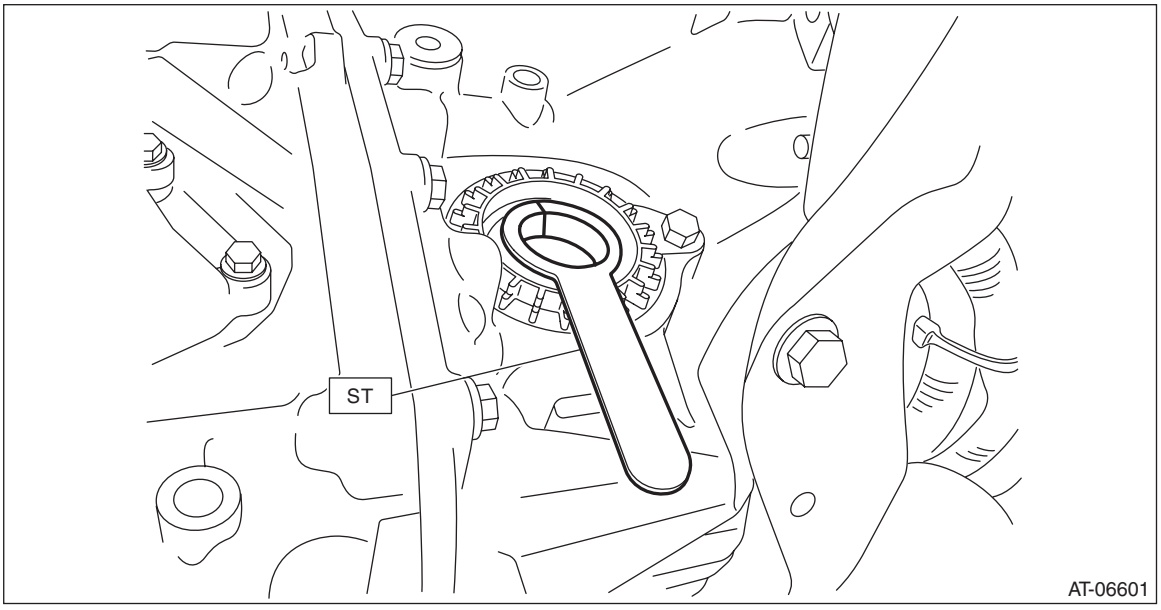

33) Replace the circlip of the drive shaft with a new part.
34) Insert the front drive shaft spline section into transmission and remove the ST (OIL SEAL PROTECTOR).

NOTE:
- Before inserting RH front drive shaft into transmission, turn the steering wheel to left hand full lock.
- Before inserting LH front drive shaft into transmission, turn the steering wheel to right hand full lock.

35) Insert the drive shaft into the transmission securely by pressing the housing from outside of the vehicle.
36) Insert the ball joint into housing and secure with bolt.

Tightening torque:
50 N·m (5.1 kgf-m, 36.9 ft-lb)

CAUTION:
- **Do not apply grease to the tapered portion of ball stud.**
- **Before tightening, make sure the lower side of housing and stepped section of ball joint are in contact.**

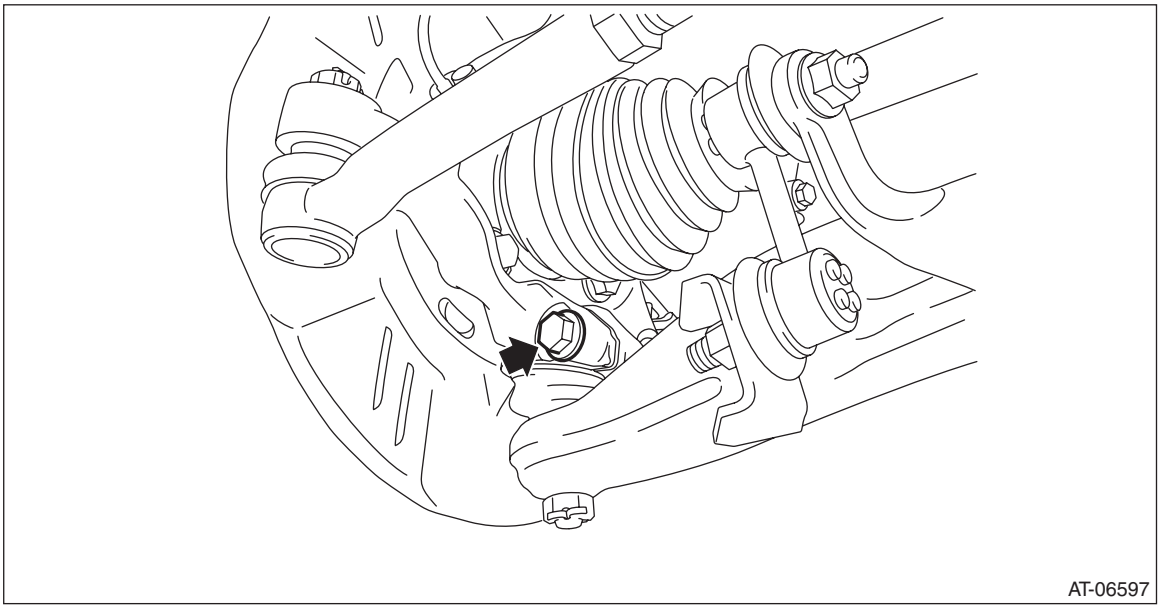

37) Install the stabilizer bracket.

Tightening torque:
25 N·m (2.5 kgf-m, 18.4 ft-lb)

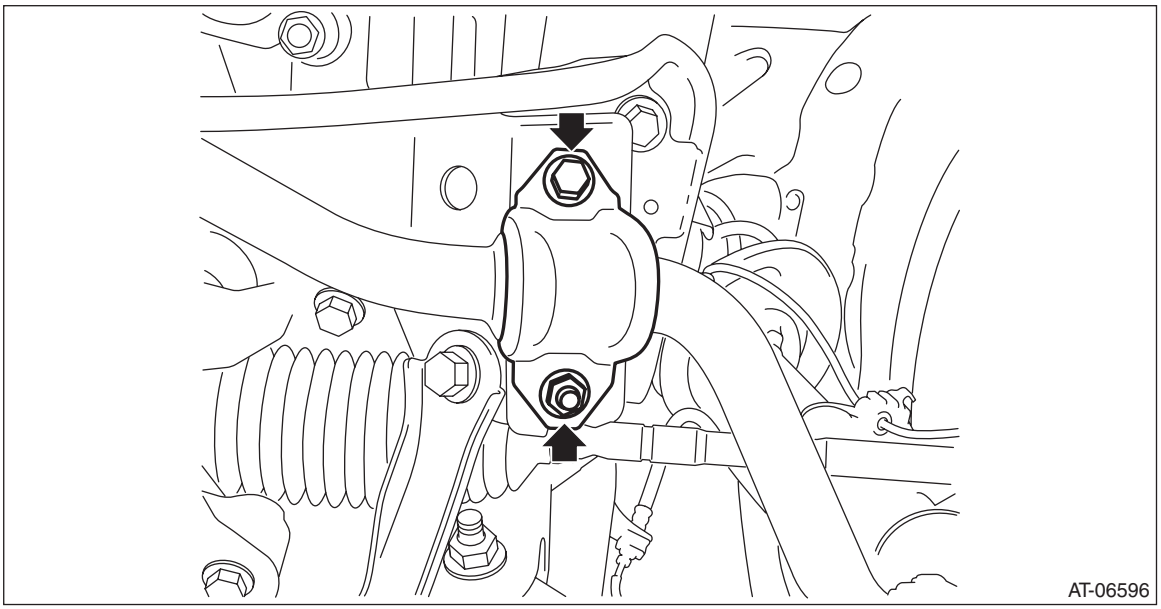

38) Install the jack-up plate.

Tightening torque:
60 N·m (6.1 kgf-m, 44.3 ft-lb)

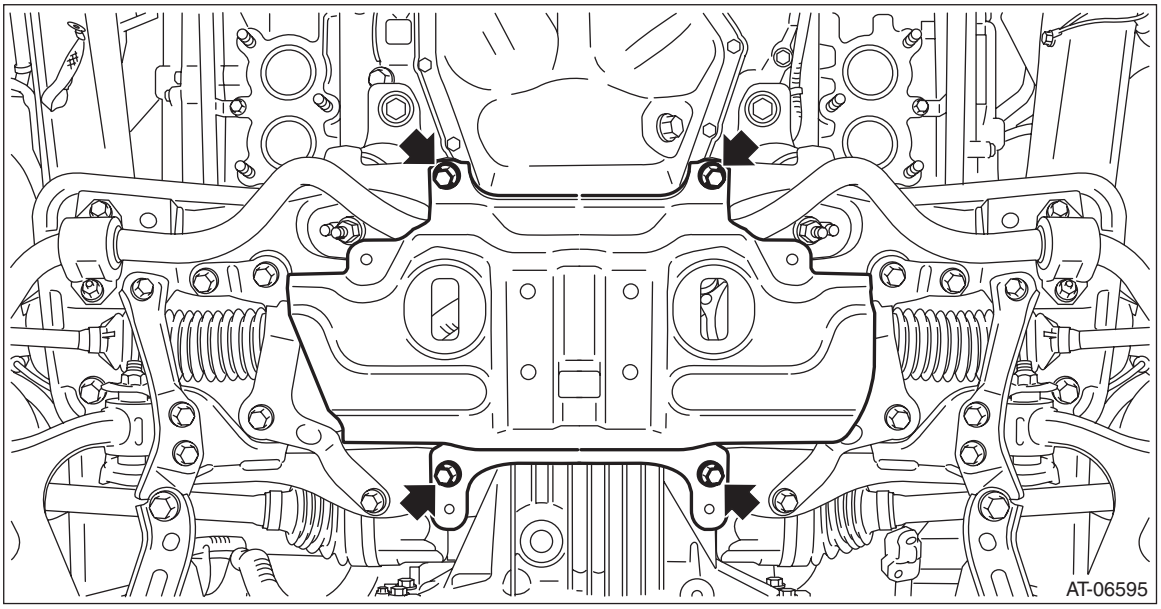

39) Install the plate assembly to transmission.

Tightening torque:
25 N·m (2.5 kgf-m, 18.4 ft-lb)

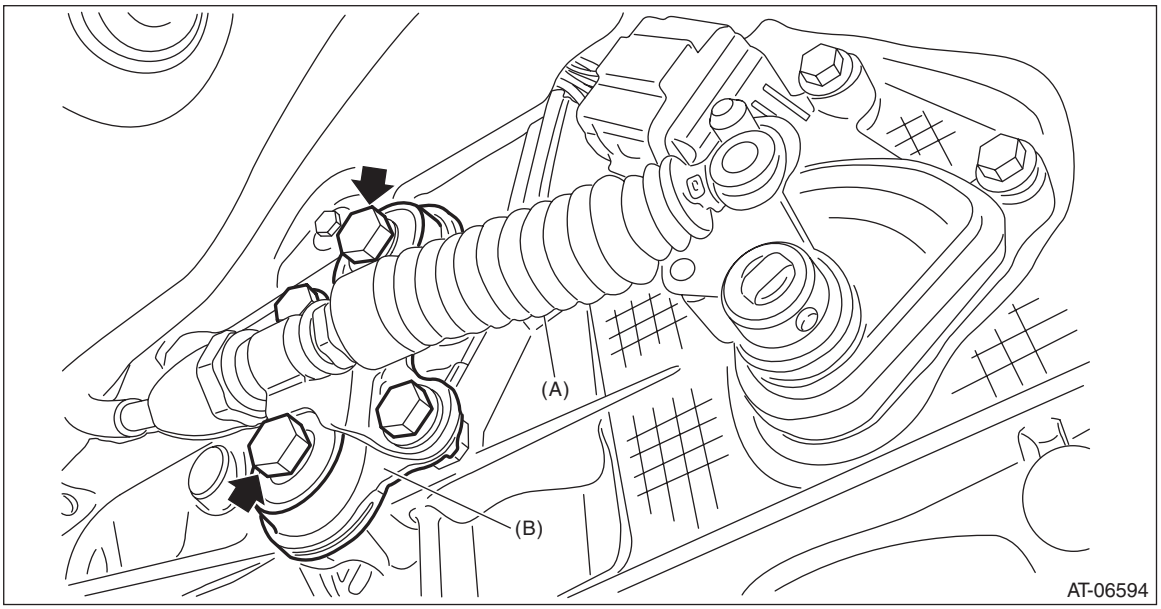

(A) Select cable
(B) Plate ASSY

40) Install the washer and snap pin to the shifter arm.

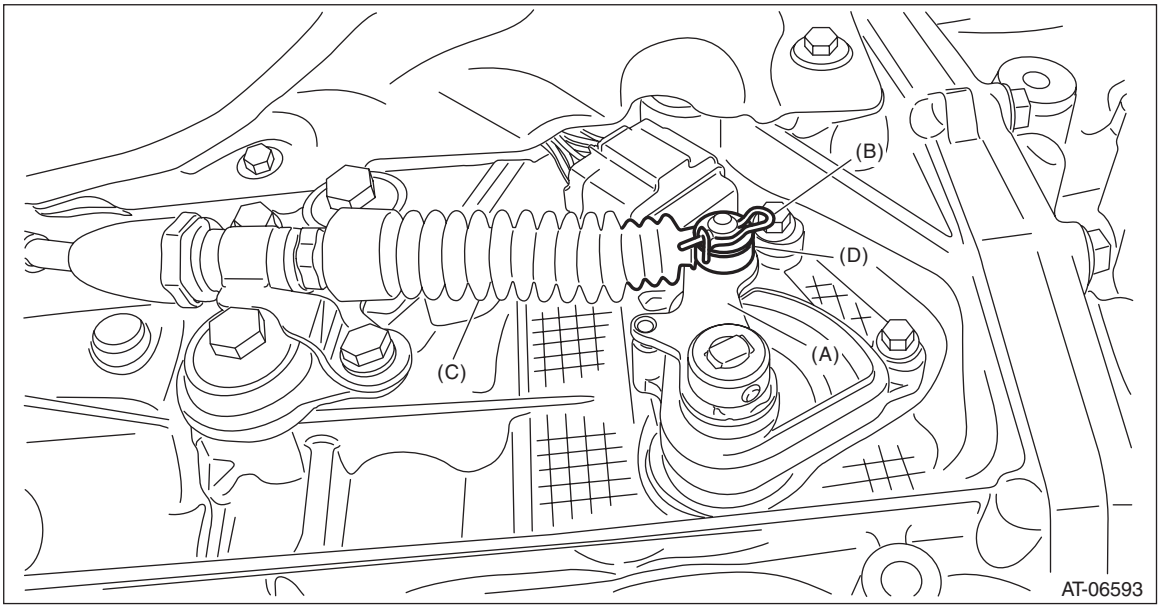

(A) Shifter arm
(B) Snap pin
(C) Select cable
(D) Washer

41) Install the propeller shaft. <Ref. to DS-13, INSTALLATION, Propeller Shaft.>
42) Install the center exhaust cover.

Tightening torque:
18 N·m (1.8 kgf-m, 13.3 ft-lb)

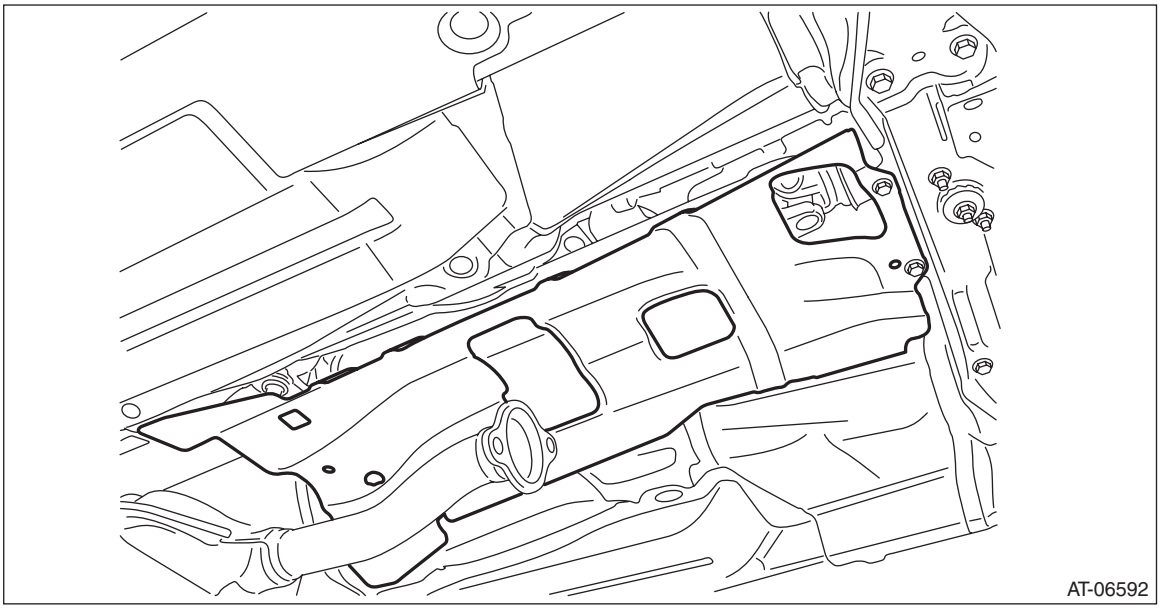

43) Install the center exhaust pipe. <Ref. to EX(H4DO(w/o HEV))-8, INSTALLATION, Front Exhaust Pipe.>
44) Install the under cover.
45) Lower the vehicle.
46) Connect the following harness connectors.
- Transmission harness connectors
- Inhibitor harness connector
- Transmission radio ground terminal

Tightening torque:
13 N·m (1.3 kgf-m, 9.6 ft-lb)

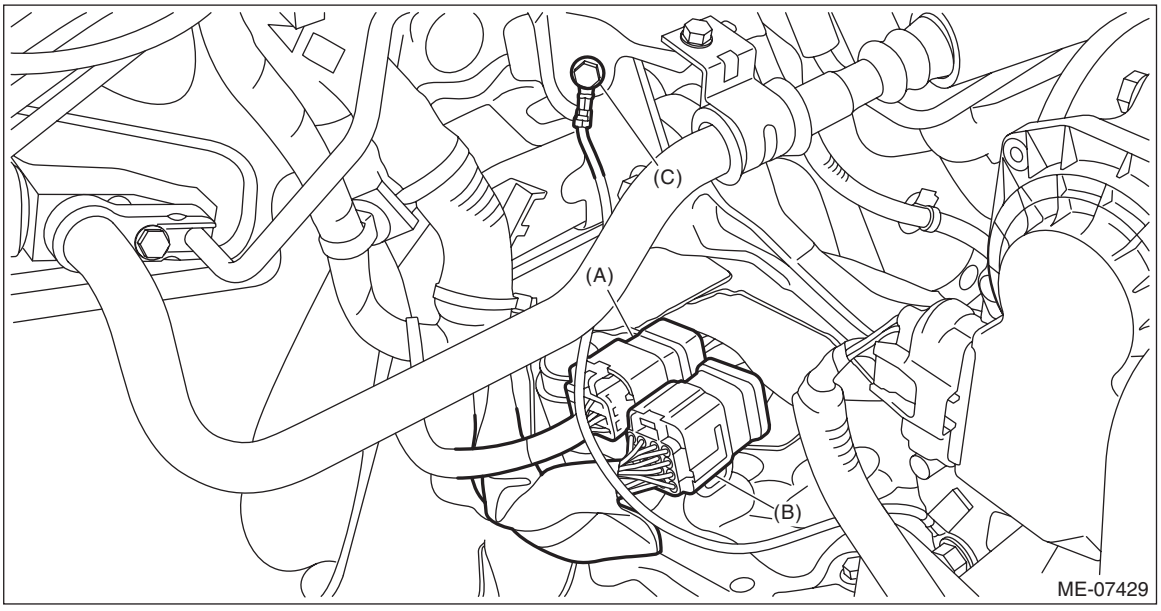

(A) Transmission harness connectors
(B) Inhibitor harness connector
(C) Transmission radio ground terminal

47) Install the air intake boot assembly. <Ref. to IN(H4DO(w/o HEV))-12, INSTALLATION, Air Intake Boot.>
48) Install the front tires. <Ref. to WT-4, INSTALLATION, Tire and Wheel.>
49) Connect the battery ground terminal.
50) Refill differential gear oil to adjust the differential gear oil amount. <Ref. to CVT(TR580)-39, Differential Gear Oil.>
51) Refill CVTF to adjust the CVTF level. <Ref. to CVT(TR580)-35, CVTF.>
52) Perform the operation for clearing AT learning value. <Ref. to CVT(w/o HEV)(diag)-18, Clear Memory Mode.>
53) Perform the operation of AT learning mode. <Ref. to CVT(w/o HEV)(diag)-23, Learning Control.>
54) Execute the rear differential inspection mode. <Ref. to DI-66, Rear Differential Inspection Mode.>

CAUTION:
Always execute the rear differential inspection mode at the replacement of the following.

- **Replacement of transmission assembly**
- **Replacement of front differential hypoid gear set**

55) Perform the road test to make sure there is no fault. <Ref. to CVT(TR580)-44, INSPECTION, Road Test.>

11.Transmission Mounting System

A: REMOVAL

1. PITCHING STOPPER

1) Disconnect the ground cable from battery.
2) Remove the clip (A) from the air intake boot.
3) Loosen the clamp (B) connecting the air intake boot and air cleaner case (rear).
4) Loosen the clamp (C) which connects the air intake boot and throttle body.

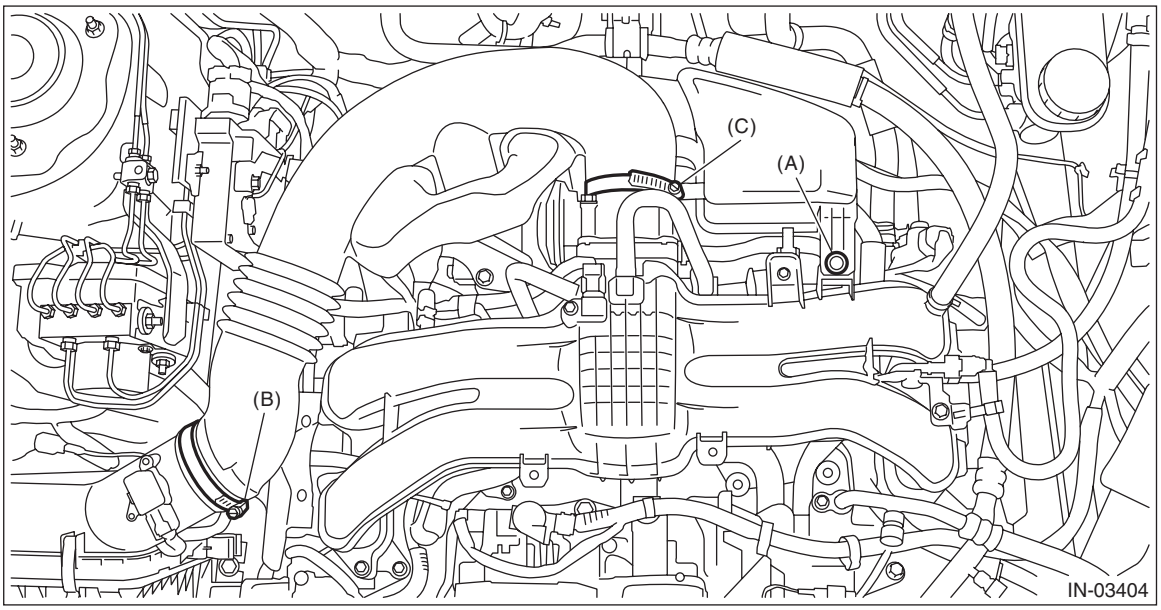

5) Remove the air intake boot from the throttle body, and move it to the left side wheel apron.

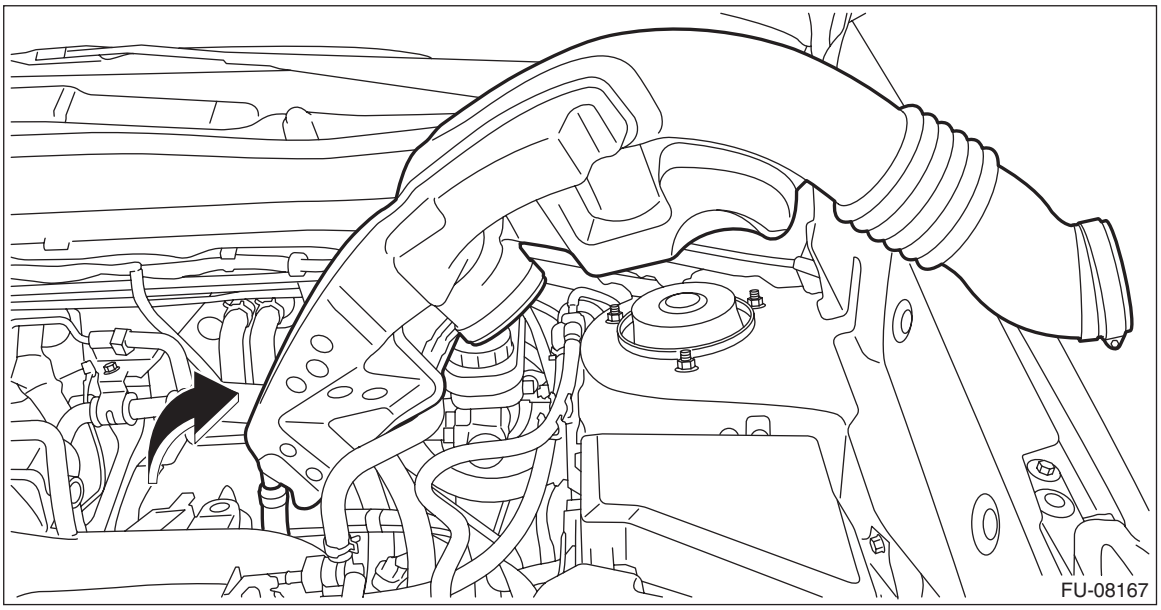

6) Remove the pitching stopper.

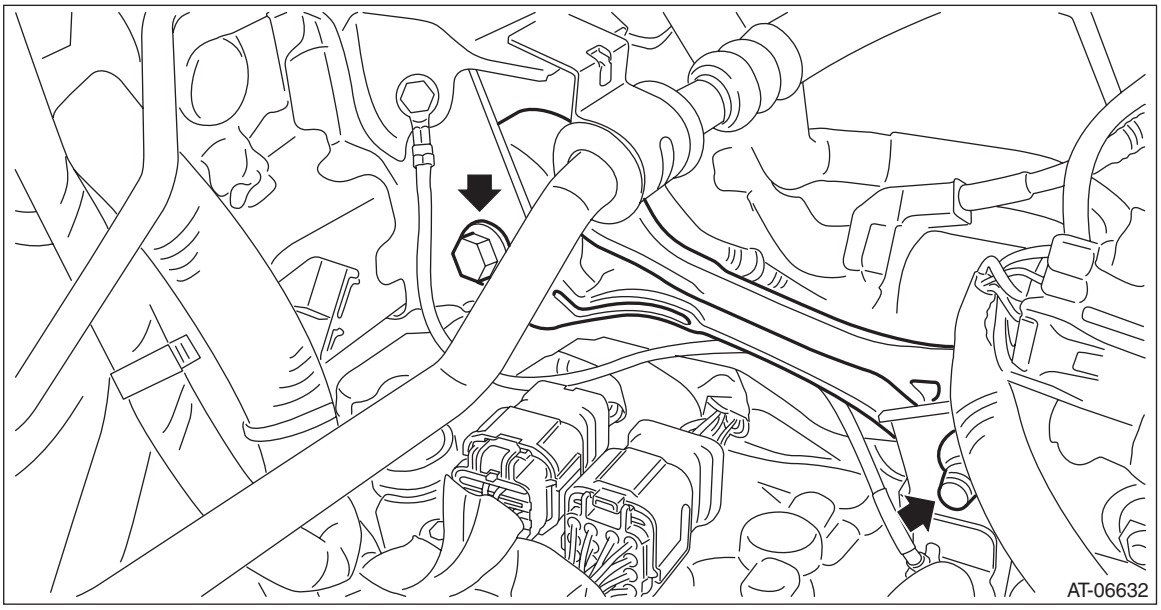

2. TRANSMISSION REAR CROSSMEMBER AND REAR CUSHION RUBBER

1) Disconnect the ground cable from battery.
2) Lift up the vehicle.
3) Remove the center exhaust pipe. <Ref. to EX(H4DO(w/o HEV))-14, REMOVAL, Center Exhaust Pipe.>
4) Remove the center exhaust cover.

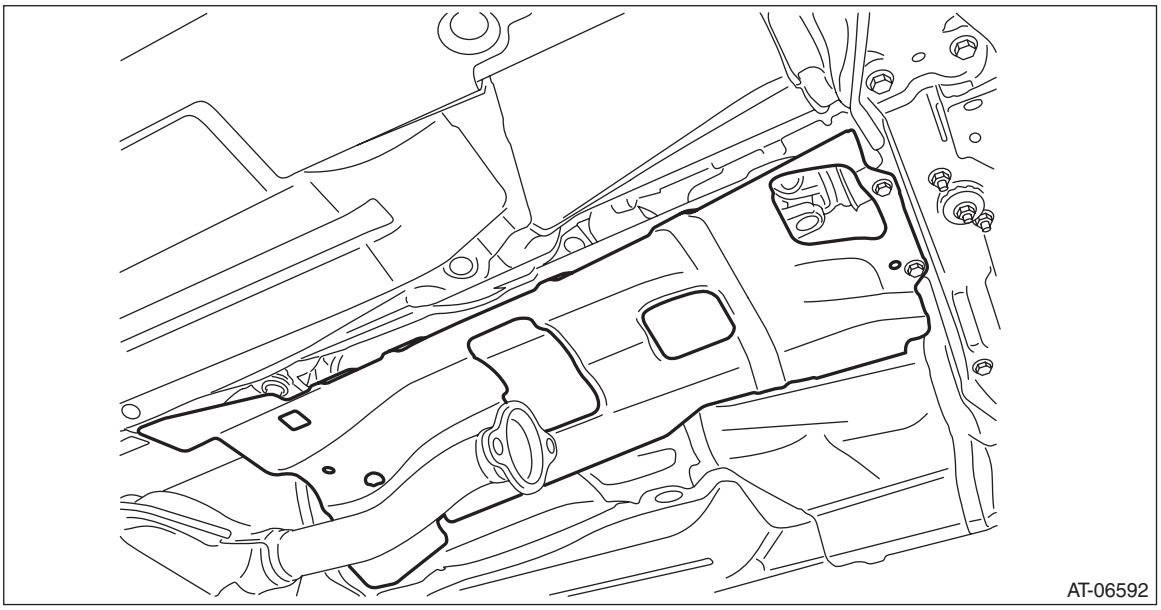

5) Set the transmission jack under the transmission. Make sure that the support plate of transmission jack does not touch the oil pan.

6) Remove the transmission rear crossmember.

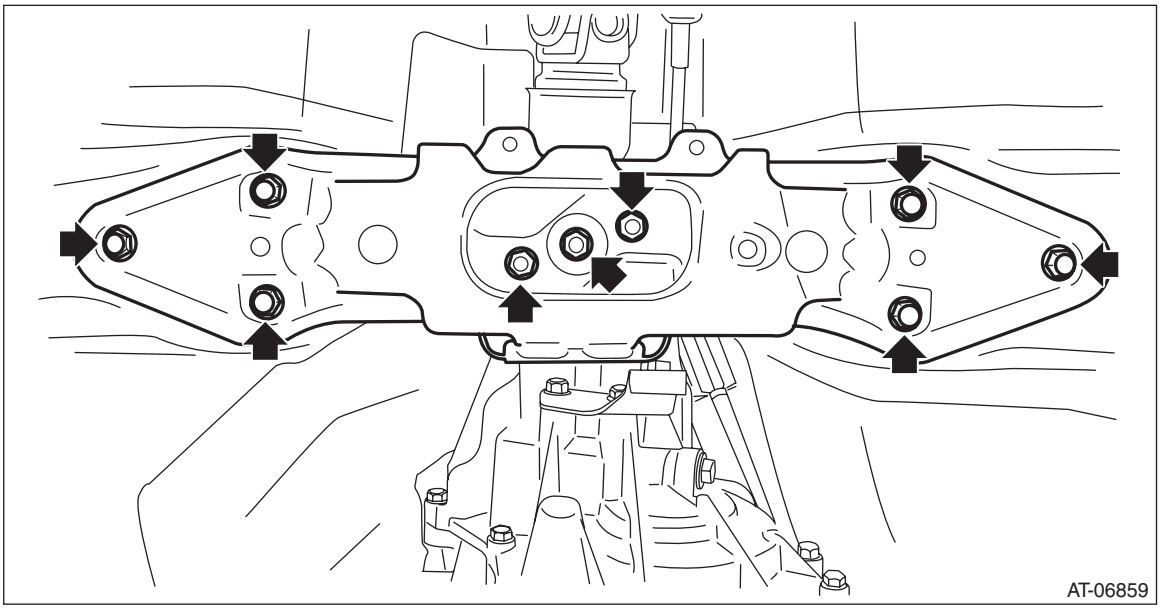

7) Remove the rear cushion rubber.

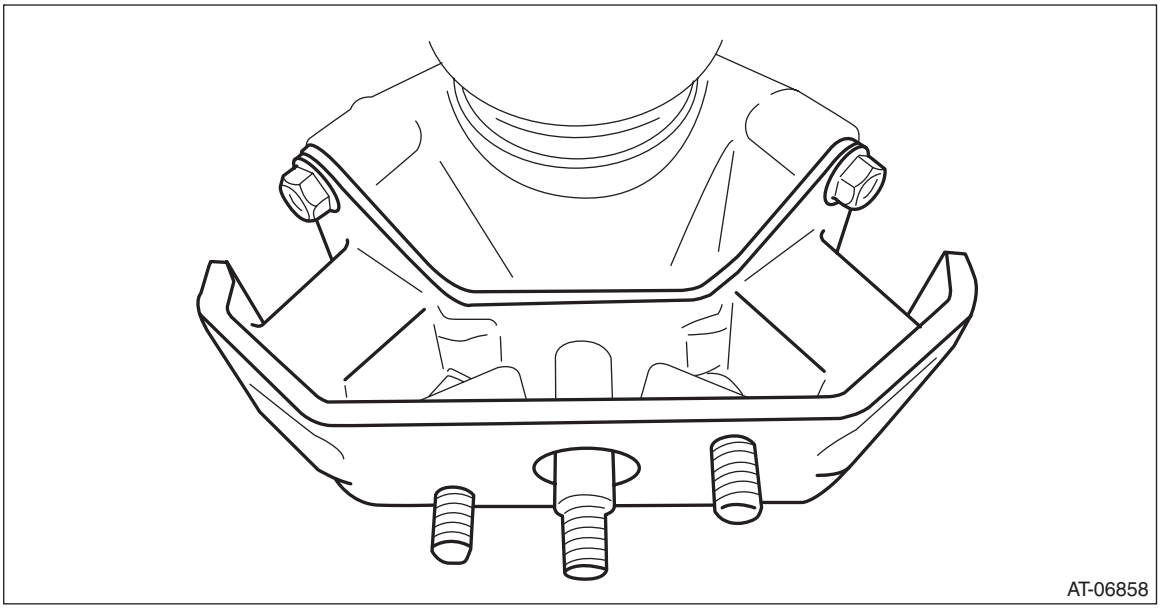

B: INSTALLATION

1. PITCHING STOPPER

1) Install the pitching stopper.

Tightening torque:
T1: 50 N·m (5.1 kgf-m, 36.9 ft-lb)
T2: 58 N·m (5.9 kgf-m, 42.8 ft-lb)

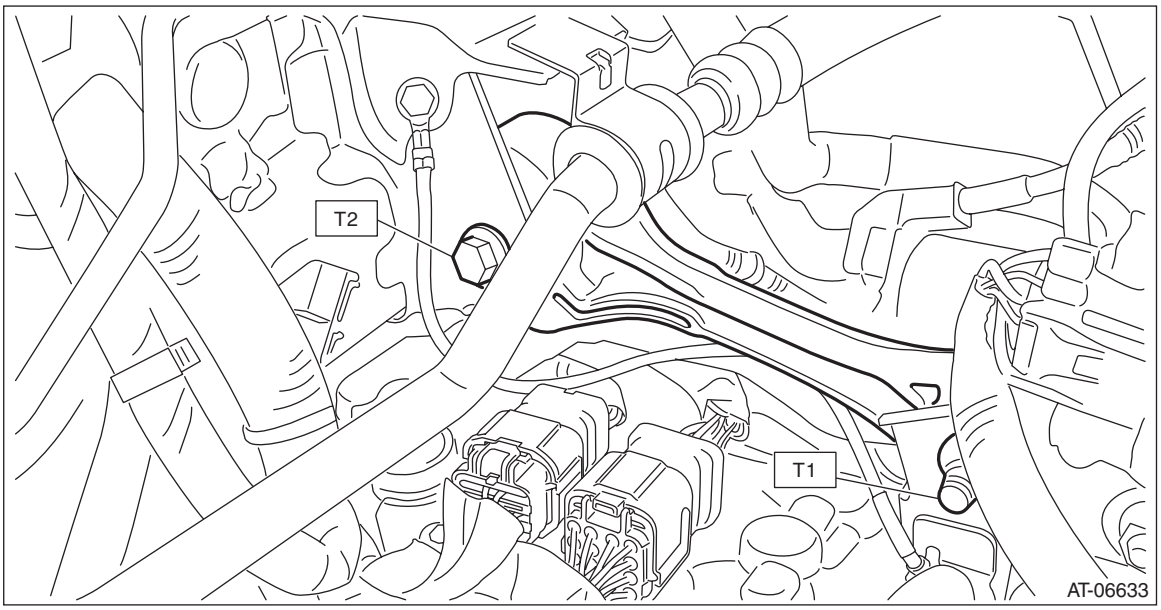

2) Install the air intake boot assembly. <Ref. to IN(H4DO(w/o HEV))-12, INSTALLATION, Air Intake Boot.>
3) Connect the battery ground terminal.

2. TRANSMISSION REAR CROSSMEMBER AND REAR CUSHION RUBBER

1) Attach the rear cushion rubber to the transmission.

Tightening torque:
40 N·m (4.1 kgf-m, 29.5 ft-lb)

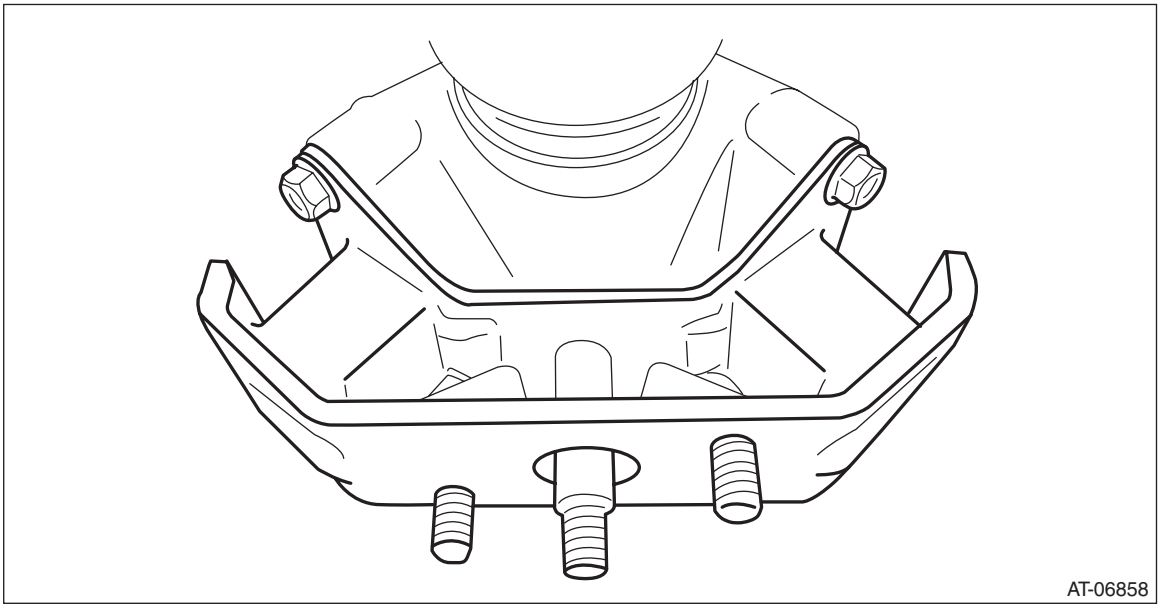

2) Install the crossmember.

Tightening torque:
T1: 35 N·m (3.6 kgf-m, 25.8 ft-lb)
T2: 70 N·m (7.1 kgf-m, 51.6 ft-lb)

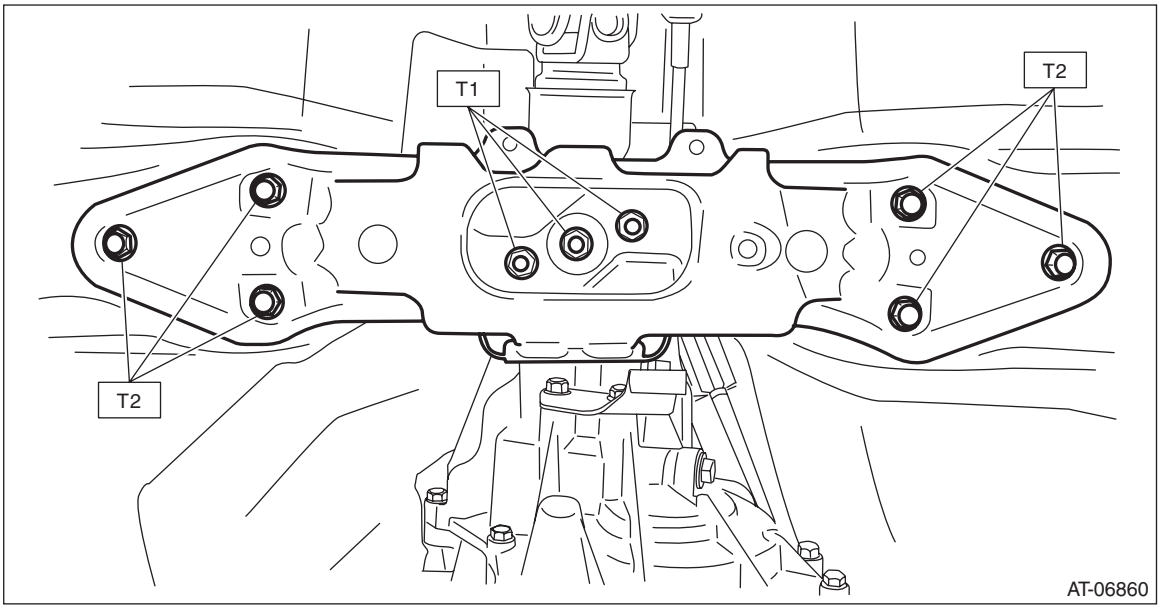

3) Remove the transmission jack.
4) Install the center exhaust cover.

Tightening torque:
18 N·m (1.8 kgf-m, 13.3 ft-lb)

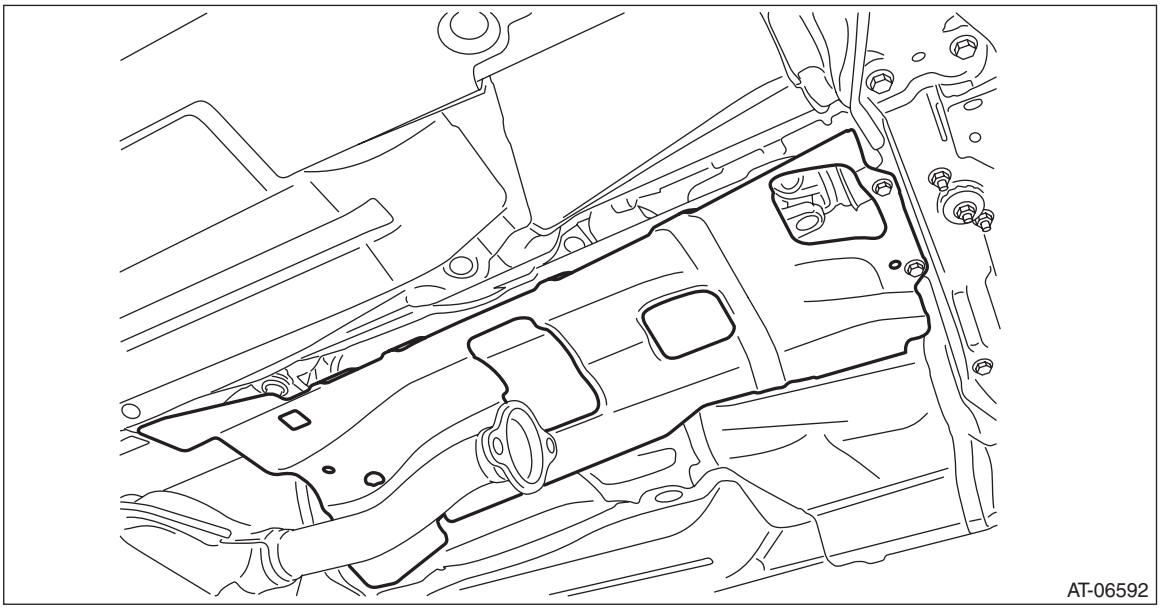

5) Install the center exhaust pipe. <Ref. to EX(H4DO(w/o HEV))-15, INSTALLATION, Center Exhaust Pipe.>
6) Connect the battery ground terminal.

C: INSPECTION

- Check the crossmember for bends or damage.
- Check that the cushion rubber is not stiff, cracked or otherwise damaged.

12.Extension Case Oil Seal

A: INSPECTION

Check for leakage of CVTF from the joint section of transmission and propeller shaft. If a leak is found, inspect the propeller shaft and replace the oil seal.

B: REPLACEMENT

CAUTION:
Immediately after the vehicle has been running or after idling for a long time, the CVTF will be hot. Be careful not to burn yourself.

1) Lift up the vehicle.
2) Remove the center exhaust pipe. <Ref. to EX(H4DO(w/o HEV))-14, REMOVAL, Center Exhaust Pipe.>
3) Remove the center exhaust cover.

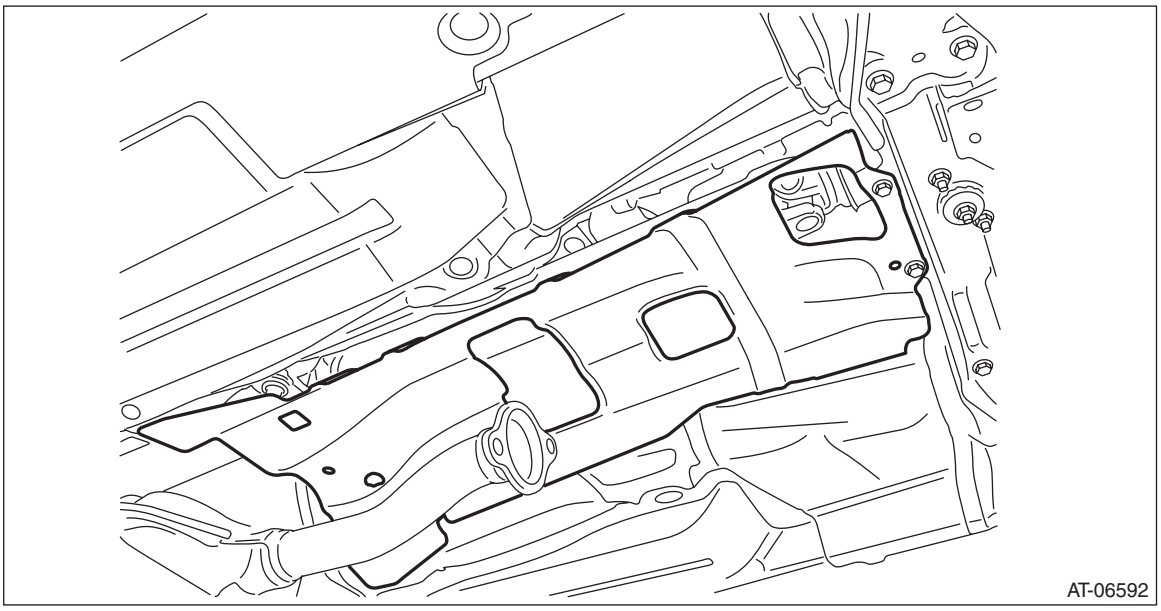

4) Clean the transmission exterior.
5) Remove the propeller shaft. <Ref. to DS-12, REMOVAL, Propeller Shaft.>
6) Using a screwdriver or ST, remove the oil seal trying not to damage the extension case.
ST 398527700 PULLER ASSY
7) Using the ST, install the oil seal.

NOTE:
- Use a new oil seal.
- Apply CVTF to the oil seal lip and press-fitting surface.

ST 498057300 OIL SEAL INSTALLER
8) Install the propeller shaft. <Ref. to DS-13, INSTALLATION, Propeller Shaft.>

9) Install the center exhaust cover.

Tightening torque:
18 N·m (1.8 kgf-m, 13.3 ft-lb)

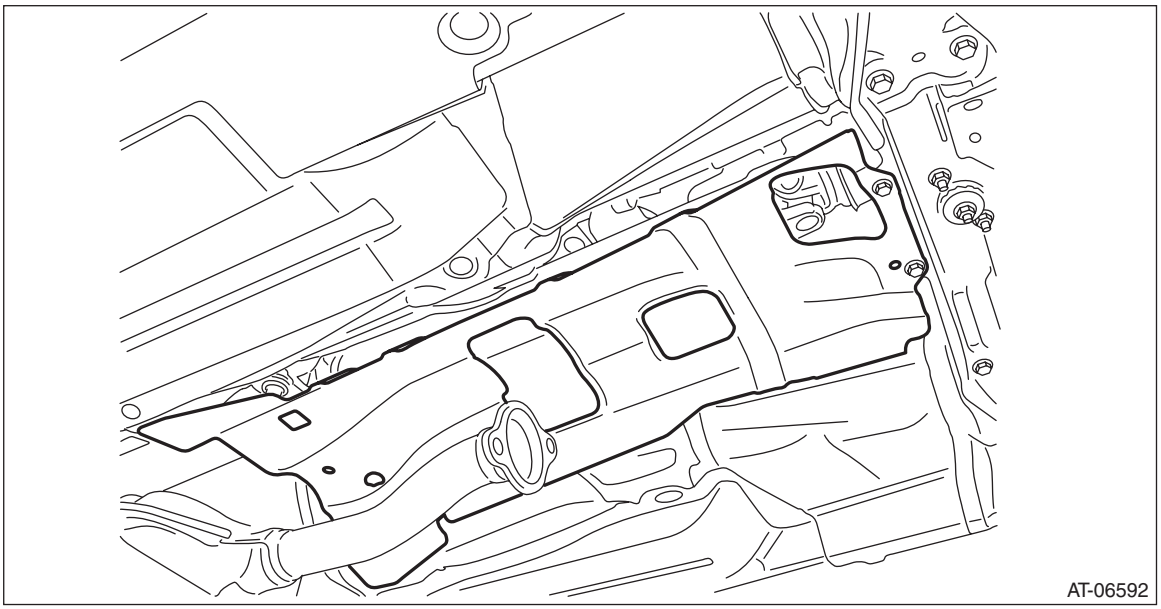

10) Install the center exhaust pipe. <Ref. to EX(H4DO(w/o HEV))-15, INSTALLATION, Center Exhaust Pipe.>
11) Adjust the CVTF level and check there is no leakage. <Ref. to CVT(TR580)-35, ADJUSTMENT, CVTF.>

13.Differential Side Retainer Oil Seal

A: INSPECTION

Check for leakage of gear oil from differential side retainer oil seal part. If there is an oil leak, inspect the front drive shaft and replace the oil seal.

B: REPLACEMENT

CAUTION:
• Immediately after the vehicle has been running or after idling for a long time, the differential gear oil will be hot. Be careful not to burn yourself.
• Be careful not to spill the differential gear oil on exhaust pipe to prevent it from emitting smoke or fire. If differential gear oil is spilled on the exhaust pipe, wipe it off completely.
1) Remove the front tires. <Ref. to WT-4, REMOVAL, Tire and Wheel.>
2) Remove the center exhaust pipe. <Ref. to EX(H4DO(w/o HEV))-14, REMOVAL, Center Exhaust Pipe.>
3) Remove the differential gear oil drain plug using TORX® bit T70, and then drain differential gear oil.

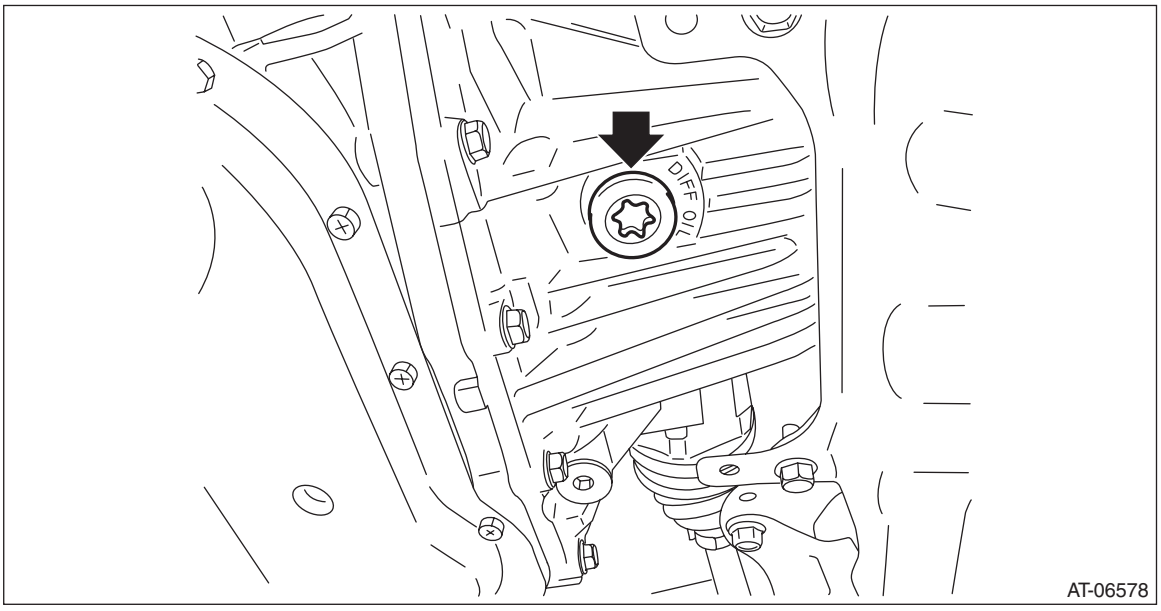

4) Tighten the differential gear oil drain plug.

NOTE:
Use a new gasket.

Tightening torque:
70 N·m (7.1 kgf-m, 51.6 ft-lb)

5) Remove the jack-up plate.

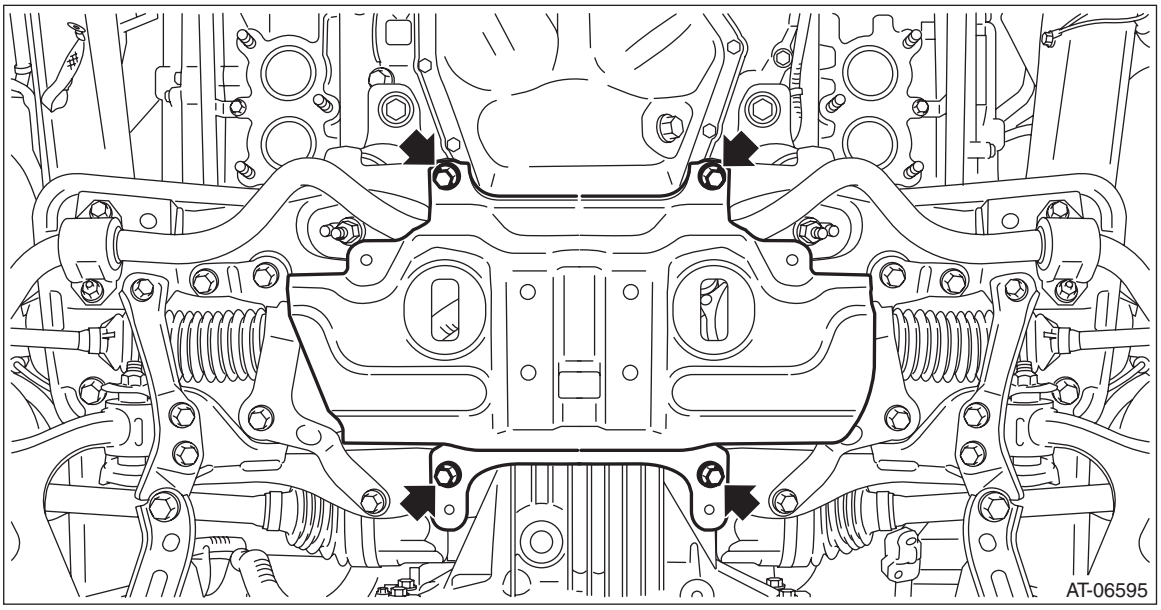

6) Remove the stabilizer bracket.

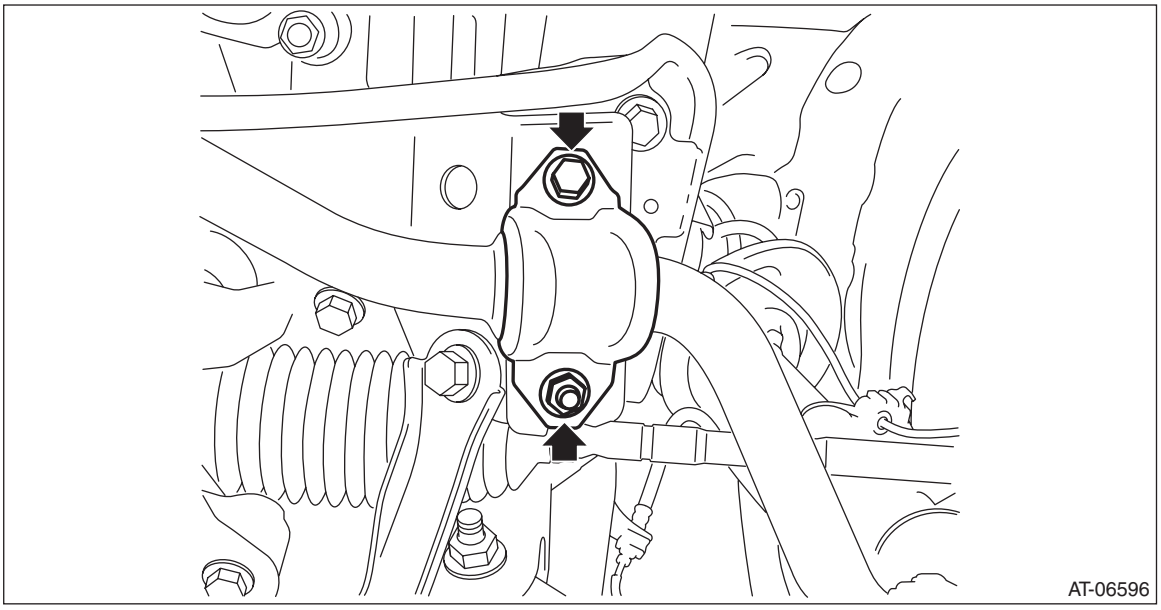

7) Remove the bolts which secure to the front housing, and separate the front arm and housing.

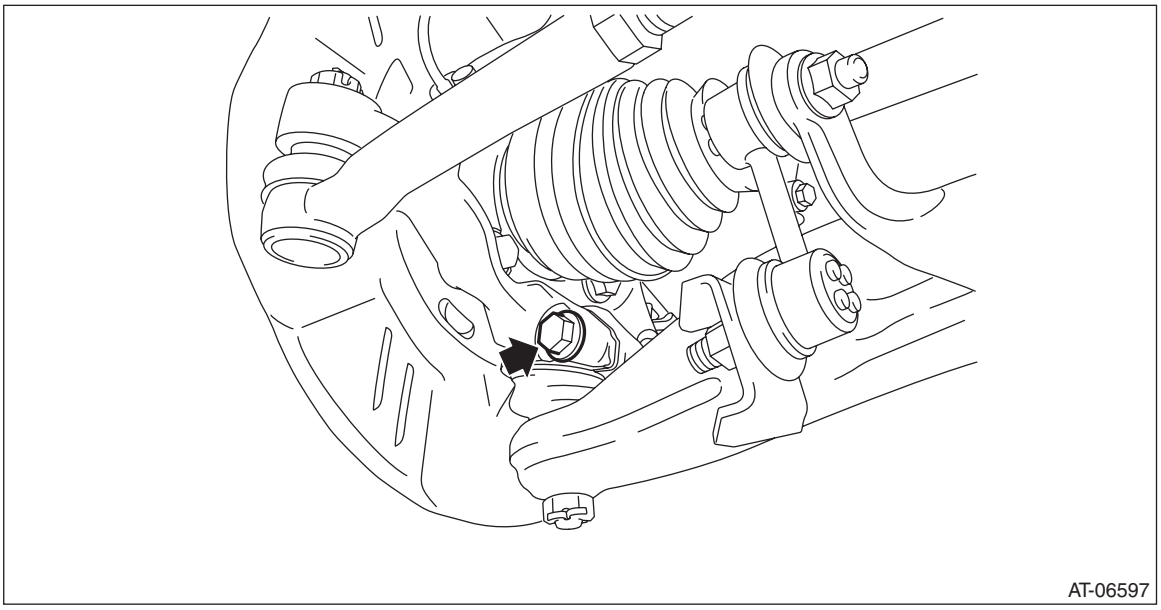

8) Using a crowbar, etc., pull out until the front drive shaft transmission side joint slides move smoothly.

NOTE:
Place cloth between the crowbar and the transmission in order to avoid damaging the transmission side retainer.

9) Hold the transmission side joint of the front drive shaft by hand and extract the housing from the transmission while pressing the housing outward, so as not to stretch the boot.

NOTE:
- Before pulling RH front drive shaft from transmission, turn the steering wheel to left hand full lock.
- Before pulling LH front drive shaft from transmission, turn the steering wheel to right hand full lock.

10) Remove the differential side retainer oil seal using driver wrapped with vinyl tape etc.

11) Using the ST, install the differential side retainer oil seal by lightly tapping with a hammer.

NOTE:
- Apply differential gear oil to the lip surface, so that the oil seal lip is not deformed.
- Apply differential gear oil to the press-fitting surface of oil seal and the differential side retainer.
- Oil seal has an identification mark (R, L). When installing oil seals, do not confuse the left and right.

ST 18675AA000 DIFFERENTIAL SIDE OIL SEAL INSTALLER

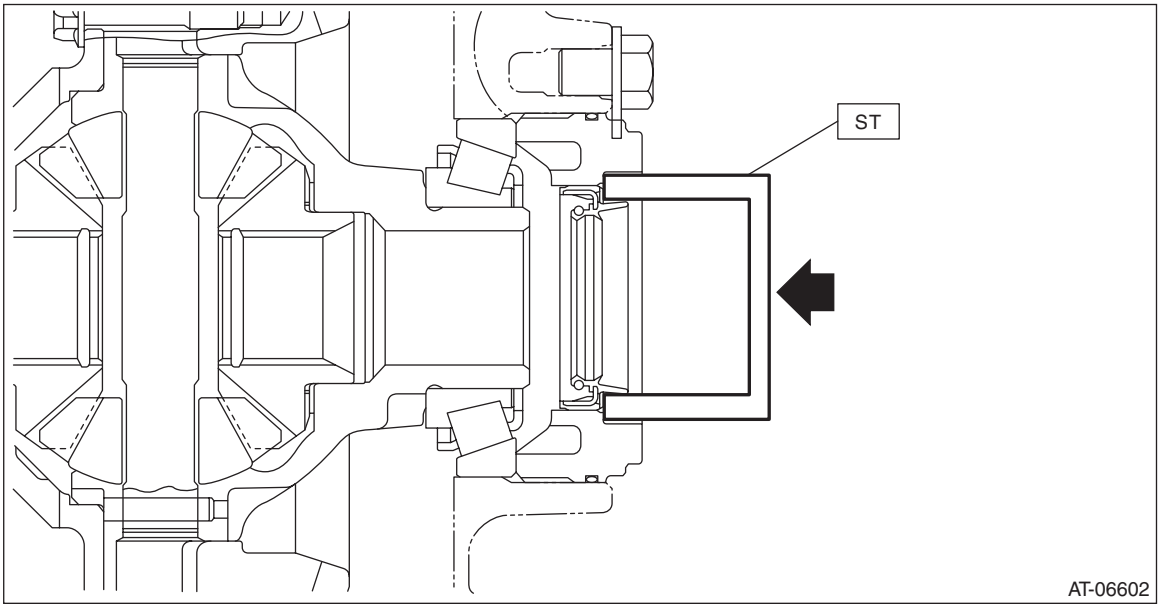

12) Set the ST to side retainer.
ST 28399SA010 OIL SEAL PROTECTOR

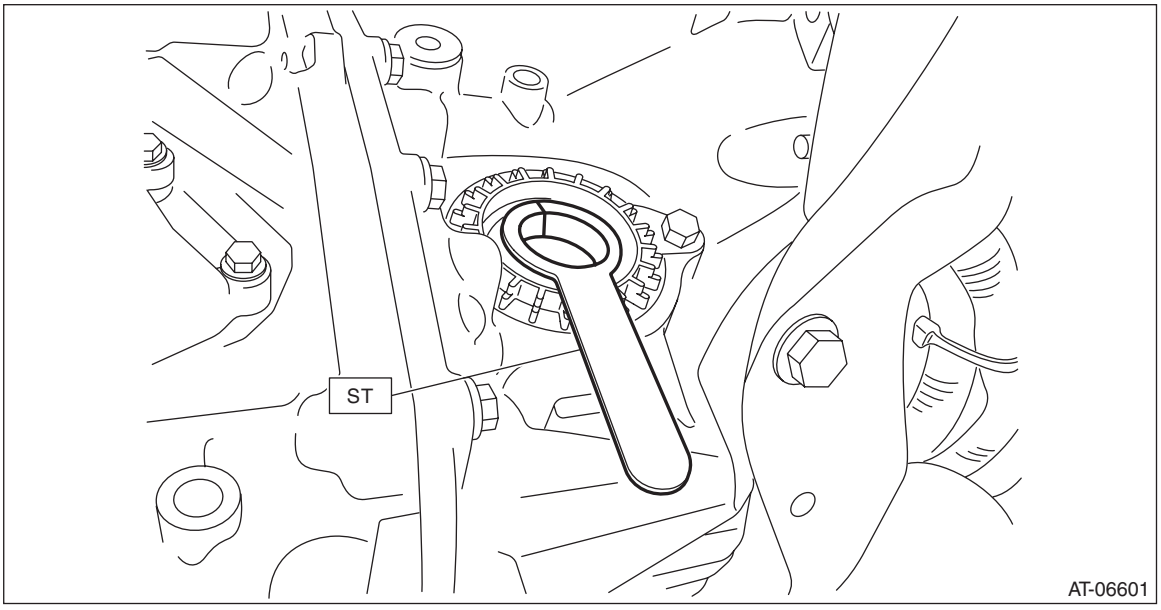

13) Replace the circlip of the drive shaft with a new part.
14) Insert the front drive shaft spline section into transmission and remove the ST (DIFFERENTIAL SIDE OIL SEAL INSTALLER).

NOTE:
- Apply grease to the side retainer oil seal lip.
- Before inserting RH front drive shaft into transmission, turn the steering wheel to left hand full lock.
- Before inserting LH front drive shaft into transmission, turn the steering wheel to right hand full lock.

15) Insert the drive shaft into the transmission securely by pressing the housing from outside of the vehicle.
16) Insert the ball joint into housing and secure with bolt.

Tightening torque:
50 N·m (5.1 kgf-m, 36.9 ft-lb)

CAUTION:
- **Do not apply grease to the tapered portion of ball stud.**
- **Before tightening, make sure the lower side of housing and stepped section of ball joint are in contact.**

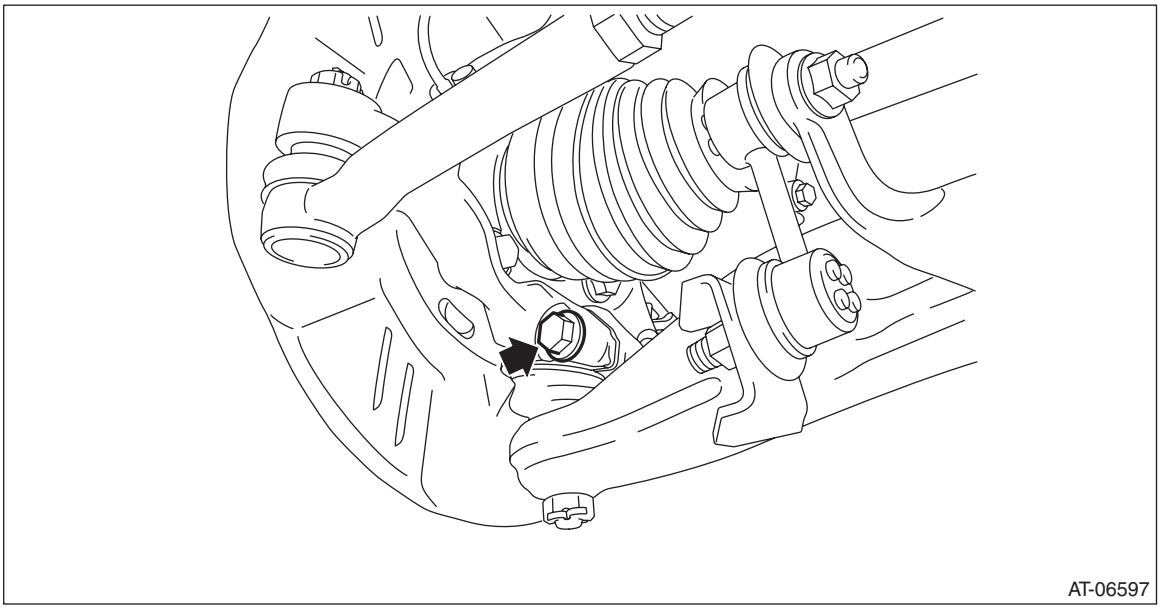

17) Install the stabilizer bracket.

Tightening torque:
25 N·m (2.5 kgf-m, 18.4 ft-lb)

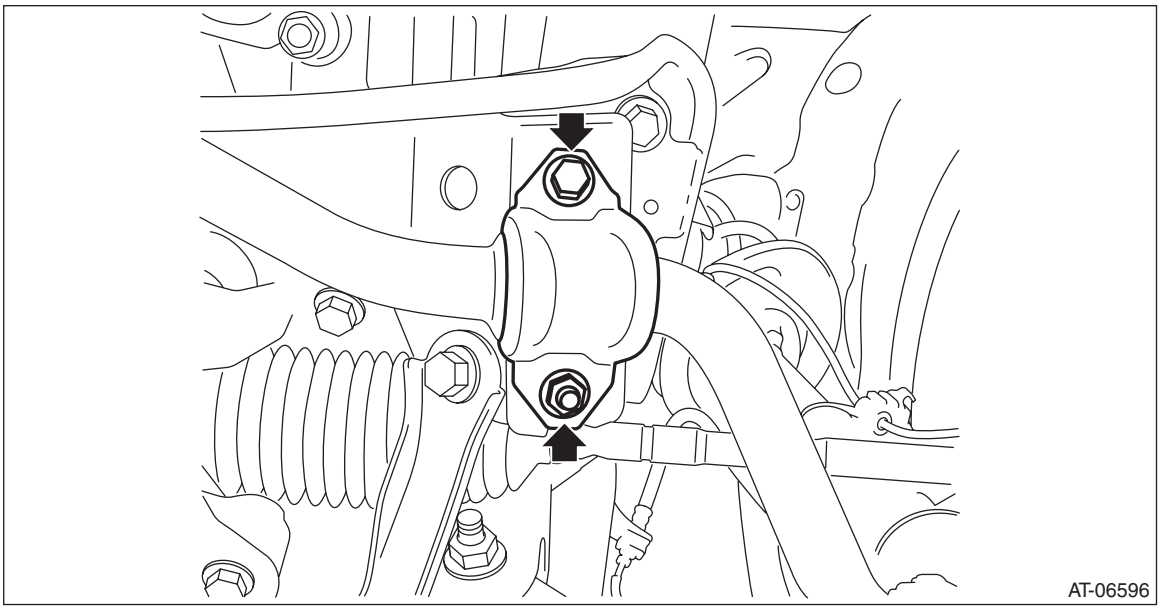

18) Install the jack-up plate.

Tightening torque:
60 N·m (6.1 kgf-m, 44.3 ft-lb)

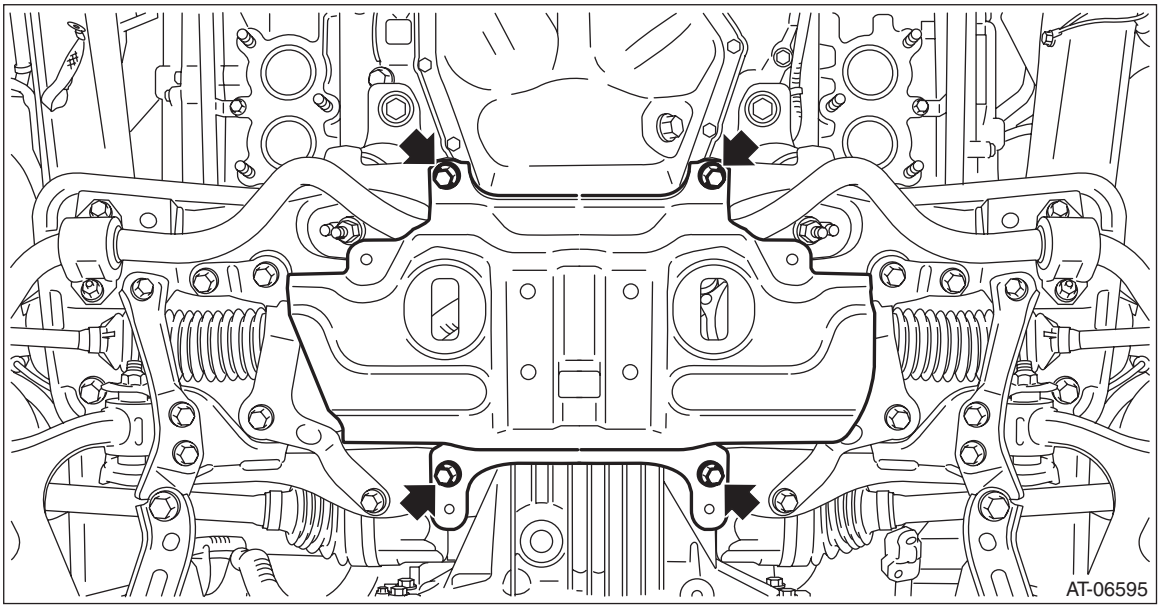

19) Install the center exhaust pipe. <Ref. to EX(H4DO(w/o HEV))-15, INSTALLATION, Center Exhaust Pipe.>
20) Fill differential gear oil. <Ref. to CVT(TR580)-39, Differential Gear Oil.>
21) Adjust the differential gear oil level, and check for leakage. <Ref. to CVT(TR580)-39, ADJUSTMENT, Differential Gear Oil.>
22) Install the front tires. <Ref. to WT-4, INSTALLATION, Tire and Wheel.>

14.Inhibitor Switch

A: INSPECTION

When the driving condition or starter motor operation is improper, first check the shift linkage for improper operation. If the shift linkage is functioning properly, check the inhibitor switch.

1) Remove the clip (A) from the air intake boot.
2) Loosen the clamp (B) connecting the air intake boot and air cleaner case (rear).
3) Loosen the clamp (C) which connects the air intake boot and throttle body.

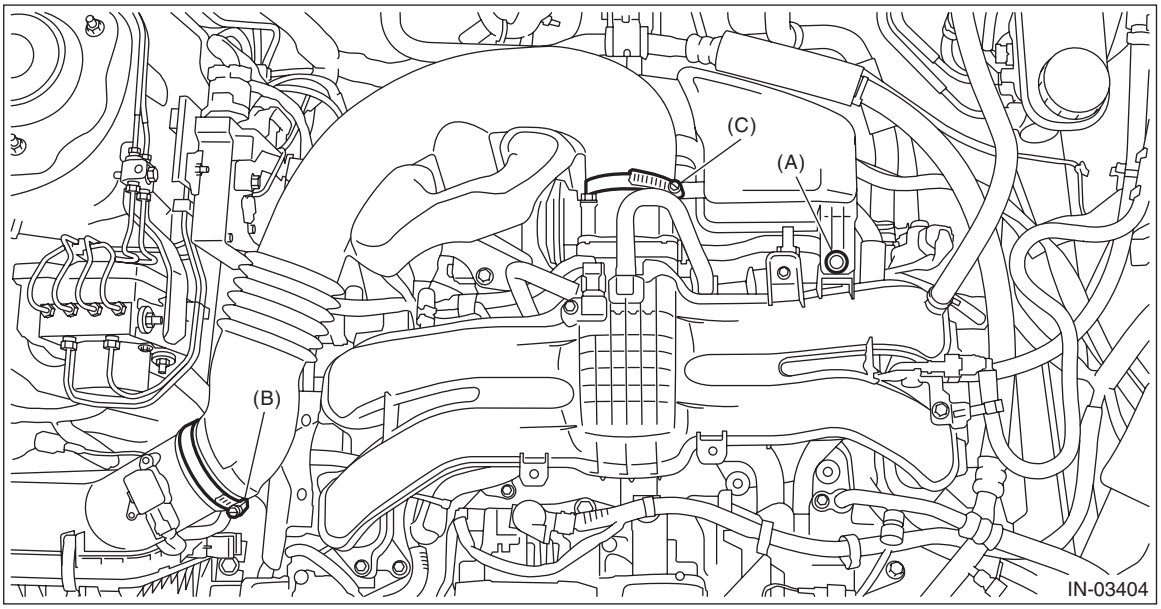

4) Remove the air intake boot from the throttle body, and move it to the left side wheel apron.

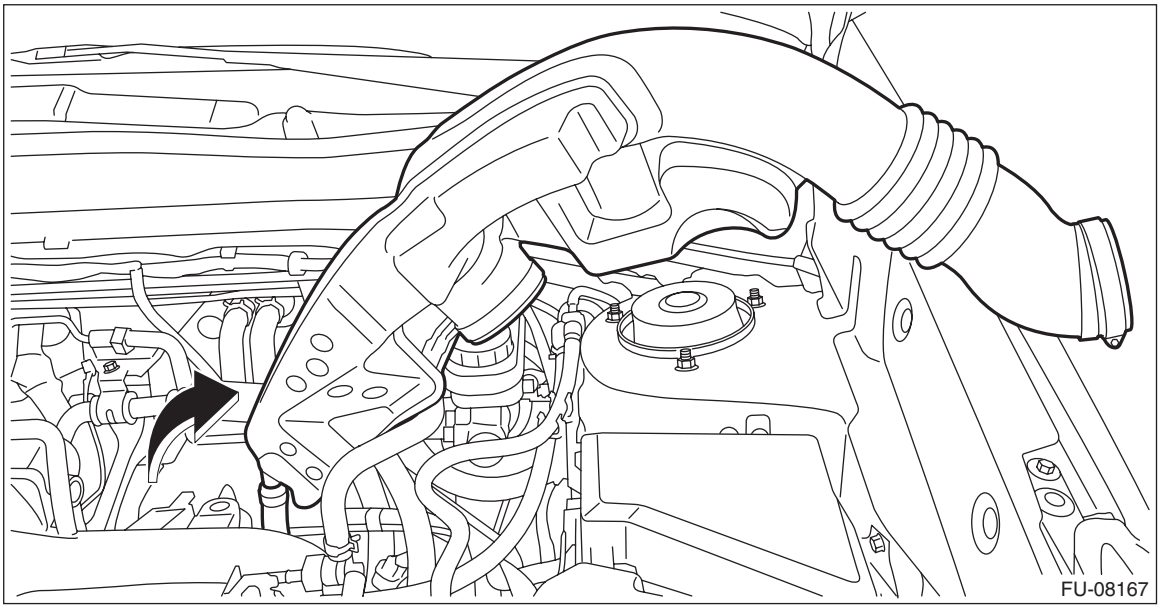

5) Disconnect the inhibitor harness connector.

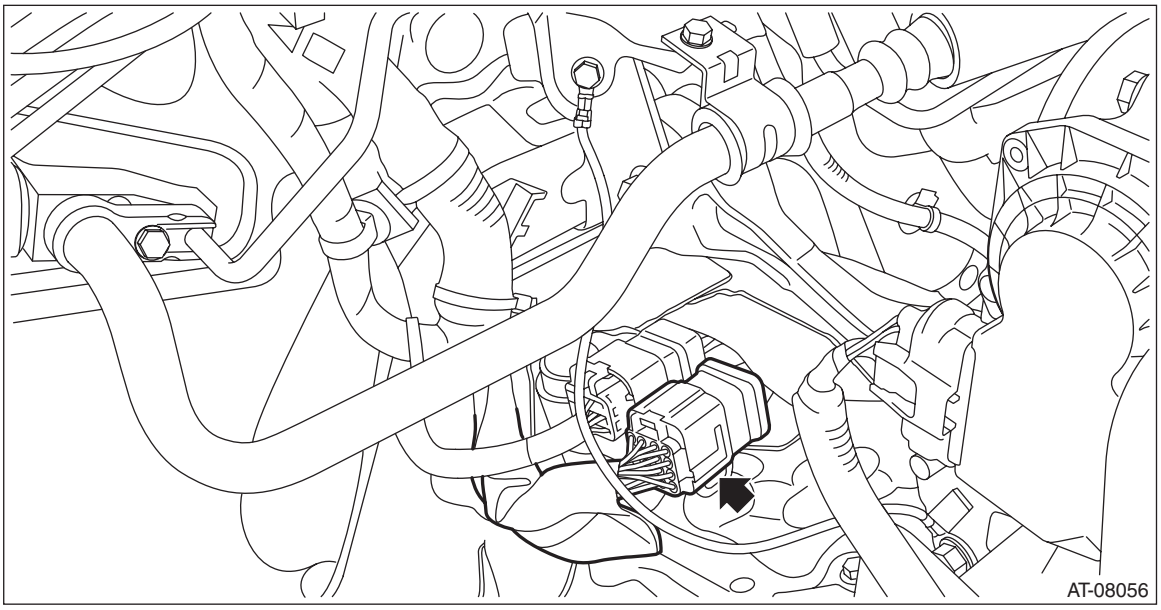

6) Check for continuity in inhibitor switch circuit by shifting the select lever in “P”, “R”, “N” and “D” respectively.

NOTE:
- Check that there is no continuity in the starter circuit when the select lever is in the “R” and “D” ranges.
- When inhibitor switch is normal, check there is no poor contact in vehicle side connector and no open circuit in harness.

	Range	Terminal No.
Signal sent to TCM	P	1 — 7
	R	2 — 7
	N	3 — 7
	D	4 — 7
Starter circuit	P/N	15 — 16
Back-up light circuit	R	13 — 14

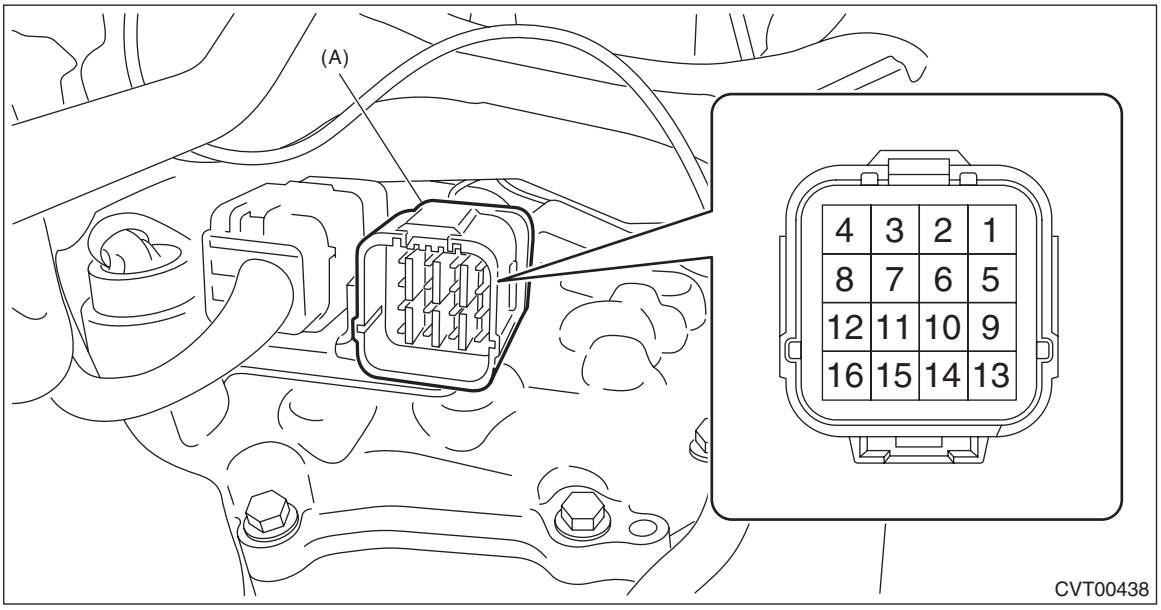

(A) Inhibitor harness connector

7) Check that there is continuity at equal points when the select lever is moved 1.5° in both directions from the “N” range.
If there is continuity in only one direction or in other points, adjust the inhibitor switch. <Ref. to CVT(TR580)-94, ADJUSTMENT, Inhibitor Switch.>

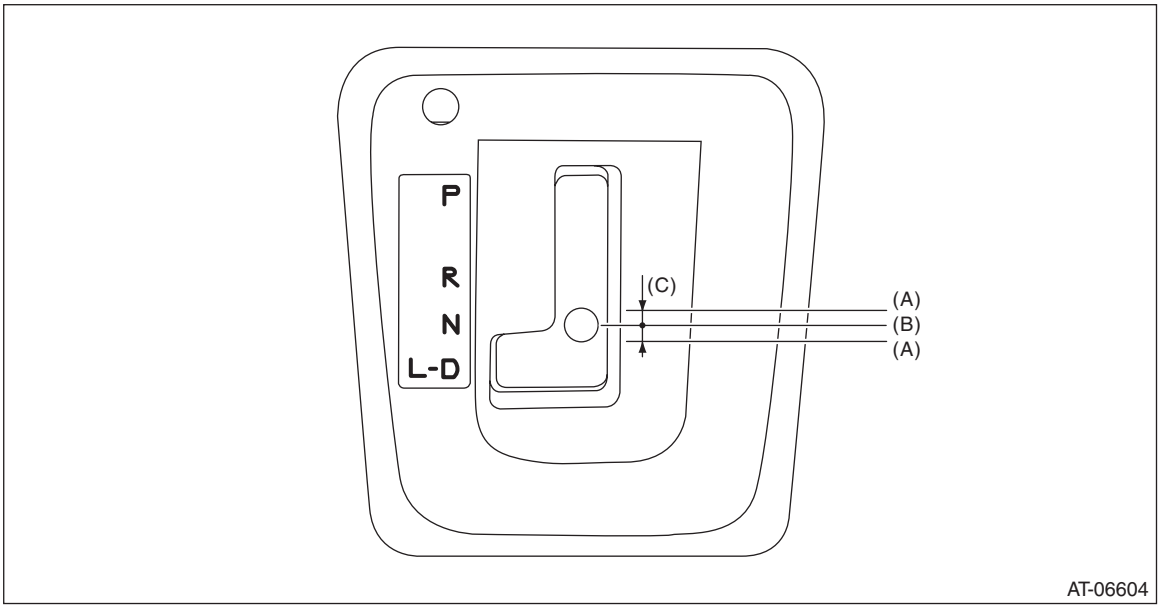

(A) Continuity does not exist.
(B) Continuity exists.
(C) 1.5°

8) Repeat the above inspection in other gear ranges. If there is fault, adjust the inhibitor switch and select cable. <Ref. to CVT(TR580)-94, ADJUSTMENT, Inhibitor Switch.> <Ref. to CS-53, ADJUSTMENT, Select Cable.>

B: ADJUSTMENT

1) Shift the select lever to “N” range.
2) Loosen the two bolts holding the inhibitor switch.
3) Insert the ST vertically into the holes of the shifter arm and switch body.
ST 499267300 STOPPER PIN

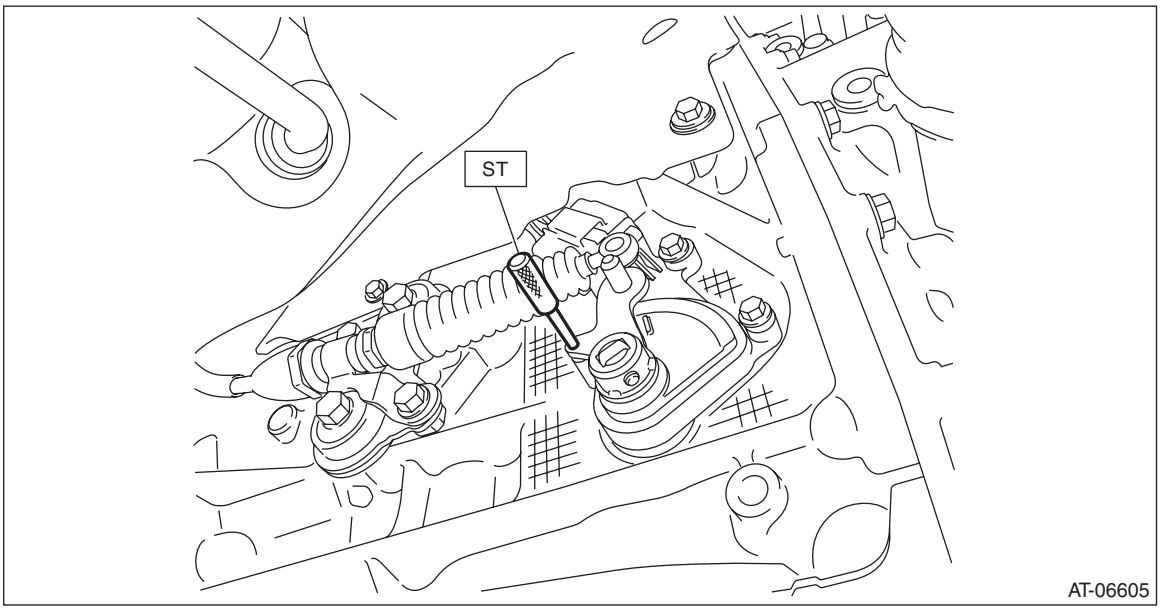

4) Tighten the two bolts holding the inhibitor switch.

Tightening torque:
5 N·m (0.5 kgf-m, 3.7 ft-lb)

5) Repeat the inspection of the inhibitor switch. If the inhibitor switch is determined to be “faulty”, replace it.

C: REMOVAL

1) Shift the select lever to “N” range.
2) Disconnect the ground cable from battery.
3) Lift up the vehicle.
4) Remove the center exhaust pipe. <Ref. to EX(H4DO(w/o HEV))-14, REMOVAL, Center Exhaust Pipe.>
5) Remove the snap pin and washer from the shifter arm.

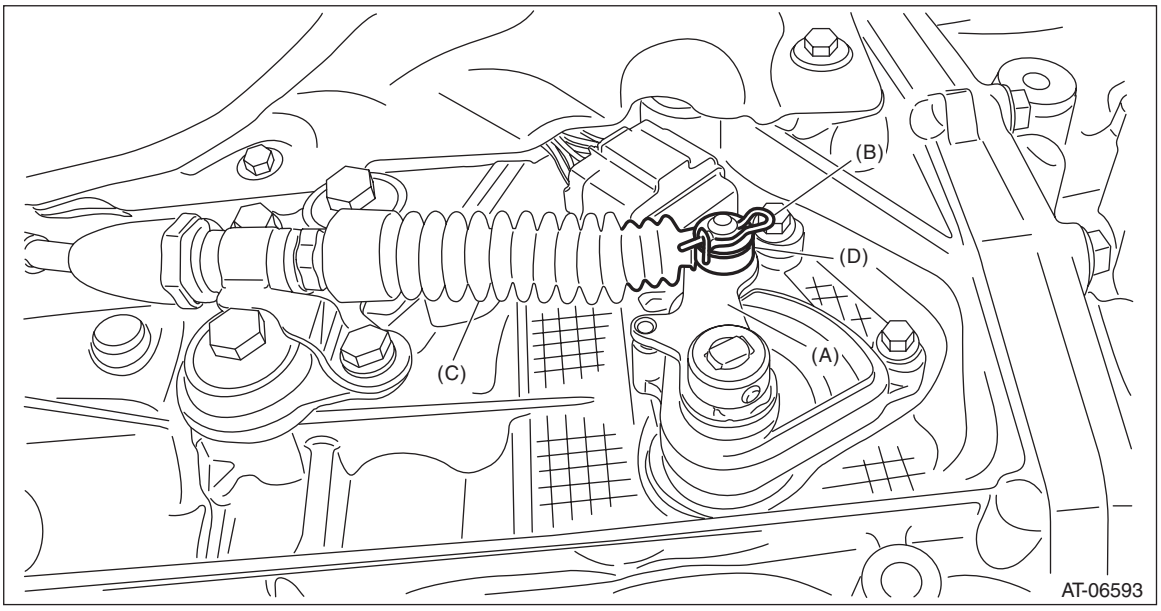

(A) Shifter arm
(B) Snap pin
(C) Select cable
(D) Washer

6) Remove the spring pin and shifter arm.

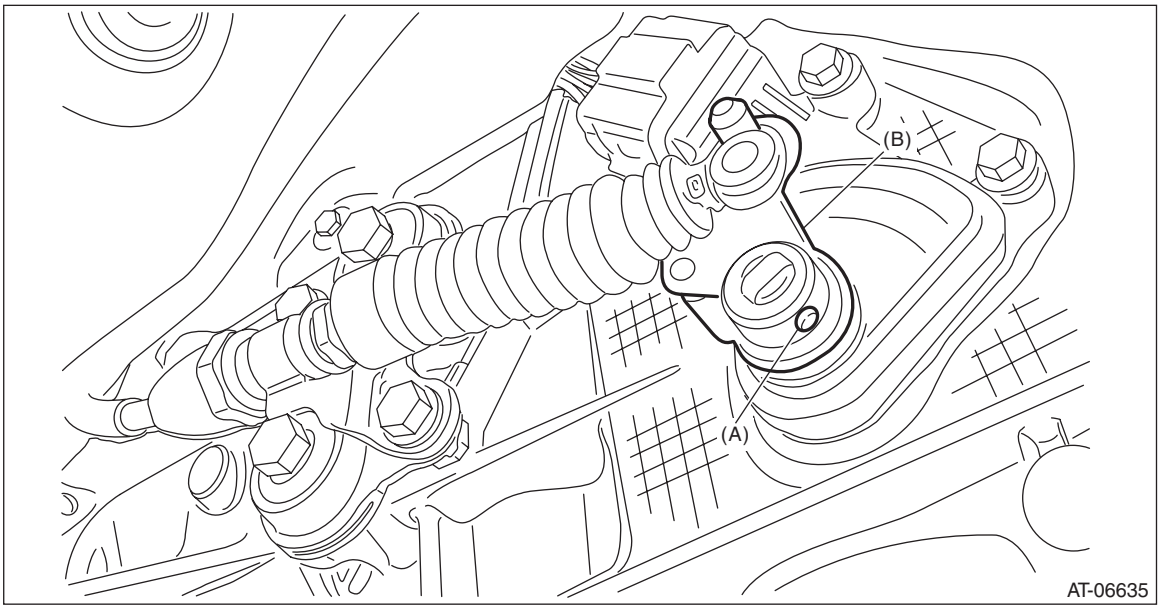

(A) Spring pin
(B) Shifter arm

7) Remove the inhibitor harness connector from inhibitor switch.
8) Remove the two inhibitor switch securing bolts.

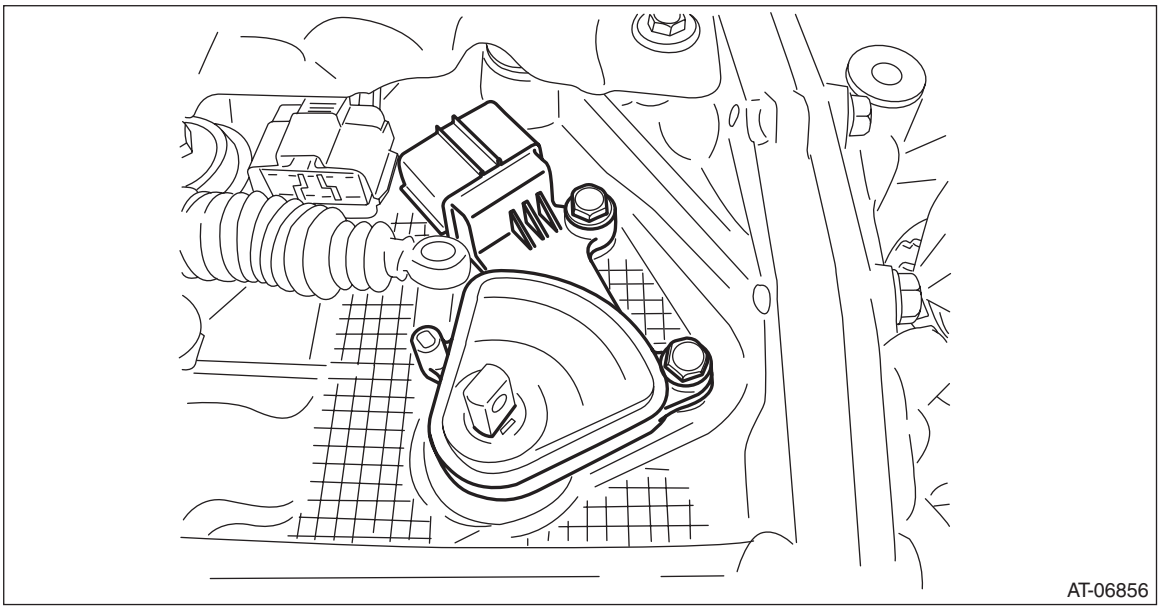

9) Remove the inhibitor switch from the transmission case.

D: INSTALLATION

1) Install the inhibitor switch to the transmission case temporarily.

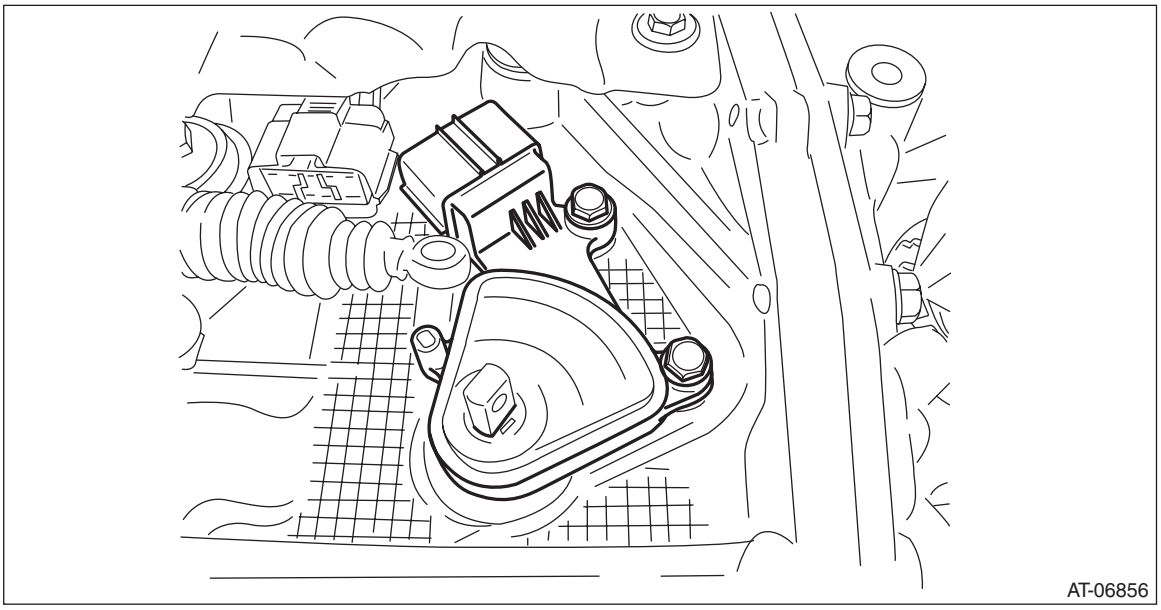

2) Connect the inhibitor harness connector to the inhibitor switch.
3) Install the shifter arm and fix with the spring pin.

NOTE:
Use new spring pin.

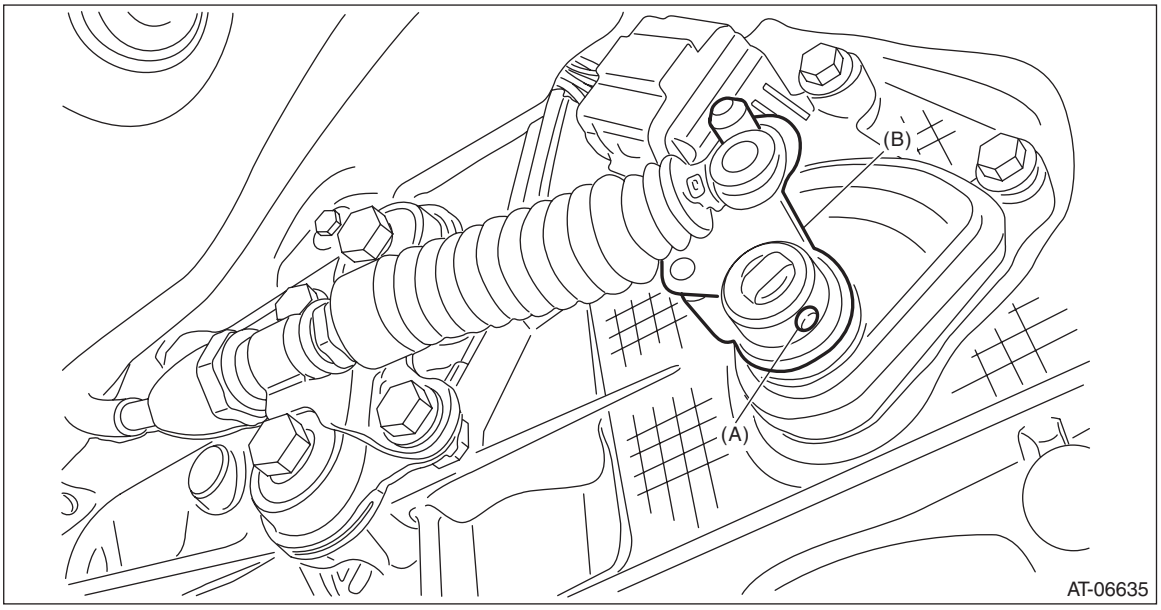

(A) Spring pin
(B) Shifter arm

4) Shift the shifter arm to “N” range.

5) Install the ST vertically in the cutout of shifter arm and the hole of switch body.
ST 499267300 STOPPER PIN

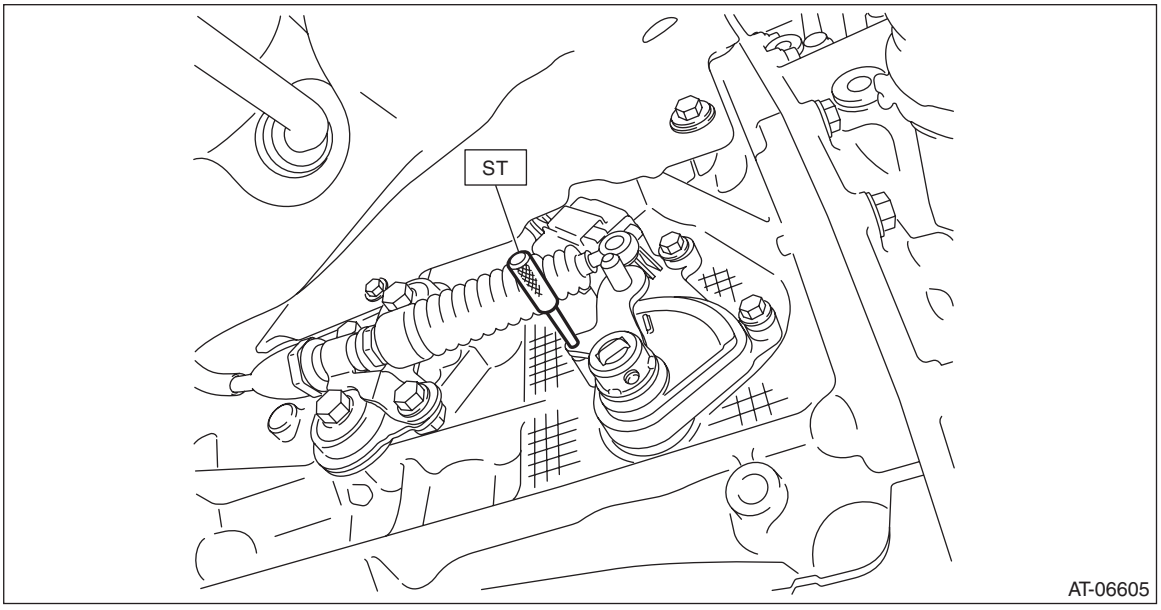

6) Tighten the two bolts holding the inhibitor switch.

Tightening torque:
5 N·m (0.5 kgf-m, 3.7 ft-lb)

7) Install the select cable to the shifter arm.
8) Install the washer and snap pin to the shifter arm.

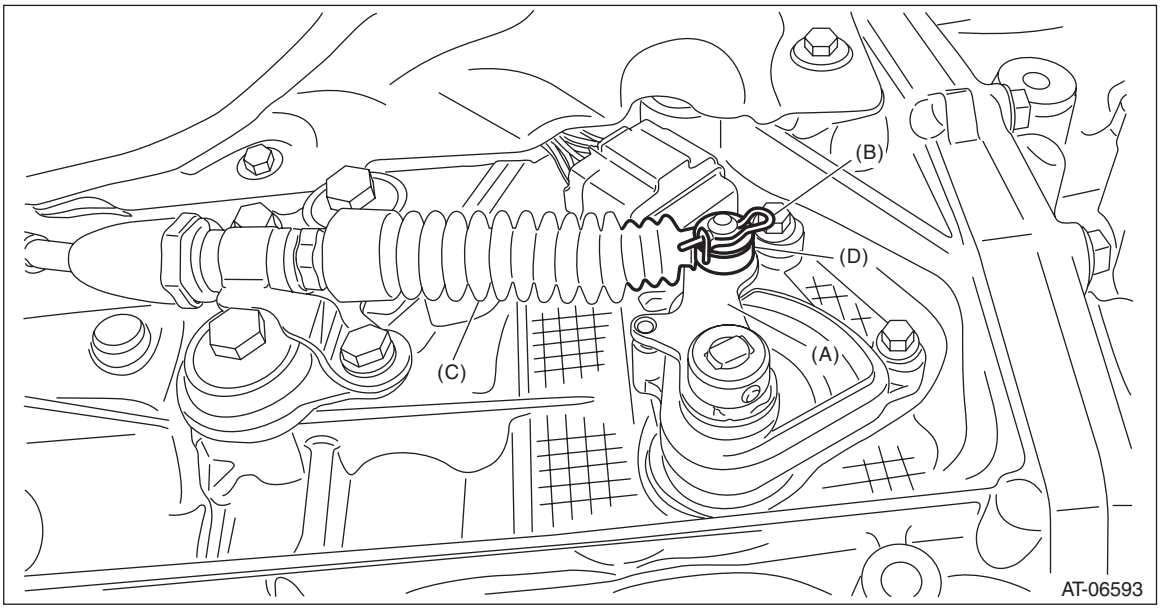

(A) Shifter arm
(B) Snap pin
(C) Select cable
(D) Washer

9) Install the center exhaust pipe. <Ref. to EX(H4DO(w/o HEV))-15, INSTALLATION, Center Exhaust Pipe.>
10) Lower the vehicle.
11) Connect the battery ground terminal.
12) Check the inhibitor switch. <Ref. to CVT(TR580)-92, INSPECTION, Inhibitor Switch.>

15.Turbine Speed Sensor

A: REMOVAL

CAUTION:
Be sure to prevent water or oil from contacting the connector terminal of turbine speed sensor. If adhesion occurs, replace with a new part.
1) Lift up the vehicle.
2) Remove the harness connector from turbine speed sensor.
3) Remove the turbine speed sensor.

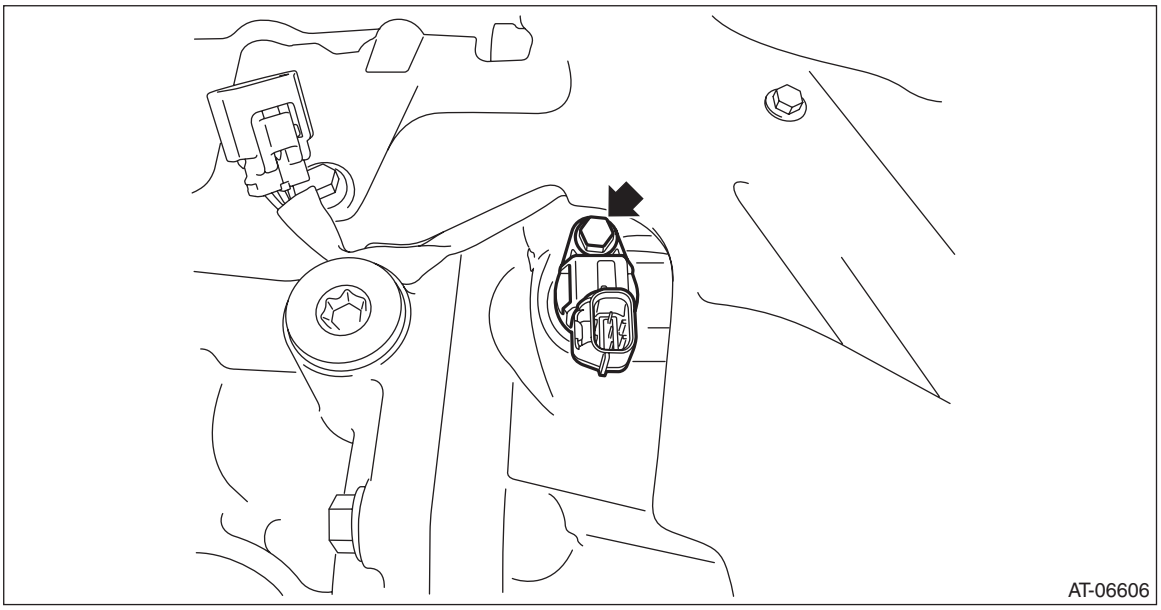

B: INSTALLATION

CAUTION:
Be sure to prevent water or oil from contacting the connector terminal of turbine speed sensor. If adhesion occurs, replace with a new part.
Install in the reverse order of removal.

NOTE:
- Use new O-rings.
- Apply CVTF to the O-ring.

Tightening torque:
7 N·m (0.7 kgf-m, 5.2 ft-lb)

C: INSPECTION

1) Remove the instrument panel lower cover. <Ref. to EI-71, REMOVAL, Instrument Panel Lower Cover.>
2) Set the probe of oscilloscope to TCM harness connector.

Connector & terminal
(B54) No. 20 (+) — No. 1 (–):

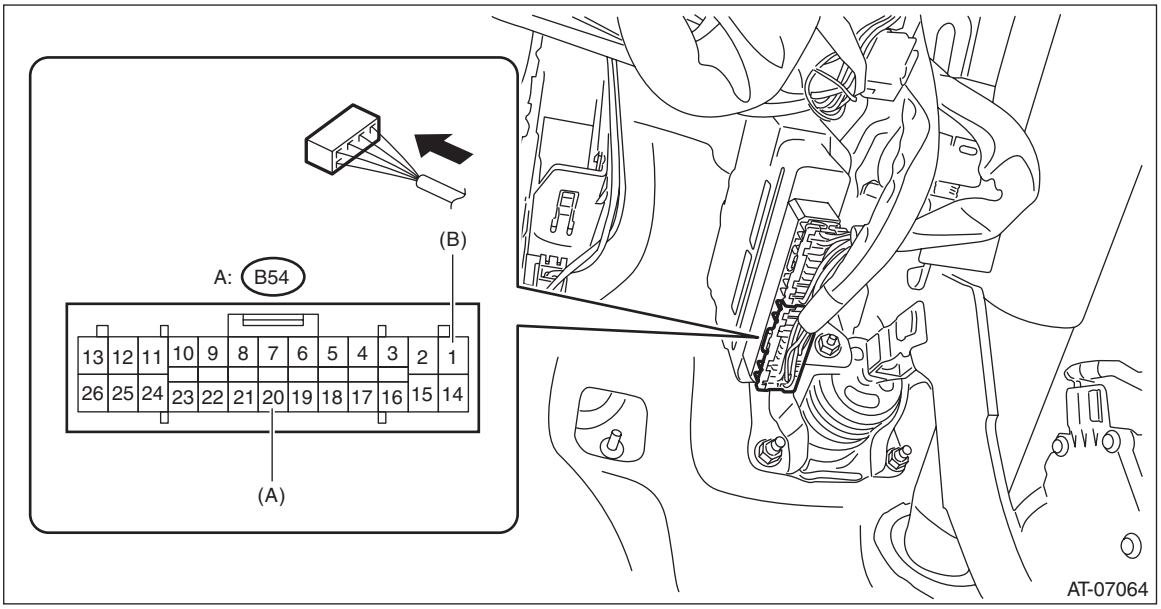

(A) + probe
(B) – probe

3) Start and warm up the engine.
4) Check the waveform and output voltage of the turbine speed sensor with engine idling.

NOTE:
The waveform cycle changes as the speed changes.

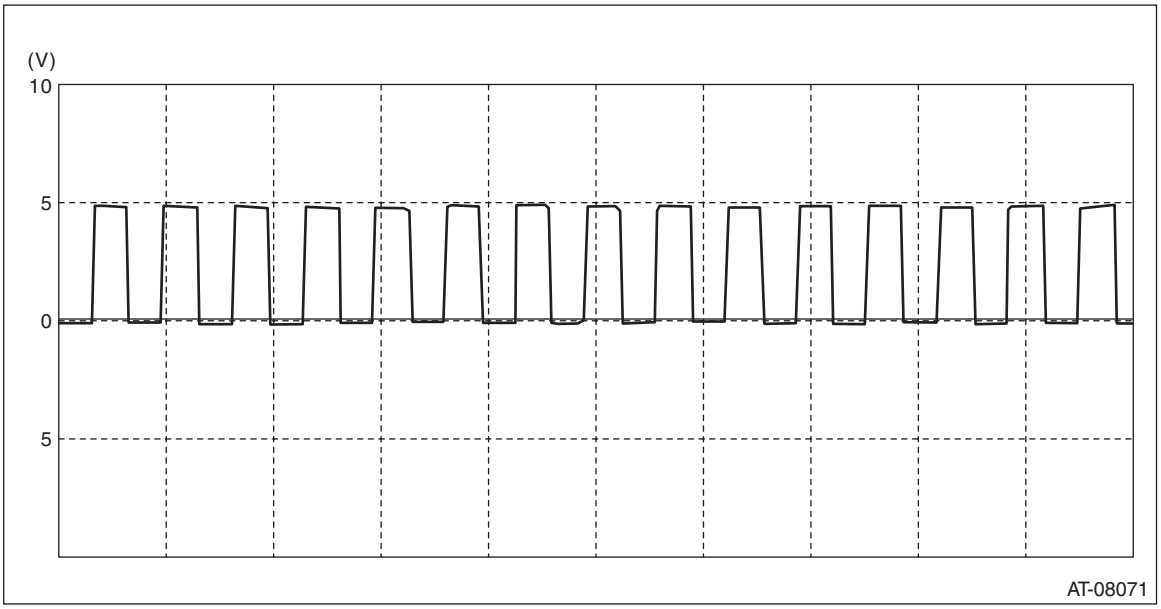

16.Secondary Speed Sensor

A: REMOVAL

CAUTION:
• Be sure to prevent water or oil from contacting the connector terminal of secondary speed sensor. If adhesion occurs, replace with a new part.
• When secondary speed sensor is removed, CVTF leaks. After installing the secondary speed sensor, adjust the CVTF level.
1) Lift up the vehicle.
2) Remove the harness connector from secondary speed sensor.
3) Remove the secondary speed sensor.

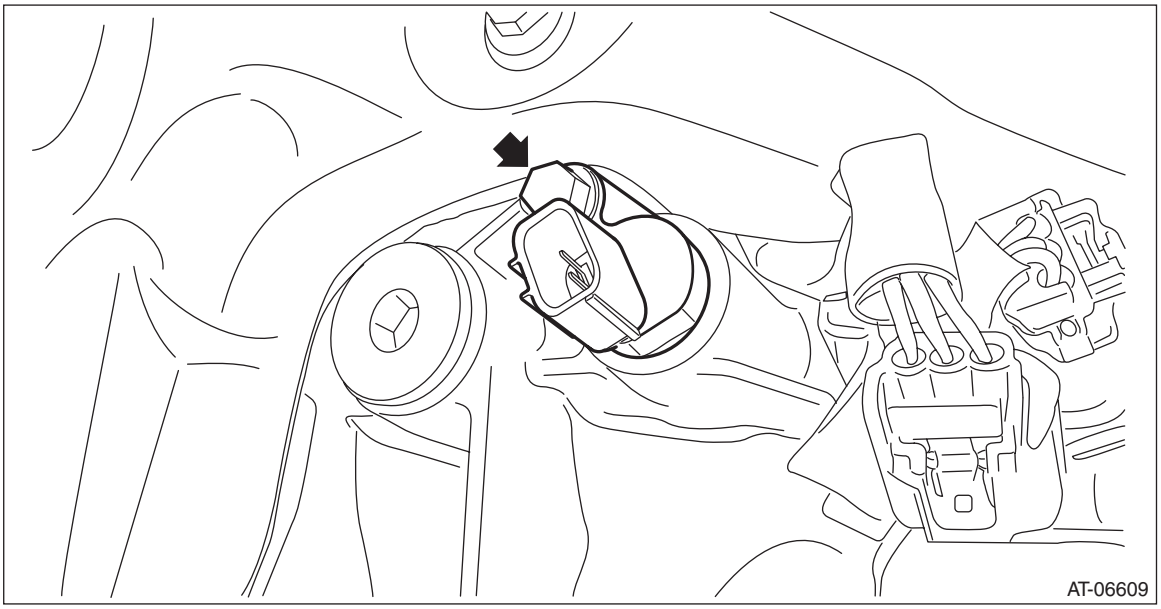

B: INSTALLATION

CAUTION:
• Be sure to prevent water or oil from contacting the connector terminal of secondary speed sensor. If adhesion occurs, replace with a new part.
• After installing the secondary speed sensor, adjust the CVTF level.
Install in the reverse order of removal.

NOTE:
• Use new O-rings.
• Apply CVTF to the O-ring.

Tightening torque:
7 N·m (0.7 kgf-m, 5.2 ft-lb)

C: INSPECTION

1) Remove the instrument panel lower cover. <Ref. to EI-71, REMOVAL, Instrument Panel Lower Cover.>
2) Set the probe of oscilloscope to TCM harness connector.

Connector & terminal
(B54) No. 7 (+) — No. 1 (–):

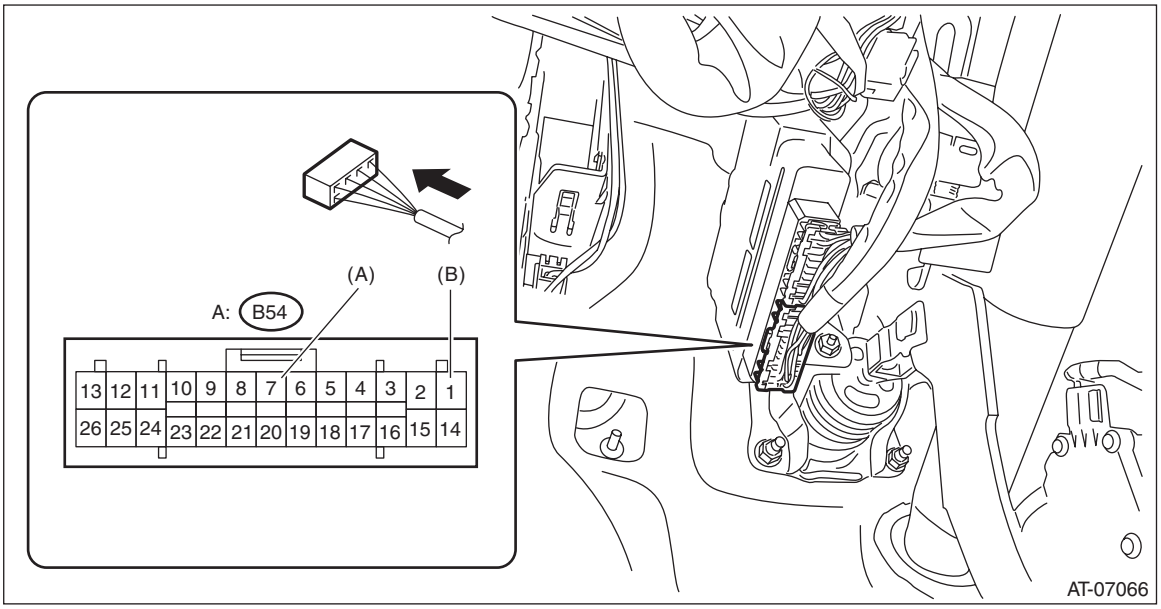

(A) + probe
(B) – probe

3) Start and warm up the engine.
4) Lift up the vehicle.

CAUTION:
Lift up the vehicle until the tire bottom is 0.3 m (0.98 ft) or more above the ground.
5) Shift the select lever to “D” range.
6) Check the waveform and output voltage of the secondary speed sensor with engine idling.

NOTE:
The waveform cycle changes as the speed changes.

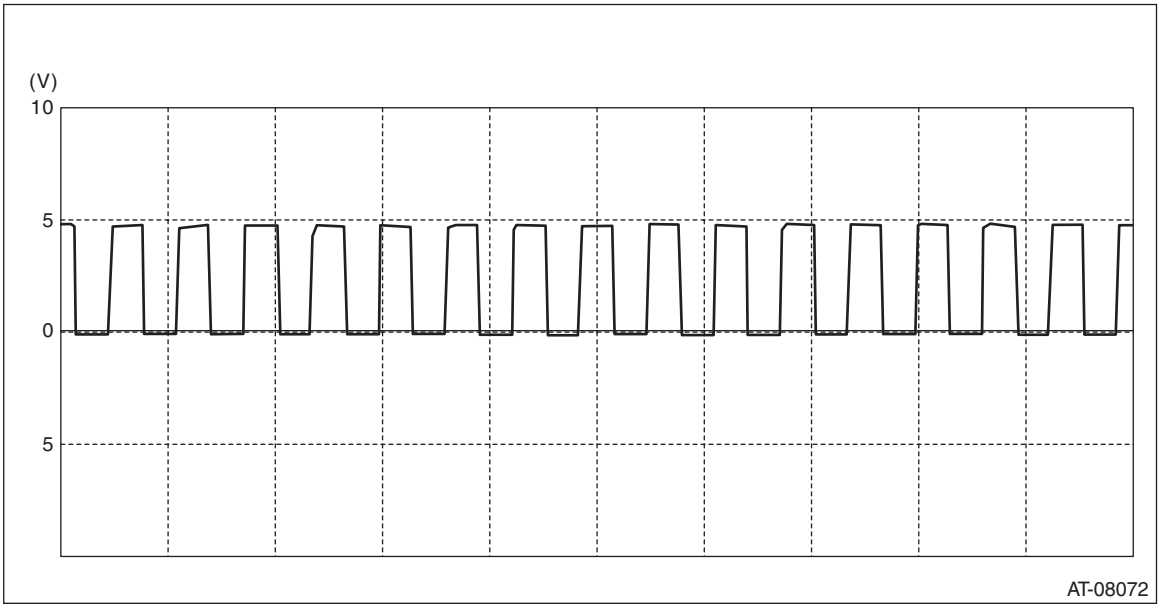

17.Primary Speed Sensor

A: REMOVAL

CAUTION:
Be sure to prevent water or oil from contacting the connector terminal of primary speed sensor. If adhesion occurs, replace with a new part.

1) Remove the transmission assembly. <Ref. to CVT(TR580)-56, REMOVAL, Automatic Transmission Assembly.>
2) Remove the primary speed sensor.

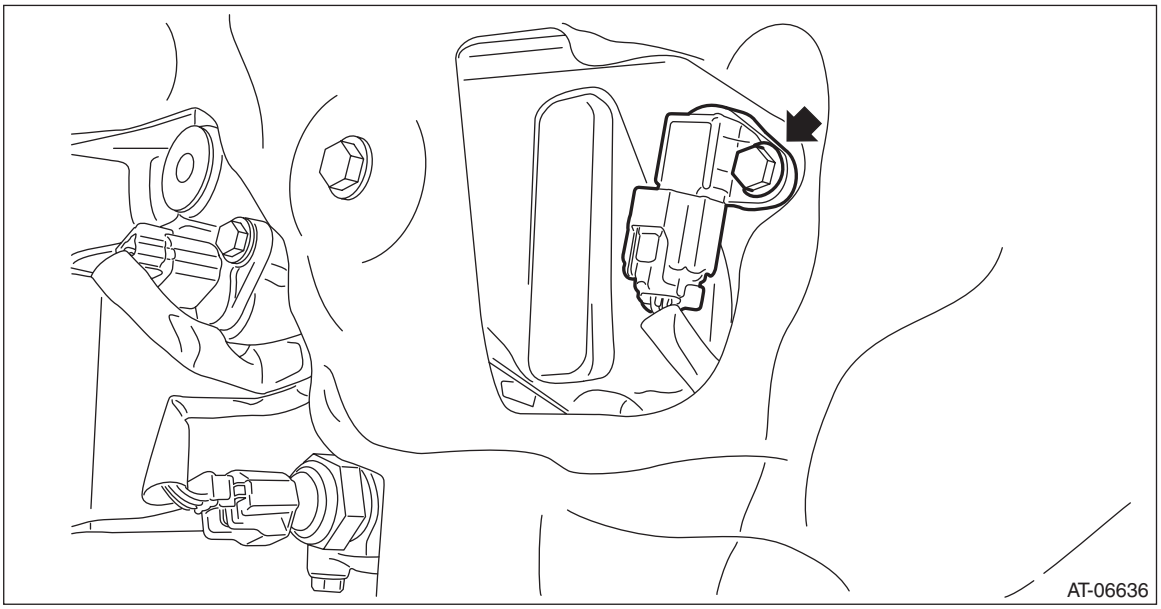

3) Remove the harness connector from primary speed sensor.

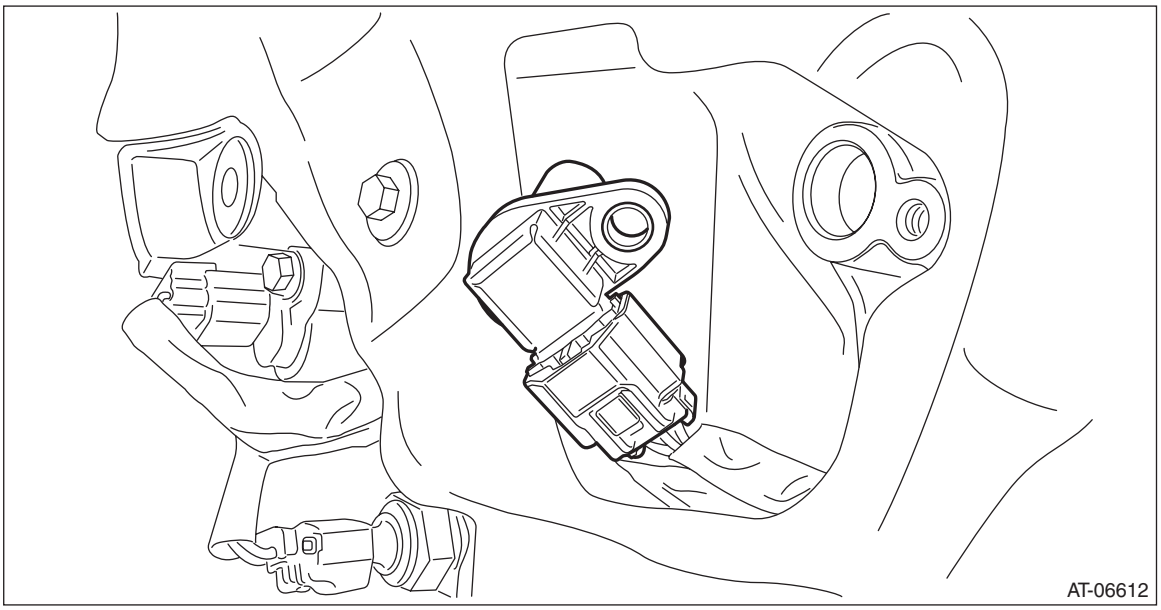

B: INSTALLATION

CAUTION:
Be sure to prevent water or oil from contacting the connector terminal of primary speed sensor. If adhesion occurs, replace with a new part.
Install in the reverse order of removal.

NOTE:
- Use new O-rings.
- Apply CVTF to the O-ring.

Tightening torque:
7 N·m (0.7 kgf-m, 5.2 ft-lb)

C: INSPECTION

1) Remove the instrument panel lower cover. <Ref. to EI-71, REMOVAL, Instrument Panel Lower Cover.>
2) Set the probe of oscilloscope to TCM harness connector.

Connector & terminal
(B54) No. 6 (+) — No. 1 (–):

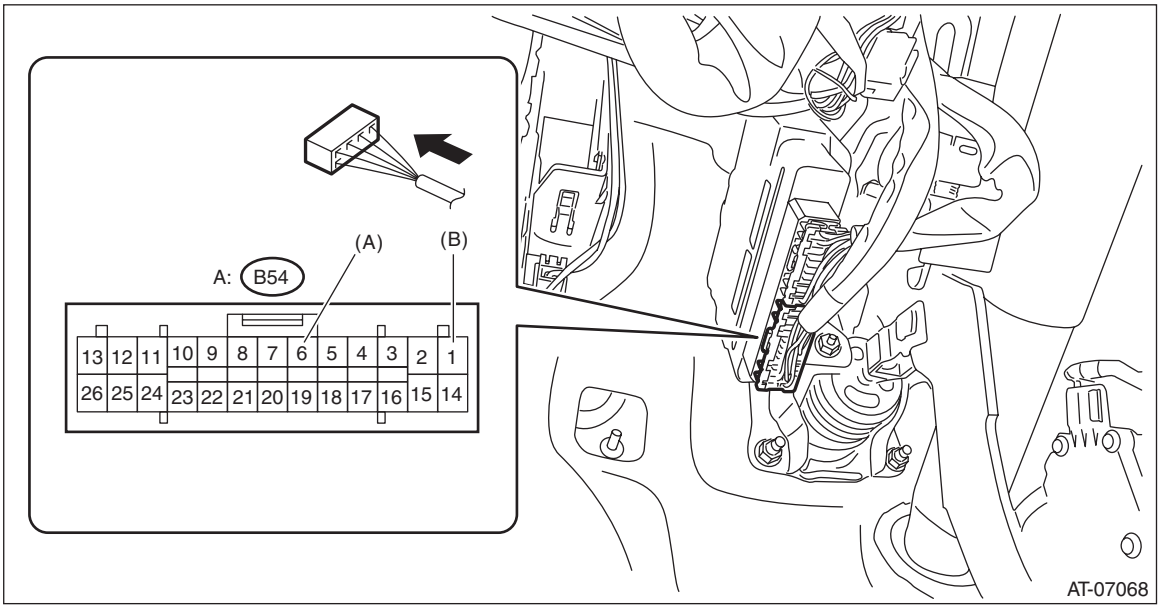

(A) + probe
(B) – probe

3) Start and warm up the engine.
4) Lift up the vehicle.

CAUTION:
Lift up the vehicle until the tire bottom is 0.3 m (0.98 ft) or more above the ground.
5) Shift the select lever to “D” range.

6) Check the waveform of primary speed sensor with engine idling running.

NOTE:
The waveform cycle changes as the speed changes.

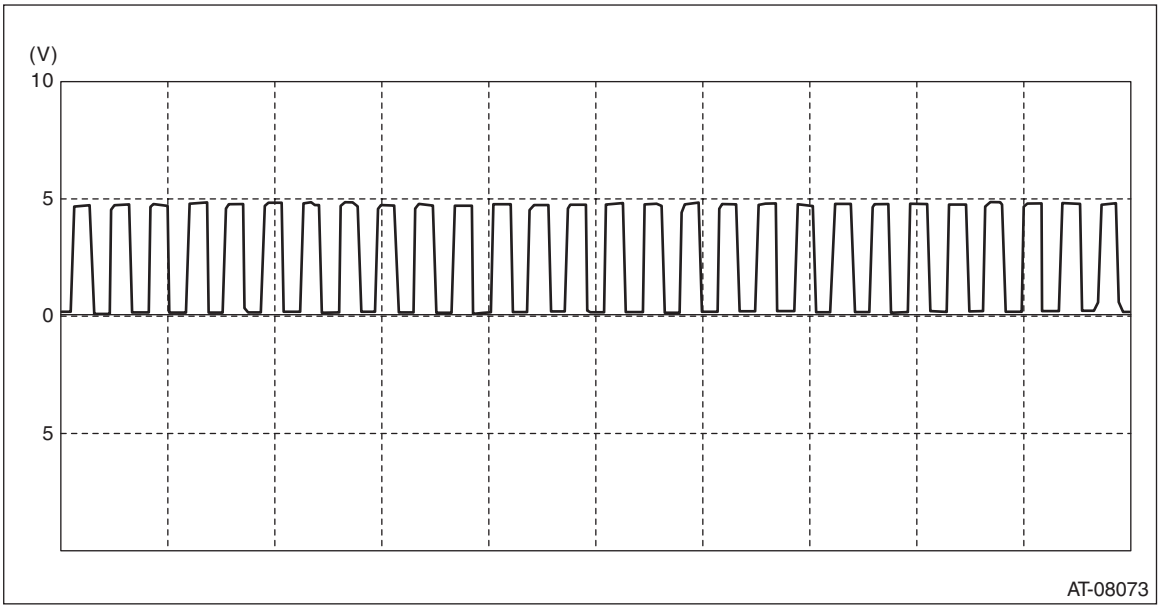

18.Secondary Pressure Sensor

A: REMOVAL

CAUTION:
• Be sure to prevent water or oil from contacting the connector terminal of secondary pressure sensor. If adhesion occurs, replace with a new part.
• When secondary pressure sensor is removed, CVTF leaks. After installing the secondary pressure sensor, adjust the CVTF level.
1) Disconnect the ground cable from battery.
2) Lift up the vehicle.
3) Remove the secondary pressure sensor connector.
4) Remove the secondary pressure sensor.

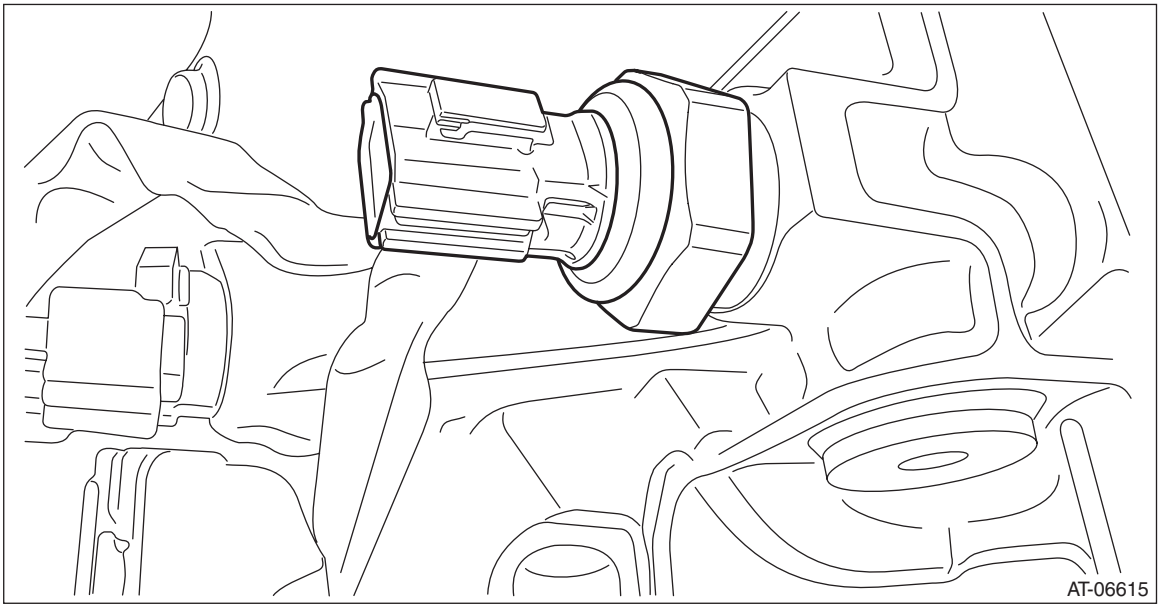

B: INSTALLATION

CAUTION:
• Be sure to prevent water or oil from contacting the connector terminal of secondary pressure sensor. If adhesion occurs, replace with a new part.
• After installing the secondary pressure sensor, adjust the CVTF level.
Install in the reverse order of removal.

NOTE:
Use new O-rings.

Tightening torque:
39 N·m (4.0 kgf-m, 28.8 ft-lb)

C: INSPECTION

1) Start and warm up the engine.
2) Shift the select lever to “P” or “N” range.
3) Depress the brake pedal and hold it.
4) Check “secondary pressure sensor voltage” by using Subaru Select Monitor while the engine is idling. <Ref. to CVT(w/o HEV)(diag)-15, OPERATION, Subaru Select Monitor.>

Standard
Approx. 0.8 V

5) Check “secondary pressure sensor voltage” by using Subaru Select Monitor while the engine is stopped and the ignition switch is turned on. <Ref. to CVT(w/o HEV)(diag)-15, OPERATION, Subaru Select Monitor.>

Specification:
Approx. 0.5 V

19.Oil Pan and Strainer

A: REMOVAL

CAUTION:
• Directly after the vehicle has been running or the engine has been idling for a long time, the CVTF is hot. Be careful not to burn yourself.
• Be careful not to spill CVTF on the exhaust pipe to prevent it from emitting smoke or causing a fire. If the CVTF adheres, wipe it off completely.

1) Lift up the vehicle.
2) Clean the transmission exterior.
3) Remove the CVTF drain plug to drain CVTF.
4) Remove the oil pan.

CAUTION:
Be careful not to allow foreign matter such as dust or dirt to enter the oil pan.

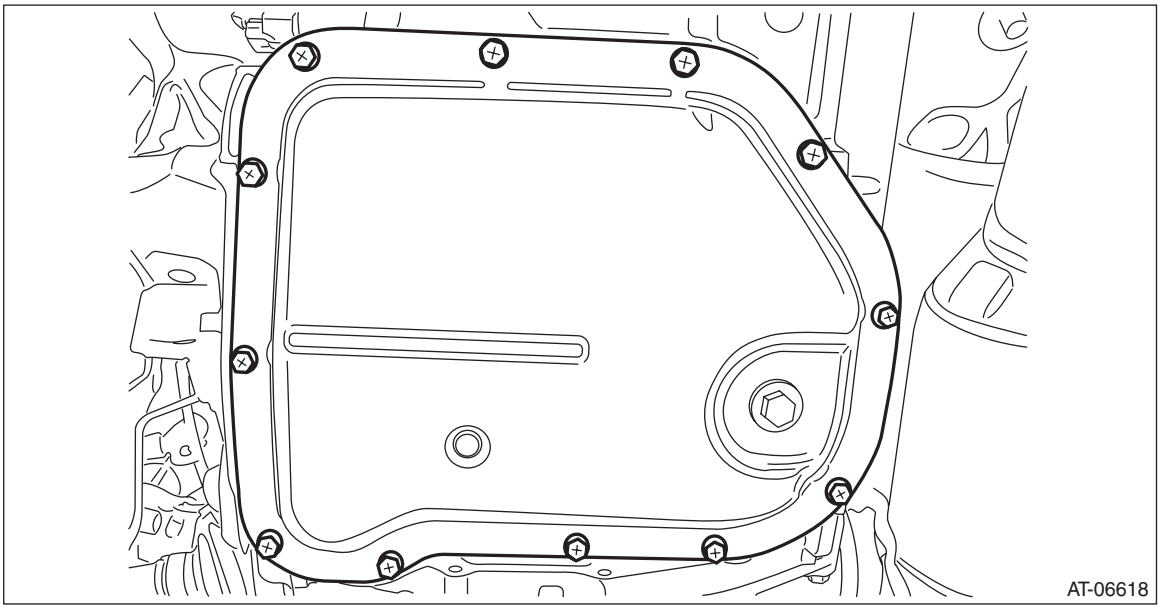

5) Remove the magnet.
6) Remove the oil strainer.

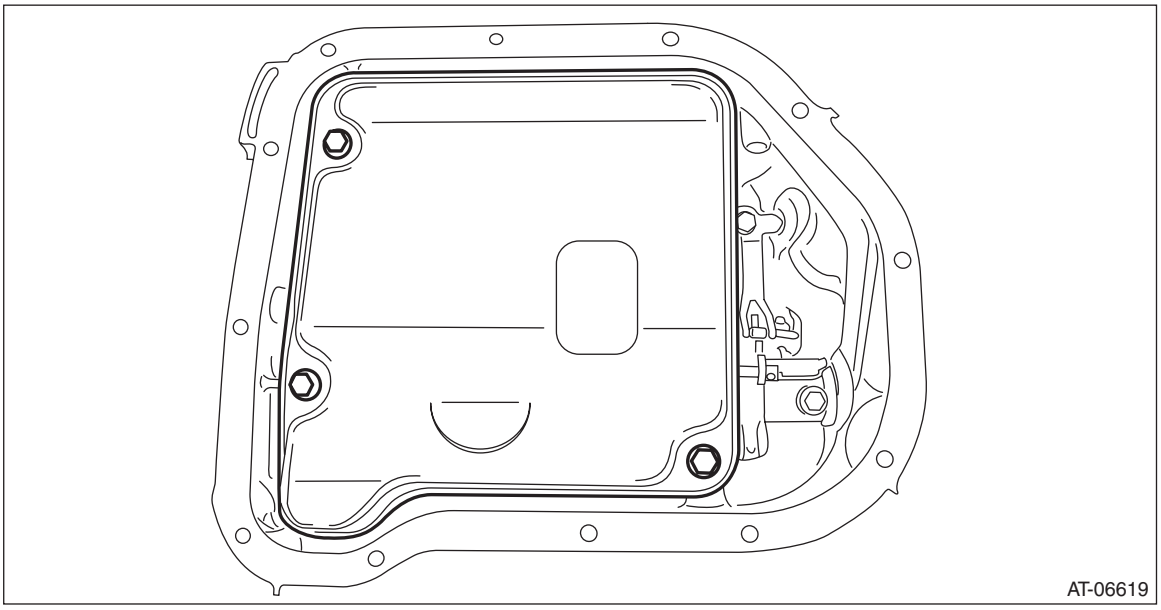

7) Remove the O-ring from oil strainer.

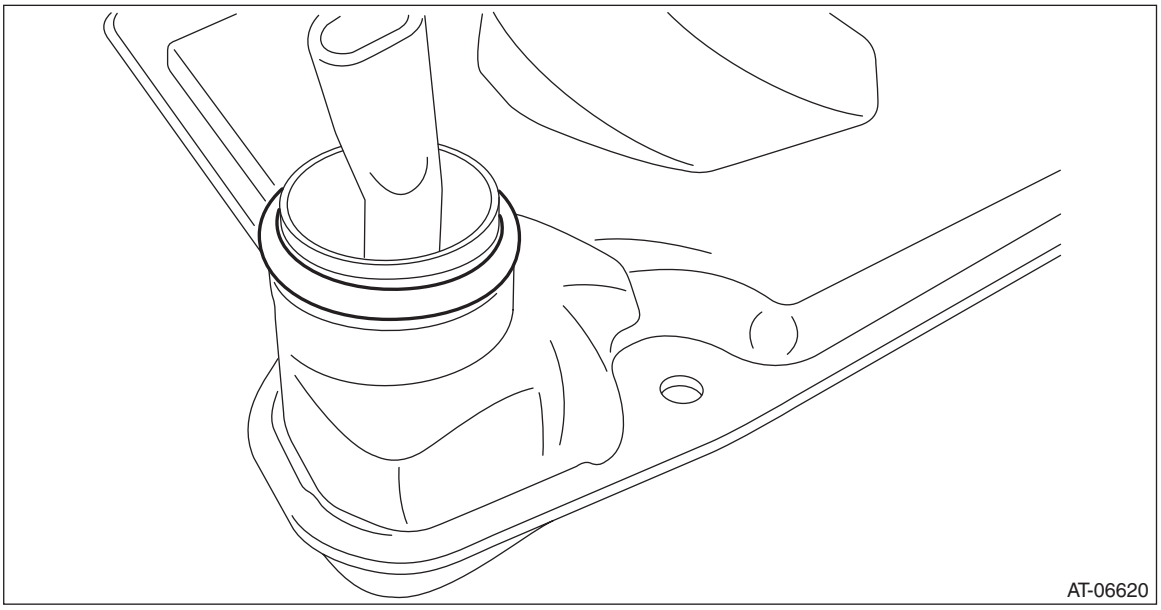

B: INSTALLATION

1) Clean the mating surface of oil pan and transmission case.
2) Install the O-ring to the oil strainer.

NOTE:
- Use new O-rings.
- Apply CVTF to the O-ring.

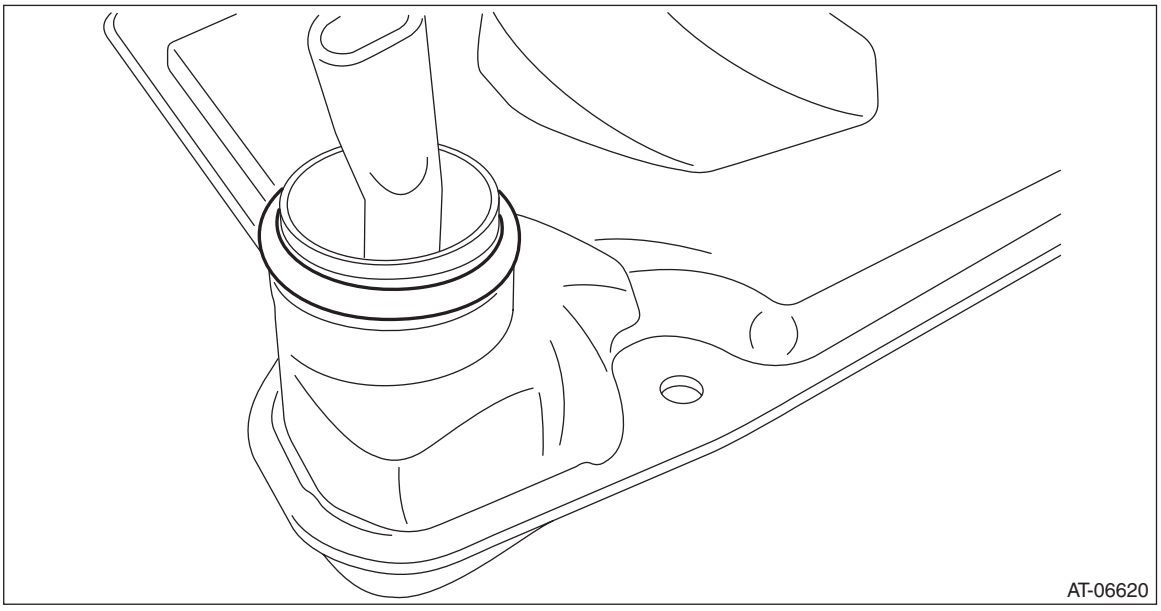

3) Install the oil strainer.

Tightening torque:
9 N·m (0.9 kgf-m, 6.6 ft-lb)

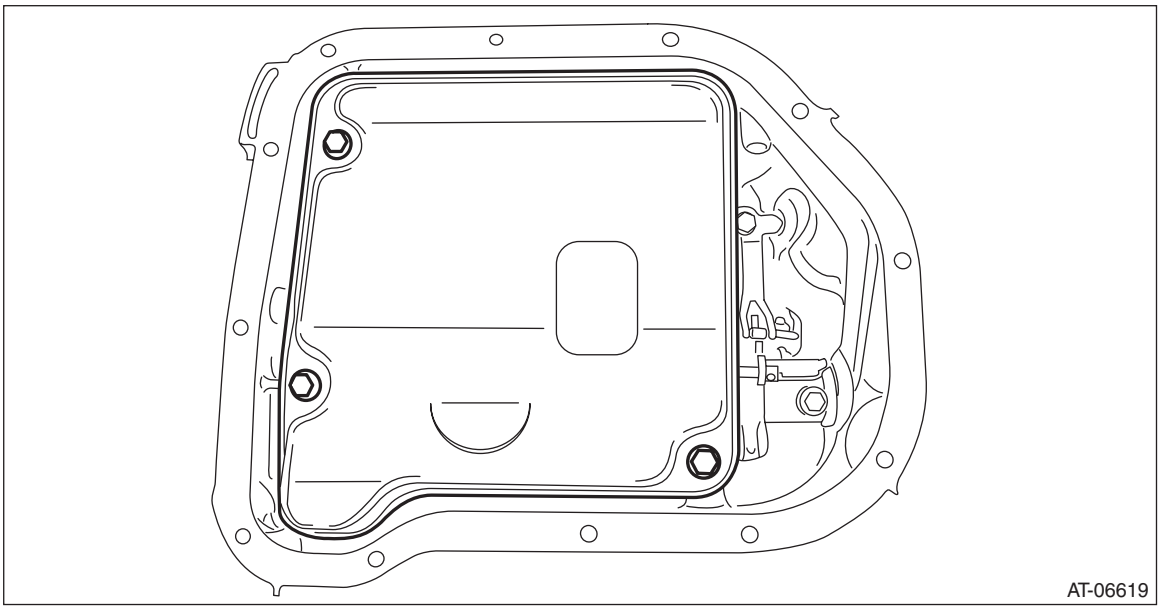

4) Clean the magnet.
5) Attach the magnet at the specified position of the oil pan.
6) Apply liquid gasket all around the oil pan mating surface seamlessly.

Liquid gasket:
THREE BOND 1217B (Part No. K0877YA020) or equivalent

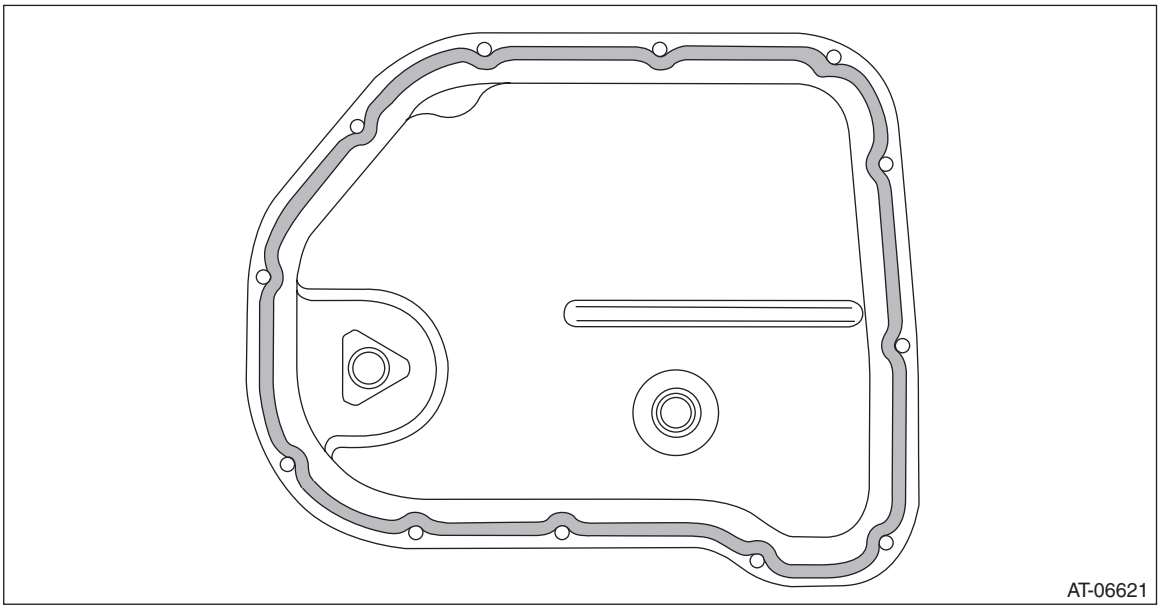

7) Install the oil pan by equally tightening the bolts.

Tightening torque:
5 N·m (0.5 kgf-m, 3.7 ft-lb)

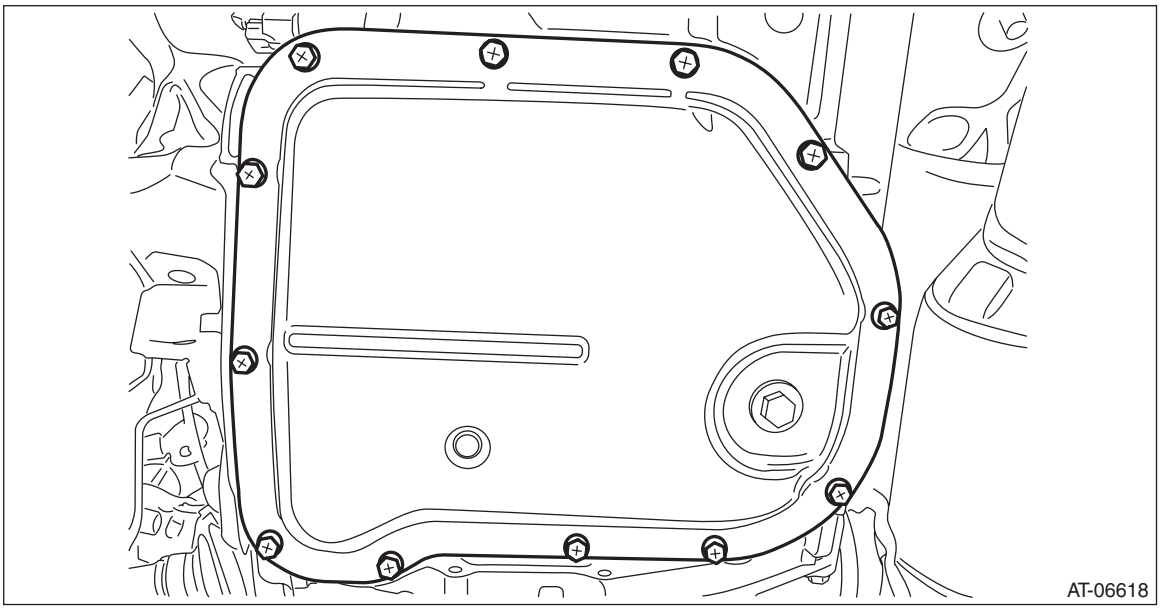

8) Refill CVTF and adjust the level. <Ref. to CVT(TR580)-36, REPLACEMENT, CVTF.>

C: INSPECTION

- Check each part for damage or dust.
- Check oil strainer for clogging.

20.Control Valve Body

A: REMOVAL

CAUTION:
• Directly after the vehicle has been running or the engine has been idling for a long time, the CVTF is hot. Be careful not to burn yourself.
• Be careful not to spill CVTF on the exhaust pipe to prevent it from emitting smoke or causing a fire. If the CVTF adheres, wipe it off completely.
• Always clean the engine compartment before removal.

NOTE:
The control valve body is replaced as an assembly only, because it is a non-disassembly part.
1) Disconnect the ground cable from battery.
2) Remove the clip (A) from the air intake boot.
3) Loosen the clamp (B) connecting the air intake boot and air cleaner case (rear).
4) Loosen the clamp (C) which connects the air intake boot and throttle body.

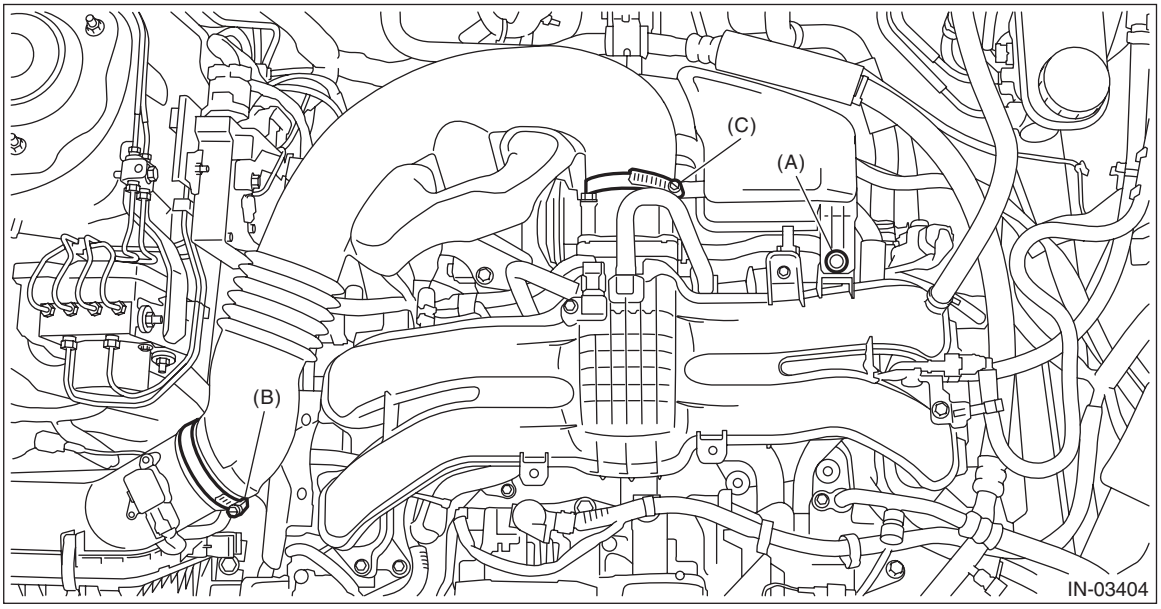

5) Remove the air intake boot from the throttle body, and move it to the left side wheel apron.

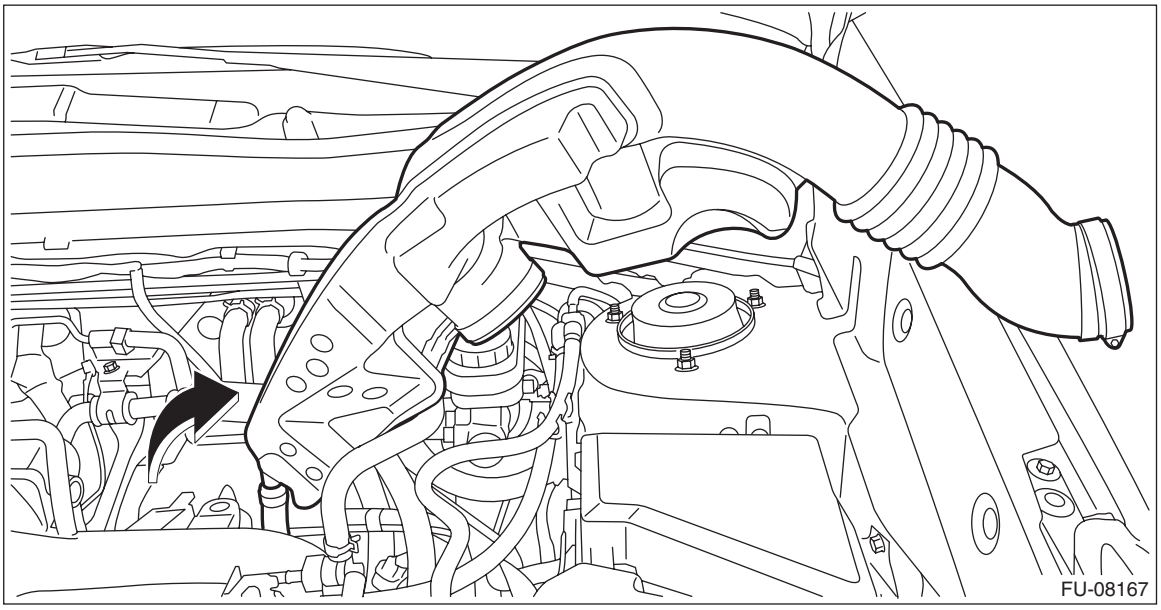

6) Disconnect the following connectors.
- Transmission harness connectors
- Inhibitor harness connector
- Transmission radio ground terminal

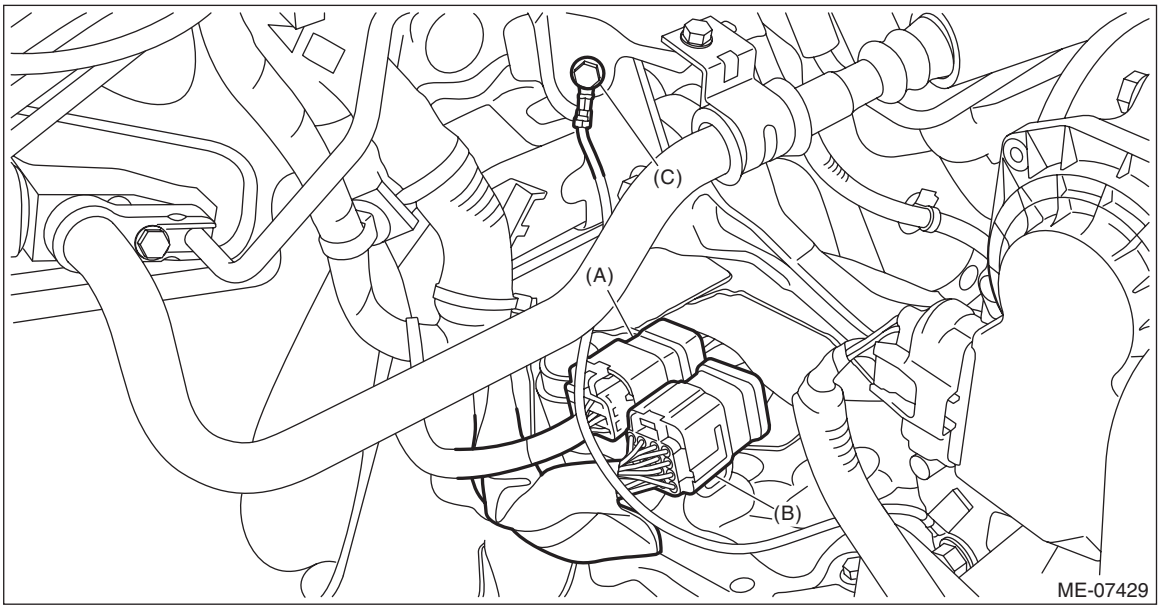

(A) Transmission harness connectors
(B) Inhibitor harness connector
(C) Transmission radio ground terminal

7) Remove the pitching stopper.

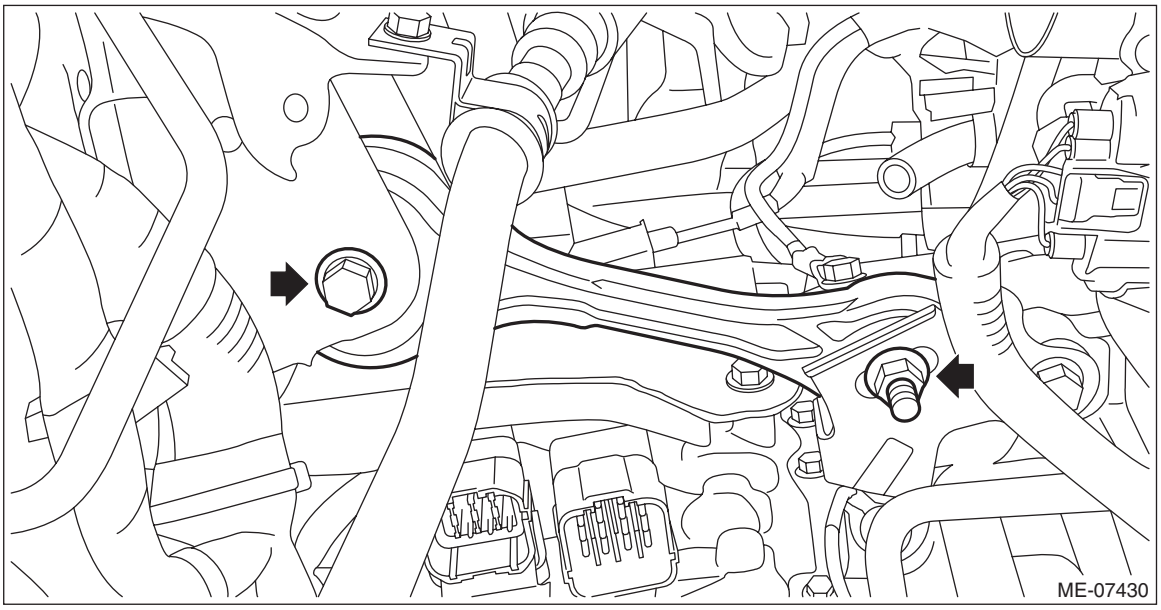

8) Remove the air breather hose from the pitching stopper bracket, and then remove the pitching stopper bracket and transmission radio ground cord.

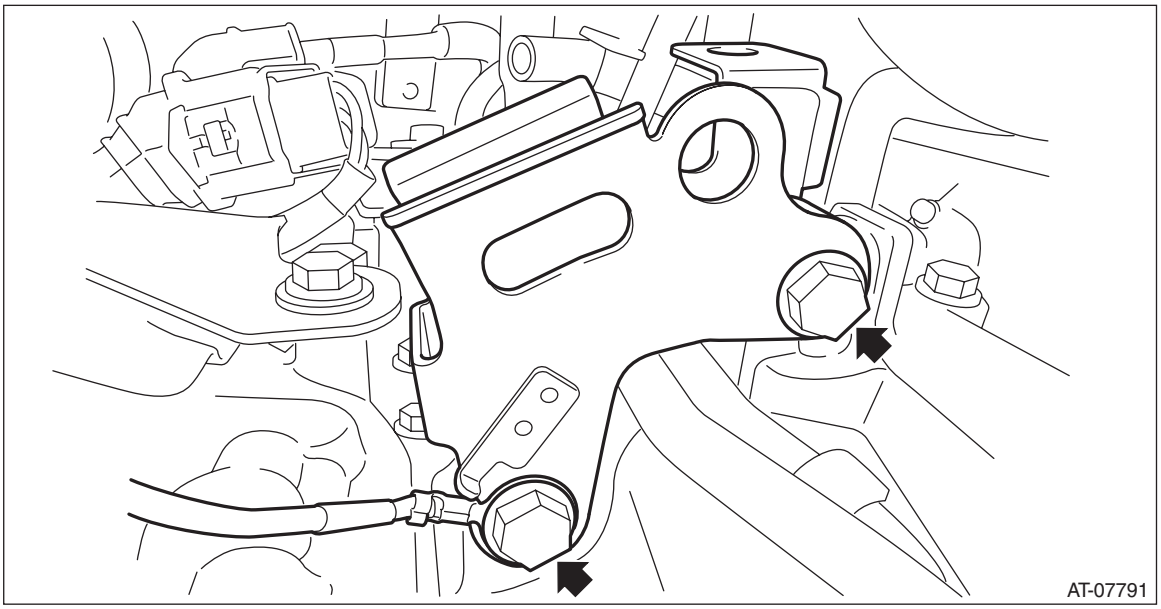

9) Remove the transmission case cover.

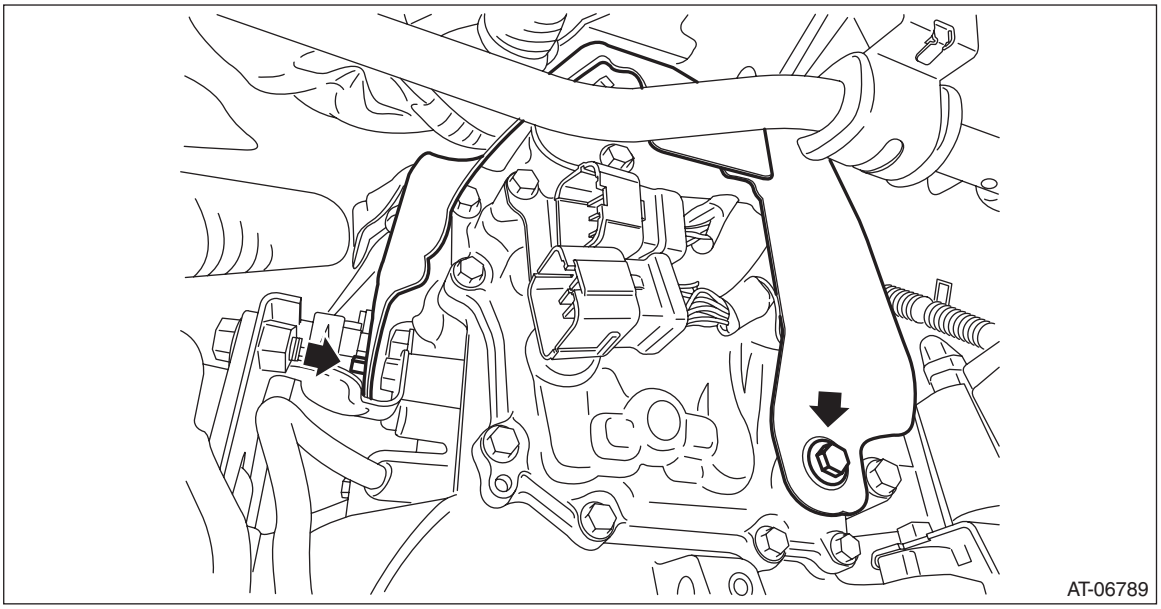

10) Remove the transmission harness stay and ground terminal.

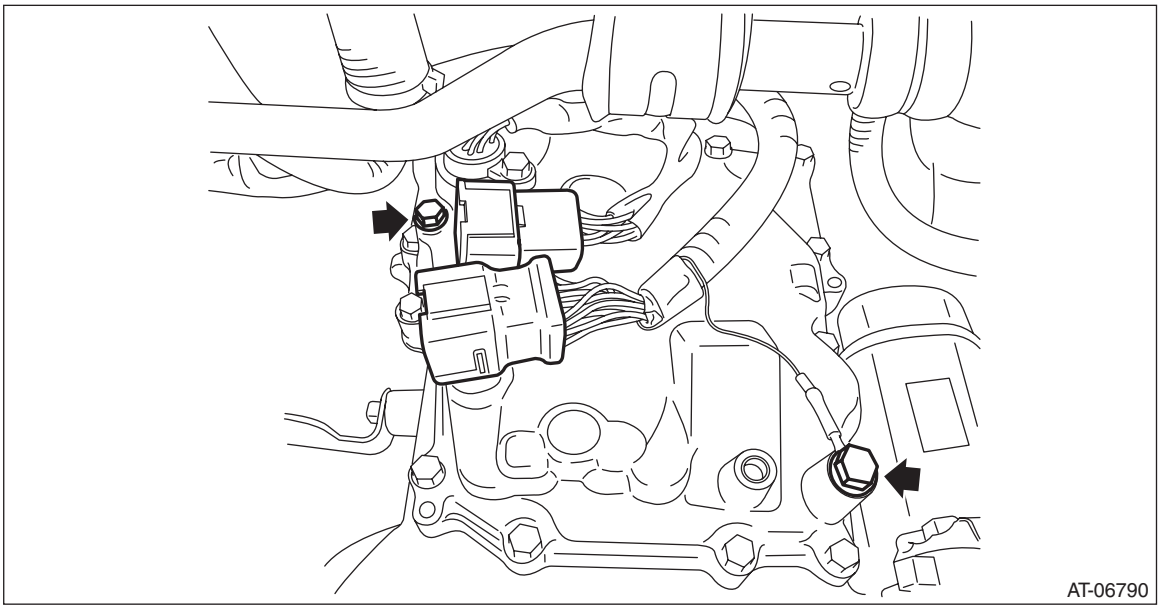

11) Remove the transmission harness connector from the harness stay.
12) Remove the throttle body, and move it aside so that it will not interfere with the removal of the control valve. <Ref. to FU(H4DO(w/o HEV))-15, REMOVAL, Throttle Body.>

NOTE:
Do not remove the preheater hose.
13) Clean the transmission exterior.
14) Fix the ST with tape, and set the ST to the vehicle.

NOTE:
When replacing the control valve body, the sheet is included in the control valve body for repairs.
ST 18761AA010 SHEET SPECIAL TOOL

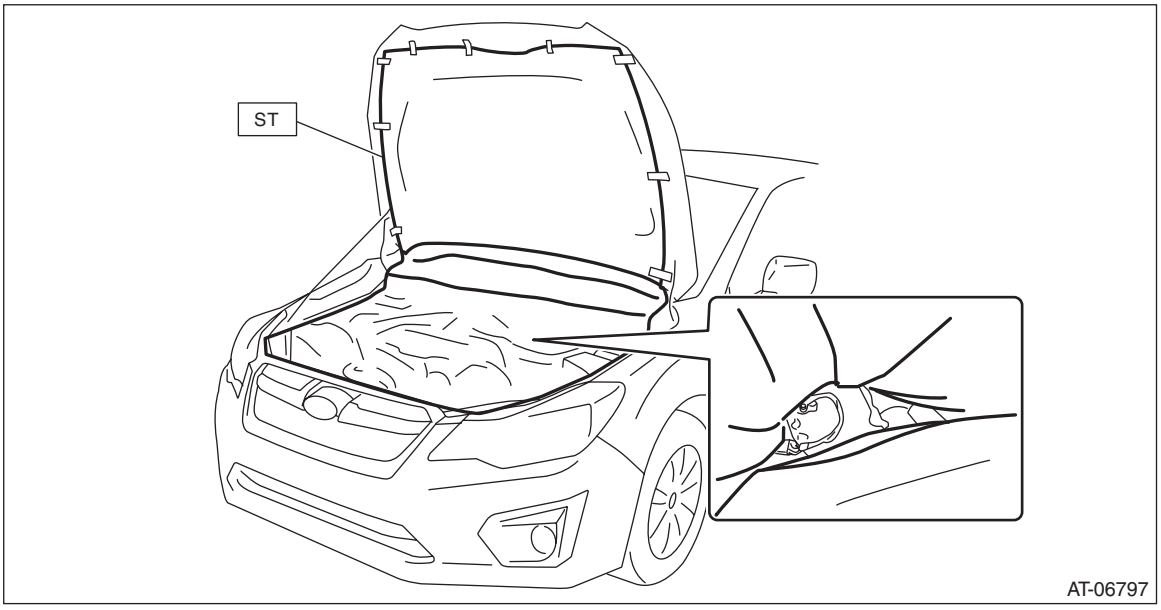

15) Remove the valve cover and gasket.

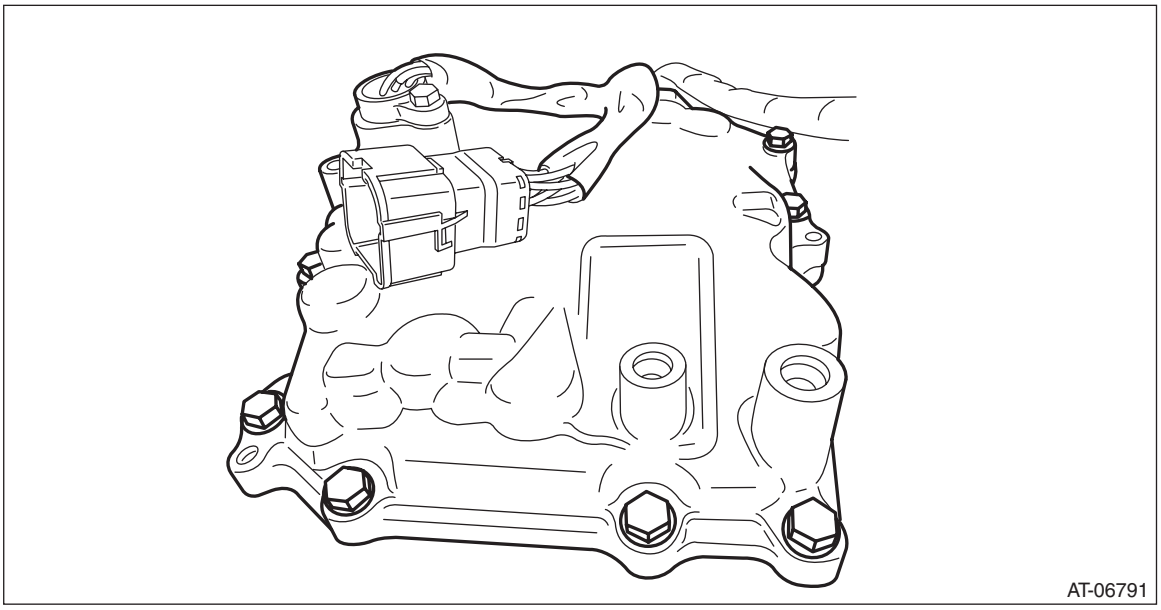

16) Remove the transmission harness from the valve cover.

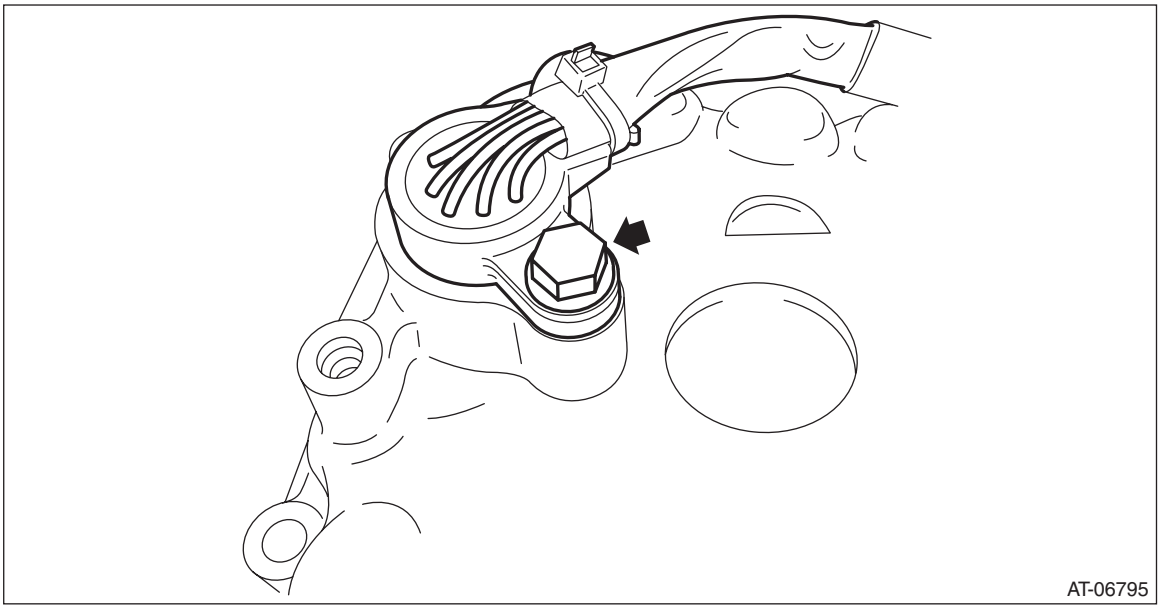

17) Remove the O-ring from the transmission harness.

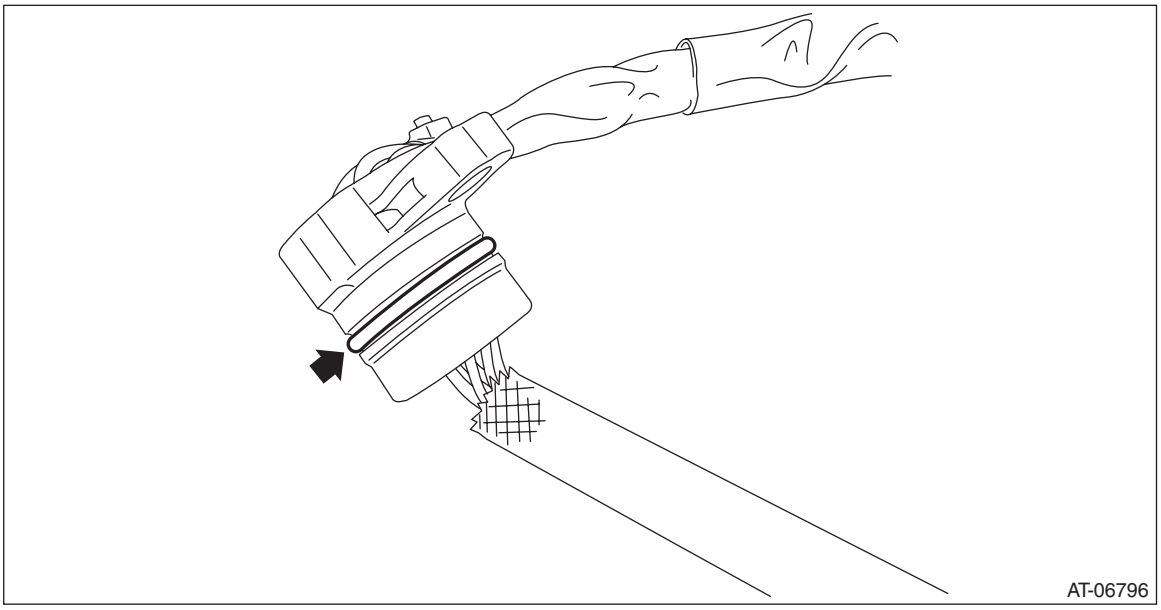

18) Disconnect the harness connector from the control valve body.
19) Remove the control valve body.

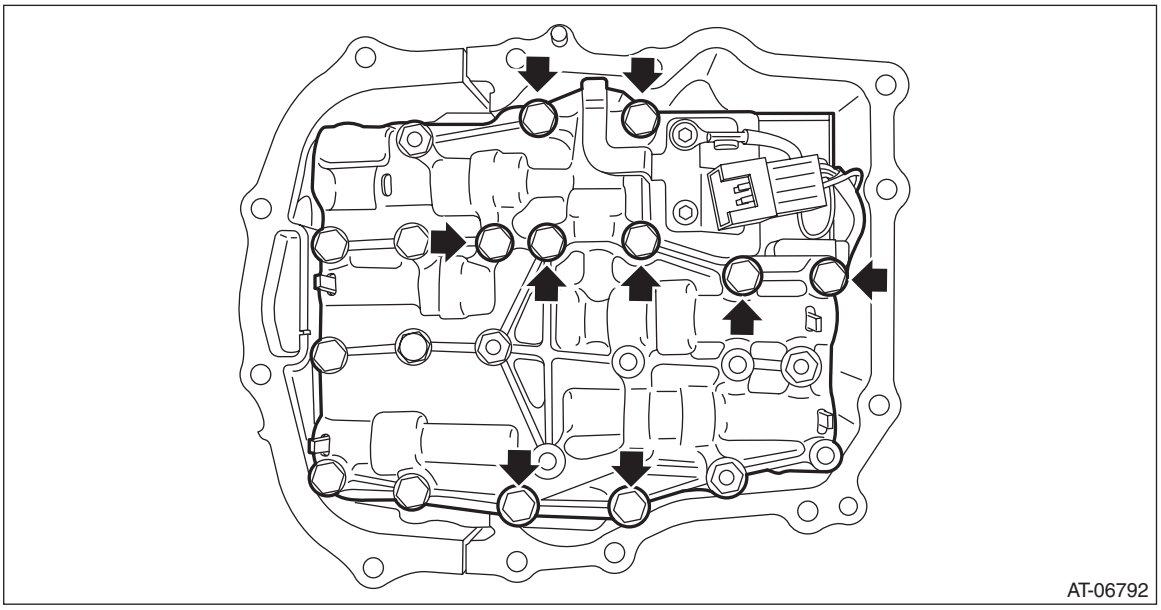

20) Remove the O-ring from the transmission.

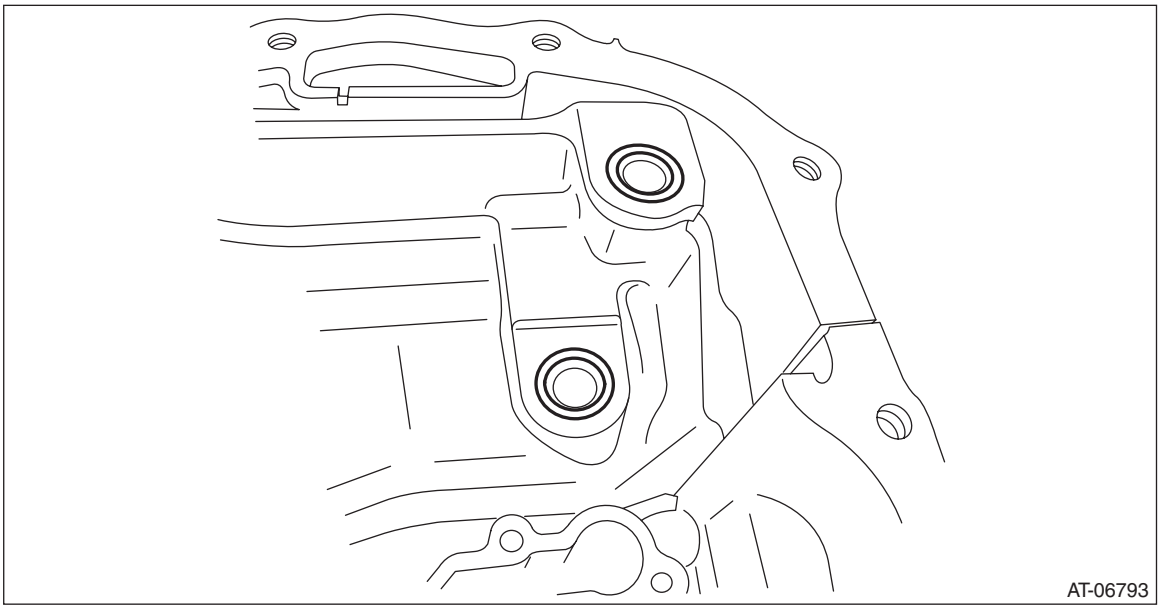

B: INSTALLATION

1) Clean the mating surface of valve cover and transmission side.

CAUTION:
When cleaning the mating surface of the transmission side, be careful not to allow any dust, foreign matter and used liquid gasket to enter the transmission.

2) Check the control valve body for dust and other foreign matter.
3) Install the O-ring.

NOTE:
- Use new O-rings.
- Apply CVTF to the O-ring.

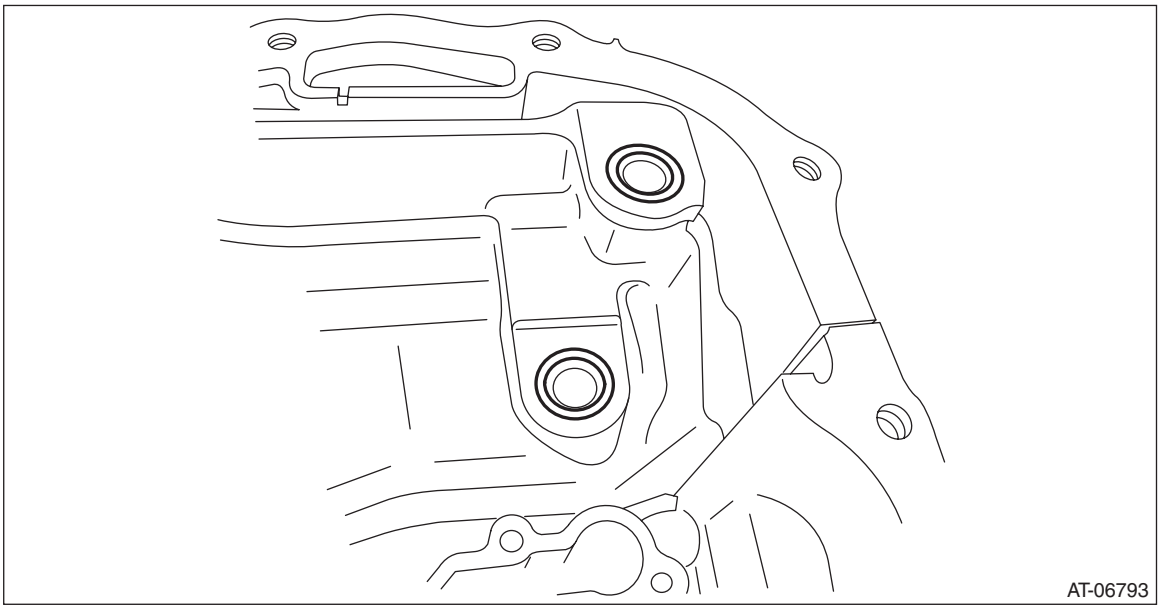

4) Install the control valve body.
(1) Install the control valve body to the transmission.

CAUTION:
- **Do not damage the O-ring.**
- **Perform installation so that the O-ring is not displaced.**

(2) Temporarily tighten the bolt (A: silver).

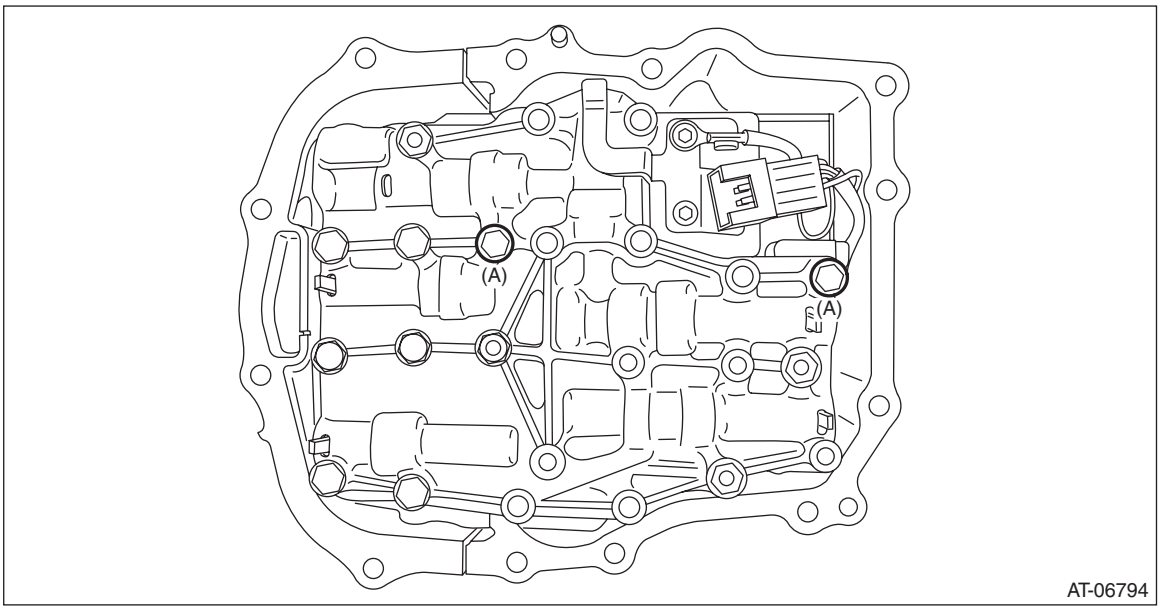

(3) Attach the bolt (B).

Tightening torque:
9 N·m (0.9 kgf-m, 6.6 ft-lb)

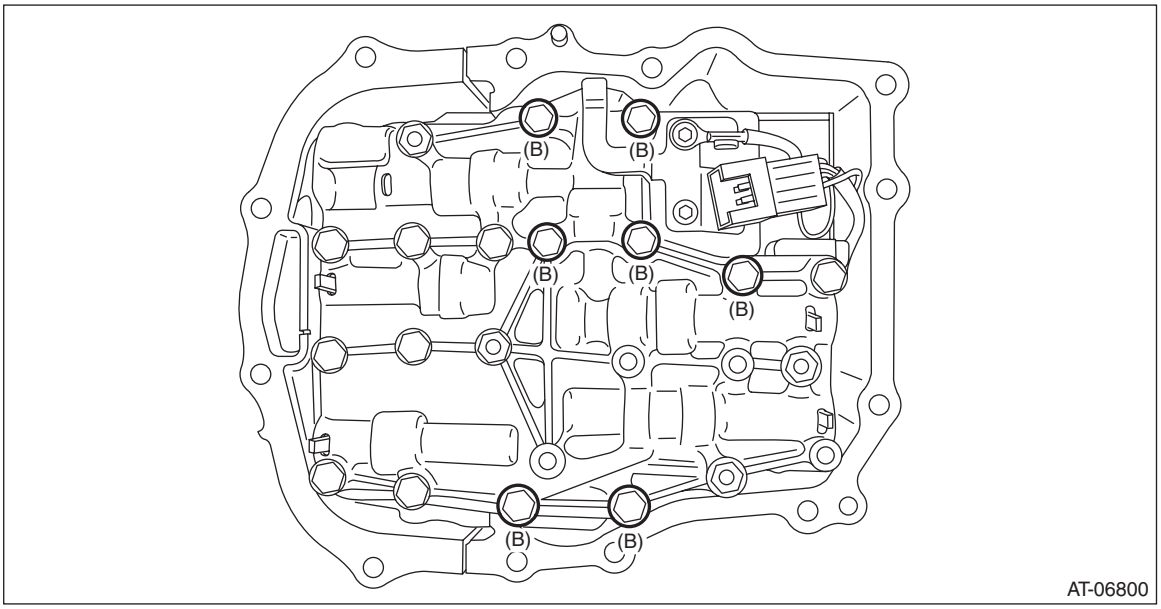

(4) Tighten the bolt (A: silver).

Tightening torque:
9 N·m (0.9 kgf-m, 6.6 ft-lb)

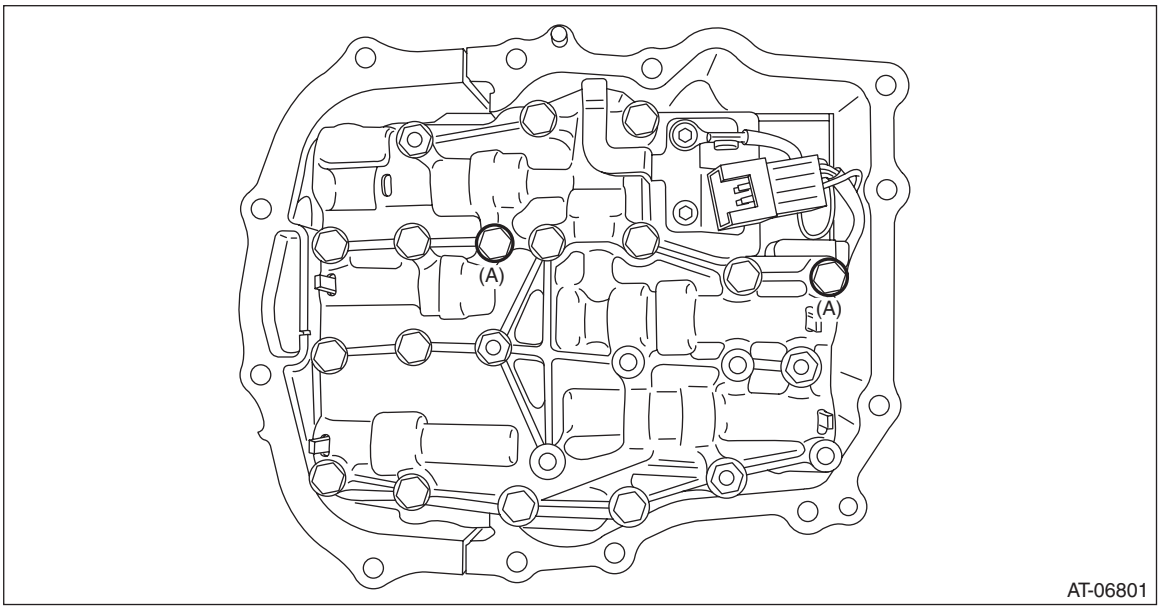

5) Install the O-ring to the transmission harness.

NOTE:
- Use new O-rings.
- Apply CVTF to the O-ring.

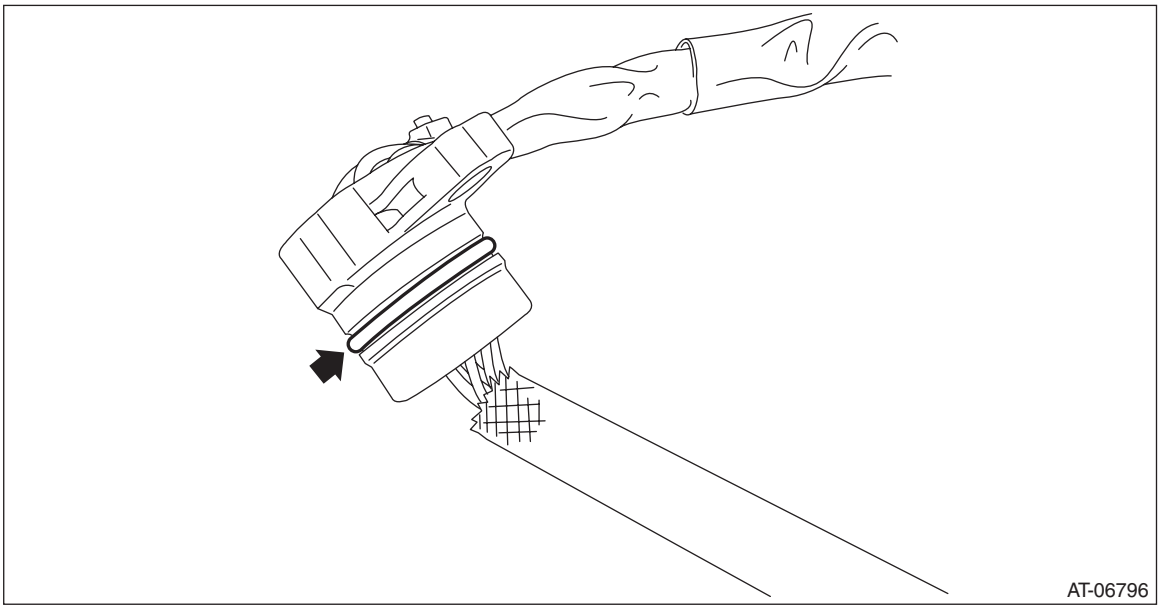

6) Install the transmission harness to the valve cover.

Tightening torque:
7 N·m (0.7 kgf-m, 5.2 ft-lb)

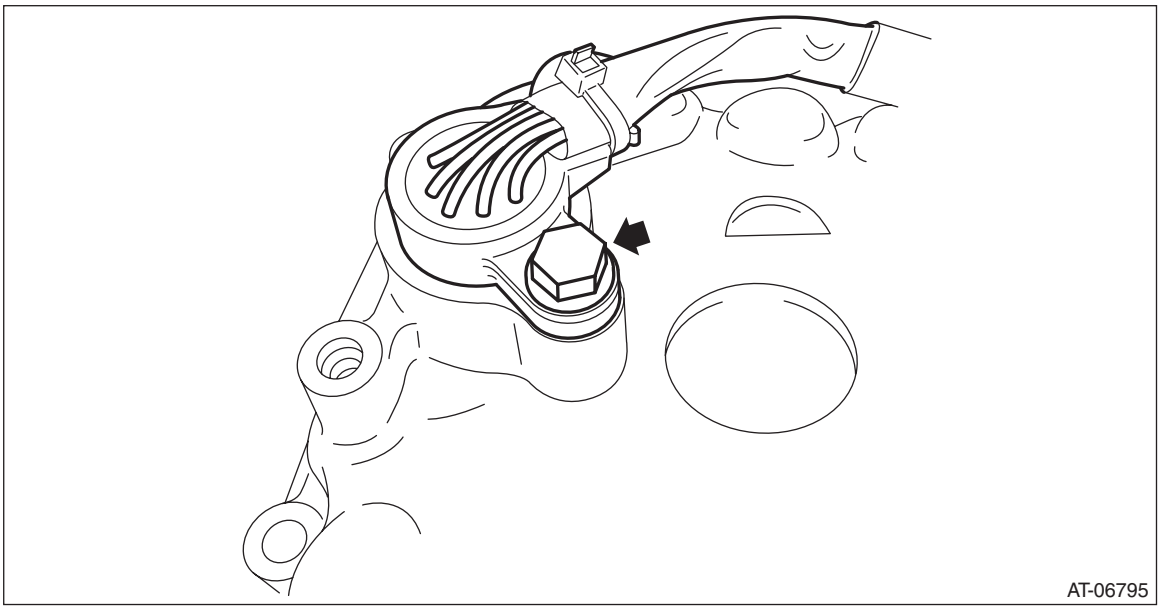

7) Install the gasket to the transmission.

NOTE:
Use a new gasket.

8) Apply liquid gasket to the oval hole of gasket.

Liquid gasket:
THREE BOND 1215 (Part No. 004403007) or equivalent

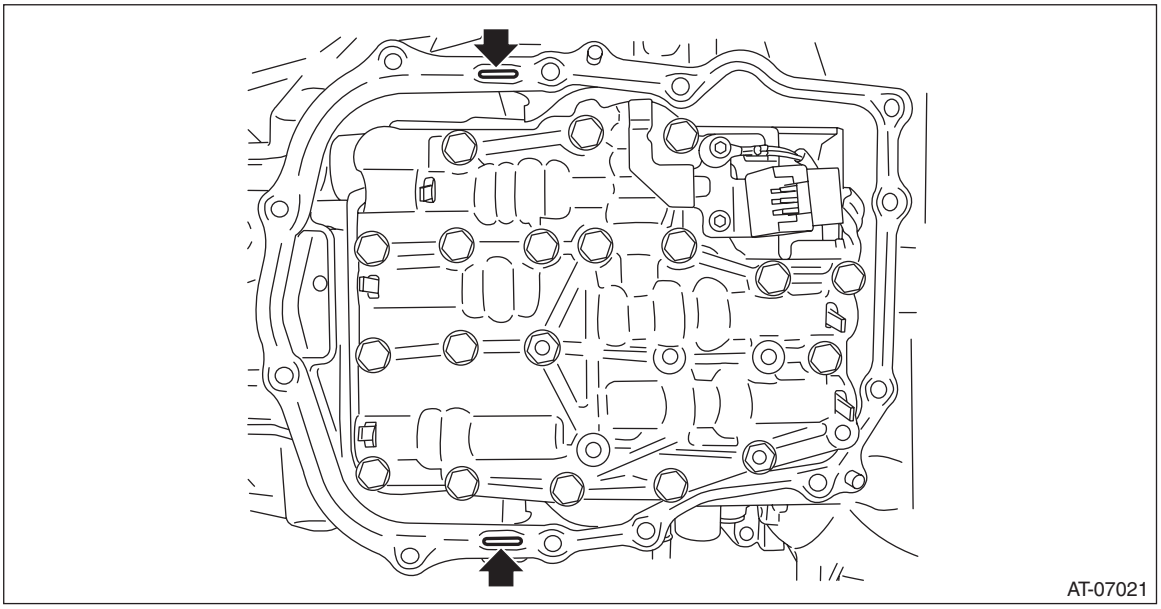

9) Connect the transmission harness connector to the control valve body, and install the valve cover.

CAUTION:
Be careful not to catch the sheet of the ST.

Tightening torque:
8 N·m (0.8 kgf-m, 5.9 ft-lb)

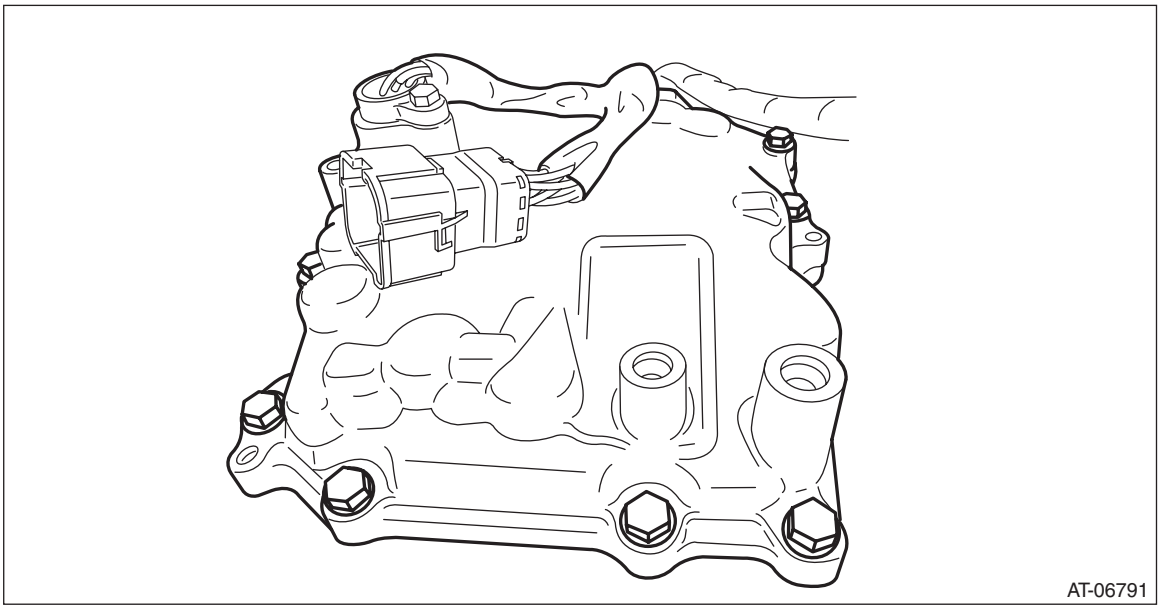

10) Remove the ST (SHEET SPECIAL TOOL).
11) Install the throttle body. <Ref. to FU(H4DO(w/o HEV))-17, INSTALLATION, Throttle Body.>
12) Install the transmission harness connector to the harness stay.
13) Install the transmission harness stay and transmission ground terminal.

NOTE:
Install the transmission ground terminal in the direction within the range of approx. 30° (A).

Tightening torque:
T1: 7 N·m (0.7 kgf-m, 5.2 ft-lb)
T2: 14 N·m (1.4 kgf-m, 10.3 ft-lb)

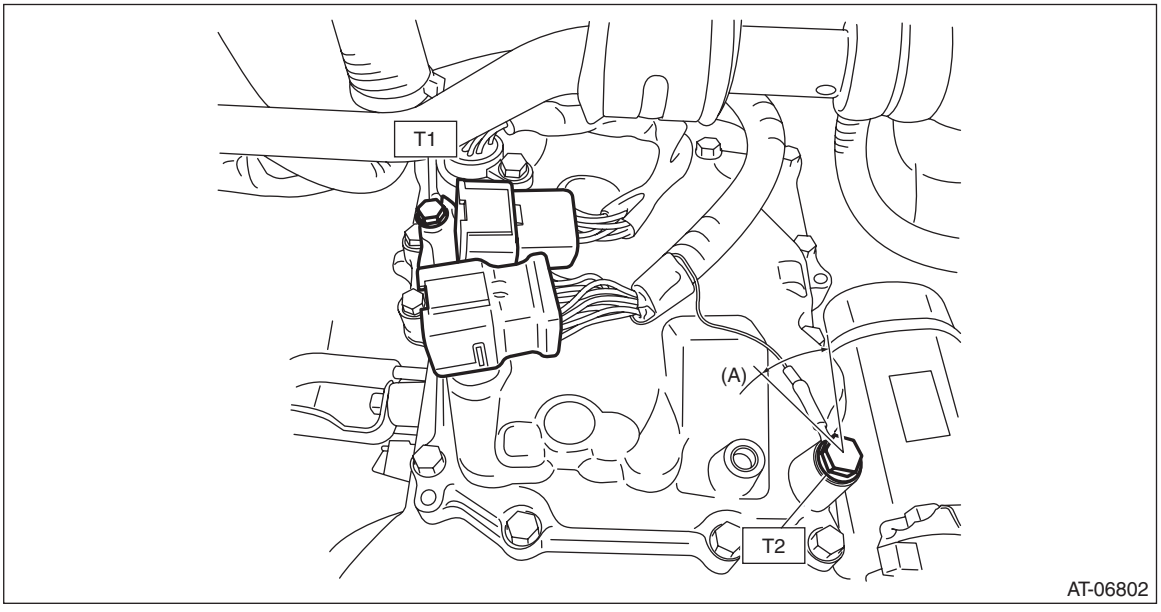

14) Install the transmission case cover.

Tightening torque:
8 N·m (0.8 kgf-m, 5.9 ft-lb)

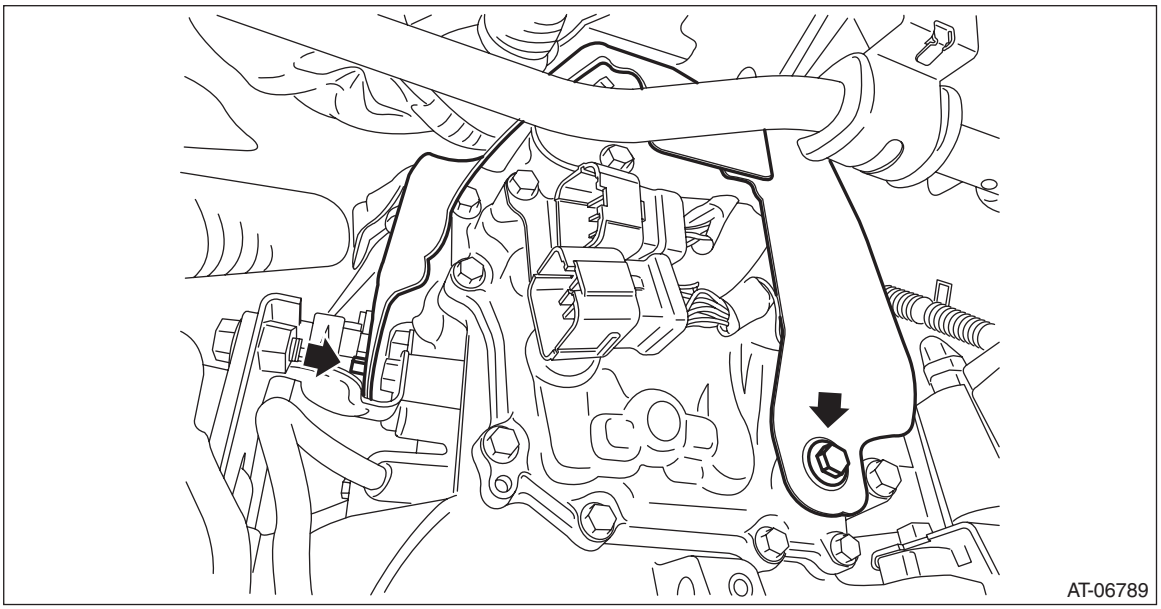

15) Install the pitching stopper bracket and transmission radio ground cord.

Tightening torque:
41 N·m (4.2 kgf-m, 30.2 ft-lb)

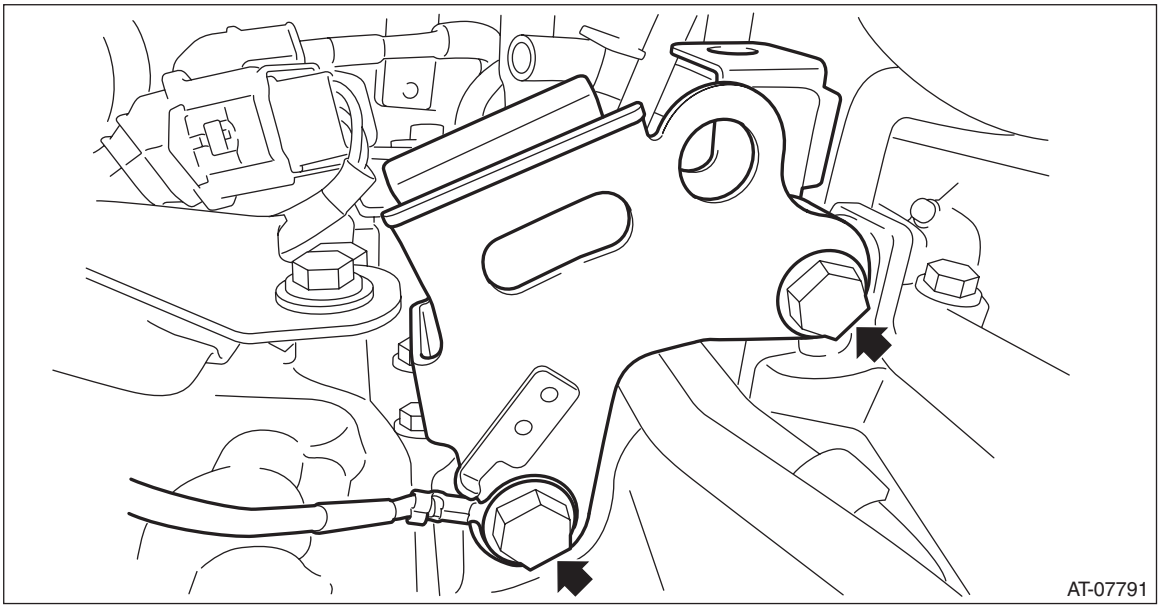

16) Install the air breather hose to the pitching stopper bracket.

17) Install the pitching stopper.

Tightening torque:
T1: 50 N·m (5.1 kgf-m, 36.9 ft-lb)
T2: 58 N·m (5.9 kgf-m, 42.8 ft-lb)

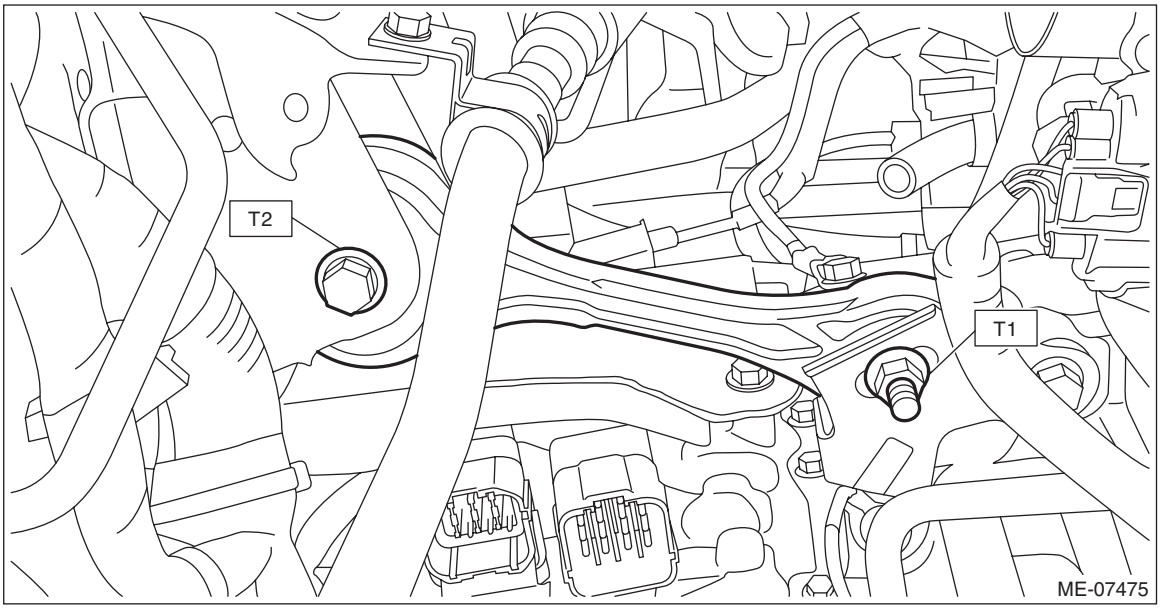

18) Connect the following harness connectors.
- Transmission harness connectors
- Inhibitor harness connector
- Transmission radio ground terminal

Tightening torque:
13 N·m (1.3 kgf-m, 9.6 ft-lb)

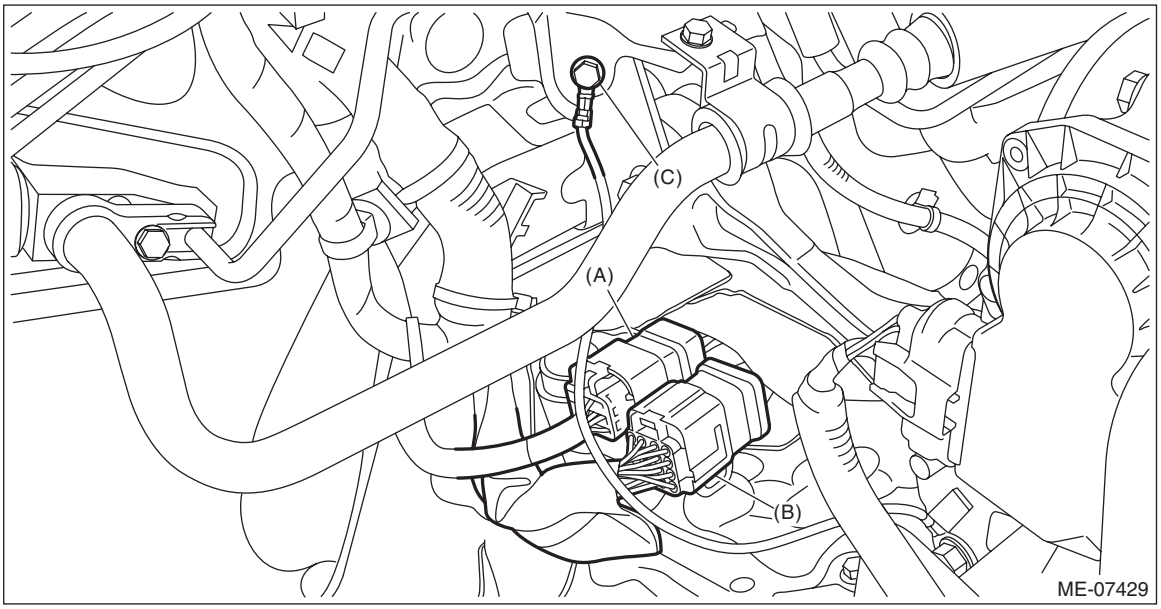

(A) Transmission harness connectors
(B) Inhibitor harness connector
(C) Transmission radio ground terminal

19) Install the air intake boot assembly. <Ref. to IN(H4DO(w/o HEV))-12, INSTALLATION, Air Intake Boot.>
20) Adjust the CVTF level. <Ref. to CVT(TR580)-35, ADJUSTMENT, CVTF.>

C: INSPECTION

- Check each part for damage or dust.
- Measure the resistance of each solenoid, sensor and ground wire.

NOTE:
Measurement should be performed at a temperature of 20°C (68°F).

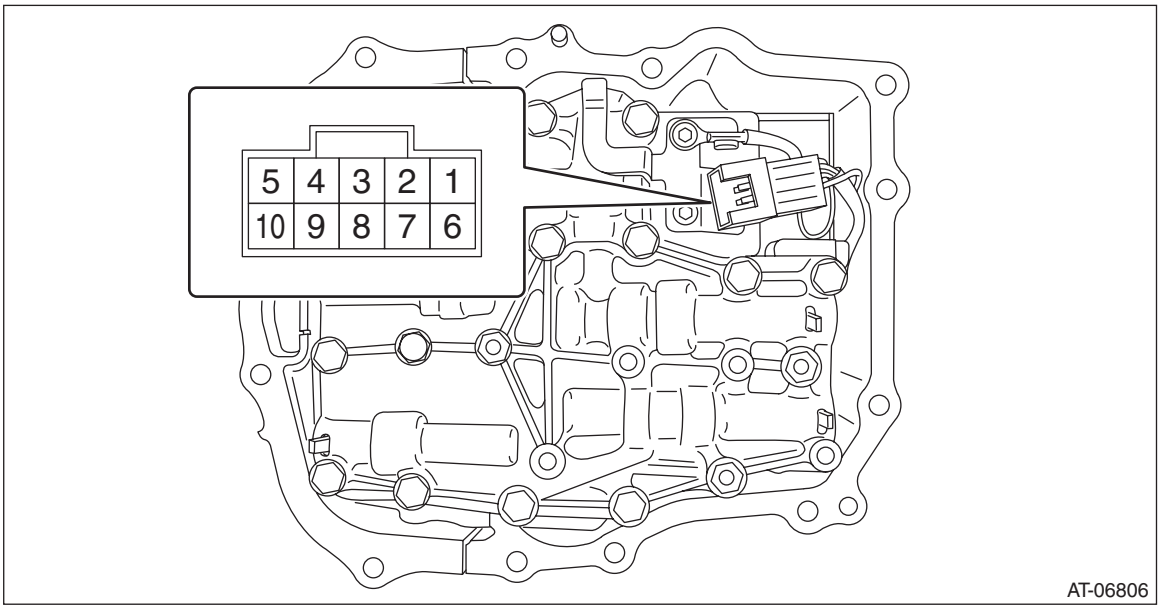

- **Solenoid**

Solenoid	Terminal No.	Standard
Primary UP solenoid	No. 2 — control valve body	Approx. 10 — 13.5 Ω
Secondary solenoid	No. 3 — control valve body	Approx. 5 — 7 Ω
F&R clutch solenoid	No. 4 — control valve body	Approx. 4 — 6 Ω
Primary DOWN solenoid	No. 7 — control valve body	Approx. 10 — 13.5 Ω
Lock-up duty solenoid	No. 9 — control valve body	Approx. 10 — 13.5 Ω
AWD solenoid	No. 10 — control valve body	Approx. 2 — 4.5 Ω

- **Oil temperature sensor**

Sensor	Terminal No.	Standard At 20°C (68°F)
Oil temperature sensor	No. 1 — No. 6	Approx. 2.5 kΩ

- **Transmission ground**

Terminal No.	Standard
No. 8 — control valve body	Less than 1 Ω

21.Transmission Harness

A: REMOVAL

1. INHIBITOR HARNESS

1) Remove the transmission from the vehicle. <Ref. to CVT(TR580)-56, REMOVAL, Automatic Transmission Assembly.>
2) Remove the transmission case cover.

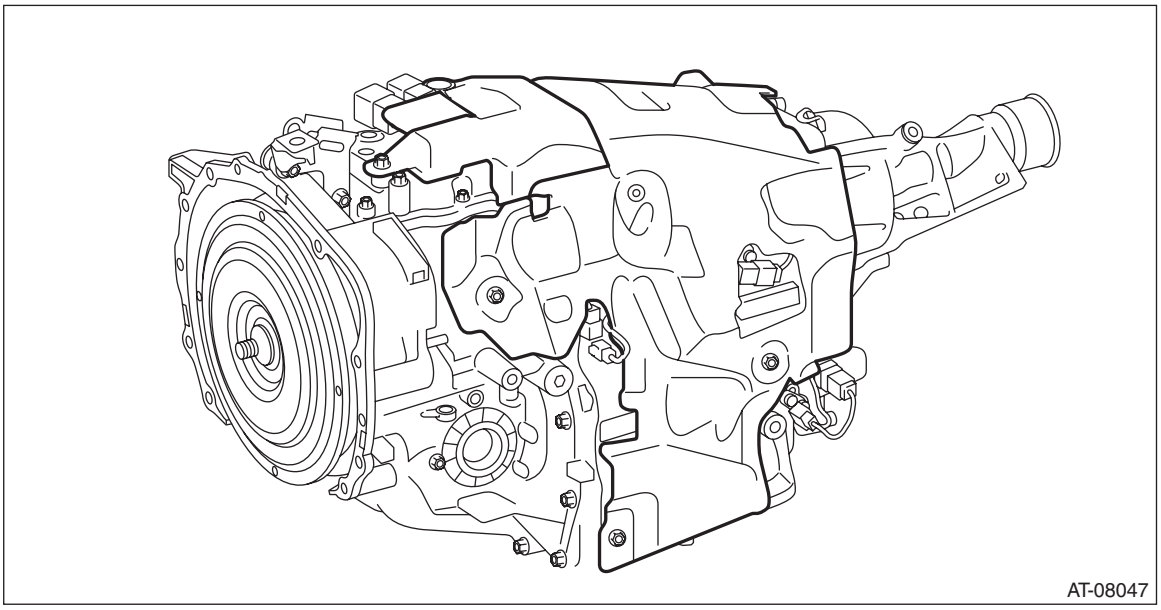

3) Remove the harness connector from the ground terminal, turbine speed sensor, primary speed sensor, secondary speed sensor and secondary pressure sensor.

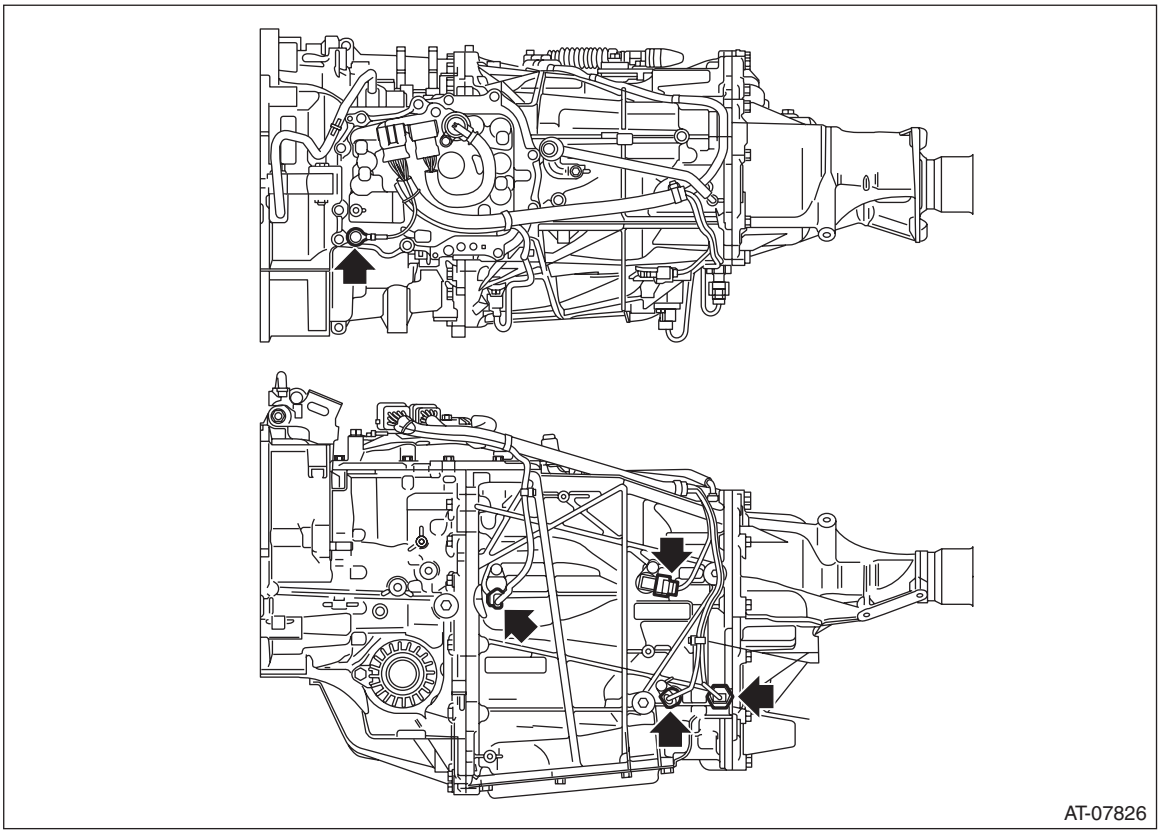

4) Remove the harness connector from inhibitor switch.

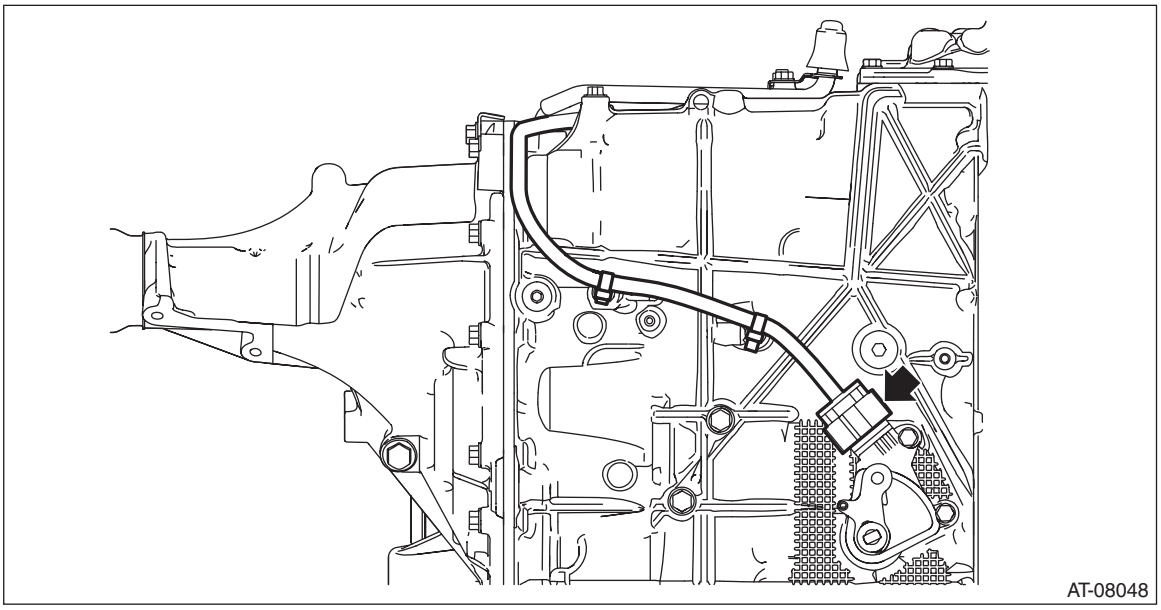

5) Remove the inhibitor harness connector from the transmission harness stay.

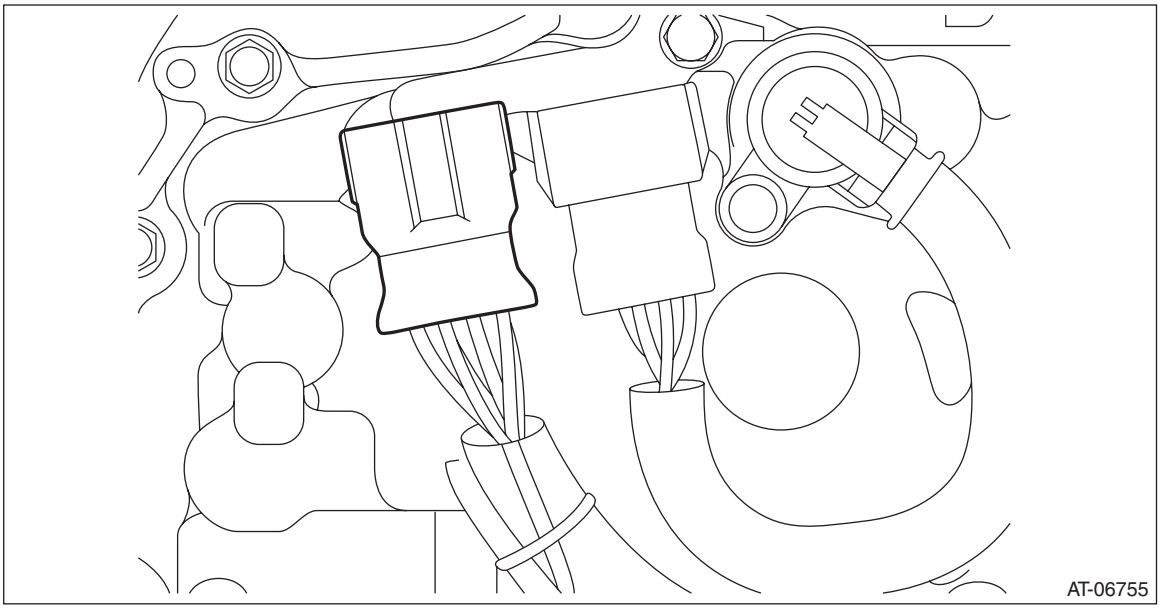

6) Remove the harness clip from the transmission, and remove the inhibitor harness.

2. TRANSMISSION HARNESS

1) Disconnect the ground cable from battery.
2) Remove the clip (A) from the air intake boot.
3) Loosen the clamp (B) connecting the air intake boot and air cleaner case (rear).
4) Loosen the clamp (C) which connects the air intake boot and throttle body.

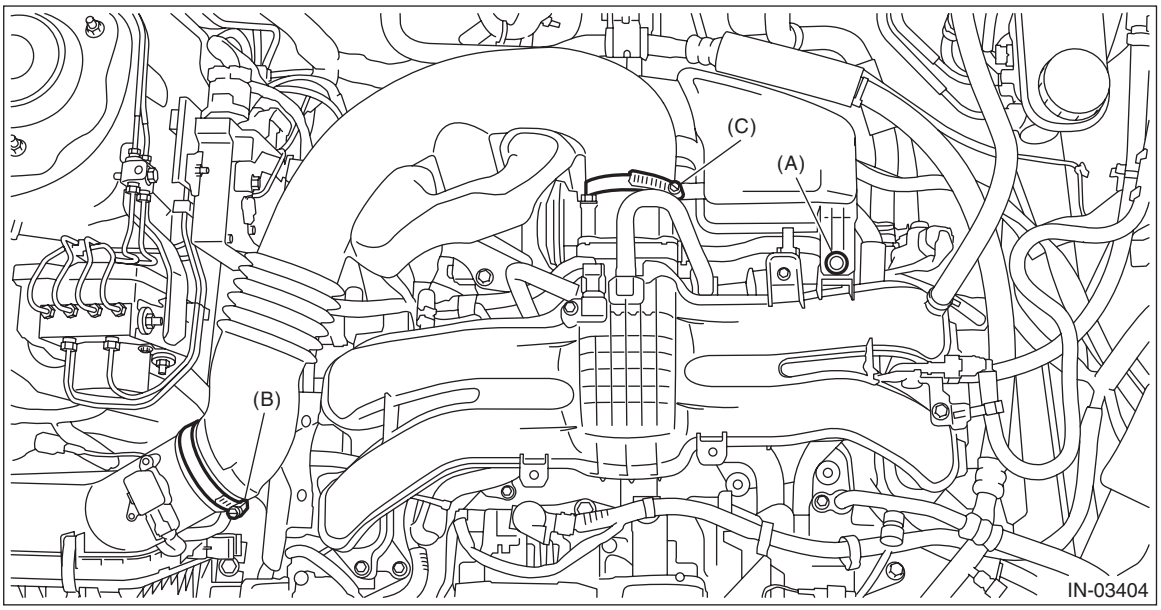

5) Remove the air intake boot from the throttle body, and move it to the left side wheel apron.

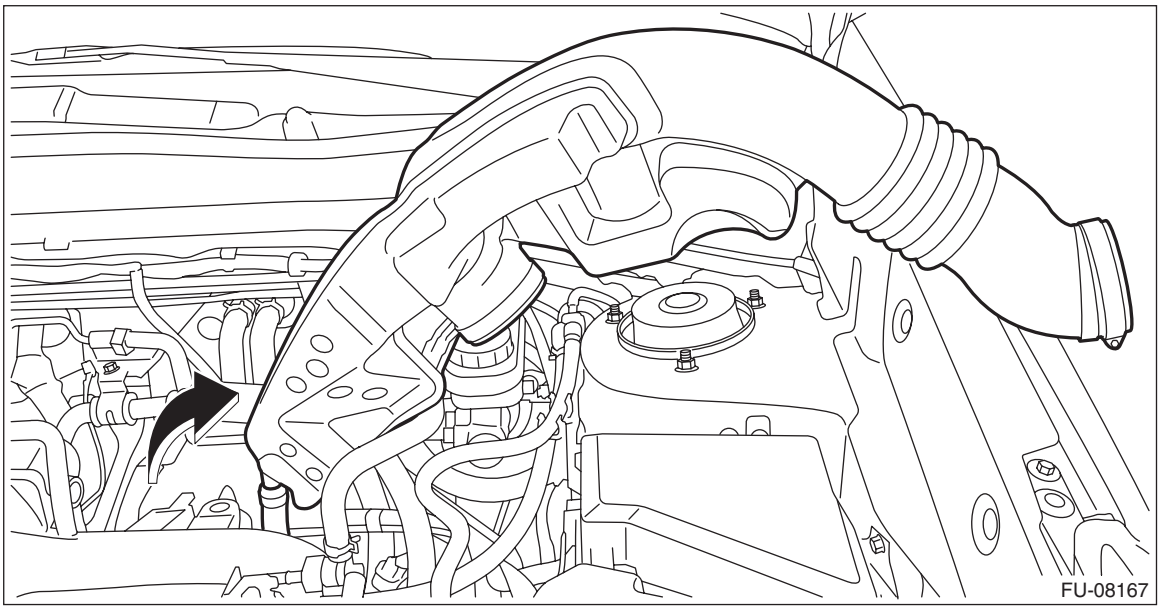

6) Disconnect the following connectors.
- Transmission harness connectors
- Inhibitor harness connector
- Transmission radio ground terminal

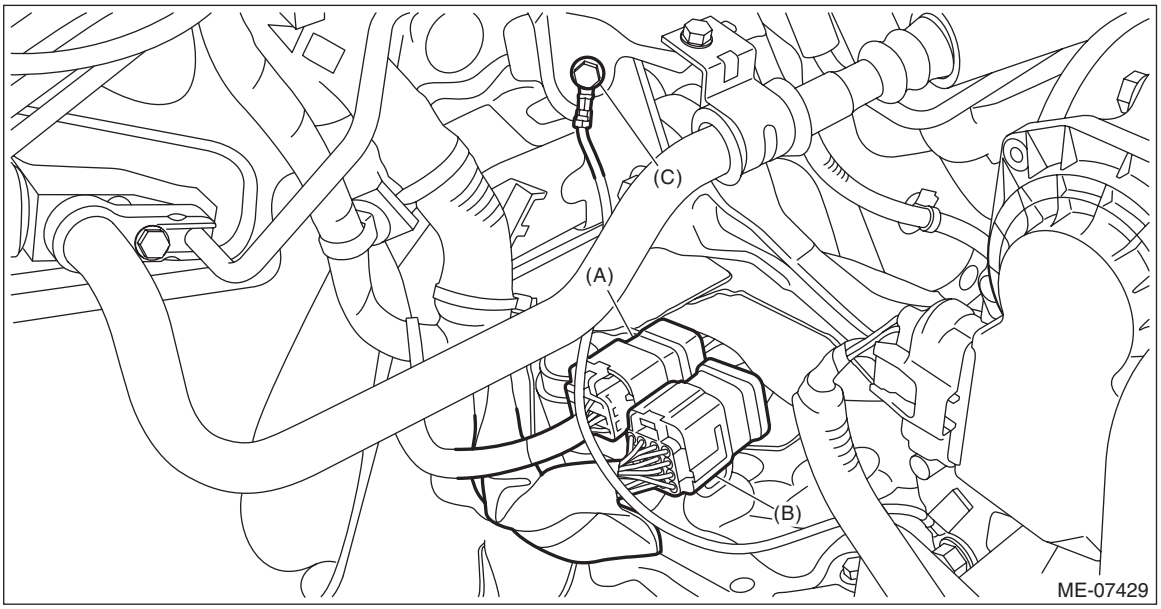

(A) Transmission harness connectors
(B) Inhibitor harness connector
(C) Transmission radio ground terminal

7) Remove the pitching stopper.

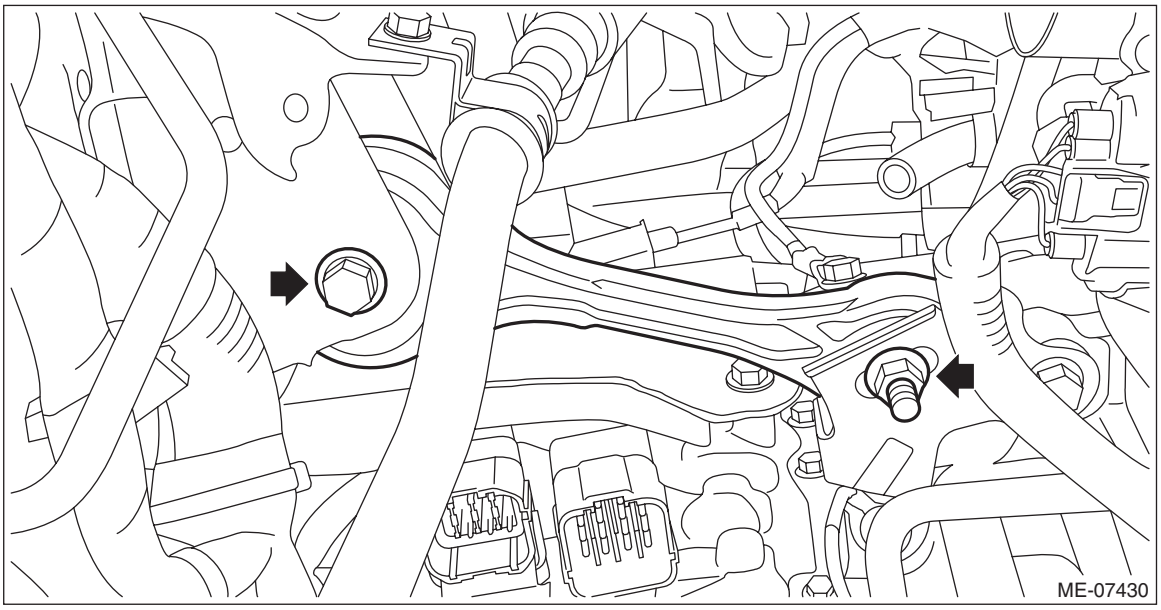

8) Remove the air breather hose from the pitching stopper bracket, and then remove the pitching stopper bracket and transmission radio ground cord.

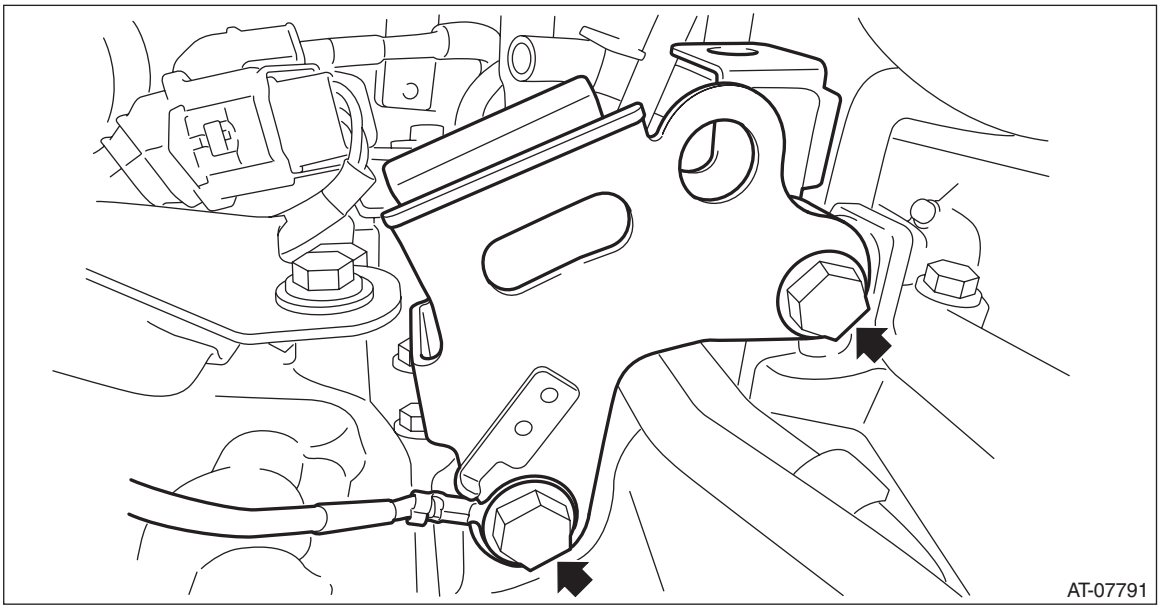

9) Remove the transmission case cover.

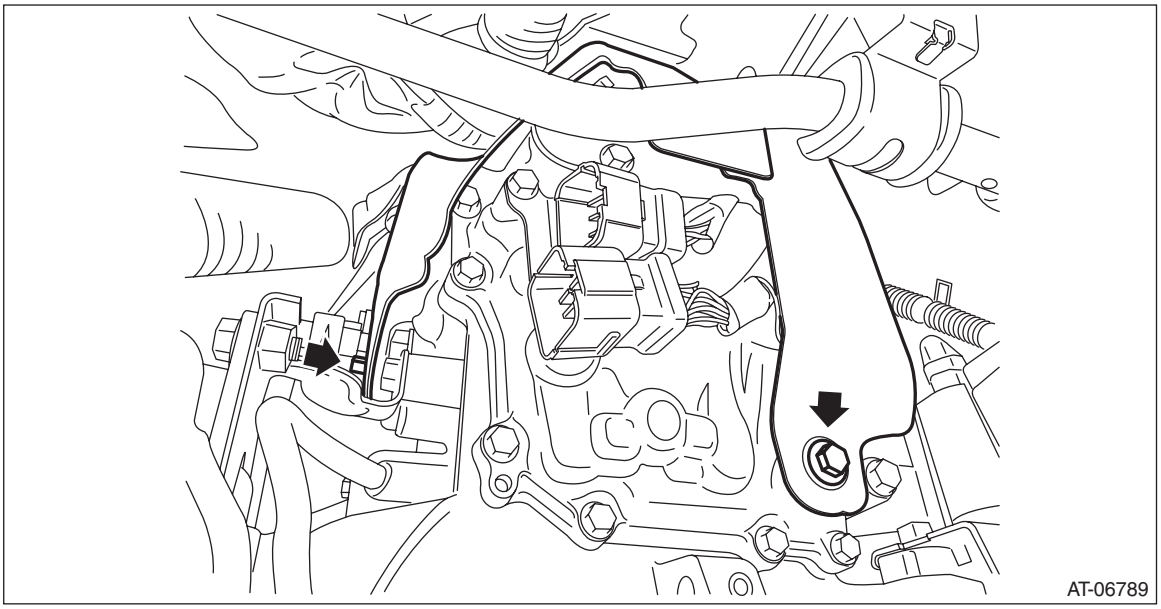

10) Remove the transmission harness stay and ground terminal.

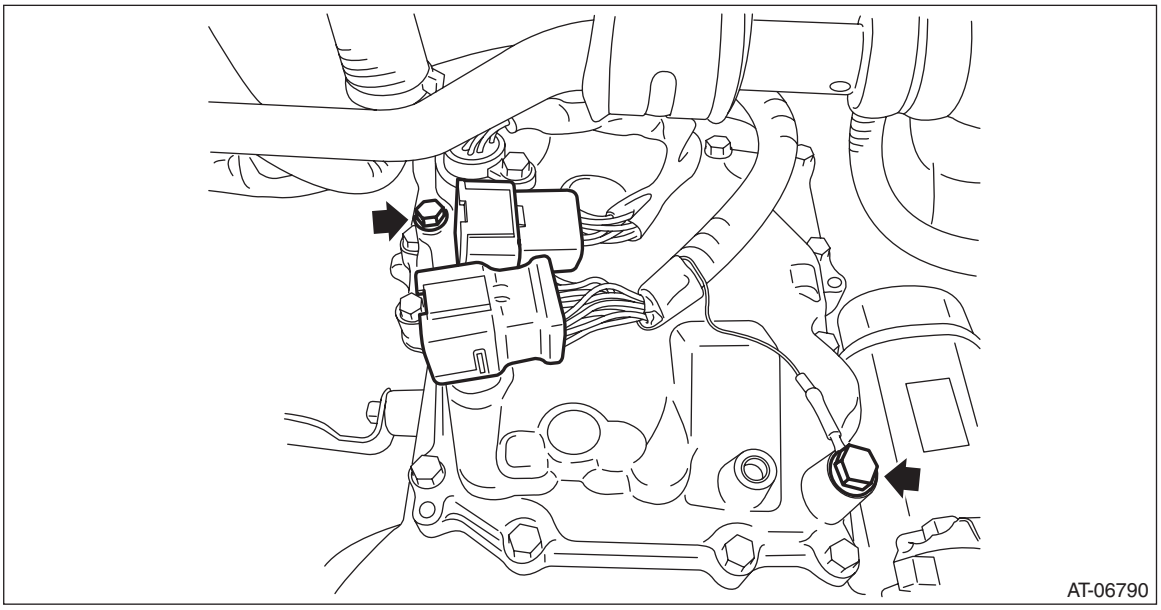

11) Remove the transmission harness connector from the harness stay.
12) Clean the transmission exterior.
13) Set the ST on the vehicle.

ST 18761AA010 SHEET SPECIAL TOOL

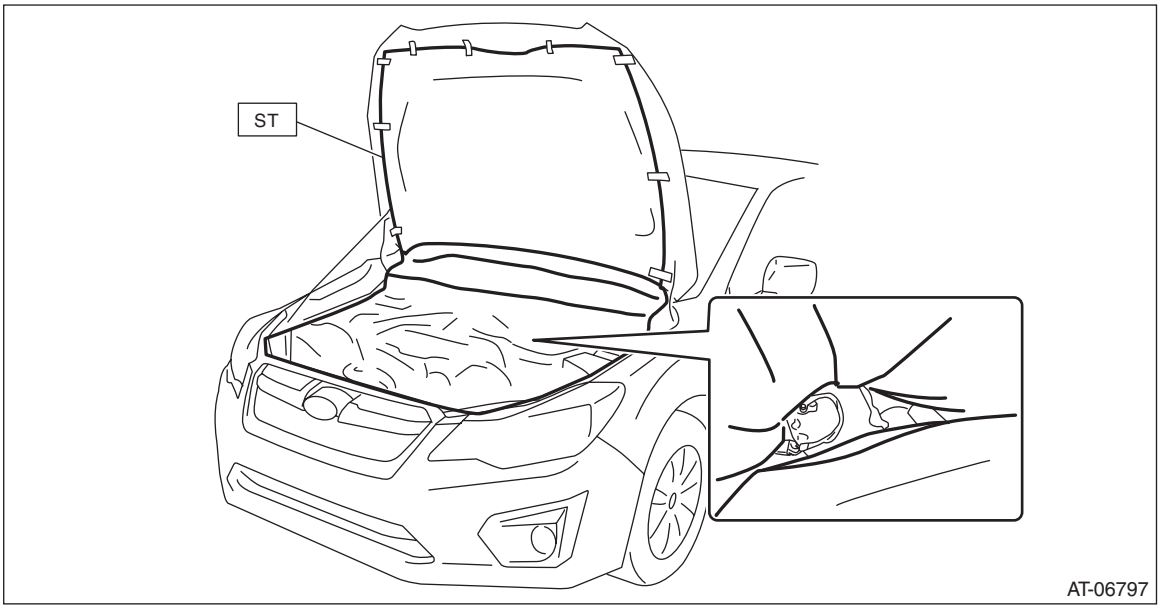

14) Remove the valve cover and gasket.

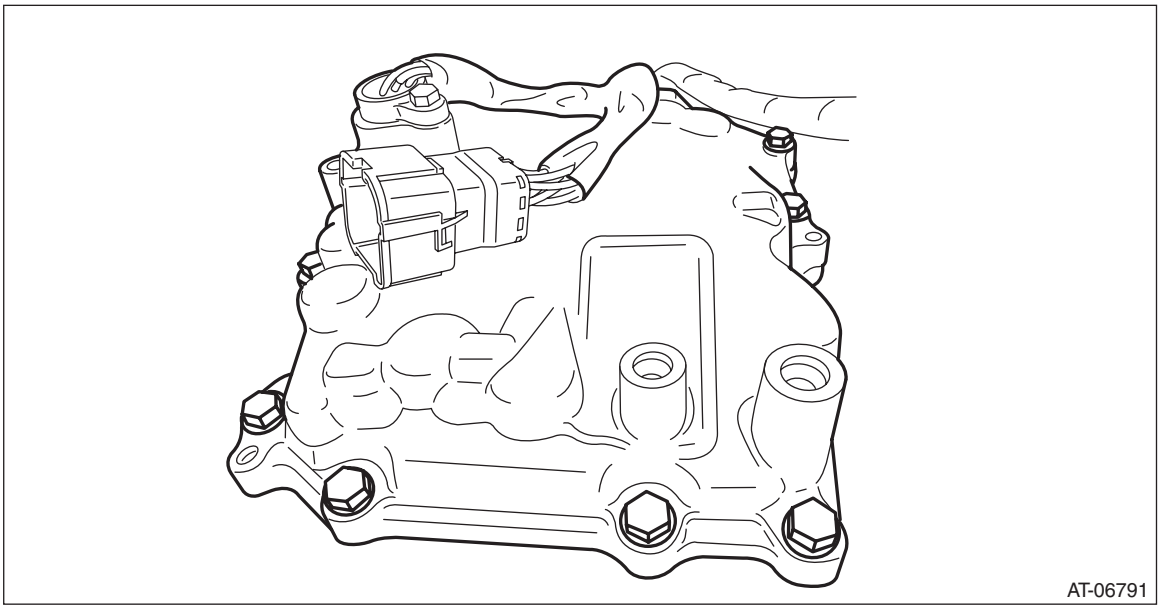

15) Remove the transmission harness connector from the control valve body.
16) Remove the transmission harness from the valve cover.

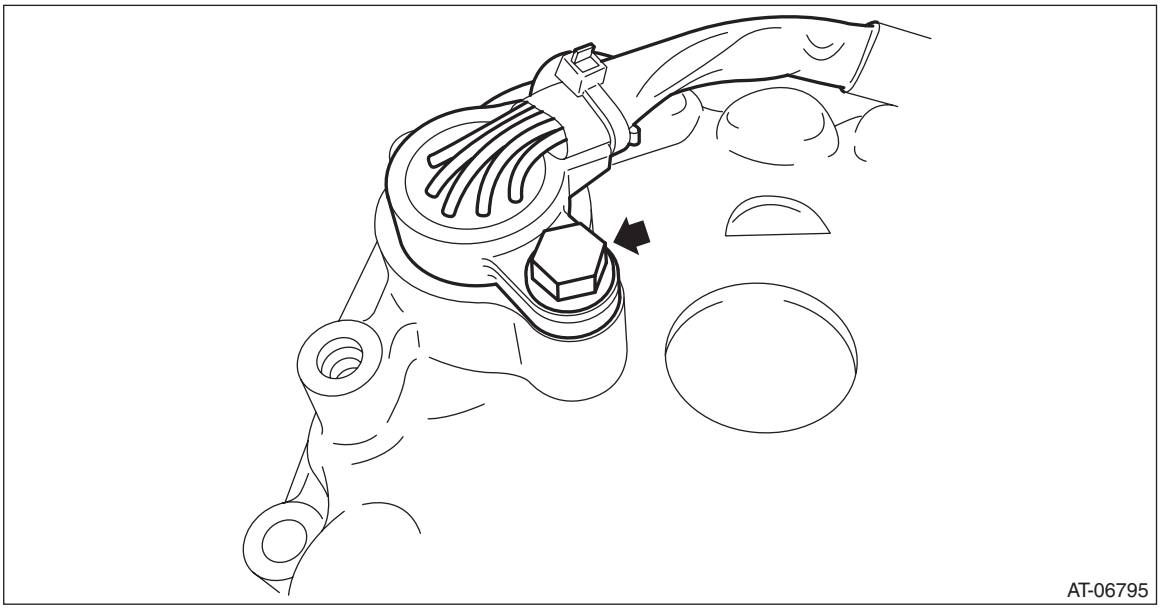

17) Remove the O-ring from the transmission harness.

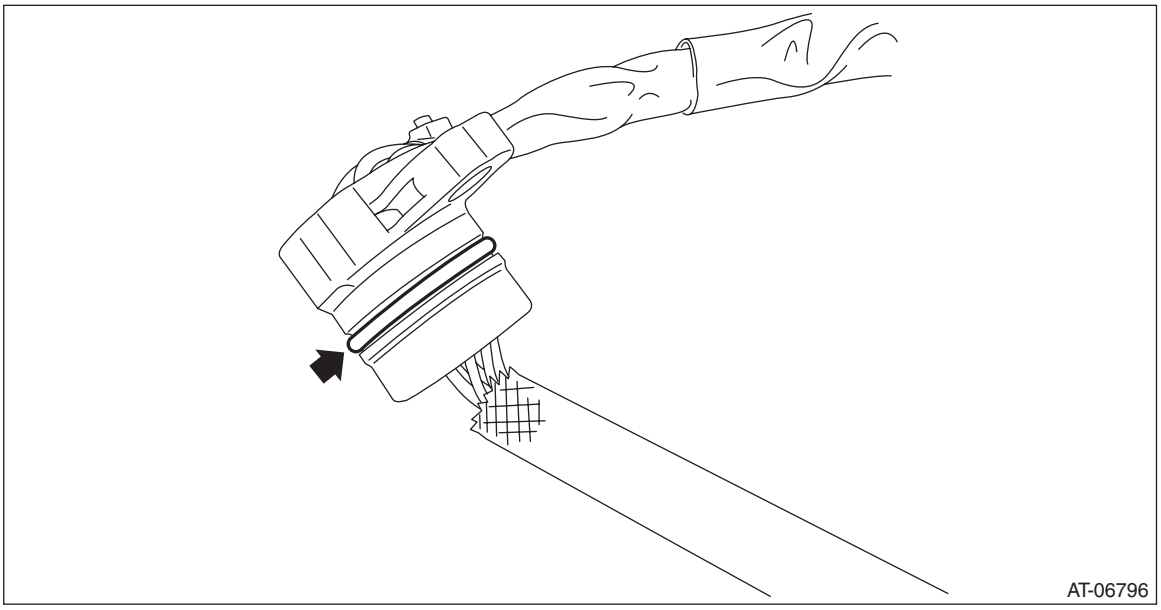

B: INSTALLATION

1. INHIBITOR HARNESS

Install in the reverse order of removal.

NOTE:
Install the transmission ground terminal in the direction within the range of approx. 30° (A).

Tightening torque:
T1: 7 N·m (0.7 kgf-m, 3.7 ft-lb)
T2: 14 N·m (1.4 kgf-m, 10.3 ft-lb)

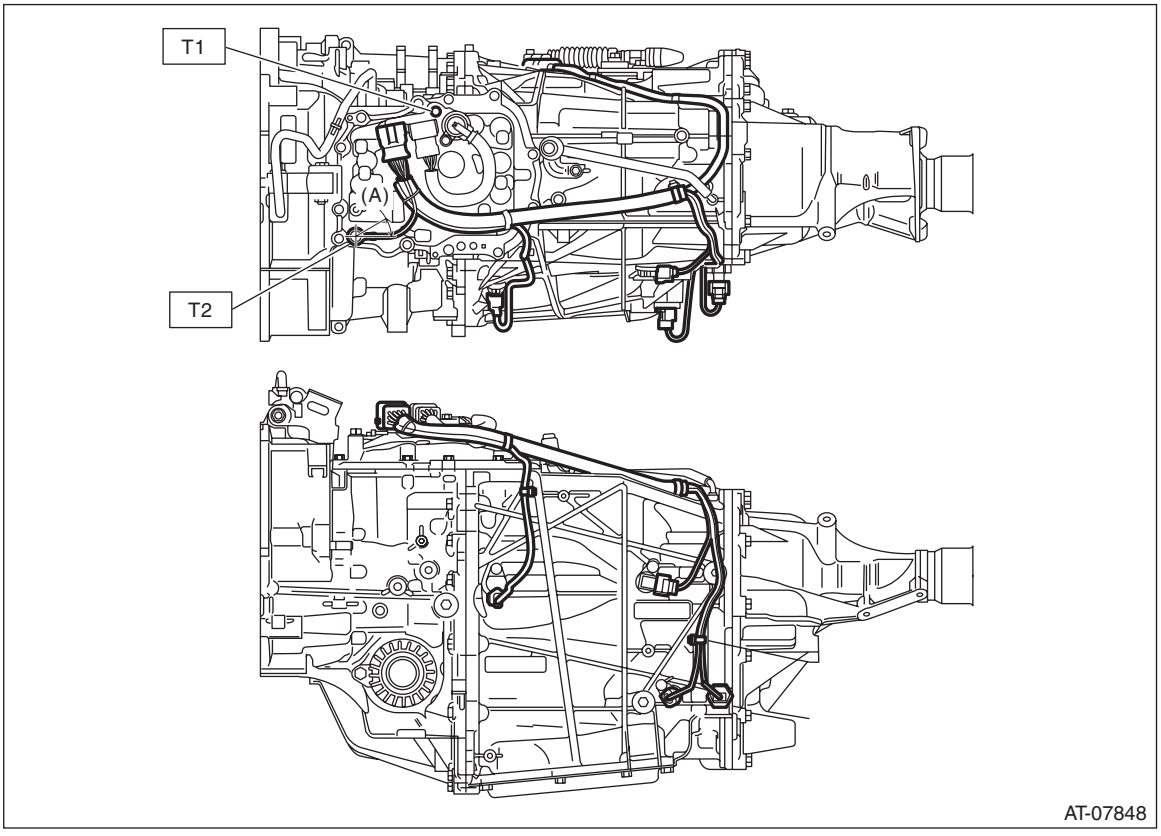

2. TRANSMISSION HARNESS

1) Clean the mating surface of valve cover and transmission side.

CAUTION:
When cleaning the mating surface of the transmission side, be careful not to allow any dust, foreign matter and used liquid gasket to enter the transmission.

2) Check the control valve body for dust and other foreign matter.
3) Install the O-ring to the transmission harness.

NOTE:
- Use new O-rings.
- Apply CVTF to the O-ring.

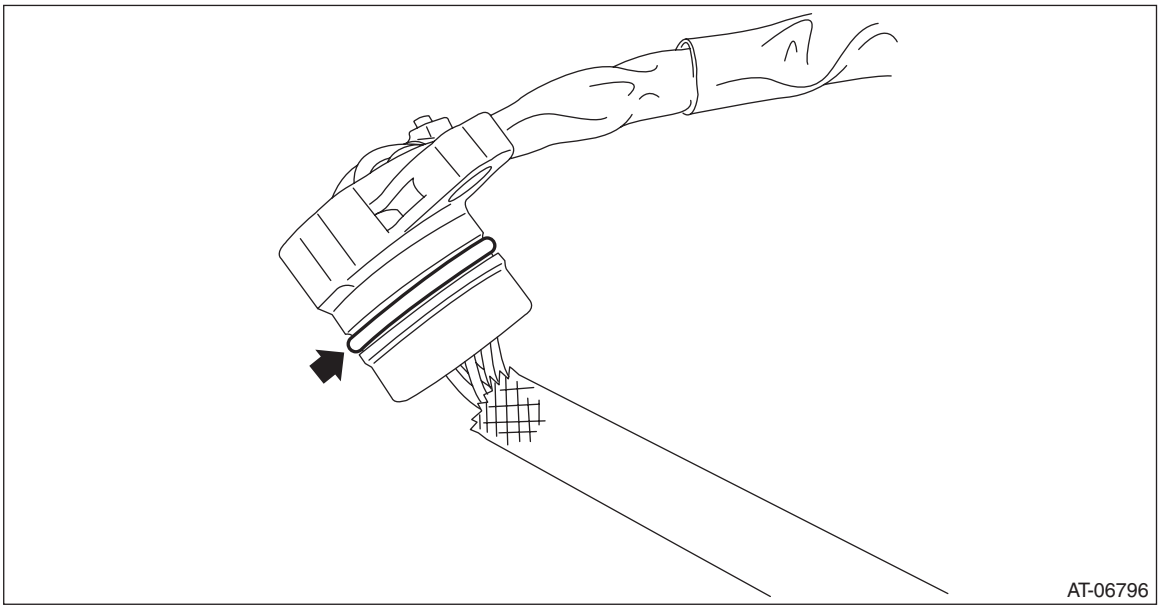

4) Install the transmission harness to the valve cover.

Tightening torque:
7 N·m (0.7 kgf-m, 5.2 ft-lb)

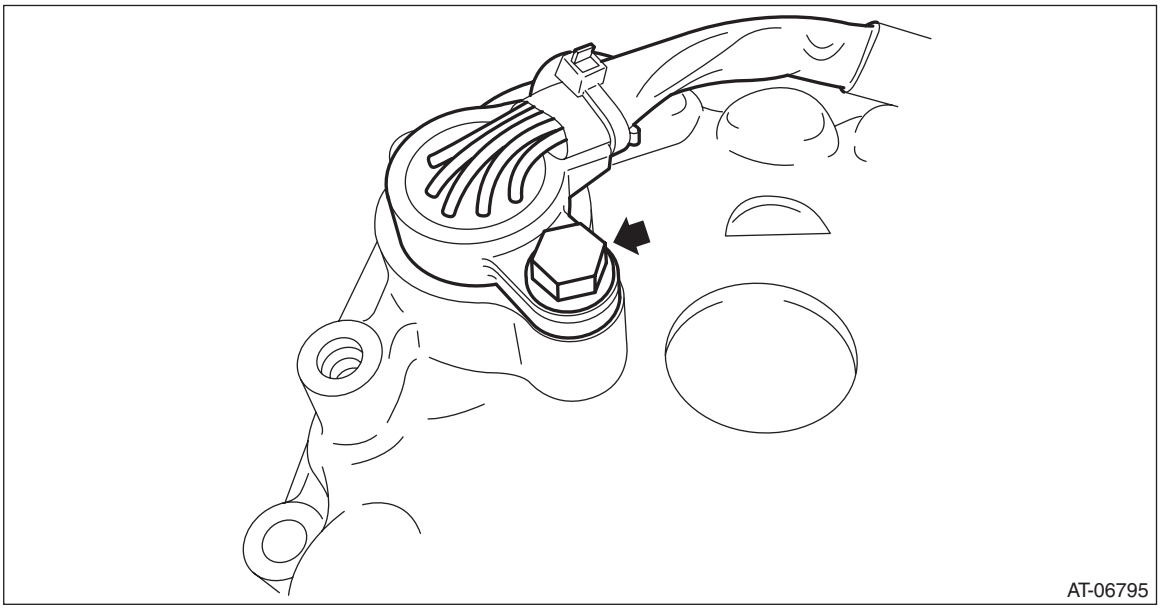

5) Install the gasket to the transmission.

NOTE:
Use a new gasket.

6) Apply liquid gasket to the oval hole of gasket.

Liquid gasket:
THREE BOND 1215 (Part No. 004403007) or equivalent

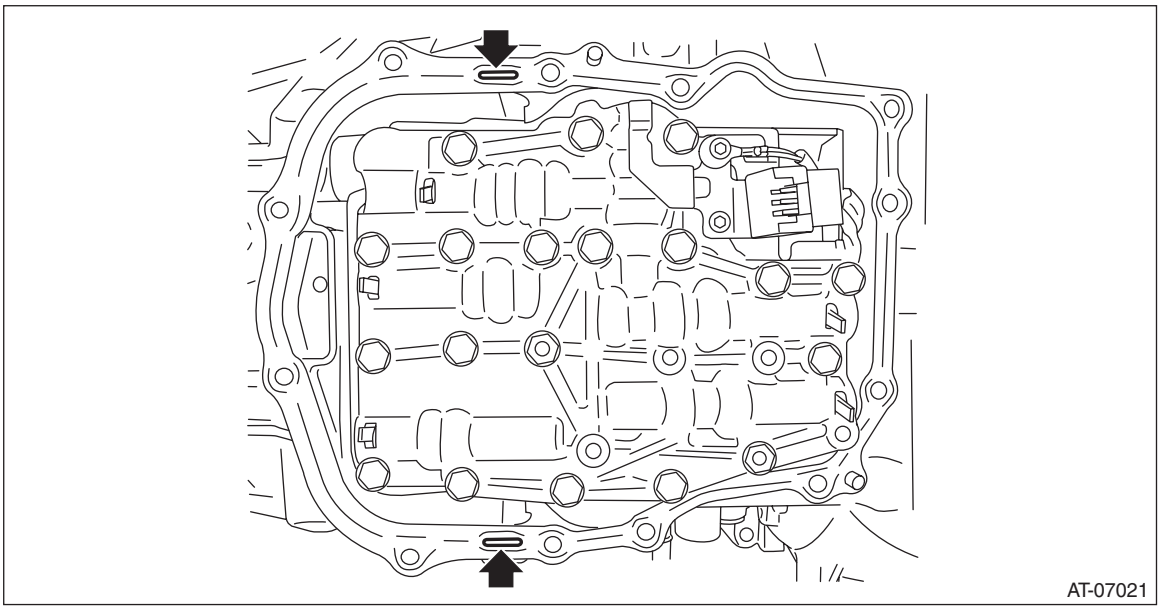

7) Connect the transmission harness connector to the control valve body, and install the valve cover.

CAUTION:
Be careful not to catch the sheet of the ST.

Tightening torque:
8 N·m (0.8 kgf-m, 5.9 ft-lb)

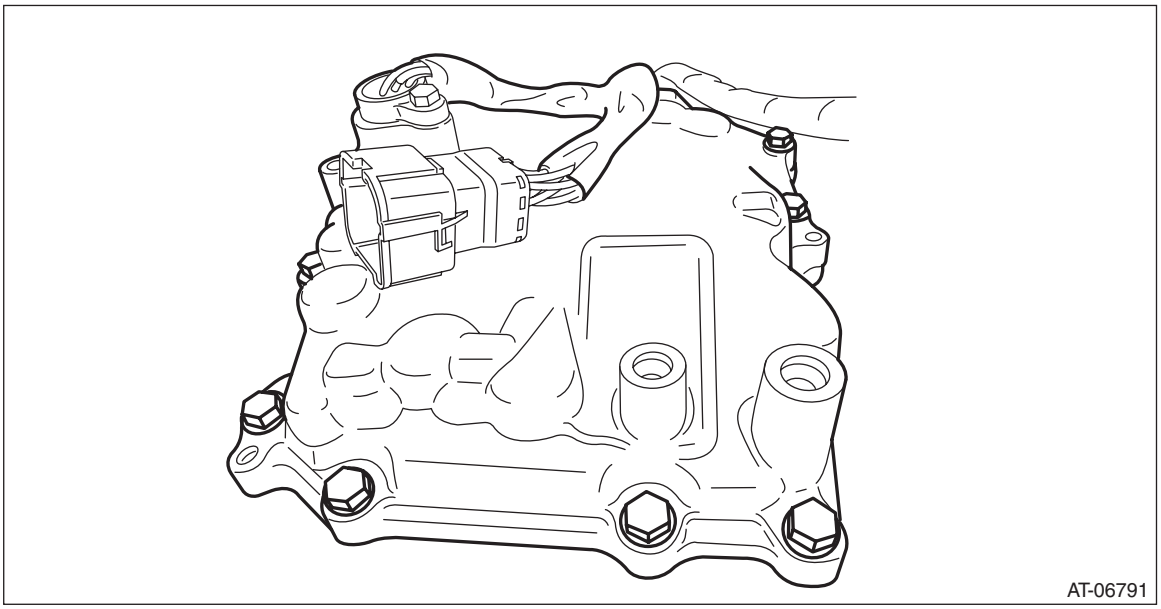

8) Remove the ST (SHEET SPECIAL TOOL).
9) Install the transmission harness connector to the harness stay.

10) Install the transmission harness stay and transmission ground terminal.

NOTE:
Install the transmission ground terminal in the direction within the range of approx. 30° (A).

Tightening torque:
T1: 7 N·m (0.7 kgf-m, 5.2 ft-lb)
T2: 14 N·m (1.4 kgf-m, 10.3 ft-lb)

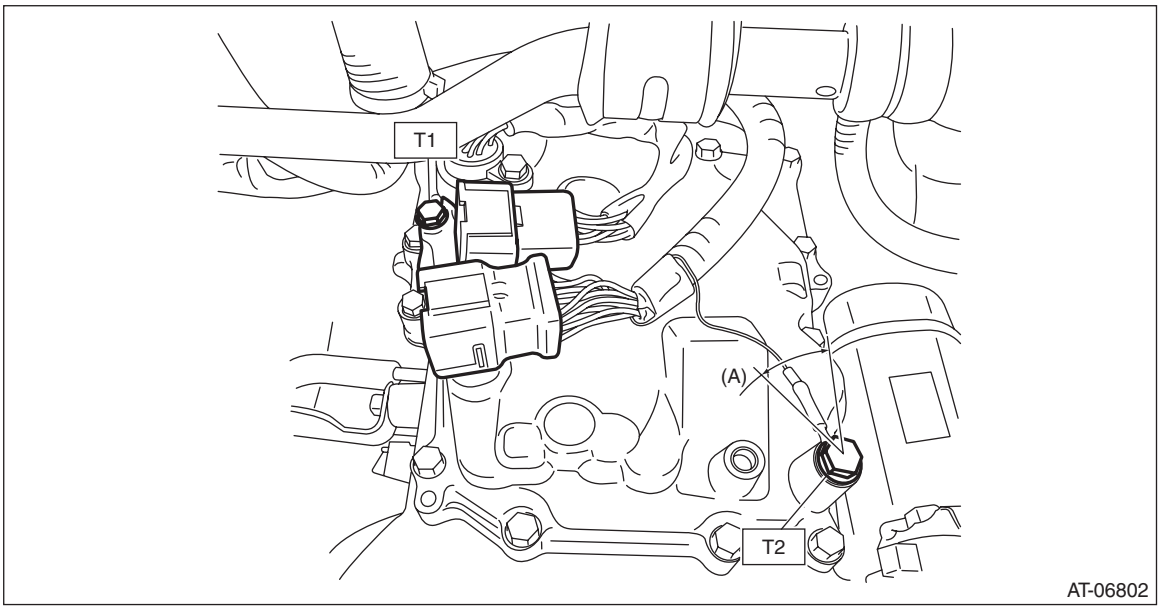

11) Install the transmission case cover.

Tightening torque:
8 N·m (0.8 kgf-m, 5.9 ft-lb)

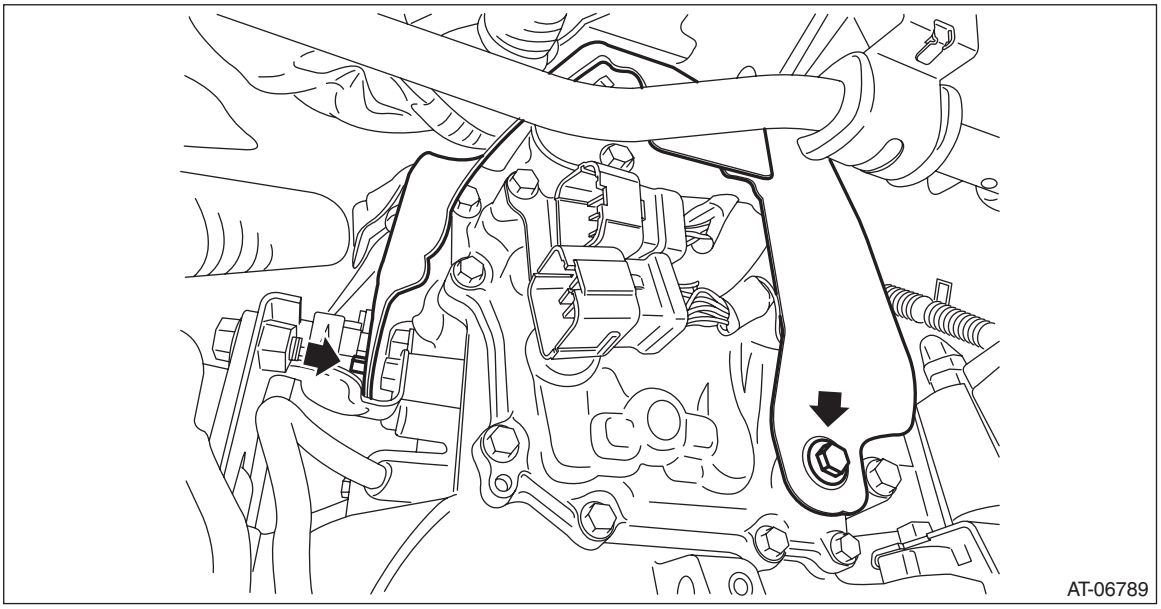

12) Install the pitching stopper bracket and transmission radio ground cord.

Tightening torque:
41 N·m (4.2 kgf-m, 30.2 ft-lb)

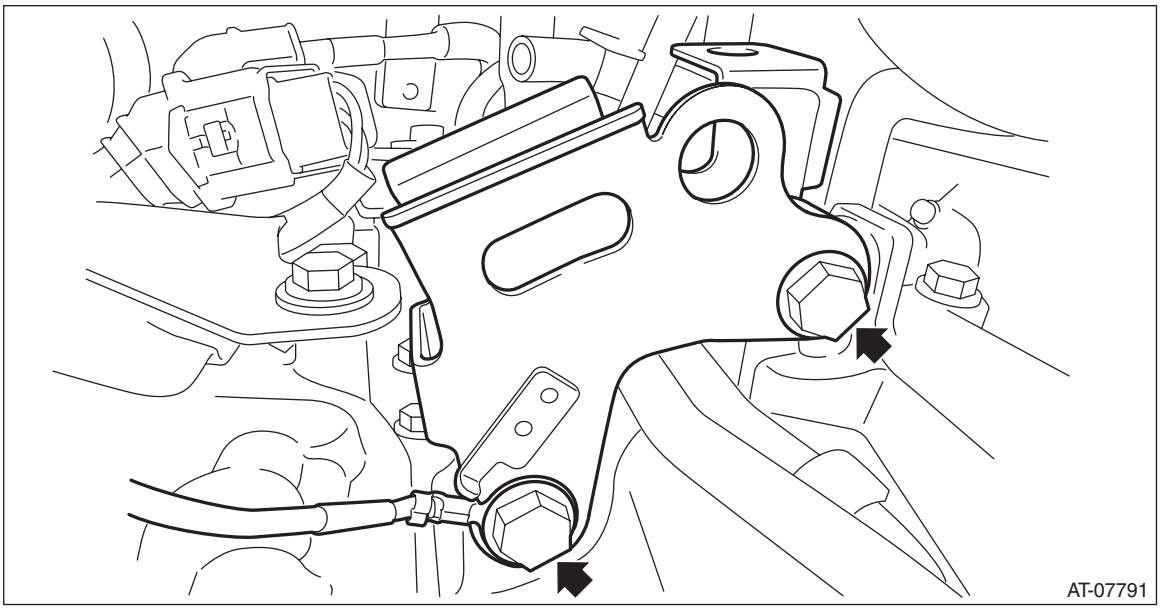

13) Install the air breather hose to the pitching stopper bracket.
14) Install the pitching stopper.

Tightening torque:
T1: 50 N·m (5.1 kgf-m, 36.9 ft-lb)
T2: 58 N·m (5.9 kgf-m, 42.8 ft-lb)

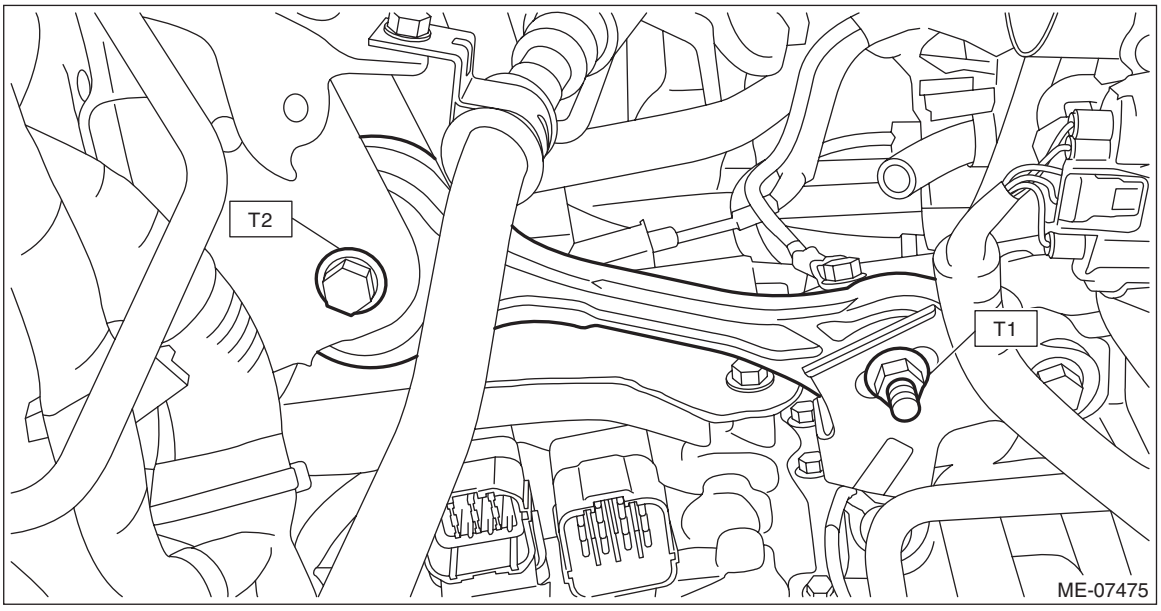

15) Connect the following harness connectors.
- Transmission harness connectors
- Inhibitor harness connector
- Transmission radio ground terminal

Tightening torque:
13 N·m (1.3 kgf-m, 9.6 ft-lb)

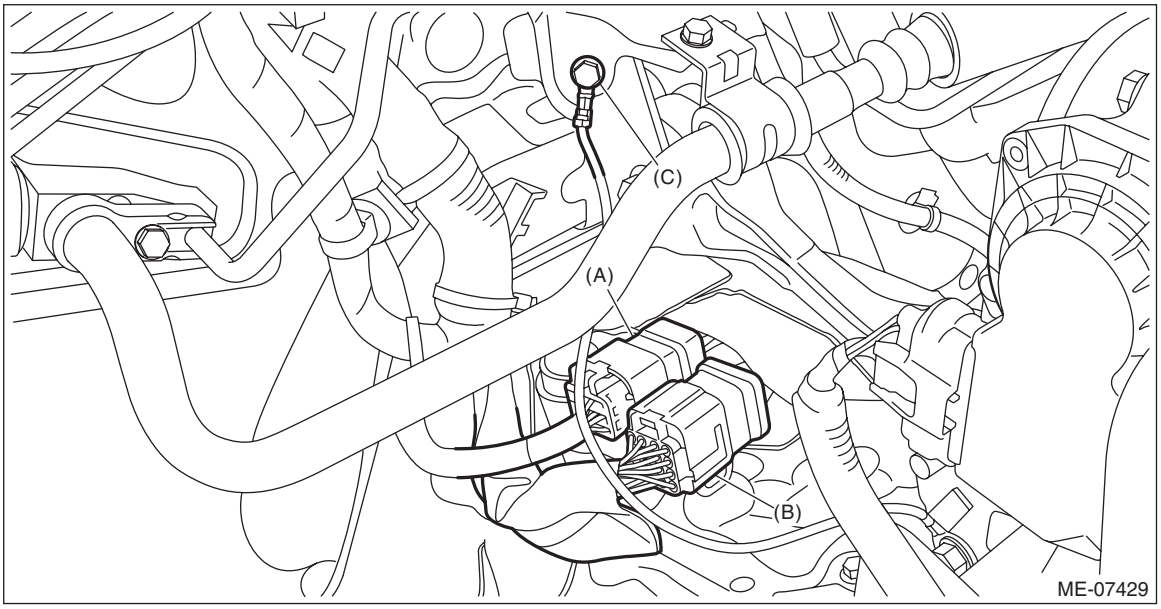

(A) Transmission harness connectors
(B) Inhibitor harness connector
(C) Transmission radio ground terminal

16) Install the air intake boot assembly. <Ref. to IN(H4DO(w/o HEV))-12, INSTALLATION, Air Intake Boot.>
17) Adjust the CVTF level. <Ref. to CVT(TR580)-35, ADJUSTMENT, CVTF.>

C: INSPECTION

1) Visually check the harness and connector for damage or crack.
2) Check the harness terminal for rust, disconnection or poor contact.
3) Check the continuity between harness terminals.

NOTE:
For details of transmission harness circuit, refer to wiring diagram. <Ref. to WI(w/o HEV)-66, WIRING DIAGRAM, CVT Control System.>

Harness continuity standard
Less than 1 Ω

22.Transmission Control Module (TCM)

A: REMOVAL

1) Disconnect the ground cable from battery.
2) Remove the instrument panel lower cover. <Ref. to EI-71, REMOVAL, Instrument Panel Lower Cover.>
3) Remove the bulkhead harness connector from TCM.

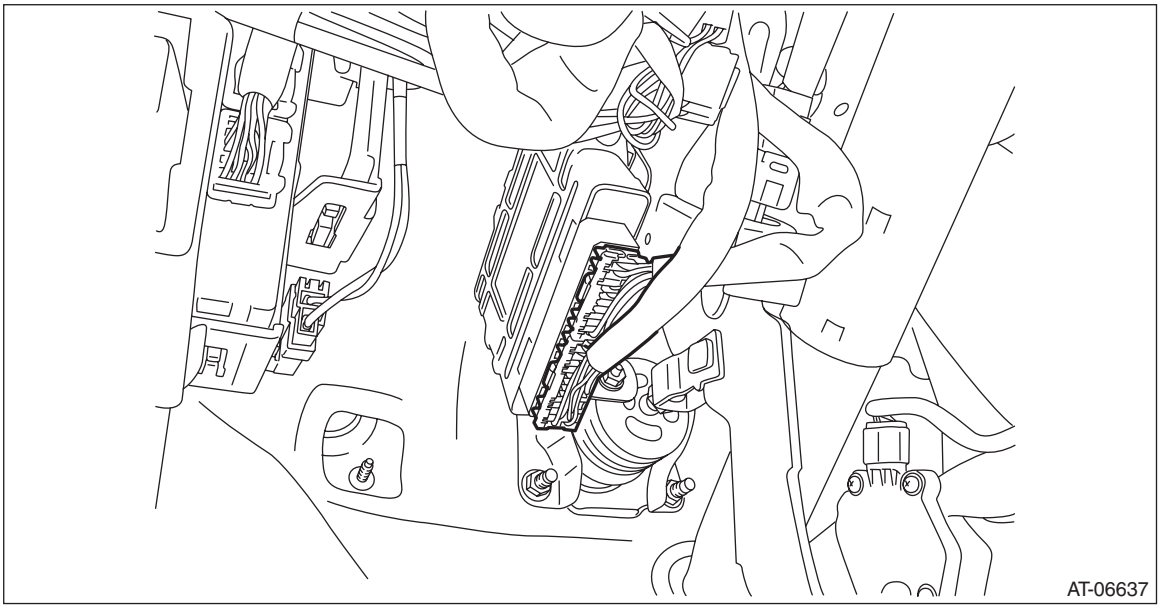

4) Remove the TCM.

NOTE:
Replace the TCM and bracket as a set.

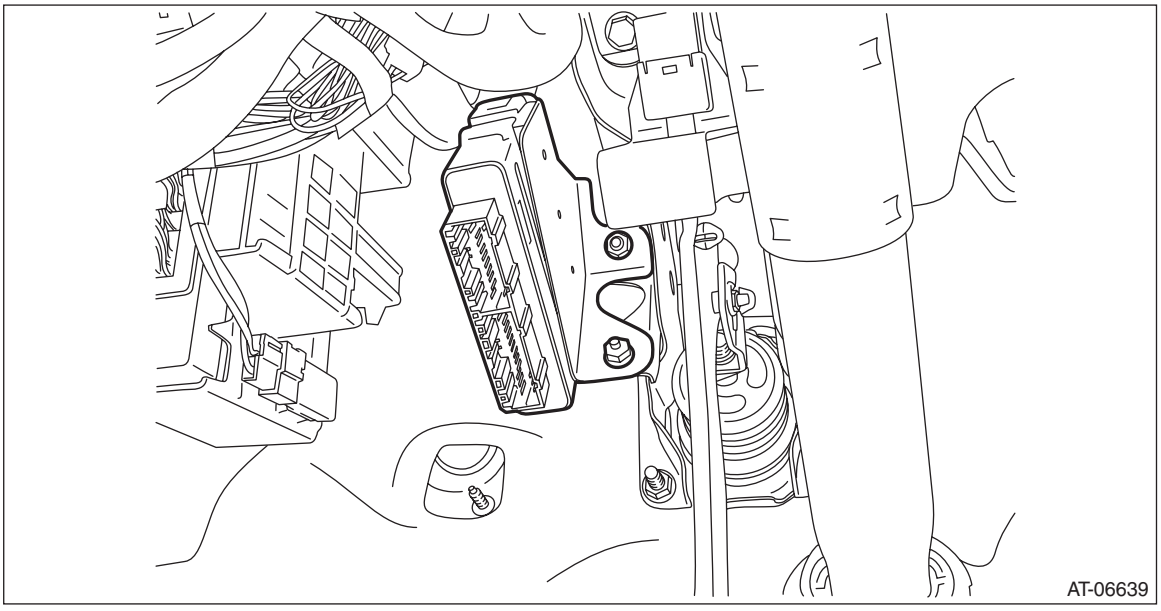

B: INSTALLATION

1) Install the TCM to the bracket.

CAUTION:
To avoid the damage to bracket and TCM, do not remove after installing TCM to bracket. If installed by mistake, the part must be replaced with a new part.

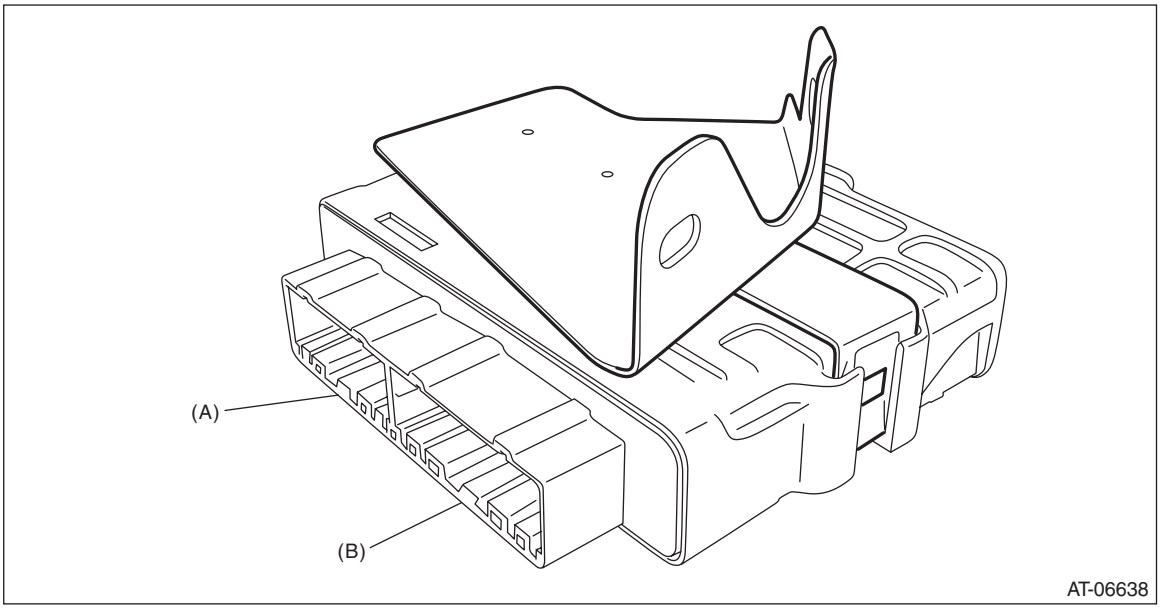

(A) 22-pin connector side
(B) 26-pin connector side

2) Install the TCM.

Tightening torque:
7.5 N·m (0.8 kgf-m, 5.5 ft-lb)

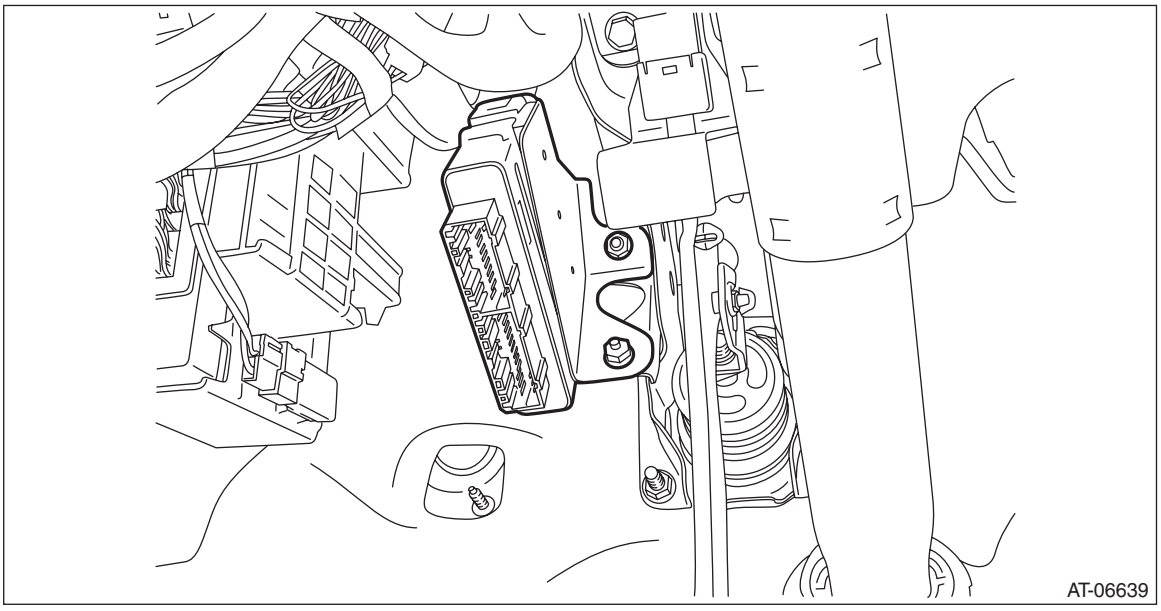

3) Install the harness connector to TCM.
4) Install the instrument panel lower cover. <Ref. to EI-72, INSTALLATION, Instrument Panel Lower Cover.>
5) Perform AT learning mode. <Ref. to CVT(w/o HEV)(diag)-23, Learning Control.>

23.CVTF Cooler (With Warmer Function)

A: REMOVAL

CAUTION:
If the CVTF and engine coolant is spilt over exhaust pipe, wipe it off with cloth to avoid emitting smoke or causing a fire.

1) Disconnect the ground cable from battery.
2) Drain engine coolant. <Ref. to CO(H4DO(w/o HEV))-16, REPLACEMENT, Engine Coolant.>
3) Remove the clip (A) from the air intake boot.
4) Loosen the clamp (B) connecting the air intake boot and air cleaner case (rear).
5) Loosen the clamp (C) which connects the air intake boot and throttle body.

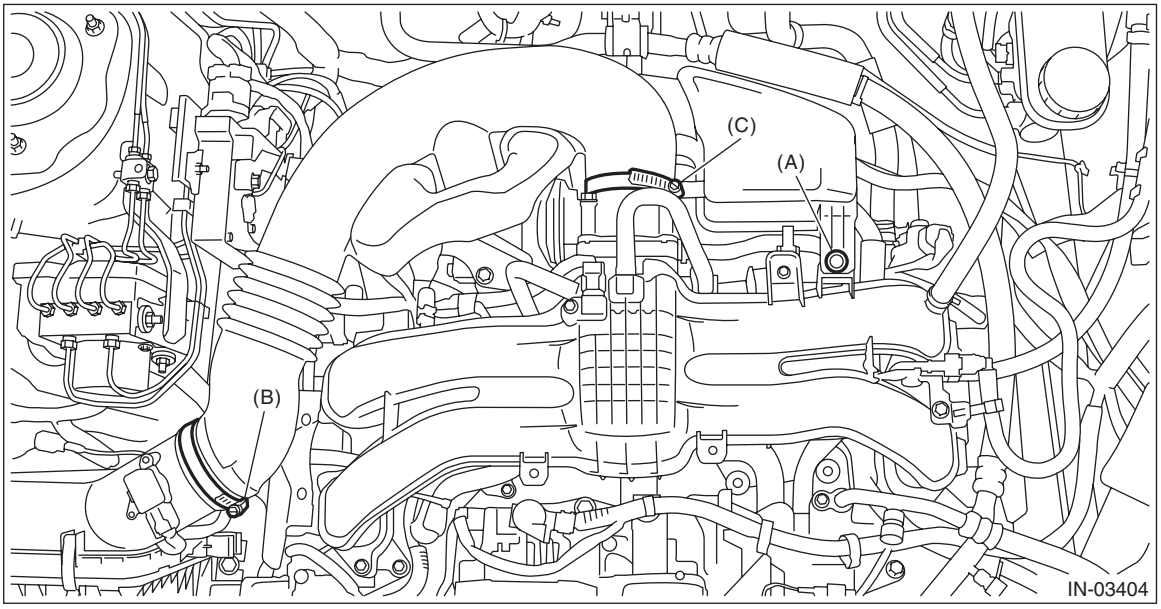

6) Remove the air intake boot from the throttle body, and move it to the left side wheel apron.

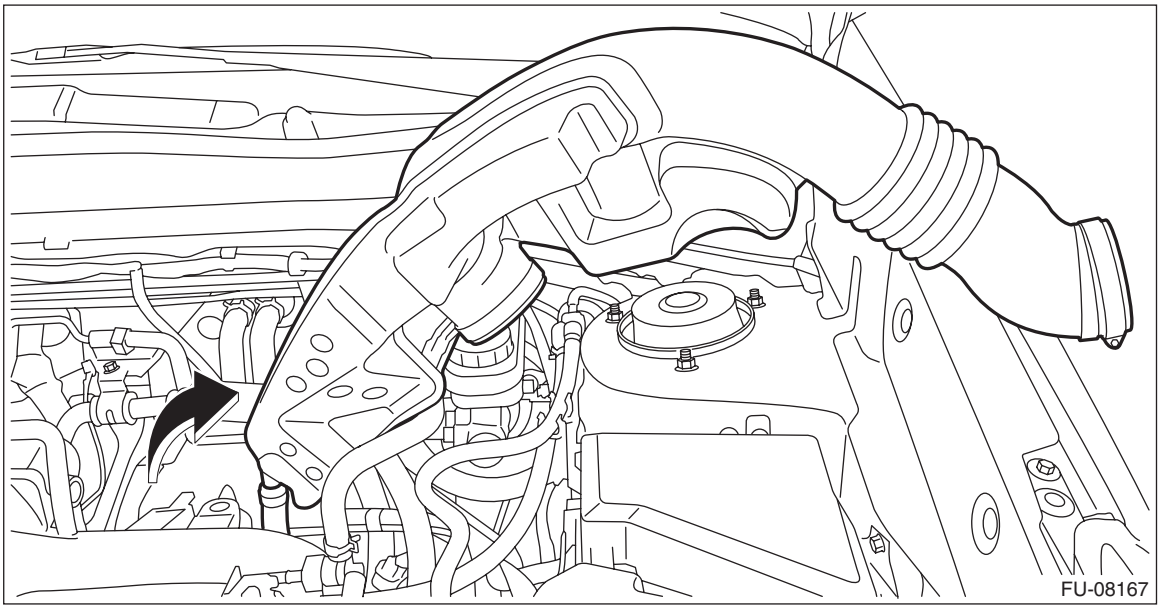

7) Remove the harness bracket, and then remove the engine harness.

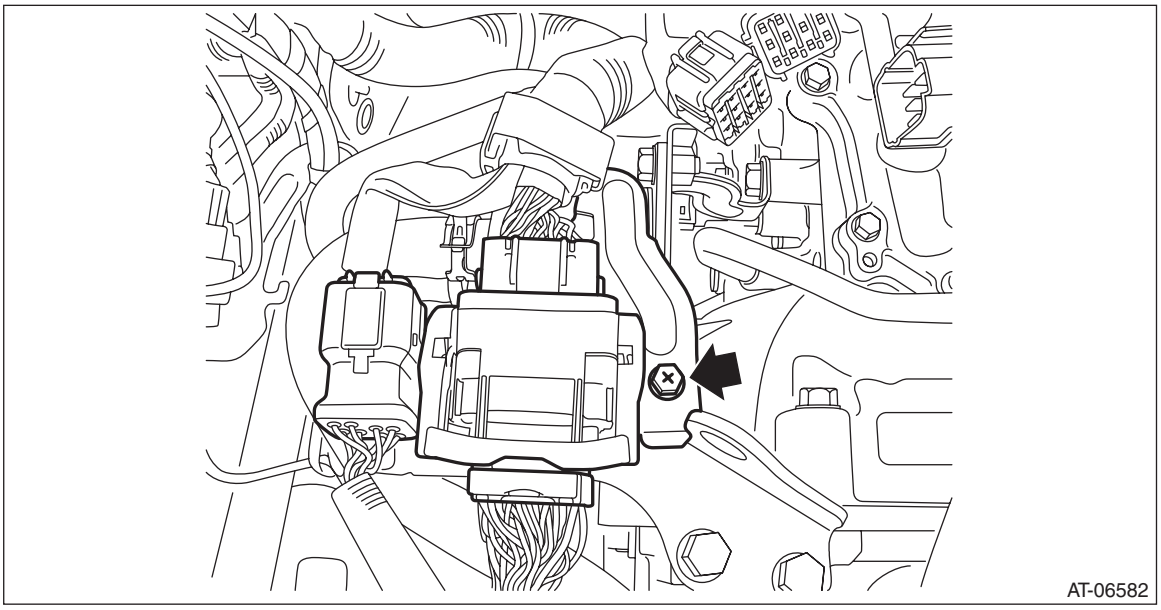

8) Disconnect the EGR control valve harness connector, throttle position sensor harness connector and manifold absolute pressure sensor harness connector.
9) Remove the engine hanger rear.

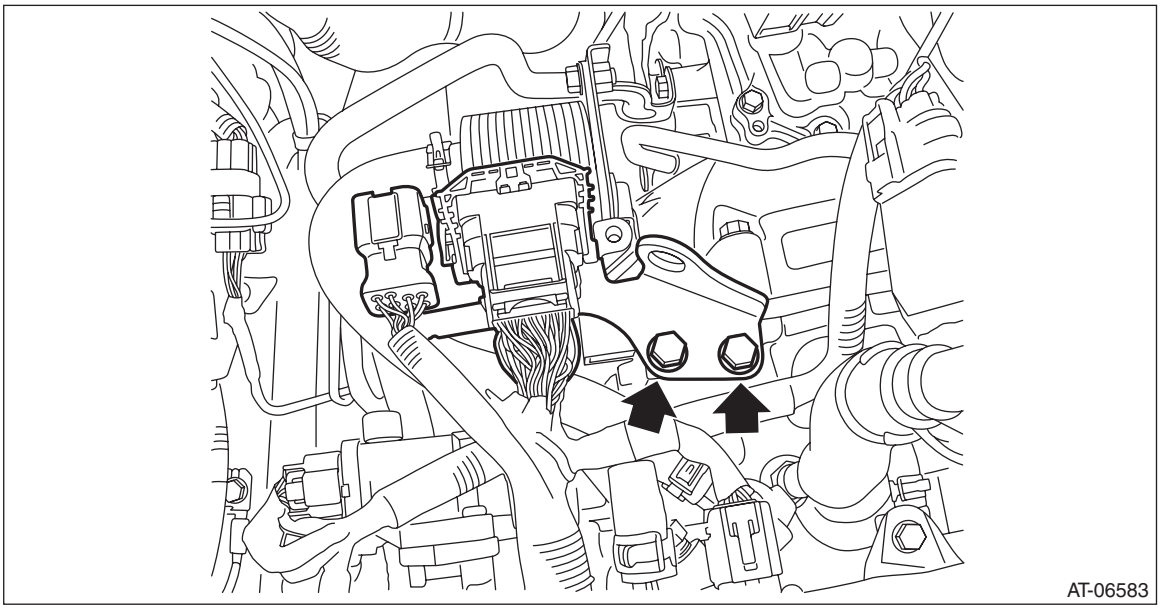

10) Disconnect the engine coolant outlet hose.

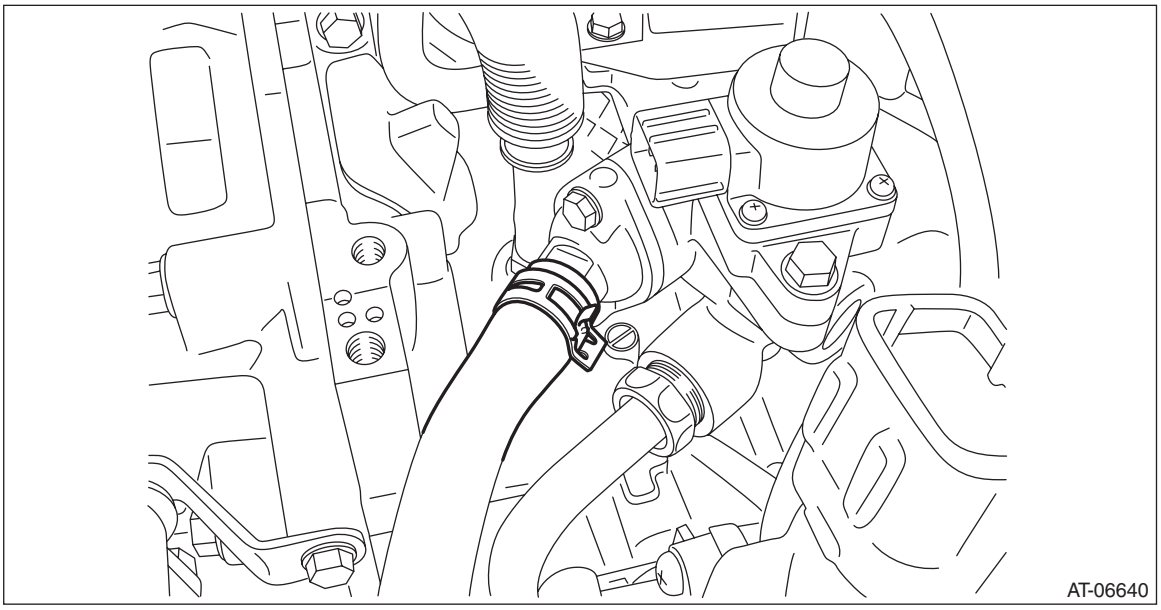

11) Remove the CVTF cooler (with warmer feature) from the transmission.

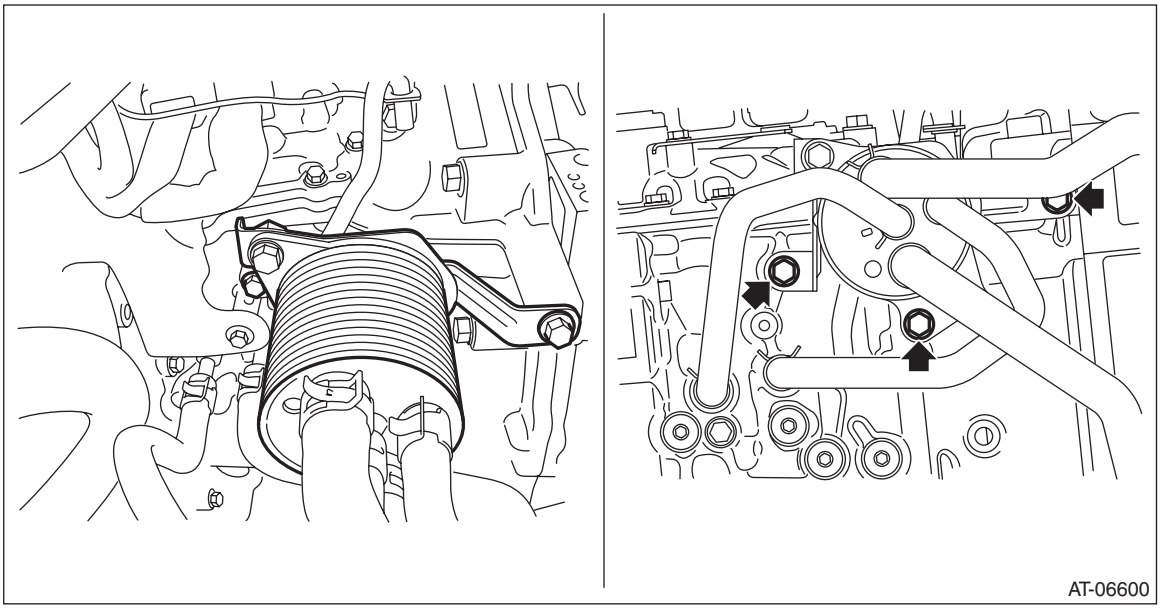

12) Remove the CVTF inlet hose and outlet hose from the pipe on the transmission side.

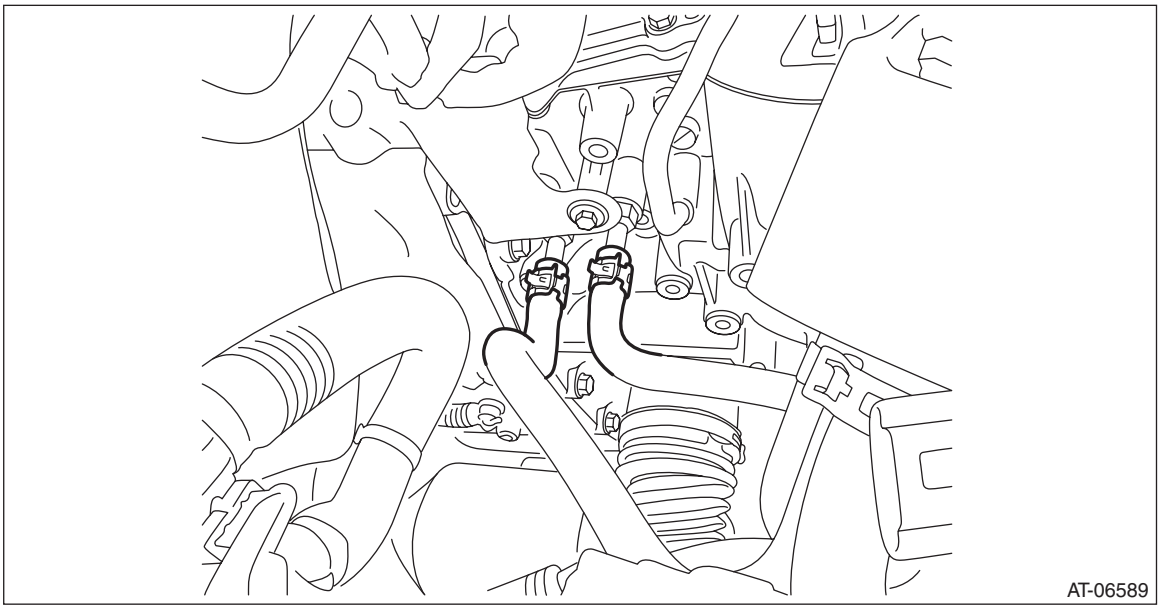

13) Disconnect the engine coolant inlet hose from the CVTF cooler (with warmer feature) assembly.

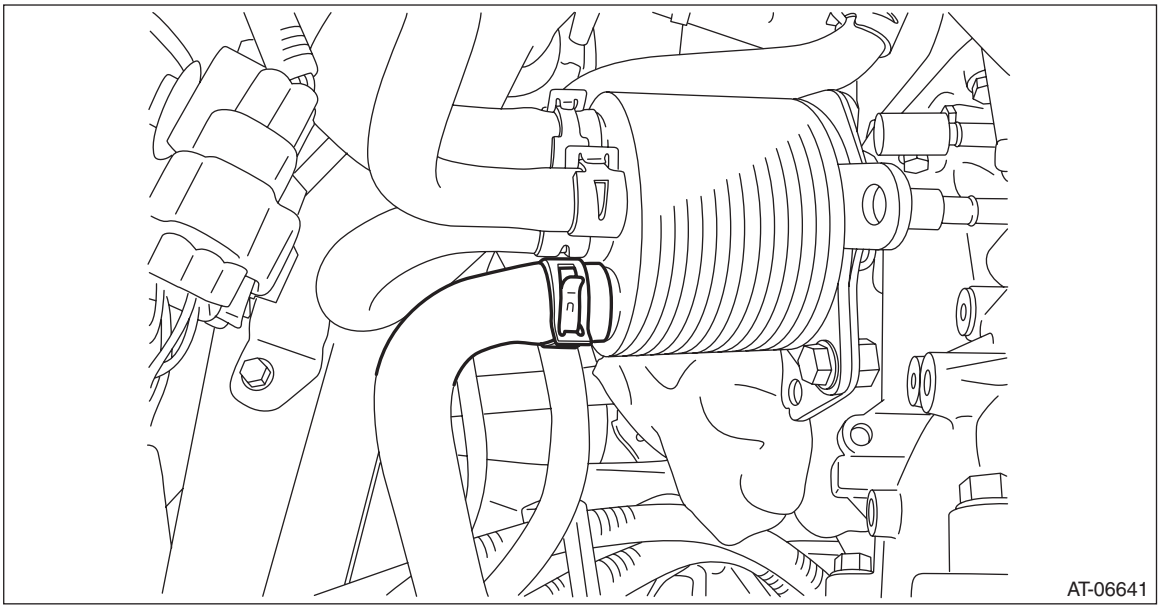

14) Remove the electric power steering harness from the clip, and remove the engine coolant inlet hose from the engine coolant pipe.

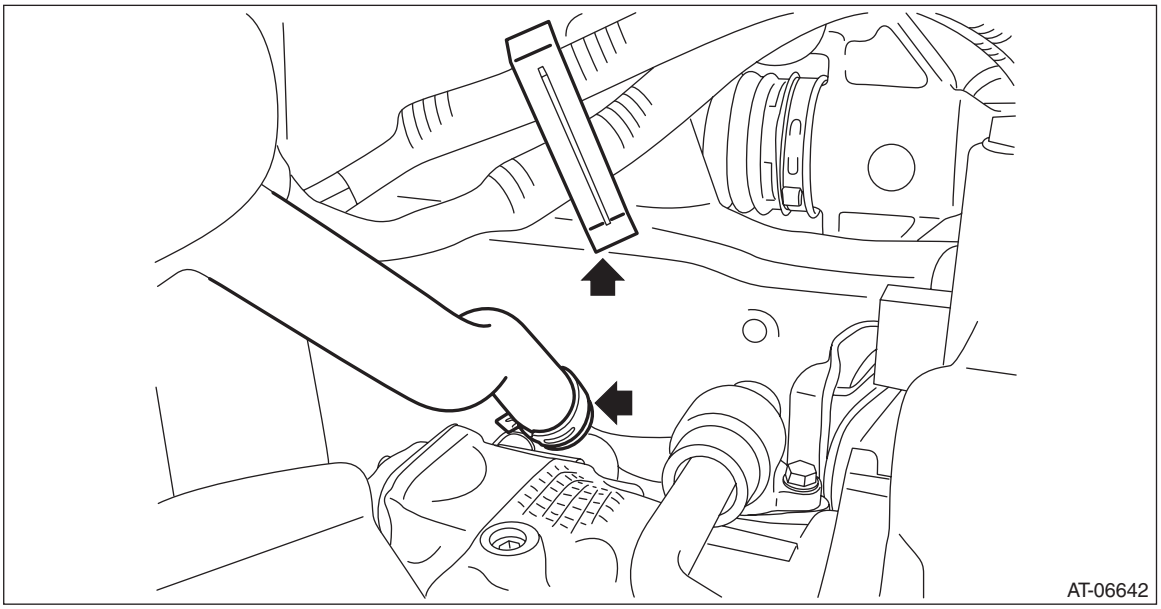

B: INSTALLATION

1) Install the engine coolant inlet hose to the engine coolant pipe, and secure the electric power steering harness to the clip.

NOTE:
With the triangle mark on the engine coolant inlet hose facing the vehicle outside, install the hose to the engine side pipe.

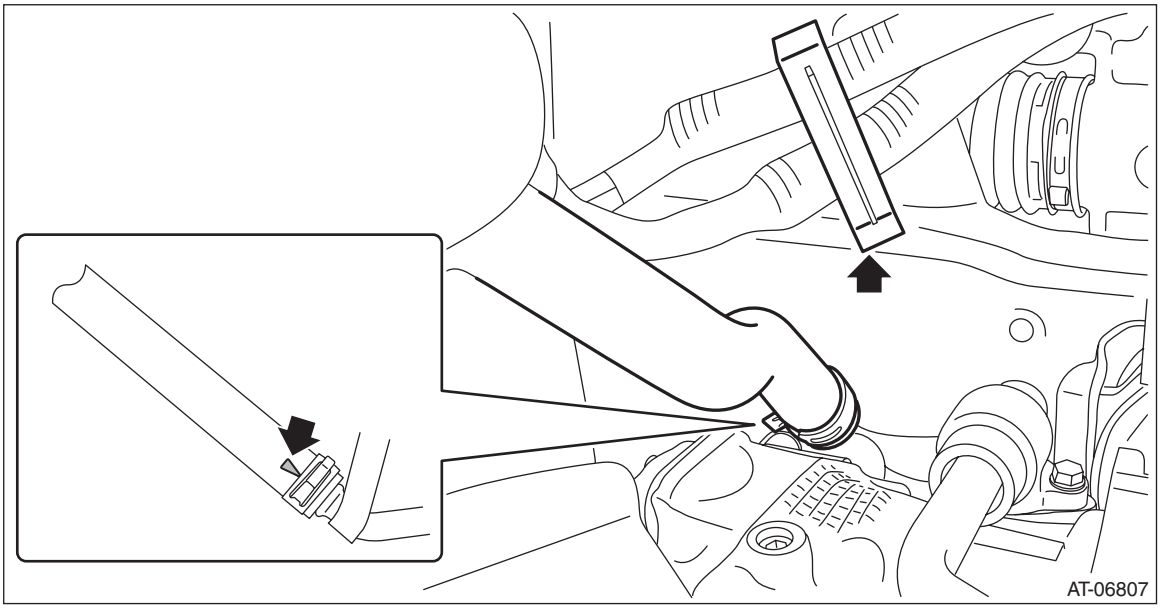

2) Install the engine coolant inlet hose to the CVTF cooler (with warmer feature) assembly.

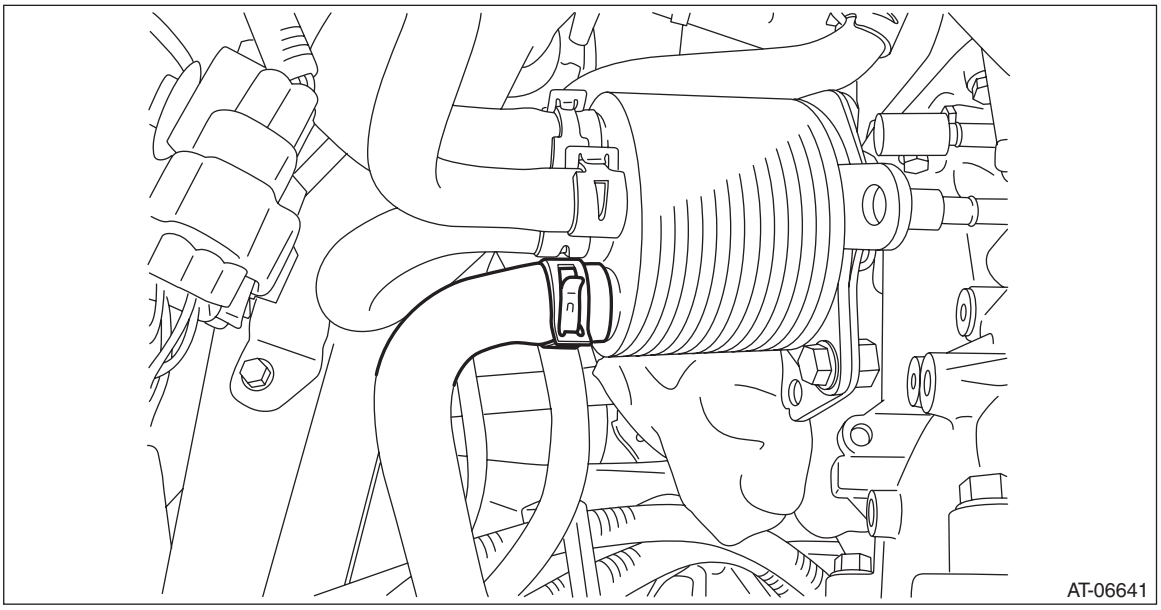

3) Install the CVTF inlet hose and CVTF outlet hose to transmission.

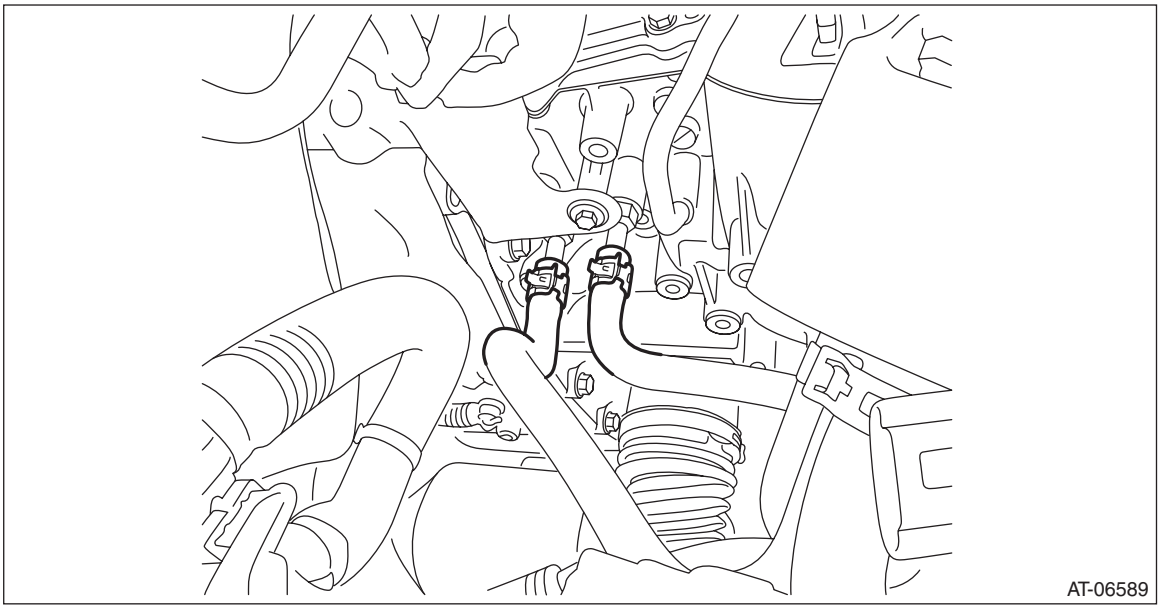

4) Install the CVTF cooler (with warmer feature) to the transmission.

Tightening torque:
23 N·m (2.3 kgf-m, 17.0 ft-lb)

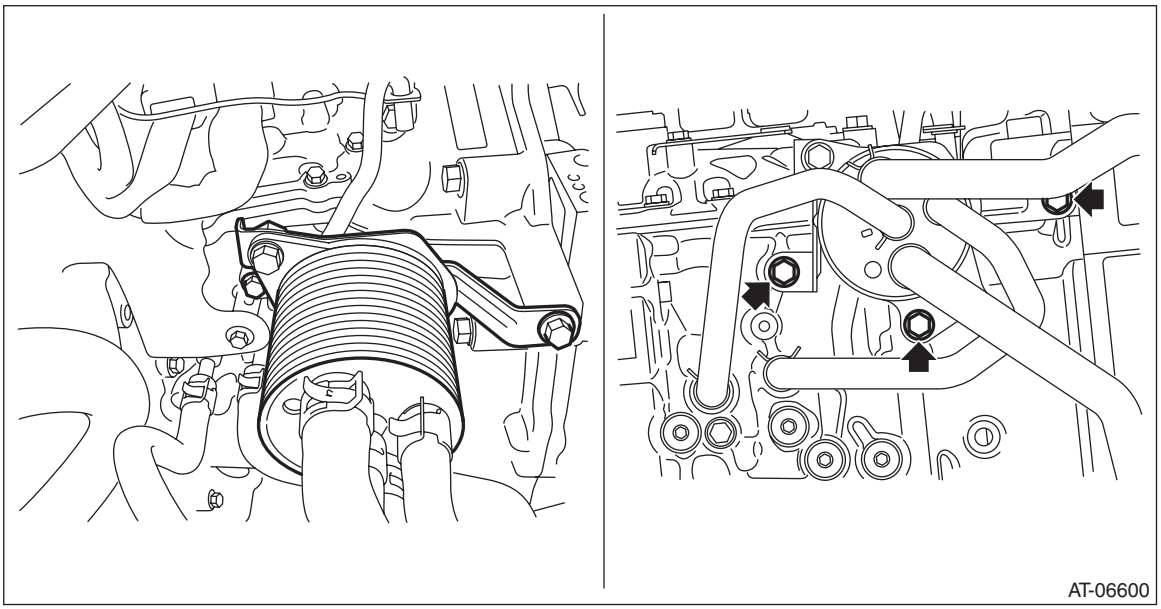

5) Connect the engine coolant outlet hose.

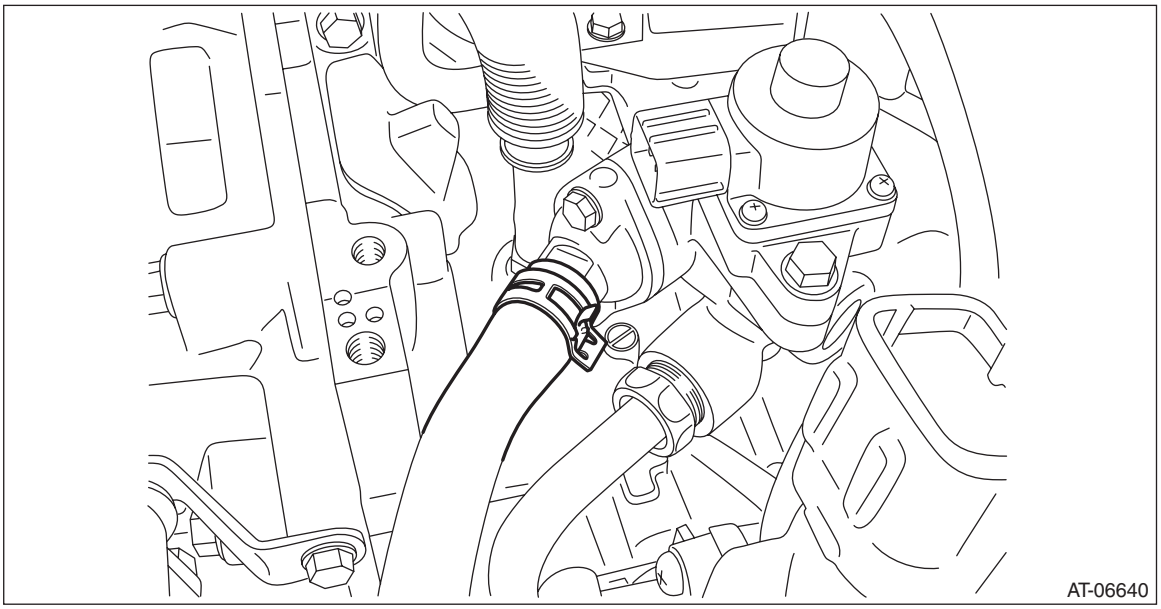

6) Check installation condition of each hose.
- Make sure the hoses do not interfere with each other or with other components.
- Check each hose for bent, excess curve, and twisting conditions.

7) Install the engine hanger rear.

Tightening torque:
21 N·m (2.1 kgf-m, 15.5 ft-lb)

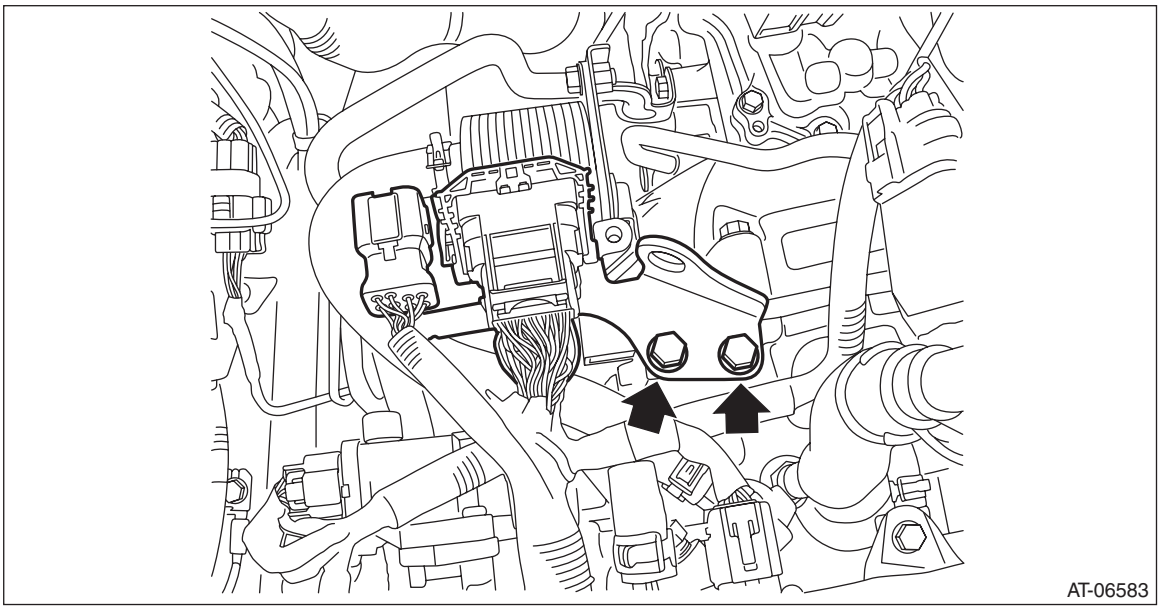

8) Connect the EGR control valve harness connector, throttle position sensor harness connector and manifold absolute pressure sensor harness connector.
9) Connect the engine harness connectors, then install the harness connector bracket.

Tightening torque:
7.5 N·m (0.8 kgf-m, 5.5 ft-lb)
10) Install the air intake boot assembly. <Ref. to IN(H4DO(w/o HEV))-12, INSTALLATION, Air Intake Boot.>
11) Connect the battery ground terminal.
12) Fill engine coolant. <Ref. to CO(H4DO(w/o HEV))-16, REPLACEMENT, Engine Coolant.>
13) Adjust the CVTF level. <Ref. to CVT(TR580)-35, ADJUSTMENT, CVTF.>

C: DISASSEMBLY

1) Remove the hoses from the CVTF cooler (with warmer feature).

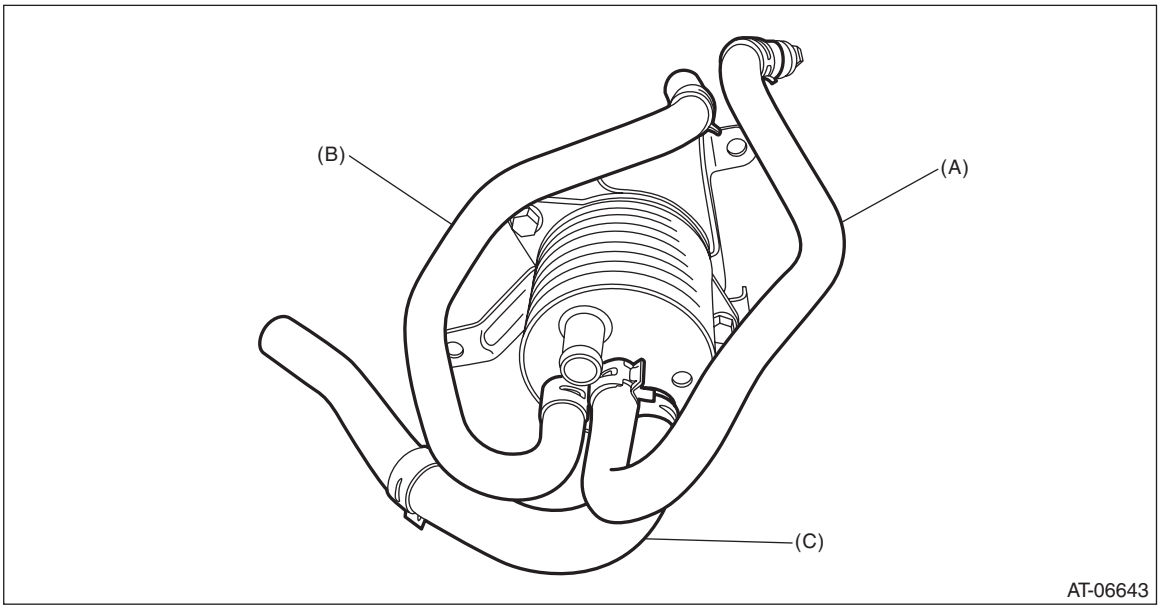

(A) CVTF cooler inlet hose
(B) CVTF cooler outlet hose
(C) Engine coolant outlet hose

2) Remove the bracket from the CVTF cooler (with warmer feature).

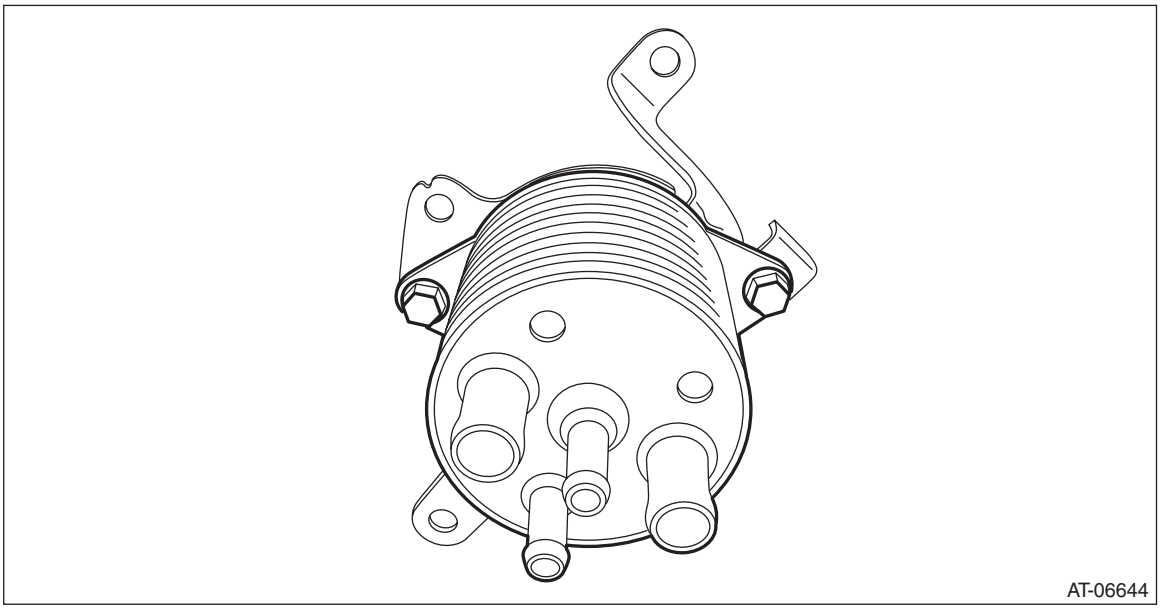

D: ASSEMBLY

1) Attach the bracket.

Tightening torque:
23 N·m (2.3 kgf-m, 17.0 ft-lb)

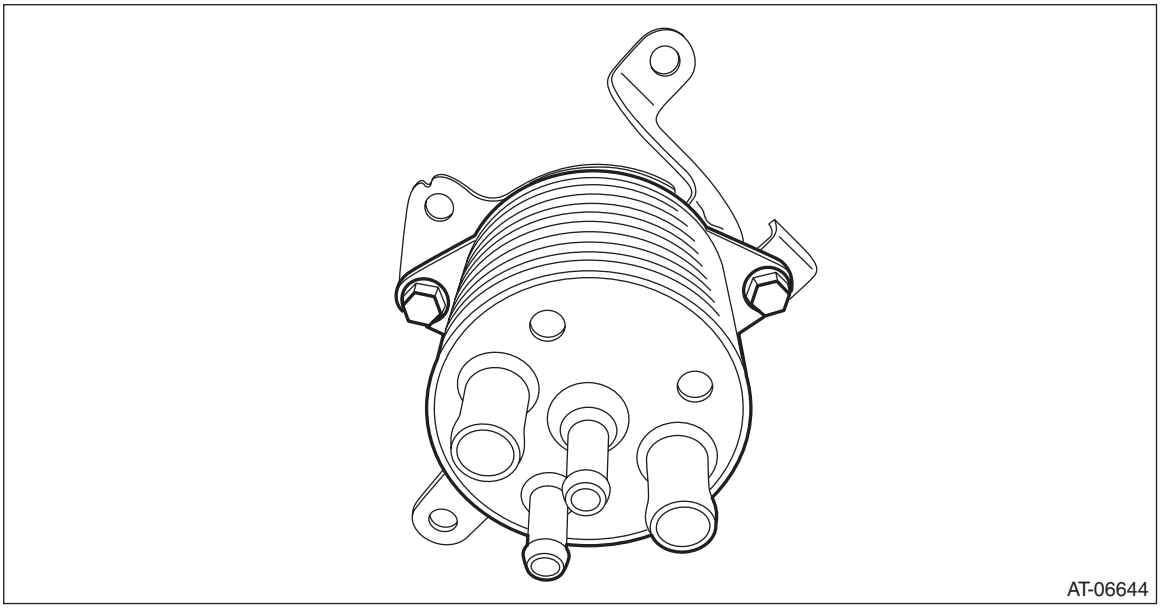

2) Attach hoses to the CVTF cooler (with warmer feature).

NOTE:
- Use a new CVTF cooler hose.
- Install so that the CVTF cooler hose is not folded over, excessively bent or twisted.
- Insert the CVTF cooler hose to the specified position in the proper direction.

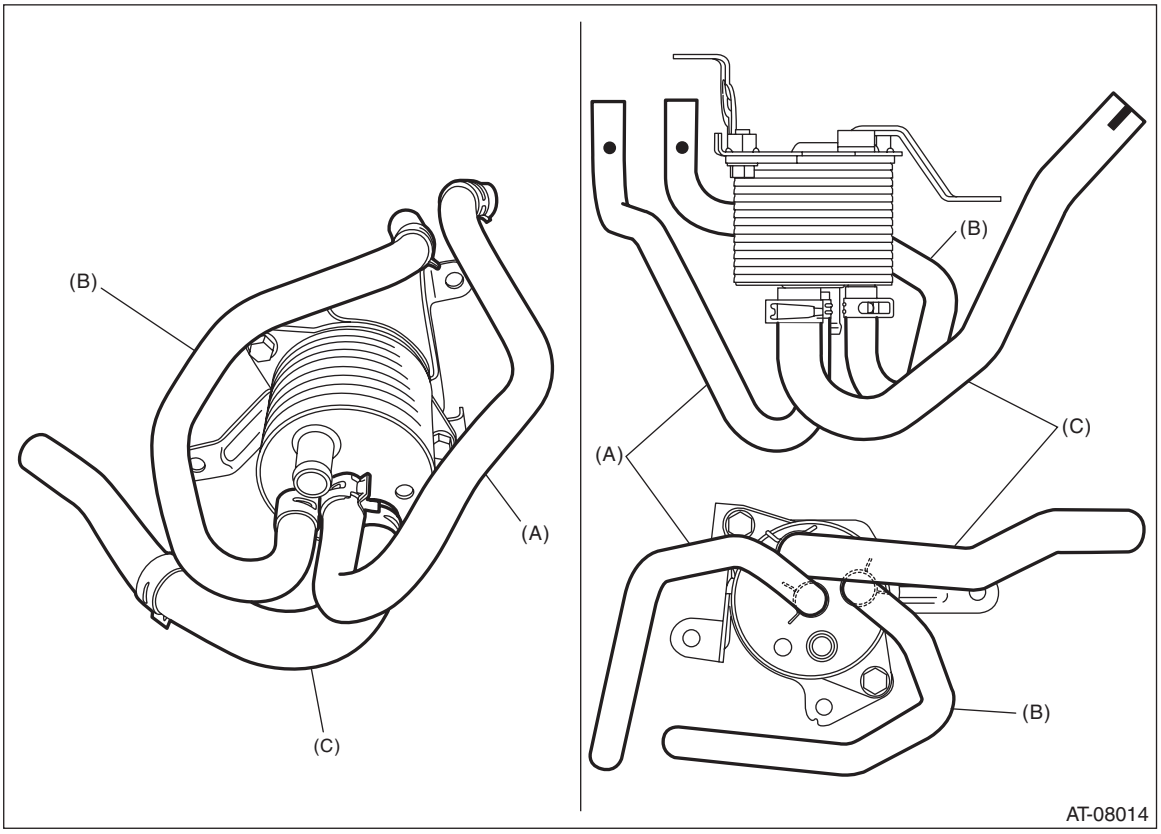

(A) CVTF cooler inlet hose
(B) CVTF cooler outlet hose
(C) Engine coolant outlet hose

E: INSPECTION

Replace any faulty CVTF cooler hoses, CVTF cooler pipes and clamps found in the inspection below.
1) Check that there are no CVTF or engine coolant leaks from the connections.
2) Check the clamp for deformation.
3) Lightly bend the CVTF cooler hose and check for cracks in the surface or other damages.
4) Pinch the CVTF cooler hose with your fingers and check for poor elasticity. Also check for poor elasticity in the parts where the clamp was installed by pressing with your fingernail.
5) Check for peeling, cracks, and deformation at the tip of the hose.
6) Check the CVTF cooler (with warmer feature) for any damage.

24.Air Breather Hose

A: REMOVAL

1. FRONT DIFFERENTIAL SIDE

1) Remove the clip (A) from the air intake boot.
2) Loosen the clamp (B) connecting the air intake boot and air cleaner case (rear).
3) Loosen the clamp (C) which connects the air intake boot and throttle body.

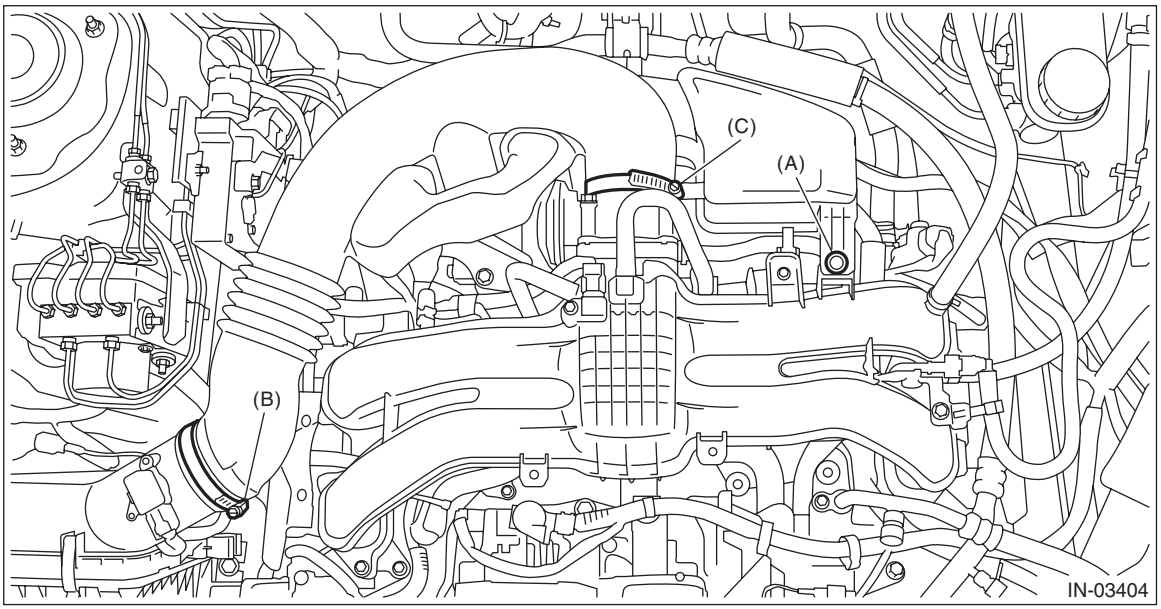

4) Remove the air intake boot from the throttle body, and move it to the left side wheel apron.

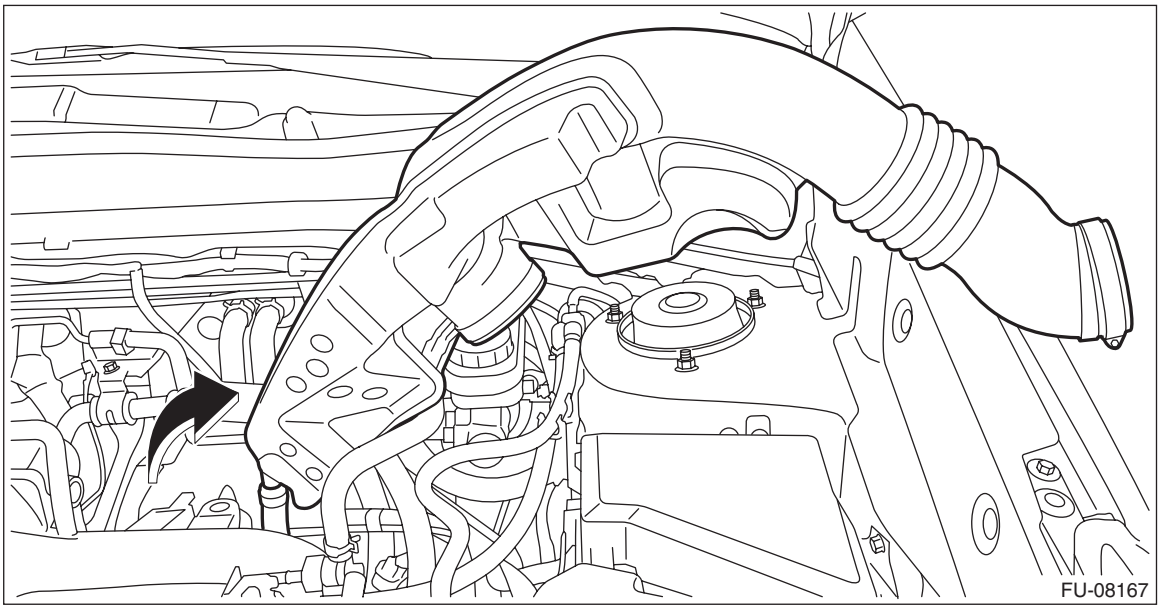

5) Remove the air breather hose.

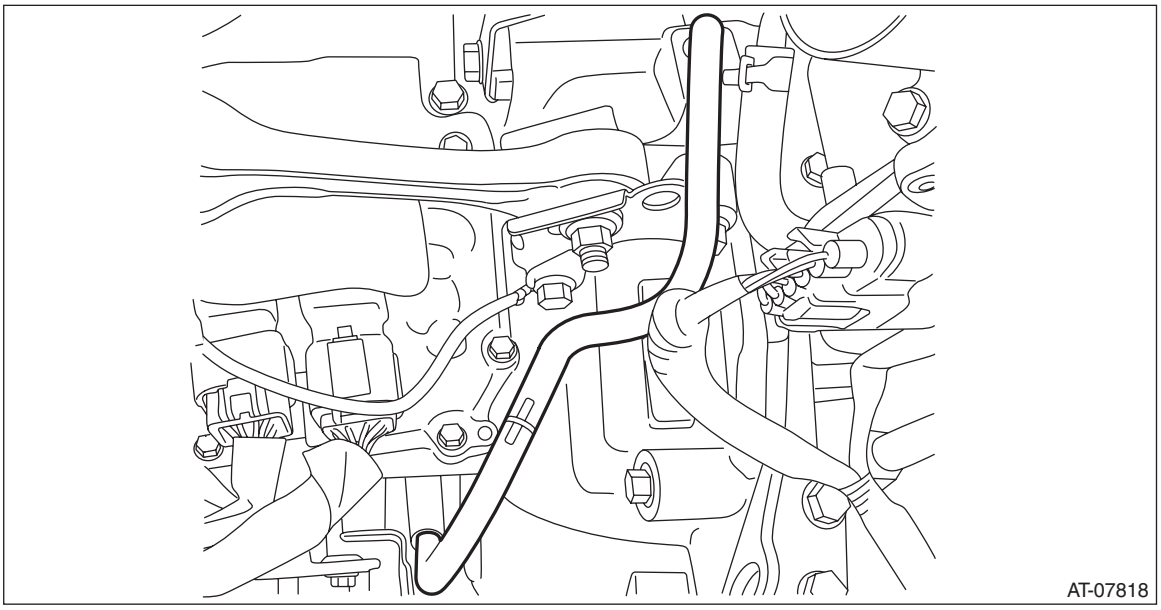

2. TRANSMISSION CASE SIDE

1) Remove the transmission assembly. <Ref. to CVT(TR580)-56, REMOVAL, Automatic Transmission Assembly.>
2) Remove the transmission case cover.

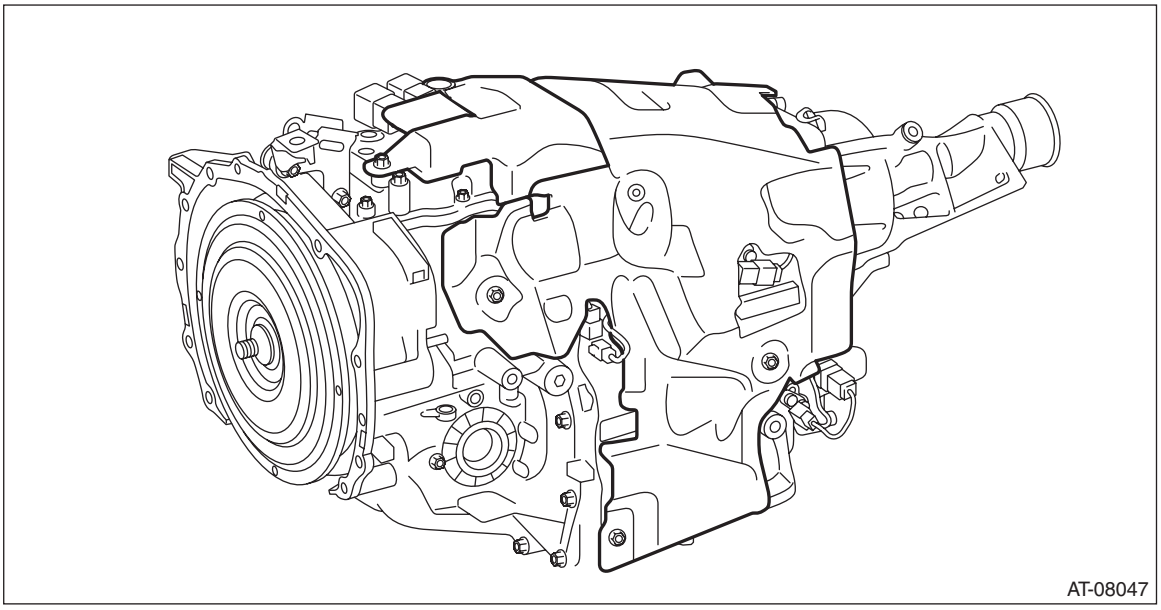

3) Remove the air breather hose.

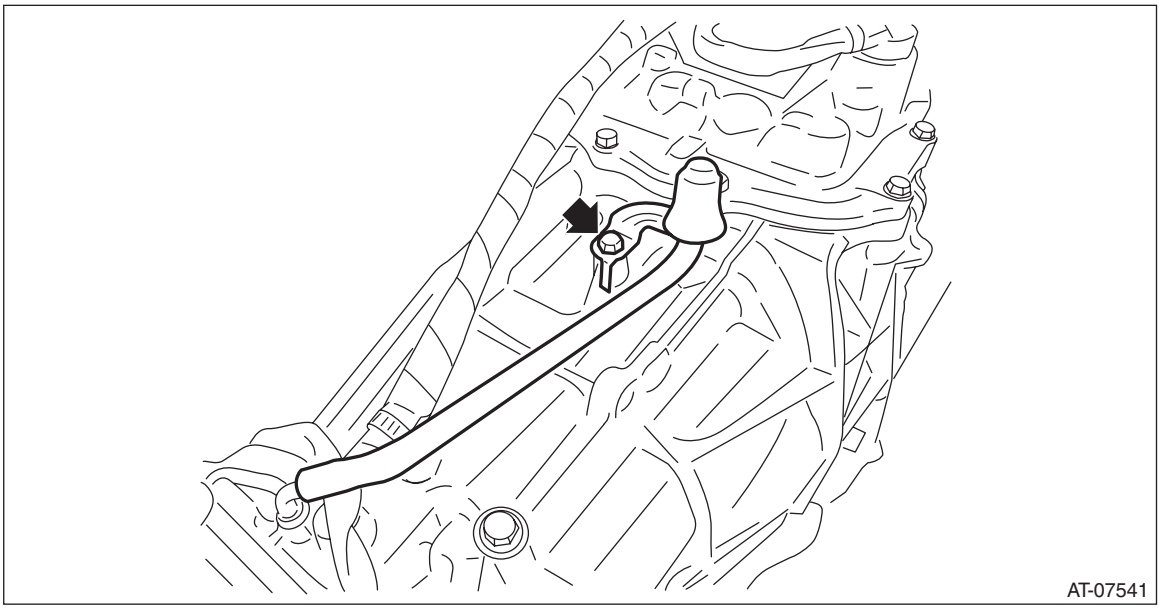

4) Remove the air breather cap.

B: INSTALLATION

1. FRONT DIFFERENTIAL SIDE

Install in the reverse order of removal.

NOTE:
Securely insert the air breather hose until the hose end contacts the catch of the pitching stopper bracket.

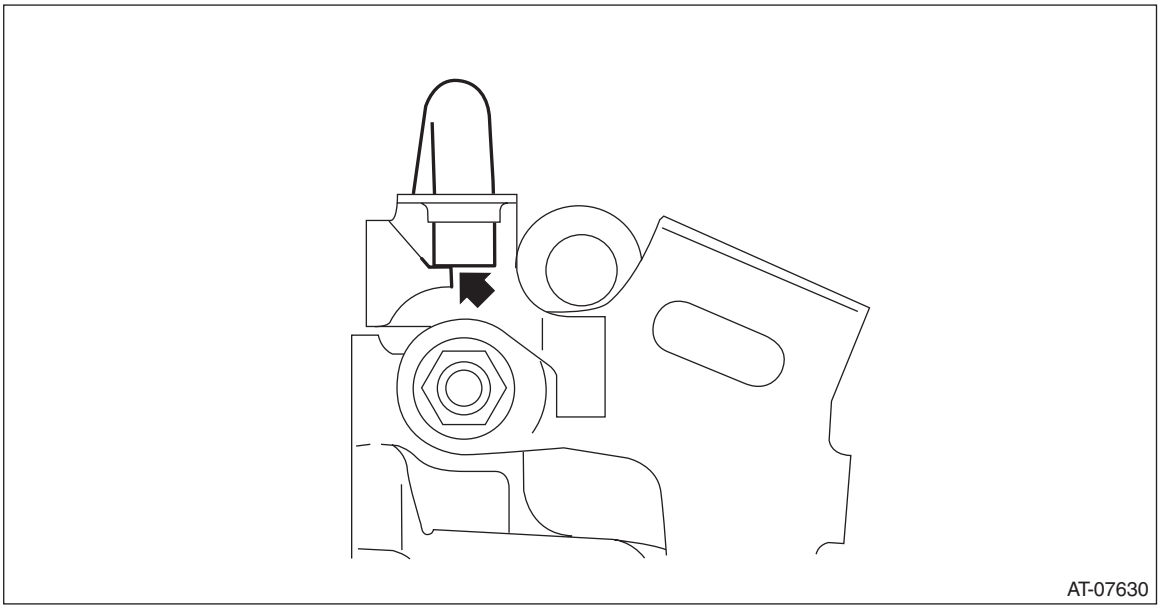

2. TRANSMISSION CASE SIDE

Install in the reverse order of removal.

Tightening torque:
Transmission case cover:
8 N·m (0.8 kgf-m, 5.9 ft-lb)
Air breather hose:
5 N·m (0.5 kgf-m, 3.7 ft-lb)

C: INSPECTION

Check the hose for peeling, crack or clogging.

25.Drive Plate

A: REMOVAL

1) Remove the transmission assembly from the vehicle. <Ref. to CVT(TR580)-56, REMOVAL, Automatic Transmission Assembly.>
2) Set the ST.
ST 498497300 CRANKSHAFT STOPPER

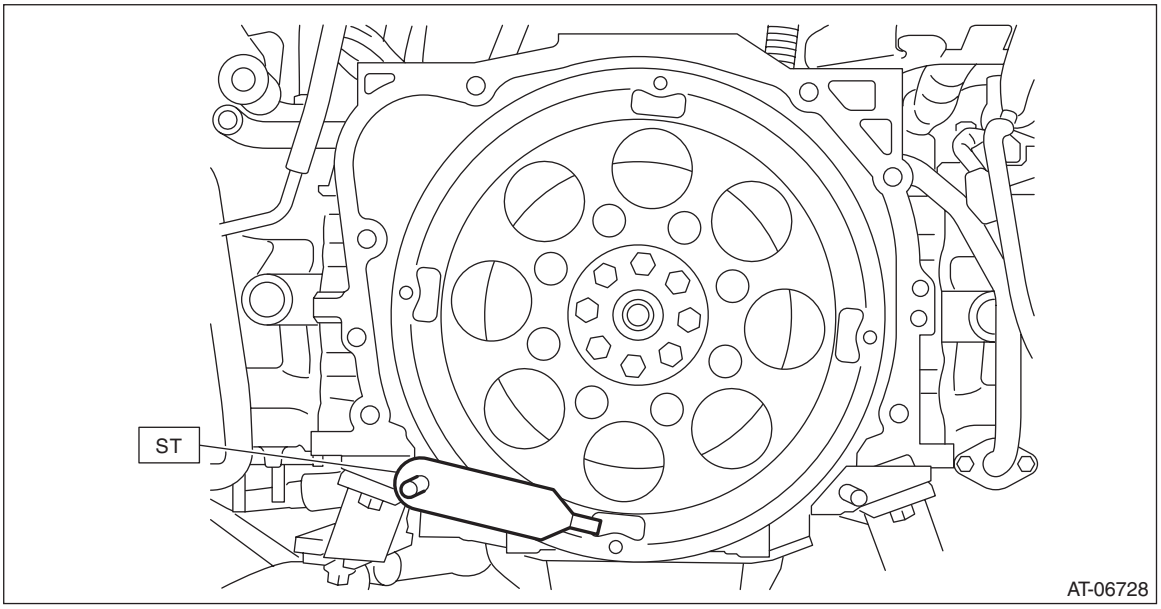

3) Remove the drive plate and reinforcement drive plate.

B: INSTALLATION

1) Temporarily install the drive plate and reinforcement drive plate.

NOTE:
Align the knock pin hole of the crankshaft position sensor plate to the knock pin of the crankshaft to secure the knock pin.
2) Set the ST.
ST 498497300 CRANKSHAFT STOPPER

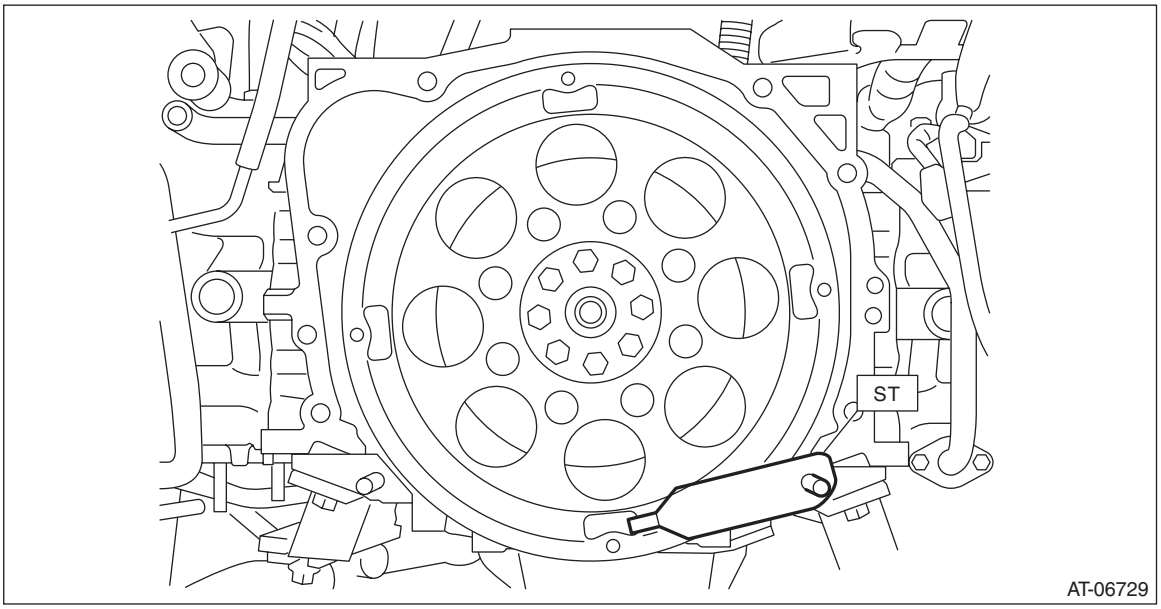

3) Tighten the drive plate mounting bolt in two stages.
(1) Tighten the drive plate mounting bolt.

Tightening torque:
30 N·m (3.1 kgf-m, 22.1 ft-lb)
(2) While checking the tightening angle with the angle gauge, tighten the drive plate mounting bolts to the specified angle.

Tightening angle:
30° — 35°

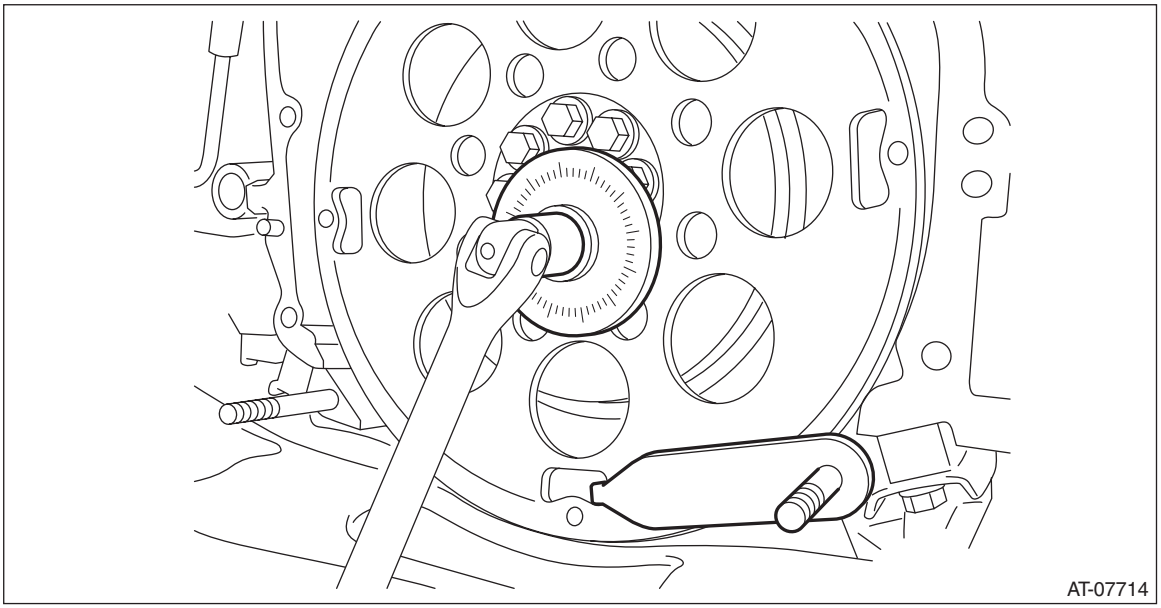

4) Install the transmission assembly to the vehicle. <Ref. to CVT(TR580)-68, INSTALLATION, Automatic Transmission Assembly.>

C: INSPECTION

Check the drive cable for damage.

26.Torque Converter Assembly

A: REMOVAL

1) Remove the transmission assembly from the vehicle. <Ref. to CVT(TR580)-56, REMOVAL, Automatic Transmission Assembly.>
2) Pull out the torque converter assembly horizontally.

CAUTION:
Do not scratch the inside of engaging parts.

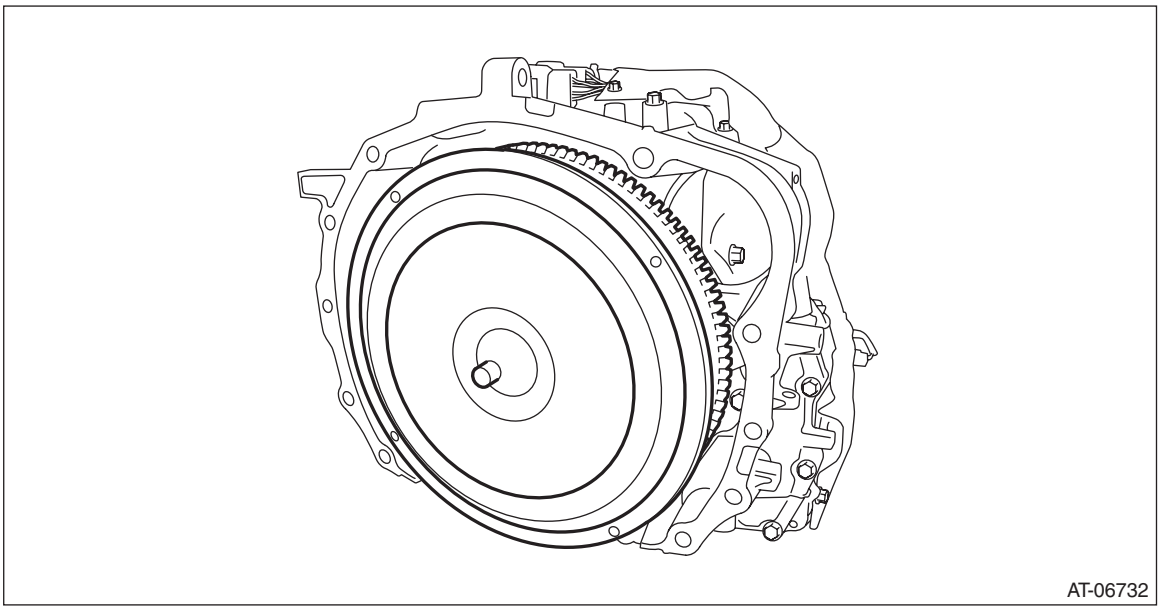

3) Remove the O-ring from the input shaft.

B: INSTALLATION

1) Install the O-ring to the input shaft.

NOTE:
- Use new O-rings.
- Apply CVTF to the O-ring.

2) While holding the torque converter assembly by hand, carefully install it into the torque converter case.

NOTE:
- Apply CVTF to the oil seal lip.
- Do not damage the oil seal and O-ring.

3) Engage the splines while gently rotating the torque converter assembly by hand, and securely insert the assembly.

4) Measure depth “A”, from converter case end surface to drive plate contacting surface.

Standard (reference):
6.8 mm (0.268 in)

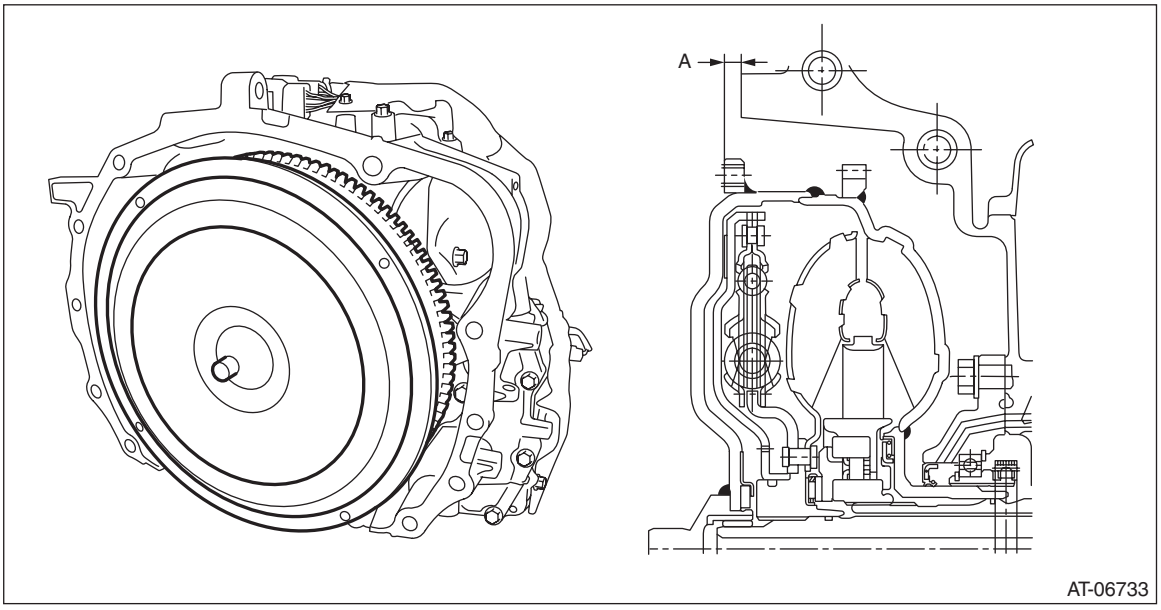

5) Install the transmission assembly to the vehicle. <Ref. to CVT(TR580)-68, INSTALLATION, Automatic Transmission Assembly.>

C: INSPECTION

- Check the protrusion of torque converter center (front boss) is not deformed or damaged.
- Check the ring gear and exterior for break or damage.

27.Preparation for Overhaul

A: GENERAL DESCRIPTION

Before disassembling and assembling the transmission, follow the following procedures to prepare.

B: PROCEDURE

1) Clean the transmission exterior.
2) Remove the torque converter assembly. <Ref. to CVT(TR580)-158, Torque Converter Assembly.>
3) Attach the ST on the transmission.
ST 18632AA000 STAND ASSY

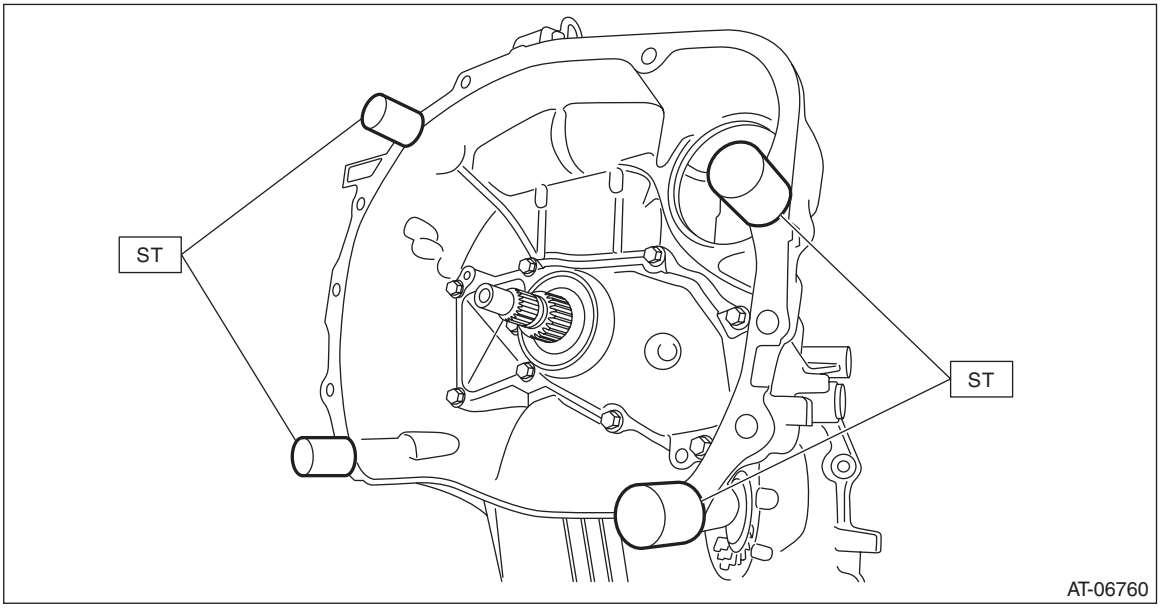

4) Remove the transmission case cover on the transmission upper side.

NOTE:
Install using the following tightening torque.

Tightening torque:
8 N·m (0.8 kgf-m, 5.9 ft-lb)

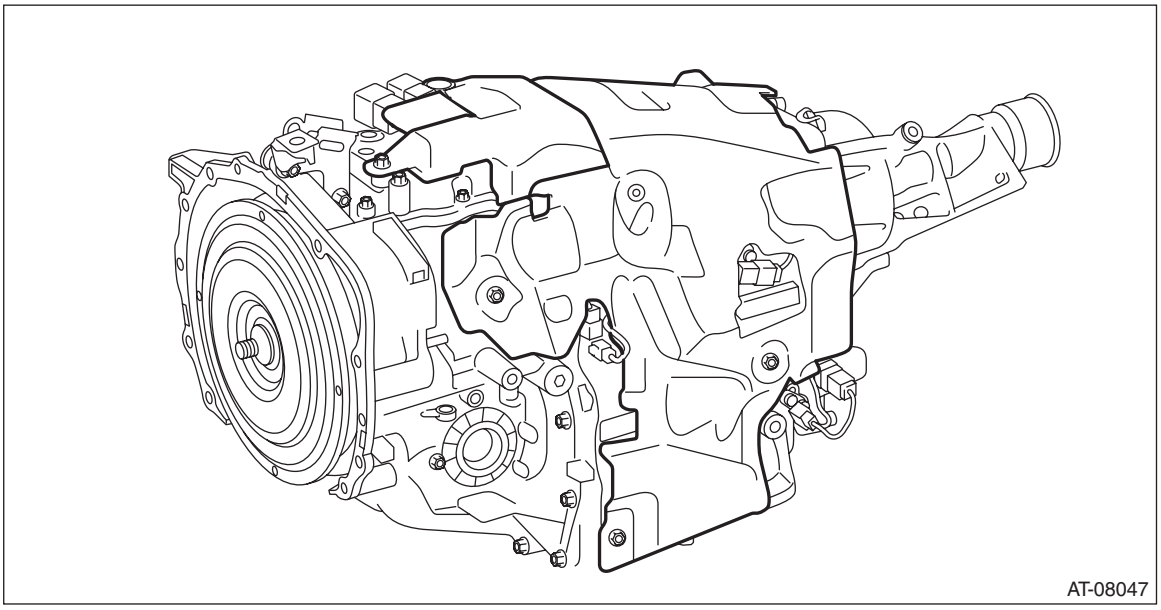

5) Place the transmission assembly on end.

6) When completely overhauling the transmission, refill approx. 10 L (2.6 US qt, 8.8 Imp qt) of CVTF through the transmission right side plug, and install the plug. Finally, install the transmission case cover.

CAUTION:
Always use specified CVTF. Using other fluid will cause malfunction. <Ref. to CVT(TR580)-4, HYDRAULIC CONTROL AND LUBRICATION, SPECIFICATION, General Description.>

NOTE:
Use a new gasket.

Tightening torque:
50 N·m (5.1 kgf-m, 36.9 ft-lb)

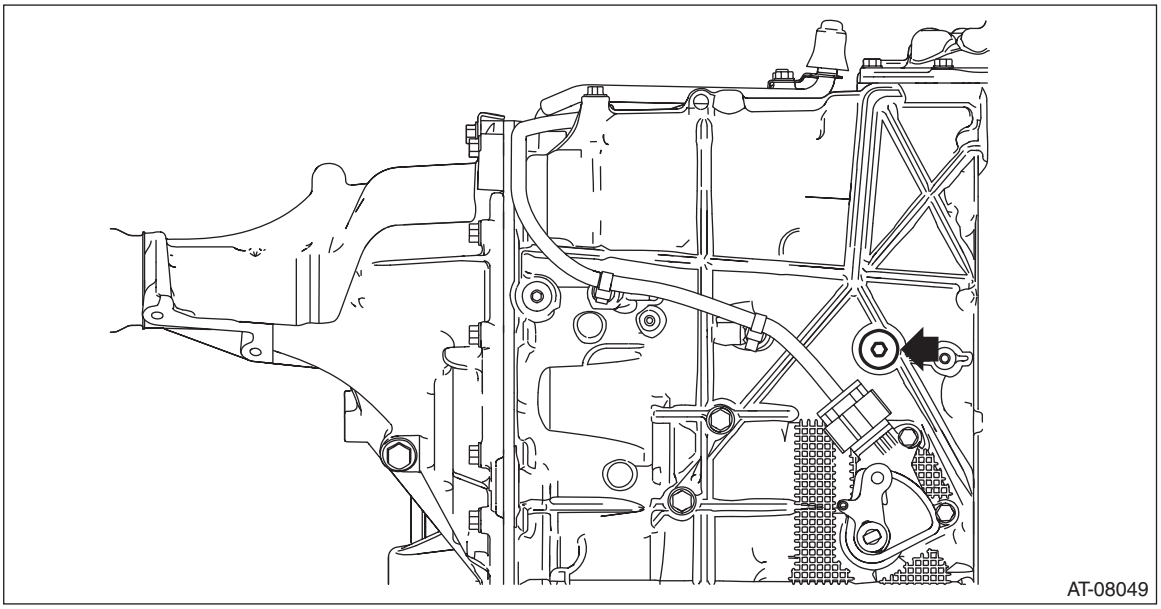

28.Extension Case

A: REMOVAL

1) Remove the transmission assembly from the vehicle. <Ref. to CVT(TR580)-56, REMOVAL, Automatic Transmission Assembly.>
2) Remove the extension case and transmission hanger.

NOTE:
The total number of extension case mounting bolts is 13.

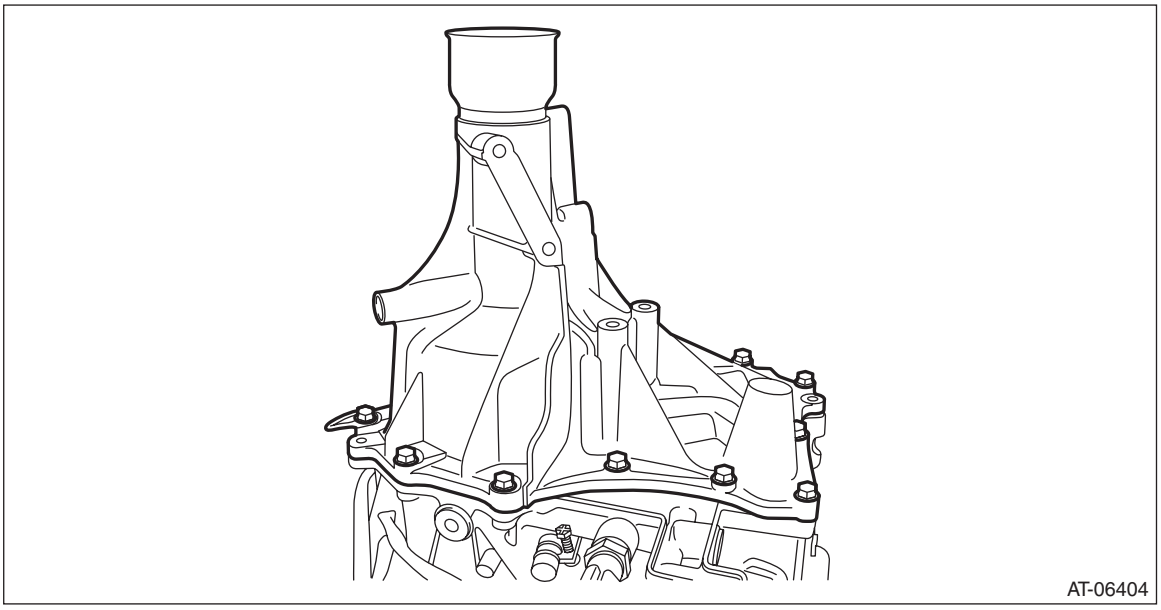

3) Remove the O-ring.

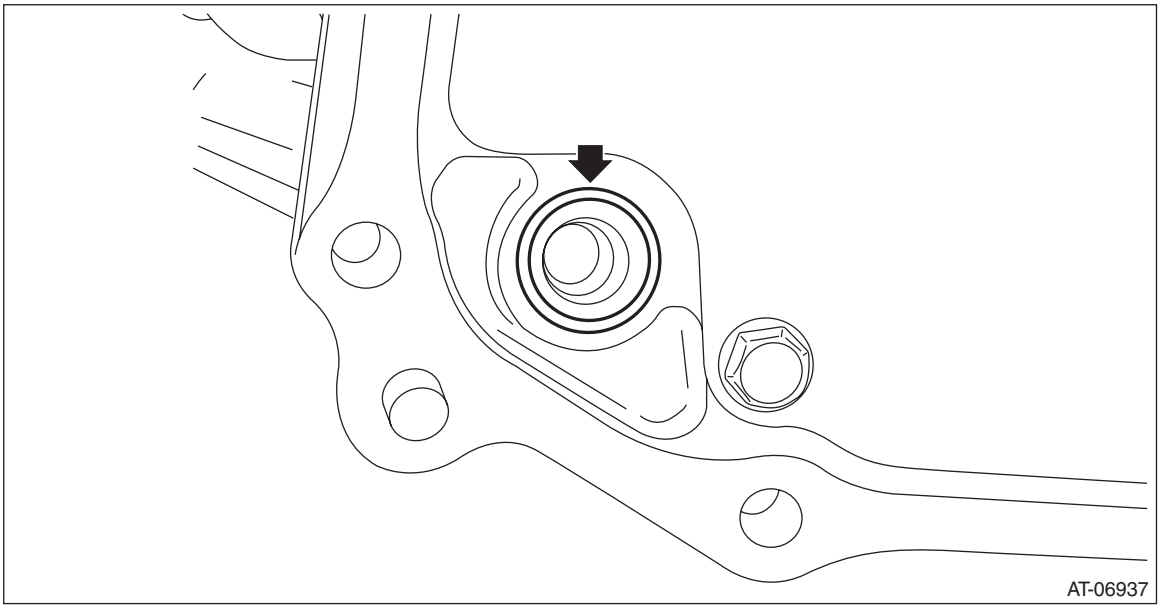

B: INSTALLATION

1) Clean the mating surface of extension case and transmission case.
2) Select the transfer drive gear shim. <Ref. to CVT(TR580)-215, ADJUSTMENT, Reduction Drive Gear.>
3) Select the transfer driven gear shim. <Ref. to CVT(TR580)-177, ADJUSTMENT, Transfer Clutch.>
4) Attach the selected transfer drive gear shim to extension case with vaseline.
5) Attach the selected transfer driven gear shim to extension case with vaseline.
6) Install the O-ring to the transmission case.

NOTE:
- Use new O-rings.
- Apply CVTF to the O-ring.

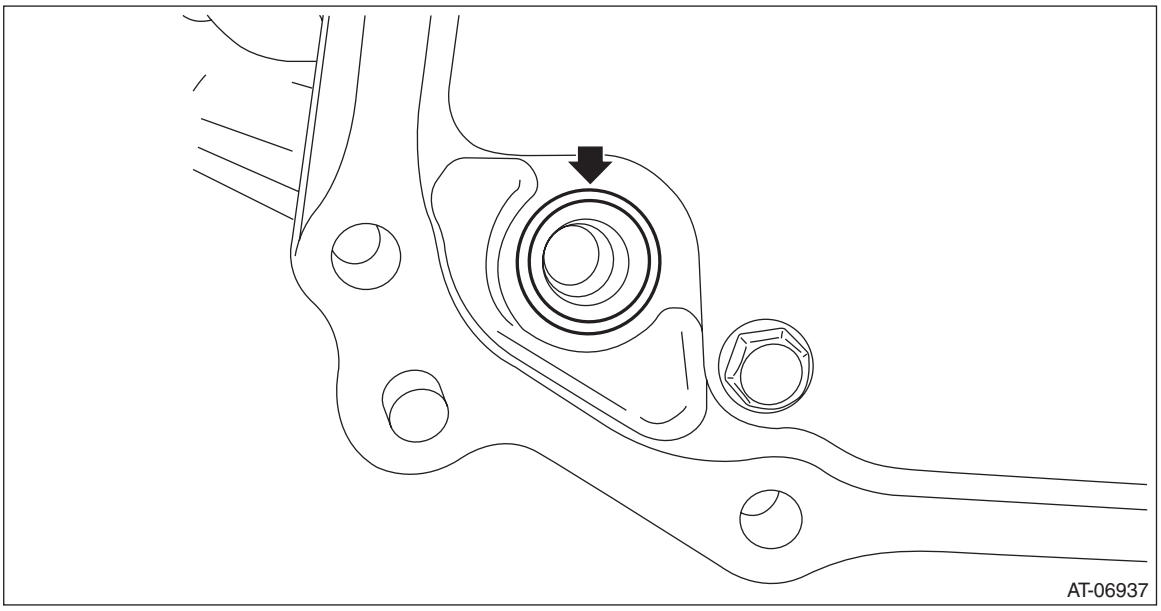

7) Apply liquid gasket to extension case seamlessly.

Liquid gasket:
THREE BOND 1215 (Part No. 004403007) or equivalent

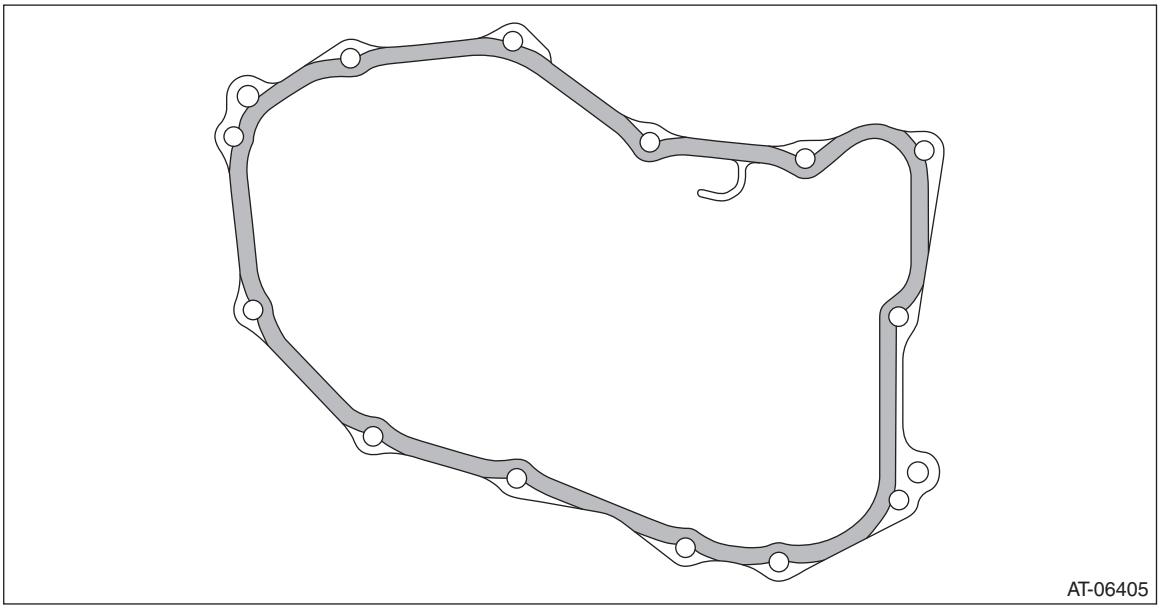

8) Install the extension case to transmission hanger.

Tightening torque:
25 N·m (2.5 kgf-m, 18.4 ft-lb)

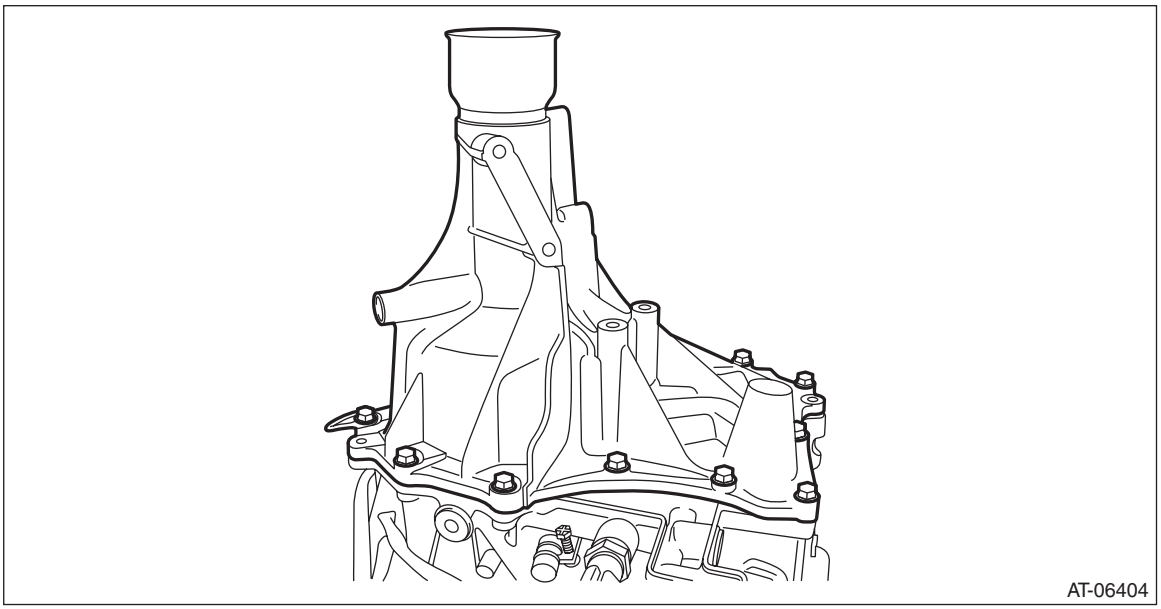

9) Install the transmission assembly. <Ref. to CVT(TR580)-68, INSTALLATION, Automatic Transmission Assembly.>

C: DISASSEMBLY

1) Remove the dust cover from extension case.
2) Remove the extension case oil seal from the extension case. <Ref. to CVT(TR580)-87, REPLACEMENT, Differential Side Retainer Oil Seal.>
3) Remove all plugs.

D: ASSEMBLY

1) Press-fit the dust cover into extension case.
2) Install the extension case oil seal to extension case. <Ref. to CVT(TR580)-87, REPLACEMENT, Differential Side Retainer Oil Seal.>
3) Install all plugs.

NOTE:
- Use a new O-ring or a gasket.
- Apply CVTF to the O-ring.

Tightening torque:
T1: 25 N·m (2.5 kgf-m, 18.4 ft-lb)
T2: 35 N·m (3.6 kgf-m, 25.8 ft-lb)

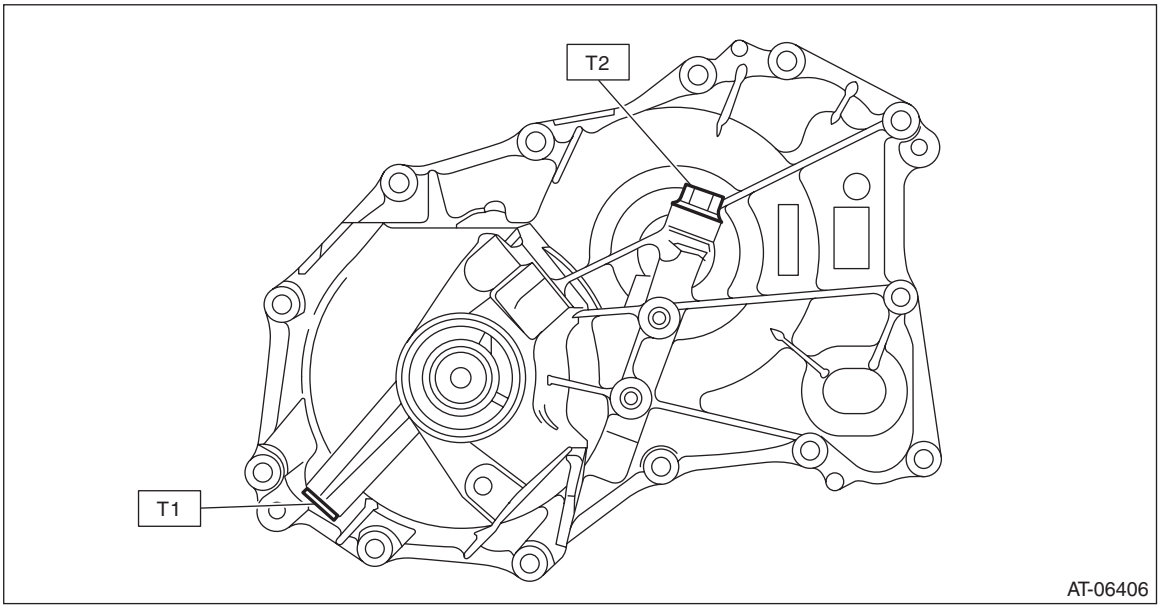

E: INSPECTION

- Check there is no leak of CVTF from the joint between extension case and transmission case.
- Check there is no damage or cracks on the extension case and other parts.

F: ADJUSTMENT

NOTE:
When replacing the extension case, select the transfer drive gear shim and transfer driven gear shim. <Ref. to CVT(TR580)-215, ADJUSTMENT, Reduction Drive Gear.> <Ref. to CVT(TR580)-177, ADJUSTMENT, Transfer Clutch.>

29.Transfer Clutch

A: REMOVAL

1) Remove the transmission assembly from the vehicle. <Ref. to CVT(TR580)-56, REMOVAL, Automatic Transmission Assembly.>
2) Remove the extension case. <Ref. to CVT(TR580)-162, REMOVAL, Extension Case.>
3) Remove the transfer clutch assembly.

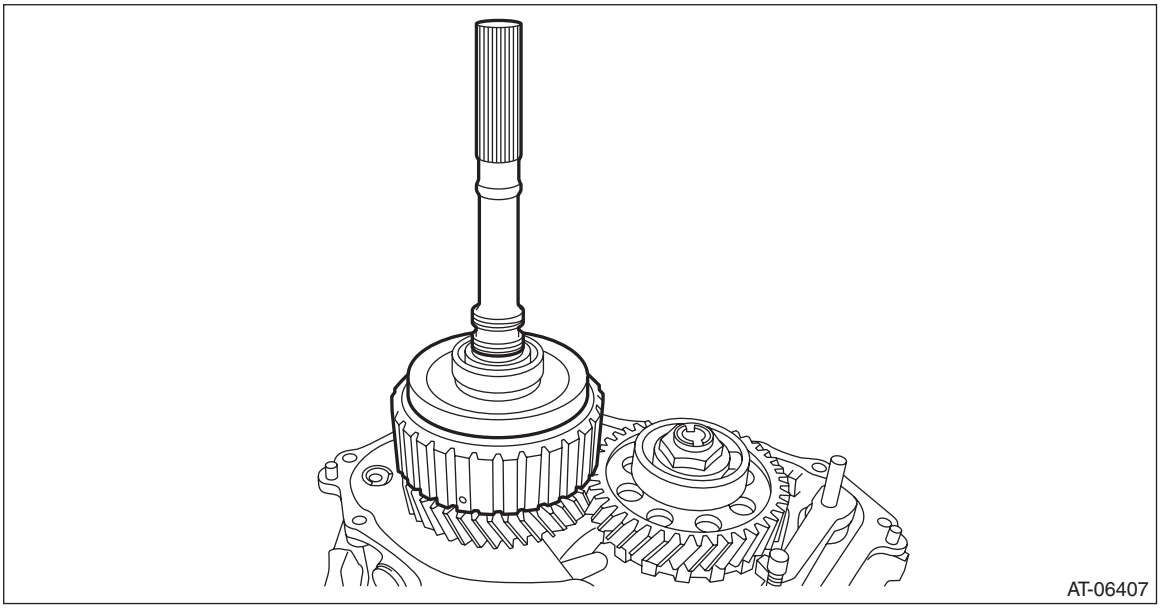

4) Remove the thrust bearing.

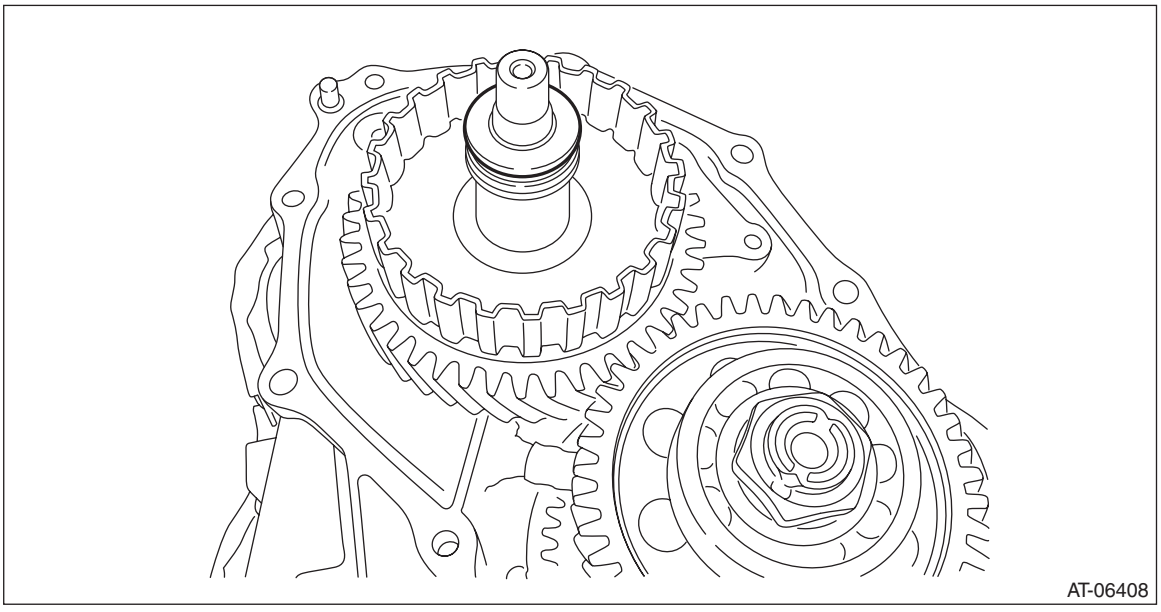

5) Remove the seal ring from transfer clutch assembly.

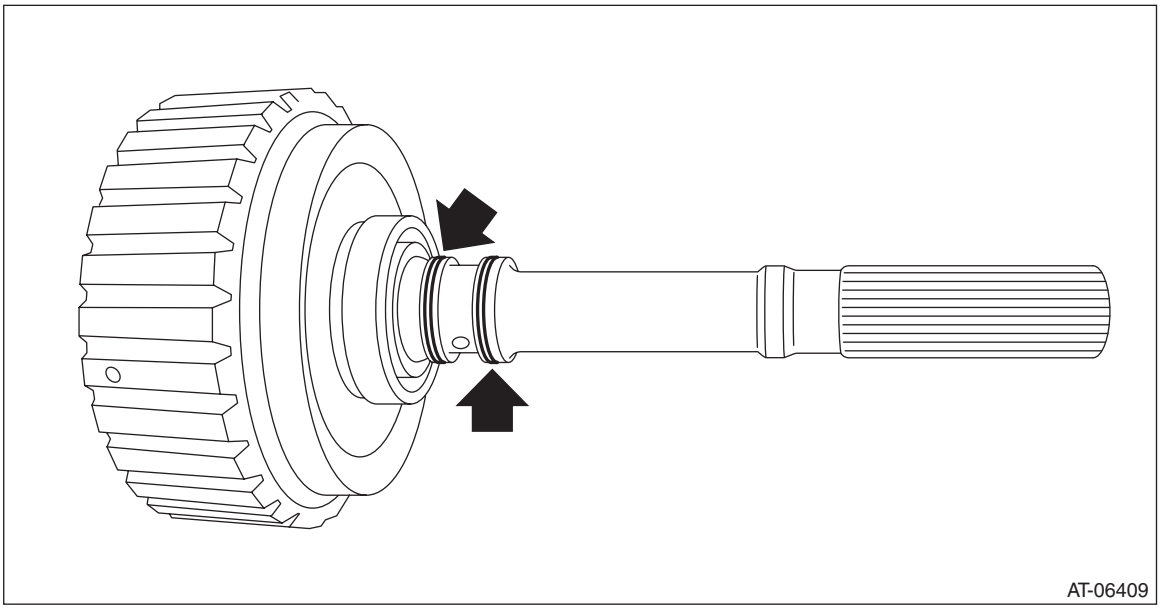

6) Remove the seal ring from the transfer driven gear assembly.

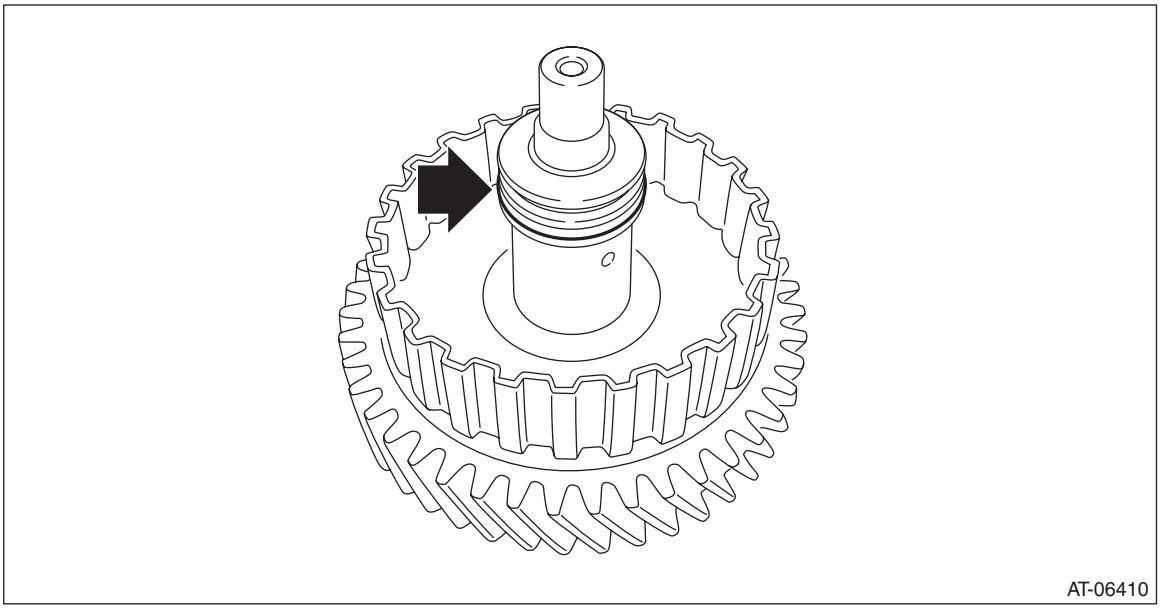

B: INSTALLATION

1) Install the thrust bearing.

NOTE:
Make sure to install in the right direction.

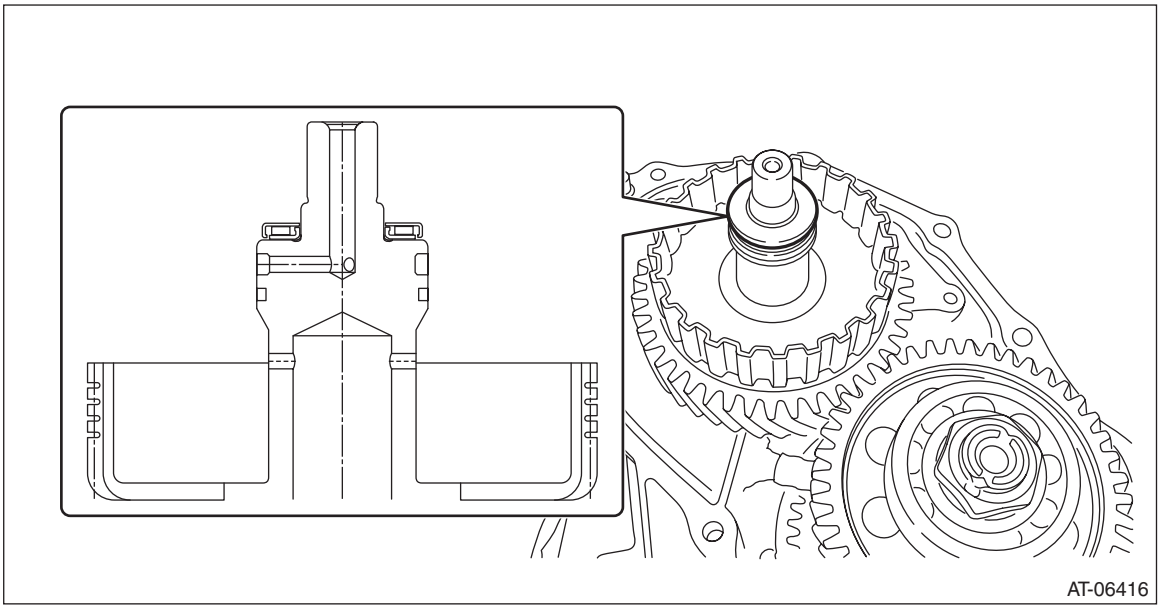

2) Install the transfer clutch assembly.

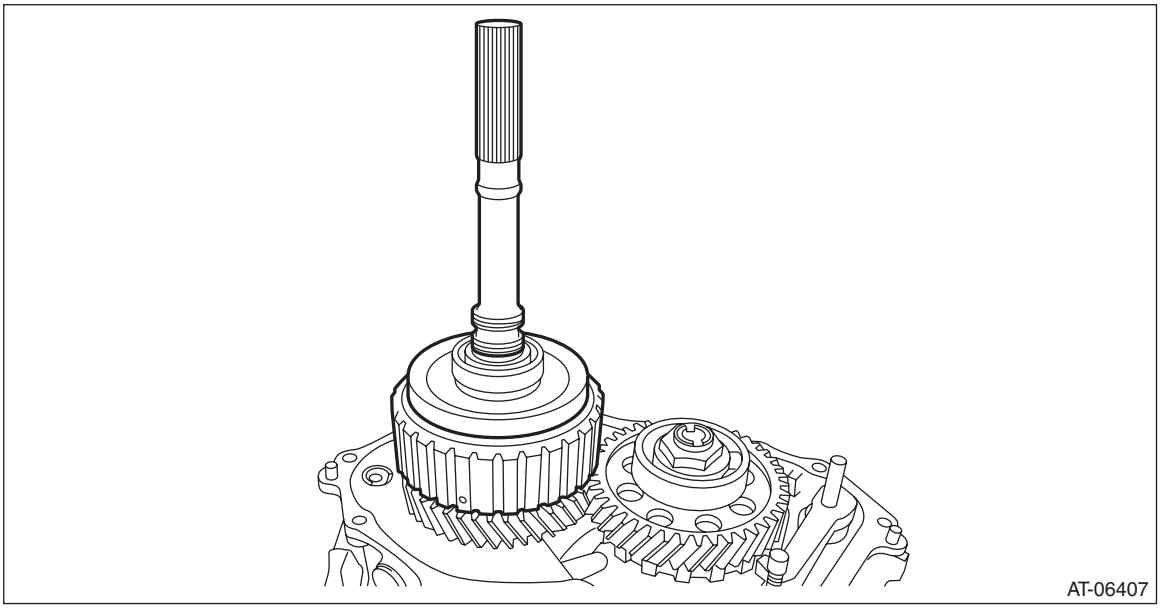

3) Select the transfer driven gear shim. <Ref. to CVT(TR580)-177, ADJUSTMENT, Transfer Clutch.>
4) Attach the selected transfer driven gear shim to extension case with vaseline.
5) Remove the transfer clutch assembly.

6) Install the seal ring to the transfer clutch assembly.

NOTE:
- Use a new seal ring.
- When installing the seal ring, do not expand the seal ring too much.
- Apply CVTF to the seal rings.

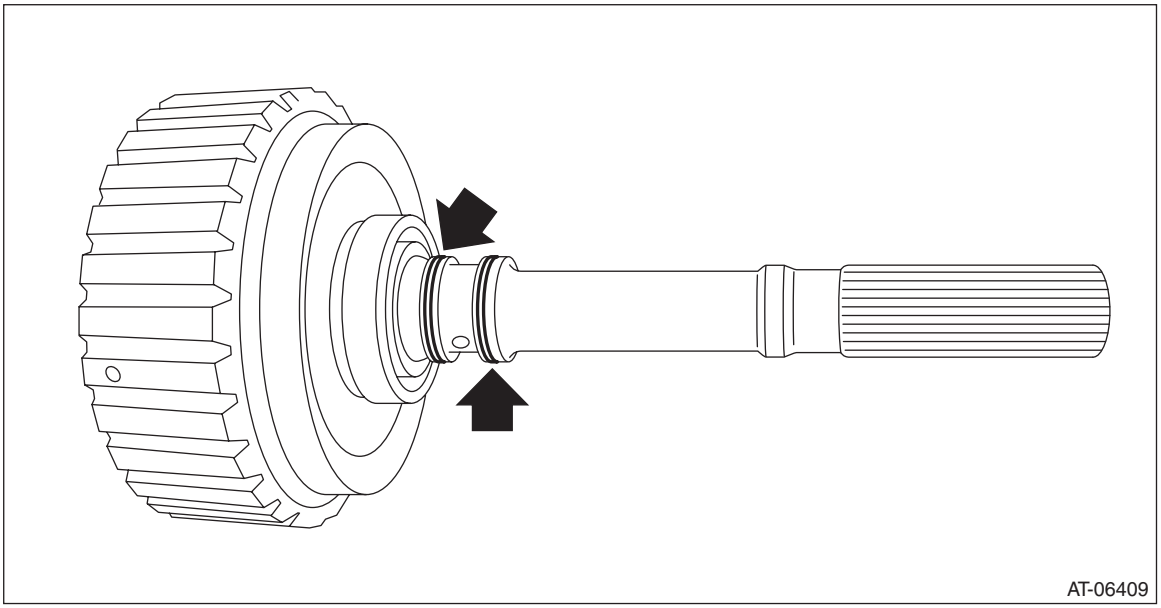

7) Install the seal ring to the transfer driven gear assembly.

NOTE:
- Use a new seal ring.
- When installing the seal ring, do not expand the seal ring too much.
- Apply CVTF to the seal rings.

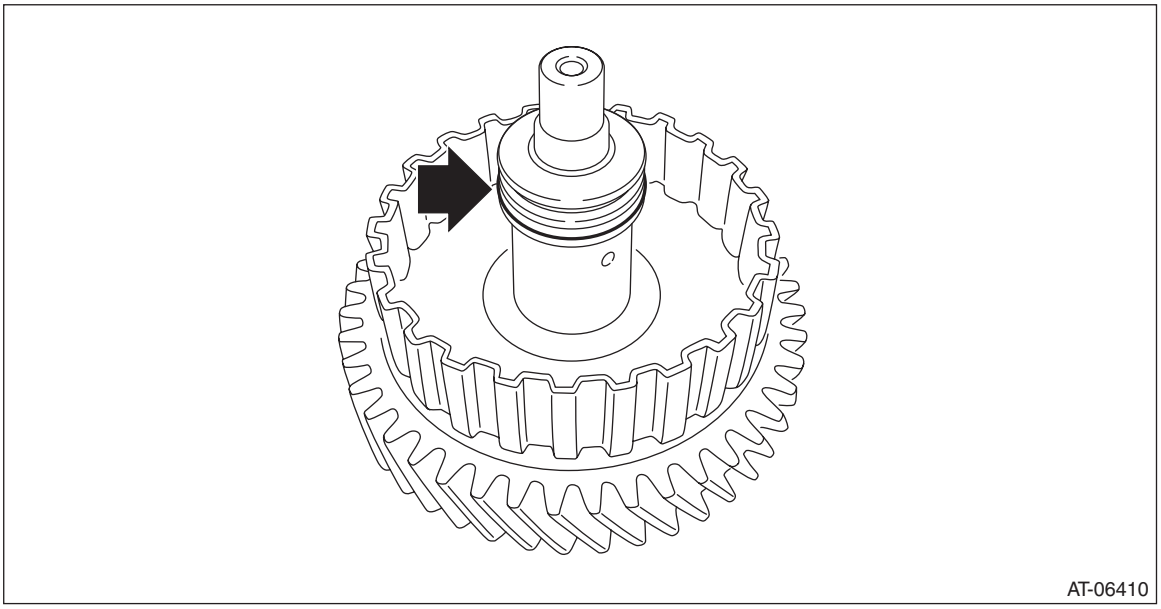

8) Install the transfer clutch assembly.
9) Install the extension case. <Ref. to CVT(TR580)-163, INSTALLATION, Extension Case.>
10) Install the transmission assembly to the vehicle. <Ref. to CVT(TR580)-68, INSTALLATION, Automatic Transmission Assembly.>

C: DISASSEMBLY

1) Remove the snap ring, and then remove the retaining plate, drive plate and driven plate.

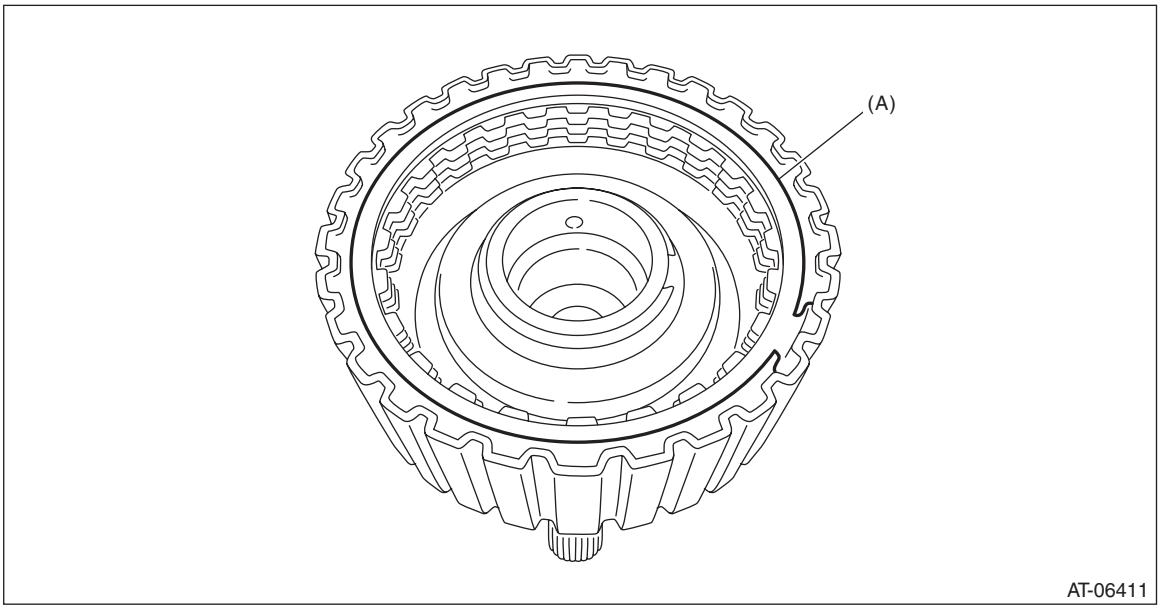

(A) Snap ring

2) Compress the return spring using the ST to remove the snap ring.
ST 18762AA000 COMPRESSOR SPECIAL TOOL (or 18762AA001)

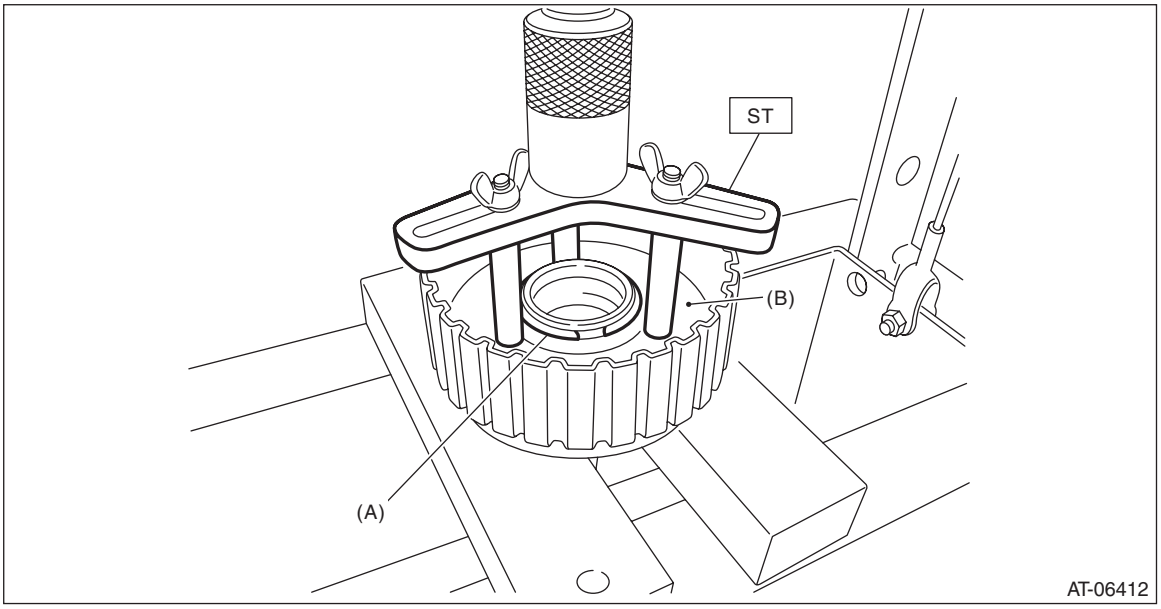

(A) Snap ring
(B) Transfer clutch piston seal

3) Remove the transfer clutch piston seal.

4) Remove the return spring.

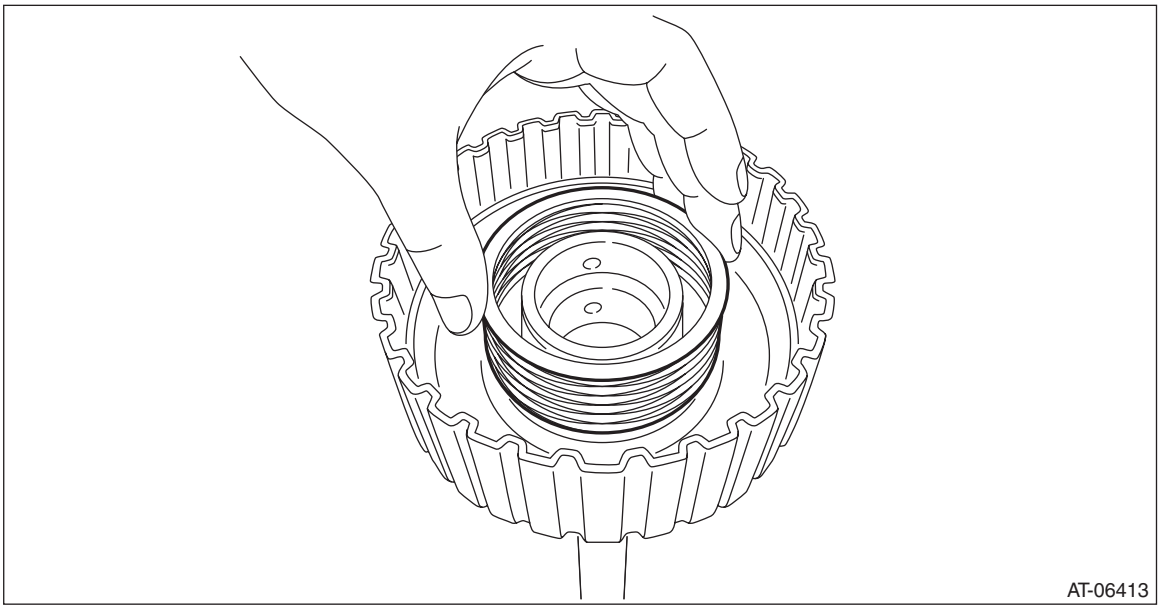

5) Remove the transfer clutch piston by blowing compressed air through transfer clutch assembly hole.

NOTE:
Plug the holes through which the compressed air is not blown.

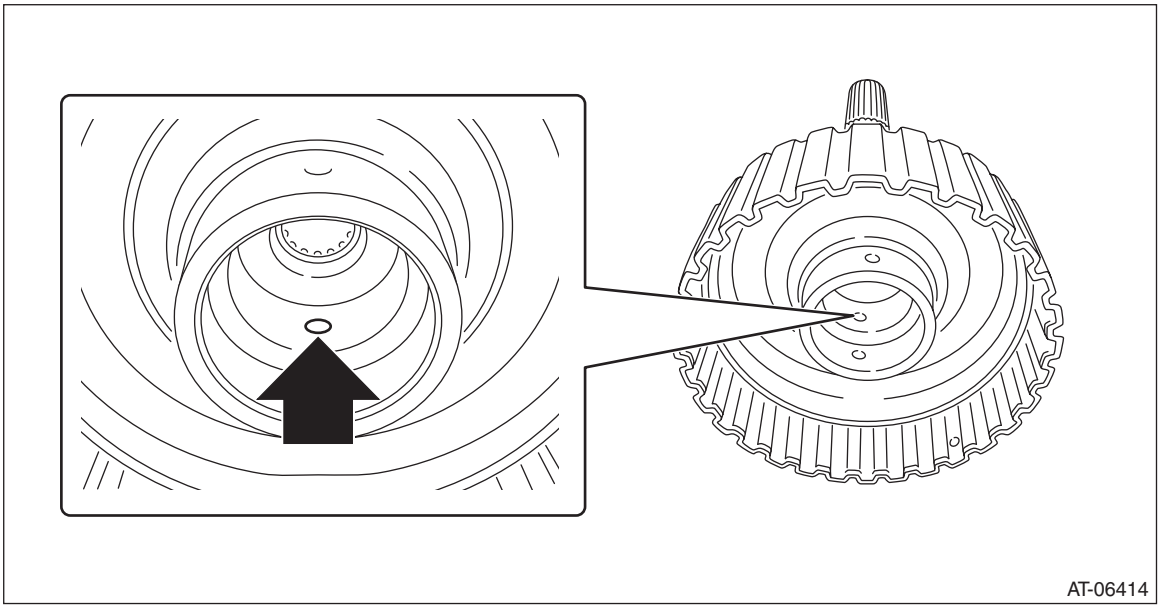

6) Remove the ball bearing using ST.
ST1 18767AA010 BEARING REMOVER
ST2 18723AA000 REMOVER

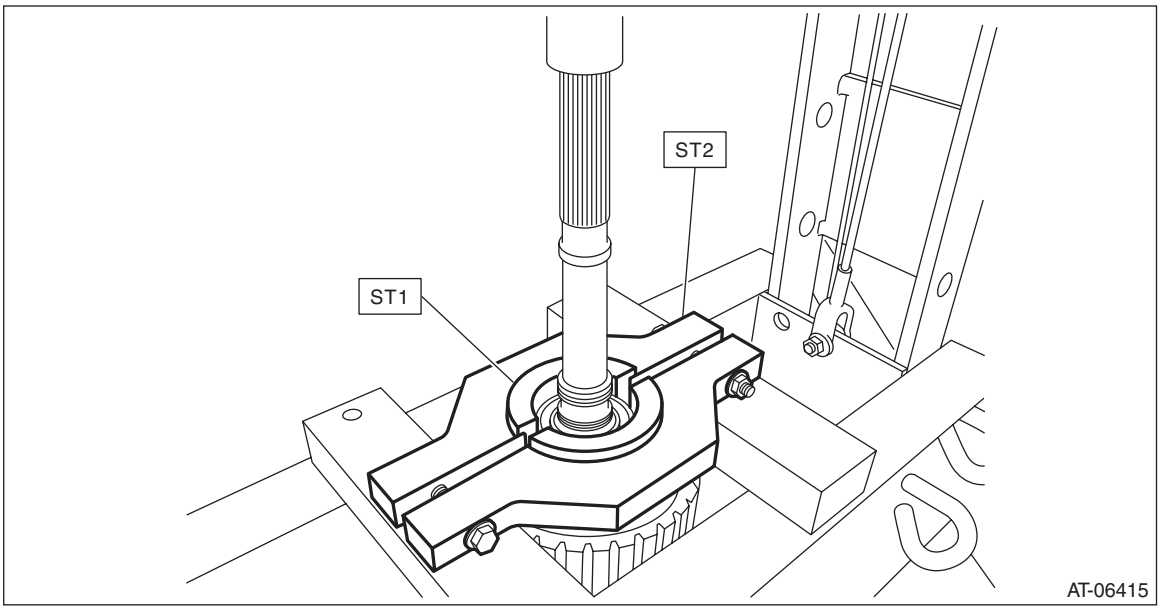

D: ASSEMBLY

1) Install the transfer clutch piston.

NOTE:
Apply CVTF to the transfer clutch piston lip.
2) Install the return spring.

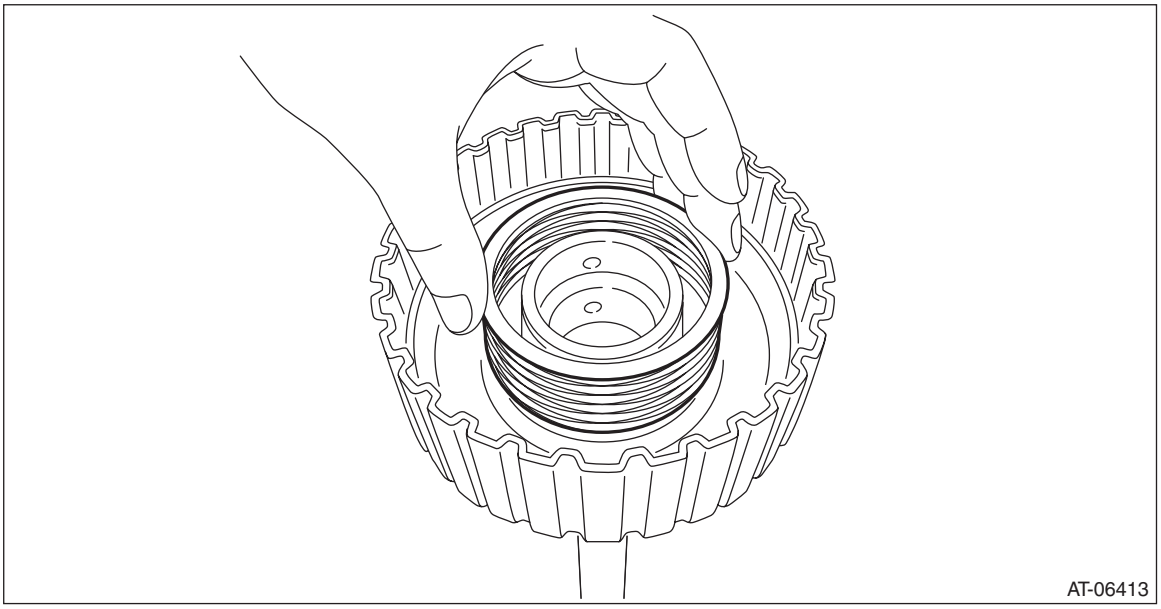

3) Install the transfer clutch piston seal.

NOTE:
Apply CVTF to the lip section of transfer clutch piston seal.

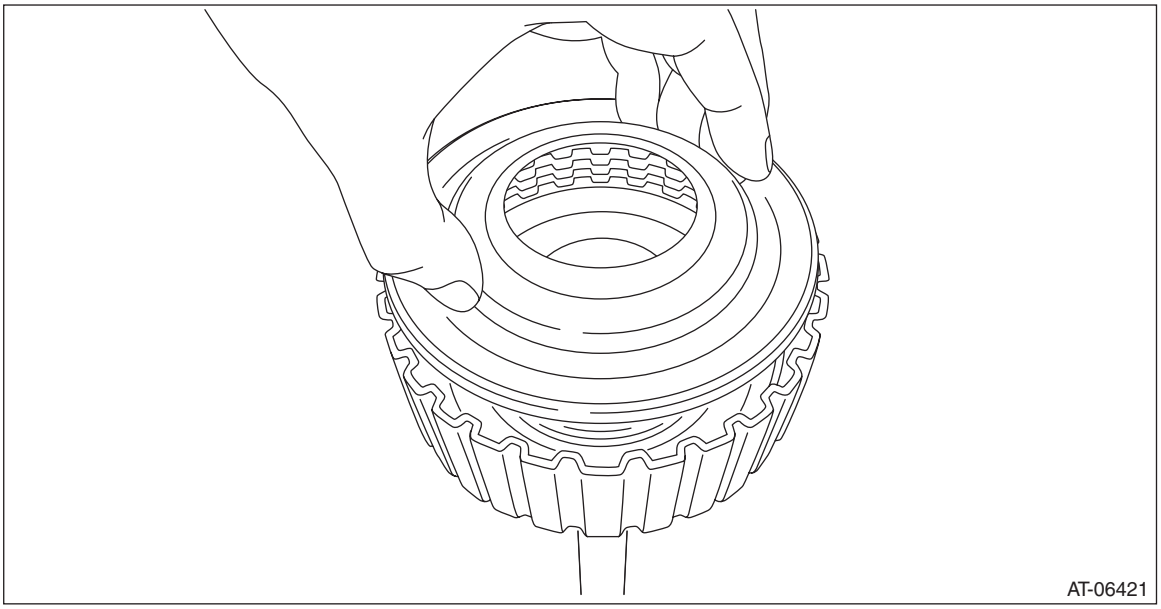

4) Compress the return spring using the ST to install the snap ring.
ST 18762AA000 COMPRESSOR SPECIAL TOOL (or 18762AA001)

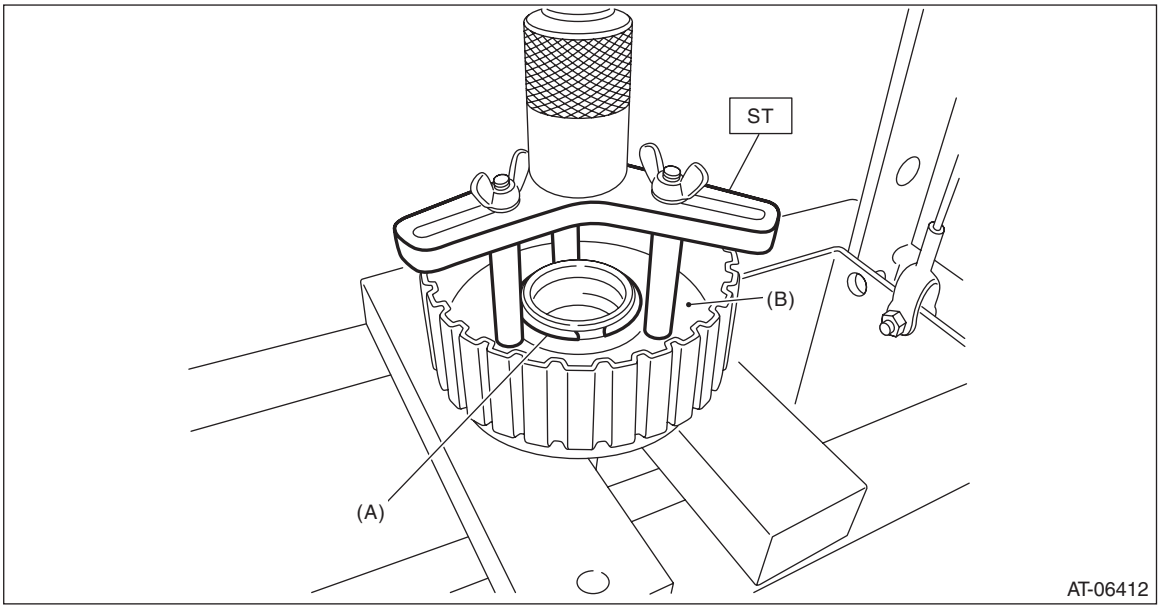

(A) Snap ring
(B) Transfer clutch piston seal

5) Install the pressure plate, driven plate, drive plate and snap ring.

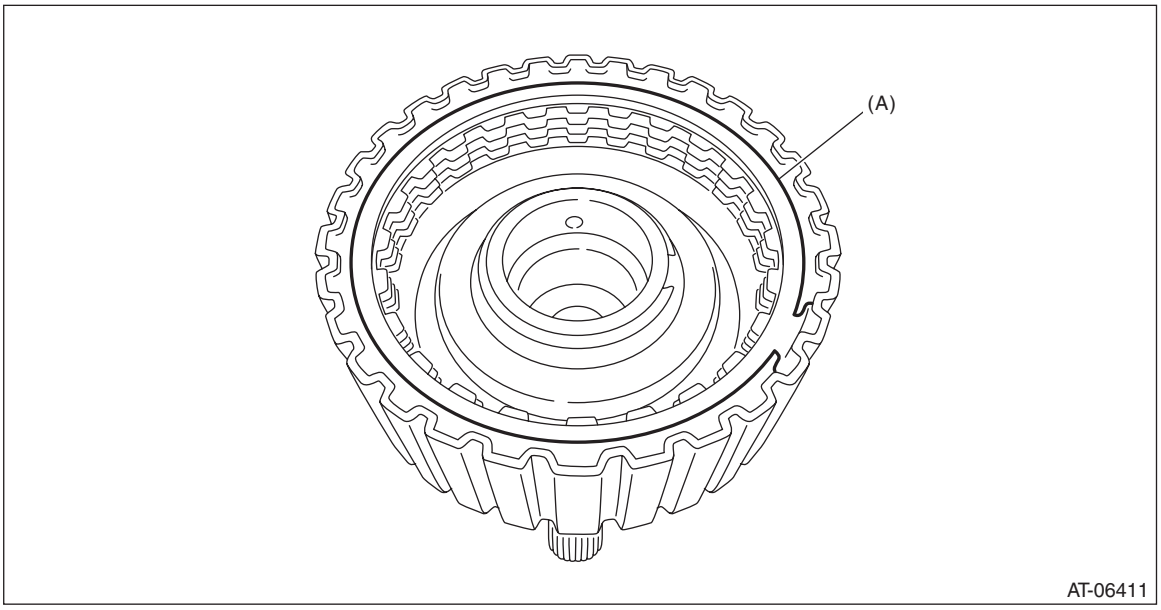

(A) Snap ring

6) Blow compressed air through transfer clutch assembly hole, and check the transfer clutch piston operation.

NOTE:
Plug the holes through which the compressed air is not blown.

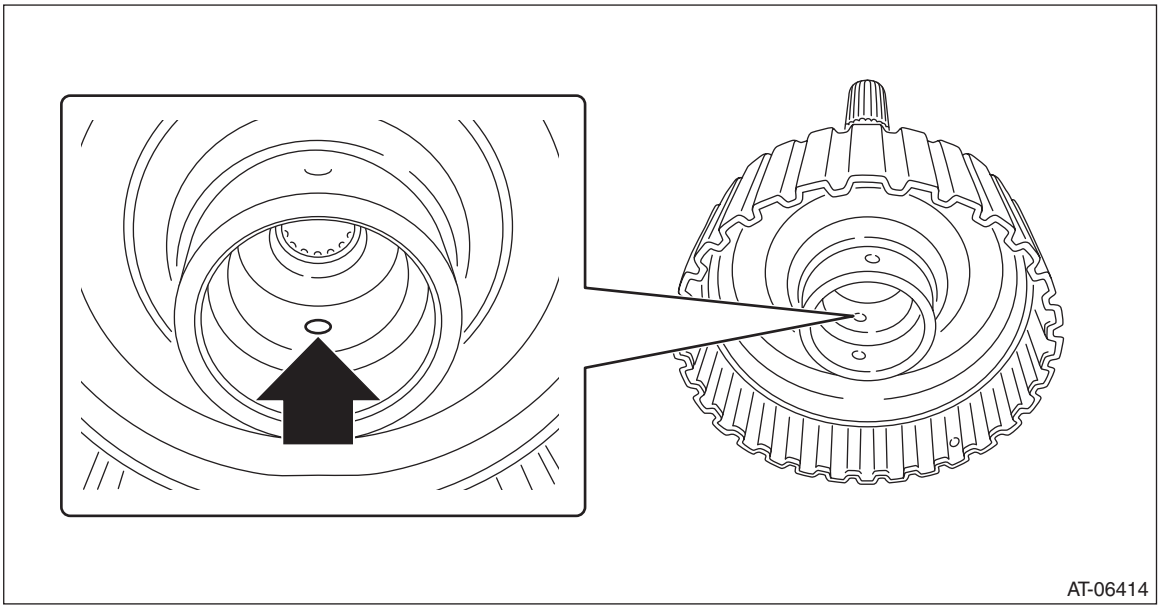

7) Before measuring clearance “A”, place same thickness shims on both sides to prevent the plate from tilting.

8) When clearance “A” exceeds the limit for use, replace the drive plate and driven plate as a set, and select and adjust the pressure plate within the initial specified value.

Initial standard:
0.7 — 1.1 mm (0.028 — 0.043 in)

Limit thickness:
1.3 mm (0.051 in)

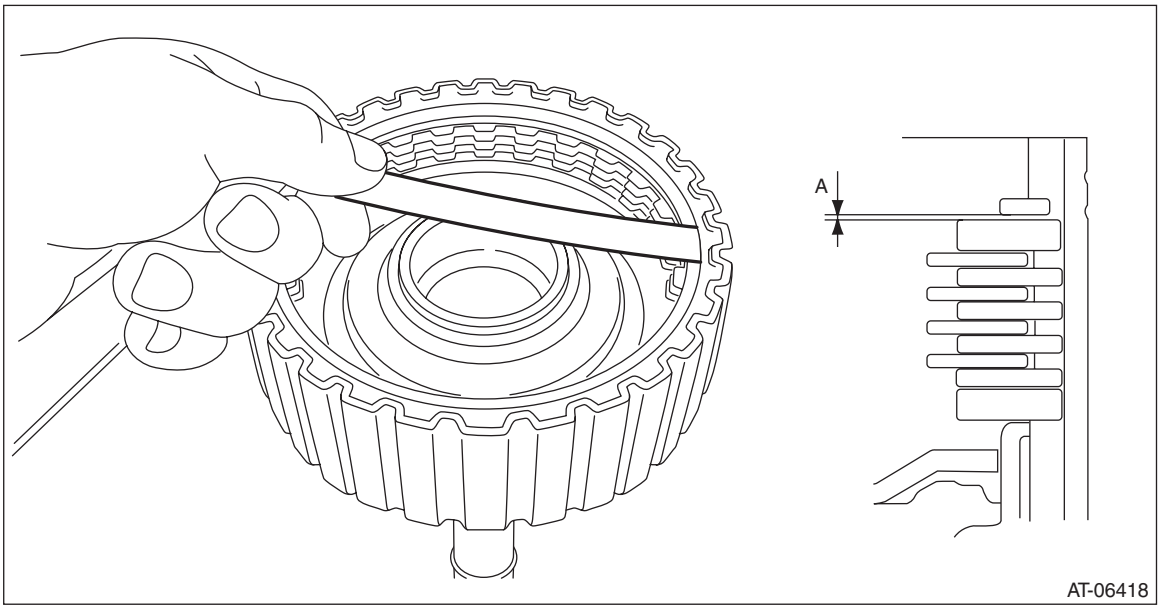

Pressure plate	
Part No.	Thickness mm (in)
31593AA151	3.3 (0.130)
31593AA161	3.7 (0.146)

9) Recheck the clearance. <Ref. to CVT(TR580)-176, INSPECTION, Transfer Clutch.>
10) Using the ST, install the ball bearing.

NOTE:
Use a new ball bearing.
ST1 398177700 INSTALLER
ST2 499277000 INSTALLER

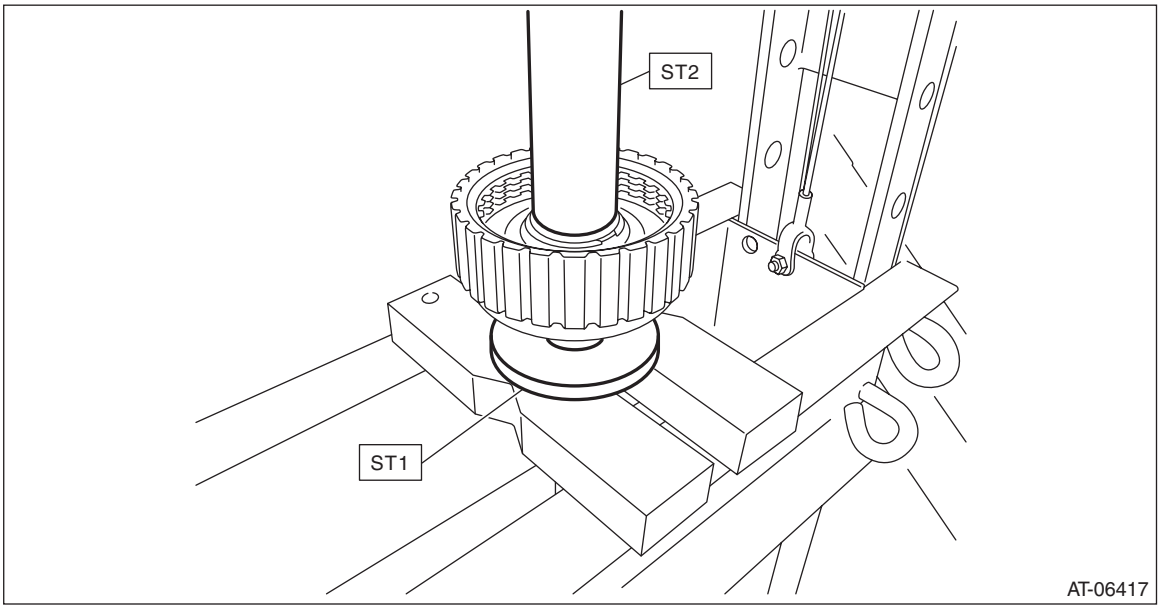

E: INSPECTION

- Inspect the drive plate facing for wear and damage.
- Driven plate for discoloration (burned color)
- Make sure the snap ring is not worn and the return spring has no permanent distortion, damage, or deformation.
- Check the lip seal for damage.
- Inspect the extension end play, and adjust it to within the standard value. <Ref. to CVT(TR580)-177, ADJUSTMENT, Transfer Clutch.>

1) Before measuring clearance “A” between snap ring and driven plate, place same thickness shims on both sides to prevent the plate from tilting.
2) When clearance “A” exceeds the limit for use, replace the drive plate and driven plate as a set, and select the pressure plate within the initial specified value.

Initial standard:
0.7 — 1.1 mm (0.028 — 0.043 in)

Limit thickness:
1.3 mm (0.051 in)

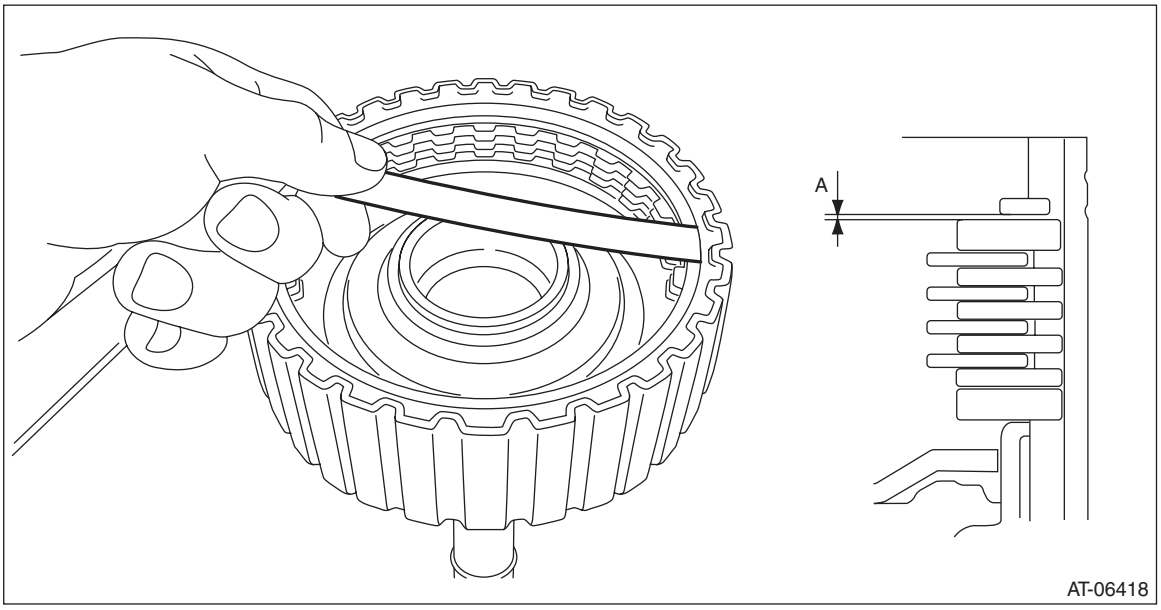

3) Check for tight corner braking phenomenon when the vehicle is moved forward with the steering fully turned. If tight corner braking occurs, perform the following procedures.
(1) With the steering wheel held at fully turned position, drive the vehicle in “D” range and with vehicle speed at approx. 5 km/h (3 MPH) in both clockwise and counterclockwise directions for approx. ten times each, while repeating acceleration and braking intermittently.
(2) If the tight corner braking phenomenon still persists, drive the vehicle again in a circle for several laps.

F: ADJUSTMENT

1) Install the transfer clutch assembly to the extension case with the transfer driven gear shims and thrust bearings removed.

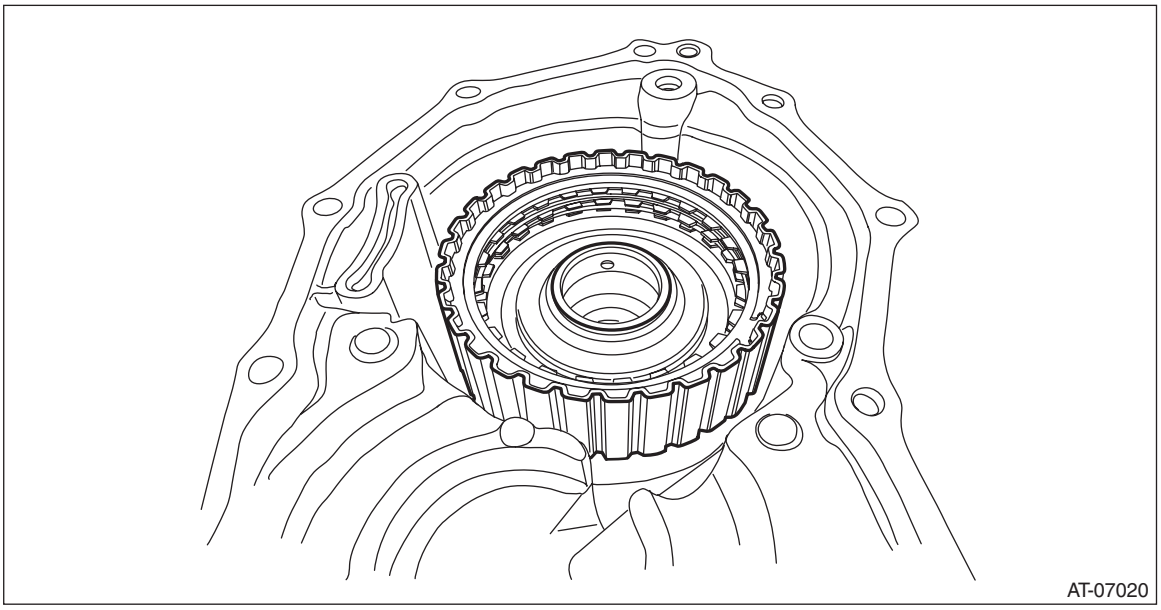

2) Install the thrust bearing to the transfer driven gear.

NOTE:
Make sure to install in the right direction.

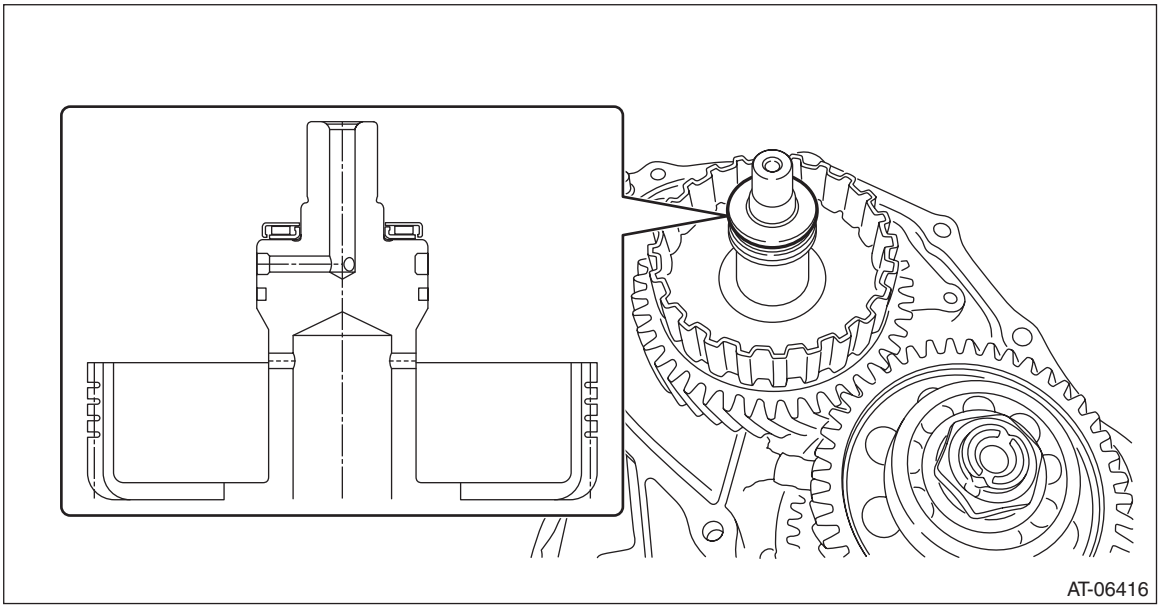

3) Using the ST, measure the height “A” from the ST end face to the thrust bearing catch surface of the transfer clutch assembly.
ST 499575500 GAUGE

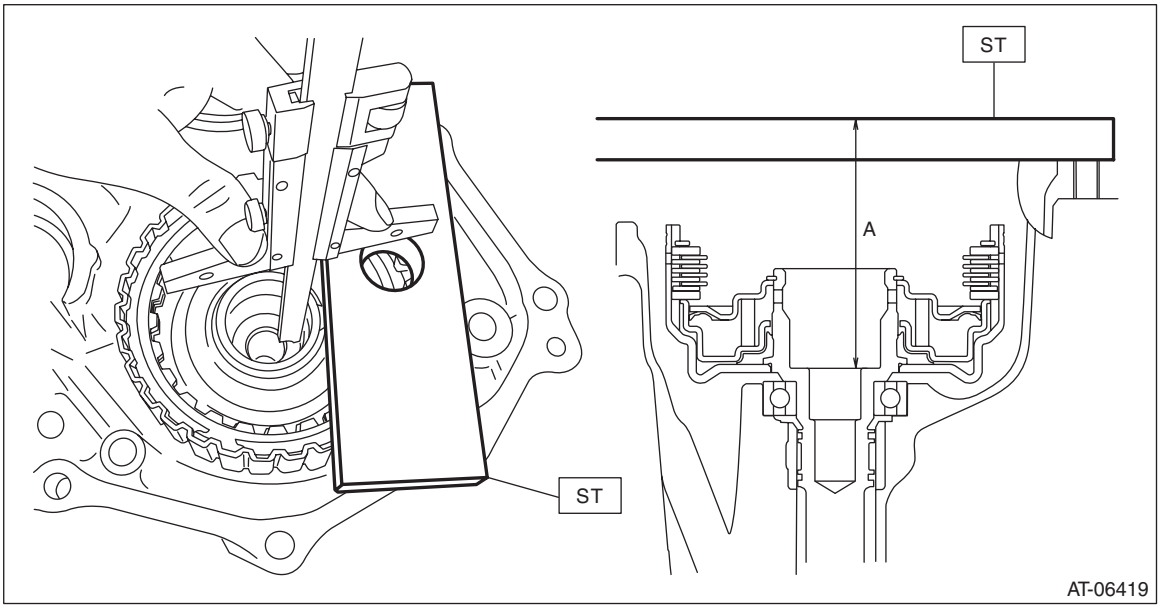

4) Using the ST, measure the height “B” from the transmission case mating surface to the end of ST.
ST 499575500 GAUGE

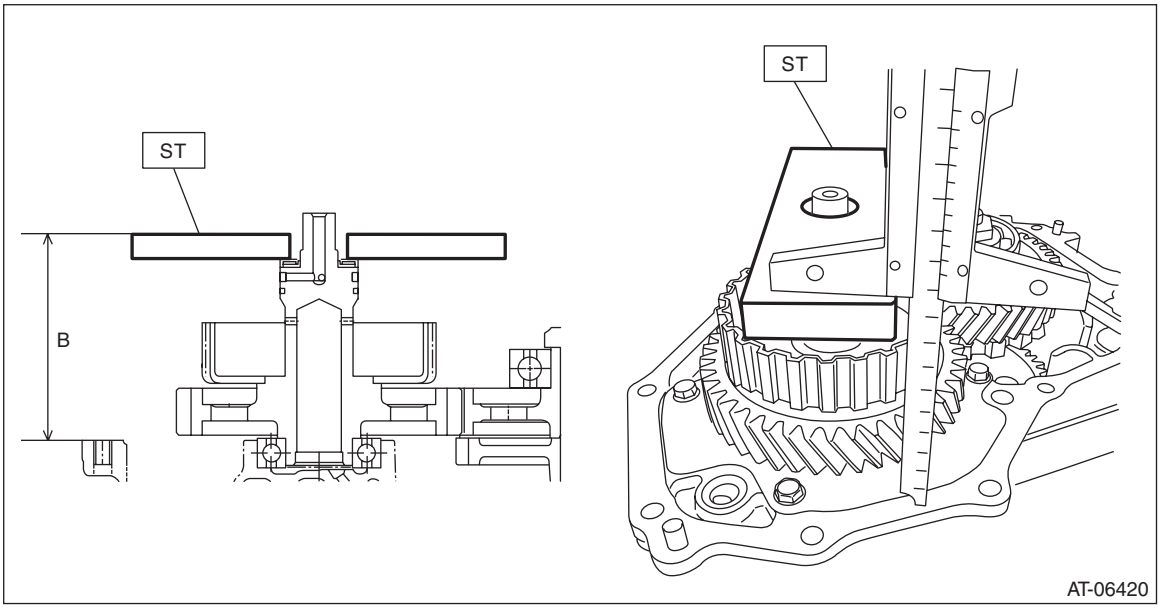

5) Obtain the thickness of transfer driven gear shim using the following formula to select one to three transfer driven gear shims.
T (mm) = A – B – (0.05 — 0.25)
[T (in) = A – B – (0.002 — 0.01)]
T: Transfer driven gear shim thickness
A: Height from the ST end face to the transfer clutch assembly thrust bearing catch surface
B: Height from the mating surface of the transmission case to the end of the ST
0.05 — 0.25 mm (0.002 — 0.01 in): Clearance

Transfer driven gear shim	
Part No.	Thickness mm (in)
33280AA030	0.3 (0.012)
33280AA040	0.4 (0.016)
33280AA050	0.5 (0.020)

30.Transfer Driven Gear

A: REMOVAL

1) Remove the transmission assembly from the vehicle. <Ref. to CVT(TR580)-56, REMOVAL, Automatic Transmission Assembly.>
2) Remove the extension case. <Ref. to CVT(TR580)-162, REMOVAL, Extension Case.>
3) Remove the transfer clutch assembly. <Ref. to CVT(TR580)-166, REMOVAL, Transfer Clutch.>
4) Remove the transfer driven gear assembly.

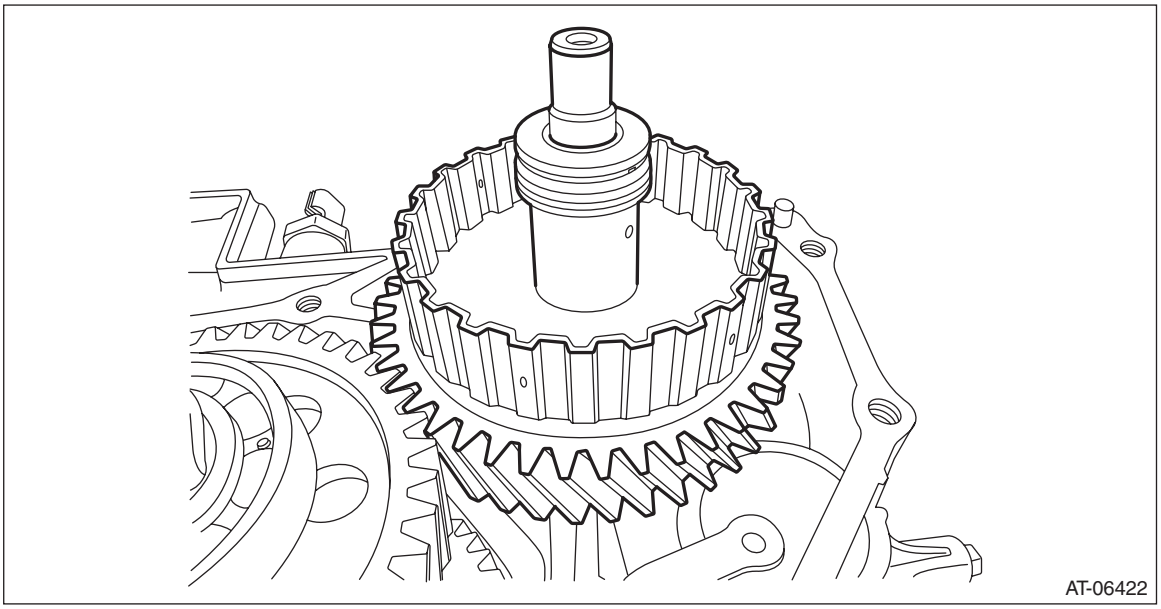
AT-06422

5) Remove the seal ring from the transfer driven gear assembly.

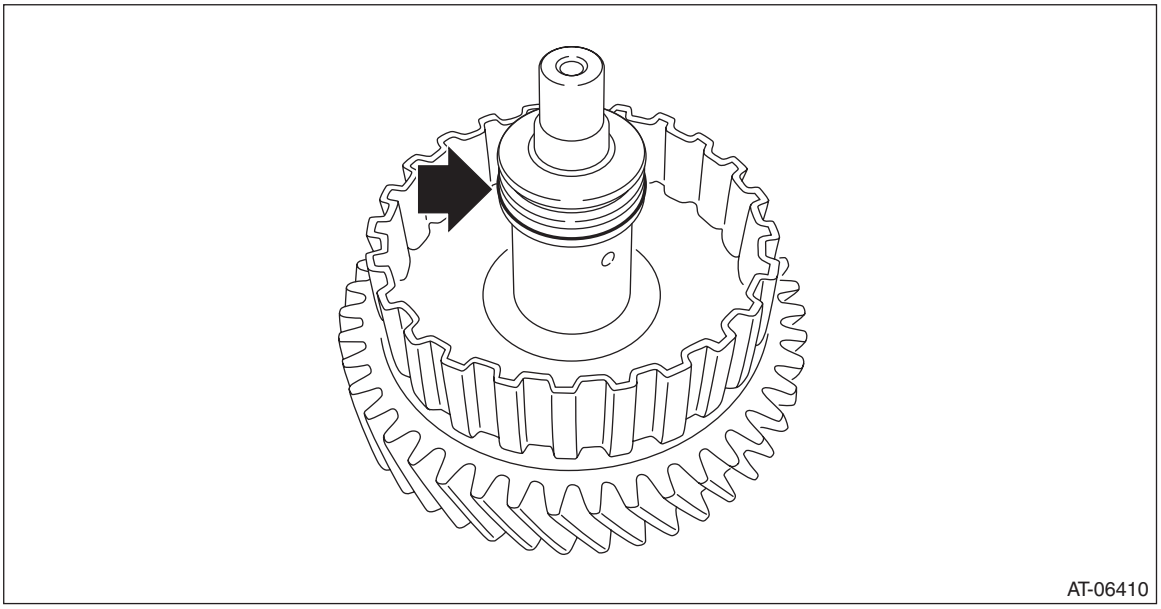
AT-06410

B: INSTALLATION

1) Install the transfer driven gear assembly.

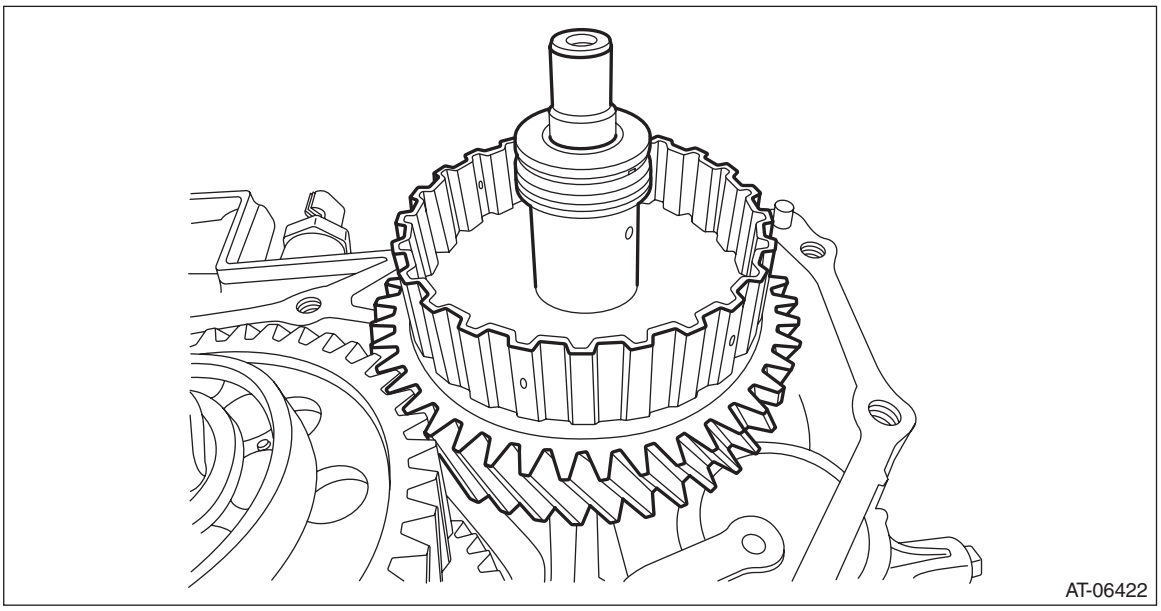

2) Install the transfer clutch assembly. <Ref. to CVT(TR580)-168, INSTALLATION, Transfer Clutch.>
3) Select the transfer driven gear shim. <Ref. to CVT(TR580)-177, ADJUSTMENT, Transfer Clutch.>
4) Install the extension case. <Ref. to CVT(TR580)-163, INSTALLATION, Extension Case.>
5) Install the transmission assembly to the vehicle. <Ref. to CVT(TR580)-68, INSTALLATION, Automatic Transmission Assembly.>

C: DISASSEMBLY

1) Remove the ball bearing using ST.
ST1 498077400 BEARING REMOVER
ST2 899864100 REMOVER

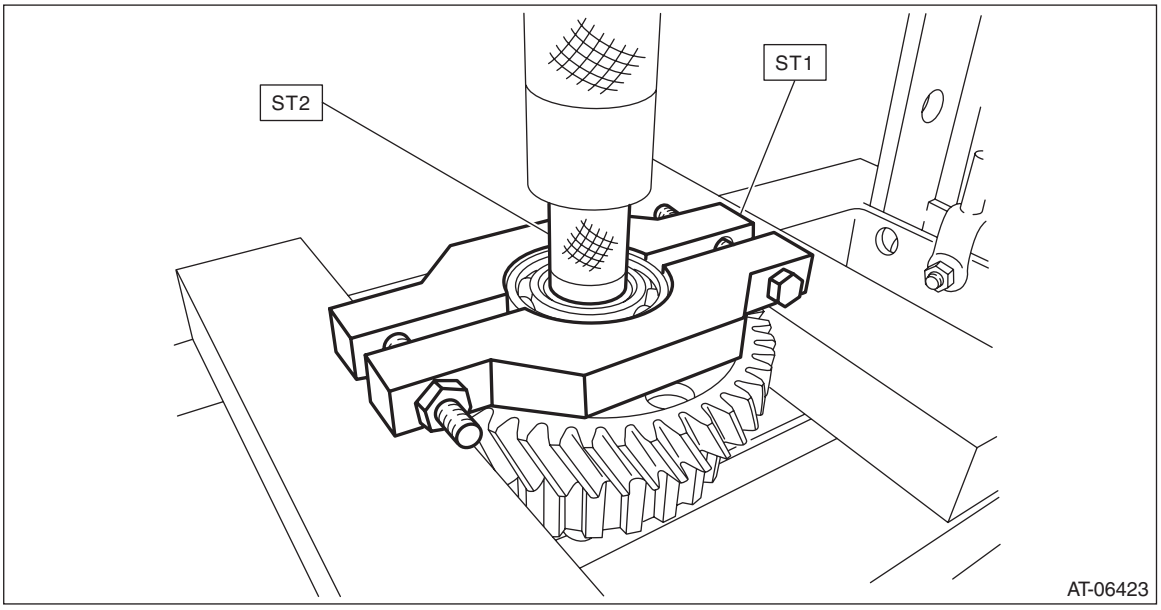

D: ASSEMBLY

1) Using the ST, install the ball bearing.
ST 899580100 INSTALLER

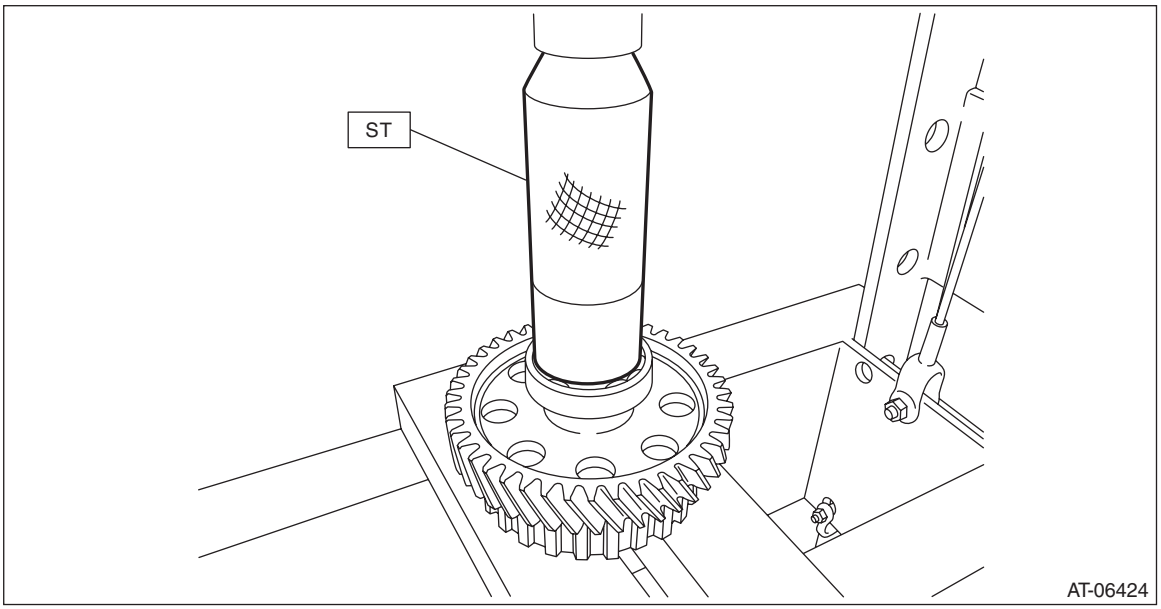

E: INSPECTION

- Check the ball bearing for smooth rotation.
- Check the ball bearing for excessive looseness.
- Check the transfer driven gear for breakage or damage.

F: ADJUSTMENT

NOTE:
When the transfer driven gear or bearing is replaced, select the transfer driven gear shim. <Ref. to CVT(TR580)-177, ADJUSTMENT, Transfer Clutch.>

31.Parking Pawl

A: REMOVAL

1) Remove the transmission assembly from the vehicle. <Ref. to CVT(TR580)-56, REMOVAL, Automatic Transmission Assembly.>
2) Shift the range select lever to “N” range.
3) Remove the extension case. <Ref. to CVT(TR580)-162, REMOVAL, Extension Case.>
4) Remove the parking pawl shaft, return spring and parking pawl.

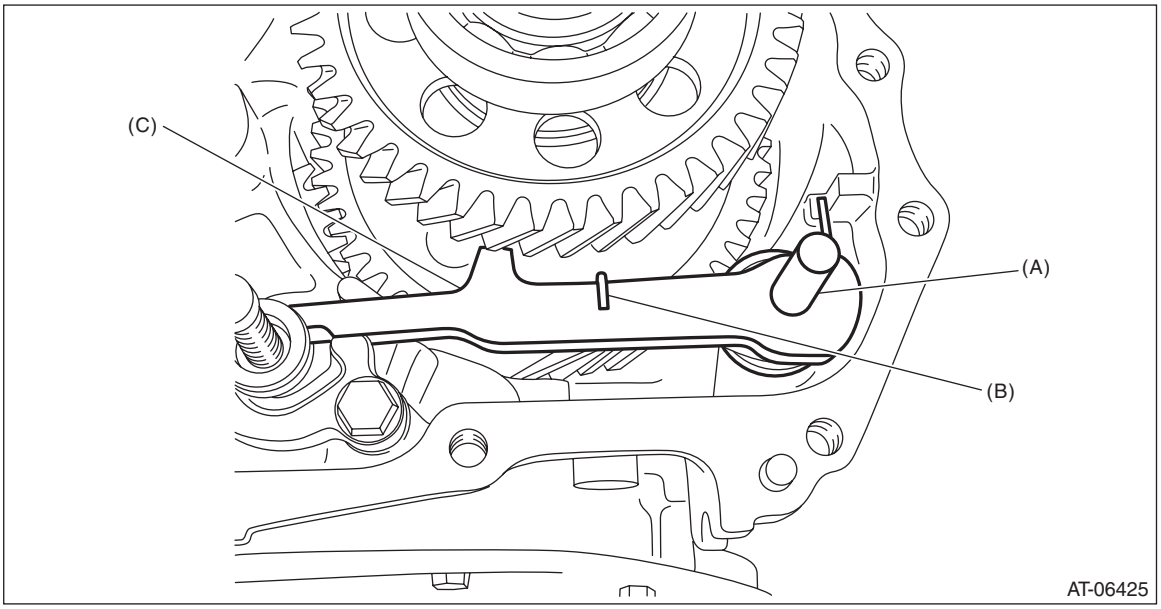

(A) Parking pawl shaft
(B) Return spring
(C) Parking pawl

B: INSTALLATION

1) Set the range select lever to the “N” range.
2) Install the parking pawl shaft, return spring and parking pawl.

NOTE:
Make sure that the end of return spring sticks out of parking pawl as shown in (a). Make sure that the other end contacts the rib of transmission case as shown in (b).

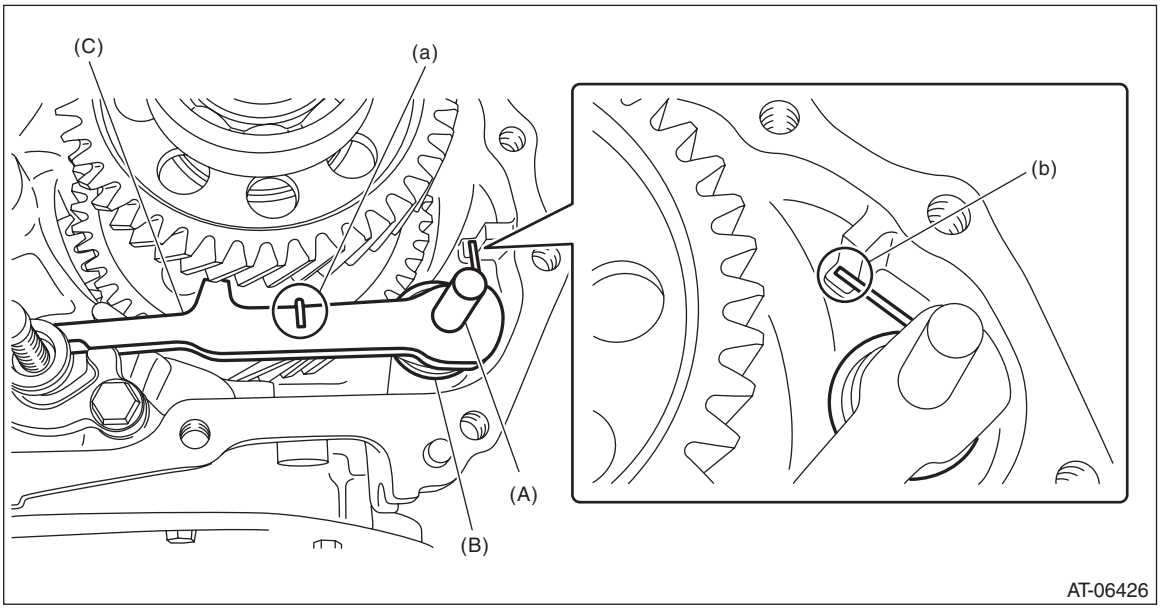

(A) Parking pawl shaft
(B) Return spring
(C) Parking pawl

3) Install the extension case. <Ref. to CVT(TR580)-163, INSTALLATION, Extension Case.>
4) Install the transmission assembly to the vehicle. <Ref. to CVT(TR580)-68, INSTALLATION, Automatic Transmission Assembly.>

C: INSPECTION

- Check the parking pawl for breakage or damage.
- Check for worn, broken and/or damaged return spring.

32.Reduction Driven Gear

A: REMOVAL

1) Remove the transmission assembly from the vehicle. <Ref. to CVT(TR580)-56, REMOVAL, Automatic Transmission Assembly.>
2) Remove the extension case. <Ref. to CVT(TR580)-162, REMOVAL, Extension Case.>
3) Remove the transfer clutch assembly. <Ref. to CVT(TR580)-166, REMOVAL, Transfer Clutch.>
4) Remove the transfer driven gear assembly. <Ref. to CVT(TR580)-180, REMOVAL, Transfer Driven Gear.>
5) Remove the parking pawl. <Ref. to CVT(TR580)-183, REMOVAL, Parking Pawl.>
6) Remove the reduction driven gear assembly.

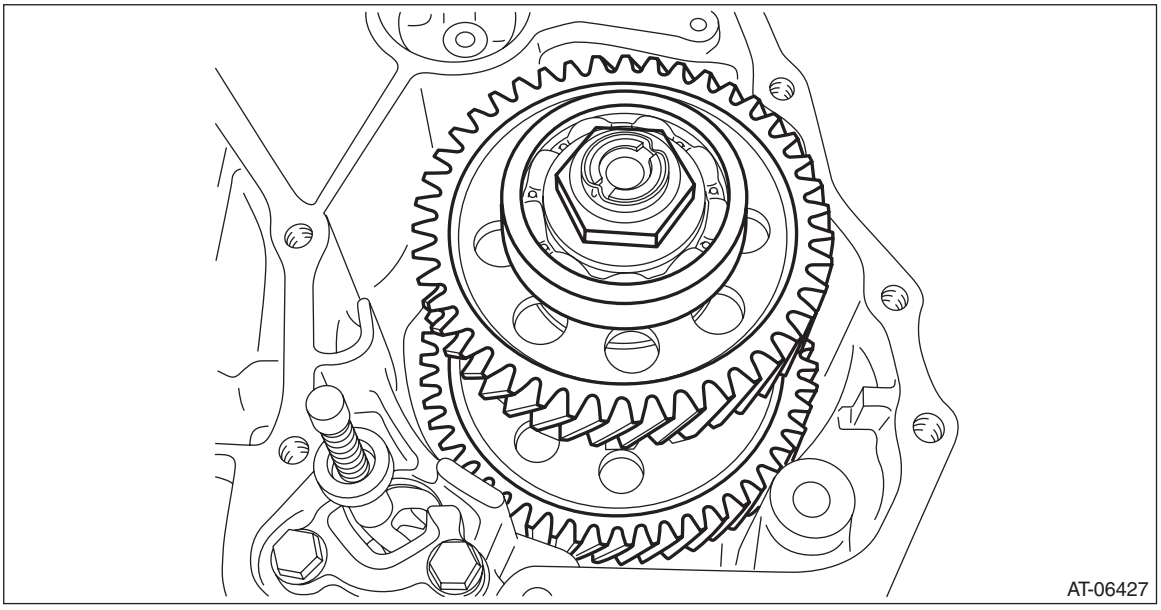

B: INSTALLATION

1) Install the reduction driven gear assembly.

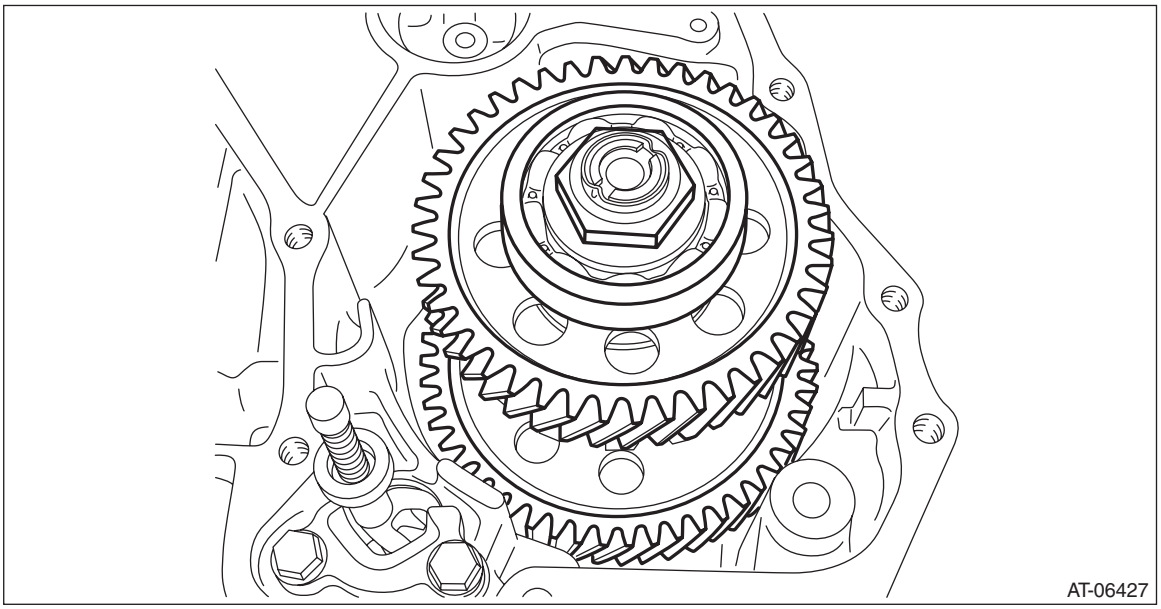

2) Select the transfer drive gear shim. <Ref. to CVT(TR580)-215, ADJUSTMENT, Reduction Drive Gear.>
3) Install the parking pawl. <Ref. to CVT(TR580)-184, INSTALLATION, Parking Pawl.>
4) Attach the selected transfer drive gear shim to extension case with vaseline.

5) Install the transfer driven gear assembly. <Ref. to CVT(TR580)-181, INSTALLATION, Transfer Driven Gear.>
6) Install the transfer clutch assembly. <Ref. to CVT(TR580)-168, INSTALLATION, Transfer Clutch.>
7) Install the extension case. <Ref. to CVT(TR580)-163, INSTALLATION, Extension Case.>
8) Install the transmission assembly to the vehicle. <Ref. to CVT(TR580)-68, INSTALLATION, Automatic Transmission Assembly.>

C: DISASSEMBLY

1) Flatten the tab of the lock nut.
2) Using the ST, counter the rotation of the reduction driven gear assembly, and remove the lock nut.
ST1 18355AA000 PULLEY WRENCH
ST2 18334AA000 PIN SET
ST3 499987003 SOCKET WRENCH (35)

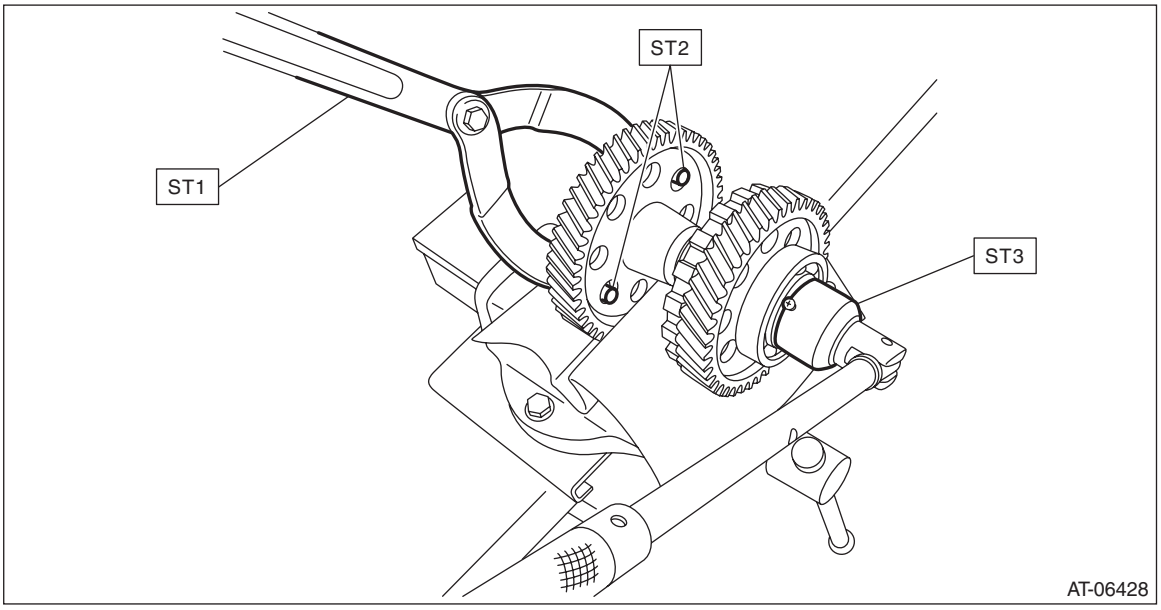

3) Remove the ball bearing using ST.
ST1 499757002 INSTALLER
ST2 498077300 REMOVER

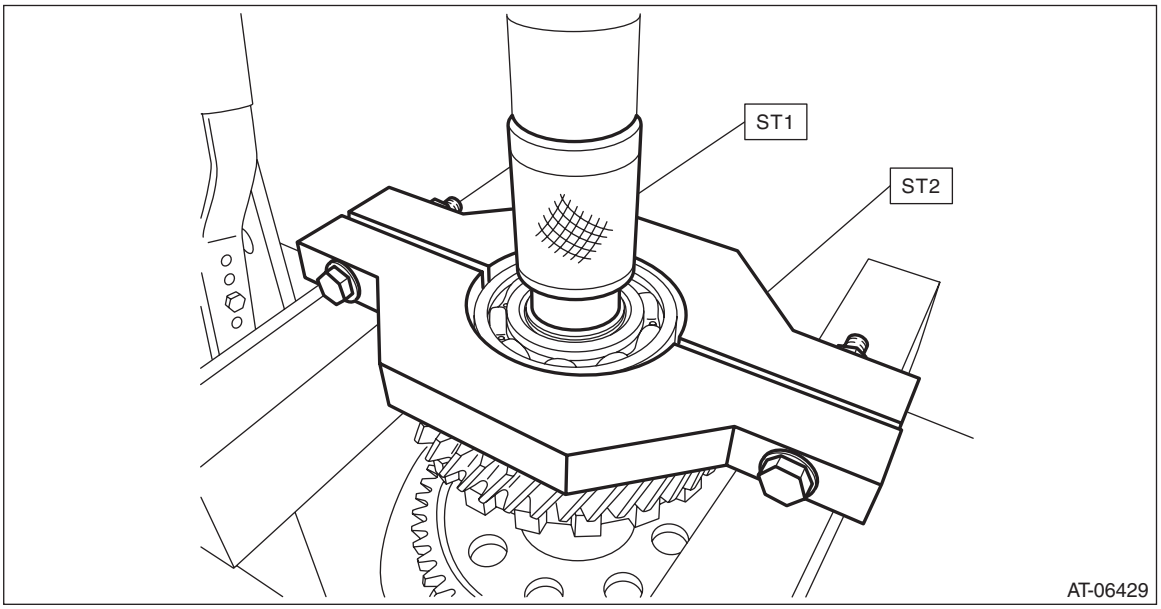

4) Using the ST, remove the parking gear and transfer drive gear.
ST 899864100 REMOVER

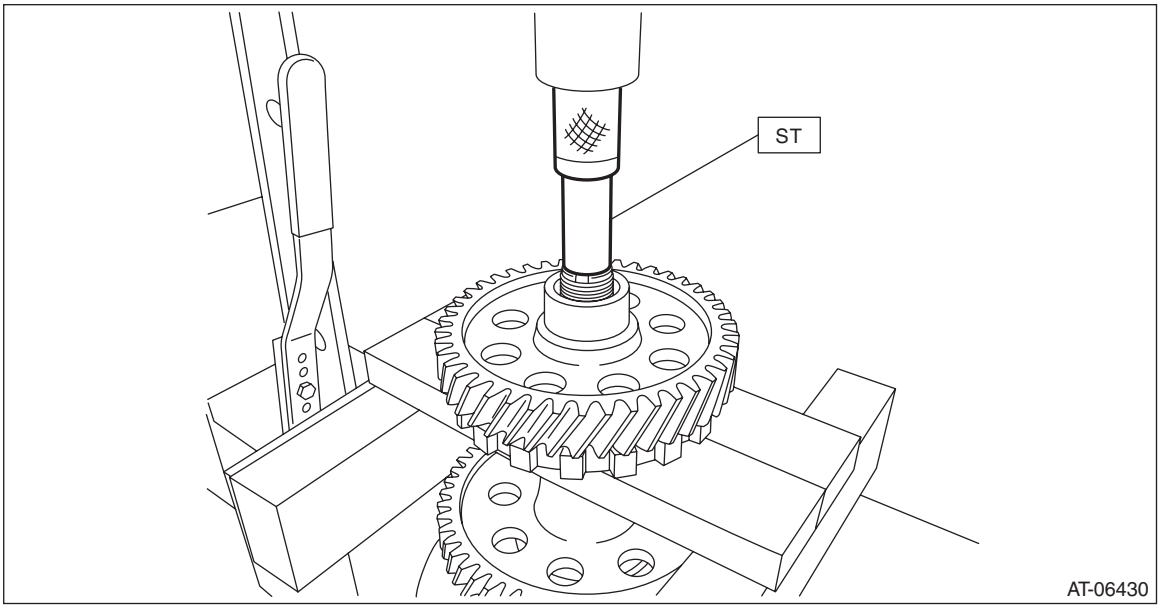

5) Remove the collar.

NOTE:
When collar has been removed, do not reuse the reduction driven gear and/or shaft, and replace it with reduction driven gear COMPL.

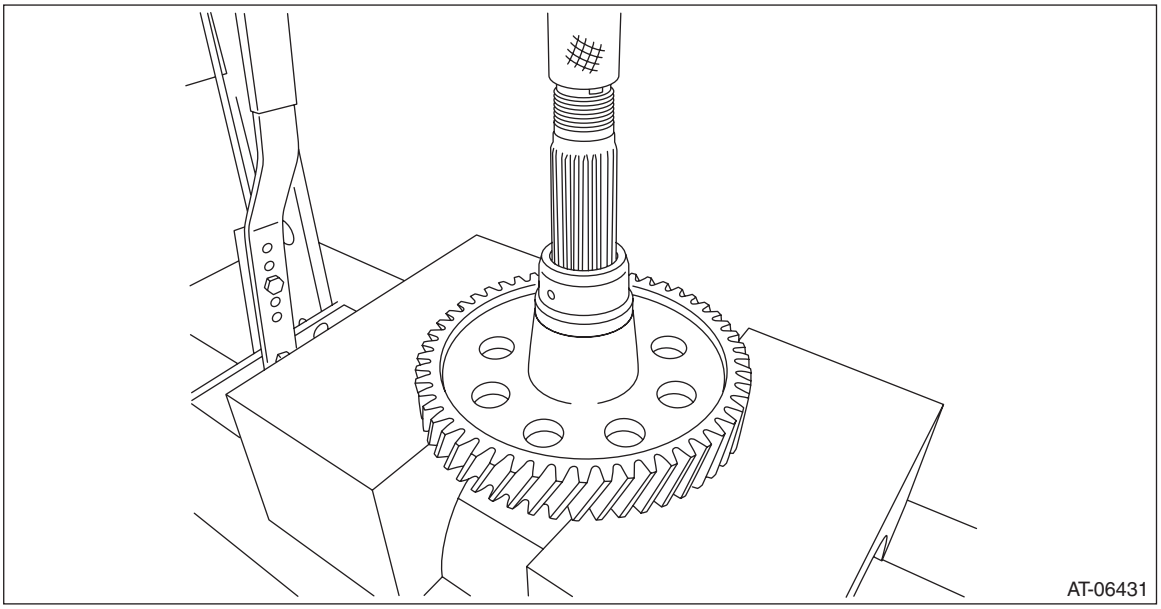

D: ASSEMBLY

1) Using the ST, attach the collar.

NOTE:
- Attach the collar in the correct direction.
- Use a new reduction driven gear COMPL.

ST 899580100 INSTALLER

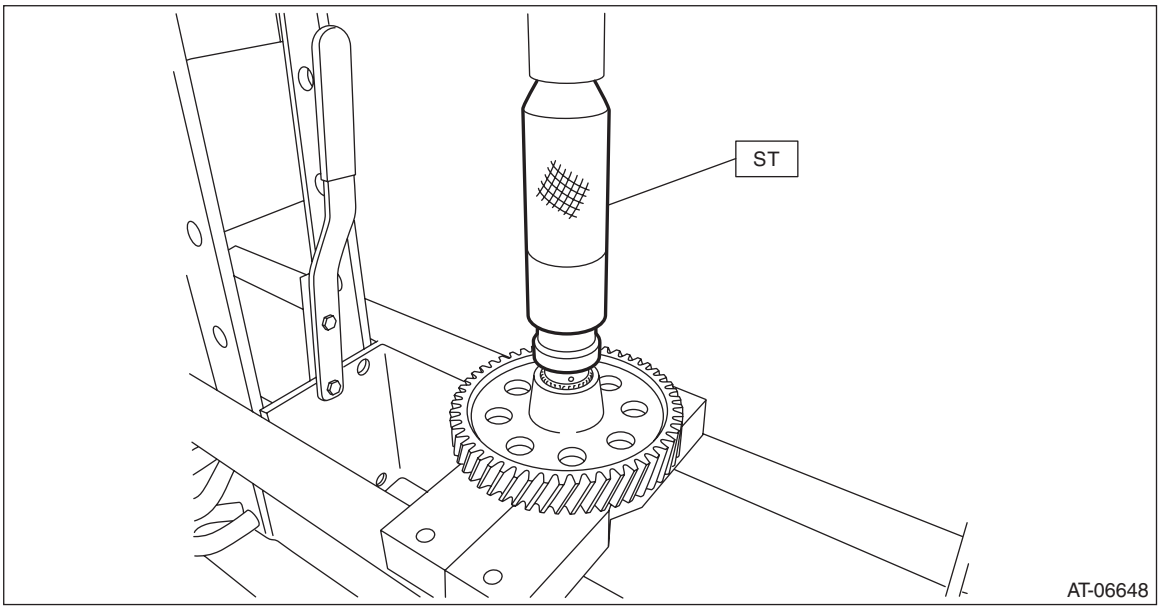

2) Using the ST, install the parking gear.

ST 499757002 INSTALLER

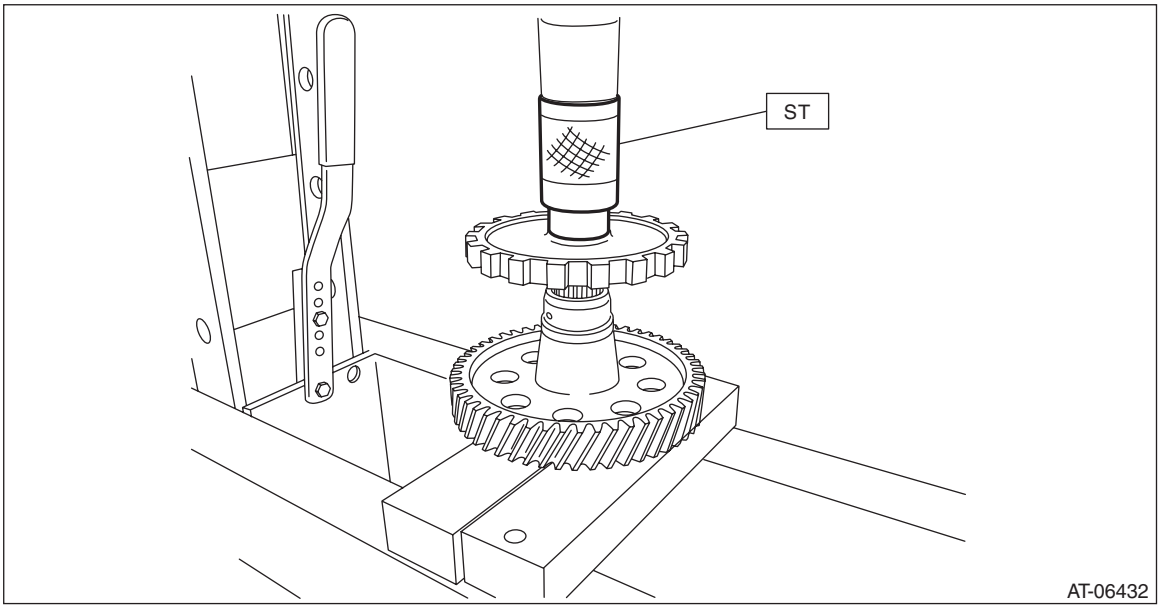

3) Using the ST, install the transfer drive gear.
ST 499757002 INSTALLER

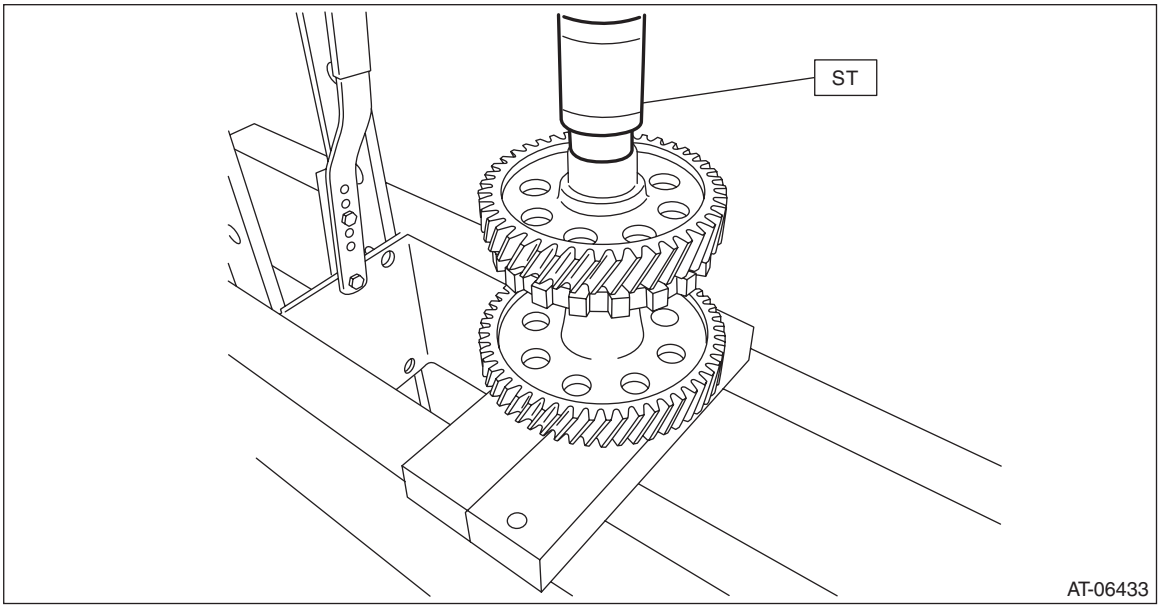

4) Using the ST, install the ball bearing.

NOTE:
Use a new ball bearing.
ST 499277100 BUSHING 1-2 INSTALLER

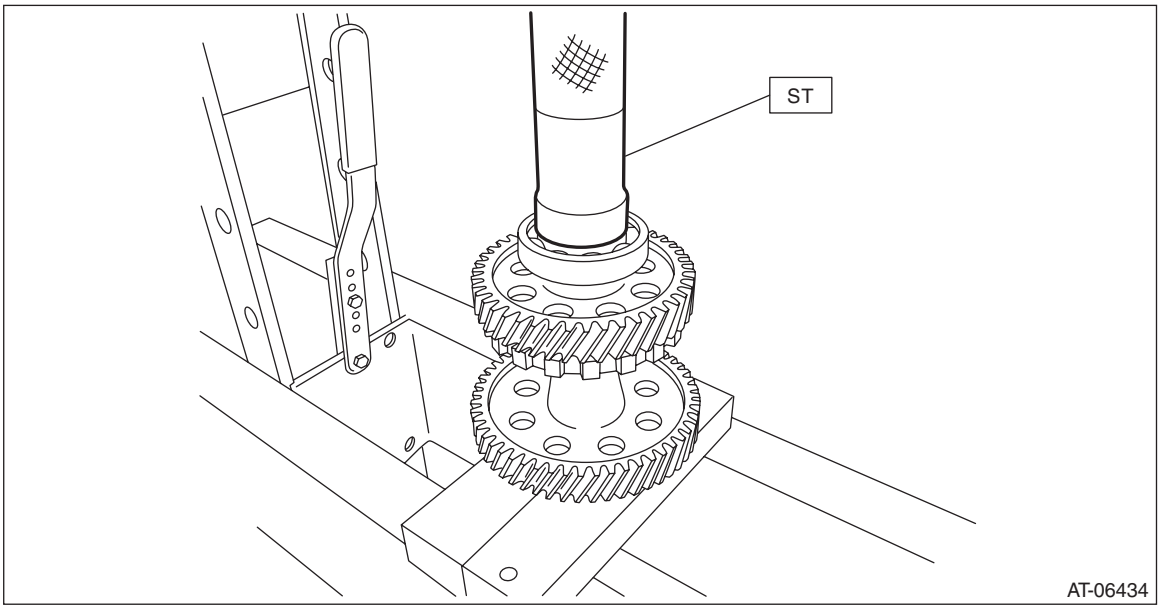

5) Using the ST, counter the rotation of the reduction drive gear assembly, and install the lock nut.

NOTE:
Use a new lock nut.
ST1 18355AA000 PULLEY WRENCH
ST2 18334AA000 PIN SET
ST3 499987003 SOCKET WRENCH (35)

Tightening torque:
95 N·m (9.7 kgf-m, 70.1 ft-lb)

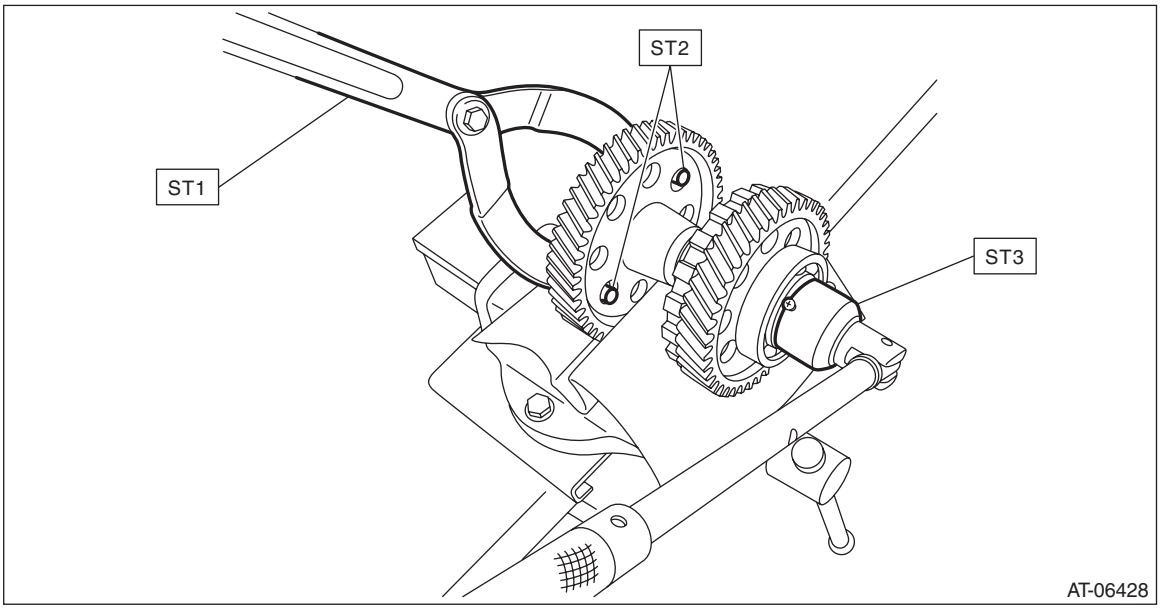

6) Crimp the lock nut in 4 locations.

CAUTION:
Do not allow the lock nut to be cracked during crimping operation.

E: INSPECTION

- Check the ball bearing for smooth rotation.
- Check the ball bearing for excessive looseness.
- Make sure each gear is not broken or damaged.

F: ADJUSTMENT

1) Measure the height “A” from the ST upper face to the ball bearing catch surface.
ST 499575600 GAUGE

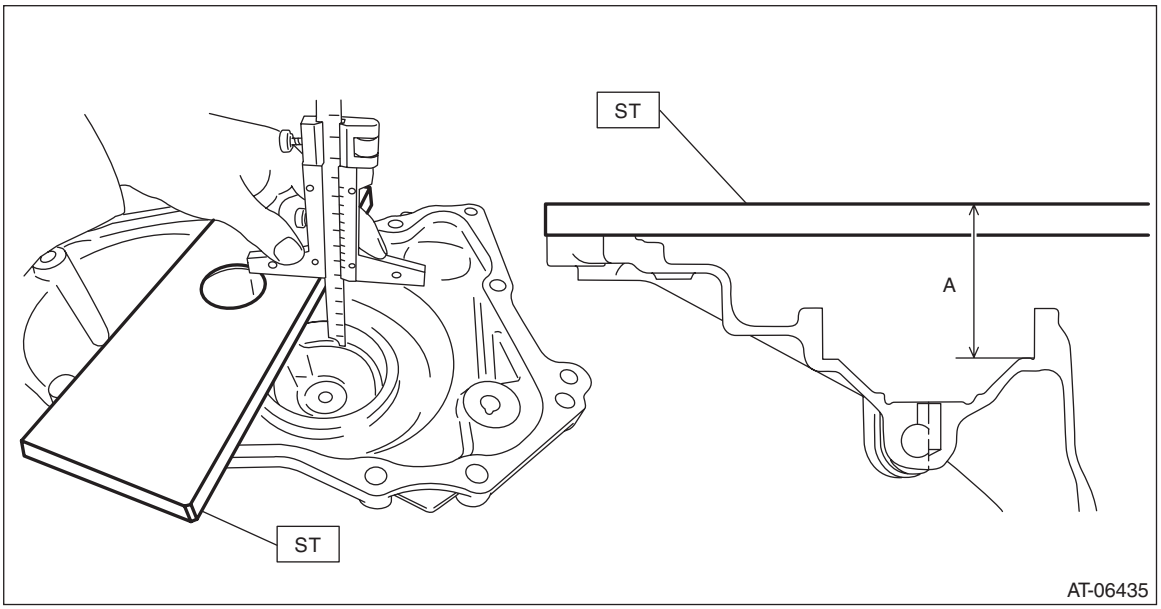

2) Measure the height “B” from the ST to the mating surface of the transmission case.
ST 499575600 GAUGE

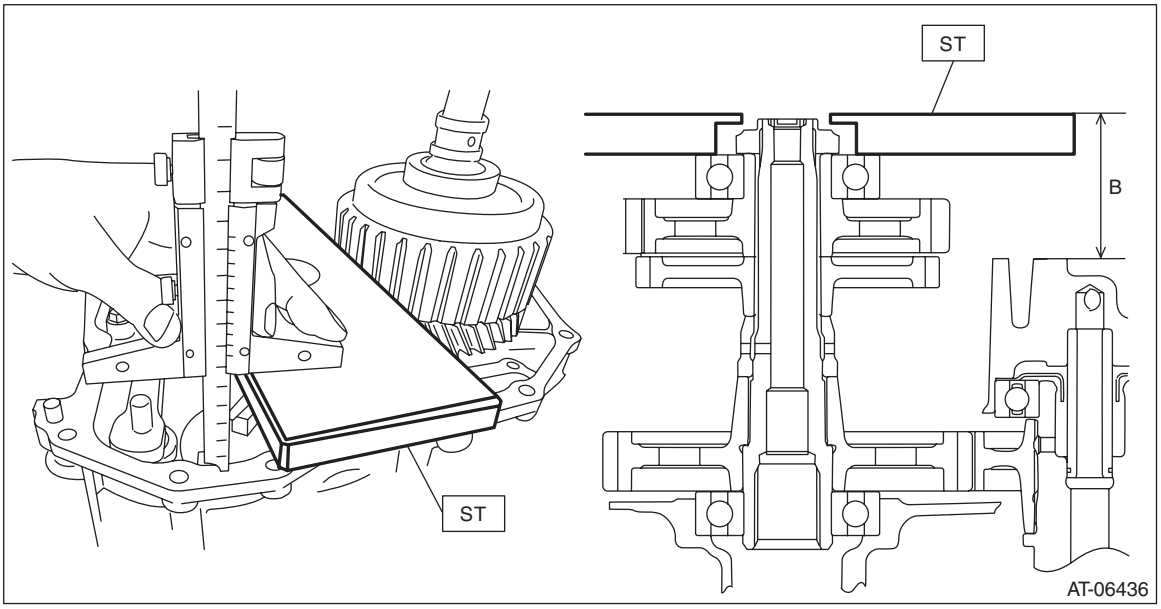

3) Obtain the thickness of transfer drive gear shim using the following formula to select one to three transfer drive gear shims.
T (mm) = A – B – (0.05 — 0.25)
[T (in) = A – B – (0.002 — 0.01)]
T: Shim thickness
A: Height from the ST upper face to the ball bearing catch surface
B: Height from ST to transmission case mating surface
0.05 — 0.25 mm (0.002 — 0.01 in): Clearance

Transfer drive gear shim	
Part No.	Thickness mm (in)
33279AA090	0.3 (0.012)
33279AA100	0.4 (0.016)
33279AA110	0.5 (0.020)

33.Transmission Control Device

A: REMOVAL

1) Remove the transmission assembly from the vehicle. <Ref. to CVT(TR580)-56, REMOVAL, Automatic Transmission Assembly.>
2) Remove the inhibitor switch. <Ref. to CVT(TR580)-95, REMOVAL, Inhibitor Switch.>
3) Remove the oil pan and oil strainer. <Ref. to CVT(TR580)-108, REMOVAL, Oil Pan and Strainer.>
4) Shift the manual plate to “N” range, and remove the spring pin.

NOTE:
Prevent the spring pin from dropping in the transmission using paper towel etc.

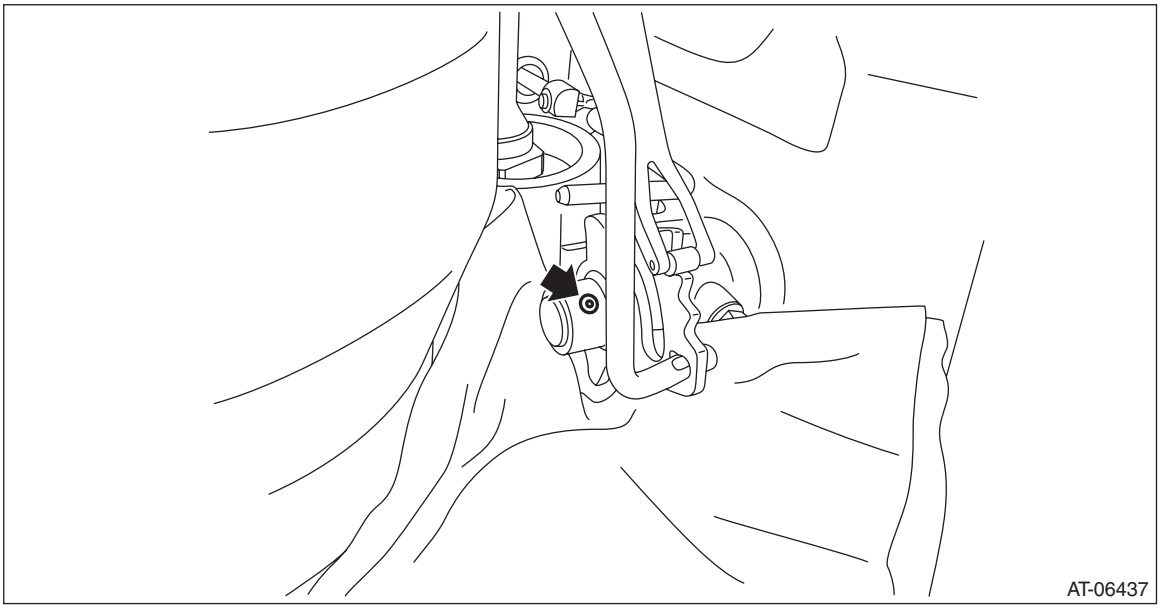

5) Remove the detent spring.

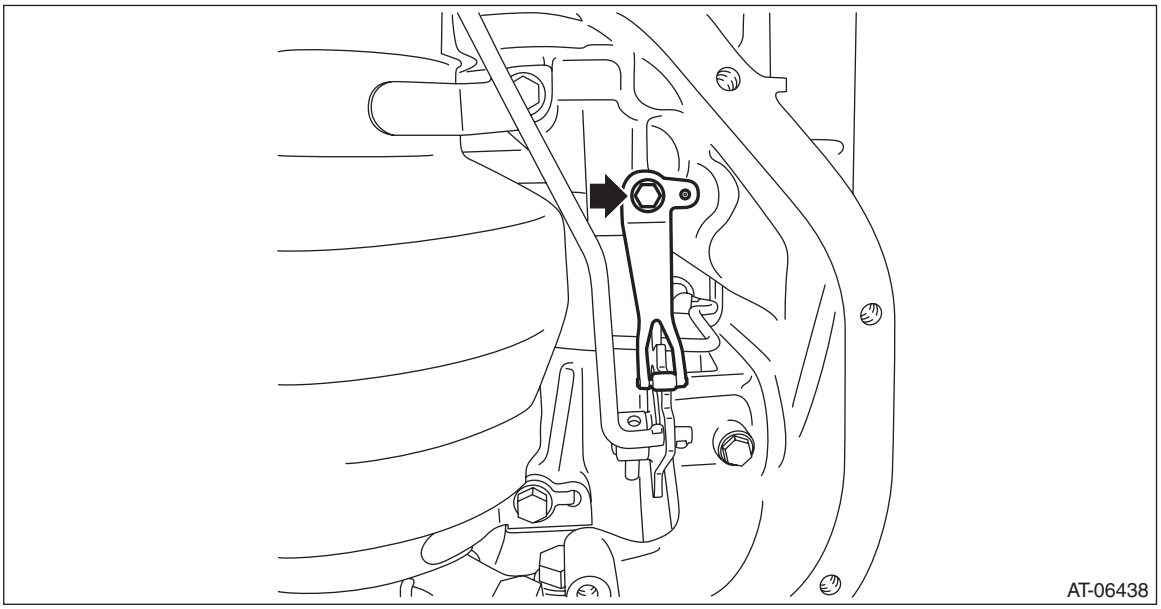

6) Remove the manual plate from the shifter arm shaft, and remove the shift connecting rod of the manual valve.

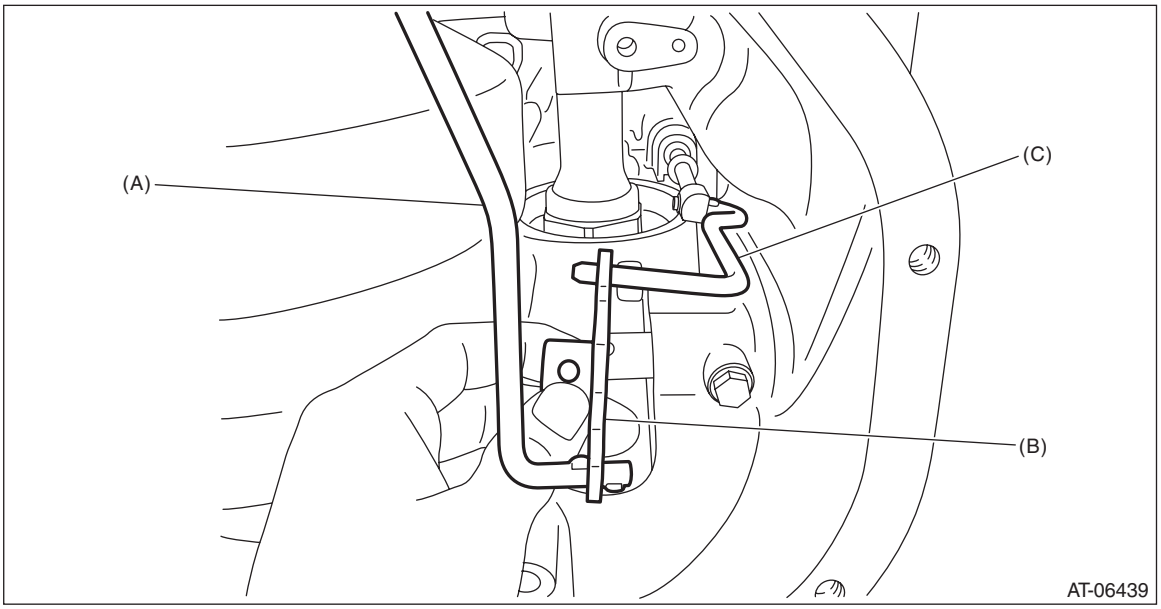

(A) Parking rod
(B) Manual plate
(C) Shift connecting rod

7) Remove the manual plate and parking rod.
8) Remove the bolt, and remove the shifter arm shaft.

NOTE:
Do not damage the lip of oil seal press-fitted in the case.

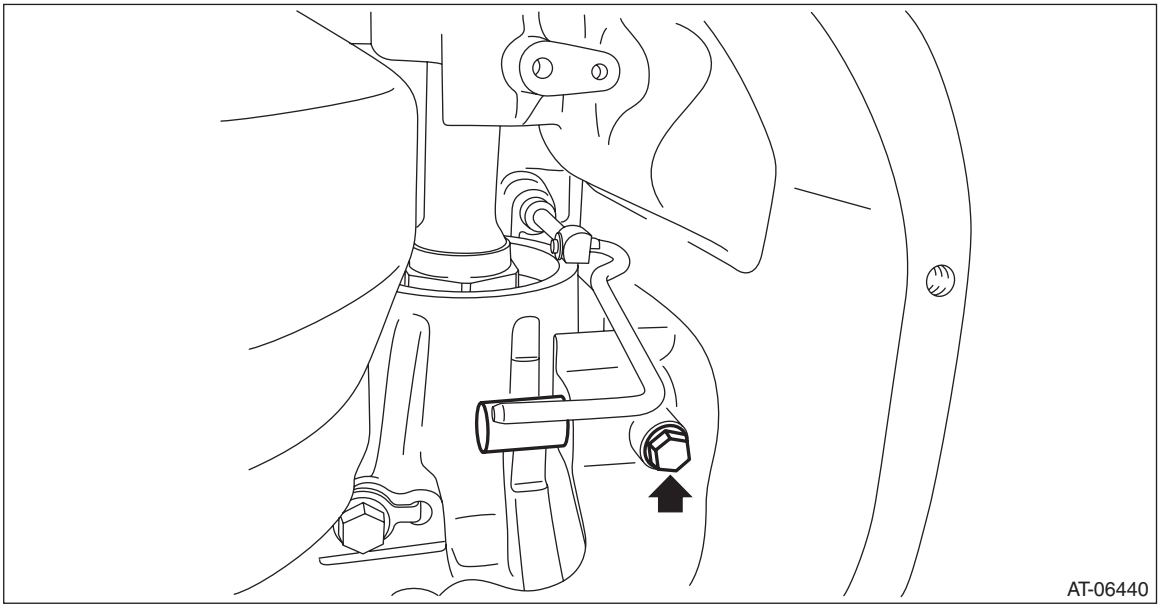

9) Remove the manual valve.

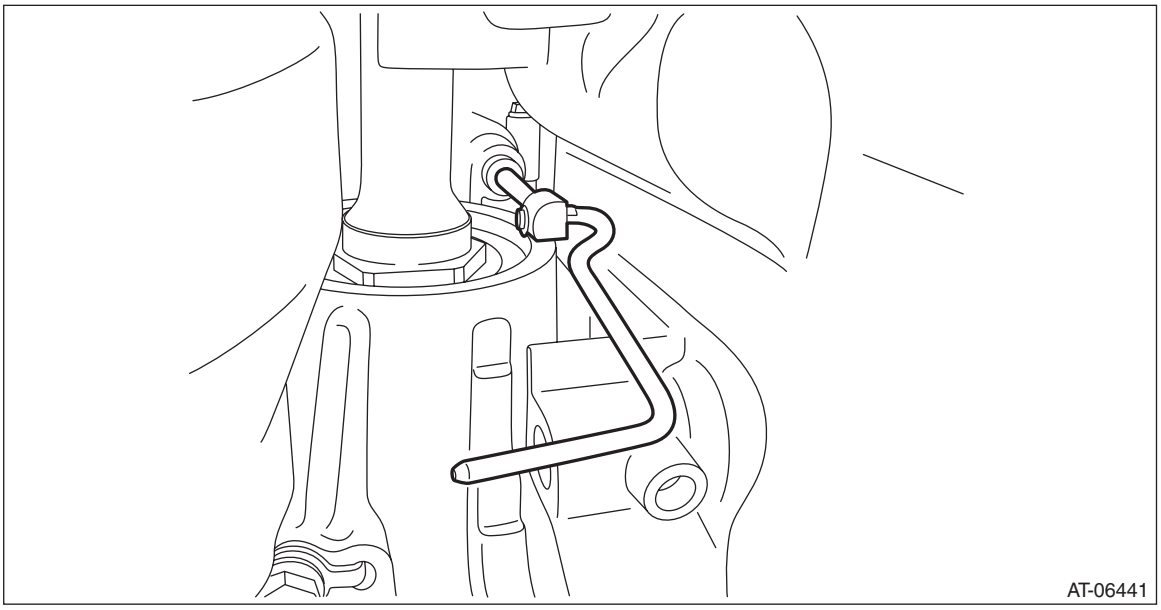

10) Remove the extension case. <Ref. to CVT(TR580)-162, REMOVAL, Extension Case.>
11) Remove the parking support.

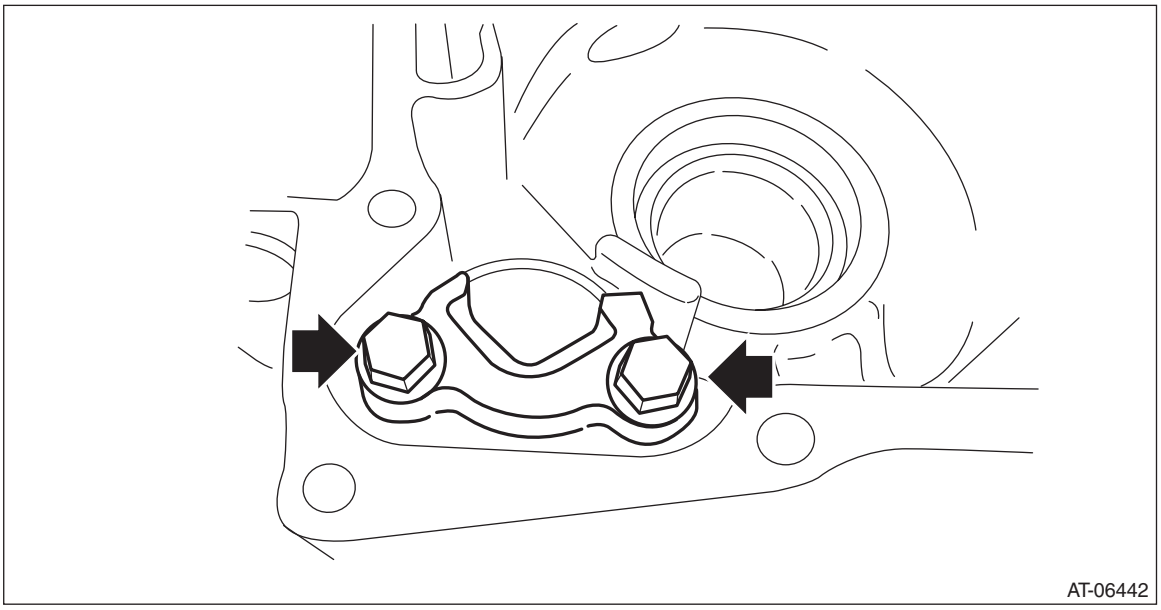

B: INSTALLATION

1) Install the parking support.

Tightening torque:
25 N·m (2.5 kgf-m, 18.4 ft-lb)

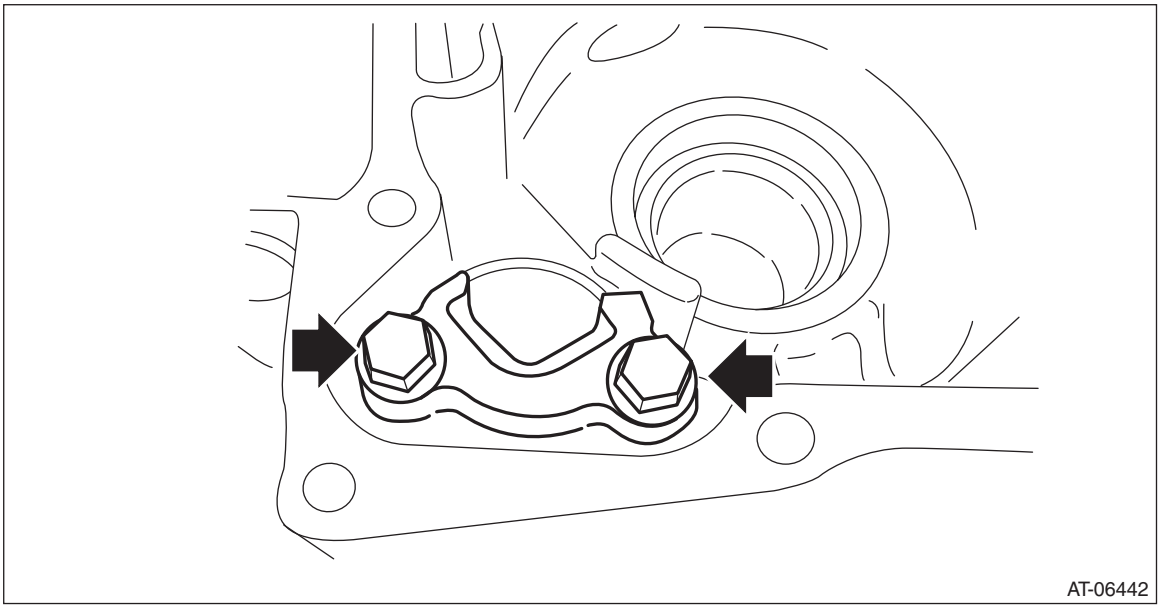

2) Install the extension case. <Ref. to CVT(TR580)-163, INSTALLATION, Extension Case.>
3) Install the manual valve.

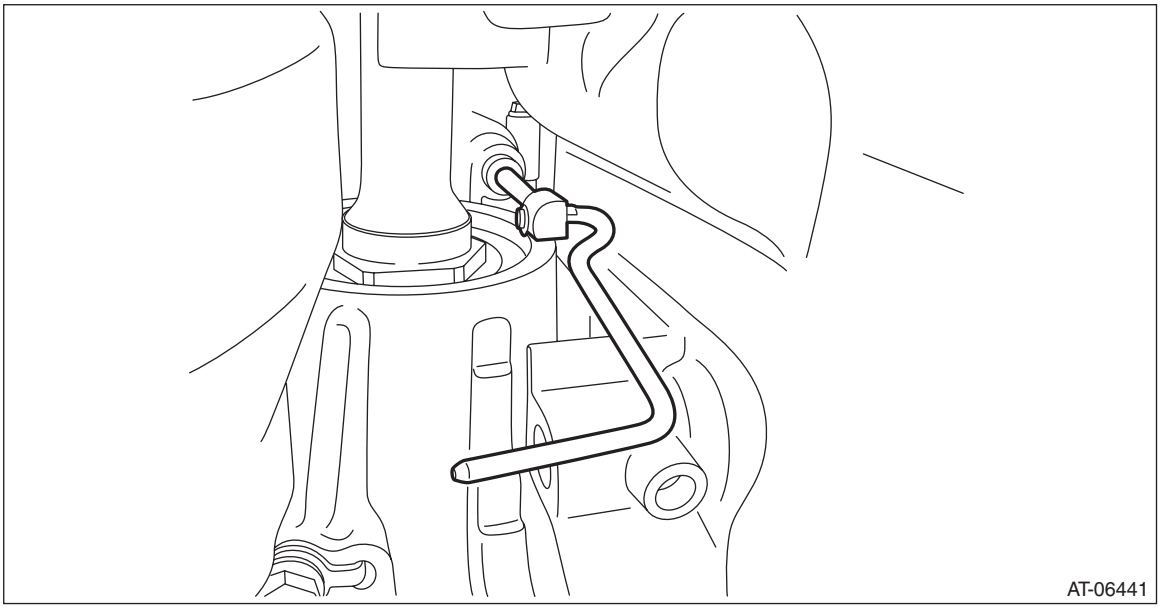

4) Install the shifter arm shaft and bolt.

NOTE:
Do not damage the lip of oil seal press-fitted in the case.

Tightening torque:
7 N·m (0.7 kgf-m, 5.2 ft-lb)

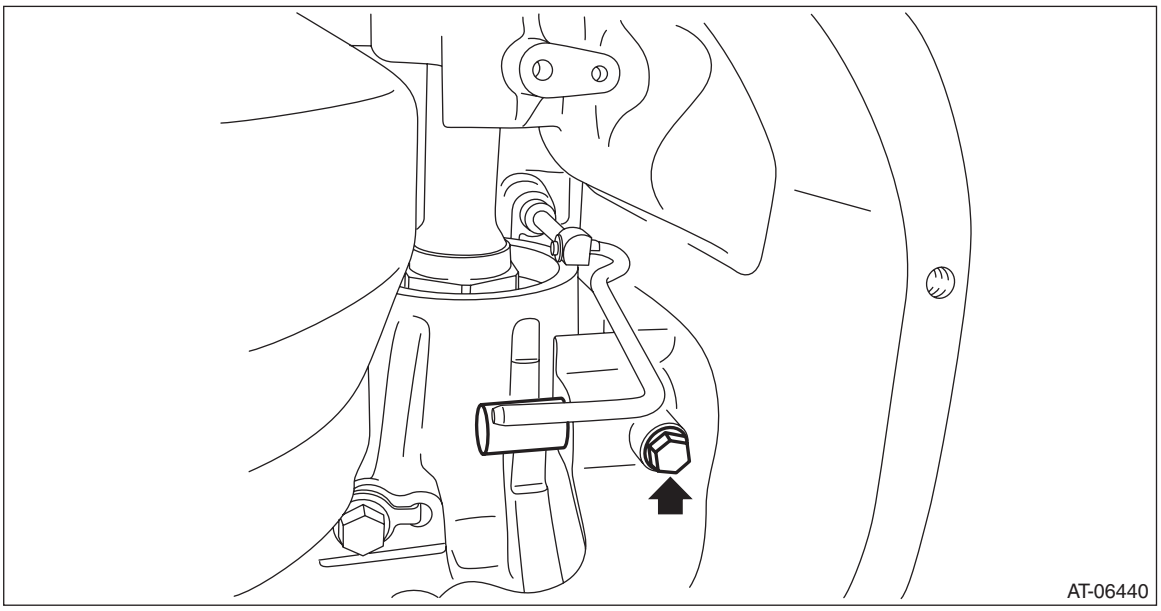

5) Install the parking rod to the manual plate.
6) Insert the parking rod into the transmission case, and install the shift connecting rod of the manual valve to the manual plate.

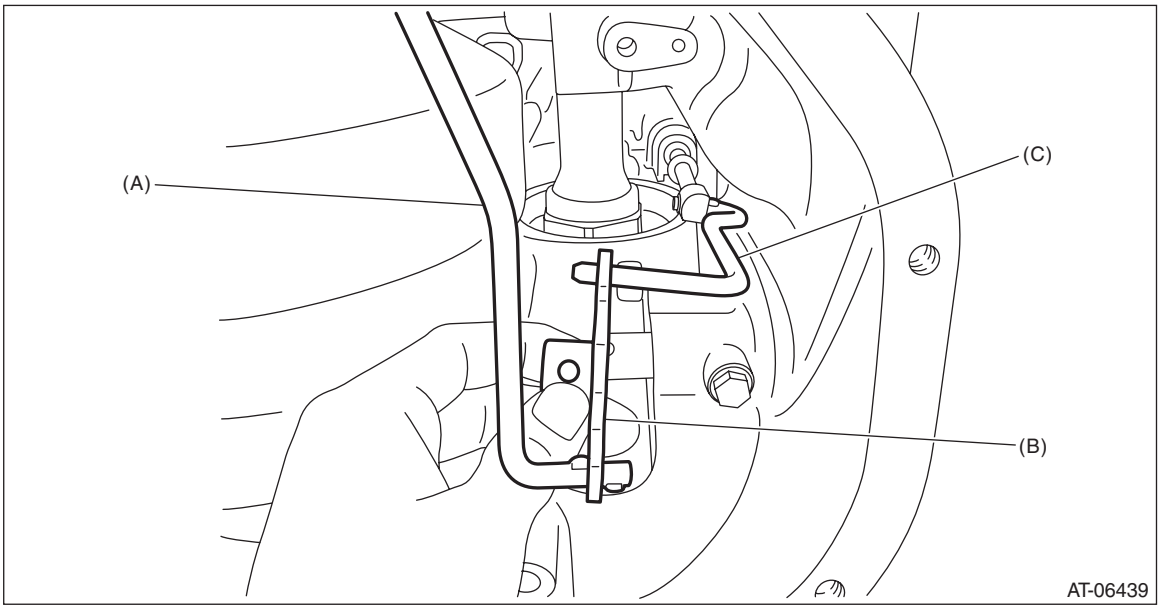

(A) Parking rod
(B) Manual plate
(C) Shift connecting rod

7) Install the manual plate to the shifter arm shaft.
8) Install the detent spring to the transmission case.

Tightening torque:
7 N·m (0.7 kgf-m, 5.2 ft-lb)

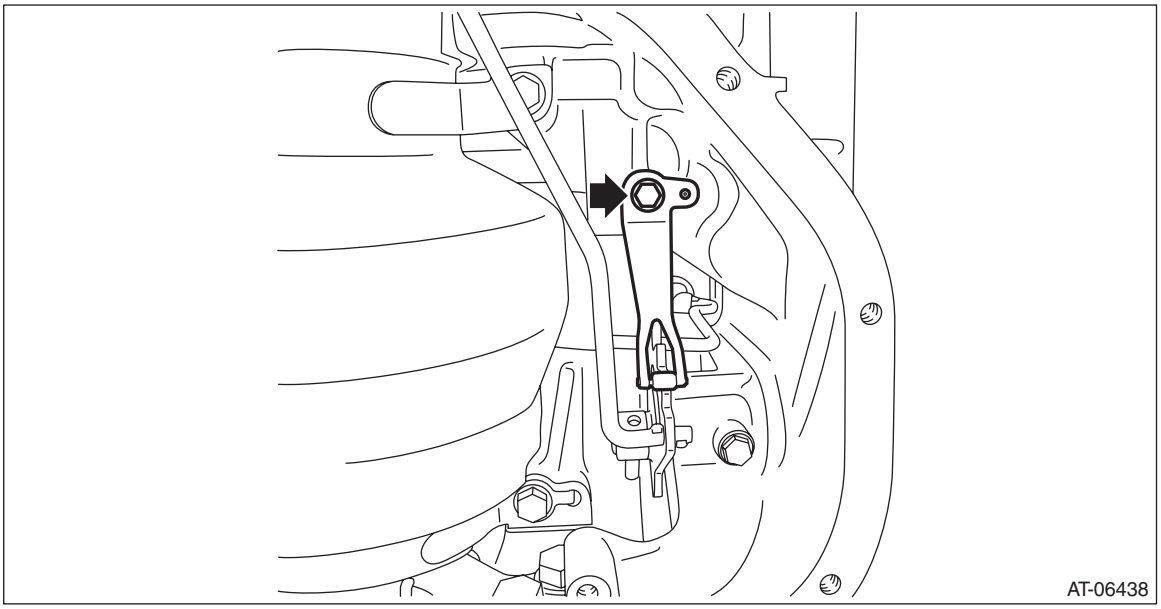

9) Install the spring pin.

NOTE:
Use new spring pin.

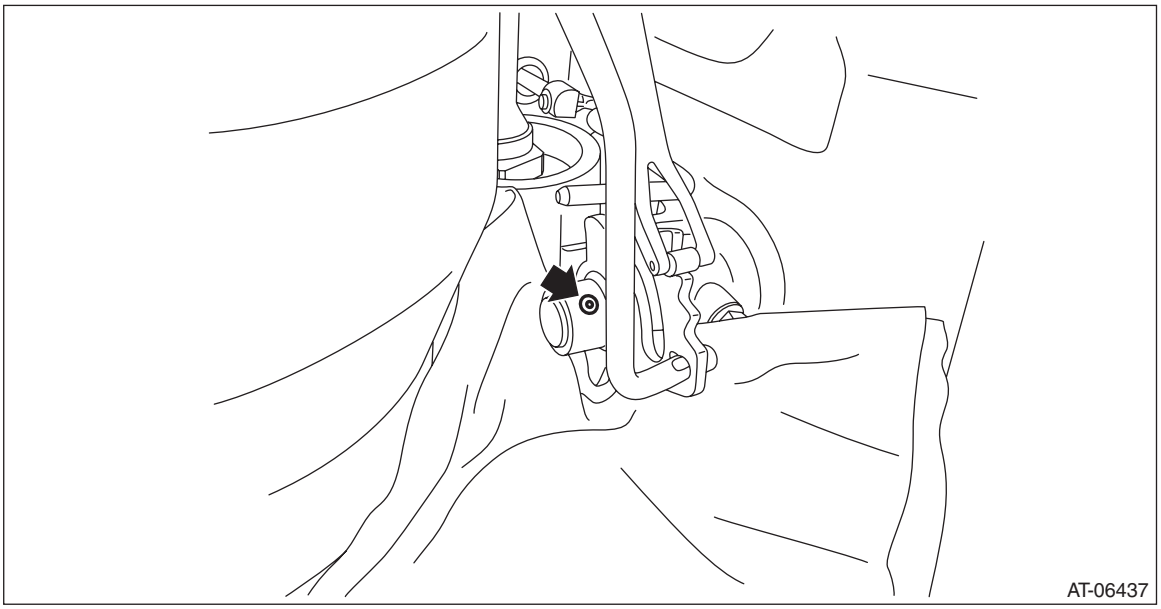

10) Install the inhibitor switch. <Ref. to CVT(TR580)-97, INSTALLATION, Inhibitor Switch.>
11) Adjust the inhibitor switch. <Ref. to CVT(TR580)-94, ADJUSTMENT, Inhibitor Switch.>
12) Install the oil strainer and oil pan. <Ref. to CVT(TR580)-109, INSTALLATION, Oil Pan and Strainer.>
13) Install the transmission assembly to the vehicle. <Ref. to CVT(TR580)-68, INSTALLATION, Automatic Transmission Assembly.>

C: INSPECTION

Make sure that the manual plate and detent spring are not worn or otherwise damaged.

34.Transmission Case

A: REMOVAL

1) Remove the transmission assembly from the vehicle. <Ref. to CVT(TR580)-56, REMOVAL, Automatic Transmission Assembly.>
2) Remove the air breather hose. <Ref. to CVT(TR580)-152, REMOVAL, Air Breather Hose.>
3) Remove the control valve body. <Ref. to CVT(TR580)-112, REMOVAL, Control Valve Body.>
4) Remove the transmission harness. <Ref. to CVT(TR580)-126, REMOVAL, Transmission Harness.>
5) Remove the turbine speed sensor. <Ref. to CVT(TR580)-99, REMOVAL, Turbine Speed Sensor.>
6) Remove the secondary speed sensor. <Ref. to CVT(TR580)-101, REMOVAL, Secondary Speed Sensor.>
7) Remove the primary speed sensor. <Ref. to CVT(TR580)-103, REMOVAL, Primary Speed Sensor.>
8) Remove the inhibitor switch. <Ref. to CVT(TR580)-95, REMOVAL, Inhibitor Switch.>
9) Remove the extension case. <Ref. to CVT(TR580)-162, REMOVAL, Extension Case.>
10) Remove the transfer clutch assembly. <Ref. to CVT(TR580)-166, REMOVAL, Transfer Clutch.>
11) Remove the transfer driven gear assembly. <Ref. to CVT(TR580)-180, REMOVAL, Transfer Driven Gear.>
12) Remove the parking pawl. <Ref. to CVT(TR580)-183, REMOVAL, Parking Pawl.>
13) Remove the reduction driven gear assembly. <Ref. to CVT(TR580)-185, REMOVAL, Reduction Driven Gear.>
14) Remove the oil pan and oil strainer. <Ref. to CVT(TR580)-108, REMOVAL, Oil Pan and Strainer.>
15) Remove the transmission control device. <Ref. to CVT(TR580)-193, REMOVAL, Transmission Control Device.>
16) Remove the oil baffle securing bolt.

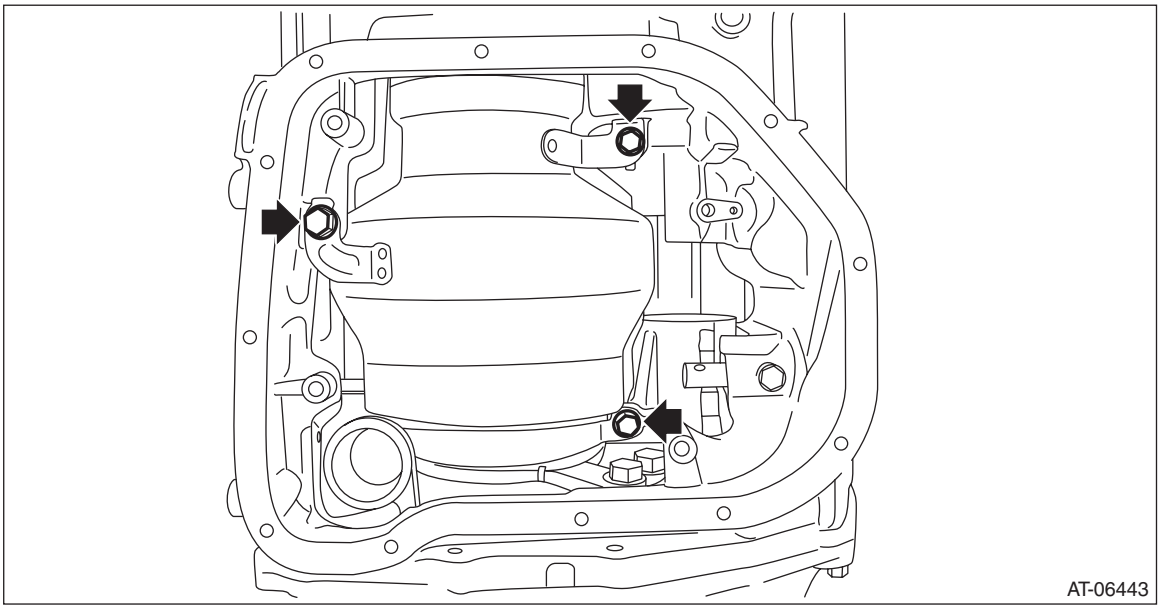

17) Remove the oil cooler pipe.

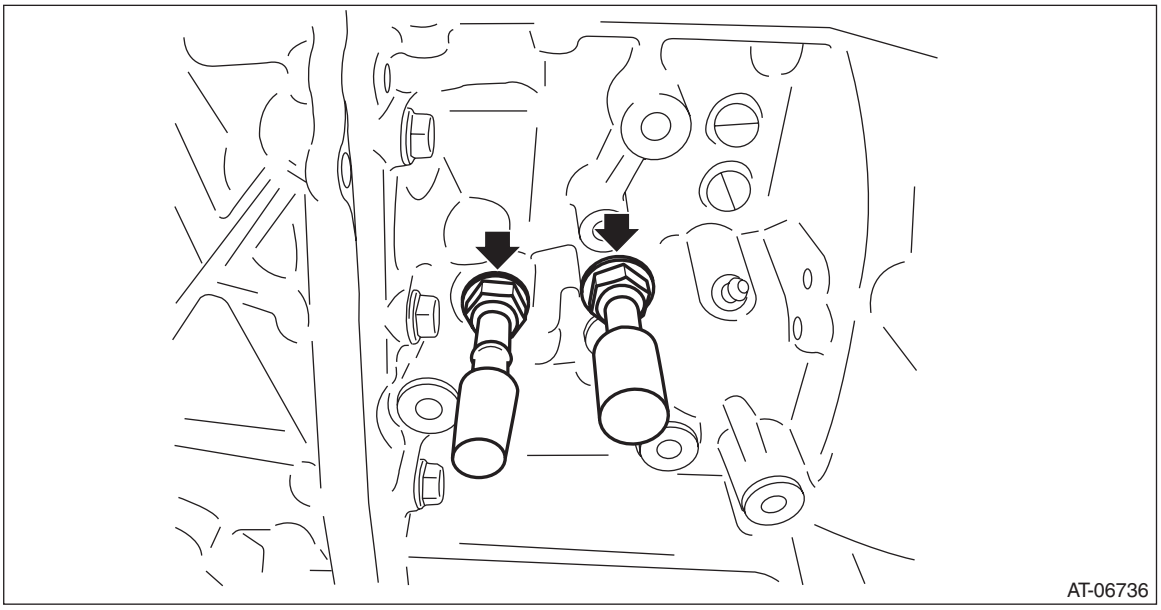

18) Remove the transmission case.

NOTE:
The total number of transmission case mounting bolts is 15.

19) Remove the oil baffle.

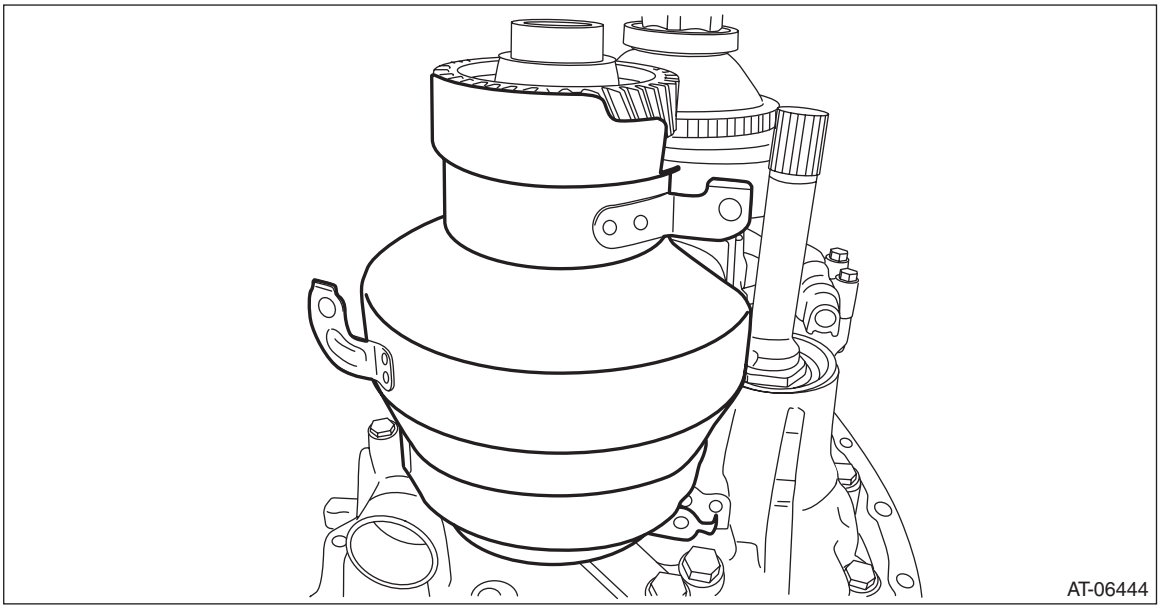

20) Remove the O-ring.

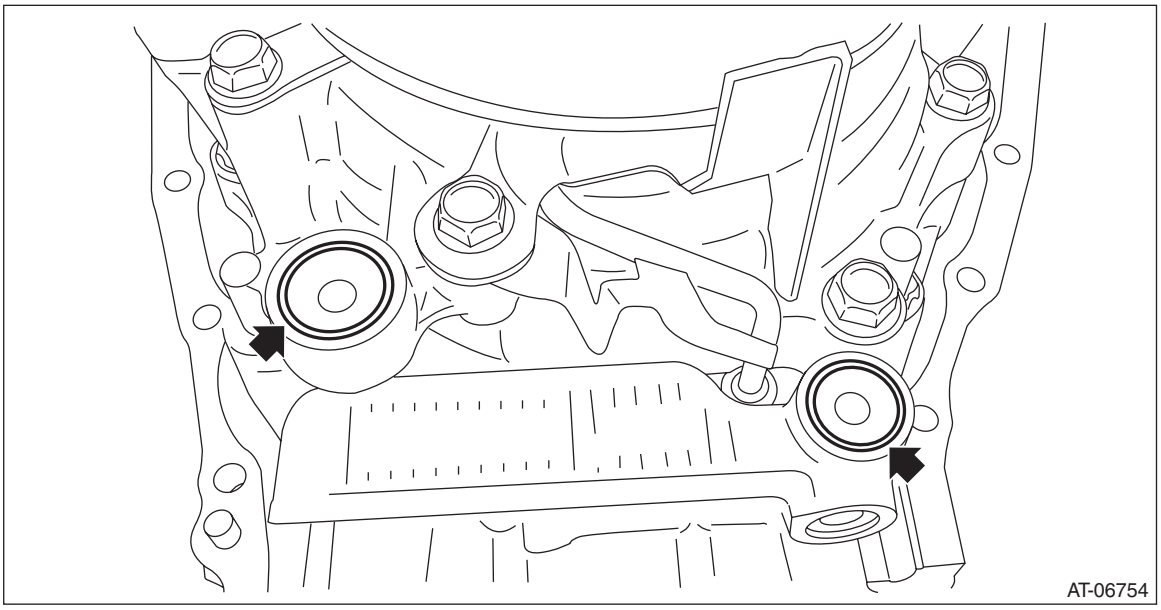

21) Remove the seal ring from the transmission case.

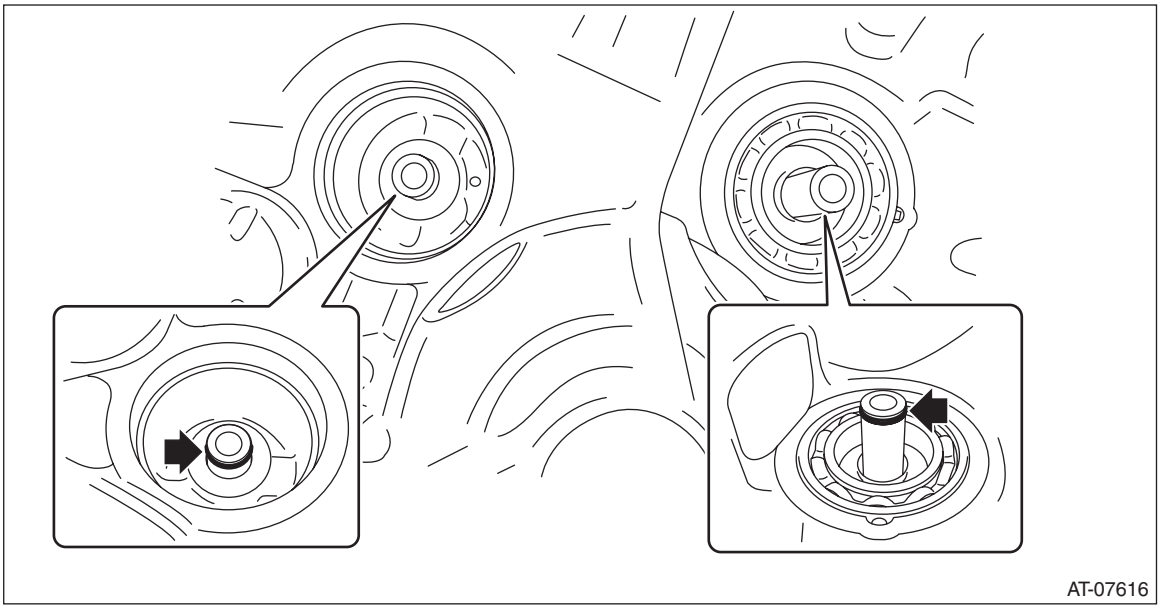

B: INSTALLATION

1) Clean the mating surface of transmission case and converter case.
2) Select the reduction gear shim. <Ref. to CVT(TR580)-215, ADJUSTMENT, Reduction Drive Gear.>
3) Remove the transmission case, and install the selected reduction gear shim to the reduction drive gear.
4) Install the O-rings to the reverse clutch housing and drive pinion retainer.

NOTE:
- Use new O-rings.
- Apply CVTF to the O-ring.

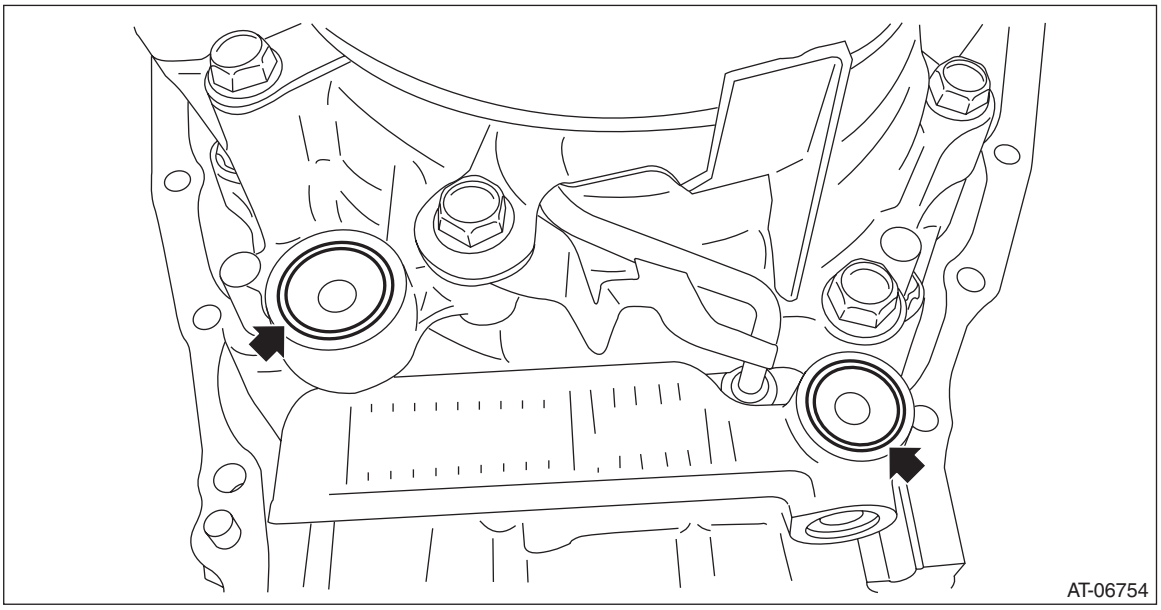

5) Install the seal ring to the transmission case.

NOTE:
- Use a new seal ring.
- Apply CVTF to the seal rings.

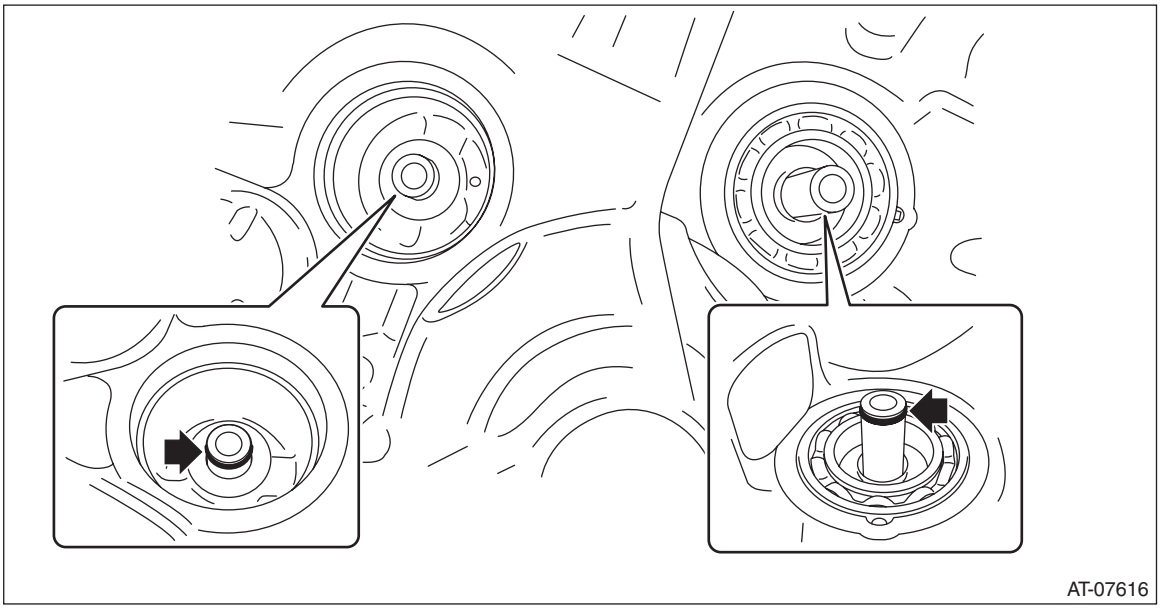

6) Cover the secondary pulley with the oil baffle, and temporarily install it with bolts.

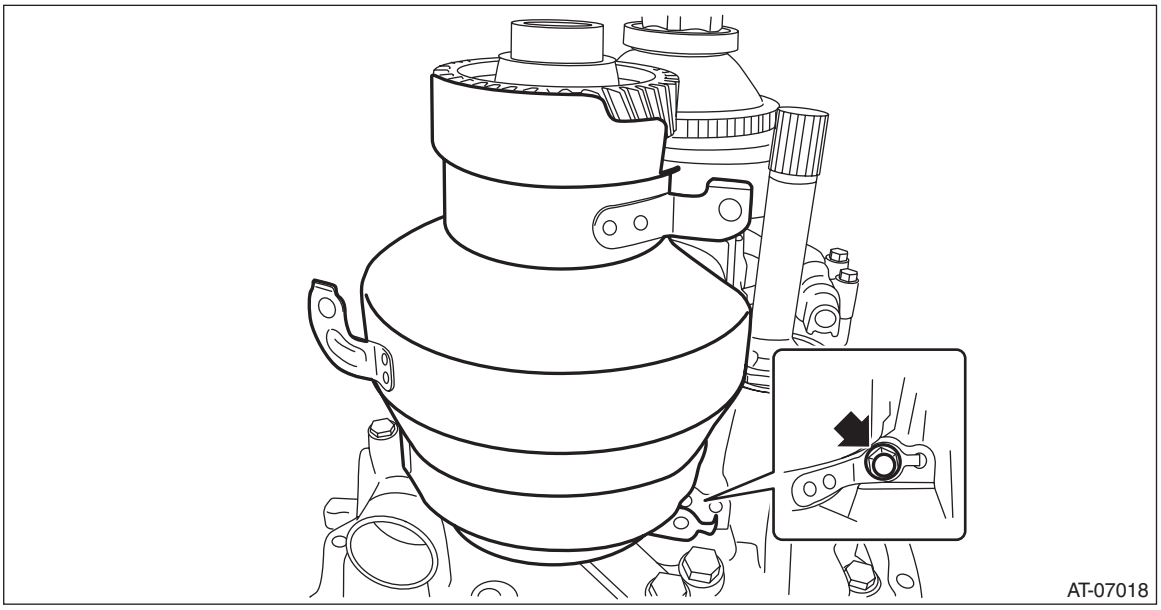

7) Apply liquid gasket seamlessly to the mating surface of transmission case.

Liquid gasket:
THREE BOND 1215 (Part No. 004403007) or equivalent

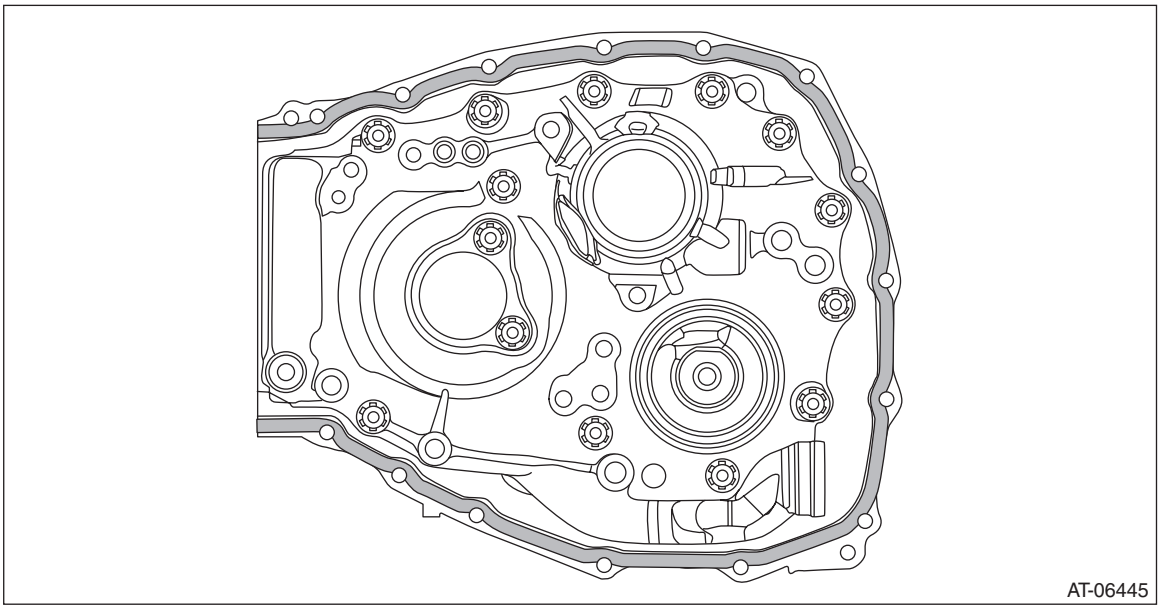

8) Install the transmission case.

NOTE:
The total number of transmission case mounting bolts is 15.

Tightening torque:
22 N·m (2.2 kgf-m, 16.2 ft-lb)

9) Install the oil cooler pipe.

NOTE:
Use new O-rings.

Tightening torque:
25 N·m (2.5 kgf-m, 18.4 ft-lb)

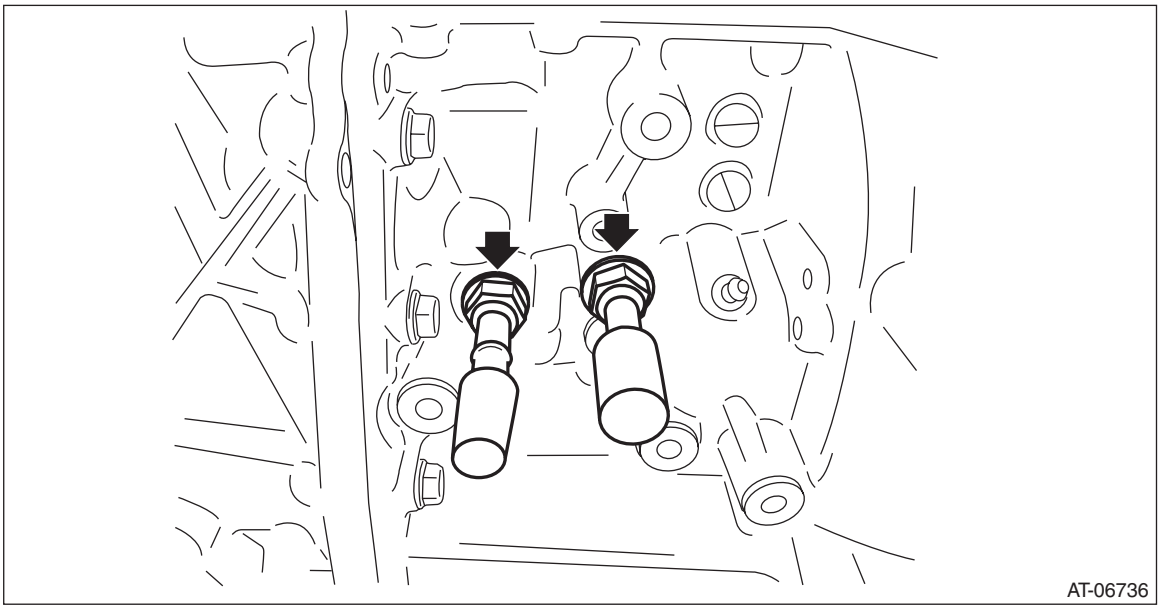

10) Install the oil baffle securing bolt.

Tightening torque:
16 N·m (1.6 kgf-m, 11.8 ft-lb)

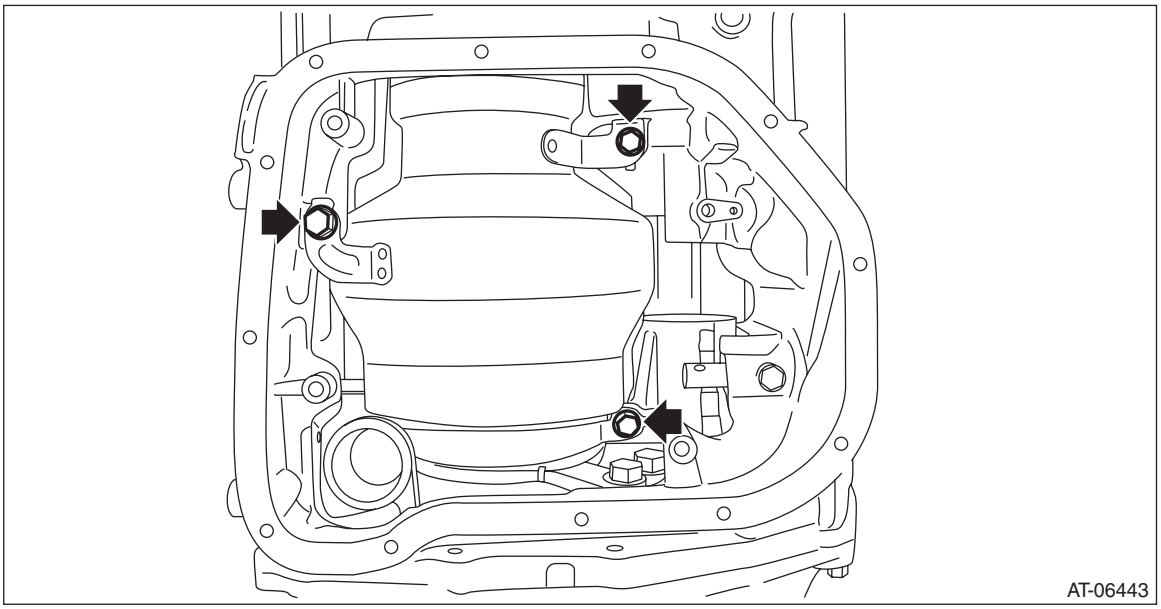

11) Install the transmission control device. <Ref. to CVT(TR580)-196, INSTALLATION, Transmission Control Device.>
12) Install the oil pan and oil strainer. <Ref. to CVT(TR580)-109, INSTALLATION, Oil Pan and Strainer.>
13) Install the reduction driven gear assembly. <Ref. to CVT(TR580)-185, INSTALLATION, Reduction Driven Gear.>
14) Install the parking pawl. <Ref. to CVT(TR580)-184, INSTALLATION, Parking Pawl.>
15) Install the transfer driven gear assembly. <Ref. to CVT(TR580)-181, INSTALLATION, Transfer Driven Gear.>
16) Install the transfer clutch assembly. <Ref. to CVT(TR580)-168, INSTALLATION, Transfer Clutch.>
17) Install the extension case. <Ref. to CVT(TR580)-163, INSTALLATION, Extension Case.>
18) Install the inhibitor switch. <Ref. to CVT(TR580)-97, INSTALLATION, Inhibitor Switch.>
19) Install the secondary speed sensor. <Ref. to CVT(TR580)-101, INSTALLATION, Secondary Speed Sensor.>
20) Install the primary speed sensor. <Ref. to CVT(TR580)-104, INSTALLATION, Primary Speed Sensor.>
21) Install the turbine speed sensor. <Ref. to CVT(TR580)-99, INSTALLATION, Turbine Speed Sensor.>
22) Install the transmission harness. <Ref. to CVT(TR580)-133, INSTALLATION, Transmission Harness.>
23) Install the control valve body. <Ref. to CVT(TR580)-118, INSTALLATION, Control Valve Body.>
24) Install the air breather hose. <Ref. to CVT(TR580)-154, INSTALLATION, Air Breather Hose.>
25) Install the transmission assembly to the vehicle. <Ref. to CVT(TR580)-68, INSTALLATION, Automatic Transmission Assembly.>

C: DISASSEMBLY

1) Remove the oil stopper plate.

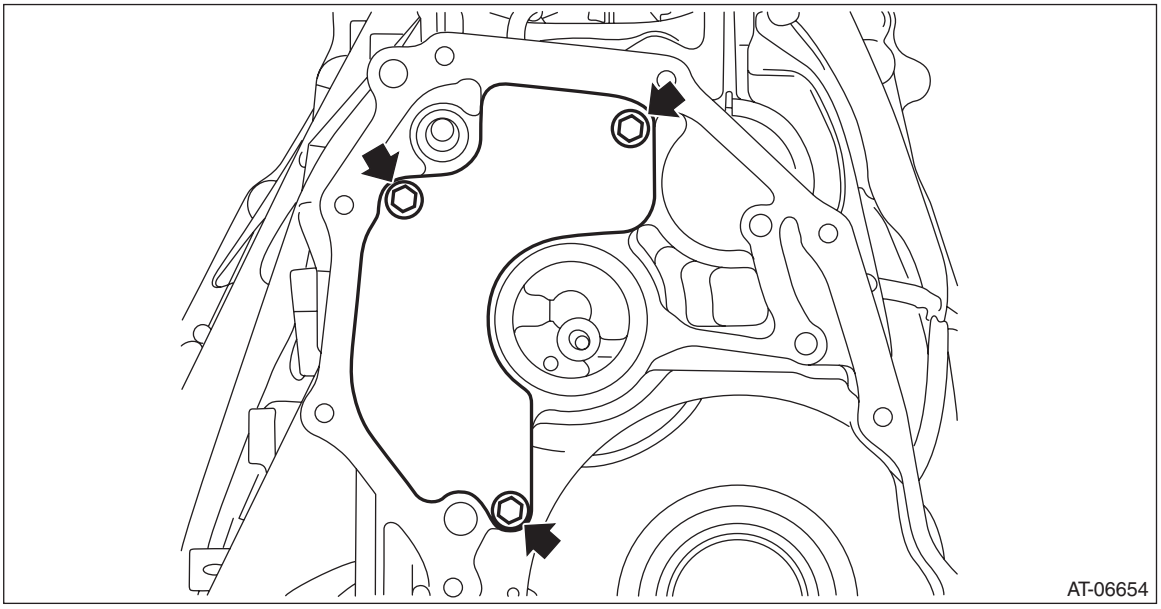

2) Remove all plugs from the transmission case.

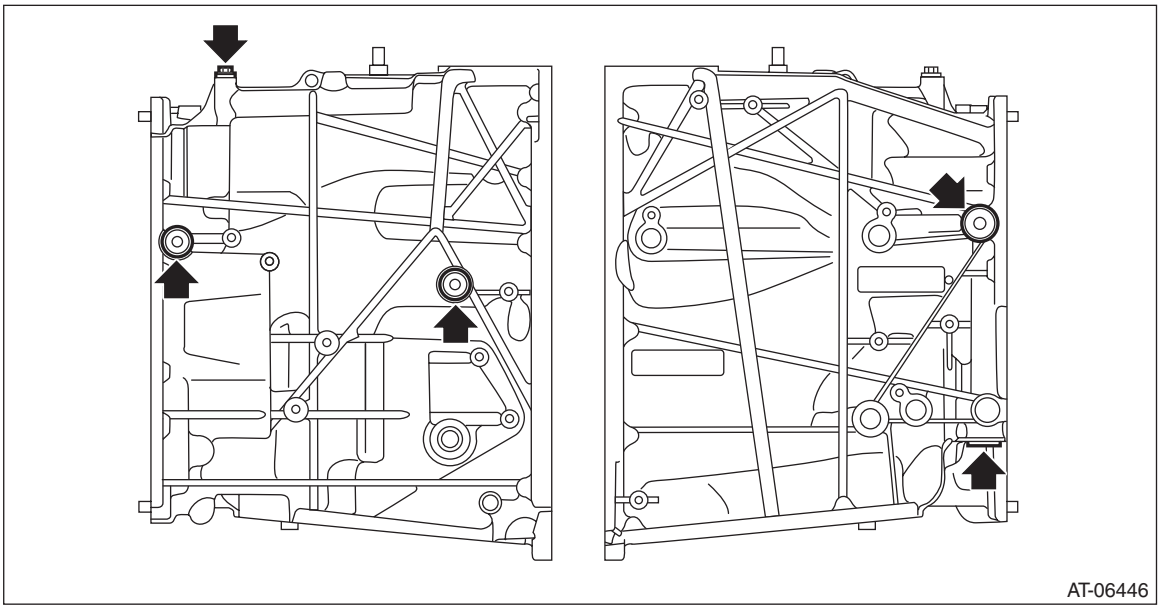

3) Remove the oil seal using a screwdriver wrapped with cloth etc.

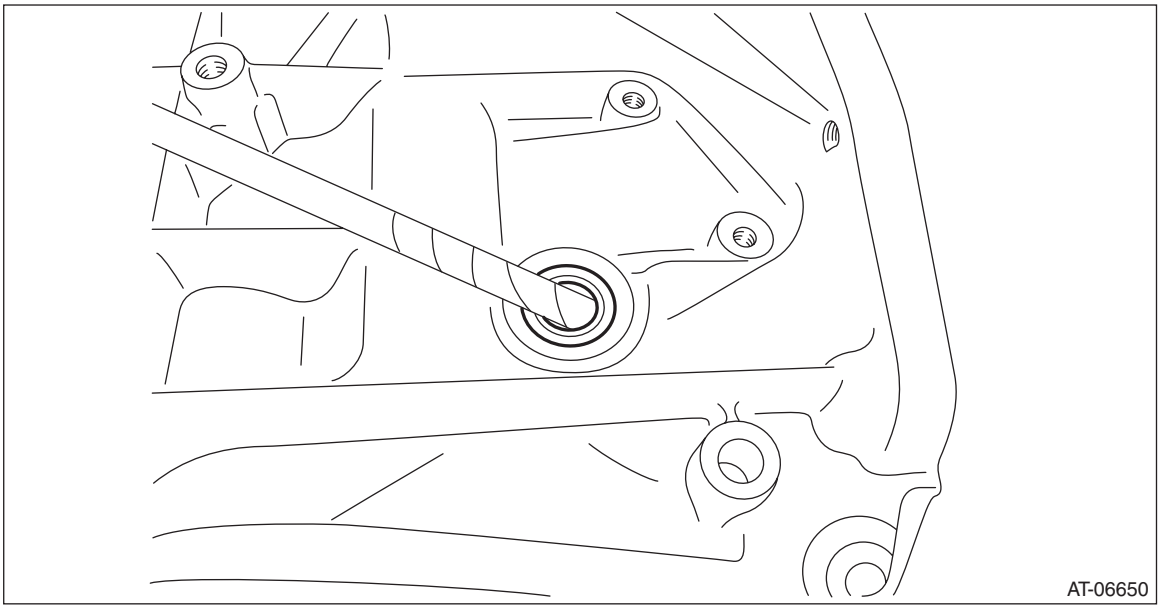

4) Remove the CVTF filter cover and gasket.

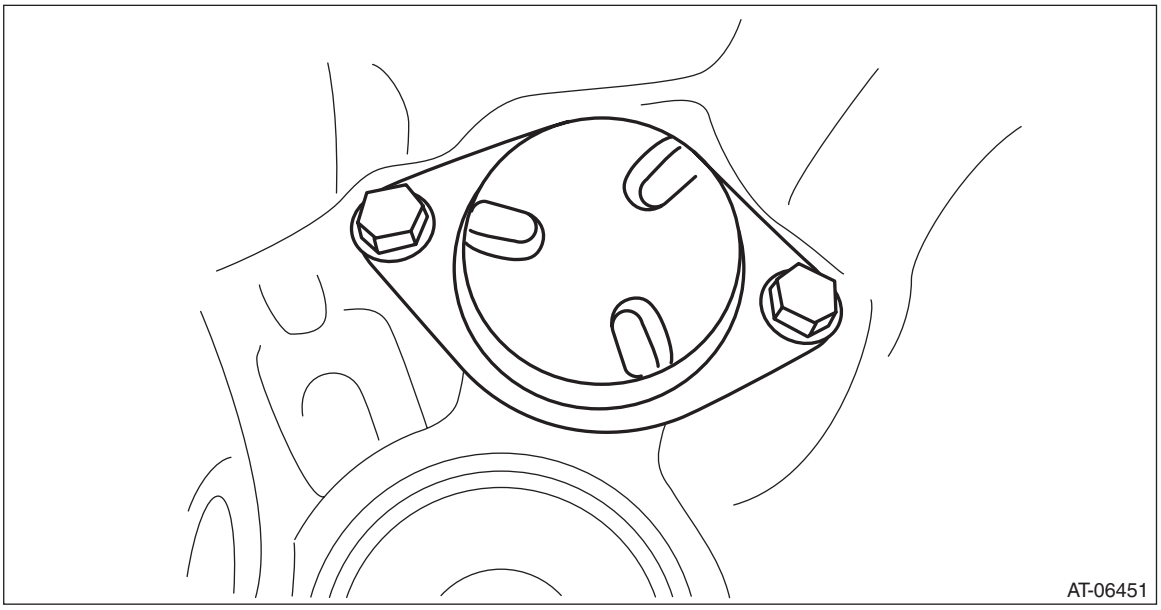

5) Remove the CVTF filter.

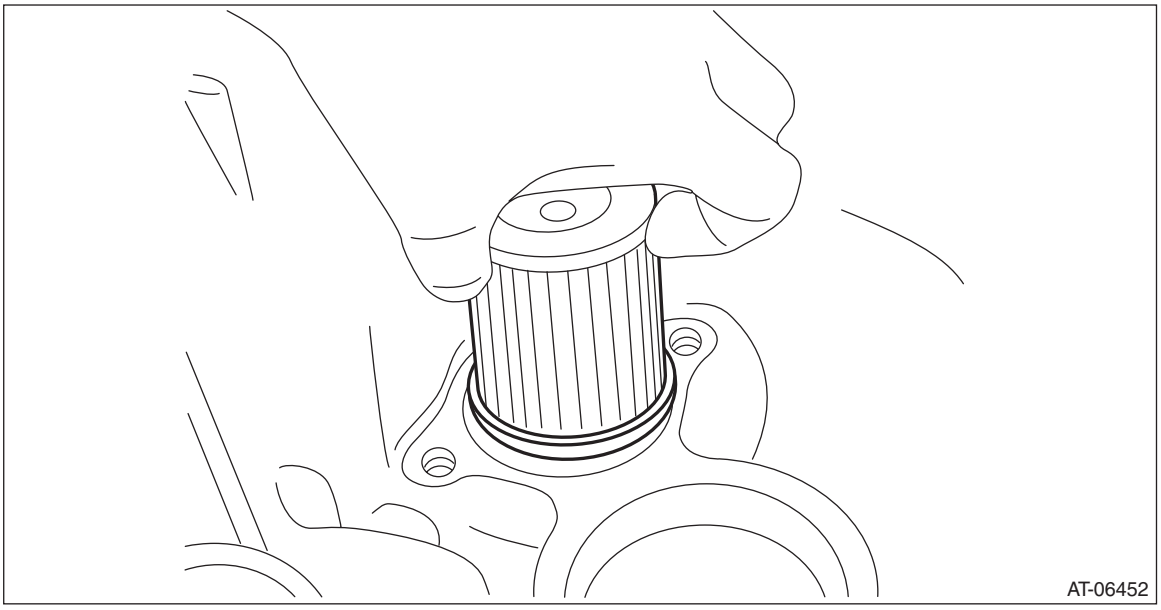

D: ASSEMBLY

1) Face the O-ring side of the CVTF filter to the transmission case side, and install the CVTF filter.

NOTE:
Apply CVTF to the O-ring of CVTF filter.

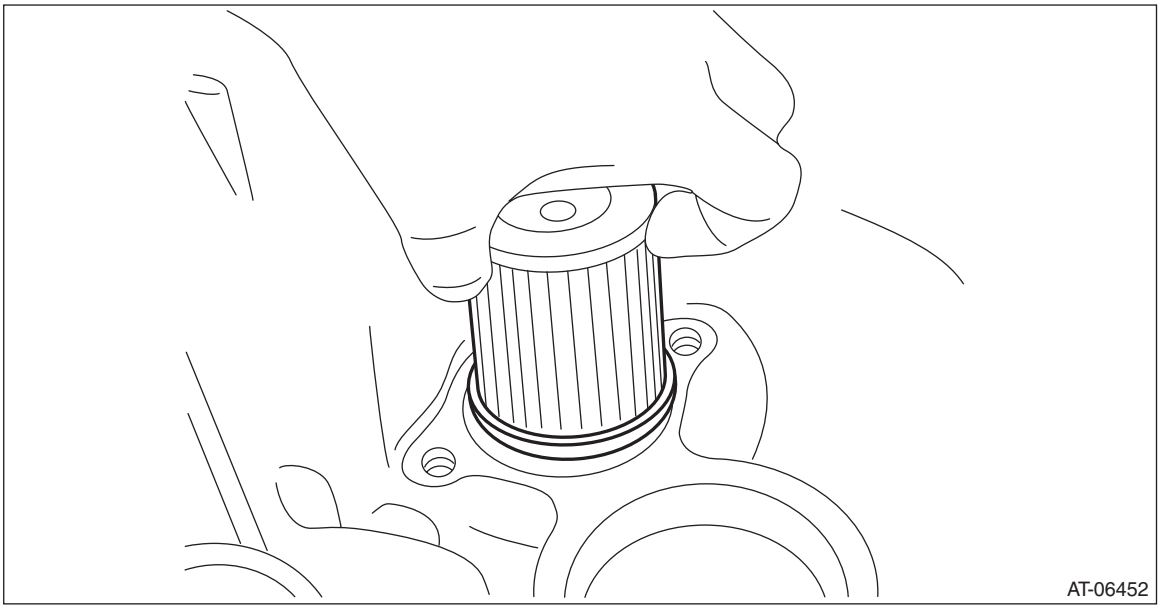

2) Install the CVTF filter cover and gasket.

NOTE:
Use a new gasket.

Tightening torque:
17 N·m (1.7 kgf-m, 12.5 ft-lb)

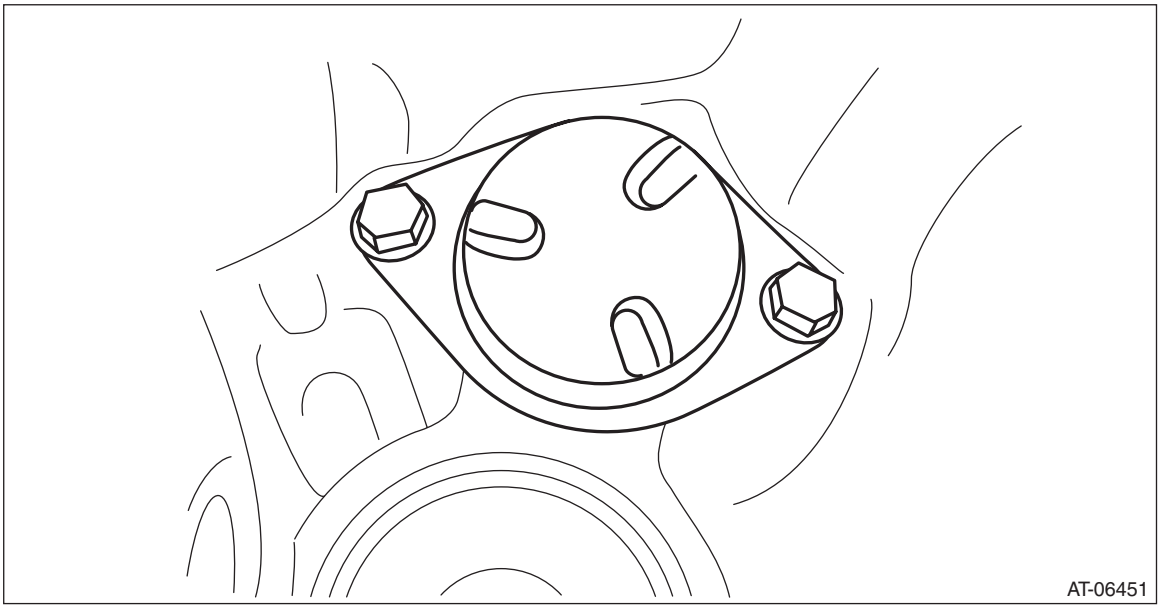

3) Using the ST, install the oil seal.

NOTE:
- Use a new oil seal.
- Apply CVTF to the oil seal lip and press-fitting surface.

ST 18657AA000 INSTALLER

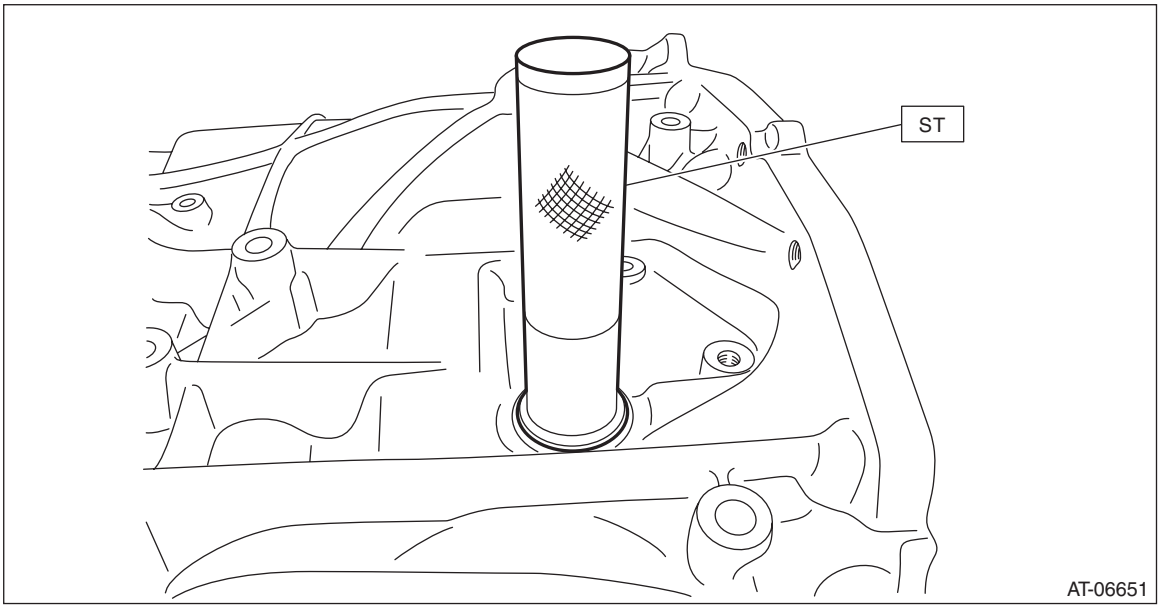

4) Install all plugs.

NOTE:
- Use new O-rings.
- Apply CVTF to the O-ring.
- For the plug (A), fill the CVTF, and then tighten the plug using a new O-ring.

Tightening torque:
T1: 13 N·m (1.3 kgf-m, 9.6 ft-lb)
T2: 25 N·m (2.5 kgf-m, 18.4 ft-lb)
T3: 50 N·m (5.1 kgf-m, 36.9 ft-lb)

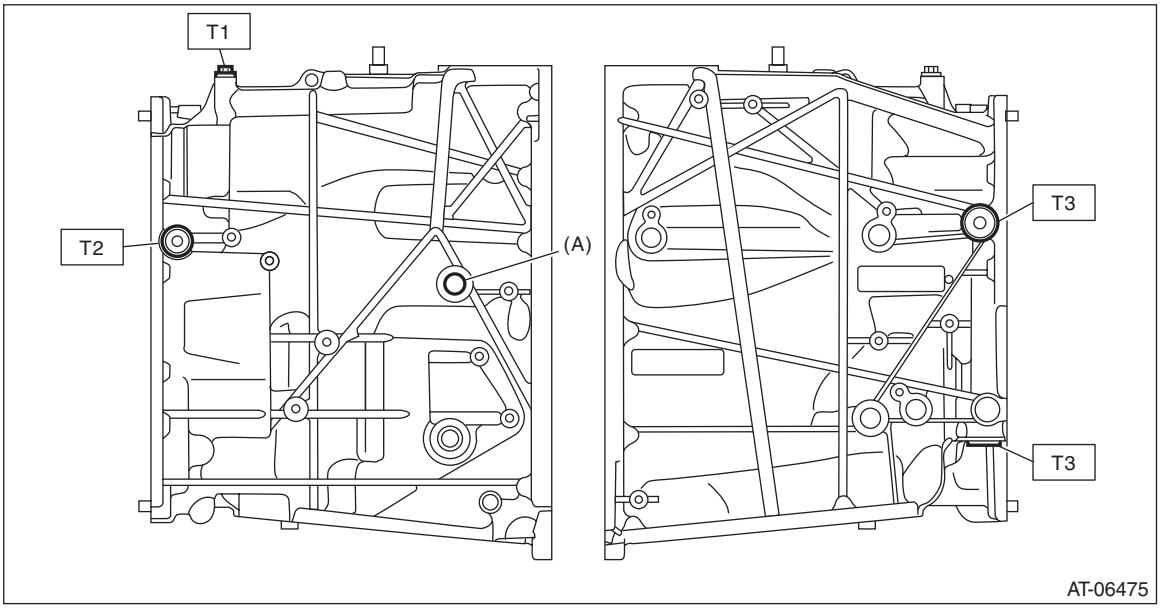

5) Install the oil stopper plate.

NOTE:
Use a new bolt.

Tightening torque:
9 N·m (0.9 kgf-m, 6.6 ft-lb)

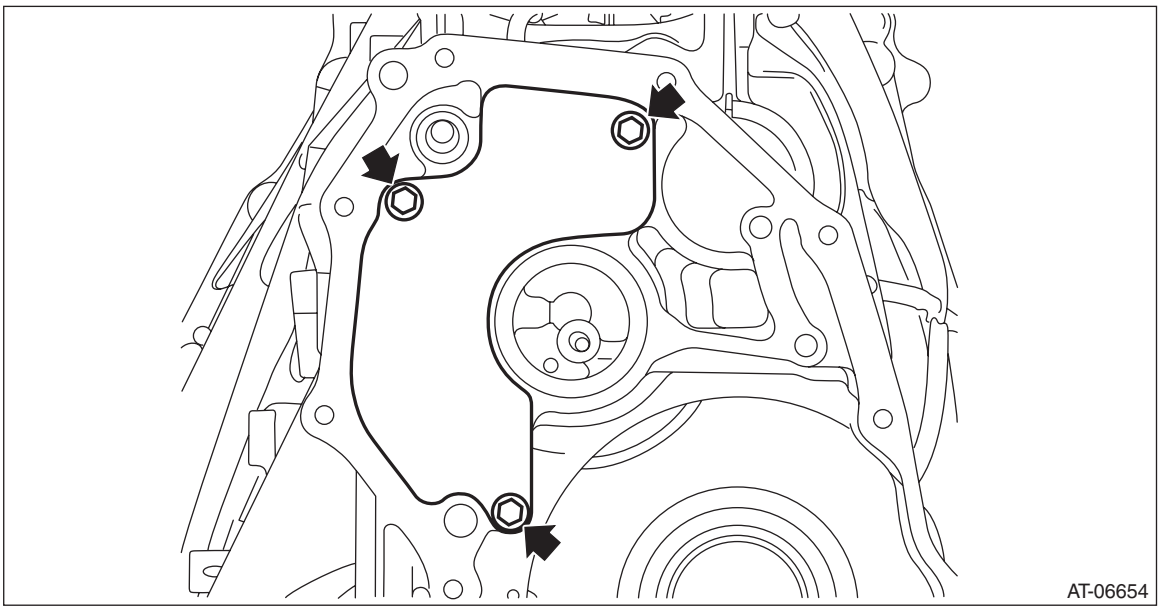

E: INSPECTION

- Check the transmission case for damage.
- Check for leakage of CVTF from the connection between converter case and transmission case.
- Check the bearing for smooth operation.
- Check the bearing for seizure or wear.

F: ADJUSTMENT

NOTE:
When replacing the transmission case with a new part, perform the following check and adjustment for the selection.

- Select the transfer driven gear shim. <Ref. to CVT(TR580)-177, ADJUSTMENT, Transfer Clutch.>
- Select the transfer drive gear shim. <Ref. to CVT(TR580)-191, ADJUSTMENT, Reduction Driven Gear.>
- Select the reduction drive gear shim. <Ref. to CVT(TR580)-215, ADJUSTMENT, Reduction Drive Gear.>

35.CVTF Filter

A: REMOVAL

NOTE:
• Although CVTF filter is a maintenance-free part, replace it if a large quantity of wear debris and metal particles are found in CVTF and CVTF filter.
• For removal of CVTF filter, refer to “Transmission Case”. <Ref. to CVT(TR580)-199, REMOVAL, Transmission Case.> <Ref. to CVT(TR580)-205, DISASSEMBLY, Transmission Case.>

B: INSTALLATION

NOTE:
For installation of CVTF filter, refer to “Transmission Case”. <Ref. to CVT(TR580)-208, ASSEMBLY, Transmission Case.> <Ref. to CVT(TR580)-202, INSTALLATION, Transmission Case.>

C: INSPECTION

- Check if a large quantity of wear debris or metal particles are in CVTF and CVTF filter.
- Check for broken part or damaged O-ring.

36.Reduction Drive Gear

A: REMOVAL

1) Remove the transmission assembly from the vehicle. <Ref. to CVT(TR580)-56, REMOVAL, Automatic Transmission Assembly.>
2) Remove the air breather hose. <Ref. to CVT(TR580)-152, REMOVAL, Air Breather Hose.>
3) Remove the control valve body. <Ref. to CVT(TR580)-112, REMOVAL, Control Valve Body.>
4) Remove the transmission harness. <Ref. to CVT(TR580)-126, REMOVAL, Transmission Harness.>
5) Remove the turbine speed sensor. <Ref. to CVT(TR580)-99, REMOVAL, Turbine Speed Sensor.>
6) Remove the secondary speed sensor. <Ref. to CVT(TR580)-101, REMOVAL, Secondary Speed Sensor.>
7) Remove the primary speed sensor. <Ref. to CVT(TR580)-103, REMOVAL, Primary Speed Sensor.>
8) Remove the inhibitor switch. <Ref. to CVT(TR580)-95, REMOVAL, Inhibitor Switch.>
9) Remove the extension case. <Ref. to CVT(TR580)-162, REMOVAL, Extension Case.>
10) Remove the transfer clutch assembly. <Ref. to CVT(TR580)-166, REMOVAL, Transfer Clutch.>
11) Remove the transfer driven gear assembly. <Ref. to CVT(TR580)-180, REMOVAL, Transfer Driven Gear.>
12) Remove the parking pawl. <Ref. to CVT(TR580)-183, REMOVAL, Parking Pawl.>
13) Remove the reduction driven gear assembly. <Ref. to CVT(TR580)-185, REMOVAL, Reduction Driven Gear.>
14) Remove the oil pan and oil strainer. <Ref. to CVT(TR580)-108, REMOVAL, Oil Pan and Strainer.>
15) Remove the transmission control device. <Ref. to CVT(TR580)-193, REMOVAL, Transmission Control Device.>
16) Remove the transmission case. <Ref. to CVT(TR580)-199, REMOVAL, Transmission Case.>
17) Remove the reduction drive gear shims, spring retainers, and dish plates.

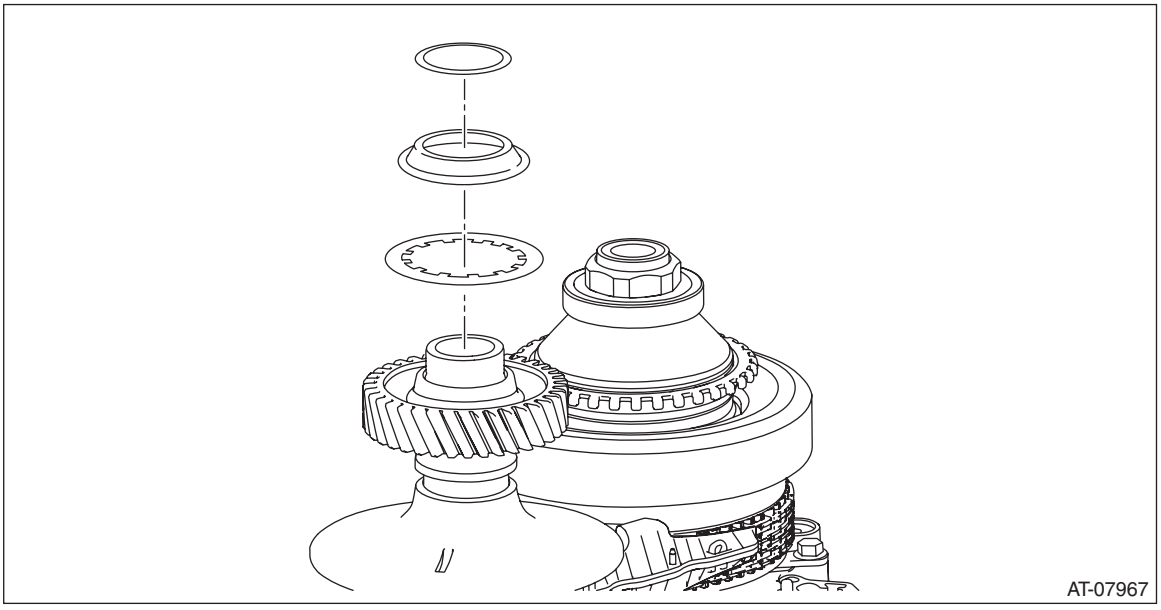

18) Remove the reduction drive gear.

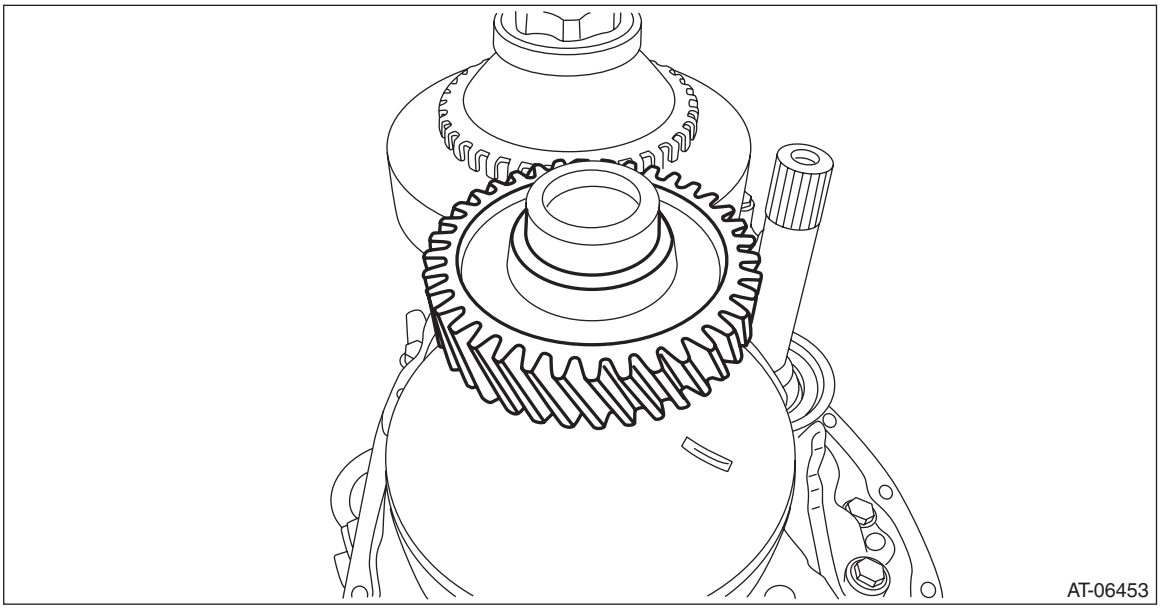

B: INSTALLATION

1) Install the reduction drive gear to secondary pulley.

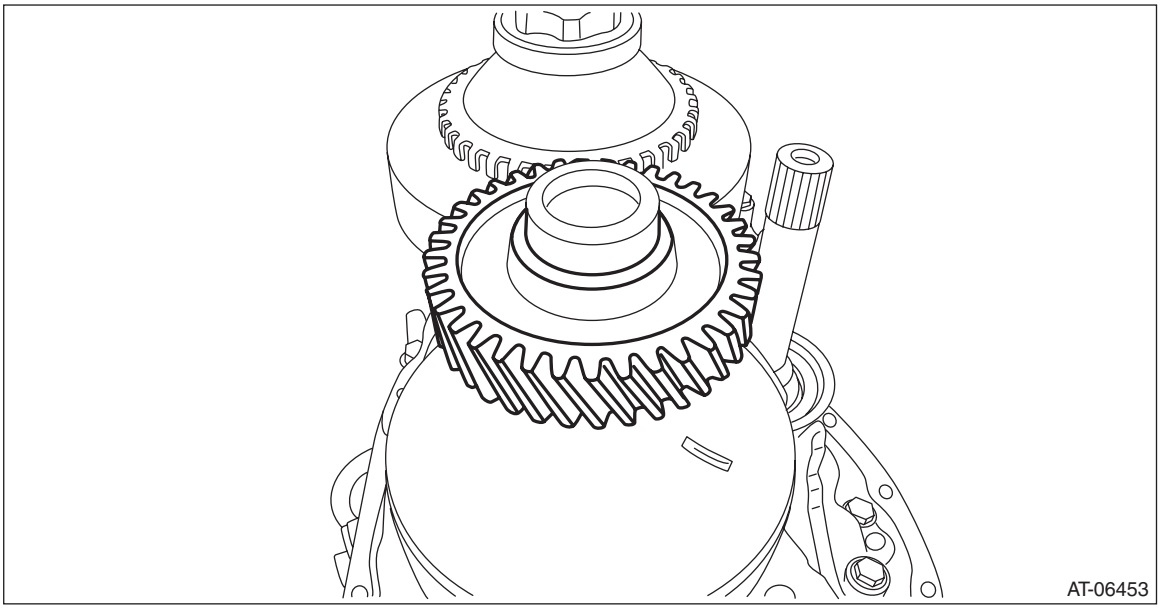

2) Select the reduction drive gear shim. <Ref. to CVT(TR580)-215, ADJUSTMENT, Reduction Drive Gear.>

3) Install the dish plates, spring retainers, and selected reduction drive gear shims.

NOTE:
Install the dish plate in the correct direction.

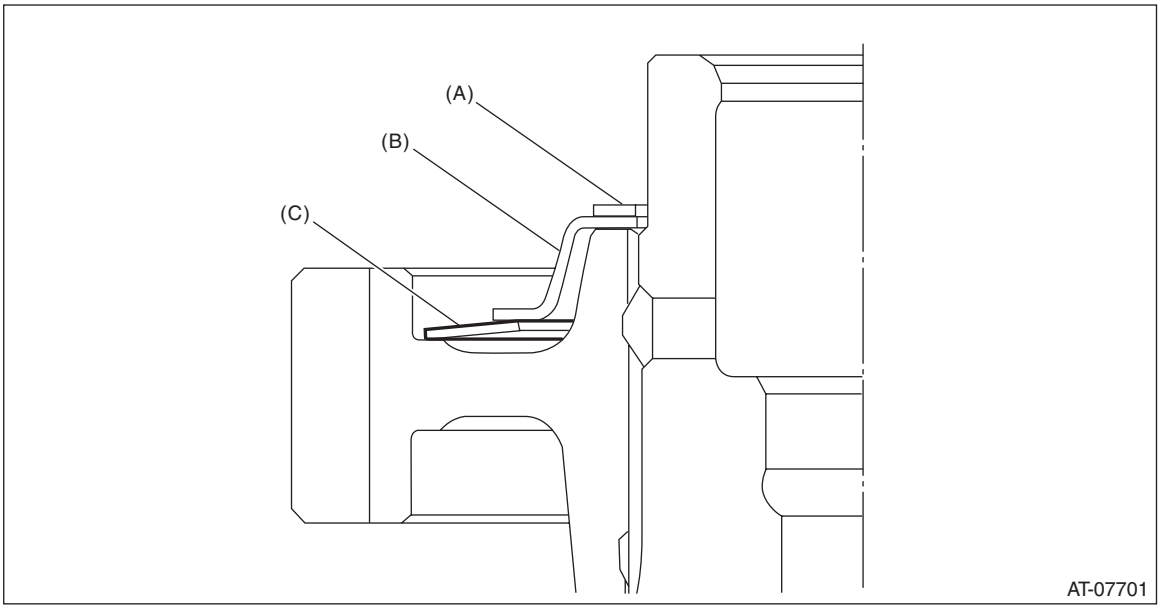

(A) Reduction drive gear shim
(B) Spring retainer
(C) Dish plate

4) Install the transmission case. <Ref. to CVT(TR580)-202, INSTALLATION, Transmission Case.>
5) Install the transmission control device. <Ref. to CVT(TR580)-196, INSTALLATION, Transmission Control Device.>
6) Install the oil strainer and oil pan. <Ref. to CVT(TR580)-109, INSTALLATION, Oil Pan and Strainer.>
7) Install the reduction driven gear assembly. <Ref. to CVT(TR580)-185, INSTALLATION, Reduction Driven Gear.>
8) Install the parking pawl. <Ref. to CVT(TR580)-184, INSTALLATION, Parking Pawl.>
9) Install the transfer driven gear assembly. <Ref. to CVT(TR580)-181, INSTALLATION, Transfer Driven Gear.>
10) Install the transfer clutch assembly. <Ref. to CVT(TR580)-168, INSTALLATION, Transfer Clutch.>
11) Install the extension case. <Ref. to CVT(TR580)-163, INSTALLATION, Extension Case.>
12) Install the inhibitor switch. <Ref. to CVT(TR580)-97, INSTALLATION, Inhibitor Switch.>
13) Install the secondary speed sensor. <Ref. to CVT(TR580)-101, INSTALLATION, Secondary Speed Sensor.>
14) Install the primary speed sensor. <Ref. to CVT(TR580)-104, INSTALLATION, Primary Speed Sensor.>
15) Install the turbine speed sensor. <Ref. to CVT(TR580)-99, INSTALLATION, Turbine Speed Sensor.>
16) Install the transmission harness. <Ref. to CVT(TR580)-133, INSTALLATION, Transmission Harness.>
17) Install the control valve body. <Ref. to CVT(TR580)-118, INSTALLATION, Control Valve Body.>
18) Install the air breather hose. <Ref. to CVT(TR580)-154, INSTALLATION, Air Breather Hose.>
19) Install the transmission assembly to the vehicle. <Ref. to CVT(TR580)-68, INSTALLATION, Automatic Transmission Assembly.>

C: INSPECTION

Check the reduction drive gear for breakage or damage.

D: ADJUSTMENT

1) Remove the retaining springs and reduction drive gear shims.
2) Install the transmission case, and secure it with four or five bolts.

Tightening torque:
22 N·m (2.2 kgf-m, 16.2 ft-lb)

3) Measure depth “A” from the ST upper face to the reduction drive gear end face.
ST 499575400 GAUGE

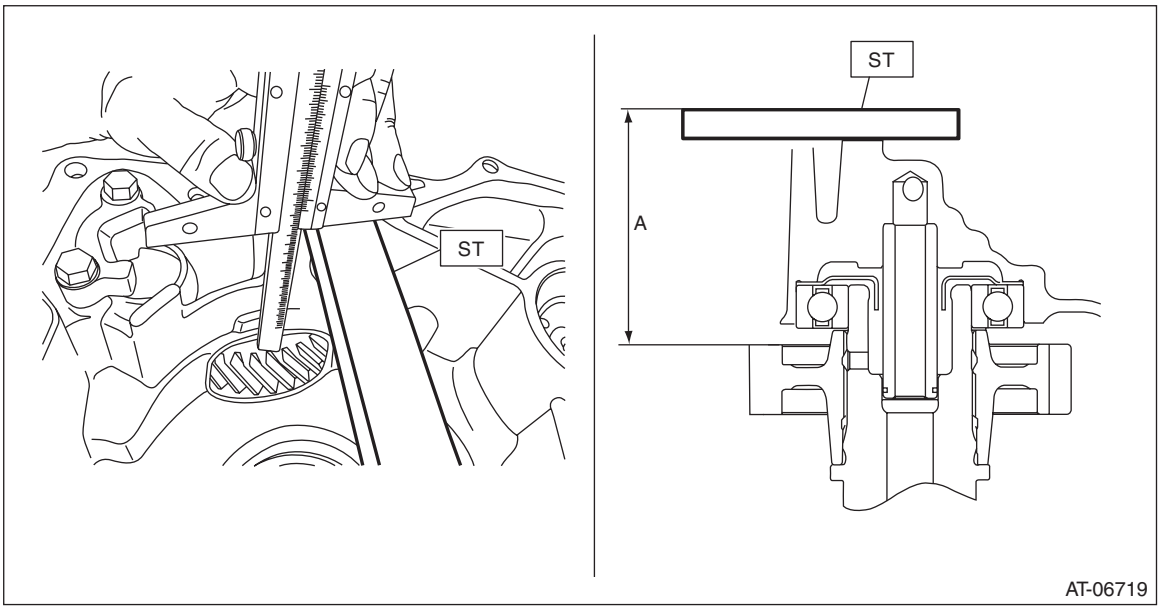

4) Raise and hold the reduction drive gear.

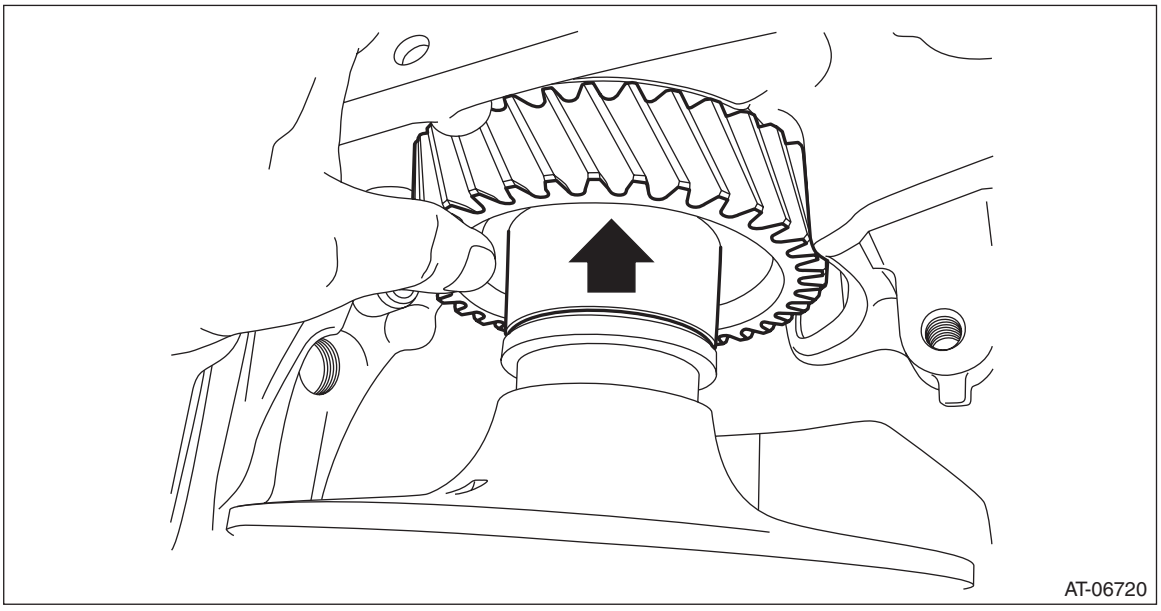

5) Measure depth “B” from the ST upper face to the reduction drive gear end face.
ST 499575400 GAUGE

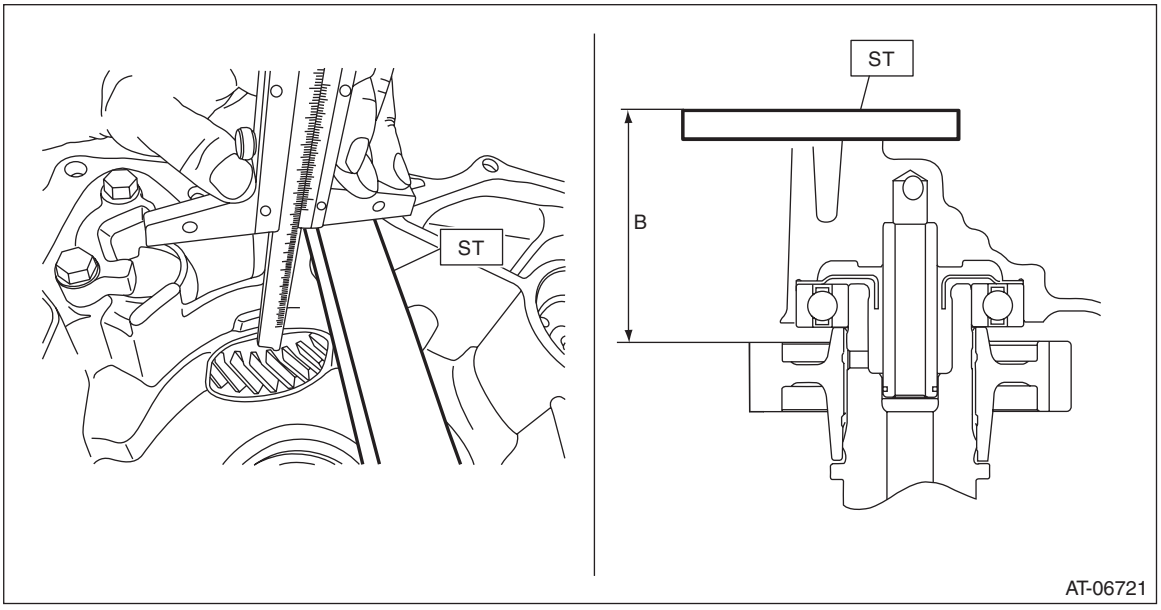

6) Calculate the following formula.
T mm = A – B – 1.0
[T in = A – B – 0.039]
T: Moving distance of reduction drive gear shim
A: Depth from the ST upper face to the reduction drive gear end surface
B: Depth from the ST upper face to the reduction drive gear end surface
1.0 mm (0.039 in): Thickness of spring retainer

Moving distance of transfer drive gear [T]	Total shim thickness mm (in)
0.420 — 0.519(0.0165 — 0.0204)	0.3 (0.012)
0.520 — 0.619(0.0205 — 0.0242)	0.4 (0.016)
0.620 — 0.719(0.0244 — 0.0283)	0.5 (0.020)
0.720 — 0.819(0.0283 — 0.0322)	0.6 (0.024)
0.820 — 0.919(0.0323 — 0.0362)	0.7 (0.028)
0.920 — 1.019(0.0362 — 0.0401)	0.8 (0.031)
1.020 — 1.119(0.0402 — 0.0441)	0.9 (0.035)
1.120 — 1.219(0.0441 — 0.0480)	1.0 (0.039)
1.220 — 1.319(0.0480 — 0.0519)	1.1 (0.043)
1.320 — 1.419(0.0520 — 0.0559)	1.2 (0.047)
1.420 — 1.519(0.0559 — 0.0598)	1.3 (0.051)
1.520 — 1.619(0.0598 — 0.0637)	1.4 (0.055)
1.620 — 1.719(0.0638 — 0.0677)	1.5 (0.059)
1.720 — 1.819(0.0677 — 0.0716)	1.6 (0.063)
1.820 — 1.920(0.0717 — 0.0756)	1.7 (0.067)

7) Select one to three reduction drive gear shims so that the total thickness meets the value obtained from step 6).

Part No.	Reduction drive gear shim thickness mm (in)
31288AA260	0.3 (0.012)
31288AA270	0.4 (0.016)
31288AA280	0.5 (0.020)
31288AA290	0.6 (0.024)

37.Primary Pulley and Secondary Pulley

A: REMOVAL

NOTE:
Always replace primary pulley and secondary pulley as an assembly because they are non-disassembled parts.
1) Remove the transmission assembly from the vehicle. <Ref. to CVT(TR580)-56, REMOVAL, Automatic Transmission Assembly.>
2) Remove the air breather hose. <Ref. to CVT(TR580)-152, REMOVAL, Air Breather Hose.>
3) Remove the control valve body. <Ref. to CVT(TR580)-112, REMOVAL, Control Valve Body.>
4) Remove the transmission harness. <Ref. to CVT(TR580)-126, REMOVAL, Transmission Harness.>
5) Remove the turbine speed sensor. <Ref. to CVT(TR580)-99, REMOVAL, Turbine Speed Sensor.>
6) Remove the secondary speed sensor. <Ref. to CVT(TR580)-101, REMOVAL, Secondary Speed Sensor.>
7) Remove the primary speed sensor. <Ref. to CVT(TR580)-103, REMOVAL, Primary Speed Sensor.>
8) Remove the inhibitor switch. <Ref. to CVT(TR580)-95, REMOVAL, Inhibitor Switch.>
9) Remove the extension case. <Ref. to CVT(TR580)-162, REMOVAL, Extension Case.>
10) Remove the transfer clutch assembly. <Ref. to CVT(TR580)-166, REMOVAL, Transfer Clutch.>
11) Remove the transfer driven gear assembly. <Ref. to CVT(TR580)-180, REMOVAL, Transfer Driven Gear.>
12) Remove the parking pawl. <Ref. to CVT(TR580)-183, REMOVAL, Parking Pawl.>
13) Remove the reduction driven gear assembly. <Ref. to CVT(TR580)-185, REMOVAL, Reduction Driven Gear.>
14) Remove the oil pan and oil strainer. <Ref. to CVT(TR580)-108, REMOVAL, Oil Pan and Strainer.>
15) Remove the transmission control device. <Ref. to CVT(TR580)-193, REMOVAL, Transmission Control Device.>
16) Remove the transmission case. <Ref. to CVT(TR580)-199, REMOVAL, Transmission Case.>
17) Remove the reduction drive gear. <Ref. to CVT(TR580)-212, REMOVAL, Reduction Drive Gear.>
18) Set the ST to secondary pulley, expand the V groove of pulley, and then completely loosen the variator chain.
ST 18769AA010 EXPANDER PULLEY

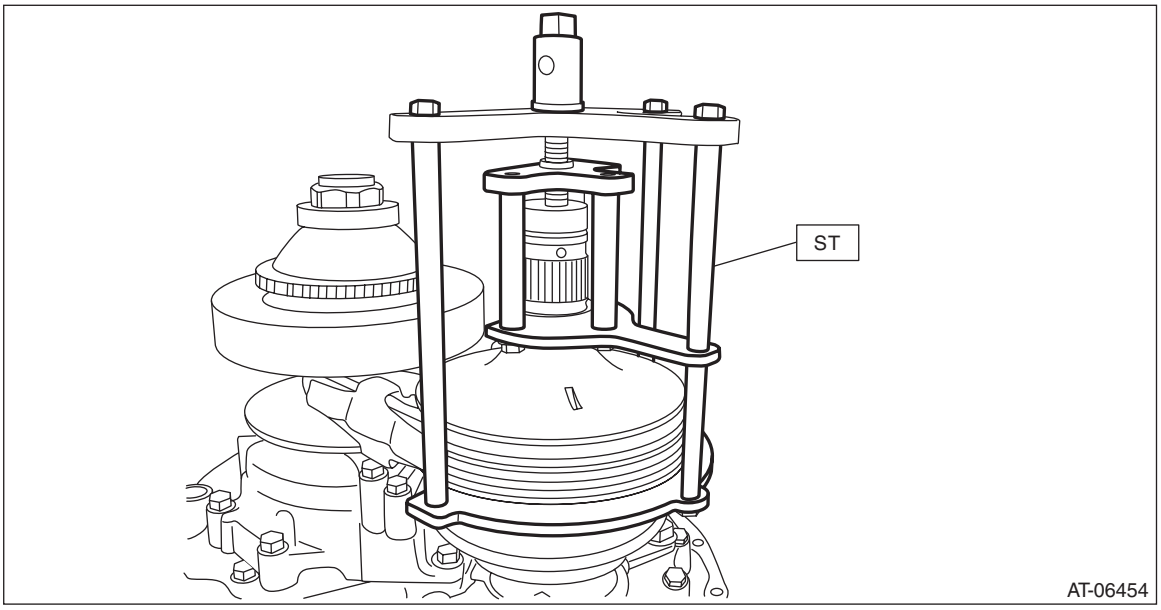

19) Remove the chain guide.
(1) Remove the chain guide from lubrication pipe.
(2) Detach the four claws to remove the chain guide.

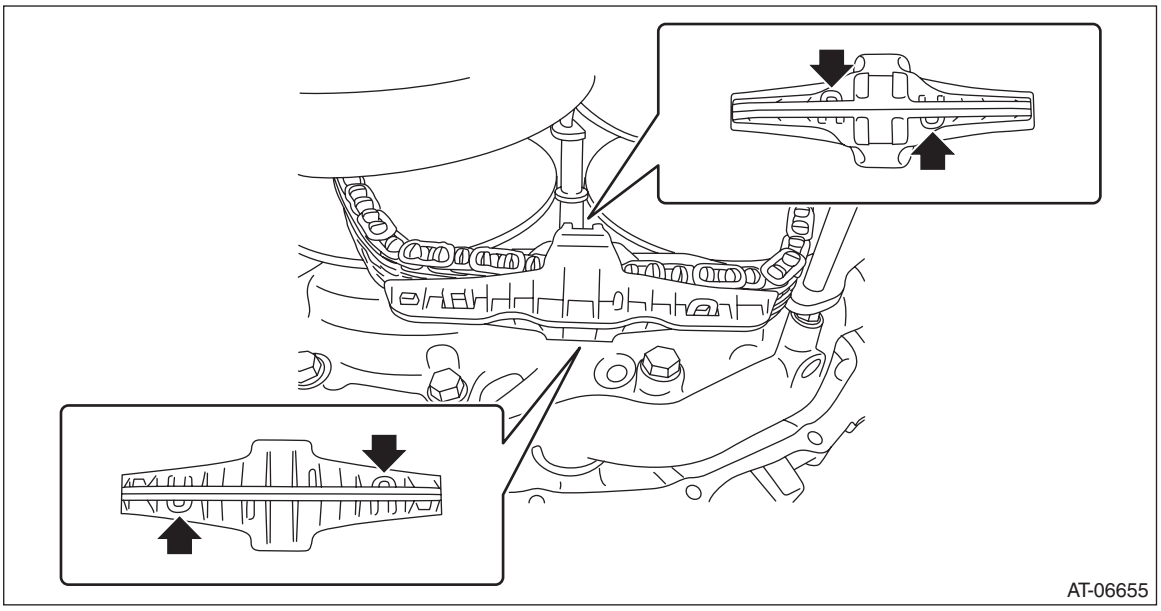

(3) Remove the lubrication pipe.

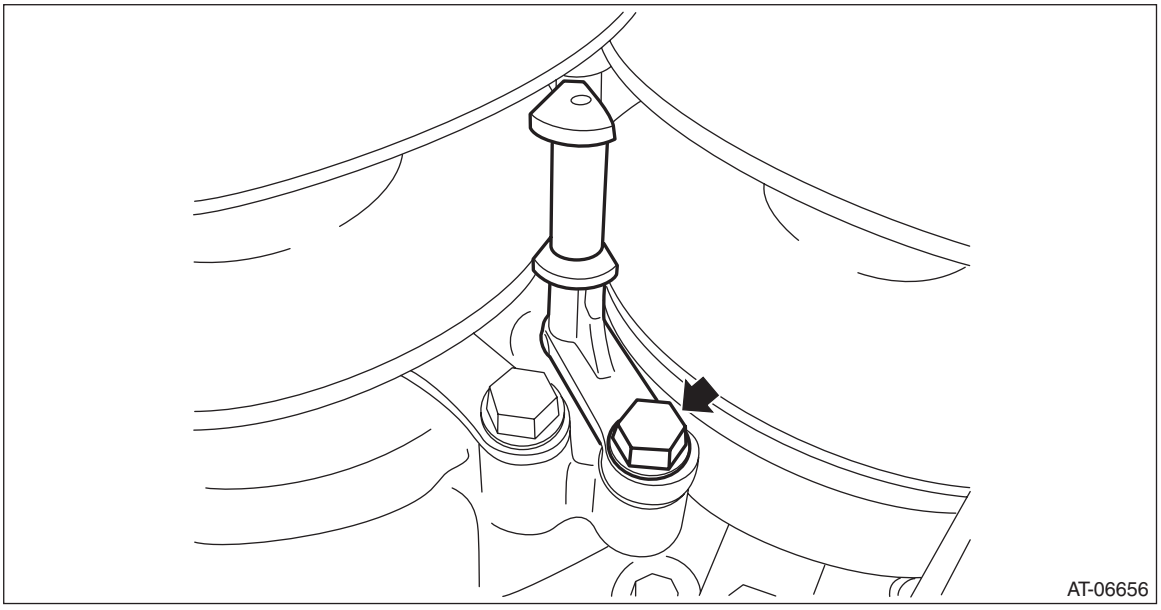

(4) Remove the support rod mounting bolts.

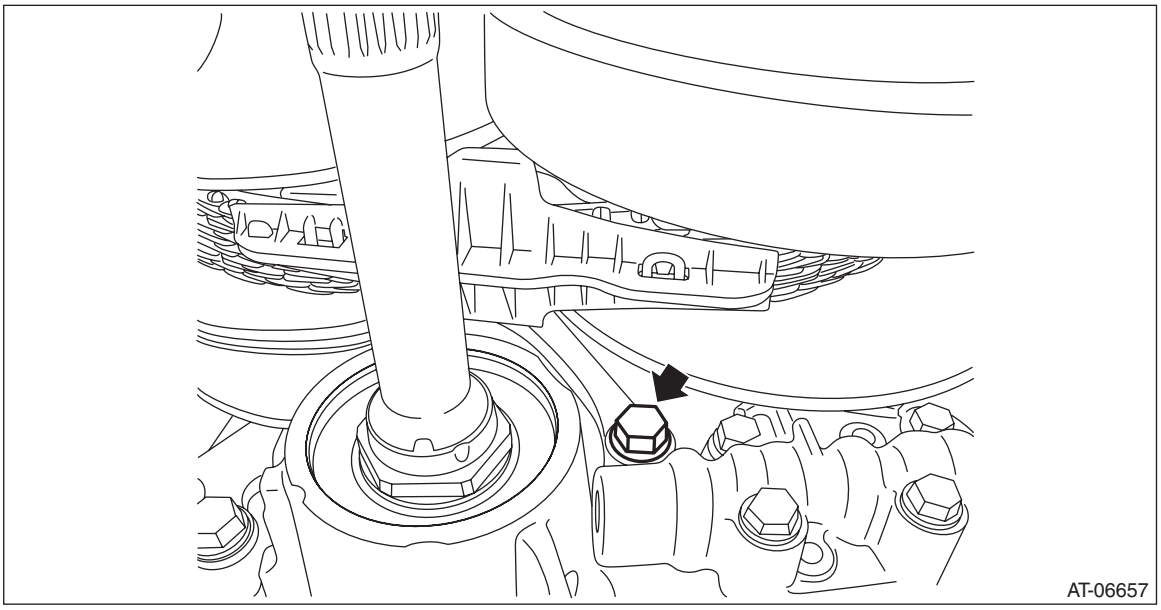

(5) Raise the support rod to remove the chain guide.

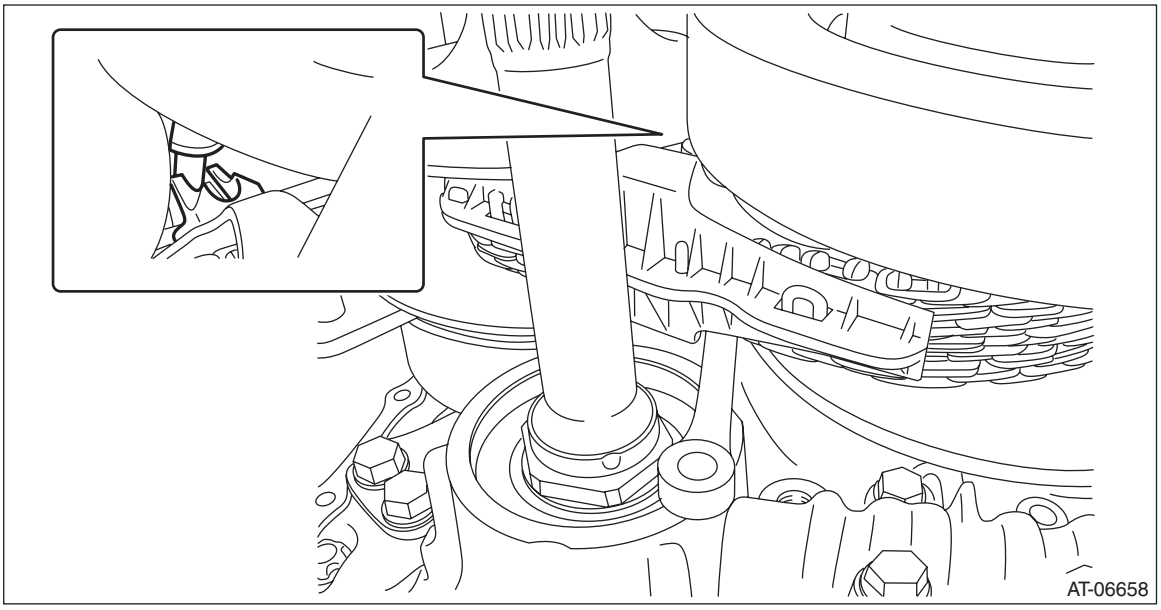

(6) Move the chain guide to the secondary pulley side.

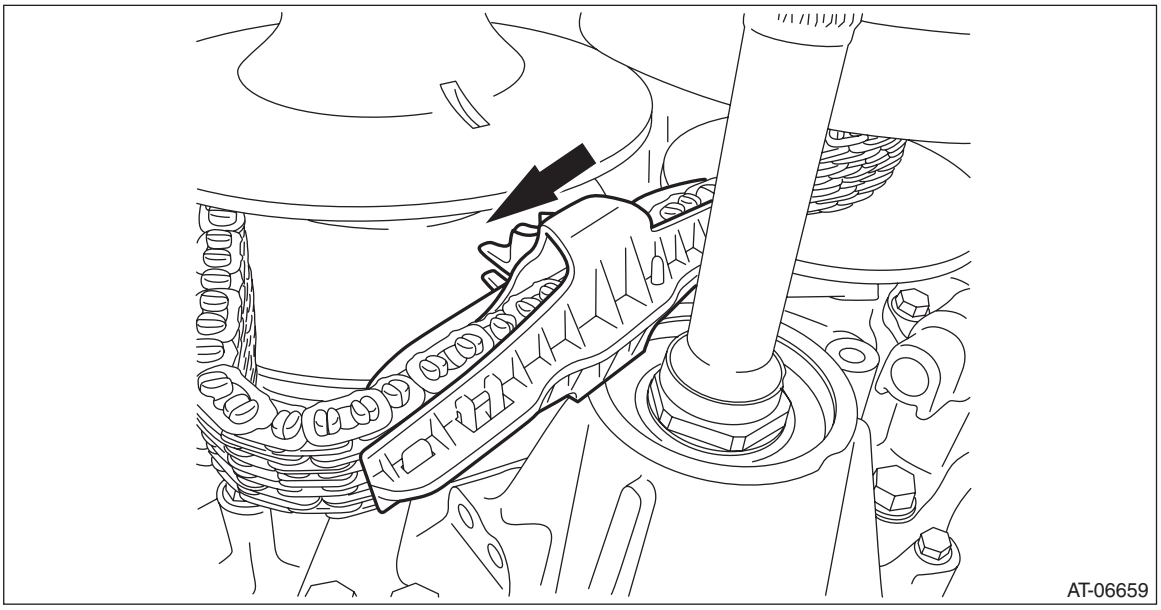

(7) Detach the four claws to remove the chain guide.

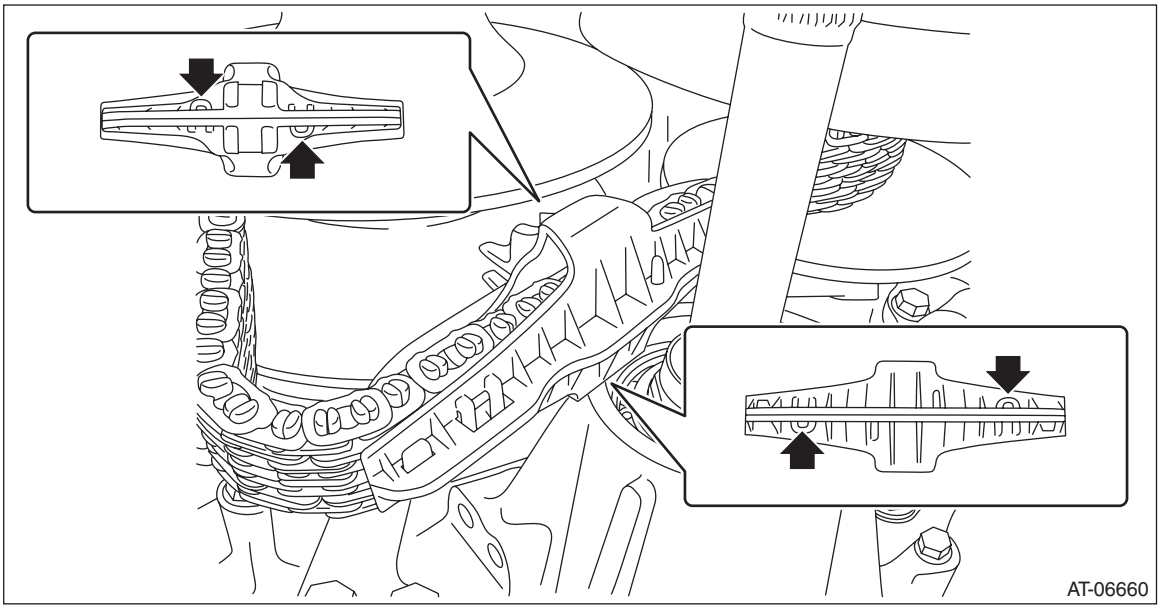

(8) Remove the support rod.

CAUTION:
Protect the both pulleys and variator chain from scratching.

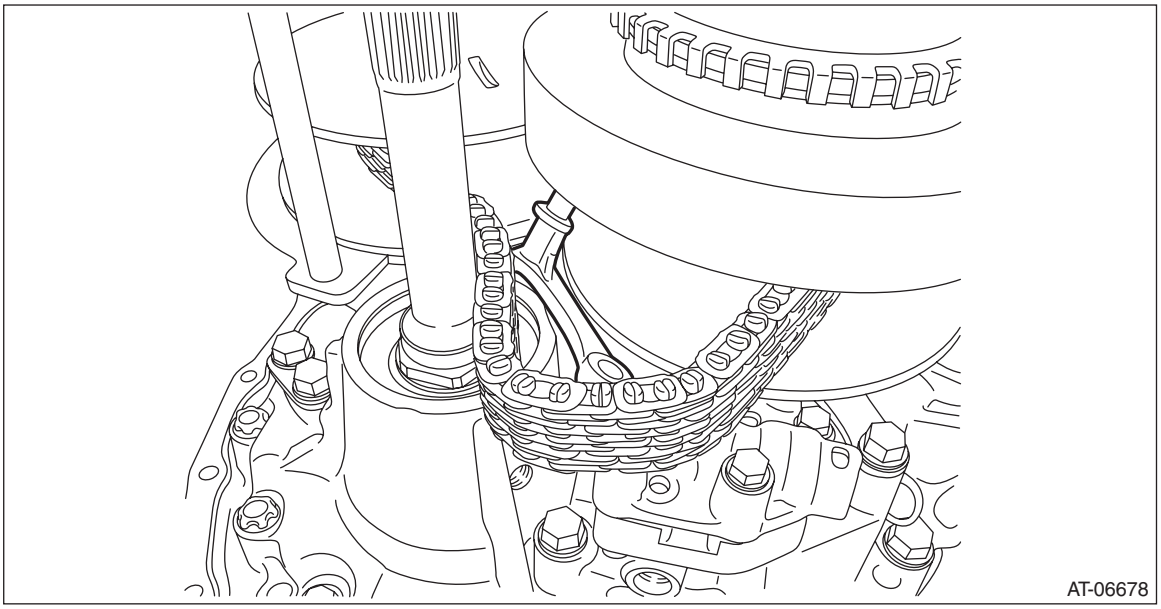

20) Remove the primary pulley mounting bolt.

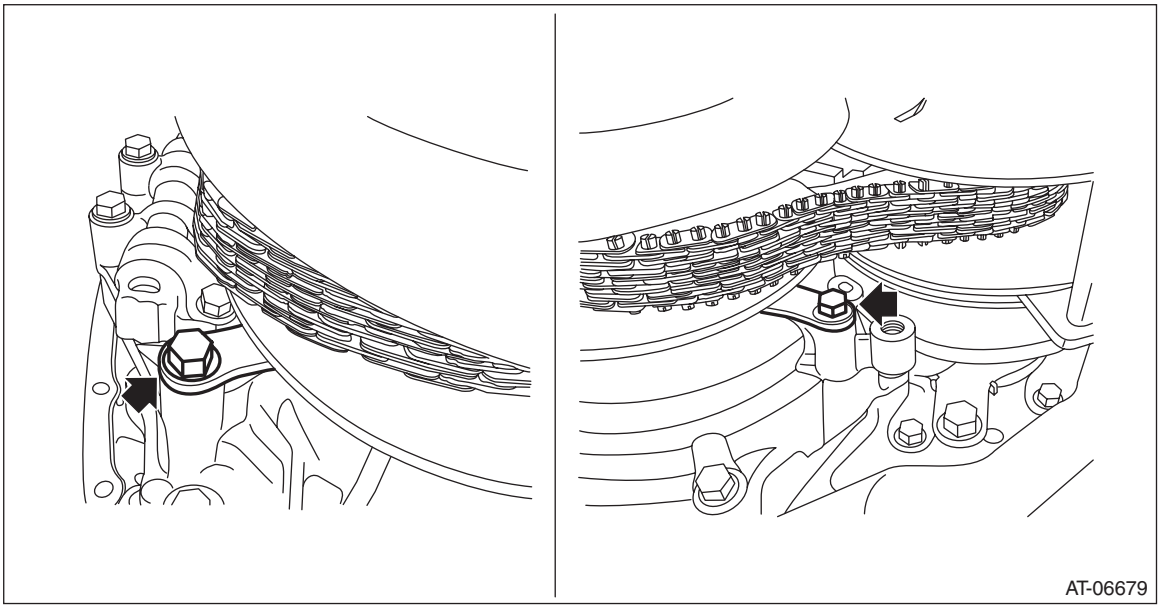

21) Remove the primary pulley from the reverse brake housing and intersect the V groove of secondary pulley and the V groove of primary pulley. Remove the variator chain from primary pulley, and remove the primary pulley.

CAUTION:
Cover the V grooves of secondary pulley and primary pulley with cloth to protect the both pulleys and variator chain from scratching.

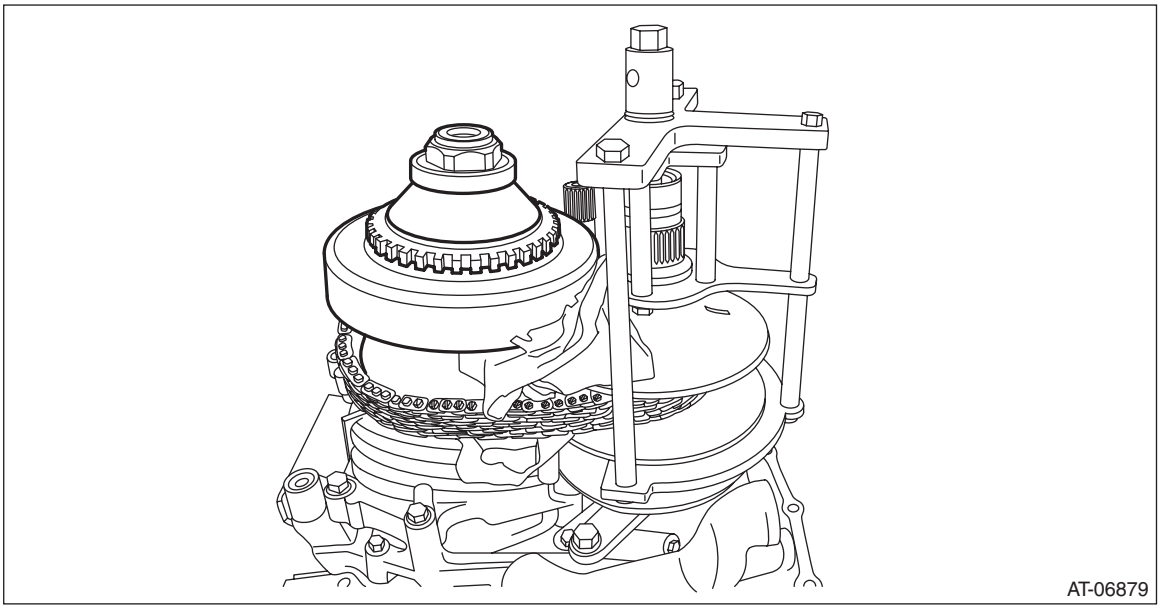

22) Remove the ST (EXPANDER PULLEY) from the secondary pulley.
23) Remove the variator chain from secondary pulley.
24) Remove the secondary pulley mounting bolts, and remove the secondary pulley.

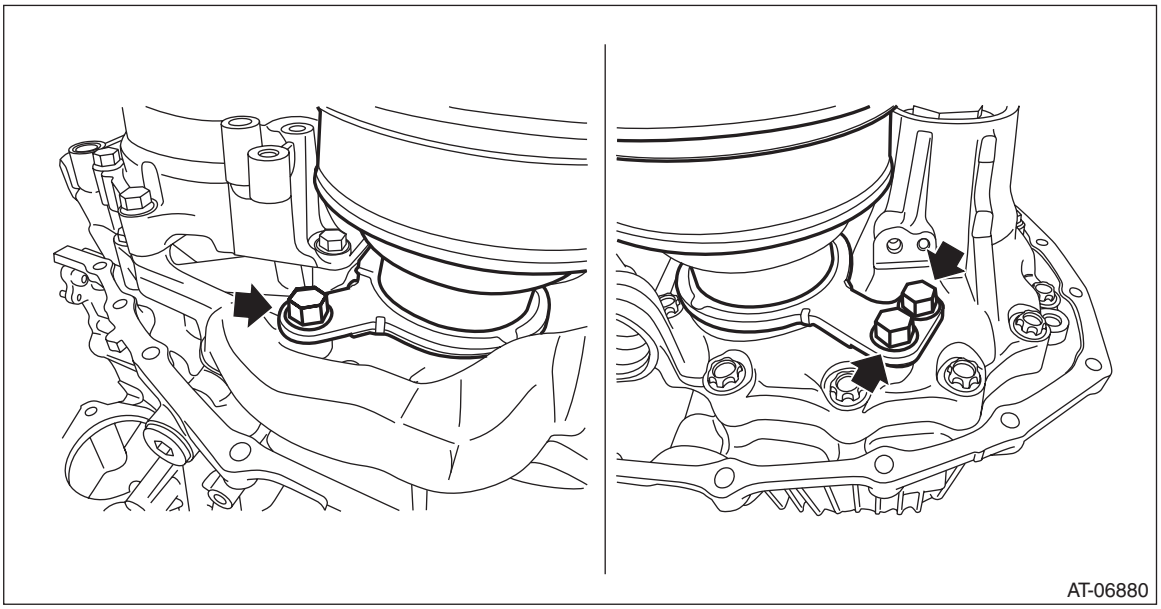

25) Remove the seal ring from drive pinion retainer.

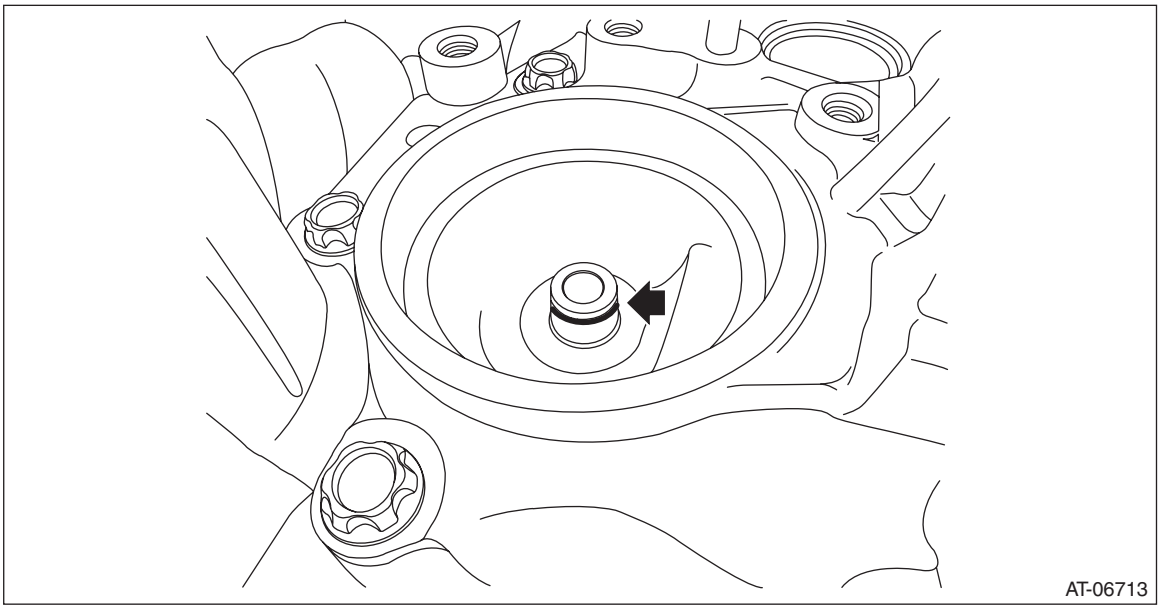

26) Remove the seal ring from the input shaft.

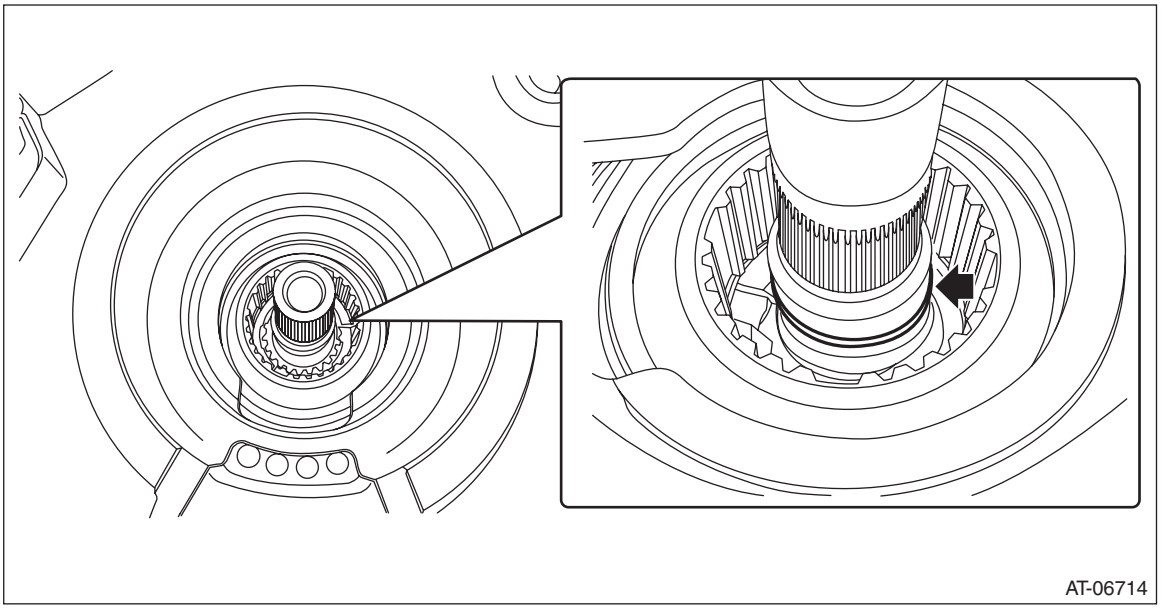

B: INSTALLATION

1) Select shims for pulley alignment. <Ref. to CVT(TR580)-232, ADJUSTMENT, Primary Pulley and Secondary Pulley.>
2) Install the seal ring to the input shaft.

NOTE:
- Use a new seal ring.
- When installing the seal ring, do not expand the seal ring too much.
- Apply CVTF to the seal rings.

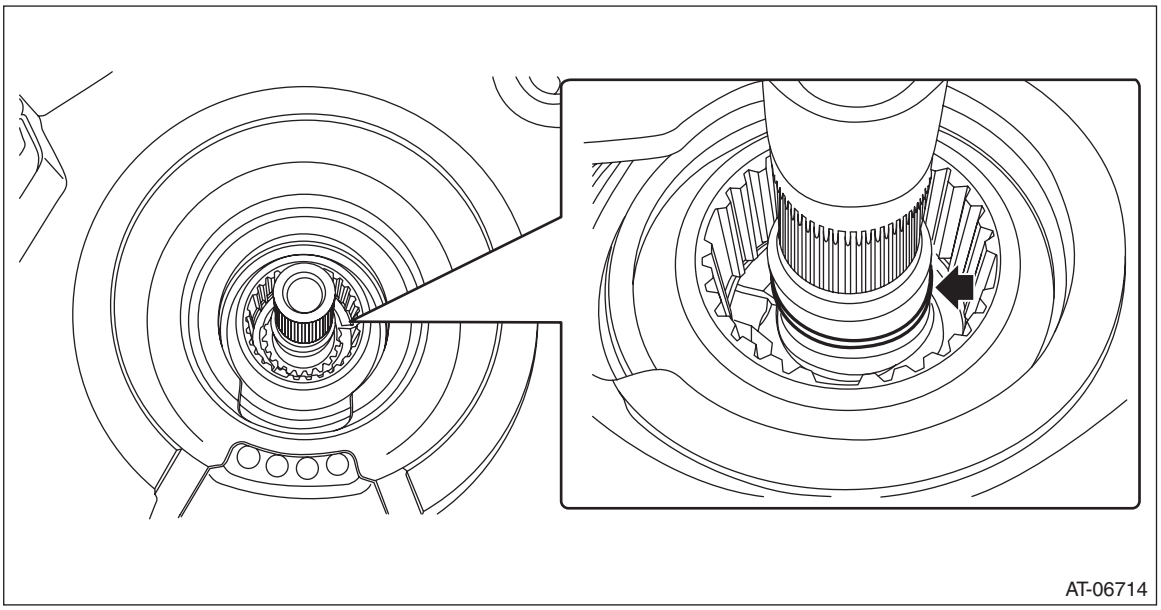

3) Install the seal ring to drive pinion retainer.

NOTE:
- Use a new seal ring.
- Apply CVTF to the seal rings.

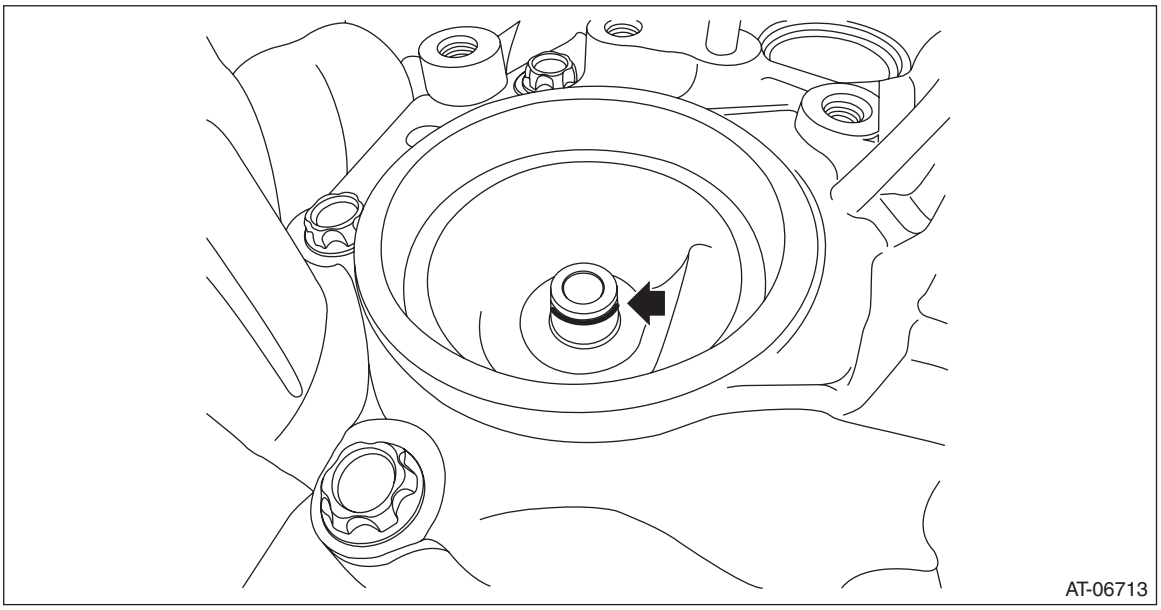

4) Install the selected shims to the primary pulley bearing catch surface.

5) Install the secondary pulley to the drive pinion retainer.

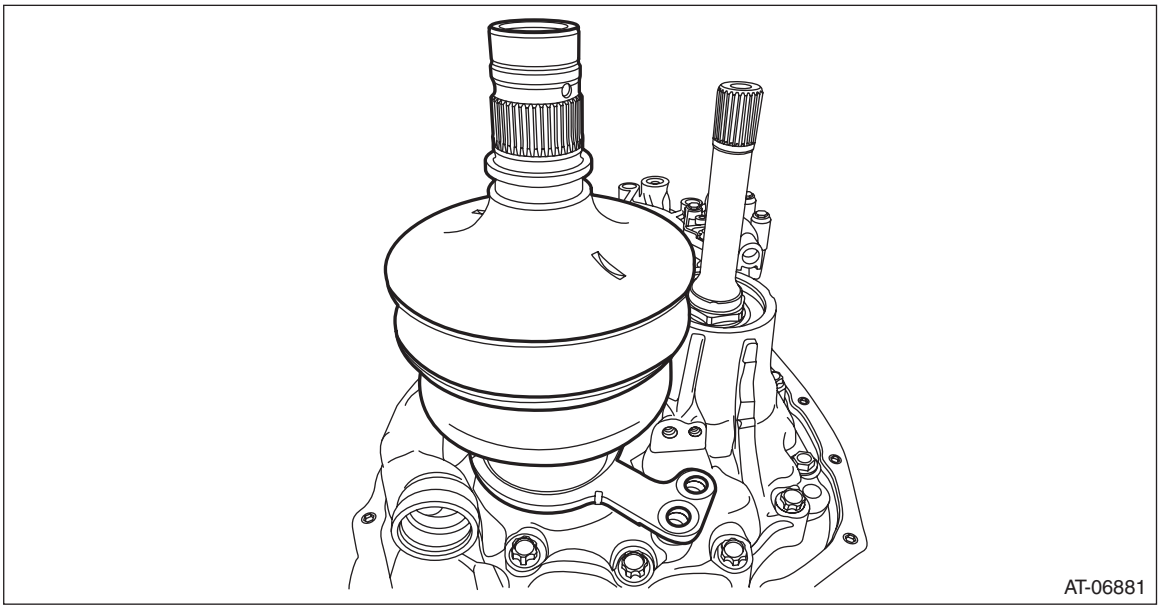

6) Install and tighten the secondary pulley securing bolts.
   (1) Tighten the three bolts until the seating surfaces contact the bearing retainer.

NOTE:
- Be careful not to tilt the bearing retainer of the secondary pulley.
- Apply CVTF to the bolt.

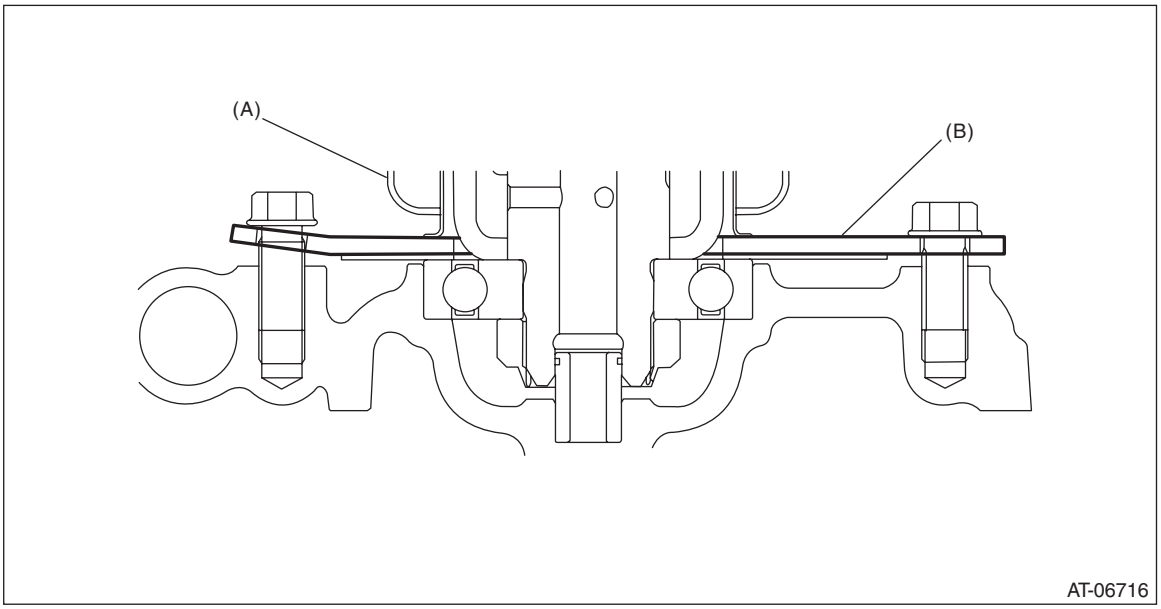

(A) Secondary pulley
(B) Bearing retainer

(2) Tighten the bolts in the order of (A) → (B) → (C) → (B).

Tightening torque:
67.5 N·m (6.9 kgf-m, 49.8 ft-lb)

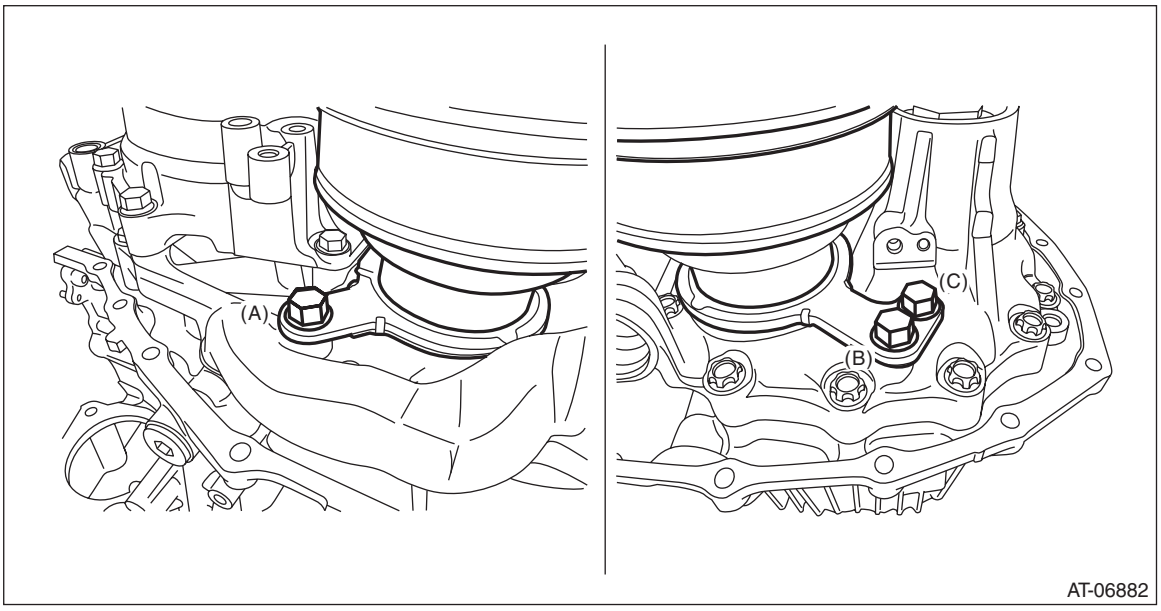

7) Place the variator chain on the V groove of the secondary pulley, and set the ST.
ST 18769AA010 EXPANDER PULLEY

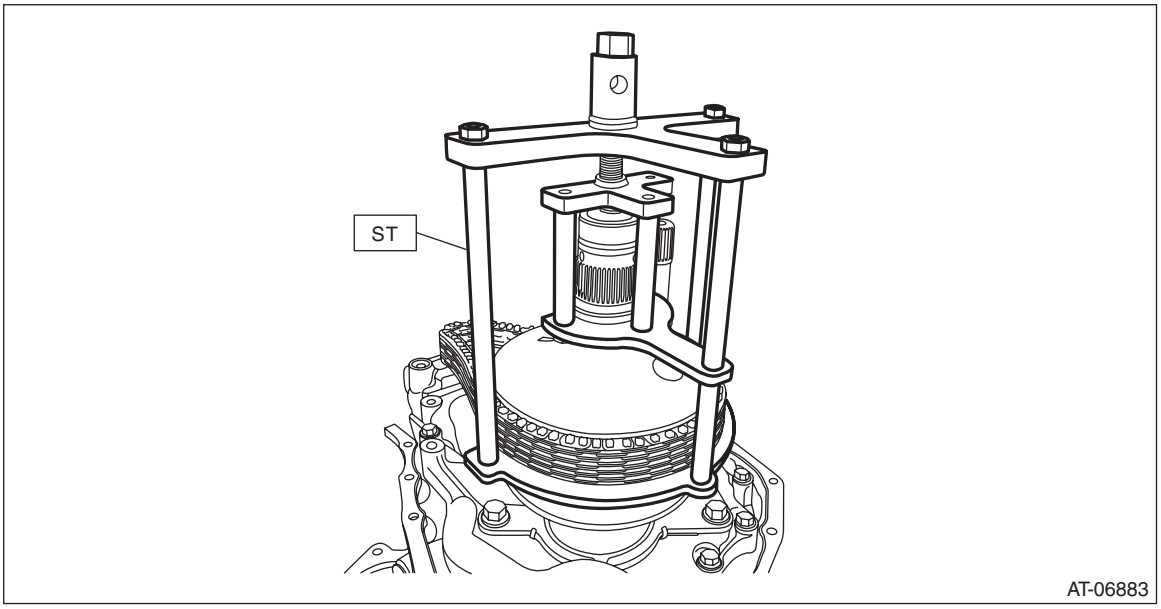

8) Expand the V groove of the secondary pulley.

9) Install the primary pulley to the reverse brake housing together with the variator chain.

CAUTION:
Cover the V grooves of primary pulley and secondary pulley with cloth to protect the both pulleys and variator chain from scratching.

(1) Intersect the V groove of primary pulley and the V groove of secondary pulley and install the secondary pulley while placing the variator chain on secondary pulley.

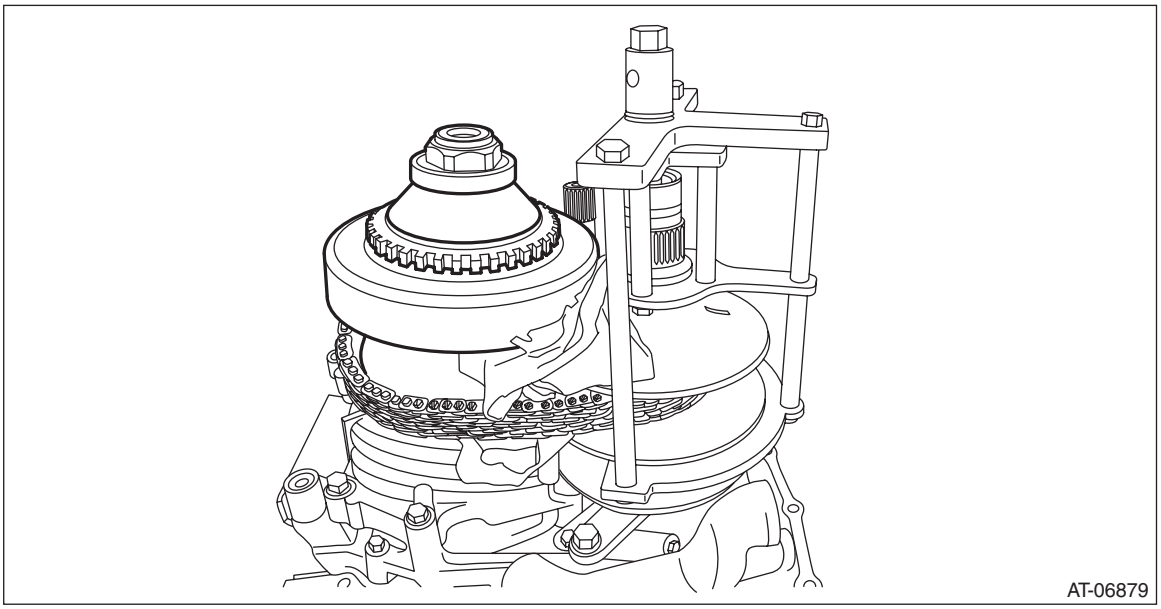

(2) Install the primary pulley to the reverse brake housing so that the bolt hole of primary bearing retainer and the bolt hole of reverse brake housing are aligned.

10) Install the primary pulley bolt.

Tightening torque:
21 N·m (2.1 kgf-m, 24.3 ft-lb)

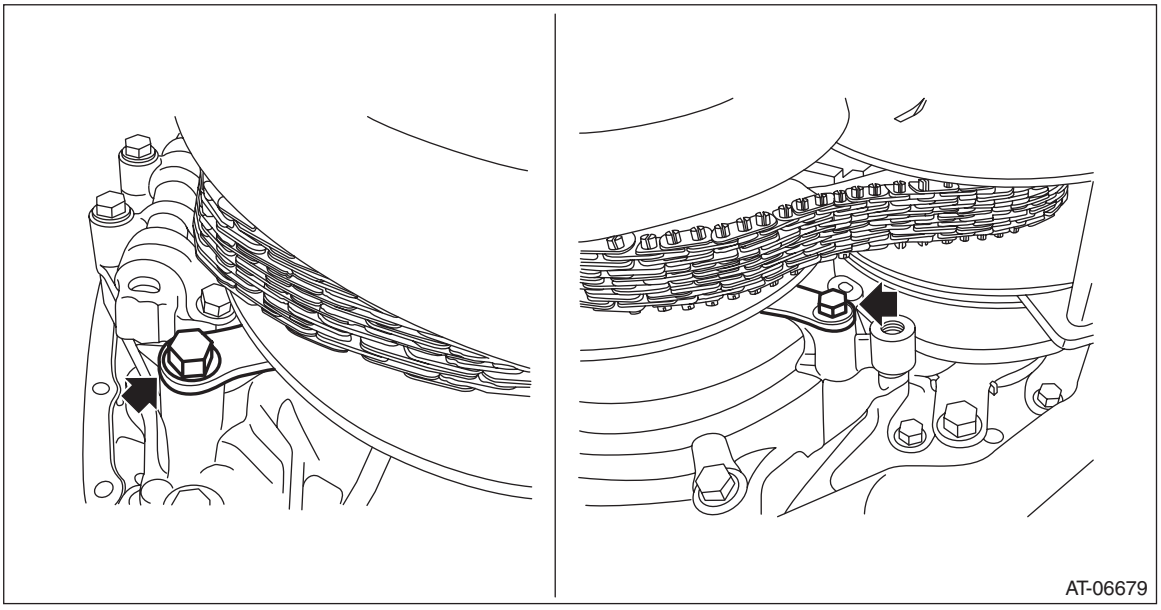

11) Install the chain guide.
(1) Place the support rod inside of the variator chain.

CAUTION:
Protect the both pulleys and variator chain from scratching.

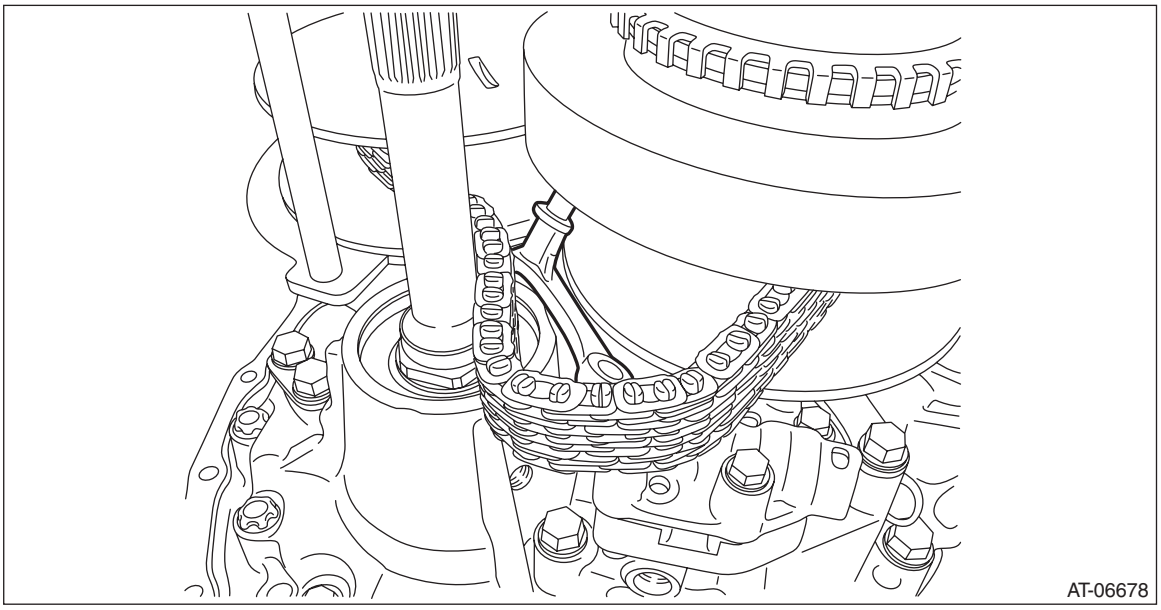
AT-06678

(2) Install the chain guide to the variator chain.

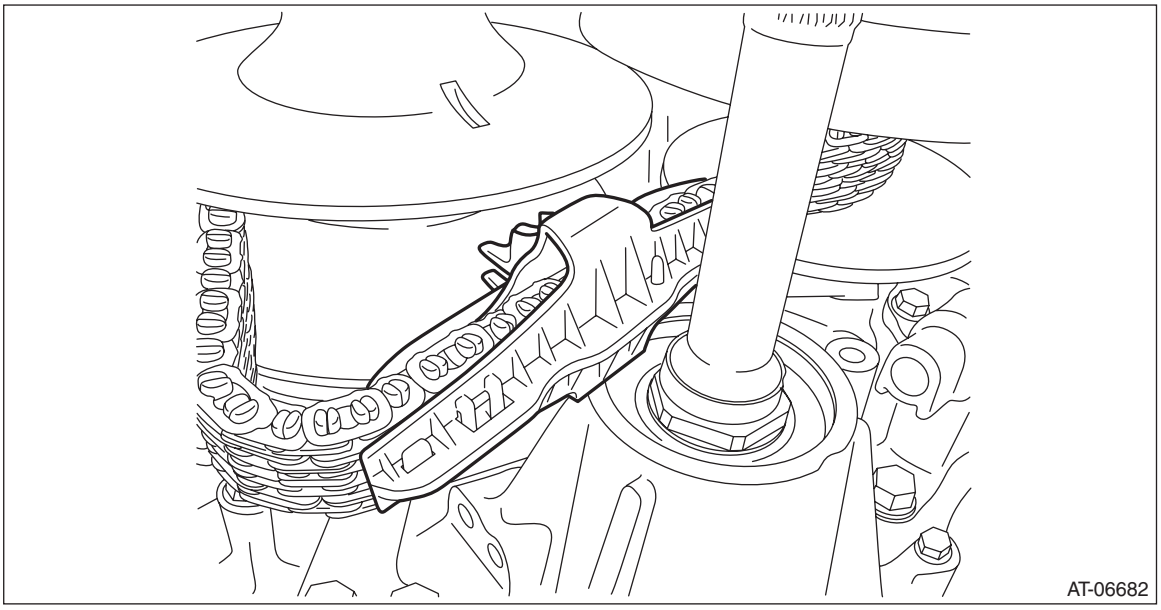
AT-06682

(3) Move the chain guide to the support rod side.
(4) While holding the support rod, press the chain guide so that the support rod runs through between the protrusions of chain guide and install the chain guide to the support rod.

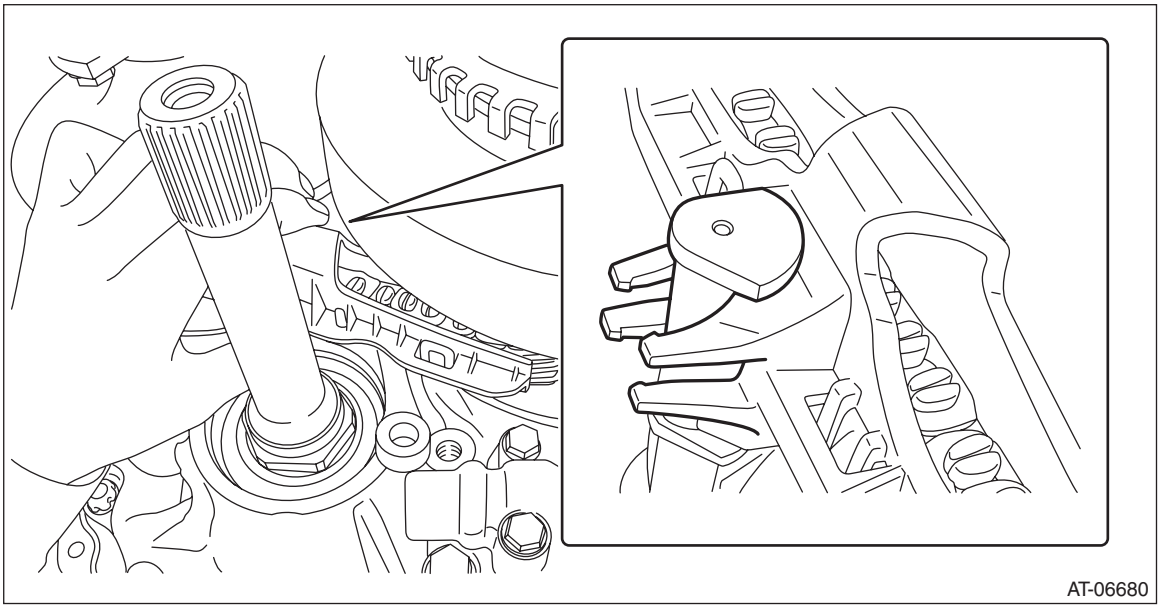

(5) Install the support rod.

Tightening torque:
21 N·m (2.1 kgf-m, 15.5 ft-lb)

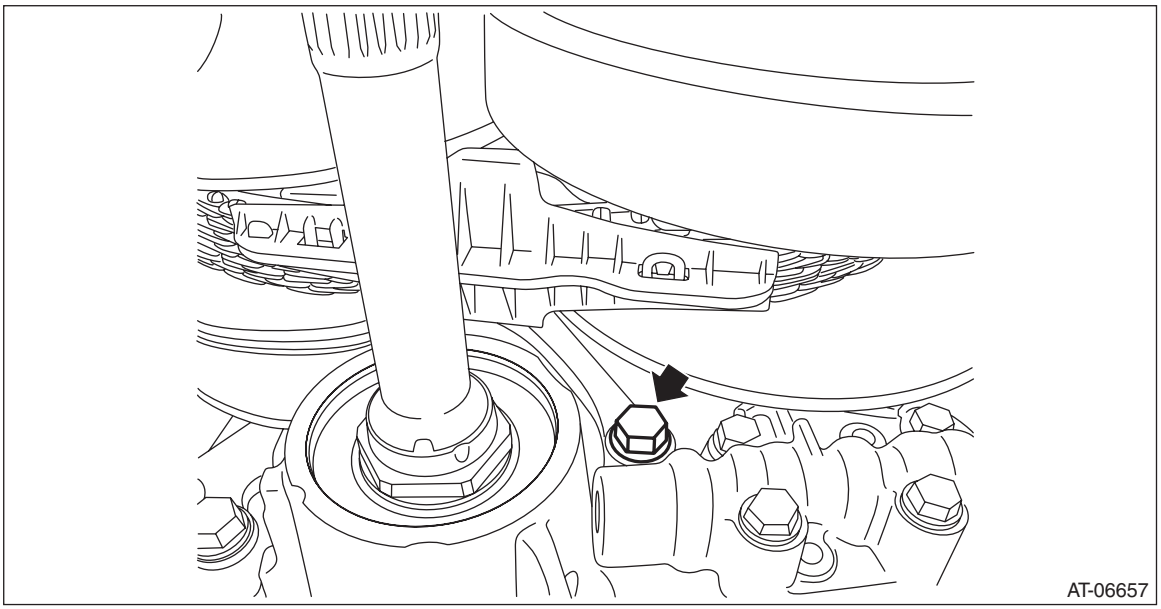

(6) Install the lubrication pipe.

Tightening torque:
21 N·m (2.1 kgf-m, 15.5 ft-lb)

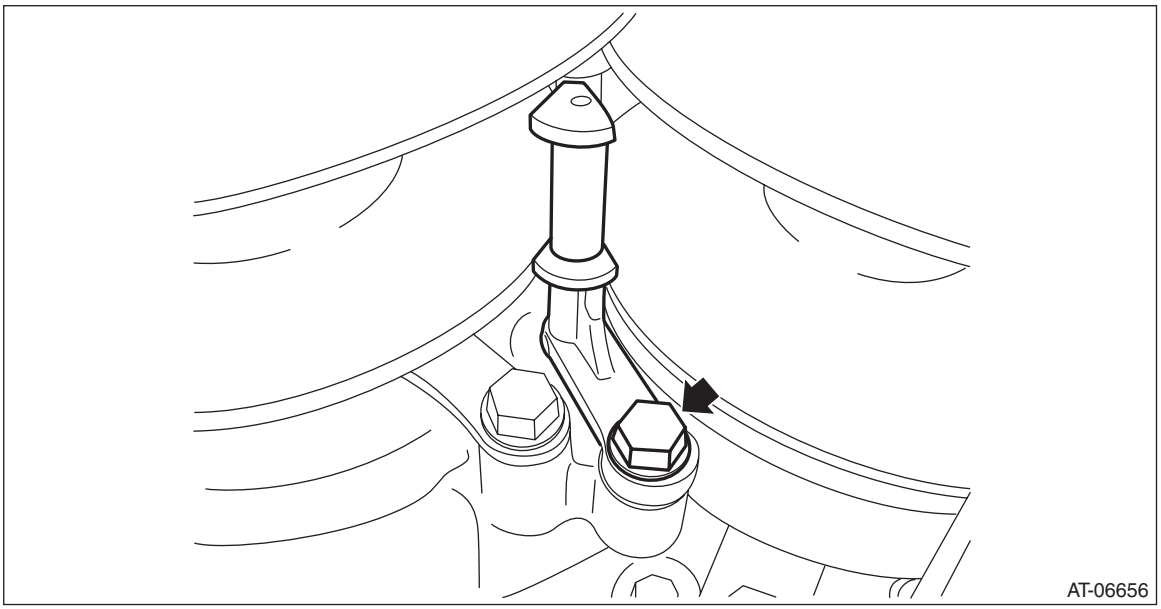

(7) Install the chain guide so that the lubrication pipe runs through between the protrusions of each chain guide. Then remove the ST (PULLEY EXPANDER).

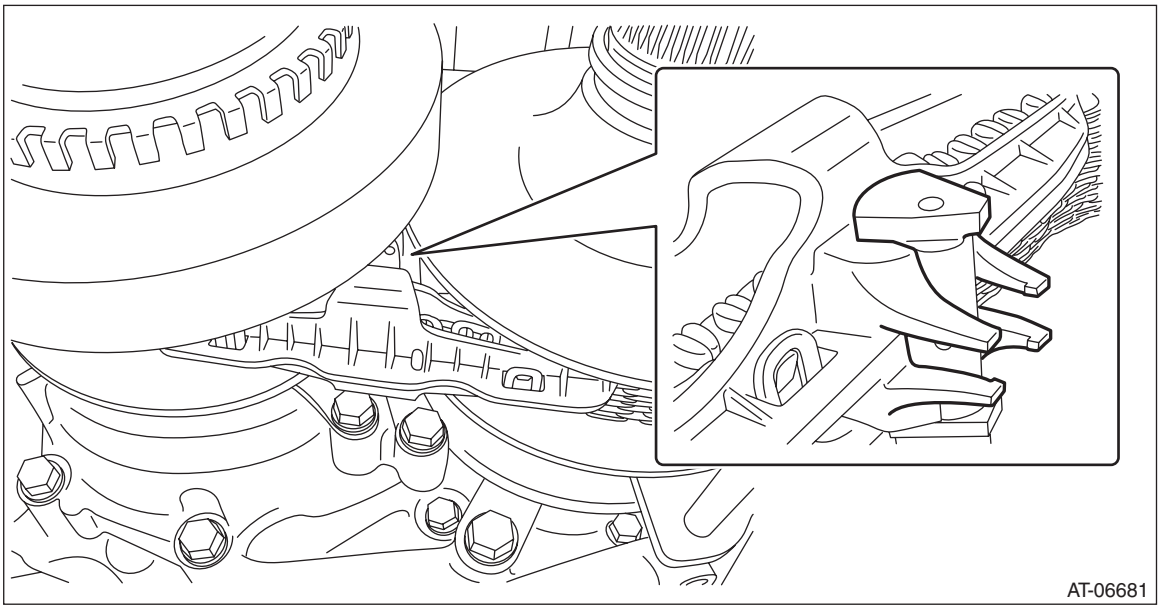

12) Install the reduction drive gear. <Ref. to CVT(TR580)-213, INSTALLATION, Reduction Drive Gear.>
13) Select the reduction drive gear shim. <Ref. to CVT(TR580)-215, ADJUSTMENT, Reduction Drive Gear.>
14) Install the transmission case. <Ref. to CVT(TR580)-202, INSTALLATION, Transmission Case.>
15) Install the transmission control device. <Ref. to CVT(TR580)-196, INSTALLATION, Transmission Control Device.>
16) Install the oil strainer and oil pan. <Ref. to CVT(TR580)-109, INSTALLATION, Oil Pan and Strainer.>
17) Install the reduction driven gear assembly. <Ref. to CVT(TR580)-185, INSTALLATION, Reduction Driven Gear.>
18) Install the transfer driven gear assembly. <Ref. to CVT(TR580)-181, INSTALLATION, Transfer Driven Gear.>
19) Install the transfer clutch assembly. <Ref. to CVT(TR580)-168, INSTALLATION, Transfer Clutch.>
20) Install the parking pawl. <Ref. to CVT(TR580)-184, INSTALLATION, Parking Pawl.>
21) Install the extension case. <Ref. to CVT(TR580)-163, INSTALLATION, Extension Case.>
22) Install the inhibitor switch. <Ref. to CVT(TR580)-97, INSTALLATION, Inhibitor Switch.>
23) Install the secondary speed sensor. <Ref. to CVT(TR580)-101, INSTALLATION, Secondary Speed Sensor.>
24) Install the primary speed sensor. <Ref. to CVT(TR580)-104, INSTALLATION, Primary Speed Sensor.>
25) Install the turbine speed sensor. <Ref. to CVT(TR580)-99, INSTALLATION, Turbine Speed Sensor.>
26) Install the transmission harness. <Ref. to CVT(TR580)-133, INSTALLATION, Transmission Harness.>
27) Install the control valve body. <Ref. to CVT(TR580)-118, INSTALLATION, Control Valve Body.>
28) Install the air breather hose. <Ref. to CVT(TR580)-154, INSTALLATION, Air Breather Hose.>
29) Install the transmission assembly to the vehicle. <Ref. to CVT(TR580)-68, INSTALLATION, Automatic Transmission Assembly.>

C: INSPECTION

- Check the surface of primary and secondary pulley cones for damage or wear.
- Check the primary and secondary pulley for damage.
- Check the bearing for seizure or wear.
- Apply CVTF to bearing and rotate the bearing to check for noise or dragging etc.

D: ADJUSTMENT

1. PROCEDURE IN REPLACEMENT OF PRIMARY AND SECONDARY PULLEY, OR IN REPLACEMENT OF PRIMARY PULLEY, SECONDARY PULLEY AND VARIATOR CHAIN

1) Measure depth “Lp” from the ST upper face to the primary pulley bearing catch surface at several points and calculate the average.
ST 499575400 GAUGE

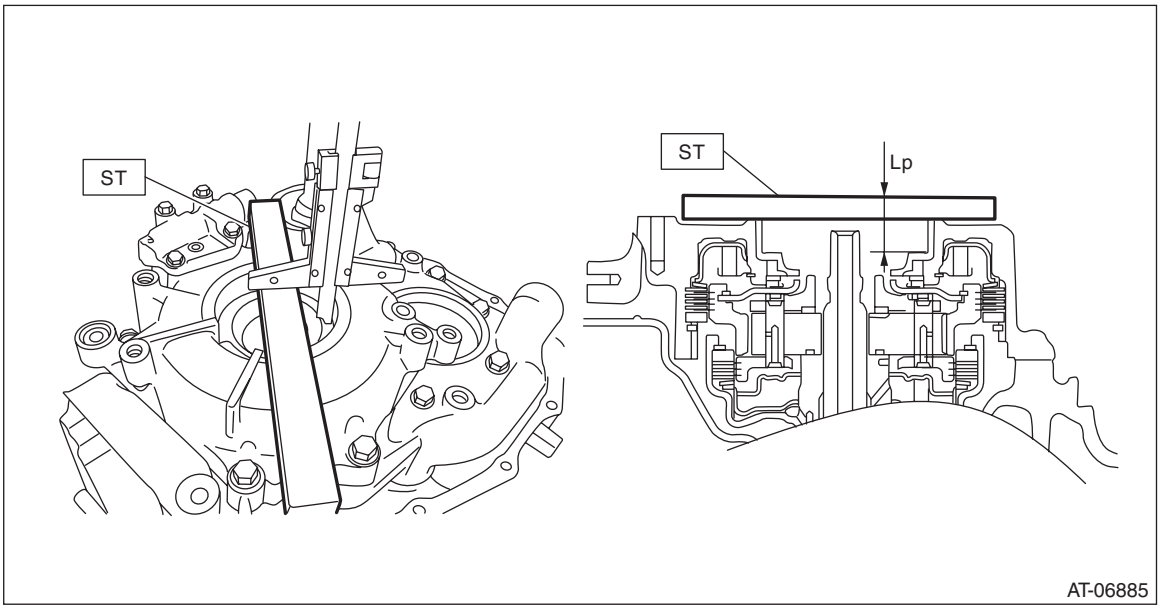

2) Measure the depth “Ls” from the ST upper face to the secondary pulley bearing catch surface at several points and calculate the average.
ST 499575400 GAUGE

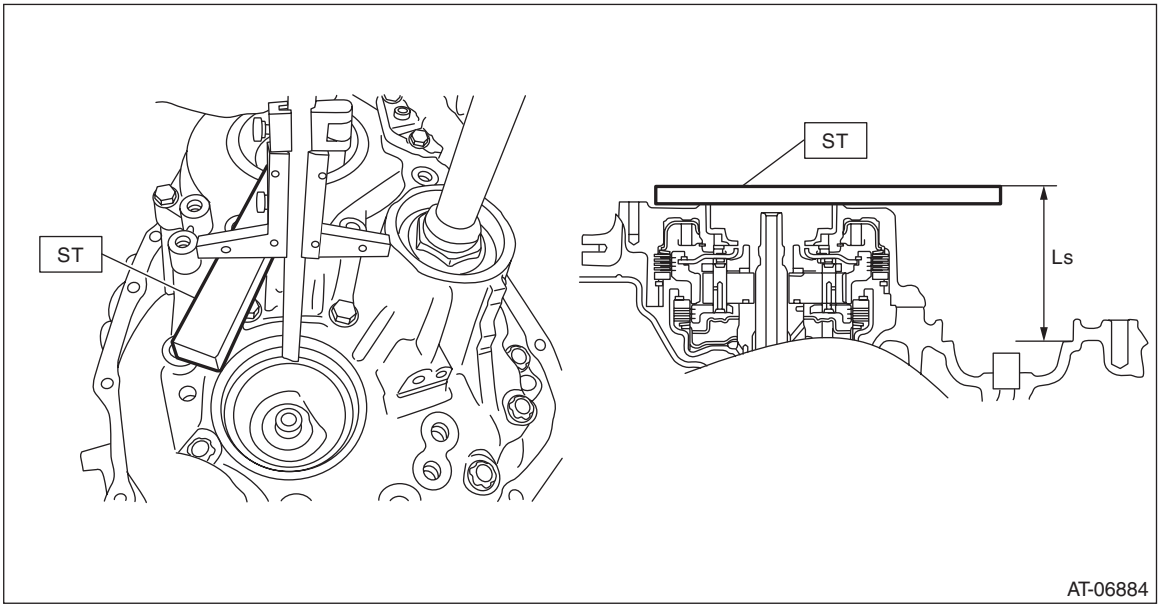

3) Calculate the following formula.
Calculation formula:
T (mm) = B – A + Lp – Ls – 28.602
[T (in) = B – A + Lp – Ls – 1.126]
T: Pulley alignment
A: Specified primary pulley dimension
B: Specified secondary pulley dimension
Lp: Depth from the ST upper face to the primary pulley bearing catch surface
Ls: Depth from the ST upper face to the secondary pulley bearing catch surface
28.602 mm (1.126 in): Constant

Pulley alignment T mm (in)	Thickness of shim mm (in)
-0.05 — 0.049 (-0.002 — 0.002)	No shims
0.050 — 0.149 (0.002 — 0.006)	0.1 (0.004)
0.150 — 0.249 (0.006 — 0.010)	0.2 (0.008)
0.250 — 0.349 (0.010 — 0.014)	0.3 (0.012)
0.350 — 0.449 (0.014 — 0.018)	0.4 (0.016)
0.450 — 0.549 (0.018 — 0.022)	0.5 (0.020)
0.550 — 0.649 (0.022 — 0.026)	0.6 (0.024)
0.650 — 0.749 (0.026 — 0.029)	0.7 (0.028)
0.750 — 0.849 (0.029 — 0.033)	0.8 (0.031)
0.850 — 0.949 (0.033 — 0.037)	0.9 (0.035)
0.950 — 1.049 (0.037 — 0.041)	1.0 (0.039)
1.050 — 1.149 (0.041 — 0.045)	1.1 (0.043)

4) Select one to two shims so that the total thickness meets the value obtained from step 3).

Part No.	Shim thickness mm (in)
32451AA050	0.1 (0.004)
32451AA060	0.2 (0.008)
32451AA070	0.3 (0.012)
32451AA080	0.4 (0.016)
32451AA090	0.5 (0.020)
32451AA100	0.6 (0.024)

2. PROCEDURE WHEN REPLACING ONLY DRIVE PINION RETAINER OR REVERSE BRAKE HOUSING

1) Clean the mating surface of current drive pinion retainer and converter case.
2) Measure and record the shim thickness that is attached on the current reverse brake housing.
3) Using the current drive pinion retainer, measure depth “Lp1” from the ST upper face to the primary pulley bearing catch surface at several points and calculate the average.
ST 499575400 GAUGE

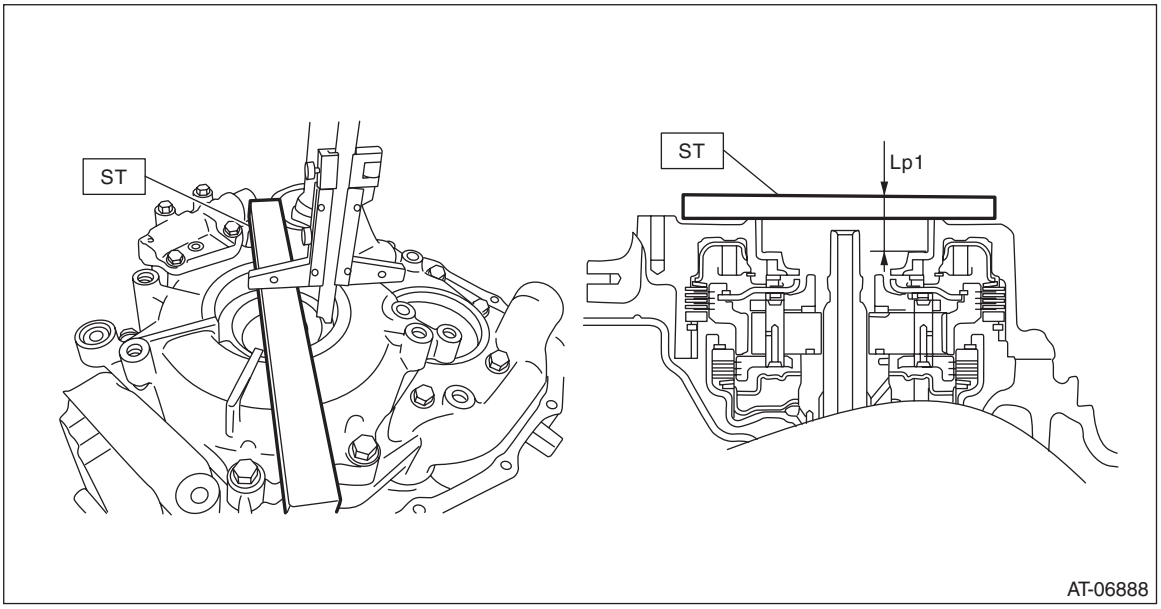

4) Using the current drive pinion retainer or current reverse brake housing, measure the depth “Ls1” from the ST upper face to the secondary pulley bearing catch surface at several points and calculate the average.
ST 499575400 GAUGE

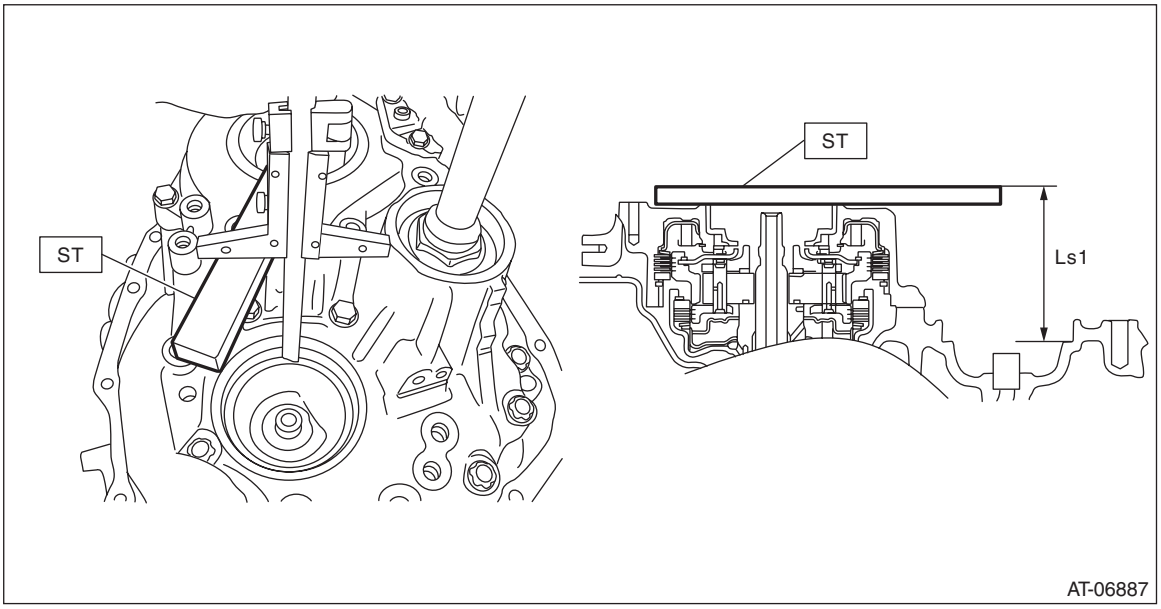

5) Calculate the “LD1” using the following formula and record it.
Calculation formula:
LD1 mm (in) = Ls1 – Lp1
LD1: Height from the primary pulley bearing catch surface to the secondary pulley bearing catch surface
Lp1: Depth from the ST upper face to the primary pulley bearing catch surface
Ls1: Depth from the ST upper face to the secondary pulley bearing catch surface
6) Using the new drive pinion retainer or new reverse brake housing, measure the depth “Lp2” from the ST upper face to the primary pulley bearing catch surface at several points and calculate the average.
ST 499575400 GAUGE

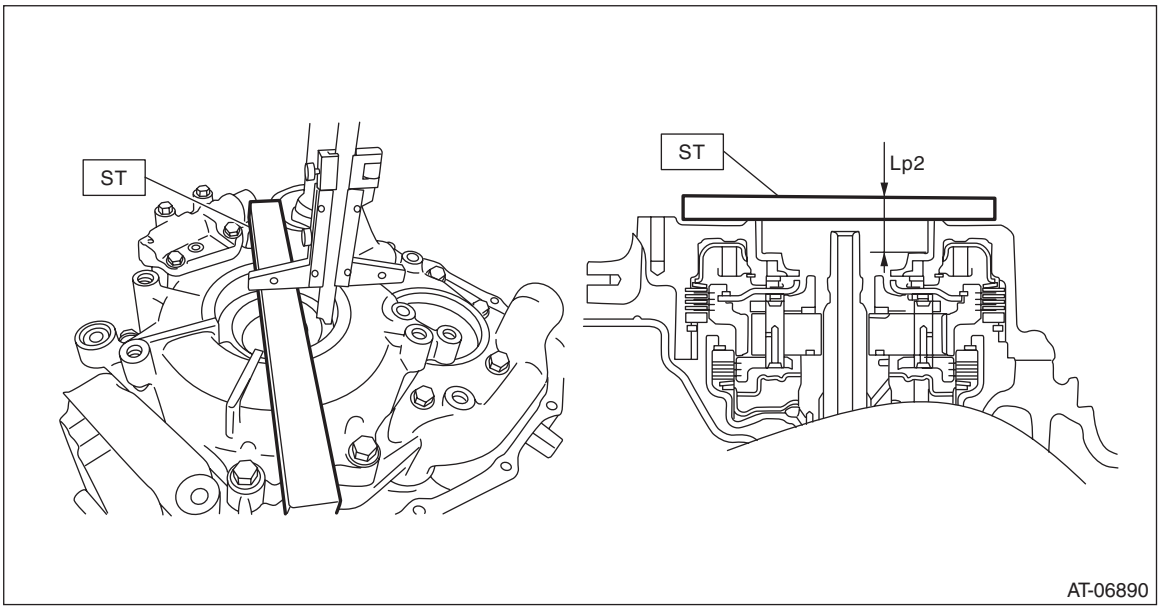

7) Using the new drive pinion retainer or new reverse brake housing, measure the depth “Ls2” from the ST upper face to the secondary pulley bearing catch surface at several points and calculate the average.
ST 499575400 GAUGE

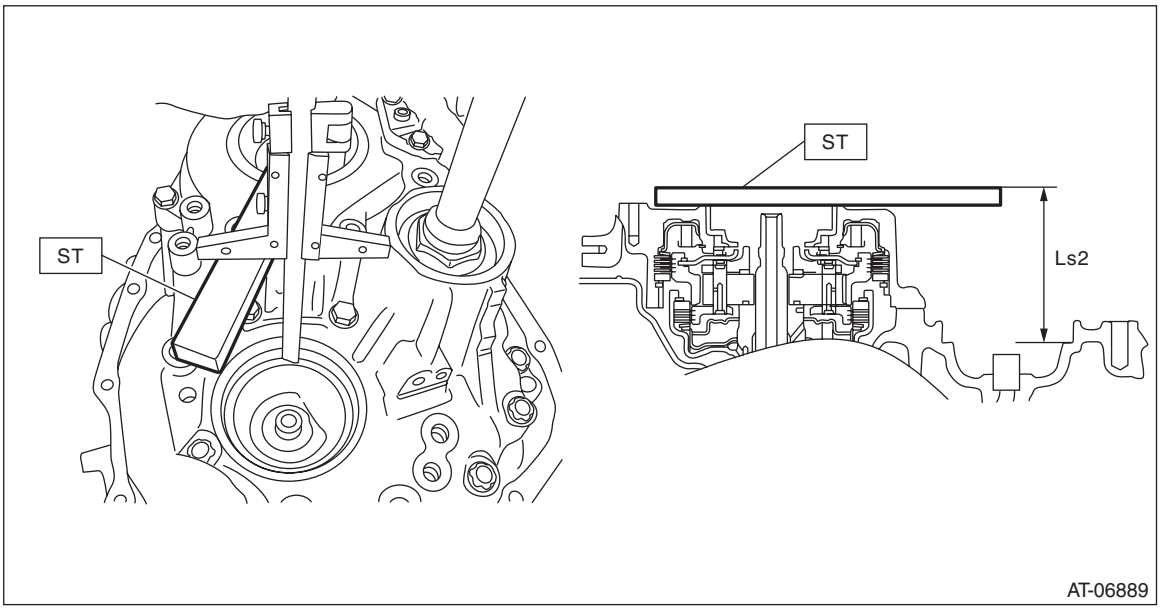

8) Calculate the “LD2” using the following formula and record it.
Calculation formula:
LD2 mm (in) = Ls2 – Lp2
LD2: Height from the primary pulley bearing catch surface to the secondary pulley bearing catch surface
Lp2: Depth from the ST upper face to the primary pulley bearing catch surface
Ls2: Depth from the ST upper face to the secondary pulley bearing catch surface
9) Calculate the recorded values of “LD1” and “LD2” to obtain the positive number to select the shims.
Calculation formula: T1 mm (in) = LD1 – LD2 or T2 mm (in) = LD2 – LD1
T1, T2: Difference between new drive pinion retainer or new reverse brake housing and current drive pinion retainer or current reverse brake housing
LD1: Calculated value of current drive pinion retainer or current reverse brake housing
LD2: Calculated value of new drive pinion retainer or new reverse brake housing

Difference of the case (T1) mm (in)	Shim selection procedure
0 — 0.050 (0 — 0.00197)	Select a new shim of the same thickness with the shim that is used on the primary pulley side of the current reverse brake housing.
0.051 — 0.150 (0.00201 — 0.00591)	Select a shim which is 0.1 mm (0.004 in) thicker than the shim that is used on the primary pulley side of the current reverse brake housing.
0.151 — 0.250 (0.00594 — 0.00984)	Select a shim which is 0.2 mm (0.008 in) thicker than the shim that is used on the primary pulley side of the current reverse brake housing.
0.251 — 0.350 (0.00988 — 0.01378)	Select a shim which is 0.3 mm (0.012 in) thicker than the shim that is used on the primary pulley side of the current reverse brake housing.
0.351 — 0.450 (0.01382 — 0.01772)	Select a shim which is 0.4 mm (0.016 in) thicker than the shim that is used on the primary pulley side of the current reverse brake housing.
0.451 — 0.550 (0.01776 — 0.02165)	Select a shim which is 0.5 mm (0.020 in) thicker than the shim that is used on the primary pulley side of the current reverse brake housing.
0.551 — 0.600 (0.02169 — 0.02362)	Select a shim which is 0.6 mm (0.024 in) thicker than the shim that is used on the primary pulley side of the current reverse brake housing.

Difference of the case (T2) mm (in)	Shim selection procedure
0 — 0.050 (0 — 0.00197)	Select a new shim of the same thickness with the shim that is used on the primary pulley side of the current reverse brake housing.
0.051 — 0.150 (0.00201 — 0.00591)	Select a shim which is 0.1 mm (0.004 in) thinner than the shim that is used on the primary pulley side of the current reverse brake housing.
0.151 — 0.250 (0.00594 — 0.00984)	Select a shim which is 0.2 mm (0.008 in) thinner than the shim that is used on the primary pulley side of the current reverse brake housing.
0.251 — 0.350 (0.00988 — 0.01378)	Select a shim which is 0.3 mm (0.012 in) thinner than the shim that is used on the primary pulley side of the current reverse brake housing.
0.351 — 0.450 (0.01382 — 0.01772)	Select a shim which is 0.4 mm (0.016 in) thinner than the shim that is used on the primary pulley side of the current reverse brake housing.
0.451 — 0.550 (0.01776 — 0.02165)	Select a shim which is 0.5 mm (0.020 in) thinner than the shim that is used on the primary pulley side of the current reverse brake housing.
0.551 — 0.600 (0.02169 — 0.02362)	Select a shim which is 0.6 mm (0.024 in) thinner than the shim that is used on the primary pulley side of the current reverse brake housing.

Part No.	Shim thickness mm (in)
32451AA050	0.1 (0.004)
32451AA060	0.2 (0.008)
32451AA070	0.3 (0.012)
32451AA080	0.4 (0.016)
32451AA090	0.5 (0.020)
32451AA100	0.6 (0.024)

38.Variator Chain

A: REMOVAL

For removal of variator chain, refer to “Primary Pulley and Secondary Pulley”. <Ref. to CVT(TR580)-217, REMOVAL, Primary Pulley and Secondary Pulley.>

B: INSTALLATION

For installation of variator chain, refer to “Primary Pulley and Secondary Pulley”. <Ref. to CVT(TR580)-224, INSTALLATION, Primary Pulley and Secondary Pulley.>

C: INSPECTION

Check the variator chain for damage and wear.

39.Reverse Brake Assembly

A: REMOVAL

1) Remove the transmission assembly from the vehicle. <Ref. to CVT(TR580)-56, REMOVAL, Automatic Transmission Assembly.>
2) Remove the air breather hose. <Ref. to CVT(TR580)-152, REMOVAL, Air Breather Hose.>
3) Remove the control valve body. <Ref. to CVT(TR580)-112, REMOVAL, Control Valve Body.>
4) Remove the transmission harness. <Ref. to CVT(TR580)-126, REMOVAL, Transmission Harness.>
5) Remove the turbine speed sensor. <Ref. to CVT(TR580)-99, REMOVAL, Turbine Speed Sensor.>
6) Remove the secondary speed sensor. <Ref. to CVT(TR580)-101, REMOVAL, Secondary Speed Sensor.>
7) Remove the primary speed sensor. <Ref. to CVT(TR580)-103, REMOVAL, Primary Speed Sensor.>
8) Remove the inhibitor switch. <Ref. to CVT(TR580)-95, REMOVAL, Inhibitor Switch.>
9) Remove the extension case. <Ref. to CVT(TR580)-162, REMOVAL, Extension Case.>
10) Remove the transfer clutch assembly. <Ref. to CVT(TR580)-166, REMOVAL, Transfer Clutch.>
11) Remove the transfer driven gear assembly. <Ref. to CVT(TR580)-180, REMOVAL, Transfer Driven Gear.>
12) Remove the parking pawl. <Ref. to CVT(TR580)-183, REMOVAL, Parking Pawl.>
13) Remove the reduction driven gear assembly. <Ref. to CVT(TR580)-185, REMOVAL, Reduction Driven Gear.>
14) Remove the oil pan and oil strainer. <Ref. to CVT(TR580)-108, REMOVAL, Oil Pan and Strainer.>
15) Remove the transmission control device. <Ref. to CVT(TR580)-193, REMOVAL, Transmission Control Device.>
16) Remove the transmission case. <Ref. to CVT(TR580)-199, REMOVAL, Transmission Case.>
17) Remove the reduction drive gear. <Ref. to CVT(TR580)-212, REMOVAL, Reduction Drive Gear.>
18) Remove the primary pulley, secondary pulley and variator chain. <Ref. to CVT(TR580)-217, REMOVAL, Primary Pulley and Secondary Pulley.>
19) Remove the manual valve assembly.

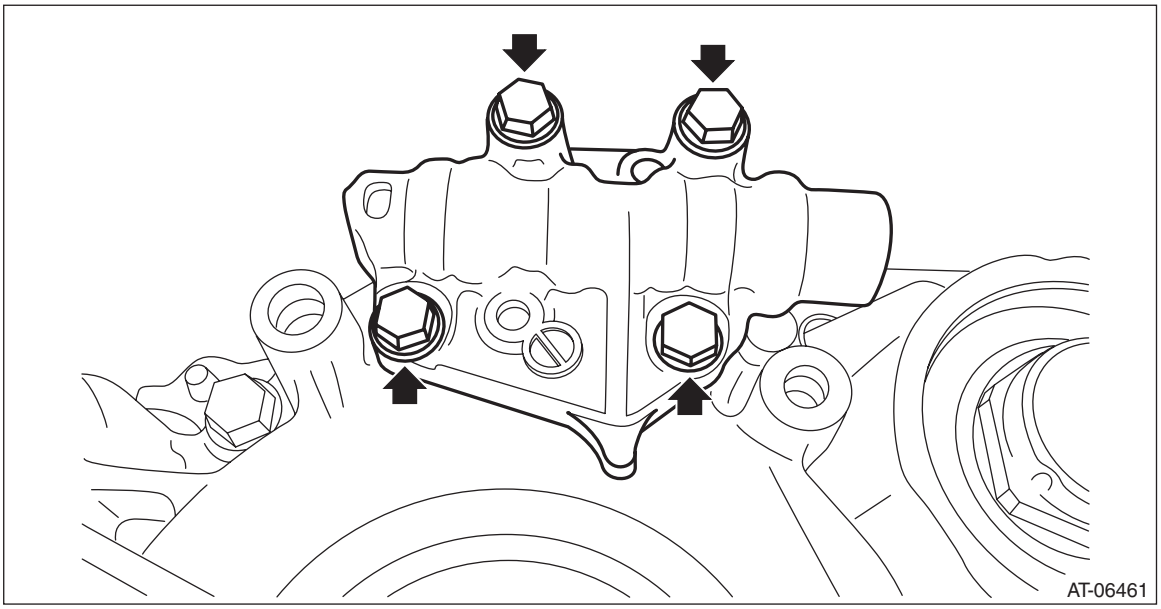

20) Remove the oil guide and lubrication pipe.

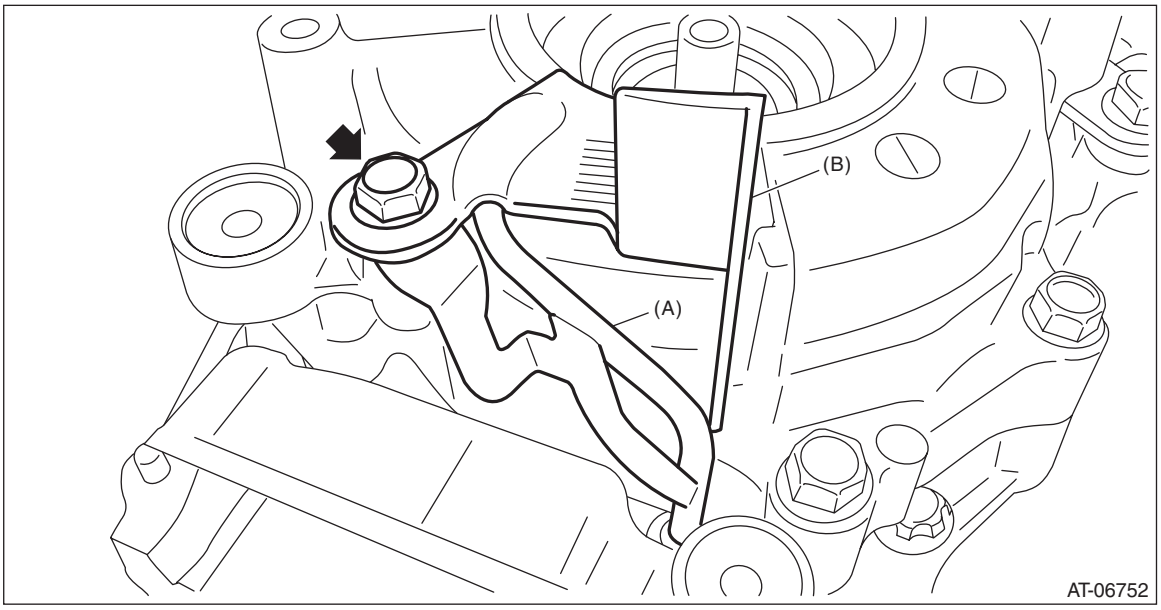

(A) Lubrication pipe
(B) Oil guide

21) Remove the O-ring from lubrication pipe.

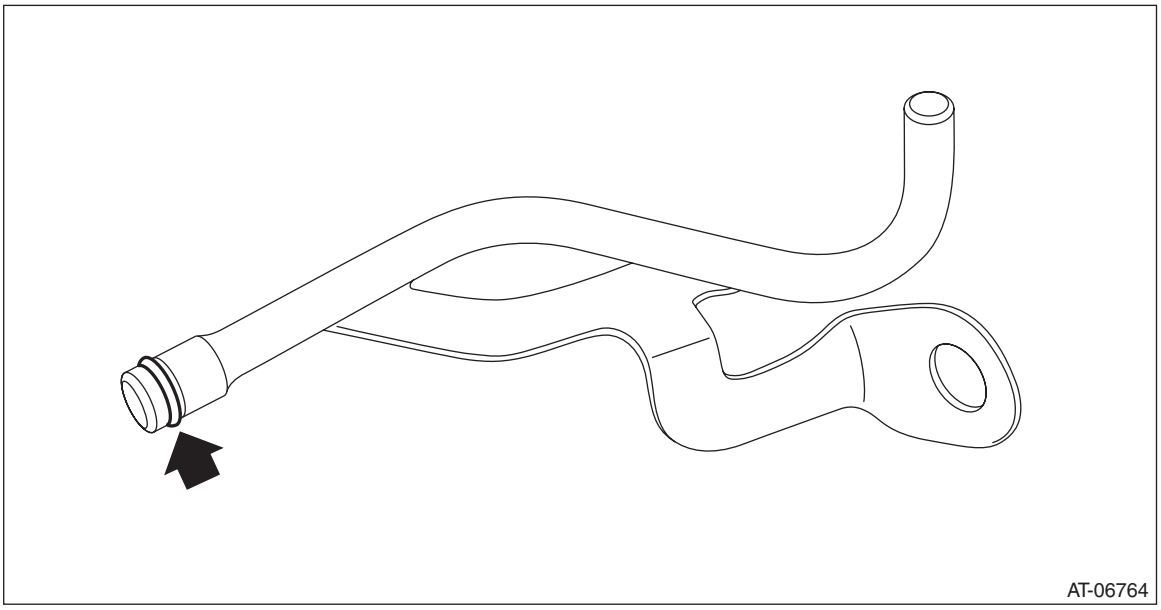

22) Remove the reverse brake assembly.

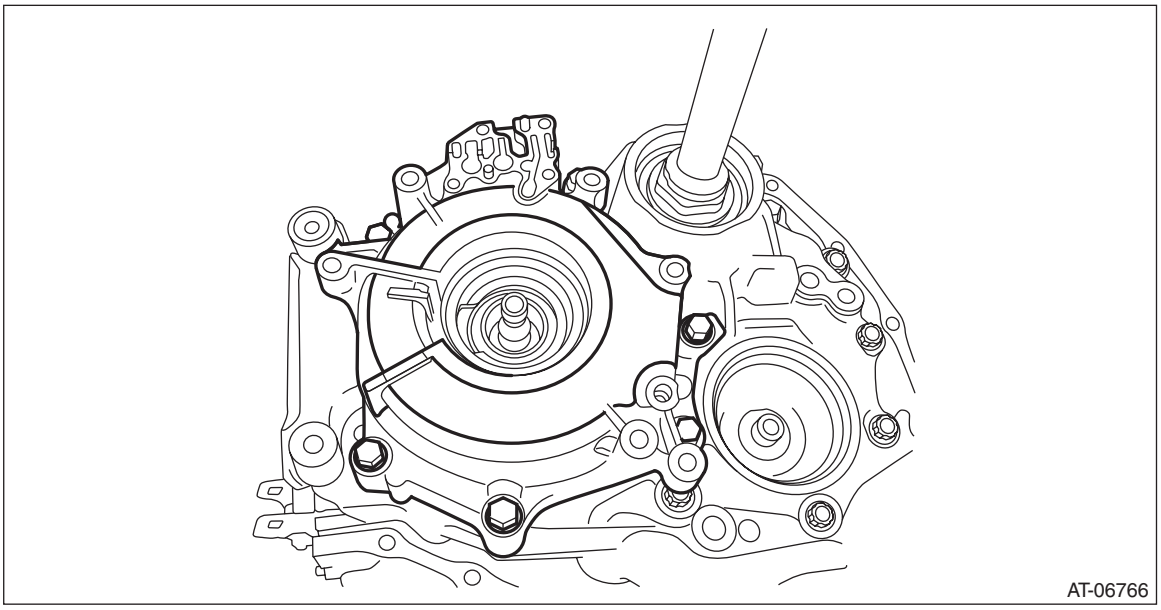

23) Remove the O-ring.

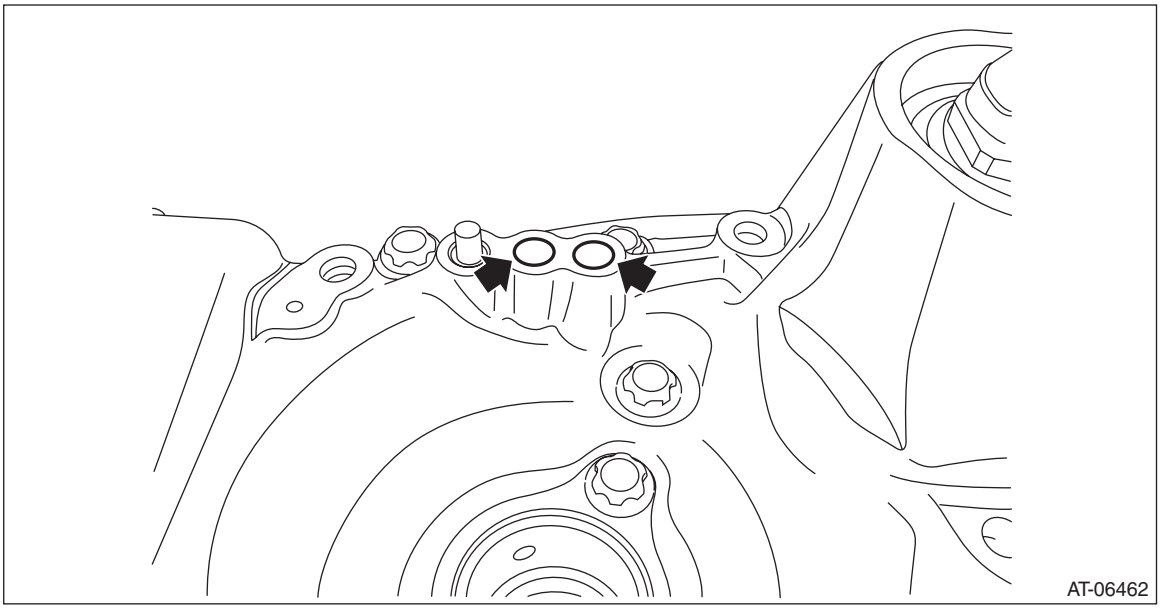

B: INSTALLATION

1) Select a washer. <Ref. to CVT(TR580)-271, ADJUSTMENT, Forward Clutch Assembly.>
2) Install the selected washer to the reverse brake housing.

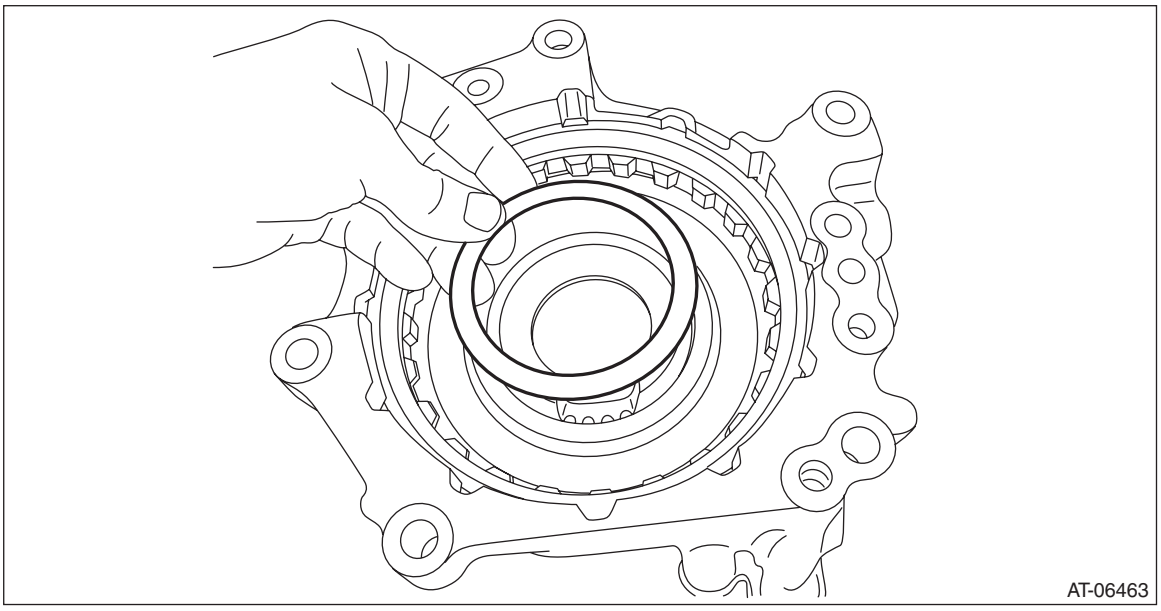

3) Install the thrust bearing to the reverse brake housing.

NOTE:
Face the temper color surface to the reverse brake side.

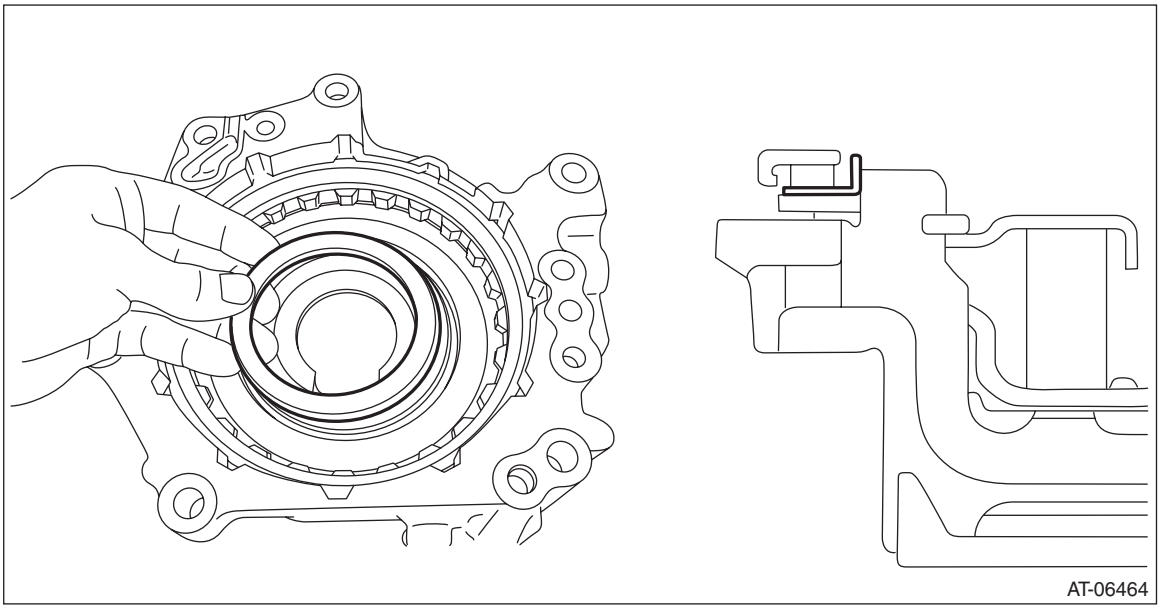

4) Remove the internal gear from the forward clutch assembly, and install it to the reverse brake housing.

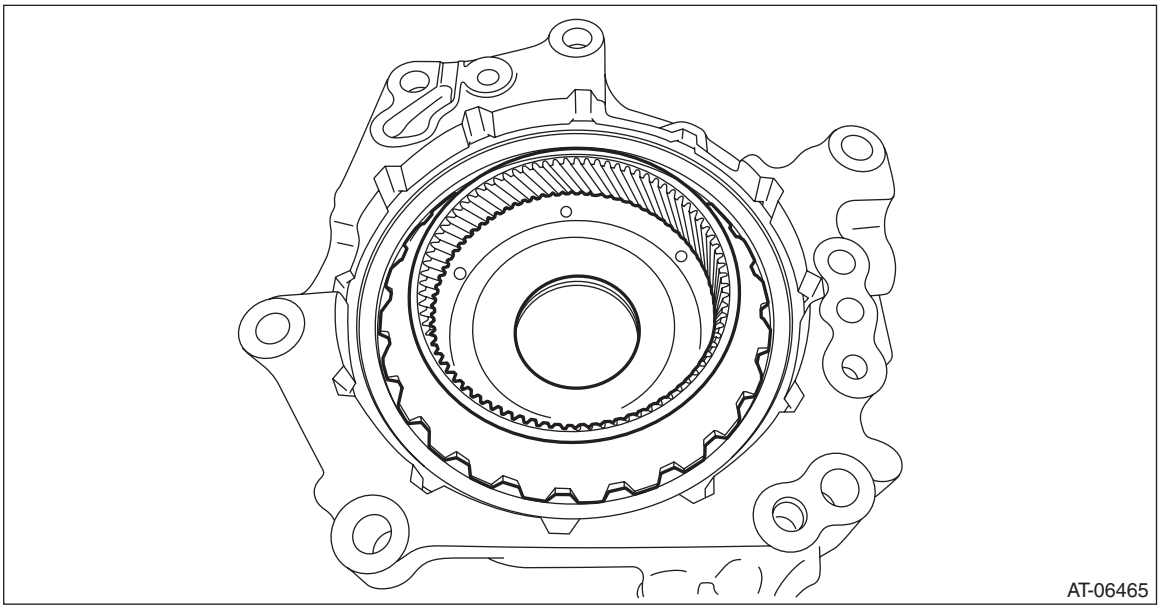

5) Install the O-ring.

NOTE:
- Install a new O-ring.
- Apply CVTF to the O-ring.

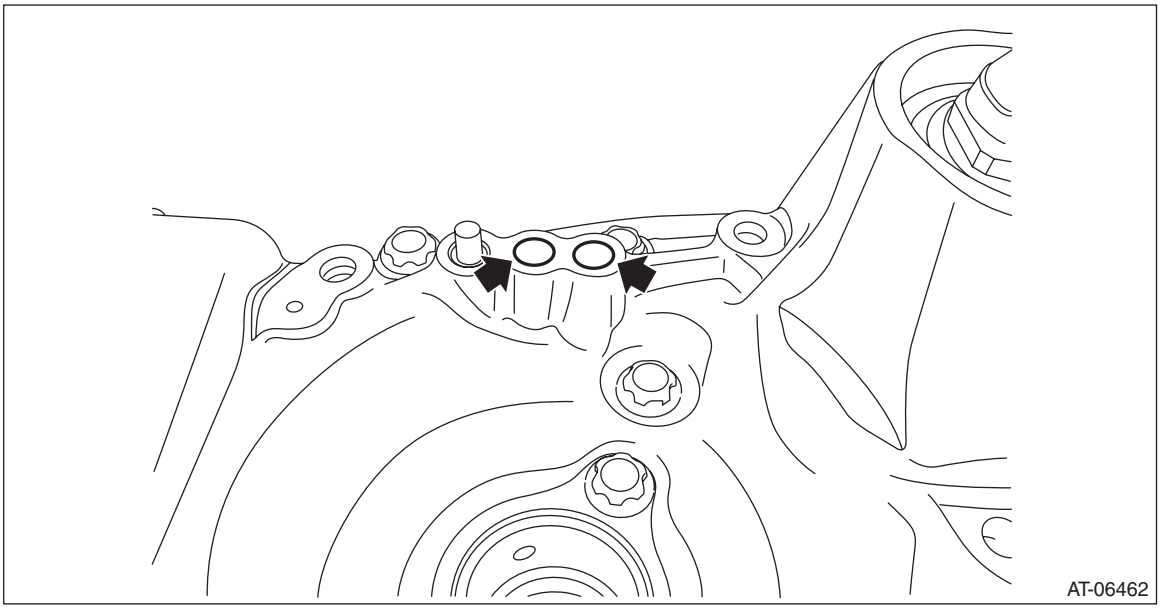

6) Install the reverse brake assembly and internal gear as a unit to the drive pinion retainer.

NOTE:
Slowly rotate the input shaft by hand to engage the internal gear and pinion gear of planetary carrier.

Tightening torque:
37 N·m (3.8 kgf-m, 27.3 ft-lb)

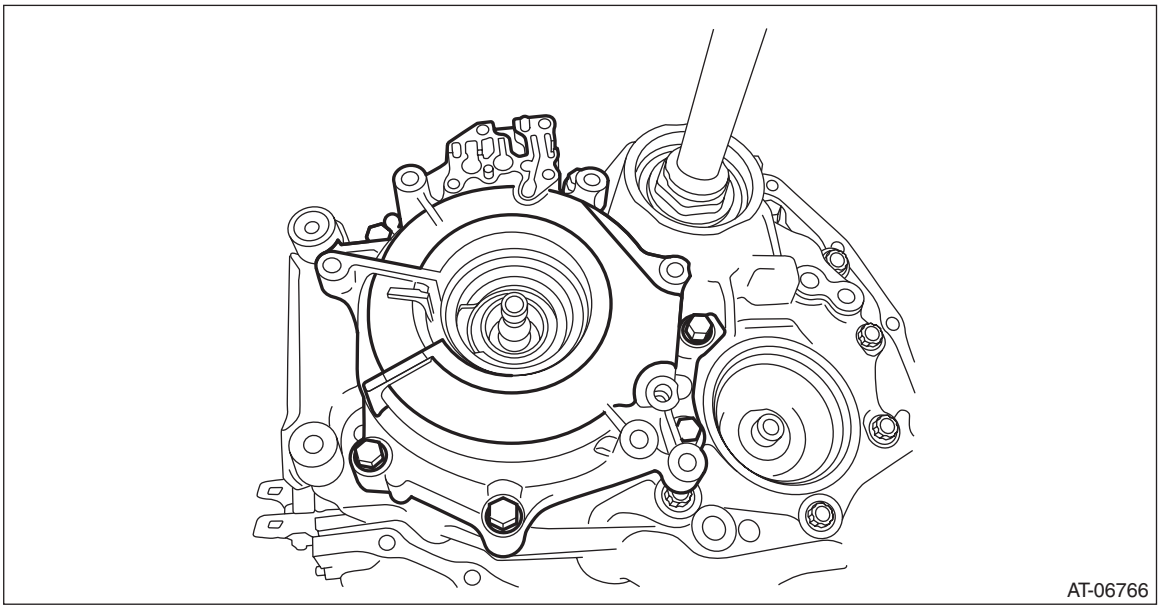

7) Install the O-ring to the lubrication pipe.

NOTE:
- Install a new O-ring.
- Apply CVTF to the O-ring.

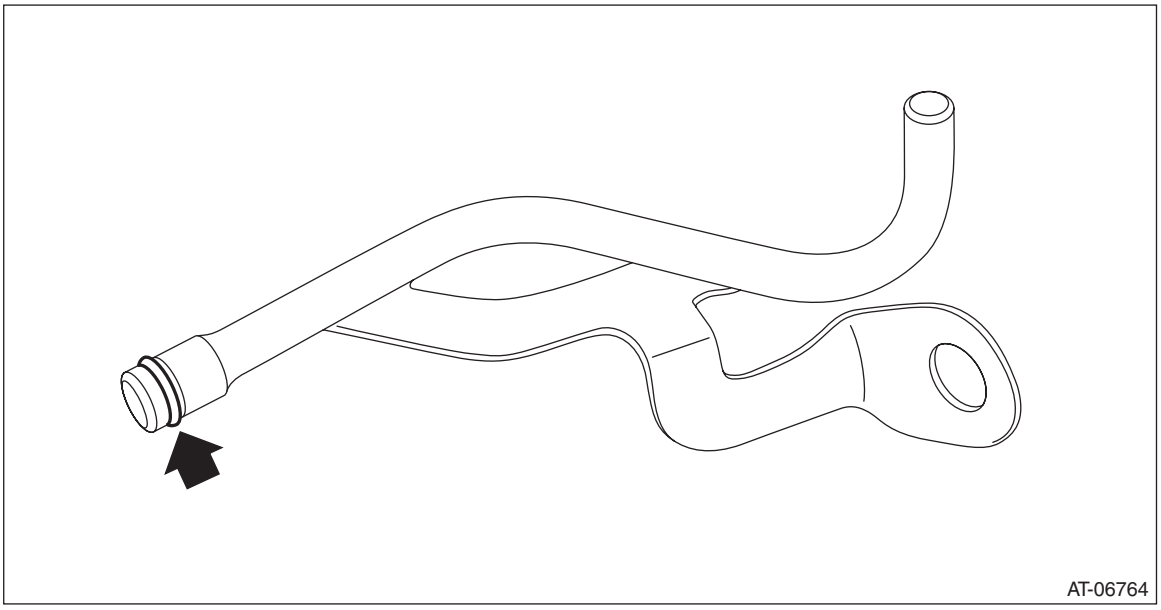

8) Install the lubrication pipe and oil guide.

Tightening torque:
16 N·m (1.6 kgf-m, 11.8 ft-lb)

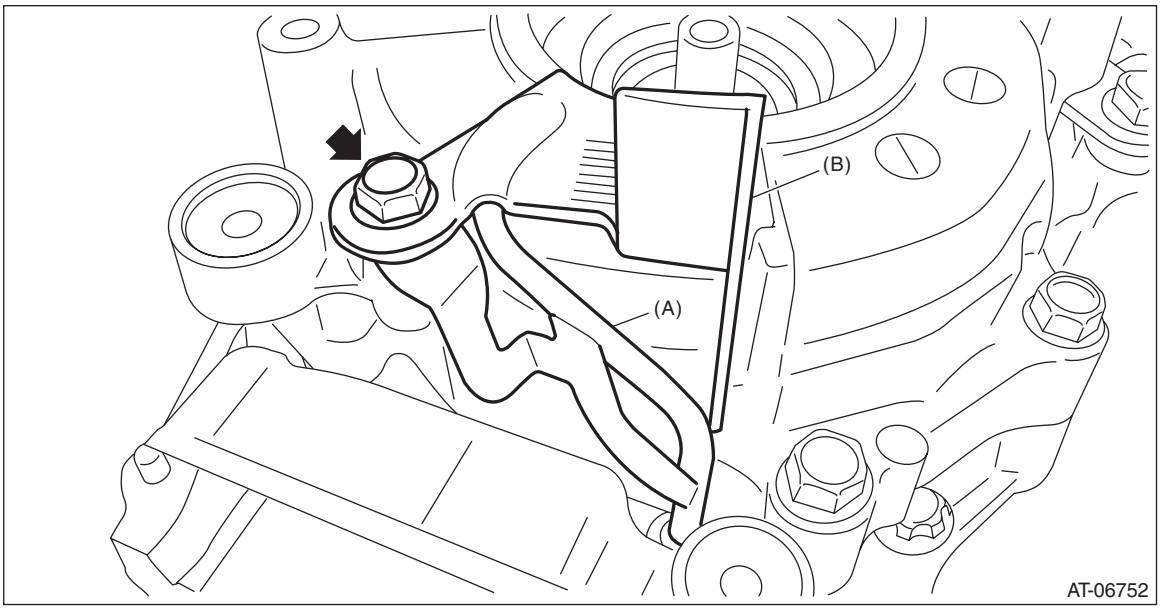

(A) Lubrication pipe
(B) Oil guide

9) Install the manual valve assembly and separator plate.

Tightening torque:
9 N·m (0.9 kgf-m, 6.6 ft-lb)

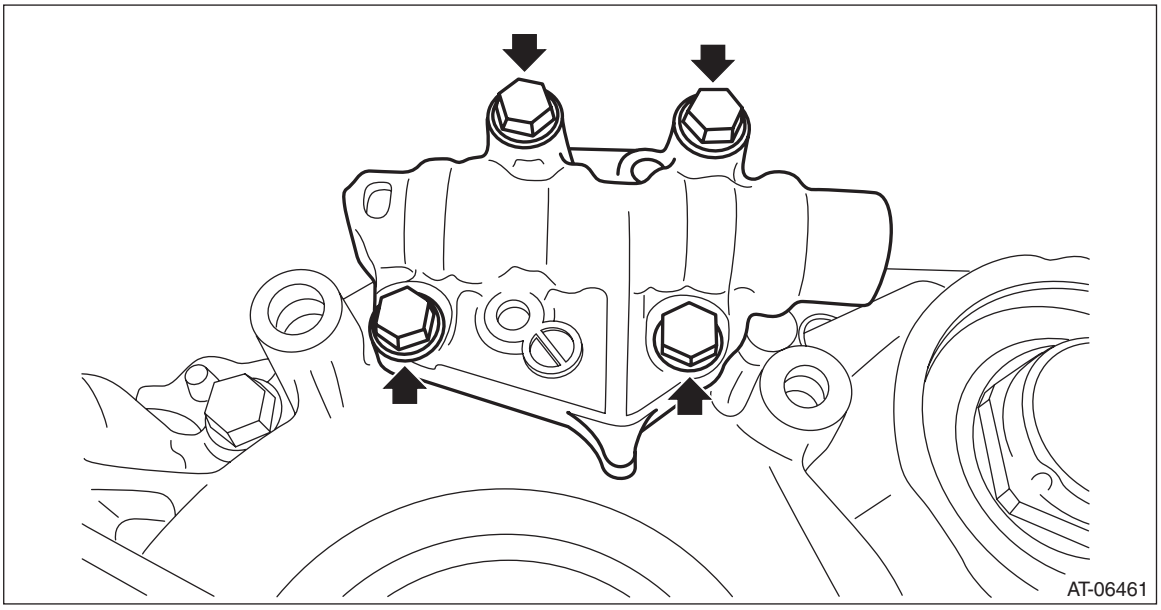

10) Install the primary pulley, secondary pulley and variator chain. <Ref. to CVT(TR580)-224, INSTALLATION, Primary Pulley and Secondary Pulley.>
11) Select shims for pulley alignment. <Ref. to CVT(TR580)-232, ADJUSTMENT, Primary Pulley and Secondary Pulley.>
12) Install the reduction drive gear. <Ref. to CVT(TR580)-213, INSTALLATION, Reduction Drive Gear.>
13) Install the transmission case. <Ref. to CVT(TR580)-202, INSTALLATION, Transmission Case.>
14) Install the transmission control device. <Ref. to CVT(TR580)-196, INSTALLATION, Transmission Control Device.>
15) Install the oil strainer and oil pan. <Ref. to CVT(TR580)-109, INSTALLATION, Oil Pan and Strainer.>
16) Install the reduction driven gear assembly. <Ref. to CVT(TR580)-185, INSTALLATION, Reduction Driven Gear.>
17) Install the transfer driven gear assembly. <Ref. to CVT(TR580)-181, INSTALLATION, Transfer Driven Gear.>
18) Install the transfer clutch assembly. <Ref. to CVT(TR580)-168, INSTALLATION, Transfer Clutch.>
19) Install the parking pawl. <Ref. to CVT(TR580)-184, INSTALLATION, Parking Pawl.>
20) Install the extension case. <Ref. to CVT(TR580)-163, INSTALLATION, Extension Case.>
21) Install the inhibitor switch. <Ref. to CVT(TR580)-97, INSTALLATION, Inhibitor Switch.>
22) Install the secondary speed sensor. <Ref. to CVT(TR580)-101, INSTALLATION, Secondary Speed Sensor.>
23) Install the primary speed sensor. <Ref. to CVT(TR580)-104, INSTALLATION, Primary Speed Sensor.>
24) Install the turbine speed sensor. <Ref. to CVT(TR580)-99, INSTALLATION, Turbine Speed Sensor.>
25) Install the transmission harness. <Ref. to CVT(TR580)-133, INSTALLATION, Transmission Harness.>
26) Install the control valve body. <Ref. to CVT(TR580)-118, INSTALLATION, Control Valve Body.>
27) Install the air breather hose. <Ref. to CVT(TR580)-154, INSTALLATION, Air Breather Hose.>
28) Install the transmission assembly to the vehicle. <Ref. to CVT(TR580)-68, INSTALLATION, Automatic Transmission Assembly.>

C: DISASSEMBLY

1) Remove the snap ring.
2) Remove the retaining plate, drive plate, driven plate and dish plate.

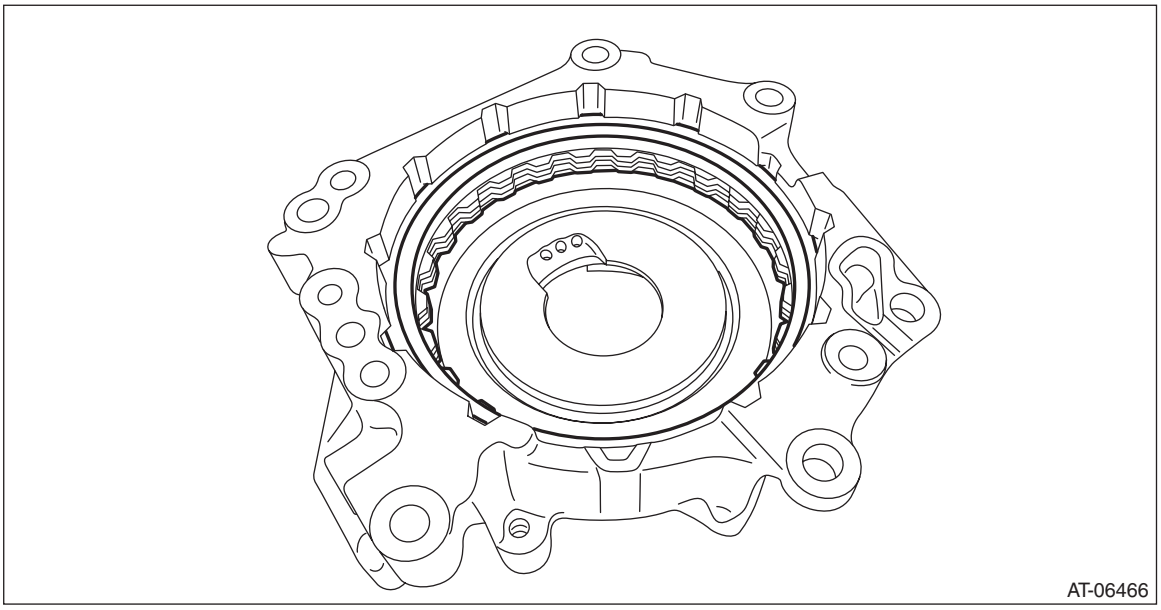

3) Compress the return spring using the ST to remove the snap ring.
ST 18762AA000 COMPRESSOR SPECIAL TOOL (or 18762AA001)

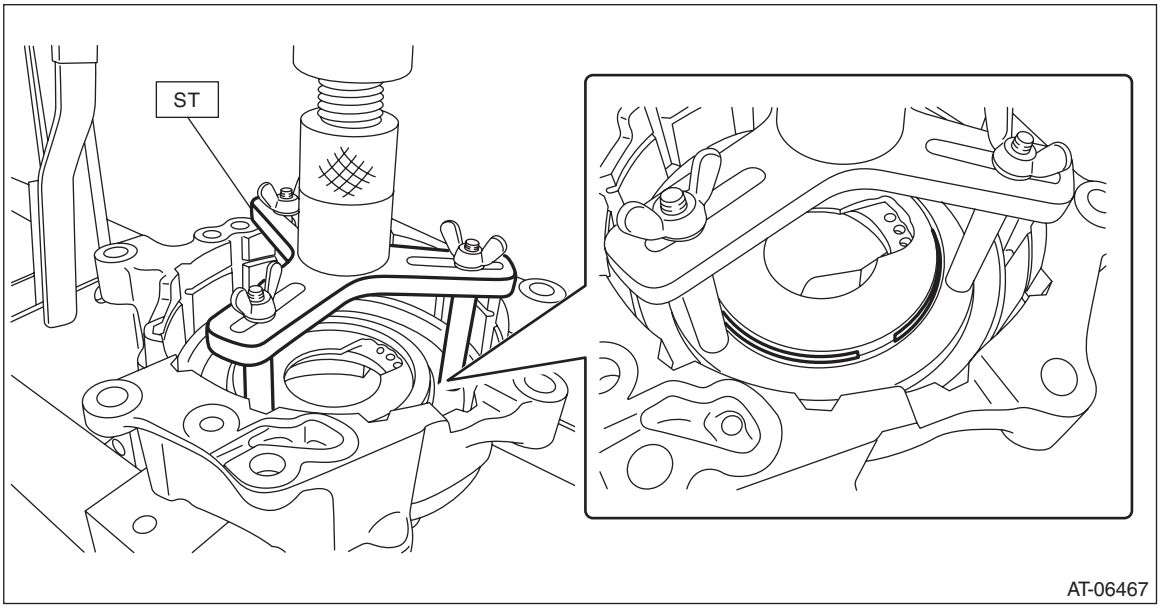

4) Using the ST, remove the snap ring and spring retainer.

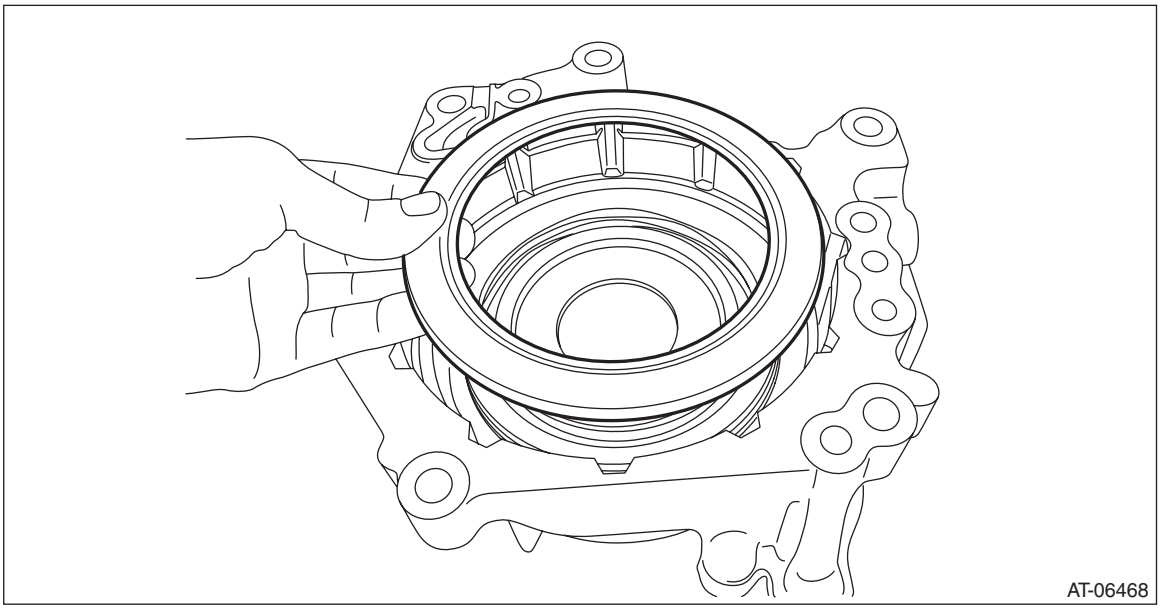

5) Remove the return spring.

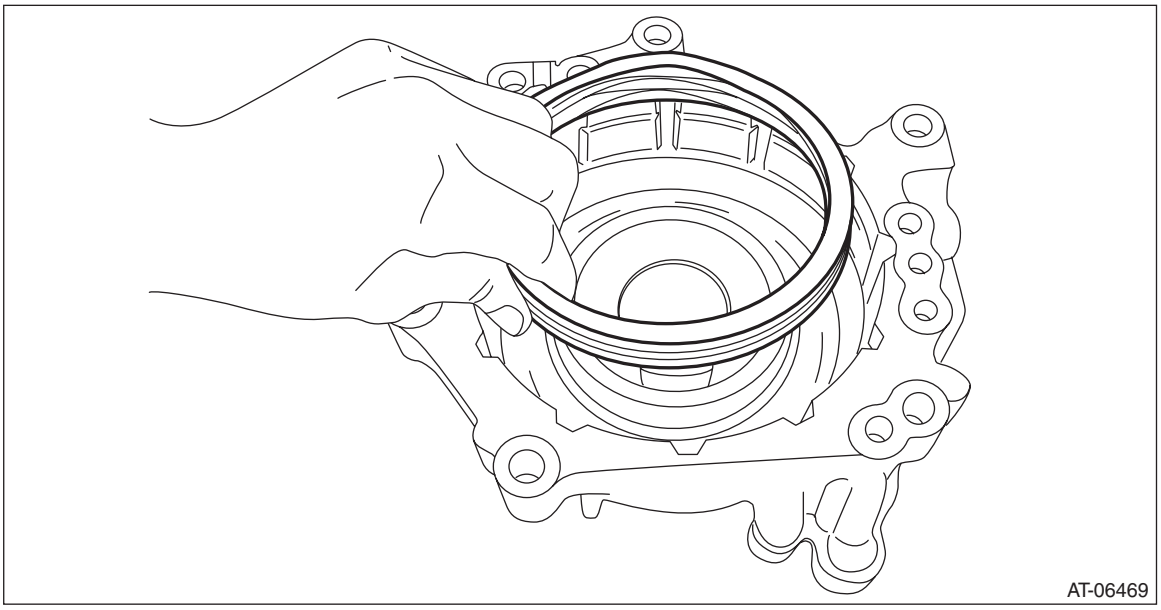

6) Remove the reverse brake piston by blowing compressed air intermittently from reverse brake housing hole.

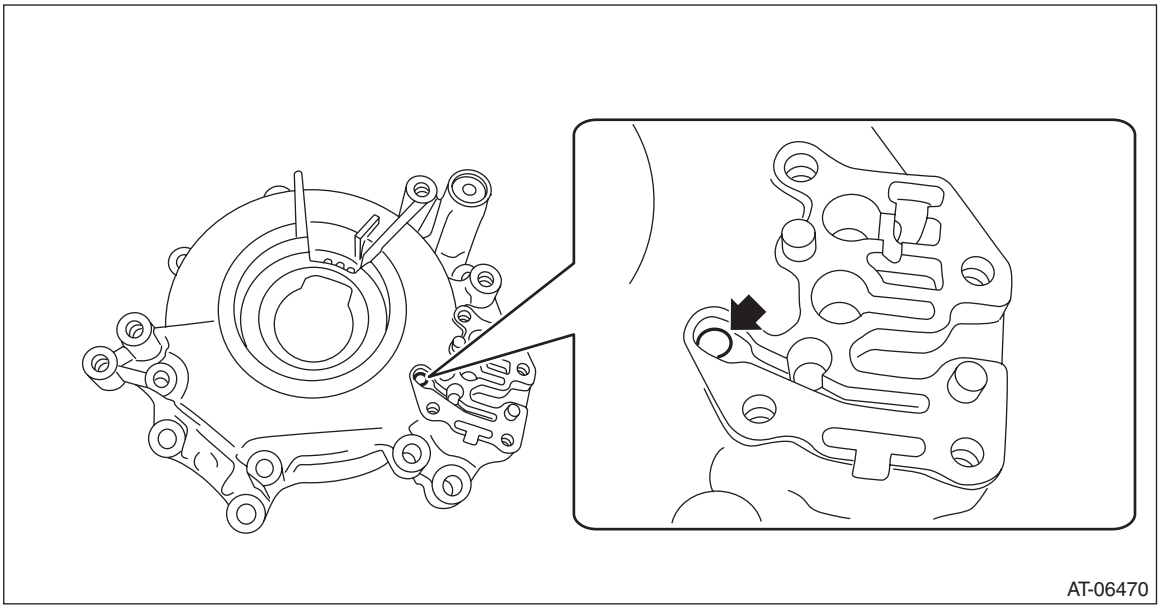

D: ASSEMBLY

1) Install the reverse brake piston.

NOTE:
Apply CVTF to the sealing area of reverse brake piston.

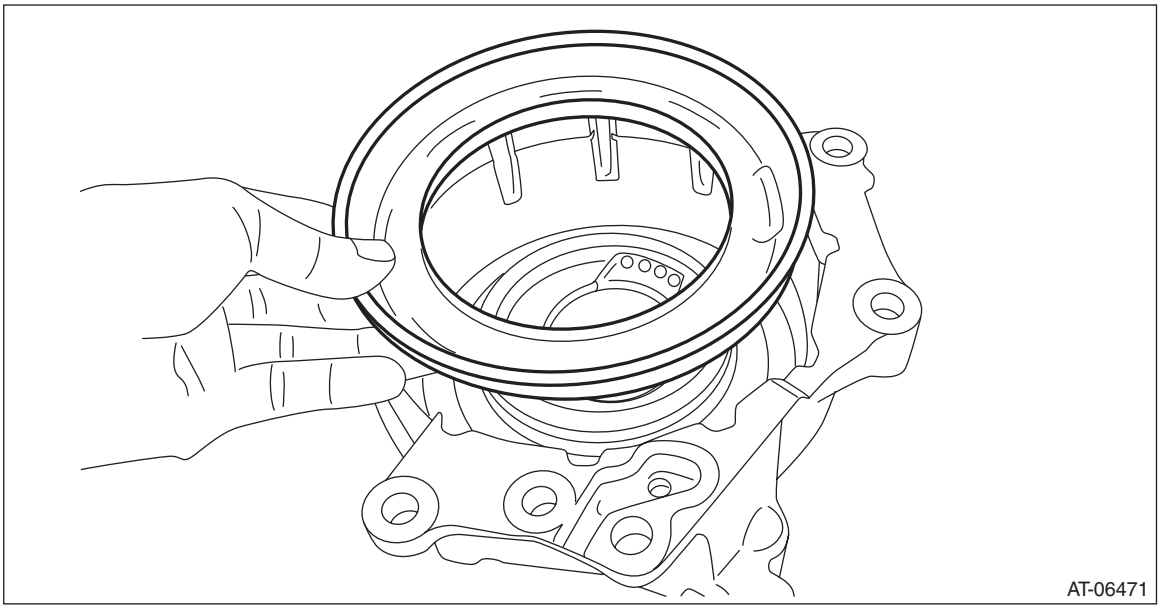

2) Install the return spring.

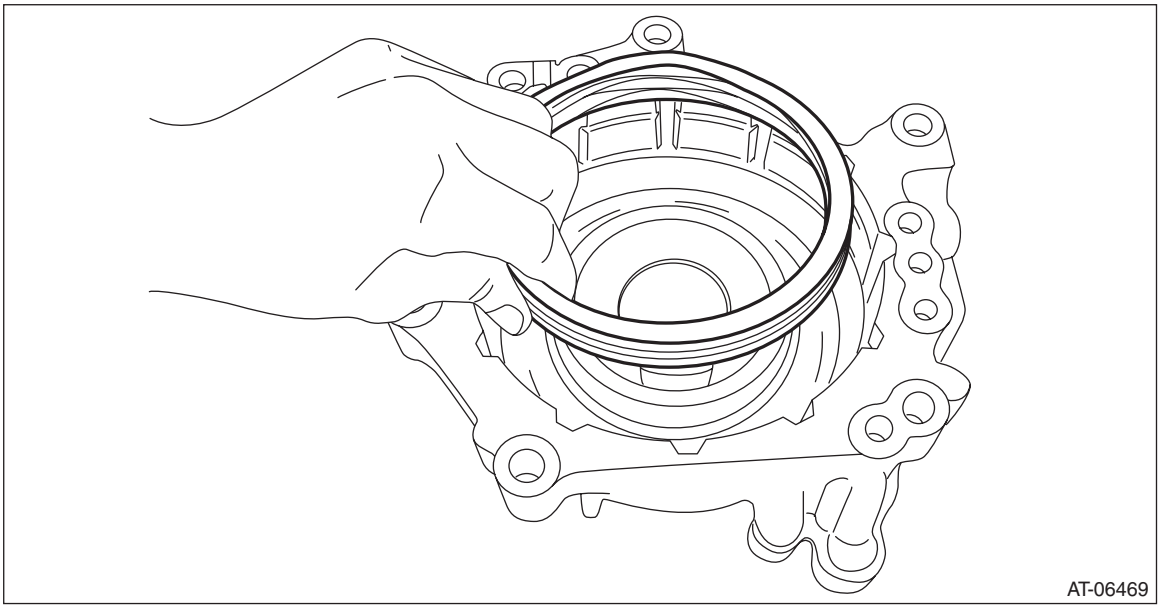

3) Install the spring retainer.

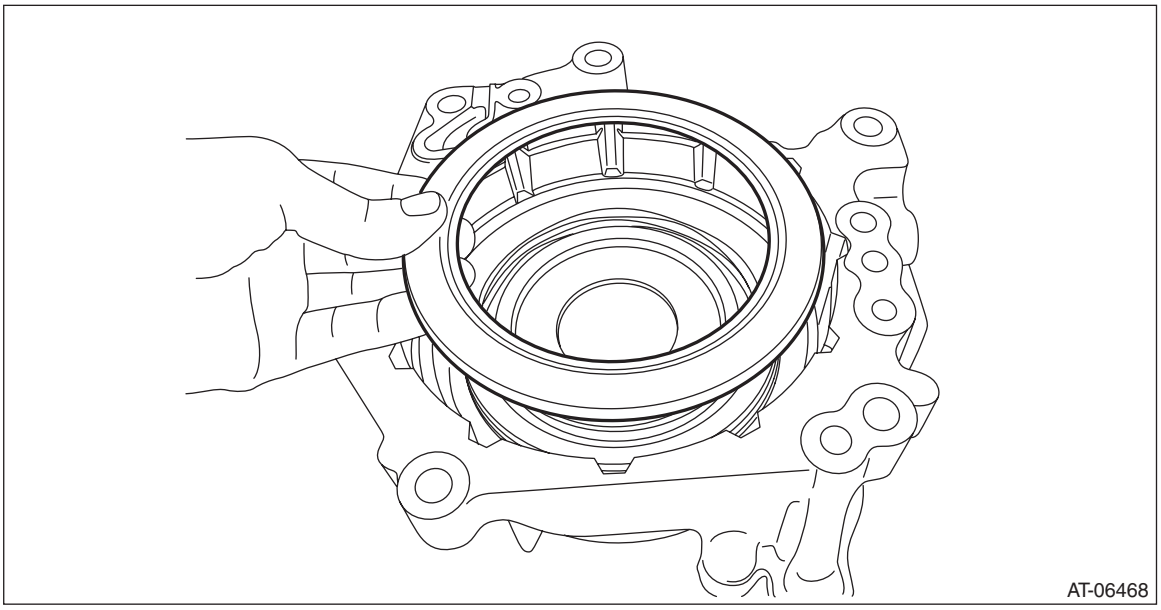

4) Compress the return spring using the ST to install the snap ring.
ST1 18762AA000 COMPRESSOR SPECIAL TOOL (or 18762AA001)

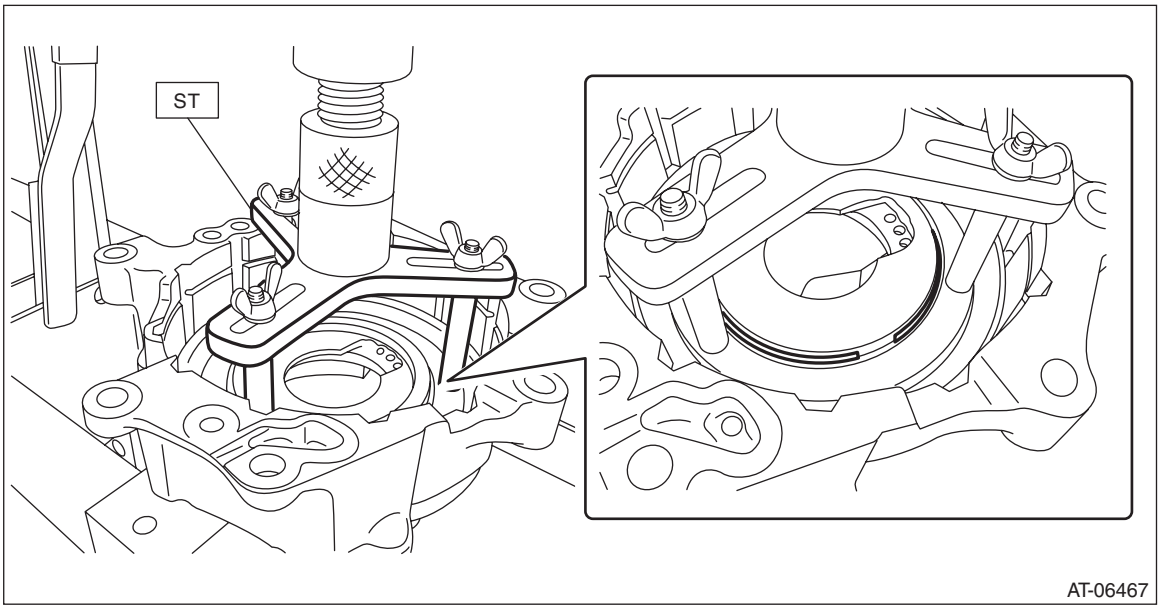

5) Check the operation of reverse brake piston by blowing compressed air intermittently from reverse brake housing hole.

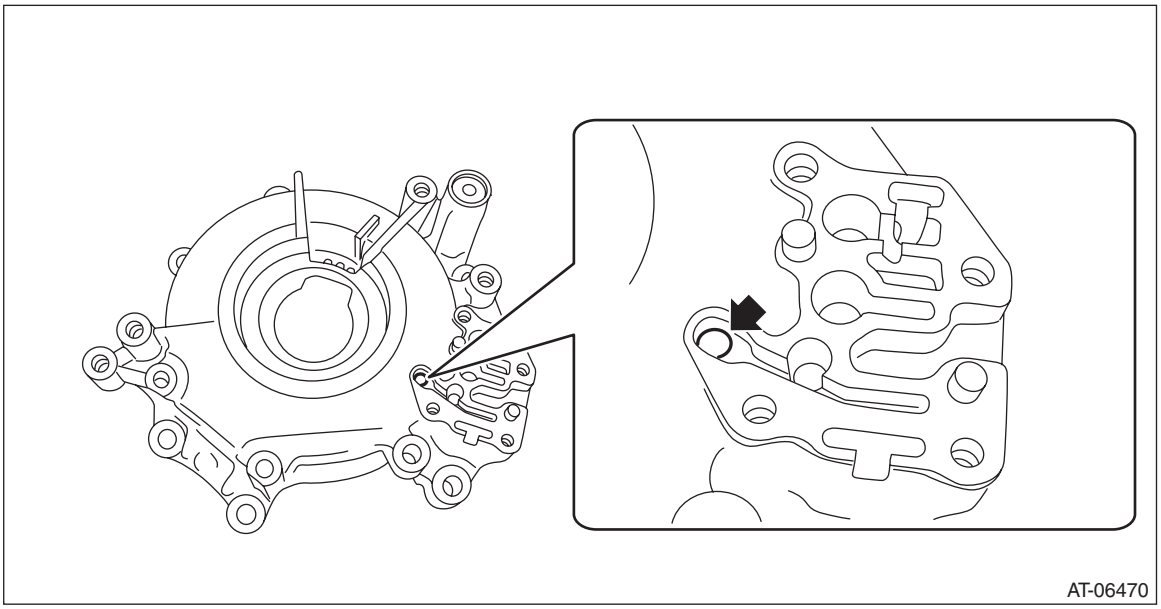

6) Place the driven plate, drive plate and retaining plate neatly in this order on surface table.
7) Set the dial gauge to retaining plate, and read its scale.

NOTE:
The value, which is read in the gauge at this time, is zero point.

8) Scale and record the weight "Z" of a flat board which will be put on retaining plate.

NOTE:
- Use a stiff board which does not bend against load as a flat board to be put on retaining plate.
- Use a flat board weighing less than 29 N (3.0 kgf, 6.5 lb).

9) Put the flat board on retaining plate.

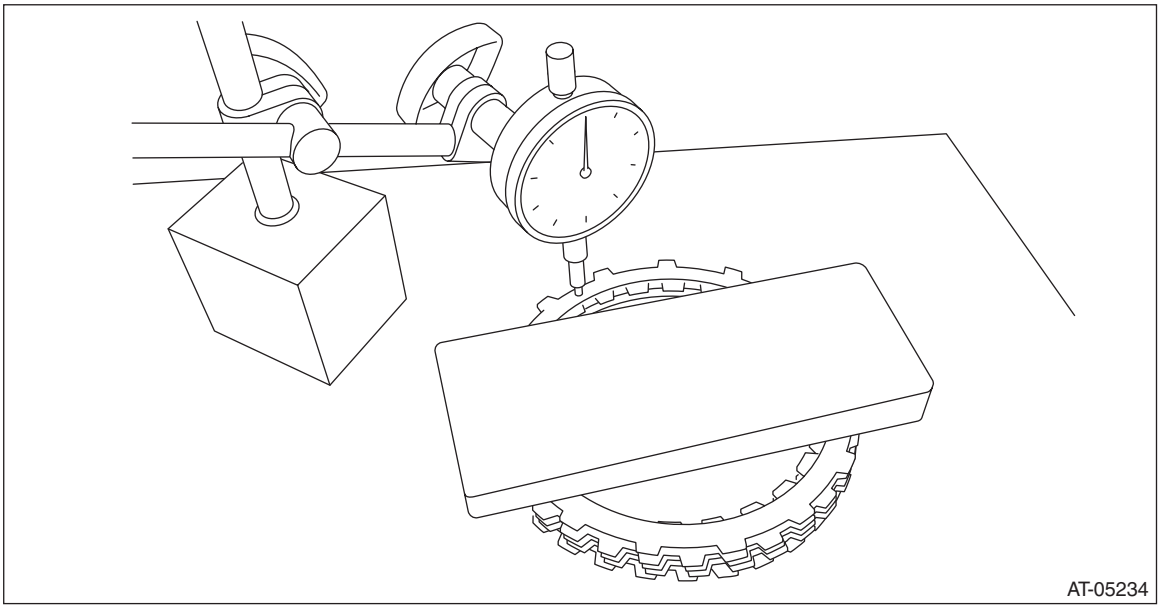

10) Using the following formula, read the push/pull gauge and calculate “N”.
N = 29 N (3.0 kgf, 6.5 lb) – Z
29 N (3.0 kgf, 6.5 lb) : Load applied to clutch plate
Z: Flat board weight
11) Press the center of retaining plate by applying a force of “N” using push/pull gauge, and then measure and record the compression amount “A”.

NOTE:
Measure at four points with a 90° interval and calculate the average.

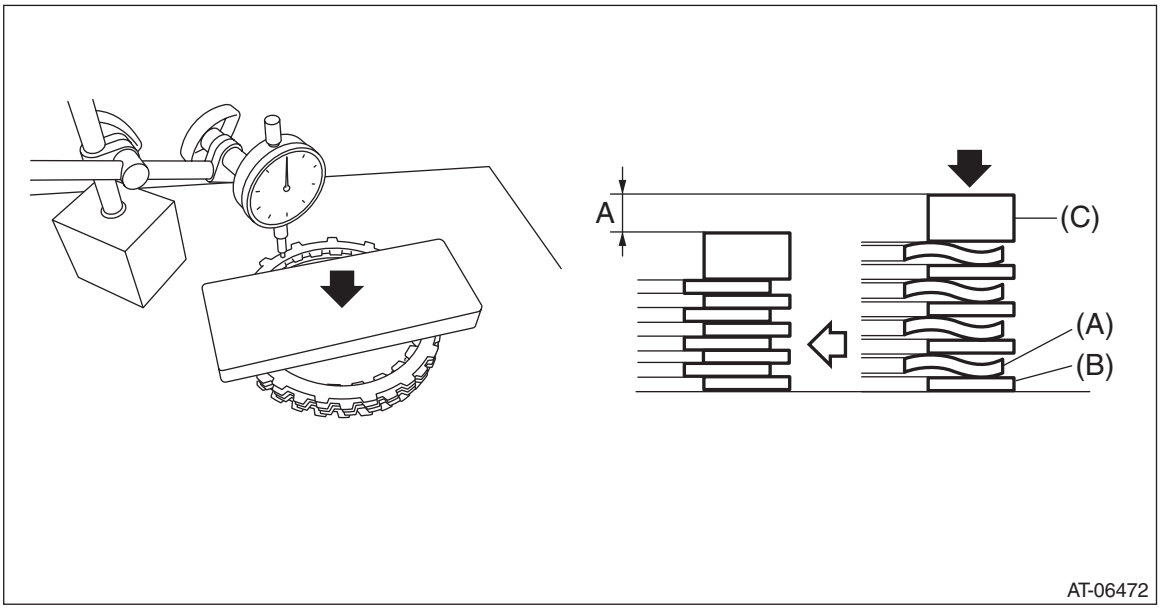

(A) Drive plate
(B) Driven plate
(C) Retaining plate

12) Install the dish plate, drive plate, driven plate, retaining plate and snap ring to the reverse brake housing.

NOTE:
Install the dish plate in the correct direction.

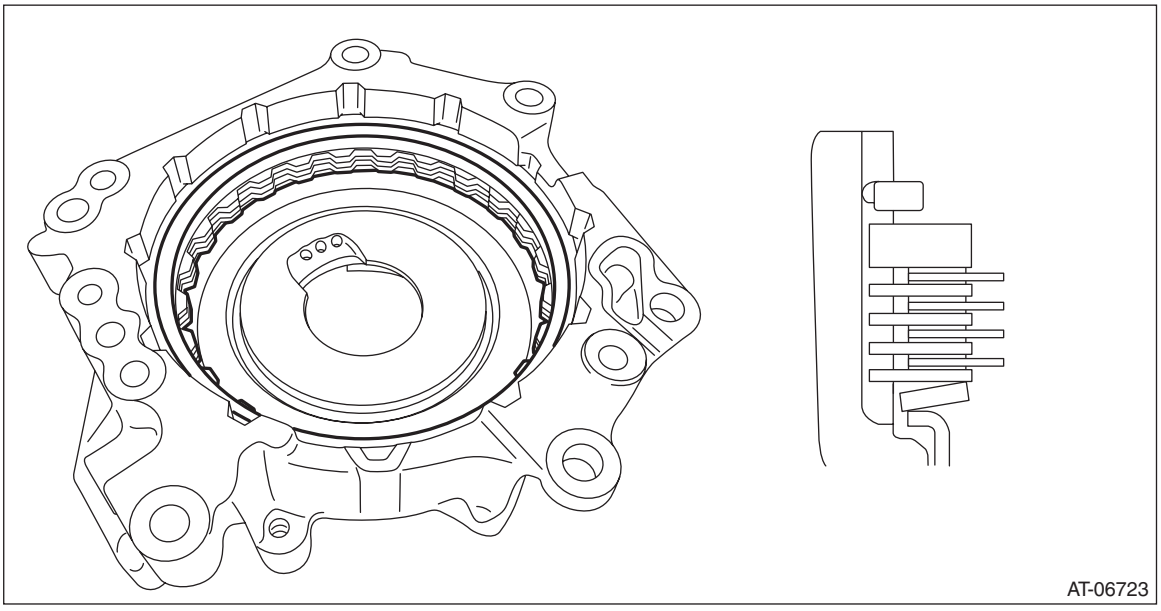

13) Measure and record the clearance “B” between the retaining plate and snap ring.

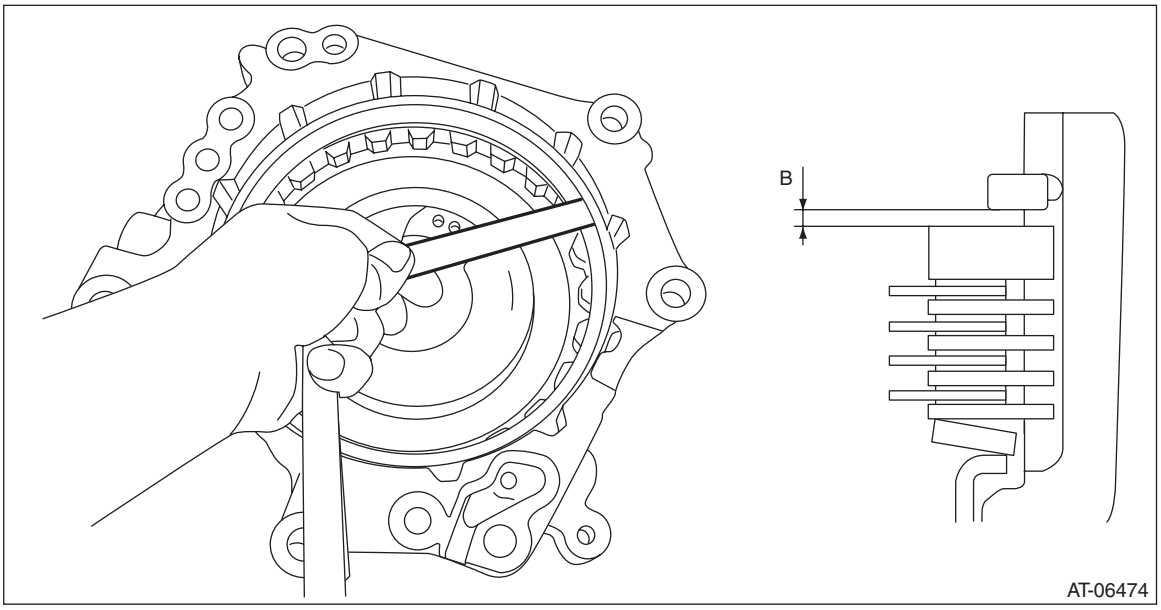

14) Piston stroke calculation
Calculate with A and B dimensions recorded before. If it exceeds the limit, replace with a new drive plate and adjust within the initial standard value.
S mm (in) = A + B
S: Piston stroke
A: Compression amount of drive plate and dish plate
B: Clearance between retaining plate and snap ring

Initial standard:
2.3 — 2.7 mm (0.091 — 0.106 in)

Limit thickness:
2.9 mm (0.114 in)

Retaining plate	
Part No.	Thickness mm (in)
31567AB750	4.2 (0.165)
31567AB800	4.4 (0.173)
31567AB810	4.6 (0.181)
31567AB820	4.8 (0.189)

E: INSPECTION

- Inspect the drive plate facing for wear and damage.
- Check the driven plate for discoloration (burnt color).
- Check for worn snap ring, fatigue or damaged return spring or deformed spring retainer.
- Make sure the clearance between retaining plate and snap ring of reverse brake is within the limit. If it exceeds the limit, replace with a new drive plate and select and adjust the retaining plate within the initial standard value. <Ref. to CVT(TR580)-248, ASSEMBLY, Reverse Brake Assembly.>

40.Forward Clutch Assembly

A: REMOVAL

1) Remove the transmission assembly from the vehicle. <Ref. to CVT(TR580)-56, REMOVAL, Automatic Transmission Assembly.>
2) Remove the air breather hose. <Ref. to CVT(TR580)-152, REMOVAL, Air Breather Hose.>
3) Remove the control valve body. <Ref. to CVT(TR580)-112, REMOVAL, Control Valve Body.>
4) Remove the transmission harness. <Ref. to CVT(TR580)-126, REMOVAL, Transmission Harness.>
5) Remove the turbine speed sensor. <Ref. to CVT(TR580)-99, REMOVAL, Turbine Speed Sensor.>
6) Remove the secondary speed sensor. <Ref. to CVT(TR580)-101, REMOVAL, Secondary Speed Sensor.>
7) Remove the primary speed sensor. <Ref. to CVT(TR580)-103, REMOVAL, Primary Speed Sensor.>
8) Remove the inhibitor switch. <Ref. to CVT(TR580)-95, REMOVAL, Inhibitor Switch.>
9) Remove the extension case. <Ref. to CVT(TR580)-162, REMOVAL, Extension Case.>
10) Remove the transfer clutch assembly. <Ref. to CVT(TR580)-166, REMOVAL, Transfer Clutch.>
11) Remove the transfer driven gear assembly. <Ref. to CVT(TR580)-180, REMOVAL, Transfer Driven Gear.>
12) Remove the parking pawl. <Ref. to CVT(TR580)-183, REMOVAL, Parking Pawl.>
13) Remove the reduction driven gear assembly. <Ref. to CVT(TR580)-185, REMOVAL, Reduction Driven Gear.>
14) Remove the oil pan and oil strainer. <Ref. to CVT(TR580)-108, REMOVAL, Oil Pan and Strainer.>
15) Remove the transmission control device. <Ref. to CVT(TR580)-193, REMOVAL, Transmission Control Device.>
16) Remove the transmission case. <Ref. to CVT(TR580)-199, REMOVAL, Transmission Case.>
17) Remove the reduction drive gear. <Ref. to CVT(TR580)-212, REMOVAL, Reduction Drive Gear.>
18) Remove the primary pulley, secondary pulley and variator chain. <Ref. to CVT(TR580)-217, REMOVAL, Primary Pulley and Secondary Pulley.>
19) Remove the reverse brake assembly. <Ref. to CVT(TR580)-238, REMOVAL, Reverse Brake Assembly.>
20) Remove the internal gear.

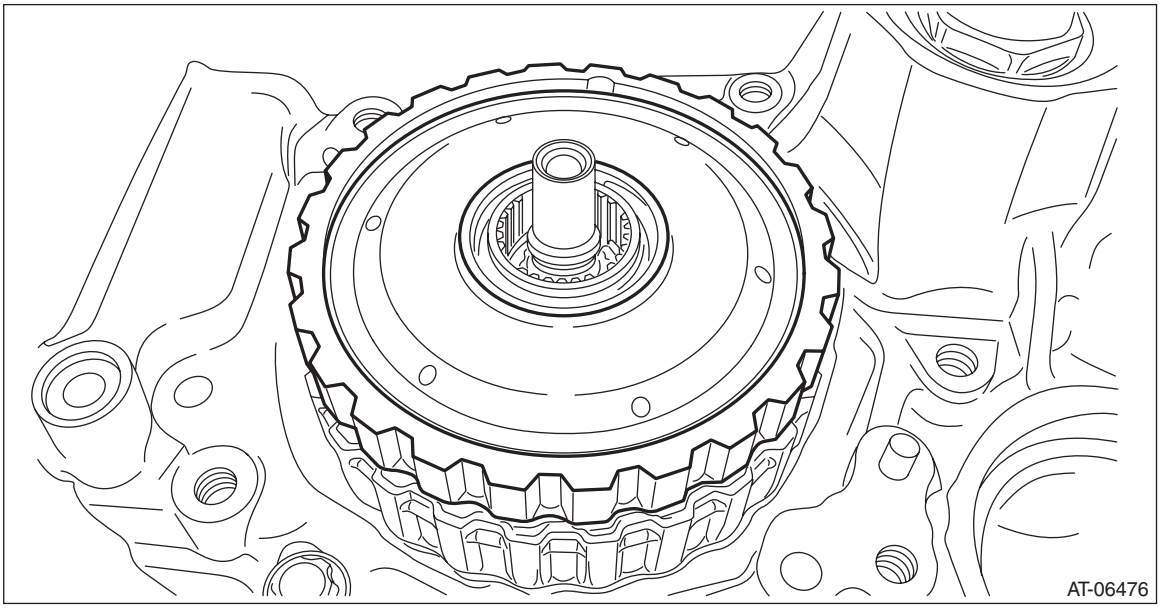

21) Remove the thrust bearing.

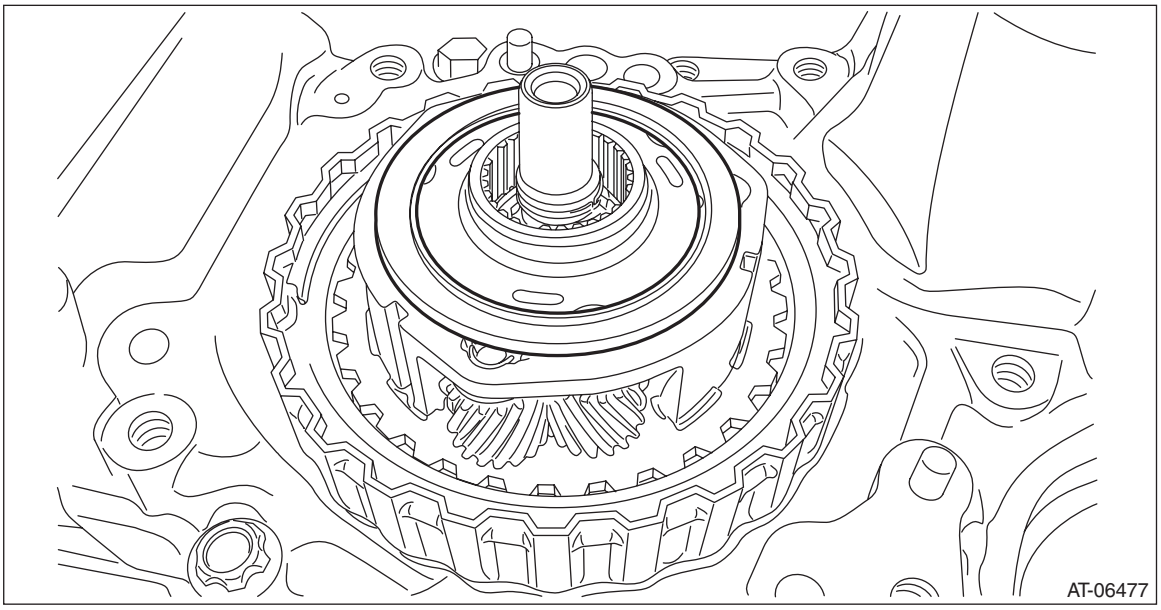

22) Remove the planetary carrier.

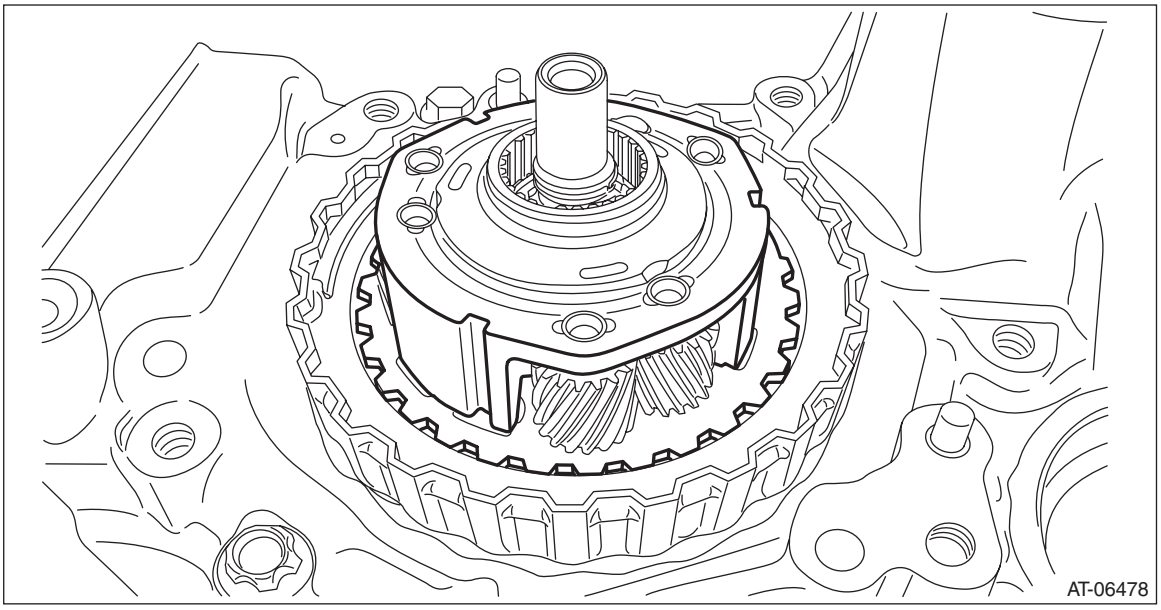

23) Remove the thrust bearing and sun gear.

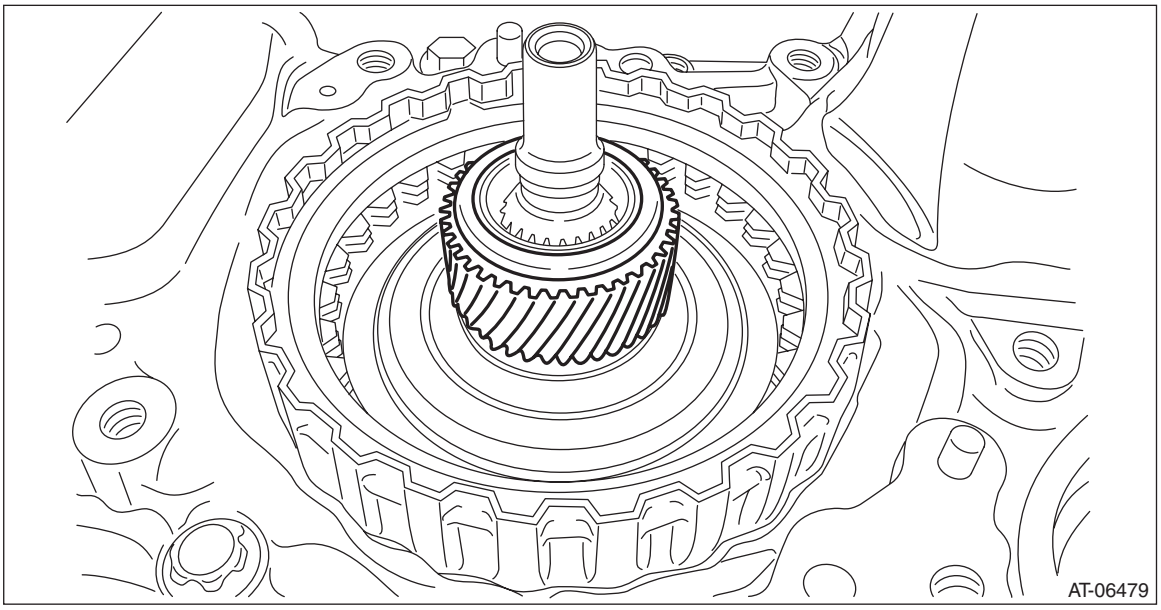

24) Remove the forward clutch assembly.

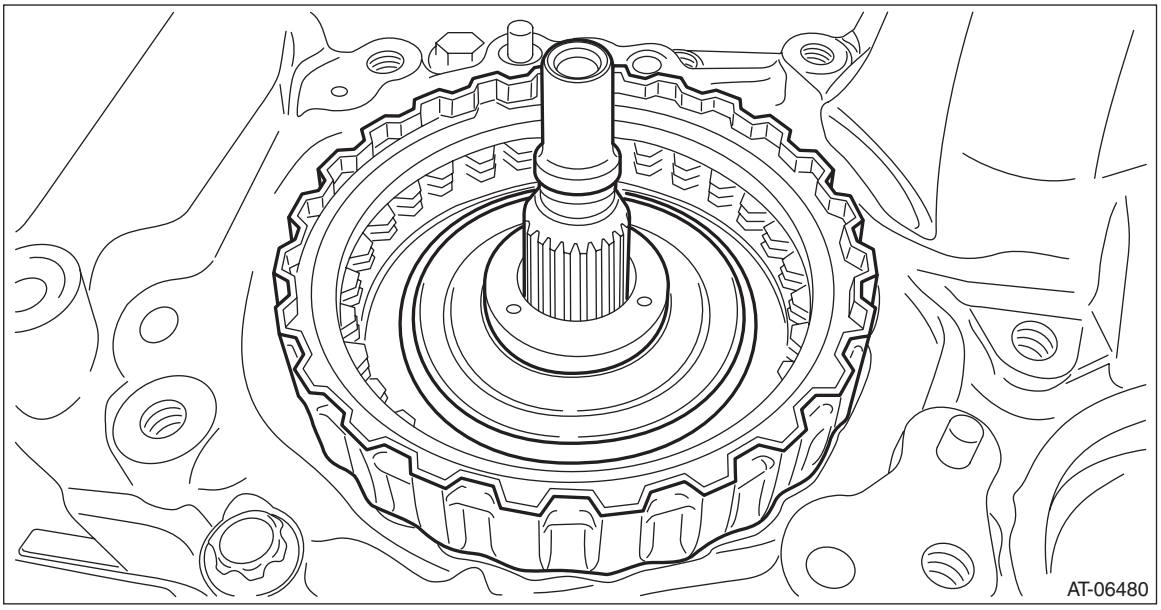

25) Remove the thrust bearing and seal ring.

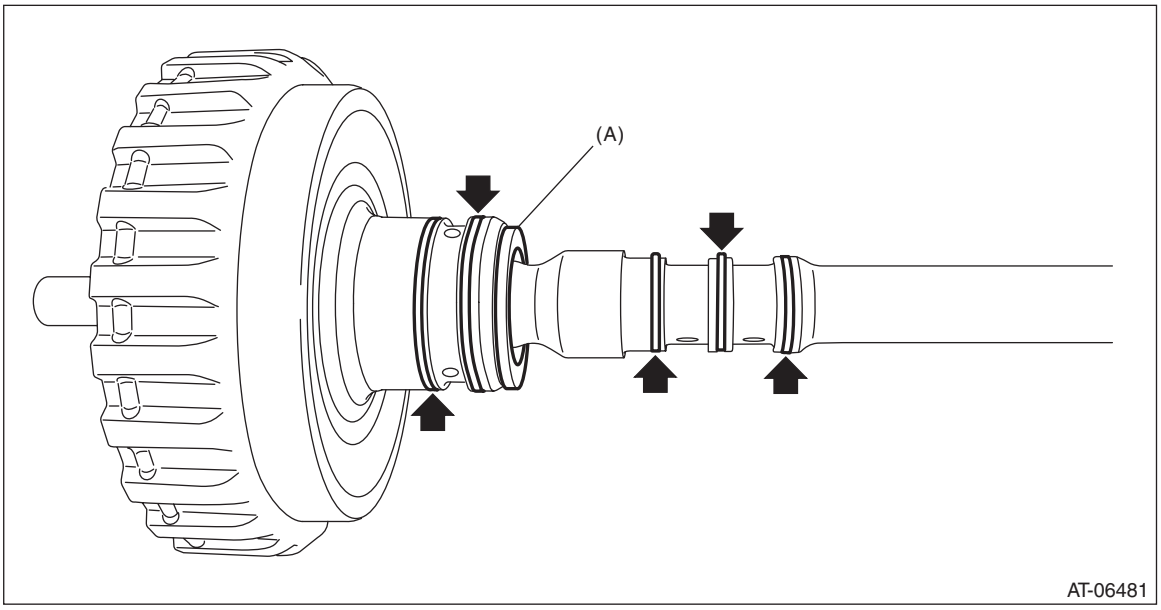

(A) Thrust bearing

B: INSTALLATION

1) Install the thrust bearing to the converter case.

NOTE:
Face the temper color surface to the converter case side.

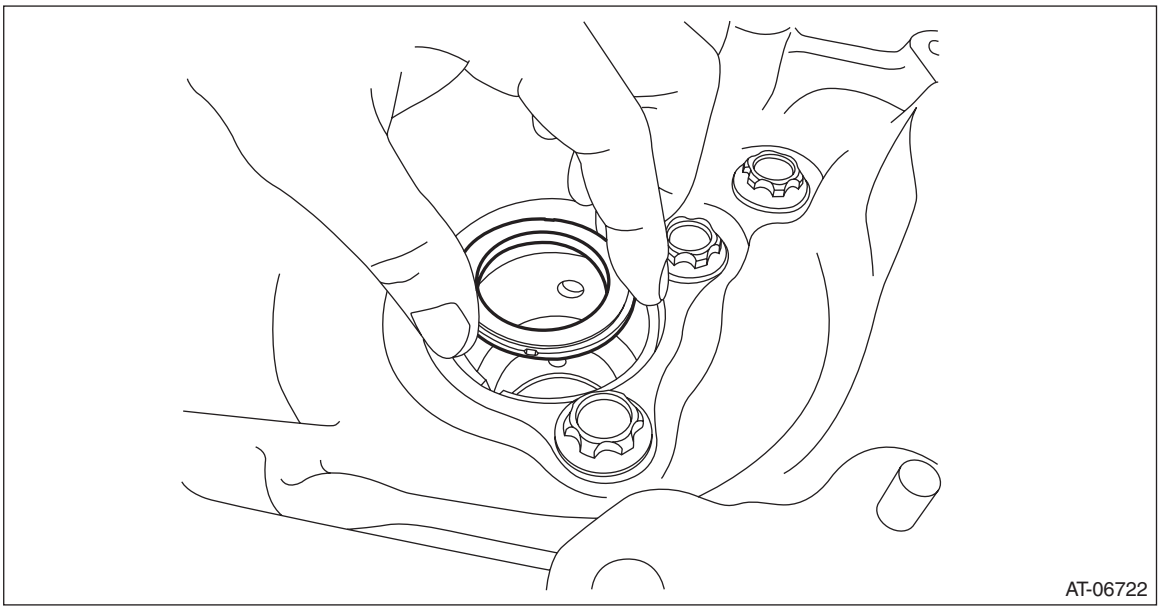

2) Install the seal ring to the input shaft.

NOTE:
- Use a new seal ring.
- When installing the seal ring, do not expand the seal ring too much.
- Apply CVTF to the seal rings.

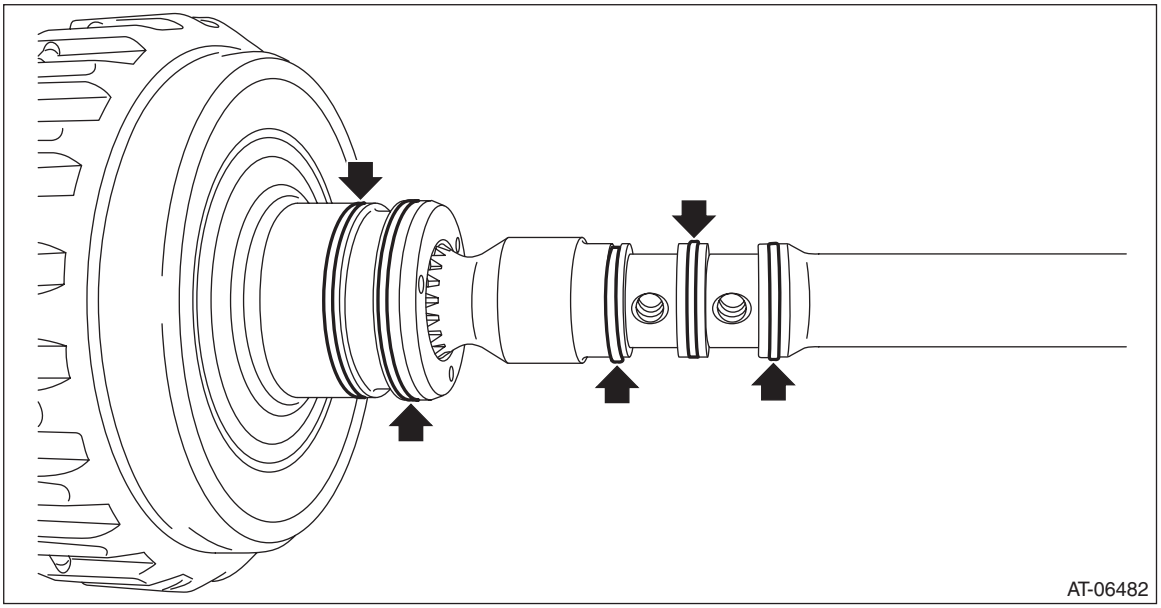

3) Install the forward clutch assembly to the converter case.

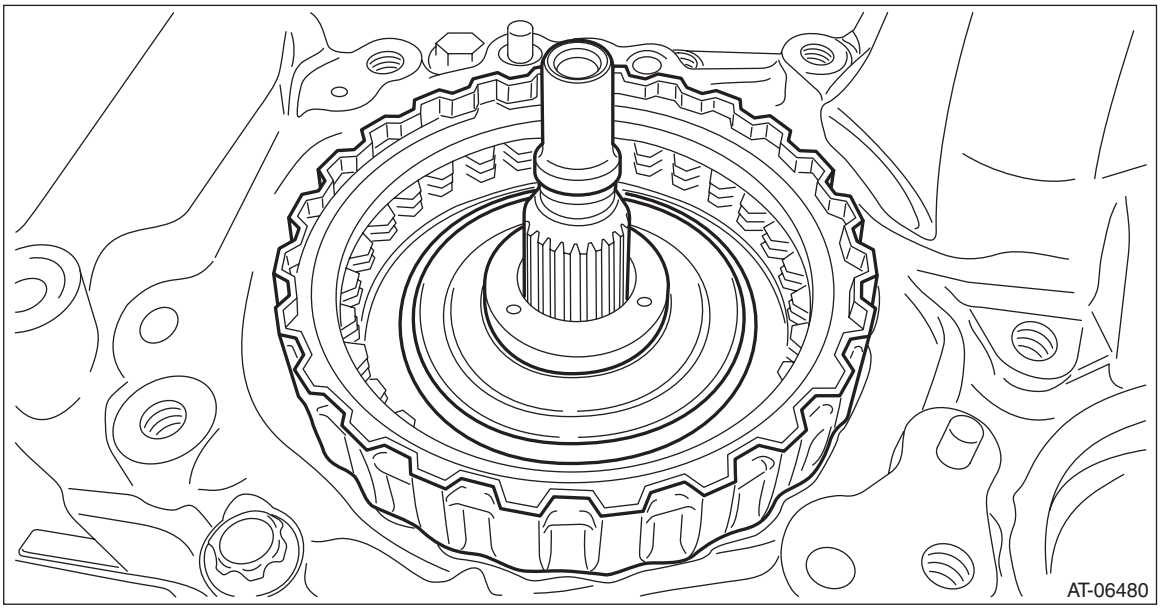

4) Install the sun gear.

NOTE:
Face the end face of the sun gear to the reverse brake side as shown in the figure.

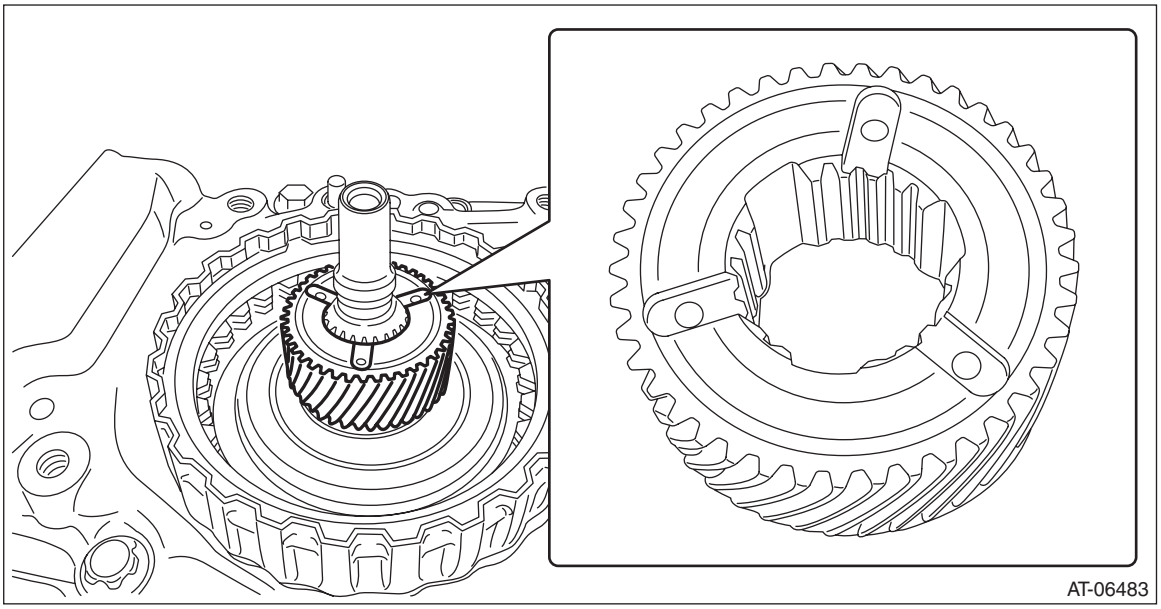

5) Install the thrust bearing to the sun gear.

NOTE:
Face the temper color surface to the reverse brake side.

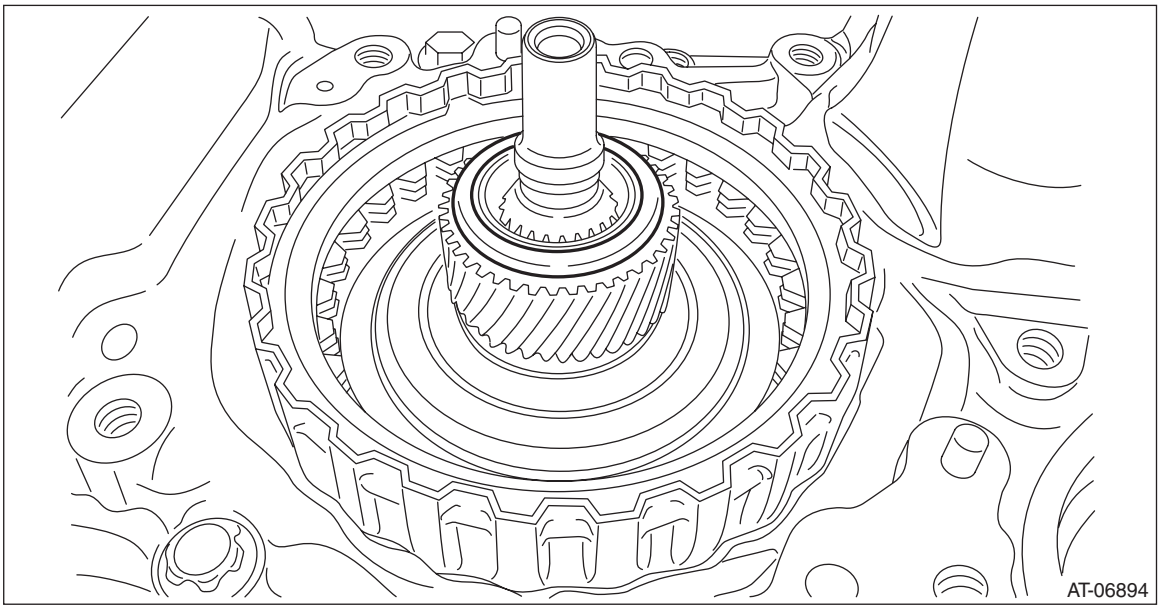

6) Install the planetary carrier.

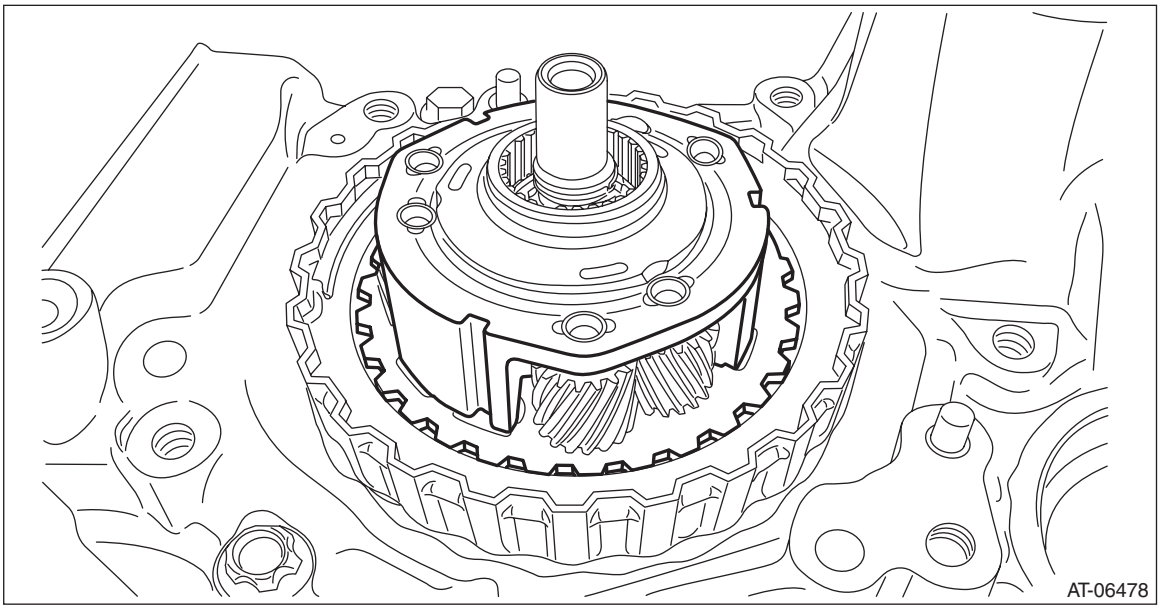

7) Install the thrust bearing.

NOTE:
Face the temper color surface to the reverse brake side.

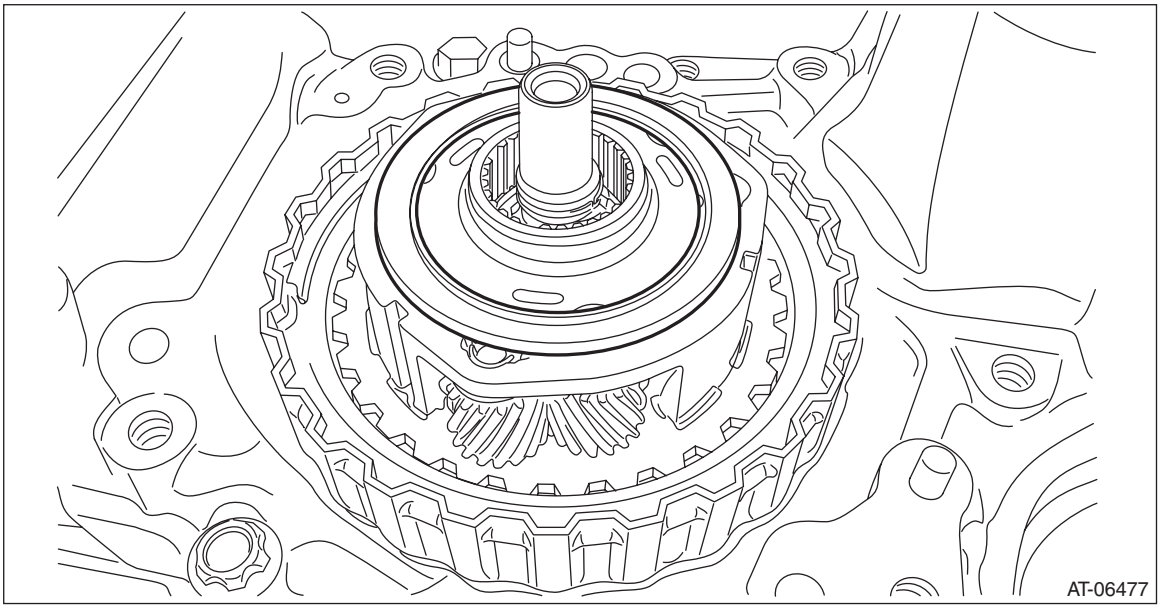

8) Install the internal gear.

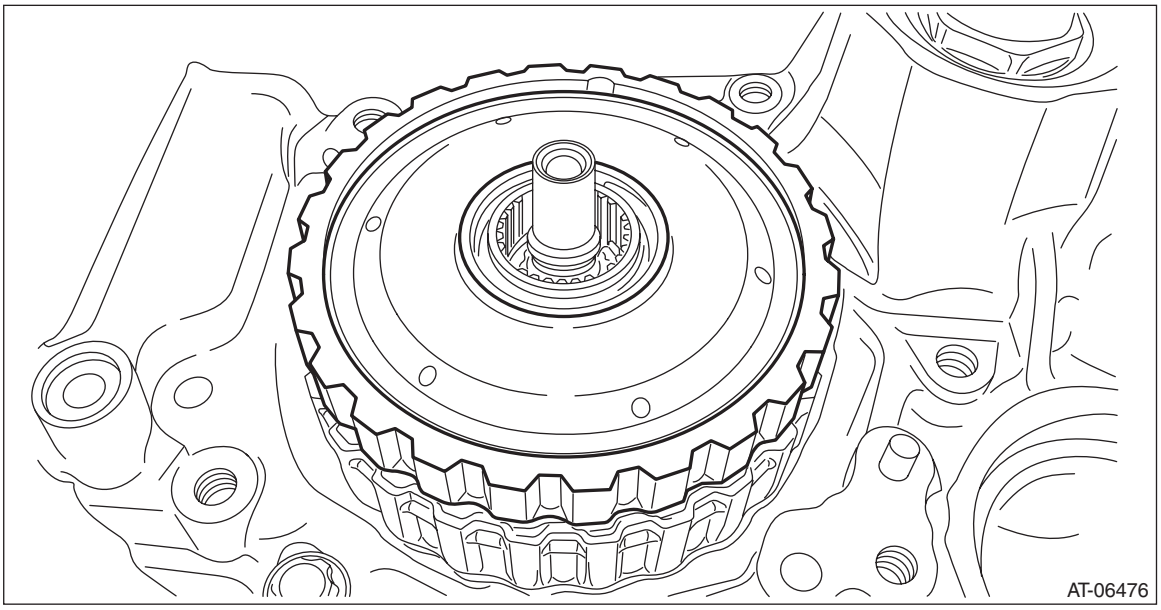

9) Install the thrust bearing to the internal gear.

NOTE:
Face the temper color surface to the reverse brake side.

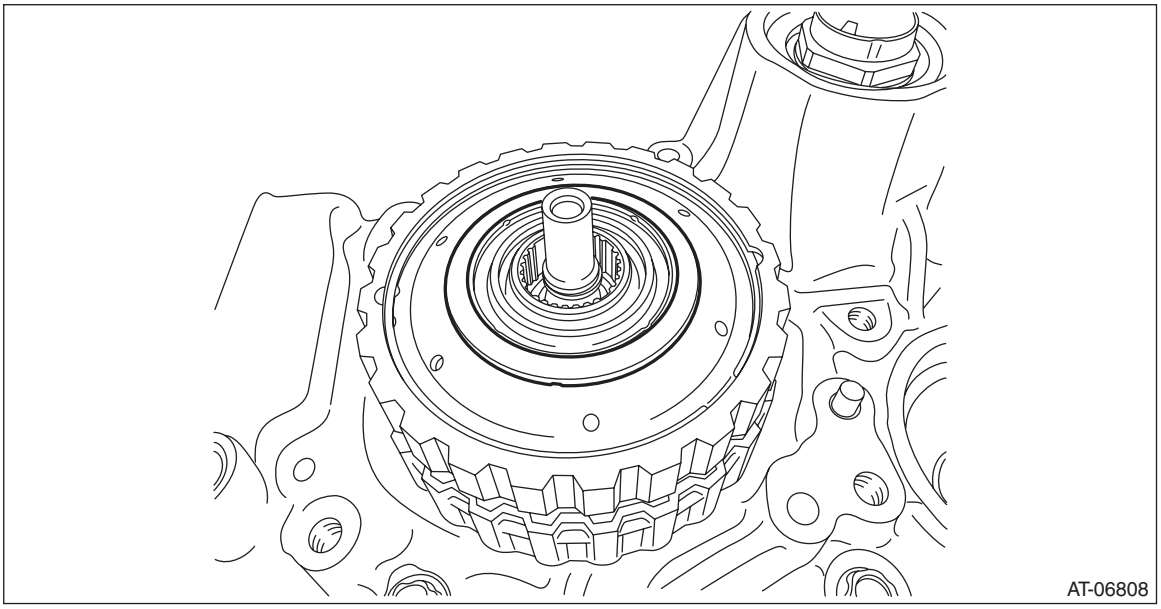

10) Select a washer. <Ref. to CVT(TR580)-271, ADJUSTMENT, Forward Clutch Assembly.>
11) Install the reverse brake assembly. <Ref. to CVT(TR580)-241, INSTALLATION, Reverse Brake Assembly.>
12) Install the primary pulley, secondary pulley and variator chain. <Ref. to CVT(TR580)-224, INSTALLATION, Primary Pulley and Secondary Pulley.>
13) Install the reduction drive gear. <Ref. to CVT(TR580)-213, INSTALLATION, Reduction Drive Gear.>
14) Install the transmission case. <Ref. to CVT(TR580)-202, INSTALLATION, Transmission Case.>
15) Install the transmission control device. <Ref. to CVT(TR580)-196, INSTALLATION, Transmission Control Device.>
16) Install the oil strainer and oil pan. <Ref. to CVT(TR580)-109, INSTALLATION, Oil Pan and Strainer.>
17) Install the reduction driven gear assembly. <Ref. to CVT(TR580)-185, INSTALLATION, Reduction Driven Gear.>
18) Install the transfer driven gear assembly. <Ref. to CVT(TR580)-181, INSTALLATION, Transfer Driven Gear.>
19) Install the transfer clutch assembly. <Ref. to CVT(TR580)-168, INSTALLATION, Transfer Clutch.>
20) Install the parking pawl. <Ref. to CVT(TR580)-184, INSTALLATION, Parking Pawl.>
21) Install the extension case. <Ref. to CVT(TR580)-163, INSTALLATION, Extension Case.>
22) Install the inhibitor switch. <Ref. to CVT(TR580)-97, INSTALLATION, Inhibitor Switch.>
23) Install the secondary speed sensor. <Ref. to CVT(TR580)-101, INSTALLATION, Secondary Speed Sensor.>
24) Install the primary speed sensor. <Ref. to CVT(TR580)-104, INSTALLATION, Primary Speed Sensor.>
25) Install the turbine speed sensor. <Ref. to CVT(TR580)-99, INSTALLATION, Turbine Speed Sensor.>
26) Install the transmission harness. <Ref. to CVT(TR580)-133, INSTALLATION, Transmission Harness.>
27) Install the control valve body. <Ref. to CVT(TR580)-118, INSTALLATION, Control Valve Body.>
28) Install the air breather hose. <Ref. to CVT(TR580)-154, INSTALLATION, Air Breather Hose.>
29) Install the transmission assembly to the vehicle. <Ref. to CVT(TR580)-68, INSTALLATION, Automatic Transmission Assembly.>

C: DISASSEMBLY

1. FORWARD CLUTCH ASSEMBLY

1) Remove the snap ring.
2) Remove the retaining plate, drive plate, driven plate and dish plate.

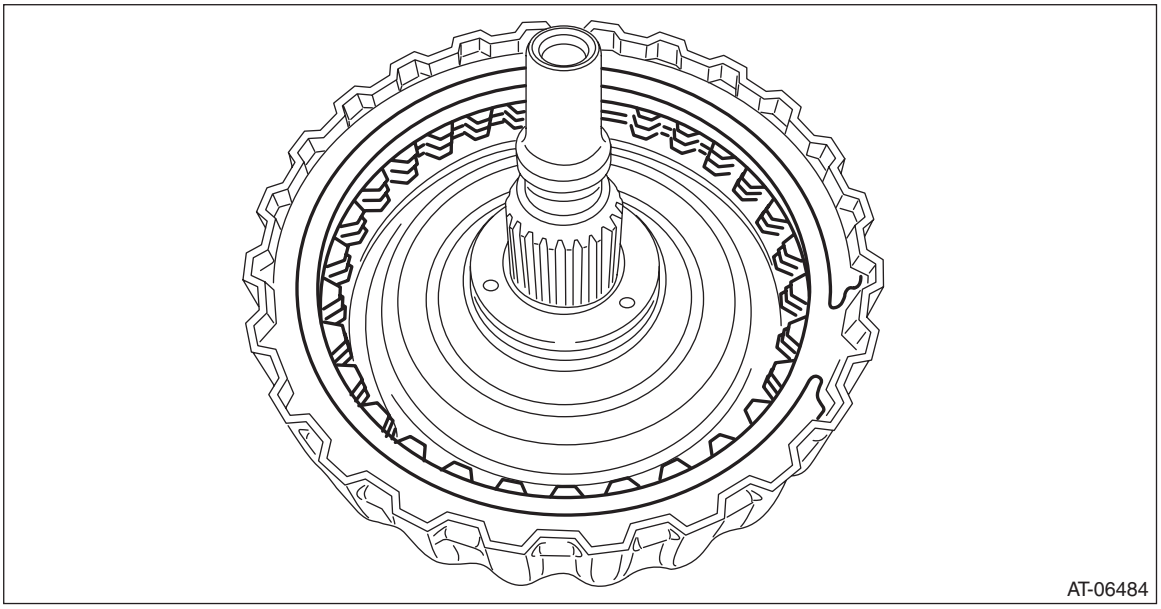

3) Compress the return spring using the ST to remove the snap ring.
ST1 18762AA010 COMPRESSOR SPECIAL TOOL
ST2 398673600 COMPRESSOR

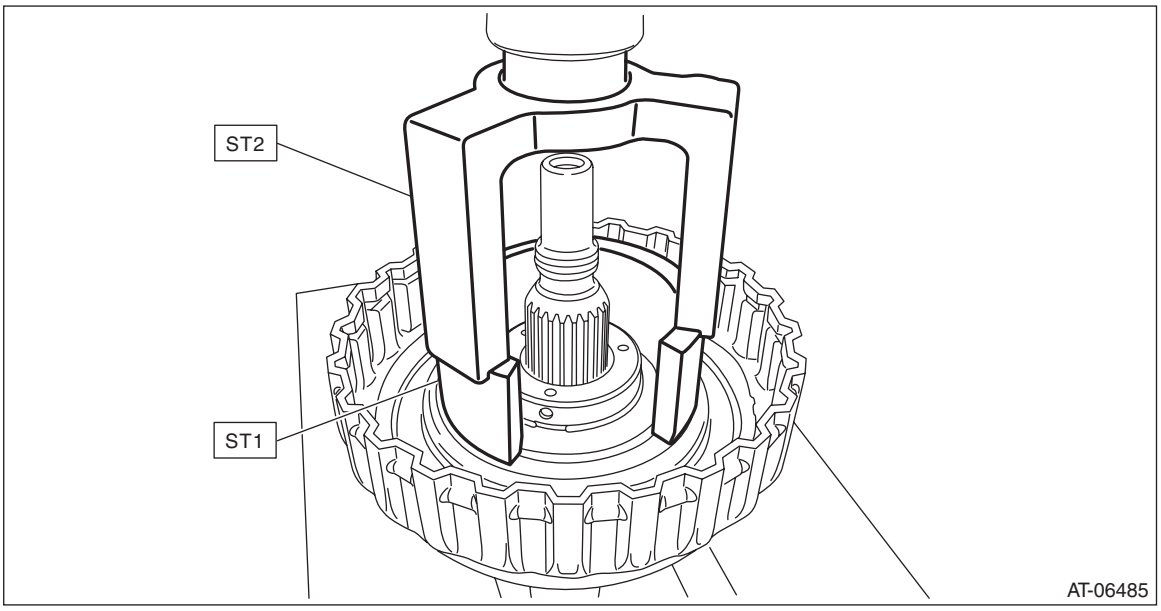

4) Remove the chamber COMPL and snap ring.

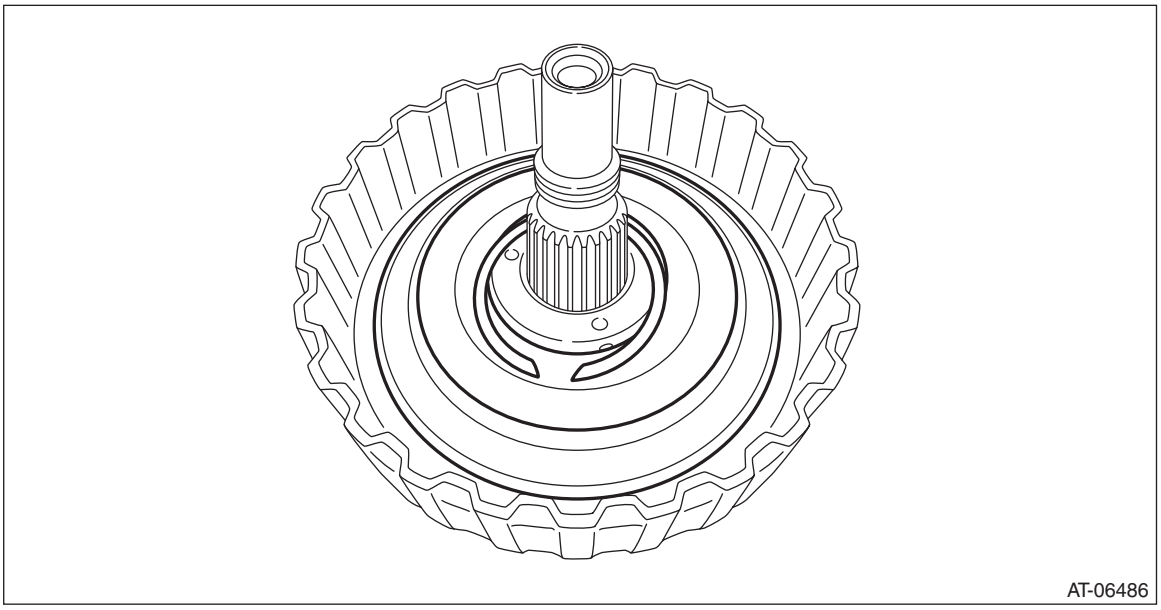

5) Remove the return spring.

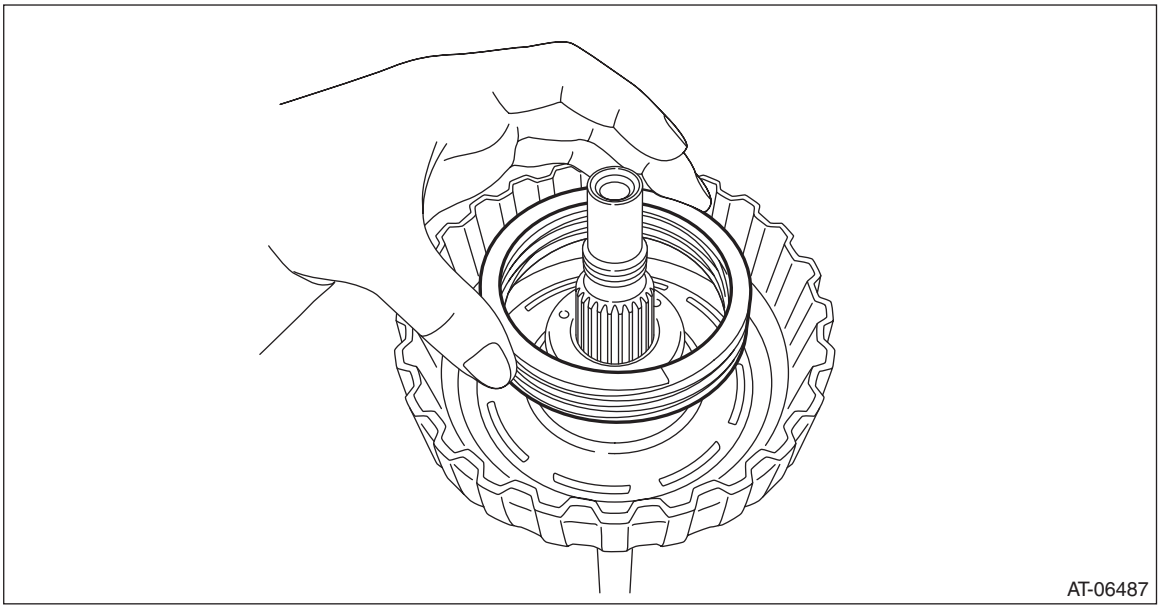

6) Remove the forward clutch piston by blowing compressed air intermittently from the forward clutch carrier hole.

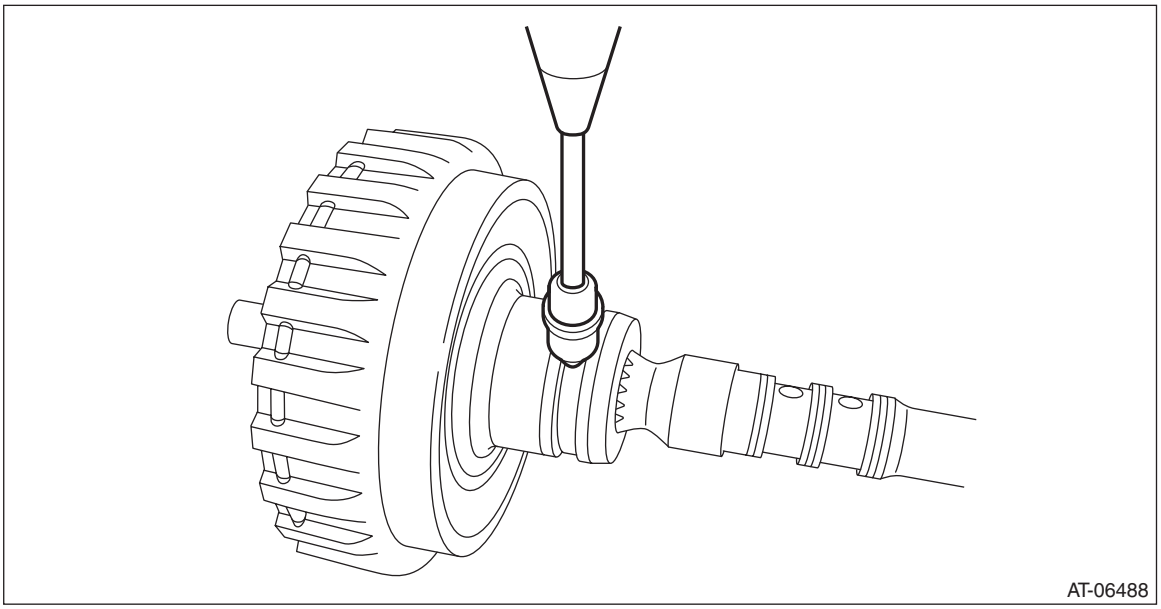

2. PLANETARY CARRIER ASSY

NOTE:
Disassemble the balance oil guide only.
1) Remove the snap ring.

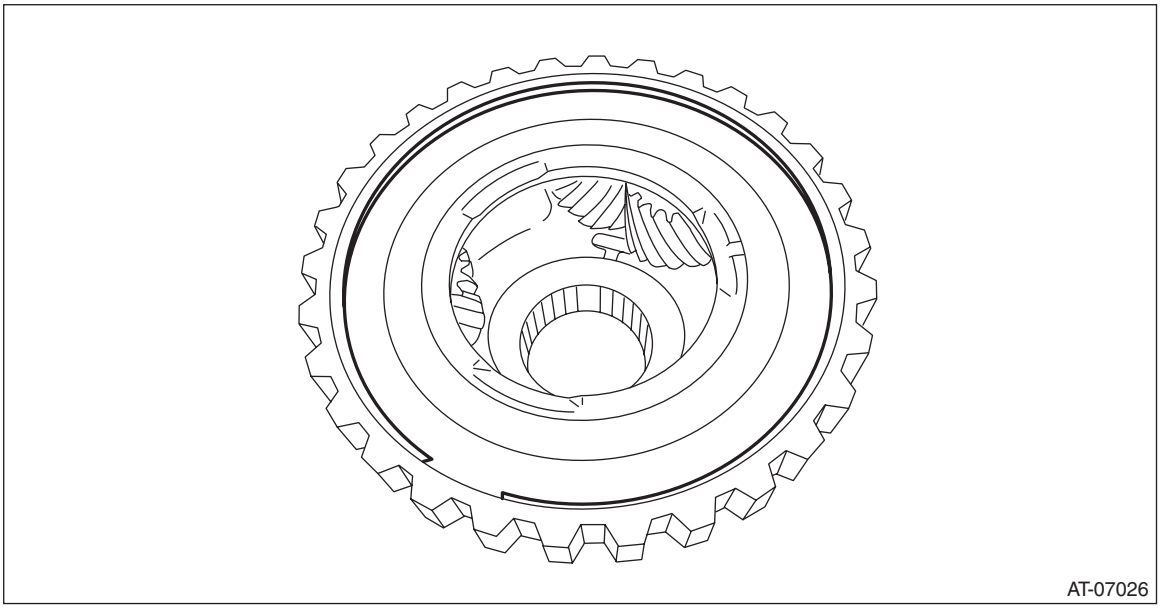

2) Remove the balance oil guide.

3. INTERNAL GEAR

1) Remove the snap ring.

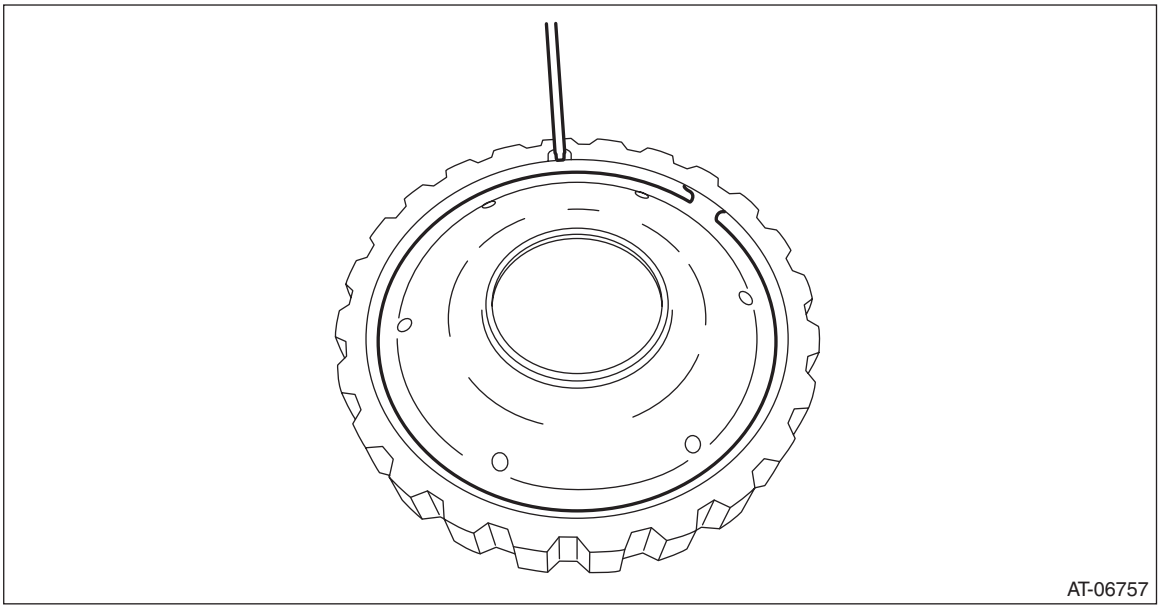

2) Remove the thrust gear plate.

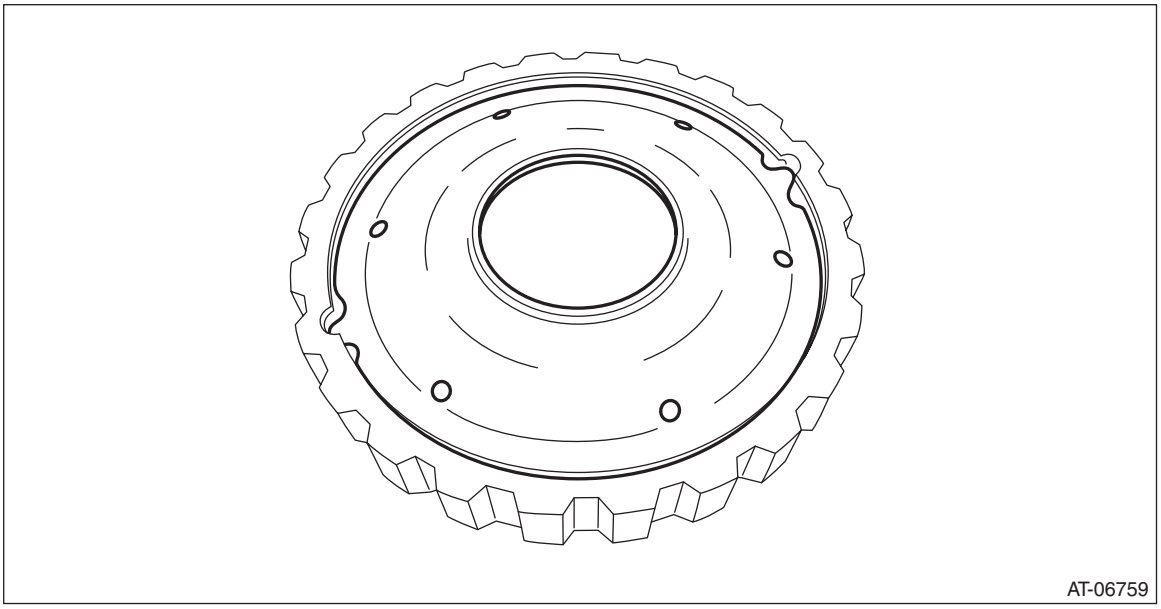

D: ASSEMBLY

1. FORWARD CLUTCH ASSEMBLY

1) Install the forward clutch piston to forward clutch drum.

NOTE:
- Apply CVTF to the seal of forward clutch piston.
- Insert it all the way to the end.

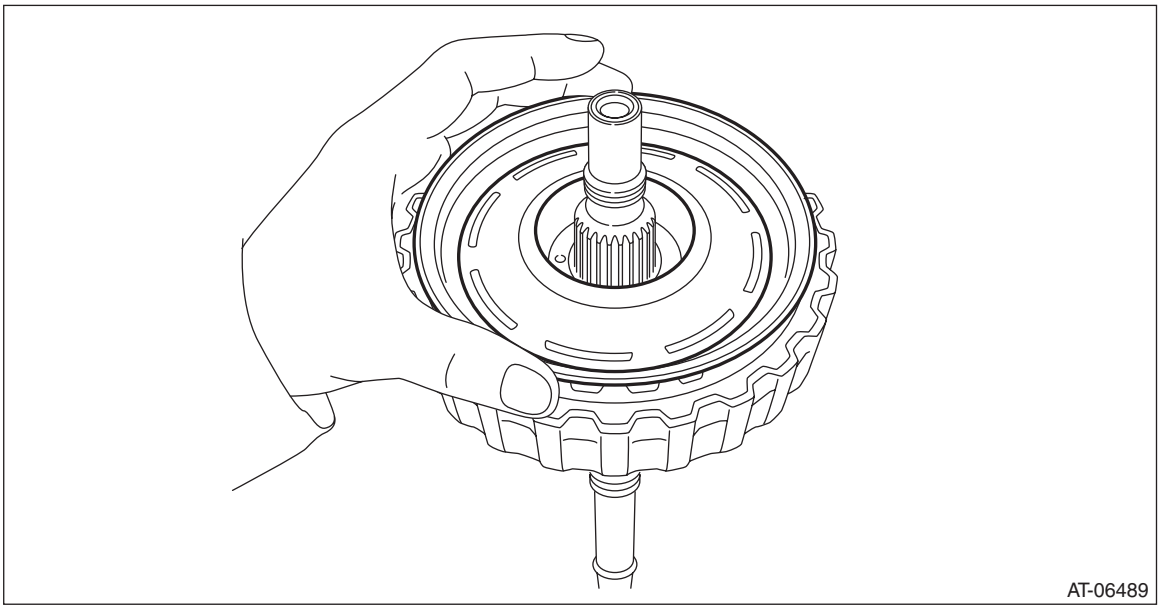

2) Install the return spring.

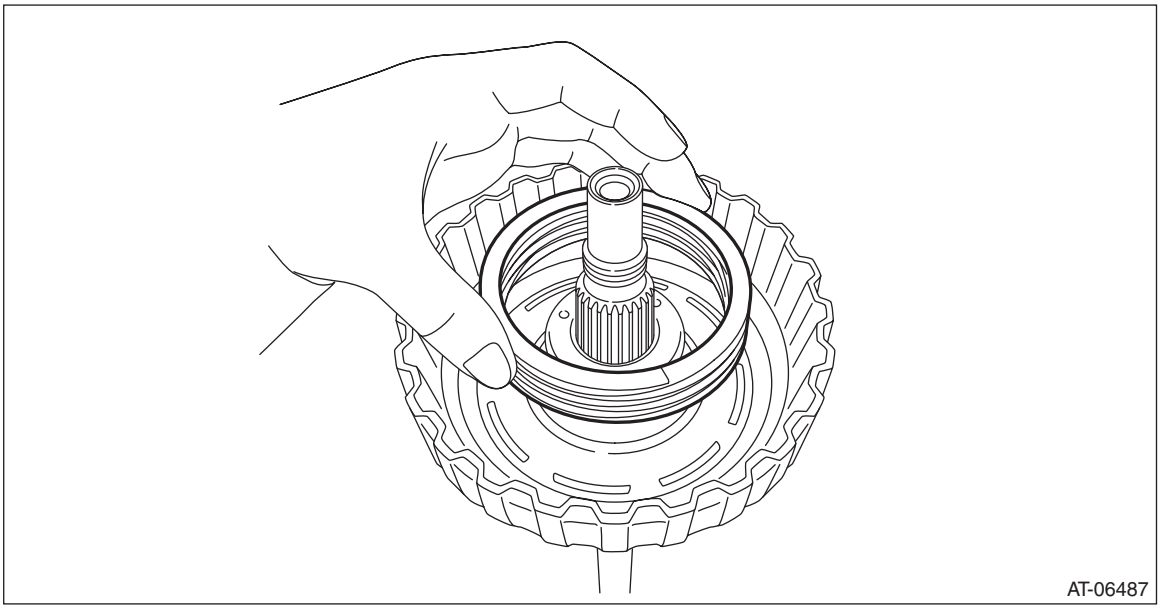

3) Install the chamber COMPL.

NOTE:
Apply CVTF to the sealing area of chamber COMPL.

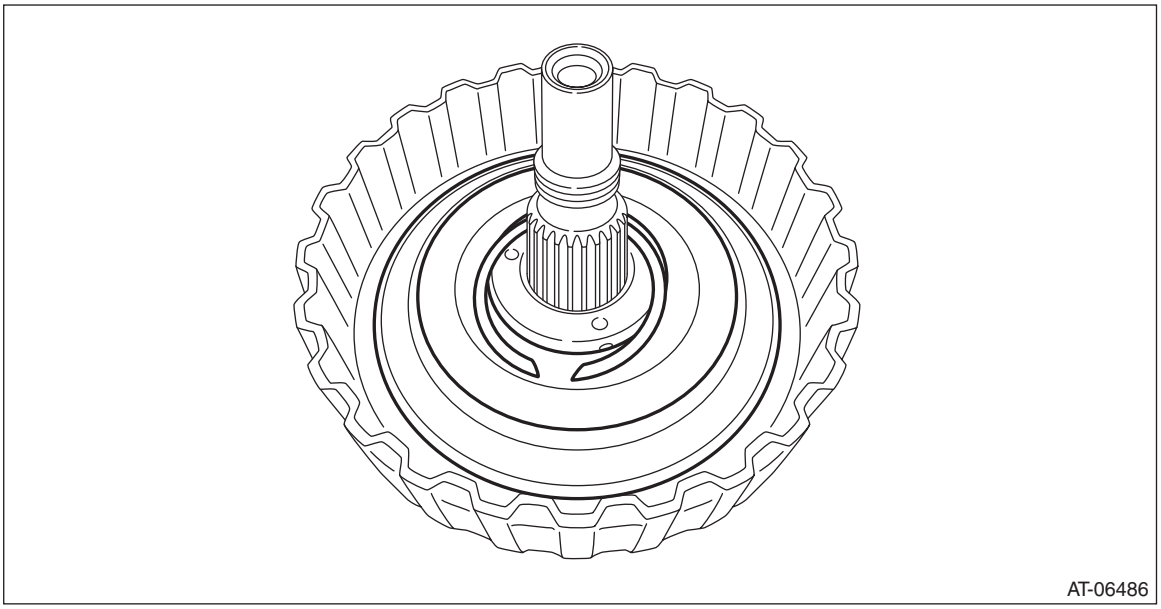

4) Compress the return spring using the ST to install the snap ring.
ST1 18762AA010 COMPRESSOR SPECIAL TOOL
ST2 398673600 COMPRESSOR

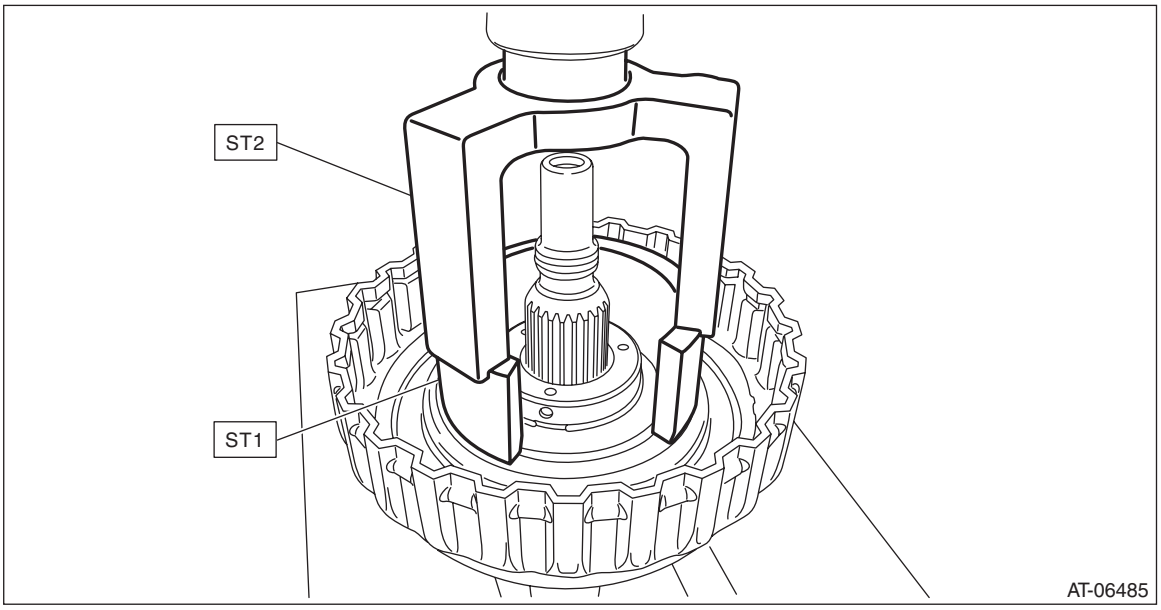

5) Check the operation of forward clutch piston by blowing compressed air intermittently from forward clutch carrier hole.

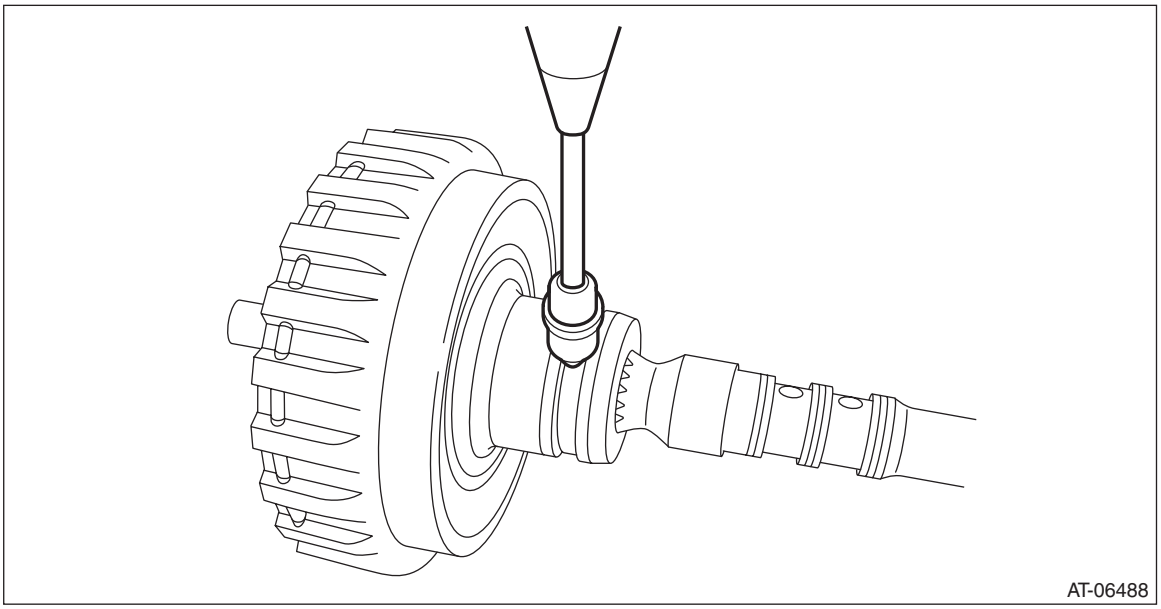

6) Place the driven plate, drive plate and retaining plate neatly in this order on surface table.
7) Set the dial gauge to retaining plate, and read its scale.

NOTE:
The value, which is read in the gauge at this time, is zero point.

8) Scale and record the weight "Z" of a flat board which will be put on retaining plate.

NOTE:
- Use a stiff board which does not bend against load as a flat board to be put on retaining plate.
- Use a flat board weighing less than 52 N (5.3 kgf, 11.7 lb).

9) Put the flat board on retaining plate.

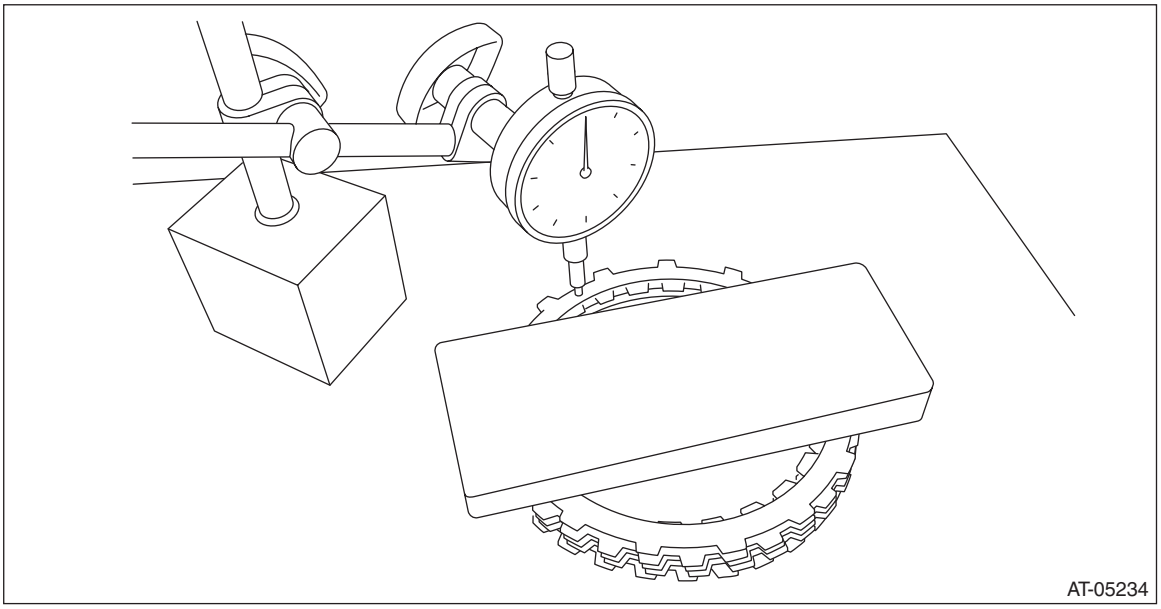

10) Using the following formula, read the push/pull gauge and calculate “N”.
N = 52 N (5.3 kgf, 11.7 lb) – Z
52 N (5.3 kgf, 11.7 lb) : Load applied to clutch plate
Z: Flat board weight
11) Press the center of retaining plate by applying a force of “N” using push/pull gauge, and then measure and record the compression amount “A”.

NOTE:
Measure at four points with a 90° interval and calculate the average.

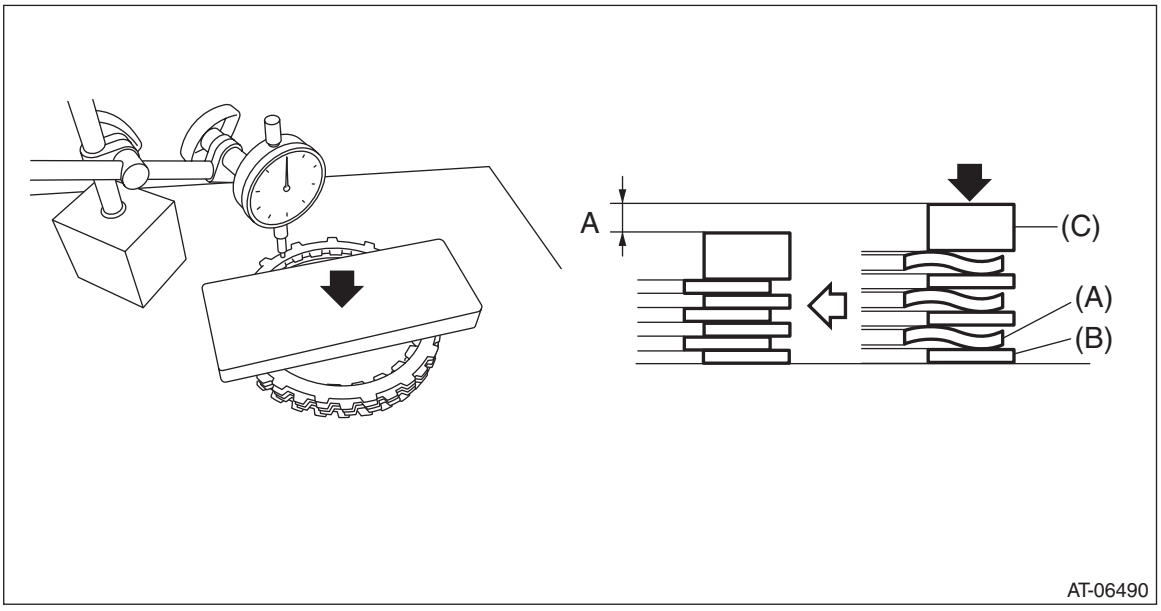

(A) Driven plate
(B) Drive plate
(C) Retaining plate

12) Install the dish plate, drive plate, driven plate, retaining plate and snap ring to the forward clutch carrier.

NOTE:
Install the dish plate in the correct direction.

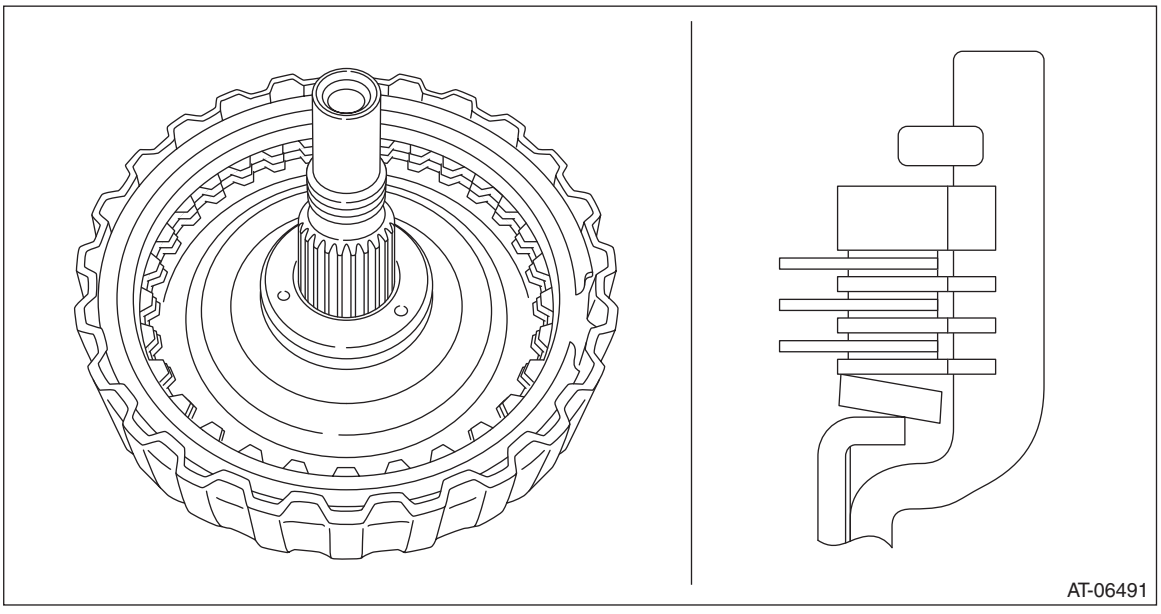

13) Measure and record the clearance “B” between the retaining plate and snap ring.

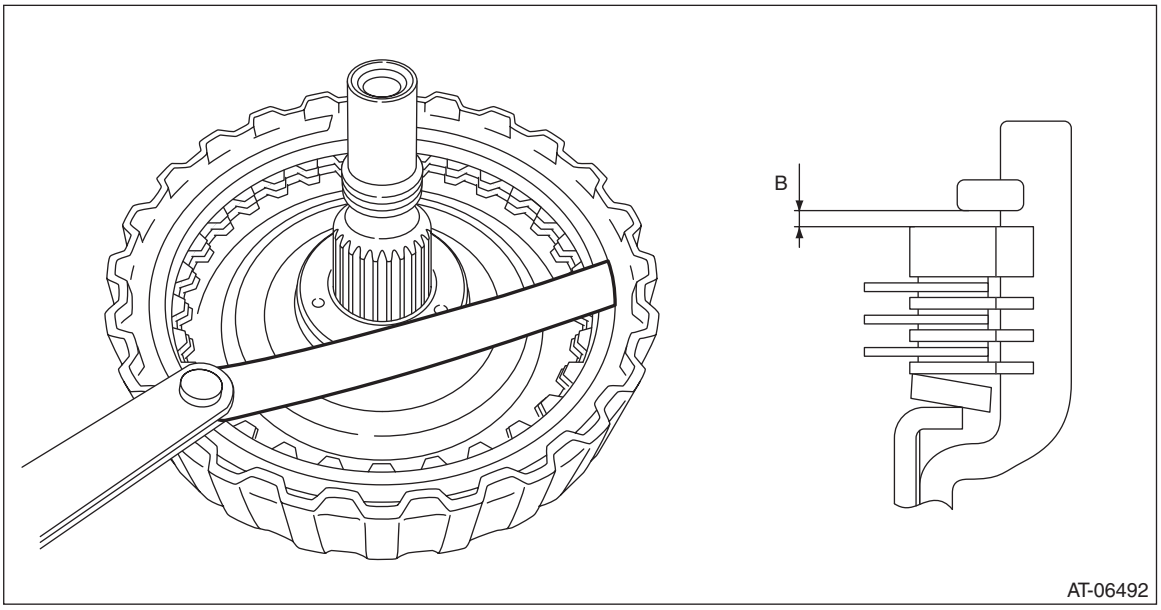

14) Piston stroke calculation
Calculate with A and B dimensions recorded before.
If it exceeds the limit, replace with a new drive plate and adjust within the initial standard value.
S mm (in) = A + B
S: Piston stroke
A: Compression amount of drive plate and dish plate
B: Clearance between retaining plate and snap ring

Initial standard:
1.0 — 1.4 mm (0.040 — 0.055 in)

Limit thickness:
1.6 mm (0.063 in)

Retaining plate	
Part No.	Thickness mm (in)
31567AB760	4.2 (0.165)
31567AB770	4.4 (0.173)
31567AB780	4.6 (0.181)
31567AB790	4.8 (0.189)
31567AB830	5.0 (0.197)

2. PLANETARY CARRIER ASSY

NOTE:
Assemble in the reverse order of disassembly.

3. INTERNAL GEAR

NOTE:
Assemble in the reverse order of disassembly.

E: INSPECTION

- Check the forward clutch drum, internal gear, sun gear and forward clutch piston lip for wear or damage.
- Inspect the drive plate facing for wear and damage.
- Check the driven plate for discoloration (burnt color).
- Check for worn snap ring, fatigue or damaged return spring or deformed spring retainer.
- Make sure the clearance between retaining plate and internal gear of forward clutch is within the limit. If it exceeds the standard, replace the forward clutch. <Ref. to CVT(TR580)-266, ASSEMBLY, Forward Clutch Assembly.>

F: ADJUSTMENT

1) Install the thrust bearing to the internal gear.

NOTE:
Face the temper color surface to the reverse brake side.

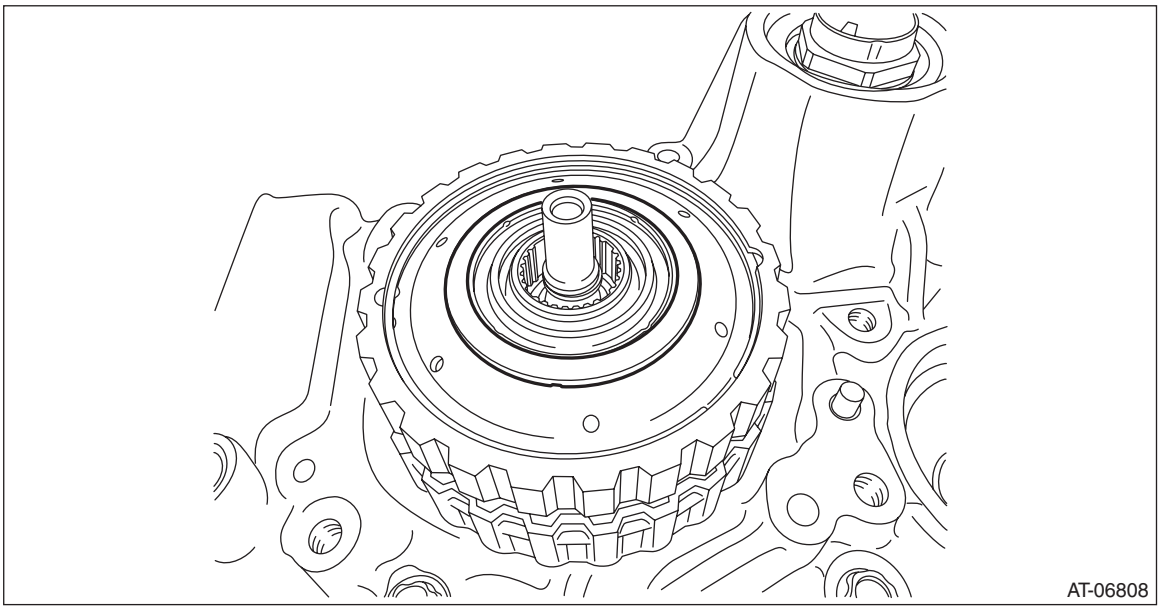

2) Measure depth “A” from the ST upper face to the washer mounting surface.
ST 499575600 GAUGE

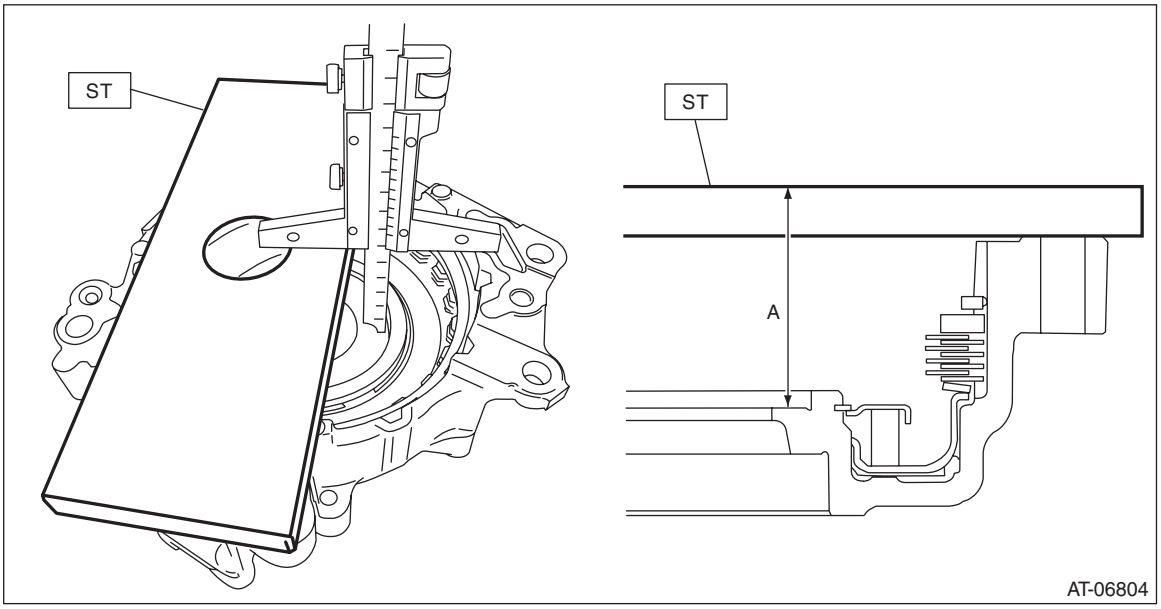

3) Measure the height “B” from the ST upper face to the mating surface of the drive pinion retainer.
ST 499575600 GAUGE

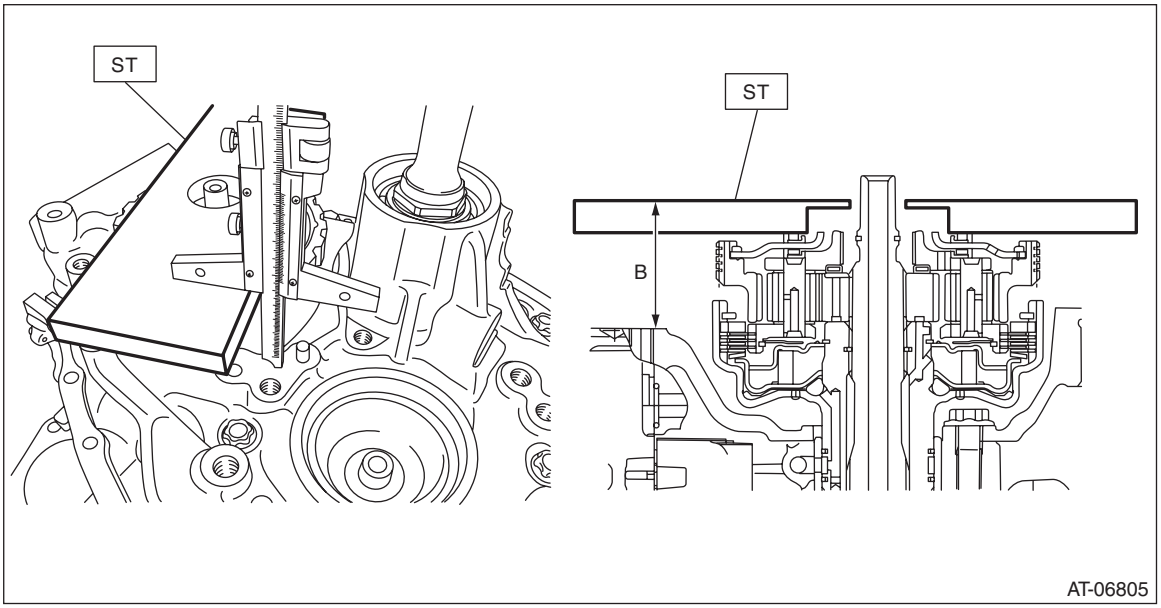

4) Obtain the thickness of washer using the following formula to select the washer.
T (mm) = A – B – (0.35 — 0.70)
[T (in) = A – B – (0.014 — 0.028)]
T: Shim thickness
A: Depth from the ST upper face to the washer mounting surface
B: Height from ST upper face to the drive pinion retainer mating surface
0.35 — 0.70 mm (0.014 — 0.028 in): Clearance

Washer	
Part No.	Thickness mm (in)
803064020	1.3 (0.051)
803064021	1.55 (0.061)
803064022	1.8 (0.071)
803064023	2.05 (0.081)
803064024	2.3 (0.091)
803064025	2.55 (0.100)

41.Drive Pinion Shaft Assembly

A: REMOVAL

1) Remove the transmission assembly from the vehicle. <Ref. to CVT(TR580)-56, REMOVAL, Automatic Transmission Assembly.>
2) Remove the air breather hose. <Ref. to CVT(TR580)-152, REMOVAL, Air Breather Hose.>
3) Remove the control valve body. <Ref. to CVT(TR580)-112, REMOVAL, Control Valve Body.>
4) Remove the transmission harness. <Ref. to CVT(TR580)-126, REMOVAL, Transmission Harness.>
5) Remove the turbine speed sensor. <Ref. to CVT(TR580)-99, REMOVAL, Turbine Speed Sensor.>
6) Remove the secondary speed sensor. <Ref. to CVT(TR580)-101, REMOVAL, Secondary Speed Sensor.>
7) Remove the primary speed sensor. <Ref. to CVT(TR580)-103, REMOVAL, Primary Speed Sensor.>
8) Remove the inhibitor switch. <Ref. to CVT(TR580)-95, REMOVAL, Inhibitor Switch.>
9) Remove the extension case. <Ref. to CVT(TR580)-162, REMOVAL, Extension Case.>
10) Remove the transfer clutch assembly. <Ref. to CVT(TR580)-166, REMOVAL, Transfer Clutch.>
11) Remove the transfer driven gear assembly. <Ref. to CVT(TR580)-180, REMOVAL, Transfer Driven Gear.>
12) Remove the parking pawl. <Ref. to CVT(TR580)-183, REMOVAL, Parking Pawl.>
13) Remove the reduction driven gear assembly. <Ref. to CVT(TR580)-185, REMOVAL, Reduction Driven Gear.>
14) Remove the oil pan and oil strainer. <Ref. to CVT(TR580)-108, REMOVAL, Oil Pan and Strainer.>
15) Remove the transmission control device. <Ref. to CVT(TR580)-193, REMOVAL, Transmission Control Device.>
16) Remove the transmission case. <Ref. to CVT(TR580)-199, REMOVAL, Transmission Case.>
17) Remove the reduction drive gear. <Ref. to CVT(TR580)-212, REMOVAL, Reduction Drive Gear.>
18) Remove the primary pulley, secondary pulley and variator chain. <Ref. to CVT(TR580)-217, REMOVAL, Primary Pulley and Secondary Pulley.>
19) Remove the reverse brake assembly. <Ref. to CVT(TR580)-238, REMOVAL, Reverse Brake Assembly.>
20) Remove the forward clutch assembly. <Ref. to CVT(TR580)-253, REMOVAL, Forward Clutch Assembly.>
21) Using the ST, remove the drive pinion retainer.
ST 18270KA020 SOCKET (E20)

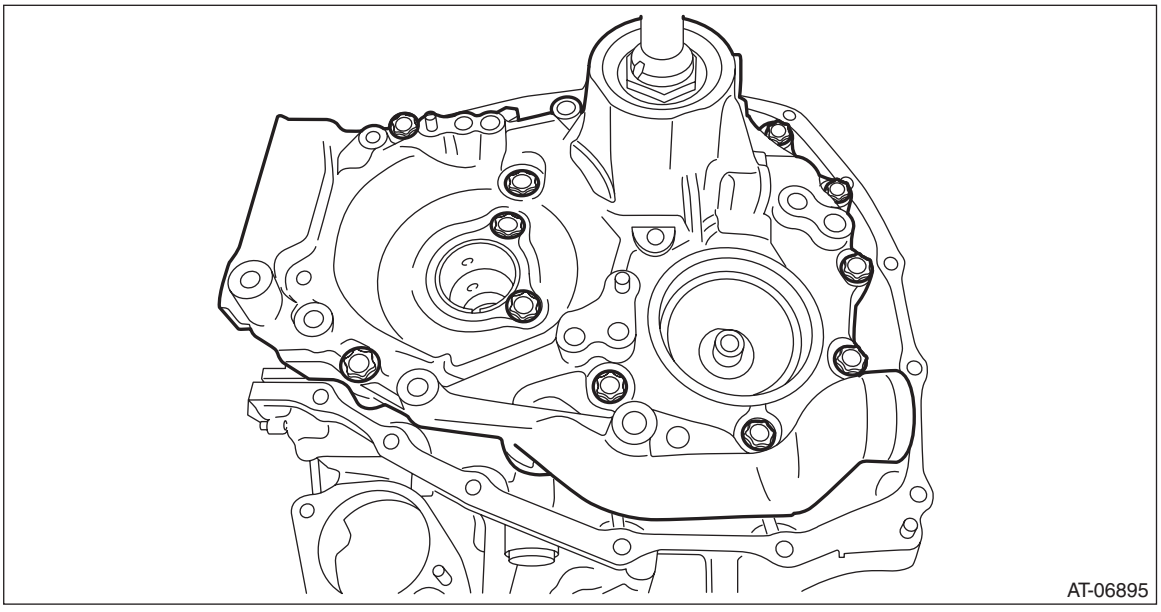

22) Remove the O-ring.

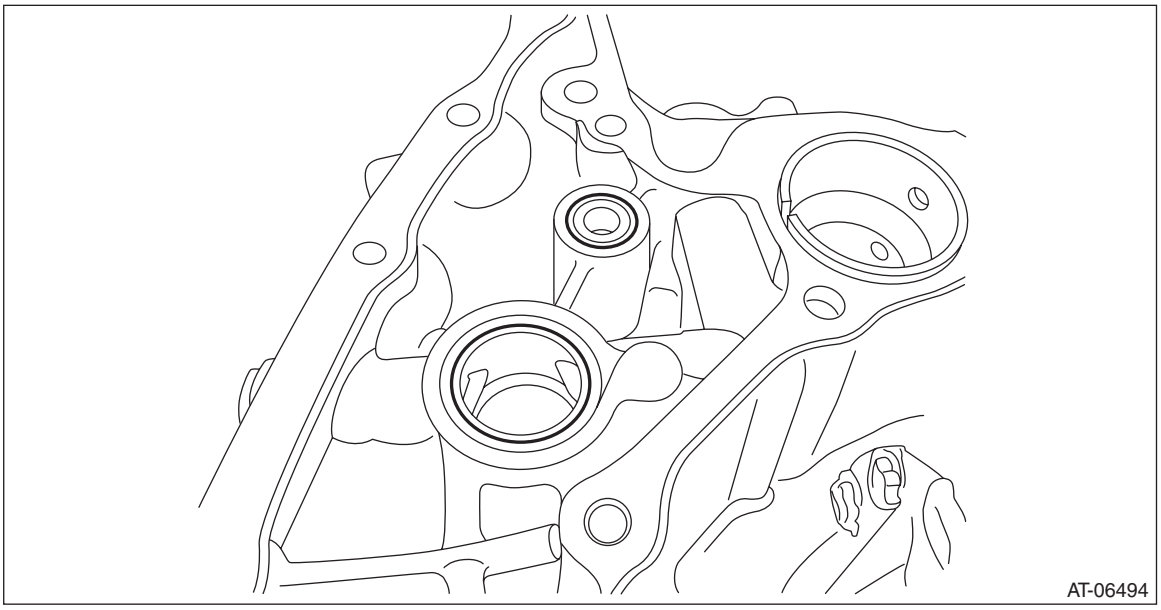

B: INSTALLATION

1) Clean the mating surface of drive pinion retainer and converter case.
2) Adjust the backlash and tooth contact between drive pinion shaft assembly and the front differential side gear. <Ref. to CVT(TR580)-295, ADJUSTMENT, Drive Pinion Shaft Assembly.>
3) Install O-rings in two locations to the converter case.

NOTE:
- Use new O-rings.
- Apply CVTF to the O-ring.

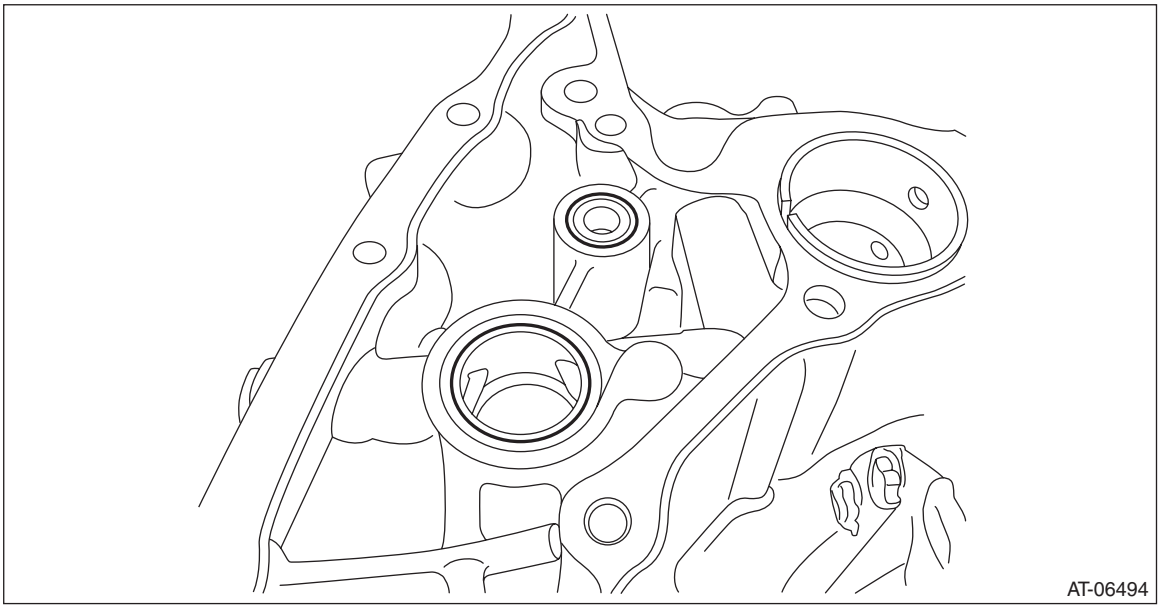

4) Apply liquid gasket seamlessly to the mating surface of drive pinion retainer.

Liquid gasket:
THREE BOND 1215 (Part No. 004403007) or equivalent

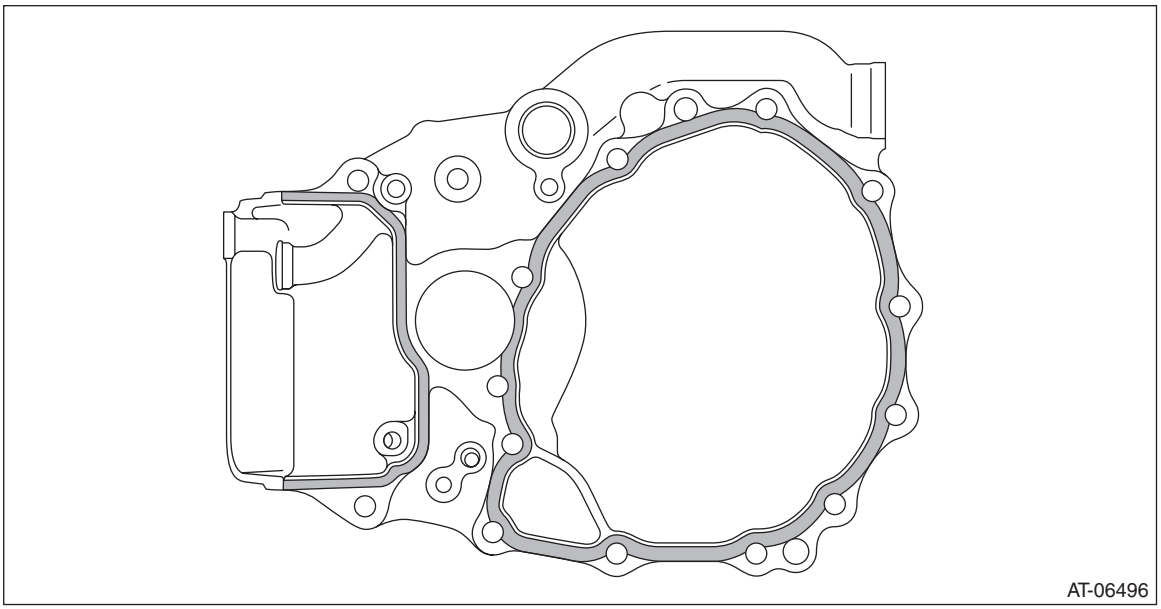

5) Install the drive pinion retainer to converter case, and tighten the bolt using the ST.
ST 18270KA020 SOCKET (E20)

NOTE:
Do not confuse the three different-length bolts when installing.

Tightening torque:
43 N·m (4.4 kgf-m, 31.7 ft-lb)

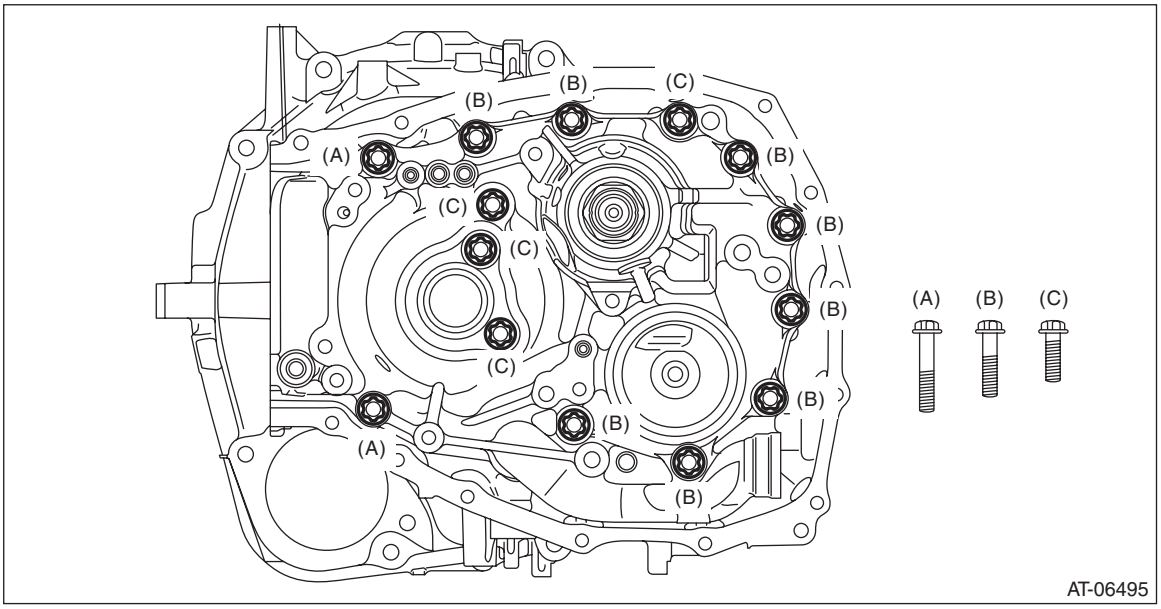

6) Install the forward clutch assembly. <Ref. to CVT(TR580)-256, INSTALLATION, Forward Clutch Assembly.>
7) Install the reverse brake assembly. <Ref. to CVT(TR580)-241, INSTALLATION, Reverse Brake Assembly.>
8) Install the primary pulley, secondary pulley and variator chain. <Ref. to CVT(TR580)-224, INSTALLATION, Primary Pulley and Secondary Pulley.>
9) Install the reduction drive gear. <Ref. to CVT(TR580)-213, INSTALLATION, Reduction Drive Gear.>
10) Install the transmission case. <Ref. to CVT(TR580)-202, INSTALLATION, Transmission Case.>
11) Install the transmission control device. <Ref. to CVT(TR580)-196, INSTALLATION, Transmission Control Device.>
12) Install the oil strainer and oil pan. <Ref. to CVT(TR580)-109, INSTALLATION, Oil Pan and Strainer.>
13) Install the reduction driven gear assembly. <Ref. to CVT(TR580)-185, INSTALLATION, Reduction Driven Gear.>
14) Install the transfer driven gear assembly. <Ref. to CVT(TR580)-181, INSTALLATION, Transfer Driven Gear.>
15) Install the transfer clutch assembly. <Ref. to CVT(TR580)-168, INSTALLATION, Transfer Clutch.>
16) Install the parking pawl. <Ref. to CVT(TR580)-184, INSTALLATION, Parking Pawl.>
17) Install the extension case. <Ref. to CVT(TR580)-163, INSTALLATION, Extension Case.>
18) Install the inhibitor switch. <Ref. to CVT(TR580)-97, INSTALLATION, Inhibitor Switch.>
19) Install the secondary speed sensor. <Ref. to CVT(TR580)-101, INSTALLATION, Secondary Speed Sensor.>
20) Install the primary speed sensor. <Ref. to CVT(TR580)-104, INSTALLATION, Primary Speed Sensor.>
21) Install the turbine speed sensor. <Ref. to CVT(TR580)-99, INSTALLATION, Turbine Speed Sensor.>
22) Install the transmission harness. <Ref. to CVT(TR580)-133, INSTALLATION, Transmission Harness.>
23) Install the control valve body. <Ref. to CVT(TR580)-118, INSTALLATION, Control Valve Body.>
24) Install the air breather hose. <Ref. to CVT(TR580)-154, INSTALLATION, Air Breather Hose.>
25) Install the transmission assembly to the vehicle. <Ref. to CVT(TR580)-68, INSTALLATION, Automatic Transmission Assembly.>

C: DISASSEMBLY

1) Flatten the tab of the lock nut.
2) Using ST1, ST2 and ST3, fix at the spline portion of drive pinion shaft to remove the lock nut.
ST1 499787500 ADAPTER
ST2 499787700 WRENCH
ST3 498937110 HOLDER

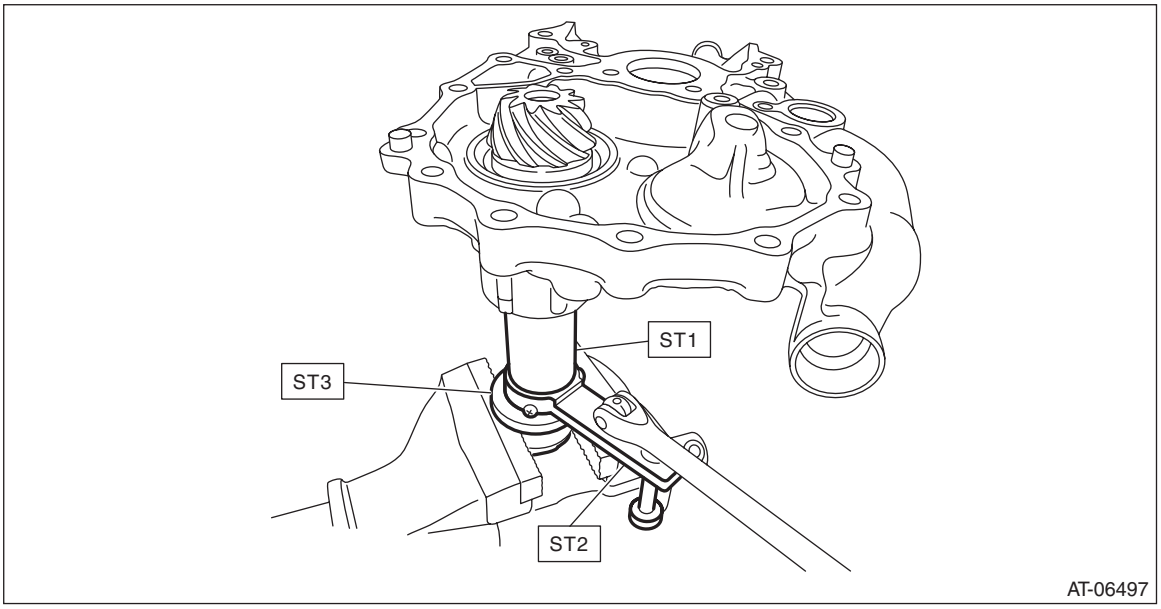

3) Remove the drive pinion shaft from the drive pinion retainer.

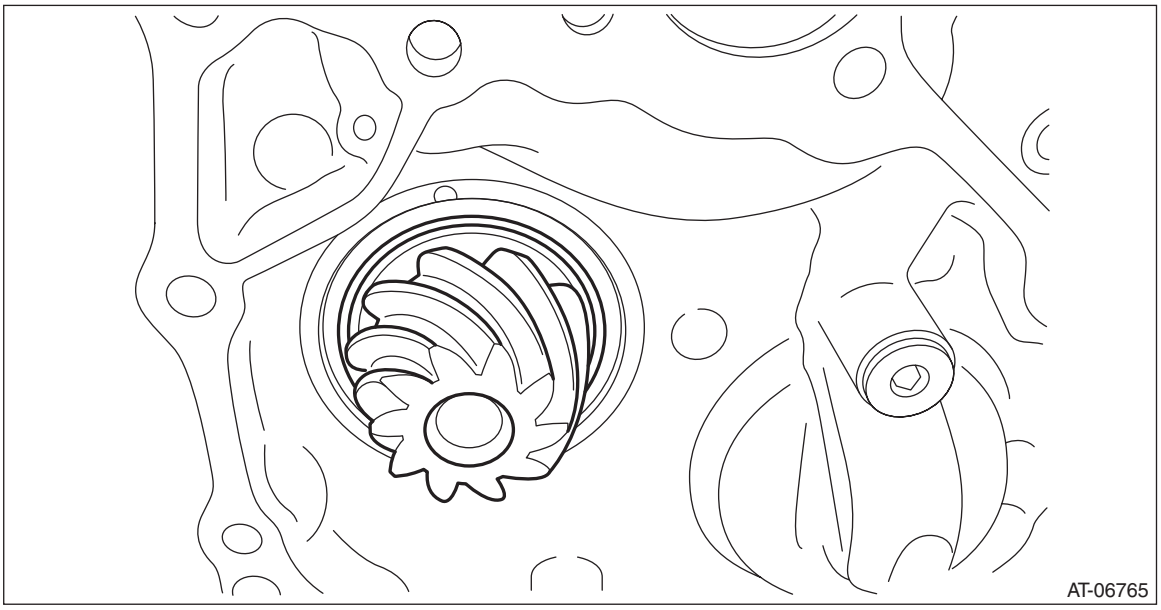

4) Using the round bar with diameter of 36 mm (1.42 in) or 37 mm (1.46 in), remove the bearing inner race and plug.

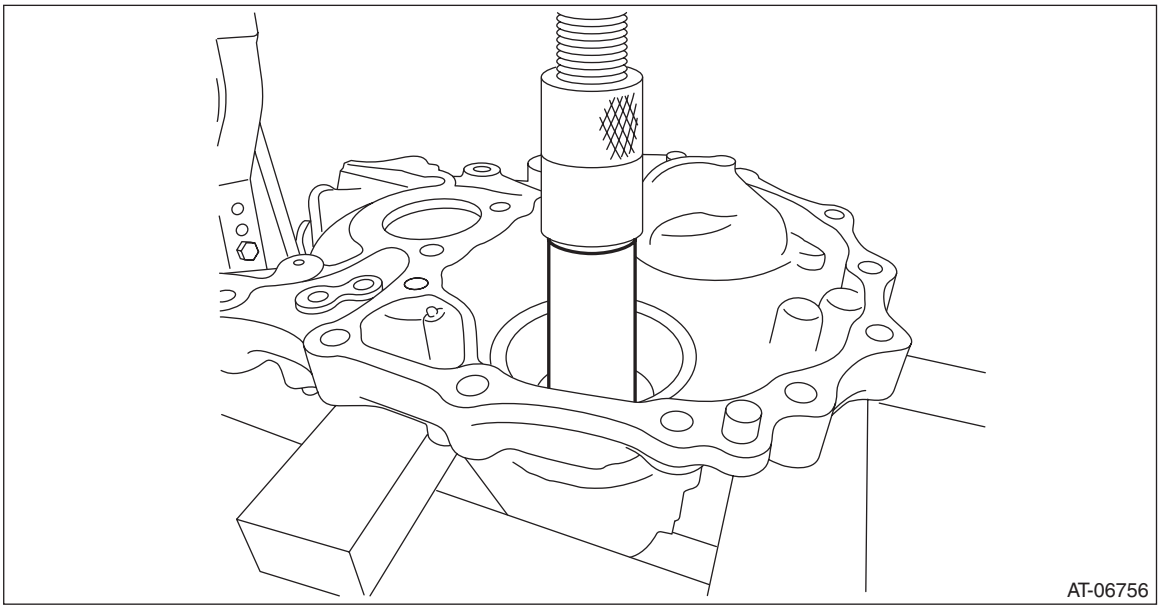

5) Remove the drive pinion washer.
6) Remove the drive pinion spacer.

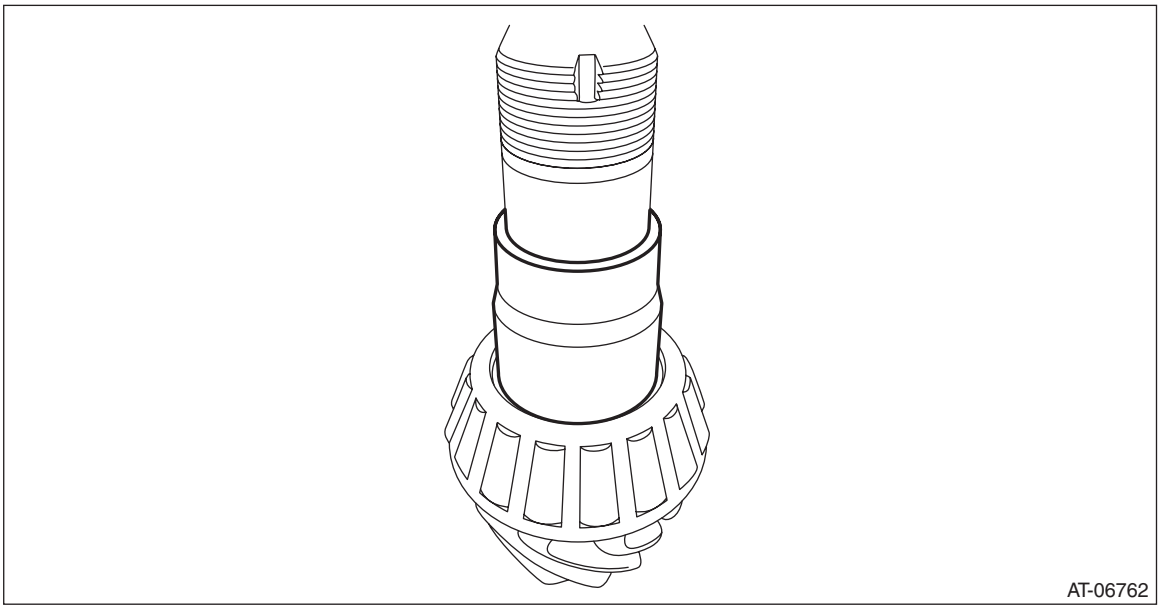

7) Remove the O-ring.

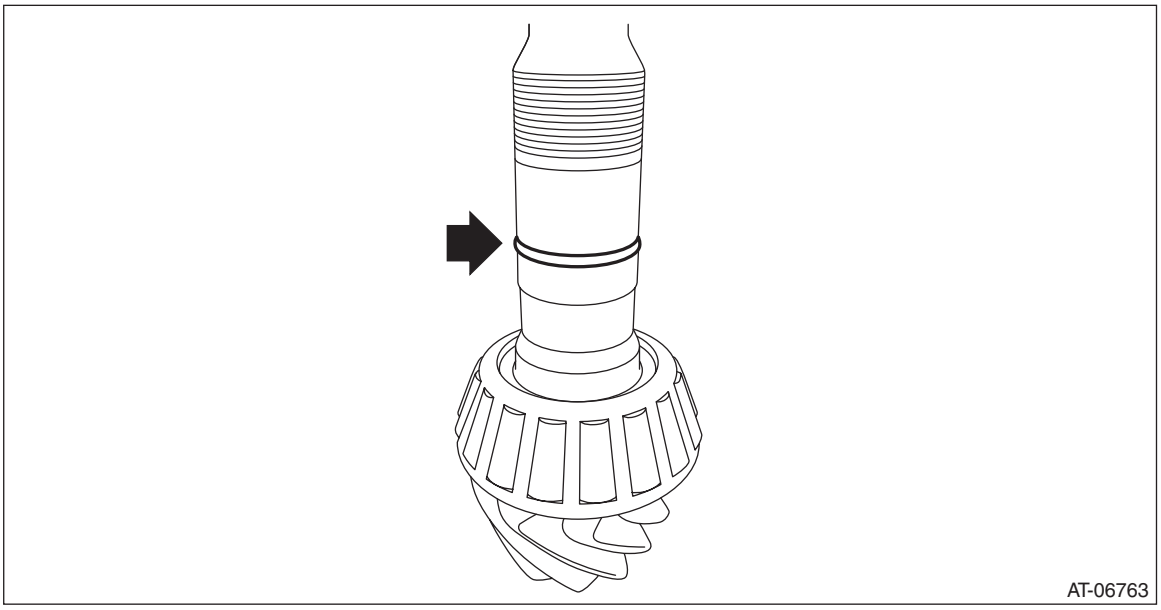

8) Remove the inner race and drive pinion shim from drive pinion shaft using ST.
ST 498515500 REMOVER

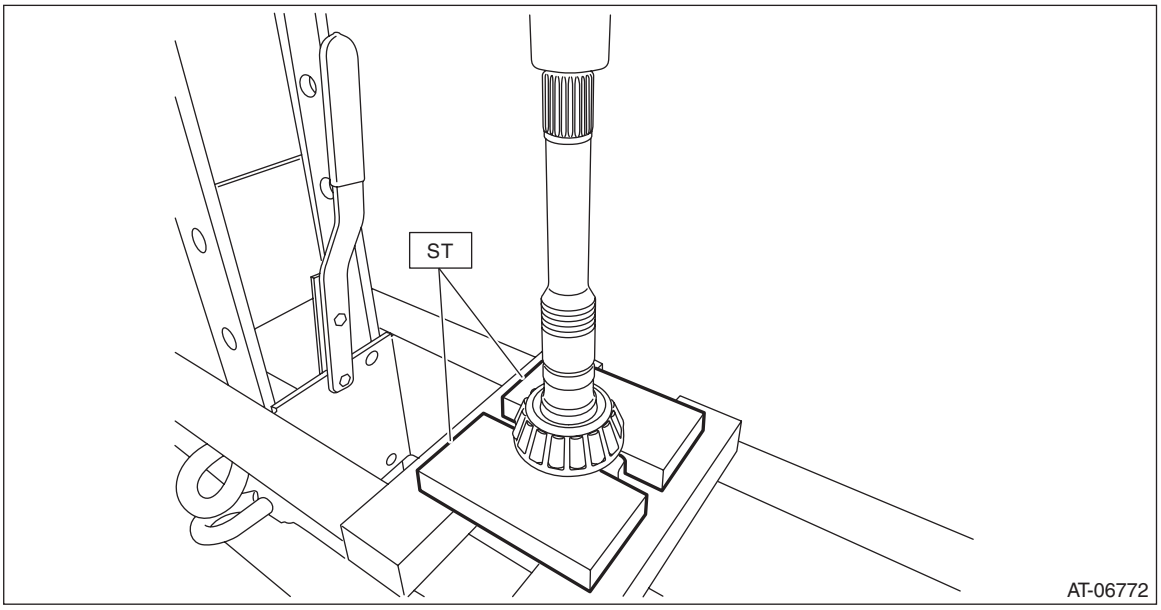

9) Using the ST, remove the outer race.
ST 398527700 PULLER ASSY

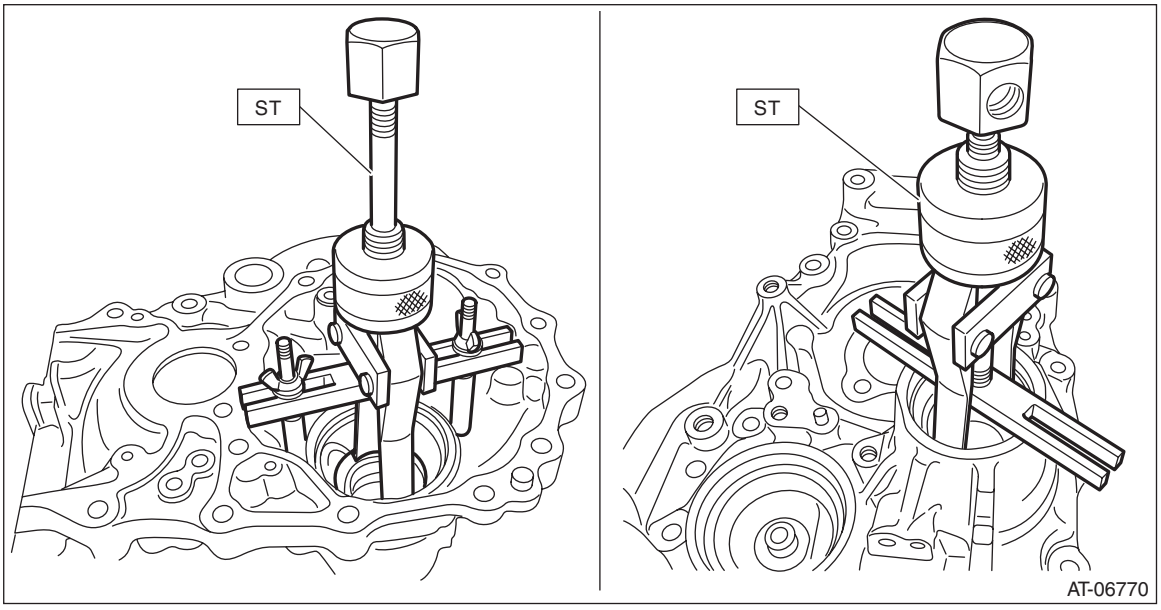

10) Remove the two oil seals using a screwdriver wrapped with cloth etc.

CAUTION:
Do not damage the fitting surface of oil seal.

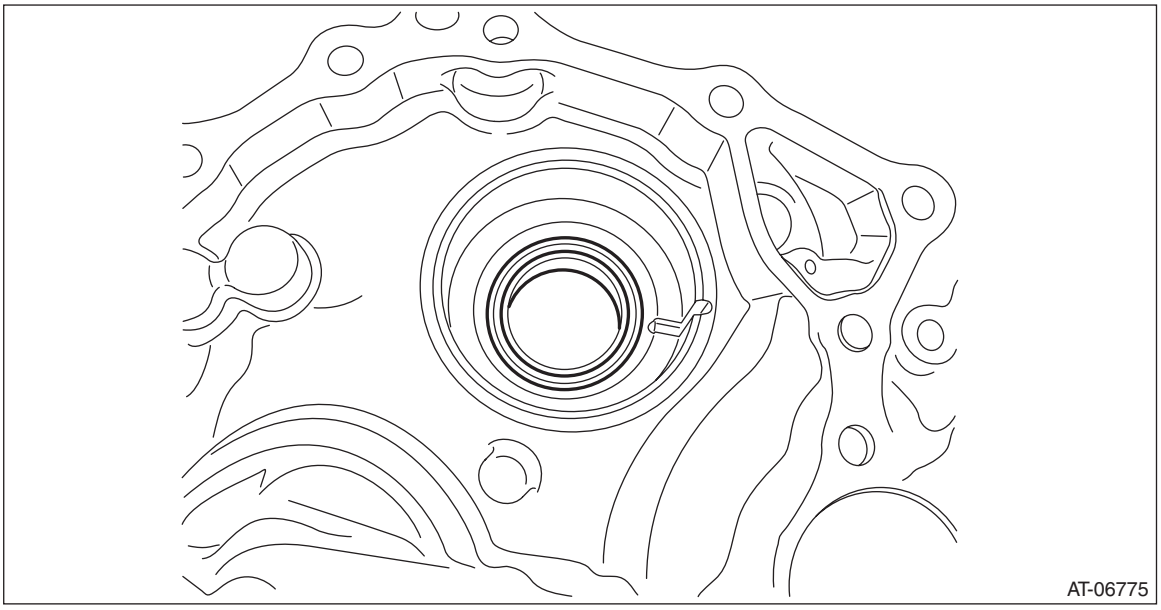

11) Remove the plug from drive pinion retainer.

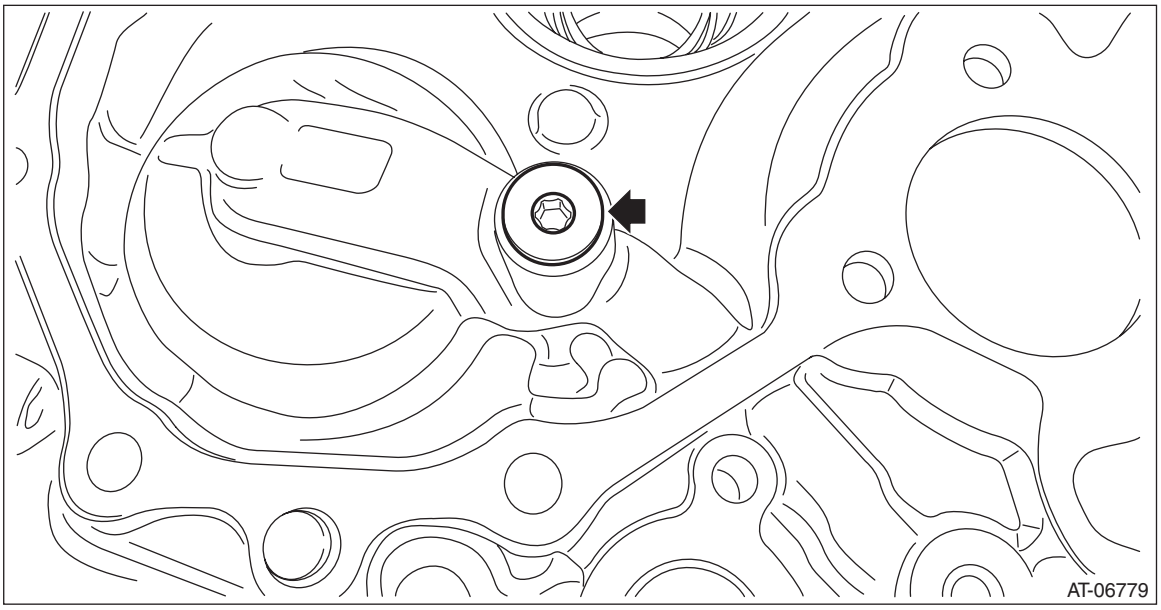

D: ASSEMBLY

1) Install the plug to drive pinion retainer.

NOTE:
- Use new O-rings.
- Apply CVTF to the O-ring.

Tightening torque:
25 N·m (2.5 kgf-m, 18.4 ft-lb)

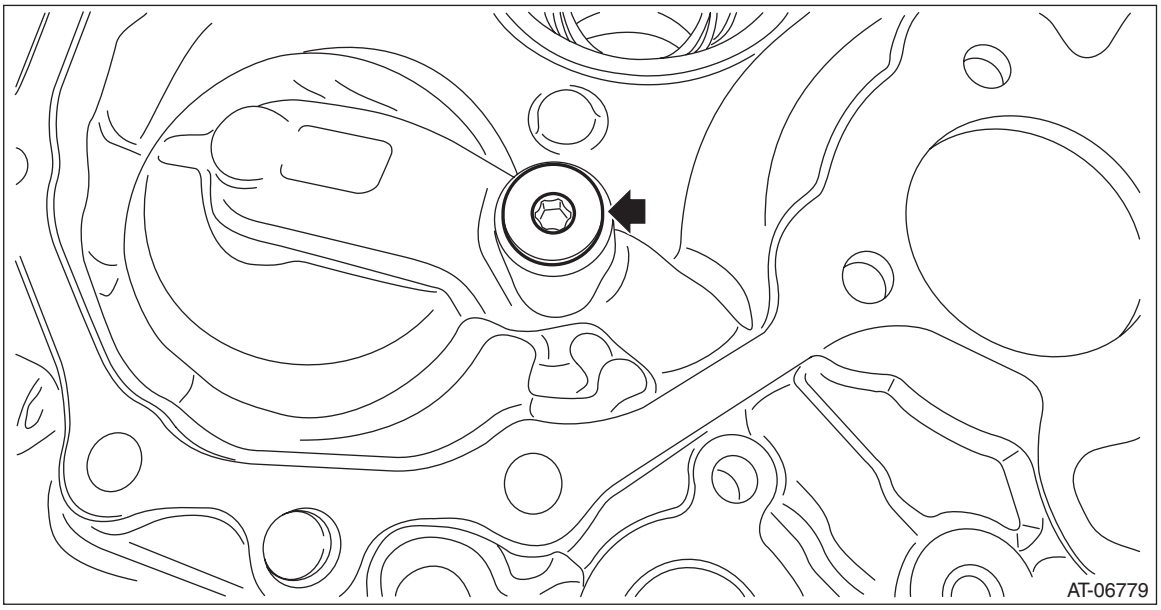

2) Using the ST, install the oil seal to drive pinion retainer.

NOTE:
- Apply CVTF to the oil seal press-fitting surface and lip.
- Install the oil seal in the correct direction.

ST 927720000 HOUSING BUSHING INSTALLER AND REMOVER

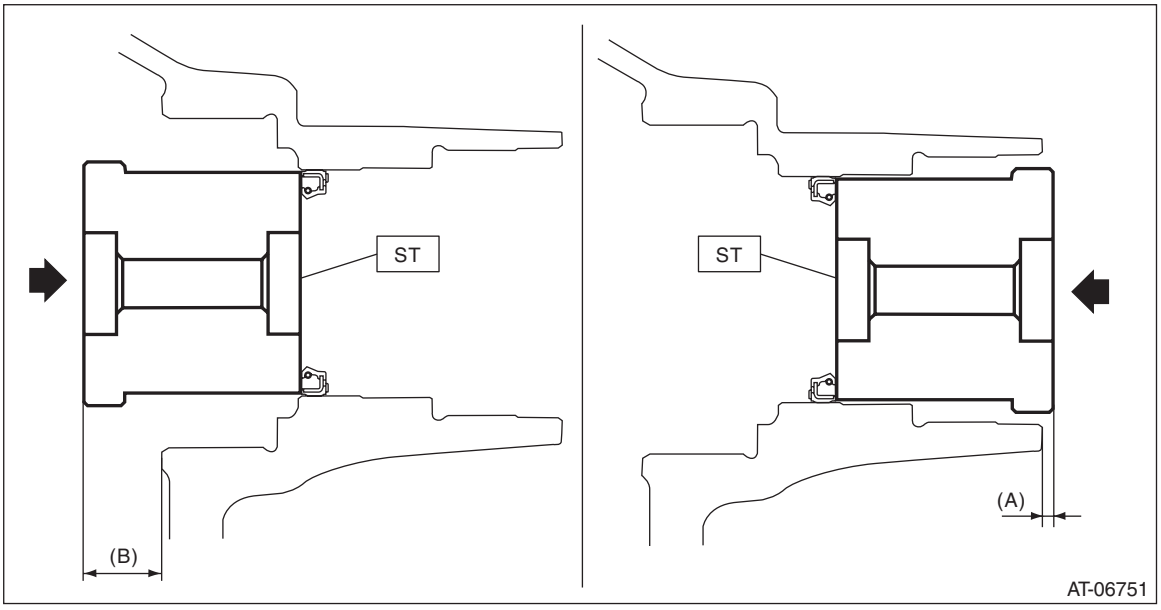

(A) 2.8 mm (0.11 in)
(B) 18.7 mm (0.74 in)

3) Select the drive pinion washer.
(1) Measure the roller bearing inner race width “A” on the front side.

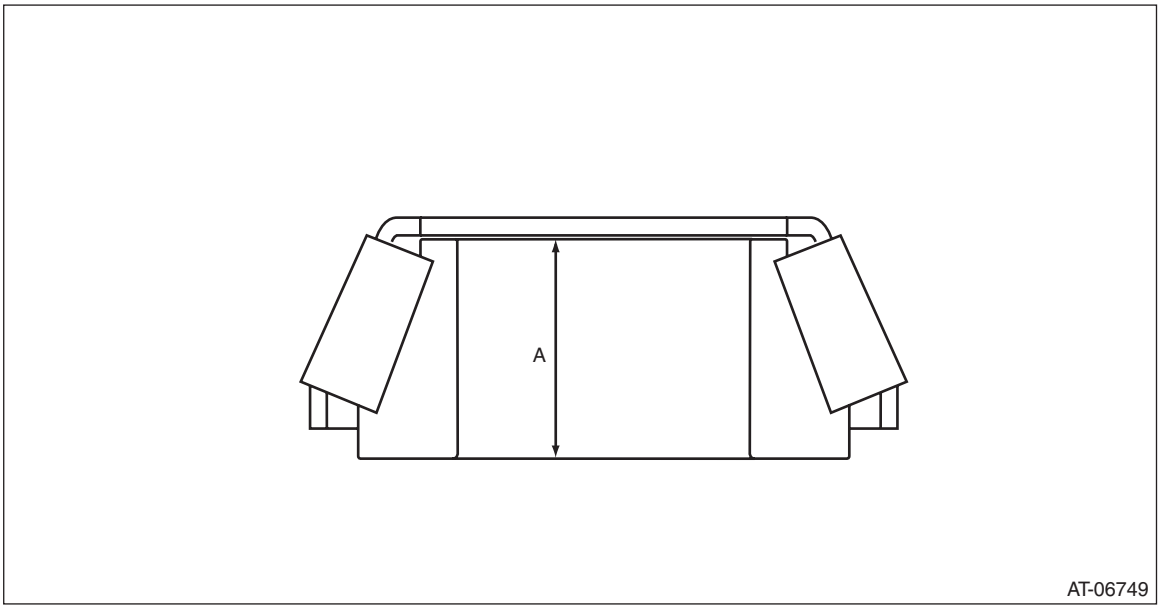

(2) Measure the roller bearing inner race width “B” on the rear side.

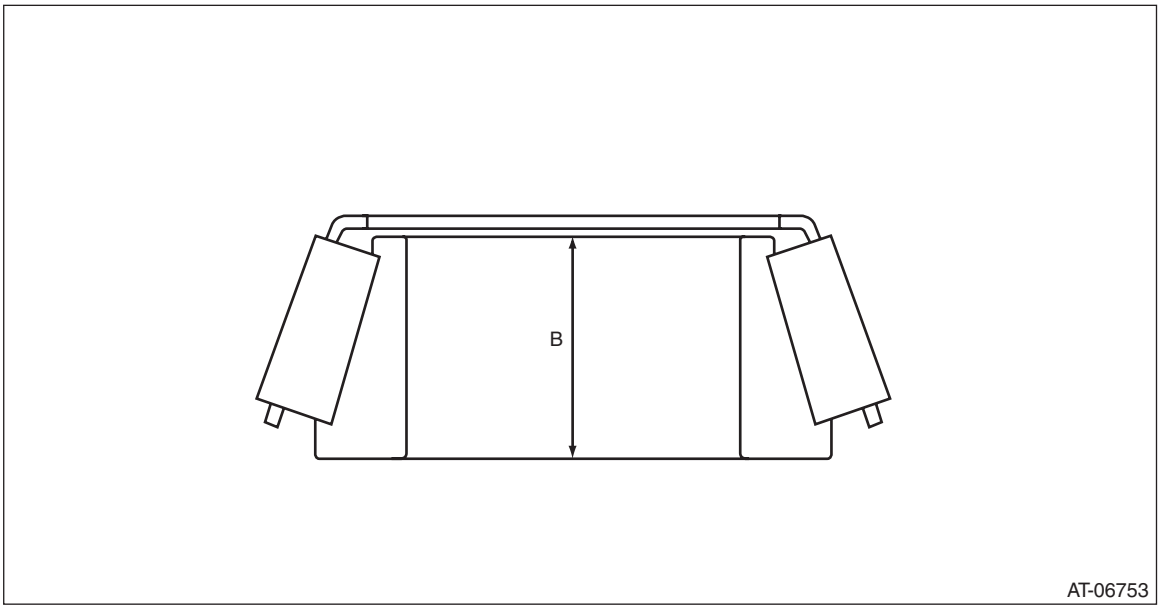

(3) Measure the spacer width “C”.

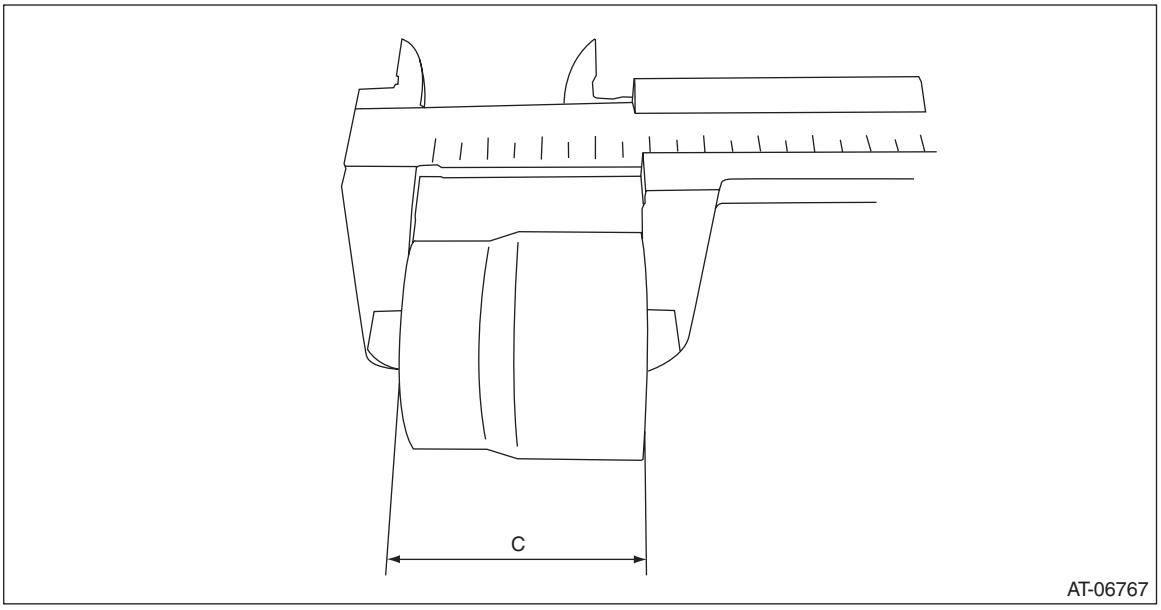

(4) Using the ST, install the front roller bearing outer race to the drive pinion retainer.
ST1 28499TC010 INSTALLER
ST2 398177700 INSTALLER

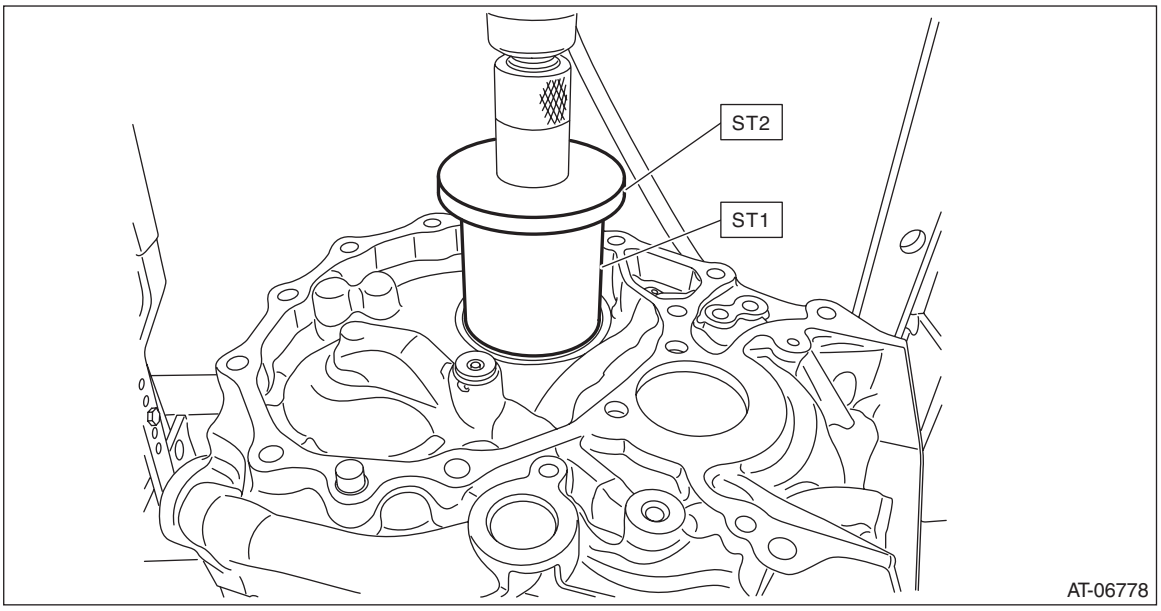

(5) Using the ST, install the rear roller bearing outer race to the drive pinion retainer.
ST 20099AE020 INSTALLER

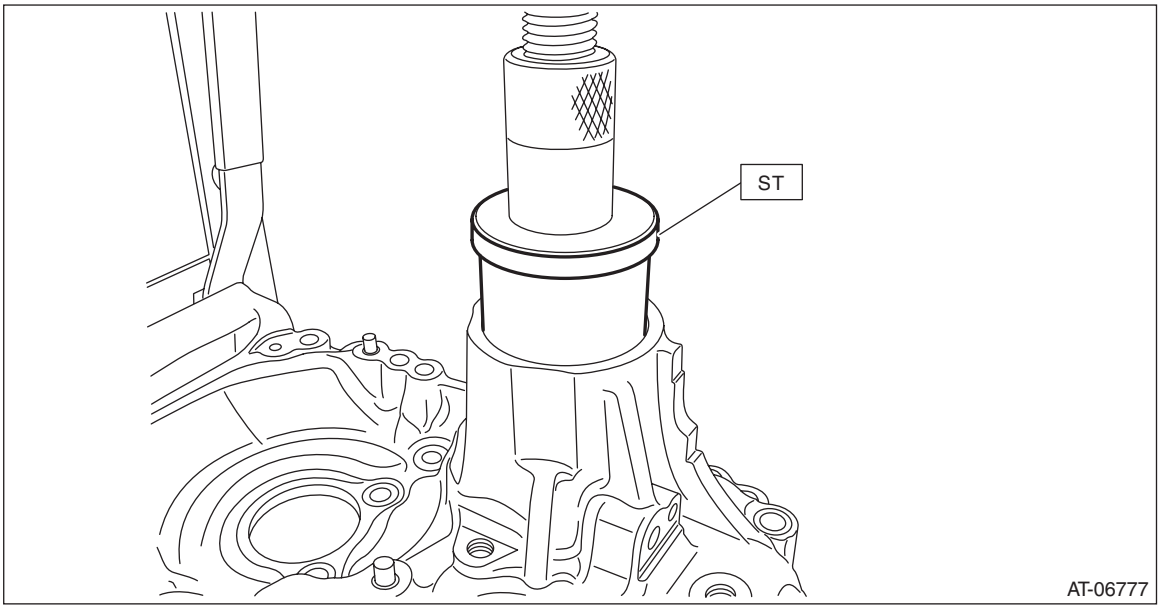

(6) Place the drive pinion retainer on the surface plate, and install the inner race to the rear roller bearing outer race.

NOTE:
Place the drive pinion retainer so that the mating surface of the drive pinion retainer (mating surface with the converter case) contacts the surface plate.

(7) Measure the height “D” from the end face of the rear roller bearing inner race to the surface plate.

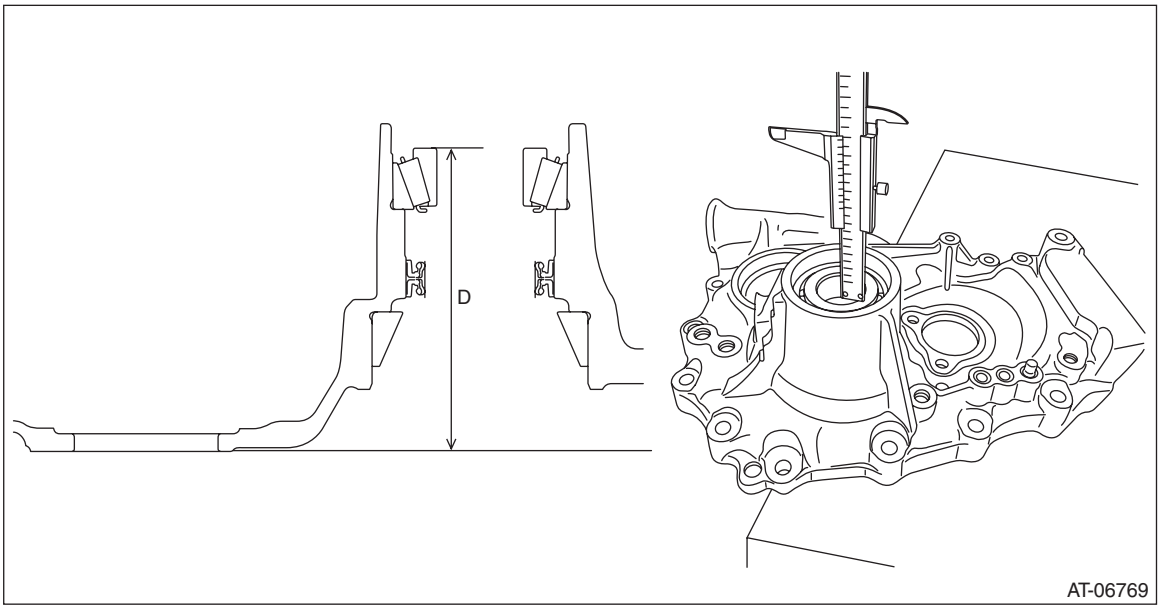

(8) Install the inner race to the front roller bearing outer race.

(9) Measure the depth “E” from the end face of the front roller bearing inner race to the end face of the ST.

ST 499575400 GAUGE

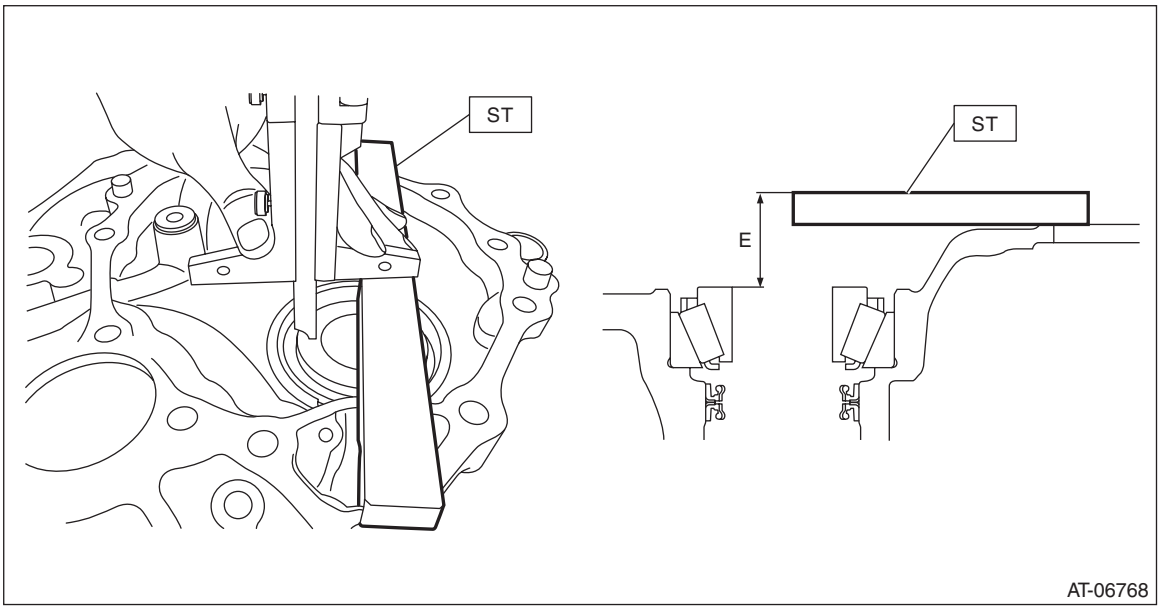

(10) Using following formula, select one to three drive pinion washers.
T (mm) = D – (A + B + C + E – 15) – (0±0.0125)
[T (in) = D – (A + B + C + E – 0.591) – (0±0.0005)]
A: Front roller bearing width
B: Rear roller bearing width
C: Spacer width
D: Height from end face of rear roller bearing inner race to surface plate
E: Depth from end face of front roller bearing inner race to end face of ST
15 mm (0.591 in): Thickness of ST
T: Drive pinion washer thickness
0±0.0125 mm (0±0.0005 in): Clearance

Drive pinion washer	
Part No.	Thickness mm (in)
38336AA750	0.150 (0.0059)
38336AA760	0.175 (0.0069)
38336AA770	0.200 (0.0079)
38336AA780	0.225 (0.0089)
38336AA790	0.250 (0.0098)
38336AA800	0.275 (0.0108)
38336AA810	0.300 (0.0118)
38336AA820	0.400 (0.0157)

4) Measure and record the drive pinion shim thickness to be reused.
5) Install the drive pinion shim that is reused for the drive pinion shaft.
6) Using the ST1 and ST2, press-fit the inner race to the drive pinion shaft.
ST1 899580100 INSTALLER
ST2 927130000 EXTENSION DRIVE SHAFT

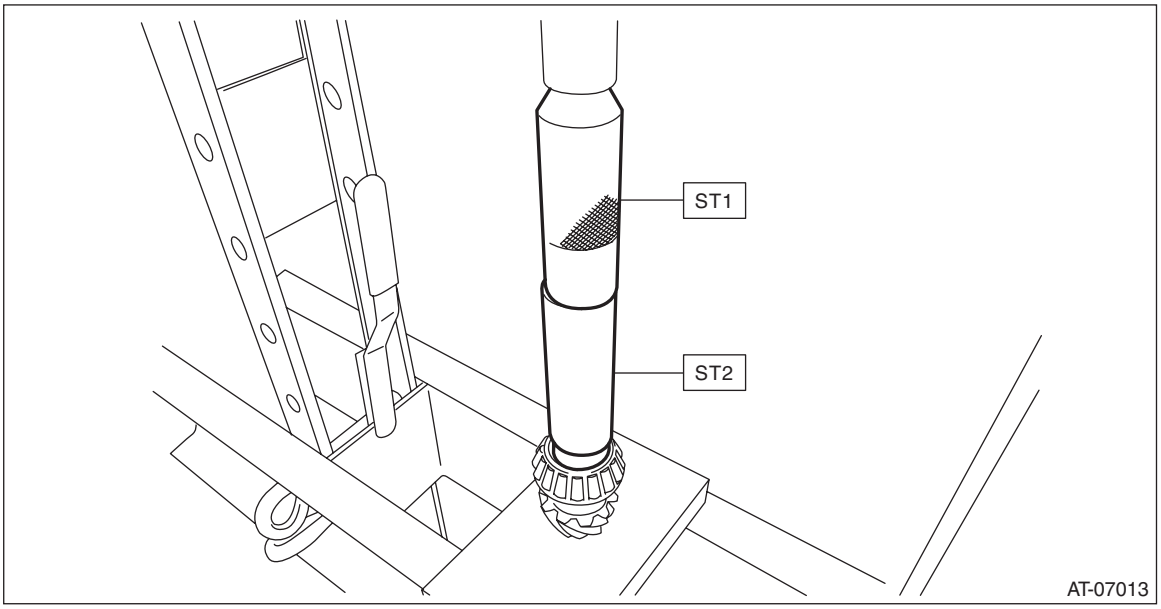

7) Install the drive pinion spacer.

NOTE:
Replace the O-ring with a new part after tooth contact inspection.

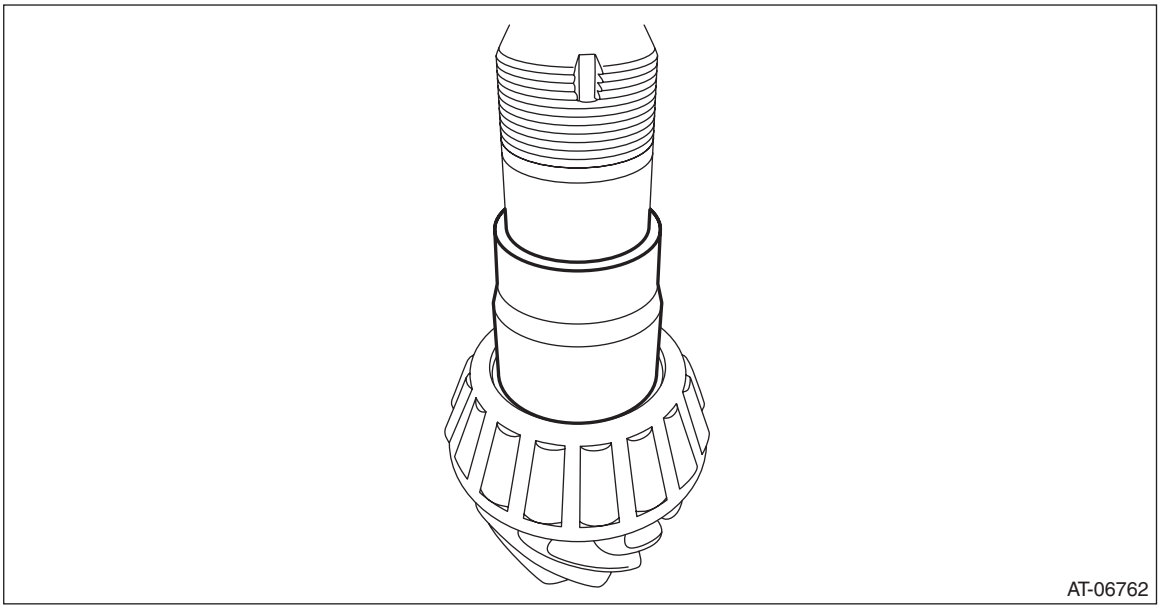

8) Install the selected drive pinion washer.

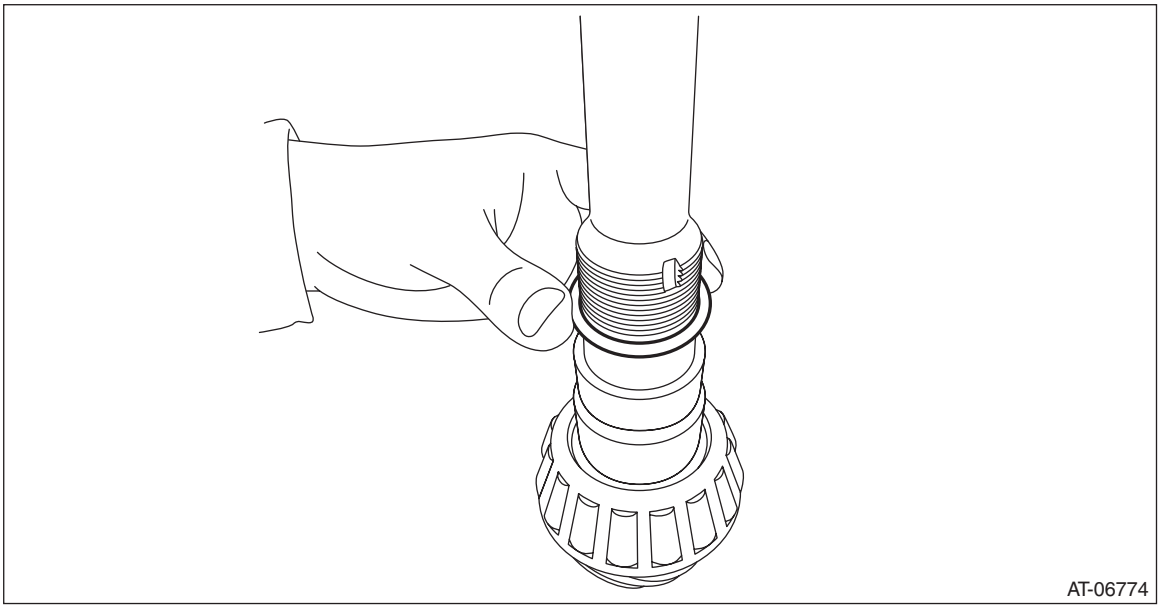

9) Insert the drive pinion shaft into the drive pinion retainer.

CAUTION:
Be careful not to damage the oil seal.

10) Install the inner bearing and lock nut.

NOTE:
Use a new lock nut.

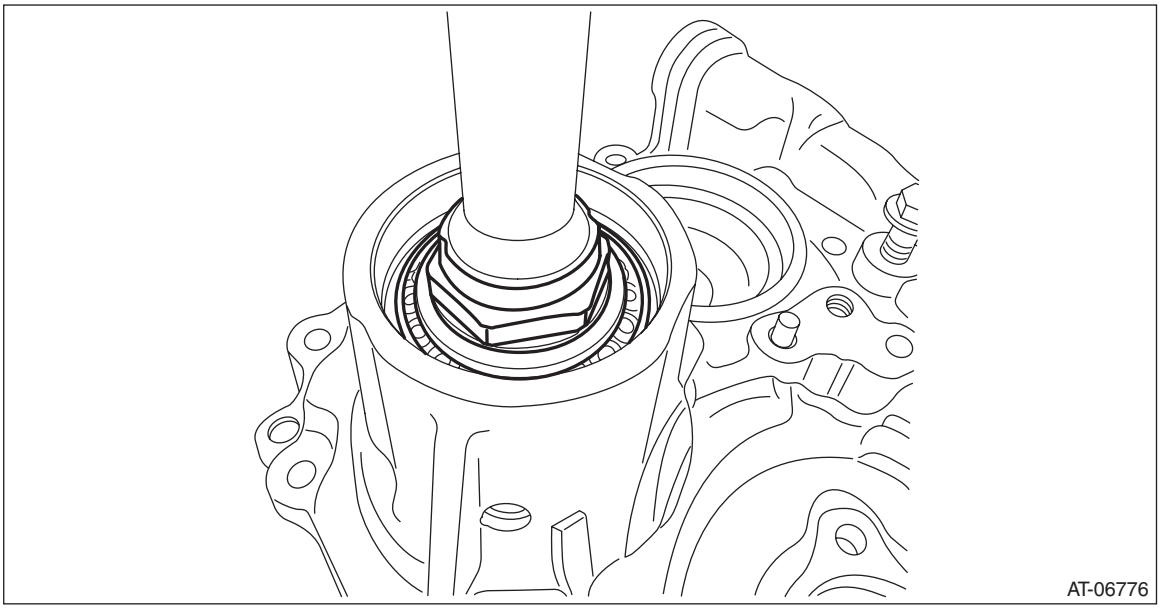

11) Using the ST, tighten the lock nut to the specified torque so that the starting torque of the drive pinion shaft is within the specified range.

CAUTION:
Before inspecting the starting torque, apply differential gear oil to roller of bearing and rotate the bearing several times.

NOTE:
- Tighten the lock nut while directly aligning ST2 and torque wrench.
- If the starting torque is not within the specified range, select the drive pinion washer, and repeat the step until the starting torque is within the specified range.
- When a thicker drive pinion washer is selected, the starting torque decreases. When a thinner drive pinion washer is selected, the starting torque increases.

Starting torque:
5.1 — 17.1 N (0.5 — 1.7 kgf, 1.1 — 3.8 lbf)

ST1 499787500 ADAPTER
ST2 499787700 WRENCH
ST3 498937110 HOLDER

Using the following formula, calculate the tightening torque for a torque wrench.
$T2 = L2/(L1 + L2) \times T1$
T1: 170 — 250 N·m (17.3 — 25.5 kgf-m, 125.4 — 184.4 ft-lb) [Specified tightening torque range]
T2: Tightening torque
L1: ST1 length 0.072 m (2.83 in)
L2: Torque wrench length

Example:

Torque wrench length m (in)	Tightening torque N·m (kgf-m, ft-lb)
0.4 (15.75)	144 — 211 (14.7 — 21.5, 106.2 — 155.6)
0.45 (17.72)	147 — 215 (15.0 — 21.9, 108.4 — 158.6)
0.5 (19.69)	149 — 218 (15.2 — 22.2, 109.9 — 160.8)
0.55 (21.65)	150 — 221 (15.3 — 22.5, 110.6 — 163.0)

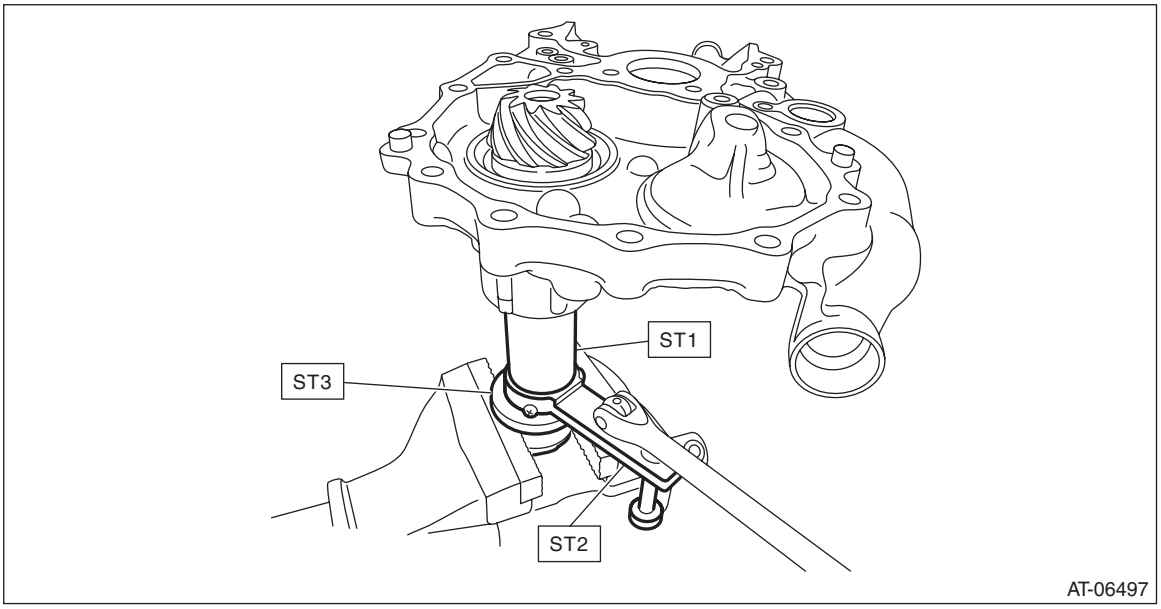

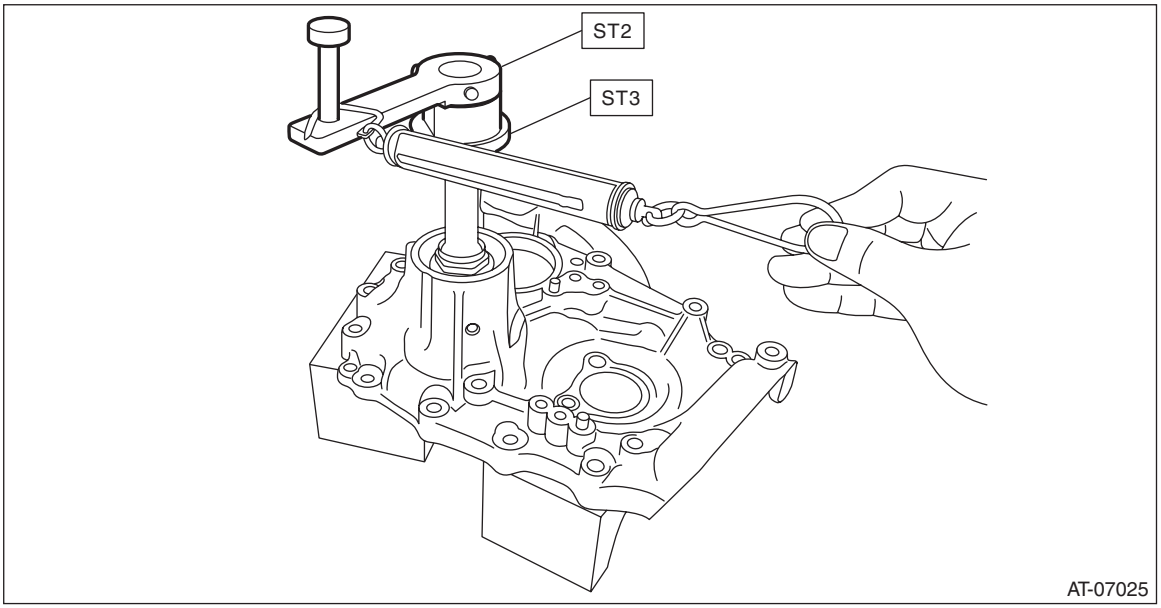

12) Install the drive pinion retainer to the converter case, and check the backlash and tooth contact. <Ref. to CVT(TR580)-295, ADJUSTMENT, Drive Pinion Shaft Assembly.> <Ref. to CVT(TR580)-317, ADJUSTMENT, Front Differential Assembly.>
13) Remove the drive pinion retainer from converter case. <Ref. to CVT(TR580)-273, REMOVAL, Drive Pinion Shaft Assembly.>
14) Remove the drive pinion spacer from the drive pinion shaft. <Ref. to CVT(TR580)-277, DISASSEMBLY, Drive Pinion Shaft Assembly.>
15) Install the O-ring to the drive pinion shaft.

NOTE:
- Use new O-rings.
- Apply CVTF to the O-ring.

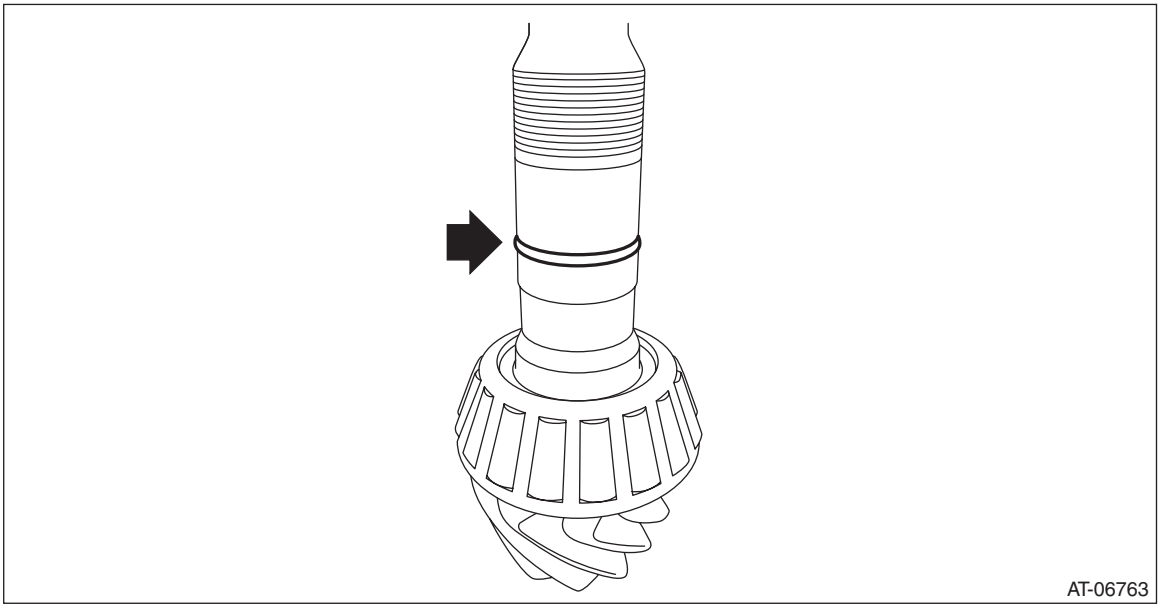
AT-06763

16) Install the drive pinion spacer to the drive pinion shaft.

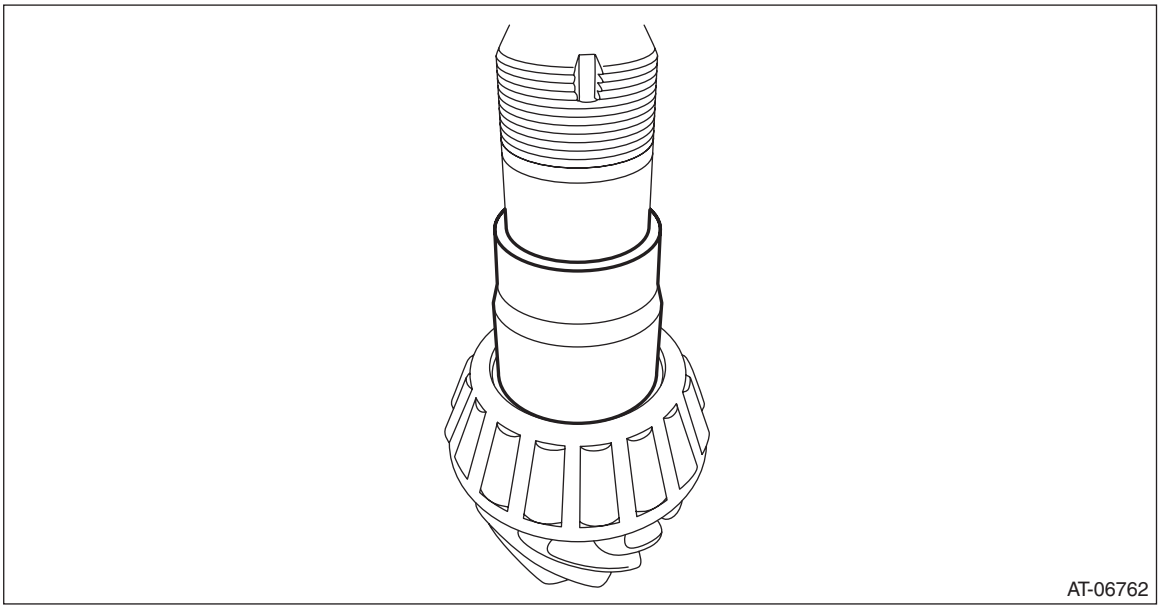
AT-06762

17) Install the drive pinion washer.

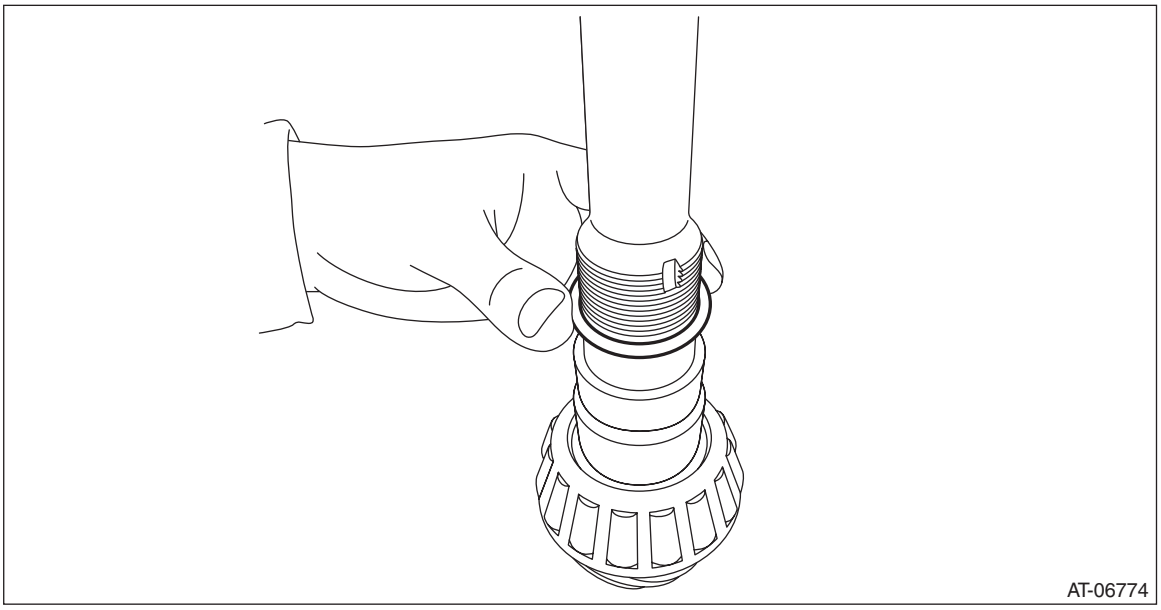

18) Insert the drive pinion shaft into the drive pinion retainer.

CAUTION:
Be careful not to damage the oil seal.

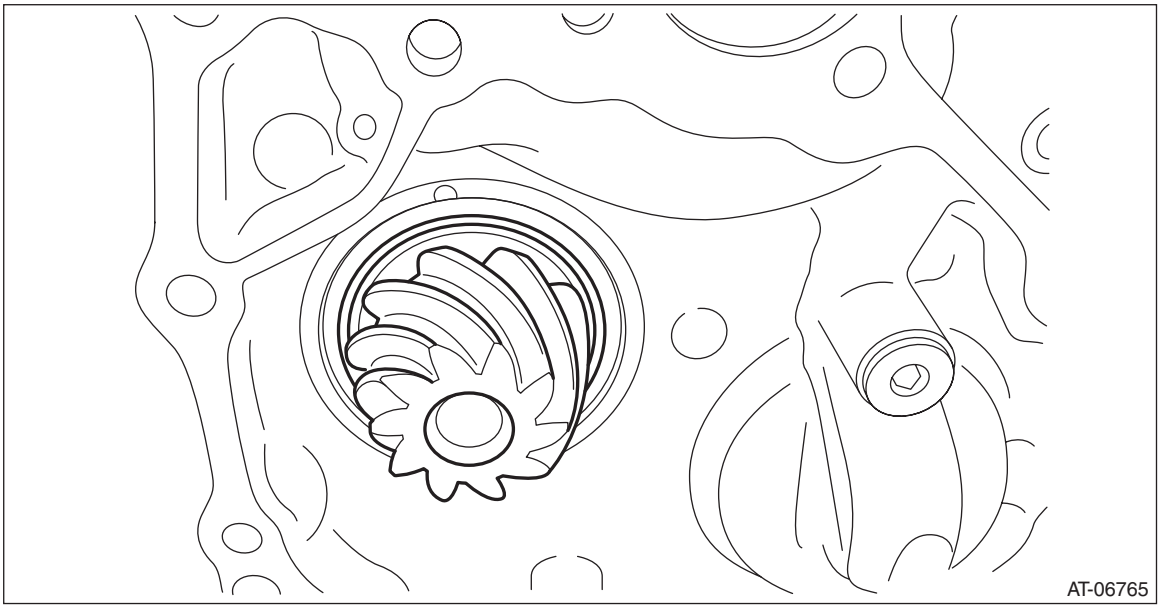

19) Install the inner bearing and lock nut.

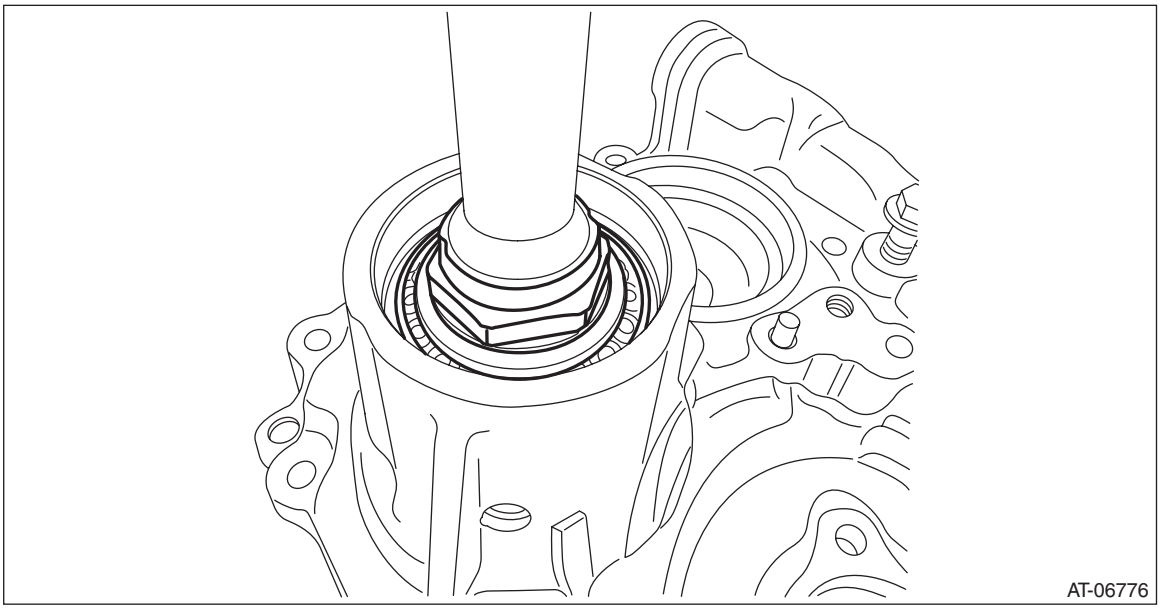

20) Using the ST, tighten the lock nut to the specified torque so that the starting torque of the drive pinion shaft is within the specified range.

CAUTION:
Before inspecting the starting torque, apply differential gear oil to roller of bearing and rotate the bearing several times.

NOTE:
- Tighten the lock nut while directly aligning ST2 and torque wrench.
- If the starting torque is not within the specified range, select the drive pinion washer, and repeat the step until the starting torque is within the specified range.
- When a thicker drive pinion washer is selected, the starting torque decreases. When a thinner drive pinion washer is selected, the starting torque increases.

Starting torque:
5.1 — 17.1 N (0.5 — 1.7 kgf, 1.1 — 3.8 lbf)

ST1 499787500 ADAPTER
ST2 499787700 WRENCH
ST3 498937110 HOLDER

Using the following formula, calculate the tightening torque for a torque wrench.
$T2 = L2/(L1 + L2) \times T1$
T1: 170 — 250 N·m (17.3 — 25.5 kgf-m, 125.4 — 184.4 ft-lb) [Specified tightening torque range]
T2: Tightening torque
L1: ST1 length 0.072 m (2.83 in)
L2: Torque wrench length

Example:

Torque wrench length m (in)	Tightening torque N·m (kgf-m, ft-lb)
0.4 (15.75)	144 — 211 (14.7 — 21.5, 106.2 — 155.6)
0.45 (17.72)	147 — 215 (15.0 — 21.9, 108.4 — 158.6)
0.5 (19.69)	149 — 218 (15.2 — 22.2, 109.9 — 160.8)
0.55 (21.65)	150 — 221 (15.3 — 22.5, 110.6 — 163.0)

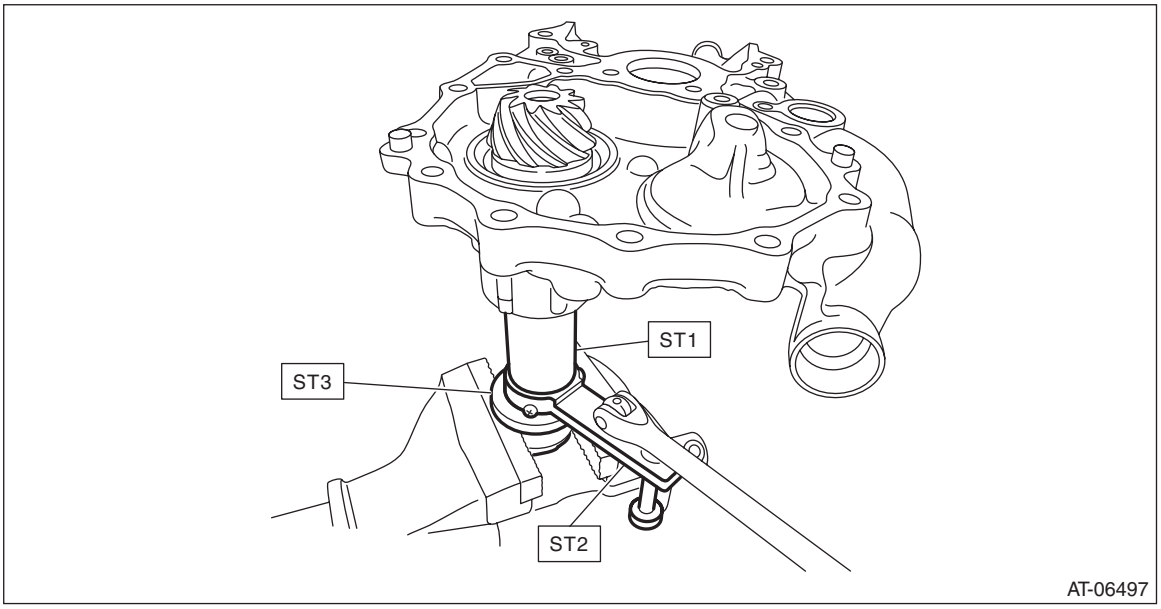

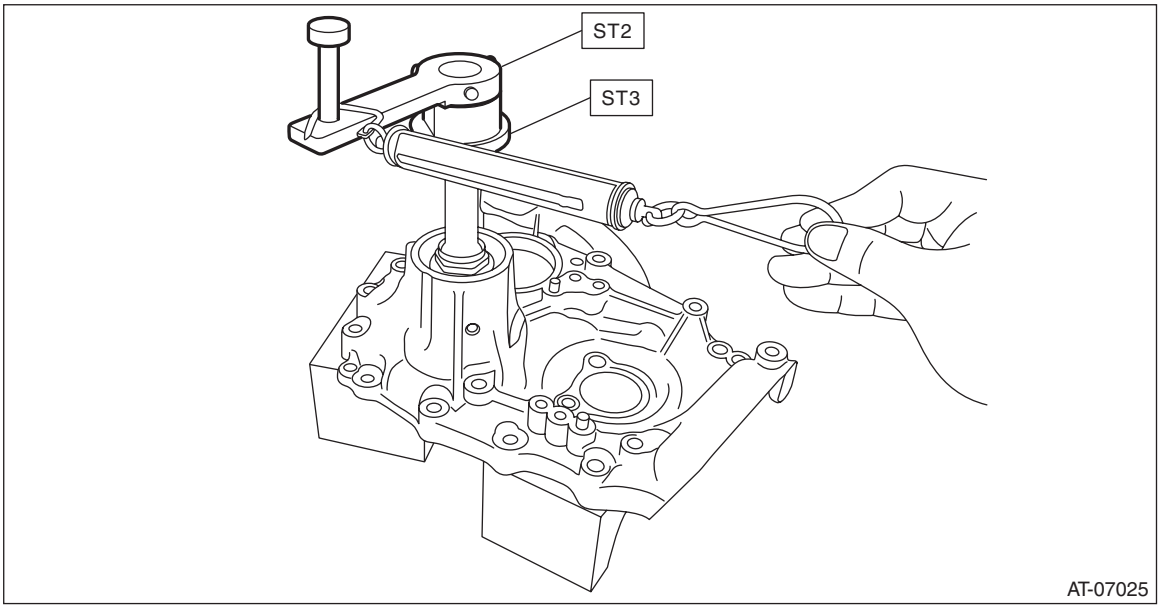

21) Crimp the lock nut in 2 locations.
22) Using the ST, install the plug.
ST1 499755602 PRESS SNAP RING
ST2 398177700 INSTALLER

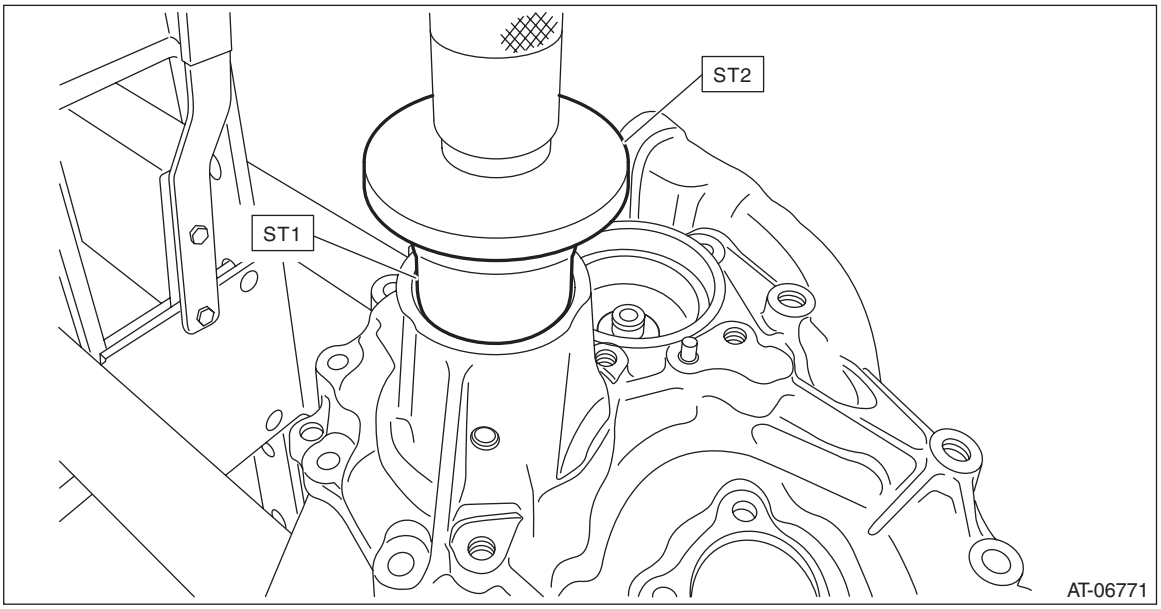

E: INSPECTION

- Make sure that all component parts are free of scratches, holes and other faults.
- Check the tooth contact. <Ref. to CVT(TR580)-295, ADJUSTMENT, Drive Pinion Shaft Assembly.>
- Apply CVTF to bearing and rotate the bearing to check for noise or dragging etc.
- Check the starting torque of drive pinion shaft.

CAUTION:
Before measuring, apply differential gear oil to roller of bearing and rotate the bearing several times.
ST1 498937110 HOLDER
ST2 499787700 WRENCH

Starting torque:
5.1 — 17.1 N (0.5 — 1.7 kgf, 1.1 — 3.8 lbf)

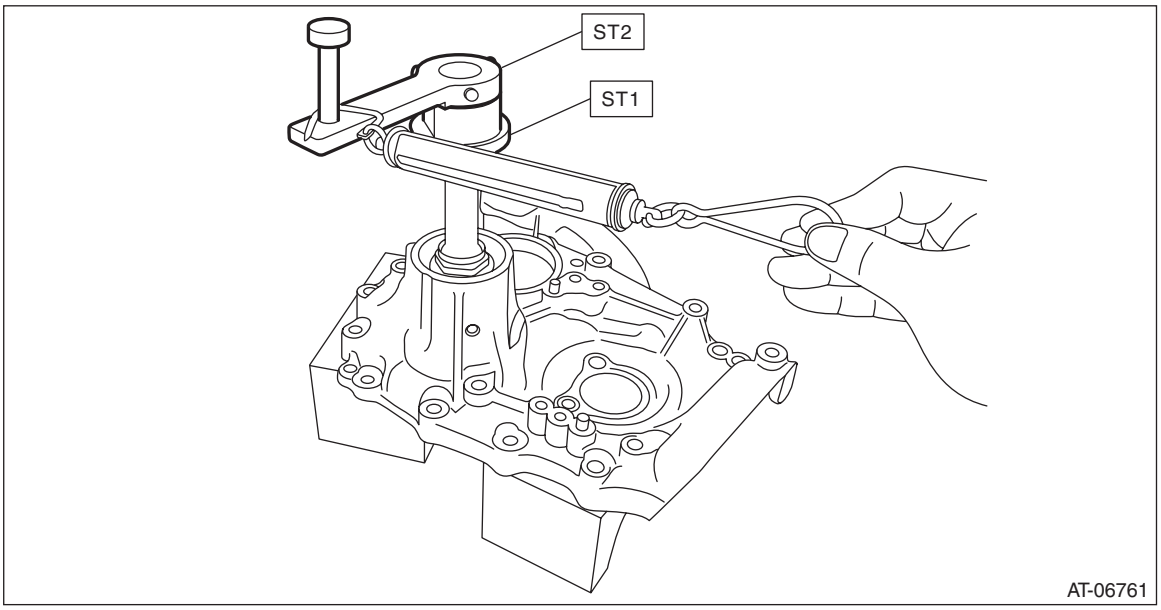

F: ADJUSTMENT

1) Remove the liquid gasket from the mating surface completely.
2) Using the ST, install the drive pinion retainer to converter case.
ST 18270KA020 SOCKET (E20)

NOTE:
Do not confuse the three different-length bolts when installing.

Tightening torque:
43 N·m (4.4 kgf-m, 31.7 ft-lb)

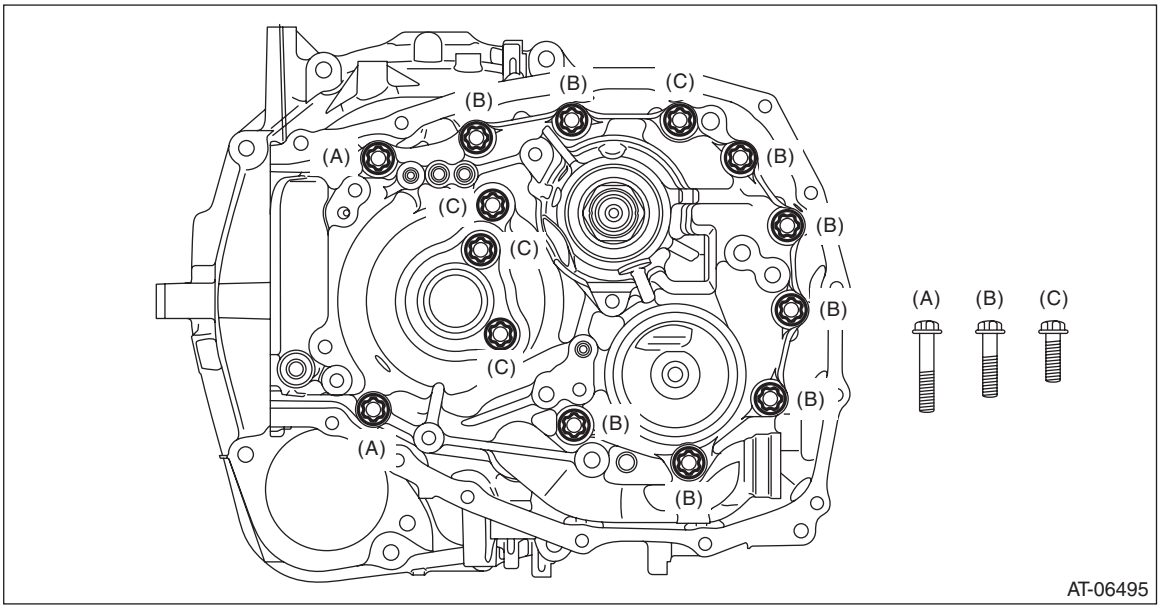

3) Rotate the drive pinion several times using ST1 and ST2.
ST1 498937110 HOLDER
ST2 499787700 WRENCH

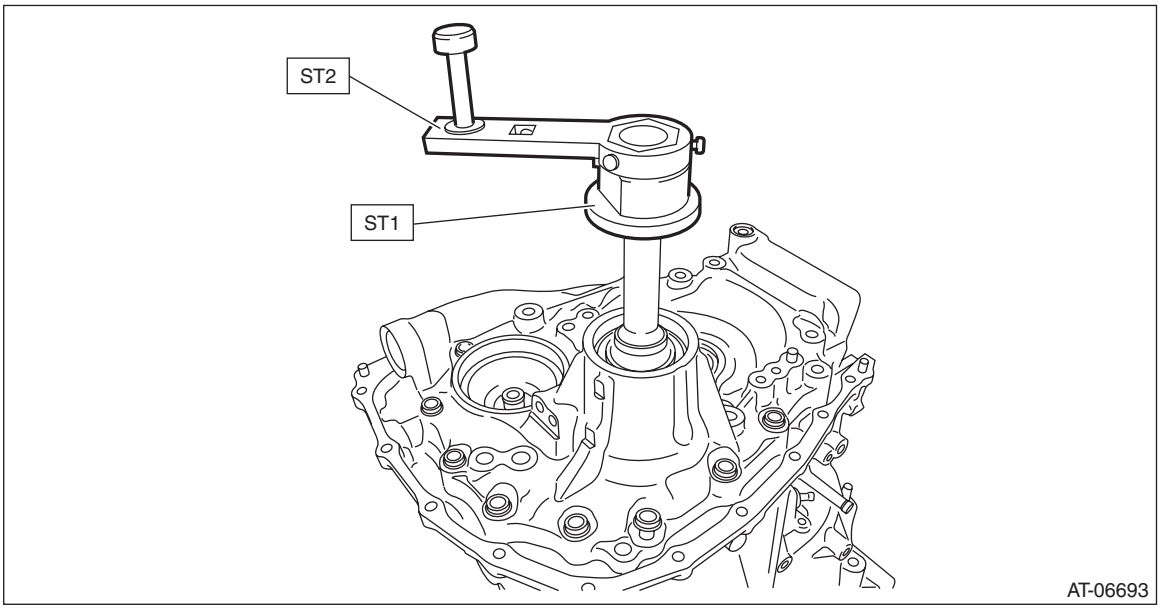

4) Adjust the drive pinion and hypoid driven gear backlash. <Ref. to CVT(TR580)-317, ADJUSTMENT, Front Differential Assembly.>
5) Using the ST, remove the drive pinion retainer from converter case.
ST 18270KA020 SOCKET (E20)

6) Apply lead-free red dye evenly on the both sides of three to four teeth of the hypoid driven gear. Then install the drive pinion retainer and rotate the drive pinion in both directions several times. Remove the drive pinion retainer and check the tooth contact pattern.
If the teeth contact is inappropriate, adjust the backlash or thickness of the shim. <Ref. to CVT(TR580)-317, ADJUSTMENT, Front Differential Assembly.>

NOTE:
After correction, wipe off the lead-free red dye.

Drive pinion shim	
Part No.	Thickness mm (in)
31451AA320	0.150 (0.0059)
31451AA330	0.175 (0.0069)
31451AA340	0.200 (0.0079)
31451AA350	0.225 (0.0089)
31451AA360	0.250 (0.0098)
31451AA370	0.275 (0.0108)

- Correct tooth contact

Check item: Tooth contact surface is slightly shifted toward the toe side under a no-load condition. (When driving, it moves towards the heel side.)

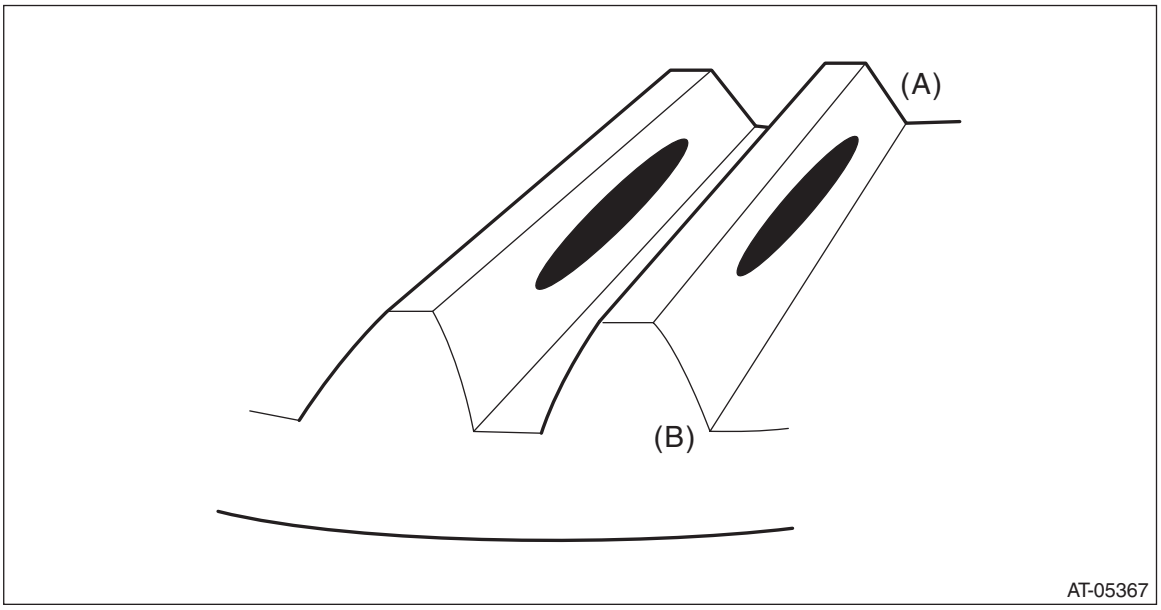

(A) Toe side
(B) Heel side

- Face contact

Check item: Backlash is too large.

Contact pattern

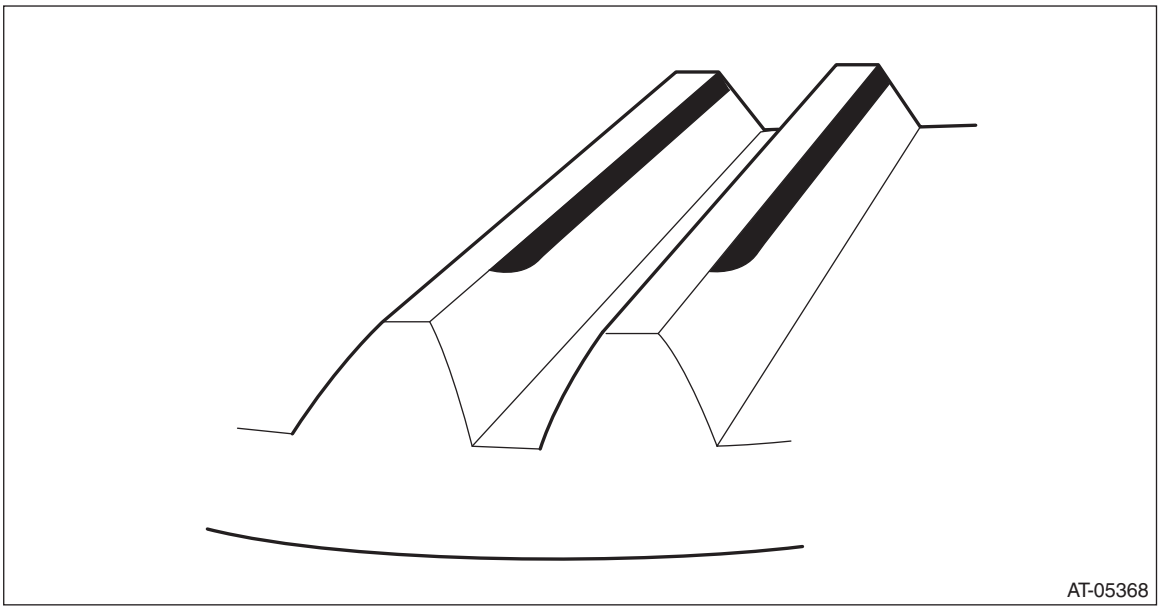

Corrective action: Increase thickness of drive pinion shim according to the procedures for moving the drive pinion close to hypoid driven gear.

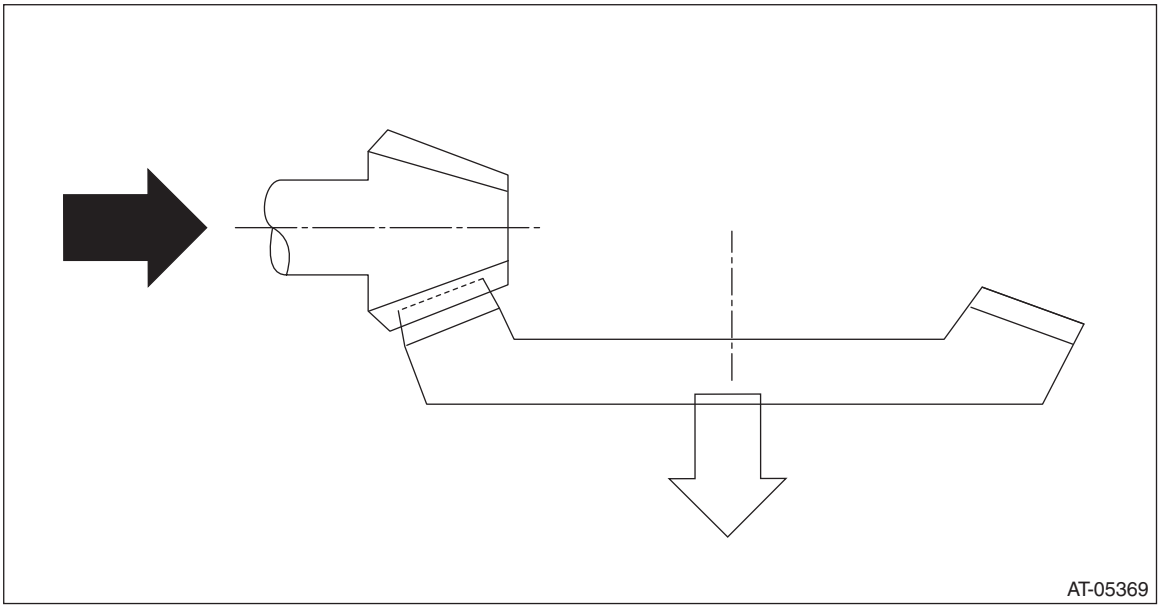

- Flank contact

Check item: Backlash is too small.

Contact pattern

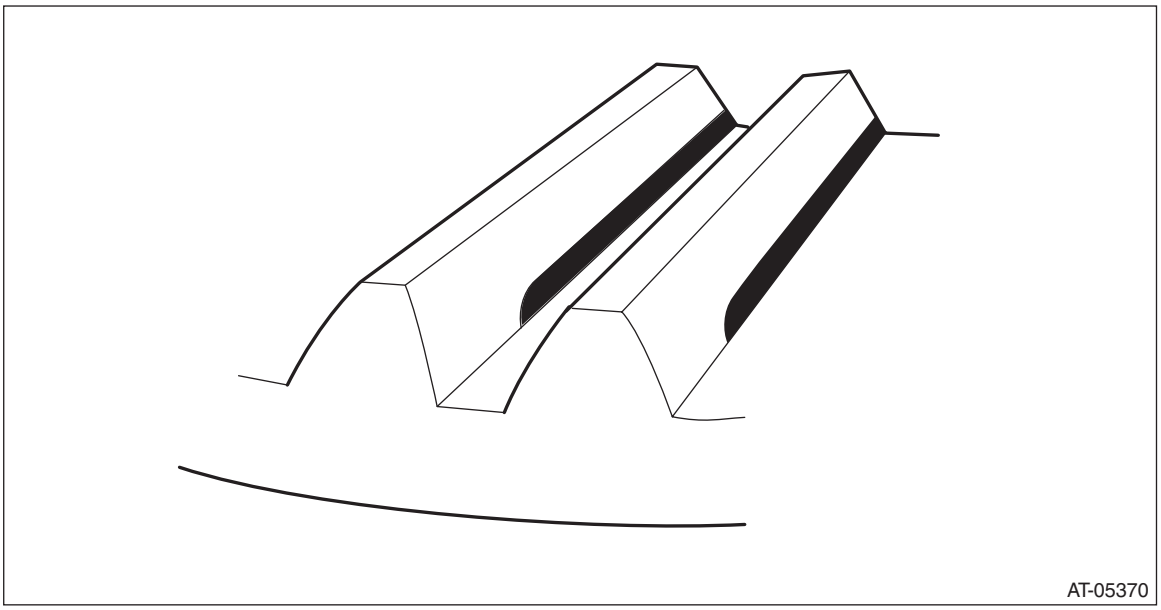

Corrective action: Reduce the thickness of the drive pinion shim according to the procedures for moving the drive pinion away from the hypoid driven gear.

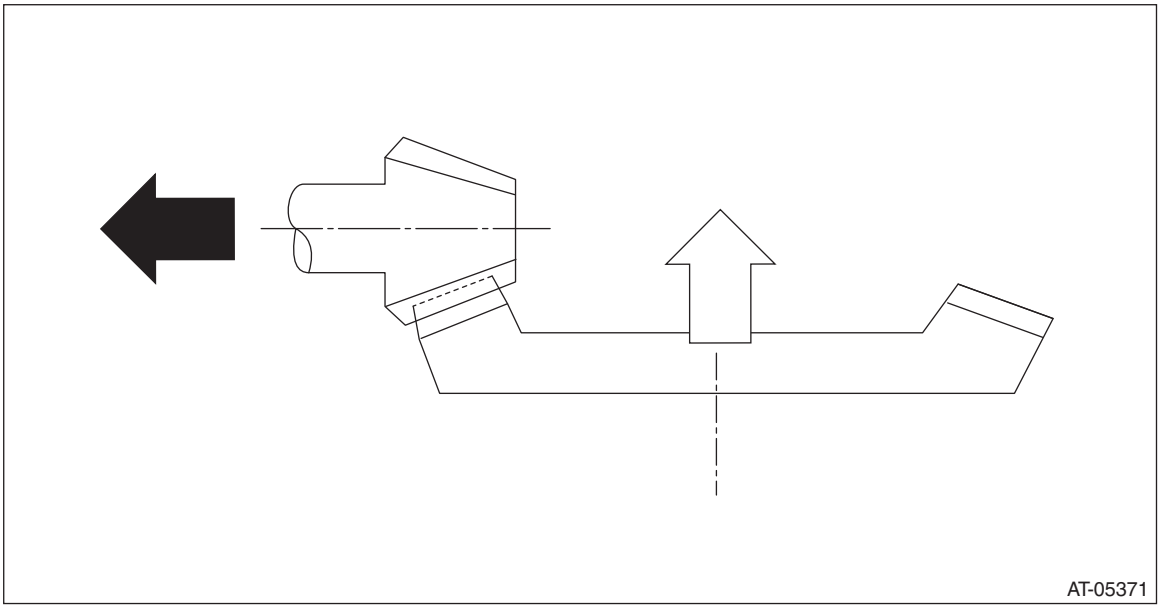

- Toe contact (inside contact)

Check item: Teeth contact area is too small.

Contact pattern

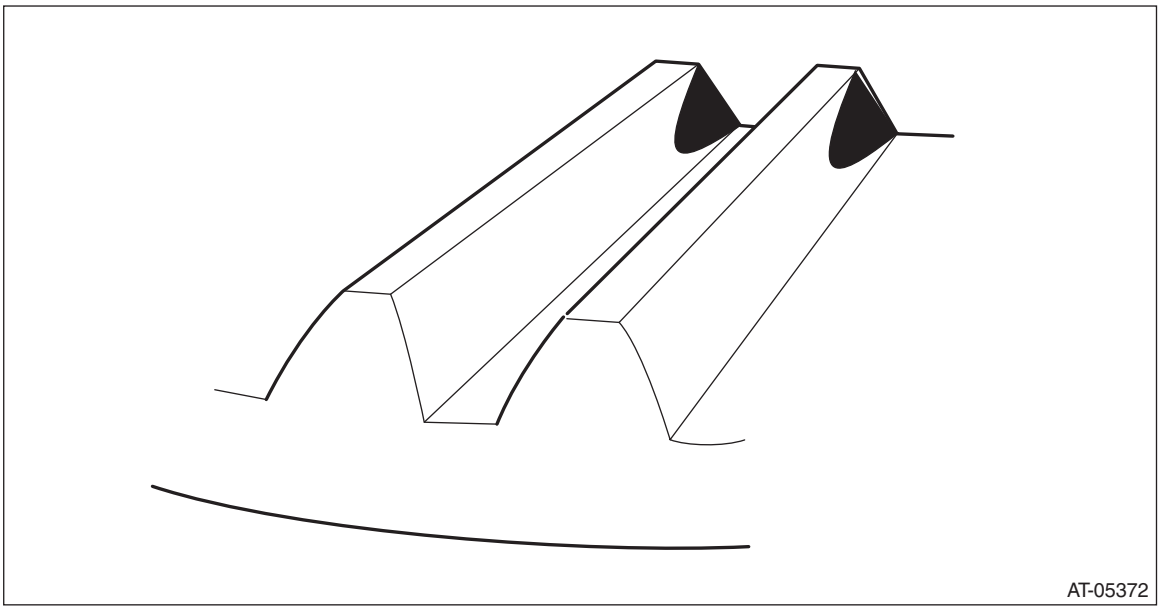

Corrective action: Reduce the thickness of the drive pinion shim according to the procedures for moving the drive pinion away from the hypoid driven gear side.

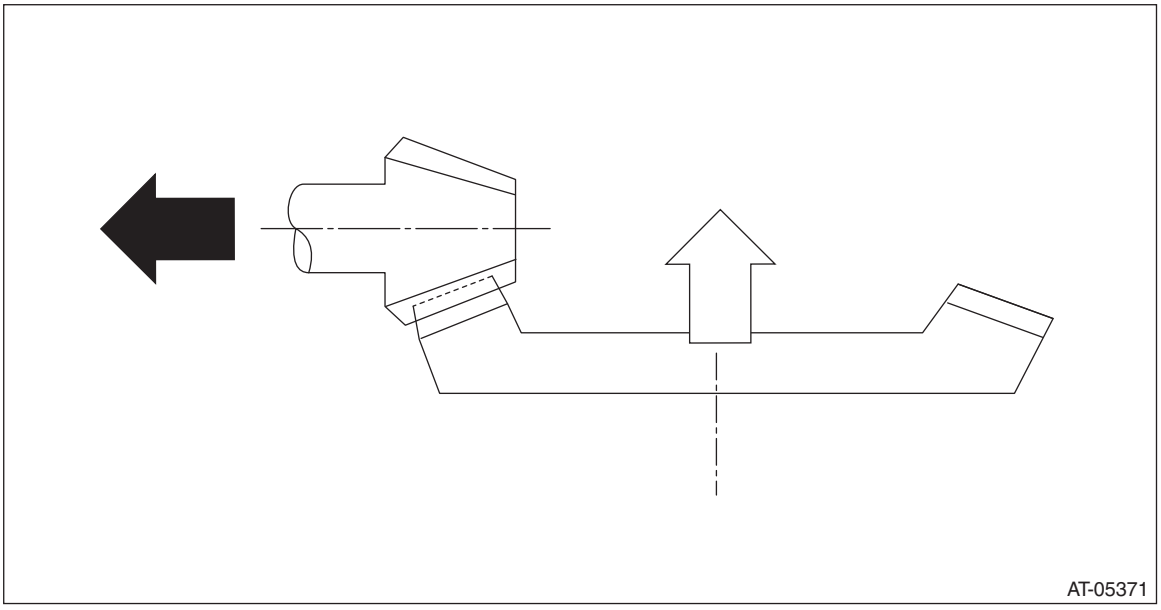

- Heel contact (outside end contact)

Check item: Teeth contact area is too small.

Contact pattern

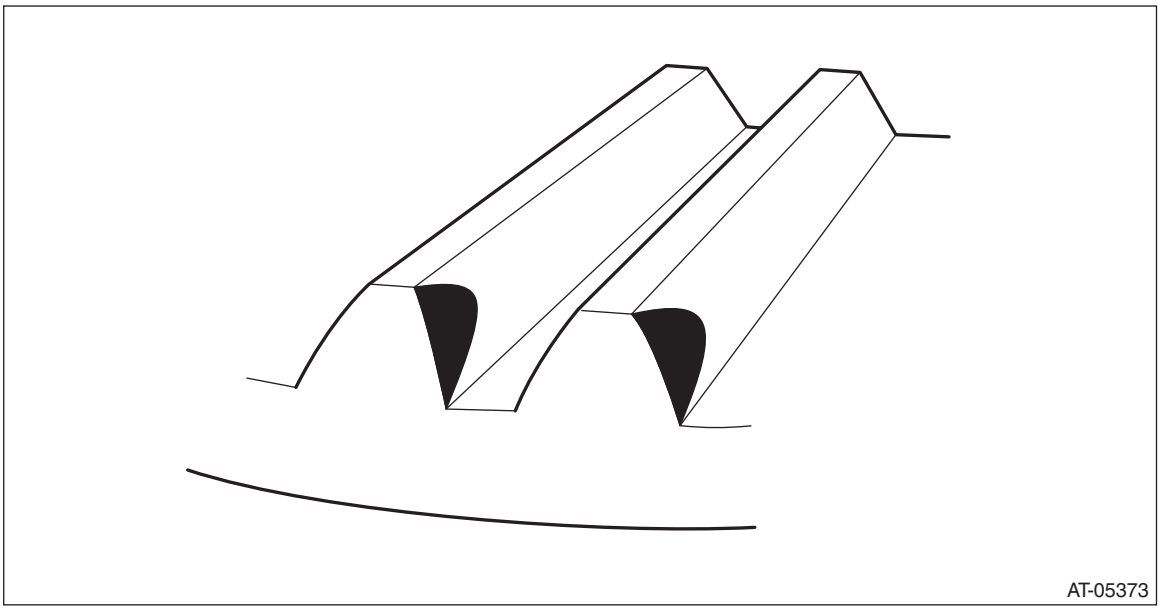

Corrective action: Increase the thickness of the drive pinion shim according to the procedures for moving the drive pinion closer to the hypoid driven gear.

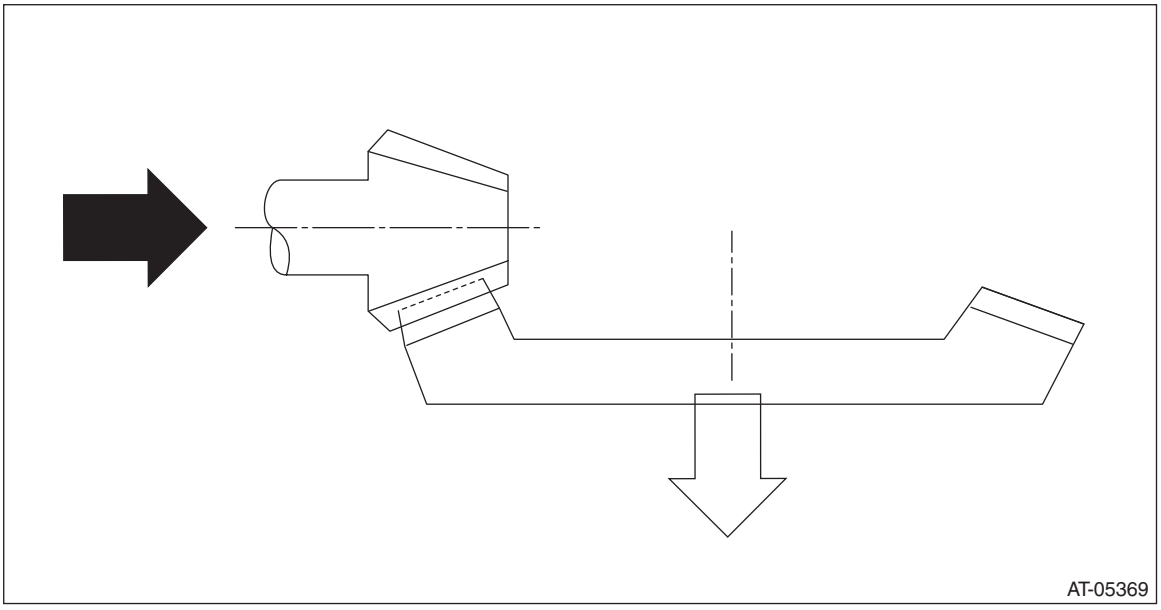

7) Using the ST, loosen the differential side retainer until the mounting groove of the O-ring appears, and then install the O-ring.

NOTE:
- When loosening the differential side retainer, record the number of the turns made.
- Perform this for both left and right differential side retainers.
- Use new O-rings.
- Apply the differential gear oil to O-ring.

ST 18658AA020 WRENCH COMPL RETAINER

8) Using the ST, tighten the retainer to the position before it is loosened.

ST 18658AA020 WRENCH COMPL RETAINER

9) Replace the differential side retainer oil seal with a new part. <Ref. to CVT(TR580)-87, Differential Side Retainer Oil Seal.>

10) Install the lock plate.

Tightening torque:
25 N·m (2.5 kgf-m, 18.4 ft-lb)

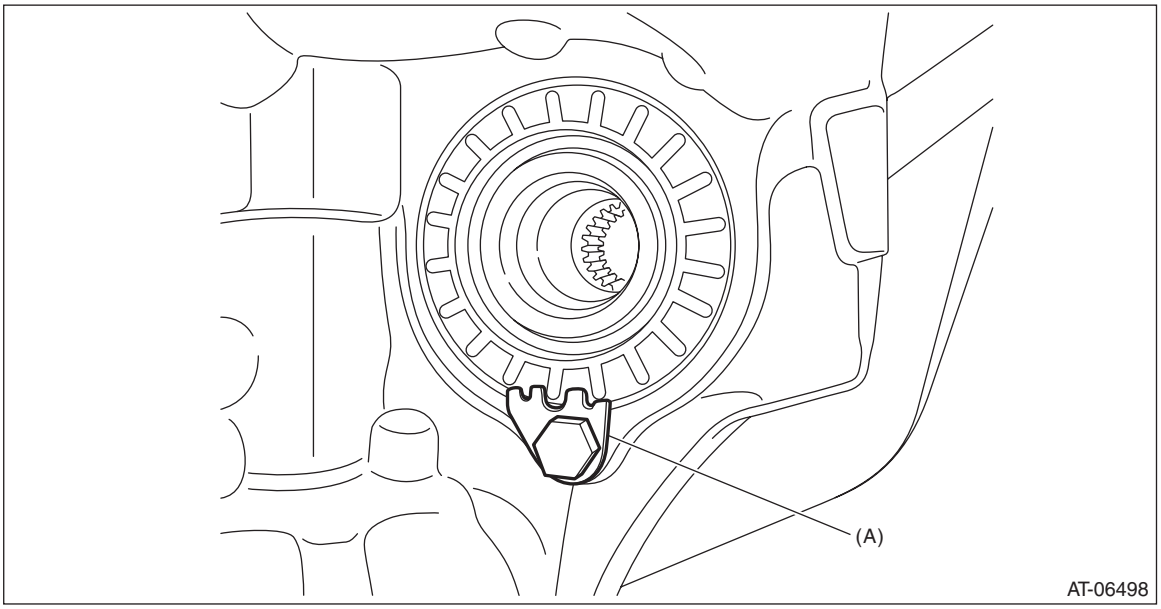

(A) Lock plate

42.Front Differential Assembly

A: REMOVAL

1) Remove the transmission assembly from the vehicle. <Ref. to CVT(TR580)-56, REMOVAL, Automatic Transmission Assembly.>
2) Remove the air breather hose. <Ref. to CVT(TR580)-152, REMOVAL, Air Breather Hose.>
3) Remove the control valve body. <Ref. to CVT(TR580)-112, REMOVAL, Control Valve Body.>
4) Remove the transmission harness. <Ref. to CVT(TR580)-126, REMOVAL, Transmission Harness.>
5) Remove the turbine speed sensor. <Ref. to CVT(TR580)-99, REMOVAL, Turbine Speed Sensor.>
6) Remove the secondary speed sensor. <Ref. to CVT(TR580)-101, REMOVAL, Secondary Speed Sensor.>
7) Remove the primary speed sensor. <Ref. to CVT(TR580)-103, REMOVAL, Primary Speed Sensor.>
8) Remove the inhibitor switch. <Ref. to CVT(TR580)-95, REMOVAL, Inhibitor Switch.>
9) Remove the extension case. <Ref. to CVT(TR580)-162, REMOVAL, Extension Case.>
10) Remove the transfer clutch assembly. <Ref. to CVT(TR580)-166, REMOVAL, Transfer Clutch.>
11) Remove the transfer driven gear assembly. <Ref. to CVT(TR580)-180, REMOVAL, Transfer Driven Gear.>
12) Remove the parking pawl. <Ref. to CVT(TR580)-183, REMOVAL, Parking Pawl.>
13) Remove the reduction driven gear assembly. <Ref. to CVT(TR580)-185, REMOVAL, Reduction Driven Gear.>
14) Remove the oil pan and oil strainer. <Ref. to CVT(TR580)-108, REMOVAL, Oil Pan and Strainer.>
15) Remove the transmission control device. <Ref. to CVT(TR580)-193, REMOVAL, Transmission Control Device.>
16) Remove the transmission case. <Ref. to CVT(TR580)-199, REMOVAL, Transmission Case.>
17) Remove the reduction drive gear. <Ref. to CVT(TR580)-212, REMOVAL, Reduction Drive Gear.>
18) Remove the primary pulley, secondary pulley and variator chain. <Ref. to CVT(TR580)-217, REMOVAL, Primary Pulley and Secondary Pulley.>
19) Remove the reverse brake assembly. <Ref. to CVT(TR580)-238, REMOVAL, Reverse Brake Assembly.>
20) Remove the forward clutch assembly. <Ref. to CVT(TR580)-253, REMOVAL, Forward Clutch Assembly.>
21) Remove the drive pinion shaft assembly. <Ref. to CVT(TR580)-273, REMOVAL, Drive Pinion Shaft Assembly.>
22) Remove the lock plates on both sides.

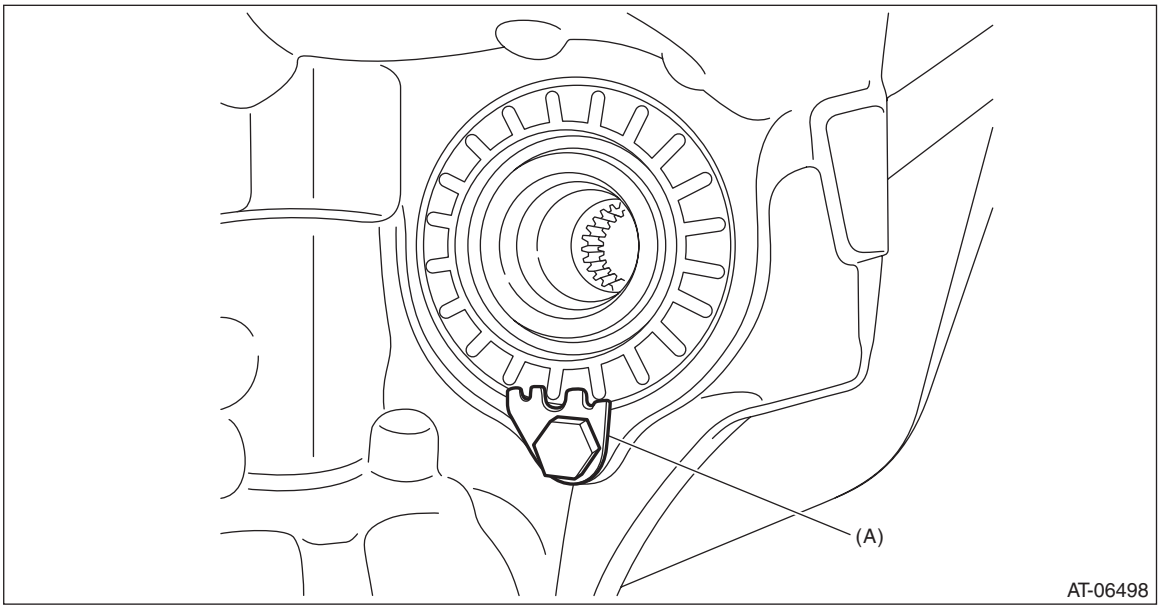

(A) Lock plate

23) Remove the differential side retainers using ST.

NOTE:
• When the wrench COMPL retainer interferes with the converter case, align the cutout portion with the interference part.
• Support the differential case assembly by hand to avoid damaging the retainer mounting hole of the converter case.
• Keep the left and right differential side retainers and left and right bearing outer races by attaching tags or in similar ways to make it possible to identify RH and LH sides.

ST 18658AA020 WRENCH COMPL RETAINER

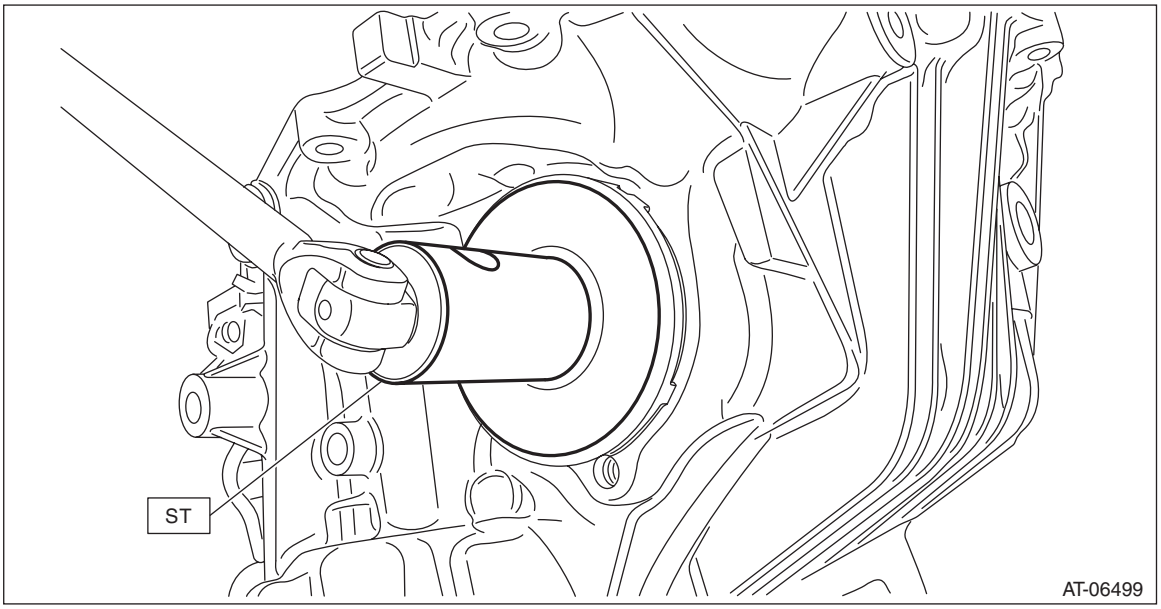

24) Remove the front differential assembly while being careful not to damage the attachment part of the retainer.

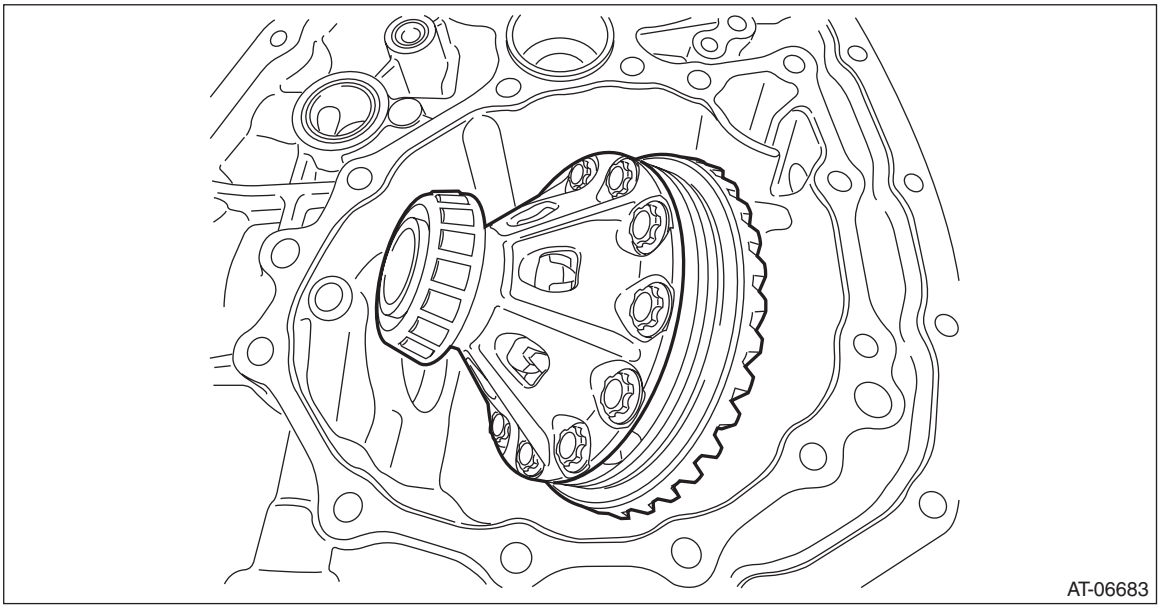

25) Remove the oil seals and O-rings from both differential side retainers. <Ref. to CVT(TR580)-310, SIDE RETAINER, DISASSEMBLY, Front Differential Assembly.>

B: INSTALLATION

1) Install the front differential assembly to the converter case.

NOTE:
Be careful not to damage the inside of the case (especially the mounting surface of the differential side retainers).

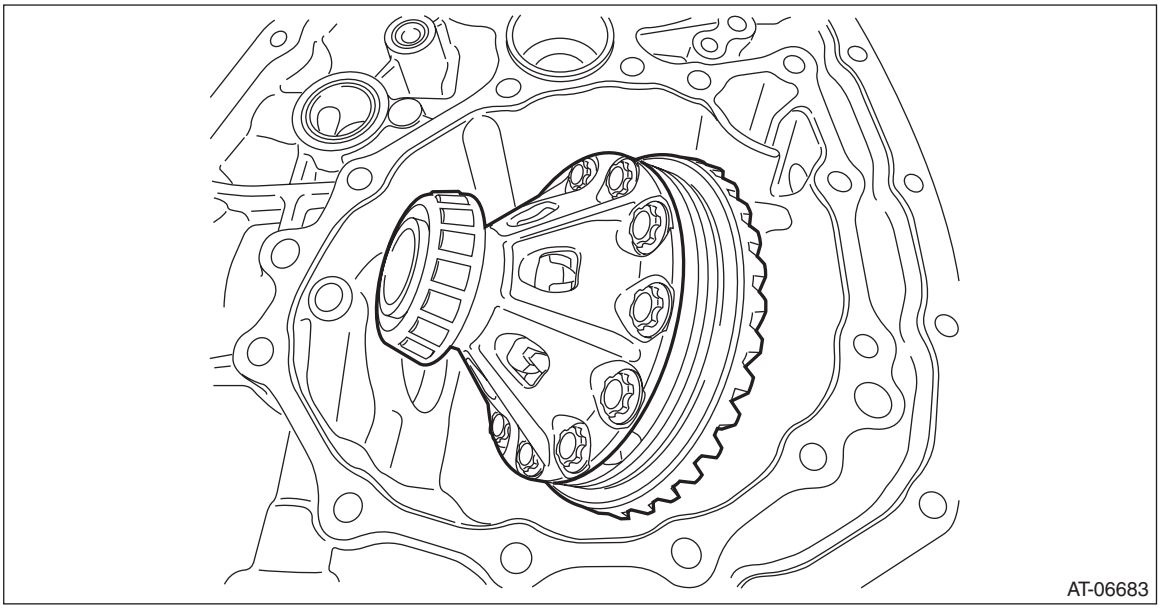

2) Install the bearing outer race.
3) Temporarily install the differential side retainers using ST.
ST 18658AA020 WRENCH COMPL RETAINER

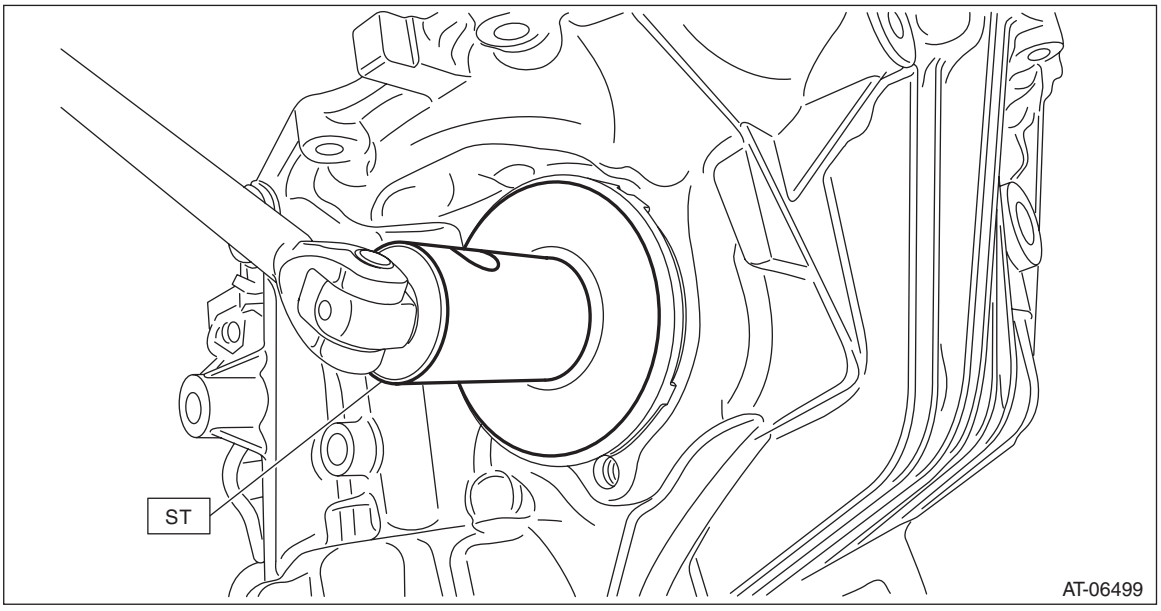

4) Adjust the backlash of the front differential. <Ref. to CVT(TR580)-317, ADJUSTMENT, Front Differential Assembly.>
5) Inspect and adjust the tooth contact. <Ref. to CVT(TR580)-295, ADJUSTMENT, Drive Pinion Shaft Assembly.>
6) Using the ST, loosen the differential side retainer until the mounting groove of the O-ring appears, and then install the O-ring.

NOTE:
- When loosening the differential side retainer, record the number of the turns made.
- Perform this for both left and right differential side retainers.
- Use new O-rings.
- Apply the differential gear oil to O-ring.

ST 18658AA020 WRENCH COMPL RETAINER
7) Using the ST, tighten the retainer to the position before it is loosened.
ST 18658AA020 WRENCH COMPL RETAINER
8) Install the oil seal to the differential side retainer. <Ref. to CVT(TR580)-87, Differential Side Retainer Oil Seal.>
9) Install the lock plate.

Tightening torque:
25 N·m (2.5 kgf-m, 18.4 ft-lb)

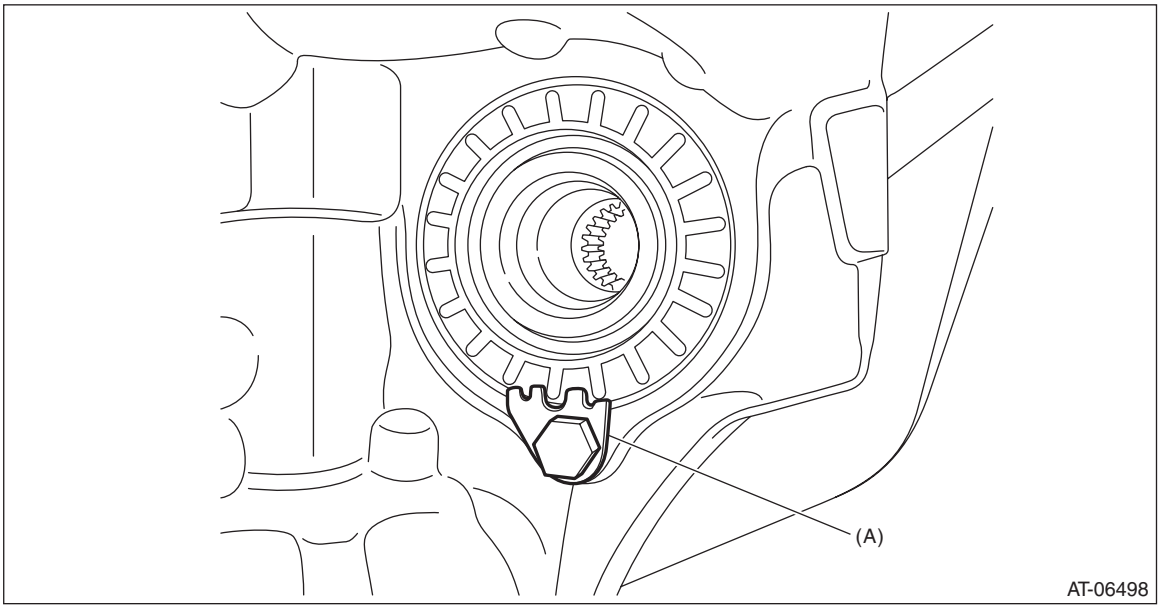

(A) Lock plate

10) Install the drive pinion shaft assembly. <Ref. to CVT(TR580)-274, INSTALLATION, Drive Pinion Shaft Assembly.>
11) Install the forward clutch assembly. <Ref. to CVT(TR580)-256, INSTALLATION, Forward Clutch Assembly.>
12) Install the reverse brake assembly. <Ref. to CVT(TR580)-241, INSTALLATION, Reverse Brake Assembly.>
13) Install the primary pulley, secondary pulley and variator chain. <Ref. to CVT(TR580)-224, INSTALLATION, Primary Pulley and Secondary Pulley.>
14) Install the reduction drive gear. <Ref. to CVT(TR580)-213, INSTALLATION, Reduction Drive Gear.>
15) Install the transmission case. <Ref. to CVT(TR580)-202, INSTALLATION, Transmission Case.>
16) Install the oil strainer and oil pan. <Ref. to CVT(TR580)-109, INSTALLATION, Oil Pan and Strainer.>
17) Install the transmission control device. <Ref. to CVT(TR580)-196, INSTALLATION, Transmission Control Device.>
18) Install the reduction driven gear assembly. <Ref. to CVT(TR580)-185, INSTALLATION, Reduction Driven Gear.>
19) Install the transfer driven gear assembly. <Ref. to CVT(TR580)-181, INSTALLATION, Transfer Driven Gear.>
20) Install the transfer clutch assembly. <Ref. to CVT(TR580)-168, INSTALLATION, Transfer Clutch.>
21) Install the parking pawl. <Ref. to CVT(TR580)-184, INSTALLATION, Parking Pawl.>
22) Install the extension case. <Ref. to CVT(TR580)-163, INSTALLATION, Extension Case.>
23) Install the inhibitor switch. <Ref. to CVT(TR580)-97, INSTALLATION, Inhibitor Switch.>
24) Install the secondary speed sensor. <Ref. to CVT(TR580)-101, INSTALLATION, Secondary Speed Sensor.>
25) Install the primary speed sensor. <Ref. to CVT(TR580)-104, INSTALLATION, Primary Speed Sensor.>
26) Install the turbine speed sensor. <Ref. to CVT(TR580)-99, INSTALLATION, Turbine Speed Sensor.>
27) Install the transmission harness. <Ref. to CVT(TR580)-133, INSTALLATION, Transmission Harness.>
28) Install the control valve body. <Ref. to CVT(TR580)-118, INSTALLATION, Control Valve Body.>
29) Install the air breather hose. <Ref. to CVT(TR580)-154, INSTALLATION, Air Breather Hose.>
30) Install the transmission assembly to the vehicle. <Ref. to CVT(TR580)-68, INSTALLATION, Automatic Transmission Assembly.>

C: DISASSEMBLY

1. DIFFERENTIAL CASE ASSEMBLY

1) Remove the taper roller bearing using the ST.
ST1 498077000 REMOVER
ST2 899864100 REMOVER
ST3 398497701 SEAT

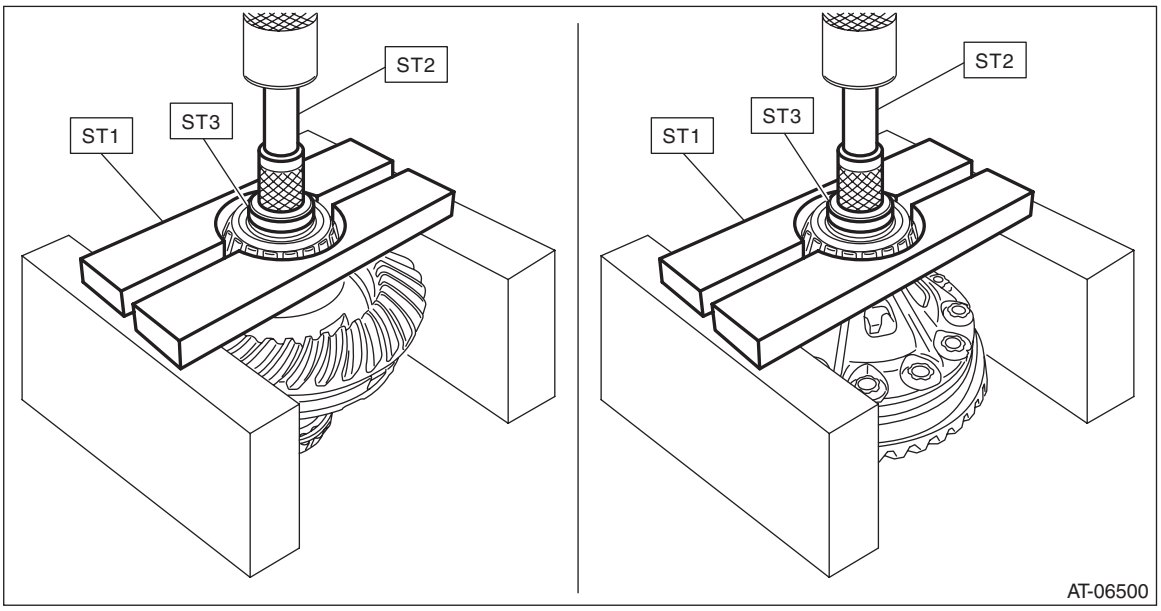

2) Remove the hypoid driven gear mounting bolt using the ST.
ST 18270KA020 SOCKET (E20)

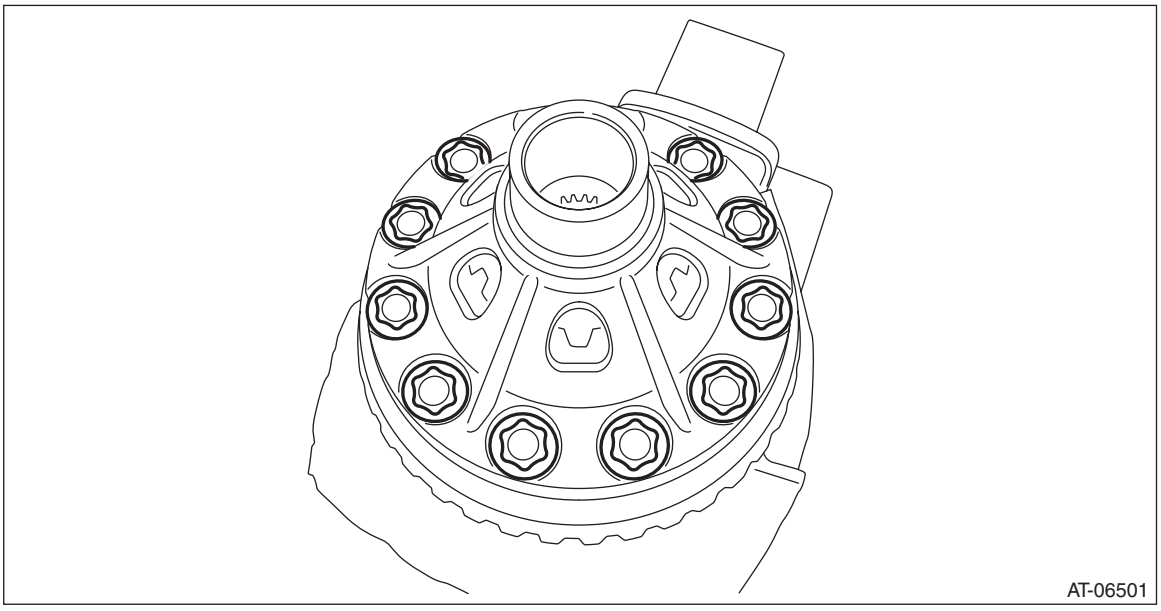

3) Remove the differential case (LH).

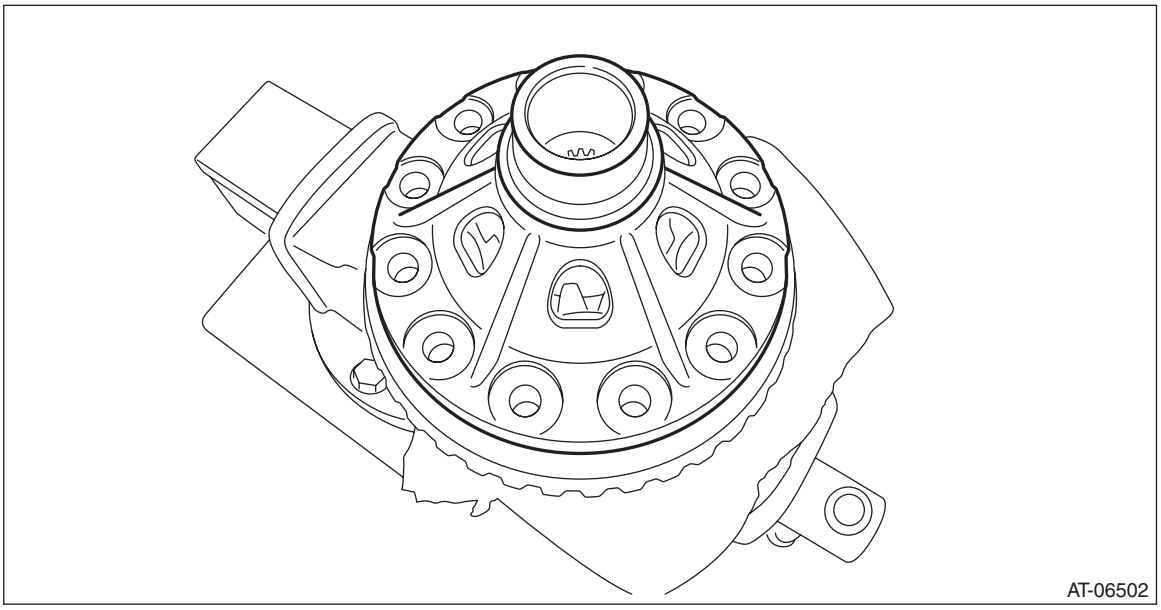

4) Remove the differential bevel gear and washer from differential case.

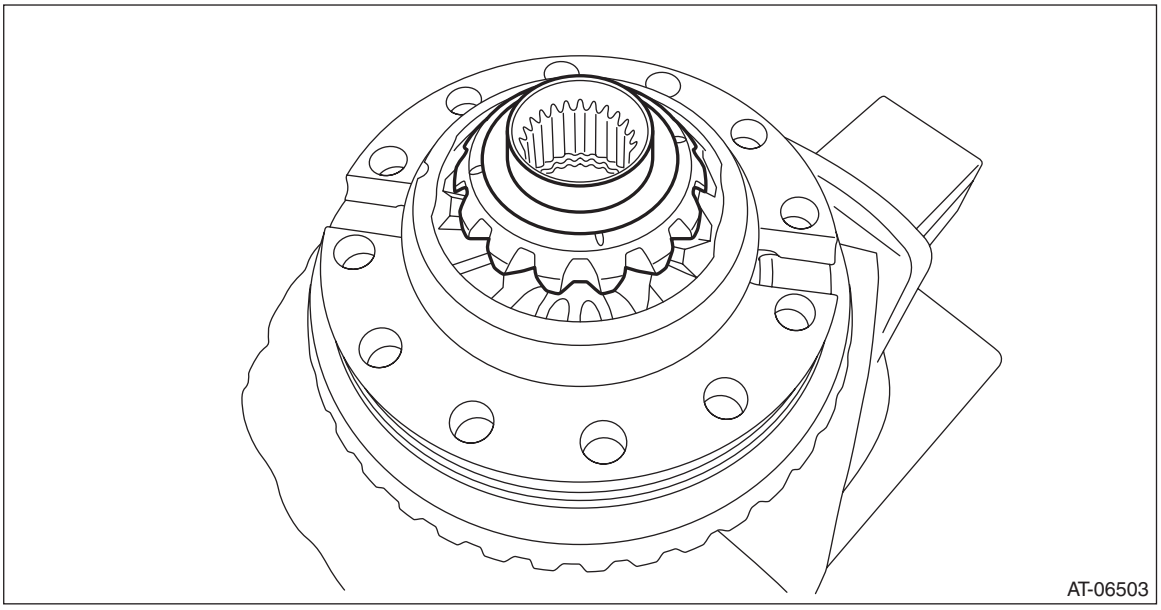

5) Remove the straight pin.

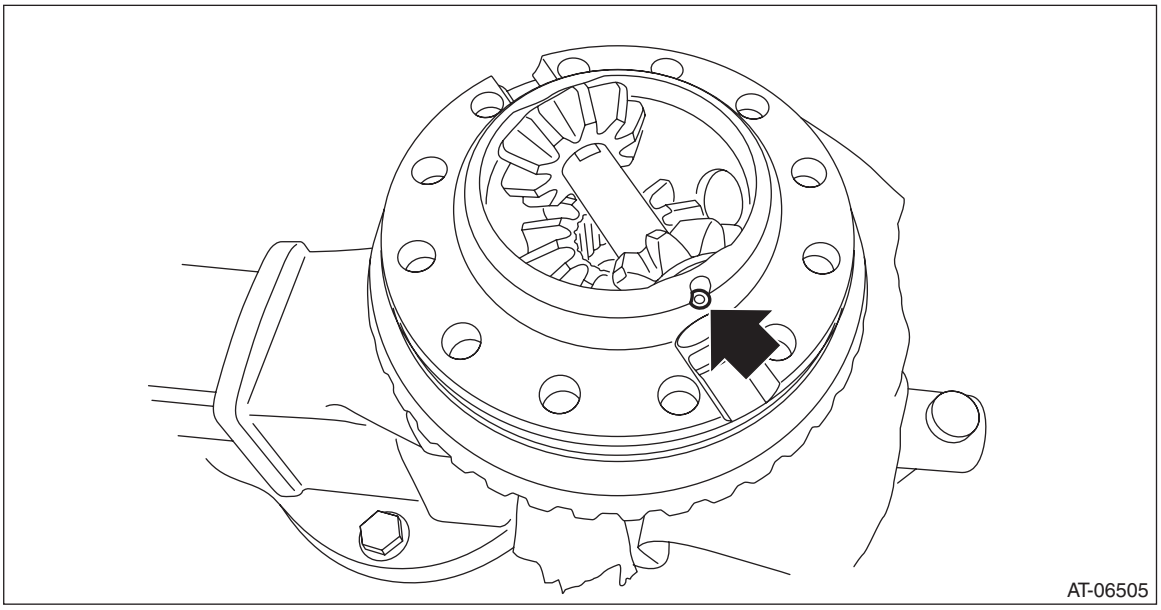

6) Remove the pinion shaft, then remove the differential bevel gear, washer and differential bevel pinion.

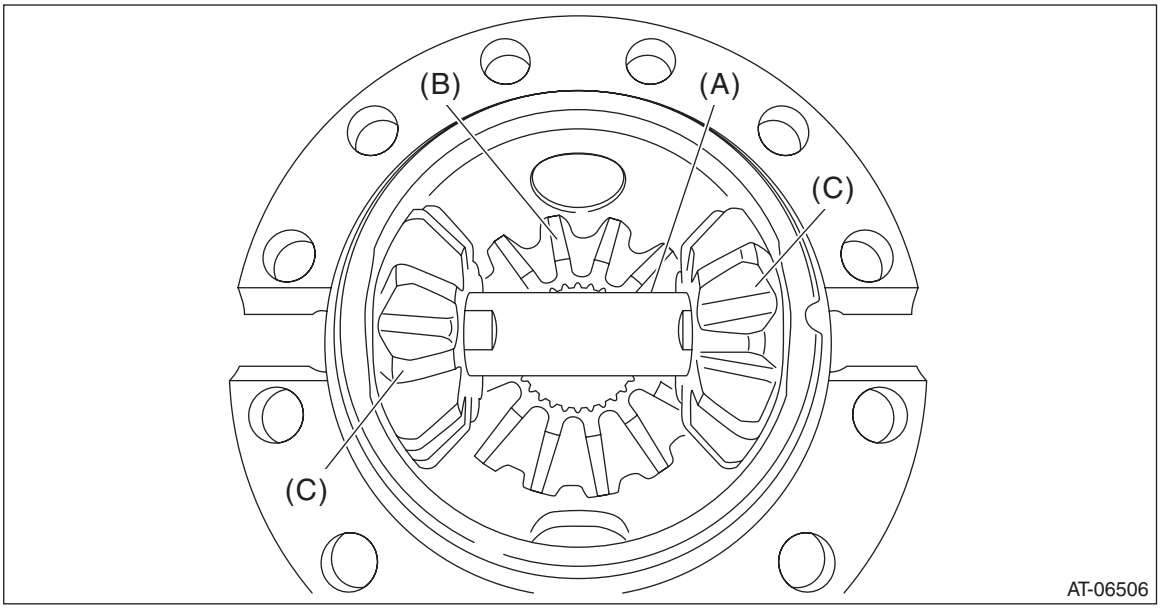

(A) Pinion shaft
(B) Differential bevel gear
(C) Differential bevel pinion

2. SIDE RETAINER

NOTE:
After adjusting the drive pinion backlash and tooth contact, replace the oil seal and O-ring with new parts.
1) Remove the O-ring.

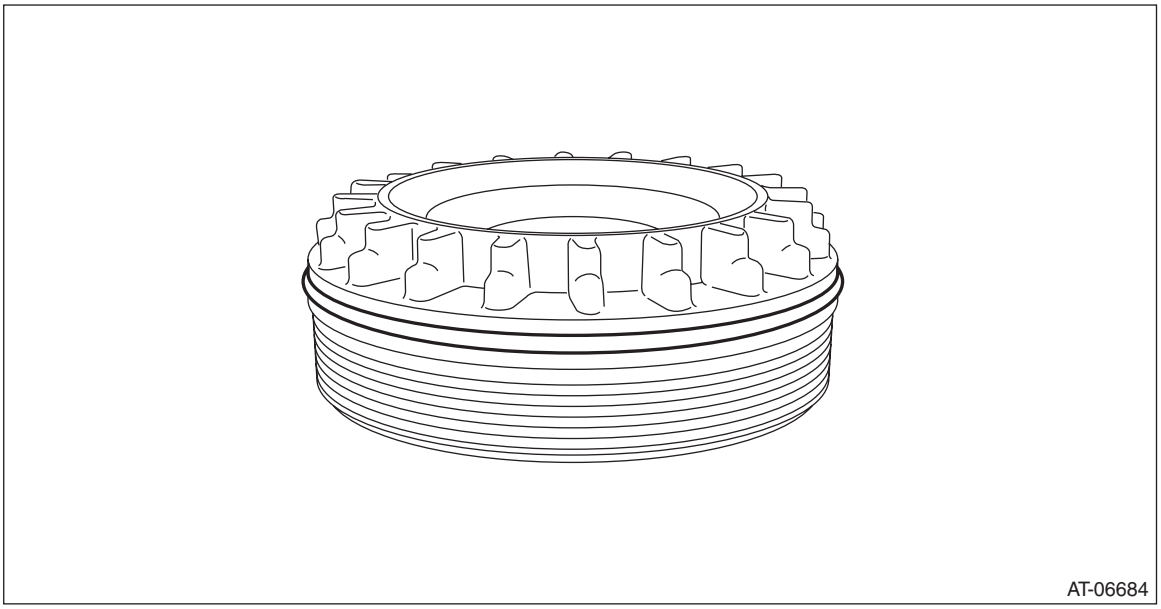

2) Remove the oil seal.

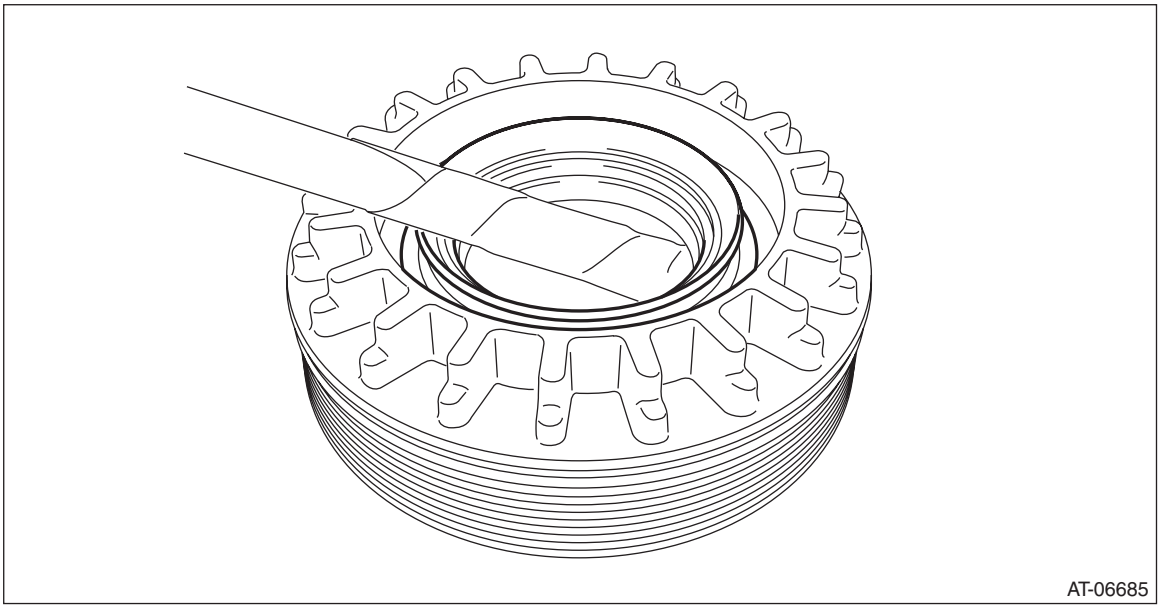

D: ASSEMBLY

1. DIFFERENTIAL CASE ASSEMBLY

1) Install the washer and differential bevel gear into the differential case (RH).

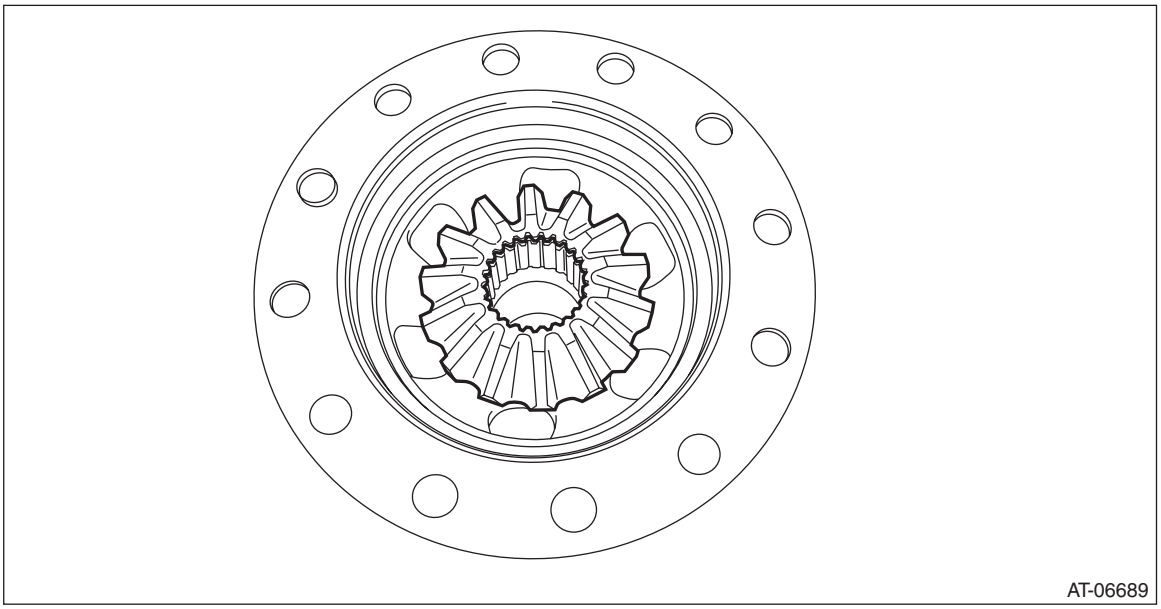

2) Install the differential bevel pinions into differential case (RH) and install the pinion shaft.

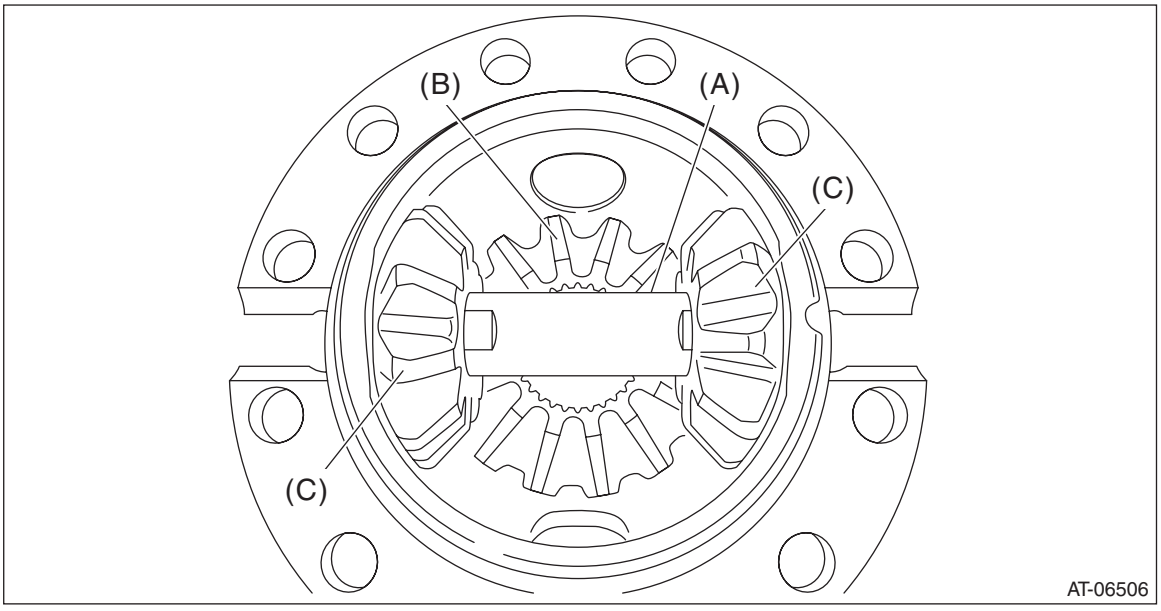

(A) Pinion shaft
(B) Differential bevel gear
(C) Differential bevel pinion

3) Install the straight pin.

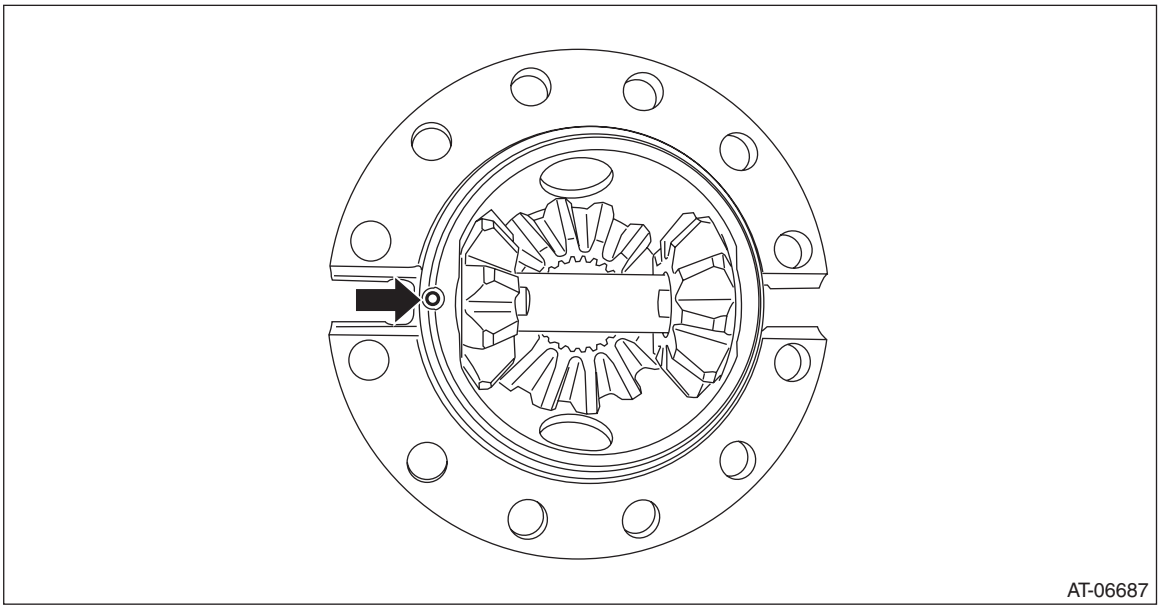

4) Install the washer and differential bevel gear to the differential case (LH).

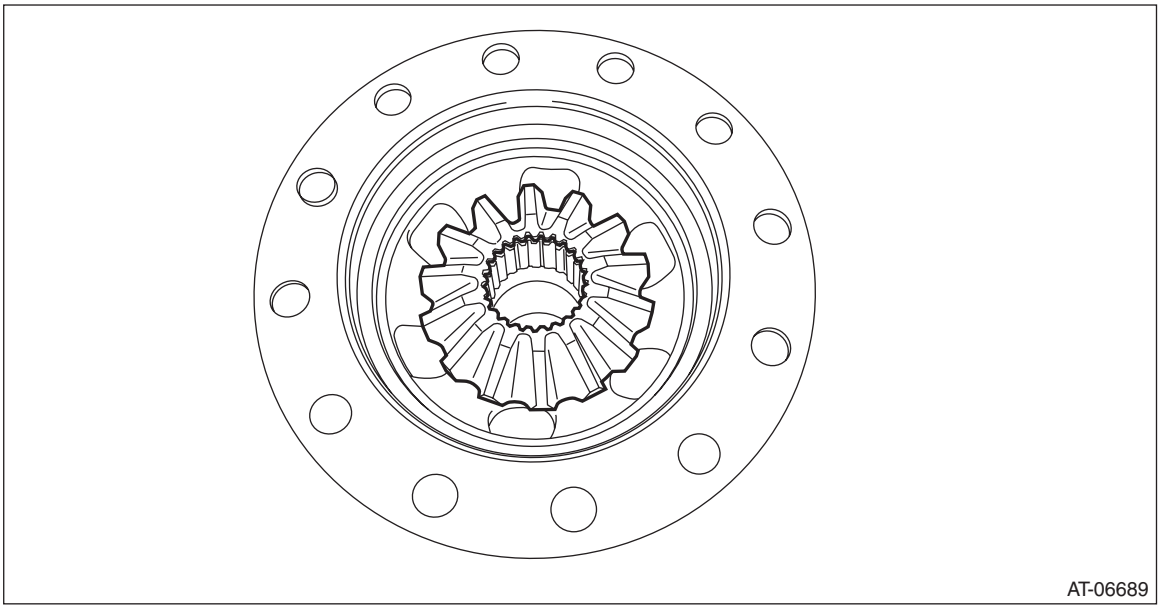

5) Install the differential case (RH) to the hypoid driven gear.

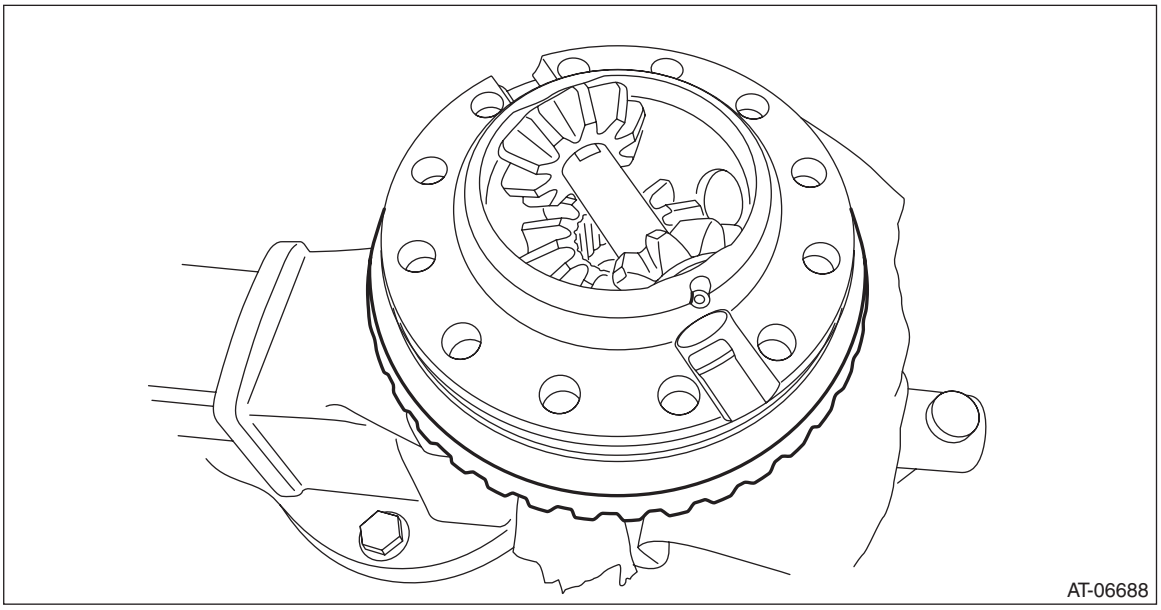

6) Install the differential case (LH) to the differential case (RH).
7) Using the ST, install the hypoid driven gear by tightening the installation bolt.
ST 18270KA020 SOCKET (E20)

Tightening torque:
64 N·m (6.5 kgf-m, 47.2 ft-lb)

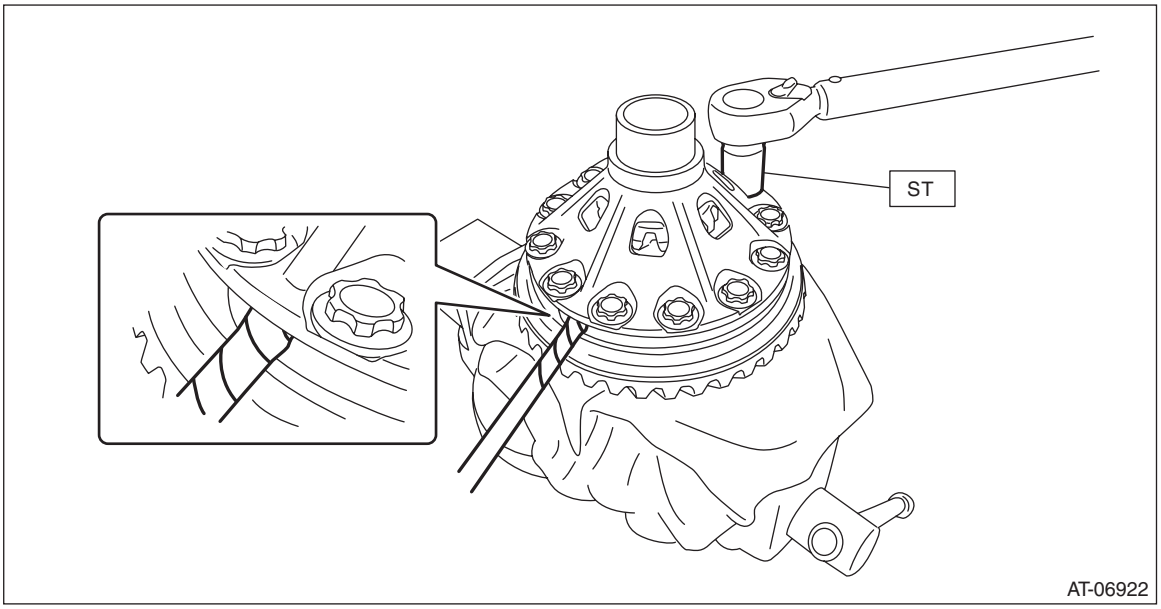

8) Measure the backlash, and select the washer.
(1) Install the SUBARU genuine axle shaft to differential case.
Part No. 38415AA070 Axle shaft
(2) Using ST1 and ST2, insert the ST2 through the window of differential case. Measure the backlash of the gear.

NOTE:
- Measure the backlash by applying a differential bevel pinion tooth between two differential bevel gear teeth.
- When measuring, fix the differential bevel pinion in place with a screwdriver covered with cloth, or a similar tool.

ST1 498247001 MAGNET BASE
ST2 498247100 DIAL GAUGE

Specification:
0.13 — 0.18 mm (0.0051 — 0.0071 in)

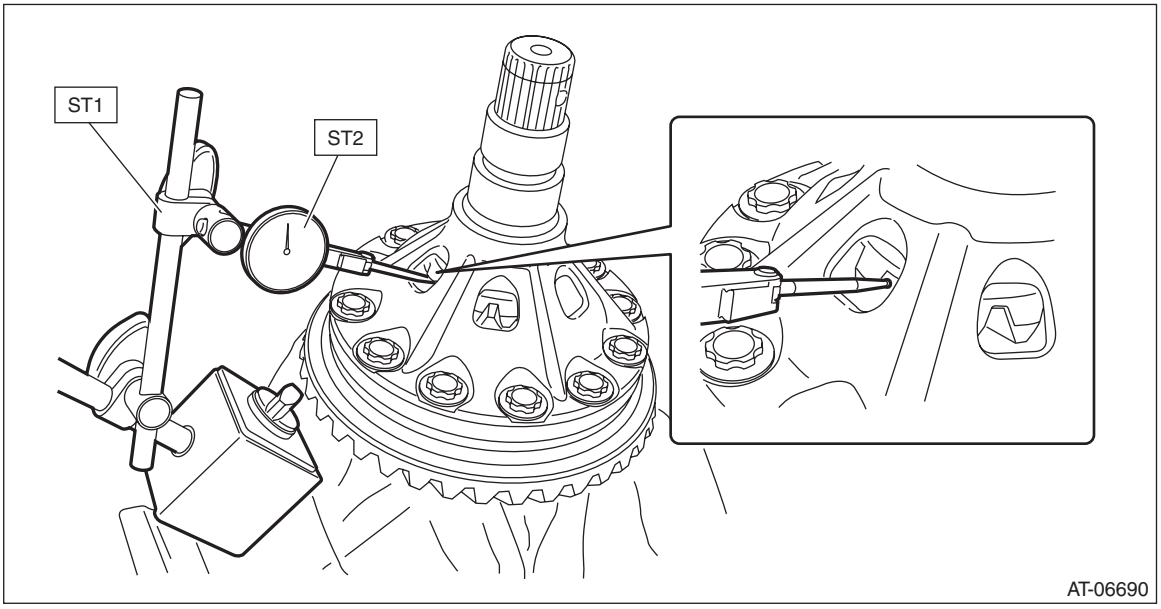

(3) If the backlash is not within specification, select a washer from the table below and replace.

Washer	
Part No.	Thickness mm (in)
803038021	0.95 (0.037)
803038022	1.00 (0.039)
803038023	1.05 (0.041)

9) Using the ST, install the left and right taper roller bearings.
ST1 499277100 BUSHING 1-2 INSTALLER
ST2 398497701 SEAT

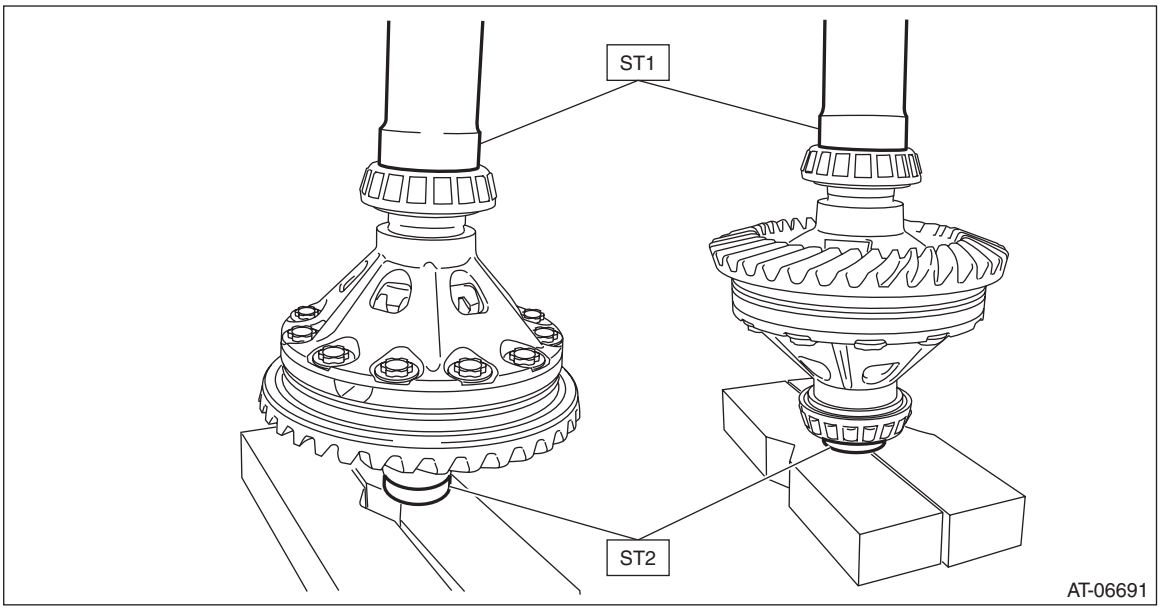

2. SIDE RETAINER

NOTE:
After adjusting the backlash and tooth contact, replace the oil seal and O-ring of side retainer with new parts.
1) Using the ST, install the oil seal.

NOTE:
- Use a new oil seal.
- Apply differential gear oil to the oil seal lip and press-fitting surface.
- Oil seal has an identification mark (R, L). When installing oil seals, do not confuse the left and right.

ST 18675AA000 DIFFERENTIAL SIDE OIL SEAL INSTALLER

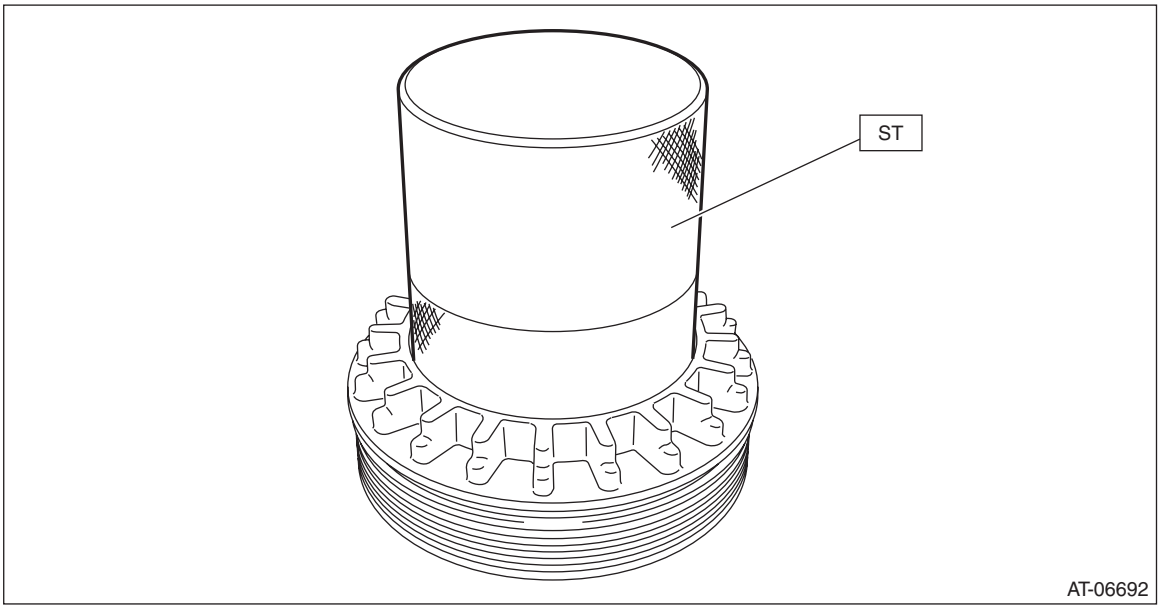

2) Install the O-ring.

NOTE:
- Use new O-rings.
- Apply the differential gear oil to O-ring.

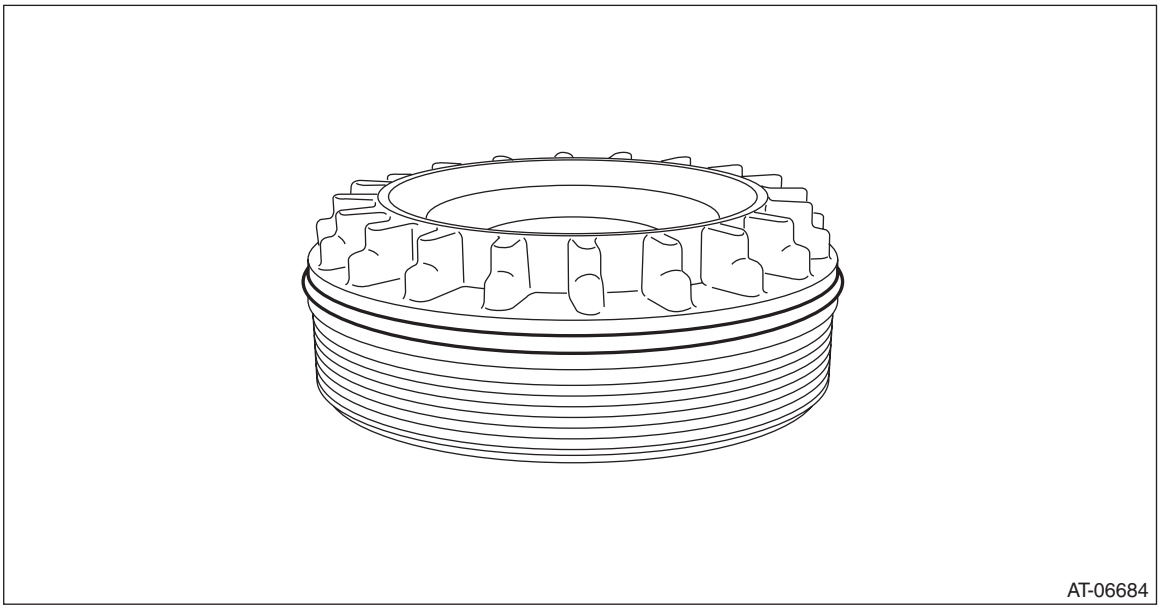

E: INSPECTION

- Check each component for scratches, damage or other faults.
- Using the ST, check the backlash of pinion gear.

ST1 498247001 MAGNET BASE
ST2 498247100 DIAL GAUGE

Specification:
0.13 — 0.18 mm (0.0051 — 0.0071 in)

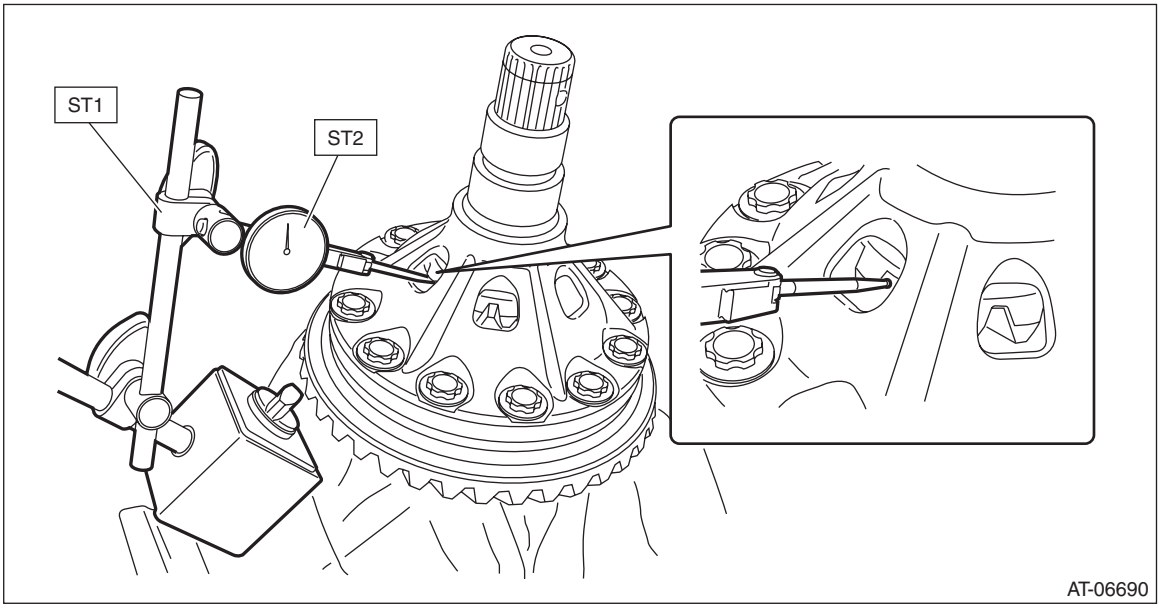

- Measure the hypoid gear backlash, and then adjust it to be within specification. <Ref. to CVT(TR580)-317, ADJUSTMENT, Front Differential Assembly.>

F: ADJUSTMENT

1) Using the ST, screw-in the retainer until resistance is felt.

NOTE:
RH side should be screwed-in more than LH side.
ST 18658AA020 WRENCH COMPL RETAINER

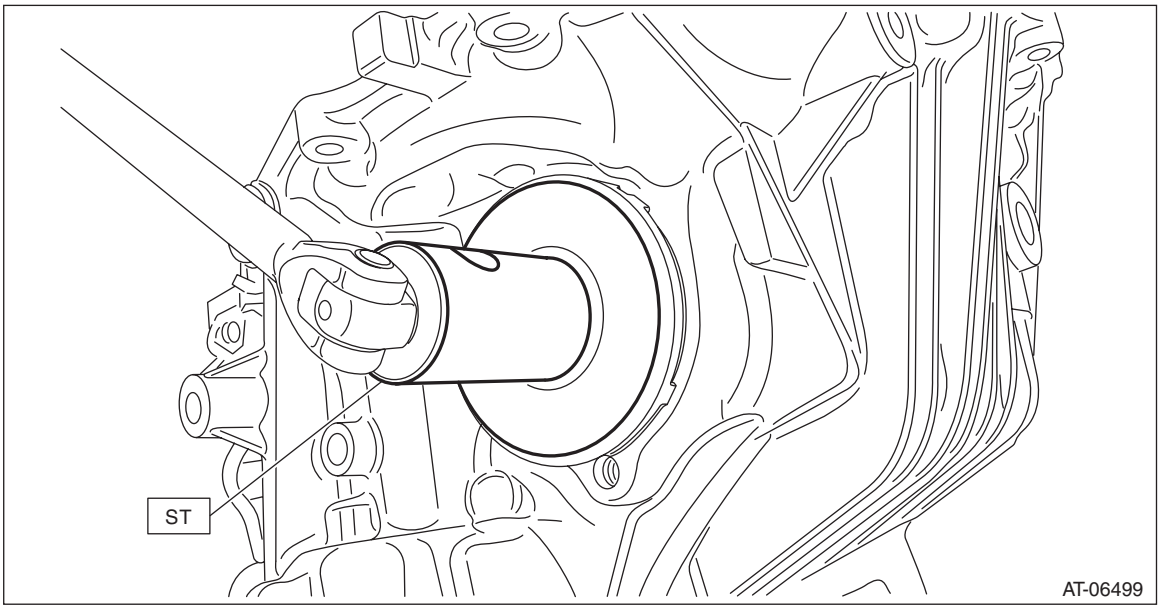

2) Remove the remaining liquid gasket from the mating surface completely.
3) Using the ST, install the drive pinion assembly to converter case.
ST 18270KA020 SOCKET (E20)

NOTE:
Do not confuse the three different-length bolts when installing.

Tightening torque:
43 N·m (4.4 kgf-m, 31.7 ft-lb)

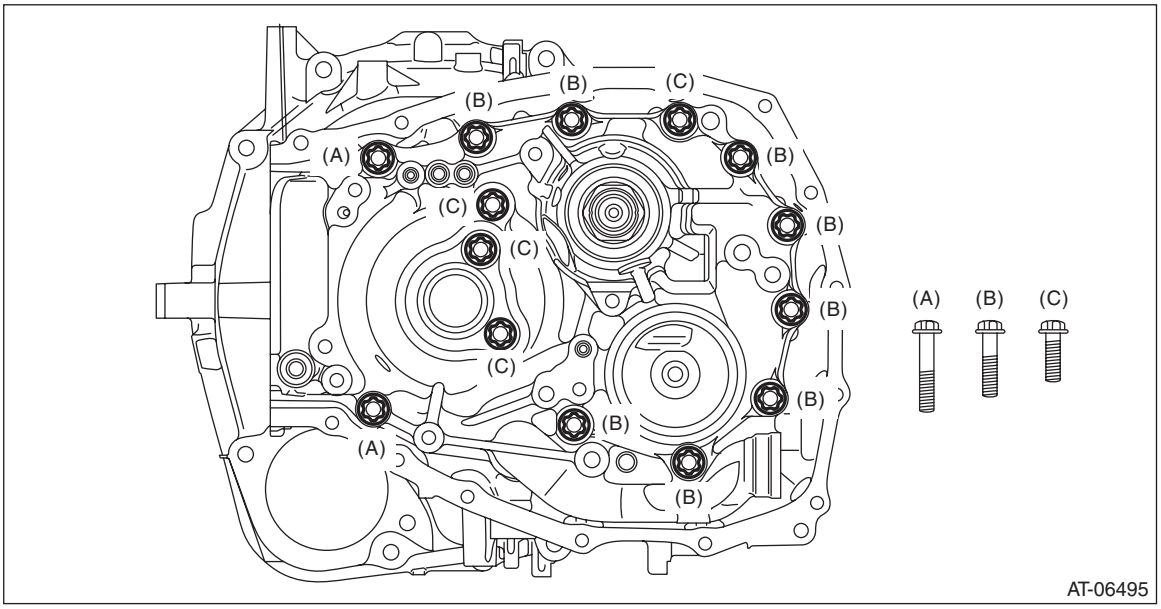

4) Rotate the drive pinion shaft ten times or more using ST1 and ST2.
ST1 18667AA010 HOLDER
ST2 499787700 WRENCH

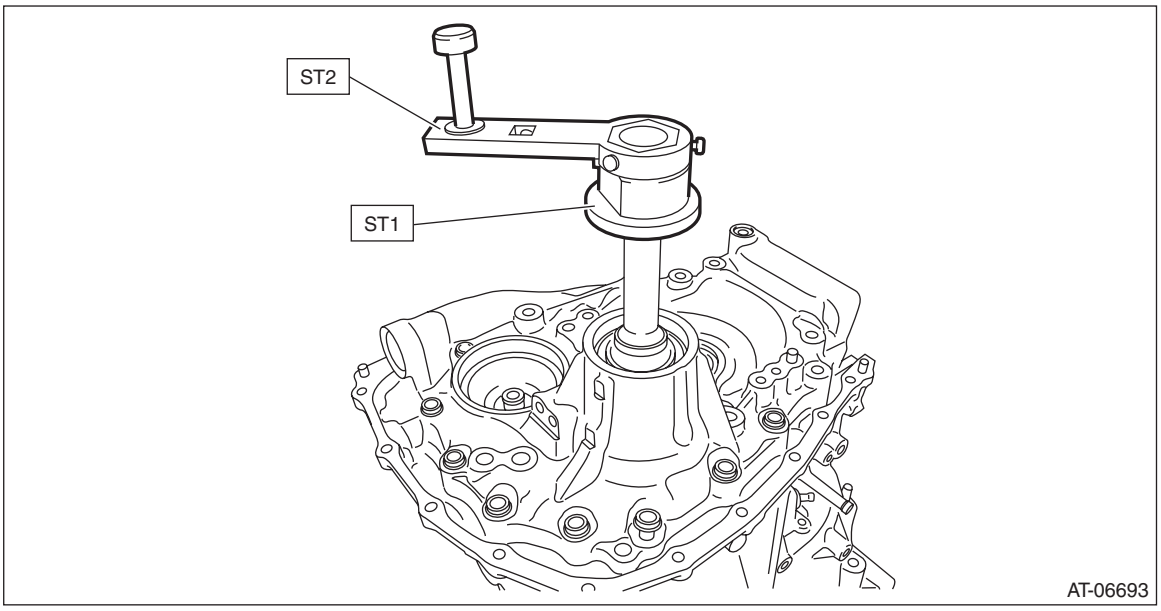

5) While rotating the pinion shaft, tighten the retainer LH and loosen the retainer RH until the shaft can't be turned anymore. The backlash is “zero” when the pinion shaft comes to the point where it doesn't rotate.
6) After the “zero” state is established, loosen the retainer LH by 3 notches and secure it with the lock plate. Retighten the retainer RH until it stops. Rotate the drive pinion 2 or 3 times. Tighten the retainer RH further 1-3/4 notches. This sets the preload. Finally, secure the retainer with its lock plate.

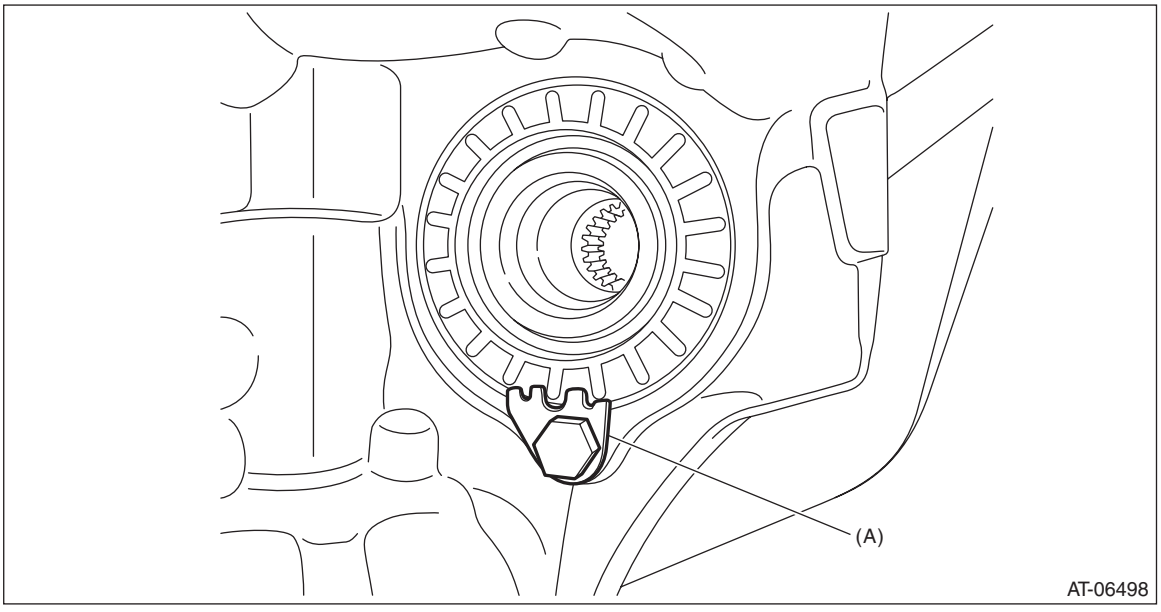

(A) Lock plate

NOTE:
Turning the retainer by every one tooth changes the backlash approx. 0.05 mm (0.0020 in).

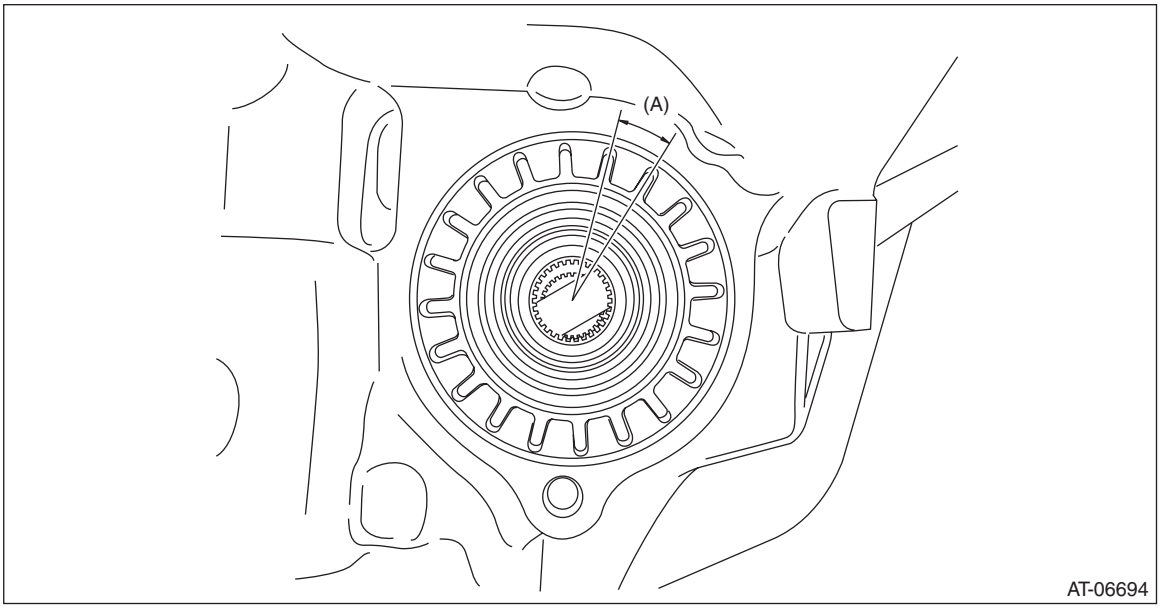

(A) 1 tooth

7) Insert the two SUBARU genuine axle shafts into differential case.
Part No. 38415AA070 Axle shaft
8) Install the ST to the drive pinion retainer, and wrap the drive pinion shaft with cloth and pinch with vise pliers. Using a tie-wrap or a wire, fix the vise pliers to the ST.
Make sure the drive pinion shaft does not move.
ST 18763AA000 COMPRESSOR SHAFT

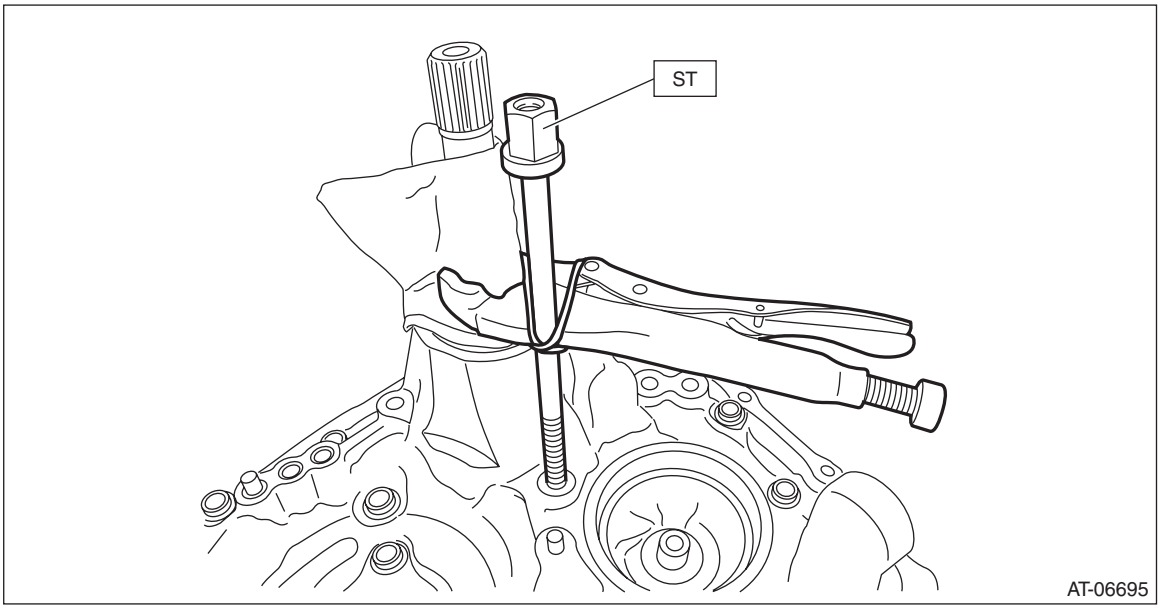

9) Check the backlash is within specification using ST1, ST2 and ST3.
ST1 498255400 PLATE
ST2 498247100 DIAL GAUGE
ST3 498247001 MAGNET BASE

Backlash:
0.13 — 0.18 mm (0.005 — 0.007 in)

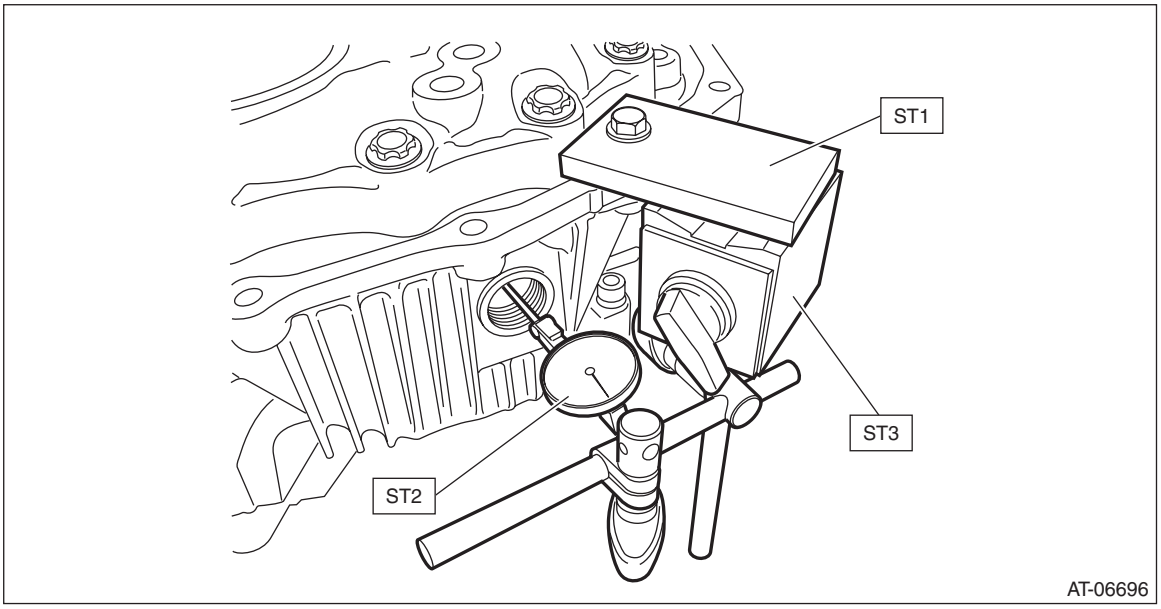

10) Adjust the teeth contact of the front differential and drive shaft. <Ref. to CVT(TR580)-295, ADJUSTMENT, Drive Pinion Shaft Assembly.>

43.Oil Pump Chain

A: REMOVAL

1) Remove the transmission assembly from the vehicle. <Ref. to CVT(TR580)-56, REMOVAL, Automatic Transmission Assembly.>
2) Remove the torque converter assembly. <Ref. to CVT(TR580)-158, REMOVAL, Torque Converter Assembly.>
3) Remove the oil pump chain cover.

NOTE:
Oil pump chain cover may be hard to remove because the driven sprocket is installed to the shaft side of the oil pump. In this case, do not apply excessive force to remove it.

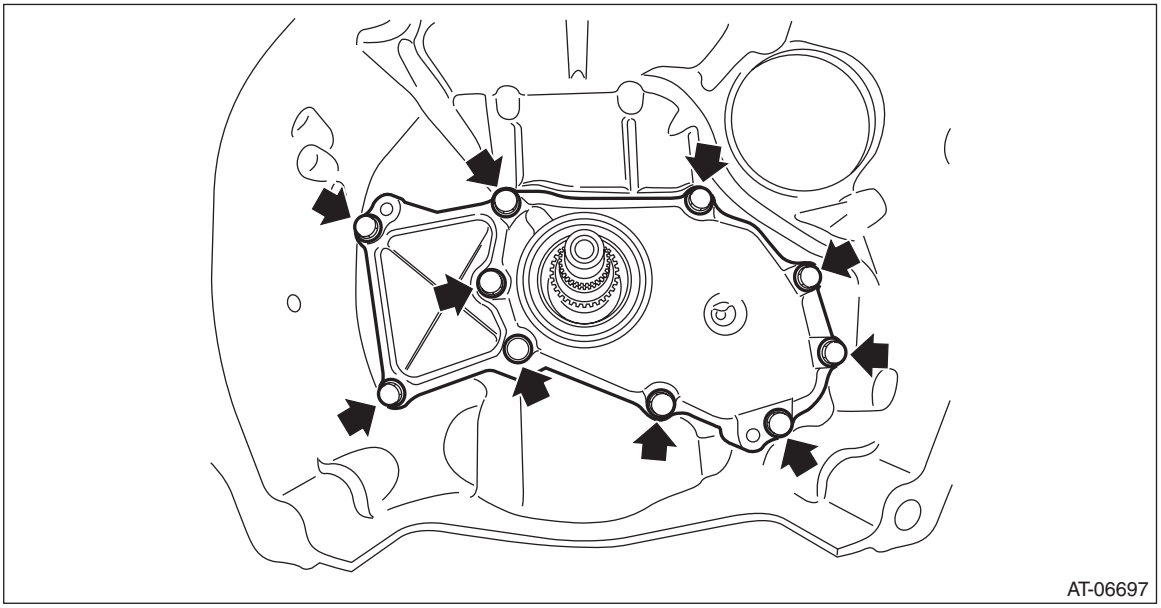

4) Remove the seal ring.

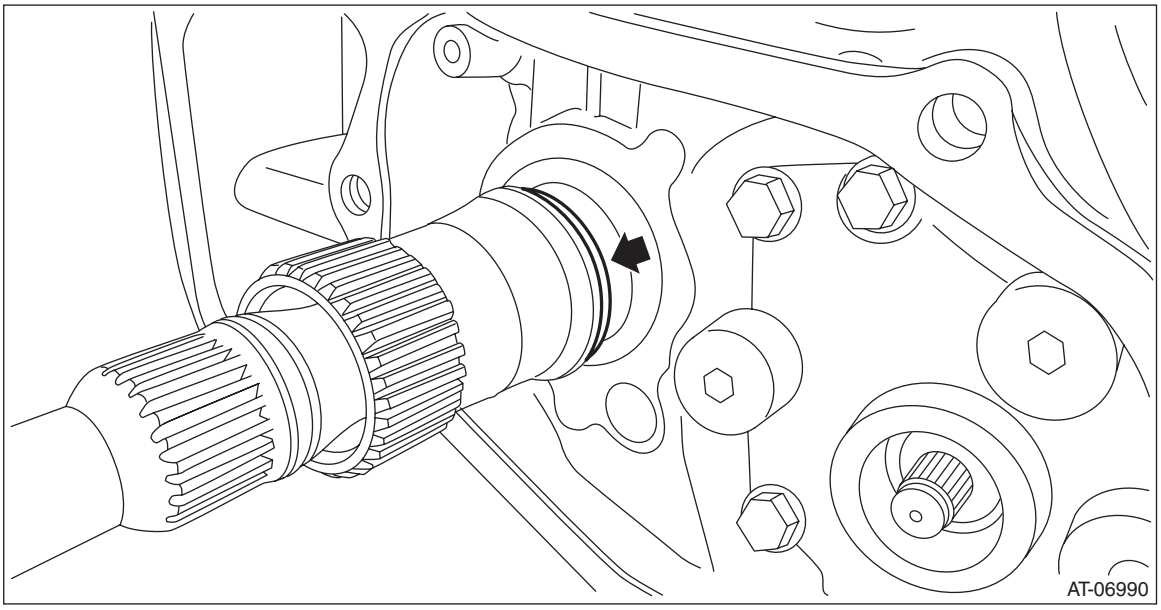

5) Remove the driven sprocket from oil pump chain cover to remove the oil pump chain.

NOTE:
- The driven sprocket is replaced as an assembly only, because it is a non-disassembly part.
- If the ball bearing is removed from the driven sprocket, replace with a new part.

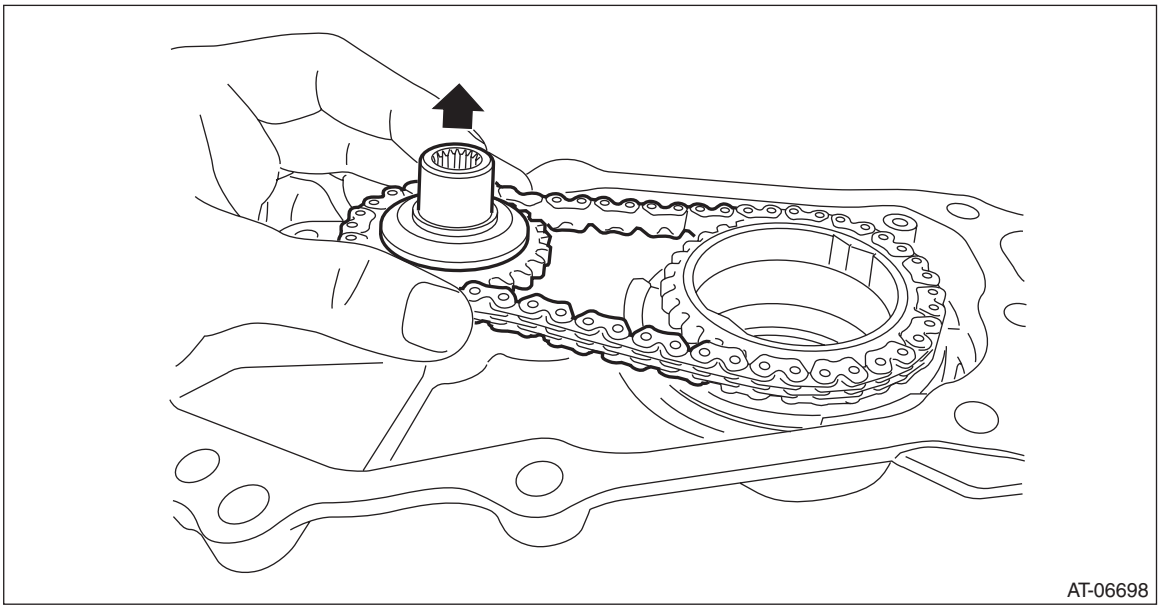

6) Remove the snap ring.

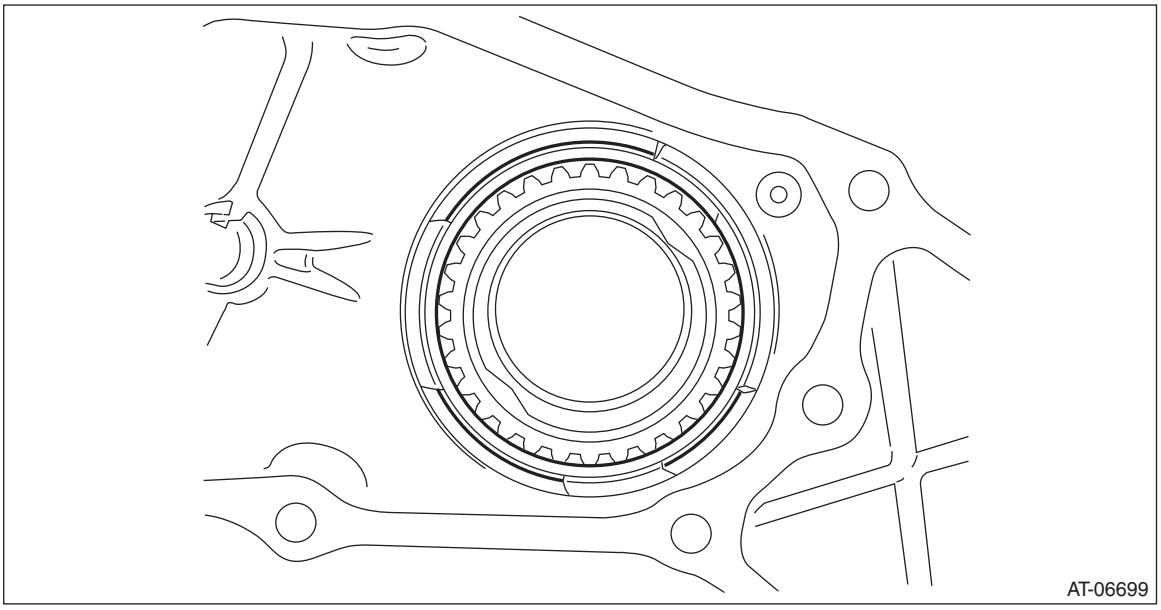

7) Remove the drive sprocket.

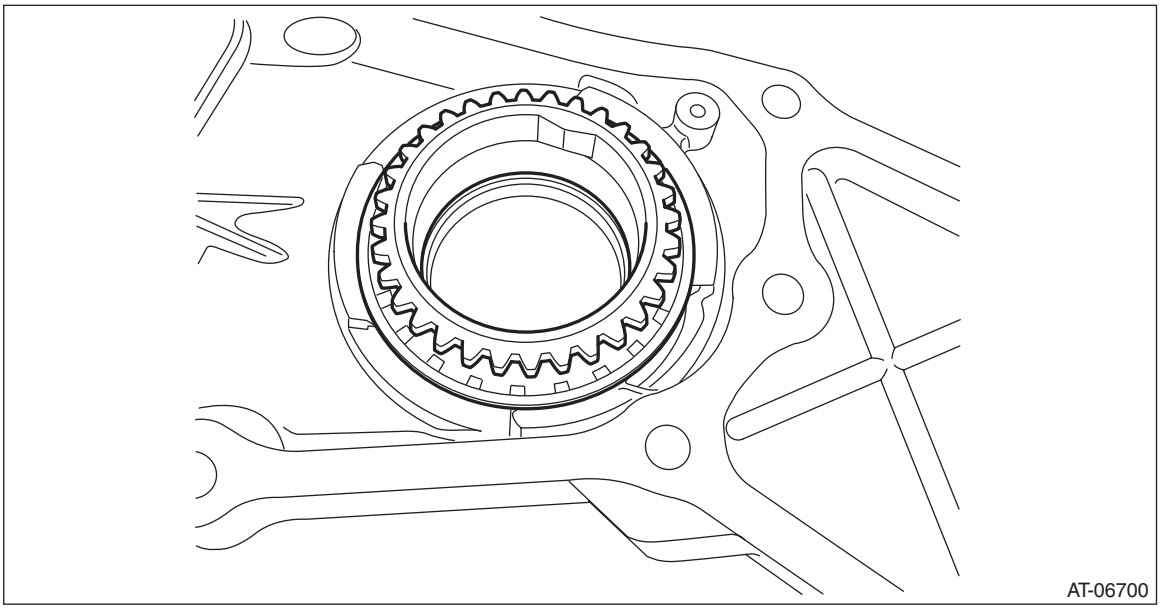

8) Remove the oil seal from the oil pump chain cover.

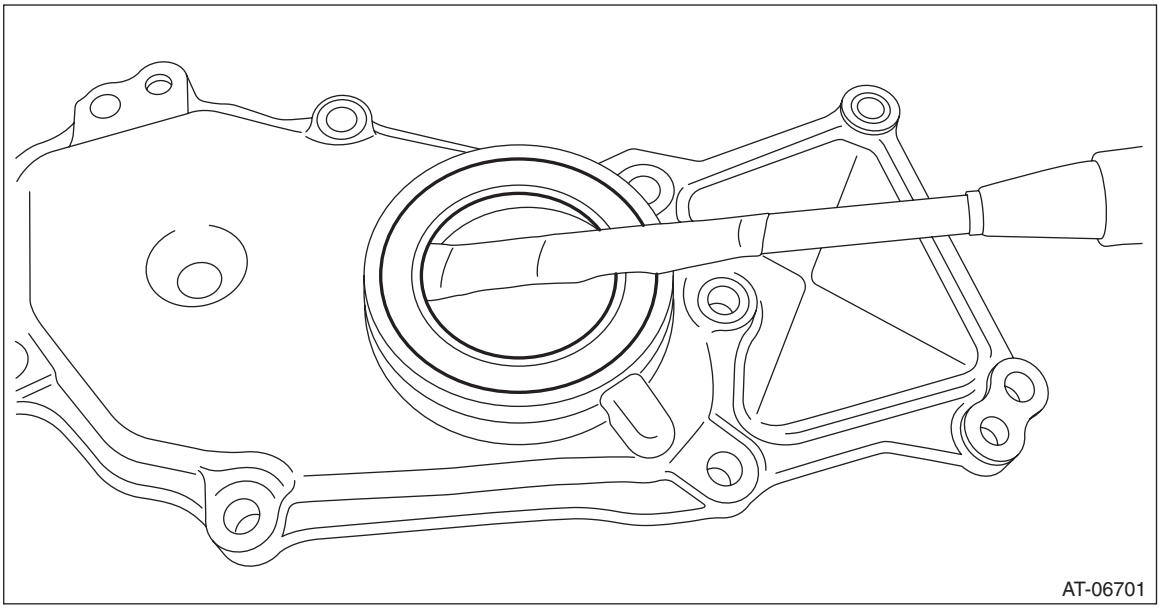

B: INSTALLATION

1) Clean the mating surface of oil pump chain cover and converter case.
2) Using the ST, install the oil seal.

NOTE:
- Use a new oil seal.
- Apply CVTF to the oil seal lip and press-fitting surface.

ST 499755602 PRESS SNAP RING

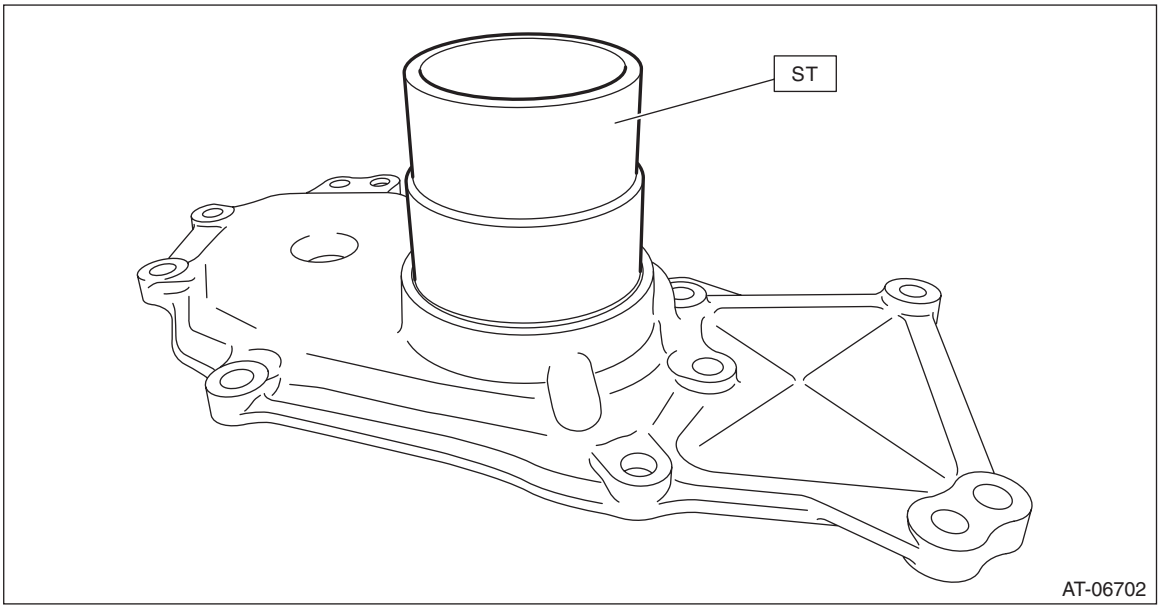

3) Install the drive sprocket.

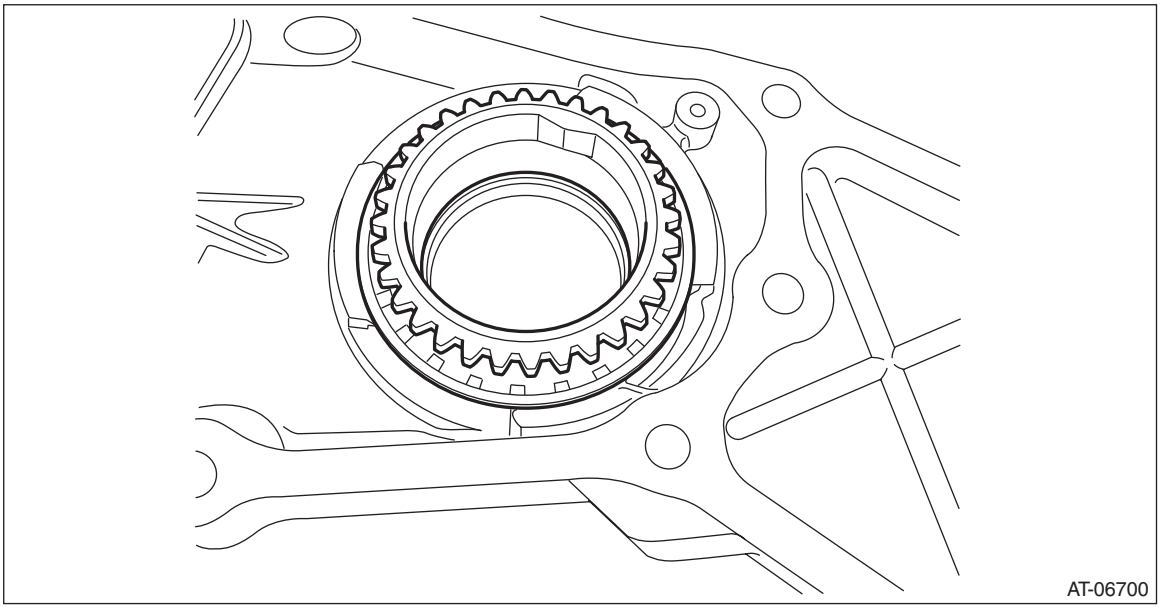

4) Install the snap ring so that its cutout portion is securely fitted into the snap ring groove of the oil pump chain cover.

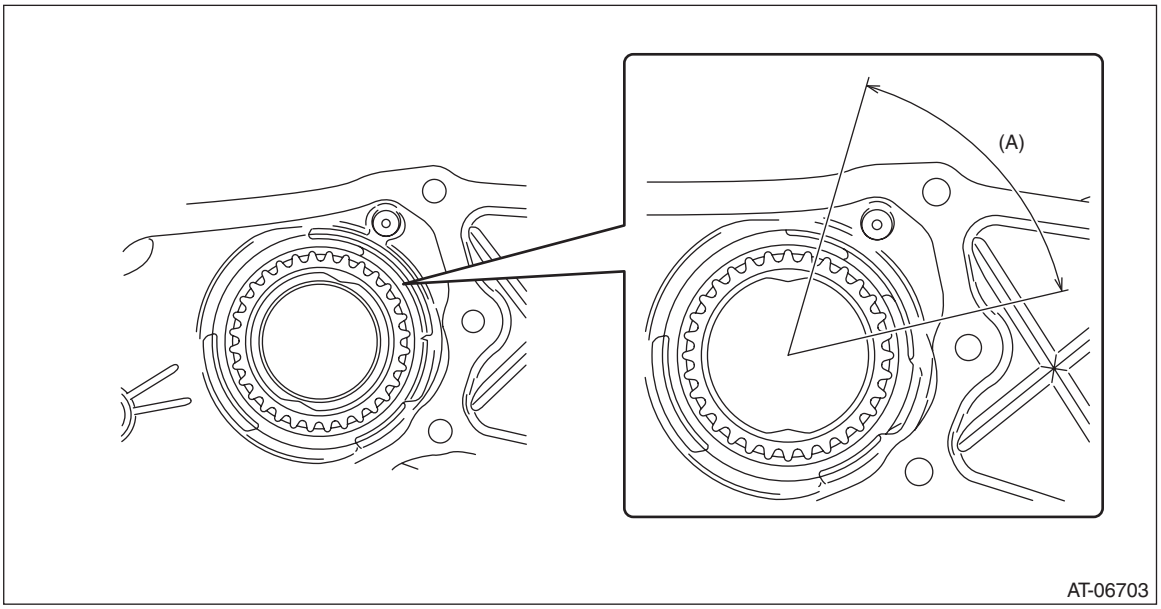

(A) Installation range of cutout portion for snap ring

5) Place the oil pump chain on drive sprocket.
6) Place the oil pump chain on driven sprocket and install the driven sprocket to oil pump chain cover.

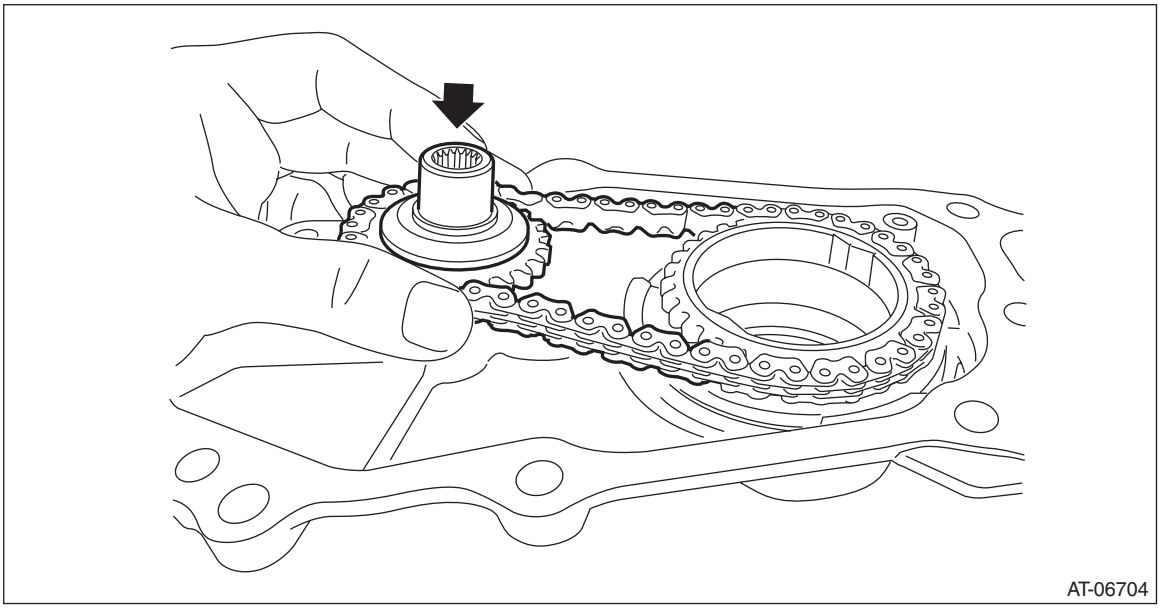

7) Install the seal ring.

NOTE:
- Use a new seal ring.
- Apply CVTF to the seal rings.
- When installing the seal ring, do not expand the seal ring too much.

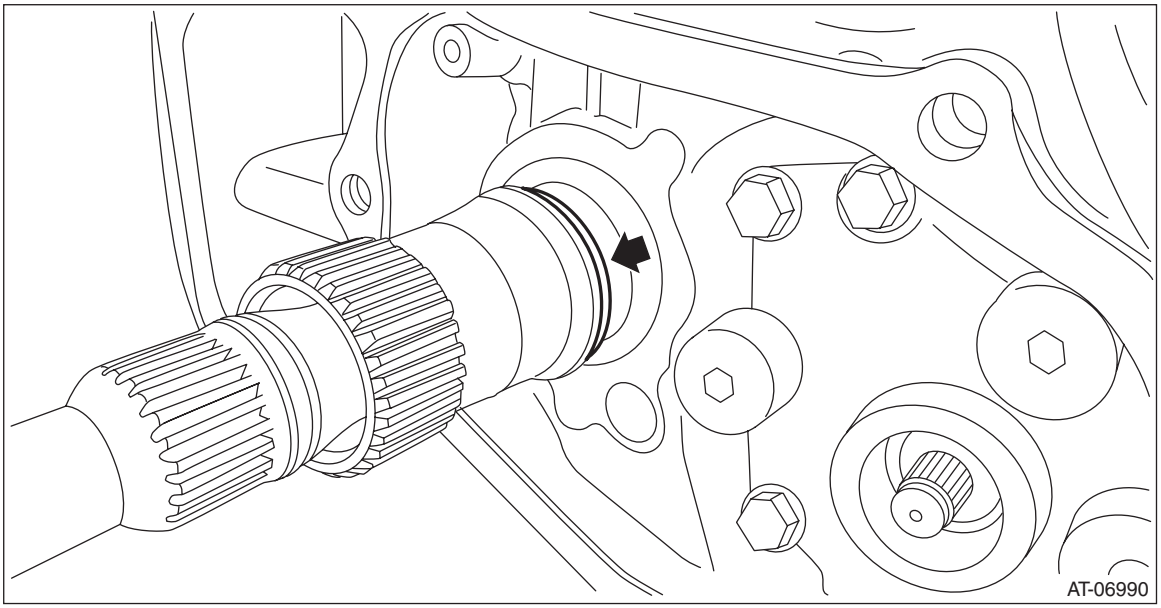

8) Apply liquid gasket seamlessly to the mating surface of oil pump chain cover.

CAUTION:
Do not apply liquid gasket at the arrowed hole.

Liquid gasket:
THREE BOND 1215 (Part No. 004403007) or equivalent

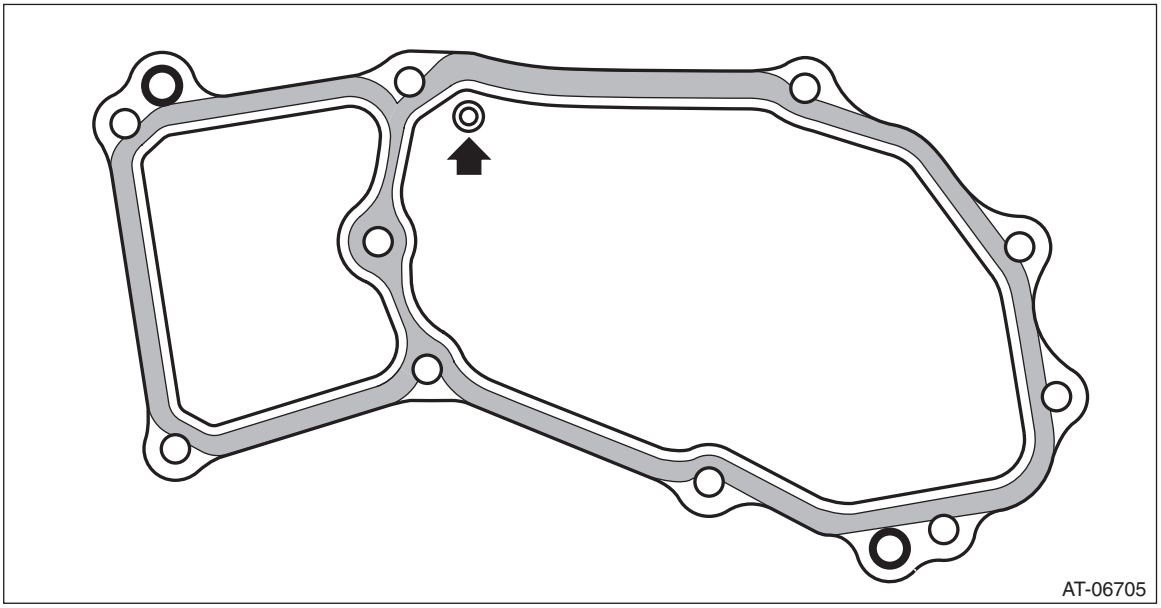

9) Install the oil pump chain cover.

Tightening torque:
21 N·m (2.1 kgf-m, 15.5 ft-lb)

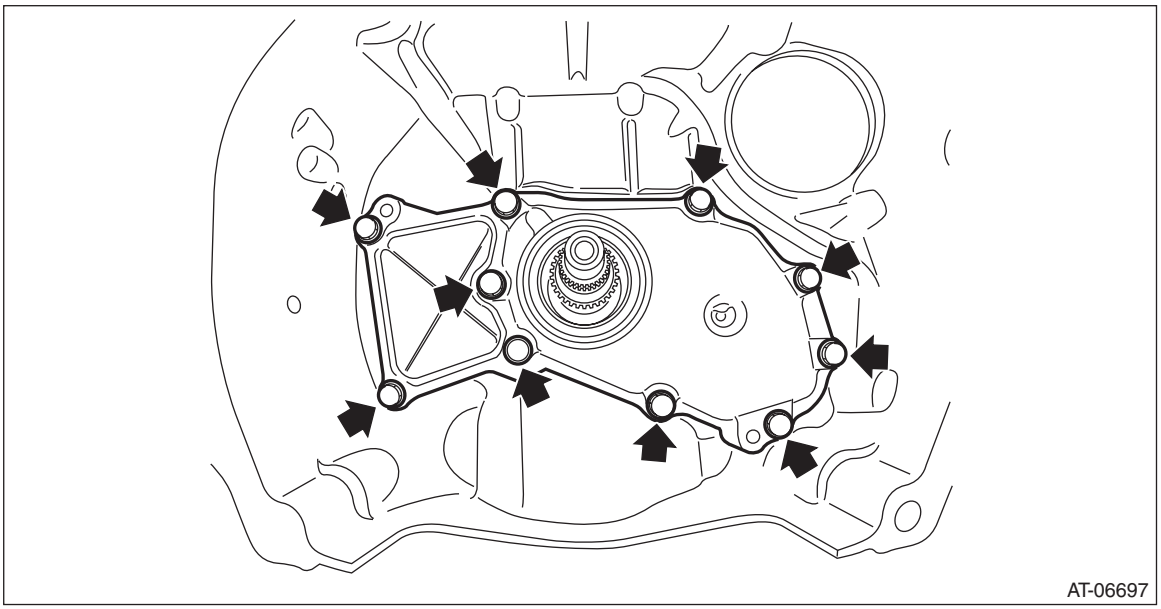

10) Install the torque converter assembly. <Ref. to CVT(TR580)-159, INSTALLATION, Torque Converter Assembly.>
11) Install the transmission assembly to the vehicle. <Ref. to CVT(TR580)-68, INSTALLATION, Automatic Transmission Assembly.>

C: DISASSEMBLY

1. DRIVE SPROCKET

1) Remove the snap ring.

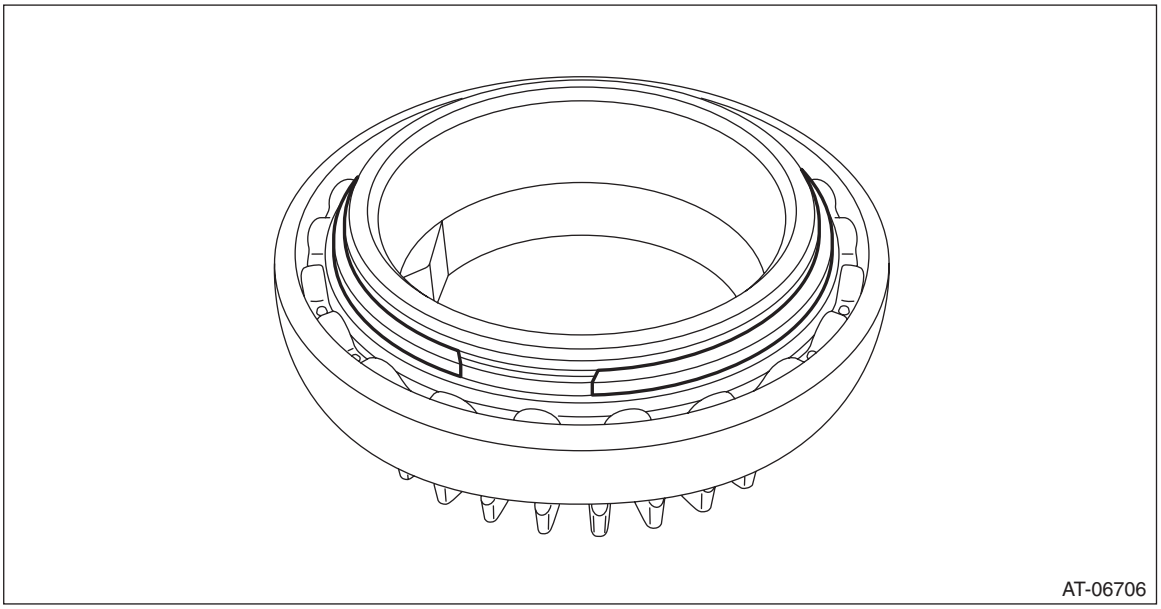

2) Remove the ball bearing using ST.
ST1 498077600 REMOVER
ST2 399513600 INSTALLER

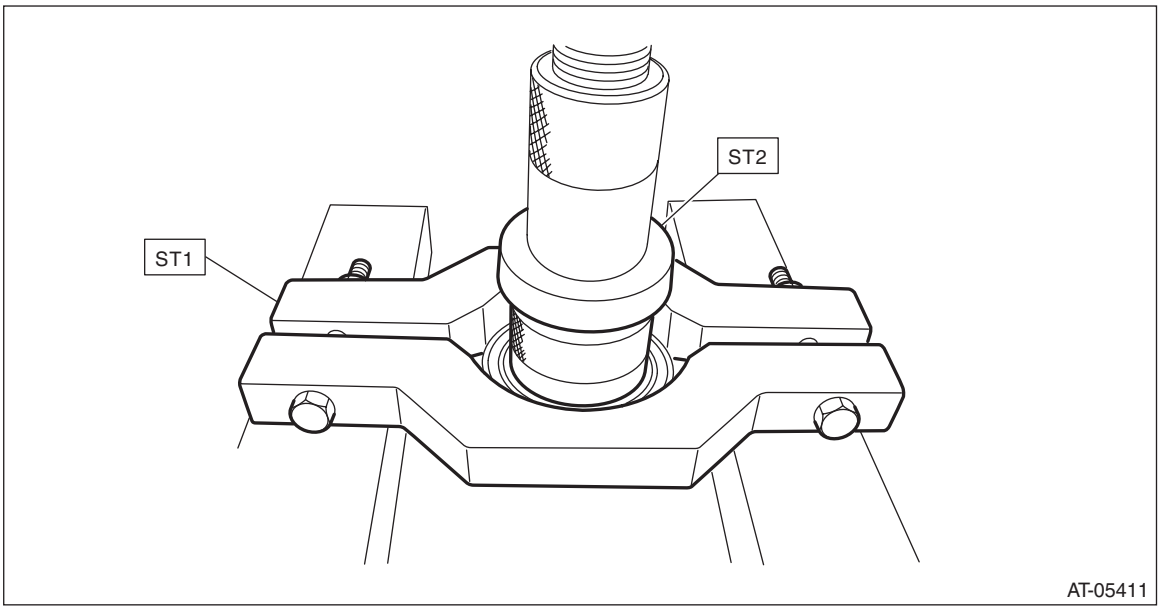

D: ASSEMBLY

1. DRIVE SPROCKET

1) Using the ST, install the ball bearing.

NOTE:
Use a new ball bearing.
ST 499755502 PRESS SNAP RING

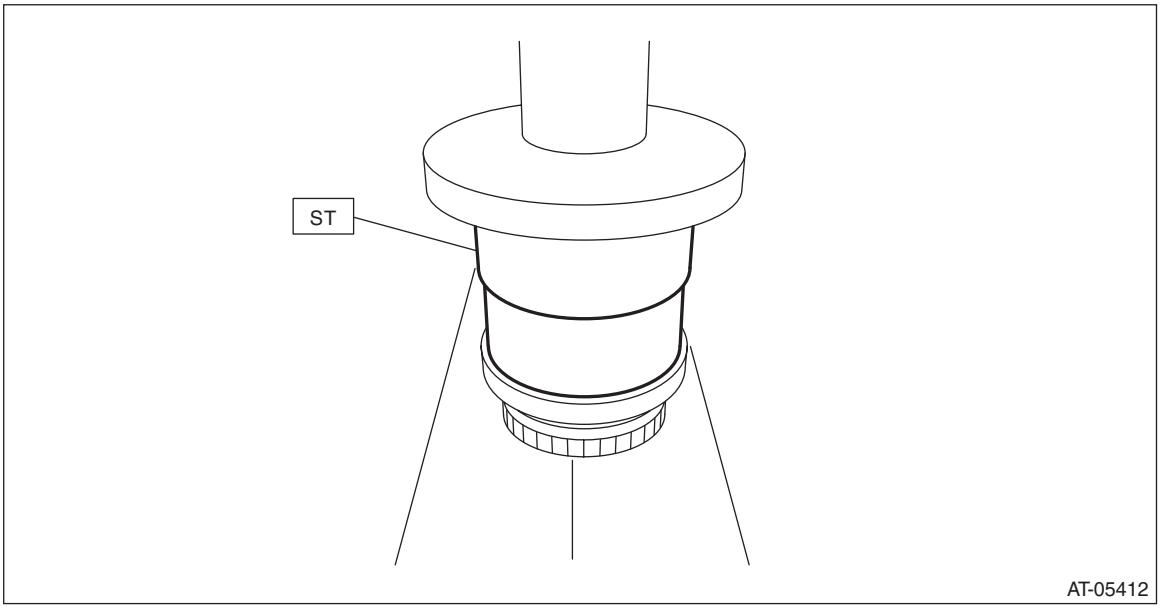

2) Install the snap ring.

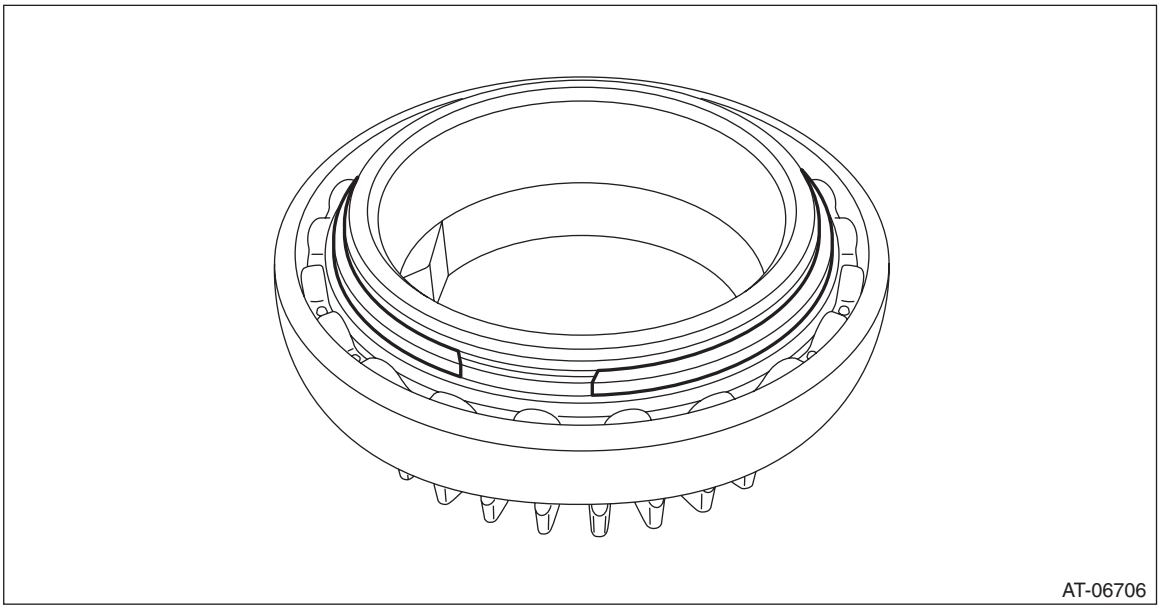

E: INSPECTION

- Check the oil pump chain for damage.
- Replace if gear teeth are broken, damaged, sharpen or excessively worn.
- Check the bearing for seizure or wear.
- Apply CVTF to bearing and rotate the bearing to check for noise or dragging etc.
- Check the oil pump chain cover for damage.
- Check for leakage of CVTF from the mating surface of oil pump chain cover.
- Check the oil seal for damage.

44.Oil Pump

A: REMOVAL

1) Remove the transmission assembly from the vehicle. <Ref. to CVT(TR580)-56, REMOVAL, Automatic Transmission Assembly.>
2) Remove the torque converter assembly. <Ref. to CVT(TR580)-158, REMOVAL, Torque Converter Assembly.>
3) Remove the oil pump chain cover. <Ref. to CVT(TR580)-321, REMOVAL, Oil Pump Chain.>
4) Remove the oil pump and the plate.

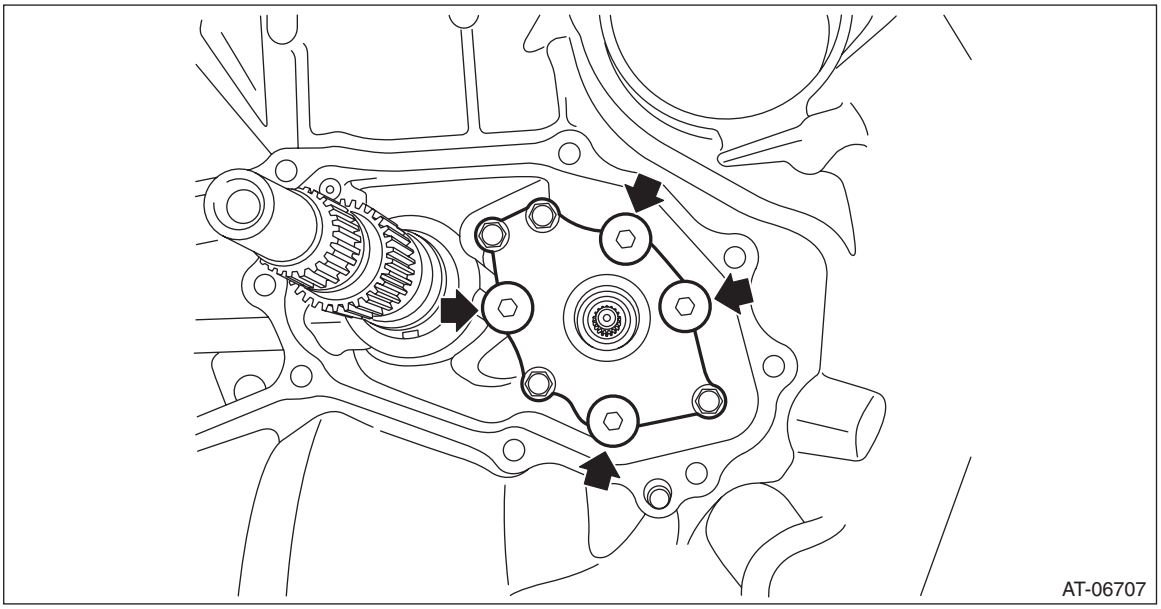

5) Remove the O-ring.

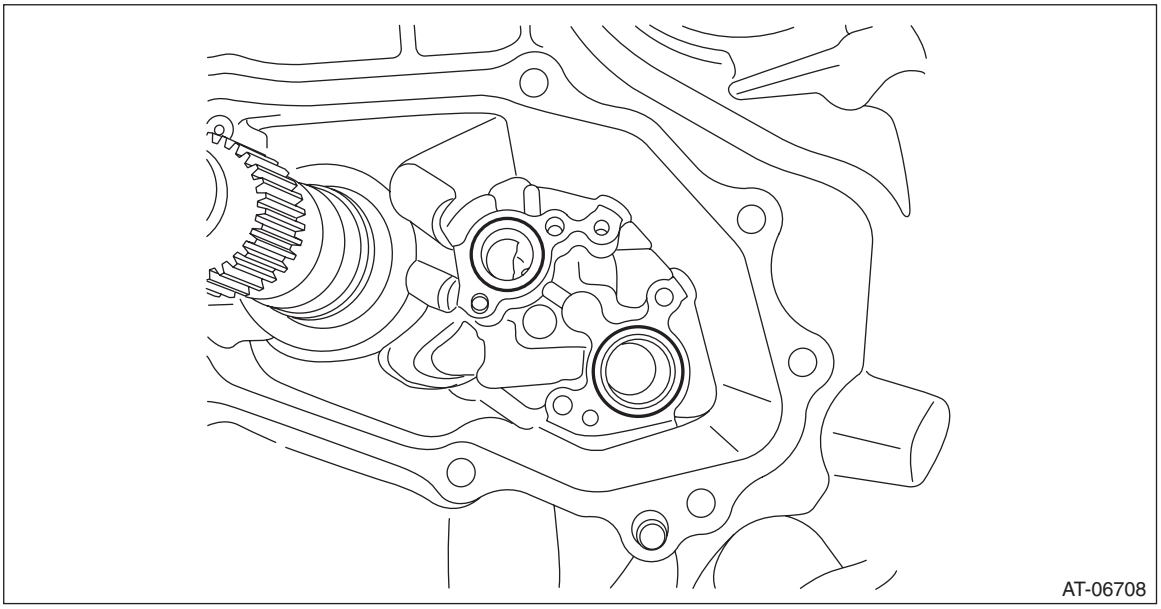

B: INSTALLATION

1) Install the O-ring.

NOTE:
- Use new O-rings.
- Apply CVTF to the O-ring.

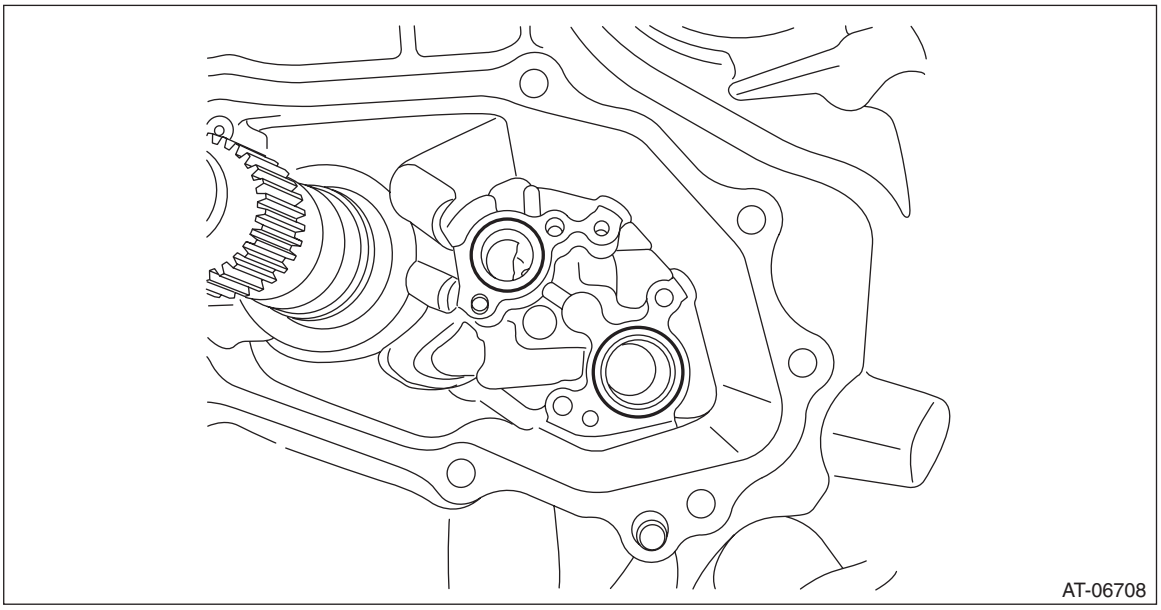

2) Install the plate and the oil pump.

NOTE:
Apply CVTF to the bolt.

Tightening torque:
8.5 N·m (0.9 kgf-m, 6.3 ft-lb)

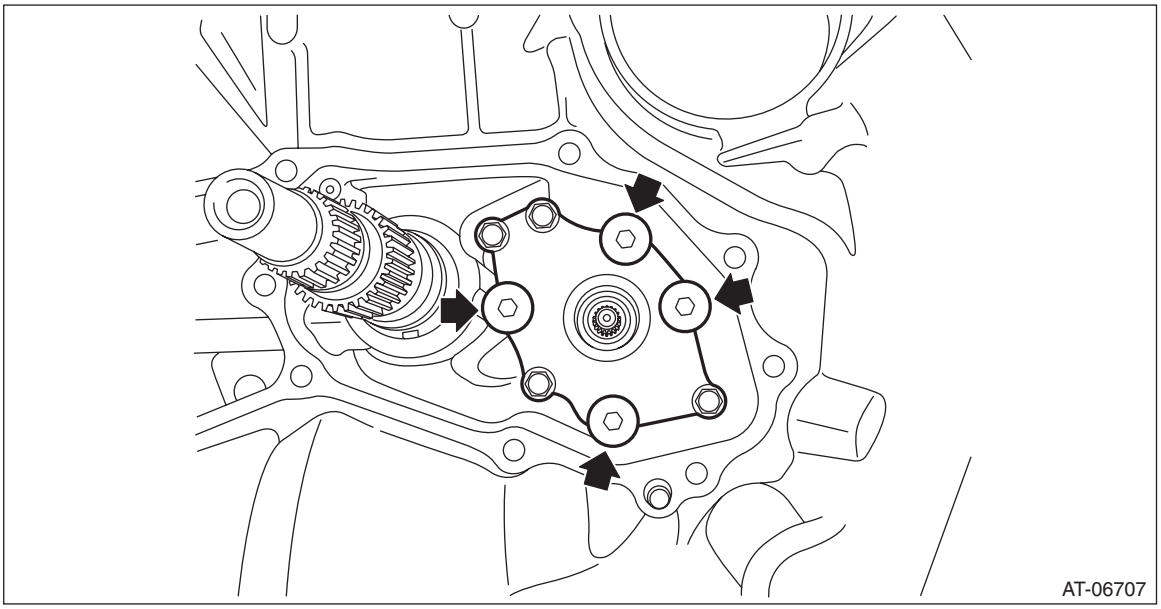

3) Install the oil pump chain cover. <Ref. to CVT(TR580)-324, INSTALLATION, Oil Pump Chain.>
4) Install the torque converter assembly. <Ref. to CVT(TR580)-159, INSTALLATION, Torque Converter Assembly.>
5) Install the transmission assembly to the vehicle. <Ref. to CVT(TR580)-68, INSTALLATION, Automatic Transmission Assembly.>

C: INSPECTION

Check the following items.
- Check the oil pump for damage and wear.
- Rotate the oil pump by hand, and check that it rotates smoothly.

1) Measure the secondary pressure. <Ref. to CVT(TR580)-47, INSPECTION, Secondary Pressure (Line Pressure) Test.>
2) Remove the oil pan and oil strainer. <Ref. to CVT(TR580)-112, REMOVAL, Control Valve Body.>
3) Check oil strainer for clogging.
When oil strainer has no clogging, replace the oil pump.

45.Converter Case

A: REMOVAL

1) Remove the transmission assembly from the vehicle. <Ref. to CVT(TR580)-56, REMOVAL, Automatic Transmission Assembly.>
2) Remove the air breather hose. <Ref. to CVT(TR580)-152, REMOVAL, Air Breather Hose.>
3) Remove the control valve body. <Ref. to CVT(TR580)-112, REMOVAL, Control Valve Body.>
4) Remove the transmission harness. <Ref. to CVT(TR580)-126, REMOVAL, Transmission Harness.>
5) Remove the turbine speed sensor. <Ref. to CVT(TR580)-99, REMOVAL, Turbine Speed Sensor.>
6) Remove the secondary speed sensor. <Ref. to CVT(TR580)-101, REMOVAL, Secondary Speed Sensor.>
7) Remove the primary speed sensor. <Ref. to CVT(TR580)-103, REMOVAL, Primary Speed Sensor.>
8) Remove the inhibitor switch. <Ref. to CVT(TR580)-95, REMOVAL, Inhibitor Switch.>
9) Remove the extension case. <Ref. to CVT(TR580)-162, REMOVAL, Extension Case.>
10) Remove the transfer clutch assembly. <Ref. to CVT(TR580)-166, REMOVAL, Transfer Clutch.>
11) Remove the transfer driven gear assembly. <Ref. to CVT(TR580)-180, REMOVAL, Transfer Driven Gear.>
12) Remove the parking pawl. <Ref. to CVT(TR580)-183, REMOVAL, Parking Pawl.>
13) Remove the reduction driven gear assembly. <Ref. to CVT(TR580)-185, REMOVAL, Reduction Driven Gear.>
14) Remove the oil pan and oil strainer. <Ref. to CVT(TR580)-108, REMOVAL, Oil Pan and Strainer.>
15) Remove the transmission control device. <Ref. to CVT(TR580)-193, REMOVAL, Transmission Control Device.>
16) Remove the transmission case. <Ref. to CVT(TR580)-199, REMOVAL, Transmission Case.>
17) Remove the reduction drive gear. <Ref. to CVT(TR580)-212, REMOVAL, Reduction Drive Gear.>
18) Remove the primary pulley, secondary pulley and variator chain. <Ref. to CVT(TR580)-217, REMOVAL, Primary Pulley and Secondary Pulley.>
19) Remove the reverse brake assembly. <Ref. to CVT(TR580)-238, REMOVAL, Reverse Brake Assembly.>
20) Remove the forward clutch assembly. <Ref. to CVT(TR580)-253, REMOVAL, Forward Clutch Assembly.>
21) Remove the drive pinion shaft assembly. <Ref. to CVT(TR580)-273, REMOVAL, Drive Pinion Shaft Assembly.>
22) Remove the front differential assembly. <Ref. to CVT(TR580)-302, REMOVAL, Front Differential Assembly.>
23) Remove the oil pump chain cover. <Ref. to CVT(TR580)-321, REMOVAL, Oil Pump Chain.>
24) Remove the oil pump. <Ref. to CVT(TR580)-330, REMOVAL, Oil Pump.>

B: INSTALLATION

1) Install the oil pump. <Ref. to CVT(TR580)-331, INSTALLATION, Oil Pump.>
2) Install the oil pump chain cover. <Ref. to CVT(TR580)-324, INSTALLATION, Oil Pump Chain.>
3) Install the front differential assembly. <Ref. to CVT(TR580)-304, INSTALLATION, Front Differential Assembly.>
4) Install the drive pinion shaft assembly. <Ref. to CVT(TR580)-274, INSTALLATION, Drive Pinion Shaft Assembly.>
5) Install the forward clutch assembly. <Ref. to CVT(TR580)-256, INSTALLATION, Forward Clutch Assembly.>
6) Install the reverse brake assembly. <Ref. to CVT(TR580)-241, INSTALLATION, Reverse Brake Assembly.>
7) Install the primary pulley, secondary pulley and variator chain. <Ref. to CVT(TR580)-224, INSTALLATION, Primary Pulley and Secondary Pulley.>
8) Install the reduction drive gear. <Ref. to CVT(TR580)-213, INSTALLATION, Reduction Drive Gear.>
9) Install the transmission case. <Ref. to CVT(TR580)-202, INSTALLATION, Transmission Case.>
10) Install the transmission control device. <Ref. to CVT(TR580)-196, INSTALLATION, Transmission Control Device.>
11) Install the oil strainer and oil pan. <Ref. to CVT(TR580)-109, INSTALLATION, Oil Pan and Strainer.>

12) Install the reduction driven gear assembly. <Ref. to CVT(TR580)-185, INSTALLATION, Reduction Driven Gear.>
13) Install the transfer driven gear assembly. <Ref. to CVT(TR580)-181, INSTALLATION, Transfer Driven Gear.>
14) Install the transfer clutch assembly. <Ref. to CVT(TR580)-168, INSTALLATION, Transfer Clutch.>
15) Install the parking pawl. <Ref. to CVT(TR580)-184, INSTALLATION, Parking Pawl.>
16) Install the extension case. <Ref. to CVT(TR580)-163, INSTALLATION, Extension Case.>
17) Install the inhibitor switch. <Ref. to CVT(TR580)-97, INSTALLATION, Inhibitor Switch.>
18) Install the secondary speed sensor. <Ref. to CVT(TR580)-101, INSTALLATION, Secondary Speed Sensor.>
19) Install the primary speed sensor. <Ref. to CVT(TR580)-104, INSTALLATION, Primary Speed Sensor.>
20) Install the turbine speed sensor. <Ref. to CVT(TR580)-99, INSTALLATION, Turbine Speed Sensor.>
21) Install the transmission harness. <Ref. to CVT(TR580)-133, INSTALLATION, Transmission Harness.>
22) Install the control valve body. <Ref. to CVT(TR580)-118, INSTALLATION, Control Valve Body.>
23) Install the air breather hose. <Ref. to CVT(TR580)-154, INSTALLATION, Air Breather Hose.>
24) Install the transmission assembly to the vehicle. <Ref. to CVT(TR580)-68, INSTALLATION, Automatic Transmission Assembly.>

C: DISASSEMBLY

1) Remove the pitching stopper bracket and transmission radio ground cord, if mounted.
2) Remove the filler plug, oil drain plug and overflow drain plug. <Ref. to CVT(TR580)-41, REPLACEMENT, Differential Gear Oil.>
3) Remove all plugs.

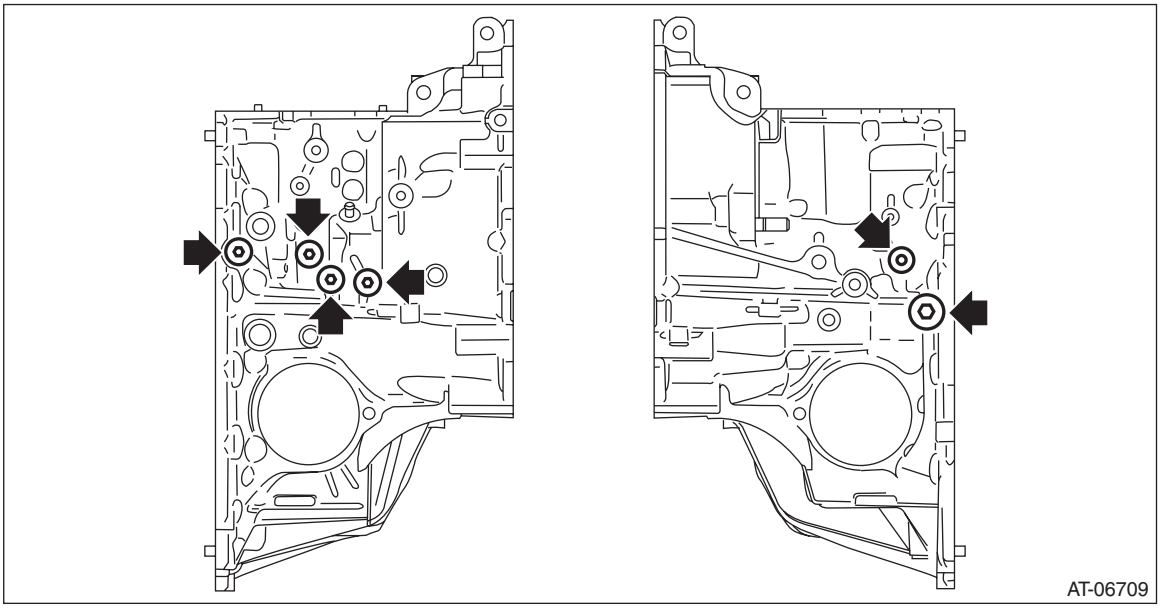

D: ASSEMBLY

1) Install the oil drain plug.

Tightening torque:
70 N·m (7.1 kgf-m, 51.6 ft-lb)

2) Install the overflow drain plug.

NOTE:
Overflow plug of differential gear oil is temporarily attached.

3) Install all plugs.

NOTE:
Use new O-rings.

Tightening torque:
T1: 25 N·m (2.5 kgf-m, 18.4 ft-lb)
T2: 25.5 N·m (2.6 kgf-m, 18.8 ft-lb)

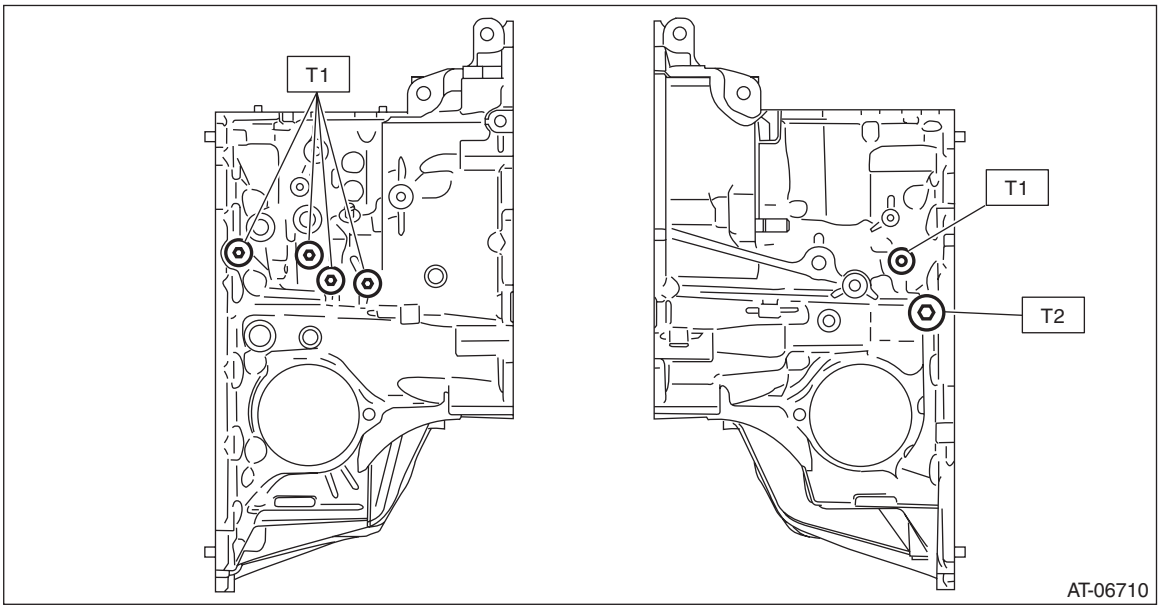

4) Install the pitching stopper bracket and transmission radio ground cord.

Tightening torque:
41 N·m (4.2 kgf-m, 30.2 ft-lb)

E: INSPECTION

- Check for leakage of CVTF from the connection between converter case and transmission case.
- Check there is no damage or cracks on the converter case.

46.Diagnostics with Phenomenon

A: INSPECTION

Symptoms	Faulty parts
Stall speed is low after warming-up, with select lever in “D” or “R” range.	Engine control system
Vehicle does not move despite engine speed rising up, with select lever in “D” or “R” range.	• Engine control system • Select cable • CVTF • Secondary pressure circuit • Pulley, gear and variator chain • Forward/reverse changeover section • TCM • Control valve body • Inhibitor switch
Vehicle does not move by engine stall, with select lever in “D” or “R” range.	• Parking mechanism • Select cable • Bearing • Forward/reverse changeover section
Excessive shock occurs at starting, with select lever in “D” or “R” range.	• Secondary pressure circuit • Pulley, gear and variator chain
Acceleration speed from standstill is insufficient, with select lever in “D” or “R” range.	• Control valve body • Forward/reverse changeover section
Engine speed suddenly rises up during driving, with select lever in “D” or “R” range.	• Control valve body • Secondary pressure circuit • Primary pressure circuit
Vibration occurs during driving, with select lever in “D” or “R” range.	• Secondary pressure circuit • Primary pressure circuit • Forward/reverse changeover section • Pulley and variator chain • Torque converter assembly • Hydraulic pressure circuit to torque converter • Control valve body
Sudden braking occurs during driving, with select lever in “D” or “R” range.	• Secondary pressure circuit • Primary pressure circuit • Control valve body
During deceleration, lockup clutch does not disengage until just before halting, with select lever in “D” or “R” range.	• Control valve body • Torque converter assembly
Engine stalls with vehicle at a standstill, with select lever in “D” or “R” range.	• Engine control system • Control valve body
Excessive lockup shock occurs during driving, with select lever in “D” range.	Control valve body
Slipping occurs at lockup, or lockup does not occur during driving, with select lever in “D” range.	• Control valve body • Lockup hydraulic line • Torque converter assembly
Excessive shift shock occurs when shifting the select lever from “N” range to “D” range, or from “N” range to “R” range.	• Inhibitor switch • Control valve body • Forward/reverse changeover section
Vehicle does not keep at standstill with select lever in “P” range, or parking cannot be released when shifting from “P” range to another range.	• Select cable • Parking mechanism
Select lever does not shift smoothly.	• Select cable • Inhibitor switch • Detent spring • Manual plate

CONTINUOUSLY VARIABLE TRANSMISSION (DIAGNOSTICS)

CVT(w/o HEV)(diag)

		Page
1.	Basic Diagnostic Procedure	2
2.	Check List for Interview	4
3.	General Description	5
4.	Electrical Component Location	7
5.	Transmission Control Module (TCM) I/O Signal	11
6.	Subaru Select Monitor	15
7.	Read Diagnostic Trouble Code (DTC)	17
8.	Clear Memory Mode	18
9.	Inspection Mode	19
10.	Drive Cycle	20
11.	Learning Control	23
12.	AT OIL TEMP Warning Light Display	25
13.	AWD Warning Light Display	27
14.	Diagnostic Procedure for Subaru Select Monitor Communication	29
15.	List of Diagnostic Trouble Code (DTC)	31
16.	Diagnostic Procedure with Diagnostic Trouble Code (DTC)	35
17.	Diagnostic Procedure without Diagnostic Trouble Code (DTC)	92
18.	Diagnostics with Phenomenon	93

1. Basic Diagnostic Procedure

A: PROCEDURE

	Step	Check	Yes	No
1	**CHECK PRE-INSPECTION.** 1) Ask the customer when and how the trouble occurred using the interview check list. <Ref. to CVT(w/o HEV)(diag)-4, Check List for Interview.> 2) Before performing diagnostics, check the following items which might affect CVT problems. • General inspection <Ref. to CVT(w/o HEV)(diag)-5, INSPECTION, General Description.> • Disconnection of harness connector • Visual check for harness damage • Oil leakage • Stall speed test <Ref. to CVT(TR580)-45, Stall Test.> • Secondary pressure test <Ref. to CVT(TR580)-47, Secondary Pressure (Line Pressure) Test.> • Transfer clutch pressure test <Ref. to CVT(TR580)-50, Transfer Clutch Pressure Test.> • Time lag test <Ref. to CVT(TR580)-46, Time Lag Test.> • Road test <Ref. to CVT(TR580)-44, Road Test.> • Inhibitor switch <Ref. to CVT(TR580)-92, Inhibitor Switch.>	Is the item that is thought to influence the CVT problem working properly?	Go to step **2**.	Repair the items which may be affecting the CVT trouble.
2	**CHECK AT OIL TEMP LIGHT.** Turn the ignition switch to ON and wait for at least 2 seconds.	Does the AT OIL TEMP light illuminate?	Go to step **3**.	Check the AT OIL TEMP light.
3	**CHECK AT OIL TEMP LIGHT.** Start the engine and wait for 2 seconds or more.	Does the AT OIL TEMP light blink?	Go to step **4**.	Go to step **5**.
4	**CHECK DTC DISPLAY.** Read the DTC. NOTE: If the communication function of Subaru Select Monitor cannot be executed normally, check the communication circuit. <Ref. to CVT(w/o HEV)(diag)-29, COMMUNICATION FOR INITIALIZING IMPOSSIBLE, Diagnostic Procedure for Subaru Select Monitor Communication.>	Is DTC displayed on Subaru Select Monitor?	Record the DTC, time stamp and freeze frame data. Go to step **6**. NOTE: • For the time stamp, refer to LAN section. <Ref. to LAN(w/o HEV)(diag)-6, TIME STAMP, CAUTION, General Description.> • Depending on DTCs, time stamp may not be stored.	Go to step **5**.

	Step	Check	Yes	No
5	**PERFORM GENERAL DIAGNOSTICS.** 1) Inspect using “Diagnostic Procedure without Diagnostic Trouble Code (DTC)”. <Ref. to CVT(w/o HEV)(diag)-92, Diagnostic Procedure without Diagnostic Trouble Code (DTC).> 2) Inspect using “Diagnostics with Phenomenon”. <Ref. to CVT(w/o HEV)(diag)-93, Diagnostics with Phenomenon.> 3) Perform the Inspection Mode. <Ref. to CVT(w/o HEV)(diag)-19, Inspection Mode.> 4) Read the DTC.	Is DTC displayed on Subaru Select Monitor?	Go to step **6**.	Finish the diagnosis.
6	**PERFORM DIAGNOSIS.** 1) Inspect by referring to “Diagnostic Procedure with Diagnostic Trouble Code (DTC)”. <Ref. to CVT(w/o HEV)(diag)-35, Diagnostic Procedure with Diagnostic Trouble Code (DTC).> NOTE: For the DTC table, refer to “List of Diagnostic Trouble Code (DTC)”. <Ref. to CVT(w/o HEV)(diag)-31, List of Diagnostic Trouble Code (DTC).> 2) Repair the trouble cause. 3) Perform the Clear Memory Mode. 4) Perform the Inspection Mode. <Ref. to CVT(w/o HEV)(diag)-19, Inspection Mode.> 5) Read the DTC.	Is DTC displayed on Subaru Select Monitor?	Inspect by referring to “Diagnostic Procedure with Diagnostic Trouble Code (DTC)”. <Ref. to CVT(w/o HEV)(diag)-35, Diagnostic Procedure with Diagnostic Trouble Code (DTC).>	Finish the diagnosis.

2. Check List for Interview

A: CHECK

Check the following items when a problem has occurred.

NOTE:
Use copies of this page for interviewing customers.

Customer's name			
Date of purchase			
Date of repair			
Transmission model	Transmission	V.I.N.	
Odometer reading	km (miles)		
Frequency	❑ Continuous ❑ Intermittent (times/day)		
Weather	❑ Fine ❑ Cloudy ❑ Rainy ❑ Snowy ❑ Other ( )		
Place	❑ Highland ❑ Suburbs ❑ Inner city ❑ Uphill ❑ Downhill ❑ Rough road ❑ Other ( )		
Ambient air temperature	❑ Hot ❑ Warm ❑ Cool ❑ Cold		
Vehicle speed	km/h (MPH)		
AT OIL TEMP light	❑ Blinks continuously	❑ Does not blink	
Select lever position	❑ P ❑ R ❑ N ❑ D ❑ Manual mode ❑ L		
Driving condition	❑ Not affected ❑ At racing ❑ While decelerating	❑ At starting ❑ While accelerating ❑ While turning (❑ RH/❑ LH)	❑ While idling ❑ When cruising (Vehicle speed km/h) ❑ Immediately after starting the engine
Manual mode	❑ ON ❑ OFF		
Symptoms	❑ Vehicle does not move (❑ Any position ❑ Particular position)		
	❑ Vehicle does not move (no load racing condition as in N range)		
	❑ Vehicle does not move (engine speed does not increase, felt as stall condition)		
	❑ Noise or vibration (Describe concretely:)		
	❑ Shock felt at N → D selection (seconds after shifting, when engine cold or after warm-up)		
	❑ Shock felt at N → R selection (seconds after shifting, when engine cold or after warm-up)		
	❑ Shifting is wrong (Describe concretely:)		
	❑ Shock or judder during driving		
	❑ Fails to accelerate.		
	❑ Engine speed increases abruptly during driving		
	❑ Shock or judder during standing start		
	❑ Select lever does not move		
	❑ Other ( )		

3. General Description

A: CAUTION

1. SUPPLEMENTAL RESTRAINT SYSTEM "AIRBAG"

The airbag system wiring harness is routed near the TCM.

CAUTION:
• All the airbag system wiring harnesses and connectors are colored yellow. Do not use an electric test equipment to check these circuits.
• Be careful not to damage the airbag system wiring harness when performing diagnostics or servicing the TCM.

2. MEASUREMENT

When measuring the voltage and resistance of the ECM, TCM or each sensor, use a tapered pin with a diameter of less than 0.64 mm (0.025 in) in order to avoid poor contact. Do not insert a pin of more than 0.65 mm (0.026 in) diameter.

B: INSPECTION

1. BATTERY

Measure the battery voltage and specific gravity of the electrolyte.

Standard voltage: 12 V or more

Specific gravity: 1.260 or more

2. TRANSMISSION GROUND

Make sure that the ground terminal bolt is tightened securely.

Tightening torque:
14 N·m (1.4 kgf-m, 10.3 ft-lb)

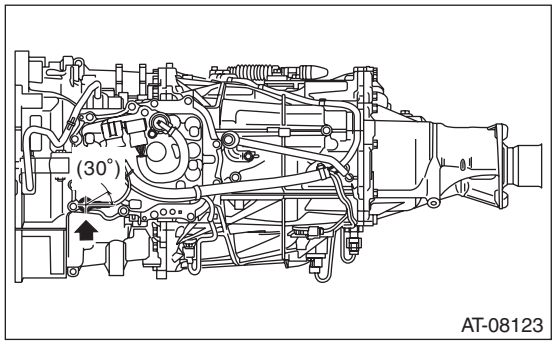

3. OPERATION OF SHIFT SELECT LEVER

Make sure there is no noise, dragging or contact pattern in each select lever range.

WARNING:
Stop the engine while checking operation of the select lever.

C: PREPARATION TOOL

1. SPECIAL TOOL

ILLUSTRATION	TOOL NUMBER	DESCRIPTION	REMARKS
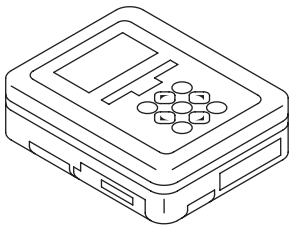 ST1B022XU0	1B022XU0	SUBARU SELECT MONITOR III KIT	Used for troubleshooting the electrical system.

2. GENERAL TOOL

TOOL NAME	REMARKS
Circuit tester	Used for measuring resistance, voltage and current.
Oscilloscope	Used for measuring the sensor.

4. Electrical Component Location

A: LOCATION

1. CONTROL MODULE

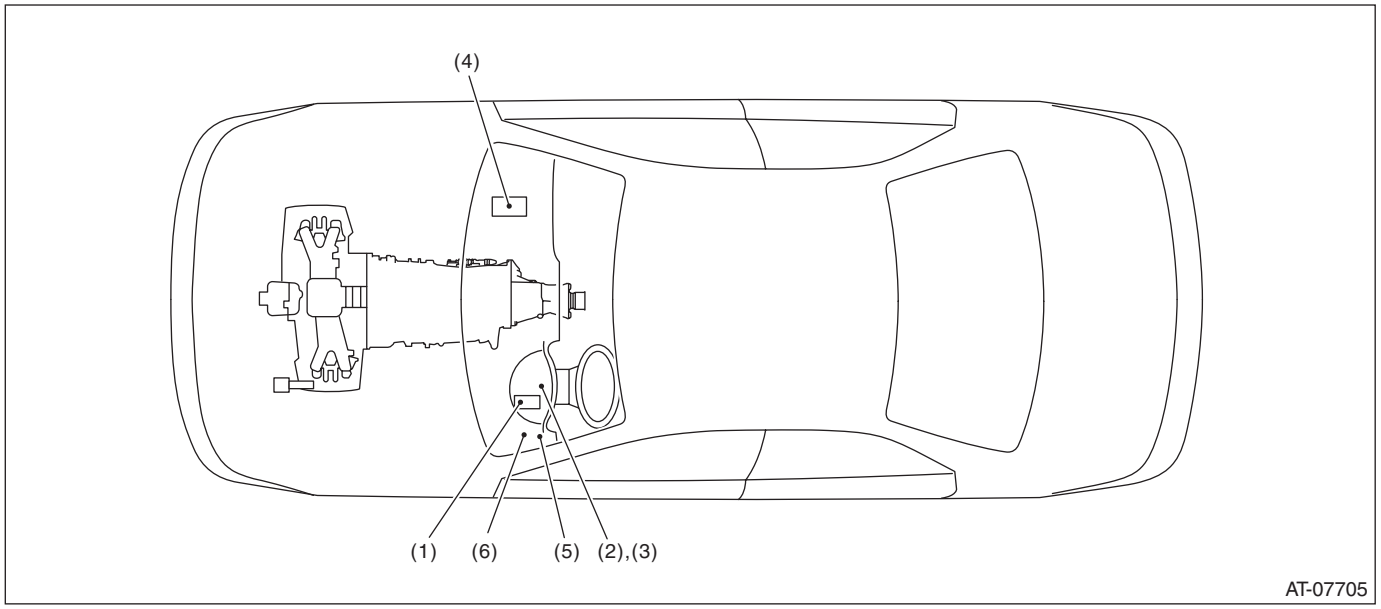

(1)	Transmission control module (TCM)	(3)	AWD light	(5)	Body integrated unit
(2)	AT OIL TEMP light	(4)	Engine control module (ECM)	(6)	Data link connector

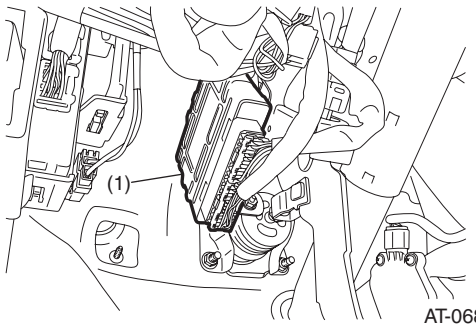

AT-06871

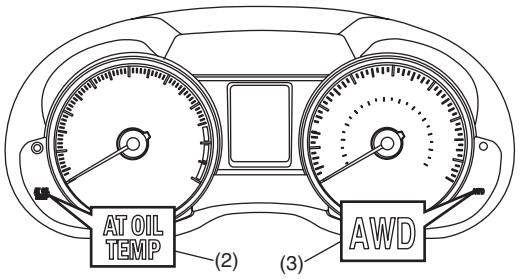

AT-06788

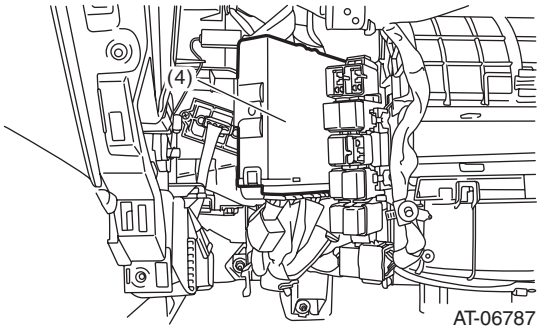

AT-06787

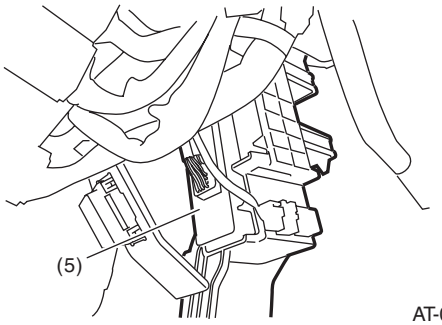

AT-06910

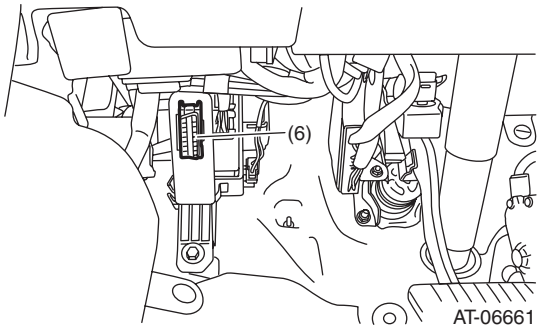

AT-06661

2. SENSOR

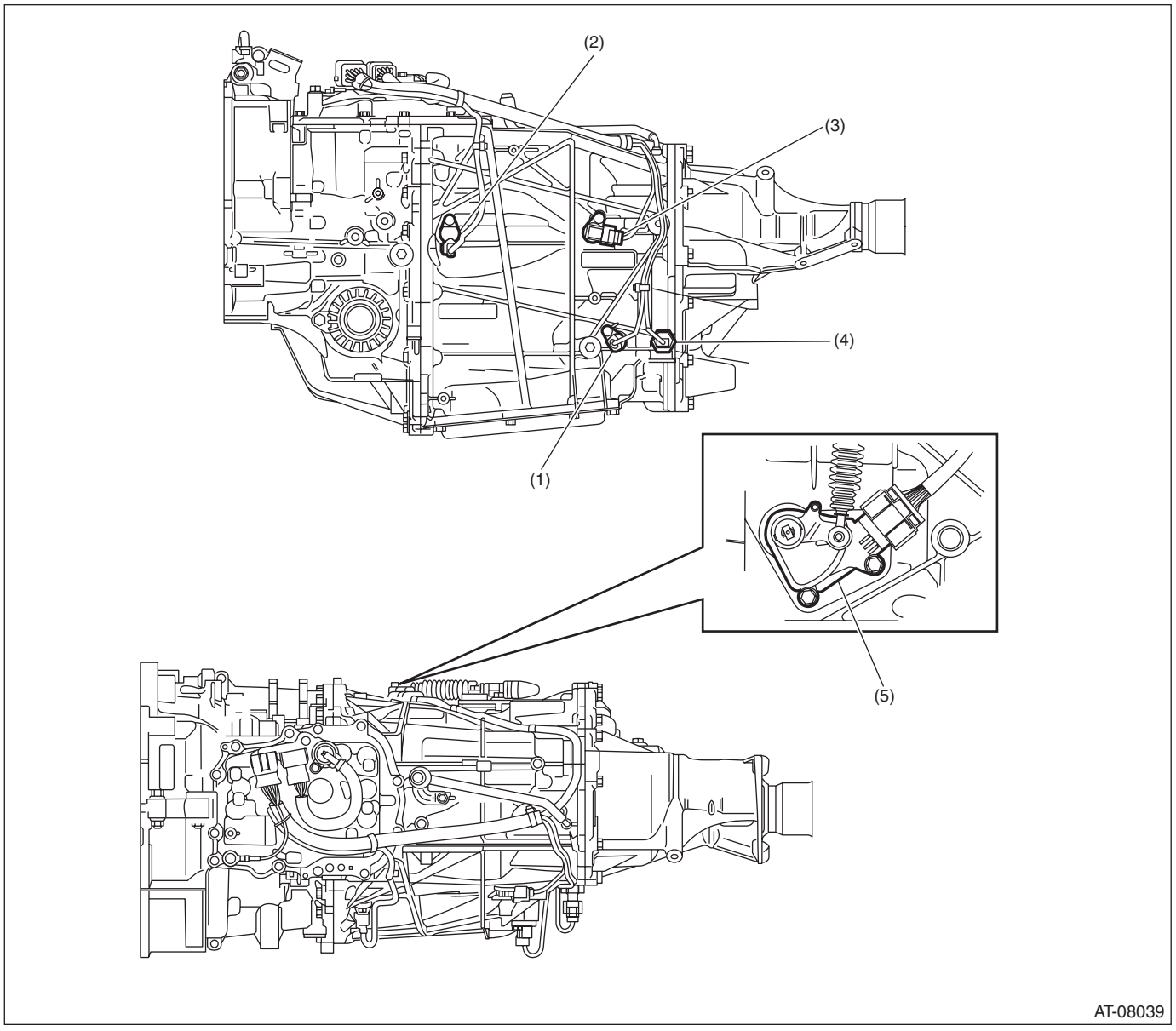

(1) Secondary speed sensor
(2) Turbine speed sensor
(3) Primary speed sensor
(4) Secondary pressure sensor
(5) Inhibitor switch

3. SOLENOID

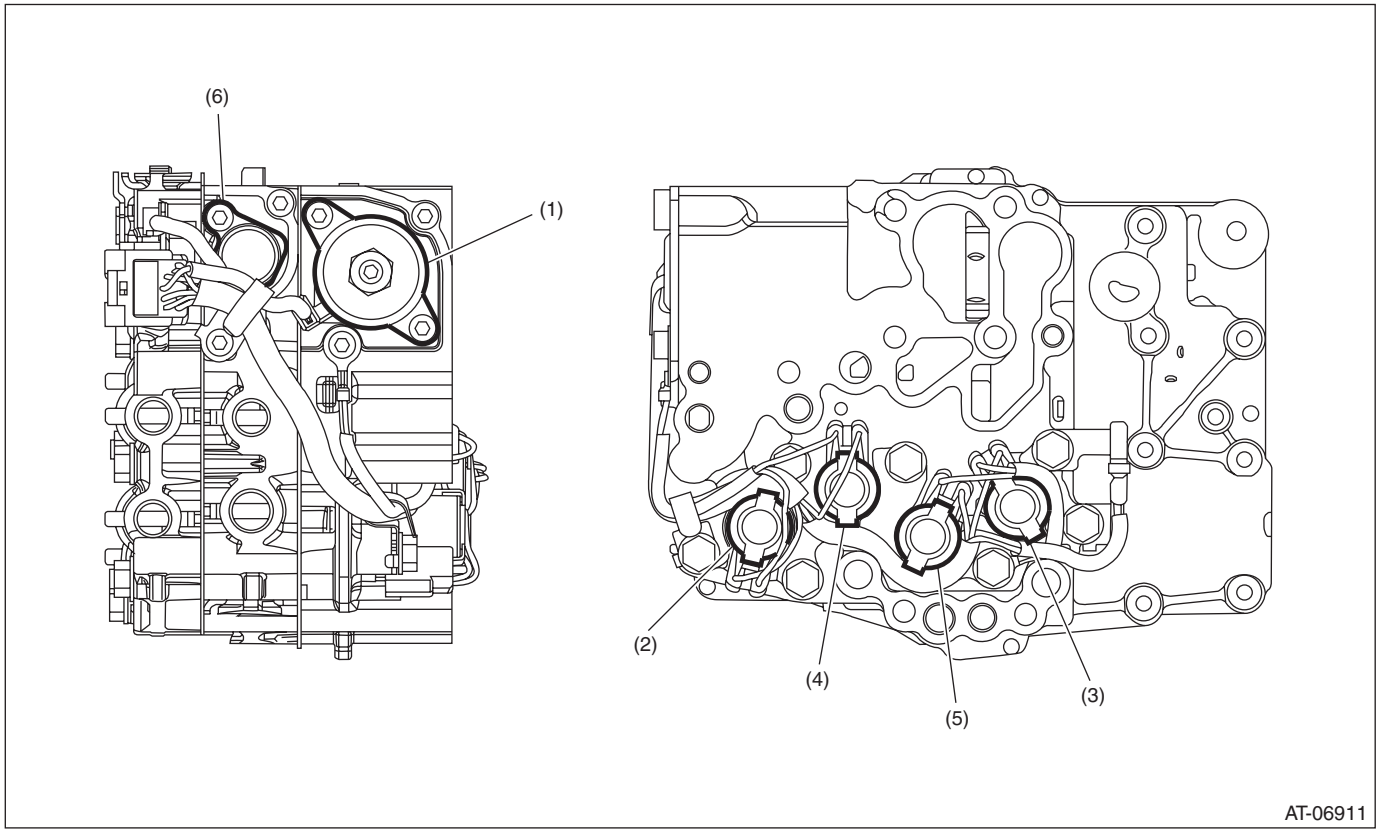

(1) Secondary solenoid
(2) AWD solenoid
(3) Lock-up duty solenoid
(4) Primary DOWN solenoid
(5) Primary UP solenoid
(6) F&R solenoid

5. Transmission Control Module (TCM) I/O Signal

A: ELECTRICAL SPECIFICATION

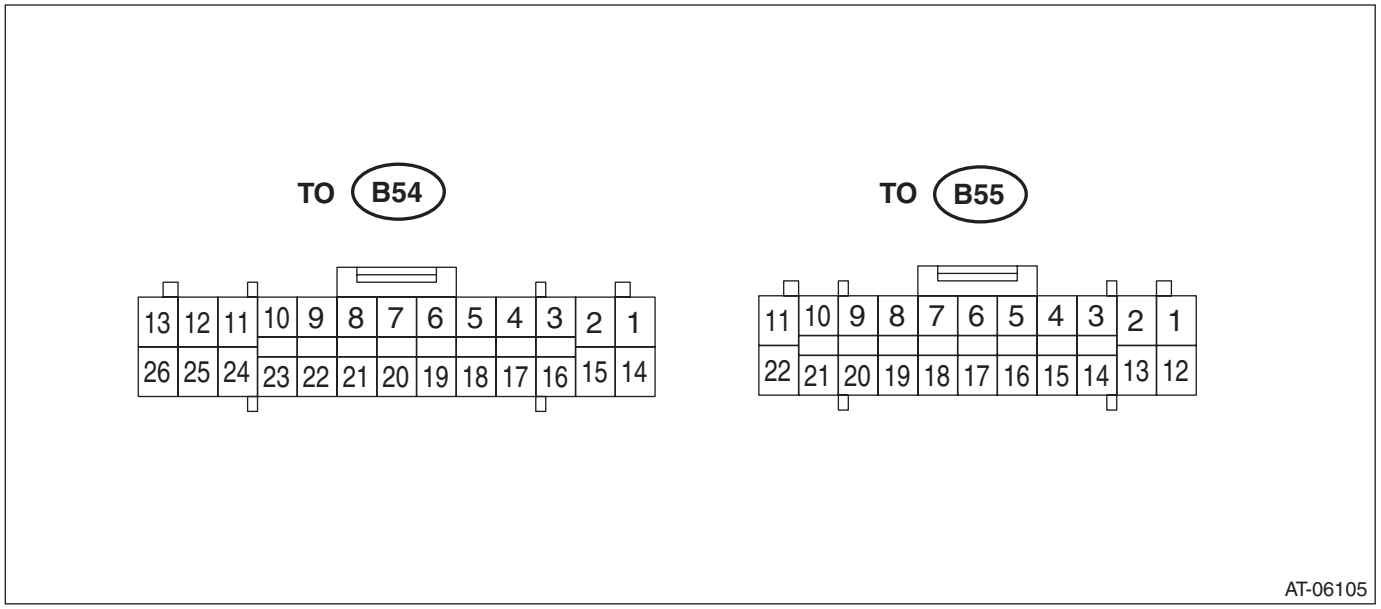

NOTE:
Measure after warming up.

Item	Connector No.	Terminal No.	Measuring condition	Measurement value	Resistance between terminal and chassis ground	Remarks
Backup power supply	B55	1	—	10 — 13 V	—	
Ignition power supply	B55	21	—	10 — 13 V	—	
Main power supply	B55	11	—	10 — 13 V	—	
Main power supply	B55	2	—	10 — 13 V	—	
Main power supply	B55	22	—	10 — 13 V	—	
Manual mode switch	B55	4	Manual mode switch ON	Less than 1 V	—	
			Manual mode switch OFF	8 V or more	—	
Manual mode UP switch	B55	5	Manual mode UP switch ON	Less than 1 V	—	
			Manual mode UP switch OFF	8 V or more	—	
Manual mode DOWN switch	B55	16	Manual mode DOWN switch ON	Less than 1 V	—	
			Manual mode DOWN switch OFF	8 V or more	—	
Stop light switch	B55	13	Stop light switch ON	8 V or more	—	
			Stop light switch OFF	Less than 1 V	—	
P range switch	B54	5	P range	Less than 1 V	—	
			Except for P range	8 V or more	—	
R range switch	B54	18	R range	Less than 1 V	—	
			Except for R range	8 V or more	—	
N range switch	B54	9	N range	Less than 1 V	—	
			Except for N range	8 V or more	—	

Item	Connector No.	Terminal No.	Measuring condition	Measurement value	Resistance between terminal and chassis ground	Remarks
D range switch	B54	22	D range	Less than 1 V	—	
			Except for D range	8 V or more	—	
ATF temperature sensor	B54	3	ATF temperature at 20°C (68°F)	Approx. 2.5 V	Approx. 2.5 kΩ	
			ATF temperature at 80°C (176°F)	Approx. 0.7 V	Approx. 330 Ω	
ATF temperature sensor GND	B54	16	Always	Approx. 0 V	—	
Secondary pressure sensor power supply output	B54	2	Ignition switch ON	5 V	—	
Secondary pressure sensor	B54	17	Ignition switch ON, engine OFF	Approx. 0.5 V (0 MPa)	—	Value increases with increase of engine load. (0.5 — 4.5 V)
			Ignition switch ON, engine ON	Approx. 1.0 V (1.0 MPa)	—	
Secondary pressure sensor GND	B54	15	Always	Approx. 0 V	—	
Primary speed sensor	B54	6	While driving	0 or 5 V	—	Refer to the waveform (sensor)
Secondary speed sensor	B54	7	While driving	0 or 5 V	—	Refer to the waveform (sensor)
Turbine speed sensor	B54	20	Engine ON, “P” or “N” range	0 or 5 V	—	Refer to the waveform (sensor)
Self shut output	B55	20	For three seconds after ignition switch ON and OFF	Less than 1 V	—	
			Ignition switch OFF	8 V or more		
F&R solenoid	B54	11	Engine ON	Refer to the waveform (solenoid (1))	Approx. 4 — 6 Ω	Resistance value at 20°C (68°F). Value is higher as the temperature increase.
Secondary solenoid	B54	12	Engine ON	Refer to the waveform (solenoid (2))	Approx. 5 — 7 Ω	Resistance value at 20°C (68°F). Value is higher as the temperature increase.
Primary UP solenoid	B54	24	Engine ON, while UP shifting	Refer to the waveform (solenoid (3))	Approx. 10 — 13.5 Ω	Resistance value at 20°C (68°F). Value is higher as the temperature increase.
Primary DOWN solenoid	B54	25	Engine ON, while DOWN shifting	Refer to the waveform (solenoid (4))	Approx. 10 — 13.5 Ω	Resistance value at 20°C (68°F). Value is higher as the temperature increase.
Lock-up duty solenoid	B54	26	Lock-up ON	Refer to the waveform (solenoid (5))	Approx. 10 — 13.5 Ω	Resistance value at 20°C (68°F). Value is higher as the temperature increase.
AWD solenoid	B54	13	Engine ON, “P” or “N” range	Refer to the waveform (solenoid (6))	Approx. 2 — 4.5 Ω	Resistance value at 20°C (68°F). Value is higher as the temperature increase.
			Engine ON, “D” range, brake ON	Refer to the waveform (solenoid (7))		

Item	Connector No.	Terminal No.	Measuring condition	Measurement value	Resistance between terminal and chassis ground	Remarks
CAN communication line (+)	B55	18	—	—	—	
CAN communication line (–)	B55	17	—	—	—	
GND	B54	1	Always	Approx. 0 V	—	
GND	B54	14	Always	Approx. 0 V	—	

B: WAVEFORM

1. SENSOR

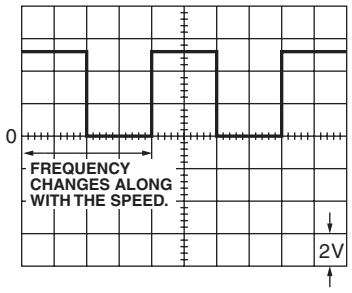

AT-04690

2. SOLENOID

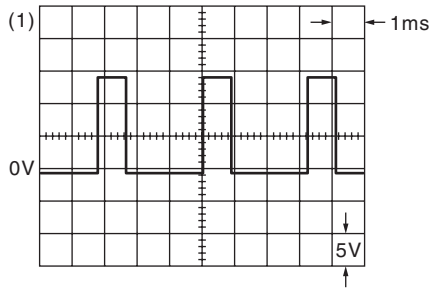

AT-06855

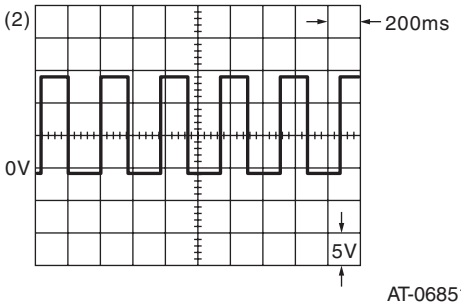

AT-06851

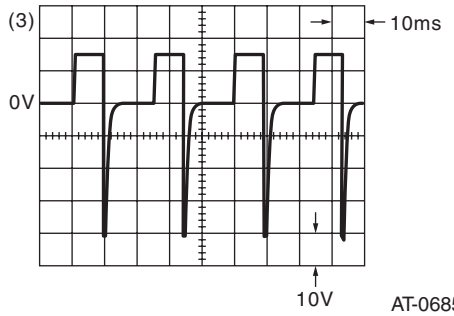

AT-06852

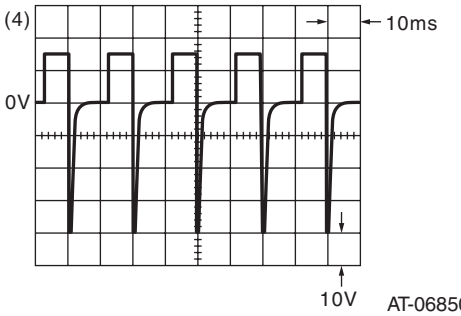

AT-06850

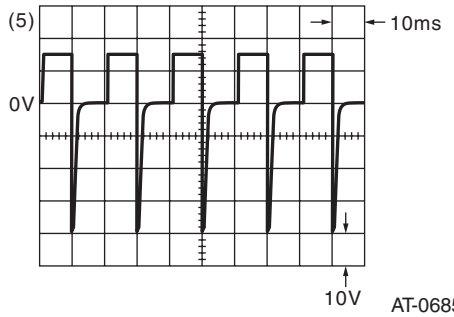

AT-06853

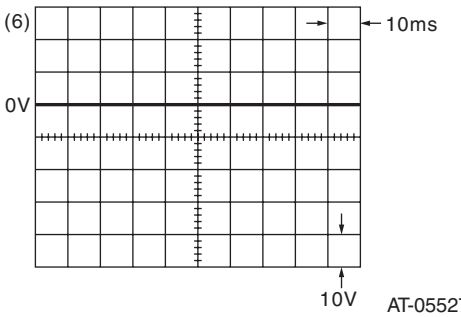

AT-05527

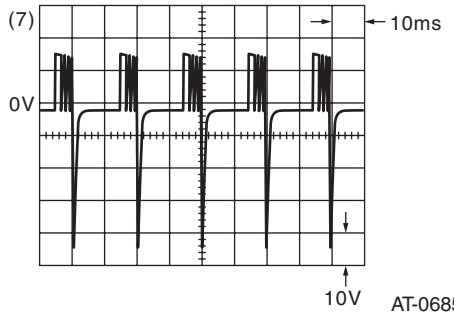

AT-06854

6. Subaru Select Monitor

A: OPERATION

1. HOW TO USE SUBARU SELECT MONITOR

For detailed operation procedures, refer to “PC application help for Subaru Select Monitor”.

2. READ CURRENT DATA

For detailed operation procedures, refer to “PC application help for Subaru Select Monitor”.

Item	Display	Unit of measure
Engine speed signal	Engine Speed	rpm
Battery voltage	ECU ACC	V
Accelerator position sensor	Accel. Opening Angle	%
Vehicle speed converted from secondary speed sensor signal	Front Wheel Speed	km/h or MPH
Lock-up duty solenoid set duty ratio	Lock Up Duty Ratio	%
AWD solenoid set duty ratio	Transfer Duty Ratio	%
Turbine speed sensor signal	Turbine Revolution Speed	rpm
ATF temperature sensor signal	ATF Temp.	°C or °F
Secondary speed sensor signal	Secondary Rev Speed	rpm
Secondary fluid pressure sensor signal	Actual Secondary Pressure	MPa
Secondary solenoid indicator current	Secondary Set Current	mA
Secondary solenoid actual current	Secondary Actual Current	mA
Gear ratio	Actual Gear Ratio	—
Shift step in manual mode	Shift Step in Manual Mode	—
Primary UP solenoid set duty ratio	Primary UP Duty	%
Primary DOWN solenoid set duty ratio	Primary DOWN Duty	%
F&R solenoid indicator current	F&R Linear Solenoid Set Current	mA
F&R solenoid actual current	F&R Linear Solenoid Actual Current	mA
Primary speed sensor signal	Primary Rev Speed	rpm
Manual mode switch signal	Tiptronic Mode Switch	ON or OFF
Manual mode down switch signal	Down Switch	ON or OFF
Stop light switch signal	Stop Light Switch	ON or OFF
Manual mode up switch signal	Up Switch	ON or OFF
Drive range signal	D Range Signal	ON or OFF
Reverse range signal	R Range Signal	ON or OFF
AT OIL TEMP light 2 Hz blink condition	Diagnosis Lamp	ON or OFF
AT OIL TEMP light ON condition	ATF Temperature Lamp	ON or OFF
Parking range signal	P Range	ON or OFF
Neutral range signal	N Range	ON or OFF
L range signal	L-range	ON or OFF
Secondary fluid pressure A/D converted value	secondary pressure sensor voltage.	V
ATF temperature sensor voltage	ATF Temp sensor voltage.	V
AT learning mode condition	AT learning	Completed or Not Completed

3. READ FREEZE FRAME DATA

For detailed operation procedures, refer to “PC application help for Subaru Select Monitor”.

Item	Display	Unit of measure
Relative time since detection	Relative time since detection	ms
Engine speed signal	Engine Speed	rpm
Battery voltage	ECU ACC	V
Accelerator position sensor	Accel. Opening Angle	%
Vehicle speed converted from secondary speed sensor signal	Front Wheel Speed	km/h or MPH
Lock-up duty solenoid set duty ratio	Lock Up Duty Ratio	%
AWD solenoid set duty ratio	Transfer Duty Ratio	%
Turbine speed sensor signal	Turbine Revolution Speed	rpm
ATF temperature sensor signal	ATF Temp.	°C or °F
Secondary speed sensor signal	Secondary Rev Speed	rpm
Secondary fluid pressure sensor signal	Actual Secondary Pressure	MPa
Secondary solenoid indicator current	Secondary Set Current	mA
Secondary solenoid actual current	Secondary Actual Current	mA
Gear ratio	Actual Gear Ratio	—
Shift step in manual mode	Shift Step in Manual Mode	—
Primary UP solenoid set duty ratio	Primary UP Duty	%
Primary DOWN solenoid set duty ratio	Primary DOWN Duty	%
F&R solenoid indicator current	F&R Linear Solenoid Set Current	mA
F&R solenoid actual current	F&R Linear Solenoid Actual Current	mA
Primary speed sensor signal	Primary Rev Speed	rpm
Manual mode switch signal	Tiptronic Mode Switch	ON or OFF
Manual mode down switch signal	Down Switch	ON or OFF
Stop light switch signal	Stop Light Switch	ON or OFF
Manual mode up switch signal	Up Switch	ON or OFF
Drive range signal	D Range Signal	ON or OFF
Reverse range signal	R Range Signal	ON or OFF
AT OIL TEMP light 2 Hz blink condition	Diagnosis Lamp	ON or OFF
AT OIL TEMP light ON condition	ATF Temperature Lamp	ON or OFF
Parking range signal	P Range	ON or OFF
Neutral range signal	N Range	ON or OFF
L range signal	L-range	ON or OFF
Secondary fluid pressure A/D converted value	secondary pressure sensor voltage.	V
ATF temperature sensor voltage	ATF Temp sensor voltage.	V

7. Read Diagnostic Trouble Code (DTC)

A: OPERATION

- For details concerning the work procedure, refer to the “PC application help for Subaru Select Monitor”.
- For details concerning DTC, refer to List of Diagnostic Trouble Code (DTC). <Ref. to CVT(w/o HEV)(diag)-31, List of Diagnostic Trouble Code (DTC).>

8. Clear Memory Mode

A: OPERATION

For details concerning the work procedure, refer to the “PC application help for Subaru Select Monitor”.

CAUTION:
• If the AT learning value is cleared, learned control memory is cleared.
• If the AT learning value is cleared, perform learning. <Ref. to CVT(w/o HEV)(diag)-23, Learning Control.>

9. Inspection Mode

A: PROCEDURE

<Ref. to CVT(TR580)-44, Road Test.>

10.Drive Cycle

A: PROCEDURE

It is possible to complete diagnosis of the DTC by performing the indicated drive cycle. After the repair for the DTC, perform a necessary drive cycle and make sure the function recovers and the DTC is recorded.

1. PREPARATION FOR DRIVE CYCLE

1) Check that the battery voltage is 12 V or more and fuel remains approx. half [20 — 40 L (5.3 — 10.6 US gal, 4.4 — 8.8 Imp gal)].
2) After performing the diagnostics and Clear Memory Mode, check that no DTC remains. <Ref. to CVT(w/o HEV)(diag)-18, Clear Memory Mode.>

NOTE:
Perform the drive cycle after warming up the engine except when the ATF temperature at engine start is specified.

2. DRIVE CYCLE A

DTC	Item	Condition
P0712	Transmission Fluid Temperature Sensor Circuit Low Input	—
P0842	Secondary Oil Pressure Sensor Circuit (Low)	—
P0843	Secondary Oil Pressure Sensor Circuit (High)	—
P0890	AT Self-Shut Relay Diagnosis (Low)	—
P0962	Secondary Solenoid Circuit (Low)	—
P0963	Secondary Solenoid Circuit (High)	—
P0966	Forward & Reverse Solenoid Circuit (Low)	—
P0967	Forward & Reverse Linear Solenoid Circuit (High)	—
P1724	AT EEPROM Error	Perform drive cycle A twice or more.
P2763	Lock-Up Duty Solenoid Circuit (High)	Perform drive cycle A then drive cycle C.

Diagnostic procedure:
1) Start the engine.
2) Shift the select lever at intervals of five seconds for each range, while depressing the brake pedal.

NOTE:
Shift the select lever in the order of “P” → “R” → “N” → “D” → “N” → “R” → “P”.

3. DRIVE CYCLE B

DTC	Item	Condition
P0711	ATF Temp. Sensor Circuit Range/Performance	Perform drive cycle B twice or more.

Diagnostic procedure:
1) Start the engine while the ATF temperature is 20°C (68°F) or below.
2) Drive the vehicle for 20 minutes.

NOTE:
Drive the vehicle once or more (for 20 seconds) at constant speed of the legal speed limit.

4. DRIVE CYCLE C

DTC	Item	Condition
P0716	Torque Converter Turbine Speed	—
P0973	Primary Solenoid System A Circuit (Low)	—
P0974	Primary Solenoid System A Circuit (High)	—
P0976	Primary Solenoid System B Circuit (Low)	—
P0977	Primary Solenoid System B Circuit (High)	—
P2746	Primary Pulley Revolution Speed Sensor Circuit	—
P2750	Sec. Pulley Revolution Speed Sensor Circuit	—
P2763	Lock-Up Duty Solenoid Circuit (High)	Perform drive cycle A then drive cycle C.
P2764	Lock-Up Duty Solenoid Circuit (Low)	—

Diagnostic procedure:
1) Start the engine.
2) Gradually accelerate the speed to the legal speed limit, and then stop the vehicle.

5. DRIVE CYCLE D

DTC	Item	Condition
P0713	Transmission Fluid Temperature Sensor Circuit High Input	—
P0730	Gearshift Control Performance Abnormal	—
P0841	Secondary Oil Pressure Sensor Performance	—
P0965	Forward & Reverse Solenoid Function	—
P2762	Lock-Up Duty Solenoid Malfunction	Perform drive cycle D twice or more.

Diagnostic procedure:
1) Start the engine.
2) Drive the vehicle for 20 minutes.

NOTE:
Drive the vehicle once or more (for 20 seconds) at constant speed of the legal speed limit.

6. DRIVE CYCLE E

DTC	Item	Condition
U0073	Control Module Communication Bus Off	—
U0100	Lost Communication With ECM/PCM “A”	—
U0122	Lost Communication With Vehicle Dynamics Control Module	—
U0401	Invalid Data Received From ECM/PCM “A”	—
U0416	Invalid Data Received From Vehicle Dynamics Control Module	—

Diagnostic procedure:
1) Start the engine.

7. DRIVE CYCLE F

DTC	Item	Condition
P0705	Transmission Range Sensor Circuit (PRNDL Input)	—

Diagnostic procedure:
1) Start the engine.
2) Shift the select lever at intervals of five seconds for each range, while depressing the brake pedal.

NOTE:
Shift the select lever in the order of “P” → “R” → “N” → “D”.
3) Keep the engine speed at 2000 rpm for five seconds.

8. DRIVE CYCLE G

DTC	Item	Condition
P0708	AT Range Switch Not Inputted	—

Diagnostic procedure:
1) Start the engine.
2) Drive the vehicle for 3 seconds at 16 km/h (10 MPH).

NOTE:
Drive the vehicle with the shift lever in “D” range and “R” range.

11.Learning Control

A: GENERAL DESCRIPTION

- Follow the messages displayed on the Subaru Select Monitor when working.
- When the following work is performed, perform learning work for the transmission.

Replacement of TCM/Replacement or disassembly of transmission assembly/Replacement of control valve body/Clearing AT leaning value is executed.

B: PROCEDURE

1. PREPARATION FOR LEARNING

1) Warm up or cool down until the ATF temperature displayed on the Subaru Select Monitor is 40 — 65°C (104 — 149°F).
2) After stopping the vehicle, shift the select lever to “P” range.
3) Fully apply the parking brake.
4) Lift up the vehicle.

CAUTION:
While working, be sure to keep the lower edge of the tires 30 cm or more above the ground as vehicle will vibrate.

5) Connect the Subaru Select Monitor to data link connector.
6) Turn the ignition switch to ON.
7) Turn off all switches causing an electrical load, such as headlights, A/C, seat heater and rear defogger, etc.

2. SIMPLE LEARNING

NOTE:
Simple learning is performed with the vehicle lifted, without actually running the vehicle.

CAUTION:
Do not turn the power of the Subaru Select Monitor OFF during work, and do not disconnect the data link connector.

1) Select {Work Support} in the «Transmission Diagnosis» display screen of the Subaru Select Monitor.
2) Select {Compulsory learning mode} in the «Work Support» display screen of the Subaru Select Monitor.
3) Follow the messages displayed on the Subaru Select Monitor screen when working.

NOTE:
During AT learning in progress, AT OIL TEMP light in the combination meter starts flashing at 2 Hz and the learning operation starts. The following message is displayed on the screen when the AT OIL TEMP light which was flashing at 2 Hz turns off.

4) When «AT learning normally ended.» is displayed, simple AT learning is completed.

NOTE:
- If communication error occurs during learning, retry the “AT learning mode” from the beginning.
- If the message «Execute AT learning again after fixing troubles of the vehicle» appears during learning, select [OK] and display the DTC list. After repairing the locations indicated by the DTC, start the “AT learning mode” over from the beginning.
- When communication error occurs during learning, select lever does not shift occasionally. If select lever does not shift, turn the ignition switch to OFF before operating the select lever.
- If the message «AT learning ended abnormally.» is displayed, start the “AT learning mode” over from the beginning.

Display	Main causes for abnormal termination
AT learning ended abnormally.	• Fault is detected during AT learning. • The accelerator pedal is depressed during AT learning. • An unspecified operation was performed during AT learning • ATF temperature becomes out of specification during AT learning. • Battery voltage is low. • Malfunction indicator light illuminates. • Parking brake not applied strongly enough. • Brake pedal is not fully depressed. • Abnormal idle speed increase, etc.

- For detailed operation procedures, refer to “PC application help for Subaru Select Monitor”.

12.AT OIL TEMP Warning Light Display

A: OPERATION

The AT OIL TEMP light illuminates or blinks, when the ATF temperature is high and malfunction occurs in CVT.

- When normal

AT OIL TEMP light always illuminates when the ignition switch is ON (engine OFF). Light goes off after two seconds from engine ON.

- When ATF temperature is high

AT OIL TEMP light illuminates when the ATF temperature is abnormally high with engine ON.

- When malfunction is detected

AT OIL TEMP light blinks at 2 Hz when the TCM detects the malfunction of CVT with engine ON. In this case, inspect using “Diagnostic Procedure with Diagnostic Trouble Code (DTC)”. <Ref. to CVT(w/o HEV)(diag)-35, Diagnostic Procedure with Diagnostic Trouble Code (DTC).>

- When AT learning is not finished

AT OIL TEMP light repeats “Blinking at 4 Hz → Turning OFF” every two seconds, when the AT learning is not finished with engine ON. In this case, perform the “Learning”. (During AT learning, the light blinks at 2 Hz or illuminates.) <Ref. to CVT(w/o HEV)(diag)-23, Learning Control.>

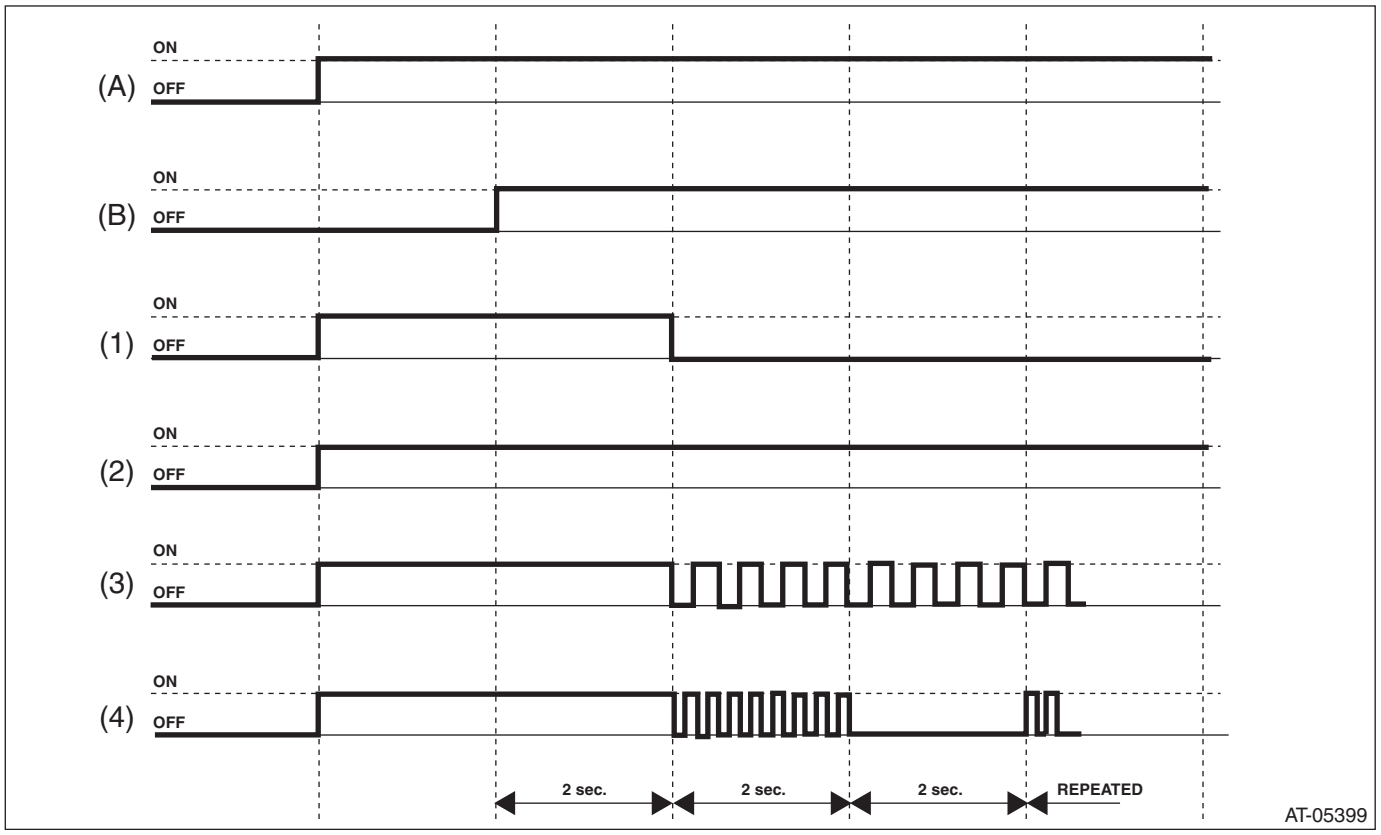

(A) Ignition switch condition
(B) Engine condition
(1) When normal
(2) When ATF temperature is high
(3) When malfunction is detected
(4) When AT learning is not finished

IF the AT OIL TEMP light does not illuminate, or illumination patterns are not as above, check the AT OIL TEMP light circuit. <Ref. to CVT(w/o HEV)(diag)-26, INSPECTION, AT OIL TEMP Warning Light Display.>

B: INSPECTION

DIAGNOSIS:

- AT OIL TEMP light circuit is open or shorted.
- Combination meter malfunction
- TCM is in special control mode.
- AT learning is not finished.

TROUBLE SYMPTOM:

- When the ignition switch is turned to ON, the AT OIL TEMP light does not illuminate.
- AT OIL TEMP light remains lit after engine start.

	Step	Check	Yes	No
1	**CHECK AT OIL TEMP LIGHT.** Turn the ignition switch to ON.	Does the AT OIL TEMP light illuminate?	Go to step **2**.	Perform the self-diagnosis of combination meter. <Ref. to IDI-7, SELF-DIAGNOSIS DISPLAY MODE, OPERATION, Combination Meter System.>
2	**CHECK AT OIL TEMP LIGHT.** Start the engine.	Does AT OIL TEMP light go off after two seconds from engine start?	Current condition is normal. Go back to Basic Diagnostic Procedure. <Ref. to CVT(w/o HEV)(diag)-2, Basic Diagnostic Procedure.>	Go to step **3**.
3	**CHECK DTC.** Read the DTC relating the TCM using the Subaru Select Monitor.	Is DTC displayed?	Perform the diagnosis according to DTC.	Go to step **4**.
4	**CHECK TCM.** Read the data of «ATF Temperature Lamp» using the Subaru Select Monitor.	Is “ON” displayed?	Go to step **5**.	Perform the self-diagnosis of combination meter. <Ref. to IDI-7, SELF-DIAGNOSIS DISPLAY MODE, OPERATION, Combination Meter System.>
5	**CHECK TCM.** Read the data of «ATF Temp.» using the Subaru Select Monitor.	Is the display 125°C or more?	Go to step **6**.	Check the TCM.
6	**CHECK ATF TEMPERATURE.** Check the real fluid temperature from the transmission case surface temperature.	Does it clearly differ from the «ATF Temp.» displayed on Subaru Select Monitor?	Perform the diagnosis according to DTC P0712 procedure. If there is no problems, perform the diagnosis according to DTC P0713 procedure.	When ATF temperature can be judged as actually high, perform the diagnosis again after the ATF temperature lowers.

13.AWD Warning Light Display

A: OPERATION

AWD light illuminates or blinks, when the AWD is in special control condition and AWD has malfunction.

- When normal

AWD light always illuminates when the ignition switch is ON (engine OFF). Light goes off after two seconds from engine ON.

- When FF mode is selected

AWD light illuminates, when the AWD ON/OFF switching function is “FF mode” with engine ON.

- When malfunction is detected

AWD light blinks at 2 Hz when any of following malfunctions are detected with engine ON.

1. When tire with different diameter is installed, or air pressure of any of four wheels is excessively low
2. When “Rear differential inspection mode” is judged as NG <Ref. to DI-66, Rear Differential Inspection Mode.>

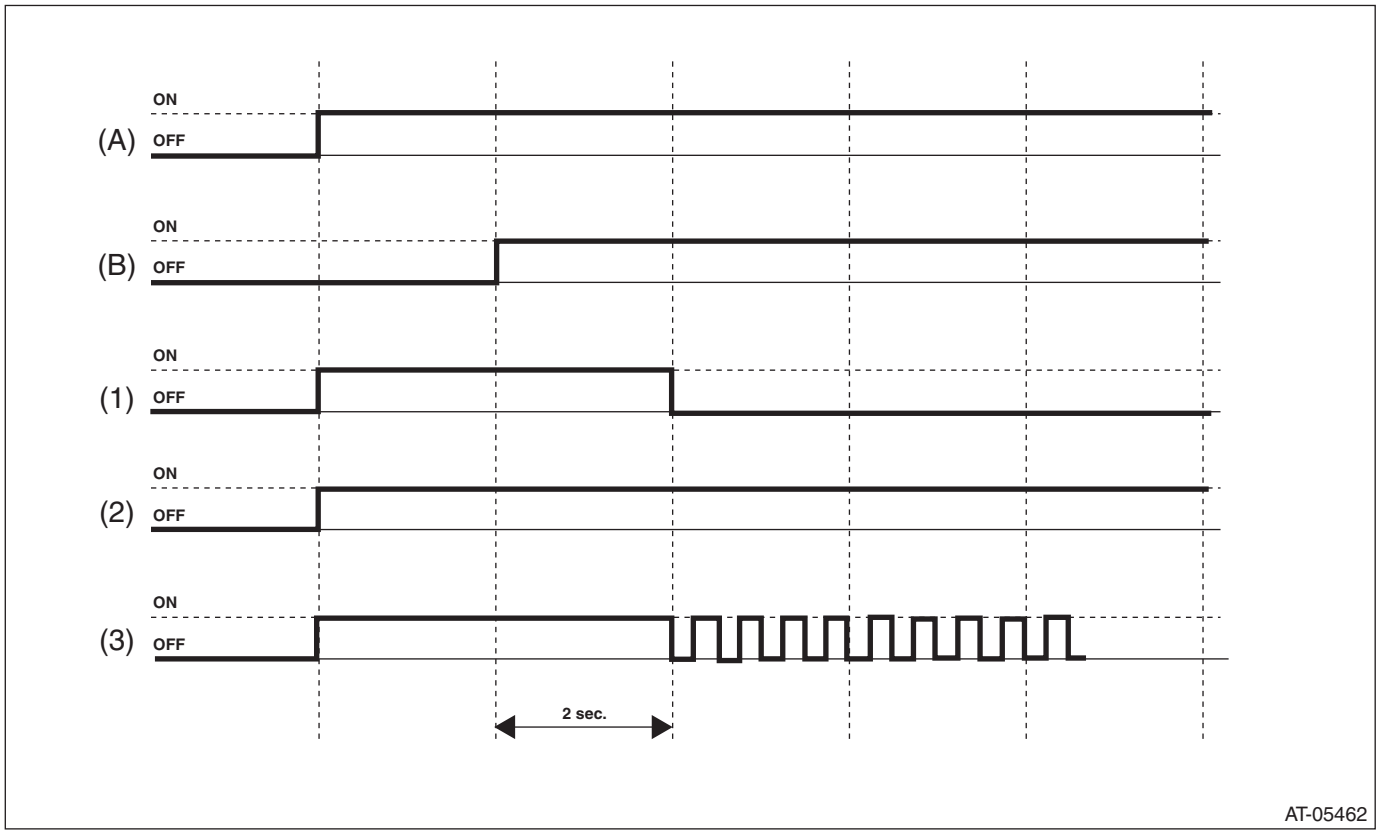

(A) Ignition switch condition (B) Engine condition

(1) When normal (2) When FF mode is selected (3) When malfunction is detected

If the AWD light does not illuminate, or illumination patterns are not as above, check the AWD light circuit. <Ref. to CVT(w/o HEV)(diag)-28, INSPECTION, AWD Warning Light Display.>

B: INSPECTION

DIAGNOSIS:
- AWD light circuit is open or shorted.
- Combination meter malfunction
- TCM is in AWD special control mode.

TROUBLE SYMPTOM:
- When the ignition switch is turned to ON, the AWD light does not illuminate.
- AWD light remains lit after engine start.
- AWD light is blinking immediately after engine start.

	Step	Check	Yes	No
1	**CHECK AWD LIGHT.** Turn the ignition switch to ON.	Does the AWD light illuminate?	Go to step **2**.	Perform the self-diagnosis of combination meter. <Ref. to IDI-7, SELF-DIAGNOSIS DISPLAY MODE, OPERATION, Combination Meter System.>
2	**CHECK AWD LIGHT.** Start the engine.	Does AWD light go off after two seconds from engine start?	Current condition is normal. Go back to Basic Diagnostic Procedure. <Ref. to CVT(w/o HEV)(diag)-2, Basic Diagnostic Procedure.>	Go to step **3**.
3	**CHECK DTC.** Read the DTC relating the TCM using the Subaru Select Monitor.	Is DTC displayed?	Perform the diagnosis according to DTC.	Go to step **4**.
4	**CHECK AWD LIGHT.** Check the display of AWD light after engine start.	Is AWD light illuminating?	Go to step **6**.	Go to step **5**.
5	**CHECK AWD LIGHT.** Check the display of AWD light after engine start.	Is AWD light blinking at 2 Hz?	Go to step **7**.	Go to step **8**.
6	**CHECK AWD ON/OFF SWITCHING FUNCTION.** Using the Subaru Select Monitor, select the {AWD ON/OFF switching mode} in {Maintenance mode} from «Work Support», and check the current mode. <Ref. to CVT(TR580)-43, AWD ON/OFF Switching Mode.>	Is the message «At present, the vehicle is in AWD. Switch to FF?» displayed?	Go to step **8**.	If the message «At present, the vehicle is in FF. Switch to AWD?» is displayed, select “OK”, and switch to AWD mode.
7	**CHECK REAR DIFFERENTIAL.** Using the Subaru Select Monitor, select {Rear differential inspection mode} in {Maintenance mode} from «Work Support», and check. <Ref. to DI-66, Rear Differential Inspection Mode.>	Does AWD light go off after inspection is finished normally?	Current condition is normal. Go back to Basic Diagnostic Procedure. <Ref. to CVT(w/o HEV)(diag)-2, Basic Diagnostic Procedure.>	Go to step **8**.
8	**CHECK COMBINATION METER.** Perform the self-diagnosis of combination meter. <Ref. to IDI-7, SELF-DIAGNOSIS DISPLAY MODE, OPERATION, Combination Meter System.>	Is there any trouble with the combination meter?	Repair the combination meter.	Check the TCM.

14.Diagnostic Procedure for Subaru Select Monitor Communication

A: COMMUNICATION FOR INITIALIZING IMPOSSIBLE

DIAGNOSIS:
Defective harness connector
TROUBLE SYMPTOM:
Subaru Select Monitor communication failure
WIRING DIAGRAM:
CVT Control System <Ref. to WI(w/o HEV)-66, CVT Control System.>

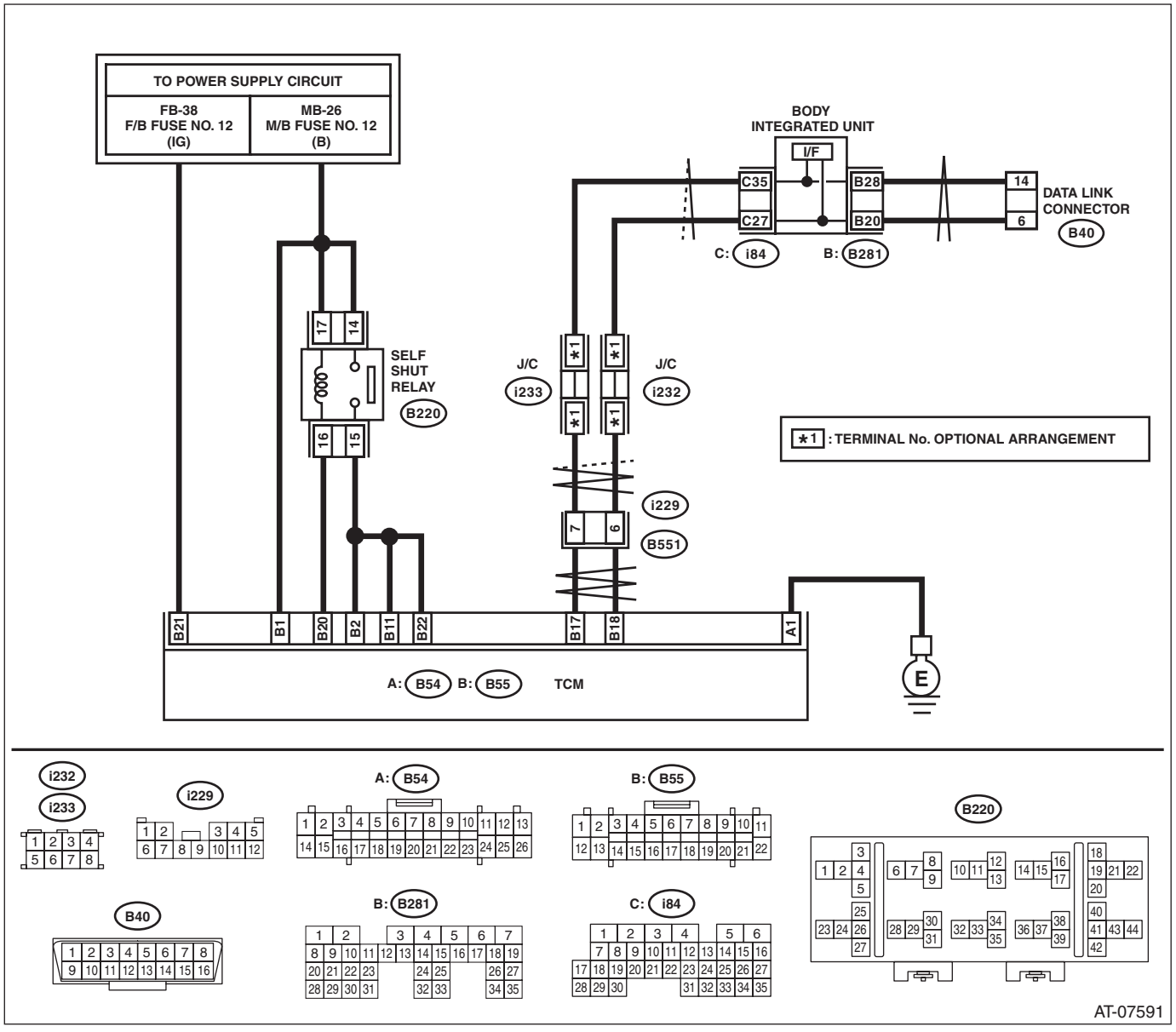

Step		Check	Yes	No
1	**CHECK IGNITION SWITCH.**	Is the ignition switch ON?	Go to step **2**.	Turn the ignition switch to ON, and select the transmission mode using the Subaru Select Monitor.

	Step	Check	Yes	No
2	**CHECK BATTERY.** 1) Turn the ignition switch to OFF. 2) Measure the battery voltage.	Is the voltage 11 V or more?	Go to step **3**.	Charge or replace the battery.
3	**CHECK BATTERY TERMINAL.**	Is there poor contact at battery terminal?	Repair or tighten the battery terminal.	Go to step **4**.
4	**CHECK INSTALLATION OF TCM CONNECTOR.** Turn the ignition switch to OFF.	Is the TCM connector inserted into the TCM until the clamp locks?	Go to step **5**.	Insert the TCM connector to TCM.
5	**CHECK LAN SYSTEM.** Perform the diagnosis for LAN system. <Ref. to LAN(w/o HEV)(diag)-2, Basic Diagnostic Procedure.>	Is there any fault in LAN system?	Perform the diagnosis according to DTC for LAN system. <Ref. to LAN(w/o HEV)(diag)-50, List of Diagnostic Trouble Code (DTC).>	Go to step **6**.
6	**CHECK SUBARU SELECT MONITOR COMMUNICATION.** 1) Turn the ignition switch to ON. 2) Check whether communication to transmission system can be executed normally.	Is the system name displayed on Subaru Select Monitor?	Check DTC of TCM. <Ref. to CVT(w/o HEV)(diag)-17, Read Diagnostic Trouble Code (DTC).>	Go to step **7**.
7	**CHECK POWER SUPPLY CIRCUIT.** 1) Turn the ignition switch to ON. (engine OFF) 2) Measure the ignition power supply voltage between TCM connector and chassis ground. ***Connector & terminal*** ***(B55) No. 1 (+) — Chassis ground (–):*** ***(B55) No. 2 (+) — Chassis ground (–):*** ***(B55) No. 11 (+) — Chassis ground (–):*** ***(B55) No. 21 (+) — Chassis ground (–):*** ***(B55) No. 22 (+) — Chassis ground (–):***	Is the voltage 10 — 13 V?	Go to step **8**.	Repair the open circuit of harness between TCM and battery.
8	**CHECK HARNESS CONNECTOR BETWEEN TCM AND CHASSIS GROUND.** 1) Turn the ignition switch to OFF. 2) Disconnect the connector from TCM. 3) Measure the resistance of harness between TCM connector and chassis ground. ***Connector & terminal*** ***(B54) No. 1 — Chassis ground:***	Is the resistance less than 10 Ω?	Go to step **9**.	Repair the open circuit of the TCM ground circuit and poor contact of connector.
9	**CHECK POOR CONTACT OF CONNECTOR.**	Is there poor contact of control module power supply, ground circuit and data link connector?	Repair the connector.	Check the TCM.

15.List of Diagnostic Trouble Code (DTC)

A: LIST

DTC	Item	Content of diagnosis	Reference
P0705	Transmission Range Sensor Circuit (PRNDL Input)	Inhibitor switch malfunction or short circuit	<Ref. to CVT(w/o HEV)(diag)-35, DTC P0705 TRANSMISSION RANGE SENSOR CIRCUIT (PRNDL INPUT), Diagnostic Procedure with Diagnostic Trouble Code (DTC).>
P0708	AT Range Switch Not Inputted	Inhibitor switch malfunction or open circuit	<Ref. to CVT(w/o HEV)(diag)-37, DTC P0708 AT RANGE SWITCH NOT INPUTTED, Diagnostic Procedure with Diagnostic Trouble Code (DTC).>
P0711	ATF Temp. Sensor Circuit Range/Performance	ATF temperature sensor is faulty or input signal circuit is faulty.	<Ref. to CVT(w/o HEV)(diag)-39, DTC P0711 ATF TEMP. SENSOR CIRCUIT RANGE/PERFORMANCE, Diagnostic Procedure with Diagnostic Trouble Code (DTC).>
P0712	Transmission Fluid Temperature Sensor Circuit Low Input	ATF temperature sensor is faulty or input signal circuit is shorted.	<Ref. to CVT(w/o HEV)(diag)-41, DTC P0712 TRANSMISSION FLUID TEMPERATURE SENSOR CIRCUIT LOW INPUT, Diagnostic Procedure with Diagnostic Trouble Code (DTC).>
P0713	Transmission Fluid Temperature Sensor Circuit High Input	ATF temperature sensor is faulty or input signal circuit is open or shorted.	<Ref. to CVT(w/o HEV)(diag)-43, DTC P0713 TRANSMISSION FLUID TEMPERATURE SENSOR CIRCUIT HIGH INPUT, Diagnostic Procedure with Diagnostic Trouble Code (DTC).>
P0716	Torque Converter Turbine Speed	Turbine speed sensor is faulty or input signal circuit is open or shorted.	<Ref. to CVT(w/o HEV)(diag)-45, DTC P0716 TORQUE CONVERTER TURBINE SPEED, Diagnostic Procedure with Diagnostic Trouble Code (DTC).>
P0719	Brake Switch Circuit Low	Brake switch is faulty or input signal circuit is open or shorted.	<Ref. to CVT(w/o HEV)(diag)-47, DTC P0719 BRAKE SWITCH CIRCUIT LOW, Diagnostic Procedure with Diagnostic Trouble Code (DTC).>
P0724	Brake Switch Circuit High	Brake switch is faulty or input signal circuit is shorted.	<Ref. to CVT(w/o HEV)(diag)-49, DTC P0724 BRAKE SWITCH CIRCUIT HIGH, Diagnostic Procedure with Diagnostic Trouble Code (DTC).>
P0730	Gearshift Control Performance Abnormal	Primary speed sensor, secondary speed sensor, control valve, or chain is faulty.	<Ref. to CVT(w/o HEV)(diag)-50, DTC P0730 GEARSHIFT CONTROL PERFORMANCE ABNORMAL, Diagnostic Procedure with Diagnostic Trouble Code (DTC).>
P0801	Reverse Inhibit Control Circuit	Shift lock solenoid is faulty or output signal circuit is open or shorted.	<Ref. to CVT(w/o HEV)(diag)-51, DTC P0801 REVERSE INHIBIT CONTROL CIRCUIT, Diagnostic Procedure with Diagnostic Trouble Code (DTC).>
P0841	Secondary Oil Pressure Sensor Performance	Secondary pressure sensor or control valve is faulty	<Ref. to CVT(w/o HEV)(diag)-52, DTC P0841 SECONDARY OIL PRESSURE SENSOR PERFORMANCE, Diagnostic Procedure with Diagnostic Trouble Code (DTC).>
P0842	Secondary Oil Pressure Sensor Circuit (Low)	Secondary pressure sensor is faulty or input signal circuit is open or shorted.	<Ref. to CVT(w/o HEV)(diag)-56, DTC P0842 SECONDARY OIL PRESSURE SENSOR CIRCUIT (LOW), Diagnostic Procedure with Diagnostic Trouble Code (DTC).>
P0843	Secondary Oil Pressure Sensor Circuit (High)	Secondary pressure sensor is faulty or input signal circuit is shorted.	<Ref. to CVT(w/o HEV)(diag)-58, DTC P0843 SECONDARY OIL PRESSURE SENSOR CIRCUIT (HIGH), Diagnostic Procedure with Diagnostic Trouble Code (DTC).>

DTC	Item	Content of diagnosis	Reference
P0890	AT Self-Shut Relay Diagnosis (Low)	Self-shut relay is faulty or input signal circuit is open or shorted.	<Ref. to CVT(w/o HEV)(diag)-60, DTC P0890 AT SELF-SHUT RELAY DIAGNOSIS (LOW), Diagnostic Procedure with Diagnostic Trouble Code (DTC).>
P0951	Manual Switch	Manual mode switch is faulty or input signal circuit is open or shorted.	<Ref. to CVT(w/o HEV)(diag)-62, DTC P0951 MANUAL SWITCH, Diagnostic Procedure with Diagnostic Trouble Code (DTC).>
P0962	Secondary Solenoid Circuit (Low)	Secondary solenoid is faulty or output signal circuit is shorted.	<Ref. to CVT(w/o HEV)(diag)-64, DTC P0962 SECONDARY SOLENOID CIRCUIT (LOW), Diagnostic Procedure with Diagnostic Trouble Code (DTC).>
P0963	Secondary Solenoid Circuit (High)	Secondary solenoid is faulty or output signal circuit is open or shorted.	<Ref. to CVT(w/o HEV)(diag)-66, DTC P0963 SECONDARY SOLENOID CIRCUIT (HIGH), Diagnostic Procedure with Diagnostic Trouble Code (DTC).>
P0965	Forward & Reverse Solenoid Function	F&R solenoid, forward clutch or control valve is faulty.	<Ref. to CVT(w/o HEV)(diag)-68, DTC P0965 FORWARD & REVERSE SOLENOID FUNCTION, Diagnostic Procedure with Diagnostic Trouble Code (DTC).>
P0966	Forward & Reverse Solenoid Circuit (Low)	F&R solenoid is faulty or output signal circuit is shorted.	<Ref. to CVT(w/o HEV)(diag)-69, DTC P0966 FORWARD & REVERSE SOLENOID CIRCUIT (LOW), Diagnostic Procedure with Diagnostic Trouble Code (DTC).>
P0967	Forward & Reverse Linear Solenoid Circuit (High)	F&R solenoid is faulty or output signal circuit is open or shorted.	<Ref. to CVT(w/o HEV)(diag)-71, DTC P0967 FORWARD & REVERSE LINEAR SOLENOID CIRCUIT (HIGH), Diagnostic Procedure with Diagnostic Trouble Code (DTC).>
P0970	Transfer Solenoid Circuit (Low)	AWD solenoid is faulty or output signal circuit is shorted.	<Ref. to CVT(w/o HEV)(diag)-73, DTC P0970 TRANSFER SOLENOID CIRCUIT (LOW), Diagnostic Procedure with Diagnostic Trouble Code (DTC).>
P0971	Transfer Solenoid Circuit (High)	AWD solenoid is faulty or output signal circuit is open or shorted.	<Ref. to CVT(w/o HEV)(diag)-74, DTC P0971 TRANSFER SOLENOID CIRCUIT (HIGH), Diagnostic Procedure with Diagnostic Trouble Code (DTC).>
P0973	Primary Solenoid System A Circuit (Low)	Primary UP solenoid is faulty or output signal circuit is shorted.	<Ref. to CVT(w/o HEV)(diag)-76, DTC P0973 PRIMARY SOLENOID SYSTEM A CIRCUIT (LOW), Diagnostic Procedure with Diagnostic Trouble Code (DTC).>
P0974	Primary Solenoid System A Circuit (High)	Primary UP solenoid is faulty or output signal circuit is open or shorted.	<Ref. to CVT(w/o HEV)(diag)-77, DTC P0974 PRIMARY SOLENOID SYSTEM A CIRCUIT (HIGH), Diagnostic Procedure with Diagnostic Trouble Code (DTC).>
P0976	Primary Solenoid System B Circuit (Low)	Primary DOWN solenoid is faulty or output signal circuit is shorted.	<Ref. to CVT(w/o HEV)(diag)-79, DTC P0976 PRIMARY SOLENOID SYSTEM B CIRCUIT (LOW), Diagnostic Procedure with Diagnostic Trouble Code (DTC).>
P0977	Primary Solenoid System B Circuit (High)	Primary DOWN solenoid is faulty or output signal circuit is open or shorted.	<Ref. to CVT(w/o HEV)(diag)-80, DTC P0977 PRIMARY SOLENOID SYSTEM B CIRCUIT (HIGH), Diagnostic Procedure with Diagnostic Trouble Code (DTC).>
P170A	L-Range SW System	L range switch is faulty or input signal circuit is open or shorted.	<Ref. to CVT(w/o HEV)(diag)-81, DTC P170A L-RANGE SW SYSTEM, Diagnostic Procedure with Diagnostic Trouble Code (DTC).>
P1724	AT EEPROM Error	TCM EEPROM malfunction	<Ref. to CVT(w/o HEV)(diag)-82, DTC P1724 AT EEPROM ERROR, Diagnostic Procedure with Diagnostic Trouble Code (DTC).>

DTC	Item	Content of diagnosis	Reference
P2746	Primary Pulley Revolution Speed Sensor Circuit	Primary speed sensor is faulty or input signal circuit is open or shorted.	<Ref. to CVT(w/o HEV)(diag)-83, DTC P2746 PRIMARY PULLEY REVOLUTION SPEED SENSOR CIRCUIT, Diagnostic Procedure with Diagnostic Trouble Code (DTC).>
P2750	Sec. Pulley Revolution Speed Sensor Circuit	Secondary speed sensor is faulty or input signal circuit is open or shorted.	<Ref. to CVT(w/o HEV)(diag)-85, DTC P2750 SEC. PULLEY REVOLUTION SPEED SENSOR CIRCUIT, Diagnostic Procedure with Diagnostic Trouble Code (DTC).>
P2762	Lock-Up Duty Solenoid Malfunction	Lock-up duty solenoid, lock-up clutch or control valve is faulty	<Ref. to CVT(w/o HEV)(diag)-87, DTC P2762 LOCK-UP DUTY SOLENOID MALFUNCTION, Diagnostic Procedure with Diagnostic Trouble Code (DTC).>
P2763	Lock-Up Duty Solenoid Circuit (High)	Lock-up duty solenoid is faulty or output signal circuit is open or shorted.	<Ref. to CVT(w/o HEV)(diag)-88, DTC P2763 LOCK-UP DUTY SOLENOID CIRCUIT (HIGH), Diagnostic Procedure with Diagnostic Trouble Code (DTC).>
P2764	Lock-Up Duty Solenoid Circuit (Low)	Lock-up duty solenoid is faulty or output signal circuit is shorted.	<Ref. to CVT(w/o HEV)(diag)-90, DTC P2764 LOCK-UP DUTY SOLENOID CIRCUIT (LOW), Diagnostic Procedure with Diagnostic Trouble Code (DTC).>
U0073	Control Module Communication Bus Off	CAN bus is shorted or communication error.	<Ref. to CVT(w/o HEV)(diag)-91, DTC U0073 CONTROL MODULE COMMUNICATION BUS OFF, Diagnostic Procedure with Diagnostic Trouble Code (DTC).>
U0100	Lost Communication With ECM/PCM “A”	Detected that the engine data has not yet arrived.	<Ref. to CVT(w/o HEV)(diag)-91, DTC U0100 LOST COMMUNICATION WITH ECM/PCM “A”, Diagnostic Procedure with Diagnostic Trouble Code (DTC).>
U0122	Lost Communication With Vehicle Dynamics Control Module	Detected that the VDC data has not yet arrived.	<Ref. to CVT(w/o HEV)(diag)-91, DTC U0122 LOST COMMUNICATION WITH VEHICLE DYNAMICS CONTROL MODULE, Diagnostic Procedure with Diagnostic Trouble Code (DTC).>
U0140	Lost Communication With Body Control Module	Detected that the body integrated unit data has not yet arrived.	<Ref. to CVT(w/o HEV)(diag)-91, DTC U0140 LOST COMMUNICATION WITH BODY CONTROL MODULE, Diagnostic Procedure with Diagnostic Trouble Code (DTC).>
U0155	Lost Communication With Instrument Panel Cluster (IPC) Control Module	Detected that the meter data has not yet arrived.	<Ref. to CVT(w/o HEV)(diag)-91, DTC U0155 LOST COMMUNICATION WITH INSTRUMENT PANEL CLUSTER (IPC) CONTROL MODULE, Diagnostic Procedure with Diagnostic Trouble Code (DTC).>
U0401	Invalid Data Received From ECM/PCM “A”	Detected abnormality of the engine data.	<Ref. to CVT(w/o HEV)(diag)-91, DTC U0401 INVALID DATA RECEIVED FROM ECM/PCM “A”, Diagnostic Procedure with Diagnostic Trouble Code (DTC).>
U0416	Invalid Data Received From Vehicle Dynamics Control Module	Detected abnormality of the VDC data.	<Ref. to CVT(w/o HEV)(diag)-91, DTC U0416 INVALID DATA RECEIVED FROM VEHICLE DYNAMICS CONTROL MODULE, Diagnostic Procedure with Diagnostic Trouble Code (DTC).>
U0422	Invalid Data Received From Body Control Module	Detected abnormality of the body integrated unit data.	<Ref. to CVT(w/o HEV)(diag)-91, DTC U0422 INVALID DATA RECEIVED FROM BODY CONTROL MODULE, Diagnostic Procedure with Diagnostic Trouble Code (DTC).>

DTC	Item	Content of diagnosis	Reference
U0423	Invalid Data Received From Instrument Panel Cluster Control Module	Detected abnormality of the meter data.	<Ref. to CVT(w/o HEV)(diag)-91, DTC U0423 INVALID DATA RECEIVED FROM INSTRUMENT PANEL CLUSTER CONTROL MODULE, Diagnostic Procedure with Diagnostic Trouble Code (DTC).>

16.Diagnostic Procedure with Diagnostic Trouble Code (DTC)

A: DTC P0705 TRANSMISSION RANGE SENSOR CIRCUIT (PRNDL INPUT)

DTC DETECTING CONDITION:

- Immediately at fault recognition
- GENERAL DESCRIPTION <Ref. to GD(CVT)(w/o HEV)-4, DTC P0705 TRANSMISSION RANGE SENSOR CIRCUIT (PRNDL INPUT), Diagnostic Trouble Code (DTC) Detecting Criteria.>

TROUBLE SYMPTOM:

- Shift characteristics are erroneous.
- The range position of the select lever and the position of shift indicator display do not match.

WIRING DIAGRAM:

CVT control system <Ref. to WI(w/o HEV)-66, CVT Control System.>

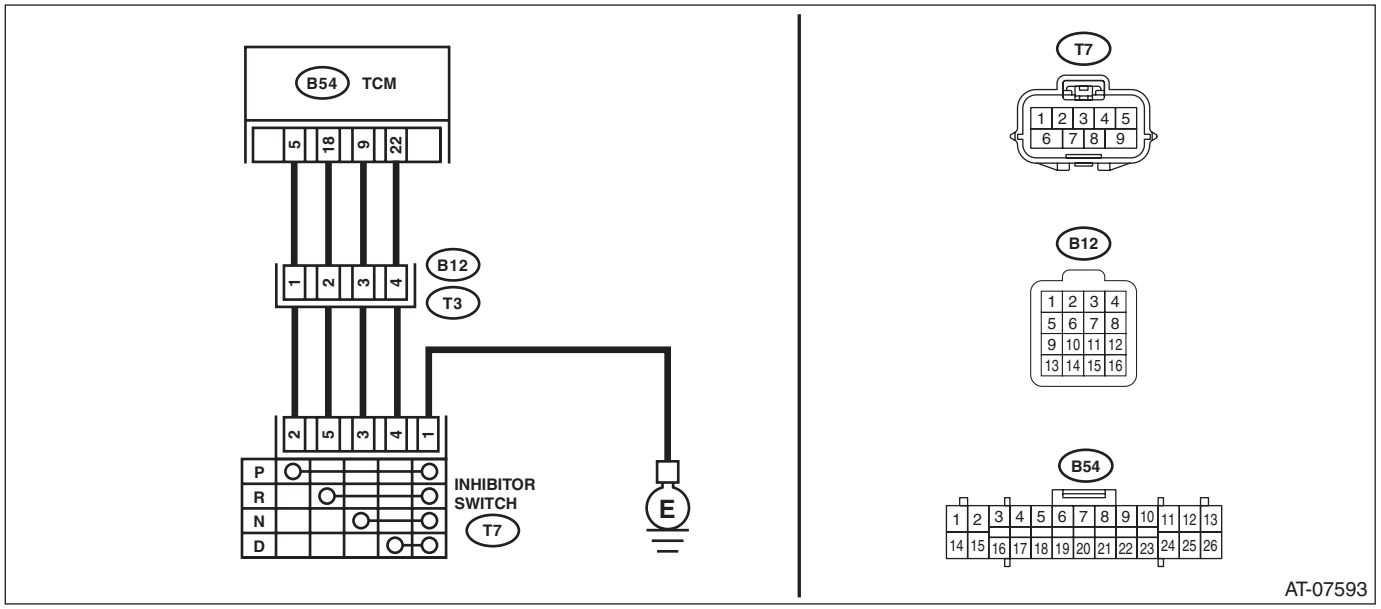

Step		Check	Yes	No
1	**CHECK INPUT SIGNAL FOR TCM.** 1) Turn the ignition switch to ON. 2) Move the select lever to each range, and read the data of «P Range», «R Range», «N Range» and «D Range» using the Subaru Select Monitor.	Is display “OFF” for the range other than corresponding range?	Go to step **5**.	Go to step **2**.
2	**CHECK HARNESS.** 1) Turn the ignition switch to OFF. 2) Disconnect the TCM and transmission connectors. 3) Measure the resistance between TCM connector and chassis ground. ***Connector & terminal*** ***(B54) No. 5 — Chassis ground:*** ***(B54) No. 18 — Chassis ground:*** ***(B54) No. 9 — Chassis ground:*** ***(B54) No. 22 — Chassis ground:***	Is each resistance 1 MΩ or more?	Go to step **3**.	Repair the short circuit of body harness.

	Step	Check	Yes	No
3	**CHECK HARNESS.** 1) Disconnect the inhibitor switch connector. 2) Measure the resistance between transmission connector and chassis ground. ***Connector & terminal*** ***(T3) No. 1 — Chassis ground:*** ***(T3) No. 2 — Chassis ground:*** ***(T3) No. 3 — Chassis ground:*** ***(T3) No. 4 — Chassis ground:***	Is each resistance 1 MΩ or more?	Go to step **4**.	Repair the short circuit of transmission harness.
4	**CHECK INHIBITOR SWITCH.** Move the select lever to each range, and measure the resistance between inhibitor switch connector terminals. ***Connector & terminal*** ***(T7) No. 2 — (T7) No. 1:*** ***(T7) No. 5 — (T7) No. 1:*** ***(T7) No. 3 — (T7) No. 1:*** ***(T7) No. 4 — (T7) No. 1:***	Is the resistance other than corresponding range 1 MΩ or more?	Go to step **5**.	Replace the inhibitor switch. <Ref. to CVT(TR580)-92, Inhibitor Switch.>
5	**CHECK FOR POOR CONTACT.**	Is there poor contact between TCM, inhibitor switch, transmission ground?	Repair the poor contact.	Check the TCM.

B: DTC P0708 AT RANGE SWITCH NOT INPUTTED

DTC DETECTING CONDITION:

- Immediately at fault recognition
- GENERAL DESCRIPTION <Ref. to GD(CVT)(w/o HEV)-5, DTC P0708 AT RANGE SWITCH NOT INPUTTED, Diagnostic Trouble Code (DTC) Detecting Criteria.>

TROUBLE SYMPTOM:

- Shift characteristics are erroneous.
- The range position of the select lever and the position of shift indicator display do not match.

WIRING DIAGRAM:

CVT control system <Ref. to WI(w/o HEV)-66, CVT Control System.>

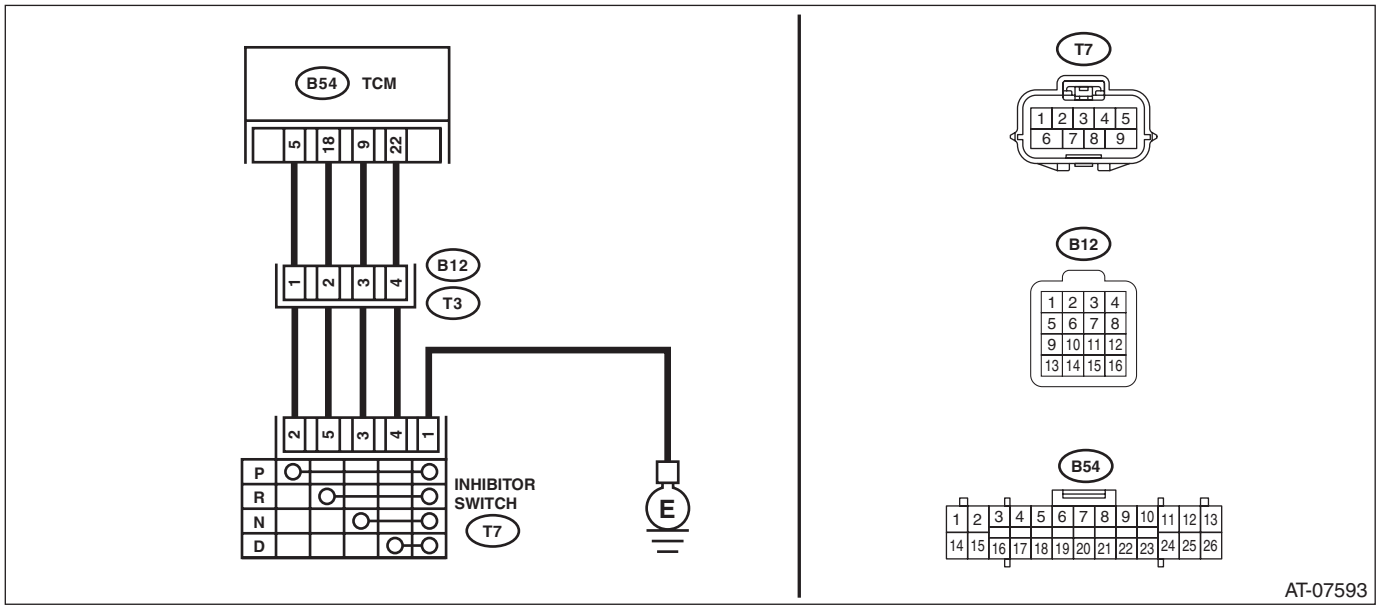

Step		Check	Yes	No
1	**CHECK INPUT SIGNAL FOR TCM.** 1) Turn the ignition switch to ON. 2) Move the select lever to each range, and read the data of «P Range», «R Range», «N Range» and «D Range» using the Subaru Select Monitor.	Is the display of the corresponding range "ON"?	Go to step **7**.	Go to step **2**.
2	**CHECK HARNESS.** 1) Turn the ignition switch to OFF. 2) Disconnect the TCM and transmission connectors. 3) Measure the resistance of harness between TCM connector and transmission connector. ***Connector & terminal*** ***(B54) No. 5 — (B12) No. 1:*** ***(B54) No. 18 — (B12) No. 2:*** ***(B54) No. 9 — (B12) No. 3:*** ***(B54) No. 22 — (B12) No. 4:***	Is each resistance less than 1 Ω?	Go to step **3**.	Repair the open circuit of body harness.
3	**CHECK HARNESS.** Measure the resistance of harness between inhibitor switch connector and transmission ground. ***Connector & terminal*** ***(T7) No. 1 — Transmission ground:***	Is the resistance less than 1 Ω?	Go to step **4**.	Repair the open circuit of harness.

	Step	Check	Yes	No
4	**CHECK HARNESS.** 1) Disconnect the inhibitor switch connector. 2) Measure the resistance between transmission connector and inhibitor switch connector. ***Connector & terminal*** ***(T3) No. 1 — (T7) No. 2:*** ***(T3) No. 2 — (T7) No. 5:*** ***(T3) No. 3 — (T7) No. 3:*** ***(T3) No. 4 — (T7) No. 4:***	Is each resistance less than 1 Ω?	Go to step **5**.	Repair the open circuit of transmission harness.
5	**CHECK INHIBITOR SWITCH.** Move the select lever to each range, and measure the resistance between inhibitor switch connector terminals. ***Connector & terminal*** ***(T7) No. 2 — (T7) No. 1:*** ***(T7) No. 5 — (T7) No. 1:*** ***(T7) No. 3 — (T7) No. 1:*** ***(T7) No. 4 — (T7) No. 1:***	Is the resistance of the corresponding range less than 1 MΩ?	Go to step **6**.	Replace the inhibitor switch. <Ref. to CVT(TR580)-92, Inhibitor Switch.>
6	**CHECK HARNESS.** 1) Turn the ignition switch to ON. 2) Measure the voltage between each connector and chassis ground. ***Connector & terminal*** ***Transmission connector (B12 side)*** ***(B12) No. 1 (+) — Chassis ground (–):*** ***(B12) No. 2 (+) — Chassis ground (–):*** ***(B12) No. 3 (+) — Chassis ground (–):*** ***(B12) No. 4 (+) — Chassis ground (–):*** ***Transmission connector (T7 side)*** ***(T7) No. 2 (+) — Chassis ground (–):*** ***(T7) No. 5 (+) — Chassis ground (–):*** ***(T7) No. 3 (+) — Chassis ground (–):*** ***(T7) No. 4 (+) — Chassis ground (–):***	Is each voltage less than 1 V?	Go to step **7**.	Repair the harness which outputs 1 V or more.
7	**CHECK FOR POOR CONTACT.**	Is there poor contact between TCM, inhibitor switch, transmission ground?	Repair the poor contact.	Check the TCM.

C: DTC P0711 ATF TEMP. SENSOR CIRCUIT RANGE/PERFORMANCE

DTC DETECTING CONDITION:

- Detected when two consecutive driving cycles with fault occur.
- GENERAL DESCRIPTION <Ref. to GD(CVT)(w/o HEV)-6, DTC P0711 ATF TEMP. SENSOR CIRCUIT RANGE/PERFORMANCE, Diagnostic Trouble Code (DTC) Detecting Criteria.>

TROUBLE SYMPTOM:

Excessive shift shock

CAUTION:

After diagnosis, perform Clear Memory Mode for each system.

WIRING DIAGRAM:

CVT control system <Ref. to WI(w/o HEV)-66, CVT Control System.>

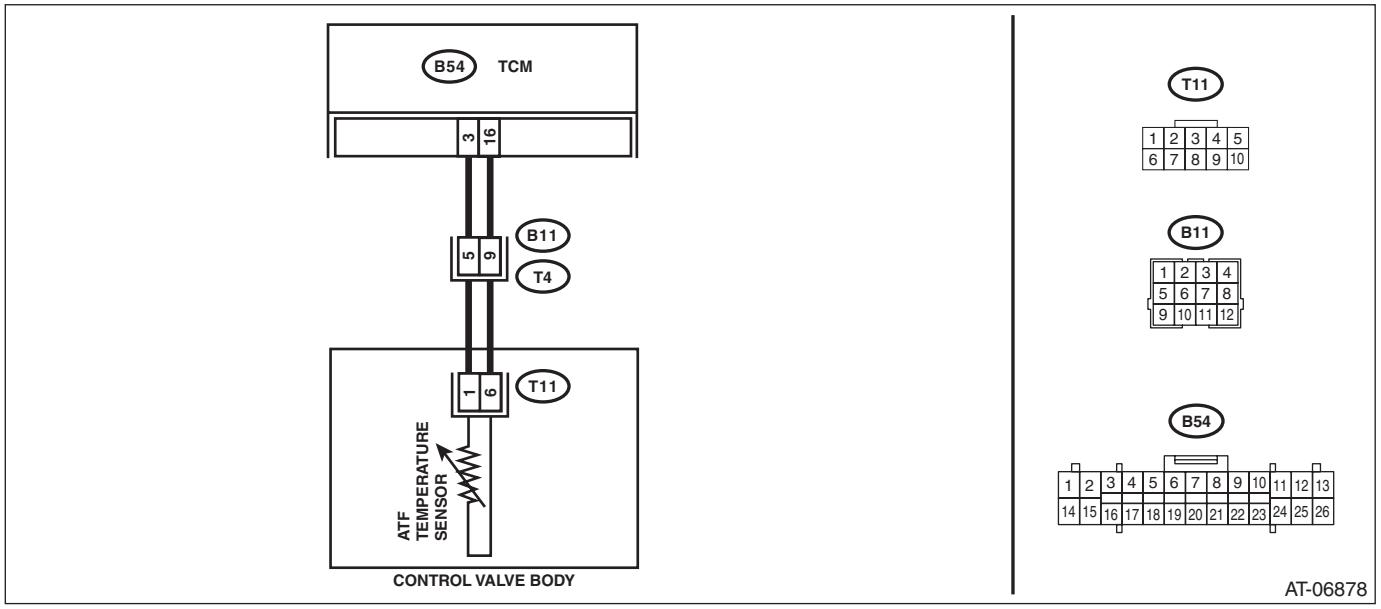

Step		Check	Yes	No
1	**CHECK DTC.** Check the DTC using Subaru Select Monitor.	Is DTC P0712 or P0713 displayed?	Perform the diagnosis according to DTC.	Go to step **2**.
2	**CHECK TRANSMISSION FLUID.** Check the amount of ATF. <Ref. to CVT(TR580)-35, ADJUSTMENT, CVTF.>	Is the ATF amount correct?	Go to step **3**.	Adjust the amount of ATF. <Ref. to CVT(TR580)-35, ADJUSTMENT, CVTF.>
3	**CHECK INPUT SIGNAL FOR TCM.** Check «ATF Temp.» using the Subaru Select Monitor.	Is «ATF Temp.» less than 20°C (68°F)?	Go to step **4**.	Reconfirm after the ATF temperature drops below 20°C (68°F).
4	**CHECK INPUT SIGNAL FOR TCM.** 1) Lift up the vehicle. 2) Apply the electronic parking brake. 3) Start the engine. 4) Set the select lever to “D” range. 5) Warm up the engine until the ATF temperature reaches 20°C (68°F). 6) Read the data of «ATF Temp.» using the Subaru Select Monitor.	Does «ATF Temp.» increase by 1°C (1.8°F) within 10 minutes?	Current condition is normal.	Go to step **5**.

	Step	Check	Yes	No
5	**CHECK HARNESS.** 1) Turn the ignition switch to OFF. 2) Disconnect the TCM and transmission connectors. 3) Measure the resistance between TCM connector and transmission connectors. ***Connector & terminal*** ***(B54) No. 3 — (B11) No. 5:*** ***(B54) No. 16 — (B11) No. 9:***	Is the resistance less than 1 Ω?	Go to step **6**.	Check for poor contact of the ATF temperature sensor and transmission connector harness, and repair the defective part.
6	**CHECK INPUT SIGNAL FOR TCM.** 1) Connect the connector to TCM. (with the transmission connector disconnected) 2) Turn the ignition switch to ON. 3) Read the data of «ATF Temp.» using the Subaru Select Monitor.	Is –50°C (–58°F) displayed in «ATF Temp.»?	Replace the control valve body. <Ref. to CVT(TR580)-112, Control Valve Body.>	Check the TCM.

D: DTC P0712 TRANSMISSION FLUID TEMPERATURE SENSOR CIRCUIT LOW INPUT

DTC DETECTING CONDITION:

- Immediately at fault recognition
- GENERAL DESCRIPTION <Ref. to GD(CVT)(w/o HEV)-7, DTC P0712 TRANSMISSION FLUID TEMPERATURE SENSOR CIRCUIT LOW INPUT, Diagnostic Trouble Code (DTC) Detecting Criteria.>

TROUBLE SYMPTOM:

- Excessive shift shock
- Shift characteristics malfunction

WIRING DIAGRAM:

CVT control system <Ref. to WI(w/o HEV)-66, CVT Control System.>

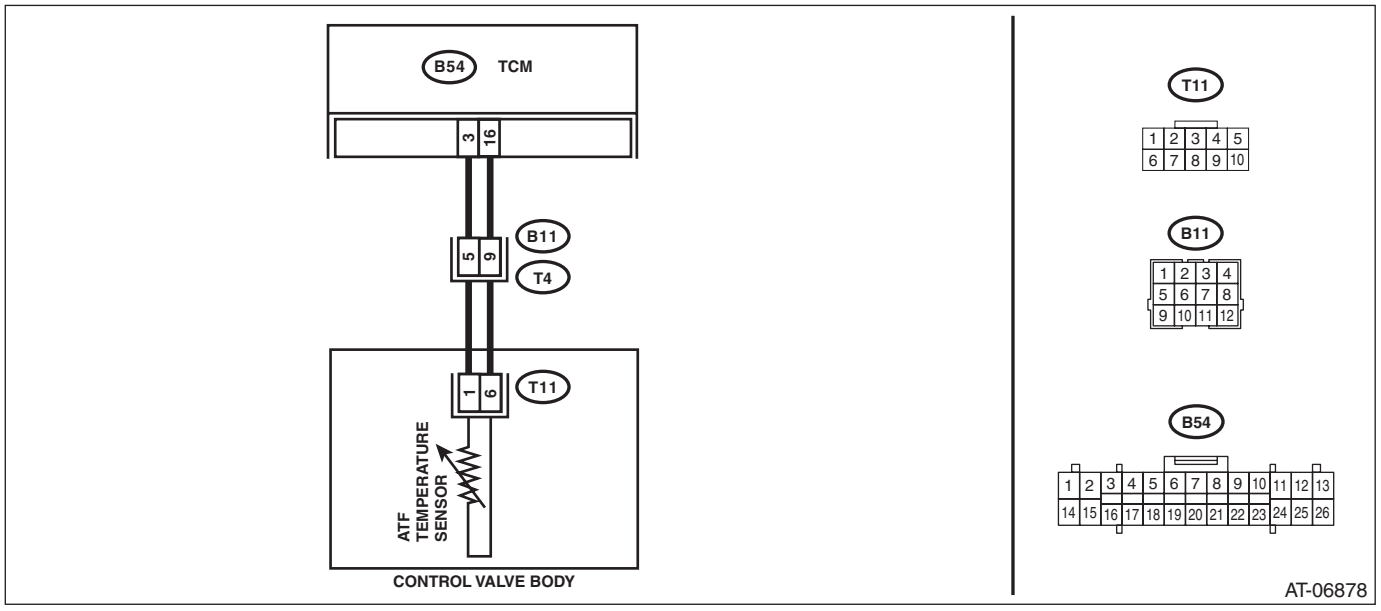

Step		Check	Yes	No
1	**CHECK HARNESS.** 1) Turn the ignition switch to OFF. 2) Disconnect the TCM connector. 3) Measure the resistance of harness between TCM connector and chassis ground. ***Connector & terminal*** ***(B54) No. 3 — Chassis ground:*** ***(B54) No. 16 — Chassis ground:***	Is the resistance 1 MΩ or more?	Go to step **4**.	Go to step **2**.
2	**CHECK HARNESS.** 1) Disconnect the transmission connector. 2) Measure the resistance between transmission connector and transmission body. ***Connector & terminal*** ***(T4) No. 5 — Transmission body:*** ***(T4) No. 9 — Transmission body:***	Is the resistance 1 MΩ or more?	Repair the short circuit of body harness.	Go to step **3**.
3	**CHECK HARNESS INSIDE TRANSMISSION.** **CAUTION:** **Start work after ATF cools down.** 1) Remove the transmission valve cover. 2) Check for the harness pinch, damage.	Is there any fault in the harness?	Replace the transmission harness.	Go to step **4**.

	Step	Check	Yes	No
4	**CHECK ATF TEMPERATURE SENSOR.** Measure the resistance between transmission connector terminals. ***Connector & terminal (T11) No. 1 — No. 6:***	Is resistance as follows? Fluid temperature 0°C → Approx. 6.0 kΩ Fluid temperature 20°C → Approx. 2.5 kΩ Fluid temperature 80°C → Approx. 330 Ω	Check the TCM.	Replace the control valve body. <Ref. to CVT(TR580)-112, Control Valve Body.>

E: DTC P0713 TRANSMISSION FLUID TEMPERATURE SENSOR CIRCUIT HIGH INPUT

DTC DETECTING CONDITION:

- Immediately at fault recognition
- GENERAL DESCRIPTION <Ref. to GD(CVT)(w/o HEV)-8, DTC P0713 TRANSMISSION FLUID TEMPERATURE SENSOR CIRCUIT HIGH INPUT, Diagnostic Trouble Code (DTC) Detecting Criteria.>

TROUBLE SYMPTOM:

- Excessive shift shock
- Shift characteristics malfunction

WIRING DIAGRAM:

CVT control system <Ref. to WI(w/o HEV)-66, CVT Control System.>

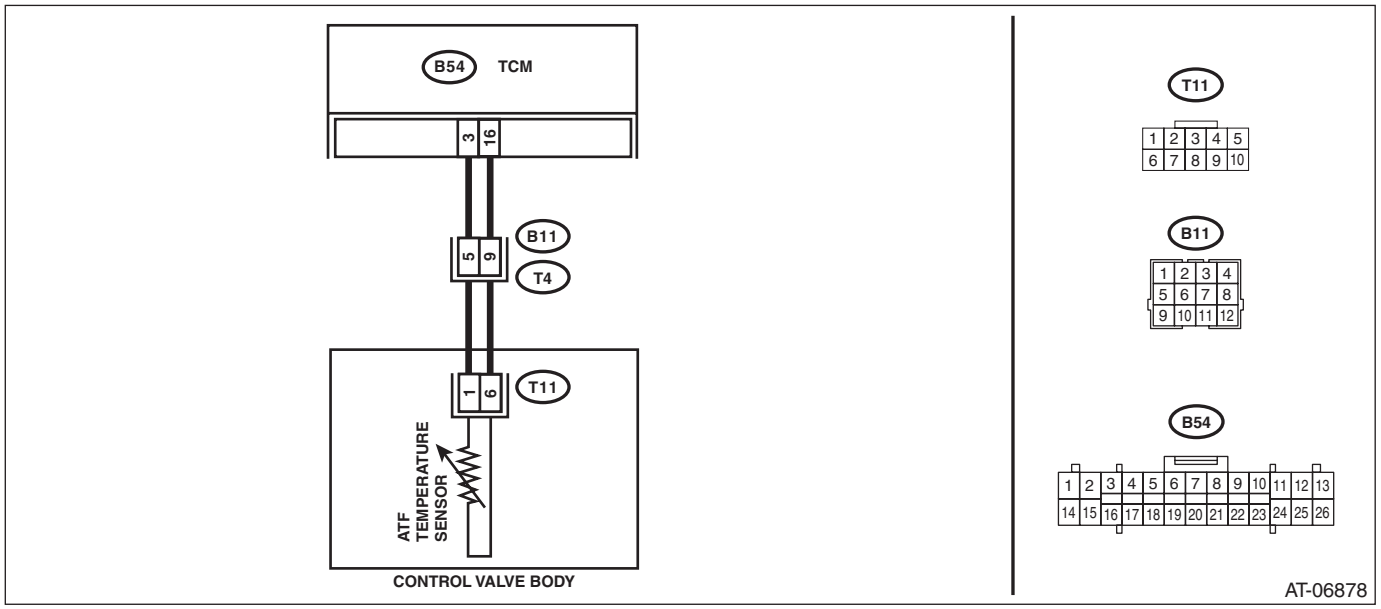

Step		Check	Yes	No
1	**CHECK HARNESS.** 1) Turn the ignition switch to ON. 2) Measure the voltage between TCM connectors. ***Connector & terminal*** ***(B54) No. 3 (+) — (B54) No. 16 (–):***	Is the voltage 5 V or more?	Repair the short circuit of harness.	Go to step **2**.
2	**CHECK HARNESS.** 1) Turn the ignition switch to OFF. 2) Disconnect the TCM and transmission connectors. 3) Measure the resistance between TCM connector and transmission connectors. ***Connector & terminal*** ***(B54) No. 3 — (B11) No. 5:*** ***(B54) No. 16 — (B11) No. 9:***	Is the resistance less than 1 Ω?	Go to step **3**.	Repair the open circuit of body harness.
3	**CHECK ATF TEMPERATURE SENSOR.** Measure the resistance between transmission connector terminals. ***Connector & terminal*** ***(T4) No. 5 — No. 9:***	Is the resistance 1 MΩ or more?	Go to step **4**.	Go to step **5**.

	Step	Check	Yes	No
4	**CHECK HARNESS.** **CAUTION:** **Start work after ATF cools down.** 1) Remove the transmission valve cover. 2) Measure the resistance between transmission connector and control valve body connector. ***Connector & terminal*** ***(T4) No. 5 — (T11) No. 1:*** ***(T4) No. 9 — (T11) No. 6:***	Is the resistance less than 1 Ω?	Repair the open circuit of transmission harness on the control valve side.	Repair the open circuit of transmission harness on the outside of the transmission.
5	**CHECK ATF TEMPERATURE SENSOR.** 1) Connect the connectors to TCM and transmission. 2) Start the engine. 3) Warm up until the ATF temperature exceeds 50°C (122°F). 4) Turn the ignition switch to OFF. 5) Disconnect the transmission connector. 6) Measure the resistance between transmission connector terminals. ***Connector & terminal*** ***(T4) No. 5 — No. 9:***	Is the resistance 650 — 990 Ω?	Go to step **6**.	Go to step **8**.
6	**CHECK ATF TEMPERATURE SENSOR.** Measure the resistance between transmission connector terminals. ***Connector & terminal*** ***(T4) No. 5 — No. 9:***	Does the resistance value increase gradually while the ATF temperature decreases?	Go to step **7**.	Replace the control valve body. <Ref. to CVT(TR580)-112, Control Valve Body.>
7	**CHECK INPUT SIGNAL FOR TCM.** 1) Connect the connector to transmission. 2) Turn the ignition switch to ON. (Do not start engine.) 3) Read the data of «ATF Temp.» using the Subaru Select Monitor.	Does the ATF temperature gradually decrease?	Check for poor contact of the ATF temperature sensor and transmission connector harness, and repair the defective part.	Go to step **8**.
8	**CHECK FOR POOR CONTACT.**	Is there poor contact of ATF temperature sensor circuit?	Repair the poor contact.	Check the TCM.

F: DTC P0716 TORQUE CONVERTER TURBINE SPEED

DTC DETECTING CONDITION:

- Immediately at fault recognition
- GENERAL DESCRIPTION <Ref. to GD(CVT)(w/o HEV)-9, DTC P0716 TORQUE CONVERTER TURBINE SPEED, Diagnostic Trouble Code (DTC) Detecting Criteria.>

TROUBLE SYMPTOM:

- Standing start problems
- Shock occurs when engaging the lockup clutch.
- Shock occurs when selecting shift position.

WIRING DIAGRAM:

CVT control system <Ref. to WI(w/o HEV)-66, CVT Control System.>

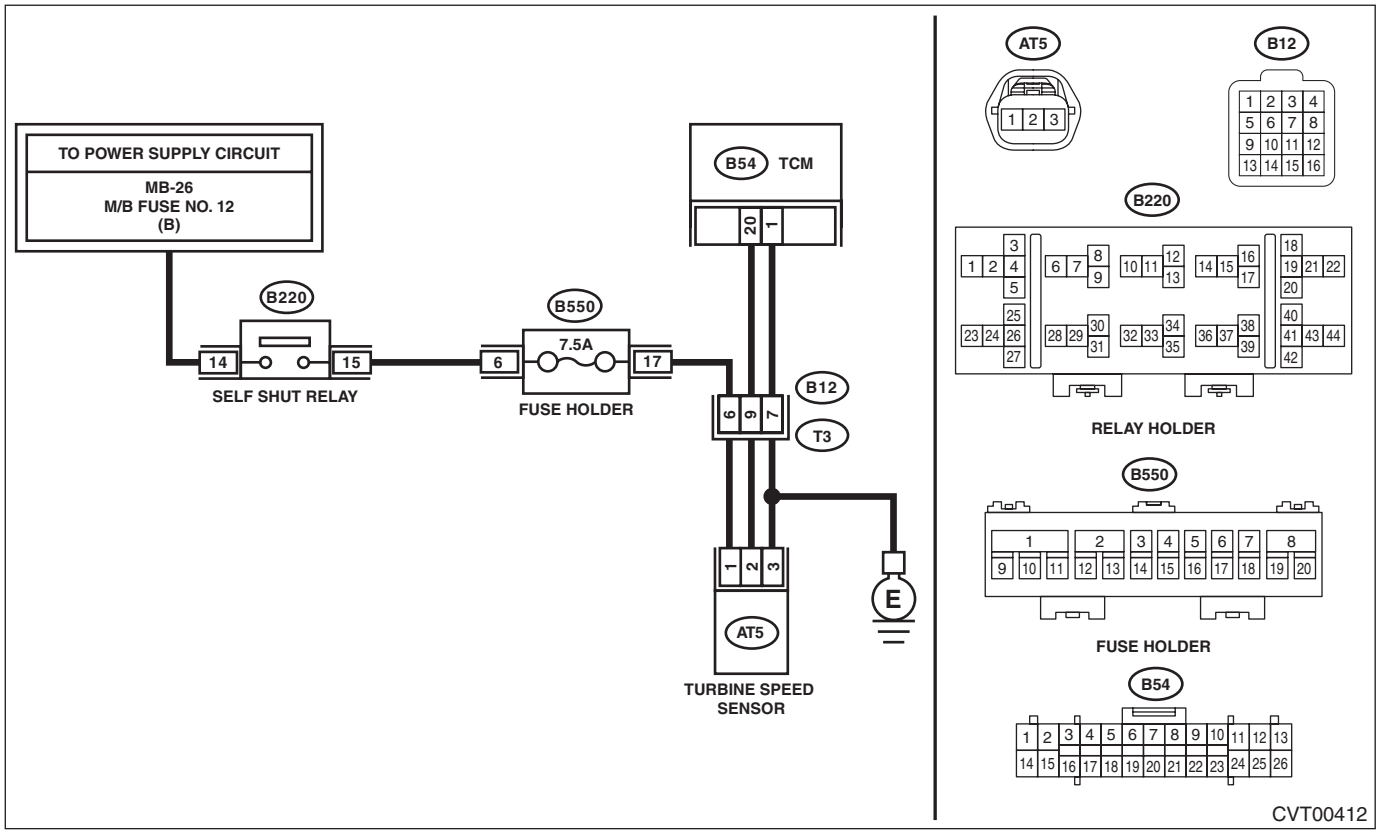

Step		Check	Yes	No
1	**CHECK FUSE.** 1) Turn the ignition switch to OFF. 2) Remove the fuse (7.5 A) from the fuse holder.	Is the fuse OK?	Go to step **2**.	Replace the fuse. If the fuse blows out easily, repair the short circuit of harness.
2	**CHECK HARNESS.** 1) Turn the ignition switch to OFF. 2) Disconnect the TCM and transmission connectors. 3) Measure the resistance between TCM connector and transmission connectors. ***Connector & terminal*** ***(B54) No. 1 — (B12) No. 7:*** ***(B54) No. 20 — (B12) No. 9:*** ***(B550) No. 17 — (B12) No. 6:***	Is the resistance less than 1 Ω?	Go to step **3**.	Repair the open circuit of harness.

	Step	Check	Yes	No
3	**CHECK HARNESS.** Measure the resistance between TCM connector and chassis ground. ***Connector & terminal*** ***(B54) No. 20 — Chassis ground:***	Is the resistance 1 MΩ or more?	Go to step **4**.	Repair the short circuit of harness.
4	**CHECK TRANSMISSION HARNESS.** 1) Connect the TCM connector. 2) Turn the ignition switch to ON. 3) Measure the voltage between transmission connector terminals. ***Connector & terminal*** ***(B12) No. 6 (+) — Chassis ground (–):***	Is the voltage 10 — 13 V?	Go to step **5**.	Repair the open circuit of harness or poor contact of connector.
5	**CHECK INPUT SIGNAL FOR TCM.** 1) Turn the ignition switch to OFF. 2) Connect the transmission connector. 3) Start the engine. 4) Read the data of «Turbine Revolution Speed» using the Subaru Select Monitor.	Does the value of «Turbine Revolution Speed» change according to the engine speed?	Current condition is normal. Repair the poor contacts of harnesses of turbine speed sensor and transmission connector.	Go to step **6**.
6	**CHECK TRANSMISSION HARNESS.** 1) Turn the ignition switch to OFF. 2) Disconnect the transmission connector. 3) Lift up the vehicle. 4) Disconnect the turbine speed sensor connector. 5) Measure the resistance between transmission connector and turbine speed sensor connector. ***Connector & terminal*** ***(T3) No. 6 — (AT5) No. 1:*** ***(T3) No. 7 — (AT5) No. 3:*** ***(T3) No. 9 — (AT5) No. 2:***	Is the resistance less than 1 Ω?	Replace the turbine speed sensor. <Ref. to CVT(TR580)-99, Turbine Speed Sensor.>	Replace the transmission harness.

G: DTC P0719 BRAKE SWITCH CIRCUIT LOW

DTC DETECTING CONDITION:
Brake switch malfunction or input signal circuit of brake switch is open or shorted.
TROUBLE SYMPTOM:
Gear is not shifted down when climbing a hill or driving down a hill.
WIRING DIAGRAM:
Stop light system <Ref. to WI(w/o HEV)-145, Stop Light System.>

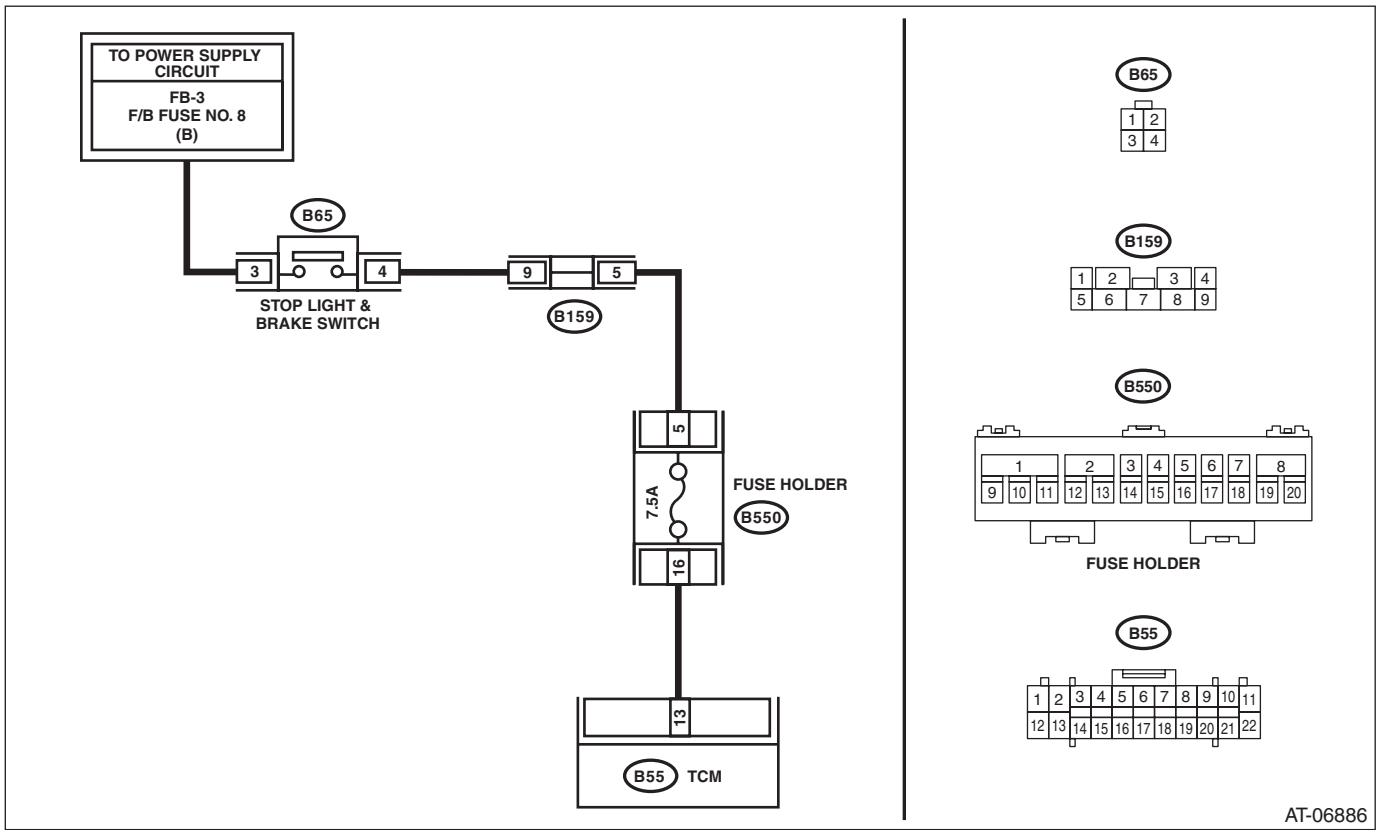

	Step	Check	Yes	No
1	**CHECK FUSE (NO. 8).** 1) Turn the ignition switch to OFF. 2) Remove the fuse (No. 8).	Is the fuse (No. 8) blown out?	Replace the fuse (No. 8). If the new fuse (No. 8) has blown out easily, repair the short circuit of harness between fuse (No. 8) and stop light switch.	Go to step **2**.
2	**CHECK FUSE.** Remove the fuse (7.5 A) from the fuse holder.	Is the fuse (7.5 A) blown out?	Replace the fuse (7.5 A). If the replaced fuse (7.5 A) blows out easily, repair the short circuit of harness between fuse (7.5 A) and TCM.	Go to step **3**.

	Step	Check	Yes	No
3	**CHECK HARNESS.** 1) Turn the ignition switch to OFF. 2) Disconnect the TCM and stop light switch connector. 3) Measure the resistance between TCM connector and stop light switch connector. ***Connector & terminal*** ***(B55) No. 13 — (B65) No. 4:***	Is the resistance less than 1 Ω?	Go to step **4**.	Repair the open circuit of harness.
4	**CHECK HARNESS.** Measure the resistance between TCM connector and fuse (No. 8). ***Connector & terminal*** ***(B65) No. 3 — fuse (No. 8):***	Is the resistance less than 1 Ω?	Go to step **5**.	Repair the open circuit of harness.
5	**CHECK INPUT SIGNAL FOR TCM.** 1) Install the fuse (No. 8). 2) Connect the TCM and stop light switch connector. 3) Depress the brake pedal. 4) Measure the voltage between TCM connector and chassis ground. ***Connector & terminal*** ***(B55) No. 13 (+) — Chassis ground (–):***	Is the voltage 10 V or more?	Go to step **6**.	Replace the stop light switch. <Ref. to BR-72, Stop Light Switch.>
6	**CHECK INPUT SIGNAL FOR TCM.** With brake pedal depressed, read the data of «Stop Light Switch» using Subaru Select Monitor.	Is “ON” displayed?	Current condition is normal. Check for poor contact in connectors or harnesses, and repair the defective part.	Go to step **7**.
7	**CHECK FOR POOR CONTACT.**	Is there poor contact of input signal of stop light switch?	Repair the poor contact.	Check the TCM.

H: DTC P0724 BRAKE SWITCH CIRCUIT HIGH

DTC DETECTING CONDITION:
Brake switch malfunction or input signal circuit of brake switch is shorted.
TROUBLE SYMPTOM:
Gear is not shifted down when climbing a hill or driving down a hill.
WIRING DIAGRAM:
Stop light system <Ref. to WI(w/o HEV)-145, Stop Light System.>

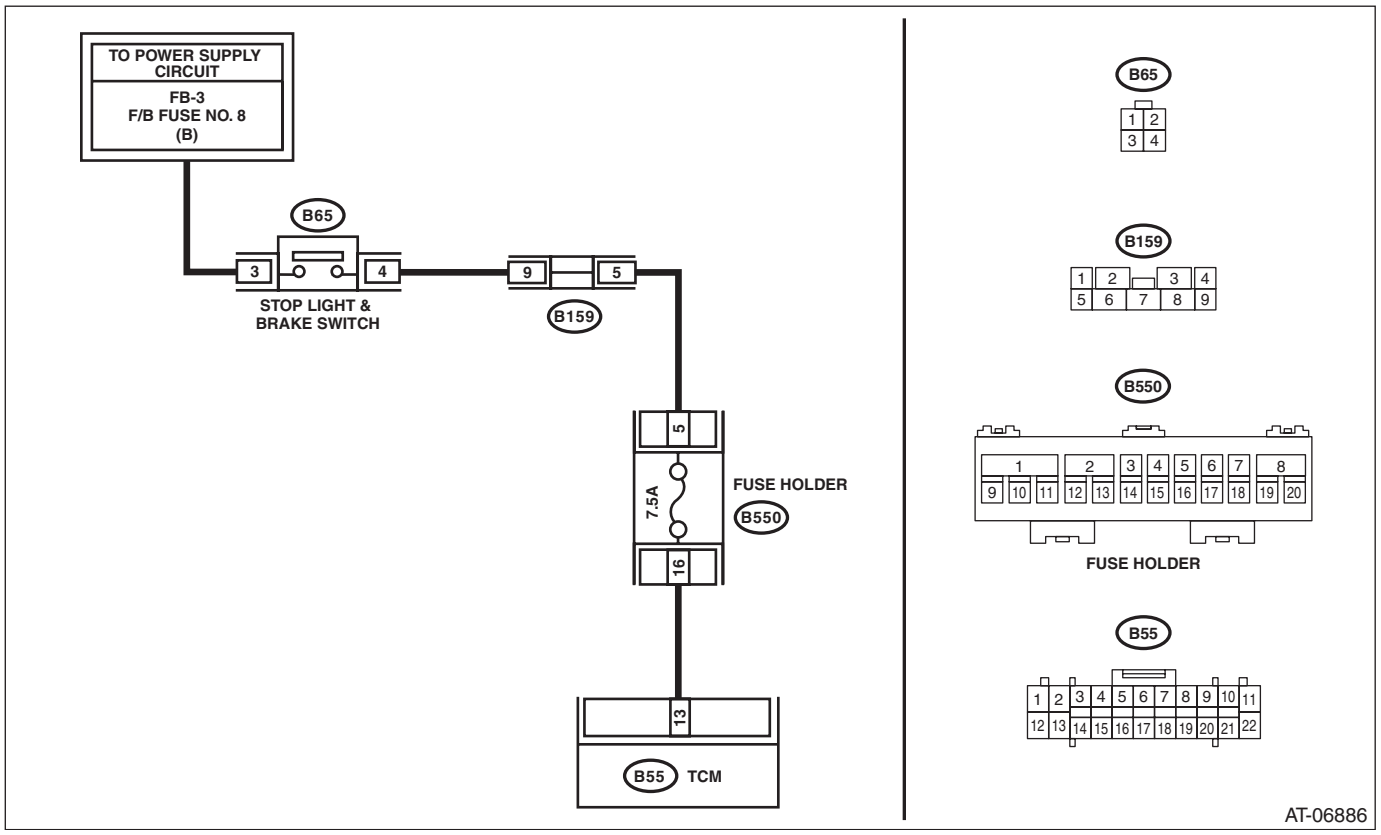

Step		Check	Yes	No
1	**CHECK STOP LIGHT SWITCH.** 1) Turn the ignition switch to OFF. 2) Disconnect the stop light switch connector. 3) Measure the resistance of harness between stop light switch connectors. ***Connector & terminal*** ***(B65) No. 3 — No. 4:***	Is the resistance 1 MΩ or more?	Go to step **2**.	Replace the stop light switch. <Ref. to BR-72, Stop Light Switch.>
2	**CHECK HARNESS.** 1) Disconnect the TCM connector. 2) Turn the ignition switch to ON. 3) Measure the voltage between TCM connector and chassis ground. ***Connector & terminal*** ***(B55) No. 13 (+) — Chassis ground (–):***	Is the voltage 10 V or more?	Repair the short circuit of harness.	Go to step **3**.
3	**CHECK INPUT SIGNAL FOR TCM.** 1) Connect the TCM and stop light switch connector. 2) Turn the ignition switch to ON. 3) Read the data of «Stop Light Switch» using Subaru Select Monitor.	Is "OFF" displayed?	Current condition is normal. Check for poor contact in connectors or harnesses, and repair the defective part.	Go to step **4**.
4	**CHECK FOR POOR CONTACT.**	Is there poor contact of input signal of stop light switch?	Repair the poor contact.	Check the TCM.

I: DTC P0730 GEARSHIFT CONTROL PERFORMANCE ABNORMAL

DTC DETECTING CONDITION:

- Immediately at fault recognition
- GENERAL DESCRIPTION <Ref. to GD(CVT)(w/o HEV)-10, DTC P0730 GEARSHIFT CONTROL PERFORMANCE ABNORMAL, Diagnostic Trouble Code (DTC) Detecting Criteria.>

TROUBLE SYMPTOM:

- Acceleration is poor during standing start.
- Shift control malfunction
- Engine speed increases abruptly.

	Step	Check	Yes	No
1	**CHECK TRANSMISSION FLUID.** Check the condition of ATF. <Ref. to CVT(TR580)-38, CONDITION CHECK, CVTF.>	Is the ATF OK?	Go to step **2**.	Check according to the “Corrective action” of ATF (CVTF) “CONDITION CHECK”. <Ref. to CVT(TR580)-38, CONDITION CHECK, CVTF.>
2	**CHECK TRANSMISSION FLUID.** Check the amount of ATF. <Ref. to CVT(TR580)-35, ADJUSTMENT, CVTF.>	Is the ATF amount correct?	Go to step **3**.	Adjust the amount of ATF. <Ref. to CVT(TR580)-35, ADJUSTMENT, CVTF.>
3	**CHECK INPUT SIGNAL FOR TCM.** 1) Lift up the vehicle. 2) Start the engine. 3) Warm up until the ATF temperature reaches to 40 — 70°C (104 — 158°F). 4) Shift the select lever to “P” range. 5) Stabilize the engine speed at idle. 6) Read the data of «Actual secondary pressure» using Subaru Select Monitor.	Is the «Actual secondary pressure» 0.5 — 1.5 MPa?	Go to step **4**.	Perform the diagnosis according to DTC P0841 procedure.
4	**CHECK INPUT SIGNAL FOR TCM.** 1) Set the select lever to “D” range. 2) Release the brake pedal to stabilize the engine speed and front wheel speed. 3) Read the data of «Actual Gear Ratio» using Subaru Select Monitor.	Is the «Actual Gear Ratio» 1.5 — 2.6?	Go to step **5**.	Go to step **6**.
5	**CHECK INPUT SIGNAL FOR TCM.** 1) Set the select lever to “D” range. 2) Slowly increase the speed to 40 km/h (24 MPH) and keep the constant speed. 3) Read the data of «Actual Gear Ratio» using Subaru Select Monitor.	Is the «Actual Gear Ratio» 0.5 — 0.9?	Go to step **6**.	Replace the transmission assembly. <Ref. to CVT(TR580)-56, Automatic Transmission Assembly.>

	Step	Check	Yes	No
6	**DRIVING CHECK BY INSPECTION MODE.** 1) Turn the ignition switch to OFF. 2) Perform a drive check based on the “Inspection Mode”. <Ref. to CVT(w/o HEV)(diag)-19, Inspection Mode.>	Does the AT OIL TEMP light blink and is DTC P0730 displayed?	Replace the transmission assembly. <Ref. to CVT(TR580)-56, Automatic Transmission Assembly.>	If there is shift problems, abrupt increase of engine speed, standing start problems, replace the transmission assembly. <Ref. to CVT(TR580)-56, Automatic Transmission Assembly.> If it is normal, temporary poor contact occurs.

J: DTC P0801 REVERSE INHIBIT CONTROL CIRCUIT

NOTE:
For diagnostic procedures, refer to “BODY CONTROL SYSTEM (DIAGNOSTICS)”. <Ref. to BC(diag)-35, DTC B1106 SHIFT LOCK CIRCUIT FAILURE, Diagnostic Procedure with Diagnostic Trouble Code (DTC).>

K: DTC P0841 SECONDARY OIL PRESSURE SENSOR PERFORMANCE

DTC DETECTING CONDITION:

- Immediately at fault recognition
- GENERAL DESCRIPTION <Ref. to GD(CVT)(w/o HEV)-11, DTC P0841 SECONDARY OIL PRESSURE SENSOR PERFORMANCE, Diagnostic Trouble Code (DTC) Detecting Criteria.>

TROUBLE SYMPTOM:

- Acceleration is poor during standing start.
- Shift control malfunction
- Engine speed increases abruptly.

CAUTION:
Before performing diagnosis, record the freeze frame data.

WIRING DIAGRAM:
CVT control system <Ref. to WI(w/o HEV)-66, CVT Control System.>

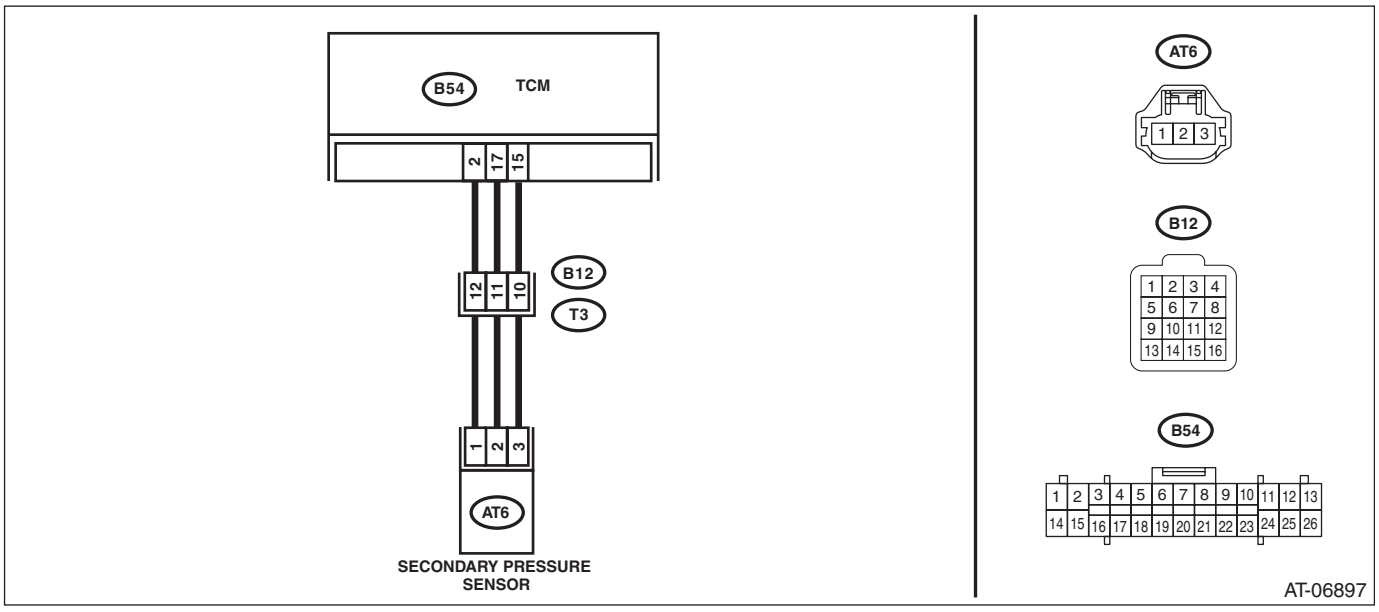

	Step	Check	Yes	No
1	**CHECK DTC.** Read the DTC using Subaru Select Monitor.	Are DTCs other than P0841 displayed?	Perform the diagnosis according to DTC. After the diagnosis, start the engine, and drive for 20 minutes in any driving pattern. (Include driving at a constant legal speed (for 20 seconds) at least once.) Read the DTC, and if P0841 alone is detected, Go to step **2**.	Go to step **2**.
2	**CHECK INPUT SIGNAL FOR TCM.** 1) Turn the ignition switch to ON. 2) Read the data of «secondary pressure sensor voltage» using Subaru Select Monitor. (While shaking the secondary pressure sensor harness)	Is the value of «secondary pressure sensor voltage» 0.39 — 0.61 V?	Go to step **10**.	Go to step **3**.

	Step	Check	Yes	No
3	**CHECK HARNESS.** 1) Turn the ignition switch to OFF. 2) Disconnect the connector of TCM and secondary pressure sensor. 3) Measure the resistance between TCM connector and secondary pressure sensor connector. ***Connector & terminal*** ***(B54) No. 2 — (AT6) No. 1:*** ***(B54) No. 15 — (AT6) No. 3:*** ***(B54) No. 17 — (AT6) No. 2:***	Is the resistance less than 1 Ω?	Go to step **4**.	Repair the open circuit of harness.
4	**CHECK HARNESS.** Measure the resistance between TCM connectors. ***Connector & terminal*** ***(B54) No. 2 — (B54) No. 17:*** ***(B54) No. 15 — (B54) No. 2:*** ***(B54) No. 17 — (B54) No. 15:***	Is the resistance 1 MΩ or more?	Go to step **5**.	Repair the short circuit of harness.
5	**CHECK HARNESS.** Measure the resistance between TCM connector and transmission body. ***Connector & terminal*** ***(B54) No. 2 — Transmission body:*** ***(B54) No. 15 — Transmission body:*** ***(B54) No. 17 — Transmission body:***	Is the resistance 1 MΩ or more?	Go to step **6**.	Repair the short circuit of harness.
6	**CHECK POWER SUPPLY FOR SECONDARY PRESSURE SENSOR.** 1) Connect the TCM connector. 2) Turn the ignition switch to ON. 3) Measure the voltage between TCM connectors. ***Connector & terminal*** ***(B54) No. 2 (+) — (B54) No. 15 (–):***	Is the voltage 4.6 — 5.4 V?	Go to step **7**.	Check for poor contact of connector, and if no fault is found, replace the TCM. <Ref. to CVT(TR580)-139, Transmission Control Module (TCM).>
7	**CHECK POWER SUPPLY FOR SECONDARY PRESSURE SENSOR.** 1) Turn the ignition switch to OFF. 2) Connect the secondary pressure sensor connector. 3) Turn the ignition switch to ON. 4) Measure the voltage between TCM connectors. ***Connector & terminal*** ***(B54) No. 2 (+) — (B54) No. 15 (–):***	Is the voltage 4.6 — 5.4 V?	Go to step **8**.	Replace the secondary pressure sensor. <Ref. to CVT(TR580)-106, Secondary Pressure Sensor.>
8	**CHECK SECONDARY PRESSURE SENSOR OUTPUT.** Measure the voltage between TCM connectors. ***Connector & terminal*** ***(B54) No. 17 (+) — (B54) No. 15 (–):***	Is the voltage 0.39 — 0.61 V?	Check for poor contact of connector, and if no fault is found, replace the TCM. <Ref. to CVT(TR580)-139, Transmission Control Module (TCM).>	Go to step **9**.
9	**CHECK CONNECTOR.** 1) Turn the ignition switch to OFF. 2) Disconnect the connector of TCM and secondary pressure sensor. 3) Check the TCM connector (B54) and the secondary pressure sensor connector (AT6).	Is there any fault in the TCM connector or the secondary pressure connector?	Repair the connector, or replace harness.	Go to step **10**.

	Step	Check	Yes	No
10	**CHECK TRANSMISSION FLUID.** 1) Connect all connectors. 2) Check the amount of ATF. <Ref. to CVT(TR580)-35, ADJUSTMENT, CVTF.>	Is the ATF amount correct?	Go to step **11**.	Adjust the amount of ATF. <Ref. to CVT(TR580)-35, ADJUSTMENT, CVTF.> Go to step **11**.
11	**CHECK INPUT SIGNAL FOR TCM.** 1) Perform the Clear Memory Mode. 2) Start the engine. 3) Warm up until the ATF temperature reaches to 40 — 70°C (104 — 158°F). 4) Depress the brake pedal and move the select lever to each range at an interval of five seconds. NOTE: Move the select lever in the following order: "P" → "R" → "N" → "D" → "N" → "R" → "P". 5) Stabilize the engine speed at idle. 6) Read the data of «Actual secondary pressure» using Subaru Select Monitor.	Is the «Actual secondary pressure» 0.5 — 1.5 MPa?	Go to step **12**.	Replace the secondary pressure sensor. <Ref. to CVT(TR580)-106, Secondary Pressure Sensor.>
12	**CHECK INPUT SIGNAL FOR TCM.** 1) Shift the select lever to "P" range. 2) Keep the engine speed at 3,000 rpm. 3) Read the data of «Actual secondary pressure» using Subaru Select Monitor.	Is the «Actual secondary pressure» 1.5 — 2.5 MPa? And is the difference of the actual oil pressure 0.2 MPa or more compared with the value measured in step 11?	Go to step **13**.	Replace the secondary pressure sensor. <Ref. to CVT(TR580)-106, Secondary Pressure Sensor.>
13	**CHECK FREEZE FRAME DATA.** 1) Turn the ignition switch to OFF. 2) Check the recorded freeze frame data.	Was the detected symptom low-voltage malfunction? <Ref. to CVT(w/o HEV)(diag)-55, CLASSIFICATION OF SYMPTOM USING FREEZE FRAME DATA, DTC P0841 SECONDARY OIL PRESSURE SENSOR PERFORMANCE, Diagnostic Procedure with Diagnostic Trouble Code (DTC).>	Replace the transmission assembly. <Ref. to CVT(TR580)-56, Automatic Transmission Assembly.>	Go to step **14**.
14	**CHECK TCM INPUT SIGNAL (STALL TEST).** 1) Lift up the vehicle. 2) Start the engine. 3) Apply the parking brake. 4) Set the select lever to "D" range. 5) Depress the brake pedal firmly. 6) Slowly open the accelerator fully, and stabilize the engine speed. 7) Read the data of «Actual secondary pressure» using Subaru Select Monitor.	Is the «Actual secondary pressure» 4.5 — 6.0 MPa?	Replace the transmission assembly. <Ref. to CVT(TR580)-56, Automatic Transmission Assembly.>	Go to step **15**.
15	**CHECK TCM INPUT SIGNAL (STALL TEST).** Check the «Actual Secondary Pressure» in step 14.	Is the «Actual secondary pressure» 4.5 MPa or less?	Replace the transmission assembly. <Ref. to CVT(TR580)-56, Automatic Transmission Assembly.>	Replace the control valve body. <Ref. to CVT(TR580)-112, Control Valve Body.>

1. CLASSIFICATION OF SYMPTOM USING FREEZE FRAME DATA

Apply the values of «Actual Secondary Pressure» and «Secondary Actual Current» recorded in the freeze frame data onto the graph shown in the following figure, and judge if either low-voltage malfunction or high-voltage malfunction occurs.

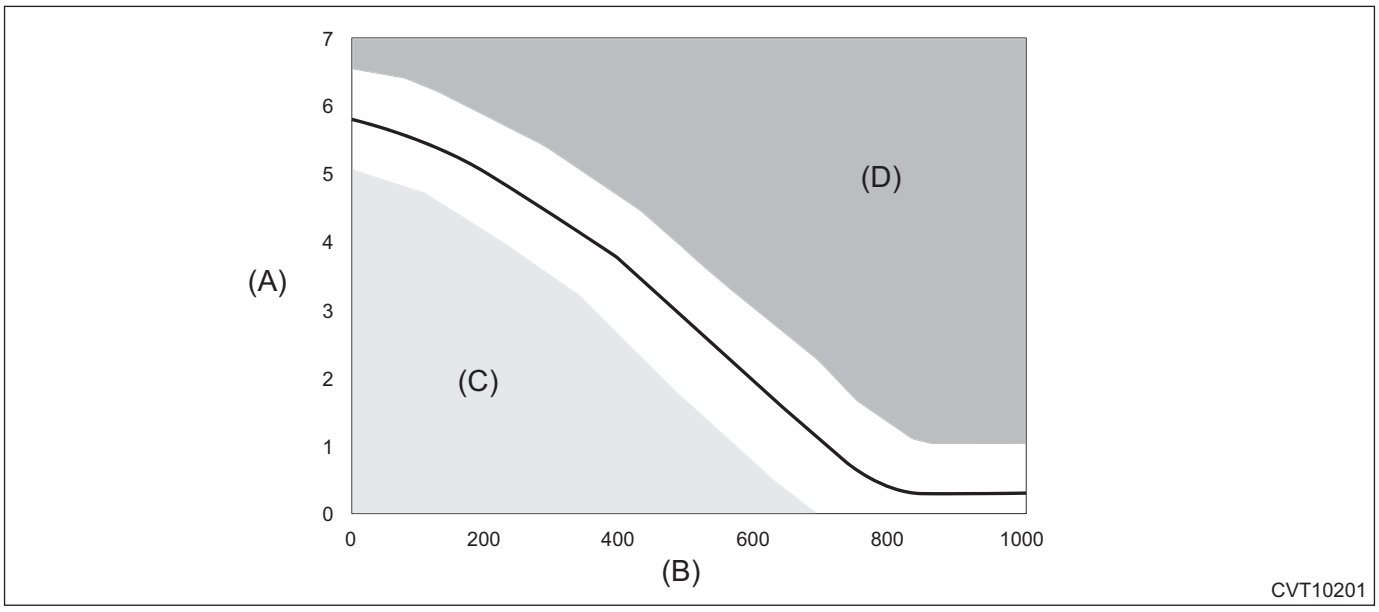

(A) Actual secondary pressure (MPa)
(B) Secondary actual current (mA)
(C) Low-voltage malfunction
(D) High-voltage malfunction

NOTE:
Symptom that the DTC P0841 illuminates can be classified into 2 patterns.
- Low-voltage malfunction: detected due to insufficient oil pressure
- High-voltage malfunction: detected due to excessive oil pressure

L: DTC P0842 SECONDARY OIL PRESSURE SENSOR CIRCUIT (LOW)

DTC DETECTING CONDITION:

- Immediately at fault recognition
- GENERAL DESCRIPTION <Ref. to GD(CVT)(w/o HEV)-12, DTC P0842 SECONDARY OIL PRESSURE SENSOR CIRCUIT (LOW), Diagnostic Trouble Code (DTC) Detecting Criteria.>

TROUBLE SYMPTOM:

Shift characteristics malfunction

WIRING DIAGRAM:

CVT control system <Ref. to WI(w/o HEV)-66, CVT Control System.>

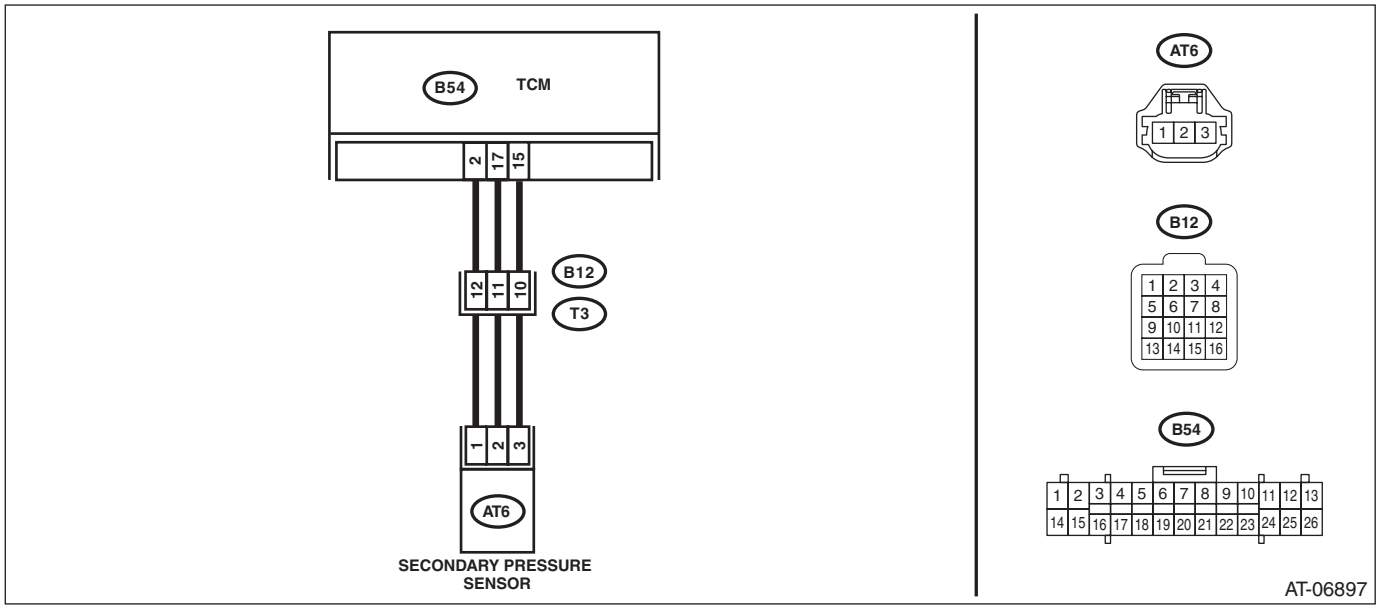

Step		Check	Yes	No
1	**CHECK INPUT SIGNAL FOR TCM.** 1) Start the engine. 2) Warm up until the ATF temperature reaches to 40 — 70°C (104 — 158°F). 3) Depress the brake pedal, and shift the select lever to “D” range. 4) Shift the select lever to “P” range. 5) Stabilize the engine speed at idle. 6) Read the data of «Actual secondary pressure» using Subaru Select Monitor.	Is the «Actual secondary pressure» 0.5 — 1.5 MPa?	Check for poor contact of connector.	Go to step **2**.
2	**CHECK HARNESS.** 1) Turn the ignition switch to OFF. 2) Disconnect the TCM and transmission connectors. 3) Measure the resistance between TCM connector and transmission connectors. ***Connector & terminal*** ***(B54) No. 2 — (B12) No. 12:*** ***(B54) No. 15 — (B12) No. 10:*** ***(B54) No. 17 — (B12) No. 11:***	Is the resistance less than 1 Ω?	Go to step **3**.	Repair the open circuit of harness.
3	**CHECK HARNESS.** Measure the resistance between TCM connector and chassis ground. ***Connector & terminal*** ***(B54) No. 2 — Chassis ground:*** ***(B54) No. 17 — Chassis ground:***	Is the resistance 1 MΩ or more?	Go to step **4**.	Repair the short circuit of harness.

	Step	Check	Yes	No
4	**CHECK TRANSMISSION HARNESS.** 1) Disconnect the secondary pressure sensor connector. 2) Measure the resistance between transmission connector and secondary pressure sensor connector. ***Connector & terminal*** ***(T3) No. 10 — (AT6) No. 3:*** ***(T3) No. 11 — (AT6) No. 2:*** ***(T3) No. 12 — (AT6) No. 1:***	Is the resistance less than 1 Ω?	Go to step **5**.	Repair the open circuit of harness.
5	**CHECK TRANSMISSION HARNESS.** Measure the resistance between transmission connector and chassis ground. ***Connector & terminal*** ***(T3) No. 11 — Chassis ground:*** ***(T3) No. 12 — Chassis ground:***	Is the resistance 1 MΩ or more?	Go to step **6**.	Repair the short circuit of harness.
6	**CHECK SENSOR POWER SUPPLY.** 1) Connect the connectors of TCM and transmission. 2) Turn the ignition switch to ON. 3) Measure the voltage between secondary pressure sensor connector terminals. ***Connector & terminal*** ***(AT6) No. 1 (+) — (AT6) No. 3 (–):***	Is the voltage 4.5 V or more?	Replace the secondary pressure sensor. <Ref. to CVT(TR580)-106, Secondary Pressure Sensor.>	Check for poor contact of the connector, and repair the defective part.

M: DTC P0843 SECONDARY OIL PRESSURE SENSOR CIRCUIT (HIGH)

DTC DETECTING CONDITION:

- Immediately at fault recognition
- GENERAL DESCRIPTION <Ref. to GD(CVT)(w/o HEV)-13, DTC P0843 SECONDARY OIL PRESSURE SENSOR CIRCUIT (HIGH), Diagnostic Trouble Code (DTC) Detecting Criteria.>

TROUBLE SYMPTOM:

Shift characteristics malfunction

WIRING DIAGRAM:

CVT control system <Ref. to WI(w/o HEV)-66, CVT Control System.>

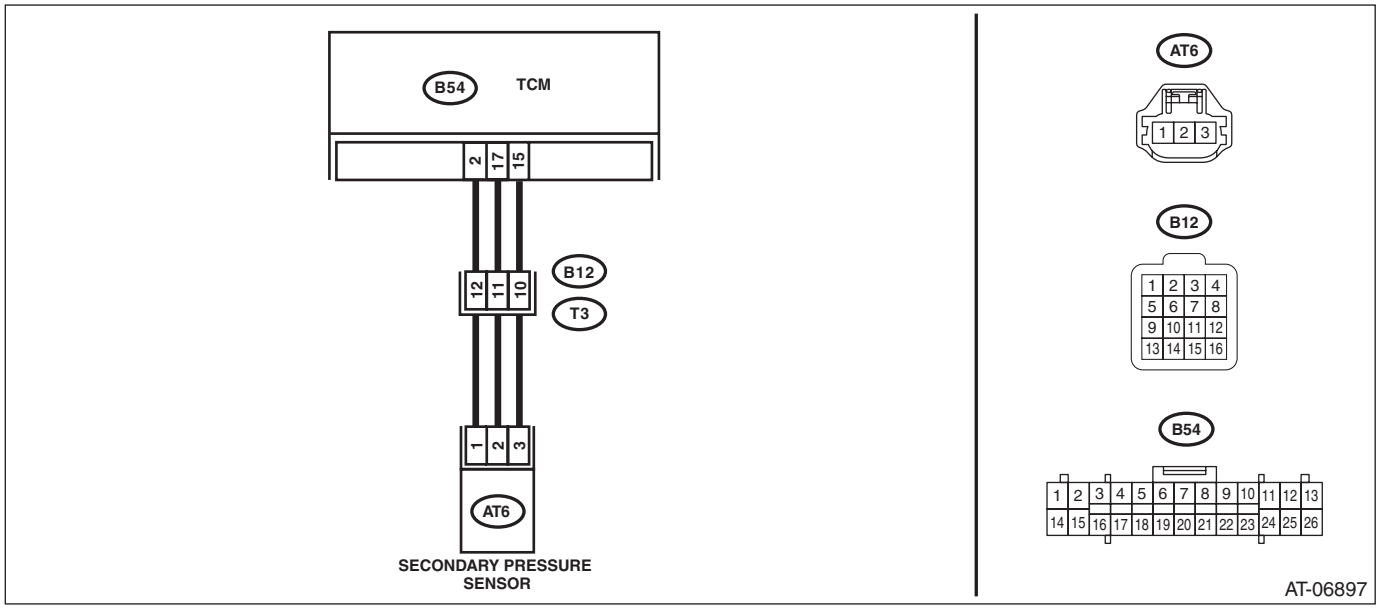

Step		Check	Yes	No
1	**CHECK INPUT SIGNAL FOR TCM.** 1) Start the engine. 2) Warm up until the ATF temperature reaches to 40 — 70°C (104 — 158°F). 3) Depress the brake pedal, and shift the select lever to “D” range. 4) Shift the select lever to “P” range. 5) Stabilize the engine speed at idle. 6) Read the data of «Actual secondary pressure» using Subaru Select Monitor.	Is the «Actual secondary pressure» 0.5 — 1.5 MPa?	Check for poor contact of connector.	Go to step **2**.
2	**CHECK HARNESS.** 1) Turn the ignition switch to OFF. 2) Disconnect the TCM and transmission connectors. 3) Turn the ignition switch to ON. 4) Measure the voltage between TCM connector and chassis ground. ***Connector & terminal*** ***(B54) No. 2 (+) — Chassis ground (–):*** ***(B54) No. 17 (+) — Chassis ground (–):***	Is the voltage approx. 0 V?	Go to step **3**.	Repair the short circuit of harness.
3	**CHECK HARNESS.** 1) Turn the ignition switch to OFF. 2) Measure the resistance between TCM connector terminals. ***Connector & terminal*** ***(B54) No. 2 — (B54) No. 17:***	Is the resistance less than 1 Ω?	Repair the short circuit of harness.	Go to step **4**.

	Step	Check	Yes	No
4	**CHECK TRANSMISSION HARNESS.** 1) Disconnect the secondary pressure sensor connector. 2) Turn the ignition switch to ON. 3) Measure the voltage between transmission connector and chassis ground. ***Connector & terminal*** ***(T3) No. 11 (+) — Chassis ground (–):*** ***(T3) No. 12 (+) — Chassis ground (–):***	Is the voltage approx. 0 V?	Go to step **5**.	Repair the short circuit of harness.
5	**CHECK TRANSMISSION HARNESS.** 1) Turn the ignition switch to OFF. 2) Measure the resistance between transmission connector terminals. ***Connector & terminal*** ***(T3) No. 11 — (T3) No. 12:***	Is the resistance less than 1 Ω?	Repair the short circuit of harness.	Go to step **6**.
6	**CHECK SENSOR POWER SUPPLY.** 1) Connect the connectors of TCM and transmission. 2) Turn the ignition switch to ON. 3) Measure the voltage between secondary pressure sensor connector terminals. ***Connector & terminal*** ***(AT6) No. 1 (+) — (AT6) No. 3 (–):***	Is the voltage 4.5 V or more?	Replace the secondary pressure sensor. <Ref. to CVT(TR580)-106, Secondary Pressure Sensor.>	Check for poor contact of the connector, and repair the defective part.

N: DTC P0890 AT SELF-SHUT RELAY DIAGNOSIS (LOW)

DTC DETECTING CONDITION:

- Immediately at fault recognition
- GENERAL DESCRIPTION <Ref. to GD(CVT)(w/o HEV)-14, DTC P0890 AT SELF-SHUT RELAY DIAGNOSIS (LOW), Diagnostic Trouble Code (DTC) Detecting Criteria.>

TROUBLE SYMPTOM:

Gear is not changed.

CAUTION:

After diagnosis, perform Clear Memory Mode for ECM. <Ref. to EN(H4DO w/o HEV)(diag)-59, Clear Memory Mode.>

WIRING DIAGRAM:

CVT control system <Ref. to WI(w/o HEV)-66, CVT Control System.>

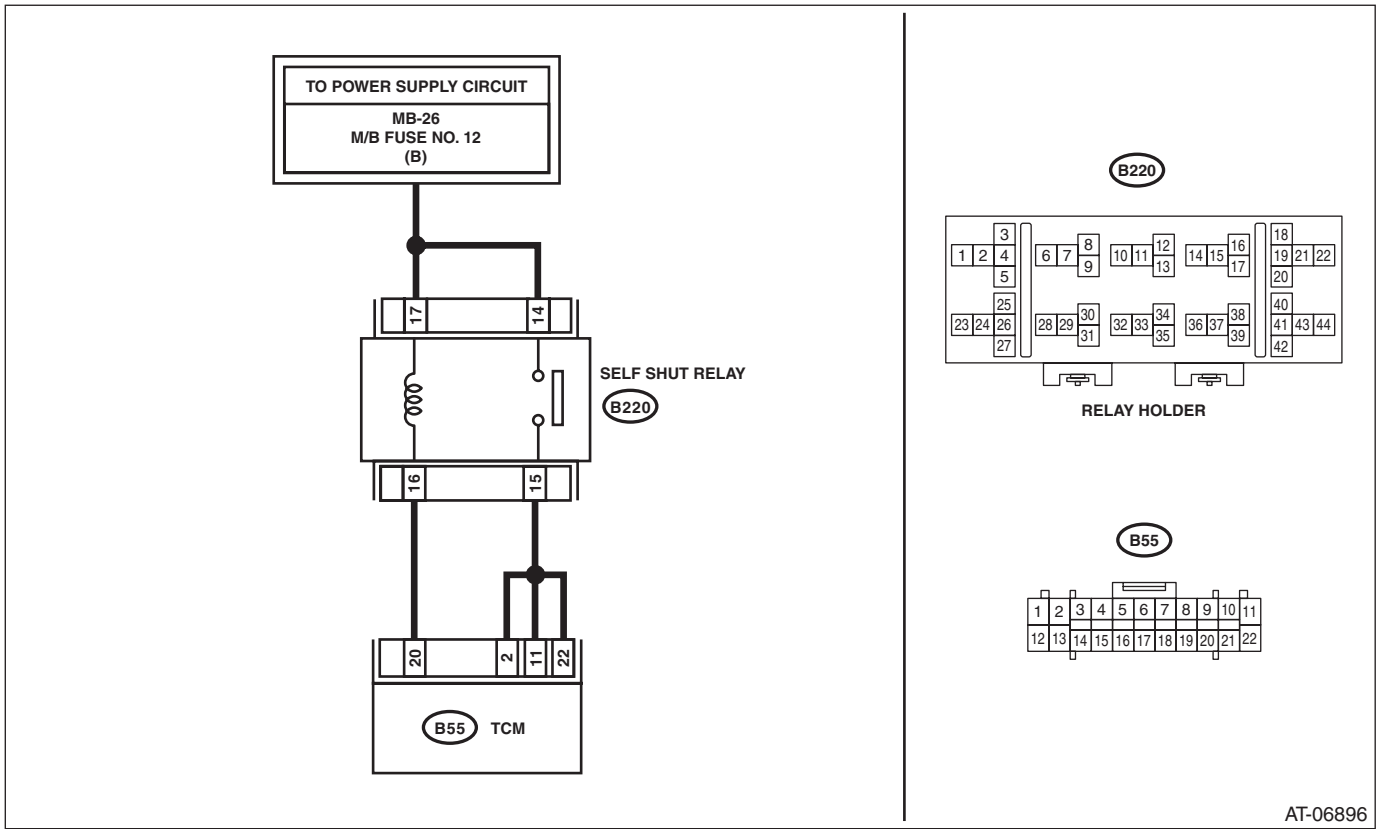

Step		Check	Yes	No
1	**CHECK HARNESS.** 1) Disconnect the TCM and self shut relay connectors. 2) Measure the resistance between TCM connector and self shut relay connector. ***Connector & terminal*** ***(B55) No. 20 — (B220) No. 16:*** ***(B55) No. 2 — (B220) No. 15:*** ***(B55) No. 11 — (B220) No. 15:*** ***(B55) No. 22 — (B220) No. 15:***	Is the resistance less than 1 Ω?	Go to step **2**.	Repair the open circuit of harness.

	Step	Check	Yes	No
2	**CHECK HARNESS.** Measure the resistance between TCM connector and chassis ground. ***Connector & terminal*** ***(B55) No. 20 — Chassis ground:*** ***(B55) No. 2 — Chassis ground:*** ***(B55) No. 11 — Chassis ground:*** ***(B55) No. 22 — Chassis ground:***	Is the resistance 1 MΩ or more?	Go to step **3**.	Repair the short circuit of harness.
3	**CHECK RELAY POWER SUPPLY.** Measure the voltage between self shut relay connector and chassis ground. ***Connector & terminal*** ***(B220) No. 14 (+) — Chassis ground (–):*** ***(B220) No. 17 (+) — Chassis ground (–):***	Is the voltage 10 V or more?	Go to step **4**.	Repair the open or short circuit of harness.
4	**CHECK SELF SHUT RELAY.** Measure the resistance between self shut relay terminals. ***Connector & terminal*** ***(B220) No. 16 — (B220) No. 17:***	Is the resistance 110 — 140 Ω?	Go to step **5**.	Replace the self shut relay.
5	**CHECK SELF SHUT RELAY.** Measure the resistance between self shut relay terminals. ***Connector & terminal*** ***(B220) No. 14 — (B220) No. 15:***	Is the resistance 1 MΩ or more?	Go to step **6**.	Replace the self shut relay.
6	**CHECK INPUT SIGNAL FOR TCM.** 1) Connect the connectors of TCM and self shut relay. 2) Read the data of «Control module voltage» using Subaru Select Monitor.	Is the «Control module voltage» 10 V or more?	Current condition is normal. Check for poor contact in connectors or harnesses, and repair the defective part.	Go to step **7**.
7	**CHECK FOR POOR CONTACT.**	Is there poor contact of the self shut relay circuit?	Repair the poor contact.	Check the TCM.

O: DTC P0951 MANUAL SWITCH

DTC DETECTING CONDITION:
Input signal circuit of manual mode switch is open or shorted.
TROUBLE SYMPTOM:
Manual mode can not be set.
WIRING DIAGRAM:
CVT control system <Ref. to WI(w/o HEV)-66, CVT Control System.>

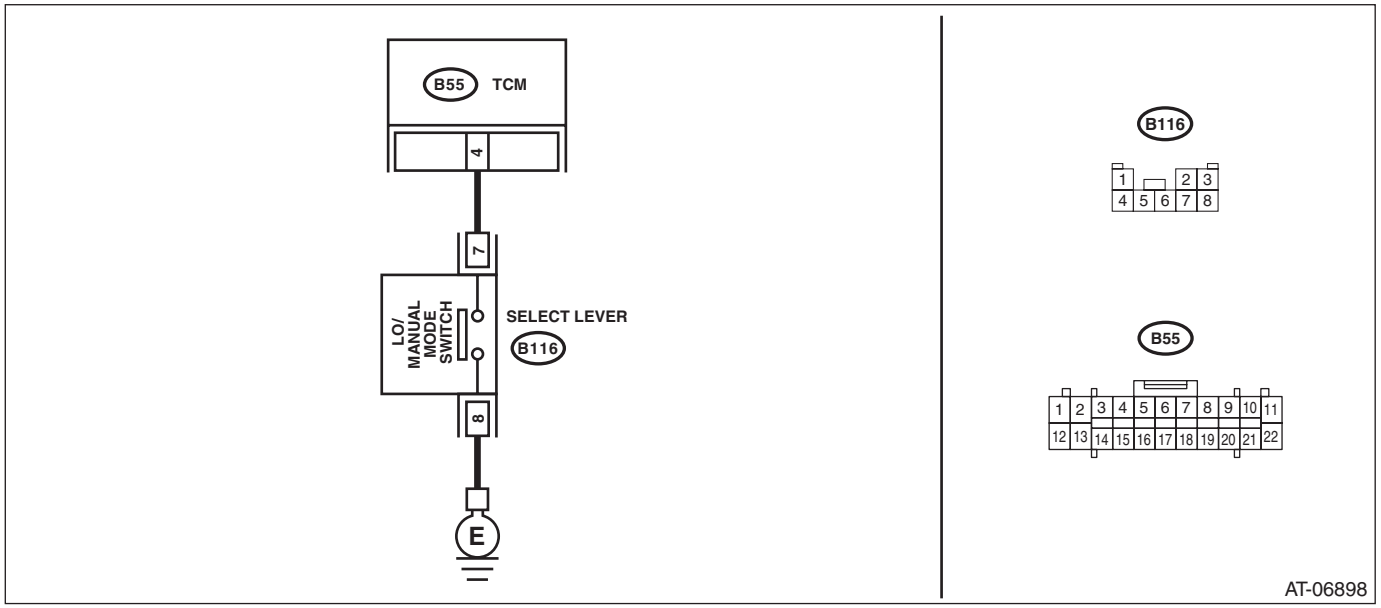

Step		Check	Yes	No
1	**CHECK HARNESS.** 1) Turn the ignition switch to OFF. 2) Disconnect the manual mode switch connector. 3) Measure the resistance between manual mode switch connector and chassis ground. ***Connector & terminal*** ***(B116) No. 8 — Chassis ground:***	Is the resistance less than 1 Ω?	Go to step **2**.	Repair the open circuit of harness.
2	**CHECK MANUAL MODE SWITCH.** Measure the resistance between manual mode switch terminals. ***Connector & terminal*** ***(B116) No. 7 — No. 8:***	Is the resistance 1 MΩ or more?	Go to step **3**.	Replace the select lever assembly. <Ref. to CS-24, Select Lever.>
3	**CHECK MANUAL MODE SWITCH.** 1) Shift the select lever to manual mode. 2) Measure the resistance between manual mode switch terminals. ***Connector & terminal*** ***(B116) No. 7 — No. 8:***	Is the resistance less than 1 Ω?	Go to step **4**.	Replace the select lever assembly. <Ref. to CS-24, Select Lever.>
4	**CHECK HARNESS.** 1) Disconnect the TCM connector. 2) Measure the resistance between TCM connector and manual mode switch connector. ***Connector & terminal*** ***(B55) No. 4 — (B116) No. 7:***	Is the resistance less than 1 Ω?	Go to step **5**.	Repair the open circuit of harness or poor contact of connector.
5	**CHECK HARNESS.** Measure the resistance between manual mode switch connector and chassis ground. ***Connector & terminal*** ***(B116) No. 7 — Chassis ground:***	Is the resistance 1 MΩ or more?	Go to step **6**.	Repair the short circuit of harness.

	Step	Check	Yes	No
6	**CHECK INPUT SIGNAL FOR TCM.** 1) Connect the TCM and manual mode switch connector. 2) Turn the ignition switch to ON. 3) Set the select lever to “D” range. 4) Read the data of «Tiptronic Mode Switch» using Subaru Select Monitor.	Does the value of «Tiptronic Mode Switch» change to “ON” with select lever in manual mode, and “OFF” with select lever in other than manual mode?	Current condition is normal.	Go to step **7**.
7	**CHECK FOR POOR CONTACT.**	Is there poor contact of the manual mode switch circuit?	Repair the poor contact.	Check the TCM.

P: DTC P0962 SECONDARY SOLENOID CIRCUIT (LOW)

DTC DETECTING CONDITION:

- Immediately at fault recognition
- GENERAL DESCRIPTION <Ref. to GD(CVT)(w/o HEV)-15, DTC P0962 SECONDARY SOLENOID CIRCUIT (LOW), Diagnostic Trouble Code (DTC) Detecting Criteria.>

TROUBLE SYMPTOM:

- Engine speed increases abruptly, and can not start.
- Engine speed increases abruptly during driving.

WIRING DIAGRAM:

CVT control system <Ref. to WI(w/o HEV)-66, CVT Control System.>

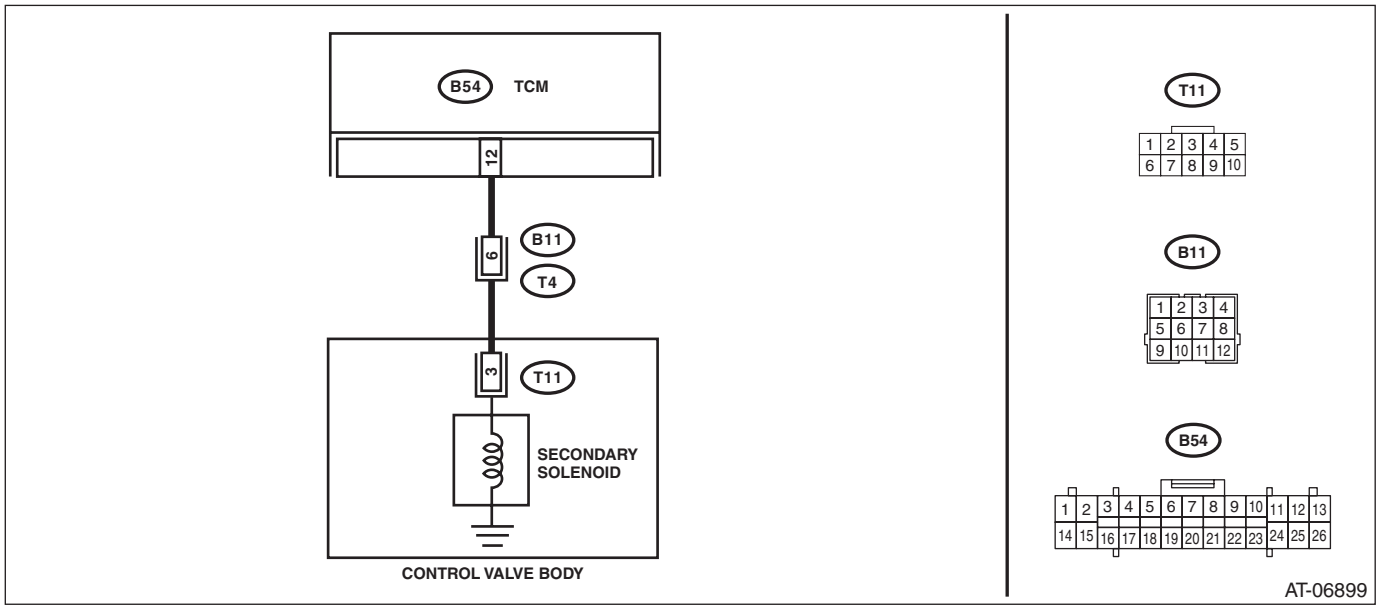

	Step	Check	Yes	No
1	**CHECK INPUT SIGNAL FOR TCM.** 1) After driving with warm up condition, park the vehicle while depressing the brake pedal at "N" range. 2) Read the data of «Sec. Sol. Set Current» and «Sec. Sol. Actual Current» using Subaru Select Monitor.	Does the value of «Sec. Sol. Set Current» and «Sec. Sol. Actual Current» almost correspond?	Check for poor contact of connector.	Go to step **2**.
2	**CHECK HARNESS.** 1) Turn the ignition switch to OFF. 2) Disconnect the TCM and transmission connectors. 3) Measure the resistance between TCM connector and chassis ground. ***Connector & terminal*** ***(B54) No. 12 — Chassis ground:***	Is the resistance 1 MΩ or more?	Go to step **3**.	Repair the short circuit of harness.
3	**CHECK SECONDARY SOLENOID.** Measure the resistance between transmission connector and transmission body. ***Connector & terminal*** ***(T4) No. 6 — Transmission body:***	Is the resistance approx. 7 Ω? (when engine cold)	Check for poor contact of the connector, and repair the defective part.	Go to step **4**.
4	**CHECK HARNESS INSIDE TRANSMISSION.** **CAUTION:** **Start work after ATF cools down.** 1) Remove the transmission valve cover. 2) Check for the harness pinch, damage.	Is there any fault in the harness?	Replace the transmission harness.	Go to step **5**.

	Step	Check	Yes	No
5	**CHECK HARNESS INSIDE TRANSMISSION.** 1) Disconnect the control valve body connector. 2) Measure the resistance between transmission connector and transmission body. ***Connector & terminal*** ***(T4) No. 6 — Transmission body:***	Is the resistance 1 MΩ or more?	Replace the control valve body. <Ref. to CVT(TR580)-112, Control Valve Body.>	Replace the transmission harness.

Q: DTC P0963 SECONDARY SOLENOID CIRCUIT (HIGH)

DTC DETECTING CONDITION:

- Generated immediately at fault recognition.
- GENERAL DESCRIPTION <Ref. to GD(CVT)(w/o HEV)-16, DTC P0963 SECONDARY SOLENOID CIRCUIT (HIGH), Diagnostic Trouble Code (DTC) Detecting Criteria.>

TROUBLE SYMPTOM:

- Engine speed increases abruptly, and can not start.
- Engine speed increases abruptly during driving.

WIRING DIAGRAM:

CVT control system <Ref. to WI(w/o HEV)-66, CVT Control System.>

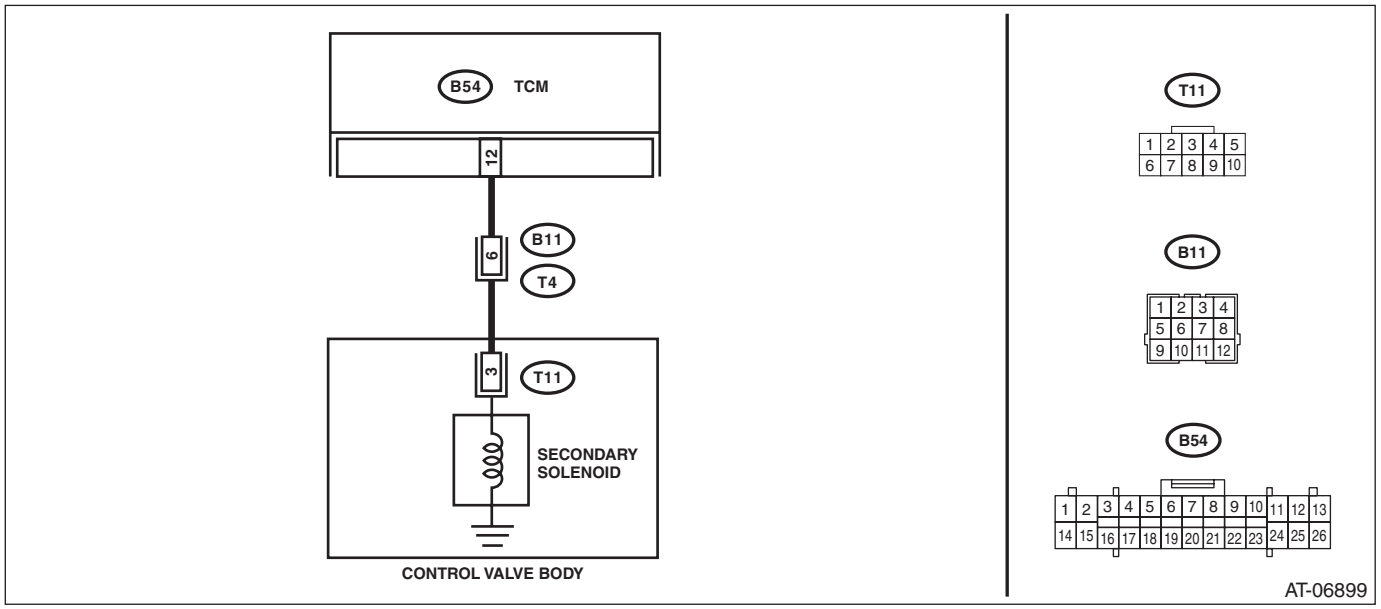

	Step	Check	Yes	No
1	**CHECK INPUT SIGNAL FOR TCM.** 1) After driving with warm up condition, park the vehicle while depressing the brake pedal at "N" range. 2) Read the data of «Sec. Sol. Set Current» and «Sec. Sol. Actual Current» using Subaru Select Monitor.	Does the value of «Sec. Sol. Set Current» and «Sec. Sol. Actual Current» almost correspond?	Check for poor contact of connector.	Go to step **2**.
2	**CHECK HARNESS.** 1) Turn the ignition switch to OFF. 2) Disconnect the TCM and transmission connectors. 3) Measure the resistance between TCM connector and transmission connectors. ***Connector & terminal*** ***(B54) No. 12 — (B11) No. 6:***	Is the resistance less than 1 Ω?	Go to step **3**.	Repair the open circuit of harness.
3	**CHECK HARNESS.** 1) Turn the ignition switch to ON. 2) Measure the voltage between TCM connector and chassis ground. ***Connector & terminal*** ***(B54) No. 12 (+) — Chassis ground (–):***	Is the voltage approx. 0 V?	Go to step **4**.	Repair the short circuit of harness.
4	**CHECK SECONDARY SOLENOID.** Measure the resistance between transmission connector and transmission body. ***Connector & terminal*** ***(T4) No. 6 — Transmission body:***	Is the resistance approx. 7 Ω? (when engine cold)	Check for poor contact of the connector, and repair the defective part.	Go to step **5**.

	Step	Check	Yes	No
5	**CHECK HARNESS INSIDE TRANSMISSION.** **CAUTION:** **Start work after ATF cools down.** 1) Remove the transmission valve cover. 2) Check for the harness pinch, damage.	Is there any fault in the harness?	Replace the transmission harness.	Go to step **6**.
6	**CHECK HARNESS INSIDE TRANSMISSION.** 1) Disconnect the control valve body connector. 2) Turn the ignition switch to ON. 3) Measure the voltage between transmission connector and transmission body. ***Connector & terminal*** ***(T4) No. 6 (+) — Transmission body (–):***	Is the voltage approx. 0 V?	Replace the control valve body. <Ref. to CVT(TR580)-112, Control Valve Body.>	Replace the transmission harness.

R: DTC P0965 FORWARD & REVERSE SOLENOID FUNCTION

DTC DETECTING CONDITION:

- Immediately at fault recognition
- GENERAL DESCRIPTION <Ref. to GD(CVT)(w/o HEV)-17, DTC P0965 FORWARD & REVERSE SOLENOID FUNCTION, Diagnostic Trouble Code (DTC) Detecting Criteria.>

TROUBLE SYMPTOM:

- Engine speed increases abruptly, and can not accelerate.
- Excessive slippage is felt.

	Step	Check	Yes	No
1	**CHECK TRANSMISSION FLUID.** Check the condition of ATF. <Ref. to CVT(TR580)-38, CONDITION CHECK, CVTF.>	Is the ATF OK?	Go to step **2**.	Check according to the "Corrective action" of ATF (CVTF) "CONDITION CHECK". <Ref. to CVT(TR580)-38, CONDITION CHECK, CVTF.>
2	**CHECK TRANSMISSION FLUID.** Check the amount of ATF. <Ref. to CVT(TR580)-35, ADJUSTMENT, CVTF.>	Is the ATF amount correct?	Go to step **3**.	Adjust the amount of ATF. <Ref. to CVT(TR580)-35, ADJUSTMENT, CVTF.>
3	**CHECK INPUT SIGNAL FOR TCM.** 1) Start the engine. 2) Warm up until the ATF temperature reaches to 40 — 70°C (104 — 158°F). 3) Shift the select lever to "P" range. 4) Stabilize the engine speed at idle. 5) Read the data of «Actual secondary pressure» using Subaru Select Monitor.	Is the «Actual secondary pressure» 0.5 — 1.5 MPa?	Go to step **4**.	Perform the diagnosis according to DTC P0841 procedure.
4	**STALL TEST.** Perform the stall test. <Ref. to CVT(TR580)-45, Stall Test.>	Is the stall test normal?	Go to step **5**.	If the engine speed increases abruptly, replace the transmission assembly. <Ref. to CVT(TR580)-56, Automatic Transmission Assembly.>
5	**DRIVING CHECK BY INSPECTION MODE.** 1) Turn the ignition switch to OFF. 2) Perform a drive check based on the "Inspection Mode". <Ref. to CVT(w/o HEV)(diag)-19, Inspection Mode.>	Does the AT OIL TEMP light blink and is DTC P0965 displayed?	Replace the transmission assembly. <Ref. to CVT(TR580)-56, Automatic Transmission Assembly.>	If there is abrupt increase of engine speed, standing start problems, replace the transmission assembly. <Ref. to CVT(TR580)-56, Automatic Transmission Assembly.> If it is normal, temporary poor contact occurs.

S: DTC P0966 FORWARD & REVERSE SOLENOID CIRCUIT (LOW)

DTC DETECTING CONDITION:

- Immediately at fault recognition
- GENERAL DESCRIPTION <Ref. to GD(CVT)(w/o HEV)-18, DTC P0966 FORWARD & REVERSE SOLENOID CIRCUIT (LOW), Diagnostic Trouble Code (DTC) Detecting Criteria.>

TROUBLE SYMPTOM:

Excessive shift shock

WIRING DIAGRAM:

CVT control system <Ref. to WI(w/o HEV)-66, CVT Control System.>

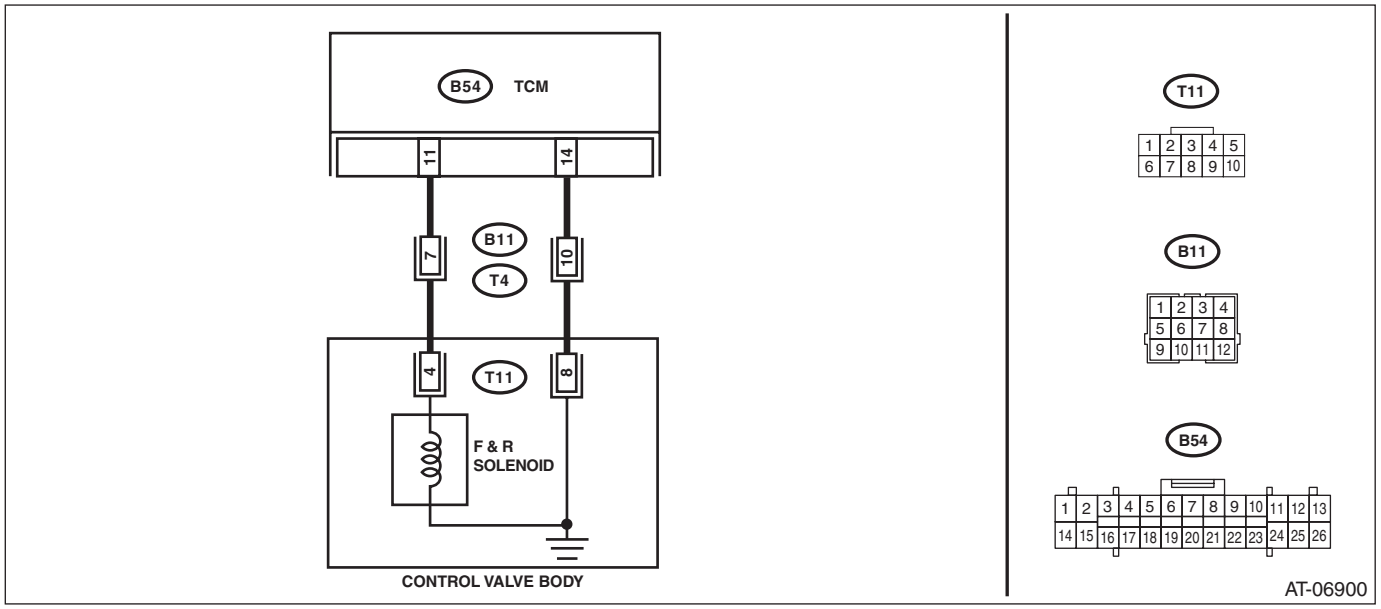

	Step	Check	Yes	No
1	**CHECK INPUT SIGNAL FOR TCM.** 1) After driving with warm up condition, park the vehicle while depressing the brake pedal at "D" range. 2) Read the data of «F&R Linear Solenoid Set Current» and «F&R Linear Solenoid Actual Current» using Subaru Select Monitor.	Does the value of «F&R Linear Solenoid Set Current» and «F&R Linear Solenoid Actual Current» almost correspond?	Check for poor contact of connector.	Go to step **2**.
2	**CHECK HARNESS.** 1) Turn the ignition switch to OFF. 2) Disconnect the TCM and transmission connectors. 3) Measure the resistance between TCM connector and chassis ground. ***Connector & terminal*** ***(B54) No. 11 — Chassis ground:***	Is the resistance 1 MΩ or more?	Go to step **3**.	Repair the short circuit of harness.
3	**CHECK F&R SOLENOID.** Measure the resistance between transmission connector and transmission body. ***Connector & terminal*** ***(T4) No. 7 — Transmission body:***	Is the resistance approx. 6 Ω? (when engine cold)	Check for poor contact of the connector, and repair the defective part.	Go to step **4**.
4	**CHECK HARNESS INSIDE TRANSMISSION.** **CAUTION:** **Start work after ATF cools down.** 1) Remove the transmission valve cover. 2) Check for the harness pinch, damage.	Is there any fault in the harness?	Replace the transmission harness.	Go to step **5**.

	Step	Check	Yes	No
5	**CHECK HARNESS INSIDE TRANSMISSION.** 1) Disconnect the control valve body connector. 2) Measure the resistance between transmission connector and transmission body. ***Connector & terminal*** ***(T4) No. 7 — Transmission body:***	Is the resistance 1 MΩ or more?	Replace the control valve body. <Ref. to CVT(TR580)-112, Control Valve Body.>	Replace the transmission harness.

T: DTC P0967 FORWARD & REVERSE LINEAR SOLENOID CIRCUIT (HIGH)

DTC DETECTING CONDITION:

- Immediately at fault recognition
- GENERAL DESCRIPTION <Ref. to GD(CVT)(w/o HEV)-19, DTC P0967 FORWARD & REVERSE LINEAR SOLENOID CIRCUIT (HIGH), Diagnostic Trouble Code (DTC) Detecting Criteria.>

TROUBLE SYMPTOM:

Engine speed increases abruptly, and can not start.

WIRING DIAGRAM:

CVT control system <Ref. to WI(w/o HEV)-66, CVT Control System.>

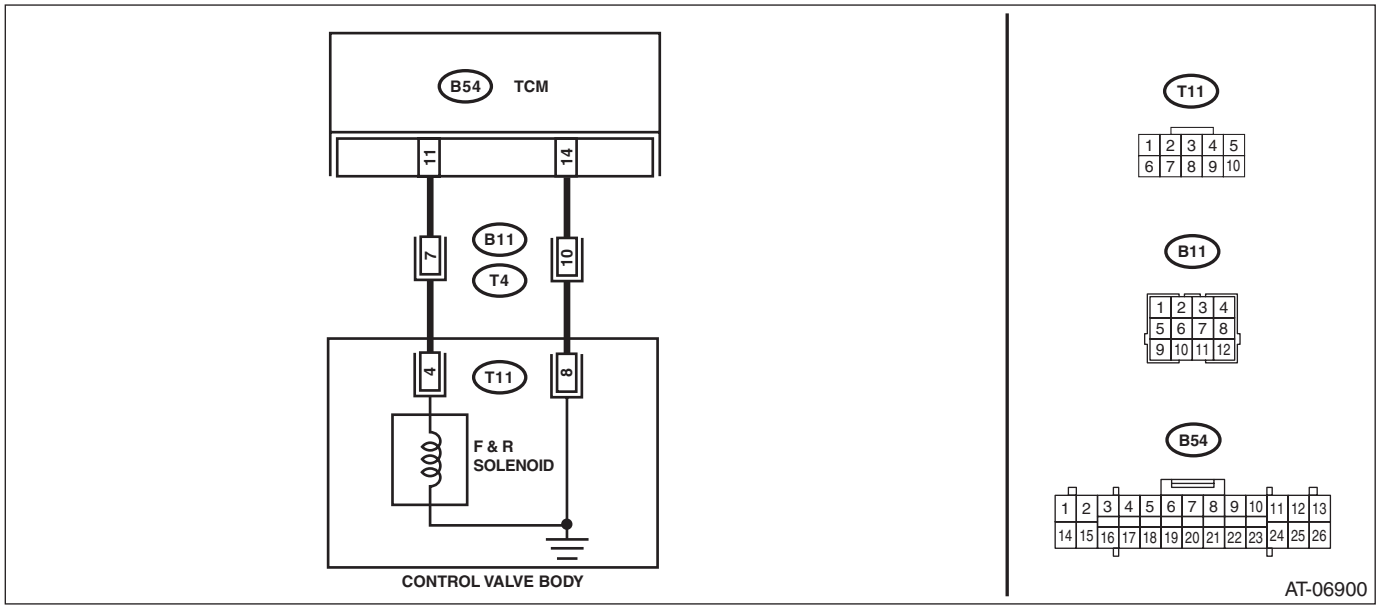

	Step	Check	Yes	No
1	**CHECK INPUT SIGNAL FOR TCM.** 1) After driving with warm up condition, park the vehicle while depressing the brake pedal at "D" range. 2) Read the data of «F&R Linear Solenoid Set Current» and «F&R Linear Solenoid Actual Current» using Subaru Select Monitor.	Does the value of «F&R Linear Solenoid Set Current» and «F&R Linear Solenoid Actual Current» almost correspond?	Check for poor contact of connector.	Go to step **2**.
2	**CHECK HARNESS.** 1) Turn the ignition switch to OFF. 2) Disconnect the TCM and transmission connectors. 3) Measure the resistance between TCM connector and transmission connectors. ***Connector & terminal*** ***(B54) No. 11 — (B11) No. 7:***	Is the resistance less than 1 Ω?	Go to step **3**.	Repair the open circuit of harness.
3	**CHECK HARNESS.** 1) Turn the ignition switch to ON. 2) Measure the voltage between TCM connector and chassis ground. ***Connector & terminal*** ***(B54) No. 11 (+) — Chassis ground (–):***	Is the voltage approx. 0 V?	Go to step **4**.	Repair the short circuit of harness.
4	**CHECK F&R SOLENOID.** Measure the resistance between transmission connector and transmission body. ***Connector & terminal*** ***(T4) No. 7 — Transmission body:***	Is the resistance approx. 6 Ω? (when engine cold)	Check for poor contact of the connector, and repair the defective part.	Go to step **5**.

	Step	Check	Yes	No
5	**CHECK HARNESS INSIDE TRANSMISSION.** **CAUTION:** **Start work after ATF cools down.** 1) Remove the transmission valve cover. 2) Check for the harness pinch, damage.	Is there any fault in the harness?	Replace the transmission harness.	Go to step **6**.
6	**CHECK HARNESS INSIDE TRANSMISSION.** 1) Disconnect the control valve body connector. 2) Turn the ignition switch to ON. 3) Measure the voltage between transmission connector and transmission body. ***Connector & terminal*** ***(T4) No. 7 (+) — Transmission body (–):***	Is the voltage approx. 0 V?	Replace the control valve body. <Ref. to CVT(TR580)-112, Control Valve Body.>	Replace the transmission harness.

U: DTC P0970 TRANSFER SOLENOID CIRCUIT (LOW)

DTC DETECTING CONDITION:
Output signal circuit of AWD solenoid is shorted.
TROUBLE SYMPTOM:
Drivability getting worse.
WIRING DIAGRAM:
CVT control system <Ref. to WI(w/o HEV)-66, CVT Control System.>

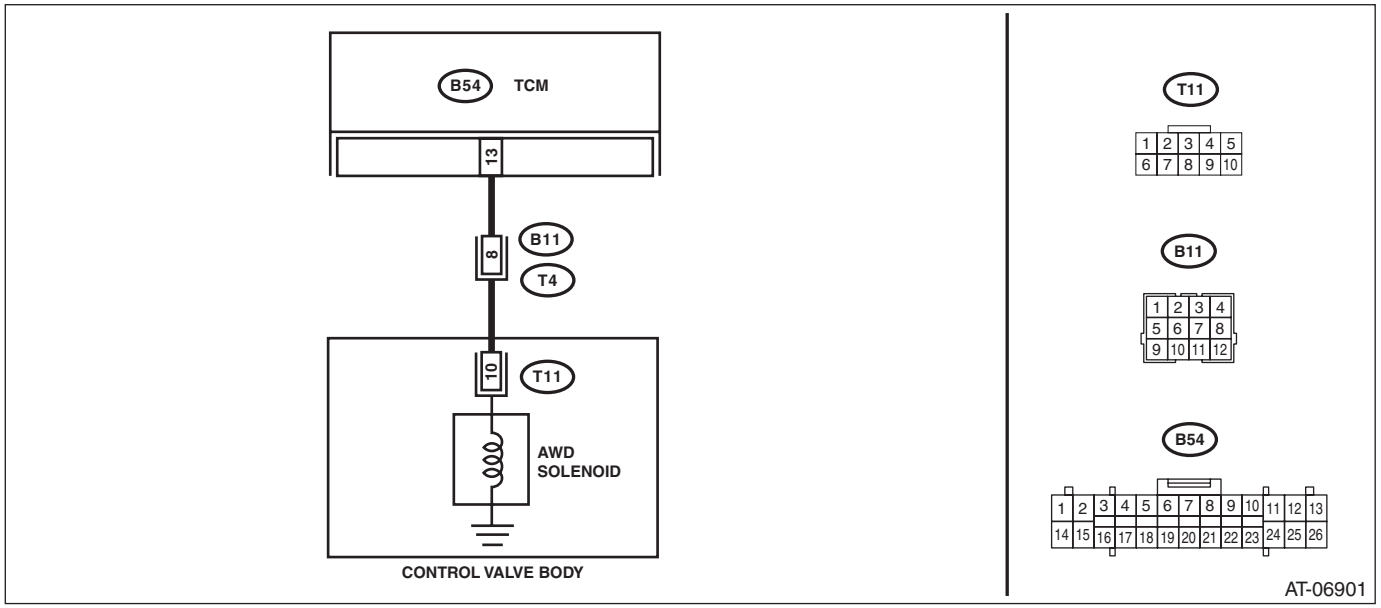

Step		Check	Yes	No
1	**CHECK HARNESS.** 1) Turn the ignition switch to OFF. 2) Disconnect the TCM and transmission connectors. 3) Measure the resistance between TCM connector and chassis ground. ***Connector & terminal*** ***(B54) No. 13 — Chassis ground:***	Is the resistance 1 MΩ or more?	Go to step **2**.	Repair the short circuit of harness.
2	**CHECK AWD SOLENOID.** Measure the resistance between transmission connector and transmission body. ***Connector & terminal*** ***(T4) No. 8 — Transmission body:***	Is the resistance approx. 4 Ω? (when engine cold)	Check for poor contact of the connector, and repair the defective part.	Go to step **3**.
3	**CHECK HARNESS INSIDE TRANSMISSION.** **CAUTION:** **Start work after ATF cools down.** 1) Remove the transmission valve cover. 2) Check for the harness pinch, damage.	Is there any fault in the harness?	Replace the transmission harness.	Go to step **4**.
4	**CHECK HARNESS INSIDE TRANSMISSION.** 1) Disconnect the control valve body connector. 2) Measure the resistance between transmission connector and transmission body. ***Connector & terminal*** ***(T4) No. 8 — Transmission body:***	Is the resistance 1 MΩ or more?	Replace the control valve body. <Ref. to CVT(TR580)-112, Control Valve Body.>	Replace the transmission harness.

V: DTC P0971 TRANSFER SOLENOID CIRCUIT (HIGH)

DTC DETECTING CONDITION:

- Output signal circuit of AWD solenoid is open or shorted.
- AWD solenoid has open circuit inside.

TROUBLE SYMPTOM:

- Tight corner braking phenomenon occurs.
- Drivability getting worse.

WIRING DIAGRAM:

CVT control system <Ref. to WI(w/o HEV)-66, CVT Control System.>

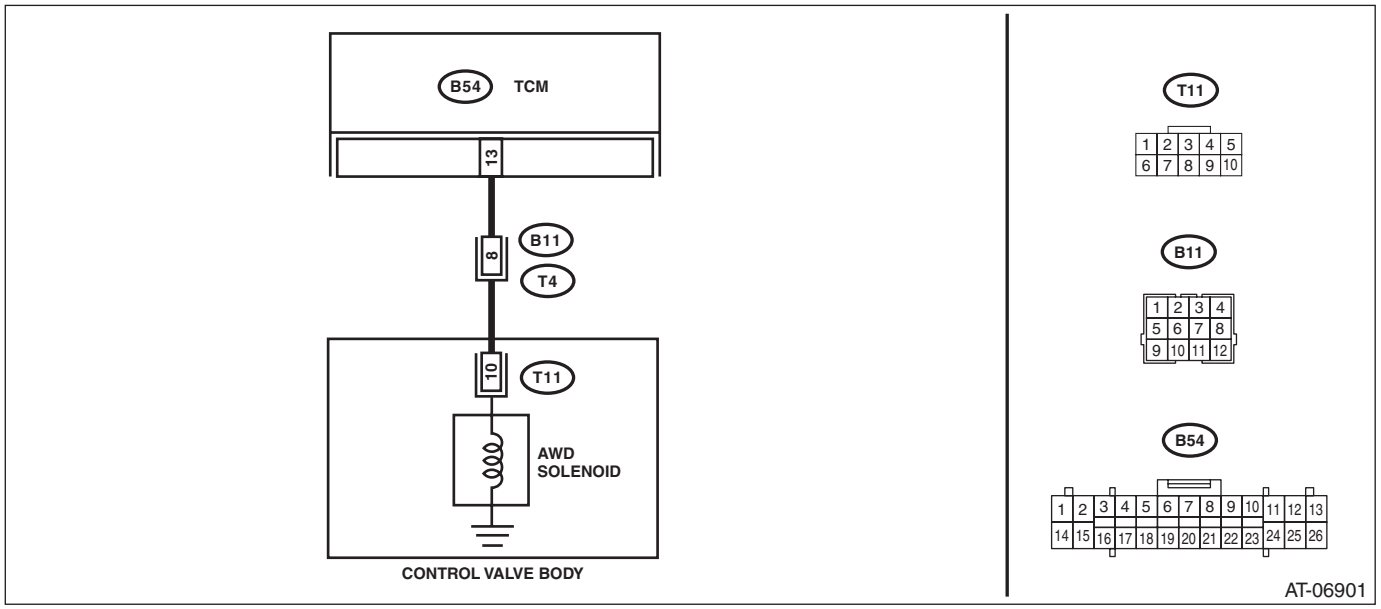

	Step	Check	Yes	No
1	**CHECK HARNESS.** 1) Turn the ignition switch to OFF. 2) Disconnect the TCM and transmission connectors. 3) Measure the resistance between TCM connector and transmission connectors. ***Connector & terminal*** ***(B54) No. 13 — (B11) No. 8:***	Is the resistance less than 1 Ω?	Go to step **2**.	Repair the open circuit of harness.
2	**CHECK HARNESS.** 1) Turn the ignition switch to ON. 2) Measure the voltage between TCM connector and chassis ground. ***Connector & terminal*** ***(B54) No. 13 (+) — Chassis ground (–):***	Is the voltage approx. 0 V?	Go to step **3**.	Repair the short circuit of harness.
3	**CHECK AWD SOLENOID.** Measure the resistance between transmission connector and transmission body. ***Connector & terminal*** ***(T4) No. 8 — Transmission body:***	Is the resistance approx. 4 Ω? (when engine cold)	Check for poor contact of the connector, and repair the defective part.	Go to step **4**.
4	**CHECK HARNESS INSIDE TRANSMISSION.** **CAUTION:** **Start work after ATF cools down.** 1) Remove the transmission valve cover. 2) Check for the harness pinch, damage.	Is there any fault in the harness?	Replace the transmission harness.	Go to step **5**.

	Step	Check	Yes	No
5	**CHECK HARNESS INSIDE TRANSMISSION.** 1) Disconnect the control valve body connector. 2) Turn the ignition switch to ON. 3) Measure the voltage between transmission connector and transmission body. ***Connector & terminal*** ***(T4) No. 8 (+) — Transmission body (–):***	Is the voltage approx. 0 V?	Replace the control valve body. <Ref. to CVT(TR580)-112, Control Valve Body.>	Replace the transmission harness.

W: DTC P0973 PRIMARY SOLENOID SYSTEM A CIRCUIT (LOW)

DTC DETECTING CONDITION:

- Immediately at fault recognition
- GENERAL DESCRIPTION <Ref. to GD(CVT)(w/o HEV)-20, DTC P0973 PRIMARY SOLENOID SYSTEM A CIRCUIT (LOW), Diagnostic Trouble Code (DTC) Detecting Criteria.>

TROUBLE SYMPTOM:

Gear is not changed. (No up-shift)

WIRING DIAGRAM:

CVT control system <Ref. to WI(w/o HEV)-66, CVT Control System.>

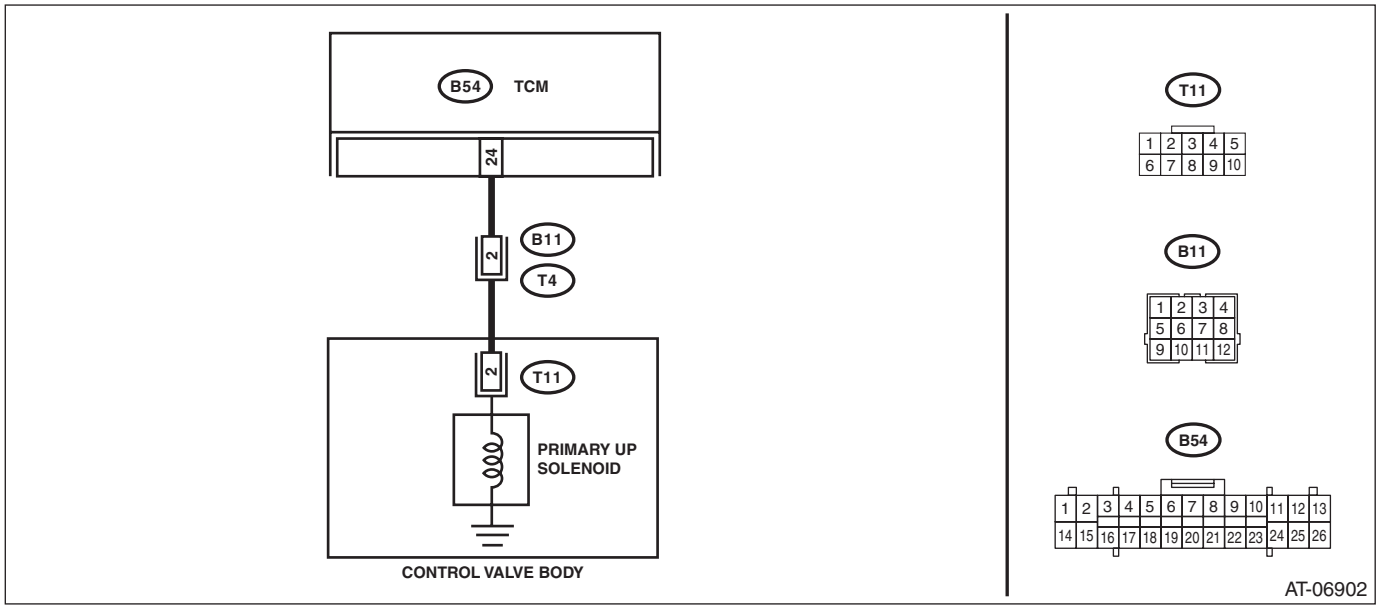

	Step	Check	Yes	No
1	**CHECK HARNESS.** 1) Turn the ignition switch to OFF. 2) Disconnect the TCM and transmission connectors. 3) Measure the resistance between TCM connector and chassis ground. ***Connector & terminal*** ***(B54) No. 24 — Chassis ground:***	Is the resistance 1 MΩ or more?	Go to step **2**.	Repair the short circuit of harness.
2	**CHECK PRIMARY UP SOLENOID.** Measure the resistance between transmission connector and transmission body. ***Connector & terminal*** ***(T4) No. 2 — Transmission body:***	Is the resistance approx. 13 Ω? (when engine cold)	Check for poor contact of the connector, and repair the defective part.	Go to step **3**.
3	**CHECK HARNESS INSIDE TRANSMISSION.** **CAUTION:** **Start work after ATF cools down.** 1) Remove the transmission valve cover. 2) Check for the harness pinch, damage.	Is there any fault in the harness?	Replace the transmission harness.	Go to step **4**.
4	**CHECK HARNESS INSIDE TRANSMISSION.** 1) Disconnect the control valve body connector. 2) Measure the resistance between transmission connector and transmission body. ***Connector & terminal*** ***(T4) No. 2 — Transmission body:***	Is the resistance 1 MΩ or more?	Replace the control valve body. <Ref. to CVT(TR580)-112, Control Valve Body.>	Replace the transmission harness.

X: DTC P0974 PRIMARY SOLENOID SYSTEM A CIRCUIT (HIGH)

DTC DETECTING CONDITION:

- Immediately at fault recognition
- GENERAL DESCRIPTION <Ref. to GD(CVT)(w/o HEV)-21, DTC P0974 PRIMARY SOLENOID SYSTEM A CIRCUIT (HIGH), Diagnostic Trouble Code (DTC) Detecting Criteria.>

TROUBLE SYMPTOM:

Gear is not changed. (No up-shift)

WIRING DIAGRAM:

CVT control system <Ref. to WI(w/o HEV)-66, CVT Control System.>

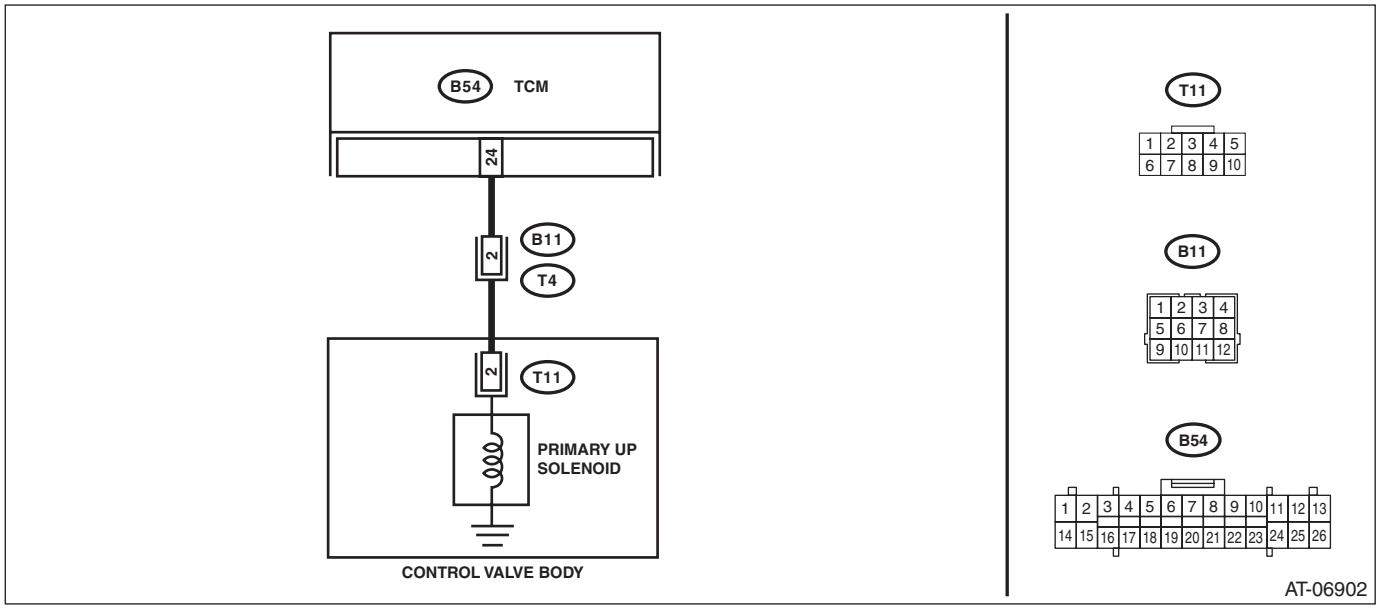

	Step	Check	Yes	No
1	**CHECK HARNESS.** 1) Turn the ignition switch to OFF. 2) Disconnect the TCM and transmission connectors. 3) Measure the resistance between TCM connector and transmission connectors. ***Connector & terminal*** ***(B54) No. 24 — (B11) No. 2:***	Is the resistance less than 1 Ω?	Go to step **2**.	Repair the open circuit of harness.
2	**CHECK HARNESS.** 1) Turn the ignition switch to ON. 2) Measure the voltage between TCM connector and chassis ground. ***Connector & terminal*** ***(B54) No. 24 (+) — Chassis ground (–):***	Is the voltage approx. 0 V?	Go to step **3**.	Repair the short circuit of harness.
3	**CHECK PRIMARY UP SOLENOID.** Measure the resistance between transmission connector and transmission body. ***Connector & terminal*** ***(T4) No. 2 — Transmission body:***	Is the resistance approx. 13 Ω? (when engine cold)	Check for poor contact of the connector, and repair the defective part.	Go to step **4**.
4	**CHECK HARNESS INSIDE TRANSMISSION.** **CAUTION:** **Start work after ATF cools down.** 1) Remove the transmission valve cover. 2) Check for the harness pinch, damage.	Is there any fault in the harness?	Replace the transmission harness.	Go to step **5**.

Step		Check	Yes	No
5	**CHECK HARNESS INSIDE TRANSMISSION.** 1) Disconnect the control valve body connector. 2) Turn the ignition switch to ON. 3) Measure the voltage between transmission connector and transmission body. ***Connector & terminal*** ***(T4) No. 2 (+) — Transmission body (–):***	Is the voltage approx. 0 V?	Replace the control valve body. <Ref. to CVT(TR580)-112, Control Valve Body.>	Replace the transmission harness.

Y: DTC P0976 PRIMARY SOLENOID SYSTEM B CIRCUIT (LOW)

DTC DETECTING CONDITION:

- Immediately at fault recognition
- GENERAL DESCRIPTION <Ref. to GD(CVT)(w/o HEV)-22, DTC P0976 PRIMARY SOLENOID SYSTEM B CIRCUIT (LOW), Diagnostic Trouble Code (DTC) Detecting Criteria.>

TROUBLE SYMPTOM:

Gear is not changed. (No down-shift)

WIRING DIAGRAM:

CVT control system <Ref. to WI(w/o HEV)-66, CVT Control System.>

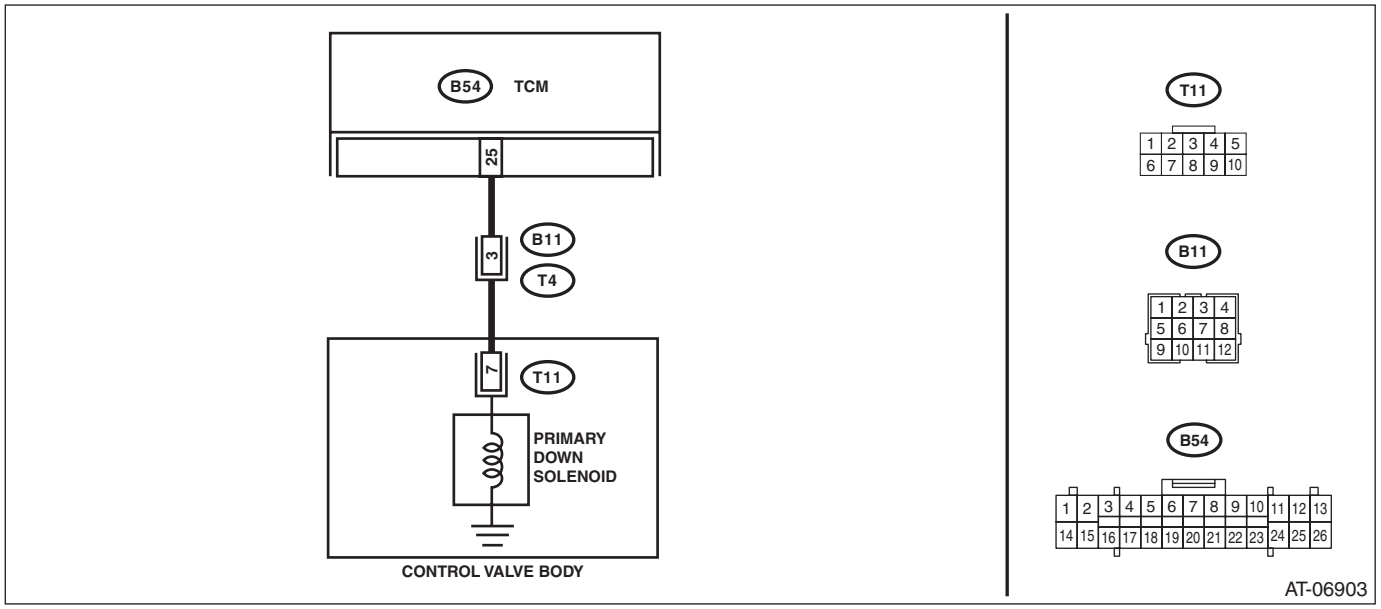

	Step	Check	Yes	No
1	**CHECK HARNESS.** 1) Turn the ignition switch to OFF. 2) Disconnect the TCM and transmission connectors. 3) Measure the resistance between TCM connector and chassis ground. ***Connector & terminal*** ***(B54) No. 25 — Chassis ground:***	Is the resistance 1 MΩ or more?	Go to step **2**.	Repair the short circuit of harness.
2	**CHECK PRIMARY DOWN SOLENOID.** Measure the resistance between transmission connector and transmission body. ***Connector & terminal*** ***(T4) No. 3 — Transmission body:***	Is the resistance approx. 13 Ω? (when engine cold)	Check for poor contact of the connector, and repair the defective part.	Go to step **3**.
3	**CHECK HARNESS INSIDE TRANSMISSION.** **CAUTION:** **Start work after ATF cools down.** 1) Remove the transmission valve cover. 2) Check for the harness pinch, damage.	Is there any fault in the harness?	Replace the transmission harness.	Go to step **4**.
4	**CHECK HARNESS INSIDE TRANSMISSION.** 1) Disconnect the control valve body connector. 2) Measure the resistance between transmission connector and transmission body. ***Connector & terminal*** ***(T4) No. 3 — Transmission body:***	Is the resistance 1 MΩ or more?	Replace the control valve body. <Ref. to CVT(TR580)-112, Control Valve Body.>	Replace the transmission harness.

Z: DTC P0977 PRIMARY SOLENOID SYSTEM B CIRCUIT (HIGH)

DTC DETECTING CONDITION:

- Immediately at fault recognition
- GENERAL DESCRIPTION <Ref. to GD(CVT)(w/o HEV)-23, DTC P0977 PRIMARY SOLENOID SYSTEM B CIRCUIT (HIGH), Diagnostic Trouble Code (DTC) Detecting Criteria.>

TROUBLE SYMPTOM:

Gear is not changed. (No down-shift)

WIRING DIAGRAM:

CVT control system <Ref. to WI(w/o HEV)-66, CVT Control System.>

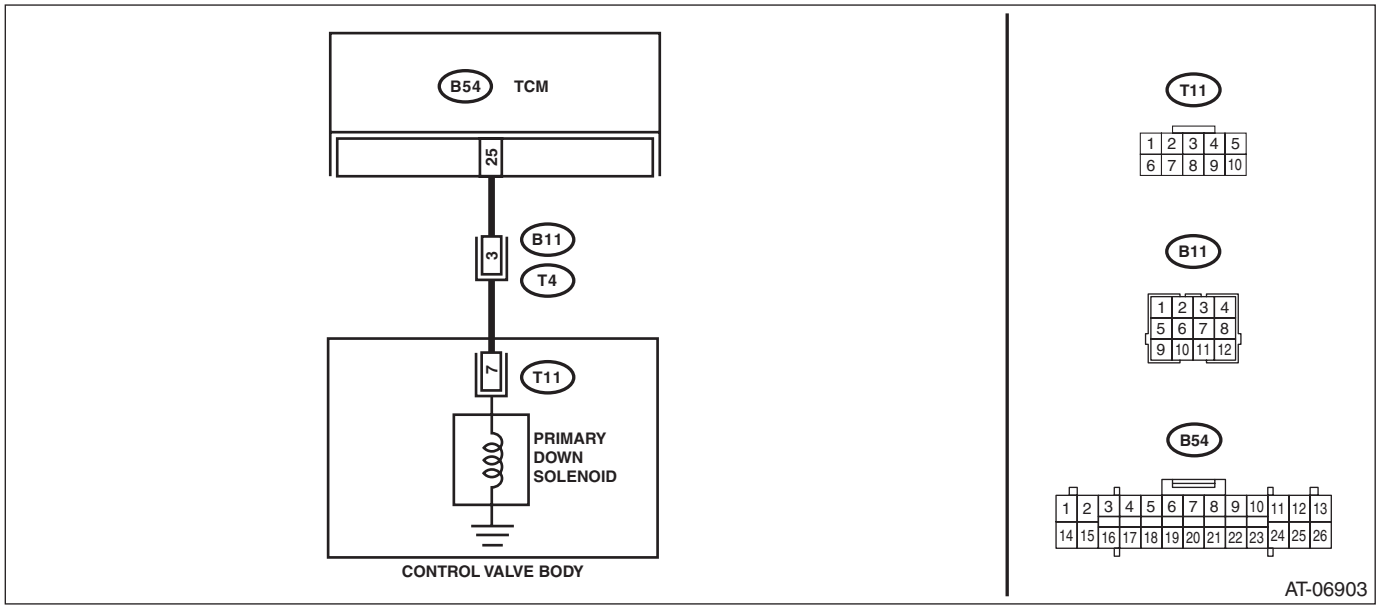

	Step	Check	Yes	No
1	**CHECK HARNESS.** 1) Turn the ignition switch to OFF. 2) Disconnect the TCM and transmission connectors. 3) Measure the resistance between TCM connector and transmission connectors. ***Connector & terminal*** ***(B54) No. 25 — (B11) No. 3:***	Is the resistance less than 1 Ω?	Go to step **2**.	Repair the open circuit of harness.
2	**CHECK HARNESS.** 1) Turn the ignition switch to ON. 2) Measure the voltage between TCM connector and chassis ground. ***Connector & terminal*** ***(B54) No. 25 (+) — Chassis ground (–):***	Is the voltage approx. 0 V?	Go to step **3**.	Repair the short circuit of harness.
3	**CHECK PRIMARY DOWN SOLENOID.** Measure the resistance between transmission connector and transmission body. ***Connector & terminal*** ***(T4) No. 3 — Transmission body:***	Is the resistance approx. 13 Ω? (when engine cold)	Check for poor contact of the connector, and repair the defective part.	Go to step **4**.
4	**CHECK HARNESS INSIDE TRANSMISSION.** **CAUTION:** **Start work after ATF cools down.** 1) Remove the transmission valve cover. 2) Check for the harness pinch, damage.	Is there any fault in the harness?	Replace the transmission harness.	Go to step **5**.

	Step	Check	Yes	No
5	**CHECK HARNESS INSIDE TRANSMISSION.** 1) Disconnect the control valve body connector. 2) Turn the ignition switch to ON. 3) Measure the voltage between transmission connector and transmission body. ***Connector & terminal*** ***(T4) No. 3 (+) — Transmission body (–):***	Is the voltage approx. 0 V?	Replace the control valve body. <Ref. to CVT(TR580)-112, Control Valve Body.>	Replace the transmission harness.

AA:DTC P170A L-RANGE SW SYSTEM

NOTE:
Refer to “DTC P0951 MANUAL SWITCH” for diagnostic procedure. <Ref. to CVT(w/o HEV)(diag)-62, DTC P0951 MANUAL SWITCH, Diagnostic Procedure with Diagnostic Trouble Code (DTC).>

AB:DTC P1724 AT EEPROM ERROR

DTC DETECTING CONDITION:

- Detected when two consecutive driving cycles with fault occur.
- GENERAL DESCRIPTION <Ref. to GD(CVT)(w/o HEV)-24, DTC P1724 AT EEPROM ERROR, Diagnostic Trouble Code (DTC) Detecting Criteria.>

TROUBLE SYMPTOM:

- AT learning is not finished.
- Shock occurs when selecting N → D, N → R.

	Step	Check	Yes	No
1	**CHECK TCM CONNECTOR.**	Is the connection of TCM connector correct?	Go to step **2**.	Connect the TCM connector.
2	**CHECK SELF SHUT RELAY.** Turn the ignition switch to ON.	Does the relay operates simultaneously?	Go to step **3**.	Perform the diagnosis according to DTC P0890.
3	**CHECK SELF SHUT RELAY.** Turn the ignition switch to OFF.	Does the relay operate after two or three seconds delay?	Go to step **4**.	Perform the diagnosis according to DTC P0890.
4	**PERFORM AT LEARNING.** 1) Perform {Clear AT learning value}. 2) Perform the AT learning. <Ref. to CVT(w/o HEV)(diag)-23, Learning Control.> 3) Start the engine.	Does the AT OIL TEMP light blink after AT learning is finished correctly?	Check the TCM.	Go to step **5**.
5	**CHECK DTC DISPLAY.** 1) Perform the {Clear Memory}. 2) Turn the ignition switch to OFF. 3) Start the engine after 10 seconds. 4) Repeat steps 2) and 3).	Does the AT OIL TEMP light blink and is DTC P1724 displayed?	Check the TCM.	Current condition is normal. Check for poor contact of TCM connector or harness.

AC:DTC P2746 PRIMARY PULLEY REVOLUTION SPEED SENSOR CIRCUIT

DTC DETECTING CONDITION:

- Immediately at fault recognition
- GENERAL DESCRIPTION <Ref. to GD(CVT)(w/o HEV)-25, DTC P2746 PRIMARY PULLEY REVOLUTION SPEED SENSOR CIRCUIT, Diagnostic Trouble Code (DTC) Detecting Criteria.>

TROUBLE SYMPTOM:

- Standing start problems
- Shock occurs when engaging the lockup clutch.
- Shock occurs when selecting shift position.

WIRING DIAGRAM:

CVT control system <Ref. to WI(w/o HEV)-66, CVT Control System.>

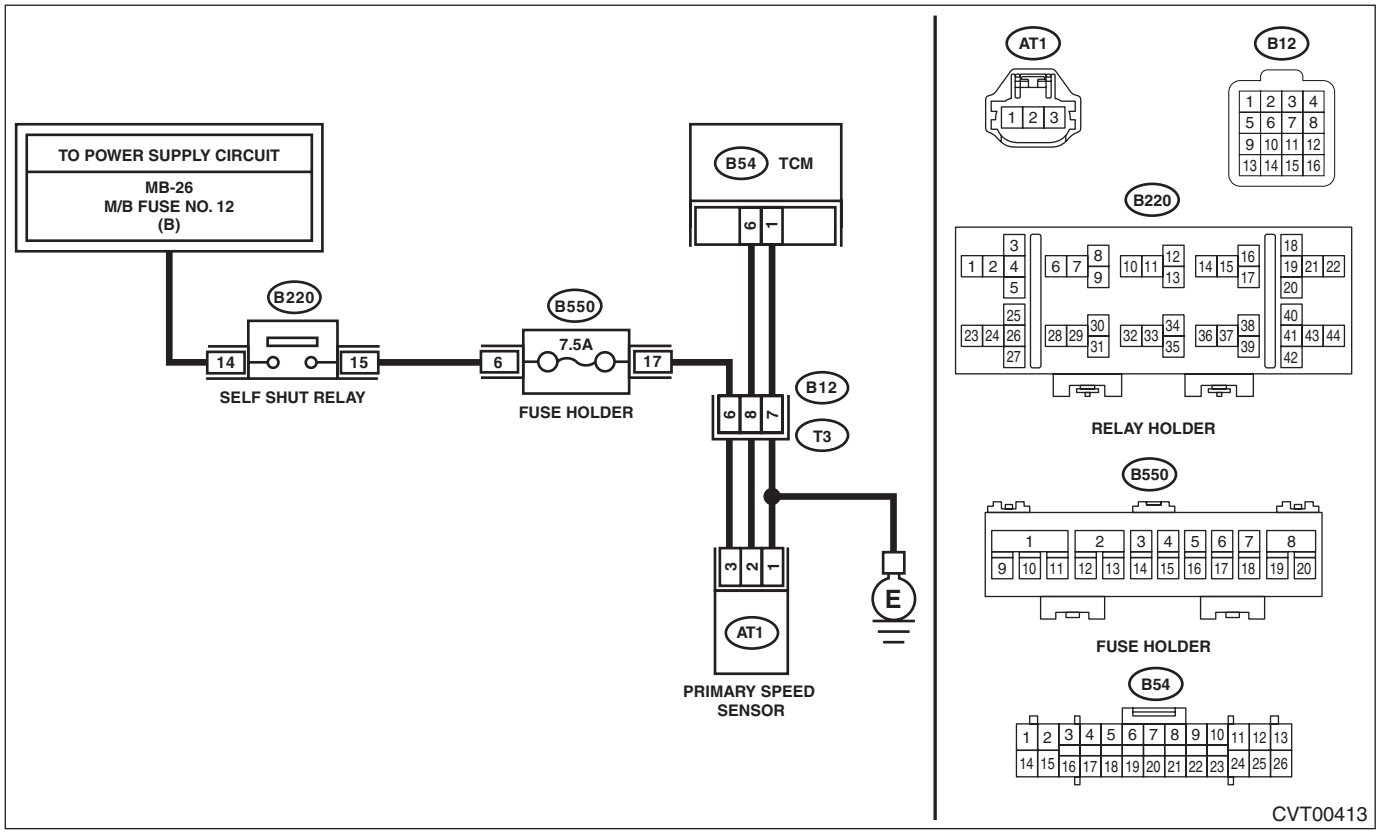

Step		Check	Yes	No
1	**CHECK FUSE.** 1) Turn the ignition switch to OFF. 2) Remove the fuse (7.5 A) from the fuse holder.	Is the fuse OK?	Go to step **2**.	Replace the fuse. If the fuse blows out easily, repair the short circuit of harness.
2	**CHECK HARNESS.** 1) Turn the ignition switch to OFF. 2) Disconnect the TCM and transmission connectors. 3) Measure the resistance between TCM connector and transmission connectors. ***Connector & terminal*** ***(B54) No. 1 — (B12) No. 7:*** ***(B54) No. 6 — (B12) No. 8:*** ***(B550) No. 17 — (B12) No. 6:***	Is the resistance less than 1 Ω?	Go to step **3**.	Repair the open circuit of harness.

	Step	Check	Yes	No
3	**CHECK HARNESS.** Measure the resistance between TCM connector and chassis ground. ***Connector & terminal*** ***(B54) No. 6 — Chassis ground:***	Is the resistance 1 MΩ or more?	Go to step **4**.	Repair the short circuit of harness.
4	**CHECK TRANSMISSION HARNESS.** 1) Connect the TCM connector. 2) Turn the ignition switch to ON. 3) Measure the voltage between transmission connector terminals. ***Connector & terminal*** ***(B12) No. 6 (+) — Chassis ground (–):***	Is the voltage 10 — 13 V?	Go to step **5**.	Repair the open circuit of harness or poor contact of connector.
5	**CHECK INPUT SIGNAL FOR TCM.** 1) Turn the ignition switch to OFF. 2) Connect the transmission connector. 3) Lift up the vehicle. 4) Start the engine. 5) Set the select lever to “D” range. 6) Read the data of «Primary Pulley Speed» using Subaru Select Monitor.	Does the value of «Primary Pulley Speed» change according to those of «Turbine Revolution Speed»?	Current condition is normal. Repair the poor contacts of harnesses of primary speed sensor and transmission connector.	Go to step **6**.
6	**CHECK TRANSMISSION HARNESS.** 1) Turn the ignition switch to OFF. 2) Disconnect the transmission connector. 3) Disconnect the primary speed sensor connector. 4) Measure the resistance between transmission connector and primary speed sensor connector. ***Connector & terminal*** ***(T3) No. 6 — (AT1) No. 3:*** ***(T3) No. 7 — (AT1) No. 1:*** ***(T3) No. 8 — (AT1) No. 2:***	Is the resistance less than 1 Ω?	Replace the primary speed sensor. <Ref. to CVT(TR580)-103, Primary Speed Sensor.>	Replace the transmission harness.

AD:DTC P2750 SEC. PULLEY REVOLUTION SPEED SENSOR CIRCUIT

DTC DETECTING CONDITION:

- Immediately at fault recognition
- GENERAL DESCRIPTION <Ref. to GD(CVT)(w/o HEV)-26, DTC P2750 SEC. PULLEY REVOLUTION SPEED SENSOR CIRCUIT, Diagnostic Trouble Code (DTC) Detecting Criteria.>

TROUBLE SYMPTOM:

- Shifting shock is felt.
- Acceleration is poor during standing start.
- Shift control malfunction

WIRING DIAGRAM:

CVT control system <Ref. to WI(w/o HEV)-66, CVT Control System.>

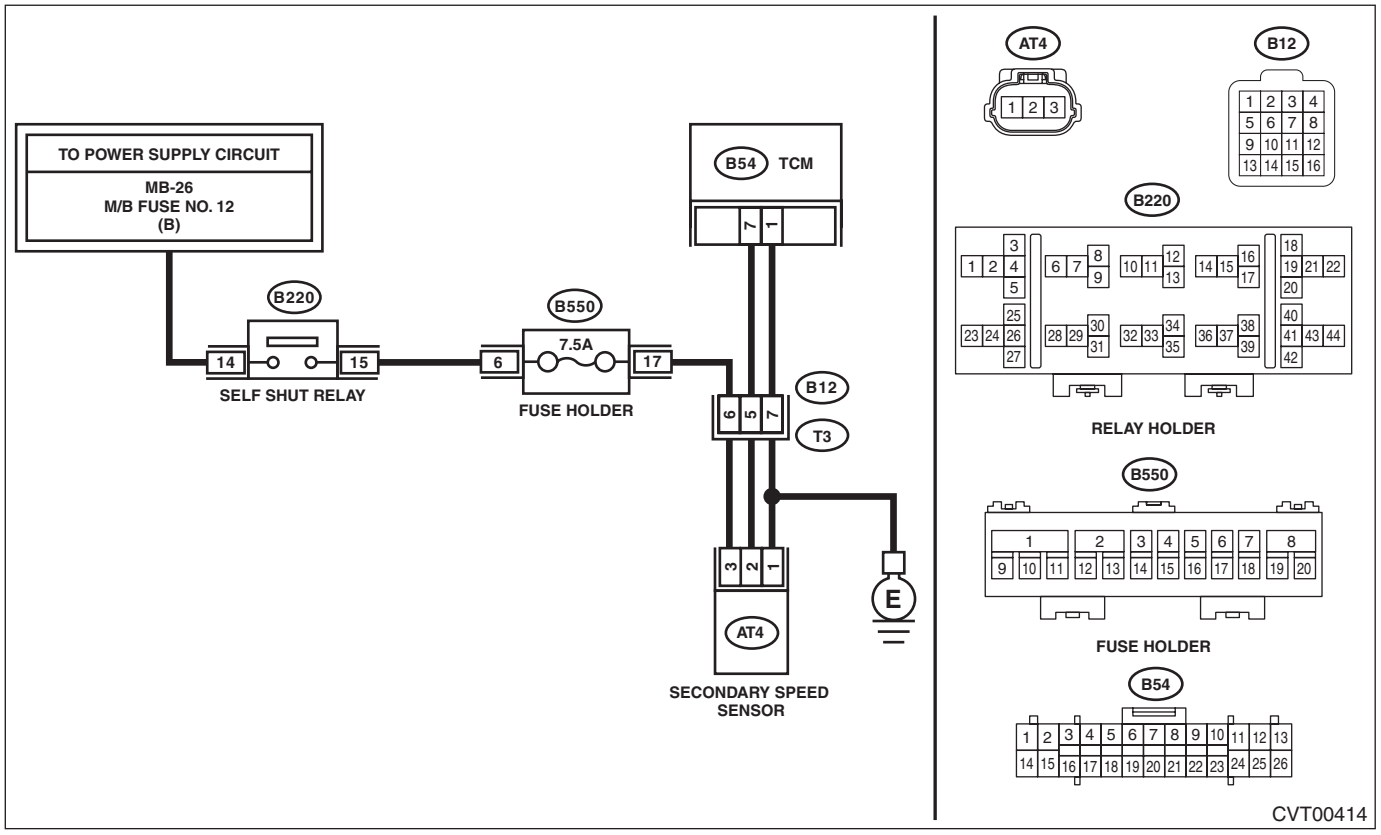

Step		Check	Yes	No
1	**CHECK FUSE.** 1) Turn the ignition switch to OFF. 2) Remove the fuse (7.5 A) from the fuse holder.	Is the fuse OK?	Go to step **2**.	Replace the fuse. If the fuse blows out easily, repair the short circuit of harness.
2	**CHECK HARNESS.** 1) Turn the ignition switch to OFF. 2) Disconnect the TCM and transmission connectors. 3) Measure the resistance between TCM connector and transmission connectors. ***Connector & terminal*** ***(B54) No. 1 — (B12) No. 7:*** ***(B54) No. 7 — (B12) No. 5:*** ***(B550) No. 17 — (B12) No. 6:***	Is the resistance less than 1 Ω?	Go to step **3**.	Repair the open circuit of harness.

	Step	Check	Yes	No
3	**CHECK HARNESS.** Measure the resistance between TCM connector and chassis ground. ***Connector & terminal*** ***(B54) No. 7 — Chassis ground:***	Is the resistance 1 MΩ or more?	Go to step **4**.	Repair the short circuit of harness.
4	**CHECK TRANSMISSION HARNESS.** 1) Connect the TCM connector. 2) Turn the ignition switch to ON. 3) Measure the voltage between transmission connector terminals. ***Connector & terminal*** ***(B12) No. 6 (+) — Chassis ground (–):***	Is the voltage 10 — 13 V?	Go to step **5**.	Repair the open circuit of harness or poor contact of connector.
5	**CHECK INPUT SIGNAL FOR TCM.** 1) Turn the ignition switch to OFF. 2) Connect the transmission connector. 3) Lift up the vehicle. 4) Start the engine. 5) Set the select lever to “D” range. 6) Read the data of «Secondary Pulley Speed» using Subaru Select Monitor.	Does the value of «Secondary Pulley Speed» change according to those of «Front Wheel Speed»?	Current condition is normal. Repair the poor contacts of harnesses of secondary speed sensor and transmission connector.	Go to step **6**.
6	**CHECK TRANSMISSION HARNESS.** 1) Turn the ignition switch to OFF. 2) Disconnect the transmission connector. 3) Disconnect the secondary speed sensor connector. 4) Measure the resistance between transmission connector and secondary speed sensor connector. ***Connector & terminal*** ***(T3) No. 5 — (AT4) No. 2:*** ***(T3) No. 6 — (AT4) No. 3:*** ***(T3) No. 7 — (AT4) No. 1:***	Is the resistance less than 1 Ω?	Replace the secondary speed sensor. <Ref. to CVT(TR580)-101, Secondary Speed Sensor.>	Replace the transmission harness.

AE:DTC P2762 LOCK-UP DUTY SOLENOID MALFUNCTION

DTC DETECTING CONDITION:

- Detected when two consecutive driving cycles with fault occur.
- GENERAL DESCRIPTION <Ref. to GD(CVT)(w/o HEV)-27, DTC P2762 LOCK-UP DUTY SOLENOID MALFUNCTION, Diagnostic Trouble Code (DTC) Detecting Criteria.>

TROUBLE SYMPTOM:

- No lock-up occurs.
- Engine speed increases abruptly during driving.

	Step	Check	Yes	No
1	**CHECK DTC.** Read the DTC relating the ECM using the Subaru Select Monitor.	Is DTC displayed?	Perform the diagnosis according to DTC.	Go to step **2**.
2	**CHECK DTC.** Read the DTC relating the TCM using the Subaru Select Monitor.	Are DTC P0841, P0842, P0843 displayed?	Perform the diagnosis according to DTC.	Go to step **3**.
3	**CHECK TRANSMISSION FLUID.** Check the condition of ATF. <Ref. to CVT(TR580)-38, CONDITION CHECK, CVTF.>	Is the ATF OK?	Go to step **4**.	Check according to the “Corrective action” of ATF (CVTF) “CONDITION CHECK”. <Ref. to CVT(TR580)-38, CONDITION CHECK, CVTF.>
4	**CHECK TRANSMISSION FLUID.** Check the amount of ATF. <Ref. to CVT(TR580)-35, ADJUSTMENT, CVTF.>	Is the ATF amount correct?	Go to step **5**.	Adjust the amount of ATF. <Ref. to CVT(TR580)-35, ADJUSTMENT, CVTF.>
5	**CHECK INPUT SIGNAL FOR TCM.** 1) Lift up the vehicle. 2) Start the engine. 3) Warm up until the ATF temperature reaches to 40 — 70°C (104 — 158°F). 4) Shift the select lever to “P” range. 5) Stabilize the engine speed at idle. 6) Read the data of «Actual secondary pressure» using Subaru Select Monitor.	Is the «Actual secondary pressure» 0.5 — 1.5 MPa?	Go to step **6**.	Perform the diagnosis according to DTC P0841 procedure.
6	**DRIVING CHECK FOR LOCK-UP CONDITION.** 1) Perform the “Clear Memory Mode”. <Ref. to CVT(w/o HEV)(diag)-18, Clear Memory Mode.> 2) Turn the ignition switch to OFF. 3) Start the engine. 4) Warm up until the ATF temperature exceeds 50°C. 5) Drive the vehicle for one minute or more while keeping the constant speed so that the display shown in the Subaru Select Monitor is as follows: «Lock Up Duty Ratio» is 70 % or more, and «Front Wheel Speed» is 40 km/h or more. 6) Turn the ignition switch to OFF. 7) Start the engine. 8) Perform the procedure in step 5) again. 9) Read the DTC using Subaru Select Monitor.	Does the AT OIL TEMP light blink and is DTC P2762 displayed?	Perform the secondary pressure test. <Ref. to CVT(TR580)-47, Secondary Pressure (Line Pressure) Test.> When DTC other than P2762 is displayed, perform the diagnosis corresponding to the DTC.	Current condition is normal. Temporary oil pressure malfunction.

AF:DTC P2763 LOCK-UP DUTY SOLENOID CIRCUIT (HIGH)

DTC DETECTING CONDITION:

- Immediately at fault recognition
- GENERAL DESCRIPTION <Ref. to GD(CVT)(w/o HEV)-28, DTC P2763 LOCK-UP DUTY SOLENOID CIRCUIT (HIGH), Diagnostic Trouble Code (DTC) Detecting Criteria.>

TROUBLE SYMPTOM:

- No lock-up occurs.
- Engine stalls.

WIRING DIAGRAM:

CVT control system <Ref. to WI(w/o HEV)-66, CVT Control System.>

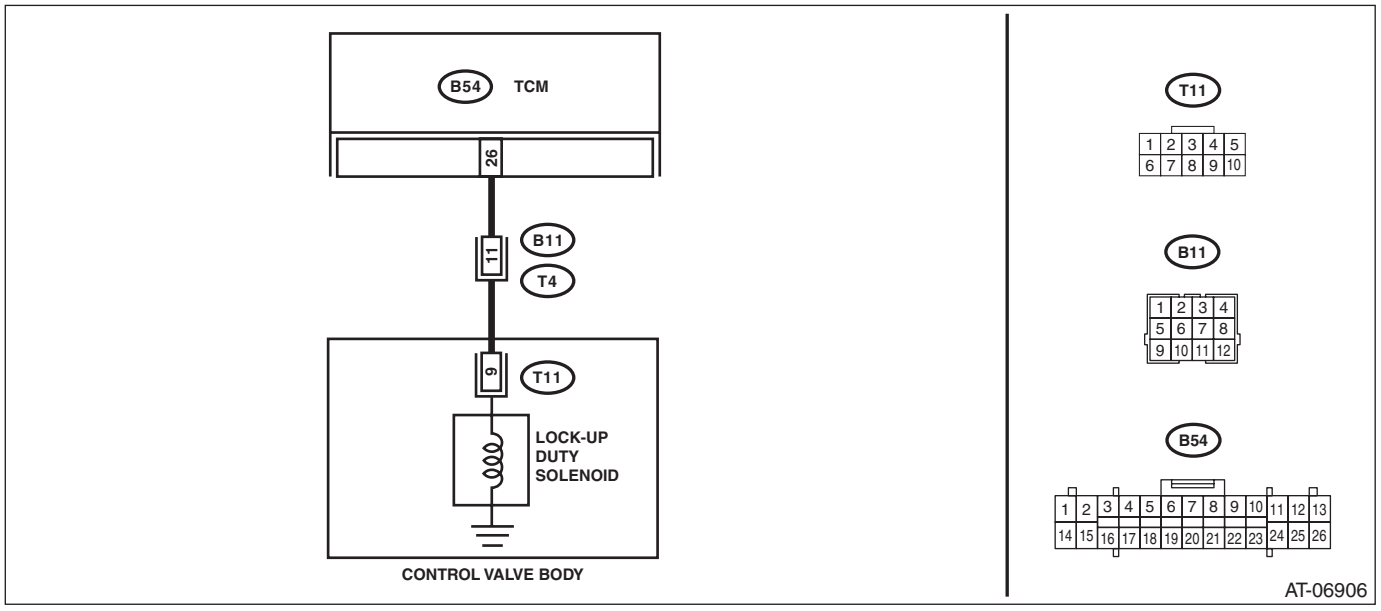

	Step	Check	Yes	No
1	**CHECK HARNESS.** 1) Turn the ignition switch to OFF. 2) Disconnect the TCM and transmission connectors. 3) Measure the resistance between TCM connector and transmission connectors. ***Connector & terminal*** ***(B54) No. 26 — (B11) No. 11:***	Is the resistance less than 1 Ω?	Go to step **2**.	Repair the open circuit of harness.
2	**CHECK HARNESS.** 1) Turn the ignition switch to ON. 2) Measure the voltage between TCM connector and chassis ground. ***Connector & terminal*** ***(B54) No. 26 (+) — Chassis ground (–):***	Is the voltage approx. 0 V?	Go to step **3**.	Repair the short circuit of harness.
3	**CHECK LOCK-UP DUTY SOLENOID.** Measure the resistance between transmission connector and transmission body. ***Connector & terminal*** ***(T4) No. 11 — Transmission body:***	Is the resistance approx. 13 Ω? (when engine cold)	Check for poor contact of the connector, and repair the defective part.	Go to step **4**.
4	**CHECK HARNESS INSIDE TRANSMISSION.** **CAUTION:** **Start work after ATF cools down.** 1) Remove the transmission valve cover. 2) Check for the harness pinch, damage.	Is there any fault in the harness?	Replace the transmission harness.	Go to step **5**.

	Step	Check	Yes	No
5	**CHECK HARNESS INSIDE TRANSMISSION.** 1) Disconnect the control valve body connector. 2) Turn the ignition switch to ON. 3) Measure the voltage between transmission connector and transmission body. ***Connector & terminal*** ***(T4) No. 11 (+) — Transmission body (–):***	Is the voltage approx. 0 V?	Replace the control valve body. <Ref. to CVT(TR580)-112, Control Valve Body.>	Replace the transmission harness.

AG:DTC P2764 LOCK-UP DUTY SOLENOID CIRCUIT (LOW)

DTC DETECTING CONDITION:

- Immediately at fault recognition
- GENERAL DESCRIPTION <Ref. to GD(CVT)(w/o HEV)-29, DTC P2764 LOCK-UP DUTY SOLENOID CIRCUIT (LOW), Diagnostic Trouble Code (DTC) Detecting Criteria.>

TROUBLE SYMPTOM:

No lock-up occurs.

WIRING DIAGRAM:

CVT control system <Ref. to WI(w/o HEV)-66, CVT Control System.>

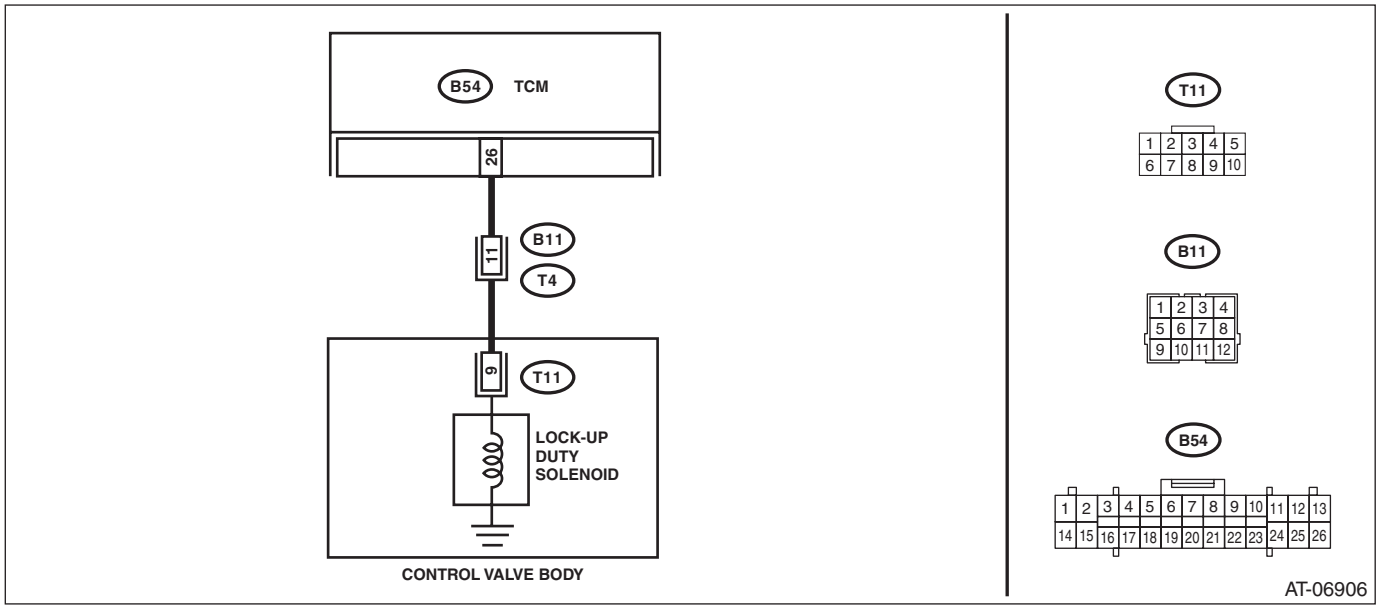

	Step	Check	Yes	No
1	**CHECK HARNESS.** 1) Turn the ignition switch to OFF. 2) Disconnect the TCM and transmission connectors. 3) Measure the resistance between TCM connector and chassis ground. ***Connector & terminal*** ***(B54) No. 26 — Chassis ground:***	Is the resistance 1 MΩ or more?	Go to step **2**.	Repair the short circuit of harness.
2	**CHECK LOCK-UP DUTY SOLENOID.** Measure the resistance between transmission connector and transmission body. ***Connector & terminal*** ***(T4) No. 11 — Transmission body:***	Is the resistance approx. 13 Ω? (when engine cold)	Check for poor contact of the connector, and repair the defective part.	Go to step **3**.
3	**CHECK HARNESS INSIDE TRANSMISSION.** **CAUTION:** **Start work after ATF cools down.** 1) Remove the transmission valve cover. 2) Check for the harness pinch, damage.	Is there any fault in the harness?	Replace the transmission harness.	Go to step **4**.
4	**CHECK HARNESS INSIDE TRANSMISSION.** 1) Disconnect the control valve body connector. 2) Measure the resistance between transmission connector and transmission body. ***Connector & terminal*** ***(T4) No. 11 — Transmission body:***	Is the resistance 1 MΩ or more?	Replace the control valve body. <Ref. to CVT(TR580)-112, Control Valve Body.>	Replace the transmission harness.

AH:DTC U0073 CONTROL MODULE COMMUNICATION BUS OFF

NOTE:
Refer to “LAN SYSTEM (DIAGNOSTICS)” for diagnostic procedure. <Ref. to LAN(w/o HEV)(diag)-2, Basic Diagnostic Procedure.>

AI: DTC U0100 LOST COMMUNICATION WITH ECM/PCM “A”

NOTE:
Refer to “LAN SYSTEM (DIAGNOSTICS)” for diagnostic procedures. <Ref. to LAN(w/o HEV)(diag)-2, Basic Diagnostic Procedure.>

AJ:DTC U0122 LOST COMMUNICATION WITH VEHICLE DYNAMICS CONTROL MODULE

NOTE:
Refer to “LAN SYSTEM (DIAGNOSTICS)” for diagnostic procedures. <Ref. to LAN(w/o HEV)(diag)-2, Basic Diagnostic Procedure.>

AK:DTC U0140 LOST COMMUNICATION WITH BODY CONTROL MODULE

NOTE:
Refer to “LAN SYSTEM (DIAGNOSTICS)” for diagnostic procedures. <Ref. to LAN(w/o HEV)(diag)-2, Basic Diagnostic Procedure.>

AL:DTC U0155 LOST COMMUNICATION WITH INSTRUMENT PANEL CLUSTER (IPC) CONTROL MODULE

NOTE:
Refer to “LAN SYSTEM (DIAGNOSTICS)” for diagnostic procedures. <Ref. to LAN(w/o HEV)(diag)-2, Basic Diagnostic Procedure.>

AM:DTC U0401 INVALID DATA RECEIVED FROM ECM/PCM “A”

NOTE:
Refer to “LAN SYSTEM (DIAGNOSTICS)” for diagnostic procedures. <Ref. to LAN(w/o HEV)(diag)-2, Basic Diagnostic Procedure.>

AN:DTC U0416 INVALID DATA RECEIVED FROM VEHICLE DYNAMICS CONTROL MODULE

NOTE:
Refer to “LAN SYSTEM (DIAGNOSTICS)” for diagnostic procedures. <Ref. to LAN(w/o HEV)(diag)-2, Basic Diagnostic Procedure.>

AO:DTC U0422 INVALID DATA RECEIVED FROM BODY CONTROL MODULE

NOTE:
Refer to “LAN SYSTEM (DIAGNOSTICS)” for diagnostic procedures. <Ref. to LAN(w/o HEV)(diag)-2, Basic Diagnostic Procedure.>

AP:DTC U0423 INVALID DATA RECEIVED FROM INSTRUMENT PANEL CLUSTER CONTROL MODULE

NOTE:
Refer to “LAN SYSTEM (DIAGNOSTICS)” for diagnostic procedures. <Ref. to LAN(w/o HEV)(diag)-2, Basic Diagnostic Procedure.>

17.Diagnostic Procedure without Diagnostic Trouble Code (DTC)

A: CHECK SHIFT INDICATOR

DIAGNOSIS:

- Output signal circuit of shift indicator is open or shorted.
- Combination meter malfunction

TROUBLE SYMPTOM:

- Shift indicator does not display or remains displayed.
- Shift indicator display does not change.

	Step	Check	Yes	No
1	**CHECK TCM.** Check the DTC relating the TCM using the Subaru Select Monitor.	Is DTC U0155 or U0423 displayed?	Perform the self-diagnosis of combination meter.	Go to step **2**.
2	**CHECK TCM.** Check the DTC relating the TCM using the Subaru Select Monitor.	Are DTCs other than U0155 and U0423 displayed?	Perform the diagnosis according to DTC.	Go to step **3**.
3	**CHECK COMBINATION METER.** Check the DTC of combination meter.	Is DTC displayed?	Perform the diagnosis according to DTC.	Go to step **4**.
4	**CHECK TCM.** 1) Operate the + side of the paddle shift switch. 2) Read the data of «Up Switch» using the Subaru Select Monitor.	Does it change between ON and OFF according to the operation?	Go to step **5**.	Check for poor contact between TCM and paddle shift UP switch, and repair the defective part.
5	**CHECK TCM.** 1) Operate the – side of the paddle shift switch. 2) Read the data of «Down Switch» using the Subaru Select Monitor.	Does it change between ON and OFF according to the operation?	Go to step **6**.	Check for poor contact between TCM and paddle shift DOWN switch, and repair the defective part.
6	**CHECK TCM.** 1) Turn the ignition switch OFF, then turn it ON again. 2) Shift the select lever to manual mode. 3) Read the data of «Shift Step in Manual Mode» using the Subaru Select Monitor.	Is “1” displayed?	Go to step **7**.	Perform the diagnosis according to DTC P0951.
7	**CHECK TCM.** 1) Shift up the select lever. 2) Read the data of «Shift Step in Manual Mode» using the Subaru Select Monitor.	Is “2” displayed?	Currently, shift indicator is normal.	Check the TCM.

18.Diagnostics with Phenomenon

A: INSPECTION

Symptoms	Faulty parts
Engine stalls when driving in “D” or “R” range, or selecting “N” → “D”, “N” → “R”.	• Control valve • Engine control system
While driving in “D” range, vibration occurs immediately before the stop or engine stalls.	• Control valve • Torque converter
Vehicle cannot shift while driving in “D” range.	• Control valve • TCM • Shift mechanism • Power supply system
Excessive shock when selecting “N” → “D”, and “N” → “R”.	• Control valve • TCM • F&R clutch pack • ATF deterioration or lack
Excessive shock at standing start in “D” range.	• Control valve • TCM • F&R clutch pack • ATF deterioration or lack
Engine speed increases abruptly during driving in “D” or “R” range.	• Control valve • Secondary pressure sensor • F&R clutch pack • ATF deterioration or lack
Vehicle can not start when depressing the accelerator pedal in “D” or “R” range, or acceleration is very poor. (without abrupt engine increase)	• Control valve • F&R clutch pack • Shift mechanism • Parking mechanism • Engine control system • Power supply system
Shift indicator in combination meter displays the position which differs from select lever position.	• Inhibitor switch • Select cable related • Combination meter
Manual mode enters even though the select lever and paddle shift switch is not operated.	• Manual mode switch • Paddle shift switch • Select lever • TCM
Engine speed increases abruptly in “D” or “R” range, vehicle can not start.	• F&R clutch pack • Select cable related
Manual mode can not be set	• Select lever • TCM

GENERAL DESCRIPTION (CVT)

GD(CVT)(w/o HEV)

Page

1. List of Diagnostic Trouble Code (DTC) 2
2. Diagnostic Trouble Code (DTC) Detecting Criteria 4

1. List of Diagnostic Trouble Code (DTC)

A: LIST

DTC	Item	Note
P0705	Transmission Range Sensor Circuit (PRNDL Input)	<Ref. to GD(CVT)(w/o HEV)-4, DTC P0705 TRANSMISSION RANGE SENSOR CIRCUIT (PRNDL INPUT), Diagnostic Trouble Code (DTC) Detecting Criteria.>
P0708	AT Range Switch Not Inputted	<Ref. to GD(CVT)(w/o HEV)-5, DTC P0708 AT RANGE SWITCH NOT INPUTTED, Diagnostic Trouble Code (DTC) Detecting Criteria.>
P0711	ATF Temp. Sensor Circuit Range/Performance	<Ref. to GD(CVT)(w/o HEV)-6, DTC P0711 ATF TEMP. SENSOR CIRCUIT RANGE/PERFORMANCE, Diagnostic Trouble Code (DTC) Detecting Criteria.>
P0712	Transmission Fluid Temperature Sensor Circuit Low Input	<Ref. to GD(CVT)(w/o HEV)-7, DTC P0712 TRANSMISSION FLUID TEMPERATURE SENSOR CIRCUIT LOW INPUT, Diagnostic Trouble Code (DTC) Detecting Criteria.>
P0713	Transmission Fluid Temperature Sensor Circuit High Input	<Ref. to GD(CVT)(w/o HEV)-8, DTC P0713 TRANSMISSION FLUID TEMPERATURE SENSOR CIRCUIT HIGH INPUT, Diagnostic Trouble Code (DTC) Detecting Criteria.>
P0716	Torque Converter Turbine Speed	<Ref. to GD(CVT)(w/o HEV)-9, DTC P0716 TORQUE CONVERTER TURBINE SPEED, Diagnostic Trouble Code (DTC) Detecting Criteria.>
P0730	Gearshift Control Performance Abnormal	<Ref. to GD(CVT)(w/o HEV)-10, DTC P0730 GEARSHIFT CONTROL PERFORMANCE ABNORMAL, Diagnostic Trouble Code (DTC) Detecting Criteria.>
P0841	Secondary Oil Pressure Sensor Performance	<Ref. to GD(CVT)(w/o HEV)-11, DTC P0841 SECONDARY OIL PRESSURE SENSOR PERFORMANCE, Diagnostic Trouble Code (DTC) Detecting Criteria.>
P0842	Secondary Oil Pressure Sensor Circuit (Low)	<Ref. to GD(CVT)(w/o HEV)-12, DTC P0842 SECONDARY OIL PRESSURE SENSOR CIRCUIT (LOW), Diagnostic Trouble Code (DTC) Detecting Criteria.>
P0843	Secondary Oil Pressure Sensor Circuit (High)	<Ref. to GD(CVT)(w/o HEV)-13, DTC P0843 SECONDARY OIL PRESSURE SENSOR CIRCUIT (HIGH), Diagnostic Trouble Code (DTC) Detecting Criteria.>
P0890	AT Self-Shut Relay Diagnosis (Low)	<Ref. to GD(CVT)(w/o HEV)-14, DTC P0890 AT SELF-SHUT RELAY DIAGNOSIS (LOW), Diagnostic Trouble Code (DTC) Detecting Criteria.>
P0962	Secondary Solenoid Circuit (Low)	<Ref. to GD(CVT)(w/o HEV)-15, DTC P0962 SECONDARY SOLENOID CIRCUIT (LOW), Diagnostic Trouble Code (DTC) Detecting Criteria.>
P0963	Secondary Solenoid Circuit (High)	<Ref. to GD(CVT)(w/o HEV)-16, DTC P0963 SECONDARY SOLENOID CIRCUIT (HIGH), Diagnostic Trouble Code (DTC) Detecting Criteria.>
P0965	Forward & Reverse Solenoid Function	<Ref. to GD(CVT)(w/o HEV)-17, DTC P0965 FORWARD & REVERSE SOLENOID FUNCTION, Diagnostic Trouble Code (DTC) Detecting Criteria.>
P0966	Forward & Reverse Solenoid Circuit (Low)	<Ref. to GD(CVT)(w/o HEV)-18, DTC P0966 FORWARD & REVERSE SOLENOID CIRCUIT (LOW), Diagnostic Trouble Code (DTC) Detecting Criteria.>
P0967	Forward & Reverse Linear Solenoid Circuit (High)	<Ref. to GD(CVT)(w/o HEV)-19, DTC P0967 FORWARD & REVERSE LINEAR SOLENOID CIRCUIT (HIGH), Diagnostic Trouble Code (DTC) Detecting Criteria.>
P0973	Primary Solenoid System A Circuit (Low)	<Ref. to GD(CVT)(w/o HEV)-20, DTC P0973 PRIMARY SOLENOID SYSTEM A CIRCUIT (LOW), Diagnostic Trouble Code (DTC) Detecting Criteria.>
P0974	Primary Solenoid System A Circuit (High)	<Ref. to GD(CVT)(w/o HEV)-21, DTC P0974 PRIMARY SOLENOID SYSTEM A CIRCUIT (HIGH), Diagnostic Trouble Code (DTC) Detecting Criteria.>

DTC	Item	Note
P0976	Primary Solenoid System B Circuit (Low)	<Ref. to GD(CVT)(w/o HEV)-22, DTC P0976 PRIMARY SOLENOID SYSTEM B CIRCUIT (LOW), Diagnostic Trouble Code (DTC) Detecting Criteria.>
P0977	Primary Solenoid System B Circuit (High)	<Ref. to GD(CVT)(w/o HEV)-23, DTC P0977 PRIMARY SOLENOID SYSTEM B CIRCUIT (HIGH), Diagnostic Trouble Code (DTC) Detecting Criteria.>
P1724	AT EEPROM Error	<Ref. to GD(CVT)(w/o HEV)-24, DTC P1724 AT EEPROM ERROR, Diagnostic Trouble Code (DTC) Detecting Criteria.>
P2746	Primary Pulley Revolution Speed Sensor Circuit	<Ref. to GD(CVT)(w/o HEV)-25, DTC P2746 PRIMARY PULLEY REVOLUTION SPEED SENSOR CIRCUIT, Diagnostic Trouble Code (DTC) Detecting Criteria.>
P2750	Sec. Pulley Revolution Speed Sensor Circuit	<Ref. to GD(CVT)(w/o HEV)-26, DTC P2750 SEC. PULLEY REVOLUTION SPEED SENSOR CIRCUIT, Diagnostic Trouble Code (DTC) Detecting Criteria.>
P2762	Lock-Up Duty Solenoid Malfunction	<Ref. to GD(CVT)(w/o HEV)-27, DTC P2762 LOCK-UP DUTY SOLENOID MALFUNCTION, Diagnostic Trouble Code (DTC) Detecting Criteria.>
P2763	Lock-Up Duty Solenoid Circuit (High)	<Ref. to GD(CVT)(w/o HEV)-28, DTC P2763 LOCK-UP DUTY SOLENOID CIRCUIT (HIGH), Diagnostic Trouble Code (DTC) Detecting Criteria.>
P2764	Lock-Up Duty Solenoid Circuit (Low)	<Ref. to GD(CVT)(w/o HEV)-29, DTC P2764 LOCK-UP DUTY SOLENOID CIRCUIT (LOW), Diagnostic Trouble Code (DTC) Detecting Criteria.>
U0073	Control Module Communication Bus Off	<Ref. to GD(CVT)(w/o HEV)-30, DTC U0073 CONTROL MODULE COMMUNICATION BUS OFF, Diagnostic Trouble Code (DTC) Detecting Criteria.>
U0100	Lost Communication With ECM/PCM “A”	<Ref. to GD(CVT)(w/o HEV)-31, DTC U0100 LOST COMMUNICATION WITH ECM/PCM “A”, Diagnostic Trouble Code (DTC) Detecting Criteria.>
U0122	Lost Communication With Vehicle Dynamics Control Module	<Ref. to GD(CVT)(w/o HEV)-32, DTC U0122 LOST COMMUNICATION WITH VEHICLE DYNAMICS CONTROL MODULE, Diagnostic Trouble Code (DTC) Detecting Criteria.>
U0401	Invalid Data Received From ECM/PCM “A”	<Ref. to GD(CVT)(w/o HEV)-33, DTC U0401 INVALID DATA RECEIVED FROM ECM/PCM “A”, Diagnostic Trouble Code (DTC) Detecting Criteria.>
U0416	Invalid Data Received From Vehicle Dynamics Control Module	<Ref. to GD(CVT)(w/o HEV)-34, DTC U0416 INVALID DATA RECEIVED FROM VEHICLE DYNAMICS CONTROL MODULE, Diagnostic Trouble Code (DTC) Detecting Criteria.>

2. Diagnostic Trouble Code (DTC) Detecting Criteria

A: DTC P0705 TRANSMISSION RANGE SENSOR CIRCUIT (PRNDL INPUT)

1. OUTLINE OF DIAGNOSIS

- Detect the malfunction of the Range Switch.
- Judge as NG when multiple Range Switch inputs are detected.

2. ENABLE CONDITIONS

Secondary Parameters	Enable Conditions
Engine speed	≥ 1500 rpm

3. DIAGNOSTIC METHOD

• Abnormality Judgment

If the duration of time while the following conditions are met is longer than the time indicated, judge as NG.

Judgment Value

Malfunction Criteria	Threshold Value
The number of range switch signal input	≥ 2

Time Needed for Diagnosis: 5 seconds
Malfunction Indicator Light Illumination: Illuminates as soon as a malfunction occurs.

• Normality Judgment

Judge as OK and clear the NG if the continuous time while the following conditions are established is more than the predetermined time.

Judgment Value

Malfunction Criteria	Threshold Value
The number of range switch signal input	< 2

Time Needed for Diagnosis: 0.02 seconds

B: DTC P0708 AT RANGE SWITCH NOT INPUTTED

1. OUTLINE OF DIAGNOSIS

- Detect the malfunction of the Range Switch.
- Judge as NG when no Range Switch inputs are detected.

2. ENABLE CONDITIONS

Secondary Parameters	Enable Conditions
Vehicle speed	> 6 MPH

3. DIAGNOSTIC METHOD

• Abnormality Judgment

If the duration of time while the following conditions are met is longer than the time indicated, judge as NG.

Judgment Value

Malfunction Criteria	Threshold Value
The number of range switch signal input	0 (No Signal)

Time Needed for Diagnosis: 3 seconds
Malfunction Indicator Light Illumination: Illuminates as soon as a malfunction occurs.

• Normality Judgment

Judge as OK and clear the NG if the continuous time while the following conditions are established is more than the predetermined time.

Judgment Value

Malfunction Criteria	Threshold Value
The number of range switch signal input	≠ 0 (No Signal)

Time Needed for Diagnosis: 0.02 seconds

C: DTC P0711 ATF TEMP. SENSOR CIRCUIT RANGE/PERFORMANCE

1. OUTLINE OF DIAGNOSIS

- Detect the malfunction of the ATF temperature sensor.
- ATF temperature sensor is below the specified value (20°C (68°F))
- Judge as characteristics malfunction (ATF temperature sensor signal stuck) when a status where ATF temperature sensor detecting voltage change is 0.049 V or less is detected, after driving for 10 minutes.

2. ENABLE CONDITIONS

Secondary Parameters	Enable Conditions
12V battery system voltage	> 10 V
Engine speed (The timer is held when the following conditions are not satisfied.)	> 600 rpm
Transmission range	Drive
Vehicle speed	≥ 21.9 MPH

3. DIAGNOSTIC METHOD

• Abnormality Judgment

If the duration of time while the following conditions are met is longer than the time indicated, judge as NG.

Judgment Value

Malfunction Criteria	Threshold Value
Absolute change of measured Transmission fluid temperature input voltage	≤ 0.049 V
Transmission fluid temperature	< 20°C (68°F)

Time Needed for Diagnosis: 600 seconds
Malfunction Indicator Light Illumination: Illuminates when malfunction occurs in 2 continuous driving cycles.

• Normality Judgment

Judge as OK and clear the NG if the continuous time while the following conditions are established is more than the predetermined time.

Judgment Value

Malfunction Criteria	Threshold Value
Absolute change of measured Transmission fluid temperature input voltage	> 0.049 V
Transmission fluid temperature	≥ 20°C (68°F)

Time Needed for Diagnosis: 0.01 seconds

D: DTC P0712 TRANSMISSION FLUID TEMPERATURE SENSOR CIRCUIT LOW INPUT

1. OUTLINE OF DIAGNOSIS

- Detect the GND-output short of the ATF temperature sensor.
- Judge as NG when a status where ATF temperature sensor detecting voltage is less than 0.132 V is detected.

2. ENABLE CONDITIONS

Secondary Parameters	Enable Conditions
12V battery system voltage	≥ 9 V

3. DIAGNOSTIC METHOD

• Abnormality Judgment

If the duration of time while the following conditions are met is longer than the time indicated, judge as NG.

Judgment Value

Malfunction Criteria	Threshold Value
Transmission fluid temperature sensor input voltage	< 0.132 V (152°C (306°F)

Time Needed for Diagnosis: 1 second
Malfunction Indicator Light Illumination: Illuminates as soon as a malfunction occurs.

• Normality Judgment

Judge as OK and clear the NG if the continuous time while the following conditions are established is more than the predetermined time.

Judgment Value

Malfunction Criteria	Threshold Value
Transmission fluid temperature sensor input voltage	≥ 0.132 V (152°C (306°F)

Time Needed for Diagnosis: 0.1 seconds

E: DTC P0713 TRANSMISSION FLUID TEMPERATURE SENSOR CIRCUIT HIGH INPUT

1. OUTLINE OF DIAGNOSIS

- Detect the open circuit and power supply-output short of ATF temperature sensor 5 V system.
- Judge as NG when a status where ATF temperature sensor detecting voltage is more than 4.052 V is detected.

2. ENABLE CONDITIONS

Secondary Parameters	Enable Conditions
12V battery system voltage	≥ 9 V
Vehicle speed	≥ 6.3 MPH
Above condition satisfied for	≥ 50 s

3. DIAGNOSTIC METHOD

• Abnormality Judgment

If the duration of time while the following conditions are met is longer than the time indicated, judge as NG.

Judgment Value

Malfunction Criteria	Threshold Value
Transmission fluid temperature sensor input voltage	> 4.502 V (–58°C (–72°F))

Time Needed for Diagnosis: 1 second
Malfunction Indicator Light Illumination: Illuminates as soon as a malfunction occurs.

• Normality Judgment

Judge as OK and clear the NG if the continuous time while the following conditions are established is more than the predetermined time.

Judgment Value

Malfunction Criteria	Threshold Value
Transmission fluid temperature sensor input voltage	≤ 4.502 V (–58°C (–72°F))

Time Needed for Diagnosis: 0.1 seconds

F: DTC P0716 TORQUE CONVERTER TURBINE SPEED

1. OUTLINE OF DIAGNOSIS

- Detect the no input signal of turbine speed sensor.
- Judge as NG when the primary speed sensor on the same axis has input signal but the turbine speed sensor has no input signal with the forward/reverse clutch engaged.

2. ENABLE CONDITIONS

Secondary Parameters	Enable Conditions
Engine speed	≥ 400 rpm
Primary pulley shaft speed	≥ 500 rpm
D range switch or R range switch	ON
MIL is not illuminated for DTCs	P2746, P0705, P0708, U0073, U0100, U0401

3. DIAGNOSTIC METHOD

• Abnormality Judgment

If the duration of time while the following conditions are met is longer than the time indicated, judge as NG.

Judgment Value

Malfunction Criteria	Threshold Value
Turbine shaft speed	0 rpm

Time Needed for Diagnosis: 0.6 seconds
Malfunction Indicator Light Illumination: Illuminates as soon as a malfunction occurs.

• Normality Judgment

Judge as OK and clear the NG if the continuous time while the following conditions are established is more than the predetermined time.

Judgment Value

Malfunction Criteria	Threshold Value
Turbine shaft speed	≠ 0 rpm

Time Needed for Diagnosis: 0.2 seconds

G: DTC P0730 GEARSHIFT CONTROL PERFORMANCE ABNORMAL

1. OUTLINE OF DIAGNOSIS

- Detect the malfunction of transmission gear ration control function.
- Judge as NG when the difference between the transmission Gear Ratio Target, which is an internal data, and Actual Gear Ratio is larger than the specified value. (Compare the “Gear Ratio Target × Secondary pulley speed ≈ Target primary speed equivalent value” and primary pulley sensor value.)

2. ENABLE CONDITIONS

Secondary Parameters	Enable Conditions
D range switch	ON
Engine speed	≥ 500 rpm
MIL is not illuminated for DTCs	P2746, P2750, P0962, P0963, P0841, P0842, P0843, U0073, U0100, U0401, P0966, P0967, P0973, P0974, P0976, P0977, P0705, P0708

3. DIAGNOSTIC METHOD

• Abnormality Judgment

If the duration of time while the following conditions are met is longer than the time indicated, judge as NG.

Judgment Value

Malfunction Criteria	Threshold Value
Target pulley ratio * secondary pulley shaft speed – primary pulley shaft speed	≥ 600 rpm

Time Needed for Diagnosis: 5 seconds
Malfunction Indicator Light Illumination: Illuminates as soon as a malfunction occurs.

• Normality Judgment

Judge as OK and clear the NG if the continuous time while the following conditions are established is more than the predetermined time.

Judgment Value

Malfunction Criteria	Threshold Value
Target pulley ratio * secondary pulley shaft speed – primary pulley shaft speed	< 600 rpm

Time Needed for Diagnosis: 0.02 seconds

H: DTC P0841 SECONDARY OIL PRESSURE SENSOR PERFORMANCE

1. OUTLINE OF DIAGNOSIS

- Detect the malfunction of transmission fluid pressure control function.
- Judge as NG when the pressure difference of 0.5 MPa or more occurs by comparing the Secondary Pressure Target, which is an internal data, and Secondary pressure sensor detecting value.

2. ENABLE CONDITIONS

Secondary Parameters	Enable Conditions
Engine speed	≥ 2100 rpm
MIL is not illuminated for DTCs	P0962, P0963, P0842, P0843, U0073, U0100, U0401, P0966, P0967, P0973, P0974, P0976, P0977, P0730, P2763, P2764

3. DIAGNOSTIC METHOD

• Abnormality Judgment

If the duration of time while the following conditions are met is longer than the time indicated, judge as NG.

Judgment Value

Malfunction Criteria	Threshold Value
Target secondary hydraulic pressure – actual secondary hydraulic pressure	≥ 500 kPa

Time Needed for Diagnosis: 5 seconds
Malfunction Indicator Light Illumination: Illuminates as soon as a malfunction occurs.

• Normality Judgment

Judge as OK and clear the NG if the continuous time while the following conditions are established is more than the predetermined time.

Judgment Value

Malfunction Criteria	Threshold Value
Target secondary hydraulic pressure – actual secondary hydraulic pressure	< 500 kPa

Time Needed for Diagnosis: 0.02 seconds

I: DTC P0842 SECONDARY OIL PRESSURE SENSOR CIRCUIT (LOW)

1. OUTLINE OF DIAGNOSIS

- Detect the GND-output short of the secondary pressure sensor.
- Judge as NG when a status where the secondary pressure sensor detecting voltage is less than 0.195 V is detected.

2. ENABLE CONDITIONS

Secondary Parameters	Enable Conditions
None	

3. DIAGNOSTIC METHOD

• Abnormality Judgment

If the duration of time while the following conditions are met is longer than the time indicated, judge as NG.

Judgment Value

Malfunction Criteria	Threshold Value
Transmission fluid pressure sensor input voltage	< 0.195 V

Time Needed for Diagnosis: 0.5 seconds
Malfunction Indicator Light Illumination: Illuminates as soon as a malfunction occurs.

• Normality Judgment

Judge as OK and clear the NG if the continuous time while the following conditions are established is more than the predetermined time.

Judgment Value

Malfunction Criteria	Threshold Value
Transmission fluid pressure sensor input voltage	≥ 0.195 V

Time Needed for Diagnosis: 1 second

J: DTC P0843 SECONDARY OIL PRESSURE SENSOR CIRCUIT (HIGH)

1. OUTLINE OF DIAGNOSIS

- Detect the open circuit and power supply-output short of secondary pressure sensor 5 V system.
- Judge as NG when a status where the secondary pressure sensor detecting voltage is more than 4.883 V is detected.

2. ENABLE CONDITIONS

Secondary Parameters	Enable Conditions
None	

3. DIAGNOSTIC METHOD

• Abnormality Judgment

If the duration of time while the following conditions are met is longer than the time indicated, judge as NG.

Judgment Value

Malfunction Criteria	Threshold Value
Transmission fluid pressure sensor input voltage	> 4.883 V

Time Needed for Diagnosis: 1.5 seconds
Malfunction Indicator Light Illumination: Illuminates as soon as a malfunction occurs.

• Normality Judgment

Judge as OK and clear the NG if the continuous time while the following conditions are established is more than the predetermined time.

Judgment Value

Malfunction Criteria	Threshold Value
Transmission fluid pressure sensor input voltage	≤ 4.883 V

Time Needed for Diagnosis: 1 second

K: DTC P0890 AT SELF-SHUT RELAY DIAGNOSIS (LOW)

1. OUTLINE OF DIAGNOSIS

- Detect the malfunction of transmission fluid pressure solenoid drive power supply relay circuit.
- Judge as NG when a status where transmission fluid pressure solenoid drive power supply voltage is less than 2 V is detected.

2. ENABLE CONDITIONS

Secondary Parameters	Enable Conditions
TCM Power Relay output	ON

3. DIAGNOSTIC METHOD

• Abnormality Judgment

If the duration of time while the following conditions are met is longer than the time indicated, judge as NG.

Judgment Value

Malfunction Criteria	Threshold Value
Monitored TCM input voltage which is supplied from the TCM Power Relay	< 2 V

Time Needed for Diagnosis: 0.5 seconds
Malfunction Indicator Light Illumination: Illuminates as soon as a malfunction occurs.

• Normality Judgment

Judge as OK and clear the NG if the continuous time while the following conditions are established is more than the predetermined time.

Judgment Value

Malfunction Criteria	Threshold Value
Monitored TCM input voltage which is supplied from the TCM Power Relay	≥ 2 V

Time Needed for Diagnosis: 0.02 seconds

L: DTC P0962 SECONDARY SOLENOID CIRCUIT (LOW)

1. OUTLINE OF DIAGNOSIS

Diagnosis 1
- Detect the GND-output short of the secondary solenoid drive circuit.
- Judge as NG when a status where secondary solenoid drive current is more than 1.1 A is detected.

Diagnosis 2
- Detect the GND-output short of the secondary solenoid drive circuit.
- Judge as NG when the number of overcurrent detection of secondary solenoid drive circuit is more than 10 times.

2. ENABLE CONDITIONS

Secondary Parameters	Enable Conditions
Diagnosis 1 Line pressure control solenoid target current	≥ 0.1 A
Diagnosis 2 None	

3. DIAGNOSTIC METHOD

• Abnormality Judgment

If the duration of time while the following conditions are met is longer than the time indicated, judge as NG.

Judgment Value

Malfunction Criteria	Threshold Value
Diagnosis 1 Line pressure control solenoid output current	≥ 1.1 A
Diagnosis 2 The number of pulse from over-current detection circuit	> 10 count

Time Needed for Diagnosis:
- **Diagnosis 1:** 0.5 s
- **Diagnosis 2:** Immediately

Malfunction Indicator Light Illumination: Illuminates as soon as a malfunction occurs.

• Normality Judgment

Judge as OK and clear the NG if the continuous time while the following conditions are established is more than the predetermined time.

Judgment Value

Malfunction Criteria	Threshold Value
Diagnosis 1 Line pressure control solenoid output current	< 1.1 A
Diagnosis 2 The number of pulse from over-current detection circuit	≤ 10 count

Time Needed for Diagnosis: 0.02 seconds

M: DTC P0963 SECONDARY SOLENOID CIRCUIT (HIGH)

1. OUTLINE OF DIAGNOSIS

- Detect the open circuit and power supply-output short of the secondary solenoid drive circuit.
- Judge as NG when a status where secondary solenoid drive current is less than 0.1 A is detected.

2. ENABLE CONDITIONS

Secondary Parameters	Enable Conditions
Line pressure control solenoid target current	≥ 0.2 A
Battery voltage	≥ 9 V

3. DIAGNOSTIC METHOD

• Abnormality Judgment

If the duration of time while the following conditions are met is longer than the time indicated, judge as NG.

Judgment Value

Malfunction Criteria	Threshold Value
Line pressure control solenoid output current	< 0.1 A

Time Needed for Diagnosis: 0.5 seconds
Malfunction Indicator Light Illumination: Illuminates as soon as a malfunction occurs.

• Normality Judgment

Judge as OK and clear the NG if the continuous time while the following conditions are established is more than the predetermined time.

Judgment Value

Malfunction Criteria	Threshold Value
Line pressure control solenoid output current	≥ 0.1 A

Time Needed for Diagnosis: 0.02 seconds

N: DTC P0965 FORWARD & REVERSE SOLENOID FUNCTION

1. OUTLINE OF DIAGNOSIS

- Detect the malfunction of F & R solenoid control function.
- Judge as NG when the difference between turbine speed and primary speed is 100 rpm with F & R clutch engaged control status.

2. ENABLE CONDITIONS

Secondary Parameters	Enable Conditions
Primary pulley shaft speed	≥ 100 rpm
Turbine shaft speed	≥ 100 rpm
Target current for Forward & reverse clutch pressure control solenoid	< 0.9 A
Engine speed	≥ 500 rpm
D range switch	ON
MIL is not illuminated for DTCs	P0716, P2746, U0073, U0100, U0401, P0966, P0967, P0705, P0708

3. DIAGNOSTIC METHOD

- **Abnormality Judgment**

If the duration of time while the following conditions are met is longer than the time indicated, judge as NG.

Judgment Value

Malfunction Criteria	Threshold Value
Turbine shaft speed – Primary pulley shaft speed	≥ 100 rpm

Time Needed for Diagnosis: 5 seconds
Malfunction Indicator Light Illumination: Illuminates as soon as a malfunction occurs.

- **Normality Judgment**

Judge as OK and clear the NG if the continuous time while the following conditions are established is more than the predetermined time.

Judgment Value

Malfunction Criteria	Threshold Value
Turbine shaft speed – Primary pulley shaft speed	< 100 rpm

Time Needed for Diagnosis: 0.02 seconds

O: DTC P0966 FORWARD & REVERSE SOLENOID CIRCUIT (LOW)

1. OUTLINE OF DIAGNOSIS

• Detect the GND-output short of F & R solenoid circuit.
• Judge as NG when the number of overcurrent detection of F & R solenoid drive circuit is more than 10 times.

2. ENABLE CONDITIONS

Secondary Parameters	Enable Conditions
None	

3. DIAGNOSTIC METHOD

• Abnormality Judgment

If the duration of time while the following conditions are met is longer than the time indicated, judge as NG.

Judgment Value

Malfunction Criteria	Threshold Value
The number of pulse from over-current detection circuit	> 10 count

Time Needed for Diagnosis: Immediately
Malfunction Indicator Light Illumination: Illuminates as soon as a malfunction occurs.

• Normality Judgment

Judge as OK and clear the NG if the continuous time while the following conditions are established is more than the predetermined time.

Judgment Value

Malfunction Criteria	Threshold Value
The number of pulse from over-current detection circuit	≤ 10 count

Time Needed for Diagnosis: 0.02 seconds

P: DTC P0967 FORWARD & REVERSE LINEAR SOLENOID CIRCUIT (HIGH)

1. OUTLINE OF DIAGNOSIS

- Detect the open circuit and power supply-output short of F & R solenoid circuit.
- Judge as NG when a status where the F&R solenoid drive current is less than 0.15 A is detected.

2. ENABLE CONDITIONS

Secondary Parameters	Enable Conditions
Forward & reverse clutch pressure control solenoid target current	≥ 300 mA
Battery voltage	≥ 9 V

3. DIAGNOSTIC METHOD

• Abnormality Judgment

If the duration of time while the following conditions are met is longer than the time indicated, judge as NG.

Judgment Value

Malfunction Criteria	Threshold Value
Forward & reverse clutch pressure control solenoid output current	< 0.15 A

Time Needed for Diagnosis: 1 second
Malfunction Indicator Light Illumination: Illuminates as soon as a malfunction occurs.

• Normality Judgment

Judge as OK and clear the NG if the continuous time while the following conditions are established is more than the predetermined time.

Judgment Value

Malfunction Criteria	Threshold Value
Forward & reverse clutch pressure control solenoid output current	≥ 0.15 A

Time Needed for Diagnosis: 0.02 seconds

Q: DTC P0973 PRIMARY SOLENOID SYSTEM A CIRCUIT (LOW)

1. OUTLINE OF DIAGNOSIS

- Detect the GND-output short of the primary UP solenoid drive circuit.
- Judge as NG when the number of GND short detection of primary UP solenoid drive circuit is more than 10 times.

2. ENABLE CONDITIONS

Secondary Parameters	Enable Conditions
Target duty cycle	0%

3. DIAGNOSTIC METHOD

• Abnormality Judgment

If the duration of time while the following conditions are met is longer than the time indicated, judge as NG.

Judgment Value

Malfunction Criteria	Threshold Value
Malfunction signal from solenoid driver IC	≥ 10 count

Time Needed for Diagnosis: Immediately
Malfunction Indicator Light Illumination: Illuminates as soon as a malfunction occurs.

• Normality Judgment

Judge as OK and clear the NG if the continuous time while the following conditions are established is more than the predetermined time.

Judgment Value

Malfunction Criteria	Threshold Value
Malfunction signal from solenoid driver IC	< 10 count

Time Needed for Diagnosis: 0.02 seconds

R: DTC P0974 PRIMARY SOLENOID SYSTEM A CIRCUIT (HIGH)

1. OUTLINE OF DIAGNOSIS

- Detect the open circuit and power supply-output short of the primary UP solenoid drive circuit.
- Judge as NG when the number of open or power supply short detection of primary UP solenoid drive circuit is more than 10 times.

2. ENABLE CONDITIONS

Secondary Parameters	Enable Conditions
Target duty cycle	100%

3. DIAGNOSTIC METHOD

• Abnormality Judgment

If the duration of time while the following conditions are met is longer than the time indicated, judge as NG.

Judgment Value

Malfunction Criteria	Threshold Value
Malfunction signal from solenoid driver IC	≥ 10 count

Time Needed for Diagnosis: Immediately
Malfunction Indicator Light Illumination: Illuminates as soon as a malfunction occurs.

• Normality Judgment

Judge as OK and clear the NG if the continuous time while the following conditions are established is more than the predetermined time.

Judgment Value

Malfunction Criteria	Threshold Value
Malfunction signal from solenoid driver IC	< 10 count

Time Needed for Diagnosis: 0.02 seconds

S: DTC P0976 PRIMARY SOLENOID SYSTEM B CIRCUIT (LOW)

1. OUTLINE OF DIAGNOSIS

- Detect the GND-output short of the primary DOWN solenoid drive circuit.
- Judge as NG when the number of GND short detection of primary DOWN solenoid drive circuit is more than 10 times.

2. ENABLE CONDITIONS

Secondary Parameters	Enable Conditions
Target duty cycle	0%

3. DIAGNOSTIC METHOD

• Abnormality Judgment

If the duration of time while the following conditions are met is longer than the time indicated, judge as NG.

Judgment Value

Malfunction Criteria	Threshold Value
Malfunction signal from solenoid driver IC	≥ 10 count

Time Needed for Diagnosis: Immediately
Malfunction Indicator Light Illumination: Illuminates as soon as a malfunction occurs.

• Normality Judgment

Judge as OK and clear the NG if the continuous time while the following conditions are established is more than the predetermined time.

Judgment Value

Malfunction Criteria	Threshold Value
Malfunction signal from solenoid driver IC	< 10 count

Time Needed for Diagnosis: 0.02 seconds

T: DTC P0977 PRIMARY SOLENOID SYSTEM B CIRCUIT (HIGH)

1. OUTLINE OF DIAGNOSIS

- Detect the open circuit and power supply-output short of the primary DOWN solenoid drive circuit.
- Judge as NG when the number of open or power supply short detection of primary DOWN solenoid drive circuit is more than 10 times.

2. ENABLE CONDITIONS

Secondary Parameters	Enable Conditions
Target duty cycle	100%

3. DIAGNOSTIC METHOD

• Abnormality Judgment

If the duration of time while the following conditions are met is longer than the time indicated, judge as NG.

Judgment Value

Malfunction Criteria	Threshold Value
Malfunction signal from solenoid driver IC	≥ 10 count

Time Needed for Diagnosis: Immediately
Malfunction Indicator Light Illumination: Illuminates as soon as a malfunction occurs.

• Normality Judgment

Judge as OK and clear the NG if the continuous time while the following conditions are established is more than the predetermined time.

Judgment Value

Malfunction Criteria	Threshold Value
Malfunction signal from solenoid driver IC	< 10 count

Time Needed for Diagnosis: 0.02 seconds

U: DTC P1724 AT EEPROM ERROR

1. OUTLINE OF DIAGNOSIS

- Detect TCM EEPROM malfunction.
- Judge as NG when the SUM check result of EEPROM writing value is abnormal and the contents of EEPROM can not be read.

2. ENABLE CONDITIONS

Secondary Parameters	Enable Conditions
Diagnosis 1	
Battery voltage	> 9 V
Diagnosis 2	
Battery voltage	> 9 V
The result of having written data to the EEPROM	All the data were written to the EEPROM

3. DIAGNOSTIC METHOD

- **Abnormality Judgment**

If the duration of time while the following conditions are met is longer than the time indicated, judge as NG.

Judgment Value

Malfunction Criteria	Threshold Value
Diagnosis 1	
Impossible to read data from EEPROM	≥ 1 count
Diagnosis 2	
Calculated sum value of EEPROM	≠ Sum value stored in EEPROM

Time Needed for Diagnosis: Immediately
Malfunction Indicator Light Illumination: Illuminates when malfunction occurs in 2 continuous driving cycles.

- **Normality Judgment**

Judge as OK and clear the NG if the continuous time while the following conditions are established is more than the predetermined time.

Judgment Value

Malfunction Criteria	Threshold Value
Diagnosis 1	
Impossible to read data from EEPROM	< 1 count
Diagnosis 2	
Calculated sum value of EEPROM	Sum value stored in EEPROM

Time Needed for Diagnosis: 0.02 seconds

V: DTC P2746 PRIMARY PULLEY REVOLUTION SPEED SENSOR CIRCUIT

1. OUTLINE OF DIAGNOSIS

- Detect the no input signal of primary speed sensor.
- Judge as NG when the secondary speed sensor has input signal but the primary speed sensor has no input signal.

2. ENABLE CONDITIONS

Secondary Parameters	Enable Conditions
MIL is not illuminated for DTC	P2750
Secondary pulley shaft speed	≥ 500 rpm

3. DIAGNOSTIC METHOD

• Abnormality Judgment

If the duration of time while the following conditions are met is longer than the time indicated, judge as NG.

Judgment Value

Malfunction Criteria	Threshold Value
Primary pulley shaft speed	0 rpm

Time Needed for Diagnosis: 0.5 seconds
Malfunction Indicator Light Illumination: Illuminates as soon as a malfunction occurs.

• Normality Judgment

Judge as OK and clear the NG if the continuous time while the following conditions are established is more than the predetermined time.

Judgment Value

Malfunction Criteria	Threshold Value
Primary pulley shaft speed	≠ 0 rpm

Time Needed for Diagnosis: 0.2 seconds

W: DTC P2750 SEC. PULLEY REVOLUTION SPEED SENSOR CIRCUIT

1. OUTLINE OF DIAGNOSIS

- Detect the no input signal of secondary speed sensor.
- Judge as NG when the primary speed sensor has input signal but the secondary speed sensor has no input signal.

2. ENABLE CONDITIONS

Secondary Parameters	Enable Conditions
Primary pulley shaft speed	≥ 1000 rpm
D range switch or R range switch	ON
MIL is not illuminated for DTC	P2746

3. DIAGNOSTIC METHOD

• Abnormality Judgment

If the duration of time while the following conditions are met is longer than the time indicated, judge as NG.

Judgment Value

Malfunction Criteria	Threshold Value
Secondary pulley shaft speed	0 rpm

Time Needed for Diagnosis: 0.5 seconds
Malfunction Indicator Light Illumination: Illuminates as soon as a malfunction occurs.

• Normality Judgment

Judge as OK and clear the NG if the continuous time while the following conditions are established is more than the predetermined time.

Judgment Value

Malfunction Criteria	Threshold Value
Secondary pulley shaft speed	≠ 0 rpm

Time Needed for Diagnosis: 0.2 seconds

X: DTC P2762 LOCK-UP DUTY SOLENOID MALFUNCTION

1. OUTLINE OF DIAGNOSIS

- Detect the malfunction of lock-up clutch control function.
- Judge as NG when the difference between engine speed and turbine speed is out of specified value with lock-up clutch engaged control status.

2. ENABLE CONDITIONS

Secondary Parameters	Enable Conditions
D range switch	ON
Torque converter clutch target hydraulic pressure	700 kPa
MIL is not illuminated for DTCs	P0716, P2746, U0073, U0100, U0401, P2763, P2764

3. DIAGNOSTIC METHOD

• Abnormality Judgment

If the duration of time while the following conditions are met is longer than the time indicated, judge as NG.

Judgment Value

Malfunction Criteria	Threshold Value
Engine speed – Turbine shaft speed	≥ 40 + Vehicle speed / 2 rpm

Time Needed for Diagnosis: 10 seconds
Malfunction Indicator Light Illumination: Illuminates when malfunction occurs in 2 continuous driving cycles.

• Normality Judgment

Judge as OK and clear the NG if the continuous time while the following conditions are established is more than the predetermined time.

Judgment Value

Malfunction Criteria	Threshold Value
Engine speed – Turbine shaft speed	< 40 + Vehicle speed / 2 rpm

Time Needed for Diagnosis: 0.02 seconds

Y: DTC P2763 LOCK-UP DUTY SOLENOID CIRCUIT (HIGH)

1. OUTLINE OF DIAGNOSIS

- Detect the open circuit and power supply-output short of the lock-up duty solenoid drive circuit.
- Judge as NG when the number of open or power supply short detection of lock-up duty solenoid drive circuit is more than 10 times.

2. ENABLE CONDITIONS

Secondary Parameters	Enable Conditions
Target duty cycle	0%

3. DIAGNOSTIC METHOD

• Abnormality Judgment

If the duration of time while the following conditions are met is longer than the time indicated, judge as NG.

Judgment Value

Malfunction Criteria	Threshold Value
Malfunction signal from solenoid driver IC	≥ 10 count

Time Needed for Diagnosis: Immediately
Malfunction Indicator Light Illumination: Illuminates as soon as a malfunction occurs.

• Normality Judgment

Judge as OK and clear the NG if the continuous time while the following conditions are established is more than the predetermined time.

Judgment Value

Malfunction Criteria	Threshold Value
Malfunction signal from solenoid driver IC	< 10 count

Time Needed for Diagnosis: 0.02 seconds

Z: DTC P2764 LOCK-UP DUTY SOLENOID CIRCUIT (LOW)

1. OUTLINE OF DIAGNOSIS

- Detect the GND-output short of the lock-up duty solenoid drive circuit.
- Judge as NG when the number of GND short detection of lock-up duty solenoid drive circuit is more than 10 times.

2. ENABLE CONDITIONS

Secondary Parameters	Enable Conditions
Target duty cycle	100%

3. DIAGNOSTIC METHOD

• Abnormality Judgment

If the duration of time while the following conditions are met is longer than the time indicated, judge as NG.

Judgment Value

Malfunction Criteria	Threshold Value
Malfunction signal from solenoid driver IC	≥ 10 count

Time Needed for Diagnosis: Immediately
Malfunction Indicator Light Illumination: Illuminates as soon as a malfunction occurs.

• Normality Judgment

Judge as OK and clear the NG if the continuous time while the following conditions are established is more than the predetermined time.

Judgment Value

Malfunction Criteria	Threshold Value
Malfunction signal from solenoid driver IC	< 10 count

Time Needed for Diagnosis: 0.02 seconds

AA:DTC U0073 CONTROL MODULE COMMUNICATION BUS OFF

1. OUTLINE OF DIAGNOSIS

- Detect malfunction of CAN communication.
- Judge as NG when CAN communication failure has occurred.

2. ENABLE CONDITIONS

Secondary Parameters	Enable Conditions
Turbine shaft speed or D range switch	0 rpm ON

3. DIAGNOSTIC METHOD

• Abnormality Judgment

If the duration of time while the following conditions are met is longer than the time indicated, judge as NG.

Judgment Value

Malfunction Criteria	Threshold Value
CAN bus status from CAN controller	Bus off

Time Needed for Diagnosis: 2 seconds
Malfunction Indicator Light Illumination: Illuminates as soon as a malfunction occurs.

• Normality Judgment

Judge as OK and clear the NG if the continuous time while the following conditions are established is more than the predetermined time.

Judgment Value

Malfunction Criteria	Threshold Value
CAN bus status from CAN controller	≠ Bus off

Time Needed for Diagnosis: 0 seconds

AB:DTC U0100 LOST COMMUNICATION WITH ECM/PCM "A"

1. OUTLINE OF DIAGNOSIS

- Detect malfunction of CAN communication.
- Judge as NG when CAN communication with ECM is not possible.

2. ENABLE CONDITIONS

Secondary Parameters	Enable Conditions
Turbine shaft speed or D range switch	0 rpm ON

3. DIAGNOSTIC METHOD

• Abnormality Judgment

If the duration of time while the following conditions are met is longer than the time indicated, judge as NG.

Judgment Value

Malfunction Criteria	Threshold Value
CAN data from ECM	Lost

Time Needed for Diagnosis: 0.5 seconds
Malfunction Indicator Light Illumination: Illuminates as soon as a malfunction occurs.

• Normality Judgment

Judge as OK and clear the NG if the continuous time while the following conditions are established is more than the predetermined time.

Judgment Value

Malfunction Criteria	Threshold Value
CAN data from ECM	≠ Lost

Time Needed for Diagnosis: 0 seconds

AC:DTC U0122 LOST COMMUNICATION WITH VEHICLE DYNAMICS CONTROL MODULE

1. OUTLINE OF DIAGNOSIS

- Detect malfunction of CAN communication.
- Judge as NG when CAN communication with VDC CM is not possible.

2. ENABLE CONDITIONS

Secondary Parameters	Enable Conditions
Turbine shaft speed or D range switch	0 rpm ON

3. DIAGNOSTIC METHOD

• Abnormality Judgment

If the duration of time while the following conditions are met is longer than the time indicated, judge as NG.

Judgment Value

Malfunction Criteria	Threshold Value
CAN data from Vehicle Dynamics Control Module	Lost

Time Needed for Diagnosis: 0.5 seconds
Malfunction Indicator Light Illumination: Illuminates as soon as a malfunction occurs.

• Normality Judgment

Judge as OK and clear the NG if the continuous time while the following conditions are established is more than the predetermined time.

Judgment Value

Malfunction Criteria	Threshold Value
CAN data from Vehicle Dynamics Control Module	≠ Lost

Time Needed for Diagnosis: 0 seconds

AD:DTC U0401 INVALID DATA RECEIVED FROM ECM/PCM "A"

1. OUTLINE OF DIAGNOSIS

- Detect malfunction of CAN communication.
- Judge as NG when data received from ECM is not normal.

2. ENABLE CONDITIONS

Secondary Parameters	Enable Conditions
Turbine shaft speed or D range switch	0 rpm ON

3. DIAGNOSTIC METHOD

• Abnormality Judgment

If the duration of time while the following conditions are met is longer than the time indicated, judge as NG.

Judgment Value

Malfunction Criteria	Threshold Value
CAN data from ECM	Freeze

Time Needed for Diagnosis: 2 seconds
Malfunction Indicator Light Illumination: Illuminates as soon as a malfunction occurs.

• Normality Judgment

Judge as OK and clear the NG if the continuous time while the following conditions are established is more than the predetermined time.

Judgment Value

Malfunction Criteria	Threshold Value
CAN data from ECM	≠ Freeze

Time Needed for Diagnosis: 0 seconds

AE:DTC U0416 INVALID DATA RECEIVED FROM VEHICLE DYNAMICS CONTROL MODULE

1. OUTLINE OF DIAGNOSIS

- Detect malfunction of CAN communication.
- Judge as NG when data received from VDC CM is not normal.

2. ENABLE CONDITIONS

Secondary Parameters	Enable Conditions
Turbine shaft speed or D range switch	0 rpm ON

3. DIAGNOSTIC METHOD

• Abnormality Judgment

If the duration of time while the following conditions are met is longer than the time indicated, judge as NG.

Judgment Value

Malfunction Criteria	Threshold Value
CAN data from Vehicle Dynamics Control Module	Freeze

Time Needed for Diagnosis: 2 seconds
Malfunction Indicator Light Illumination: Illuminates as soon as a malfunction occurs.

• Normality Judgment

Judge as OK and clear the NG if the continuous time while the following conditions are established is more than the predetermined time.

Judgment Value

Malfunction Criteria	Threshold Value
CAN data from Vehicle Dynamics Control Module	≠ Freeze

Time Needed for Diagnosis: 0 seconds

CONTINUOUSLY VARIABLE TRANSMISSION

CVT(TH58A)

		Page
1.	General Description	3
2.	CVTF	41
3.	Differential Gear Oil	45
4.	AWD ON/OFF Switching Mode	49
5.	Road Test	50
6.	Stall Test	52
7.	Time Lag Test	53
8.	Secondary Pressure (Line Pressure) Test	54
9.	Output Clutch Pressure Test	57
10.	Transfer Clutch Pressure Test	59
11.	Automatic Transmission Assembly	62
12.	Transmission Mounting System	86
13.	Extension Case Oil Seal	90
14.	Differential Side Retainer Oil Seal	91
15.	Inhibitor Switch	96
16.	Turbine Speed Sensor	103
17.	Secondary Speed Sensor	105
18.	Front Wheel Speed Sensor	107
19.	Secondary Pressure Sensor	109
20.	Oil Pan and Strainer	111
21.	Control Valve Body	114
22.	Electric Fluid Pump	132
23.	Transmission Harness	141
24.	Drive Motor Control Module	155
25.	Transmission Control Module (TCM)	156
26.	Relay and Fuse	158
27.	CVTF Cooler (With Warmer Function)	160
28.	Air Breather Hose	169
29.	Drive Plate	173
30.	Torque Converter Assembly	175
31.	Preparation for Overhaul	177
32.	Extension Case	179
33.	Transfer Clutch	183
34.	Transfer Driven Gear	197
35.	Transfer Drive Gear	200
36.	Parking Pawl	205
37.	Transmission Control Device	208
38.	Drive Motor Assembly	215
39.	Output Clutch Assembly	226
40.	Transmission Case	243
41.	CVTF Filter	255
42.	Reduction Drive Gear	256
43.	Primary Pulley and Secondary Pulley	261

44. Variator Chain 284
45. Reverse Brake Assembly 285
46. Forward Clutch Assembly 301
47. Drive Pinion Shaft Assembly 321
48. Front Differential Assembly 350
49. Oil Pump Chain 370
50. Oil Pump 380
51. Converter Case 386
52. Diagnostics with Phenomenon 389

1. General Description

A: SPECIFICATION

1. TORQUE CONVERTER

Model	HEV
Type	Symmetric, 3-element, single stage, 2-phase torque converter
Stall torque ratio	2.34
Nominal mm (in)	236 (9.29)
Stall speed (at sea level)	2,350 — 3,100 (D range) 2,100 — 2,800 (R range)
One-way clutch	Sprag type one-way clutch

2. OIL PUMP

Type		Internal gear pump
Driving method		Driven by chain
Number of teeth	Inner rotor	8
	Outer rotor	9

3. TRANSMISSION CONTROL ELEMENT

Type	Forward continuously variable speed change, 1 reverse, planetary gear
Multi-plate clutch	1 set
Multi-plate brake	1 set

4. OUTPUT CLUTCH

Multi-plate clutch	1 set
Control method	Electronic hydraulic type

5. TRANSMISSION GEAR RATIO

Forward	3.420 — 0.544
Rev	3.502

6. PLATE

Number of forward clutch drive plates	3
Number of reverse brake drive plates	4
Number of output clutch drive plates	7

7. SELECTOR POSITION

P (Park)	Transmission neutral, output shaft locked, engine start enabled
R (Reverse)	Rev
N (Neutral)	Transmission neutral, engine start enabled
D (Drive)	Forward continuously variable speed change
M (Manual mode) (paddle shift +side)	Manual gear change 1st → 2nd → 3rd → 4th → 5th → 6th
M (Manual mode) (paddle shift –side)	Manual gear change 1st ← 2nd ← 3rd ← 4th ← 5th ← 6th

8. HYDRAULIC CONTROL AND LUBRICATION

Type	Electronic hydraulic control (gear ratio is changed by signals of vehicle speed and accelerator opening angle.)
Fluid	Specified fluid: SUBARU CVT OIL FOR LINEARTRONIC **CAUTION:** **Always use specified CVTF. Using other fluid will cause malfunction.**
Fluid capacity L (US qt, Imp qt)	13.46 — 13.96 (14.2 — 14.8, 11.8 — 12.3)
Lubrication system	Forced feed lubrication with oil pump

9. COOLING AND HARNESS

Cooling system	CVTF cooler (with warmer feature)
Inhibitor switch harness	16 poles
Transmission harness	12 poles
Drive motor harness	20 poles

10.DRIVE MOTOR

Kind	Three-phase AC synchronous motor
Rated voltage V	100.8

11.TRANSFER

Transfer type	Multi-plate transfer (MP-T)
Number of transfer clutch drives & driven plates	5
Control method	Electronic hydraulic type
Reduction gear ratio	1.000 (43/43)

12.REDUCTION GEAR RATIO

Front final reduction gear ratio	3.700

13.RECOMMENDED GEAR OIL

Lubrication oil	GL-5 (75W-90)
Front differential oil capacity L (US qt, Imp qt)	1.3 — 1.4 (1.4 — 1.5, 1.1 — 1.2)

B: COMPONENT

1. TORQUE CONVERTER ASSEMBLY AND CONVERTER CASE

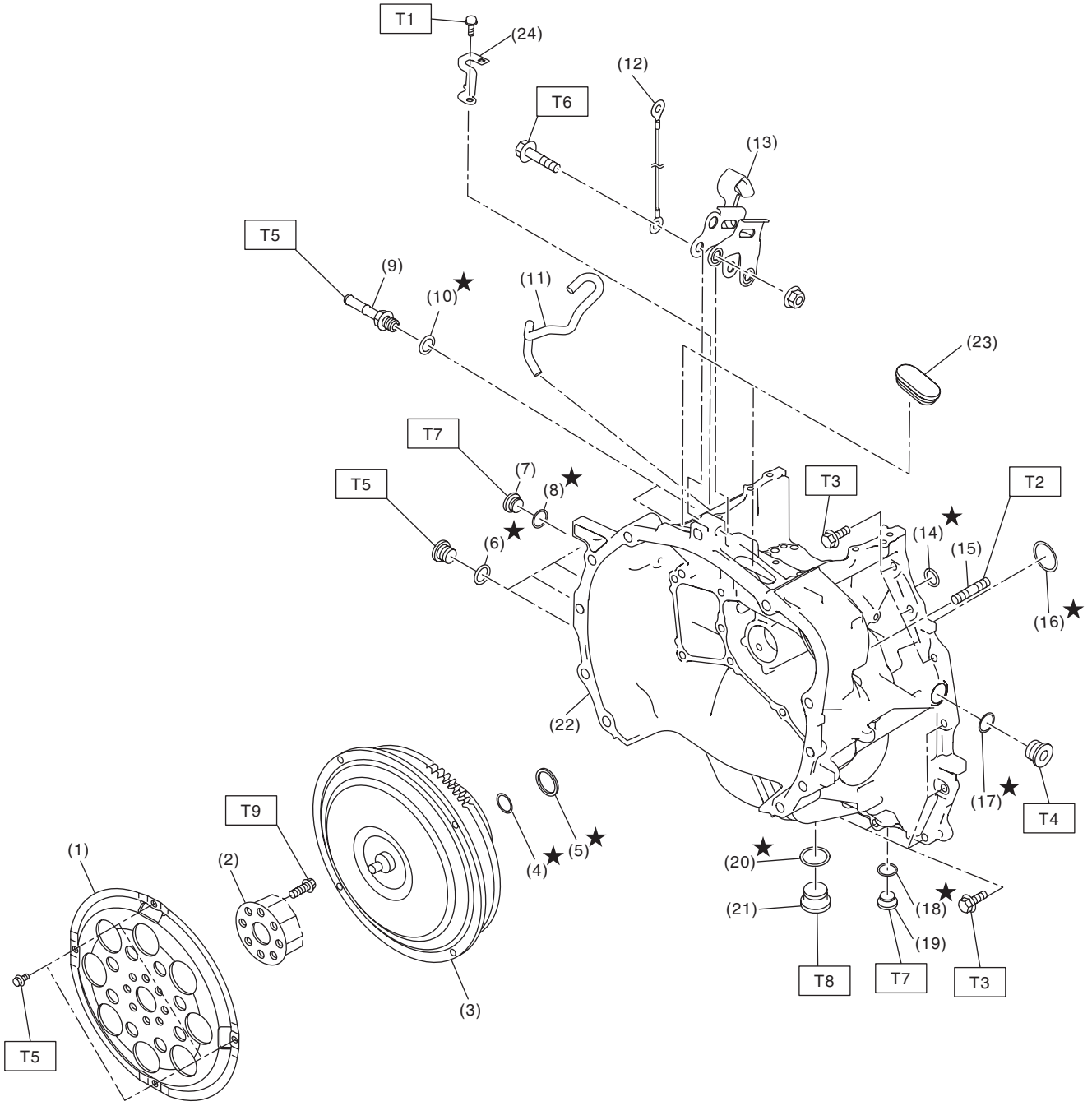

CVT00309

(1)	Drive plate	(13)	Pitching stopper bracket
(2)	Reinforcement drive plate	(14)	O-ring
(3)	Torque converter ASSY	(15)	Stud bolt
(4)	O-ring	(16)	O-ring
(5)	Seal ring	(17)	O-ring
(6)	O-ring	(18)	Gasket
(7)	Front differential gear oil filler plug	(19)	Overflow drain plug
(8)	O-ring	(20)	Gasket
(9)	Oil cooler pipe	(21)	Front differential gear oil drain plug
(10)	O-ring	(22)	Converter case
(11)	Air breather hose	(23)	Rubber cap
(12)	Transmission radio ground cord	(24)	Drive motor harness stay

Tightening torque: N·m (kgf-m, ft-lb)

- ***T1: 7 (0.7, 5.2)***
- ***T2: 18 (1.8, 13.3)***
- ***T3: 22 (2.2, 16.2)***
- ***T4: 22.5 (2.3, 16.6)***
- ***T5: 25 (2.5, 18.4)***
- ***T6: 41 (4.2, 30.2)***
- ***T7: 50 (5.1, 36.9)***
- ***T8: 70 (7.1, 51.6)***
- ***T9: <Ref. to CVT(TH58A)-173, INSTALLATION, Drive Plate.>***

2. OIL PUMP ASSEMBLY

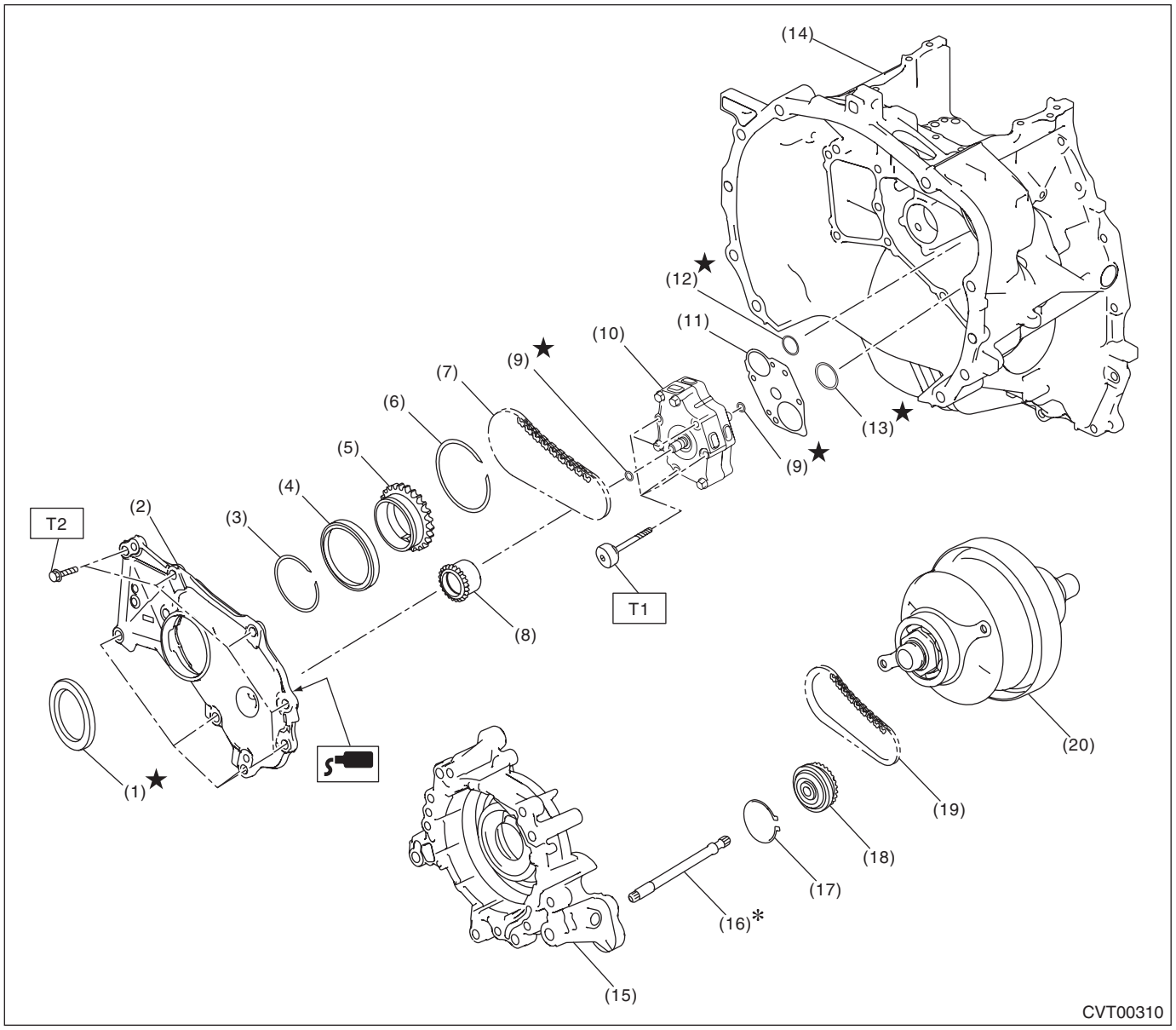

(1) Oil seal
(2) Oil pump chain cover
(3) Snap ring
(4) Ball bearing
(5) Drive sprocket
(6) Snap ring
(7) Oil pump chain front
(8) Oil pump sprocket front
(9) O-ring
(10) Oil pump ASSY
(11) Plate
(12) O-ring (small)
(13) O-ring (large)
(14) Converter case
(15) Reverse brake housing
(16) Oil pump shaft
(17) Snap ring
(18) Oil pump sprocket rear
(19) Oil pump chain rear
(20) Primary pulley ASSY

Tightening torque: N·m (kgf-m, ft-lb)
T1: 8.5 (0.9, 6.3)
T2: 21 (2.1, 15.5)

3. TRANSMISSION CASE

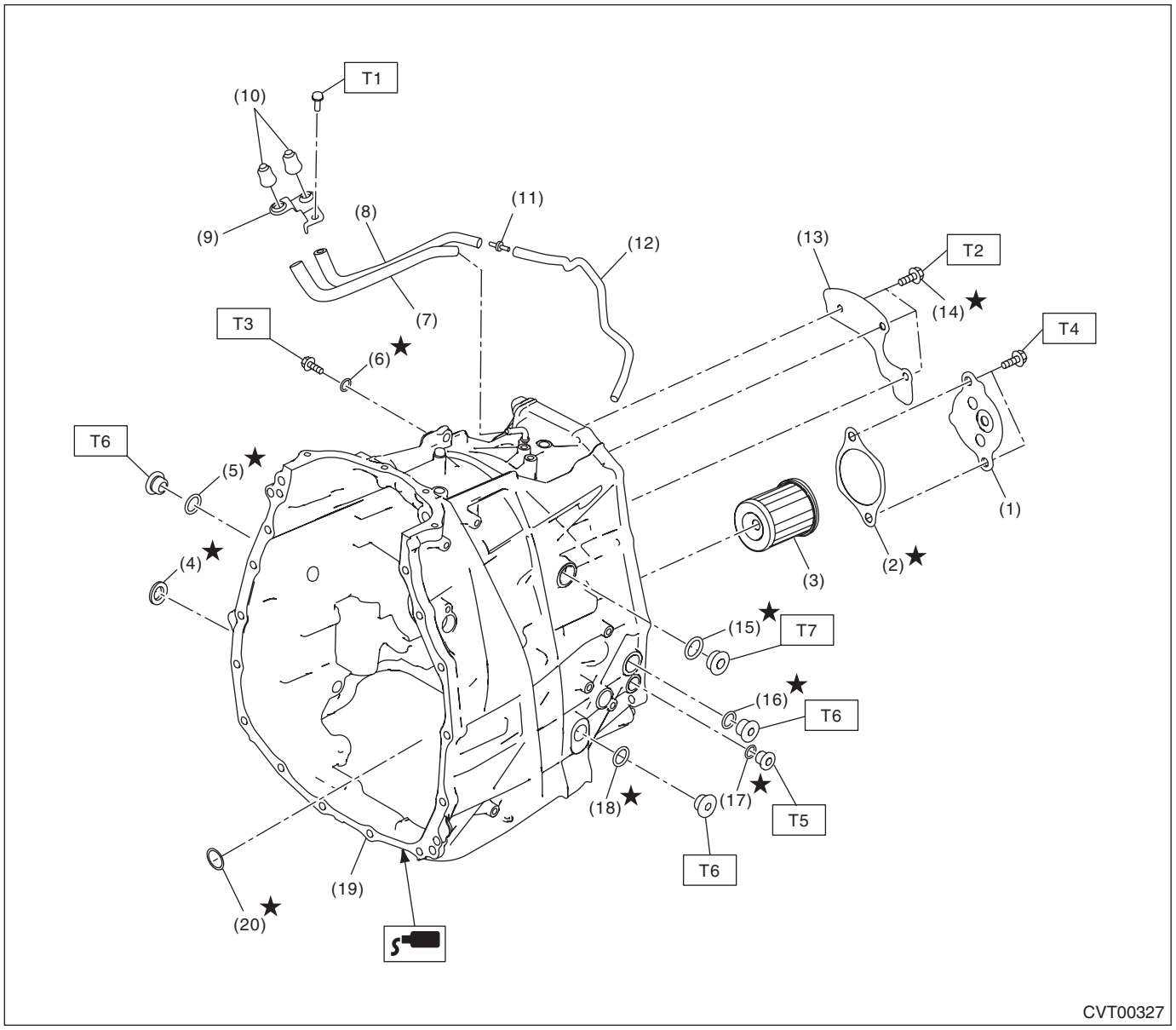

(1)	CVTF filter cover	(11)	Hose connector	
(2)	Gasket	(12)	Air breather hose	
(3)	CVTF filter	(13)	Oil stopper plate	
(4)	Oil seal	(14)	Micro-encapsulated bolt	
(5)	Gasket	(15)	Gasket	
(6)	O-ring	(16)	O-ring	
(7)	Air breather hose	(17)	O-ring	
(8)	Air breather hose	(18)	Gasket	
(9)	Bracket	(19)	Transmission case	
(10)	Air breather cap	(20)	Seal ring	

Tightening torque: N·m (kgf-m, ft-lb)
T1: 5 (0.5, 3.7)
T2: 9 (0.9, 6.6)
T3: 13 (1.3, 9.6)
T4: 17 (1.7, 12.5)
T5: 25 (2.5, 18.4)
T6: 50 (5.1, 36.9)
T7: 60 (6.1, 44.3)

4. CONTROL VALVE BODY

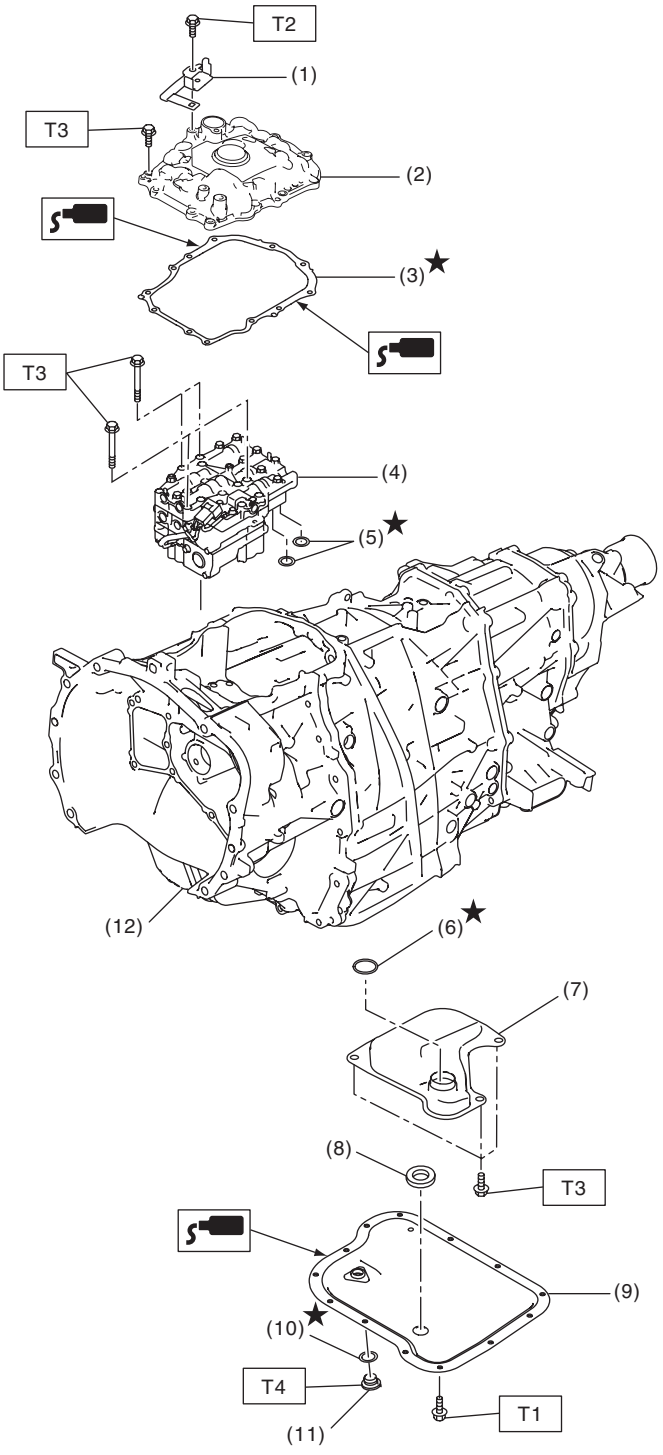

CVT00311

(1)	Transmission harness stay	(7)	Oil strainer	
(2)	Valve cover	(8)	Magnet	
(3)	Gasket	(9)	Oil pan	
(4)	Control valve body	(10)	Gasket	
(5)	O-ring	(11)	CVTF drain plug	
(6)	O-ring	(12)	Transmission ASSY	

Tightening torque: N·m (kgf-m, ft-lb)
T1: 5 (0.5, 3.7)
T2: 7 (0.7, 5.2)
T3: 9 (0.9, 6.6)
T4: 31 (3.2, 22.9)

5. REVERSE BRAKE ASSEMBLY

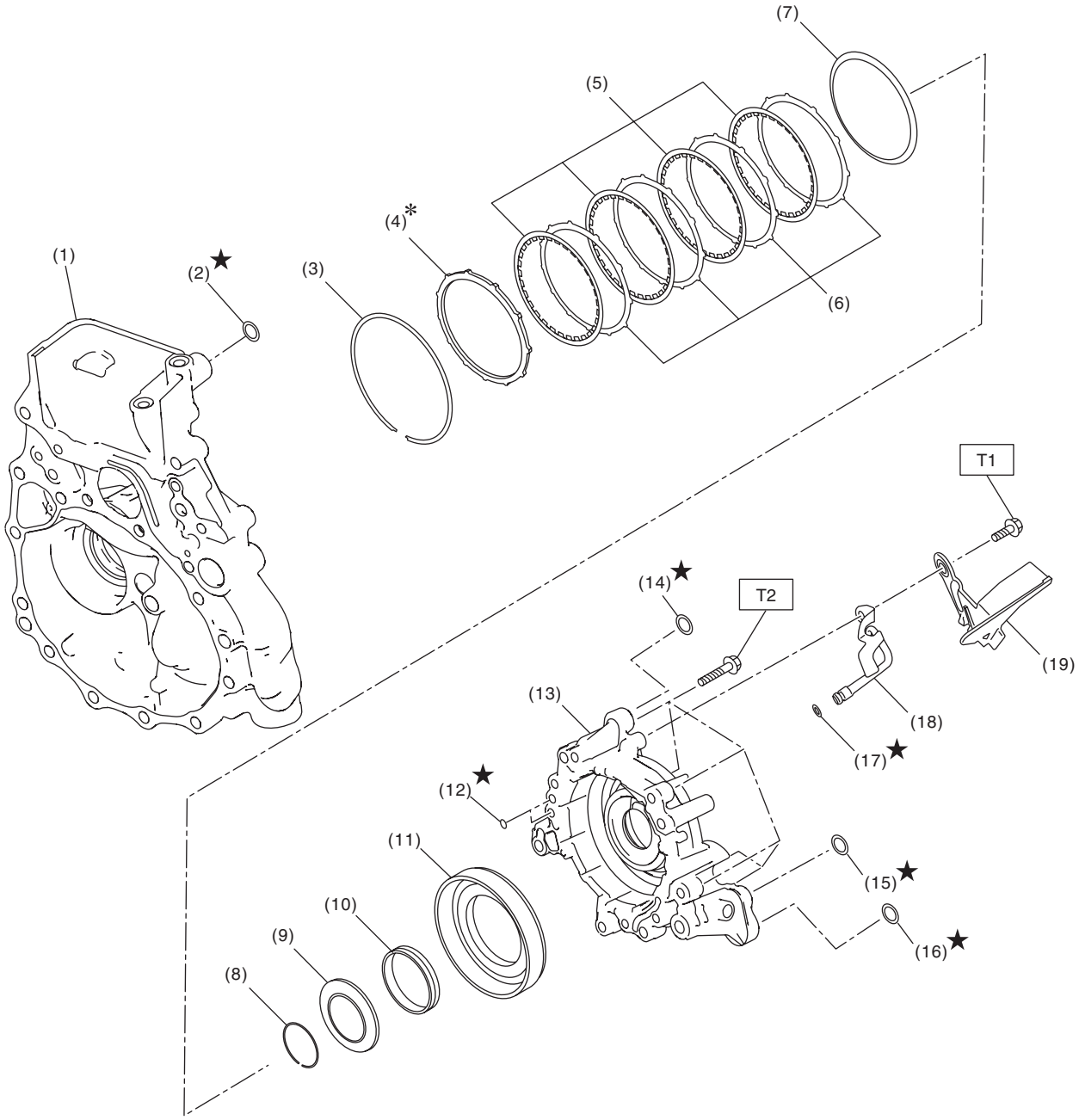

CVT00312

(1) Drive pinion retainer
(2) O-ring
(3) Snap ring
(4) Retaining plate
(5) Drive plate
(6) Driven plate
(7) Dish plate
(8) Snap ring
(9) Spring retainer
(10) Return spring
(11) Reverse brake piston
(12) O-ring
(13) Reverse brake housing
(14) O-ring
(15) O-ring
(16) O-ring
(17) O-ring
(18) Lubrication pipe
(19) Oil guide

Tightening torque: N·m (kgf-m, ft-lb)
T1: 16 (1.6, 11.8)
T2: 37 (3.8, 27.3)

6. FORWARD CLUTCH ASSEMBLY

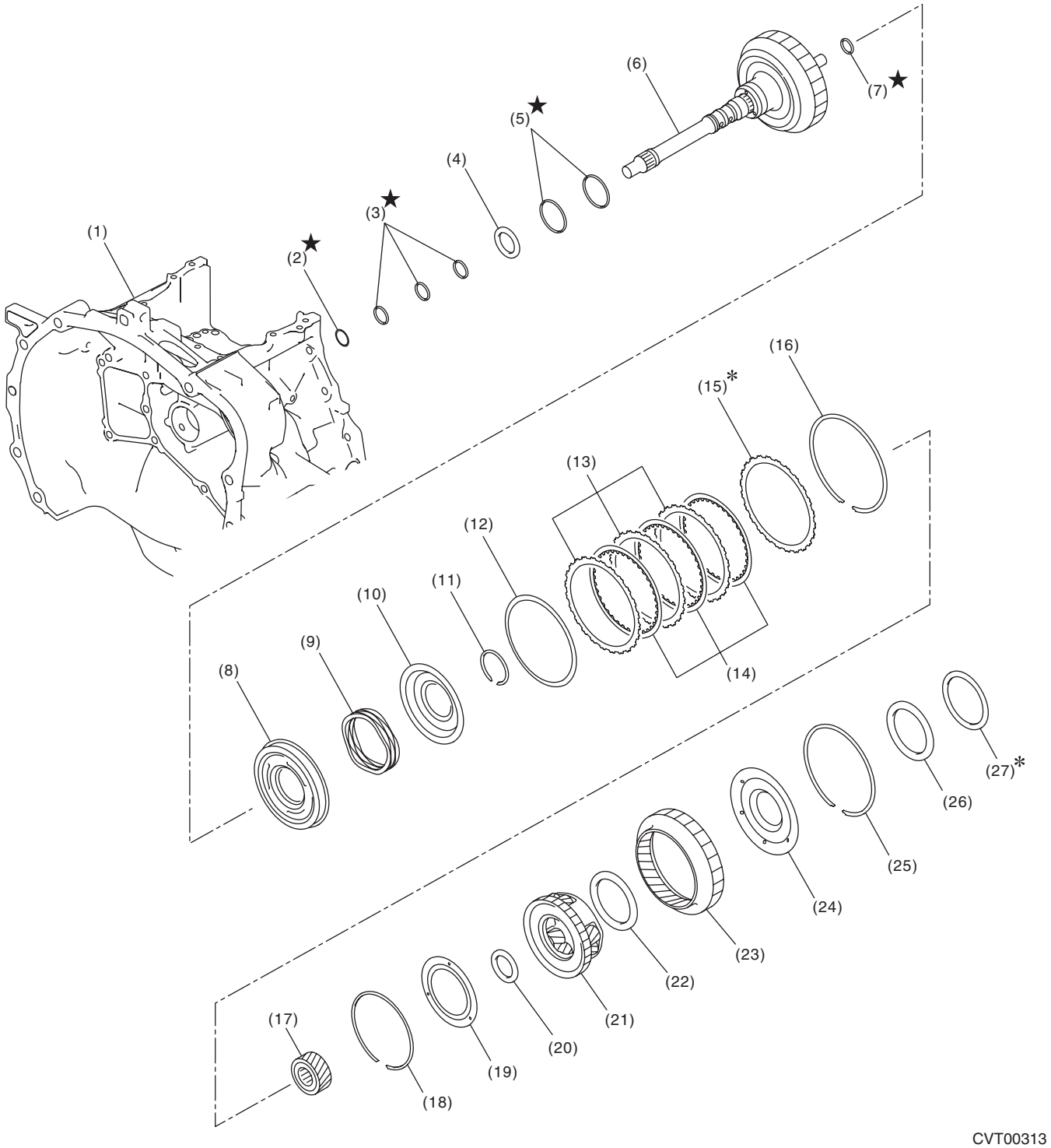

(1) Converter case
(2) O-ring
(3) Seal ring
(4) Thrust bearing
(5) Seal ring
(6) Forward clutch drum ASSY
(7) Seal ring
(8) Forward clutch piston
(9) Return spring
(10) Chamber COMPL
(11) Snap ring
(12) Dish plate
(13) Driven plate
(14) Drive plate
(15) Retaining plate
(16) Snap ring
(17) Sun gear
(18) Snap ring
(19) Balance oil guide
(20) Thrust bearing
(21) Planetary carrier ASSY
(22) Thrust bearing
(23) Internal gear
(24) Thrust gear plate
(25) Snap ring
(26) Thrust bearing
(27) Washer

7. TRANSMISSION CONTROL DEVICE

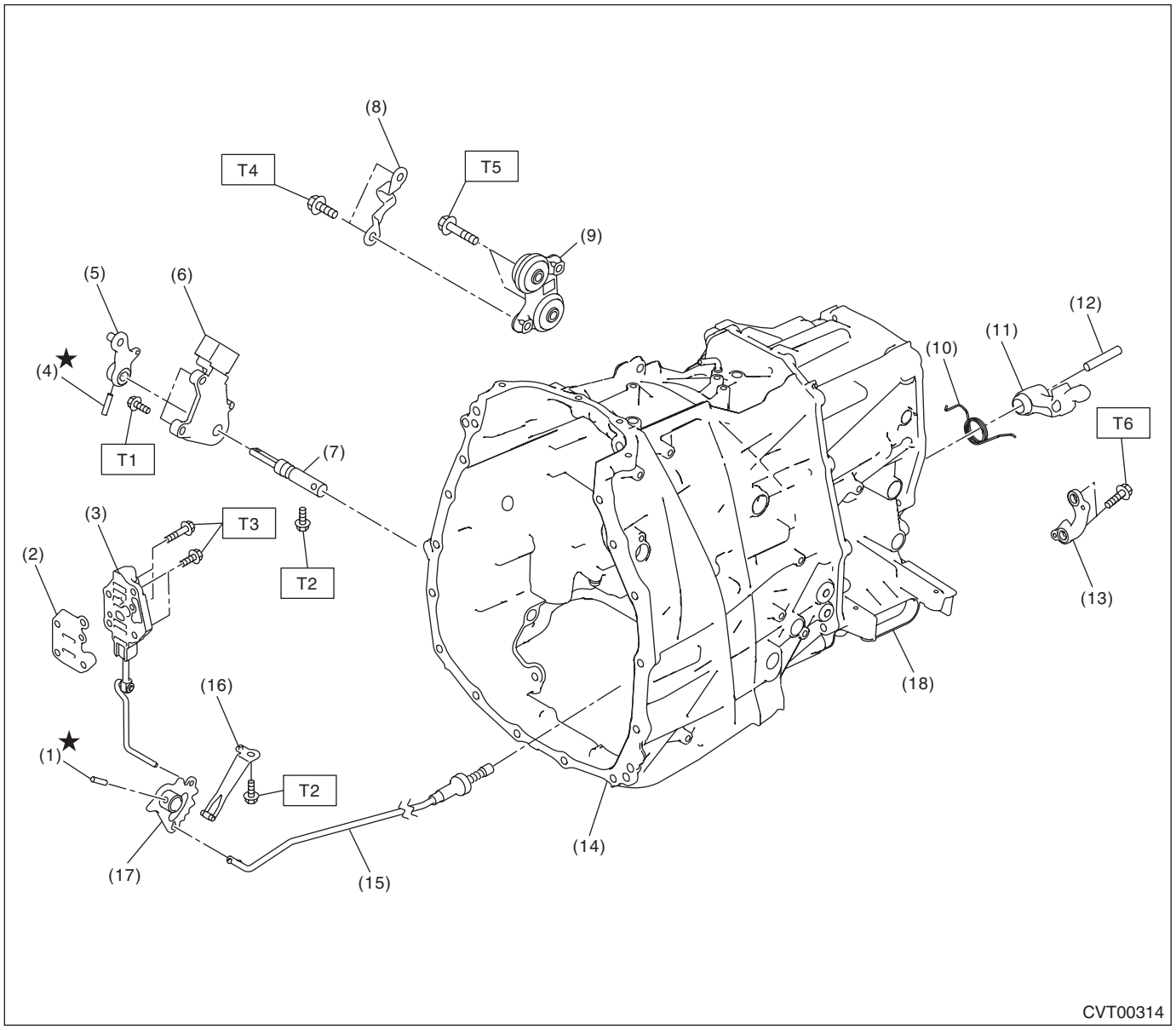

(1)	Spring pin	(10)	Return spring
(2)	Separator plate	(11)	Parking pawl
(3)	Manual valve ASSY	(12)	Shaft
(4)	Spring pin	(13)	Parking support
(5)	Shifter arm	(14)	Transmission case
(6)	Inhibitor switch	(15)	Parking rod
(7)	Shifter arm shaft	(16)	Detent spring
(8)	Cable bracket	(17)	Manual plate
(9)	Plate ASSY	(18)	Drive motor ASSY

Tightening torque: N·m (kgf-m, ft-lb)

- ***T1: 5 (0.5, 3.7)***
- ***T2: 7 (0.7, 5.2)***
- ***T3: 9 (0.9, 6.6)***
- ***T4: 18 (1.8, 13.3)***
- ***T5: 25 (2.5, 18.4)***
- ***T6: <Ref. to CVT(TH58A)-211, INSTALLATION, Transmission Control Device.>***

8. PRIMARY PULLEY, SECONDARY PULLEY & VARIATOR CHAIN AND REDUCTION DRIVE GEAR

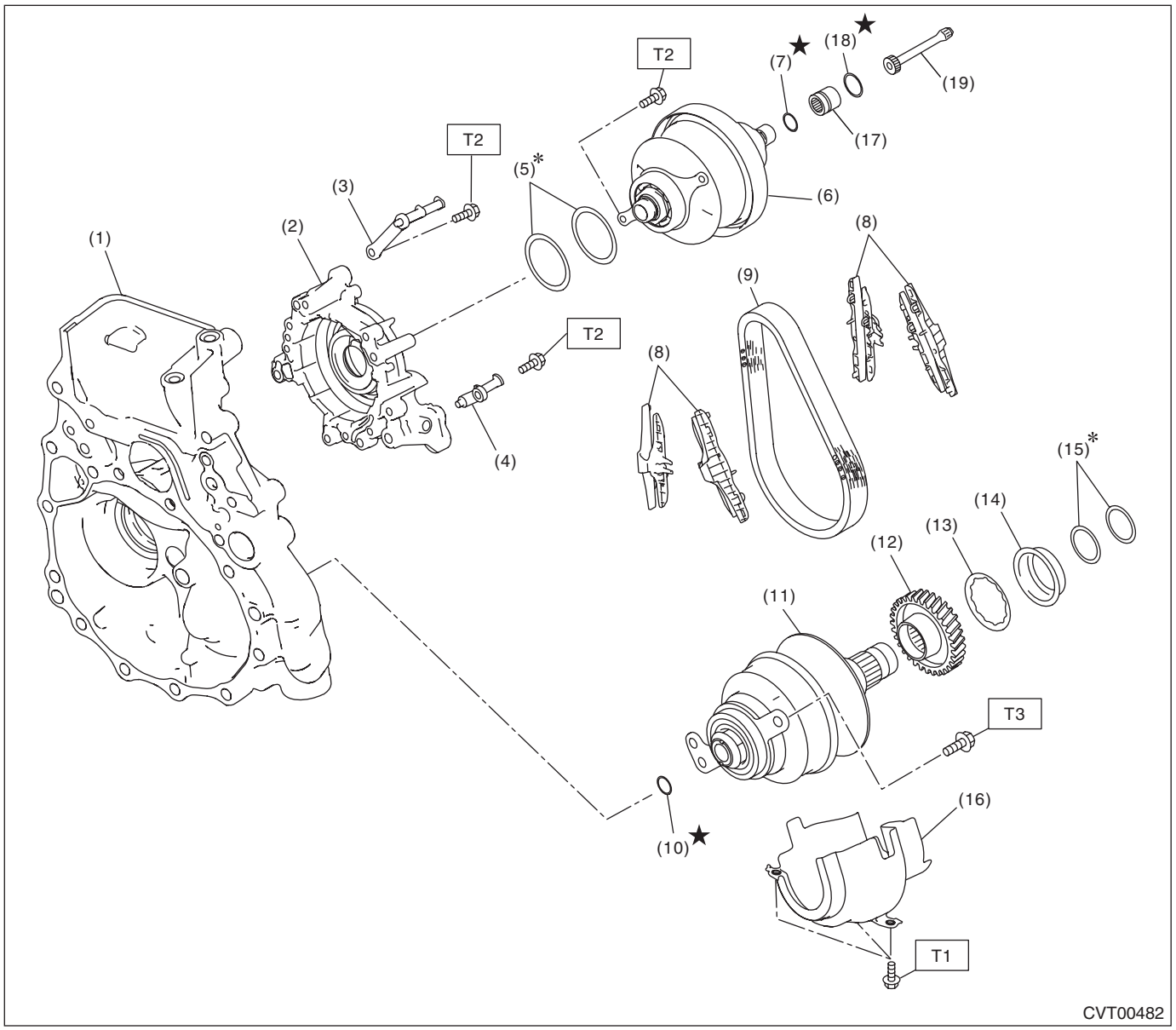

(1) Drive pinion retainer
(2) Reverse brake housing
(3) Support rod
(4) Lubrication pipe
(5) Primary pulley shim
(6) Primary pulley ASSY
(7) O-ring
(8) Chain guide
(9) Variator chain
(10) Seal ring
(11) Secondary pulley ASSY
(12) Reduction drive gear
(13) Dish plate
(14) Spring retainer
(15) Reduction gear shim
(16) Oil baffle
(17) Sleeve
(18) O-ring
(19) Intermediate shaft

Tightening torque: N·m (kgf-m, ft-lb)
T1: 16 (1.6, 11.8)
T2: 21 (2.1, 15.5)
T3: 67.5 (6.9, 49.8)

9. FRONT DIFFERENTIAL GEAR

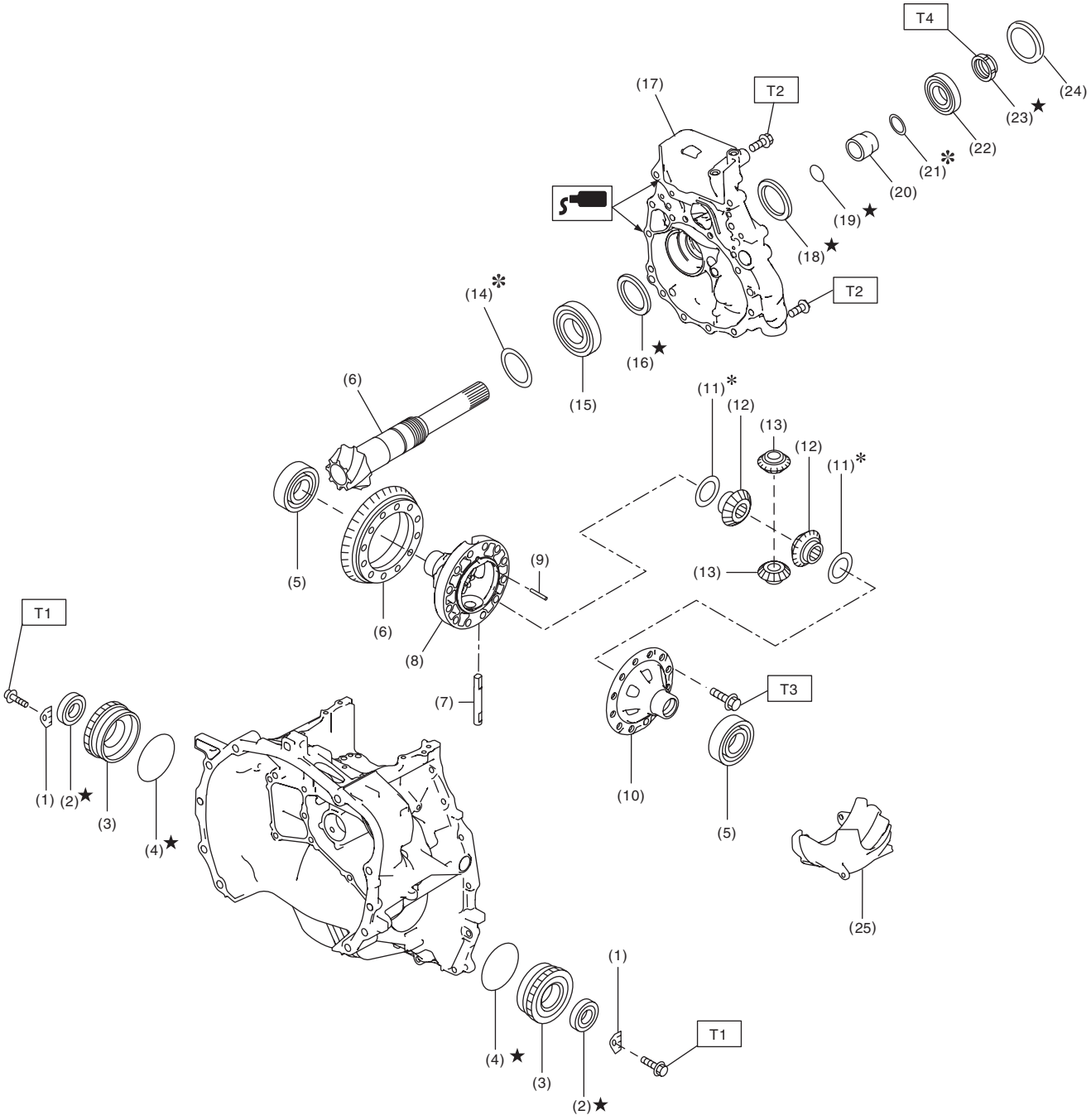

CVT00316

(1) Lock plate
(2) Oil seal
(3) Differential side retainer
(4) O-ring
(5) Taper roller bearing
(6) Drive pinion gear set
(7) Pinion shaft
(8) Differential case RH
(9) Straight pin
(10) Differential case LH
(11) Washer
(12) Differential bevel gear
(13) Differential bevel pinion
(14) Drive pinion shim
(15) Taper roller bearing
(16) Oil seal
(17) Drive pinion retainer
(18) Oil seal
(19) O-ring
(20) Drive pinion spacer
(21) Drive pinion washer
(22) Taper roller bearing
(23) Lock nut
(24) Plug
(25) Oil baffle

Tightening torque: N·m (kgf-m, ft-lb)

T1: 25 (2.5, 18.4)
T2: 43 (4.4, 31.7)
T3: 64 (6.5, 47.2)
T4: <Ref. to CVT(TH58A)-329, ASSEMBLY, Drive Pinion Shaft Assembly.>

10.DRIVE MOTOR ASSY

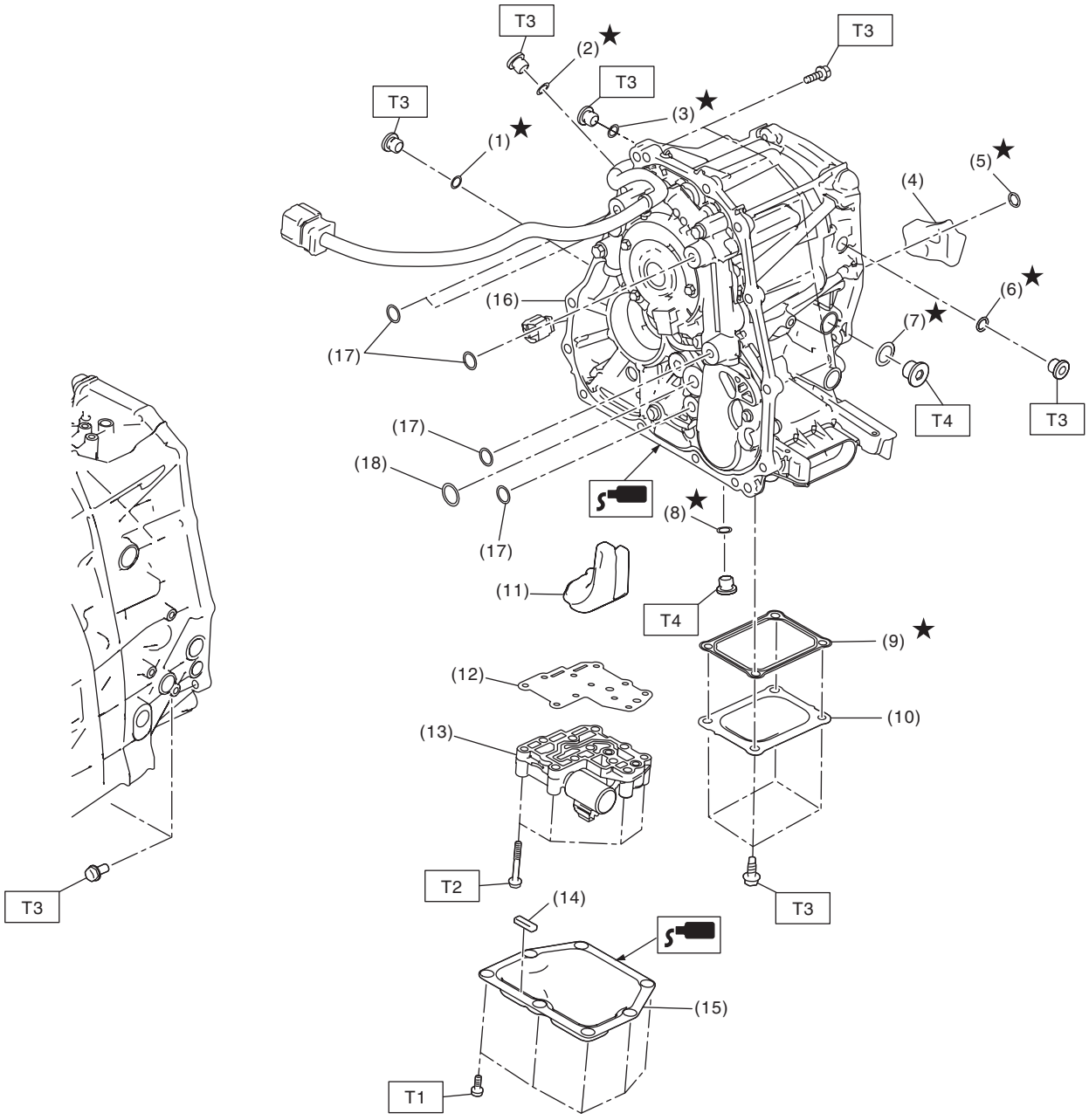

CVT00483

(1) O-ring
(2) O-ring
(3) O-ring
(4) Oil spacer
(5) O-ring
(6) O-ring
(7) O-ring
(8) O-ring
(9) Gasket
(10) Power connect cover
(11) Oil spacer
(12) Separator plate
(13) Output clutch control valve body
(14) Magnet
(15) Oil pan
(16) Drive motor case ASSY
(17) O-ring
(18) O-ring

Tightening torque: N·m (kgf-m, ft-lb)
T1: 5 (0.5, 3.7)
T2: 9 (0.9, 6.6)
T3: 25 (2.5, 18.4)
T4: 50 (5.1, 36.9)

11.OUTPUT CLUTCH ASSEMBLY

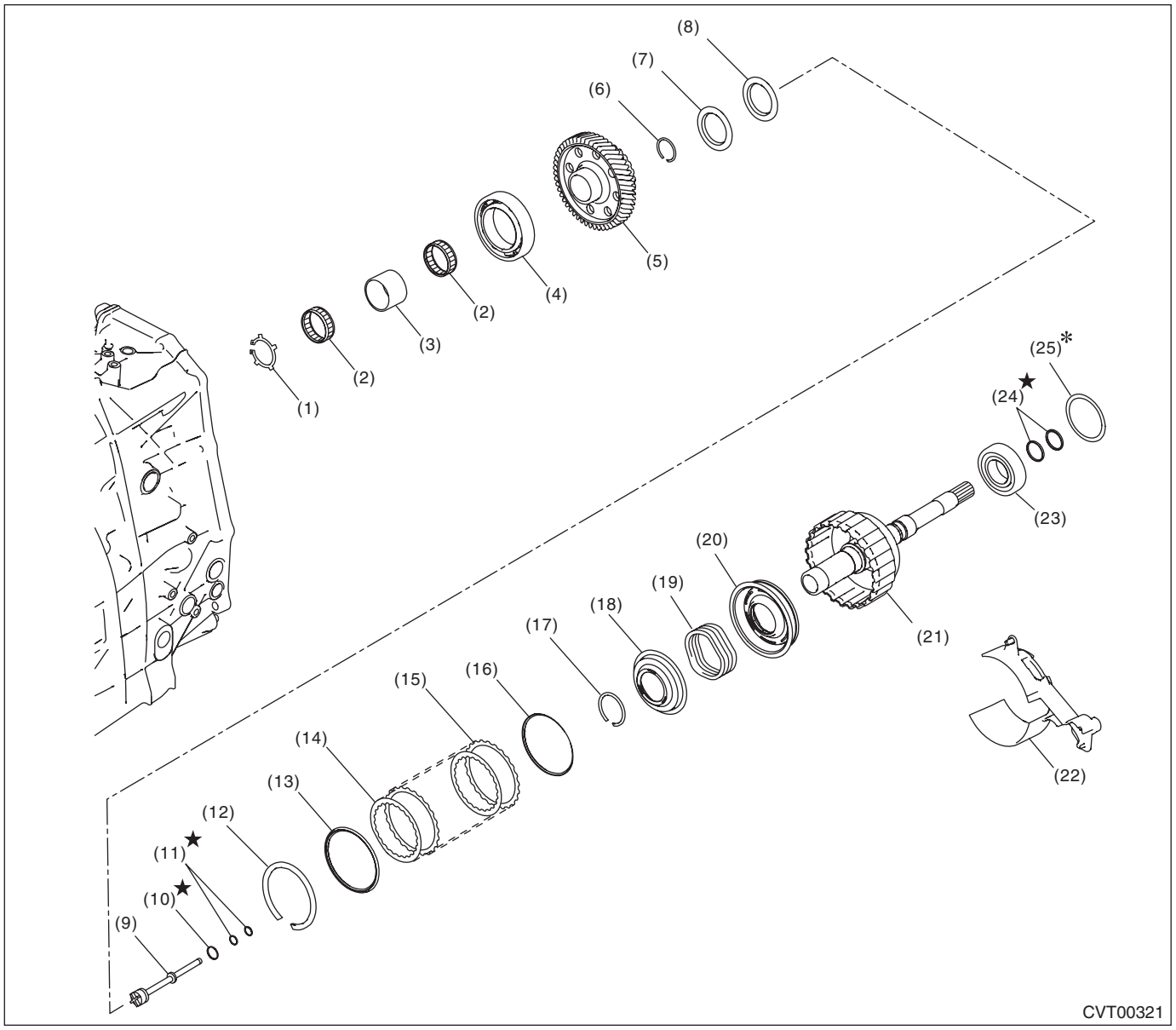

(1) Snap ring
(2) Needle bearing
(3) Reduction driven gear bushing
(4) Ball bearing
(5) Reduction driven gear
(6) Snap ring
(7) Thrust bearing
(8) Thrust washer
(9) Oil pipe
(10) O-ring
(11) O-ring
(12) Snap ring
(13) Retaining plate
(14) Drive plate
(15) Driven plate
(16) Dish plate
(17) Snap ring
(18) Balance chamber
(19) Clutch piston return spring
(20) Clutch piston
(21) Driven shaft
(22) Oil baffle
(23) Ball bearing
(24) Seal ring
(25) Reduction driven gear shim

12.TRANSFER AND EXTENSION CASE

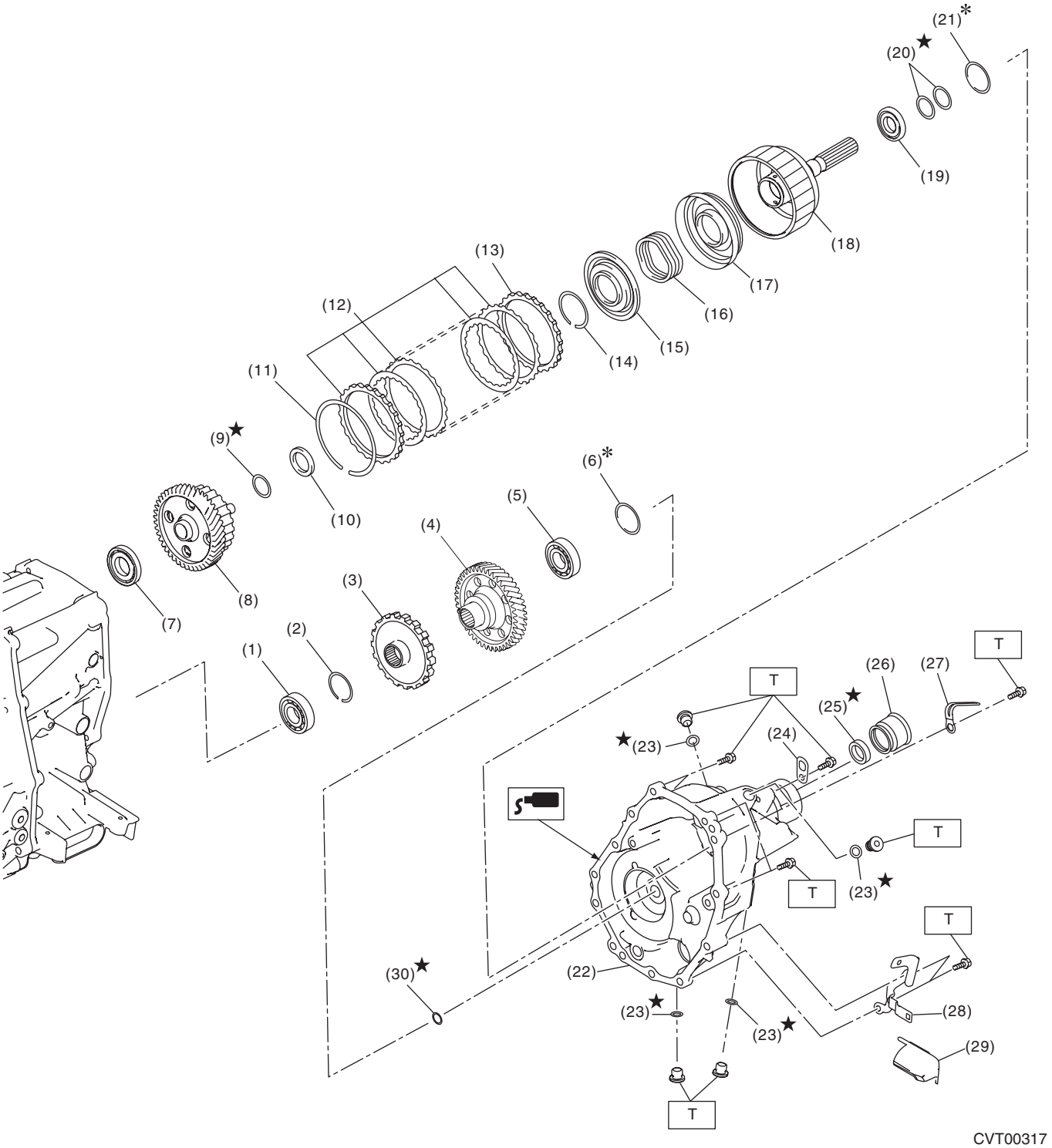

(1) Ball bearing
(2) Snap ring
(3) Parking gear
(4) Transfer drive gear
(5) Ball bearing
(6) Transfer drive gear shim
(7) Ball bearing
(8) Transfer driven gear
(9) Seal ring
(10) Thrust bearing
(11) Snap ring
(12) Transfer clutch plate set
(13) Pressure plate
(14) Snap ring
(15) Transfer clutch piston seal
(16) Transfer clutch piston return spring
(17) Transfer clutch piston
(18) Rear drive shaft
(19) Ball bearing
(20) Seal ring
(21) Transfer driven gear shim
(22) Extension case
(23) O-ring
(24) Transmission hanger
(25) Oil seal
(26) Dust cover
(27) Clip
(28) Harness bracket
(29) Sensor cover
(30) Seal ring

Tightening torque: N·m (kgf-m, ft-lb)
T: 25 (2.5, 18.4)

13.TRANSMISSION HARNESS AND SENSOR

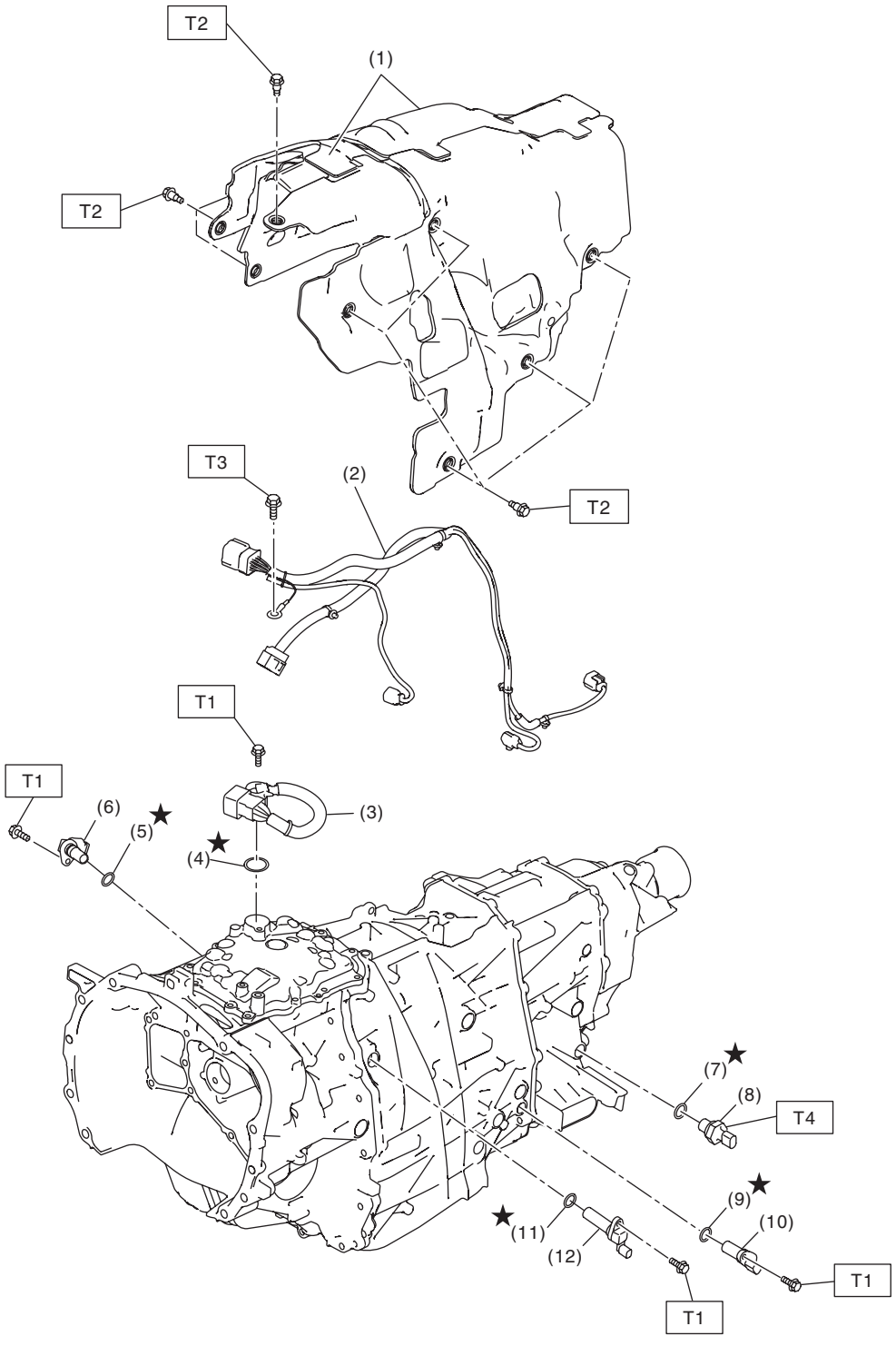

(1)	Transmission case cover	(7)	O-ring
(2)	Inhibitor harness	(8)	Secondary pressure sensor
(3)	Transmission harness	(9)	O-ring
(4)	O-ring	(10)	Secondary speed sensor
(5)	O-ring	(11)	O-ring
(6)	Front wheel speed sensor	(12)	Turbine speed sensor

Tightening torque: N·m (kgf-m, ft-lb)
T1: 7 (0.7, 3.7)
T2: 8 (0.8, 5.9)
T3: 14 (1.4, 10.3)
T4: 39 (4.0, 28.8)

14.ELECTRIC OIL PUMP

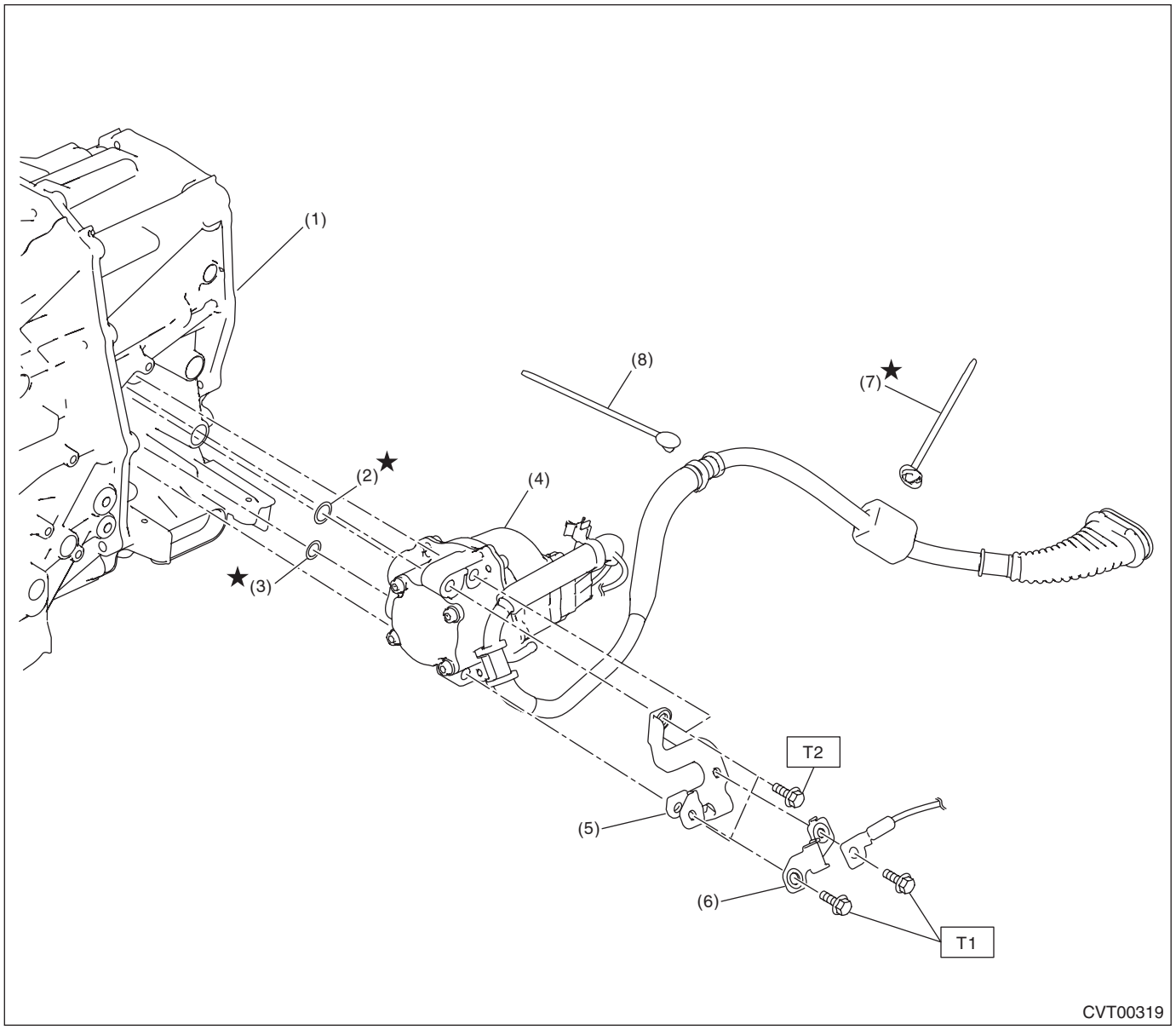

(1)	Drive motor ASSY	(5)	Harness bracket
(2)	O-ring	(6)	Harness bracket COMP
(3)	O-ring	(7)	Electric oil pump harness clip
(4)	Electric oil pump ASSY	(8)	Electric oil pump harness clip

Tightening torque: N·m (kgf-m, ft-lb)
T1: 8 (0.8, 5.2)
T2: 22 (2.2, 16.2)

15.CVTF COOLER (WITH WARMER FEATURE)

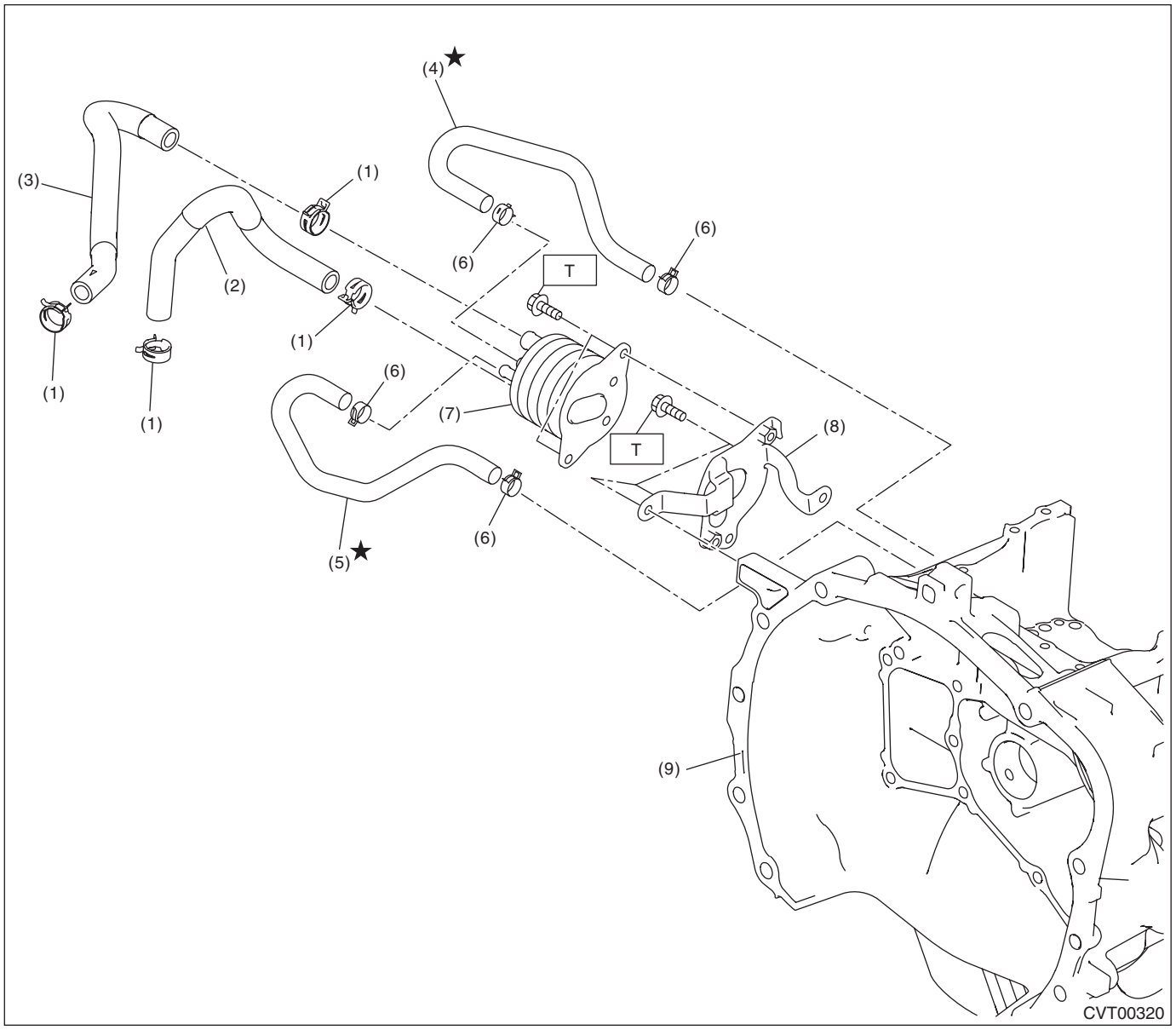

(1) Hose clamp
(2) Engine coolant inlet hose
(3) Engine coolant outlet hose
(4) CVTF cooler outlet hose
(5) CVTF cooler inlet hose
(6) Hose clamp
(7) CVTF cooler (with warmer feature)
(8) CVTF cooler bracket
(9) Converter case

Tightening torque: N·m (kgf-m, ft-lb)
T: 23 (2.3, 17.0)

16.TRANSMISSION CONTROL MODULE

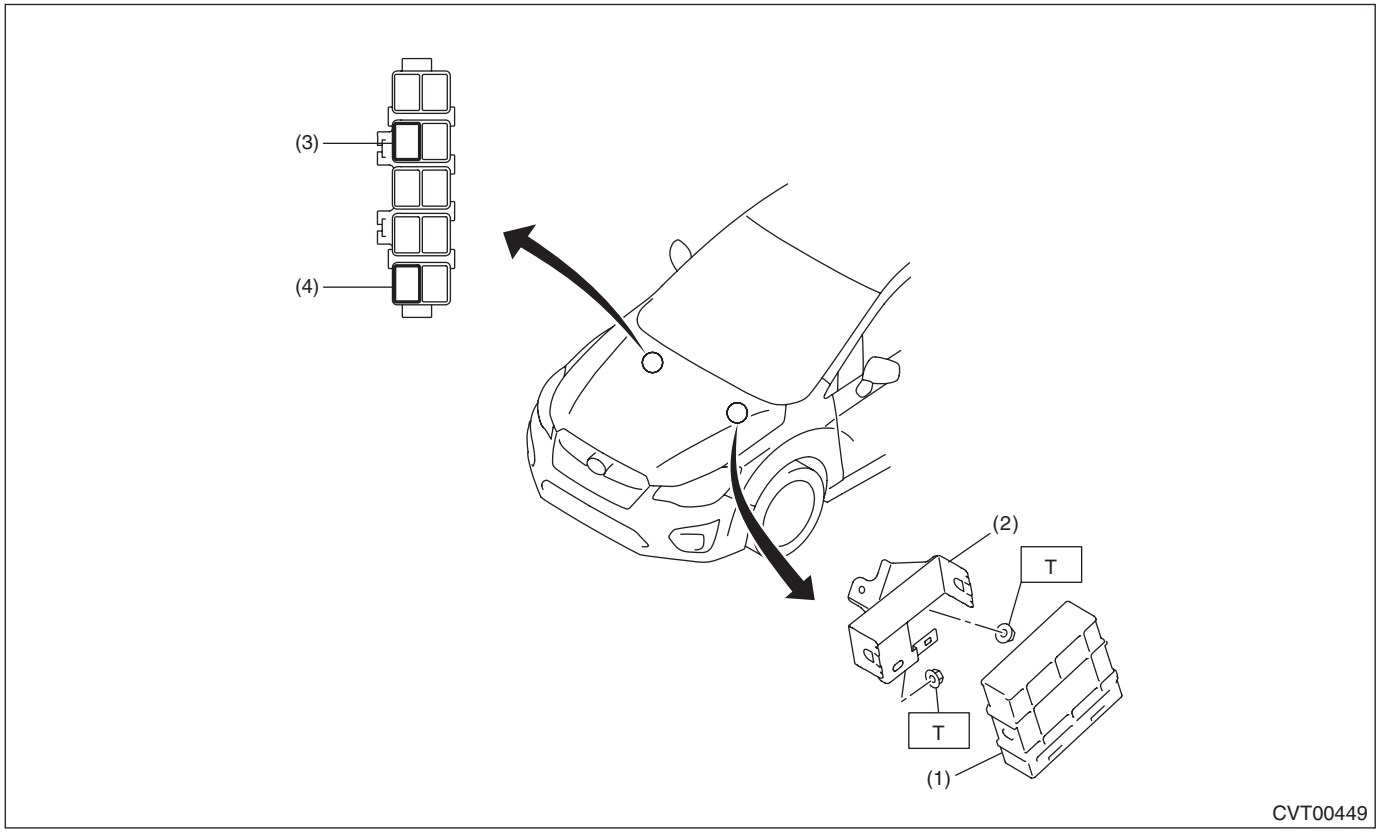

(1)	Transmission control module (TCM)	(3)	Self shut relay	***Tightening torque: N·m (kgf-m, ft-lb)***
(2)	TCM bracket	(4)	R range relay	***T: 7.5 (0.8, 5.5)***

17.TRANSMISSION MOUNTING

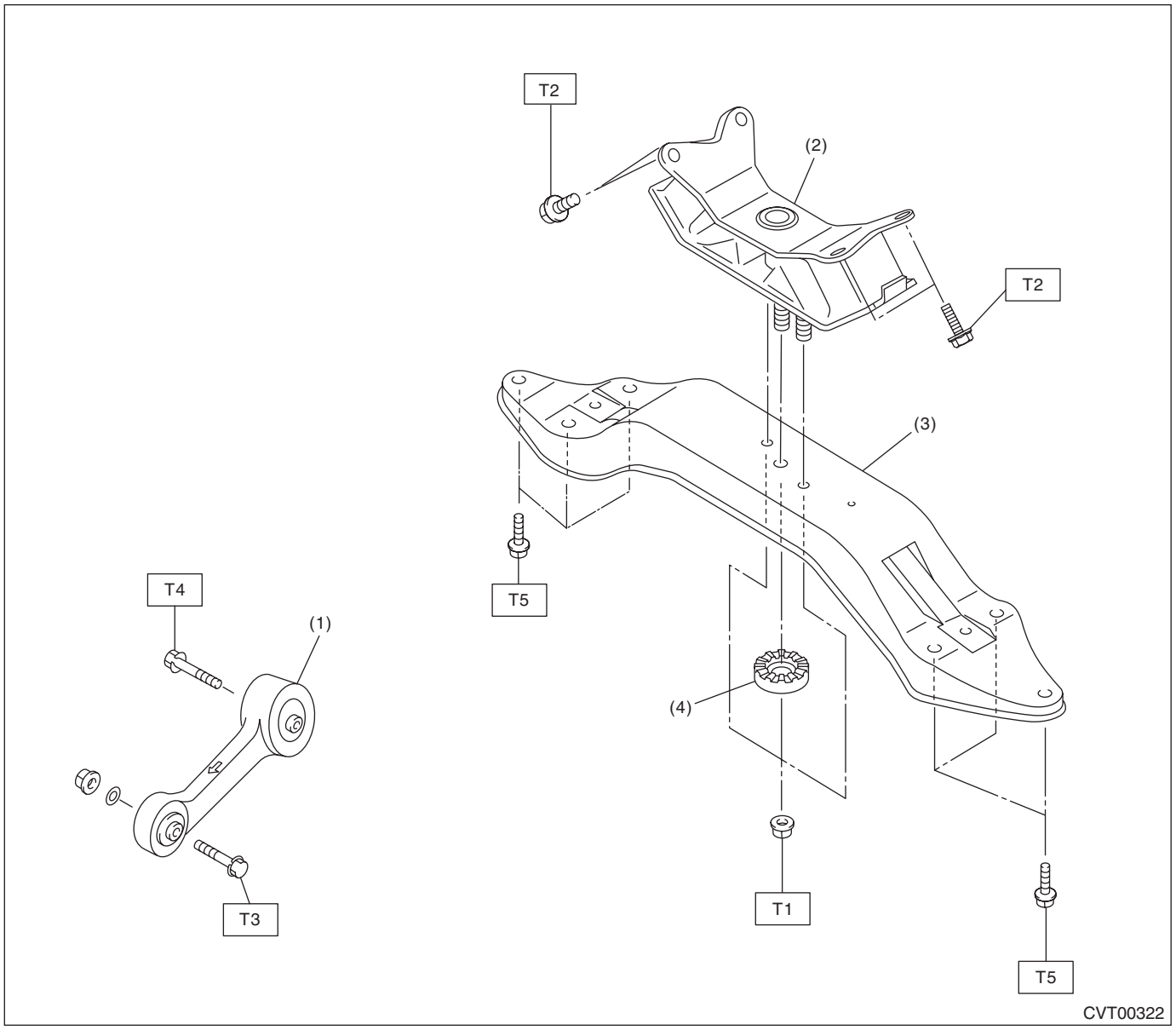

(1) Pitching stopper
(2) Rear cushion rubber
(3) Transmission rear crossmember
(4) Stopper

Tightening torque: N·m (kgf-m, ft-lb)
T1: 35 (3.6, 25.8)
T2: 40 (4.1, 29.5)
T3: 50 (5.1, 36.9)
T4: 58 (5.9, 42.8)
T5: 70 (7.1, 51.6)

C: CAUTION

• The hybrid system includes a high voltage circuit. Mishandling could cause accidents such as electric shock or leak. Always check "CAUTION (HYBRID SYSTEM)" and perform the proper operation. <Ref. to PC-6, CAUTION (HYBRID SYSTEM), Precaution.>

• Wear appropriate work clothing, including insulated gloves, a cap, protective goggles and protective shoes when performing any work.
• Remove contamination including dirt and corrosion before removal, installation or disassembly.
• Keep the disassembled parts in order and protect them from dust and dirt.
• Do not place the valve cover with its inner side facing up until it is installed, to prevent intrusion of foreign matter into the main control valve body.
• Do not place the oil pan with its inner side facing up until it is installed, to prevent intrusion of foreign matter into the output clutch control valve body.
• Before removal, installation or disassembly, be sure to clarify the failure. Avoid unnecessary removal, installation, disassembly and replacement.
• When disassembling the case and other light alloy parts, use a plastic hammer to force it apart. Do not pry apart with screwdrivers or other tools.
• Vehicle components are extremely hot after driving. Be wary of receiving burns from heated parts.
• Use SUBARU genuine CVTF and recommended grease. Do not mix CVTF, grease etc. of different grades or manufacturers.
• Be sure to tighten bolts and nuts to the specified torque.
• Place lifts, shop jacks or rigid racks at specified locations.
• Apply CVTF onto sliding or revolving surfaces before installation.
• Replace deformed or damaged snap rings with new parts.
• Before installing O-rings or oil seals, apply sufficient amount of CVTF or gear oil to appropriate locations in order to avoid damage and deformation.
• Be careful not to incorrectly install or fail to install O-rings, snap rings and other such parts.
• Before securing a part on a vise, place cushioning material such as wood blocks, aluminum plate, or cloth between the part and the vise.
• Avoid damaging the mating surface of the case.
• Before applying liquid gasket, completely remove the old liquid gasket.
• After removing the sensors, breather hose and plugs, plug the holes to avoid foreign materials intruding as necessary.
• During disassembly or assembly, be sure to use nylon gloves or paper towels. Do not use cloth gloves or waste cloth.

D: PREPARATION TOOL

1. SPECIAL TOOL

ILLUSTRATION	TOOL NUMBER	DESCRIPTION	REMARKS
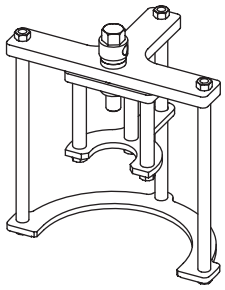 ST18769AA010	18769AA010	EXPANDER PULLEY	Used for removing and installing the secondary pulley assembly.
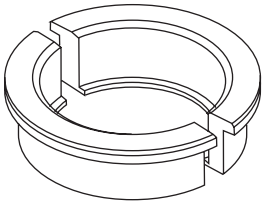 ST18767AA020	18767AA020 (Newly adopted tool)	BEARING REMOVER	Used for removing the ball bearing of transfer clutch assembly and the ball bearing of transfer driven gear.
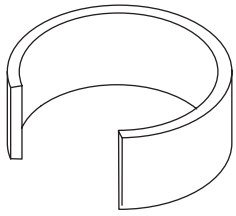 ST18762AA010	18762AA010	COMPRESSOR SPECIAL TOOL	Used for removing and installing snap ring of forward clutch assembly and output clutch assembly.
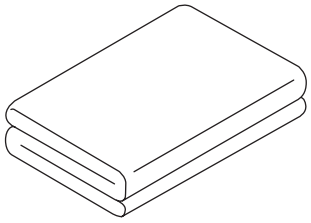 ST18761AA010	18761AA010	SHEET SPECIAL TOOL	• Used for removing and installing control valve body. • Used for removing and installing valve cover. • Used for removing and installing transmission harness.

ILLUSTRATION	TOOL NUMBER	DESCRIPTION	REMARKS
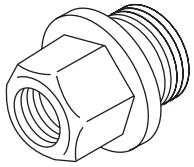 ST18681AA010	18681AA010	PRESSURE GAUGE ADAPTER	Used for measuring the secondary pressure (line pressure). NOTE: Used together with the genuine O-ring (part No. 806916050).
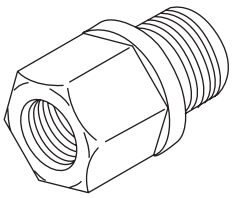 ST18681AA000	18681AA000	PRESSURE GAUGE ADAPTER	Used for measuring the hydraulic pressure of transfer clutch and output clutch pressure. NOTE: Used together with the genuine O-ring (part No. 806911080).
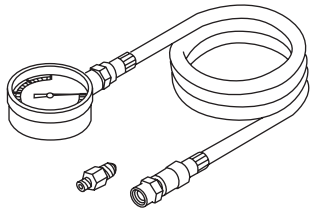 ST18801AA000	18801AA000	OIL PRESSURE GAUGE ASSY	Used for measuring the hydraulic pressure of secondary pressure (line pressure) and output clutch pressure.
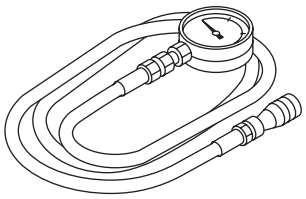 ST-498575400	498575400	OIL PRESSURE GAUGE ASSY	Used for measuring the transfer clutch hydraulic pressure.
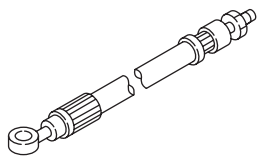 ST-498897800	498897800	OIL PRESSURE ADAPTER	Used for measuring the output clutch hydraulic pressure.

ILLUSTRATION	TOOL NUMBER	DESCRIPTION	REMARKS
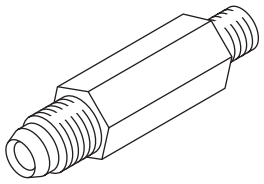 ST-498897200	498897200	OIL PRESSURE GAUGE ASSY	Used for measuring the transfer clutch hydraulic pressure.
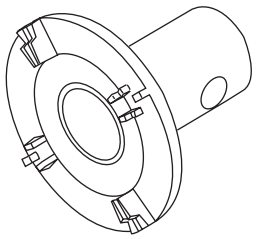 ST18658AA020	18658AA020	WRENCH COMPL RETAINER	Used for removing and installing the differential side retainer.
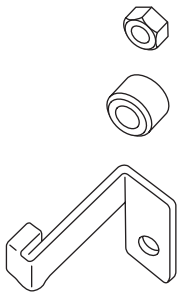 ST-498277200	498277200	STOPPER SET	• Used for removing and installing transmission assembly to engine. • Used for preventing the torque converter from dropping off.
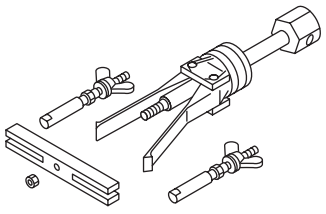 ST-398527700	398527700	PULLER ASSY	• Used for removing the extension case oil seal. • Used for removing the bearing outer race of the drive pinion shaft.
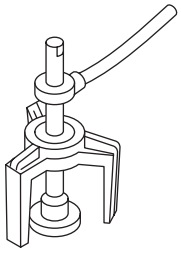 ST-398673600	398673600	COMPRESSOR	Used for removing and installing snap ring of forward clutch assembly and output clutch.

ILLUSTRATION	TOOL NUMBER	DESCRIPTION	REMARKS
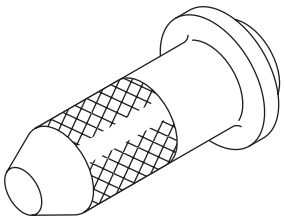 ST-498057300	498057300	OIL SEAL INSTALLER	Used for installing the extension case oil seal.
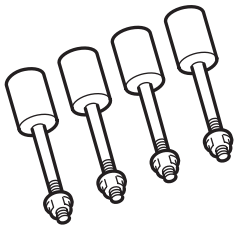 ST18632AA000	18632AA000	STAND ASSY	Used for disassembling and assembling the transmission.
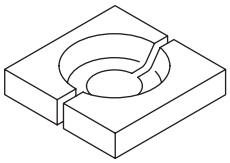 ST-498515500	498515500	REMOVER	Used for removing the bearing inner race of the drive pinion shaft.
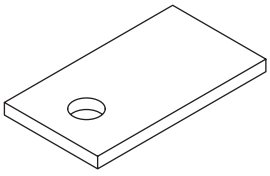 ST-498255400	498255400	PLATE	Used for measuring the backlash of hypoid gear.
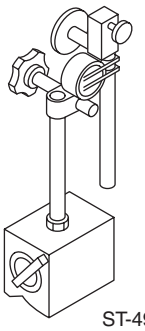 ST-498247001	498247001	MAGNET BASE	• Used for measuring the backlash of differential bevel pinion gear. • Used for measuring the backlash of hypoid gear. • Used together with DIAL GAUGE (498247100).

ILLUSTRATION	TOOL NUMBER	DESCRIPTION	REMARKS
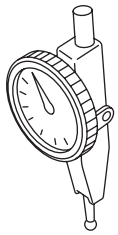 ST-498247100	498247100	DIAL GAUGE	• Used for measuring the backlash of differential bevel pinion gear. • Used for measuring the backlash of hypoid gear. • Used together with DIAL GAUGE (498247101).
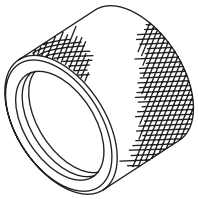 ST18675AA000	18675AA000	DIFFERENTIAL SIDE OIL SEAL INSTALLER	Used for installing the differential side retainer oil seal.
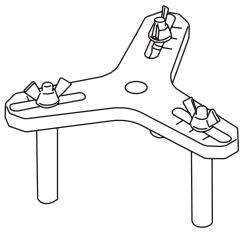 ST18762AA001	18762AA001	COMPRESSOR SPECIAL TOOL	• Used for disassembling and installing the multi-plate clutch piston. • COMPRESSOR SPECIAL TOOL (18762AA000) can also be used.
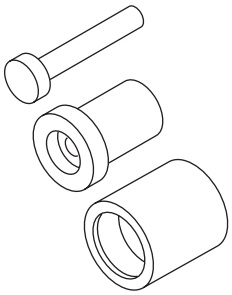 ST-927720000	927720000	HOUSING BUSHING INSTALLER AND REMOVER	• Used for installing the oil seal. • Use BUSHING SHAFT (927880000).
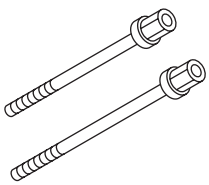 ST18763AA000	18763AA000	COMPRESSOR SHAFT	Used for measuring the backlash of hypoid gear.

ILLUSTRATION	TOOL NUMBER	DESCRIPTION	REMARKS
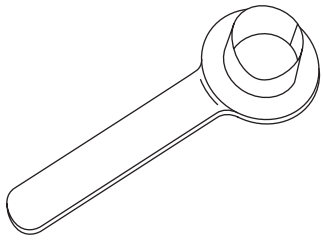 ST28399SA010	28399SA010	OIL SEAL PROTECTOR	Used for protecting oil seal when installing front drive shaft.
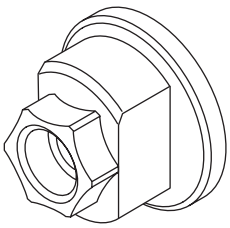 ST-498937110	498937110	HOLDER	• Used for removing and installing the drive pinion lock nut. • Used as a holder to rotate gear when checking tooth contact.
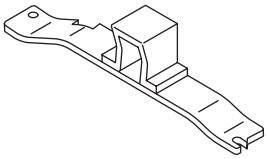 ST41099AA011	41099AA011	ENGINE SUPPORT BRACKET	Used for supporting the engine.
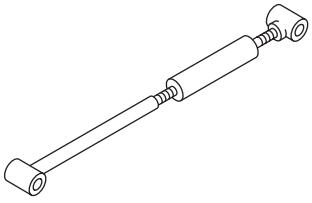 ST41099AA020	41099AA020	ENGINE SUPPORT	Used for supporting the engine.
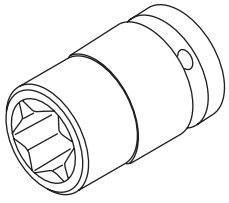 ST18270KA020	18270KA020	SOCKET (E20)	• Used for removing and installing the hypoid driven gear. • Used for removing and installing the drive pinion shaft retainer.

ILLUSTRATION	TOOL NUMBER	DESCRIPTION	REMARKS
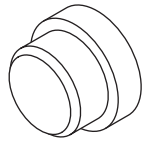 ST-398497701	398497701	SEAT	Used for removing and installing the bearing.
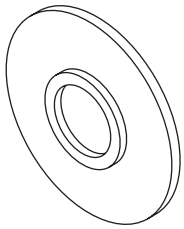 ST-398177700	398177700	INSTALLER	• Used for installing the ball bearing. • Used for installing the bearing outer race. • Used for installing the plug.
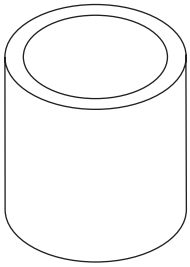 ST28499TC010	28499TC010	PRESS SNAP RING	Used for installing the bearing outer race of drive pinion shaft.
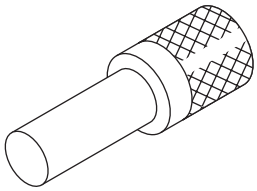 ST-899864100	899864100	REMOVER	• Used for removing and installing the ball bearing. • Used for removing the transfer drive gear. • Used for removing the bearing inner race of the front differential.
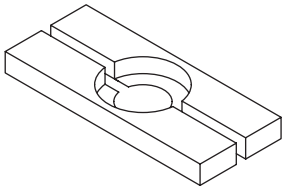 ST-498077000	498077000	REMOVER	Used for removing the bearing inner race of the front differential.

ILLUSTRATION	TOOL NUMBER	DESCRIPTION	REMARKS
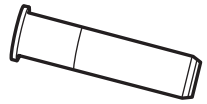 ST18657AA010	18657AA010	INSTALLER	Used for installing the oil seal at shifter arm shaft portion.
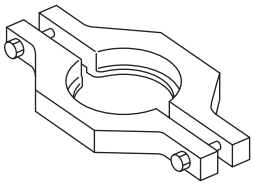 ST-498077600	498077600	REMOVER	Used for removing the ball bearing of drive sprocket.
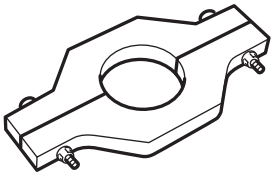 ST18723AA000	18723AA000	REMOVER	Used for removing the ball bearings of transfer clutch assembly and transfer driven gear.
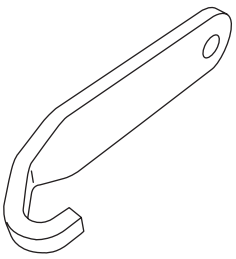 ST-498497300	498497300	CRANKSHAFT STOPPER	Used for stopping the drive plate rotation when removing and installing the drive plate.
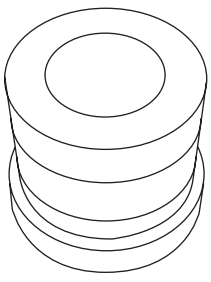 ST-399513600	399513600	INSTALLER	Used for removing the ball bearing of drive sprocket.

ILLUSTRATION	TOOL NUMBER	DESCRIPTION	REMARKS
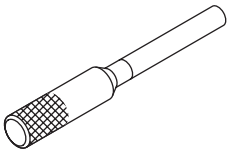 ST-499267300	499267300	STOPPER PIN	Used for adjusting the inhibitor switch.
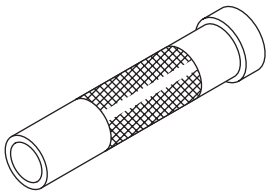 ST-499277100	499277100	BUSHING 1-2 INSTALLER	• Used for installing the ball bearing. • Used for installing the bearing inner race.
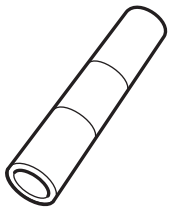 ST18651AA000	18651AA000	INSTALLER	Used for installing the ball bearing.
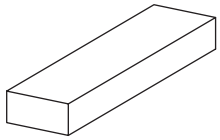 ST-499575400	499575400	GAUGE	Used for measuring height of end play.
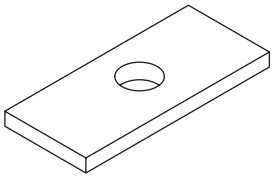 ST-499575500	499575500	GAUGE	Used for measuring height of end play.

ILLUSTRATION	TOOL NUMBER	DESCRIPTION	REMARKS
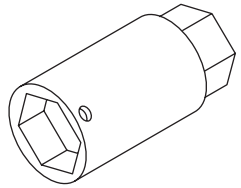 ST-499787500	499787500	ADAPTER	• Used for removing and installing the drive pinion shaft lock nut. • Used for measuring the preload of the drive pinion shaft. • Used for measuring the backlash of hypoid gear.
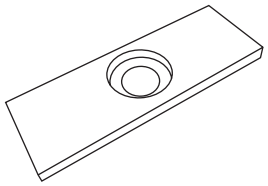 ST-499575600	499575600	GAUGE	Used for measuring height of end play.
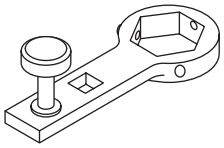 ST-499787700	499787700	WRENCH	• Used for removing and installing the drive pinion shaft lock nut. • Used for measuring the preload of the drive pinion shaft. • Used for measuring the backlash of hypoid gear.
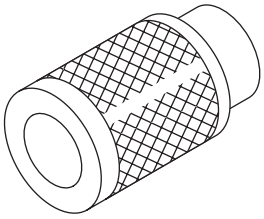 ST-499757002	499757002	INSTALLER	• Used for removing the bearing of reduction driven gear. • Used for installing the transfer drive gear.
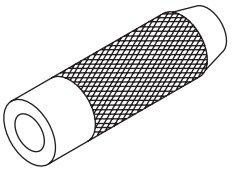 ST-899580100	899580100	INSTALLER	Used for installing the bearing inner race of drive pinion shaft.

ILLUSTRATION	TOOL NUMBER	DESCRIPTION	REMARKS
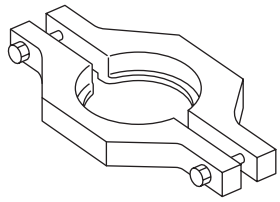 ST-498077300	498077300	REMOVER	Used for removing the ball bearings of the reduction driven gear and output clutch assembly.
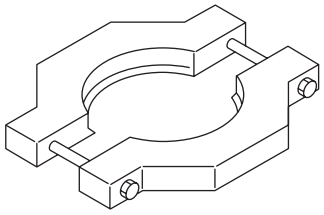 ST18767AA000	18767AA000	REMOVER	Used for removing the parking gear.
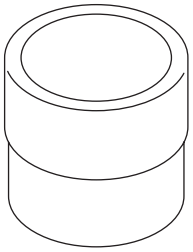 ST-499755602	499755602	PRESS SNAP RING	• Used for installing the oil seal. • Used for installing the ball bearing and roller bearing. • Used for installing the plug. • Used for installing the parking gear.
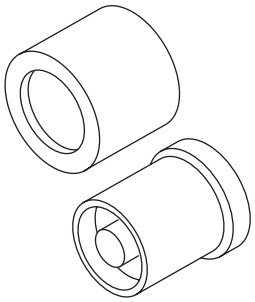 ST20099AE020	20099AE020	INSTALLER	Used for installing the bearing outer race of drive pinion shaft.
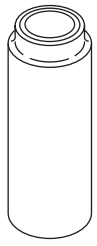 ST-927130000	927130000	EXTENSION DRIVE SHAFT	Used for installing the bearing inner race of drive pinion shaft.

ILLUSTRATION	TOOL NUMBER	DESCRIPTION	REMARKS
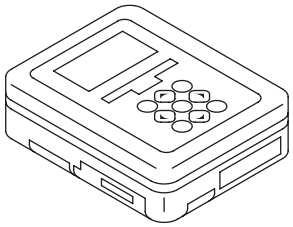 ST1B022XU0	1B022XU0	SUBARU SELECT MONITOR III KIT	Used for troubleshooting the electrical system.

2. GENERAL TOOL

TOOL NAME	REMARKS
Circuit tester	Used for measuring resistance and voltage.
Thickness gauge	Used for measuring the clearance in reverse brake, forward clutch, output clutch and transfer clutch.
Oil pressure gauge	Used for measuring the electric oil pump hydraulic pressure.
Caliper	Used for measuring the dimension.
Spring scale	Used for measuring the starting torque of the drive pinion.
TORX® bit T70	Used for removing and installing differential gear oil drain plug.
Straight pin remover	Used for removing and installing the straight pin.
Push/pull gauge	Used for measuring clutch clearance.
Angle gauge	Used for installing the drive plate.
Insulated gloves	Used for high voltage system operation.
Insulated tools	Used for high voltage system operation.
Insulating tape	Used for insulation by wrapping high voltage system cable connectors and terminals with it.
Insulation multimeter	Used for measuring high voltage system resistance and voltage.

2. CVTF

A: INSPECTION

Check for leakage of CVTF from transmission.

B: ADJUSTMENT

CAUTION:
• CVTF level changes along with CVTF temperature. When inspecting CVTF level, observe the specified CVTF temperature.
• Always use specified CVTF. Using other fluid will cause malfunction.

1) Perform “Engine only Drive Mode” using the Subaru Select Monitor. <Ref. to HEV(diag)-72, HYBRID POWERTRAIN CONTROL SYSTEM, OPERATION, System Operation Check Mode.>
2) Idle the engine to raise CVTF temperature to 35 — 45°C (95 — 113°F) on Subaru Select Monitor.
3) Operate the select lever in P → R → N → D and D → N → R → P to circulate CVTF with the engine idling.
4) While the select lever is in “P” range and the engine is running, lift up the vehicle and remove the filler plug.

CAUTION:
Pay special attention to the following operations as the engine is at idle.

NOTE:
CVTF is at the specified level when it is up to the filler plug hole lower section.

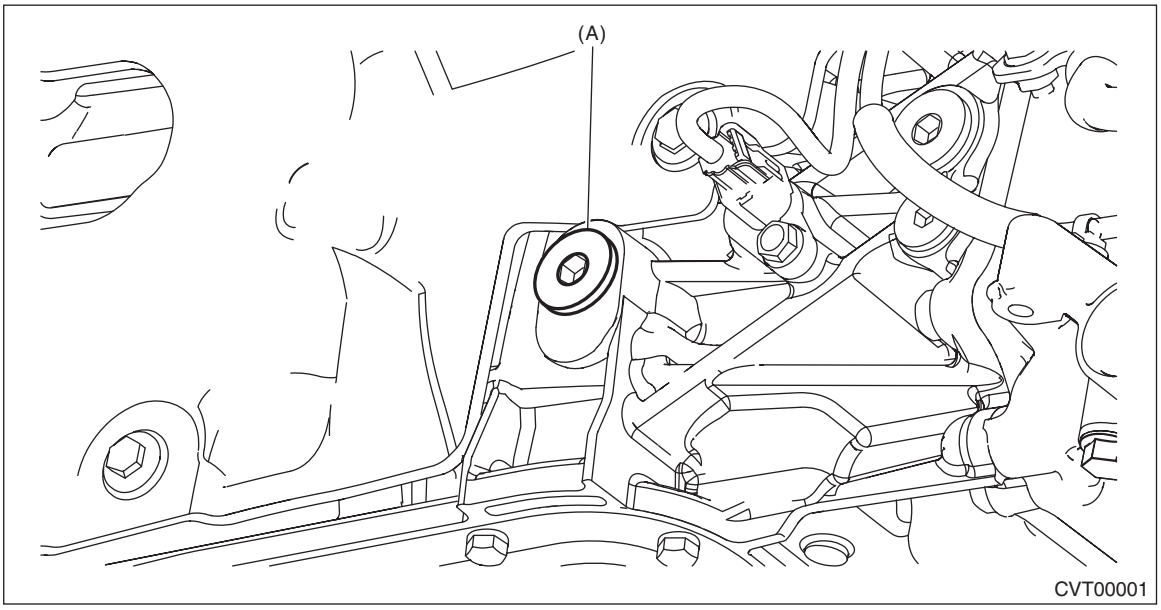

(A) Filler plug

5) When there is no CVTF leakage from the transmission, add the specified fluid up to the filler plug hole lower section.

Specified fluid:
<Ref. to CVT(TH58A)-4, HYDRAULIC CONTROL AND LUBRICATION, SPECIFICATION, General Description.>

CAUTION:
Note that when CVTF is added up to the lower section of filler plug while the transmission is in cold condition, overfilling of CVTF occurs, causing the oil to spill out.

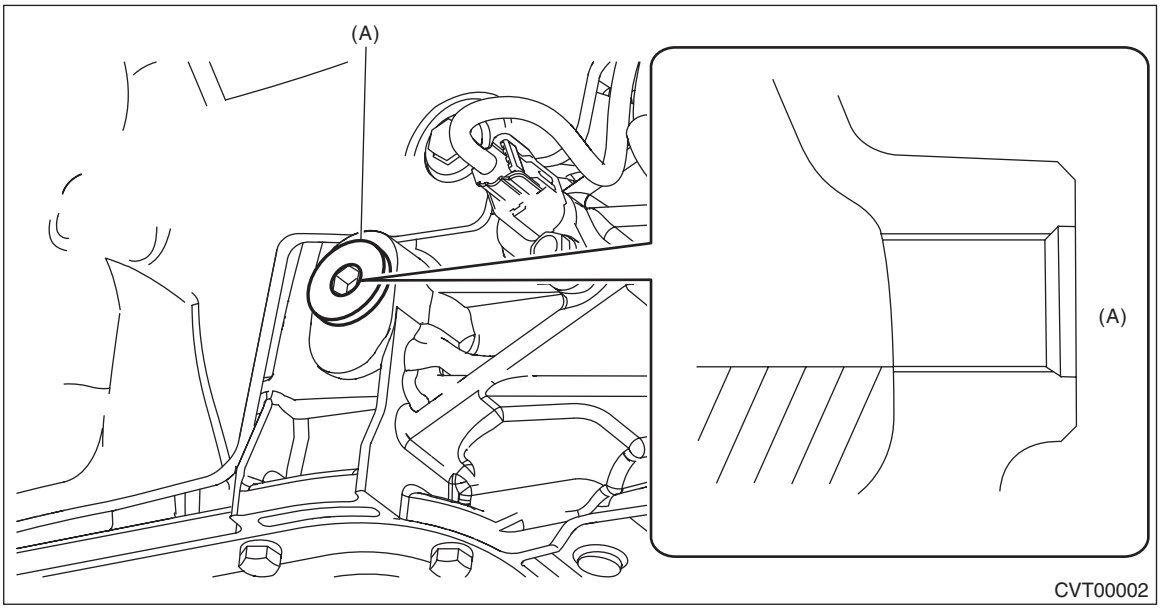

(A) Filler plug hole

6) Install the filler plug.

NOTE:
Use a new gasket.

Tightening torque:
50 N·m (5.1 kgf-m, 36.9 ft-lb)

C: REPLACEMENT

CAUTION:
• Directly after the vehicle has been running or the engine has been idling for a long time, the CVTF is hot. Be careful not to burn yourself.
• Be careful not to spill the CVTF on exhaust pipe to prevent it from emitting smoke or causing fires. If CVTF adheres, wipe it off completely.
• Always use specified CVTF. Using other fluid will cause malfunction.

1) Lift up the vehicle, and remove the CVTF drain plug.

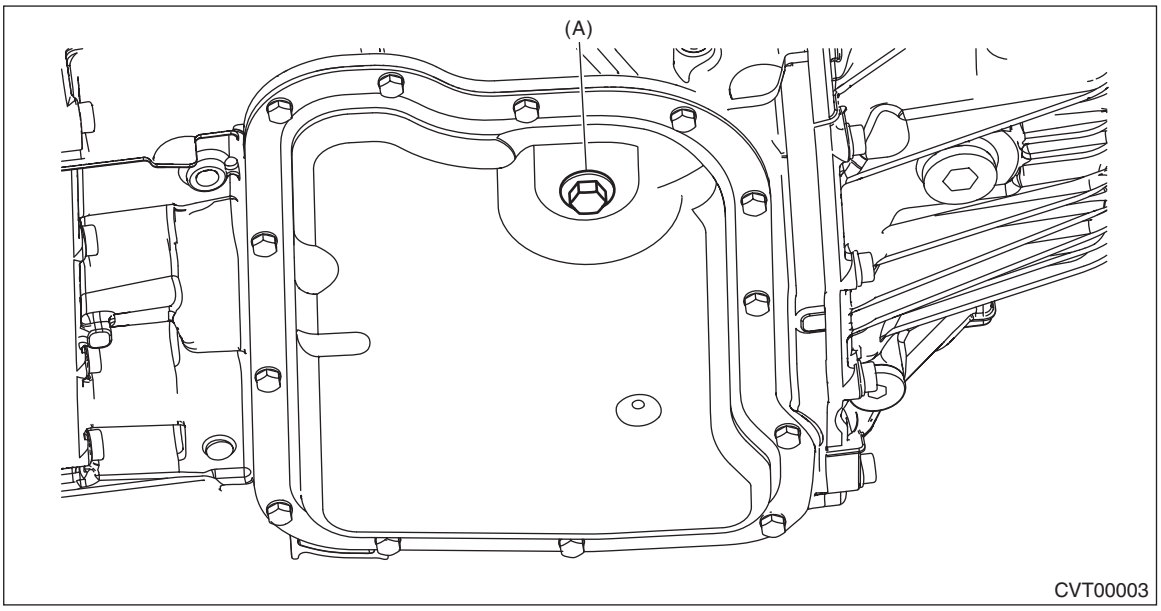

(A) CVTF drain plug

2) Check the CVTF condition. <Ref. to CVT(TH58A)-44, CONDITION CHECK, CVTF.>
3) Install the CVTF drain plug and gasket.

NOTE:
Use a new gasket.

Tightening torque:
31 N·m (3.2 kgf-m, 22.9 ft-lb)

4) Remove the filler plug.

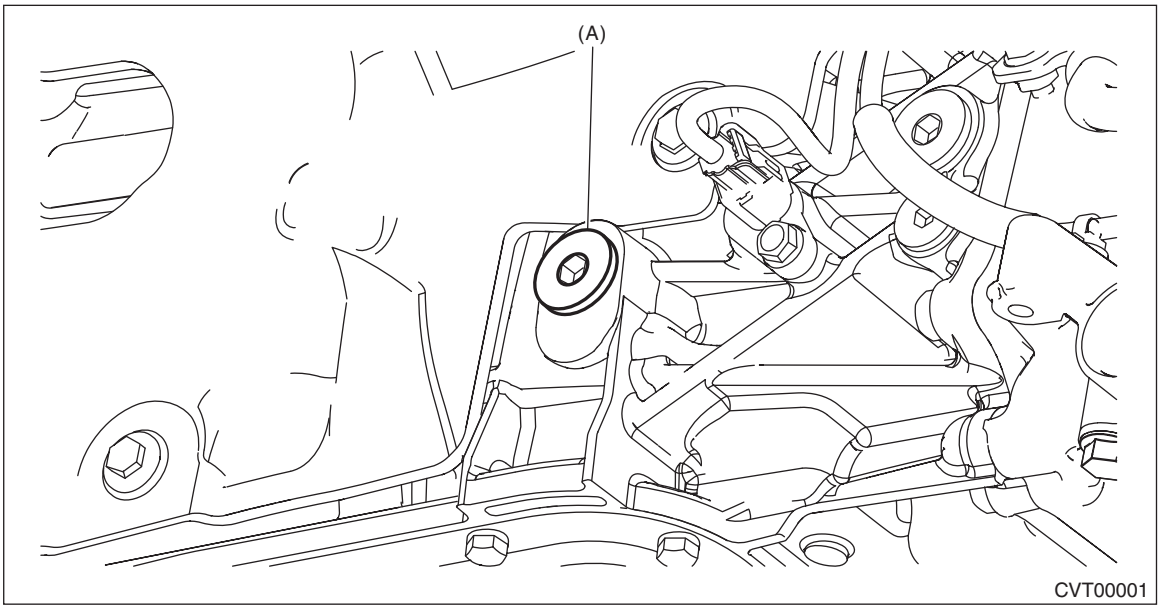

(A) Filler plug

5) Add the specified fluid up to the filler plug hole lower section.

Specified fluid:
<Ref. to CVT(TH58A)-4, HYDRAULIC CONTROL AND LUBRICATION, SPECIFICATION, General Description.>

6) Temporarily tighten the filler plug.
7) Idle the engine to raise CVTF temperature to 35 — 45°C (95 — 113°F) on Subaru Select Monitor.
8) Operate the select lever in P → R → N → D and D → N → R → P to circulate CVTF with the engine idling.

CAUTION:
Pay special attention to the following operations as the engine is at idle.

9) With the select lever shifted to “P” range and the engine started, lift up the vehicle. Adjust the CVTF level and check for leakage. <Ref. to CVT(TH58A)-41, ADJUSTMENT, CVTF.>
10) Install the filler plug.

NOTE:
Use a new gasket.

Tightening torque:
50 N·m (5.1 kgf-m, 36.9 ft-lb)

D: CONDITION CHECK

NOTE:
When replacing CVTF, determine the condition inside the transmission body by inspecting the drained CVTF.

Fluid condition	Trouble and possible cause	Corrective action
Metal particles.	Excessive wear of the internal of the transmission body.	Replace CVTF and check if CVT operates correctly.
Thick and varnish-form fluid.	Burnt clutches	Replace CVTF and check the CVT body or vehicle for faulty.
Clouded CVTF or bubbles.	Water mixed in fluid.	Replace CVTF and check the water entering point.

3. Differential Gear Oil

A: INSPECTION

Check that there is no leakage of differential gear oil from the converter case.

B: ADJUSTMENT

NOTE:
Immediately after removing the overflow drain plug, remaining gear oil (approx. 8 cc) may come out of the overflow pipe. This is not included in the specified amount. When removing the overflow drain plug, make sure the gear oil flows out of the overflow drain plug hole by filling with gear oil.
1) Turn the ignition switch to OFF.
2) Lift up the vehicle.
3) Remove the filler plug.

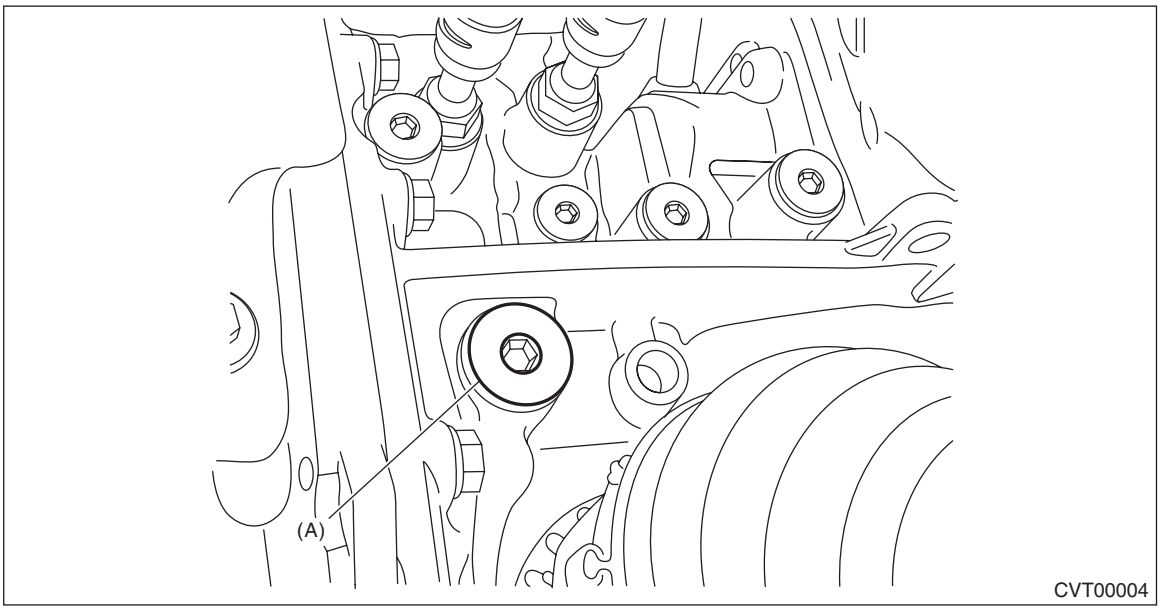

(A) Filler plug

4) Remove the overflow drain plug.

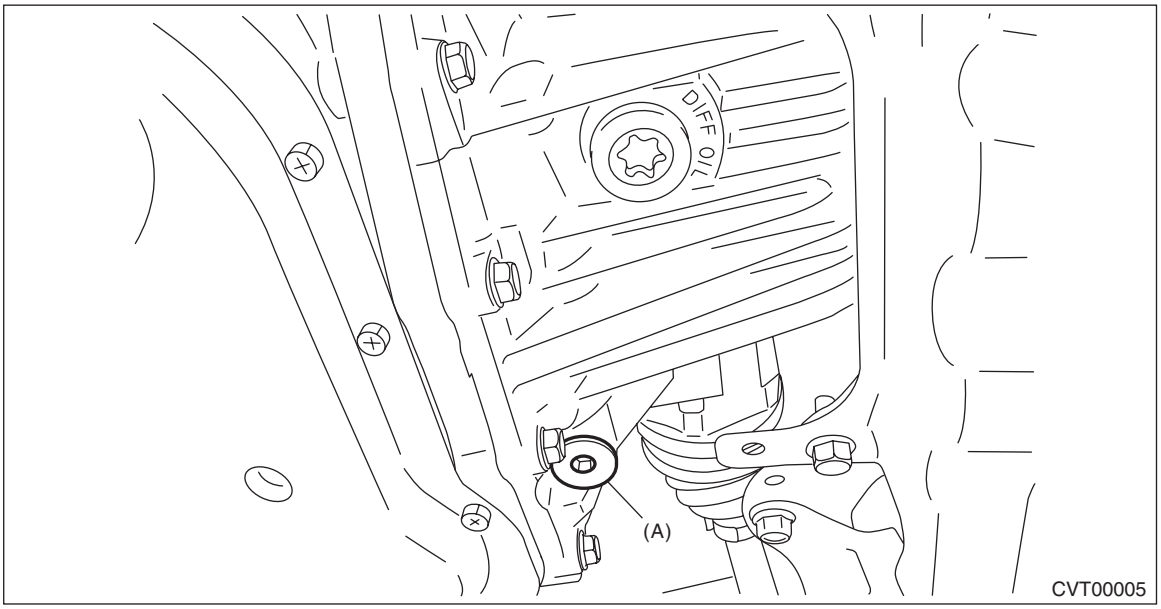

(A) Overflow drain plug

5) Fill in the differential gear oil through the filler plug hole up to where the oil flows out of the overflow drain plug.

Recommended gear oil:
<Ref. to CVT(TH58A)-4, RECOMMENDED GEAR OIL, SPECIFICATION, General Description.>

6) When the flow of the differential gear oil turns into a narrow stream, install the overflow drain plug.

NOTE:
Use a new gasket.

Tightening torque:
50 N·m (5.1 kgf-m, 36.9 ft-lb)

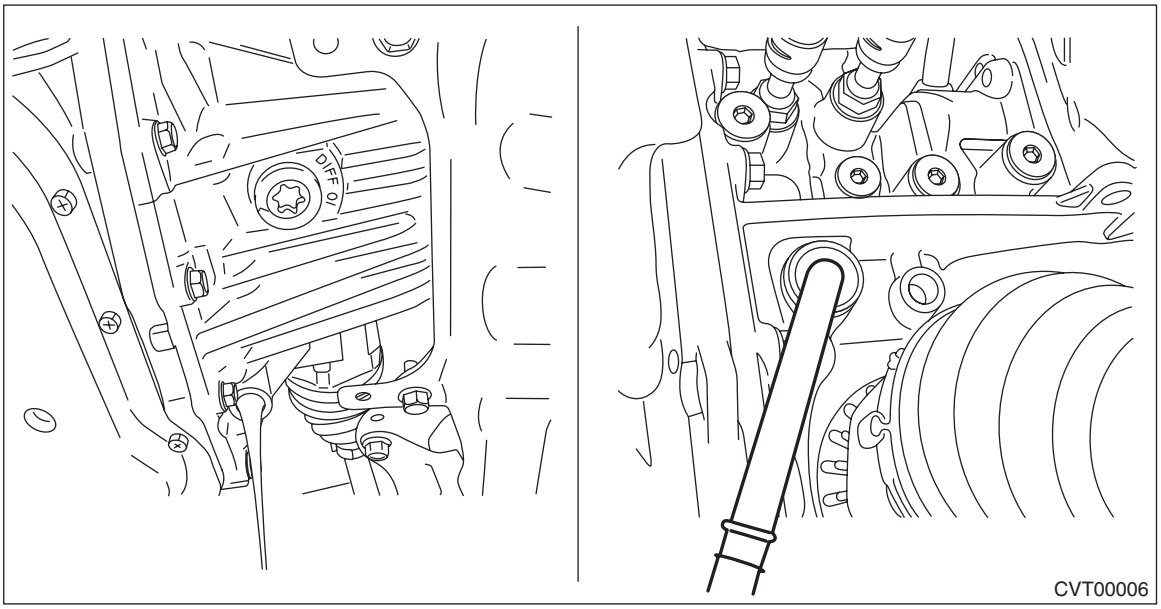

7) Install the filler plug.

NOTE:
Use a new gasket.

Tightening torque:
50 N·m (5.1 kgf-m, 36.9 ft-lb)

C: REPLACEMENT

CAUTION:
• Immediately after the vehicle has been running or after idling for a long time, the differential gear oil will be hot. Be careful not to burn yourself.
• Be careful not to spill differential gear oil on the exhaust pipe to prevent it from emitting smoke or causing a fire. If gear oil adheres, wipe it off completely.
1) Lift up the vehicle.
2) Remove the differential gear oil drain plug using TORX® bit T70. Drain differential gear oil.
3) Install the differential gear oil drain plug using TORX® bit T70.

NOTE:
Use a new gasket.

Tightening torque:
70 N·m (7.1 kgf-m, 51.6 ft-lb)

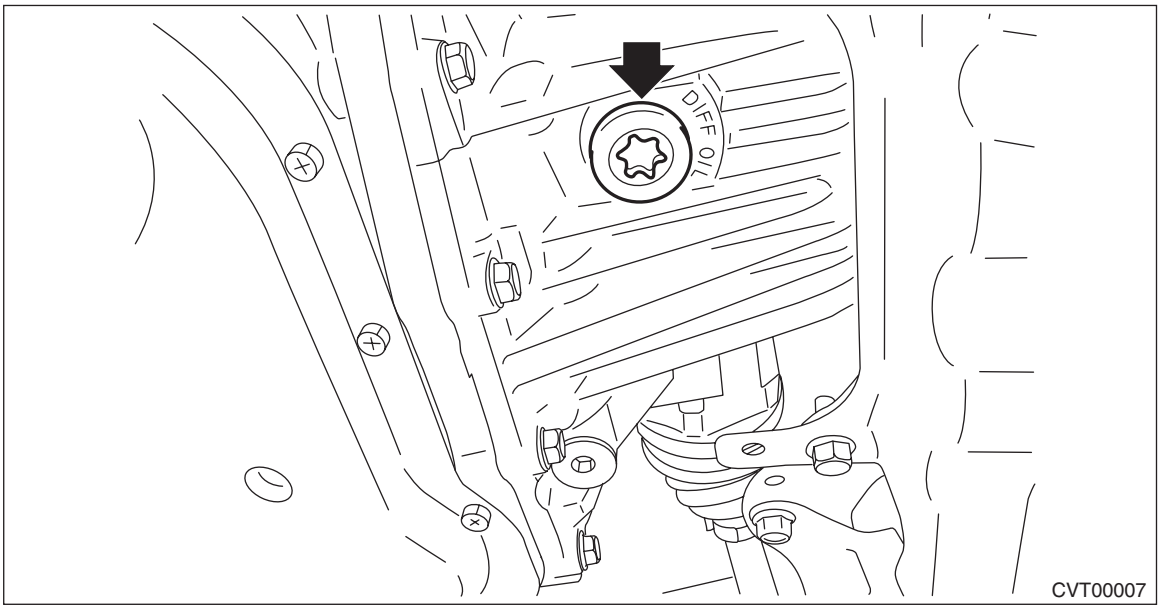

4) Remove the filler plug.

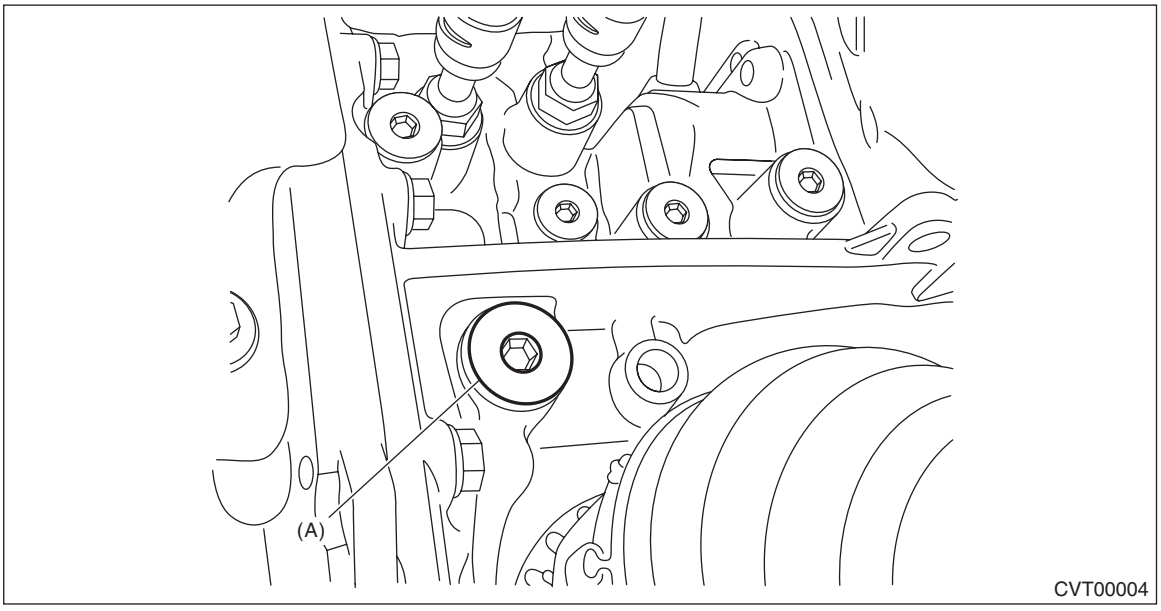

(A) Filler plug

5) Pour gear oil into the filler plug hole.

Recommended gear oil:
<Ref. to CVT(TH58A)-4, RECOMMENDED GEAR OIL, SPECIFICATION, General Description.>

Gear oil capacity:
<Ref. to CVT(TH58A)-4, RECOMMENDED GEAR OIL, SPECIFICATION, General Description.>

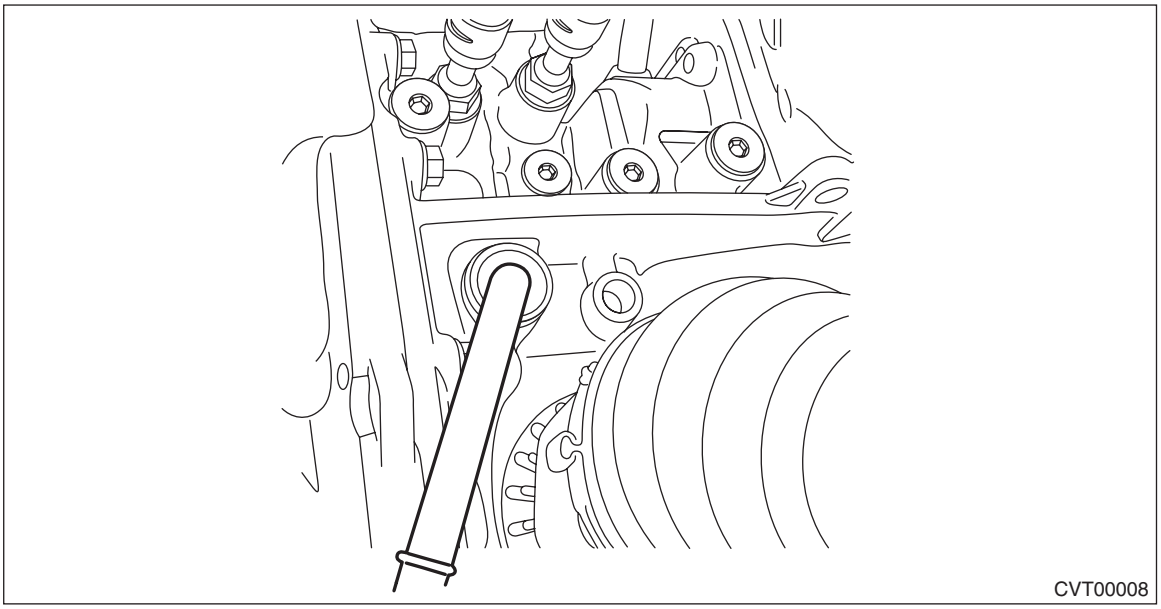

6) Adjust the level of differential gear oil. <Ref. to CVT(TH58A)-45, ADJUSTMENT, Differential Gear Oil.>

4. AWD ON/OFF Switching Mode

A: GENERAL DESCRIPTION

- Follow the messages displayed on the Subaru Select Monitor when working.
- Perform as necessary in FWD mode.
- When switched to FWD, AWD light illuminates.

B: PROCEDURE

CAUTION:
• Do not turn the power of the Subaru Select Monitor OFF during work, and do not disconnect the data link connector.
• On completing the work in FWD, switch back in AWD.
1) Shift the select lever to “P” range.
2) Connect the Subaru Select Monitor to data link connector.
3) Press the push button ignition switch twice without depressing the brake pedal.
4) Turn off all switches causing an electrical load, such as headlights, A/C, seat heater and rear defogger.
5) Select {Work Support} in the «Transmission Diagnosis» display screen of the Subaru Select Monitor.
6) Select {Maintenance mode} in the «Work Support» screen of Subaru Select Monitor.
7) Select {AWD ON/OFF switching mode} in the «Maintenance mode» screen of the Subaru Select Monitor.
8) Follow the messages displayed on the Subaru Select Monitor screen when working.
Switching completes successfully if any of the following messages is displayed.
- When switching from AWD to FWD: {Switched to FF. To return to AWD, perform basic mode again.}
- When switching from FWD to AWD: {Switched to AWD. To return to FF, perform basic mode again.}

NOTE:
- If communication error occurs during switching mode, start in the “AWD ON/OFF switching mode” again.
- If operation is interrupted before the successful end message is displayed, perform the {AWD ON/OFF switching mode} from the beginning until confirming the operation is successfully ended. If this mode fails to complete successfully, the cause is as follows.
  - Select lever is not in “P” range.
  - Engine is running.
- For detailed operation procedures, refer to “PC application help for Subaru Select Monitor”.
- When performing the 2-wheel speed tester operation after FWD mode, place the vehicle on the speed tester, turn the ignition switch from OFF to ON, and then use the FWD mode. Failure to do so may cause a DTC on the hybrid system.

5. Road Test

A: INSPECTION

1. GENERAL PRECAUTION

Road tests should be conducted to properly diagnose the condition of CVT.

CAUTION:
Always observe the local traffic laws when performing the test.

2. D RANGE SHIFT FUNCTION

Make sure the engine speed is 950 — 1,400 rpm while driving on the level road at 50 km/h (31 MPH) after accelerating from halting to 1/4 of accelerator opening angle. Then stop the vehicle. Check normal gear change has occurred while the vehicle speed changes from a constant speed to zero.

3. KICK-DOWN FUNCTION

Check if engine speed will rise by operating the accelerator opening angle to the full from a constant speed of 50 km/h (31 MPH) or more.

4. ENGINE BRAKE OPERATION

- Drive in “6th speed of manual mode” [70 — 80 km/h (43 — 50 MPH)], and shift down from 6th to 5th. Check if the indicator of combination meter switches “6” → “5”. At the same time, check the engine brake in 5th gear.
- Drive in “5th speed of manual mode” [60 — 70 km/h (37 — 43 MPH)], and shift down from 5th to 4th. Check if the indicator of combination meter switches “5” → “4”. At the same time, check the engine brake in 4th gear.
- Drive in “4th speed of manual mode” [50 — 60 km/h (31 — 37 MPH)], and shift down from 4th to 3rd. Check if the indicator of combination meter switches “4” → “3”. At the same time, check the engine brake in 3rd gear.
- Drive in “3rd speed of manual mode” [40 — 50 km/h (25 — 31 MPH)], and shift down from 3rd to 2nd. Check if the indicator of combination meter switches “3” → “2”. At the same time, check the engine brake in 2nd gear.
- Drive in “2nd speed of manual mode” [20 — 30 km/h (12 — 19 MPH)], and shift down from 2nd to 1st. Check if the indicator of combination meter switches “2” → “1”. At the same time, check the engine brake in 1st gear.

5. LOCK-UP FUNCTION

When the accelerator is lightly depressed while driving on a flat road in “D” range, check that rpm does not change abruptly.

6. P RANGE OPERATION

Stop the vehicle on an uphill grade of 5% or more and shift to the “P” range and apply the parking brake. Check that the vehicle does not move when the parking brake is released.

7. NOISE AND VIBRATION

Check for noise and vibration during driving at a constant speed, accelerating, decelerating and manual shift operation.

8. OIL LEAKAGE

After the driving test, inspect for leakage of CVTF and differential gear oil from the transmission body.

9. Auto Start Stop

NOTE:
- Perform inspection without using a lift and with the wheels in full contact with the ground.
- Measurement should be performed at CVTF temperature of 60°C (140°F) or more.

1) Start the engine.
2) Using the Subaru Select Monitor, check that Auto Start Stop cooperation prohibition demand is ON. <Ref. to CVT(HEV)(diag)-15, OPERATION, Subaru Select Monitor.>

NOTE:
If “Auto Start Stop cooperation prohibition demand” is “OFF”, turn it to “ON”.
   (1) Start the engine.
   (2) Check that no DTCs are stored in TCM, ECM, VDCCM, battery energy CM, drive motor CM and hybrid powertrain CM.
   (3) Check that ATF OIL TEMP or AWD light is not blinking or illuminating.
   (4) Check that the CVTF temperature reaches 60 — 90°C (140 — 194°F). <Ref. to CVT(HEV)(diag)-15, OPERATION, Subaru Select Monitor.>
   (5) Drive in D range at [20 — 30 km/h (12 — 19 MPH)], and slowly depress the brake pedal to decelerate the vehicle.
   (6) Check that «Auto Start Stop cooperation prohibition demand» is “ON”. <Ref. to CVT(HEV)(diag)-15, OPERATION, Subaru Select Monitor.>
   When the cooperation prohibition demand is “OFF”, repeat the procedure from step (1).
3) Shift the select lever to “D” range.
4) Set the vehicle to Auto Start Stop condition, and keep the condition for 5 seconds or more.
5) Release the brake pedal, depress the accelerator pedal firmly and start the engine to accelerate.
6) Stop the vehicle by depressing the brake pedal, and set the vehicle to Auto Start Stop condition.
7) Shift the select lever to “N” range.
8) Repeat steps from 3) to 7) five times.
9) Check that no shift shock occurs during engine starting.

If any shift shock occurred, repeat the steps five more times.

6. Stall Test

A: INSPECTION

CAUTION:
Make sure no other person is around the vehicle during stall test measurement.

NOTE:
Stall test is extremely important in diagnosing the condition of CVT and engine. The test is necessary to measure the engine stall speeds in “R” and “D” range.
Purposes of the stall test:
- Operational check of forward clutch, reverse brake and output clutch
- Operational check of the torque converter assembly
- Engine performance check

1) Place wheel chocks at the front and rear of all wheels and engage the parking brake.
2) Turn the A/C OFF.
3) Using the Subaru Select Monitor, check if the throttle valve operates when you depress the accelerator pedal. <Ref. to EN(H4DO HEV)(diag)-37, OPERATION, Subaru Select Monitor.>
4) Check the engine oil level. <Ref. to LU(H4DO(w/o HEV))-12, Engine Oil.>
5) Check the coolant level. <Ref. to CO(H4DO(w/o HEV))-16, Engine Coolant.>
6) Adjust the CVTF level. <Ref. to CVT(TH58A)-41, ADJUSTMENT, CVTF.>
7) Increase the CVTF temperature to 60 — 80°C (140 — 176°F) with the engine running and the select lever shifted to “N” or “P” range.
8) Shift the select lever to “D” range.
9) Depress the accelerator pedal to the full while fully depressing the foot brake pedal with your left foot.
10) When the engine speed stabilizes, quickly record the engine speed and release accelerator pedal. Shift the select lever to “N” range. Let the engine idle for one minute or more to cool it down.
11) Shift to “R” range and perform the same stall test.

NOTE:
- Do not perform a stall test for over 5 seconds at a time. (From closed throttle, fully open throttle to stall speed reading.) Failure to follow this instruction will cause the engine oil and CVTF to deteriorate and the clutch and brake to be adversely affected.
- Be sure to cool down the engine for at least one minute after each stall test with the select lever set in the “P” or “N” range and with the idle speed of 1,200 rpm or less.
- If the stall speed is higher than the specified range, attempt to finish the stall test in as short a time as possible, in order to prevent the CVT from sustaining damage.

Stall speed standard:
D range: 2,350 — 3,100 rpm
R range: 2,100 — 2,800 rpm

Stall test judgment

Range	Range	Probable cause
Lower than standard value	D, R	• Insufficient engine output • Torque converter malfunction
Higher than standard value	D	• Forward clutch slippage • Secondary pressure (line pressure) is low. • Variator chain malfunction • Output clutch pressure is low. • Output clutch slippage
	R	• Reverse brake slippage • Secondary pressure (line pressure) is low. • Variator chain malfunction • Output clutch pressure is low. • Output clutch slippage
	D, R	• Torque converter malfunction • Control valve body malfunction • TCM malfunction • Damaged harness and harness connector

7. Time Lag Test

A: INSPECTION

NOTE:
When the select lever is shifted while the engine is idling, there will be a certain time elapse or lag before shock is felt. This symptom helps to check the condition of forward clutch and reverse brake.
- Perform the test at normal operation CVTF temperature of 60 — 80°C (140 — 176°F).
- Be sure to allow one minute or more interval between tests.
- Make three measurements and take the average value.

1) Apply the parking brake.
2) Start the engine. Check the idle speed. (A/C OFF)
3) Perform “Engine only Drive Mode” using the Subaru Select Monitor. <Ref. to HEV(diag)-72, HYBRID POWERTRAIN CONTROL SYSTEM, OPERATION, System Operation Check Mode.>
4) Shift the select lever from “N” to “D” range. Using a stop watch, measure the time elapsed from shifting the lever until the shock is felt.

Time lag standard:
1.5 seconds or less

If “N” → “D” time lag is longer than specified:
- Secondary pressure (line pressure) is too low.
- Forward clutch worn
- Forward clutch piston malfunction
- Control valve body malfunction
- Learning incomplete

5) In the same manner, measure the time lag when shifting from “N” range to “R” range.

Time lag standard:
1.5 seconds or less

If “N” → “R” time lag is longer than specified:
- Secondary pressure (line pressure) is too low.
- Reverse brake worn
- Reverse brake piston malfunction
- Control valve body malfunction
- Learning incomplete

8. Secondary Pressure (Line Pressure) Test

A: INSPECTION

CAUTION:
• Directly after the vehicle has been running or the engine has been idling for a long time, the CVTF is hot. Be careful not to burn yourself.
• Make sure no other person is around the vehicle during secondary pressure (line pressure) test measurement.
• After performing the secondary pressure (line pressure) test measurement, adjust the CVTF level.

NOTE:
• If the pulley and variator chain, clutch or brake show signs of slipping or shift feel is not correct, check the secondary pressure (line pressure).
• Connect Subaru Select Monitor to vehicle so as to measure the engine speed and actual secondary pressure (secondary pressure (line pressure)).
• In many cases, slippage or inability to operate the vehicle may be due to insufficient oil pressure for the operation of clutch, brake or control valve body.
1) Lift up the vehicle.
2) Remove the secondary pressure (line pressure) test plug, and install ST1 and ST2.

CAUTION:
Removal of the test plug and installation of the ST shall be both performed quickly.

NOTE:
Use ST2 PRESSURE GAUGE ADAPTER with genuine O-ring (part No. 806916050) attached.
ST1 18801AA000 OIL PRESSURE GAUGE ASSY
ST2 18681AA010 PRESSURE GAUGE ADAPTER

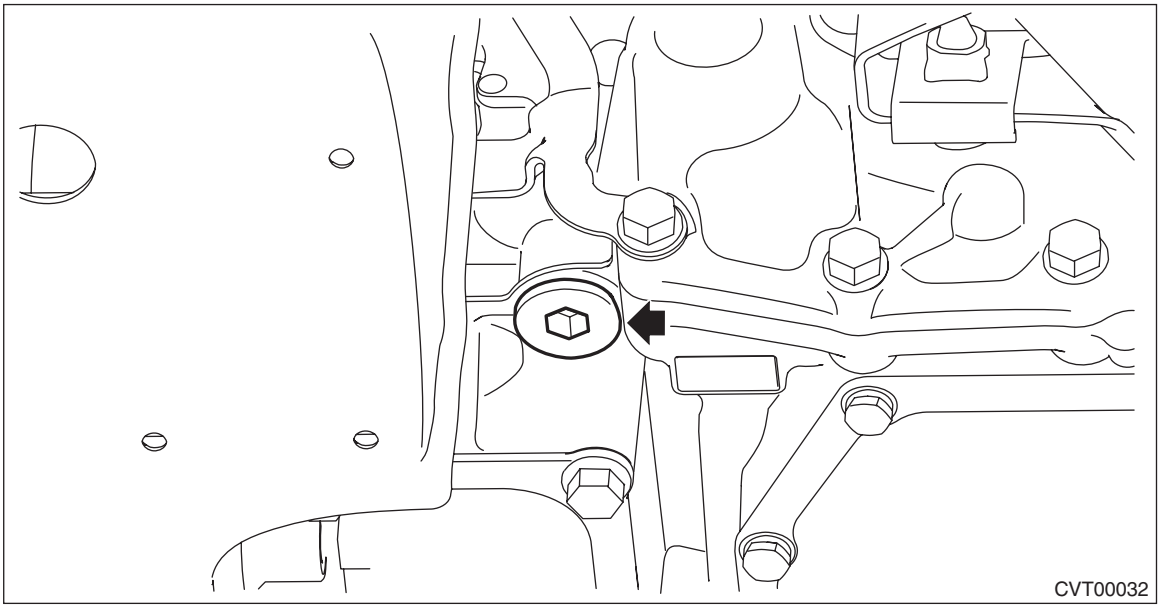

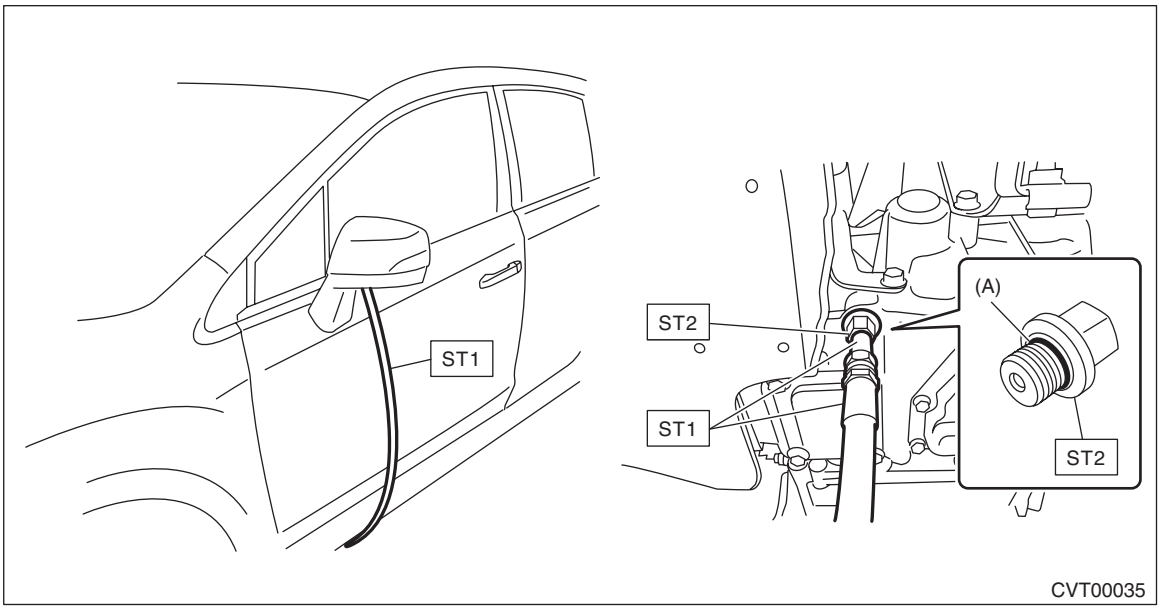

(A) O-ring (genuine part)

3) Lower the vehicle.
4) Set the gauge so that it can be seen from the driver's seat.
5) Using the Subaru Select Monitor, check if the throttle valve operates when you depress the accelerator pedal. <Ref. to EN(H4DO HEV)(diag)-37, OPERATION, Subaru Select Monitor.>
6) Check the engine oil level. <Ref. to LU(H4DO(w/o HEV))-12, Engine Oil.>
7) Check the coolant level. <Ref. to CO(H4DO(w/o HEV))-16, Engine Coolant.>
8) Adjust the CVTF level. <Ref. to CVT(TH58A)-41, ADJUSTMENT, CVTF.>
9) Increase the CVTF temperature to 60 — 80°C (140 — 176°F) with the engine running and the select lever shifted to "N" or "P" range.
10) Shift the select lever to "D" range.
11) Depress the accelerator pedal to the full while fully depressing the foot brake pedal with your left foot.
12) Immediately after the engine speed becomes steady, record the reading of the secondary pressure (line pressure), engine speed and actual secondary pressure on Subaru Select Monitor. And then release the accelerator pedal. Shift the select lever to "N" range. Let the engine idle for one minute or more to cool it down.

NOTE:
• Do not continue the stall test for 5 seconds or more at a time (from fully closed throttle, fully open throttle to secondary pressure (line pressure) reading). Failure to follow this instruction will cause the engine oil and CVTF to deteriorate and the clutch and brake to be adversely affected.
• After performing the secondary pressure (line pressure) test, be sure to cool down the engine for at least one minute with the select lever set in "P" or "N" range and with the idle speed at 1,200 rpm or less.
• Under each condition, check that the measured pressure matches almost totally with actual secondary pressure.
• When both measured pressure and actual secondary pressure are out of specification, judge as control valve body malfunction.
• The value at stall is for reference because the pressure changes under different conditions or circumstances.
• The value at idling is steady because it is not affected by any condition or circumstance.

Secondary pressure (line pressure) standard				
	Range	Throttle	Brake	Secondary pressure (line pressure) (MPa (kgf/cm^2, psi))
Stall	D, R	Full open	ON	4.5 — 6.0 (45.9 — 61.2, 652 — 870)
Idling	P, N	Full closed	OFF	0.5 — 1.5 (5.1 — 15.3, 72 — 218)

13) Remove the ST and install the plug after measurement.

CAUTION:
Removal of the ST and installation of the test plug shall be both performed quickly.

NOTE:
- Use new O-rings.
- Apply CVTF to the O-ring.

Tightening torque:
50 N·m (5.1 kgf-m, 36.9 ft-lb)

14) Adjust the CVTF level. <Ref. to CVT(TH58A)-41, ADJUSTMENT, CVTF.>

9. Output Clutch Pressure Test

A: INSPECTION

CAUTION:
• Directly after the vehicle has been running or the engine has been idling for a long time, the CVTF is hot. Be careful not to burn yourself.
• Make sure no other person is around the vehicle during output clutch pressure test measurement.
• After performing the output clutch pressure test measurement, adjust the CVTF level.

1) Lift up the vehicle.
2) Remove the output clutch pressure test plug, and install ST1, ST2 and ST3.

CAUTION:
• Be careful when setting tools so that the hoses do not touch the exhaust pipes.
• Be careful when setting tools so that the front wheel speed sensor harness does not touch ST1 and ST2.

NOTE:
Use ST1 (PRESSURE GAUGE ADAPTER) with genuine O-ring (part No. 806916050) attached.
ST1 18681AA000 PRESSURE GAUGE ADAPTER
ST2 498897800 OIL PRESSURE GAUGE ADAPTER SET
ST3 18801AA000 OIL PRESSURE GAUGE ASSY

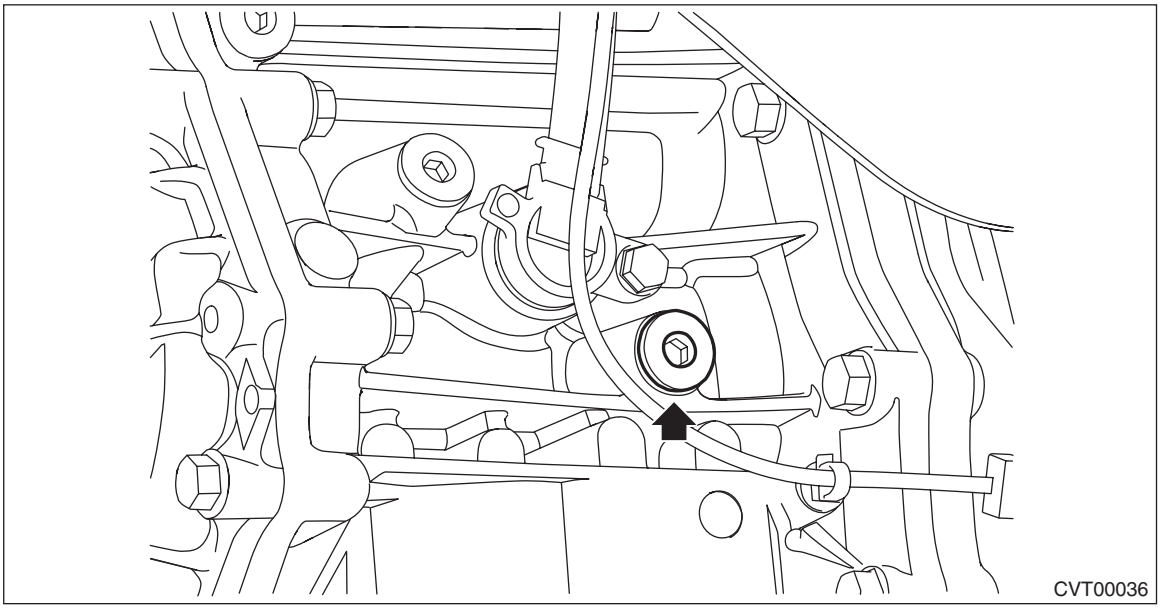

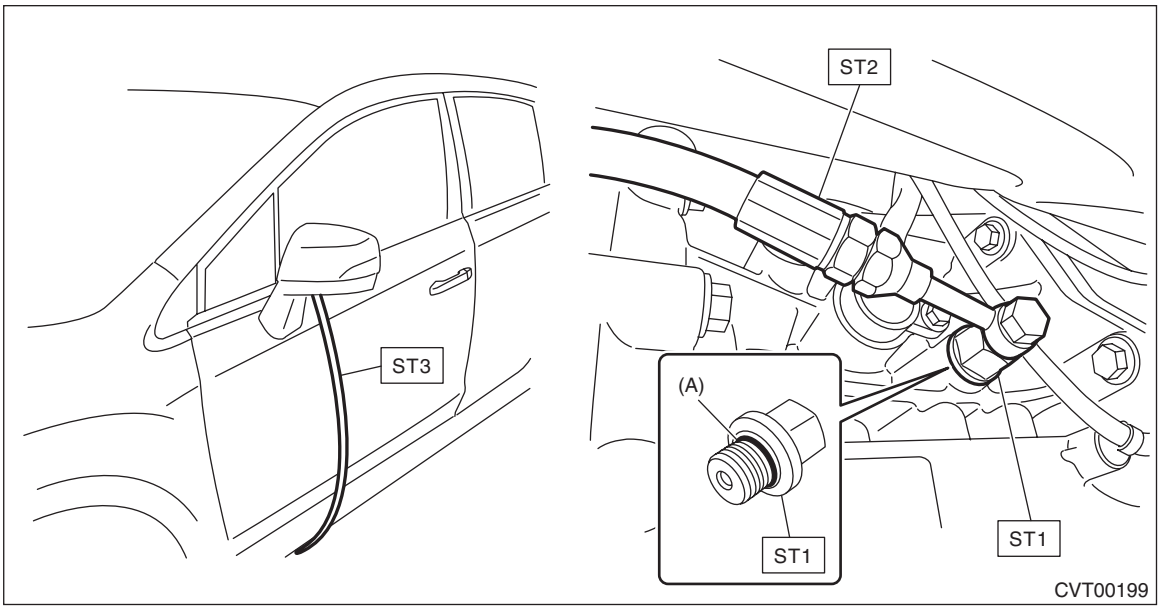

(A) O-ring (genuine part)

3) Lower the vehicle.
4) Connect the Subaru Select Monitor to the data link connector and read the current data.
5) Check the output clutch pressure as in secondary pressure (line pressure) test. <Ref. to CVT(TH58A)-54, Secondary Pressure (Line Pressure) Test.>

Output clutch pressure standard value				
	Range	Throttle	Brake	MPa (kgf/cm^2, psi)
Stall	D	Full open	ON	1.5 — 4.0 (15.3 — 40.8, 217.5 — 580)
Idling (Engine speed: 1,000 rpm or less)	N	Full closed	OFF	0.5 — 1.3 (5.1 — 13.3, 72.5 — 188.5)

6) Lift up the vehicle.
7) Remove the ST and install the plug.

NOTE:
- Use new O-rings.
- Apply CVTF to the O-ring.

Tightening torque:
25 N·m (2.5 kgf-m, 18.4 ft-lb)
8) Adjust the CVTF level. <Ref. to CVT(TH58A)-41, ADJUSTMENT, CVTF.>

10.Transfer Clutch Pressure Test

A: INSPECTION

CAUTION:
• Directly after the vehicle has been running or the engine has been idling for a long time, the CVTF is hot. Be careful not to burn yourself.
• Make sure no other person is around the vehicle during transfer clutch pressure test measurement.
1) Lift up the vehicle.
2) Remove the under cover front - cable.

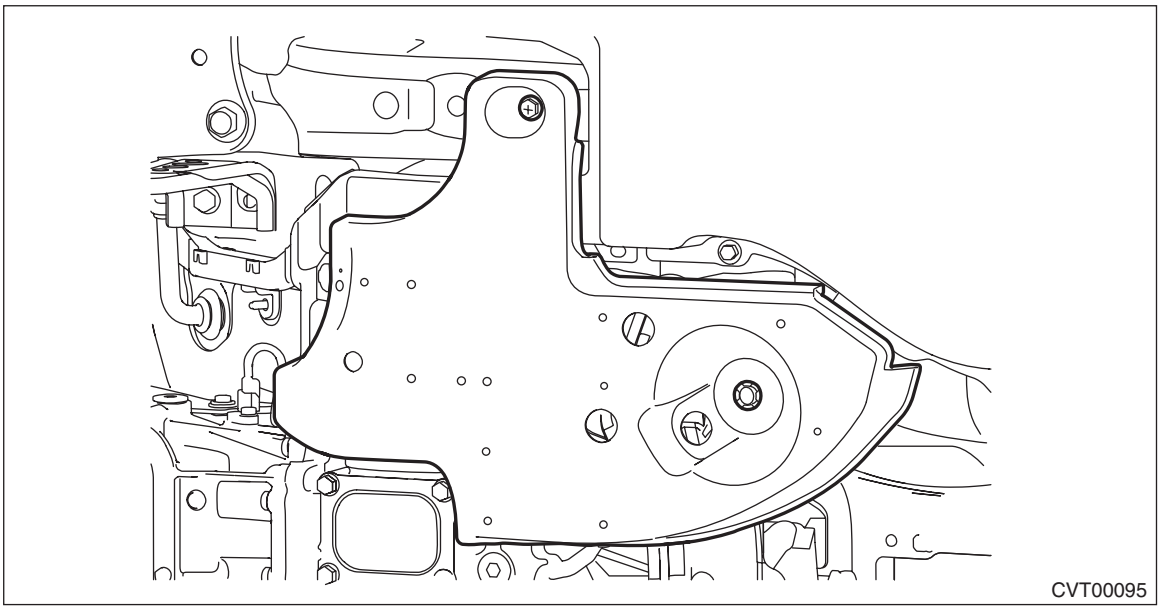

3) Remove the transfer clutch pressure test plug, and install ST1 and ST2.

CAUTION:
Removal of the test plug and installation of the ST shall be both performed quickly.

NOTE:
- Use ST1 (PRESSURE GAUGE ADAPTER) with genuine O-ring (part No. 806911080) attached.
- Use ST2 (OIL PRESSURE GAUGE ADAPTER) with genuine O-ring (part No. 806908070) attached.

ST1 18681AA000 PRESSURE GAUGE ADAPTER
ST2 498897200 OIL PRESSURE GAUGE ADAPTER
ST3 498575400 OIL PRESSURE GAUGE ASSY

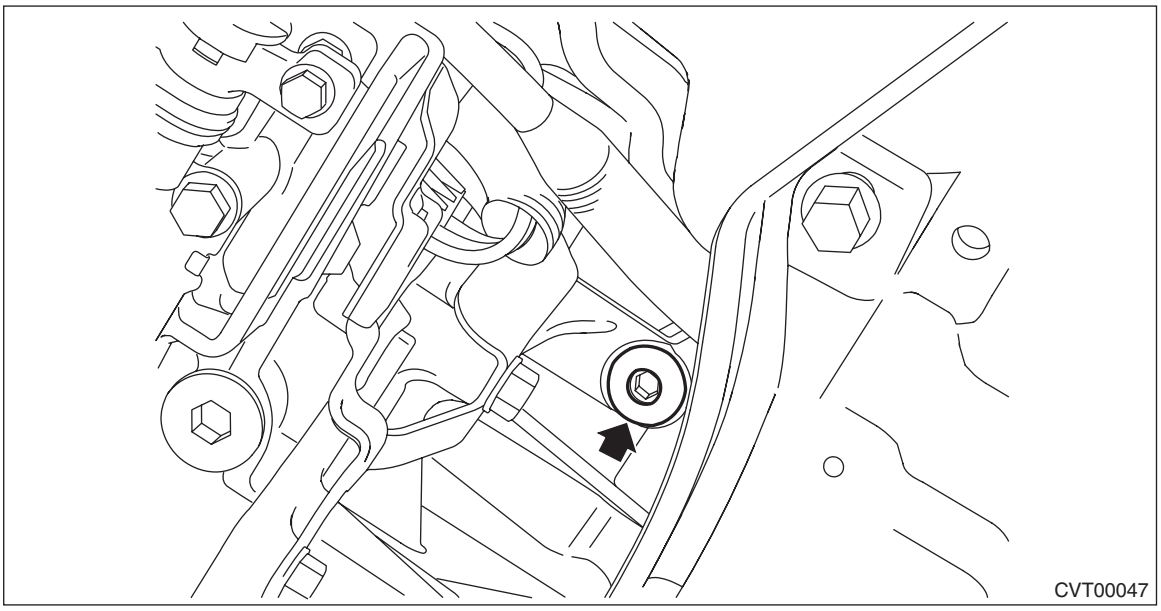

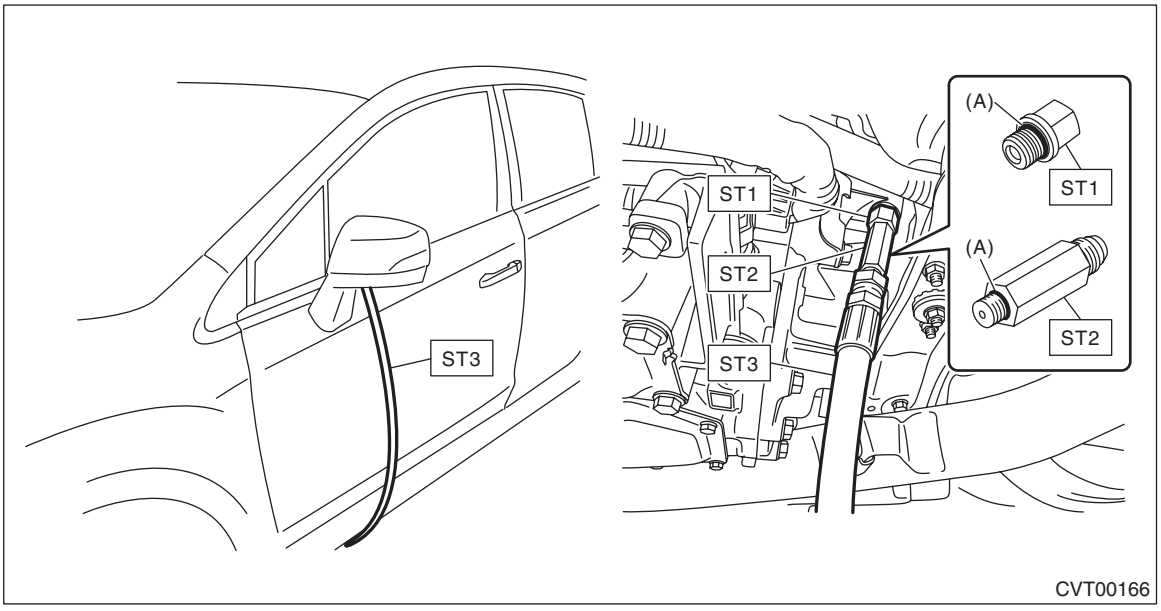

(A) O-ring (genuine part)

4) Lower the vehicle.
5) Connect the Subaru Select Monitor to the data link connector and read the current data.
6) Check the transfer clutch pressure as in secondary pressure (line pressure) test. <Ref. to CVT(TH58A)-54, Secondary Pressure (Line Pressure) Test.>

NOTE:
• Use Subaru Select Monitor for switching to FWD mode. <Ref. to CVT(TH58A)-49, AWD ON/OFF Switching Mode.>
• If no oil pressure is produced, if it does not change in AWD mode or if oil pressure is produced in FWD mode, there may be a problem in the control valve body.

Range position	ON Duty ratio (%)	Accelerator pedal opening angle (%)	Standard transfer clutch pressure kPa (kgf/cm^2, psi)	
			AWD mode	FWD mode
D	85 — 100	Fully opened (100)	800 — 1,200 (8.2 — 12.2, 117 — 174)	—
	60	Adjust ON Duty ratio to 60%.	400 — 700 (4.1 — 7.1, 58 — 102)	—
	0	Fully closed (0)	—	0 (0, 0)
N or P	0	Fully closed (0)	0	—

7) Lift up the vehicle.
8) Remove the ST and install the plug.

NOTE:
• Use new O-rings.
• Apply CVTF to the O-ring.

Tightening torque:
25 N·m (2.5 kgf-m, 18.4 ft-lb)
9) Install the under cover front - cable.

Tightening torque:
18 N·m (1.8 kgf-m, 13.3 ft-lb)
10) Adjust the CVTF level. <Ref. to CVT(TH58A)-41, ADJUSTMENT, CVTF.>

11.Automatic Transmission Assembly

A: REMOVAL

WARNING:
The hybrid system includes a high voltage circuit. Mishandling could cause accidents such as electric shock or leak. Always check "CAUTION (HYBRID SYSTEM)" and perform the proper operation. <Ref. to PC-6, CAUTION (HYBRID SYSTEM), Precaution.>

1) Disconnect the ground cable from battery. <Ref. to NT-5, BATTERY, NOTE, Note.>

NOTE:
For the 12 volt engine restart battery, disconnect the ground terminal from 12V engine restart battery sensor.

2) Remove the service disconnect plug. <Ref. to HEV-15, REMOVAL, Service Plug.>

WARNING:
After pulling out the service disconnect plug, a high voltage is accumulated in the condenser inside the inverter. If touching the high voltage parts, wiring harness, terminals and connectors is required, wait for 10 minutes before starting the operation.

3) Remove the collector cover.
   (1) Pull up the two points at the front of collector cover (A).
   (2) Pull up the two points at the rear of collector cover (B) while moving them rearward.

NOTE:
Be careful not to contact the fuel delivery tube when moving the collector cover rearward.

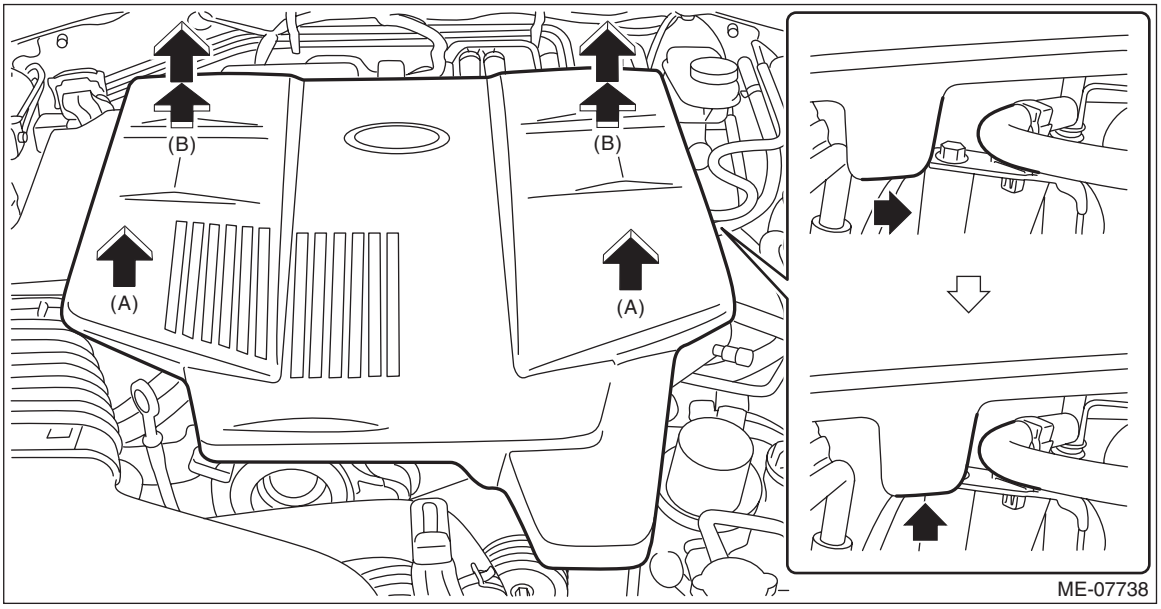

4) Remove the air cleaner case. <Ref. to IN(H4DO(HEV))-6, REMOVAL, Air Cleaner Case.>

5) Disconnect the following connectors and harness clips.
- Transmission radio ground terminal
- Transmission harness connectors
- Inhibitor harness connector
- Drive motor harness connector
- Engine harness connectors
- Harness clip

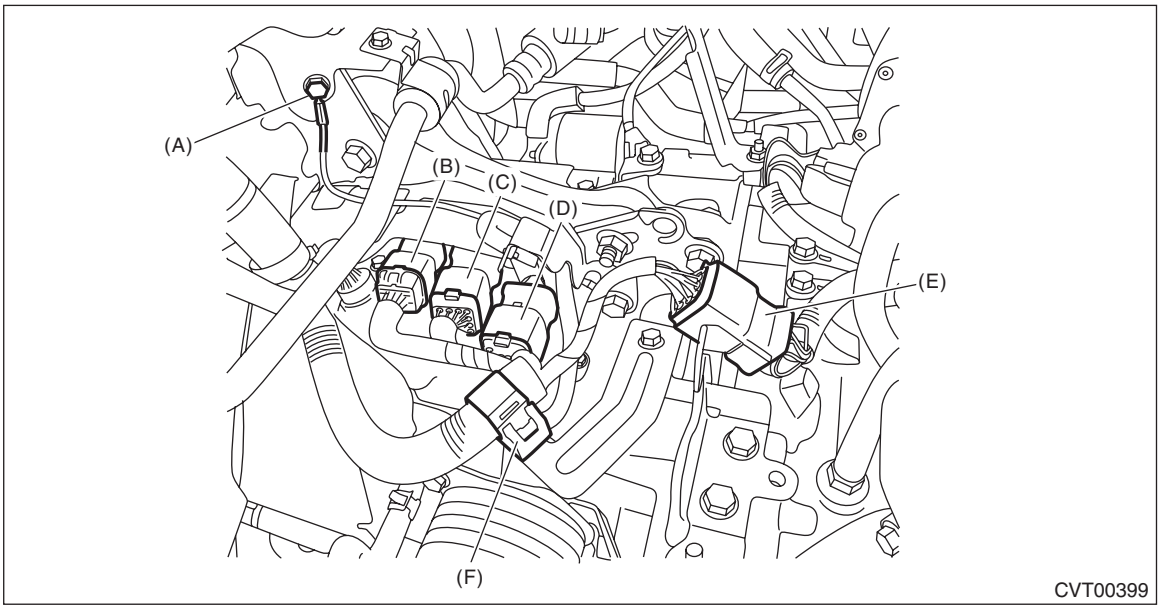

(A) Transmission radio ground terminal
(B) Transmission harness connectors
(C) Inhibitor harness connector
(D) Drive motor harness connector
(E) Engine harness connectors
(F) Harness clip

6) Remove the engine harness connector, and remove the engine hanger.

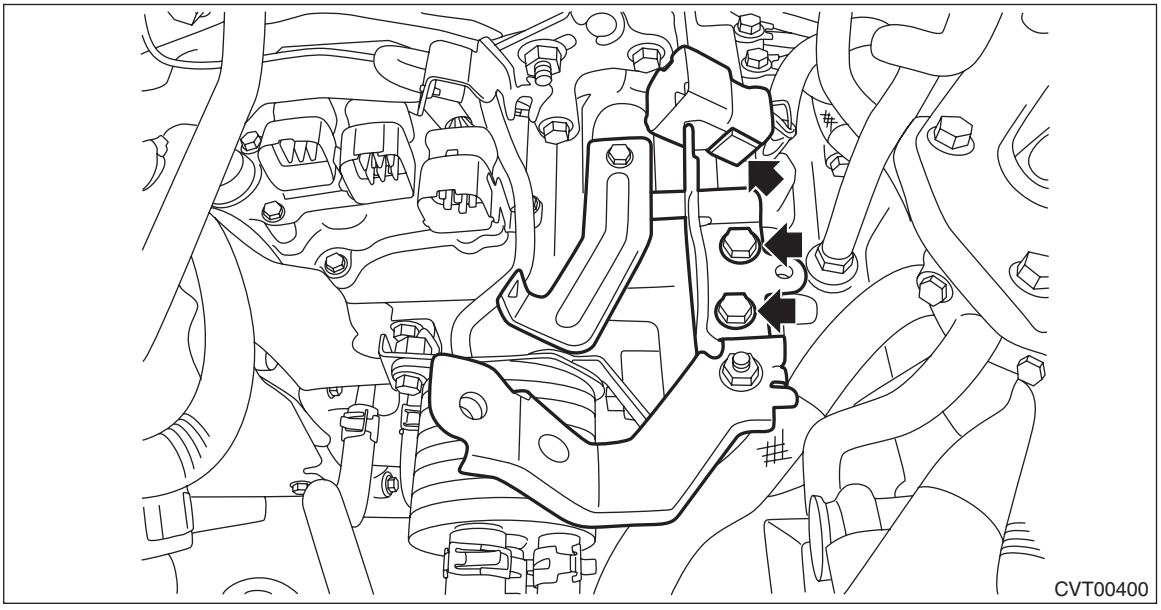

7) Remove the air cleaner case bracket LH.

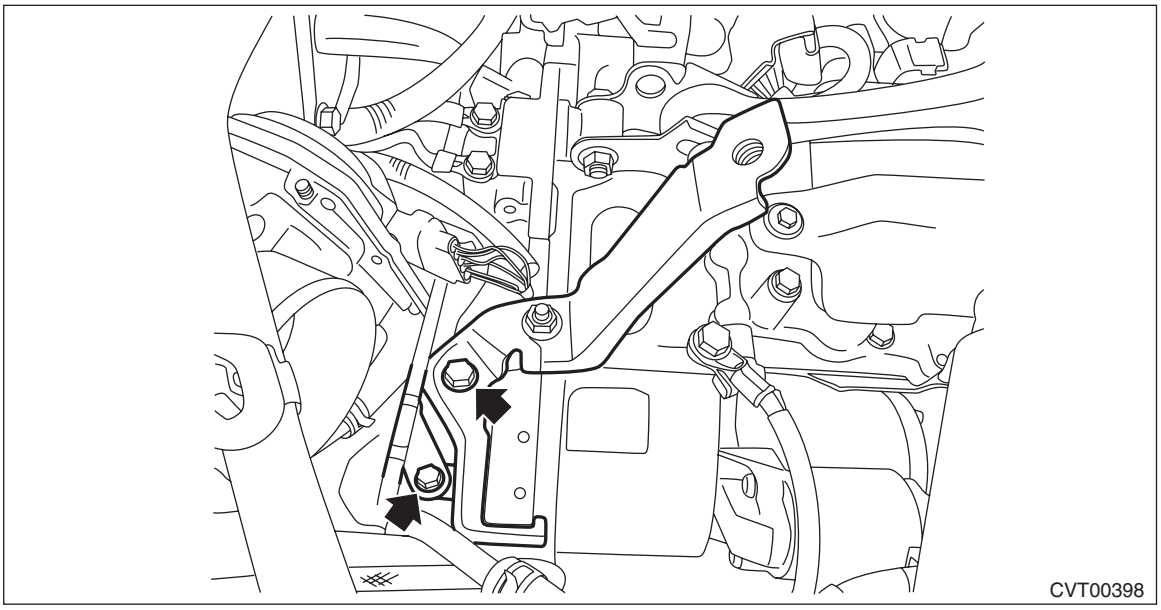

8) Remove the starter. <Ref. to SC(H4DO(HEV))-10, REMOVAL, Starter.>
9) Remove the pitching stopper. <Ref. to CVT(TH58A)-86, PITCHING STOPPER, REMOVAL, Transmission Mounting System.>
10) Disconnect the throttle position sensor harness connector.
11) Remove the service hole plug.

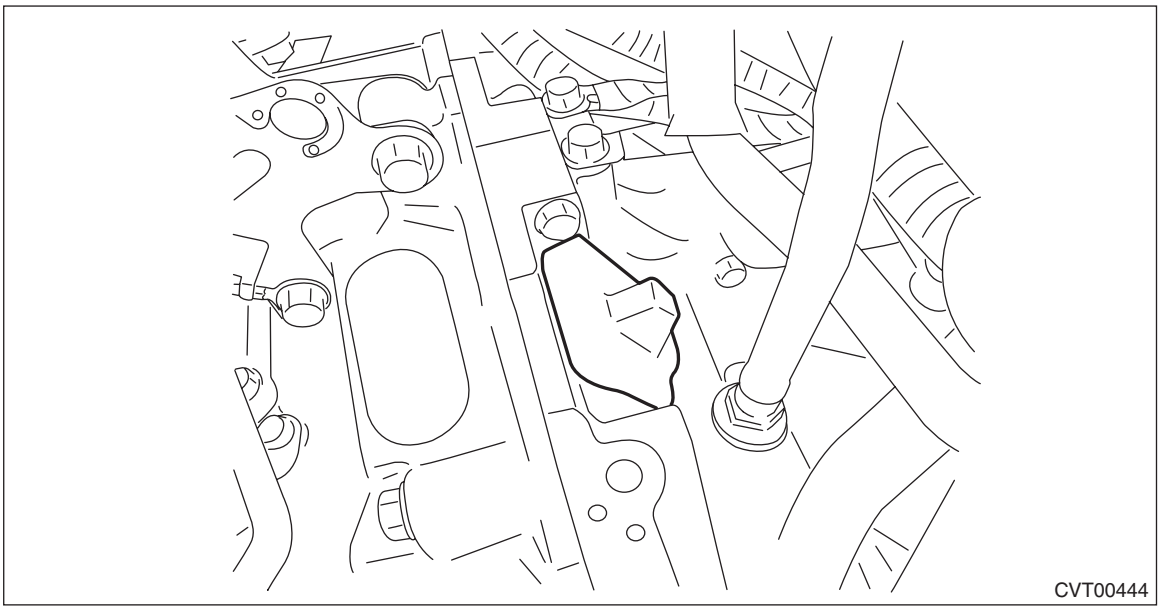

12) Remove the four bolts combining the torque converter and drive plate while rotating the crank pulley a little at a time in the same direction as engine revolution.

CAUTION:
- **Be careful not to drop bolts into the converter housing.**
- **Be careful not to damage the mounting bolts.**

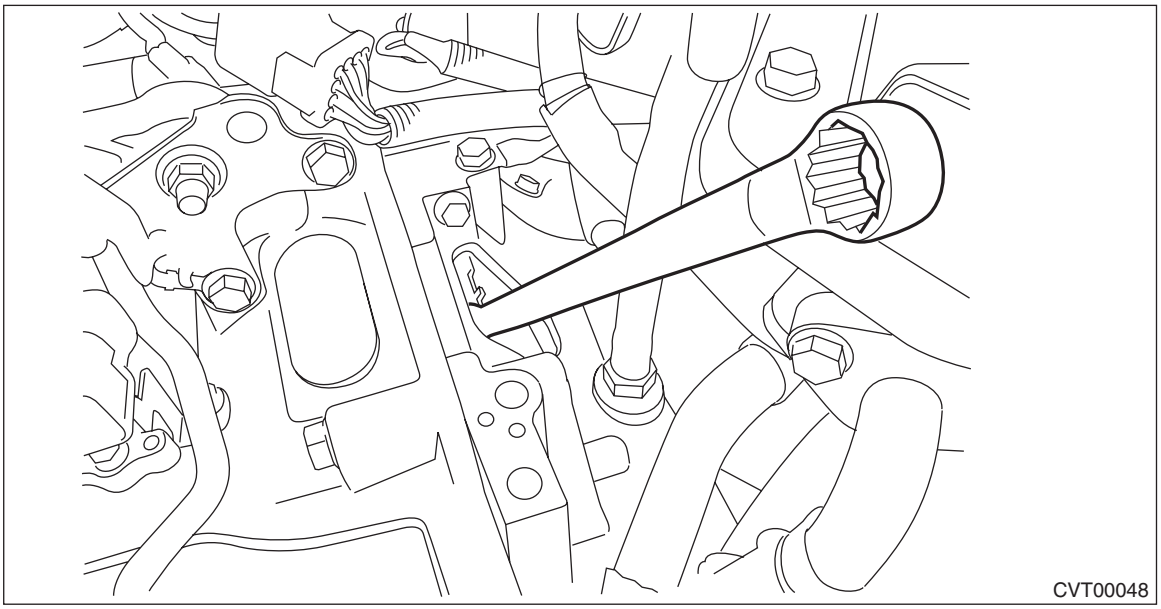

13) Make sure the torque converter moves freely by rotating with finger through the starter installation hole.
14) Attach the ST to the converter case.
ST 498277200 STOPPER SET

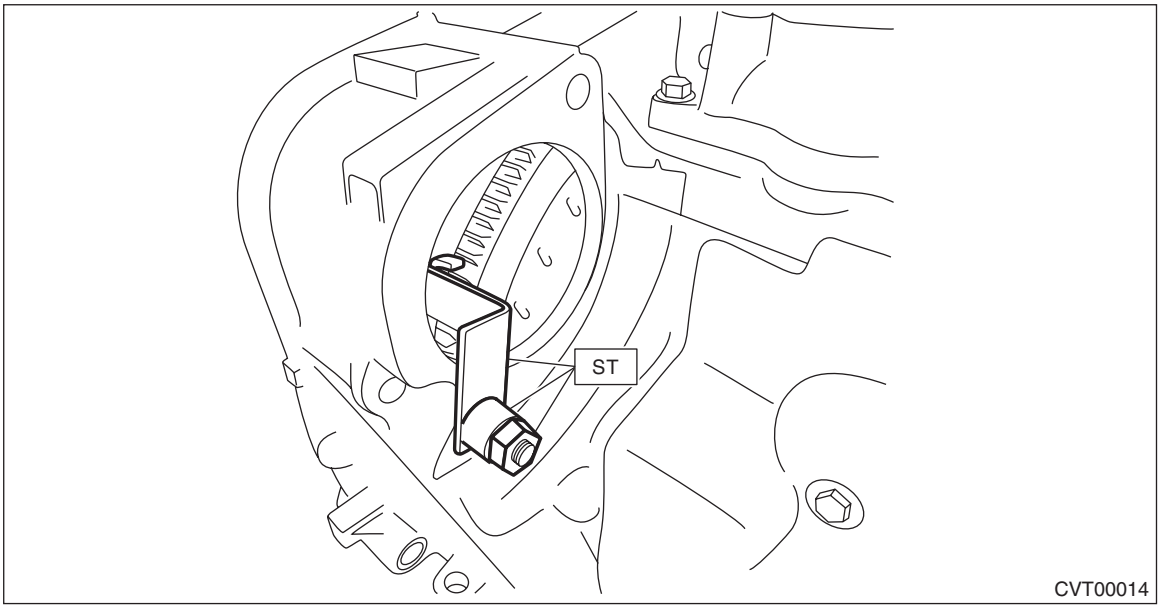

15) Remove the air breather hose from the pitching stopper bracket, and then remove the pitching stopper bracket and transmission radio ground cord.

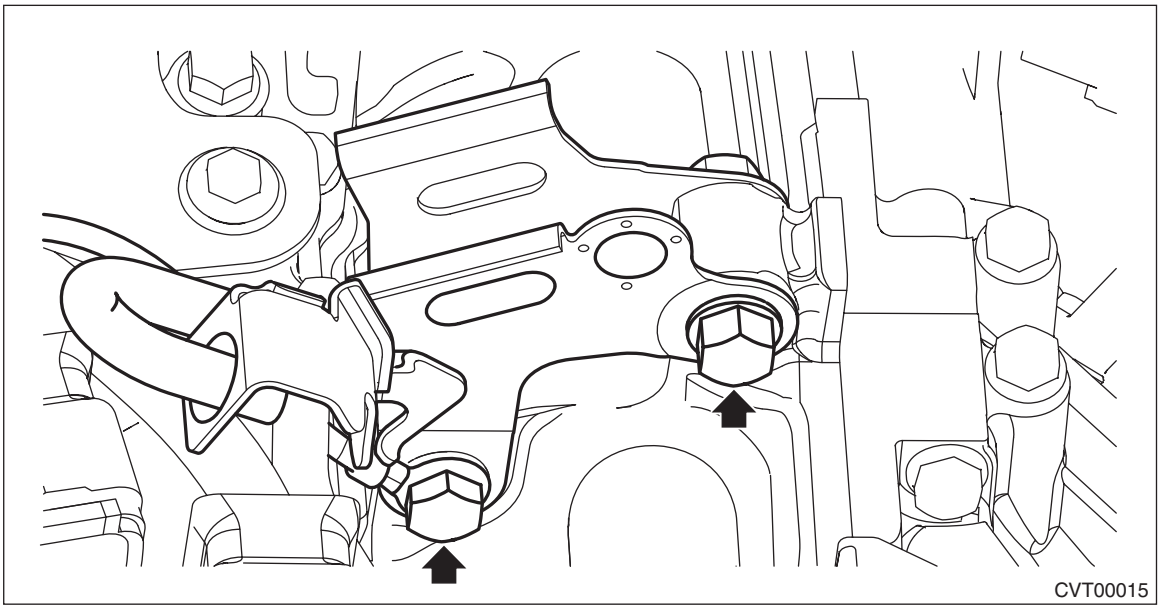

16) Disconnect the engine ground terminals.

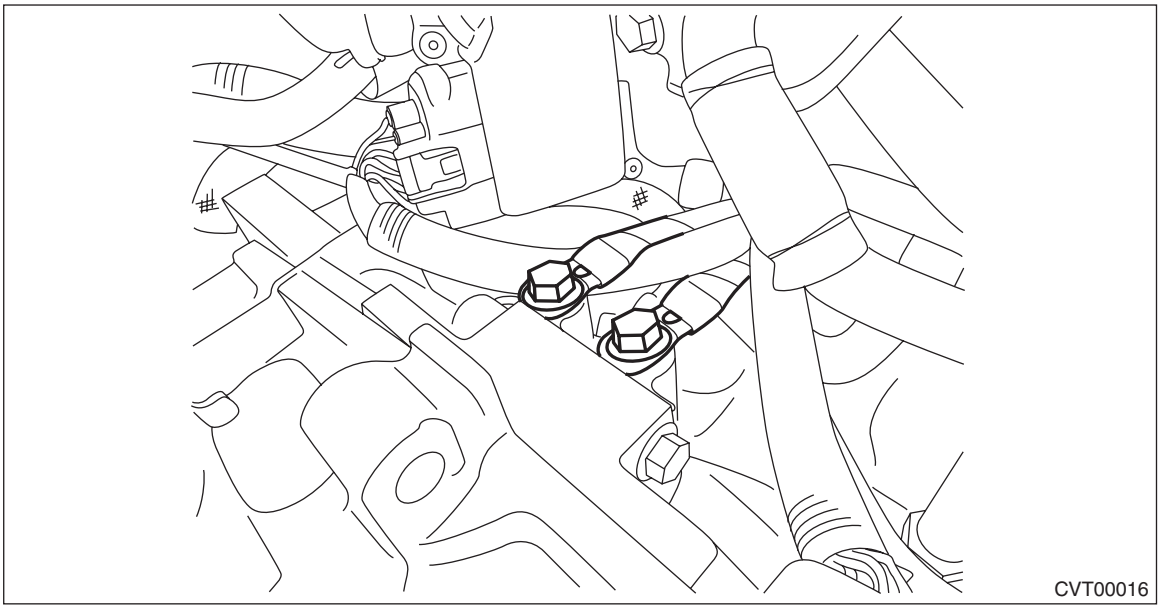

17) Remove the CVTF cooler (with warmer feature) from the transmission, and using a piece of wire, affix to a location of the body where it will not interfere with the removal of the transmission.

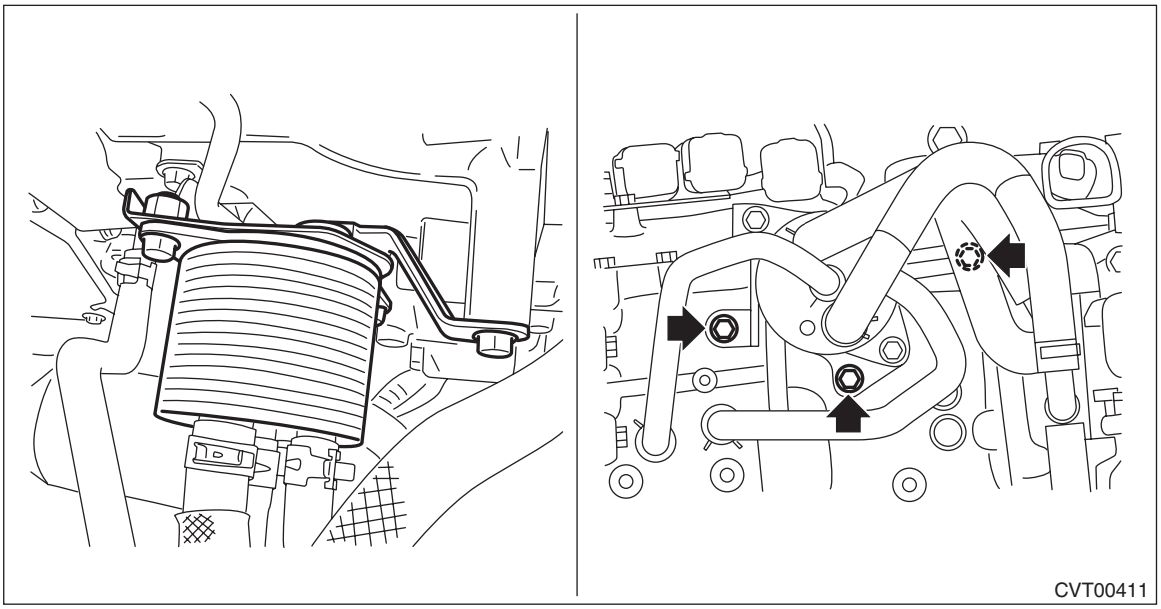

18) Remove the CVTF inlet hose and outlet hose from the pipe.

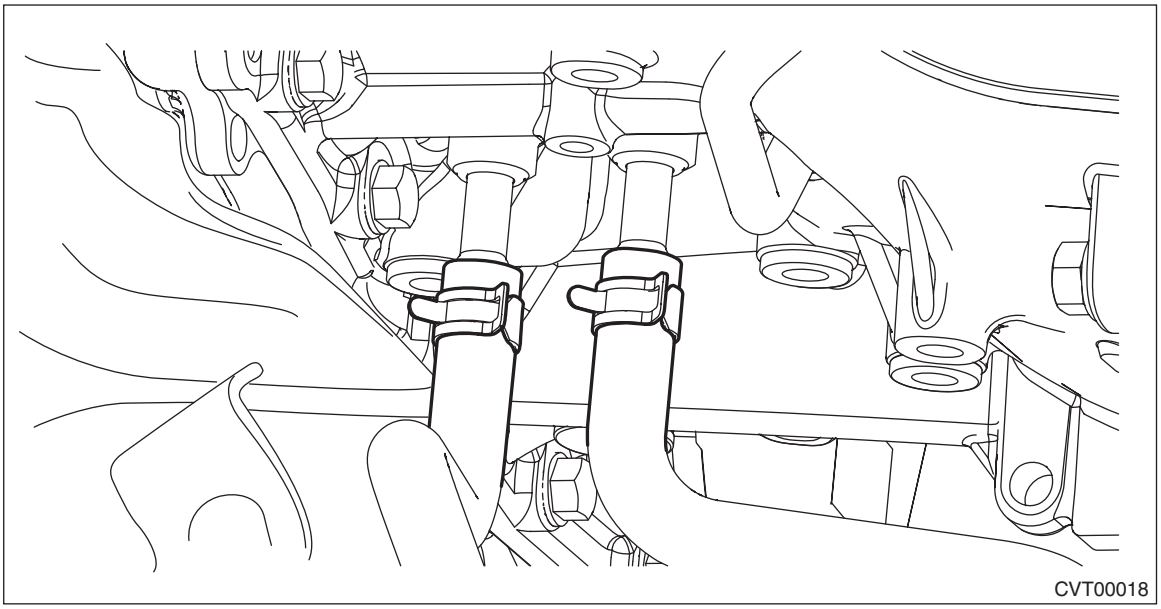

19) Set the ST.
ST1 41099AA011 ENGINE SUPPORT BRACKET
ST2 41099AA020 ENGINE SUPPORT

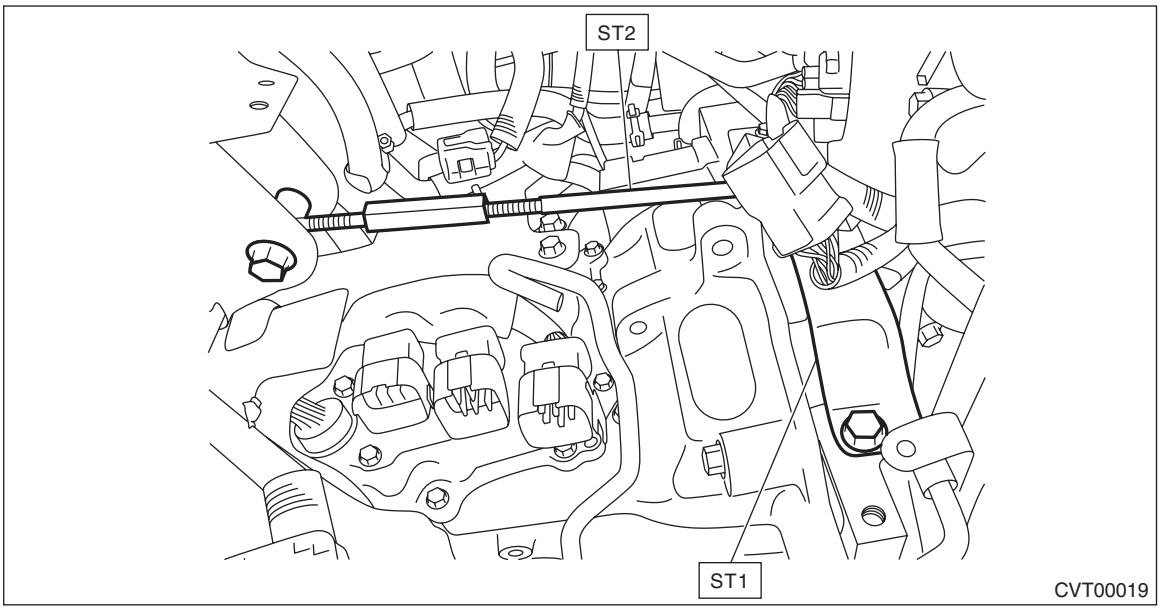

20) Remove the three transmission connecting bolts.

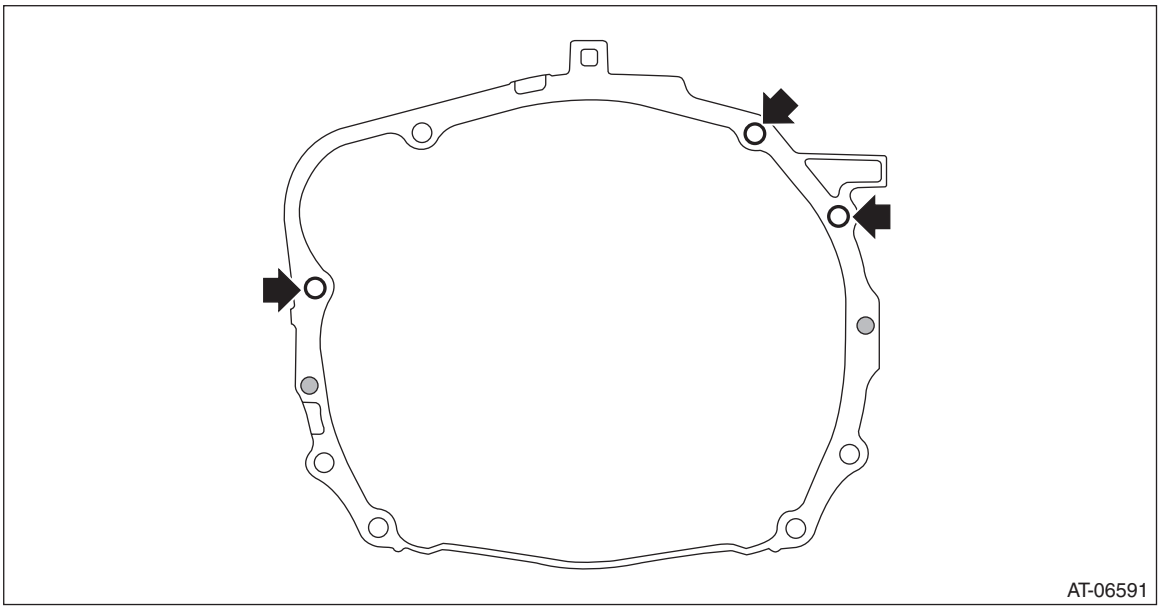

21) Lift up the vehicle.
22) Remove the front tires. <Ref. to WT-4, REMOVAL, Tire and Wheel.>
23) Remove the under cover - rear LH. <Ref. to EI-29, REMOVAL, Front Under Cover.>

24) Remove the under cover front - cable.

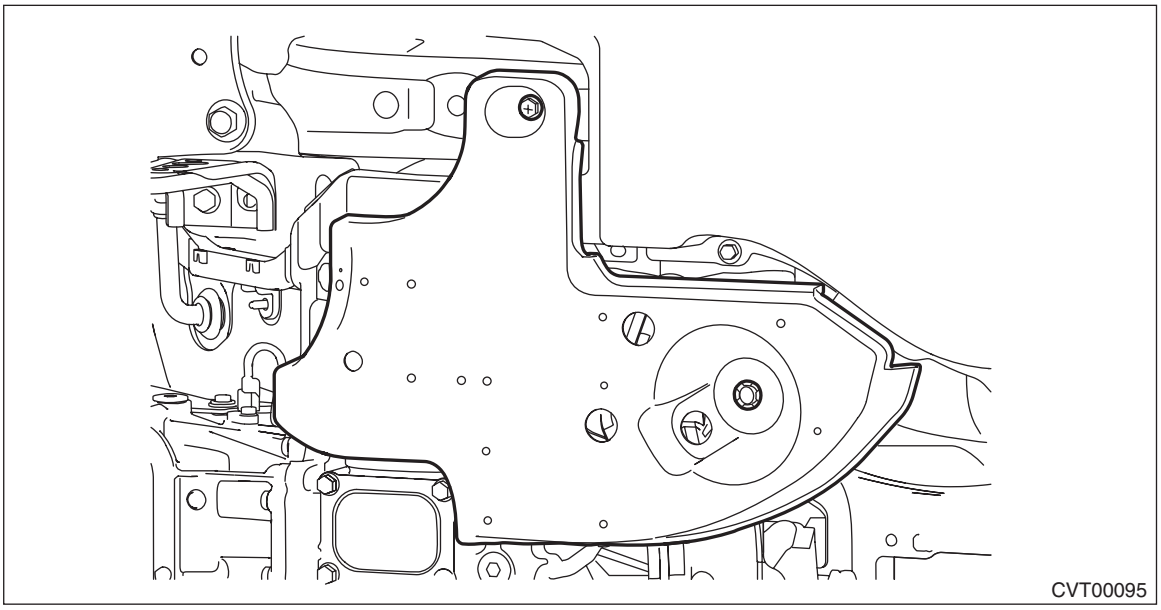

25) Remove the center exhaust pipe. <Ref. to EX(H4DO(w/o HEV))-18, REMOVAL, Rear Exhaust Pipe.>
26) Remove the hanger bracket.

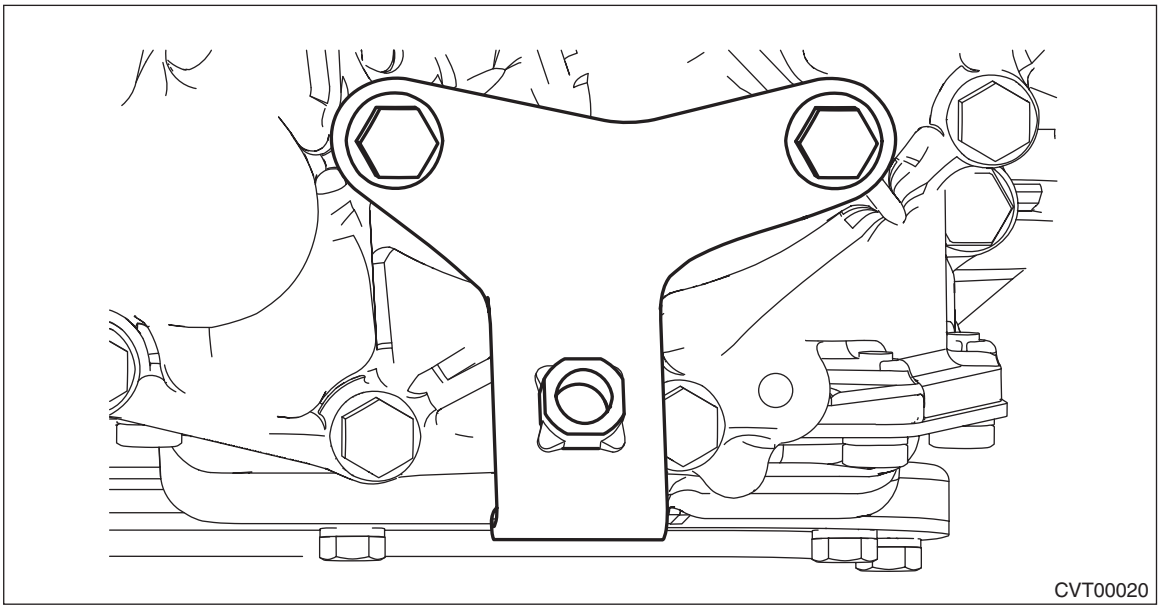

27) Remove the center exhaust cover.

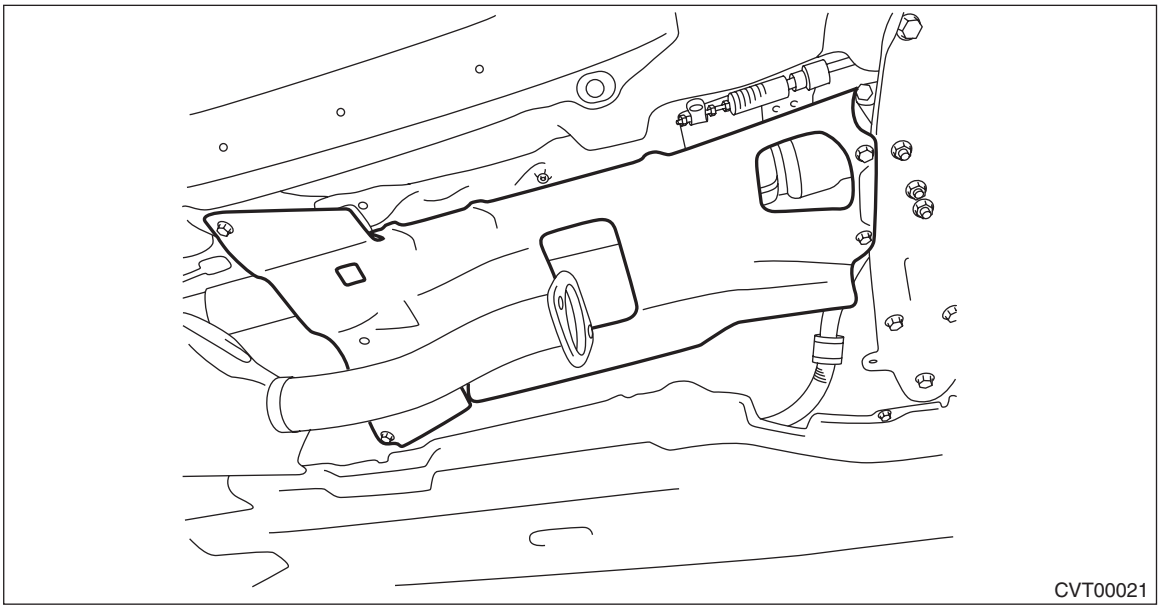

28) Remove the CVTF drain plug to drain CVTF. <Ref. to CVT(TH58A)-43, REPLACEMENT, CVTF.>
29) Drain differential gear oil. <Ref. to CVT(TH58A)-47, REPLACEMENT, Differential Gear Oil.>
30) Remove the snap pin and washer from shifter arm and remove the select cable from shifter arm.

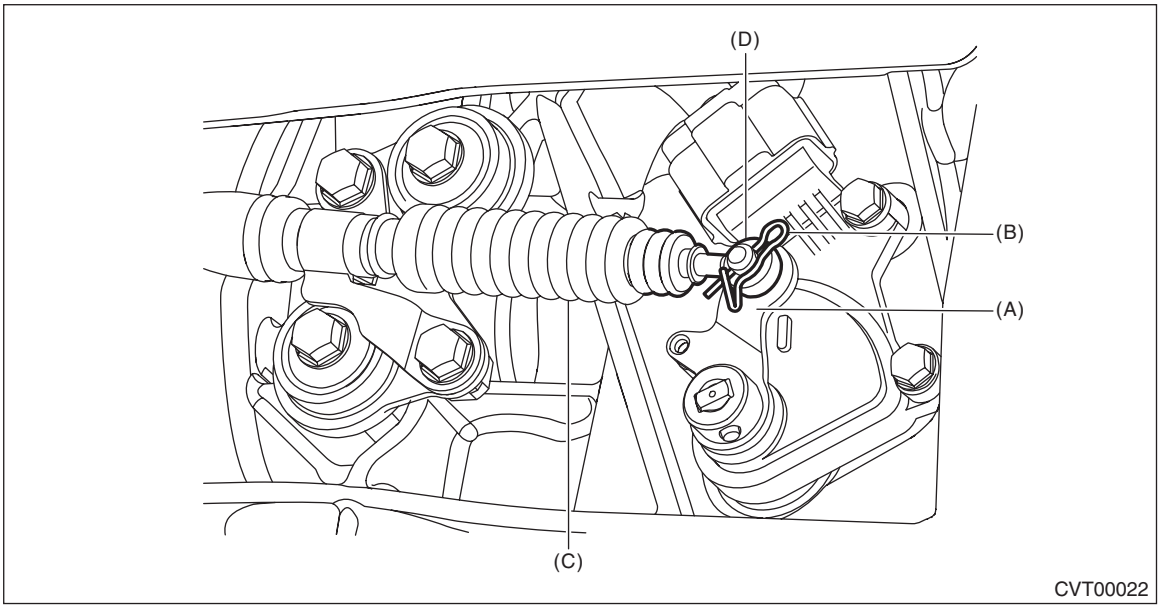

(A) Shifter arm
(B) Snap pin
(C) Select cable
(D) Washer

31) Remove the plate assembly from the transmission case.

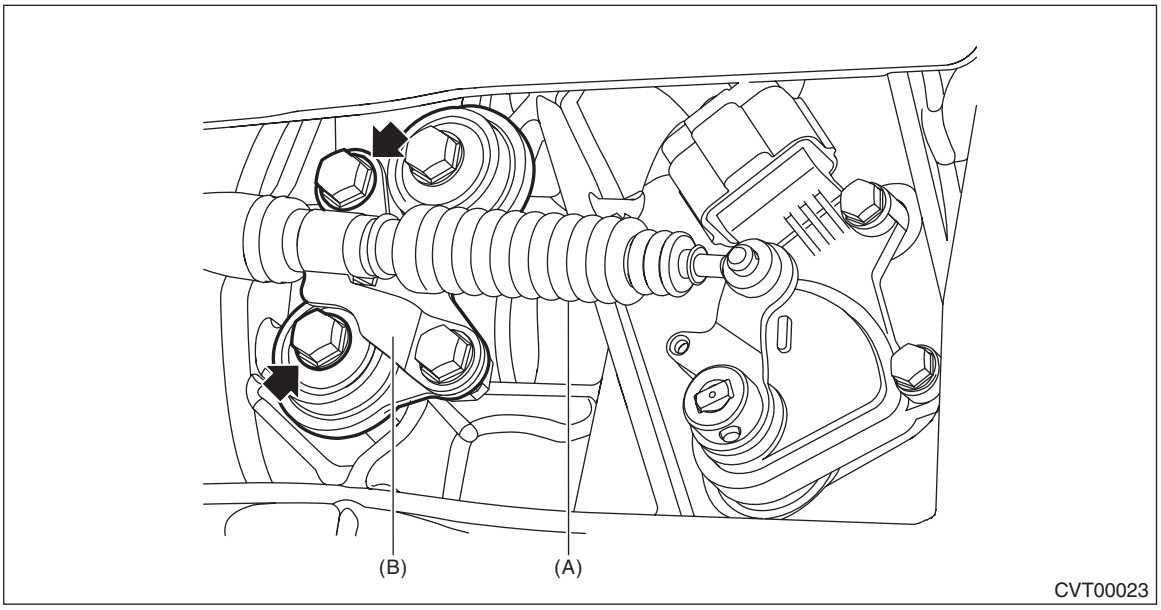

(A) Select cable
(B) Plate ASSY

32) Remove the propeller shaft. <Ref. to DS-12, REMOVAL, Propeller Shaft.>
33) Remove the jack-up plate.

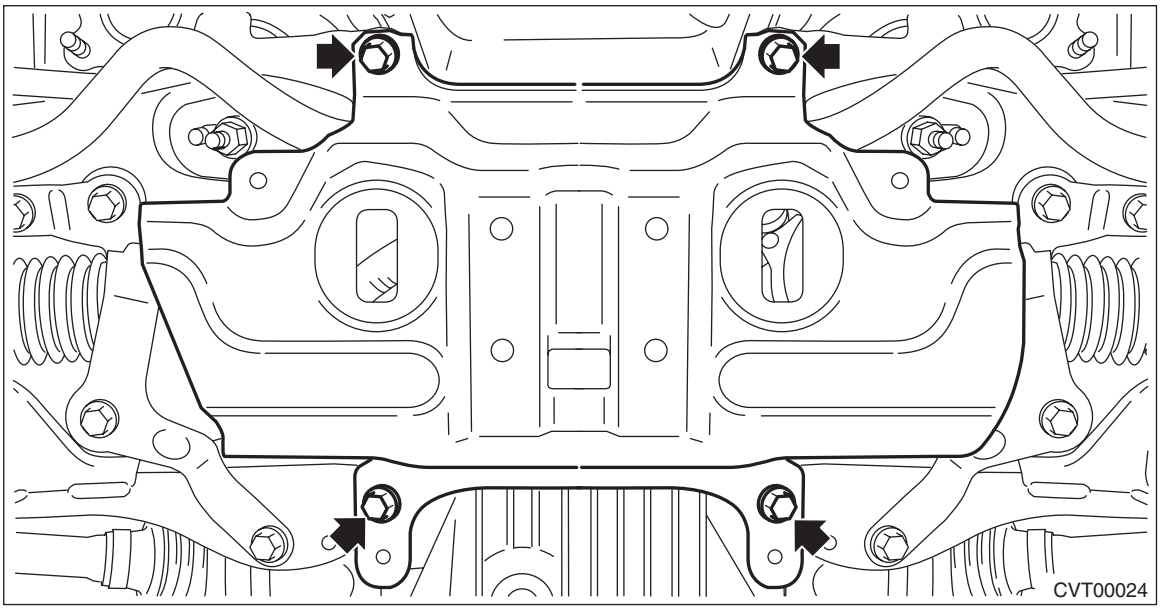

34) Remove the stabilizer bracket.

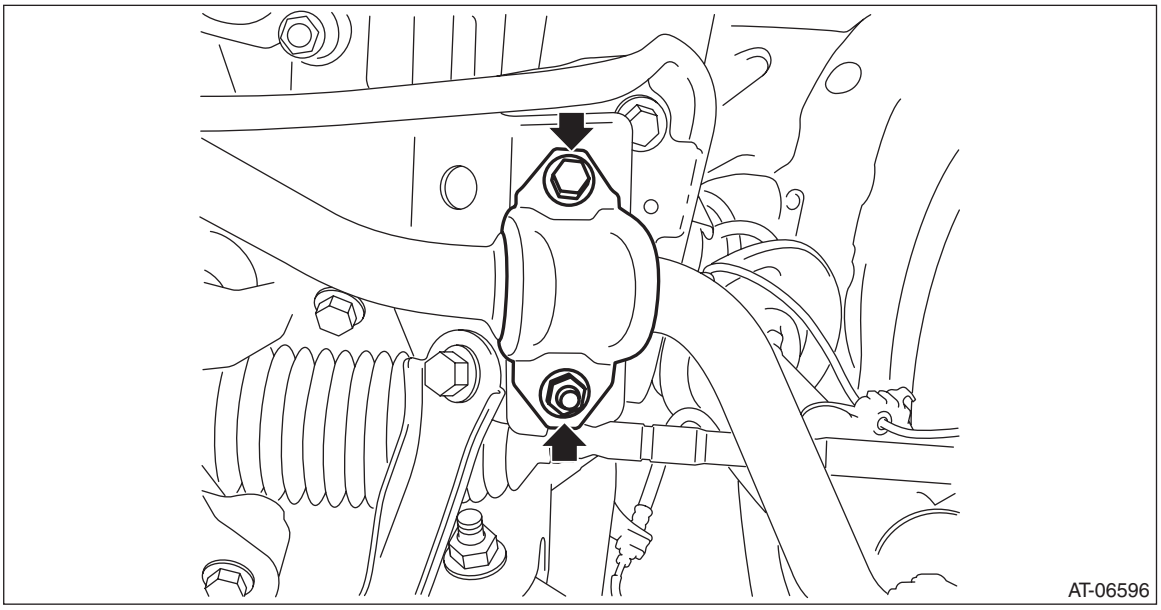

35) Remove the bolts which secure to the front housing, and separate the front arm and housing.

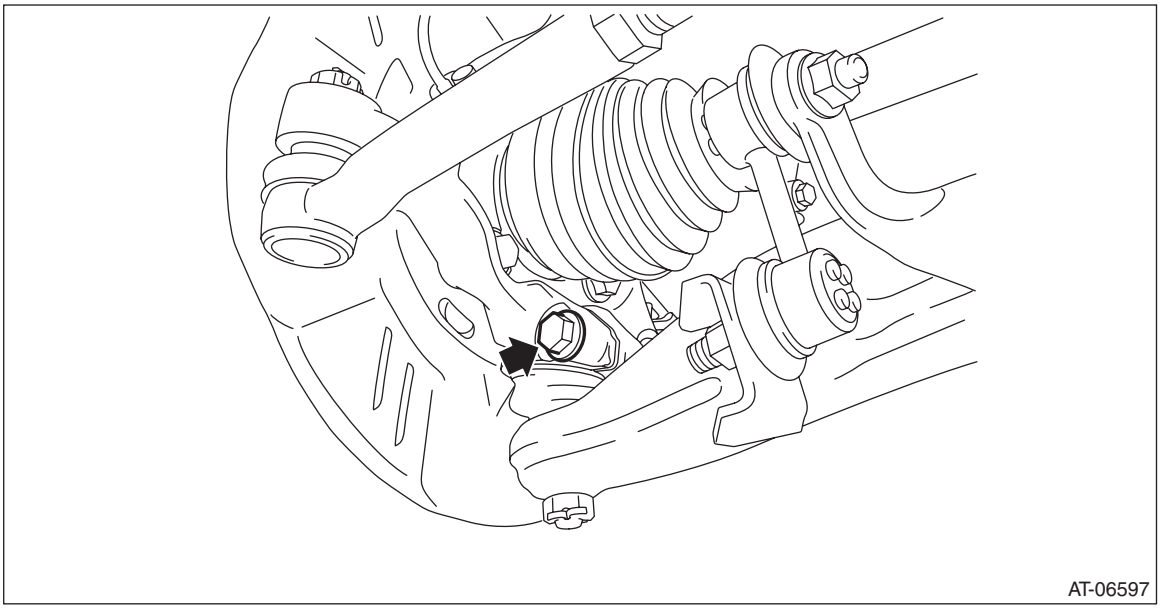

36) Using a tire lever or a crow bar, etc., pull out until the front drive shaft transmission side joint slides move smoothly.

NOTE:
Place cloth between the tire lever or bar and the transmission in order to avoid damaging the transmission side retainer.

37) Hold the transmission side joint of the front drive shaft by hand and extract the housing from the transmission while pressing the housing outward, so as not to stretch the boot.

NOTE:
- Before pulling RH front drive shaft from transmission, turn the steering wheel to left hand full lock.
- Before pulling LH front drive shaft from transmission, turn the steering wheel to right hand full lock.

38) Remove the power cable.

WARNING:
Be sure to wear insulated gloves.

CAUTION:
- **Be sure to insulate the power cable terminal by wrapping it with insulating tape.**
- **When removing the power cable, do not apply excessive force or damage it.**

(1) Clean any water, dirt and sand thoroughly from the area around the power connect cover using air, etc.
(2) Remove the power connect cover and gasket.

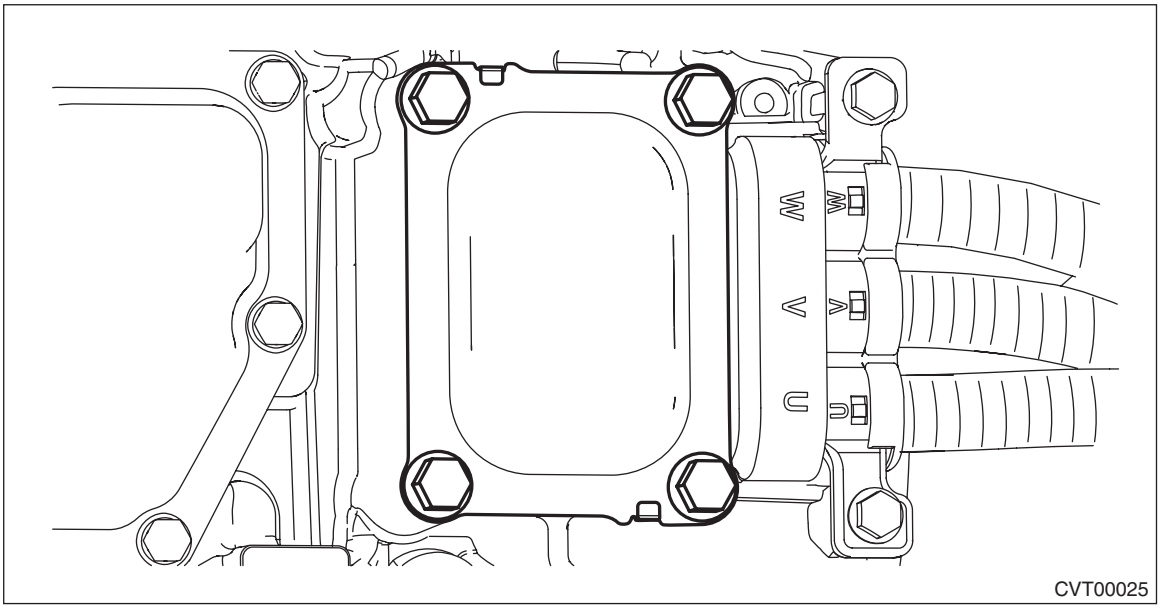

(3) Remove the power cable terminal, and remove the terminal box assembly.

NOTE:
To prevent intrusion of foreign matter such as oil, water and dirt after removal, install the power connect cover and cover the terminal box assembly with tape.

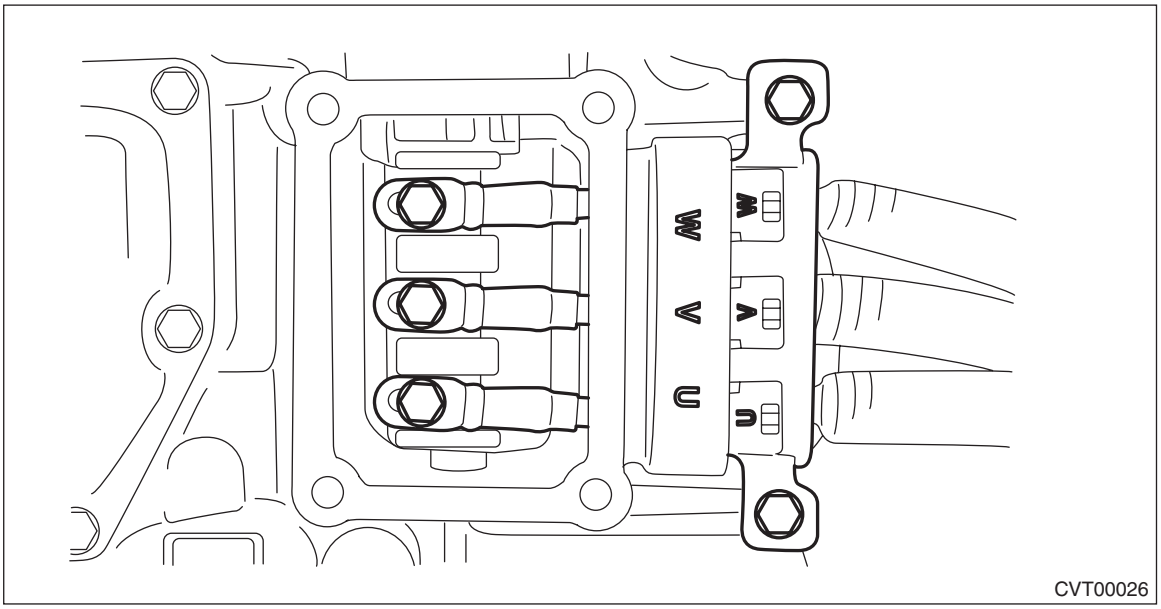

39) Remove the under cover - rear LH. <Ref. to EI-31, REMOVAL, Floor Under Protector.>

40) Remove the electric oil pump harness connector.

WARNING:
Be sure to wear insulated gloves.

CAUTION:
• To prevent intrusion of foreign matter such as oil, water and dirt after removal, cover the female side connector with a clean cloth or a plastic bag and cover the coupler portion of the male side connector with insulating tape.
• When foreign matter is found, remove it while paying attention not to damage the electrode inside. If water is attached, dry it completely.
• When disconnecting the electric oil pump harness connector, do not apply excessive force or damage it.

(1) Pull the slide lock (A) in the direction of arrow.
(2) Disconnect the harness connector by pushing the claw (B).

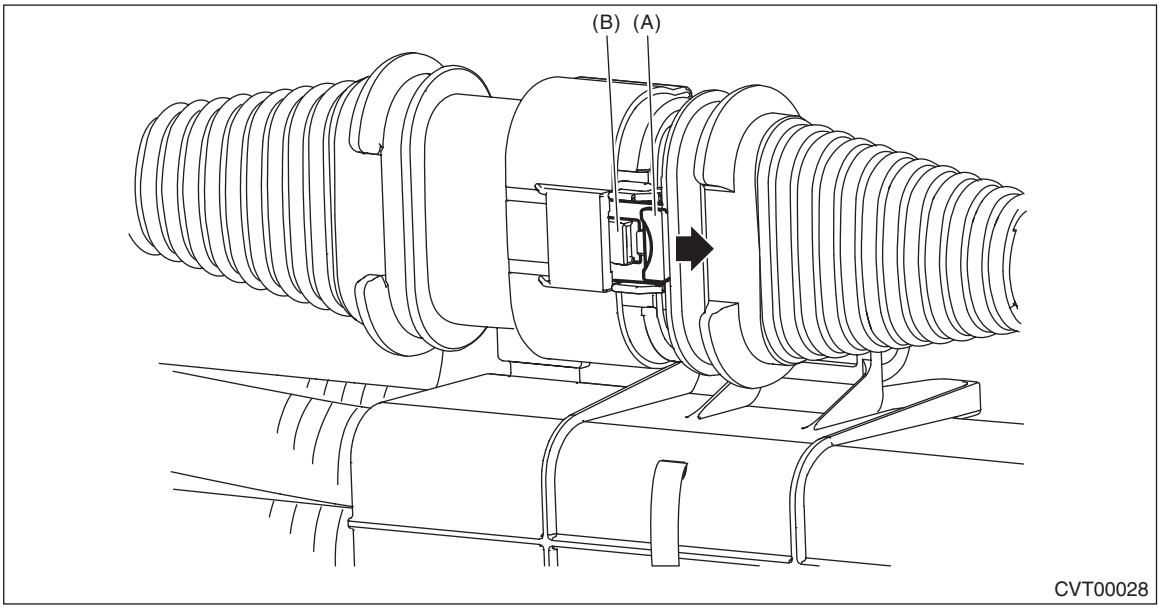

(3) Release the clip of the electric oil pump harness from the vehicle.

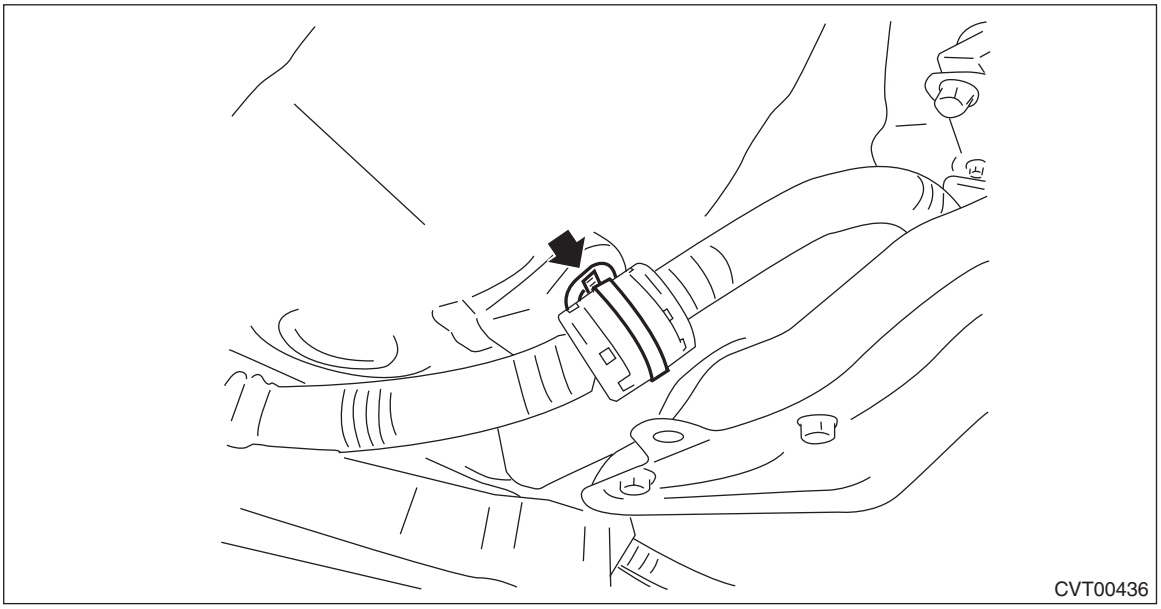

41) Remove the two transmission connecting bolts and two nuts (lower side).

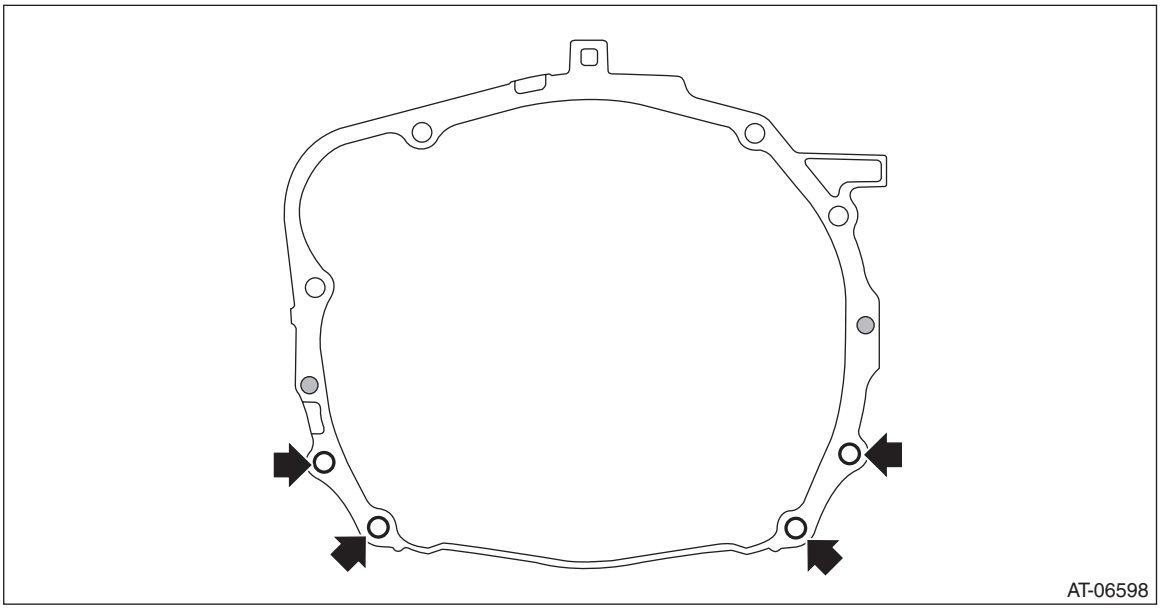

42) Set the transmission jack under the transmission.

NOTE:
Make sure that the support plates of transmission jack do not touch the oil pan.

43) Release the clip of the electric oil pump harness from the transmission rear crossmember, and remove the transmission rear crossmember from the vehicle. <Ref. to CVT(TH58A)-87, TRANSMISSION REAR CROSSMEMBER AND REAR CUSHION RUBBER, REMOVAL, Transmission Mounting System.>

44) While lowering the transmission jack gradually, fully retract the engine support, and then tilt the engine rearward.

45) Remove the transmission assembly.

CAUTION:
Be careful not to damage the electric oil pump harness.

NOTE:
Remove it while moving the transmission jack up and down so that the engine and transmission remain directly aligned.

46) Remove the rear cushion rubber. <Ref. to CVT(TH58A)-87, TRANSMISSION REAR CROSSMEMBER AND REAR CUSHION RUBBER, REMOVAL, Transmission Mounting System.>

B: INSTALLATION

WARNING:
The hybrid system includes a high voltage circuit. Mishandling could cause accidents such as electric shock or leak. Always check "CAUTION (HYBRID SYSTEM)" and perform the proper operation. <Ref. to PC-6, CAUTION (HYBRID SYSTEM), Precaution.>

1) Attach the ST to converter case.
ST 498277200 STOPPER SET

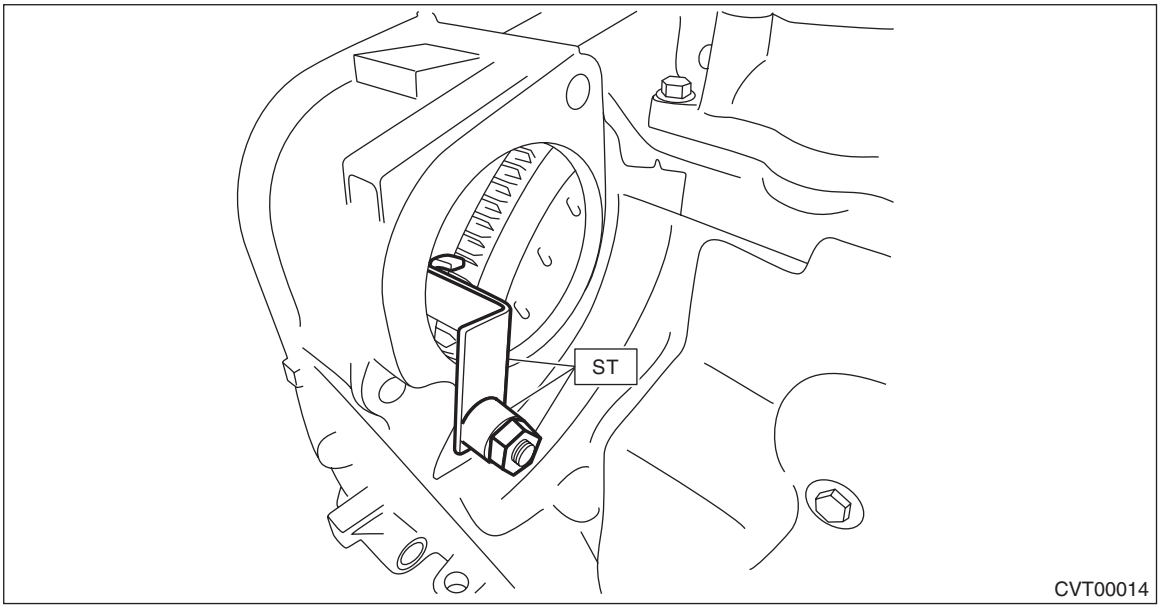

2) When completely overhauling the transmission, refill CVTF through the transmission right side plug. <Ref. to CVT(TH58A)-177, Preparation for Overhaul.>
3) Replace the front differential side retainer oil seal. <Ref. to CVT(TH58A)-91, REPLACEMENT, Differential Side Retainer Oil Seal.>

NOTE:
• Be sure to replace the differential side retainer oil seal with a new part whenever the front drive shaft is removed from the transmission.
• When a new differential side retainer oil seal has been installed, replacement is not required.

4) Install the rear cushion rubber on the transmission. <Ref. to CVT(TH58A)-89, TRANSMISSION REAR CROSSMEMBER AND REAR CUSHION RUBBER, INSTALLATION, Transmission Mounting System.>
5) Mount the transmission onto the transmission jack.
6) Remove the pitching stopper bracket, if mounted.

7) Install the transmission assembly onto the engine.

CAUTION:
Be careful not to damage the electric oil pump harness.

NOTE:
- While raising the transmission jack gradually, turn the screw of engine support, then tilt the engine forward.
- Temporarily attach the two engine connecting bolts and two nuts (lower side).

8) Attach the transmission rear crossmember, and install the clip of the electric oil pump cable to the transmission rear crossmember. <Ref. to CVT(TH58A)-89, TRANSMISSION REAR CROSSMEMBER AND REAR CUSHION RUBBER, INSTALLATION, Transmission Mounting System.>
9) Tighten the two engine connecting bolts and two nuts (lower side).

Tightening torque:
50 N·m (5.1 kgf-m, 36.9 ft-lb)

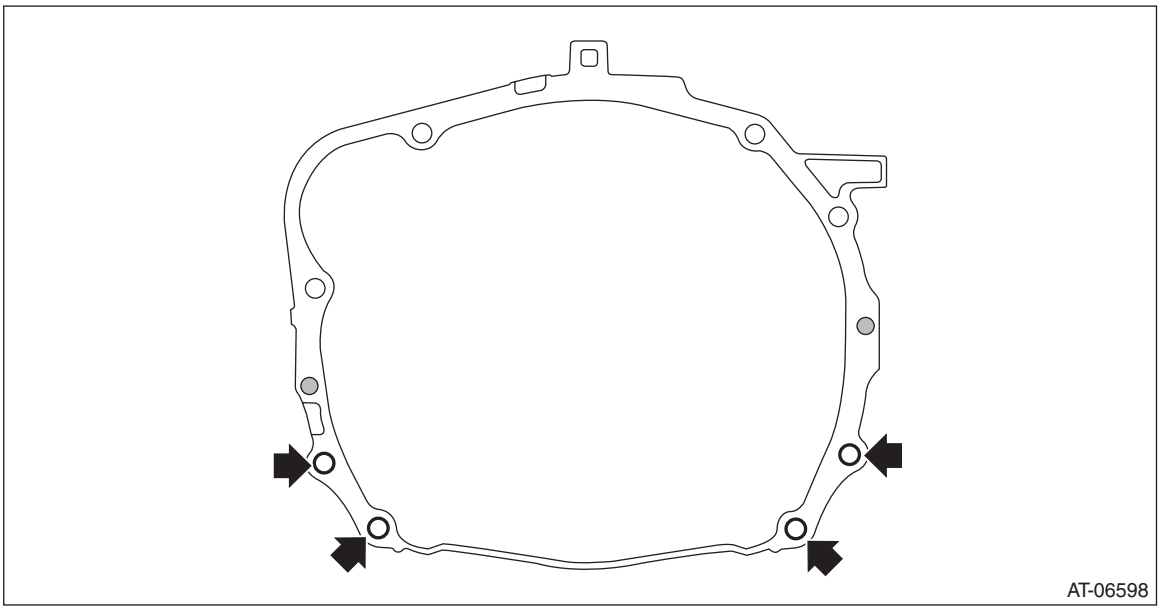

10) Remove the transmission jack.

11) Install the power cable.

WARNING:
Be sure to wear insulated gloves.

CAUTION:
• Do not allow foreign matter intrusion. If any foreign matter is found, remove them carefully so that the electrodes are not damaged.
• If water is attached, dry it completely before starting the operation.
• Do not apply excessive force to the terminals and watch to make sure the cable is not damaged or pinched.

(1) Match the letters (U, V, and W) imprinted on both the power cable and the transmission body, then insert the cable to the transmission and fix securely.

Tightening torque:
7.5 N·m (0.8 kgf-m, 5.5 ft-lb)

(2) Install the power cable terminal.

Tightening torque:
7.5 N·m (0.8 kgf-m, 5.5 ft-lb)

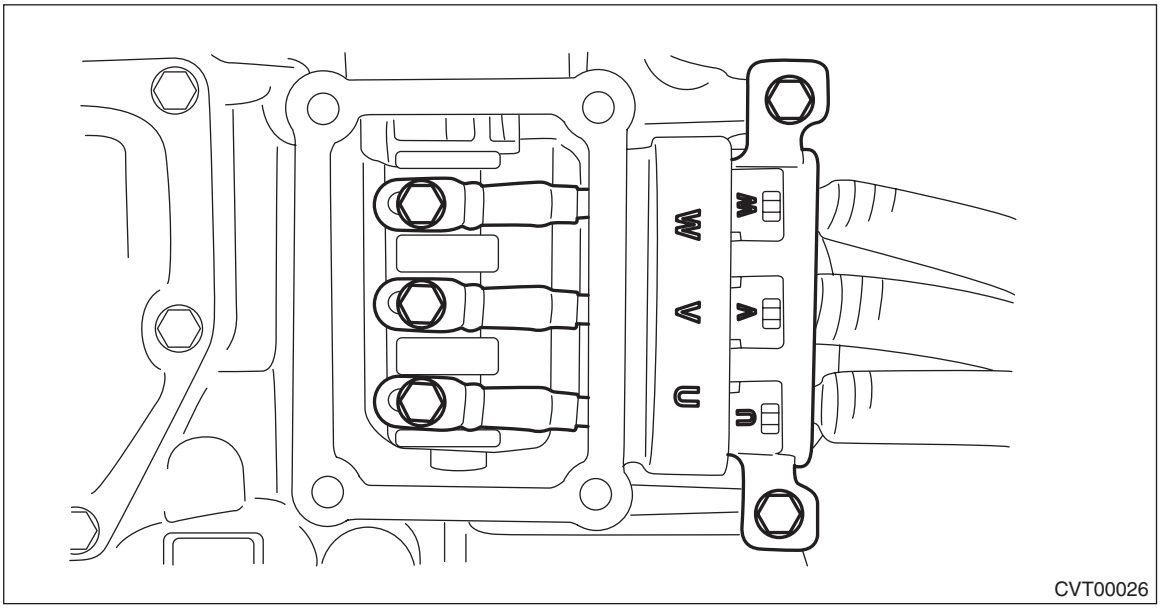

(3) Install the power connect cover.

NOTE:
Use a new gasket.

Tightening torque:
25 N·m (2.5 kgf-m, 18.4 ft-lb)

12) Install the electric oil pump harness connector.

WARNING:
Be sure to wear insulated gloves.

CAUTION:
• Do not allow foreign matter intrusion. When foreign matter is found inside, remove it while paying attention not to damage the electrode inside.
• If water is attached, dry it completely before starting the operation.

(1) Insert the harness connector until a click is heard, and move the slide lock (A) in the arrow direction to lock.

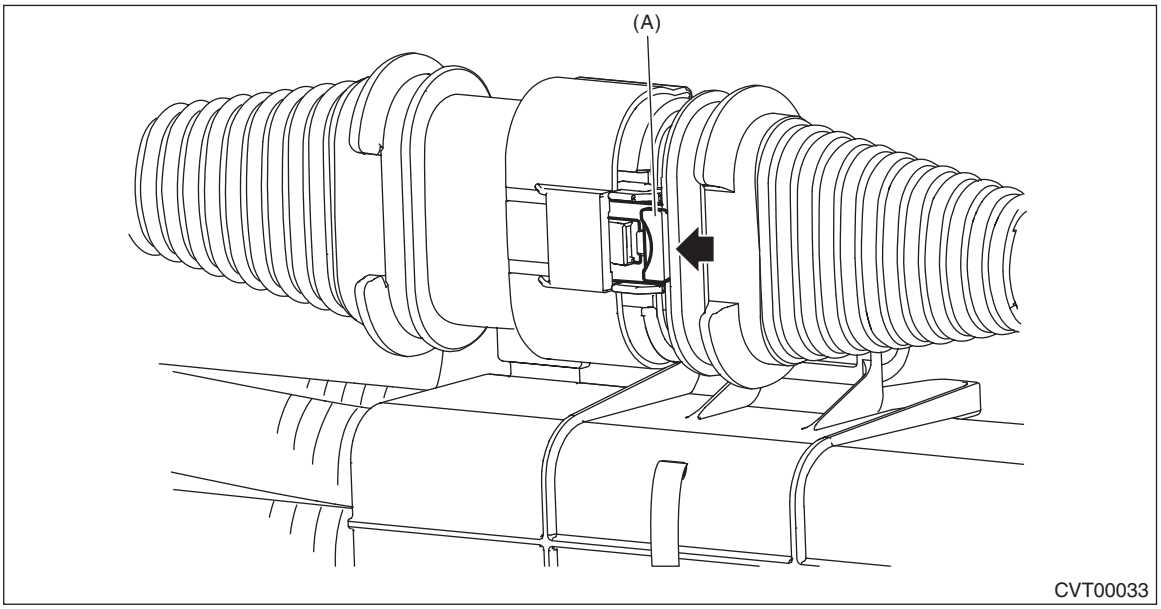

(2) Install the electric oil pump harness to the vehicle.

NOTE:
• Use a new electric oil pump harness clip.
• Install the electric oil pump harness clip as shown in the figure.

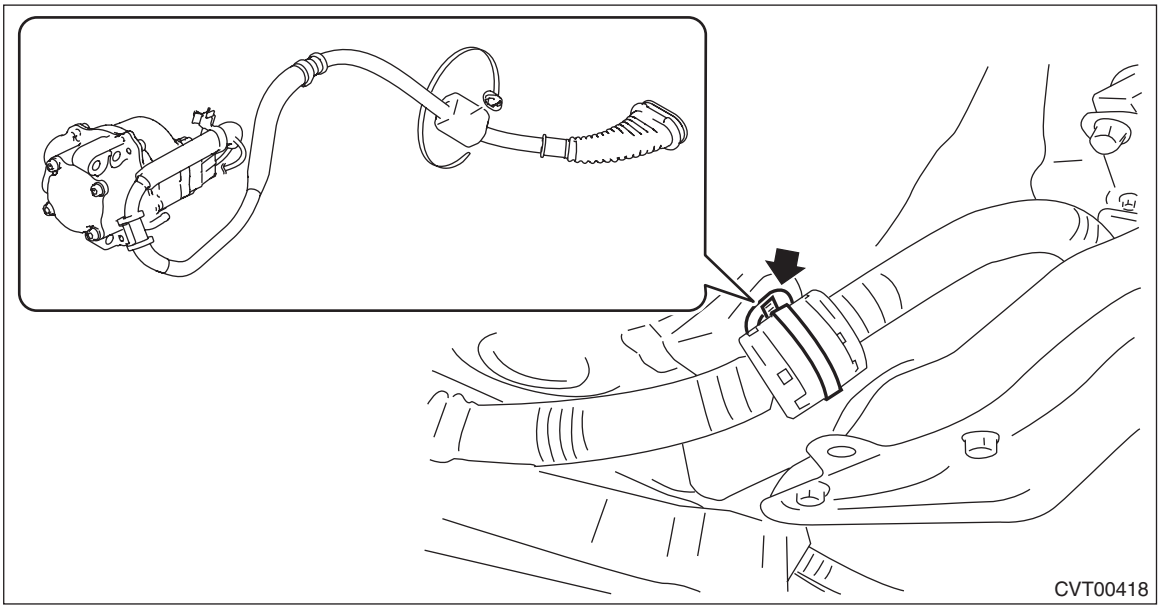

(3) Make sure that the electric oil pump harness does not interfere with other parts.

13) Install the under cover - rear LH. <Ref. to EI-32, INSTALLATION, Floor Under Protector.>
14) Lower the vehicle.
15) Install the three engine mounting bolts (upper side).

Tightening torque:
50 N·m (5.1 kgf-m, 36.9 ft-lb)

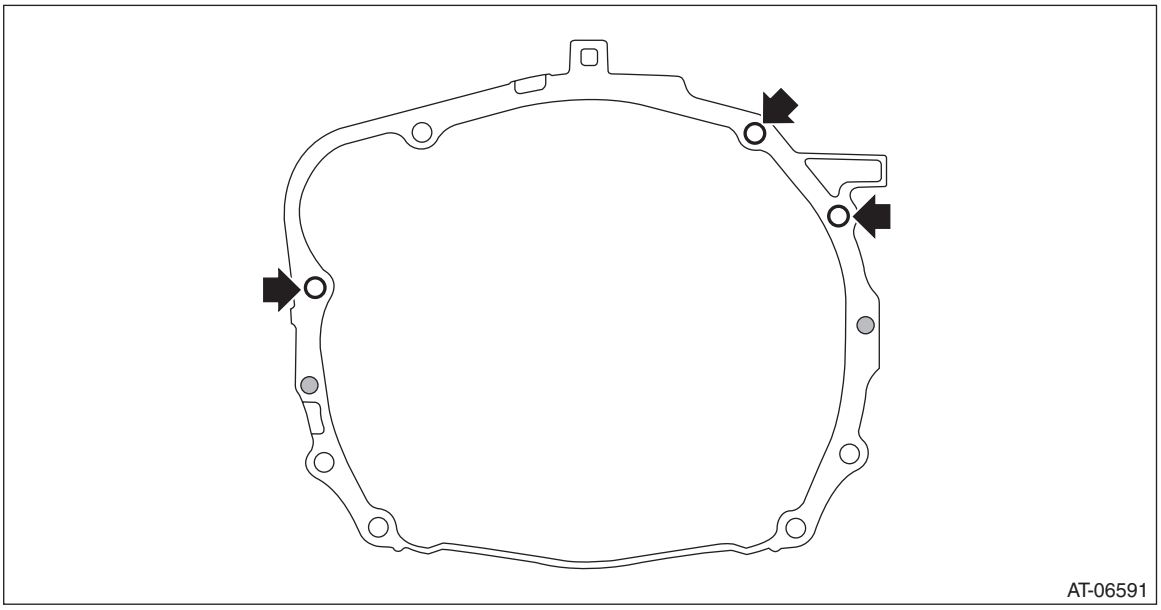

16) Remove the ST (STOPPER SET) from converter case.
17) Remove the ST (ENGINE SUPPORT BRACKET and ENGINE SUPPORT).
ST1 41099AA011 ENGINE SUPPORT BRACKET
ST2 41099AA020 ENGINE SUPPORT

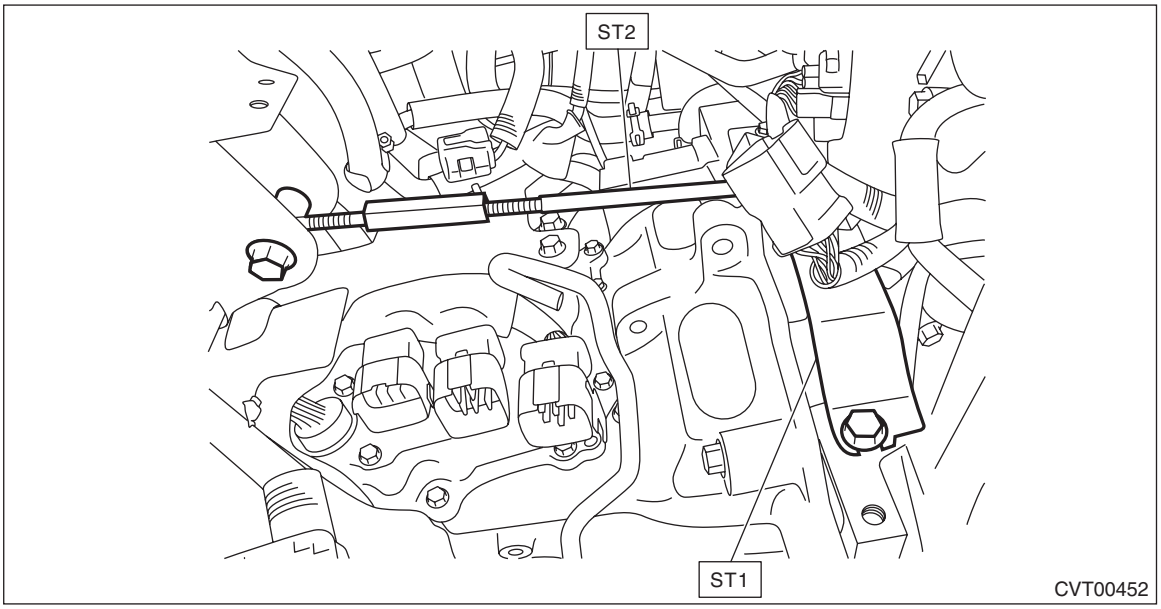

18) Connect the throttle position sensor harness connector.
19) Match the torque converter screw hole with drive plate hole to install the bolt.

CAUTION:
- **Do not drop the mounting bolt in the converter housing.**
- **Do not damage the mounting bolt.**

Tightening torque:
25 N·m (2.5 kgf-m, 18.4 ft-lb)

20) Install the remaining three bolts by rotating the crank pulley a little at a time in the same direction as engine revolution.

Tightening torque:
25 N·m (2.5 kgf-m, 18.4 ft-lb)
21) Install the service hole plug.
22) Install the engine ground terminals.

Tightening torque:
19 N·m (1.9 kgf-m, 14.0 ft-lb)
23) Replace the CVTF inlet hose and CVTF outlet hose. <Ref. to CVT(TH58A)-160, CVTF Cooler (With Warmer Function).>
24) Install the CVTF inlet hose and CVTF outlet hose to transmission.
25) Install the CVTF cooler (with warmer feature) to the transmission.

Tightening torque:
23 N·m (2.3 kgf-m, 17.0 ft-lb)
26) Install the starter. <Ref. to SC(H4DO(HEV))-11, INSTALLATION, Starter.>
27) Install the pitching stopper bracket and transmission radio ground cord.

Tightening torque:
41 N·m (4.2 kgf-m, 30.2 ft-lb)
28) Install the air breather hose to the pitching stopper bracket. <Ref. to CVT(TH58A)-171, FRONT DIFFERENTIAL SIDE, INSTALLATION, Air Breather Hose.>
29) Install the pitching stopper. <Ref. to CVT(TH58A)-88, PITCHING STOPPER, INSTALLATION, Transmission Mounting System.>
30) Lift up the vehicle.
31) Apply grease to the side retainer oil seal lip.
32) Set the ST to side retainer.
ST 28399SA010 OIL SEAL PROTECTOR

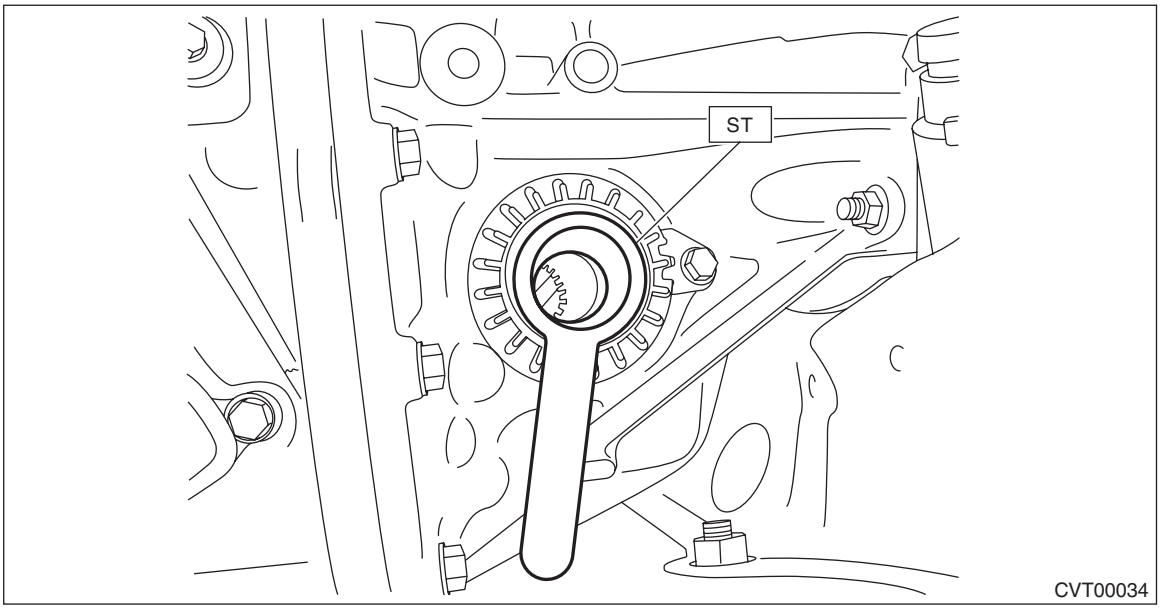

33) Replace the circlip of the drive shaft with a new part.
34) Insert the front drive shaft spline section into transmission and remove the ST (OIL SEAL PROTECTOR).

NOTE:
- Before inserting RH front drive shaft into transmission, turn the steering wheel to left hand full lock.
- Before inserting LH front drive shaft into transmission, turn the steering wheel to right hand full lock.

35) Insert the drive shaft into the transmission securely by pressing the housing from outside of the vehicle.
36) Insert the ball joint into housing and secure with bolt.

Tightening torque:
50 N·m (5.1 kgf-m, 36.9 ft-lb)

CAUTION:
- **Do not apply grease to the tapered portion of ball stud.**
- **Before tightening, make sure the lower side of housing and stepped section of ball joint are in contact.**

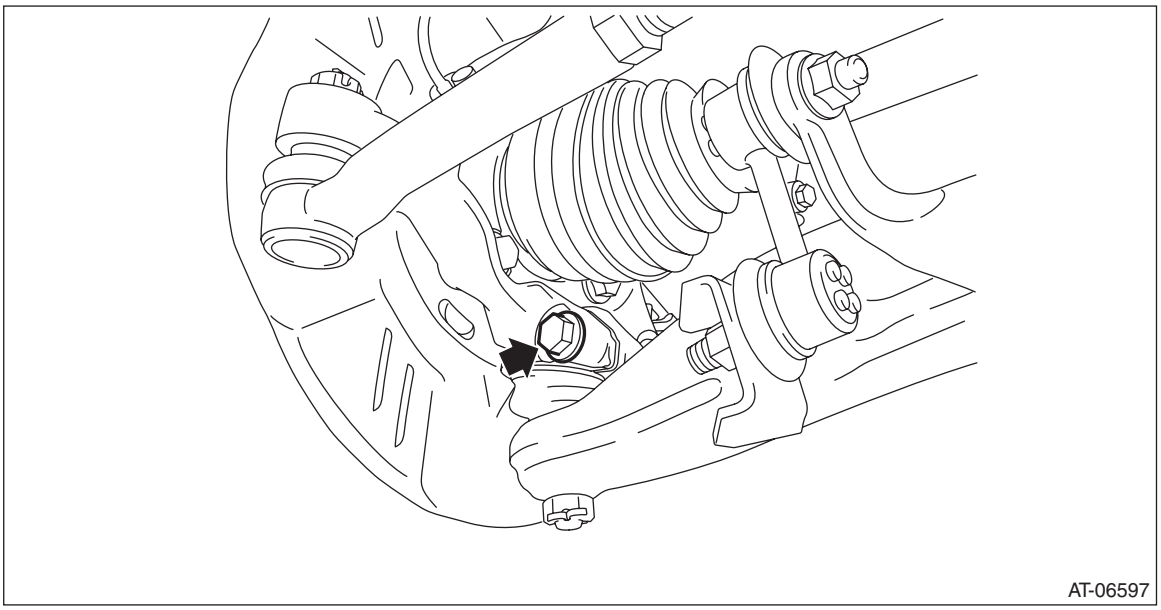
AT-06597

37) Install the stabilizer bracket.

Tightening torque:
25 N·m (2.5 kgf-m, 18.4 ft-lb)

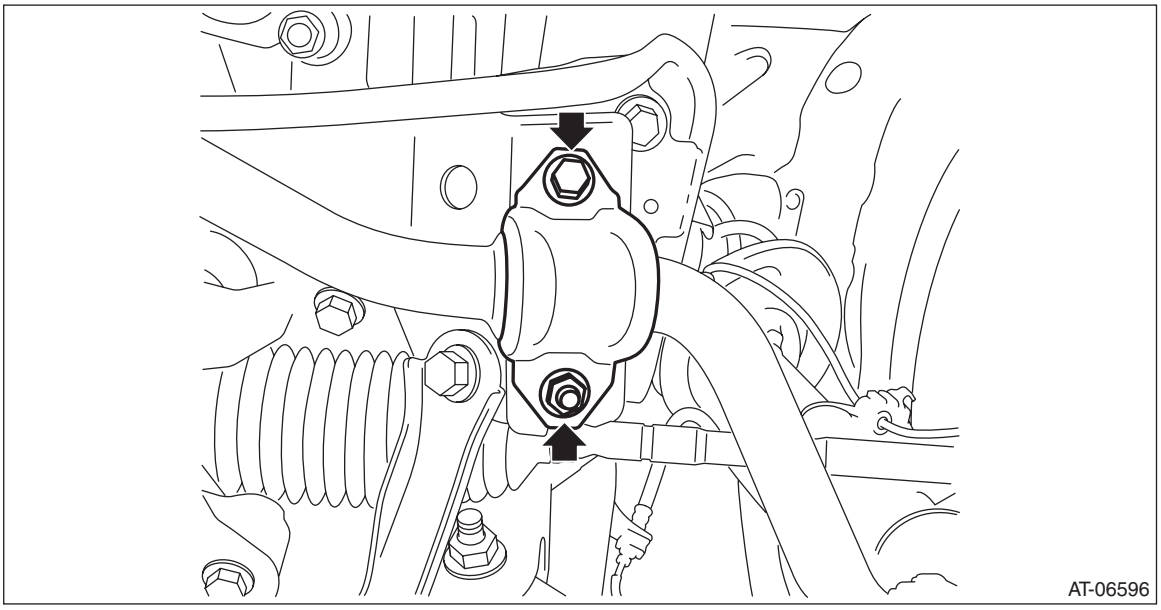
AT-06596

38) Install the jack-up plate.

Tightening torque:
60 N·m (6.1 kgf-m, 44.3 ft-lb)

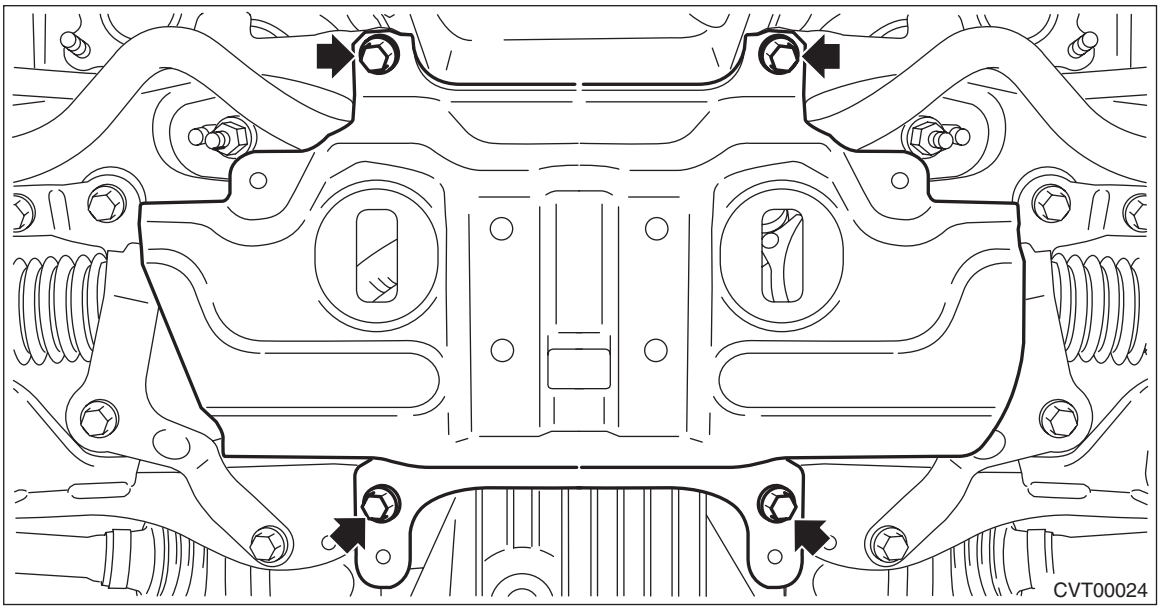

39) Install the plate assembly to transmission.

Tightening torque:
25 N·m (2.5 kgf-m, 18.4 ft-lb)

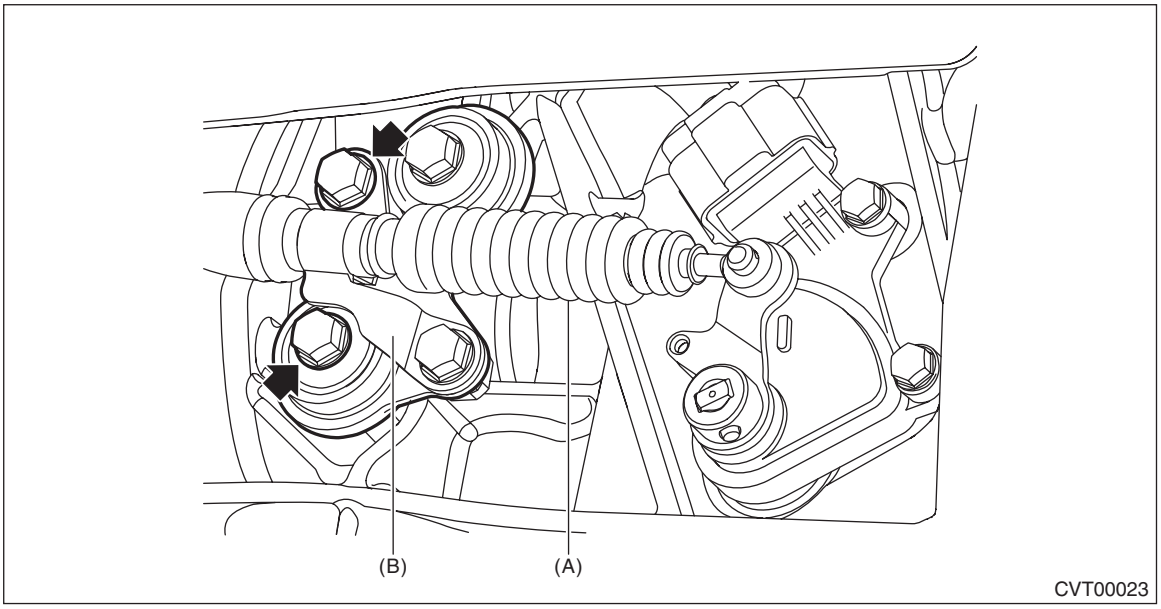

(A) Select cable
(B) Plate ASSY

40) Install the washer and snap pin to the shifter arm.

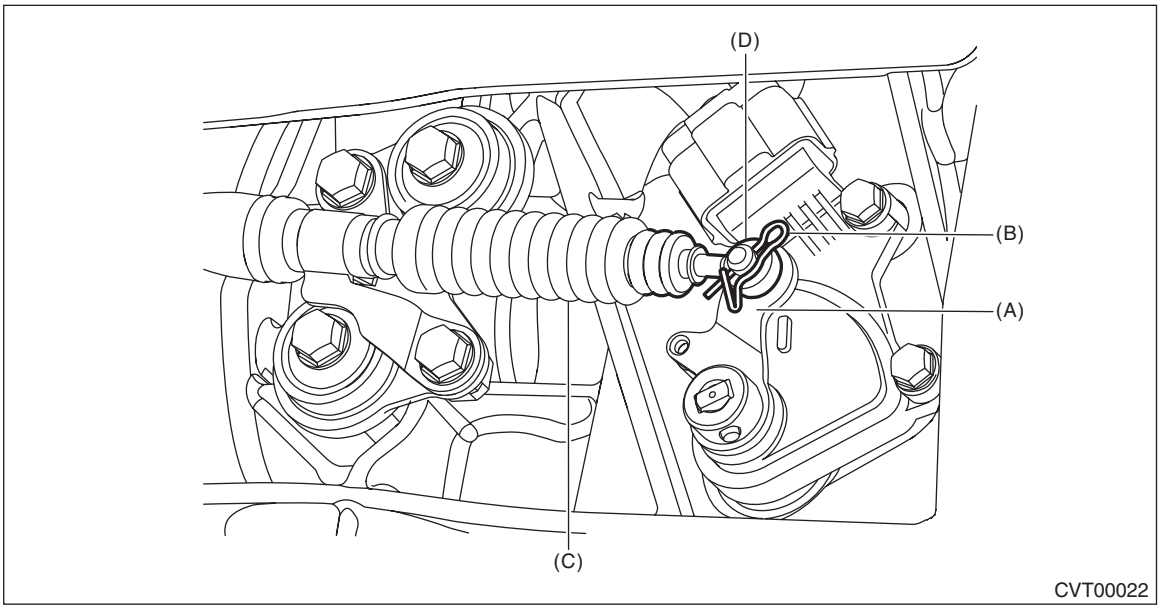

(A) Shifter arm
(B) Snap pin
(C) Select cable
(D) Washer

41) Install the propeller shaft. <Ref. to DS-13, INSTALLATION, Propeller Shaft.>
42) Install the center exhaust cover.

Tightening torque:
18 N·m (1.8 kgf-m, 13.3 ft-lb)
43) Install the hanger bracket.

Tightening torque:
23 N·m (2.3 kgf-m, 17.0 ft-lb)
44) Install the center exhaust pipe. <Ref. to EX(H4DO(w/o HEV))-8, INSTALLATION, Front Exhaust Pipe.>
45) Install the under cover - rear LH. <Ref. to EI-29, INSTALLATION, Front Under Cover.>
46) Install the under cover front - cable.

Tightening torque:
18 N·m (1.8 kgf-m, 13.3 ft-lb)
47) Lower the vehicle.
48) Install the engine hanger rear and the vacuum pipe.

Tightening torque:
Engine hanger rear
21 N·m (2.1 kgf-m, 15.5 ft-lb)
Vacuum pipe
6.4 N·m (0.7 kgf-m, 4.7 ft-lb)
49) Install the air cleaner case bracket LH.

Tightening torque:
18 N·m (1.8 kgf-m, 13.3 ft-lb)

50) Connect the following connectors and install the harness clip to the bracket.
- Transmission radio ground terminal
- Transmission harness connectors
- Inhibitor harness connector
- Drive motor harness connector
- Engine harness connectors
- Harness clip

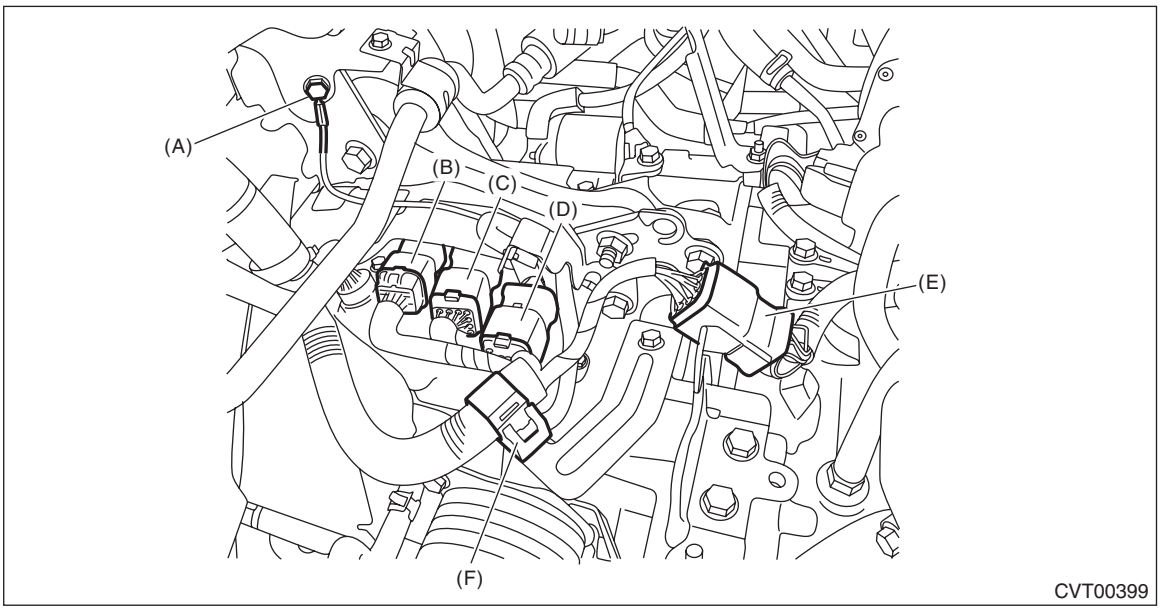

(A) Transmission radio ground terminal
(B) Transmission harness connectors
(C) Inhibitor harness connector
(D) Drive motor harness connector
(E) Engine harness connectors
(F) Harness clip

51) Install the air cleaner case. <Ref. to IN(H4DO(HEV))-8, INSTALLATION, Air Cleaner Case.>
52) Install the front tires. <Ref. to WT-4, INSTALLATION, Tire and Wheel.>
53) Install the collector cover.
54) Install the service disconnect plug. <Ref. to HEV-16, INSTALLATION, Service Plug.>
55) Install the 12 volt auxiliary battery ground terminal and ground terminal to the 12V engine restart battery sensor of the 12 volt engine restart battery. <Ref. to NT-5, BATTERY, NOTE, Note.>
56) Refill differential gear oil to adjust the differential gear oil amount. <Ref. to CVT(TH58A)-45, Differential Gear Oil.>
57) Refill CVTF to adjust the CVTF level. <Ref. to CVT(TH58A)-41, CVTF.>
58) Perform the operation for clearing AT learning value. <Ref. to CVT(HEV)(diag)-19, Clear Memory Mode.>
59) Perform the operation of AT learning mode. <Ref. to CVT(HEV)(diag)-24, Learning Control.>
60) Execute the rear differential inspection mode. <Ref. to DI-66, Rear Differential Inspection Mode.>

CAUTION:
Always execute the rear differential inspection mode at the replacement of the following.
- **Replacement of transmission assembly**
- **Replacement of front differential hypoid gear set**

61) Perform the road test to make sure there is no fault. <Ref. to CVT(TH58A)-50, INSPECTION, Road Test.>

12.Transmission Mounting System

A: REMOVAL

1. PITCHING STOPPER

1) Disconnect the ground cable from battery. <Ref. to NT-5, BATTERY, NOTE, Note.>

NOTE:
For the 12 volt engine restart battery, disconnect the ground terminal from 12V engine restart battery sensor.

2) Remove the collector cover.
   (1) Pull up the two points at the front of collector cover (A).
   (2) Pull up the two points at the rear of collector cover (B) while moving them rearward.

NOTE:
Be careful not to contact the fuel delivery tube when moving the collector cover rearward.

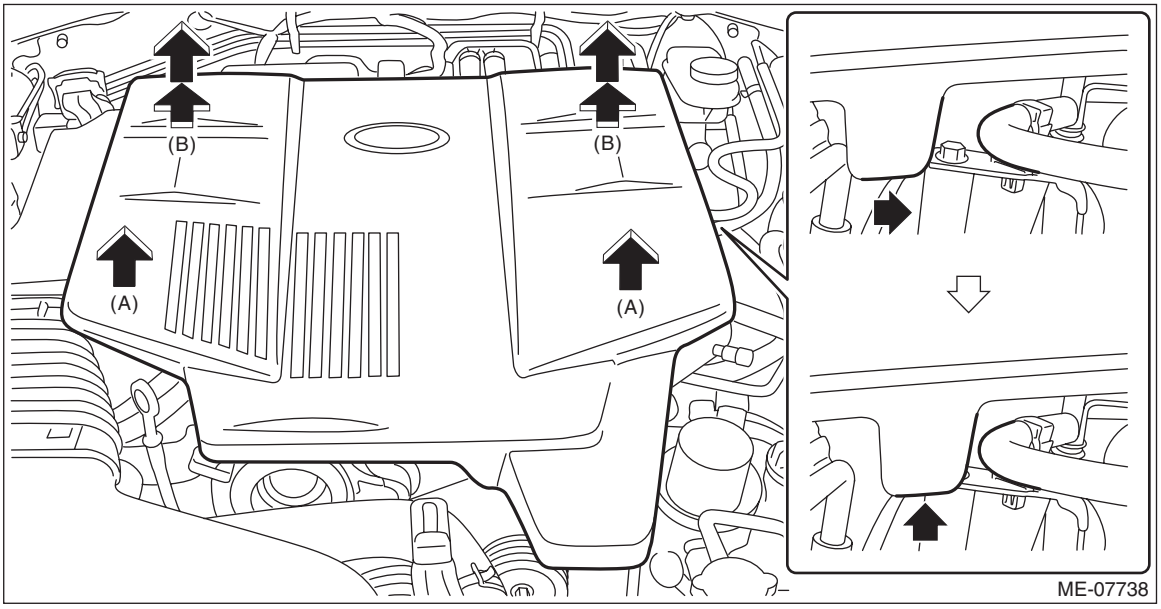

3) Remove the air cleaner case. <Ref. to IN(H4DO(HEV))-6, REMOVAL, Air Cleaner Case.>
4) Remove the pitching stopper.

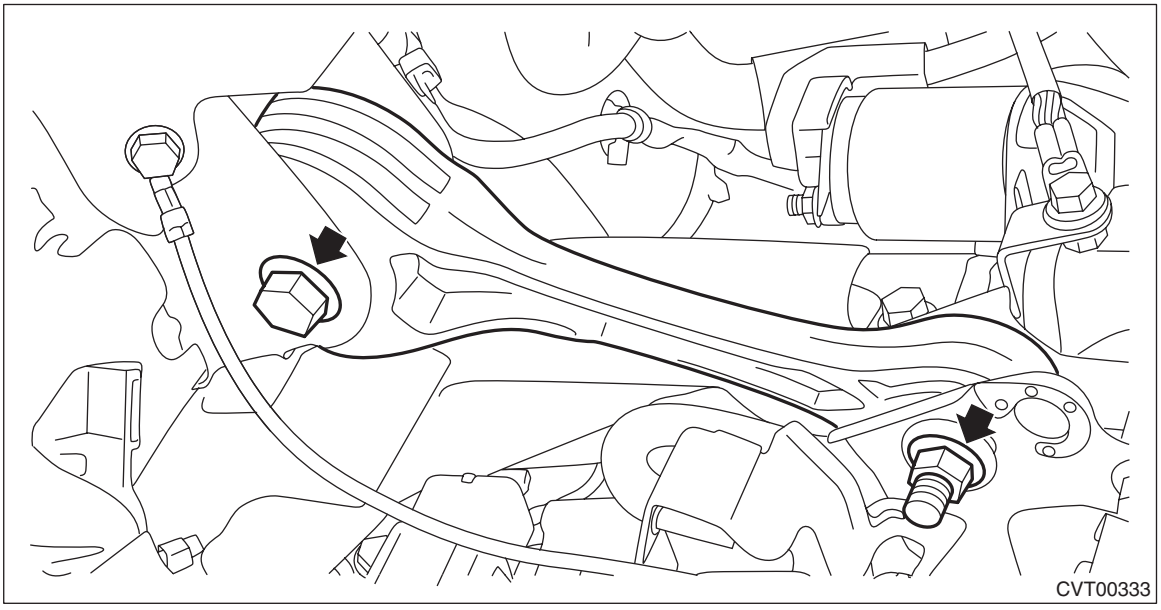

2. TRANSMISSION REAR CROSSMEMBER AND REAR CUSHION RUBBER

1) Disconnect the ground cable from battery. <Ref. to NT-5, BATTERY, NOTE, Note.>

NOTE:
For the 12 volt engine restart battery, disconnect the ground terminal from 12V engine restart battery sensor.
2) Lift up the vehicle.
3) Remove the center exhaust pipe. <Ref. to EX(H4DO(w/o HEV))-14, REMOVAL, Center Exhaust Pipe.>
4) Remove the center exhaust cover.

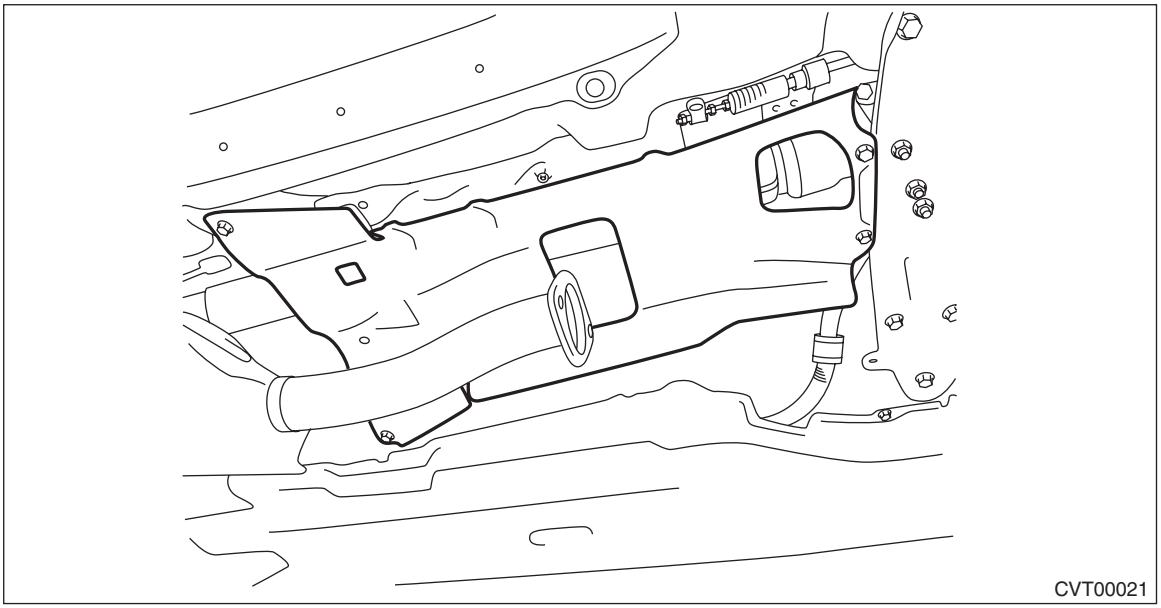
CVT00021

5) Set the transmission jack under the transmission.

NOTE:
Make sure that the support plate of transmission jack does not touch the oil pan.
6) Release the clip of the electric oil pump cable from the transmission rear crossmember, and remove the transmission rear crossmember.

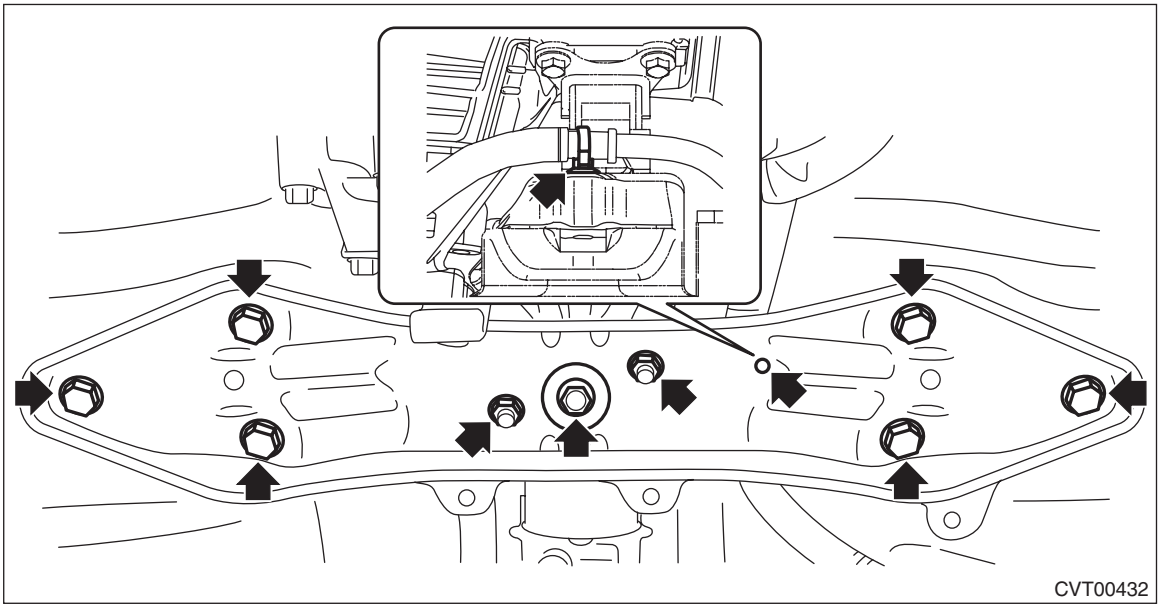
CVT00432

7) Remove the rear cushion rubber.

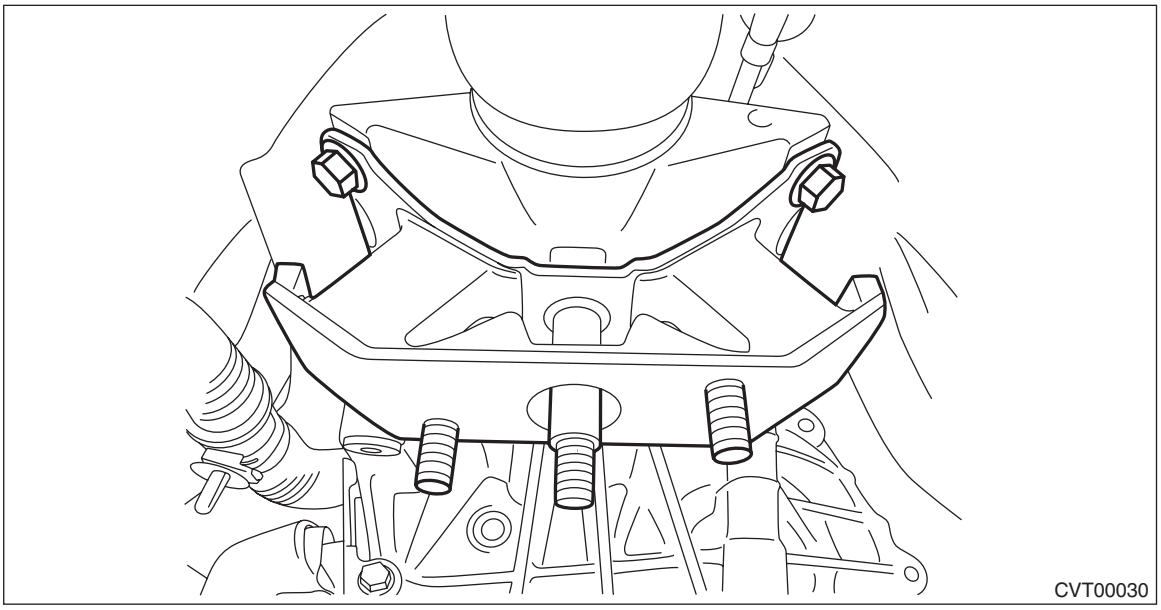

B: INSTALLATION

1. PITCHING STOPPER

1) Install the pitching stopper.

Tightening torque:
T1: 50 N·m (5.1 kgf-m, 36.9 ft-lb)
T2: 58 N·m (5.9 kgf-m, 42.8 ft-lb)

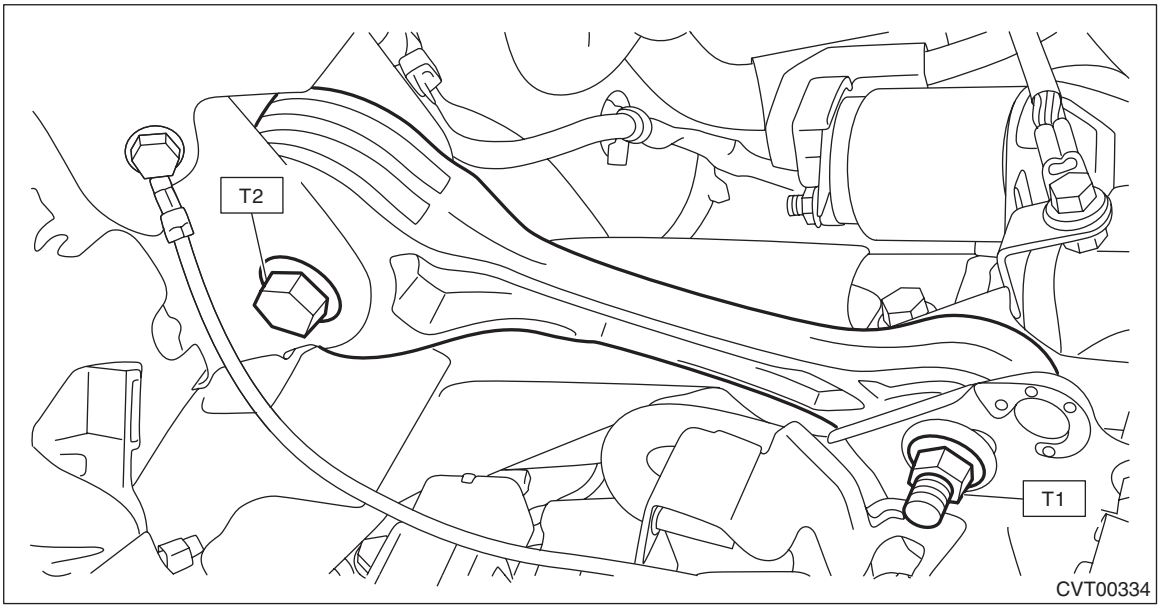

2) Install the air cleaner case. <Ref. to IN(H4DO(HEV))-8, INSTALLATION, Air Cleaner Case.>
3) Install the collector cover.
4) Install the 12 volt auxiliary battery ground terminal and ground terminal to the 12V engine restart battery sensor of the 12 volt engine restart battery. <Ref. to NT-5, BATTERY, NOTE, Note.>

2. TRANSMISSION REAR CROSSMEMBER AND REAR CUSHION RUBBER

1) Attach the rear cushion rubber to the transmission.

Tightening torque:
40 N·m (4.1 kgf-m, 29.5 ft-lb)

2) Attach the transmission rear crossmember, and install the electric oil pump harness clip to the transmission rear crossmember.

CAUTION:
- **Be careful not to damage the electric oil pump harness.**
- **Be careful not to pinch the harness.**

NOTE:
- If the electric oil pump harness clip is damaged, replace the harness clip.
- When replacing the electric oil pump harness clip, install the harness clip as shown in the figure.

Tightening torque:
T1: 35 N·m (3.6 kgf-m, 25.8 ft-lb)
T2: 70 N·m (7.1 kgf-m, 51.6 ft-lb)

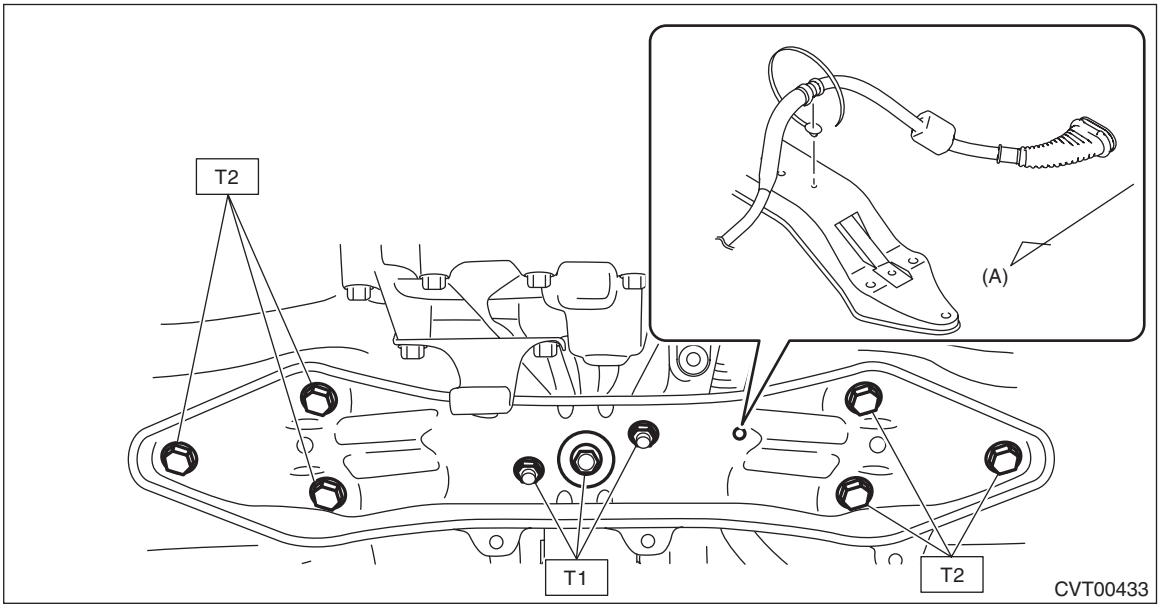

(A) Front side of vehicle

3) Remove the transmission jack.
4) Install the center exhaust cover.

Tightening torque:
18 N·m (1.8 kgf-m, 13.3 ft-lb)

5) Install the center exhaust pipe. <Ref. to EX(H4DO(w/o HEV))-15, INSTALLATION, Center Exhaust Pipe.>
6) Install the 12 volt auxiliary battery ground terminal and ground terminal to the 12V engine restart battery sensor of the 12 volt engine restart battery. <Ref. to NT-5, BATTERY, NOTE, Note.>

C: INSPECTION

- Check the crossmember for bends or damage.
- Check that the cushion rubber is not stiff, cracked or otherwise damaged.

13.Extension Case Oil Seal

A: INSPECTION

Check for leakage of CVTF from the joint section of transmission and propeller shaft. If a leak is found, inspect the propeller shaft and replace the oil seal.

B: REPLACEMENT

CAUTION:
Immediately after the vehicle has been running or after idling for a long time, the CVTF will be hot. Be careful not to burn yourself.

1) Lift up the vehicle.
2) Remove the center exhaust pipe. <Ref. to EX(H4DO(w/o HEV))-14, REMOVAL, Center Exhaust Pipe.>
3) Remove the center exhaust cover.

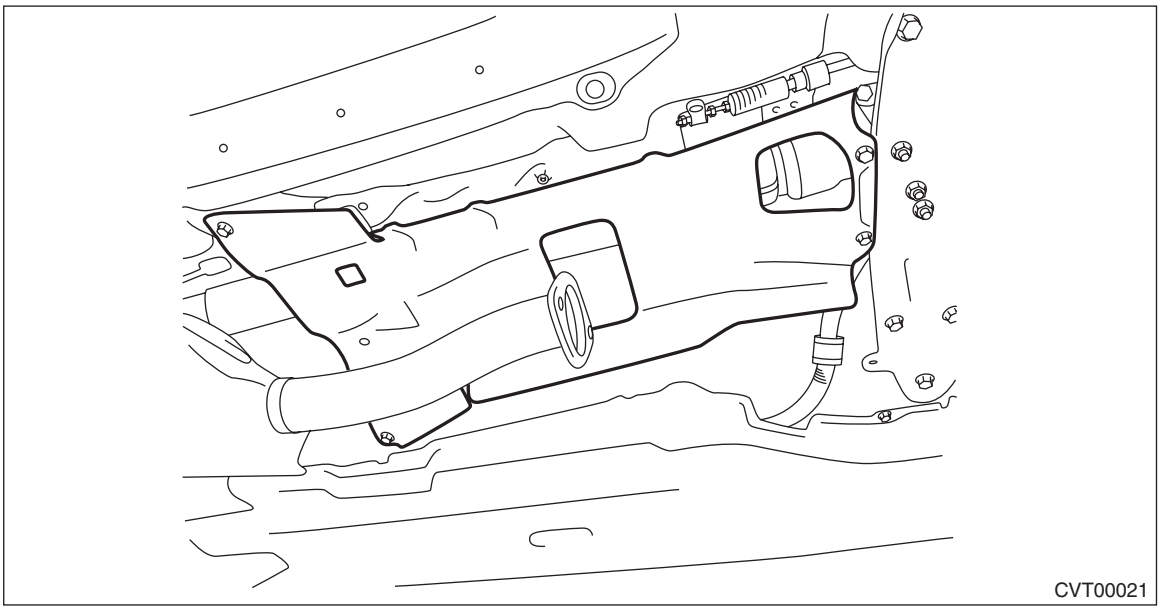

4) Clean the transmission exterior.
5) Remove the propeller shaft. <Ref. to DS-12, REMOVAL, Propeller Shaft.>
6) Using a screwdriver or ST, remove the oil seal trying not to damage the extension case.
ST 398527700 PULLER ASSY
7) Using the ST, install the oil seal.

NOTE:
- Use a new oil seal.
- Apply CVTF to the oil seal lip and press-fitting surface.

ST 498057300 OIL SEAL INSTALLER
8) Install the propeller shaft. <Ref. to DS-13, INSTALLATION, Propeller Shaft.>
9) Install the center exhaust cover.

Tightening torque:
18 N·m (1.8 kgf-m, 13.3 ft-lb)

10) Install the center exhaust pipe. <Ref. to EX(H4DO(w/o HEV))-15, INSTALLATION, Center Exhaust Pipe.>
11) Adjust the CVTF level and check there is no leakage. <Ref. to CVT(TH58A)-41, ADJUSTMENT, CVTF.>

14.Differential Side Retainer Oil Seal

A: INSPECTION

Check for leakage of gear oil from differential side retainer oil seal part. If there is an oil leak, inspect the front drive shaft and replace the oil seal.

B: REPLACEMENT

CAUTION:
• Immediately after the vehicle has been running or after idling for a long time, the differential gear oil will be hot. Be careful not to burn yourself.
• Be careful not to spill the differential gear oil on exhaust pipe to prevent it from emitting smoke or fire. If differential gear oil is spilled on the exhaust pipe, wipe it off completely.
1) Remove the front tires. <Ref. to WT-4, REMOVAL, Tire and Wheel.>
2) Remove the center exhaust pipe. <Ref. to EX(H4DO(w/o HEV))-14, REMOVAL, Center Exhaust Pipe.>
3) Drain differential gear oil. <Ref. to CVT(TH58A)-47, REPLACEMENT, Differential Gear Oil.>
4) Tighten the differential gear oil drain plug.

NOTE:
Use a new gasket.

Tightening torque:
70 N·m (7.1 kgf-m, 51.6 ft-lb)
5) Remove the jack-up plate.

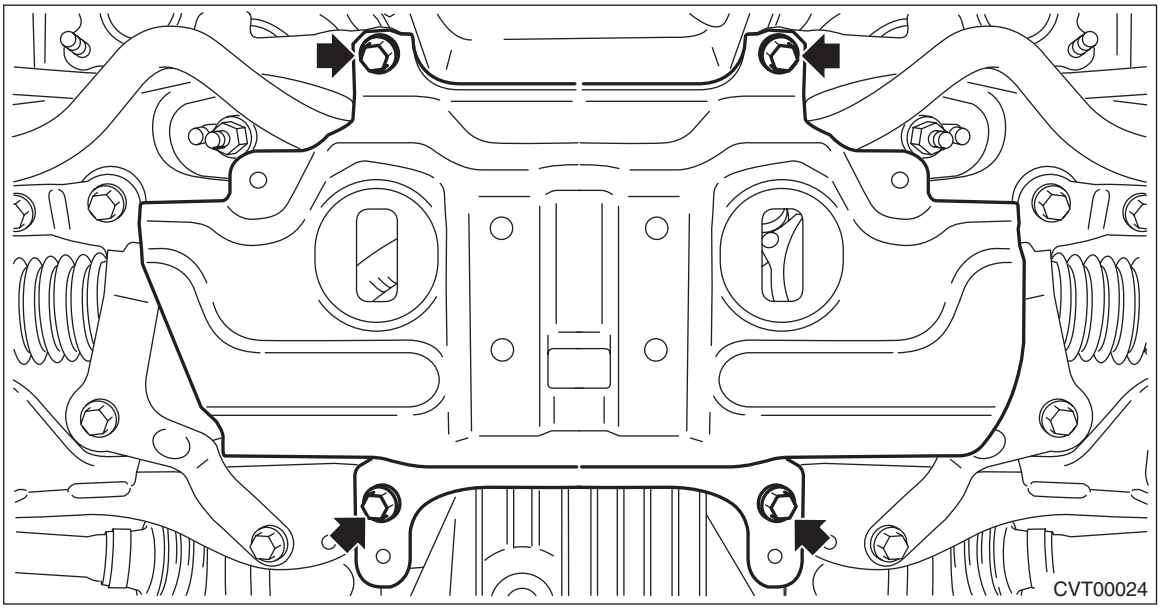

6) Remove the stabilizer bracket.

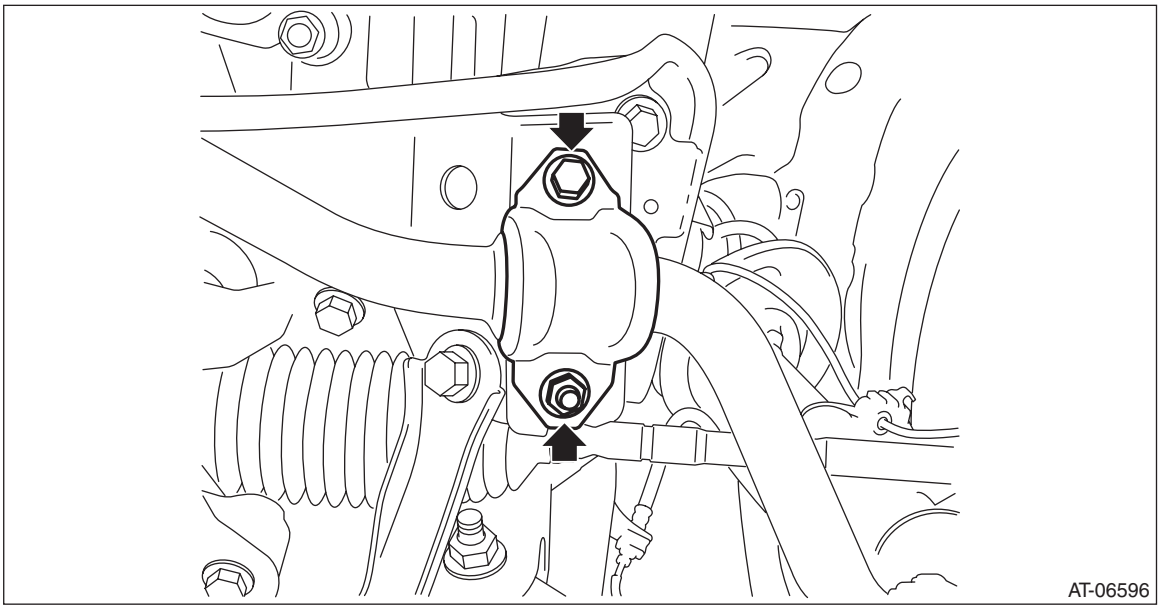

7) Remove the bolts which secure to the front housing, and separate the front arm and housing.

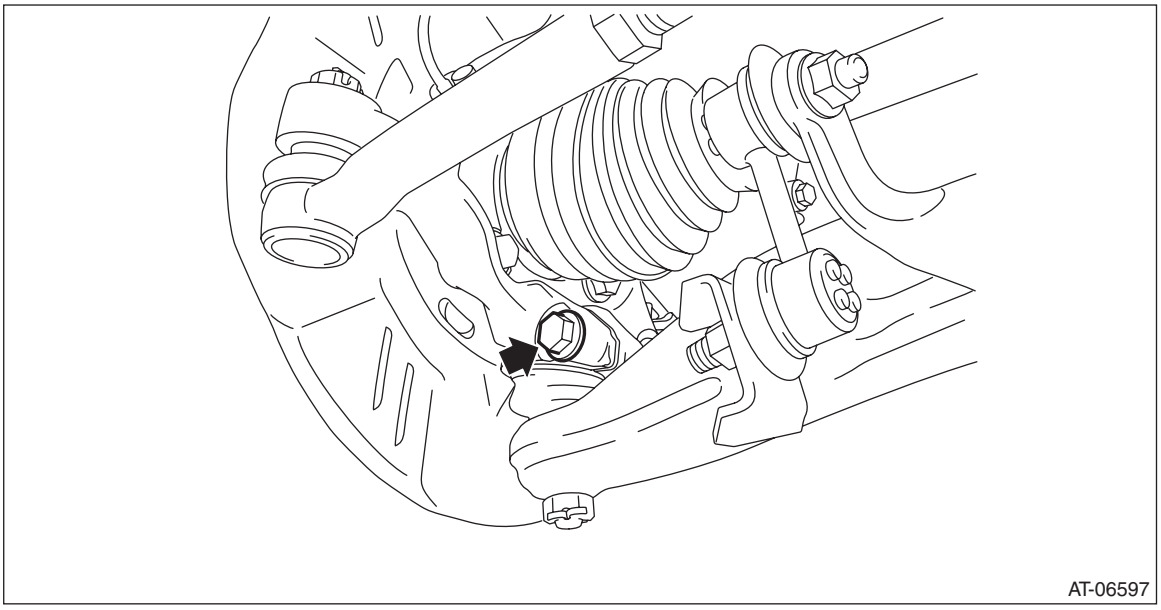

8) Using a crowbar, etc., pull out until the front drive shaft transmission side joint slides move smoothly.

NOTE:
Place cloth between the crowbar and the transmission in order to avoid damaging the transmission side retainer.

9) Hold the transmission side joint of the front drive shaft by hand and extract the housing from the transmission while pressing the housing outward, so as not to stretch the boot.

NOTE:
- Before pulling RH front drive shaft from transmission, turn the steering wheel to left hand full lock.
- Before pulling LH front drive shaft from transmission, turn the steering wheel to right hand full lock.

10) Remove the differential side retainer oil seal using driver wrapped with vinyl tape etc.

11) Using the ST, install the differential side retainer oil seal by lightly tapping with a hammer.

NOTE:
- Apply differential gear oil to the lip surface, so that the oil seal lip is not deformed.
- Apply differential gear oil to the press-fitting surface of oil seal and the differential side retainer.
- Oil seal has an identification mark (R, L). When installing oil seals, do not confuse the left and right.

ST 18675AA000 DIFFERENTIAL SIDE OIL SEAL INSTALLER

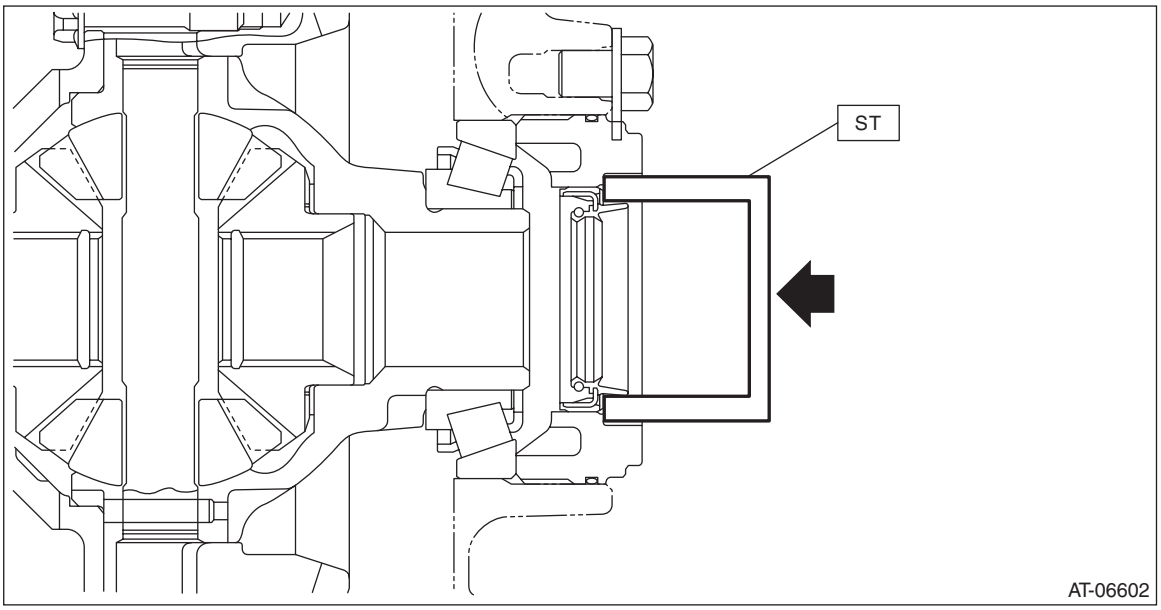

12) Set the ST to side retainer.

ST 28399SA010 OIL SEAL PROTECTOR

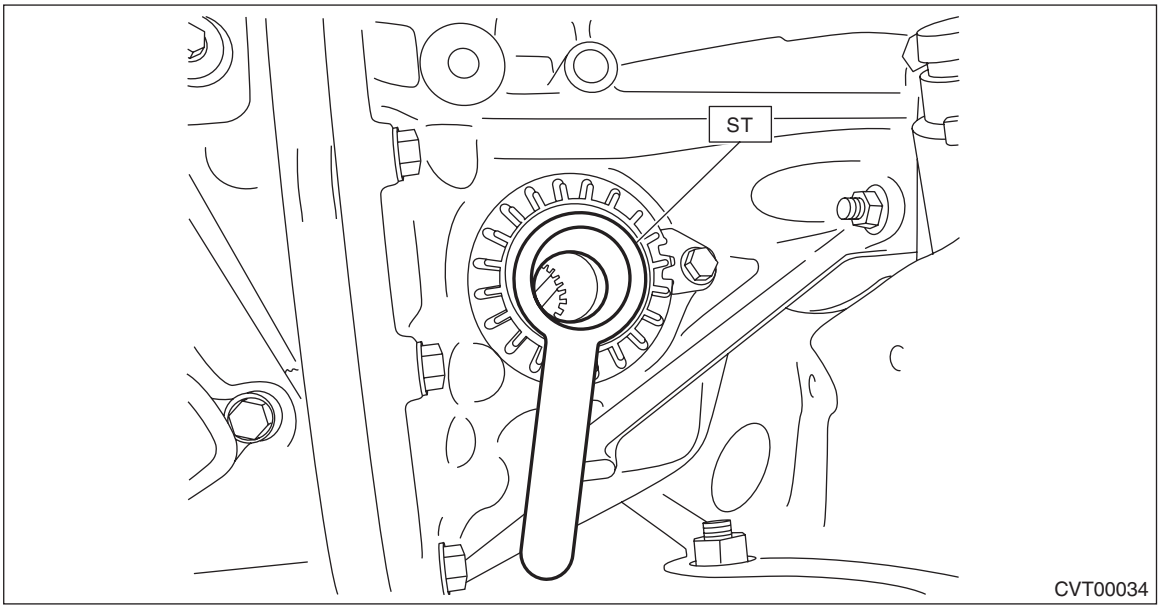

13) Replace the circlip of the drive shaft with a new part.
14) Apply grease to the side retainer oil seal lip.
15) Insert the front drive shaft spline section into transmission and remove the ST (DIFFERENTIAL SIDE OIL SEAL INSTALLER).

NOTE:
- Before inserting RH front drive shaft into transmission, turn the steering wheel to left hand full lock.
- Before inserting LH front drive shaft into transmission, turn the steering wheel to right hand full lock.

16) Insert the drive shaft into the transmission securely by pressing the housing from outside of the vehicle.
17) Insert the ball joint into housing and secure with bolt.

Tightening torque:
50 N·m (5.1 kgf-m, 36.9 ft-lb)

CAUTION:
- **Do not apply grease to the tapered portion of ball stud.**
- **Before tightening, make sure the lower side of housing and stepped section of ball joint are in contact.**

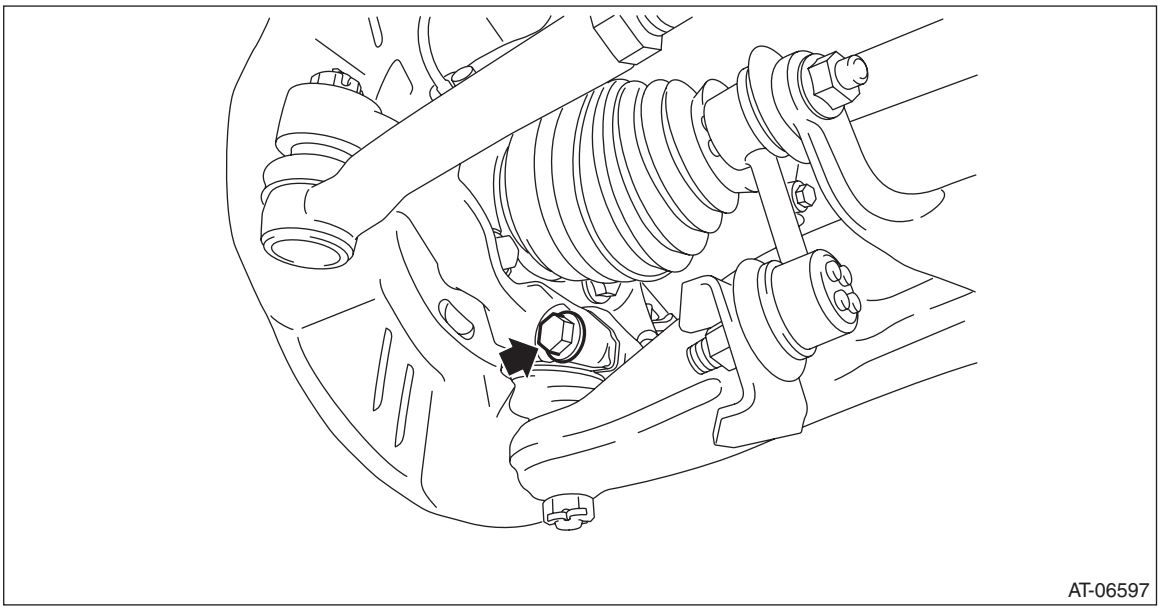
AT-06597

18) Install the stabilizer bracket.

Tightening torque:
25 N·m (2.5 kgf-m, 18.4 ft-lb)

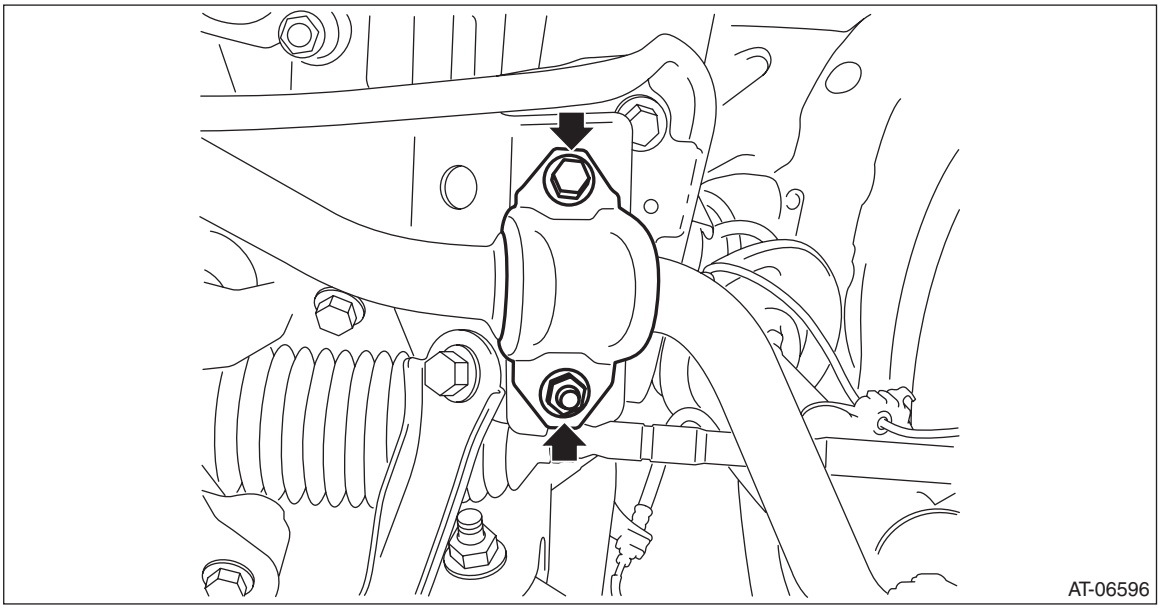
AT-06596

19) Install the jack-up plate.

Tightening torque:
60 N·m (6.1 kgf-m, 44.3 ft-lb)

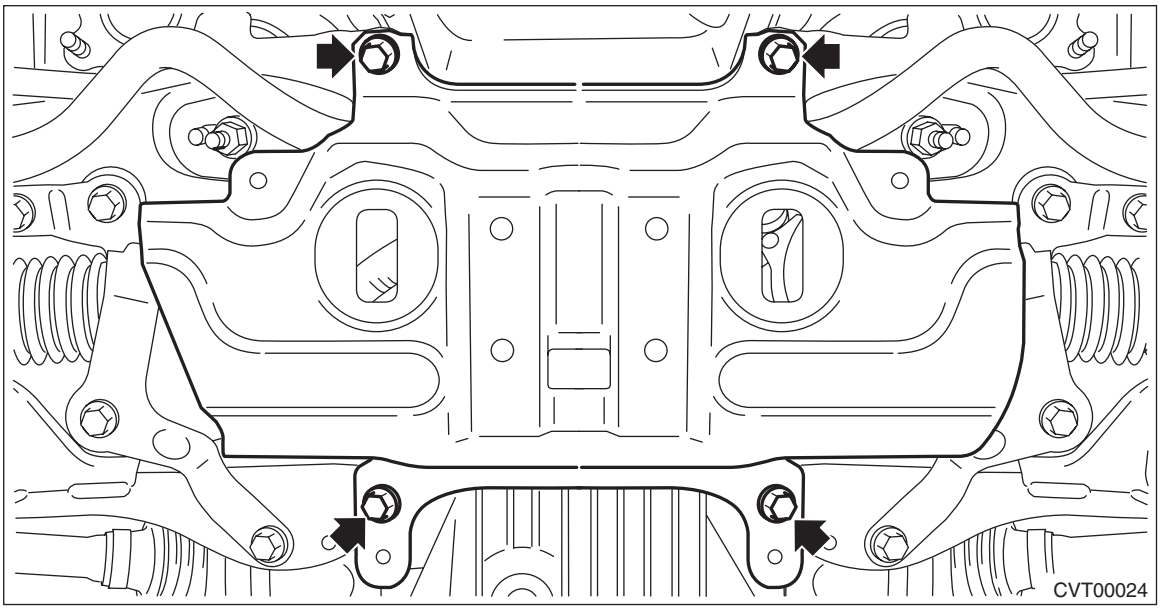

20) Install the center exhaust pipe. <Ref. to EX(H4DO(w/o HEV))-15, INSTALLATION, Center Exhaust Pipe.>
21) Fill differential gear oil. <Ref. to CVT(TH58A)-45, Differential Gear Oil.>
22) Adjust the differential gear oil level, and check for leakage. <Ref. to CVT(TH58A)-45, ADJUSTMENT, Differential Gear Oil.>
23) Install the front tires. <Ref. to WT-4, INSTALLATION, Tire and Wheel.>

15.Inhibitor Switch

A: INSPECTION

When the driving condition or starter motor operation is improper, first check the shift linkage for improper operation. If the shift linkage is functioning properly, check the inhibitor switch.

1) Disconnect the ground cable from battery. <Ref. to NT-5, BATTERY, NOTE, Note.>

NOTE:
For the 12 volt engine restart battery, disconnect the ground terminal from 12V engine restart battery sensor.

2) Remove the collector cover.
   (1) Pull up the two points at the front of collector cover (A).
   (2) Pull up the two points at the rear of collector cover (B) while moving them rearward.

NOTE:
Be careful not to contact the fuel delivery tube when moving the collector cover rearward.

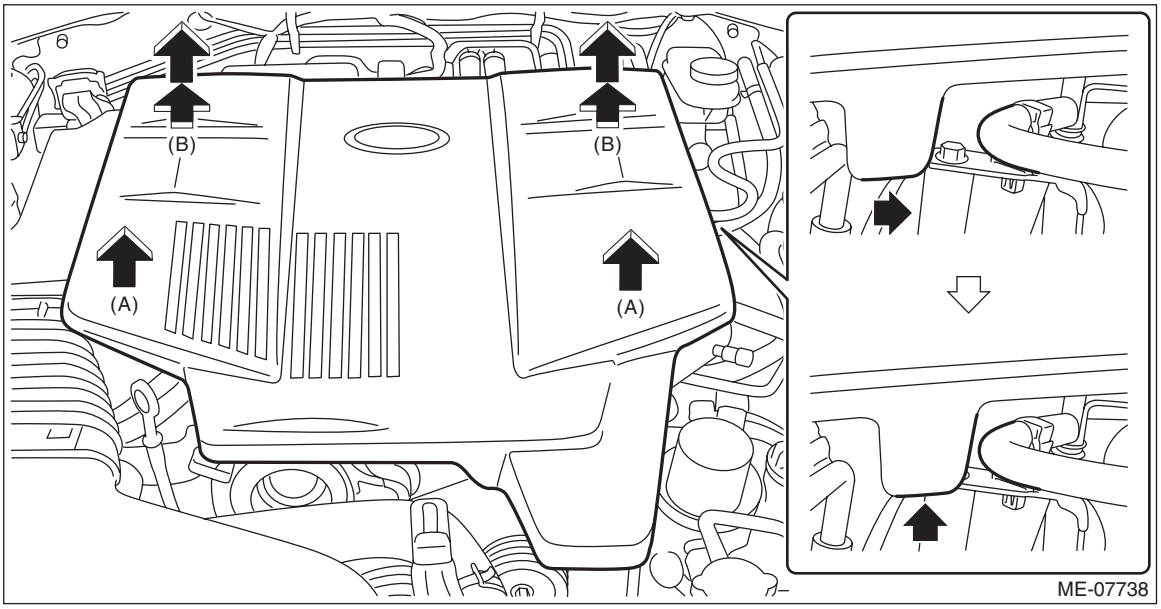

3) Remove the air cleaner case. <Ref. to IN(H4DO(HEV))-6, REMOVAL, Air Cleaner Case.>
4) Disconnect the inhibitor harness connector.

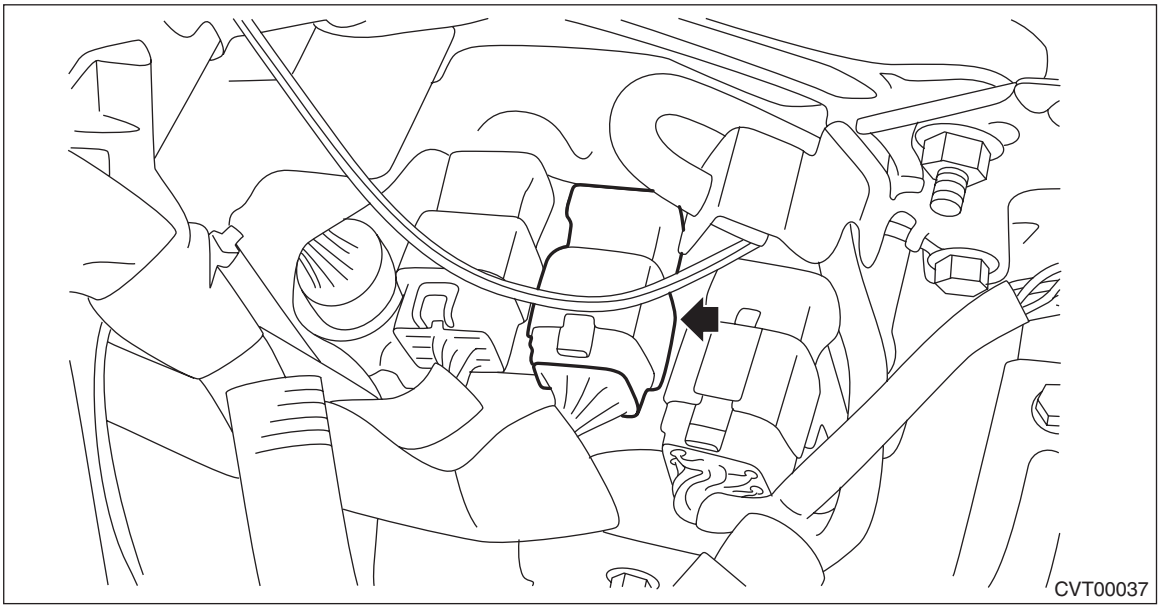

5) Check for continuity in inhibitor switch circuit by shifting the select lever in “P”, “R”, “N” and “D” respectively.

NOTE:
- Check that there is no continuity in the starter circuit when the select lever is in the “R” and “D” ranges.
- When inhibitor switch is normal, check there is no poor contact in vehicle side connector and no open circuit in harness.

	Range	Terminal No.
Signal sent to TCM	P	1 — 7
	R	2 — 7
	N	3 — 7
	D	4 — 7
Starter circuit	P/N	15 — 16
Back-up light circuit	R	13 — 14

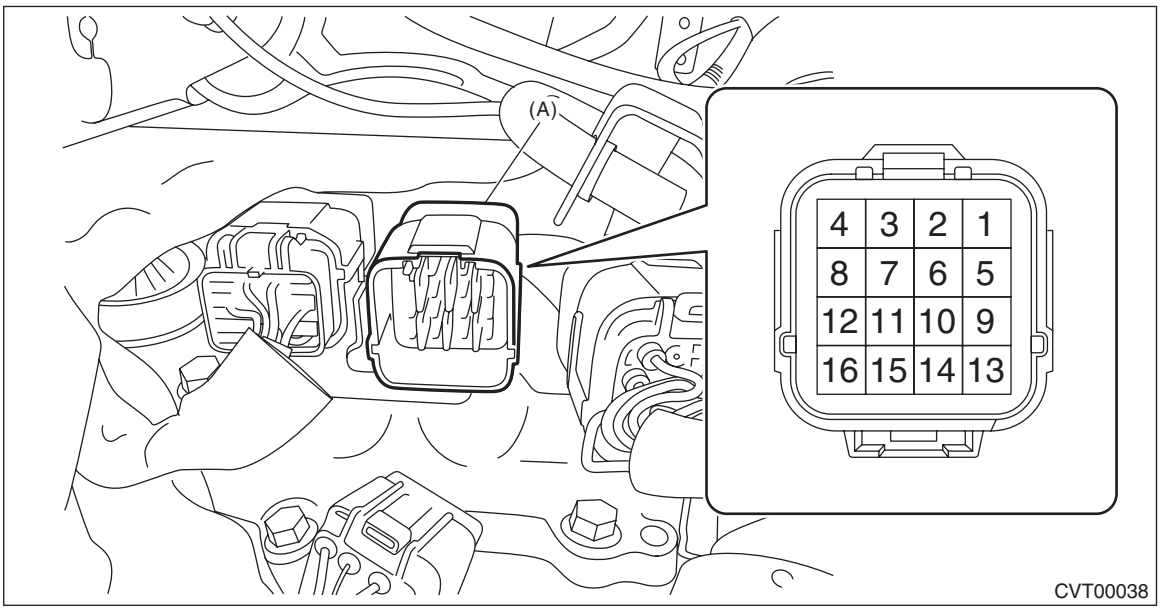

(A) Inhibitor harness connector

6) Check that there is continuity at equal points when the select lever is moved 1.5° in both directions from the “N” range.
If there is continuity in only one direction or in other points, adjust the inhibitor switch. <Ref. to CVT(TH58A)-98, ADJUSTMENT, Inhibitor Switch.>

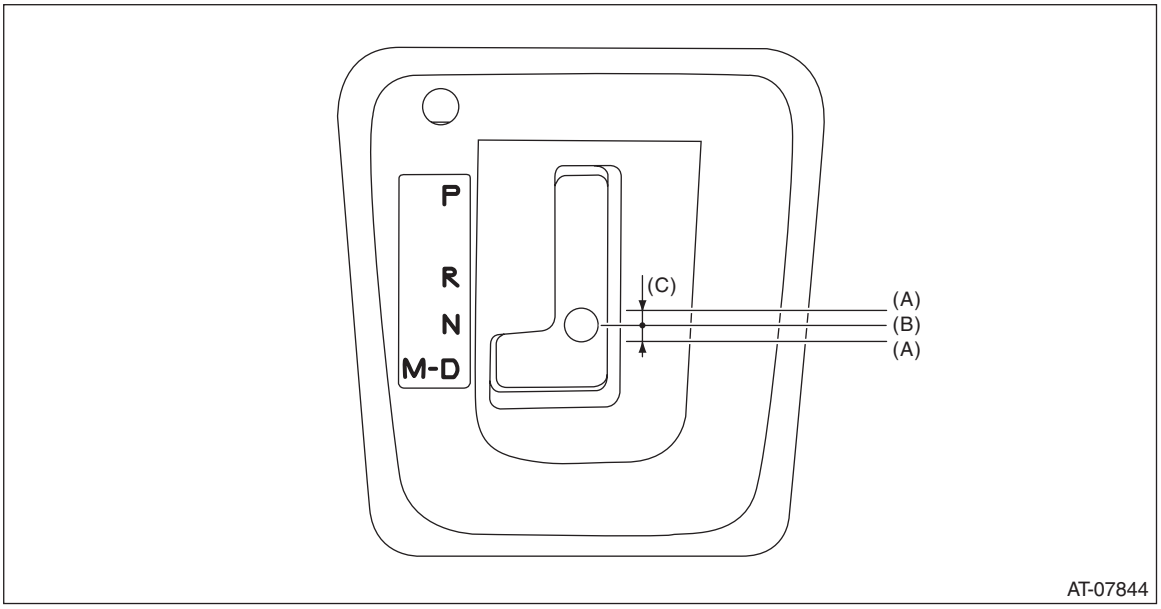

(A) Continuity does not exist.
(B) Continuity exists.
(C) 1.5°

7) Repeat the above inspection in other gear ranges. If there is fault, adjust the inhibitor switch and select cable. <Ref. to CVT(TH58A)-98, ADJUSTMENT, Inhibitor Switch.> <Ref. to CS-53, ADJUSTMENT, Select Cable.>

B: ADJUSTMENT

1) Shift the select lever to “N” range.
2) Loosen the two bolts holding the inhibitor switch.
3) Insert the ST vertically into the holes of the shifter arm and switch body.
ST 499267300 STOPPER PIN

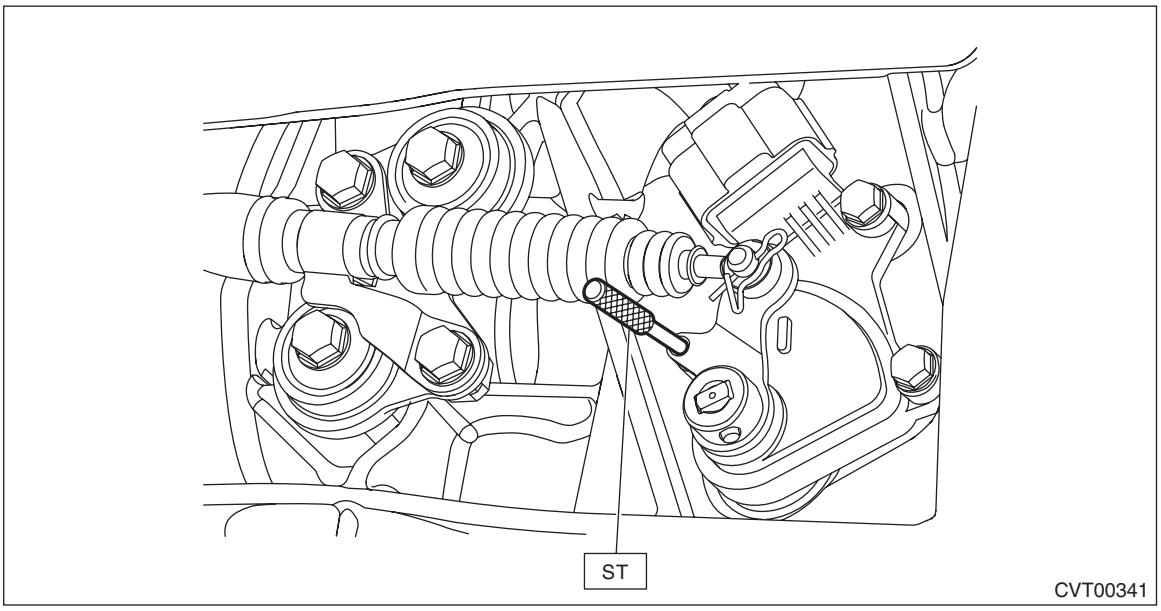

4) Tighten the two bolts holding the inhibitor switch.

Tightening torque:
5 N·m (0.5 kgf-m, 3.7 ft-lb)

5) Repeat the inspection of the inhibitor switch. If the inhibitor switch is determined to be “faulty”, replace it.

C: REMOVAL

1) Disconnect the ground cable from battery. <Ref. to NT-5, BATTERY, NOTE, Note.>

NOTE:
For the 12 volt engine restart battery, disconnect the ground terminal from 12V engine restart battery sensor.

2) Shift the select lever to “N” range.
3) Lift up the vehicle.
4) Remove the center exhaust pipe. <Ref. to EX(H4DO(w/o HEV))-14, REMOVAL, Center Exhaust Pipe.>
5) Remove the snap pin and washer from the shifter arm.

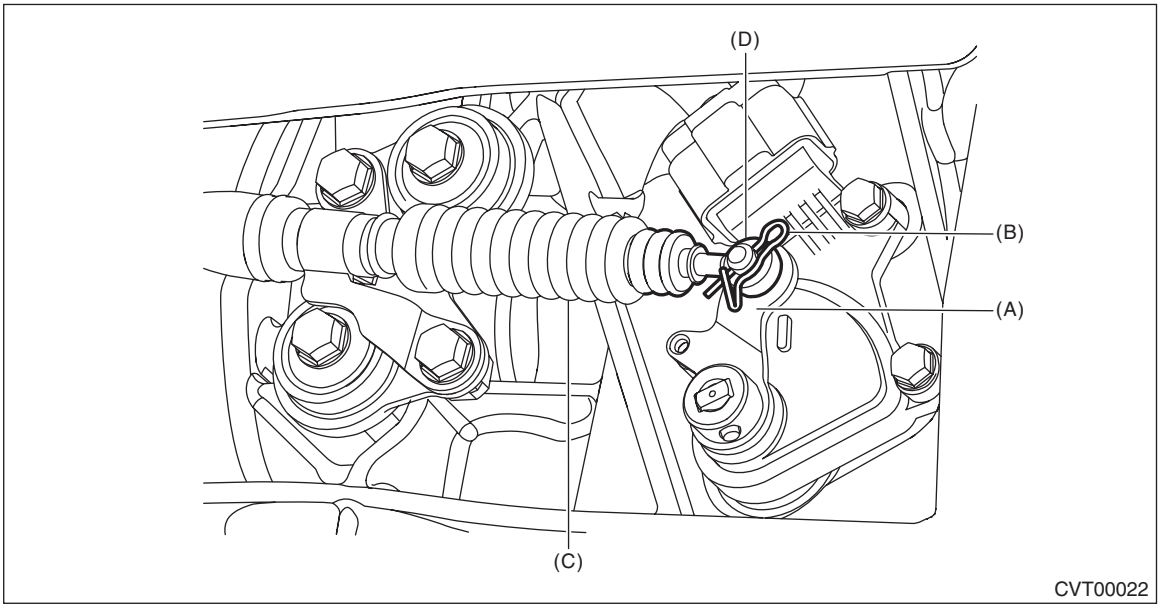

(A) Shifter arm
(B) Snap pin
(C) Select cable
(D) Washer

6) Remove the spring pin and shifter arm.

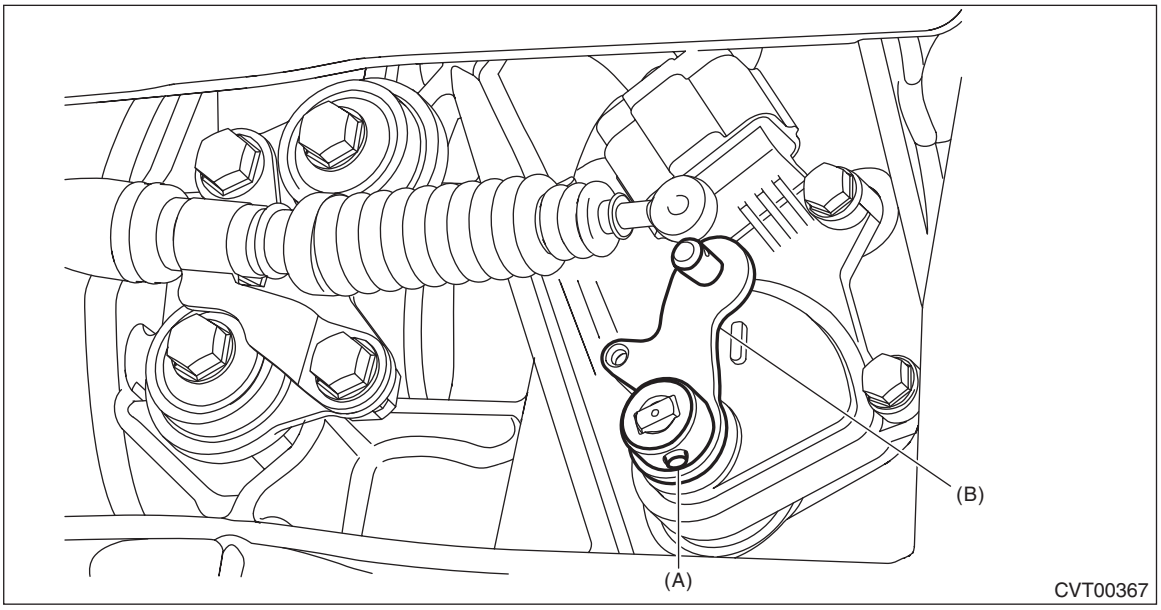

(A) Spring pin
(B) Shifter arm

7) Remove the inhibitor harness connector from inhibitor switch.
8) Remove the two inhibitor switch securing bolts.

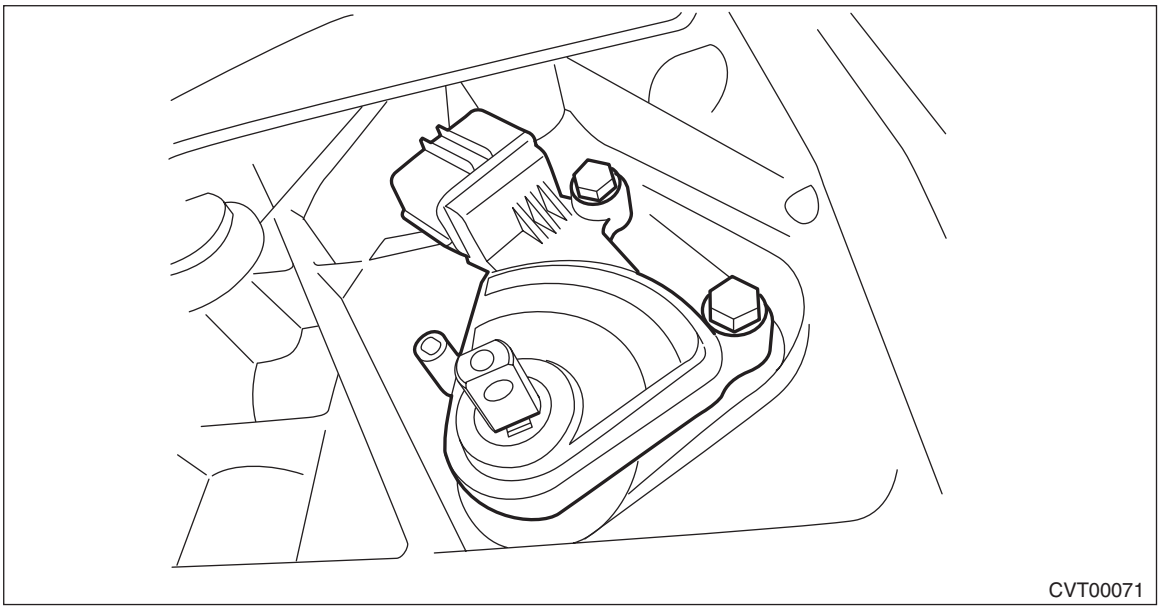

9) Remove the inhibitor switch from the transmission case.

D: INSTALLATION

1) Install the inhibitor switch to the transmission case temporarily.

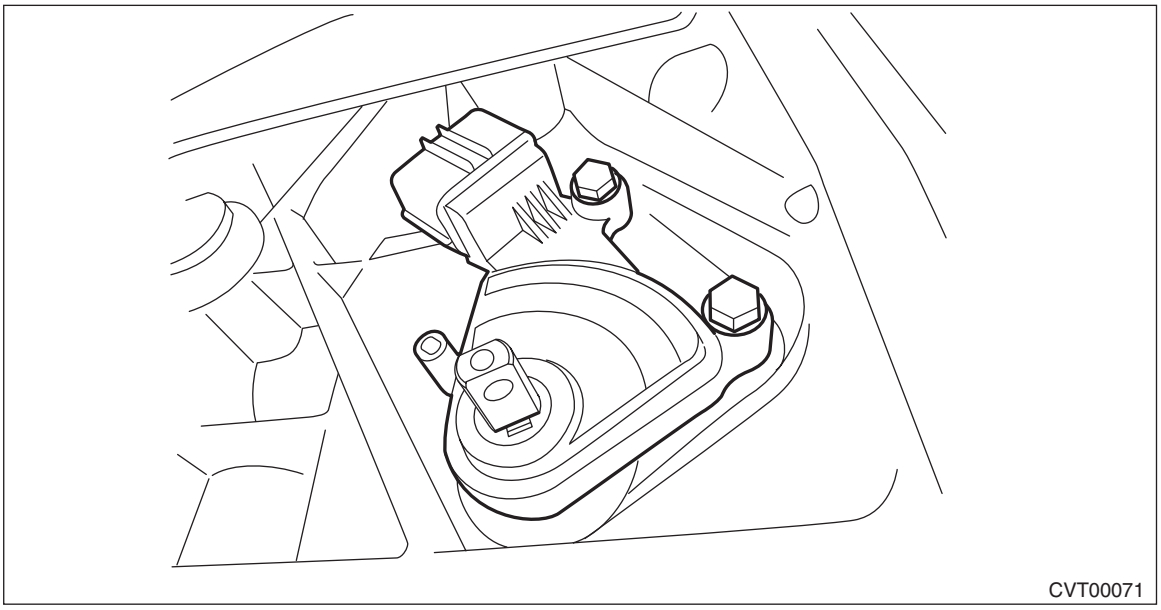

2) Connect the inhibitor harness connector to the inhibitor switch.
3) Install the shifter arm and fix with the spring pin.

NOTE:
Use new spring pin.

4) Shift the shifter arm to “N” range.
5) Install the ST vertically in the cutout of shifter arm and the hole of switch body.

ST 499267300 STOPPER PIN

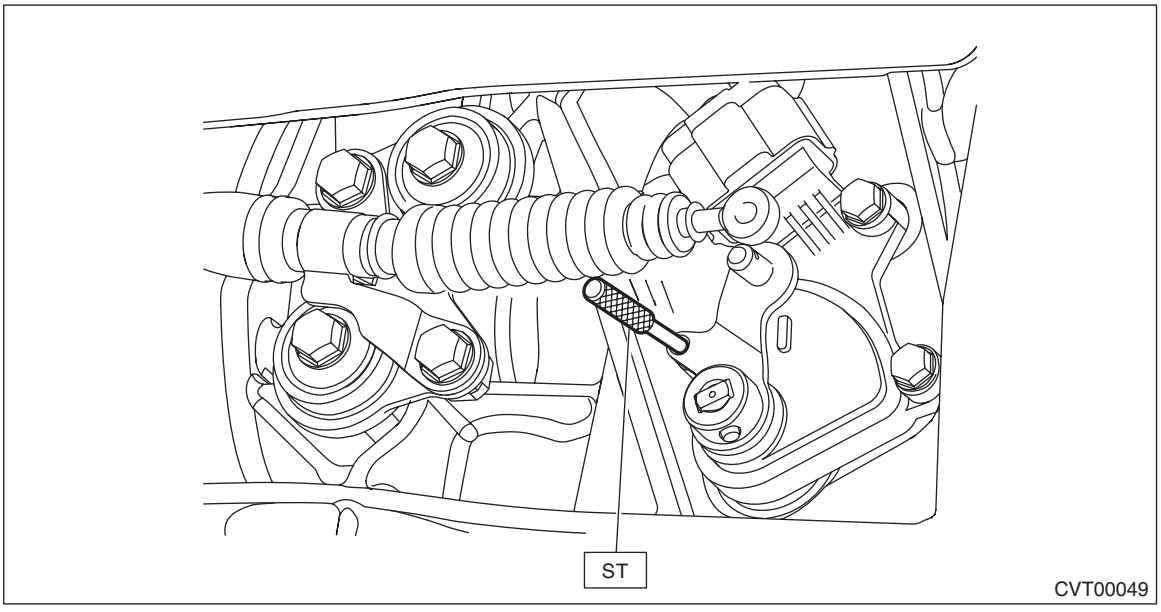

6) Tighten the two bolts holding the inhibitor switch.

Tightening torque:
5 N·m (0.5 kgf-m, 3.7 ft-lb)

7) Install the select cable to the shifter arm.
8) Install the washer and snap pin to the shifter arm.
9) Install the center exhaust pipe. <Ref. to EX(H4DO(w/o HEV))-15, INSTALLATION, Center Exhaust Pipe.>
10) Lower the vehicle.
11) Install the 12 volt auxiliary battery ground terminal and ground terminal to the 12V engine restart battery sensor of the 12 volt engine restart battery. <Ref. to NT-5, BATTERY, NOTE, Note.>
12) Check the inhibitor switch. <Ref. to CVT(TH58A)-96, INSPECTION, Inhibitor Switch.>

16.Turbine Speed Sensor

A: REMOVAL

CAUTION:
Be sure to prevent water or oil from contacting the connector terminal of turbine speed sensor. If adhesion occurs, replace with a new part.
1) Disconnect the ground cable from battery. <Ref. to NT-5, BATTERY, NOTE, Note.>

NOTE:
For the 12 volt engine restart battery, disconnect the ground terminal from 12V engine restart battery sensor.
2) Lift up the vehicle.
3) Remove the harness connector from turbine speed sensor.
4) Remove the turbine speed sensor.

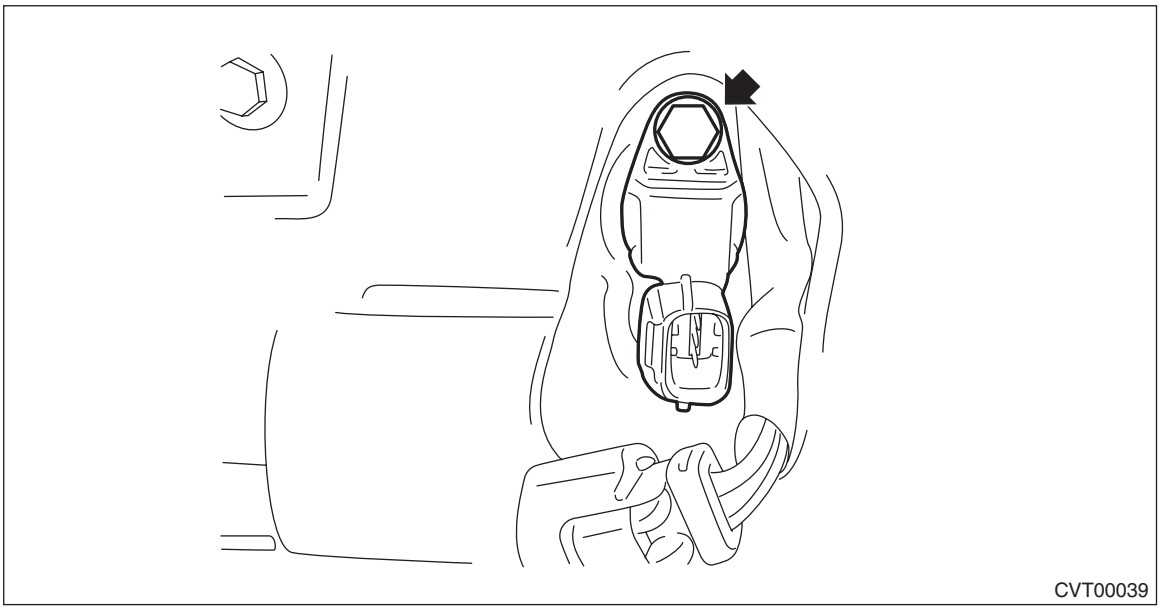

B: INSTALLATION

CAUTION:
Be sure to prevent water or oil from contacting the connector terminal of turbine speed sensor. If adhesion occurs, replace with a new part.
Install in the reverse order of removal.

NOTE:
- Use new O-rings.
- Apply CVTF to the O-ring.

Tightening torque:
7 N·m (0.7 kgf-m, 5.2 ft-lb)

C: INSPECTION

1) Set the probe of oscilloscope to TCM harness connector.

Connector & terminal
(B54) No. 20 (+) — No. 1 (–):

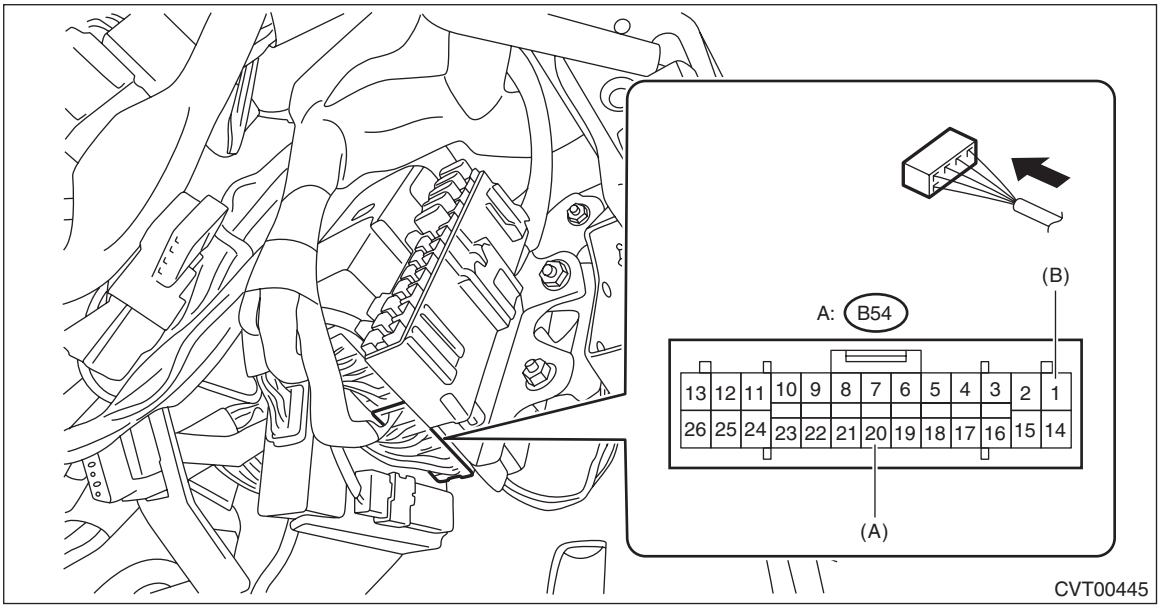

(A) + probe
(B) – probe

2) Start and warm up the engine.
3) Perform “Engine only Drive Mode” using the Subaru Select Monitor. <Ref. to HEV(diag)-72, HYBRID POWERTRAIN CONTROL SYSTEM, OPERATION, System Operation Check Mode.>
4) Check the waveform and output voltage of the turbine speed sensor with engine idling.

NOTE:
The waveform cycle changes as the speed changes.

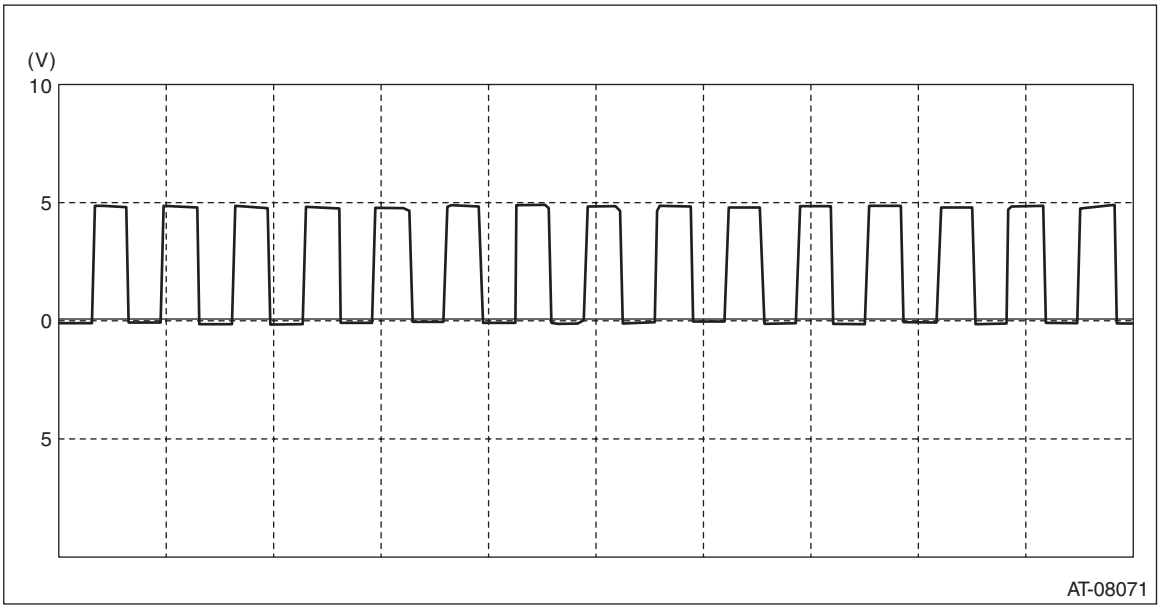

17.Secondary Speed Sensor

A: REMOVAL

CAUTION:
• Be sure to prevent water or oil from contacting the connector terminal of secondary speed sensor. If adhesion occurs, replace with a new part.
• When secondary speed sensor is removed, CVTF leaks. After installing the secondary speed sensor, adjust the CVTF level.

1) Disconnect the ground cable from battery. <Ref. to NT-5, BATTERY, NOTE, Note.>

NOTE:
For the 12 volt engine restart battery, disconnect the ground terminal from 12V engine restart battery sensor.

2) Lift up the vehicle.
3) Remove the harness connector from secondary speed sensor.
4) Remove the secondary speed sensor.

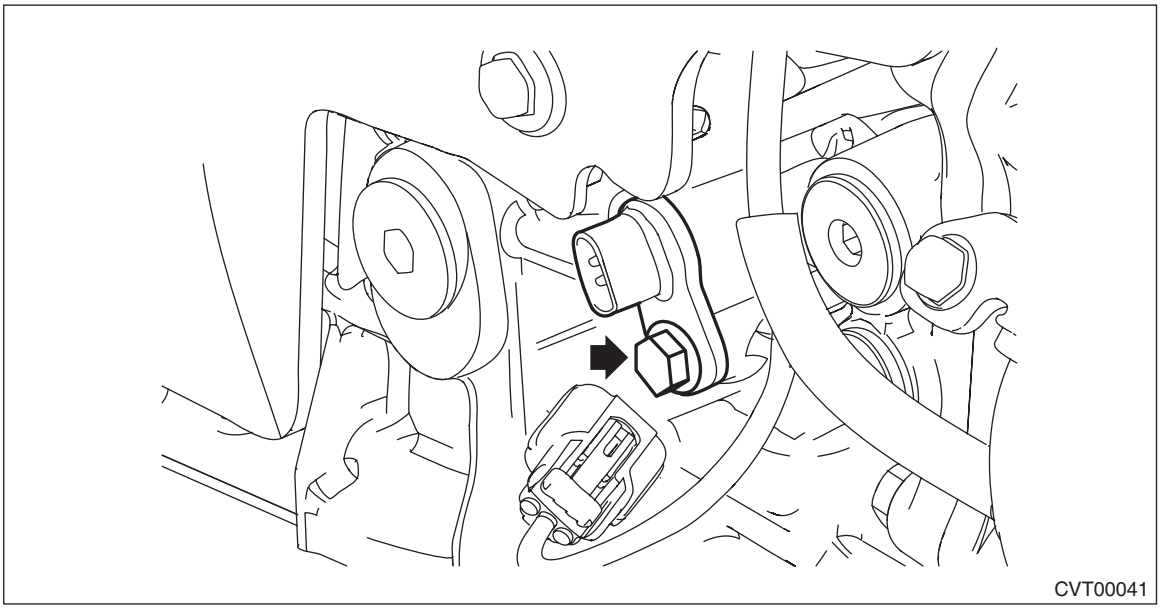

B: INSTALLATION

CAUTION:
• Be sure to prevent water or oil from contacting the connector terminal of secondary speed sensor. If adhesion occurs, replace with a new part.
• After installing the secondary speed sensor, adjust the CVTF level.

Install in the reverse order of removal.

NOTE:
- Use new O-rings.
- Apply CVTF to the O-ring.

Tightening torque:
7 N·m (0.7 kgf-m, 5.2 ft-lb)

C: INSPECTION

1) Set the probe of oscilloscope to TCM harness connector.

Connector & terminal
(B54) No. 7 (+) — No. 1 (–):

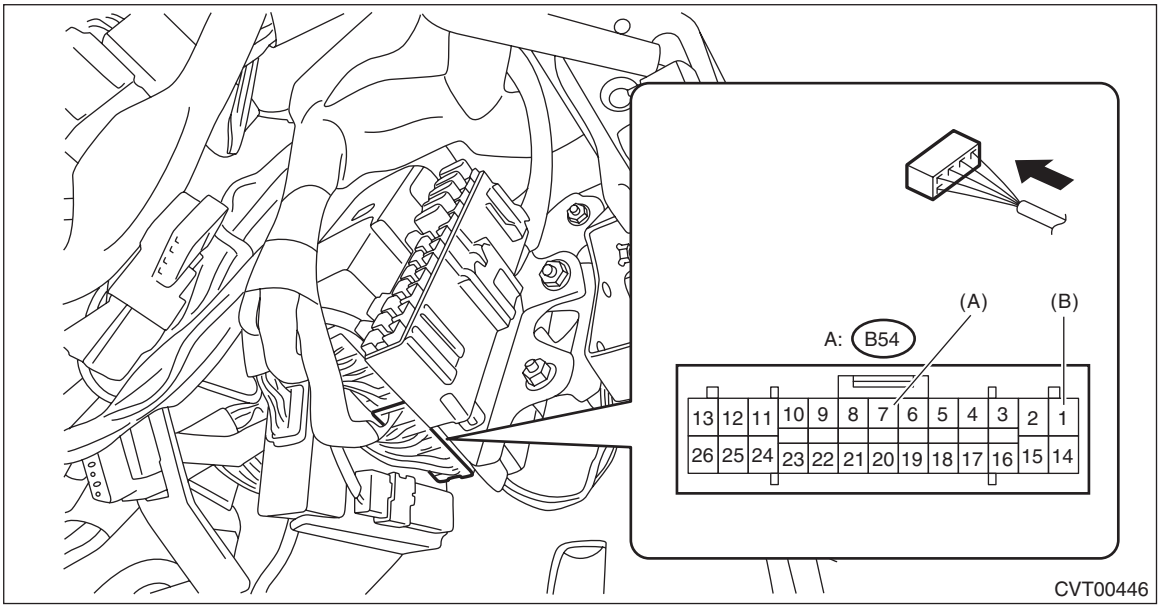

(A) + probe
(B) – probe

2) Start and warm up the engine.
3) Lift up the vehicle.

CAUTION:
Lift up the vehicle until the tire bottom is 0.3 m (0.98 ft) or more above the ground.
4) Shift the select lever to “D” range.
5) Check the waveform and output voltage of the secondary speed sensor with engine idling.

NOTE:
The waveform cycle changes as the speed changes.

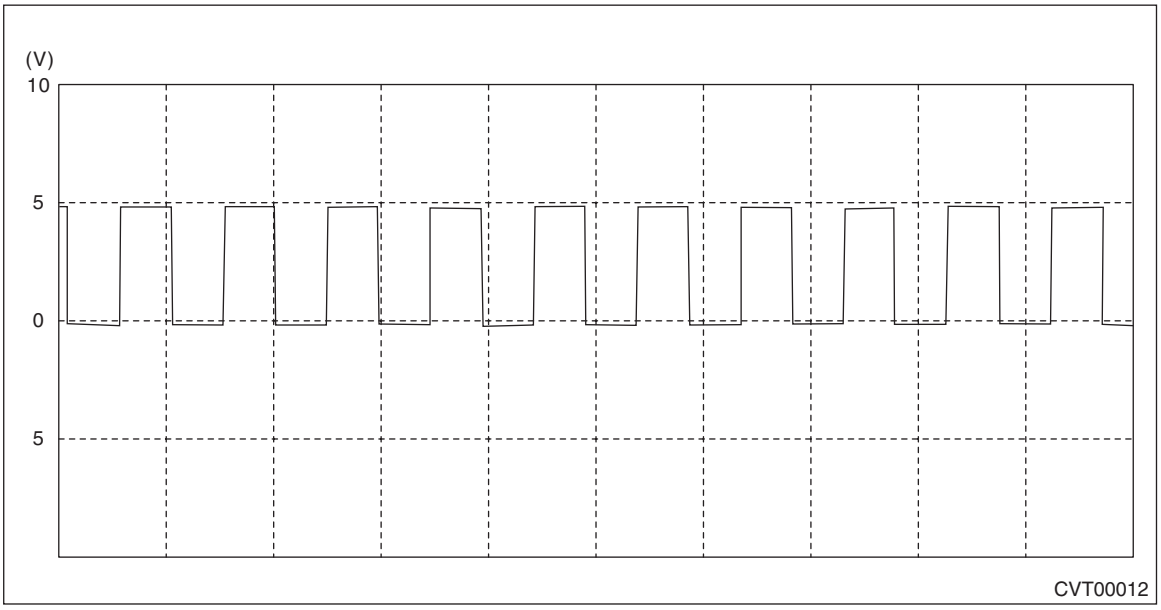

18.Front Wheel Speed Sensor

A: REMOVAL

CAUTION:
• Be sure to prevent water or oil from contacting the connector terminal of front wheel speed sensor. If adhesion occurs, replace with a new part.
• When the front wheel speed sensor is removed, CVTF leaks. After installing the front wheel speed sensor, adjust the CVTF level.

1) Disconnect the ground cable from battery. <Ref. to NT-5, BATTERY, NOTE, Note.>

NOTE:
For the 12 volt engine restart battery, disconnect the ground terminal from 12V engine restart battery sensor.

2) Lift up the vehicle.
3) Remove the harness connector from front wheel speed sensor.
4) Remove the front wheel speed sensor.

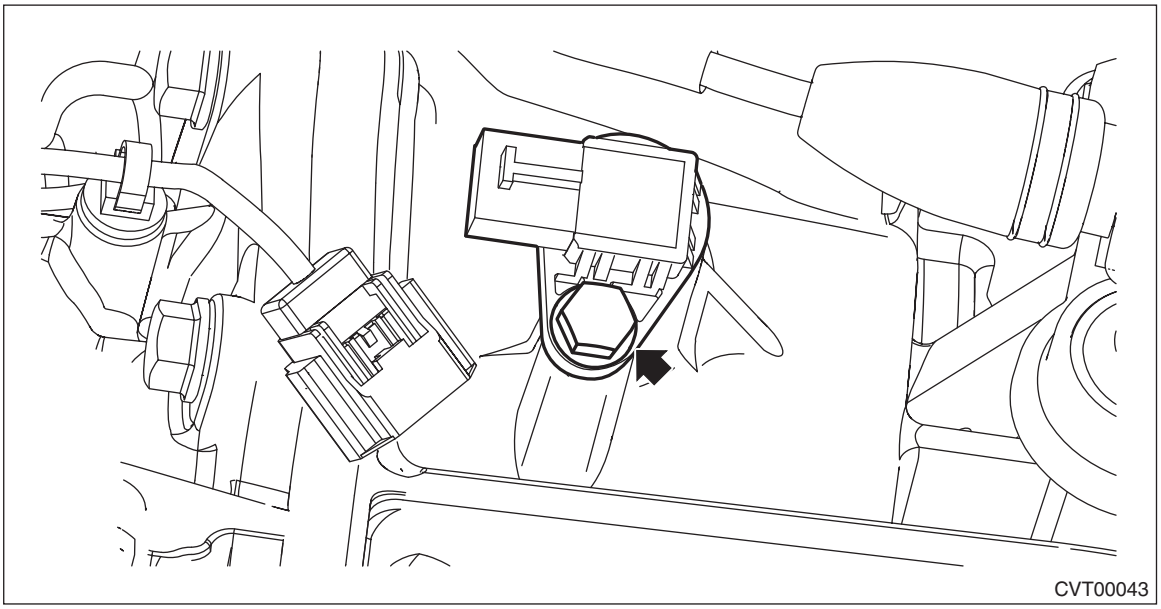

B: INSTALLATION

CAUTION:
• Be sure to prevent water or oil from contacting the connector terminal of front wheel speed sensor. If adhesion occurs, replace with a new part.
• After installing the front wheel speed sensor, adjust the CVTF level.

Install in the reverse order of removal.

NOTE:
- Use new O-rings.
- Apply CVTF to the O-ring.

Tightening torque:
7 N·m (0.7 kgf-m, 5.2 ft-lb)

C: INSPECTION

1) Set the probe of oscilloscope to TCM harness connector.

Connector & terminal
(B54) No. 19 (+) — No. 1 (–):

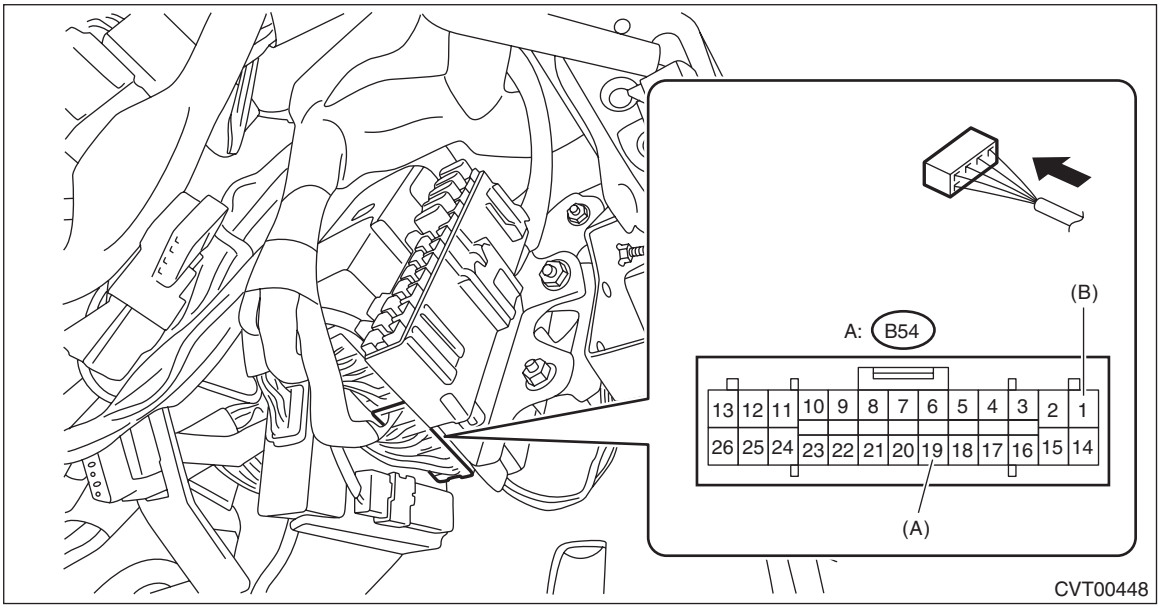

(A) + probe
(B) – probe

2) Start and warm up the engine.
3) Lift up the vehicle.

CAUTION:
Lift up the vehicle until the tire bottom is 0.3 m (0.98 ft) or more above the ground.
4) Shift the select lever to “D” range.
5) Check the waveform and output voltage of the front wheel speed sensor while driving with the engine idling.

NOTE:
The waveform cycle changes as the speed changes.

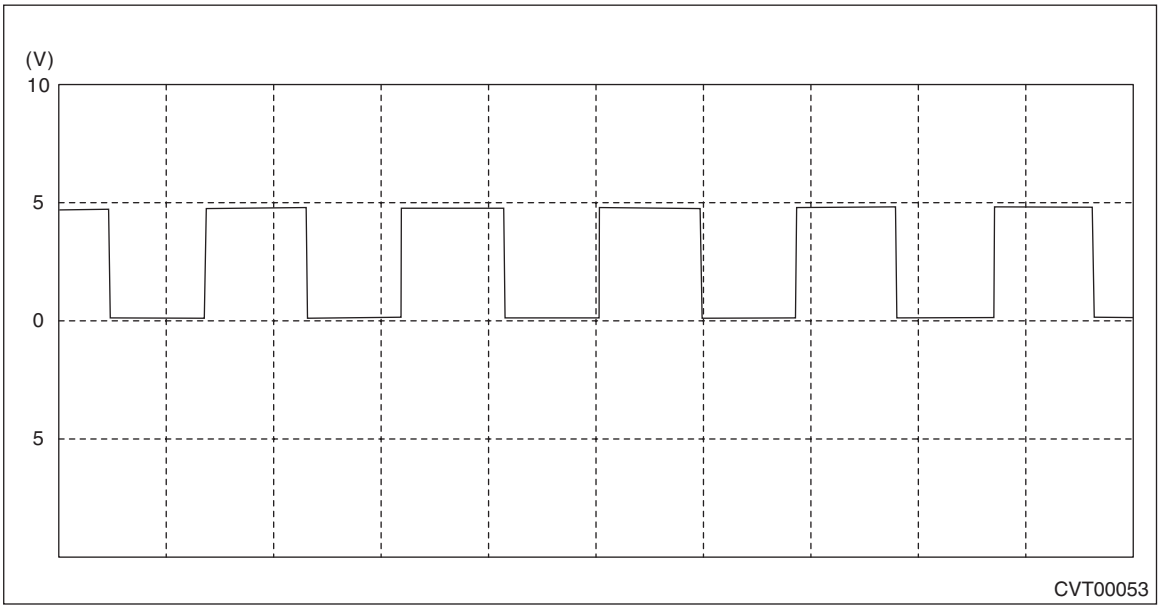

19.Secondary Pressure Sensor

A: REMOVAL

CAUTION:
• Be sure to prevent water or oil from contacting the connector terminal of secondary pressure sensor. If adhesion occurs, replace with a new part.
• When secondary pressure sensor is removed, CVTF leaks. After installing the secondary pressure sensor, adjust the CVTF level.

1) Disconnect the ground cable from battery. <Ref. to NT-5, BATTERY, NOTE, Note.>

NOTE:
For the 12 volt engine restart battery, disconnect the ground terminal from 12V engine restart battery sensor.

2) Lift up the vehicle.
3) Remove the under cover front - cable.

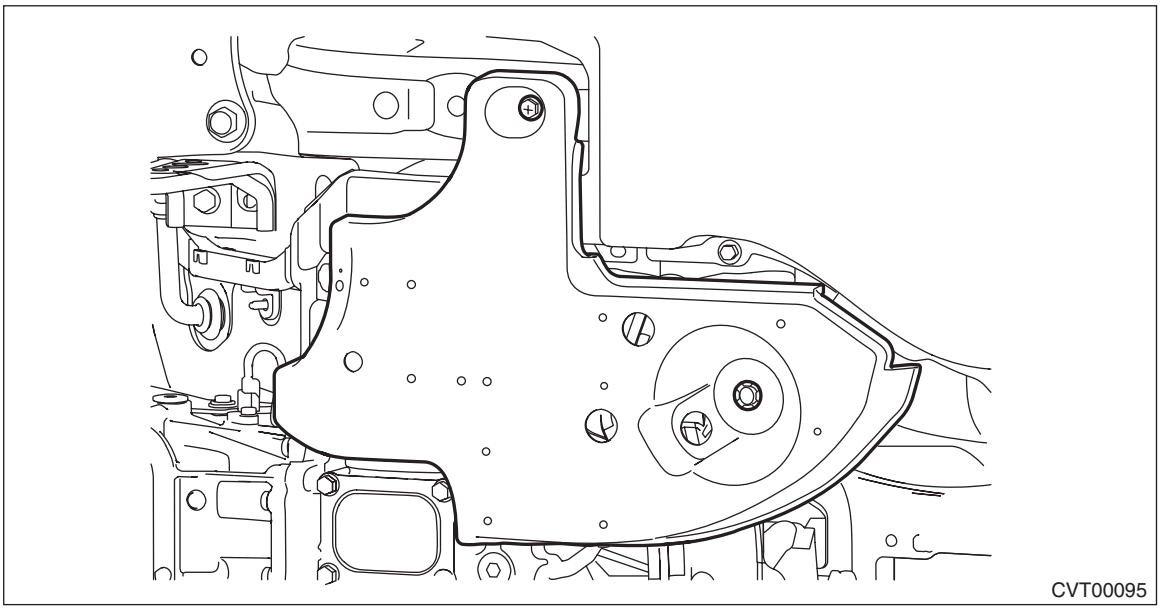
CVT00095

4) Remove the sensor cover.

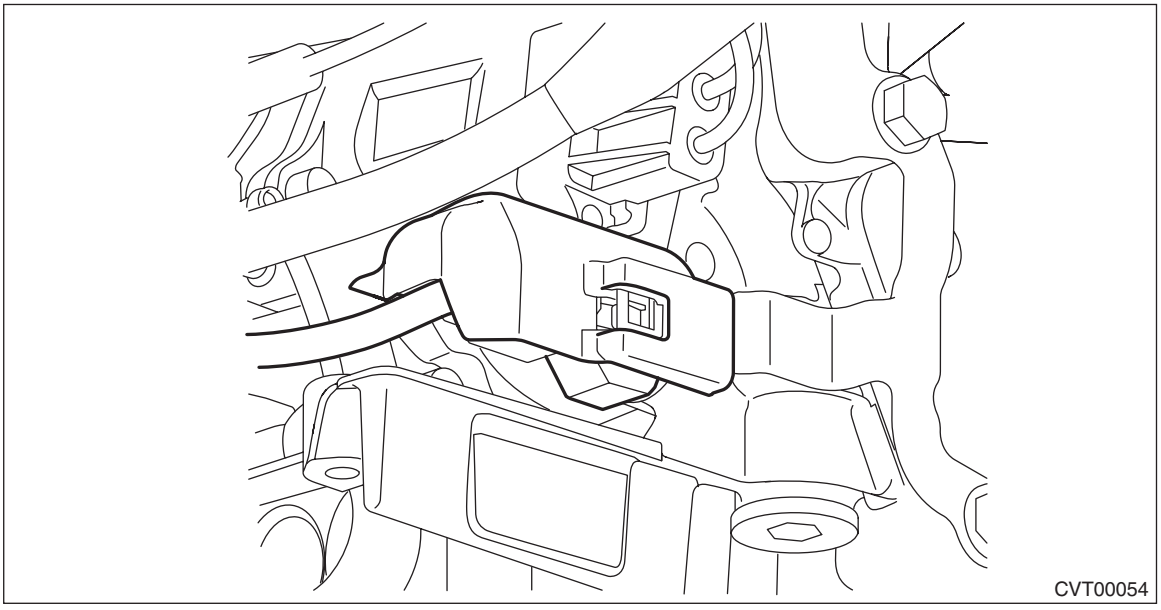
CVT00054

5) Remove the secondary pressure sensor connector.

6) Remove the secondary pressure sensor.

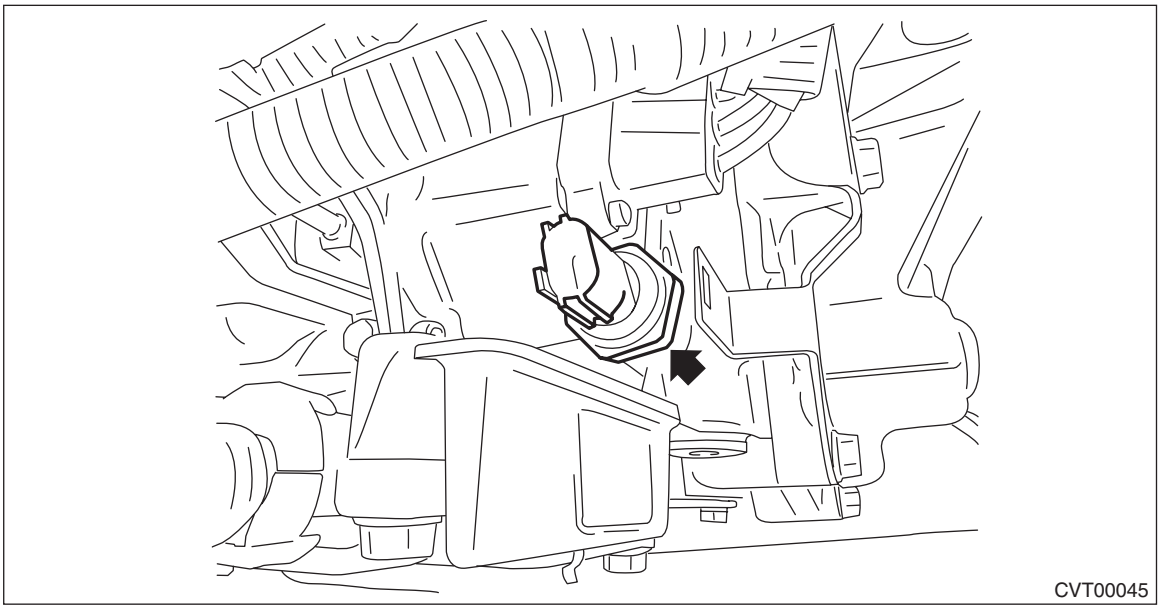

B: INSTALLATION

CAUTION:
- **Be sure to prevent water or oil from contacting the connector terminal of secondary pressure sensor. If adhesion occurs, replace with a new part.**
- **After installing the secondary pressure sensor, adjust the CVTF level.**

Install in the reverse order of removal.

NOTE:
Use new O-rings.

Tightening torque:
Secondary pressure sensor
39 N·m (4.0 kgf-m, 28.8 ft-lb)
Under cover front - cable
18 N·m (1.8 kgf-m, 13.3 ft-lb)

C: INSPECTION

1) Start the engine in the “P” range, and warm up the engine.
2) Shift the select lever to “N” range.
3) Depress the brake pedal and hold it.
4) Check “secondary pressure sensor voltage” by using Subaru Select Monitor while the engine is idling. <Ref. to CVT(HEV)(diag)-15, OPERATION, Subaru Select Monitor.>

Specification:
Approx. 1.0 V

5) Check “secondary pressure sensor voltage” by using Subaru Select Monitor while the engine is stopped and the ignition switch is turned on. <Ref. to CVT(HEV)(diag)-15, OPERATION, Subaru Select Monitor.>

Specification:
Approx. 0.5 V

20.Oil Pan and Strainer

A: REMOVAL

CAUTION:
• Directly after the vehicle has been running or the engine has been idling for a long time, the CVTF is hot. Be careful not to burn yourself.
• Be careful not to spill CVTF on the exhaust pipe to prevent it from emitting smoke or causing a fire. If the CVTF adheres, wipe it off completely.

1) Lift up the vehicle.
2) Clean the transmission exterior.
3) Remove the CVTF drain plug to drain CVTF. <Ref. to CVT(TH58A)-41, CVTF.>
4) Remove the oil pan.

CAUTION:
Be careful not to allow foreign matter such as dust or dirt to enter the oil pan.

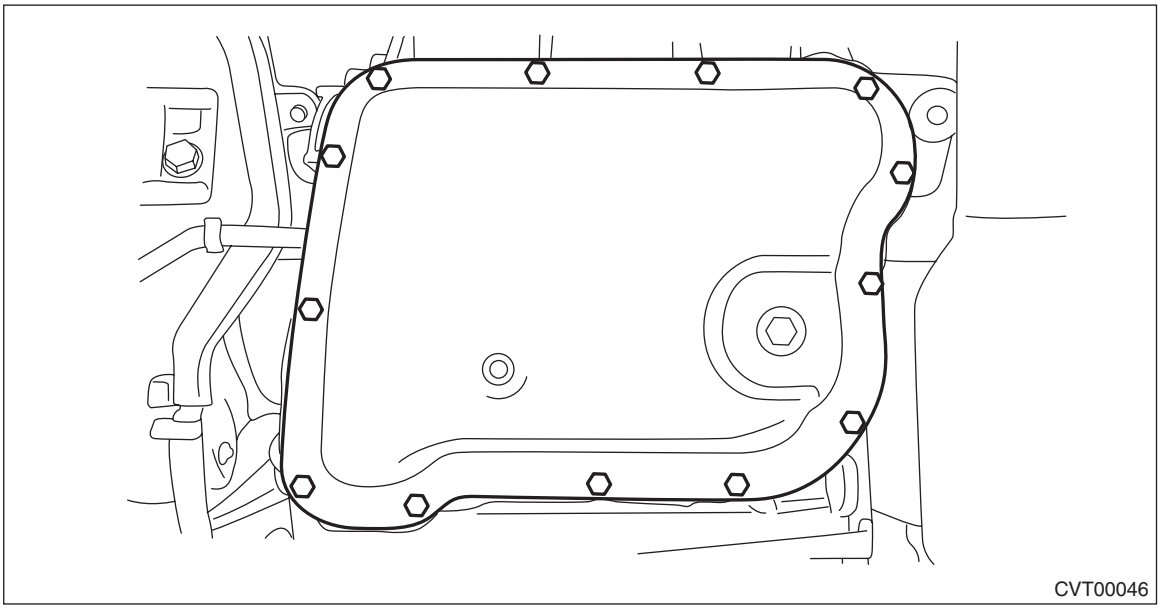

5) Remove the magnet.

6) Remove the oil strainer.

CAUTION:
Be careful not to touch the oil strainer filter.

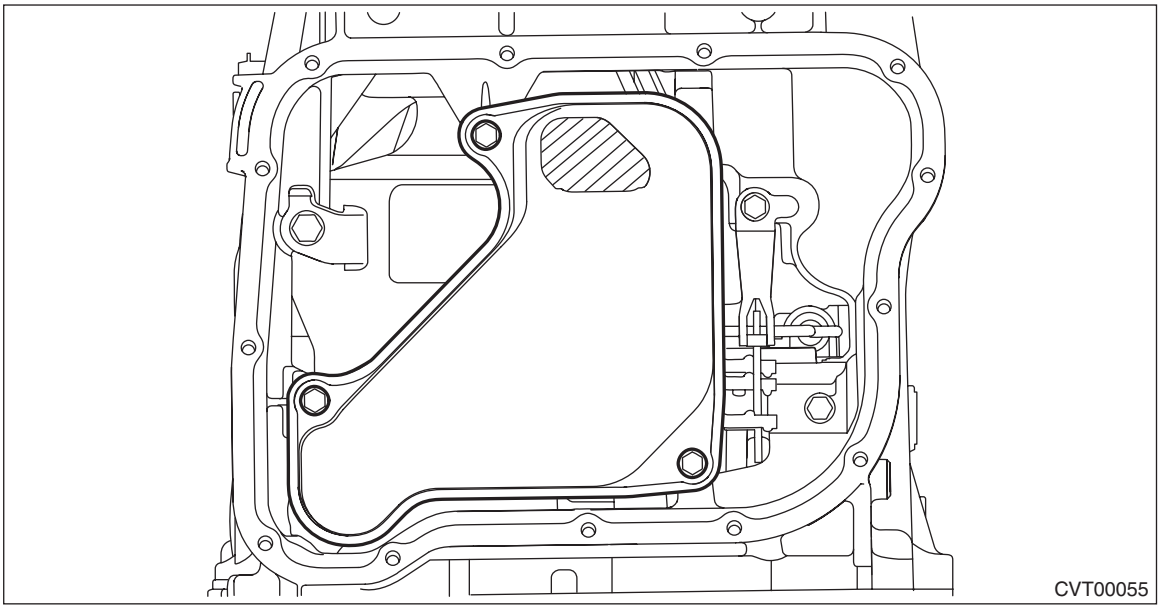

7) Remove the O-ring from oil strainer.

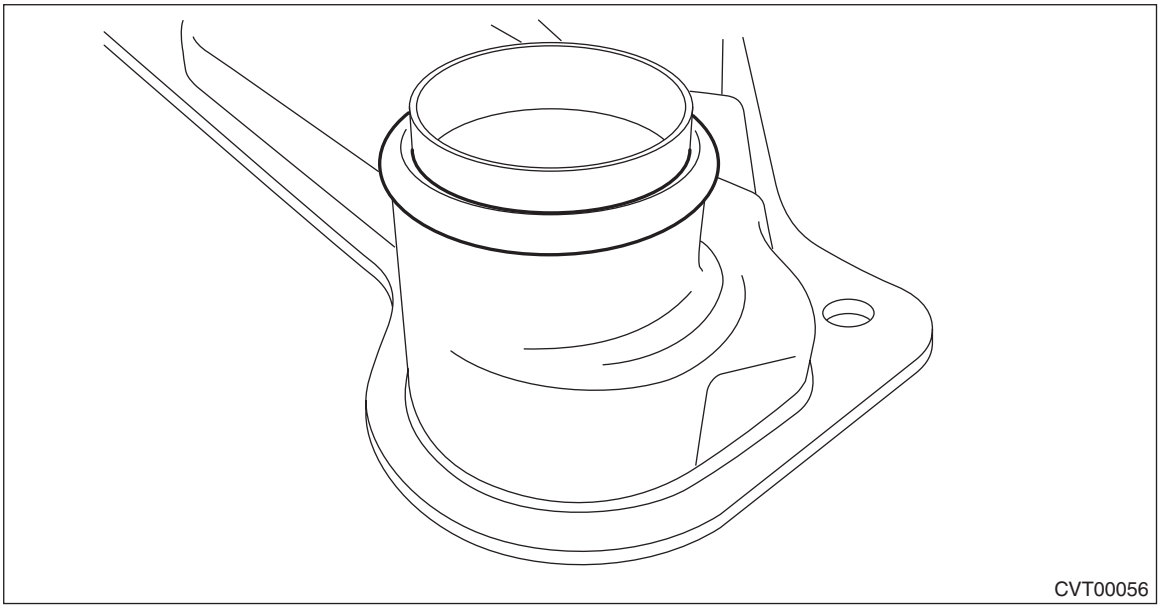

B: INSTALLATION

CAUTION:
Be careful not to touch the oil strainer filter.

1) Clean the mating surface of oil pan and transmission case.
2) Install the O-ring to the oil strainer.

NOTE:
- Use new O-rings.
- Apply CVTF to the O-ring.

3) Install the oil strainer.

Tightening torque:
9 N·m (0.9 kgf-m, 6.6 ft-lb)

4) Clean the magnet.
5) Attach the magnet at the specified position of the oil pan.
6) Apply liquid gasket all around the oil pan mating surface seamlessly.

Liquid gasket:
THREE BOND 1217B (Part No. K0877YA020) or equivalent

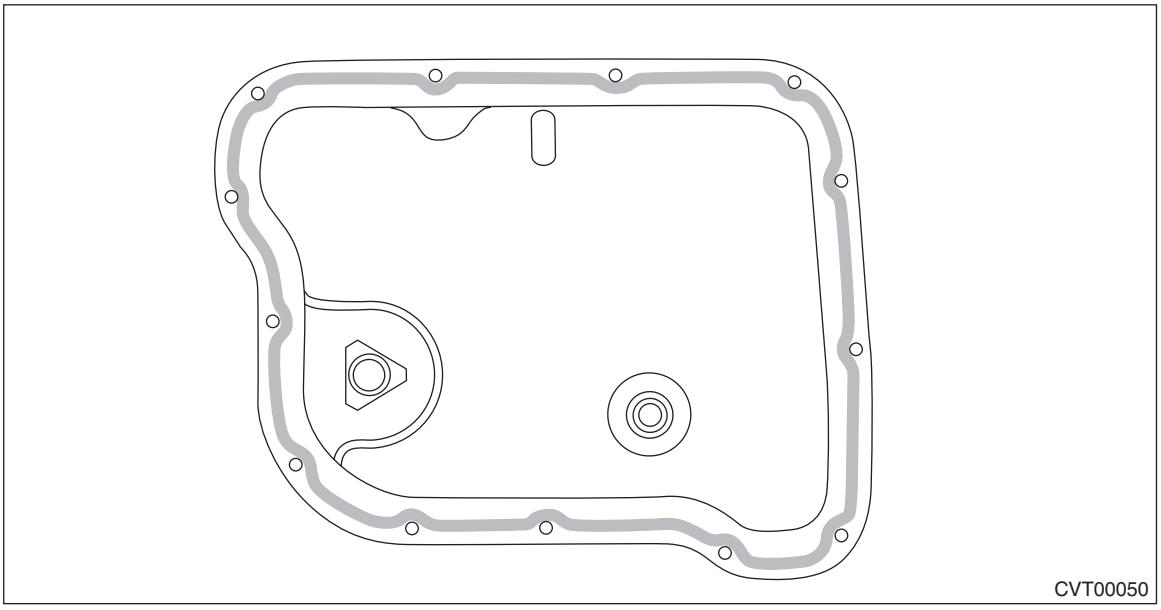

7) Install the oil pan by equally tightening the bolts.

Tightening torque:
5 N·m (0.5 kgf-m, 3.7 ft-lb)

8) Refill CVTF to adjust the CVTF level. <Ref. to CVT(TH58A)-41, CVTF.>

C: INSPECTION

- Check each part for damage or dust.
- Check oil strainer for clogging.

21.Control Valve Body

A: REMOVAL

1. MAIN CONTROL VALVE BODY

CAUTION:
• Directly after the vehicle has been running or the engine has been idling for a long time, the CVTF is hot. Be careful not to burn yourself.
• Be careful not to spill CVTF on the exhaust pipe to prevent it from emitting smoke or causing a fire. If the CVTF adheres, wipe it off completely.
• Always clean the engine compartment before removal.

NOTE:
The control valve body is replaced as an assembly only, because it is a non-disassembly part.
1) Disconnect the ground cable from battery. <Ref. to NT-5, BATTERY, NOTE, Note.>

NOTE:
For the 12 volt engine restart battery, disconnect the ground terminal from 12V engine restart battery sensor.
2) Remove the collector cover.
(1) Pull up the two points at the front of collector cover (A).
(2) Pull up the two points at the rear of collector cover (B) while moving them rearward.

NOTE:
Be careful not to contact the fuel delivery tube when moving the collector cover rearward.

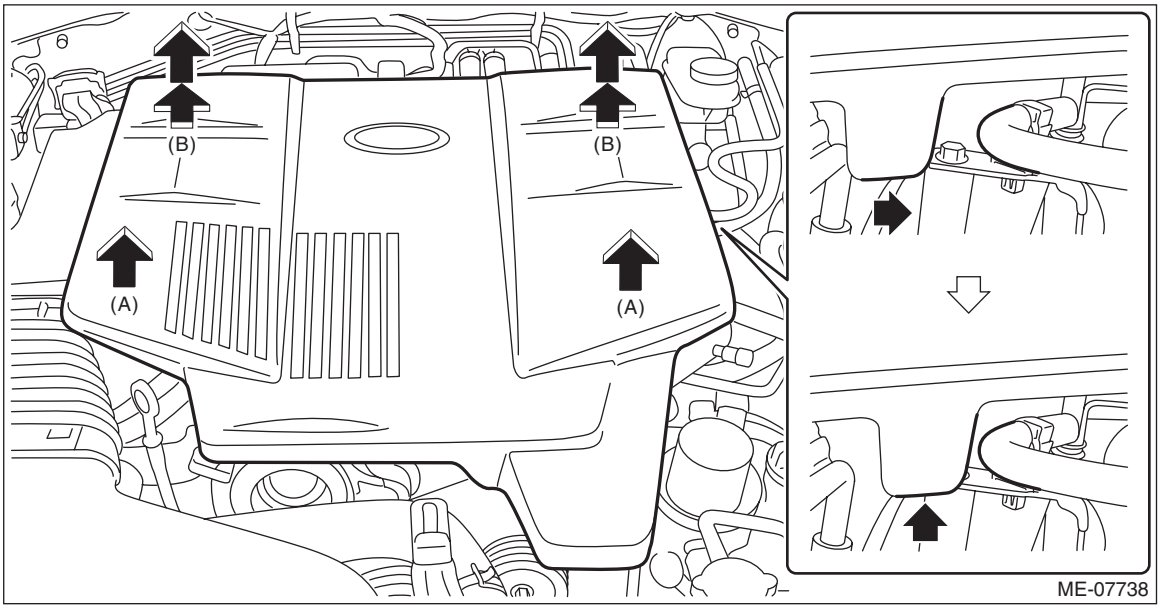

3) Remove the air cleaner case and bracket. <Ref. to IN(H4DO(HEV))-6, REMOVAL, Air Cleaner Case.>

4) Disconnect the following connectors and harness clips.
- Transmission radio ground terminal
- Transmission harness connectors
- Inhibitor harness connector
- Drive motor harness connector
- Engine harness connectors
- Harness clip

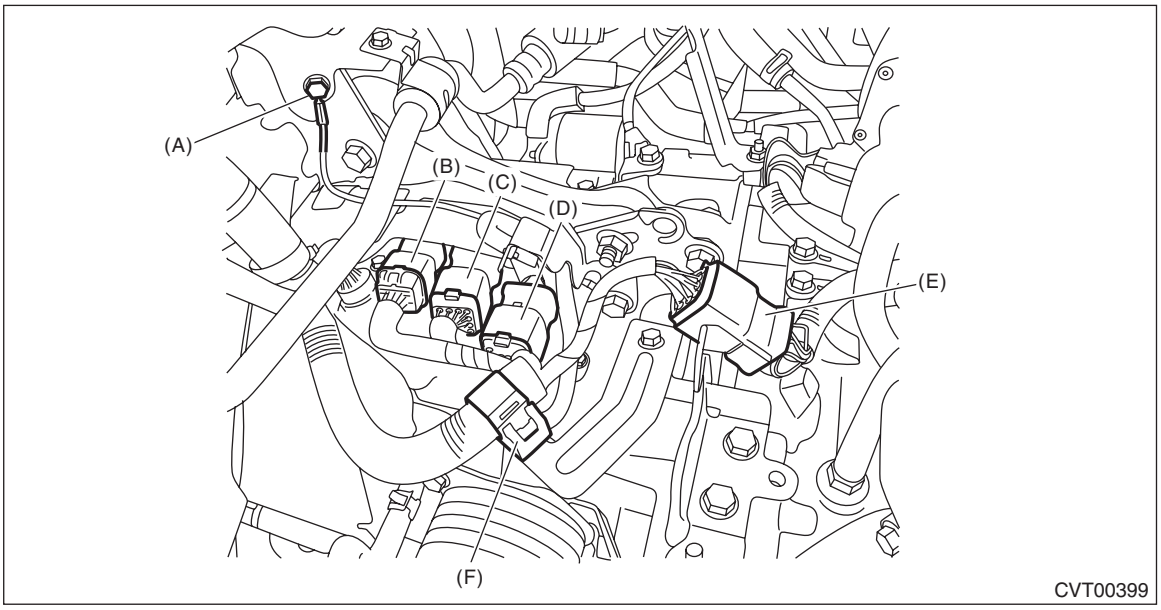

(A) Transmission radio ground terminal
(B) Transmission harness connectors
(C) Inhibitor harness connector
(D) Drive motor harness connector
(E) Engine harness connectors
(F) Harness clip

5) Remove the pitching stopper. <Ref. to CVT(TH58A)-86, PITCHING STOPPER, REMOVAL, Transmission Mounting System.>
6) Remove the air breather hose from the pitching stopper bracket, and then remove the pitching stopper bracket and transmission radio ground cord.

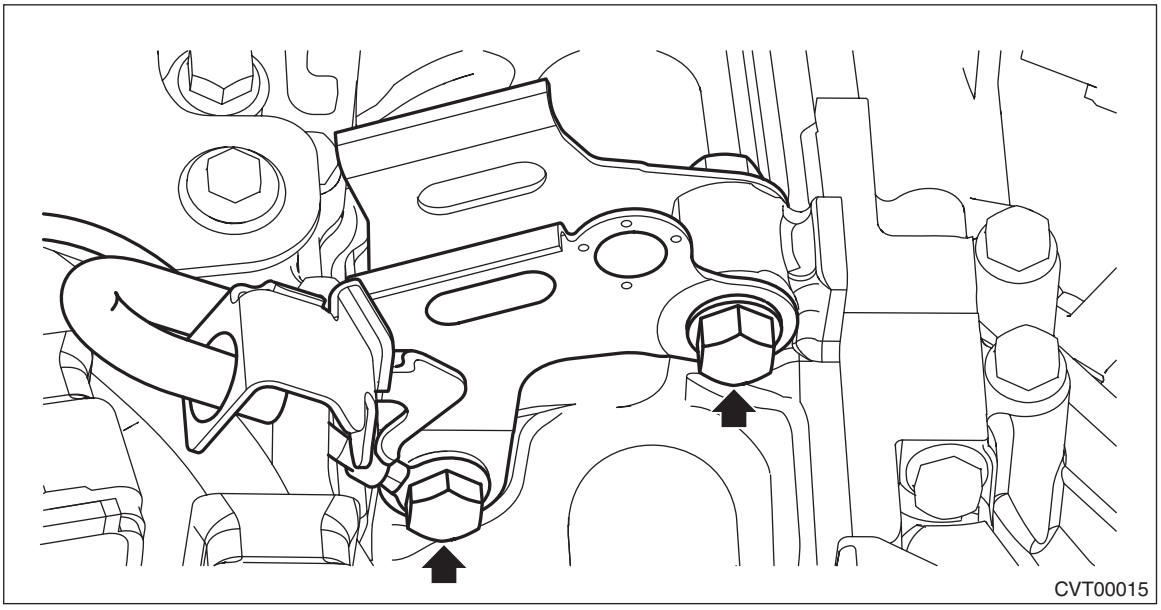

7) Remove the transmission case cover.

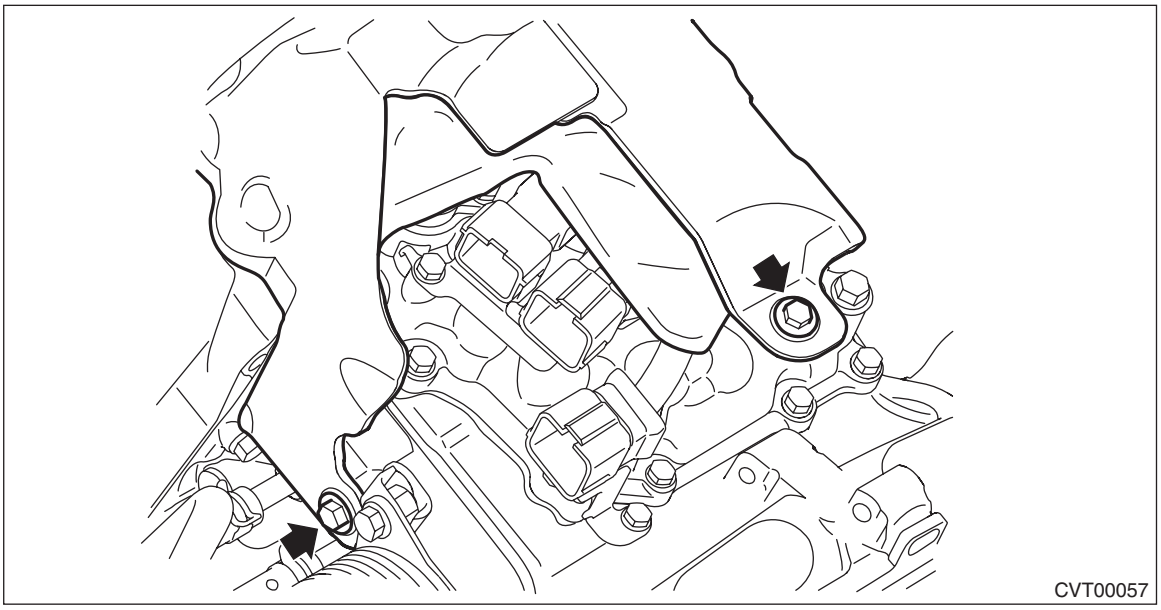

8) Remove the transmission harness stay, drive motor harness stay and transmission ground terminal.

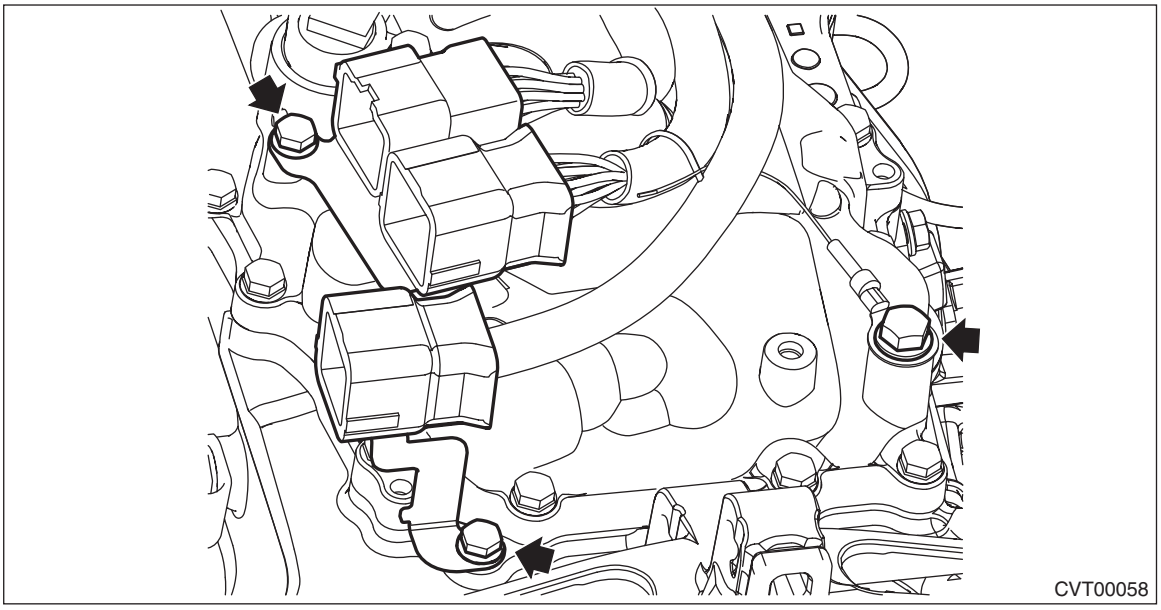

9) Remove the transmission harness connector from the harness stay.
10) Clean the transmission exterior.

11) Fix the ST with tape, and set the ST to the vehicle.

NOTE:
When replacing the control valve body, the sheet is included in the control valve body for repairs.
ST 18761AA010 SHEET SPECIAL TOOL

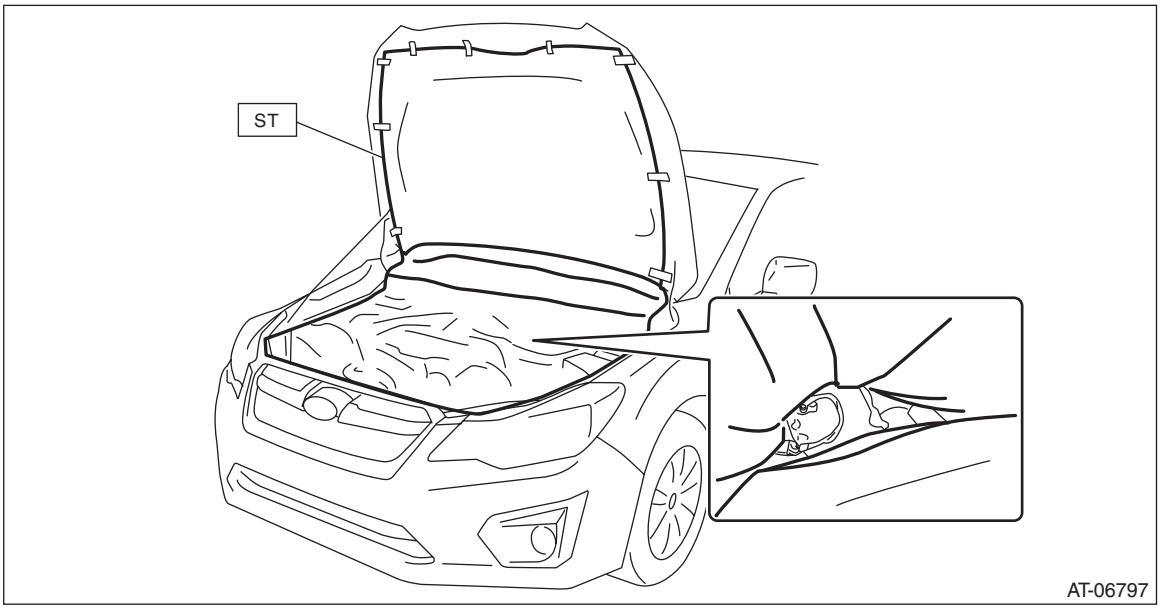

12) Remove the valve cover and gasket.

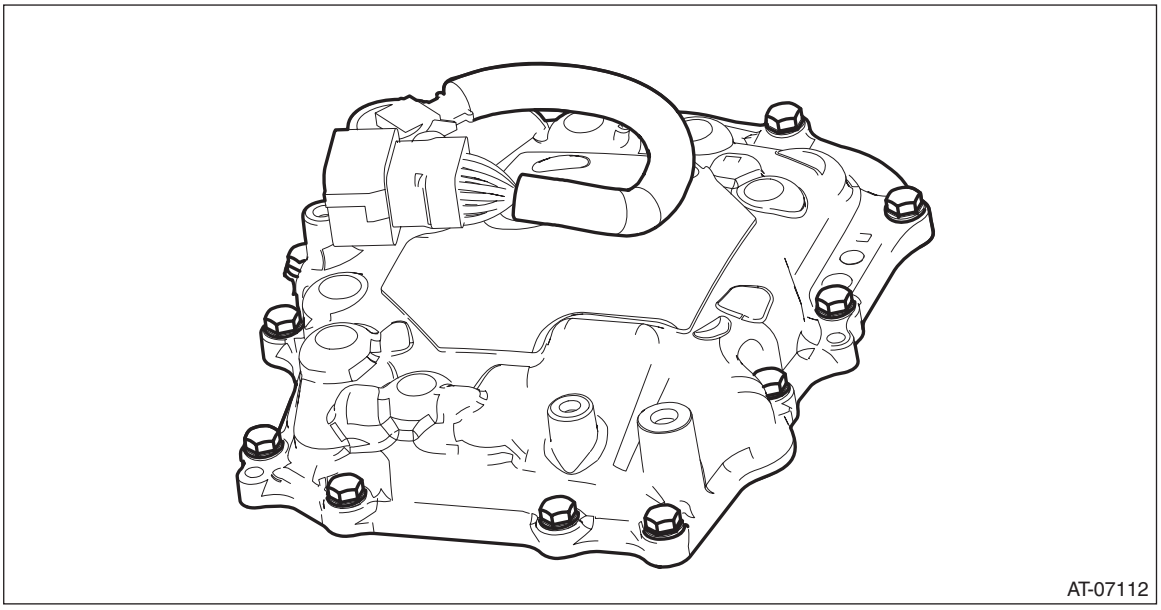

13) Disconnect the harness connector from the control valve body.

14) Remove the transmission harness from the valve cover.

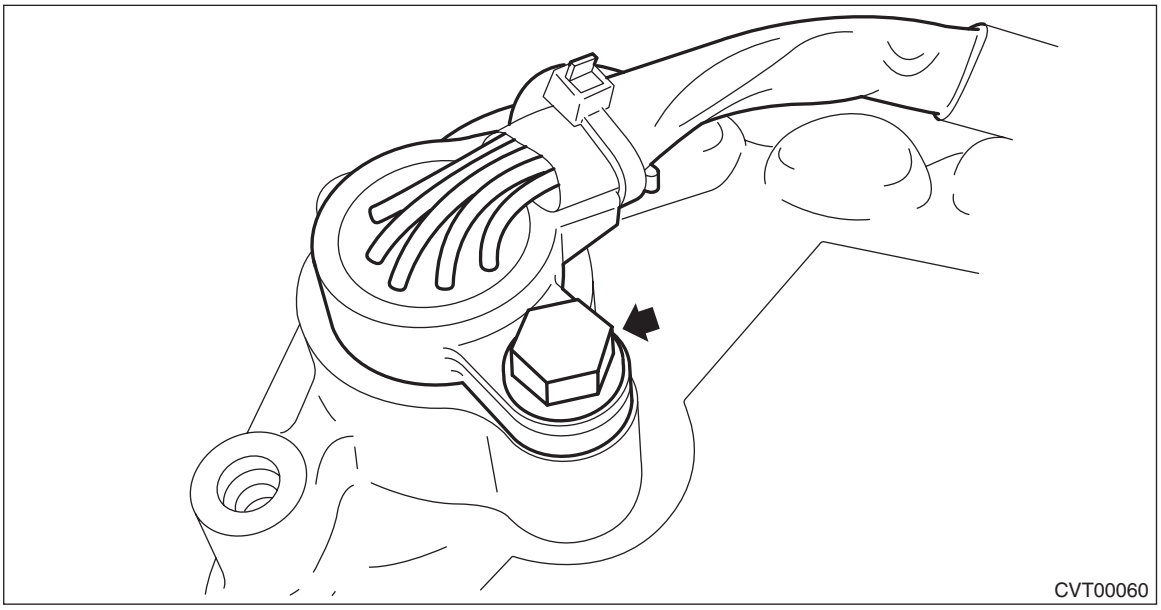

15) Remove the O-ring from the transmission harness.

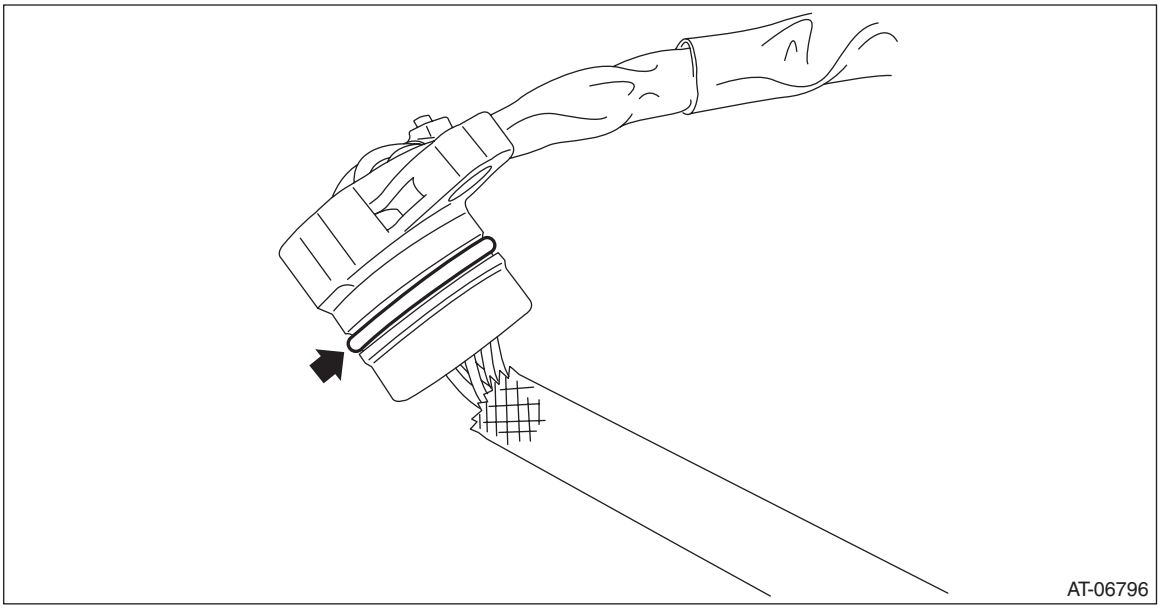

16) Remove the control valve body.

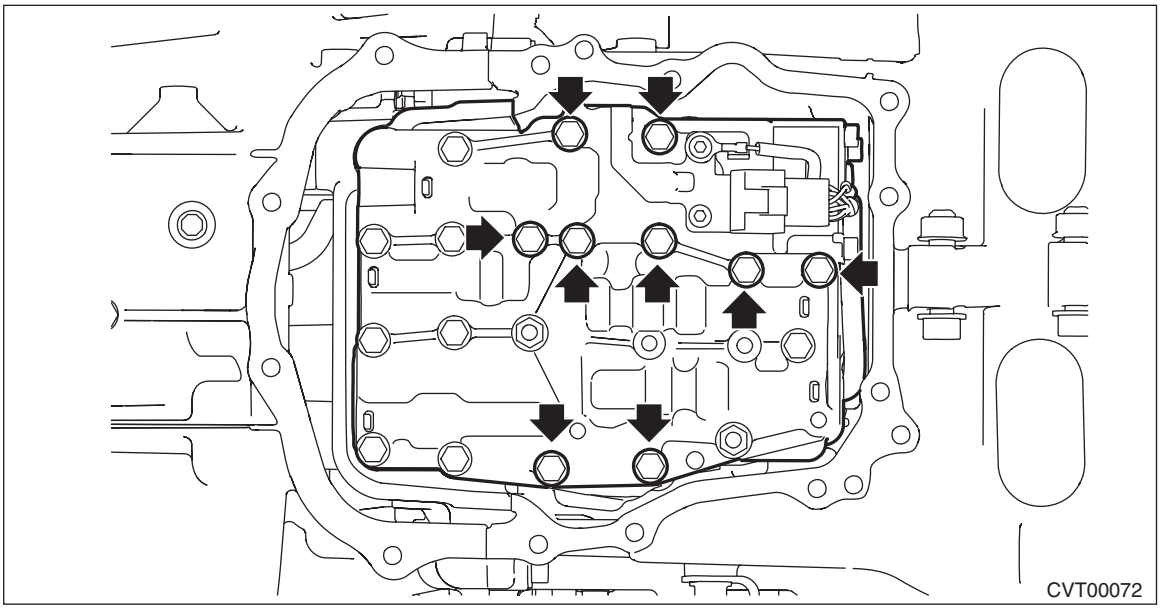

17) Remove the O-ring from the transmission.

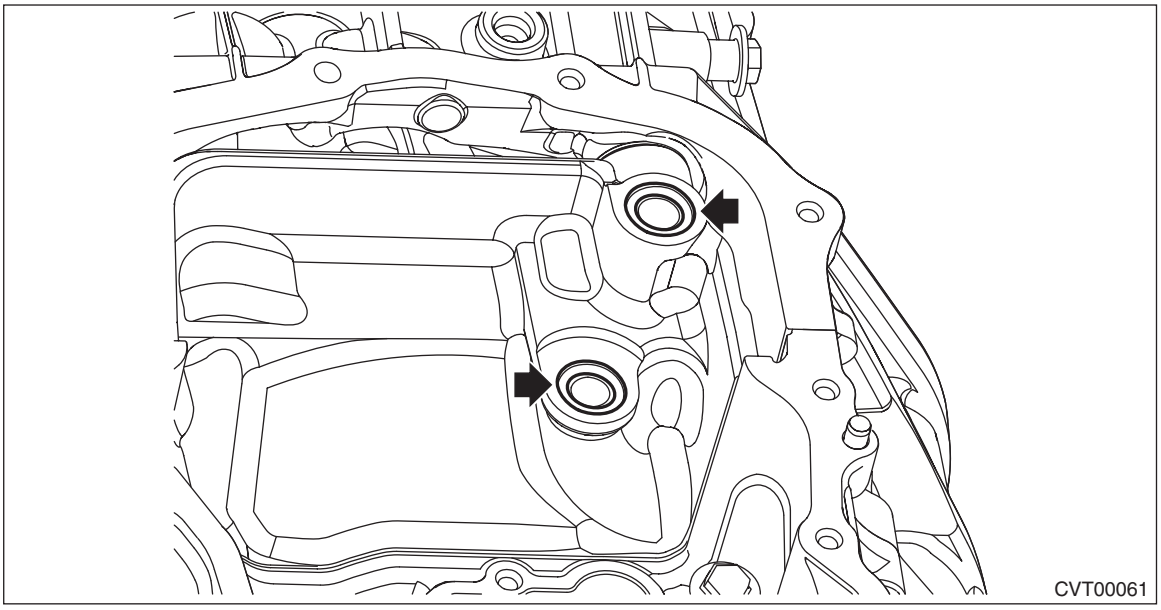

2. OUTPUT CLUTCH CONTROL VALVE BODY

CAUTION:
• Directly after the vehicle has been running or the engine has been idling for a long time, the CVTF is hot. Be careful not to burn yourself.
• Be careful not to spill CVTF on the exhaust pipe to prevent it from emitting smoke or causing a fire. If the CVTF adheres, wipe it off completely.
• Always clean the transmission before removal.

NOTE:
The output clutch control valve body is replaced as an assembly only, because it is a non-disassembly part.
1) Disconnect the ground cable from battery. <Ref. to NT-5, BATTERY, NOTE, Note.>

NOTE:
For the 12 volt engine restart battery, disconnect the ground terminal from 12V engine restart battery sensor.
2) Lift up the vehicle.

3) Remove the oil pan.

CAUTION:
Be careful not to allow foreign matter such as dust or dirt to enter the oil pan.

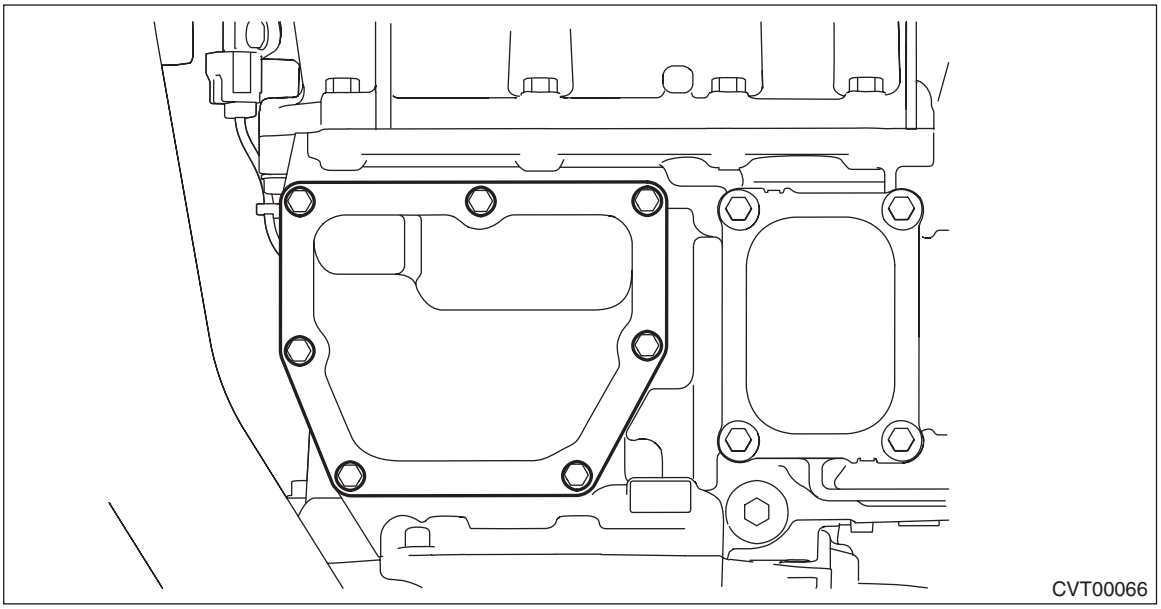

4) Remove the magnet.
5) Disconnect the harness connector from the solenoid.
6) Remove the control valve body and separate plate.

CAUTION:
Do not remove any bolts other than specified.

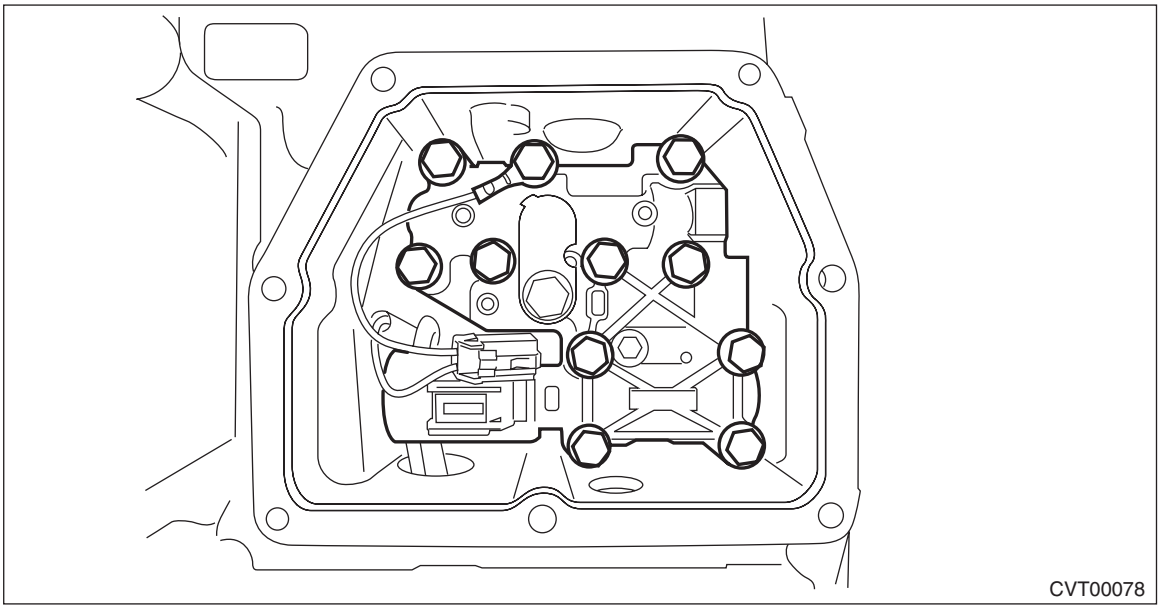

7) Remove the oil spacer.

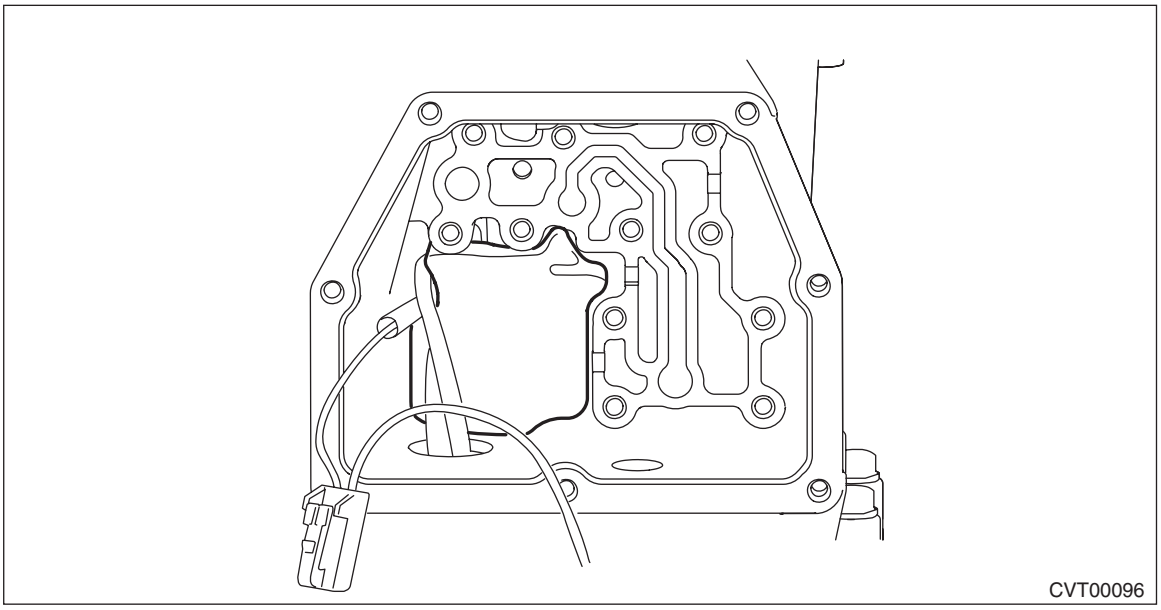

B: INSTALLATION

1. MAIN CONTROL VALVE BODY

1) Clean the mating surface of valve cover and transmission side.

CAUTION:
When cleaning the mating surface of the transmission side, be careful not to allow any dust, foreign matter and used liquid gasket to enter the transmission.

2) Check the control valve body for dust and other foreign matter.
3) Install the O-ring.

NOTE:
- Use new O-rings.
- Apply CVTF to the O-ring.

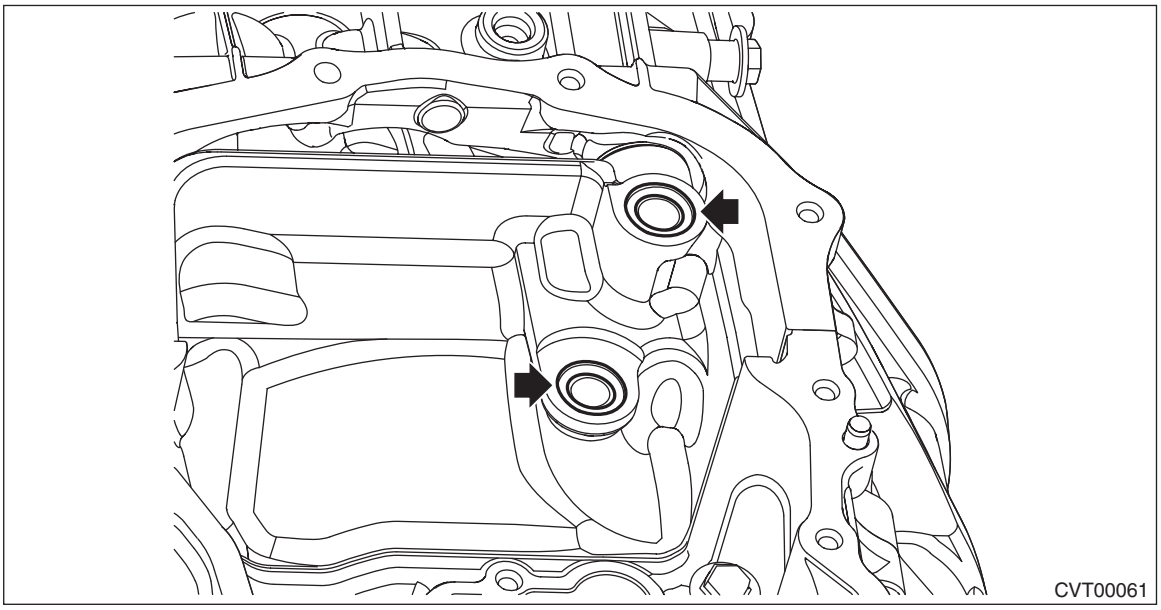

4) Install the control valve body.
(1) Install the control valve body to the transmission.

CAUTION:
- **Do not damage the O-ring.**
- **Perform installation so that the O-ring is not displaced.**

(2) Temporarily tighten the bolt (A: silver).

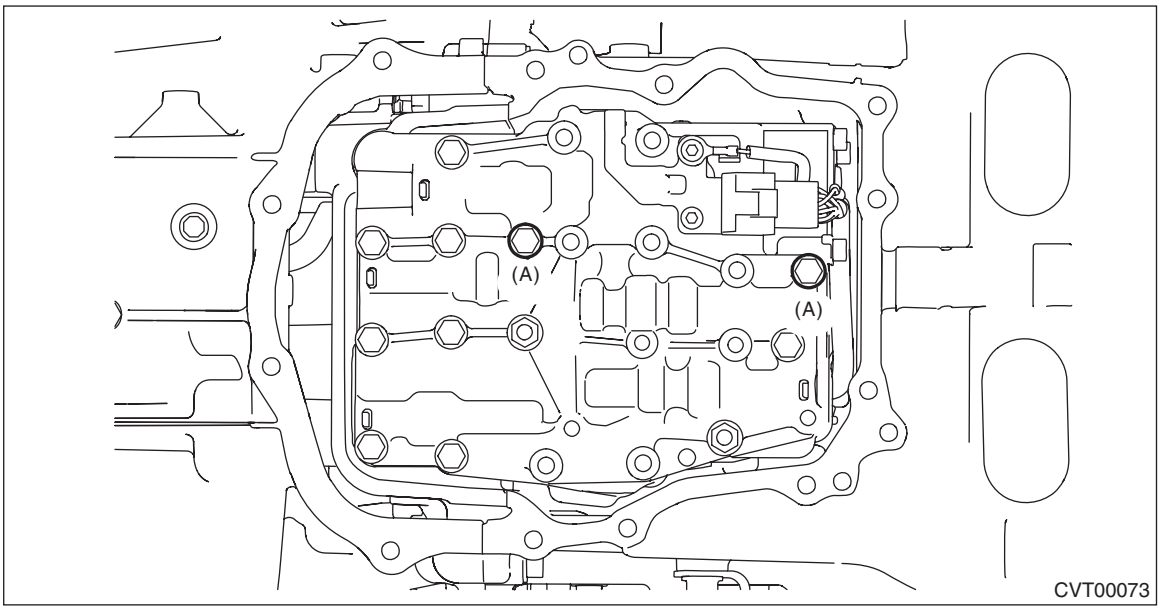

(3) Attach the bolt (B).

Tightening torque:
9 N·m (0.9 kgf-m, 6.6 ft-lb)

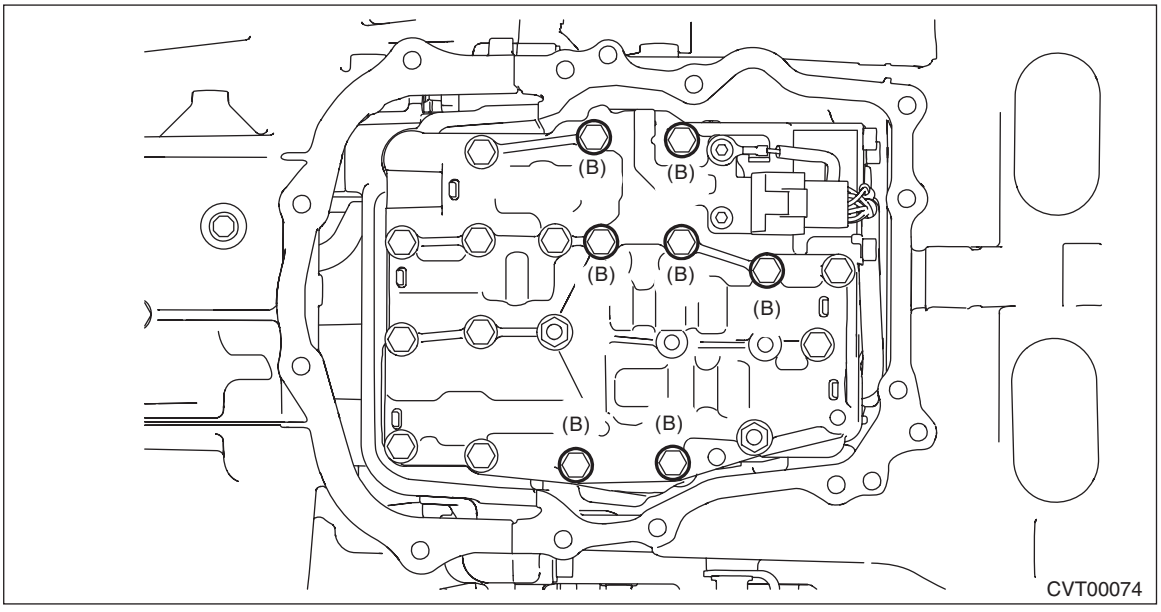

(4) Tighten the bolt (A: silver).

Tightening torque:
9 N·m (0.9 kgf-m, 6.6 ft-lb)

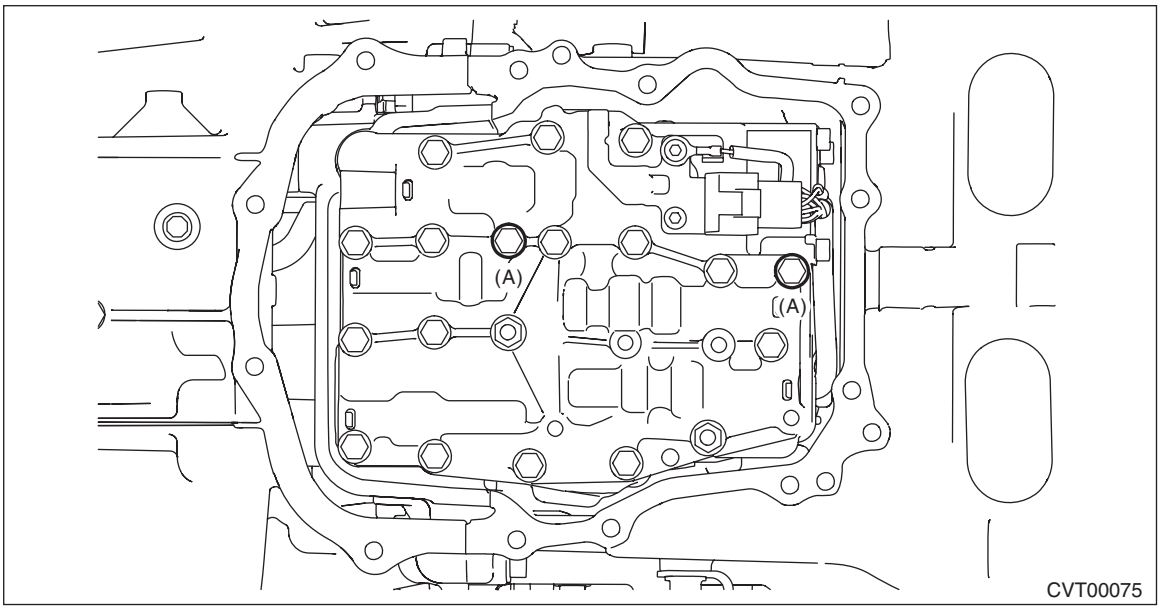

5) Install the O-ring to the transmission harness.

NOTE:
- Use new O-rings.
- Apply CVTF to the O-ring.

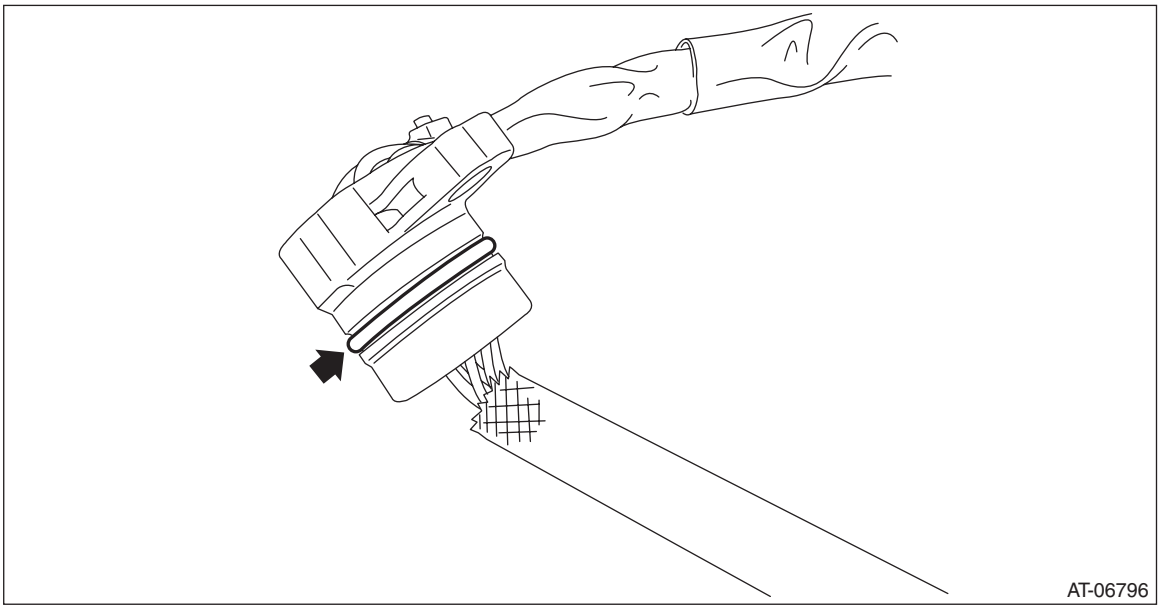

6) Install the transmission harness to the valve cover.

Tightening torque:
7 N·m (0.7 kgf-m, 5.2 ft-lb)

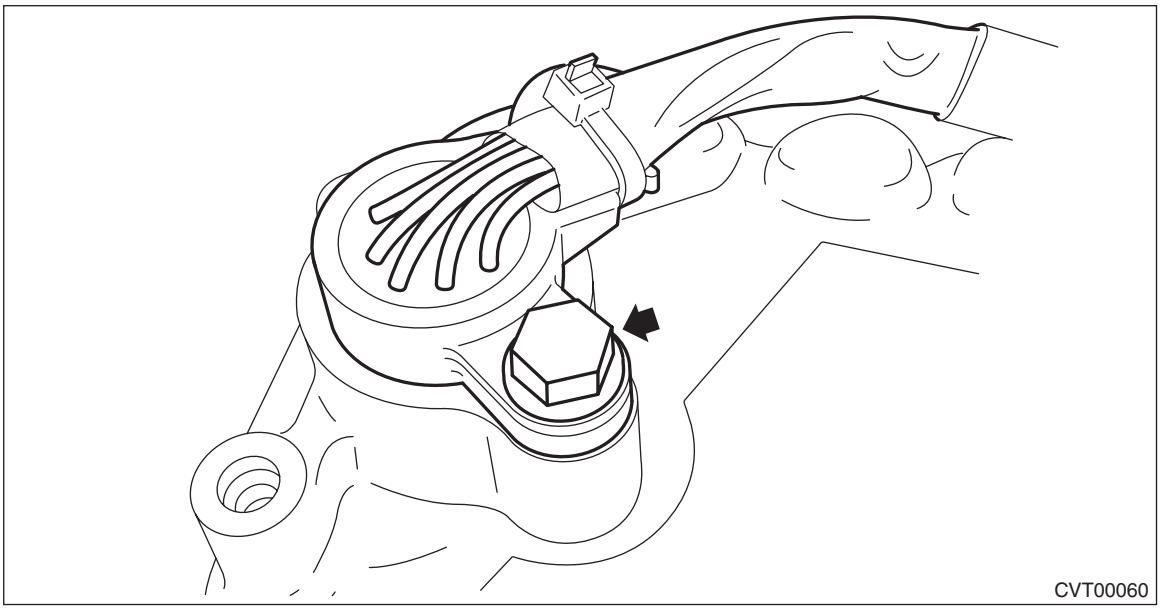
CVT00060

7) Install the gasket to the transmission.

NOTE:
Use a new gasket.

8) Apply liquid gasket to the oval hole of gasket.

Liquid gasket:
THREE BOND 1215 (Part No. 004403007) or equivalent

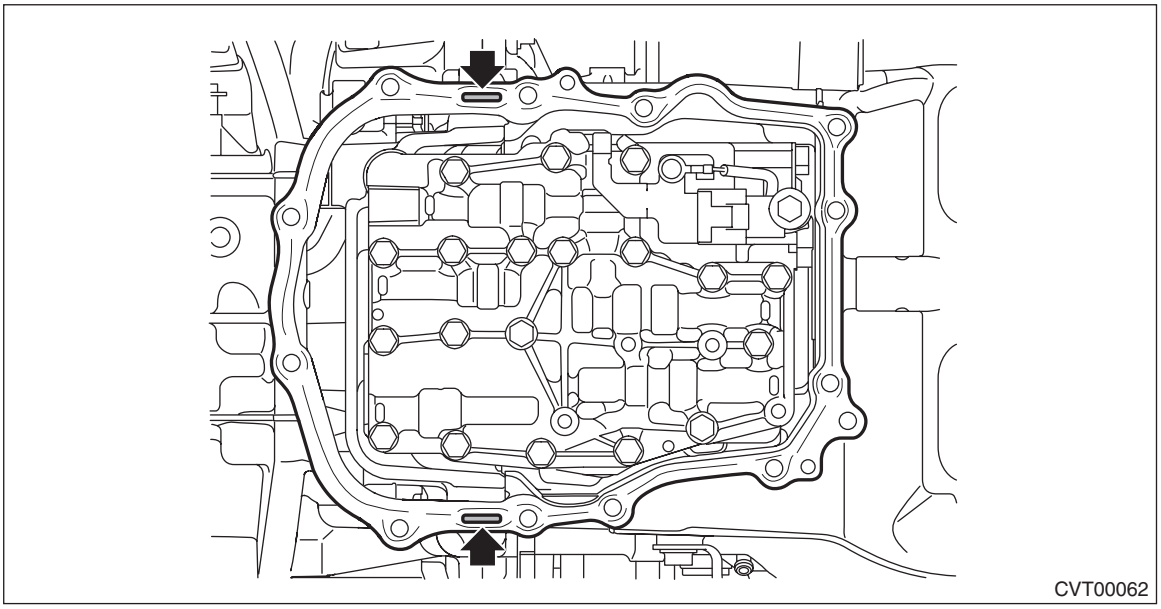
CVT00062

9) Connect the transmission harness connector to the control valve body, and install the valve cover.

CAUTION:
Be careful not to catch the sheet of the ST.

Tightening torque:
9 N·m (0.9 kgf-m, 6.6 ft-lb)

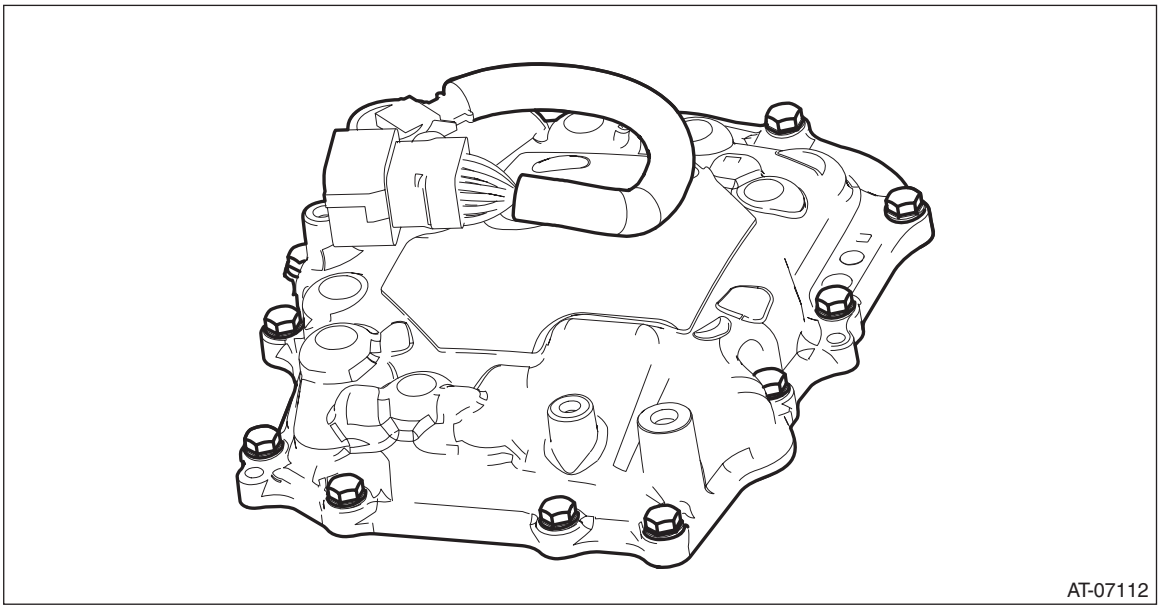

10) Remove the ST (SHEET SPECIAL TOOL).
11) Install the transmission harness connector to the harness stay.
12) Install the transmission harness stay, drive motor harness stay and transmission ground terminal.

NOTE:
Install the transmission ground terminal in the direction within the range of approx. 30° (A).

Tightening torque:
T1: 7 N·m (0.7 kgf-m, 5.2 ft-lb)
T2: 14 N·m (1.4 kgf-m, 10.3 ft-lb)

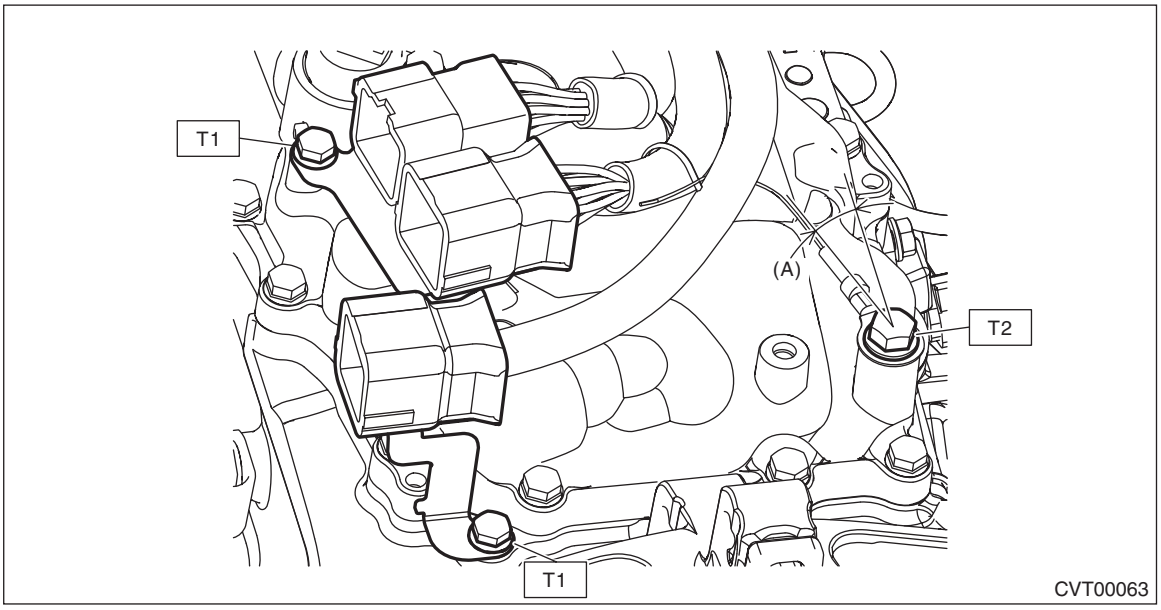

13) Insert the transmission case cover (small) between the transmission case cover (large) and the transmission to install.

Tightening torque:
8 N·m (0.8 kgf-m, 5.9 ft-lb)

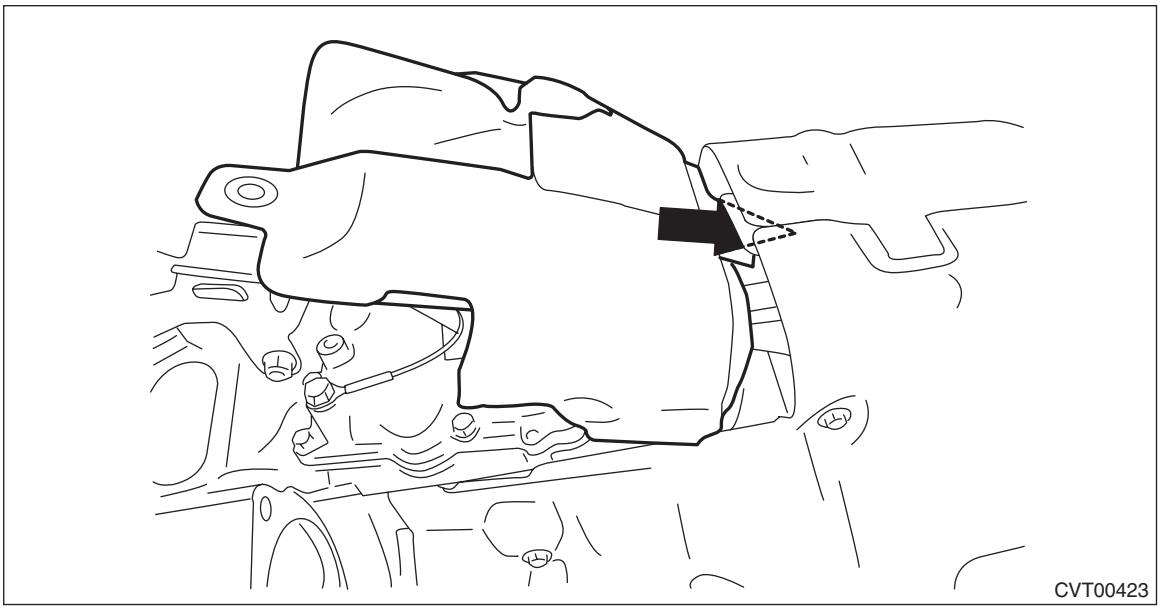

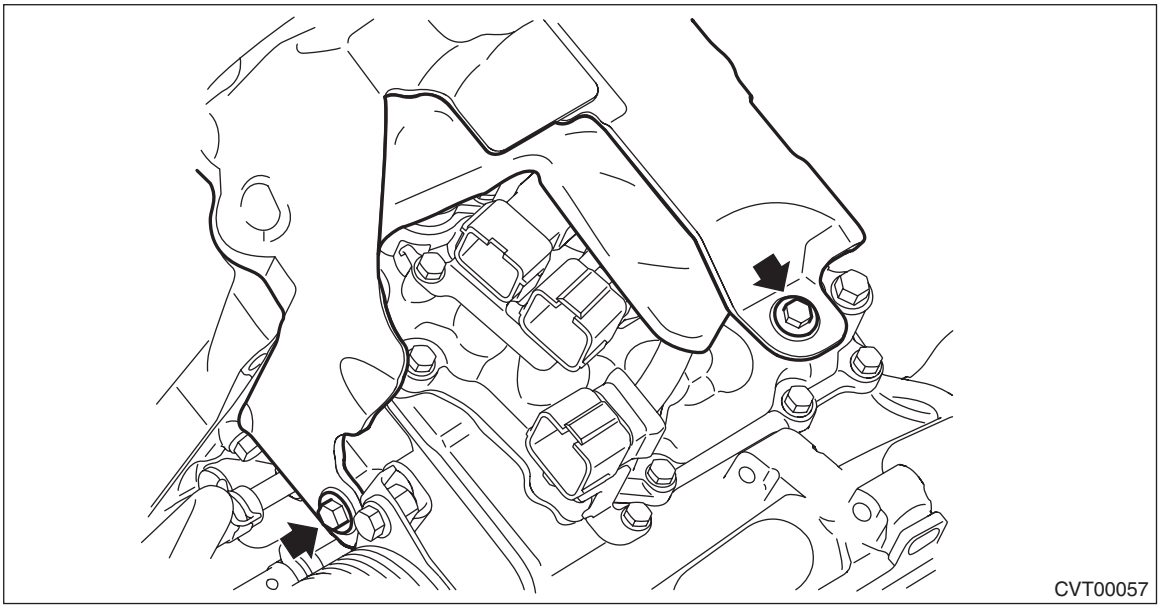

14) Install the pitching stopper bracket and transmission radio ground cord.

Tightening torque:
41 N·m (4.2 kgf-m, 30.2 ft-lb)

15) Install the air breather hose to the pitching stopper bracket. <Ref. to CVT(TH58A)-171, FRONT DIFFERENTIAL SIDE, INSTALLATION, Air Breather Hose.>

16) Install the pitching stopper. <Ref. to CVT(TH58A)-88, PITCHING STOPPER, INSTALLATION, Transmission Mounting System.>

17) Connect the following connectors and install the harness clip to the bracket.
- Transmission radio ground terminal
- Transmission harness connectors
- Inhibitor harness connector
- Drive motor harness connector
- Engine harness connectors
- Harness clip

Tightening torque:
13 N·m (1.3 kgf-m, 9.6 ft-lb)

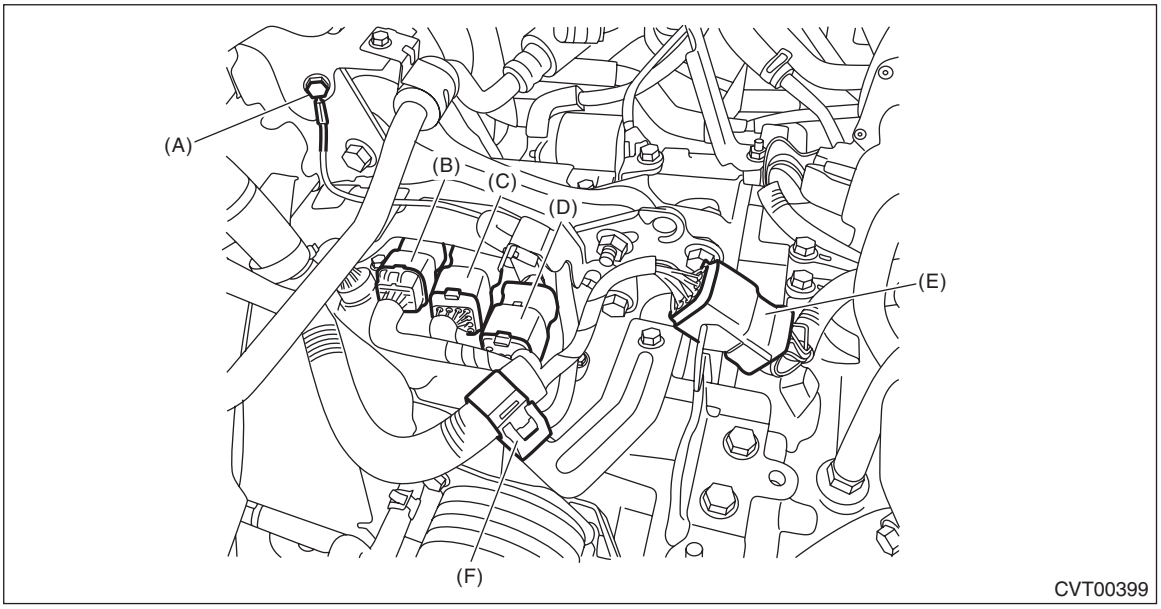

(A) Transmission radio ground terminal
(B) Transmission harness connectors
(C) Inhibitor harness connector
(D) Drive motor harness connector
(E) Engine harness connectors
(F) Harness clip

18) Install the air cleaner case and bracket. <Ref. to IN(H4DO(HEV))-8, INSTALLATION, Air Cleaner Case.>
19) Install the collector cover.
20) Install the 12 volt auxiliary battery ground terminal and ground terminal to the 12V engine restart battery sensor of the 12 volt engine restart battery. <Ref. to NT-5, BATTERY, NOTE, Note.>
21) Refill CVTF to adjust the CVTF level. <Ref. to CVT(TH58A)-41, ADJUSTMENT, CVTF.>
22) Perform the operation of AT learning mode. <Ref. to CVT(HEV)(diag)-24, Learning Control.>

2. OUTPUT CLUTCH CONTROL VALVE BODY

1) Clean the mating surface of oil pan and drive motor case.
2) Clean the magnet.
3) Attach the magnet at the specified position of the oil pan.
4) Install the oil spacer.
5) Install the control valve body.
   (1) Temporarily attach the separator plate and output clutch control valve with two bolts.

NOTE:
Apply CVTF to the bolt seating surface.

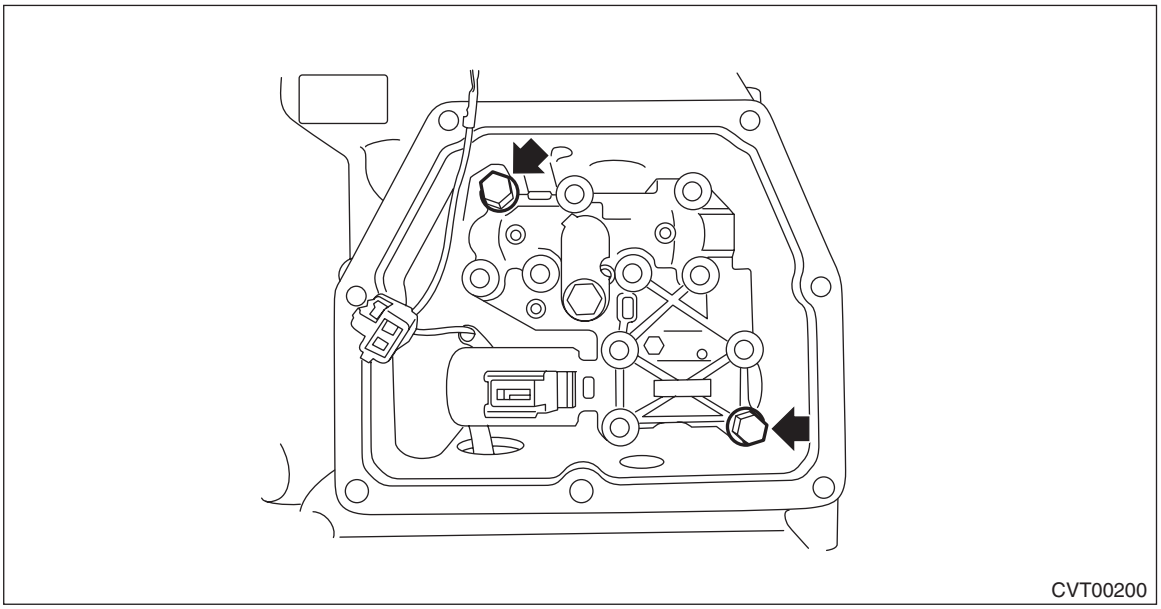

   (2) Install the bolt and the ground terminal.

NOTE:
Apply CVTF to the bolt seating surface.

Tightening torque:
9 N·m (0.9 kgf-m, 6.6 ft-lb)

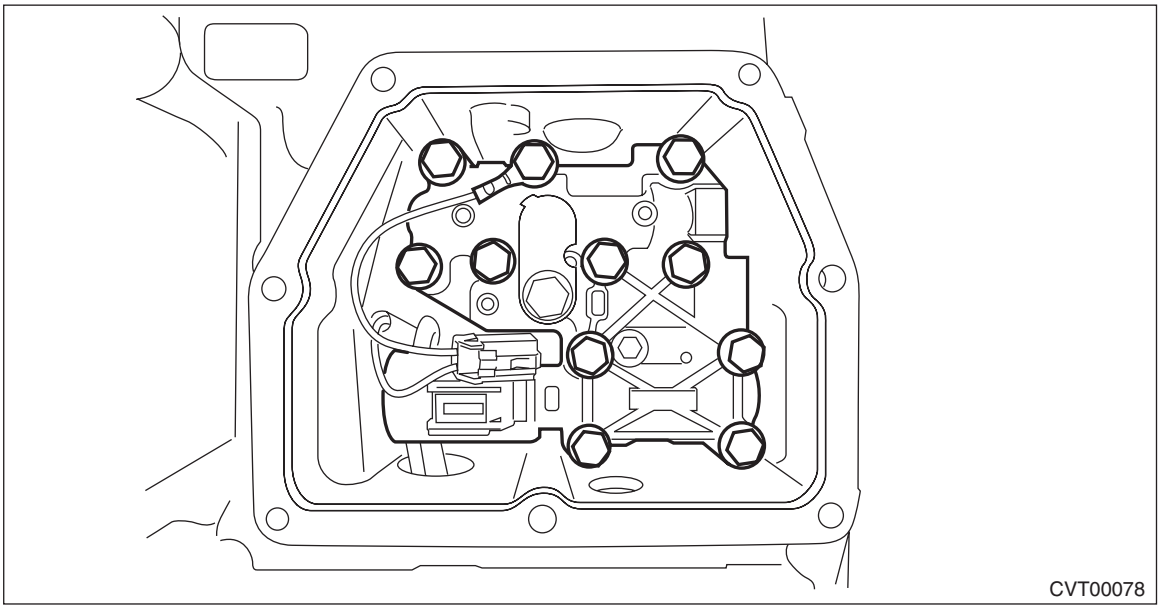

   (3) Install the harness connector to the solenoid.

6) Apply liquid gasket all around the oil pan mating surface seamlessly.

Liquid gasket:
THREE BOND 1217B (Part No. K0877YA020) or equivalent

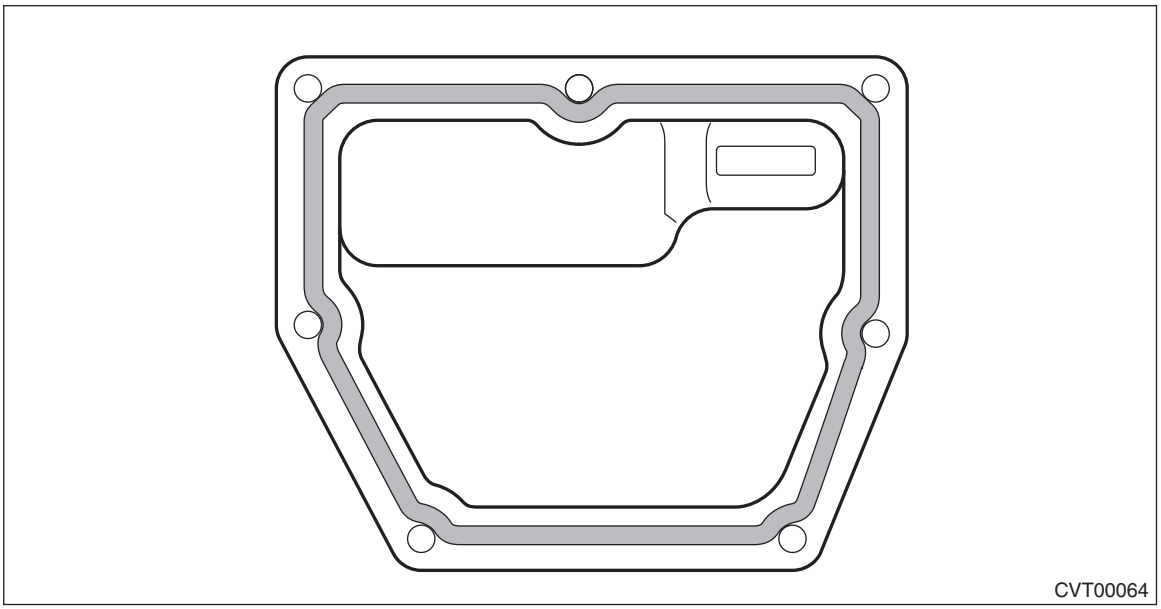

7) Install the oil pan by equally tightening the bolts.

Tightening torque:
5 N·m (0.5 kgf-m, 3.7 ft-lb)

8) Install the 12 volt auxiliary battery ground terminal and ground terminal to the 12V engine restart battery sensor of the 12 volt engine restart battery. <Ref. to NT-5, BATTERY, NOTE, Note.>
9) Refill CVTF to adjust the CVTF level. <Ref. to CVT(TH58A)-41, ADJUSTMENT, CVTF.>
10) Perform the operation of AT learning mode five times. <Ref. to CVT(HEV)(diag)-24, Learning Control.>

C: INSPECTION

- Check each part for damage or dust.
- Measure the resistance of each solenoid, sensor and ground wire.

NOTE:
Measurement should be performed at a temperature of 20°C (68°F).

1. MAIN CONTROL VALVE BODY

- **Solenoid**

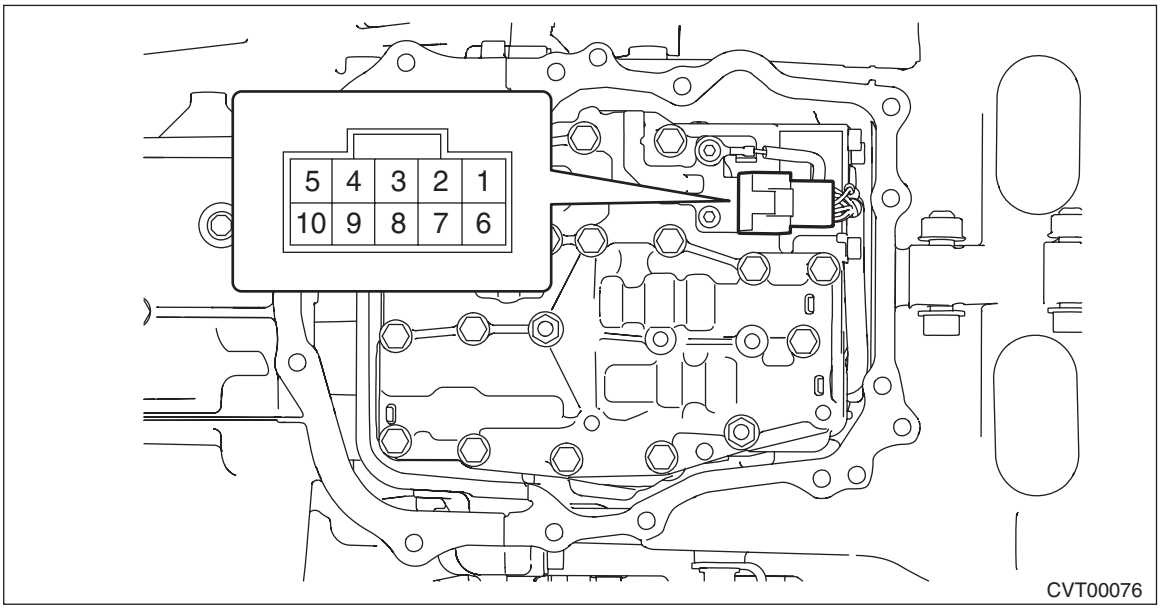

Solenoid	Terminal No.	Standard (Ω)
Primary UP solenoid	No. 2 — control valve body	Approx. 10 — 13.5 Ω
Secondary solenoid	No. 3 — control valve body	Approx. 5 — 7 Ω
F&R clutch solenoid	No. 4 — control valve body	Approx. 4 — 6 Ω
Primary DOWN solenoid	No. 7 — control valve body	Approx. 10 — 13.5 Ω
Lock-up duty solenoid	No. 9 — control valve body	Approx. 10 — 13.5 Ω
AWD solenoid	No. 10 — control valve body	Approx. 2 — 4.5 Ω

- **Oil temperature sensor**

Sensor	Terminal No.	Standard (Ω) At 20°C (68°F)
Oil temperature sensor	No. 1 — No. 6	Approx. 2.5 kΩ

- **Transmission ground**

Terminal No.	Standard (Ω)
No. 8 — control valve body	Less than 1 Ω

2. OUTPUT CLUTCH CONTROL VALVE BODY

- **Solenoid**

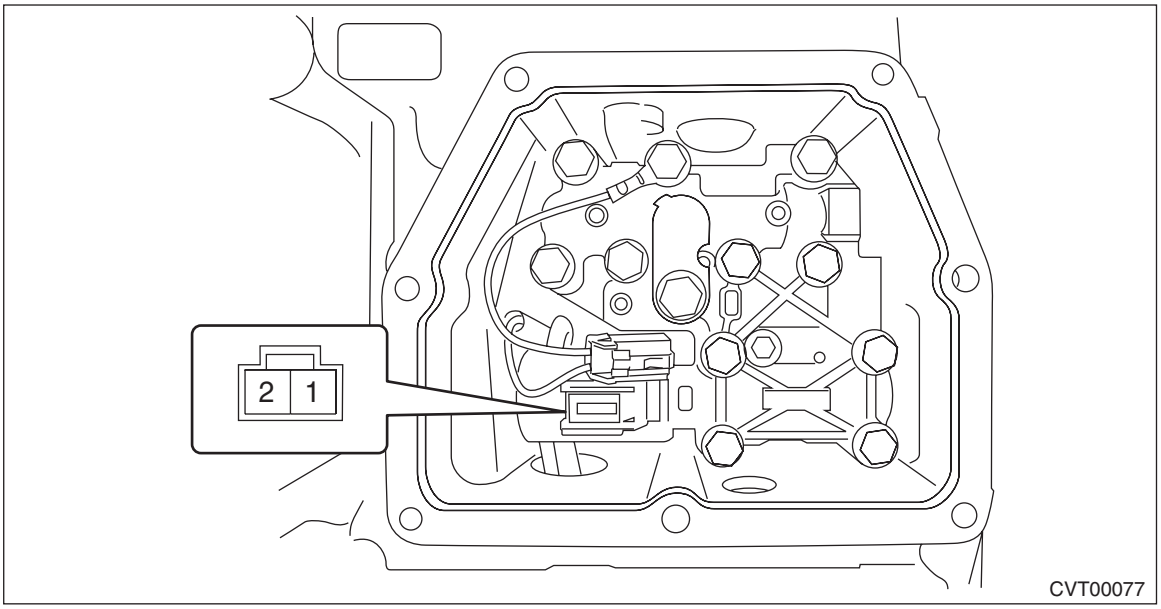

Solenoid	Terminal No.	Standard (Ω)
Output clutch solenoid	No. 1 — No. 2	Approx. 4 — 6 Ω

22.Electric Fluid Pump

A: REMOVAL

WARNING:
The hybrid system includes a high voltage circuit. Mishandling could cause accidents such as electric shock or leak. Always check "CAUTION (HYBRID SYSTEM)" and perform the proper operation. <Ref. to PC-6, CAUTION (HYBRID SYSTEM), Precaution.>

CAUTION:
• Directly after the vehicle has been running or the engine has been idling for a long time, the CVTF is hot. Be careful not to burn yourself.
• Be careful not to spill CVTF on the exhaust pipe to prevent it from emitting smoke or causing a fire. If the CVTF adheres, wipe it off completely.
• Always clean the transmission before removal.

NOTE:
The electric oil pump is replaced as an assembly only, because it is a non-disassembly part.
1) Disconnect the ground cable from battery. <Ref. to NT-5, BATTERY, NOTE, Note.>

NOTE:
For the 12 volt engine restart battery, disconnect the ground terminal from 12V engine restart battery sensor.
2) Remove the service disconnect plug. <Ref. to HEV-15, REMOVAL, Service Plug.>

WARNING:
After pulling out the service disconnect plug, a high voltage is accumulated in the condenser inside the inverter. If touching the high voltage parts, wiring harness, terminals and connectors is required, wait for 10 minutes before starting the operation.
3) Remove the collector cover.
(1) Pull up the two points at the front of collector cover (A).
(2) Pull up the two points at the rear of collector cover (B) while moving them rearward.

NOTE:
Be careful not to contact the fuel delivery tube when moving the collector cover rearward.

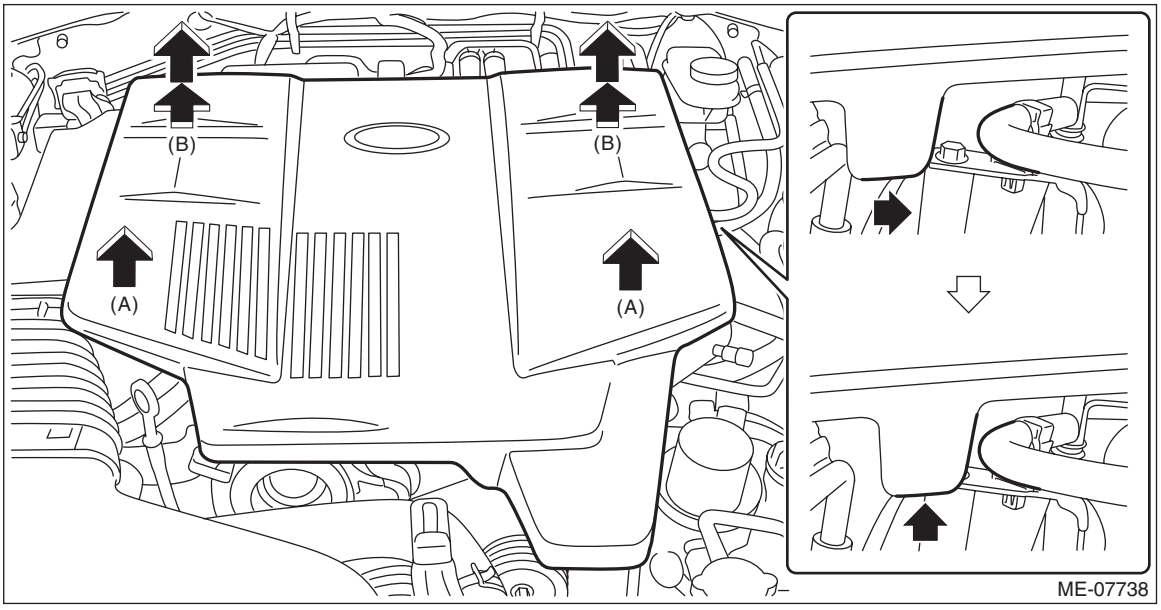

4) Remove the air cleaner case. <Ref. to IN(H4DO(HEV))-6, REMOVAL, Air Cleaner Case.>
5) Remove the pitching stopper. <Ref. to CVT(TH58A)-86, PITCHING STOPPER, REMOVAL, Transmission Mounting System.>
6) Lift up the vehicle.
7) Remove the center exhaust pipe. <Ref. to EX(H4DO(w/o HEV))-18, REMOVAL, Rear Exhaust Pipe.>
8) Remove the center exhaust cover.

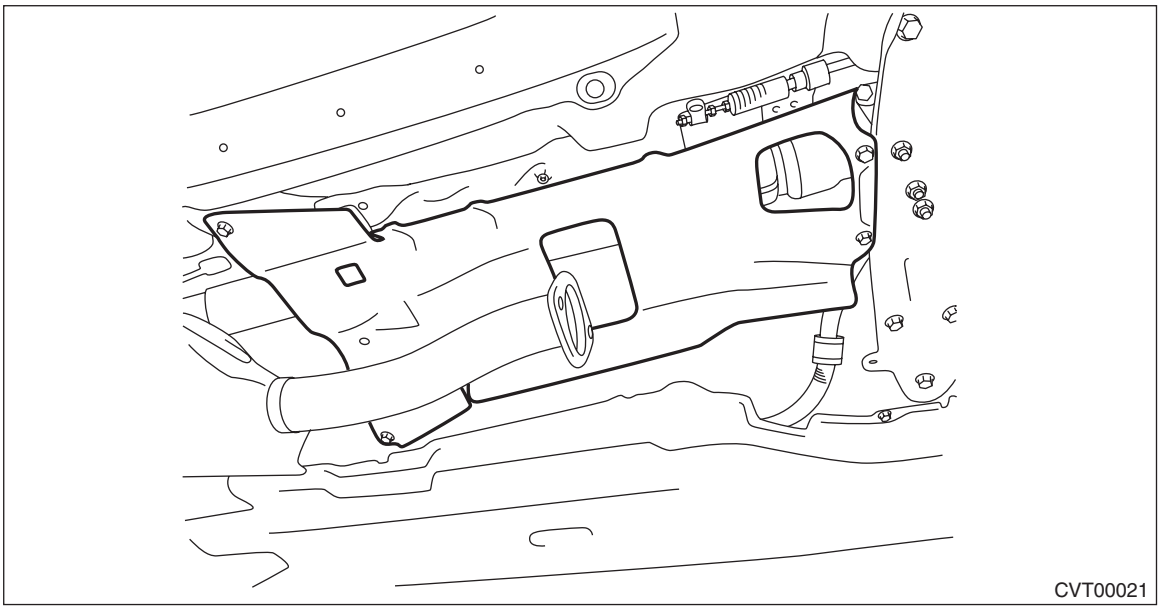
CVT00021

9) Remove the under cover - cable.

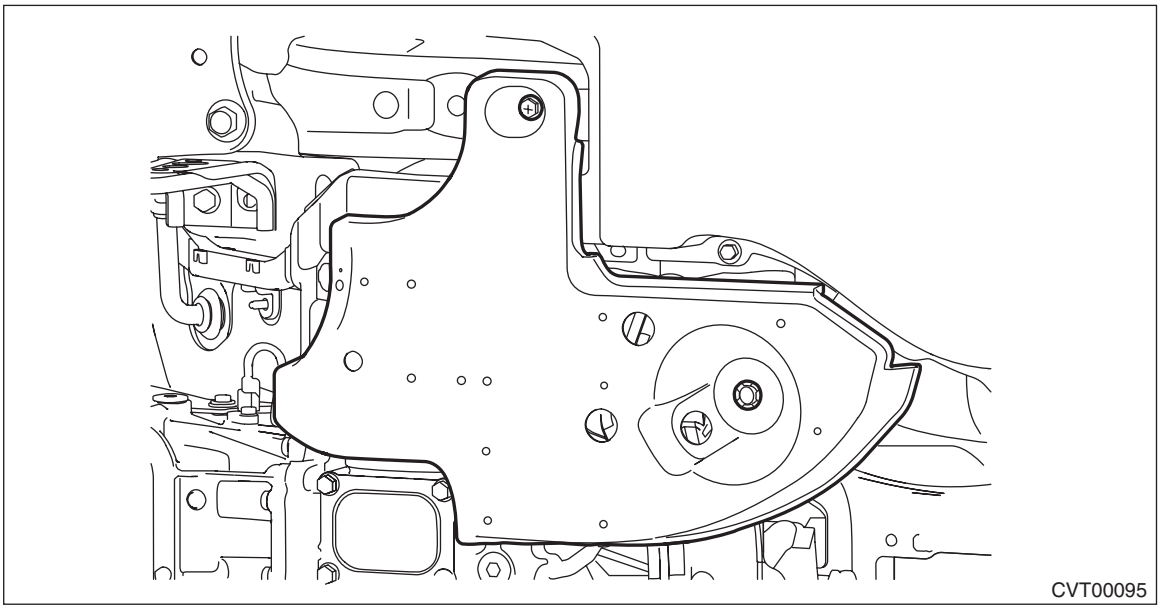
CVT00095

10) Remove the under cover - rear LH. <Ref. to EI-31, REMOVAL, Floor Under Protector.>

11) Remove the electric oil pump harness connector.

WARNING:
Be sure to wear insulated gloves.

CAUTION:
• To prevent intrusion of foreign matter such as oil, water and dirt after removal, cover the female side connector with a clean cloth or a plastic bag and cover the coupler portion of the male side connector with insulating tape.
• When foreign matter is found, remove it while paying attention not to damage the electrode inside. If water is attached, dry it completely.
• When disconnecting the electric oil pump harness connector, do not apply excessive force or damage it.

(1) Pull the slide lock (A) in the direction of arrow.
(2) Disconnect the harness connector by pushing the claw (B).

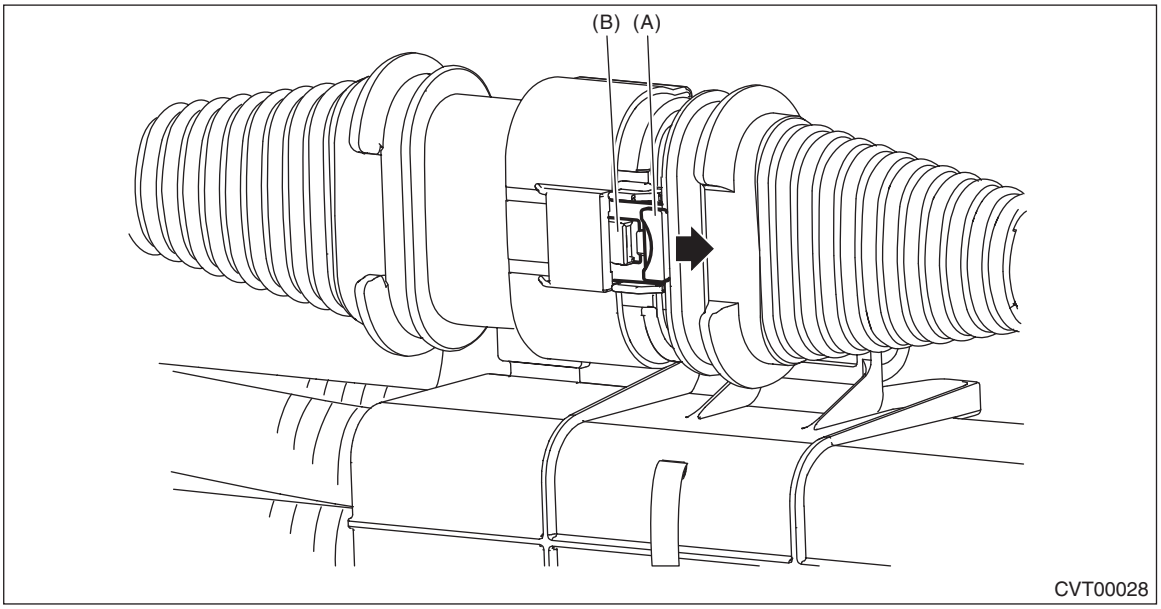

(3) Release the clip of the electric oil pump harness from the vehicle.

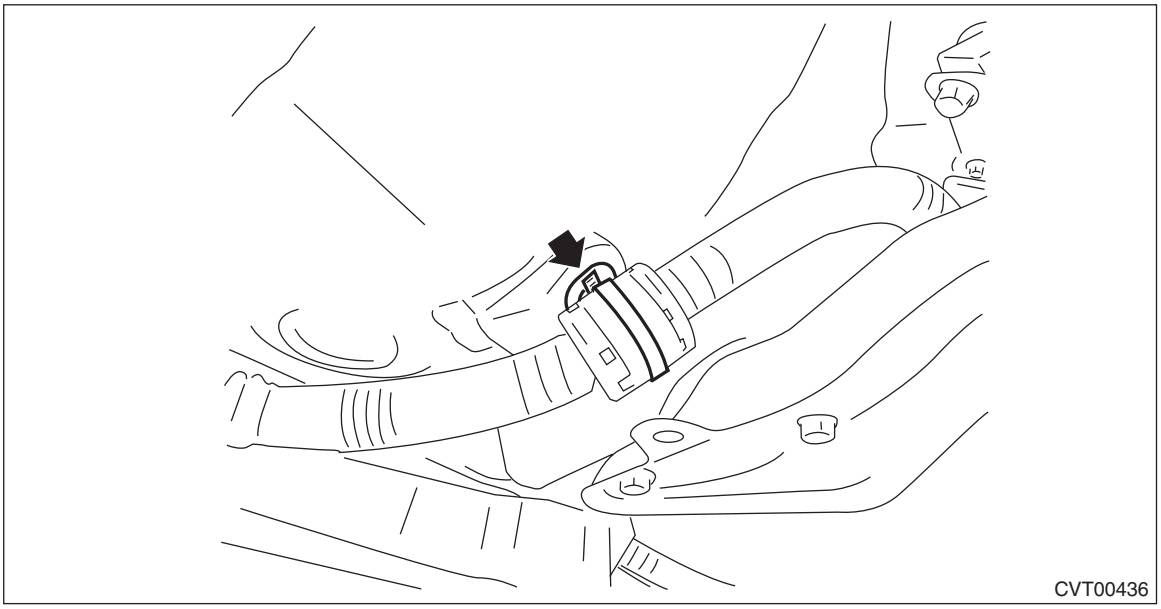

12) Set the transmission jack under the transmission.
13) Remove the rear crossmember. <Ref. to CVT(TH58A)-87, TRANSMISSION REAR CROSSMEMBER AND REAR CUSHION RUBBER, REMOVAL, Transmission Mounting System.>
14) Lower the transmission.
15) Release the harness clips, then remove the air breather hose, harness bracket and ground terminal.

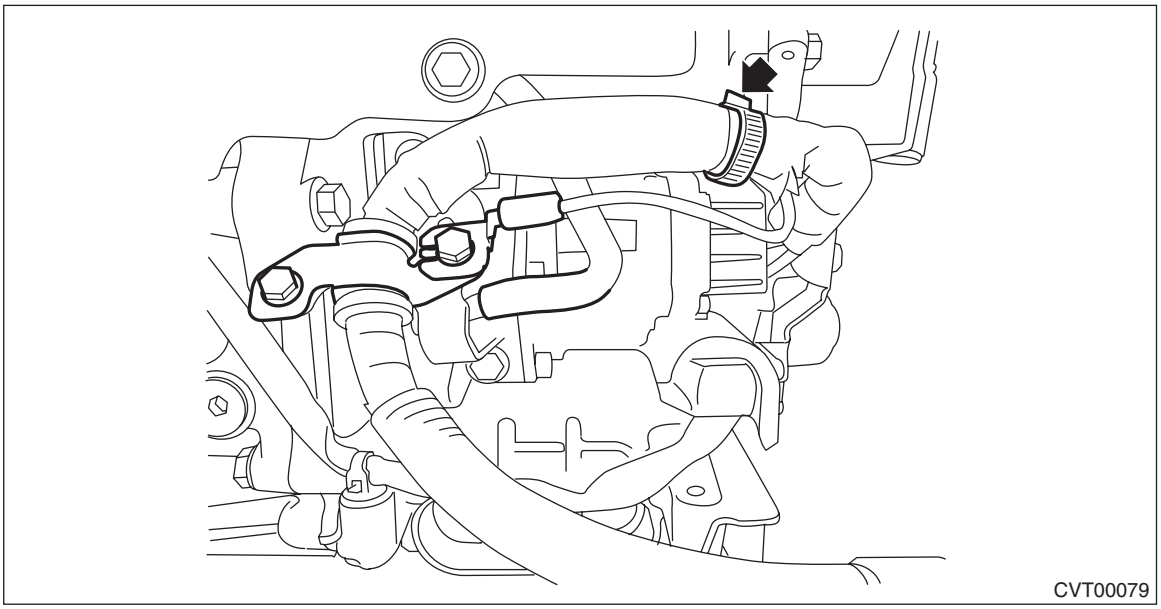

16) Remove the electric oil pump assembly and the harness bracket COMP.

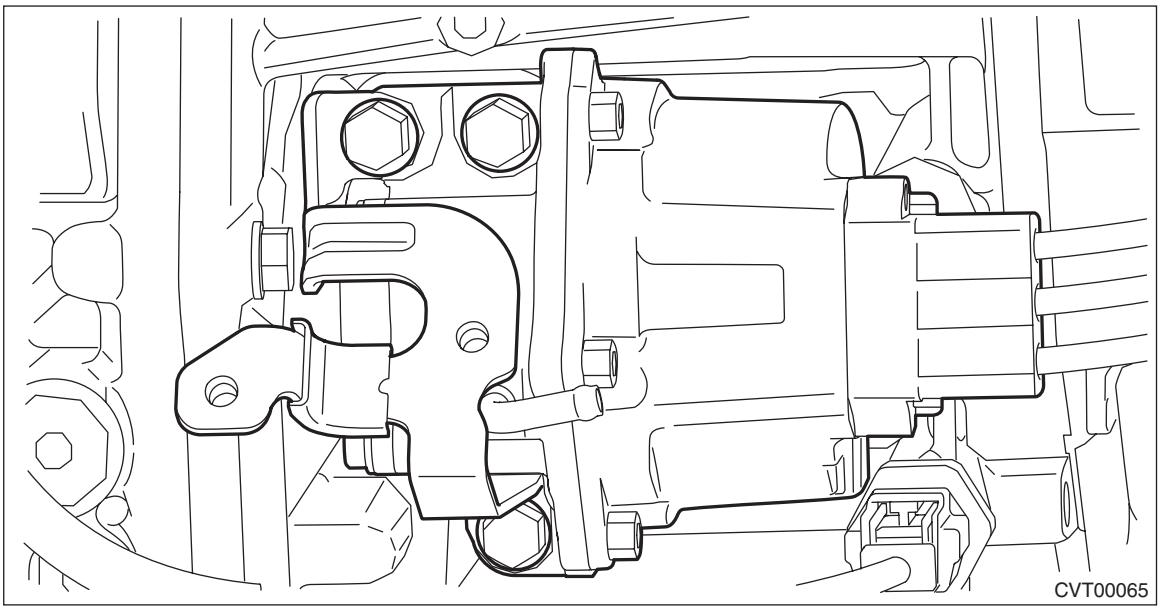

17) Remove the O-ring.

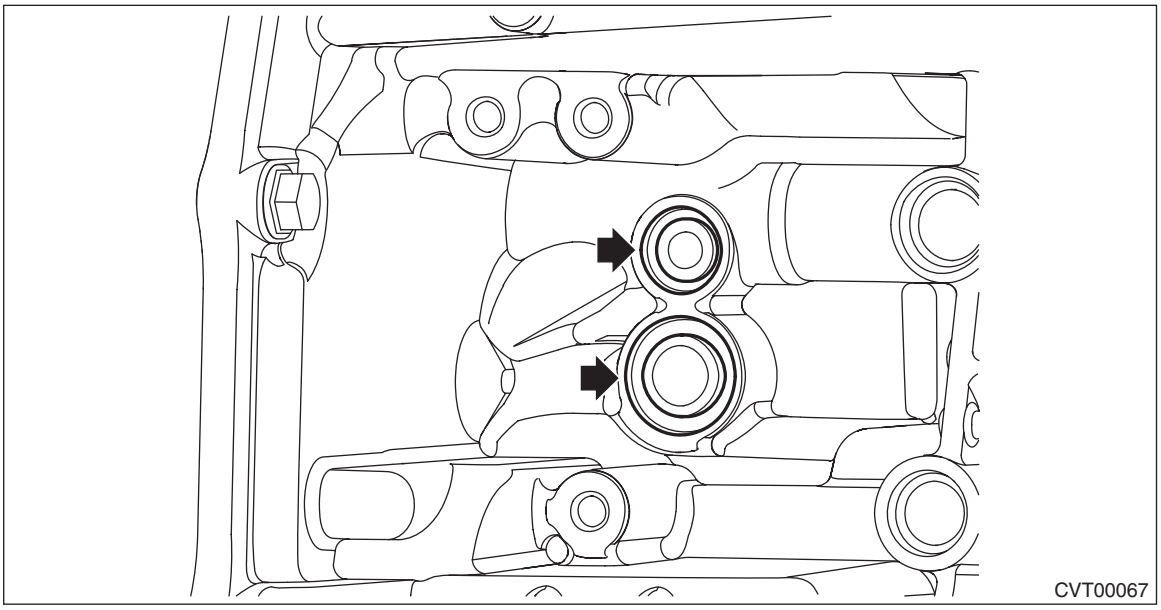

B: INSTALLATION

WARNING:
The hybrid system includes a high voltage circuit. Mishandling could cause accidents such as electric shock or leak. Always check "CAUTION (HYBRID SYSTEM)" and perform the proper operation. <Ref. to PC-6, CAUTION (HYBRID SYSTEM), Precaution.>

CAUTION:
- **Do not apply excessive force or damage the electric oil pump harness.**
- **Be careful not to twist the electric oil pump harness.**
- **When cleaning the mating surface of the transmission side, be careful not to allow any dust or dirt to enter the transmission.**

1) Install the O-ring to the transmission case.

NOTE:
- Use new O-rings.
- Apply CVTF to the O-ring.

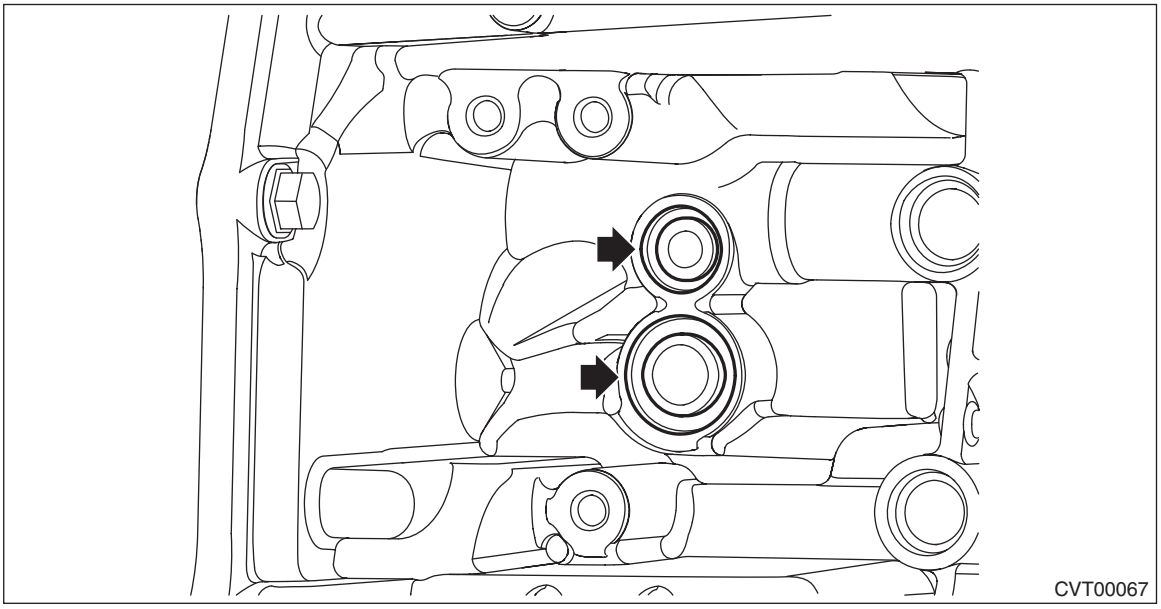

2) Install the electric oil pump assembly and the harness bracket COMP.

Tightening torque:
22 N·m (2.2 kgf-m, 16.2 ft-lb)

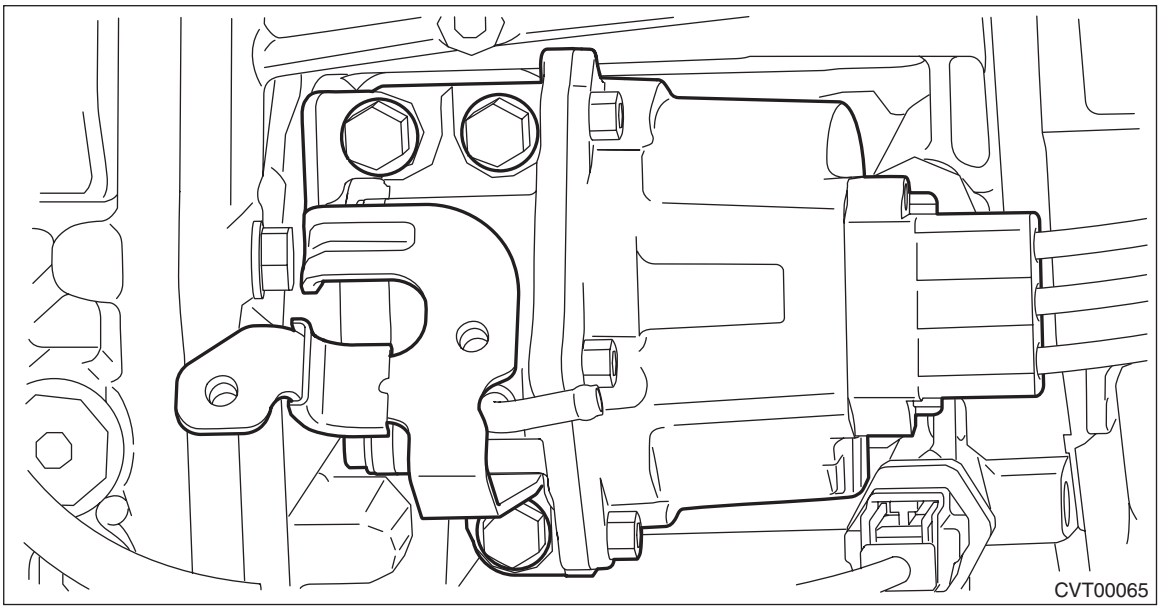

3) Install the harness clips to the bracket, then install the air breather hose, electric oil pump harness, harness bracket and ground terminal.

CAUTION:
When installing the electric oil pump harness clips, be careful not to twist the electric oil pump harness by 360°.

Tightening torque:
8 N·m (0.8 kgf-m, 13.3 ft-lb)

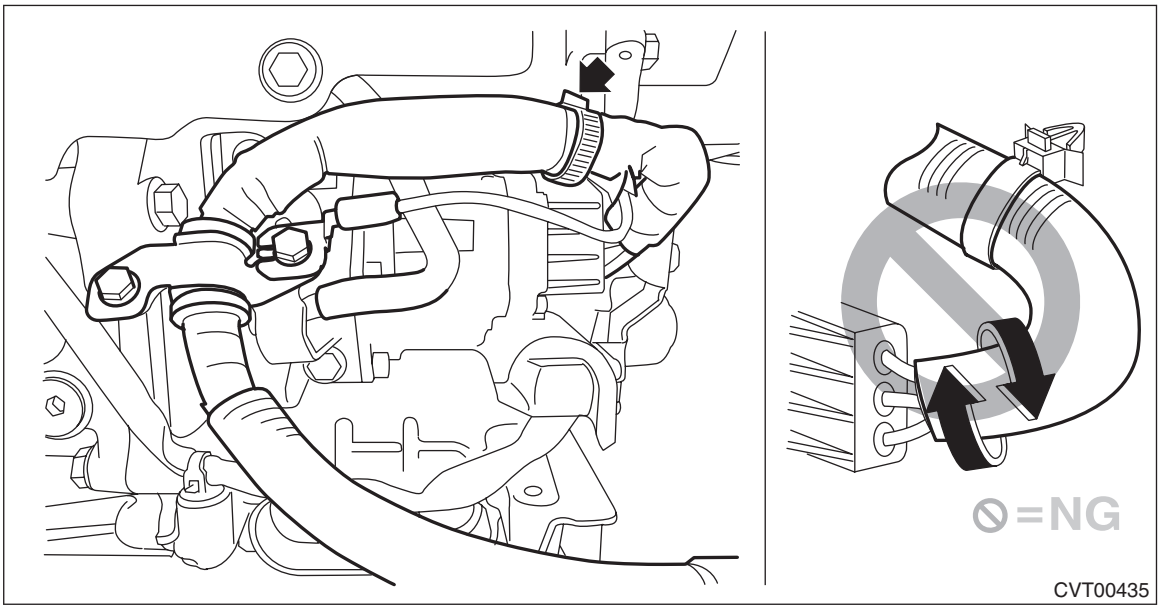

4) Raise the transmission, and install the rear crossmember. <Ref. to CVT(TH58A)-89, TRANSMISSION REAR CROSSMEMBER AND REAR CUSHION RUBBER, INSTALLATION, Transmission Mounting System.>
5) Install the exhaust cover.

Tightening torque:
18 N·m (1.8 kgf-m, 13.3 ft-lb)

6) Install the electric oil pump harness connector.

WARNING:
Be sure to wear insulated gloves.

CAUTION:
• Do not allow foreign matter intrusion. When foreign matter is found inside, remove it while paying attention not to damage the electrode inside.
• If water is attached, dry it completely before starting the operation.

(1) Insert the harness connector until a click is heard, and move the slide lock (A) in the arrow direction to lock.

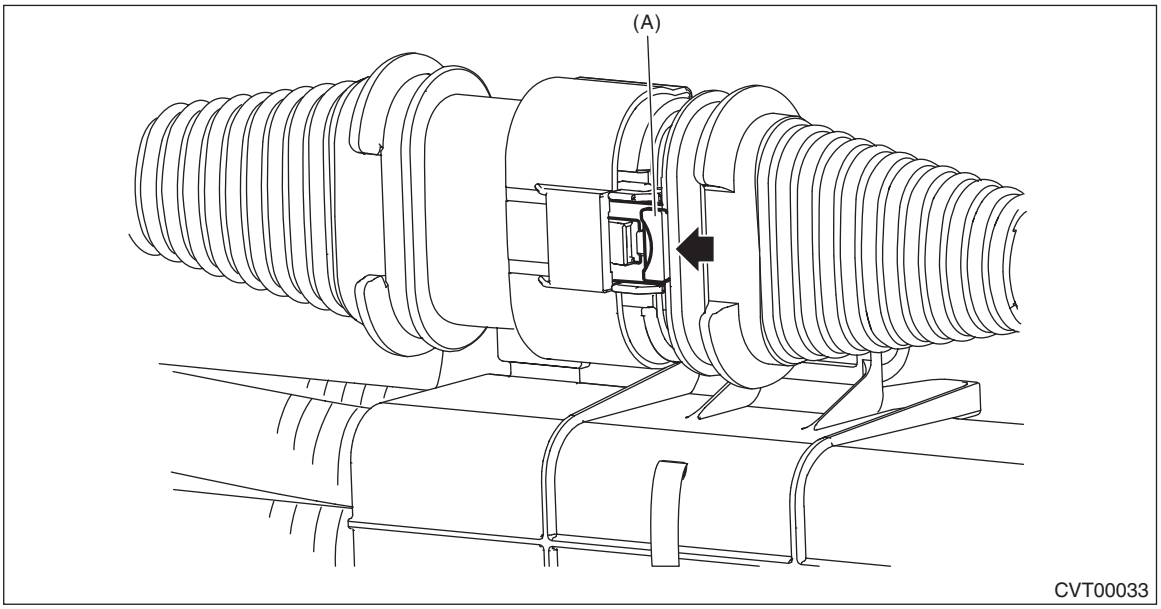

(2) Install the electric oil pump harness to the vehicle.

NOTE:
• Use a new electric oil pump harness clip.
• Install the electric oil pump harness clip as shown in the figure.

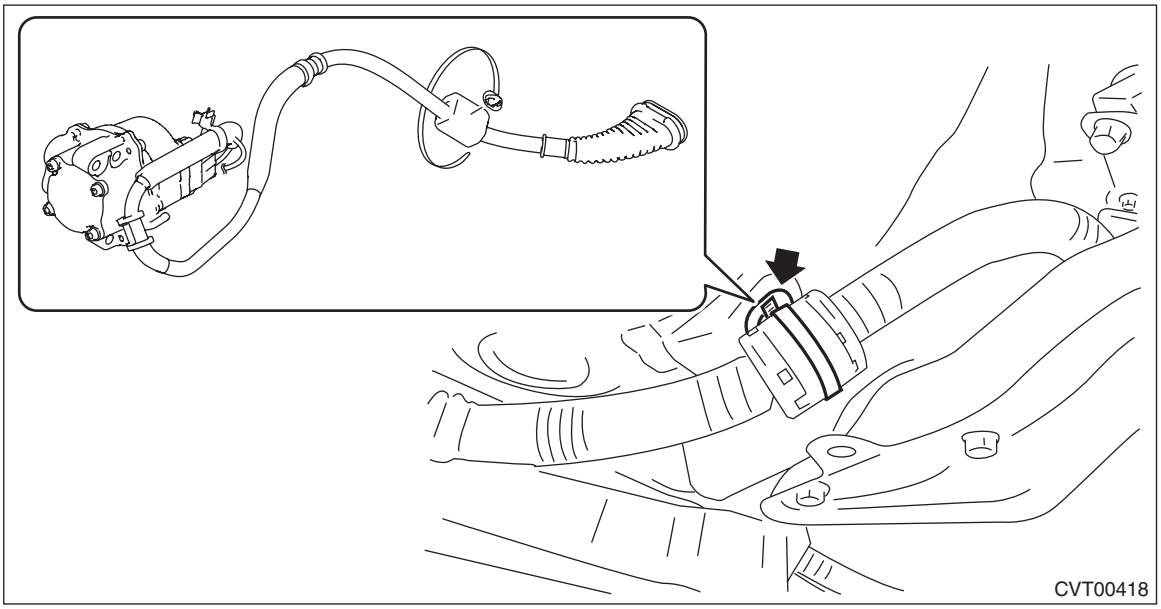

(3) Make sure that the electric oil pump harness does not interfere with other parts.

7) Install the under cover - rear LH. <Ref. to EI-32, INSTALLATION, Floor Under Protector.>
8) Install the under cover - cable.

Tightening torque:
18 N·m (1.8 kgf-m, 13.3 ft-lb)
9) Install the center exhaust cover.

Tightening torque:
18 N·m (1.8 kgf-m, 13.3 ft-lb)
10) Install the center exhaust pipe. <Ref. to EX(H4DO(w/o HEV))-20, INSTALLATION, Rear Exhaust Pipe.>
11) Lower the vehicle.
12) Install the pitching stopper. <Ref. to CVT(TH58A)-88, PITCHING STOPPER, INSTALLATION, Transmission Mounting System.>
13) Install the air cleaner case. <Ref. to IN(H4DO(HEV))-8, INSTALLATION, Air Cleaner Case.>
14) Install the collector cover.
15) Install the service disconnect plug. <Ref. to HEV-16, INSTALLATION, Service Plug.>
16) Install the 12 volt auxiliary battery ground terminal and ground terminal to the 12V engine restart battery sensor of the 12 volt engine restart battery. <Ref. to NT-5, BATTERY, NOTE, Note.>
17) Refill CVTF to adjust the CVTF level. <Ref. to CVT(TH58A)-41, CVTF.>

C: INSPECTION

1. GENERAL DESCRIPTION

Perform this inspection as necessary when replacing or troubleshooting the electric oil pump to check that the electric oil pump works correctly.

2. PROCEDURE

CAUTION:
Do not turn the power of the Subaru Select Monitor OFF during work, and do not disconnect the data link connector.
1) Idle the engine until the CVTF temperature becomes 60 — 100°C (140 — 212°F) on Subaru Select Monitor.
2) Turn the ignition switch to OFF.
3) Apply the parking brake.
4) Connect the Subaru Select Monitor to data link connector.
5) Turn the ignition switch to ON.
6) Shift the select lever to “P” range.
7) Select {Work Support} in the «Transmission Diagnosis» display screen of the Subaru Select Monitor.
8) Select {Maintenance mode} in the «Work Support» screen of Subaru Select Monitor.
9) Select {Electric Fluid Pump inspection mode} in the «Maintenance mode» screen of the Subaru Select Monitor.
10) Follow the messages displayed on the Subaru Select Monitor screen when working.

NOTE:
If the operation does not follow the messages displayed on the Subaru Select Monitor screen, the inspection mode is finished.

11) The results of the electric oil pump inspection mode are displayed on the Subaru Select Monitor screen.
- Malfunction of TCM is detected or TCM is out of conditions: “Finished by abnormality of TCU.”
- The operation is ended normally: “Successful. Turn off the ignition switch.”
- Malfunction of hybrid system is detected or it is out of conditions: “Error finished.”
- Another malfunction is detected: “By high pressure abnormality of the secondary pressure, finished work.” or “Abnormal termination by Time out”

NOTE:
- For detailed operation procedures, refer to “PC application help for Subaru Select Monitor”.
- If the hybrid system is defective, perform the remedy displayed on the Subaru Select Monitor and inspect the electric oil pump again.
- When the inspection mode does not end normally, the following message is displayed.

Message	Main reasons for abnormal termination and actions to take
“By high pressure abnormality of the secondary pressure, finished work.”	• The secondary pressure is high. • The relief valve is damaged. Replace the drive motor assembly.
“Abnormal termination by Time out”	• The actual speed of electric oil pump does not follow the specified speed. Inspect the electric oil pump again. • The secondary pressure does not increase more than necessary. • Check the CVTF level. • Inspect the electric oil pump again. • Check for oil leaks in the secondary pressure oil passage. • If no malfunctions are found, the relief valve or the spring is damaged. Replace the drive motor assembly.
“Finished by abnormality of TCU”	• TCM detects a trouble code. Repair it according to the trouble code. • Other than P range is detected. Do not shift the select lever to other than P range during inspection. In addition, make sure the range SW is in the P range continuously using Subaru Select Monitor. • Engine speed is detected. • The CVTF temperature is out of 60 — 100°C (140 — 212°F). The CVTF temperature should be within 60 — 100°C (140 — 212°F). • Vehicle speed is detected. • 12 V battery voltage is low. • Malfunction of CAN communication with other than TCM is detected. Stop the inspection, and after starting the engine, check that no U codes exist in the current and past malfunctions of transmission using Subaru Select Monitor. • Electric oil pump temperature is high. Turn the ignition switch to OFF, stop the electric oil pump for approx. 60 seconds, and then perform the inspection mode again.
“Hybrid system is out of order”	• The hybrid system has a failure. Check the hybrid system.
“Safety plug has not been set”	• The safety plug is out of position or is not set properly. Inspect according to the troubleshooting for the battery energy control module.
“High voltage battery capacity is low”	• The battery remaining capacity of high voltage battery is low. Charge the high voltage battery.
“12V battery capacity is low”	• 12 V battery voltage is low. Charge the 12 V battery.
“Can not Test for a Hybrid system of other factors”	• High voltage start is inhibited by immobilizer. • A collision is detected. (P1C1E) Check the hybrid system.

12) After the message “Successful. Turn off the ignition switch.” appears, turn the ignition switch to OFF and finish the electric oil pump inspection mode.

23.Transmission Harness

A: REMOVAL

1. INHIBITOR HARNESS

1) Remove the transmission from the vehicle. <Ref. to CVT(TH58A)-62, REMOVAL, Automatic Transmission Assembly.>
2) Remove the transmission case cover.

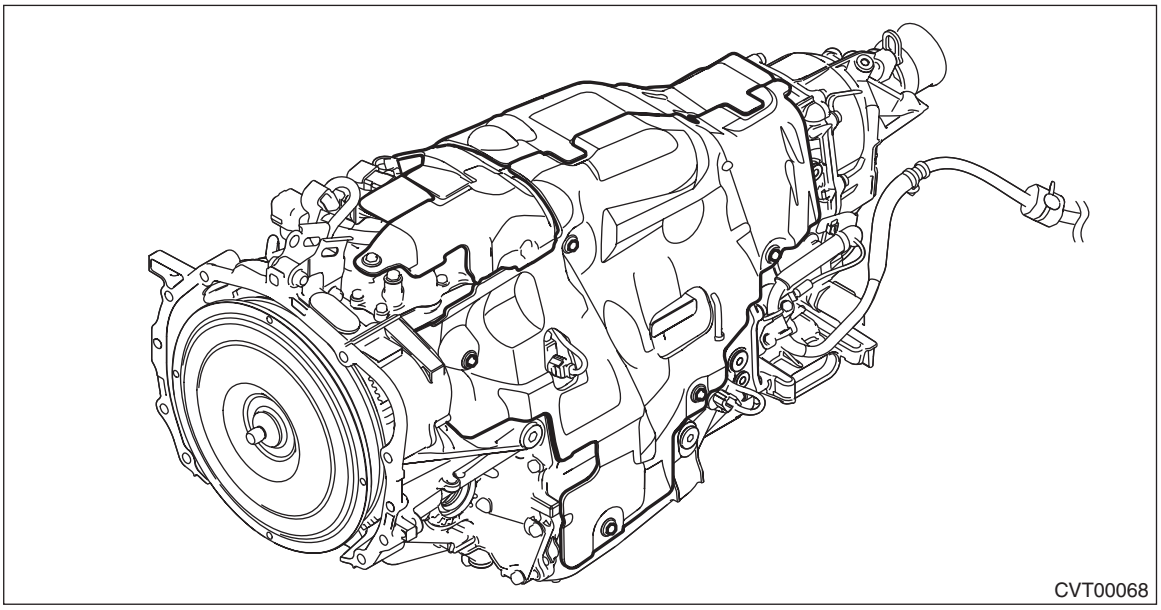

3) Remove the sensor cover.

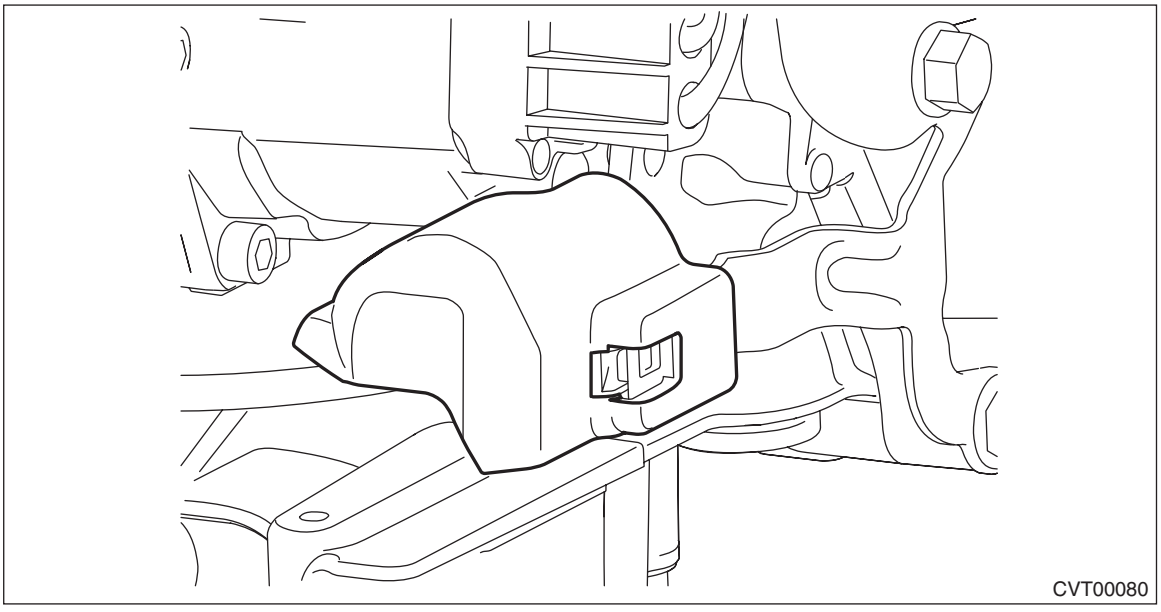

4) Remove the harness connector from the ground terminal, turbine speed sensor, secondary speed sensor and secondary pressure sensor.

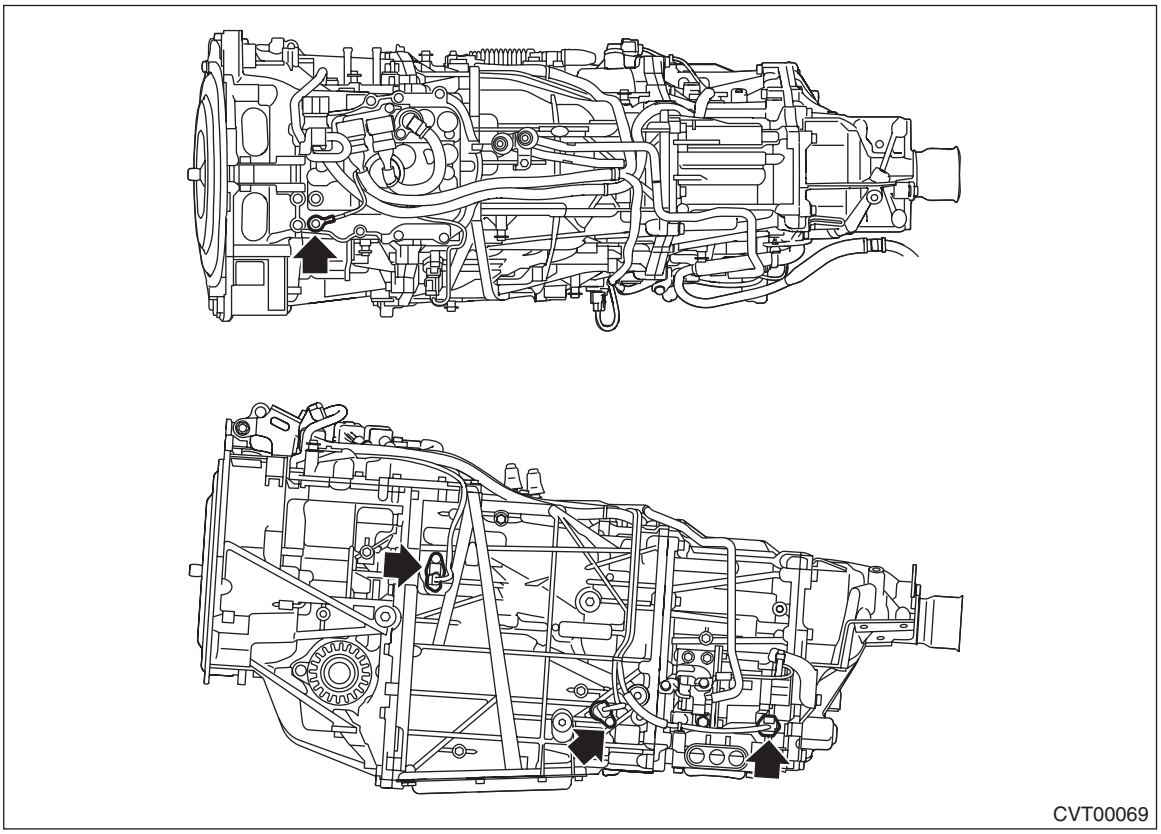

5) Remove the harness connector from inhibitor switch.

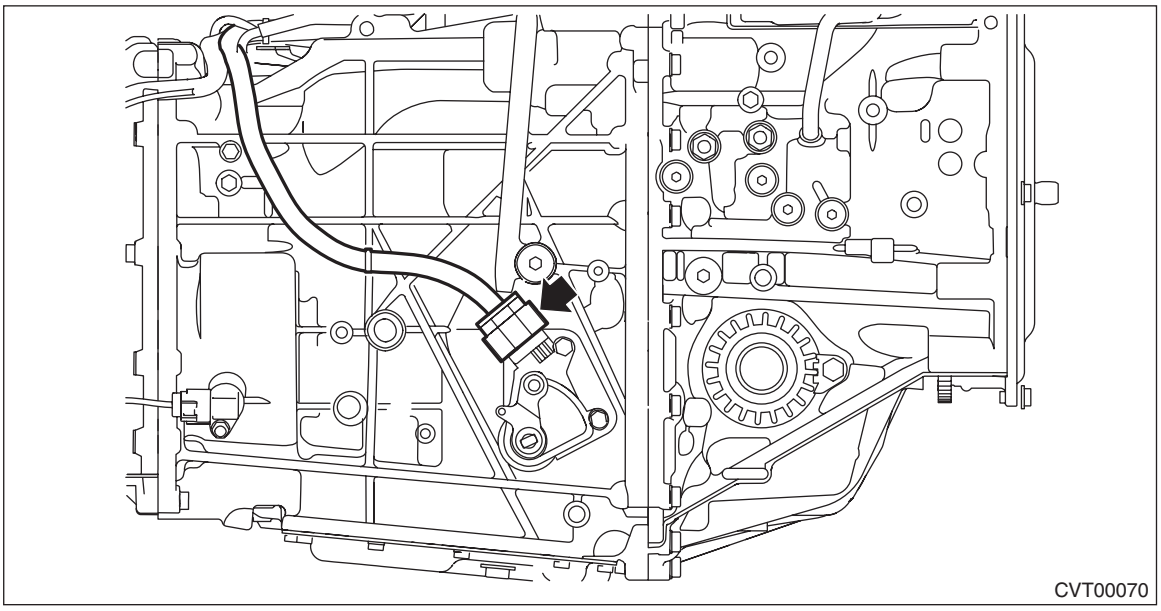

6) Remove the inhibitor harness connector from the transmission harness stay.

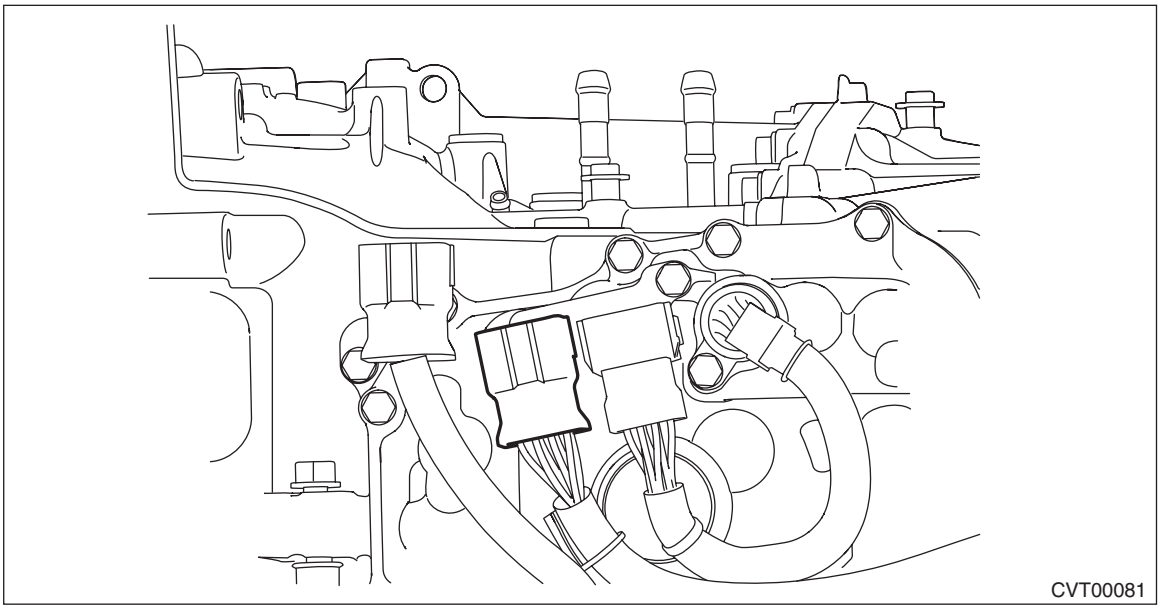

7) Remove the harness clip from the transmission, and remove the inhibitor harness.

2. TRANSMISSION HARNESS

CAUTION:
• Directly after the vehicle has been running or the engine has been idling for a long time, the CVTF is hot. Be careful not to burn yourself.
• Be careful not to spill CVTF on the exhaust pipe to prevent it from emitting smoke or causing a fire. If the CVTF adheres, wipe it off completely.
• Always clean the engine compartment before removal.

1) Disconnect the ground cable from battery. <Ref. to NT-5, BATTERY, NOTE, Note.>

NOTE:
For the 12 volt engine restart battery, disconnect the ground terminal from 12V engine restart battery sensor.

2) Remove the collector cover.
   (1) Pull up the two points at the front of collector cover (A).
   (2) Pull up the two points at the rear of collector cover (B) while moving them rearward.

NOTE:
Be careful not to contact the fuel delivery tube when moving the collector cover rearward.

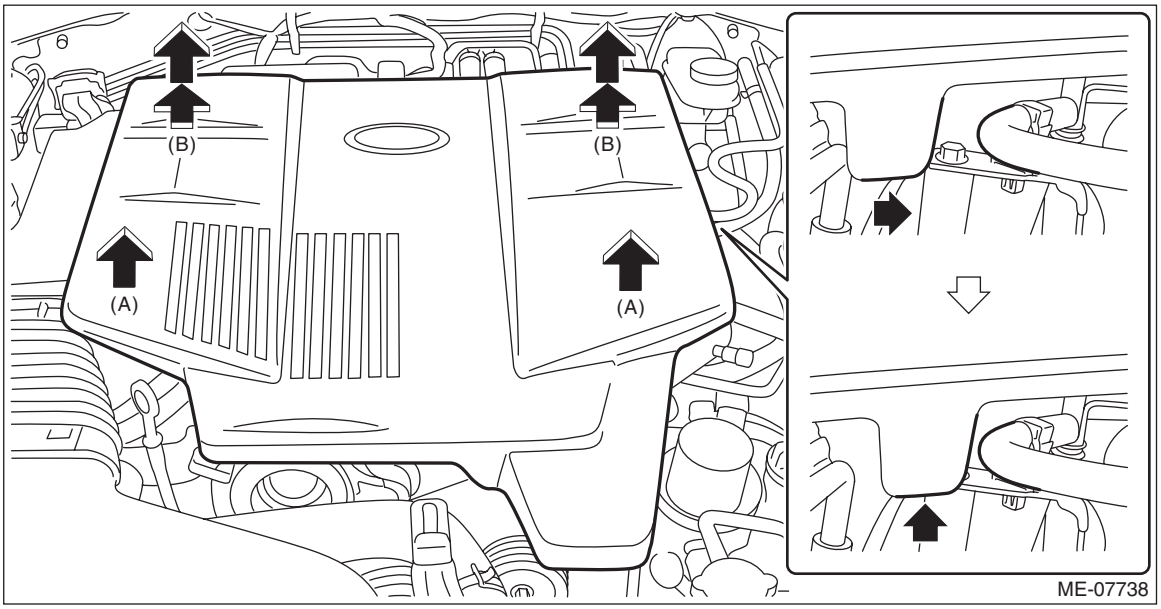

3) Remove the air cleaner case and bracket. <Ref. to IN(H4DO(HEV))-6, REMOVAL, Air Cleaner Case.>
4) Disconnect the following connectors and harness clips.
- Transmission radio ground terminal
- Transmission harness connectors
- Inhibitor harness connector
- Drive motor harness connector
- Engine harness connectors
- Harness clip

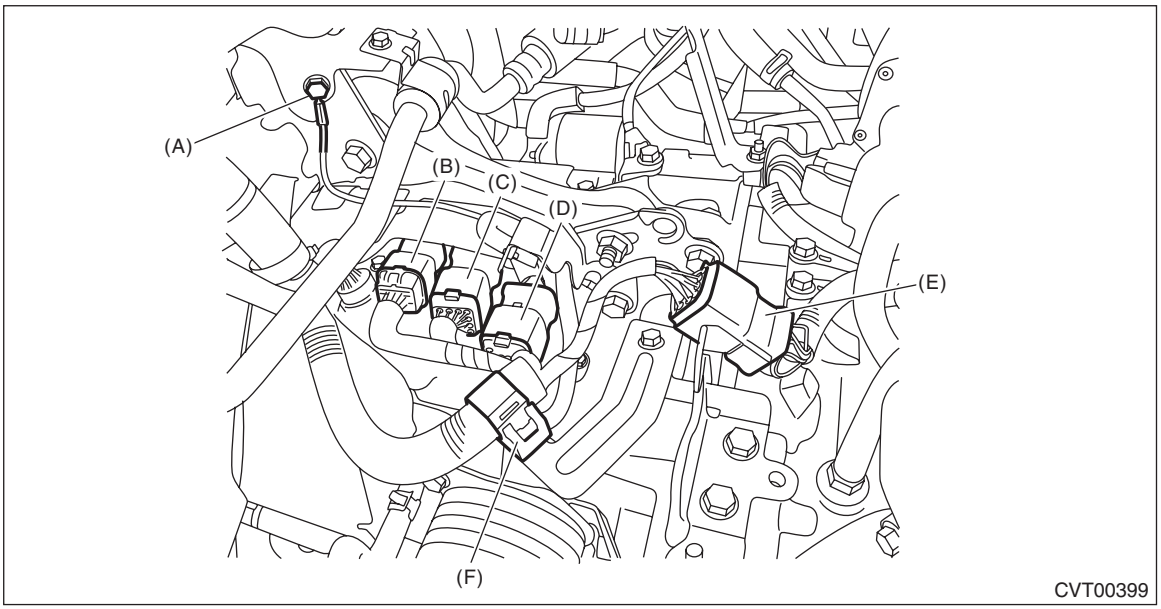

(A) Transmission radio ground terminal
(B) Transmission harness connectors
(C) Inhibitor harness connector
(D) Drive motor harness connector
(E) Engine harness connectors
(F) Harness clip

5) Remove the pitching stopper. <Ref. to CVT(TH58A)-86, PITCHING STOPPER, REMOVAL, Transmission Mounting System.>

6) Remove the air breather hose from the pitching stopper bracket, and then remove the pitching stopper bracket and transmission radio ground cord.

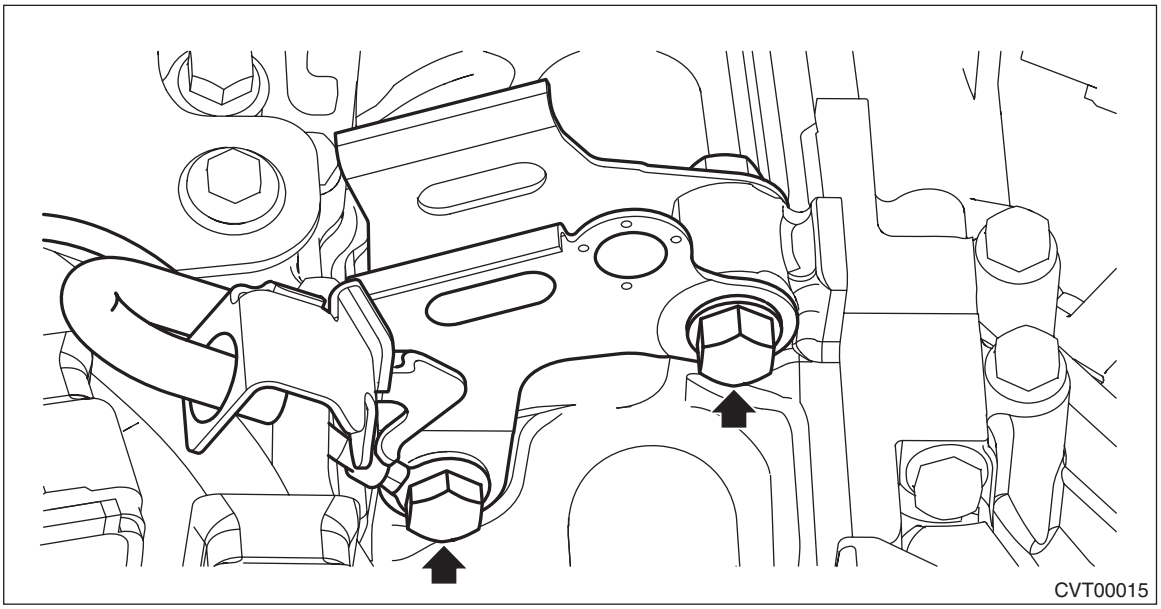

7) Remove the transmission case cover.

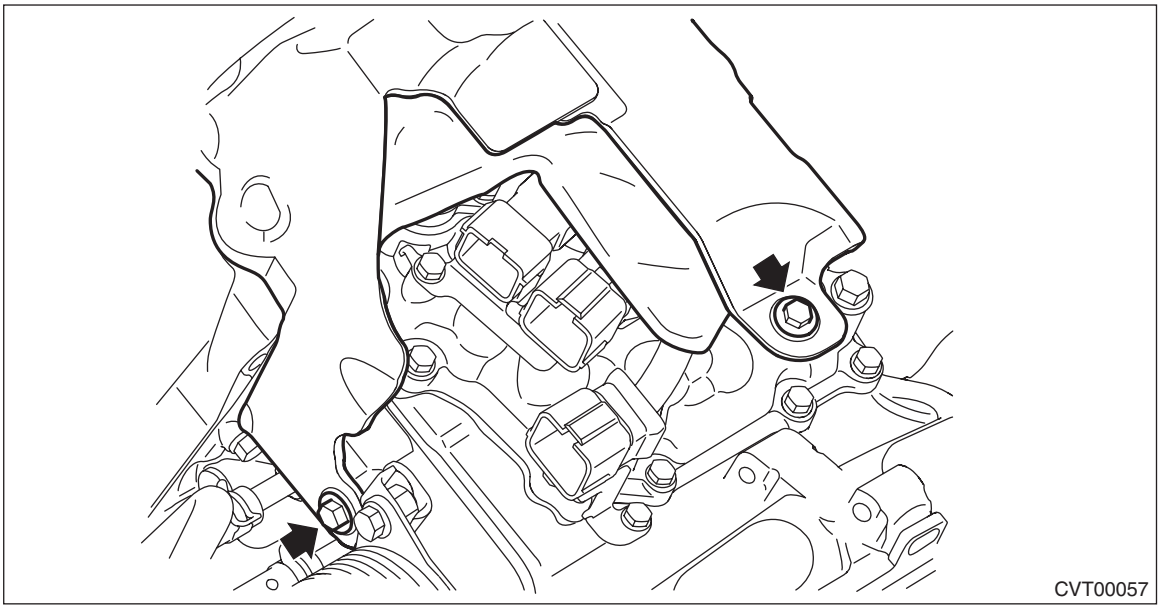

8) Remove the transmission harness stay, drive motor harness stay and transmission ground terminal.

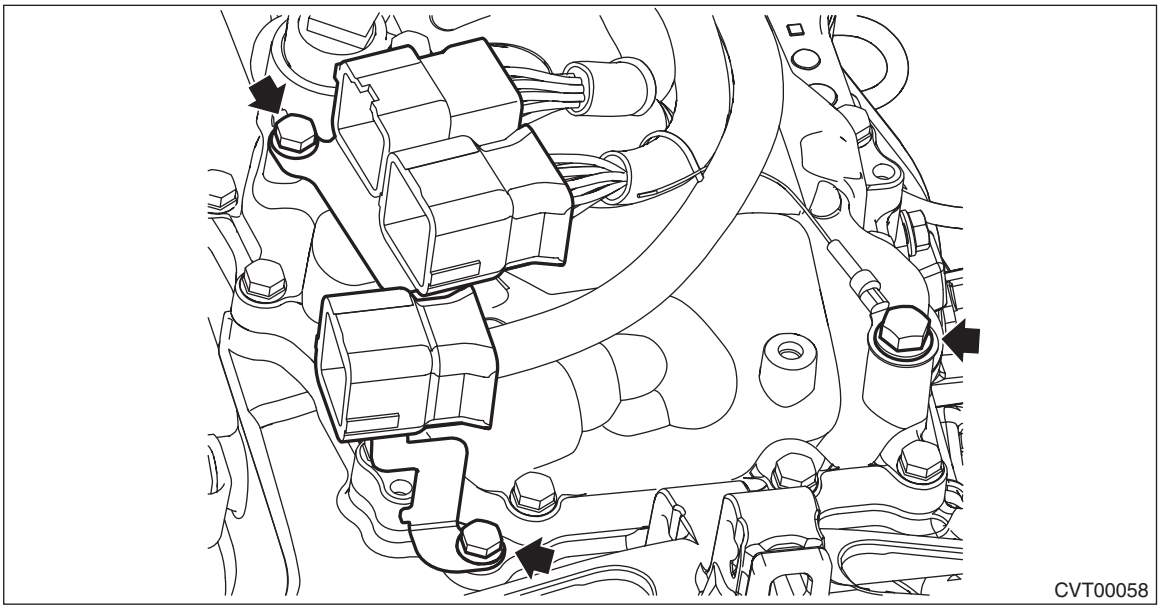

9) Remove the transmission harness connector from the harness stay.
10) Clean the transmission exterior.
11) Fix the ST with tape, and set the ST to the vehicle.
ST 18761AA010 SHEET SPECIAL TOOL

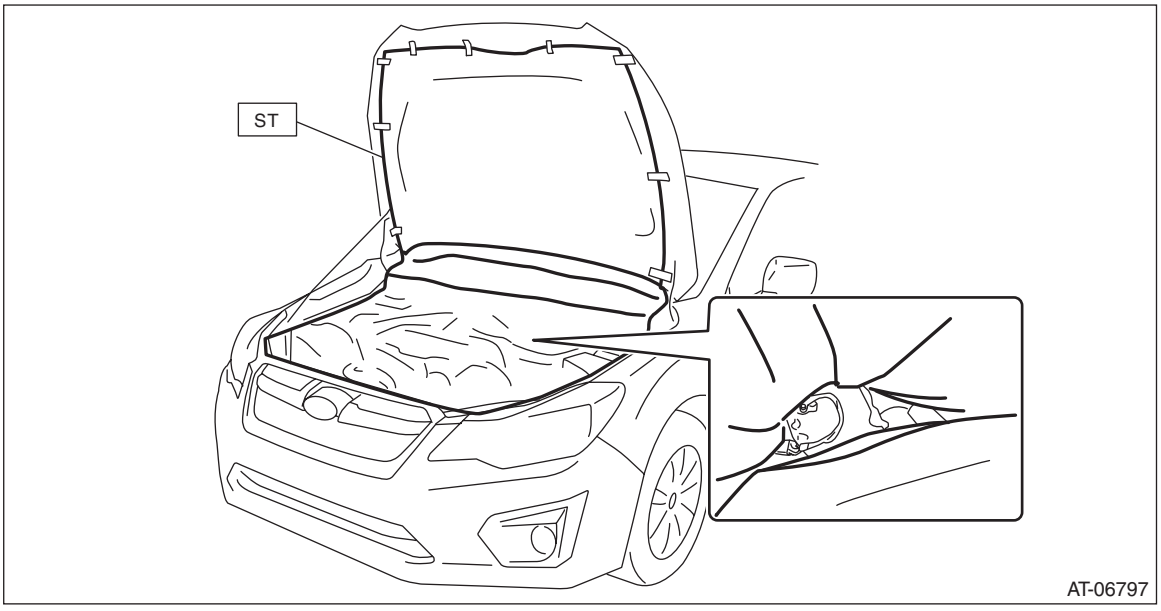

12) Remove the valve cover and gasket.

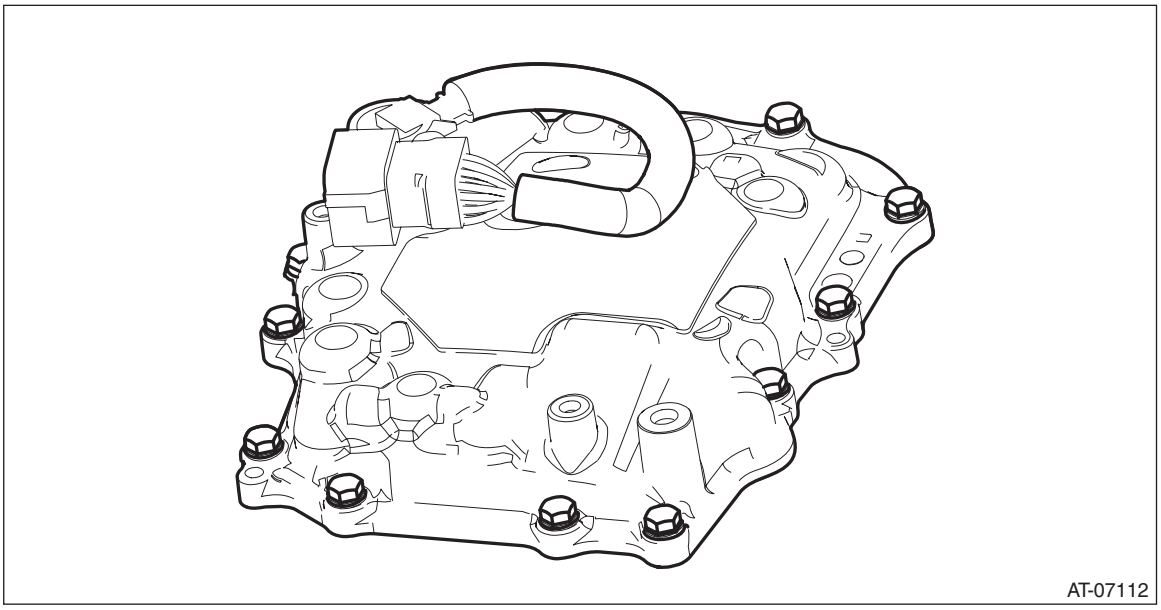

13) Disconnect the harness connector from the control valve body.
14) Remove the transmission harness from the valve cover.

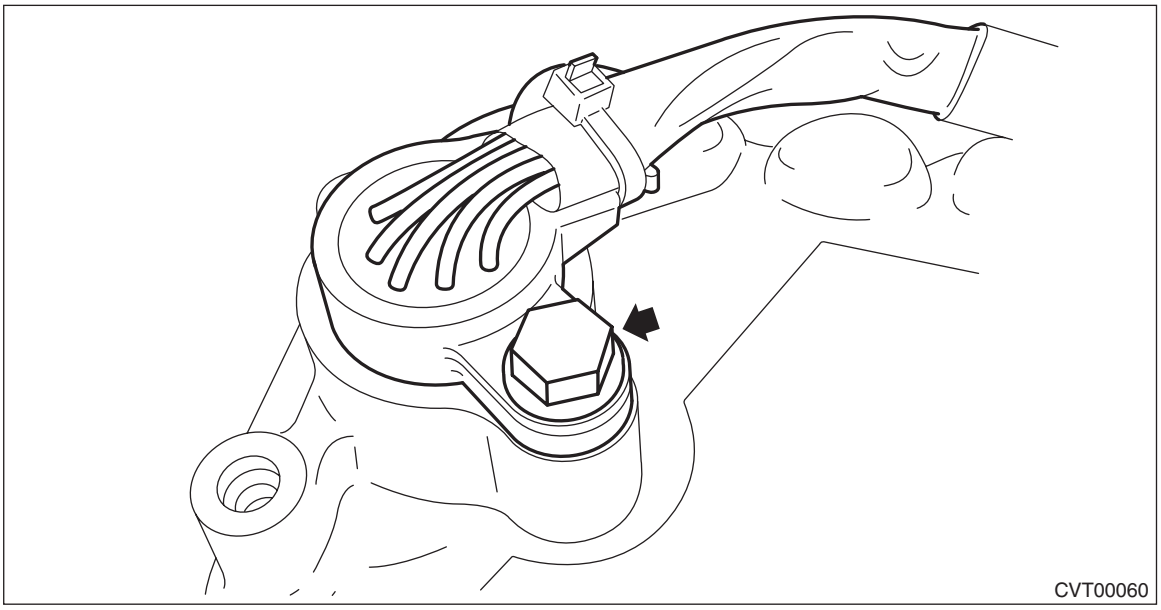

15) Remove the O-ring from the transmission harness.

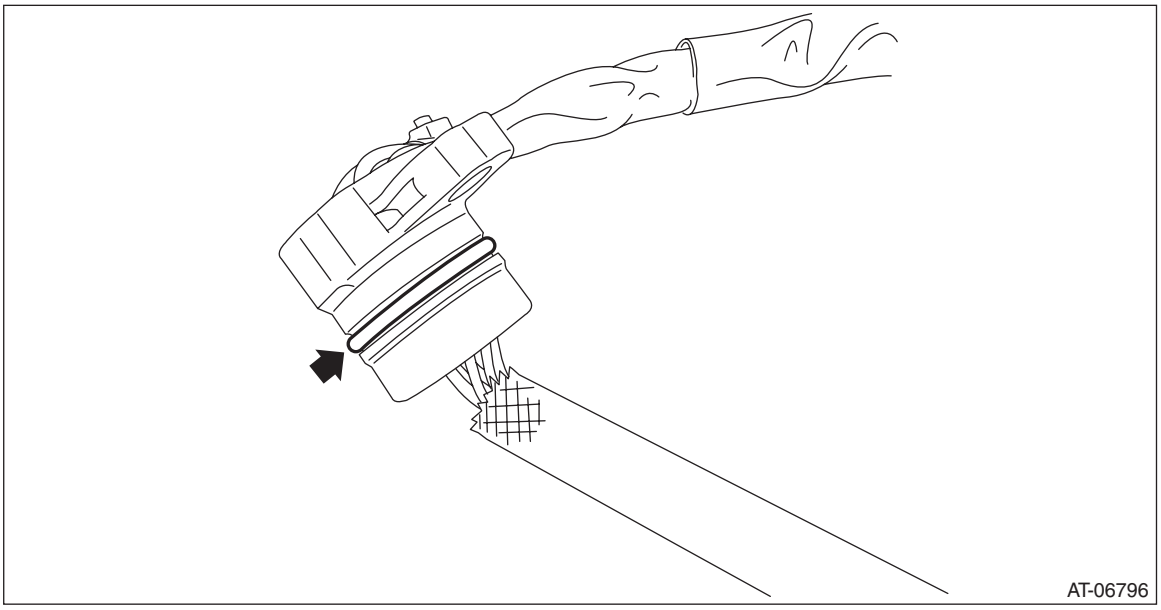

B: INSTALLATION

1. INHIBITOR HARNESS

Install in the reverse order of removal.

NOTE:
- Install the transmission ground terminal in the direction within the range of approx. 30° (A).
- Install the transmission harness through the lower side of air breather hose.

Tightening torque:
T1: 7 N·m (0.7 kgf-m, 3.7 ft-lb)
T2: 14 N·m (1.4 kgf-m, 10.3 ft-lb)

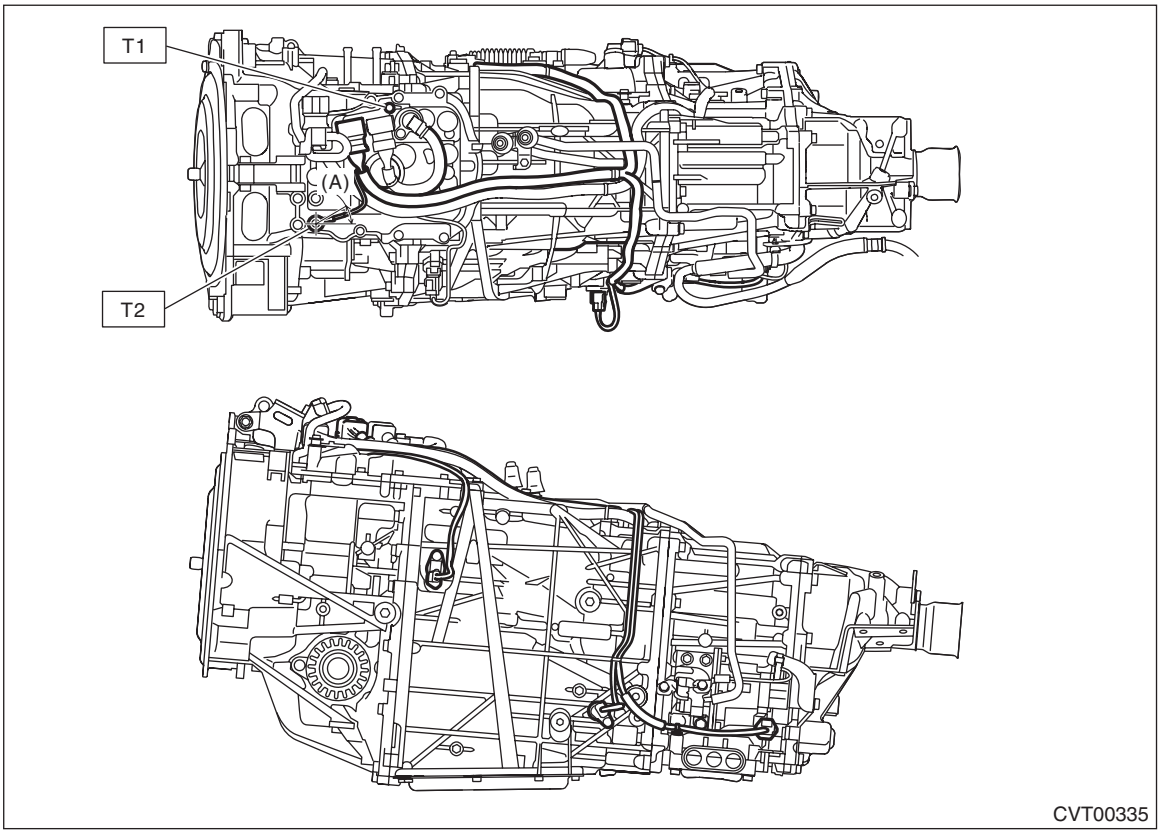

2. TRANSMISSION HARNESS

1) Clean the mating surface of valve cover and transmission side.

CAUTION:
When cleaning the mating surface of the transmission side, be careful not to allow any dust, foreign matter and used liquid gasket to enter the transmission.

2) Check the control valve body for dust and other foreign matter.

3) Install the O-ring to the transmission harness.

NOTE:
- Use new O-rings.
- Apply CVTF to the O-ring.

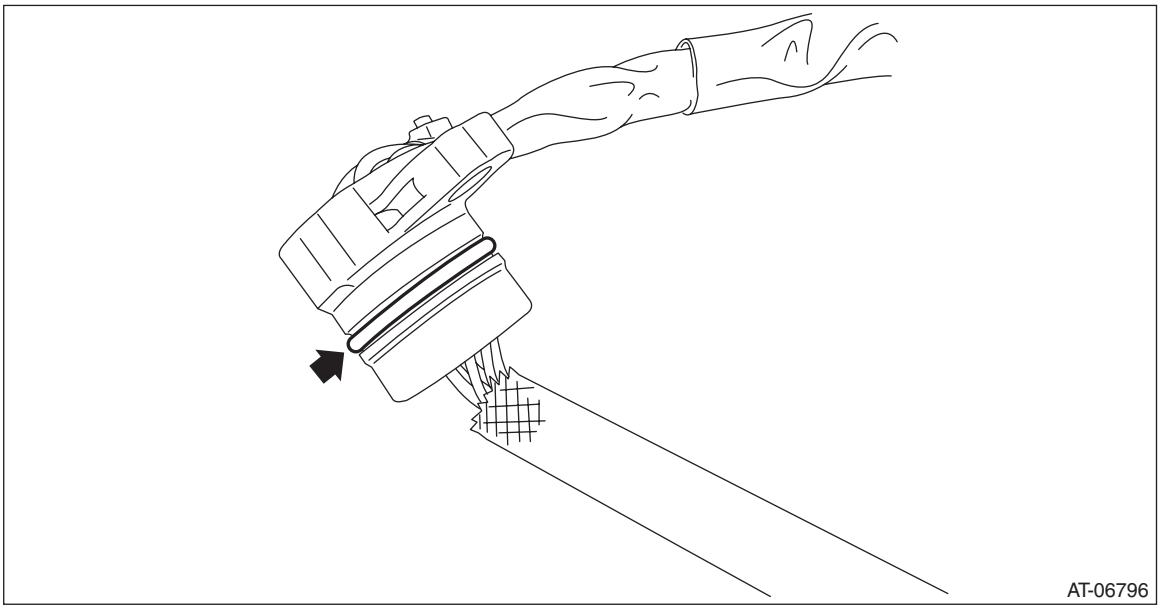

4) Install the transmission harness to the valve cover.

Tightening torque:
7 N·m (0.7 kgf-m, 5.2 ft-lb)

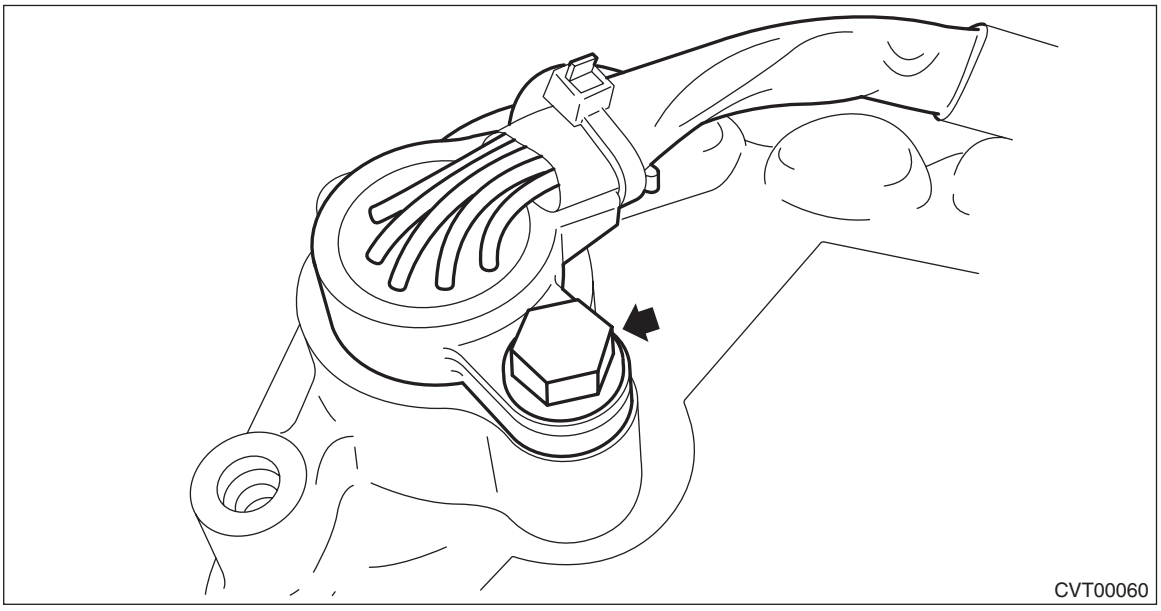

5) Install the gasket to the transmission.

NOTE:
Use a new gasket.

6) Apply liquid gasket to the oval hole of gasket.

Liquid gasket:
THREE BOND 1215 (Part No. 004403007) or equivalent

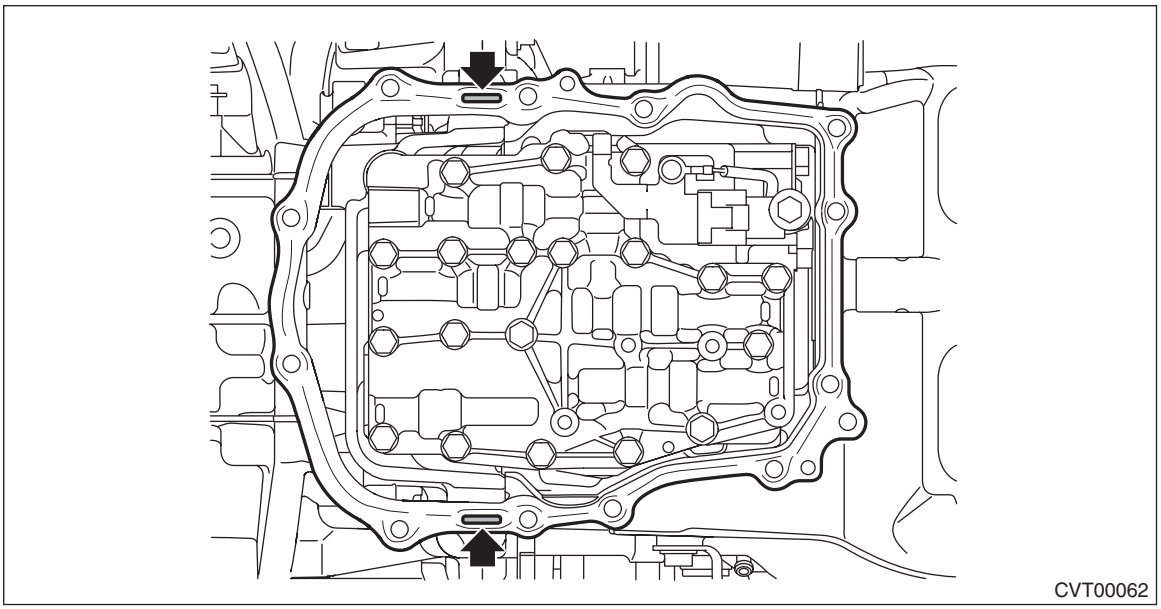

7) Connect the transmission harness connector to the control valve body, and install the valve cover.

CAUTION:
Be careful not to catch the sheet of the ST.

Tightening torque:
9 N·m (0.9 kgf-m, 6.6 ft-lb)

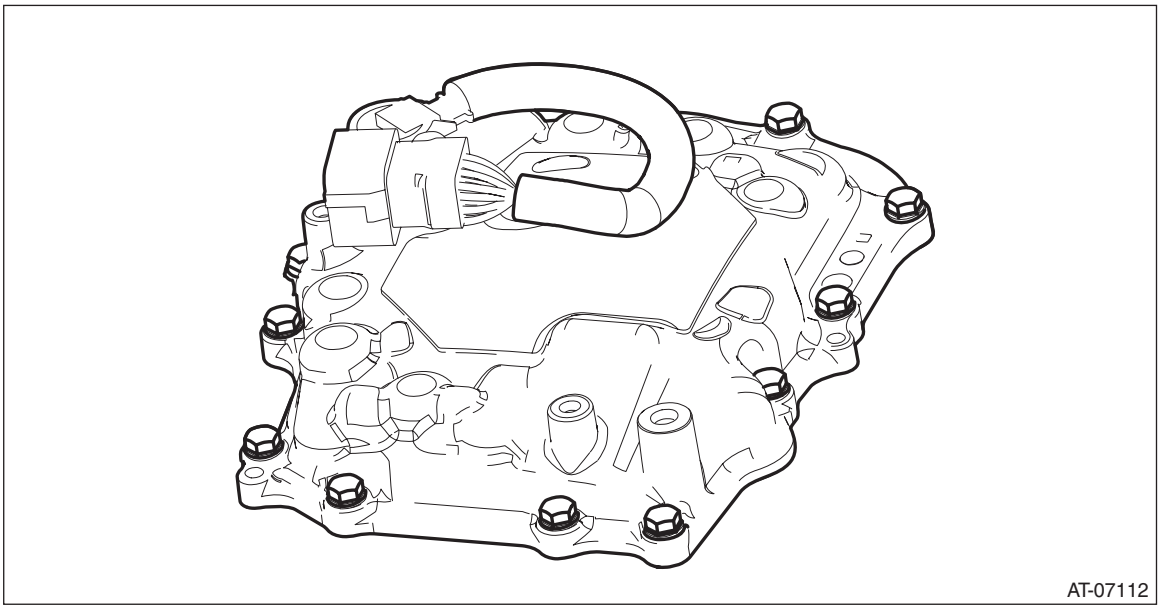

8) Remove the ST (SHEET SPECIAL TOOL).
9) Install the transmission harness connector to the harness stay.
10) Install the transmission harness stay, drive motor harness stay and transmission ground terminal.

NOTE:
Install the transmission ground terminal in the direction within the range of approx. 30° (A).

Tightening torque:
T1: 7 N·m (0.7 kgf-m, 5.2 ft-lb)
T2: 14 N·m (1.4 kgf-m, 10.3 ft-lb)

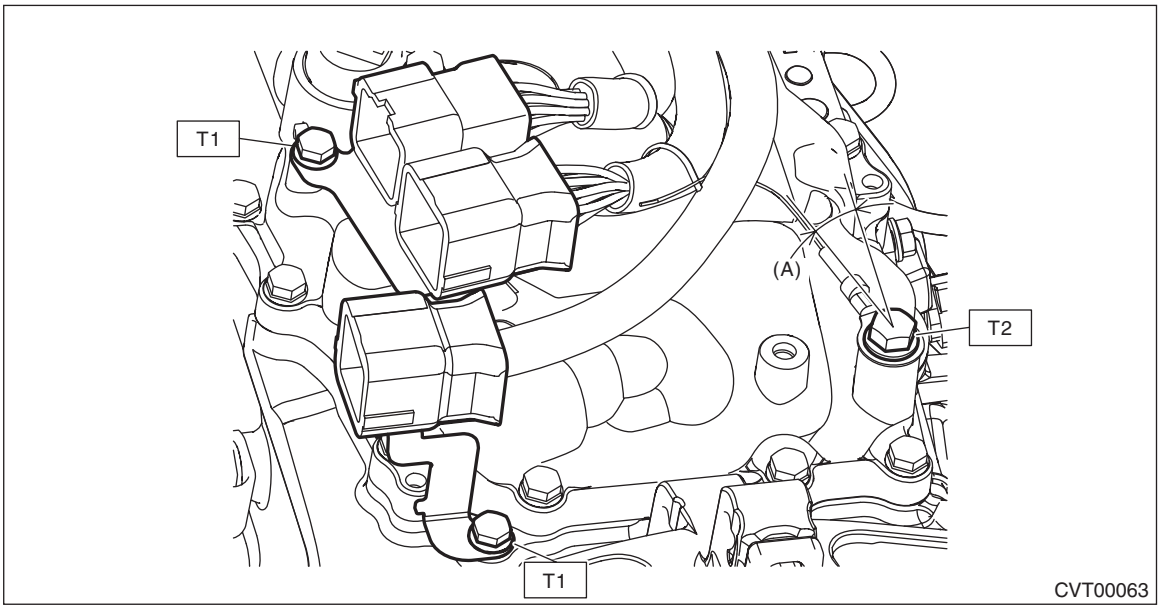

11) Insert the transmission case cover (small) between the transmission case cover (large) and the transmission to install.

Tightening torque:
8 N·m (0.8 kgf-m, 5.9 ft-lb)

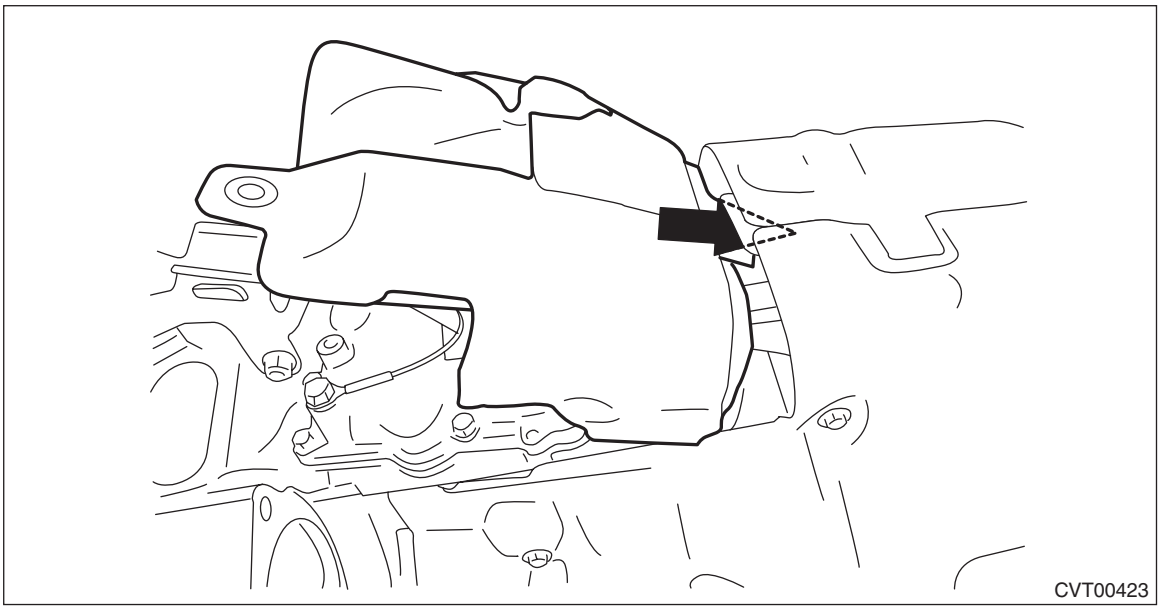

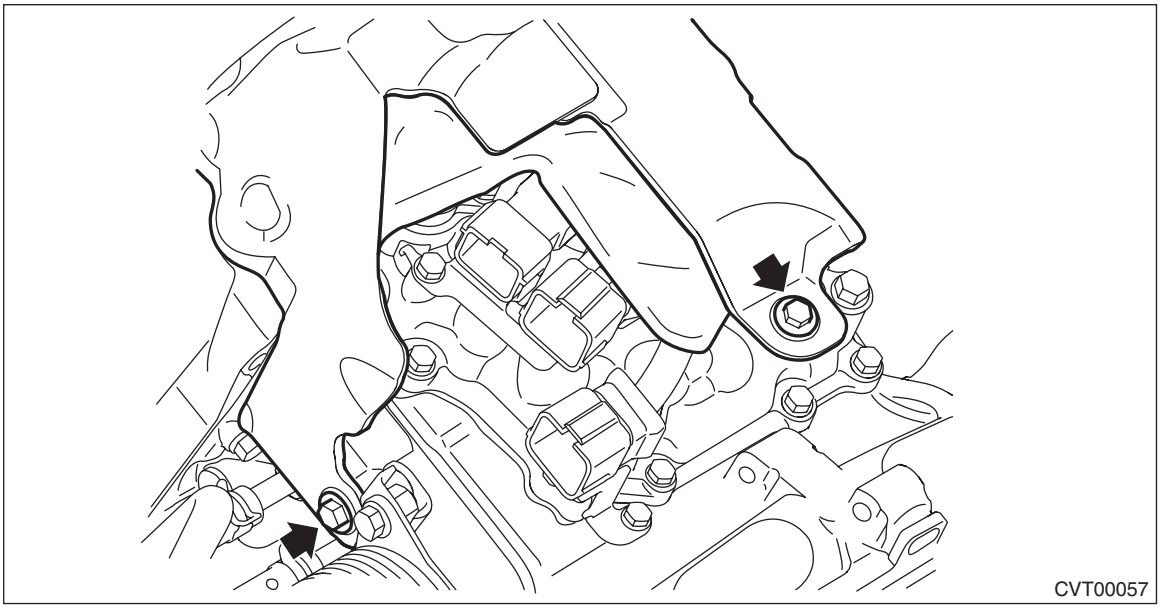

12) Install the pitching stopper bracket and transmission radio ground cord.

Tightening torque:
41 N·m (4.2 kgf-m, 30.2 ft-lb)

13) Install the air breather hose to the pitching stopper bracket. <Ref. to CVT(TH58A)-171, FRONT DIFFERENTIAL SIDE, INSTALLATION, Air Breather Hose.>

14) Install the pitching stopper. <Ref. to CVT(TH58A)-88, PITCHING STOPPER, INSTALLATION, Transmission Mounting System.>

15) Connect the following connectors and install the harness clip to the bracket.
- Transmission radio ground terminal
- Transmission harness connectors
- Inhibitor harness connector
- Drive motor harness connector
- Engine harness connectors
- Harness clip

Tightening torque:
13 N·m (1.3 kgf-m, 9.6 ft-lb)

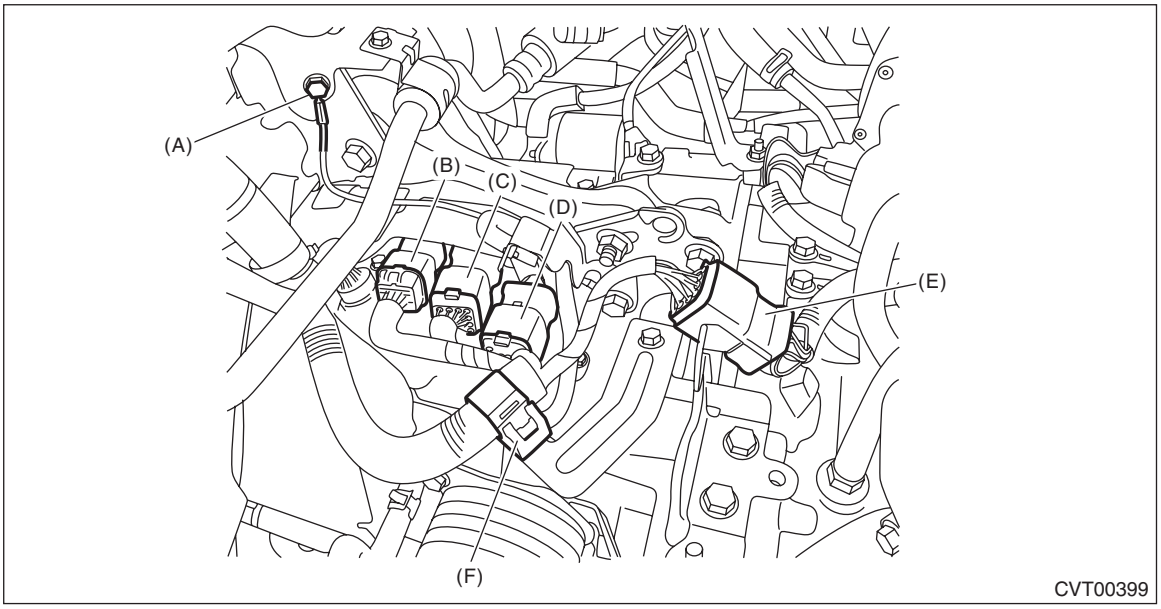

(A) Transmission radio ground terminal
(B) Transmission harness connectors
(C) Inhibitor harness connector
(D) Drive motor harness connector
(E) Engine harness connectors
(F) Harness clip

16) Install the air cleaner case and bracket. <Ref. to IN(H4DO(HEV))-8, INSTALLATION, Air Cleaner Case.>
17) Install the collector cover.
18) Install the 12 volt auxiliary battery ground terminal and ground terminal to the 12V engine restart battery sensor of the 12 volt engine restart battery. <Ref. to NT-5, BATTERY, NOTE, Note.>

C: INSPECTION

1) Visually check the harness and connector for damage or crack.
2) Check the harness terminal for rust, disconnection or poor contact.
3) Check the continuity between harness terminals.

NOTE:
For details of transmission harness circuit, refer to wiring diagram. <Ref. to WI(w/o HEV)-66, WIRING DIAGRAM, CVT Control System.>

Harness continuity standard:
Less than 1 Ω

24.Drive Motor Control Module

A: REMOVAL

NOTE:
For removal of the drive motor control module, refer to “HEV” section. <Ref. to HEV-73, Drive Motor Control Module.>

B: INSTALLATION

NOTE:
For installation of the drive motor control module, refer to HEV section. <Ref. to HEV-73, Drive Motor Control Module.>

25.Transmission Control Module (TCM)

A: REMOVAL

1) Disconnect the ground cable from battery. <Ref. to NT-5, BATTERY, NOTE, Note.>

NOTE:
For the 12 volt engine restart battery, disconnect the ground terminal from 12V engine restart battery sensor.

2) Remove the fuse holder.

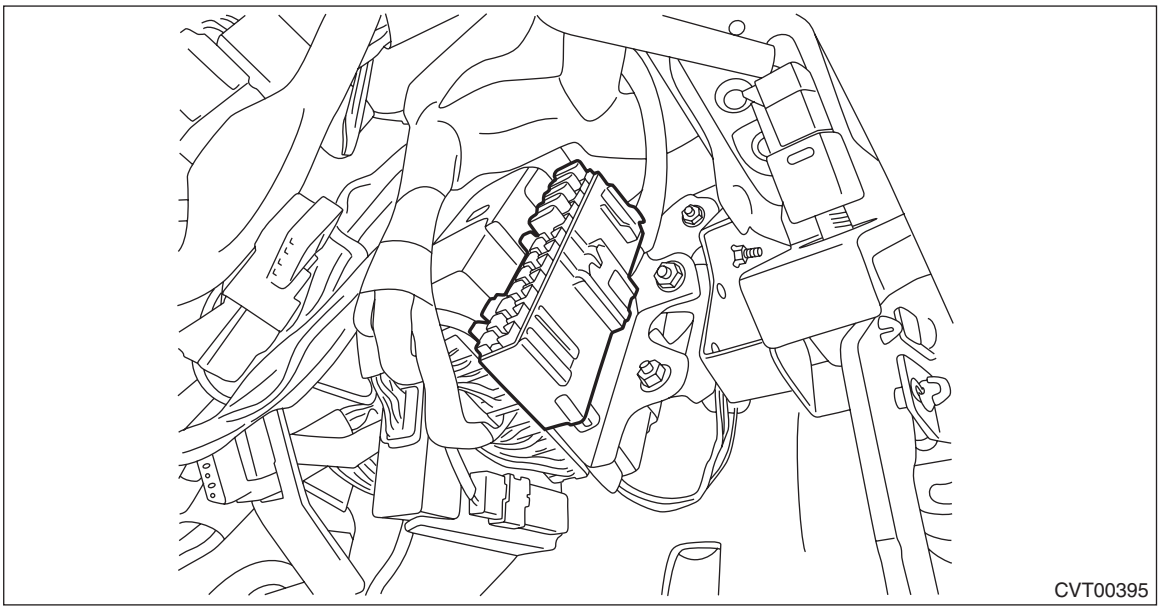

3) Release the harness clips, and disconnect the bulk head harness connector from TCM.

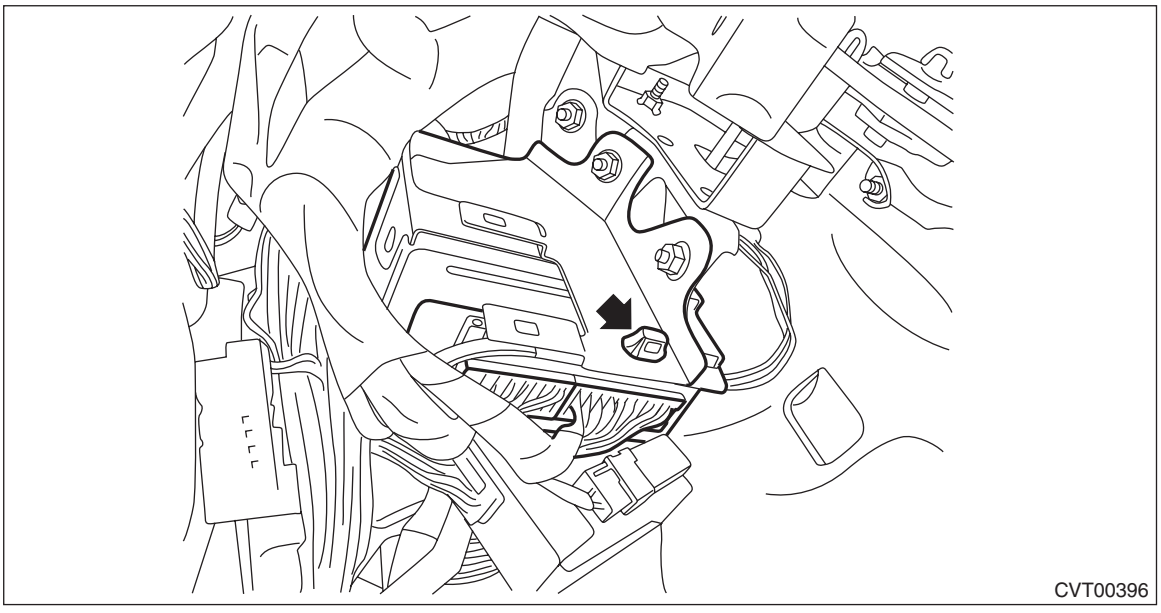

4) Remove the TCM.

NOTE:
Replace the TCM and bracket as a set.

B: INSTALLATION

1) Install the TCM to the bracket.

CAUTION:
To avoid the damage to bracket and TCM, do not remove after installing TCM to bracket. If installed by mistake, the part must be replaced with a new part.

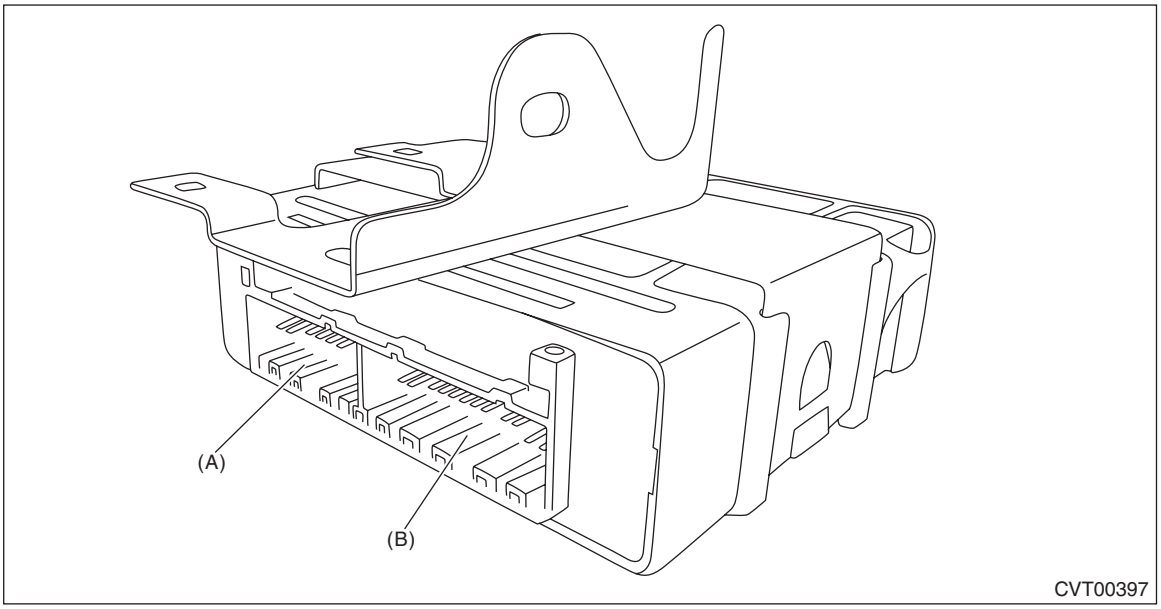

(A) 22-pin connector side
(B) 26-pin connector side

2) Install the TCM.

Tightening torque:
7.5 N·m (0.8 kgf-m, 5.5 ft-lb)

3) Install the harness connector and harness clip to TCM.
4) Install the fuse holder.
5) Install the 12 volt auxiliary battery ground terminal and ground terminal to the 12V engine restart battery sensor of the 12 volt engine restart battery. <Ref. to NT-5, BATTERY, NOTE, Note.>
6) Perform the operation of AT learning mode. <Ref. to CVT(HEV)(diag)-24, Learning Control.>

26.Relay and Fuse

A: LOCATION

1. TRANSMISSION CONTROL MODULE (TCM)

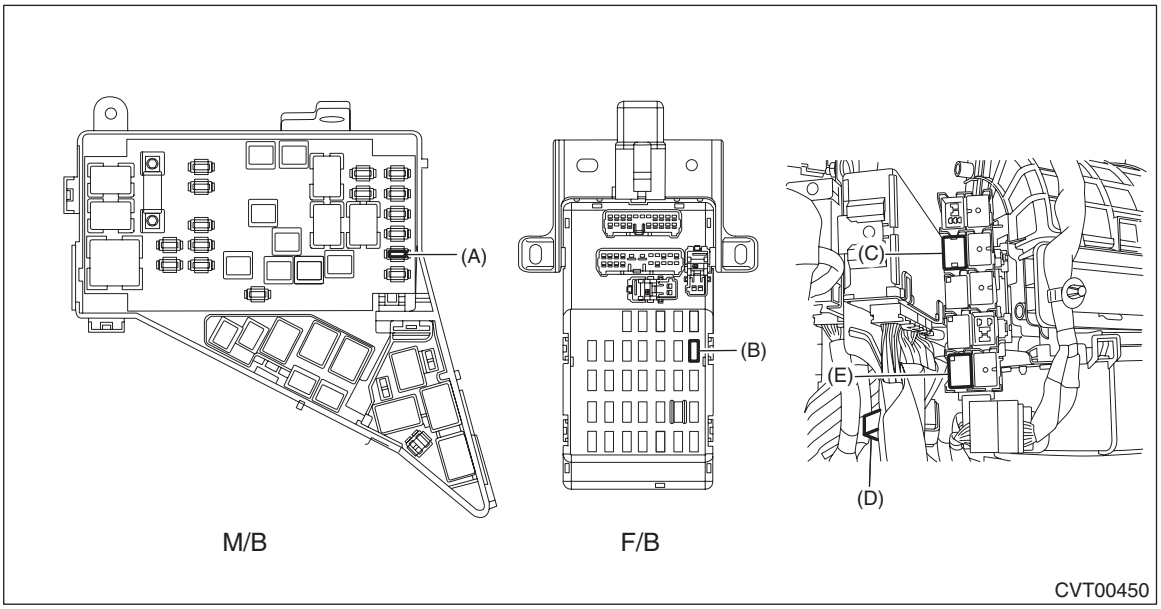

Main fuse box	Fuse 20 A	(A)
Relay & fuse box	Fuse 15 A	(B)
Relay holder	Self shut relay	(C)
Relay holder	Linear solenoid relay	(D)
Relay holder	R range relay	(E)

2. DRIVE MOTOR CONTROL MODULE

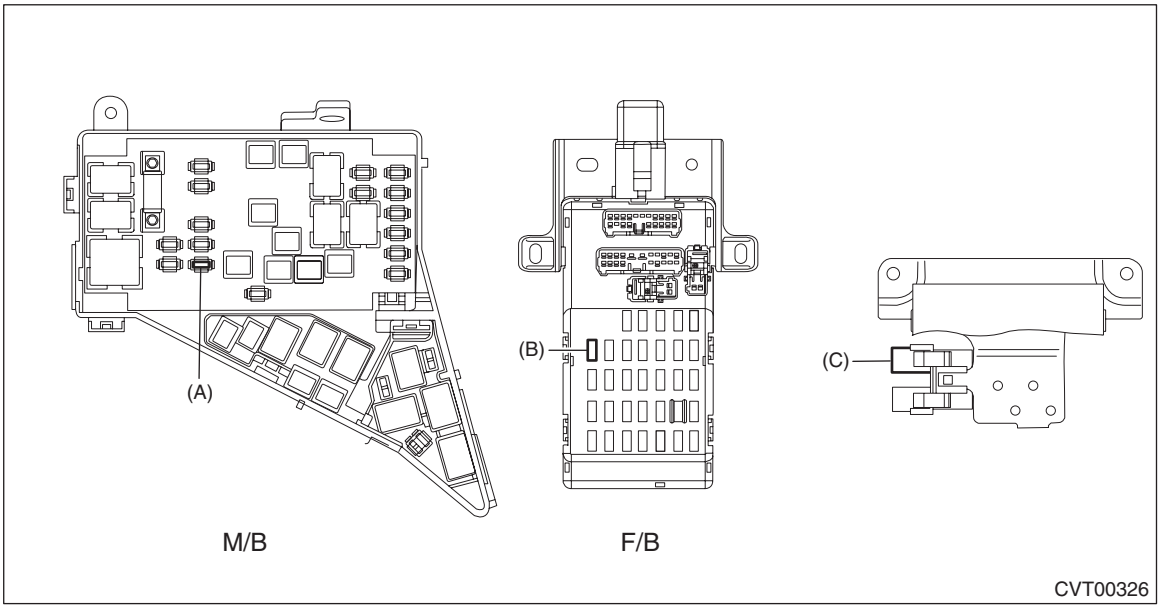

Main fuse box	Fuse 25 A	(A)
Relay & fuse box	Fuse 7.5 A	(B)
Drive motor control module	Drive motor control module relay	(C)

B: INSPECTION

1. CHECK FUSE

Remove the fuse and inspect visually. If the fuse is blown out, replace the fuse.

NOTE:
If the fuse is blown again, check the system.

2. CHECK RELAY

Check the resistance between relay terminals. If it is not within the standard, replace the relay.

- Drive motor control module relay and self shut relay

Terminal No.	Inspection conditions	Standard	Circuit
1 — 2	Always	1 MΩ or more	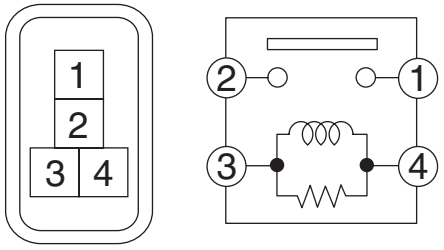 LI-01273
1 — 2	4 — Apply battery voltage between three terminals.	Less than 1 Ω	

- Linear solenoid relay and R range relay

Terminal No.	Inspection conditions	Standard	Circuit
1 — 2	Always	1 MΩ or more	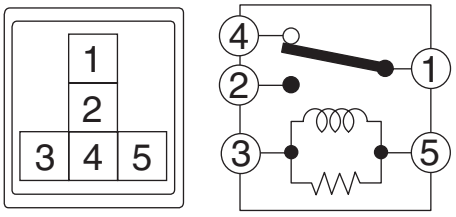 LI-01274
1 — 4	Always	Less than 1 Ω	
1 — 2	3 — Apply battery voltage between five terminals.	Less than 1 Ω	

27.CVTF Cooler (With Warmer Function)

A: REMOVAL

CAUTION:
If the CVTF and engine coolant is spilt over exhaust pipe, wipe it off with cloth to avoid emitting smoke or causing a fire.

1) Disconnect the ground cable from battery. <Ref. to NT-5, BATTERY, NOTE, Note.>

NOTE:
For the 12 volt engine restart battery, disconnect the ground terminal from 12V engine restart battery sensor.

2) Drain engine coolant. <Ref. to CO(H4DO(w/o HEV))-16, REPLACEMENT, Engine Coolant.>
3) Remove the collector cover.
   (1) Pull up the two points at the front of collector cover (A).
   (2) Pull up the two points at the rear of collector cover (B) while moving them rearward.

NOTE:
Be careful not to contact the fuel delivery tube when moving the collector cover rearward.

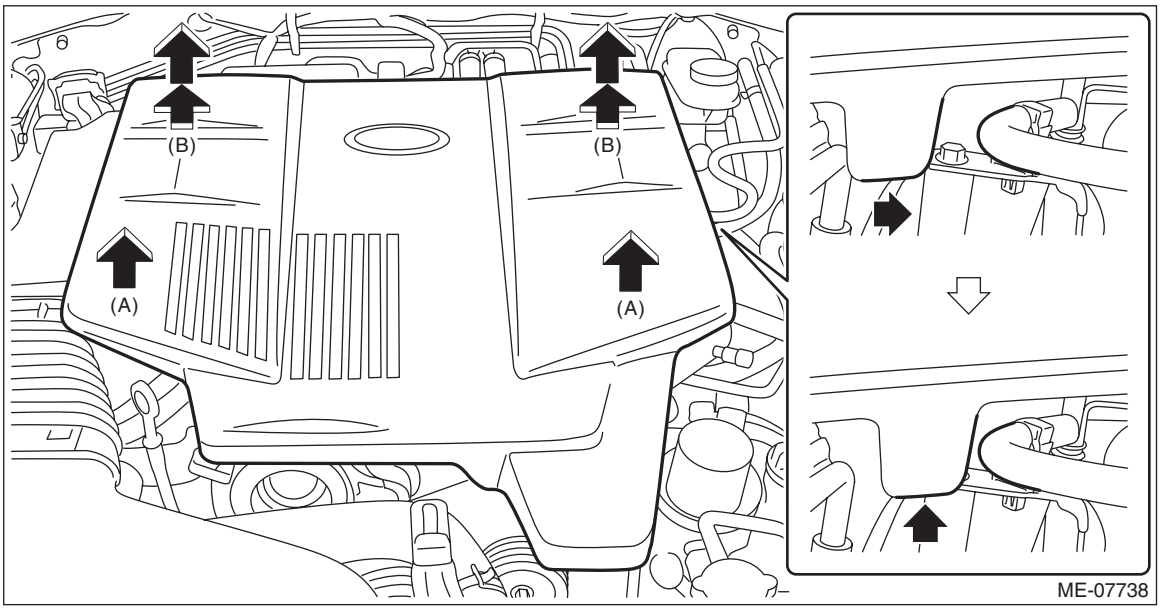

4) Remove the air cleaner case. <Ref. to IN(H4DO(HEV))-6, REMOVAL, Air Cleaner Case.>
5) Disconnect the drive motor harness connector, and detach the harness clip.

6) Remove the engine harness connector, and remove the engine hanger rear.

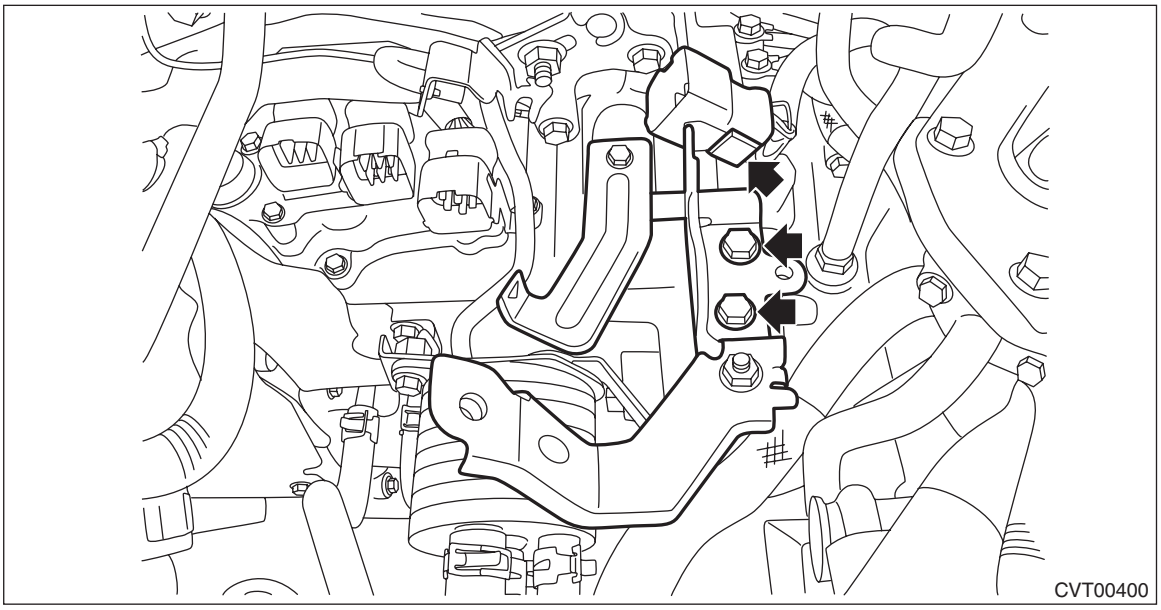

7) Remove the engine coolant inlet hose from the EGR cooler.
8) Remove the engine coolant outlet hose from the CVT cooler (with warmer feature).

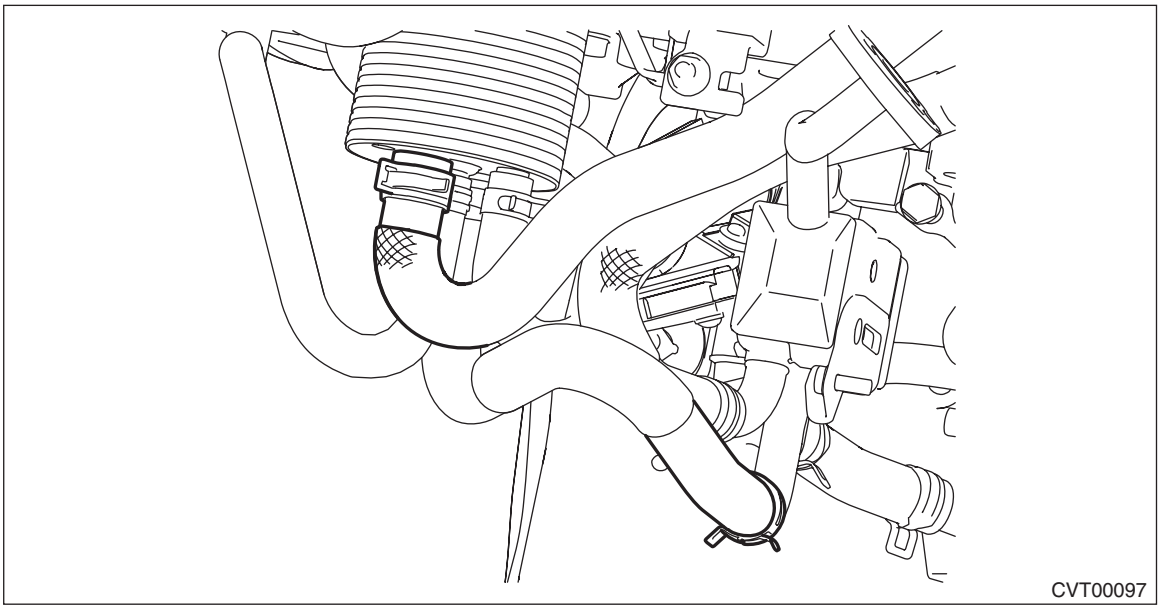

9) Remove the CVTF cooler (with warmer feature) from the transmission.

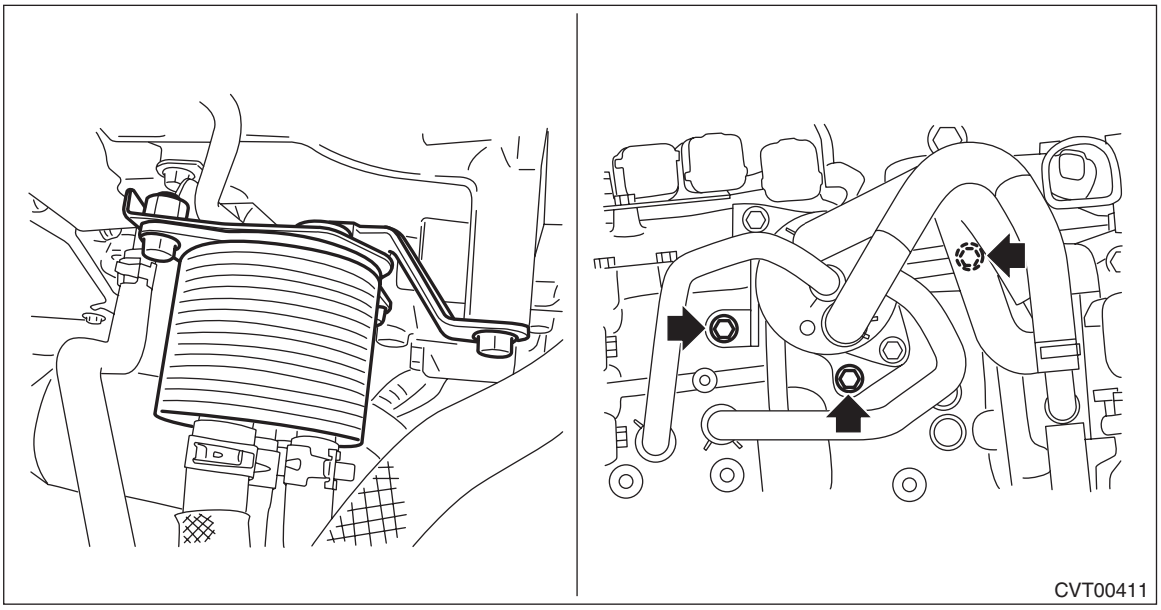

10) Remove the CVTF inlet hose and outlet hose from the pipe on the transmission side.

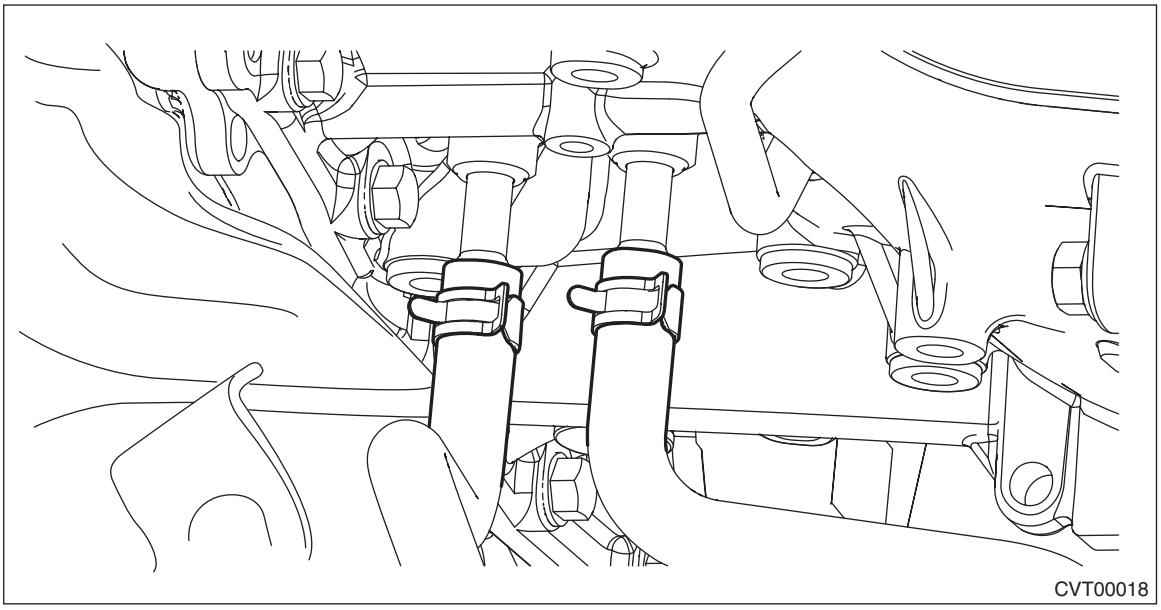

11) Remove the intake manifold. <Ref. to FU(H4DO(HEV))-20, REMOVAL, Intake Manifold.>

12) Remove the engine coolant outlet hose.

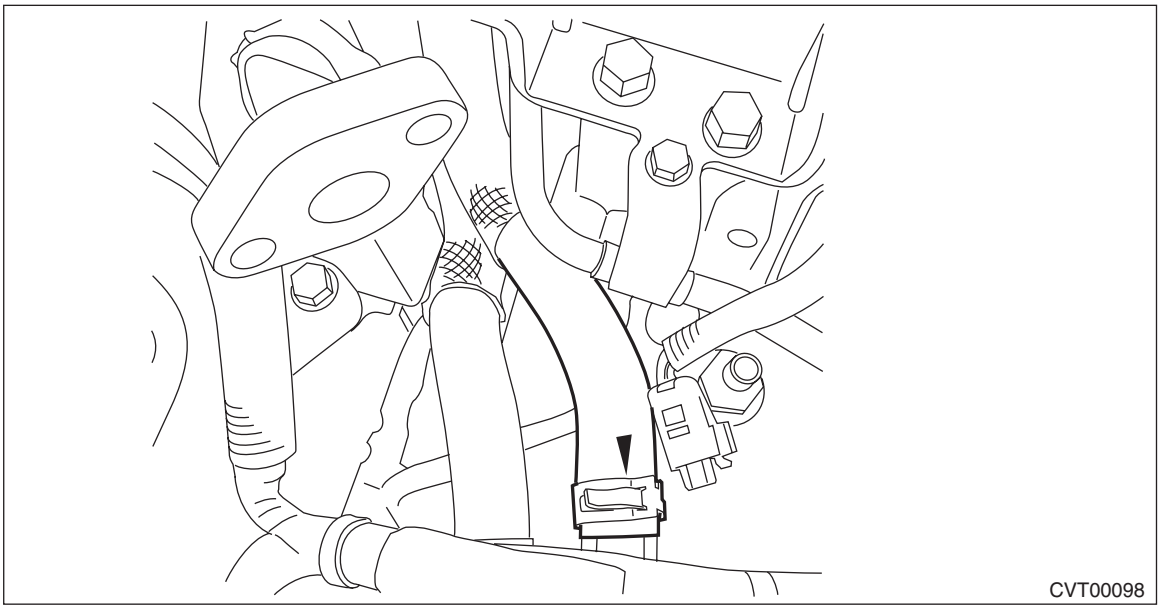

B: INSTALLATION

1) Connect the engine coolant outlet hose.

NOTE:
When installing the engine coolant outlet hose, the triangle marking should face upward.

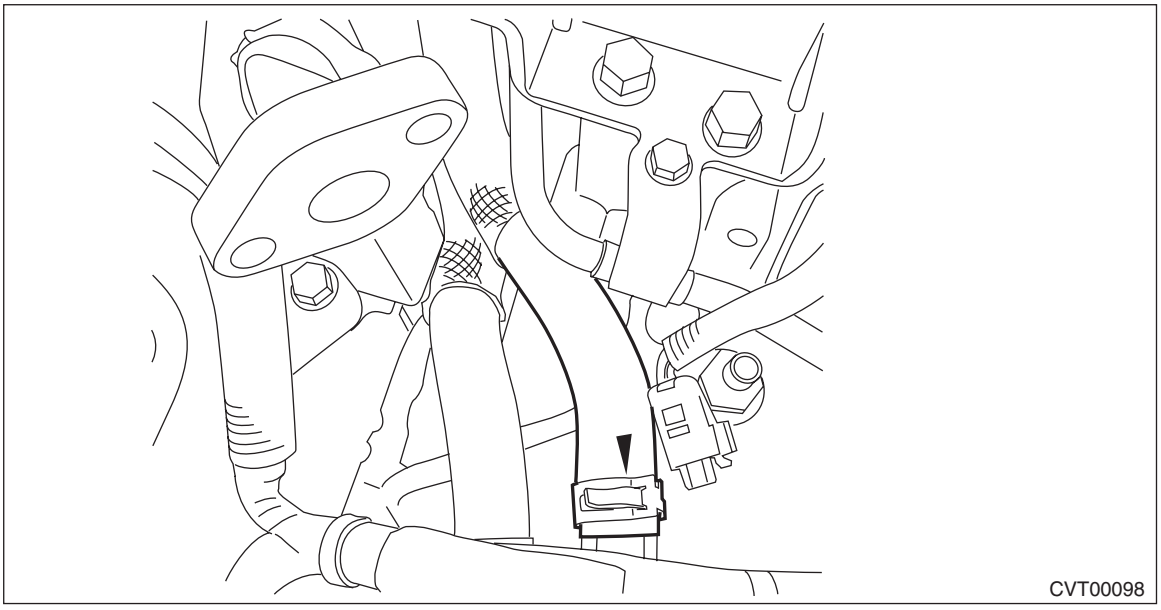

2) Install the intake manifold. <Ref. to FU(H4DO(w/o HEV))-30, INSTALLATION, Intake Manifold.>

3) Install the CVTF inlet hose and CVTF outlet hose to transmission.

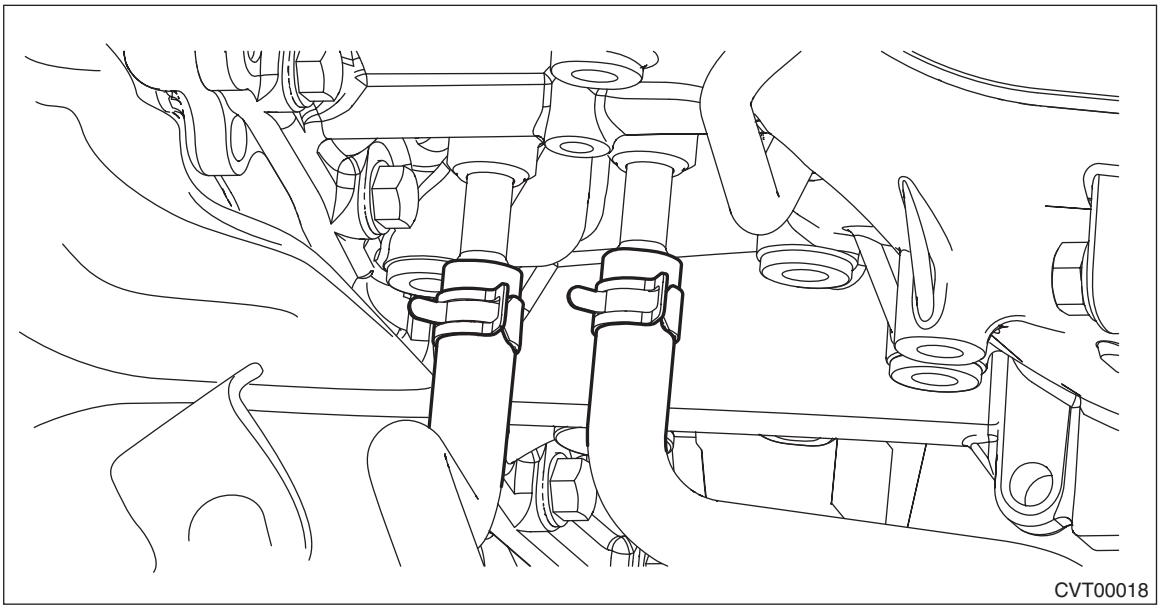

4) Install the CVTF cooler (with warmer feature) to the transmission.

Tightening torque:
23 N·m (2.3 kgf-m, 17.0 ft-lb)

5) Install the engine coolant outlet hose to the CVT cooler (with warmer feature).
6) Install the engine coolant inlet hose to the EGR cooler.

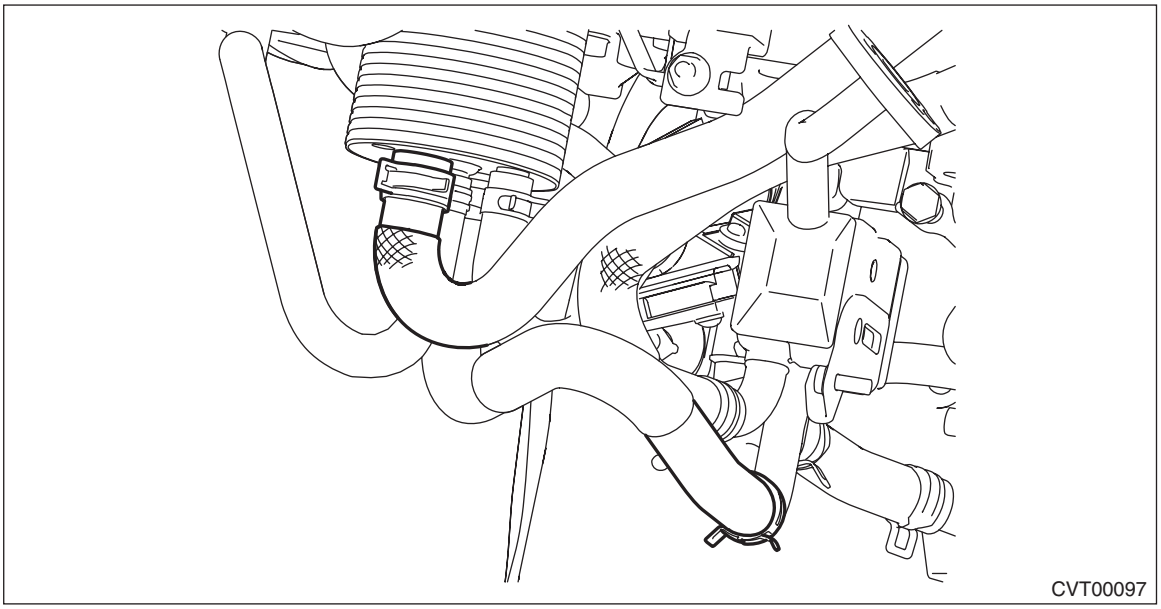

7) Check installation condition of the hose.
- Make sure the hoses do not interfere with each other or with other components.
- Check each hose for bent, excess curve, and twisting conditions.

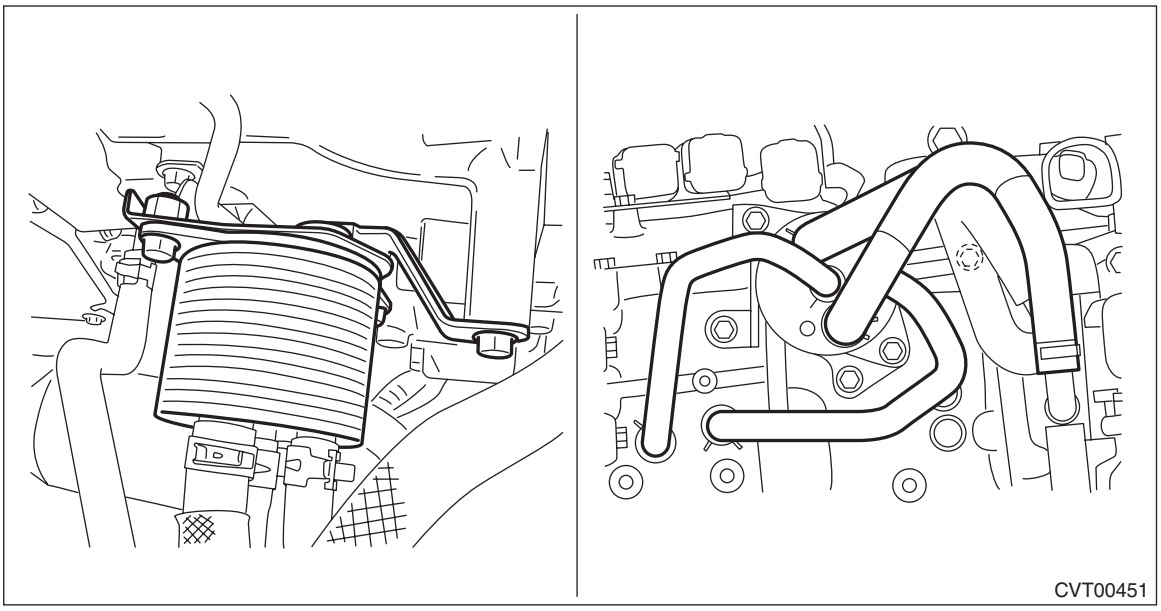

8) Install the engine hanger rear and the vacuum pipe.

Tightening torque:
Engine hanger rear
21 N·m (2.1 kgf-m, 15.5 ft-lb)
Vacuum pipe
6.4 N·m (0.7 kgf-m, 4.7 ft-lb)

9) Install the engine harness connector to the bracket, and then connect the engine harness.
10) Install the drive motor harness connector, and then install the harness clip.
11) Install the air cleaner case. <Ref. to IN(H4DO(HEV))-8, INSTALLATION, Air Cleaner Case.>
12) Install the 12 volt auxiliary battery ground terminal and ground terminal to the 12V engine restart battery sensor of the 12 volt engine restart battery. <Ref. to NT-5, BATTERY, NOTE, Note.>
13) Fill engine coolant. <Ref. to CO(H4DO(w/o HEV))-16, REPLACEMENT, Engine Coolant.>
14) Adjust the CVTF level. <Ref. to CVT(TH58A)-41, ADJUSTMENT, CVTF.>

C: DISASSEMBLY

1) Remove the hoses from the CVTF cooler (with warmer feature).

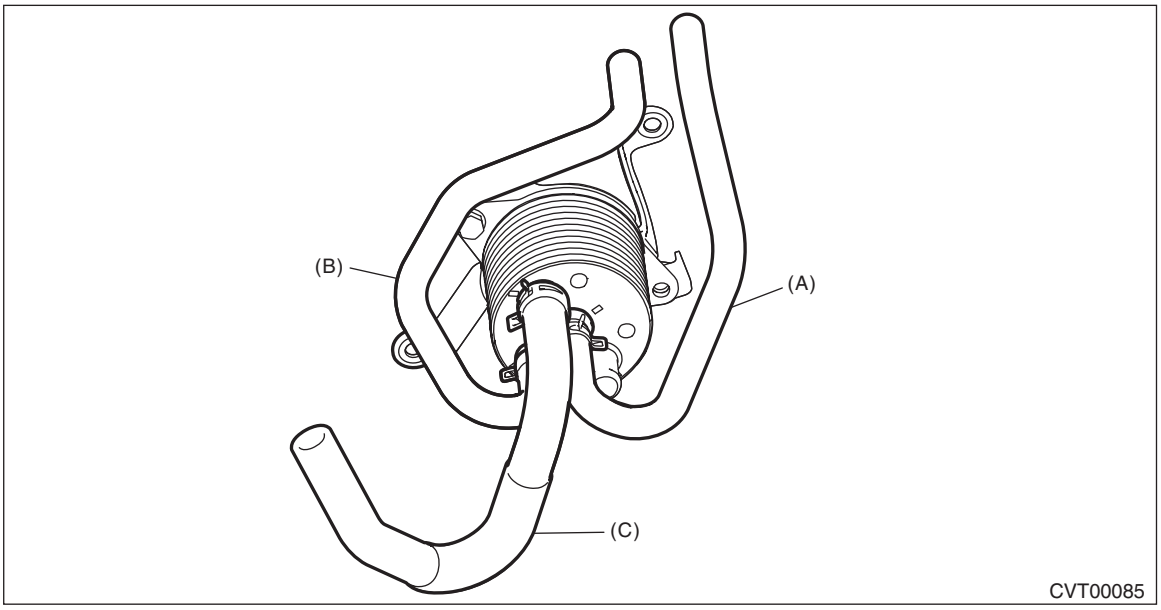

(A) CVTF cooler outlet hose
(B) CVTF cooler inlet hose
(C) Engine coolant inlet hose

2) Remove the bracket from the CVTF cooler (with warmer feature).

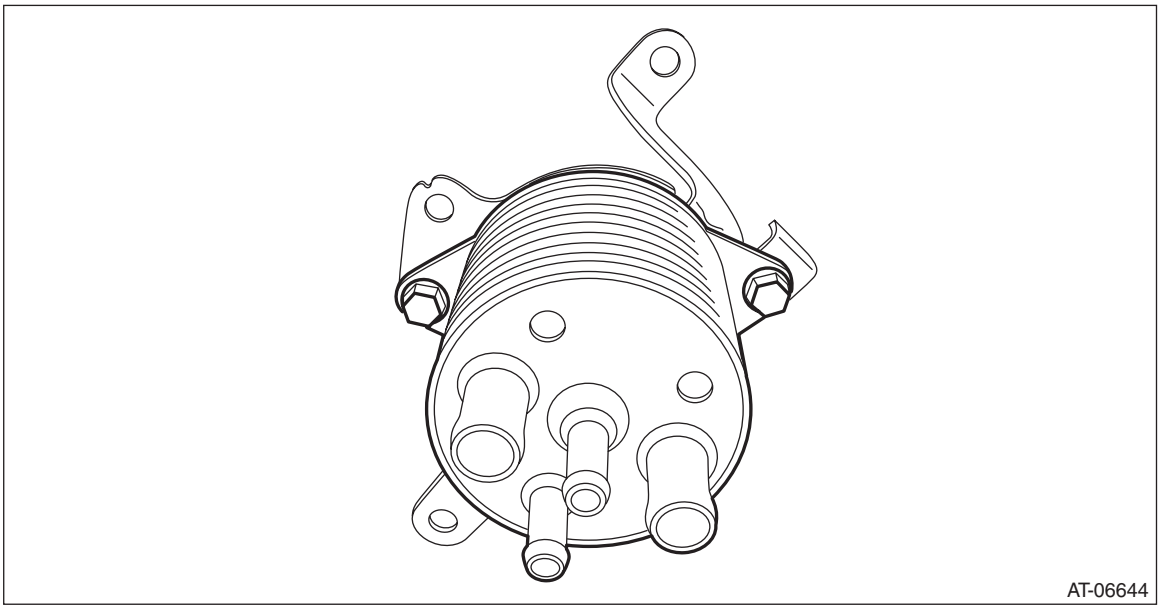

D: ASSEMBLY

1) Attach the bracket.

Tightening torque:
23 N·m (2.3 kgf-m, 17.0 ft-lb)

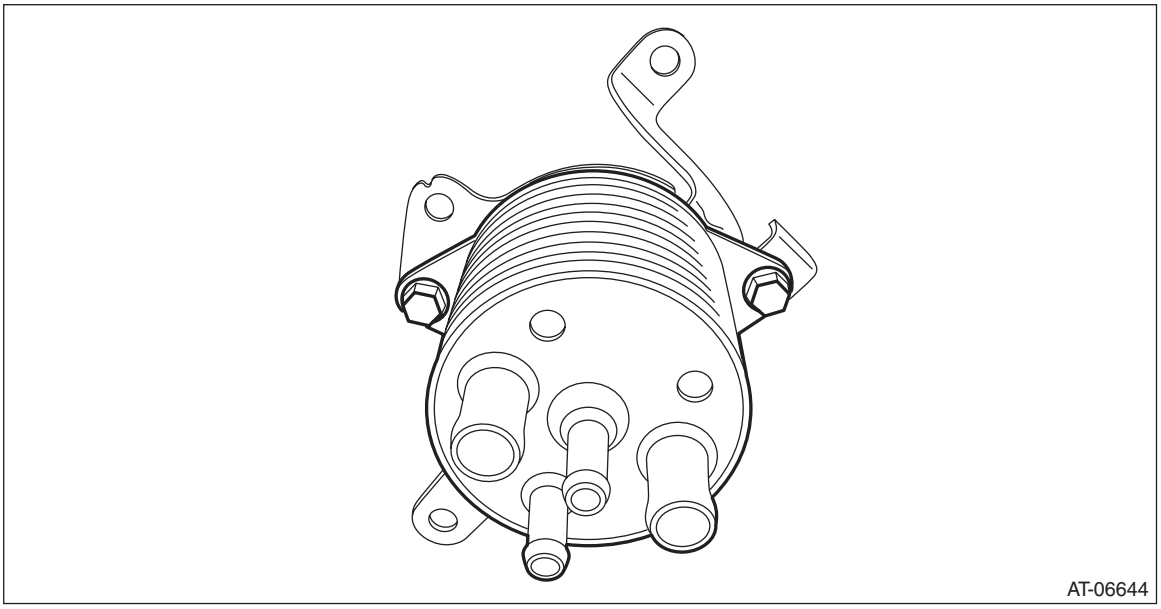

2) Attach hoses to the CVTF cooler (with warmer feature).

NOTE:
- Use a new CVTF cooler hose.
- Install so that the CVTF cooler hose is not folded over, excessively bent or twisted.
- Insert the CVTF cooler hose to the specified position in the proper direction.

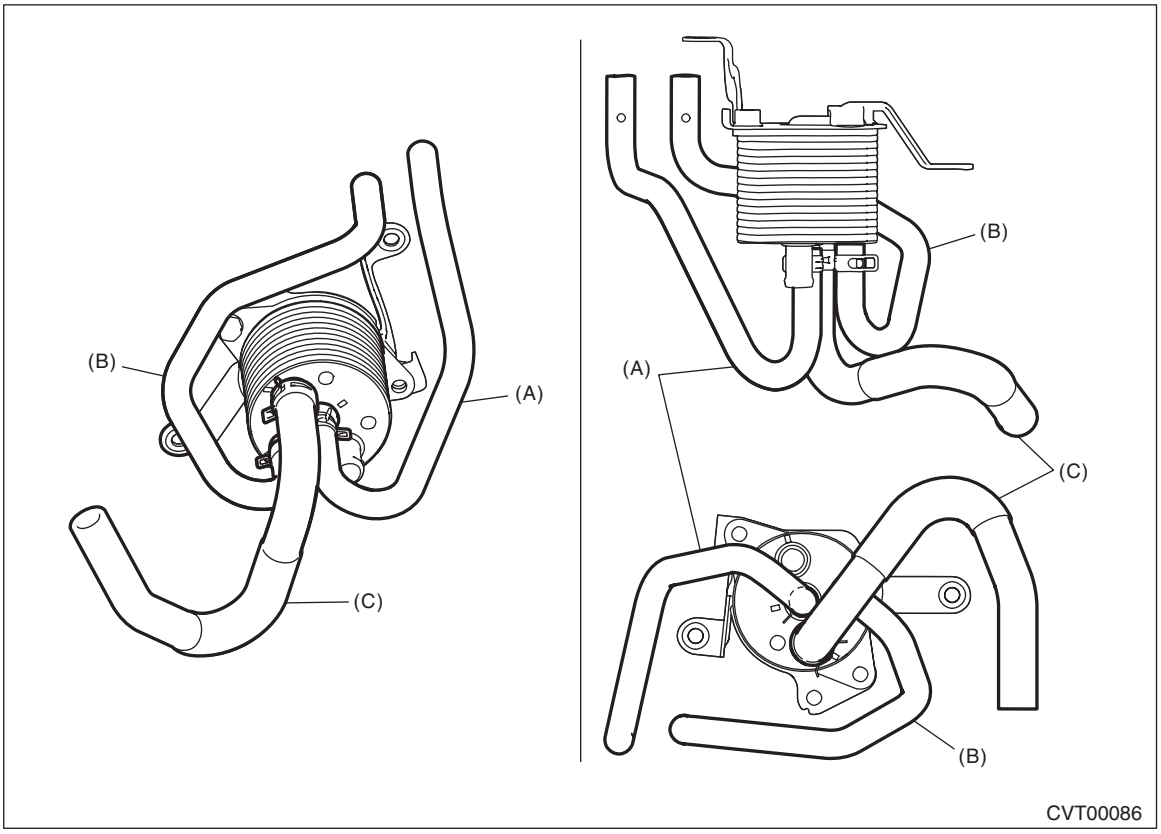

(A) CVTF cooler outlet hose
(B) CVTF cooler inlet hose
(C) Engine coolant inlet hose

E: INSPECTION

If any malfunction is found in hoses and clamps resulting from the following inspection, replace them.
1) Check that there are no CVTF or engine coolant leaks from the connections.
2) Check the clamp for deformation.
3) Lightly bend the CVTF cooler hose and check for cracks in the surface or other damages.
4) Pinch the CVTF cooler hose with your fingers and check for poor elasticity. Also check for poor elasticity in the parts where the clamp was installed by pressing with your fingernail.
5) Check for peeling, cracks, and deformation at the tip of the hose.
6) Check the CVTF cooler (with warmer feature) for any damage.

28.Air Breather Hose

A: REMOVAL

1. FRONT DIFFERENTIAL SIDE

1) Turn the ignition switch to OFF.
2) Remove the collector cover.
   (1) Pull up the two points at the front of collector cover (A).
   (2) Pull up the two points at the rear of collector cover (B) while moving them rearward.

NOTE:
Be careful not to contact the fuel delivery tube when moving the collector cover rearward.

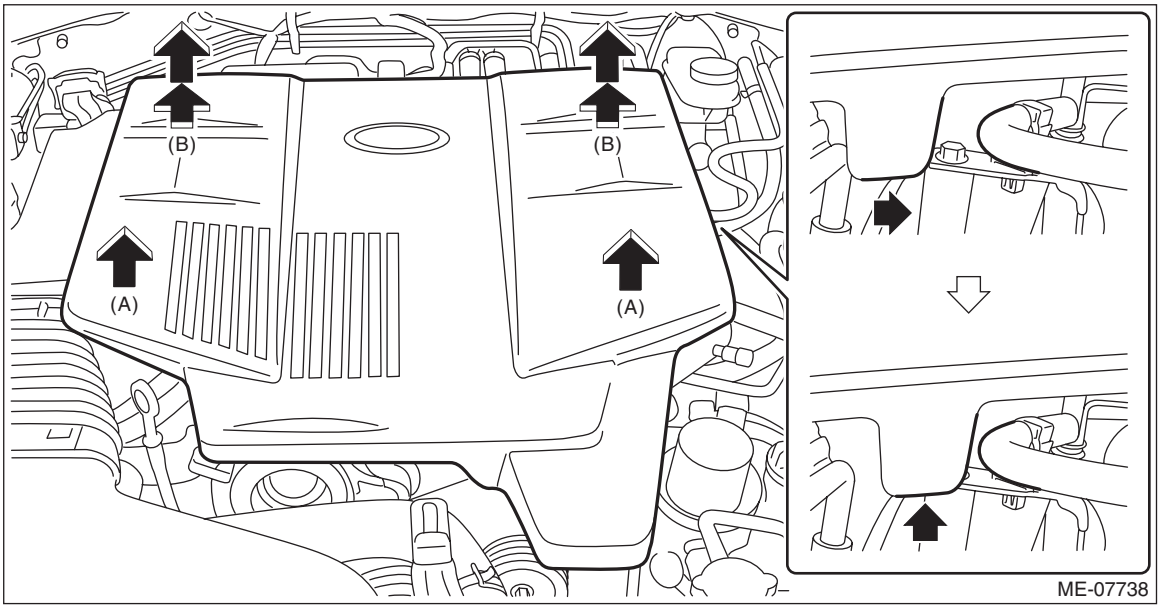

3) Remove the air cleaner case. <Ref. to IN(H4DO(HEV))-6, REMOVAL, Air Cleaner Case.>
4) Remove the air breather hose.

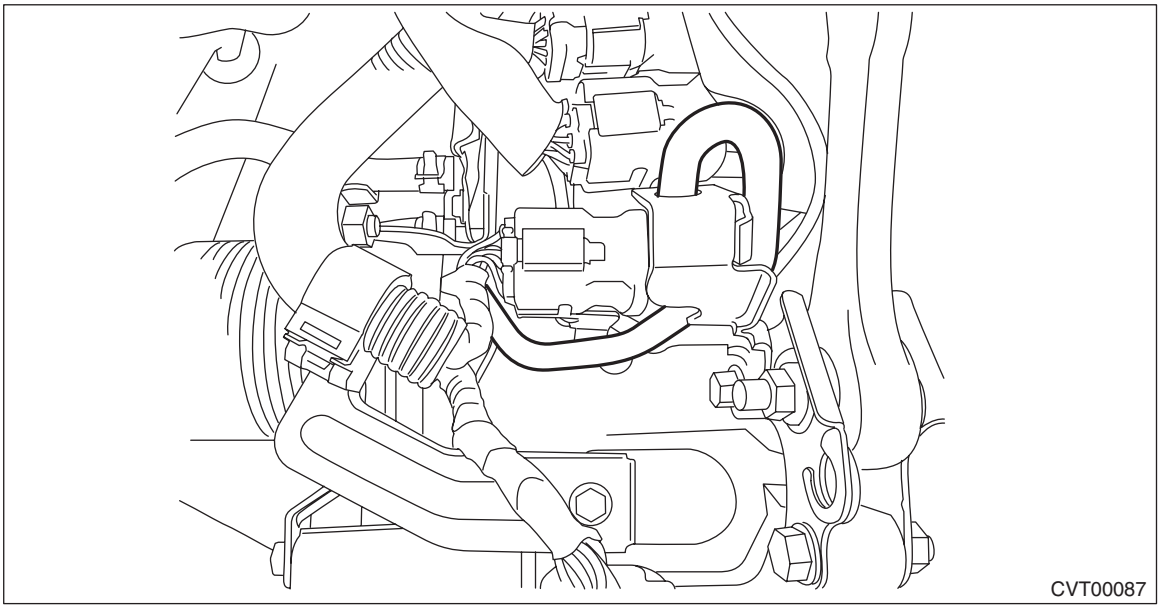

2. TRANSMISSION CASE SIDE

1) Remove the transmission assembly. <Ref. to CVT(TH58A)-62, REMOVAL, Automatic Transmission Assembly.>
2) Remove the transmission case cover.

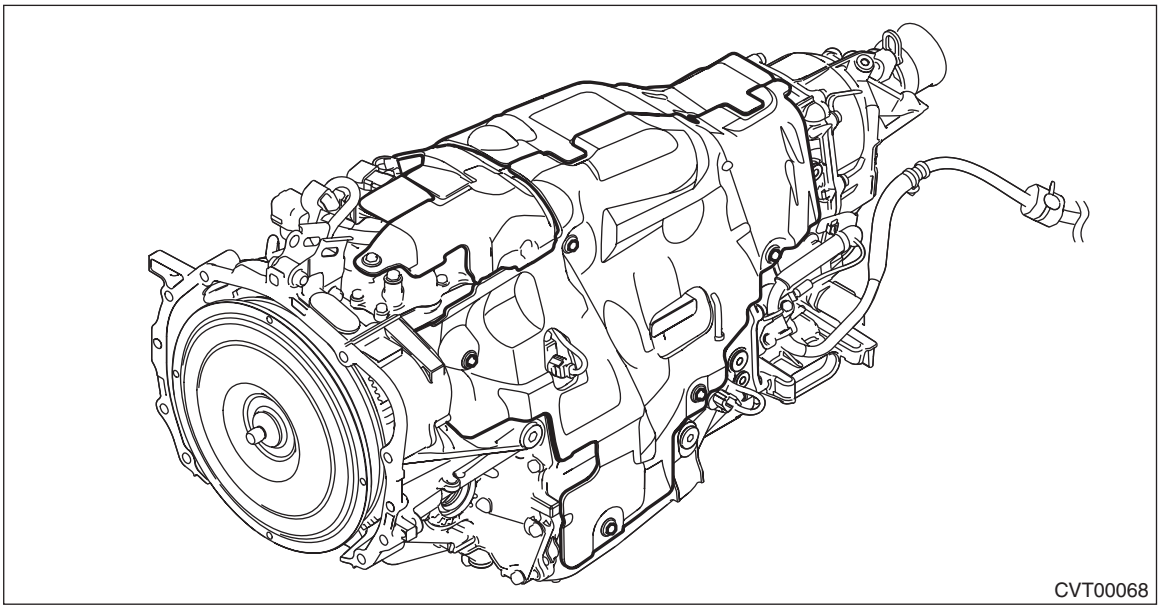
CVT00068

3) Remove the two air breather hoses.

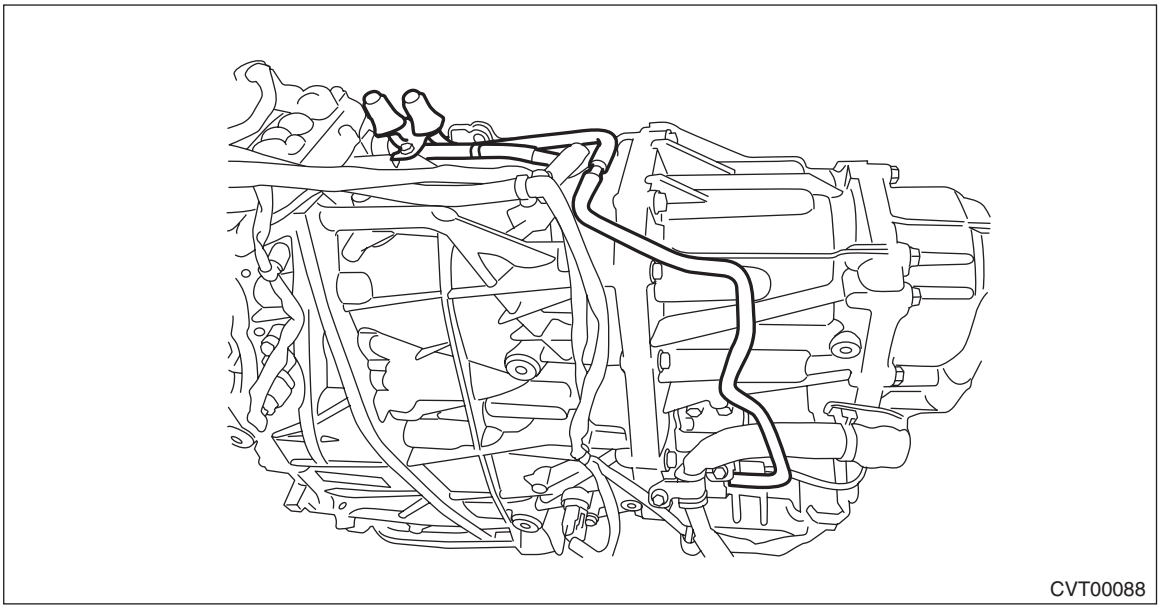
CVT00088

4) Remove the air breather cap, air breather hose and bracket.

B: INSTALLATION

1. FRONT DIFFERENTIAL SIDE

Install in the reverse order of removal.

NOTE:
Place the bracket between the markings of the hose during installation.

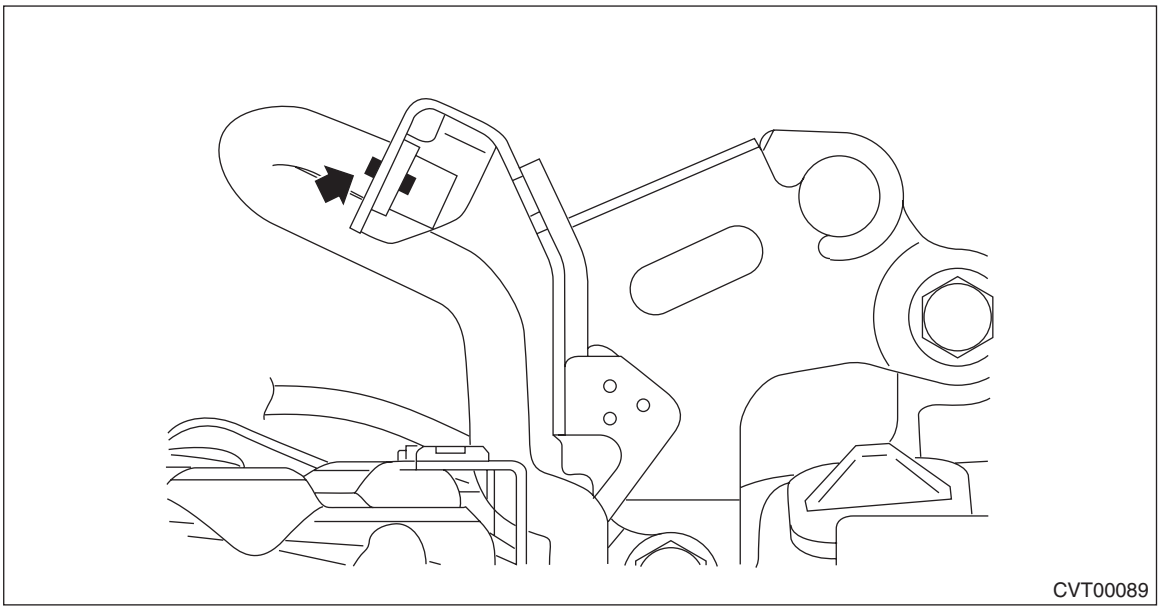

2. TRANSMISSION CASE SIDE

Install in the reverse order of removal.

Tightening torque:
Transmission case cover
8 N·m (0.8 kgf-m, 5.9 ft-lb)
Air breather
5 N·m (0.5 kgf-m, 3.7 ft-lb)

NOTE:
- Place the bracket between the markings of the hose during installation.

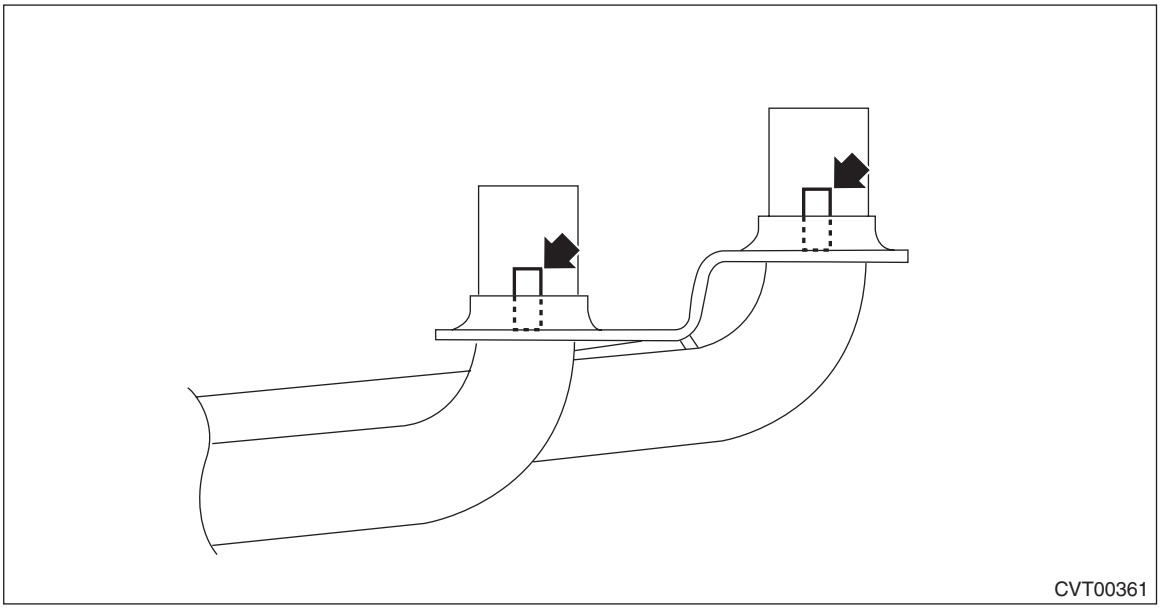

- After the transmission case cover (large) is installed, insert the transmission case cover (small) between the transmission case cover (large) and the transmission to install.

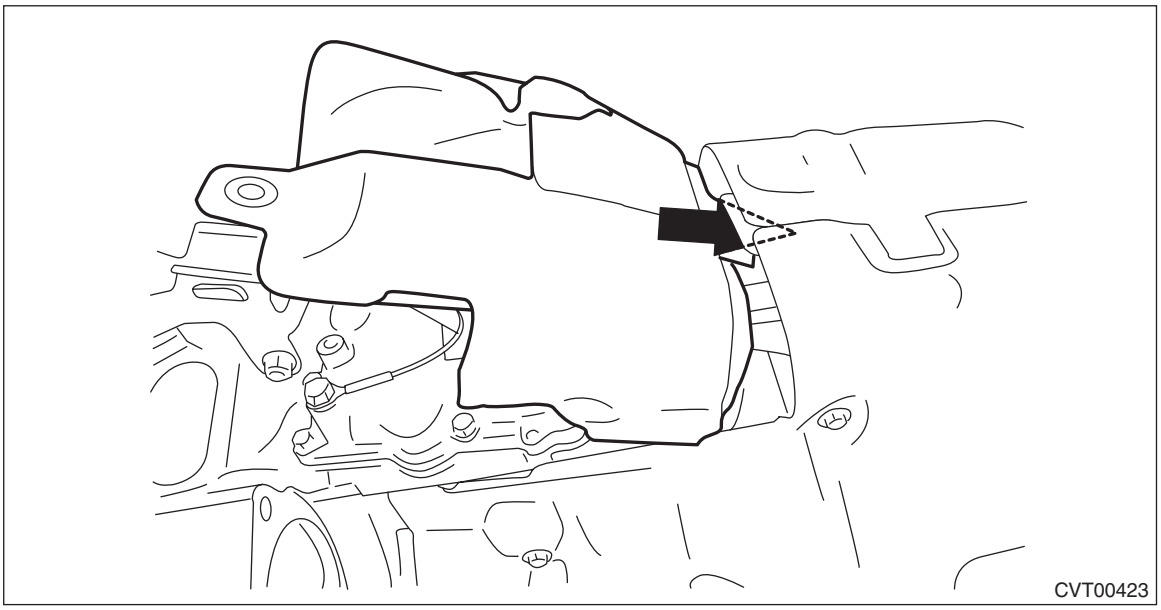

- Pass the air breather hose through the upper side of the transmission harness and inside of the electric oil pump harness.

C: INSPECTION

Check the hose for peeling, crack or clogging.

29.Drive Plate

A: REMOVAL

1) Remove the transmission assembly from the vehicle. <Ref. to CVT(TH58A)-62, REMOVAL, Automatic Transmission Assembly.>
2) Set the ST.

NOTE:
Set the ST to the drive plate referring to the illustration.
ST 498497300 CRANKSHAFT STOPPER

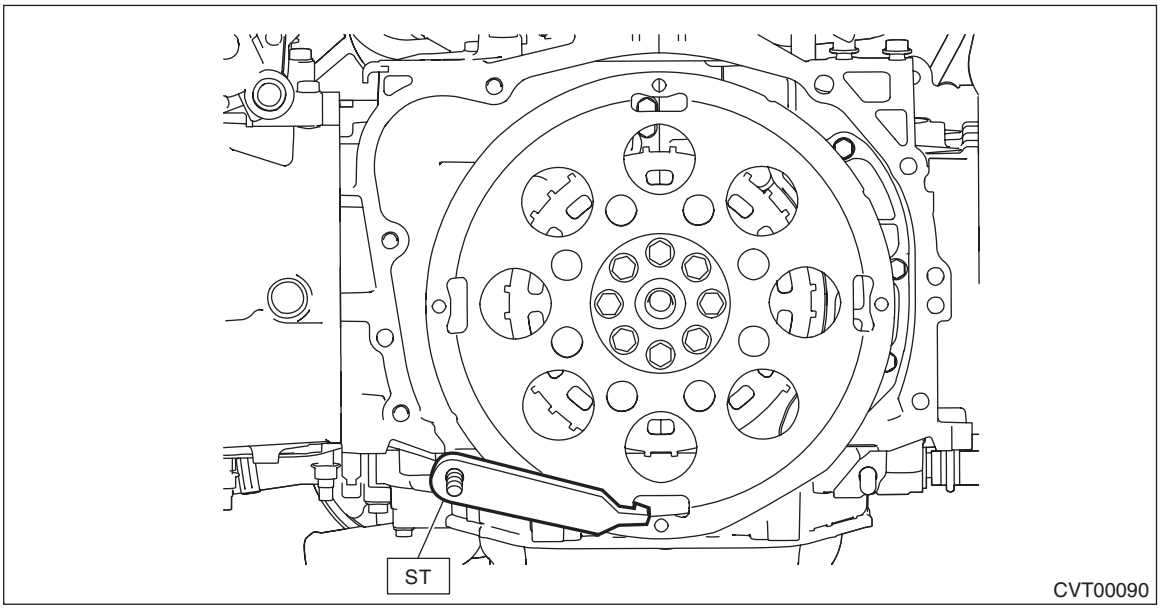

3) Remove the drive plate and reinforcement drive plate.

B: INSTALLATION

1) Temporarily install the drive plate and reinforcement drive plate.

NOTE:
Align the knock pin hole of the crankshaft position sensor plate to the knock pin of the crankshaft to secure the knock pin.

2) Set the ST.

NOTE:
Set the ST to the drive plate referring to the illustration.
ST 498497300 CRANKSHAFT STOPPER

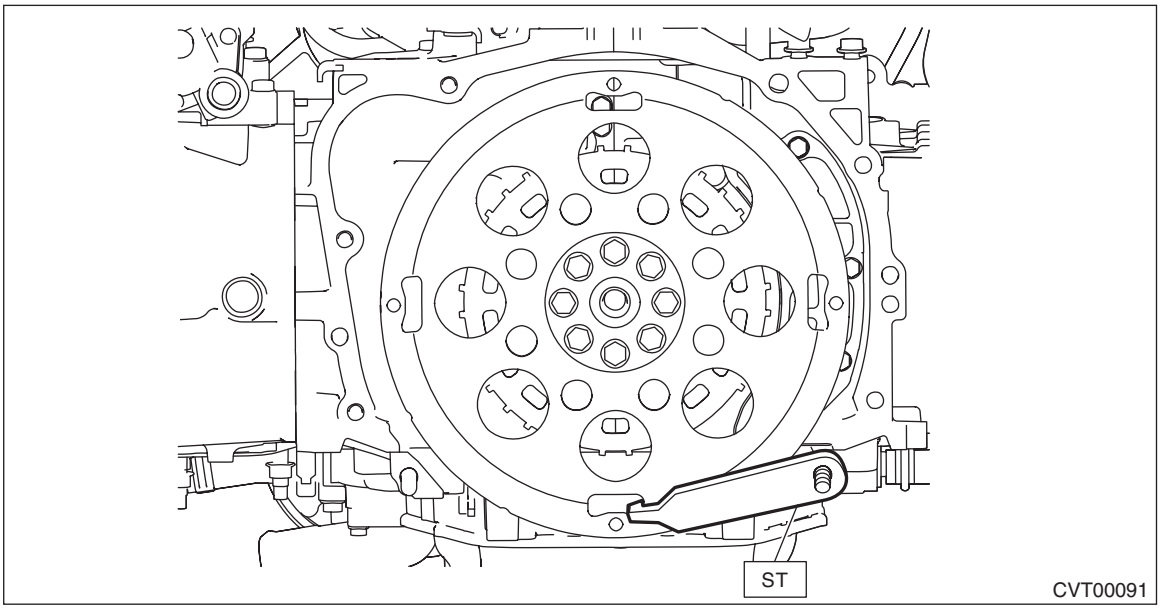

3) Tighten the drive plate mounting bolt in two stages.
(1) Tighten the drive plate mounting bolt.

Tightening torque:
30 N·m (3.1 kgf-m, 22.1 ft-lb)

(2) While checking the tightening angle with the angle gauge, tighten the drive plate mounting bolts to the specified angle.

Tightening angle:
30° — 35°

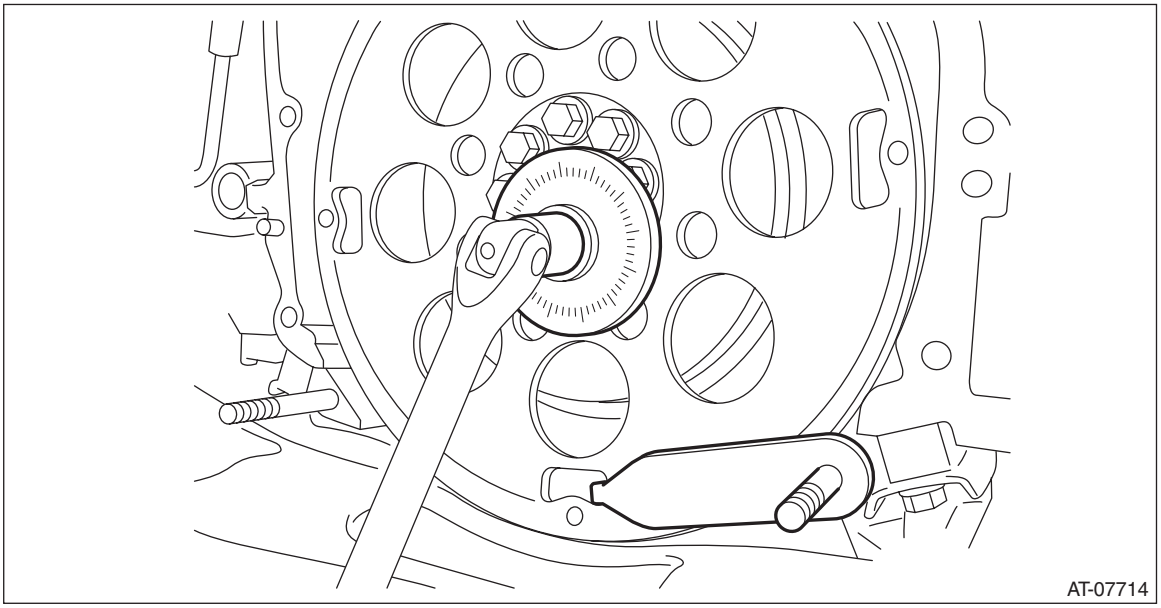

4) Install the transmission assembly to the vehicle. <Ref. to CVT(TH58A)-76, INSTALLATION, Automatic Transmission Assembly.>

C: INSPECTION

Check the drive cable for damage.

30.Torque Converter Assembly

A: REMOVAL

1) Remove the transmission assembly from the vehicle. <Ref. to CVT(TH58A)-62, REMOVAL, Automatic Transmission Assembly.>
2) Pull out the torque converter assembly horizontally.

CAUTION:
Do not scratch the inside of engaging parts.

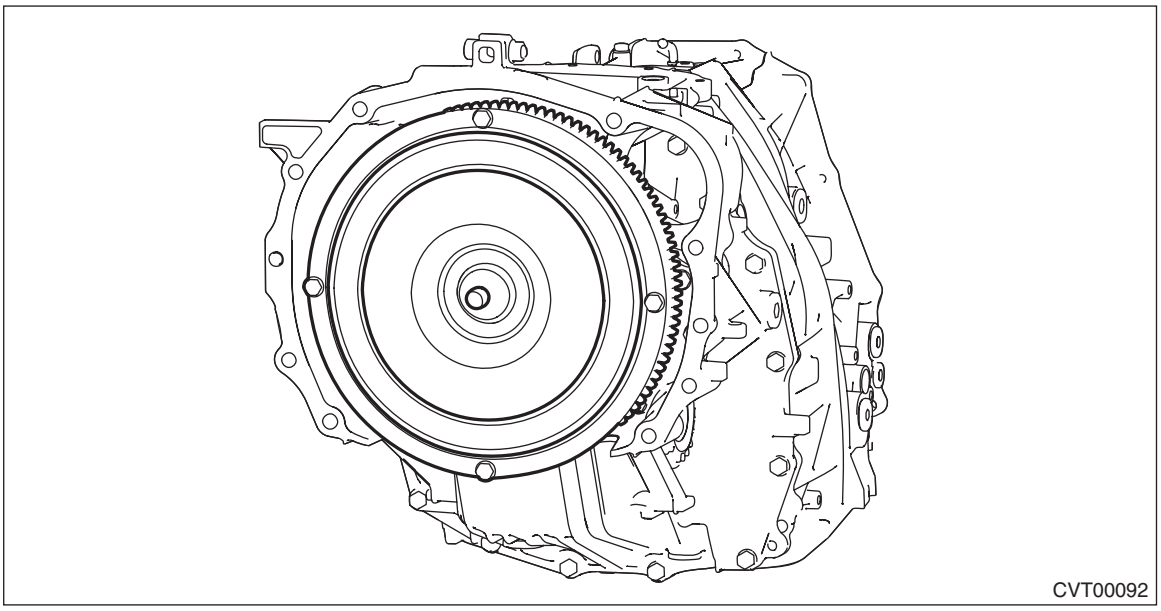

3) Remove the O-ring from the input shaft.

B: INSTALLATION

1) Install the O-ring to the input shaft.

NOTE:
- Use new O-rings.
- Apply CVTF to the O-ring.

2) While holding the torque converter assembly by hand, carefully install it into the torque converter case.

NOTE:
- Apply CVTF to the oil seal lip.
- Do not damage the oil seal and O-ring.

3) Engage the splines while gently rotating the torque converter assembly by hand, and securely insert the assembly.

4) Measure depth “A”, from converter case end surface to drive plate contacting surface.

Standard (reference):
6.8 mm (0.268 in) or less

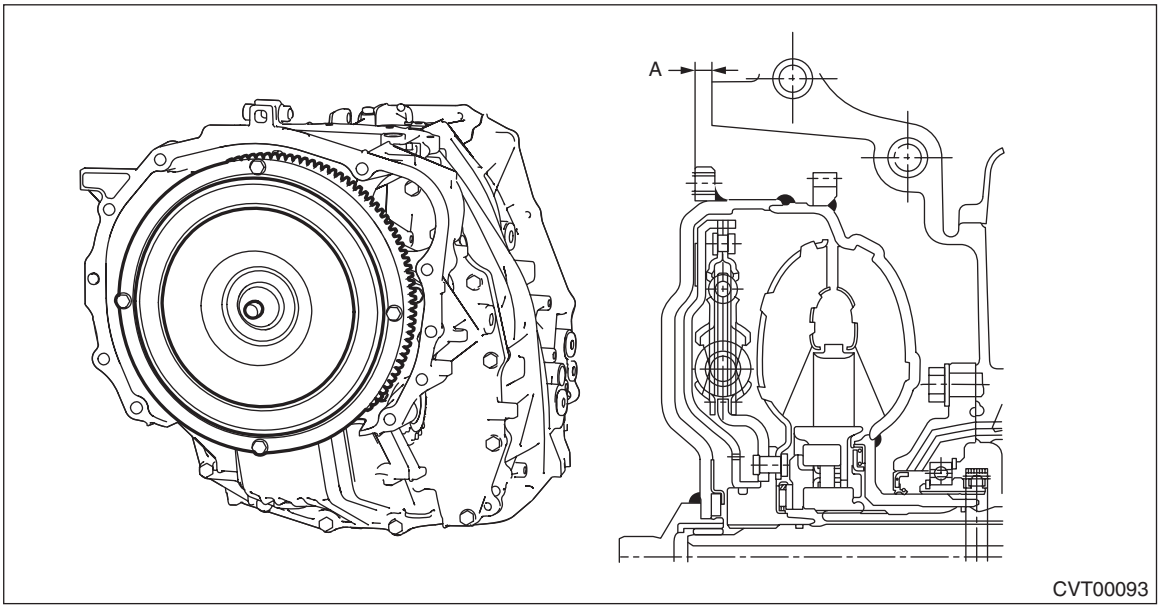

5) Install the transmission assembly to the vehicle. <Ref. to CVT(TH58A)-76, INSTALLATION, Automatic Transmission Assembly.>

C: INSPECTION

- Check the protrusion of torque converter center (front boss) is not deformed or damaged.
- Check the ring gear and exterior for break or damage.

31.Preparation for Overhaul

A: GENERAL DESCRIPTION

Before disassembling and assembling the transmission, follow the following procedures to prepare.

B: PROCEDURE

1) Clean the transmission exterior.
2) Remove the torque converter assembly. <Ref. to CVT(TH58A)-175, Torque Converter Assembly.>
3) Attach the ST on the transmission.
ST 18632AA000 STAND ASSY

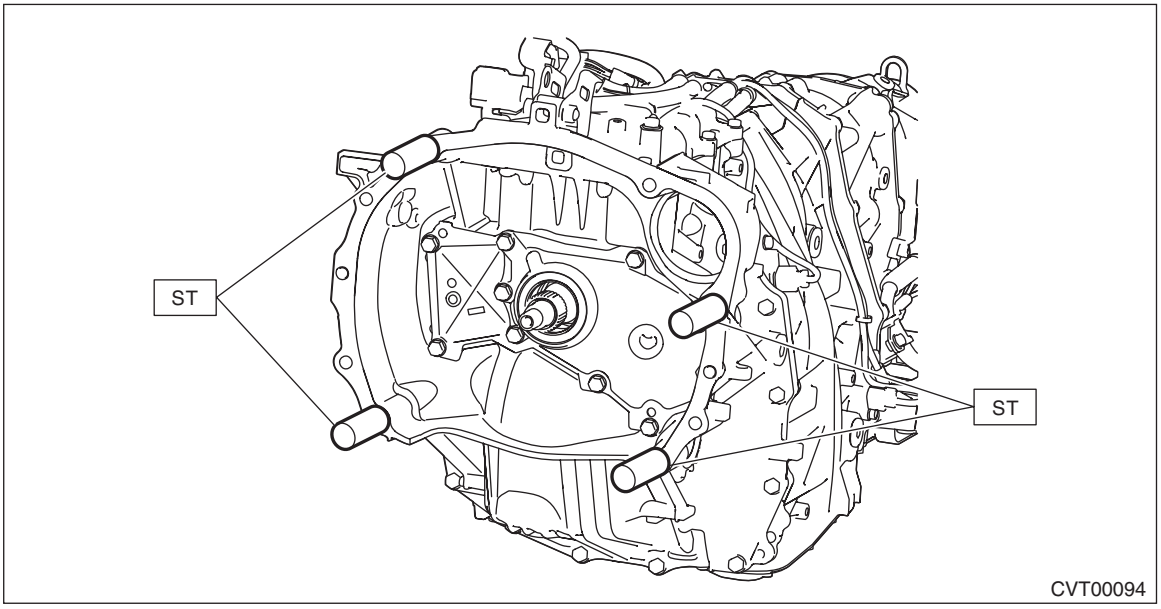

4) Remove the transmission case cover on the transmission upper side.

NOTE:
After the transmission case cover (large) is installed, insert the transmission case cover (small) between the transmission case cover (large) and the transmission to install.

Tightening torque:
8 N·m (0.8 kgf-m, 5.9 ft-lb)

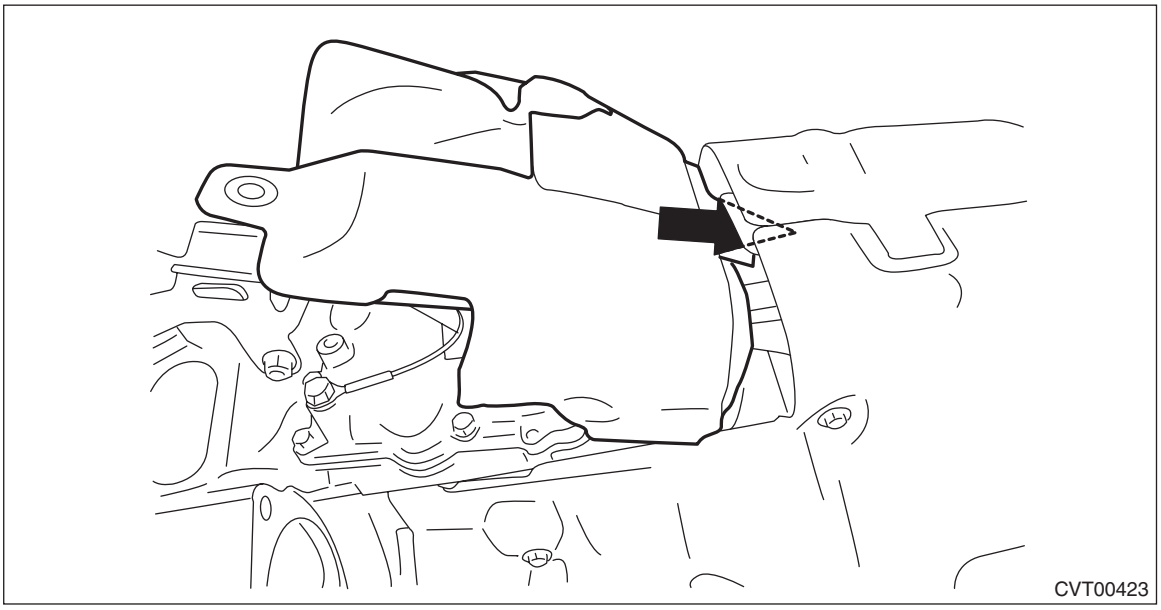

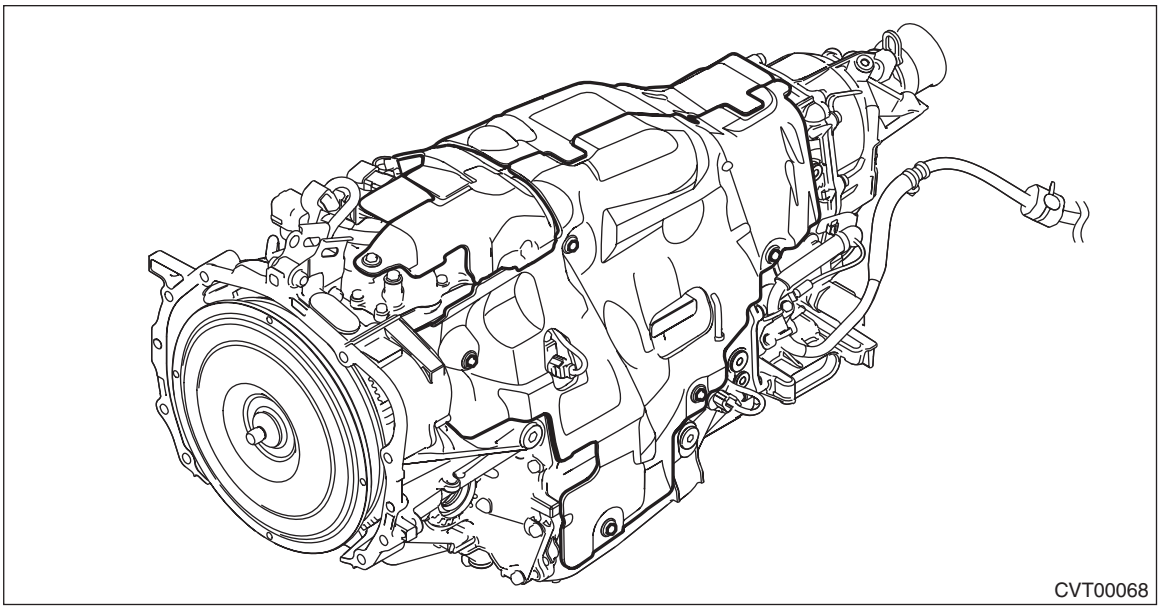

5) Place the transmission assembly on end.
6) When completely overhauling the transmission, refill it with CVTF through the transmission right side plug, and install the plug.

CAUTION:
• Always use specified CVTF. Using other fluid will cause malfunction. <Ref. to CVT(TH58A)-4, HYDRAULIC CONTROL AND LUBRICATION, SPECIFICATION, General Description.>
• After the transmission is installed to the engine, be sure to adjust the CVTF level.

NOTE:
Use a new gasket.

Tightening torque:
50 N·m (5.1 kgf-m, 36.9 ft-lb)

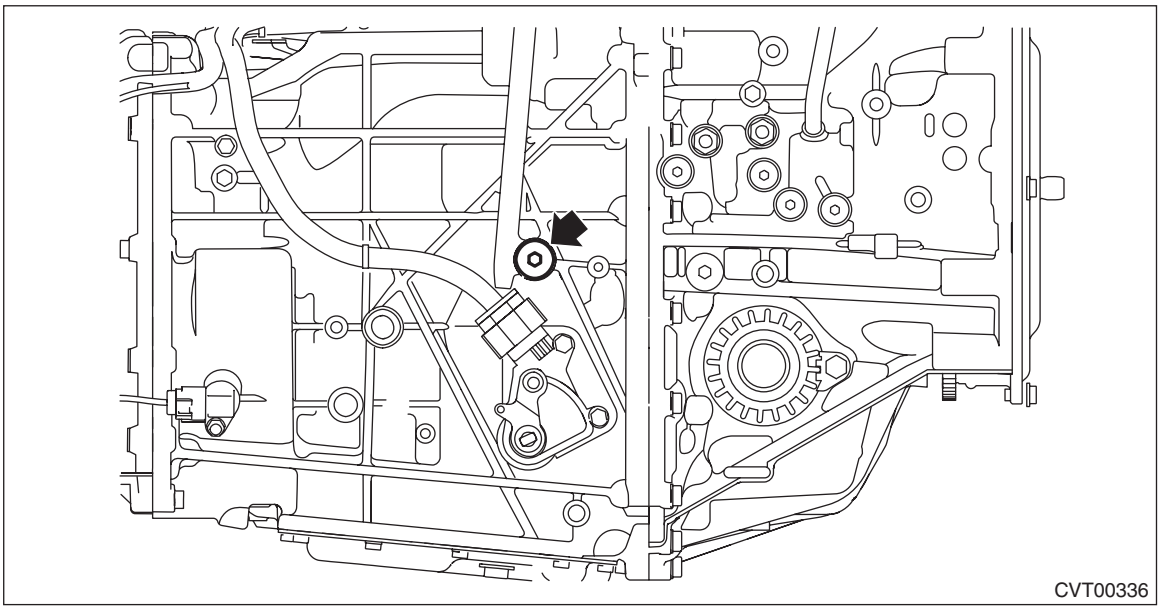

32.Extension Case

A: REMOVAL

1) Remove the transmission assembly from the vehicle. <Ref. to CVT(TH58A)-62, REMOVAL, Automatic Transmission Assembly.>
2) Remove the extension case and the clip.

NOTE:
The total number of extension case mounting bolts is 12.

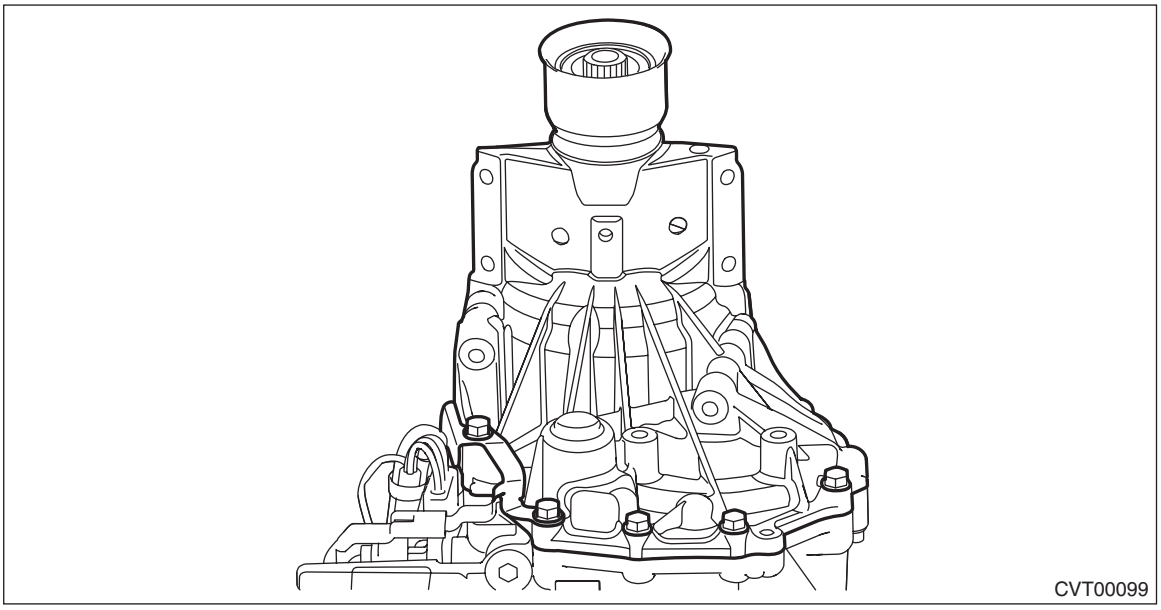

3) Remove the O-ring.

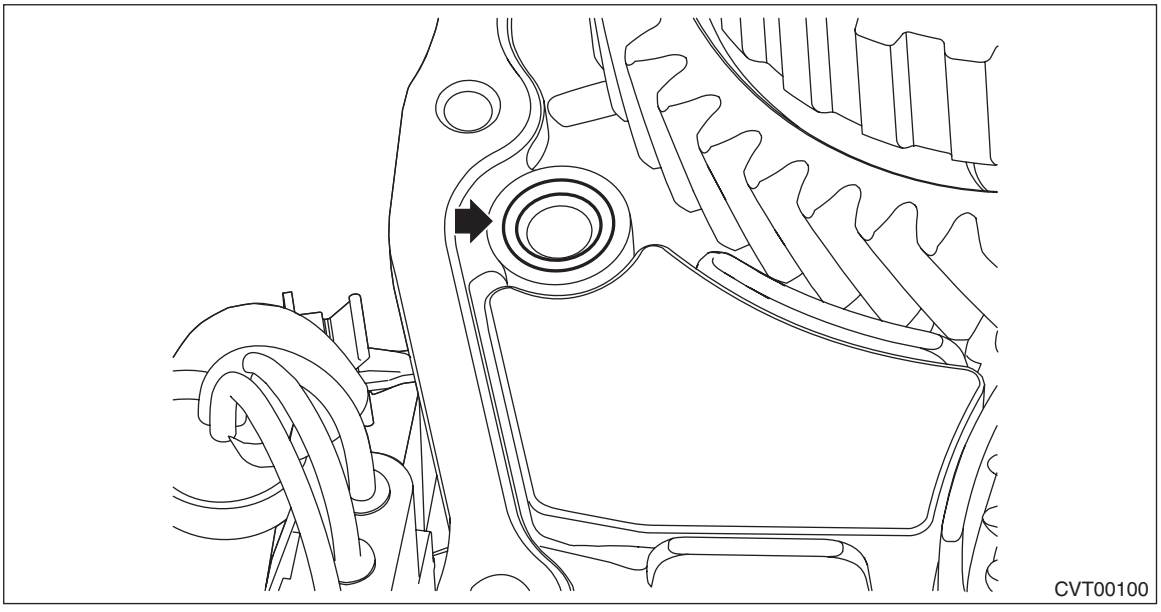

4) Remove the seal ring.

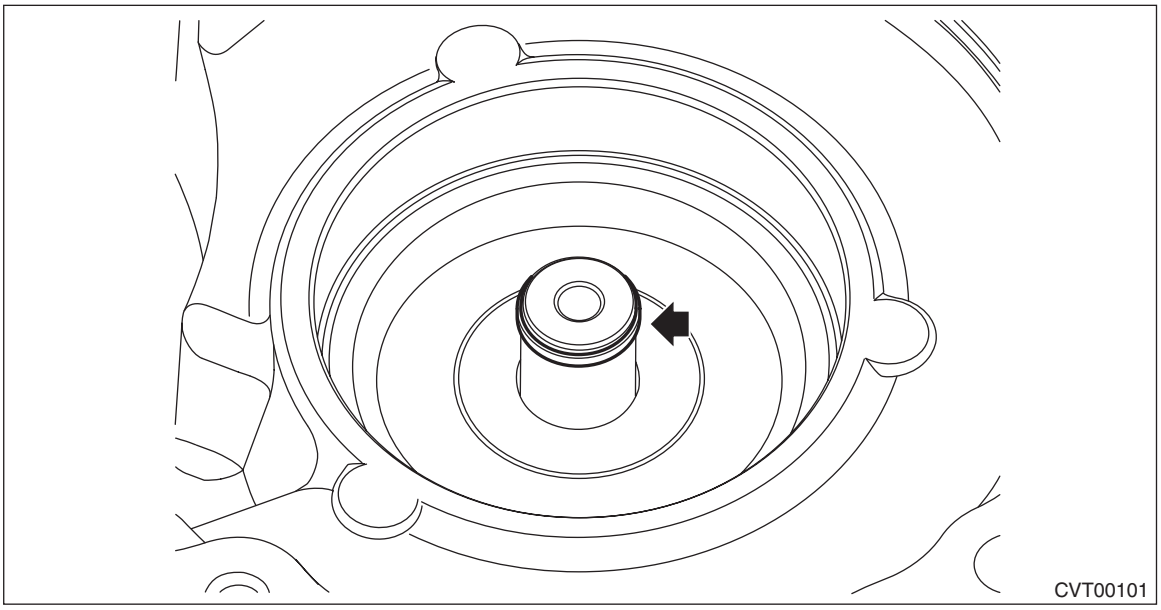

B: INSTALLATION

1) Clean the mating surface of extension case and transmission case.
2) Select the transfer drive gear shim. <Ref. to CVT(TH58A)-259, ADJUSTMENT, Reduction Drive Gear.>
3) Select the transfer driven gear shim. <Ref. to CVT(TH58A)-194, ADJUSTMENT, Transfer Clutch.>
4) Attach the selected transfer drive gear shim to extension case with vaseline.
5) Attach the selected transfer driven gear shim to extension case with vaseline.
6) Install the seal ring to the extension case.

NOTE:
- Use a new seal ring.
- When installing the seal ring, do not expand the seal ring too much.
- Apply CVTF to the seal rings.

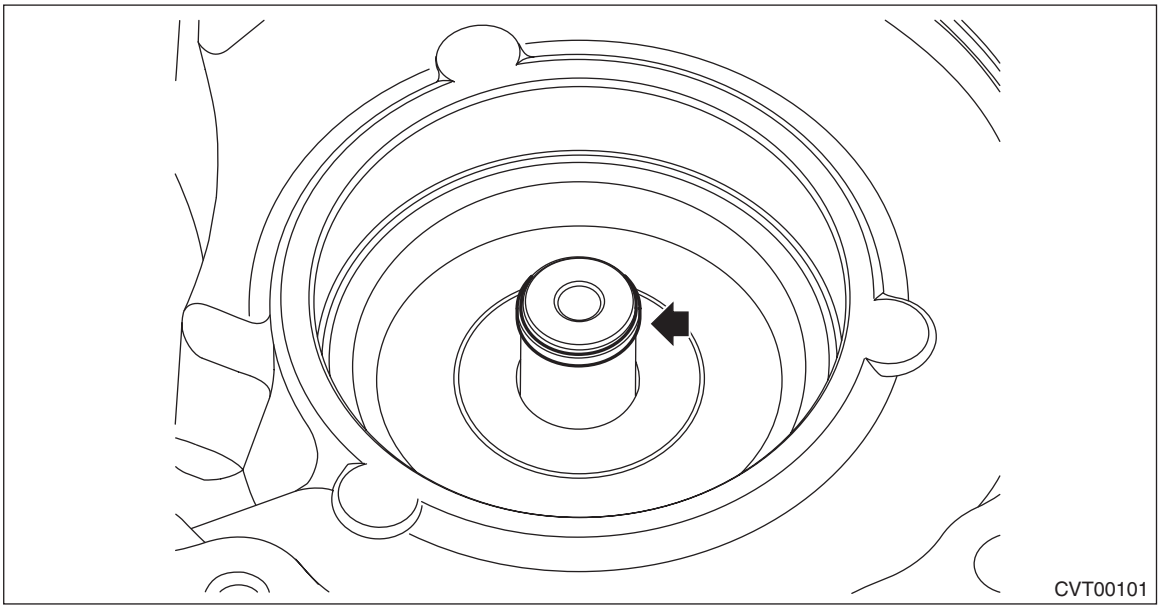

7) Install the O-ring to the transmission case.

NOTE:
- Use new O-rings.
- Apply CVTF to the O-ring.

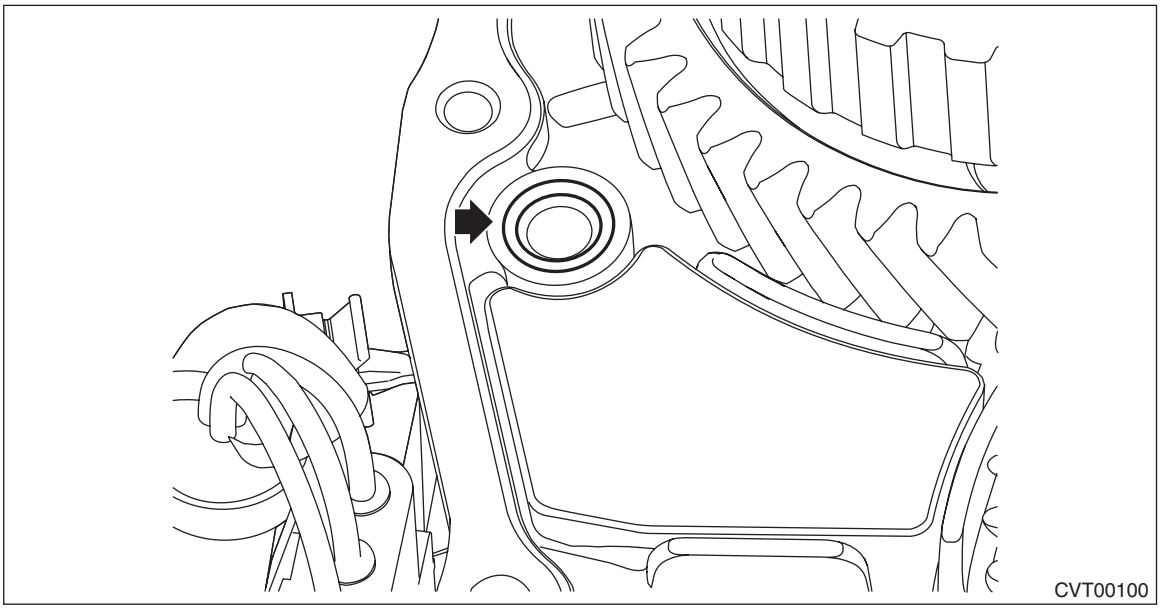

8) Apply liquid gasket to the drive motor assembly seamlessly.

Liquid gasket:
THREE BOND 1215 (Part No. 004403007) or equivalent

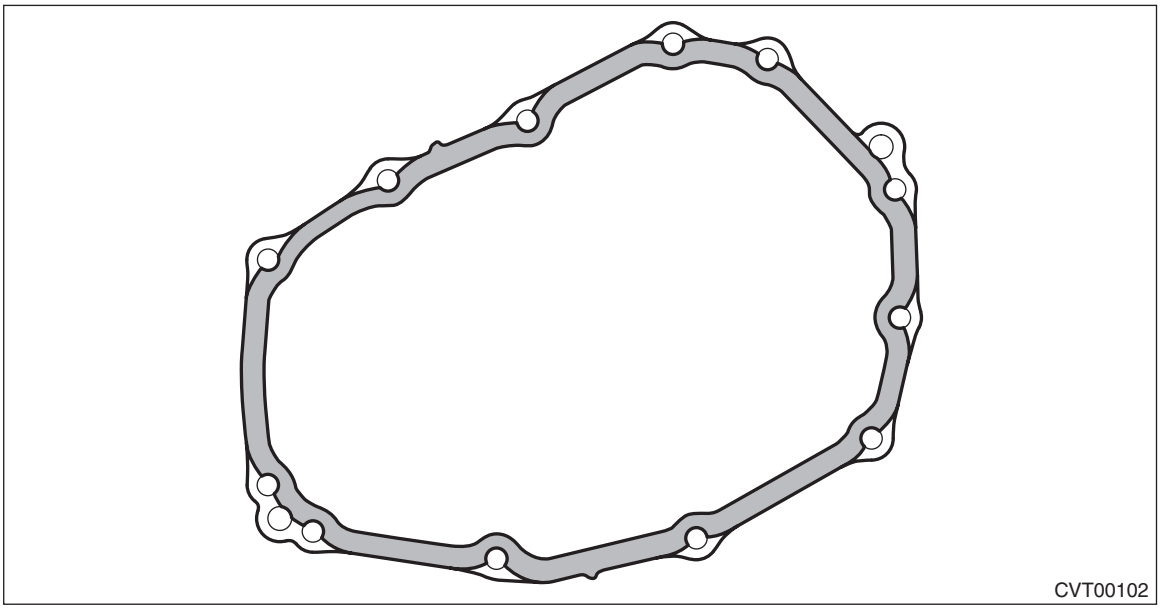

9) Install the extension case, clip and harness bracket.

Tightening torque:
25 N·m (2.5 kgf-m, 18.4 ft-lb)

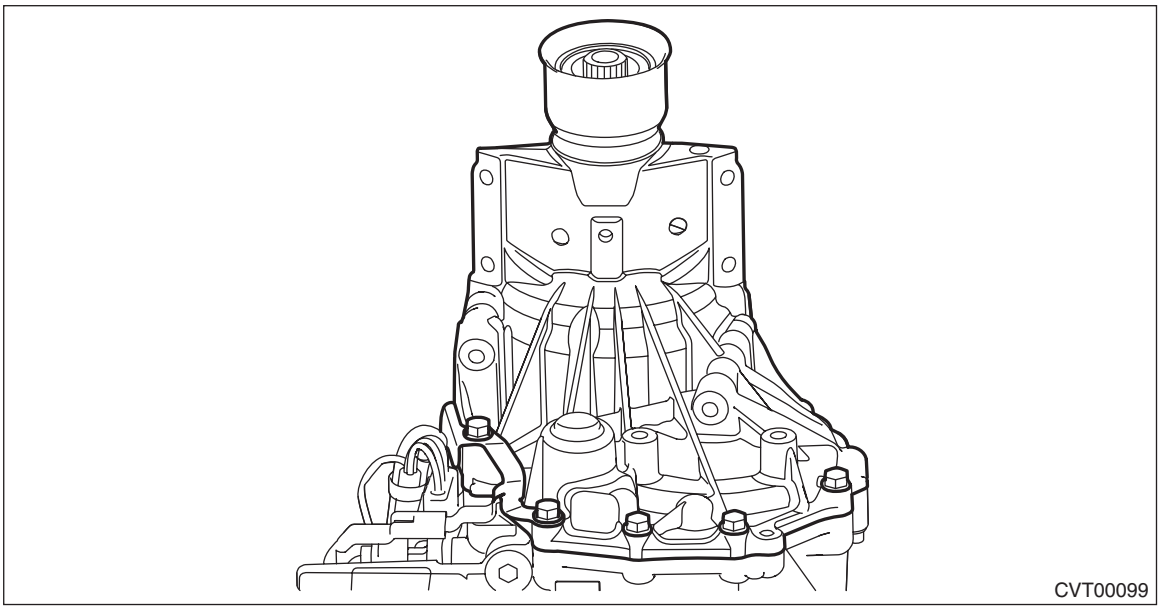

10) Install the transmission assembly. <Ref. to CVT(TH58A)-76, INSTALLATION, Automatic Transmission Assembly.>

C: DISASSEMBLY

1) Remove the transmission hanger.
2) Remove the dust cover from extension case.
3) Remove the extension case oil seal from the extension case.
4) Remove all plugs.

D: ASSEMBLY

1) Press-fit the dust cover into extension case.
2) Install the extension case oil seal to extension case.
3) Install all plugs.

NOTE:
- Use a new O-ring or a gasket.
- Apply CVTF to the O-ring.

Tightening torque:
25 N·m (2.5 kgf-m, 18.4 ft-lb)

4) Install the transmission hanger.

Tightening torque:
25 N·m (2.5 kgf-m, 18.4 ft-lb)

E: INSPECTION

- Check there is no leak of CVTF from the joint between extension case and transmission case.
- Check there is no damage or cracks on the extension case and other parts.

F: ADJUSTMENT

NOTE:
When replacing the extension case, select the transfer drive gear shim and transfer driven gear shim. <Ref. to CVT(TH58A)-203, ADJUSTMENT, Transfer Drive Gear.> <Ref. to CVT(TH58A)-194, ADJUSTMENT, Transfer Clutch.>

33.Transfer Clutch

A: REMOVAL

1) Remove the transmission assembly from the vehicle. <Ref. to CVT(TH58A)-62, REMOVAL, Automatic Transmission Assembly.>
2) Remove the extension case. <Ref. to CVT(TH58A)-179, REMOVAL, Extension Case.>
3) Remove the transfer clutch assembly.

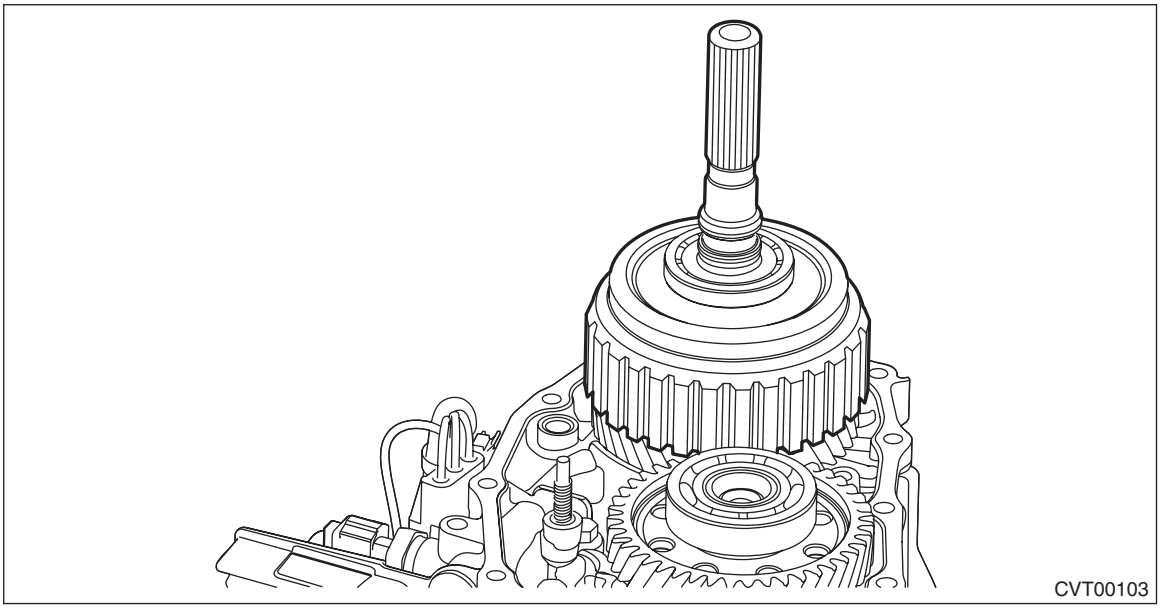
CVT00103

4) Remove the thrust bearing.

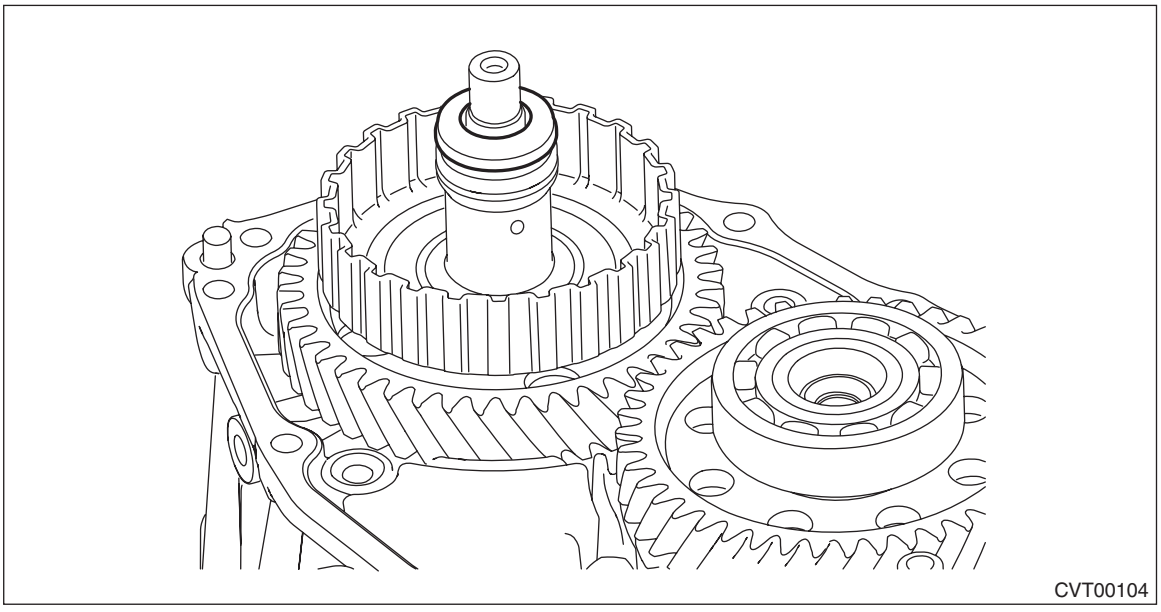
CVT00104

5) Remove the seal ring from transfer clutch assembly.

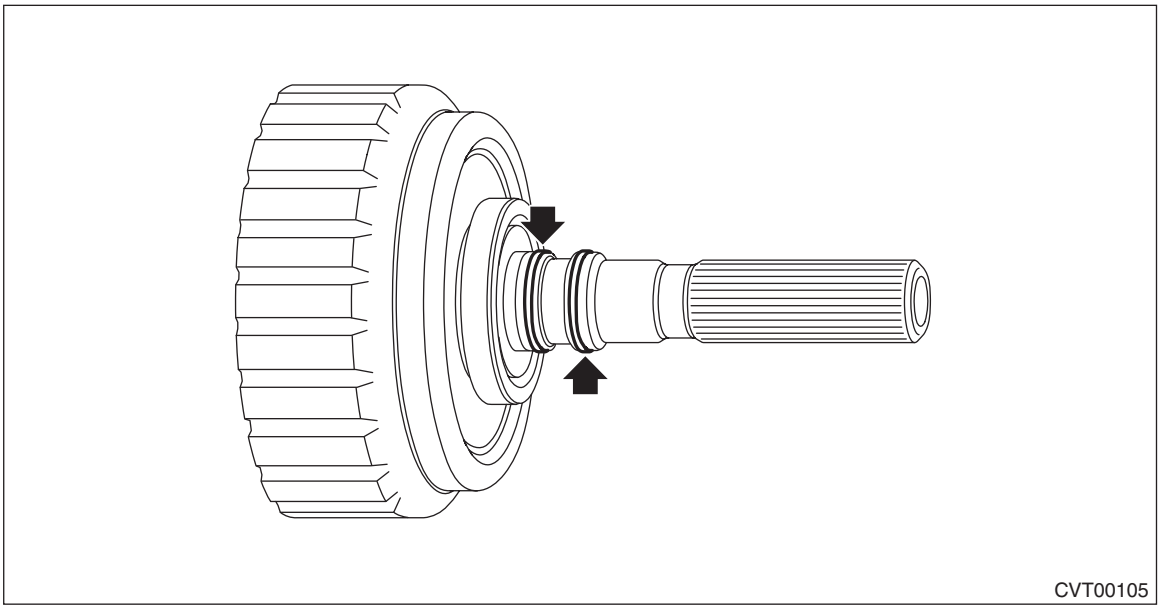

6) Remove the seal ring from the transfer driven gear assembly.

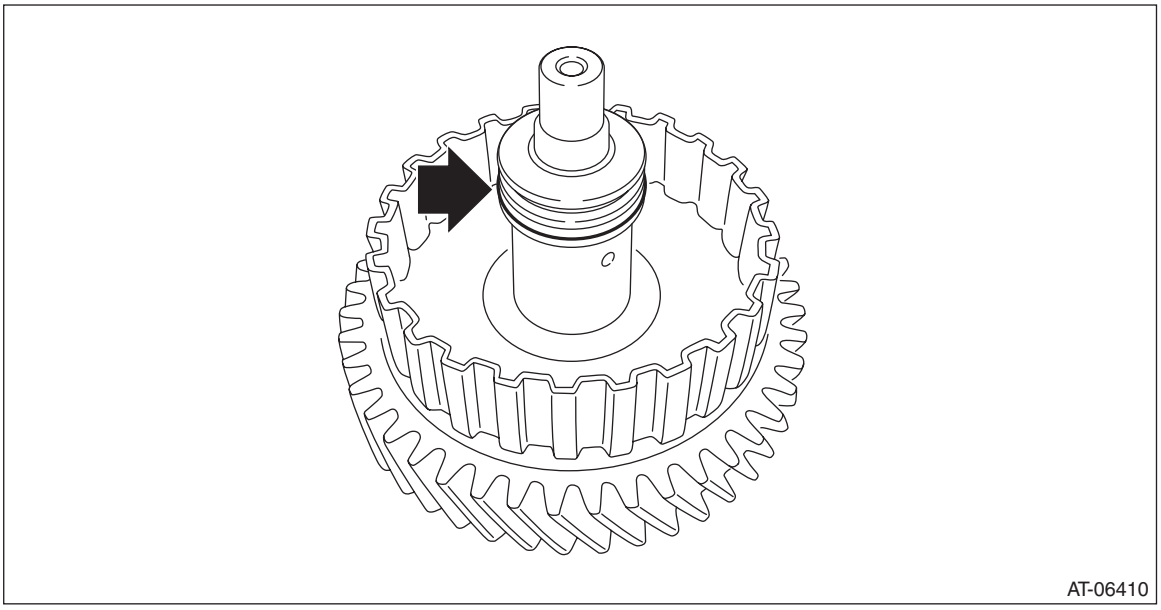

B: INSTALLATION

1) Install the thrust bearing.

NOTE:
Make sure to install in the right direction.

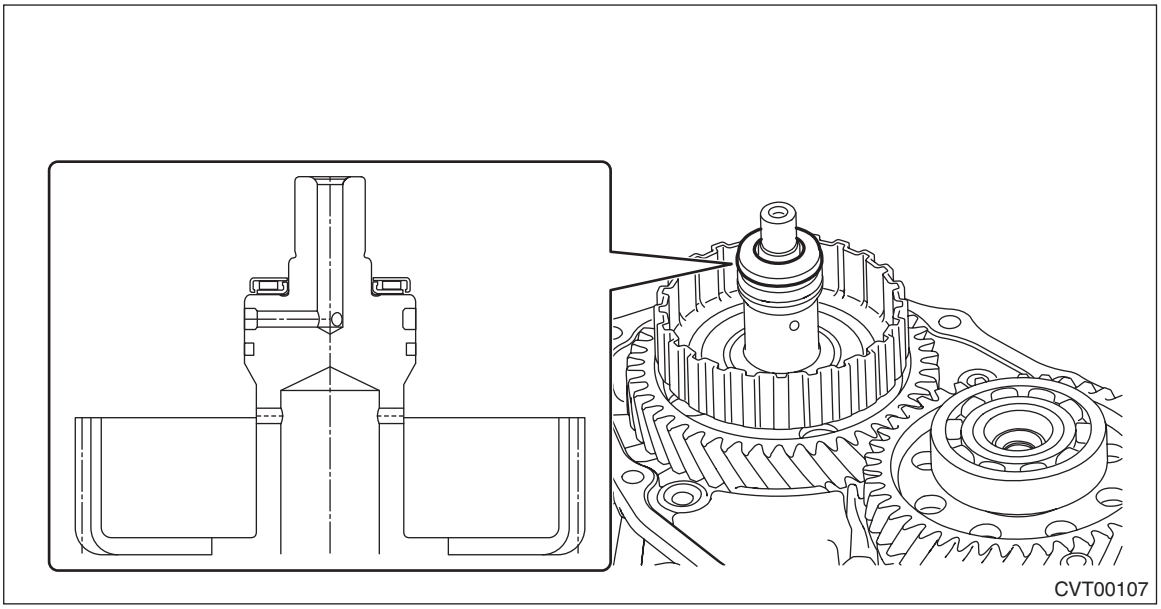

2) Install the transfer clutch assembly.

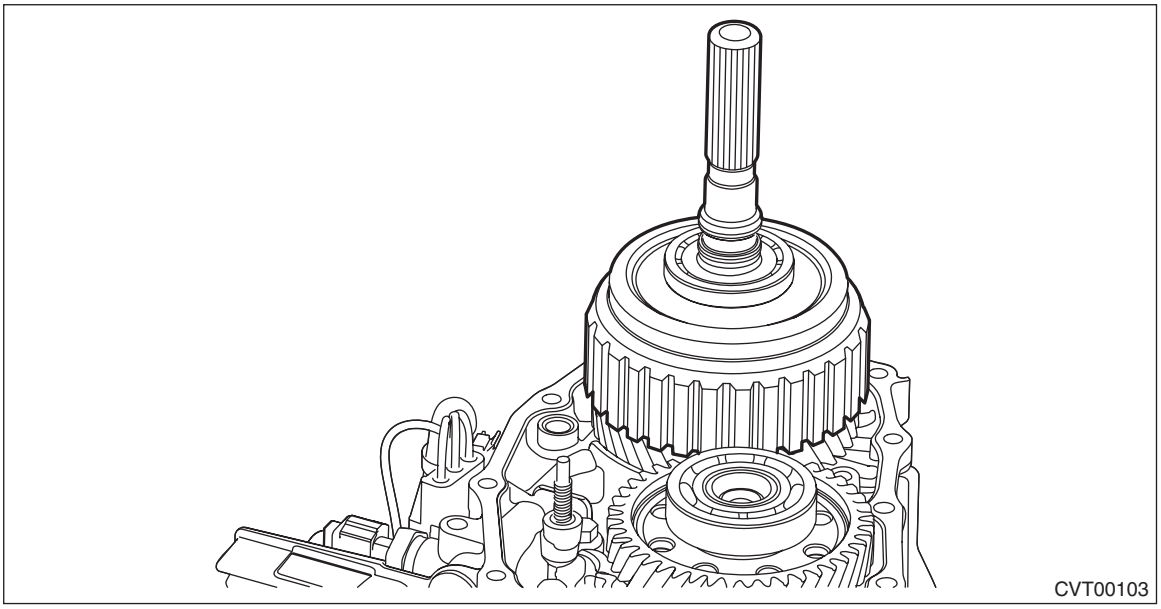

3) Select the transfer driven gear shim. <Ref. to CVT(TH58A)-194, ADJUSTMENT, Transfer Clutch.>
4) Attach the selected transfer driven gear shim to extension case with vaseline.
5) Remove the transfer clutch assembly.

6) Install the seal ring to the transfer clutch assembly.

NOTE:
- Use a new seal ring.
- When installing the seal ring, do not expand the seal ring too much.
- Apply CVTF to the seal rings.

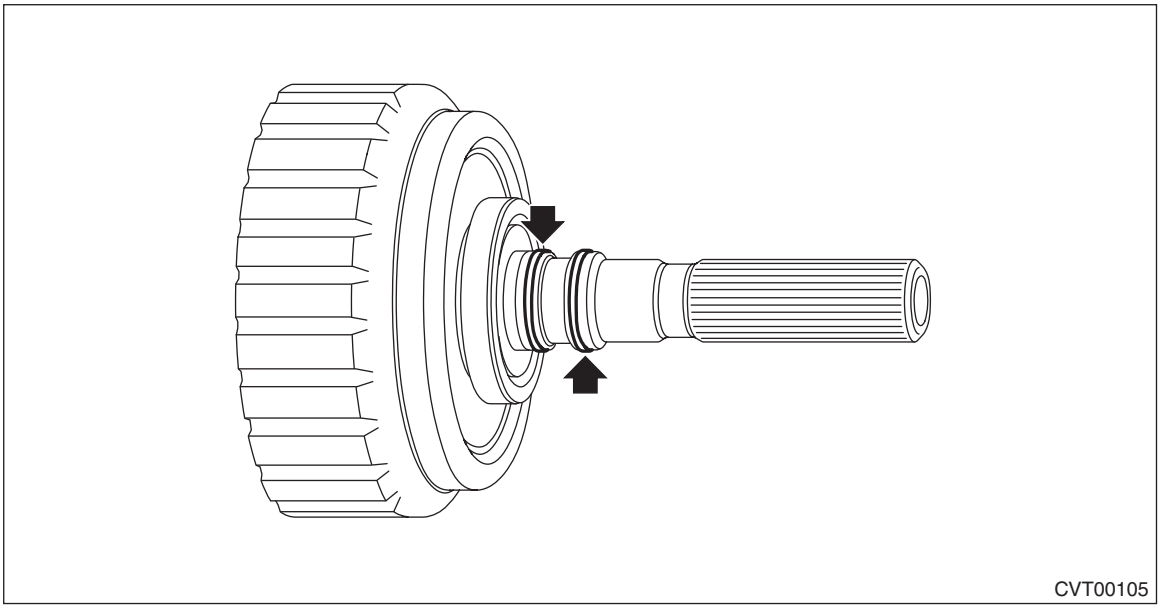

7) Install the seal ring to the transfer driven gear assembly.

NOTE:
- Use a new seal ring.
- When installing the seal ring, do not expand the seal ring too much.
- Apply CVTF to the seal rings.

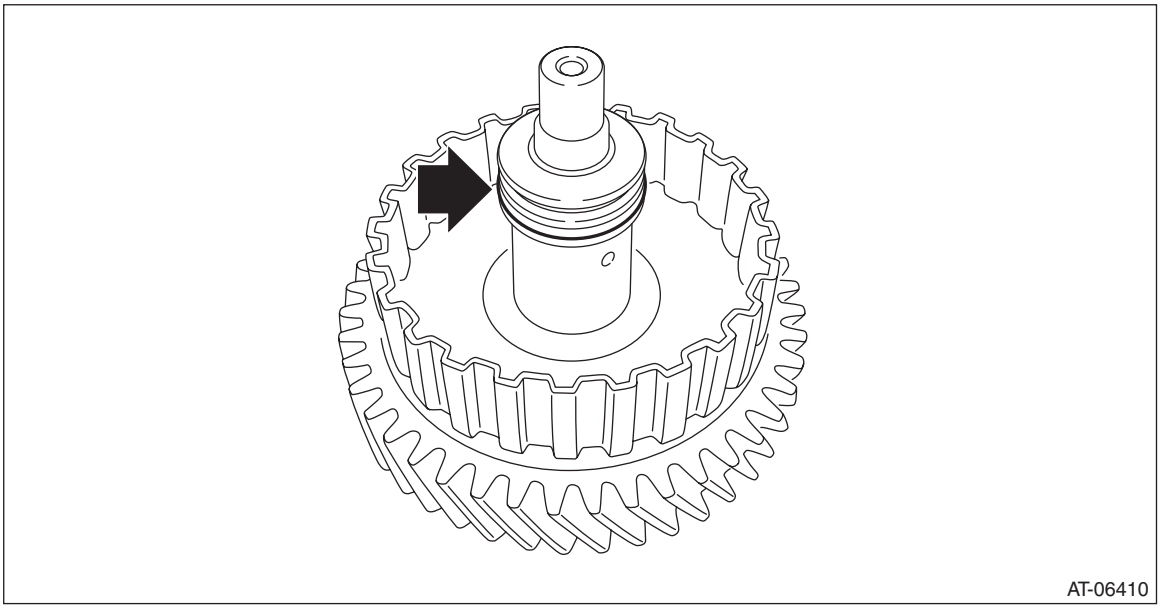

8) Install the transfer clutch assembly.
9) Install the extension case. <Ref. to CVT(TH58A)-180, INSTALLATION, Extension Case.>
10) Install the transmission assembly to the vehicle. <Ref. to CVT(TH58A)-76, INSTALLATION, Automatic Transmission Assembly.>

C: DISASSEMBLY

1) Remove the snap ring, and then remove the retaining plate, drive plate and driven plate.

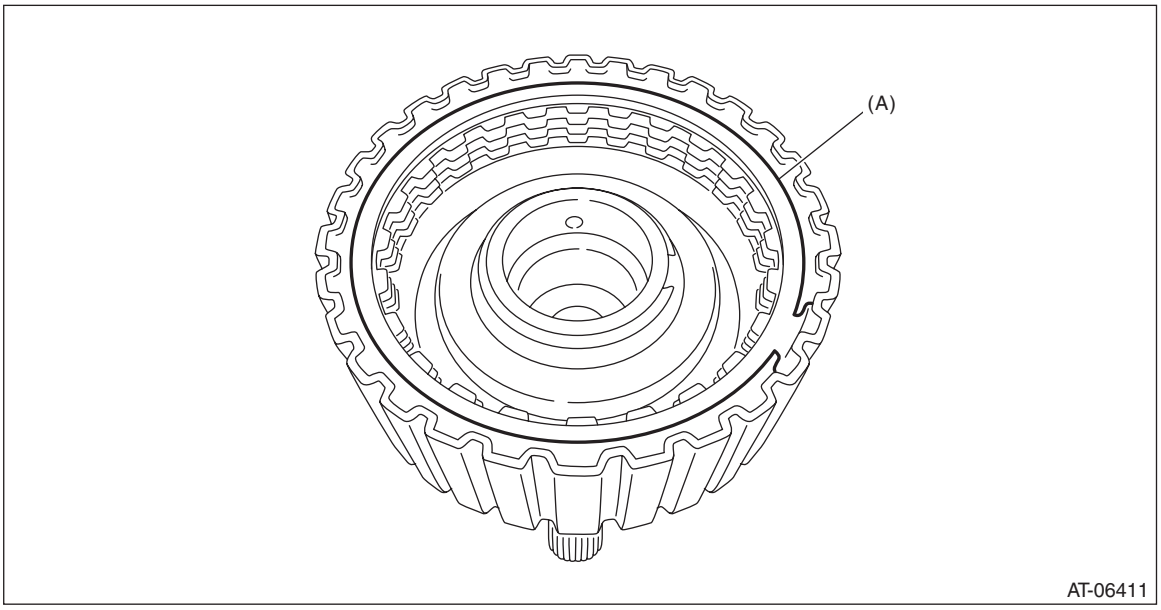

(A) Snap ring

2) Compress the return spring using the ST to remove the snap ring.
ST 18762AA000 COMPRESSOR SPECIAL TOOL (or 18762AA001)

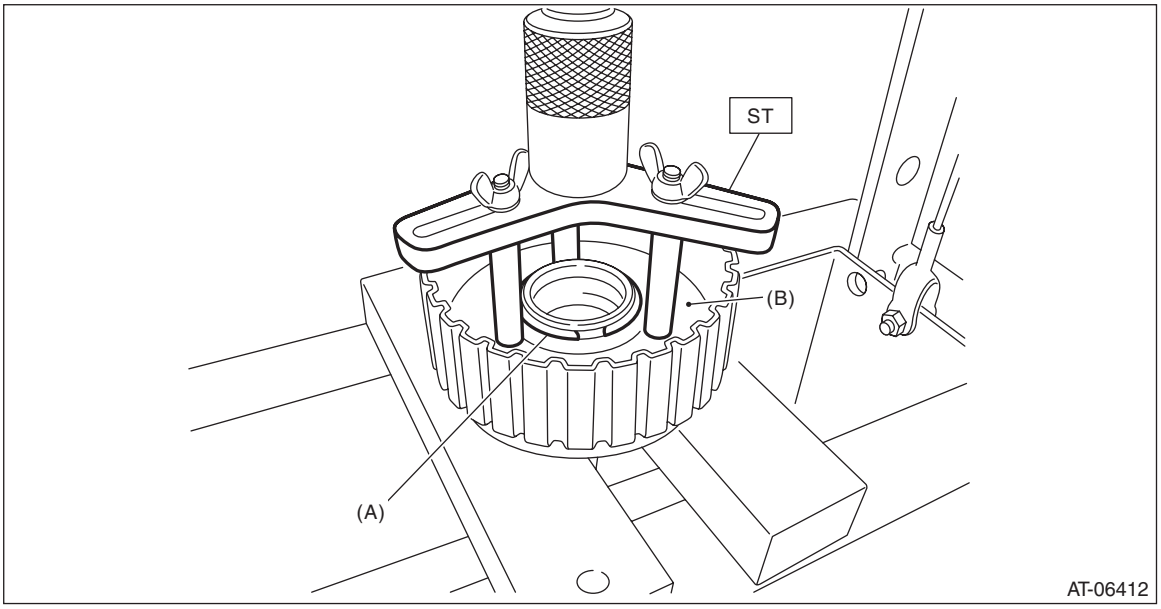

(A) Snap ring
(B) Transfer clutch piston seal

3) Remove the transfer clutch piston seal.

4) Remove the return spring.

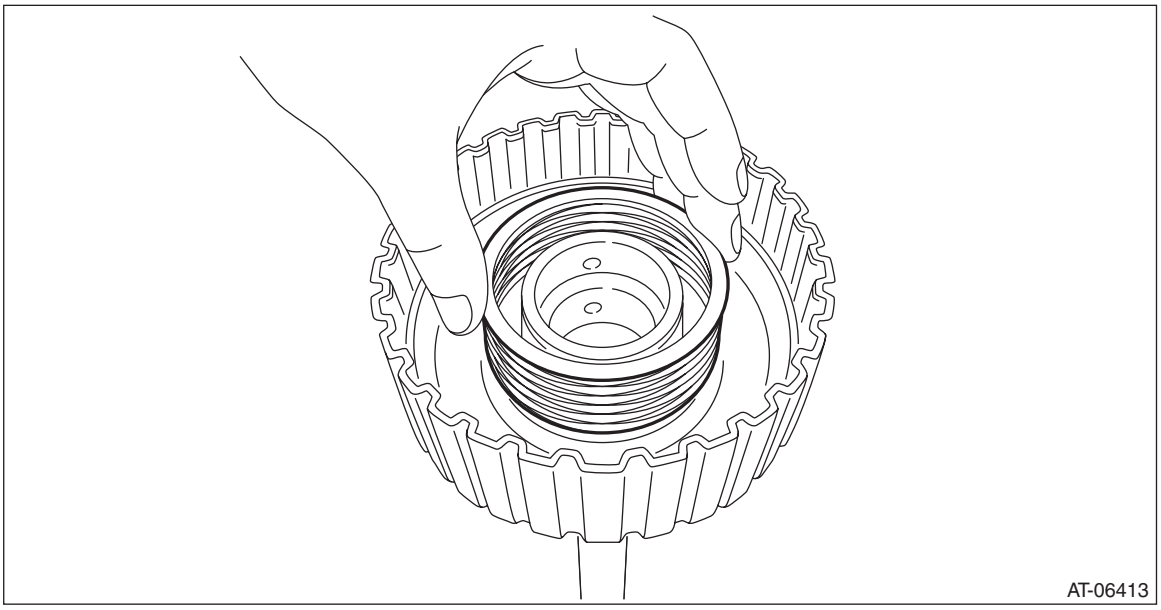

5) Remove the transfer clutch piston by blowing compressed air through transfer clutch assembly hole.

NOTE:
Plug the holes through which the compressed air is not blown.

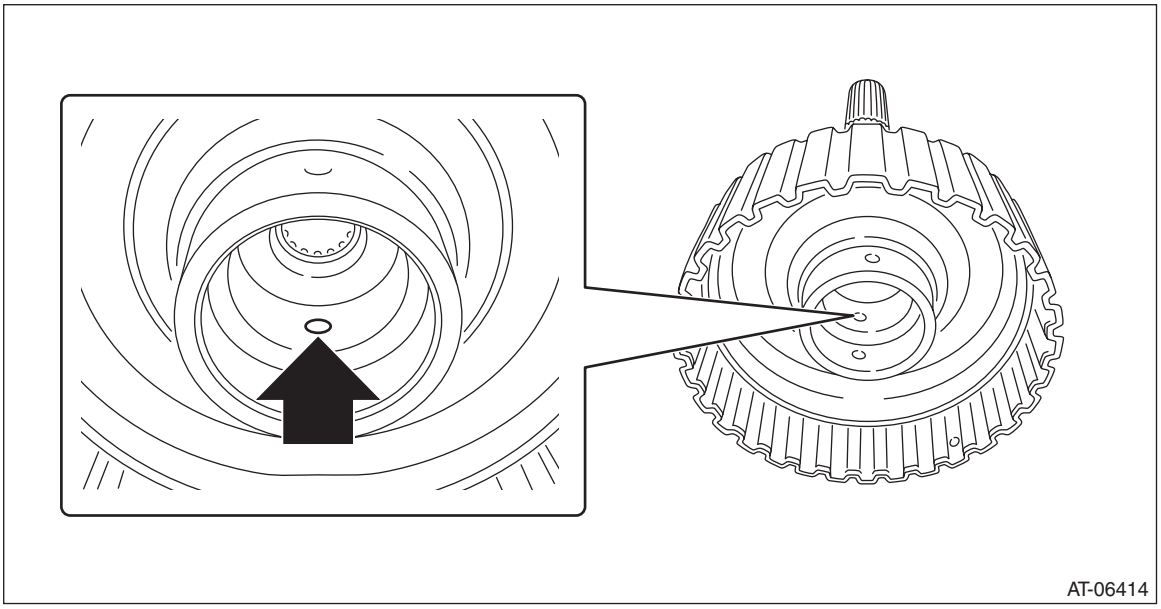

6) Remove the ball bearing using ST.
ST1 18767AA020 BEARING REMOVER
ST2 18723AA000 REMOVER

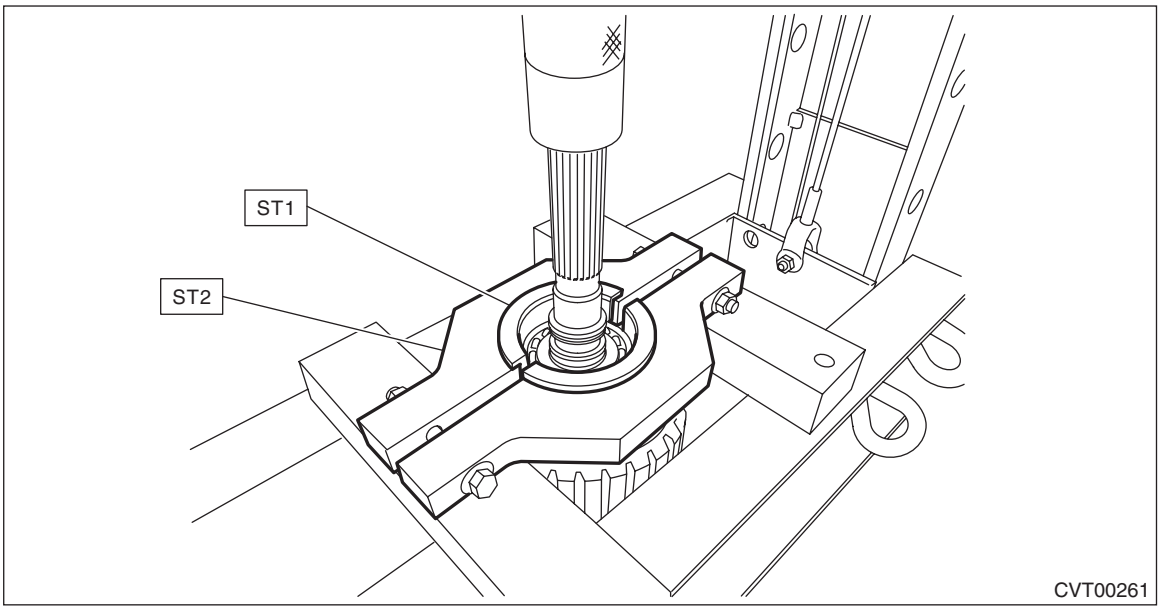

D: ASSEMBLY

1) Install the transfer clutch piston.

NOTE:
Apply CVTF to the transfer clutch piston lip.
2) Install the return spring.

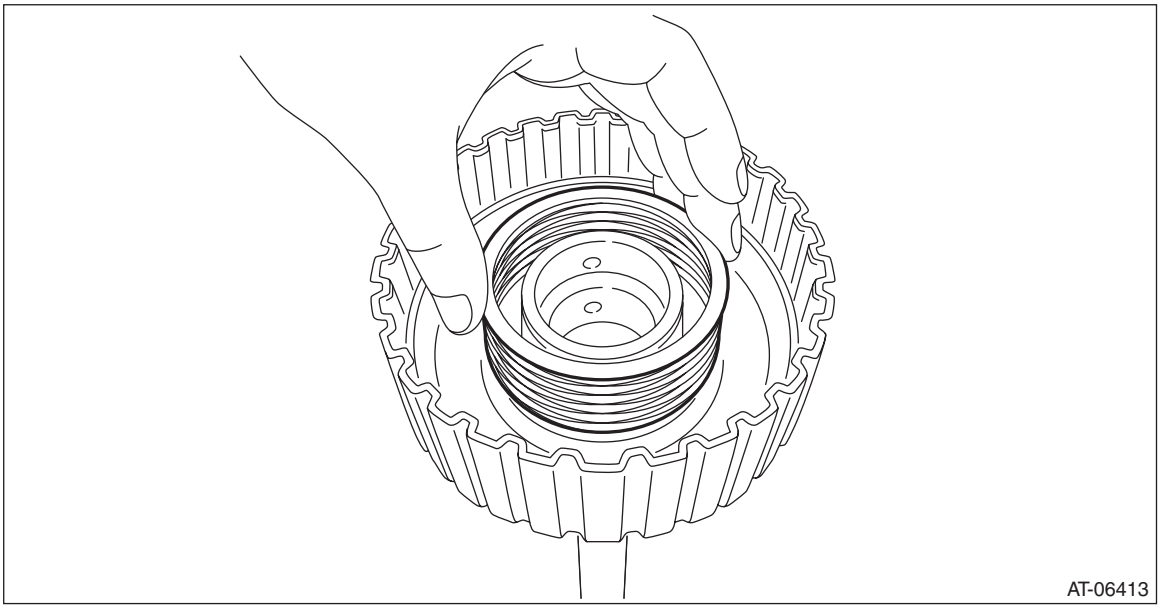

3) Install the transfer clutch piston seal.

NOTE:
Apply CVTF to the lip section of transfer clutch piston seal.

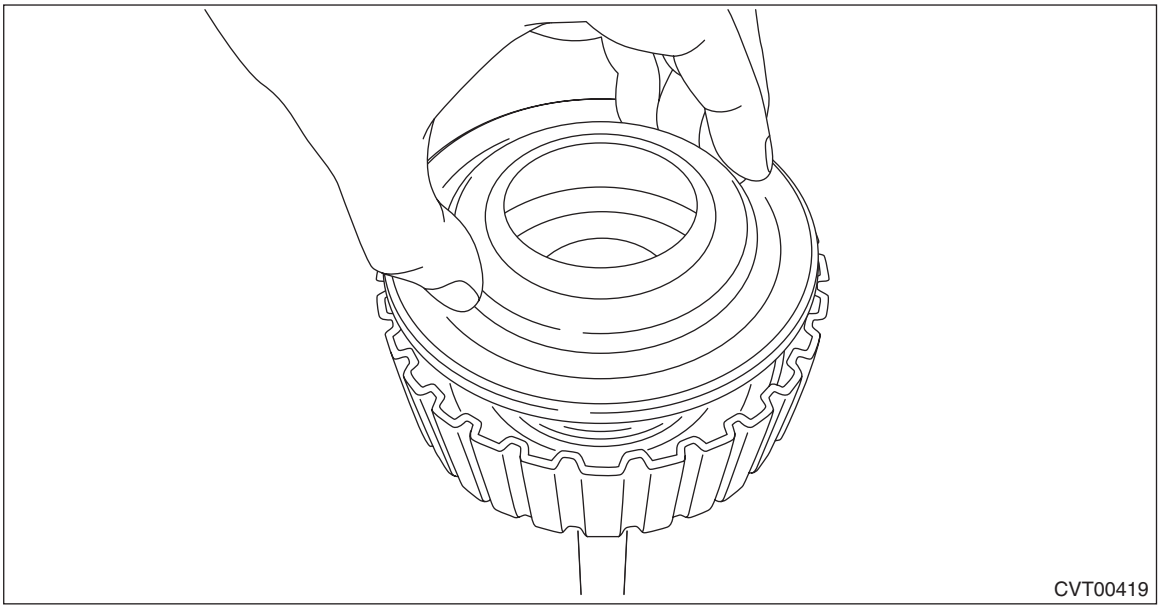

4) Compress the return spring using the ST to install the snap ring.
ST 18762AA000 COMPRESSOR SPECIAL TOOL (or 18762AA001)

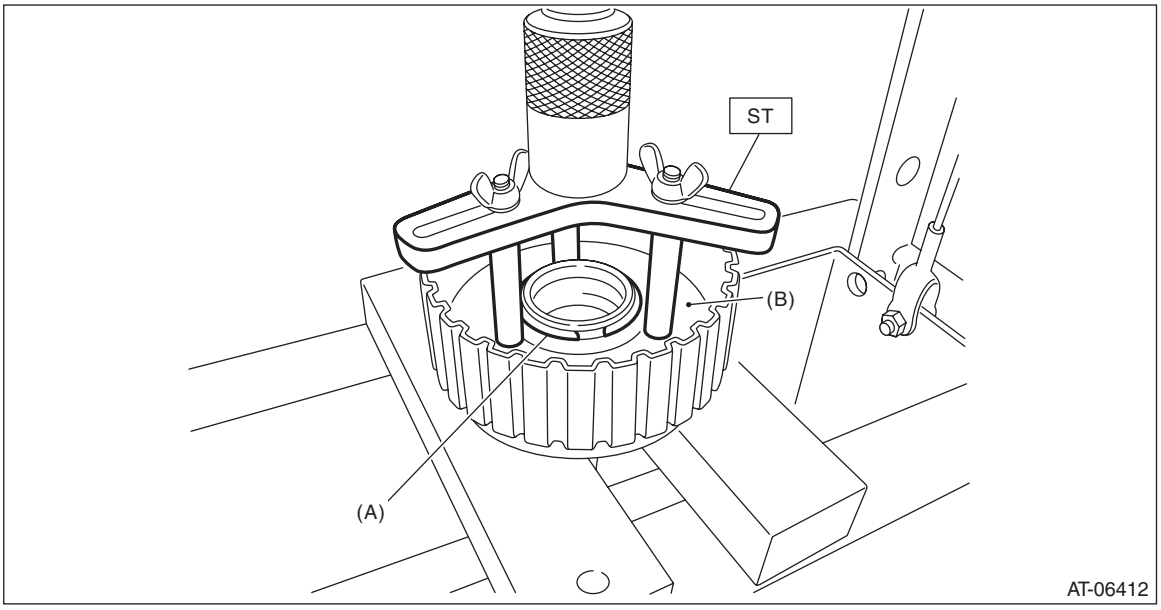

(A) Snap ring
(B) Transfer clutch piston seal

5) Install the pressure plate, driven plate, drive plate and snap ring.

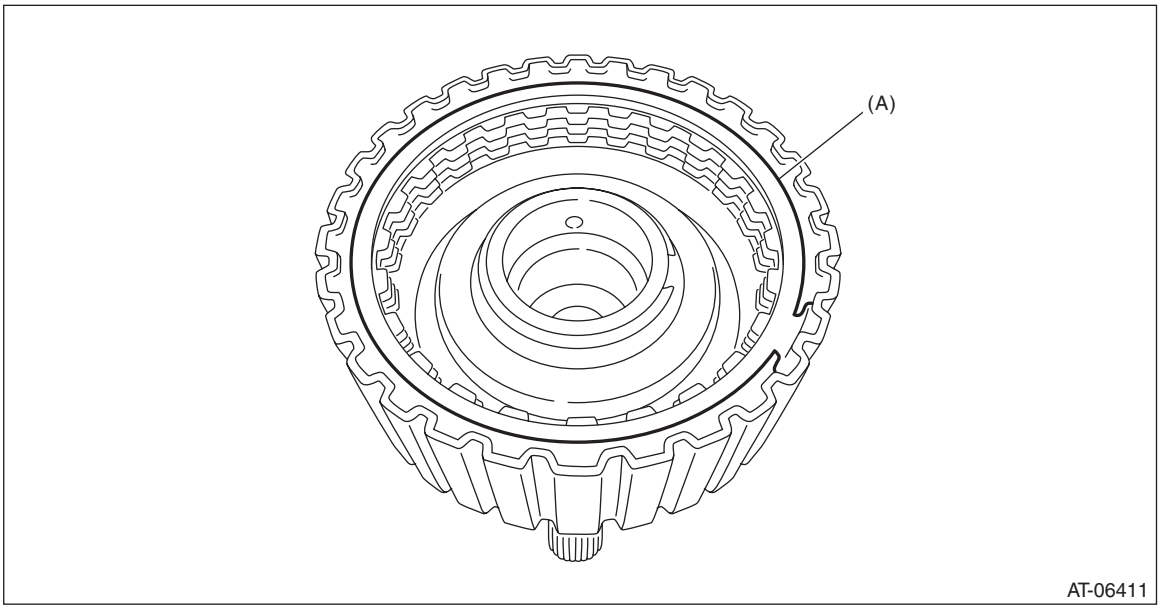

(A) Snap ring

6) Blow compressed air through transfer clutch assembly hole, and check the transfer clutch piston operation.

NOTE:
Plug the holes through which the compressed air is not blown.

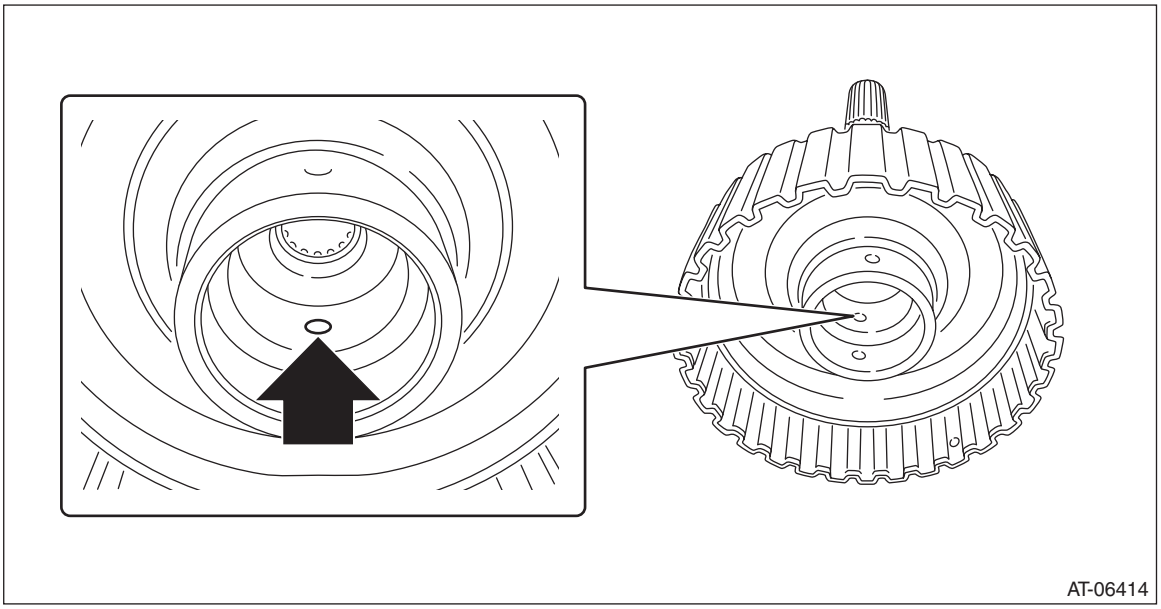

7) Before measuring clearance “A”, place same thickness shims on both sides to prevent the plate from tilting.

8) When clearance “A” exceeds the limit for use, replace the drive plate and driven plate as a set, and select and adjust the pressure plate within the initial specified value.

Initial standard:
0.7 — 1.1 mm (0.028 — 0.043 in)

Limit thickness:
1.45 mm (0.057 in)

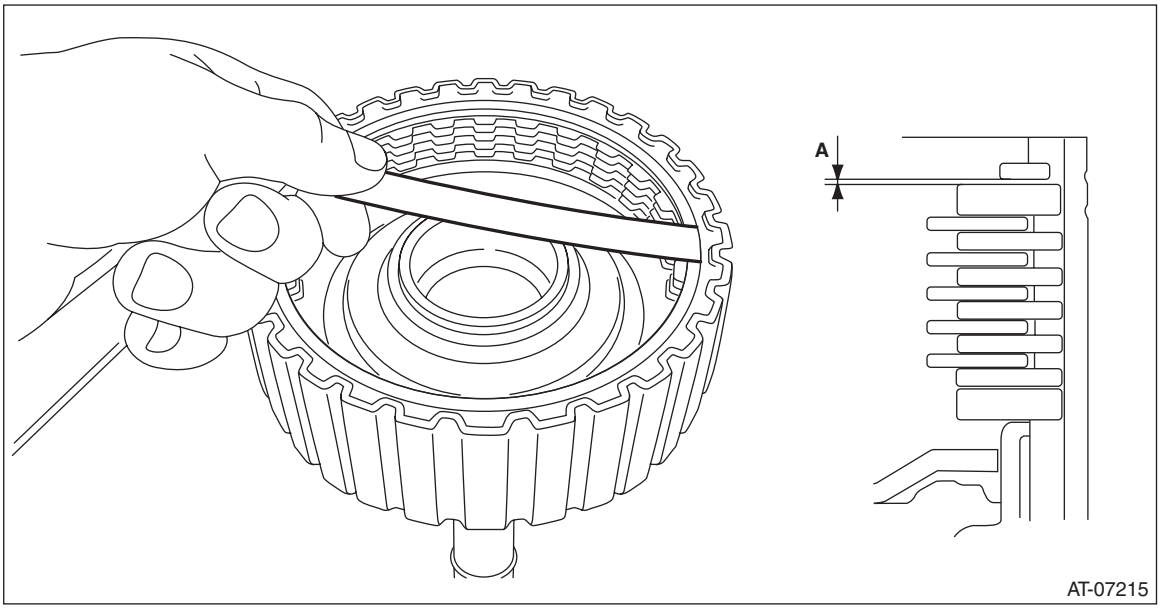

Pressure plate	
Part No.	Thickness mm (in)
31593AA151	3.3 (0.130)
31593AA161	3.7 (0.146)

9) Recheck the clearance. <Ref. to CVT(TH58A)-193, INSPECTION, Transfer Clutch.>

10) Using the ST, install the ball bearing.

NOTE:
Use a new ball bearing.
ST1 398177700 INSTALLER
ST2 499277100 INSTALLER

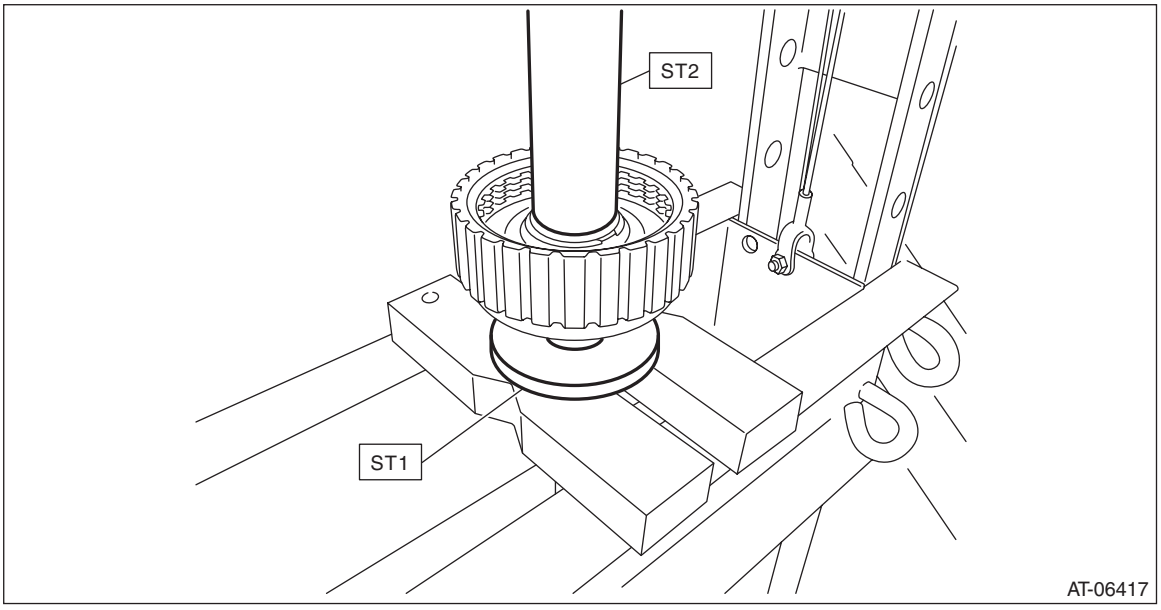

E: INSPECTION

- Inspect the drive plate facing for wear and damage.
- Driven plate for discoloration (burned color)
- Make sure the snap ring is not worn and the return spring has no permanent distortion, damage, or deformation.
- Check the lip seal for damage.
- Inspect the extension end play, and adjust it to within the standard value. <Ref. to CVT(TH58A)-194, ADJUSTMENT, Transfer Clutch.>

1) Before measuring clearance “A” between snap ring and driven plate, place same thickness shims on both sides to prevent the plate from tilting.

2) When clearance “A” exceeds the limit for use, replace the drive plate and driven plate as a set, and select the pressure plate within the initial specified value.

Initial standard:
0.7 — 1.1 mm (0.028 — 0.043 in)

Limit thickness:
1.45 mm (0.057 in)

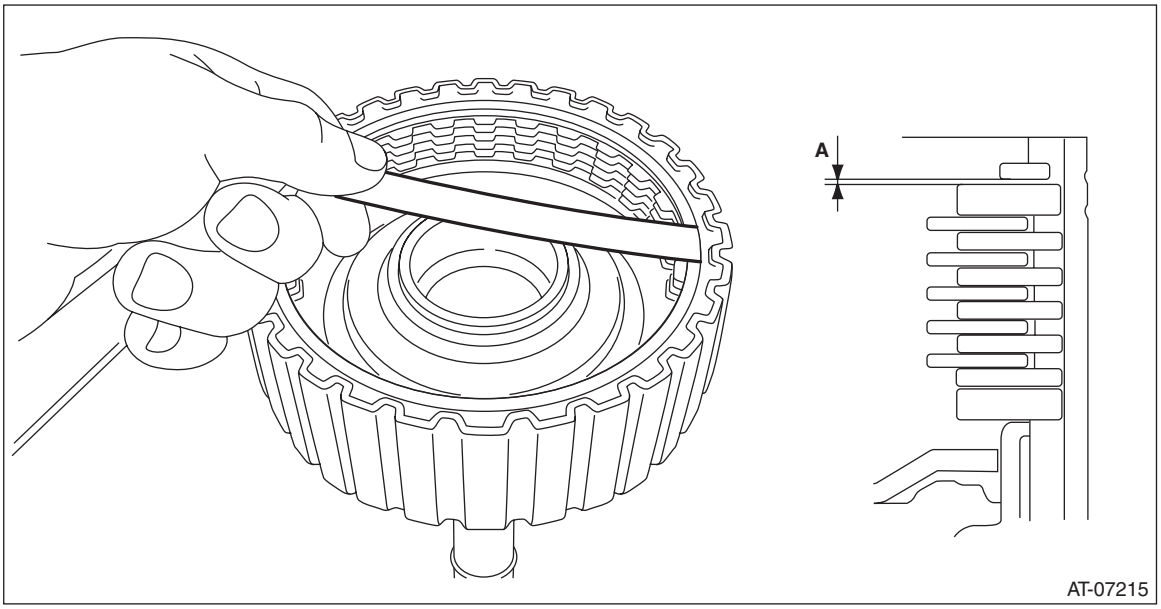

3) Check for tight corner braking phenomenon when the vehicle is moved forward with the steering fully turned. If tight corner braking occurs, perform the following procedures.
(1) With the steering wheel held at fully turned position, drive the vehicle in “D” range and with vehicle speed at approx. 5 km/h (3 MPH) in both clockwise and counterclockwise directions for approx. ten times each, while repeating acceleration and braking intermittently.
(2) If the tight corner braking phenomenon still persists, drive the vehicle again in a circle for several laps.

F: ADJUSTMENT

1) Install the transfer clutch assembly to the extension case with the transfer driven gear shims and thrust bearings removed.

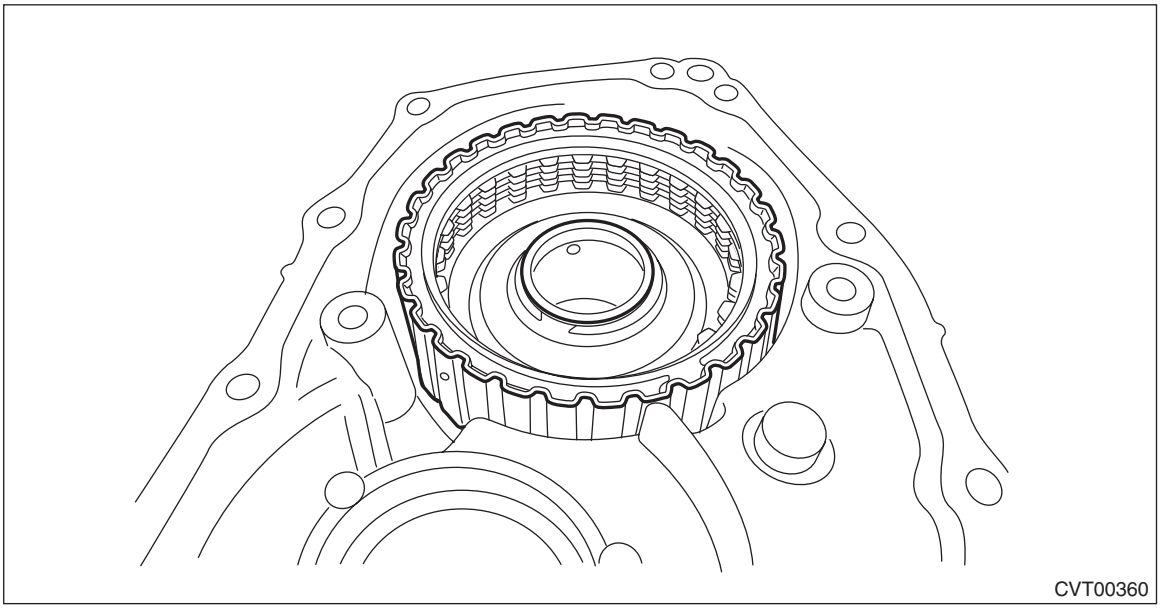

2) Install the thrust bearing to the transfer driven gear.

NOTE:
Make sure to install in the right direction.

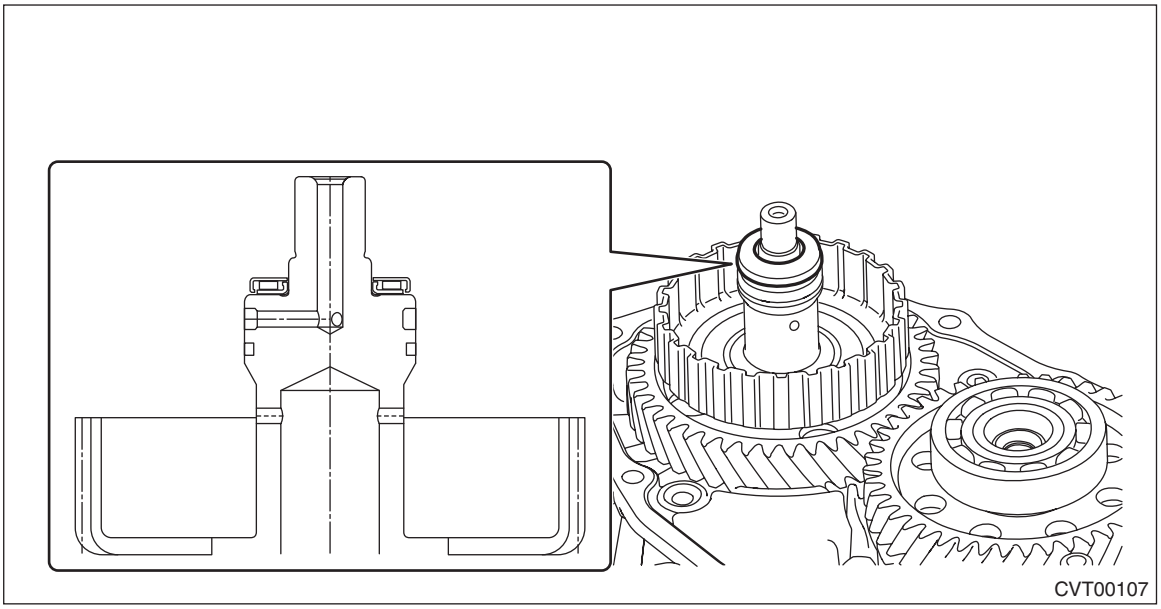

3) Using the ST, measure the height “A” from the ST end face to the thrust bearing catch surface of the transfer clutch assembly.
ST 499575500 GAUGE

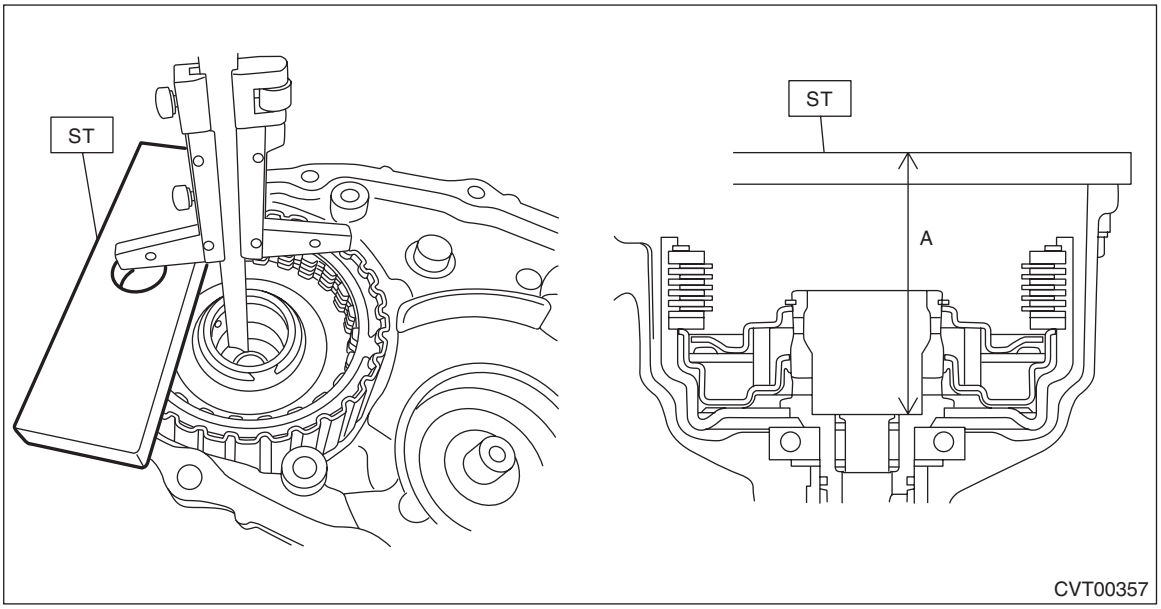

4) Using the ST, measure the height “B” from the transmission case mating surface to the end of ST.
ST 499575500 GAUGE

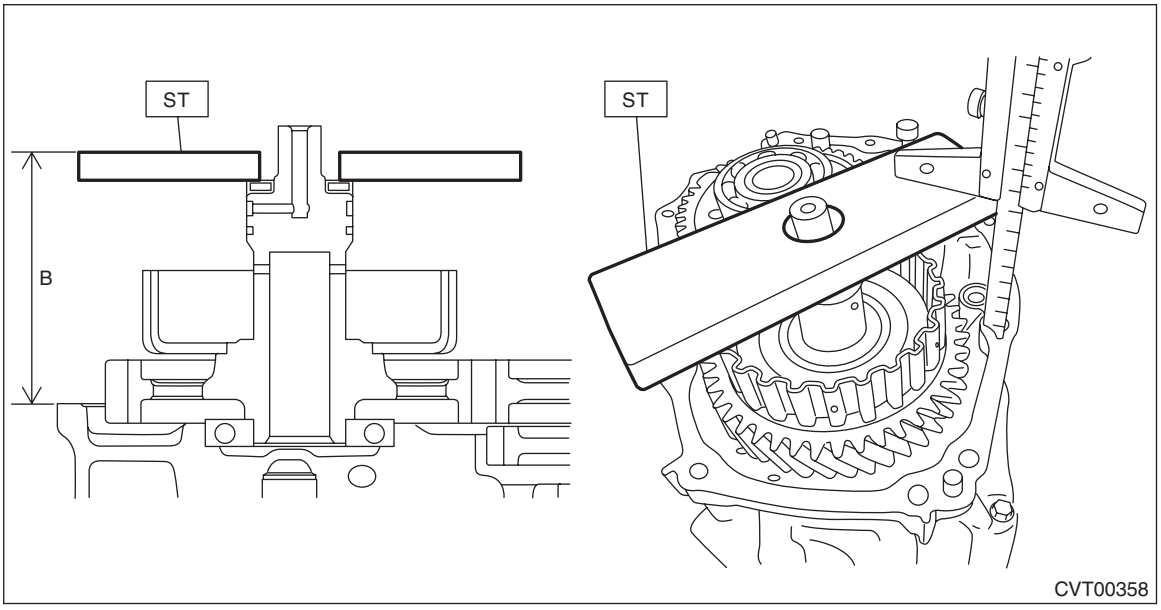

5) Obtain the thickness of transfer driven gear shim using the following formula to select zero to three transfer driven gear shims.
T (mm) = A – B – (0.05 — 0.25)
[T (in) = A – B – (0.002 — 0.01)]
T: Transfer driven gear shim thickness
A: Height from the ST end face to the transfer clutch assembly thrust bearing catch surface
B: Height from the mating surface of the transmission case to the end of the ST
0.05 — 0.25 mm (0.002 — 0.01 in): Clearance

Transfer driven gear shim	
Part No.	Thickness mm (in)
33280AA060	0.3 (0.012)
33280AA070	0.4 (0.016)
33280AA080	0.5 (0.020)

34.Transfer Driven Gear

A: REMOVAL

1) Remove the transmission assembly from the vehicle. <Ref. to CVT(TH58A)-62, REMOVAL, Automatic Transmission Assembly.>
2) Remove the extension case. <Ref. to CVT(TH58A)-179, REMOVAL, Extension Case.>
3) Remove the transfer clutch assembly. <Ref. to CVT(TH58A)-183, REMOVAL, Transfer Clutch.>
4) Remove the transfer driven gear assembly.

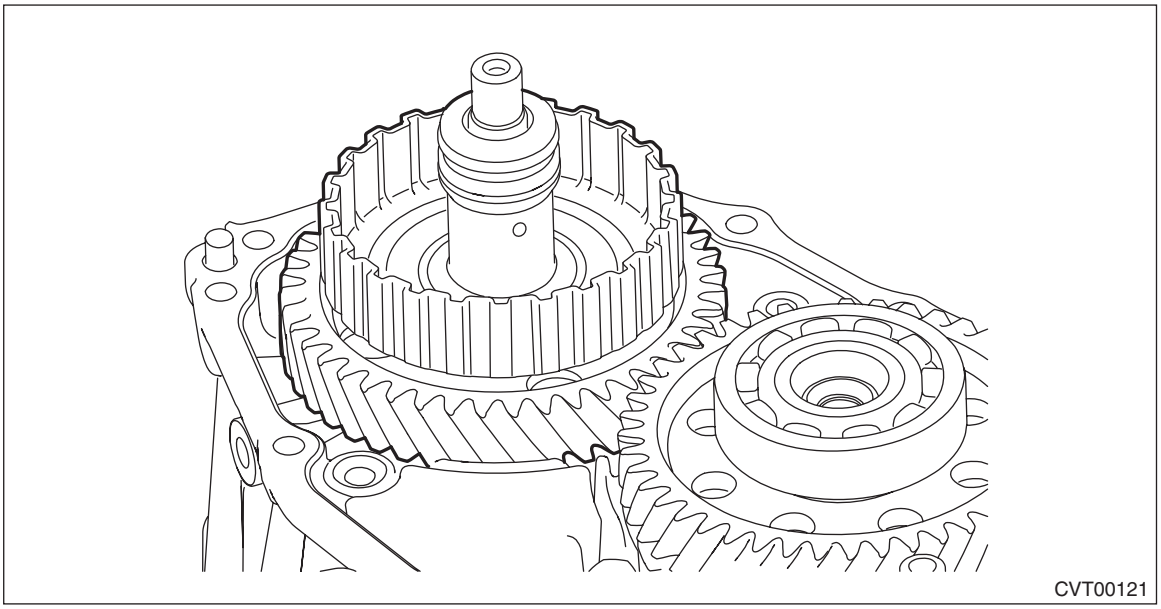
CVT00121

5) Remove the seal ring from the transfer driven gear assembly.

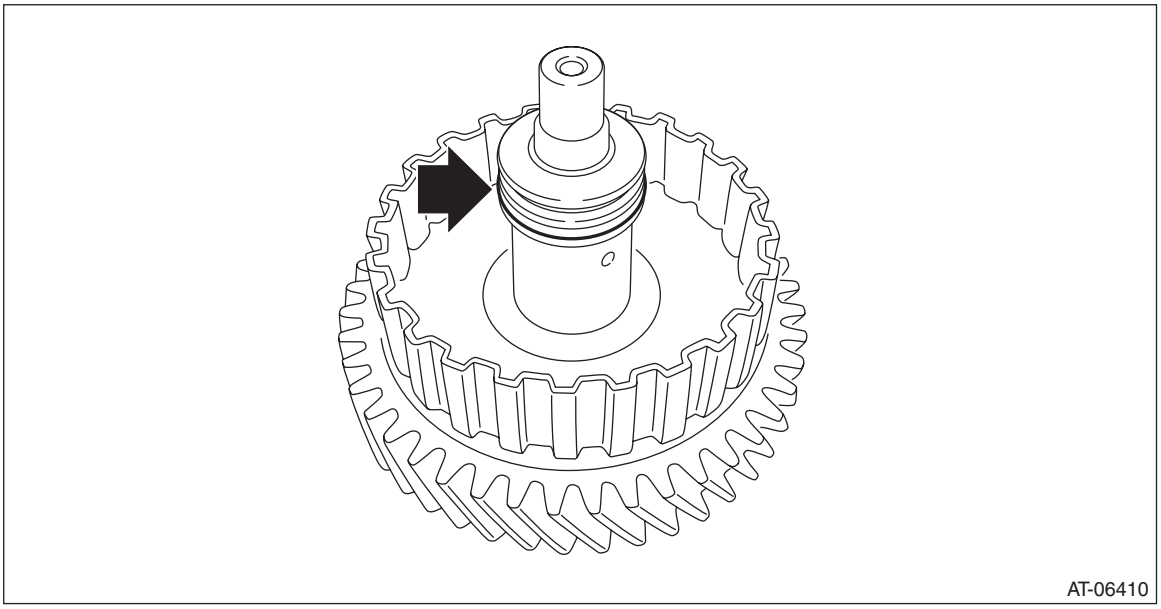
AT-06410

B: INSTALLATION

1) Install the transfer driven gear assembly.

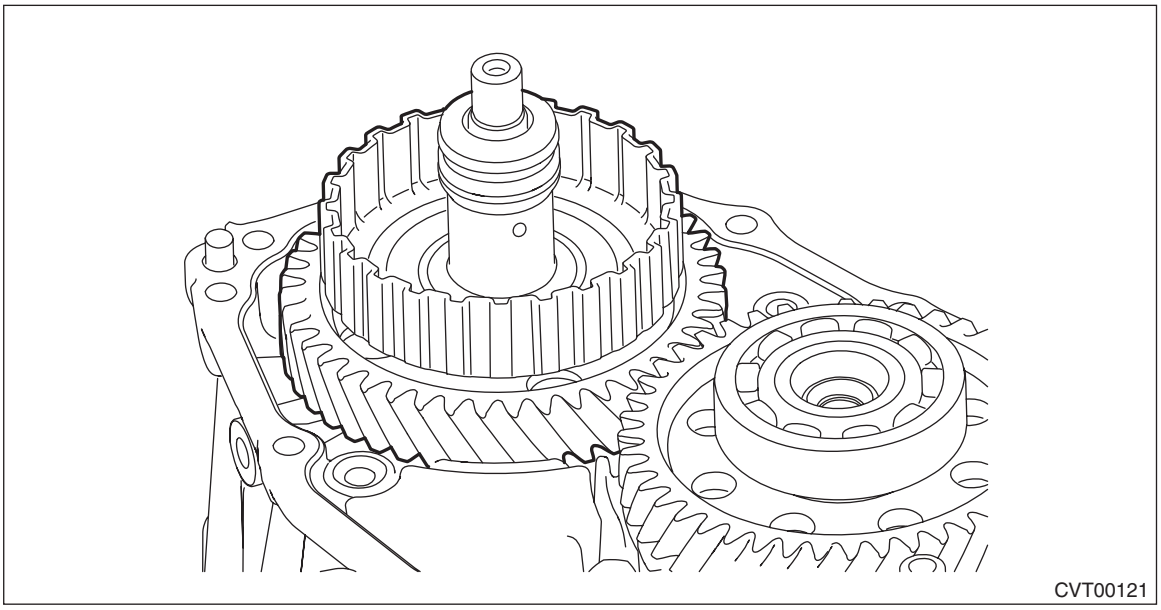

2) Install the transfer clutch assembly. <Ref. to CVT(TH58A)-185, INSTALLATION, Transfer Clutch.>
3) Select the transfer driven gear shim. <Ref. to CVT(TH58A)-194, ADJUSTMENT, Transfer Clutch.>
4) Install the extension case. <Ref. to CVT(TH58A)-180, INSTALLATION, Extension Case.>
5) Install the transmission assembly to the vehicle. <Ref. to CVT(TH58A)-76, INSTALLATION, Automatic Transmission Assembly.>

C: DISASSEMBLY

1) Remove the ball bearing using ST.
ST1 18767AA020 BEARING REMOVER
ST2 18723AA000 REMOVER
ST3 899864100 REMOVER

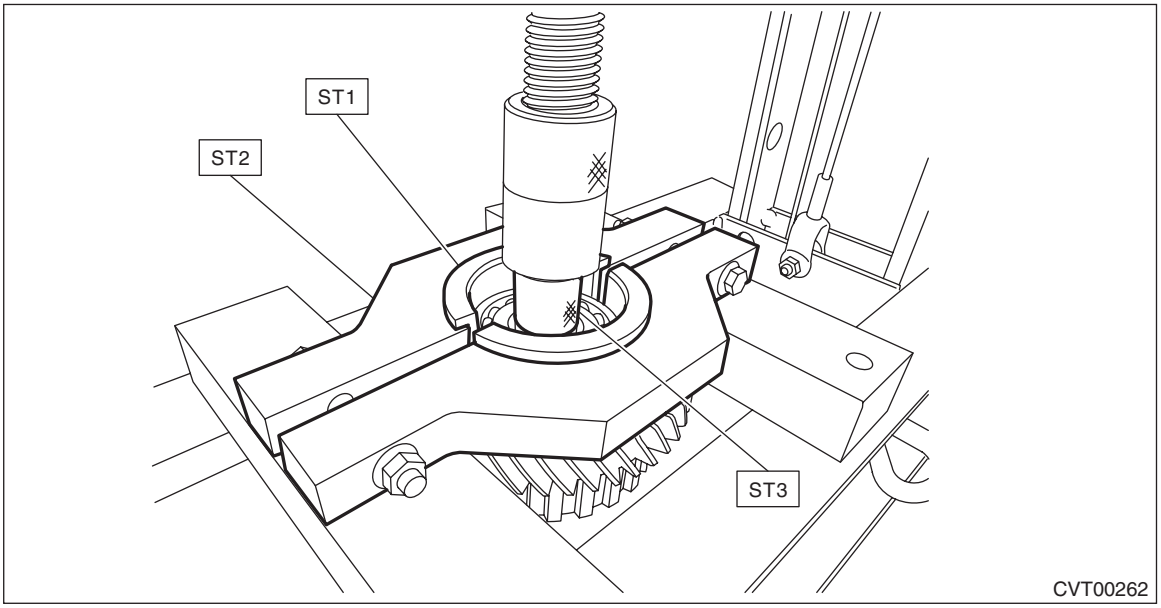

D: ASSEMBLY

1) Using the ST, install the ball bearing.
ST 18651AA000 INSTALLER

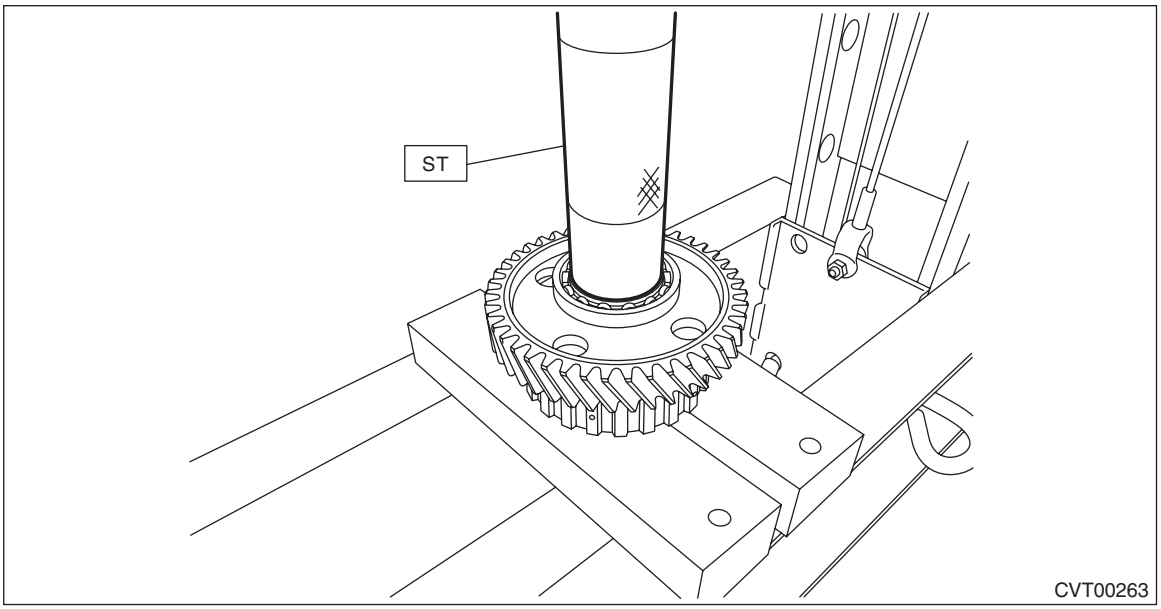

E: INSPECTION

- Check the ball bearing for smooth rotation.
- Check the ball bearing for excessive looseness.
- Check the transfer driven gear for breakage or damage.

F: ADJUSTMENT

NOTE:
When the transfer driven gear or bearing is replaced, select the transfer driven gear shim. <Ref. to CVT(TH58A)-194, ADJUSTMENT, Transfer Clutch.>

35.Transfer Drive Gear

A: REMOVAL

1) Remove the transmission assembly from the vehicle. <Ref. to CVT(TH58A)-62, REMOVAL, Automatic Transmission Assembly.>
2) Remove the extension case. <Ref. to CVT(TH58A)-179, REMOVAL, Extension Case.>
3) Remove the transfer clutch assembly. <Ref. to CVT(TH58A)-183, REMOVAL, Transfer Clutch.>
4) Remove the transfer driven gear assembly. <Ref. to CVT(TH58A)-197, REMOVAL, Transfer Driven Gear.>
5) Remove the transfer drive gear assembly.

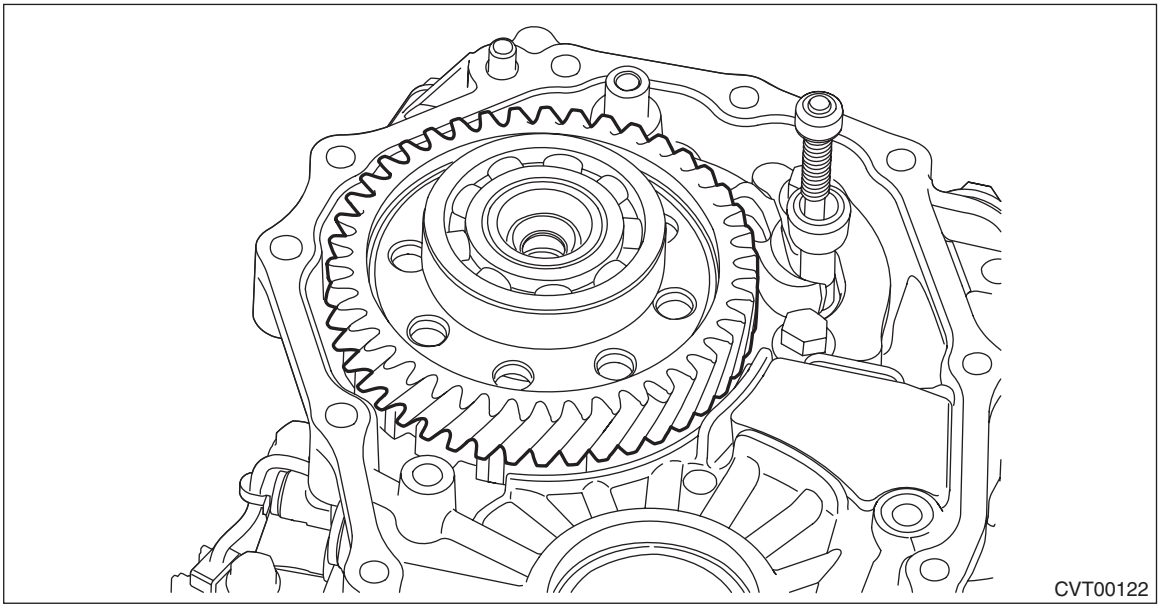

B: INSTALLATION

1) Install the transfer drive gear assembly.

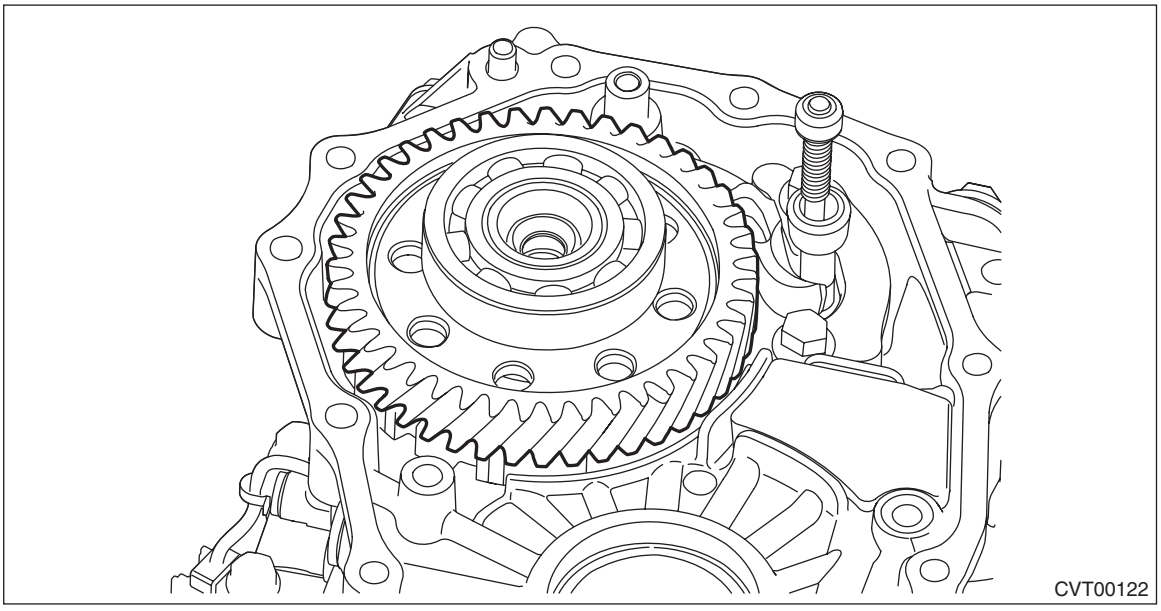

2) Select the transfer drive gear shim. <Ref. to CVT(TH58A)-203, ADJUSTMENT, Transfer Drive Gear.>
3) Attach the selected transfer drive gear shim to extension case with vaseline.
4) Install the transfer driven gear assembly. <Ref. to CVT(TH58A)-198, INSTALLATION, Transfer Driven Gear.>

5) Install the transfer clutch assembly. <Ref. to CVT(TH58A)-185, INSTALLATION, Transfer Clutch.>
6) Install the extension case. <Ref. to CVT(TH58A)-180, INSTALLATION, Extension Case.>
7) Install the transmission assembly to the vehicle. <Ref. to CVT(TH58A)-76, INSTALLATION, Automatic Transmission Assembly.>

C: DISASSEMBLY

1) Remove the ball bearing using ST.
ST1 499757002 INSTALLER
ST2 498077300 REMOVER

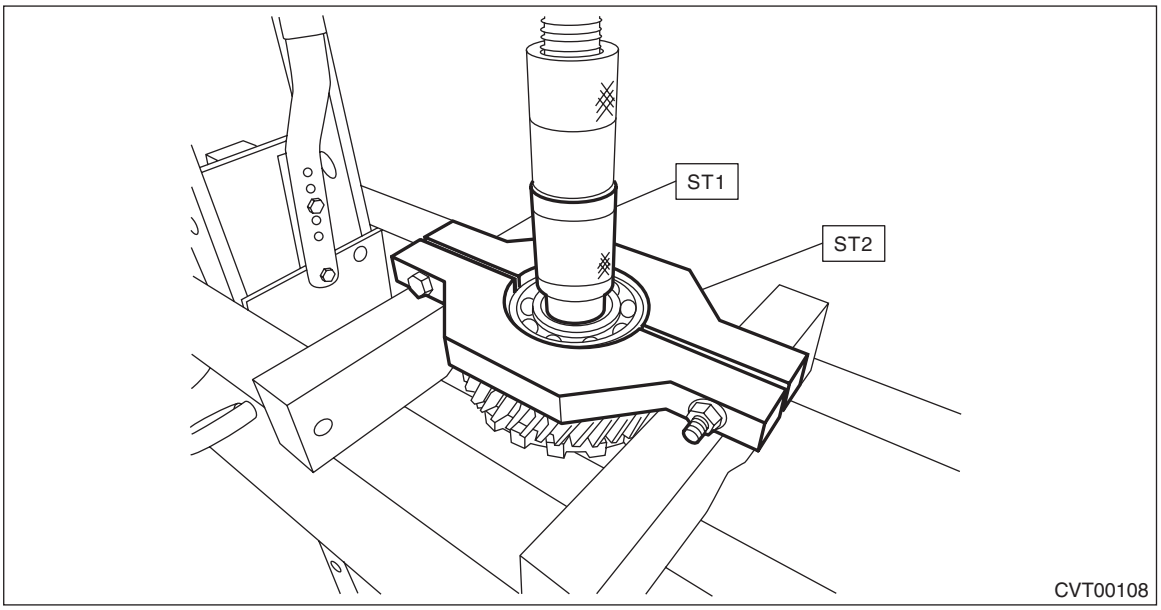

2) Remove the snap ring.

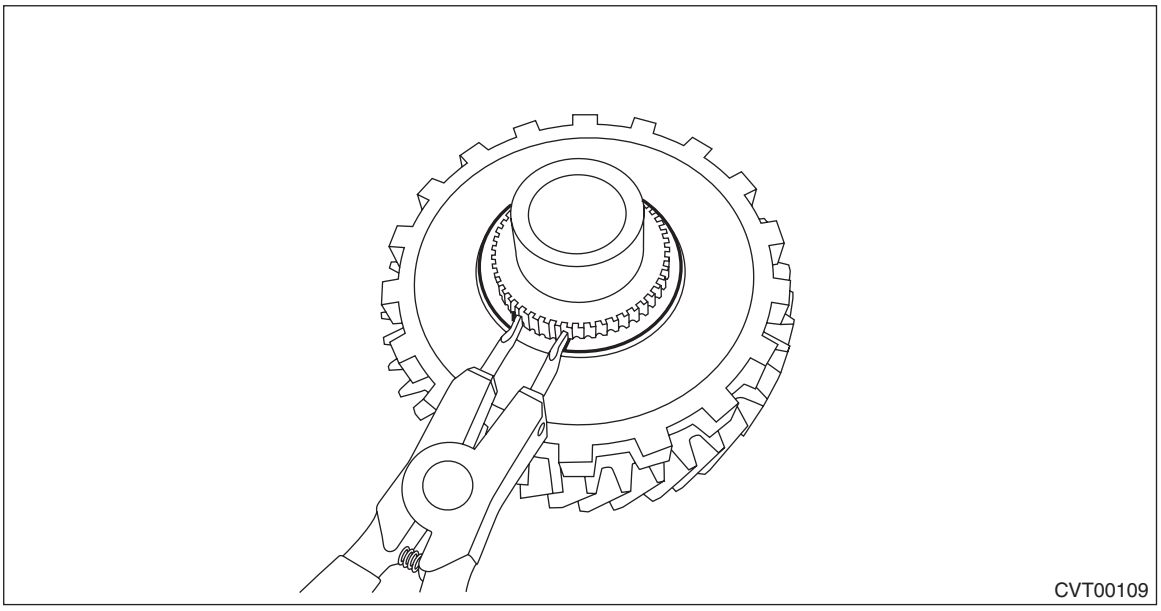

3) Using the ST, remove the parking gear from transfer reduction drive gear.
ST1 499757002 INSTALLER
ST2 18767AA000 BEARING REMOVER

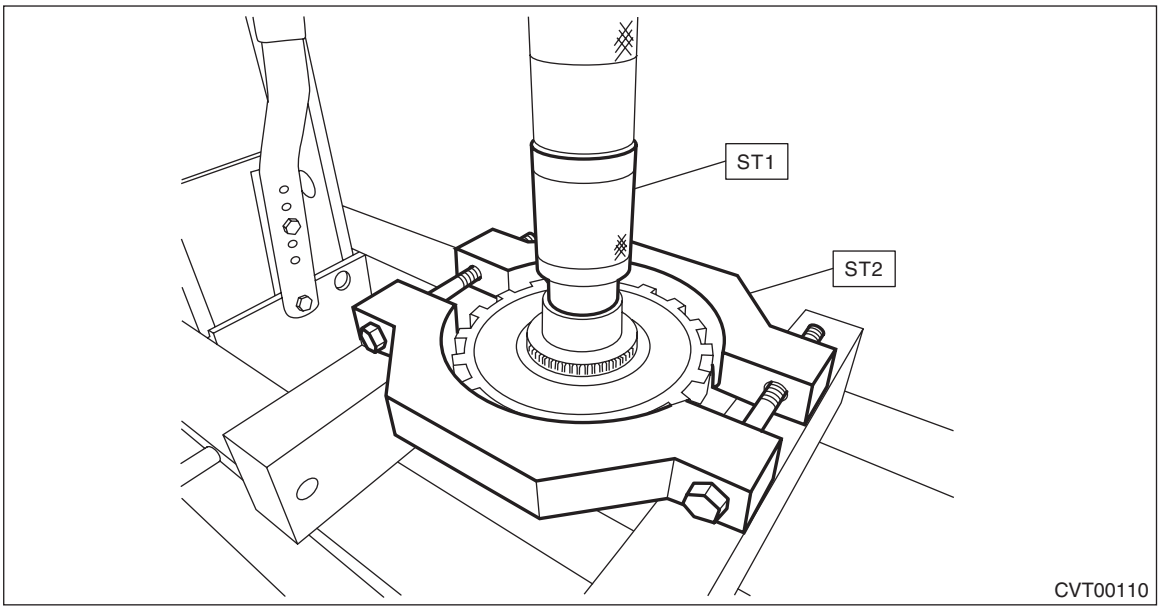

D: ASSEMBLY

1) Using the ST, install the transfer drive gear.
ST 499755602 INSTALLER

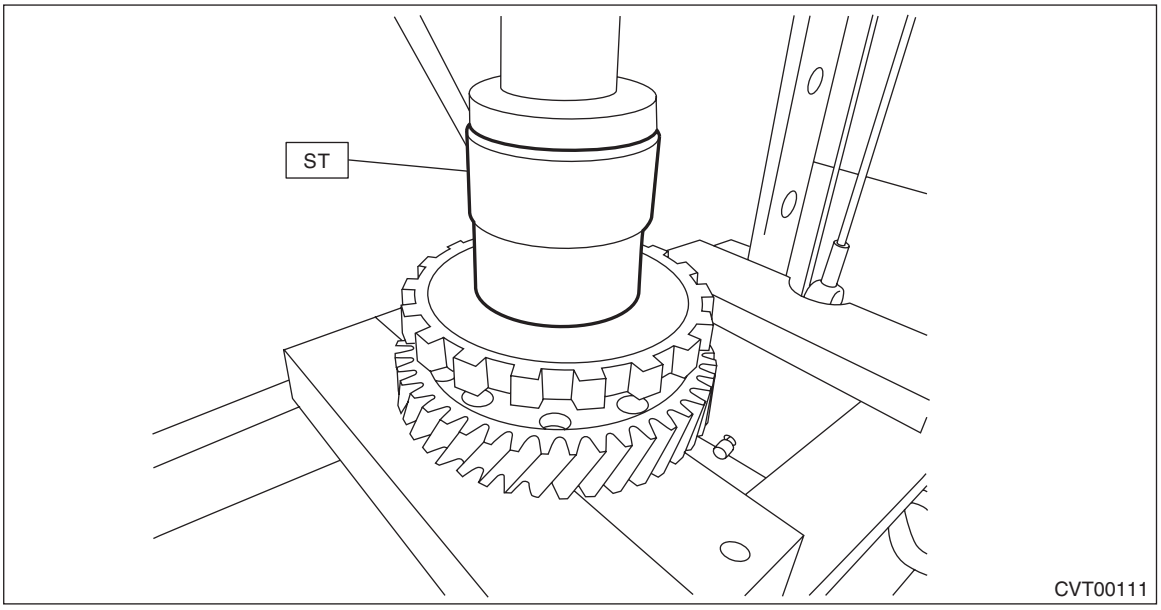

2) Install the snap ring.

3) Using the ST, install the ball bearing.

NOTE:
Use a new ball bearing.
ST 499277100 BUSHING 1-2 INSTALLER

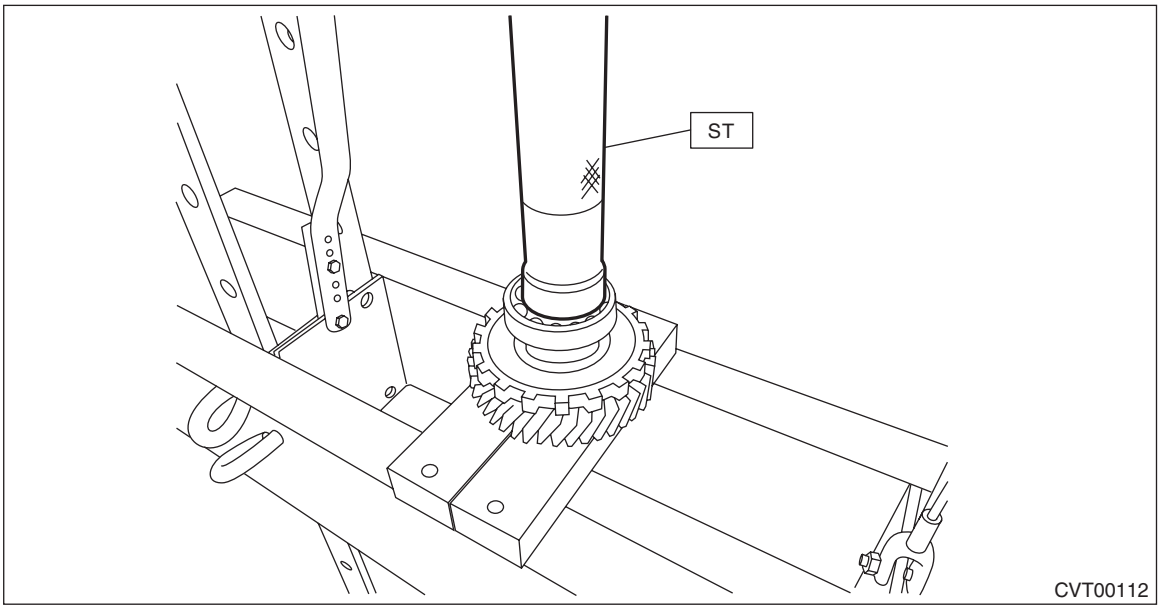

E: INSPECTION

- Check the ball bearing for smooth rotation.
- Check the ball bearing for excessive looseness.
- Make sure each gear is not broken or damaged.

F: ADJUSTMENT

1) Measure the height “A” from the ST upper face to the ball bearing catch surface.
ST 499575600 GAUGE

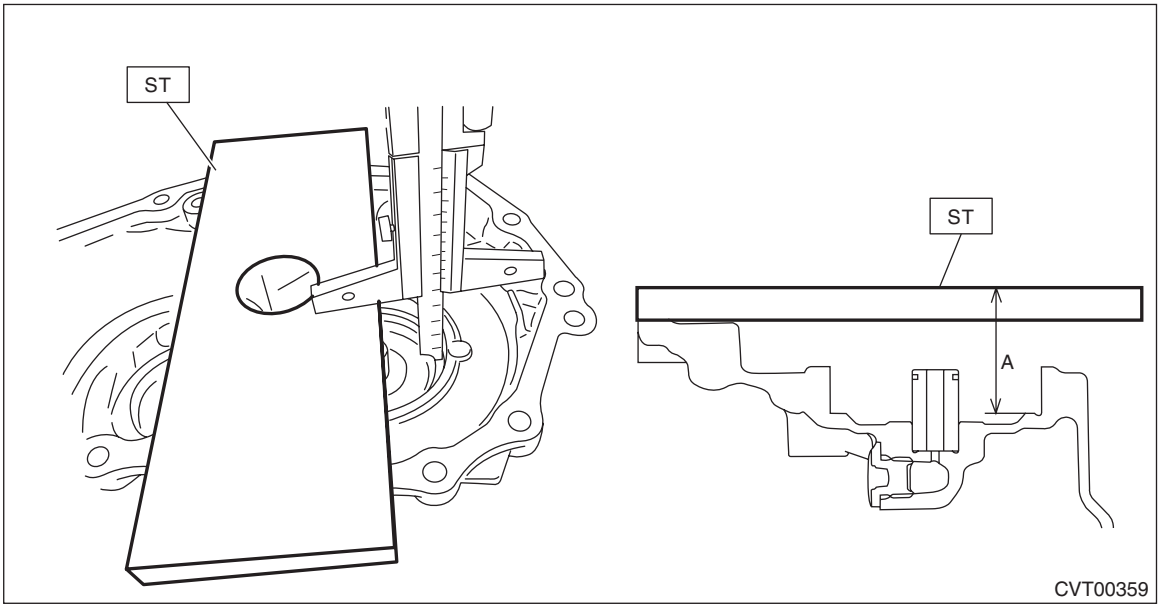

2) Measure the height “B” from the ST to the mating surface of the transmission case.
ST 499575600 GAUGE

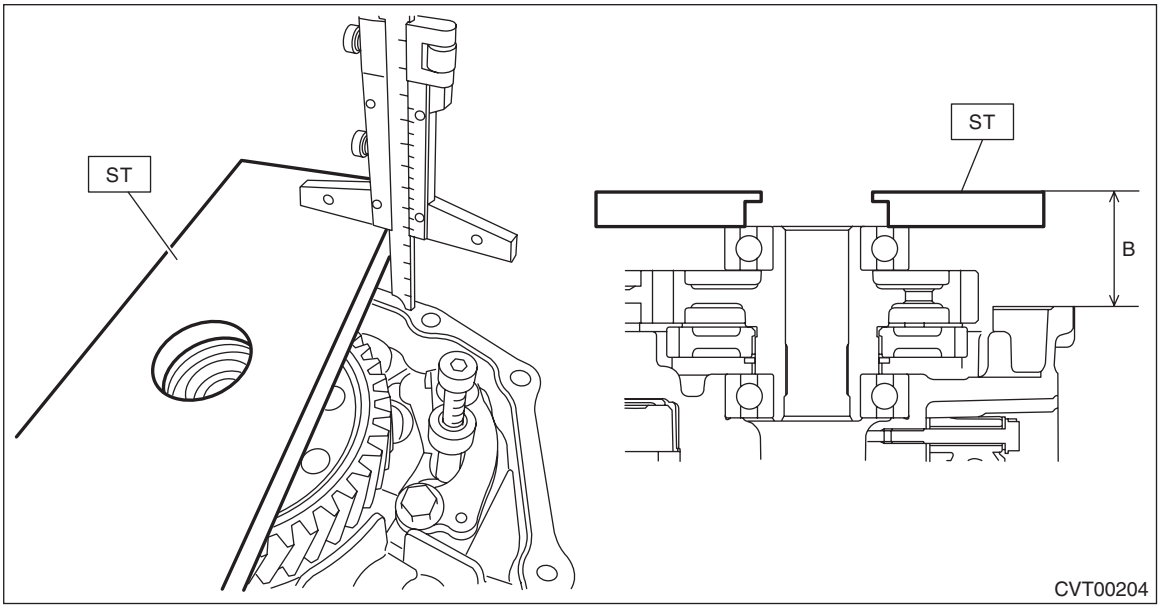

3) Obtain the thickness of transfer drive gear shim using the following formula to select zero to three transfer drive gear shims.
T (mm) = A – B – (0.05 — 0.25)
[T (in) = A – B – (0.002 — 0.01)]
T: Shim thickness
A: Height from the ST upper face to the ball bearing catch surface
B: Height from ST to transmission case mating surface
0.05 — 0.25 mm (0.002 — 0.01 in): Clearance

Transfer drive gear shim	
Part No.	Thickness mm (in)
33279AA090	0.3 (0.012)
33279AA100	0.4 (0.016)
33279AA110	0.5 (0.020)

36.Parking Pawl

A: REMOVAL

1) Remove the transmission assembly from the vehicle. <Ref. to CVT(TH58A)-62, REMOVAL, Automatic Transmission Assembly.>
2) Remove the extension case. <Ref. to CVT(TH58A)-179, REMOVAL, Extension Case.>
3) Remove the transfer clutch assembly. <Ref. to CVT(TH58A)-183, REMOVAL, Transfer Clutch.>
4) Remove the transfer driven gear assembly. <Ref. to CVT(TH58A)-197, REMOVAL, Transfer Driven Gear.>
5) Remove the transfer drive gear assembly. <Ref. to CVT(TH58A)-200, REMOVAL, Transfer Drive Gear.>
6) Remove the parking pawl shaft, return spring and parking pawl.

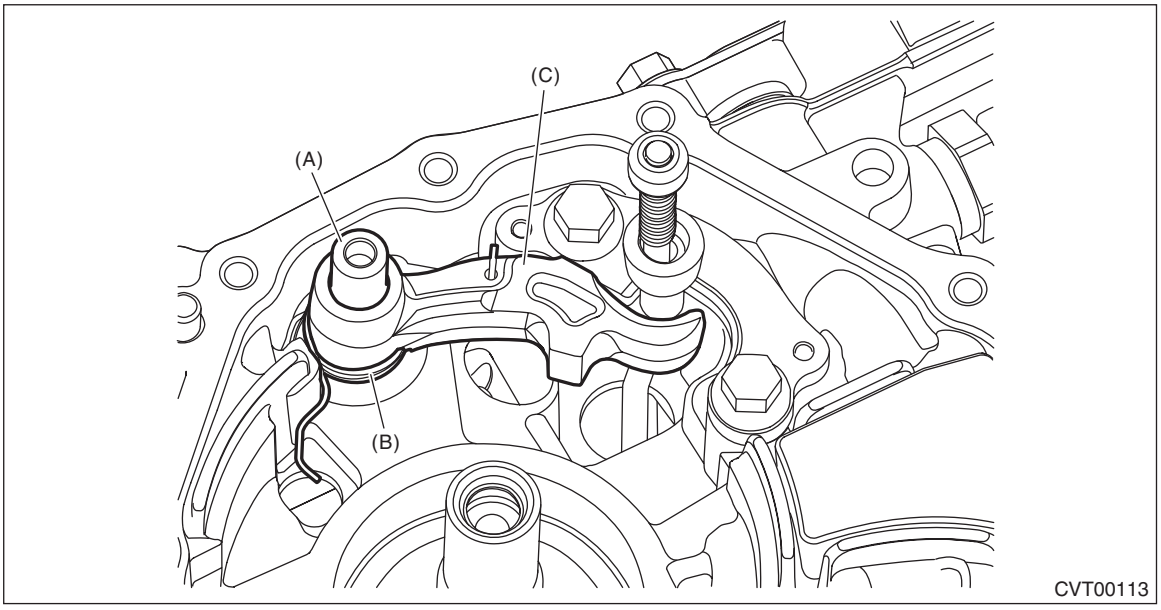

(A) Parking pawl shaft
(B) Return spring
(C) Parking pawl

B: INSTALLATION

1) Set the range select lever to the “N” range.
2) Install the return spring to parking pawl.

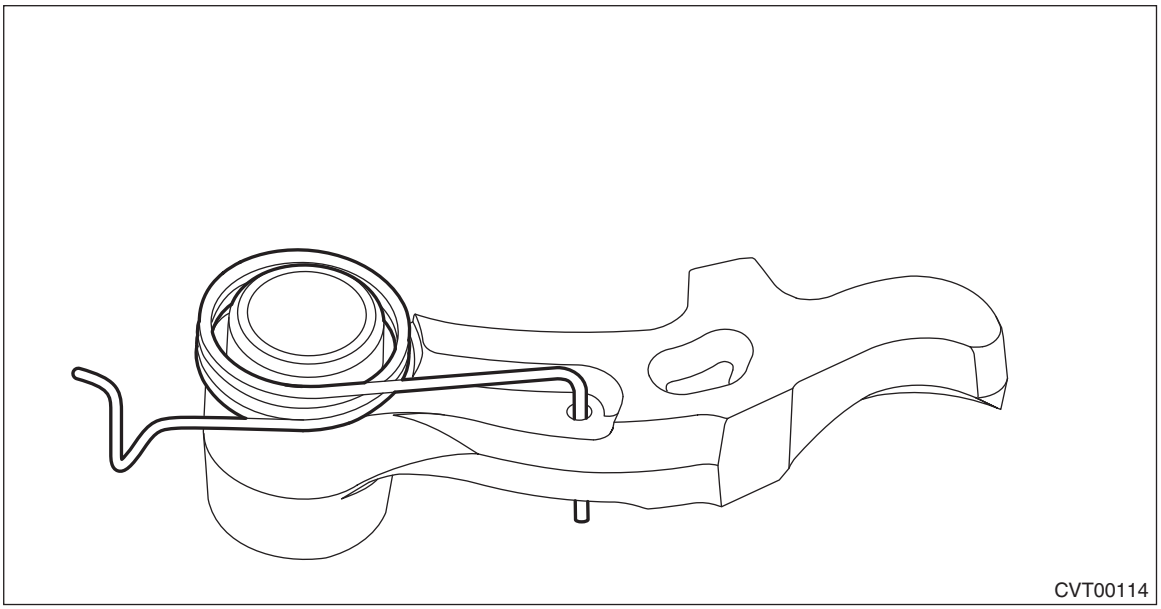

3) Install the parking pawl and parking pawl shaft.

NOTE:
Make sure that the end of return spring sticks out of the hole of parking pawl as shown in (a). Make sure that the other end contacts the rib of transmission case as shown in (b).

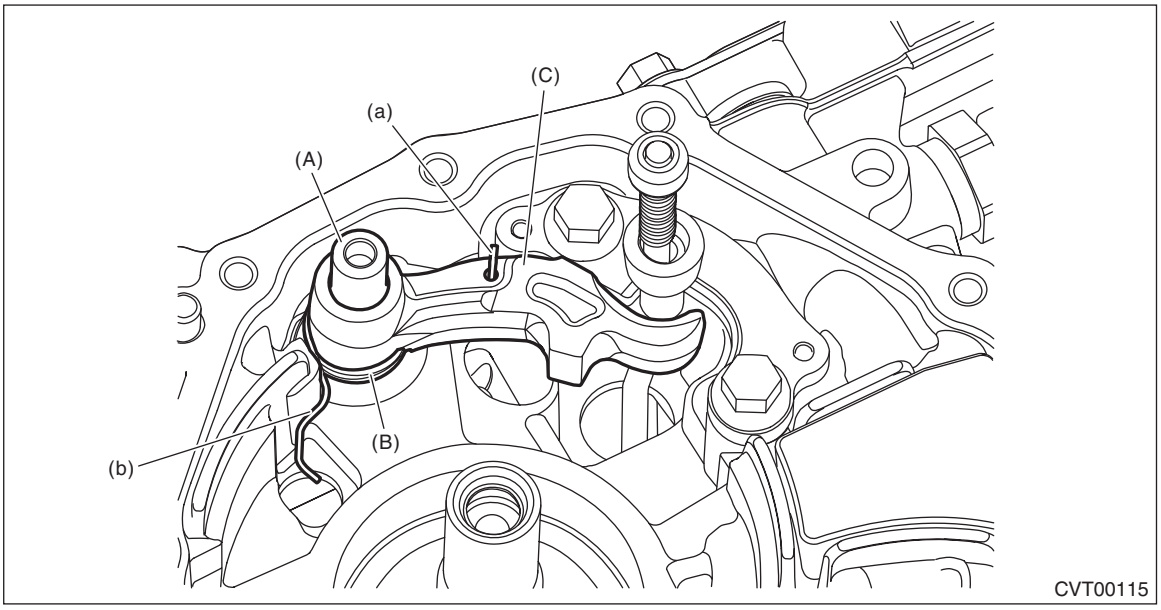

(A) Parking pawl shaft
(B) Return spring
(C) Parking pawl

4) Install the transfer drive gear assembly. <Ref. to CVT(TH58A)-200, INSTALLATION, Transfer Drive Gear.>
5) Install the transfer driven gear assembly. <Ref. to CVT(TH58A)-198, INSTALLATION, Transfer Driven Gear.>
6) Install the transfer clutch assembly. <Ref. to CVT(TH58A)-185, INSTALLATION, Transfer Clutch.>
7) Install the extension case. <Ref. to CVT(TH58A)-180, INSTALLATION, Extension Case.>
8) Install the transmission assembly to the vehicle. <Ref. to CVT(TH58A)-76, INSTALLATION, Automatic Transmission Assembly.>

C: INSPECTION

- Check the parking pawl for breakage or damage.
- Check for worn, broken and/or damaged return spring.

37.Transmission Control Device

A: REMOVAL

1) Remove the transmission assembly from the vehicle. <Ref. to CVT(TH58A)-62, REMOVAL, Automatic Transmission Assembly.>
2) Remove the inhibitor switch. <Ref. to CVT(TH58A)-99, REMOVAL, Inhibitor Switch.>
3) Remove the oil pan and oil strainer. <Ref. to CVT(TH58A)-111, REMOVAL, Oil Pan and Strainer.>
4) Shift the manual plate to “N” range, and remove the spring pin.

NOTE:
Prevent the spring pin from dropping in the transmission using paper towel etc.

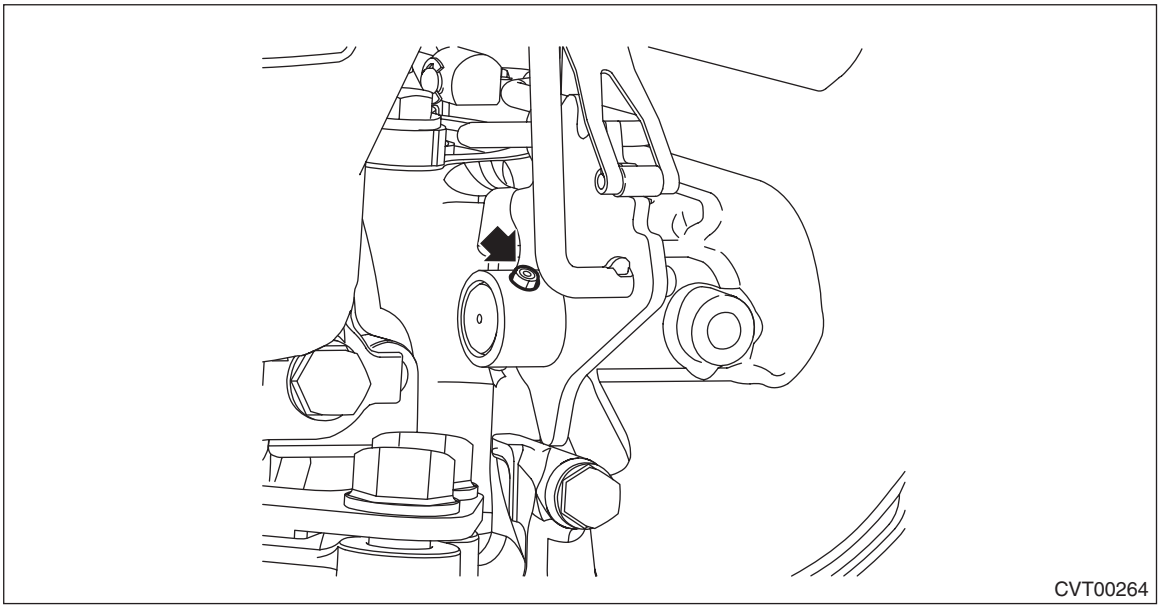
CVT00264

5) Remove the detent spring.

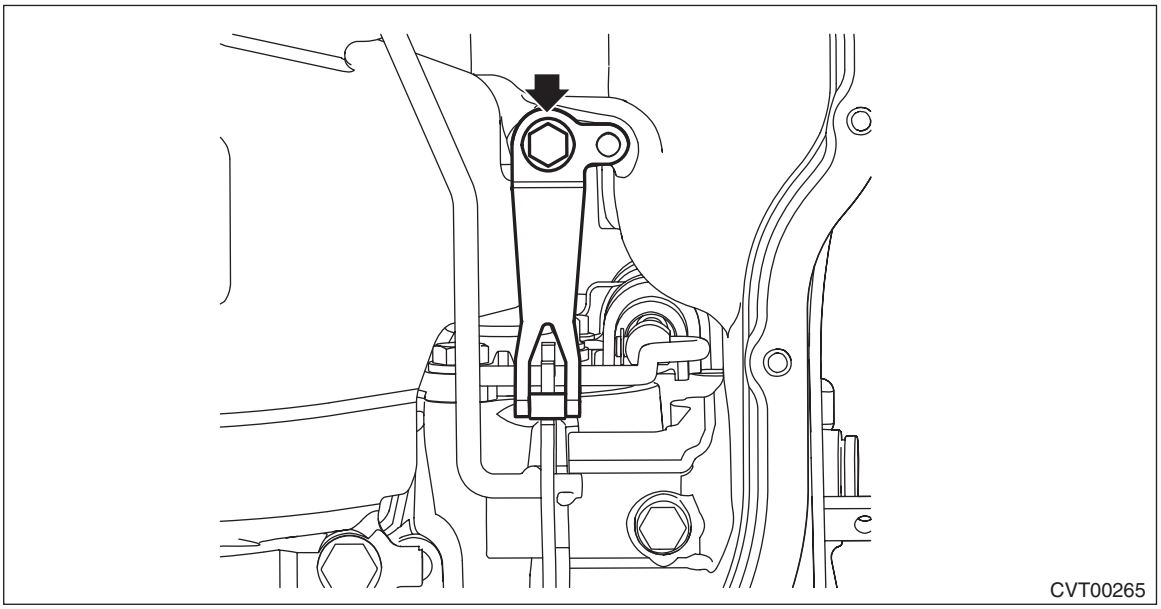
CVT00265

6) Remove the shifter arm shaft.

NOTE:
Do not damage the lip of oil seal press-fitted in the case.

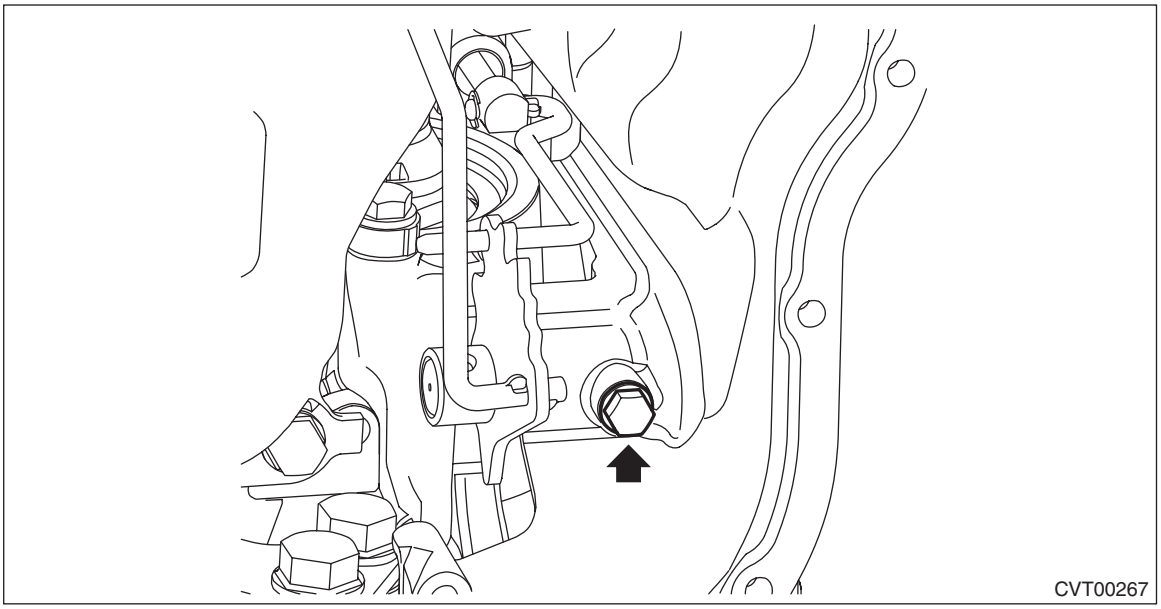

7) Remove the shift connecting rod of manual valve.

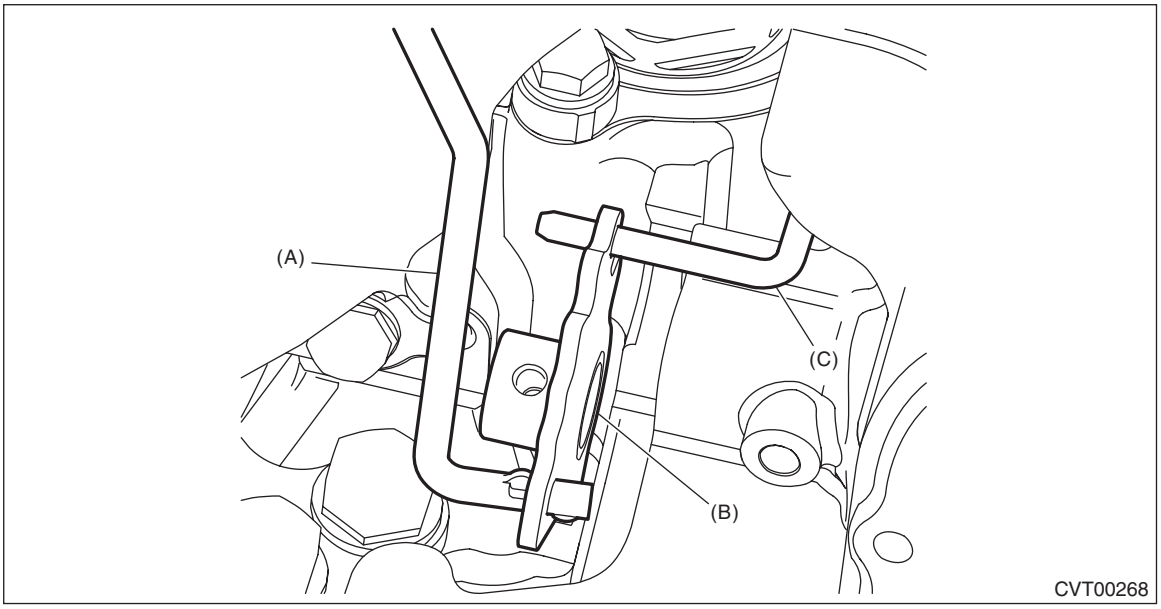

(A) Parking rod
(B) Manual plate
(C) Shift connecting rod

8) Remove the manual plate and parking rod.

9) Remove the manual valve.

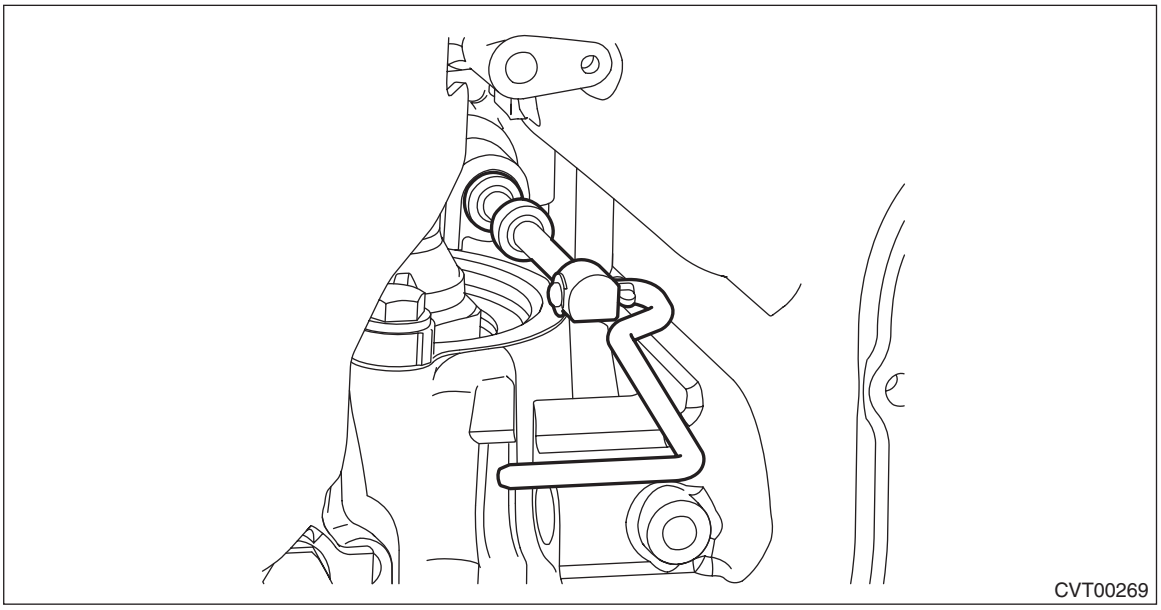

10) Remove the extension case. <Ref. to CVT(TH58A)-179, REMOVAL, Extension Case.>
11) Remove the transfer clutch assembly. <Ref. to CVT(TH58A)-183, REMOVAL, Transfer Clutch.>
12) Remove the transfer driven gear assembly. <Ref. to CVT(TH58A)-197, REMOVAL, Transfer Driven Gear.>
13) Remove the transfer drive gear assembly. <Ref. to CVT(TH58A)-200, REMOVAL, Transfer Drive Gear.>
14) Remove the parking pawl. <Ref. to CVT(TH58A)-205, REMOVAL, Parking Pawl.>
15) Remove the parking support.

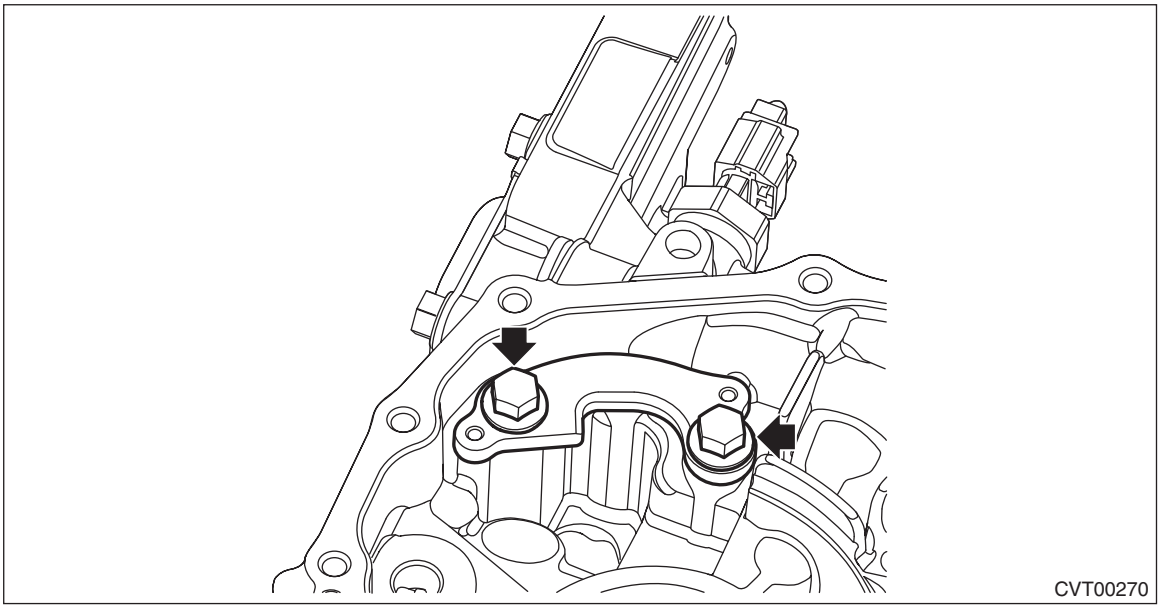

B: INSTALLATION

1) Install the parking support.
   (1) Install the parking support.

Tightening torque:
10 N·m (1.0 kgf-m, 7.4 ft-lb)

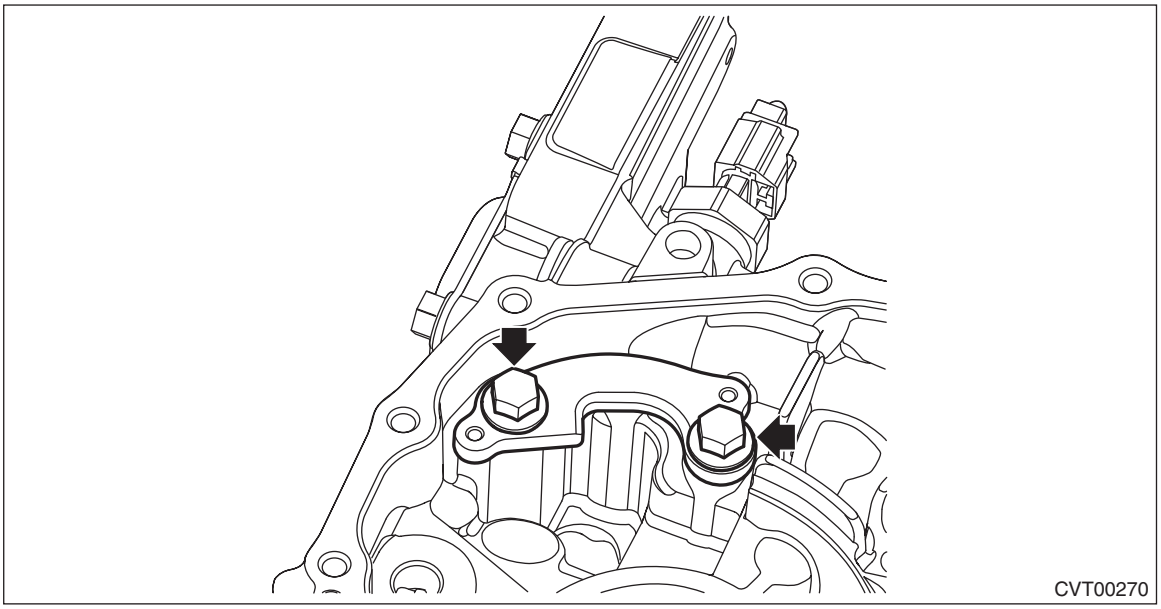

(2) While checking the tightening angle with the angle gauge, tighten the parking support mounting bolts to the specified angle.

Tightening angle:
15° — 19°

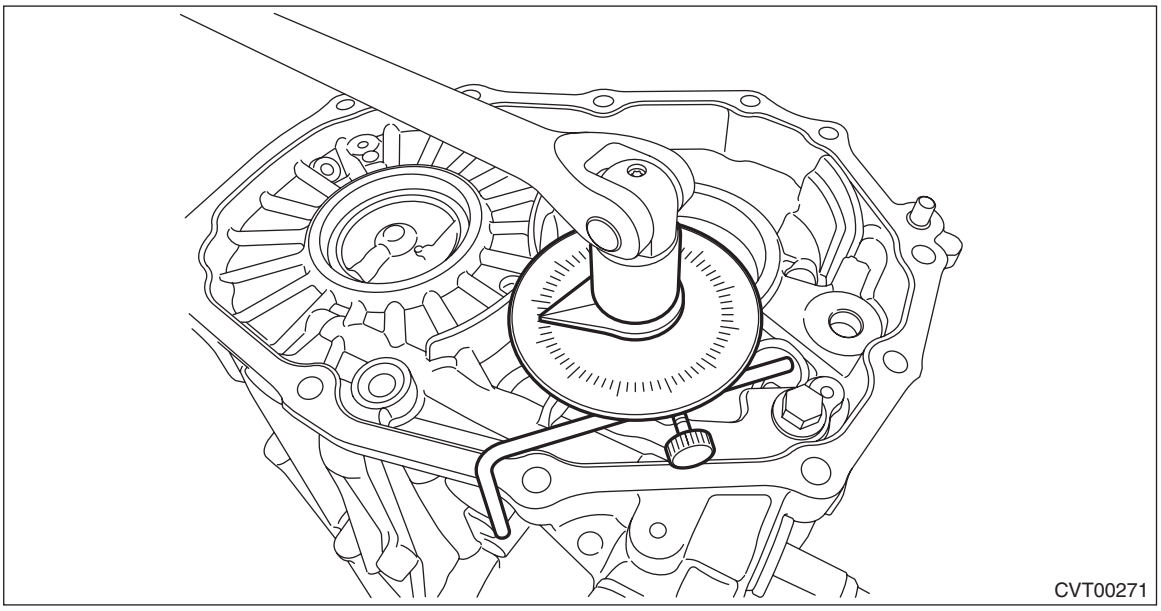

2) Install the manual valve.

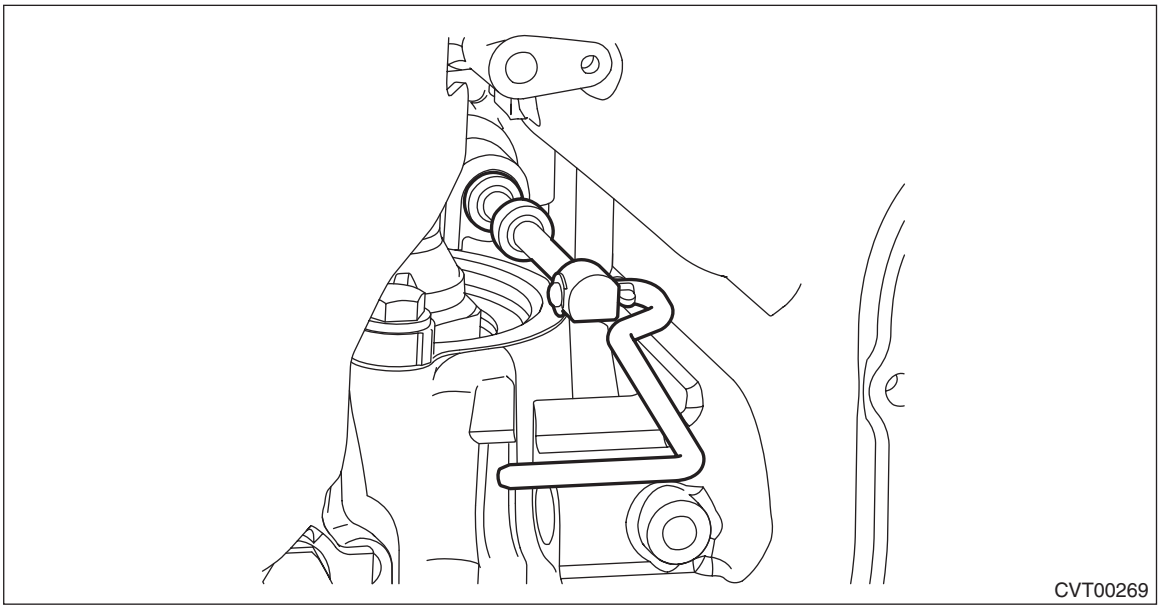

3) Install the parking rod to the manual plate.
4) Insert the parking rod into the transmission case, and install the shift connecting rod of the manual valve to the manual plate.

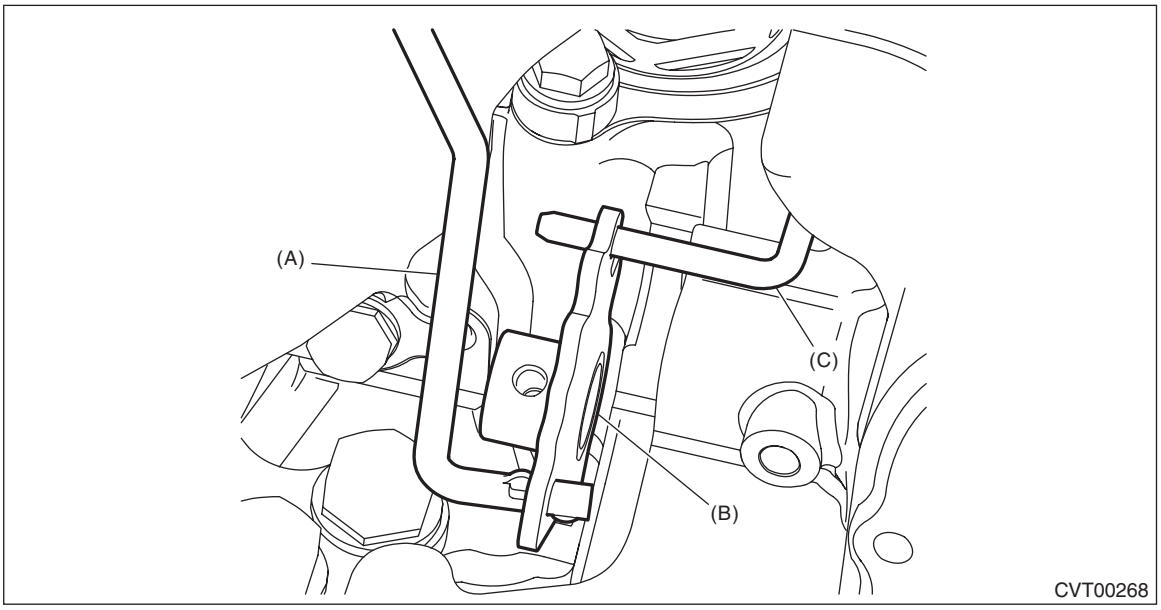

(A) Parking rod
(B) Manual plate
(C) Shift connecting rod

5) Insert the shifter arm shaft to the transmission, install the manual plate to the shifter arm shaft, and secure the shifter arm shaft with bolt.

NOTE:
Do not damage the lip of oil seal press-fitted in the case.

Tightening torque:
7 N·m (0.7 kgf-m, 5.2 ft-lb)

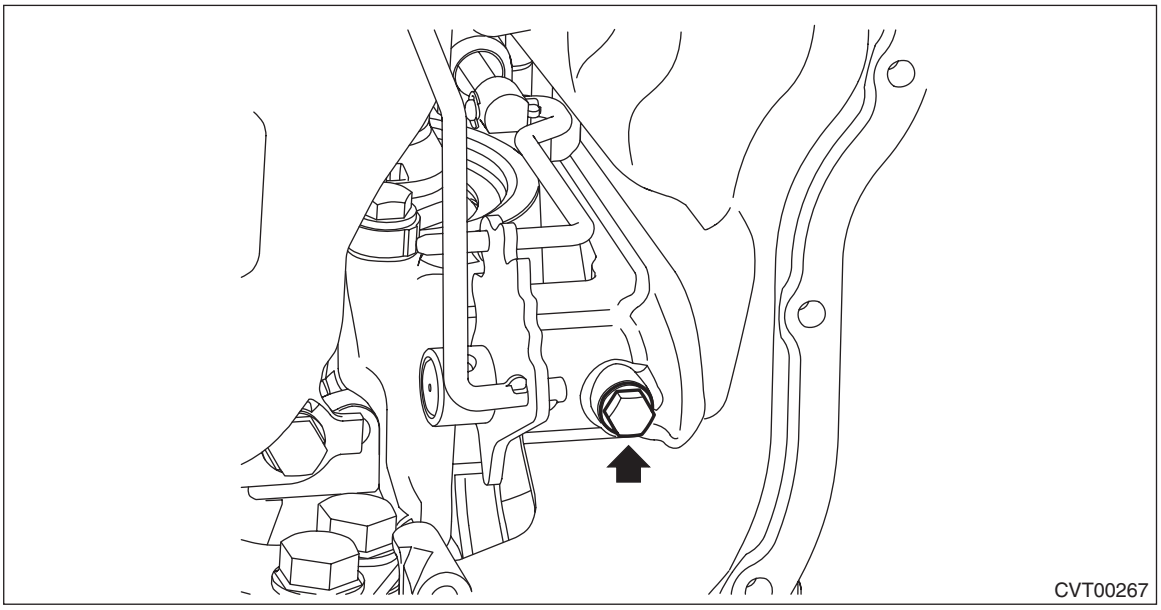

6) Install the detent spring to the transmission case.

Tightening torque:
7 N·m (0.7 kgf-m, 5.2 ft-lb)

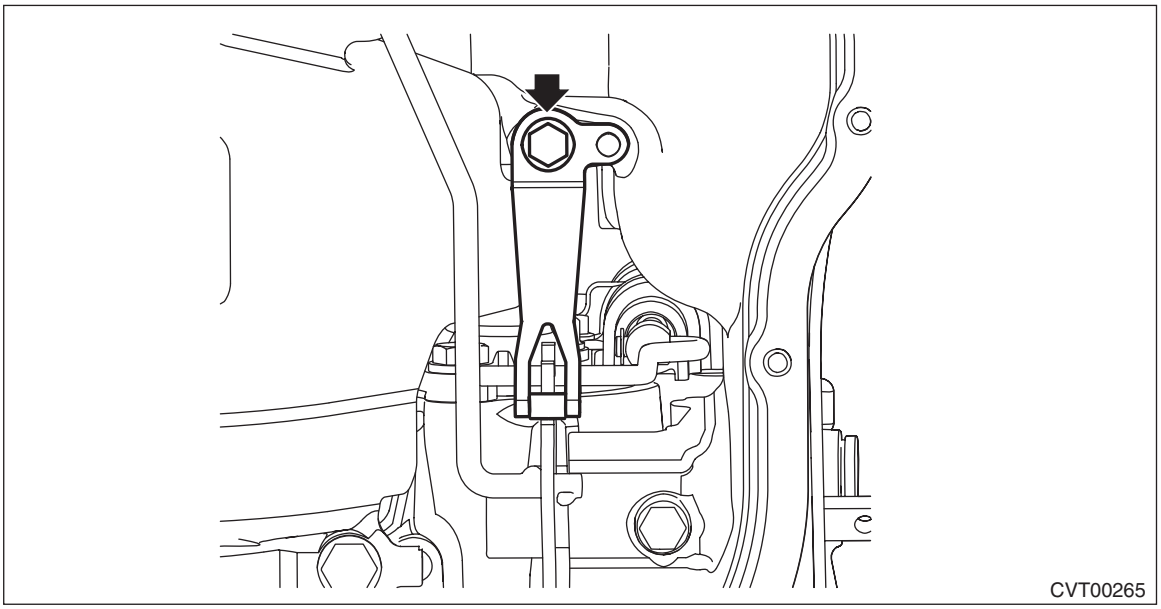

7) Install the spring pin.

NOTE:
Use new spring pin.

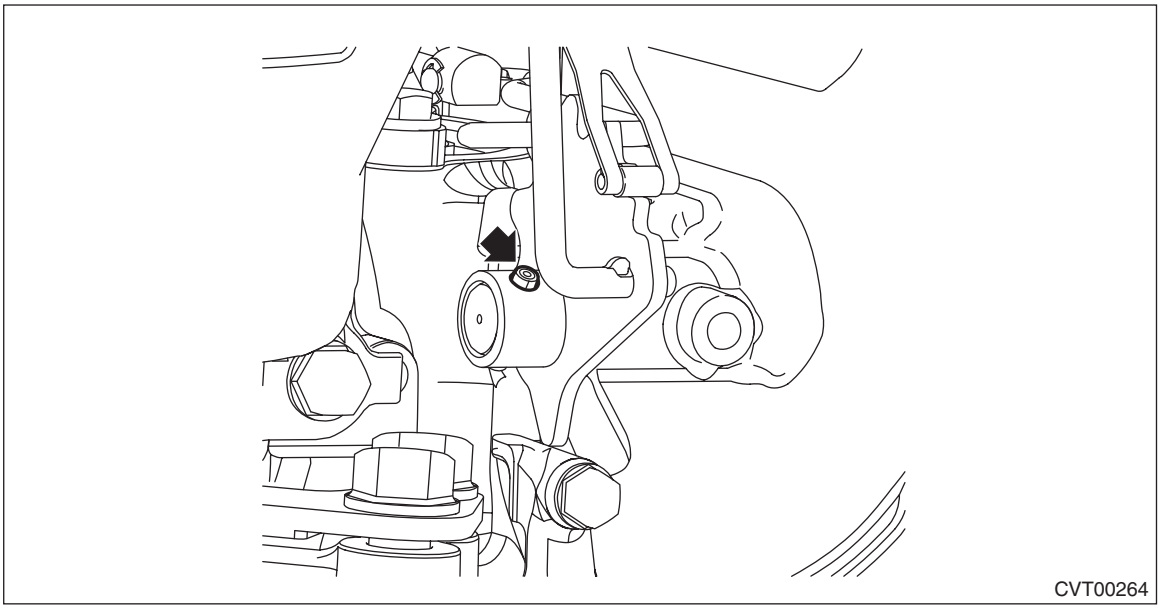

8) Install the inhibitor switch. <Ref. to CVT(TH58A)-101, INSTALLATION, Inhibitor Switch.>
9) Adjust the inhibitor switch. <Ref. to CVT(TH58A)-98, ADJUSTMENT, Inhibitor Switch.>
10) Install the oil strainer and oil pan. <Ref. to CVT(TH58A)-113, INSTALLATION, Oil Pan and Strainer.>
11) Install the parking pawl. <Ref. to CVT(TH58A)-206, INSTALLATION, Parking Pawl.>
12) Install the transfer drive gear assembly. <Ref. to CVT(TH58A)-200, INSTALLATION, Transfer Drive Gear.>
13) Install the transfer driven gear assembly. <Ref. to CVT(TH58A)-198, INSTALLATION, Transfer Driven Gear.>
14) Install the transfer clutch assembly. <Ref. to CVT(TH58A)-185, INSTALLATION, Transfer Clutch.>
15) Install the extension case. <Ref. to CVT(TH58A)-180, INSTALLATION, Extension Case.>
16) Install the transmission assembly to the vehicle. <Ref. to CVT(TH58A)-76, INSTALLATION, Automatic Transmission Assembly.>

C: INSPECTION

Make sure that the manual plate and detent spring are not worn or otherwise damaged.

38.Drive Motor Assembly

A: REMOVAL

1) Remove the transmission assembly from the vehicle. <Ref. to CVT(TH58A)-62, REMOVAL, Automatic Transmission Assembly.>
2) Remove the sensor cover. <Ref. to CVT(TH58A)-141, REMOVAL, Transmission Harness.>
3) Remove the secondary pressure sensor harness connector, and remove the harness clip. <Ref. to CVT(TH58A)-141, REMOVAL, Transmission Harness.>
4) Remove the extension case. <Ref. to CVT(TH58A)-179, REMOVAL, Extension Case.>
5) Remove the transfer clutch assembly. <Ref. to CVT(TH58A)-183, REMOVAL, Transfer Clutch.>
6) Remove the transfer driven gear assembly. <Ref. to CVT(TH58A)-197, REMOVAL, Transfer Driven Gear.>
7) Remove the transfer drive gear assembly. <Ref. to CVT(TH58A)-200, REMOVAL, Transfer Drive Gear.>
8) Remove the parking pawl. <Ref. to CVT(TH58A)-205, REMOVAL, Parking Pawl.>
9) Remove the transmission control device. <Ref. to CVT(TH58A)-208, REMOVAL, Transmission Control Device.>
10) Remove the oil spacer.

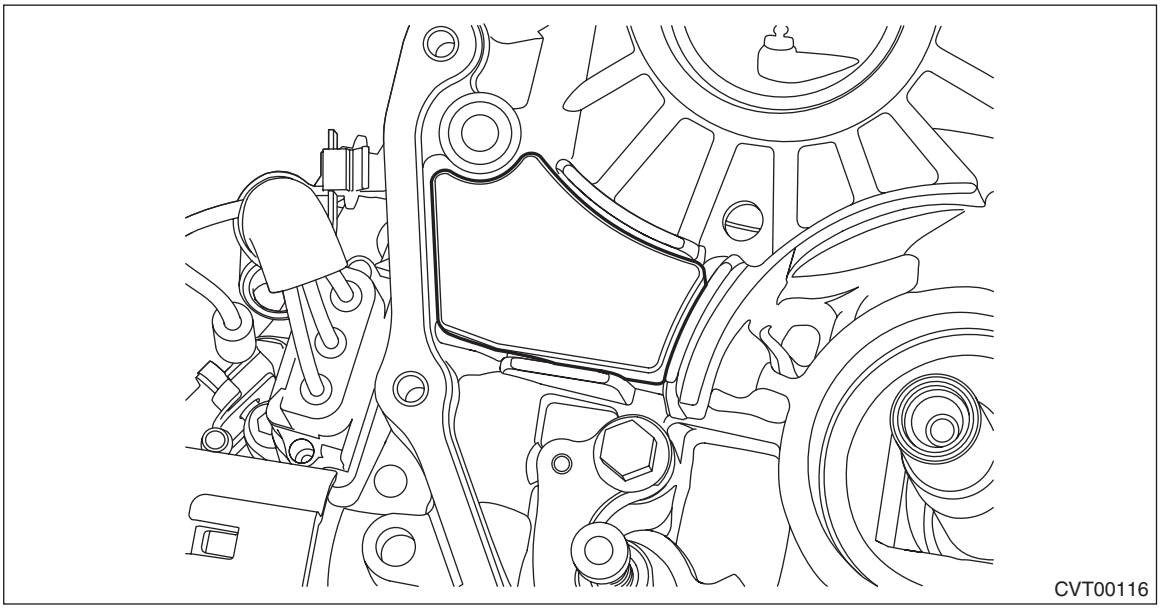

11) Release the harness clips from the harness bracket, then remove the air breather hose, harness bracket and ground terminal.

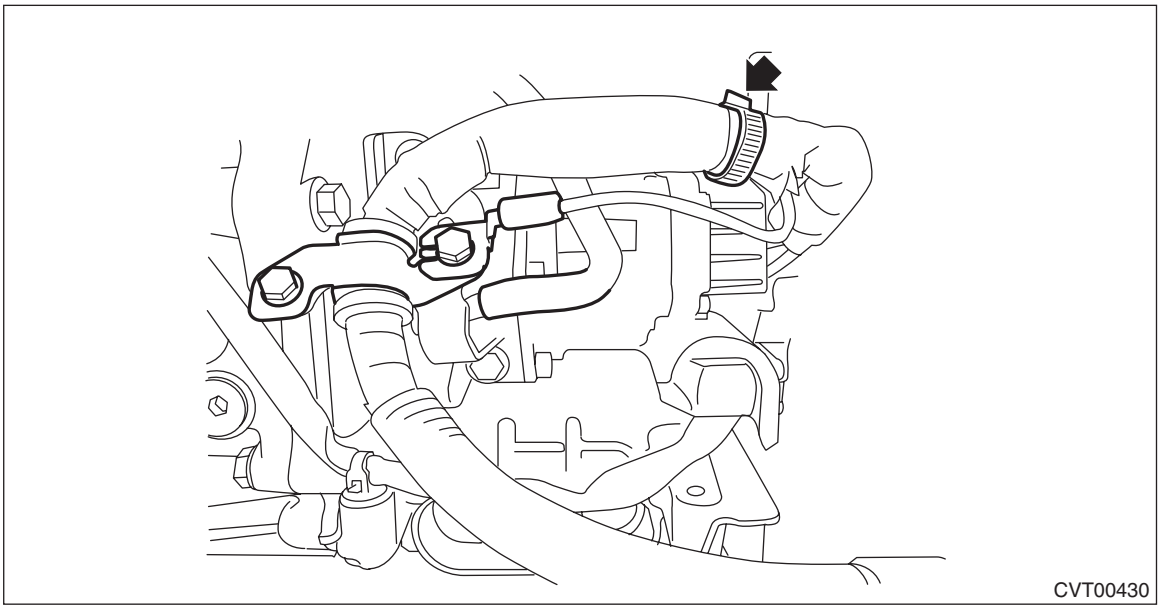

12) Remove the drive motor harness connector from the stay, and release the drive motor harness clips.

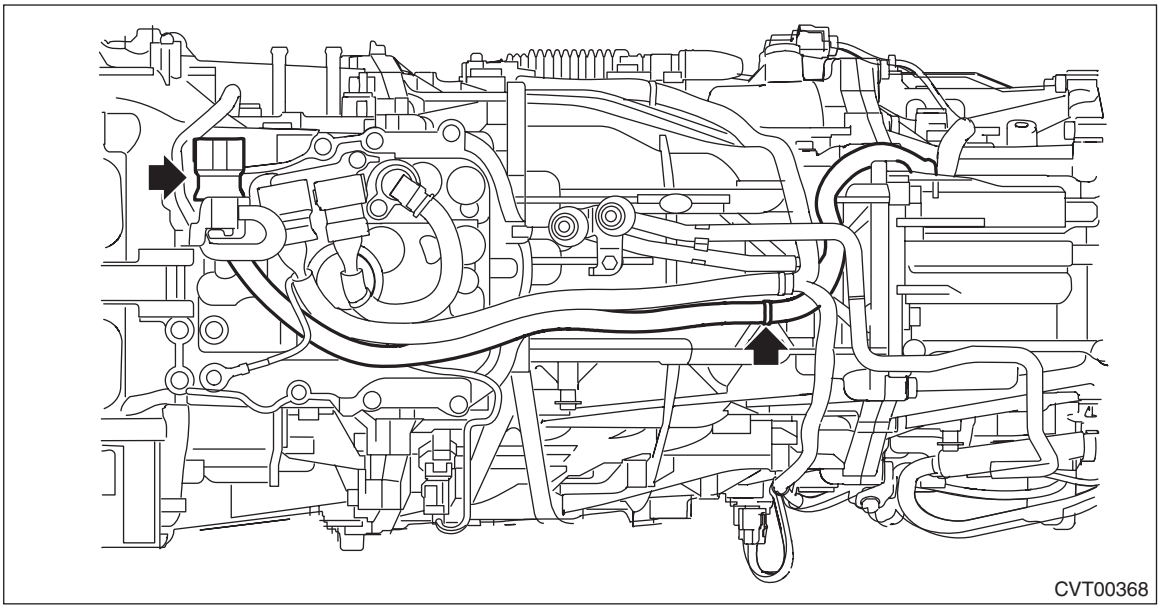

13) Remove the front wheel speed sensor harness connector.

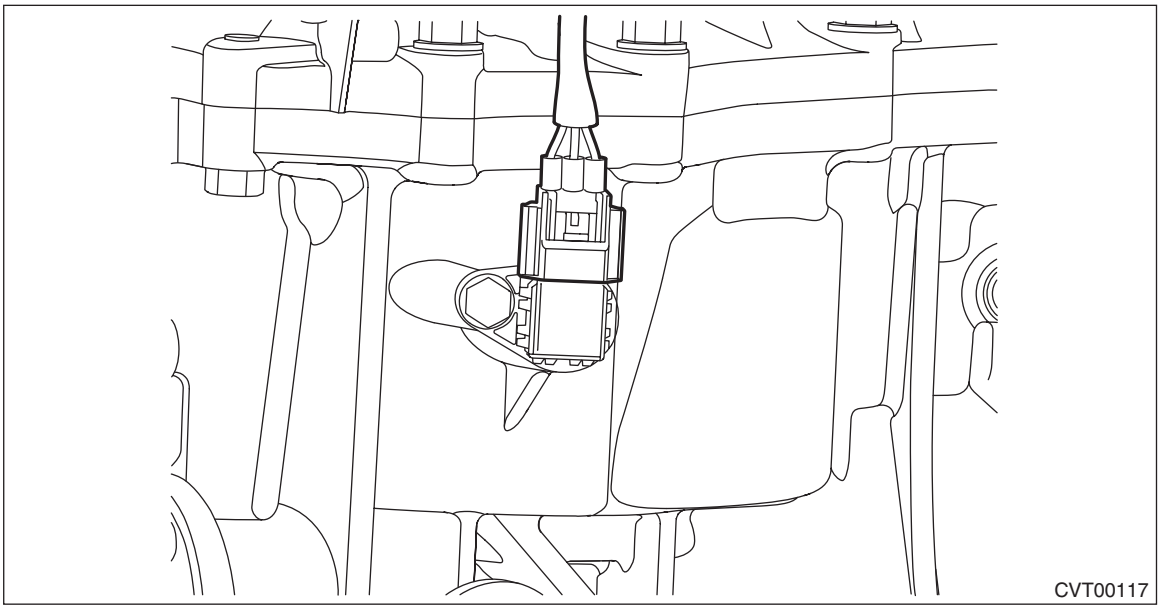

14) Remove the drive motor assembly.

CAUTION:
Do not apply excessive force or damage the electric oil pump harness.

NOTE:
- The total number of drive motor assembly mounting bolts is 14.
- Perform this operation with two persons.
- After removal, do not place it with the drive motor side facing downward.

15) Remove the intermediate shaft.

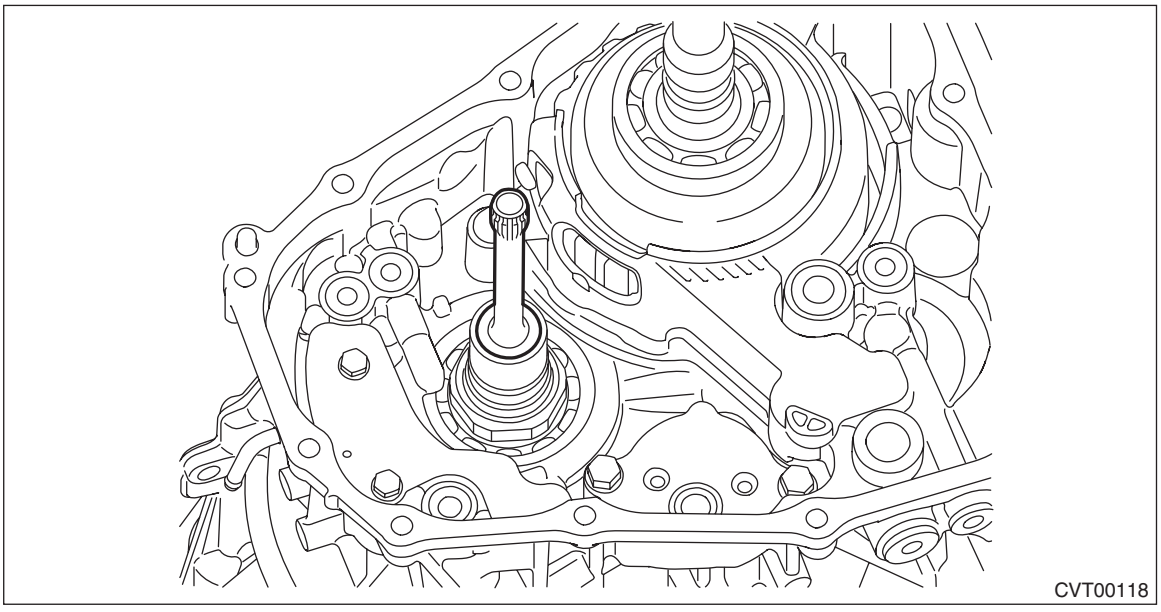

16) Remove the O-rings.

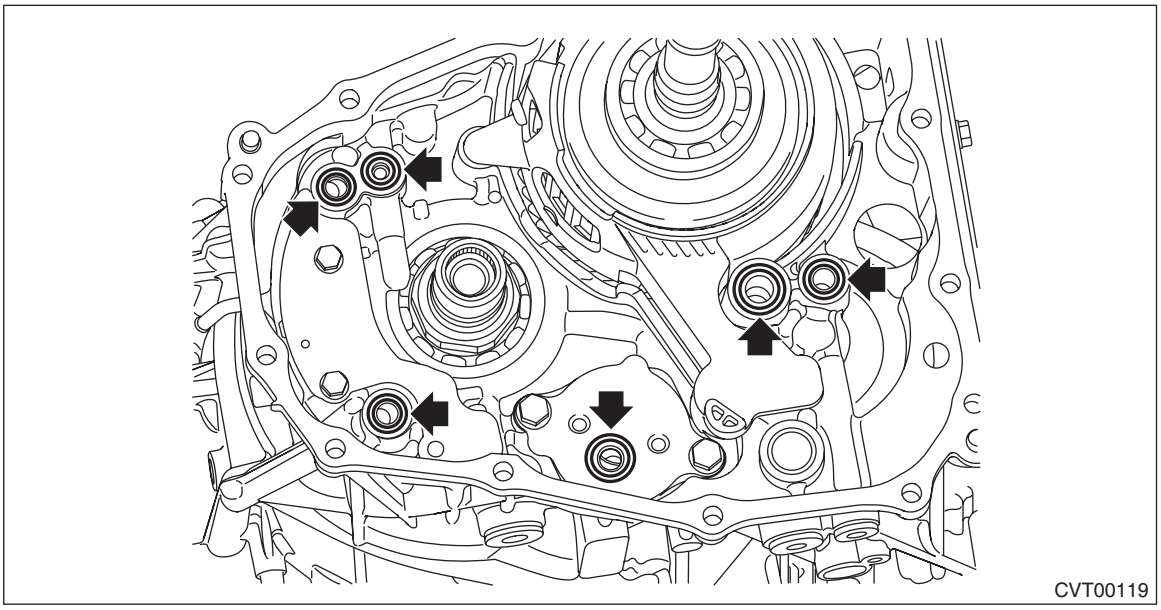

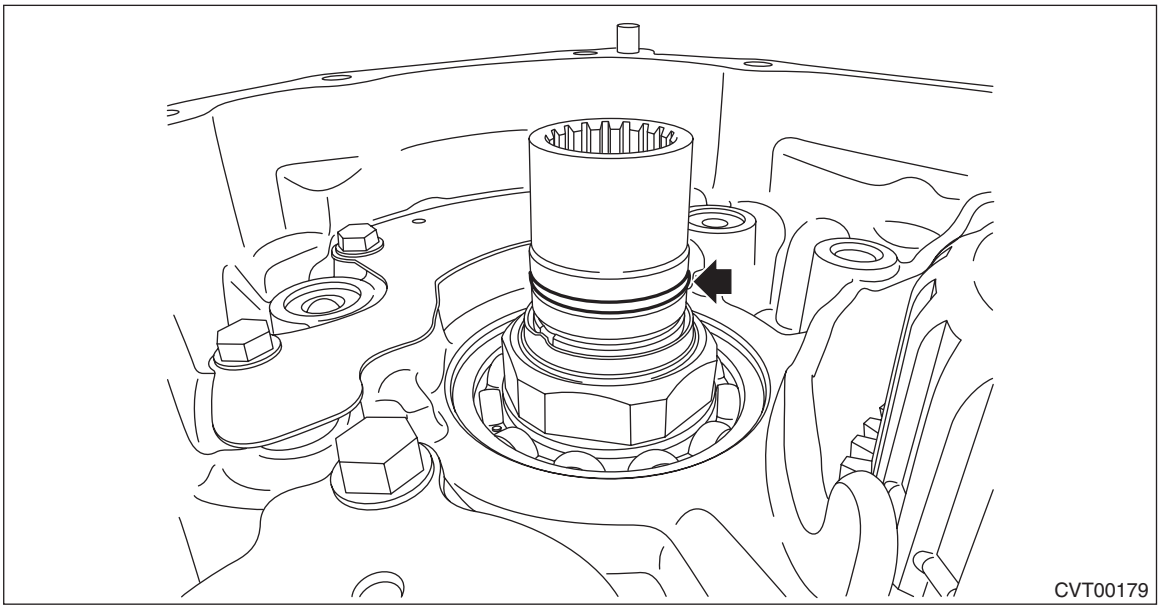

17) Remove the seal rings.

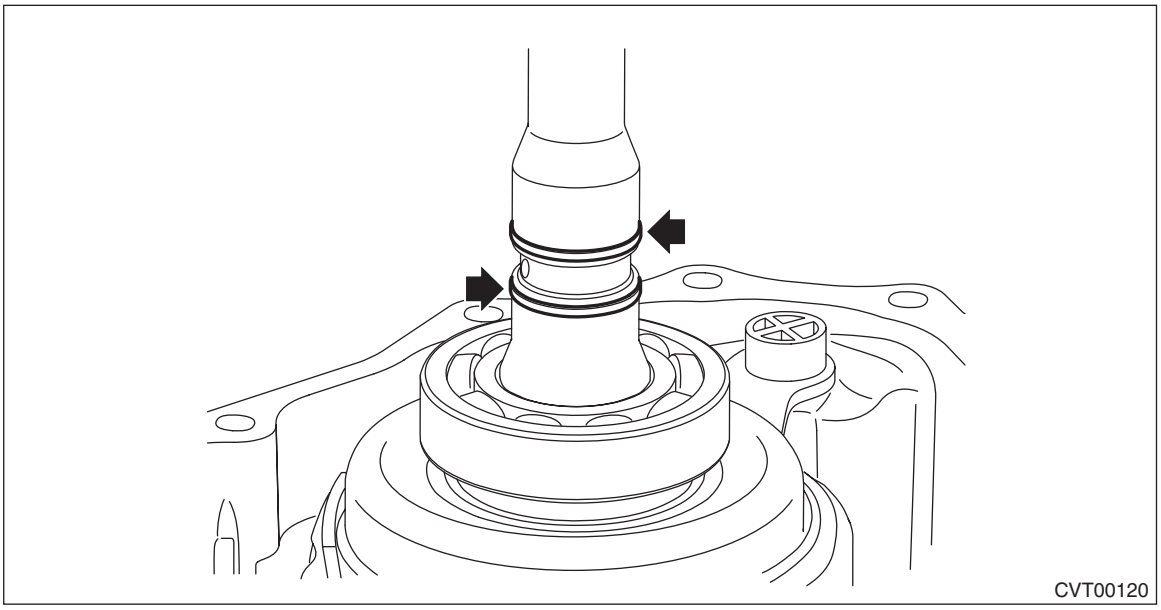

B: INSTALLATION

1) Install the seal rings.

NOTE:
- Use new seal rings.
- When installing the seal rings, do not expand the seal rings too much.
- Apply CVTF to the seal rings.

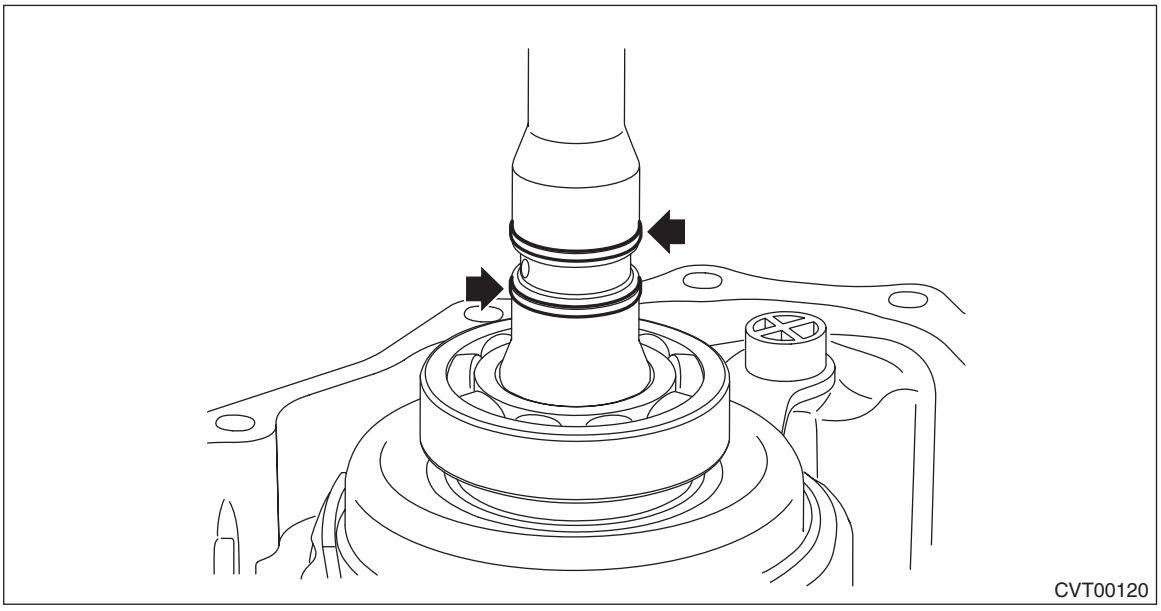

2) Install the O-rings.

NOTE:
- Use new O-rings.
- Apply CVTF to the O-rings.

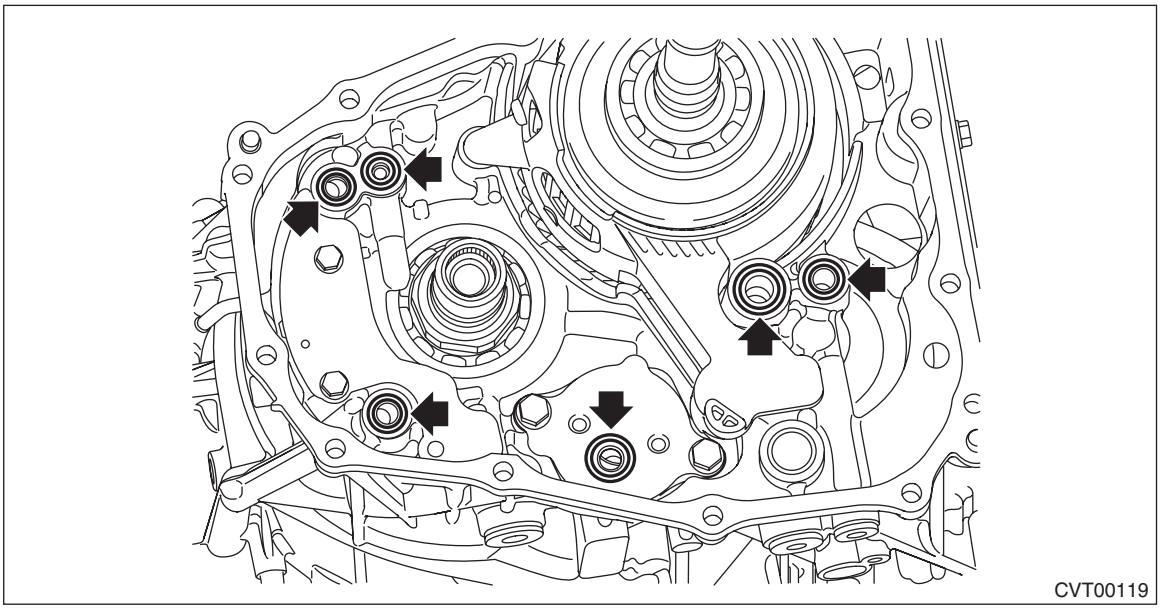
CVT00119

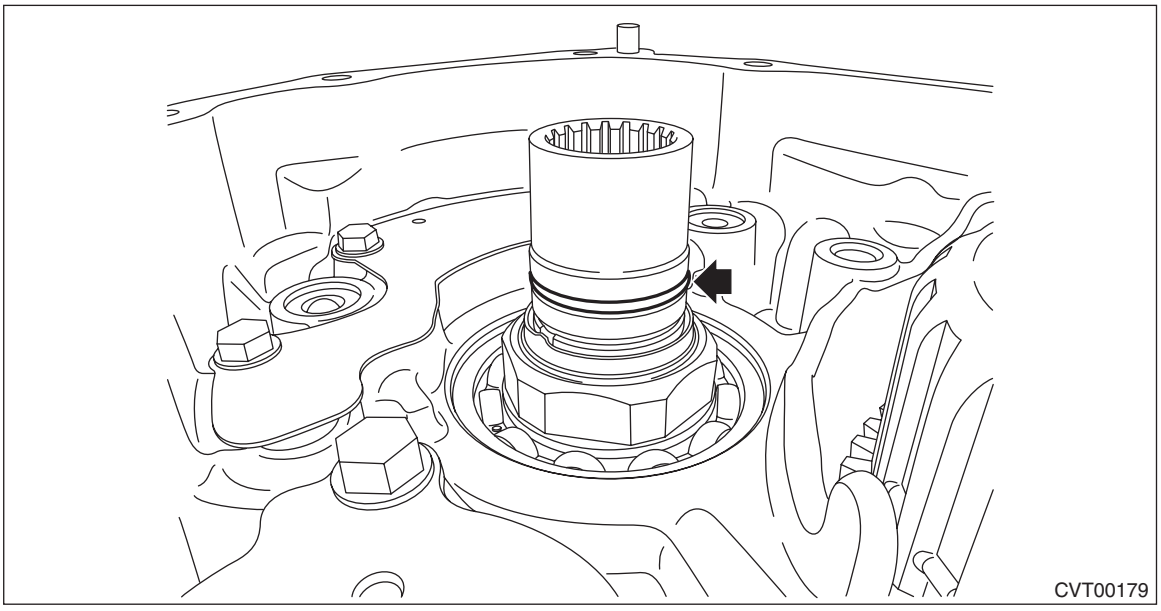
CVT00179

3) Install the intermediate shaft.

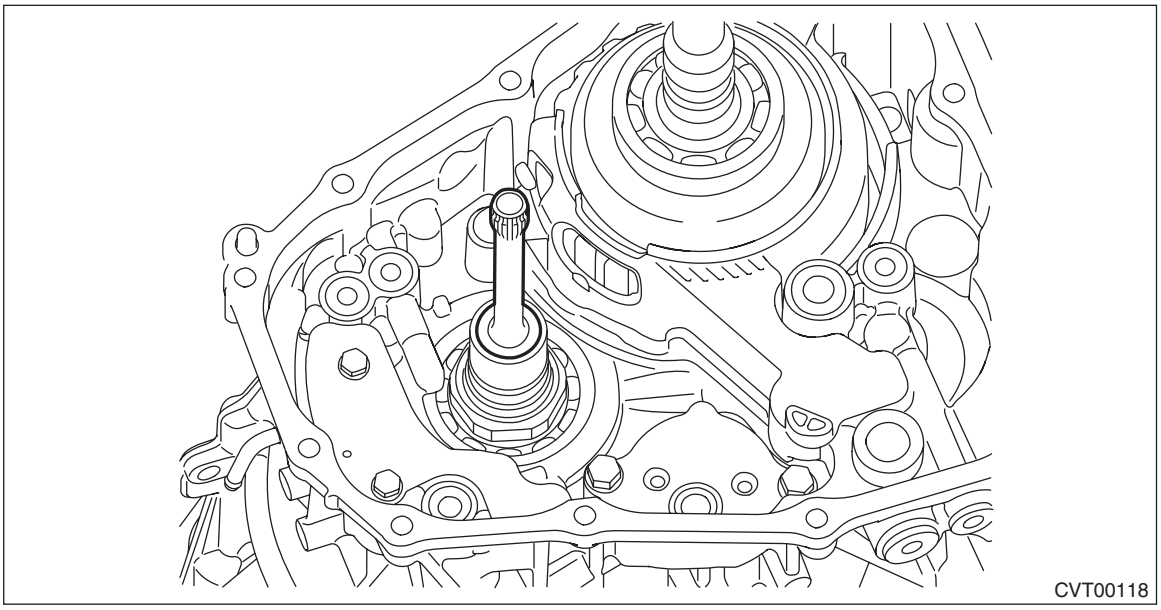

4) Apply liquid gasket to the transmission case seamlessly.

Liquid gasket:
THREE BOND 1215 (Part No. 004403007) or equivalent

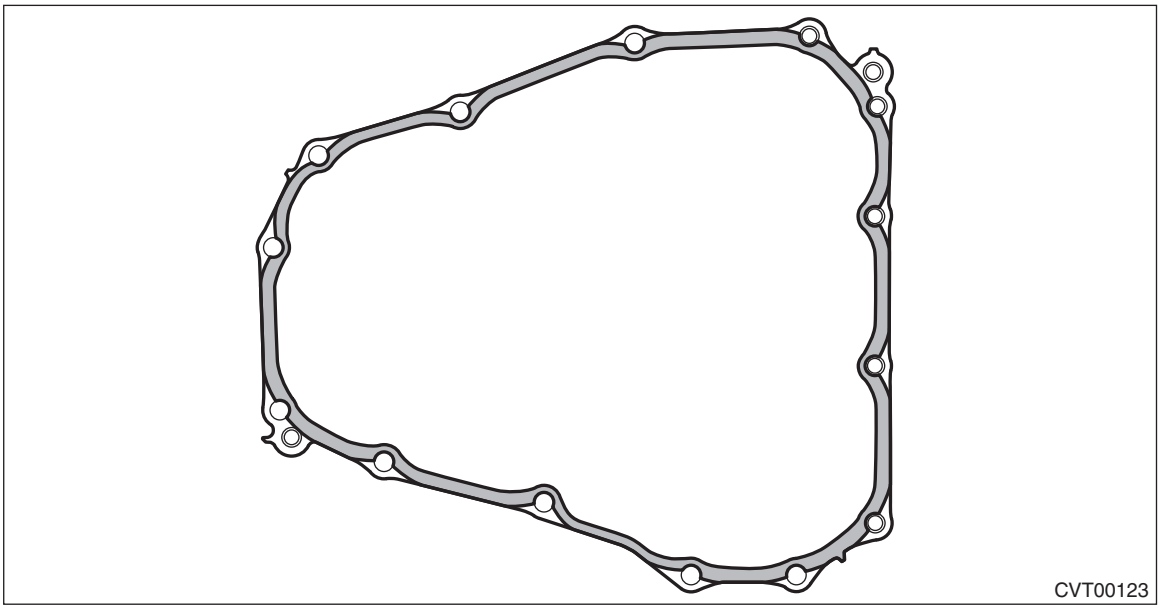

5) Install the drive motor assembly.

CAUTION:
Do not apply excessive force or damage the electric oil pump harness.

NOTE:
- The total number of drive motor assembly mounting bolts is 14.
- Perform this operation with two persons.

Tightening torque:
25 N·m (2.5 kgf-m, 18.4 ft-lb)

6) Install the front wheel speed sensor harness connector.

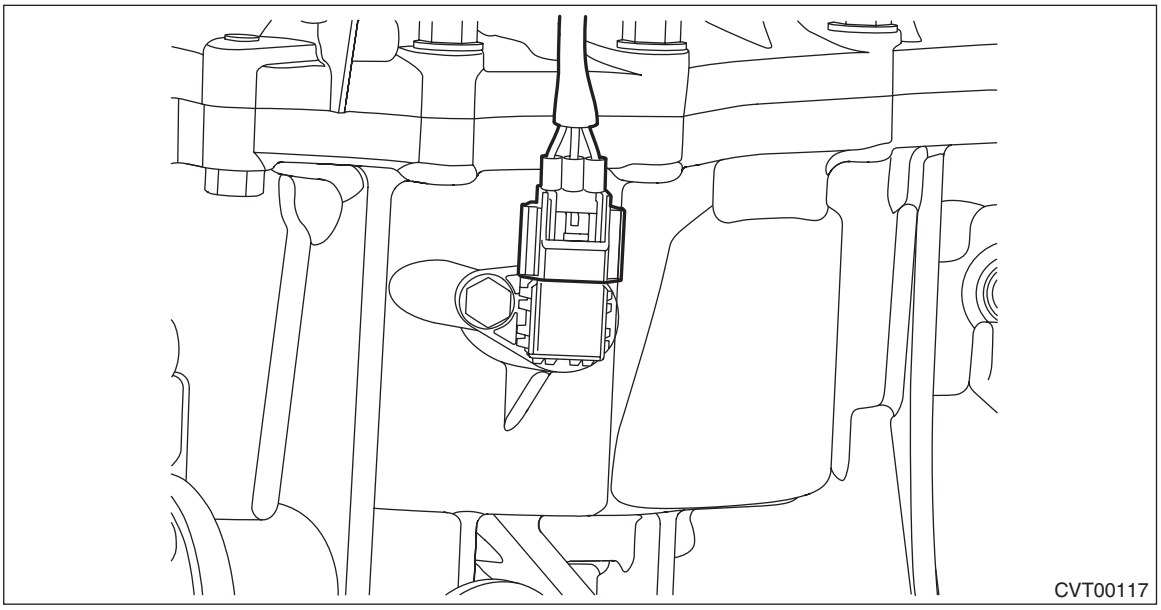

7) Install the harness bracket to the harness clip, then install the air breather hose, electric oil pump harness, harness bracket and ground terminal.

CAUTION:
When installing the electric oil pump harness, be careful not to twist the harness by 360°.

Tightening torque:
8 N·m (0.8 kgf-m, 13.3 ft-lb)

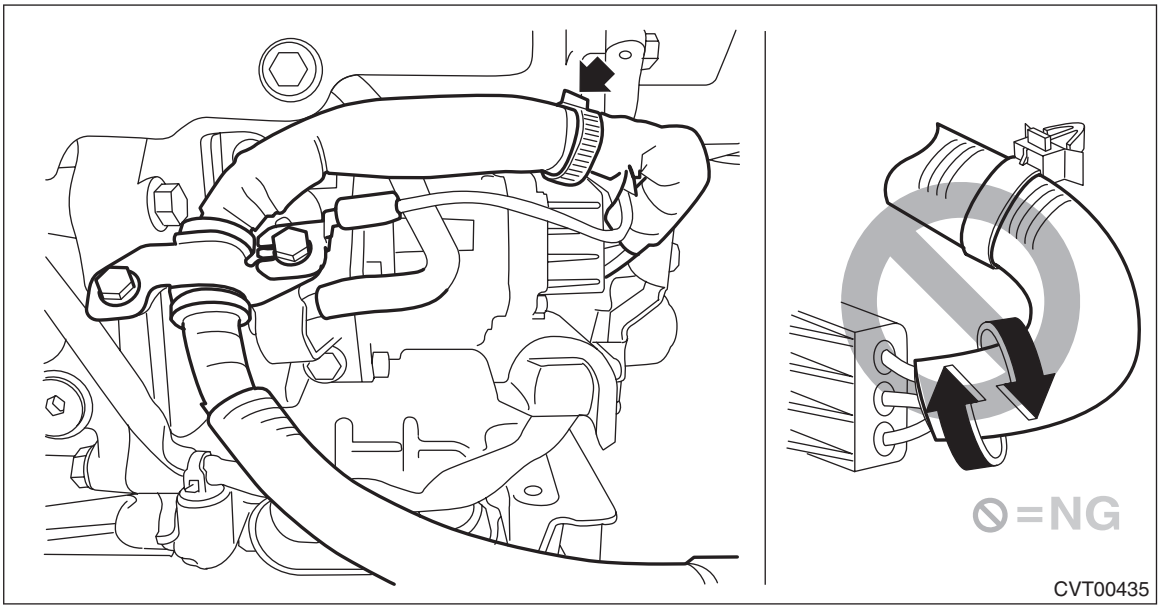

8) Install the oil spacer.

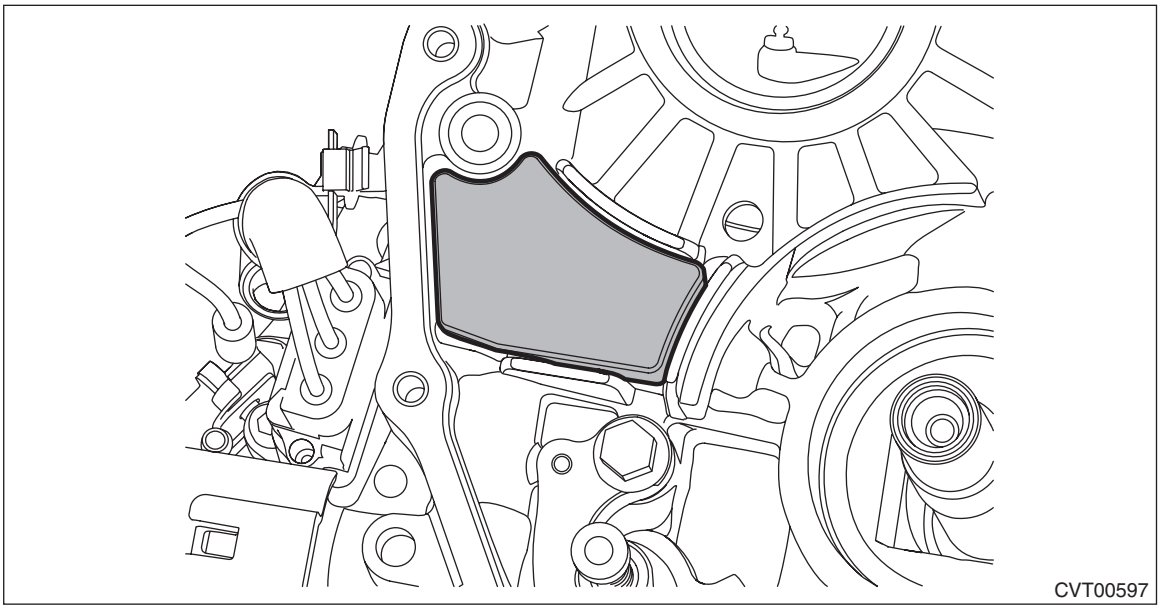

9) Install the drive motor harness clip, and then install the drive motor harness connector to the stay.

NOTE:
Install the drive motor harness through the lower side of air breather hose and the transmission harness.

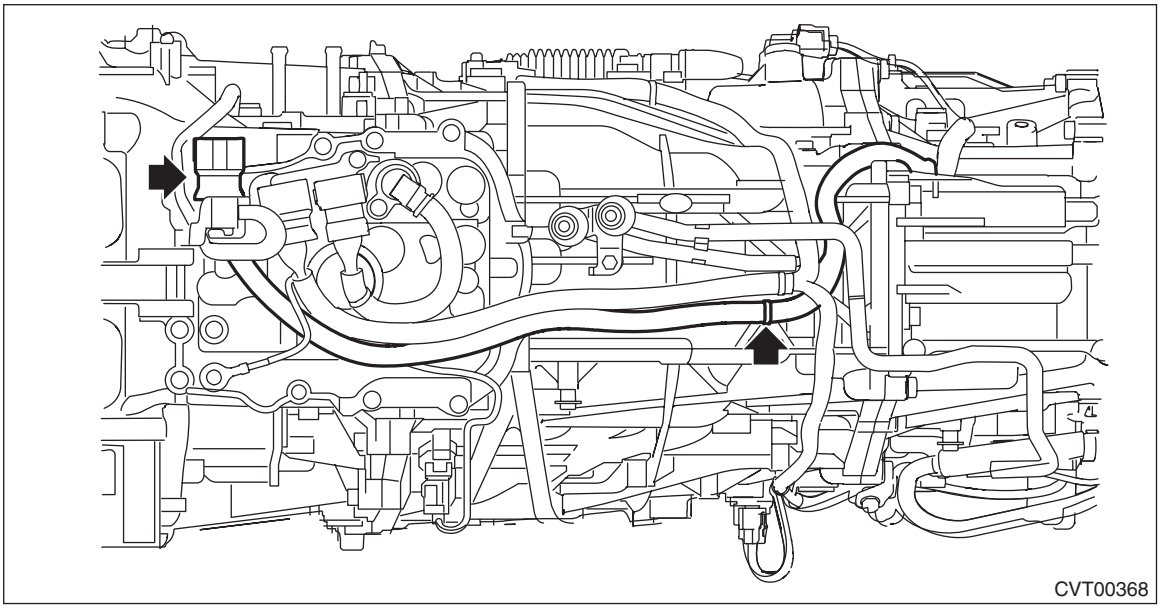

10) Install the transmission control device. <Ref. to CVT(TH58A)-211, INSTALLATION, Transmission Control Device.>
11) Install the parking pawl. <Ref. to CVT(TH58A)-206, INSTALLATION, Parking Pawl.>
12) Install the transfer drive gear assembly. <Ref. to CVT(TH58A)-200, INSTALLATION, Transfer Drive Gear.>
13) Install the transfer driven gear assembly. <Ref. to CVT(TH58A)-198, INSTALLATION, Transfer Driven Gear.>
14) Install the transfer clutch assembly. <Ref. to CVT(TH58A)-185, INSTALLATION, Transfer Clutch.>
15) Install the extension case. <Ref. to CVT(TH58A)-180, INSTALLATION, Extension Case.>
16) Install the secondary pressure sensor harness connector, and then install the harness clip. <Ref. to CVT(TH58A)-149, INSTALLATION, Transmission Harness.>
17) Install the sensor cover. <Ref. to CVT(TH58A)-149, INSTALLATION, Transmission Harness.>
18) Install the transmission assembly to the vehicle. <Ref. to CVT(TH58A)-76, INSTALLATION, Automatic Transmission Assembly.>

C: DISASSEMBLY

CAUTION:
For disassembly, follow the instructions in this manual. Do not disassemble other than the specified parts.

1) Remove the electric oil pump. <Ref. to CVT(TH58A)-132, REMOVAL, Electric Fluid Pump.>
2) Remove the output clutch control valve body. <Ref. to CVT(TH58A)-119, OUTPUT CLUTCH CONTROL VALVE BODY, REMOVAL, Control Valve Body.>
3) Remove the power connect cover, if mounted.
4) Remove the secondary pressure sensor. <Ref. to CVT(TH58A)-109, REMOVAL, Secondary Pressure Sensor.>
5) Remove all plugs.

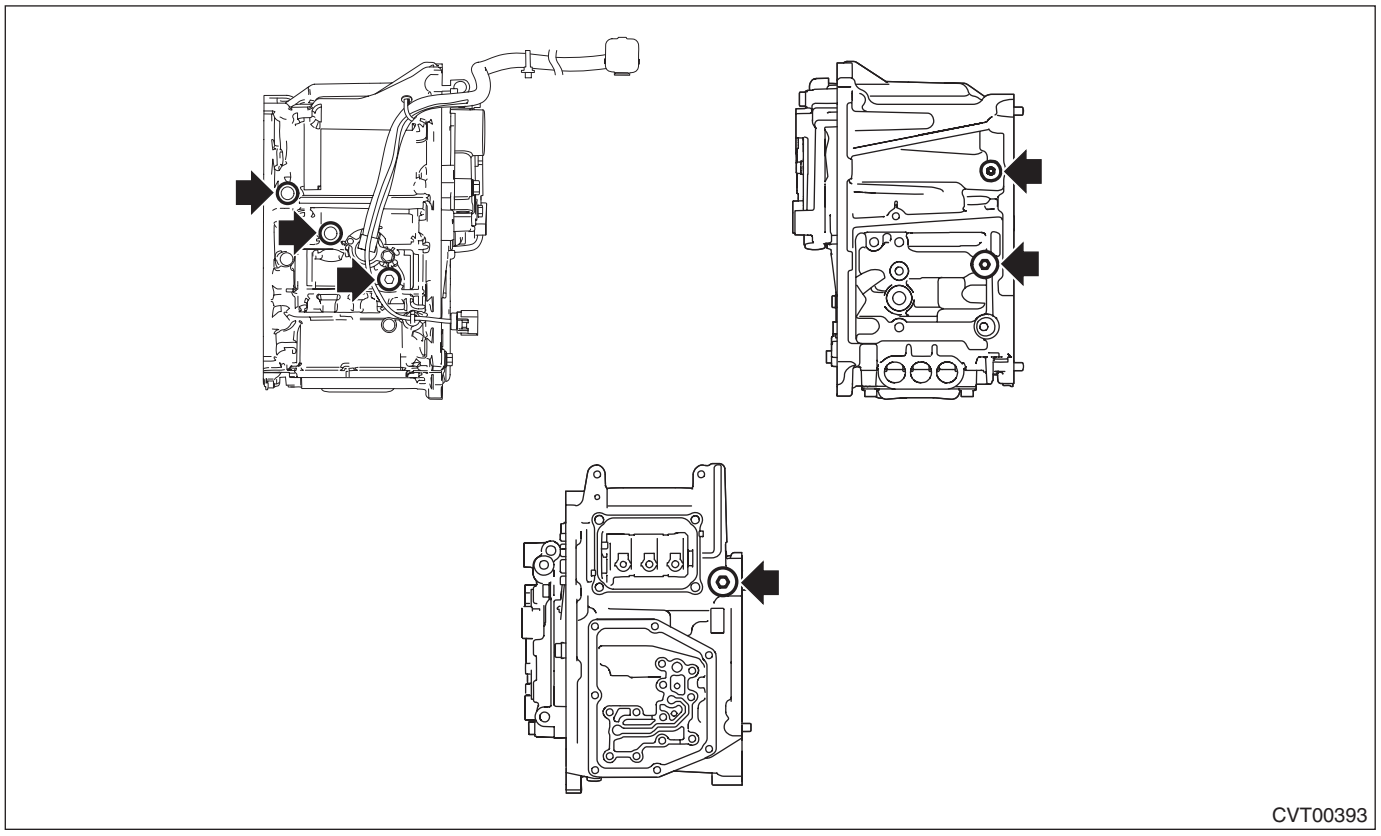

D: ASSEMBLY

1) Install all plugs.

NOTE:
- Use new O-rings.
- Apply CVTF to the O-rings.

Tightening torque:
T1: 25 N·m (2.5 kgf-m, 18.4 ft-lb)
T2: 50 N·m (5.1 kgf-m, 36.9 ft-lb)

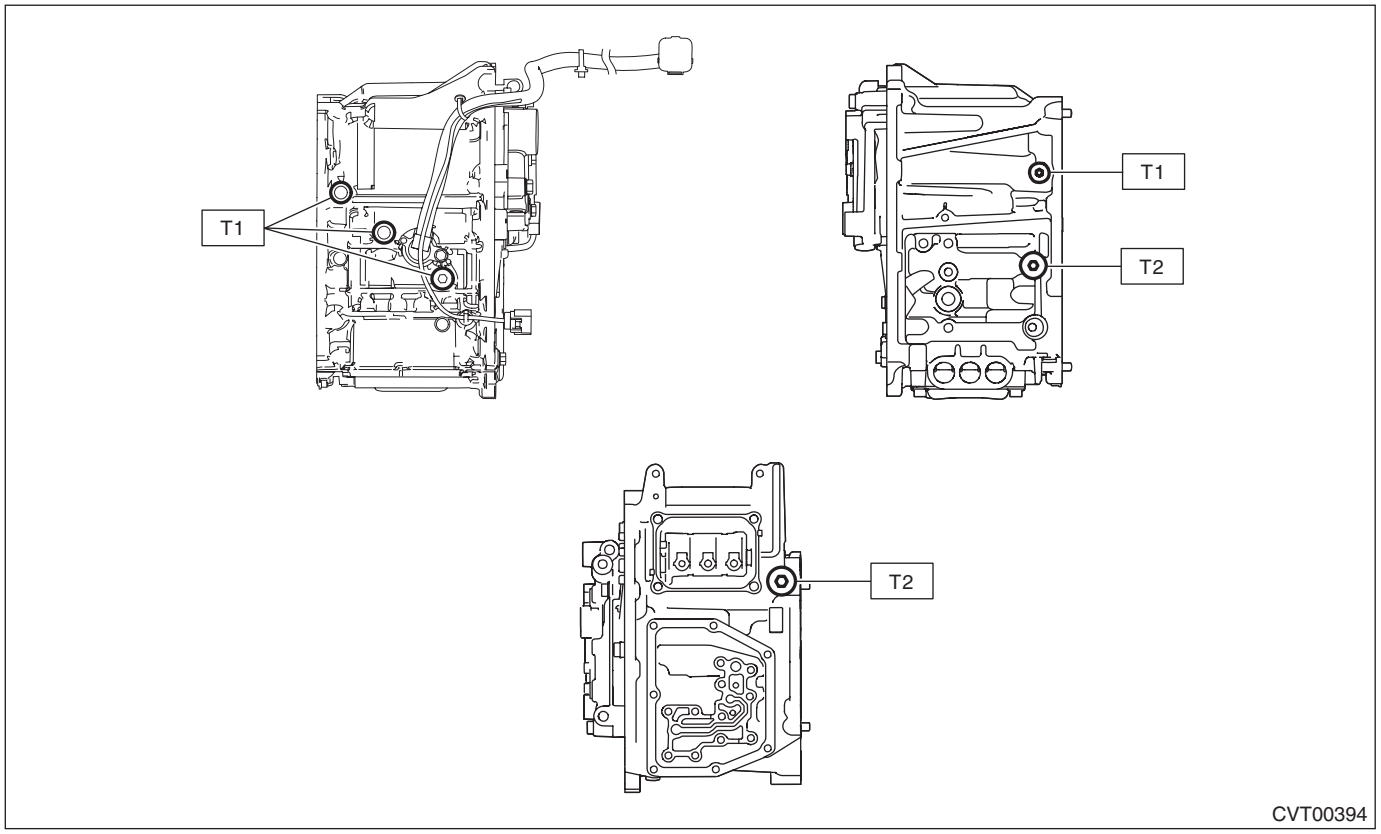

2) Install the secondary pressure sensor. <Ref. to CVT(TH58A)-110, INSTALLATION, Secondary Pressure Sensor.>
3) Temporarily attach the power connect cover.
4) Install the output clutch control valve body. <Ref. to CVT(TH58A)-119, OUTPUT CLUTCH CONTROL VALVE BODY, REMOVAL, Control Valve Body.>
5) Install the electric oil pump. <Ref. to CVT(TH58A)-136, INSTALLATION, Electric Fluid Pump.>

E: INSPECTION

- Check there is no damage or cracks on the drive motor assembly case and other parts.
- Check there is no leak of CVTF from the joint between drive motor assembly case and transmission case.

F: ADJUSTMENT

NOTE:
When replacing the drive motor assembly with a new part, perform the following check and adjustment for the selection.
- Select the transfer driven gear shim. <Ref. to CVT(TH58A)-194, ADJUSTMENT, Transfer Clutch.>
- Select the transfer drive gear shim. <Ref. to CVT(TH58A)-203, ADJUSTMENT, Transfer Drive Gear.>
- Select the reduction driven gear shim. <Ref. to CVT(TH58A)-241, ADJUSTMENT, Output Clutch Assembly.>

39.Output Clutch Assembly

A: REMOVAL

1) Remove the transmission assembly from the vehicle. <Ref. to CVT(TH58A)-62, REMOVAL, Automatic Transmission Assembly.>
2) Remove the sensor cover. <Ref. to CVT(TH58A)-141, REMOVAL, Transmission Harness.>
3) Remove the secondary pressure sensor harness connector, and remove the harness clip. <Ref. to CVT(TH58A)-141, REMOVAL, Transmission Harness.>
4) Remove the extension case. <Ref. to CVT(TH58A)-179, REMOVAL, Extension Case.>
5) Remove the transfer clutch assembly. <Ref. to CVT(TH58A)-183, REMOVAL, Transfer Clutch.>
6) Remove the transfer driven gear assembly. <Ref. to CVT(TH58A)-197, REMOVAL, Transfer Driven Gear.>
7) Remove the transfer drive gear assembly. <Ref. to CVT(TH58A)-200, REMOVAL, Transfer Drive Gear.>
8) Remove the parking pawl. <Ref. to CVT(TH58A)-205, REMOVAL, Parking Pawl.>
9) Remove the transmission control device. <Ref. to CVT(TH58A)-208, REMOVAL, Transmission Control Device.>
10) Remove the drive motor assembly. <Ref. to CVT(TH58A)-215, REMOVAL, Drive Motor Assembly.>
11) Remove the front wheel speed sensor. <Ref. to CVT(TH58A)-107, REMOVAL, Front Wheel Speed Sensor.>
12) Remove the oil baffle.

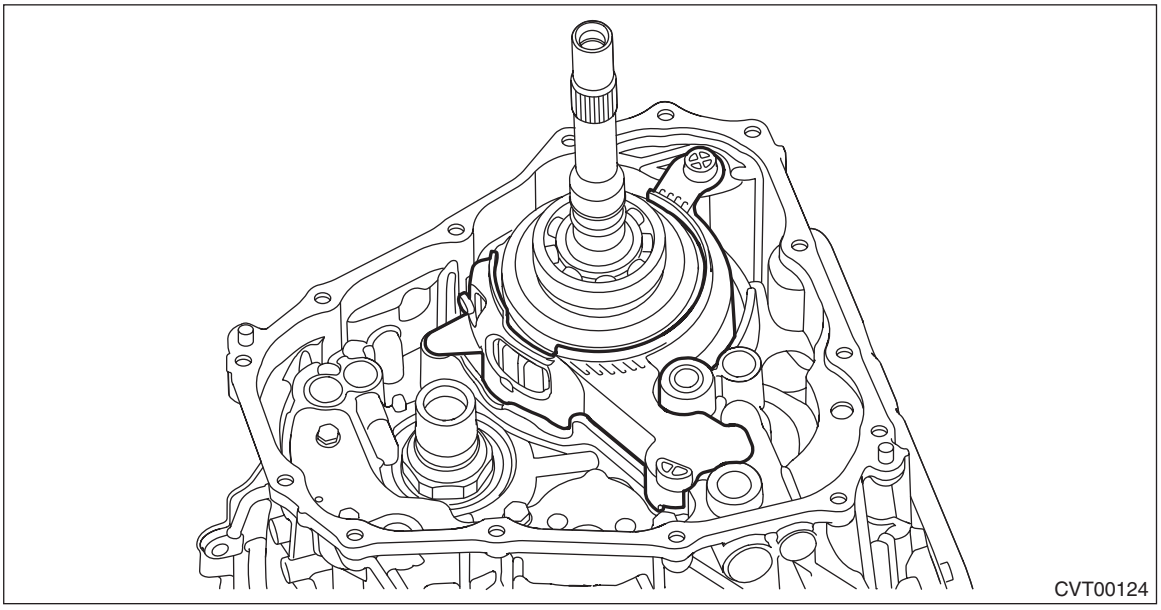

13) Remove the output clutch assembly.

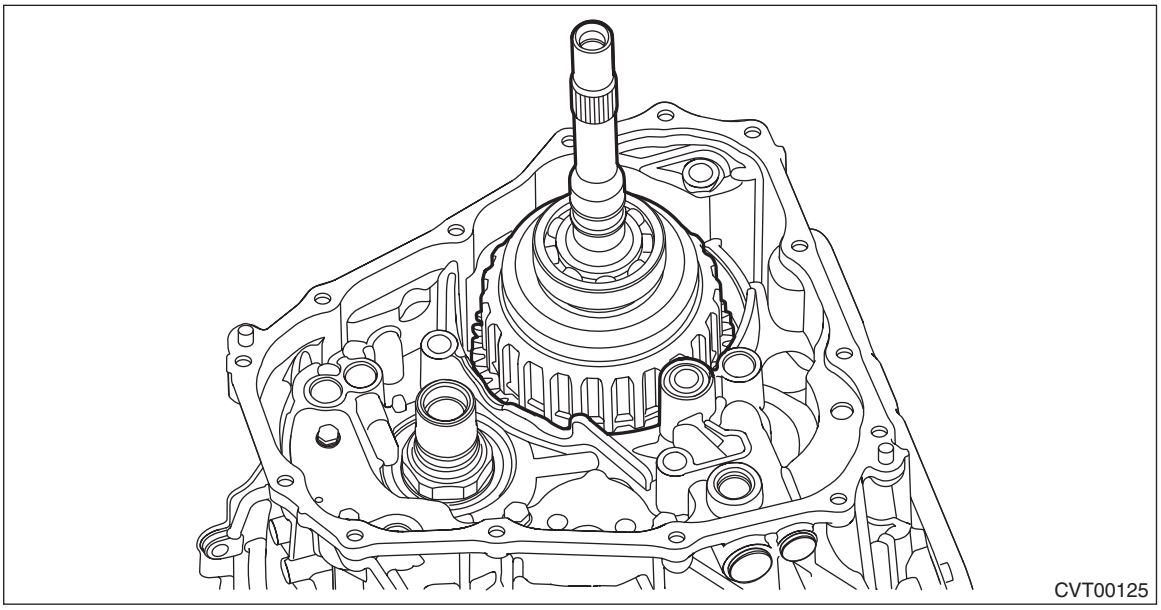

B: INSTALLATION

1) Install the output clutch assembly.

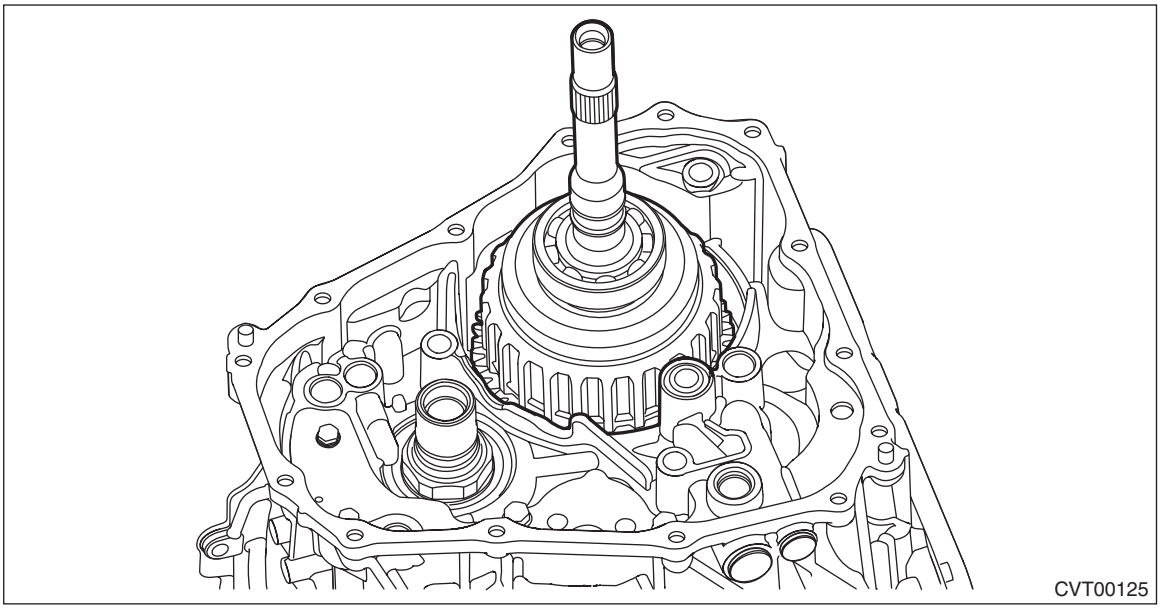

2) Select the reduction driven gear shim. <Ref. to CVT(TH58A)-241, ADJUSTMENT, Output Clutch Assembly.>
3) Attach the selected reduction driven gear shim to drive motor assembly with vaseline.

4) Install the oil baffle.

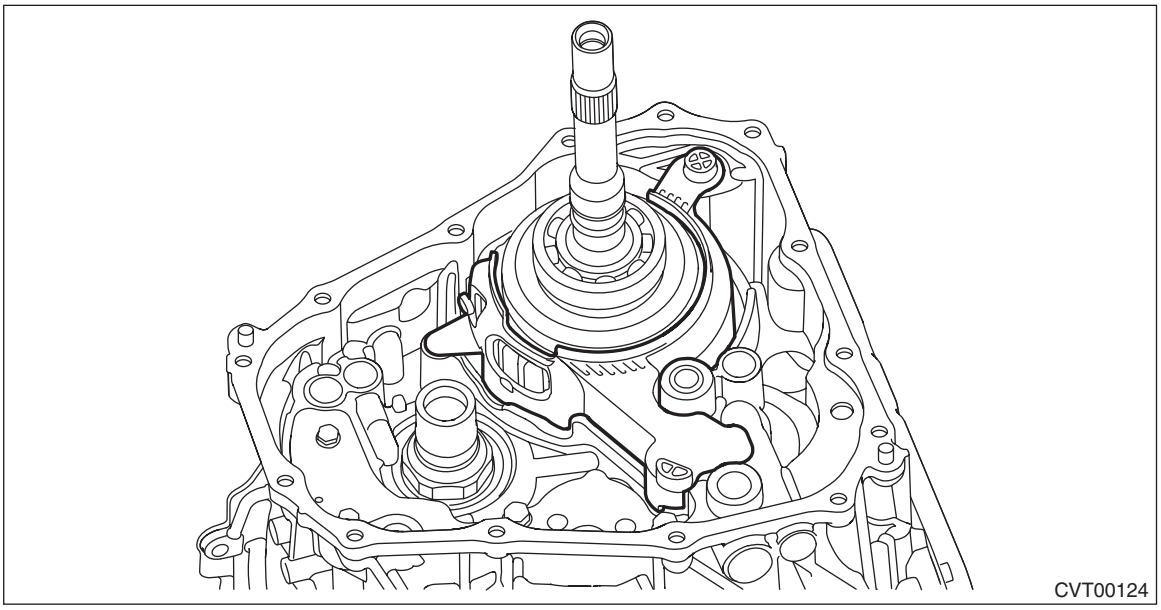

5) Install the front wheel speed sensor. <Ref. to CVT(TH58A)-107, REMOVAL, Front Wheel Speed Sensor.>
6) Install the drive motor assembly. <Ref. to CVT(TH58A)-219, INSTALLATION, Drive Motor Assembly.>
7) Install the transmission control device. <Ref. to CVT(TH58A)-211, INSTALLATION, Transmission Control Device.>
8) Install the parking pawl. <Ref. to CVT(TH58A)-206, INSTALLATION, Parking Pawl.>
9) Install the transfer drive gear. <Ref. to CVT(TH58A)-200, INSTALLATION, Transfer Drive Gear.>
10) Install the transfer driven gear assembly. <Ref. to CVT(TH58A)-198, INSTALLATION, Transfer Driven Gear.>
11) Install the extension case. <Ref. to CVT(TH58A)-180, INSTALLATION, Extension Case.>
12) Install the secondary pressure sensor harness connector, and then install the harness clip. <Ref. to CVT(TH58A)-149, INSTALLATION, Transmission Harness.>
13) Install the sensor cover. <Ref. to CVT(TH58A)-149, INSTALLATION, Transmission Harness.>
14) Install the transmission assembly to the vehicle. <Ref. to CVT(TH58A)-76, INSTALLATION, Automatic Transmission Assembly.>

C: DISASSEMBLY

1) Remove the snap ring.

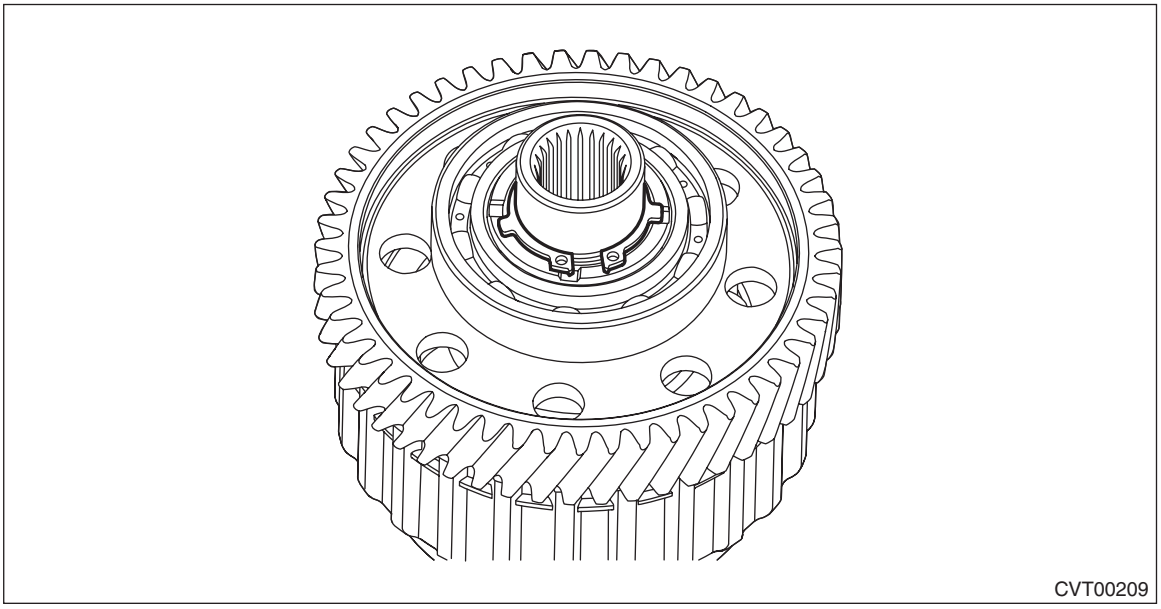

2) Remove the reduction driven gear assembly needle bearing and reduction driven gear bushing.

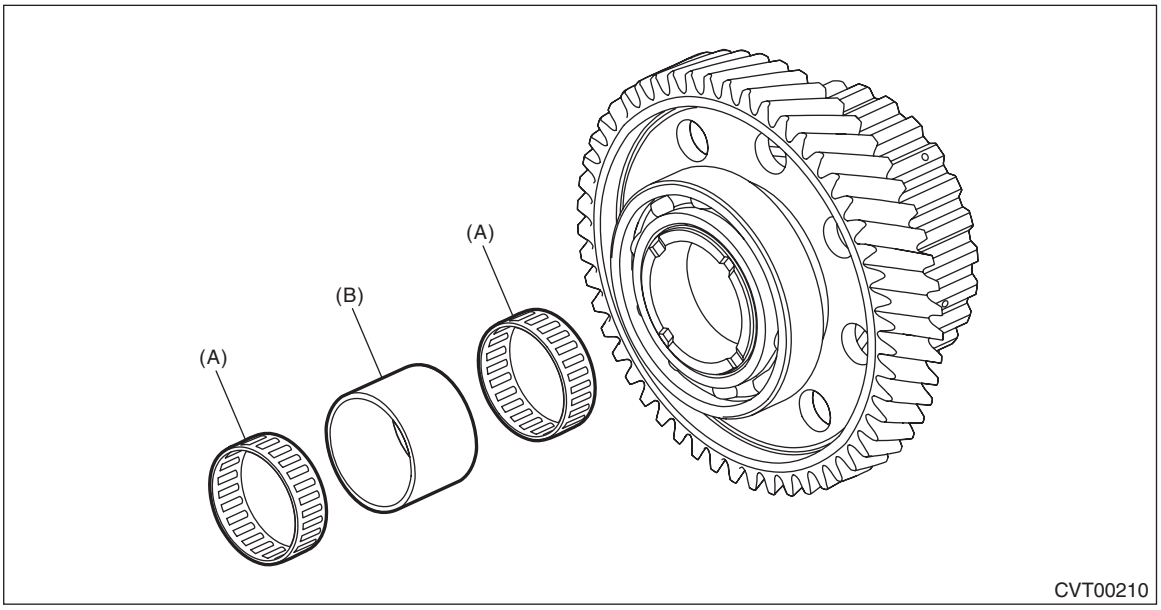

(A) Needle bearing
(B) Reduction driven gear bushing

3) Remove the thrust bearing and thrust washer.

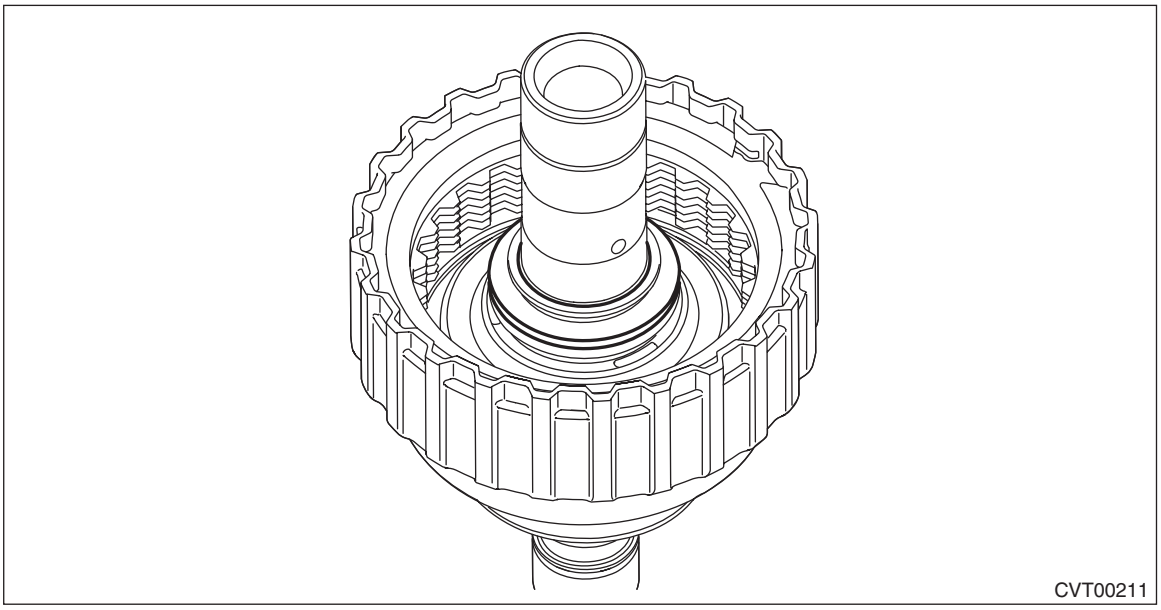

4) Remove the snap ring.

5) Remove the retaining plate, drive plate, driven plate and dish plate.

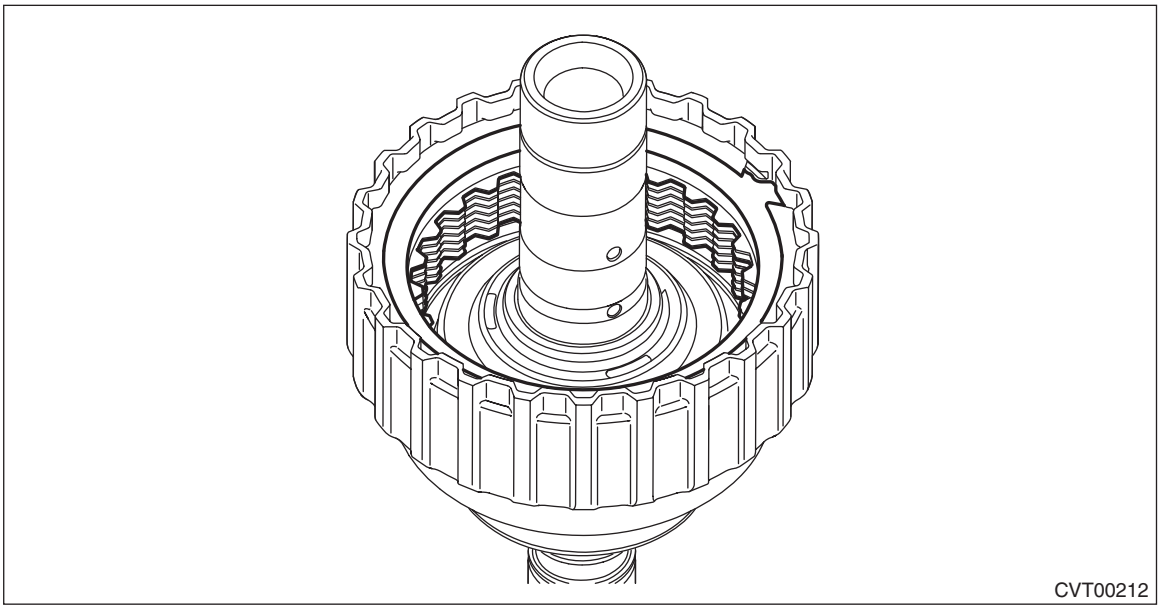

6) Compress the return spring using the ST to remove the snap ring.
ST1 18769AA010 COMPRESSOR SPECIAL TOOL
ST2 398673600 COMPRESSOR

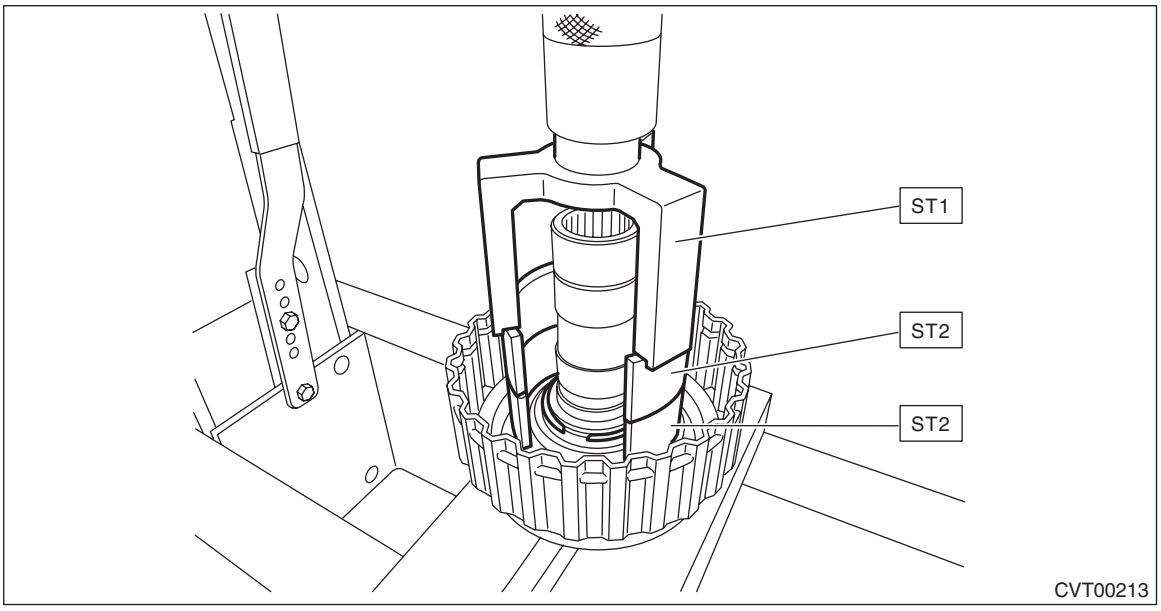

7) Remove the chamber COMPL and snap ring.

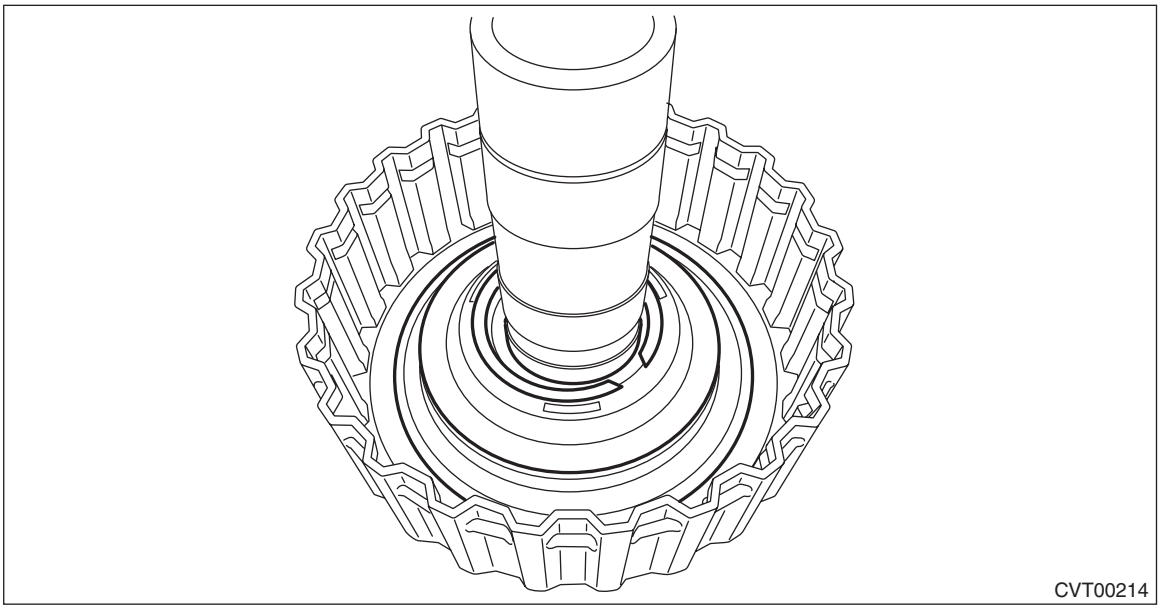
CVT00214

8) Remove the return spring.

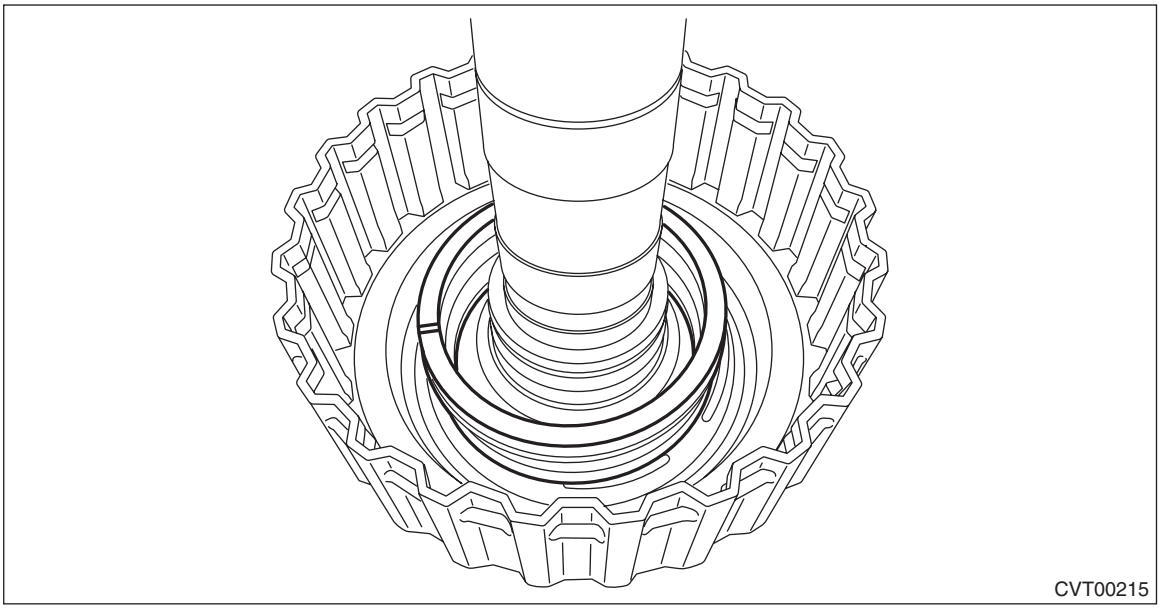
CVT00215

9) Remove the clutch piston by blowing compressed air intermittently from the shaft hole.

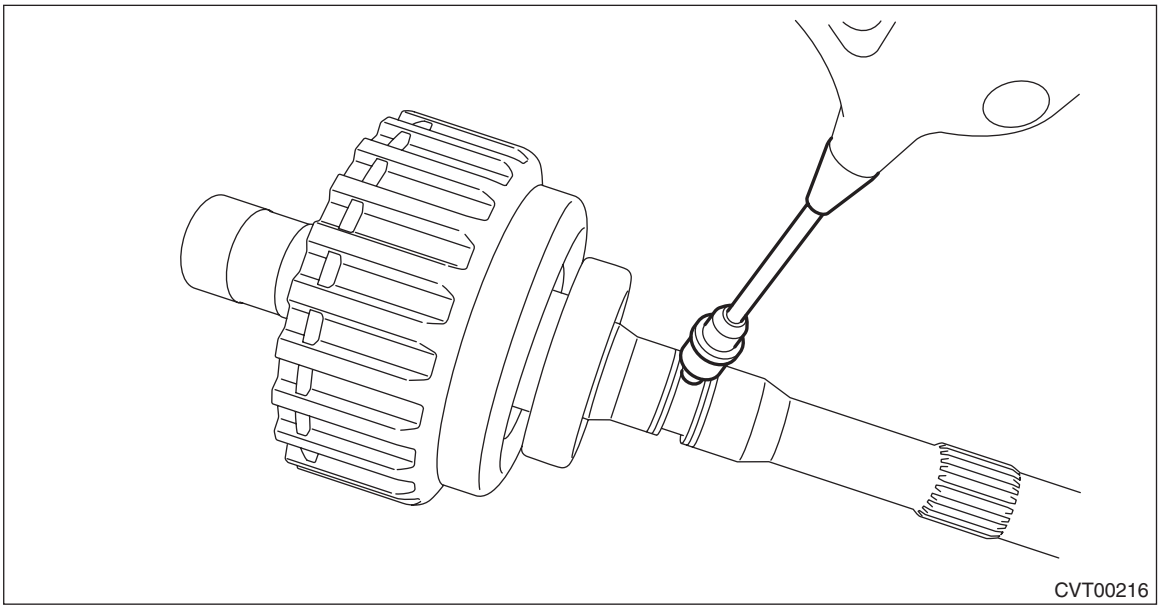
CVT00216

10) Using a round bar with diameter of 5 mm (0.2 in), remove the oil pipe assembly.

NOTE:
Apply vinyl tape to the tip of round bar.

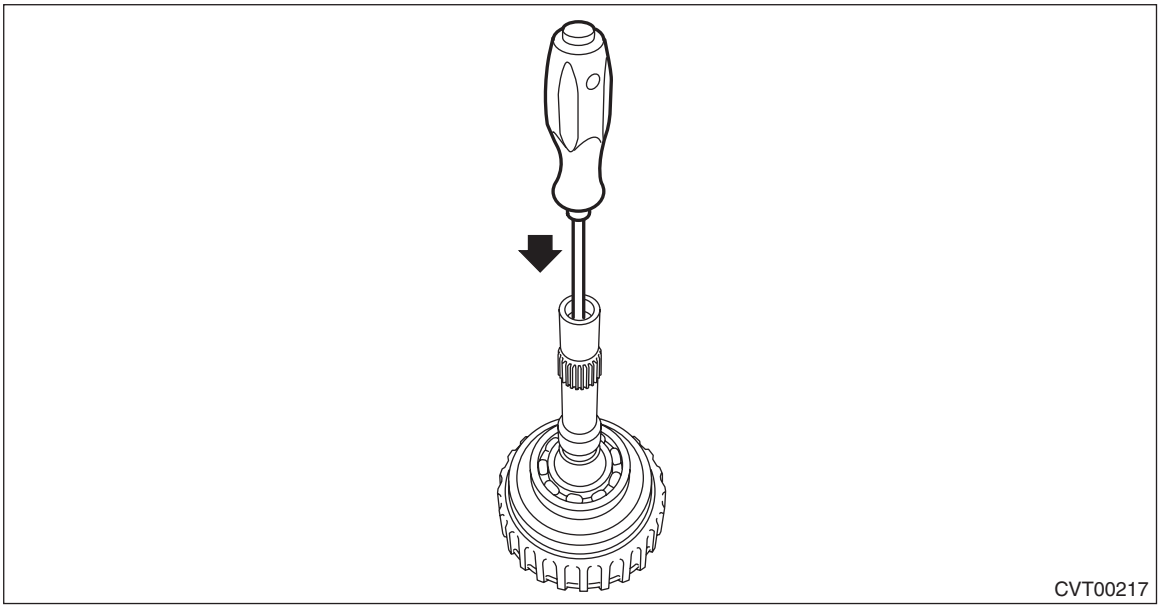
CVT00217

11) Remove the O-ring from the oil pipe assembly.

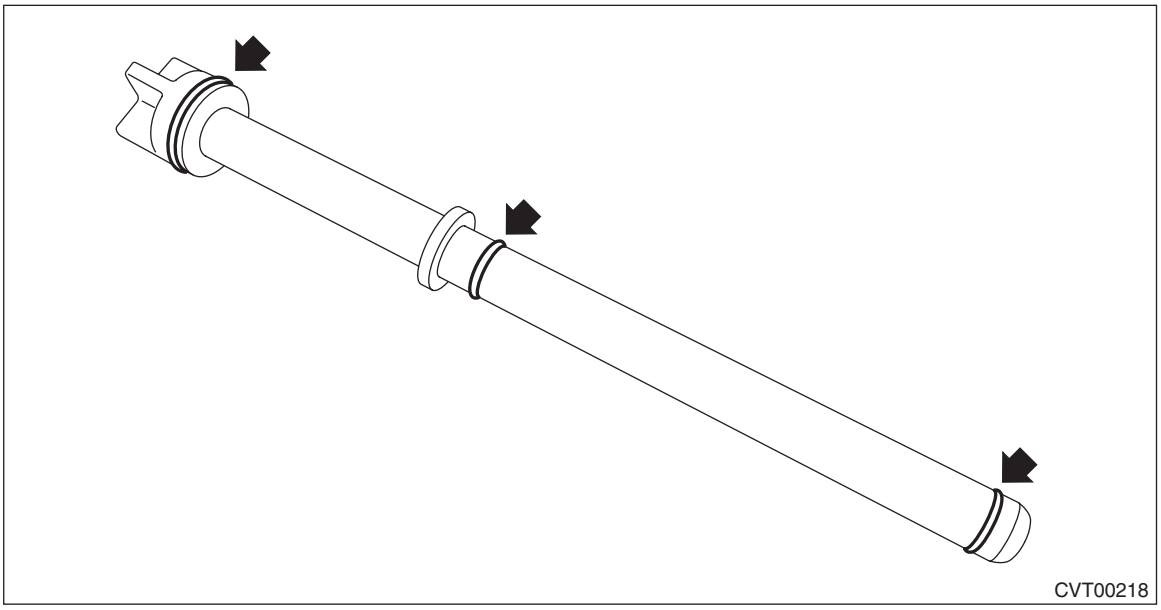

12) Remove the ball bearing using ST.
ST 498077300 REMOVER

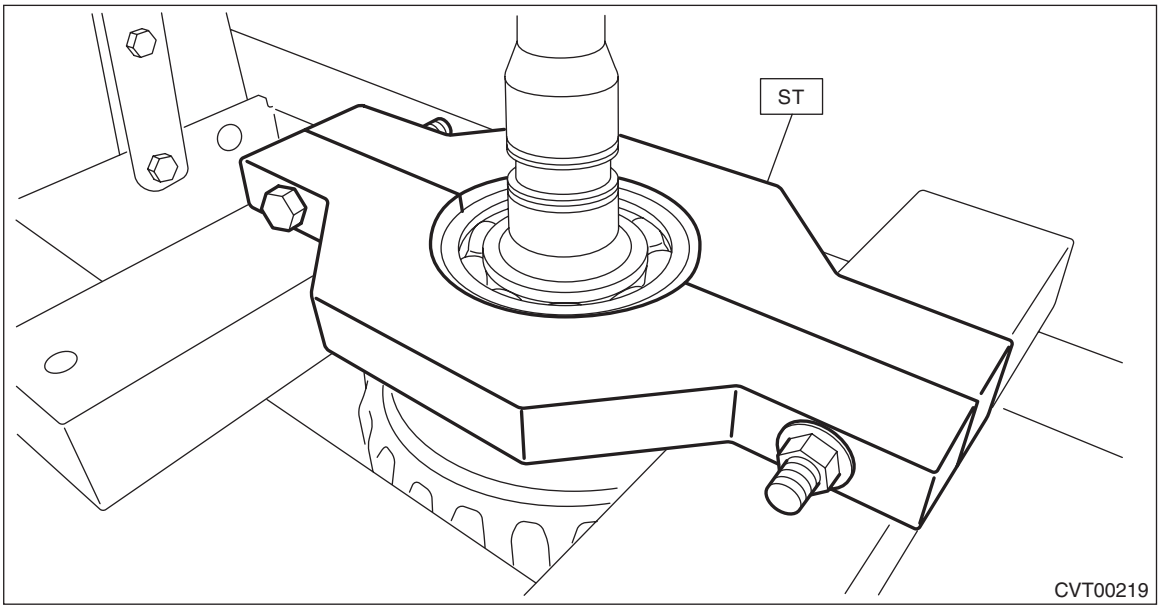

D: ASSEMBLY

1) Using the ST, install the ball bearing.
ST1 499277100 BUSHING 1-2 INSTALLER
ST2 398497701 SEAT

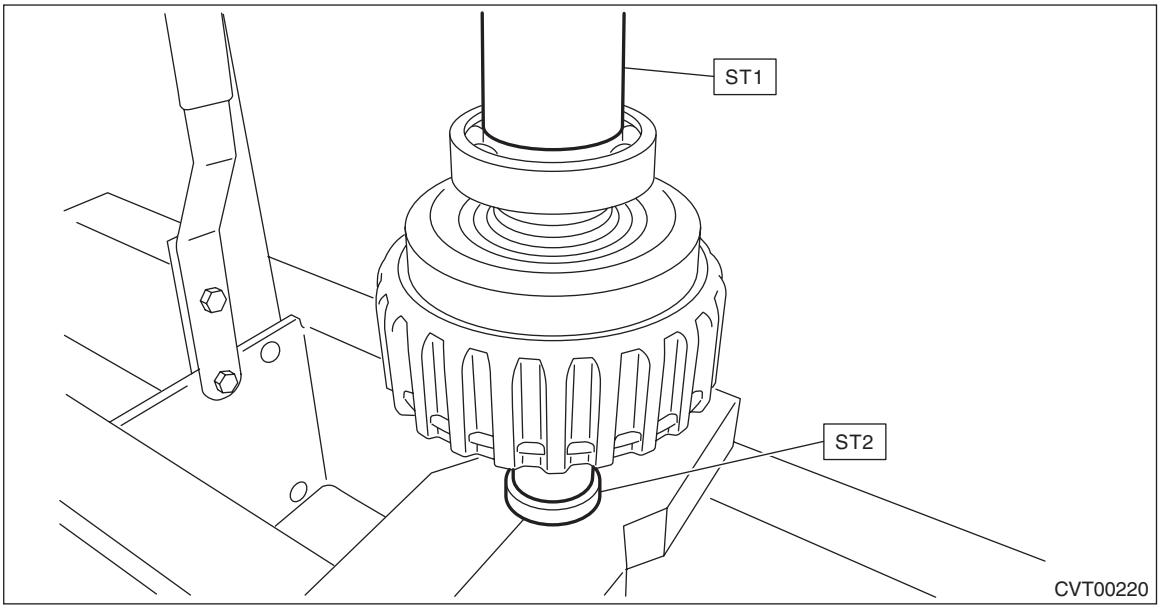

2) Install the O-ring to the oil pipe assembly.

NOTE:
- Use new O-rings.
- Apply CVTF to the O-ring.

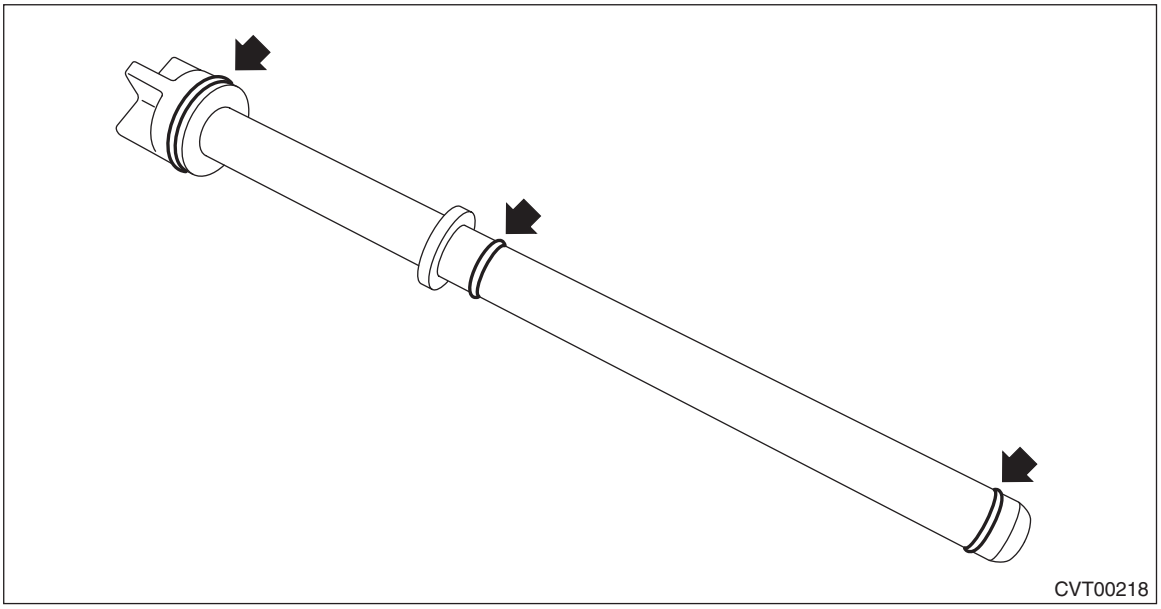

3) Insert the oil pipe assembly into the shaft, and press into the end.

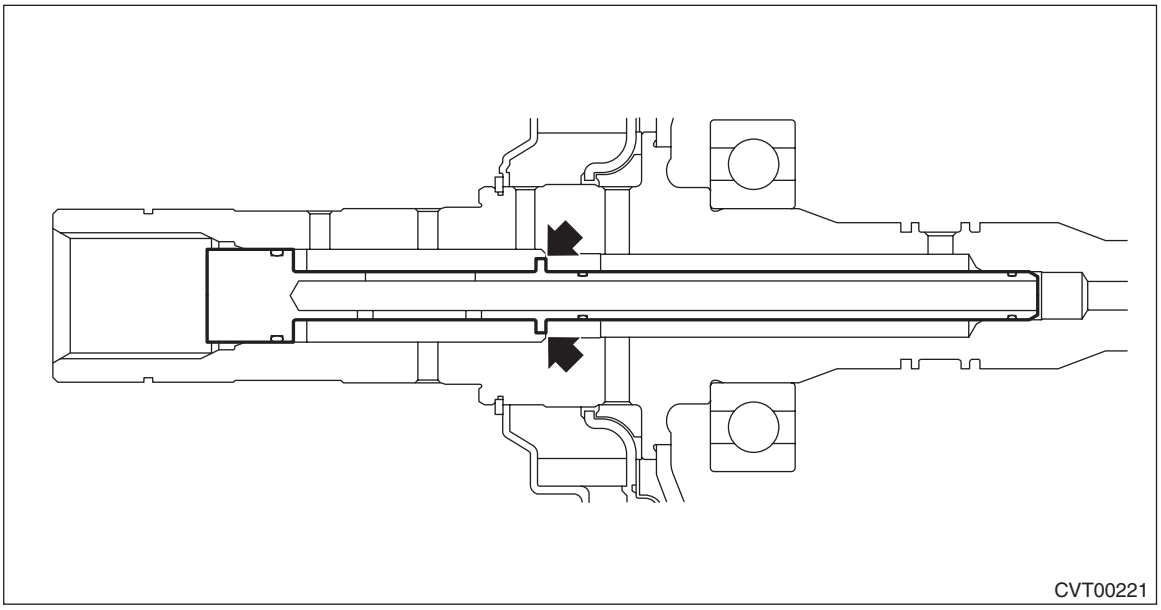
CVT00221

4) Install the output clutch piston to the clutch drum.

NOTE:
- Apply CVTF to the sealing area of the output clutch piston.
- Insert it all the way to the end.

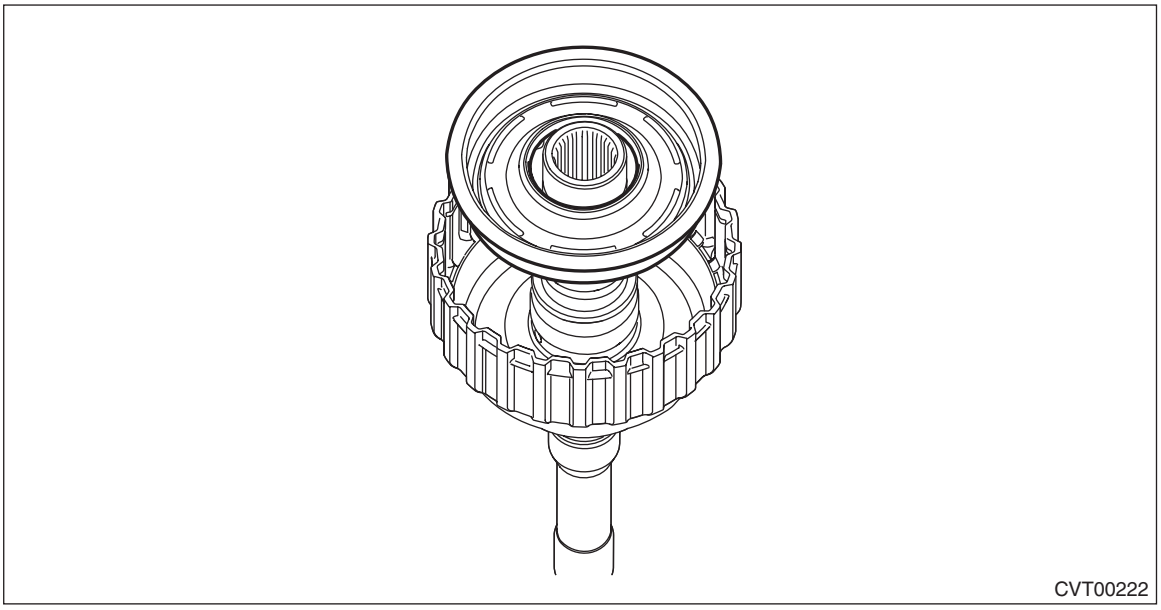
CVT00222

5) Install the return spring.

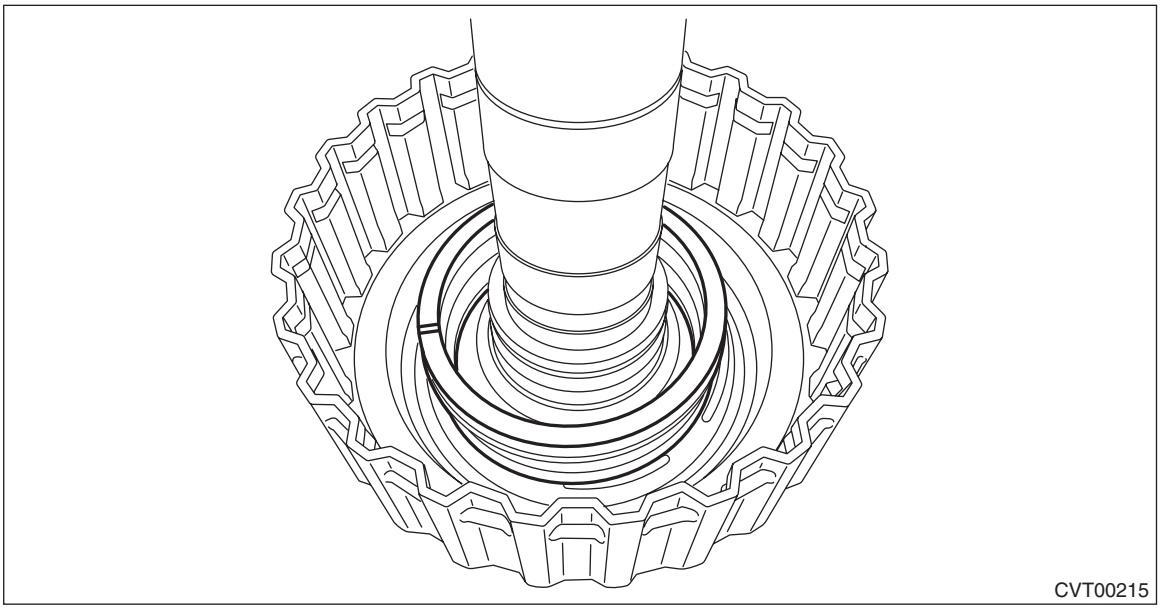
CVT00215

6) Install the chamber COMPL and snap ring.

NOTE:
Apply CVTF to the sealing area of chamber COMPL.

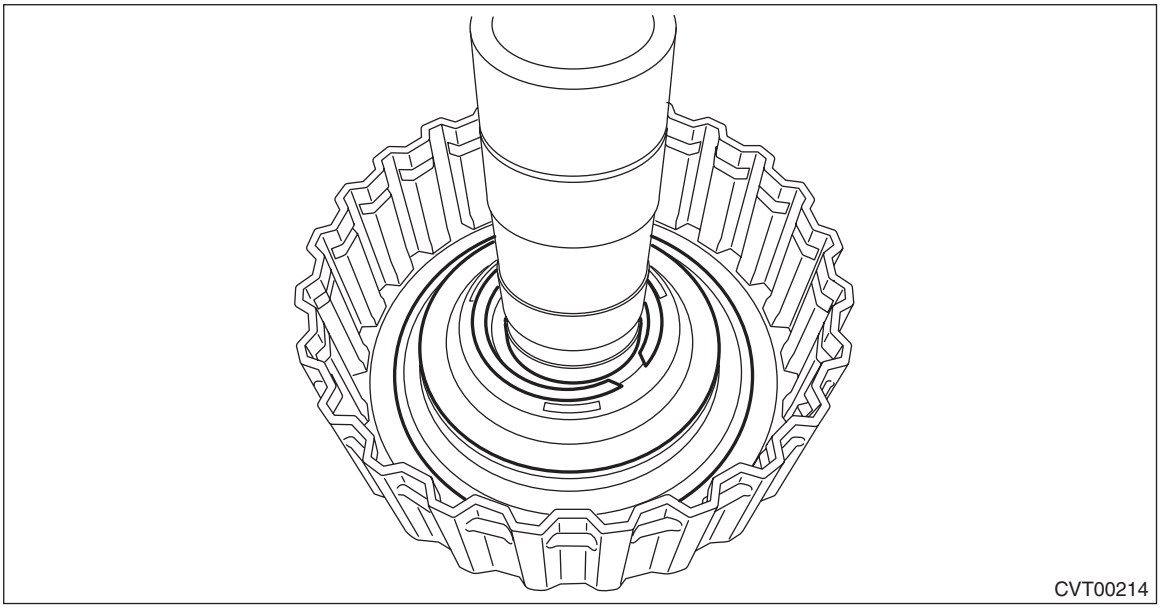
CVT00214

7) Compress the return spring using the ST to install the snap ring.
ST1 18769AA010 COMPRESSOR SPECIAL TOOL
ST2 398673600 COMPRESSOR

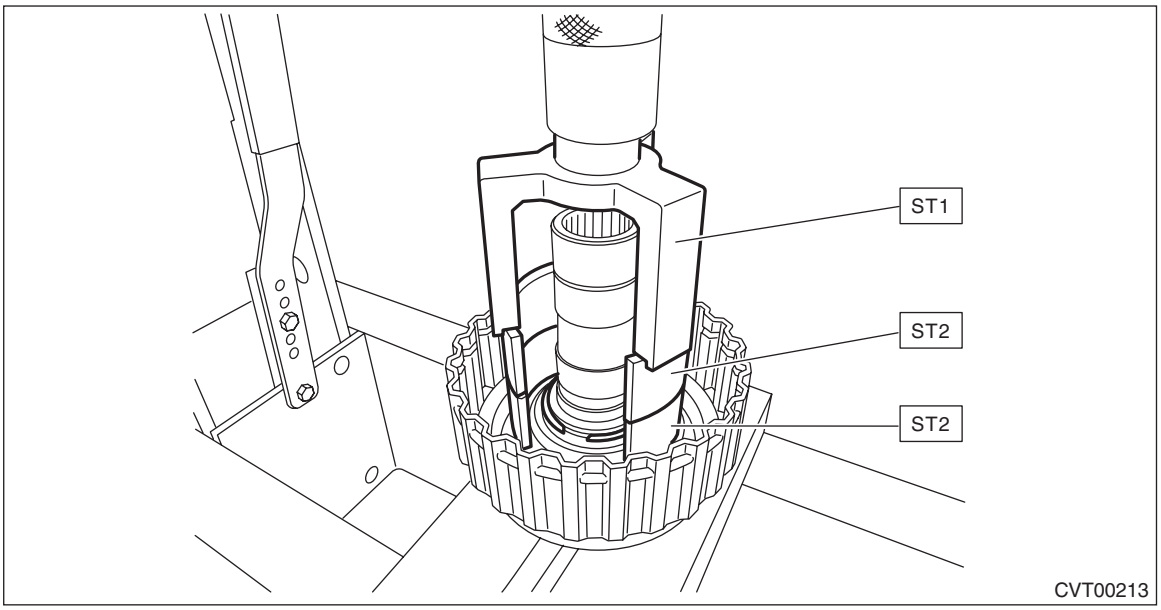

8) Check the operation of clutch piston by blowing compressed air intermittently from the shaft hole.

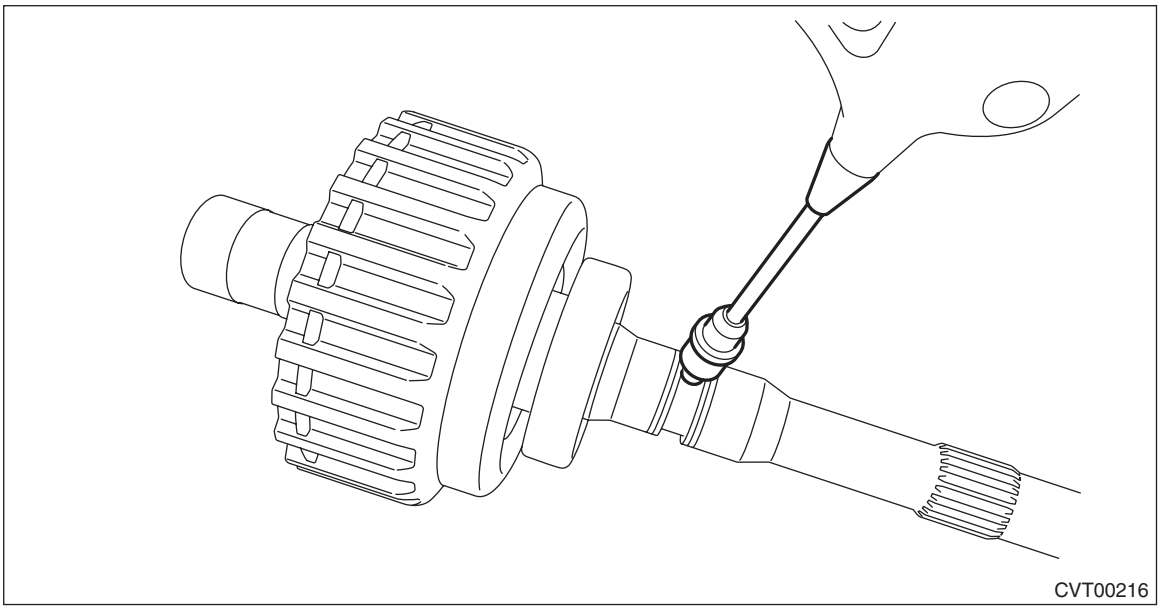

9) Place the driven plate, drive plate and retaining plate neatly in this order on surface table.
10) Set the dial gauge to retaining plate, and read its scale.

NOTE:
The value, which is read in the gauge at this time, is zero point.
11) Scale and record the weight “Z” of a flat board which will be put on retaining plate.

NOTE:
- Use a stiff board which does not bend against load as a flat board to be put on retaining plate.
- Use a flat board weighing less than 135 N (13.8 kgf, 30.4 lb).

12) Put the flat board on retaining plate.

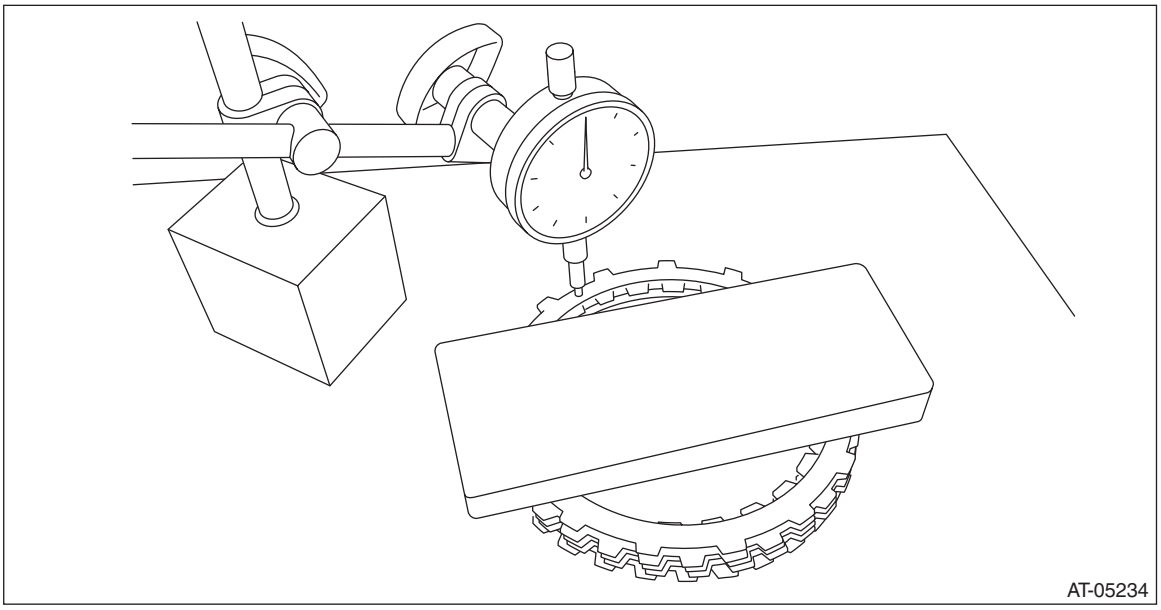

13) Using the following formula, read the push/pull gauge, and calculate “N”.
N = 135 — 162 N (13.8 — 16.5 kgf, 30.4 — 36.4 lb) – Z
135 — 162 N (13.8 — 16.5 kgf, 30.4 — 36.4 lb): Load on the clutch plate
Z: Flat board weight
14) Press the center of retaining plate by applying a force of “N” using push/pull gauge, and then measure and record the compression amount “A”.

NOTE:
Measure at four points with a 90° interval and calculate the average.

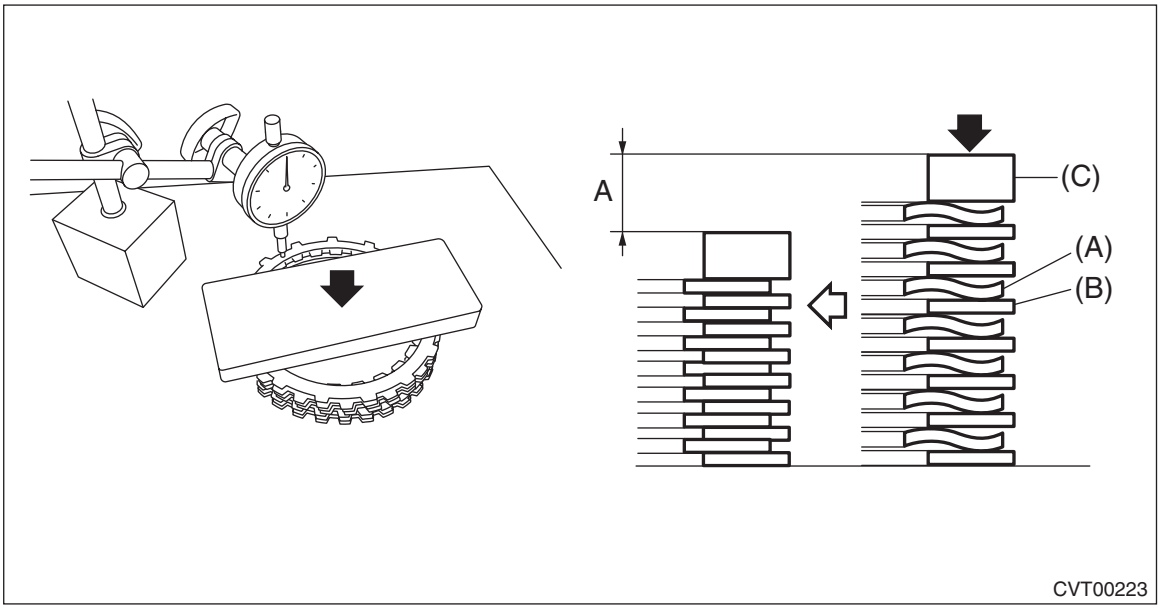

(A) Drive plate
(B) Driven plate
(C) Retaining plate

15) Install the dish plate, drive plate, driven plate, retaining plate and snap ring to the driven shaft.

NOTE:
Install the dish plate in the correct direction.

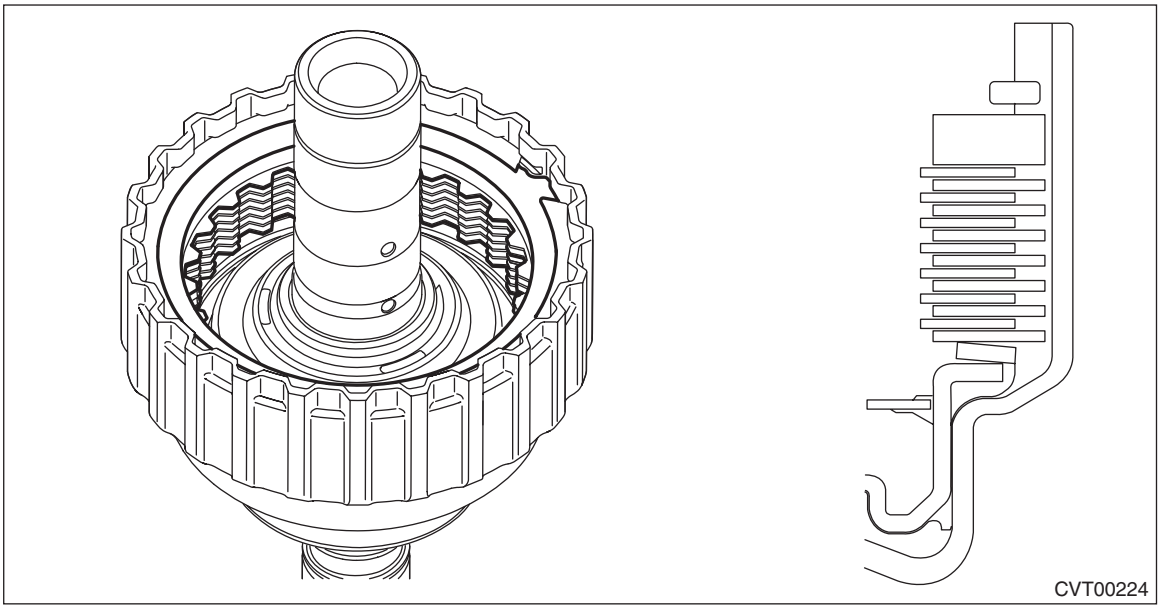

16) Measure and record the clearance “B” between the retaining plate and snap ring.

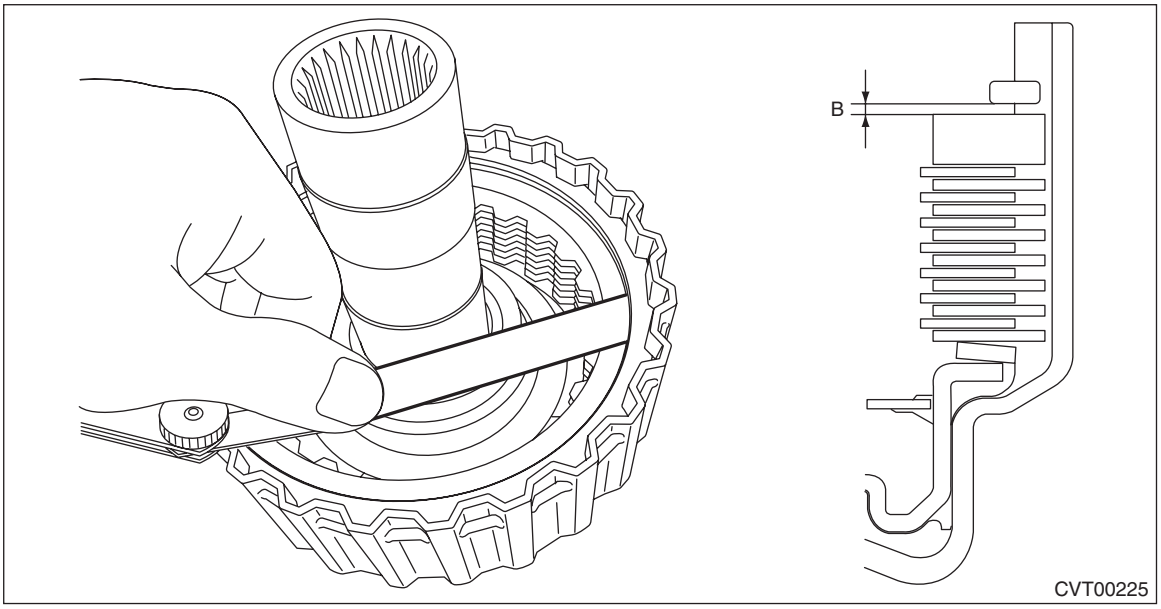

17) Piston stroke calculation
Calculate with A and B dimensions recorded before. If it exceeds the limit, replace with a new drive plate and adjust within the initial standard value.
S mm (in) = A + B
S: Piston stroke
A: Amount of drive plate compression
B: Clearance between retaining plate and snap ring

Initial standard:
2.65 — 3.05 mm (0.104 — 0.12 in)

Limit thickness:
4.05 mm (0.159 in)

Retaining plate	
Part No.	Thickness mm (in)
31567AB840	5.3 (0.209)
31567AB850	5.5 (0.217)
31567AB860	5.7 (0.224)
31567AB870	5.9 (0.232)
31567AB880	6.1 (0.240)

18) Install the snap ring to the reduction driven gear assembly.
19) Install the reduction driven gear assembly, needle bearing and reduction driven gear bushing to the output clutch assembly.
20) Install the snap ring.

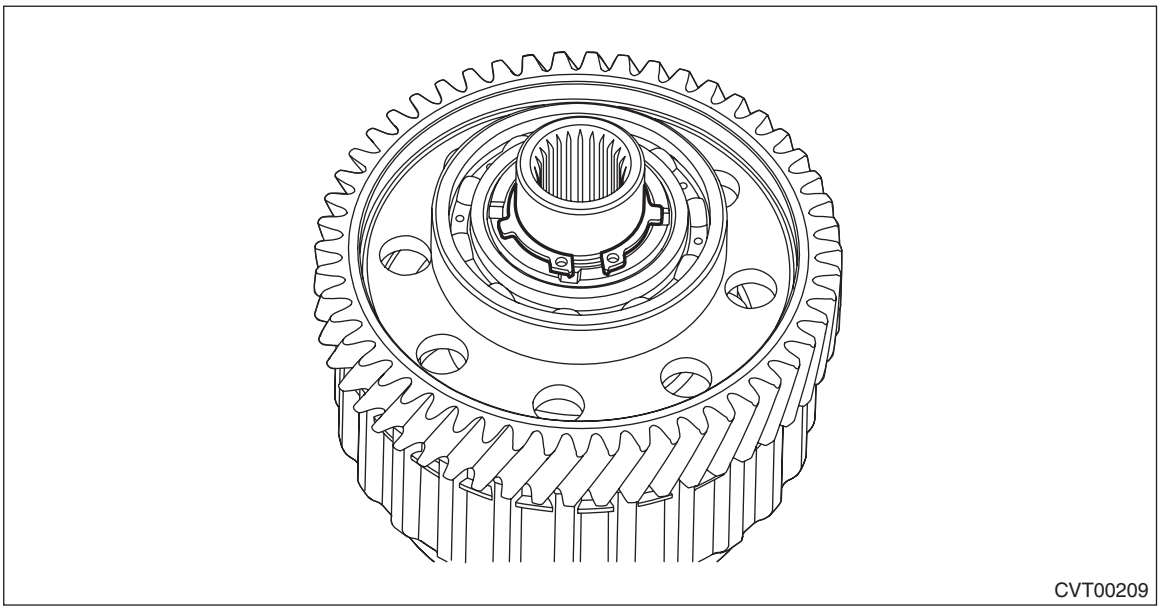
CVT00209

E: INSPECTION

- Inspect the drive plate facing for wear and damage.
- Check the driven plate for discoloration (burnt color).
- Check for worn snap ring, fatigue or damaged return spring or deformed spring retainer.
- Make sure the clearance between retaining plate and snap ring of output clutch is within the limit. If it exceeds the limit, replace with a new drive plate and select and adjust the retaining plate within the initial standard value. <Ref. to CVT(TH58A)-234, ASSEMBLY, Output Clutch Assembly.>

F: ADJUSTMENT

1) Install the output clutch assembly.

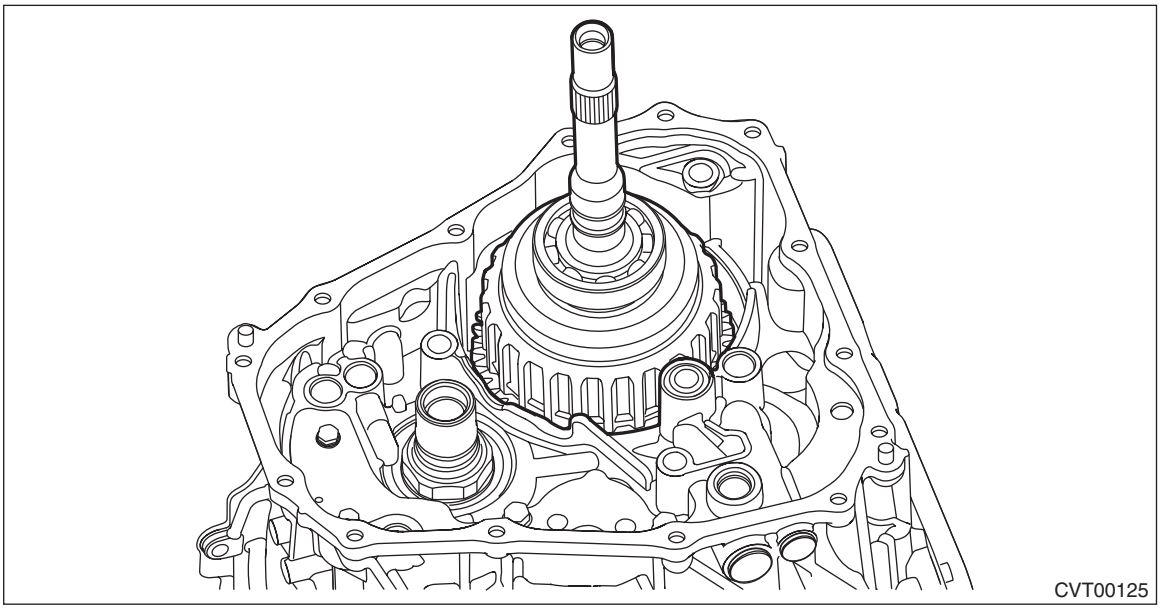

2) Measure the height “A” from the ST upper face to the ball bearing catch surface.
ST 499575400 GAUGE

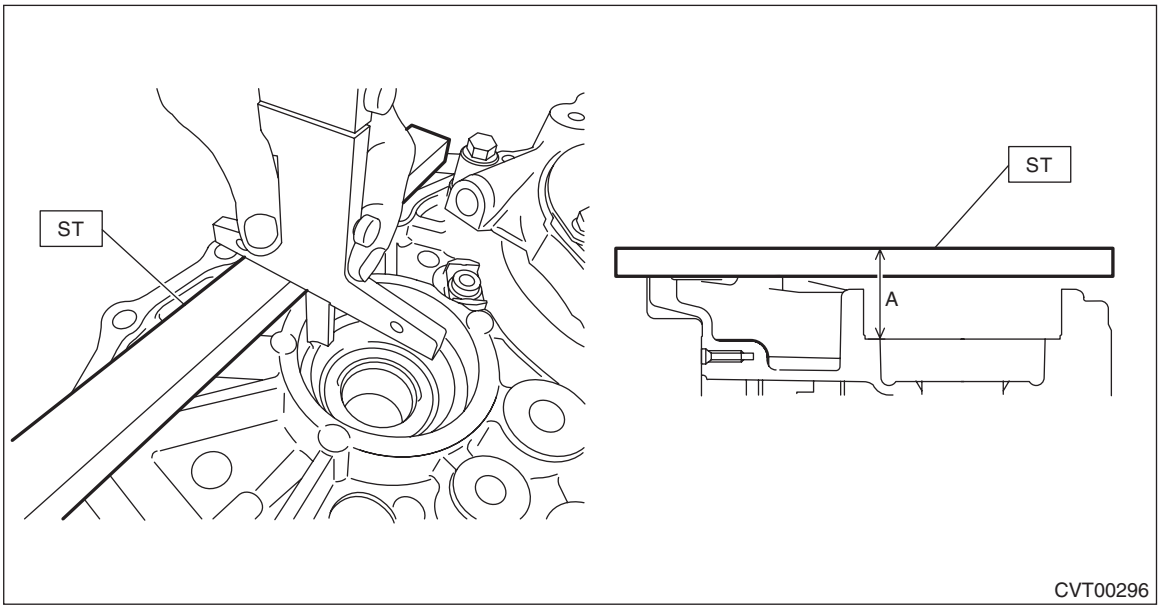

3) Measure the height “B” from the ST to the mating surface of the transmission case.
ST 499575600 GAUGE

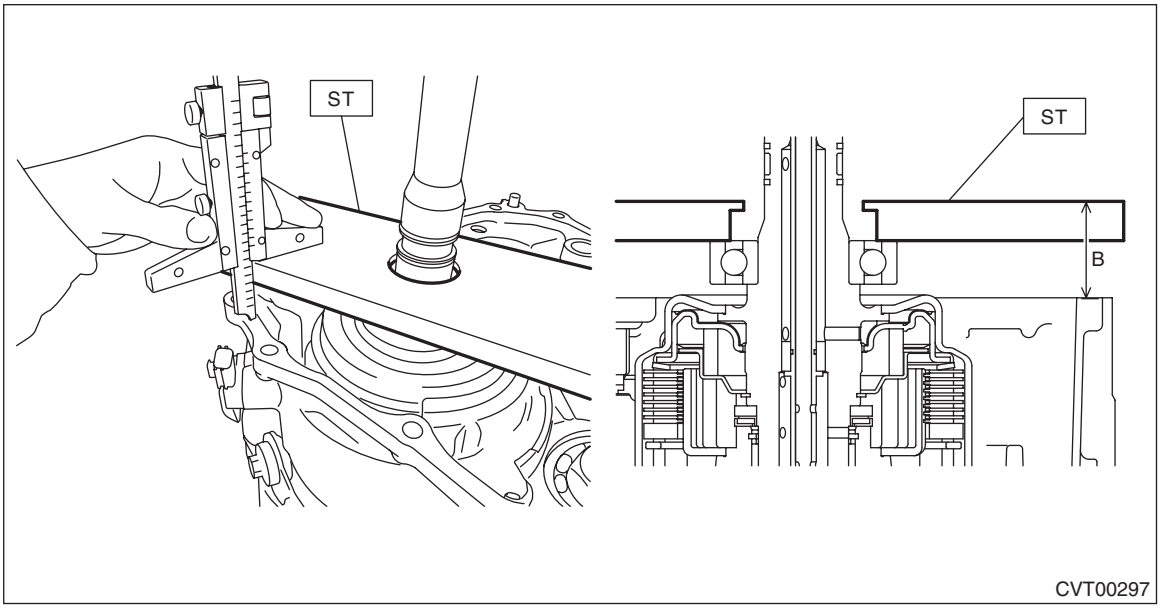

4) Obtain the thickness of reduction driven gear shim using the following formula to select zero to three reduction driven gear shims.
T (mm) = A – B – (0.05 — 0.25)
[T (in) = A – B – (0.002 — 0.01)]
T: Shim thickness
A: Height from the ST upper face to the ball bearing catch surface
B: Height from ST to transmission case mating surface
0.05 — 0.25 mm (0.002 — 0.01 in): Clearance

Reduction driven gear shim	
Part No.	Thickness mm (in)
33279AA090	0.3 (0.012)
33279AA100	0.4 (0.016)
33279AA110	0.5 (0.020)

40.Transmission Case

A: REMOVAL

1) Remove the transmission assembly from the vehicle. <Ref. to CVT(TH58A)-62, REMOVAL, Automatic Transmission Assembly.>
2) Remove the air breather hose. <Ref. to CVT(TH58A)-169, REMOVAL, Air Breather Hose.>
3) Remove the transmission harness. <Ref. to CVT(TH58A)-141, REMOVAL, Transmission Harness.>
4) Remove the main control valve body. <Ref. to CVT(TH58A)-114, REMOVAL, Control Valve Body.>
5) Remove the turbine speed sensor. <Ref. to CVT(TH58A)-103, REMOVAL, Turbine Speed Sensor.>
6) Remove the secondary speed sensor. <Ref. to CVT(TH58A)-105, REMOVAL, Secondary Speed Sensor.>
7) Remove the front wheel speed sensor. <Ref. to CVT(TH58A)-107, REMOVAL, Front Wheel Speed Sensor.>
8) Remove the inhibitor switch. <Ref. to CVT(TH58A)-99, REMOVAL, Inhibitor Switch.>
9) Remove the extension case. <Ref. to CVT(TH58A)-179, REMOVAL, Extension Case.>
10) Remove the transfer clutch assembly. <Ref. to CVT(TH58A)-183, REMOVAL, Transfer Clutch.>
11) Remove the transfer driven gear assembly. <Ref. to CVT(TH58A)-197, REMOVAL, Transfer Driven Gear.>
12) Remove the transfer drive gear assembly. <Ref. to CVT(TH58A)-200, REMOVAL, Transfer Drive Gear.>
13) Remove the parking pawl. <Ref. to CVT(TH58A)-205, REMOVAL, Parking Pawl.>
14) Remove the oil pan and oil strainer. <Ref. to CVT(TH58A)-111, REMOVAL, Oil Pan and Strainer.>
15) Remove the transmission control device. <Ref. to CVT(TH58A)-208, REMOVAL, Transmission Control Device.>
16) Remove the drive motor assembly. <Ref. to CVT(TH58A)-215, REMOVAL, Drive Motor Assembly.>
17) Remove the output clutch assembly. <Ref. to CVT(TH58A)-226, REMOVAL, Output Clutch Assembly.>
18) Remove the two oil baffle mounting bolts.

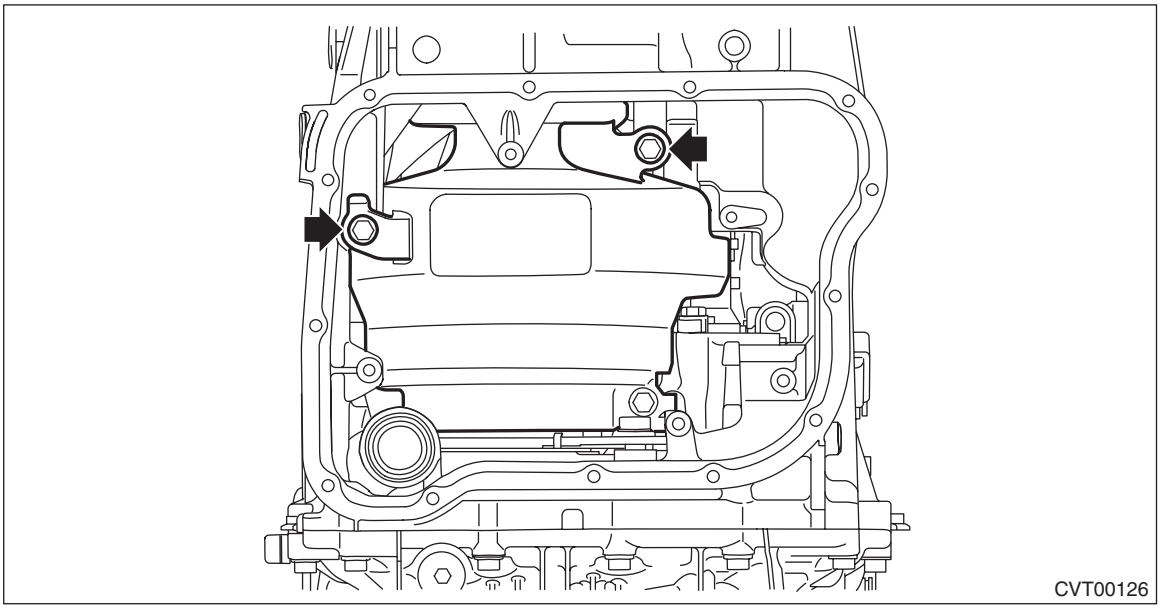

19) Remove the oil cooler pipe.

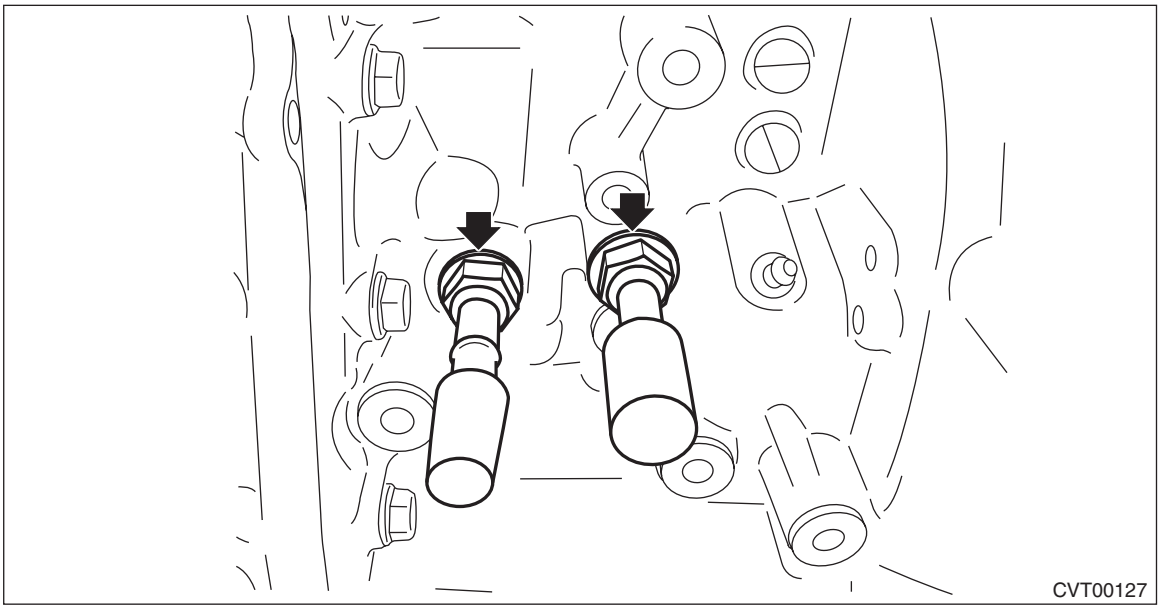

20) Remove the transmission case.

NOTE:
The total number of transmission case mounting bolts is 15.

21) Remove the oil baffle.

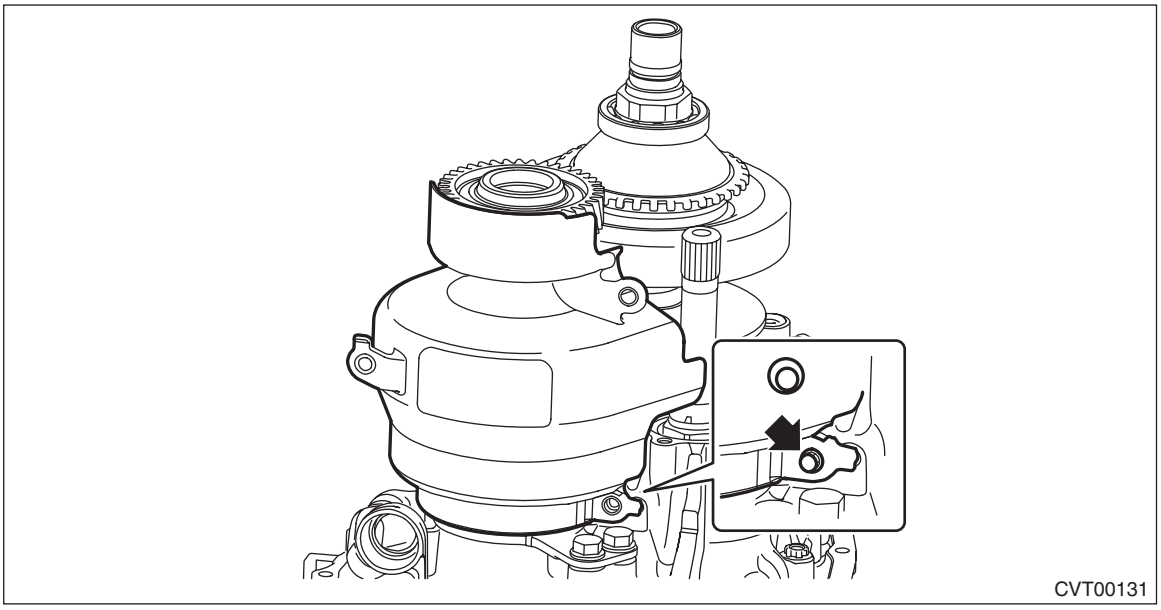

22) Remove the O-ring.

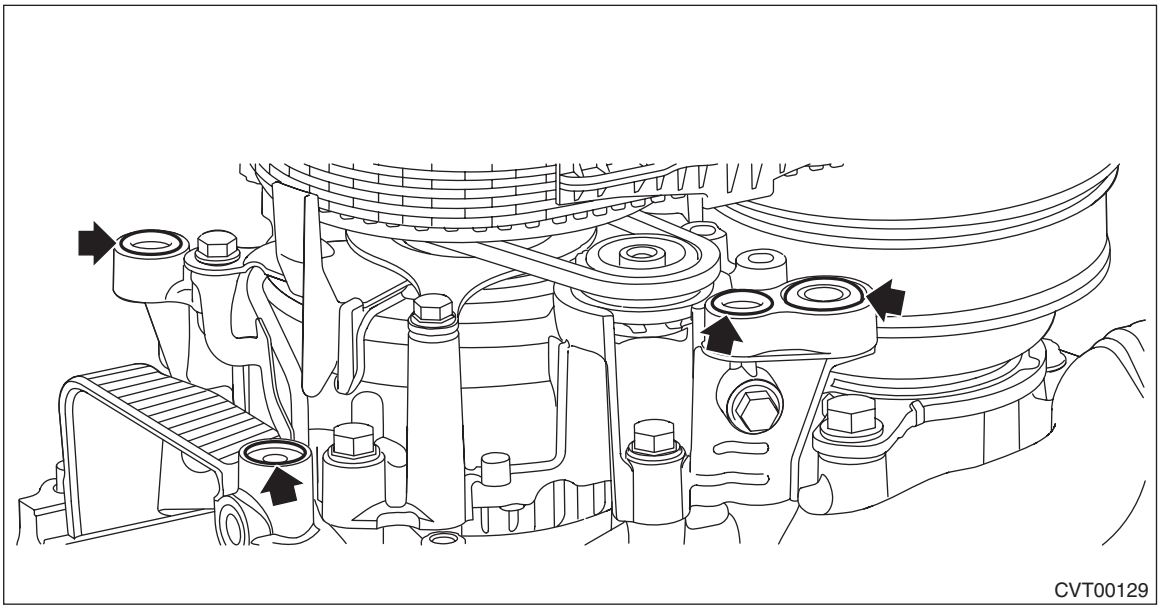

23) Remove the seal ring from the transmission case.

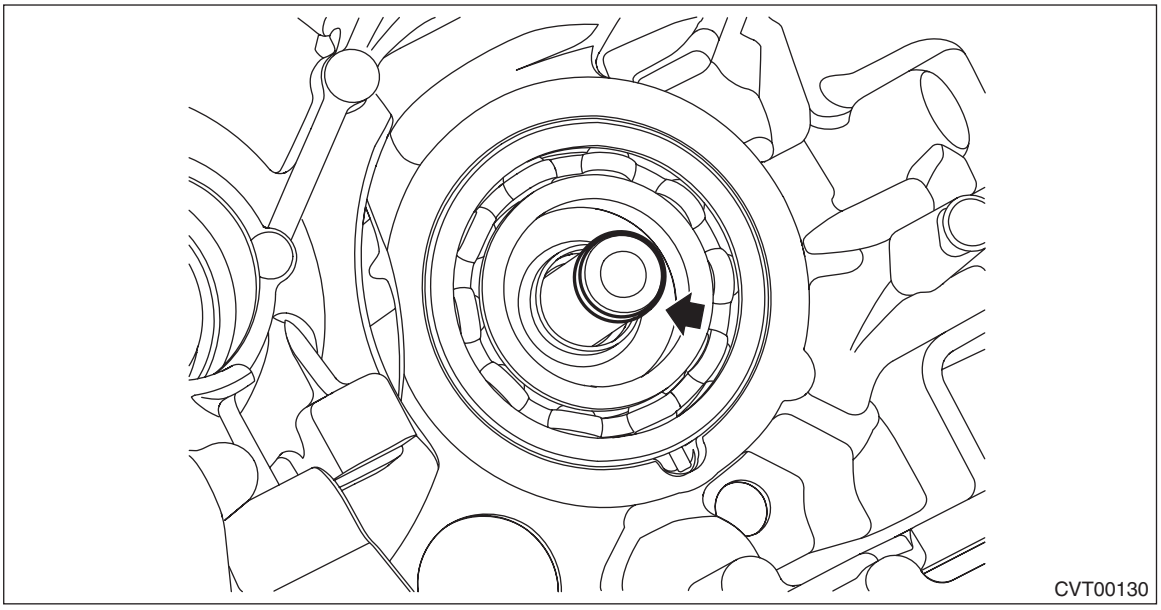

B: INSTALLATION

1) Clean the mating surface of transmission case and converter case.
2) Select the reduction gear shim. <Ref. to CVT(TH58A)-259, ADJUSTMENT, Reduction Drive Gear.>
3) Remove the transmission case, and install the selected reduction gear shim to the reduction drive gear.
4) Install the O-rings to the reverse clutch housing and drive pinion retainer.

NOTE:
- Use new O-rings.
- Apply CVTF to the O-ring.

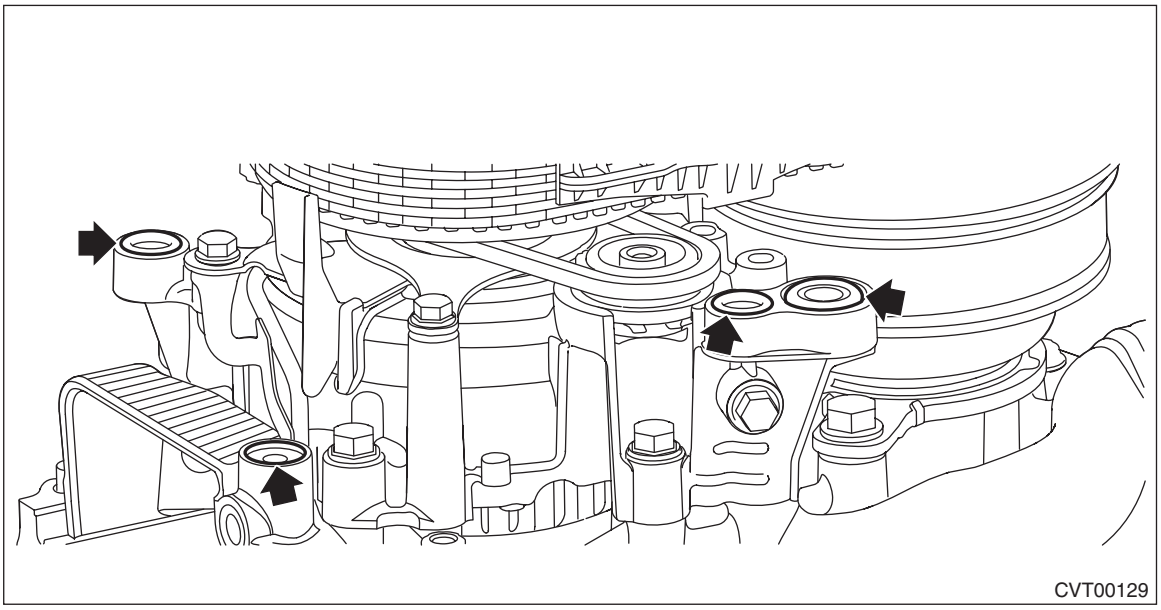
CVT00129

5) Install the seal ring to the transmission case.

NOTE:
- Use a new seal ring.
- When installing the seal ring, do not expand the seal ring too much.
- Apply CVTF to the seal rings.

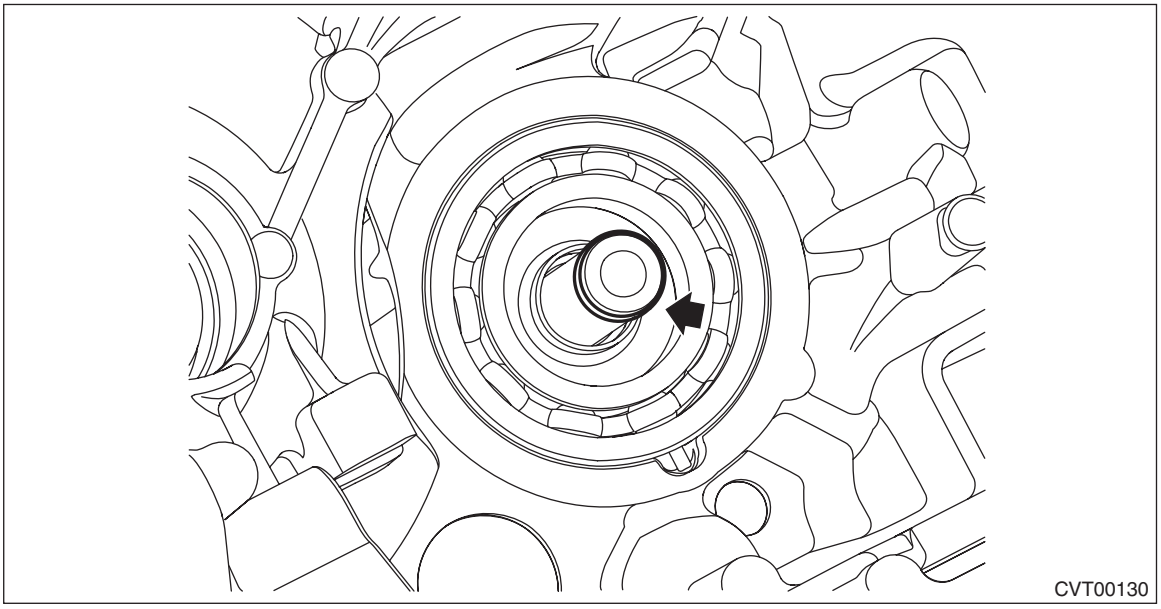
CVT00130

6) Cover the secondary pulley with the oil baffle, and temporarily install it with bolts.

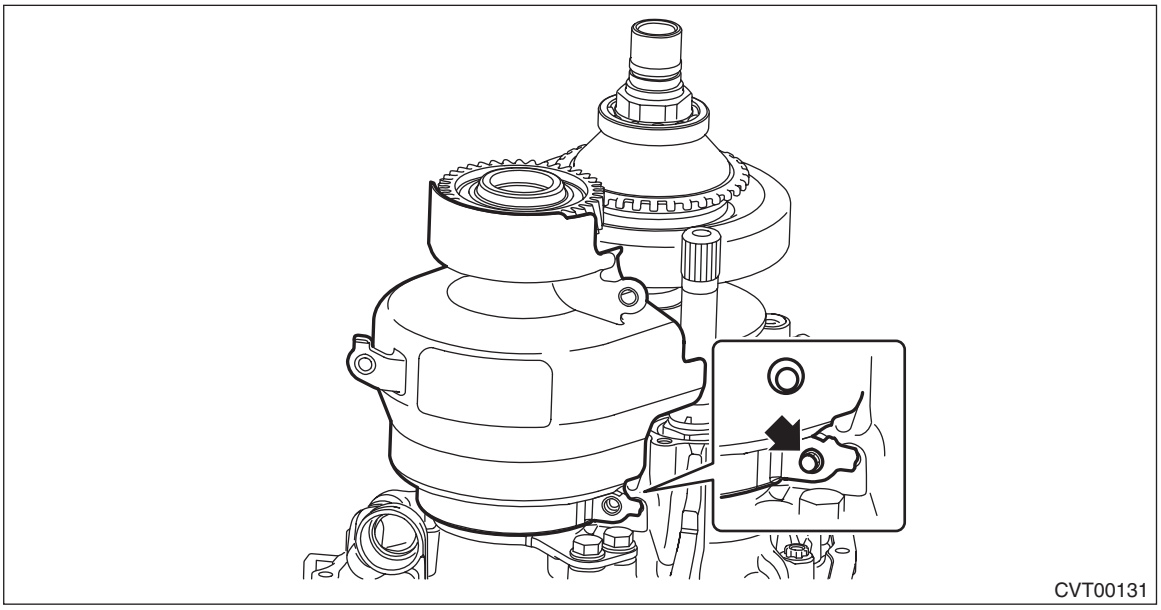
CVT00131

7) Apply liquid gasket seamlessly to the mating surface of transmission case.

Liquid gasket:
THREE BOND 1215 (Part No. 004403007) or equivalent

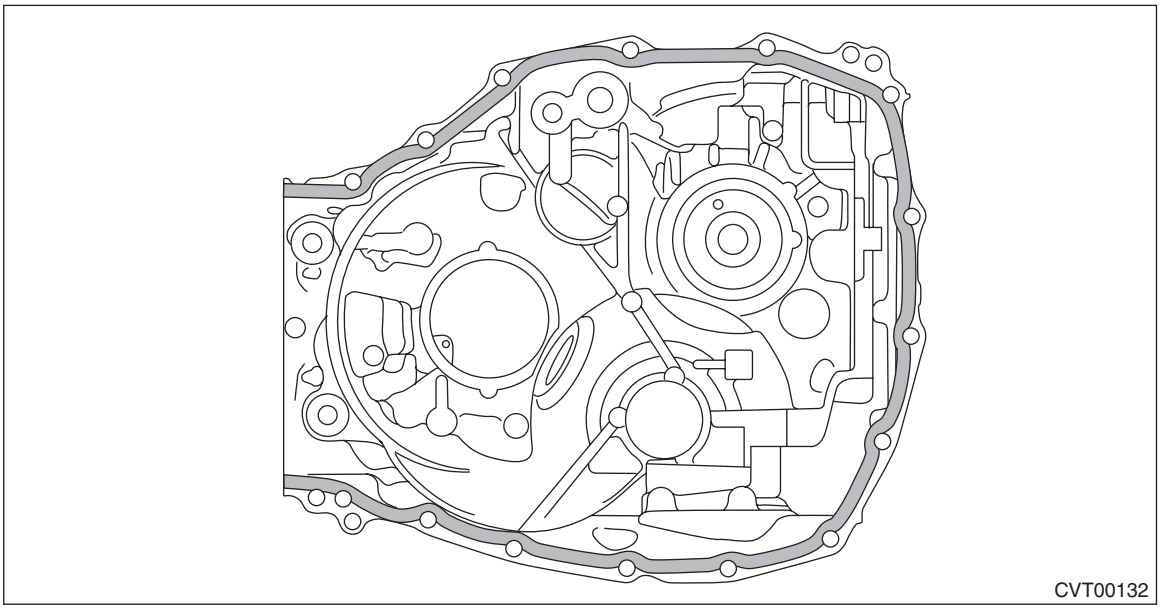
CVT00132

8) Install the transmission case.

NOTE:
The total number of transmission case mounting bolts is 15.

Tightening torque:
22 N·m (2.2 kgf-m, 16.2 ft-lb)

9) Install the oil cooler pipe.

NOTE:
- Use new O-rings.
- Apply CVTF to the O-ring.

Tightening torque:
25 N·m (2.5 kgf-m, 18.4 ft-lb)

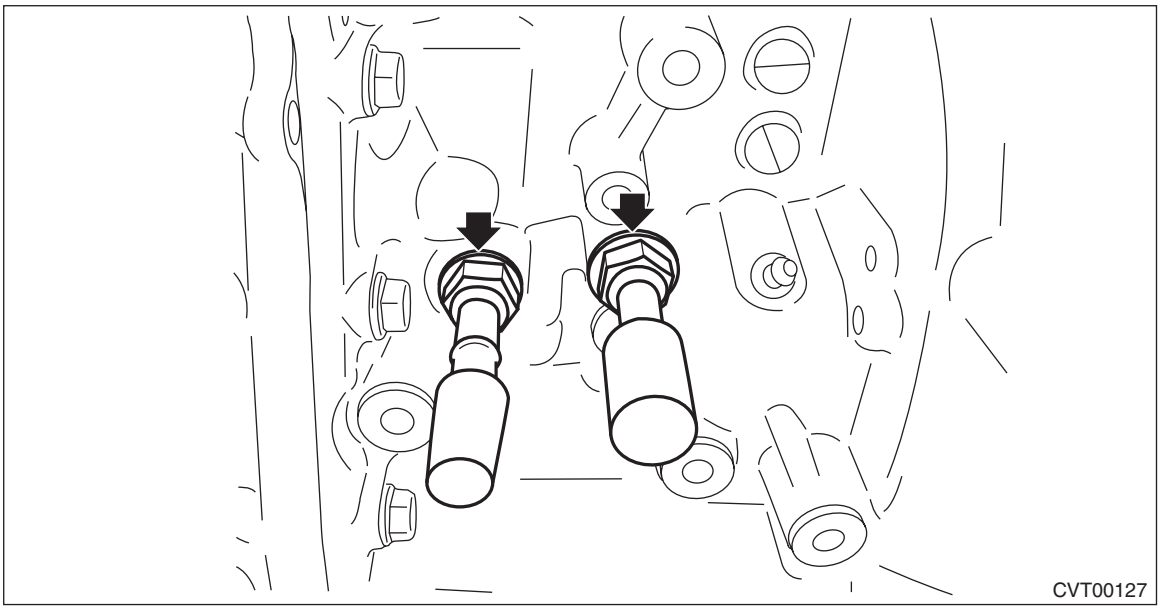

10) Install the oil baffle securing bolt.

Tightening torque:
16 N·m (1.6 kgf-m, 11.8 ft-lb)

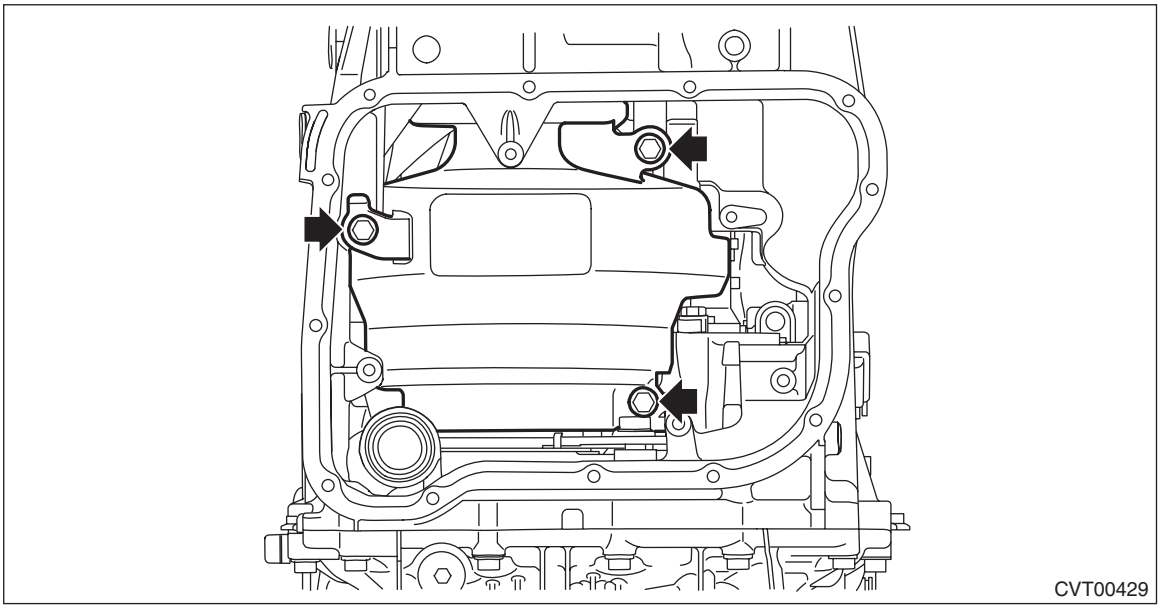

11) Install the output clutch assembly. <Ref. to CVT(TH58A)-227, INSTALLATION, Output Clutch Assembly.>
12) Install the drive motor assembly. <Ref. to CVT(TH58A)-219, INSTALLATION, Drive Motor Assembly.>
13) Install the transmission control device. <Ref. to CVT(TH58A)-211, INSTALLATION, Transmission Control Device.>
14) Install the oil strainer and oil pan. <Ref. to CVT(TH58A)-113, INSTALLATION, Oil Pan and Strainer.>
15) Install the parking pawl. <Ref. to CVT(TH58A)-206, INSTALLATION, Parking Pawl.>
16) Install the transfer drive gear assembly. <Ref. to CVT(TH58A)-200, INSTALLATION, Transfer Drive Gear.>
17) Install the transfer driven gear assembly. <Ref. to CVT(TH58A)-198, INSTALLATION, Transfer Driven Gear.>
18) Install the transfer clutch assembly. <Ref. to CVT(TH58A)-185, INSTALLATION, Transfer Clutch.>
19) Install the extension case. <Ref. to CVT(TH58A)-180, INSTALLATION, Extension Case.>
20) Install the inhibitor switch. <Ref. to CVT(TH58A)-101, INSTALLATION, Inhibitor Switch.>
21) Install the secondary speed sensor. <Ref. to CVT(TH58A)-105, INSTALLATION, Secondary Speed Sensor.>
22) Install the front wheel speed sensor. <Ref. to CVT(TH58A)-107, INSTALLATION, Front Wheel Speed Sensor.>
23) Install the turbine speed sensor. <Ref. to CVT(TH58A)-103, INSTALLATION, Turbine Speed Sensor.>
24) Install the main control valve body. <Ref. to CVT(TH58A)-121, INSTALLATION, Control Valve Body.>
25) Install the transmission harness. <Ref. to CVT(TH58A)-149, INSTALLATION, Transmission Harness.>
26) Install the air breather hose. <Ref. to CVT(TH58A)-171, INSTALLATION, Air Breather Hose.>
27) Install the transmission assembly to the vehicle. <Ref. to CVT(TH58A)-76, INSTALLATION, Automatic Transmission Assembly.>

C: DISASSEMBLY

1) Remove the oil stopper plate.

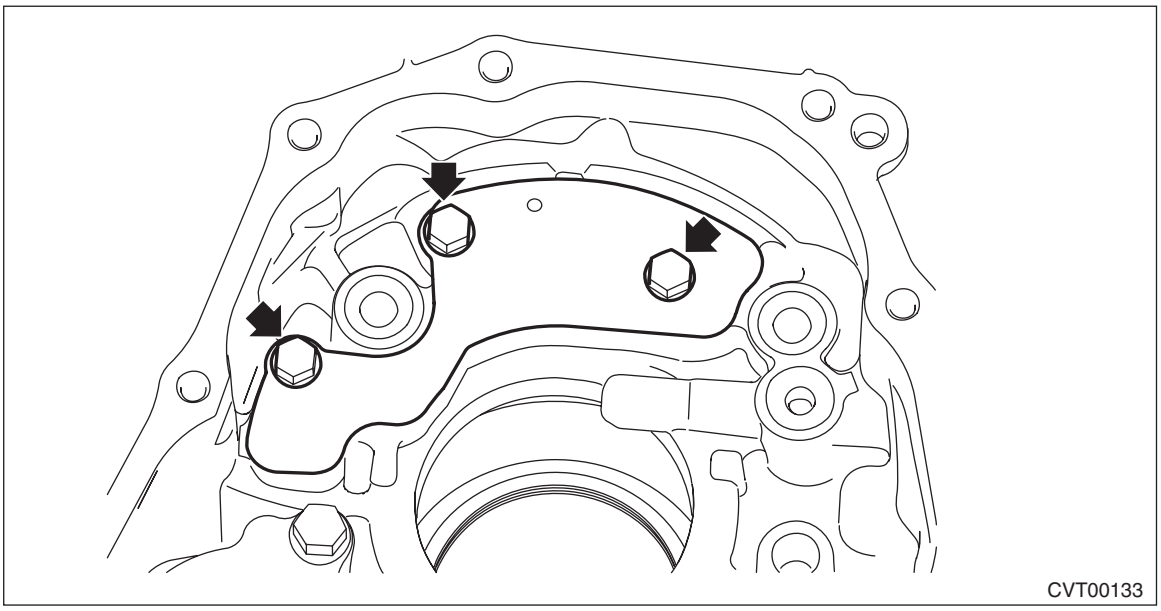

2) Remove all plugs from the transmission case.

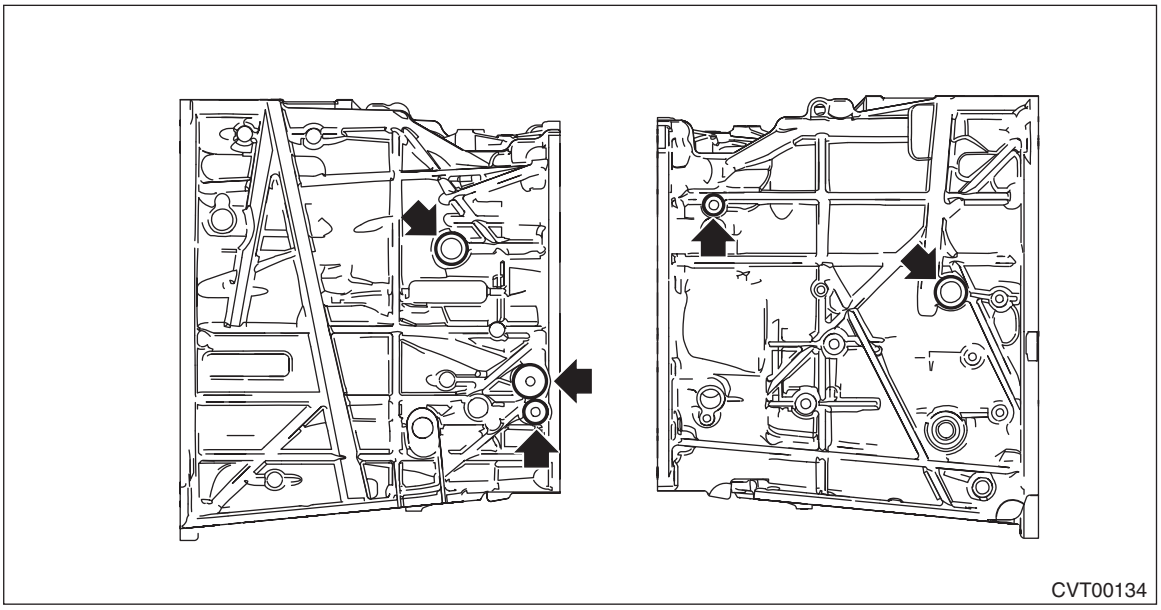

3) Remove the oil seal using a screwdriver wrapped with cloth etc.

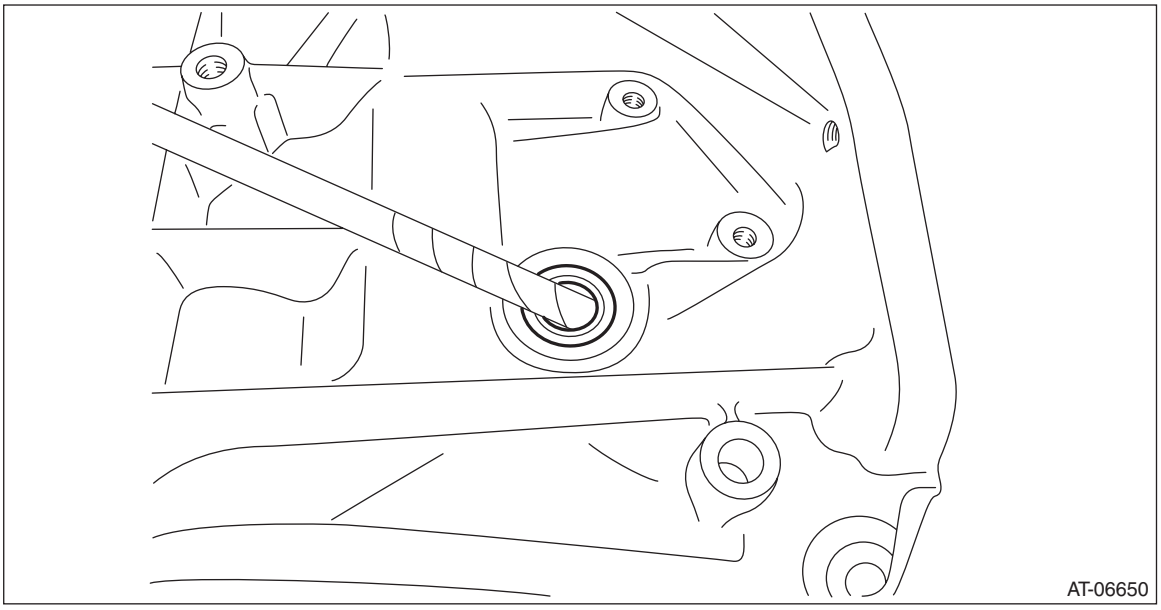

4) Remove the CVTF filter cover and gasket.

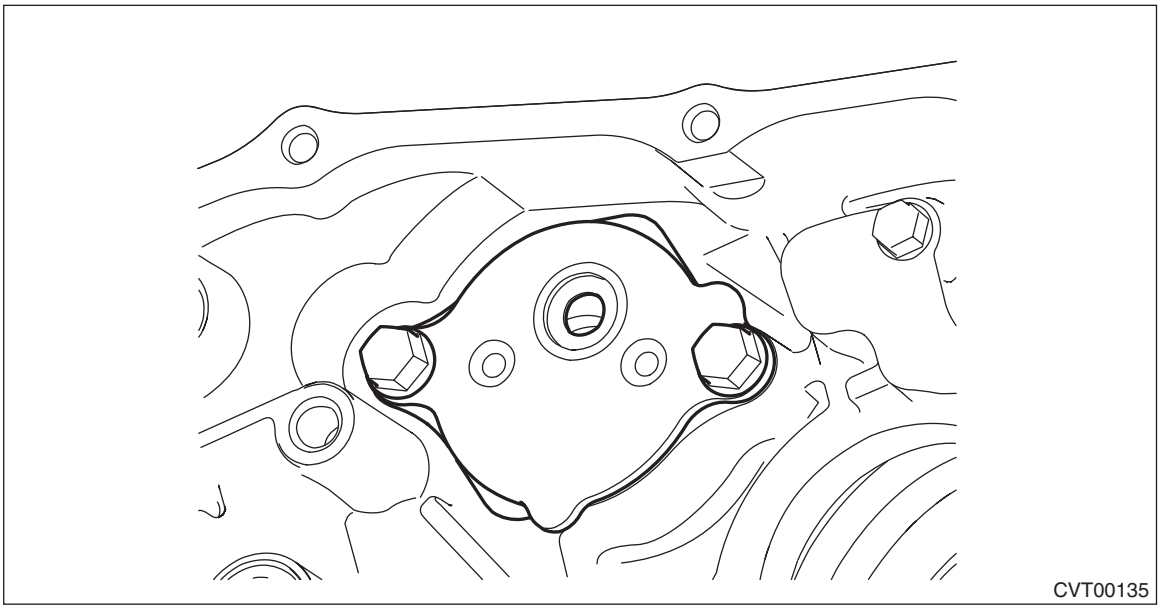

5) Remove the CVTF filter.

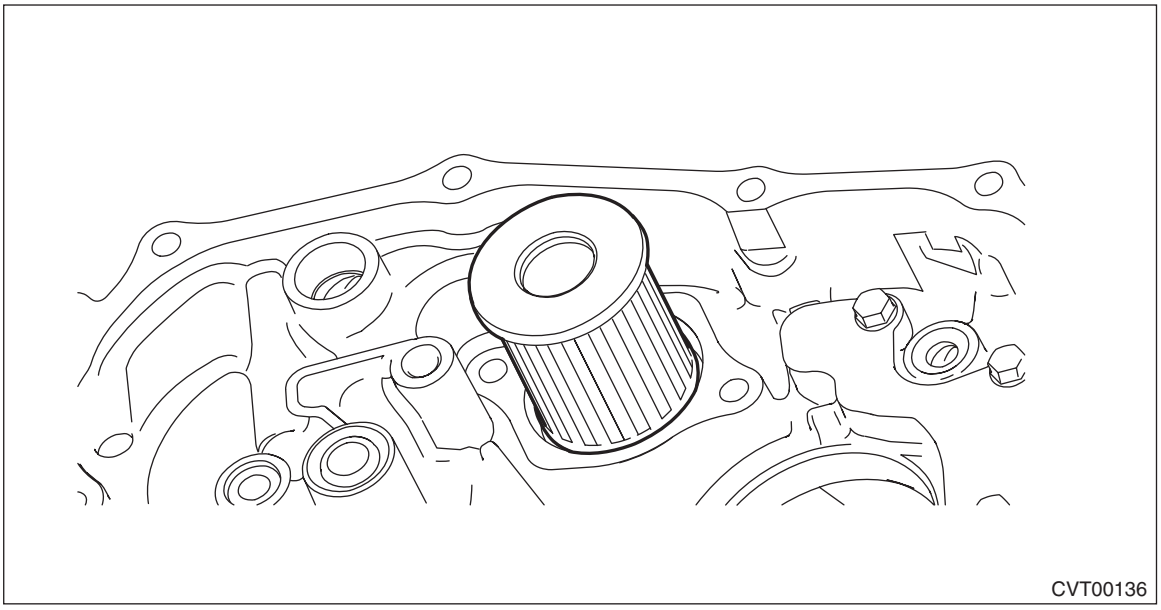

D: ASSEMBLY

1) Face the O-ring side of the CVTF filter to the CVTF filter cover side, and install the CVTF filter.

NOTE:
Apply CVTF to the O-ring of CVTF filter.

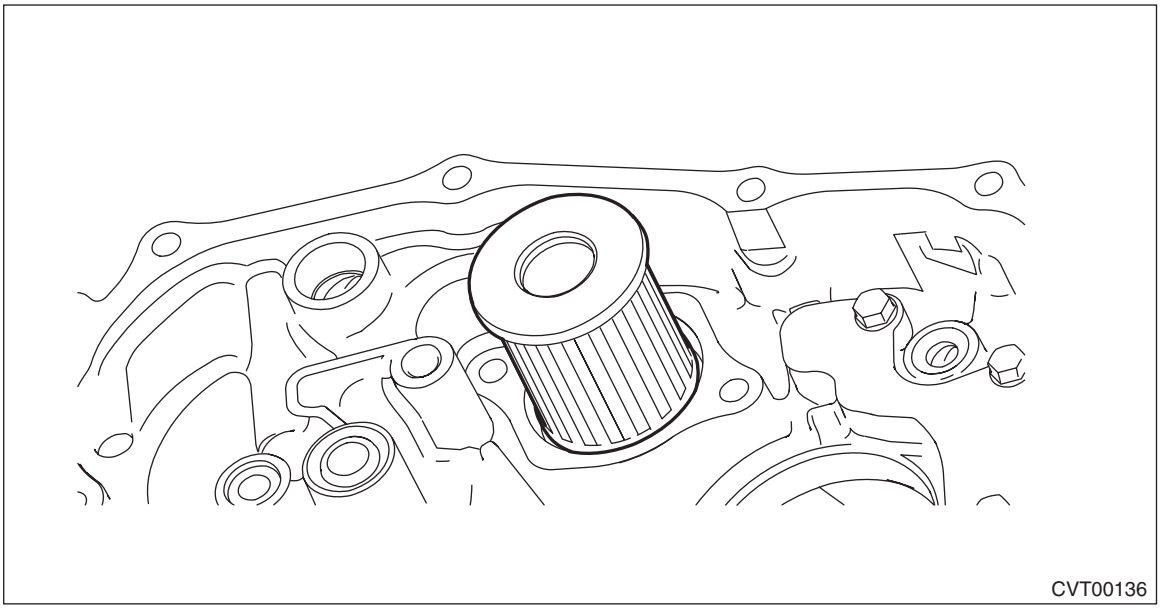

2) Install the CVTF filter cover and gasket.

NOTE:
- Use a new gasket.
- The gasket has the front side and back side. Install it as shown in the figure.

Tightening torque:
17 N·m (1.7 kgf-m, 12.5 ft-lb)

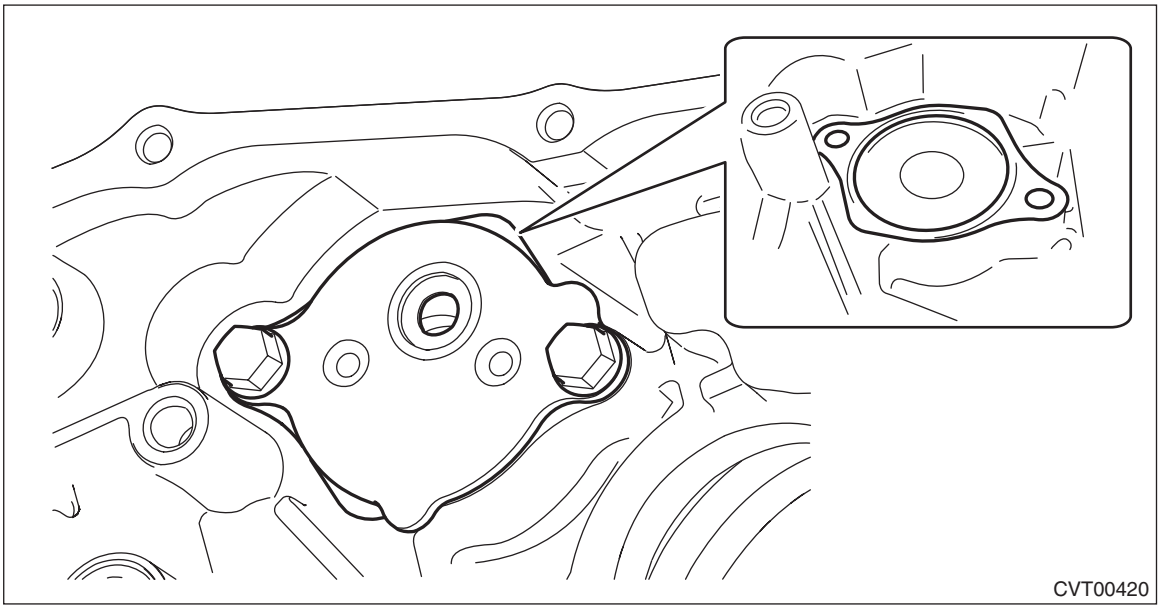

3) Using the ST, install the oil seal.

NOTE:
- Use a new oil seal.
- Apply CVTF to the oil seal lip and press-fitting surface.

ST 18657AA000 INSTALLER

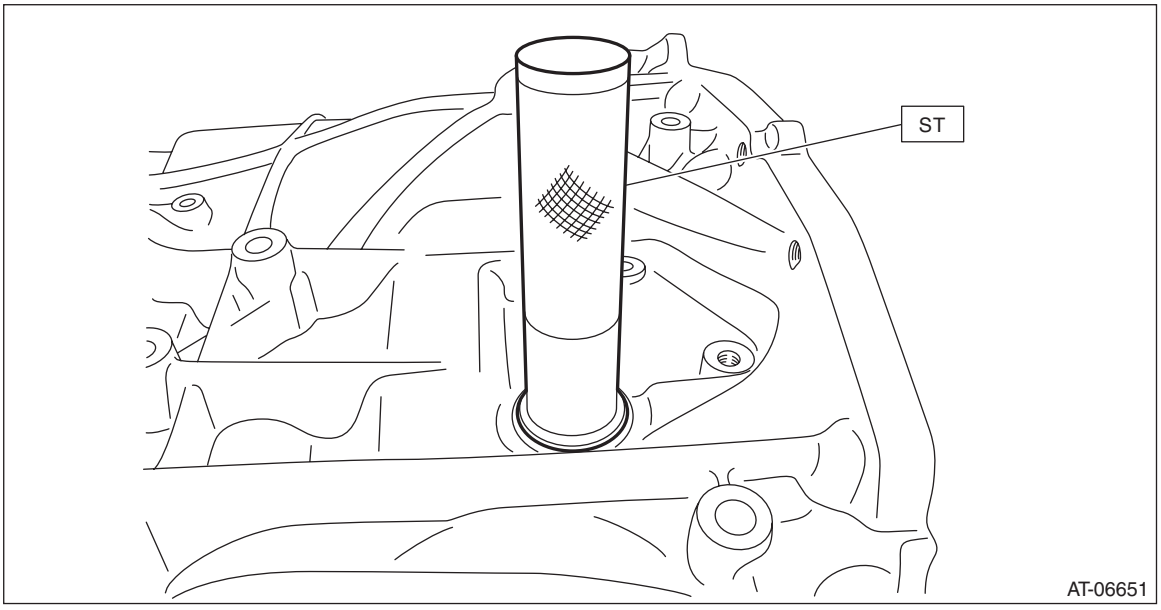

4) Install all plugs.

NOTE:
- Use new O-rings.
- Apply CVTF to the O-ring.
- For the plug (A), fill the CVTF, and then tighten the plug using a new gasket.

Tightening torque:
T1: 13 N·m (1.3 kgf-m, 9.6 ft-lb)
T2: 25 N·m (2.5 kgf-m, 18.4 ft-lb)
T3: 50 N·m (5.1 kgf-m, 36.9 ft-lb)
T4: 60 N·m (6.0 kgf-m, 44.3 ft-lb)

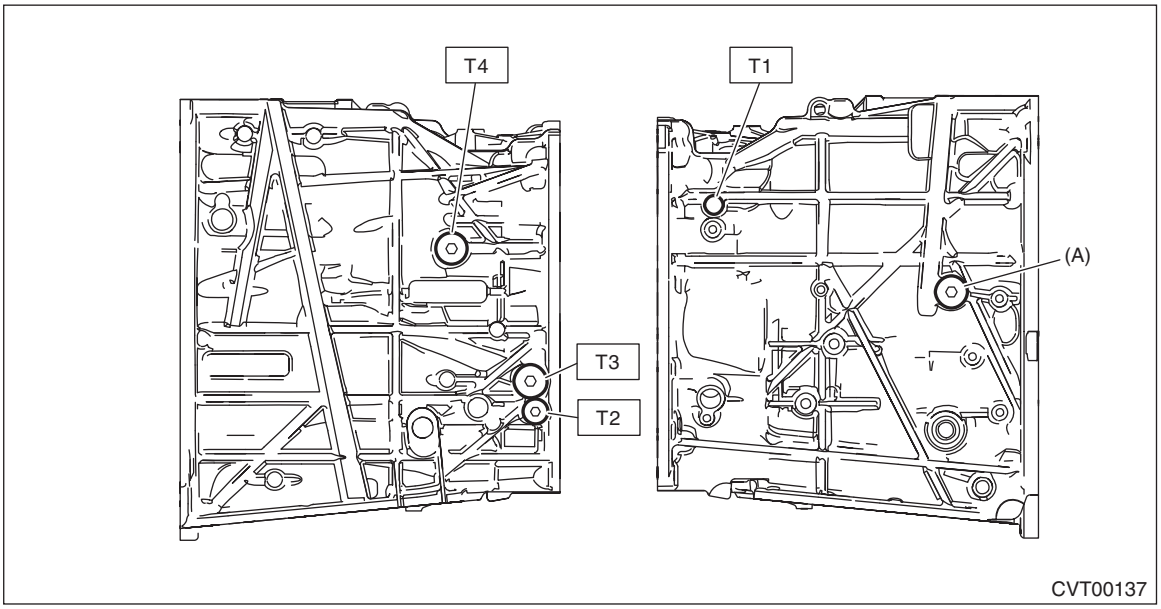

5) Install the oil stopper plate.

NOTE:
Use a new bolt.

Tightening torque:
9 N·m (0.9 kgf-m, 6.6 ft-lb)

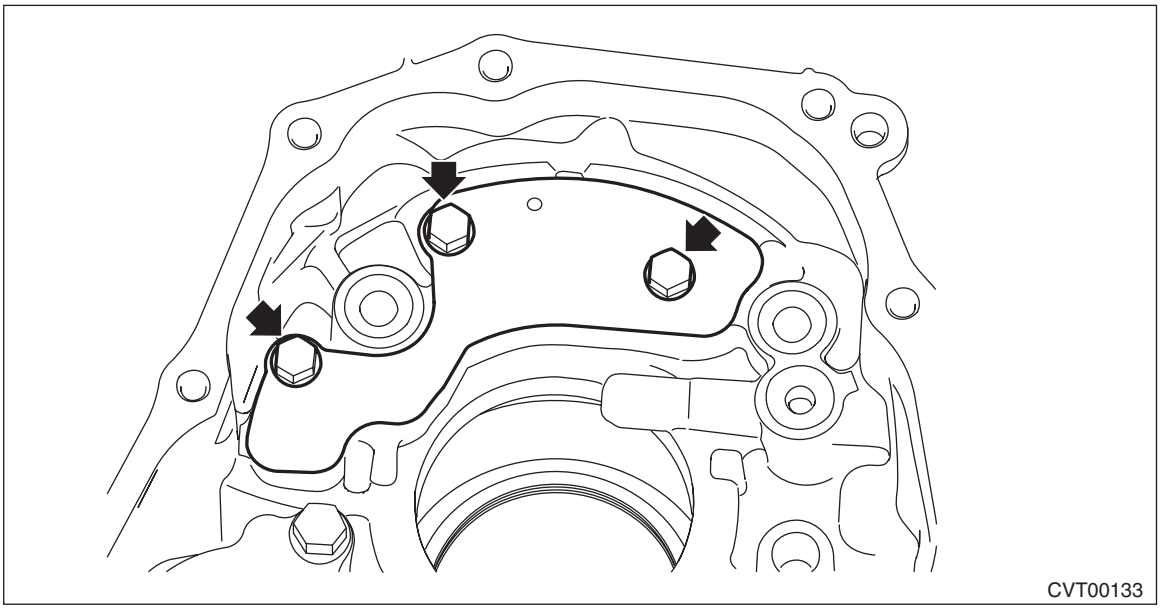

E: INSPECTION

- Check the transmission case for damage.
- Check for leakage of CVTF from the connection between converter case and transmission case.
- Check the bearing for smooth operation.
- Check the bearing for seizure or wear.
- Check each part for damage.

F: ADJUSTMENT

NOTE:
When replacing the transmission case with a new part, perform the following check and adjustment for the selection.

- Select the reduction driven gear shim. <Ref. to CVT(TH58A)-241, ADJUSTMENT, Output Clutch Assembly.>
- Select the reduction drive gear shim. <Ref. to CVT(TH58A)-259, ADJUSTMENT, Reduction Drive Gear.>

41.CVTF Filter

A: REMOVAL

NOTE:
• Although CVTF filter is a maintenance-free part, replace it if a large quantity of wear debris and metal particles are found in CVTF and CVTF filter.
• For removal of CVTF filter, refer to “Transmission Case”. <Ref. to CVT(TH58A)-243, REMOVAL, Transmission Case.> <Ref. to CVT(TH58A)-249, DISASSEMBLY, Transmission Case.>

B: INSTALLATION

NOTE:
For installation of CVTF filter, refer to “Transmission Case”. <Ref. to CVT(TH58A)-252, ASSEMBLY, Transmission Case.> <Ref. to CVT(TH58A)-246, INSTALLATION, Transmission Case.>

C: INSPECTION

- Check if a large quantity of wear debris or metal particles are in CVTF and CVTF filter.
- Check for broken part or damaged O-ring.

42.Reduction Drive Gear

A: REMOVAL

1) Remove the transmission assembly from the vehicle. <Ref. to CVT(TH58A)-62, REMOVAL, Automatic Transmission Assembly.>
2) Remove the air breather hose. <Ref. to CVT(TH58A)-169, REMOVAL, Air Breather Hose.>
3) Remove the transmission harness. <Ref. to CVT(TH58A)-141, REMOVAL, Transmission Harness.>
4) Remove the main control valve body. <Ref. to CVT(TH58A)-114, REMOVAL, Control Valve Body.>
5) Remove the turbine speed sensor. <Ref. to CVT(TH58A)-103, REMOVAL, Turbine Speed Sensor.>
6) Remove the secondary speed sensor. <Ref. to CVT(TH58A)-105, REMOVAL, Secondary Speed Sensor.>
7) Remove the front wheel speed sensor. <Ref. to CVT(TH58A)-107, REMOVAL, Front Wheel Speed Sensor.>
8) Remove the inhibitor switch. <Ref. to CVT(TH58A)-99, REMOVAL, Inhibitor Switch.>
9) Remove the extension case. <Ref. to CVT(TH58A)-179, REMOVAL, Extension Case.>
10) Remove the transfer clutch assembly. <Ref. to CVT(TH58A)-183, REMOVAL, Transfer Clutch.>
11) Remove the transfer driven gear assembly. <Ref. to CVT(TH58A)-197, REMOVAL, Transfer Driven Gear.>
12) Remove the transfer drive gear assembly. <Ref. to CVT(TH58A)-200, REMOVAL, Transfer Drive Gear.>
13) Remove the parking pawl. <Ref. to CVT(TH58A)-205, REMOVAL, Parking Pawl.>
14) Remove the oil pan and oil strainer. <Ref. to CVT(TH58A)-111, REMOVAL, Oil Pan and Strainer.>
15) Remove the transmission control device. <Ref. to CVT(TH58A)-208, REMOVAL, Transmission Control Device.>
16) Remove the drive motor assembly. <Ref. to CVT(TH58A)-215, REMOVAL, Drive Motor Assembly.>
17) Remove the output clutch assembly. <Ref. to CVT(TH58A)-226, REMOVAL, Output Clutch Assembly.>
18) Remove the transmission case. <Ref. to CVT(TH58A)-243, REMOVAL, Transmission Case.>
19) Remove the reduction drive gear shims, spring retainers, and dish plates.

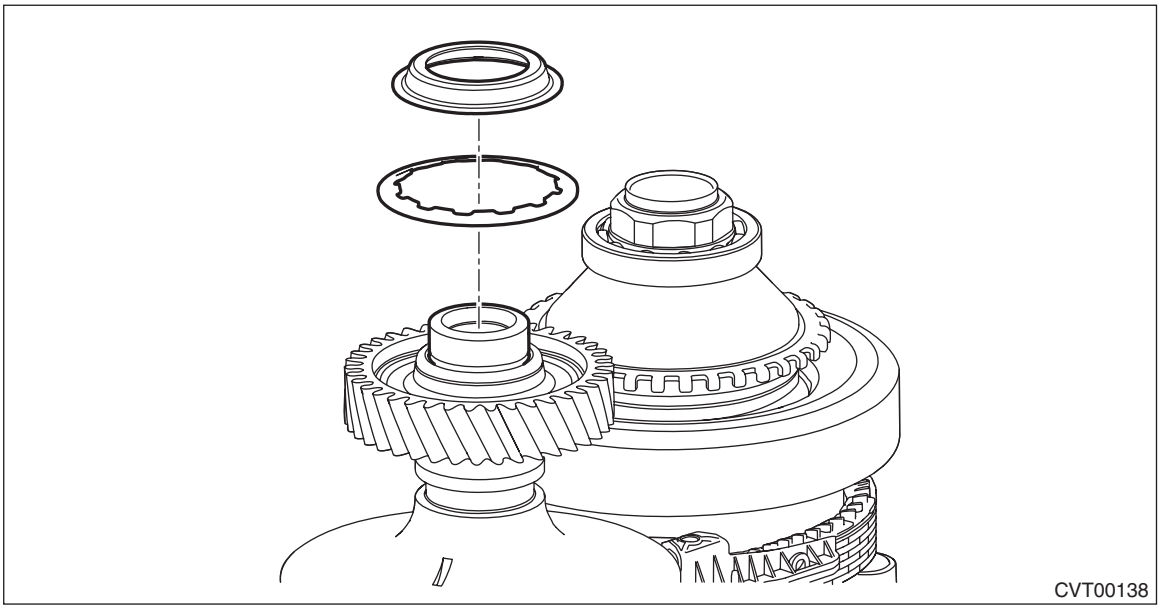

20) Remove the reduction drive gear.

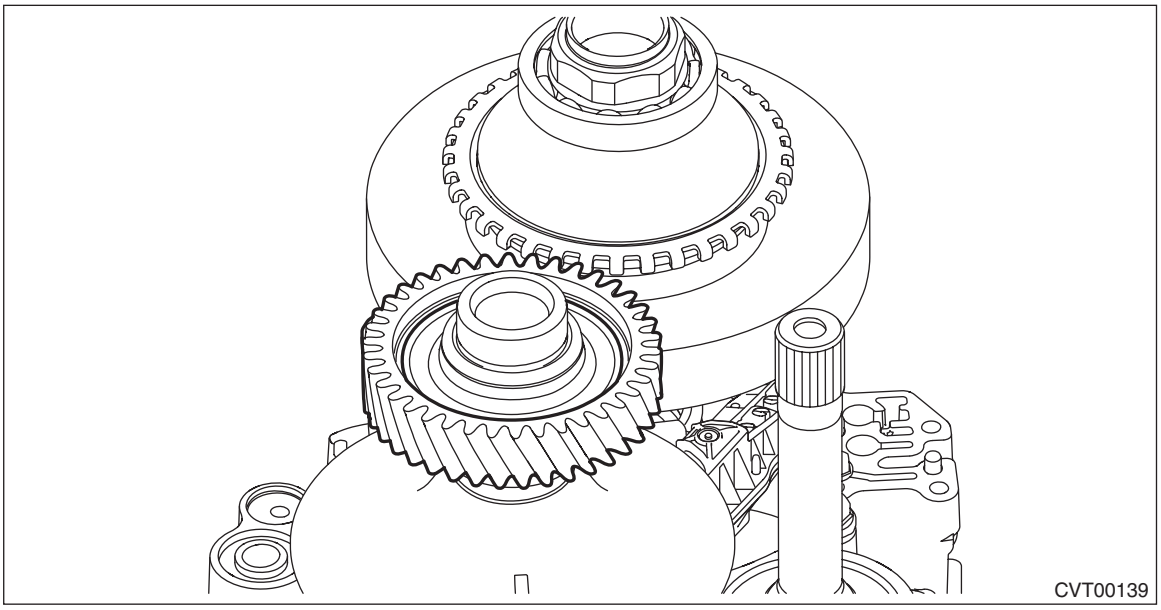

B: INSTALLATION

1) Install the reduction drive gear to secondary pulley.

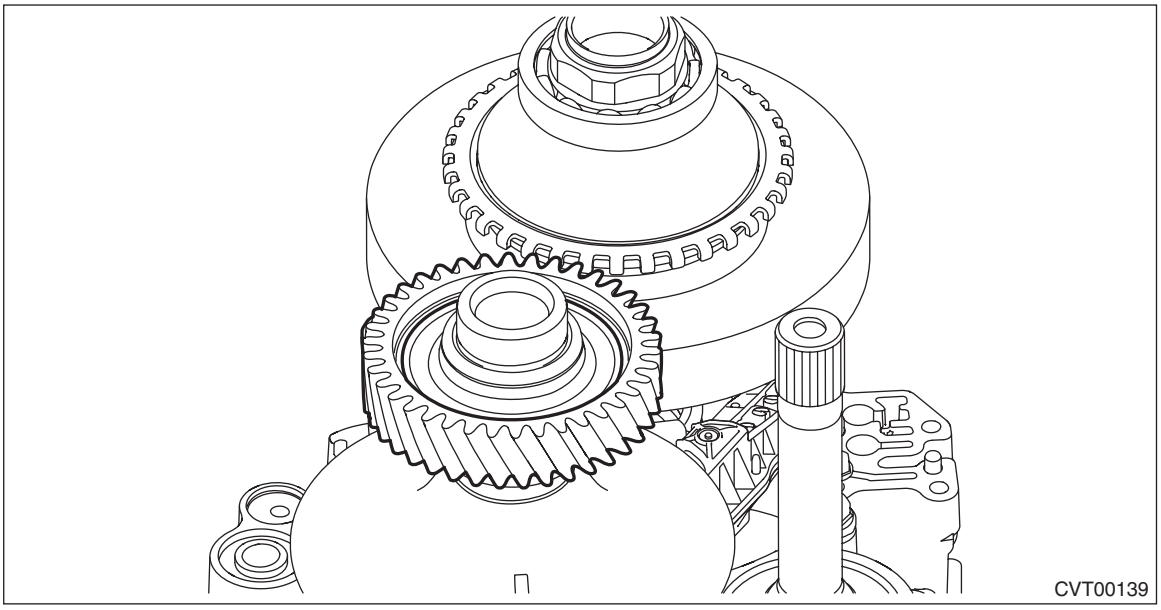

2) Select the reduction drive gear shim. <Ref. to CVT(TH58A)-259, ADJUSTMENT, Reduction Drive Gear.>

3) Install the dish plates, spring retainers, and selected reduction drive gear shims.

NOTE:
Install the dish plate in the correct direction.

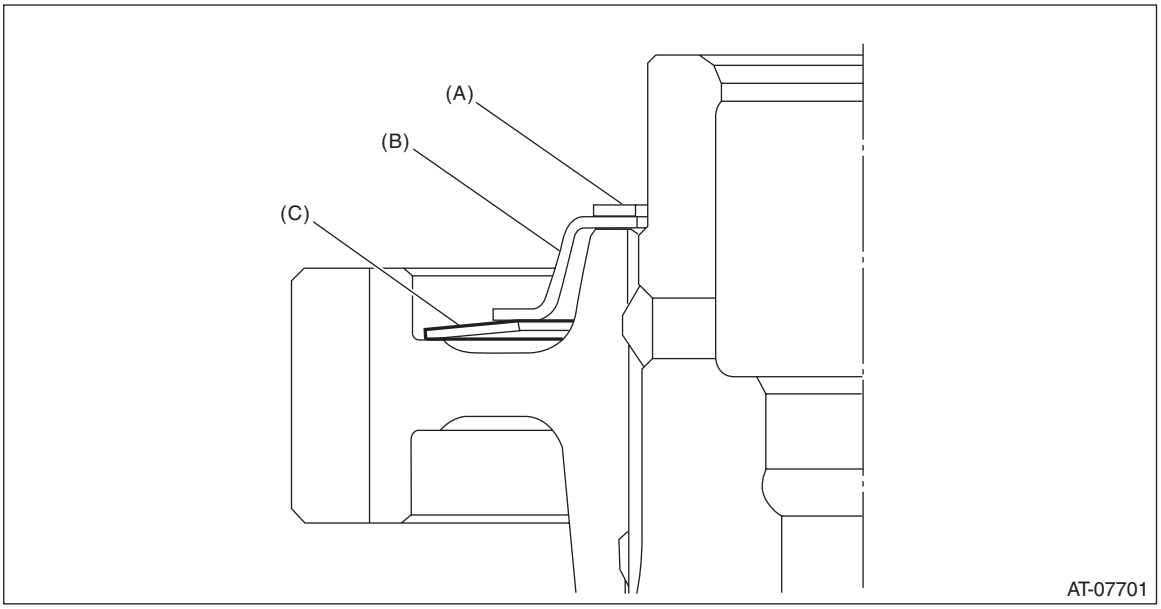

(A) Reduction drive gear shim
(B) Spring retainer
(C) Dish plate

4) Install the transmission case. <Ref. to CVT(TH58A)-246, INSTALLATION, Transmission Case.>
5) Install the output clutch assembly. <Ref. to CVT(TH58A)-227, INSTALLATION, Output Clutch Assembly.>
6) Install the drive motor assembly. <Ref. to CVT(TH58A)-219, INSTALLATION, Drive Motor Assembly.>
7) Install the transmission control device. <Ref. to CVT(TH58A)-211, INSTALLATION, Transmission Control Device.>
8) Install the oil strainer and oil pan. <Ref. to CVT(TH58A)-113, INSTALLATION, Oil Pan and Strainer.>
9) Install the parking pawl. <Ref. to CVT(TH58A)-206, INSTALLATION, Parking Pawl.>
10) Install the transfer drive gear assembly. <Ref. to CVT(TH58A)-200, INSTALLATION, Transfer Drive Gear.>
11) Install the transfer driven gear assembly. <Ref. to CVT(TH58A)-198, INSTALLATION, Transfer Driven Gear.>
12) Install the transfer clutch assembly. <Ref. to CVT(TH58A)-185, INSTALLATION, Transfer Clutch.>
13) Install the extension case. <Ref. to CVT(TH58A)-180, INSTALLATION, Extension Case.>
14) Install the inhibitor switch. <Ref. to CVT(TH58A)-101, INSTALLATION, Inhibitor Switch.>
15) Install the secondary speed sensor. <Ref. to CVT(TH58A)-105, INSTALLATION, Secondary Speed Sensor.>
16) Install the front wheel speed sensor. <Ref. to CVT(TH58A)-107, INSTALLATION, Front Wheel Speed Sensor.>
17) Install the turbine speed sensor. <Ref. to CVT(TH58A)-103, INSTALLATION, Turbine Speed Sensor.>
18) Install the main control valve body. <Ref. to CVT(TH58A)-121, INSTALLATION, Control Valve Body.>
19) Install the transmission harness. <Ref. to CVT(TH58A)-149, INSTALLATION, Transmission Harness.>
20) Install the air breather hose. <Ref. to CVT(TH58A)-171, INSTALLATION, Air Breather Hose.>
21) Install the transmission assembly to the vehicle. <Ref. to CVT(TH58A)-76, INSTALLATION, Automatic Transmission Assembly.>

C: INSPECTION

Check the reduction drive gear for breakage or damage.

D: ADJUSTMENT

1) Remove the spring retainers and reduction drive gear shims.
2) Install the transmission case, and secure it with four or five bolts.

Tightening torque:
22 N·m (2.2 kgf-m, 16.2 ft-lb)

3) Measure depth “A” from the ST upper face to the reduction drive gear end face.
ST 499575400 GAUGE

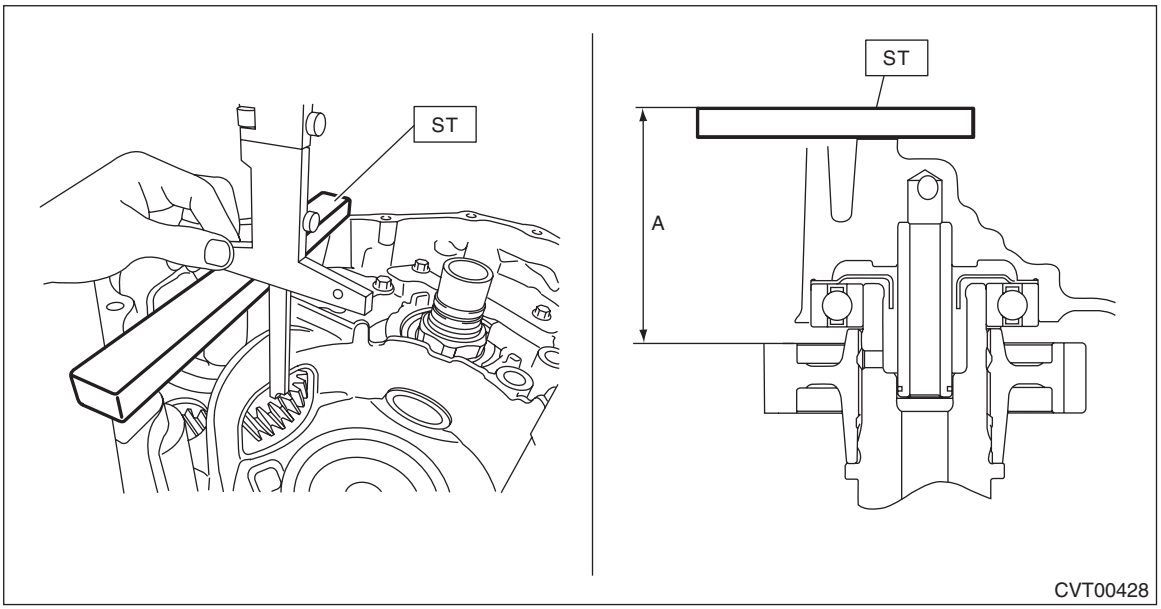

4) Raise and hold the reduction drive gear.

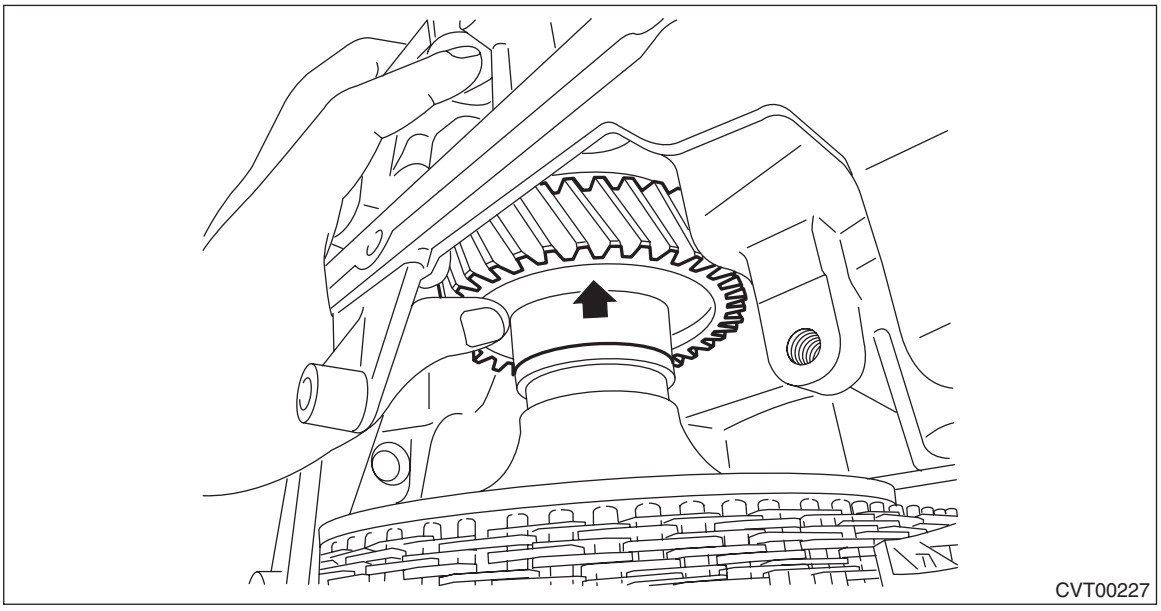

5) Measure depth “B” from the ST upper face to the reduction drive gear end face.
ST 499575400 GAUGE

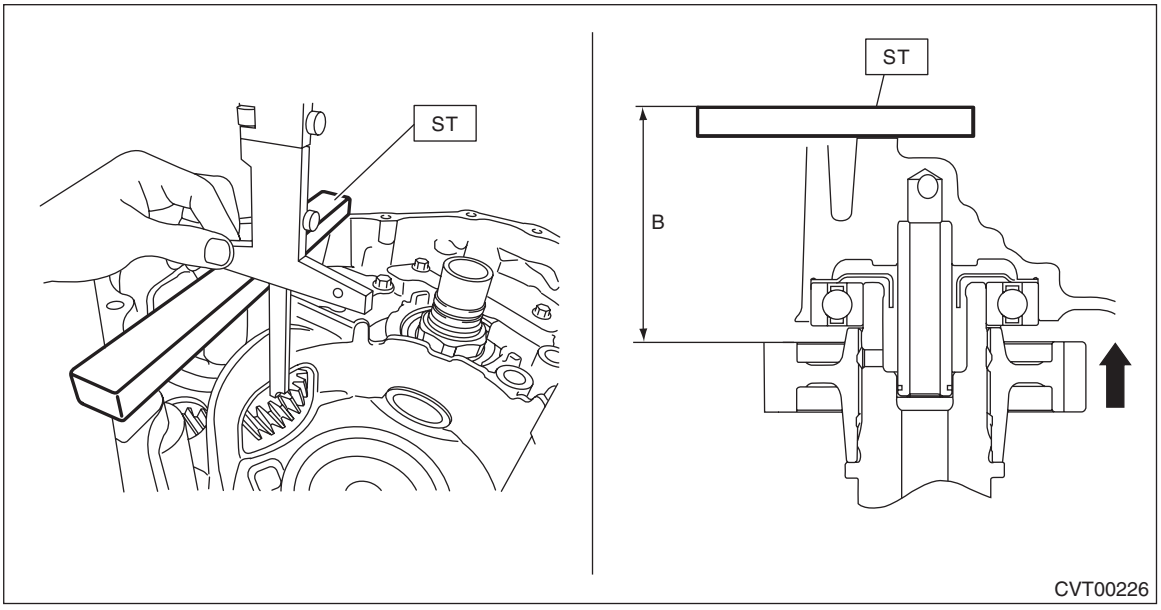

6) Calculate the following formula.
T mm = A – B – 1.0
[T in = A – B – 0.039]
T: Moving distance of reduction drive gear
A: Depth from the ST upper face to the reduction drive gear end surface
B: Depth from the ST upper face to the reduction drive gear end surface (with the gear raised)
1.0 mm (0.039 in): Thickness of spring retainer

Moving distance of transfer drive gear [T]	Total shim thickness mm (in)
0.420 — 0.519(0.0165 — 0.0204)	0.3 (0.012)
0.520 — 0.619(0.0205 — 0.0242)	0.4 (0.016)
0.620 — 0.719(0.0244 — 0.0283)	0.5 (0.020)
0.720 — 0.819(0.0283 — 0.0322)	0.6 (0.024)
0.820 — 0.919(0.0323 — 0.0362)	0.7 (0.028)
0.920 — 1.019(0.0362 — 0.0401)	0.8 (0.031)
1.020 — 1.119(0.0402 — 0.0441)	0.9 (0.035)
1.120 — 1.219(0.0441 — 0.0480)	1.0 (0.039)
1.220 — 1.319(0.0480 — 0.0519)	1.1 (0.043)
1.320 — 1.419(0.0520 — 0.0559)	1.2 (0.047)
1.420 — 1.519(0.0559 — 0.0598)	1.3 (0.051)
1.520 — 1.619(0.0598 — 0.0637)	1.4 (0.055)
1.620 — 1.719(0.0638 — 0.0677)	1.5 (0.059)
1.720 — 1.819(0.0677 — 0.0716)	1.6 (0.063)
1.820 — 1.920(0.0717 — 0.0756)	1.7 (0.067)

7) Select one to three reduction drive gear shims so that the total thickness meets the value obtained from step 6).

Part No.	Reduction drive gear shim thickness mm (in)
31288AA260	0.3 (0.012)
31288AA270	0.4 (0.016)
31288AA280	0.5 (0.020)
31288AA290	0.6 (0.024)

43.Primary Pulley and Secondary Pulley

A: REMOVAL

NOTE:
Always replace primary pulley and secondary pulley as an assembly because they are non-disassembled parts.
1) Remove the transmission assembly from the vehicle. <Ref. to CVT(TH58A)-62, REMOVAL, Automatic Transmission Assembly.>
2) Remove the air breather hose. <Ref. to CVT(TH58A)-169, REMOVAL, Air Breather Hose.>
3) Remove the transmission harness. <Ref. to CVT(TH58A)-141, REMOVAL, Transmission Harness.>
4) Remove the main control valve body. <Ref. to CVT(TH58A)-114, REMOVAL, Control Valve Body.>
5) Remove the turbine speed sensor. <Ref. to CVT(TH58A)-103, REMOVAL, Turbine Speed Sensor.>
6) Remove the secondary speed sensor. <Ref. to CVT(TH58A)-105, REMOVAL, Secondary Speed Sensor.>
7) Remove the front wheel speed sensor. <Ref. to CVT(TH58A)-107, REMOVAL, Front Wheel Speed Sensor.>
8) Remove the inhibitor switch. <Ref. to CVT(TH58A)-99, REMOVAL, Inhibitor Switch.>
9) Remove the extension case. <Ref. to CVT(TH58A)-179, REMOVAL, Extension Case.>
10) Remove the transfer clutch assembly. <Ref. to CVT(TH58A)-183, REMOVAL, Transfer Clutch.>
11) Remove the transfer driven gear assembly. <Ref. to CVT(TH58A)-197, REMOVAL, Transfer Driven Gear.>
12) Remove the transfer drive gear assembly. <Ref. to CVT(TH58A)-200, REMOVAL, Transfer Drive Gear.>
13) Remove the parking pawl. <Ref. to CVT(TH58A)-205, REMOVAL, Parking Pawl.>
14) Remove the oil pan and oil strainer. <Ref. to CVT(TH58A)-111, REMOVAL, Oil Pan and Strainer.>
15) Remove the transmission control device. <Ref. to CVT(TH58A)-208, REMOVAL, Transmission Control Device.>
16) Remove the drive motor assembly. <Ref. to CVT(TH58A)-215, REMOVAL, Drive Motor Assembly.>
17) Remove the output clutch assembly. <Ref. to CVT(TH58A)-226, REMOVAL, Output Clutch Assembly.>
18) Remove the transmission case. <Ref. to CVT(TH58A)-243, REMOVAL, Transmission Case.>
19) Remove the reduction drive gear. <Ref. to CVT(TH58A)-256, REMOVAL, Reduction Drive Gear.>
20) Set the ST to secondary pulley, expand the V groove of pulley, and then completely loosen the variator chain.
ST 18769AA010 EXPANDER PULLEY

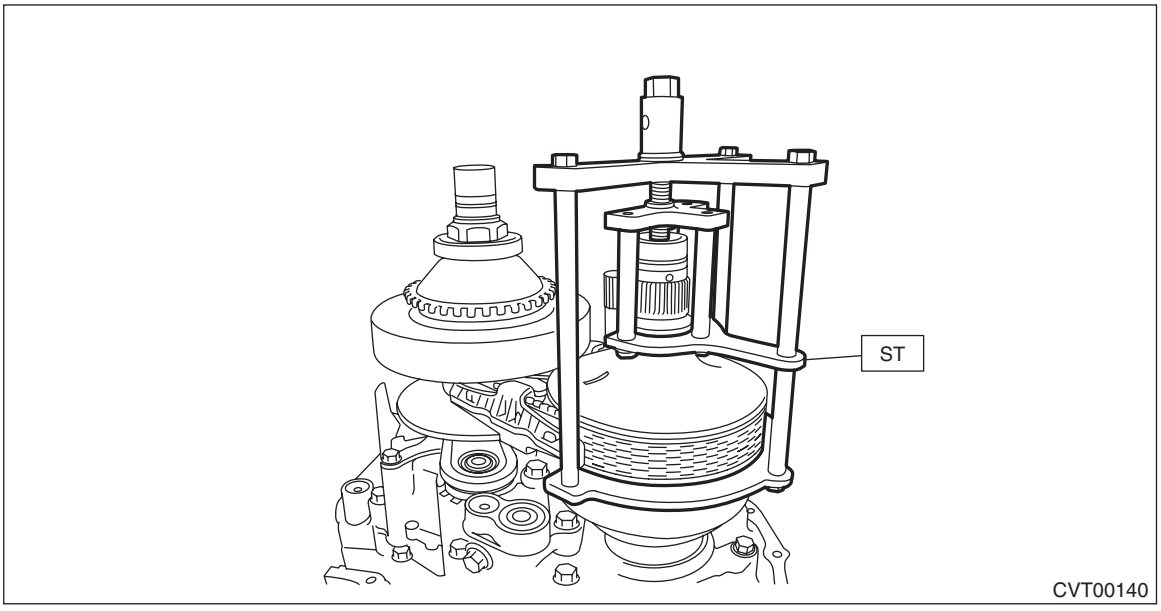

21) Remove the chain guide.
(1) Remove the chain guide from lubrication pipe.
(2) Detach the four claws to remove the chain guide.

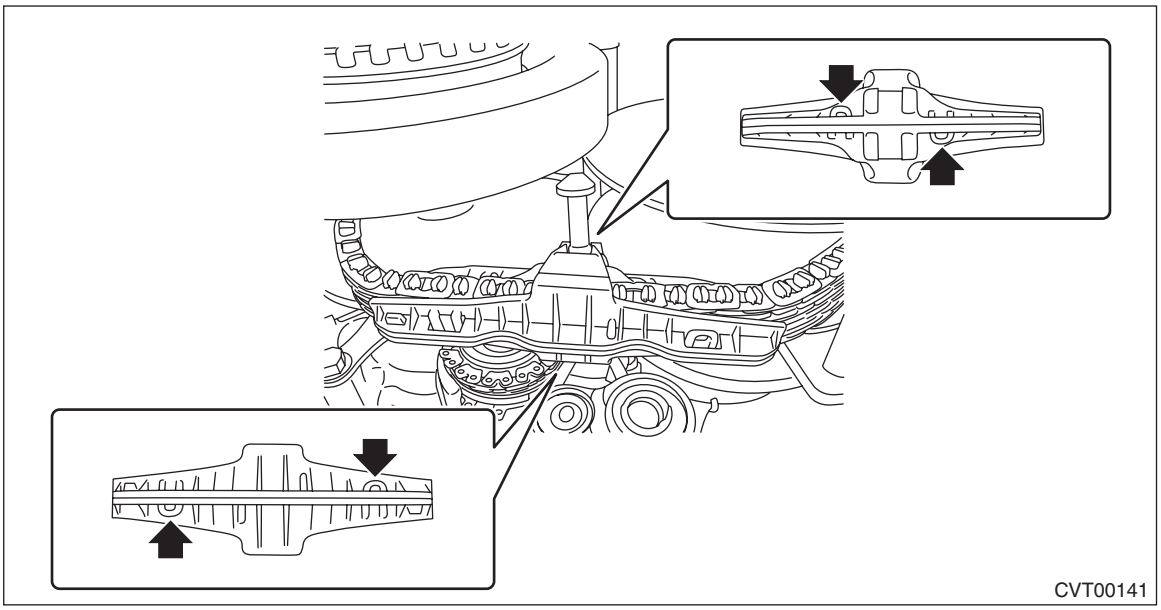
CVT00141

(3) Remove the lubrication pipe.

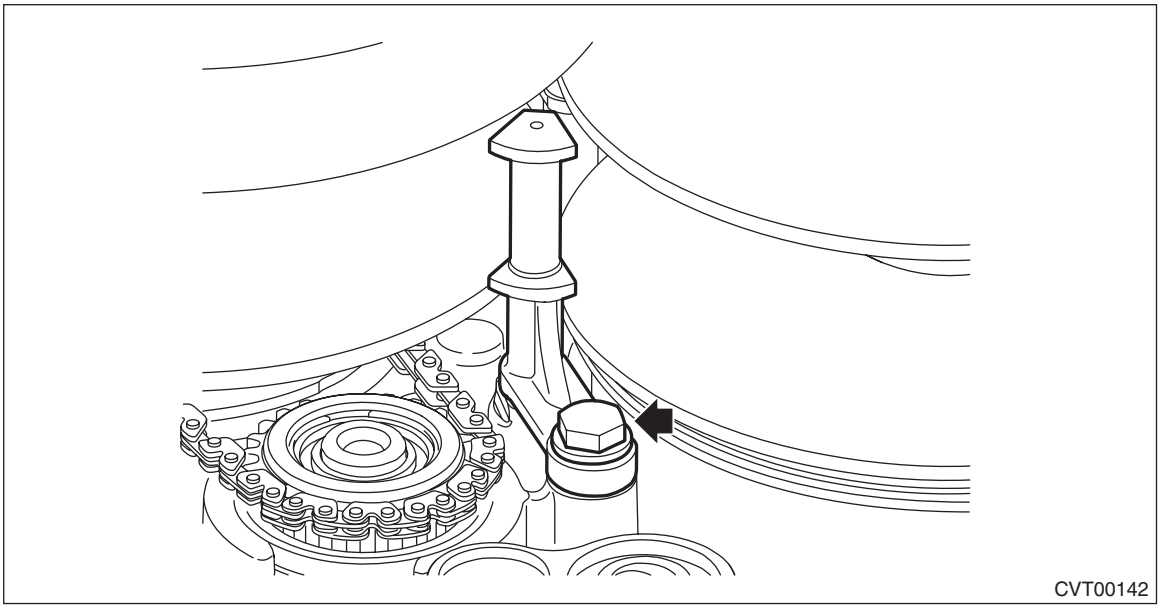
CVT00142

(4) Remove the support rod mounting bolts.

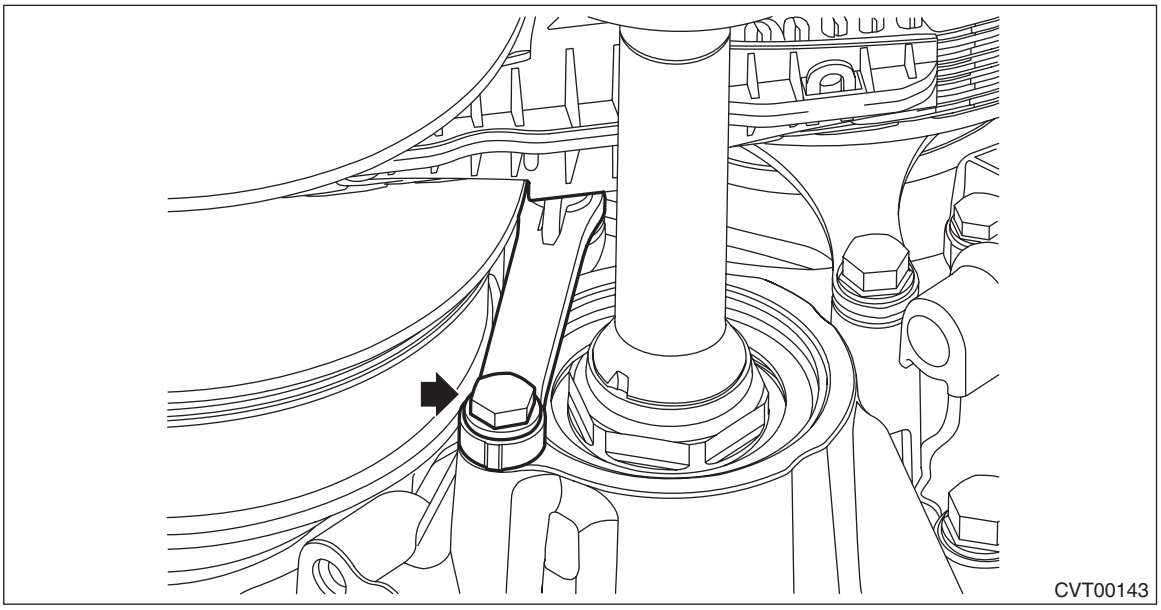

(5) Raise the support rod to remove the chain guide.

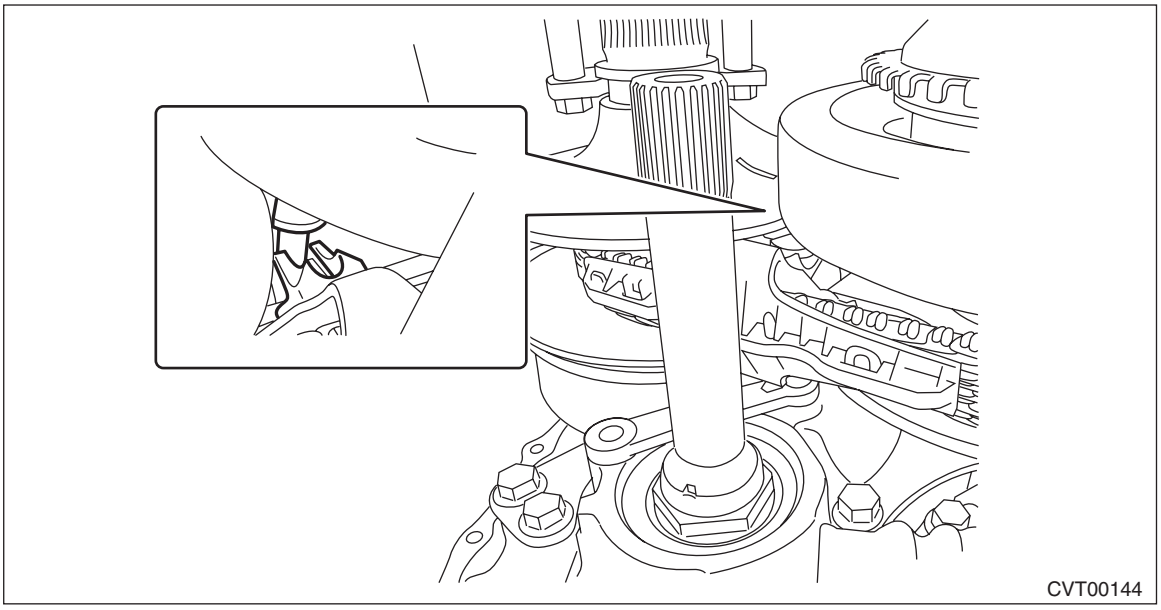

(6) Move the chain guide to the secondary pulley side.

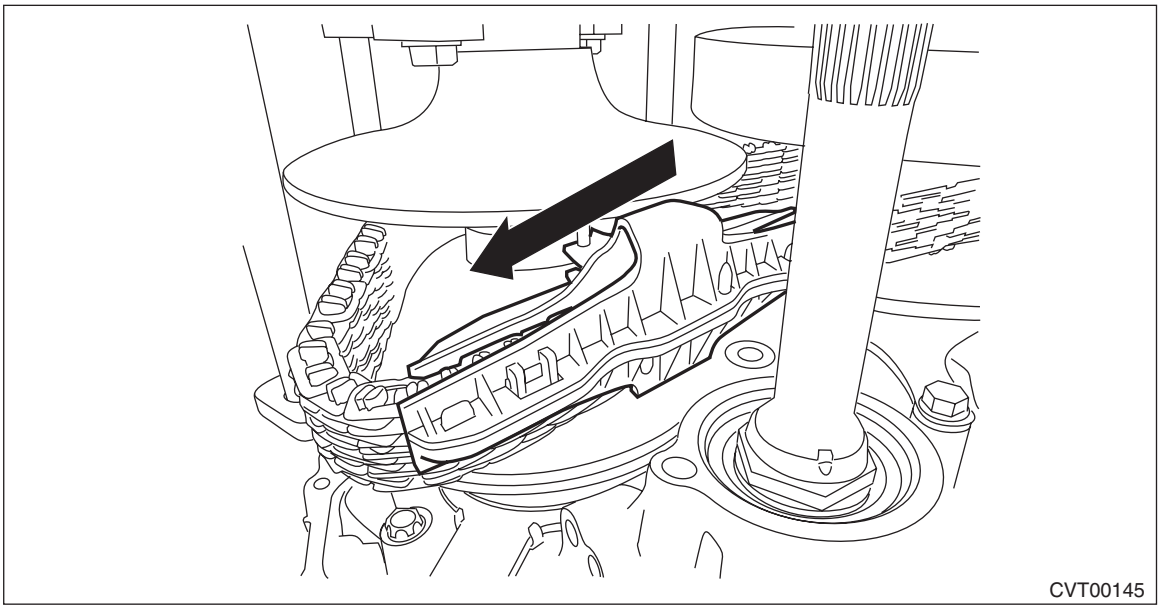

(7) Detach the four claws to remove the chain guide.

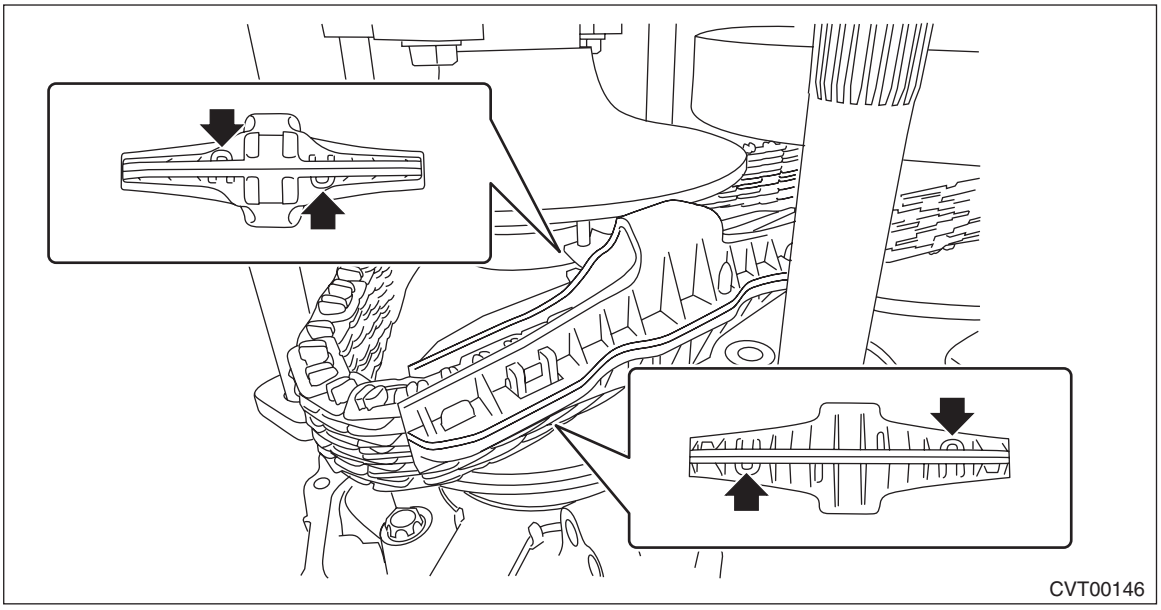

(8) Remove the support rod.

CAUTION:
Protect the both pulleys and variator chain from scratching.

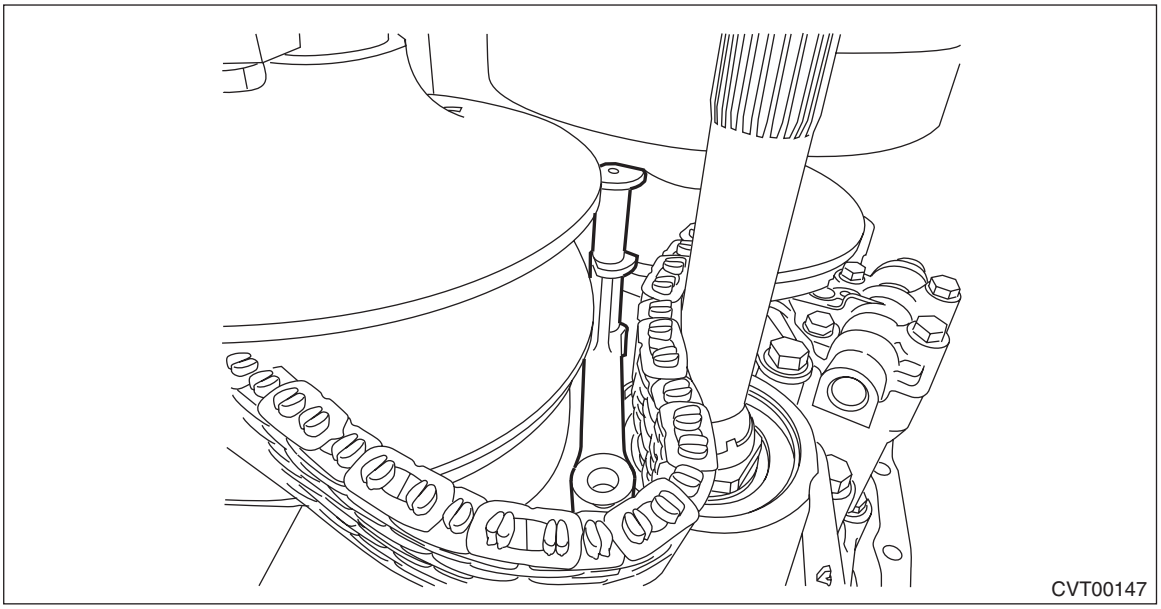

22) Remove the primary pulley mounting bolt.

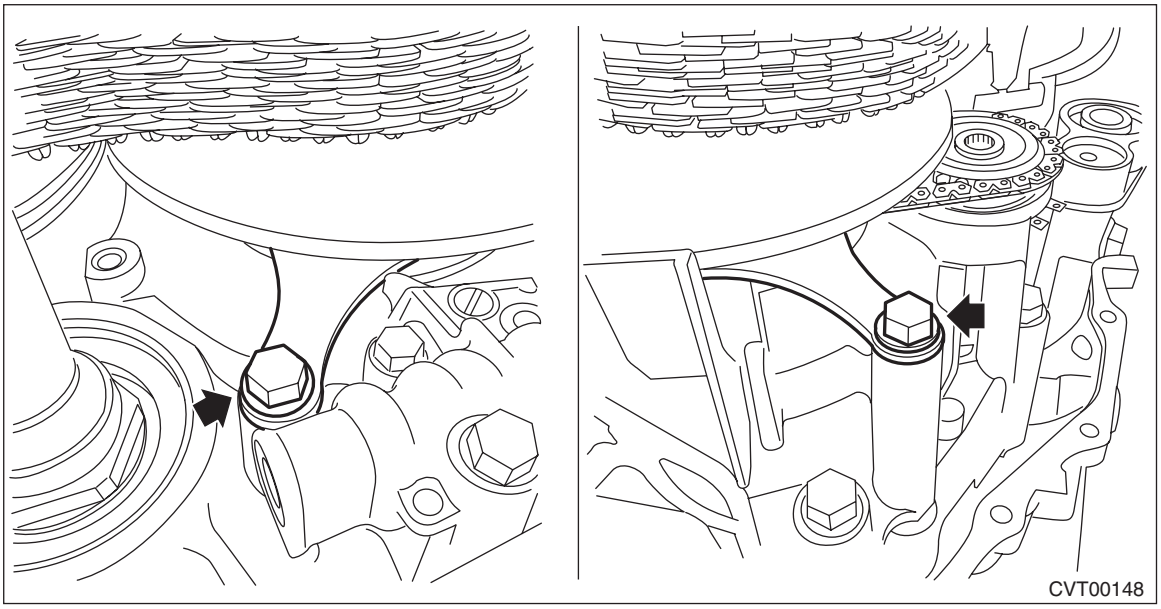

23) Spread the snap ring, and remove the snap ring from the oil pump sprocket (rear).

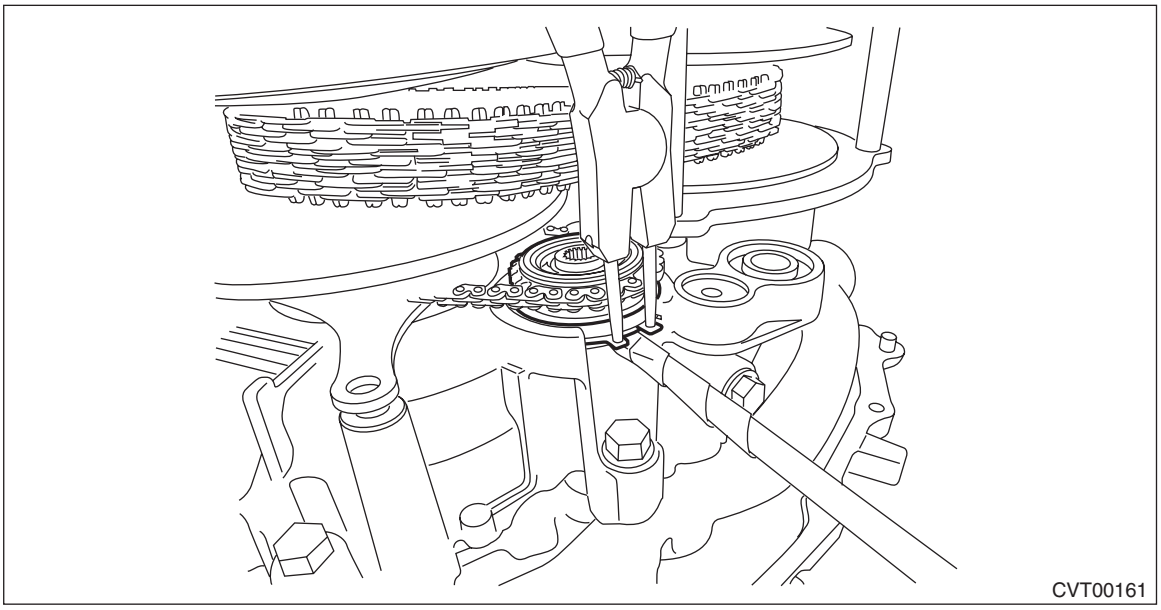
CVT00161

24) Remove the primary pulley.

CAUTION:
Cover the V grooves of secondary pulley and primary pulley with cloth to protect the both pulleys and variator chain from scratching.

(1) Raise the primary pulley and the oil pump sprocket (rear) together, and remove the oil pump sprocket (rear).
(2) Remove the primary pulley from the reverse brake housing and intersect the V groove of secondary pulley and the V groove of primary pulley.
(3) Remove the variator chain from primary pulley, and remove the primary pulley.

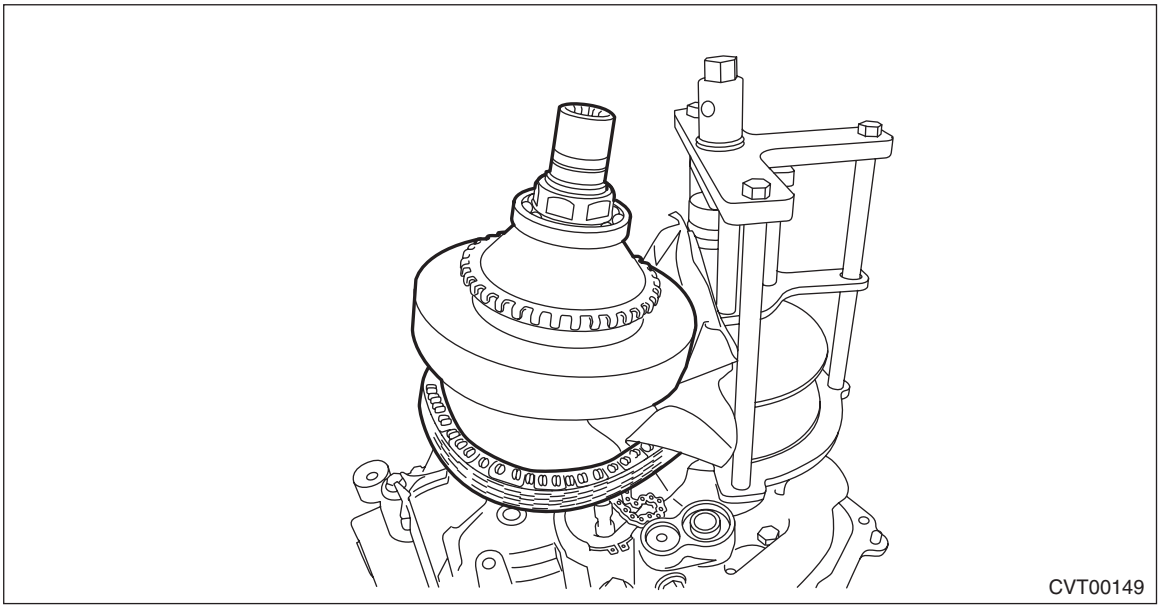
CVT00149

25) Remove the rear oil pump chain.

26) Remove the sleeve.

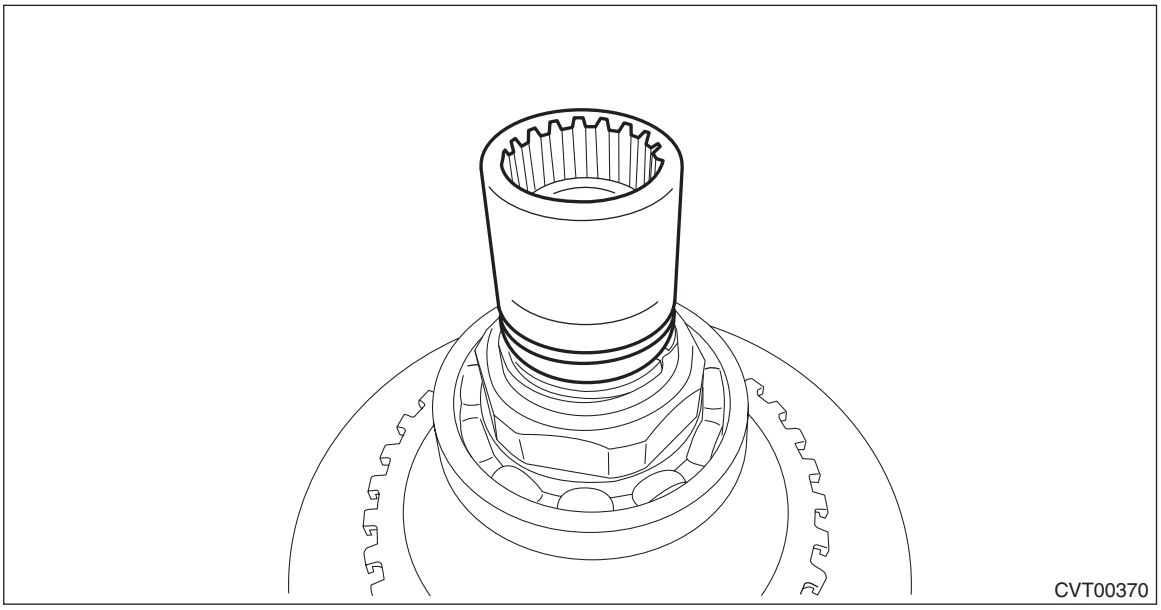

27) Remove the O-ring from the primary pulley assembly.
28) Remove the ST (EXPANDER PULLEY) from the secondary pulley.
29) Remove the variator chain from secondary pulley.
30) Remove the secondary pulley mounting bolts, and remove the secondary pulley.

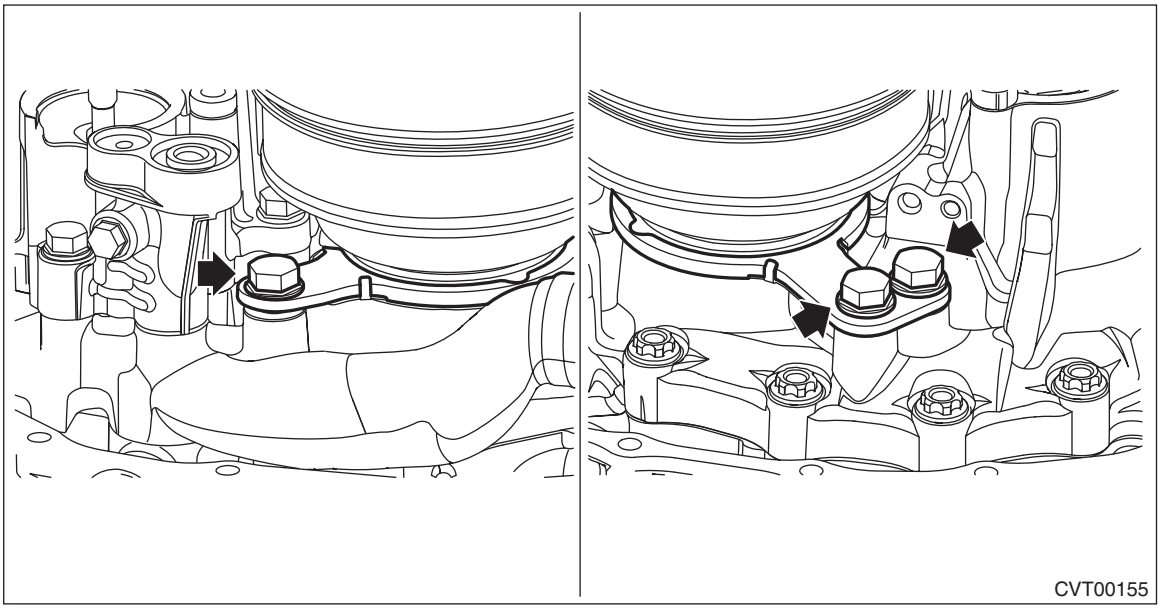

31) Remove the seal ring from drive pinion retainer.

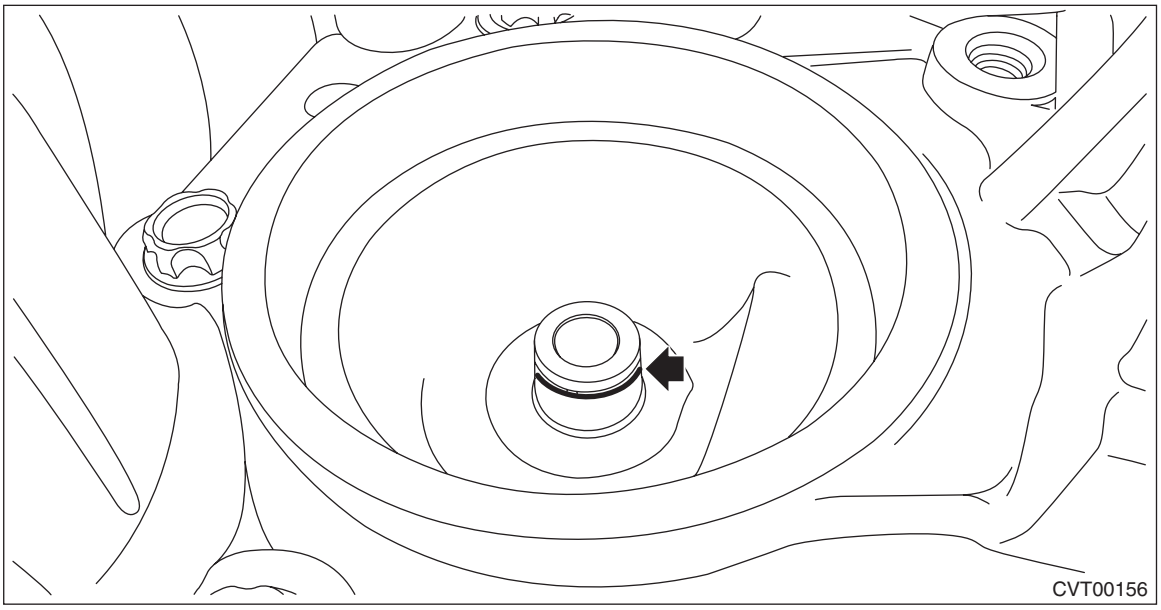

32) Remove the seal ring from the input shaft.

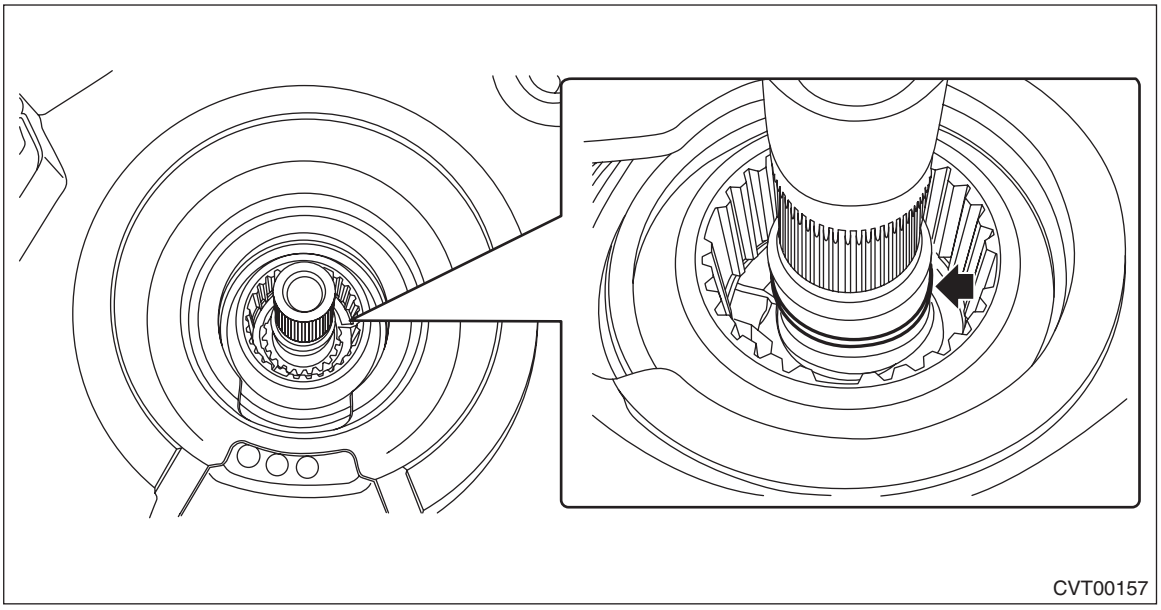

B: INSTALLATION

1) Select shims for pulley alignment. <Ref. to CVT(TH58A)-279, ADJUSTMENT, Primary Pulley and Secondary Pulley.>
2) When replacing the oil pump sprocket rear and the snap ring which secures the oil pump sprocket rear, select the oil pump shaft. <Ref. to CVT(TH58A)-384, ADJUSTMENT, Oil Pump.>
3) Install the seal ring to the input shaft.

NOTE:
- Use a new seal ring.
- When installing the seal ring, do not expand the seal ring too much.
- Apply CVTF to the seal rings.

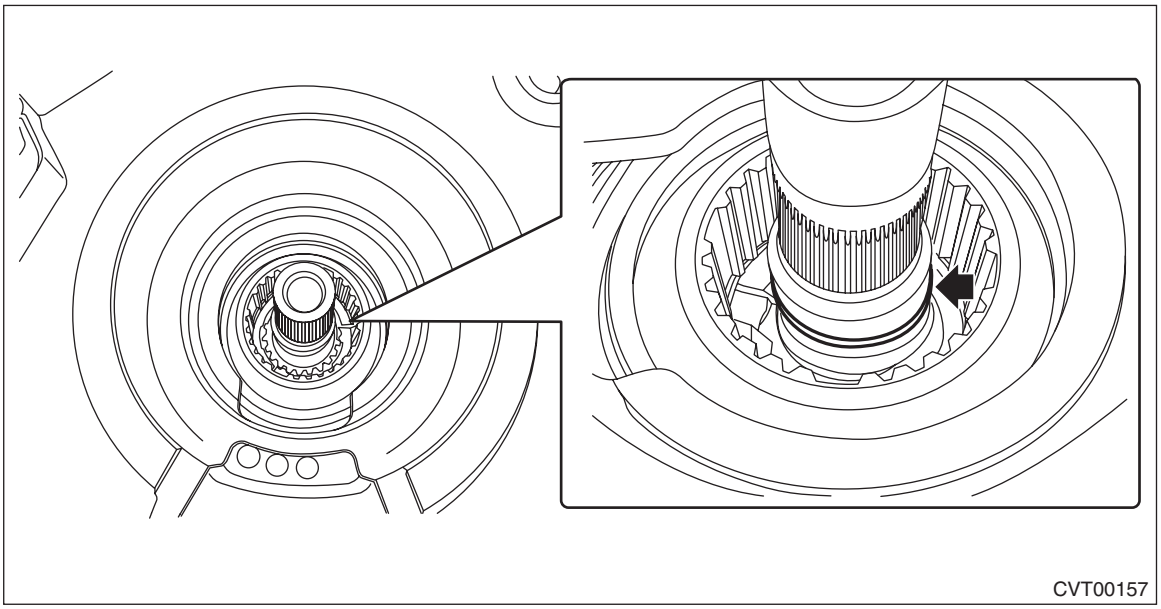

4) Install the seal ring to drive pinion retainer.

NOTE:
- Use a new seal ring.
- When installing the seal ring, do not expand the seal ring too much.
- Apply CVTF to the seal rings.

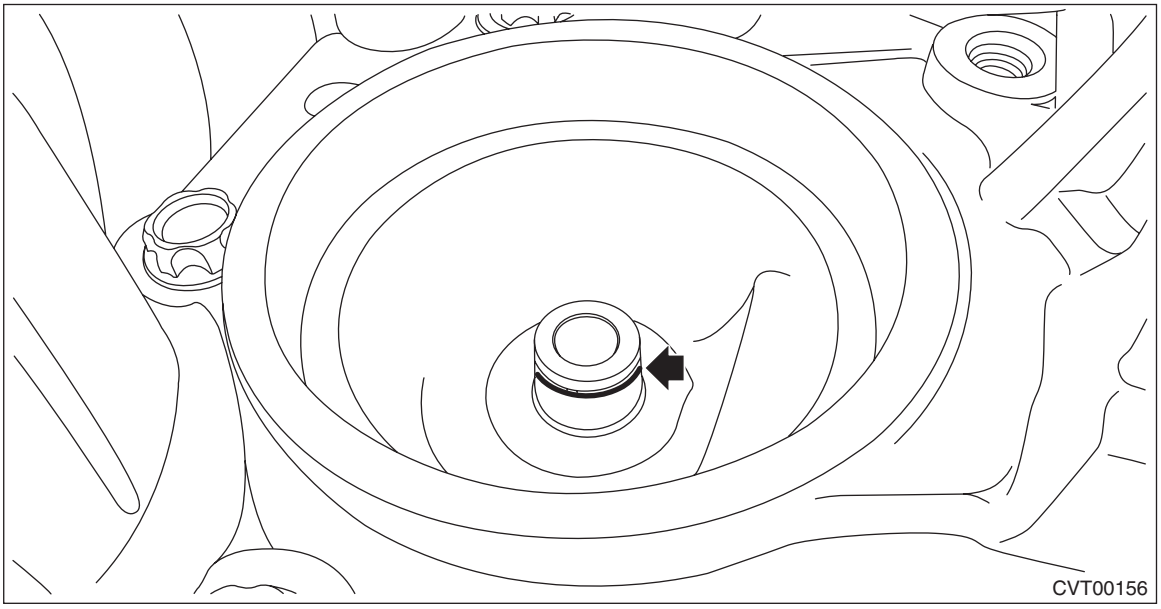

5) Install the selected shims to the primary pulley bearing catch surface.

6) Install the secondary pulley to the drive pinion retainer.

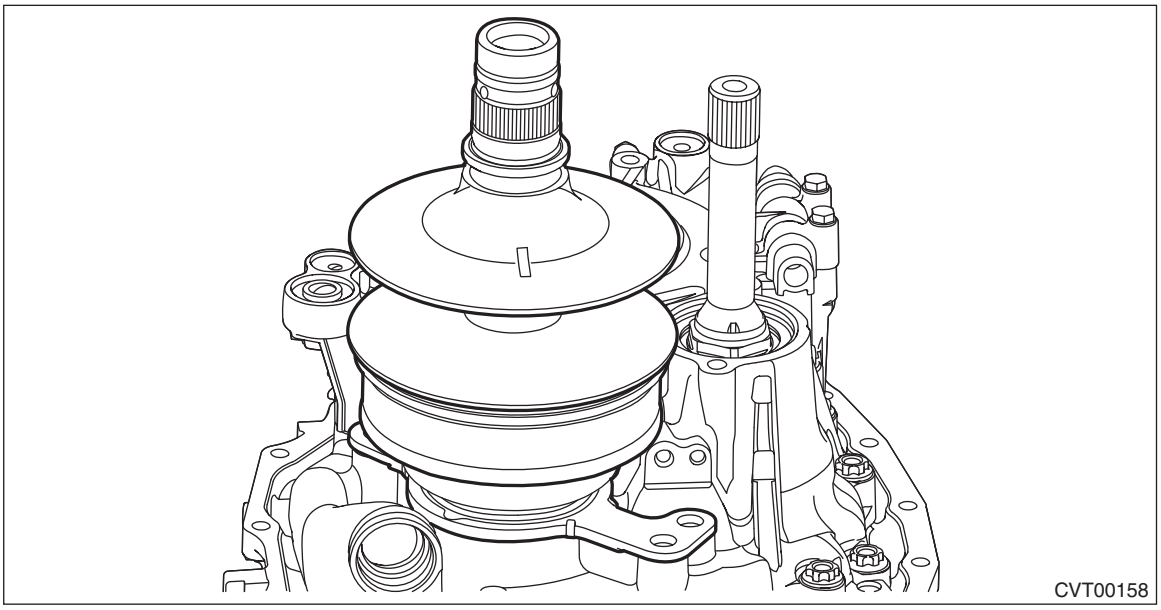

7) Install and tighten the secondary pulley securing bolts.
   (1) Tighten the three bolts until the seating surfaces contact the bearing retainer.

NOTE:
- Be careful not to tilt the bearing retainer of the secondary pulley.
- Apply CVTF to the bolt.

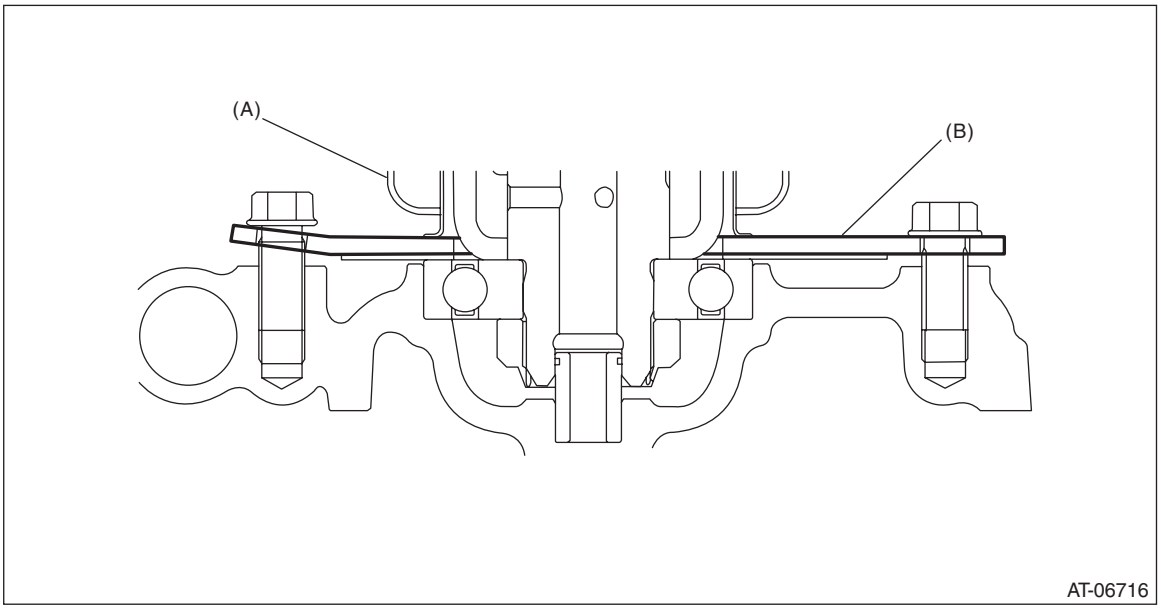

(A) Secondary pulley
(B) Bearing retainer

(2) Tighten the bolts in the order of (A) → (B) → (C) → (B).

Tightening torque:
67.5 N·m (6.9 kgf-m, 49.8 ft-lb)

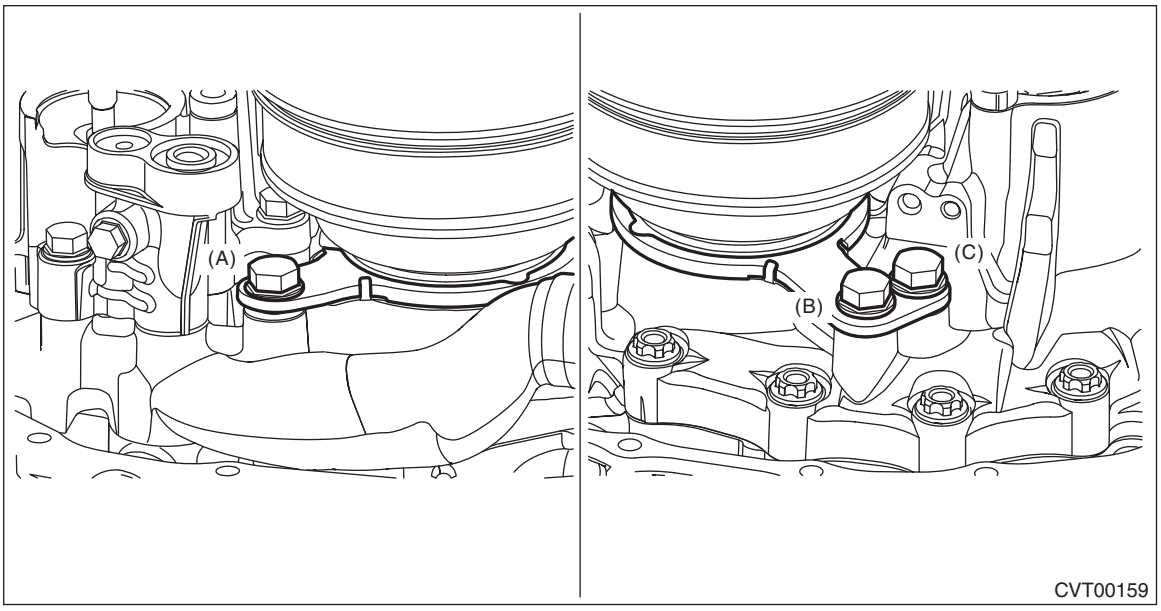

8) Place the variator chain on the V groove of the secondary pulley, and set the ST.
ST 18769AA010 EXPANDER PULLEY

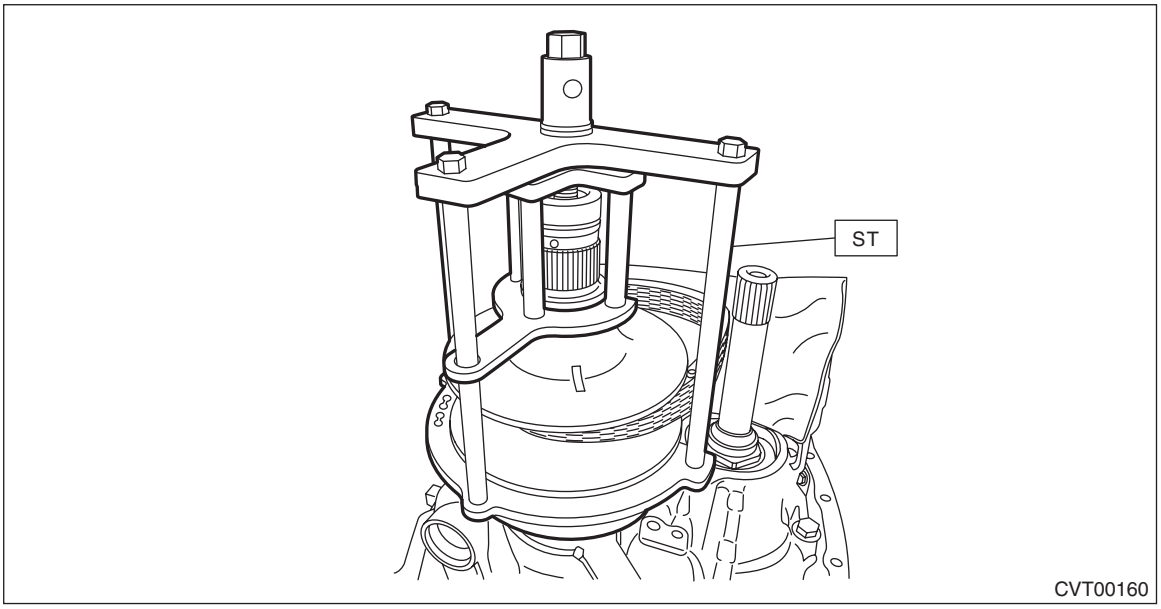

9) Expand the V groove of the secondary pulley.
10) Install the O-ring to the primary pulley.

NOTE:
- Use new O-rings.
- Apply CVTF to the O-ring.

11) Install the sleeve.

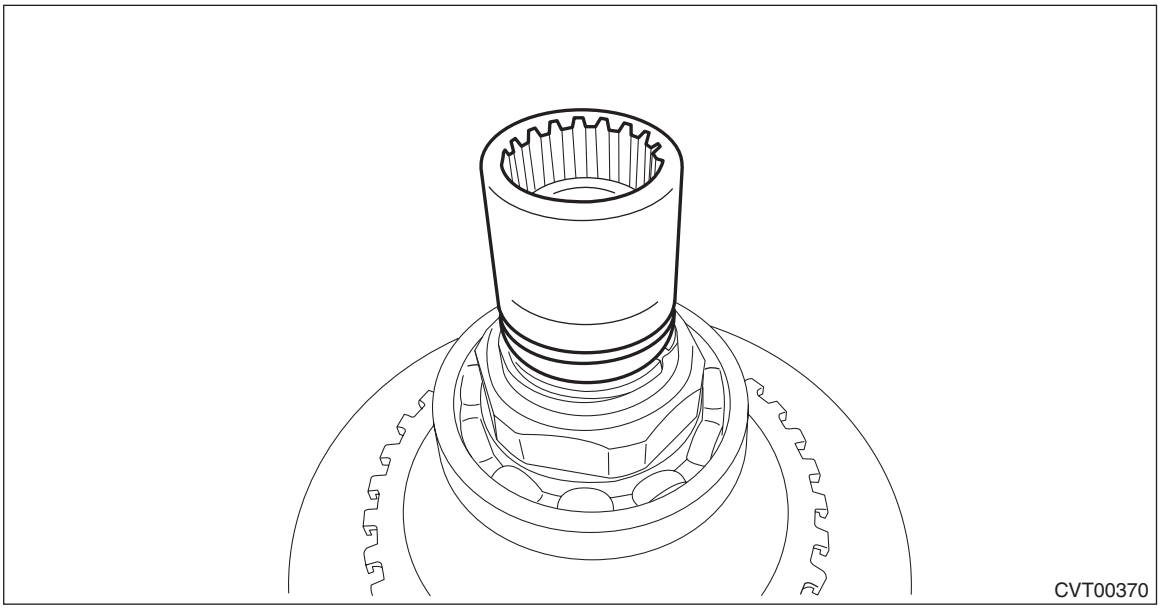

12) Install the primary pulley.

CAUTION:
Cover the V grooves of primary pulley and secondary pulley with cloth to protect the both pulleys and variator chain from scratching.

(1) Install the oil pump chain rear to the primary pulley.
(2) Intersect the V groove of primary pulley and the V groove of secondary pulley, and attach the variator chain to the primary pulley.

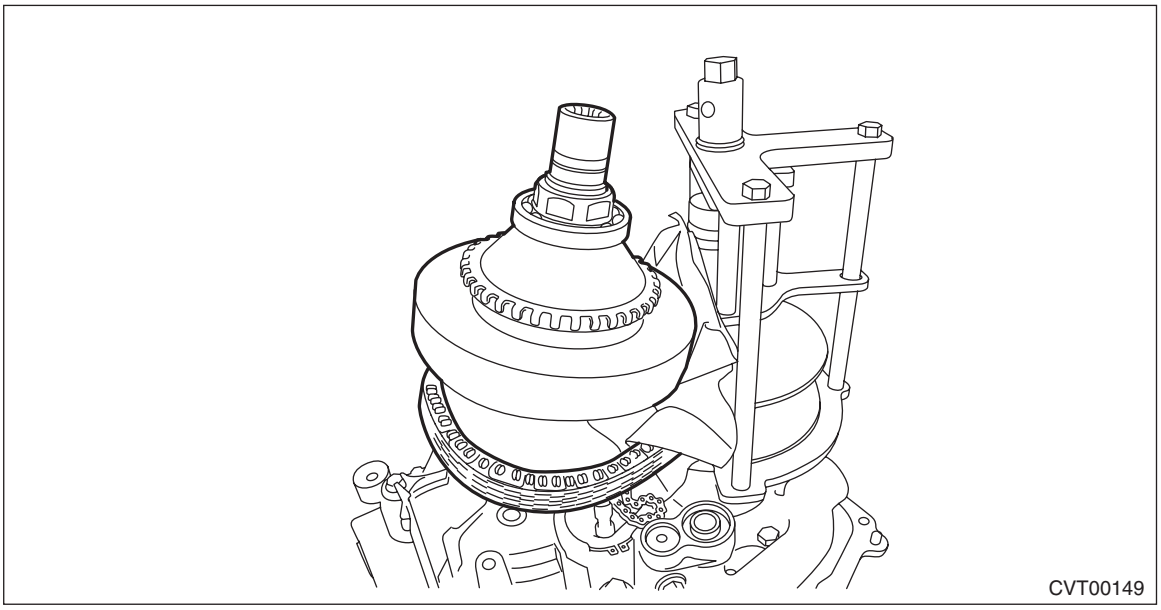

(3) Attach the oil pump chain rear to the primary pulley sprocket, and install the oil pump sprocket rear.
(4) Align the bolt hole of primary bearing retainer and the bolt hole of reverse brake housing, and install the primary pulley and the oil pump sprocket rear to the reverse brake housing.

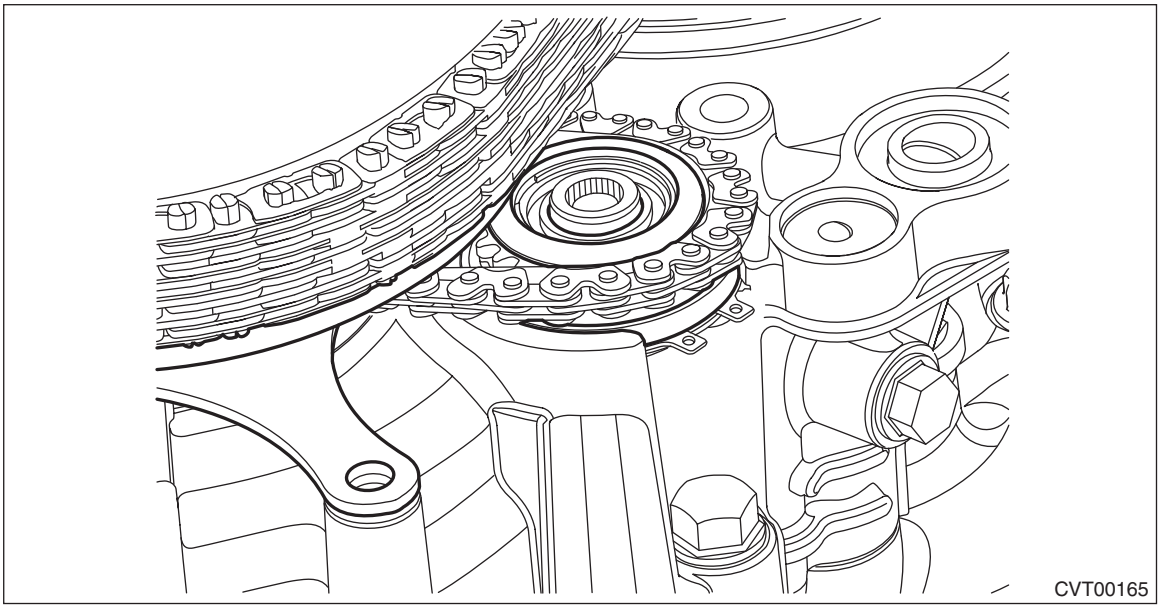
CVT00165

13) Spread the snap ring, align the snap ring with the bearing groove, and install the oil pump sprocket rear.

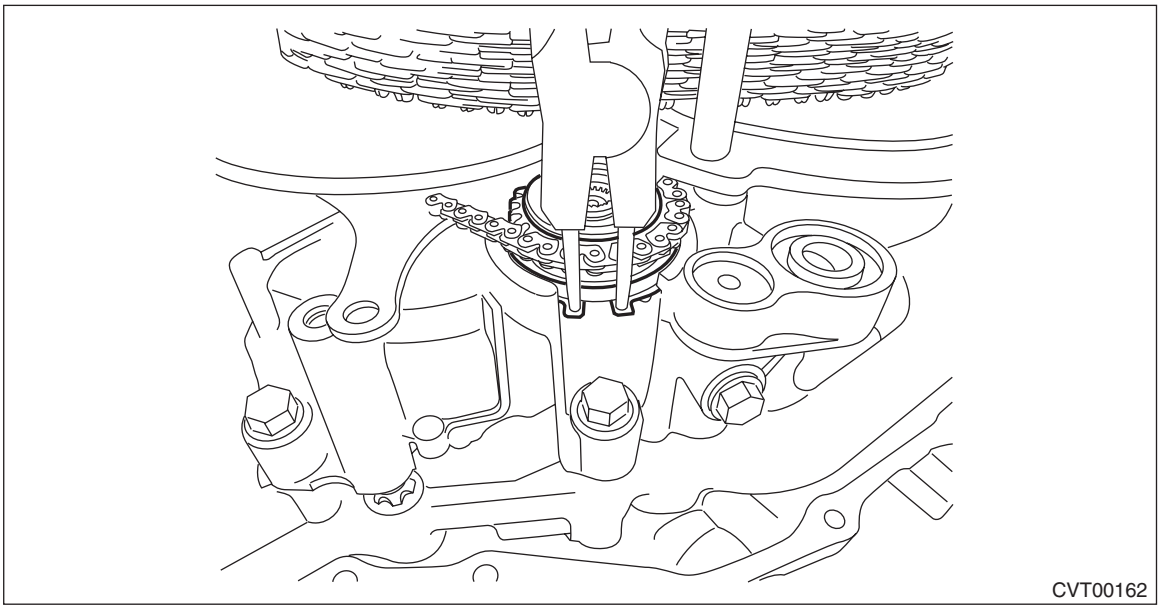
CVT00162

14) Install the primary pulley bolt.

NOTE:
Apply CVTF to the bolt.

Tightening torque:
21 N·m (2.1 kgf-m, 24.3 ft-lb)

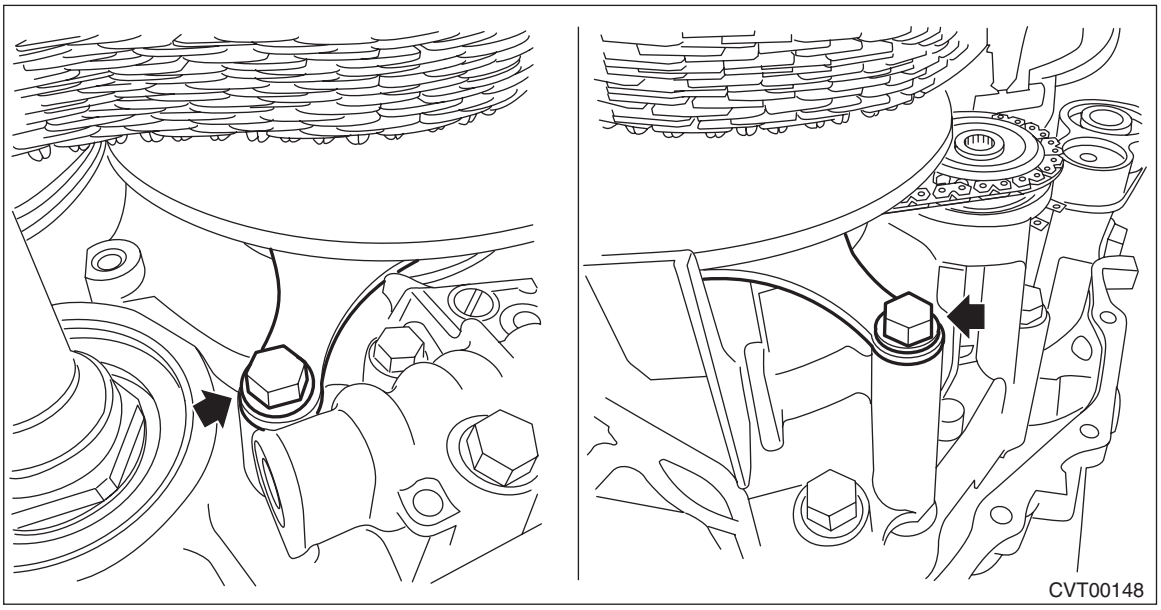

15) Install the chain guide.
(1) Place the support rod inside of the variator chain.

CAUTION:
Protect the both pulleys and variator chain from scratching.

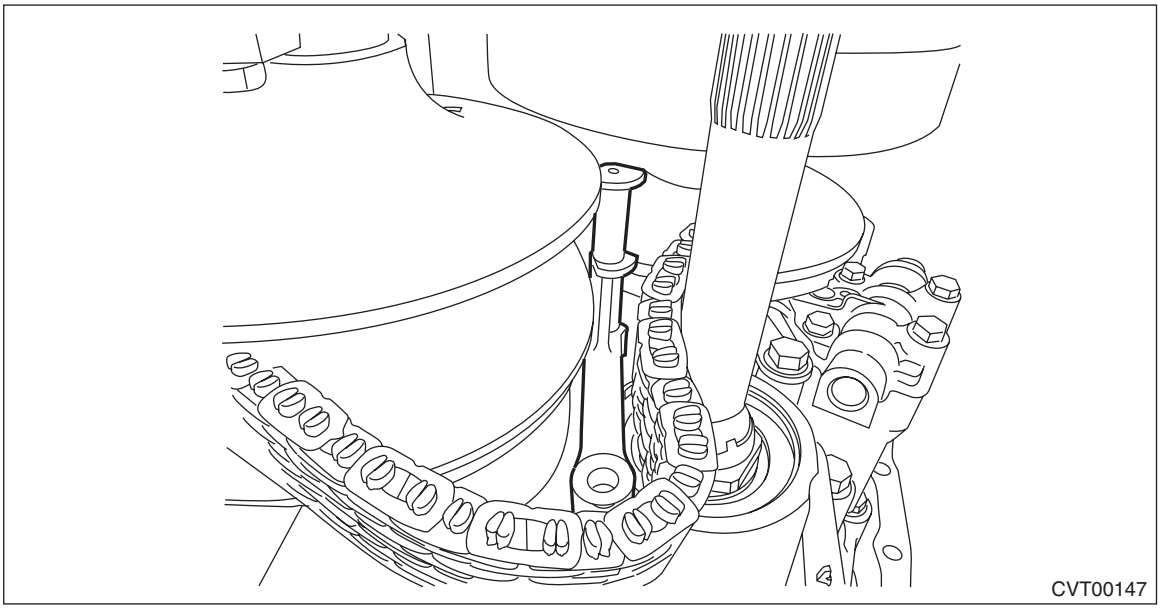

(2) Install the chain guide to the variator chain.

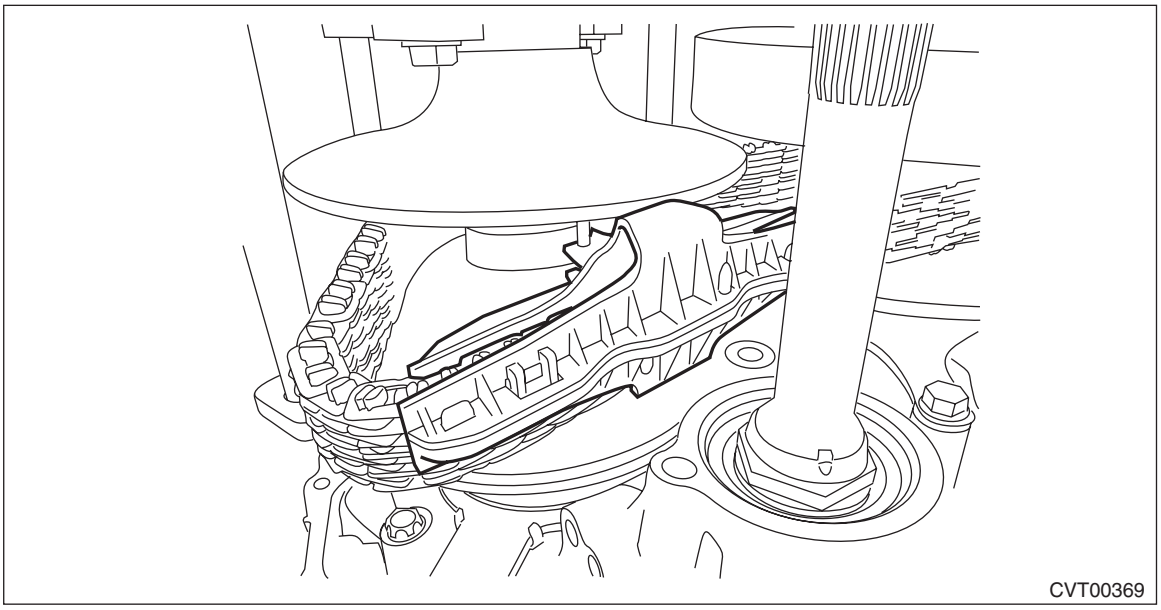

(3) Move the chain guide to the support rod side.
(4) While holding the support rod, press the chain guide so that the support rod runs through between the protrusions of chain guide and install the chain guide to the support rod.

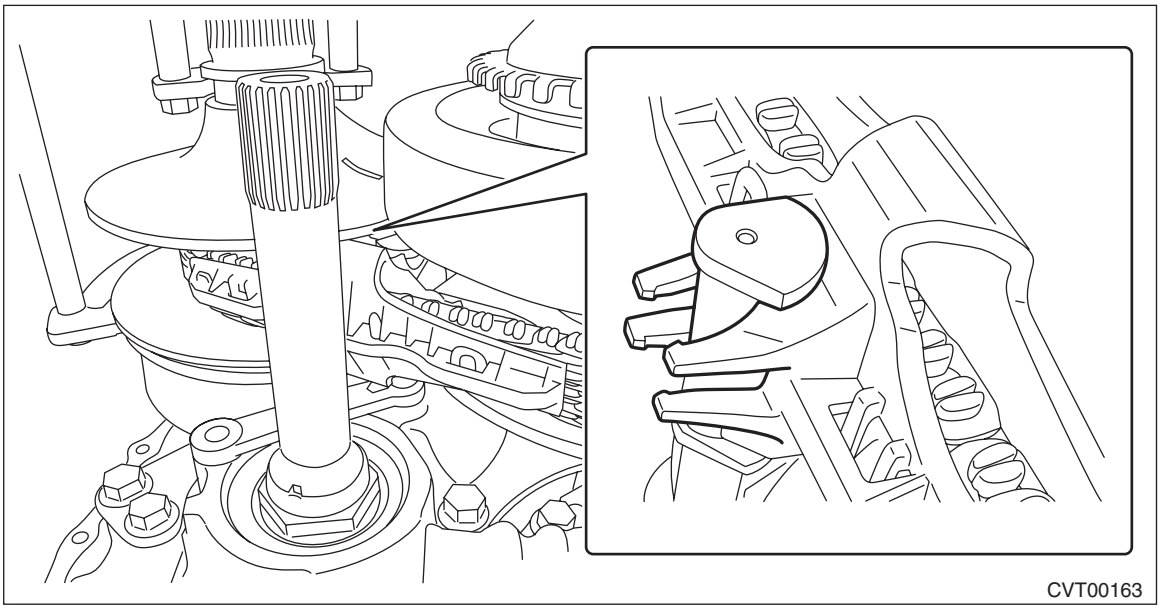

(5) Install the support rod.

Tightening torque:
21 N·m (2.1 kgf-m, 15.5 ft-lb)

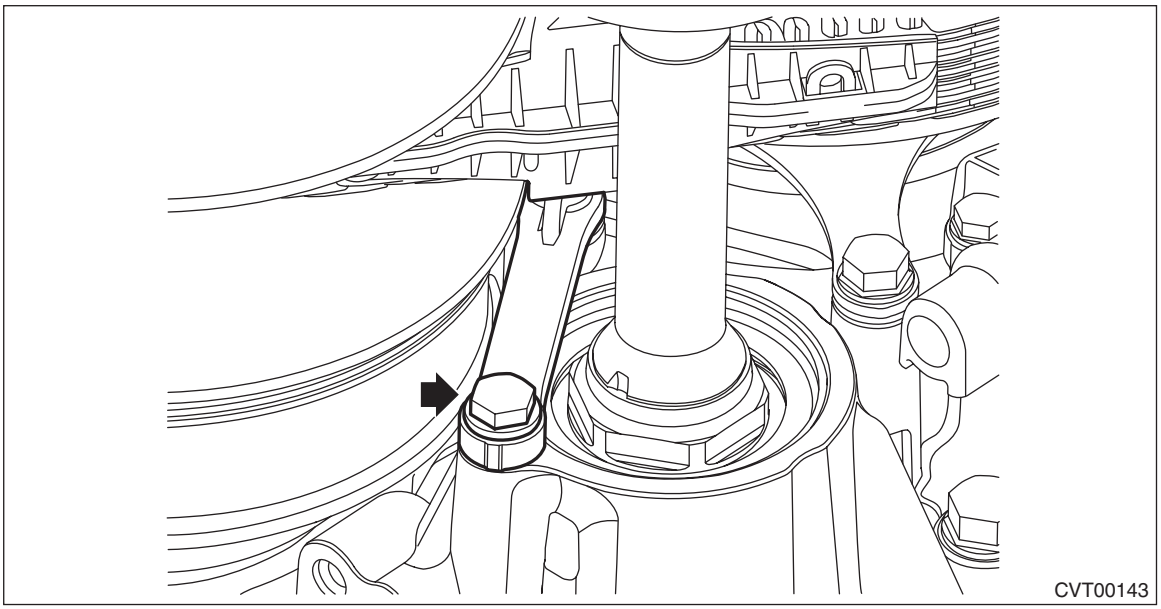

(6) Install the lubrication pipe.

Tightening torque:
21 N·m (2.1 kgf-m, 15.5 ft-lb)

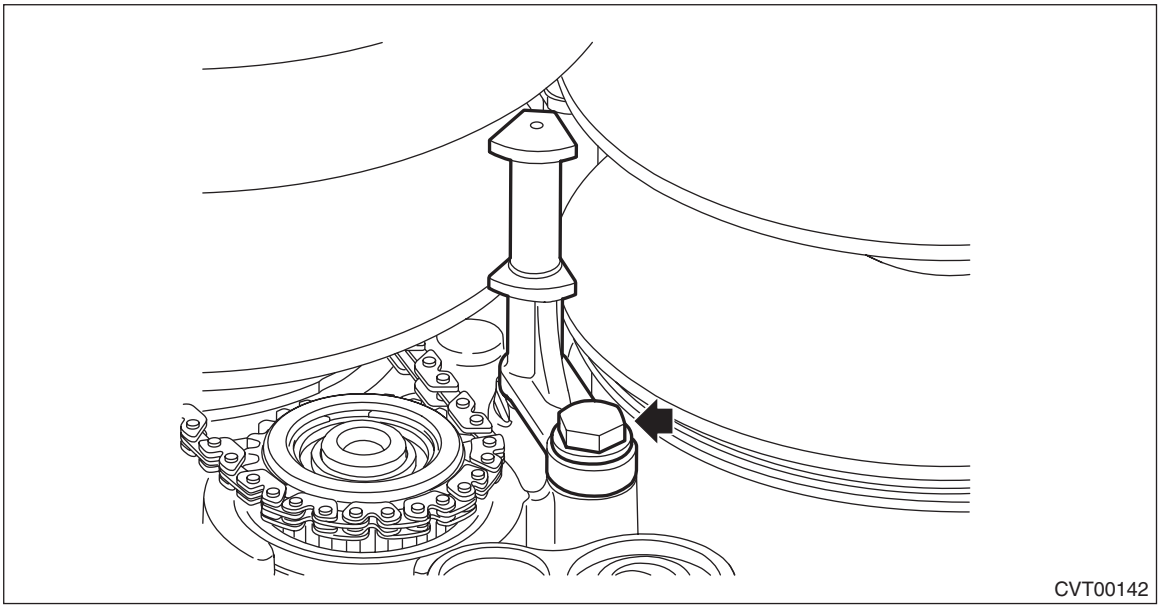

(7) Install the chain guide to the variator chain.
(8) Install the chain guide so that the lubrication pipe runs through between the protrusions of each chain guide. Then remove the ST (PULLEY EXPANDER).

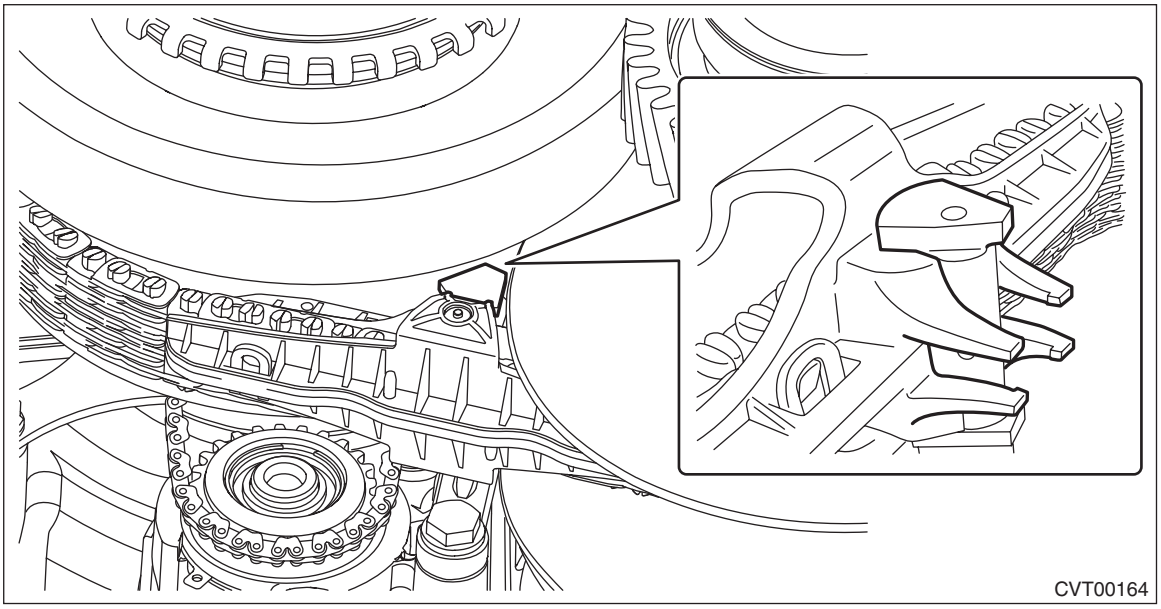

16) Install the reduction drive gear. <Ref. to CVT(TH58A)-257, INSTALLATION, Reduction Drive Gear.>
17) Install the transmission case. <Ref. to CVT(TH58A)-246, INSTALLATION, Transmission Case.>
18) Install the output clutch assembly. <Ref. to CVT(TH58A)-227, INSTALLATION, Output Clutch Assembly.>
19) Install the drive motor assembly. <Ref. to CVT(TH58A)-219, INSTALLATION, Drive Motor Assembly.>
20) Install the transmission control device. <Ref. to CVT(TH58A)-211, INSTALLATION, Transmission Control Device.>
21) Install the oil strainer and oil pan. <Ref. to CVT(TH58A)-113, INSTALLATION, Oil Pan and Strainer.>
22) Install the parking pawl. <Ref. to CVT(TH58A)-206, INSTALLATION, Parking Pawl.>
23) Install the transfer drive gear assembly. <Ref. to CVT(TH58A)-200, INSTALLATION, Transfer Drive Gear.>
24) Install the transfer driven gear assembly. <Ref. to CVT(TH58A)-198, INSTALLATION, Transfer Driven Gear.>
25) Install the transfer clutch assembly. <Ref. to CVT(TH58A)-185, INSTALLATION, Transfer Clutch.>
26) Install the extension case. <Ref. to CVT(TH58A)-180, INSTALLATION, Extension Case.>
27) Install the inhibitor switch. <Ref. to CVT(TH58A)-101, INSTALLATION, Inhibitor Switch.>
28) Install the secondary speed sensor. <Ref. to CVT(TH58A)-105, INSTALLATION, Secondary Speed Sensor.>
29) Install the front wheel speed sensor. <Ref. to CVT(TH58A)-107, INSTALLATION, Front Wheel Speed Sensor.>
30) Install the turbine speed sensor. <Ref. to CVT(TH58A)-103, INSTALLATION, Turbine Speed Sensor.>
31) Install the main control valve body. <Ref. to CVT(TH58A)-121, INSTALLATION, Control Valve Body.>
32) Install the transmission harness. <Ref. to CVT(TH58A)-149, INSTALLATION, Transmission Harness.>
33) Install the air breather hose. <Ref. to CVT(TH58A)-171, INSTALLATION, Air Breather Hose.>
34) Install the transmission assembly to the vehicle. <Ref. to CVT(TH58A)-76, INSTALLATION, Automatic Transmission Assembly.>

C: INSPECTION

- Check the surface of primary and secondary pulley cones for damage or wear.
- Check the primary and secondary pulley for damage.
- Check the bearing for seizure or wear.
- Apply CVTF to bearing and rotate the bearing to check for noise or dragging etc.
- Check the rear oil pump chain for damage.
- Check the one-way clutch of the oil pump sprocket (rear).

Secure the inner race, and check that the sprocket rotates clockwise and locks counterclockwise.

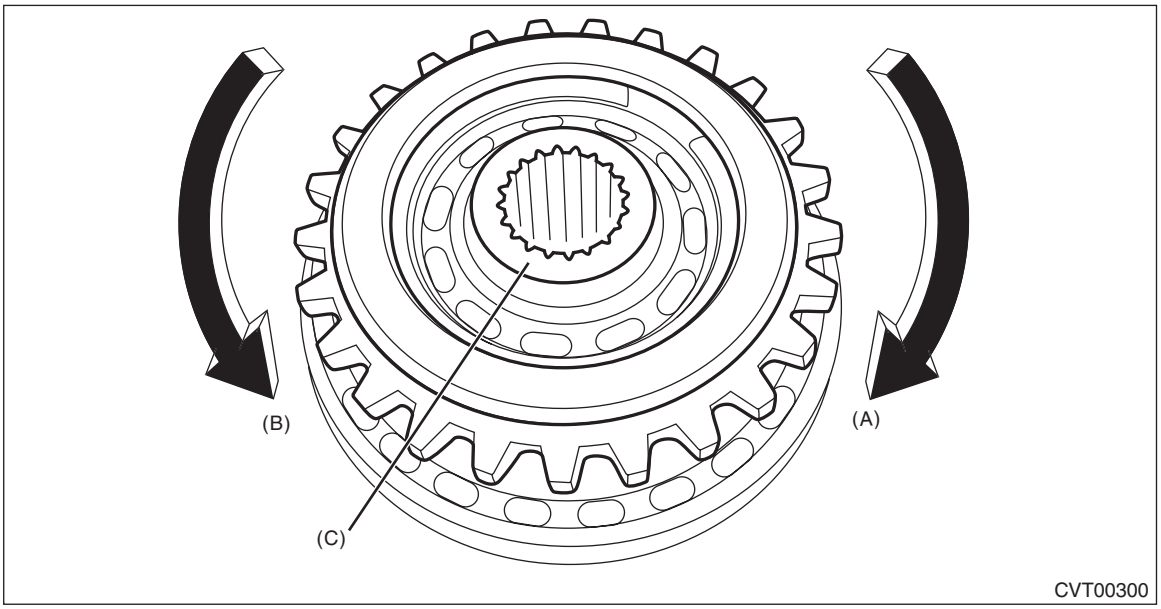

(A) Rotates freely
(B) Locked
(C) Inner race

D: ADJUSTMENT

1. PROCEDURE IN REPLACEMENT OF PRIMARY AND SECONDARY PULLEY, OR IN REPLACEMENT OF PRIMARY PULLEY, SECONDARY PULLEY AND VARIATOR CHAIN

1) Measure depth “Lp” from the ST upper face to the primary pulley bearing catch surface at several points and calculate the average.
ST 499575400 GAUGE

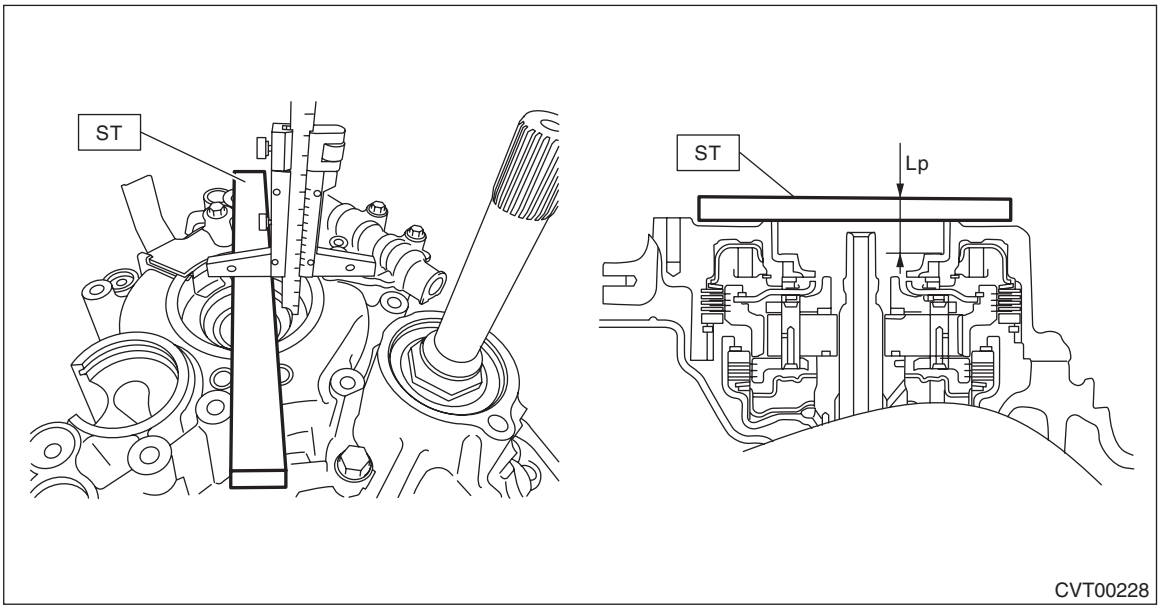

2) Measure the depth “Ls” from the ST upper face to the secondary pulley bearing catch surface at several points and calculate the average.
ST 499575400 GAUGE

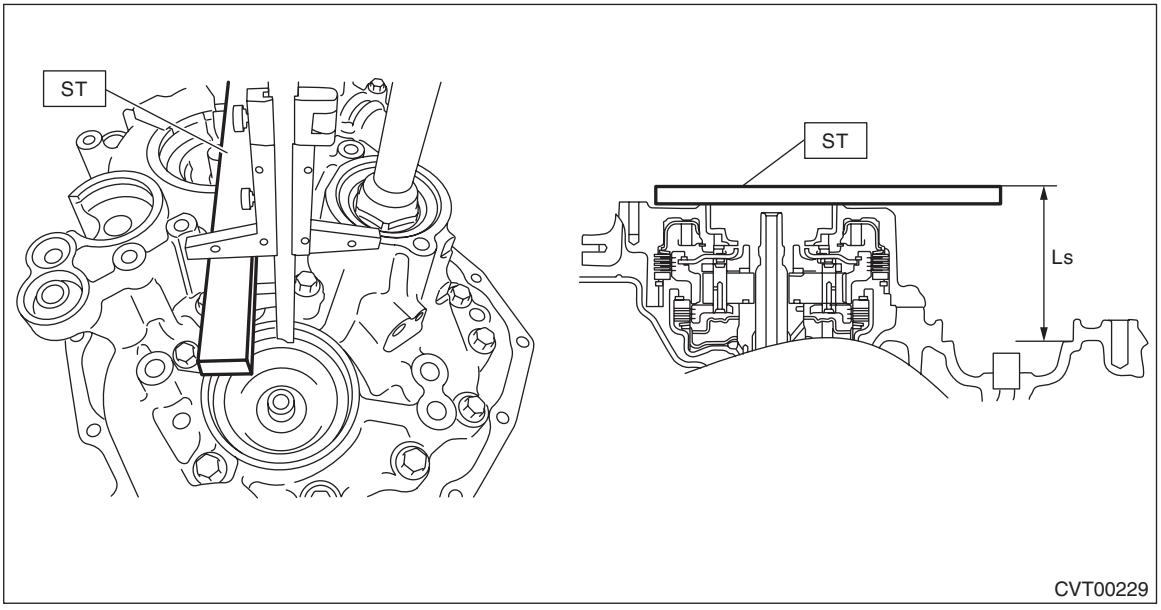

3) Calculate the following formula.
Calculation formula:
T (mm) = B – A + Lp – Ls – 28.602
[T (in) = B – A + Lp – Ls – 1.126]
T: Pulley alignment
A: Specified primary pulley dimension
B: Specified secondary pulley dimension
Lp: Depth from the ST upper face to the primary pulley bearing catch surface
Ls: Depth from the ST upper face to the secondary pulley bearing catch surface
28.602 mm (1.126 in): Constant

Pulley alignment T mm (in)	Thickness of shim mm (in)
-0.05 — 0.049(-0.002 — 0.002)	No shims
0.050 — 0.149(0.002 — 0.006)	0.1 (0.004)
0.150 — 0.249(0.006 — 0.010)	0.2 (0.008)
0.250 — 0.349(0.010 — 0.014)	0.3 (0.012)
0.350 — 0.449(0.014 — 0.018)	0.4 (0.016)
0.450 — 0.549(0.018 — 0.022)	0.5 (0.020)
0.550 — 0.649(0.022 — 0.026)	0.6 (0.024)
0.650 — 0.749(0.026 — 0.029)	0.7 (0.028)
0.750 — 0.849(0.029 — 0.033)	0.8 (0.031)
0.850 — 0.949(0.033 — 0.037)	0.9 (0.035)
0.950 — 1.049(0.037 — 0.041)	1.0 (0.039)
1.050 — 1.149(0.041 — 0.045)	1.1 (0.043)

4) Select one to two shims so that the total thickness meets the value obtained from step 3).

Part No.	Shim thickness mm (in)
32451AA050	0.1 (0.004)
32451AA060	0.2 (0.008)
32451AA070	0.3 (0.012)
32451AA080	0.4 (0.016)
32451AA090	0.5 (0.020)
32451AA100	0.6 (0.024)

2. PROCEDURE WHEN REPLACING ONLY DRIVE PINION RETAINER OR REVERSE BRAKE HOUSING

1) Clean the mating surface of current drive pinion retainer and converter case.
2) Measure and record the shim thickness that is attached on the current reverse brake housing.

3) Using the current drive pinion retainer, measure depth “Lp1” from the ST upper face to the primary pulley bearing catch surface at several points and calculate the average.
ST 499575400 GAUGE

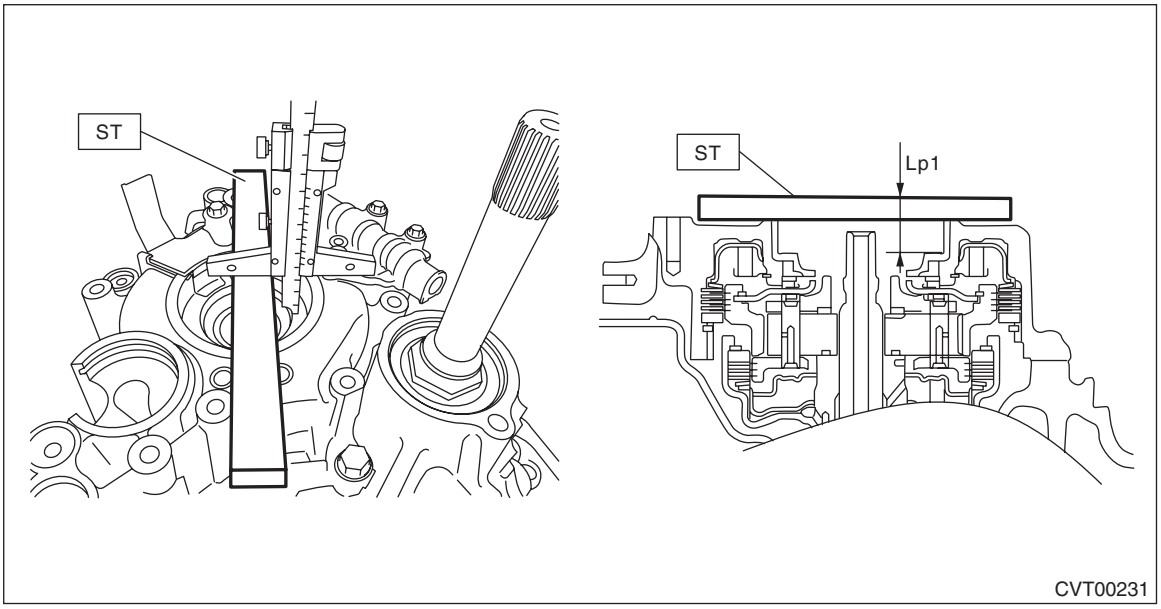

4) Using the current drive pinion retainer or current reverse brake housing, measure the depth “Ls1” from the ST upper face to the secondary pulley bearing catch surface at several points and calculate the average.
ST 499575400 GAUGE

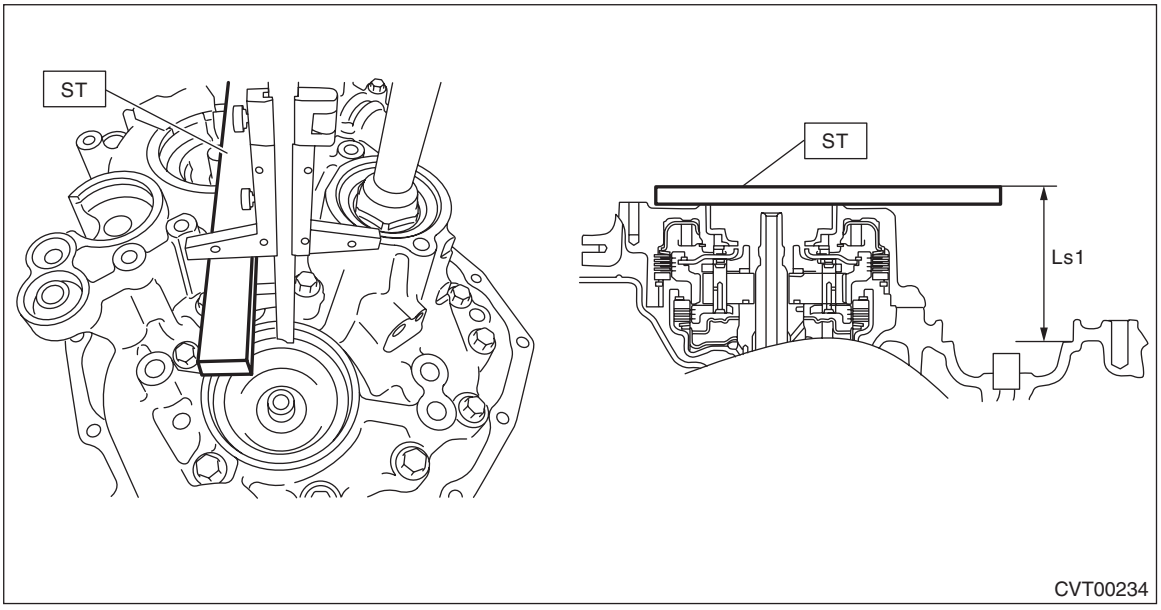

5) Calculate the “LD1” using the following formula and record it.
Calculation formula:
LD1 mm (in) = Ls1 – Lp1
LD1: Height from the primary pulley bearing catch surface to the secondary pulley bearing catch surface
Lp1: Depth from the ST upper face to the primary pulley bearing catch surface
Ls1: Depth from the ST upper face to the secondary pulley bearing catch surface

6) Using the new drive pinion retainer or new reverse brake housing, measure the depth “Lp2” from the ST upper face to the primary pulley bearing catch surface at several points and calculate the average.
ST 499575400 GAUGE

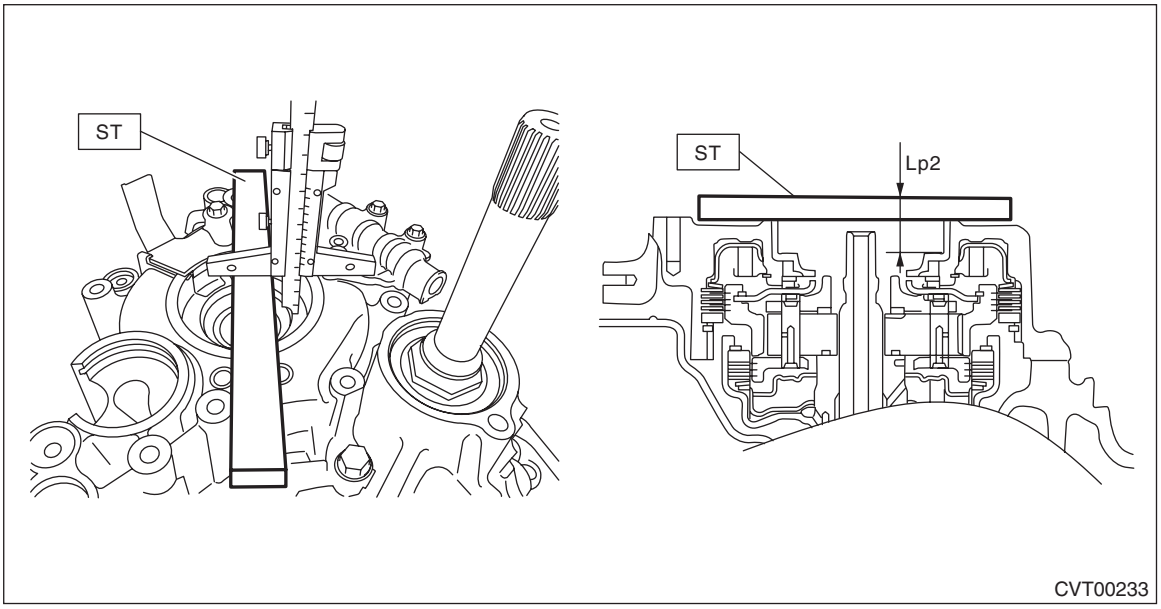

7) Using the new drive pinion retainer or new reverse brake housing, measure depth “Ls2” from the ST upper face to the secondary pulley bearing catch surface at several points and calculate the average.
ST 499575400 GAUGE

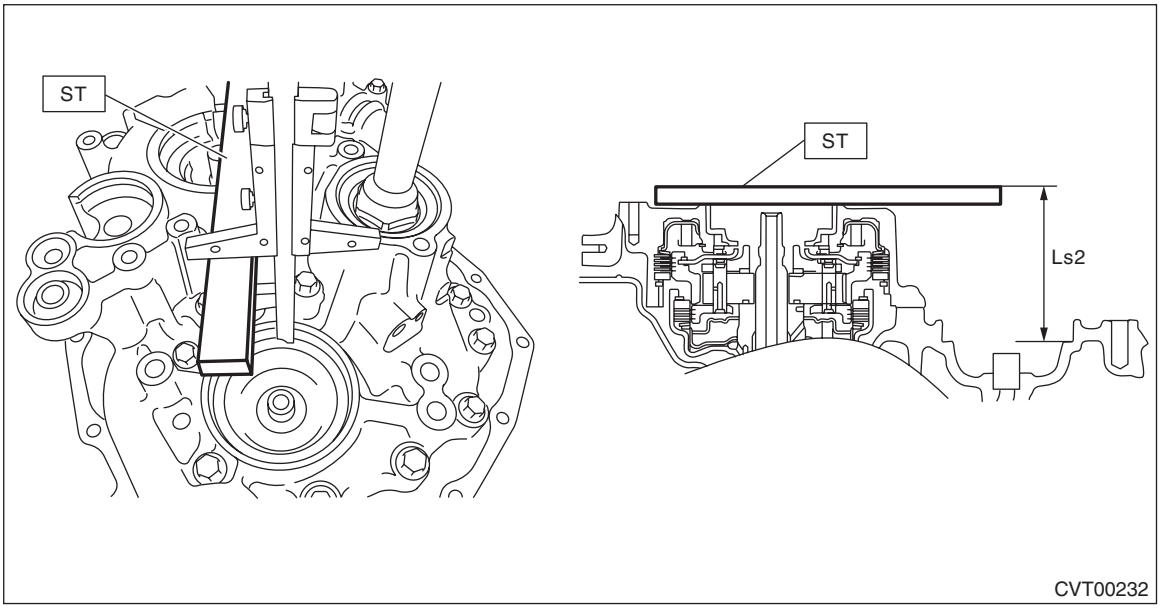

8) Calculate the “LD2” using the following formula and record it.
Calculation formula:
LD2 mm (in) = Ls2 – Lp2
LD2: Height from the primary pulley bearing catch surface to the secondary pulley bearing catch surface
Lp2: Depth from the ST upper face to the primary pulley bearing catch surface
Ls2: Depth from the ST upper face to the secondary pulley bearing catch surface

9) Calculate the recorded values of “LD1” and “LD2” to obtain the positive number to select the shims.
Calculation formula: T1 mm (in) = LD1 – LD2 or T2 mm (in) = LD2 – LD1
T1, T2: Difference between new drive pinion retainer or new reverse brake housing and current drive pinion retainer or current reverse brake housing
LD1: Calculated value of current drive pinion retainer or current reverse brake housing
LD2: Calculated value of new drive pinion retainer or new reverse brake housing

Difference of the case (T1) mm (in)	Shim selection procedure
0 — 0.050 (0 — 0.00197)	Select a new shim of the same thickness with the shim that is used on the primary pulley side of the current reverse brake housing.
0.051 — 0.150 (0.00201 — 0.00591)	Select a shim which is 0.1 mm (0.004 in) thicker than the shim that is used on the primary pulley side of the current reverse brake housing.
0.151 — 0.250 (0.00594 — 0.00984)	Select a shim which is 0.2 mm (0.008 in) thicker than the shim that is used on the primary pulley side of the current reverse brake housing.
0.251 — 0.350 (0.00988 — 0.01378)	Select a shim which is 0.3 mm (0.012 in) thicker than the shim that is used on the primary pulley side of the current reverse brake housing.
0.351 — 0.450 (0.01382 — 0.01772)	Select a shim which is 0.4 mm (0.016 in) thicker than the shim that is used on the primary pulley side of the current reverse brake housing.
0.451 — 0.550 (0.01776 — 0.02165)	Select a shim which is 0.5 mm (0.020 in) thicker than the shim that is used on the primary pulley side of the current reverse brake housing.
0.551 — 0.600 (0.02169 — 0.02362)	Select a shim which is 0.6 mm (0.024 in) thicker than the shim that is used on the primary pulley side of the current reverse brake housing.

Difference of the case (T2) mm (in)	Shim selection procedure
0 — 0.050 (0 — 0.00197)	Select a new shim of the same thickness with the shim that is used on the primary pulley side of the current reverse brake housing.
0.051 — 0.150 (0.00201 — 0.00591)	Select a shim which is 0.1 mm (0.004 in) thinner than the shim that is used on the primary pulley side of the current reverse brake housing.
0.151 — 0.250 (0.00594 — 0.00984)	Select a shim which is 0.2 mm (0.008 in) thinner than the shim that is used on the primary pulley side of the current reverse brake housing.
0.251 — 0.350 (0.00988 — 0.01378)	Select a shim which is 0.3 mm (0.012 in) thinner than the shim that is used on the primary pulley side of the current reverse brake housing.
0.351 — 0.450 (0.01382 — 0.01772)	Select a shim which is 0.4 mm (0.016 in) thinner than the shim that is used on the primary pulley side of the current reverse brake housing.
0.451 — 0.550 (0.01776 — 0.02165)	Select a shim which is 0.5 mm (0.020 in) thinner than the shim that is used on the primary pulley side of the current reverse brake housing.
0.551 — 0.600 (0.02169 — 0.02362)	Select a shim which is 0.6 mm (0.024 in) thinner than the shim that is used on the primary pulley side of the current reverse brake housing.

Part No.	Shim thickness mm (in)
32451AA050	0.1 (0.004)
32451AA060	0.2 (0.008)
32451AA070	0.3 (0.012)
32451AA080	0.4 (0.016)
32451AA090	0.5 (0.020)
32451AA100	0.6 (0.024)

44.Variator Chain

A: REMOVAL

For removal of variator chain, refer to “Primary Pulley and Secondary Pulley”. <Ref. to CVT(TH58A)-261, REMOVAL, Primary Pulley and Secondary Pulley.>

B: INSTALLATION

For installation of variator chain, refer to “Primary Pulley and Secondary Pulley”. <Ref. to CVT(TH58A)-269, INSTALLATION, Primary Pulley and Secondary Pulley.>

C: INSPECTION

Check the variator chain for damage and wear.

45.Reverse Brake Assembly

A: REMOVAL

1) Remove the transmission assembly from the vehicle. <Ref. to CVT(TH58A)-62, REMOVAL, Automatic Transmission Assembly.>
2) Remove the air breather hose. <Ref. to CVT(TH58A)-169, REMOVAL, Air Breather Hose.>
3) Remove the transmission harness. <Ref. to CVT(TH58A)-141, REMOVAL, Transmission Harness.>
4) Remove the main control valve body. <Ref. to CVT(TH58A)-114, REMOVAL, Control Valve Body.>
5) Remove the turbine speed sensor. <Ref. to CVT(TH58A)-103, REMOVAL, Turbine Speed Sensor.>
6) Remove the secondary speed sensor. <Ref. to CVT(TH58A)-105, REMOVAL, Secondary Speed Sensor.>
7) Remove the front wheel speed sensor. <Ref. to CVT(TH58A)-107, REMOVAL, Front Wheel Speed Sensor.>
8) Remove the inhibitor switch. <Ref. to CVT(TH58A)-99, REMOVAL, Inhibitor Switch.>
9) Remove the extension case. <Ref. to CVT(TH58A)-179, REMOVAL, Extension Case.>
10) Remove the transfer clutch assembly. <Ref. to CVT(TH58A)-183, REMOVAL, Transfer Clutch.>
11) Remove the transfer driven gear assembly. <Ref. to CVT(TH58A)-197, REMOVAL, Transfer Driven Gear.>
12) Remove the transfer drive gear assembly. <Ref. to CVT(TH58A)-200, REMOVAL, Transfer Drive Gear.>
13) Remove the parking pawl. <Ref. to CVT(TH58A)-205, REMOVAL, Parking Pawl.>
14) Remove the oil pan and oil strainer. <Ref. to CVT(TH58A)-111, REMOVAL, Oil Pan and Strainer.>
15) Remove the transmission control device. <Ref. to CVT(TH58A)-208, REMOVAL, Transmission Control Device.>
16) Remove the drive motor assembly. <Ref. to CVT(TH58A)-215, REMOVAL, Drive Motor Assembly.>
17) Remove the output clutch assembly. <Ref. to CVT(TH58A)-226, REMOVAL, Output Clutch Assembly.>
18) Remove the transmission case. <Ref. to CVT(TH58A)-243, REMOVAL, Transmission Case.>
19) Remove the reduction drive gear. <Ref. to CVT(TH58A)-256, REMOVAL, Reduction Drive Gear.>
20) Remove the primary pulley, secondary pulley and variator chain. <Ref. to CVT(TH58A)-261, REMOVAL, Primary Pulley and Secondary Pulley.>
21) Remove the oil pump shaft and the snap ring.

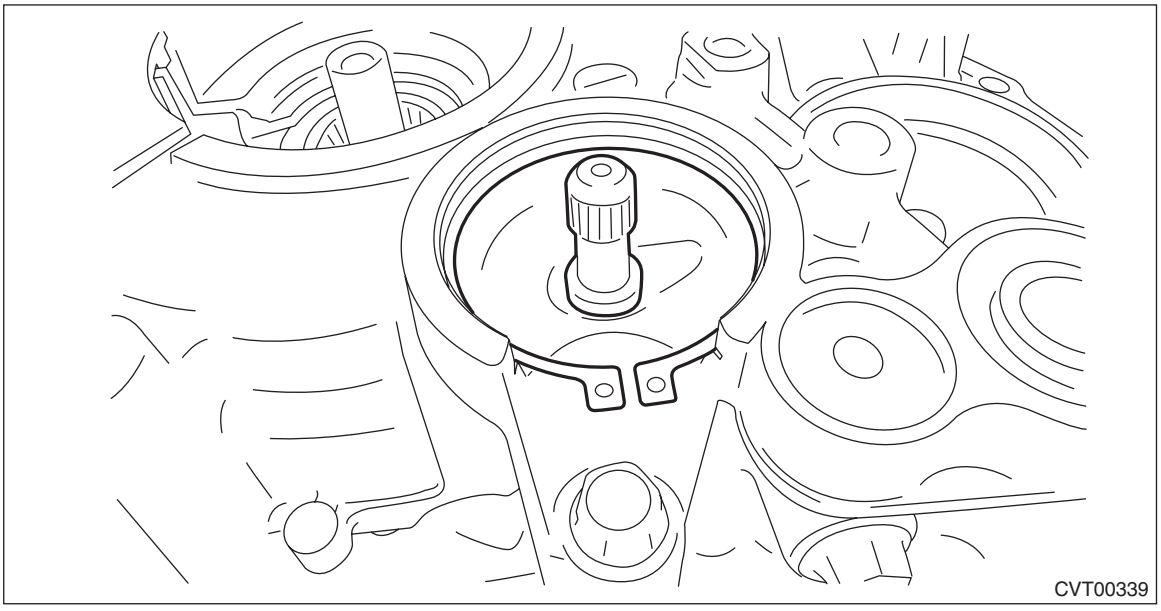

22) Remove the manual valve assembly.

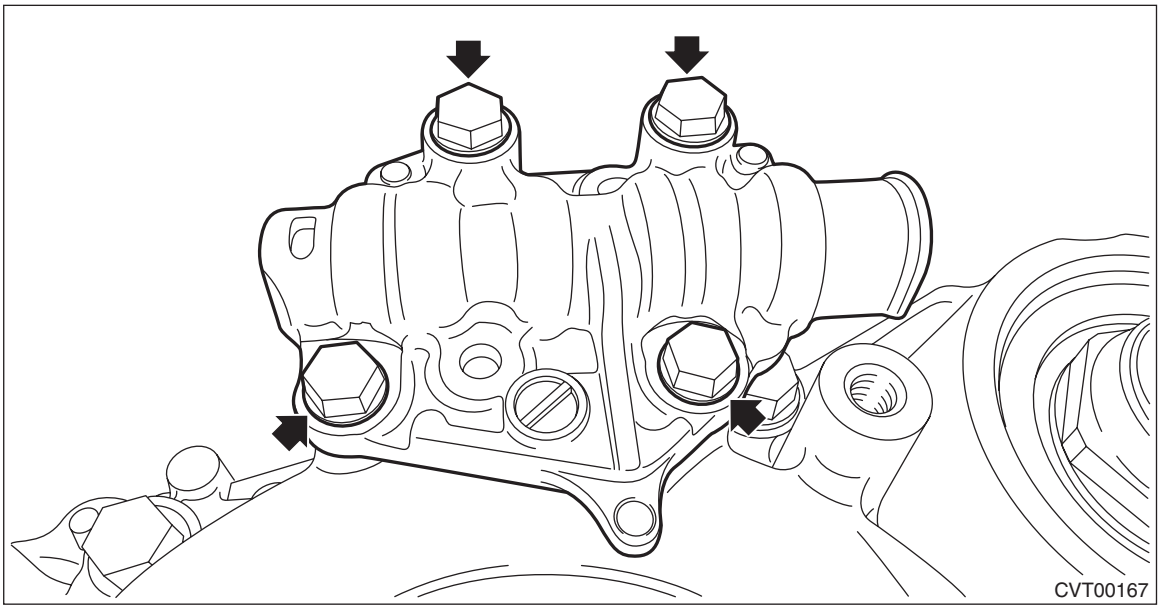

23) Remove the oil guide and lubrication pipe.

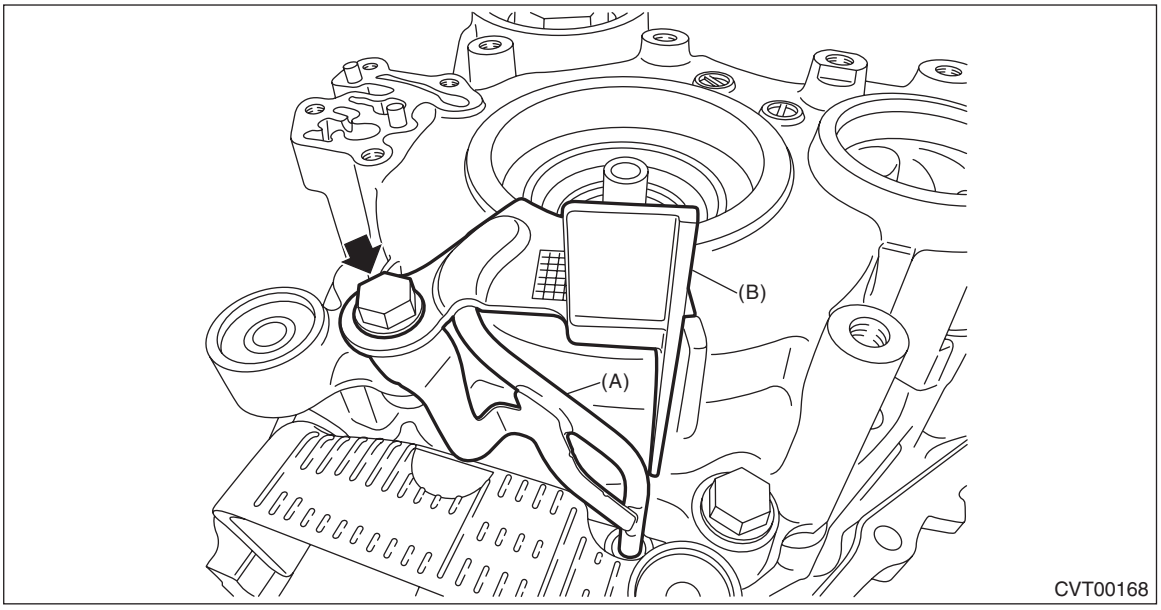

(A) Lubrication pipe
(B) Oil guide

24) Remove the O-ring from lubrication pipe.

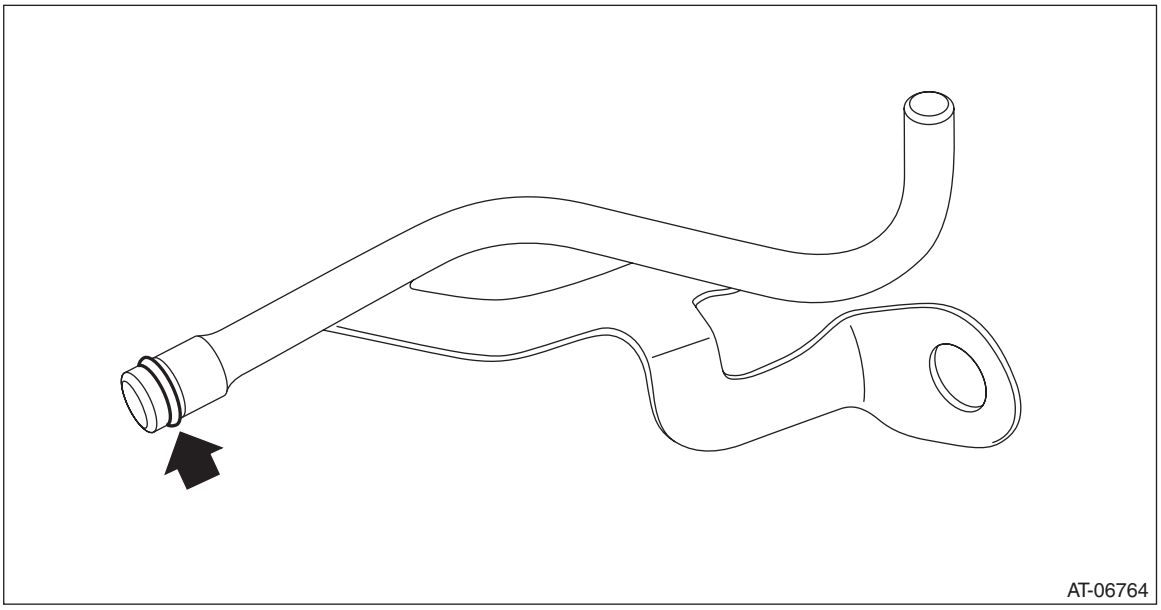

25) Remove the reverse brake assembly.

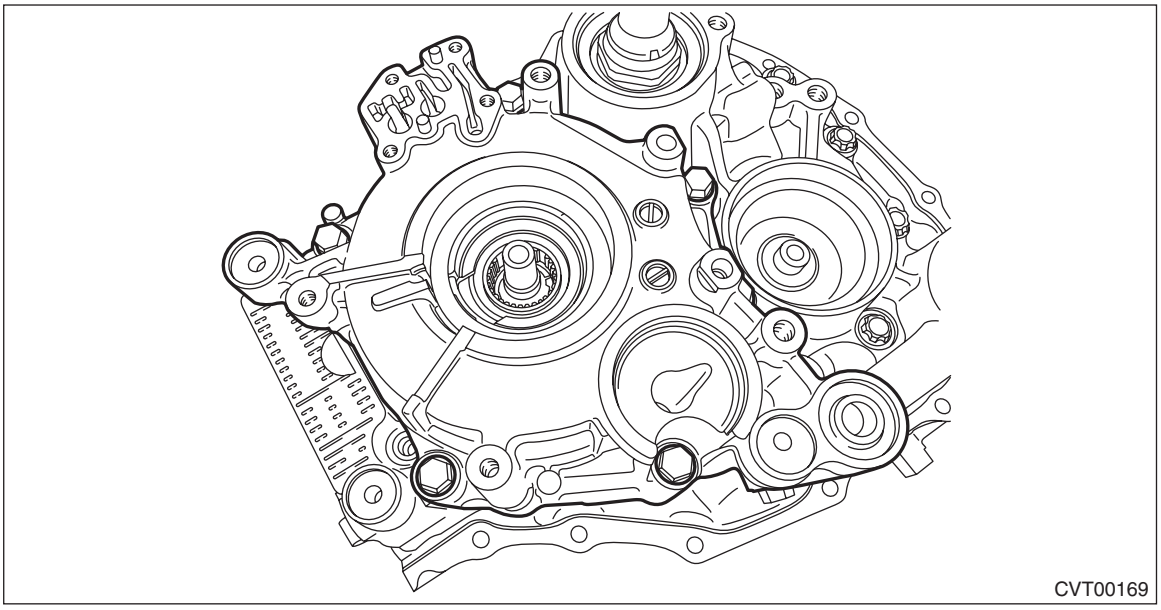

26) Remove the O-ring.

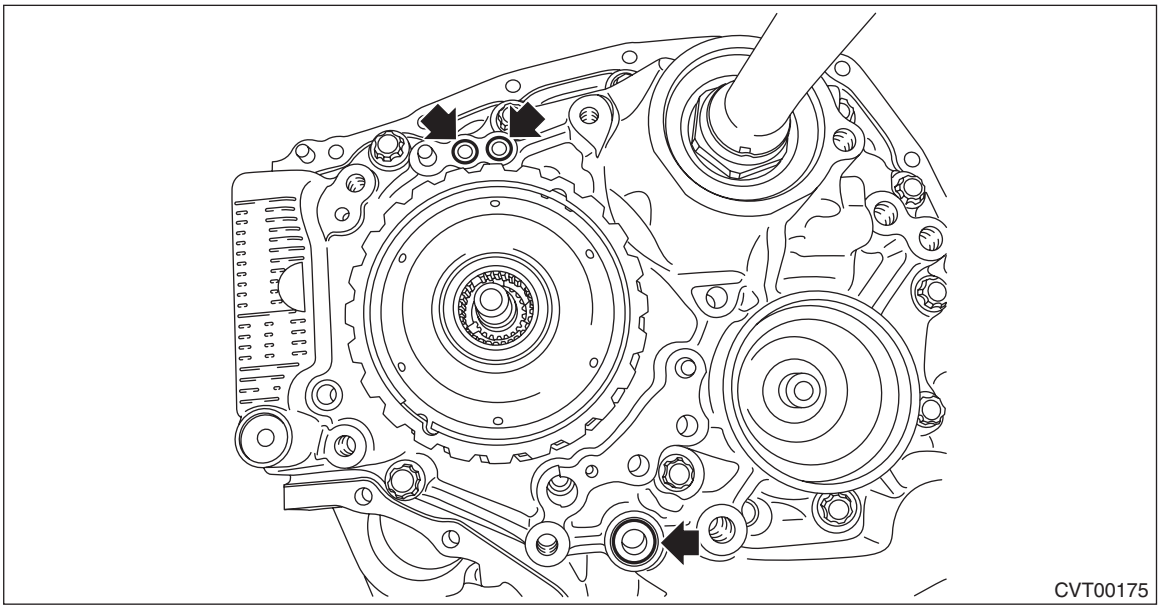

B: INSTALLATION

1) Select a washer. <Ref. to CVT(TH58A)-319, ADJUSTMENT, Forward Clutch Assembly.>
2) When replacing the reverse brake housing and the snap ring which secures the oil pump sprocket rear, select the oil pump shaft. <Ref. to CVT(TH58A)-384, ADJUSTMENT, Oil Pump.>
3) Install the selected washer to the reverse brake housing.

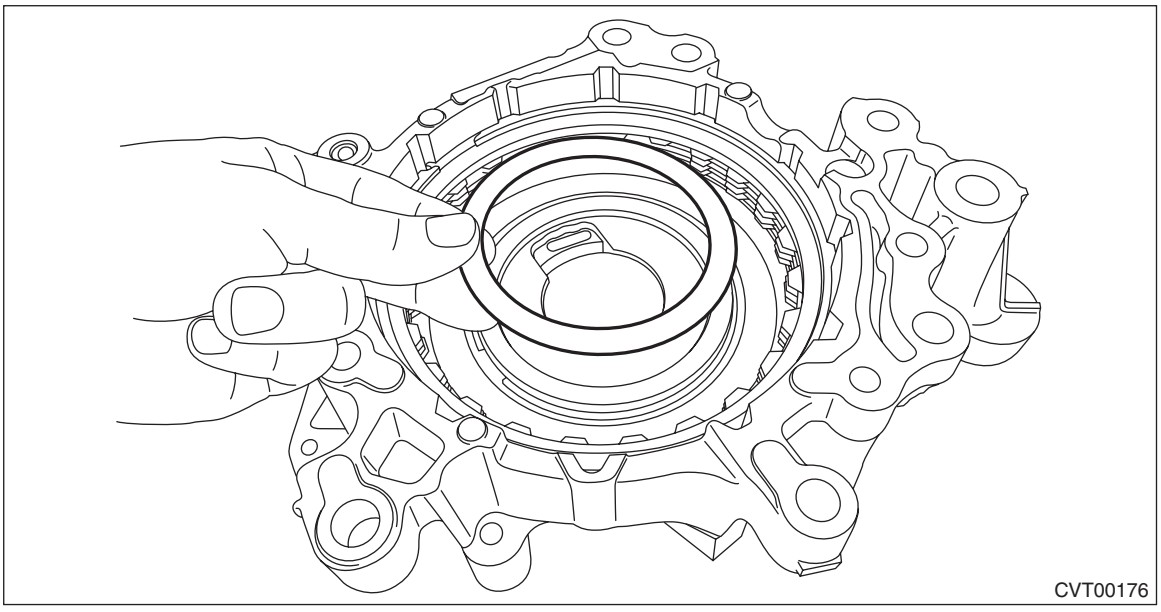

4) Install the thrust bearing to the reverse brake housing.

NOTE:
Face the temper color surface to the reverse brake side.

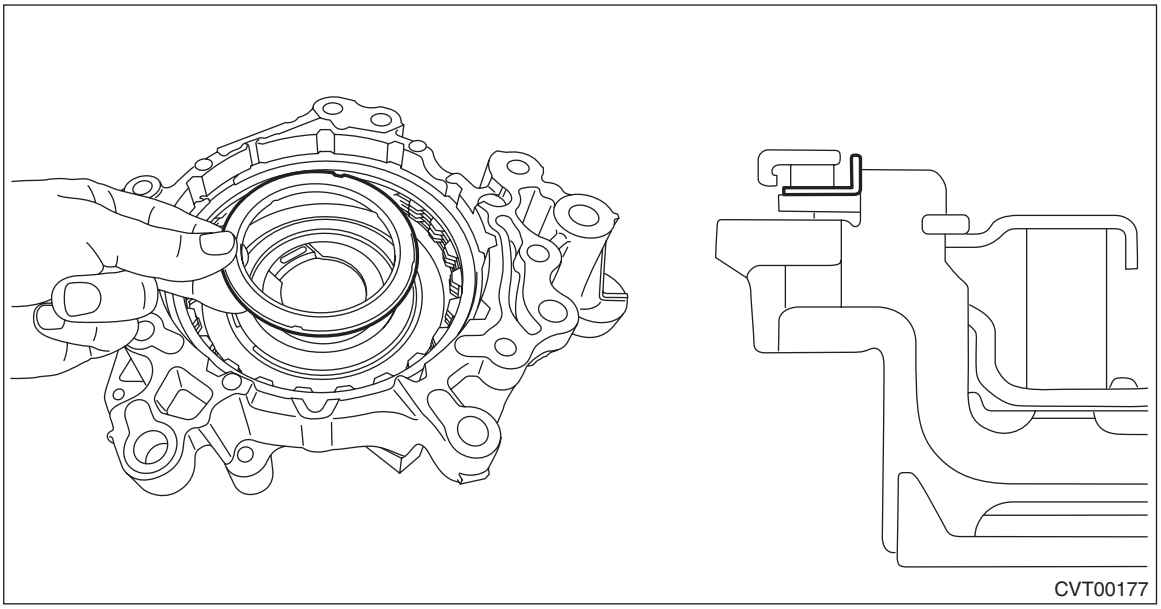

5) Remove the internal gear from the forward clutch assembly, and install it to the reverse brake housing.

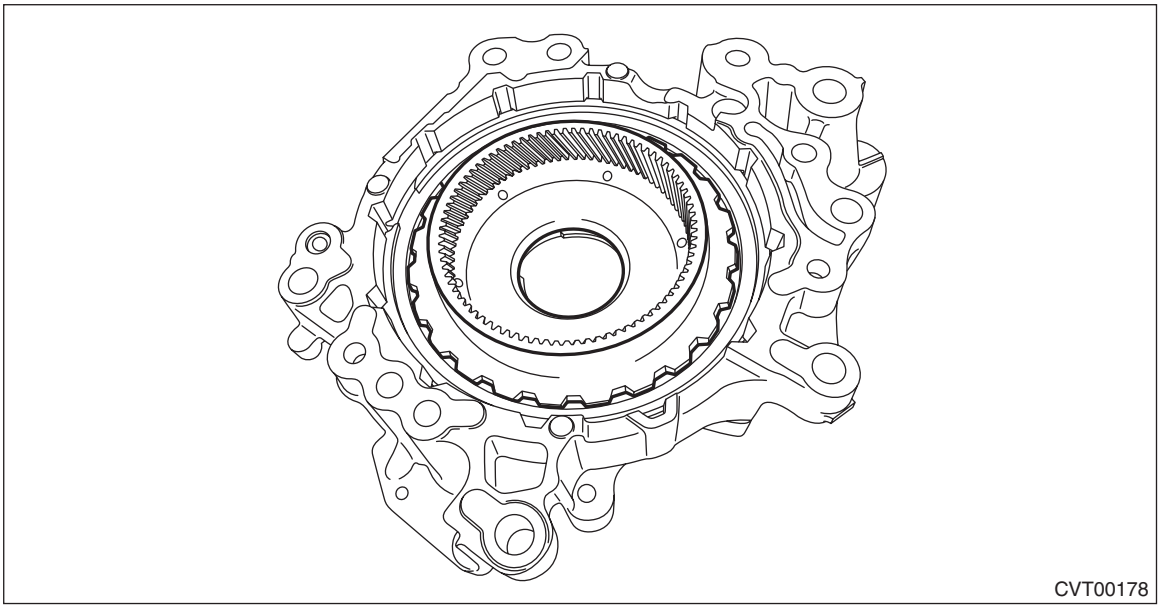

6) Install the O-ring.

NOTE:
- Install a new O-ring.
- Apply CVTF to the O-ring.

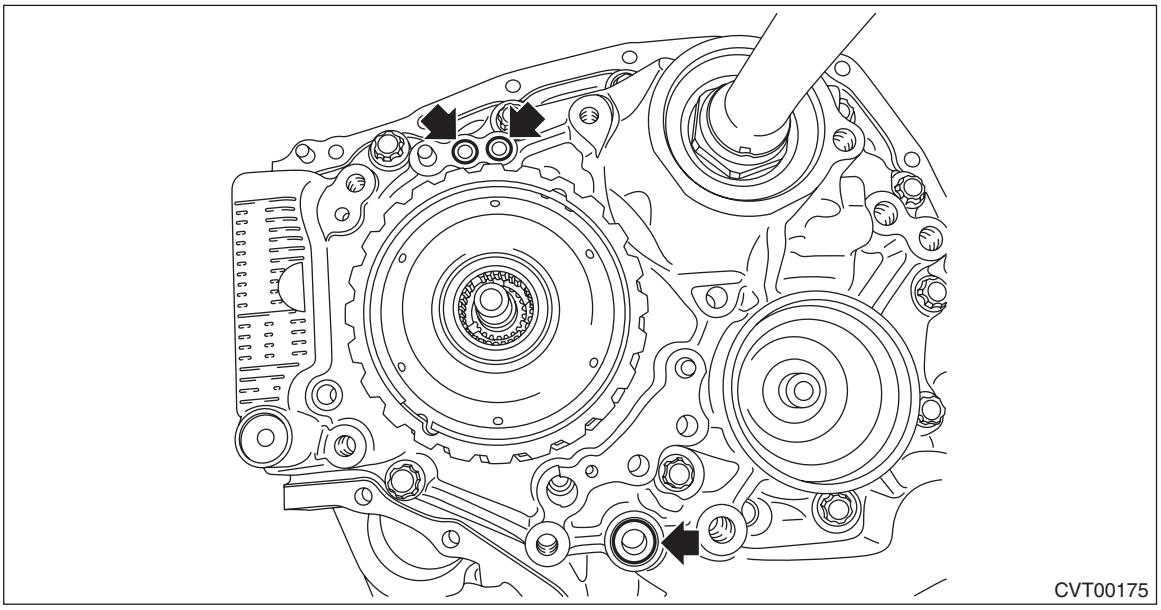

7) Install the reverse brake assembly and internal gear as a unit to the drive pinion retainer.

NOTE:
Slowly rotate the input shaft by hand to engage the internal gear and pinion gear of planetary carrier.

Tightening torque:
37 N·m (3.8 kgf-m, 27.3 ft-lb)

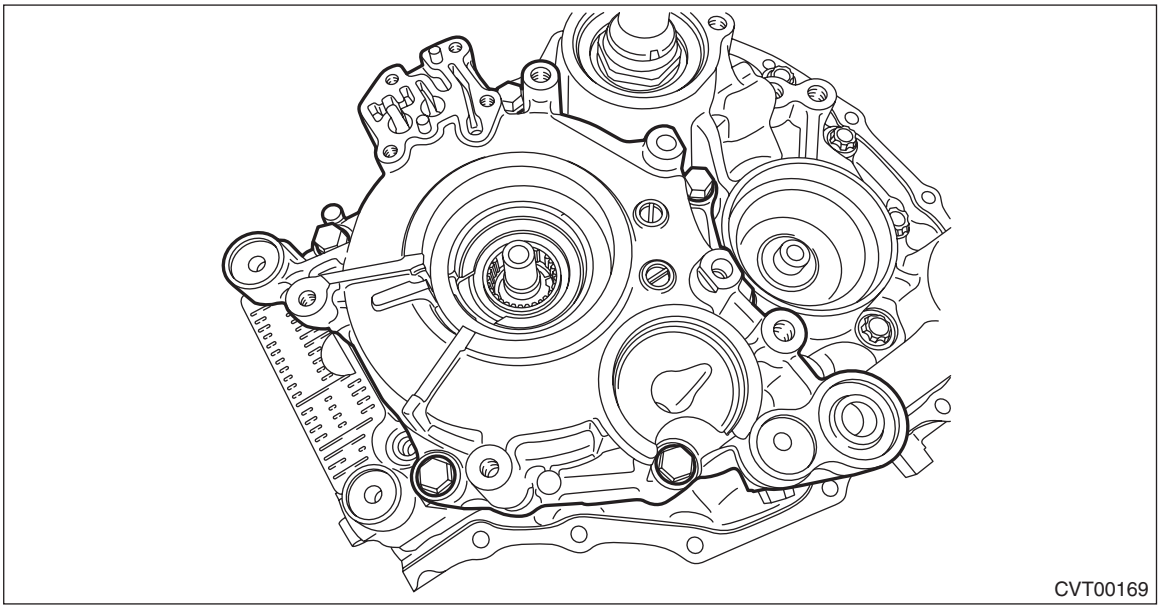

8) Install the O-ring to the lubrication pipe.

NOTE:
- Install a new O-ring.
- Apply CVTF to the O-ring.

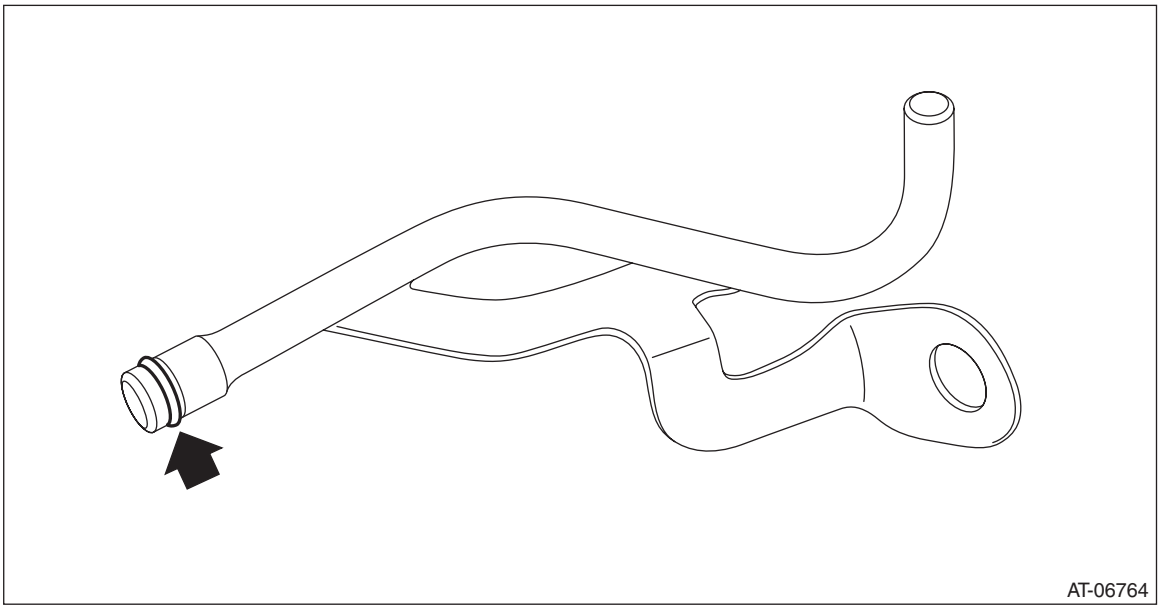

9) Install the lubrication pipe and oil guide.

Tightening torque:
16 N·m (1.6 kgf-m, 11.8 ft-lb)

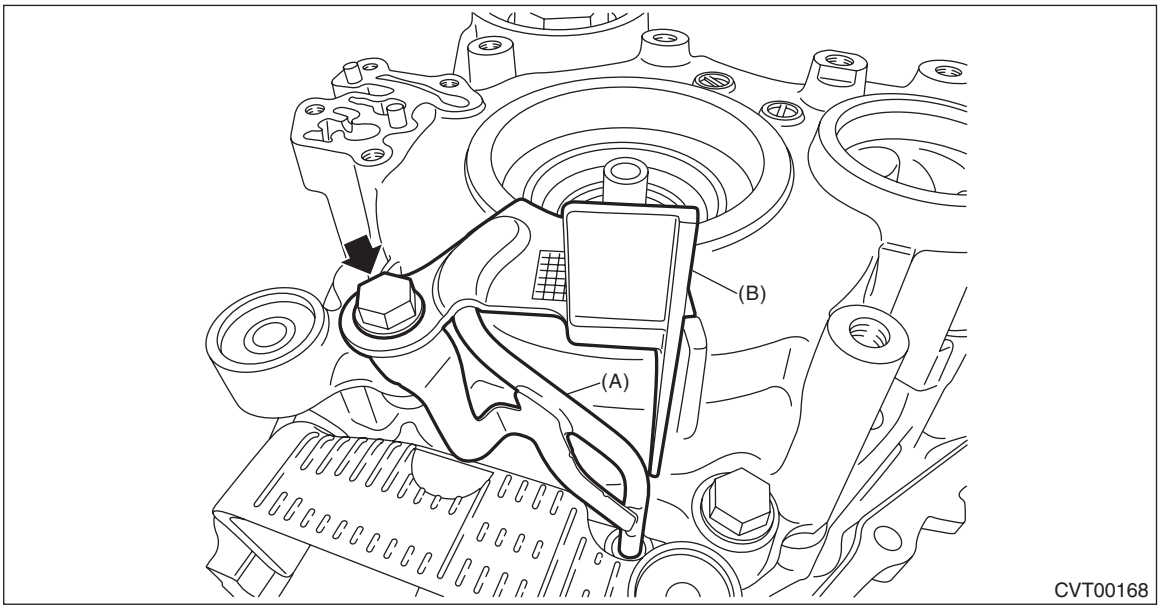

(A) Lubrication pipe
(B) Oil guide

10) Install the manual valve assembly and separator plate.

Tightening torque:
9 N·m (0.9 kgf-m, 6.6 ft-lb)

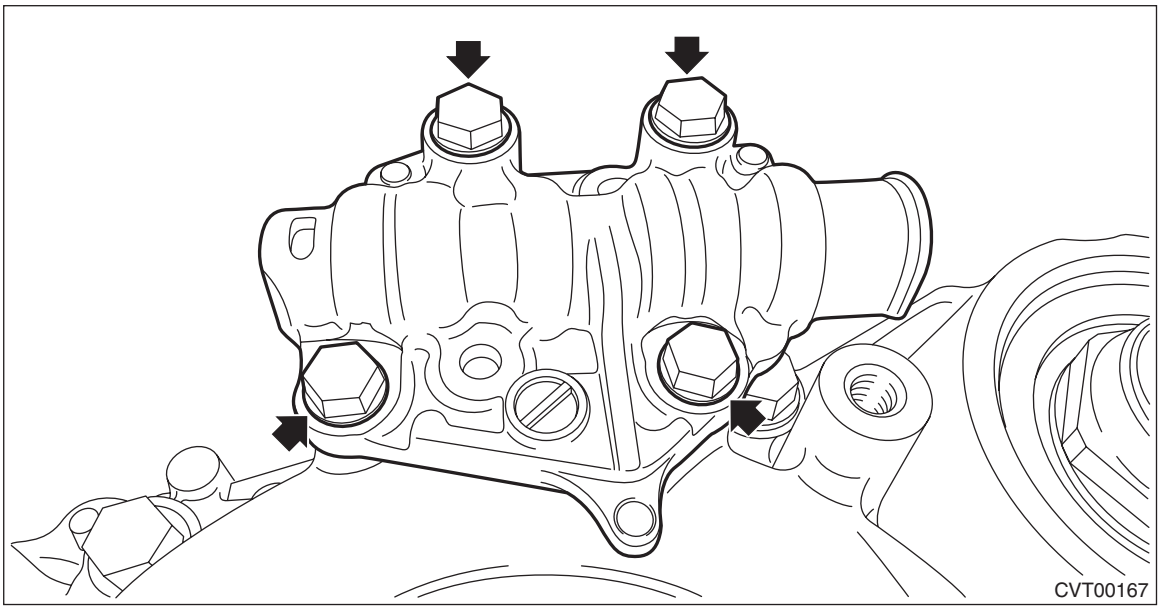

11) Install the primary pulley, secondary pulley and variator chain. <Ref. to CVT(TH58A)-269, INSTALLATION, Primary Pulley and Secondary Pulley.>
12) Install the reduction drive gear. <Ref. to CVT(TH58A)-257, INSTALLATION, Reduction Drive Gear.>
13) Install the transmission case. <Ref. to CVT(TH58A)-246, INSTALLATION, Transmission Case.>
14) Install the output clutch assembly. <Ref. to CVT(TH58A)-227, INSTALLATION, Output Clutch Assembly.>
15) Install the drive motor assembly. <Ref. to CVT(TH58A)-219, INSTALLATION, Drive Motor Assembly.>
16) Install the transmission control device. <Ref. to CVT(TH58A)-211, INSTALLATION, Transmission Control Device.>
17) Install the oil strainer and oil pan. <Ref. to CVT(TH58A)-113, INSTALLATION, Oil Pan and Strainer.>
18) Install the parking pawl. <Ref. to CVT(TH58A)-206, INSTALLATION, Parking Pawl.>
19) Install the transfer drive gear assembly. <Ref. to CVT(TH58A)-200, INSTALLATION, Transfer Drive Gear.>
20) Install the transfer driven gear assembly. <Ref. to CVT(TH58A)-198, INSTALLATION, Transfer Driven Gear.>
21) Install the transfer clutch assembly. <Ref. to CVT(TH58A)-185, INSTALLATION, Transfer Clutch.>
22) Install the extension case. <Ref. to CVT(TH58A)-180, INSTALLATION, Extension Case.>
23) Install the inhibitor switch. <Ref. to CVT(TH58A)-101, INSTALLATION, Inhibitor Switch.>
24) Install the secondary speed sensor. <Ref. to CVT(TH58A)-105, INSTALLATION, Secondary Speed Sensor.>
25) Install the front wheel speed sensor. <Ref. to CVT(TH58A)-107, INSTALLATION, Front Wheel Speed Sensor.>
26) Install the turbine speed sensor. <Ref. to CVT(TH58A)-103, INSTALLATION, Turbine Speed Sensor.>
27) Install the main control valve body. <Ref. to CVT(TH58A)-121, INSTALLATION, Control Valve Body.>
28) Install the transmission harness. <Ref. to CVT(TH58A)-149, INSTALLATION, Transmission Harness.>
29) Install the air breather hose. <Ref. to CVT(TH58A)-171, INSTALLATION, Air Breather Hose.>
30) Install the transmission assembly to the vehicle. <Ref. to CVT(TH58A)-76, INSTALLATION, Automatic Transmission Assembly.>

C: DISASSEMBLY

1) Remove the snap ring, retaining plate, drive plate, driven plate and dish plate.

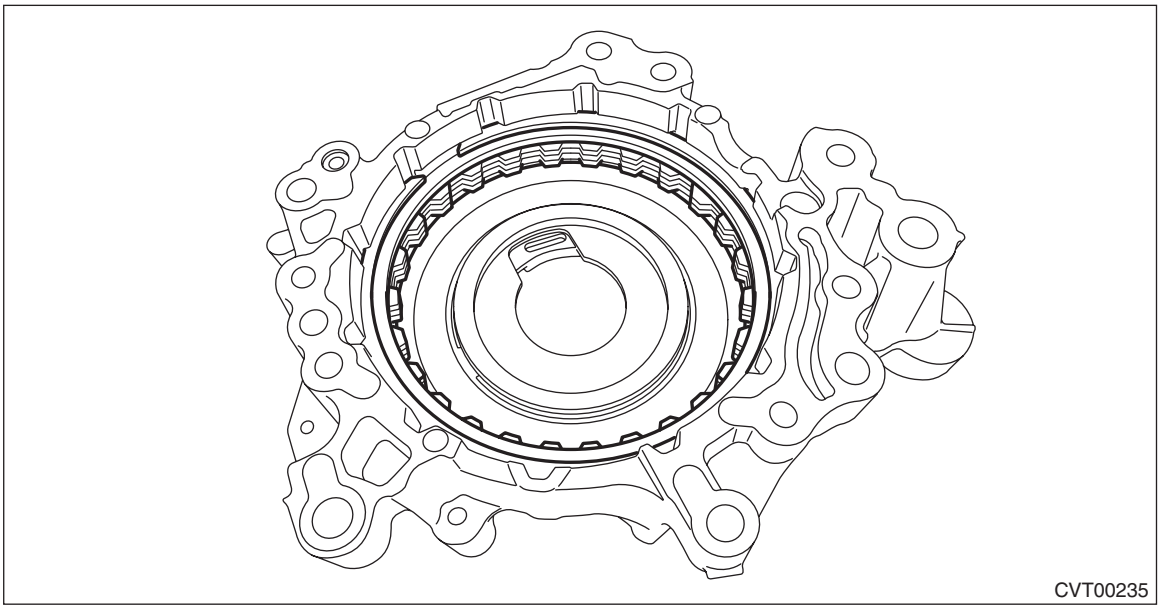

2) Compress the return spring using the ST to remove the snap ring.
ST 18762AA000 COMPRESSOR SPECIAL TOOL (or 18762AA001)

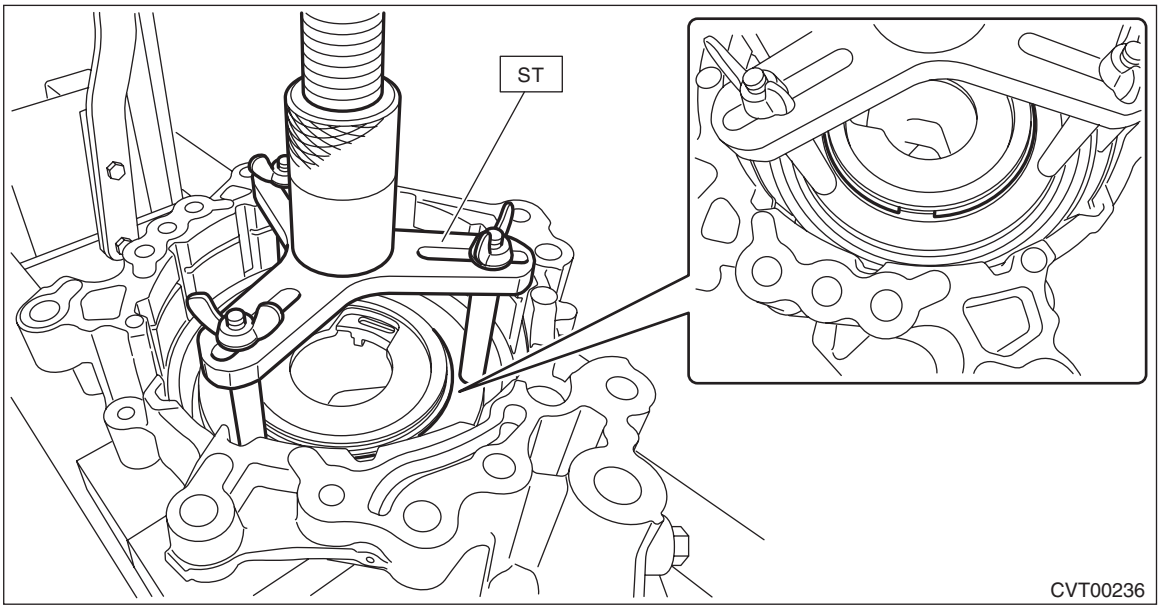

3) Using the ST, remove the snap ring and spring retainer.

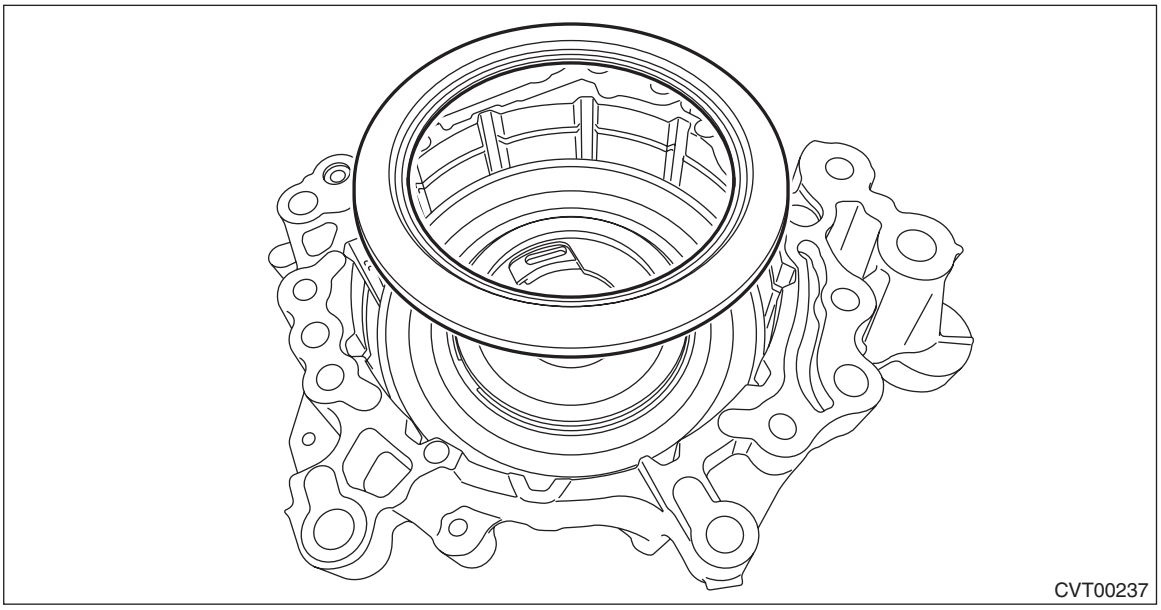
CVT00237

4) Remove the return spring.

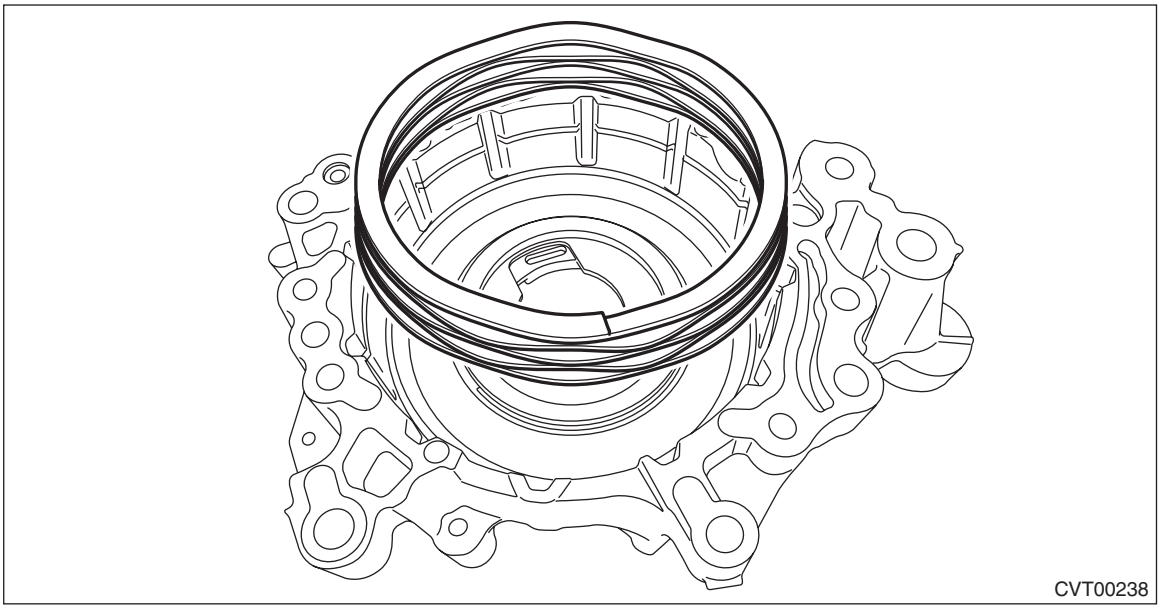
CVT00238

5) Remove the reverse brake piston by blowing compressed air intermittently from the reverse brake housing hole.

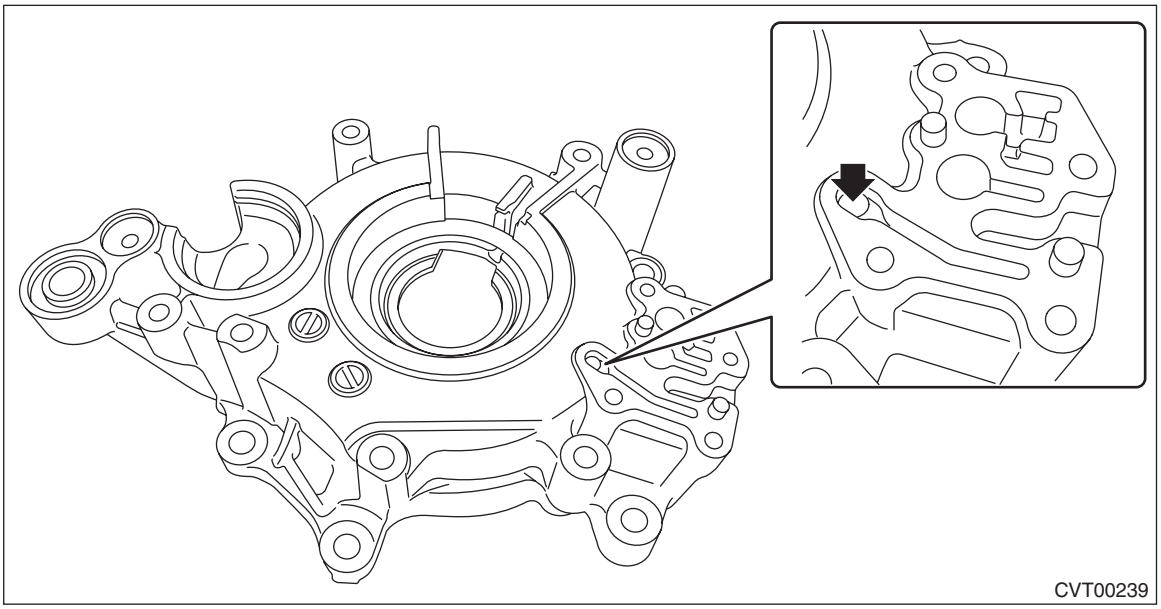
CVT00239

6) Remove the plug.

D: ASSEMBLY

1) Install the plugs.

NOTE:
Use new O-rings.

Tightening torque:
16 N·m (1.6 kgf-m, 11.8 ft-lb)

2) Install the reverse brake piston.

NOTE:
Apply CVTF to the sealing area of reverse brake piston.

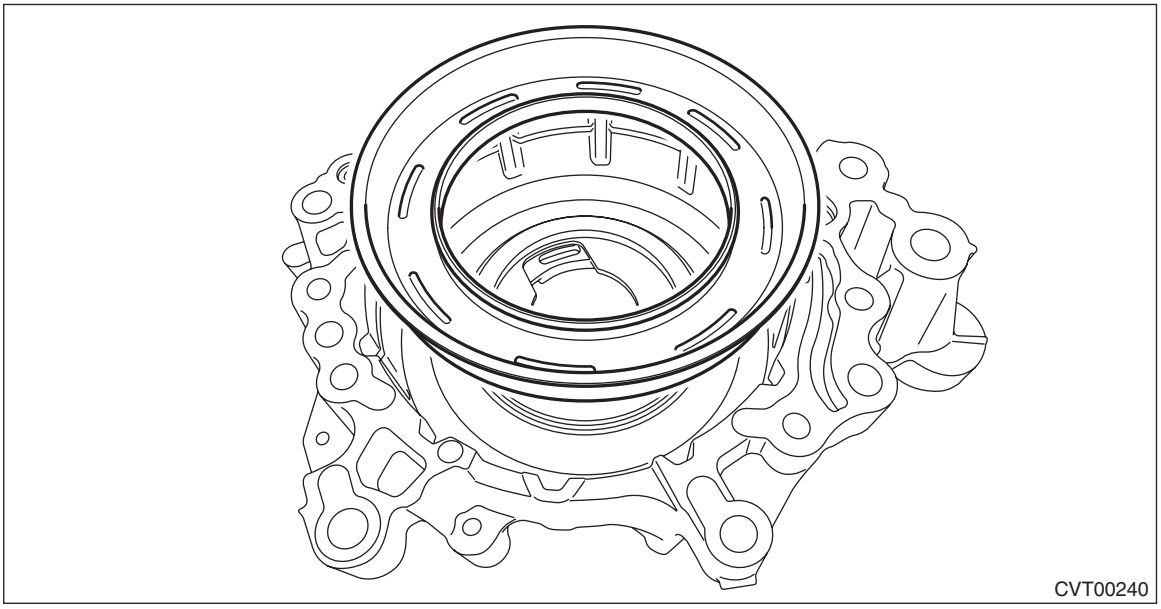
CVT00240

3) Install the return spring.

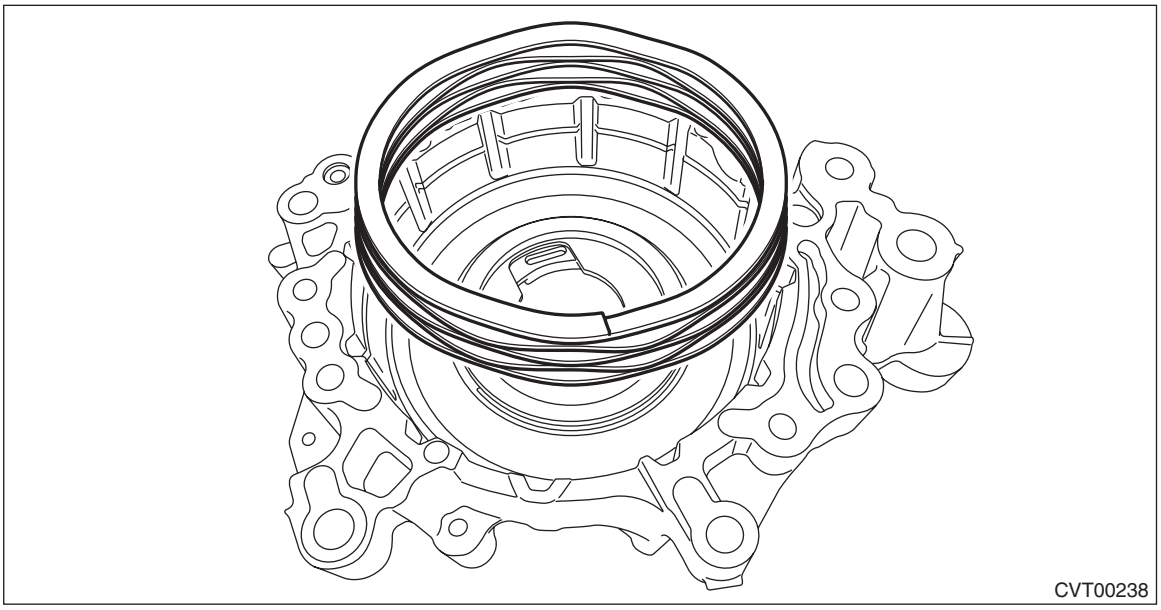
CVT00238

4) Install the spring retainer.

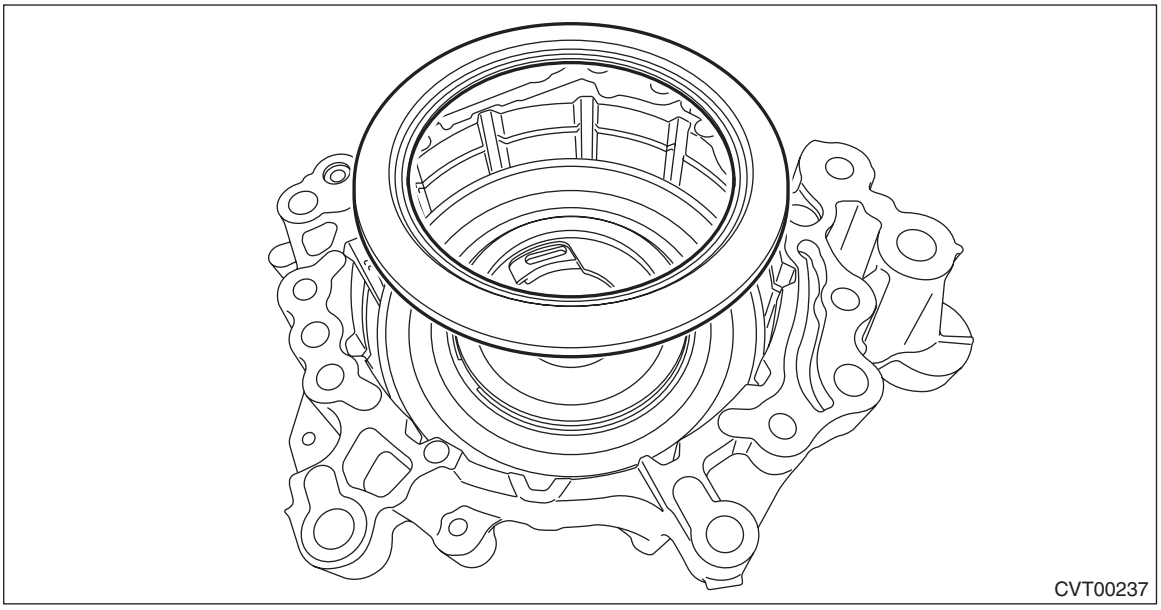
CVT00237

5) Compress the return spring using the ST to install the snap ring.
ST 18762AA000 COMPRESSOR SPECIAL TOOL (or 18762AA001)

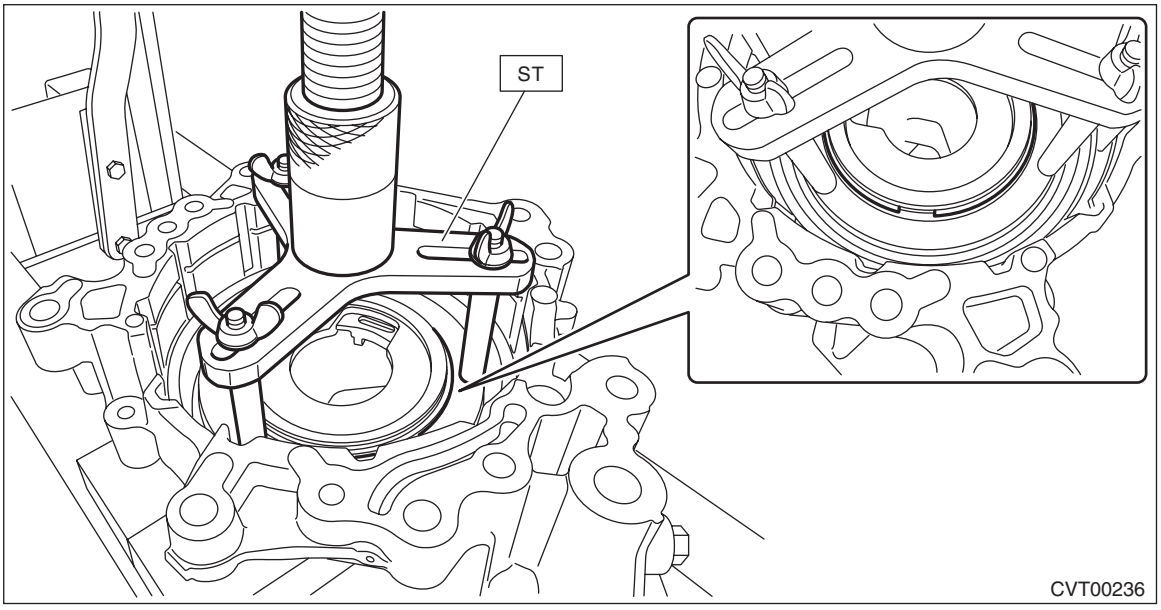

6) Check the operation of reverse brake piston by blowing compressed air intermittently from the reverse brake housing hole.

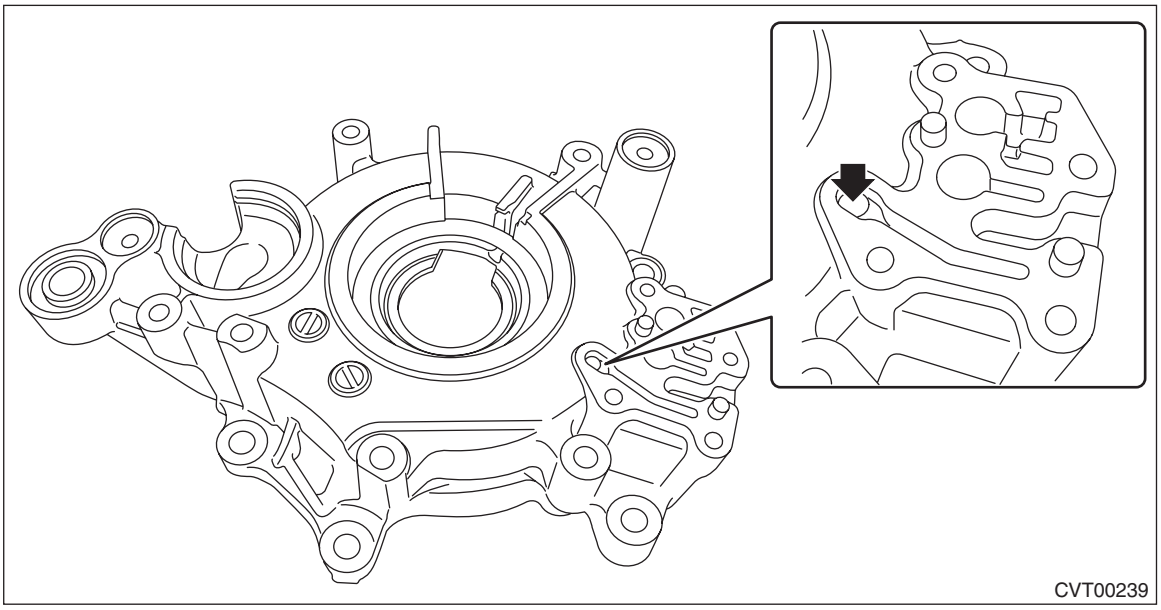

7) Place the driven plate, drive plate and retaining plate neatly in this order on surface table.
8) Set the dial gauge to retaining plate, and read its scale.

NOTE:
The value, which is read in the gauge at this time, is zero point.
9) Scale and record the weight "Z" of a flat board which will be put on retaining plate.

NOTE:
- Use a stiff board which does not bend against load as a flat board to be put on retaining plate.
- Use a flat board weighing less than 29 N (3.0 kgf, 6.5 lb).

10) Put the flat board on retaining plate.

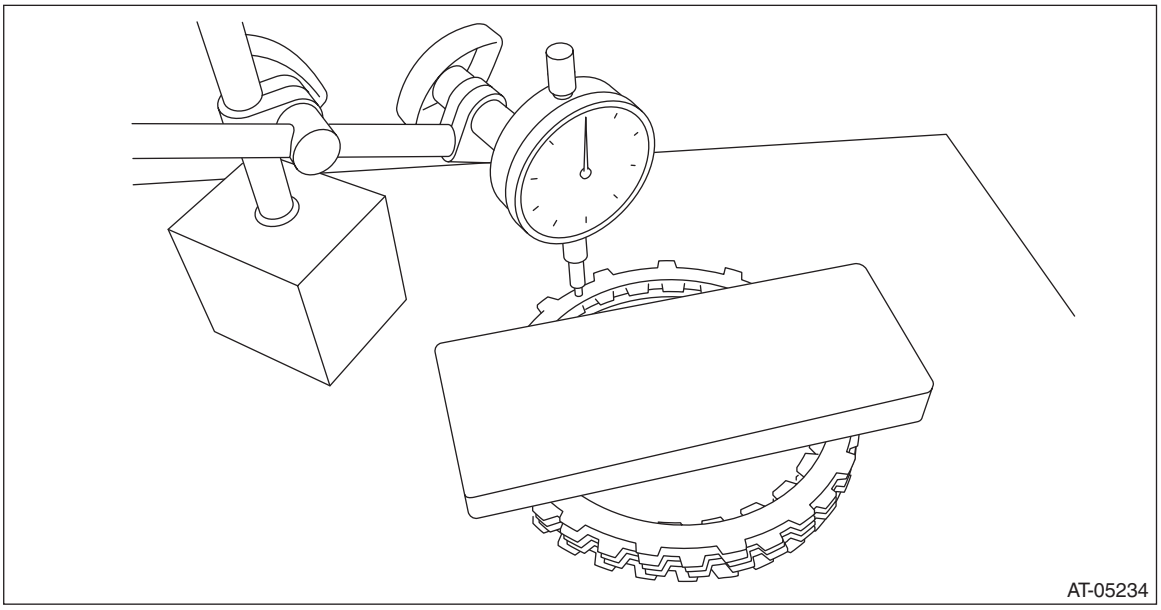

11) Using the following formula, read the push/pull gauge, and calculate “N”.
N = 29 N (3.0 kgf, 6.5 lb) – Z
29 N (3.0 kgf, 6.5 lb) : Load applied to clutch plate
Z: Flat board weight
12) Press the center of retaining plate by applying a force of “N” using push/pull gauge, and then measure and record the compression amount “A”.

NOTE:
Measure at four points with a 90° interval and calculate the average.

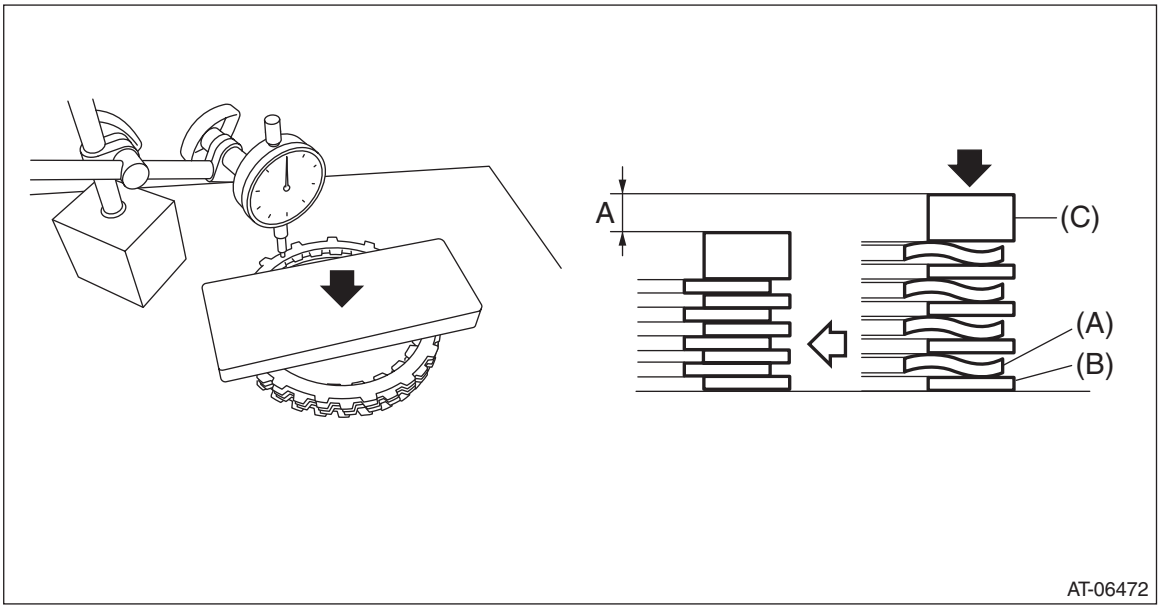

(A) Drive plate
(B) Driven plate
(C) Retaining plate

13) Install the dish plate, drive plate, driven plate, retaining plate and snap ring to the reverse brake housing.

NOTE:
Install the dish plate in the correct direction.

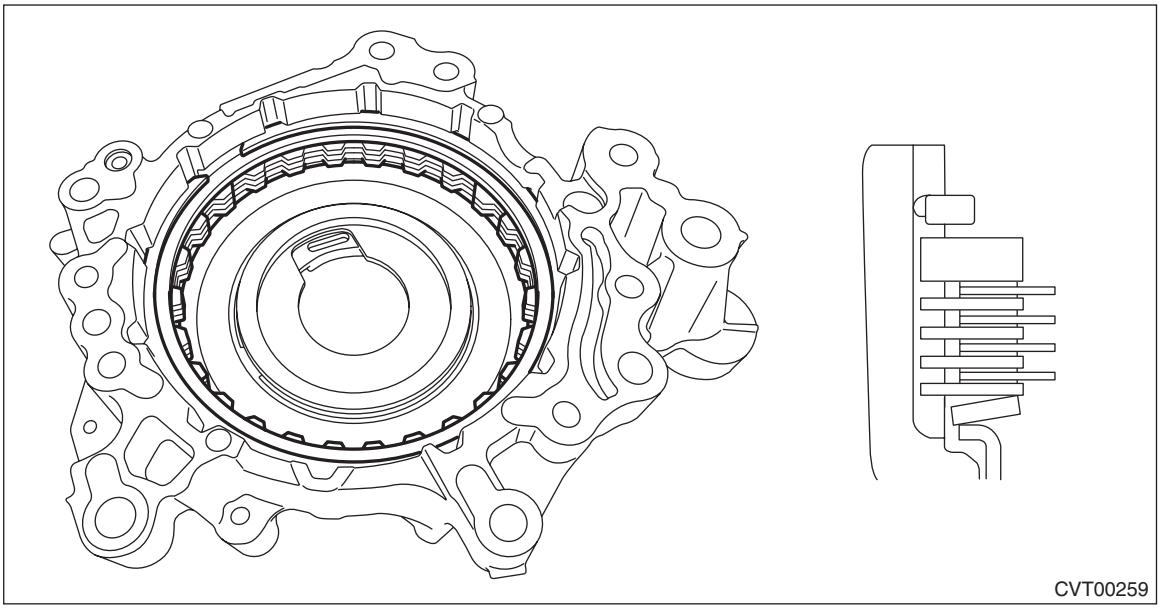

14) Measure and record the clearance “B” between the retaining plate and snap ring.

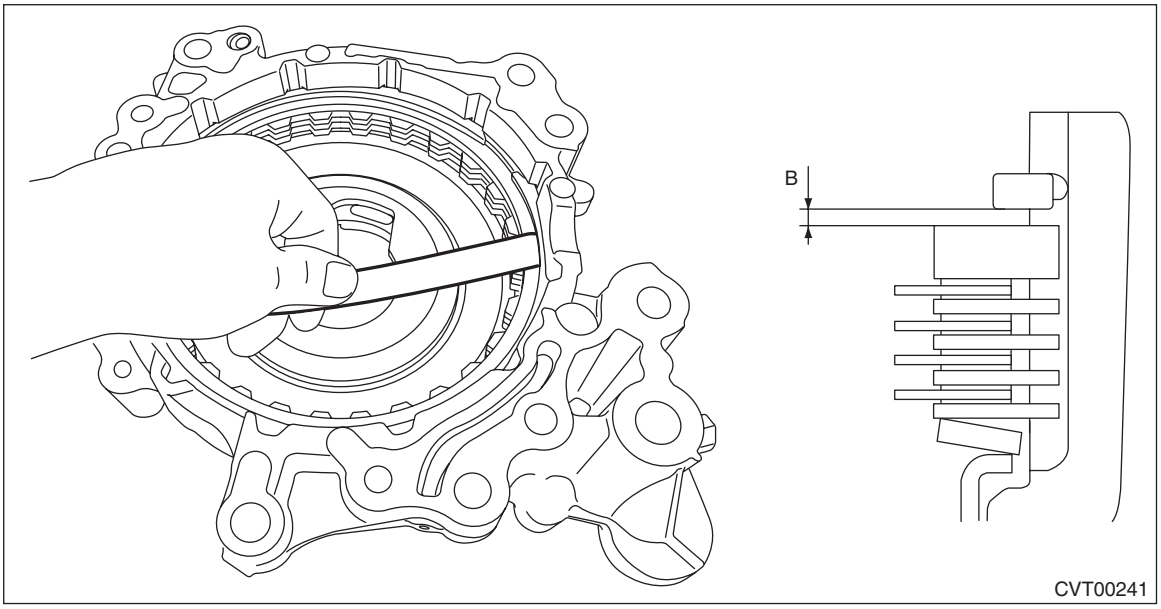

15) Piston stroke calculation
Calculate with A and B dimensions recorded before. If it exceeds the limit, replace with a new drive plate and adjust within the initial standard value.
S mm (in) = A + B
S: Piston stroke
A: Compression amount of drive plate and dish plate
B: Clearance between retaining plate and snap ring

Initial standard:
2.3 — 2.7 mm (0.091 — 0.106 in)

Limit thickness:
2.9 mm (0.114 in)

Retaining plate	
Part No.	Thickness mm (in)
31567AB750	4.2 (0.165)
31567AB800	4.4 (0.173)
31567AB810	4.6 (0.181)
31567AB820	4.8 (0.189)

E: INSPECTION

- Inspect the drive plate facing for wear and damage.
- Check the driven plate for discoloration (burnt color).
- Check for worn snap ring, fatigue or damaged return spring or deformed spring retainer.
- Make sure the clearance between retaining plate and snap ring of reverse brake is within the limit. If it exceeds the limit, replace with a new drive plate and select and adjust the retaining plate within the initial standard value. <Ref. to CVT(TH58A)-295, ASSEMBLY, Reverse Brake Assembly.>
- Check the oil pump shaft for damage.

46.Forward Clutch Assembly

A: REMOVAL

1) Remove the transmission assembly from the vehicle. <Ref. to CVT(TH58A)-62, REMOVAL, Automatic Transmission Assembly.>
2) Remove the air breather hose. <Ref. to CVT(TH58A)-169, REMOVAL, Air Breather Hose.>
3) Remove the transmission harness. <Ref. to CVT(TH58A)-141, REMOVAL, Transmission Harness.>
4) Remove the main control valve body. <Ref. to CVT(TH58A)-114, REMOVAL, Control Valve Body.>
5) Remove the turbine speed sensor. <Ref. to CVT(TH58A)-103, REMOVAL, Turbine Speed Sensor.>
6) Remove the secondary speed sensor. <Ref. to CVT(TH58A)-105, REMOVAL, Secondary Speed Sensor.>
7) Remove the front wheel speed sensor. <Ref. to CVT(TH58A)-107, REMOVAL, Front Wheel Speed Sensor.>
8) Remove the inhibitor switch. <Ref. to CVT(TH58A)-99, REMOVAL, Inhibitor Switch.>
9) Remove the extension case. <Ref. to CVT(TH58A)-179, REMOVAL, Extension Case.>
10) Remove the transfer clutch assembly. <Ref. to CVT(TH58A)-183, REMOVAL, Transfer Clutch.>
11) Remove the transfer driven gear assembly. <Ref. to CVT(TH58A)-200, REMOVAL, Transfer Drive Gear.>
12) Remove the transfer drive gear assembly. <Ref. to CVT(TH58A)-200, REMOVAL, Transfer Drive Gear.>
13) Remove the parking pawl. <Ref. to CVT(TH58A)-205, REMOVAL, Parking Pawl.>
14) Remove the oil pan and oil strainer. <Ref. to CVT(TH58A)-111, REMOVAL, Oil Pan and Strainer.>
15) Remove the transmission control device. <Ref. to CVT(TH58A)-208, REMOVAL, Transmission Control Device.>
16) Remove the drive motor assembly. <Ref. to CVT(TH58A)-215, REMOVAL, Drive Motor Assembly.>
17) Remove the output clutch assembly. <Ref. to CVT(TH58A)-226, REMOVAL, Output Clutch Assembly.>
18) Remove the transmission case. <Ref. to CVT(TH58A)-243, REMOVAL, Transmission Case.>
19) Remove the reduction drive gear. <Ref. to CVT(TH58A)-256, REMOVAL, Reduction Drive Gear.>
20) Remove the primary pulley, secondary pulley and variator chain. <Ref. to CVT(TH58A)-261, REMOVAL, Primary Pulley and Secondary Pulley.>
21) Remove the reverse brake assembly. <Ref. to CVT(TH58A)-285, REMOVAL, Reverse Brake Assembly.>
22) Remove the internal gear.

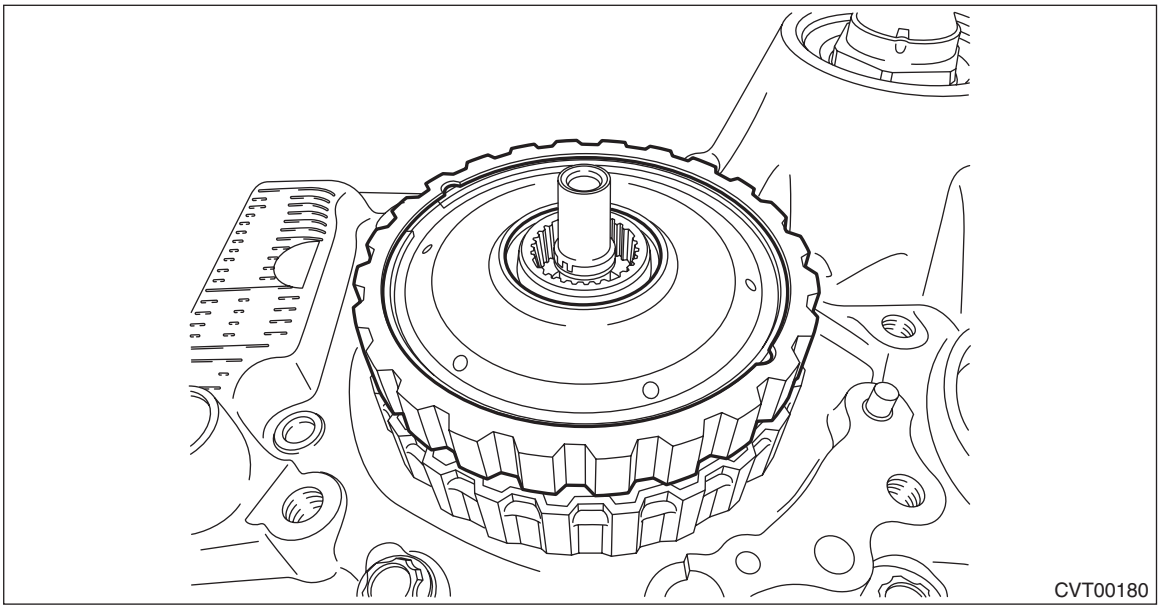

23) Remove the thrust bearing.

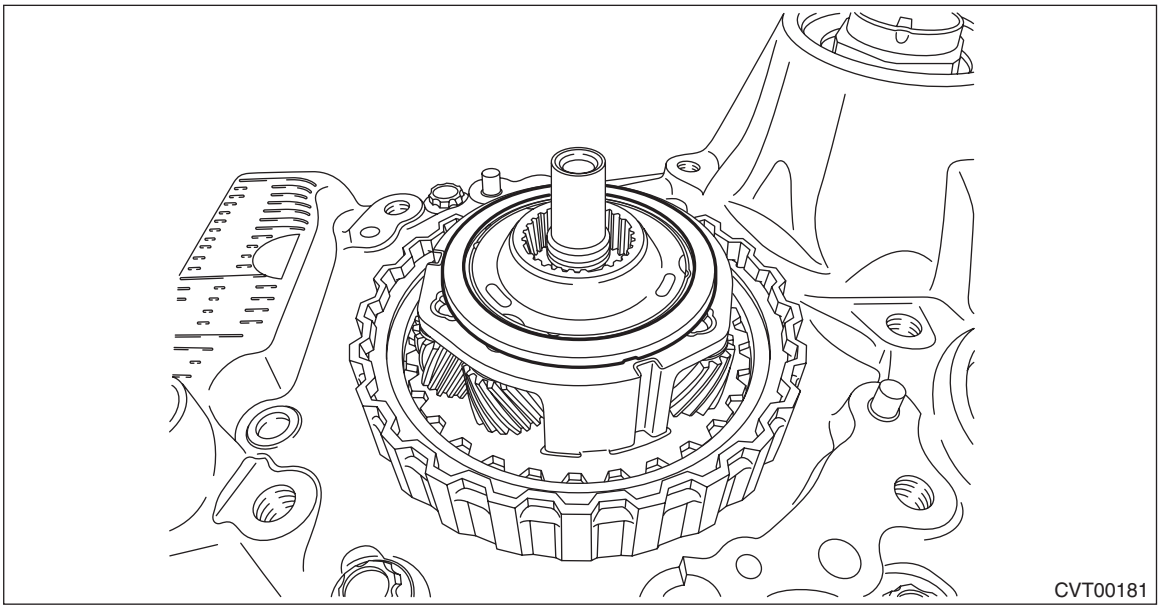

24) Remove the planetary carrier.

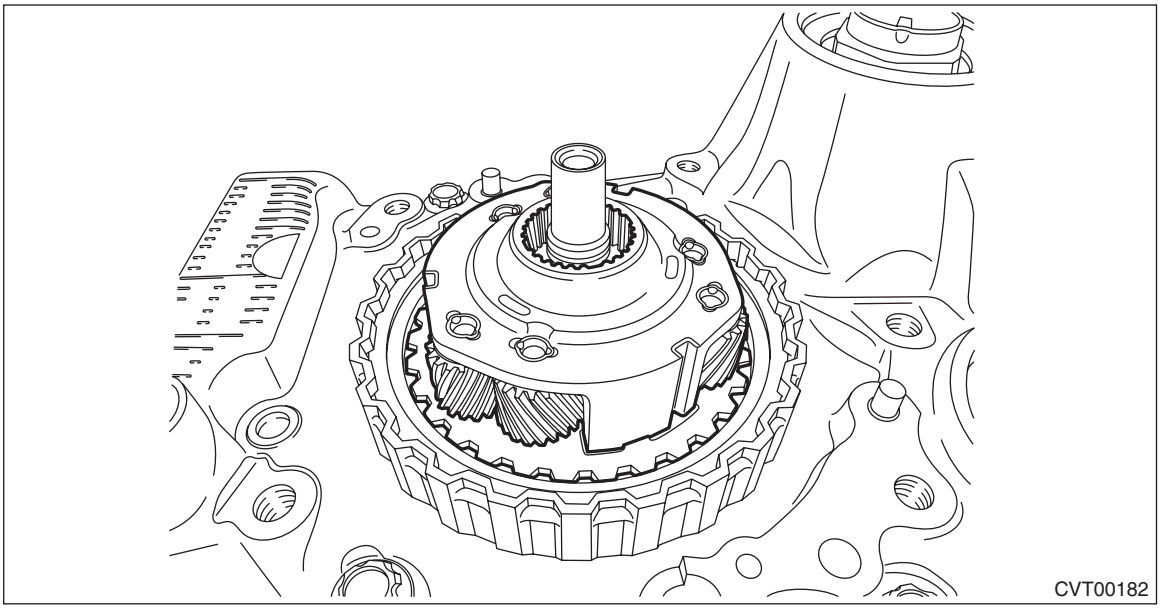

25) Remove the thrust bearing and sun gear.

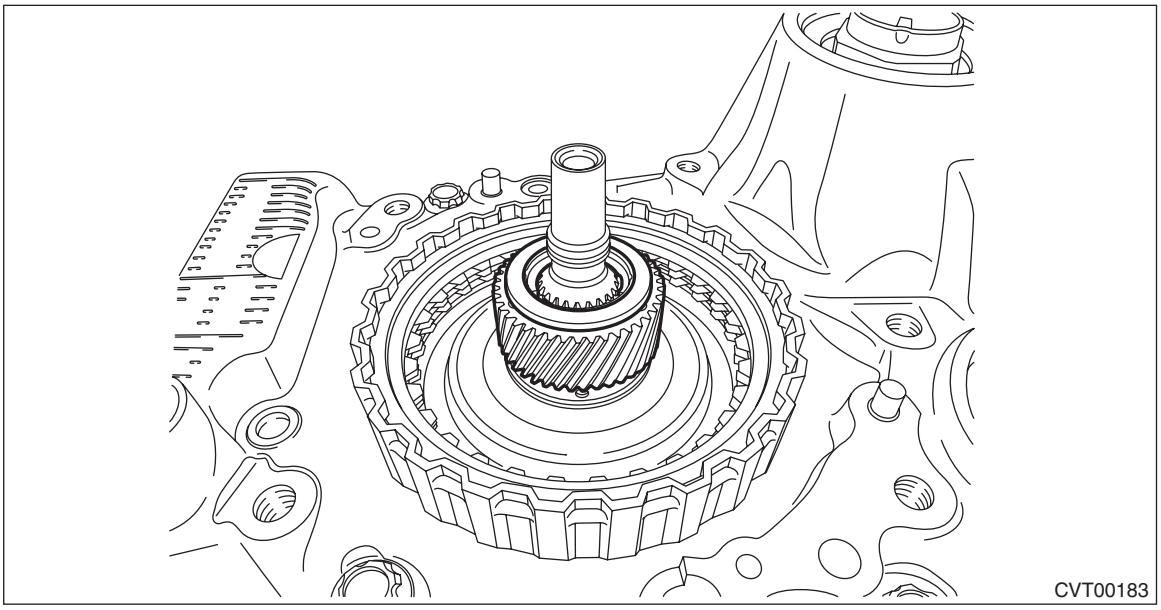

26) Remove the forward clutch assembly.

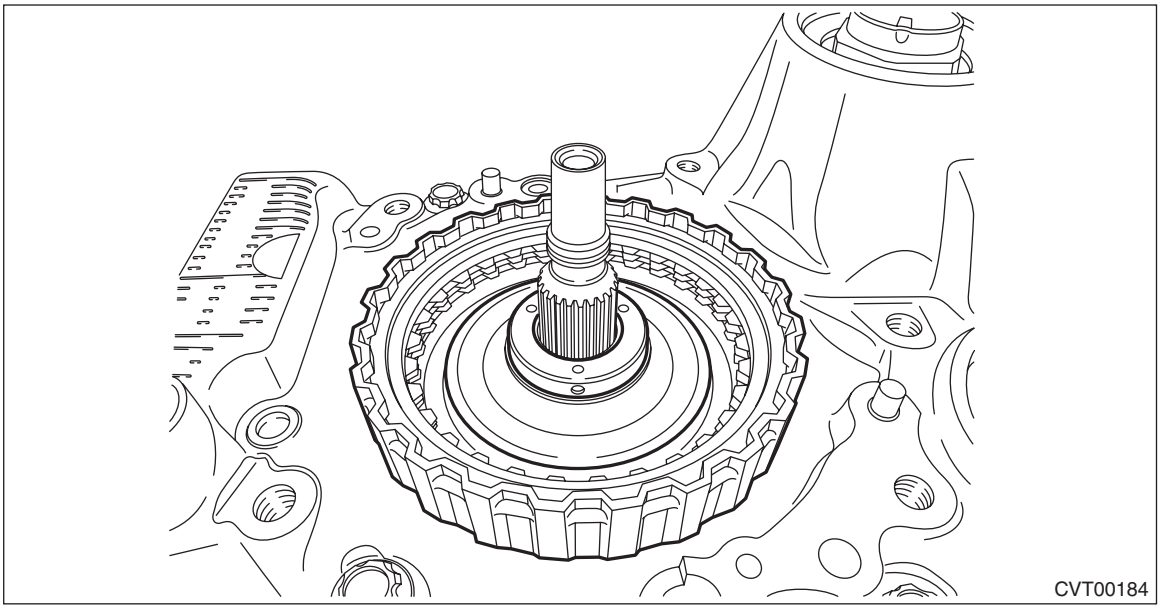

27) Remove the thrust bearing and seal ring.

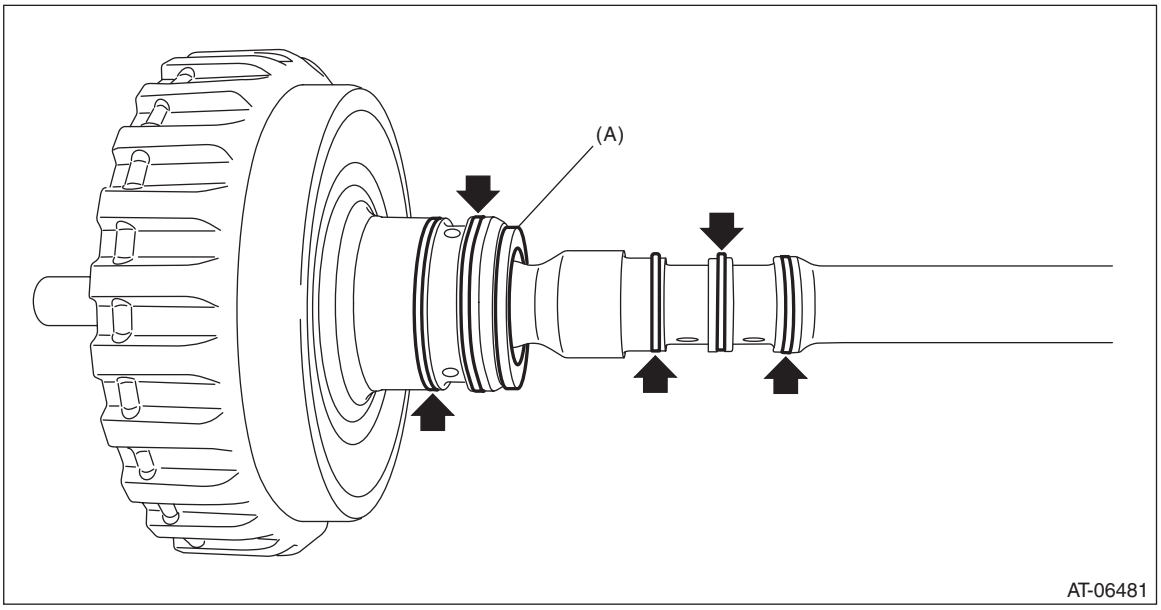

(A) Thrust bearing

B: INSTALLATION

1) Install the thrust bearing to the converter case.

NOTE:
Face the temper color surface to the converter case side.

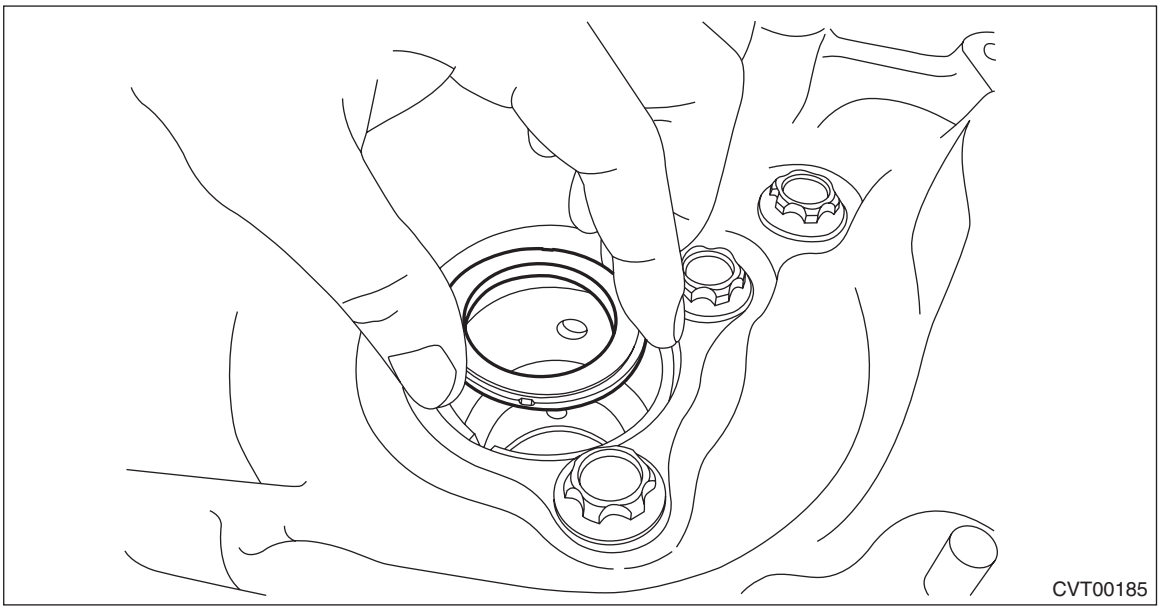

2) Install the seal ring to the input shaft.

NOTE:
- Use a new seal ring.
- When installing the seal ring, do not expand the seal ring too much.
- Apply CVTF to the seal rings.

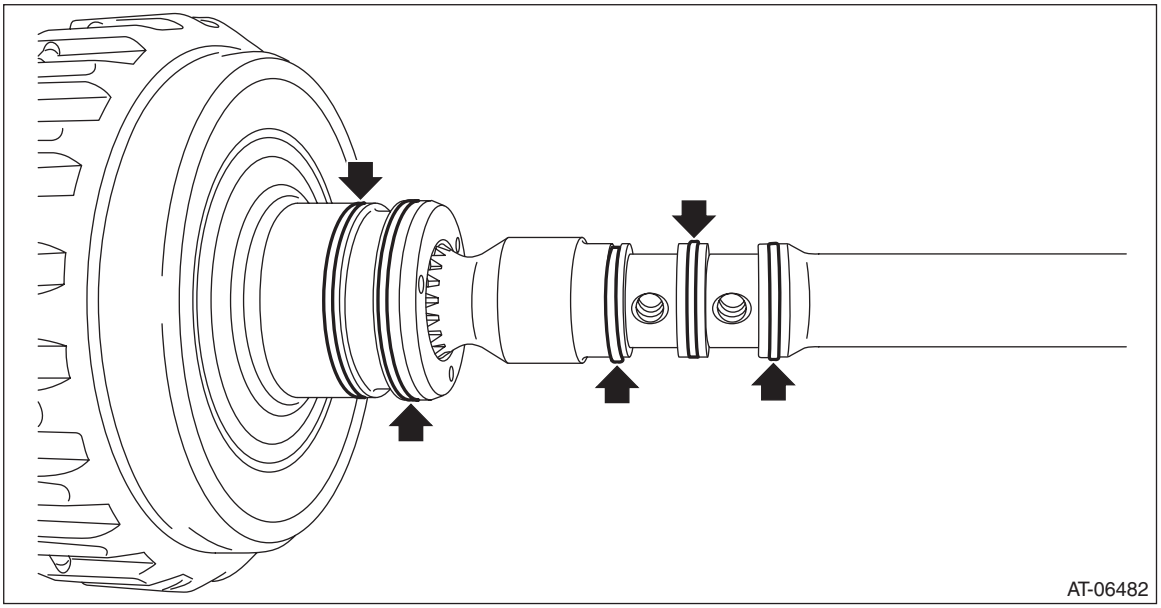

3) Install the forward clutch assembly to the converter case.

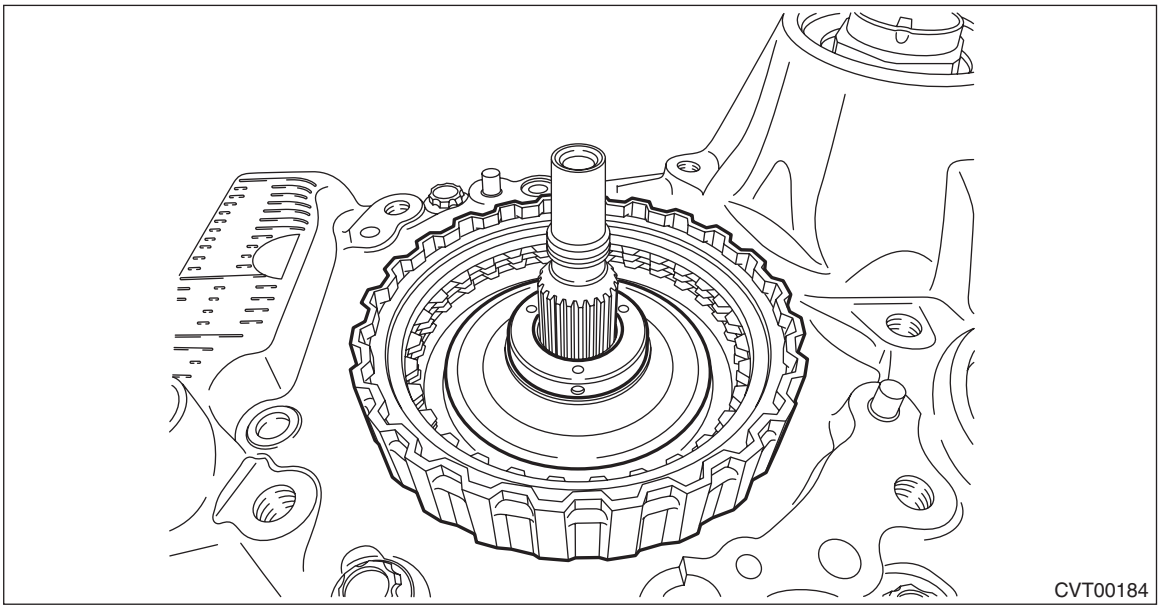

4) Install the sun gear.

NOTE:
Face the end face of the sun gear to the reverse brake side as shown in the figure.

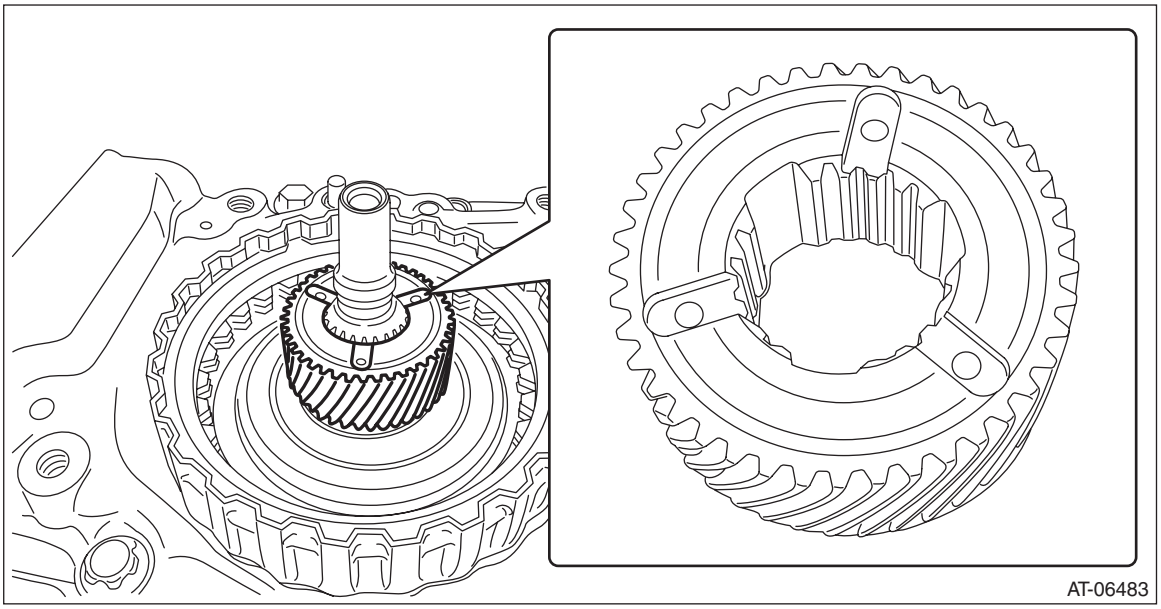

5) Install the thrust bearing to the sun gear.

NOTE:
Face the temper color surface to the reverse brake side.

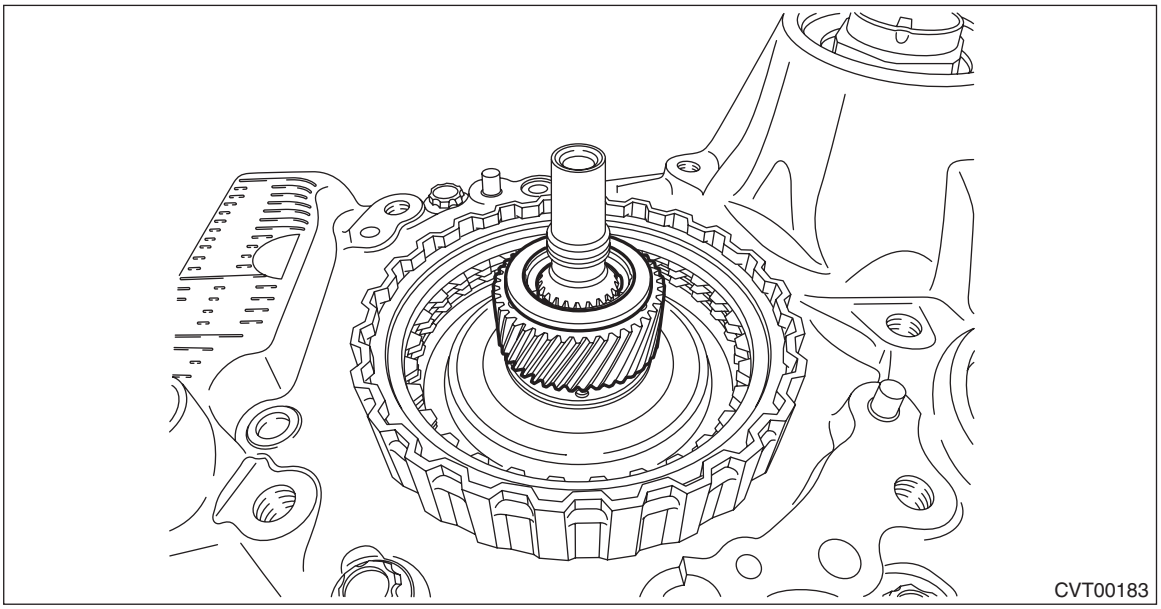

6) Install the planetary carrier.

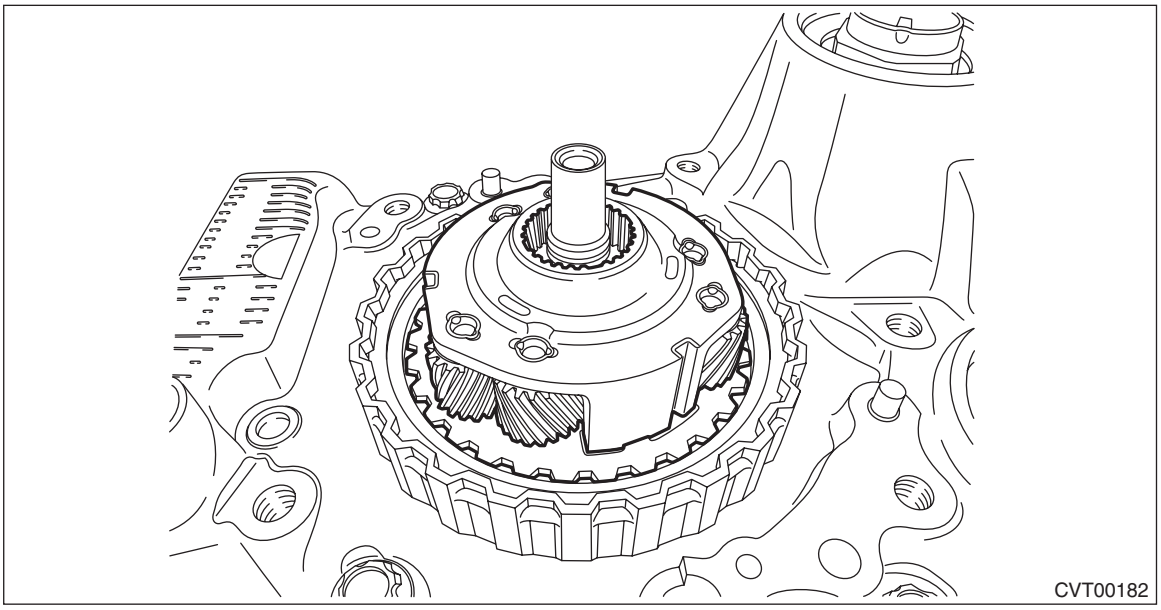

7) Install the thrust bearing.

NOTE:
Face the temper color surface to the reverse brake side.

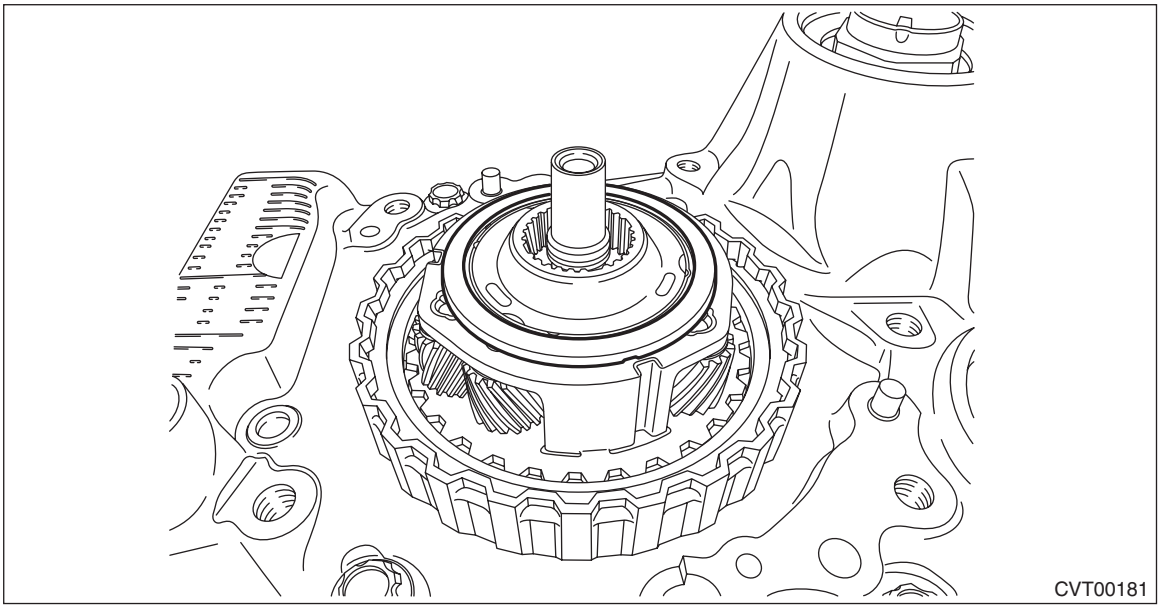

8) Install the internal gear.

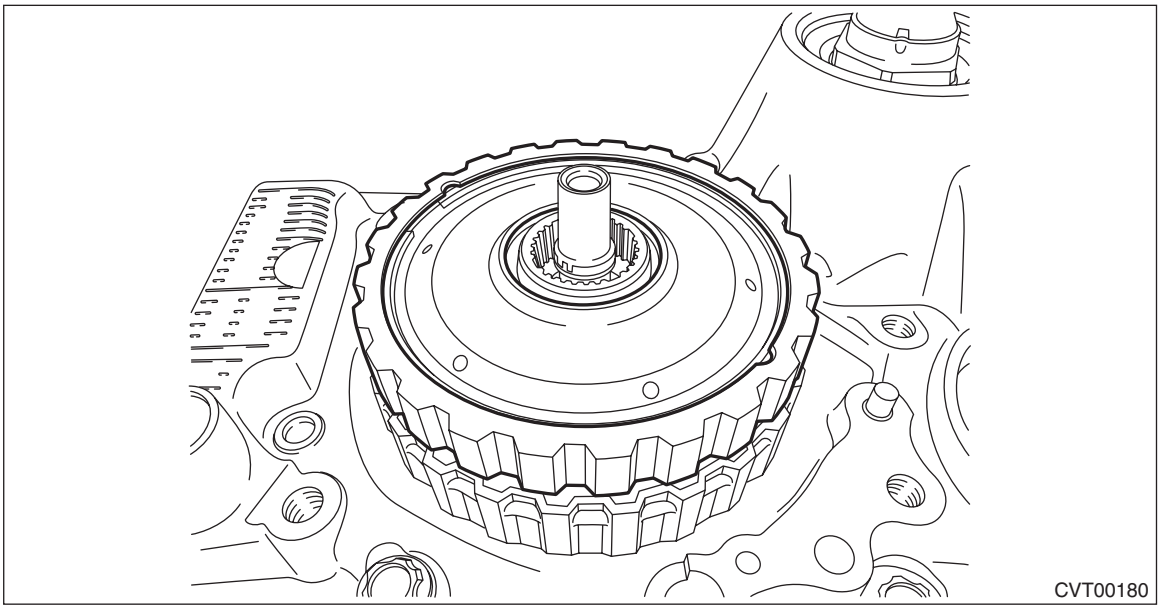

9) Install the thrust bearing to the internal gear.

NOTE:
Face the temper color surface to the reverse brake side.

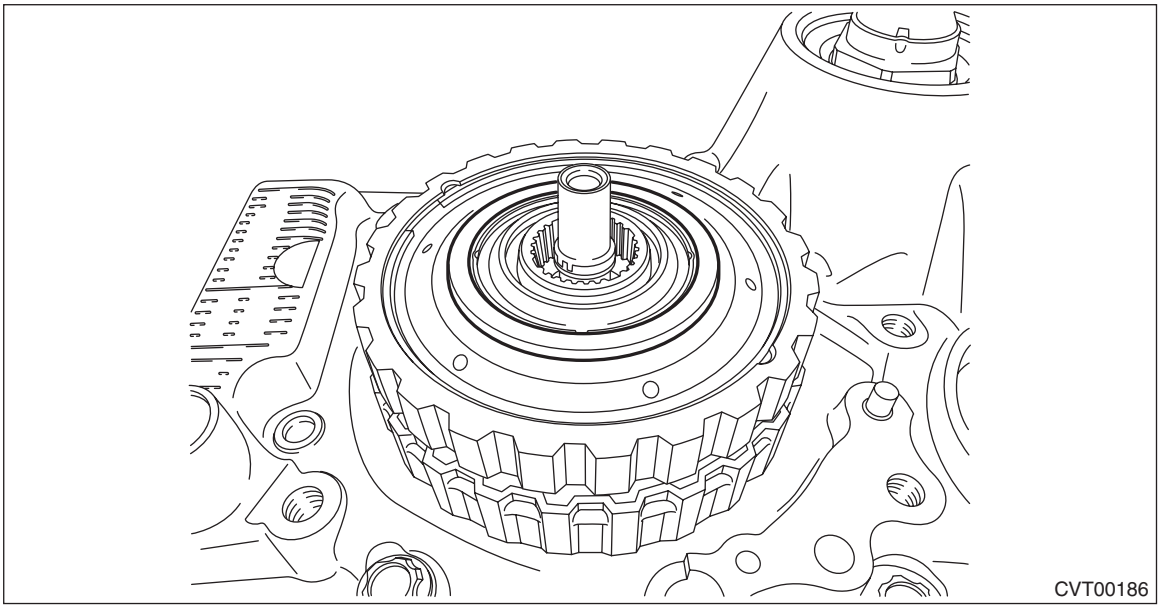

10) Select a washer. <Ref. to CVT(TH58A)-319, ADJUSTMENT, Forward Clutch Assembly.>
11) Install the reverse brake assembly. <Ref. to CVT(TH58A)-288, INSTALLATION, Reverse Brake Assembly.>
12) Install the primary pulley, secondary pulley and variator chain. <Ref. to CVT(TH58A)-269, INSTALLATION, Primary Pulley and Secondary Pulley.>
13) Install the reduction drive gear. <Ref. to CVT(TH58A)-257, INSTALLATION, Reduction Drive Gear.>
14) Install the transmission case. <Ref. to CVT(TH58A)-246, INSTALLATION, Transmission Case.>
15) Install the output clutch assembly. <Ref. to CVT(TH58A)-227, INSTALLATION, Output Clutch Assembly.>
16) Install the drive motor assembly. <Ref. to CVT(TH58A)-219, INSTALLATION, Drive Motor Assembly.>
17) Install the transmission control device. <Ref. to CVT(TH58A)-211, INSTALLATION, Transmission Control Device.>
18) Install the oil strainer and oil pan. <Ref. to CVT(TH58A)-113, INSTALLATION, Oil Pan and Strainer.>
19) Install the parking pawl. <Ref. to CVT(TH58A)-206, INSTALLATION, Parking Pawl.>
20) Install the transfer drive gear assembly. <Ref. to CVT(TH58A)-200, INSTALLATION, Transfer Drive Gear.>
21) Install the transfer driven gear assembly. <Ref. to CVT(TH58A)-198, INSTALLATION, Transfer Driven Gear.>
22) Install the transfer clutch assembly. <Ref. to CVT(TH58A)-185, INSTALLATION, Transfer Clutch.>
23) Install the extension case. <Ref. to CVT(TH58A)-180, INSTALLATION, Extension Case.>
24) Install the inhibitor switch. <Ref. to CVT(TH58A)-101, INSTALLATION, Inhibitor Switch.>
25) Install the secondary speed sensor. <Ref. to CVT(TH58A)-105, INSTALLATION, Secondary Speed Sensor.>
26) Install the front wheel speed sensor. <Ref. to CVT(TH58A)-107, INSTALLATION, Front Wheel Speed Sensor.>
27) Install the turbine speed sensor. <Ref. to CVT(TH58A)-103, INSTALLATION, Turbine Speed Sensor.>
28) Install the main control valve body. <Ref. to CVT(TH58A)-121, INSTALLATION, Control Valve Body.>
29) Install the transmission harness. <Ref. to CVT(TH58A)-149, INSTALLATION, Transmission Harness.>
30) Install the air breather hose. <Ref. to CVT(TH58A)-171, INSTALLATION, Air Breather Hose.>
31) Install the transmission assembly to the vehicle. <Ref. to CVT(TH58A)-76, INSTALLATION, Automatic Transmission Assembly.>

C: DISASSEMBLY

1. FORWARD CLUTCH ASSEMBLY

1) Remove the snap ring, retaining plate, drive plate, driven plate and dish plate.

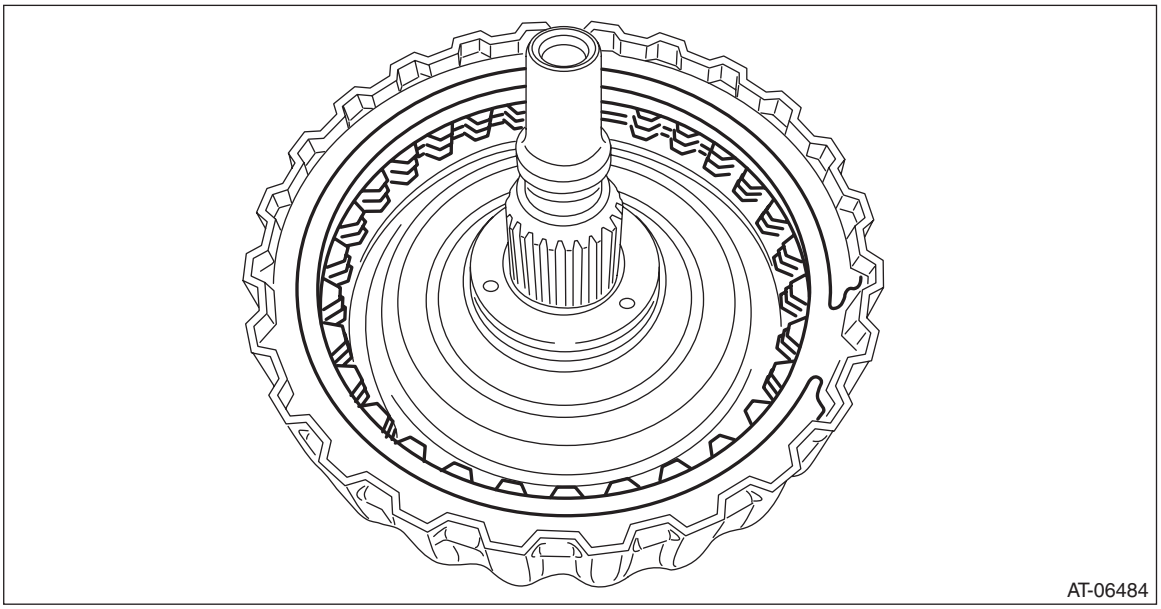

2) Compress the return spring using the ST to remove the snap ring.

ST1 18762AA010 COMPRESSOR SPECIAL TOOL
ST2 398673600 COMPRESSOR

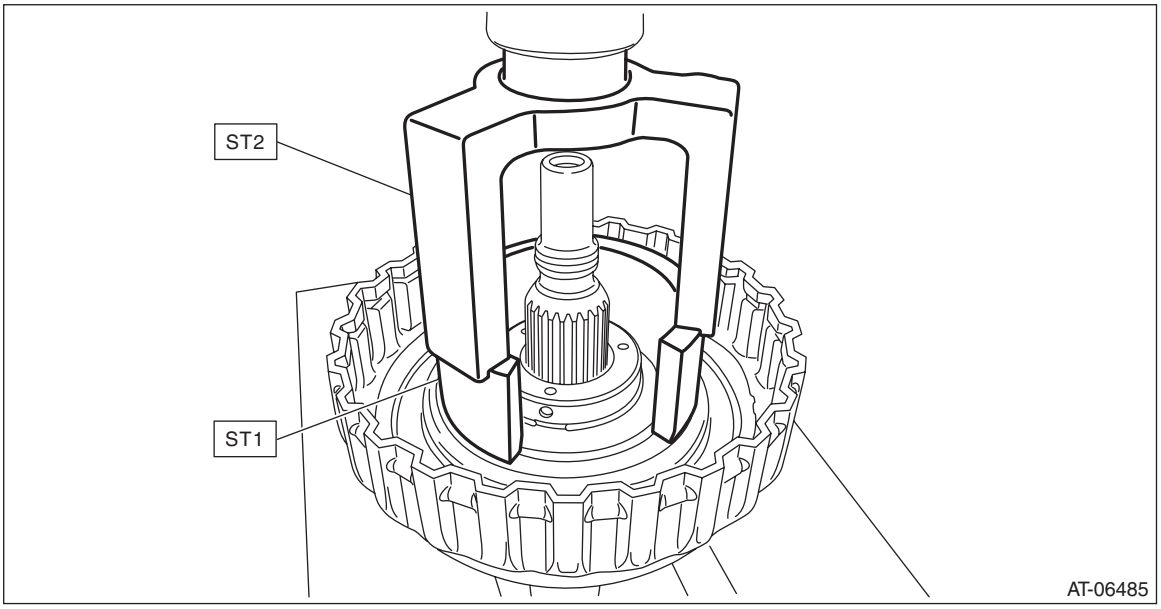

3) Remove the chamber COMPL and snap ring.

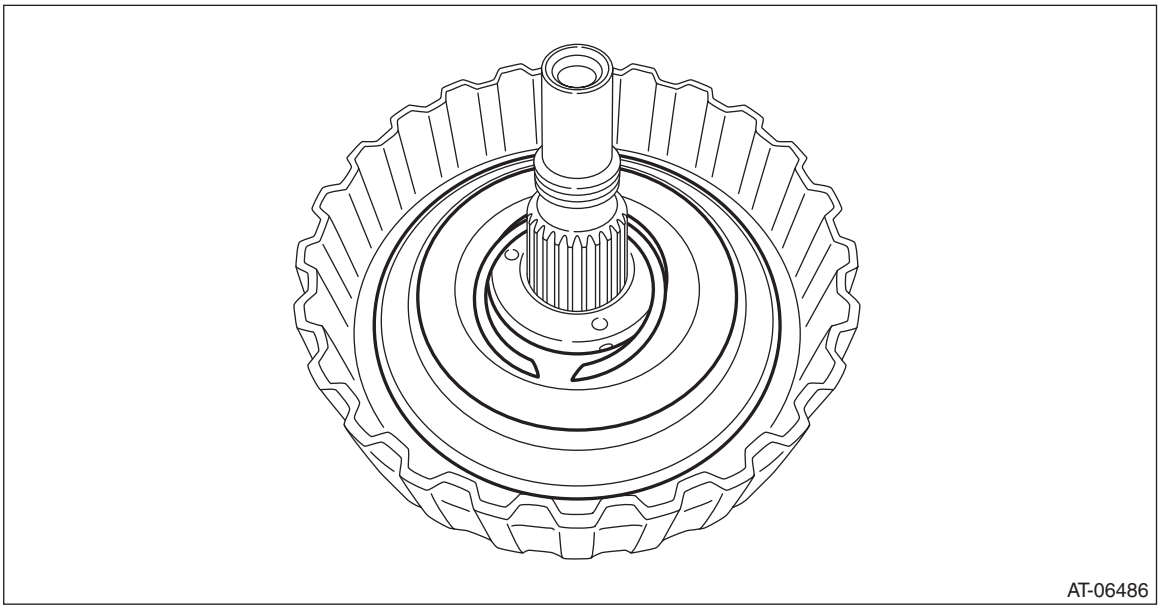

4) Remove the return spring.

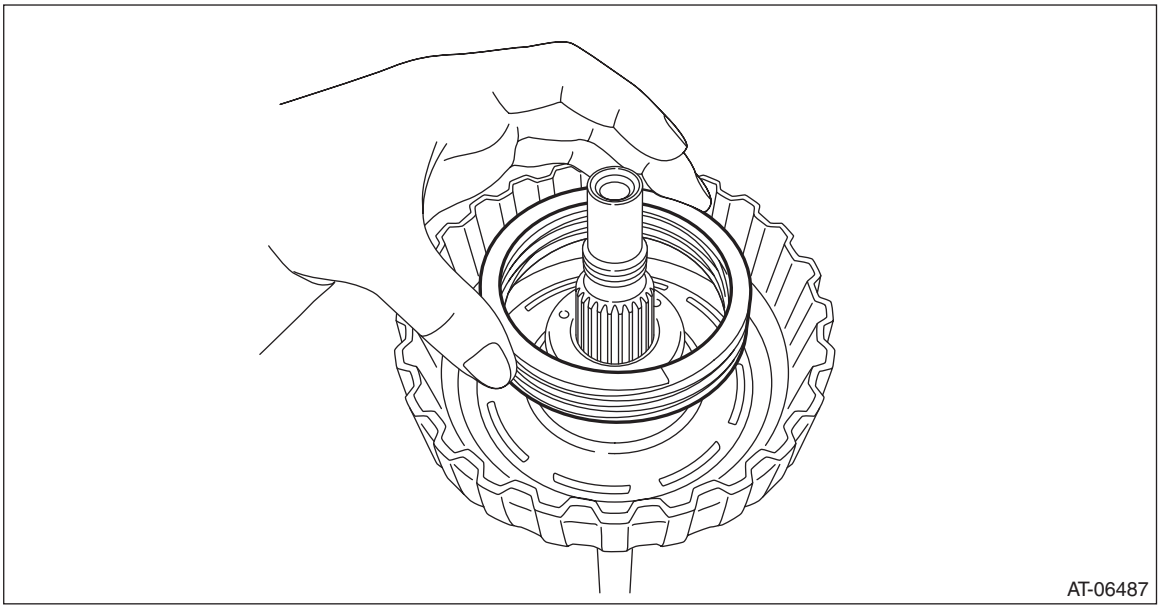

5) Remove the forward clutch piston by blowing compressed air intermittently from the forward clutch carrier hole.

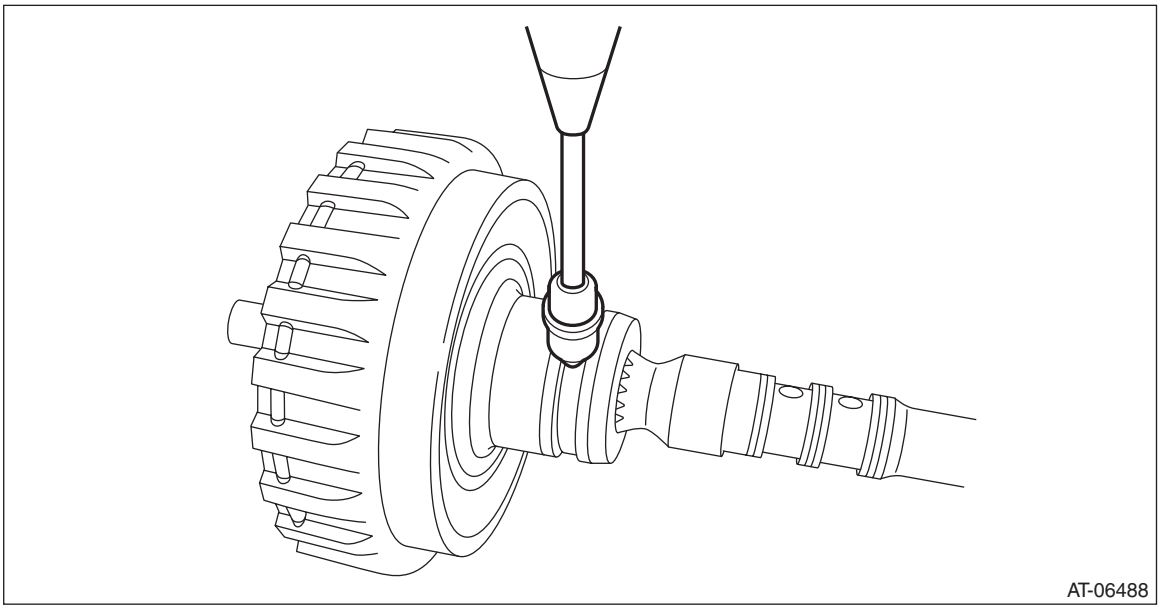

2. PLANETARY CARRIER ASSEMBLY

NOTE:
Disassemble the balance oil guide only.
1) Remove the snap ring.

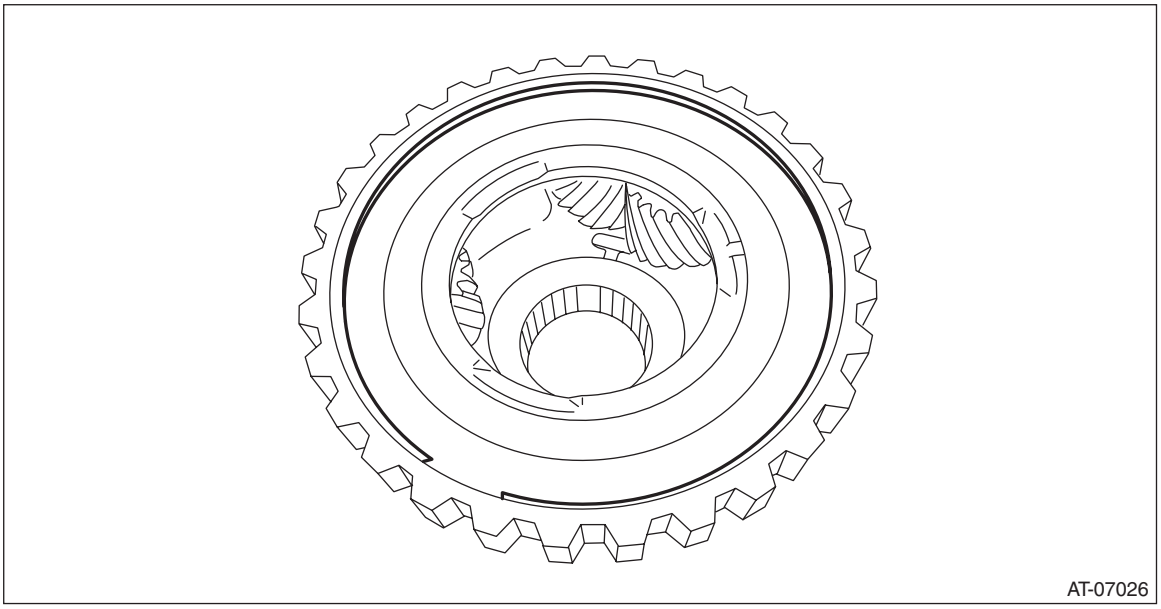

2) Remove the balance oil guide.

3. INTERNAL GEAR

1) Remove the snap ring.

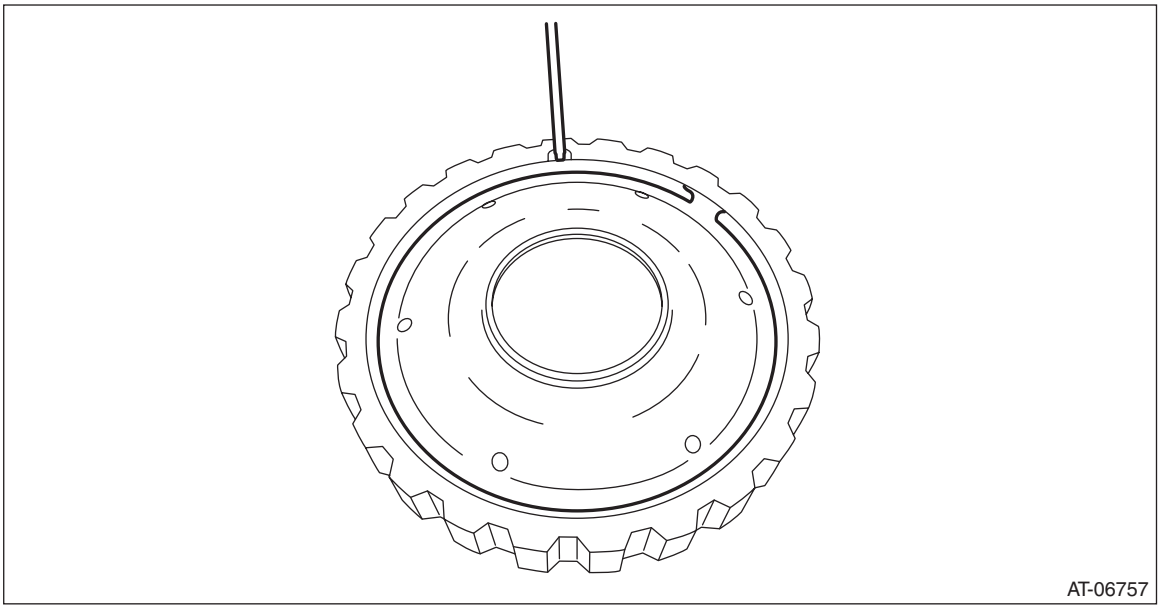

2) Remove the thrust gear plate.

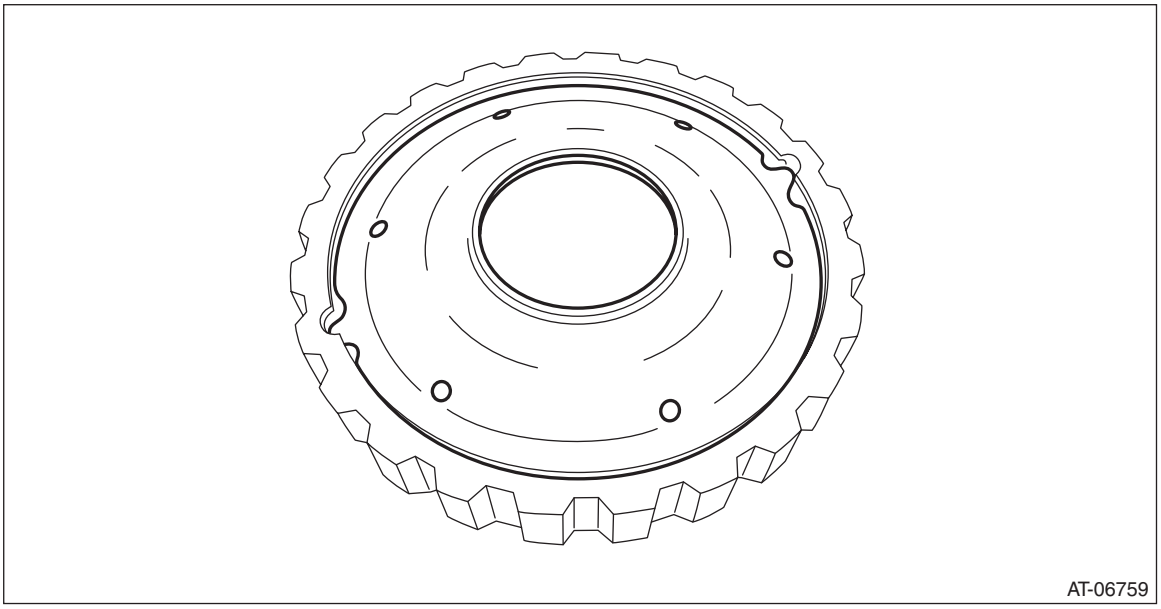

D: ASSEMBLY

1. FORWARD CLUTCH ASSEMBLY

1) Install the forward clutch piston to forward clutch drum.

NOTE:
- Apply CVTF to the seal of forward clutch piston.
- Insert it all the way to the end.

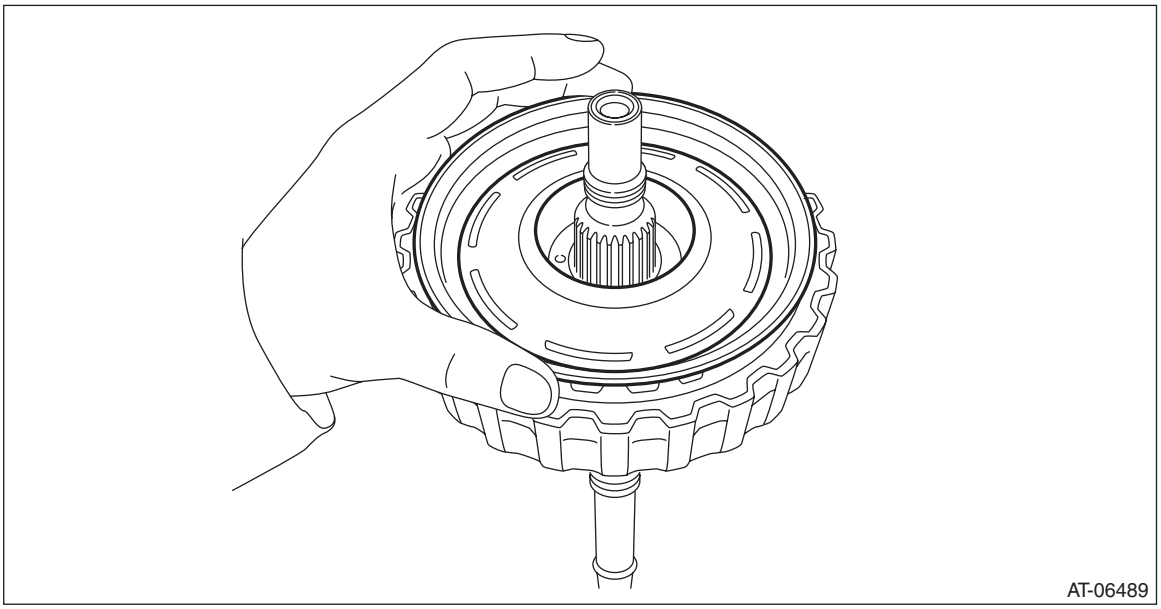

2) Install the return spring.

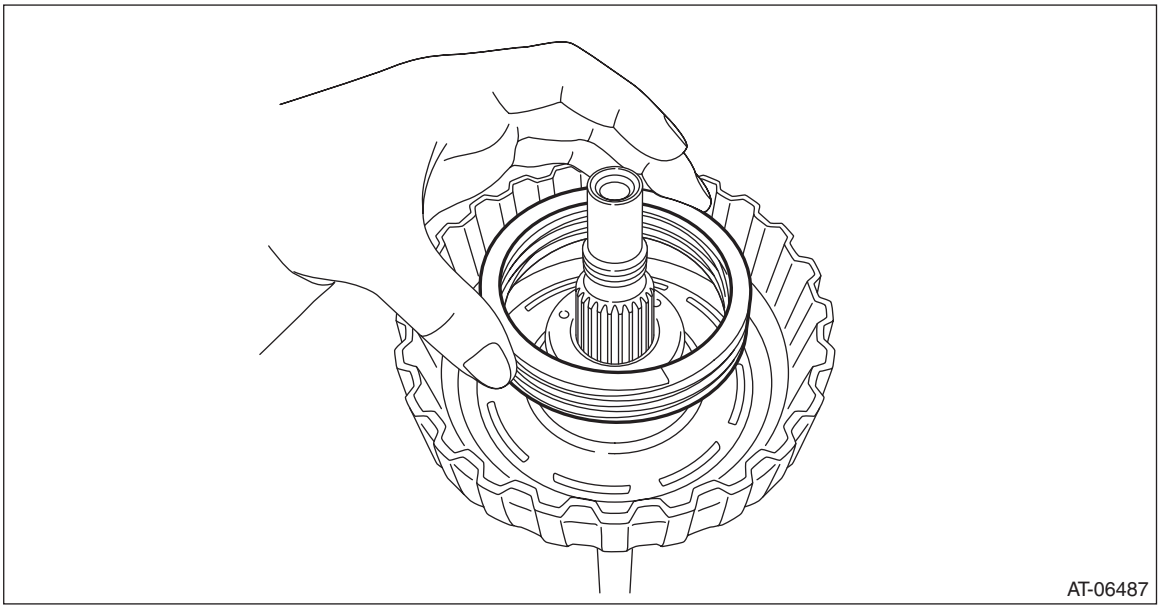

3) Install the chamber COMPL.

NOTE:
Apply CVTF to the sealing area of chamber COMPL.

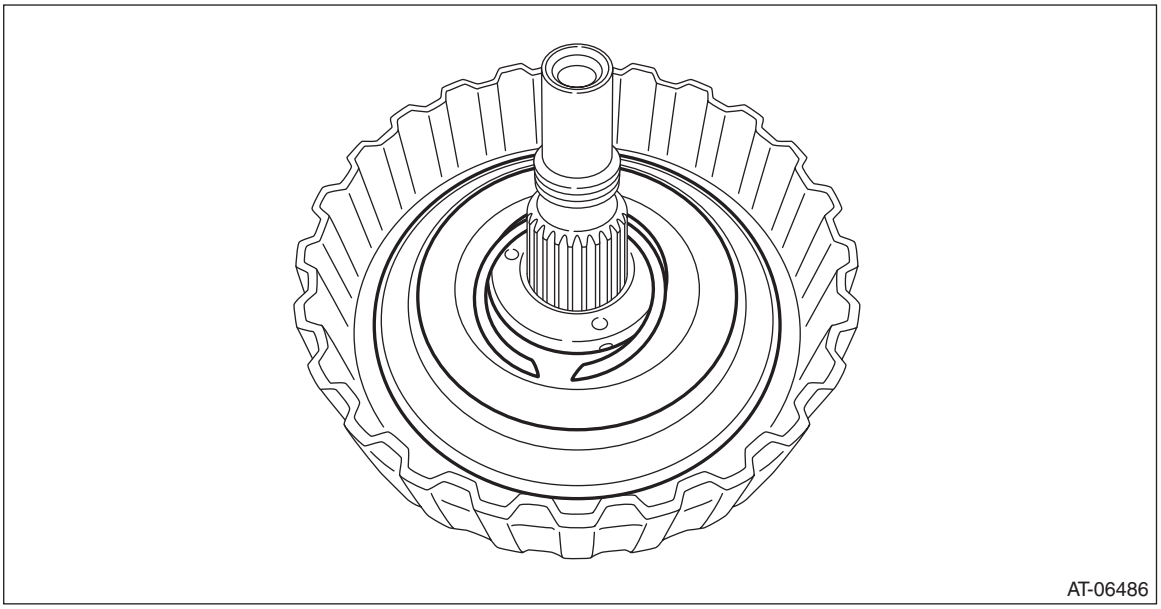

4) Compress the return spring using the ST to install the snap ring.
ST1 18762AA010 COMPRESSOR SPECIAL TOOL
ST2 398673600 COMPRESSOR

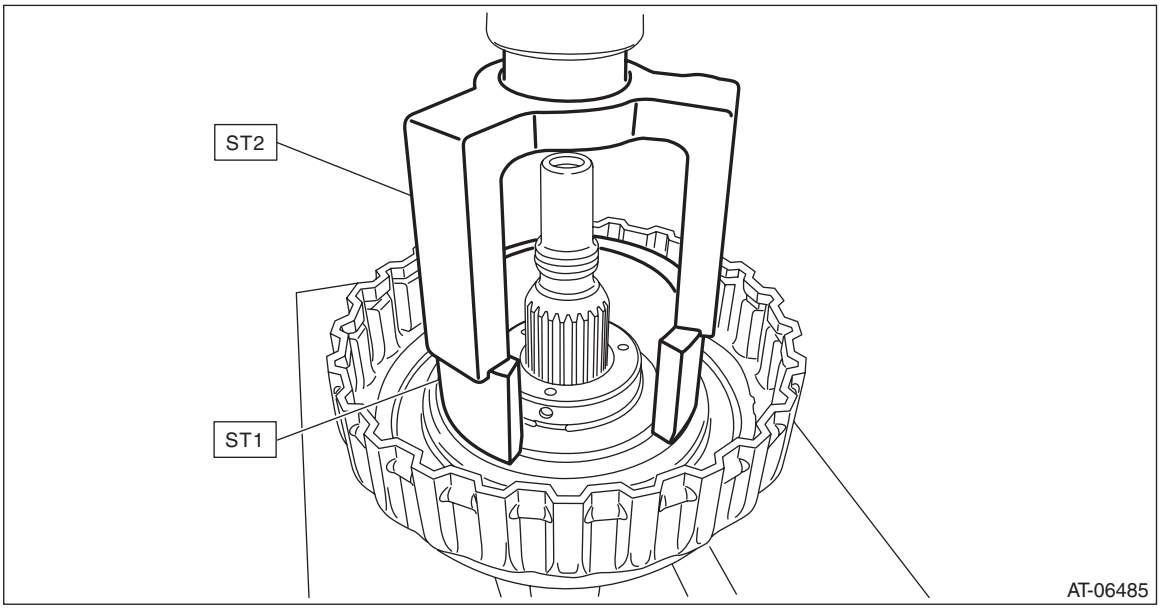

5) Check the operation of forward clutch piston by blowing compressed air intermittently from the forward clutch carrier hole.

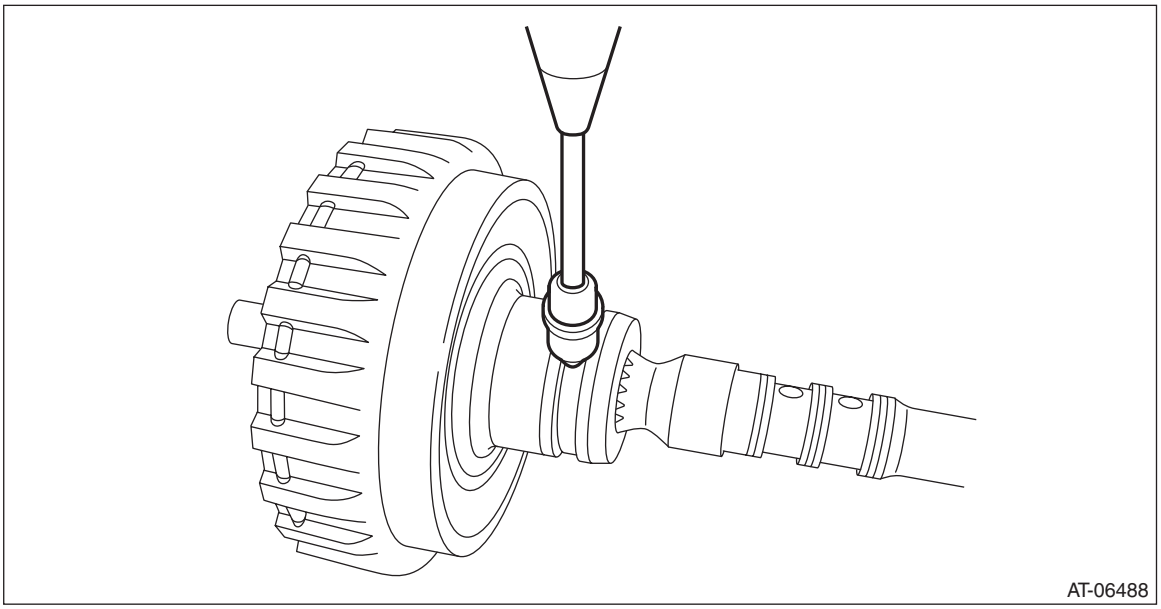

6) Place the driven plate, drive plate and retaining plate neatly in this order on surface table.
7) Set the dial gauge to retaining plate, and read its scale.

NOTE:
The value, which is read in the gauge at this time, is zero point.
8) Scale and record the weight "Z" of a flat board which will be put on retaining plate.

NOTE:
- Use a stiff board which does not bend against load as a flat board to be put on retaining plate.
- Use a flat board weighing less than 52 N (5.3 kgf, 11.7 lb).

9) Put the flat board on retaining plate.

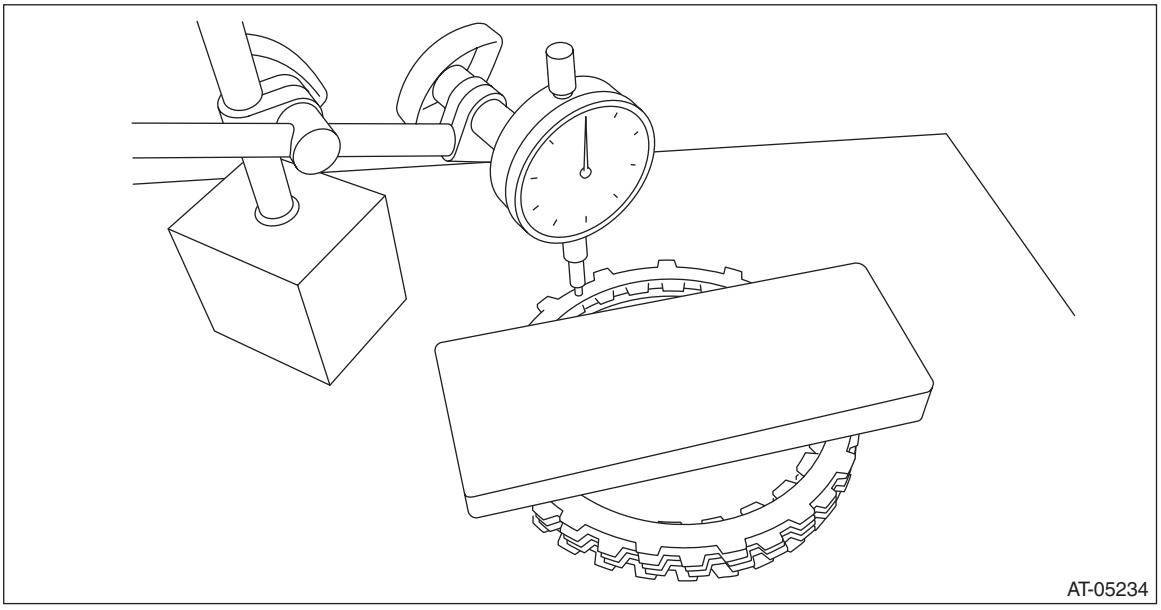

10) Using the following formula, read the push/pull gauge, and calculate “N”.
N = 52 N (5.3 kgf, 11.7 lb) – Z
52 N (5.3 kgf, 11.7 lb) : Load applied to clutch plate
Z: Flat board weight
11) Press the center of retaining plate by applying a force of “N” using push/pull gauge, and then measure and record the compression amount “A”.

NOTE:
Measure at four points with a 90° interval and calculate the average.

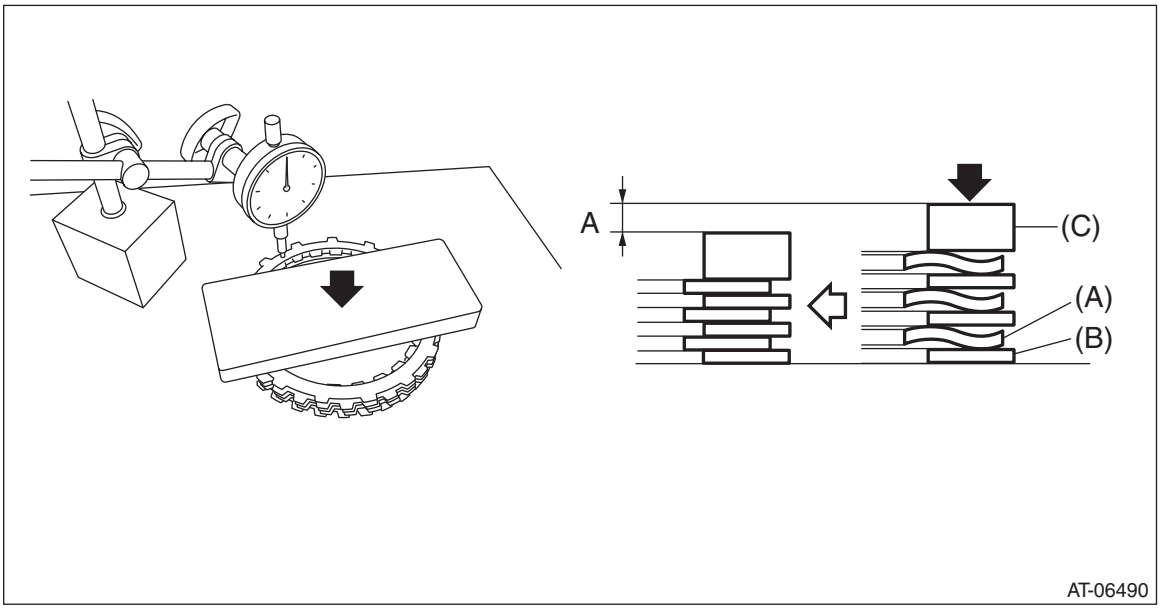

(A) Driven plate
(B) Drive plate
(C) Retaining plate

12) Install the dish plate, drive plate, driven plate, retaining plate and snap ring to the forward clutch carrier.

NOTE:
Install the dish plate in the correct direction.

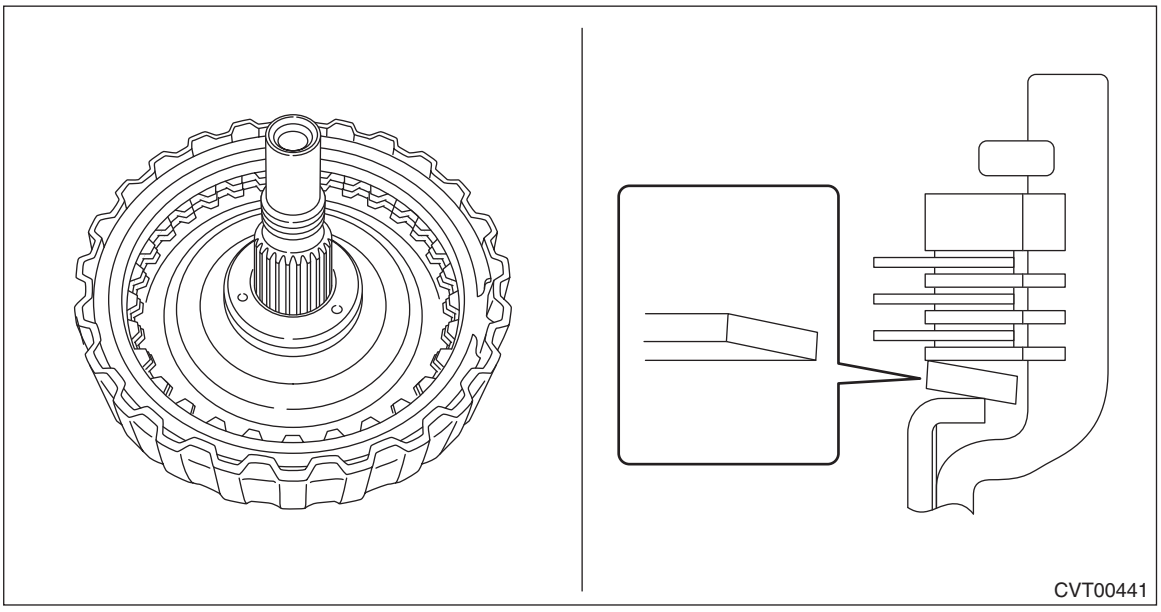

13) Measure and record the clearance “B” between the retaining plate and snap ring.

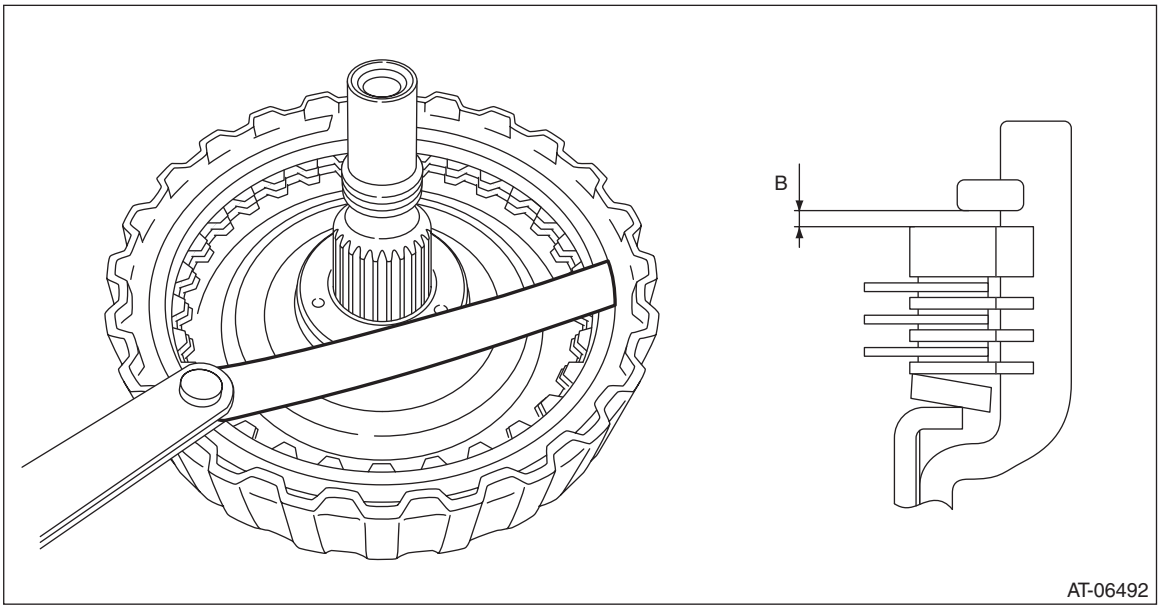

14) Piston stroke calculation
Calculate with A and B dimensions recorded before.
If it exceeds the limit, replace with a new drive plate and adjust within the initial standard value.
S mm (in) = A + B
S: Piston stroke
A: Compression amount of drive plate and dish plate
B: Clearance between retaining plate and snap ring

Initial standard:
1.0 — 1.4 mm (0.040 — 0.055 in)

Limit thickness:
1.6 mm (0.063 in)

Retaining plate	
Part No.	Thickness mm (in)
31567AB760	4.2 (0.165)
31567AB770	4.4 (0.173)
31567AB780	4.6 (0.181)
31567AB790	4.8 (0.189)
31567AB830	5.0 (0.197)

2. PLANETARY CARRIER ASSEMBLY

NOTE:
Assemble in the reverse order of disassembly.

3. INTERNAL GEAR

NOTE:
Assemble in the reverse order of disassembly.

E: INSPECTION

- Check the forward clutch drum, internal gear, sun gear and forward clutch piston lip for wear or damage.
- Inspect the drive plate facing for wear and damage.
- Check the driven plate for discoloration (burnt color).
- Check for worn snap ring, fatigue or damaged return spring or deformed spring retainer.
- Make sure the clearance between retaining plate and internal gear of forward clutch is within the limit. If it exceeds the standard, replace the forward clutch. <Ref. to CVT(TH58A)-314, ASSEMBLY, Forward Clutch Assembly.>

F: ADJUSTMENT

1) Install the thrust bearing to the internal gear.

NOTE:
Face the temper color surface to the reverse brake side.

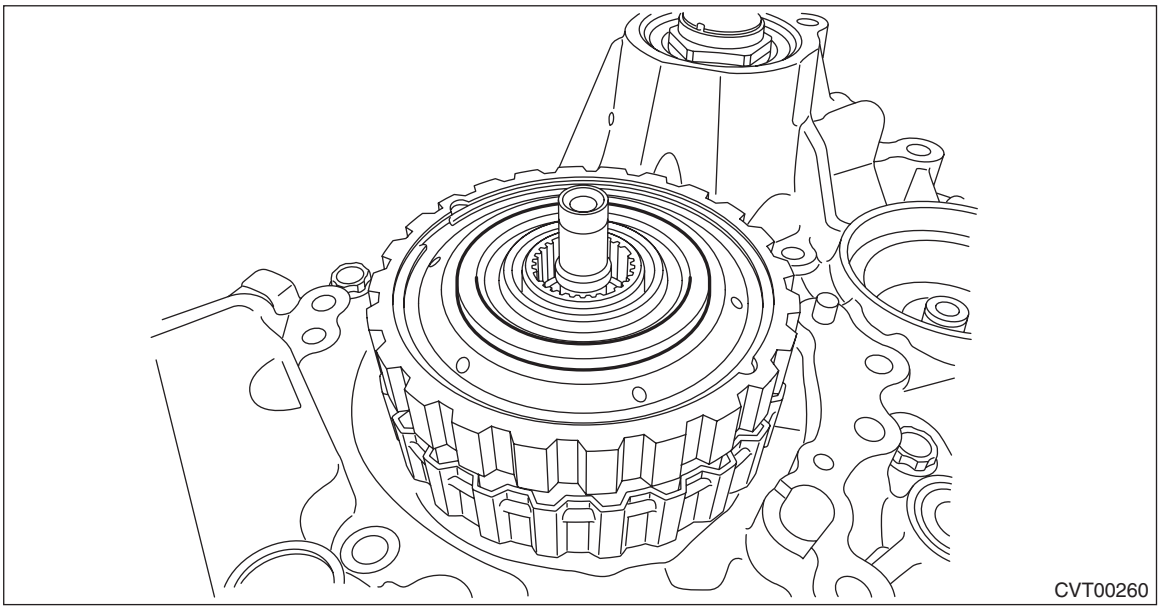

2) Measure depth “A” from the ST upper face to the washer mounting surface.
ST 499575600 GAUGE

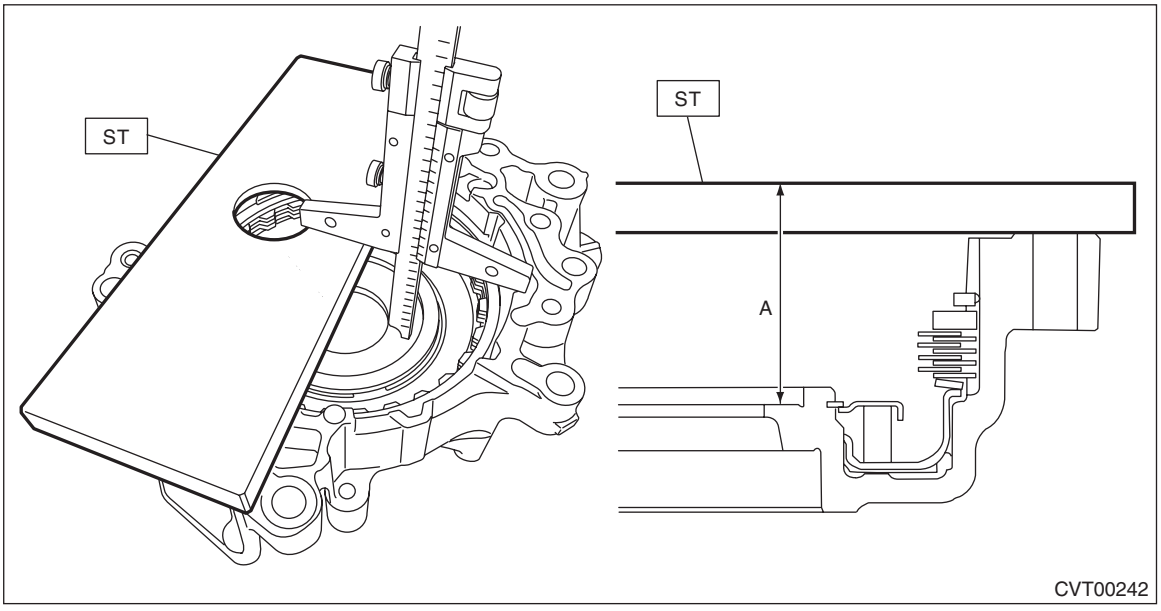

3) Measure the height “B” from the ST upper face to the mating surface of the drive pinion retainer.
ST 499575600 GAUGE

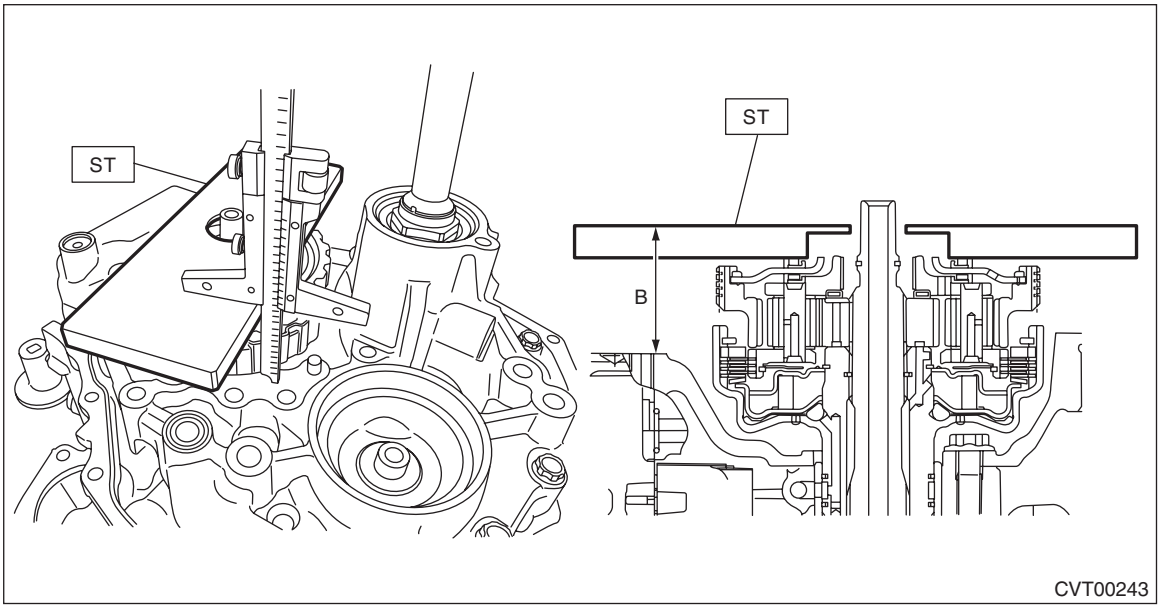

4) Obtain the thickness of washer using the following formula to select the washer.
T (mm) = A – B – (0.35 — 0.70)
[T (in) = A – B – (0.014 — 0.028)]
T: Shim thickness
A: Depth from the ST upper face to the washer mounting surface
B: Height from ST upper face to the drive pinion retainer mating surface
0.35 — 0.70 mm (0.014 — 0.028 in): Clearance

Washer	
Part No.	Thickness mm (in)
803064020	1.3 (0.051)
803064021	1.55 (0.061)
803064022	1.8 (0.071)
803064023	2.05 (0.081)
803064024	2.3 (0.091)
803064025	2.55 (0.100)

47.Drive Pinion Shaft Assembly

A: REMOVAL

1) Remove the transmission assembly from the vehicle. <Ref. to CVT(TH58A)-62, REMOVAL, Automatic Transmission Assembly.>
2) Remove the air breather hose. <Ref. to CVT(TH58A)-169, REMOVAL, Air Breather Hose.>
3) Remove the transmission harness. <Ref. to CVT(TH58A)-141, REMOVAL, Transmission Harness.>
4) Remove the main control valve body. <Ref. to CVT(TH58A)-114, REMOVAL, Control Valve Body.>
5) Remove the turbine speed sensor. <Ref. to CVT(TH58A)-103, REMOVAL, Turbine Speed Sensor.>
6) Remove the secondary speed sensor. <Ref. to CVT(TH58A)-105, REMOVAL, Secondary Speed Sensor.>
7) Remove the front wheel speed sensor. <Ref. to CVT(TH58A)-107, REMOVAL, Front Wheel Speed Sensor.>
8) Remove the inhibitor switch. <Ref. to CVT(TH58A)-99, REMOVAL, Inhibitor Switch.>
9) Remove the extension case. <Ref. to CVT(TH58A)-179, REMOVAL, Extension Case.>
10) Remove the transfer clutch assembly. <Ref. to CVT(TH58A)-183, REMOVAL, Transfer Clutch.>
11) Remove the transfer driven gear assembly. <Ref. to CVT(TH58A)-197, REMOVAL, Transfer Driven Gear.>
12) Remove the transfer drive gear assembly. <Ref. to CVT(TH58A)-200, REMOVAL, Transfer Drive Gear.>
13) Remove the parking pawl. <Ref. to CVT(TH58A)-205, REMOVAL, Parking Pawl.>
14) Remove the oil pan and oil strainer. <Ref. to CVT(TH58A)-111, REMOVAL, Oil Pan and Strainer.>
15) Remove the transmission control device. <Ref. to CVT(TH58A)-208, REMOVAL, Transmission Control Device.>
16) Remove the drive motor assembly. <Ref. to CVT(TH58A)-215, REMOVAL, Drive Motor Assembly.>
17) Remove the output clutch assembly. <Ref. to CVT(TH58A)-226, REMOVAL, Output Clutch Assembly.>
18) Remove the transmission case. <Ref. to CVT(TH58A)-243, REMOVAL, Transmission Case.>
19) Remove the reduction drive gear. <Ref. to CVT(TH58A)-256, REMOVAL, Reduction Drive Gear.>
20) Remove the primary pulley, secondary pulley and variator chain. <Ref. to CVT(TH58A)-261, REMOVAL, Primary Pulley and Secondary Pulley.>
21) Remove the reverse brake assembly. <Ref. to CVT(TH58A)-285, REMOVAL, Reverse Brake Assembly.>
22) Remove the forward clutch assembly. <Ref. to CVT(TH58A)-301, REMOVAL, Forward Clutch Assembly.>
23) Using the ST, remove the drive pinion retainer.
ST 18270KA020 SOCKET (E20)

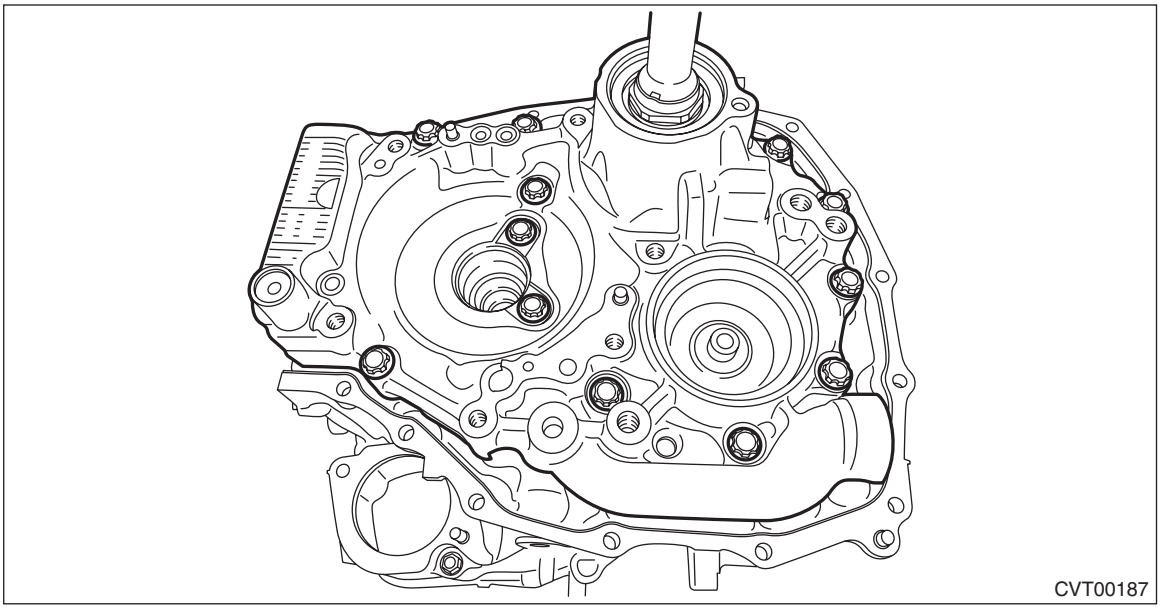
CVT00187

24) Remove the O-ring.

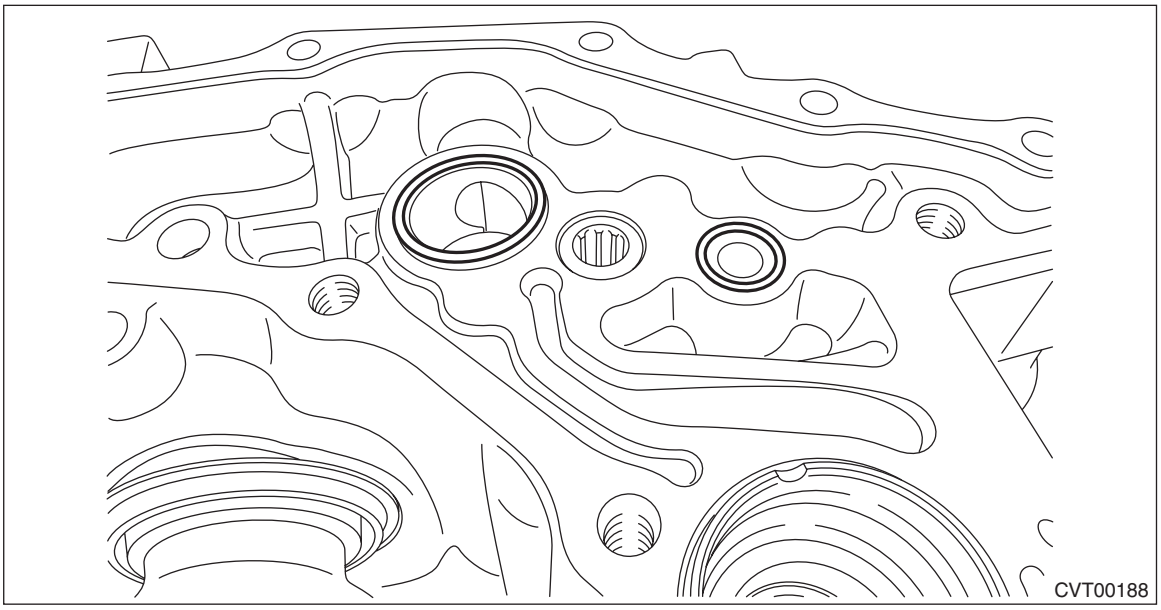

B: INSTALLATION

1) Clean the mating surface of drive pinion retainer and converter case.
2) Adjust the backlash and tooth contact between drive pinion shaft assembly and the front differential side gear. <Ref. to CVT(TH58A)-343, ADJUSTMENT, Drive Pinion Shaft Assembly.>
3) Install O-rings in two locations to the converter case.

NOTE:
- Use new O-rings.
- Apply CVTF to the O-ring.

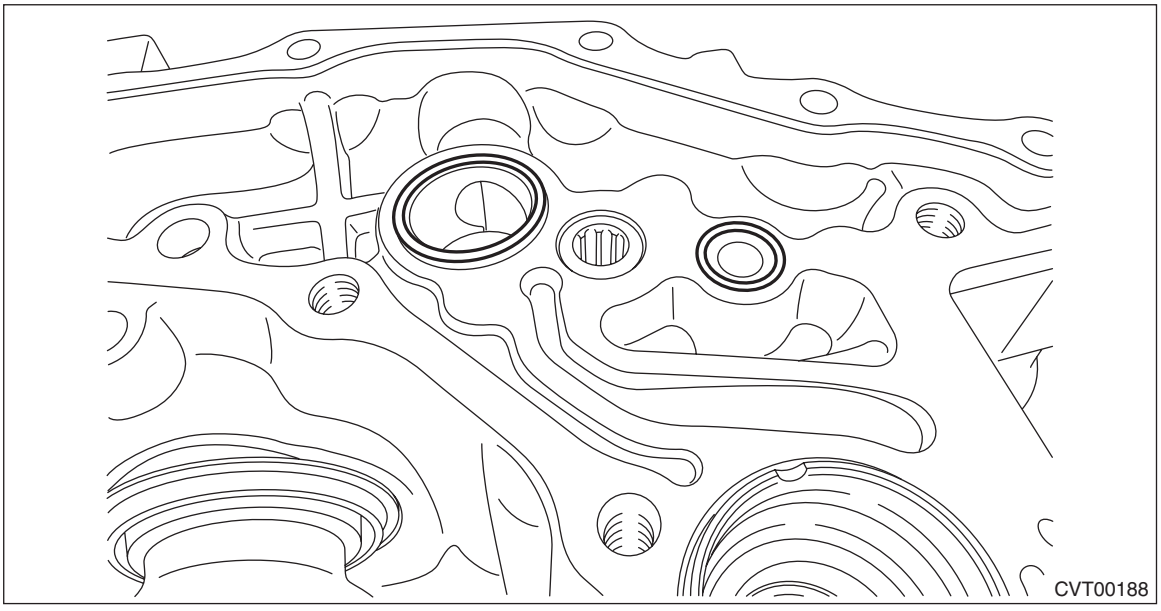

4) Apply liquid gasket seamlessly to the mating surface of drive pinion retainer.

Liquid gasket:
THREE BOND 1215 (Part No. 004403007) or equivalent

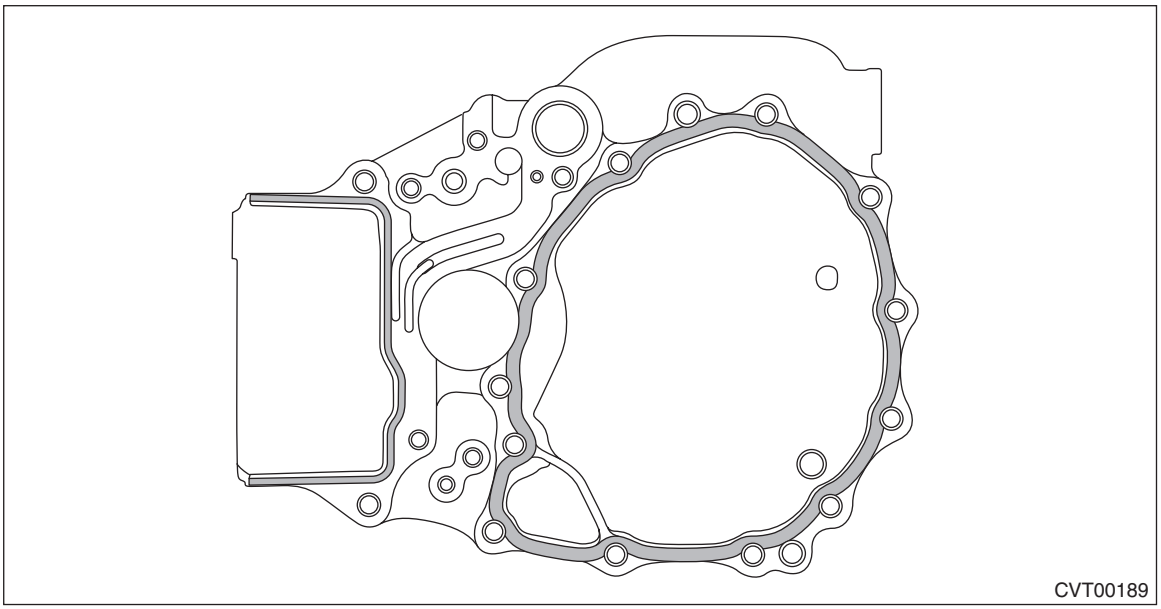

5) Install the drive pinion retainer to converter case, and tighten the bolt using the ST.
ST 18270KA020 SOCKET (E20)

NOTE:
Do not confuse the three different-length bolts when installing.

Tightening torque:
43 N·m (4.4 kgf-m, 31.7 ft-lb)

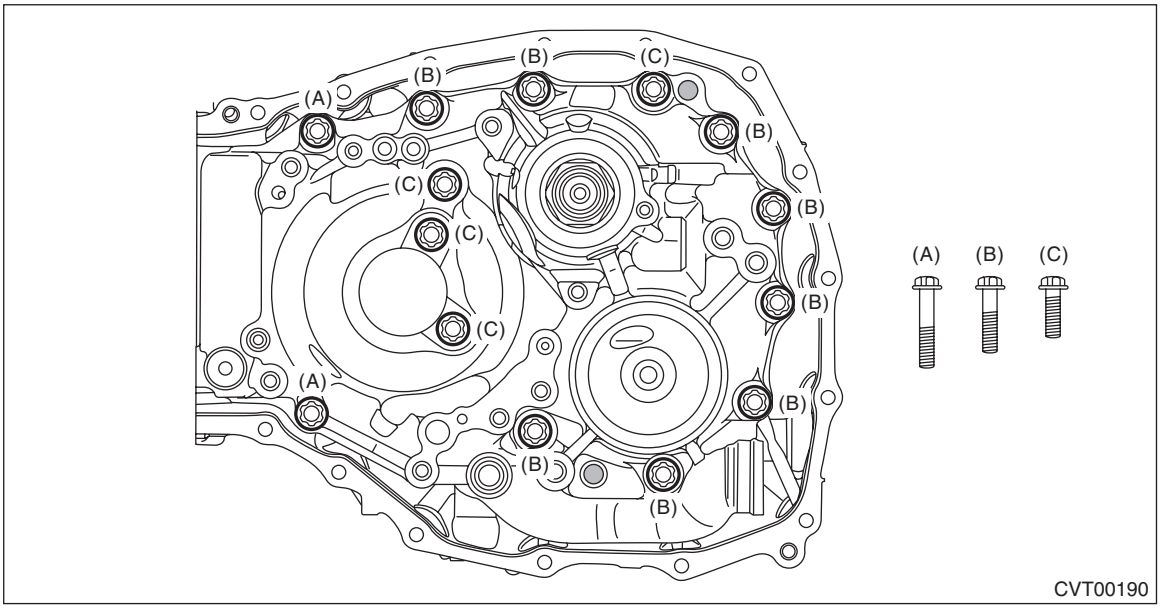

6) When replacing the drive pinion retainer, select the oil pump shaft. <Ref. to CVT(TH58A)-384, ADJUSTMENT, Oil Pump.>
7) Install the forward clutch assembly. <Ref. to CVT(TH58A)-304, INSTALLATION, Forward Clutch Assembly.>
8) Install the reverse brake assembly. <Ref. to CVT(TH58A)-288, INSTALLATION, Reverse Brake Assembly.>
9) Install the primary pulley, secondary pulley and variator chain. <Ref. to CVT(TH58A)-269, INSTALLATION, Primary Pulley and Secondary Pulley.>
10) Install the reduction drive gear. <Ref. to CVT(TH58A)-257, INSTALLATION, Reduction Drive Gear.>
11) Install the transmission case. <Ref. to CVT(TH58A)-246, INSTALLATION, Transmission Case.>
12) Install the output clutch assembly. <Ref. to CVT(TH58A)-227, INSTALLATION, Output Clutch Assembly.>
13) Install the drive motor assembly. <Ref. to CVT(TH58A)-219, INSTALLATION, Drive Motor Assembly.>
14) Install the transmission control device. <Ref. to CVT(TH58A)-211, INSTALLATION, Transmission Control Device.>
15) Install the oil strainer and oil pan. <Ref. to CVT(TH58A)-113, INSTALLATION, Oil Pan and Strainer.>
16) Install the parking pawl. <Ref. to CVT(TH58A)-206, INSTALLATION, Parking Pawl.>
17) Install the transfer drive gear assembly. <Ref. to CVT(TH58A)-200, INSTALLATION, Transfer Drive Gear.>
18) Install the transfer driven gear assembly. <Ref. to CVT(TH58A)-198, INSTALLATION, Transfer Driven Gear.>
19) Install the transfer clutch assembly. <Ref. to CVT(TH58A)-185, INSTALLATION, Transfer Clutch.>
20) Install the extension case. <Ref. to CVT(TH58A)-180, INSTALLATION, Extension Case.>
21) Install the inhibitor switch. <Ref. to CVT(TH58A)-101, INSTALLATION, Inhibitor Switch.>
22) Install the secondary speed sensor. <Ref. to CVT(TH58A)-105, INSTALLATION, Secondary Speed Sensor.>
23) Install the front wheel speed sensor. <Ref. to CVT(TH58A)-107, INSTALLATION, Front Wheel Speed Sensor.>
24) Install the turbine speed sensor. <Ref. to CVT(TH58A)-103, INSTALLATION, Turbine Speed Sensor.>
25) Install the main control valve body. <Ref. to CVT(TH58A)-121, INSTALLATION, Control Valve Body.>
26) Install the transmission harness. <Ref. to CVT(TH58A)-149, INSTALLATION, Transmission Harness.>
27) Install the air breather hose. <Ref. to CVT(TH58A)-171, INSTALLATION, Air Breather Hose.>
28) Install the transmission assembly to the vehicle. <Ref. to CVT(TH58A)-76, INSTALLATION, Automatic Transmission Assembly.>

C: DISASSEMBLY

1) Flatten the tab of the lock nut.
2) Using ST1, ST2 and ST3, fix at the spline portion of drive pinion shaft to remove the lock nut.
ST1 499787500 ADAPTER
ST2 499787700 WRENCH
ST3 498937110 HOLDER

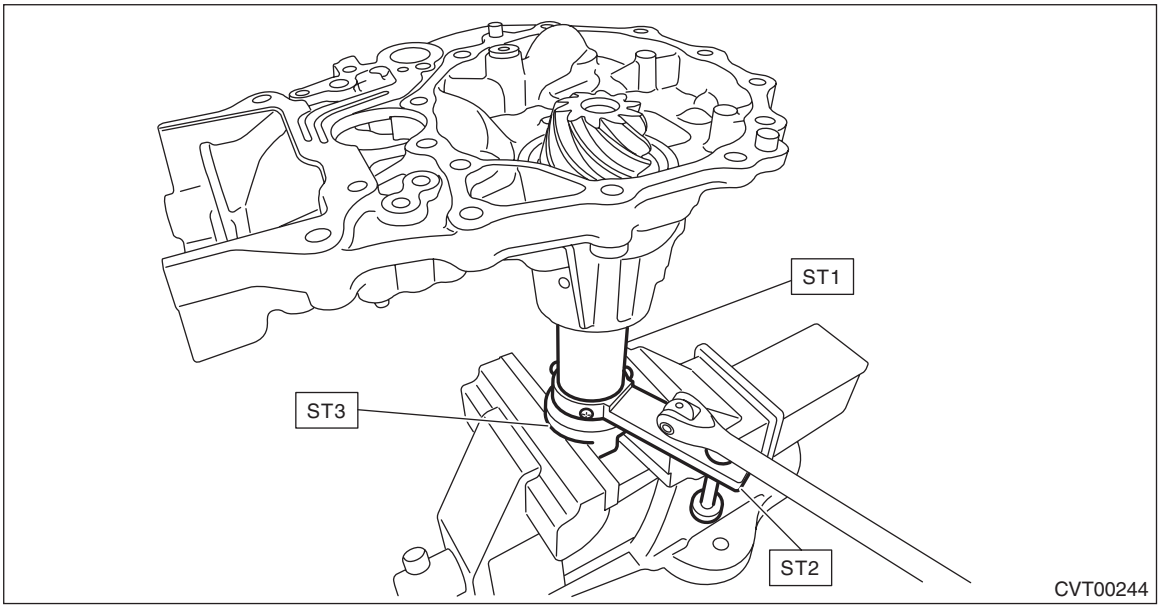

3) Remove the drive pinion shaft from the drive pinion retainer.

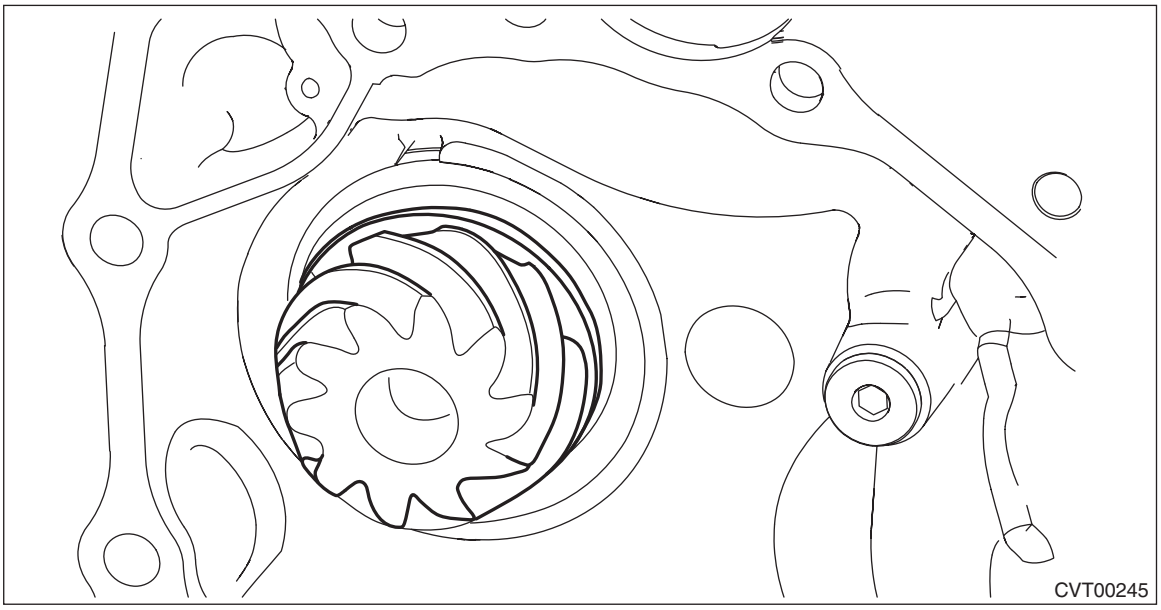

4) Using the round bar with diameter of 36 mm (1.42 in) or 37 mm (1.46 in), remove the bearing inner race and plug.

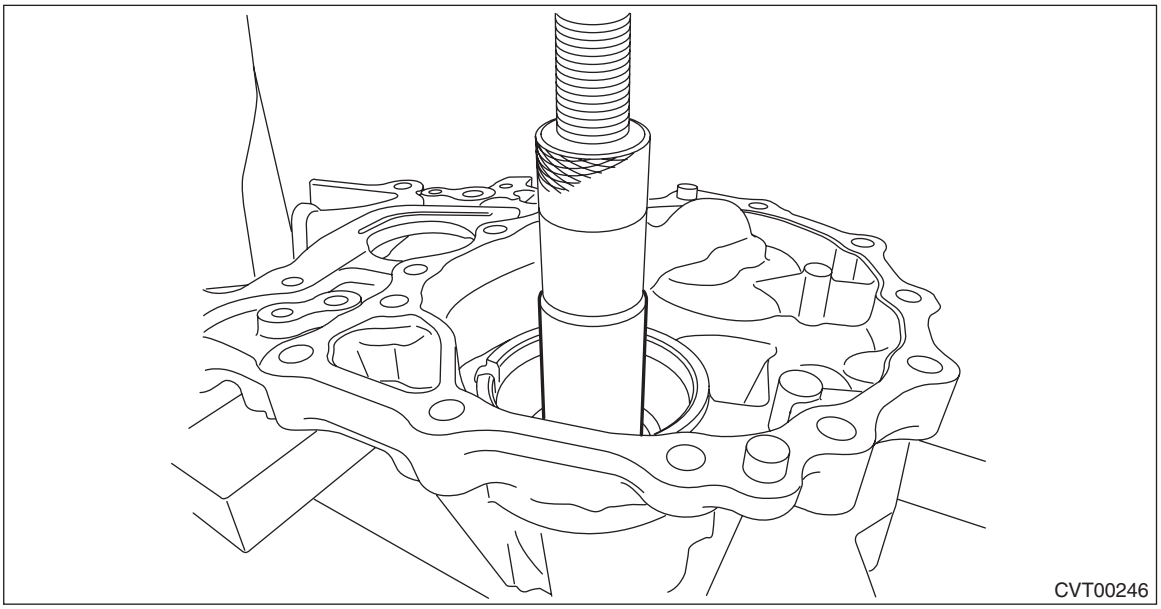

5) Remove the drive pinion washer.
6) Remove the drive pinion spacer.

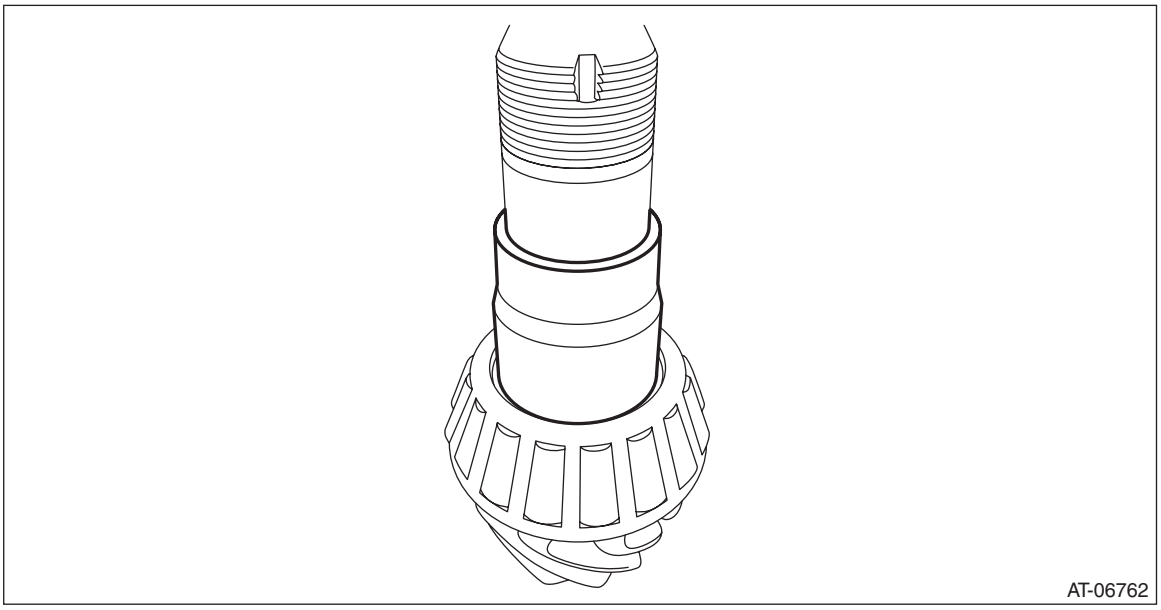

7) Remove the O-ring.

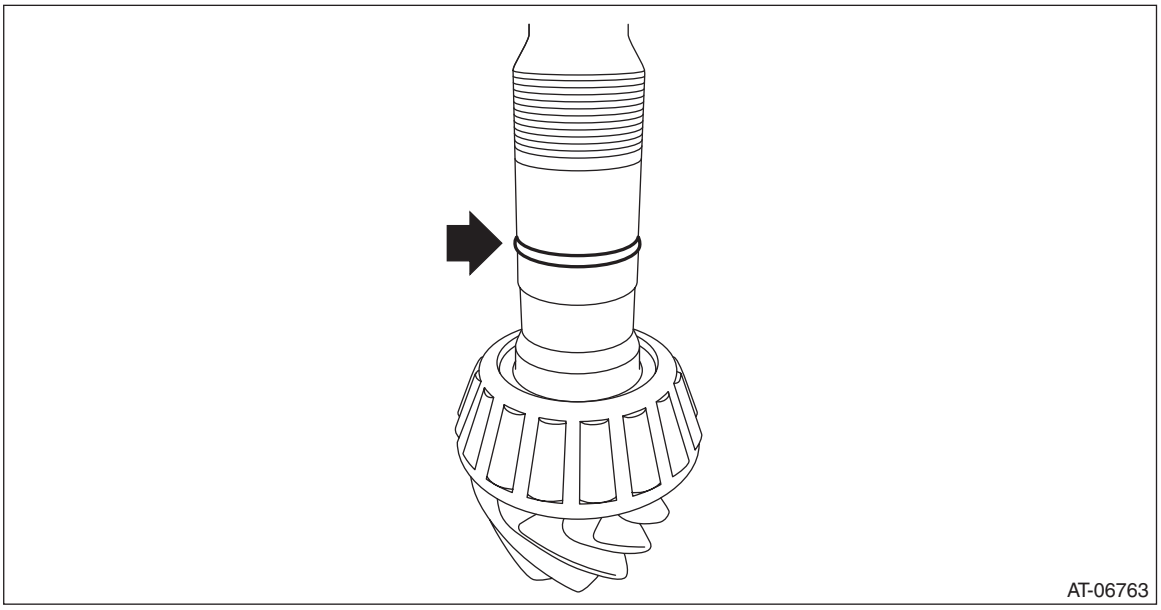

8) Remove the inner race and drive pinion shim from drive pinion shaft using ST.
ST 498515500 REMOVER

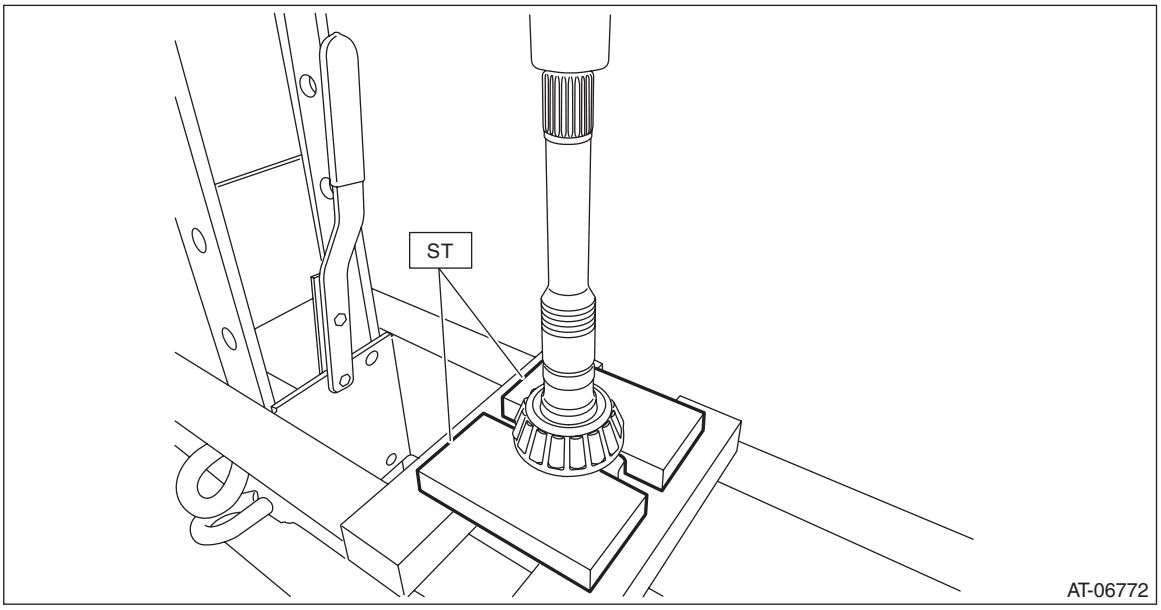

9) Using the ST, remove the outer race.
ST 398527700 PULLER ASSY

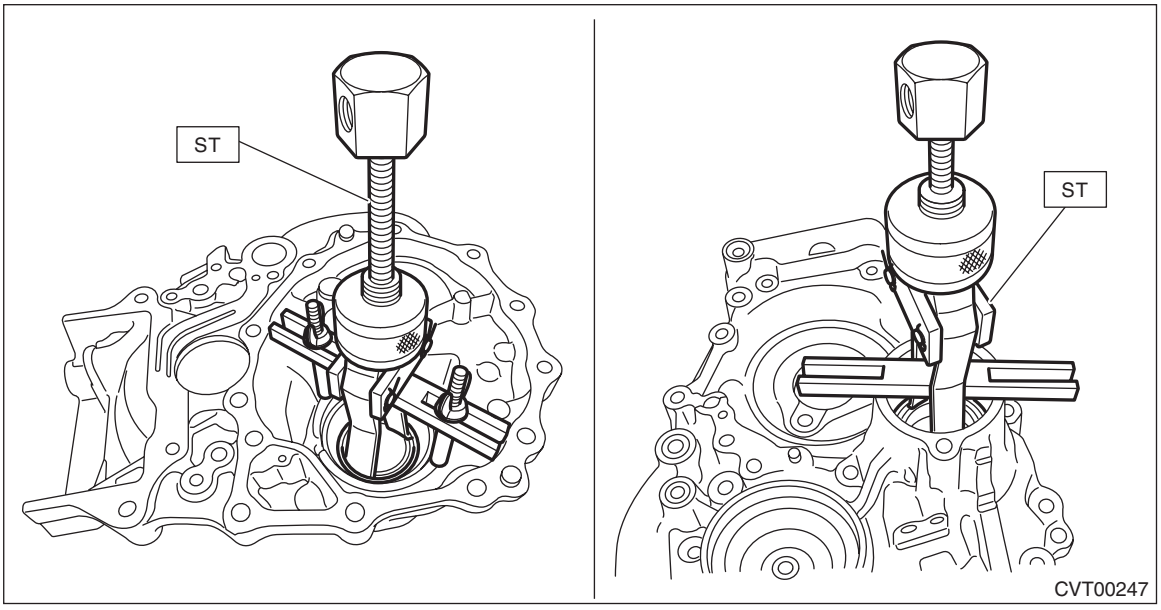

10) Remove the two oil seals using a screwdriver wrapped with cloth, etc.

CAUTION:
Do not damage the fitting surface of oil seal.

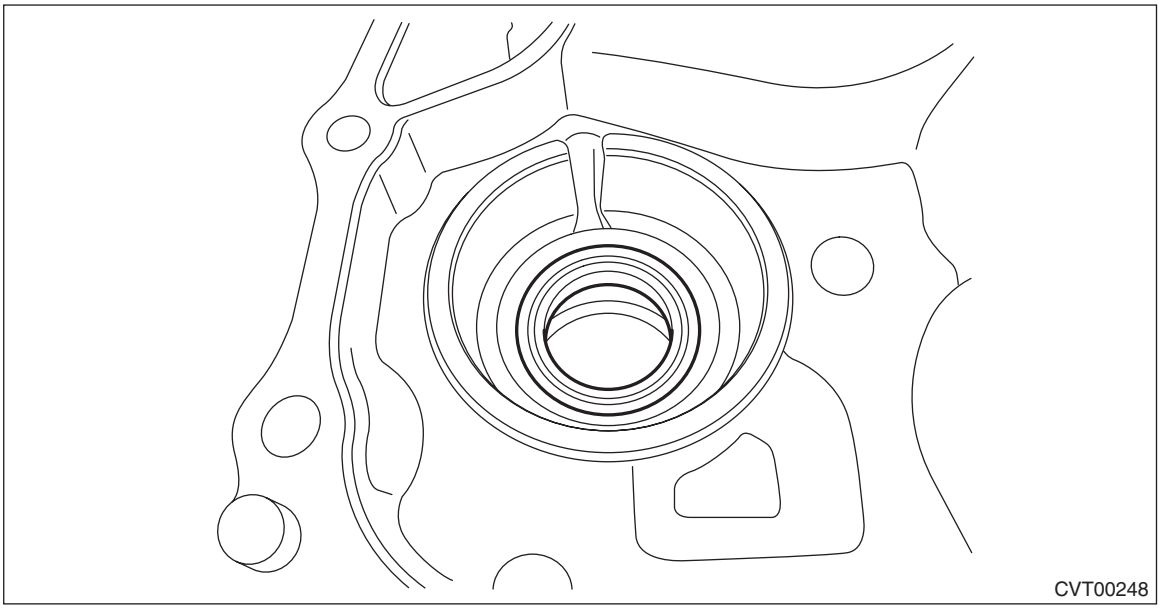

11) Remove the plug from drive pinion retainer.

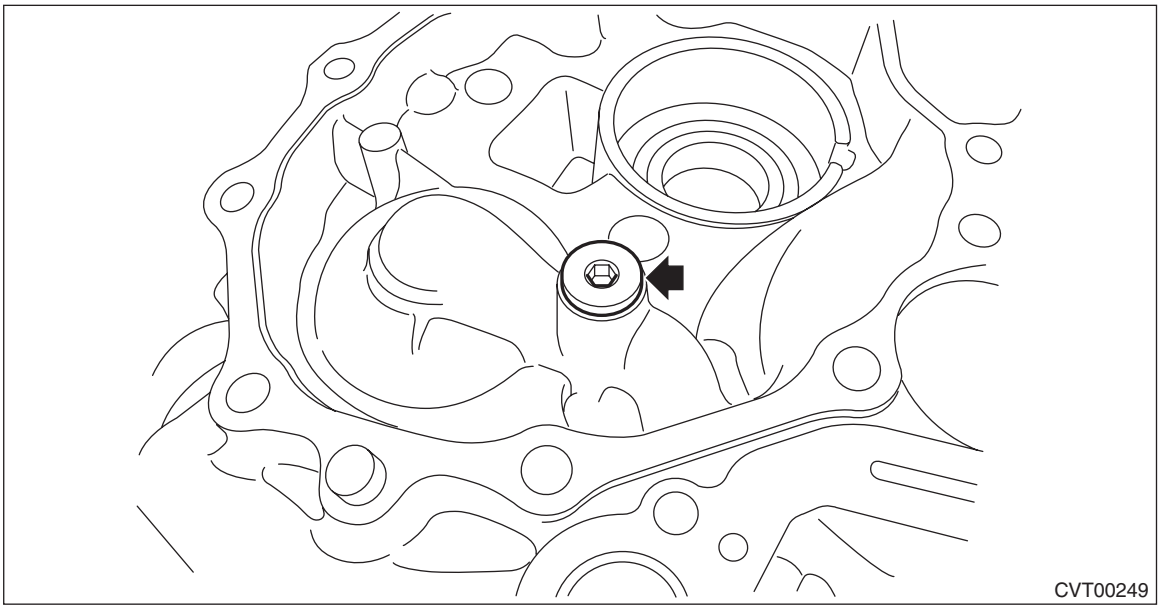

D: ASSEMBLY

1) Install the plug to drive pinion retainer.

NOTE:
- Use new O-rings.
- Apply CVTF to the O-ring.

Tightening torque:
25 N·m (2.5 kgf-m, 18.4 ft-lb)

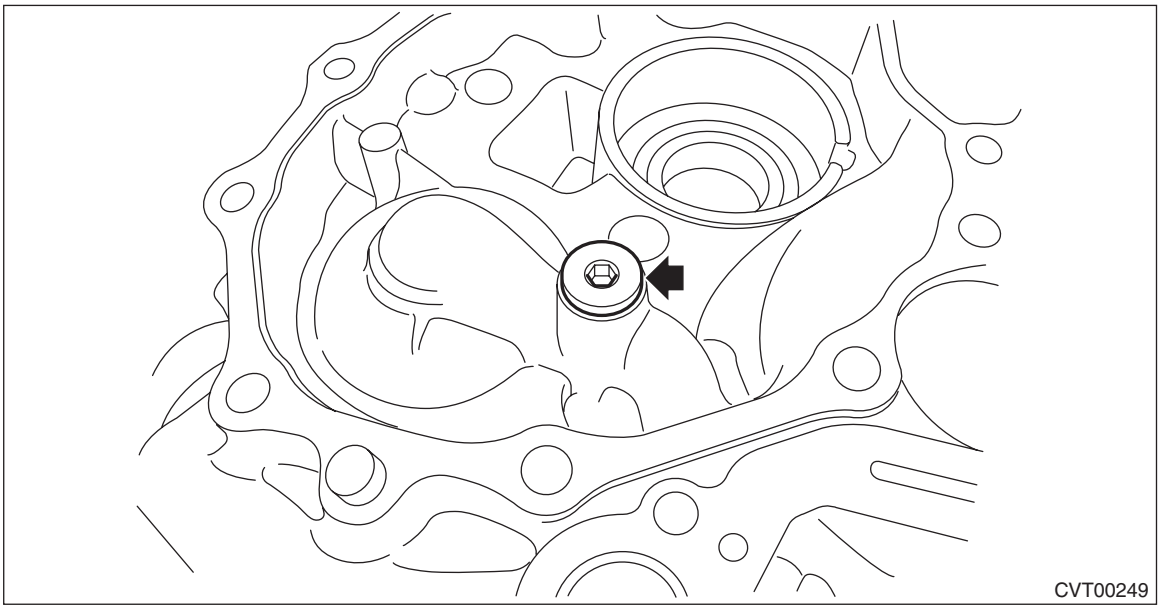

2) Using the ST, install the oil seal to drive pinion retainer.

NOTE:
- Apply CVTF to the oil seal press-fitting surface and lip.
- Install the oil seal in the correct direction.

ST 927720000 HOUSING BUSHING INSTALLER AND REMOVER

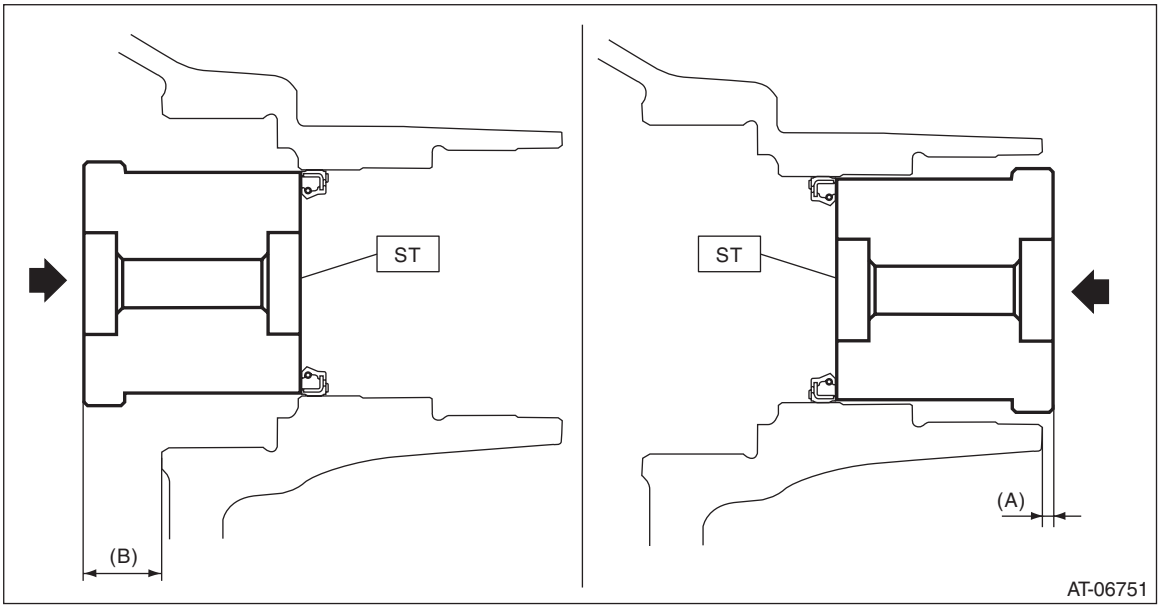

(A) 2.8 mm (0.11 in)
(B) 18.7 mm (0.74 in)

3) Select the drive pinion washer.
(1) Measure the roller bearing inner race width “A” on the front side.

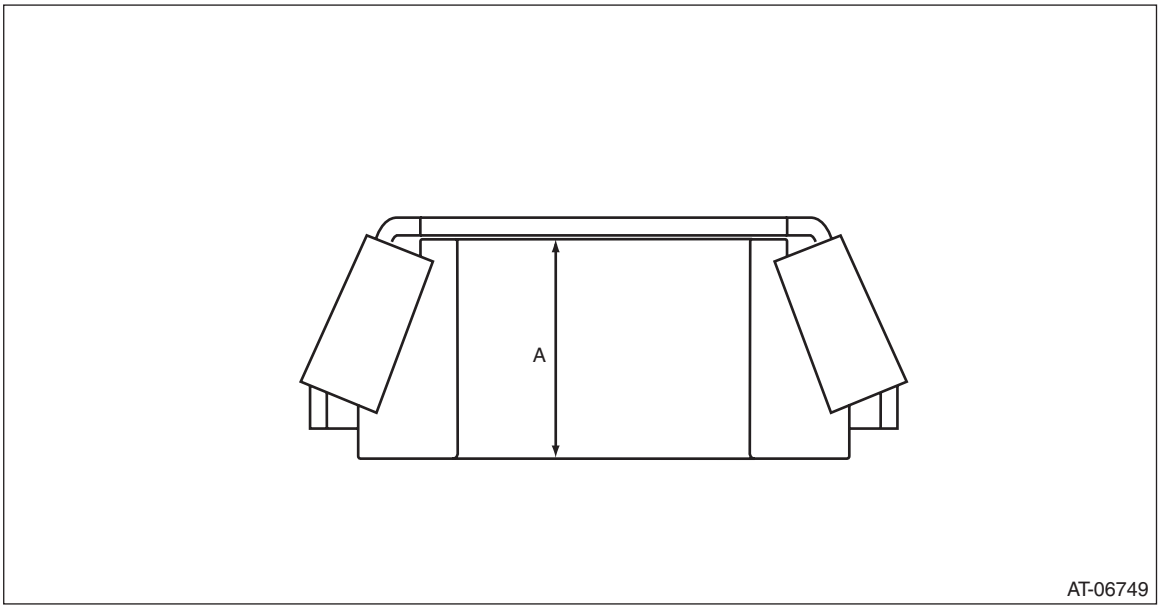

(2) Measure the roller bearing inner race width “B” on the rear side.

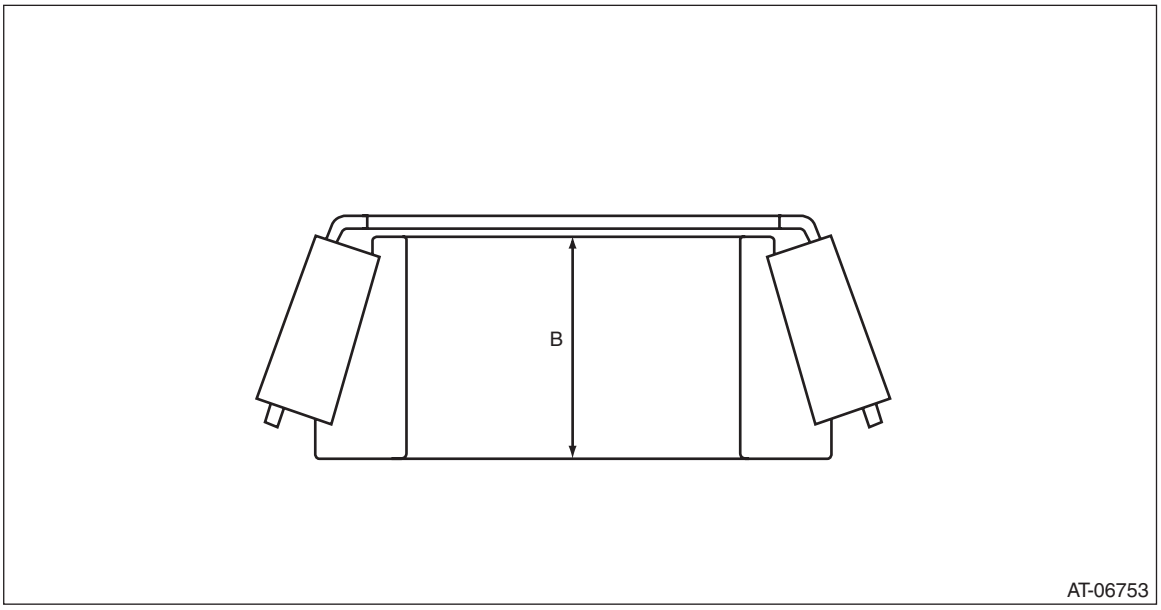

(3) Measure the spacer width “C”.

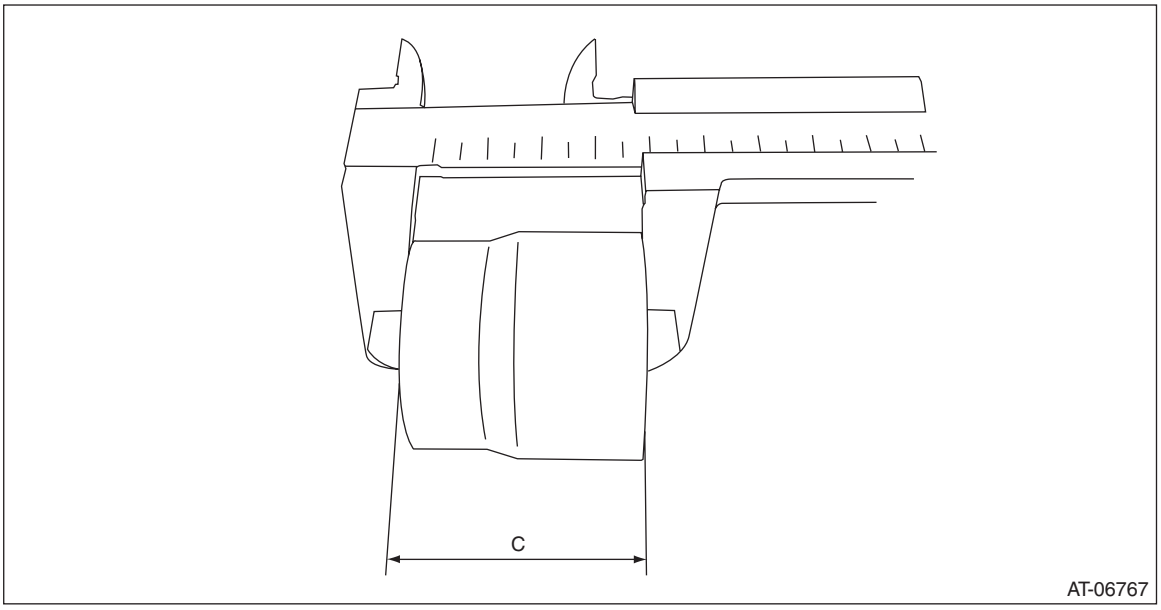

(4) Using the ST, install the front roller bearing outer race to the drive pinion retainer.
ST1 28499TC010 INSTALLER
ST2 398177700 INSTALLER

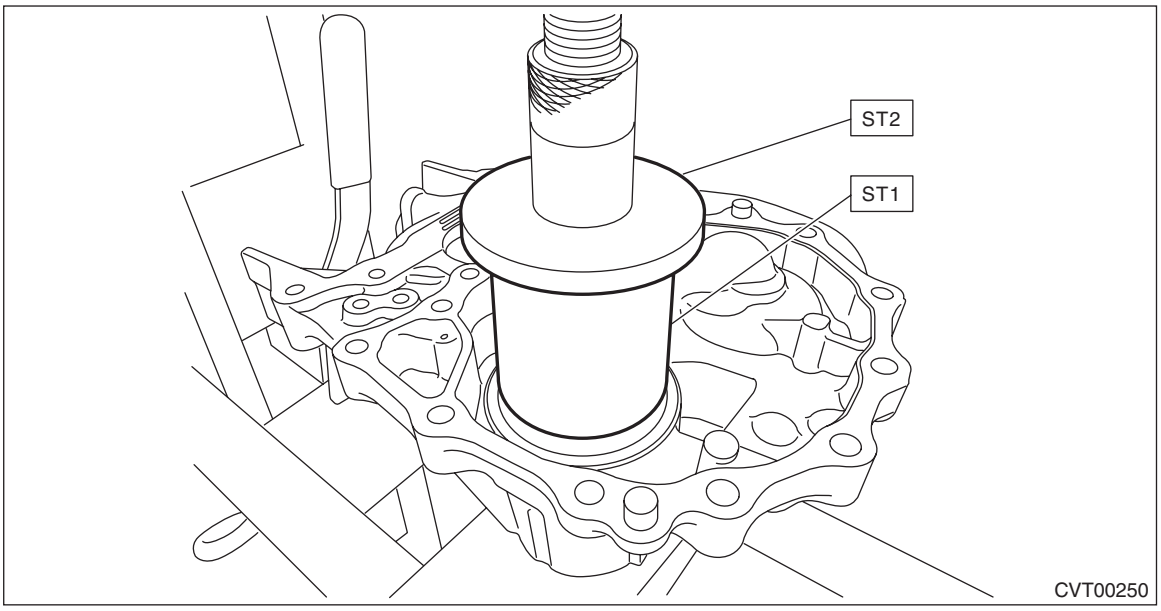

(5) Using the ST, install the rear roller bearing outer race to the drive pinion retainer.
ST 20099AE020 INSTALLER

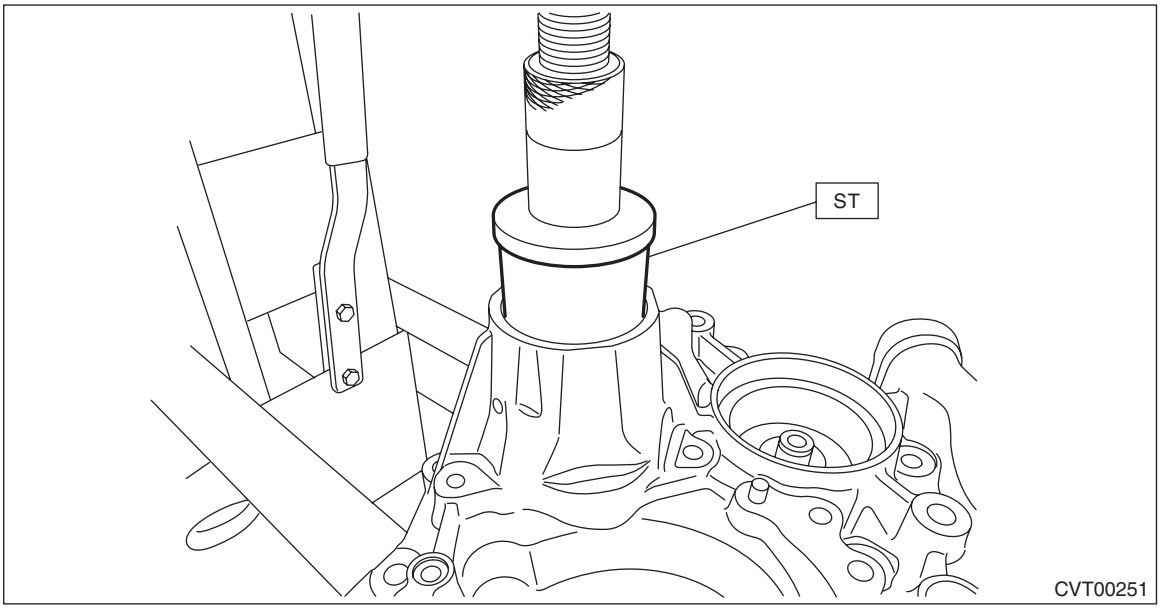

(6) Place the drive pinion retainer on the surface plate, and install the inner race to the rear roller bearing outer race.

NOTE:
Place the drive pinion retainer so that the mating surface of the drive pinion retainer (mating surface with the converter case) contacts the surface plate.

(7) Measure the height “D” from the end face of the rear roller bearing inner race to the surface plate.

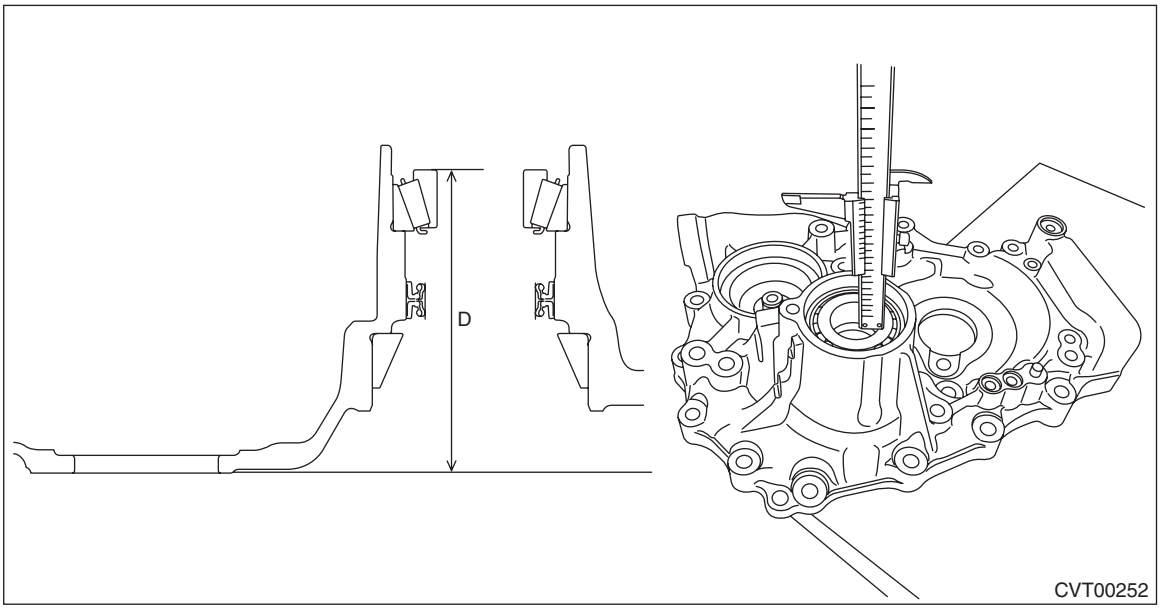

(8) Install the inner race to the front roller bearing outer race.

(9) Measure the depth “E” from the end face of the front roller bearing inner race to the end face of the ST.

ST 499575400 GAUGE

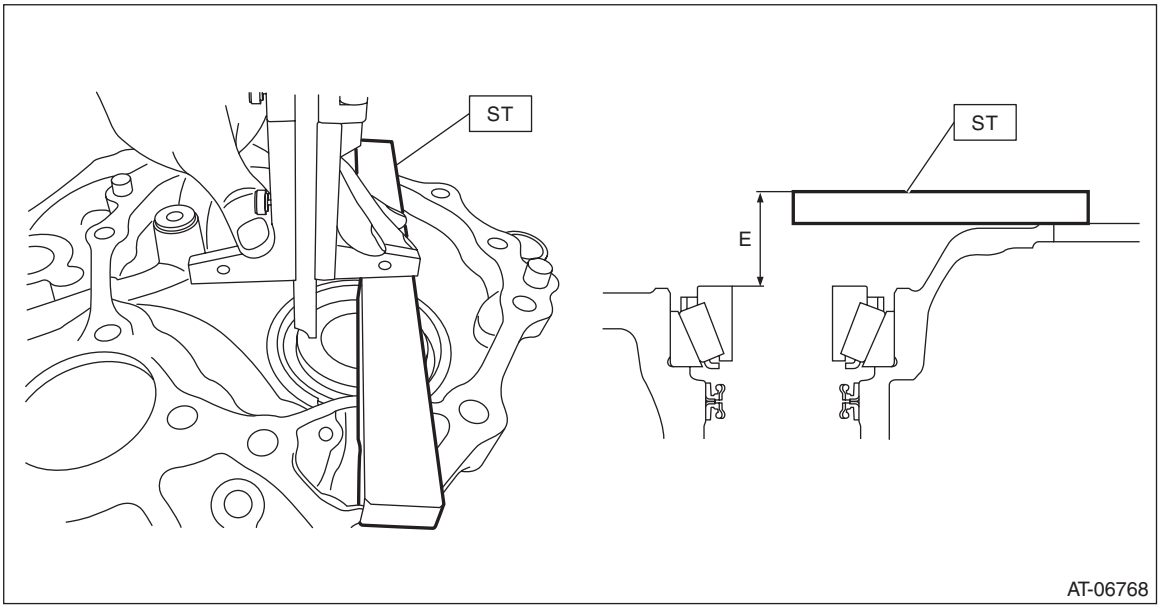

(10) Using following formula, select one to three drive pinion washers.
T (mm) = D – (A + B + C + E – 15) – (0±0.0125)
[T (in) = D – (A + B + C + E – 0.591) – (0±0.0005)]
A: Front roller bearing width
B: Rear roller bearing width
C: Spacer width
D: Height from end face of rear roller bearing inner race to surface plate
E: Depth from end face of front roller bearing inner race to end face of ST
15 mm (0.591 in): Thickness of ST
T: Drive pinion washer thickness
0±0.0125 mm (0±0.0005 in): Clearance

Drive pinion washer	
Part No.	Thickness mm (in)
38336AA750	0.150 (0.0059)
38336AA760	0.175 (0.0069)
38336AA770	0.200 (0.0079)
38336AA780	0.225 (0.0089)
38336AA790	0.250 (0.0098)
38336AA800	0.275 (0.0108)
38336AA810	0.300 (0.0118)
38336AA820	0.400 (0.0157)

4) Measure and record the drive pinion shim thickness to be reused.
5) Install the drive pinion shim that is reused for the drive pinion shaft.
6) Using the ST1 and ST2, press-fit the inner race to the drive pinion shaft.
ST1 899580100 INSTALLER
ST2 927130000 EXTENSION DRIVE SHAFT

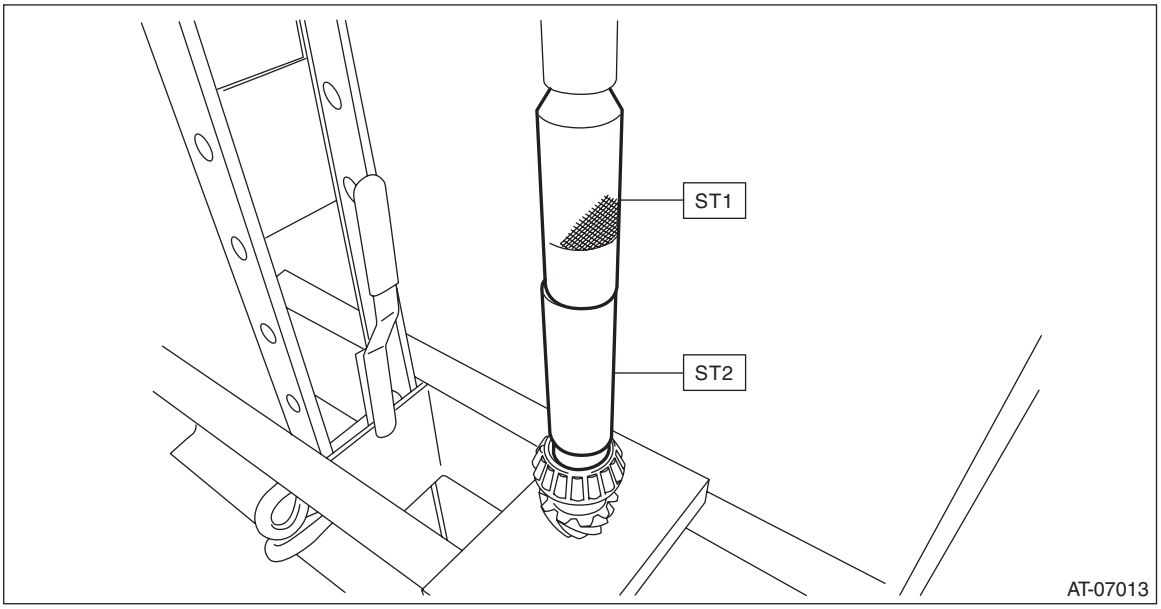

7) Install the drive pinion spacer.

NOTE:
Replace the O-ring with a new part after tooth contact inspection.

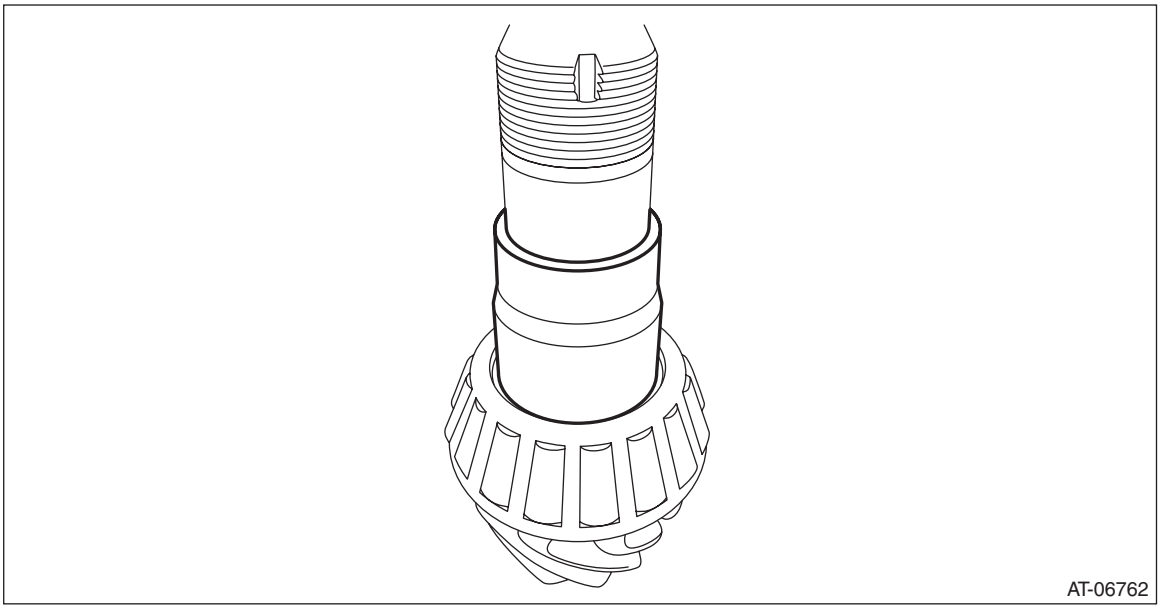

8) Install the selected drive pinion washer.

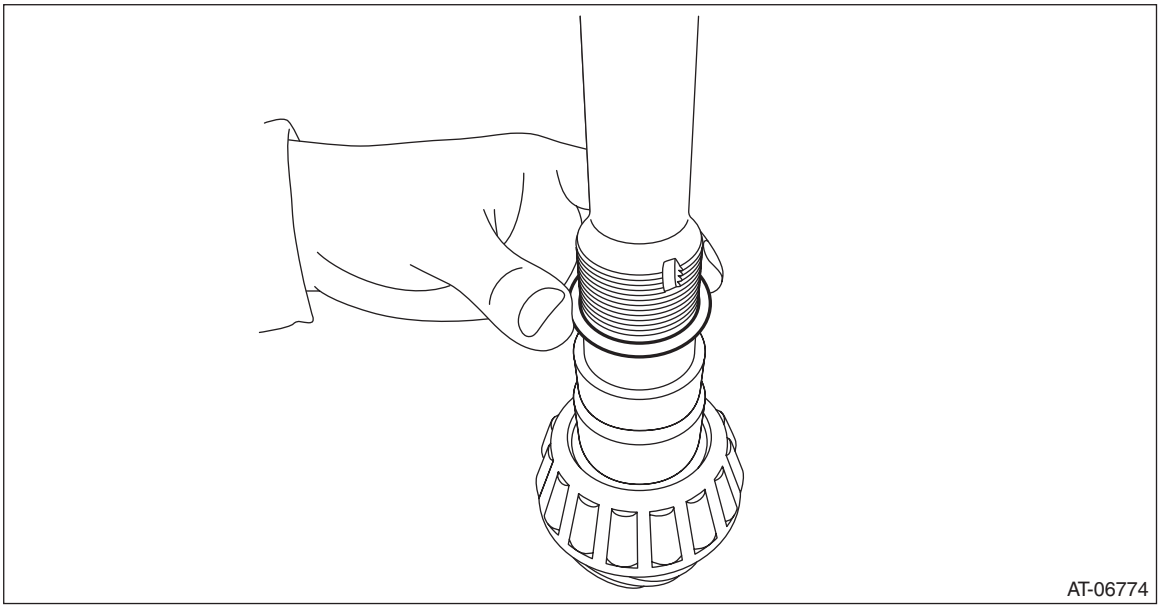

9) Insert the drive pinion shaft into the drive pinion retainer.

CAUTION:
Be careful not to damage the oil seal.
10) Install the inner bearing and lock nut.

NOTE:
Use a new lock nut.

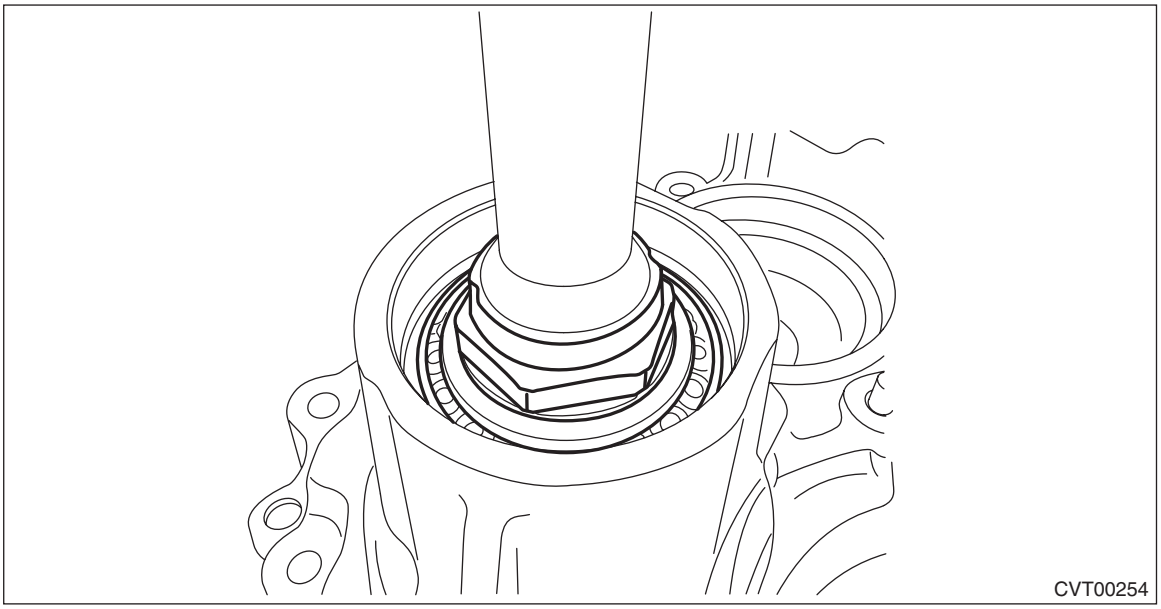

11) Using the ST, tighten the lock nut to the specified torque so that the starting torque of the drive pinion shaft is within the specified range.

CAUTION:
Before inspecting the starting torque, apply differential gear oil to roller of bearing and rotate the bearing several times.

NOTE:
- Tighten the lock nut while directly aligning ST2 and torque wrench.
- If the starting torque is not within the specified range, select the drive pinion washer, and repeat the step until the starting torque is within the specified range.
- When a thicker drive pinion washer is selected, the starting torque decreases. When a thinner drive pinion washer is selected, the starting torque increases.

Starting torque:
5.1 — 17.1 N (0.5 — 1.7 kgf, 1.1 — 3.8 lbf)

ST1 499787500 ADAPTER
ST2 499787700 WRENCH
ST3 498937110 HOLDER

Using the following formula, calculate the tightening torque for a torque wrench.
$T2 = L2/(L1 + L2) \times T1$
T1: 170 — 250 N·m (17.3 — 25.5 kgf-m, 125.4 — 184.4 ft-lb) [Specified tightening torque range]
T2: Tightening torque
L1: ST1 length 0.072 m (2.83 in)
L2: Torque wrench length

Example:

Torque wrench length m (in)	Tightening torque N·m (kgf-m, ft-lb)
0.4 (15.75)	144 — 211 (14.7 — 21.5, 106.2 — 155.6)
0.45 (17.72)	147 — 215 (15.0 — 21.9, 108.4 — 158.6)
0.5 (19.69)	149 — 218 (15.2 — 22.2, 109.9 — 160.8)
0.55 (21.65)	150 — 221 (15.3 — 22.5, 110.6 — 163.0)

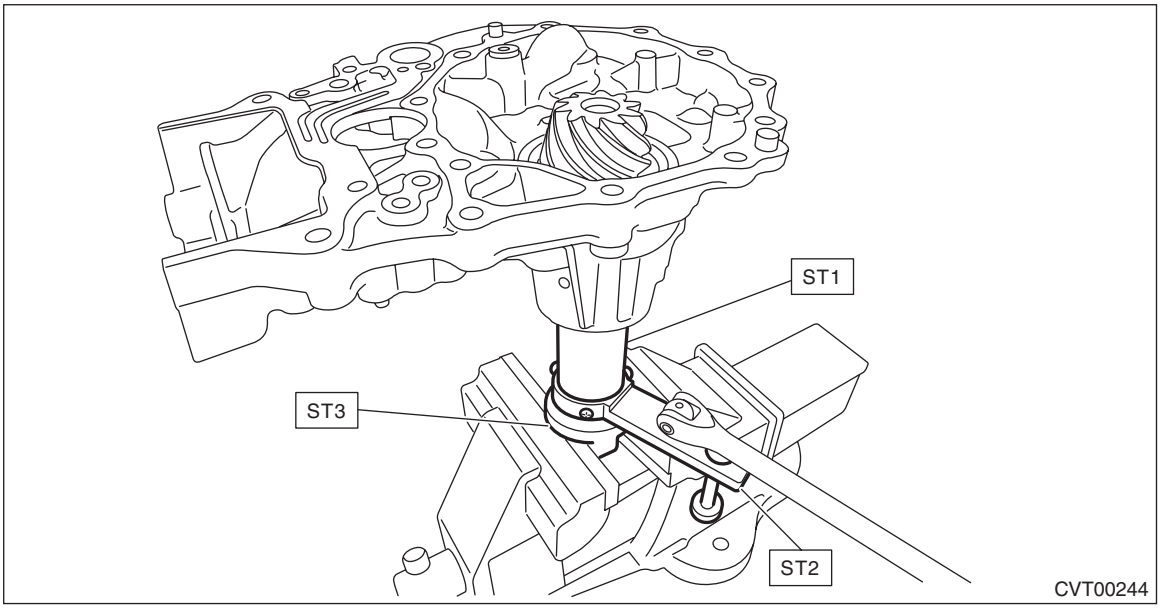

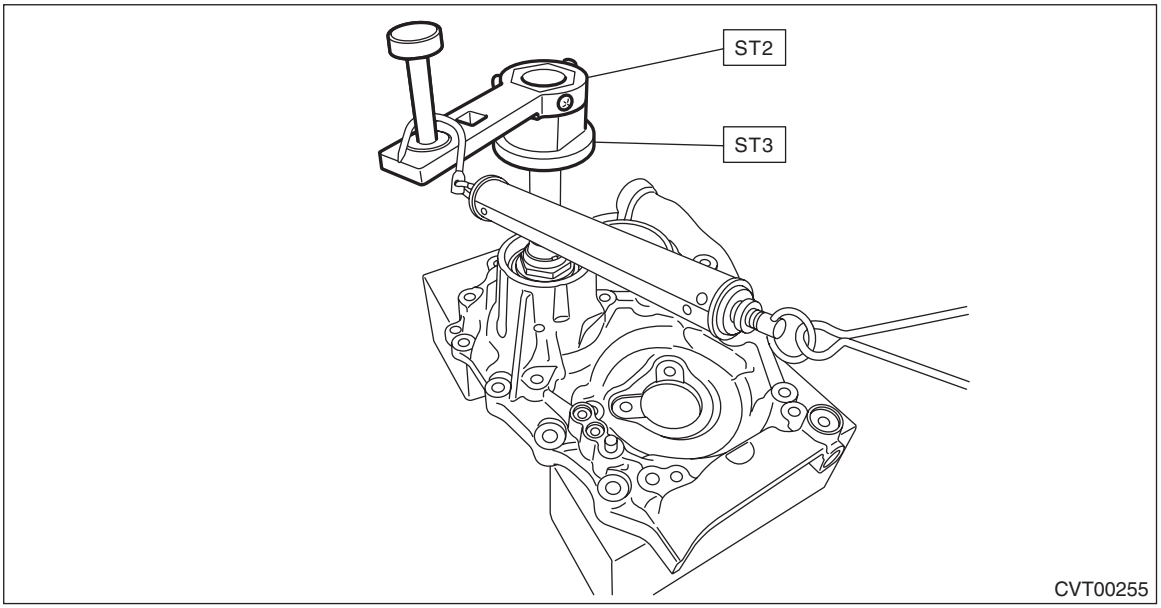

12) Install the drive pinion retainer to the converter case, and check the backlash and tooth contact. <Ref. to CVT(TH58A)-343, ADJUSTMENT, Drive Pinion Shaft Assembly.> <Ref. to CVT(TH58A)-366, ADJUSTMENT, Front Differential Assembly.>
13) Remove the drive pinion retainer from converter case. <Ref. to CVT(TH58A)-321, REMOVAL, Drive Pinion Shaft Assembly.>
14) Remove the drive pinion spacer from the drive pinion shaft. <Ref. to CVT(TH58A)-325, DISASSEMBLY, Drive Pinion Shaft Assembly.>
15) Install the O-ring to the drive pinion shaft.

NOTE:
- Use new O-rings.
- Apply CVTF to the O-ring.

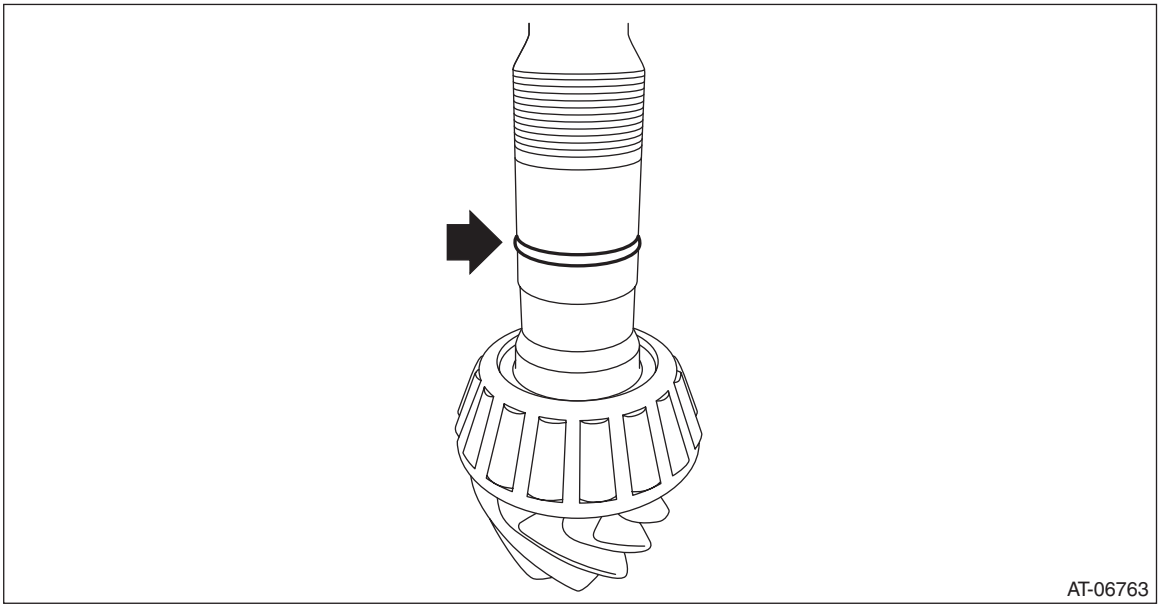
AT-06763

16) Install the drive pinion spacer to the drive pinion shaft.

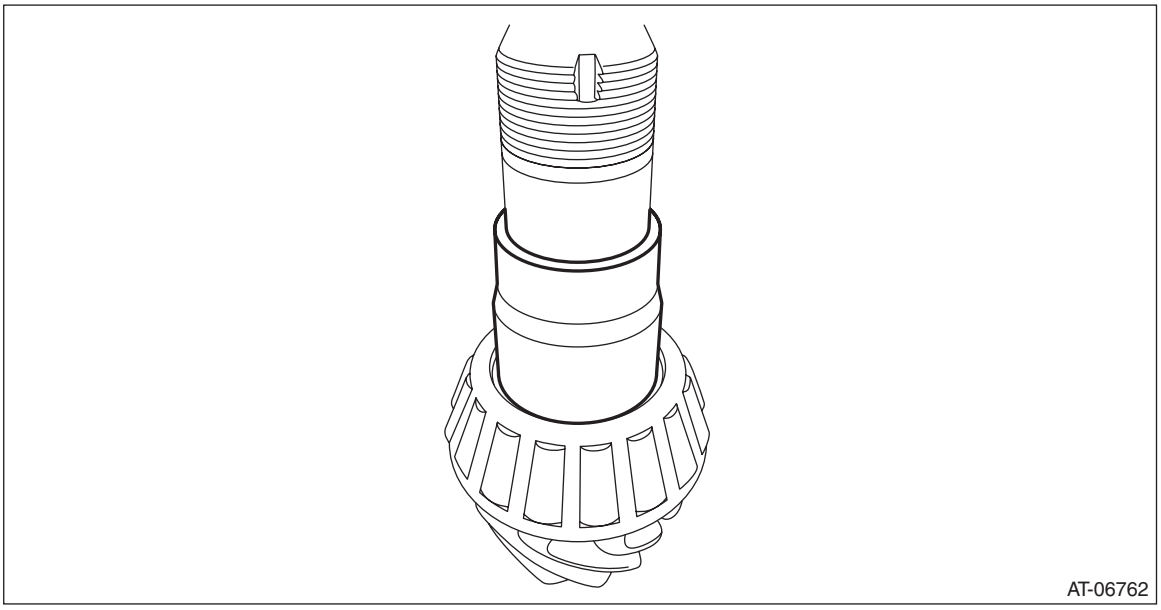
AT-06762

17) Install the drive pinion washer.

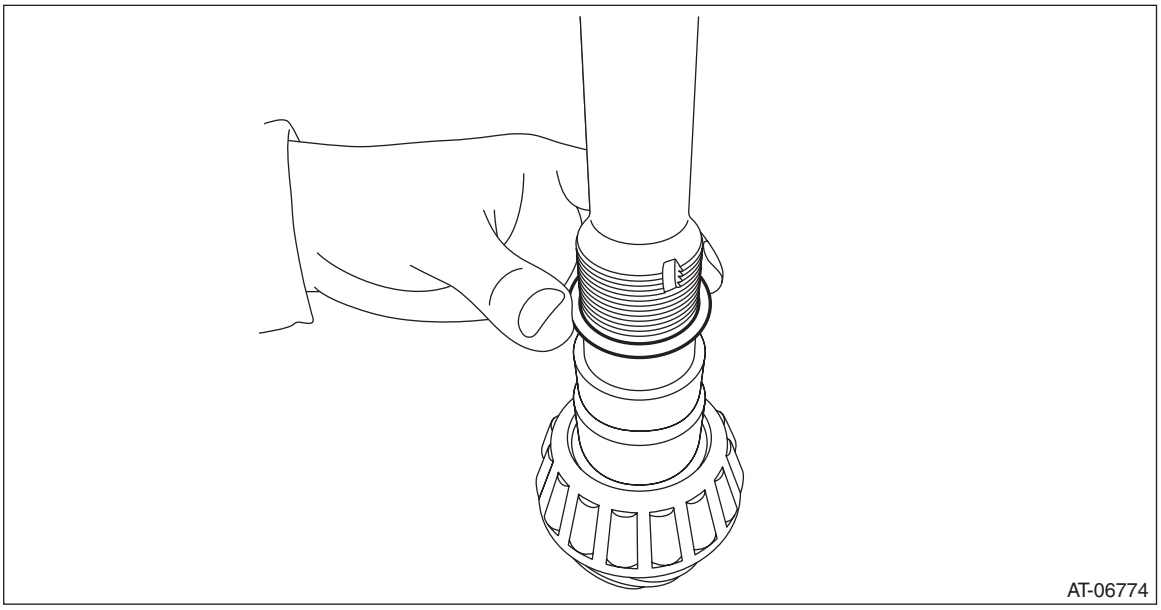

18) Insert the drive pinion shaft into the drive pinion retainer.

CAUTION:
Be careful not to damage the oil seal.

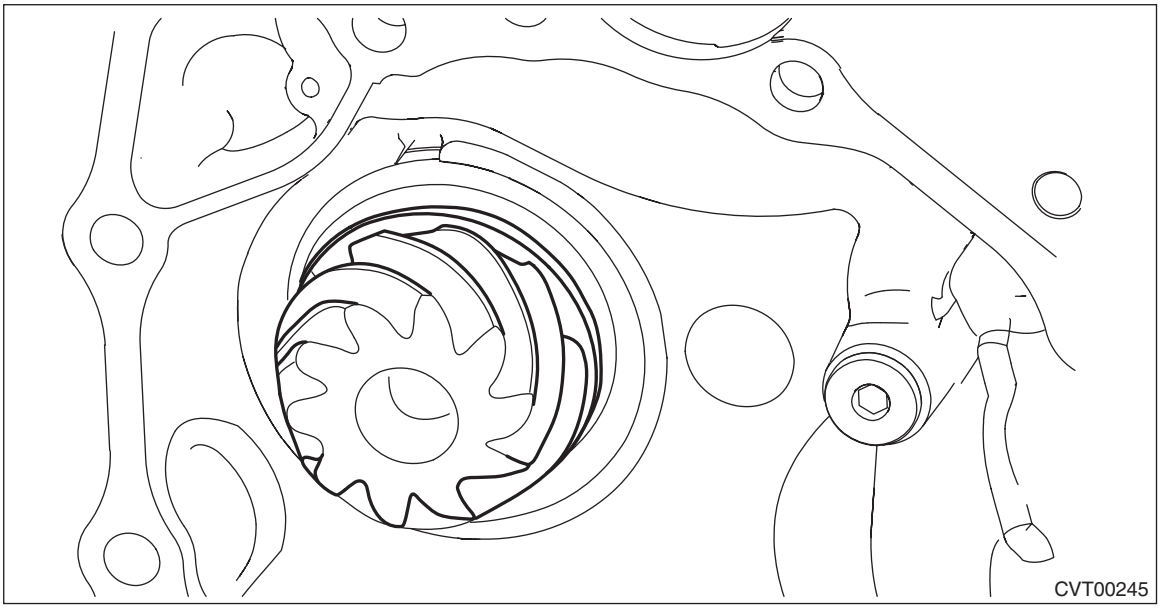

19) Install the inner bearing and lock nut.

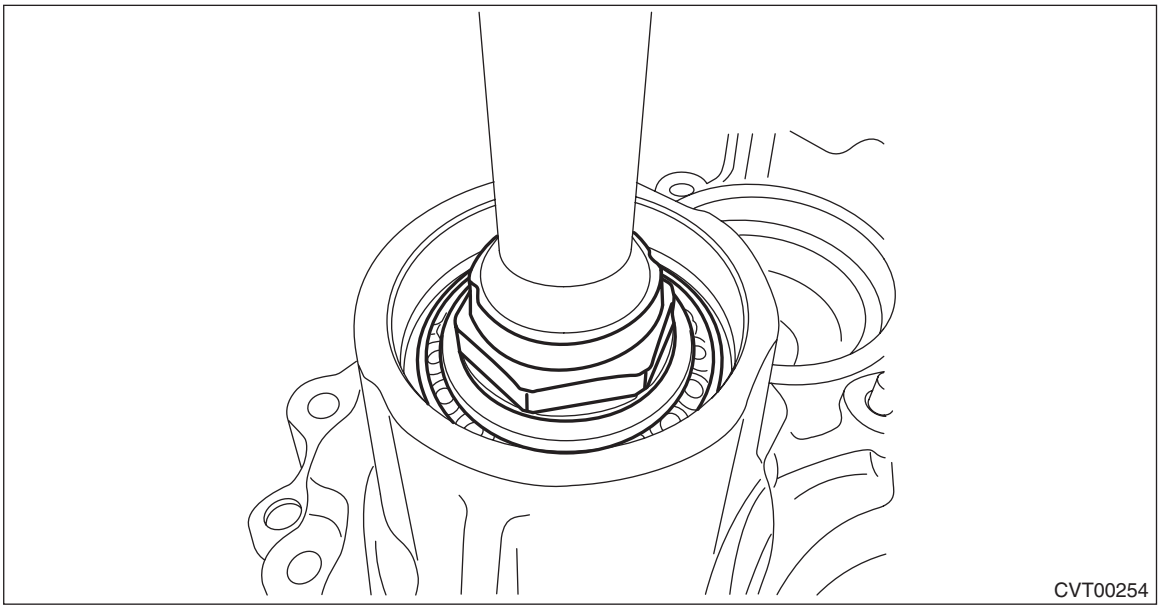

20) Using the ST, tighten the lock nut to the specified torque so that the starting torque of the drive pinion shaft is within the specified range.

CAUTION:
Before inspecting the starting torque, apply differential gear oil to roller of bearing and rotate the bearing several times.

NOTE:
- Tighten the lock nut while directly aligning ST2 and torque wrench.
- If the starting torque is not within the specified range, select the drive pinion washer, and repeat the step until the starting torque is within the specified range.
- When a thicker drive pinion washer is selected, the starting torque decreases. When a thinner drive pinion washer is selected, the starting torque increases.

Starting torque:
5.1 — 17.1 N (0.5 — 1.7 kgf, 1.1 — 3.8 lbf)

ST1 499787500 ADAPTER
ST2 499787700 WRENCH
ST3 498937110 HOLDER

Using the following formula, calculate the tightening torque for a torque wrench.
$T2 = L2/(L1 + L2) \times T1$
T1: 170 — 250 N·m (17.3 — 25.5 kgf-m, 125.4 — 184.4 ft-lb) [Specified tightening torque range]
T2: Tightening torque
L1: ST1 length 0.072 m (2.83 in)
L2: Torque wrench length

Example:

Torque wrench length m (in)	Tightening torque N·m (kgf-m, ft-lb)
0.4 (15.75)	144 — 211 (14.7 — 21.5, 106.2 — 155.6)
0.45 (17.72)	147 — 215 (15.0 — 21.9, 108.4 — 158.6)
0.5 (19.69)	149 — 218 (15.2 — 22.2, 109.9 — 160.8)
0.55 (21.65)	150 — 221 (15.3 — 22.5, 110.6 — 163.0)

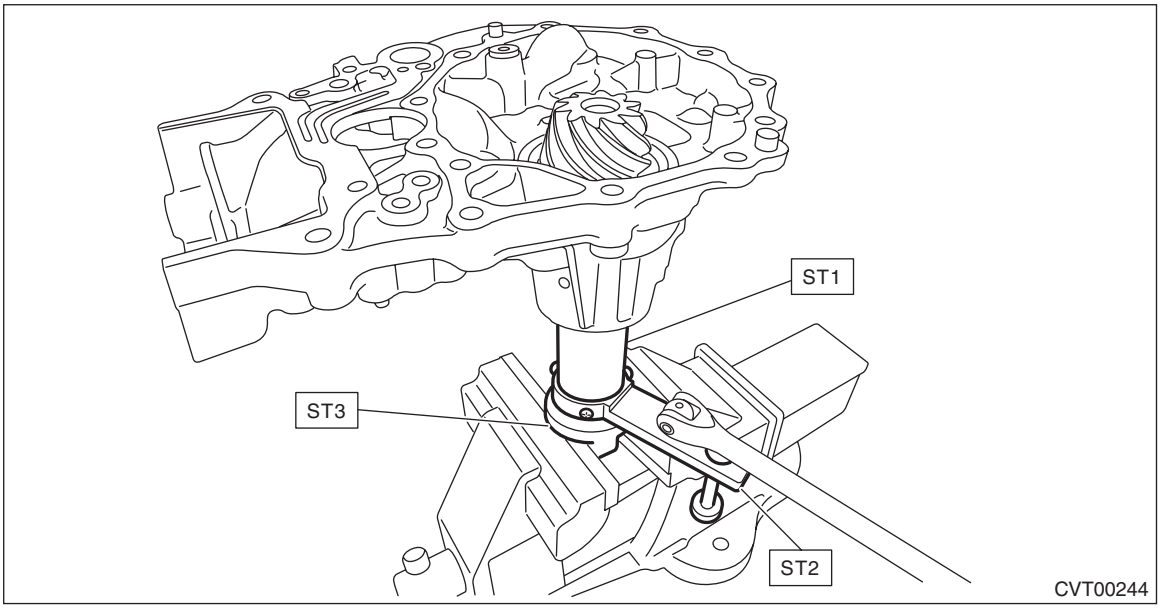

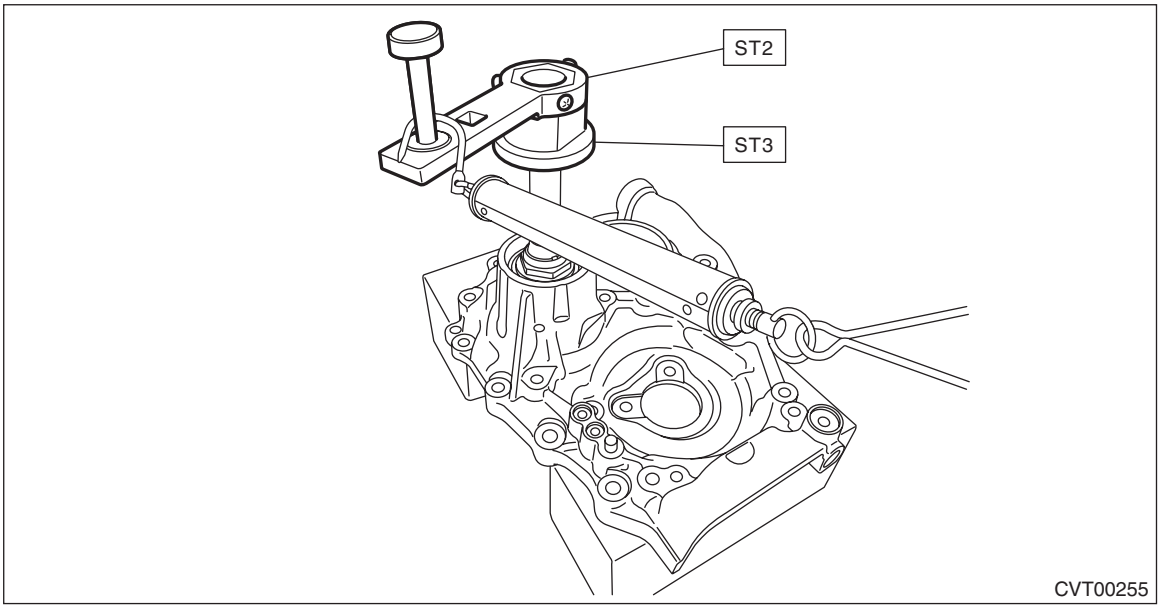

21) Crimp the lock nut in 2 locations.
22) Using the ST, install the plug.
ST1 499755602 PRESS SNAP RING
ST2 398177700 INSTALLER

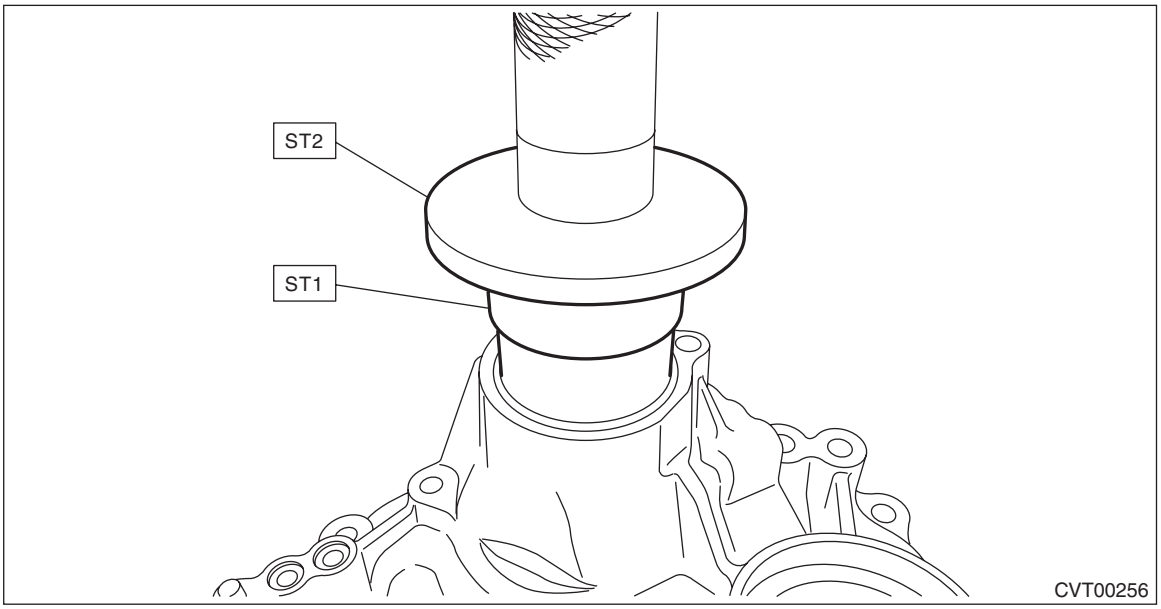

E: INSPECTION

- Make sure that all component parts are free of scratches, holes and other faults.
- Check the tooth contact. <Ref. to CVT(TH58A)-343, ADJUSTMENT, Drive Pinion Shaft Assembly.>
- Apply CVTF to bearing and rotate the bearing to check for noise or dragging etc.
- Check the starting torque of drive pinion shaft.

CAUTION:
Before measuring, apply differential gear oil to roller of bearing and rotate the bearing several times.
ST1 499787700 WRENCH
ST2 498937110 HOLDER

Starting torque:
5.1 — 17.1 N (0.5 — 1.7 kgf, 1.1 — 3.8 lbf)

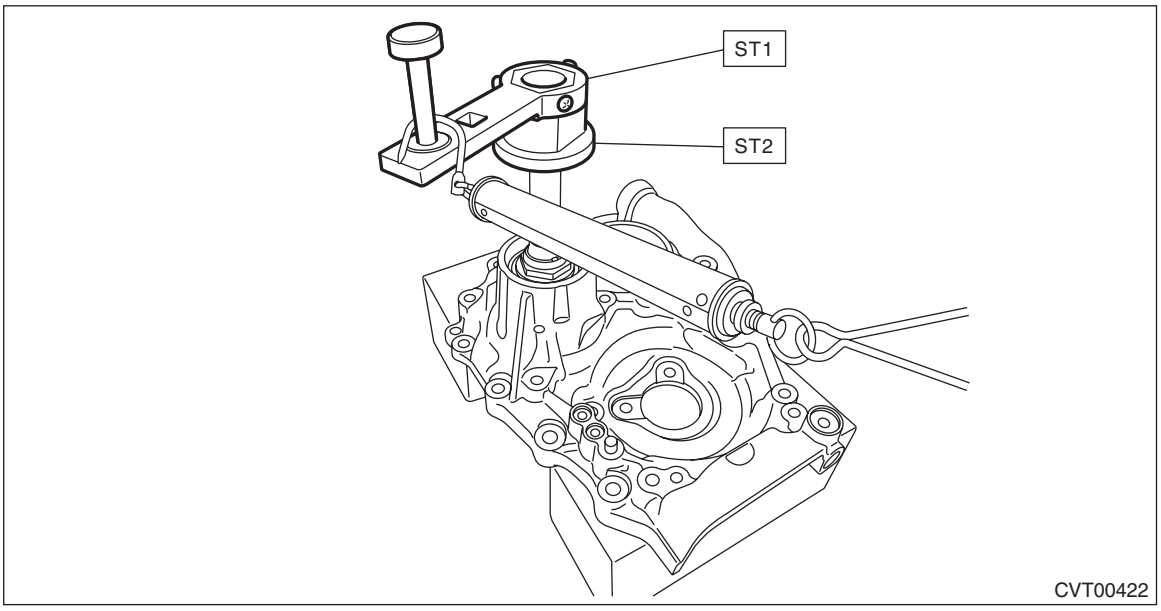

F: ADJUSTMENT

1) Remove the liquid gasket from the mating surface completely.
2) Using the ST, install the drive pinion retainer to converter case.
ST 18270KA020 SOCKET (E20)

NOTE:
Do not confuse the three different-length bolts when installing.

Tightening torque:
43 N·m (4.4 kgf-m, 31.7 ft-lb)

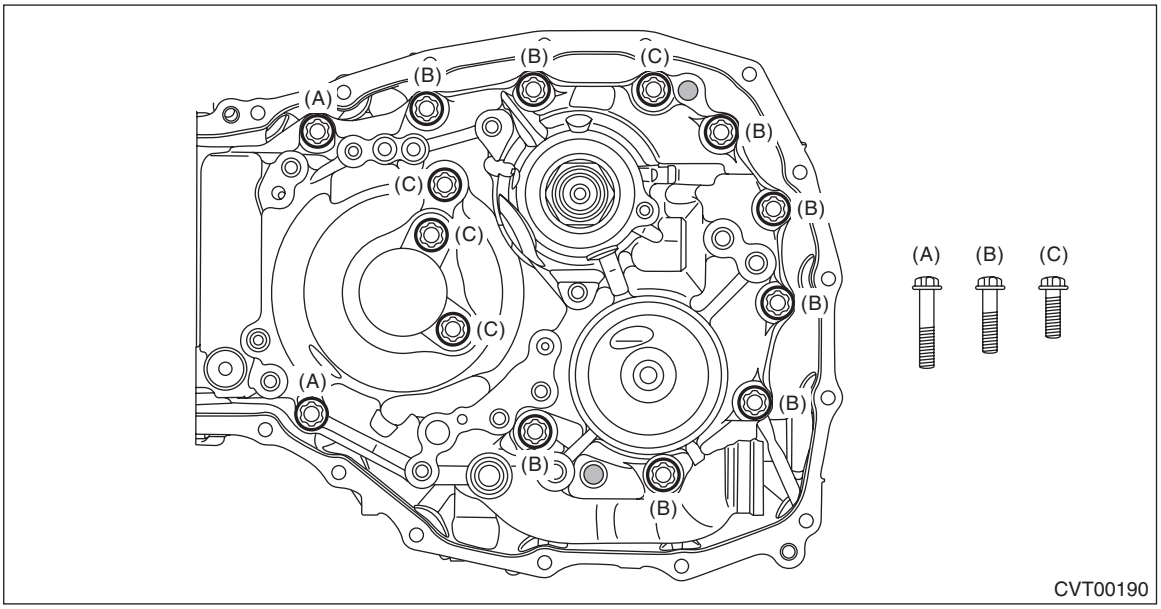

3) Rotate the drive pinion several times using ST1 and ST2.
ST1 499787700 WRENCH
ST2 498937110 HOLDER

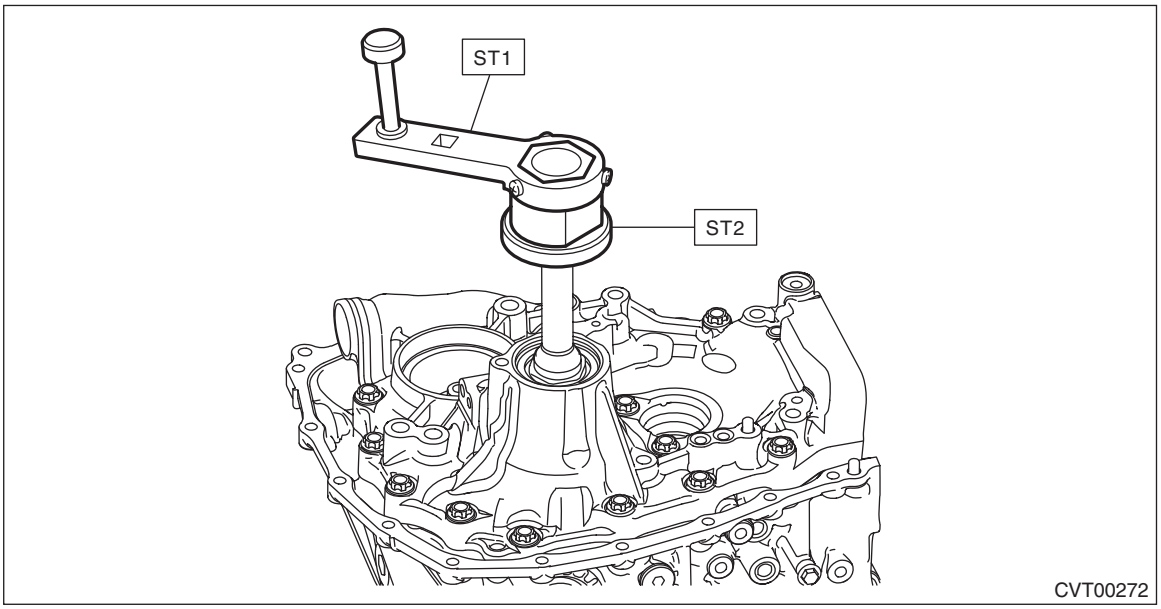

4) Adjust the drive pinion and hypoid driven gear backlash. <Ref. to CVT(TH58A)-366, ADJUSTMENT, Front Differential Assembly.>
5) Using the ST, remove the drive pinion retainer from converter case.
ST 18270KA020 SOCKET (E20)

6) Apply lead-free red dye evenly on the both sides of three to four teeth of the hypoid driven gear. Then install the drive pinion retainer and rotate the drive pinion in both directions several times. Remove the drive pinion retainer and check the tooth contact pattern.
If the tooth contact is inappropriate, readjust the backlash and shim thickness (select 1 — 3 shims) until the correct tooth contact is obtained.

NOTE:
After correction, wipe off the lead-free red dye.

Drive pinion shim	
Part No.	Thickness mm (in)
31451AA320	0.150 (0.0059)
31451AA330	0.175 (0.0069)
31451AA340	0.200 (0.0079)
31451AA350	0.225 (0.0089)
31451AA360	0.250 (0.0098)
31451AA370	0.275 (0.0108)

- Correct tooth contact

Check item: Tooth contact surface is slightly shifted toward the toe side under a no-load condition. (When driving, it moves towards the heel side.)

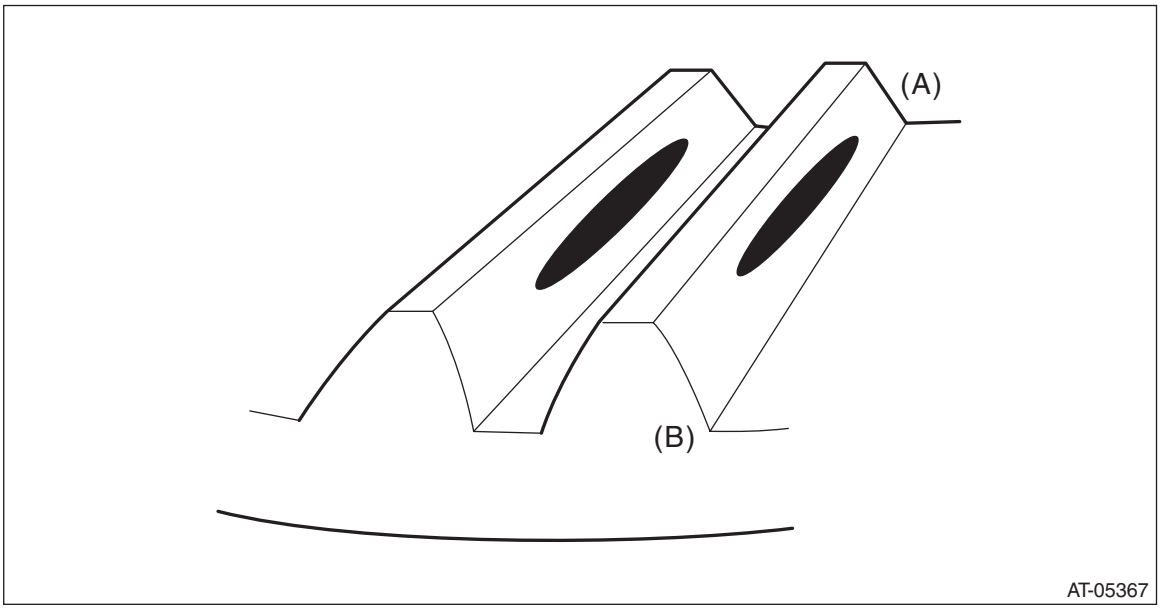

(A) Toe side
(B) Heel side

- Face contact

Check item: Backlash is too large.

Contact pattern

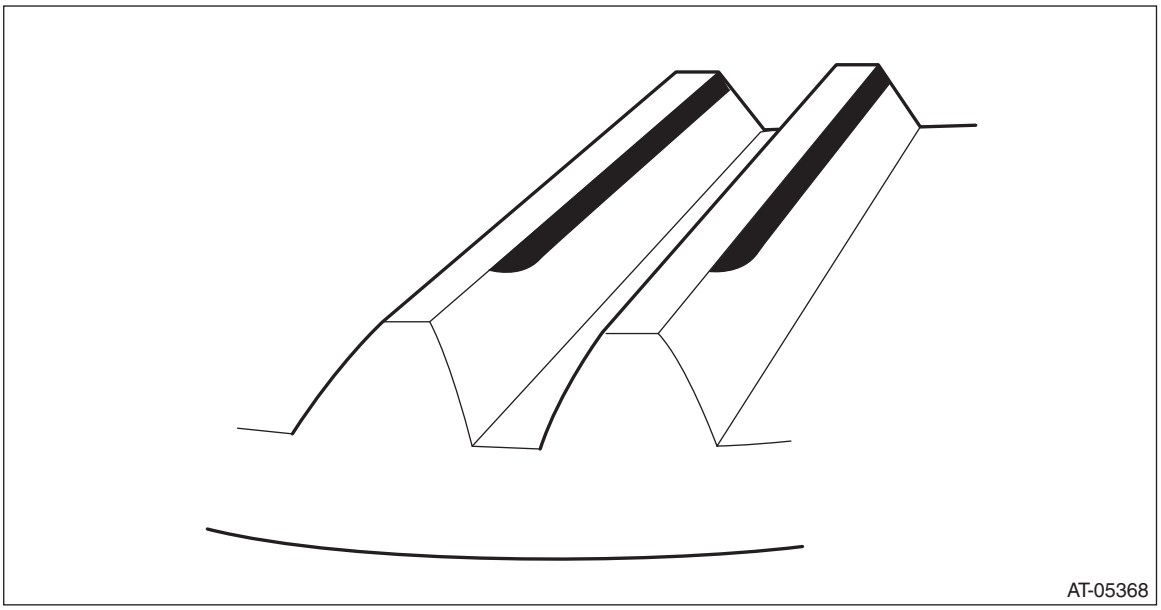

Corrective action: Increase thickness of drive pinion shim according to the procedures for moving the drive pinion close to hypoid driven gear.

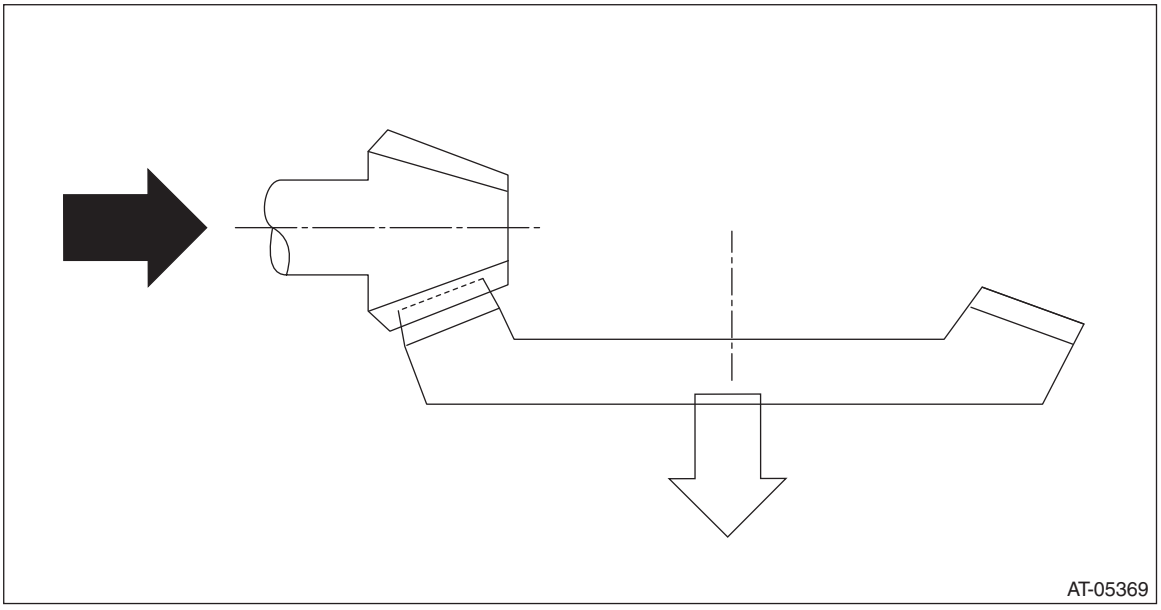

- Flank contact

Check item: Backlash is too small.

Contact pattern

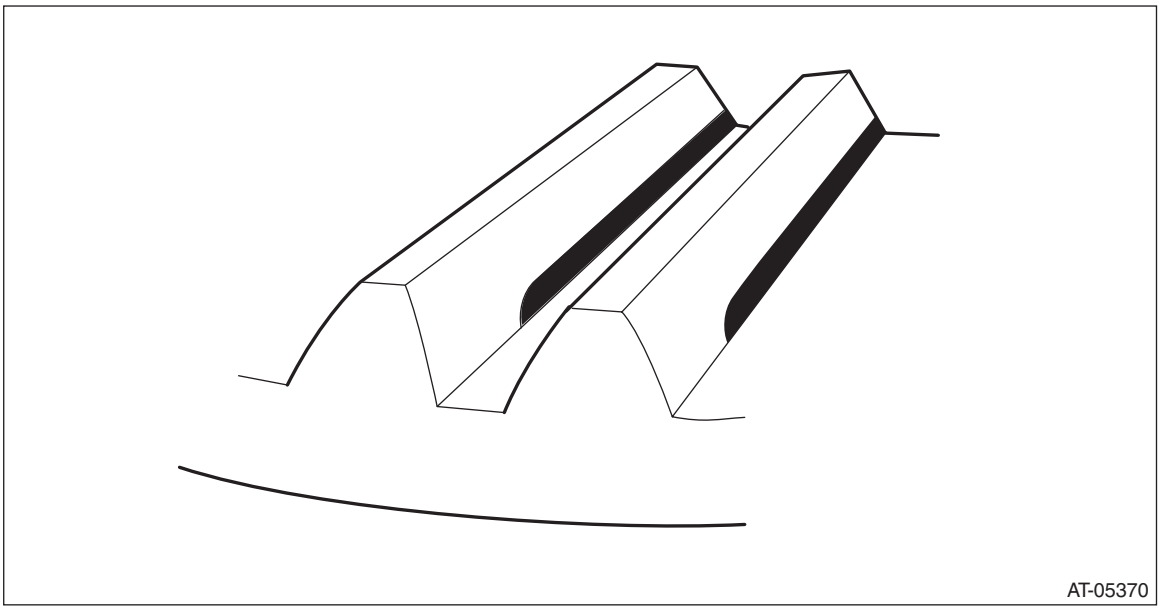

Corrective action: Reduce the thickness of the drive pinion shim according to the procedures for moving the drive pinion away from the hypoid driven gear.

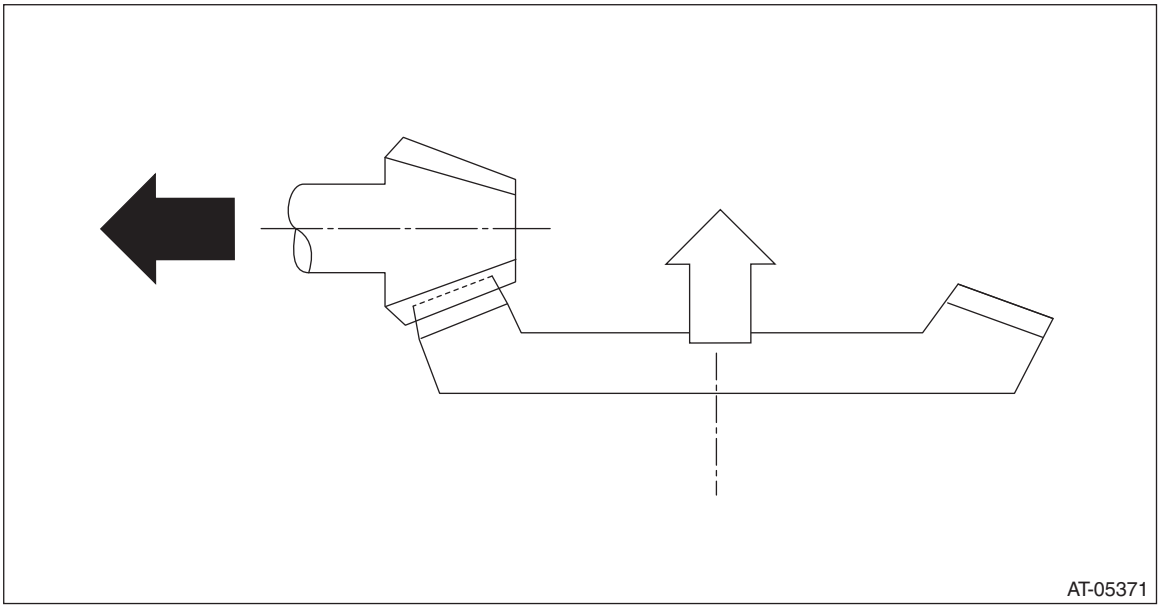

- Toe contact (inside contact)

Check item: Teeth contact area is too small.

Contact pattern

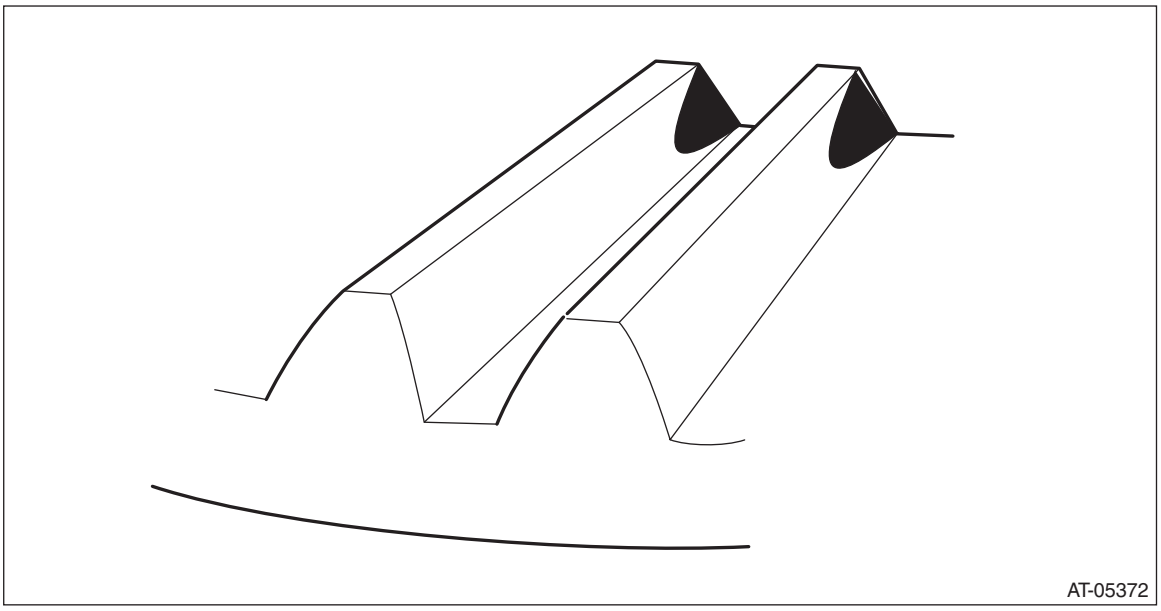

Corrective action: Reduce the thickness of the drive pinion shim according to the procedures for moving the drive pinion away from the hypoid driven gear side.

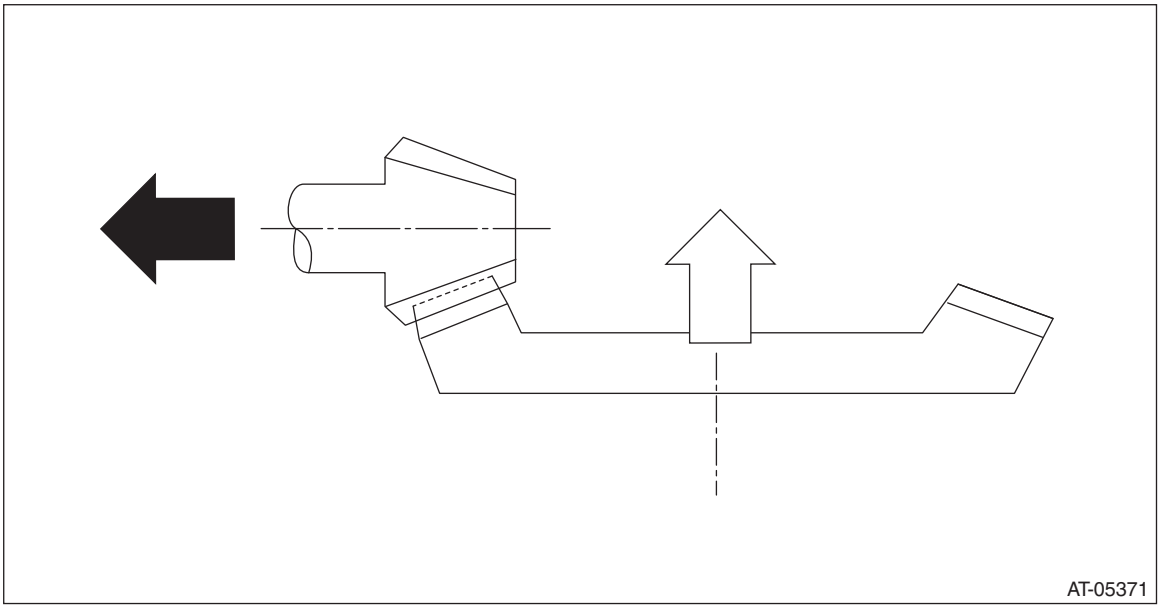

- Heel contact (outside end contact)

Check item: Teeth contact area is too small.

Contact pattern

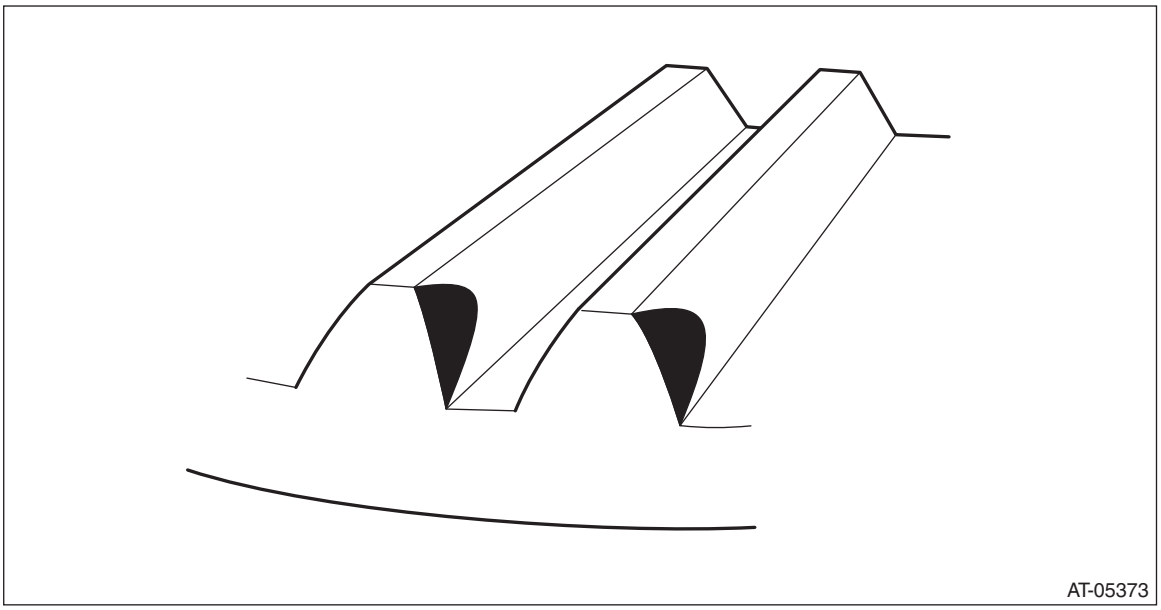

Corrective action: Increase the thickness of the drive pinion shim according to the procedures for moving the drive pinion closer to the hypoid driven gear.

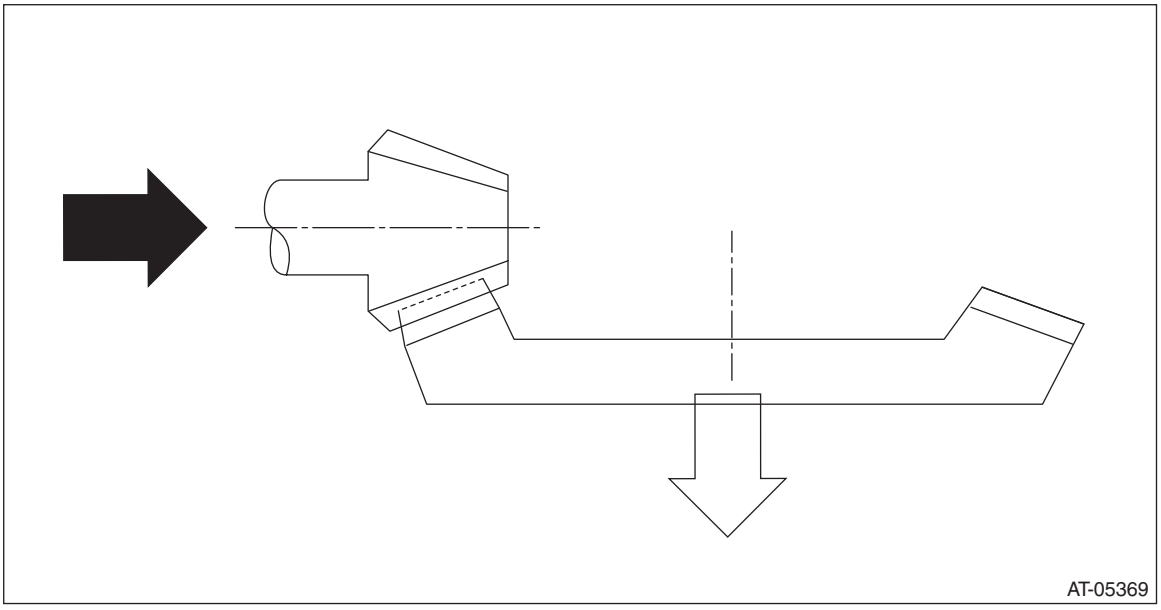

7) Using the ST, loosen the differential side retainer until the mounting groove of the O-ring appears, and then install the O-ring.

NOTE:
- When loosening the differential side retainer, record the number of the turns made.
- Perform this for both left and right differential side retainers.
- Use new O-rings.
- Apply the differential gear oil to O-ring.

ST 18658AA020 WRENCH COMPL RETAINER

8) Using the ST, tighten the retainer to the position before it is loosened.

ST 18658AA020 WRENCH COMPL RETAINER

9) Replace the differential side retainer oil seal with a new part. <Ref. to CVT(TH58A)-91, Differential Side Retainer Oil Seal.>

10) Install the lock plate.

Tightening torque:
25 N·m (2.5 kgf-m, 18.4 ft-lb)

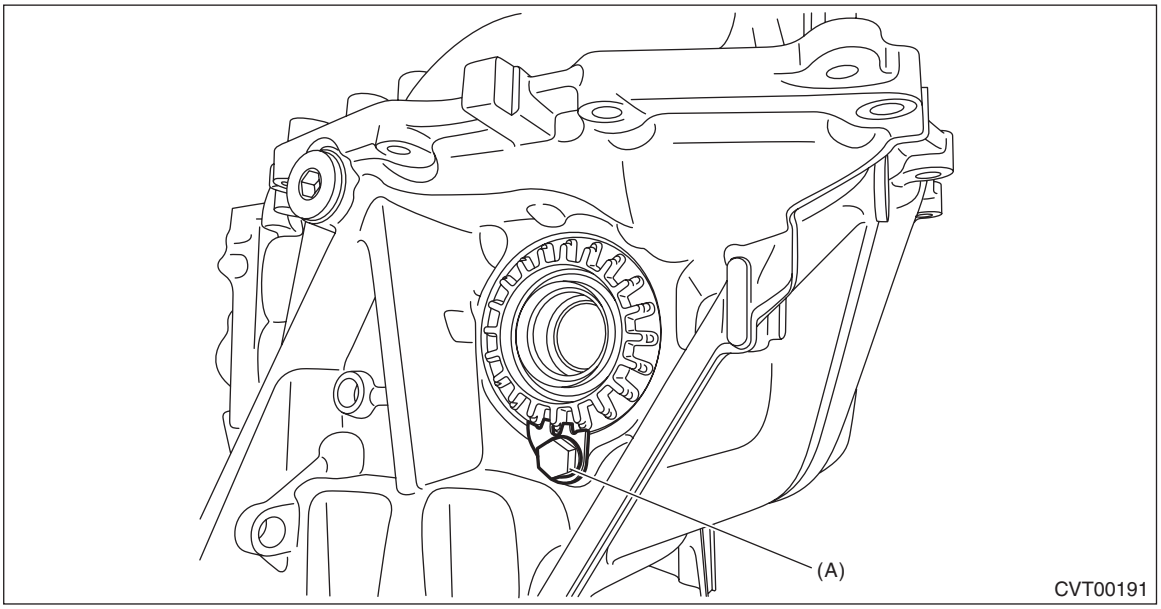

(A) Lock plate

48.Front Differential Assembly

A: REMOVAL

1) Remove the transmission assembly from the vehicle. <Ref. to CVT(TH58A)-62, REMOVAL, Automatic Transmission Assembly.>
2) Remove the air breather hose. <Ref. to CVT(TH58A)-169, REMOVAL, Air Breather Hose.>
3) Remove the transmission harness. <Ref. to CVT(TH58A)-141, REMOVAL, Transmission Harness.>
4) Remove the main control valve body. <Ref. to CVT(TH58A)-114, REMOVAL, Control Valve Body.>
5) Remove the turbine speed sensor. <Ref. to CVT(TH58A)-103, REMOVAL, Turbine Speed Sensor.>
6) Remove the secondary speed sensor. <Ref. to CVT(TH58A)-105, REMOVAL, Secondary Speed Sensor.>
7) Remove the front wheel speed sensor. <Ref. to CVT(TH58A)-107, REMOVAL, Front Wheel Speed Sensor.>
8) Remove the inhibitor switch. <Ref. to CVT(TH58A)-99, REMOVAL, Inhibitor Switch.>
9) Remove the extension case. <Ref. to CVT(TH58A)-179, REMOVAL, Extension Case.>
10) Remove the transfer clutch assembly. <Ref. to CVT(TH58A)-183, REMOVAL, Transfer Clutch.>
11) Remove the transfer driven gear assembly. <Ref. to CVT(TH58A)-197, REMOVAL, Transfer Driven Gear.>
12) Remove the transfer drive gear assembly. <Ref. to CVT(TH58A)-200, REMOVAL, Transfer Drive Gear.>
13) Remove the parking pawl. <Ref. to CVT(TH58A)-205, REMOVAL, Parking Pawl.>
14) Remove the oil pan and oil strainer. <Ref. to CVT(TH58A)-111, REMOVAL, Oil Pan and Strainer.>
15) Remove the transmission control device. <Ref. to CVT(TH58A)-208, REMOVAL, Transmission Control Device.>
16) Remove the drive motor assembly. <Ref. to CVT(TH58A)-215, REMOVAL, Drive Motor Assembly.>
17) Remove the output clutch assembly. <Ref. to CVT(TH58A)-226, REMOVAL, Output Clutch Assembly.>
18) Remove the transmission case. <Ref. to CVT(TH58A)-243, REMOVAL, Transmission Case.>
19) Remove the reduction drive gear. <Ref. to CVT(TH58A)-256, REMOVAL, Reduction Drive Gear.>
20) Remove the primary pulley, secondary pulley and variator chain. <Ref. to CVT(TH58A)-261, REMOVAL, Primary Pulley and Secondary Pulley.>
21) Remove the reverse brake assembly. <Ref. to CVT(TH58A)-285, REMOVAL, Reverse Brake Assembly.>
22) Remove the forward clutch assembly. <Ref. to CVT(TH58A)-301, REMOVAL, Forward Clutch Assembly.>
23) Remove the drive pinion shaft assembly. <Ref. to CVT(TH58A)-321, REMOVAL, Drive Pinion Shaft Assembly.>
24) Remove the oil baffle.

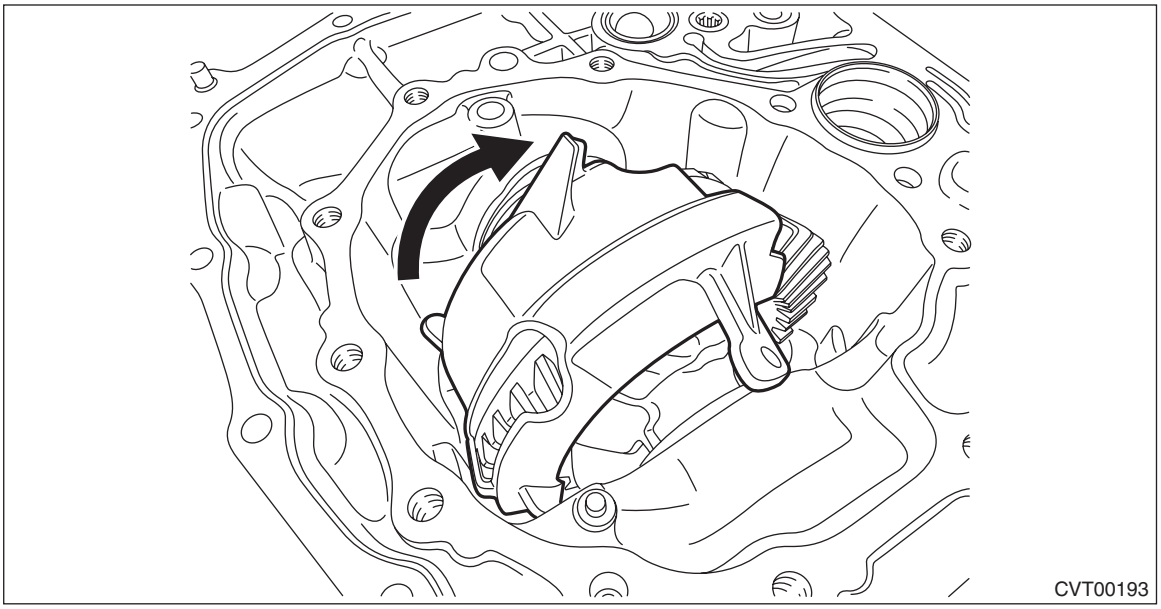

25) Remove the lock plates on both sides.

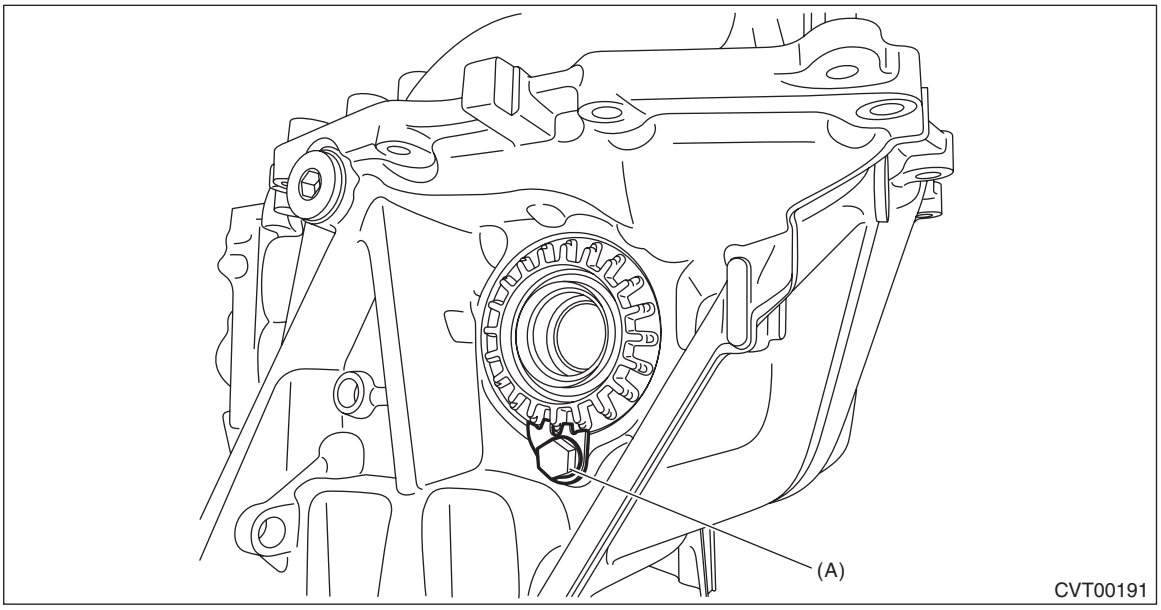

(A) Lock plate

26) Remove the differential side retainers using ST.

NOTE:
• When the wrench COMPL retainer interferes with the converter case, align the cutout portion with the interference part.
• Support the differential case assembly by hand to avoid damaging the retainer mounting hole of the converter case.
• Keep the left and right differential side retainers and left and right bearing outer races by attaching tags or in similar ways to make it possible to identify RH and LH sides.

ST 18658AA020 WRENCH COMPL RETAINER

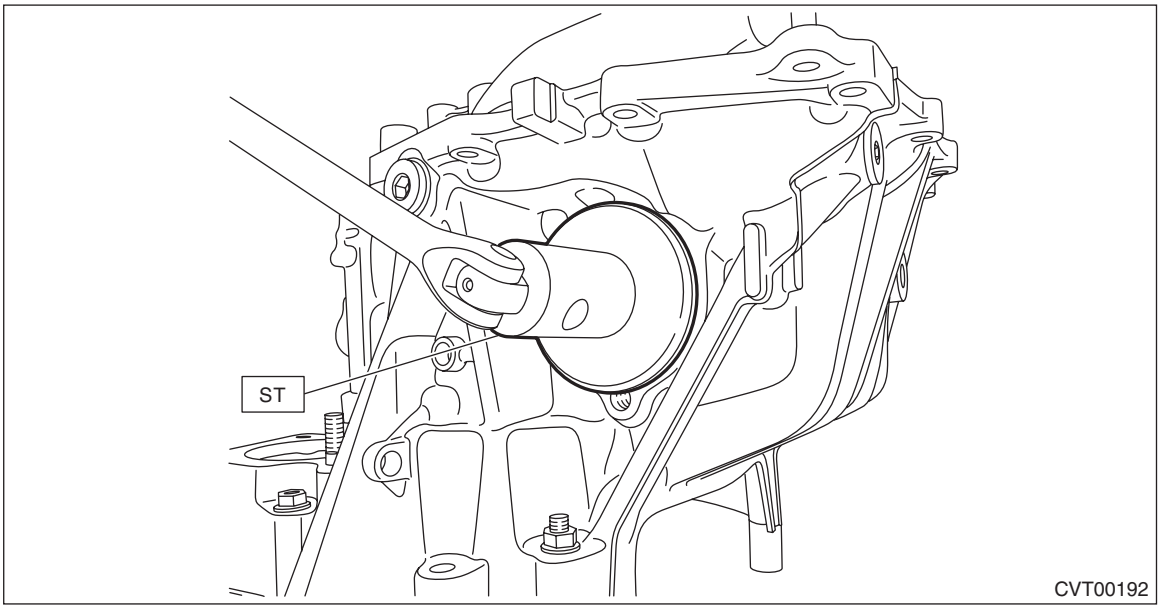

27) Remove the front differential assembly while being careful not to damage the attachment part of the retainer.

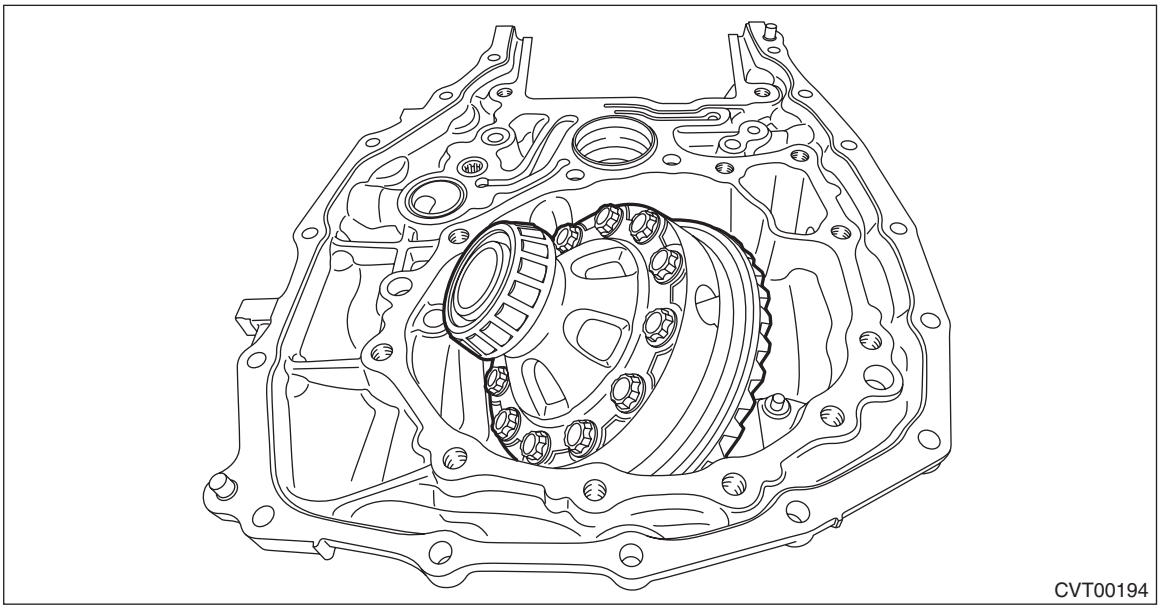

28) Remove the oil seals and O-rings from both differential side retainers. <Ref. to CVT(TH58A)-359, SIDE RETAINER, DISASSEMBLY, Front Differential Assembly.>

B: INSTALLATION

1) Install the front differential assembly to the converter case.

NOTE:
Be careful not to damage the inside of the case (especially the mounting surface of the differential side retainers).

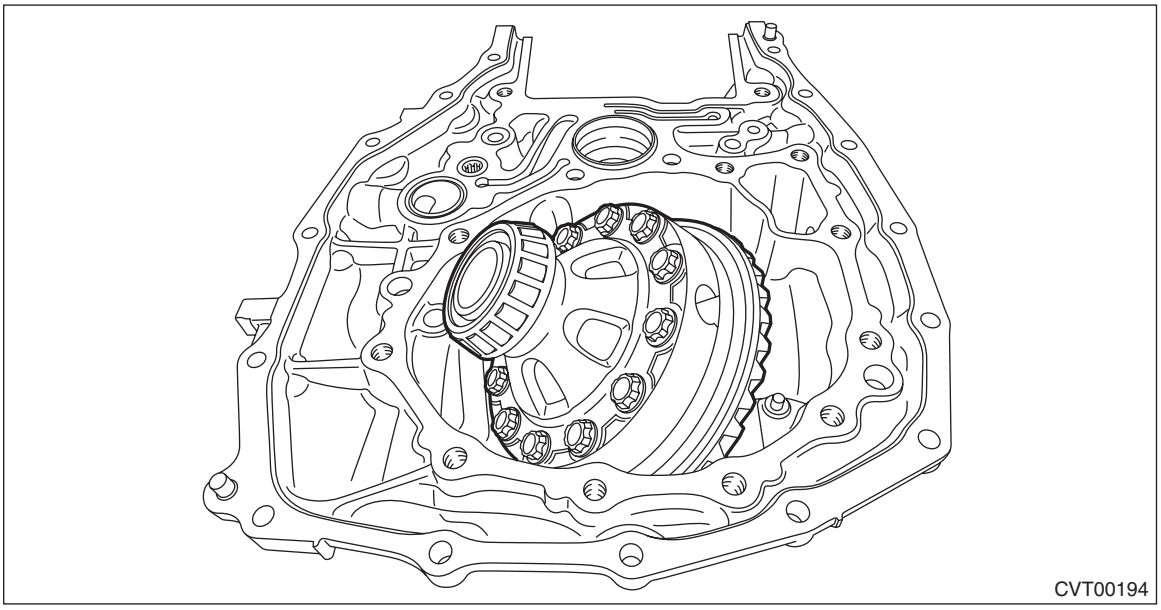

2) Install the bearing outer race.

3) Temporarily install the differential side retainers using ST.
ST 18658AA020 WRENCH COMPL RETAINER

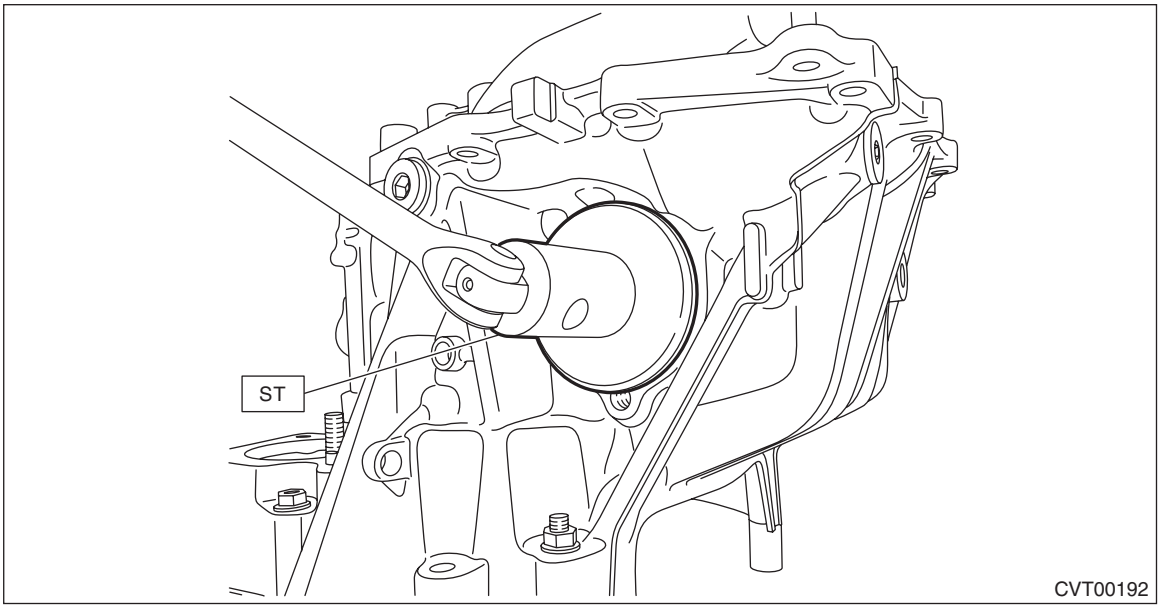

4) Adjust the backlash of the front differential. <Ref. to CVT(TH58A)-366, ADJUSTMENT, Front Differential Assembly.>
5) Inspect and adjust the tooth contact. <Ref. to CVT(TH58A)-343, ADJUSTMENT, Drive Pinion Shaft Assembly.>
6) Using the ST, loosen the differential side retainer until the mounting groove of the O-ring appears, and then install the O-ring.

NOTE:
- When loosening the differential side retainer, record the number of the turns made.
- Perform this for both left and right differential side retainers.
- Use new O-rings.
- Apply the differential gear oil to O-ring.

ST 18658AA020 WRENCH COMPL RETAINER
7) Using the ST, tighten the retainer to the position before it is loosened.
ST 18658AA020 WRENCH COMPL RETAINER
8) Install the oil seal to the differential side retainer. <Ref. to CVT(TH58A)-91, Differential Side Retainer Oil Seal.>

9) Install the lock plate.

Tightening torque:
25 N·m (2.5 kgf-m, 18.4 ft-lb)

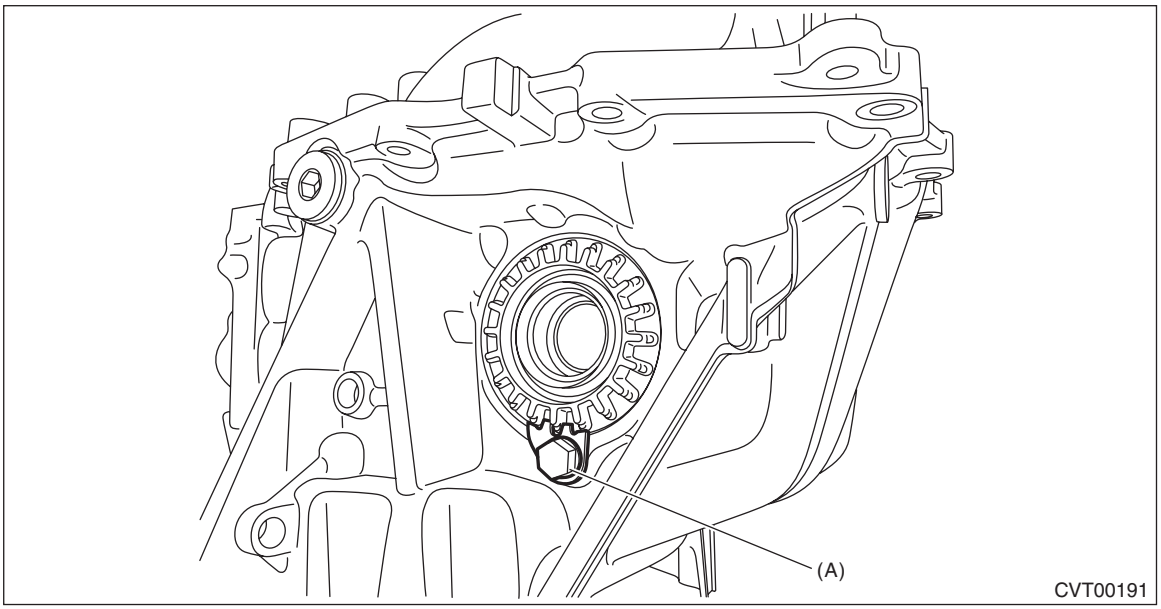

(A) Lock plate

10) Install the oil baffle.

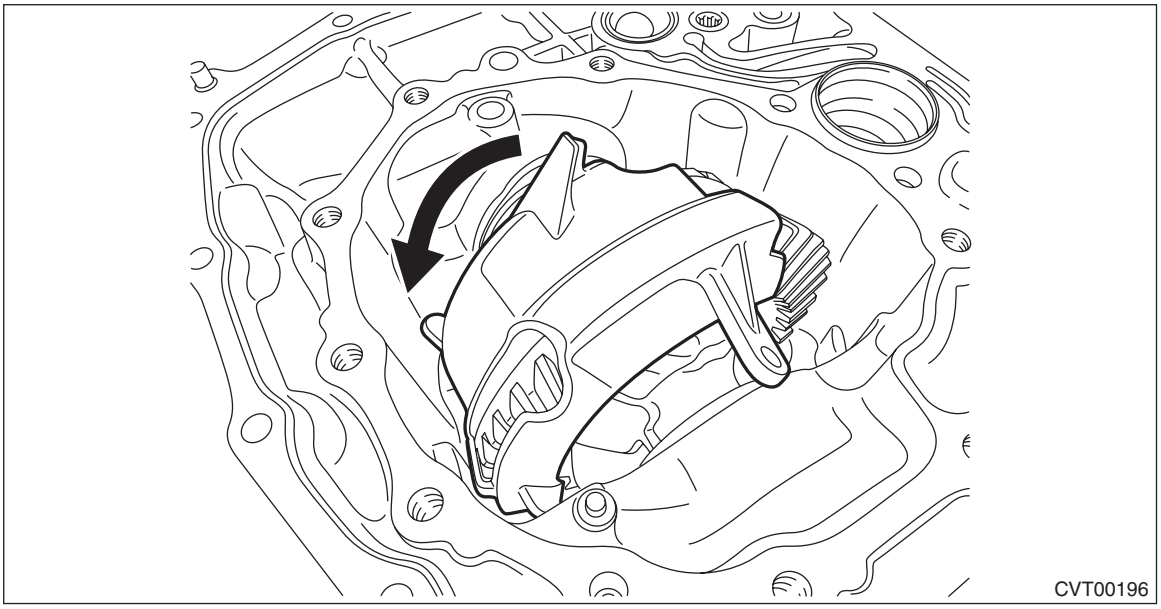

11) Install the drive pinion shaft assembly. <Ref. to CVT(TH58A)-322, INSTALLATION, Drive Pinion Shaft Assembly.>
12) Install the forward clutch assembly. <Ref. to CVT(TH58A)-304, INSTALLATION, Forward Clutch Assembly.>
13) Install the reverse brake assembly. <Ref. to CVT(TH58A)-288, INSTALLATION, Reverse Brake Assembly.>
14) Install the primary pulley, secondary pulley and variator chain. <Ref. to CVT(TH58A)-269, INSTALLATION, Primary Pulley and Secondary Pulley.>
15) Install the reduction drive gear. <Ref. to CVT(TH58A)-257, INSTALLATION, Reduction Drive Gear.>
16) Install the transmission case. <Ref. to CVT(TH58A)-246, INSTALLATION, Transmission Case.>
17) Install the output clutch assembly. <Ref. to CVT(TH58A)-227, INSTALLATION, Output Clutch Assembly.>
18) Install the drive motor assembly. <Ref. to CVT(TH58A)-219, INSTALLATION, Drive Motor Assembly.>
19) Install the transmission control device. <Ref. to CVT(TH58A)-211, INSTALLATION, Transmission Control Device.>
20) Install the oil strainer and oil pan. <Ref. to CVT(TH58A)-113, INSTALLATION, Oil Pan and Strainer.>
21) Install the parking pawl. <Ref. to CVT(TH58A)-206, INSTALLATION, Parking Pawl.>
22) Install the transfer drive gear assembly. <Ref. to CVT(TH58A)-200, INSTALLATION, Transfer Drive Gear.>
23) Install the transfer driven gear assembly. <Ref. to CVT(TH58A)-198, INSTALLATION, Transfer Driven Gear.>
24) Install the transfer clutch assembly. <Ref. to CVT(TH58A)-185, INSTALLATION, Transfer Clutch.>
25) Install the extension case. <Ref. to CVT(TH58A)-180, INSTALLATION, Extension Case.>
26) Install the inhibitor switch. <Ref. to CVT(TH58A)-101, INSTALLATION, Inhibitor Switch.>
27) Install the secondary speed sensor. <Ref. to CVT(TH58A)-105, INSTALLATION, Secondary Speed Sensor.>
28) Install the front wheel speed sensor. <Ref. to CVT(TH58A)-107, INSTALLATION, Front Wheel Speed Sensor.>
29) Install the turbine speed sensor. <Ref. to CVT(TH58A)-103, INSTALLATION, Turbine Speed Sensor.>
30) Install the main control valve body. <Ref. to CVT(TH58A)-121, INSTALLATION, Control Valve Body.>
31) Install the transmission harness. <Ref. to CVT(TH58A)-149, INSTALLATION, Transmission Harness.>
32) Install the air breather hose. <Ref. to CVT(TH58A)-171, INSTALLATION, Air Breather Hose.>
33) Install the transmission assembly to the vehicle. <Ref. to CVT(TH58A)-76, INSTALLATION, Automatic Transmission Assembly.>

C: DISASSEMBLY

1. DIFFERENTIAL CASE ASSEMBLY

1) Remove the taper roller bearing using the ST.
ST1 498077000 REMOVER
ST2 899864100 REMOVER
ST3 398497701 SEAT

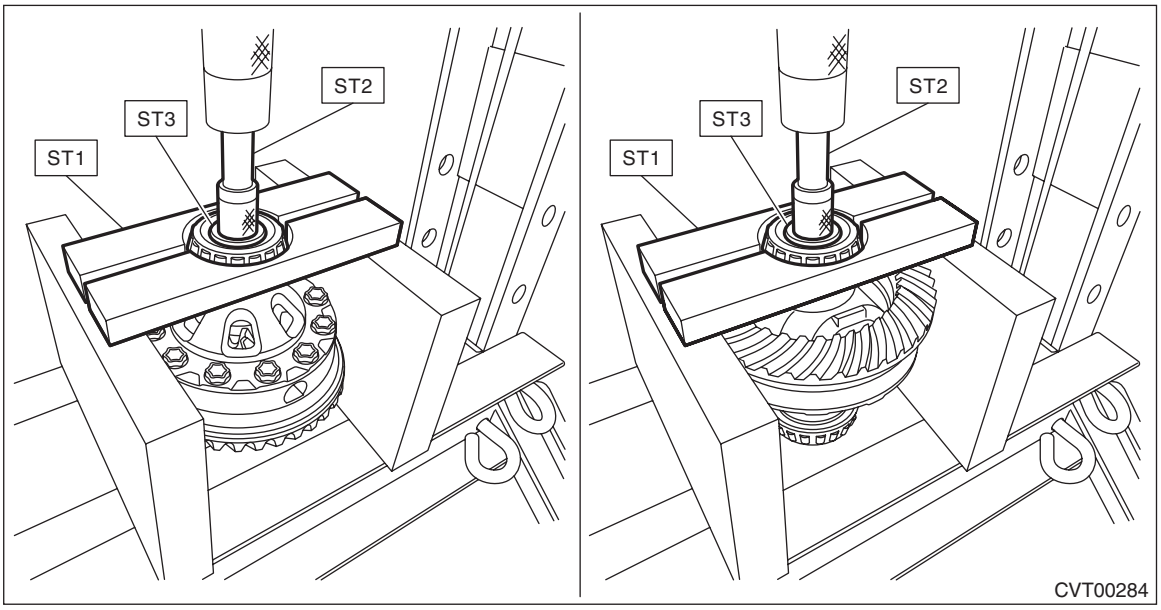

2) Remove the hypoid driven gear mounting bolt using the ST.
ST 18270KA020 SOCKET (E20)

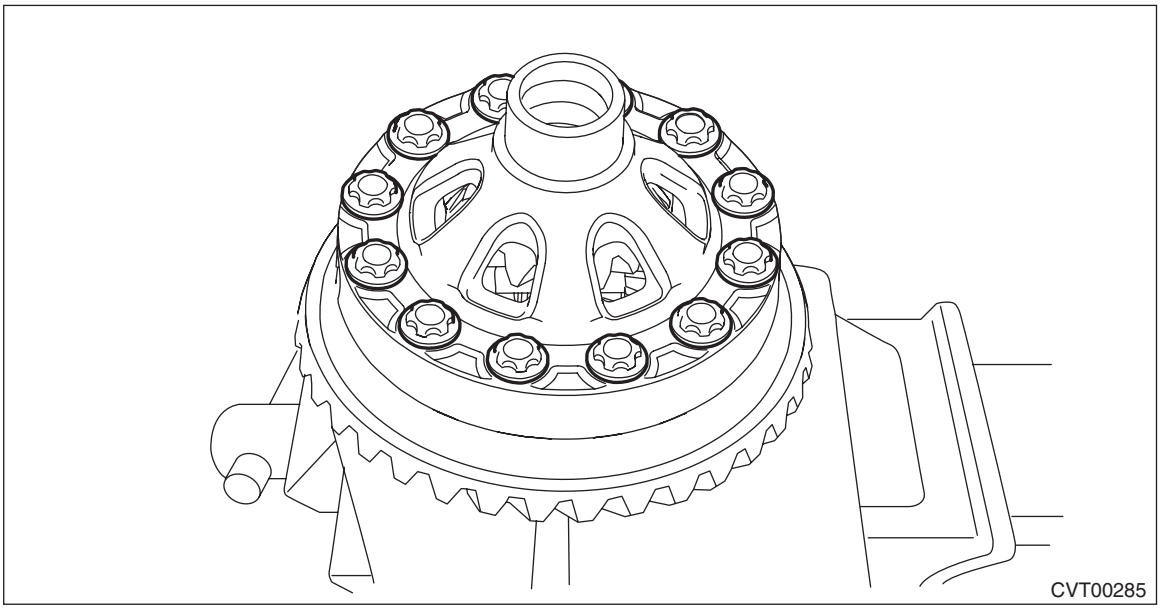

3) Remove the differential case (LH).

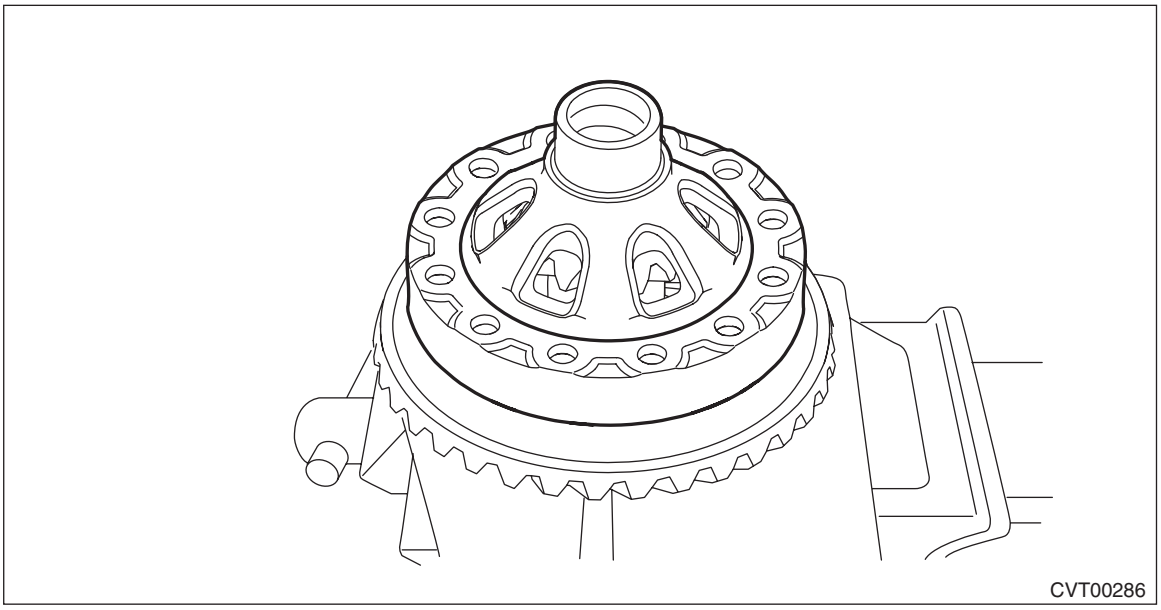

4) Remove the differential bevel gear and washer from differential case.

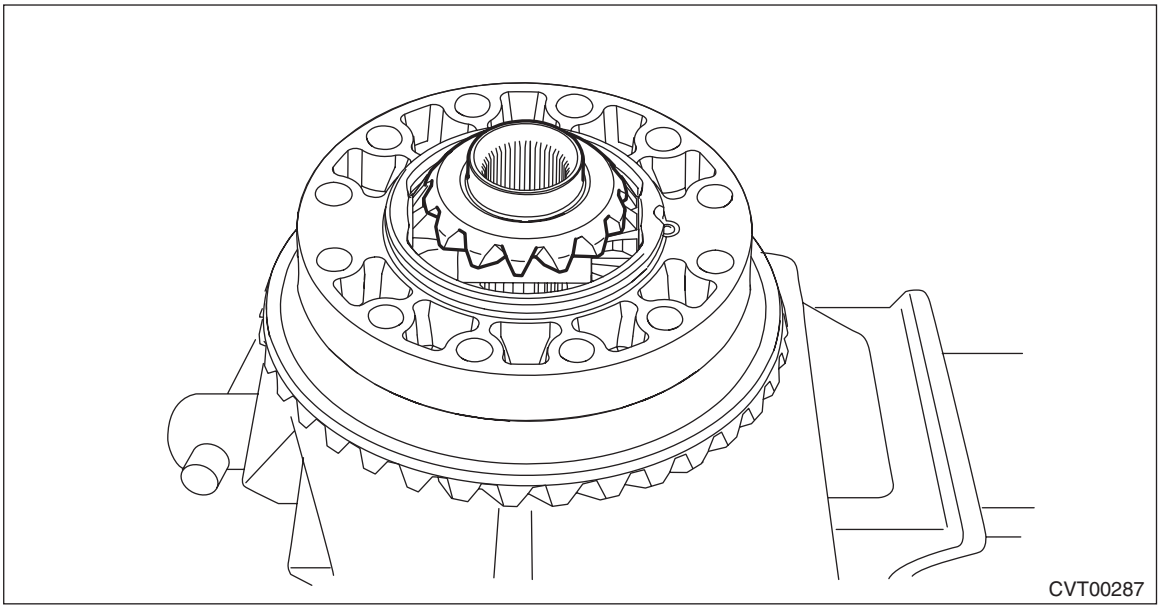

5) Remove the straight pin.

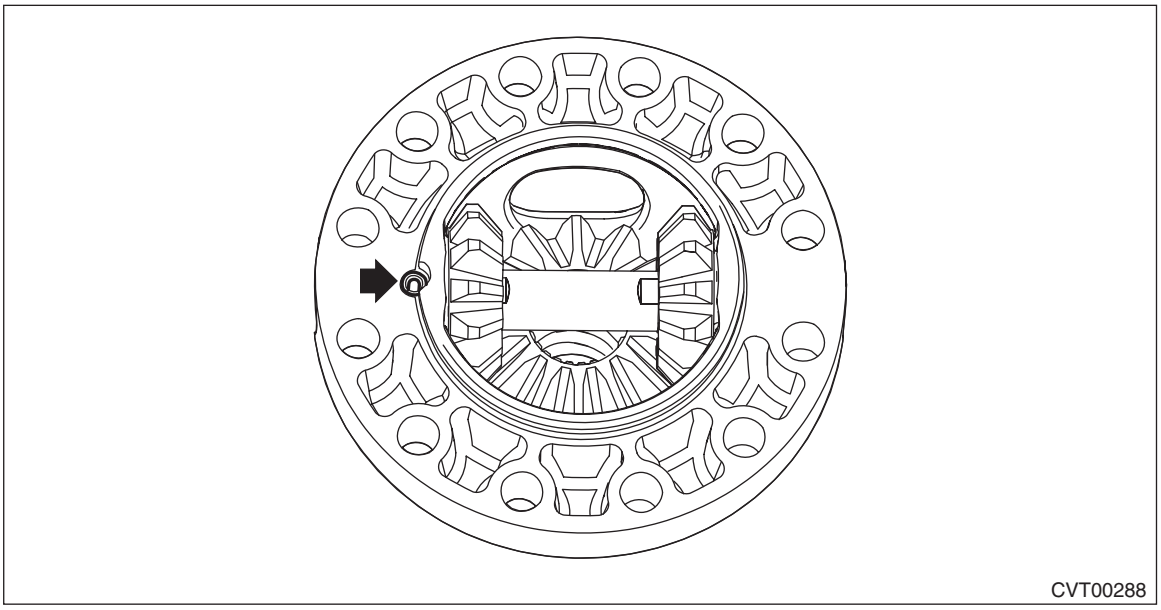

6) Remove the pinion shaft, then remove the differential bevel gear, washer and differential bevel pinion.

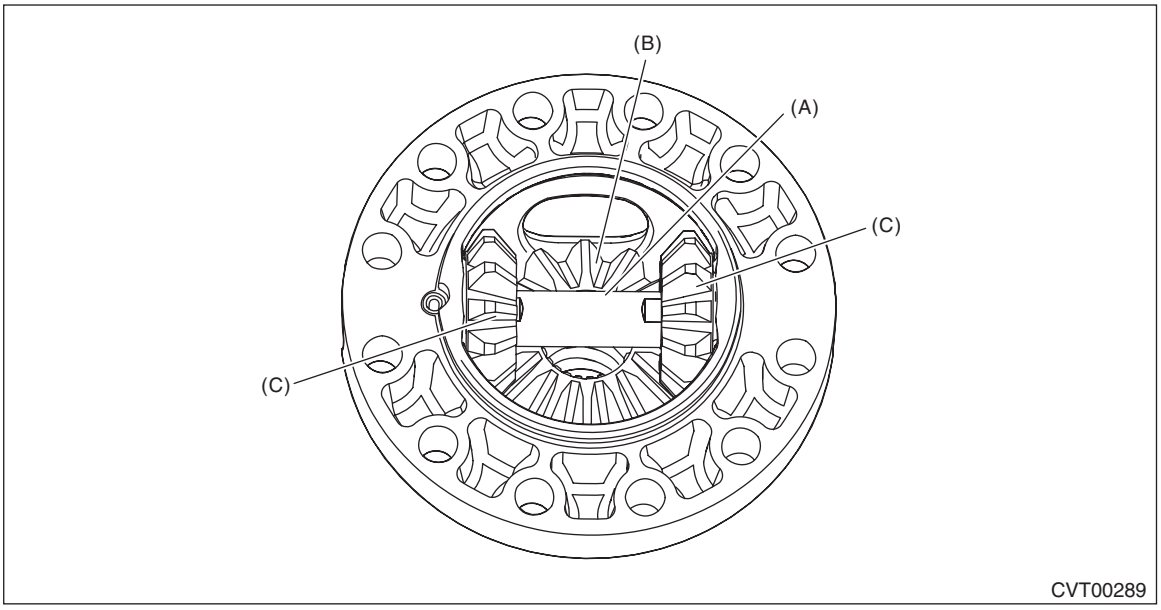

(A) Pinion shaft
(B) Differential bevel gear
(C) Differential bevel pinion

2. SIDE RETAINER

NOTE:
After adjusting the drive pinion backlash and tooth contact, replace the oil seal and O-ring with new parts.
1) Remove the O-ring.

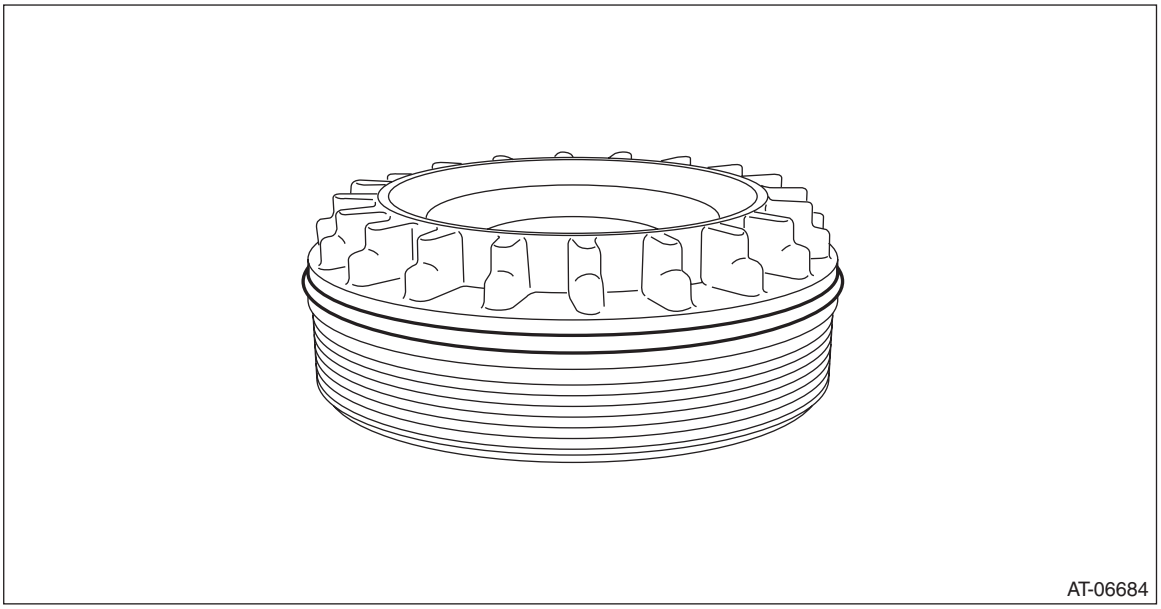

2) Remove the oil seal.

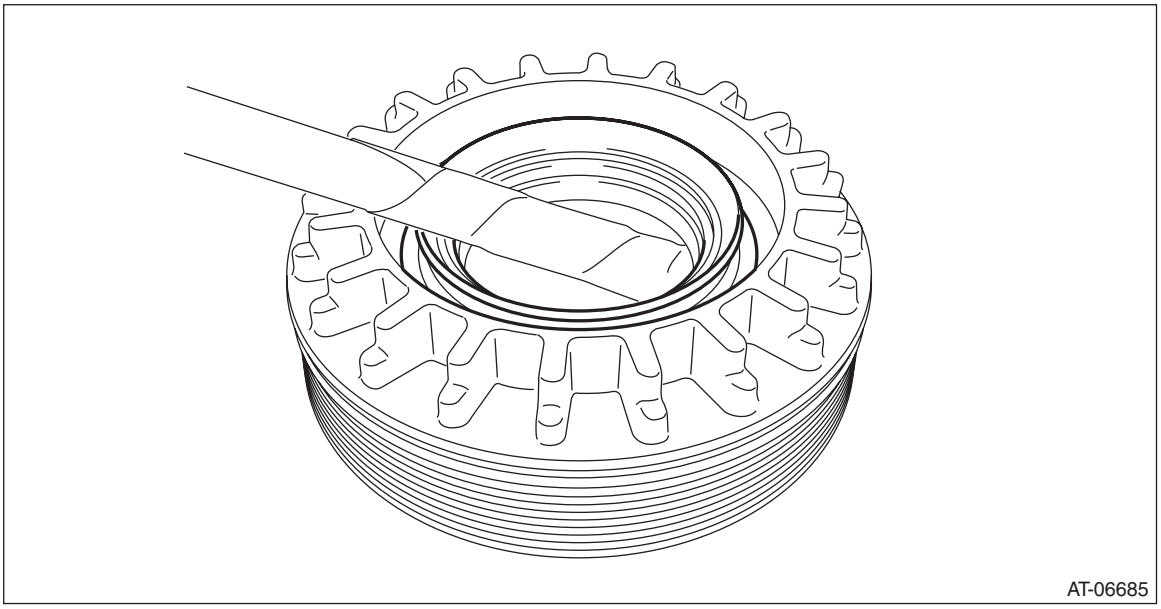

D: ASSEMBLY

1. DIFFERENTIAL CASE ASSEMBLY

1) Install the washer and differential bevel gear into the differential case (RH).

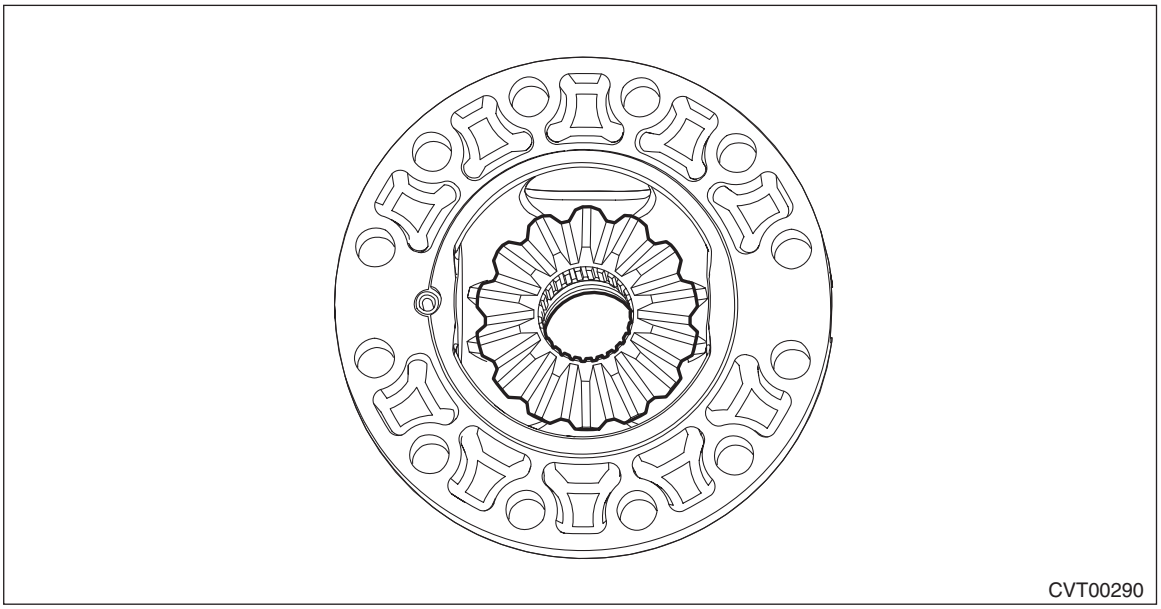

2) Install the differential bevel pinions into differential case (RH) and install the pinion shaft.

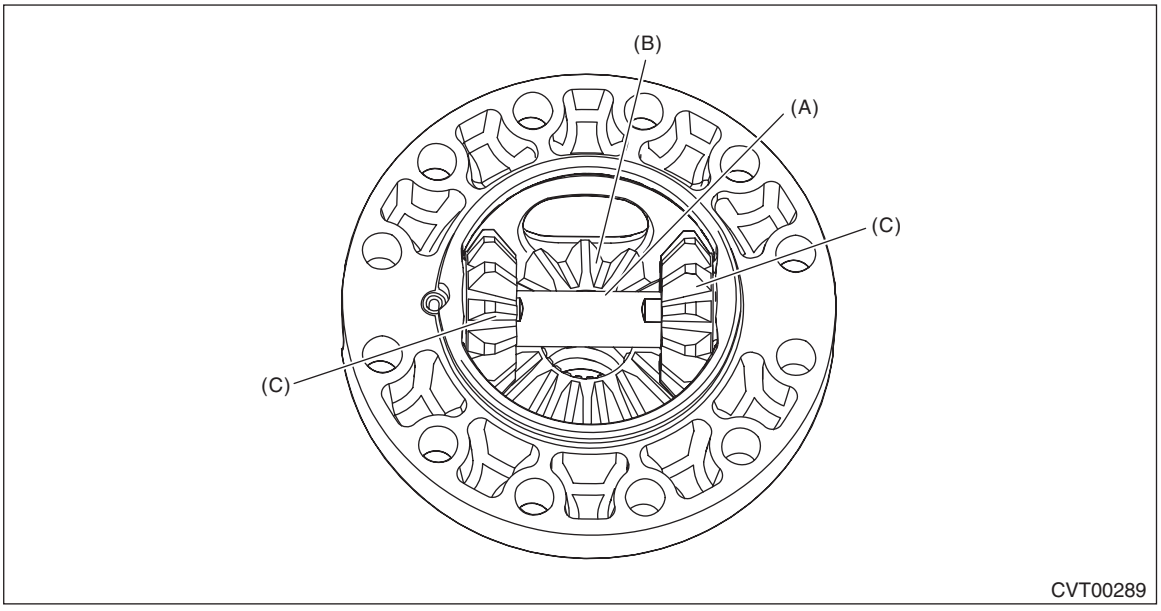

(A) Pinion shaft
(B) Differential bevel gear
(C) Differential bevel pinion

3) Install the straight pin.

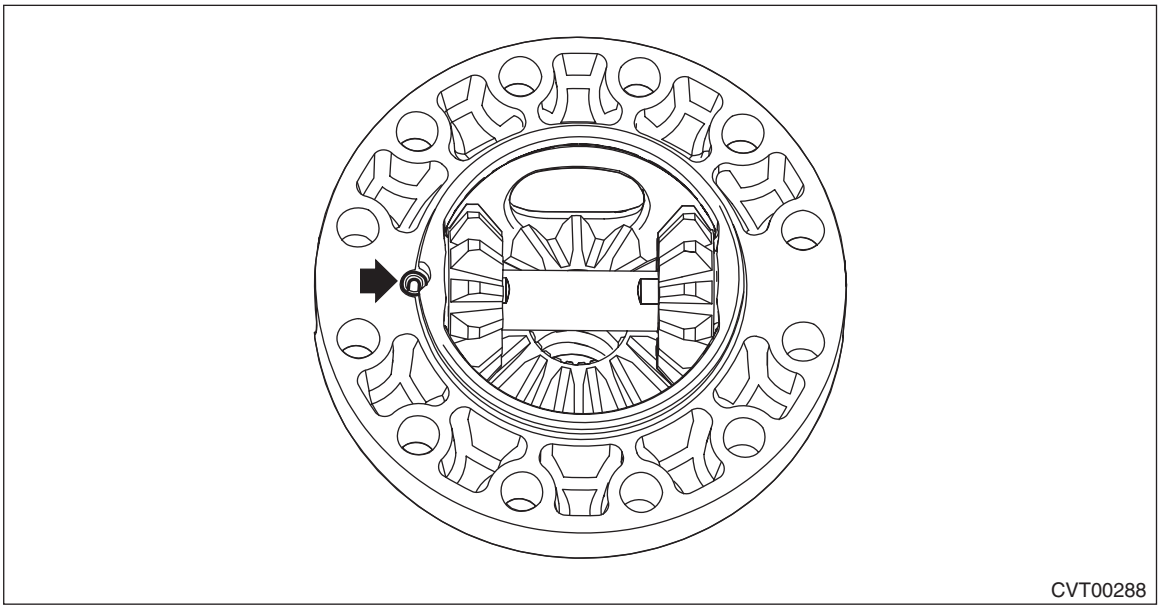
CVT00288

4) Install the washer and differential bevel gear to the differential case (LH).

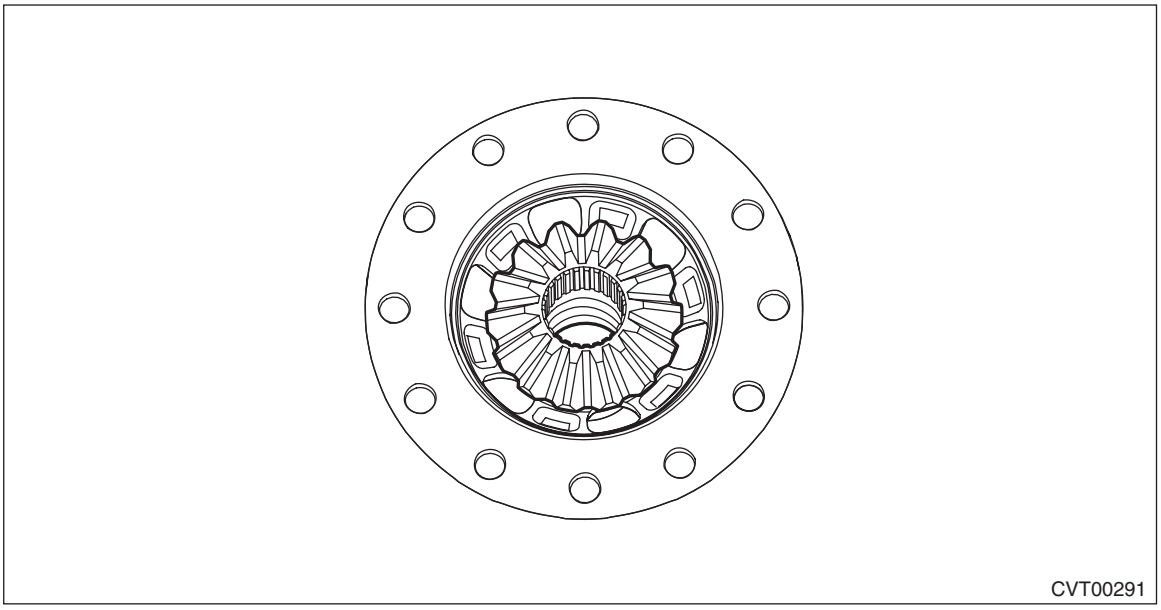
CVT00291

5) Install the differential case (RH) to the hypoid driven gear.

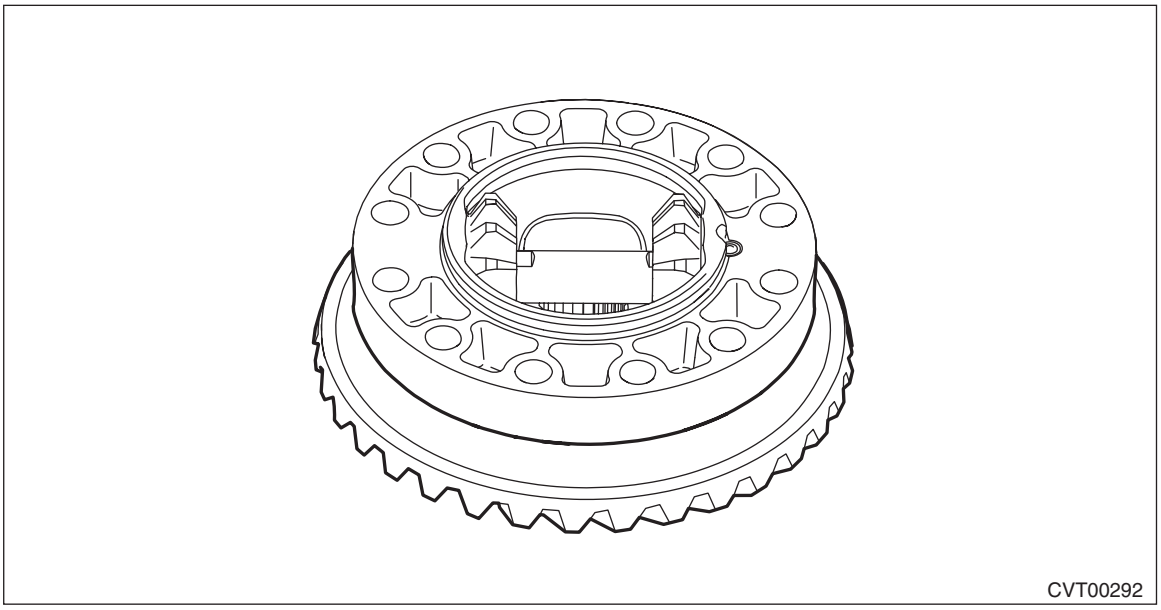

6) Install the differential case (LH) to the differential case (RH).
7) Using the ST, install the hypoid driven gear by tightening the installation bolt.
ST 18270KA020 SOCKET (E20)

Tightening torque:
64 N·m (6.5 kgf-m, 47.2 ft-lb)

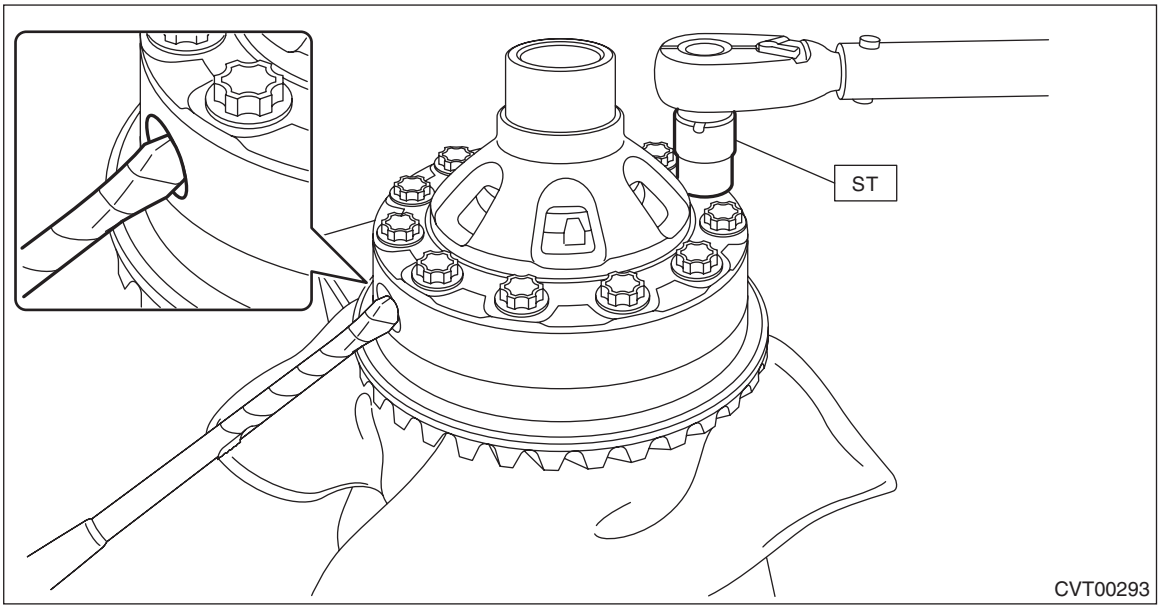

8) Measure the backlash, and select the washer.
(1) Install the SUBARU genuine axle shaft to differential case.
Part No. 38415AA070 Axle shaft
(2) Using ST1 and ST2, insert the ST2 through the window of differential case. Measure the backlash of the gear.

NOTE:
• Measure the backlash by applying a differential bevel pinion tooth between two differential bevel gear teeth.
• When measuring, fix the differential bevel pinion gear in place with a screwdriver covered with cloth, or a similar tool.
ST1 498247001 MAGNET BASE
ST2 498247100 DIAL GAUGE

Specification:
0.13 — 0.18 mm (0.0051 — 0.0071 in)

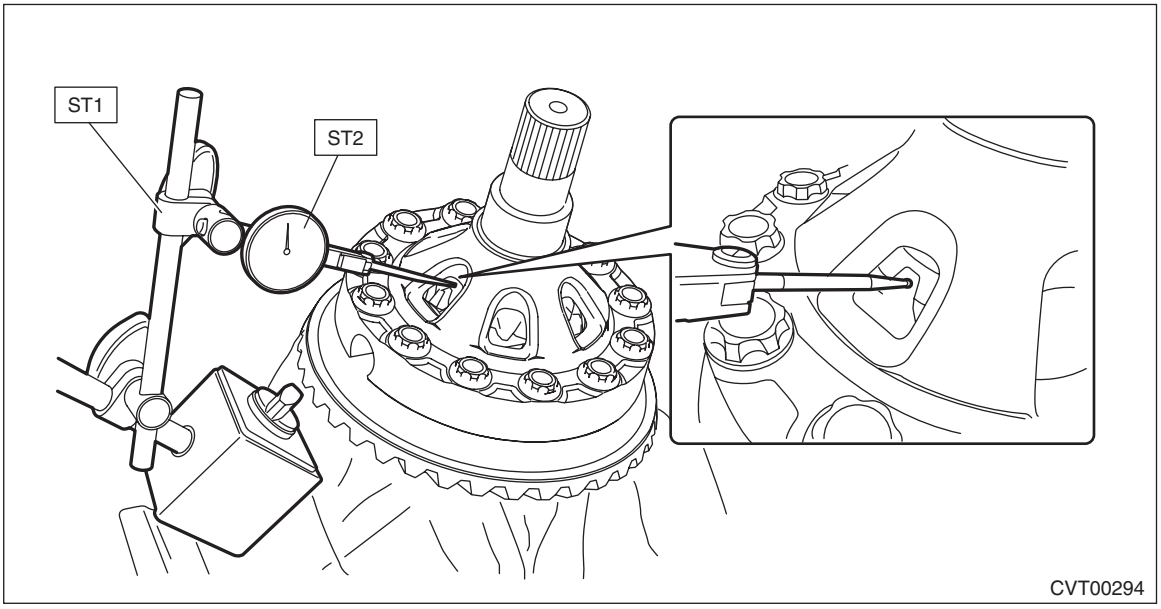

(3) If the backlash is not within specification, select a washer from the table below and replace.

Washer	
Part No.	Thickness mm (in)
803038021	0.95 (0.037)
803038022	1.00 (0.039)
803038023	1.05 (0.041)

9) Using the ST, install the left and right taper roller bearings.
ST1 499277100 BUSHING 1-2 INSTALLER
ST2 398497701 SEAT

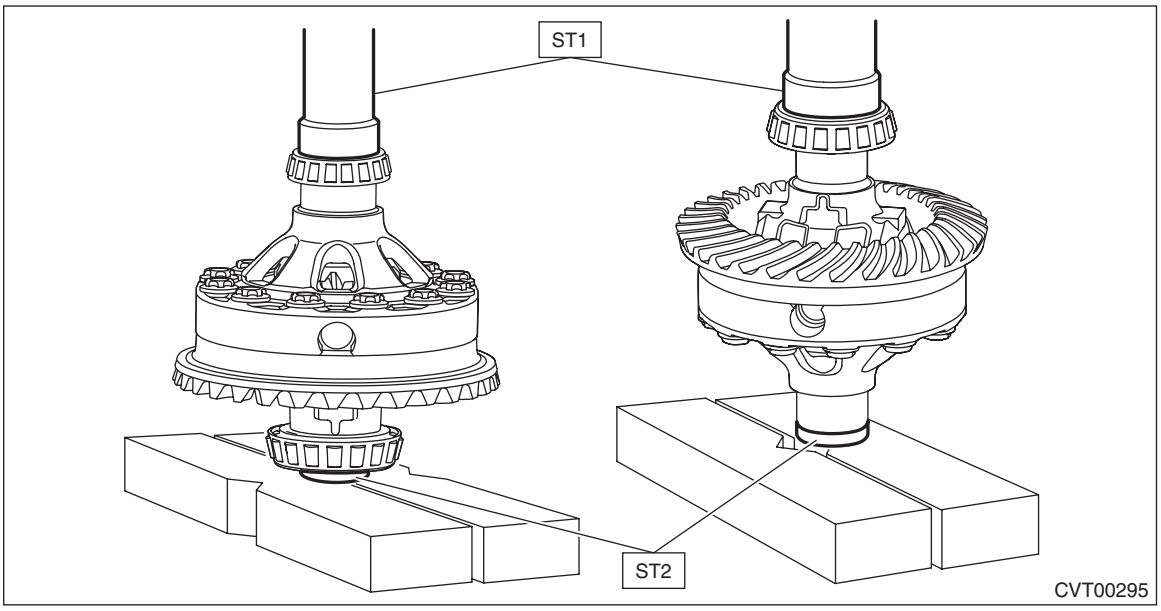

2. SIDE RETAINER

NOTE:
After adjusting the backlash and tooth contact, replace the oil seal and O-ring of side retainer with new parts.
1) Using the ST, install the oil seal.

NOTE:
- Use a new oil seal.
- Apply differential gear oil to the oil seal lip and press-fitting surface.
- Oil seal has an identification mark (R, L). When installing oil seals, do not confuse the left and right.

ST 18675AA000 DIFFERENTIAL SIDE OIL SEAL INSTALLER

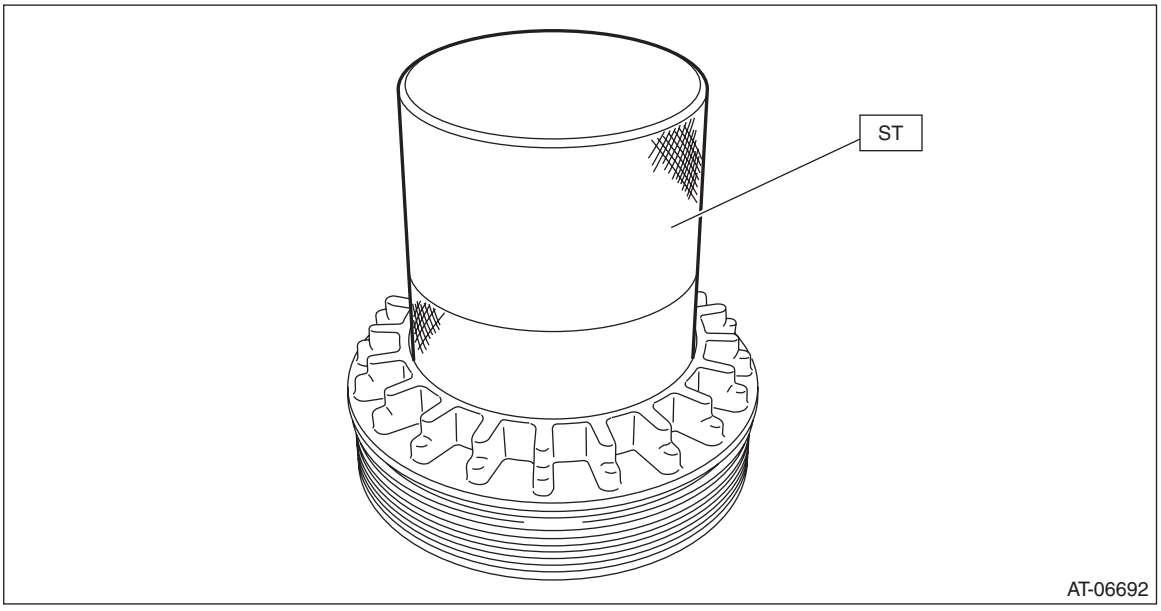

2) Install the O-ring.

NOTE:
- Use new O-rings.
- Apply the differential gear oil to O-ring.

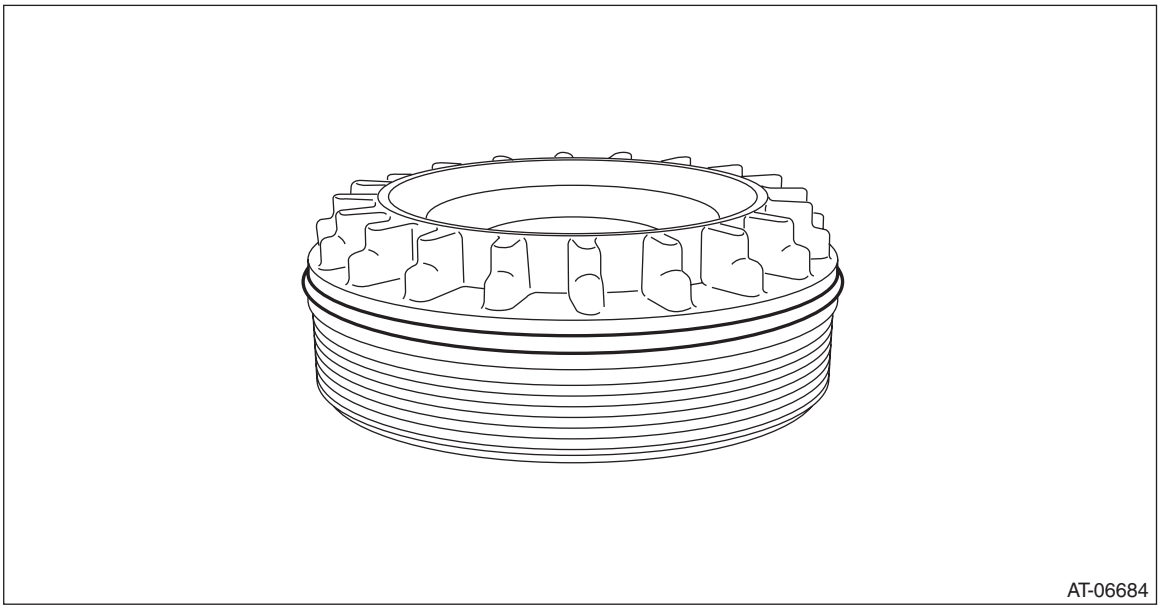

E: INSPECTION

- Check each component for scratches, damage or other faults.
- Using the ST, check the backlash of pinion gear.

ST1 498247001 MAGNET BASE
ST2 498247100 DIAL GAUGE

Specification:
0.13 — 0.18 mm (0.0051 — 0.0071 in)

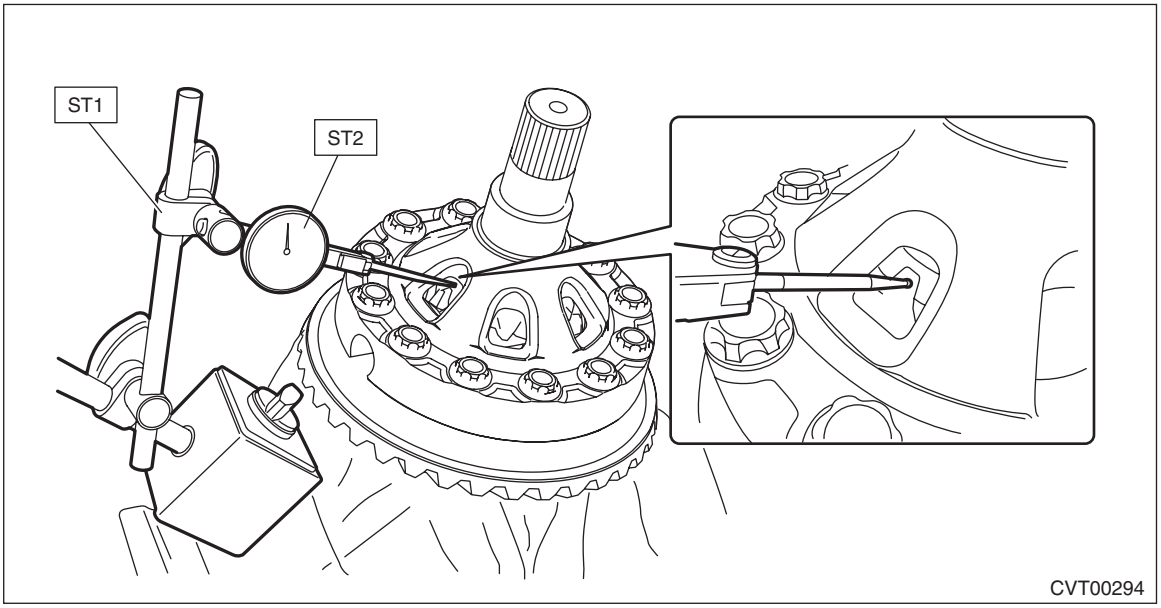

- Measure the hypoid gear backlash, and then adjust it to be within specification. <Ref. to CVT(TH58A)-366, ADJUSTMENT, Front Differential Assembly.>

F: ADJUSTMENT

1) Using the ST, screw-in the retainer until resistance is felt.

NOTE:
RH side should be screwed-in more than LH side.
ST 18658AA020 WRENCH COMPL RETAINER

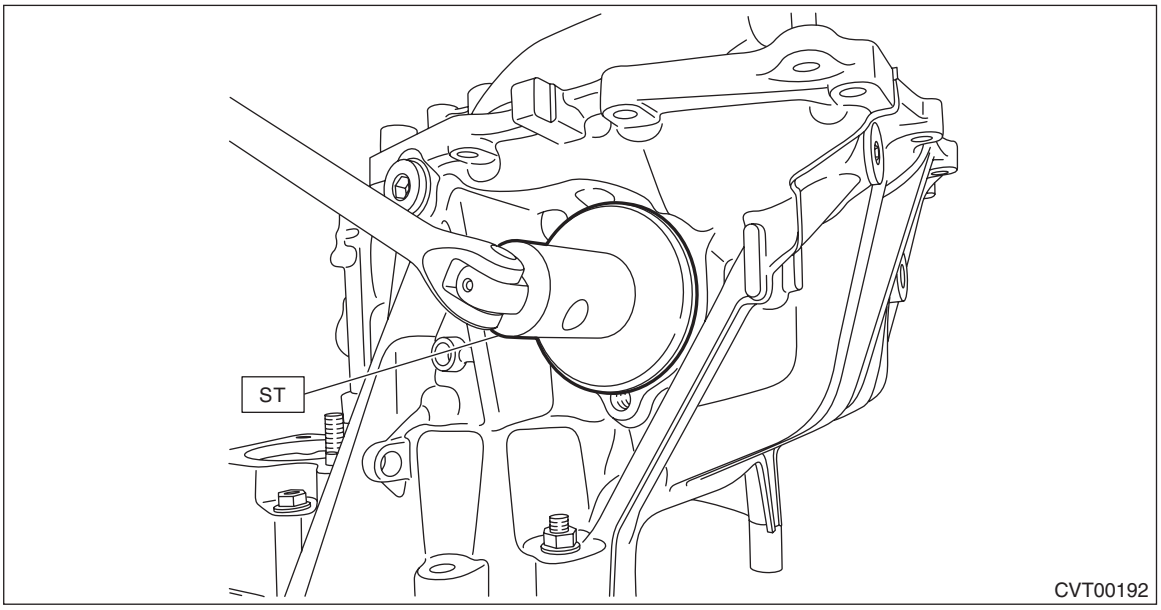

2) Remove the remaining liquid gasket from the mating surface completely.
3) Using the ST, install the drive pinion assembly to converter case.
ST 18270KA020 SOCKET (E20)

NOTE:
Do not confuse the three different-length bolts when installing.

Tightening torque:
43 N·m (4.4 kgf-m, 31.7 ft-lb)

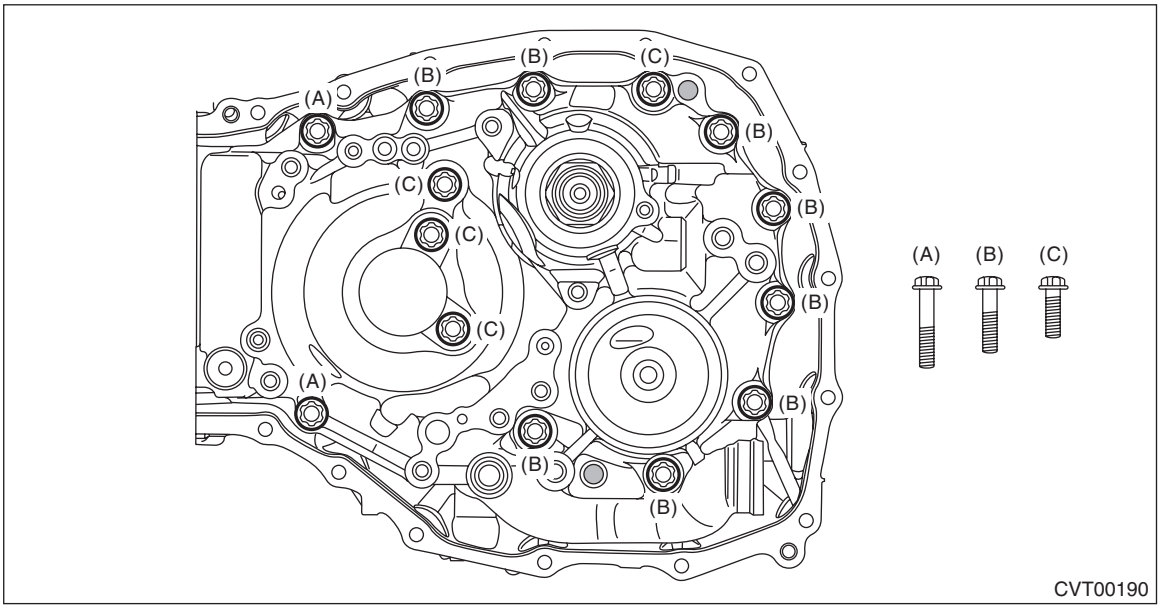

4) Rotate the drive pinion shaft ten times or more using ST1 and ST2.
ST1 499787700 WRENCH
ST2 498937110 HOLDER

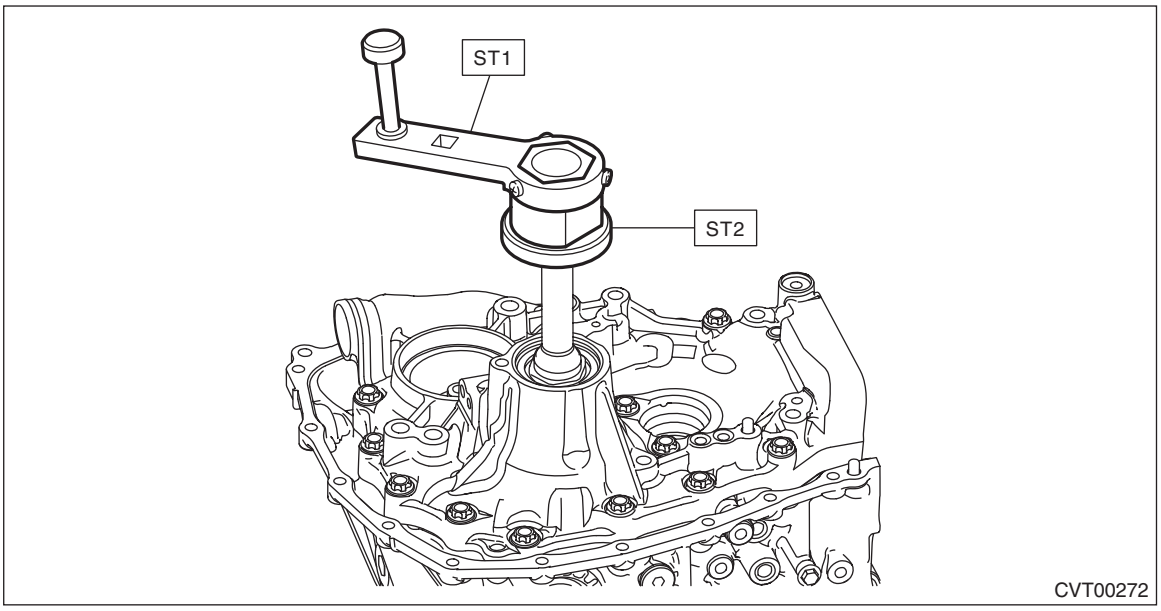

5) While rotating the pinion shaft, tighten the retainer LH and loosen the retainer RH until the shaft can't be turned anymore. The backlash is “zero” when the pinion shaft comes to the point where it doesn't rotate.
6) After the “zero” state is established, loosen the retainer LH by 3 notches and secure it with the lock plate. Retighten the retainer RH until it stops. Rotate the drive pinion 2 or 3 times. Tighten the retainer RH further 1-3/4 notches. This sets the preload. Finally, secure the retainer with its lock plate.

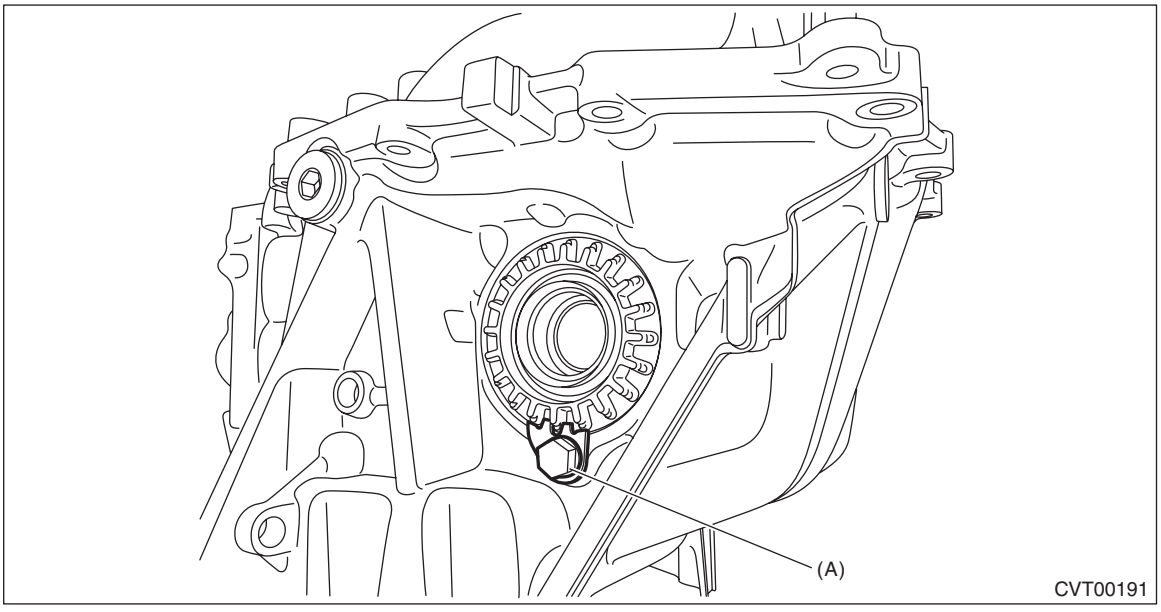

(A) Lock plate

NOTE:
Turning the retainer by every one tooth changes the backlash approx. 0.05 mm (0.0020 in).

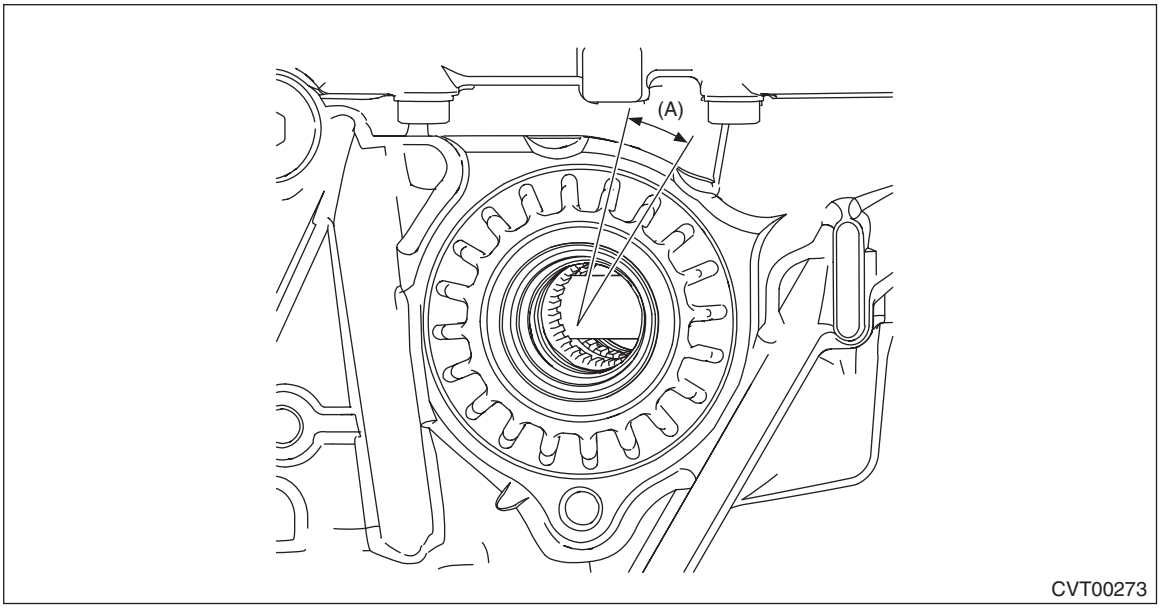

(A) 1 tooth

7) Insert the two SUBARU genuine axle shafts into differential case.
Part No. 38415AA070 Axle shaft
8) Install the ST to the drive pinion retainer, and wrap the drive pinion shaft with cloth and pinch with vise pliers. Using a tie-wrap or a wire, fix the vise pliers to the ST.
Make sure the drive pinion shaft does not move.
ST 18763AA000 COMPRESSOR SHAFT

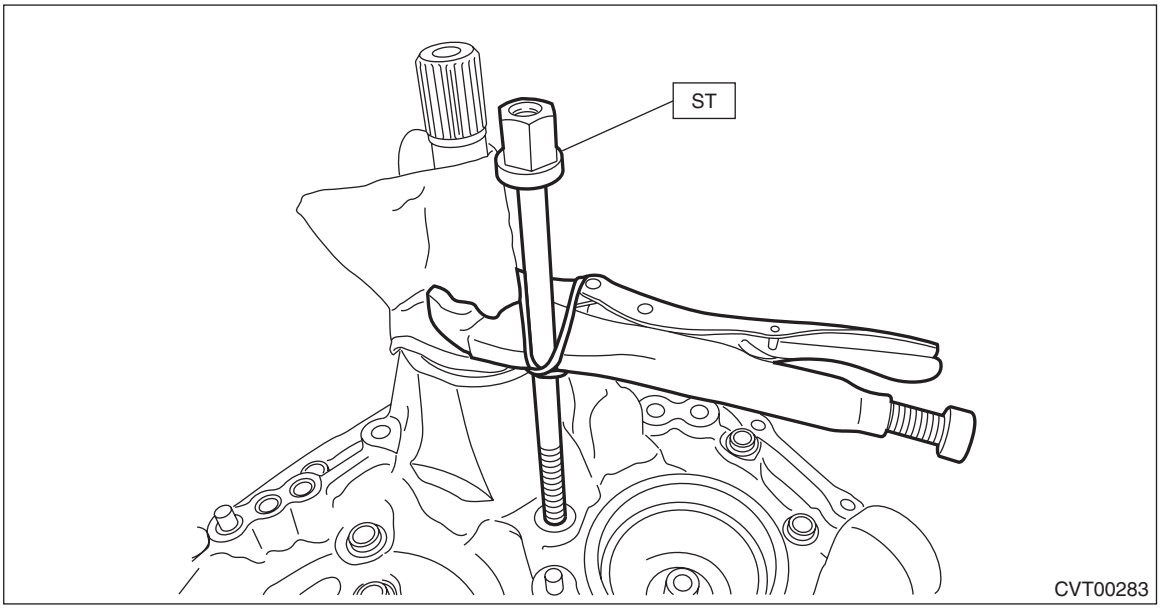

9) Check the backlash is within specification using ST1, ST2 and ST3.
ST1 498255400 PLATE
ST2 498247100 DIAL GAUGE
ST3 498247001 MAGNET BASE

Backlash:
0.13 — 0.18 mm (0.005 — 0.007 in)

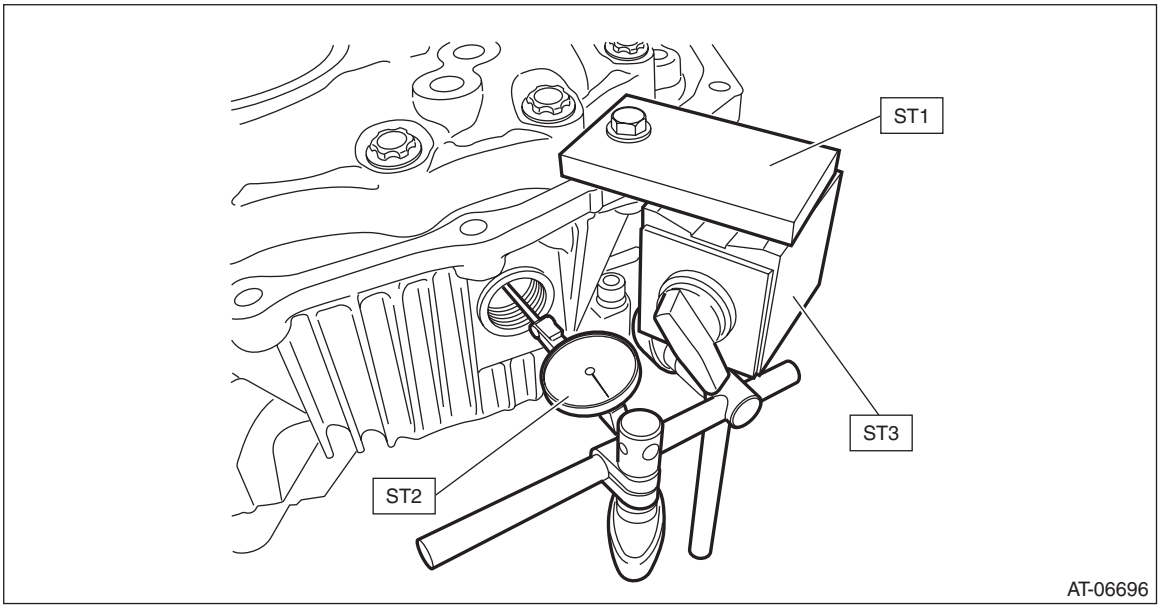

10) Adjust the teeth contact of the front differential and drive shaft. <Ref. to CVT(TH58A)-343, ADJUSTMENT, Drive Pinion Shaft Assembly.>

49.Oil Pump Chain

A: REMOVAL

1) Remove the transmission assembly from the vehicle. <Ref. to CVT(TH58A)-62, REMOVAL, Automatic Transmission Assembly.>
2) Remove the torque converter assembly. <Ref. to CVT(TH58A)-175, REMOVAL, Torque Converter Assembly.>
3) Remove the oil pump chain cover, oil pump sprocket (front) and front oil pump chain.

NOTE:
Oil pump chain cover may be hard to remove because the oil pump sprocket (front) is installed to the shaft side of the oil pump. Do not remove forcibly. Support the oil pump sprocket (front) by hand to remove.

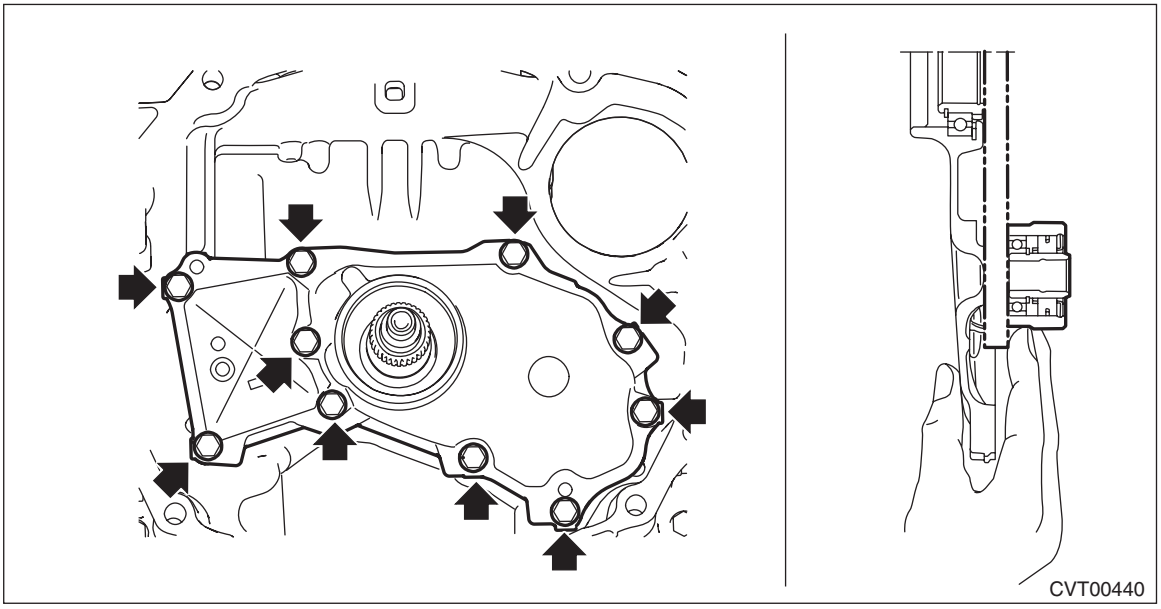

4) Remove the O-ring from the oil pump shaft.

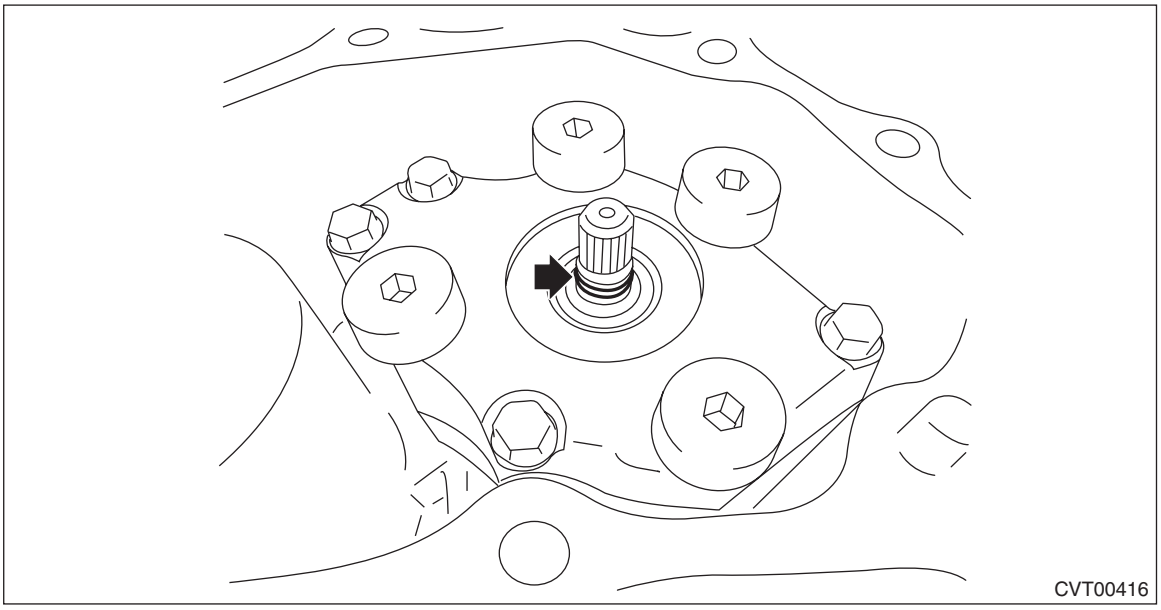

5) Remove the seal ring.

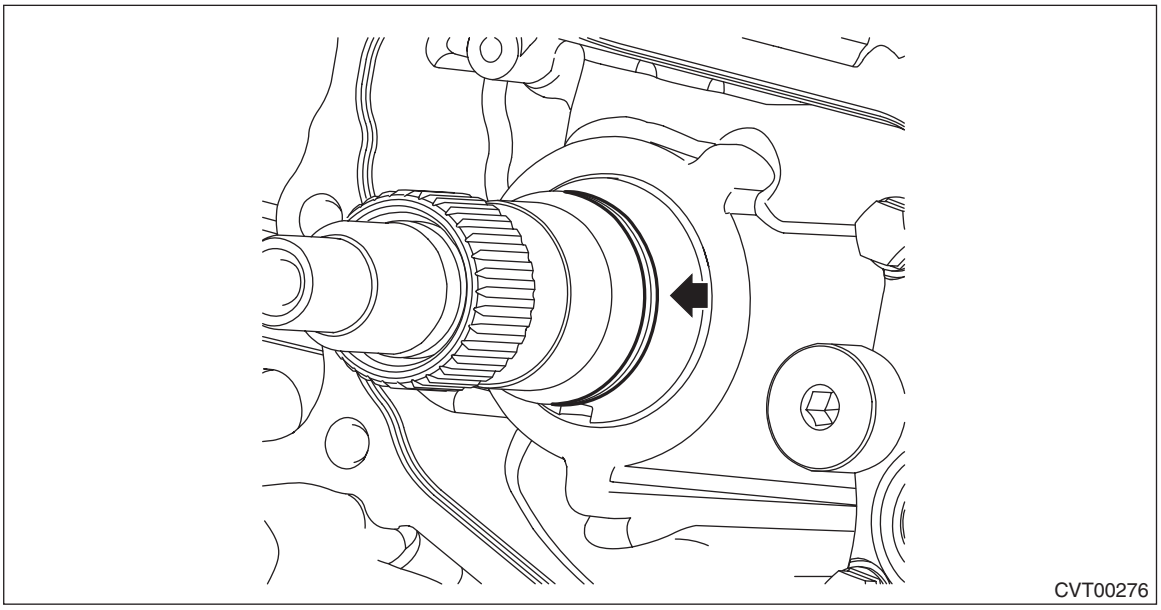

6) Remove the front oil pump chain and the oil pump sprocket (front) from the oil pump chain cover.

NOTE:
The oil pump sprocket (front) is replaced as an assembly only, because it is a non-disassembly part.

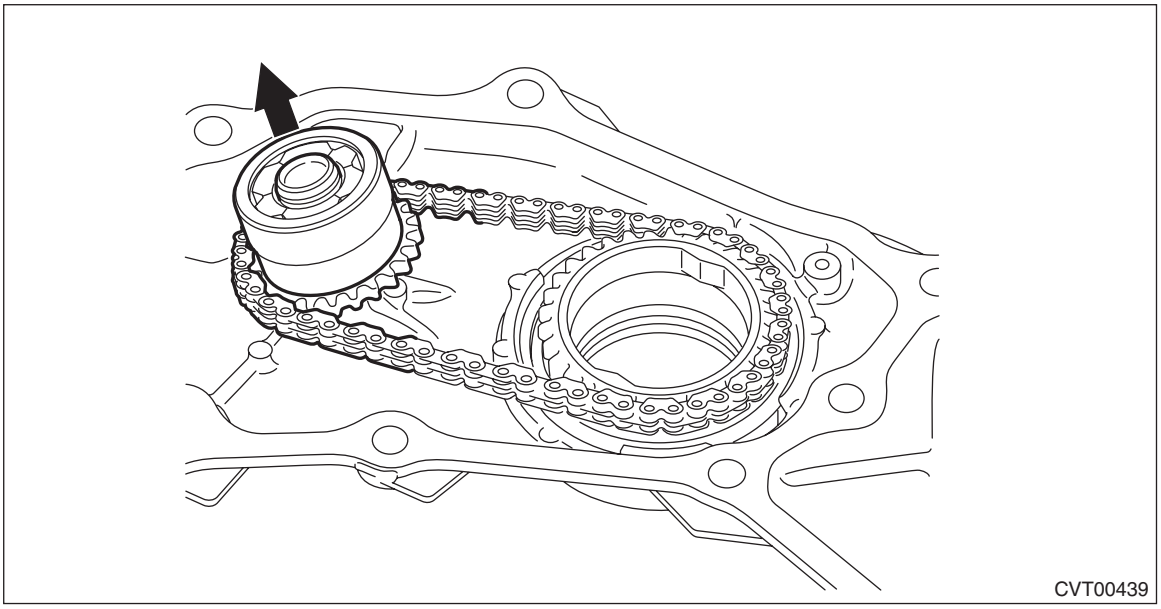

7) Remove the snap ring.

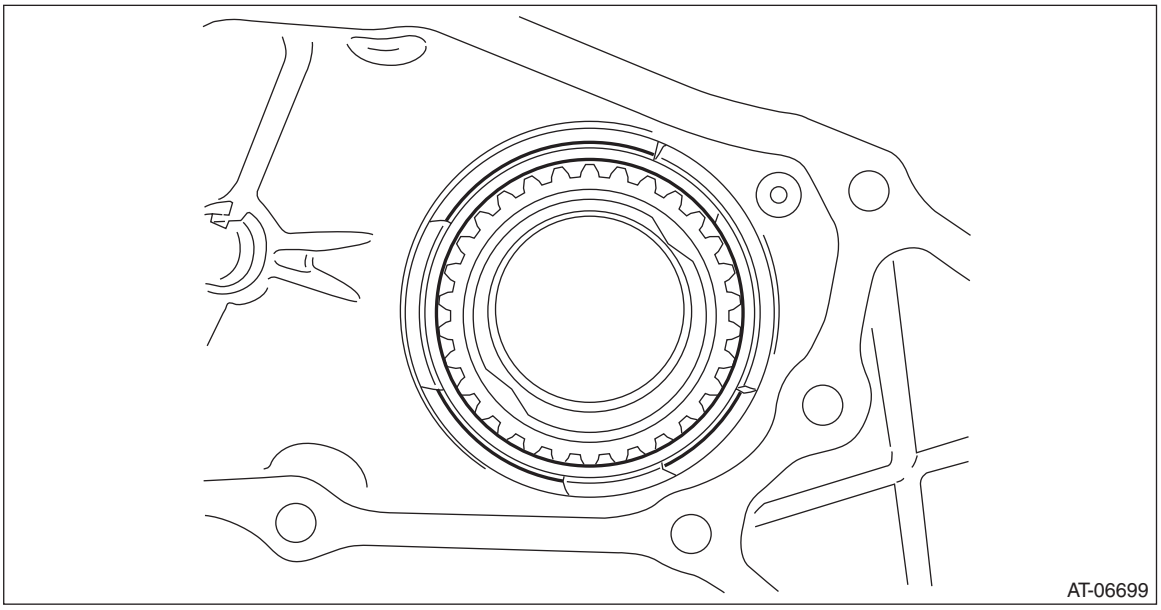

8) Remove the drive sprocket.

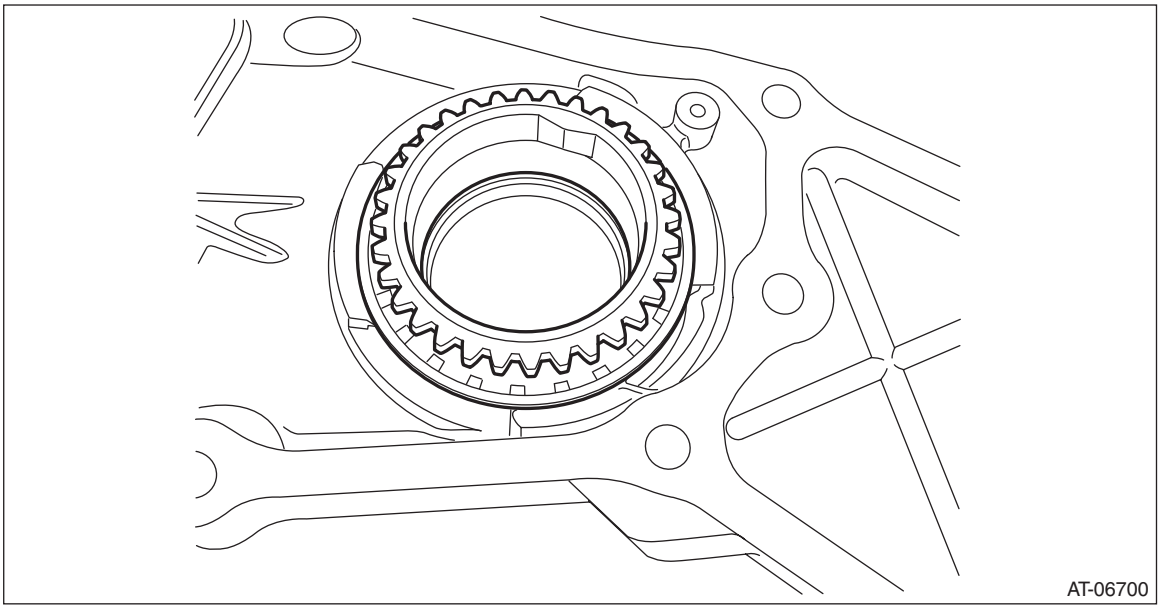

9) Remove the oil seal from the oil pump chain cover by using a screwdriver wrapped with vinyl tape, etc.

CAUTION:
Be careful not to damage the oil seal press-fitting surface.

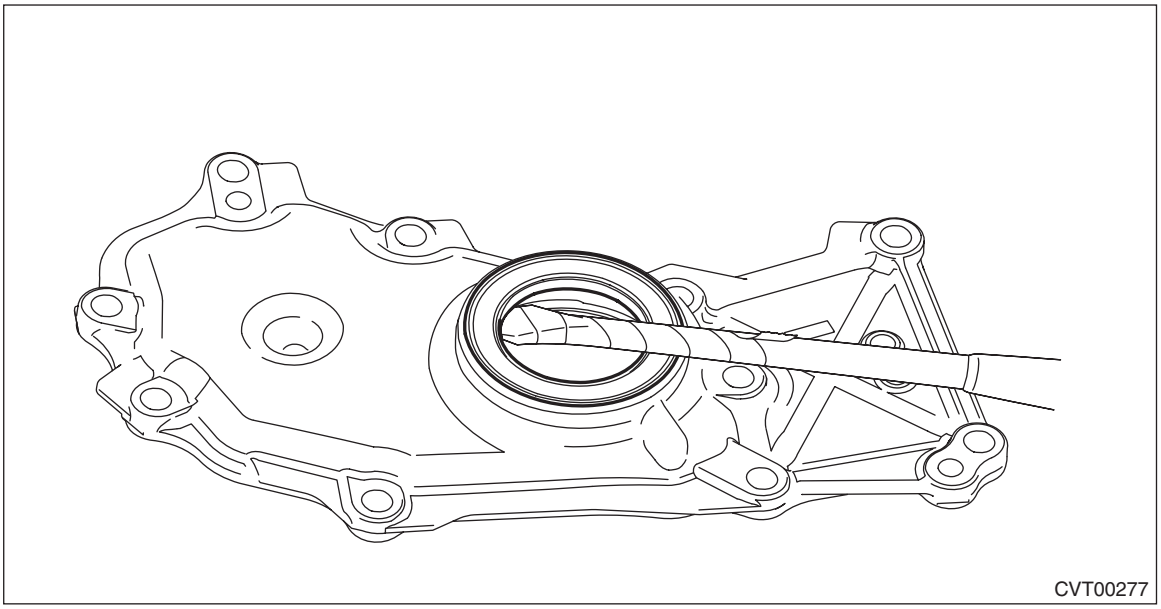

B: INSTALLATION

1) Clean the mating surface of oil pump chain cover and converter case.
2) Using the ST, install the oil seal.

NOTE:
- Use a new oil seal.
- Apply CVTF to the oil seal lip and press-fitting surface.

ST 499755602 PRESS SNAP RING

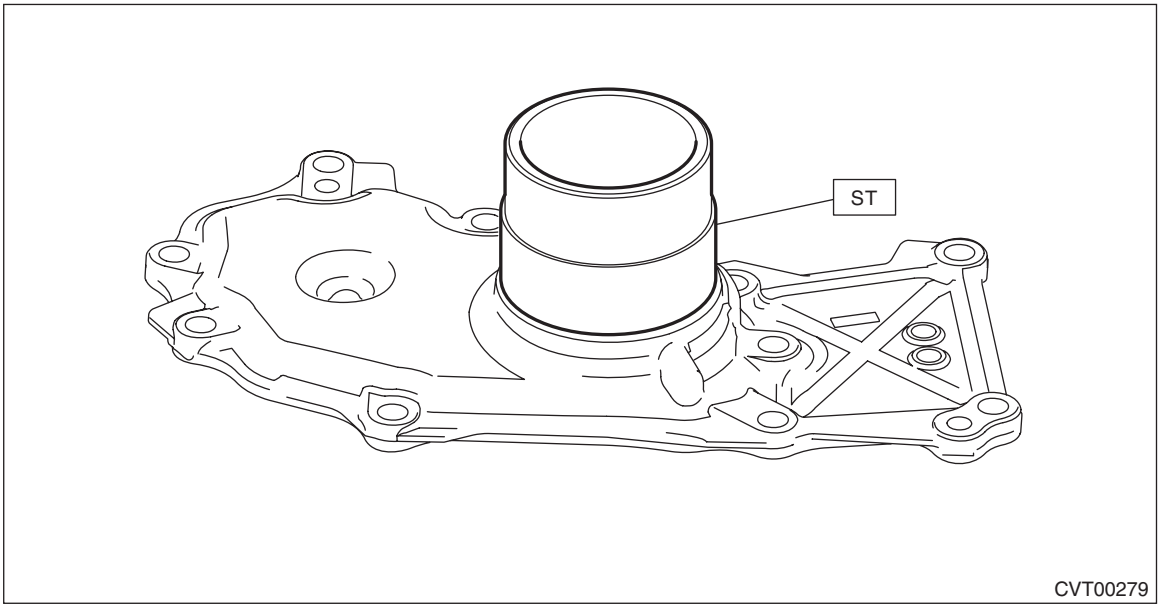

3) Install the drive sprocket.

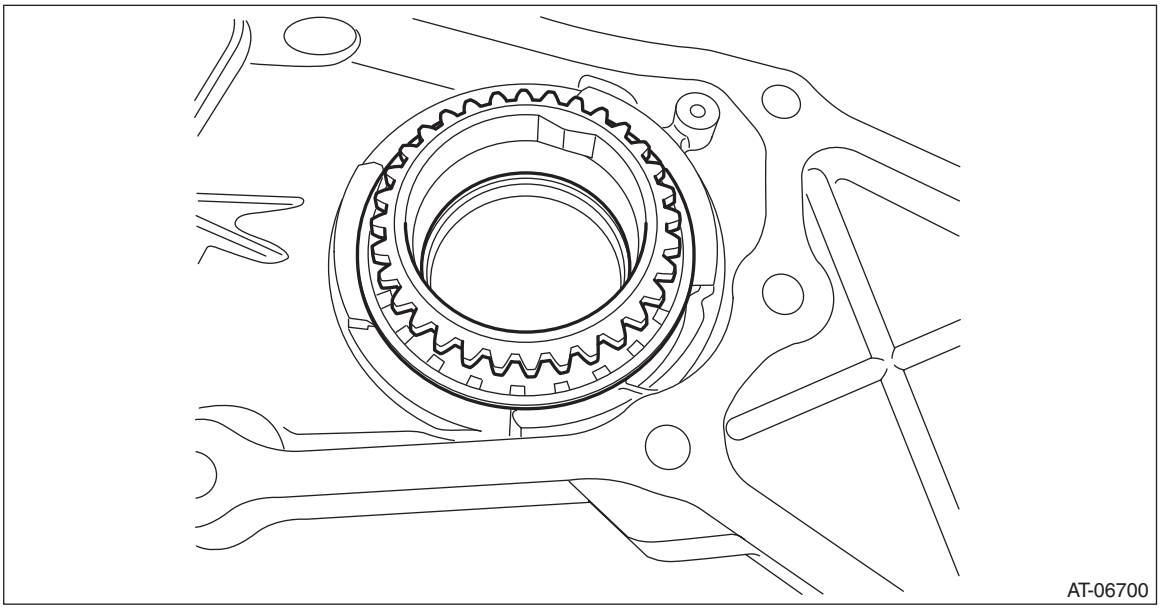

4) Install the snap ring so that its cutout portion is securely fitted into the snap ring groove of the oil pump chain cover.

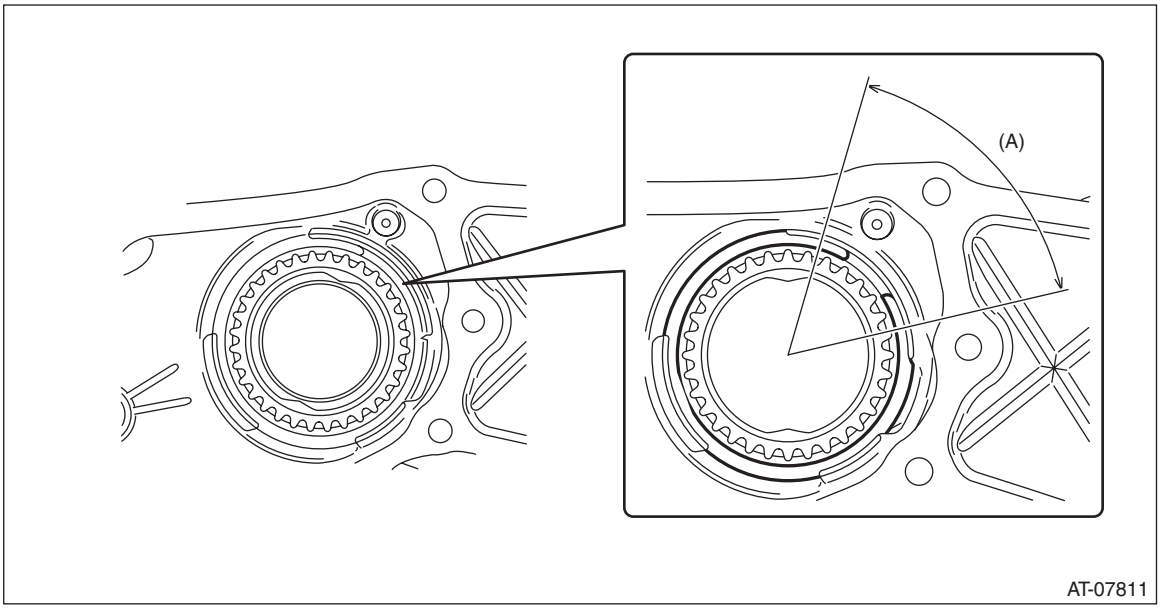

(A) Installation range of cutout portion for snap ring

5) Place the oil pump chain on drive sprocket.

6) Place the front oil pump chain on the oil pump sprocket (front) and install the oil pump sprocket (front) to oil pump chain cover.

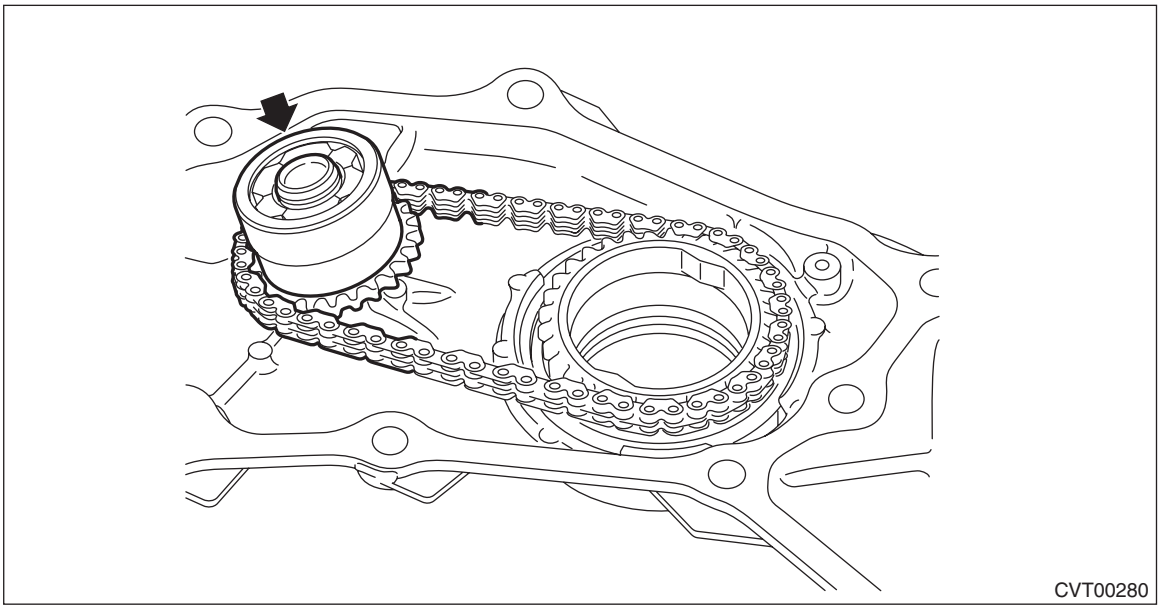

7) When replacing the oil pump sprocket (front) and the oil pump chain cover, select the oil pump shaft. <Ref. to CVT(TH58A)-384, ADJUSTMENT, Oil Pump.>
8) Install the seal ring.

NOTE:
- Use a new seal ring.
- Apply CVTF to the seal rings.
- When installing the seal ring, do not expand the seal ring too much.

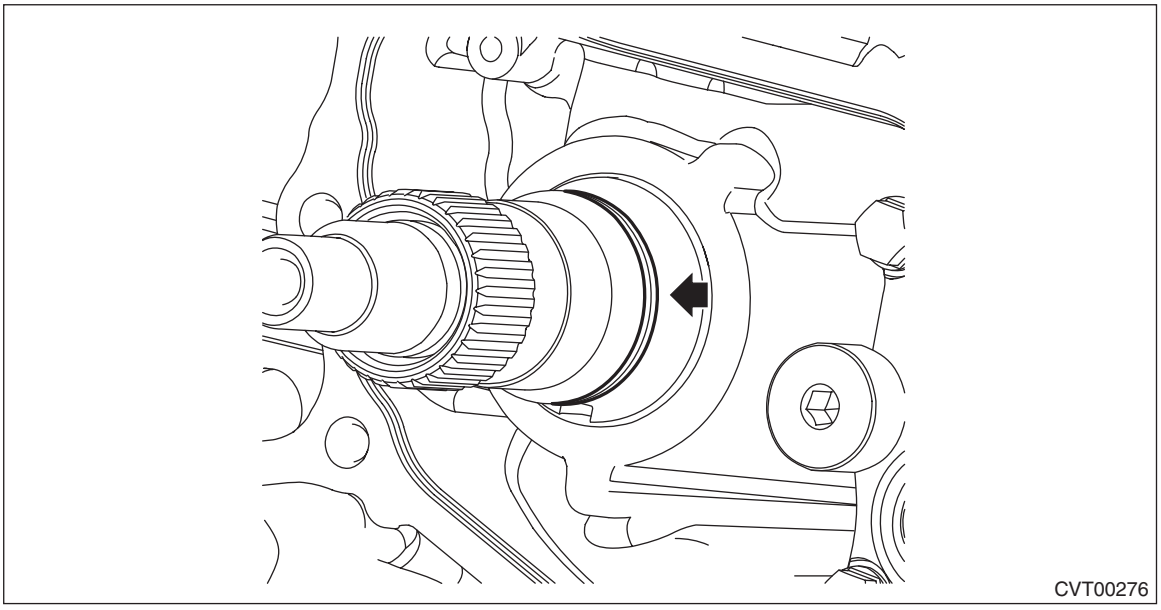

9) Install the O-ring to the oil pump shaft.

NOTE:
- Use new O-rings.
- Apply CVTF to the O-ring.

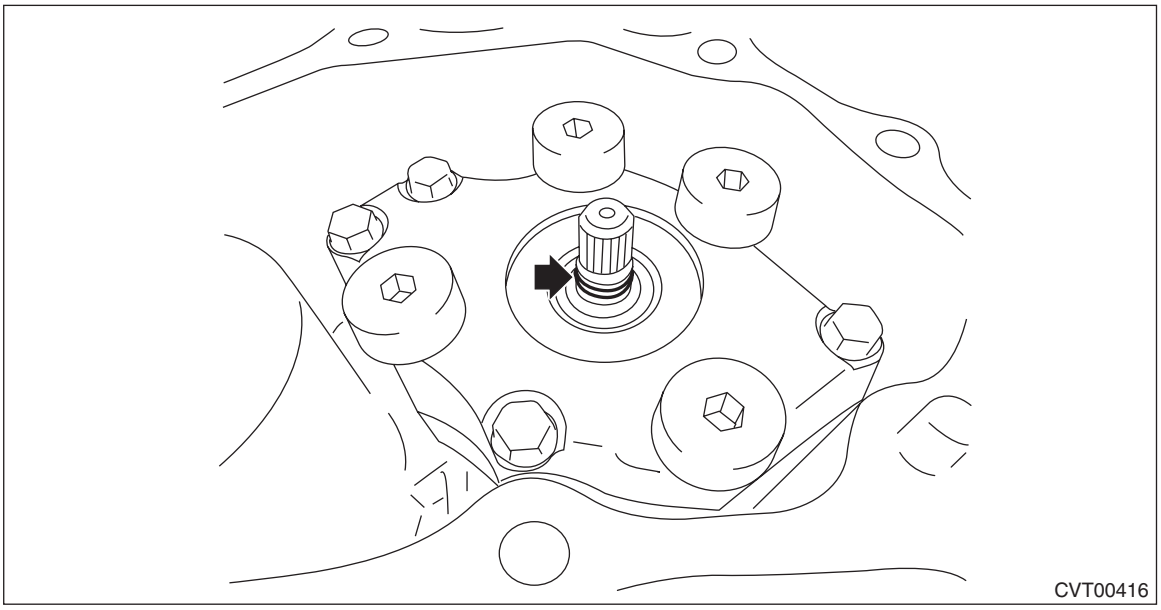

10) Apply liquid gasket seamlessly to the mating surface of oil pump chain cover.

CAUTION:
Do not apply liquid gasket at the arrowed hole.

Liquid gasket:
THREE BOND 1215 (Part No. 004403007) or equivalent

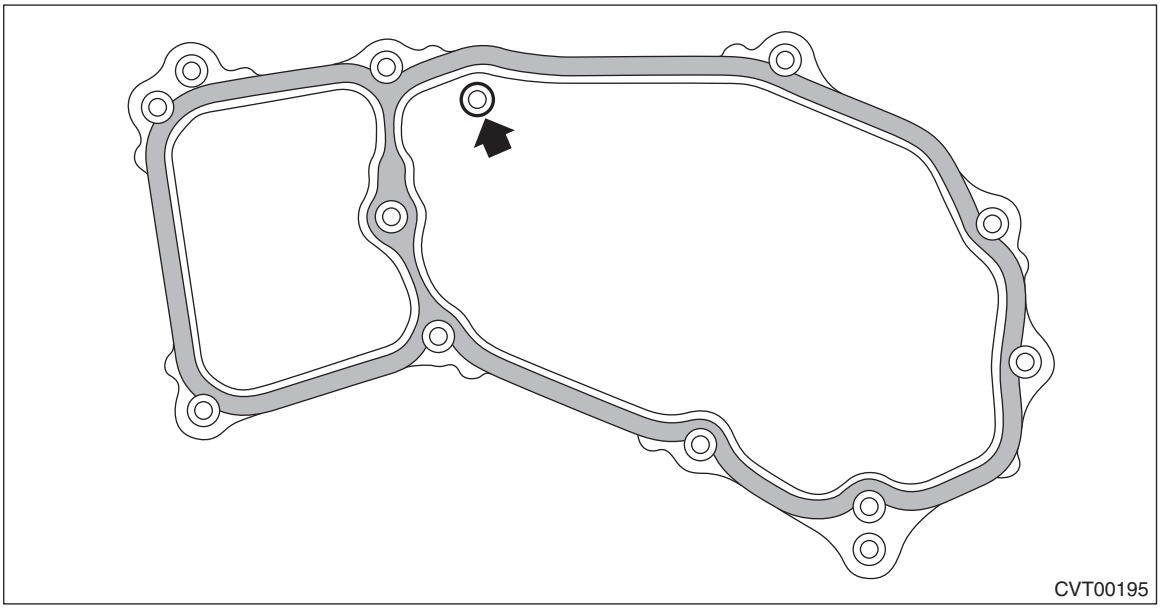

11) Install the oil pump chain cover.

Tightening torque:
21 N·m (2.1 kgf-m, 15.5 ft-lb)

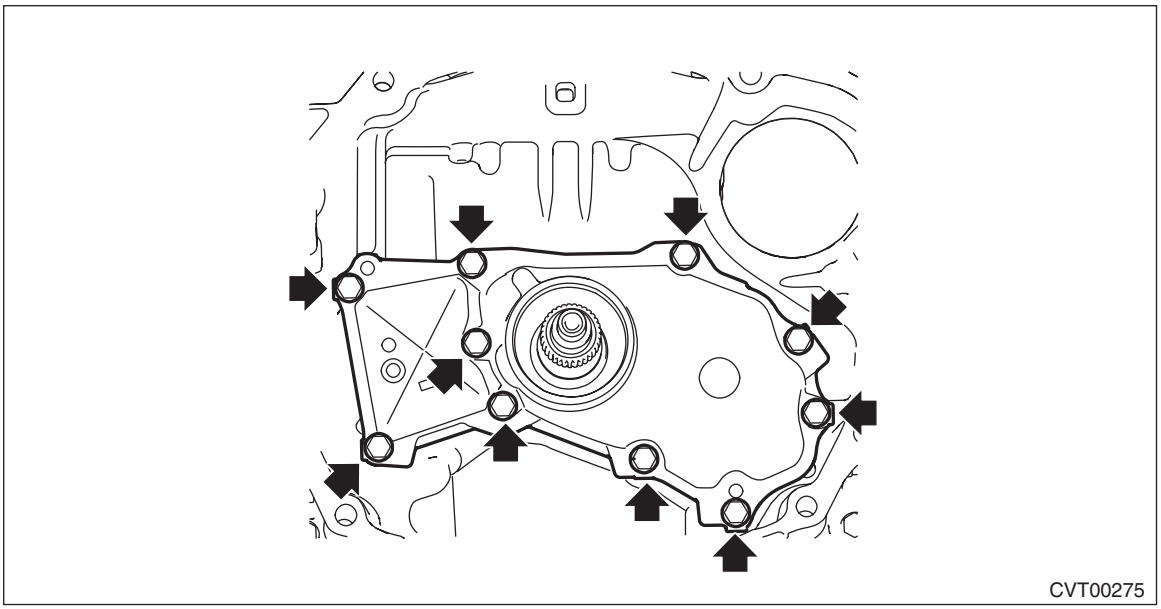
CVT00275

12) Install the torque converter assembly. <Ref. to CVT(TH58A)-176, INSTALLATION, Torque Converter Assembly.>
13) Install the transmission assembly to the vehicle. <Ref. to CVT(TH58A)-76, INSTALLATION, Automatic Transmission Assembly.>

C: DISASSEMBLY

1. DRIVE SPROCKET

1) Remove the snap ring.

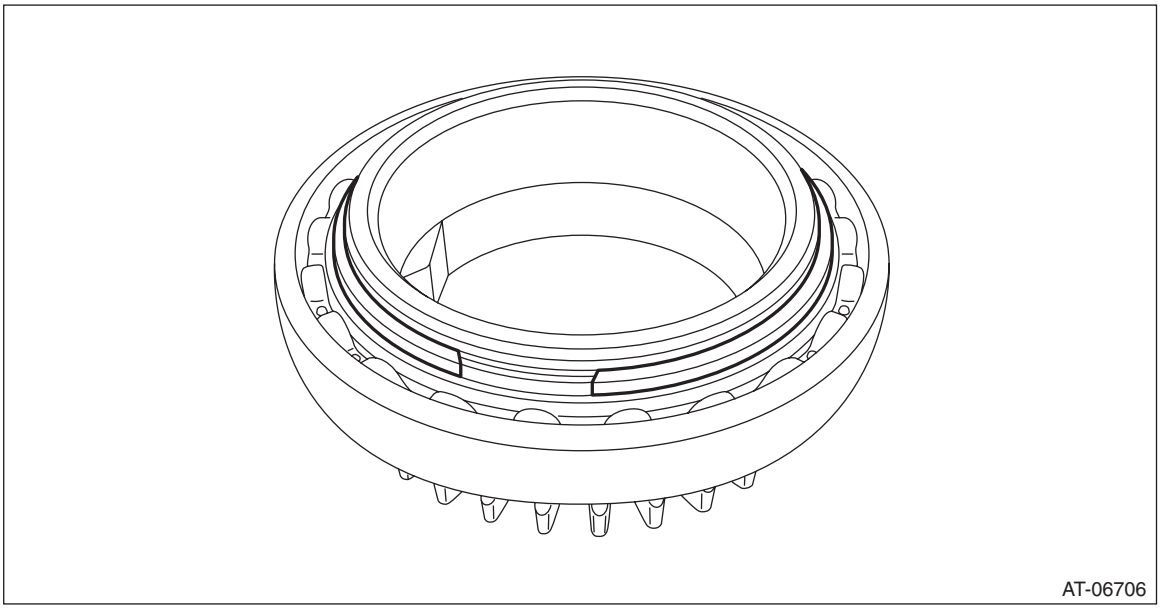
AT-06706

2) Remove the ball bearing using ST.
ST1 498077600 REMOVER
ST2 399513600 INSTALLER

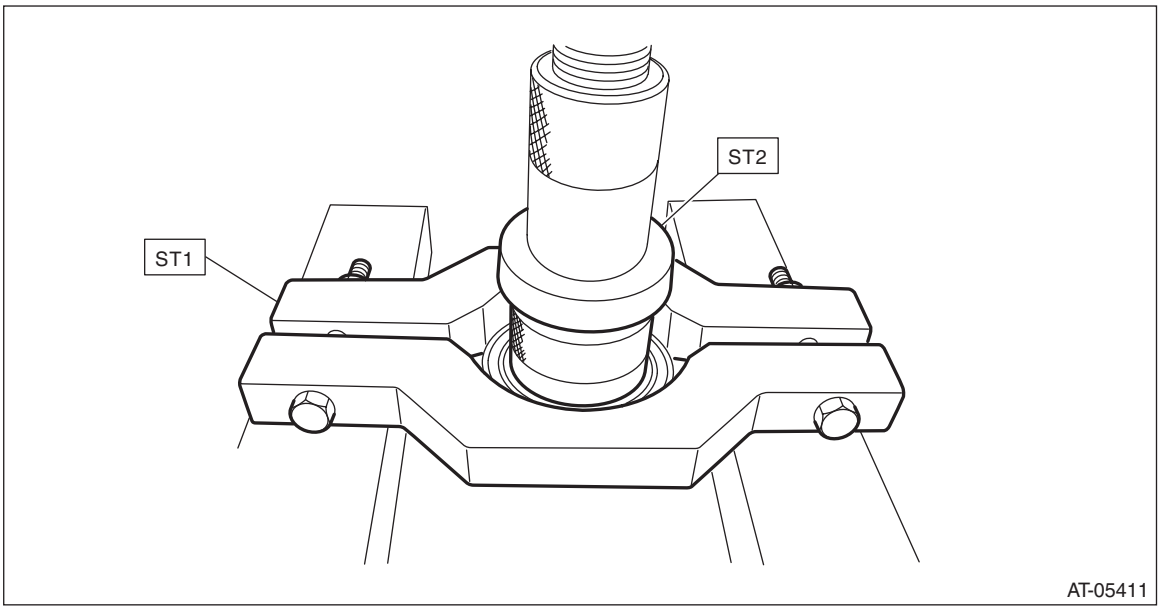

D: ASSEMBLY

1. DRIVE SPROCKET

1) Using the ST, install the ball bearing.

NOTE:
Use a new ball bearing.
ST 499755502 PRESS SNAP RING

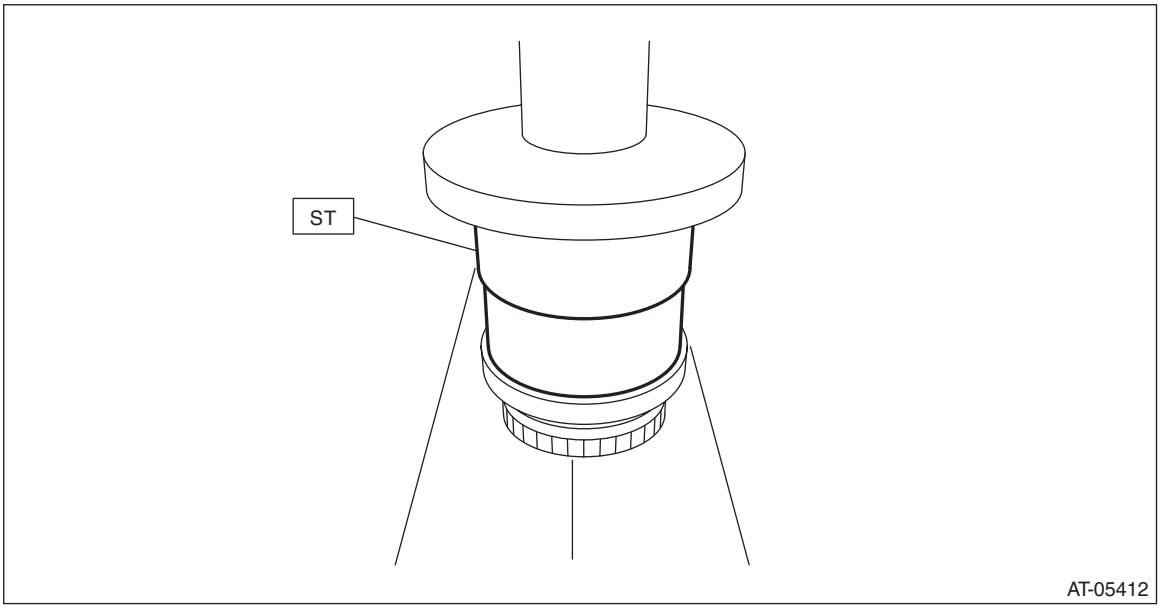

2) Install the snap ring.

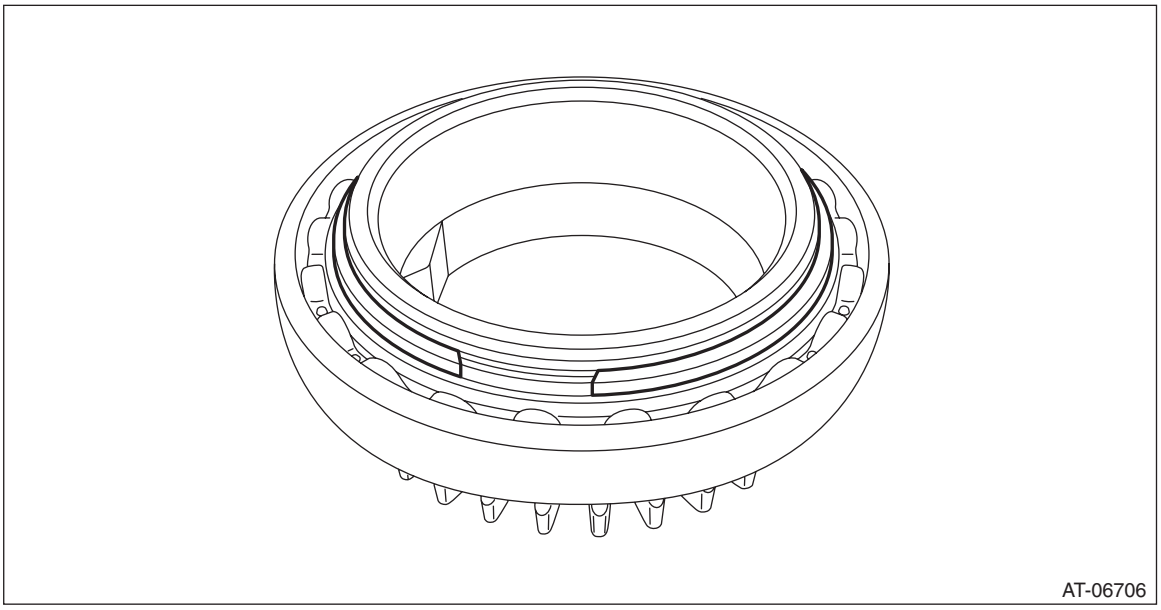

E: INSPECTION

- Check the front oil pump chain for damage.
- Replace if gear teeth are broken, damaged, sharpen or excessively worn.
- Check the bearing for seizure or wear.
- Apply CVTF to bearing and rotate the bearing to check for noise or dragging etc.
- Check the oil pump chain cover for damage.
- Check for leakage of CVTF from the mating surface of oil pump chain cover.
- Check the oil seal for damage.
- Check the one-way clutch of the oil pump sprocket (front).

Secure the inner race, and check that the sprocket locks clockwise and rotates counterclockwise.

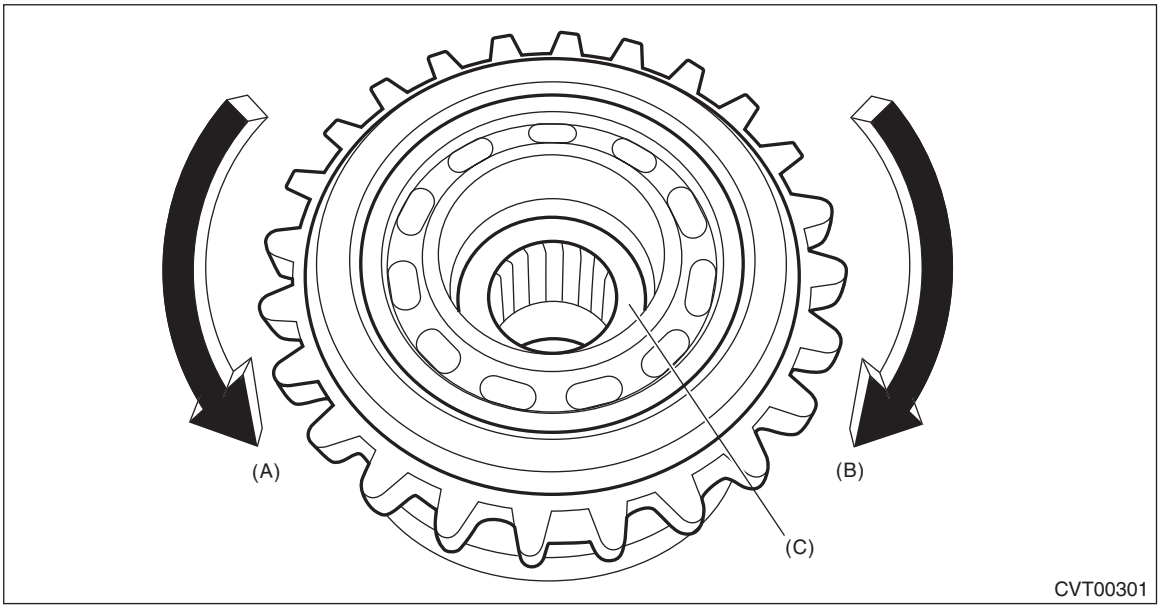

(A) Rotates freely
(B) Locked
(C) Inner race

50.Oil Pump

A: REMOVAL

1) Remove the transmission assembly from the vehicle. <Ref. to CVT(TH58A)-62, REMOVAL, Automatic Transmission Assembly.>
2) Remove the torque converter assembly. <Ref. to CVT(TH58A)-175, REMOVAL, Torque Converter Assembly.>
3) Remove the oil pump chain cover. <Ref. to CVT(TH58A)-370, REMOVAL, Oil Pump Chain.>
4) Remove the oil pump and the plate.

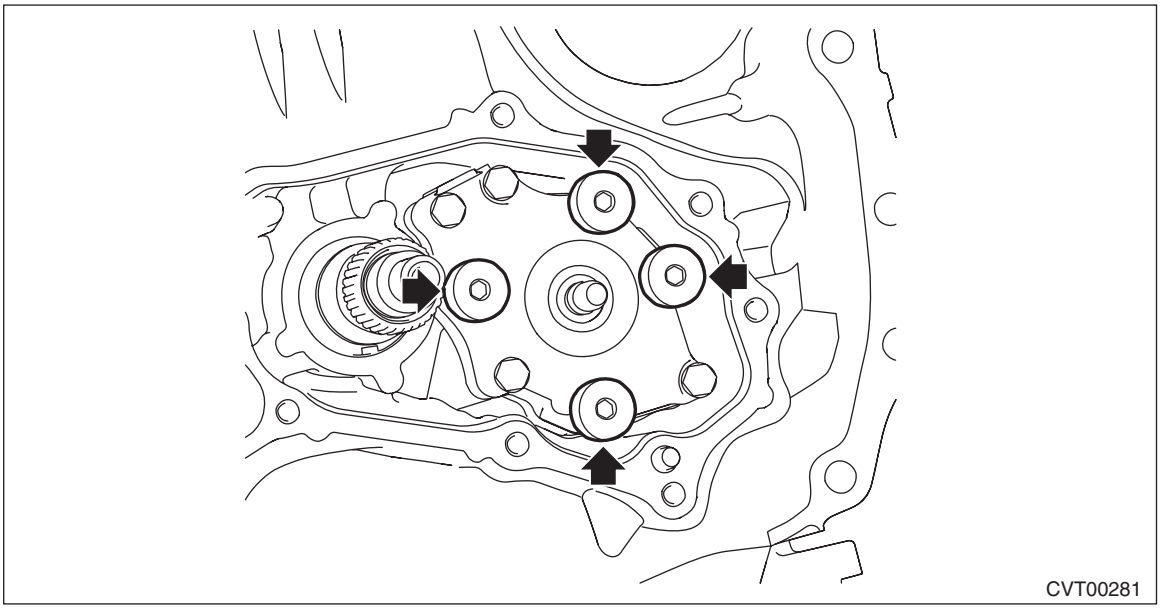
CVT00281

5) Remove the O-ring from the oil pump shaft.

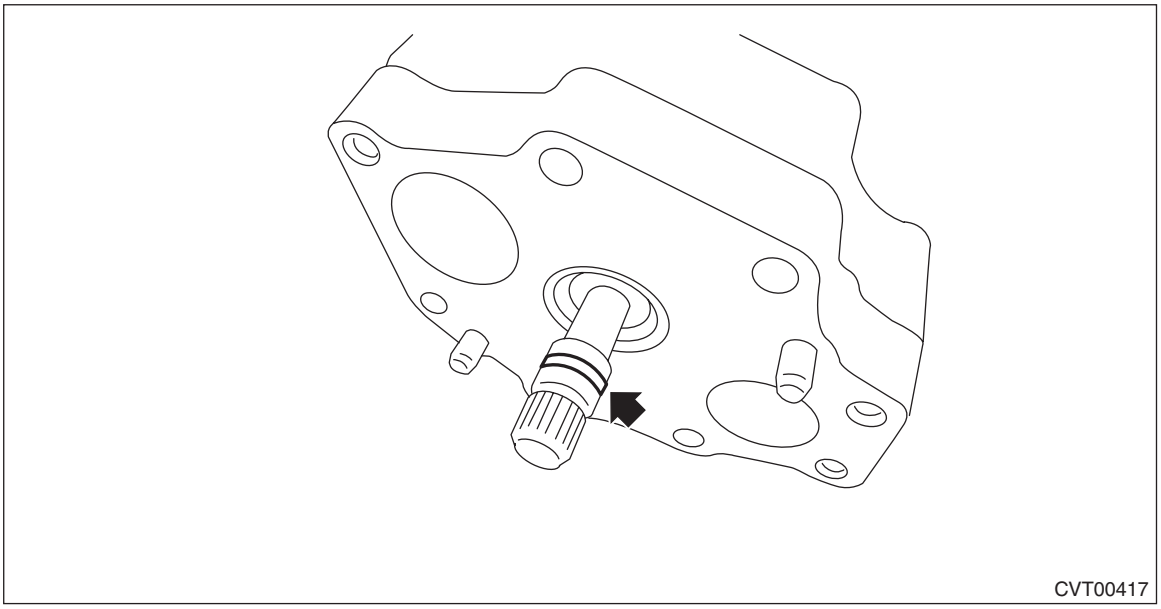
CVT00417

6) Remove the O-ring.

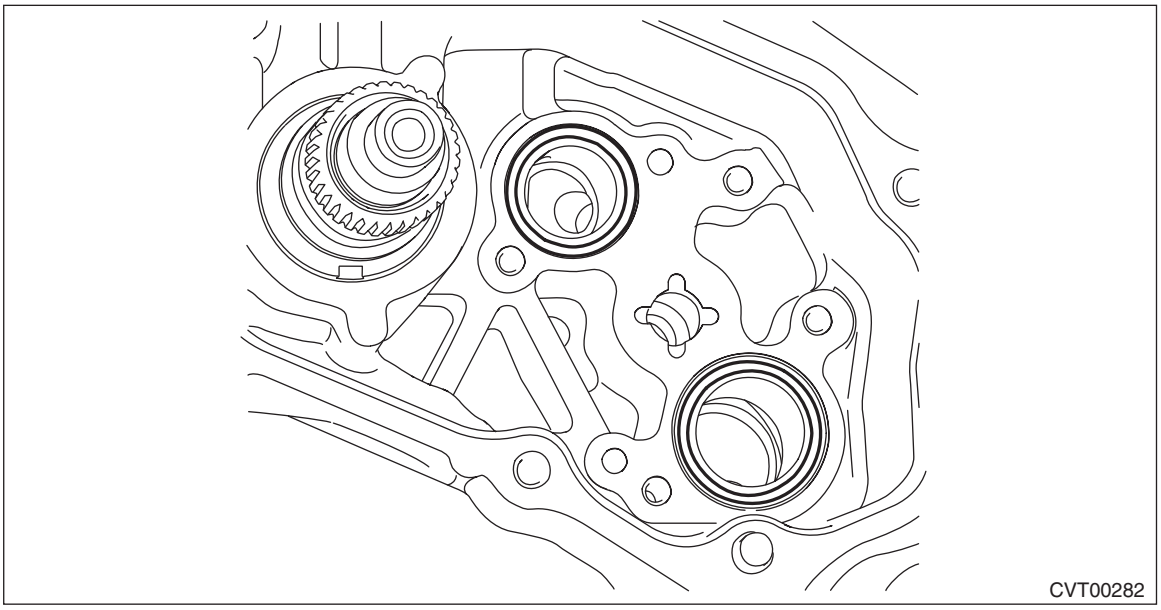

B: INSTALLATION

1) Install the plate and the oil pump.

NOTE:
Apply CVTF to the bolt.

Tightening torque:
8.5 N·m (0.9 kgf-m, 6.3 ft-lb)

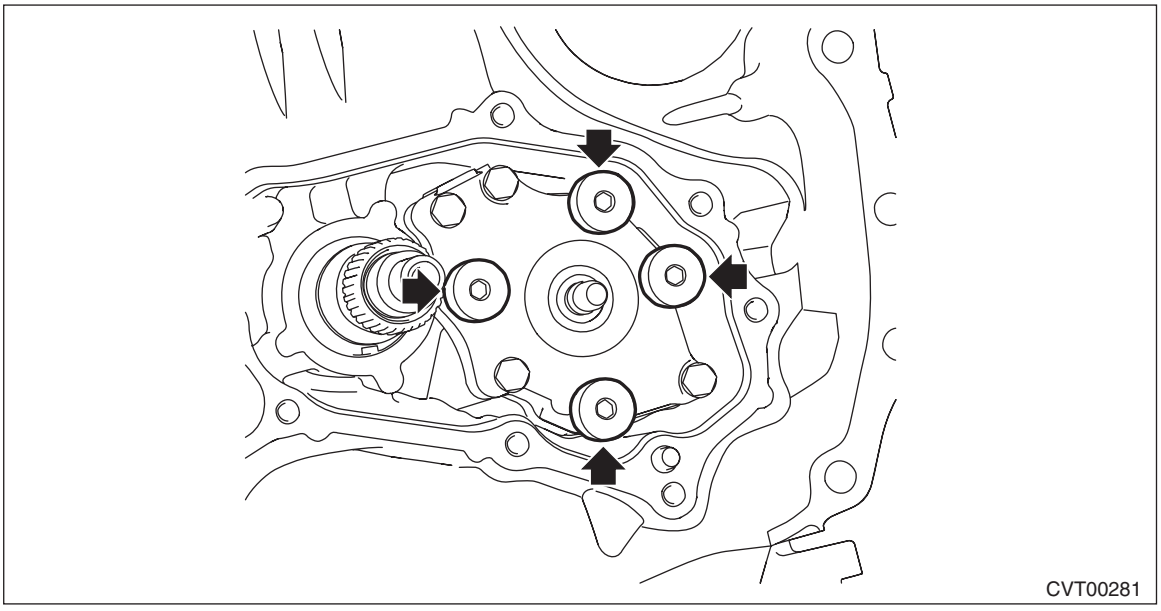

2) Select the oil pump shaft. <Ref. to CVT(TH58A)-384, ADJUSTMENT, Oil Pump.>
3) Remove the oil pump.
4) Install the O-ring.

NOTE:
- Use new O-rings.
- Apply CVTF to the O-ring.

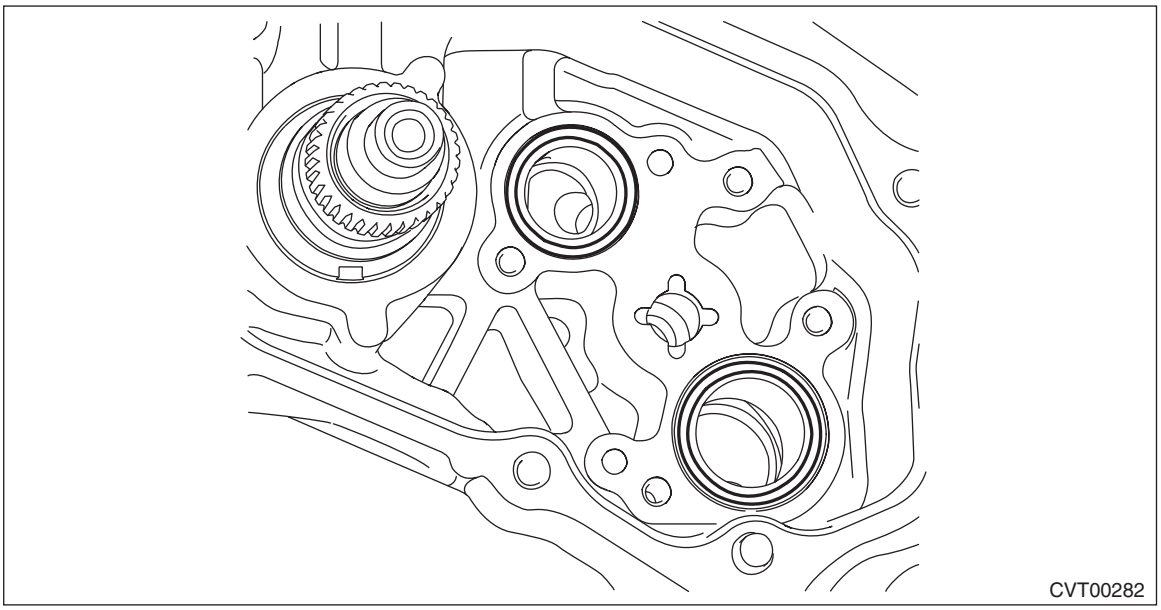
CVT00282

5) Install the O-ring to the oil pump shaft.

NOTE:
- Use new O-rings.
- Apply CVTF to the O-ring.

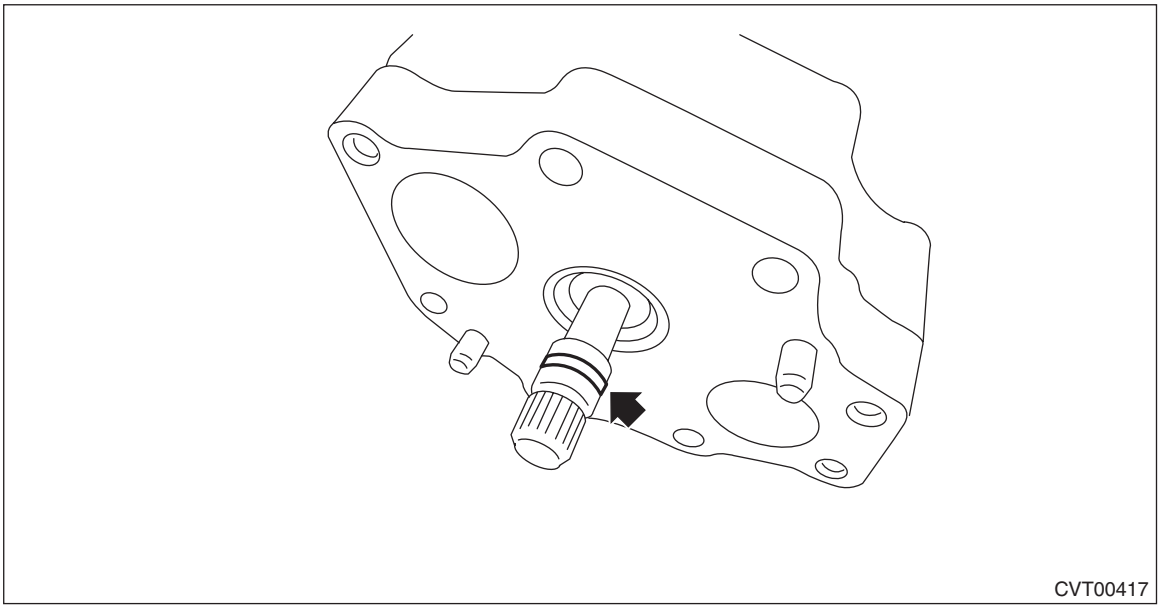
CVT00417

6) Install the plate and the oil pump.

NOTE:
Apply CVTF to the bolt.

Tightening torque:
8.5 N·m (0.9 kgf-m, 6.3 ft-lb)

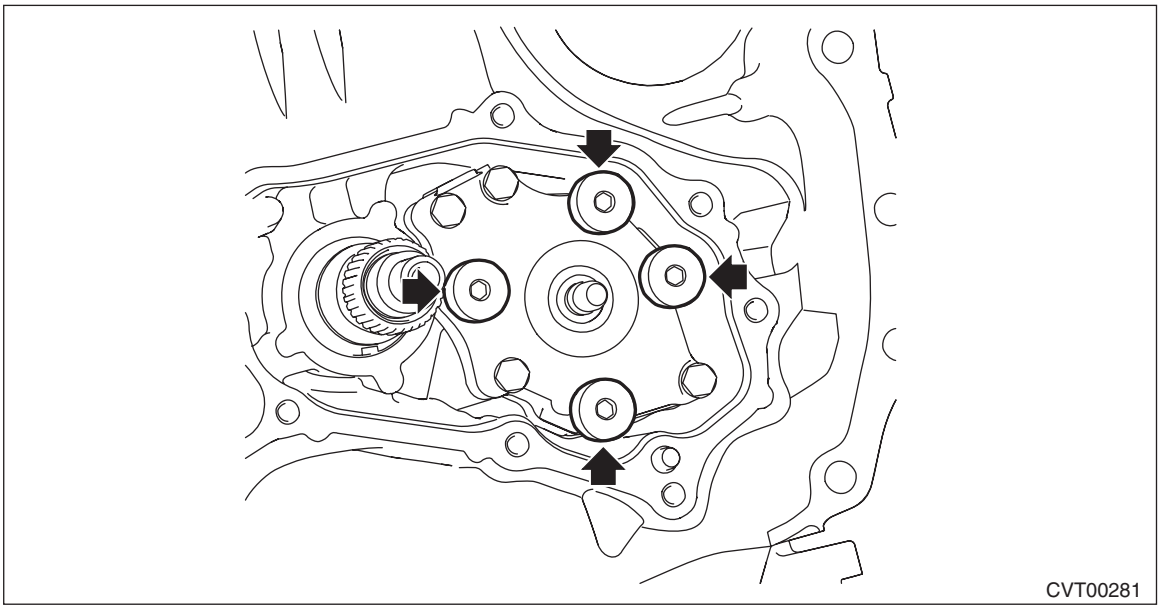

7) Install the oil pump chain cover. <Ref. to CVT(TH58A)-373, INSTALLATION, Oil Pump Chain.>
8) Install the selected oil pump shaft, and assemble the transmission assembly. <Ref. to CVT(TH58A)-288, INSTALLATION, Reverse Brake Assembly.>
9) Install the torque converter assembly. <Ref. to CVT(TH58A)-176, INSTALLATION, Torque Converter Assembly.>
10) Install the transmission assembly to the vehicle. <Ref. to CVT(TH58A)-76, INSTALLATION, Automatic Transmission Assembly.>

C: INSPECTION

Check the following items.
- Check the oil pump for damage and wear.
- Rotate the oil pump by hand, and check that it rotates smoothly.

1) Measure the secondary pressure. <Ref. to CVT(TH58A)-54, INSPECTION, Secondary Pressure (Line Pressure) Test.>
2) Remove the oil pan and oil strainer. <Ref. to CVT(TH58A)-114, REMOVAL, Control Valve Body.>
3) Check oil strainer for clogging.
When oil strainer has no clogging, replace the oil pump.

D: ADJUSTMENT

1) Remove the reverse brake assembly. <Ref. to CVT(TH58A)-285, REMOVAL, Reverse Brake Assembly.>
2) Install the oil pump sprocket rear to the reverse brake housing.

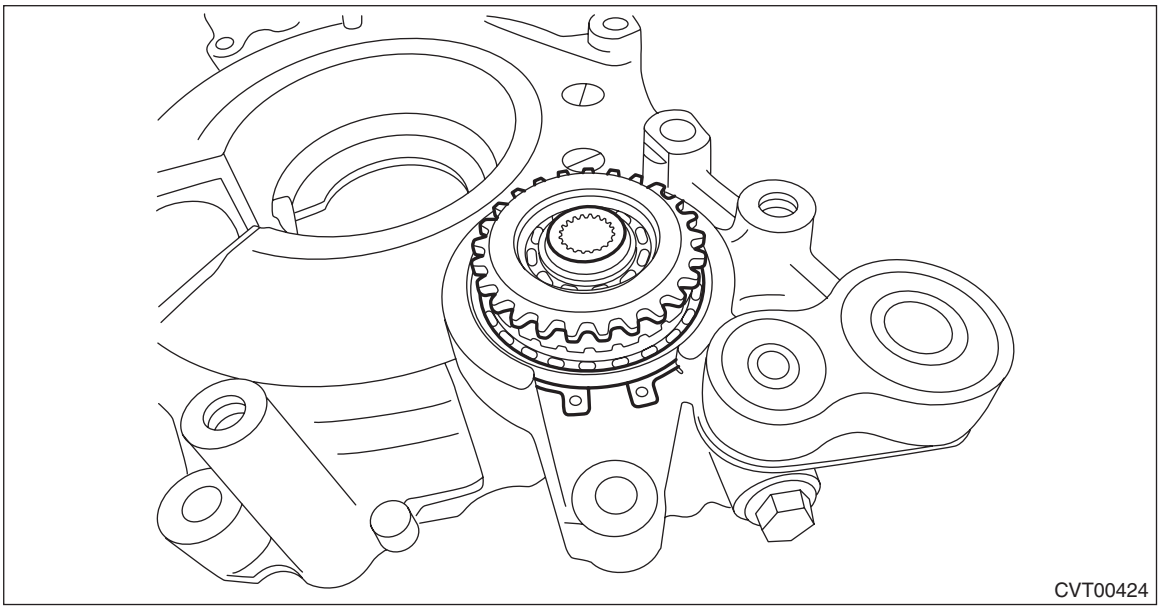
CVT00424

3) Measure the height “A” from the drive pinion retainer to the oil pump.

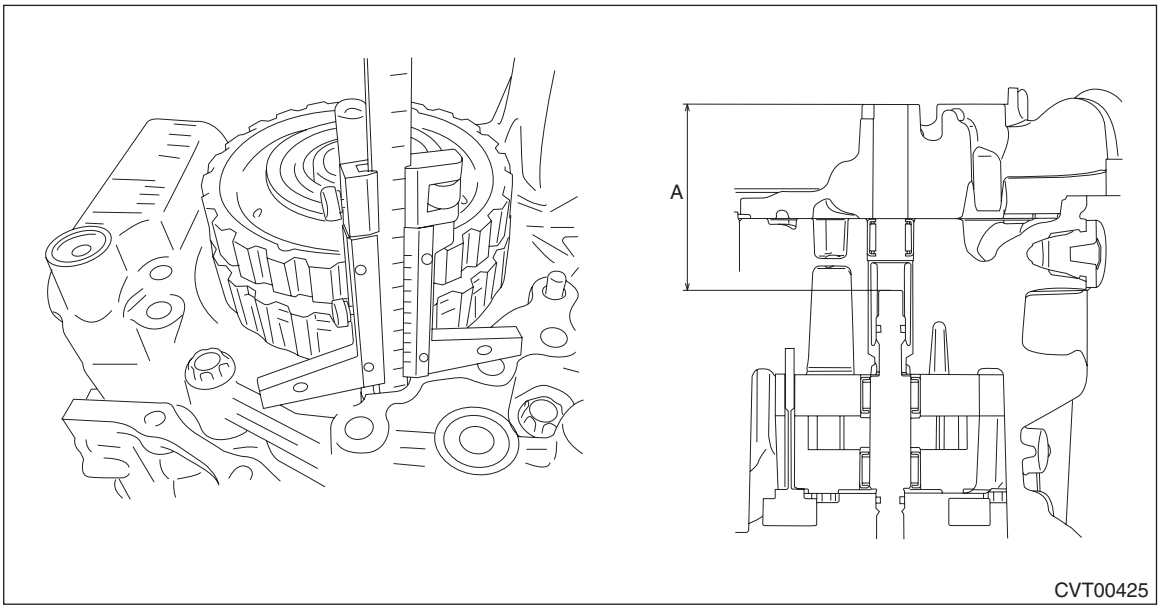

CVT00425

4) Measure the depth “B” from the mating surface of the reverse brake housing and the drive pinion retainer to the oil pump sprocket rear inner race.

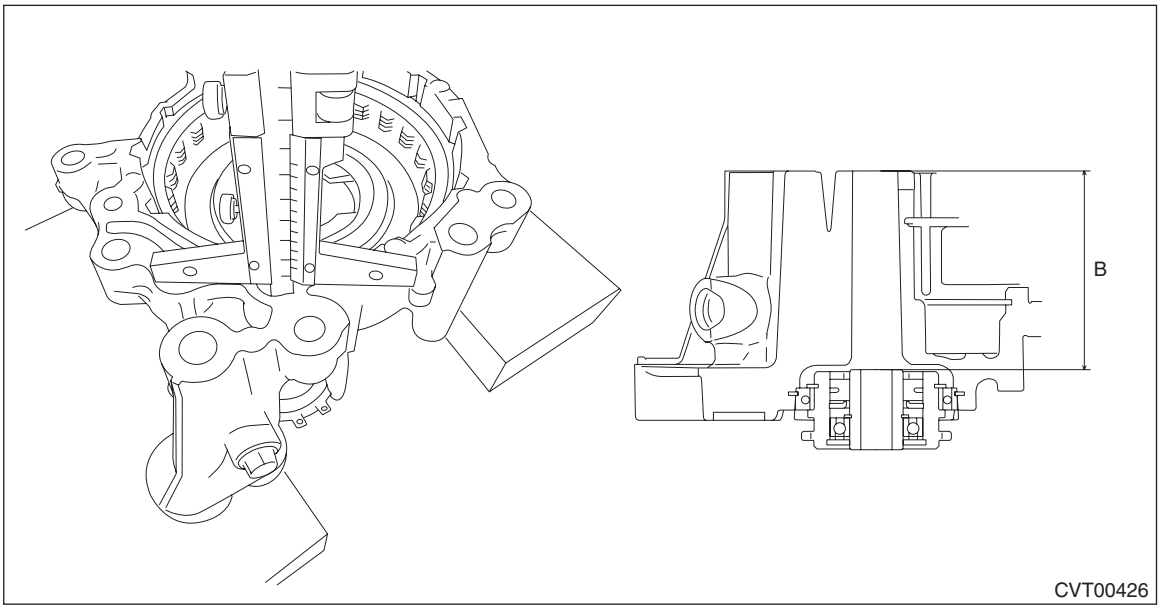

5) Calculate the following formula and select the oil pump shaft.
T mm = A + B
[T in = A + B]
T: Distance from oil pump to oil pump sprocket rear inner race
A: Height from reverse brake housing mating surface to oil pump
B: Depth from drive pinion retainer mating surface to oil pump sprocket rear inner race

T mm (in)	Part No.
141.6 — 141.8(5.575 — 5.583)	31359AA220
141.8 — 142.0(5.583 — 5.591)	31359AA230
142.0 — 142.2(5.591 — 5.598)	31359AA240
142.2 — 142.4(5.598 — 5.606)	31359AA250
142.4 — 142.6(5.606 — 5.614)	31359AA260
142.6 — 142.8(5.614 — 5.622)	31359AA270
142.8 — 143.0(5.622 — 5.630)	31359AA280
143.0 — 143.2(5.630 — 5.638)	31359AA290

51.Converter Case

A: REMOVAL

1) Remove the transmission assembly from the vehicle. <Ref. to CVT(TH58A)-62, REMOVAL, Automatic Transmission Assembly.>
2) Remove the air breather hose. <Ref. to CVT(TH58A)-169, REMOVAL, Air Breather Hose.>
3) Remove the transmission harness. <Ref. to CVT(TH58A)-141, REMOVAL, Transmission Harness.>
4) Remove the main control valve body. <Ref. to CVT(TH58A)-114, REMOVAL, Control Valve Body.>
5) Remove the turbine speed sensor. <Ref. to CVT(TH58A)-103, REMOVAL, Turbine Speed Sensor.>
6) Remove the secondary speed sensor. <Ref. to CVT(TH58A)-105, REMOVAL, Secondary Speed Sensor.>
7) Remove the front wheel speed sensor. <Ref. to CVT(TH58A)-107, REMOVAL, Front Wheel Speed Sensor.>
8) Remove the inhibitor switch. <Ref. to CVT(TH58A)-99, REMOVAL, Inhibitor Switch.>
9) Remove the extension case. <Ref. to CVT(TH58A)-179, REMOVAL, Extension Case.>
10) Remove the transfer clutch assembly. <Ref. to CVT(TH58A)-183, REMOVAL, Transfer Clutch.>
11) Remove the transfer driven gear assembly. <Ref. to CVT(TH58A)-197, REMOVAL, Transfer Driven Gear.>
12) Remove the transfer drive gear assembly. <Ref. to CVT(TH58A)-200, REMOVAL, Transfer Drive Gear.>
13) Remove the parking pawl. <Ref. to CVT(TH58A)-205, REMOVAL, Parking Pawl.>
14) Remove the oil pan and oil strainer. <Ref. to CVT(TH58A)-111, REMOVAL, Oil Pan and Strainer.>
15) Remove the transmission control device. <Ref. to CVT(TH58A)-208, REMOVAL, Transmission Control Device.>
16) Remove the drive motor assembly. <Ref. to CVT(TH58A)-208, REMOVAL, Transmission Control Device.>
17) Remove the output clutch assembly. <Ref. to CVT(TH58A)-226, Output Clutch Assembly.>
18) Remove the transmission case. <Ref. to CVT(TH58A)-243, REMOVAL, Transmission Case.>
19) Remove the reduction drive gear. <Ref. to CVT(TH58A)-256, REMOVAL, Reduction Drive Gear.>
20) Remove the primary pulley, secondary pulley and variator chain. <Ref. to CVT(TH58A)-261, REMOVAL, Primary Pulley and Secondary Pulley.>
21) Remove the reverse brake assembly. <Ref. to CVT(TH58A)-285, REMOVAL, Reverse Brake Assembly.>
22) Remove the forward clutch assembly. <Ref. to CVT(TH58A)-301, REMOVAL, Forward Clutch Assembly.>
23) Remove the drive pinion shaft assembly. <Ref. to CVT(TH58A)-321, REMOVAL, Drive Pinion Shaft Assembly.>
24) Remove the front differential assembly. <Ref. to CVT(TH58A)-350, REMOVAL, Front Differential Assembly.>
25) Remove the oil pump chain cover. <Ref. to CVT(TH58A)-370, REMOVAL, Oil Pump Chain.>
26) Remove the oil pump. <Ref. to CVT(TH58A)-380, REMOVAL, Oil Pump.>

B: INSTALLATION

1) Install the oil pump. <Ref. to CVT(TH58A)-381, INSTALLATION, Oil Pump.>
2) Install the oil pump chain cover. <Ref. to CVT(TH58A)-373, INSTALLATION, Oil Pump Chain.>
3) Install the front differential assembly. <Ref. to CVT(TH58A)-352, INSTALLATION, Front Differential Assembly.>
4) Install the drive pinion shaft assembly. <Ref. to CVT(TH58A)-322, INSTALLATION, Drive Pinion Shaft Assembly.>
5) Select the oil pump shaft. <Ref. to CVT(TH58A)-384, ADJUSTMENT, Oil Pump.>
6) Install the forward clutch assembly. <Ref. to CVT(TH58A)-304, INSTALLATION, Forward Clutch Assembly.>
7) Install the reverse brake assembly. <Ref. to CVT(TH58A)-288, INSTALLATION, Reverse Brake Assembly.>
8) Install the primary pulley, secondary pulley and variator chain. <Ref. to CVT(TH58A)-269, INSTALLATION, Primary Pulley and Secondary Pulley.>
9) Install the transmission case. <Ref. to CVT(TH58A)-246, INSTALLATION, Transmission Case.>

10) Install the output clutch. <Ref. to CVT(TH58A)-227, INSTALLATION, Output Clutch Assembly.>
11) Install the drive motor assembly. <Ref. to CVT(TH58A)-219, INSTALLATION, Drive Motor Assembly.>
12) Install the transmission control device. <Ref. to CVT(TH58A)-211, INSTALLATION, Transmission Control Device.>
13) Install the oil strainer and oil pan. <Ref. to CVT(TH58A)-113, INSTALLATION, Oil Pan and Strainer.>
14) Install the parking pawl. <Ref. to CVT(TH58A)-206, INSTALLATION, Parking Pawl.>
15) Install the transfer drive gear assembly. <Ref. to CVT(TH58A)-200, INSTALLATION, Transfer Drive Gear.>
16) Install the transfer driven gear assembly. <Ref. to CVT(TH58A)-198, INSTALLATION, Transfer Driven Gear.>
17) Install the transfer clutch assembly. <Ref. to CVT(TH58A)-185, INSTALLATION, Transfer Clutch.>
18) Install the extension case. <Ref. to CVT(TH58A)-180, INSTALLATION, Extension Case.>
19) Install the inhibitor switch. <Ref. to CVT(TH58A)-101, INSTALLATION, Inhibitor Switch.>
20) Install the secondary speed sensor. <Ref. to CVT(TH58A)-105, INSTALLATION, Secondary Speed Sensor.>
21) Install the front wheel speed sensor. <Ref. to CVT(TH58A)-107, INSTALLATION, Front Wheel Speed Sensor.>
22) Install the turbine speed sensor. <Ref. to CVT(TH58A)-103, INSTALLATION, Turbine Speed Sensor.>
23) Install the control valve body. <Ref. to CVT(TH58A)-121, INSTALLATION, Control Valve Body.>
24) Install the transmission harness. <Ref. to CVT(TH58A)-149, INSTALLATION, Transmission Harness.>
25) Install the air breather hose. <Ref. to CVT(TH58A)-171, INSTALLATION, Air Breather Hose.>
26) Install the transmission assembly to the vehicle. <Ref. to CVT(TH58A)-76, INSTALLATION, Automatic Transmission Assembly.>

C: DISASSEMBLY

1) Remove the pitching stopper bracket and transmission radio ground cord, if mounted.
2) Remove the filler plug, oil drain plug and overflow drain plug. <Ref. to CVT(TH58A)-47, REPLACEMENT, Differential Gear Oil.>
3) Remove all plugs.

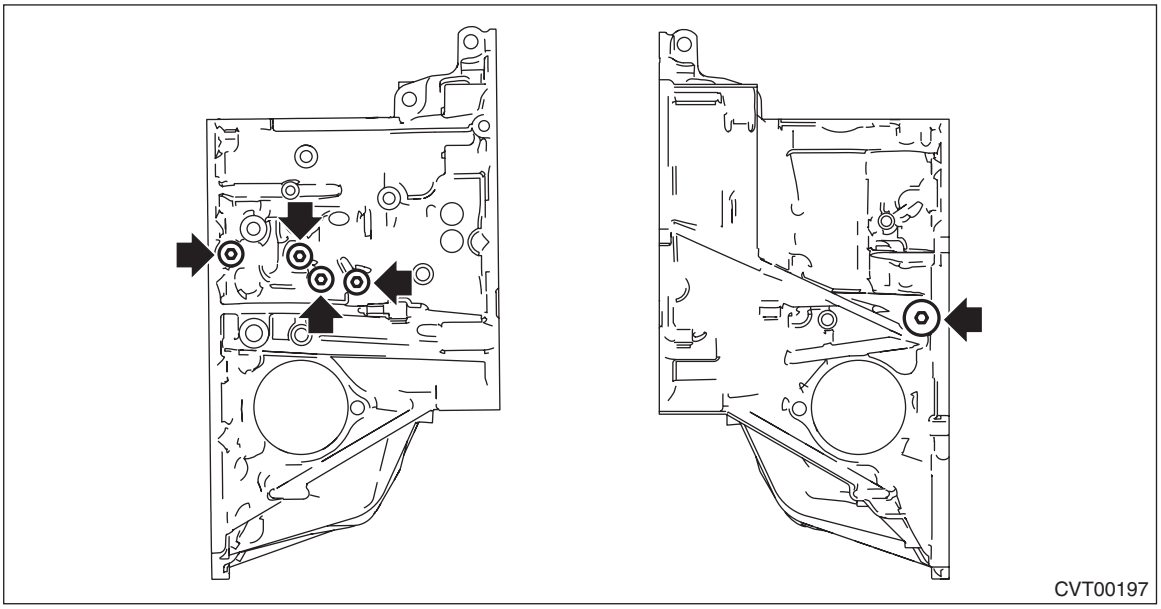

4) Remove the rubber cap.

D: ASSEMBLY

1) Install the rubber cap.
2) Install the oil drain plug.

NOTE:
Use a new gasket.

Tightening torque:
70 N·m (7.1 kgf-m, 51.6 ft-lb)

3) Install the overflow drain plug.

NOTE:
Overflow plug of differential gear oil is temporarily attached.

4) Install all plugs.

NOTE:
Use new O-rings.

Tightening torque:
T1: 25 N·m (2.5 kgf-m, 18.4 ft-lb)
T2: 22.5 N·m (2.3 kgf-m, 16.6 ft-lb)

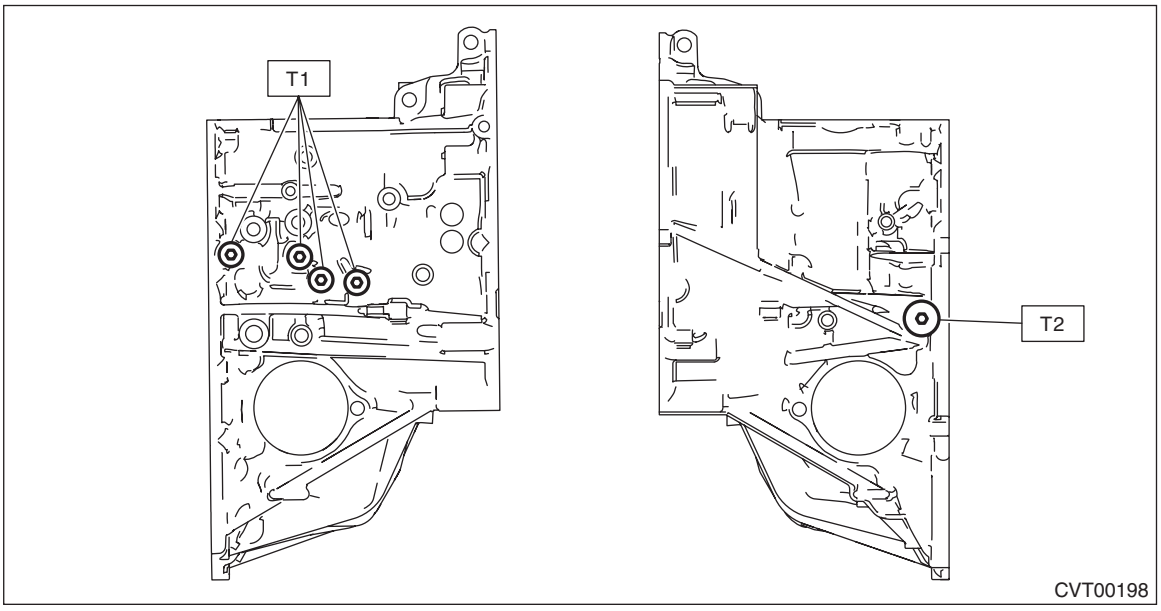

5) Install the pitching stopper bracket and transmission radio ground cord.

Tightening torque:
41 N·m (4.2 kgf-m, 30.2 ft-lb)

E: INSPECTION

- Check for leakage of CVTF from the connection between converter case and transmission case.
- Check there is no damage or cracks on the converter case.

52.Diagnostics with Phenomenon

A: INSPECTION

Symptoms	Faulty parts
Stall speed is low after warming-up, with select lever in “D” or “R” range.	Engine control system
Vehicle does not move despite engine speed rising up, with select lever in “D” or “R” range.	• Engine control system • Select cable • CVTF • Secondary pressure circuit • Pulley, gear and variator chain • Forward/reverse changeover section • Output clutch • Torque converter assembly • TCM • Control valve body • Inhibitor switch
Vehicle does not move by engine stall, with select lever in “D” or “R” range.	• Parking mechanism • Select cable • Bearing • Forward/reverse changeover section • Output clutch
Excessive shock occurs at starting, with select lever in “D” or “R” range.	• Secondary pressure circuit • Control valve body • Pulley, gear and variator chain • Output clutch
Acceleration speed from standstill is insufficient, with select lever in “D” or “R” range.	• Control valve body • Forward/reverse changeover section • Output clutch • Torque converter assembly • Drive motor
Engine speed suddenly rises up during driving, with select lever in “D” or “R” range.	• Control valve body • Secondary pressure circuit • Primary pressure circuit
Vibration occurs during driving, with select lever in “D” or “R” range.	• Secondary pressure circuit • Primary pressure circuit • Forward/reverse changeover section • Pulley and variator chain • Torque converter assembly • Hydraulic pressure circuit to torque converter • Control valve body • Drive motor • Output clutch
Sudden braking occurs during driving, with select lever in “D” or “R” range.	• Secondary pressure circuit • Primary pressure circuit • Control valve body • Drive motor
During deceleration, lockup clutch does not disengage until just before halting, with select lever in “D” or “R” range.	• Control valve body • Torque converter assembly • CVTF
Engine stalls with vehicle at a standstill, with select lever in “D” or “R” range, except for Auto Start Stop.	• Engine control system • Control valve body • Torque converter assembly
Excessive lockup shock occurs during driving, with select lever in “D” range.	Control valve body
Slipping occurs at lockup, or lockup does not occur during driving, with select lever in “D” range.	• Control valve body • Lockup hydraulic line • Torque converter assembly

Symptoms	Faulty parts
Excessive shift shock occurs when shifting the select lever from “N” range to “D” range, or from “N” range to “R” range.	• Inhibitor switch • Control valve body • Forward/reverse changeover section
Vehicle does not keep at standstill with select lever in “P” range, or parking cannot be released when shifting from “P” range to another range.	• Select cable • Parking mechanism
Select lever does not shift smoothly.	• Select cable • Inhibitor switch • Detent spring • Manual plate
Clutch engagement shock occurs when engine is restarted from the Auto Start Stop condition and driving with motor.	• Electric oil pump • Relief valve • Electric oil pump hydraulic circuit • Forward clutch • CVTF
Large clutch engagement shock occurs with vehicle at a standstill.	• Output clutch • Forward clutch • CVTF • Torque converter assembly • Output clutch control valve body

CONTINUOUSLY VARIABLE TRANSMISSION (DIAGNOSTICS)

CVT(HEV)(diag)

		Page
1.	Basic Diagnostic Procedure	2
2.	Check List for Interview	4
3.	General Description	5
4.	Electrical Component Location	7
5.	Transmission Control Module (TCM) I/O Signal	11
6.	Subaru Select Monitor	15
7.	Read Diagnostic Trouble Code (DTC)	18
8.	Clear Memory Mode	19
9.	Inspection Mode	20
10.	Drive Cycle	21
11.	Learning Control	24
12.	AT OIL TEMP Warning Light Display	26
13.	AWD Warning Light Display	28
14.	Diagnostic Procedure for Subaru Select Monitor Communication	30
15.	List of Diagnostic Trouble Code (DTC)	32
16.	Diagnostic Procedure with Diagnostic Trouble Code (DTC)	38
17.	Diagnostic Procedure without Diagnostic Trouble Code (DTC)	128
18.	Diagnostics with Phenomenon	129

1. Basic Diagnostic Procedure

A: PROCEDURE

	Step	Check	Yes	No
1	**CHECK PRE-INSPECTION.** 1) Ask the customer when and how the trouble occurred using the interview check list. <Ref. to CVT(HEV)(diag)-4, Check List for Interview.> 2) Before performing diagnostics, check the following items which might affect CVT problems. • General inspection <Ref. to CVT(HEV)(diag)-5, INSPECTION, General Description.> • Disconnection of harness connector • Visual check for harness damage • Oil leakage • Stall test <Ref. to CVT(TH58A)-52, Stall Test.> • Secondary pressure test <Ref. to CVT(TH58A)-54, Secondary Pressure (Line Pressure) Test.> • Output clutch pressure test <Ref. to CVT(TH58A)-57, Output Clutch Pressure Test.> • Transfer clutch pressure test <Ref. to CVT(TH58A)-59, Transfer Clutch Pressure Test.> • Time lag test <Ref. to CVT(TH58A)-53, Time Lag Test.> • Road test <Ref. to CVT(TH58A)-50, Road Test.> • Inhibitor switch <Ref. to CVT(TH58A)-96, Inhibitor Switch.> • Electric oil pump inspection mode <Ref. to CVT(TH58A)-139, INSPECTION, Electric Fluid Pump.>	Is the item that is thought to influence the CVT problem working properly?	Go to step **2**.	Repair the items which may be affecting the CVT trouble.
2	**CHECK AT OIL TEMP LIGHT.** Turn the ignition switch to ON and wait for at least 2 seconds.	Does the AT OIL TEMP light illuminate?	Go to step **3**.	Check the AT OIL TEMP light.
3	**CHECK AT OIL TEMP LIGHT.** Start the engine and wait for 2 seconds or more.	Does the AT OIL TEMP light blink?	Go to step **4**.	Go to step **5**.
4	**CHECK DTC DISPLAY.** Read the DTC. NOTE: If the communication function of Subaru Select Monitor cannot be executed normally, check the communication circuit. <Ref. to CVT(HEV)(diag)-30, COMMUNICATION FOR INITIALIZING IMPOSSIBLE, Diagnostic Procedure for Subaru Select Monitor Communication.>	Is DTC displayed on Subaru Select Monitor?	Record the DTC, time stamp and freeze frame data. Go to step **6**. NOTE: • For the time stamp, refer to LAN section. <Ref. to LAN(HEV)(diag)-6, TIME STAMP, CAUTION, General Description.> • Depending on DTCs, time stamp may not be stored.	Go to step **5**.

	Step	Check	Yes	No
5	**PERFORM GENERAL DIAGNOSTICS.** 1) Inspect using “Diagnostic Procedure without Diagnostic Trouble Code (DTC)”. <Ref. to CVT(HEV)(diag)-128, Diagnostic Procedure without Diagnostic Trouble Code (DTC).> 2) Inspect using “Diagnostics with Phenomenon”. <Ref. to CVT(HEV)(diag)-129, Diagnostics with Phenomenon.> 3) Perform the Inspection Mode. <Ref. to CVT(HEV)(diag)-20, Inspection Mode.> 4) Read the DTC.	Is DTC displayed on Subaru Select Monitor?	Go to step **6**.	Finish the diagnosis.
6	**PERFORM DIAGNOSIS.** 1) Inspect by referring to “Diagnostic Procedure with Diagnostic Trouble Code (DTC)”. <Ref. to CVT(HEV)(diag)-38, Diagnostic Procedure with Diagnostic Trouble Code (DTC).> NOTE: For the DTC table, refer to “List of Diagnostic Trouble Code (DTC)”. <Ref. to CVT(HEV)(diag)-32, List of Diagnostic Trouble Code (DTC).> 2) Repair the trouble cause. 3) Perform the Clear Memory Mode. 4) Perform the Inspection Mode. <Ref. to CVT(HEV)(diag)-20, Inspection Mode.> 5) Read the DTC.	Is DTC displayed on Subaru Select Monitor?	Inspect by referring to “Diagnostic Procedure with Diagnostic Trouble Code (DTC)”. <Ref. to CVT(HEV)(diag)-38, Diagnostic Procedure with Diagnostic Trouble Code (DTC).>	Finish the diagnosis.

2. Check List for Interview

A: CHECK

Check the following items when a problem has occurred.

NOTE:
Use copies of this page for interviewing customers.

Customer's name			
Date of purchase			
Date of repair			
Transmission model	Transmission	V.I.N.	
Odometer reading	km (miles)		
Frequency	❑ Continuous ❑ Intermittent (times/day)		
Weather	❑ Fine ❑ Cloudy ❑ Rainy ❑ Snowy ❑ Other ( )		
Place	❑ Highland ❑ Suburbs ❑ Inner city ❑ Uphill ❑ Downhill ❑ Rough road ❑ Other ( )		
Ambient air temperature	❑ Hot ❑ Warm ❑ Cool ❑ Cold		
Vehicle speed	km/h (MPH)		
AT OIL TEMP light	❑ Blinks continuously	❑ Does not blink	
Select lever position	❑ P ❑ R ❑ N ❑ D ❑ Manual mode		
Driving condition	❑ Not affected ❑ At racing ❑ While decelerating ❑ While EV traveling	❑ At starting ❑ While accelerating ❑ While turning (❑ RH/❑ LH)	❑ While idling ❑ When cruising (Vehicle speed km/h) ❑ Immediately after starting the engine
Manual mode	❑ ON ❑ OFF		
Symptoms	❑ Vehicle does not move (❑ Any position ❑ Particular position)		
	❑ Vehicle does not move (no load racing condition as in N range)		
	❑ Vehicle does not move (engine speed does not increase, felt as stall condition)		
	❑ Noise or vibration (Describe concretely:)		
	❑ Shock felt at N → D selection (seconds after shifting, when engine cold or after warm-up)		
	❑ Shock felt at N → R selection (seconds after shifting, when engine cold or after warm-up)		
	❑ Shifting is wrong (Describe concretely:)		
	❑ Shock or judder during driving		
	❑ Fails to accelerate.		
	❑ Engine speed increases abruptly during driving		
	❑ Shock or judder during standing start		
	❑ Select lever does not move		
	❑ Other ( )		

3. General Description

A: CAUTION

1. SRS AIRBAG SYSTEM

The airbag system wiring harness is routed near the TCM.

CAUTION:
• All the airbag system wiring harnesses and connectors are colored yellow. Do not use an electric test equipment to check these circuits.
• Be careful not to damage the airbag system wiring harness when performing diagnostics or servicing the TCM.

2. HYBRID SYSTEM

Refer to “CAUTION (HYBRID SYSTEM)” in “PRECAUTION section”. <Ref. to PC-6, CAUTION (HYBRID SYSTEM), Precaution.>

3. MEASUREMENT

When measuring the voltage and resistance of the ECM, TCM or each sensor, use a tapered pin with a diameter of less than 0.64 mm (0.025 in) in order to avoid poor contact. Do not insert a pin of more than 0.65 mm (0.026 in) diameter.

B: INSPECTION

1. 12 VOLT AUXILIARY BATTERY

Measure the battery voltage and specific gravity of the electrolyte.

Standard voltage: 12 V or more

Specific gravity: 1.260 or more

2. TRANSMISSION GROUND

Make sure that the ground terminal bolt is tightened securely.

Tightening torque:
14 N·m (1.4 kgf-m, 10.3 ft-lb)

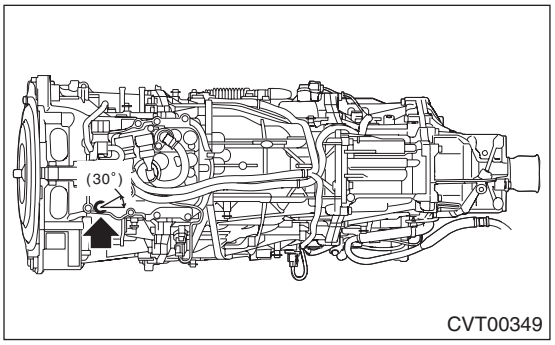

3. OPERATION OF SELECT LEVER

Make sure there is no noise, dragging or contact pattern in each select lever range.

WARNING:
Stop the engine while checking operation of the select lever.

C: PREPARATION TOOL

1. SPECIAL TOOL

ILLUSTRATION	TOOL NUMBER	DESCRIPTION	REMARKS
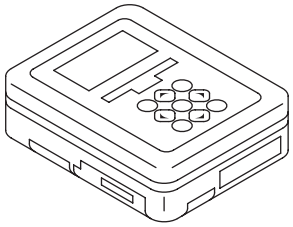 ST1B022XU0	1B022XU0	SUBARU SELECT MONITOR III KIT	Used for troubleshooting the electrical system.

2. GENERAL TOOL

TOOL NAME	REMARKS
Circuit tester	Used for measuring resistance, voltage and current.
Oscilloscope	Used for measuring the sensor.

4. Electrical Component Location

A: LOCATION

1. CONTROL MODULE

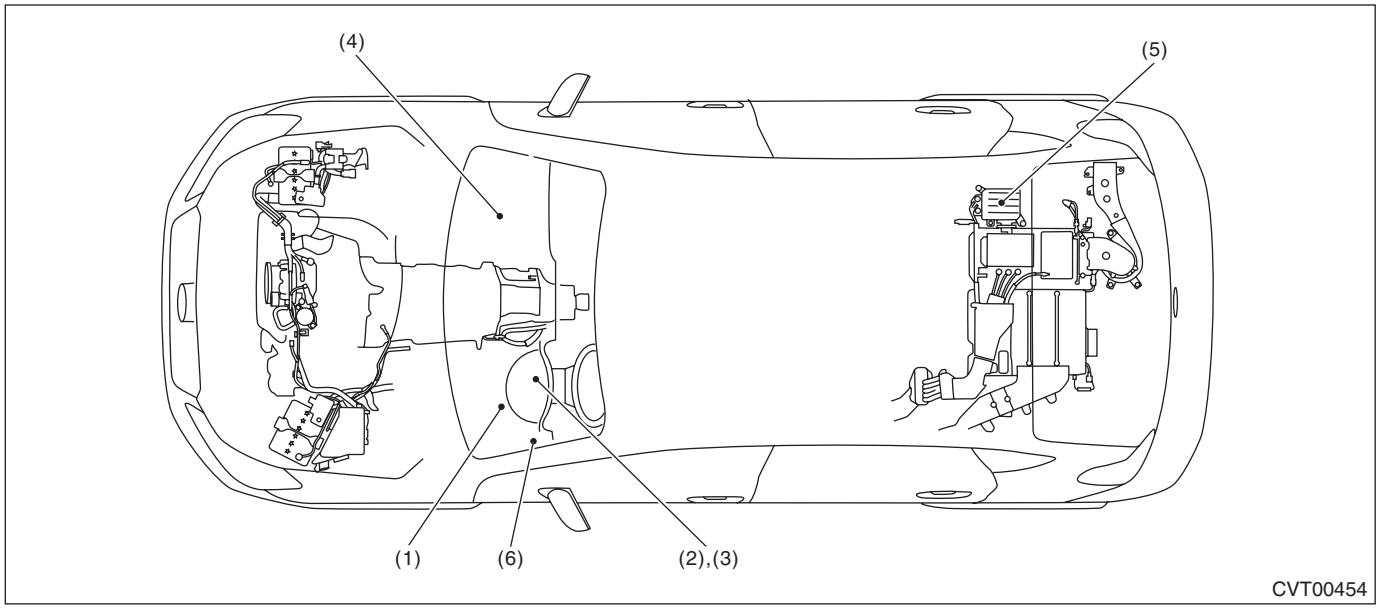

(1) Transmission control module (TCM)
(2) AT OIL TEMP light
(3) AWD light
(4) Hybrid powertrain control module (HPCM)
(5) Electric oil pump inverter
(6) Data link connector

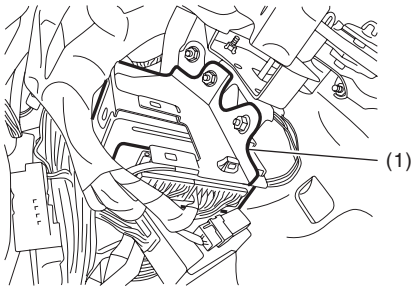

CVT00455

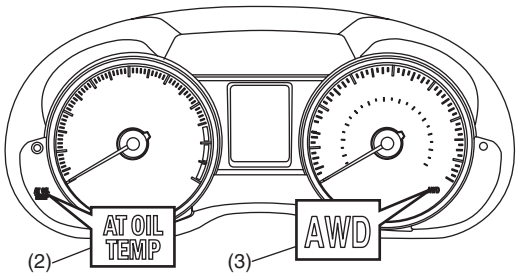

CVT00202

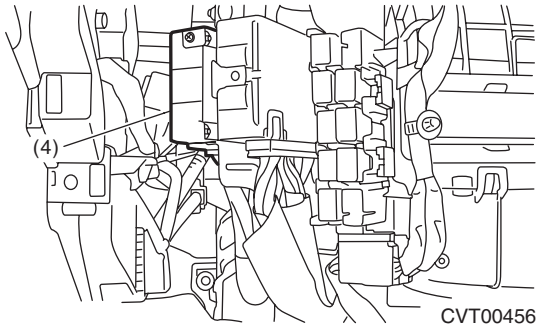

CVT00456

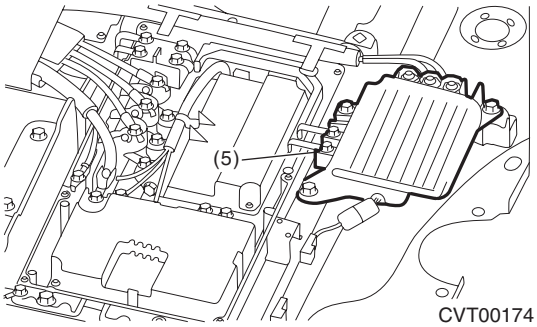

CVT00174

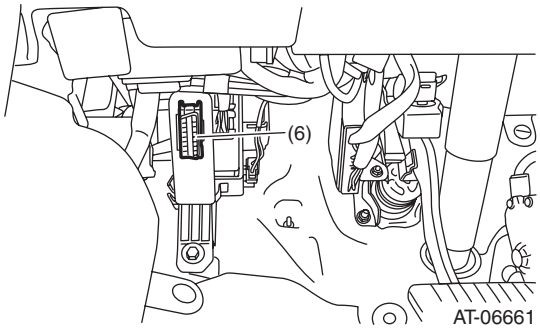

AT-06661

2. SENSOR

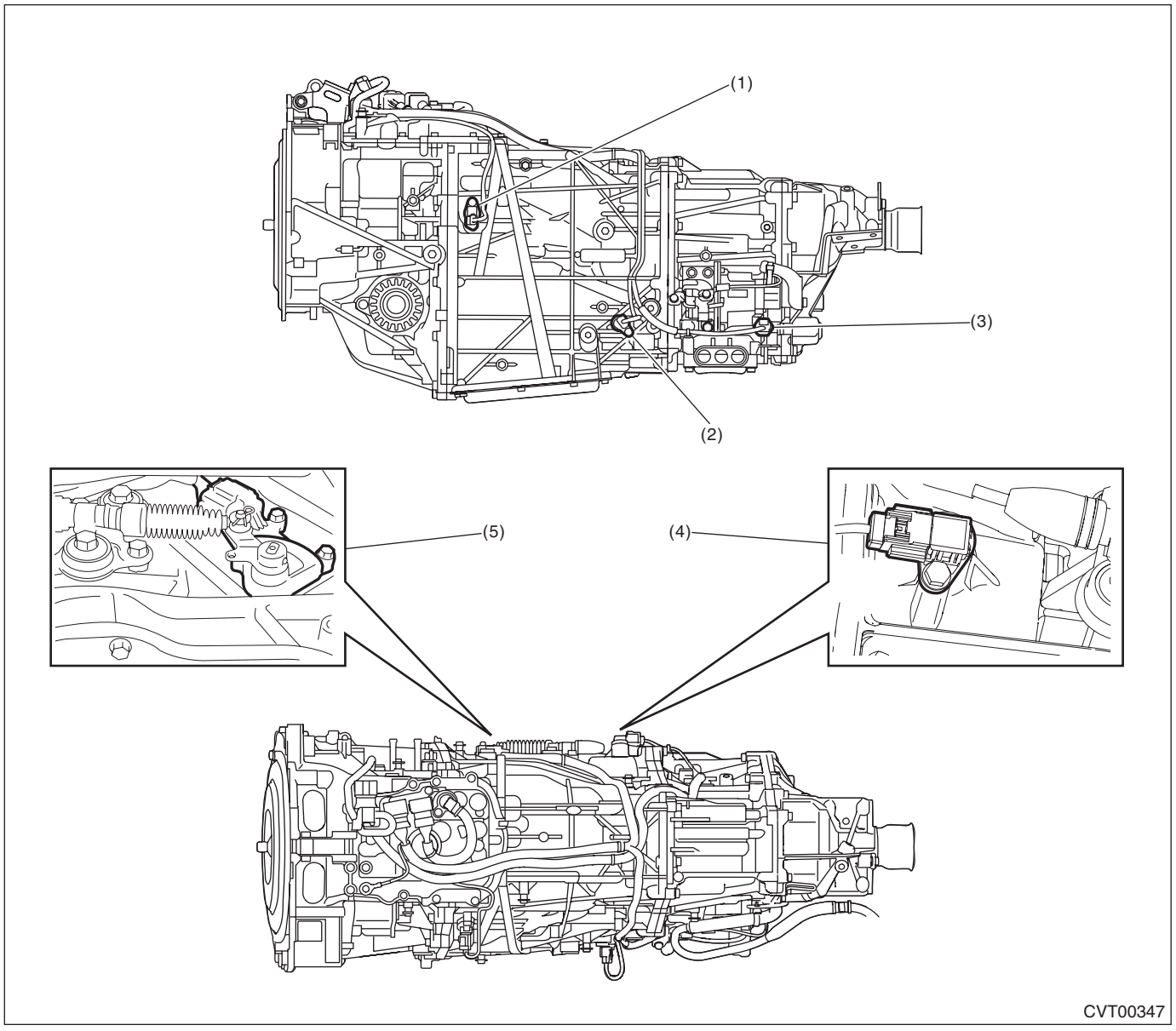

(1) Turbine speed sensor
(2) Secondary speed sensor
(3) Secondary pressure sensor
(4) Front wheel speed sensor
(5) Inhibitor switch

3. SOLENOID

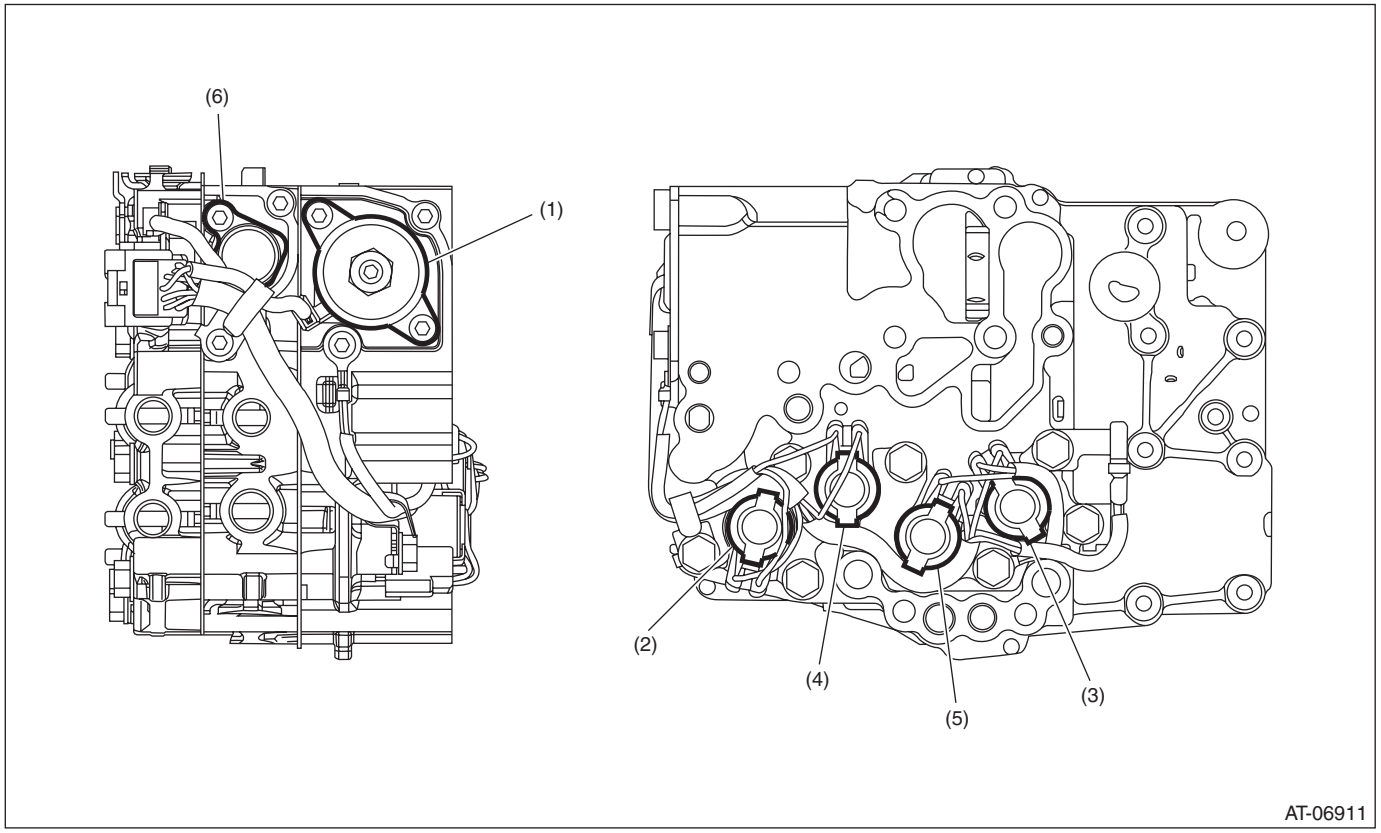

(1) Secondary solenoid
(2) AWD solenoid
(3) Lock-up duty solenoid
(4) Primary DOWN solenoid
(5) Primary UP solenoid
(6) F&R solenoid

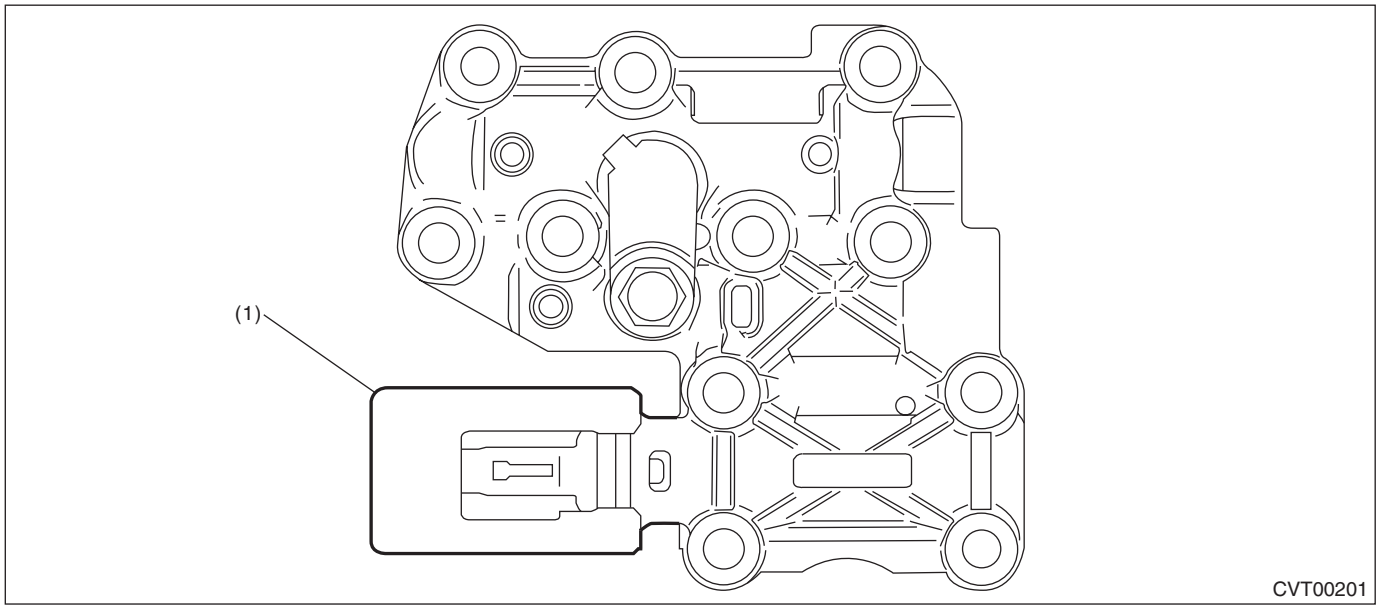

(1) Output clutch solenoid

5. Transmission Control Module (TCM) I/O Signal

A: ELECTRICAL SPECIFICATION

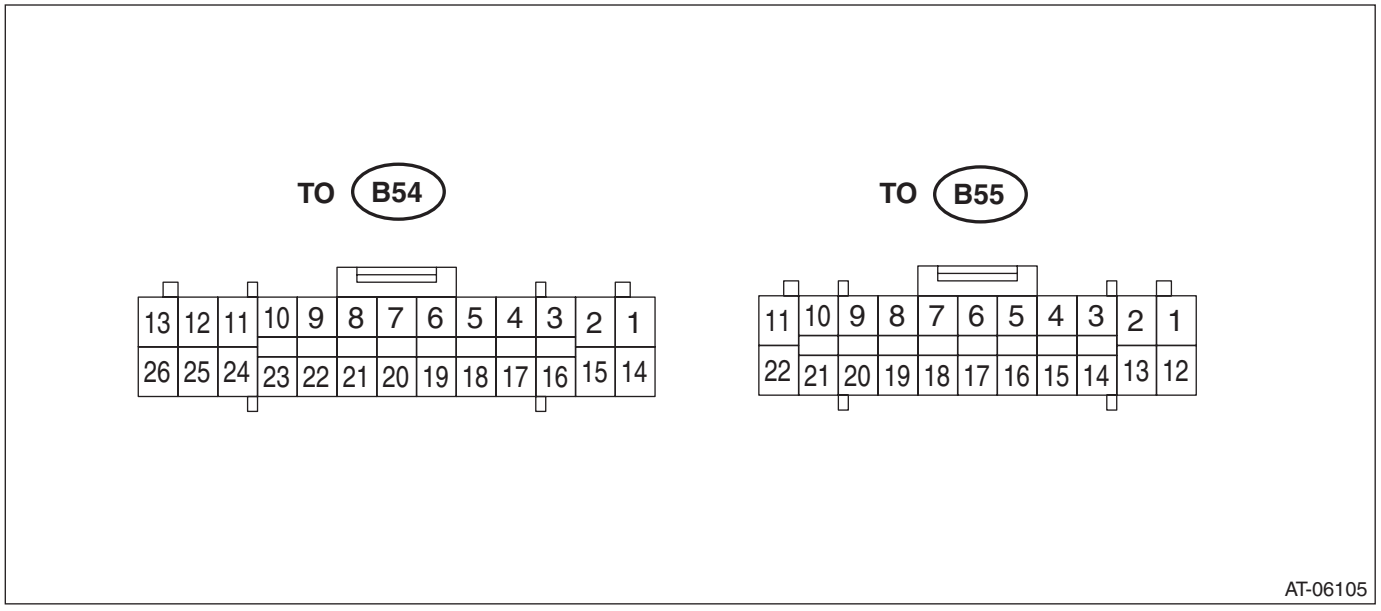

NOTE:
Measure after warming up.

Item	Connector No.	Terminal No.	Measuring condition	Measurement value	Resistance between terminal and chassis ground	Remarks
Backup power supply	B55	1	—	10 — 13 V	—	
Ignition power supply	B55	21	—	10 — 13 V	—	
Main power supply	B55	11	—	10 — 13 V	—	
Main power supply	B55	2	—	10 — 13 V	—	
Main power supply	B55	22	—	10 — 13 V	—	
Manual mode switch	B55	4	Manual mode switch ON	Less than 1 V	—	
			Manual mode switch OFF	8 V or more	—	
Manual mode UP switch	B55	5	Manual mode UP switch ON	Less than 1 V	—	
			Manual mode UP switch OFF	8 V or more	—	
Manual mode DOWN switch	B55	16	Manual mode DOWN switch ON	Less than 1 V	—	
			Manual mode DOWN switch OFF	8 V or more	—	
Stop light switch	B55	13	Stop light switch ON	8 V or more	—	
			Stop light switch OFF	Less than 1 V	—	
P range switch	B54	5	P range	Less than 1 V	—	
			Except for P range	8 V or more	—	
R range switch	B54	18	R range	Less than 1 V	—	
			Except for R range	8 V or more	—	
R range switch 2	B54	21	R range	Less than 1 V	—	
			Except for R range	8 V or more	—	

Item	Connector No.	Terminal No.	Measuring condition	Measurement value	Resistance between terminal and chassis ground	Remarks
P N range switch	B55	15	At P, N range	Less than 1 V	—	
			Except for P, N range	8 V or more	—	
N range switch	B54	9	N range	Less than 1 V	—	
			Except for N range	8 V or more	—	
D range switch	B54	22	D range	Less than 1 V	—	
			Except for D range	8 V or more	—	
ATF temperature sensor	B54	3	ATF temperature at 20°C (68°F)	Approx. 2.5 V	Approx. 2.5 kΩ	
			ATF temperature at 80°C (176°F)	Approx. 0.7 V	Approx. 330 Ω	
ATF temperature sensor GND	B54	16	Always	Approx. 0 V	—	
Secondary pressure sensor power supply	B54	2	Ignition switch ON	5 V	—	
Secondary pressure sensor	B54	17	Ignition switch ON, engine OFF	Approx. 0.5 V (0 MPa)	—	Value increases with increase of engine load. (0.5 — 4.5 V)
			Ignition switch ON, engine ON	Approx. 1.0 V (1.0 MPa)	—	
Secondary pressure sensor GND	B54	15	Always	Approx. 0 V	—	
Secondary speed sensor	B54	7	While driving	0 or 5 V	—	Refer to the waveform (sensor)
Turbine speed sensor	B54	20	Engine ON, “P” or “N” range	0 or 5 V	—	Refer to the waveform (sensor)
Front wheel speed sensor	B54	19	While driving	0 or 5 V	—	Refer to the waveform (sensor)
Self-shut relay output	B55	20	For three seconds after ignition switch ON and OFF	Less than 1 V	—	
			Ignition switch OFF	8 V or more		
F&R solenoid	B54	11	Engine ON	Refer to the waveform (solenoid (1))	Approx. 4 — 6 Ω	Resistance value at 20°C (68°F). Value is higher as the temperature increase.
Secondary solenoid	B54	12	Engine ON	Refer to the waveform (solenoid (2))	Approx. 5 — 7 Ω	Resistance value at 20°C (68°F). Value is higher as the temperature increase.
Primary UP solenoid	B54	24	Engine ON, while UP shifting	Refer to the waveform (solenoid (3))	Approx. 10 — 13.5 Ω	Resistance value at 20°C (68°F). Value is higher as the temperature increase.
Primary DOWN solenoid	B54	25	Engine ON, while DOWN shifting	Refer to the waveform (solenoid (4))	Approx. 10 — 13.5 Ω	Resistance value at 20°C (68°F). Value is higher as the temperature increase.
Lock-up duty solenoid	B54	26	Lock-up ON	Refer to the waveform (solenoid (5))	Approx. 10 — 13.5 Ω	Resistance value at 20°C (68°F). Value is higher as the temperature increase.

Item	Connector No.	Terminal No.	Measuring condition	Measurement value	Resistance between terminal and chassis ground	Remarks
AWD solenoid	B54	13	Engine ON, “P” or “N” range	Refer to the waveform (solenoid (6))	Approx. 2 — 4.5 Ω	Resistance value at 20°C (68°F). Value is higher as the temperature increase.
			Engine ON, “D” range, brake ON	Refer to the waveform (solenoid (7))		
Output clutch solenoid	B54	10	Engine ON, “P” or “N” range	Refer to the waveform (solenoid (8))	Approx. 4 — 6 Ω	Resistance value at 20°C (68°F). Value is higher as the temperature increase.
CAN communication line (+)	B55	18	—	—	—	
CAN communication line (–)	B55	17	—	—	—	
CAN communication line 2 (+)	B55	10	—	—	—	
CAN communication line 2 (–)	B55	9	—	—	—	
GND	B54	1	Always	Approx. 0 V	—	
GND	B54	14	Always	Approx. 0 V	—	

B: WAVEFORM

1. SENSOR

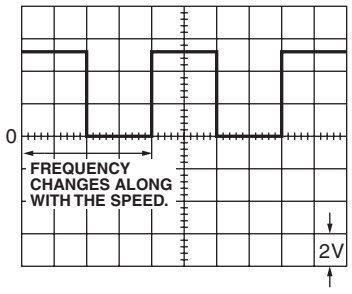

AT-04690

2. SOLENOID

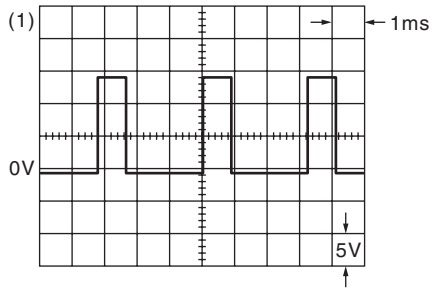

AT-06855

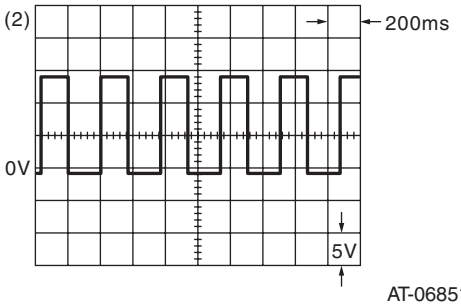

AT-06851

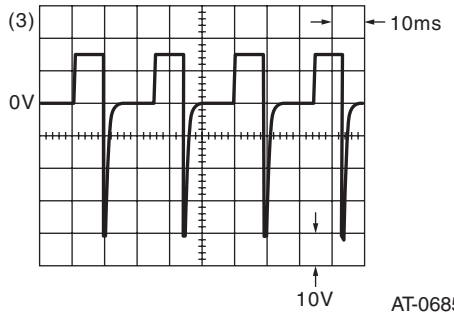

AT-06852

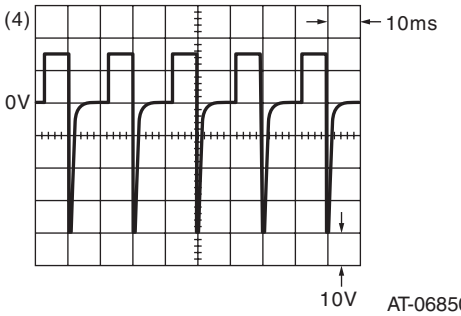

AT-06850

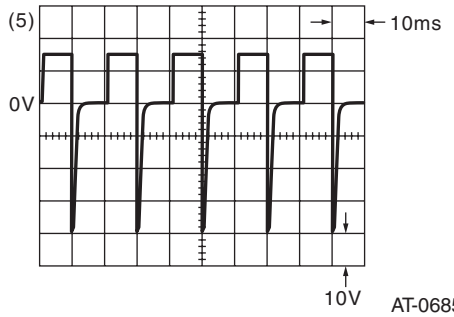

AT-06853

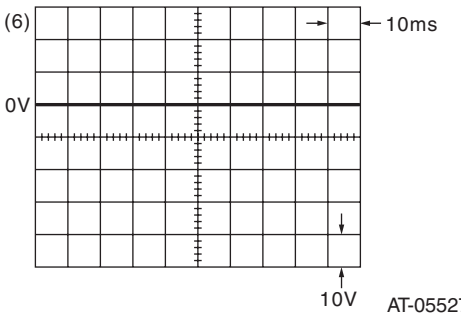

AT-05527

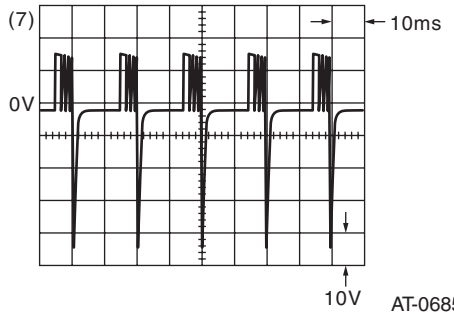

AT-06854

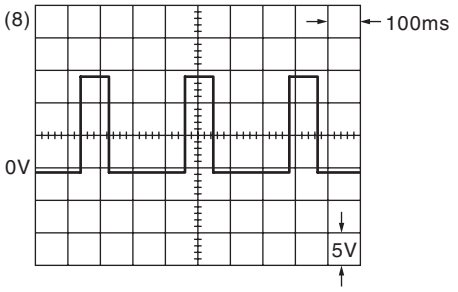

CVT00431

6. Subaru Select Monitor

A: OPERATION

1. HOW TO USE SUBARU SELECT MONITOR

For detailed operation procedures, refer to “PC application help for Subaru Select Monitor”.

2. READ CURRENT DATA

For detailed operation procedures, refer to “PC application help for Subaru Select Monitor”.

Item	Display	Unit of measure
Engine speed signal	Engine Speed	rpm
Turbine speed sensor signal	Turbine Speed	rpm
Accelerator position sensor opening angle	Accel opening angle	%
Vehicle speed converted from secondary speed sensor signal	Front Wheel Speed	km/h or MPH
ATF temperature sensor signal	A/T Oil Temperature	°C or °F
Lock-up duty solenoid set duty ratio	Lock Up Duty Ratio	%
4WD solenoid set duty ratio	Transfer Duty Ratio	%
Gear ratio	Actual Gear Ratio	—
Secondary speed sensor signal	Secondary Rev Speed	rpm
Front wheel speed sensor signal	Front Wheel Speed	rpm
Stop light switch signal	Stop light SW	ON or OFF
Secondary solenoid set current	Secondary Set Current	mA
Secondary solenoid actual current	Secondary Actual Current	mA
F&R solenoid indicator current	F&R Linear Solenoid Set Current	mA
F&R solenoid actual current	F&R Linear Solenoid Actual Current	mA
ECM power supply voltage	ECU ACC	V
Primary UP solenoid set duty ratio	Primary UP Duty	%
Primary DOWN solenoid set duty ratio	Primary DOWN Duty	%
Parking range signal	P Range	ON or OFF
Reverse range signal	R Range	ON or OFF
Neutral range signal	N Range	ON or OFF
Drive range signal	D Range	ON or OFF
Manual mode switch signal	Tiptronic Mode Switch	ON or OFF
Manual mode up switch signal	Up Switch	ON or OFF
Manual mode down switch signal	Down Switch	ON or OFF
Condition established for Auto Start Stop cooperation prohibition demand	Emphasized idle stop request	ON or OFF
Secondary oil pressure A/D convert value	secondary pressure sensor voltage.	V
ATF oil temperature sensor voltage	ATF Temp sensor voltage.	V
AT OIL TEMP light 2 Hz blink condition	Diagnosis Lamp	ON or OFF
AT OIL TEMP light ON condition	ATF Temperature Lamp	ON or OFF
AT learning mode condition	AT learning	Completed or Not Completed
Total number of ignition switch ON	Trip Count	times
Count	Count	—
Elapsed time after ignition switch ON	Time Count	ms
Secondary oil pressure sensor signal	Actual secondary press.	MPa
N/P range signal	N/P Range Signal	ON or OFF
R range 2 signal	R Range Signal2	ON or OFF
Back-up power supply voltage	System Voltage	V
Electric oil pump target RPM	Electric Fluid Pump Target RPM	rpm
Electric oil pump actual RPM	Electric Fluid Pump Actual RPM	rpm

Item	Display	Unit of measure
Electric oil pump actual current	Electric Fluid Pump Actual Current	A
Output clutch linear solenoid set current	Output Clutch Linear Solenoid Set Current	mA
Output clutch linear solenoid actual current	Output Clutch Linear Solenoid Actual Current	mA
Speed converted from resolver signal	Primary Rev Speed	rpm

3. READ FREEZE FRAME DATA

For detailed operation procedures, refer to “PC application help for Subaru Select Monitor”.

Item	Display	Unit of measure
Engine speed signal	Engine Speed	rpm
Turbine speed sensor signal	Turbine Speed	rpm
Accelerator position sensor opening angle	Accel opening angle	%
Vehicle speed converted from secondary speed sensor signal	Front Wheel Speed	km/h or MPH
ATF temperature sensor signal	A/T Oil Temperature	°C or °F
Lock-up duty solenoid set duty ratio	Lock Up Duty Ratio	%
4WD solenoid set duty ratio	Transfer Duty Ratio	%
Gear ratio	Actual Gear Ratio	—
Secondary speed sensor signal	Secondary Rev Speed	rpm
Front wheel speed sensor signal	Front Wheel Speed	rpm
Stop light switch signal	Stop light SW	ON or OFF
Secondary solenoid set current	Secondary Set Current	mA
Secondary solenoid actual current	Secondary Actual Current	mA
F&R solenoid indicator current	F&R Linear Solenoid Set Current	mA
F&R solenoid actual current	F&R Linear Solenoid Actual Current	mA
ECM power supply voltage	ECU ACC	V
Primary UP solenoid set duty ratio	Primary UP Duty	%
Primary DOWN solenoid set duty ratio	Primary DOWN Duty	%
Parking range signal	P Range	ON or OFF
Reverse range signal	R Range	ON or OFF
Neutral range signal	N Range	ON or OFF
Drive range signal	D Range	ON or OFF
Manual mode switch signal	Tiptronic Mode Switch	ON or OFF
Manual mode up switch signal	Up Switch	ON or OFF
Manual mode down switch signal	Down Switch	ON or OFF
Condition established for Auto Start Stop cooperation prohibition demand	Emphasized idle stop request	ON or OFF
Secondary oil pressure A/D convert value	secondary pressure sensor voltage.	V
ATF oil temperature sensor voltage	ATF Temp sensor voltage.	V
AT OIL TEMP light 2 Hz blink condition	Diagnosis Lamp	ON or OFF
AT OIL TEMP light ON condition	ATF Temperature Lamp	ON or OFF
Total number of ignition switch ON	Trip Count	times
Count	Count	—
Elapsed time after ignition switch ON	Time Count	ms
Secondary oil pressure sensor signal	Actual secondary press.	MPa
N/P range signal	N/P Range Signal	ON or OFF
R range 2 signal	R Range Signal2	ON or OFF
Back-up power supply voltage	System Voltage	V
Electric oil pump target RPM	Electric Fluid Pump Target RPM	rpm
Electric oil pump actual RPM	Electric Fluid Pump Actual RPM	rpm
Electric oil pump actual current	Electric Fluid Pump Actual Current	A
Output clutch linear solenoid set current	Output Clutch Linear Solenoid Set Current	mA
Output clutch linear solenoid actual current	Output Clutch Linear Solenoid Actual Current	mA
Speed converted from resolver signal	Primary Rev Speed	rpm

7. Read Diagnostic Trouble Code (DTC)

A: OPERATION

• For detailed operation procedures, refer to “PC application help for Subaru Select Monitor”.
• For details concerning DTC, refer to “List of Diagnostic Trouble Code (DTC)”. <Ref. to CVT(HEV)(diag)-32, List of Diagnostic Trouble Code (DTC).>

8. Clear Memory Mode

A: OPERATION

For detailed operation procedures, refer to “PC application help for Subaru Select Monitor”.

CAUTION:
• If the AT learning value is cleared, learned control memory is cleared.
• If the AT learning value is cleared, perform learning. <Ref. to CVT(HEV)(diag)-24, Learning Control.>

9. Inspection Mode

A: PROCEDURE

<Ref. to CVT(TH58A)-50, Road Test.>

10.Drive Cycle

A: PROCEDURE

It is possible to complete diagnosis of the DTC by performing the indicated drive cycle. After the repair for the DTC, perform a necessary drive cycle and make sure the function recovers and the DTC is recorded.

1. PREPARATION FOR DRIVE CYCLE

1) Check that the battery voltage is 12 V or more and fuel remains approx. half [20 — 40 L (5.3 — 10.6 US gal, 4.4 — 8.8 Imp gal)].
2) After performing the diagnostics and Clear Memory Mode, check that no DTC remains. <Ref. to CVT(w/o HEV)(diag)-18, Clear Memory Mode.>

NOTE:
Perform the drive cycle after warming up the engine except when the ATF temperature at engine start is specified.

2. DRIVE CYCLE A

DTC	Item	Condition
P0603	Internal Control Module Keep Alive Memory (KAM) Error	—
P0705	Transmission Range Sensor Circuit (PRNDL Input)	—
P0712	Transmission Fluid Temperature Sensor Circuit Low Input	—
P0842	Secondary Oil Pressure Sensor Circuit (Low)	—
P0843	Secondary Oil Pressure Sensor Circuit (High)	—
P0890	AT Self-Shut Relay Diagnosis (Low)	—
P0962	Secondary Solenoid Circuit (Low)	—
P0963	Secondary Solenoid Circuit (High)	—
P0966	Forward & Reverse Solenoid Circuit (Low)	—
P0967	Forward & Reverse Linear Solenoid Circuit (High)	—
P0B0A	Auxiliary Transmission Fluid Pump Motor Supply Voltage Circuit Low	—
P0B0B	Auxiliary Transmission Fluid Pump Motor Supply Voltage Circuit High	—
P0B0D	Auxiliary Transmission Fluid Pump Motor Control Module	—
P0C21	Auxiliary Transmission Fluid Pump Phase U-V-W Circuit Low	—
P0C22	Auxiliary Transmission Fluid Pump Phase U-V-W Circuit High	—
P1724	AT EEPROM Error	Perform drive cycle A twice or more.
P172A	Auxiliary Transmission Fluid Pump Reverse Rotation	—
P2720	Pressure Control Solenoid D Control Circuit Low	—
P2721	Pressure Control Solenoid D Control Circuit High	—
P2763	Lock-Up Duty Solenoid Circuit (High)	Perform drive cycle A then drive cycle C.

Diagnostic procedure:
1) Start the engine.
2) Shift the select lever at intervals of five seconds for each range, while depressing the brake pedal.

NOTE:
Shift the select lever in the order of “P” → “R” → “N” → “D” → “N” → “R” → “P”.

3. DRIVE CYCLE B

DTC	Item	Condition
P0711	ATF Temp. Sensor Circuit Range/Performance	Perform drive cycle B twice or more.

Diagnostic procedure:
1) Start the engine while the ATF temperature is 20°C (68°F) or below.
2) Drive the vehicle for 20 minutes.

NOTE:
Drive the vehicle once or more (for 20 seconds) at constant speed of the legal speed limit.

4. DRIVE CYCLE C

DTC	Item	Condition
P0716	Torque Converter Turbine Speed	—
P0719	Brake Switch Circuit Low	Perform drive cycle C twelve times.
P0720	Output Speed Sensor Circuit	—
P0724	Brake Switch Circuit High	Perform drive cycle C twelve times.
P0973	Primary Solenoid System A Circuit (Low)	—
P0974	Primary Solenoid System A Circuit (High)	—
P0976	Primary Solenoid System B Circuit (Low)	—
P0977	Primary Solenoid System B Circuit (High)	—
P2750	Sec. Pulley Revolution Speed Sensor Circuit	—
P2763	Lock-Up Duty Solenoid Circuit (High)	Perform drive cycle A then drive cycle C.
P2764	Lock-Up Duty Solenoid Circuit (Low)	—

Diagnostic procedure:
1) Start the engine.
2) Gradually accelerate the speed to the legal speed limit, and then stop the vehicle.

5. DRIVE CYCLE D

DTC	Item	Condition
P0713	Transmission Fluid Temperature Sensor Circuit High Input	—
P0730	Gearshift Control Performance Abnormal	—
P0841	Secondary Oil Pressure Sensor Performance	—
P0965	Forward & Reverse Solenoid Function	—
P2719	Pressure Control Solenoid D Control Circuit Range/Performance	—
P2762	Lock-Up Duty Solenoid Malfunction	Perform drive cycle D twice or more.

Diagnostic procedure:
1) Start the engine.
2) Drive the vehicle for 20 minutes.

NOTE:
Drive the vehicle once or more (for 20 seconds) at constant speed of the legal speed limit.

6. DRIVE CYCLE E

DTC	Item	Condition
U0073	Control Module Communication Bus Off	—
U0075	Control Module Communication Bus "PU-CAN" Off	—
U0100	Lost Communication With ECM/PCM “A”	—
U0110	Lost Communication With Drive Motor Control Module "A"	—
U0122	Lost Communication With Vehicle Dynamics Control Module	—
U0287	Lost Communication With Transmission Fluid Pump Module	—
U0293	Lost Communication With Hybrid Powertrain Control Module	—
U0401	Invalid Data Received From ECM/PCM “A”	—
U0411	Invalid Data Received From Drive Motor Control Module "A"	—
U0416	Invalid Data Received From Vehicle Dynamics Control Module	—
U0588	Invalid Data Received From Transmission Fluid Pump Module	—
U0594	Invalid Data Received From Hybrid Powertrain Control Module	—
U1100	Lost Communication With ECM/PCM PU-CAN	—
U1293	Lost Communication With Hybrid Powertrain Control Module PU-CAN	—
U1401	Invalid Data Received From ECM/PCM PU-CAN	—
U1594	Invalid Data Received From Hybrid Powertrain Control Module PU-CAN	—

Diagnostic procedure:
1) Start the engine.

7. DRIVE CYCLE F

DTC	Item	Condition
P0708	Transmission Range Sensor Circuit (PRNDL Input)	—

Diagnostic procedure:
1) Start the engine.
2) Shift the select lever at intervals of 15 seconds for each range, while depressing the brake pedal.

NOTE:
Shift the select lever in the order of “P” → “R” → “N” → “D” → “N” → “R” → “P”.

8. DRIVE CYCLE G

DTC	Item	Condition
P0C29	Auxiliary Transmission Fluid Pump Driver Current Performance	—
P0C2A	Auxiliary Transmission Fluid Pump Motor Stalled	—
P2797	Auxiliary Transmission Fluid Pump	—

Diagnostic procedure:
1) Perform a stop from EV traveling condition three times.

9. DRIVE CYCLE H

DTC	Item	Condition
P0500	Vehicle Speed Sensor “A”	—

Diagnostic procedure:
1) Drive at 10 km/h (6 MPH) or more.
2) Stop the vehicle and idle for ten minutes.

11.Learning Control

A: GENERAL DESCRIPTION

- Follow the messages displayed on the Subaru Select Monitor when working.
- When the following work is performed, perform learning work for the transmission.

Replacement of TCM/Replacement or disassembly of transmission assembly/Replacement of control valve body/Clearing AT leaning value is executed.

B: PROCEDURE

1. PREPARATION FOR LEARNING

1) Warm up or cool down until the ATF temperature displayed on the Subaru Select Monitor is 40 — 65°C (104 — 149°F).
2) After stopping the vehicle, shift the select lever to “P” range.
3) Fully apply the parking brake.
4) Lift up the vehicle.

CAUTION:
While working, be sure to keep the lower edge of the tires 30 cm or more above the ground as vehicle will vibrate.
5) Connect the Subaru Select Monitor to data link connector.
6) Turn the ignition switch to ON.
7) Turn off all switches causing an electrical load, such as headlights, A/C, seat heater and rear defogger, etc.

2. SIMPLE LEARNING

NOTE:
Simple learning is performed with the vehicle lifted, without actually running the vehicle.

CAUTION:
Do not turn the power of the Subaru Select Monitor OFF during work, and do not disconnect the data link connector.
1) Select {Work Support} in the «Transmission Diagnosis» display screen of the Subaru Select Monitor.
2) Select {Compulsory learning mode} in the «Work Support» display screen of the Subaru Select Monitor.
3) Follow the messages displayed on the Subaru Select Monitor screen when working.

NOTE:
During AT learning in progress, AT OIL TEMP light in the combination meter starts flashing at 2 Hz and the learning operation starts. The following message is displayed on the screen when the AT OIL TEMP light which was flashing at 2 Hz turns off.

4) When «AT learning normally ended.» is displayed, simple AT learning is completed.

NOTE:
- If communication error occurs during learning, retry the “AT learning mode” from the beginning.
- If the message «Execute AT learning again after fixing troubles of the vehicle» appears during learning, select [OK] and display the DTC list. After repairing the locations indicated by the DTC, start the “AT learning mode” over from the beginning.
- When communication error occurs during learning, select lever does not shift occasionally. If select lever does not shift, turn the ignition switch to OFF before operating the select lever.
- If the message «AT learning ended abnormally.» is displayed, start the “AT learning mode” over from the beginning.

Display	Main causes for abnormal termination
AT learning ended abnormally.	• Fault is detected during AT learning. • The accelerator pedal is depressed during AT learning. • An unspecified operation was performed during AT learning • ATF temperature becomes out of specification during AT learning. • Battery voltage is low. • Malfunction indicator light illuminates. • Hybrid fail lamp illuminates. • Parking brake not applied strongly enough. • Brake pedal is not fully depressed. • Abnormal idle speed increase, etc.

- For detailed operation procedures, refer to “PC application help for Subaru Select Monitor”.

12.AT OIL TEMP Warning Light Display

A: OPERATION

The AT OIL TEMP light illuminates or blinks, when the ATF temperature is high and malfunction occurs in CVT.

- At normal condition

AT OIL TEMP light always illuminates when the ignition switch is ON (engine OFF). Light goes off after two seconds from engine ON.

- When ATF temperature is high

AT OIL TEMP light illuminates when the ATF temperature is abnormally high with engine ON.

- When malfunction is detected

AT OIL TEMP light blinks at 2 Hz when the TCM detects the malfunction of CVT with engine ON. In this case, inspect using “Diagnostic Procedure with Diagnostic Trouble Code (DTC)”. <Ref. to CVT(HEV)(diag)-38, Diagnostic Procedure with Diagnostic Trouble Code (DTC).>

- When AT learning is not finished

AT OIL TEMP light repeats “Blinking at 4 Hz → Turning OFF” every two seconds, when the AT learning is not finished with engine ON. In this case, perform the “Learning”. (During AT learning, the light blinks at 2 Hz or illuminates.) <Ref. to CVT(HEV)(diag)-24, Learning Control.>

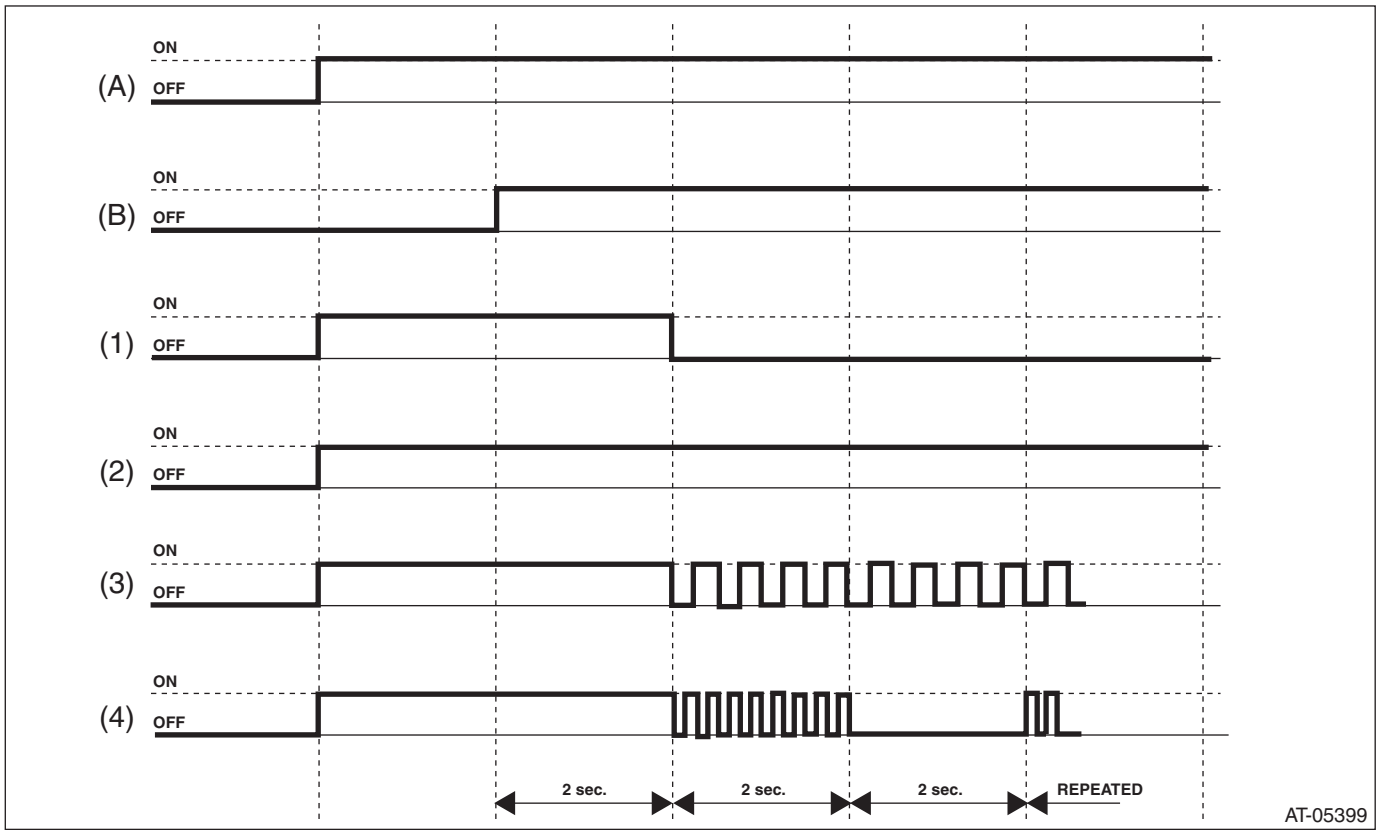

(A) Ignition switch condition
(B) Engine condition
(1) At normal condition
(2) When ATF temperature is high
(3) When malfunction is detected
(4) When AT learning is not finished

If the AT OIL TEMP light does not illuminate, or illumination patterns are not as above, check the AT OIL TEMP light circuit. <Ref. to CVT(HEV)(diag)-27, INSPECTION, AT OIL TEMP Warning Light Display.>

B: INSPECTION

DIAGNOSIS:

- AT OIL TEMP light circuit is open or shorted.
- Combination meter malfunction
- TCM is in special control mode.
- AT learning is not finished.

TROUBLE SYMPTOM:

- When the ignition switch is turned to ON, the AT OIL TEMP light does not illuminate.
- AT OIL TEMP light remains lit after engine start.

	Step	Check	Yes	No
1	**CHECK AT OIL TEMP LIGHT.** Turn the ignition switch to ON.	Does the AT OIL TEMP light illuminate?	Go to step **2**.	Perform the self-diagnosis of combination meter. <Ref. to IDI-7, SELF-DIAGNOSIS DISPLAY MODE, OPERATION, Combination Meter System.>
2	**CHECK AT OIL TEMP LIGHT.** Start the engine.	Does AT OIL TEMP light go off after two seconds from engine start?	Current condition is normal. Go back to Basic Diagnostic Procedure. <Ref. to CVT(HEV)(diag)-2, Basic Diagnostic Procedure.>	Go to step **3**.
3	**CHECK DTC.** Read the DTC relating the TCM using the Subaru Select Monitor.	Is DTC displayed?	Perform the diagnosis according to DTC.	Go to step **4**.
4	**CHECK TCM.** Read the data of «ATF Temperature Lamp» using the Subaru Select Monitor.	Is “ON” displayed?	Go to step **5**.	Perform the self-diagnosis of combination meter. <Ref. to IDI-7, SELF-DIAGNOSIS DISPLAY MODE, OPERATION, Combination Meter System.>
5	**CHECK TCM.** Read the data of «ATF Temp.» using the Subaru Select Monitor.	Is the display 125°C or more?	Go to step **6**.	Check the TCM.
6	**CHECK ATF TEMPERATURE.** Check the real fluid temperature from the transmission case surface temperature.	Does it clearly differ from the «ATF Temp.» displayed on Subaru Select Monitor?	Perform the diagnosis according to DTC P0711, P0712, P0713.	When ATF temperature can be judged as actually high, perform the diagnosis again after the ATF temperature lowers.

13.AWD Warning Light Display

A: OPERATION

AWD light illuminates or blinks, when the AWD is in special control condition and AWD has malfunction.

- At normal condition

AWD light always illuminates when the ignition switch is ON (engine OFF). Light goes off after two seconds from engine ON.

- When FF mode is selected

AWD light illuminates, when the AWD ON/OFF switching function is “FF mode” with engine ON.

- When malfunction is detected

AWD light blinks at 2 Hz when any of following malfunctions are detected.

1. When tire with different diameter is installed, or air pressure of any of four wheels is excessively low
2. When “Rear differential inspection mode” is judged as NG <Ref. to DI-66, Rear Differential Inspection Mode.>

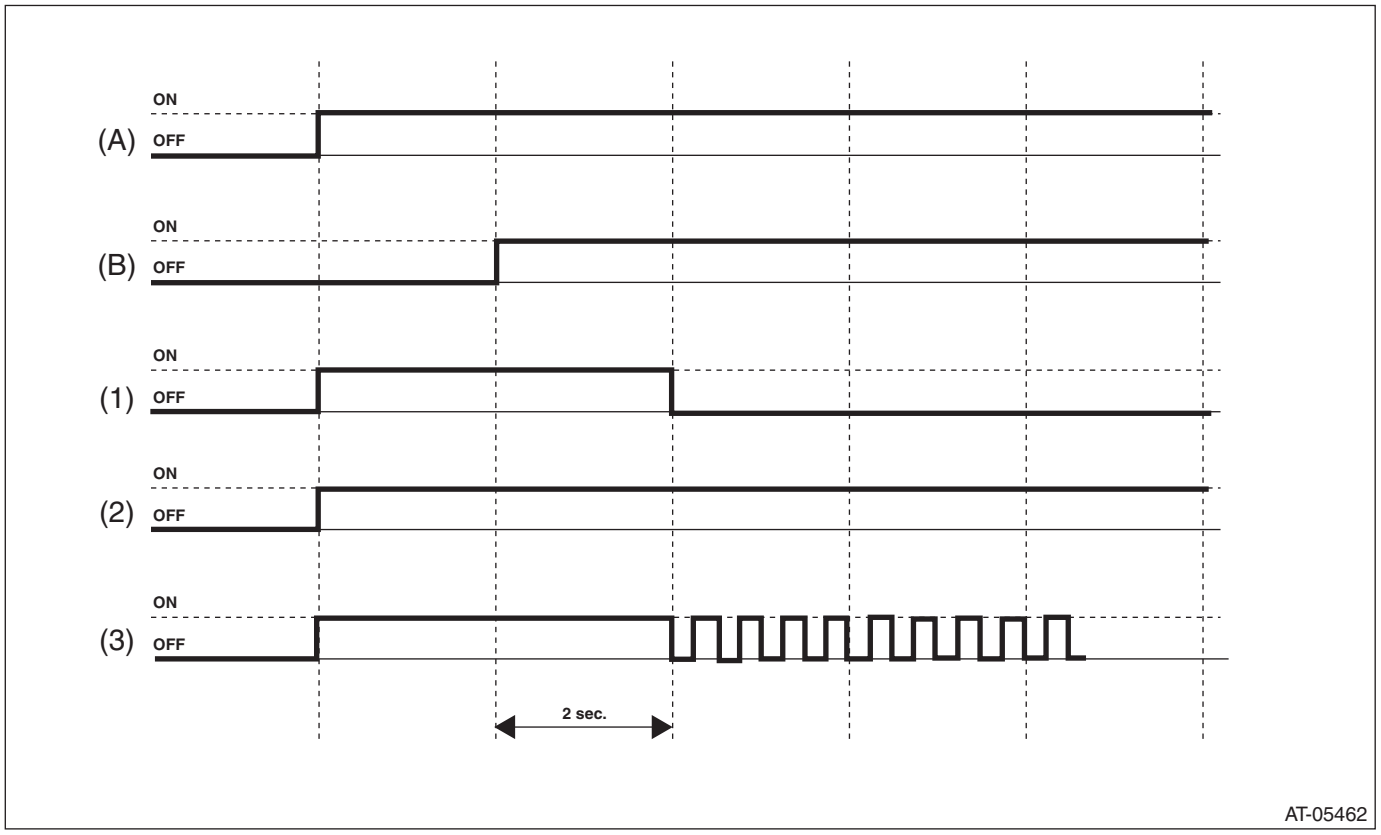

(A) Ignition switch condition (B) Engine condition

(1) At normal condition (2) When FF mode is selected (3) When malfunction is detected

If the AWD light does not illuminate, or illumination patterns are not as above, check the AWD light circuit. <Ref. to CVT(HEV)(diag)-29, INSPECTION, AWD Warning Light Display.>

B: INSPECTION

DIAGNOSIS:

- AWD light circuit is open or shorted.
- Combination meter malfunction
- TCM is in AWD special control mode.

TROUBLE SYMPTOM:

- When the ignition switch is turned to ON, the AWD light does not illuminate.
- AWD light remains lit after engine start.
- AWD light is blinking immediately after engine start.

	Step	Check	Yes	No
1	**CHECK AWD LIGHT.** Turn the ignition switch to ON.	Does the AWD light illuminate?	Go to step **2**.	Perform the self-diagnosis of combination meter. <Ref. to IDI-7, SELF-DIAGNOSIS DISPLAY MODE, OPERATION, Combination Meter System.>
2	**CHECK AWD LIGHT.** Start the engine.	Does AWD light go off after two seconds from engine start?	Current condition is normal. Go back to Basic Diagnostic Procedure. <Ref. to CVT(HEV)(diag)-2, Basic Diagnostic Procedure.>	Go to step **3**.
3	**CHECK DTC.** Read the DTC relating the TCM using the Subaru Select Monitor.	Is DTC displayed?	Perform the diagnosis according to DTC.	Go to step **4**.
4	**CHECK AWD LIGHT.** Check the display of AWD light after engine start.	Is AWD light illuminating?	Go to step **6**.	Go to step **5**.
5	**CHECK AWD LIGHT.** Check the display of AWD light after engine start.	Is AWD light blinking at 2 Hz?	Go to step **7**.	Go to step **8**.
6	**CHECK AWD ON/OFF SWITCHING FUNCTION.** Using the Subaru Select Monitor, select the {AWD ON/OFF switching mode} in {Maintenance mode} from «Work Support», and check the current mode. <Ref. to CVT(TH58A)-49, AWD ON/OFF Switching Mode.>	Is the message «At present, the vehicle is in AWD. Switch to FF?» displayed?	Go to step **8**.	If the message «At present, the vehicle is in FF. Switch to AWD?» is displayed, select “OK”, and switch to AWD mode.
7	**CHECK REAR DIFFERENTIAL.** Using the Subaru Select Monitor, select {Rear differential inspection mode} in {Maintenance mode} from «Work Support», and check. <Ref. to DI-66, Rear Differential Inspection Mode.>	Does AWD light go off after inspection is finished normally?	Current condition is normal. Go back to Basic Diagnostic Procedure. <Ref. to CVT(HEV)(diag)-2, Basic Diagnostic Procedure.>	Go to step **8**.
8	**CHECK COMBINATION METER.** Perform the self-diagnosis of combination meter. <Ref. to IDI-7, SELF-DIAGNOSIS DISPLAY MODE, OPERATION, Combination Meter System.>	Is there any trouble with the combination meter?	Repair the combination meter.	Check the TCM.

14.Diagnostic Procedure for Subaru Select Monitor Communication

A: COMMUNICATION FOR INITIALIZING IMPOSSIBLE

DIAGNOSIS:
Defective harness connector
TROUBLE SYMPTOM:
Subaru Select Monitor communication failure
WIRING DIAGRAM:
CVT control system <Ref. to WI(HEV)-86, CVT Control System.>

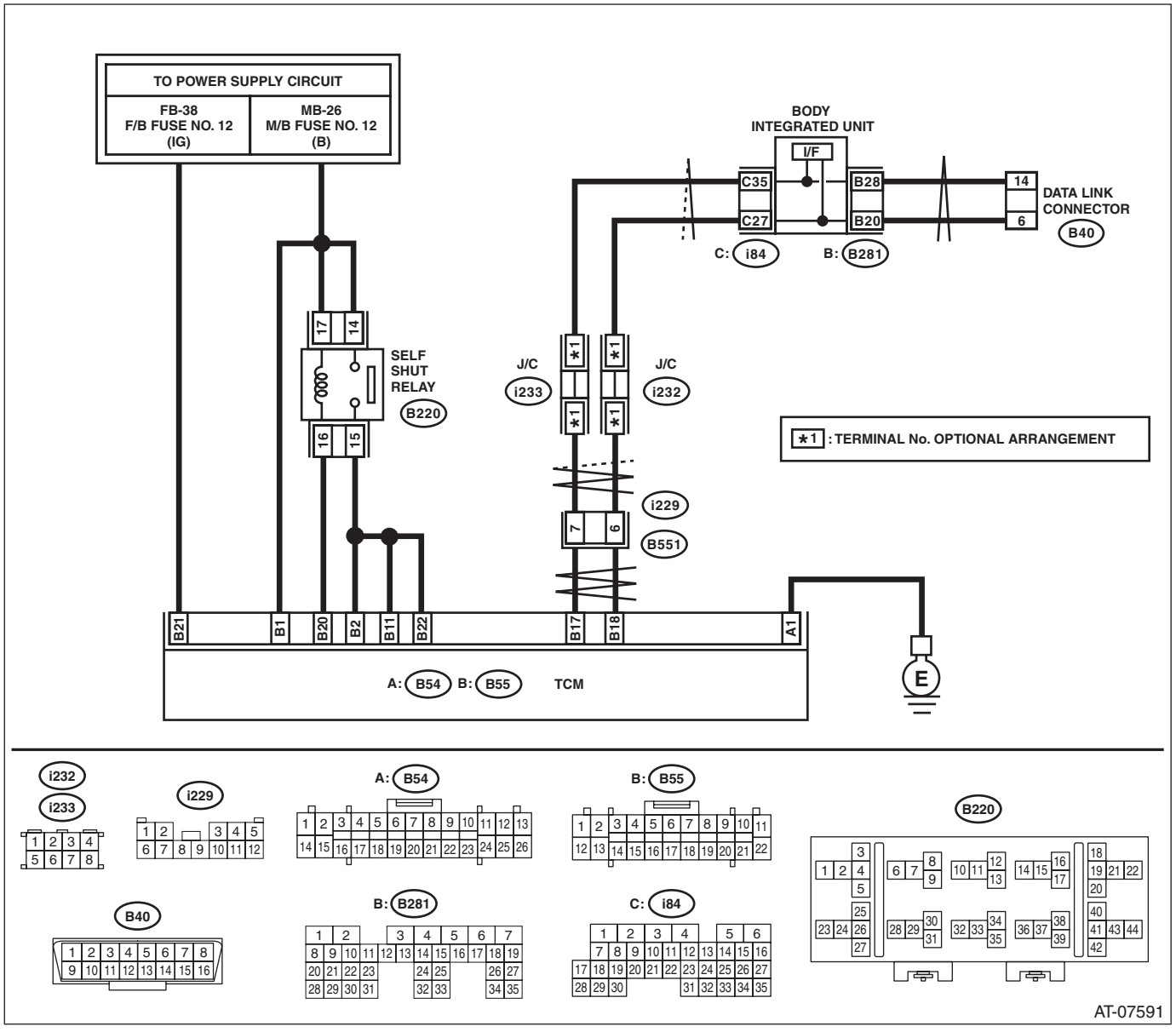

Step		Check	Yes	No
1	**CHECK IGNITION SWITCH.**	Is the ignition switch ON?	Go to step **2**.	Turn the ignition switch to ON, and select the transmission mode using the Subaru Select Monitor.

	Step	Check	Yes	No
2	**CHECK BATTERY.** 1) Turn the ignition switch to OFF. 2) Measure the battery voltage.	Is the voltage 11 V or more?	Go to step **3**.	Charge or replace the battery.
3	**CHECK BATTERY TERMINAL.**	Is there poor contact at battery terminal?	Repair or tighten the battery terminal.	Go to step **4**.
4	**CHECK INSTALLATION OF TCM CONNECTOR.** Turn the ignition switch to OFF.	Is the TCM connector inserted into the TCM until the clamp locks?	Go to step **5**.	Insert the TCM connector to TCM.
5	**CHECK LAN SYSTEM.** Perform the diagnosis for LAN system. <Ref. to LAN(HEV)(diag)-2, Basic Diagnostic Procedure.>	Is there any fault in LAN system?	Perform the diagnosis according to DTC for LAN system. <Ref. to LAN(HEV)(diag)-87, List of Diagnostic Trouble Code (DTC).>	Go to step **6**.
6	**CHECK SUBARU SELECT MONITOR COMMUNICATION.** 1) Turn the ignition switch to ON. 2) Check whether communication to transmission system can be executed normally.	Is the system name displayed on Subaru Select Monitor?	Check DTC of TCM. <Ref. to CVT(HEV)(diag)-18, Read Diagnostic Trouble Code (DTC).>	Go to step **7**.
7	**CHECK POWER SUPPLY CIRCUIT.** 1) Turn the ignition switch to ON. (engine OFF) 2) Measure the ignition power supply voltage between TCM connector and chassis ground. ***Connector & terminal*** ***(B55) No. 1 (+) — Chassis ground (–):*** ***(B55) No. 2 (+) — Chassis ground (–):*** ***(B55) No. 11 (+) — Chassis ground (–):*** ***(B55) No. 21 (+) — Chassis ground (–):*** ***(B55) No. 22 (+) — Chassis ground (–):***	Is the voltage 10 — 13 V?	Go to step **8**.	Repair the open circuit of harness between TCM and battery.
8	**CHECK HARNESS CONNECTOR BETWEEN TCM AND CHASSIS GROUND.** 1) Turn the ignition switch to OFF. 2) Disconnect the connector from TCM. 3) Measure the resistance of harness between TCM connector and chassis ground. ***Connector & terminal*** ***(B54) No. 1 — Chassis ground:***	Is the resistance less than 10 Ω?	Go to step **9**.	Repair the open circuit of the TCM ground circuit and poor contact of connector.
9	**CHECK POOR CONTACT OF CONNECTOR.**	Is there poor contact of control module power supply, ground circuit and data link connector?	Repair the connector.	Check the TCM.

15.List of Diagnostic Trouble Code (DTC)

A: LIST

DTC	Item	Content of diagnosis	Reference
P0500	Vehicle Speed Sensor “A”	VDCCM&H/U reception data abnormal	<Ref. to CVT(HEV)(diag)-38, DTC P0500 VEHICLE SPEED SENSOR “A”, Diagnostic Procedure with Diagnostic Trouble Code (DTC).>
P0603	Internal Control Module Keep Alive Memory (KAM) Error	Back-up voltage circuit is open or shorted.	<Ref. to CVT(HEV)(diag)-39, DTC P0603 INTERNAL CONTROL MODULE KEEP ALIVE MEMORY (KAM) ERROR, Diagnostic Procedure with Diagnostic Trouble Code (DTC).>
P0705	Transmission Range Sensor Circuit (PRNDL Input)	Inhibitor switch malfunction or short circuit	<Ref. to CVT(HEV)(diag)-40, DTC P0705 TRANSMISSION RANGE SENSOR CIRCUIT (PRNDL INPUT), Diagnostic Procedure with Diagnostic Trouble Code (DTC).>
P0708	AT Range Switch Not Inputted	Inhibitor switch malfunction or open circuit	<Ref. to CVT(HEV)(diag)-42, DTC P0708 AT RANGE SWITCH NOT INPUTTED, Diagnostic Procedure with Diagnostic Trouble Code (DTC).>
P0711	ATF Temp. Sensor Circuit Range/Performance	ATF temperature sensor is faulty or input signal circuit is faulty.	<Ref. to CVT(HEV)(diag)-44, DTC P0711 ATF TEMP. SENSOR CIRCUIT RANGE/PERFORMANCE, Diagnostic Procedure with Diagnostic Trouble Code (DTC).>
P0712	Transmission Fluid Temperature Sensor Circuit Low Input	ATF temperature sensor is faulty or input signal circuit is shorted.	<Ref. to CVT(HEV)(diag)-46, DTC P0712 TRANSMISSION FLUID TEMPERATURE SENSOR CIRCUIT LOW INPUT, Diagnostic Procedure with Diagnostic Trouble Code (DTC).>
P0713	Transmission Fluid Temperature Sensor Circuit High Input	ATF temperature sensor is faulty or input signal circuit is open or shorted.	<Ref. to CVT(HEV)(diag)-48, DTC P0713 TRANSMISSION FLUID TEMPERATURE SENSOR CIRCUIT HIGH INPUT, Diagnostic Procedure with Diagnostic Trouble Code (DTC).>
P0716	Torque Converter Turbine Speed	Turbine speed sensor is faulty or input signal circuit is open or shorted.	<Ref. to CVT(HEV)(diag)-50, DTC P0716 TORQUE CONVERTER TURBINE SPEED, Diagnostic Procedure with Diagnostic Trouble Code (DTC).>
P0719	Brake Switch Circuit Low	Brake switch is faulty or input signal circuit is open or shorted.	<Ref. to CVT(HEV)(diag)-52, DTC P0719 BRAKE SWITCH CIRCUIT LOW, Diagnostic Procedure with Diagnostic Trouble Code (DTC).>
P0720	Output Speed Sensor Circuit	Front wheel speed sensor is faulty or input signal circuit is open or shorted.	<Ref. to CVT(HEV)(diag)-54, DTC P0720 OUTPUT SPEED SENSOR CIRCUIT, Diagnostic Procedure with Diagnostic Trouble Code (DTC).>
P0724	Brake Switch Circuit High	Brake switch is faulty or input signal circuit is shorted.	<Ref. to CVT(HEV)(diag)-56, DTC P0724 BRAKE SWITCH CIRCUIT HIGH, Diagnostic Procedure with Diagnostic Trouble Code (DTC).>
P0730	Gearshift Control Performance Abnormal	Primary speed sensor or secondary speed sensor is faulty, control valve is faulty, or chain is faulty.	<Ref. to CVT(HEV)(diag)-58, DTC P0730 GEARSHIFT CONTROL PERFORMANCE ABNORMAL, Diagnostic Procedure with Diagnostic Trouble Code (DTC).>
P0801	Reverse Inhibit Control Circuit	Shift lock solenoid is faulty or output signal circuit is open or shorted.	<Ref. to CVT(HEV)(diag)-59, DTC P0801 REVERSE INHIBIT CONTROL CIRCUIT, Diagnostic Procedure with Diagnostic Trouble Code (DTC).>

DTC	Item	Content of diagnosis	Reference
P0812	Reverse Input Circuit	Inhibitor switch is faulty or R range switch input signal circuit is open or shorted.	<Ref. to CVT(HEV)(diag)-60, DTC P0812 REVERSE INPUT CIRCUIT, Diagnostic Procedure with Diagnostic Trouble Code (DTC).>
P0841	Secondary Oil Pressure Sensor Performance	Secondary pressure sensor is faulty, or control valve is faulty.	<Ref. to CVT(HEV)(diag)-62, DTC P0841 SECONDARY OIL PRESSURE SENSOR PERFORMANCE, Diagnostic Procedure with Diagnostic Trouble Code (DTC).>
P0842	Secondary Oil Pressure Sensor Circuit (Low)	Secondary pressure sensor is faulty, or input signal circuit is open or shorted.	<Ref. to CVT(HEV)(diag)-66, DTC P0842 SECONDARY OIL PRESSURE SENSOR CIRCUIT (LOW), Diagnostic Procedure with Diagnostic Trouble Code (DTC).>
P0843	Secondary Oil Pressure Sensor Circuit (High)	Secondary pressure sensor is faulty, or input signal circuit is shorted.	<Ref. to CVT(HEV)(diag)-68, DTC P0843 SECONDARY OIL PRESSURE SENSOR CIRCUIT (HIGH), Diagnostic Procedure with Diagnostic Trouble Code (DTC).>
P0851	Park/Neutral Switch Input Circuit Low	Inhibitor switch is faulty or P, N range switch input signal circuit is open or shorted.	<Ref. to CVT(HEV)(diag)-70, DTC P0851 PARK/NEUTRAL SWITCH INPUT CIRCUIT LOW, Diagnostic Procedure with Diagnostic Trouble Code (DTC).>
P086C	Reverse Input Circuit 2	Inhibitor switch is faulty or R range switch 2 input signal circuit is open or shorted.	<Ref. to CVT(HEV)(diag)-72, DTC P086C REVERSE INPUT CIRCUIT 2, Diagnostic Procedure with Diagnostic Trouble Code (DTC).>
P0882	TCM Power Input Signal Low	TCM power supply voltage low	<Ref. to CVT(HEV)(diag)-73, DTC P0882 TCM POWER INPUT SIGNAL LOW, Diagnostic Procedure with Diagnostic Trouble Code (DTC).>
P0890	AT Self-Shut Relay Diagnosis (Low)	Self-shut relay is faulty or input signal circuit is open or shorted.	<Ref. to CVT(HEV)(diag)-74, DTC P0890 AT SELF-SHUT RELAY DIAGNOSIS (LOW), Diagnostic Procedure with Diagnostic Trouble Code (DTC).>
P0951	Manual Switch	Manual mode switch is faulty or input signal circuit is open or shorted.	<Ref. to CVT(HEV)(diag)-76, DTC P0951 MANUAL SWITCH, Diagnostic Procedure with Diagnostic Trouble Code (DTC).>
P0962	Secondary Solenoid Circuit (Low)	Secondary solenoid is faulty, or output signal circuit is shorted.	<Ref. to CVT(HEV)(diag)-78, DTC P0962 SECONDARY SOLENOID CIRCUIT (LOW), Diagnostic Procedure with Diagnostic Trouble Code (DTC).>
P0963	Secondary Solenoid Circuit (High)	Secondary solenoid is faulty, or output signal circuit is open or shorted.	<Ref. to CVT(HEV)(diag)-80, DTC P0963 SECONDARY SOLENOID CIRCUIT (HIGH), Diagnostic Procedure with Diagnostic Trouble Code (DTC).>
P0965	Forward & Reverse Solenoid Function	F&R solenoid, forward clutch or control valve is faulty.	<Ref. to CVT(HEV)(diag)-82, DTC P0965 FORWARD & REVERSE SOLENOID FUNCTION, Diagnostic Procedure with Diagnostic Trouble Code (DTC).>
P0966	Forward & Reverse Solenoid Circuit (Low)	F&R solenoid is faulty or output signal circuit is shorted.	<Ref. to CVT(HEV)(diag)-83, DTC P0966 FORWARD & REVERSE SOLENOID CIRCUIT (LOW), Diagnostic Procedure with Diagnostic Trouble Code (DTC).>
P0967	Forward & Reverse Linear Solenoid Circuit (High)	F&R solenoid is faulty or output signal circuit is open or shorted.	<Ref. to CVT(HEV)(diag)-85, DTC P0967 FORWARD & REVERSE LINEAR SOLENOID CIRCUIT (HIGH), Diagnostic Procedure with Diagnostic Trouble Code (DTC).>
P0970	Transfer Solenoid Circuit (Low)	AWD solenoid is faulty or output signal circuit is shorted.	<Ref. to CVT(HEV)(diag)-87, DTC P0970 TRANSFER SOLENOID CIRCUIT (LOW), Diagnostic Procedure with Diagnostic Trouble Code (DTC).>

DTC	Item	Content of diagnosis	Reference
P0971	Transfer Solenoid Circuit (High)	AWD solenoid is faulty or output signal circuit is open or shorted.	<Ref. to CVT(HEV)(diag)-88, DTC P0971 TRANSFER SOLENOID CIRCUIT (HIGH), Diagnostic Procedure with Diagnostic Trouble Code (DTC).>
P0973	Primary Solenoid System A Circuit (Low)	Primary UP solenoid is faulty, or output signal circuit is shorted.	<Ref. to CVT(HEV)(diag)-90, DTC P0973 PRIMARY SOLENOID SYSTEM A CIRCUIT (LOW), Diagnostic Procedure with Diagnostic Trouble Code (DTC).>
P0974	Primary Solenoid System A Circuit (High)	Primary UP solenoid is faulty, or output signal circuit is open or shorted.	<Ref. to CVT(HEV)(diag)-91, DTC P0974 PRIMARY SOLENOID SYSTEM A CIRCUIT (HIGH), Diagnostic Procedure with Diagnostic Trouble Code (DTC).>
P0976	Primary Solenoid System B Circuit (Low)	Primary DOWN solenoid is faulty, or output signal circuit is shorted.	<Ref. to CVT(HEV)(diag)-93, DTC P0976 PRIMARY SOLENOID SYSTEM B CIRCUIT (LOW), Diagnostic Procedure with Diagnostic Trouble Code (DTC).>
P0977	Primary Solenoid System B Circuit (High)	Primary DOWN solenoid is faulty, or output signal circuit is open or shorted.	<Ref. to CVT(HEV)(diag)-94, DTC P0977 PRIMARY SOLENOID SYSTEM B CIRCUIT (HIGH), Diagnostic Procedure with Diagnostic Trouble Code (DTC).>
P0B0A	Auxiliary Transmission Fluid Pump Motor Supply Voltage Circuit Low	Electric oil pump inverter 100 V power failure	<Ref. to CVT(HEV)(diag)-96, DTC P0B0A AUXILIARY TRANSMISSION FLUID PUMP MOTOR SUPPLY VOLTAGE CIRCUIT LOW, Diagnostic Procedure with Diagnostic Trouble Code (DTC).>
P0B0B	Auxiliary Transmission Fluid Pump Motor Supply Voltage Circuit High	Electric oil pump inverter 100 V power failure	<Ref. to CVT(HEV)(diag)-97, DTC P0B0B AUXILIARY TRANSMISSION FLUID PUMP MOTOR SUPPLY VOLTAGE CIRCUIT HIGH, Diagnostic Procedure with Diagnostic Trouble Code (DTC).>
P0B0D	Auxiliary Transmission Fluid Pump Motor Control Module	Electric oil pump inverter is faulty.	<Ref. to CVT(HEV)(diag)-98, DTC P0B0D AUXILIARY TRANSMISSION FLUID PUMP MOTOR CONTROL MODULE, Diagnostic Procedure with Diagnostic Trouble Code (DTC).>
P0C1D	Auxiliary Transmission Fluid Pump Control Module Internal Temperature Sensor Range/Performance	Electric oil pump inverter circuit board is faulty.	<Ref. to CVT(HEV)(diag)-99, DTC P0C1D AUXILIARY TRANSMISSION FLUID PUMP CONTROL MODULE INTERNAL TEMPERATURE SENSOR RANGE/PERFORMANCE, Diagnostic Procedure with Diagnostic Trouble Code (DTC).>
P0C21	Auxiliary Transmission Fluid Pump Phase U-V-W Circuit Low	Electric oil pump is faulty, electric oil pump inverter is faulty, or 3-phase circuit is open or shorted.	<Ref. to CVT(HEV)(diag)-100, DTC P0C21 AUXILIARY TRANSMISSION FLUID PUMP PHASE U-V-W CIRCUIT LOW, Diagnostic Procedure with Diagnostic Trouble Code (DTC).>
P0C22	Auxiliary Transmission Fluid Pump Phase U-V-W Circuit High	Electric oil pump is faulty, electric oil pump inverter is faulty, or 3-phase circuit is shorted.	<Ref. to CVT(HEV)(diag)-102, DTC P0C22 AUXILIARY TRANSMISSION FLUID PUMP PHASE U-V-W CIRCUIT HIGH, Diagnostic Procedure with Diagnostic Trouble Code (DTC).>
P0C24	Auxiliary Transmission Fluid Pump Control Module Circuit Low	Electric oil pump inverter 12V power failure	<Ref. to CVT(HEV)(diag)-104, DTC P0C24 AUXILIARY TRANSMISSION FLUID PUMP CONTROL MODULE CIRCUIT LOW, Diagnostic Procedure with Diagnostic Trouble Code (DTC).>

DTC	Item	Content of diagnosis	Reference
P0C25	Auxiliary Transmission Fluid Pump Control Module Circuit High	Electric oil pump inverter 12V power failure	<Ref. to CVT(HEV)(diag)-105, DTC P0C25 AUXILIARY TRANSMISSION FLUID PUMP CONTROL MODULE CIRCUIT HIGH, Diagnostic Procedure with Diagnostic Trouble Code (DTC).>
P0C27	Auxiliary Transmission Fluid Pump Motor Current Low	Electric oil pump inverter is faulty.	<Ref. to CVT(HEV)(diag)-106, DTC P0C27 AUXILIARY TRANSMISSION FLUID PUMP MOTOR CURRENT LOW, Diagnostic Procedure with Diagnostic Trouble Code (DTC).>
P0C28	Auxiliary Transmission Fluid Pump Motor Current High	Electric oil pump inverter is faulty.	<Ref. to CVT(HEV)(diag)-107, DTC P0C28 AUXILIARY TRANSMISSION FLUID PUMP MOTOR CURRENT HIGH, Diagnostic Procedure with Diagnostic Trouble Code (DTC).>
P0C29	Auxiliary Transmission Fluid Pump Driver Current Performance	Overcurrent to electric oil pump inverter, too much load being applied electric oil pump motor.	<Ref. to CVT(HEV)(diag)-108, DTC P0C29 AUXILIARY TRANSMISSION FLUID PUMP DRIVER CURRENT PERFORMANCE, Diagnostic Procedure with Diagnostic Trouble Code (DTC).>
P0C2A	Auxiliary Transmission Fluid Pump Motor Stalled	Electric oil pump inverter control error	<Ref. to CVT(HEV)(diag)-110, DTC P0C2A AUXILIARY TRANSMISSION FLUID PUMP MOTOR STALLED, Diagnostic Procedure with Diagnostic Trouble Code (DTC).>
P1724	AT EEPROM Error	TCM EEPROM malfunction	<Ref. to CVT(HEV)(diag)-111, DTC P1724 AT EEPROM ERROR, Diagnostic Procedure with Diagnostic Trouble Code (DTC).>
P172A	Auxiliary Transmission Fluid Pump Reverse Rotation	Electric oil pump inverter control error	<Ref. to CVT(HEV)(diag)-112, DTC P172A AUXILIARY TRANSMISSION FLUID PUMP REVERSE ROTATION, Diagnostic Procedure with Diagnostic Trouble Code (DTC).>
P2715	Pressure Control Solenoid D Stuck On	Output clutch solenoid is faulty, output clutch is faulty, or output clutch valve is malfunctioning.	<Ref. to CVT(HEV)(diag)-112, DTC P2715 PRESSURE CONTROL SOLENOID D STUCK ON, Diagnostic Procedure with Diagnostic Trouble Code (DTC).>
P2719	Pressure Control Solenoid D Control Circuit Range/Performance	Output clutch solenoid is faulty, output clutch is faulty, or output clutch valve is malfunctioning.	<Ref. to CVT(HEV)(diag)-113, DTC P2719 PRESSURE CONTROL SOLENOID D CONTROL CIRCUIT RANGE/PERFORMANCE, Diagnostic Procedure with Diagnostic Trouble Code (DTC).>
P2720	Pressure Control Solenoid D Control Circuit Low	Output clutch solenoid is faulty, or output signal circuit is shorted.	<Ref. to CVT(HEV)(diag)-114, DTC P2720 PRESSURE CONTROL SOLENOID D CONTROL CIRCUIT LOW, Diagnostic Procedure with Diagnostic Trouble Code (DTC).>
P2721	Pressure Control Solenoid D Control Circuit High	Output clutch solenoid is faulty, or output signal circuit is open or shorted.	<Ref. to CVT(HEV)(diag)-116, DTC P2721 PRESSURE CONTROL SOLENOID D CONTROL CIRCUIT HIGH, Diagnostic Procedure with Diagnostic Trouble Code (DTC).>
P2750	Sec. Pulley Revolution Speed Sensor Circuit	Secondary speed sensor is faulty, or input signal circuit is open or shorted.	<Ref. to CVT(HEV)(diag)-118, DTC P2750 SEC. PULLEY REVOLUTION SPEED SENSOR CIRCUIT, Diagnostic Procedure with Diagnostic Trouble Code (DTC).>
P2762	Lock-Up Duty Solenoid Malfunction	Lock-up duty solenoid, lock-up clutch or control valve is faulty	<Ref. to CVT(HEV)(diag)-120, DTC P2762 LOCK-UP DUTY SOLENOID MALFUNCTION, Diagnostic Procedure with Diagnostic Trouble Code (DTC).>
P2763	Lock-Up Duty Solenoid Circuit (High)	Lock-up duty solenoid is faulty or output signal circuit is open or shorted.	<Ref. to CVT(HEV)(diag)-121, DTC P2763 LOCK-UP DUTY SOLENOID CIRCUIT (HIGH), Diagnostic Procedure with Diagnostic Trouble Code (DTC).>

DTC	Item	Content of diagnosis	Reference
P2764	Lock-Up Duty Solenoid Circuit (Low)	Lock-up duty solenoid is faulty or output signal circuit is shorted.	<Ref. to CVT(HEV)(diag)-123, DTC P2764 LOCK-UP DUTY SOLENOID CIRCUIT (LOW), Diagnostic Procedure with Diagnostic Trouble Code (DTC).>
P2797	Auxiliary Transmission Fluid Pump	Air entering, contamination clogging, or oil passage abnormality in the electric air pump	<Ref. to CVT(HEV)(diag)-124, DTC P2797 AUXILIARY TRANSMISSION FLUID PUMP, Diagnostic Procedure with Diagnostic Trouble Code (DTC).>
U0073	Control Module Communication Bus Off	CAN bus is shorted or communication error.	<Ref. to CVT(HEV)(diag)-125, DTC U0073 CONTROL MODULE COMMUNICATION BUS OFF, Diagnostic Procedure with Diagnostic Trouble Code (DTC).>
U0075	Control Module Communication Bus "PU-CAN" Off	PU-CAN bus circuit is short or communication system is faulty.	<Ref. to CVT(HEV)(diag)-125, DTC U0075 CONTROL MODULE COMMUNICATION BUS "PU-CAN" OFF, Diagnostic Procedure with Diagnostic Trouble Code (DTC).>
U0076	Control Module Communication Bus "HEV-CAN" Off	HEV-CAN bus circuit is short or communication system is faulty.	<Ref. to CVT(HEV)(diag)-125, DTC U0076 CONTROL MODULE COMMUNICATION BUS "HEV-CAN" OFF, Diagnostic Procedure with Diagnostic Trouble Code (DTC).>
U0100	Lost Communication With ECM/PCM “A”	Detected that the engine data has not yet arrived.	<Ref. to CVT(HEV)(diag)-125, DTC U0100 LOST COMMUNICATION WITH ECM/PCM “A”, Diagnostic Procedure with Diagnostic Trouble Code (DTC).>
U0101	Lost Communication With TCM	Detected that the transmission data has not yet arrived.	<Ref. to CVT(HEV)(diag)-125, DTC U0101 LOST COMMUNICATION WITH TCM, Diagnostic Procedure with Diagnostic Trouble Code (DTC).>
U0110	Lost Communication With Drive Motor Control Module "A"	Detected that the motor control module data has not yet arrived.	<Ref. to CVT(HEV)(diag)-125, DTC U0110 LOST COMMUNICATION WITH DRIVE MOTOR CONTROL MODULE "A", Diagnostic Procedure with Diagnostic Trouble Code (DTC).>
U0122	Lost Communication With Vehicle Dynamics Control Module	Detected that the VDC data has not yet arrived.	<Ref. to CVT(HEV)(diag)-125, DTC U0122 LOST COMMUNICATION WITH VEHICLE DYNAMICS CONTROL MODULE, Diagnostic Procedure with Diagnostic Trouble Code (DTC).>
U0140	Lost Communication With Body Control Module	Detected that the body integrated unit data has not yet arrived.	<Ref. to CVT(HEV)(diag)-125, DTC U0140 LOST COMMUNICATION WITH BODY CONTROL MODULE, Diagnostic Procedure with Diagnostic Trouble Code (DTC).>
U0155	Lost Communication With Instrument Panel Cluster (IPC) Control Module	Detected that the meter data has not yet arrived.	<Ref. to CVT(HEV)(diag)-125, DTC U0155 LOST COMMUNICATION WITH INSTRUMENT PANEL CLUSTER (IPC) CONTROL MODULE, Diagnostic Procedure with Diagnostic Trouble Code (DTC).>
U0287	Lost Communication With Transmission Fluid Pump Module	Detected that the electric oil pump data has not yet arrived.	<Ref. to CVT(HEV)(diag)-125, DTC U0287 LOST COMMUNICATION WITH TRANSMISSION FLUID PUMP MODULE, Diagnostic Procedure with Diagnostic Trouble Code (DTC).>
U0293	Lost Communication With Hybrid Powertrain Control Module	Detected that the hybrid data has not yet arrived.	<Ref. to CVT(HEV)(diag)-126, DTC U0293 LOST COMMUNICATION WITH HYBRID POWERTRAIN CONTROL MODULE, Diagnostic Procedure with Diagnostic Trouble Code (DTC).>

DTC	Item	Content of diagnosis	Reference
U0401	Invalid Data Received From ECM/PCM “A”	Detected abnormality of the engine data.	<Ref. to CVT(HEV)(diag)-126, DTC U0401 INVALID DATA RECEIVED FROM ECM/PCM “A”, Diagnostic Procedure with Diagnostic Trouble Code (DTC).>
U0402	Invalid Data Received From TCM	Detected abnormality of the transmission data.	<Ref. to CVT(HEV)(diag)-126, DTC U0402 INVALID DATA RECEIVED FROM TCM, Diagnostic Procedure with Diagnostic Trouble Code (DTC).>
U0411	Invalid Data Received From Drive Motor Control Module "A"	Detected abnormality of the motor control module data.	<Ref. to CVT(HEV)(diag)-126, DTC U0411 INVALID DATA RECEIVED FROM DRIVE MOTOR CONTROL MODULE "A", Diagnostic Procedure with Diagnostic Trouble Code (DTC).>
U0416	Invalid Data Received From Vehicle Dynamics Control Module	Detected abnormality of the VDC data.	<Ref. to CVT(HEV)(diag)-126, DTC U0416 INVALID DATA RECEIVED FROM VEHICLE DYNAMICS CONTROL MODULE, Diagnostic Procedure with Diagnostic Trouble Code (DTC).>
U0422	Invalid Data Received From Body Control Module	Detected abnormality of the body integrated unit data.	<Ref. to CVT(HEV)(diag)-126, DTC U0422 INVALID DATA RECEIVED FROM BODY CONTROL MODULE, Diagnostic Procedure with Diagnostic Trouble Code (DTC).>
U0423	Invalid Data Received From Instrument Panel Cluster Control Module	Detected abnormality of the meter data.	<Ref. to CVT(HEV)(diag)-126, DTC U0423 INVALID DATA RECEIVED FROM INSTRUMENT PANEL CLUSTER CONTROL MODULE, Diagnostic Procedure with Diagnostic Trouble Code (DTC).>
U0588	Invalid Data Received From Transmission Fluid Pump Module	Detected abnormality of the electric oil pump data.	<Ref. to CVT(HEV)(diag)-126, DTC U0588 INVALID DATA RECEIVED FROM TRANSMISSION FLUID PUMP MODULE, Diagnostic Procedure with Diagnostic Trouble Code (DTC).>
U0594	Invalid Data Received From Hybrid Powertrain Control Module	Detected abnormality of the hybrid data.	<Ref. to CVT(HEV)(diag)-126, DTC U0594 INVALID DATA RECEIVED FROM HYBRID POWERTRAIN CONTROL MODULE, Diagnostic Procedure with Diagnostic Trouble Code (DTC).>
U1100	Lost Communication With ECM/PCM PU-CAN	Detected that the engine PU-CAN data has not yet arrived.	<Ref. to CVT(HEV)(diag)-127, DTC U1100 LOST COMMUNICATION WITH ECM/PCM PU-CAN, Diagnostic Procedure with Diagnostic Trouble Code (DTC).>
U1293	Lost Communication With Hybrid Powertrain Control Module PU-CAN	Detected that the hybrid powertrain control module PU-CAN data has not yet arrived.	<Ref. to CVT(HEV)(diag)-127, DTC U1293 LOST COMMUNICATION WITH HYBRID POWERTRAIN CONTROL MODULE PU-CAN, Diagnostic Procedure with Diagnostic Trouble Code (DTC).>
U1401	Invalid Data Received From ECM/PCM PU-CAN	Detected abnormality of the engine·PU-CAN data.	<Ref. to CVT(HEV)(diag)-127, DTC U1401 INVALID DATA RECEIVED FROM ECM/PCM PU-CAN, Diagnostic Procedure with Diagnostic Trouble Code (DTC).>
U1594	Invalid Data Received From Hybrid Powertrain Control Module PU-CAN	Detected abnormality of the hybrid powertrain control module PU-CAN data.	<Ref. to CVT(HEV)(diag)-127, DTC U1594 INVALID DATA RECEIVED FROM HYBRID POWERTRAIN CONTROL MODULE PU-CAN, Diagnostic Procedure with Diagnostic Trouble Code (DTC).>

16.Diagnostic Procedure with Diagnostic Trouble Code (DTC)

A: DTC P0500 VEHICLE SPEED SENSOR “A”

DTC DETECTING CONDITION:

- Immediately at fault recognition
- GENERAL DESCRIPTION <Ref. to GD(CVT)(HEV)-5, DTC P0500 VEHICLE SPEED SENSOR “A”, Diagnostic Trouble Code (DTC) Detecting Criteria.>

NOTE:
Refer to the “ENGINE (DIAGNOSTICS)” for diagnostic procedure. <Ref. to EN(H4DO HEV)(diag)-253, DTC P0500 VEHICLE SPEED SENSOR “A”, Diagnostic Procedure with Diagnostic Trouble Code (DTC).>

B: DTC P0603 INTERNAL CONTROL MODULE KEEP ALIVE MEMORY (KAM) ERROR

DTC DETECTING CONDITION:

- Immediately at fault recognition
- GENERAL DESCRIPTION <Ref. to GD(CVT)(HEV)-6, DTC P0603 INTERNAL CONTROL MODULE KEEP ALIVE MEMORY (KAM) ERROR, Diagnostic Trouble Code (DTC) Detecting Criteria.>

WIRING DIAGRAM:

CVT control system <Ref. to WI(HEV)-86, CVT Control System.>

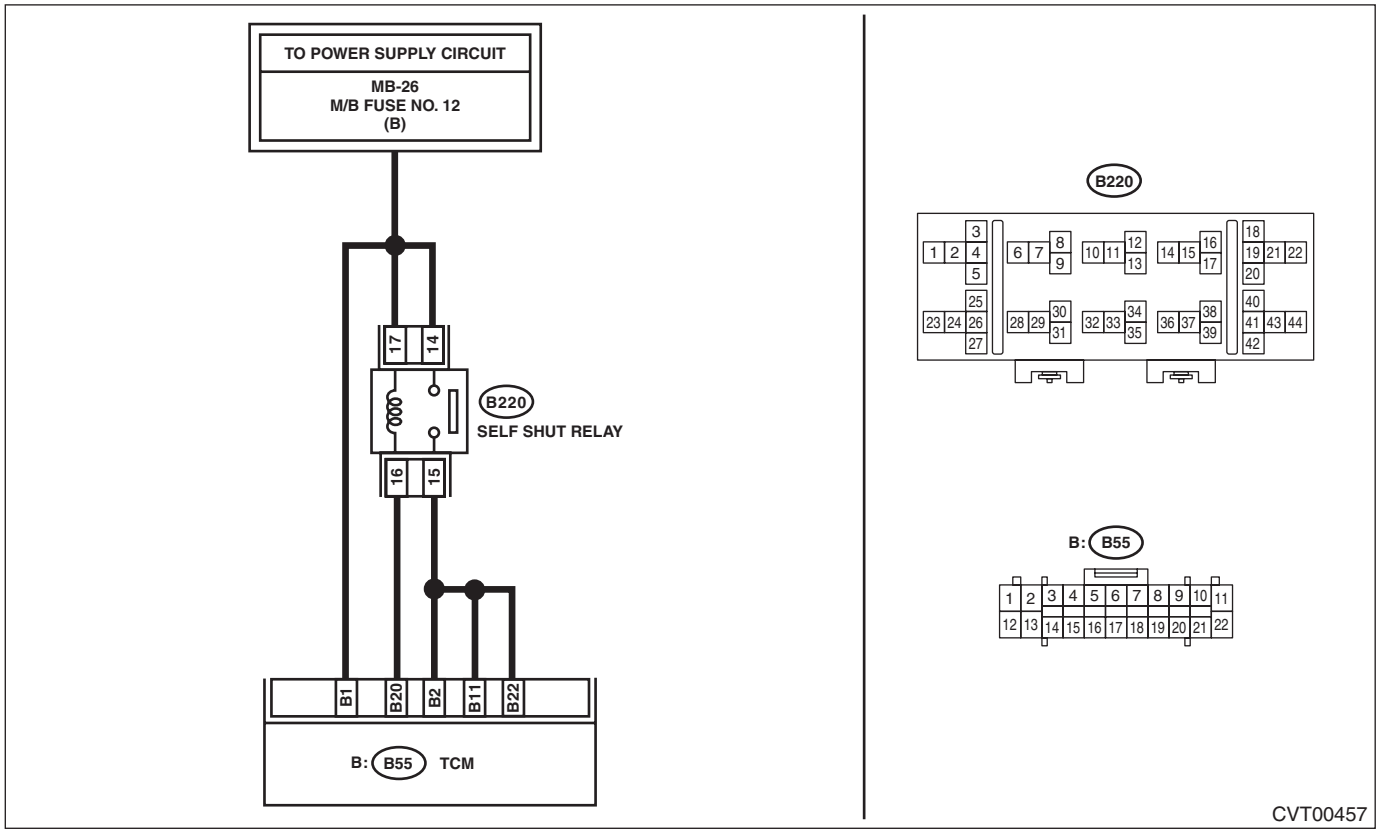

	Step	Check	Yes	No
1	**CHECK FUSE.** Remove the fuse (M/B No. 12).	Is the fuse blown out?	Replace the fuse. If the replaced fuse has blown out easily, repair short circuit of harness between fuse and TCM.	Go to step **2**.
2	**CHECK BACKUP POWER SUPPLY.** Read the data of «System Voltage» using the Subaru Select Monitor.	Is the voltage 10 — 13 V?	Current condition is normal.	Go to step **3**.
3	**CHECK HARNESS.** 1) Disconnect the TCM connector. 2) Measure the resistance of harness between TCM and fuse (M/B No. 12). ***Connector & terminal*** ***(B55) No. 20 — fuse (M/B No. 12):***	Is the resistance less than 1 Ω?	Check the TCM.	Repair the open circuit of harness.

C: DTC P0705 TRANSMISSION RANGE SENSOR CIRCUIT (PRNDL INPUT)

DTC DETECTING CONDITION:

- Immediately at fault recognition
- GENERAL DESCRIPTION <Ref. to GD(CVT)(HEV)-7, DTC P0705 TRANSMISSION RANGE SENSOR CIRCUIT (PRNDL INPUT), Diagnostic Trouble Code (DTC) Detecting Criteria.>

TROUBLE SYMPTOM:

- Shift characteristics are erroneous.
- The range position of the select lever and the position of shift indicator display do not match.

WIRING DIAGRAM:

CVT control system <Ref. to WI(HEV)-86, CVT Control System.>

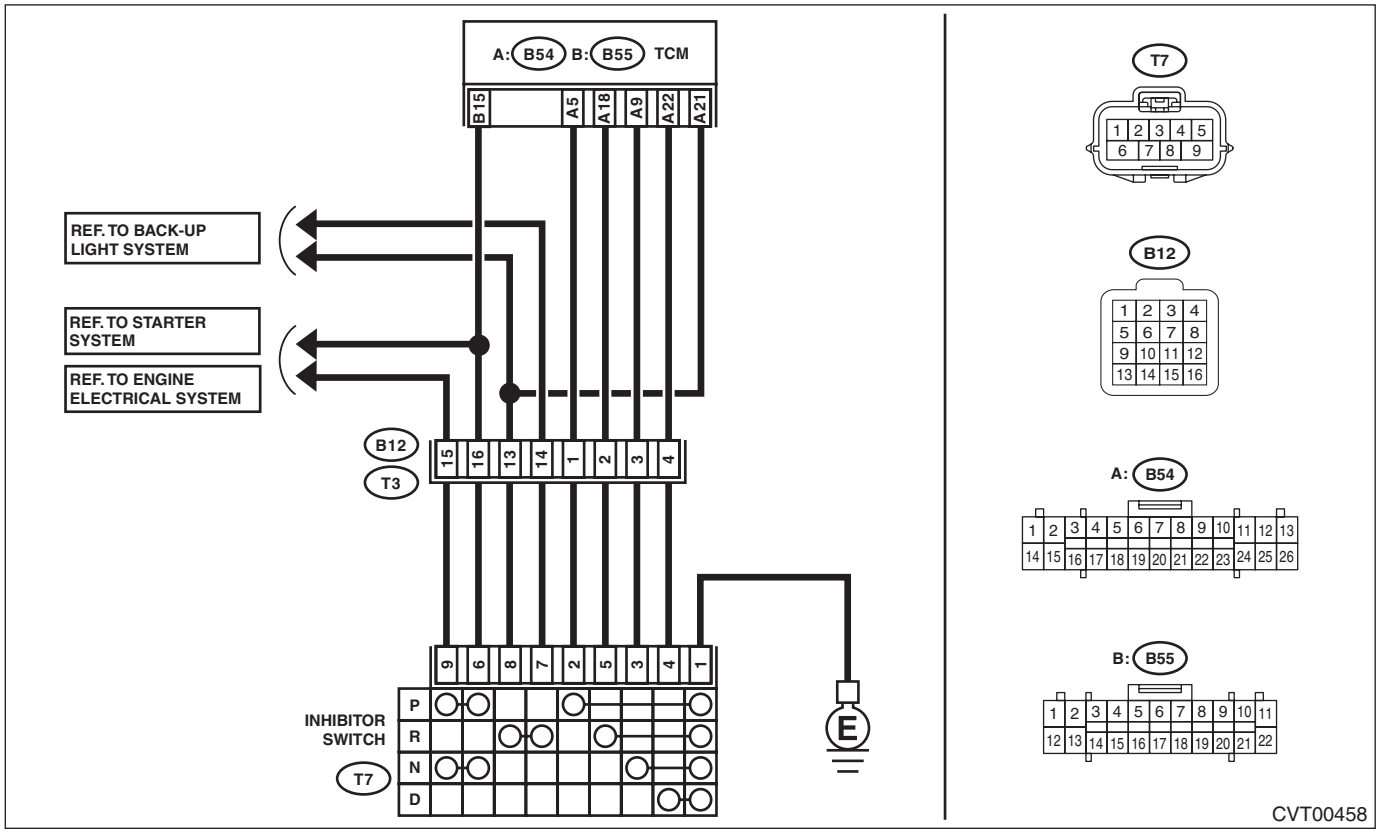

	Step	Check	Yes	No
1	**CHECK INPUT SIGNAL FOR TCM.** 1) Turn the ignition switch to ON. 2) Move the select lever to each range, and read the data of «P Range», «R Range», «N Range», «D Range», «N/P Range Signal», «R Range Signal2» using the Subaru Select Monitor.	Is display “OFF” for the range other than corresponding range?	Go to step **5**.	Go to step **2**.
2	**CHECK HARNESS.** 1) Turn the ignition switch to OFF. 2) Disconnect the TCM and transmission connectors. 3) Measure the resistance between TCM connector and chassis ground. ***Connector & terminal*** ***(B54) No. 5 — Chassis ground:*** ***(B54) No. 18 — Chassis ground:*** ***(B54) No. 9 — Chassis ground:*** ***(B54) No. 21 — Chassis ground:*** ***(B55) No. 15 — Chassis ground:*** ***(B54) No. 22 — Chassis ground:***	Is each resistance 1 MΩ or more?	Go to step **3**.	Repair the short circuit of body harness.

	Step	Check	Yes	No
3	**CHECK HARNESS.** 1) Disconnect the inhibitor switch connector. 2) Measure the resistance between transmission connector and chassis ground. ***Connector & terminal*** ***(T3) No. 1 — Chassis ground:*** ***(T3) No. 2 — Chassis ground:*** ***(T3) No. 3 — Chassis ground:*** ***(T3) No. 4 — Chassis ground:*** ***(T3) No. 13 — Chassis ground:*** ***(T3) No. 16 — Chassis ground:***	Is each resistance 1 MΩ or more?	Go to step **4**.	Repair the short circuit of transmission harness.
4	**CHECK INHIBITOR SWITCH.** Move the select lever to each range, and measure the resistance between inhibitor switch connector terminals. ***Connector & terminal*** ***(T7) No. 2 — (T7) No. 1:*** ***(T7) No. 5 — (T7) No. 1:*** ***(T7) No. 3 — (T7) No. 1:*** ***(T7) No. 4 — (T7) No. 1:*** ***(T7) No. 6 — (T7) No. 1:*** ***(T7) No. 8 — (T7) No. 1:***	Is the resistance other than corresponding range 1 MΩ or more?	Go to step **5**.	Replace the inhibitor switch. <Ref. to CVT(TH58A)-96, Inhibitor Switch.>
5	**CHECK FOR POOR CONTACT.**	Is there poor contact between TCM, inhibitor switch, transmission ground?	Repair the poor contact.	Check the TCM.

D: DTC P0708 AT RANGE SWITCH NOT INPUTTED

DTC DETECTING CONDITION:

- Immediately at fault recognition
- GENERAL DESCRIPTION <Ref. to GD(CVT)(HEV)-8, DTC P0708 AT RANGE SWITCH NOT INPUTTED, Diagnostic Trouble Code (DTC) Detecting Criteria.>

TROUBLE SYMPTOM:

- Shift characteristics are erroneous.
- The range position of the select lever and the position of shift indicator display do not match.

WIRING DIAGRAM:

CVT control system <Ref. to WI(HEV)-86, CVT Control System.>

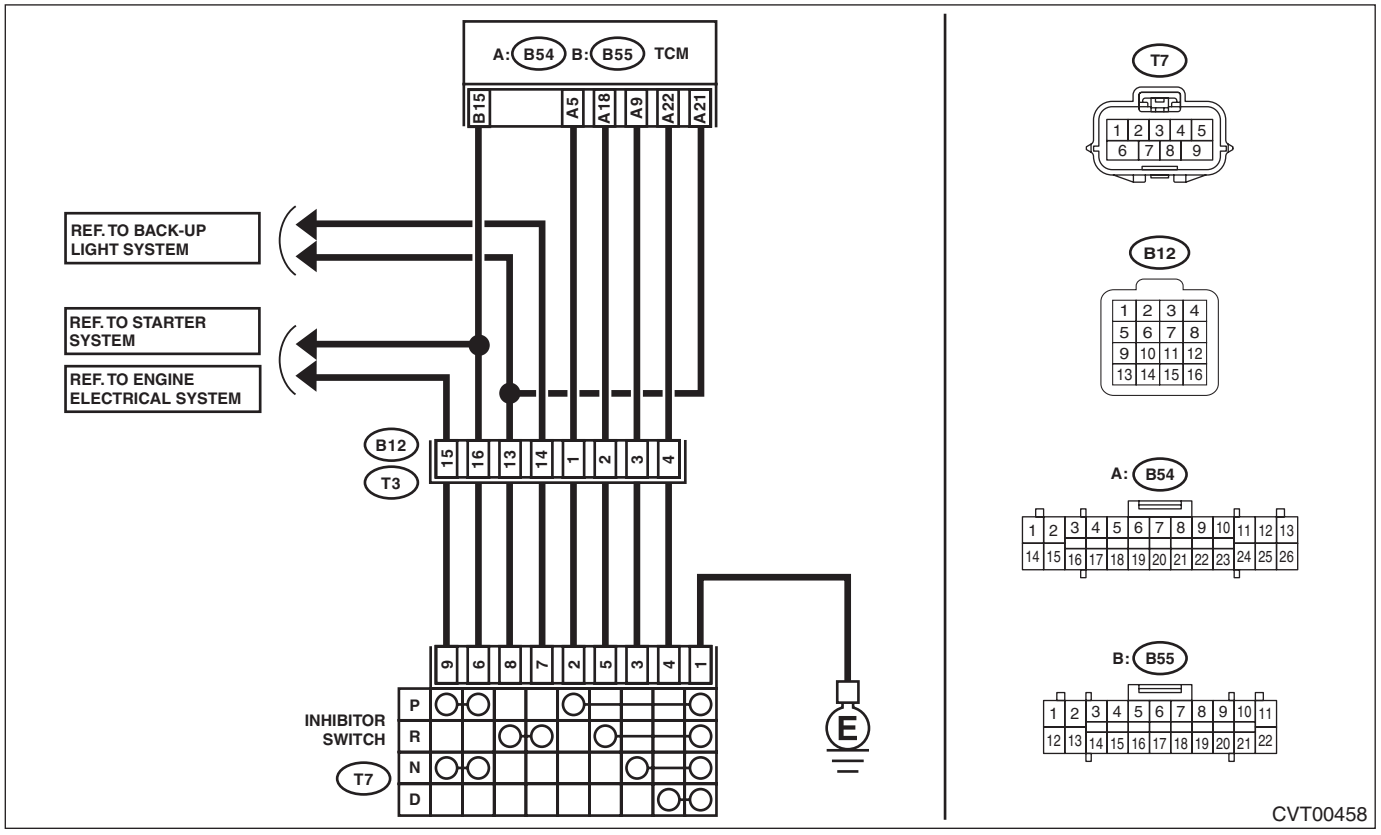

	Step	Check	Yes	No
1	**CHECK INPUT SIGNAL FOR TCM.** 1) Turn the ignition switch to ON. 2) Move the select lever to each range, and read the data of «P Range», «R Range», «N Range», «D Range», «N/P Range Signal», «R Range Signal2» using the Subaru Select Monitor.	Is the display of the corresponding range “ON”?	Go to step **7**.	Go to step **2**.
2	**CHECK HARNESS.** 1) Turn the ignition switch to OFF. 2) Disconnect the TCM and transmission connectors. 3) Measure the resistance of harness between TCM connector and transmission connector. ***Connector & terminal*** ***(B54) No. 5 — (B12) No. 1:*** ***(B54) No. 18 — (B12) No. 2:*** ***(B54) No. 9 — (B12) No. 3:*** ***(B54) No. 22 — (B12) No. 4:*** ***(B54) No. 21 — (B12) No. 13:*** ***(B55) No. 15 — (B12) No. 16:***	Is each resistance less than 1 Ω?	Go to step **3**.	Repair the open circuit of body harness.

	Step	Check	Yes	No
3	**CHECK HARNESS.** Measure the resistance of harness between inhibitor switch connector and transmission ground. ***Connector & terminal*** ***(T7) No. 1 — Transmission ground:***	Is the resistance less than 1 Ω?	Go to step **4**.	Repair the open circuit of harness.
4	**CHECK HARNESS.** 1) Disconnect the inhibitor switch connector. 2) Measure the resistance between transmission connector and inhibitor switch connector. ***Connector & terminal*** ***(T3) No. 1 — (T7) No. 2:*** ***(T3) No. 2 — (T7) No. 5:*** ***(T3) No. 3 — (T7) No. 3:*** ***(T3) No. 4 — (T7) No. 4:*** ***(T3) No. 13 — (T7) No. 8:*** ***(T3) No. 16 — (T7) No. 6:***	Is each resistance less than 1 Ω?	Go to step **5**.	Repair the open circuit of transmission harness.
5	**CHECK INHIBITOR SWITCH.** Move the select lever to each range, and measure the resistance between inhibitor switch connector terminals. ***Connector & terminal*** ***(T7) No. 2 — (T7) No. 1:*** ***(T7) No. 5 — (T7) No. 1:*** ***(T7) No. 3 — (T7) No. 1:*** ***(T7) No. 4 — (T7) No. 1:*** ***(T7) No. 8 — (T7) No. 1:*** ***(T7) No. 6 — (T7) No. 1:***	Is the resistance of the corresponding range less than 1 MΩ?	Go to step **6**.	Replace the inhibitor switch. <Ref. to CVT(TH58A)-96, Inhibitor Switch.>
6	**CHECK HARNESS.** 1) Turn the ignition switch to ON. 2) Measure the voltage between each connector and chassis ground. ***Connector & terminal*** ***Transmission connector (B12 side)*** ***(B12) No. 1 (+) — Chassis ground (–):*** ***(B12) No. 2 (+) — Chassis ground (–):*** ***(B12) No. 3 (+) — Chassis ground (–):*** ***(B12) No. 4 (+) — Chassis ground (–):*** ***(B12) No. 13 (+) — Chassis ground (–):*** ***(B12) No. 16 (+) — Chassis ground (–):*** ***Transmission connector (T7 side)*** ***(T7) No. 2 (+) — Chassis ground (–):*** ***(T7) No. 5 (+) — Chassis ground (–):*** ***(T7) No. 3 (+) — Chassis ground (–):*** ***(T7) No. 4 (+) — Chassis ground (–):*** ***(T7) No. 8 (+) — Chassis ground (–):*** ***(T7) No. 6 (+) — Chassis ground (–):***	Is each voltage less than 1 V?	Go to step **7**.	Repair the harness which outputs 1 V or more.
7	**CHECK FOR POOR CONTACT.**	Is there poor contact between TCM, inhibitor switch, transmission ground?	Repair the poor contact.	Check the TCM.

E: DTC P0711 ATF TEMP. SENSOR CIRCUIT RANGE/PERFORMANCE

DTC DETECTING CONDITION:

- Detected when two consecutive driving cycles with fault occur.
- GENERAL DESCRIPTION <Ref. to GD(CVT)(HEV)-9, DTC P0711 ATF TEMP. SENSOR CIRCUIT RANGE/PERFORMANCE, Diagnostic Trouble Code (DTC) Detecting Criteria.>

TROUBLE SYMPTOM:

Excessive shift shock

CAUTION:

After diagnosis, perform Clear Memory Mode for each system.

WIRING DIAGRAM:

CVT control system <Ref. to WI(HEV)-86, CVT Control System.>

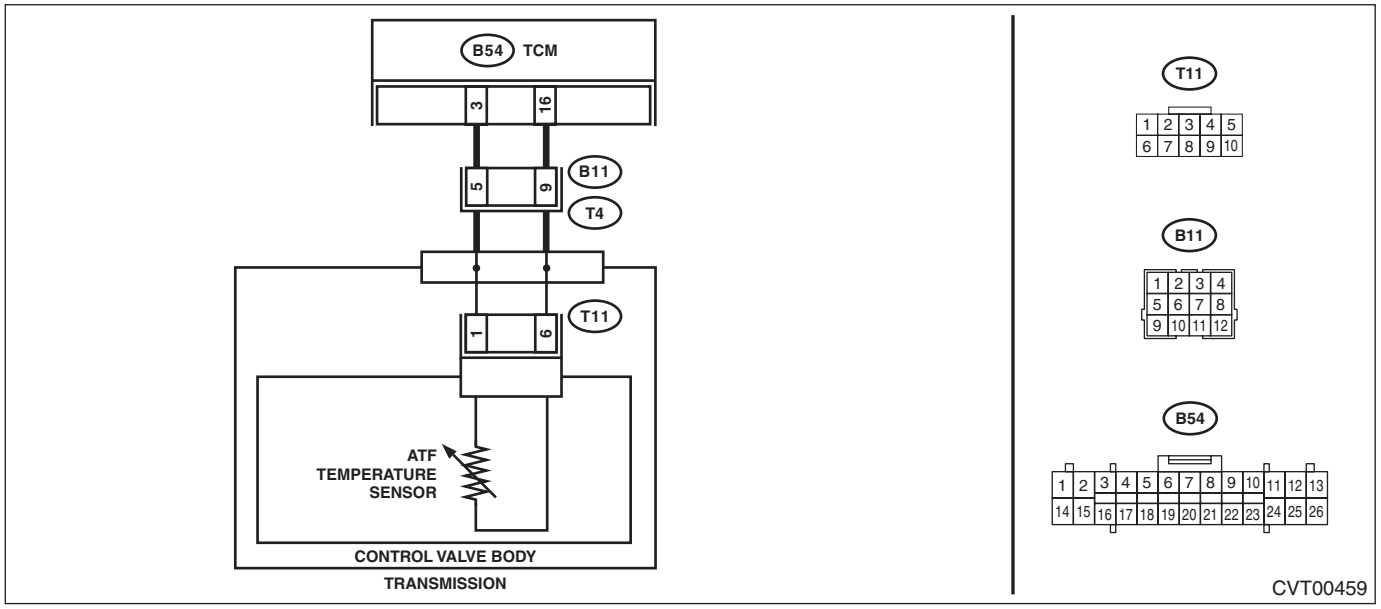

	Step	Check	Yes	No
1	**CHECK DTC.** Check the DTC using Subaru Select Monitor.	Is DTC P0712 or P0713 displayed?	Perform the diagnosis according to DTC.	Go to step **2**.
2	**CHECK TRANSMISSION FLUID.** Check the amount of ATF. <Ref. to CVT(TH58A)-41, ADJUSTMENT, CVTF.>	Is the ATF amount correct?	Go to step **3**.	Adjust the amount of ATF. <Ref. to CVT(TH58A)-41, ADJUSTMENT, CVTF.>
3	**CHECK INPUT SIGNAL FOR TCM.** Check «ATF Temp.» using the Subaru Select Monitor.	Is «ATF Temp.» less than 20°C (68°F)?	Go to step **4**.	Reconfirm after the ATF temperature drops below 20°C (68°F).
4	**CHECK INPUT SIGNAL FOR TCM.** 1) Lift up the vehicle. 2) Apply the electronic parking brake. 3) Start the engine. 4) Set the select lever to “D” range. 5) Warm up the engine until the ATF temperature reaches 20°C (68°F). 6) Read the data of «ATF Temp.» using the Subaru Select Monitor.	Does «ATF Temp.» increase by 1°C (1.8°F) within 10 minutes?	Current condition is normal.	Go to step **5**.

	Step	Check	Yes	No
5	**CHECK HARNESS.** 1) Turn the ignition switch to OFF. 2) Disconnect the TCM and transmission connectors. 3) Measure the resistance between TCM connector and transmission connectors. ***Connector & terminal*** ***(B54) No. 3 — (B11) No. 5:*** ***(B54) No. 16 — (B11) No. 9:***	Is the resistance less than 1 Ω?	Go to step **6**.	Check for poor contact of the ATF temperature sensor and transmission connector harness, and repair the defective part.
6	**CHECK INPUT SIGNAL FOR TCM.** 1) Connect the connector to TCM. (with the transmission connector disconnected) 2) Turn the ignition switch to ON. 3) Read the data of «ATF Temp.» using the Subaru Select Monitor.	Is –50°C (–58°F) displayed in «ATF Temp.»?	Replace the control valve body. <Ref. to CVT(TH58A)-114, Control Valve Body.>	Check the TCM.

F: DTC P0712 TRANSMISSION FLUID TEMPERATURE SENSOR CIRCUIT LOW INPUT

DTC DETECTING CONDITION:

- Immediately at fault recognition
- GENERAL DESCRIPTION <Ref. to GD(CVT)(HEV)-10, DTC P0712 TRANSMISSION FLUID TEMPERATURE SENSOR CIRCUIT LOW INPUT, Diagnostic Trouble Code (DTC) Detecting Criteria.>

TROUBLE SYMPTOM:

- Excessive shift shock
- Shift characteristics malfunction

WIRING DIAGRAM:

CVT control system <Ref. to WI(HEV)-86, CVT Control System.>

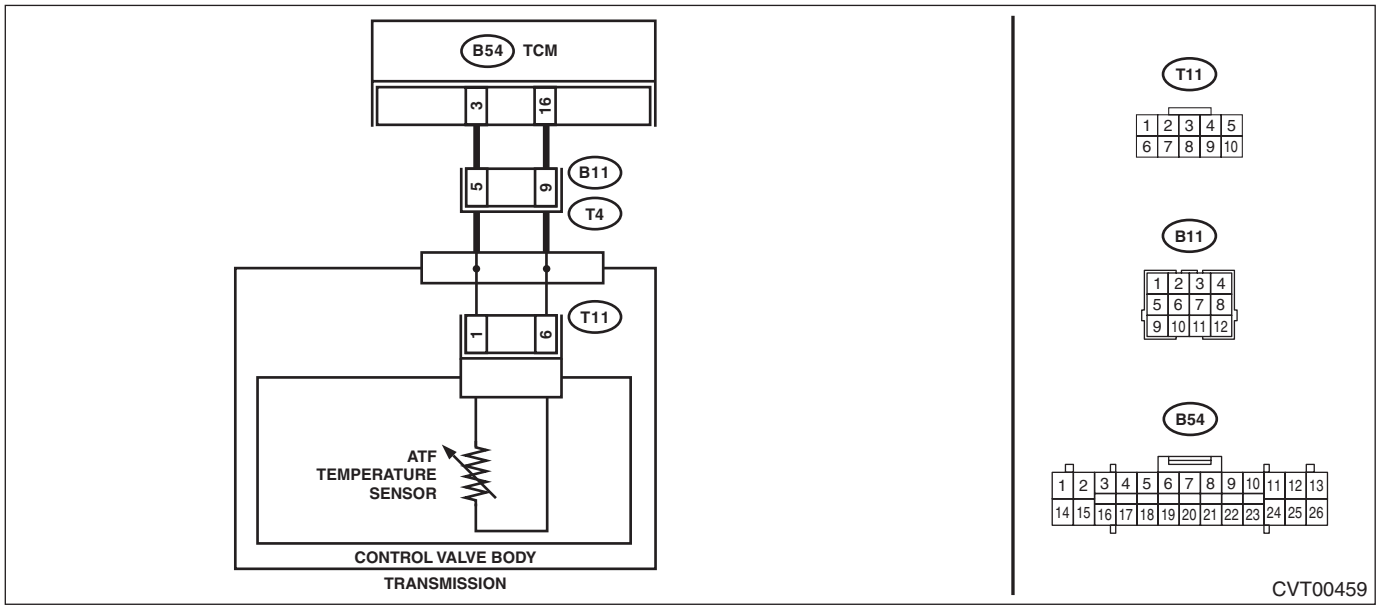

Step		Check	Yes	No
1	**CHECK HARNESS.** 1) Turn the ignition switch to OFF. 2) Disconnect the TCM connector. 3) Measure the resistance of harness between TCM connector and chassis ground. ***Connector & terminal*** ***(B54) No. 3 — Chassis ground:*** ***(B54) No. 16 — Chassis ground:***	Is the resistance 1 MΩ or more?	Go to step **4**.	Go to step **2**.
2	**CHECK HARNESS.** 1) Disconnect the transmission connector. 2) Measure the resistance between transmission connector and transmission body. ***Connector & terminal*** ***(T4) No. 5 — Transmission body:*** ***(T4) No. 9 — Transmission body:***	Is the resistance 1 MΩ or more?	Repair the short circuit of body harness.	Go to step **3**.
3	**CHECK HARNESS INSIDE TRANSMISSION.** **CAUTION:** **Start work after ATF cools down.** 1) Remove the transmission valve cover. 2) Check for the harness pinch, damage.	Is there any fault in the harness?	Replace the transmission harness.	Go to step **4**.

	Step	Check	Yes	No
4	**CHECK ATF TEMPERATURE SENSOR.** Measure the resistance between transmission connector terminals. ***Connector & terminal*** ***(T11) No. 1 — No. 6:***	Is resistance as follows? Fluid temperature 0°C → Approx. 6.0 kΩ Fluid temperature 20°C → Approx. 2.5 kΩ Fluid temperature 80°C → Approx. 330 Ω	Check the TCM.	Replace the control valve body. <Ref. to CVT(TH58A)-114, Control Valve Body.>

G: DTC P0713 TRANSMISSION FLUID TEMPERATURE SENSOR CIRCUIT HIGH INPUT

DTC DETECTING CONDITION:

- Immediately at fault recognition
- GENERAL DESCRIPTION <Ref. to GD(CVT)(HEV)-11, DTC P0713 TRANSMISSION FLUID TEMPERATURE SENSOR CIRCUIT HIGH INPUT, Diagnostic Trouble Code (DTC) Detecting Criteria.>

TROUBLE SYMPTOM:

- Excessive shift shock
- Shift characteristics malfunction

WIRING DIAGRAM:

CVT control system <Ref. to WI(HEV)-86, CVT Control System.>

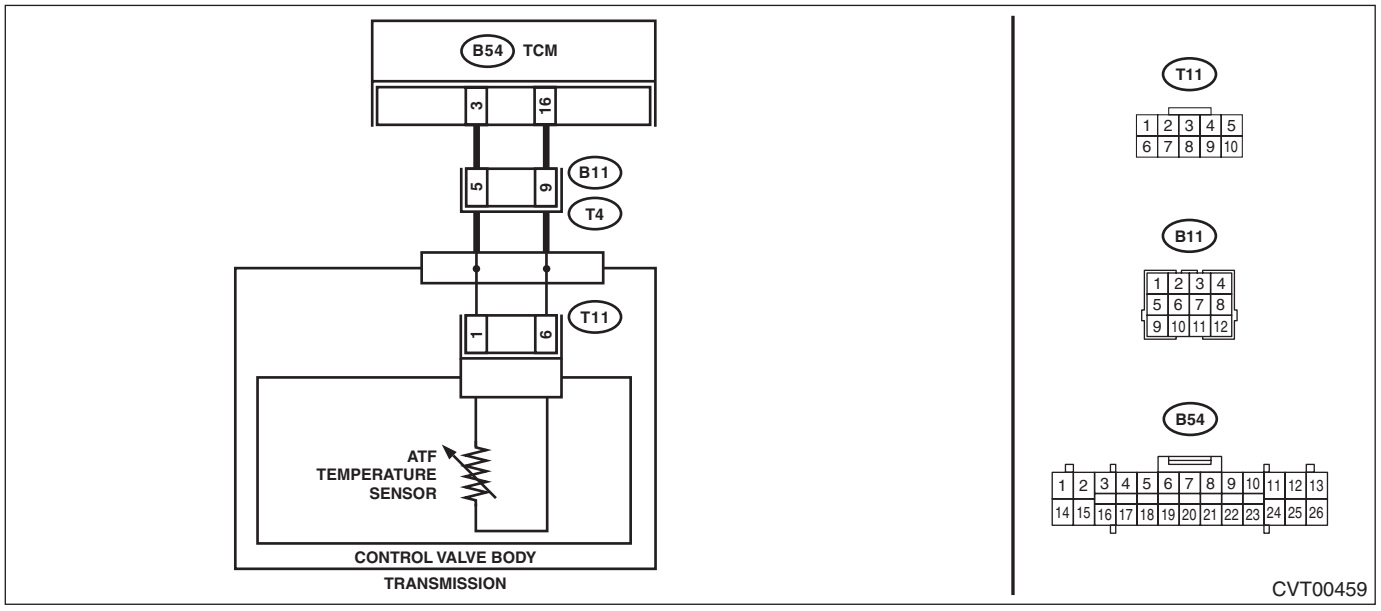

Step		Check	Yes	No
1	**CHECK HARNESS.** 1) Turn the ignition switch to ON. 2) Measure the voltage between TCM connectors. ***Connector & terminal*** ***(B54) No. 3 (+) — (B54) No. 16 (–):***	Is the voltage 5 V or more?	Repair the short circuit of harness.	Go to step **2**.
2	**CHECK HARNESS.** 1) Turn the ignition switch to OFF. 2) Disconnect the TCM and transmission connectors. 3) Measure the resistance between TCM connector and transmission connectors. ***Connector & terminal*** ***(B54) No. 3 — (B11) No. 5:*** ***(B54) No. 16 — (B11) No. 9:***	Is the resistance less than 1 Ω?	Go to step **3**.	Repair the open circuit of body harness.
3	**CHECK ATF TEMPERATURE SENSOR.** Measure the resistance between transmission connector terminals. ***Connector & terminal*** ***(T4) No. 5 — No. 9:***	Is the resistance 1 MΩ or more?	Go to step **4**.	Go to step **5**.

	Step	Check	Yes	No
4	**CHECK HARNESS.** **CAUTION:** **Start work after ATF cools down.** 1) Remove the transmission valve cover. 2) Measure the resistance between transmission connector and control valve body connector. ***Connector & terminal*** ***(T4) No. 5 — (T11) No. 1:*** ***(T4) No. 9 — (T11) No. 6:***	Is the resistance less than 1 Ω?	Repair the open circuit of transmission harness on the control valve side.	Repair the open circuit of transmission harness on the outside of the transmission.
5	**CHECK ATF TEMPERATURE SENSOR.** 1) Connect the connectors to TCM and transmission. 2) Start the engine. 3) Warm up until the ATF temperature exceeds 50°C (122°F). 4) Turn the ignition switch to OFF. 5) Disconnect the transmission connector. 6) Measure the resistance between transmission connector terminals. ***Connector & terminal*** ***(T4) No. 5 — No. 9:***	Is the resistance 650 — 990 Ω?	Go to step **6**.	Go to step **8**.
6	**CHECK ATF TEMPERATURE SENSOR.** Measure the resistance between transmission connector terminals. ***Connector & terminal*** ***(T4) No. 5 — No. 9:***	Does the resistance value increase gradually while the ATF temperature decreases?	Go to step **7**.	Replace the control valve body. <Ref. to CVT(TH58A)-114, Control Valve Body.>
7	**CHECK INPUT SIGNAL FOR TCM.** 1) Connect the transmission connector. 2) Turn the ignition switch to ON. (Do not start engine.) 3) Read the data of «ATF Temp.» using the Subaru Select Monitor.	Does the ATF temperature gradually decrease?	Check for poor contact of the ATF temperature sensor and transmission connector harness, and repair the defective part.	Go to step **8**.
8	**CHECK FOR POOR CONTACT.**	Is there poor contact of ATF temperature sensor circuit?	Repair the poor contact.	Check the TCM.

H: DTC P0716 TORQUE CONVERTER TURBINE SPEED

DTC DETECTING CONDITION:

- Immediately at fault recognition
- GENERAL DESCRIPTION <Ref. to GD(CVT)(HEV)-12, DTC P0716 TORQUE CONVERTER TURBINE SPEED, Diagnostic Trouble Code (DTC) Detecting Criteria.>

TROUBLE SYMPTOM:

- Standing start problems
- Shock occurs when engaging the lockup clutch.
- Shock occurs when selecting shift position.
- Shock occurs when engine starts from EV traveling.

WIRING DIAGRAM:

CVT control system <Ref. to WI(HEV)-86, CVT Control System.>

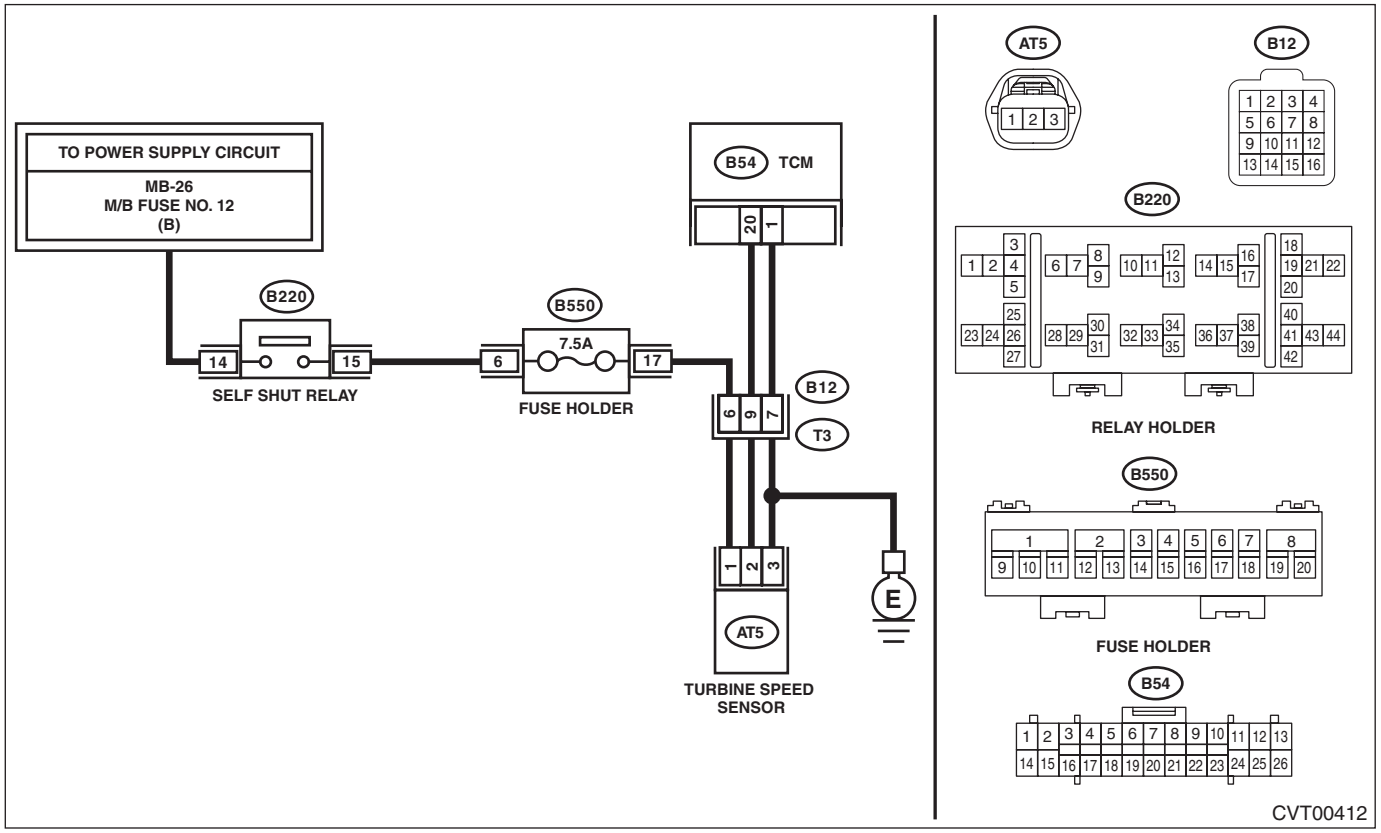

Step		Check	Yes	No
1	**CHECK FUSE.** 1) Turn the ignition switch to OFF. 2) Remove the fuse (7.5 A) from the fuse holder.	Is the fuse blown out?	Replace the fuse. If the replaced fuse blows out easily, repair the short circuit of harness.	Go to step **2**.
2	**CHECK INPUT SIGNAL FOR TCM.** 1) Lift up the vehicle. 2) Start the engine. 3) Set the select lever to “D” range. 4) While the vehicle is at a standstill, read the data of «Turbine Revolution Speed» and «Primary Pulley Speed» using Subaru Select Monitor.	Is the value of «Turbine Revolution Speed» and «Primary Pulley Speed» 0 rpm?	Go to step **3**.	Check the turbine speed sensor circuit.
3	**CHECK INPUT SIGNAL FOR TCM.** Read the data of «Turbine Revolution Speed» and «Primary Pulley Speed» using Subaru Select Monitor.	Does the value of «Turbine Revolution Speed» and «Primary Pulley Speed» change according to the engine speed?	Current condition is normal.	Go to step **4**.

	Step	Check	Yes	No
4	**CHECK HARNESS.** 1) Turn the ignition switch to OFF. 2) Disconnect the TCM and transmission connectors. 3) Measure the resistance between TCM connector and transmission connectors. ***Connector & terminal*** ***(B54) No. 1 — (B12) No. 7:*** ***(B54) No. 20 — (B12) No. 9:*** ***(B550) No. 12 — (B12) No. 6:***	Is the resistance less than 1 Ω?	Go to step **5**.	Repair the open circuit of harness.
5	**CHECK HARNESS.** Measure the resistance between TCM connector and chassis ground. ***Connector & terminal*** ***(B54) No. 20 — Chassis ground:***	Is the resistance 1 MΩ or more?	Go to step **6**.	Repair the short circuit of harness.
6	**CHECK TRANSMISSION HARNESS.** 1) Connect the TCM connector. 2) Turn the ignition switch to ON. 3) Measure the voltage between transmission connector terminals. ***Connector & terminal*** ***(B12) No. 6 (+) — Chassis ground (–):***	Is the voltage 10 — 13 V?	Go to step **7**.	Repair the open circuit of harness or poor contact of connector.
7	**CHECK TRANSMISSION HARNESS.** 1) Turn the ignition switch to OFF. 2) Disconnect the transmission connector. 3) Lift up the vehicle. 4) Disconnect the turbine speed sensor connector. 5) Measure the resistance between transmission connector and turbine speed sensor connector. ***Connector & terminal*** ***(T3) No. 6 — (AT5) No. 1:*** ***(T3) No. 7 — (AT5) No. 3:*** ***(T3) No. 9 — (AT5) No. 2:***	Is the resistance less than 1 Ω?	Replace the turbine speed sensor. <Ref. to CVT(TH58A)-103, Turbine Speed Sensor.>	Replace the transmission harness.

I: DTC P0719 BRAKE SWITCH CIRCUIT LOW

DTC DETECTING CONDITION:

- Immediately at fault recognition
- GENERAL DESCRIPTION <Ref. to GD(CVT)(HEV)-13, DTC P0719 BRAKE SWITCH CIRCUIT LOW, Diagnostic Trouble Code (DTC) Detecting Criteria.>

TROUBLE SYMPTOM:

Symptoms such as shift-down not operating may occur.

WIRING DIAGRAM:

Stop light system <Ref. to WI(HEV)-208, Stop Light System.>

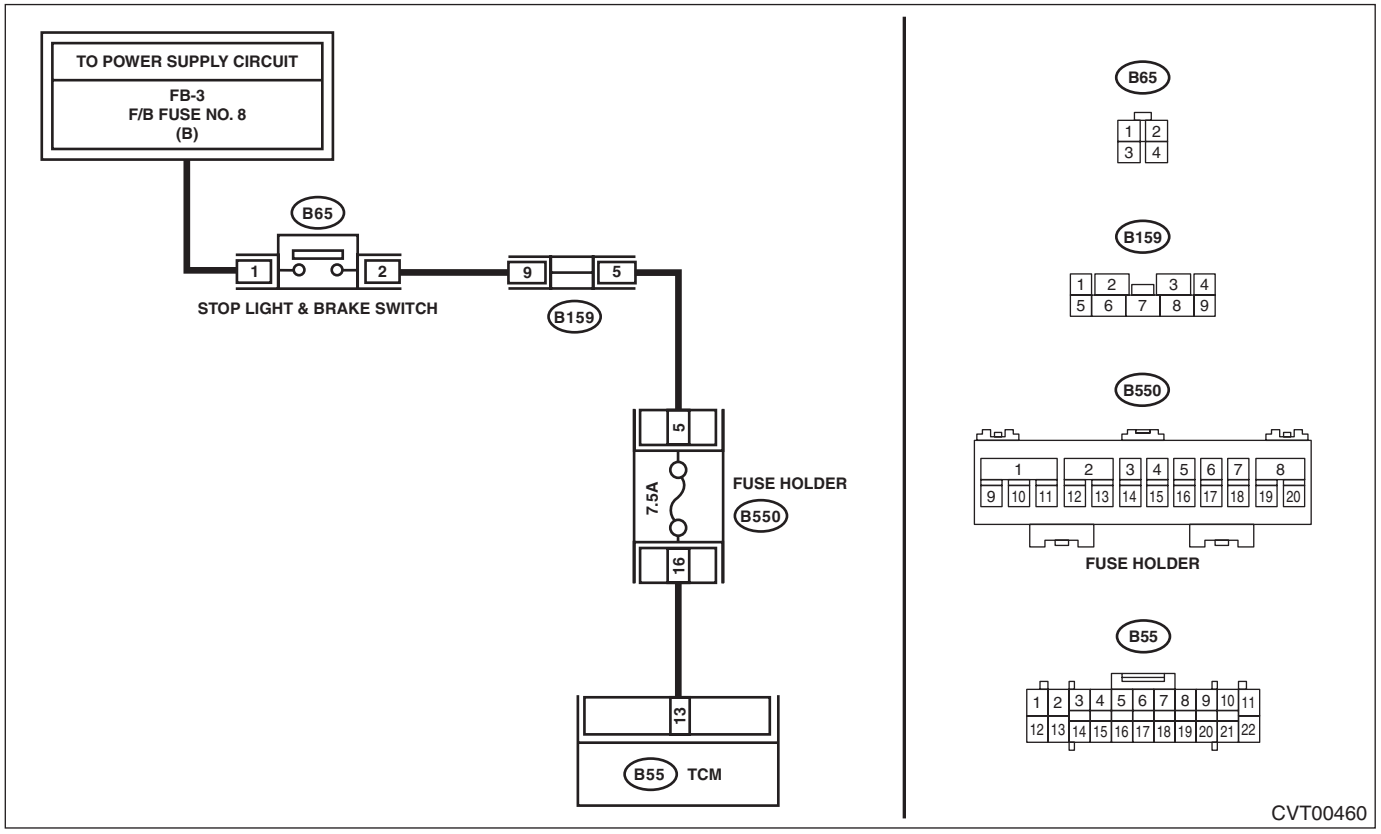

	Step	Check	Yes	No
1	**CHECK FUSE (NO. 8).** 1) Turn the ignition switch to OFF. 2) Remove the fuse (No. 8).	Is the fuse (No. 8) blown out?	Replace the fuse (No. 8). If the new fuse (No. 8) has blown out easily, repair the short circuit of harness between fuse (No. 8) and stop light switch.	Go to step **2**.
2	**CHECK FUSE.** Remove the fuse (7.5 A) from the fuse holder.	Is the fuse (7.5 A) blown out?	Replace the fuse (7.5 A). If the replaced fuse (7.5 A) blows out easily, repair the short circuit of harness between fuse (7.5 A) and TCM.	Go to step **3**.

	Step	Check	Yes	No
3	**CHECK HARNESS.** 1) Turn the ignition switch to OFF. 2) Disconnect the TCM and stop light switch connector. 3) Measure the resistance between TCM connector and stop light switch connector. ***Connector & terminal*** ***(B55) No. 13 — (B65) No. 2:***	Is the resistance less than 1 Ω?	Go to step **4**.	Repair the open circuit of harness.
4	**CHECK HARNESS.** Measure the resistance between TCM connector and fuse (No. 8). ***Connector & terminal*** ***(B65) No. 1 — fuse (No. 8):***	Is the resistance less than 1 Ω?	Go to step **5**.	Repair the open circuit of harness.
5	**CHECK INPUT SIGNAL FOR TCM.** 1) Install the fuse (No. 8). 2) Connect the TCM and stop light switch connector. 3) Depress the brake pedal. 4) Measure the voltage between TCM connector and chassis ground. ***Connector & terminal*** ***(B55) No. 13 (+) — Chassis ground (–):***	Is the voltage 10 V or more?	Go to step **6**.	Replace the stop light switch. <Ref. to BR-72, Stop Light Switch.>
6	**CHECK INPUT SIGNAL FOR TCM.** With brake pedal depressed, read the data of «Stop Light Switch» using Subaru Select Monitor.	Is “ON” displayed?	Current condition is normal. Check for poor contact in connectors or harnesses, and repair the defective part.	Go to step **7**.
7	**CHECK FOR POOR CONTACT.**	Is there poor contact of input signal of stop light switch?	Repair the poor contact.	Check the TCM.

J: DTC P0720 OUTPUT SPEED SENSOR CIRCUIT

DTC DETECTING CONDITION:

- Immediately at fault recognition
- GENERAL DESCRIPTION <Ref. to GD(CVT)(HEV)-14, DTC P0720 OUTPUT SPEED SENSOR CIRCUIT, Diagnostic Trouble Code (DTC) Detecting Criteria.>

TROUBLE SYMPTOM:

Symptoms such as vehicle-vibration may occur.

WIRING DIAGRAM:

CVT control system <Ref. to WI(HEV)-86, CVT Control System.>

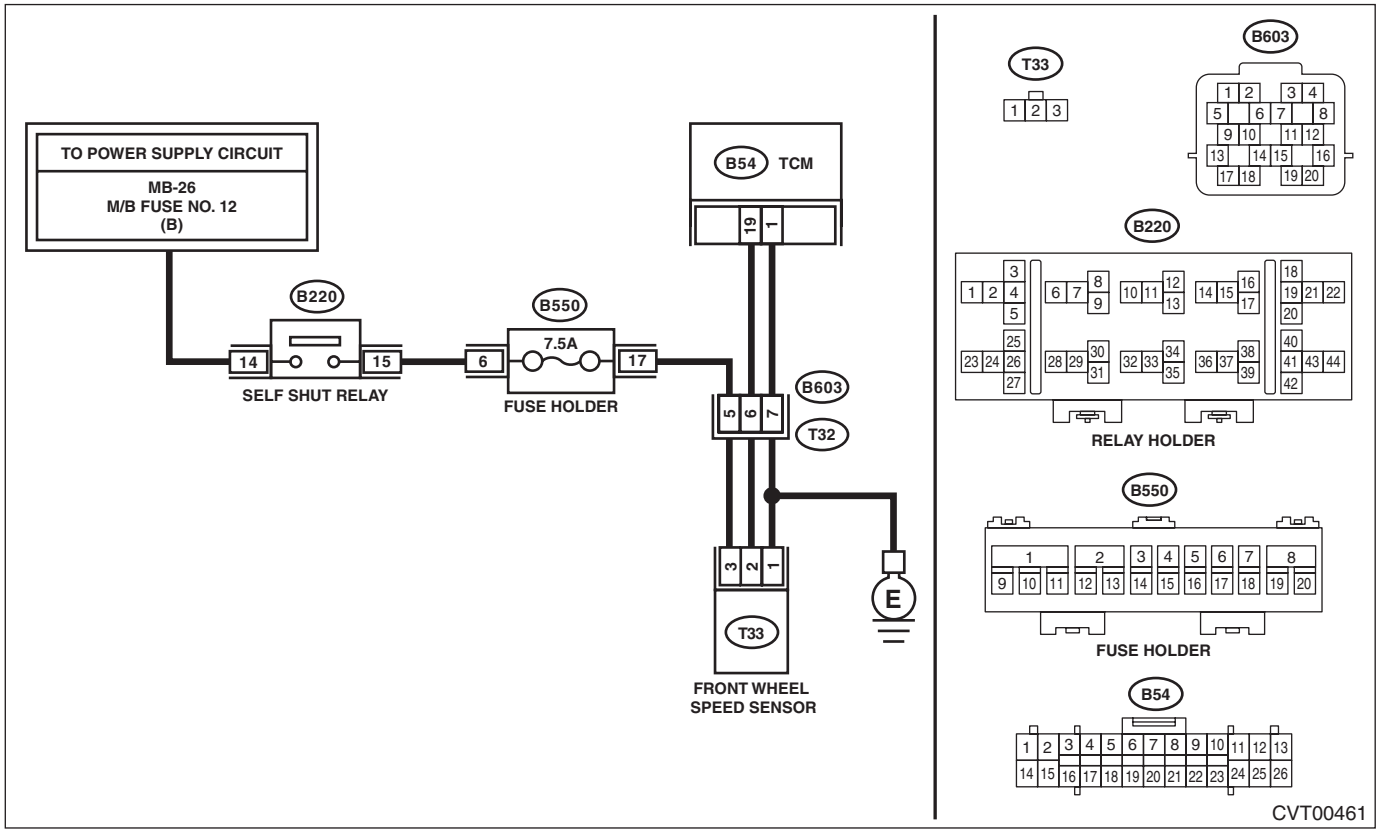

	Step	Check	Yes	No
1	**CHECK FUSE (NO. 8).** 1) Turn the ignition switch to OFF. 2) Remove the fuse (7.5 A) from the fuse holder.	Is the fuse blown out?	Replace the fuse. If the fuse blows out easily, repair the short circuit of harness.	Go to step **2**.
2	**CHECK INPUT SIGNAL FOR TCM.** 1) Lift up the vehicle. 2) Start the engine. 3) Slowly increase the speed to 30 km/h (18 MPH). 4) Read the data of «Front Wheel Speed» using Subaru Select Monitor.	Does the value of «Front Wheel Speed» change according to the engine speed?	Current condition is normal.	Go to step **3**.

	Step	Check	Yes	No
3	**CHECK HARNESS.** 1) Turn the ignition switch to OFF. 2) Disconnect the TCM and transmission connectors. 3) Measure the resistance between TCM connector and transmission connectors. ***Connector & terminal*** ***(B54) No. 1 — (B603) No. 7:*** ***(B54) No. 19 — (B603) No. 6:*** ***(B550) No. 12 — (B603) No. 5:***	Is the resistance less than 1 Ω?	Go to step **4**.	Repair the open circuit of harness.
4	**CHECK HARNESS.** Measure the resistance between TCM connector and chassis ground. ***Connector & terminal*** ***(B54) No. 19 — Chassis ground:***	Is the resistance 1 MΩ or more?	Go to step **5**.	Repair the short circuit of harness.
5	**CHECK TRANSMISSION HARNESS.** 1) Connect the TCM connector. 2) Turn the ignition switch to ON. 3) Measure the voltage between transmission connector terminals. ***Connector & terminal*** ***(B603) No. 5 (+) — Chassis ground (–):***	Is the voltage 10 — 13 V?	Go to step **6**.	Repair the open circuit of harness or poor contact of connector.
6	**CHECK TRANSMISSION HARNESS.** 1) Turn the ignition switch to OFF. 2) Disconnect the transmission connector. 3) Lift up the vehicle. 4) Disconnect the front wheel speed sensor connector. 5) Measure the resistance between transmission connector and front wheel speed sensor connector. ***Connector & terminal*** ***(T32) No. 5 — (T33) No. 3:*** ***(T32) No. 6 — (T33) No. 2:*** ***(T32) No. 7 — (T33) No. 1:***	Is the resistance less than 1 Ω?	Replace the front wheel speed sensor. <Ref. to CVT(TH58A)-107, Front Wheel Speed Sensor.>	Replace the transmission harness.

K: DTC P0724 BRAKE SWITCH CIRCUIT HIGH

DTC DETECTING CONDITION:

- Immediately at fault recognition
- GENERAL DESCRIPTION <Ref. to GD(CVT)(HEV)-15, DTC P0724 BRAKE SWITCH CIRCUIT HIGH, Diagnostic Trouble Code (DTC) Detecting Criteria.>

TROUBLE SYMPTOM:

Symptoms such as shift-down not operating may occur.

WIRING DIAGRAM:

Stop light system <Ref. to WI(HEV)-208, Stop Light System.>

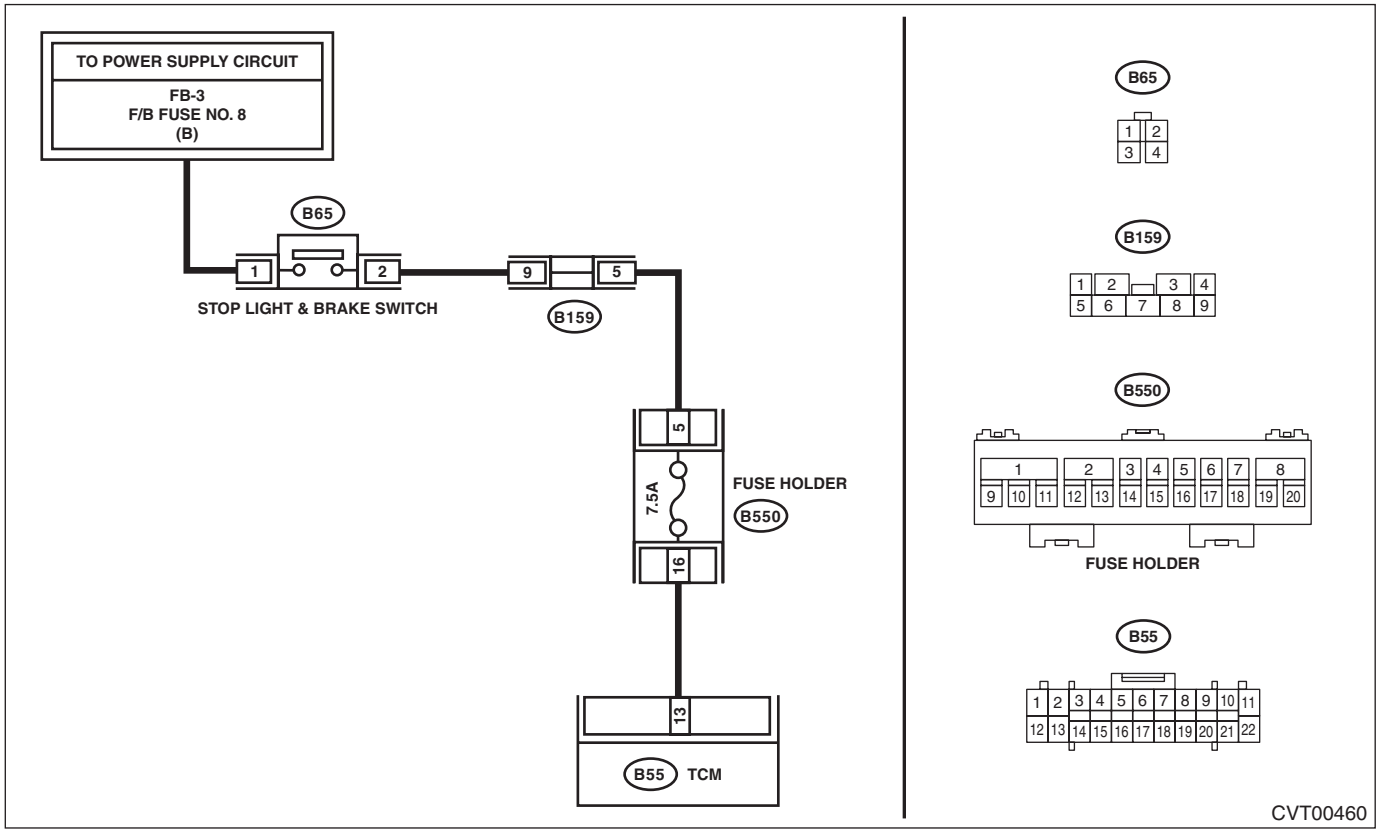

Step		Check	Yes	No
1	**CHECK STOP LIGHT SWITCH.** 1) Turn the ignition switch to OFF. 2) Disconnect the stop light switch connector. 3) Measure the resistance of harness between stop light switch connectors. ***Connector & terminal*** ***(B65) No. 1 — No. 2:***	Is the resistance 1 MΩ or more?	Go to step **2**.	Replace the stop light switch. <Ref. to BR-72, Stop Light Switch.>
2	**CHECK HARNESS.** 1) Disconnect the TCM connector. 2) Turn the ignition switch to ON. 3) Measure the voltage between TCM connector and chassis ground. ***Connector & terminal*** ***(B55) No. 13 (+) — Chassis ground (–):***	Is the voltage 10 V or more?	Repair the short circuit of harness.	Go to step **3**.
3	**CHECK INPUT SIGNAL FOR TCM.** 1) Connect the TCM and stop light switch connector. 2) Turn the ignition switch to ON. 3) Read the data of «Stop Light Switch» using Subaru Select Monitor.	Is “OFF” displayed?	Current condition is normal. Check for poor contact in connectors or harnesses, and repair the defective part.	Go to step **4**.

Step		Check	Yes	No
4	**CHECK FOR POOR CONTACT.**	Is there poor contact of input signal of stop light switch?	Repair the poor contact.	Check the TCM.

L: DTC P0730 GEARSHIFT CONTROL PERFORMANCE ABNORMAL

DTC DETECTING CONDITION:

- Immediately at fault recognition
- GENERAL DESCRIPTION <Ref. to GD(CVT)(HEV)-16, DTC P0730 GEARSHIFT CONTROL PERFORMANCE ABNORMAL, Diagnostic Trouble Code (DTC) Detecting Criteria.>

TROUBLE SYMPTOM:

- Acceleration is poor during standing start.
- Shift control malfunction
- Engine speed increases abruptly.

	Step	Check	Yes	No
1	**CHECK TRANSMISSION FLUID.** Check the condition of ATF. <Ref. to CVT(TH58A)-44, CONDITION CHECK, CVTF.>	Is the ATF OK?	Go to step **2**.	Check according to the “Corrective action” of ATF (CVTF) “CONDITION CHECK”. <Ref. to CVT(TH58A)-44, CONDITION CHECK, CVTF.>
2	**CHECK TRANSMISSION FLUID.** Check the amount of ATF. <Ref. to CVT(TH58A)-41, ADJUSTMENT, CVTF.>	Is the ATF amount correct?	Go to step **3**.	Adjust the amount of ATF. <Ref. to CVT(TH58A)-41, ADJUSTMENT, CVTF.>
3	**CHECK INPUT SIGNAL FOR TCM.** 1) Lift up the vehicle. 2) Start the engine. 3) Warm up until the ATF temperature reaches to 40 — 70°C (104 — 158°F). 4) Shift the select lever to “P” range. 5) Stabilize the engine speed at idle. 6) Read the data of «Actual secondary pressure» using Subaru Select Monitor.	Is the «Actual secondary pressure» 0.5 — 1.5 MPa?	Go to step **4**.	Perform the diagnosis according to DTC P0841 procedure.
4	**CHECK INPUT SIGNAL FOR TCM.** 1) Set the select lever to “D” range. 2) Release the brake pedal to stabilize the engine speed and front wheel speed. 3) Read the data of «Actual Gear Ratio» using Subaru Select Monitor.	Is the «Actual Gear Ratio» 1.5 — 2.6?	Go to step **5**.	Go to step **6**.
5	**CHECK INPUT SIGNAL FOR TCM.** 1) Set the select lever to “D” range. 2) Slowly increase the speed to 40 km/h (24 MPH) and keep the constant speed. 3) Read the data of «Actual Gear Ratio» using Subaru Select Monitor.	Is the «Actual Gear Ratio» 0.5 — 0.9?	Go to step **6**.	Replace the transmission assembly. <Ref. to CVT(TH58A)-62, Automatic Transmission Assembly.>

	Step	Check	Yes	No
6	**DRIVING CHECK BY INSPECTION MODE.** 1) Turn the ignition switch to OFF. 2) Perform a drive check based on the “Inspection Mode”. <Ref. to CVT(HEV)(diag)-20, Inspection Mode.>	Does the AT OIL TEMP light blink and is DTC P0730 detected?	Replace the transmission assembly. <Ref. to CVT(TH58A)-62, Automatic Transmission Assembly.>	If there is shift problems, abrupt increase of engine speed, standing start problems, replace the transmission assembly. <Ref. to CVT(TH58A)-62, Automatic Transmission Assembly.> If it is normal, temporary poor contact occurs.

M: DTC P0801 REVERSE INHIBIT CONTROL CIRCUIT

NOTE:
For diagnostic procedures, refer to “BODY CONTROL SYSTEM (DIAGNOSTICS)”. <Ref. to BC(diag)-35, DTC B1106 SHIFT LOCK CIRCUIT FAILURE, Diagnostic Procedure with Diagnostic Trouble Code (DTC).>

N: DTC P0812 REVERSE INPUT CIRCUIT

DTC DETECTING CONDITION:

- Inhibitor switch is faulty.
- R range signal is not input.

TROUBLE SYMPTOM:

- Shift characteristics are erroneous.
- The range position of the select lever and the position of shift indicator display do not match.

WIRING DIAGRAM:

CVT control system <Ref. to WI(HEV)-86, CVT Control System.>

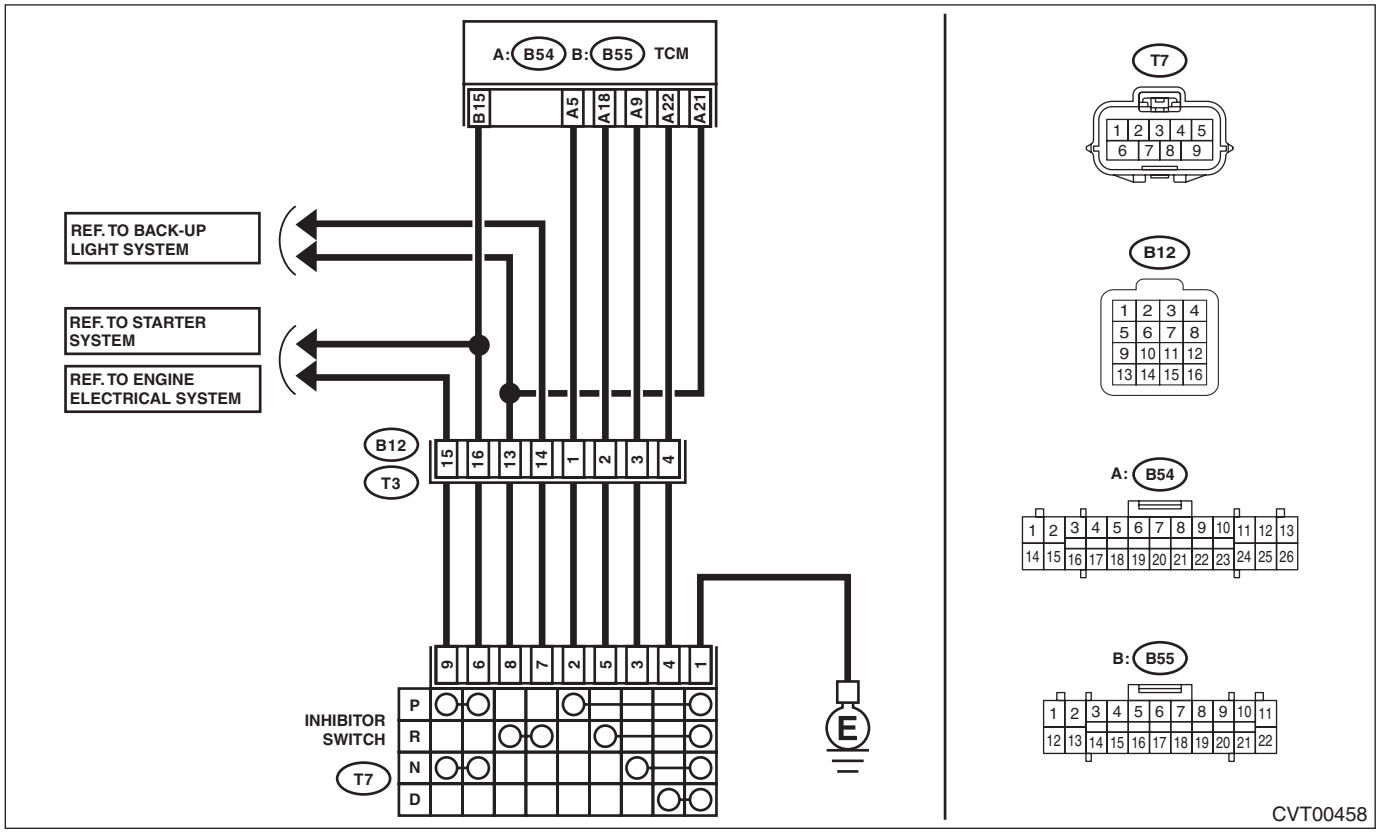

Step		Check	Yes	No
1	**CHECK INPUT SIGNAL FOR TCM.** 1) Turn the ignition switch to ON. 2) Move the select lever to "R" range, and read the data of «R Range» using the Subaru Select Monitor.	Is "ON" displayed?	Go to step **7**.	Go to step **2**.
2	**CHECK HARNESS.** 1) Turn the ignition switch to OFF. 2) Disconnect the TCM and transmission connectors. 3) Measure the resistance of harness between TCM connector and transmission connector. ***Connector & terminal*** ***(B54) No. 18 — (B12) No. 2:***	Is the resistance less than 1 Ω?	Go to step **3**.	Repair the open circuit of body harness.
3	**CHECK HARNESS.** Measure the resistance of harness between inhibitor switch connector and transmission ground. ***Connector & terminal*** ***(T7) No. 1 — Transmission ground:***	Is the resistance less than 1 Ω?	Go to step **4**.	Repair the open circuit of harness.

	Step	Check	Yes	No
4	**CHECK HARNESS.** 1) Disconnect the inhibitor switch connector. 2) Measure the resistance between transmission connector and inhibitor switch connector. ***Connector & terminal*** ***(T3) No. 2 — (T7) No. 5:***	Is the resistance less than 1 Ω?	Go to step **5**.	Repair the open circuit of transmission harness.
5	**CHECK INHIBITOR SWITCH.** Move the select lever to "R" range, and measure the resistance between inhibitor switch connector terminals. ***Connector & terminal*** ***(T7) No. 5 — (T7) No. 1:***	Is the resistance less than 1 Ω?	Go to step **6**.	Replace the inhibitor switch. <Ref. to CVT(TH58A)-96, Inhibitor Switch.>
6	**CHECK HARNESS.** 1) Turn the ignition switch to ON. 2) Measure the voltage between each connector and chassis ground. ***Connector & terminal*** ***Transmission connector (B12 side)*** ***(B12) No. 2 (+) — Chassis ground (–):*** ***Transmission connector (T7 side)*** ***(T7) No. 5 (+) — Chassis ground (–):***	Is each voltage less than 1 V?	Go to step **7**.	Repair the harness which outputs 1 V or more.
7	**CHECK FOR POOR CONTACT.**	Is there poor contact between TCM, inhibitor switch, transmission ground?	Repair the poor contact.	Check the TCM.

O: DTC P0841 SECONDARY OIL PRESSURE SENSOR PERFORMANCE

DTC DETECTING CONDITION:

- Immediately at fault recognition
- GENERAL DESCRIPTION <Ref. to GD(CVT)(HEV)-17, DTC P0841 SECONDARY OIL PRESSURE SENSOR PERFORMANCE, Diagnostic Trouble Code (DTC) Detecting Criteria.>

TROUBLE SYMPTOM:

- Acceleration is poor during standing start.
- Shift control malfunction
- Engine speed increases abruptly.

CAUTION:
Before performing diagnosis, record the freeze frame data.

WIRING DIAGRAM:
CVT control system <Ref. to WI(HEV)-86, CVT Control System.>

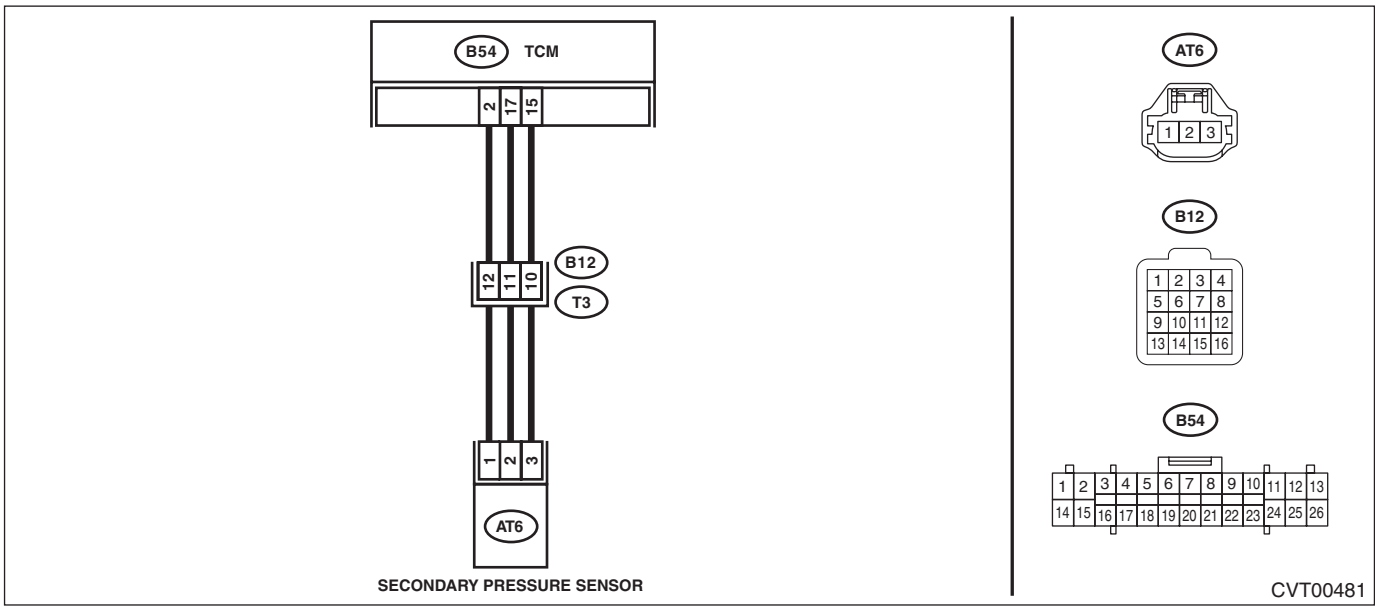

	Step	Check	Yes	No
1	**CHECK DTC.** Read the DTC using Subaru Select Monitor.	Are DTCs other than P0841 displayed?	Perform the diagnosis according to DTC. After the diagnosis, start the engine, and drive for 20 minutes in any driving pattern. (Include driving at a constant legal speed (for 20 seconds) at least once.) Read the DTC, and if P0841 alone is detected, Go to step **2**.	Go to step **2**.
2	**CHECK INPUT SIGNAL FOR TCM.** 1) Turn the ignition switch to ON. 2) Read the data of «secondary pressure sensor voltage» using Subaru Select Monitor. (While shaking the secondary pressure sensor harness)	Is the value of «secondary pressure sensor voltage» 0.39 — 0.61 V?	Go to step **10**.	Go to step **3**.

	Step	Check	Yes	No
3	**CHECK HARNESS.** 1) Turn the ignition switch to OFF. 2) Disconnect the connector of TCM and secondary pressure sensor. 3) Measure the resistance between TCM connector and secondary pressure sensor connector. ***Connector & terminal*** ***(B54) No. 2 — (AT6) No. 1:*** ***(B54) No. 15 — (AT6) No. 3:*** ***(B54) No. 17 — (AT6) No. 2:***	Is the resistance less than 1 Ω?	Go to step **4**.	Repair the open circuit of harness.
4	**CHECK HARNESS.** Measure the resistance between TCM connectors. ***Connector & terminal*** ***(B54) No. 2 — (B54) No. 17:*** ***(B54) No. 15 — (B54) No. 2:*** ***(B54) No. 17 — (B54) No. 15:***	Is the resistance 1 MΩ or more?	Go to step **5**.	Repair the short circuit of harness.
5	**CHECK HARNESS.** Measure the resistance between TCM connector and transmission body. ***Connector & terminal*** ***(B54) No. 2 — Transmission body:*** ***(B54) No. 15 — Transmission body:*** ***(B54) No. 17 — Transmission body:***	Is the resistance 1 MΩ or more?	Go to step **6**.	Repair the short circuit of harness.
6	**CHECK POWER SUPPLY FOR SECONDARY PRESSURE SENSOR.** 1) Connect the TCM connector. 2) Turn the ignition switch to ON. 3) Measure the voltage between TCM connectors. ***Connector & terminal*** ***(B54) No. 2 (+) — (B54) No. 15 (–):***	Is the voltage 4.6 — 5.4 V?	Go to step **7**.	Check for poor contact of connector, and if no fault is found, replace the TCM. <Ref. to CVT(TH58A)-156, Transmission Control Module (TCM).>
7	**CHECK POWER SUPPLY FOR SECONDARY PRESSURE SENSOR.** 1) Turn the ignition switch to OFF. 2) Connect the secondary pressure sensor connector. 3) Turn the ignition switch to ON. 4) Measure the voltage between TCM connectors. ***Connector & terminal*** ***(B54) No. 2 (+) — (B54) No. 15 (–):***	Is the voltage 4.6 — 5.4 V?	Go to step **8**.	Replace the secondary pressure sensor. <Ref. to CVT(TH58A)-109, Secondary Pressure Sensor.>
8	**CHECK SECONDARY PRESSURE SENSOR OUTPUT.** Measure the voltage between TCM connectors. ***Connector & terminal*** ***(B54) No. 17 (+) — (B54) No. 15 (–):***	Is the voltage 0.39 — 0.61 V?	Check for poor contact of connector, and if no fault is found, replace the TCM. <Ref. to CVT(TH58A)-156, Transmission Control Module (TCM).>	Go to step **9**.
9	**CHECK CONNECTOR.** 1) Turn the ignition switch to OFF. 2) Disconnect the connector of TCM and secondary pressure sensor. 3) Check the TCM connector (B54) and the secondary pressure sensor connector (AT6).	Is there any fault in the TCM connector or the secondary pressure connector?	Repair the connector, or replace harness.	Go to step **10**.

	Step	Check	Yes	No
10	**CHECK TRANSMISSION FLUID.** 1) Connect all connectors. 2) Check the amount of ATF. <Ref. to CVT(TH58A)-41, ADJUSTMENT, CVTF.>	Is the ATF amount correct?	Go to step **11**.	Adjust the amount of ATF. <Ref. to CVT(TH58A)-41, ADJUSTMENT, CVTF.> Go to step **11**.
11	**CHECK INPUT SIGNAL FOR TCM.** 1) Perform the Clear Memory Mode. 2) Start the engine. 3) Warm up until the ATF temperature reaches to 40 — 70°C (104 — 158°F). 4) Depress the brake pedal and move the select lever to each range at an interval of five seconds. NOTE: Move the select lever in the following order: “P” → “R” → “N” → “D” → “N” → “R” → “P”. 5) Stabilize the engine speed at idle. 6) Read the data of «Actual secondary pressure» using Subaru Select Monitor.	Is the «Actual secondary pressure» 0.5 — 1.5 MPa?	Go to step **12**.	Replace the secondary pressure sensor. <Ref. to CVT(TH58A)-109, Secondary Pressure Sensor.>
12	**CHECK INPUT SIGNAL FOR TCM.** 1) Shift the select lever to “P” range. 2) Keep the engine speed at 3,000 rpm. 3) Read the data of «Actual secondary pressure» using Subaru Select Monitor.	Is the «Actual secondary pressure» 1.5 — 2.5 MPa? And is the difference of the actual oil pressure 0.2 MPa or more compared with the value measured in step 11?	Go to step **13**.	Replace the secondary pressure sensor. <Ref. to CVT(TH58A)-109, Secondary Pressure Sensor.>
13	**CHECK FREEZE FRAME DATA.** 1) Turn the ignition switch to OFF. 2) Check the recorded freeze frame data.	Was the detected symptom low-voltage malfunction? <Ref. to CVT(HEV)(diag)-65, CLASSIFICATION OF SYMPTOM USING FREEZE FRAME DATA, DTC P0841 SECONDARY OIL PRESSURE SENSOR PERFORMANCE, Diagnostic Procedure with Diagnostic Trouble Code (DTC).>	Replace the transmission assembly. <Ref. to CVT(TH58A)-62, Automatic Transmission Assembly.>	Go to step **14**.
14	**CHECK TCM INPUT SIGNAL (STALL TEST).** 1) Lift up the vehicle. 2) Start the engine. 3) Apply the parking brake. 4) Set the select lever to “D” range. 5) Depress the brake pedal firmly. 6) Slowly open the accelerator fully, and stabilize the engine speed. 7) Read the data of «Actual secondary pressure» using Subaru Select Monitor.	Is the «Actual secondary pressure» 4.5 — 6.0 MPa?	Replace the transmission assembly. <Ref. to CVT(TH58A)-62, Automatic Transmission Assembly.>	Go to step **15**.
15	**CHECK TCM INPUT SIGNAL (STALL TEST).** Check the «Actual Secondary Pressure» in step 14.	Is the «Actual secondary pressure» 4.5 MPa or less?	Replace the transmission assembly. <Ref. to CVT(TH58A)-62, Automatic Transmission Assembly.>	Replace the control valve body. <Ref. to CVT(TH58A)-114, Control Valve Body.>

1. CLASSIFICATION OF SYMPTOM USING FREEZE FRAME DATA

Apply the values of «Actual Secondary Pressure» and «Secondary Actual Current» recorded in the freeze frame data onto the graph shown in the following figure, and judge if either low-voltage malfunction or high-voltage malfunction occurs.

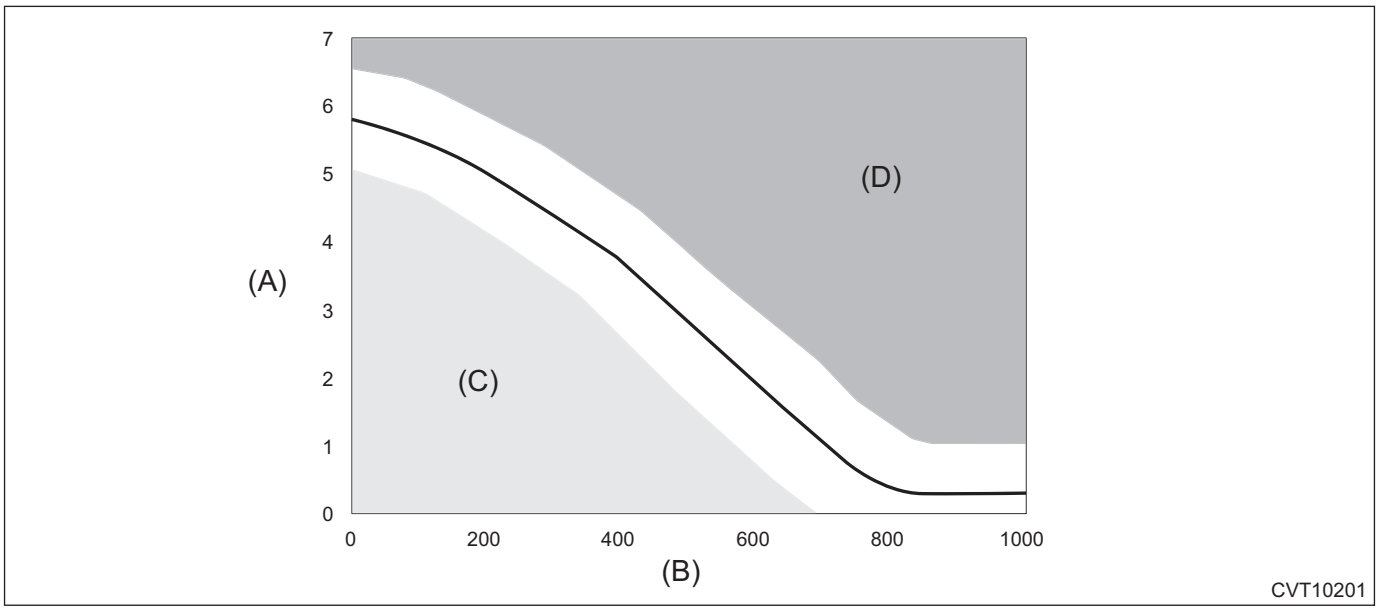

(A) Actual secondary pressure (MPa)
(B) Secondary actual current (mA)
(C) Low-voltage malfunction
(D) High-voltage malfunction

NOTE:
Symptom that the DTC P0841 illuminates can be classified into 2 patterns.
- Low-voltage malfunction: detected due to insufficient oil pressure
- High-voltage malfunction: detected due to excessive oil pressure

P: DTC P0842 SECONDARY OIL PRESSURE SENSOR CIRCUIT (LOW)

DTC DETECTING CONDITION:

- Immediately at fault recognition
- GENERAL DESCRIPTION <Ref. to GD(CVT)(HEV)-18, DTC P0842 SECONDARY OIL PRESSURE SENSOR CIRCUIT (LOW), Diagnostic Trouble Code (DTC) Detecting Criteria.>

TROUBLE SYMPTOM:

Shift characteristics malfunction

WIRING DIAGRAM:

CVT control system <Ref. to WI(HEV)-86, CVT Control System.>

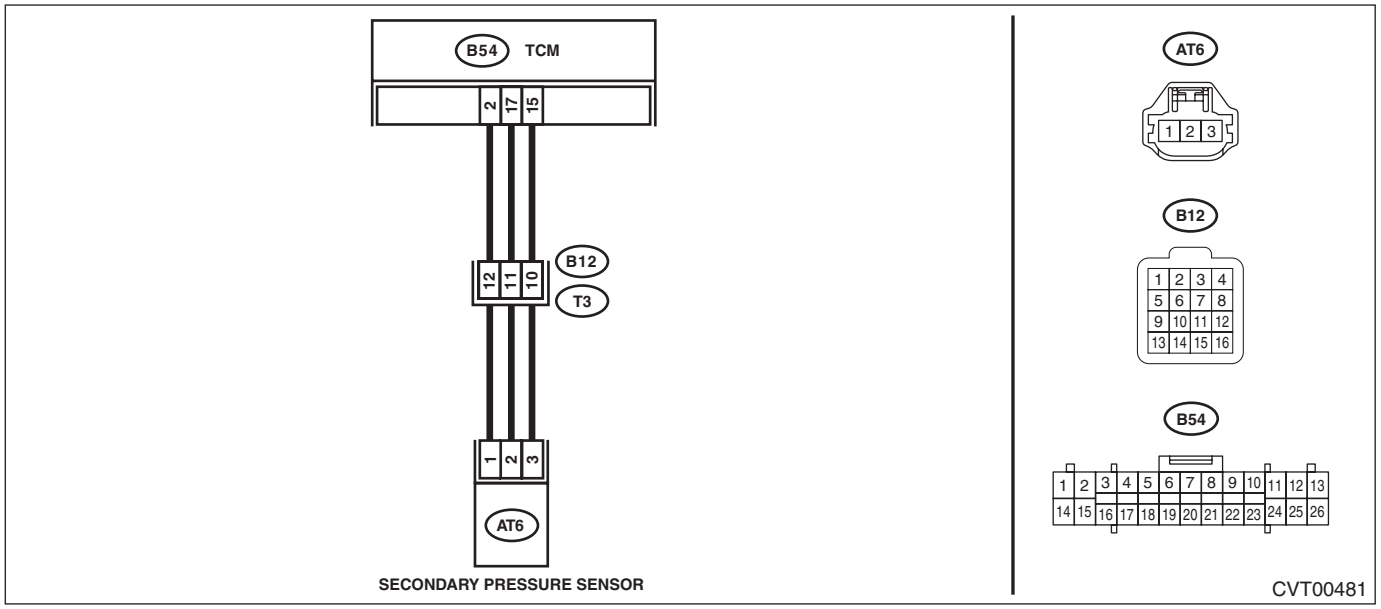

Step		Check	Yes	No
1	**CHECK INPUT SIGNAL FOR TCM.** 1) Start the engine. 2) Warm up until the ATF temperature reaches to 40 — 70°C (104 — 158°F). 3) Depress the brake pedal, and shift the select lever to “D” range. 4) Shift the select lever to “P” range. 5) Stabilize the engine speed at idle. 6) Read the data of «Actual secondary pressure» using Subaru Select Monitor.	Is the «Actual secondary pressure» 0.5 — 1.5 MPa?	Check for poor contact of connector.	Go to step **2**.
2	**CHECK HARNESS.** 1) Turn the ignition switch to OFF. 2) Disconnect the TCM and transmission connectors. 3) Measure the resistance between TCM connector and transmission connectors. ***Connector & terminal*** ***(B54) No. 2 — (B12) No. 12:*** ***(B54) No. 15 — (B12) No. 10:*** ***(B54) No. 17 — (B12) No. 11:***	Is the resistance less than 1 Ω?	Go to step **3**.	Repair the open circuit of harness.
3	**CHECK HARNESS.** Measure the resistance between TCM connector and chassis ground. ***Connector & terminal*** ***(B54) No. 2 — Chassis ground:*** ***(B54) No. 17 — Chassis ground:***	Is the resistance 1 MΩ or more?	Go to step **4**.	Repair the short circuit of harness.

	Step	Check	Yes	No
4	**CHECK TRANSMISSION HARNESS.** 1) Disconnect the secondary pressure sensor connector. 2) Measure the resistance between transmission connector and secondary pressure sensor connector. ***Connector & terminal*** ***(T3) No. 10 — (AT6) No. 3:*** ***(T3) No. 11 — (AT6) No. 2:*** ***(T3) No. 12 — (AT6) No. 1:***	Is the resistance less than 1 Ω?	Go to step **5**.	Repair the open circuit of harness.
5	**CHECK TRANSMISSION HARNESS.** Measure the resistance between transmission connector and chassis ground. ***Connector & terminal*** ***(T3) No. 11 — Chassis ground:*** ***(T3) No. 12 — Chassis ground:***	Is the resistance 1 MΩ or more?	Go to step **6**.	Repair the short circuit of harness.
6	**CHECK SENSOR POWER SUPPLY.** 1) Connect the connectors of TCM and transmission. 2) Turn the ignition switch to ON. 3) Measure the voltage between secondary pressure sensor connector terminals. ***Connector & terminal*** ***(AT6) No. 1 (+) — (AT6) No. 3 (–):***	Is the voltage 4.5 V or more?	Replace the secondary pressure sensor. <Ref. to CVT(TH58A)-109, Secondary Pressure Sensor.>	Check for poor contact of the connector, and repair the defective part.

Q: DTC P0843 SECONDARY OIL PRESSURE SENSOR CIRCUIT (HIGH)

DTC DETECTING CONDITION:

- Immediately at fault recognition
- GENERAL DESCRIPTION <Ref. to GD(CVT)(HEV)-19, DTC P0843 SECONDARY OIL PRESSURE SENSOR CIRCUIT (HIGH), Diagnostic Trouble Code (DTC) Detecting Criteria.>

TROUBLE SYMPTOM:

Shift characteristics malfunction

WIRING DIAGRAM:

CVT control system <Ref. to WI(HEV)-86, CVT Control System.>

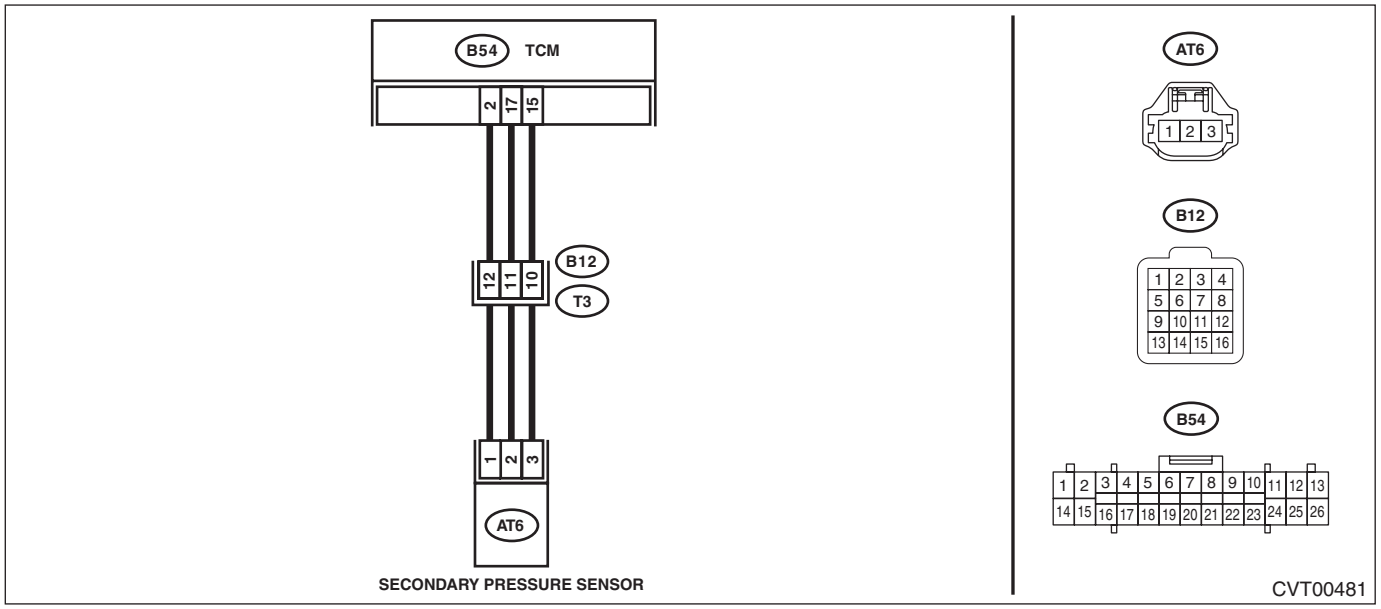

Step		Check	Yes	No
1	**CHECK INPUT SIGNAL FOR TCM.** 1) Start the engine. 2) Warm up until the ATF temperature reaches to 40 — 70°C (104 — 158°F). 3) Depress the brake pedal, and shift the select lever to “D” range. 4) Shift the select lever to “P” range. 5) Stabilize the engine speed at idle. 6) Read the data of «Actual secondary pressure» using Subaru Select Monitor.	Is the «Actual secondary pressure» 0.5 — 1.5 MPa?	Check for poor contact of connector.	Go to step **2**.
2	**CHECK HARNESS.** 1) Turn the ignition switch to OFF. 2) Disconnect the TCM and transmission connectors. 3) Turn the ignition switch to ON. 4) Measure the voltage between TCM connector and chassis ground. ***Connector & terminal*** ***(B54) No. 2 (+) — Chassis ground (–):*** ***(B54) No. 17 (+) — Chassis ground (–):***	Is the voltage approx. 0 V?	Go to step **3**.	Repair the short circuit of harness.
3	**CHECK HARNESS.** 1) Turn the ignition switch to OFF. 2) Measure the resistance between TCM connector terminals. ***Connector & terminal*** ***(B54) No. 2 — (B54) No. 17:***	Is the resistance less than 1 Ω?	Repair the short circuit of harness.	Go to step **4**.

	Step	Check	Yes	No
4	**CHECK TRANSMISSION HARNESS.** 1) Disconnect the secondary pressure sensor connector. 2) Turn the ignition switch to ON. 3) Measure the voltage between transmission connector and chassis ground. ***Connector & terminal*** ***(T3) No. 11 (+) — Chassis ground (–):*** ***(T3) No. 12 (+) — Chassis ground (–):***	Is the voltage approx. 0 V?	Go to step **5**.	Repair the short circuit of harness.
5	**CHECK TRANSMISSION HARNESS.** 1) Turn the ignition switch to OFF. 2) Measure the resistance between transmission connector terminals. ***Connector & terminal*** ***(T3) No. 11 — (T3) No. 12:***	Is the resistance less than 1 Ω?	Repair the short circuit of harness.	Go to step **6**.
6	**CHECK SENSOR POWER SUPPLY.** 1) Connect the connectors of TCM and transmission. 2) Turn the ignition switch to ON. 3) Measure the voltage between secondary pressure sensor connector terminals. ***Connector & terminal*** ***(AT6) No. 1 (+) — (AT6) No. 3 (–):***	Is the voltage 4.5 V or more?	Replace the secondary pressure sensor. <Ref. to CVT(TH58A)-109, Secondary Pressure Sensor.>	Check for poor contact of the connector, and repair the defective part.

R: DTC P0851 PARK/NEUTRAL SWITCH INPUT CIRCUIT LOW

DTC DETECTING CONDITION:
Inhibitor switch is faulty.
TROUBLE SYMPTOM:
- Shift characteristics are erroneous.
- The range position of the select lever and the position of shift indicator display do not match.

WIRING DIAGRAM:
CVT control system <Ref. to WI(HEV)-86, CVT Control System.>

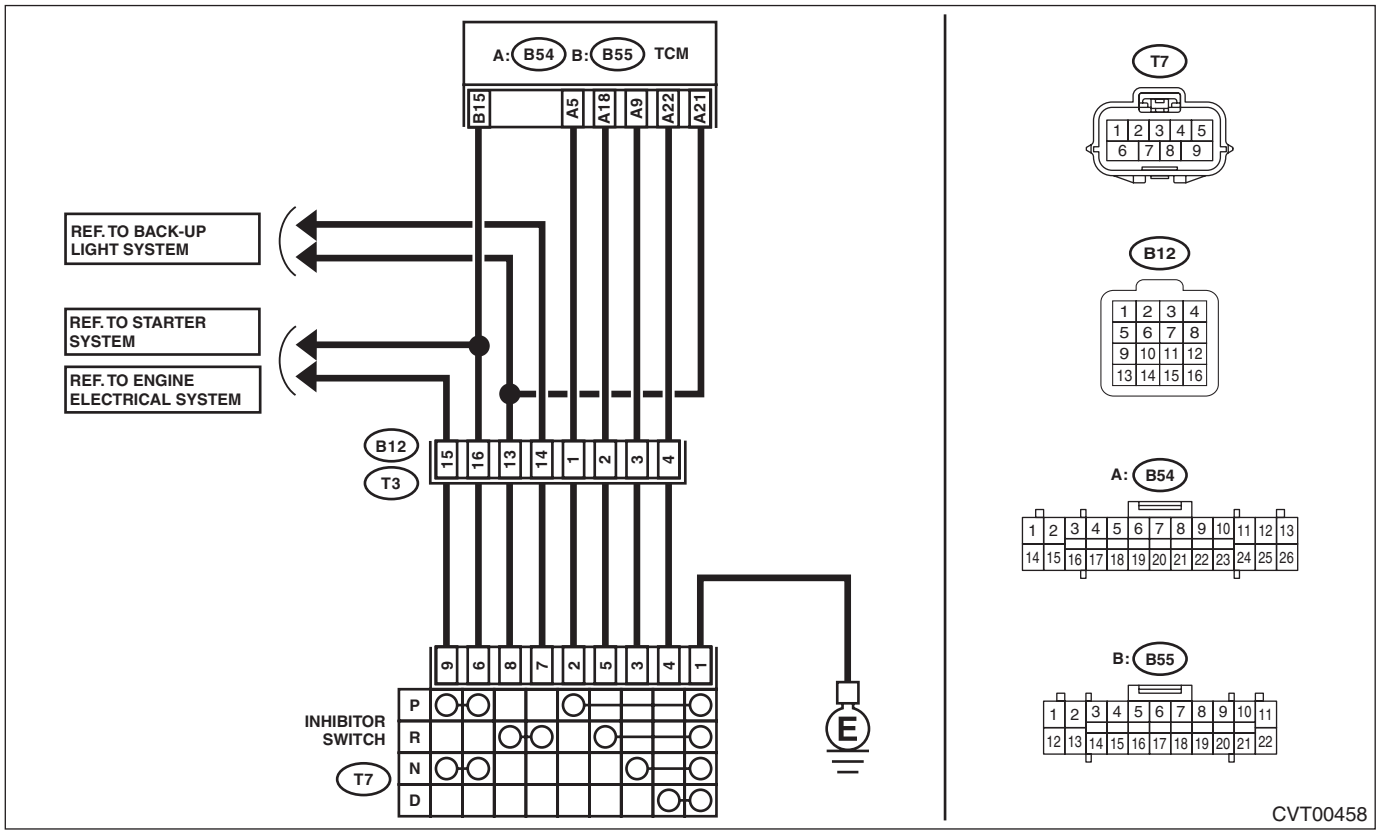

Step		Check	Yes	No
1	**CHECK INPUT SIGNAL FOR TCM.** 1) Turn the ignition switch to ON. 2) Move the select lever to each range, and read the data of «P Range» and «N/P Range Signal» at P range, and the data of «N Range» and «N/P Range Signal» at N range using the Subaru Select Monitor.	Is the display of the corresponding range “ON”?	Go to step **7**.	Go to step **2**.
2	**CHECK HARNESS.** 1) Turn the ignition switch to OFF. 2) Disconnect the TCM and transmission connectors. 3) Measure the resistance of harness between TCM connector and transmission connector. ***Connector & terminal*** ***(B54) No. 5 — (B12) No. 1:*** ***(B54) No. 9 — (B12) No. 3:*** ***(B55) No. 15 — (B12) No. 16:***	Is each resistance less than 1 Ω?	Go to step **3**.	Repair the open circuit of body harness.

	Step	Check	Yes	No
3	**CHECK HARNESS.** Measure the resistance of harness between inhibitor switch connector and transmission ground. ***Connector & terminal*** ***(T7) No. 1 — Transmission ground:***	Is the resistance less than 1 Ω?	Go to step **4**.	Repair the open circuit of harness.
4	**CHECK HARNESS.** 1) Disconnect the inhibitor switch connector. 2) Measure the resistance between transmission connector and inhibitor switch connector. ***Connector & terminal*** ***(T3) No. 1 — (T7) No. 2:*** ***(T3) No. 3 — (T7) No. 3:*** ***(T3) No. 16 — (T7) No. 6:***	Is each resistance less than 1 Ω?	Go to step **5**.	Repair the open circuit of transmission harness.
5	**CHECK INHIBITOR SWITCH.** Move the select lever to each range, and measure the resistance between inhibitor switch connector terminals. ***Connector & terminal*** ***(T7) No. 2 — (T7) No. 1:*** ***(T7) No. 3 — (T7) No. 1:*** ***(T7) No. 6 — (T7) No. 1:***	Is the resistance of the corresponding range less than 1 MΩ?	Go to step **6**.	Replace the inhibitor switch. <Ref. to CVT(TH58A)-96, Inhibitor Switch.>
6	**CHECK HARNESS.** 1) Turn the ignition switch to ON. 2) Measure the voltage between each connector and chassis ground. ***Connector & terminal*** ***Transmission connector (B12 side)*** ***(B12) No. 1 (+) — Chassis ground (–):*** ***(B12) No. 3 (+) — Chassis ground (–):*** ***(B12) No. 16 (+) — Chassis ground (–):*** ***Transmission connector (T7 side)*** ***(T7) No. 2 (+) — Chassis ground (–):*** ***(T7) No. 3 (+) — Chassis ground (–):*** ***(T7) No. 6 (+) — Chassis ground (–):***	Is each voltage less than 1 V?	Go to step **7**.	Repair the harness which outputs 1 V or more.
7	**CHECK FOR POOR CONTACT.**	Is there poor contact between TCM, inhibitor switch, transmission ground?	Repair the poor contact.	Check the TCM.

S: DTC P086C REVERSE INPUT CIRCUIT 2

DTC DETECTING CONDITION:

- Inhibitor switch is faulty.
- R range 2 signal is not input.

TROUBLE SYMPTOM:

- Shift characteristics are erroneous.
- The range position of the select lever and the position of shift indicator display do not match.

WIRING DIAGRAM:

CVT control system <Ref. to WI(HEV)-86, CVT Control System.>

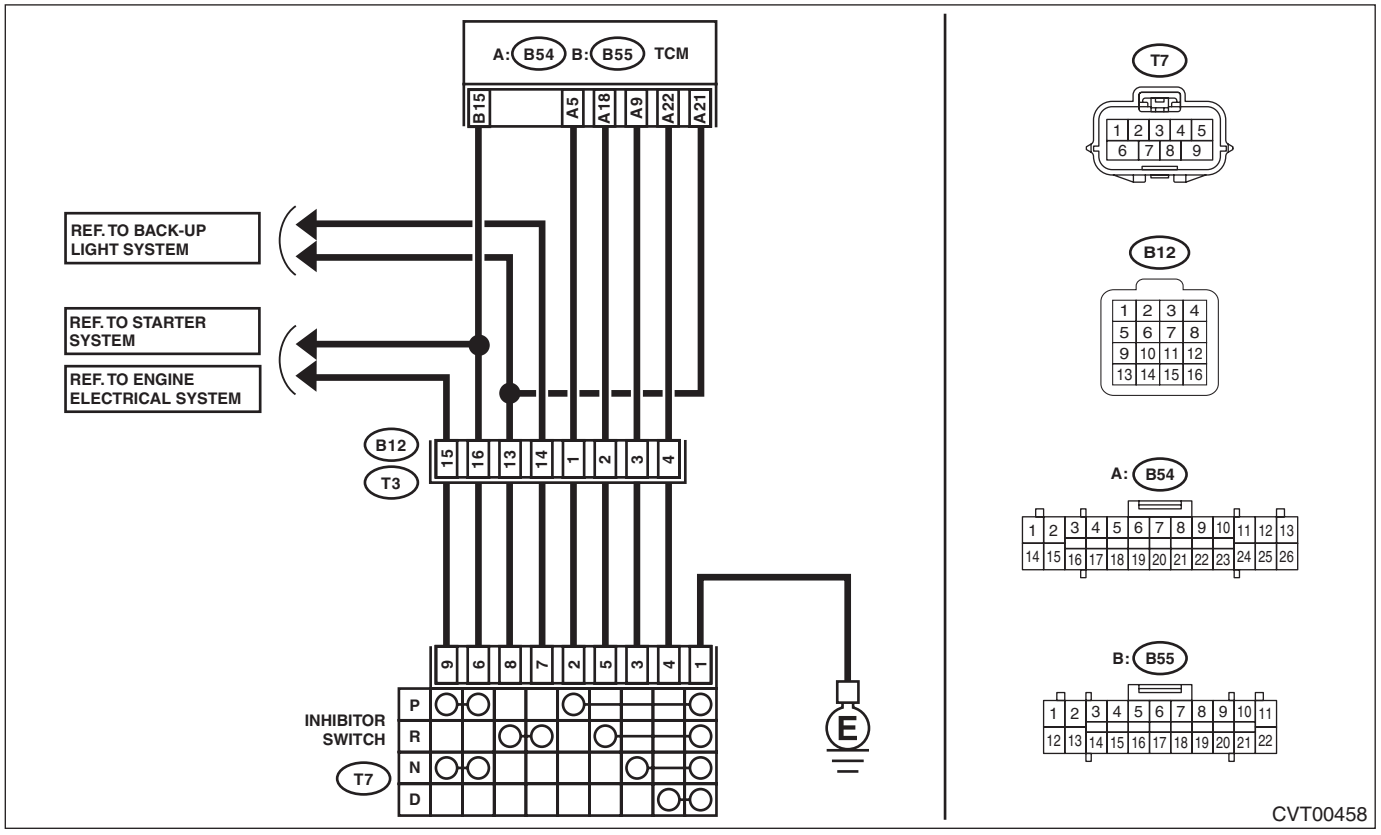

Step		Check	Yes	No
1	**CHECK INPUT SIGNAL FOR TCM.** 1) Turn the ignition switch to ON. 2) Move the select lever to "R" range, and read the data of «R Range Signal2» using the Subaru Select Monitor.	Is "ON" displayed?	Go to step **7**.	Go to step **2**.
2	**CHECK HARNESS.** 1) Turn the ignition switch to OFF. 2) Disconnect the TCM and transmission connectors. 3) Measure the resistance of harness between TCM connector and transmission connector. ***Connector & terminal*** ***(B54) No. 21 — (B12) No. 13:***	Is the resistance less than 1 Ω?	Go to step **3**.	Repair the open circuit of body harness.
3	**CHECK HARNESS.** Measure the resistance of harness between inhibitor switch connector and transmission ground. ***Connector & terminal*** ***(T7) No. 1 — Transmission ground:***	Is the resistance less than 1 Ω?	Go to step **4**.	Repair the open circuit of harness.

	Step	Check	Yes	No
4	**CHECK HARNESS.** 1) Disconnect the inhibitor switch connector. 2) Measure the resistance between transmission connector and inhibitor switch connector. ***Connector & terminal*** ***(T3) No. 13 — (T7) No. 8:***	Is the resistance less than 1 Ω?	Go to step **5**.	Repair the open circuit of transmission harness.
5	**CHECK INHIBITOR SWITCH.** Move the select lever to "R" range, and measure the resistance between inhibitor switch connector terminals. ***Connector & terminal*** ***(T7) No. 8 — (T7) No. 1:***	Is the resistance less than 1 Ω?	Go to step **6**.	Replace the inhibitor switch. <Ref. to CVT(TH58A)-96, Inhibitor Switch.>
6	**CHECK HARNESS.** 1) Turn the ignition switch to ON. 2) Measure the voltage between each connector and chassis ground. ***Connector & terminal*** ***Transmission connector (B12 side)*** ***(B12) No. 13 (+) — Chassis ground (–):*** ***Transmission connector (T7 side)*** ***(T7) No. 8 (+) — Chassis ground (–):***	Is each voltage less than 1 V?	Go to step **7**.	Repair the harness which outputs 1 V or more.
7	**CHECK FOR POOR CONTACT.**	Is there poor contact between TCM, inhibitor switch, transmission ground?	Repair the poor contact.	Check the TCM.

T: DTC P0882 TCM POWER INPUT SIGNAL LOW

NOTE:
Refer to "DTC P0890 AT SELF-SHUT RELAY DIAGNOSIS (LOW)" for diagnostic procedure. <Ref. to CVT(HEV)(diag)-74, DTC P0890 AT SELF-SHUT RELAY DIAGNOSIS (LOW), Diagnostic Procedure with Diagnostic Trouble Code (DTC).>

U: DTC P0890 AT SELF-SHUT RELAY DIAGNOSIS (LOW)

DTC DETECTING CONDITION:

- Immediately at fault recognition
- GENERAL DESCRIPTION <Ref. to GD(CVT)(HEV)-20, DTC P0890 AT SELF-SHUT RELAY DIAGNOSIS (LOW), Diagnostic Trouble Code (DTC) Detecting Criteria.>

TROUBLE SYMPTOM:

Gear is not changed.

CAUTION:

After diagnosis, perform Clear Memory Mode for ECM. <Ref. to EN(H4DO HEV)(diag)-63, Clear Memory Mode.>

WIRING DIAGRAM:

CVT control system <Ref. to WI(HEV)-86, CVT Control System.>

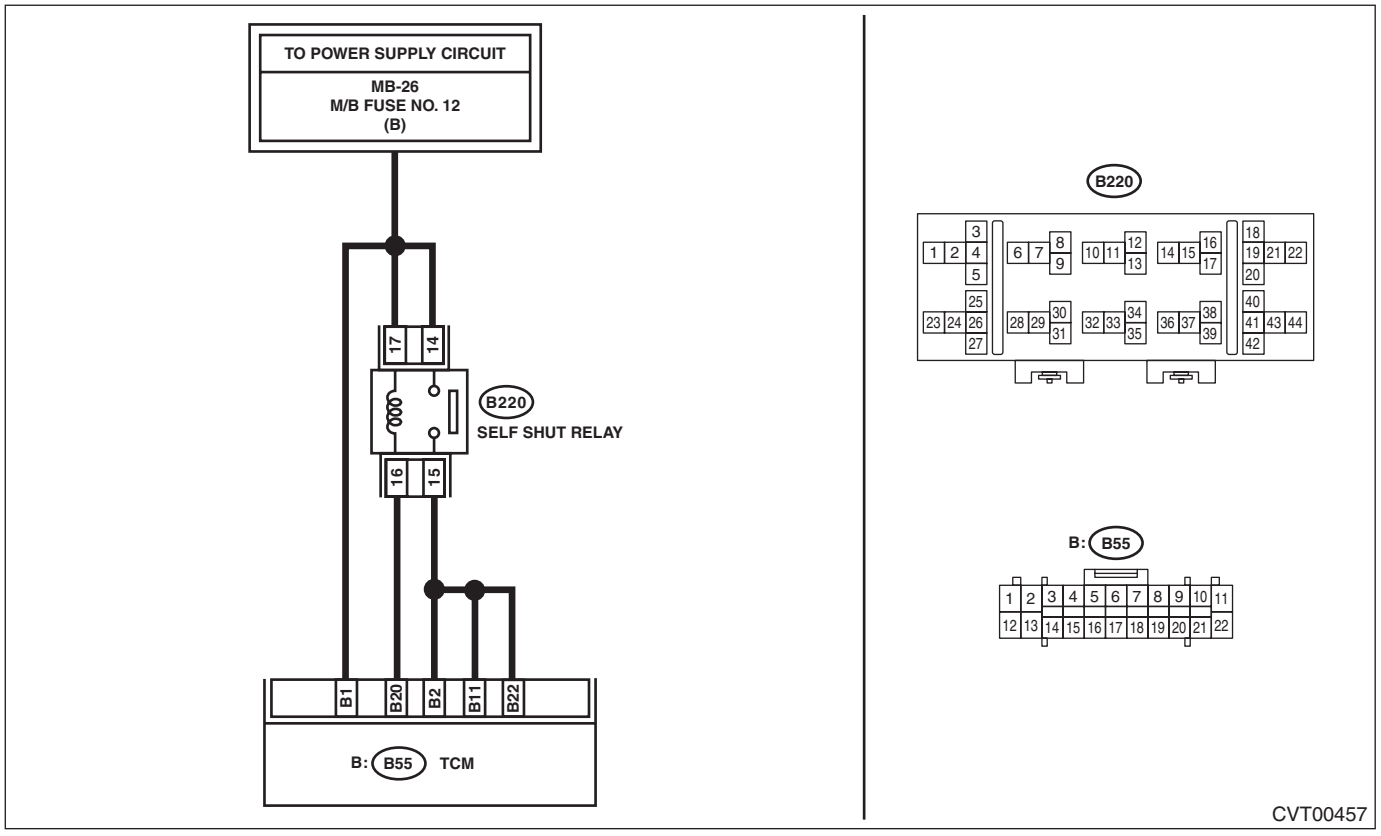

Step		Check	Yes	No
1	**CHECK HARNESS.** 1) Disconnect the TCM and self shut relay connectors. 2) Measure the resistance between TCM connector and self shut relay connector. ***Connector & terminal*** ***(B55) No. 20 — (B220) No. 16:*** ***(B55) No. 2 — (B220) No. 15:*** ***(B55) No. 11 — (B220) No. 15:*** ***(B55) No. 22 — (B220) No. 15:***	Is the resistance less than 1 Ω?	Go to step **2**.	Repair the open circuit of harness.

	Step	Check	Yes	No
2	**CHECK HARNESS.** Measure the resistance between TCM connector and chassis ground. ***Connector & terminal*** ***(B55) No. 20 — Chassis ground:*** ***(B55) No. 2 — Chassis ground:*** ***(B55) No. 11 — Chassis ground:*** ***(B55) No. 22 — Chassis ground:***	Is the resistance 1 MΩ or more?	Go to step **3**.	Repair the short circuit of harness.
3	**CHECK RELAY POWER SUPPLY.** Measure the voltage between self shut relay connector and chassis ground. ***Connector & terminal*** ***(B220) No. 14 (+) — Chassis ground (–):*** ***(B220) No. 17 (+) — Chassis ground (–):***	Is the voltage 10 V or more?	Go to step **4**.	Repair the open or short circuit of harness.
4	**CHECK SELF SHUT RELAY.** Measure the resistance between self shut relay terminals. ***Connector & terminal*** ***(B220) No. 16 — (B220) No. 17:***	Is the resistance 110 — 140 Ω?	Go to step **5**.	Replace the self shut relay.
5	**CHECK SELF SHUT RELAY.** Measure the resistance between self shut relay terminals. ***Connector & terminal*** ***(B220) No. 14 — (B220) No. 15:***	Is the resistance 1 MΩ or more?	Go to step **6**.	Replace the self shut relay.
6	**CHECK INPUT SIGNAL FOR TCM.** 1) Connect the connectors of TCM and self shut relay. 2) Read the data of «Control module voltage» using Subaru Select Monitor.	Is the «Control module voltage» 10 V or more?	Current condition is normal. Check for poor contact in connectors or harnesses, and repair the defective part.	Go to step **7**.
7	**CHECK FOR POOR CONTACT.**	Is there poor contact of the self shut relay circuit?	Repair the poor contact.	Check the TCM.

V: DTC P0951 MANUAL SWITCH

DTC DETECTING CONDITION:
Input signal circuit of manual mode switch is open or shorted.
TROUBLE SYMPTOM:
Manual mode can not be set.
WIRING DIAGRAM:
CVT control system <Ref. to WI(HEV)-86, CVT Control System.>

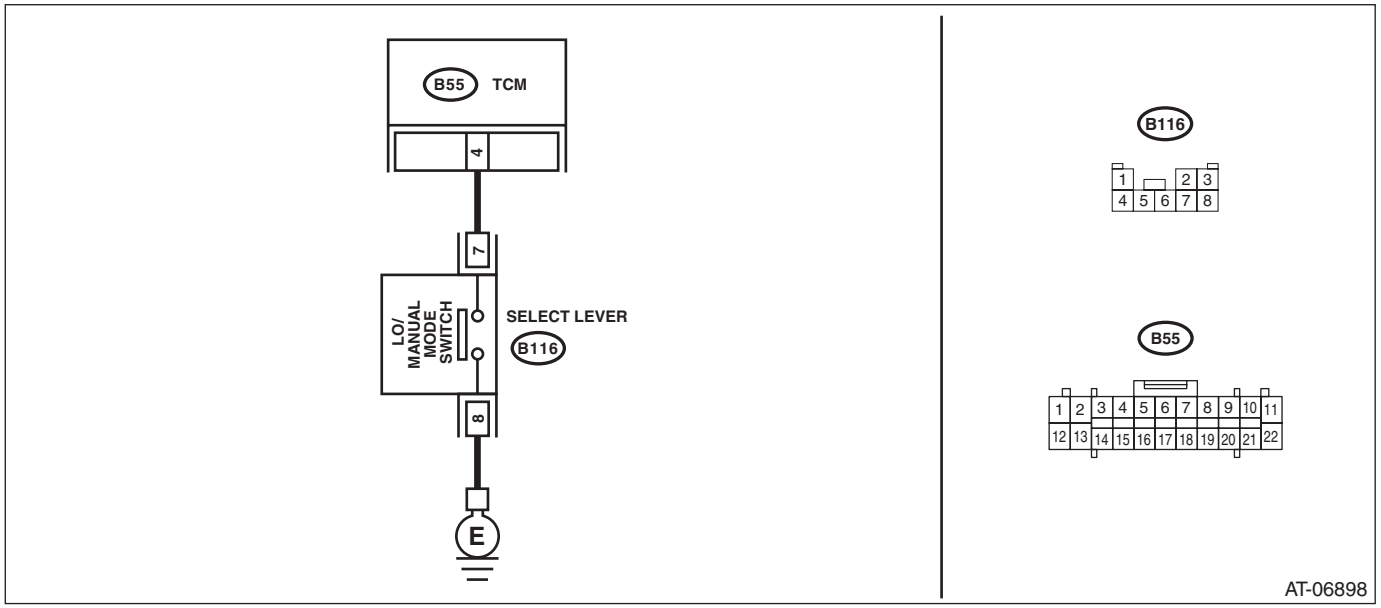

Step		Check	Yes	No
1	**CHECK HARNESS.** 1) Turn the ignition switch to OFF. 2) Disconnect the manual mode switch connector. 3) Measure the resistance between manual mode switch connector and chassis ground. ***Connector & terminal*** ***(B116) No. 8 — Chassis ground:***	Is the resistance less than 1 Ω?	Go to step **2**.	Repair the open circuit of harness.
2	**CHECK MANUAL MODE SWITCH.** Measure the resistance between manual mode switch terminals. ***Connector & terminal*** ***(B116) No. 7 — No. 8:***	Is the resistance 1 MΩ or more?	Go to step **3**.	Replace the select lever assembly. <Ref. to CS-24, Select Lever.>
3	**CHECK MANUAL MODE SWITCH.** 1) Shift the select lever to manual mode. 2) Measure the resistance between manual mode switch terminals. ***Connector & terminal*** ***(B116) No. 7 — No. 8:***	Is the resistance less than 1 Ω?	Go to step **4**.	Replace the select lever assembly. <Ref. to CS-24, Select Lever.>
4	**CHECK HARNESS.** 1) Disconnect the TCM connector. 2) Measure the resistance between TCM connector and manual mode switch connector. ***Connector & terminal*** ***(B55) No. 4 — (B116) No. 7:***	Is the resistance less than 1 Ω?	Go to step **5**.	Repair the open circuit of harness or poor contact of connector.
5	**CHECK HARNESS.** Measure the resistance between manual mode switch connector and chassis ground. ***Connector & terminal*** ***(B116) No. 7 — Chassis ground:***	Is the resistance 1 MΩ or more?	Go to step **6**.	Repair the short circuit of harness.

	Step	Check	Yes	No
6	**CHECK INPUT SIGNAL FOR TCM.** 1) Connect the TCM and manual mode switch connector. 2) Turn the ignition switch to ON. 3) Set the select lever to “D” range. 4) Read the data of «Tiptronic Mode Switch» using Subaru Select Monitor.	Does the value of «Tiptronic Mode Switch» change to “ON” with select lever in manual mode, and “OFF” with select lever in other than manual mode?	Current condition is normal.	Go to step **7**.
7	**CHECK FOR POOR CONTACT.**	Is there poor contact of the manual mode switch circuit?	Repair the poor contact.	Check the TCM.

W: DTC P0962 SECONDARY SOLENOID CIRCUIT (LOW)

DTC DETECTING CONDITION:

- Immediately at fault recognition
- GENERAL DESCRIPTION <Ref. to GD(CVT)(HEV)-21, DTC P0962 SECONDARY SOLENOID CIRCUIT (LOW), Diagnostic Trouble Code (DTC) Detecting Criteria.>

TROUBLE SYMPTOM:

- Engine speed increases abruptly, and can not start.
- Engine speed increases abruptly during driving.

WIRING DIAGRAM:

CVT control system <Ref. to WI(HEV)-86, CVT Control System.>

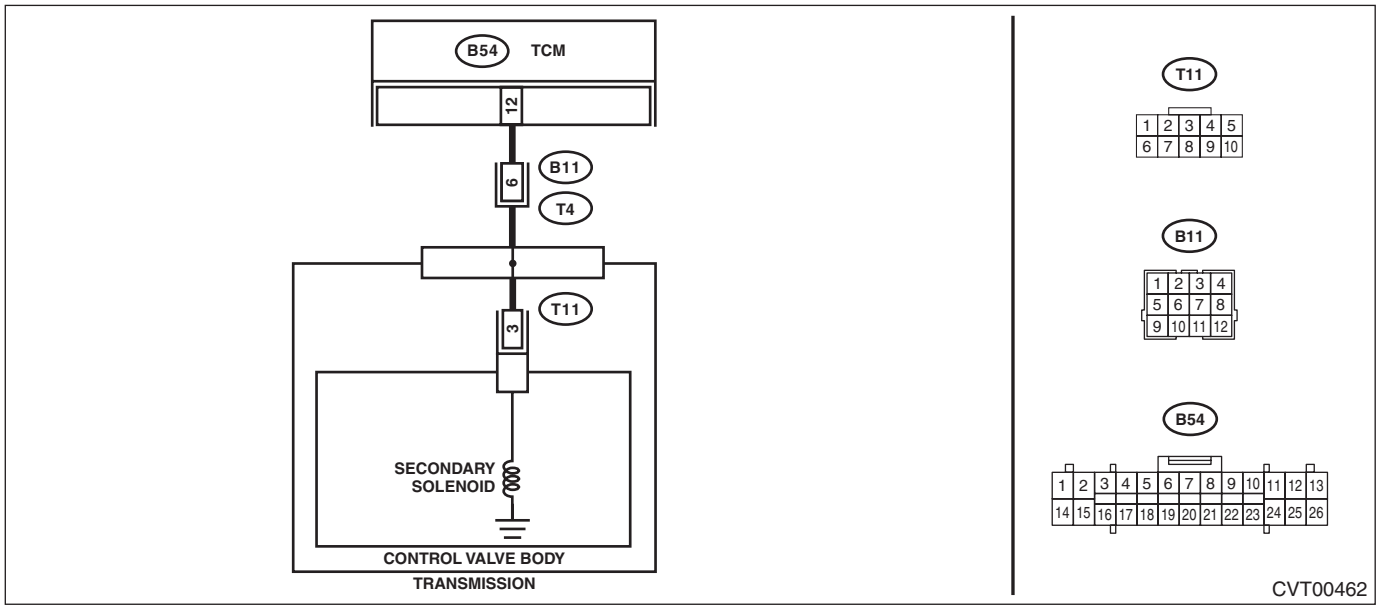

	Step	Check	Yes	No
1	**CHECK INPUT SIGNAL FOR TCM.** 1) After driving with warm up condition, park the vehicle while depressing the brake pedal at "N" range. 2) Read the data of «Sec. Sol. Set Current» and «Sec. Sol. Actual Current» using Subaru Select Monitor.	Does the value of «Sec. Sol. Set Current» and «Sec. Sol. Actual Current» almost correspond?	Check for poor contact of connector.	Go to step **2**.
2	**CHECK HARNESS.** 1) Turn the ignition switch to OFF. 2) Disconnect the TCM and transmission connectors. 3) Measure the resistance between TCM connector and chassis ground. ***Connector & terminal*** ***(B54) No. 12 — Chassis ground:***	Is the resistance 1 MΩ or more?	Go to step **3**.	Repair the short circuit of harness.
3	**CHECK SECONDARY SOLENOID.** Measure the resistance between transmission connector and transmission body. ***Connector & terminal*** ***(T4) No. 6 — Transmission body:***	Is the resistance approx. 7 Ω? (when engine cold)	Check for poor contact of the connector, and repair the defective part.	Go to step **4**.
4	**CHECK HARNESS INSIDE TRANSMISSION.** **CAUTION:** **Start work after ATF cools down.** 1) Remove the transmission valve cover. 2) Check for the harness pinch, damage.	Is there any fault in the harness?	Replace the transmission harness.	Go to step **5**.

	Step	Check	Yes	No
5	**CHECK HARNESS INSIDE TRANSMISSION.** 1) Disconnect the control valve body connector. 2) Measure the resistance between transmission connector and transmission body. ***Connector & terminal*** ***(T4) No. 6 — Transmission body:***	Is the resistance 1 MΩ or more?	Replace the control valve body. <Ref. to CVT(TH58A)-114, Control Valve Body.>	Replace the transmission harness.

X: DTC P0963 SECONDARY SOLENOID CIRCUIT (HIGH)

DTC DETECTING CONDITION:

- Immediately at fault recognition
- GENERAL DESCRIPTION <Ref. to GD(CVT)(HEV)-22, DTC P0963 SECONDARY SOLENOID CIRCUIT (HIGH), Diagnostic Trouble Code (DTC) Detecting Criteria.>

TROUBLE SYMPTOM:

- Engine speed increases abruptly, and can not start.
- Engine speed increases abruptly during driving.

WIRING DIAGRAM:

CVT control system <Ref. to WI(HEV)-86, CVT Control System.>

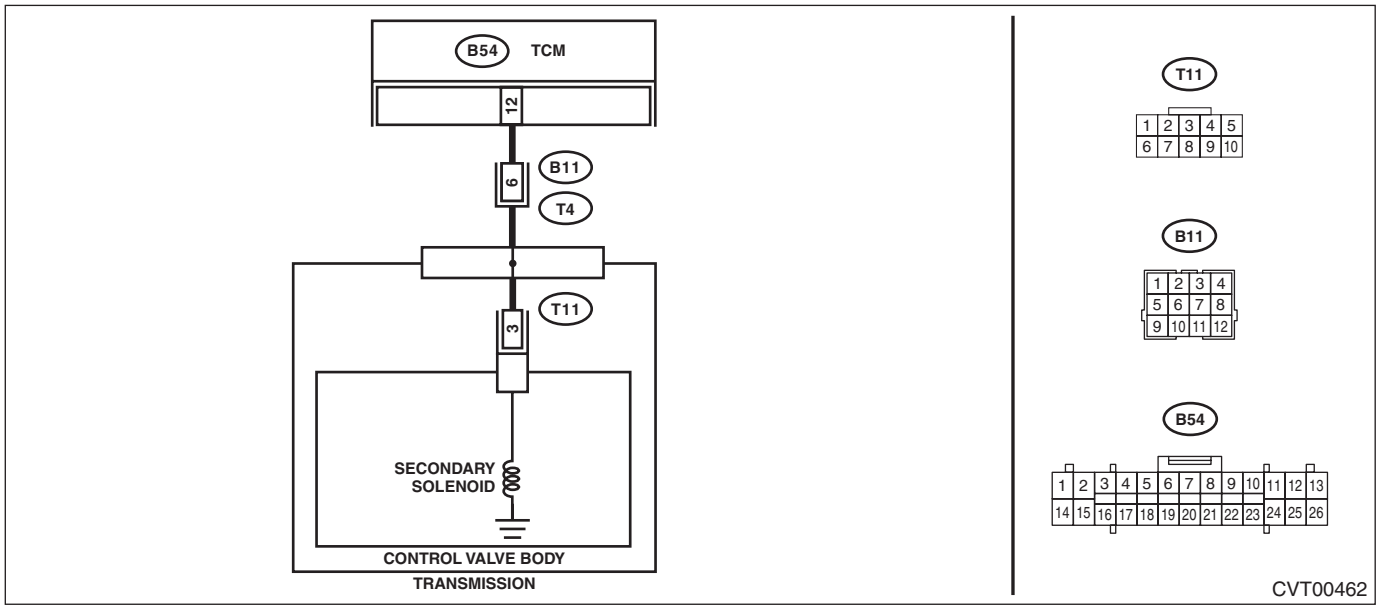

	Step	Check	Yes	No
1	**CHECK INPUT SIGNAL FOR TCM.** 1) After driving with warm up condition, park the vehicle while depressing the brake pedal at "N" range. 2) Read the data of «Sec. Sol. Set Current» and «Sec. Sol. Actual Current» using Subaru Select Monitor.	Does the value of «Sec. Sol. Set Current» and «Sec. Sol. Actual Current» almost correspond?	Check for poor contact of connector.	Go to step **2**.
2	**CHECK HARNESS.** 1) Turn the ignition switch to OFF. 2) Disconnect the TCM and transmission connectors. 3) Measure the resistance between TCM connector and transmission connectors. ***Connector & terminal*** ***(B54) No. 12 — (B11) No. 6:***	Is the resistance less than 1 Ω?	Go to step **3**.	Repair the open circuit of harness.
3	**CHECK HARNESS.** 1) Turn the ignition switch to ON. 2) Measure the voltage between TCM connector and chassis ground. ***Connector & terminal*** ***(B54) No. 12 (+) — Chassis ground (–):***	Is the voltage approx. 0 V?	Go to step **4**.	Repair the short circuit of harness.
4	**CHECK SECONDARY SOLENOID.** Measure the resistance between transmission connector and transmission body. ***Connector & terminal*** ***(T4) No. 6 — Transmission body:***	Is the resistance approx. 7 Ω? (when engine cold)	Check for poor contact of the connector, and repair the defective part.	Go to step **5**.

	Step	Check	Yes	No
5	**CHECK HARNESS INSIDE TRANSMISSION.** **CAUTION:** **Start work after ATF cools down.** 1) Remove the transmission valve cover. 2) Check for the harness pinch, damage.	Is there any fault in the harness?	Replace the transmission harness.	Go to step **6**.
6	**CHECK HARNESS INSIDE TRANSMISSION.** 1) Disconnect the control valve body connector. 2) Turn the ignition switch to ON. 3) Measure the voltage between transmission connector and transmission body. ***Connector & terminal*** ***(T4) No. 6 (+) — Transmission body (–):***	Is the voltage approx. 0 V?	Replace the control valve body. <Ref. to CVT(TH58A)-114, Control Valve Body.>	Replace the transmission harness.

Y: DTC P0965 FORWARD & REVERSE SOLENOID FUNCTION

DTC DETECTING CONDITION:

- Immediately at fault recognition
- GENERAL DESCRIPTION <Ref. to GD(CVT)(HEV)-23, DTC P0965 FORWARD & REVERSE SOLENOID FUNCTION, Diagnostic Trouble Code (DTC) Detecting Criteria.>

TROUBLE SYMPTOM:

- Engine speed increases abruptly, and can not accelerate.
- Excessive slippage is felt.

	Step	Check	Yes	No
1	**CHECK TRANSMISSION FLUID.** Check the condition of ATF. <Ref. to CVT(TH58A)-44, CONDITION CHECK, CVTF.>	Is the ATF OK?	Go to step **2**.	Check according to the "Corrective action" of ATF (CVTF) "CONDITION CHECK". <Ref. to CVT(TH58A)-44, CONDITION CHECK, CVTF.>
2	**CHECK TRANSMISSION FLUID.** Check the amount of ATF. <Ref. to CVT(TH58A)-41, ADJUSTMENT, CVTF.>	Is the ATF amount correct?	Go to step **3**.	Adjust the amount of ATF. <Ref. to CVT(TH58A)-41, ADJUSTMENT, CVTF.>
3	**CHECK INPUT SIGNAL FOR TCM.** 1) Start the engine. 2) Warm up until the ATF temperature reaches to 40 — 70°C (104 — 158°F). 3) Shift the select lever to "P" range. 4) Stabilize the engine speed at idle. 5) Read the data of «Actual secondary pressure» using Subaru Select Monitor.	Is the «Actual secondary pressure» 0.5 — 1.5 MPa?	Go to step **4**.	Perform the diagnosis according to DTC P0841 procedure.
4	**STALL TEST.** Perform the stall test. <Ref. to CVT(TH58A)-52, Stall Test.>	Is the stall test normal?	Go to step **5**.	If the engine speed increases abruptly, replace the transmission assembly. <Ref. to CVT(TH58A)-62, Automatic Transmission Assembly.>
5	**DRIVING CHECK BY INSPECTION MODE.** 1) Turn the ignition switch to OFF. 2) Perform a drive check based on the "Inspection Mode". <Ref. to CVT(HEV)(diag)-20, Inspection Mode.>	Does the AT OIL TEMP light blink and is DTC P0965 detected?	Replace the transmission assembly. <Ref. to CVT(TH58A)-62, Automatic Transmission Assembly.>	If there is abrupt increase of engine speed, standing start problems, replace the transmission assembly. <Ref. to CVT(TH58A)-62, Automatic Transmission Assembly.> If it is normal, temporary poor contact occurs.

Z: DTC P0966 FORWARD & REVERSE SOLENOID CIRCUIT (LOW)

DTC DETECTING CONDITION:

- Immediately at fault recognition
- GENERAL DESCRIPTION <Ref. to GD(CVT)(HEV)-24, DTC P0966 FORWARD & REVERSE SOLENOID CIRCUIT (LOW), Diagnostic Trouble Code (DTC) Detecting Criteria.>

TROUBLE SYMPTOM:

Excessive shift shock

WIRING DIAGRAM:

CVT control system <Ref. to WI(HEV)-86, CVT Control System.>

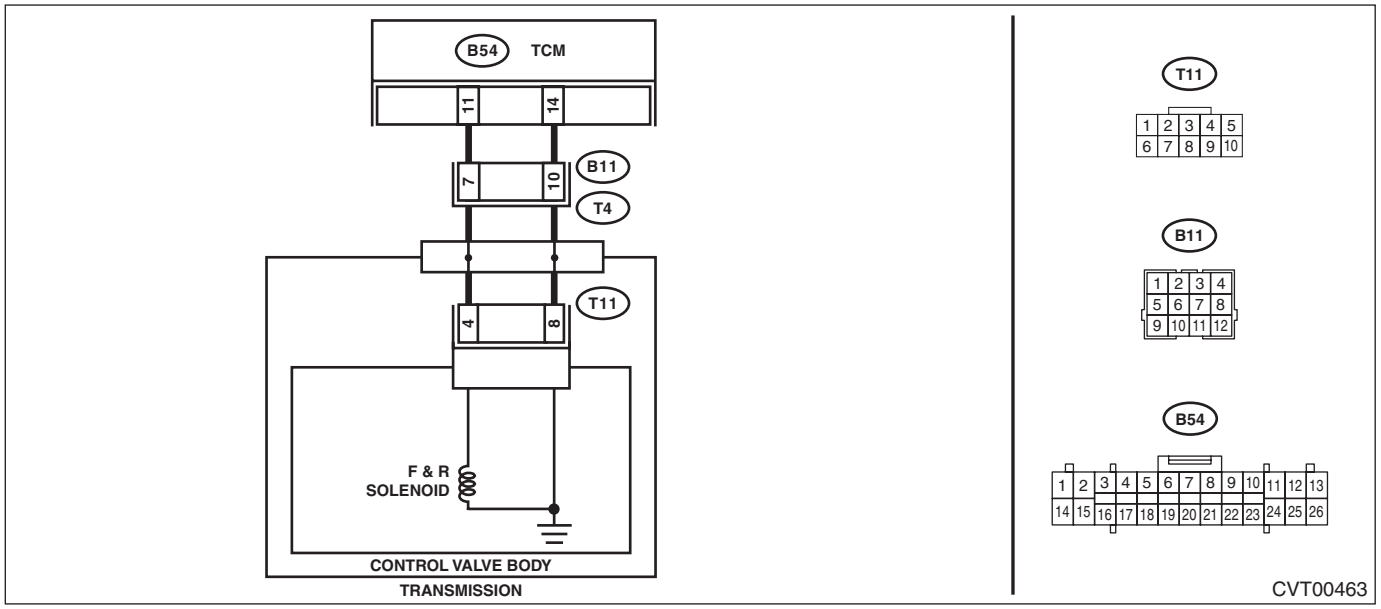

Step		Check	Yes	No
1	**CHECK INPUT SIGNAL FOR TCM.** 1) After driving with warm up condition, park the vehicle while depressing the brake pedal at "D" range. 2) Read the data of «F&R Linear Solenoid Set Current» and «F&R Linear Solenoid Actual Current» using Subaru Select Monitor.	Does the value of «F&R Linear Solenoid Set Current» and «F&R Linear Solenoid Actual Current» almost correspond?	Check for poor contact of connector.	Go to step **2**.
2	**CHECK HARNESS.** 1) Turn the ignition switch to OFF. 2) Disconnect the TCM and transmission connectors. 3) Measure the resistance between TCM connector and chassis ground. ***Connector & terminal*** ***(B54) No. 11 — Chassis ground:***	Is the resistance 1 MΩ or more?	Go to step **3**.	Repair the short circuit of harness.
3	**CHECK F&R SOLENOID.** Measure the resistance between transmission connector and transmission body. ***Connector & terminal*** ***(T4) No. 7 — Transmission body:***	Is the resistance approx. 6 Ω? (when engine cold)	Check for poor contact of the connector, and repair the defective part.	Go to step **4**.
4	**CHECK HARNESS INSIDE TRANSMISSION.** **CAUTION:** **Start work after ATF cools down.** 1) Remove the transmission valve cover. 2) Check for the harness pinch, damage.	Is there any fault in the harness?	Replace the transmission harness.	Go to step **5**.

	Step	Check	Yes	No
5	**CHECK HARNESS INSIDE TRANSMISSION.** 1) Disconnect the control valve body connector. 2) Measure the resistance between transmission connector and transmission body. ***Connector & terminal*** ***(T4) No. 7 — Transmission body:***	Is the resistance 1 MΩ or more?	Replace the control valve body. <Ref. to CVT(TH58A)-114, Control Valve Body.>	Replace the transmission harness.

AA:DTC P0967 FORWARD & REVERSE LINEAR SOLENOID CIRCUIT (HIGH)

DTC DETECTING CONDITION:

- Immediately at fault recognition
- GENERAL DESCRIPTION <Ref. to GD(CVT)(HEV)-25, DTC P0967 FORWARD & REVERSE LINEAR SOLENOID CIRCUIT (HIGH), Diagnostic Trouble Code (DTC) Detecting Criteria.>

TROUBLE SYMPTOM:

Engine speed increases abruptly, and can not start.

WIRING DIAGRAM:

CVT control system <Ref. to WI(HEV)-86, CVT Control System.>

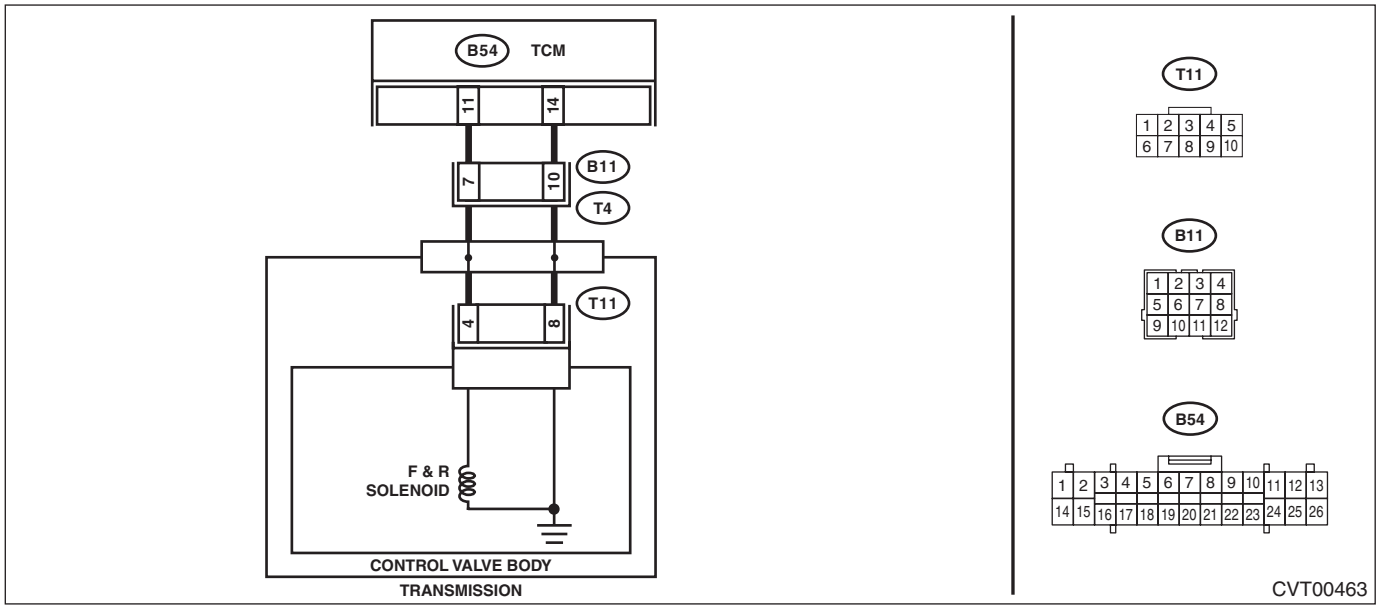

Step		Check	Yes	No
1	**CHECK INPUT SIGNAL FOR TCM.** 1) After driving with warm up condition, park the vehicle while depressing the brake pedal at "D" range. 2) Read the data of «F&R Linear Solenoid Set Current» and «F&R Linear Solenoid Actual Current» using Subaru Select Monitor.	Does the value of «F&R Linear Solenoid Set Current» and «F&R Linear Solenoid Actual Current» almost correspond?	Check for poor contact of connector.	Go to step **2**.
2	**CHECK HARNESS.** 1) Turn the ignition switch to OFF. 2) Disconnect the TCM and transmission connectors. 3) Measure the resistance between TCM connector and transmission connectors. ***Connector & terminal*** ***(B54) No. 11 — (B11) No. 7:***	Is the resistance less than 1 Ω?	Go to step **3**.	Repair the open circuit of harness.
3	**CHECK HARNESS.** 1) Turn the ignition switch to ON. 2) Measure the voltage between TCM connector and chassis ground. ***Connector & terminal*** ***(B54) No. 11 (+) — Chassis ground (–):***	Is the voltage approx. 0 V?	Go to step **4**.	Repair the short circuit of harness.
4	**CHECK F&R SOLENOID.** Measure the resistance between transmission connector and transmission body. ***Connector & terminal*** ***(T4) No. 7 — Transmission body:***	Is the resistance approx. 6 Ω? (when engine cold)	Check for poor contact of the connector, and repair the defective part.	Go to step **5**.

	Step	Check	Yes	No
5	**CHECK HARNESS INSIDE TRANSMISSION.** **CAUTION:** **Start work after ATF cools down.** 1) Remove the transmission valve cover. 2) Check for the harness pinch, damage.	Is there any fault in the harness?	Replace the transmission harness.	Go to step **6**.
6	**CHECK HARNESS INSIDE TRANSMISSION.** 1) Disconnect the control valve body connector. 2) Turn the ignition switch to ON. 3) Measure the voltage between transmission connector and transmission body. ***Connector & terminal*** ***(T4) No. 7 (+) — Transmission body (–):***	Is the voltage approx. 0 V?	Replace the control valve body. <Ref. to CVT(TH58A)-114, Control Valve Body.>	Replace the transmission harness.

AB:DTC P0970 TRANSFER SOLENOID CIRCUIT (LOW)

DTC DETECTING CONDITION:
Output signal circuit of AWD solenoid is shorted.
TROUBLE SYMPTOM:
Drivability getting worse.
WIRING DIAGRAM:
CVT control system <Ref. to WI(HEV)-86, CVT Control System.>

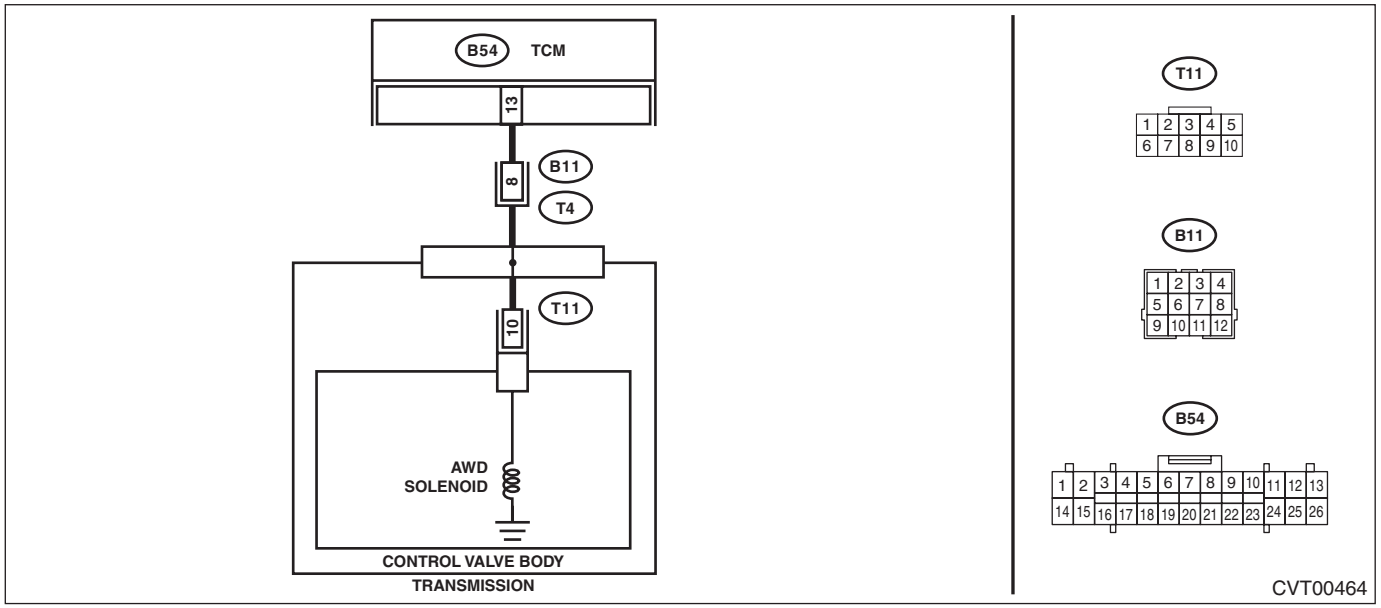

Step		Check	Yes	No
1	**CHECK HARNESS.** 1) Turn the ignition switch to OFF. 2) Disconnect the TCM and transmission connectors. 3) Measure the resistance between TCM connector and chassis ground. ***Connector & terminal*** ***(B54) No. 13 — Chassis ground:***	Is the resistance 1 MΩ or more?	Go to step **2**.	Repair the short circuit of harness.
2	**CHECK AWD SOLENOID.** Measure the resistance between transmission connector and transmission body. ***Connector & terminal*** ***(T4) No. 8 — Transmission body:***	Is the resistance approx. 4 Ω? (when engine cold)	Check for poor contact of the connector, and repair the defective part.	Go to step **3**.
3	**CHECK HARNESS INSIDE TRANSMISSION.** **CAUTION:** **Start work after ATF cools down.** 1) Remove the transmission valve cover. 2) Check for the harness pinch, damage.	Is there any fault in the harness?	Replace the transmission harness.	Go to step **4**.
4	**CHECK HARNESS INSIDE TRANSMISSION.** 1) Disconnect the control valve body connector. 2) Measure the resistance between transmission connector and transmission body. ***Connector & terminal*** ***(T4) No. 8 — Transmission body:***	Is the resistance 1 MΩ or more?	Replace the control valve body. <Ref. to CVT(TH58A)-114, Control Valve Body.>	Replace the transmission harness.

AC:DTC P0971 TRANSFER SOLENOID CIRCUIT (HIGH)

DTC DETECTING CONDITION:

- Output signal circuit of AWD solenoid is open or shorted.
- AWD solenoid has open circuit inside.

TROUBLE SYMPTOM:

- Tight corner braking phenomenon occurs.
- Drivability getting worse.

WIRING DIAGRAM:

CVT control system <Ref. to WI(HEV)-86, CVT Control System.>

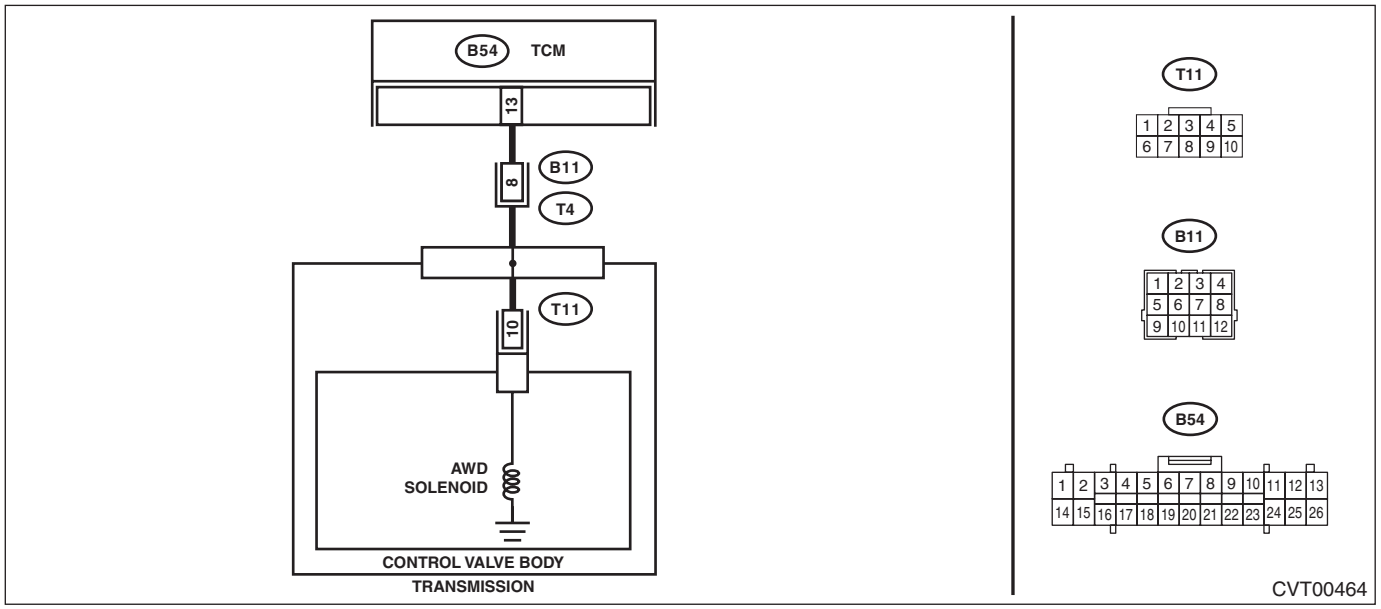

	Step	Check	Yes	No
1	**CHECK HARNESS.** 1) Turn the ignition switch to OFF. 2) Disconnect the TCM and transmission connectors. 3) Measure the resistance between TCM connector and transmission connectors. ***Connector & terminal*** ***(B54) No. 13 — (B11) No. 8:***	Is the resistance less than 1 Ω?	Go to step **2**.	Repair the open circuit of harness.
2	**CHECK HARNESS.** 1) Turn the ignition switch to ON. 2) Measure the voltage between TCM connector and chassis ground. ***Connector & terminal*** ***(B54) No. 13 (+) — Chassis ground (–):***	Is the voltage approx. 0 V?	Go to step **3**.	Repair the short circuit of harness.
3	**CHECK AWD SOLENOID.** Measure the resistance between transmission connector and transmission body. ***Connector & terminal*** ***(T4) No. 8 — Transmission body:***	Is the resistance approx. 4 Ω? (when engine cold)	Check for poor contact of the connector, and repair the defective part.	Go to step **4**.
4	**CHECK HARNESS INSIDE TRANSMISSION.** **CAUTION:** **Start work after ATF cools down.** 1) Remove the transmission valve cover. 2) Check for the harness pinch, damage.	Is there any fault in the harness?	Replace the transmission harness.	Go to step **5**.

	Step	Check	Yes	No
5	**CHECK HARNESS INSIDE TRANSMISSION.** 1) Disconnect the control valve body connector. 2) Turn the ignition switch to ON. 3) Measure the voltage between transmission connector and transmission body. ***Connector & terminal*** ***(T4) No. 8 (+) — Transmission body (–):***	Is the voltage approx. 0 V?	Replace the control valve body. <Ref. to CVT(TH58A)-114, Control Valve Body.>	Replace the transmission harness.

AD:DTC P0973 PRIMARY SOLENOID SYSTEM A CIRCUIT (LOW)

DTC DETECTING CONDITION:

- Immediately at fault recognition
- GENERAL DESCRIPTION <Ref. to GD(CVT)(HEV)-26, DTC P0973 PRIMARY SOLENOID SYSTEM A CIRCUIT (LOW), Diagnostic Trouble Code (DTC) Detecting Criteria.>

TROUBLE SYMPTOM:

Gear is not changed. (No up-shift)

WIRING DIAGRAM:

CVT control system <Ref. to WI(HEV)-86, CVT Control System.>

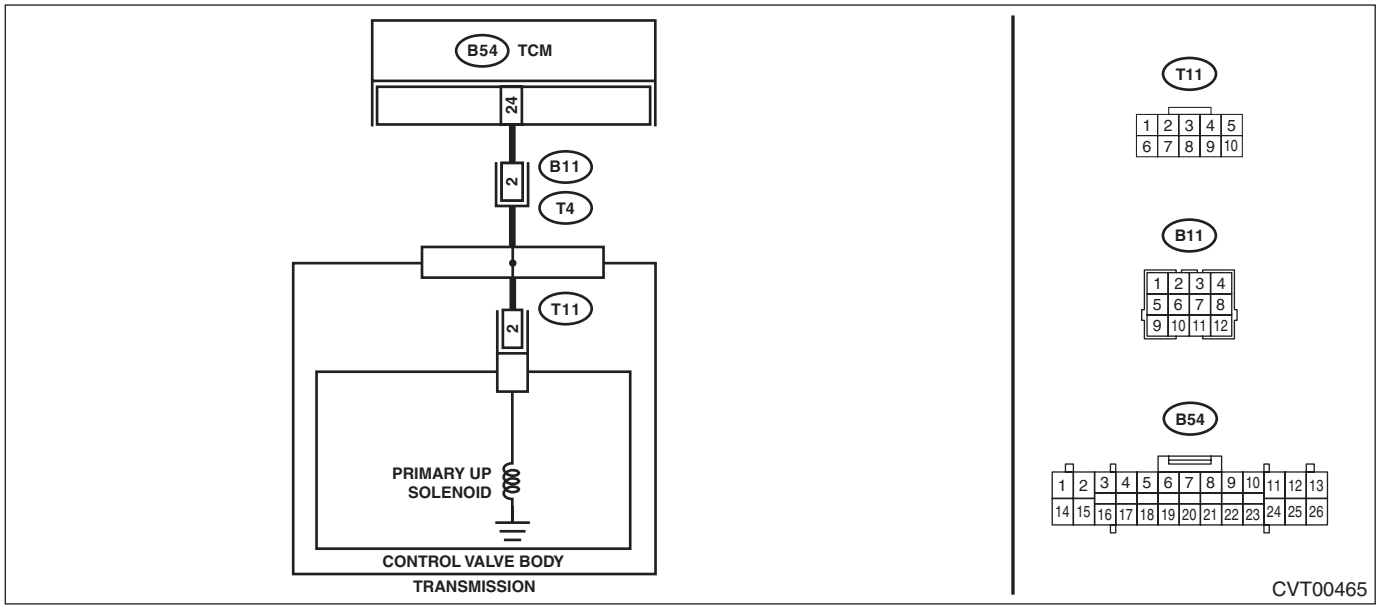

	Step	Check	Yes	No
1	**CHECK HARNESS.** 1) Turn the ignition switch to OFF. 2) Disconnect the TCM and transmission connectors. 3) Measure the resistance between TCM connector and chassis ground. ***Connector & terminal*** ***(B54) No. 24 — Chassis ground:***	Is the resistance 1 MΩ or more?	Go to step **2**.	Repair the short circuit of harness.
2	**CHECK PRIMARY UP SOLENOID.** Measure the resistance between transmission connector and transmission body. ***Connector & terminal*** ***(T4) No. 2 — Transmission body:***	Is the resistance approx. 13 Ω? (when engine cold)	Check for poor contact of the connector, and repair the defective part.	Go to step **3**.
3	**CHECK HARNESS INSIDE TRANSMISSION.** **CAUTION:** **Start work after ATF cools down.** 1) Remove the transmission valve cover. 2) Check for the harness pinch, damage.	Is there any fault in the harness?	Replace the transmission harness.	Go to step **4**.
4	**CHECK HARNESS INSIDE TRANSMISSION.** 1) Disconnect the control valve body connector. 2) Measure the resistance between transmission connector and transmission body. ***Connector & terminal*** ***(T4) No. 2 — Transmission body:***	Is the resistance 1 MΩ or more?	Replace the control valve body. <Ref. to CVT(TH58A)-114, Control Valve Body.>	Replace the transmission harness.

AE:DTC P0974 PRIMARY SOLENOID SYSTEM A CIRCUIT (HIGH)

DTC DETECTING CONDITION:

- Immediately at fault recognition
- GENERAL DESCRIPTION <Ref. to GD(CVT)(HEV)-27, DTC P0974 PRIMARY SOLENOID SYSTEM A CIRCUIT (HIGH), Diagnostic Trouble Code (DTC) Detecting Criteria.>

TROUBLE SYMPTOM:

Gear is not changed. (No up-shift)

WIRING DIAGRAM:

CVT control system <Ref. to WI(HEV)-86, CVT Control System.>

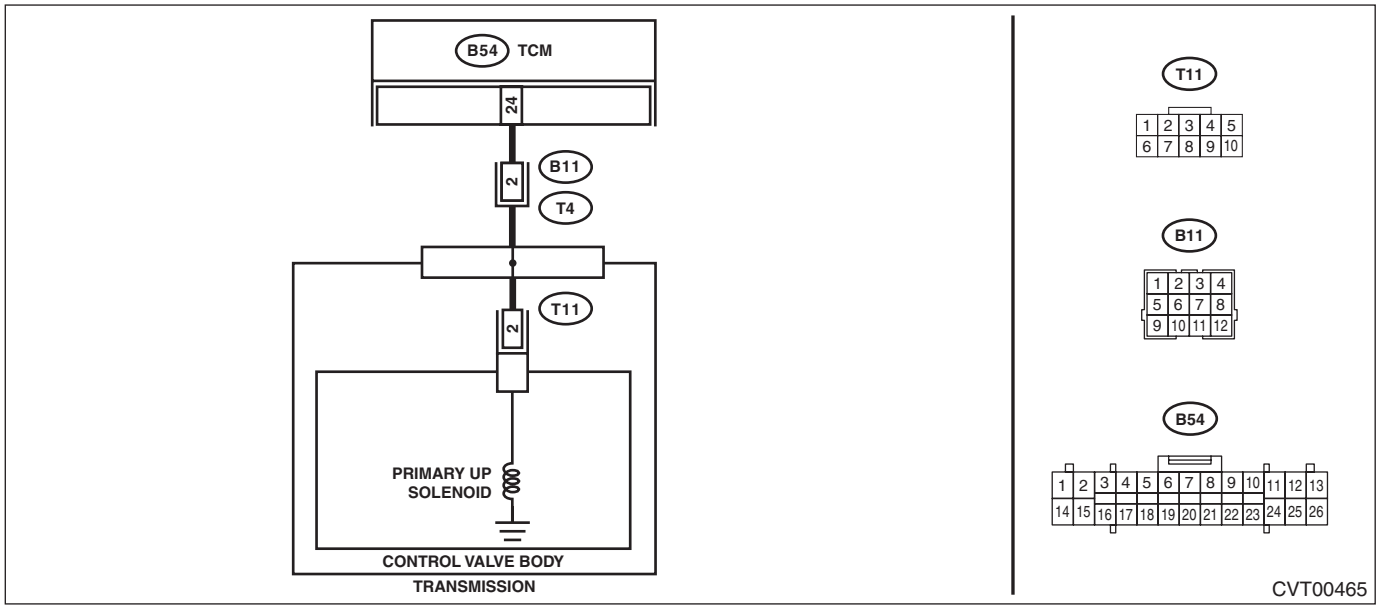

	Step	Check	Yes	No
1	**CHECK HARNESS.** 1) Turn the ignition switch to OFF. 2) Disconnect the TCM and transmission connectors. 3) Measure the resistance between TCM connector and transmission connectors. ***Connector & terminal*** ***(B54) No. 24 — (B11) No. 2:***	Is the resistance less than 1 Ω?	Go to step **2**.	Repair the open circuit of harness.
2	**CHECK HARNESS.** 1) Turn the ignition switch to ON. 2) Measure the voltage between TCM connector and chassis ground. ***Connector & terminal*** ***(B54) No. 24 (+) — Chassis ground (–):***	Is the voltage approx. 0 V?	Go to step **3**.	Repair the short circuit of harness.
3	**CHECK PRIMARY UP SOLENOID.** Measure the resistance between transmission connector and transmission body. ***Connector & terminal*** ***(T4) No. 2 — Transmission body:***	Is the resistance approx. 13 Ω? (when engine cold)	Check for poor contact of the connector, and repair the defective part.	Go to step **4**.
4	**CHECK HARNESS INSIDE TRANSMISSION.** **CAUTION:** **Start work after ATF cools down.** 1) Remove the transmission valve cover. 2) Check for the harness pinch, damage.	Is there any fault in the harness?	Replace the transmission harness.	Go to step **5**.

Step		Check	Yes	No
5	**CHECK HARNESS INSIDE TRANSMISSION.** 1) Disconnect the control valve body connector. 2) Turn the ignition switch to ON. 3) Measure the voltage between transmission connector and transmission body. ***Connector & terminal*** ***(T4) No. 2 (+) — Transmission body (–):***	Is the voltage approx. 0 V?	Replace the control valve body. <Ref. to CVT(TH58A)-114, Control Valve Body.>	Replace the transmission harness.

AF:DTC P0976 PRIMARY SOLENOID SYSTEM B CIRCUIT (LOW)

DTC DETECTING CONDITION:

- Immediately at fault recognition
- GENERAL DESCRIPTION <Ref. to GD(CVT)(HEV)-28, DTC P0976 PRIMARY SOLENOID SYSTEM B CIRCUIT (LOW), Diagnostic Trouble Code (DTC) Detecting Criteria.>

TROUBLE SYMPTOM:

Gear is not changed. (No down-shift)

WIRING DIAGRAM:

CVT control system <Ref. to WI(HEV)-86, CVT Control System.>

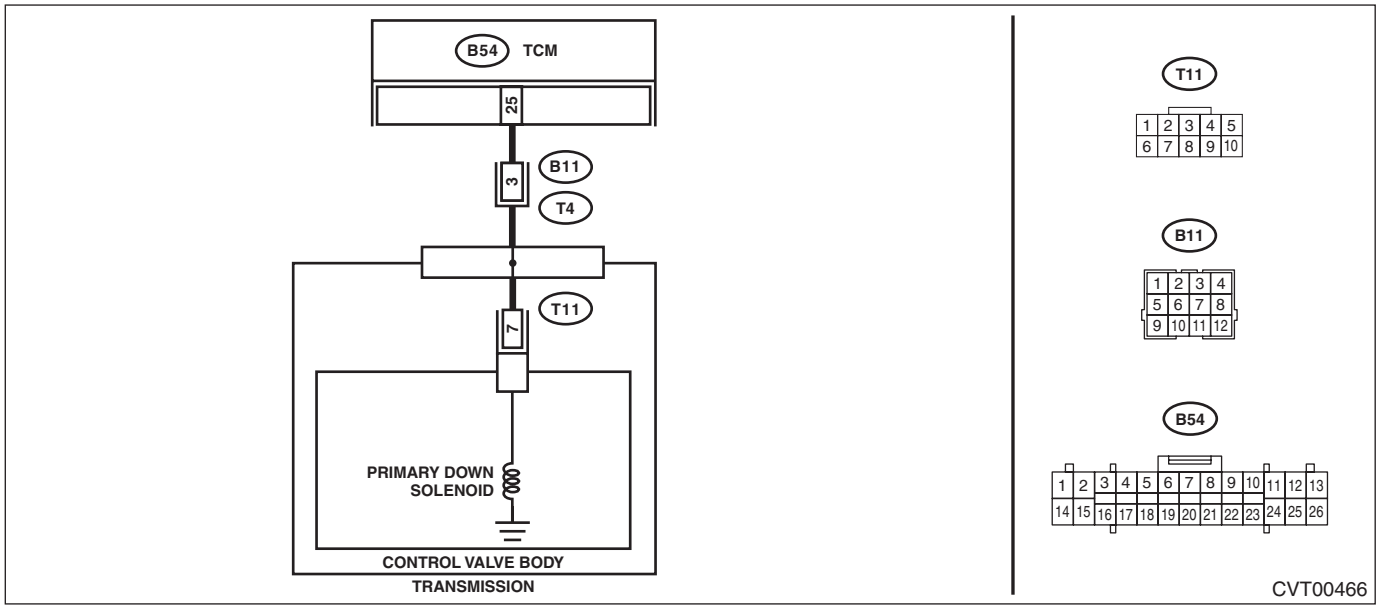

	Step	Check	Yes	No
1	**CHECK HARNESS.** 1) Turn the ignition switch to OFF. 2) Disconnect the TCM and transmission connectors. 3) Measure the resistance between TCM connector and chassis ground. ***Connector & terminal*** ***(B54) No. 25 — Chassis ground:***	Is the resistance 1 MΩ or more?	Go to step **2**.	Repair the short circuit of harness.
2	**CHECK PRIMARY DOWN SOLENOID.** Measure the resistance between transmission connector and transmission body. ***Connector & terminal*** ***(T4) No. 3 — Transmission body:***	Is the resistance approx. 13 Ω? (when engine cold)	Check for poor contact of the connector, and repair the defective part.	Go to step **3**.
3	**CHECK HARNESS INSIDE TRANSMISSION.** **CAUTION:** **Start work after ATF cools down.** 1) Remove the transmission valve cover. 2) Check for the harness pinch, damage.	Is there any fault in the harness?	Replace the transmission harness.	Go to step **4**.
4	**CHECK HARNESS INSIDE TRANSMISSION.** 1) Disconnect the control valve body connector. 2) Measure the resistance between transmission connector and transmission body. ***Connector & terminal*** ***(T4) No. 3 — Transmission body:***	Is the resistance 1 MΩ or more?	Replace the control valve body. <Ref. to CVT(TH58A)-114, Control Valve Body.>	Replace the transmission harness.

AG:DTC P0977 PRIMARY SOLENOID SYSTEM B CIRCUIT (HIGH)

DTC DETECTING CONDITION:

- Immediately at fault recognition
- GENERAL DESCRIPTION <Ref. to GD(CVT)(HEV)-29, DTC P0977 PRIMARY SOLENOID SYSTEM B CIRCUIT (HIGH), Diagnostic Trouble Code (DTC) Detecting Criteria.>

TROUBLE SYMPTOM:

Gear is not changed. (No down-shift)

WIRING DIAGRAM:

CVT control system <Ref. to WI(HEV)-86, CVT Control System.>

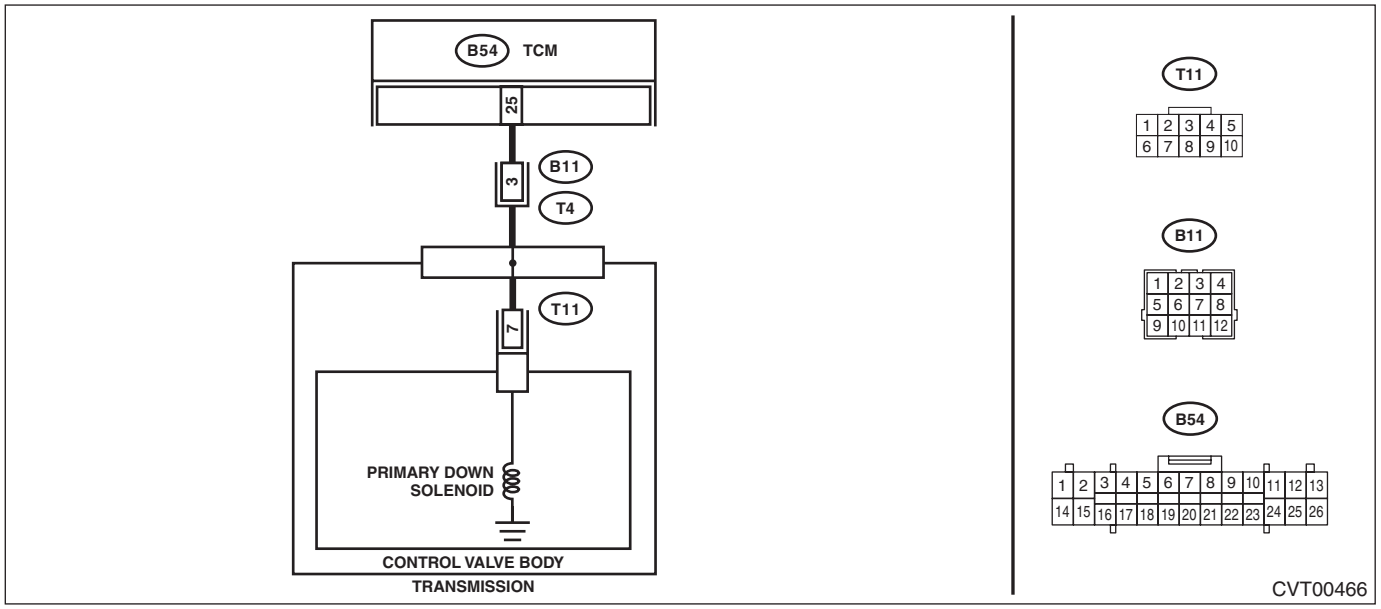

	Step	Check	Yes	No
1	**CHECK HARNESS.** 1) Turn the ignition switch to OFF. 2) Disconnect the TCM and transmission connectors. 3) Measure the resistance between TCM connector and transmission connectors. ***Connector & terminal*** ***(B54) No. 25 — (B11) No. 3:***	Is the resistance less than 1 Ω?	Go to step **2**.	Repair the open circuit of harness.
2	**CHECK HARNESS.** 1) Turn the ignition switch to ON. 2) Measure the voltage between TCM connector and chassis ground. ***Connector & terminal*** ***(B54) No. 25 (+) — Chassis ground (–):***	Is the voltage approx. 0 V?	Go to step **3**.	Repair the short circuit of harness.
3	**CHECK PRIMARY DOWN SOLENOID.** Measure the resistance between transmission connector and transmission body. ***Connector & terminal*** ***(T4) No. 3 — Transmission body:***	Is the resistance approx. 13 Ω? (when engine cold)	Check for poor contact of the connector, and repair the defective part.	Go to step **4**.
4	**CHECK HARNESS INSIDE TRANSMISSION.** **CAUTION:** **Start work after ATF cools down.** 1) Remove the transmission valve cover. 2) Check for the harness pinch, damage.	Is there any fault in the harness?	Replace the transmission harness.	Go to step **5**.

	Step	Check	Yes	No
5	**CHECK HARNESS INSIDE TRANSMISSION.** 1) Disconnect the control valve body connector. 2) Turn the ignition switch to ON. 3) Measure the voltage between transmission connector and transmission body. ***Connector & terminal*** ***(T4) No. 3 (+) — Transmission body (–):***	Is the voltage approx. 0 V?	Replace the control valve body. <Ref. to CVT(TH58A)-114, Control Valve Body.>	Replace the transmission harness.

AH:DTC P0B0A AUXILIARY TRANSMISSION FLUID PUMP MOTOR SUPPLY VOLTAGE CIRCUIT LOW

DTC DETECTING CONDITION:

- Immediately at fault recognition
- GENERAL DESCRIPTION <Ref. to GD(CVT)(HEV)-30, DTC P0B0A AUXILIARY TRANSMISSION FLUID PUMP MOTOR SUPPLY VOLTAGE CIRCUIT LOW, Diagnostic Trouble Code (DTC) Detecting Criteria.>

TROUBLE SYMPTOM:

Electric oil pump does not operate.

CAUTION:

Before performing diagnosis, refer to "CAUTION" in "General Description". <Ref. to CVT(HEV)(diag)-5, HYBRID SYSTEM, CAUTION, General Description.>

	Step	Check	Yes	No
1	**CHECK DTC.** Check the DTC relating the HPCM, BECM using the Subaru Select Monitor.	Is DTC detected?	Perform the diagnosis according to DTC.	Go to step **2**.
2	**CHECK BUS BAR.** 1) Turn the ignition switch to OFF. 2) Disconnect the ground cable of the 12 volt auxiliary battery, and as for the 12 volt engine restart battery, disconnect the ground cable from the 12V engine restart battery sensor. <Ref. to NT-5, BATTERY, NOTE, Note.> 3) Remove the service disconnect plug. <Ref. to HEV-15, Service Plug.> 4) Wait for 10 minutes. 5) Check the bus bar.	Is there any bend or looseness?	Reinstall or replace the bus bar.	Replace the electric oil pump inverter. <Ref. to HEV-45, ELECTRIC OIL PUMP INVERTER, REMOVAL, Inverter.>

AI: DTC P0B0B AUXILIARY TRANSMISSION FLUID PUMP MOTOR SUPPLY VOLTAGE CIRCUIT HIGH

DTC DETECTING CONDITION:

- Immediately at fault recognition
- GENERAL DESCRIPTION <Ref. to GD(CVT)(HEV)-31, DTC P0B0B AUXILIARY TRANSMISSION FLUID PUMP MOTOR SUPPLY VOLTAGE CIRCUIT HIGH, Diagnostic Trouble Code (DTC) Detecting Criteria.>

TROUBLE SYMPTOM:

Electric oil pump does not operate.

CAUTION:

Before performing diagnosis, refer to "CAUTION" in "General Description". <Ref. to CVT(HEV)(diag)-5, HYBRID SYSTEM, CAUTION, General Description.>

	Step	Check	Yes	No
1	**CHECK DTC.** Check the DTC relating the HPCM, BECM using the Subaru Select Monitor.	Is DTC detected?	Perform the diagnosis according to DTC.	Go to step **2**.
2	**CHECK DTC.** Check the displayed DTC using Subaru Select Monitor. (While the vehicle is stopped and idling)	Is the DTC P0B0B a current malfunction?	Replace the electric oil pump inverter. <Ref. to HEV-45, ELECTRIC OIL PUMP INVERTER, REMOVAL, Inverter.>	Go to step **3**.
3	**CHECK DTC.** Check other DTC using the Subaru Select Monitor.	Is a past malfunction DTC detected? (TCM, HPCM, BECM, DMCM)	Perform the diagnosis according to DTC.	Replace the electric oil pump inverter. <Ref. to HEV-45, ELECTRIC OIL PUMP INVERTER, REMOVAL, Inverter.>

AJ:DTC P0B0D AUXILIARY TRANSMISSION FLUID PUMP MOTOR CONTROL MODULE

DTC DETECTING CONDITION:

- Immediately at fault recognition
- GENERAL DESCRIPTION <Ref. to GD(CVT)(HEV)-32, DTC P0B0D AUXILIARY TRANSMISSION FLUID PUMP MOTOR CONTROL MODULE, Diagnostic Trouble Code (DTC) Detecting Criteria.>

TROUBLE SYMPTOM:

Electric oil pump does not operate.

CAUTION:

Before performing diagnosis, refer to "CAUTION" in "General Description". <Ref. to CVT(HEV)(diag)-5, HYBRID SYSTEM, CAUTION, General Description.>

Step		Check	Yes	No
1	**CHECK DTC.** Check the DTC using Subaru Select Monitor.	Is the DTC a current malfunction?	Replace the electric oil pump inverter. <Ref. to HEV-45, ELECTRIC OIL PUMP INVERTER, REMOVAL, Inverter.>	Go to step **2**.
2	**CHECK DTC.** 1) Perform the Clear Memory Mode. 2) Start the engine. 3) Check the DTC using Subaru Select Monitor.	Is DTC P0B0D detected?	Replace the electric oil pump inverter. <Ref. to HEV-45, ELECTRIC OIL PUMP INVERTER, REMOVAL, Inverter.>	Perform the Inspection Mode, and if there is no problem, finish the diagnosis. <Ref. to CVT(HEV)(diag)-20, Inspection Mode.>

AK:DTC P0C1D AUXILIARY TRANSMISSION FLUID PUMP CONTROL MODULE INTERNAL TEMPERATURE SENSOR RANGE/PERFORMANCE

DTC DETECTING CONDITION:
Electric oil pump inverter circuit board failure
TROUBLE SYMPTOM:
Electric oil pump does not operate.

CAUTION:
Before performing diagnosis, refer to "CAUTION" in "General Description". <Ref. to CVT(HEV)(diag)-5, HYBRID SYSTEM, CAUTION, General Description.>

	Step	Check	Yes	No
1	**CHECK DTC.** Check the DTC using Subaru Select Monitor.	Is the DTC a current malfunction?	Replace the electric oil pump inverter. <Ref. to HEV-45, ELECTRIC OIL PUMP INVERTER, REMOVAL, Inverter.>	Go to step **2**.
2	**CHECK DTC.** 1) Perform the Clear Memory Mode. 2) Start the engine. 3) Warm up the engine until the ATF temperature reaches 40°C (104°F) or more. 4) Check the DTC using Subaru Select Monitor.	Is DTC P0C1D detected?	Replace the electric oil pump inverter. <Ref. to HEV-45, ELECTRIC OIL PUMP INVERTER, REMOVAL, Inverter.>	Perform the Inspection Mode, and if there is no problem, finish the diagnosis. <Ref. to CVT(HEV)(diag)-20, Inspection Mode.>

AL:DTC P0C21 AUXILIARY TRANSMISSION FLUID PUMP PHASE U-V-W CIRCUIT LOW

DTC DETECTING CONDITION:

- Immediately at fault recognition
- GENERAL DESCRIPTION <Ref. to GD(CVT)(HEV)-33, DTC P0C21 AUXILIARY TRANSMISSION FLUID PUMP PHASE U-V-W CIRCUIT LOW, Diagnostic Trouble Code (DTC) Detecting Criteria.>

TROUBLE SYMPTOM:

Electric oil pump does not operate.

CAUTION:

Before performing diagnosis, refer to "CAUTION" in "General Description". <Ref. to CVT(HEV)(diag)-5, HYBRID SYSTEM, CAUTION, General Description.>

WIRING DIAGRAM:

CVT control system <Ref. to WI(HEV)-86, CVT Control System.>
Hybrid system <Ref. to WI(HEV)-139, Hybrid Electric Vehicle System.>

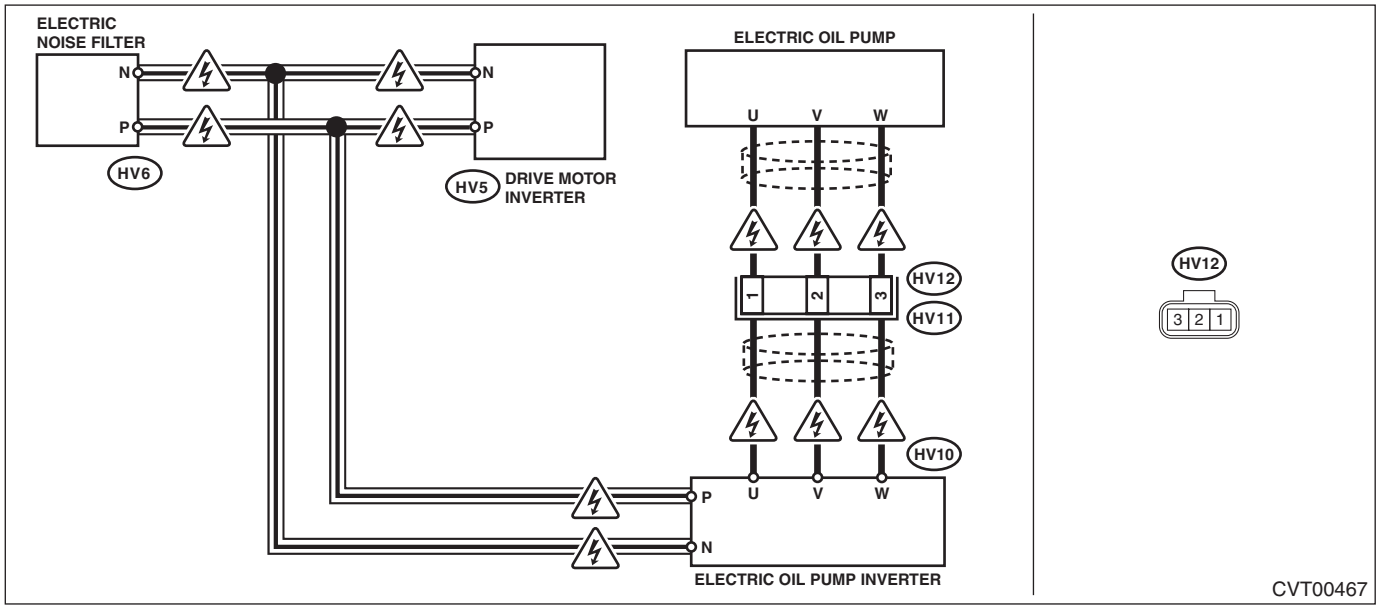

Step		Check	Yes	No
1	**CHECK POWER CABLE.** 1) Turn the ignition switch to OFF. 2) Disconnect the ground cable of the 12 volt auxiliary battery, and as for the 12 volt engine restart battery, disconnect the ground cable from the 12V engine restart battery sensor. <Ref. to NT-5, BATTERY, NOTE, Note.> 3) Remove the service disconnect plug. 4) Wait for 10 minutes. 5) Check the power cables of the electric oil pump and the electric oil pump inverter.	Is there any fault in the power cable? (looseness or rust)	Repair the power cable.	Go to step **2**.
2	**CHECK POWER CABLE.** 1) Disconnect the coupling connector of the electric oil pump and electric oil pump inverter. (HV11, HV12) 2) Disconnect the power cable from electric oil pump inverter. 3) Measure the resistance of power cable. ***Connector & terminal*** ***(HV10) U — (HV11) No. 1:*** ***(HV10) V — (HV11) No. 2:*** ***(HV10) W — (HV11) No. 3:***	Is the resistance less than 1 Ω?	Go to step **3**.	Replace the power cable. <Ref. to HEV-51, Power Cable.>

	Step	Check	Yes	No
3	**CHECK ELECTRIC OIL PUMP INVERTER.** Measure the resistance between the electric oil pump inverter terminals. ***Connector & terminal*** ***Electric oil pump inverter U terminal —*** ***Electric oil pump inverter N terminal:*** ***Electric oil pump inverter V terminal —*** ***Electric oil pump inverter N terminal:*** ***Electric oil pump inverter W terminal —*** ***Electric oil pump inverter N terminal:***	Is the resistance 1 kΩ or more?	Go to step **4**.	Replace the electric oil pump inverter. <Ref. to HEV-45, ELECTRIC OIL PUMP INVERTER, REMOVAL, Inverter.>
4	**CHECK ELECTRIC OIL PUMP SIDE POWER CABLE.** Measure the resistance of electric oil pump side power cable. ***Connector & terminal*** ***(HV12) No. 1 — (HV12) No. 2:*** ***(HV12) No. 1 — (HV12) No. 3:*** ***(HV12) No. 2 — (HV12) No. 3:***	Is the resistance 0.3 Ω or more?	Go to step **5**.	Replace the electric oil pump. <Ref. to CVT(TH58A)-132, Electric Fluid Pump.>
5	**CHECK ELECTRIC OIL PUMP.** 1) Replace the removed/disconnected parts back to the vehicle. 2) Perform the «Electric Fluid Pump inspection mode». <Ref. to CVT(TH58A)-139, INSPECTION, Electric Fluid Pump.>	Is P0C21 detected?	Replace the electric oil pump inverter. <Ref. to HEV-45, ELECTRIC OIL PUMP INVERTER, REMOVAL, Inverter.>	Go to step **6**.
6	**Auto Start Stop ROAD TEST.** Perform the Auto Start Stop road test. <Ref. to CVT(TH58A)-51, Auto Start Stop, INSPECTION, Road Test.>	Is P0C21 detected?	Replace the electric oil pump and the electric oil pump inverter. <Ref. to CVT(TH58A)-132, Electric Fluid Pump.> <Ref. to HEV-45, ELECTRIC OIL PUMP INVERTER, REMOVAL, Inverter.>	Current condition is normal.

AM:DTC P0C22 AUXILIARY TRANSMISSION FLUID PUMP PHASE U-V-W CIRCUIT HIGH

DTC DETECTING CONDITION:

- Immediately at fault recognition
- GENERAL DESCRIPTION <Ref. to GD(CVT)(HEV)-36, DTC P0C22 AUXILIARY TRANSMISSION FLUID PUMP PHASE U-V-W CIRCUIT HIGH, Diagnostic Trouble Code (DTC) Detecting Criteria.>

TROUBLE SYMPTOM:

Electric oil pump does not operate.

CAUTION:

Before performing diagnosis, refer to "CAUTION" in "General Description". <Ref. to CVT(HEV)(diag)-5, HYBRID SYSTEM, CAUTION, General Description.>

WIRING DIAGRAM:

CVT control system <Ref. to WI(HEV)-86, CVT Control System.>
Hybrid system <Ref. to WI(HEV)-139, Hybrid Electric Vehicle System.>

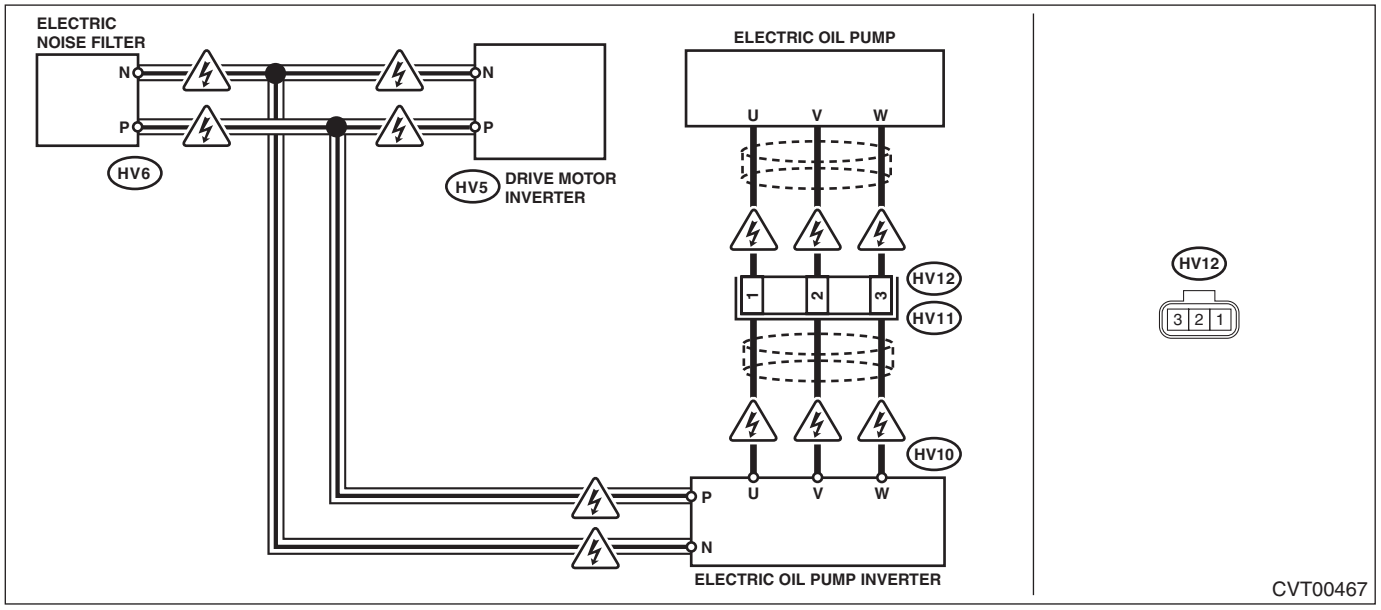

Step		Check	Yes	No
1	**CHECK POWER CABLE.** 1) Turn the ignition switch to OFF. 2) Disconnect the ground cable of the 12 volt auxiliary battery, and as for the 12 volt engine restart battery, disconnect the ground cable from the 12V engine restart battery sensor. <Ref. to NT-5, BATTERY, NOTE, Note.> 3) Remove the service disconnect plug. 4) Wait for 10 minutes. 5) Check the power cables of the electric oil pump and the electric oil pump inverter.	Is there any fault in the power cable? (looseness or rust)	Repair the power cable.	Go to step **2**.
2	**CHECK POWER CABLE.** 1) Disconnect the coupling connector of the electric oil pump and electric oil pump inverter. (HV11, HV12) 2) Disconnect the power cable from electric oil pump inverter. 3) Measure the resistance of power cable. ***Connector & terminal*** ***(HV10) U — (HV11) No. 1:*** ***(HV10) V — (HV11) No. 2:*** ***(HV10) W — (HV11) No. 3:***	Is the resistance less than 1 Ω?	Go to step **3**.	Replace the power cable. <Ref. to HEV-51, Power Cable.>

	Step	Check	Yes	No
3	**CHECK ELECTRIC OIL PUMP INVERTER.** Measure the resistance between the electric oil pump inverter terminals. ***Connector & terminal*** ***Electric oil pump inverter U terminal —*** ***Electric oil pump inverter P terminal:*** ***Electric oil pump inverter V terminal —*** ***Electric oil pump inverter P terminal:*** ***Electric oil pump inverter W terminal —*** ***Electric oil pump inverter P terminal:***	Is the resistance 1 MΩ or more?	Go to step **4**.	Replace the electric oil pump inverter. <Ref. to HEV-45, ELECTRIC OIL PUMP INVERTER, REMOVAL, Inverter.>
4	**CHECK ELECTRIC OIL PUMP SIDE POWER CABLE.** Measure the resistance of electric oil pump side power cable. ***Connector & terminal*** ***(HV12) No. 1 — (HV12) No. 2:*** ***(HV12) No. 1 — (HV12) No. 3:*** ***(HV12) No. 2 — (HV12) No. 3:***	Is the resistance 0.3 Ω or more?	Go to step **5**.	Replace the electric oil pump. <Ref. to CVT(TH58A)-132, Electric Fluid Pump.>
5	**CHECK ELECTRIC OIL PUMP.** 1) Replace the removed/disconnected parts back to the vehicle. 2) Perform the «Electric Fluid Pump inspection mode». <Ref. to CVT(TH58A)-139, INSPECTION, Electric Fluid Pump.>	Is P0C22 detected?	Replace the electric oil pump inverter. <Ref. to HEV-45, ELECTRIC OIL PUMP INVERTER, REMOVAL, Inverter.>	Go to step **6**.
6	**Auto Start Stop ROAD TEST.** Perform the Auto Start Stop road test. <Ref. to CVT(TH58A)-51, Auto Start Stop, INSPECTION, Road Test.>	Is P0C22 detected?	Replace the electric oil pump and the electric oil pump inverter. <Ref. to CVT(TH58A)-132, Electric Fluid Pump.> <Ref. to HEV-45, ELECTRIC OIL PUMP INVERTER, REMOVAL, Inverter.>	Current condition is normal.

AN:DTC P0C24 AUXILIARY TRANSMISSION FLUID PUMP CONTROL MODULE CIRCUIT LOW

DTC DETECTING CONDITION:
Electric oil pump inverter 12 V supply voltage is shorted.
TROUBLE SYMPTOM:
Electric oil pump does not operate.

CAUTION:
Before performing diagnosis, refer to "CAUTION" in "General Description". <Ref. to CVT(HEV)(diag)-5, HYBRID SYSTEM, CAUTION, General Description.>
WIRING DIAGRAM:
CVT control system <Ref. to WI(HEV)-86, CVT Control System.>
Hybrid system <Ref. to WI(HEV)-139, Hybrid Electric Vehicle System.>

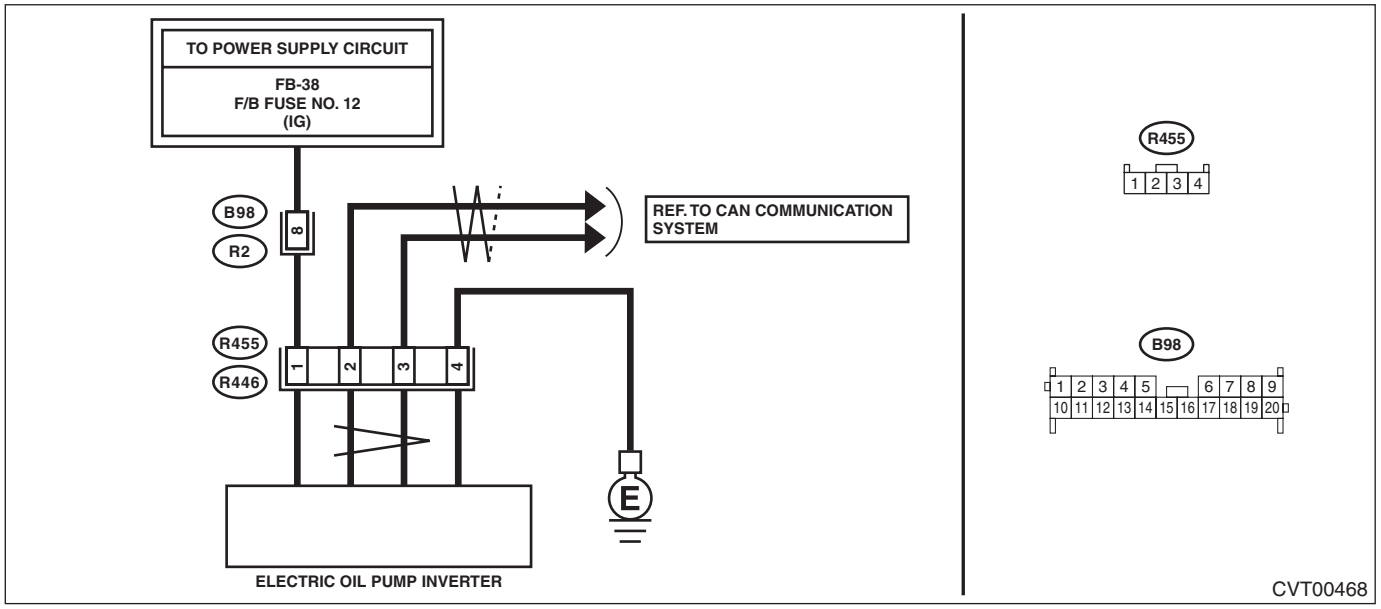

Step		Check	Yes	No
1	**CHECK DTC.** Using the Subaru Select Monitor, confirm all DTCs.	Is DTC detected?	Perform the diagnosis according to DTC.	Go to step **2**.
2	**CHECK INPUT SIGNAL FOR TCM.** Read the data of «Control module voltage» using Subaru Select Monitor.	Is the «Control Module Voltage» 10 V or more?	Go to step **3**.	Check the battery and TCM power supply circuit.
3	**CHECK HARNESS.** 1) Disconnect the connector from electric oil pump inverter. 2) Measure the voltage between the electric oil pump inverter connector and the ground bolt of inverter frame body. (ignition ON) ***Connector & terminal*** ***(R455) No. 1 (+) — Ground bolt of inverter frame body:***	Is the voltage 10 V or more?	Go to step **4**.	Check the power supply circuit between the fuse and the electric oil pump inverter connector (R455).
4	**CHECK HARNESS.** Measure the resistance between the electric oil pump inverter connector and the ground bolt of inverter frame body. ***Connector & terminal*** ***(R455) No. 4 — Ground bolt of inverter frame body:***	Is the resistance less than 1 Ω?	Replace the electric oil pump inverter. <Ref. to HEV-45, ELECTRIC OIL PUMP INVERTER, REMOVAL, Inverter.>	Repair the ground circuit.

AO:DTC P0C25 AUXILIARY TRANSMISSION FLUID PUMP CONTROL MODULE CIRCUIT HIGH

DTC DETECTING CONDITION:
Electric oil pump inverter 12 V supply voltage is shorted.
TROUBLE SYMPTOM:
Electric oil pump does not operate.

CAUTION:
Before performing diagnosis, refer to "CAUTION" in "General Description". <Ref. to CVT(HEV)(diag)-5, HYBRID SYSTEM, CAUTION, General Description.>
WIRING DIAGRAM:
CVT control system <Ref. to WI(HEV)-86, CVT Control System.>
Hybrid system <Ref. to WI(HEV)-139, Hybrid Electric Vehicle System.>

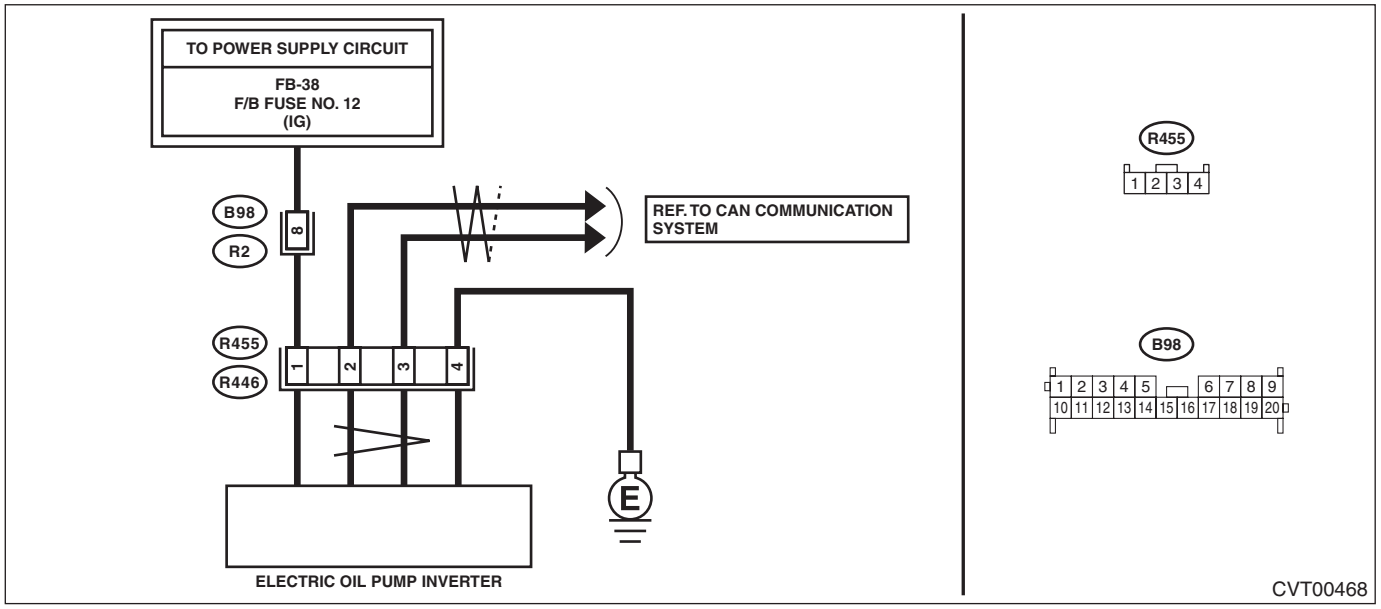

Step		Check	Yes	No
1	**CHECK DTC.** Using the Subaru Select Monitor, confirm all DTCs.	Is DTC detected?	Perform the diagnosis according to DTC.	Go to step **2**.
2	**CHECK INPUT SIGNAL FOR TCM.** Read the data of «Control module voltage» using Subaru Select Monitor.	Is the «Control Module Voltage» 16 V or more?	Go to step **3**.	Check the battery and TCM power supply circuit.
3	**CHECK HARNESS.** 1) Disconnect the connector from electric oil pump inverter. 2) Measure the voltage between the electric oil pump inverter connector terminals. (ignition ON) ***Connector & terminal*** ***(R455) No. 1 (+) — (B455) No. 4 (–):***	Is the voltage 16 V or more?	Check the power supply circuit between the fuse and the electric oil pump inverter connector (R455).	Go to step **4**.
4	**CHECK ELECTRIC OIL PUMP.** 1) Perform the Clear Memory Mode. 2) Perform the «Electric Fluid Pump inspection mode». <Ref. to CVT(TH58A)-139, INSPECTION, Electric Fluid Pump.>	Is P0C25 detected?	Replace the electric oil pump inverter. <Ref. to HEV-45, ELECTRIC OIL PUMP INVERTER, REMOVAL, Inverter.>	Current condition is normal.

AP:DTC P0C27 AUXILIARY TRANSMISSION FLUID PUMP MOTOR CURRENT LOW

DTC DETECTING CONDITION:
Electric oil pump inverter failure
TROUBLE SYMPTOM:
Electric oil pump does not operate.

	Step	Check	Yes	No
1	**CHECK DTC.** Using the Subaru Select Monitor, confirm all DTCs.	Is DTC detected?	Perform the diagnosis according to DTC.	Go to step **2**.
2	**CHECK ELECTRIC OIL PUMP.** 1) Perform the Clear Memory Mode. 2) Perform the «Electric Fluid Pump inspection mode». <Ref. to CVT(TH58A)-139, INSPECTION, Electric Fluid Pump.>	Is P0C27 detected?	Replace the electric oil pump inverter. <Ref. to HEV-45, ELECTRIC OIL PUMP INVERTER, REMOVAL, Inverter.>	Go to step **3**.
3	**Auto Start Stop ROAD TEST.** Perform the Auto Start Stop road test. <Ref. to CVT(TH58A)-51, Auto Start Stop, INSPECTION, Road Test.>	Is P0C27 detected?	Replace the electric oil pump and the electric oil pump inverter. <Ref. to CVT(TH58A)-132, Electric Fluid Pump.> <Ref. to HEV-45, ELECTRIC OIL PUMP INVERTER, REMOVAL, Inverter.>	Current condition is normal.

AQ:DTC P0C28 AUXILIARY TRANSMISSION FLUID PUMP MOTOR CURRENT HIGH

DTC DETECTING CONDITION:
Electric oil pump inverter failure
TROUBLE SYMPTOM:
Electric oil pump does not operate.

CAUTION:
Before performing diagnosis, refer to "CAUTION" in "General Description". <Ref. to CVT(HEV)(diag)-5, HYBRID SYSTEM, CAUTION, General Description.>

	Step	Check	Yes	No
1	**CHECK DTC.** Using the Subaru Select Monitor, confirm all DTCs.	Is DTC detected?	Perform the diagnosis according to DTC.	Go to step **2**.
2	**CHECK ELECTRIC OIL PUMP.** 1) Perform the Clear Memory Mode. 2) Perform the «Electric Fluid Pump inspection mode». <Ref. to CVT(TH58A)-139, INSPECTION, Electric Fluid Pump.>	Is P0C28 detected?	Replace the electric oil pump inverter. <Ref. to HEV-45, ELECTRIC OIL PUMP INVERTER, REMOVAL, Inverter.>	Go to step **3**.
3	**Auto Start Stop ROAD TEST.** Perform the Auto Start Stop road test. <Ref. to CVT(TH58A)-51, Auto Start Stop, INSPECTION, Road Test.>	Is P0C28 detected?	Replace the electric oil pump and the electric oil pump inverter. <Ref. to CVT(TH58A)-132, Electric Fluid Pump.> <Ref. to HEV-45, ELECTRIC OIL PUMP INVERTER, REMOVAL, Inverter.>	Current condition is normal.

AR:DTC P0C29 AUXILIARY TRANSMISSION FLUID PUMP DRIVER CURRENT PERFORMANCE

DTC DETECTING CONDITION:

- Immediately at fault recognition
- GENERAL DESCRIPTION <Ref. to GD(CVT)(HEV)-37, DTC P0C29 AUXILIARY TRANSMISSION FLUID PUMP DRIVER CURRENT PERFORMANCE, Diagnostic Trouble Code (DTC) Detecting Criteria.>

TROUBLE SYMPTOM:

Electric oil pump does not operate.

CAUTION:

Before performing diagnosis, refer to "CAUTION" in "General Description". <Ref. to CVT(HEV)(diag)-5, HYBRID SYSTEM, CAUTION, General Description.>

WIRING DIAGRAM:

CVT control system <Ref. to WI(HEV)-86, CVT Control System.>
Hybrid system <Ref. to WI(HEV)-139, Hybrid Electric Vehicle System.>

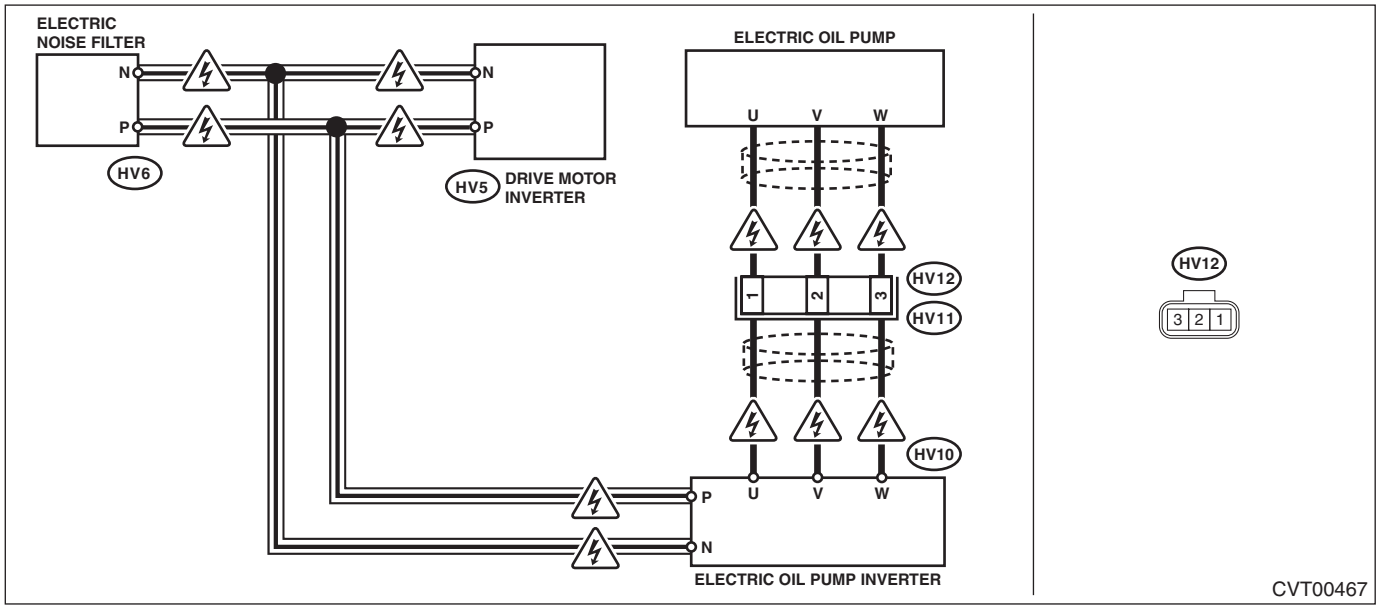

Step		Check	Yes	No
1	**CHECK ELECTRIC OIL PUMP.** 1) Perform the Clear Memory Mode. 2) Perform the «Electric Fluid Pump inspection mode». <Ref. to CVT(TH58A)-139, INSPECTION, Electric Fluid Pump.>	Is P0C29 detected?	Go to step **2**.	Current condition is normal.
2	**CHECK POWER CABLE.** 1) Turn the ignition switch to OFF. 2) Disconnect the ground cable of the 12 volt auxiliary battery, and as for the 12 volt engine restart battery, disconnect the ground cable from the 12V engine restart battery sensor. <Ref. to NT-5, BATTERY, NOTE, Note.> 3) Remove the service disconnect plug. 4) Wait for 10 minutes. 5) Remove the power cable from electric oil pump inverter. 6) Measure the resistance of power cable. ***Connector & terminal*** ***(HV10) U — (HV10) V:*** ***(HV10) U — (HV10) W:*** ***(HV10) V — (HV10) W:***	Is the resistance 0.3 Ω or more?	Go to step **3**.	Go to step **4**.

	Step	Check	Yes	No
3	**CHECK POWER CABLE.** 1) Disconnect the coupling connector of the electric oil pump and electric oil pump inverter. (HV11, HV12) 2) Measure the resistance of power cable. ***Connector & terminal*** ***(HV12) No. 1 — (HV12) No. 2:*** ***(HV12) No. 1 — (HV12) No. 3:*** ***(HV12) No. 2 — (HV12) No. 3:***	Is the resistance 0.3 Ω or more?	Replace the electric oil pump. <Ref. to CVT(TH58A)-132, Electric Fluid Pump.>	Replace the power cable. <Ref. to HEV-51, Power Cable.>
4	**CHECK ELECTRIC OIL PUMP INVERTER.** Measure the resistance between the electric oil pump inverter terminals. ***Terminals*** ***Electric oil pump inverter U terminal — Electric oil pump inverter V terminal:*** ***Electric oil pump inverter U terminal — Electric oil pump inverter W terminal:*** ***Electric oil pump inverter V terminal — Electric oil pump inverter W terminal:***	Is the resistance 1 kΩ or more?	Go to step **5**.	Replace the electric oil pump inverter. <Ref. to HEV-45, ELECTRIC OIL PUMP INVERTER, REMOVAL, Inverter.>
5	**CHECK INPUT SIGNAL FOR TCM.** 1) Connect the power cable and the battery. 2) Turn the ignition switch to ON. 3) Read the data of «Electric Fluid Pump Actual Current» using Subaru Select Monitor.	Is the «Electric Fluid Pump Actual Current» 0 A?	Go to step **6**.	Replace the electric oil pump inverter. <Ref. to HEV-45, ELECTRIC OIL PUMP INVERTER, REMOVAL, Inverter.>
6	**CHECK ELECTRIC OIL PUMP.** 1) Perform the Clear Memory Mode. 2) Perform the «Electric Fluid Pump inspection mode».	Is P0C29 detected?	Replace the electric oil pump. <Ref. to CVT(TH58A)-132, Electric Fluid Pump.>	Current condition is normal.

AS:DTC P0C2A AUXILIARY TRANSMISSION FLUID PUMP MOTOR STALLED

DTC DETECTING CONDITION:

- Immediately at fault recognition
- GENERAL DESCRIPTION <Ref. to GD(CVT)(HEV)-39, DTC P0C2A AUXILIARY TRANSMISSION FLUID PUMP MOTOR STALLED, Diagnostic Trouble Code (DTC) Detecting Criteria.>

TROUBLE SYMPTOM:

Electric oil pump does not operate.

CAUTION:

Before performing diagnosis, refer to "CAUTION" in "General Description". <Ref. to CVT(HEV)(diag)-5, HYBRID SYSTEM, CAUTION, General Description.>

	Step	Check	Yes	No
1	**CHECK ELECTRIC OIL PUMP.** 1) Turn the ignition switch to ON. 2) Perform the Clear Memory Mode. 3) Perform the «Electric Fluid Pump inspection mode». <Ref. to CVT(TH58A)-139, INSPECTION, Electric Fluid Pump.>	Is P0C2A detected?	Go to step **3**.	Go to step **2**.
2	**CHECK ELECTRIC OIL PUMP NOISE.** Perform the «Electric Fluid Pump inspection mode».	Does the electric oil pump emit noise while performing the «Electric Fluid Pump inspection mode»?	Go to step **3**.	Current condition is normal.
3	**CHECK SECONDARY PRESSURE.** 1) Perform the «Electric Fluid Pump inspection mode». 2) Read the data of «Actual secondary pressure» using Subaru Select Monitor.	Is the «Actual secondary pressure» 1.53 MPa or more? Or 0.3 MPa or less?	Replace the drive motor assembly. <Ref. to CVT(TH58A)-215, Drive Motor Assembly.>	Go to step **4**.
4	**CHECK ELECTRIC OIL PUMP.** 1) Perform the Clear Memory Mode. 2) Perform the «Electric Fluid Pump inspection mode».	Is P0C2A detected?	Replace the electric oil pump inverter. <Ref. to HEV-45, ELECTRIC OIL PUMP INVERTER, REMOVAL, Inverter.>	Go to step **5**.
5	**Auto Start Stop ROAD TEST.** Perform the Auto Start Stop road test. <Ref. to CVT(TH58A)-51, Auto Start Stop, INSPECTION, Road Test.>	Is P0C2A detected?	Replace the electric oil pump and the electric oil pump inverter. <Ref. to CVT(TH58A)-132, Electric Fluid Pump.> <Ref. to HEV-45, ELECTRIC OIL PUMP INVERTER, REMOVAL, Inverter.>	Current condition is normal.

AT:DTC P1724 AT EEPROM ERROR

DTC DETECTING CONDITION:

- Detected when two consecutive driving cycles with fault occur.
- GENERAL DESCRIPTION <Ref. to GD(CVT)(HEV)-40, DTC P1724 AT EEPROM ERROR, Diagnostic Trouble Code (DTC) Detecting Criteria.>

TROUBLE SYMPTOM:

- AT learning is not finished.
- Shock occurs when selecting N → D, N → R.
- Shock occurs when the vehicle starts to move after power generation at stand still.

	Step	Check	Yes	No
1	**CHECK TCM CONNECTOR.**	Is there improper connection of TCM connector?	Connect the TCM connector.	Go to step **2**.
2	**CHECK SELF SHUT RELAY.** Turn the ignition switch to ON.	Does the relay operates simultaneously?	Go to step **3**.	Perform the diagnosis according to DTC P0890.
3	**CHECK SELF SHUT RELAY.** Turn the ignition switch to OFF.	Does the relay operate after two or three seconds delay?	Go to step **4**.	Perform the diagnosis according to DTC P0890.
4	**PERFORM AT LEARNING.** 1) Perform {Clear AT learning value}. 2) Perform the AT learning. <Ref. to CVT(HEV)(diag)-24, Learning Control.> 3) Start the engine.	Does the AT OIL TEMP light blink after AT learning is finished correctly?	Check the TCM.	Go to step **5**.
5	**CHECK DTC DISPLAY.** 1) Perform the Clear Memory Mode. 2) Turn the ignition switch to OFF. 3) Start the engine after 10 seconds. 4) Repeat steps 2) and 3).	Does the AT OIL TEMP light blink and is DTC P1724 detected?	Check the TCM.	Current condition is normal. Check for poor contact of TCM connector or harness.

AU:DTC P172A AUXILIARY TRANSMISSION FLUID PUMP REVERSE ROTATION

DTC DETECTING CONDITION:

- Immediately at fault recognition
- GENERAL DESCRIPTION <Ref. to GD(CVT)(HEV)-41, DTC P172A AUXILIARY TRANSMISSION FLUID PUMP REVERSE ROTATION, Diagnostic Trouble Code (DTC) Detecting Criteria.>

TROUBLE SYMPTOM:

Electric oil pump does not operate.

CAUTION:

Before performing diagnosis, refer to "CAUTION" in "General Description". <Ref. to CVT(HEV)(diag)-5, HYBRID SYSTEM, CAUTION, General Description.>

	Step	Check	Yes	No
1	**CHECK DTC.** Check the DTC relating the HPCM, BECM using the Subaru Select Monitor.	Is DTC detected?	Perform the diagnosis according to DTC.	Go to step **2**.
2	**CHECK ELECTRIC OIL PUMP.** 1) Perform the Clear Memory Mode. 2) Perform the «Electric Fluid Pump inspection mode». <Ref. to CVT(TH58A)-139, INSPECTION, Electric Fluid Pump.>	Is DTC P172A detected?	Replace the electric oil pump inverter. <Ref. to HEV-45, ELECTRIC OIL PUMP INVERTER, REMOVAL, Inverter.>	Go to step **3**.
3	**STALL TEST.** Perform the stall test. <Ref. to CVT(TH58A)-52, Stall Test.>	Is DTC P172A detected?	Replace the drive motor assembly. <Ref. to CVT(TH58A)-215, Drive Motor Assembly.>	Go to step **4**.
4	**Auto Start Stop ROAD TEST.** Perform the Auto Start Stop road test. <Ref. to CVT(TH58A)-51, Auto Start Stop, INSPECTION, Road Test.>	Is DTC P172A detected?	Replace the drive motor assembly. <Ref. to CVT(TH58A)-215, Drive Motor Assembly.>	Current condition is normal.

AV:DTC P2715 PRESSURE CONTROL SOLENOID D STUCK ON

CAUTION:

Before performing diagnosis, refer to "CAUTION" in "General Description". <Ref. to CVT(HEV)(diag)-5, HYBRID SYSTEM, CAUTION, General Description.>

NOTE:

Replace the drive motor assembly when this DTC is detected. <Ref. to CVT(TH58A)-215, Drive Motor Assembly.>

AW:DTC P2719 PRESSURE CONTROL SOLENOID D CONTROL CIRCUIT RANGE/PERFORMANCE

DTC DETECTING CONDITION:

- Immediately at fault recognition
- GENERAL DESCRIPTION <Ref. to GD(CVT)(HEV)-42, DTC P2719 PRESSURE CONTROL SOLENOID D CONTROL CIRCUIT RANGE/PERFORMANCE, Diagnostic Trouble Code (DTC) Detecting Criteria.>

TROUBLE SYMPTOM:

- Engine speed increases abruptly, and can not accelerate.
- Excessive slippage is felt.

CAUTION:

Before performing diagnosis, refer to "CAUTION" in "General Description". <Ref. to CVT(HEV)(diag)-5, HYBRID SYSTEM, CAUTION, General Description.>

	Step	Check	Yes	No
1	**CHECK TRANSMISSION FLUID.** Check the condition of ATF.	Is the ATF OK?	Go to step **2**.	Check according to the "Corrective action" of ATF (CVTF) "CONDITION CHECK".
2	**CHECK TRANSMISSION FLUID.** Check the amount of ATF.	Is the ATF amount correct?	Go to step **3**.	Adjust the amount of ATF.
3	**CHECK INPUT SIGNAL FOR TCM.** 1) Start the engine. 2) Warm up until the ATF temperature reaches to 40 — 70°C (104 — 158°F). 3) Shift the select lever to "P" range. 4) Stabilize the engine speed at idle. 5) Read the data of «Actual secondary pressure» using Subaru Select Monitor.	Is the «Actual secondary pressure» 0.5 — 1.5 MPa?	Go to step **4**.	Perform the diagnosis according to DTC P0841 procedure.
4	**STALL TEST.** Perform the stall test. <Ref. to CVT(TH58A)-52, Stall Test.>	Is the stall test normal?	Go to step **5**.	If the engine speed increases abruptly, replace the transmission assembly. <Ref. to CVT(TH58A)-62, Automatic Transmission Assembly.>
5	**DRIVING CHECK BY INSPECTION MODE.** 1) Turn the ignition switch to OFF. 2) Perform a drive check based on the "Inspection Mode". <Ref. to CVT(HEV)(diag)-20, Inspection Mode.>	Does the AT OIL TEMP light blink and is DTC P2719 detected?	Replace the transmission assembly. <Ref. to CVT(TH58A)-62, Automatic Transmission Assembly.>	If there is abrupt increase of engine speed, standing start problems, replace the transmission assembly. <Ref. to CVT(TH58A)-62, Automatic Transmission Assembly.>

AX:DTC P2720 PRESSURE CONTROL SOLENOID D CONTROL CIRCUIT LOW

DTC DETECTING CONDITION:

- Immediately at fault recognition
- GENERAL DESCRIPTION <Ref. to GD(CVT)(HEV)-44, DTC P2720 PRESSURE CONTROL SOLENOID D CONTROL CIRCUIT LOW, Diagnostic Trouble Code (DTC) Detecting Criteria.>

TROUBLE SYMPTOM:

Unexpected vibration occurs.

CAUTION:

Before performing diagnosis, refer to "CAUTION" in "General Description". <Ref. to CVT(HEV)(diag)-5, HYBRID SYSTEM, CAUTION, General Description.>

WIRING DIAGRAM:

CVT control system <Ref. to WI(HEV)-86, CVT Control System.>

Hybrid system <Ref. to WI(HEV)-139, Hybrid Electric Vehicle System.>

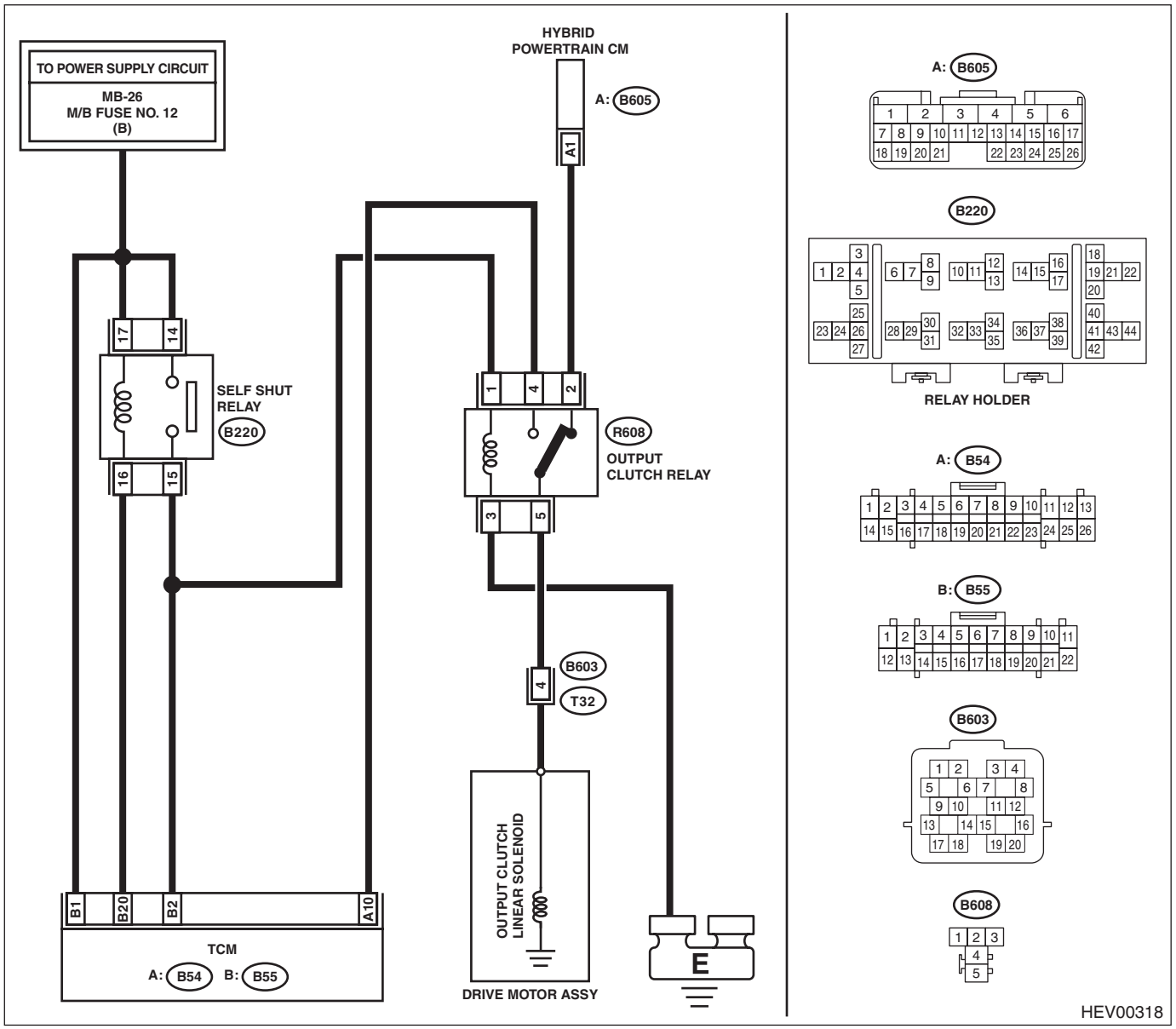

	Step	Check	Yes	No
1	**CHECK INPUT SIGNAL FOR TCM.** 1) After driving with warm up condition, park the vehicle while depressing the brake pedal at "D" range. 2) Read the data of «Output Clutch Linear Solenoid Set Current» and «Output Clutch Linear Solenoid Actual Current» using Subaru Select Monitor.	Does the value of «Output Clutch Linear Solenoid Set Current» and «Output Clutch Linear Solenoid Actual Current» almost correspond?	Check for poor contact of connector.	Go to step **2**.
2	**CHECK HARNESS.** 1) Turn the ignition switch to OFF. 2) Disconnect the TCM connector. 3) Remove the output clutch relay. 4) Measure the resistance between TCM connector and chassis ground. ***Connector & terminal*** ***(B54) No. 10 — Chassis ground:***	Is the resistance 1 MΩ or more?	Go to step **3**.	Repair the short circuit of harness.
3	**CHECK HARNESS.** 1) Turn the ignition switch to OFF. 2) Measure the resistance between output clutch relay and chassis ground. ***Connector & terminal*** ***(B608) No. 5 — Transmission body:***	Is the resistance approximately 6 Ω?	Check for poor contact of the connector, and repair the defective part.	Go to step **4**.
4	**CHECK RELAY.** Check the output clutch relay. <Ref. to CVT(TH58A)-159, INSPECTION, Relay and Fuse.>	Is the output clutch relay OK?	Go to step **5**.	Replace the output clutch relay.
5	**CHECK HARNESS.** 1) Disconnect connector (B603) of the drive motor assembly. 2) Measure the resistance of drive motor assembly harness. ***Connector & terminal*** ***(B603) No. 4 — Chassis ground:***	Is the resistance 1 MΩ or more?	Replace the drive motor assembly. <Ref. to CVT(TH58A)-215, Drive Motor Assembly.>	Replace the transmission harness.

AY:DTC P2721 PRESSURE CONTROL SOLENOID D CONTROL CIRCUIT HIGH

DTC DETECTING CONDITION:

- Immediately at fault recognition
- GENERAL DESCRIPTION <Ref. to GD(CVT)(HEV)-45, DTC P2721 PRESSURE CONTROL SOLENOID D CONTROL CIRCUIT HIGH, Diagnostic Trouble Code (DTC) Detecting Criteria.>

TROUBLE SYMPTOM:

- Engine speed increases abruptly, and can not start.
- Unexpected vibration occurs.

CAUTION:

Before performing diagnosis, refer to "CAUTION" in "General Description". <Ref. to CVT(HEV)(diag)-5, HYBRID SYSTEM, CAUTION, General Description.>

WIRING DIAGRAM:

CVT control system <Ref. to WI(HEV)-86, CVT Control System.>
Hybrid system <Ref. to WI(HEV)-139, Hybrid Electric Vehicle System.>

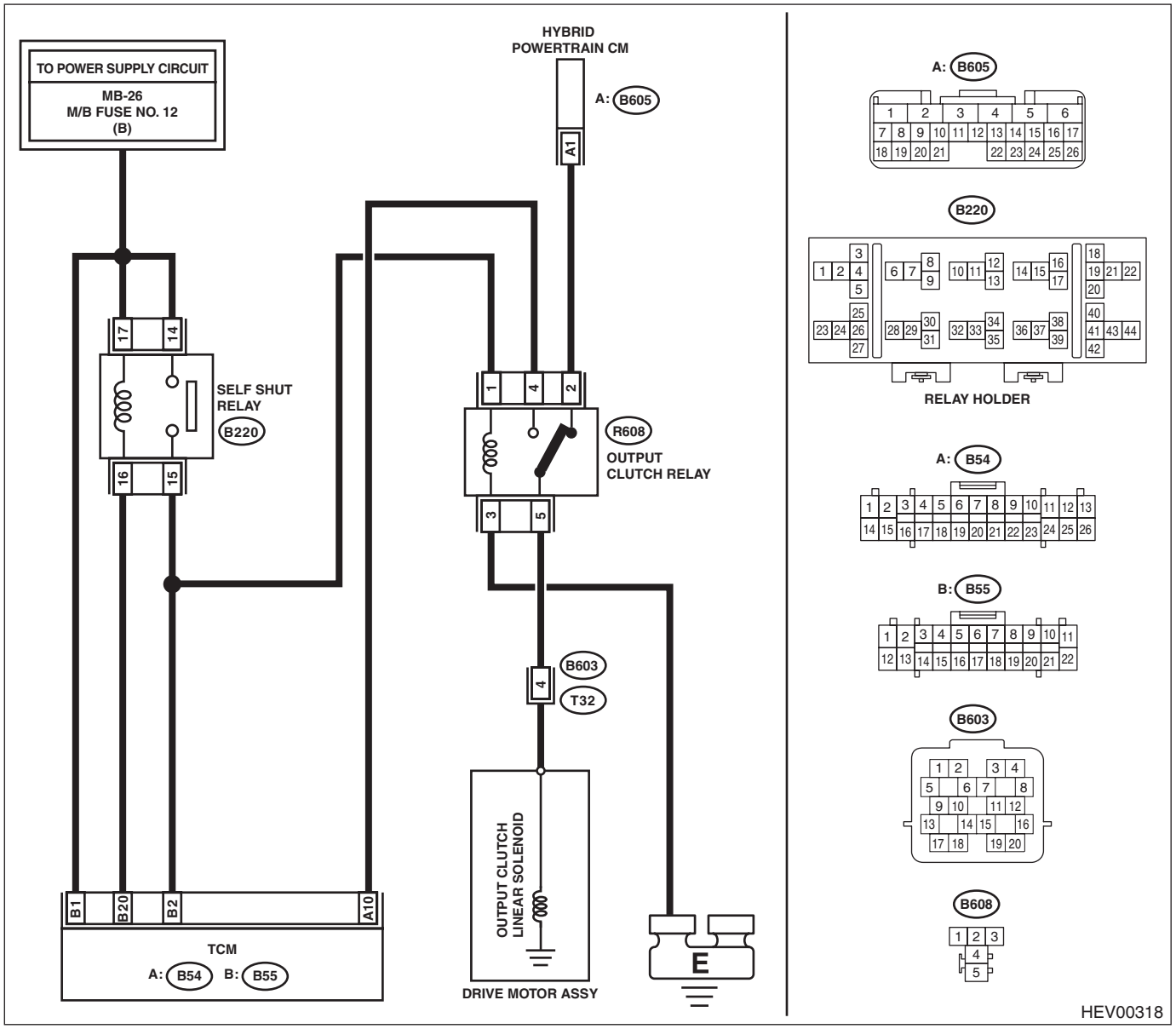

	Step	Check	Yes	No
1	**CHECK INPUT SIGNAL FOR TCM.** 1) After driving with warm up condition, park the vehicle while depressing the brake pedal at "D" range. 2) Read the data of «Output Clutch Linear Solenoid Set Current» and «Output Clutch Linear Solenoid Actual Current» using Subaru Select Monitor.	Does the value of «Output Clutch Linear Solenoid Set Current» and «Output Clutch Linear Solenoid Actual Current» almost correspond?	Check for poor contact of connector.	Go to step **2**.
2	**CHECK HARNESS.** 1) Turn the ignition switch to OFF. 2) Disconnect the TCM connector. 3) Measure the resistance between TCM connector and output clutch relay connector. ***Connector & terminal*** ***(B54) No. 10 — (B608) No. 4:***	Is the resistance less than 1 Ω?	Go to step **3**.	Repair the open circuit of harness.
3	**CHECK HARNESS.** 1) Turn the ignition switch to ON. 2) Measure the voltage between TCM connector and chassis ground. ***Connector & terminal*** ***(B54) No. 10 (+) — Chassis ground (–):***	Is the voltage approx. 0 V?	Go to step **4**.	Repair the short circuit of harness.
4	**CHECK HARNESS.** 1) Turn the ignition switch to OFF. 2) Measure the resistance between output clutch relay and chassis ground. ***Connector & terminal*** ***(B608) No. 5 — Chassis ground:***	Is the resistance approximately 6 Ω?	Check for poor contact of the connector, and repair the defective part.	Go to step **5**.
5	**CHECK RELAY.** Check the output clutch relay. <Ref. to CVT(TH58A)-159, INSPECTION, Relay and Fuse.>	Is the output clutch relay OK?	Go to step **6**.	Replace the output clutch relay.
6	**CHECK HARNESS.** 1) Disconnect connector (B603) of the drive motor assembly. 2) Turn the ignition switch to ON. 3) Measure the voltage between drive motor assembly harness and transmission body. ***Connector & terminal*** ***(B603) No. 4 (+) — Transmission body (–):***	Is the voltage approx. 0 V?	Replace the drive motor assembly. <Ref. to CVT(TH58A)-215, Drive Motor Assembly.>	Replace the transmission harness.

AZ:DTC P2750 SEC. PULLEY REVOLUTION SPEED SENSOR CIRCUIT

DTC DETECTING CONDITION:

- Immediately at fault recognition
- GENERAL DESCRIPTION <Ref. to GD(CVT)(HEV)-46, DTC P2750 SEC. PULLEY REVOLUTION SPEED SENSOR CIRCUIT, Diagnostic Trouble Code (DTC) Detecting Criteria.>

TROUBLE SYMPTOM:

- Shifting shock is felt.
- Acceleration is poor during standing start.
- Shift control malfunction

WIRING DIAGRAM:

CVT control system <Ref. to WI(HEV)-86, CVT Control System.>

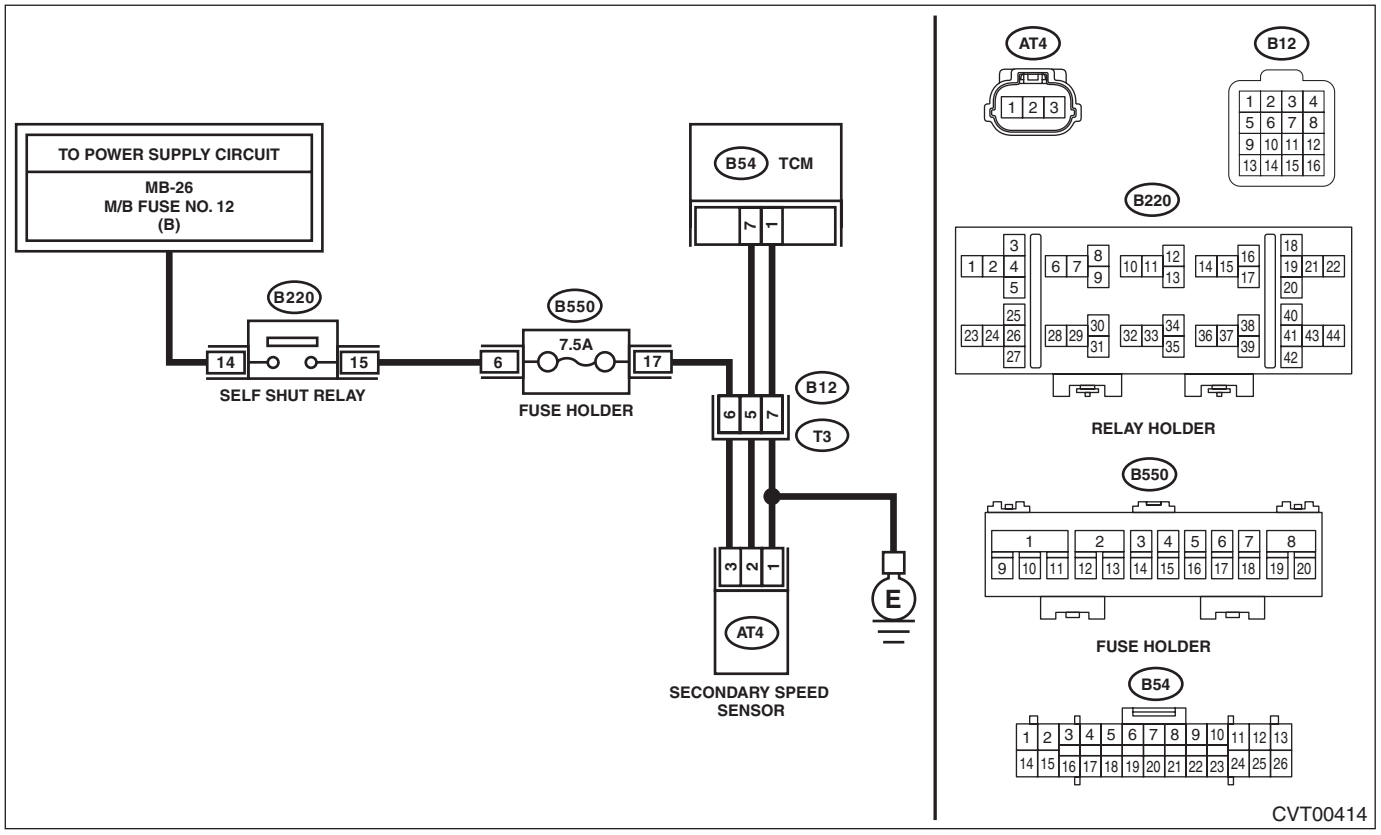

Step		Check	Yes	No
1	**CHECK FUSE.** 1) Turn the ignition switch to OFF. 2) Remove the fuse (7.5 A) from the fuse holder.	Is the fuse blown out?	Replace the fuse. If the fuse blows out easily, repair the short circuit of harness.	Go to step **2**.
2	**CHECK INPUT SIGNAL FOR TCM.** 1) Lift up the vehicle. 2) Start the engine. 3) Set the select lever to “D” range. 4) Read the data of «Secondary Pulley Speed» and «Front Wheel Speed» using Subaru Select Monitor.	Does the value of «Secondary Pulley Speed» change according to those of «Front Wheel Speed»?	Current condition is normal.	Go to step **3**.

	Step	Check	Yes	No
3	**CHECK HARNESS.** 1) Turn the ignition switch to OFF. 2) Disconnect the TCM and transmission connectors. 3) Measure the resistance between TCM connector and transmission connectors. ***Connector & terminal*** ***(B54) No. 1 — (B12) No. 7:*** ***(B54) No. 7 — (B12) No. 5:*** ***(B550) No. 12 — (B12) No. 6:***	Is the resistance less than 1 Ω?	Go to step **4**.	Repair the open circuit of harness.
4	**CHECK HARNESS.** Measure the resistance between TCM connector and chassis ground. ***Connector & terminal*** ***(B54) No. 7 — Chassis ground:***	Is the resistance 1 MΩ or more?	Go to step **5**.	Repair the short circuit of harness.
5	**CHECK TRANSMISSION HARNESS.** 1) Connect the TCM connector. 2) Turn the ignition switch to ON. 3) Measure the voltage between transmission connector terminals. ***Connector & terminal*** ***(B12) No. 6 (+) — Chassis ground (–):***	Is the voltage 10 — 13 V?	Go to step **6**.	Repair the open circuit of harness or poor contact of connector.
6	**CHECK TRANSMISSION HARNESS.** 1) Turn the ignition switch to OFF. 2) Disconnect the transmission connector. 3) Disconnect the secondary speed sensor connector. 4) Measure the resistance between transmission connector and secondary speed sensor connector. ***Connector & terminal*** ***(T3) No. 5 — (AT4) No. 2:*** ***(T3) No. 6 — (AT4) No. 3:*** ***(T3) No. 7 — (AT4) No. 1:***	Is the resistance less than 1 Ω?	Replace the secondary speed sensor. <Ref. to CVT(TH58A)-105, Secondary Speed Sensor.>	Replace the transmission harness.

BA:DTC P2762 LOCK-UP DUTY SOLENOID MALFUNCTION

DTC DETECTING CONDITION:

- Detected when two consecutive driving cycles with fault occur.
- GENERAL DESCRIPTION <Ref. to GD(CVT)(HEV)-47, DTC P2762 LOCK-UP DUTY SOLENOID MALFUNCTION, Diagnostic Trouble Code (DTC) Detecting Criteria.>

TROUBLE SYMPTOM:

- No lock-up occurs.
- Engine speed increases abruptly during driving.

	Step	Check	Yes	No
1	**CHECK DTC.** Read the DTC relating the ECM using the Subaru Select Monitor.	Is DTC detected?	Perform the diagnosis according to DTC.	Go to step **2**.
2	**CHECK DTC.** Read the DTC relating the TCM using the Subaru Select Monitor.	Are P0841, P0842, P0843 detected?	Perform the diagnosis according to DTC.	Go to step **3**.
3	**CHECK TRANSMISSION FLUID.** Check the condition of ATF. <Ref. to CVT(TH58A)-44, CONDITION CHECK, CVTF.>	Is the ATF OK?	Go to step **4**.	Check according to the “Corrective action” of ATF (CVTF) “CONDITION CHECK”. <Ref. to CVT(TH58A)-44, CONDITION CHECK, CVTF.>
4	**CHECK TRANSMISSION FLUID.** Check the amount of ATF. <Ref. to CVT(TH58A)-41, ADJUSTMENT, CVTF.>	Is the ATF amount correct?	Go to step **5**.	Adjust the amount of ATF. <Ref. to CVT(TH58A)-41, ADJUSTMENT, CVTF.>
5	**CHECK INPUT SIGNAL FOR TCM.** 1) Lift up the vehicle. 2) Start the engine. 3) Warm up until the ATF temperature reaches to 40 — 70°C (104 — 158°F). 4) Shift the select lever to “P” range. 5) Stabilize the engine speed at idle. 6) Read the data of «Actual secondary pressure» using Subaru Select Monitor.	Is the «Actual secondary pressure» 0.5 — 1.5 MPa?	Go to step **6**.	Perform the diagnosis according to DTC P0841 procedure.
6	**DRIVING CHECK FOR LOCK-UP CONDITION.** 1) Perform the “Clear Memory Mode”. <Ref. to CVT(HEV)(diag)-19, Clear Memory Mode.> 2) Turn the ignition switch to OFF. 3) Start the engine. 4) Warm up until the ATF temperature exceeds 50°C. 5) Drive the vehicle for one minute or more while keeping the constant speed so that the display shown in the Subaru Select Monitor is as follows: «Lock Up Duty Ratio» is 70 % or more, and «Front Wheel Speed» is 40 km/h or more. 6) Turn the ignition switch to OFF. 7) Start the engine. 8) Perform the procedure in step 5) again. 9) Read the DTC using Subaru Select Monitor.	Does the AT OIL TEMP light blink and is DTC P2762 detected?	Perform the secondary pressure test. <Ref. to CVT(TH58A)-54, Secondary Pressure (Line Pressure) Test.> When DTC other than P2762 is displayed, perform the diagnosis corresponding to the DTC.	Current condition is normal. Temporary oil pressure malfunction.

BB:DTC P2763 LOCK-UP DUTY SOLENOID CIRCUIT (HIGH)

DTC DETECTING CONDITION:

- Immediately at fault recognition
- GENERAL DESCRIPTION <Ref. to GD(CVT)(HEV)-48, DTC P2763 LOCK-UP DUTY SOLENOID CIRCUIT (HIGH), Diagnostic Trouble Code (DTC) Detecting Criteria.>

TROUBLE SYMPTOM:

- No lock-up occurs.
- Engine stalls.

WIRING DIAGRAM:

CVT control system <Ref. to WI(HEV)-86, CVT Control System.>

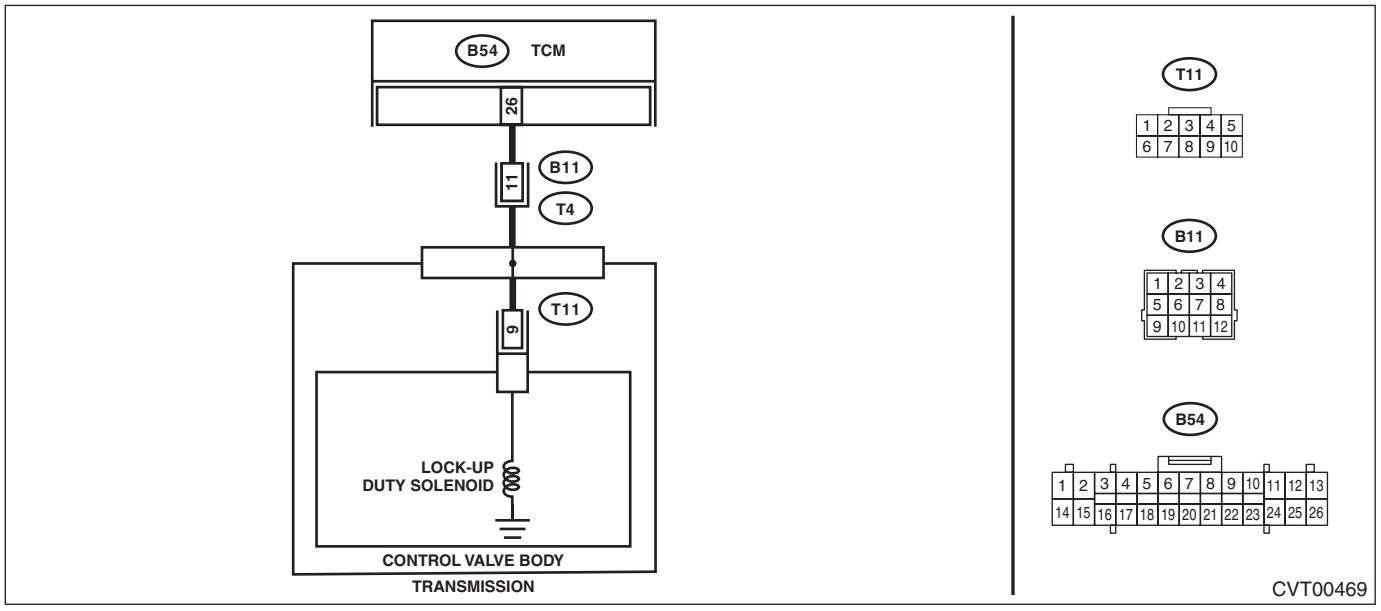

Step		Check	Yes	No
1	**CHECK HARNESS.** 1) Turn the ignition switch to OFF. 2) Disconnect the TCM and transmission connectors. 3) Measure the resistance between TCM connector and transmission connectors. ***Connector & terminal*** ***(B54) No. 26 — (B11) No. 11:***	Is the resistance less than 1 Ω?	Go to step **2**.	Repair the open circuit of harness.
2	**CHECK HARNESS.** 1) Turn the ignition switch to ON. 2) Measure the voltage between TCM connector and chassis ground. ***Connector & terminal*** ***(B54) No. 26 (+) — Chassis ground (–):***	Is the voltage approx. 0 V?	Go to step **3**.	Repair the short circuit of harness.
3	**CHECK LOCK-UP DUTY SOLENOID.** Measure the resistance between transmission connector and transmission body. ***Connector & terminal*** ***(T4) No. 11 — Transmission body:***	Is the resistance approx. 13 Ω? (when engine cold)	Check for poor contact of the connector, and repair the defective part.	Go to step **4**.
4	**CHECK HARNESS INSIDE TRANSMISSION.** **CAUTION:** **Start work after ATF cools down.** 1) Remove the transmission valve cover. 2) Check for the harness pinch, damage.	Is there any fault in the harness?	Replace the transmission harness.	Go to step **5**.

	Step	Check	Yes	No
5	**CHECK HARNESS INSIDE TRANSMISSION.** 1) Disconnect the control valve body connector. 2) Turn the ignition switch to ON. 3) Measure the voltage between transmission connector and transmission body. ***Connector & terminal*** ***(T4) No. 11 (+) — Transmission body (–):***	Is the voltage approx. 0 V?	Replace the control valve body. <Ref. to CVT(TH58A)-114, Control Valve Body.>	Replace the transmission harness.

BC:DTC P2764 LOCK-UP DUTY SOLENOID CIRCUIT (LOW)

DTC DETECTING CONDITION:

- Immediately at fault recognition
- GENERAL DESCRIPTION <Ref. to GD(CVT)(HEV)-49, DTC P2764 LOCK-UP DUTY SOLENOID CIRCUIT (LOW), Diagnostic Trouble Code (DTC) Detecting Criteria.>

TROUBLE SYMPTOM:

No lock-up occurs.

WIRING DIAGRAM:

CVT control system <Ref. to WI(HEV)-86, CVT Control System.>

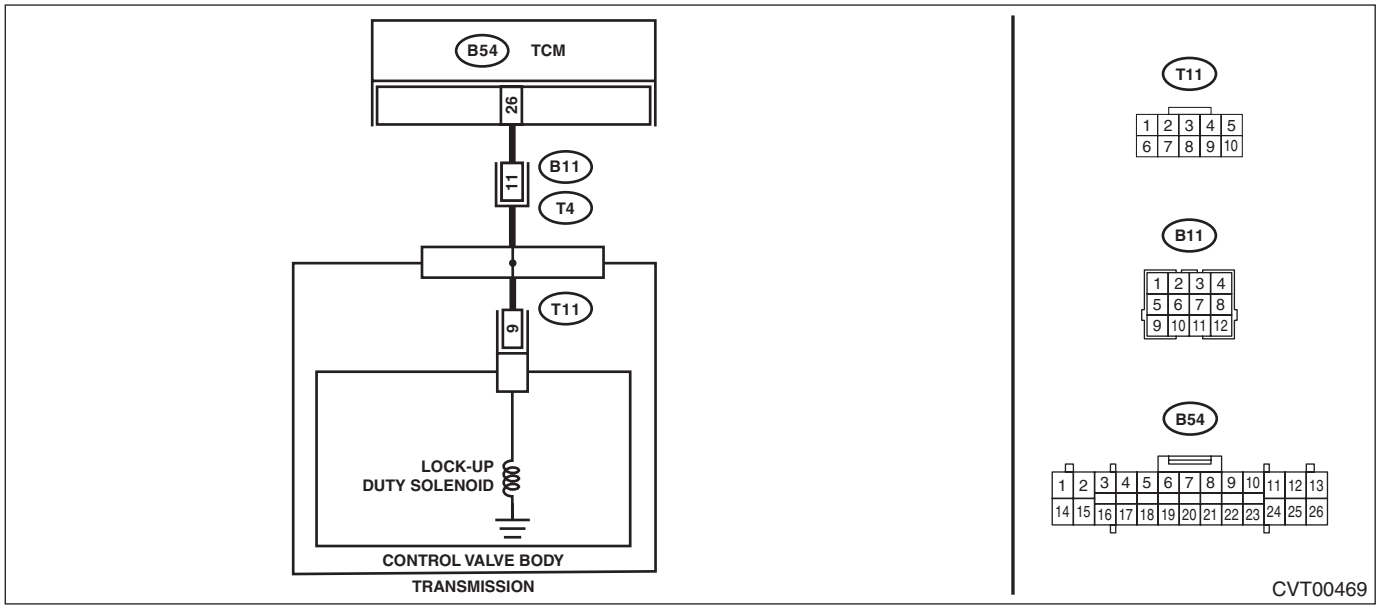

	Step	Check	Yes	No
1	**CHECK HARNESS.** 1) Turn the ignition switch to OFF. 2) Disconnect the TCM and transmission connectors. 3) Measure the resistance between TCM connector and chassis ground. ***Connector & terminal*** ***(B54) No. 26 — Chassis ground:***	Is the resistance 1 MΩ or more?	Go to step **2**.	Repair the short circuit of harness.
2	**CHECK LOCK-UP DUTY SOLENOID.** Measure the resistance between transmission connector and transmission body. ***Connector & terminal*** ***(T4) No. 11 — Transmission body:***	Is the resistance approx. 13 Ω? (when engine cold)	Check for poor contact of the connector, and repair the defective part.	Go to step **3**.
3	**CHECK HARNESS INSIDE TRANSMISSION.** **CAUTION:** **Start work after ATF cools down.** 1) Remove the transmission valve cover. 2) Check for the harness pinch, damage.	Is there any fault in the harness?	Replace the transmission harness.	Go to step **4**.
4	**CHECK HARNESS INSIDE TRANSMISSION.** 1) Disconnect the control valve body connector. 2) Measure the resistance between transmission connector and transmission body. ***Connector & terminal*** ***(T4) No. 11 — Transmission body:***	Is the resistance 1 MΩ or more?	Replace the control valve body. <Ref. to CVT(TH58A)-114, Control Valve Body.>	Replace the transmission harness.

BD:DTC P2797 AUXILIARY TRANSMISSION FLUID PUMP

DTC DETECTING CONDITION:

- Immediately at fault recognition
- GENERAL DESCRIPTION <Ref. to GD(CVT)(HEV)-50, DTC P2797 AUXILIARY TRANSMISSION FLUID PUMP, Diagnostic Trouble Code (DTC) Detecting Criteria.>

TROUBLE SYMPTOM:

Electric oil pump does not operate.

CAUTION:

Before performing diagnosis, refer to "CAUTION" in "General Description". <Ref. to CVT(HEV)(diag)-5, HYBRID SYSTEM, CAUTION, General Description.>

	Step	Check	Yes	No
1	**CHECK TRANSMISSION FLUID.** Check the amount of ATF. <Ref. to CVT(TH58A)-41, ADJUSTMENT, CVTF.>	Is the ATF amount correct?	Go to step **2**.	Adjust the amount of ATF. <Ref. to CVT(TH58A)-41, ADJUSTMENT, CVTF.>
2	**CHECK DTC.** Check the DTC relating the TCM using the Subaru Select Monitor.	Is P0841 detected?	Perform the diagnosis according to DTC.	Go to step **3**.
3	**CHECK ELECTRIC OIL PUMP.** 1) Perform the Clear Memory Mode. 2) Perform the «Electric Fluid Pump inspection mode». <Ref. to CVT(TH58A)-139, INSPECTION, Electric Fluid Pump.>	Is a DTC other than DTC P2797 displayed?	Perform the diagnosis according to DTC.	Go to step **4**.
4	**CHECK ELECTRIC OIL PUMP.** 1) Perform the «Electric Fluid Pump inspection mode». 2) Read the data of «Electric Fluid Pump Target RPM» and «Electric Fluid Pump Actual RPM» using Subaru Select Monitor.	Is the difference between «Electric Fluid Pump Target RPM» and «Electric Fluid Pump Actual RPM» 200 rpm or more?	Go to step **6**.	Go to step **5**.
5	**CHECK ELECTRIC OIL PUMP.** 1) Perform the «Electric Fluid Pump inspection mode». 2) Read the data of «Actual secondary pressure» using Subaru Select Monitor.	Is the «Actual secondary pressure» 0.3 MPa or less?	Replace the drive motor assembly. <Ref. to CVT(TH58A)-215, Drive Motor Assembly.>	Current condition is normal.
6	**CHECK DTC HISTORY WHEN RECEIVING THE VEHICLE.**	Was DTC P0C21 recorded when receiving the vehicle?	Replace the electric oil pump inverter. <Ref. to HEV-45, ELECTRIC OIL PUMP INVERTER, REMOVAL, Inverter.>	Replace the electric oil pump. <Ref. to CVT(TH58A)-132, Electric Fluid Pump.>

BE:DTC U0073 CONTROL MODULE COMMUNICATION BUS OFF

NOTE:
Refer to “LAN SYSTEM (HEV) (DIAGNOSTICS)” for diagnostic procedure. <Ref. to LAN(HEV)(diag)-2, Basic Diagnostic Procedure.>

BF:DTC U0075 CONTROL MODULE COMMUNICATION BUS "PU-CAN" OFF

NOTE:
Refer to “LAN SYSTEM (HEV) (DIAGNOSTICS)” for diagnostic procedure. <Ref. to LAN(HEV)(diag)-2, Basic Diagnostic Procedure.>

BG:DTC U0076 CONTROL MODULE COMMUNICATION BUS "HEV-CAN" OFF

NOTE:
Refer to “LAN SYSTEM (HEV) (DIAGNOSTICS)” for diagnostic procedure. <Ref. to LAN(HEV)(diag)-2, Basic Diagnostic Procedure.>

BH:DTC U0100 LOST COMMUNICATION WITH ECM/PCM “A”

NOTE:
Refer to “LAN SYSTEM (HEV) (DIAGNOSTICS)” for diagnostic procedure. <Ref. to LAN(HEV)(diag)-2, Basic Diagnostic Procedure.>

BI: DTC U0101 LOST COMMUNICATION WITH TCM

NOTE:
Refer to “LAN SYSTEM (HEV) (DIAGNOSTICS)” for diagnostic procedure. <Ref. to LAN(HEV)(diag)-2, Basic Diagnostic Procedure.>

BJ:DTC U0110 LOST COMMUNICATION WITH DRIVE MOTOR CONTROL MODULE "A"

NOTE:
Refer to “LAN SYSTEM (HEV) (DIAGNOSTICS)” for diagnostic procedure. <Ref. to LAN(HEV)(diag)-2, Basic Diagnostic Procedure.>

BK:DTC U0122 LOST COMMUNICATION WITH VEHICLE DYNAMICS CONTROL MODULE

NOTE:
Refer to “LAN SYSTEM (HEV) (DIAGNOSTICS)” for diagnostic procedure. <Ref. to LAN(HEV)(diag)-2, Basic Diagnostic Procedure.>

BL:DTC U0140 LOST COMMUNICATION WITH BODY CONTROL MODULE

NOTE:
Refer to “LAN SYSTEM (HEV) (DIAGNOSTICS)” for diagnostic procedure. <Ref. to LAN(HEV)(diag)-2, Basic Diagnostic Procedure.>

BM:DTC U0155 LOST COMMUNICATION WITH INSTRUMENT PANEL CLUSTER (IPC) CONTROL MODULE

NOTE:
Refer to “LAN SYSTEM (HEV) (DIAGNOSTICS)” for diagnostic procedure. <Ref. to LAN(HEV)(diag)-2, Basic Diagnostic Procedure.>

BN:DTC U0287 LOST COMMUNICATION WITH TRANSMISSION FLUID PUMP MODULE

NOTE:
Refer to “LAN SYSTEM (HEV) (DIAGNOSTICS)” for diagnostic procedure. <Ref. to LAN(HEV)(diag)-2, Basic Diagnostic Procedure.>

BO:DTC U0293 LOST COMMUNICATION WITH HYBRID POWERTRAIN CONTROL MODULE

NOTE:
Refer to “LAN SYSTEM (HEV) (DIAGNOSTICS)” for diagnostic procedure. <Ref. to LAN(HEV)(diag)-2, Basic Diagnostic Procedure.>

BP:DTC U0401 INVALID DATA RECEIVED FROM ECM/PCM “A”

NOTE:
Refer to “LAN SYSTEM (HEV) (DIAGNOSTICS)” for diagnostic procedure. <Ref. to LAN(HEV)(diag)-2, Basic Diagnostic Procedure.>

BQ:DTC U0402 INVALID DATA RECEIVED FROM TCM

NOTE:
Refer to “LAN SYSTEM (HEV) (DIAGNOSTICS)” for diagnostic procedure. <Ref. to LAN(HEV)(diag)-2, Basic Diagnostic Procedure.>

BR:DTC U0411 INVALID DATA RECEIVED FROM DRIVE MOTOR CONTROL MODULE "A"

NOTE:
Refer to “LAN SYSTEM (HEV) (DIAGNOSTICS)” for diagnostic procedure. <Ref. to LAN(HEV)(diag)-2, Basic Diagnostic Procedure.>

BS:DTC U0416 INVALID DATA RECEIVED FROM VEHICLE DYNAMICS CONTROL MODULE

NOTE:
Refer to “LAN SYSTEM (HEV) (DIAGNOSTICS)” for diagnostic procedure. <Ref. to LAN(HEV)(diag)-2, Basic Diagnostic Procedure.>

BT:DTC U0422 INVALID DATA RECEIVED FROM BODY CONTROL MODULE

NOTE:
Refer to “LAN SYSTEM (HEV) (DIAGNOSTICS)” for diagnostic procedure. <Ref. to LAN(HEV)(diag)-2, Basic Diagnostic Procedure.>

BU:DTC U0423 INVALID DATA RECEIVED FROM INSTRUMENT PANEL CLUSTER CONTROL MODULE

NOTE:
Refer to “LAN SYSTEM (HEV) (DIAGNOSTICS)” for diagnostic procedure. <Ref. to LAN(HEV)(diag)-2, Basic Diagnostic Procedure.>

BV:DTC U0588 INVALID DATA RECEIVED FROM TRANSMISSION FLUID PUMP MODULE

NOTE:
Refer to “LAN SYSTEM (HEV) (DIAGNOSTICS)” for diagnostic procedure. <Ref. to LAN(HEV)(diag)-2, Basic Diagnostic Procedure.>

BW:DTC U0594 INVALID DATA RECEIVED FROM HYBRID POWERTRAIN CONTROL MODULE

NOTE:
Refer to “LAN SYSTEM (HEV) (DIAGNOSTICS)” for diagnostic procedure. <Ref. to LAN(HEV)(diag)-2, Basic Diagnostic Procedure.>

BX:DTC U1100 LOST COMMUNICATION WITH ECM/PCM PU-CAN

NOTE:
Refer to “LAN SYSTEM (HEV) (DIAGNOSTICS)” for diagnostic procedure. <Ref. to LAN(HEV)(diag)-2, Basic Diagnostic Procedure.>

BY:DTC U1293 LOST COMMUNICATION WITH HYBRID POWERTRAIN CONTROL MODULE PU-CAN

NOTE:
Refer to “LAN SYSTEM (HEV) (DIAGNOSTICS)” for diagnostic procedure. <Ref. to LAN(HEV)(diag)-2, Basic Diagnostic Procedure.>

BZ:DTC U1401 INVALID DATA RECEIVED FROM ECM/PCM PU-CAN

NOTE:
Refer to “LAN SYSTEM (HEV) (DIAGNOSTICS)” for diagnostic procedure. <Ref. to LAN(HEV)(diag)-2, Basic Diagnostic Procedure.>

CA:DTC U1594 INVALID DATA RECEIVED FROM HYBRID POWERTRAIN CONTROL MODULE PU-CAN

NOTE:
Refer to “LAN SYSTEM (HEV) (DIAGNOSTICS)” for diagnostic procedure. <Ref. to LAN(HEV)(diag)-2, Basic Diagnostic Procedure.>

17.Diagnostic Procedure without Diagnostic Trouble Code (DTC)

A: CHECK SHIFT INDICATOR

DIAGNOSIS:

- Output signal circuit of shift indicator is open or shorted.
- Combination meter malfunction

TROUBLE SYMPTOM:

- Shift indicator does not display or remains displayed.
- Shift indicator display does not change.

	Step	Check	Yes	No
1	**CHECK TCM.** Check the DTC relating the TCM using the Subaru Select Monitor.	Is DTC U0155 or U0423 detected?	Perform the self-diagnosis of combination meter.	Go to step **2**.
2	**CHECK TCM.** Check the DTC relating the TCM using the Subaru Select Monitor.	Are DTCs other than U0155 and U0423 detected?	Perform the diagnosis according to DTC.	Go to step **3**.
3	**CHECK COMBINATION METER.** Check the DTC of combination meter.	Is DTC detected?	Perform the diagnosis according to DTC.	Go to step **4**.
4	**CHECK TCM.** 1) Operate the + side of the paddle shift switch. 2) Read the data of «Up Switch» using the Subaru Select Monitor.	Does it change between ON and OFF according to the operation?	Go to step **5**.	Check for poor contact between TCM and paddle shift UP switch, and repair the defective part.
5	**CHECK TCM.** 1) Operate the – side of the paddle shift switch. 2) Read the data of «Down Switch» using the Subaru Select Monitor.	Does it change between ON and OFF according to the operation?	Go to step **6**.	Check for poor contact between TCM and paddle shift down switch, and repair the defective part.
6	**CHECK TCM.** 1) Turn the ignition switch OFF, then turn it ON again. 2) Shift the select lever to manual mode. 3) Read the data of «Tiptronic Mode Switch» using Subaru Select Monitor.	Does it change between ON and OFF according to the operation?	Current condition is normal.	Check the TCM.

18.Diagnostics with Phenomenon

A: INSPECTION

Symptoms	Faulty parts
The vehicle can not move unless the engine is started after ignition switch was turned off, when driving in “D” or “R” range, or selecting “N” → “D”, “N” → “R”.	• Control valve • Engine control system
While driving in “D” range, the vibration occurs immediately before the stopping. Or the vehicle can not move unless the engine is started after ignition switch was turned off.	• Control valve • Torque converter
Vehicle cannot shift while driving in “D” range.	• Control valve • TCM • Shift mechanism • Power supply system • HPCM
Excessive shock when selecting “N” → “D”, and “N” → “R”.	• Control valve • TCM • F&R clutch pack • ATF deterioration or lack
Excessive shock at standing start in “D” range.	• Control valve • TCM • F&R clutch pack • ATF deterioration or lack
Engine speed increases abruptly during driving in “D” or “R” range.	• Control valve • Secondary pressure sensor • F&R clutch pack • Output clutch pack • ATF deterioration or lack
Vehicle can not start when depressing the accelerator pedal in “D” or “R” range, or acceleration is very poor. (without abrupt engine increase)	• Control valve • F&R clutch pack • Output clutch pack • Shift mechanism • Parking mechanism • Engine control system • Power supply system • HPCM
Shift indicator in combination meter displays the position which differs from select lever position.	• Inhibitor switch • Select cable related • Combination meter
Manual mode enters even though the select lever and paddle shift switch is not operated.	• Manual mode switch • Paddle shift switch • Select lever • TCM • HPCM
Engine speed increases abruptly in “D” or “R” range, vehicle can not start.	• F&R clutch pack • Output clutch pack • Select cable related
Manual mode can not be set	• Select lever • TCM • HPCM

GENERAL DESCRIPTION (CVT)

GD(CVT)(HEV)

Page

1. List of Diagnostic Trouble Code (DTC) 2
2. Diagnostic Trouble Code (DTC) Detecting Criteria 5

1. List of Diagnostic Trouble Code (DTC)

A: LIST

DTC	Item	Note
P0500	Vehicle Speed Sensor “A”	<Ref. to GD(CVT)(HEV)-5, DTC P0500 VEHICLE SPEED SENSOR “A”, Diagnostic Trouble Code (DTC) Detecting Criteria.>
P0603	Internal Control Module Keep Alive Memory (KAM) Error	<Ref. to GD(CVT)(HEV)-6, DTC P0603 INTERNAL CONTROL MODULE KEEP ALIVE MEMORY (KAM) ERROR, Diagnostic Trouble Code (DTC) Detecting Criteria.>
P0705	Transmission Range Sensor Circuit (PRNDL Input)	<Ref. to GD(CVT)(HEV)-7, DTC P0705 TRANSMISSION RANGE SENSOR CIRCUIT (PRNDL INPUT), Diagnostic Trouble Code (DTC) Detecting Criteria.>
P0708	AT Range Switch Not Inputted	<Ref. to GD(CVT)(HEV)-8, DTC P0708 AT RANGE SWITCH NOT INPUTTED, Diagnostic Trouble Code (DTC) Detecting Criteria.>
P0711	ATF Temp. Sensor Circuit Range/Performance	<Ref. to GD(CVT)(HEV)-9, DTC P0711 ATF TEMP. SENSOR CIRCUIT RANGE/PERFORMANCE, Diagnostic Trouble Code (DTC) Detecting Criteria.>
P0712	Transmission Fluid Temperature Sensor Circuit Low Input	<Ref. to GD(CVT)(HEV)-10, DTC P0712 TRANSMISSION FLUID TEMPERATURE SENSOR CIRCUIT LOW INPUT, Diagnostic Trouble Code (DTC) Detecting Criteria.>
P0713	Transmission Fluid Temperature Sensor Circuit High Input	<Ref. to GD(CVT)(HEV)-11, DTC P0713 TRANSMISSION FLUID TEMPERATURE SENSOR CIRCUIT HIGH INPUT, Diagnostic Trouble Code (DTC) Detecting Criteria.>
P0716	Torque Converter Turbine Speed	<Ref. to GD(CVT)(HEV)-12, DTC P0716 TORQUE CONVERTER TURBINE SPEED, Diagnostic Trouble Code (DTC) Detecting Criteria.>
P0719	Brake Switch Circuit Low	<Ref. to GD(CVT)(HEV)-13, DTC P0719 BRAKE SWITCH CIRCUIT LOW, Diagnostic Trouble Code (DTC) Detecting Criteria.>
P0720	Output Speed Sensor Circuit	<Ref. to GD(CVT)(HEV)-14, DTC P0720 OUTPUT SPEED SENSOR CIRCUIT, Diagnostic Trouble Code (DTC) Detecting Criteria.>
P0724	Brake Switch Circuit High	<Ref. to GD(CVT)(HEV)-15, DTC P0724 BRAKE SWITCH CIRCUIT HIGH, Diagnostic Trouble Code (DTC) Detecting Criteria.>
P0730	Gearshift Control Performance Abnormal	<Ref. to GD(CVT)(HEV)-16, DTC P0730 GEARSHIFT CONTROL PERFORMANCE ABNORMAL, Diagnostic Trouble Code (DTC) Detecting Criteria.>
P0841	Secondary Oil Pressure Sensor Performance	<Ref. to GD(CVT)(HEV)-17, DTC P0841 SECONDARY OIL PRESSURE SENSOR PERFORMANCE, Diagnostic Trouble Code (DTC) Detecting Criteria.>
P0842	Secondary Oil Pressure Sensor Circuit (Low)	<Ref. to GD(CVT)(HEV)-18, DTC P0842 SECONDARY OIL PRESSURE SENSOR CIRCUIT (LOW), Diagnostic Trouble Code (DTC) Detecting Criteria.>
P0843	Secondary Oil Pressure Sensor Circuit (High)	<Ref. to GD(CVT)(HEV)-19, DTC P0843 SECONDARY OIL PRESSURE SENSOR CIRCUIT (HIGH), Diagnostic Trouble Code (DTC) Detecting Criteria.>
P0890	AT Self-Shut Relay Diagnosis (Low)	<Ref. to GD(CVT)(HEV)-20, DTC P0890 AT SELF-SHUT RELAY DIAGNOSIS (LOW), Diagnostic Trouble Code (DTC) Detecting Criteria.>
P0962	Secondary Solenoid Circuit (Low)	<Ref. to GD(CVT)(HEV)-21, DTC P0962 SECONDARY SOLENOID CIRCUIT (LOW), Diagnostic Trouble Code (DTC) Detecting Criteria.>
P0963	Secondary Solenoid Circuit (High)	<Ref. to GD(CVT)(HEV)-22, DTC P0963 SECONDARY SOLENOID CIRCUIT (HIGH), Diagnostic Trouble Code (DTC) Detecting Criteria.>
P0965	Forward & Reverse Solenoid Function	<Ref. to GD(CVT)(HEV)-23, DTC P0965 FORWARD & REVERSE SOLENOID FUNCTION, Diagnostic Trouble Code (DTC) Detecting Criteria.>
P0966	Forward & Reverse Solenoid Circuit (Low)	<Ref. to GD(CVT)(HEV)-24, DTC P0966 FORWARD & REVERSE SOLENOID CIRCUIT (LOW), Diagnostic Trouble Code (DTC) Detecting Criteria.>

DTC	Item	Note
P0967	Forward & Reverse Linear Solenoid Circuit (High)	<Ref. to GD(CVT)(HEV)-25, DTC P0967 FORWARD & REVERSE LINEAR SOLENOID CIRCUIT (HIGH), Diagnostic Trouble Code (DTC) Detecting Criteria.>
P0973	Primary Solenoid System A Circuit (Low)	<Ref. to GD(CVT)(HEV)-26, DTC P0973 PRIMARY SOLENOID SYSTEM A CIRCUIT (LOW), Diagnostic Trouble Code (DTC) Detecting Criteria.>
P0974	Primary Solenoid System A Circuit (High)	<Ref. to GD(CVT)(HEV)-27, DTC P0974 PRIMARY SOLENOID SYSTEM A CIRCUIT (HIGH), Diagnostic Trouble Code (DTC) Detecting Criteria.>
P0976	Primary Solenoid System B Circuit (Low)	<Ref. to GD(CVT)(HEV)-28, DTC P0976 PRIMARY SOLENOID SYSTEM B CIRCUIT (LOW), Diagnostic Trouble Code (DTC) Detecting Criteria.>
P0977	Primary Solenoid System B Circuit (High)	<Ref. to GD(CVT)(HEV)-29, DTC P0977 PRIMARY SOLENOID SYSTEM B CIRCUIT (HIGH), Diagnostic Trouble Code (DTC) Detecting Criteria.>
P0B0A	Auxiliary Transmission Fluid Pump Motor Supply Voltage Circuit Low	<Ref. to GD(CVT)(HEV)-30, DTC P0B0A AUXILIARY TRANSMISSION FLUID PUMP MOTOR SUPPLY VOLTAGE CIRCUIT LOW, Diagnostic Trouble Code (DTC) Detecting Criteria.>
P0B0B	Auxiliary Transmission Fluid Pump Motor Supply Voltage Circuit High	<Ref. to GD(CVT)(HEV)-31, DTC P0B0B AUXILIARY TRANSMISSION FLUID PUMP MOTOR SUPPLY VOLTAGE CIRCUIT HIGH, Diagnostic Trouble Code (DTC) Detecting Criteria.>
P0B0D	Auxiliary Transmission Fluid Pump Motor Control Module	<Ref. to GD(CVT)(HEV)-32, DTC P0B0D AUXILIARY TRANSMISSION FLUID PUMP MOTOR CONTROL MODULE, Diagnostic Trouble Code (DTC) Detecting Criteria.>
P0C21	Auxiliary Transmission Fluid Pump Phase U-V-W Circuit Low	<Ref. to GD(CVT)(HEV)-33, DTC P0C21 AUXILIARY TRANSMISSION FLUID PUMP PHASE U-V-W CIRCUIT LOW, Diagnostic Trouble Code (DTC) Detecting Criteria.>
P0C22	Auxiliary Transmission Fluid Pump Phase U-V-W Circuit High	<Ref. to GD(CVT)(HEV)-36, DTC P0C22 AUXILIARY TRANSMISSION FLUID PUMP PHASE U-V-W CIRCUIT HIGH, Diagnostic Trouble Code (DTC) Detecting Criteria.>
P0C29	Auxiliary Transmission Fluid Pump Driver Current Performance	<Ref. to GD(CVT)(HEV)-37, DTC P0C29 AUXILIARY TRANSMISSION FLUID PUMP DRIVER CURRENT PERFORMANCE, Diagnostic Trouble Code (DTC) Detecting Criteria.>
P0C2A	Auxiliary Transmission Fluid Pump Motor Stalled	<Ref. to GD(CVT)(HEV)-39, DTC P0C2A AUXILIARY TRANSMISSION FLUID PUMP MOTOR STALLED, Diagnostic Trouble Code (DTC) Detecting Criteria.>
P1724	AT EEPROM Error	<Ref. to GD(CVT)(HEV)-40, DTC P1724 AT EEPROM ERROR, Diagnostic Trouble Code (DTC) Detecting Criteria.>
P172A	Auxiliary Transmission Fluid Pump Reverse Rotation	<Ref. to GD(CVT)(HEV)-41, DTC P172A AUXILIARY TRANSMISSION FLUID PUMP REVERSE ROTATION, Diagnostic Trouble Code (DTC) Detecting Criteria.>
P2719	Pressure Control Solenoid D Control Circuit Range/Performance	<Ref. to GD(CVT)(HEV)-42, DTC P2719 PRESSURE CONTROL SOLENOID D CONTROL CIRCUIT RANGE/PERFORMANCE, Diagnostic Trouble Code (DTC) Detecting Criteria.>
P2720	Pressure Control Solenoid D Control Circuit Low	<Ref. to GD(CVT)(HEV)-44, DTC P2720 PRESSURE CONTROL SOLENOID D CONTROL CIRCUIT LOW, Diagnostic Trouble Code (DTC) Detecting Criteria.>
P2721	Pressure Control Solenoid D Control Circuit High	<Ref. to GD(CVT)(HEV)-45, DTC P2721 PRESSURE CONTROL SOLENOID D CONTROL CIRCUIT HIGH, Diagnostic Trouble Code (DTC) Detecting Criteria.>
P2750	Sec. Pulley Revolution Speed Sensor Circuit	<Ref. to GD(CVT)(HEV)-46, DTC P2750 SEC. PULLEY REVOLUTION SPEED SENSOR CIRCUIT, Diagnostic Trouble Code (DTC) Detecting Criteria.>
P2762	Lock-Up Duty Solenoid Malfunction	<Ref. to GD(CVT)(HEV)-47, DTC P2762 LOCK-UP DUTY SOLENOID MALFUNCTION, Diagnostic Trouble Code (DTC) Detecting Criteria.>

DTC	Item	Note
P2763	Lock-Up Duty Solenoid Circuit (High)	<Ref. to GD(CVT)(HEV)-48, DTC P2763 LOCK-UP DUTY SOLENOID CIRCUIT (HIGH), Diagnostic Trouble Code (DTC) Detecting Criteria.>
P2764	Lock-Up Duty Solenoid Circuit (Low)	<Ref. to GD(CVT)(HEV)-49, DTC P2764 LOCK-UP DUTY SOLENOID CIRCUIT (LOW), Diagnostic Trouble Code (DTC) Detecting Criteria.>
P2797	Auxiliary Transmission Fluid Pump	<Ref. to GD(CVT)(HEV)-50, DTC P2797 AUXILIARY TRANSMISSION FLUID PUMP, Diagnostic Trouble Code (DTC) Detecting Criteria.>
U0073	Control Module Communication Bus Off	<Ref. to GD(CVT)(HEV)-51, DTC U0073 CONTROL MODULE COMMUNICATION BUS OFF, Diagnostic Trouble Code (DTC) Detecting Criteria.>
U0075	Control Module Communication Bus "PU-CAN" Off	<Ref. to GD(CVT)(HEV)-52, DTC U0075 CONTROL MODULE COMMUNICATION BUS "PU-CAN" OFF, Diagnostic Trouble Code (DTC) Detecting Criteria.>
U0100	Lost Communication With ECM/PCM “A”	<Ref. to GD(CVT)(HEV)-53, DTC U0100 LOST COMMUNICATION WITH ECM/PCM “A”, Diagnostic Trouble Code (DTC) Detecting Criteria.>
U0110	Lost Communication With Drive Motor Control Module "A"	<Ref. to GD(CVT)(HEV)-54, DTC U0110 LOST COMMUNICATION WITH DRIVE MOTOR CONTROL MODULE "A", Diagnostic Trouble Code (DTC) Detecting Criteria.>
U0122	Lost Communication With Vehicle Dynamics Control Module	<Ref. to GD(CVT)(HEV)-55, DTC U0122 LOST COMMUNICATION WITH VEHICLE DYNAMICS CONTROL MODULE, Diagnostic Trouble Code (DTC) Detecting Criteria.>
U0287	Lost Communication With Transmission Fluid Pump Module	<Ref. to GD(CVT)(HEV)-56, DTC U0287 LOST COMMUNICATION WITH TRANSMISSION FLUID PUMP MODULE, Diagnostic Trouble Code (DTC) Detecting Criteria.>
U0293	Lost Communication With Hybrid Powertrain Control Module	<Ref. to GD(CVT)(HEV)-57, DTC U0293 LOST COMMUNICATION WITH HYBRID POWERTRAIN CONTROL MODULE, Diagnostic Trouble Code (DTC) Detecting Criteria.>
U0401	Invalid Data Received From ECM/PCM “A”	<Ref. to GD(CVT)(HEV)-58, DTC U0401 INVALID DATA RECEIVED FROM ECM/PCM “A”, Diagnostic Trouble Code (DTC) Detecting Criteria.>
U0411	Invalid Data Received From Drive Motor Control Module "A"	<Ref. to GD(CVT)(HEV)-59, DTC U0411 INVALID DATA RECEIVED FROM DRIVE MOTOR CONTROL MODULE "A", Diagnostic Trouble Code (DTC) Detecting Criteria.>
U0416	Invalid Data Received From Vehicle Dynamics Control Module	<Ref. to GD(CVT)(HEV)-60, DTC U0416 INVALID DATA RECEIVED FROM VEHICLE DYNAMICS CONTROL MODULE, Diagnostic Trouble Code (DTC) Detecting Criteria.>
U0588	Invalid Data Received From Transmission Fluid Pump Module	<Ref. to GD(CVT)(HEV)-61, DTC U0588 INVALID DATA RECEIVED FROM TRANSMISSION FLUID PUMP MODULE, Diagnostic Trouble Code (DTC) Detecting Criteria.>
U0594	Invalid Data Received From Hybrid Powertrain Control Module	<Ref. to GD(CVT)(HEV)-62, DTC U0594 INVALID DATA RECEIVED FROM HYBRID POWERTRAIN CONTROL MODULE, Diagnostic Trouble Code (DTC) Detecting Criteria.>
U1100	Lost Communication With ECM/PCM PU-CAN	<Ref. to GD(CVT)(HEV)-63, DTC U1100 LOST COMMUNICATION WITH ECM/PCM PU-CAN, Diagnostic Trouble Code (DTC) Detecting Criteria.>
U1293	Lost Communication With Hybrid Powertrain Control Module PU-CAN	<Ref. to GD(CVT)(HEV)-64, DTC U1293 LOST COMMUNICATION WITH HYBRID POWERTRAIN CONTROL MODULE PU-CAN, Diagnostic Trouble Code (DTC) Detecting Criteria.>
U1401	Invalid Data Received From ECM/PCM PU-CAN	<Ref. to GD(CVT)(HEV)-65, DTC U1401 INVALID DATA RECEIVED FROM ECM/PCM PU-CAN, Diagnostic Trouble Code (DTC) Detecting Criteria.>
U1594	Invalid Data Received From Hybrid Powertrain Control Module PU-CAN	<Ref. to GD(CVT)(HEV)-66, DTC U1594 INVALID DATA RECEIVED FROM HYBRID POWERTRAIN CONTROL MODULE PU-CAN, Diagnostic Trouble Code (DTC) Detecting Criteria.>

2. Diagnostic Trouble Code (DTC) Detecting Criteria

A: DTC P0500 VEHICLE SPEED SENSOR “A”

1. OUTLINE OF DIAGNOSIS

- Detect the malfunction of the VDC wheel speed sensor.
- Judge as NG when the VDC wheel speed sensor value is specified value or more.

2. ENABLE CONDITIONS

Secondary Parameters	Enable Conditions
12V battery system voltage	≥ 10.9 V

3. DIAGNOSTIC METHOD

• Abnormality Judgment

If the duration of time while the following conditions are met is longer than the time indicated, judge as NG.

Judgment Value

Malfunction Criteria	Threshold Value
Vehicle speed (from Vehicle Dynamics Control Module) NOTE: The VDC controller detects malfunction if one of the speed sensors does not output a signal and the other vehicle speed sensor output signal is above 7.46 MPH.	≥ 186.4 MPH

Time Needed for Diagnosis: 2.5 seconds
AT OIL TEMP Light Illumination: Illuminates as soon as a malfunction occurs.

• Normality Judgment

Judge as OK and clear the NG if the continuous time while the following conditions are established is more than the predetermined time.

Judgment Value

Malfunction Criteria	Threshold Value
Vehicle speed (from Vehicle Dynamics Control Module) NOTE: The VDC controller detects malfunction if one of the speed sensors does not output a signal and the other vehicle speed sensor output signal is above 7.46 MPH.	< 186.4 MPH

Time Needed for Diagnosis: 2.5 seconds

B: DTC P0603 INTERNAL CONTROL MODULE KEEP ALIVE MEMORY (KAM) ERROR

1. OUTLINE OF DIAGNOSIS

- Detect the abnormality of back-up power supply voltage.
- Judge as NG when the battery voltage is normal and the back-up power supply voltage is specified value or less.

2. ENABLE CONDITIONS

Secondary Parameters	Enable Conditions
12V battery system voltage (Ignition state = Run or crank)	≥ 9 V

3. DIAGNOSTIC METHOD

- **Abnormality Judgment**

If the duration of time while the following conditions are met is longer than the time indicated, judge as NG.

Judgment Value

Malfunction Criteria	Threshold Value
Voltage of back-up power (TCM input voltage)	< 5 V

Time Needed for Diagnosis: 10 seconds
AT OIL TEMP Light Illumination: Illuminates as soon as a malfunction occurs.

- **Normality Judgment**

Judge as NG and Clear NG when the following conditions are met and a status where the back-up voltage is 10 V or more lasts the predetermined time or more.

Judgment Value

Malfunction Criteria	Threshold Value
Voltage of back-up power (TCM input voltage)	≥ 5 V

Time Needed for Diagnosis: 5 seconds

C: DTC P0705 TRANSMISSION RANGE SENSOR CIRCUIT (PRNDL INPUT)

1. OUTLINE OF DIAGNOSIS

- Detect the malfunction of the Range Switch.
- Judge as NG when multiple Range Switch inputs are detected.

2. ENABLE CONDITIONS

Secondary Parameters	Enable Conditions
12V battery system voltage	≥ 9 V

3. DIAGNOSTIC METHOD

• Abnormality Judgment

If the duration of time while the following conditions are met is longer than the time indicated, judge as NG.

Judgment Value

Malfunction Criteria	Threshold Value
Two or more transmission range switches ON NOTE: "Transmission range switch ON" is defined as transmission range switch input voltage < 2.9 V.	True

Time Needed for Diagnosis: 5 seconds
AT OIL TEMP Light Illumination: Illuminates as soon as a malfunction occurs.

• Normality Judgment

Judge as OK and clear the NG if the continuous time while the following conditions are established is more than the predetermined time.

Judgment Value

Malfunction Criteria	Threshold Value
Two or more transmission range switches ON NOTE: "Transmission range switch ON" is defined as transmission range switch input voltage < 2.9 V.	≠ True

Time Needed for Diagnosis: 0.01 seconds

D: DTC P0708 AT RANGE SWITCH NOT INPUTTED

1. OUTLINE OF DIAGNOSIS

- Detect the malfunction of the Range Switch.
- Judge as NG when no Range Switch inputs are detected.

2. ENABLE CONDITIONS

Secondary Parameters	Enable Conditions
12V battery system voltage	≥ 9 V
Brake switch B OFF NOTE: "Brake switch B OFF" is defined as Brake switch B input voltage ≥ 4.1 V.	True

3. DIAGNOSTIC METHOD

• Abnormality Judgment

If the duration of time while the following conditions are met is longer than the time indicated, judge as NG.

Judgment Value

Malfunction Criteria	Threshold Value
All range switches OFF NOTE: "Transmission range switch OFF" is defined as transmission range switch input voltage ≥ 4.1 V.	True

Time Needed for Diagnosis: 10 seconds
Malfunction Indicator Light Illumination: Illuminates as soon as a malfunction occurs.

• Normality Judgment

Judge as NG and Clear NG when the following conditions are met and a status where D range is detected lasts the predetermined time or more.

Judgment Value

Malfunction Criteria	Threshold Value
All range switches OFF NOTE: "Transmission range switch OFF" is defined as transmission range switch input voltage ≥ 4.1 V.	≠ True

Time Needed for Diagnosis: 1 second

E: DTC P0711 ATF TEMP. SENSOR CIRCUIT RANGE/PERFORMANCE

1. OUTLINE OF DIAGNOSIS

- Detect the malfunction of the ATF temperature sensor.
- ATF temperature sensor is below the specified value (20°C (68°F))
- Judge as characteristics malfunction (ATF temperature sensor signal stuck) when a status where ATF temperature sensor detecting voltage change is 0.049 V or less is detected, after driving for 10 minutes.

2. ENABLE CONDITIONS

Secondary Parameters	Enable Conditions
12V battery system voltage	> 10 V
Engine speed (The timer is held when the following conditions are not satisfied.)	> 600 rpm
Transmission range	Drive
Vehicle speed (from Output shaft speed sensor)	≥ 21.9 MPH

3. DIAGNOSTIC METHOD

• Abnormality Judgment

If the duration of time while the following conditions are met is longer than the time indicated, judge as NG.

Judgment Value

Malfunction Criteria	Threshold Value
Absolute change of measured Transmission fluid temperature input voltage	≤ 0.049 V
Transmission fluid temperature	< 20°C (68°F)

Time Needed for Diagnosis: 600 seconds
Malfunction Indicator Light Illumination: Illuminates when malfunction occurs in 2 continuous driving cycles.

• Normality Judgment

Judge as OK and clear the NG if the continuous time while the following conditions are established is more than the predetermined time.

Judgment Value

Malfunction Criteria	Threshold Value
Absolute change of measured Transmission fluid temperature input voltage	> 0.049 V
Transmission fluid temperature	≥ 20°C (68°F)

Time Needed for Diagnosis: 0.01 seconds

F: DTC P0712 TRANSMISSION FLUID TEMPERATURE SENSOR CIRCUIT LOW INPUT

1. OUTLINE OF DIAGNOSIS

- Detect the GND-output short of the ATF temperature sensor.
- Judge as NG when a status where ATF temperature sensor detecting voltage is less than 0.117 V is detected.

2. ENABLE CONDITIONS

Secondary Parameters	Enable Conditions
12V battery system voltage	≥ 9 V

3. DIAGNOSTIC METHOD

• Abnormality Judgment

If the duration of time while the following conditions are met is longer than the time indicated, judge as NG.

Judgment Value

Malfunction Criteria	Threshold Value
Transmission fluid temperature sensor input voltage	< 0.117 V
(Transmission fluid temperature)	(> 146.5°C (295.7°F))

Time Needed for Diagnosis: 1 second
Malfunction Indicator Light Illumination: Illuminates as soon as a malfunction occurs.

• Normality Judgment

Judge as OK and clear the NG if the continuous time while the following conditions are established is more than the predetermined time.

Judgment Value

Malfunction Criteria	Threshold Value
Transmission fluid temperature sensor input voltage	≥ 0.117 V
(Transmission fluid temperature)	(≤ 146.5°C (295.7°F)

Time Needed for Diagnosis: 1 second

G: DTC P0713 TRANSMISSION FLUID TEMPERATURE SENSOR CIRCUIT HIGH INPUT

1. OUTLINE OF DIAGNOSIS

- Detect the open circuit and power supply-output short of ATF temperature sensor 5 V system.
- Judge as NG when a status where ATF temperature sensor detecting voltage is more than 4.507 V is detected.

2. ENABLE CONDITIONS

Secondary Parameters	Enable Conditions
12V battery system voltage	≥ 9 V
Vehicle speed (from Output shaft speed sensor)	≥ 6.3 MPH
Above condition satisfied for	≥ 50 s

3. DIAGNOSTIC METHOD

• Abnormality Judgment

If the duration of time while the following conditions are met is longer than the time indicated, judge as NG.

Judgment Value

Malfunction Criteria	Threshold Value
Transmission fluid temperature sensor input voltage	> 4.507 V
(Transmission fluid temperature)	(< –52.6°C (–62.7°F))

Time Needed for Diagnosis: 1 second
Malfunction Indicator Light Illumination: Illuminates as soon as a malfunction occurs.

• Normality Judgment

Judge as OK and clear the NG if the continuous time while the following conditions are established is more than the predetermined time.

Judgment Value

Malfunction Criteria	Threshold Value
Transmission fluid temperature sensor input voltage	≤ 4.507 V
(Transmission fluid temperature)	(≥ –52.6°C (–62.7°F))

Time Needed for Diagnosis: 1 second

H: DTC P0716 TORQUE CONVERTER TURBINE SPEED

1. OUTLINE OF DIAGNOSIS

- Detect the no input signal of turbine speed sensor.
- Judge as NG when the drive motor speed sensor on the same axis has input signal but the turbine speed sensor has no input signal with the forward/reverse clutch engaged in “D”, “R” range.
- Judge as NG when the engine speed sensor on the same axis has input signal but the turbine speed sensor has no input signal with the forward/reverse clutch released in “P”, “N” range.
- Judge as NG when no speed sensor inputs are received from TCM connector during driving.

2. ENABLE CONDITIONS

Secondary Parameters	Enable Conditions
Condition 1	
12V battery system voltage	≥ 10 V
Engine speed	≥ 400 rpm
Primary pulley shaft speed	≥ 500 rpm
Transmission range	Drive or Reverse
Condition 2	
12V battery system voltage	≥ 10 V
Engine speed	≥ 400 rpm
Transmission range	Park or Neutral
Condition 3	
12V battery system voltage	≥ 10 V
Secondary pulley shaft speed	0 rpm
Output shaft speed	0 rpm
Primary pulley shaft speed	≥ 500 rpm
Transmission range	Drive or Reverse
Vehicle speed (from vehicle dynamics control module)	≥ 6.3 MPH

3. DIAGNOSTIC METHOD

• Abnormality Judgment

If the duration of time while the following conditions are met is longer than the time indicated, judge as NG.

Judgment Value

Malfunction Criteria	Threshold Value
Turbine shaft speed	0 rpm

Time Needed for Diagnosis:
- **Condition 1:** 1 s
- **Condition 2:** 3 s
- **Condition 3:** 0.6 s

Malfunction Indicator Light Illumination: Illuminates as soon as a malfunction occurs.

• Normality Judgment

Judge as OK and clear the NG if the continuous time while the following conditions are established is more than the predetermined time.

Judgment Value

Malfunction Criteria	Threshold Value
Turbine shaft speed	≠ 0 rpm

Time Needed for Diagnosis: 0.2 seconds

I: DTC P0719 BRAKE SWITCH CIRCUIT LOW

1. OUTLINE OF DIAGNOSIS

- Detect the malfunction of brake SW signal Low.
- Judge as NG when detecting the condition ten times where the vehicle speed is from more than 18.8 MPH to less than 0.6 MPH with brake SW signal OFF.

2. ENABLE CONDITIONS

Secondary Parameters	Enable Conditions
12V battery system voltage	≥ 9 V

3. DIAGNOSTIC METHOD

• Abnormality Judgment

If the duration of time while the following conditions are met is longer than the time indicated, judge as NG.

Judgment Value

Malfunction Criteria	Threshold Value
The brake switch B is continuously OFF while the vehicle speed changed from "X" to "Y".	
Vehicle speed "X"	≥ 18.8 MPH
Vehicle speed "Y"	< 0.6 MPH
NOTE: "Brake switch B OFF" is defined as Brake switch B input voltage ≤ 2.9 V.	

Time Needed for Diagnosis: 10 times
Malfunction Indicator Light Illumination: Illuminates as soon as a malfunction occurs.

• Normality Judgment

Judge as OK and clear the NG if the continuous time while the following conditions are established is more than the predetermined time.

Judgment Value

Malfunction Criteria	Threshold Value
The brake switch B is continuously OFF while the vehicle speed changed from "X" to "Y".	
Vehicle speed "X"	< 18.8 MPH
Vehicle speed "Y"	≥ 0.6 MPH
NOTE: "Brake switch B OFF" is defined as Brake switch B input voltage ≤ 2.9 V.	

Time Needed for Diagnosis: 0.02 seconds

J: DTC P0720 OUTPUT SPEED SENSOR CIRCUIT

1. OUTLINE OF DIAGNOSIS

- Detect the no input signal of front wheel speed sensor.
- Judge as NG when no front wheel speed sensor inputs occur while vehicle speed is detected by VDC wheel speed sensor at driving in “D”, “R” range.
- Judge as NG when no front wheel speed sensor inputs occur while inputs are received by secondary speed sensor on the same axle at driving in “D”, “R” range.
- Judge as NG when no speed sensor inputs are received from TCM connector during driving.

2. ENABLE CONDITIONS

Secondary Parameters	Enable Conditions
Condition 1	
12V battery system voltage	≥ 10 V
Vehicle speed (from vehicle dynamics control module)	≥ 3.1 MPH
Transmission range	Drive or Reverse
Condition 2	
12V battery system voltage	≥ 10 V
Secondary pulley shaft speed	≥ 800 rpm
Transmission range	Drive or Reverse
MIL is illuminated for DTCs.	P0500, U0073, U0122, U0416
Condition 3	
12V battery system voltage	≥ 10 V
Turbine shaft speed	0 rpm
Secondary pulley shaft speed	0 rpm
Primary pulley shaft speed	≥ 500 rpm
Transmission range	Drive or Reverse
Vehicle speed (from vehicle dynamics control module)	≥ 6.3 MPH

3. DIAGNOSTIC METHOD

• Abnormality Judgment

If the duration of time while the following conditions are met is longer than the time indicated, judge as NG.

Judgment Value

Malfunction Criteria	Threshold Value
Output shaft speed	0 rpm

Time Needed for Diagnosis:
- **Condition 1:** 1 s
- **Condition 2:** 1 s
- **Condition 3:** 0.6 s

Malfunction Indicator Light Illumination: Illuminates as soon as a malfunction occurs.

• Normality Judgment

Judge as OK and clear the NG if the continuous time while the following conditions are established is more than the predetermined time.

Judgment Value

Malfunction Criteria	Threshold Value
Output shaft speed	≠ 0 rpm

Time Needed for Diagnosis: 0.2 seconds

K: DTC P0724 BRAKE SWITCH CIRCUIT HIGH

1. OUTLINE OF DIAGNOSIS

- Detect the malfunction of brake SW signal High.
- Judge as NG when detecting the condition ten times where the vehicle speed is from less than 0.6 MPH to more than 18.8 MPH with brake SW signal ON.

2. ENABLE CONDITIONS

Secondary Parameters	Enable Conditions
12V battery system voltage	≥ 9 V

3. DIAGNOSTIC METHOD

• Abnormality Judgment

If the duration of time while the following conditions are met is longer than the time indicated, judge as NG.

Judgment Value

Malfunction Criteria	Threshold Value
The brake switch B is continuously ON while the vehicle speed changed from “Y” to “X”.	
Vehicle speed “Y”	< 0.6 MPH
Vehicle speed “X”	≥ 18.8 MPH
NOTE: “Brake switch B ON” is defined as Brake switch B input voltage ≥ 4.1 V.	

Time Needed for Diagnosis: 10 times
Malfunction Indicator Light Illumination: Illuminates as soon as a malfunction occurs.

• Normality Judgment

Judge as OK and clear the NG if the continuous time while the following conditions are established is more than the predetermined time.

Judgment Value

Malfunction Criteria	Threshold Value
The brake switch B is continuously ON while the vehicle speed changed from “Y” to “X”.	
Vehicle speed “Y”	≥ 0.6 MPH
Vehicle speed “X”	< 18.8 MPH
NOTE: “Brake switch B ON” is defined as Brake switch B input voltage ≥ 4.1 V.	

Time Needed for Diagnosis: 0.02 seconds

L: DTC P0730 GEARSHIFT CONTROL PERFORMANCE ABNORMAL

1. OUTLINE OF DIAGNOSIS

- Detect the malfunction of transmission gear ration control function.
- Judge as NG when the difference between the transmission Gear Ratio Target, which is an internal data, and Actual Gear Ratio is larger than the specified value. (Compare the “Gear Ratio Target × Secondary pulley speed ≈ Target primary speed equivalent value” and primary pulley sensor value.)

2. ENABLE CONDITIONS

Secondary Parameters	Enable Conditions
12V battery system voltage	≥ 10 V
Transmission range	Drive
Transmission fluid pump speed (MTFP or ETFP)	≥ 500 rpm
Secondary pulley shaft speed	> 150 rpm

3. DIAGNOSTIC METHOD

• Abnormality Judgment

If the duration of time while the following conditions are met is longer than the time indicated, judge as NG.

Judgment Value

Malfunction Criteria	Threshold Value
Target primary pulley shaft speed – primary pulley shaft speed	≥ 800 rpm
Duty of shift up pressure control solenoid valve or Duty of shift down pressure control solenoid valve	≥ 100%

Time Needed for Diagnosis: 5 seconds
Malfunction Indicator Light Illumination: Illuminates as soon as a malfunction occurs.

• Normality Judgment

Judge as OK and clear the NG if the continuous time while the following conditions are established is more than the predetermined time.

Judgment Value

Malfunction Criteria	Threshold Value
Target primary pulley shaft speed – primary pulley shaft speed	< 800 rpm
Duty of shift up pressure control solenoid valve or Duty of shift down pressure control solenoid valve	< 100%

Time Needed for Diagnosis: 1 second

M: DTC P0841 SECONDARY OIL PRESSURE SENSOR PERFORMANCE

1. OUTLINE OF DIAGNOSIS

- Detect the malfunction of transmission fluid pressure control function.
- Judge as NG when the pressure difference of 0.5 MPa or more occurs by comparing the Secondary Pressure Target, which is an internal data, and Secondary pressure sensor detecting value.

2. ENABLE CONDITIONS

Secondary Parameters	Enable Conditions
12V battery system voltage	≥ 10 V
Transmission fluid pump speed (MTFP or ETFP)	≥ Map A rpm

Map A

Commanded line pressure (MPa)	0.00	0.50	1.00	1.50	2.00	3.00	4.00	5.00	6.00
Transmission fluid pump speed * (rpm)	300	660	900	1080	1170	1400	1680	1900	2100

* MTFP or ETFP

3. DIAGNOSTIC METHOD

• Abnormality Judgment

If the duration of time while the following conditions are met is longer than the time indicated, judge as NG.

Judgment Value

Malfunction Criteria	Threshold Value
Commanded line pressure – actual line pressure	≥ 500 kPa
Correction value of line pressure control solenoid feedback control	≥ 0.2 A

Time Needed for Diagnosis: 5 seconds
Malfunction Indicator Light Illumination: Illuminates as soon as a malfunction occurs.

• Normality Judgment

Judge as OK and clear the NG if the continuous time while the following conditions are established is more than the predetermined time.

Judgment Value

Malfunction Criteria	Threshold Value
Commanded line pressure – actual line pressure	< 500 kPa
Correction value of line pressure control solenoid feedback control	< 0.2 A

Time Needed for Diagnosis: 1 second

N: DTC P0842 SECONDARY OIL PRESSURE SENSOR CIRCUIT (LOW)

1. OUTLINE OF DIAGNOSIS

- Detect the GND-output short of the secondary pressure sensor.
- Judge as NG when a status where the secondary pressure sensor detecting voltage is less than 0.195 V is detected.

2. ENABLE CONDITIONS

Secondary Parameters	Enable Conditions
12V battery system voltage	≥ 9 V

3. DIAGNOSTIC METHOD

• Abnormality Judgment

If the duration of time while the following conditions are met is longer than the time indicated, judge as NG.

Judgment Value

Malfunction Criteria	Threshold Value
Transmission fluid pressure sensor input voltage	< 0.195 V
(Transmission fluid pressure)	(< – 574 kPa)

Time Needed for Diagnosis: 0.5 seconds
Malfunction Indicator Light Illumination: Illuminates as soon as a malfunction occurs.

• Normality Judgment

Judge as OK and clear the NG if the continuous time while the following conditions are established is more than the predetermined time.

Judgment Value

Malfunction Criteria	Threshold Value
Transmission fluid pressure sensor input voltage	≥ 0.195 V
(Transmission fluid pressure)	(≥ – 574 kPa)

Time Needed for Diagnosis: 1 second

O: DTC P0843 SECONDARY OIL PRESSURE SENSOR CIRCUIT (HIGH)

1. OUTLINE OF DIAGNOSIS

- Detect the open circuit and power supply-output short of secondary pressure sensor 5 V system.
- Judge as NG when a status where the secondary pressure sensor detecting voltage is more than 4.883 V is detected.

2. ENABLE CONDITIONS

Secondary Parameters	Enable Conditions
12V battery system voltage	≥ 9 V

3. DIAGNOSTIC METHOD

• Abnormality Judgment

If the duration of time while the following conditions are met is longer than the time indicated, judge as NG.

Judgment Value

Malfunction Criteria	Threshold Value
Transmission fluid pressure sensor input voltage	> 4.883 V
(Transmission fluid pressure)	(> 8200 kPa)

Time Needed for Diagnosis: 1.5 seconds
Malfunction Indicator Light Illumination: Illuminates as soon as a malfunction occurs.

• Normality Judgment

Judge as OK and clear the NG if the continuous time while the following conditions are established is more than the predetermined time.

Judgment Value

Malfunction Criteria	Threshold Value
Transmission fluid pressure sensor input voltage	≤ 4.883 V
(Transmission fluid pressure)	(≤ 8200 kPa)

Time Needed for Diagnosis: 1 second

P: DTC P0890 AT SELF-SHUT RELAY DIAGNOSIS (LOW)

1. OUTLINE OF DIAGNOSIS

- Detect the malfunction of transmission fluid pressure solenoid drive power supply relay circuit.
- Judge as NG when a status where transmission fluid pressure solenoid drive power supply voltage is less than 2 V is detected.

2. ENABLE CONDITIONS

Secondary Parameters	Enable Conditions
TCM Power Relay output command	ON
Ignition state	Run or crank

3. DIAGNOSTIC METHOD

- **Abnormality Judgment**

If the duration of time while the following conditions are met is longer than the time indicated, judge as NG.

Judgment Value

Malfunction Criteria	Threshold Value
Measured TCM input voltage which is supplied from 12 V battery system through the TCM Power Relay	< 2 V

Time Needed for Diagnosis: 0.5 seconds
Malfunction Indicator Light Illumination: Illuminates as soon as a malfunction occurs.

- **Normality Judgment**

Judge as OK and clear the NG if the continuous time while the following conditions are established is more than the predetermined time.

Judgment Value

Malfunction Criteria	Threshold Value
Measured TCM input voltage which is supplied from 12 V battery system through the TCM Power Relay	≥ 2 V

Time Needed for Diagnosis: 0.5 seconds

Q: DTC P0962 SECONDARY SOLENOID CIRCUIT (LOW)

1. OUTLINE OF DIAGNOSIS

Diagnosis 1
- Detect the GND-output short of the secondary solenoid drive circuit.
- Judge as NG when a status where secondary solenoid drive current is more than 1.1 A is detected.

Diagnosis 2
- Detect the GND-output short of the secondary solenoid drive circuit.
- Judge as NG when a status where the solenoid current of secondary solenoid drive circuit is more than 1.2 A is detected.

2. ENABLE CONDITIONS

Secondary Parameters	Enable Conditions
Diagnosis 1	
12V battery system voltage	≥ 9 V
Commanded line pressure control solenoid current	≥ 0.1 A
Diagnosis 2	
12V battery system voltage	≥ 9 V

3. DIAGNOSTIC METHOD

• Abnormality Judgment

If the duration of time while the following conditions are met is longer than the time indicated, judge as NG.

Judgment Value

Malfunction Criteria	Threshold Value
Diagnosis 1	
Measured line pressure control solenoid current	≥ 1.1 A
Diagnosis 2	
Signal of malfunction from solenoid driver IC	ON
As defined by:	
Measured line pressure control solenoid current	≥ 1.2 A

Time Needed for Diagnosis: 0.5 seconds
Malfunction Indicator Light Illumination: Illuminates as soon as a malfunction occurs.

• Normality Judgment

Judge as OK and clear the NG if the continuous time while the following conditions are established is more than the predetermined time.

Judgment Value

Malfunction Criteria	Threshold Value
Diagnosis 1	
Measured line pressure control solenoid current	< 1.1 A
Diagnosis 2	
Signal of malfunction from solenoid driver IC	≠ ON
As defined by:	
Measured line pressure control solenoid current	< 1.2 A

Time Needed for Diagnosis: 0.5 seconds

R: DTC P0963 SECONDARY SOLENOID CIRCUIT (HIGH)

1. OUTLINE OF DIAGNOSIS

- Detect the open circuit and power supply-output short of the secondary solenoid drive circuit.
- Judge as NG when a status where secondary solenoid drive current is less than 0.1 A is detected.

2. ENABLE CONDITIONS

Secondary Parameters	Enable Conditions
12V battery system voltage	≥ 9 V
Commanded line pressure control solenoid valve current	≥ 0.2 A

3. DIAGNOSTIC METHOD

• Abnormality Judgment

If the duration of time while the following conditions are met is longer than the time indicated, judge as NG.

Judgment Value

Malfunction Criteria	Threshold Value
Measured line pressure control solenoid valve current	< 0.1 A

Time Needed for Diagnosis: 0.5 seconds
Malfunction Indicator Light Illumination: Illuminates as soon as a malfunction occurs.

• Normality Judgment

Judge as OK and clear the NG if the continuous time while the following conditions are established is more than the predetermined time.

Judgment Value

Malfunction Criteria	Threshold Value
Measured line pressure control solenoid valve current	≥ 0.1 A

Time Needed for Diagnosis: 0.5 seconds

S: DTC P0965 FORWARD & REVERSE SOLENOID FUNCTION

1. OUTLINE OF DIAGNOSIS

- Detect the malfunction of F & R solenoid control function.
- Judge as NG when the difference between turbine speed and primary speed is 100 rpm with F & R clutch engaged control status.

2. ENABLE CONDITIONS

Secondary Parameters	Enable Conditions
12V battery system voltage	≥ 10 V
Primary pulley shaft speed	≥ 100 rpm
Turbine shaft speed	≥ 100 rpm
Commanded forward & reverse clutch pressure control solenoid current	< 0.8 A
Engine speed	≥ 500 rpm
Transmission range	Drive

3. DIAGNOSTIC METHOD

- **Abnormality Judgment**

If the duration of time while the following conditions are met is longer than the time indicated, judge as NG.

Judgment Value

Malfunction Criteria	Threshold Value
Turbine shaft speed – Primary pulley shaft speed	≥ 100 rpm

Time Needed for Diagnosis: 5 seconds
Malfunction Indicator Light Illumination: Illuminates as soon as a malfunction occurs.

- **Normality Judgment**

Judge as OK and clear the NG if the continuous time while the following conditions are established is more than the predetermined time.

Judgment Value

Malfunction Criteria	Threshold Value
Turbine shaft speed – Primary pulley shaft speed	< 100 rpm

Time Needed for Diagnosis: 1 second

T: DTC P0966 FORWARD & REVERSE SOLENOID CIRCUIT (LOW)

1. OUTLINE OF DIAGNOSIS

- Detect the GND-output short of F & R solenoid circuit.
- Judge as NG when a status where the F&R solenoid drive current is more than 1.9 A is detected.

2. ENABLE CONDITIONS

Secondary Parameters	Enable Conditions
12V battery system voltage	≥ 9 V

3. DIAGNOSTIC METHOD

• Abnormality Judgment

If the duration of time while the following conditions are met is longer than the time indicated, judge as NG.

Judgment Value

Malfunction Criteria	Threshold Value
Signal of malfunction from solenoid driver IC	ON
As defined by:	
Measured line pressure control solenoid current	≥ 1.9 A

Time Needed for Diagnosis: 0.02 seconds
Malfunction Indicator Light Illumination: Illuminates as soon as a malfunction occurs.

• Normality Judgment

Judge as OK and clear the NG if the continuous time while the following conditions are established is more than the predetermined time.

Judgment Value

Malfunction Criteria	Threshold Value
Signal of malfunction from solenoid driver IC	≠ ON
As defined by:	
Measured line pressure control solenoid current	< 1.9 A

Time Needed for Diagnosis: 0.5 seconds

U: DTC P0967 FORWARD & REVERSE LINEAR SOLENOID CIRCUIT (HIGH)

1. OUTLINE OF DIAGNOSIS

- Detect the open circuit and power supply-output short of F & R solenoid circuit.
- Judge as NG when a status where the F&R solenoid drive current is less than 0.15 A is detected.

2. ENABLE CONDITIONS

Secondary Parameters	Enable Conditions
12V battery system voltage	≥ 9 V
Commanded forward & reverse clutch pressure control solenoid current	≥ 0.3 A

3. DIAGNOSTIC METHOD

• Abnormality Judgment

If the duration of time while the following conditions are met is longer than the time indicated, judge as NG.

Judgment Value

Malfunction Criteria	Threshold Value
Measured forward & reverse clutch pressure control solenoid current	< 0.15 A

Time Needed for Diagnosis: 1 second
Malfunction Indicator Light Illumination: Illuminates as soon as a malfunction occurs.

• Normality Judgment

Judge as OK and clear the NG if the continuous time while the following conditions are established is more than the predetermined time.

Judgment Value

Malfunction Criteria	Threshold Value
Measured forward & reverse clutch pressure control solenoid current	≥ 0.15 A

Time Needed for Diagnosis: 0.5 seconds

V: DTC P0973 PRIMARY SOLENOID SYSTEM A CIRCUIT (LOW)

1. OUTLINE OF DIAGNOSIS

- Detect the GND-output short of the primary UP solenoid drive circuit.
- Judge as NG when a status where primary UP solenoid drive voltage is less than 0.8 V is detected.

2. ENABLE CONDITIONS

Secondary Parameters	Enable Conditions
12V battery system voltage	≥ 9 V
Commanded duty of shift up pressure control solenoid	< 95%

3. DIAGNOSTIC METHOD

• Abnormality Judgment

If the duration of time while the following conditions are met is longer than the time indicated, judge as NG.

Judgment Value

Malfunction Criteria	Threshold Value
Signal of malfunction from solenoid driver IC	ON
As defined by:	
Measured shift up pressure control solenoid voltage	≤ 0.8 V

Time Needed for Diagnosis: 0.2 seconds
Malfunction Indicator Light Illumination: Illuminates as soon as a malfunction occurs.

• Normality Judgment

Judge as OK and clear the NG if the continuous time while the following conditions are established is more than the predetermined time.

Judgment Value

Malfunction Criteria	Threshold Value
Signal of malfunction from solenoid driver IC	≠ ON
As defined by:	
Measured shift up pressure control solenoid voltage	> 0.8 V

Time Needed for Diagnosis: 2 seconds

W: DTC P0974 PRIMARY SOLENOID SYSTEM A CIRCUIT (HIGH)

1. OUTLINE OF DIAGNOSIS

- Detect the open circuit and power supply-output short of the primary UP solenoid drive circuit.
- Judge as NG when a status where primary UP solenoid drive voltage is more than 2.5 V is detected.

2. ENABLE CONDITIONS

Secondary Parameters	Enable Conditions
12V battery system voltage	≥ 9 V

3. DIAGNOSTIC METHOD

• Abnormality Judgment

If the duration of time while the following conditions are met is longer than the time indicated, judge as NG.

Judgment Value

Malfunction Criteria	Threshold Value
Signal of malfunction from solenoid driver IC	ON
As defined by:	
Measured shift up pressure control solenoid voltage	≥ 2.5 V

Time Needed for Diagnosis: 0.2 seconds
Malfunction Indicator Light Illumination: Illuminates as soon as a malfunction occurs.

• Normality Judgment

Judge as OK and clear the NG if the continuous time while the following conditions are established is more than the predetermined time.

Judgment Value

Malfunction Criteria	Threshold Value
Signal of malfunction from solenoid driver IC	≠ ON
As defined by:	
Measured shift up pressure control solenoid voltage	< 2.5 V

Time Needed for Diagnosis: 2 seconds

X: DTC P0976 PRIMARY SOLENOID SYSTEM B CIRCUIT (LOW)

1. OUTLINE OF DIAGNOSIS

- Detect the GND-output short of the primary DOWN solenoid drive circuit.
- Judge as NG when a status where primary DOWN solenoid drive voltage is less than 0.8 V is detected.

2. ENABLE CONDITIONS

Secondary Parameters	Enable Conditions
12V battery system voltage	≥ 9 V
Commanded duty of shift down pressure control solenoid	< 95%

3. DIAGNOSTIC METHOD

• Abnormality Judgment

If the duration of time while the following conditions are met is longer than the time indicated, judge as NG.

Judgment Value

Malfunction Criteria	Threshold Value
Signal of malfunction from solenoid driver IC	ON
As defined by:	
Measured shift down pressure control solenoid voltage	≤ 0.8 V

Time Needed for Diagnosis: 0.2 seconds
Malfunction Indicator Light Illumination: Illuminates as soon as a malfunction occurs.

• Normality Judgment

Judge as OK and clear the NG if the continuous time while the following conditions are established is more than the predetermined time.

Judgment Value

Malfunction Criteria	Threshold Value
Signal of malfunction from solenoid driver IC	≠ ON
As defined by:	
Measured shift down pressure control solenoid voltage	> 0.8 V

Time Needed for Diagnosis: 2 seconds

Y: DTC P0977 PRIMARY SOLENOID SYSTEM B CIRCUIT (HIGH)

1. OUTLINE OF DIAGNOSIS

- Detect the open circuit and power supply-output short of the primary DOWN solenoid drive circuit.
- Judge as NG when a status where primary DOWN solenoid drive voltage is more than 2.5 V is detected.

2. ENABLE CONDITIONS

Secondary Parameters	Enable Conditions
12V battery system voltage	≥ 9 V

3. DIAGNOSTIC METHOD

• Abnormality Judgment

If the duration of time while the following conditions are met is longer than the time indicated, judge as NG.

Judgment Value

Malfunction Criteria	Threshold Value
Signal of malfunction from solenoid driver IC	ON
As defined by:	
Measured shift down pressure control solenoid voltage	≥ 2.5 V

Time Needed for Diagnosis: 0.2 seconds
Malfunction Indicator Light Illumination: Illuminates as soon as a malfunction occurs.

• Normality Judgment

Judge as OK and clear the NG if the continuous time while the following conditions are established is more than the predetermined time.

Judgment Value

Malfunction Criteria	Threshold Value
Malfunction signal from solenoid driver IC	≠ ON
As defined by:	
Measured shift down pressure control solenoid voltage	< 2.5 V

Time Needed for Diagnosis: 2 seconds

Z: DTC P0B0A AUXILIARY TRANSMISSION FLUID PUMP MOTOR SUPPLY VOLTAGE CIRCUIT LOW

1. OUTLINE OF DIAGNOSIS

- Detect the short to 100 V system GND of electric oil pump 100 V power supply.
- Judge as NG when a status where 100 V power supply voltage is less than 66 V is detected.

2. ENABLE CONDITIONS

Secondary Parameters	Enable Conditions
12V battery system voltage	≥ 10 V
Pre-charge contactor (in the hybrid battery pack)	Open
Positive contactor (in the hybrid battery pack)	Closed
Negative contactor (in the hybrid battery pack)	Closed

3. DIAGNOSTIC METHOD

• Abnormality Judgment

If the duration of time while the following conditions are met is longer than the time indicated, judge as NG.

Judgment Value

Malfunction Criteria	Threshold Value
Signal of malfunction from ETFP control module	ON
As defined by:	
ETFP control module input voltage	< 66 V

Time Needed for Diagnosis: 0.5 seconds
Malfunction Indicator Light Illumination: Illuminates as soon as a malfunction occurs.

• Normality Judgment

Judge as OK and clear the NG if the continuous time while the following conditions are established is more than the predetermined time.

Judgment Value

Malfunction Criteria	Threshold Value
Signal of malfunction from ETFP control module	≠ ON
As defined by:	
ETFP control module input voltage	≥ 66 V

Time Needed for Diagnosis: 0.6 seconds

AA:DTC P0B0B AUXILIARY TRANSMISSION FLUID PUMP MOTOR SUPPLY VOLTAGE CIRCUIT HIGH

1. OUTLINE OF DIAGNOSIS

- Detect the malfunction of electric oil pump 100 V power supply HIGH side.
- Judge as NG when a status where 100 V power supply voltage is more than 210 V is detected.

2. ENABLE CONDITIONS

Secondary Parameters	Enable Conditions
12V battery system voltage	≥ 10 V
Pre-charge contactor (in the hybrid battery pack)	Open
Positive contactor (in the hybrid battery pack)	Closed
Negative contactor (in the hybrid battery pack)	Closed

3. DIAGNOSTIC METHOD

• Abnormality Judgment

If the duration of time while the following conditions are met is longer than the time indicated, judge as NG.

Judgment Value

Malfunction Criteria	Threshold Value
Signal of malfunction from ETFP control module	ON
As defined by:	
ETFP control module input voltage	≥ 210 V

Time Needed for Diagnosis: 10 seconds
Malfunction Indicator Light Illumination: Illuminates as soon as a malfunction occurs.

• Normality Judgment

Judge as OK and clear the NG if the continuous time while the following conditions are established is more than the predetermined time.

Judgment Value

Malfunction Criteria	Threshold Value
Signal of malfunction from ETFP control module	≠ ON
As defined by:	
ETFP control module input voltage	< 210 V

Time Needed for Diagnosis: 0.01 seconds

AB:DTC P0B0D AUXILIARY TRANSMISSION FLUID PUMP MOTOR CONTROL MODULE

1. OUTLINE OF DIAGNOSIS

- Detect ROM/RAM of electric oil pump.
- Judge as NG when ROM/RAM diagnostic of electric oil pump inverter is performed.

2. ENABLE CONDITIONS

Secondary Parameters	Enable Conditions
12V battery system voltage	≥ 10 V

3. DIAGNOSTIC METHOD

• Abnormality Judgment

If the duration of time while the following conditions are met is longer than the time indicated, judge as NG.

Judgment Value

Malfunction Criteria	Threshold Value
Signal of malfunction from ETFP control module	ON
As defined by:	
Writing-check (RAM) or Checksum (ROM)	Error

Time Needed for Diagnosis: 1 second
Malfunction Indicator Light Illumination: Illuminates as soon as a malfunction occurs.

• Normality Judgment

Judge as OK and clear the NG if the continuous time while the following conditions are established is more than the predetermined time.

Judgment Value

Malfunction Criteria	Threshold Value
Signal of malfunction from ETFP control module	≠ ON
As defined by:	
Writing-check (RAM) or Checksum (ROM)	≠ Error

Time Needed for Diagnosis: 0.01 seconds

AC:DTC P0C21 AUXILIARY TRANSMISSION FLUID PUMP PHASE U-V-W CIRCUIT LOW

1. OUTLINE OF DIAGNOSIS

Diagnosis 1
- Detect the open or ground short circuit of electric oil pump U/V/W line.
- Judge as NG when a status where the total current value of three phase line is 50 A or more and then any of voltage sensor values of U/V/W lines is less than 2.7 V.

Diagnosis 2
- Detect the open or ground short circuit of electric oil pump U/V/W line.
- Judge as NG when a status where IGBT of V line is ON and any of voltage sensor values of U/V/W lines is less than 58 V.

2. ENABLE CONDITIONS

Secondary Parameters	Enable Conditions
Diagnosis 1	
12V battery system voltage	≥ 10 V
Pre-charge contactor (in the hybrid battery pack)	Open
Positive contactor (in the hybrid battery pack)	Closed
Negative contactor (in the hybrid battery pack)	Closed
Diagnosis 2	
12V battery system voltage	≥ 10 V
Pre-charge contactor (in the hybrid battery pack)	Open
Positive contactor (in the hybrid battery pack)	Closed
Negative contactor (in the hybrid battery pack)	Closed

3. DIAGNOSTIC METHOD

- **Abnormality Judgment**

If the duration of time while the following conditions are met is longer than the time indicated, judge as NG.

Judgment Value

Malfunction Criteria	Threshold Value
Diagnosis 1	
Signal of malfunction from ETFP control module	ON
As defined by:	
Inverter phase U voltage or Inverter phase V voltage or Inverter phase W voltage	< 2.7 V
Actual current of ETFP inverter	≥ 50 A
Diagnosis 2	
Signal of malfunction from ETFP control module	ON
As defined by:	
Inverter phase U voltage when the V phase high side IGBT is ON or Inverter phase V voltage when the V phase high side IGBT is ON or Inverter phase W voltage when the V phase high side IGBT is ON	≤ 58V

Time Needed for Diagnosis: 0.2 seconds
Malfunction Indicator Light Illumination: Illuminates as soon as a malfunction occurs.

- **Normality Judgment**

Judge as OK and clear the NG if the continuous time while the following conditions are established is more than the predetermined time.

Judgment Value

Malfunction Criteria	Threshold Value
Diagnosis 1	
Signal of malfunction from ETFP control module	≠ ON
As defined by:	
Inverter phase U voltage or Inverter phase V voltage or Inverter phase W voltage	≥ 2.7 V
Actual current of ETFP inverter	< 50 A
Diagnosis 2	
Signal of malfunction from ETFP control module	≠ ON
As defined by:	
Inverter phase U voltage when the V phase high side IGBT is ON or Inverter phase V voltage when the V phase high side IGBT is ON or Inverter phase W voltage when the V phase high side IGBT is ON	> 58V

Time Needed for Diagnosis: 0.01 seconds

AD:DTC P0C22 AUXILIARY TRANSMISSION FLUID PUMP PHASE U-V-W CIRCUIT HIGH

1. OUTLINE OF DIAGNOSIS

- Detect the short circuit to 100 V power supply system of electric oil pump U/V/W line.
- Judge as NG when a status where the total current value of three phase line is 50 A or more and then any of voltage sensor values of U/V/W lines is more than 58 V.

2. ENABLE CONDITIONS

Secondary Parameters	Enable Conditions
12V battery system voltage	≥ 10 V
Pre-charge contactor (in the hybrid battery pack)	Open
Positive contactor (in the hybrid battery pack)	Closed
Negative contactor (in the hybrid battery pack)	Closed

3. DIAGNOSTIC METHOD

- **Abnormality Judgment**

If the duration of time while the following conditions are met is longer than the time indicated, judge as NG.

Judgment Value

Malfunction Criteria	Threshold Value
Signal of malfunction from ETFP control module	ON
As defined by:	
Inverter phase U voltage or Inverter phase V voltage or Inverter phase W voltage	> 58V
Actual current of ETFP control module	≥ 50 A

Time Needed for Diagnosis: 0.2 seconds
Malfunction Indicator Light Illumination: Illuminates as soon as a malfunction occurs.

- **Normality Judgment**

Judge as OK and clear the NG if the continuous time while the following conditions are established is more than the predetermined time.

Judgment Value

Malfunction Criteria	Threshold Value
Signal of malfunction from ETFP control module	≠ ON
As defined by:	
Inverter phase U voltage or Inverter phase V voltage or Inverter phase W voltage	≤ 58V
Actual current of ETFP control module	< 50 A

Time Needed for Diagnosis: 0.01 seconds

AE:DTC P0C29 AUXILIARY TRANSMISSION FLUID PUMP DRIVER CURRENT PERFORMANCE

1. OUTLINE OF DIAGNOSIS

Diagnosis 1
- Detect the overcurrent of electric oil pump U/V/W line.
- Judge as NG when a status where the total current value of three phase line is 14 A or more lasts 3 seconds or more.

Diagnosis 2
- Detect the overcurrent of electric oil pump U/V/W line.
- Judge as NG when a status where the total current value of three phase line is 50 A or more is detected two times or more in one driving cycle.

2. ENABLE CONDITIONS

Secondary Parameters	Enable Conditions
Diagnosis 1	
12V battery system voltage	≥ 10 V
Diagnosis 2	
12V battery system voltage	≥ 10 V

3. DIAGNOSTIC METHOD

• Abnormality Judgment

If the duration of time while the following conditions are met is longer than the time indicated, judge as NG.

Judgment Value

Malfunction Criteria	Threshold Value
Diagnosis 1	
Signal of malfunction from ETFP control module	ON
As defined by:	
Actual current of ETFP control module	≥ 14 A
Diagnosis 2	
Signal of malfunction from ETFP control module	ON
As defined by:	
Actual current of ETFP control module	≥ 50 A

Time Needed for Diagnosis:
- **Diagnosis 1:** 3 s
- **Diagnosis 2:** 2 s

Malfunction Indicator Light Illumination: Illuminates as soon as a malfunction occurs.

• Normality Judgment

Judge as OK and clear the NG if the continuous time while the following conditions are established is more than the predetermined time.

Judgment Value

Malfunction Criteria	Threshold Value
Diagnosis 1	
Signal of malfunction from ETFP control module	≠ ON
As defined by:	
Actual current of ETFP control module	< 14 A
Diagnosis 2	
Signal of malfunction from ETFP control module	≠ ON
As defined by:	
Actual current of ETFP control module	< 50 A

Time Needed for Diagnosis: 3 seconds

AF:DTC P0C2A AUXILIARY TRANSMISSION FLUID PUMP MOTOR STALLED

1. OUTLINE OF DIAGNOSIS

- Detect low speed revolution malfunction of electric oil pump.
- Judge as NG when a status where (indicated speed) – (actual speed) of electric oil pump is more than specified value is detected.

2. ENABLE CONDITIONS

Secondary Parameters	Enable Conditions
12V battery system voltage	≥ 10 V
Commanded ETFP speed	≥ 800 rpm
Pre-charge contactor (in the hybrid battery pack)	Open
Positive contactor (in the hybrid battery pack)	Closed
Negative contactor (in the hybrid battery pack)	Closed

3. DIAGNOSTIC METHOD

- **Abnormality Judgment**

If the duration of time while the following conditions are met is longer than the time indicated, judge as NG.

Judgment Value

Malfunction Criteria	Threshold Value
Signal of malfunction from ETFP control module	ON
As defined by:	
Commanded ETFP speed – Actual ETFP speed	> 270 rpm

Time Needed for Diagnosis: 3 sec × 2 times
Malfunction Indicator Light Illumination: Illuminates as soon as a malfunction occurs.

- **Normality Judgment**

Judge as OK and clear the NG if the continuous time while the following conditions are established is more than the predetermined time.

Judgment Value

Malfunction Criteria	Threshold Value
Signal of malfunction from ETFP control module	≠ ON
As defined by:	
Commanded ETFP speed – Actual ETFP speed	≤ 270 rpm

Time Needed for Diagnosis: 3 seconds

AG:DTC P1724 AT EEPROM ERROR

1. OUTLINE OF DIAGNOSIS

- Detect TCM EEPROM malfunction.
- Judge as NG when the SUM check result of EEPROM writing value is abnormal and the contents of EEPROM can not be read.

2. ENABLE CONDITIONS

Secondary Parameters	Enable Conditions
Diagnosis 1	
12V battery system voltage	> 9 V
Diagnosis 2	
12V battery system voltage	> 9 V

3. DIAGNOSTIC METHOD

- **Abnormality Judgment**

If the duration of time while the following conditions are met is longer than the time indicated, judge as NG.

Judgment Value

Malfunction Criteria	Threshold Value
Diagnosis 1	
Writing-check (EEPROM)	Error
Diagnosis 2	
Reading-check (EEPROM)	Error

Time Needed for Diagnosis: Immediately
Malfunction Indicator Light Illumination: Illuminates when malfunction occurs in 2 continuous driving cycles.

- **Normality Judgment**

Judge as OK and clear the NG if the continuous time while the following conditions are established is more than the predetermined time.

Judgment Value

Malfunction Criteria	Threshold Value
Diagnosis 1	
Writing-check (EEPROM)	≠ Error
Diagnosis 2	
Reading-check (EEPROM)	≠ Error

Time Needed for Diagnosis: 0.02 seconds

AH:DTC P172A AUXILIARY TRANSMISSION FLUID PUMP REVERSE ROTATION

1. OUTLINE OF DIAGNOSIS

- Detect high speed revolution malfunction of electric oil pump.
- Judge as NG when a status where 100 V power supply voltage is more than 225 V is detected.

2. ENABLE CONDITIONS

Secondary Parameters	Enable Conditions
12V battery system voltage	≥ 10 V
Commanded ETFP speed	0 rpm
Pre-charge contactor (in the hybrid battery pack)	Open
Positive contactor (in the hybrid battery pack)	Closed
Negative contactor (in the hybrid battery pack)	Closed

3. DIAGNOSTIC METHOD

• Abnormality Judgment

If the duration of time while the following conditions are met is longer than the time indicated, judge as NG.

Judgment Value

Malfunction Criteria	Threshold Value
Signal of malfunction from ETFP control module	ON
As defined by:	
ETFP control module input voltage	≥ 225 V

Time Needed for Diagnosis: 1 second
Malfunction Indicator Light Illumination: Illuminates as soon as a malfunction occurs.

• Normality Judgment

Judge as OK and clear the NG if the continuous time while the following conditions are established is more than the predetermined time.

Judgment Value

Malfunction Criteria	Threshold Value
Signal of malfunction from ETFP control module	≠ ON
As defined by:	
ETFP control module input voltage	< 225 V

Time Needed for Diagnosis: 0.01 seconds

AI: DTC P2719 PRESSURE CONTROL SOLENOID D CONTROL CIRCUIT RANGE/PERFORMANCE

1. OUTLINE OF DIAGNOSIS

- Detect the malfunction of output clutch solenoid control function.
- Judge as NG when the difference between output clutch input speed calculated from secondary speed sensor and output clutch output speed is 180 rpm with output clutch engaged control.

2. ENABLE CONDITIONS

Secondary Parameters	Enable Conditions
12V battery system voltage	≥ 10 V
Output shaft speed	≥ 100 rpm
or	
MIL is not illuminated for DTCs	P0500, U0073, U0122, U0416
Vehicle speed (from vehicle dynamics control module)	0 MPH
Output shaft speed	0 rpm
Secondary pulley shaft speed	≥ 100 rpm
Commanded output clutch control solenoid current	≤ 0.8 A
Transmission range	Drive or Reverse
Transmission fluid pump speed (MTFP or ETFP)	≥ 500 rpm

3. DIAGNOSTIC METHOD

• Abnormality Judgment

If the duration of time while the following conditions are met is longer than the time indicated, judge as NG.

Judgment Value

Malfunction Criteria	Threshold Value
Input speed of output clutch* – Output shaft speed NOTE: *Input speed of output clutch: Secondary pulley shaft speed / 1.405** **1.405: Secondary reduction gear ratio	≥ 180 rpm

Time Needed for Diagnosis: MAP B s

Map B

Input speed of output clutch – Output shaft speed (rpm)	30	40	100	200	300	400	500
Time Required (sec)	10.0	10.0	10.0	10.0	7.0	5.0	5.0

Malfunction Indicator Light Illumination: Illuminates as soon as a malfunction occurs.

• Normality Judgment

Judge as OK and clear the NG if the continuous time while the following conditions are established is more than the predetermined time.

Judgment Value

Malfunction Criteria	Threshold Value
Input speed of output clutch* – Output shaft speed NOTE: *Input speed of output clutch: Secondary pulley shaft speed / 1.405** **1.405: Secondary reduction gear ratio	< 180 rpm

Time Needed for Diagnosis: 1 second

AJ:DTC P2720 PRESSURE CONTROL SOLENOID D CONTROL CIRCUIT LOW

1. OUTLINE OF DIAGNOSIS

- Detect the ground short of output clutch solenoid circuit.
- Judge as NG when a status where the output clutch solenoid drive current is more than 1.9 A is detected.

2. ENABLE CONDITIONS

Secondary Parameters	Enable Conditions
12V battery system voltage	≥ 9 V

3. DIAGNOSTIC METHOD

• Abnormality Judgment

If the duration of time while the following conditions are met is longer than the time indicated, judge as NG.

Judgment Value

Malfunction Criteria	Threshold Value
Signal of malfunction from solenoid driver IC	ON
As defined by:	
Measured output clutch pressure control solenoid current	≥ 1.9 A

Time Needed for Diagnosis: 0.02 seconds
Malfunction Indicator Light Illumination: Illuminates as soon as a malfunction occurs.

• Normality Judgment

Judge as OK and clear the NG if the continuous time while the following conditions are established is more than the predetermined time.

Judgment Value

Malfunction Criteria	Threshold Value
Signal of malfunction from solenoid driver IC	≠ ON
As defined by:	
Measured output clutch pressure control solenoid current	< 1.9 A

Time Needed for Diagnosis: 0.5 seconds

AK:DTC P2721 PRESSURE CONTROL SOLENOID D CONTROL CIRCUIT HIGH

1. OUTLINE OF DIAGNOSIS

- Detect the open or short circuit to power supply of output clutch solenoid circuit.
- Judge as NG when a status where the output clutch solenoid drive current is less than 0.15 A is detected.

2. ENABLE CONDITIONS

Secondary Parameters	Enable Conditions
12V battery system voltage	≥ 9 V
Commanded output clutch control solenoid current	≥ 0.3 A

3. DIAGNOSTIC METHOD

• Abnormality Judgment

If the duration of time while the following conditions are met is longer than the time indicated, judge as NG.

Judgment Value

Malfunction Criteria	Threshold Value
Measured output clutch pressure control solenoid current	< 0.15 A

Time Needed for Diagnosis: 1 second
Malfunction Indicator Light Illumination: Illuminates as soon as a malfunction occurs.

• Normality Judgment

Judge as OK and clear the NG if the continuous time while the following conditions are established is more than the predetermined time.

Judgment Value

Malfunction Criteria	Threshold Value
Measured output clutch pressure control solenoid current	≥ 0.15 A

Time Needed for Diagnosis: 0.5 seconds

AL:DTC P2750 SEC. PULLEY REVOLUTION SPEED SENSOR CIRCUIT

1. OUTLINE OF DIAGNOSIS

- Detect the no input signal of secondary speed sensor.
- Judge as NG when the drive motor speed sensor has input signal but the secondary speed sensor has no input signal.
- Judge as NG when no speed sensor inputs are received from TCM connector during driving.

2. ENABLE CONDITIONS

Secondary Parameters	Enable Conditions
Condition 1	
12V battery system voltage	≥ 10 V
Transmission range	Drive or Reverse
Primary pulley shaft speed	≥ 1000 rpm
Condition 2	
12V battery system voltage	≥ 10 V
Turbine shaft speed	0 rpm
Output shaft speed	0 rpm
Primary pulley shaft speed	≥ 500 rpm
Transmission range	Drive or Reverse
Vehicle speed (from vehicle dynamics control module)	≥ 6.3 MPH

3. DIAGNOSTIC METHOD

• Abnormality Judgment

If the duration of time while the following conditions are met is longer than the time indicated, judge as NG.

Judgment Value

Malfunction Criteria	Threshold Value
Secondary pulley shaft speed	0 rpm

Time Needed for Diagnosis:
- **Condition 1:** 0.5 s
- **Condition 2:** 0.6 s

Malfunction Indicator Light Illumination: Illuminates as soon as a malfunction occurs.

• Normality Judgment

Judge as OK and clear the NG if the continuous time while the following conditions are established is more than the predetermined time.

Judgment Value

Malfunction Criteria	Threshold Value
Secondary pulley shaft speed	≠ 0 rpm

Time Needed for Diagnosis: 0.2 seconds

AM:DTC P2762 LOCK-UP DUTY SOLENOID MALFUNCTION

1. OUTLINE OF DIAGNOSIS

- Detect the malfunction of lock-up clutch control function.
- Judge as NG when the difference between engine speed and turbine speed is out of specified value with lock-up clutch engaged control status.

2. ENABLE CONDITIONS

Secondary Parameters	Enable Conditions
12V battery system voltage	≥ 10 V
Transmission range	Drive
Commanded Torque converter clutch pressure	≥ 700 kPa

3. DIAGNOSTIC METHOD

• Abnormality Judgment

If the duration of time while the following conditions are met is longer than the time indicated, judge as NG.

Judgment Value

Malfunction Criteria	Threshold Value
Engine speed – Turbine shaft speed	≥ 40 + Vehicle speed / 1.25 rpm (Vehicle speed: MPH)

Time Needed for Diagnosis: 10 seconds
Malfunction Indicator Light Illumination: Illuminates when malfunction occurs in 2 continuous driving cycles.

• Normality Judgment

Judge as OK and clear the NG if the continuous time while the following conditions are established is more than the predetermined time.

Judgment Value

Malfunction Criteria	Threshold Value
Engine speed – Turbine shaft speed	< 40 + Vehicle speed / 1.25 rpm (Vehicle speed: MPH)

Time Needed for Diagnosis: 10 seconds

AN:DTC P2763 LOCK-UP DUTY SOLENOID CIRCUIT (HIGH)

1. OUTLINE OF DIAGNOSIS

- Detect the open circuit and power supply-output short of the lock-up duty solenoid drive circuit.
- Judge as NG when a status where lock-up duty solenoid drive voltage is less than 0.8 V is detected.

2. ENABLE CONDITIONS

Secondary Parameters	Enable Conditions
12V battery system voltage	≥ 9 V

3. DIAGNOSTIC METHOD

• Abnormality Judgment

If the duration of time while the following conditions are met is longer than the time indicated, judge as NG.

Judgment Value

Malfunction Criteria	Threshold Value
Signal of malfunction from solenoid driver IC	ON
As defined by:	
Measured torque converter clutch pressure control solenoid voltage	≤ 0.8 V

Time Needed for Diagnosis: Immediately
Malfunction Indicator Light Illumination: Illuminates as soon as a malfunction occurs.

• Normality Judgment

Judge as OK and clear the NG if the continuous time while the following conditions are established is more than the predetermined time.

Judgment Value

Malfunction Criteria	Threshold Value
Signal of malfunction from solenoid driver IC	≠ ON
As defined by:	
Measured torque converter clutch pressure control solenoid voltage	> 0.8 V

Time Needed for Diagnosis: 2 seconds

AO:DTC P2764 LOCK-UP DUTY SOLENOID CIRCUIT (LOW)

1. OUTLINE OF DIAGNOSIS

- Detect the GND-output short of the lock-up duty solenoid drive circuit.
- Judge as NG when a status where lock-up duty solenoid drive voltage is more than 2.5 V is detected.

2. ENABLE CONDITIONS

Secondary Parameters	Enable Conditions
12V battery system voltage	≥ 9 V
Commanded duty of torque converter clutch pressure control solenoid	< 95%

3. DIAGNOSTIC METHOD

• Abnormality Judgment

If the duration of time while the following conditions are met is longer than the time indicated, judge as NG.

Judgment Value

Malfunction Criteria	Threshold Value
Signal of malfunction from solenoid driver IC	ON
As defined by:	
Measured torque converter clutch pressure control solenoid voltage	≥ 2.5 V

Time Needed for Diagnosis: Immediately
Malfunction Indicator Light Illumination: Illuminates as soon as a malfunction occurs.

• Normality Judgment

Judge as OK and clear the NG if the continuous time while the following conditions are established is more than the predetermined time.

Judgment Value

Malfunction Criteria	Threshold Value
Signal of malfunction from solenoid driver IC	≠ ON
As defined by:	
Measured torque converter clutch pressure control solenoid voltage	< 2.5 V

Time Needed for Diagnosis: 2 seconds

AP:DTC P2797 AUXILIARY TRANSMISSION FLUID PUMP

1. OUTLINE OF DIAGNOSIS

- Detect function malfunction of electric oil pump.
- Judge as NG when a status where the secondary pressure is less than 0.2 MPa is detected while the electric oil pump is driven.

2. ENABLE CONDITIONS

Secondary Parameters	Enable Conditions
12V battery system voltage	≥ 10 V
Commanded ETFP speed	≥ 800 rpm
Pre-charge contactor (in the hybrid battery pack)	Open
Positive contactor (in the hybrid battery pack)	Closed
Negative contactor (in the hybrid battery pack)	Closed

3. DIAGNOSTIC METHOD

- **Abnormality Judgment**

If the duration of time while the following conditions are met is longer than the time indicated, judge as NG.

Judgment Value

Malfunction Criteria	Threshold Value
Actual line pressure	< 200 kPa

Time Needed for Diagnosis: 1 second
Malfunction Indicator Light Illumination: Illuminates as soon as a malfunction occurs.

- **Normality Judgment**

Judge as OK and clear the NG if the continuous time while the following conditions are established is more than the predetermined time.

Judgment Value

Malfunction Criteria	Threshold Value
Actual line pressure	≥ 200 kPa

Time Needed for Diagnosis: 5 seconds

AQ:DTC U0073 CONTROL MODULE COMMUNICATION BUS OFF

1. OUTLINE OF DIAGNOSIS

- Detect malfunction of CAN communication.
- Judge as NG when CAN communication failure has occurred.

2. ENABLE CONDITIONS

Secondary Parameters	Enable Conditions
12V battery system voltage	≥ 10 V

3. DIAGNOSTIC METHOD

• Abnormality Judgment

If the duration of time while the following conditions are met is longer than the time indicated, judge as NG.

Judgment Value

Malfunction Criteria	Threshold Value
CAN bus condition	Bus off

Time Needed for Diagnosis: 2 seconds
Malfunction Indicator Light Illumination: Illuminates as soon as a malfunction occurs.

• Normality Judgment

Judge as OK and clear the NG if the continuous time while the following conditions are established is more than the predetermined time.

Judgment Value

Malfunction Criteria	Threshold Value
CAN bus condition	≠ Bus off

Time Needed for Diagnosis: 3 seconds

AR:DTC U0075 CONTROL MODULE COMMUNICATION BUS "PU-CAN" OFF

1. OUTLINE OF DIAGNOSIS

- Detect malfunction of CAN communication.
- Judge as NG when CAN communication failure has occurred.

2. ENABLE CONDITIONS

Secondary Parameters	Enable Conditions
12V battery system voltage	≥ 10 V

3. DIAGNOSTIC METHOD

• Abnormality Judgment

If the duration of time while the following conditions are met is longer than the time indicated, judge as NG.

Judgment Value

Malfunction Criteria	Threshold Value
CAN bus condition	Bus off

Time Needed for Diagnosis: 2 seconds
Malfunction Indicator Light Illumination: Illuminates as soon as a malfunction occurs.

• Normality Judgment

Judge as OK and clear the NG if the continuous time while the following conditions are established is more than the predetermined time.

Judgment Value

Malfunction Criteria	Threshold Value
CAN bus condition	≠ Bus off

Time Needed for Diagnosis: 3 seconds

AS:DTC U0100 LOST COMMUNICATION WITH ECM/PCM "A"

1. OUTLINE OF DIAGNOSIS

- Detect malfunction of CAN communication.
- Judge as NG when CAN communication with ECM is not possible.

2. ENABLE CONDITIONS

Secondary Parameters	Enable Conditions
12V battery system voltage	≥ 10 V

3. DIAGNOSTIC METHOD

• Abnormality Judgment

If the duration of time while the following conditions are met is longer than the time indicated, judge as NG.

Judgment Value

Malfunction Criteria	Threshold Value
CAN data from ECM	Lost

Time Needed for Diagnosis: 0.5 seconds
Malfunction Indicator Light Illumination: Illuminates as soon as a malfunction occurs.

• Normality Judgment

Judge as OK and clear the NG if the continuous time while the following conditions are established is more than the predetermined time.

Judgment Value

Malfunction Criteria	Threshold Value
CAN data from ECM	≠ Lost

Time Needed for Diagnosis: 3 seconds

AT:DTC U0110 LOST COMMUNICATION WITH DRIVE MOTOR CONTROL MODULE "A"

1. OUTLINE OF DIAGNOSIS

- Detect malfunction of CAN communication.
- Judge as NG when CAN communication with motor control module is not possible.

2. ENABLE CONDITIONS

Secondary Parameters	Enable Conditions
12V battery system voltage	≥ 10 V

3. DIAGNOSTIC METHOD

• Abnormality Judgment

If the duration of time while the following conditions are met is longer than the time indicated, judge as NG.

Judgment Value

Malfunction Criteria	Threshold Value
CAN data from Drive Motor Control Module	Lost

Time Needed for Diagnosis: 0.5 seconds
Malfunction Indicator Light Illumination: Illuminates as soon as a malfunction occurs.

• Normality Judgment

Judge as OK and clear the NG if the continuous time while the following conditions are established is more than the predetermined time.

Judgment Value

Malfunction Criteria	Threshold Value
CAN data from Drive Motor Control Module	≠ Lost

Time Needed for Diagnosis: 3 seconds

AU:DTC U0122 LOST COMMUNICATION WITH VEHICLE DYNAMICS CONTROL MODULE

1. OUTLINE OF DIAGNOSIS

- Detect malfunction of CAN communication.
- Judge as NG when CAN communication with VDC CM is not possible.

2. ENABLE CONDITIONS

Secondary Parameters	Enable Conditions
12V battery system voltage	≥ 10 V

3. DIAGNOSTIC METHOD

• Abnormality Judgment

If the duration of time while the following conditions are met is longer than the time indicated, judge as NG.

Judgment Value

Malfunction Criteria	Threshold Value
CAN data from Vehicle Dynamics Control Module	Lost

Time Needed for Diagnosis: 0.5 seconds
Malfunction Indicator Light Illumination: Illuminates as soon as a malfunction occurs.

• Normality Judgment

Judge as OK and clear the NG if the continuous time while the following conditions are established is more than the predetermined time.

Judgment Value

Malfunction Criteria	Threshold Value
CAN data from Vehicle Dynamics Control Module	≠ Lost

Time Needed for Diagnosis: 3 seconds

AV:DTC U0287 LOST COMMUNICATION WITH TRANSMISSION FLUID PUMP MODULE

1. OUTLINE OF DIAGNOSIS

- Detect malfunction of CAN communication.
- Judge as NG when CAN communication with electric oil pump inverter is not possible.

2. ENABLE CONDITIONS

Secondary Parameters	Enable Conditions
12V battery system voltage	≥ 10 V

3. DIAGNOSTIC METHOD

• Abnormality Judgment

If the duration of time while the following conditions are met is longer than the time indicated, judge as NG.

Judgment Value

Malfunction Criteria	Threshold Value
CAN data from ETFP Control Module	Lost

Time Needed for Diagnosis: 0.5 seconds
Malfunction Indicator Light Illumination: Illuminates as soon as a malfunction occurs.

• Normality Judgment

Judge as OK and clear the NG if the continuous time while the following conditions are established is more than the predetermined time.

Judgment Value

Malfunction Criteria	Threshold Value
CAN data from ETFP Control Module	≠ Lost

Time Needed for Diagnosis: 3 seconds

AW:DTC U0293 LOST COMMUNICATION WITH HYBRID POWERTRAIN CONTROL MODULE

1. OUTLINE OF DIAGNOSIS

- Detect malfunction of CAN communication.
- Judge as NG when CAN communication with hybrid powertrain control CM is not possible.

2. ENABLE CONDITIONS

Secondary Parameters	Enable Conditions
12V battery system voltage	≥ 10 V

3. DIAGNOSTIC METHOD

• Abnormality Judgment

If the duration of time while the following conditions are met is longer than the time indicated, judge as NG.

Judgment Value

Malfunction Criteria	Threshold Value
CAN data from HPCM	Lost

Time Needed for Diagnosis: 0.5 seconds
Malfunction Indicator Light Illumination: Illuminates as soon as a malfunction occurs.

• Normality Judgment

Judge as OK and clear the NG if the continuous time while the following conditions are established is more than the predetermined time.

Judgment Value

Malfunction Criteria	Threshold Value
CAN data from HPCM	≠ Lost

Time Needed for Diagnosis: 3 seconds

AX:DTC U0401 INVALID DATA RECEIVED FROM ECM/PCM “A”

1. OUTLINE OF DIAGNOSIS

- Detect malfunction of CAN communication.
- Judge as NG when data received from ECM is not normal.

2. ENABLE CONDITIONS

Secondary Parameters	Enable Conditions
12V battery system voltage	≥ 10 V

3. DIAGNOSTIC METHOD

• Abnormality Judgment

If the duration of time while the following conditions are met is longer than the time indicated, judge as NG.

Judgment Value

Malfunction Criteria	Threshold Value
CAN data from ECM	Did not change

Time Needed for Diagnosis: 2 seconds
Malfunction Indicator Light Illumination: Illuminates as soon as a malfunction occurs.

• Normality Judgment

Judge as OK and clear the NG if the continuous time while the following conditions are established is more than the predetermined time.

Judgment Value

Malfunction Criteria	Threshold Value
CAN data from ECM	≠ Did not change

Time Needed for Diagnosis: 3 seconds

AY:DTC U0411 INVALID DATA RECEIVED FROM DRIVE MOTOR CONTROL MODULE "A"

1. OUTLINE OF DIAGNOSIS

- Detect malfunction of CAN communication.
- Judge as NG when data received from motor control module is not normal.

2. ENABLE CONDITIONS

Secondary Parameters	Enable Conditions
Diagnosis 1	
12V battery system voltage	≥ 10 V
Diagnosis 2	
12V battery system voltage	≥ 10 V

3. DIAGNOSTIC METHOD

• Abnormality Judgment

If the duration of time while the following conditions are met is longer than the time indicated, judge as NG.

Judgment Value

Malfunction Criteria	Threshold Value
Diagnosis 1	
CAN data from Drive Motor Control Module	Did not change
Diagnosis 2	
CAN data from Drive Motor Control Module	Check sum error

Time Needed for Diagnosis:

- **Diagnosis 1:** 2 s
- **Diagnosis 2:** 3 times

Malfunction Indicator Light Illumination: Illuminates as soon as a malfunction occurs.

• Normality Judgment

Judge as OK and clear the NG if the continuous time while the following conditions are established is more than the predetermined time.

Judgment Value

Malfunction Criteria	Threshold Value
Diagnosis 1	
CAN data from Drive Motor Control Module	≠ Did not change
Diagnosis 2	
CAN data from Drive Motor Control Module	≠ Check sum error

Time Needed for Diagnosis: 3 seconds

AZ:DTC U0416 INVALID DATA RECEIVED FROM VEHICLE DYNAMICS CONTROL MODULE

1. OUTLINE OF DIAGNOSIS

- Detect malfunction of CAN communication.
- Judge as NG when data received from VDC CM is not normal.

2. ENABLE CONDITIONS

Secondary Parameters	Enable Conditions
12V battery system voltage	≥ 10 V

3. DIAGNOSTIC METHOD

• Abnormality Judgment

If the duration of time while the following conditions are met is longer than the time indicated, judge as NG.

Judgment Value

Malfunction Criteria	Threshold Value
CAN data from Vehicle Dynamics Control Module	Did not change

Time Needed for Diagnosis: 2 seconds
Malfunction Indicator Light Illumination: Illuminates as soon as a malfunction occurs.

• Normality Judgment

Judge as OK and clear the NG if the continuous time while the following conditions are established is more than the predetermined time.

Judgment Value

Malfunction Criteria	Threshold Value
CAN data from Vehicle Dynamics Control Module	≠ Did not change

Time Needed for Diagnosis: 3 seconds

BA:DTC U0588 INVALID DATA RECEIVED FROM TRANSMISSION FLUID PUMP MODULE

1. OUTLINE OF DIAGNOSIS

- Detect malfunction of CAN communication.
- Judge as NG when data received from electric oil pump inverter is not normal.

2. ENABLE CONDITIONS

Secondary Parameters	Enable Conditions
Diagnosis 1	
12V battery system voltage	≥ 10 V
Diagnosis 2	
12V battery system voltage	≥ 10 V

3. DIAGNOSTIC METHOD

• Abnormality Judgment

If the duration of time while the following conditions are met is longer than the time indicated, judge as NG.

Judgment Value

Malfunction Criteria	Threshold Value
Diagnosis 1	
CAN data from ETFP Control Module	Did not change
Diagnosis 2	
CAN data from ETFP Control Module	Check sum error

Time Needed for Diagnosis:

- **Diagnosis 1:** 2 s
- **Diagnosis 2:** 3 times

Malfunction Indicator Light Illumination: Illuminates as soon as a malfunction occurs.

• Normality Judgment

Judge as OK and clear the NG if the continuous time while the following conditions are established is more than the predetermined time.

Judgment Value

Malfunction Criteria	Threshold Value
Diagnosis 1	
CAN data from ETFP Control Module	≠ Did not change
Diagnosis 2	
CAN data from ETFP Control Module	≠ Check sum error

Time Needed for Diagnosis: 3 seconds

BB:DTC U0594 INVALID DATA RECEIVED FROM HYBRID POWERTRAIN CONTROL MODULE

1. OUTLINE OF DIAGNOSIS

- Detect malfunction of CAN communication.
- Judge as NG when data received from hybrid powertrain CM is not normal.

2. ENABLE CONDITIONS

Secondary Parameters	Enable Conditions
12V battery system voltage	≥ 10 V

3. DIAGNOSTIC METHOD

• Abnormality Judgment

If the duration of time while the following conditions are met is longer than the time indicated, judge as NG.

Judgment Value

Malfunction Criteria	Threshold Value
CAN data from HPCM	Did not change

Time Needed for Diagnosis: 2 seconds
Malfunction Indicator Light Illumination: Illuminates as soon as a malfunction occurs.

• Normality Judgment

Judge as OK and clear the NG if the continuous time while the following conditions are established is more than the predetermined time.

Judgment Value

Malfunction Criteria	Threshold Value
CAN data from HPCM	≠ Did not change

Time Needed for Diagnosis: 3 seconds

BC:DTC U1100 LOST COMMUNICATION WITH ECM/PCM PU-CAN

1. OUTLINE OF DIAGNOSIS

- Detect malfunction of CAN communication.
- Judge as NG when CAN communication with ECM is not possible.

2. ENABLE CONDITIONS

Secondary Parameters	Enable Conditions
12V battery system voltage	≥ 10 V

3. DIAGNOSTIC METHOD

• Abnormality Judgment

If the duration of time while the following conditions are met is longer than the time indicated, judge as NG.

Judgment Value

Malfunction Criteria	Threshold Value
CAN data from ECM	Lost

Time Needed for Diagnosis: 2 seconds
Malfunction Indicator Light Illumination: Illuminates as soon as a malfunction occurs.

• Normality Judgment

Judge as OK and clear the NG if the continuous time while the following conditions are established is more than the predetermined time.

Judgment Value

Malfunction Criteria	Threshold Value
CAN data from ECM	≠ Lost

Time Needed for Diagnosis: 3 seconds

BD:DTC U1293 LOST COMMUNICATION WITH HYBRID POWERTRAIN CONTROL MODULE PU-CAN

1. OUTLINE OF DIAGNOSIS

- Detect malfunction of CAN communication.
- Judge as NG when CAN communication with hybrid powertrain CM is not possible.

2. ENABLE CONDITIONS

Secondary Parameters	Enable Conditions
12V battery system voltage	≥ 10 V

3. DIAGNOSTIC METHOD

• Abnormality Judgment

If the duration of time while the following conditions are met is longer than the time indicated, judge as NG.

Judgment Value

Malfunction Criteria	Threshold Value
CAN data from HPCM	Lost

Time Needed for Diagnosis: 2 seconds
Malfunction Indicator Light Illumination: Illuminates as soon as a malfunction occurs.

• Normality Judgment

Judge as OK and clear the NG if the continuous time while the following conditions are established is more than the predetermined time.

Judgment Value

Malfunction Criteria	Threshold Value
CAN data from HPCM	≠ Lost

Time Needed for Diagnosis: 3 seconds

BE:DTC U1401 INVALID DATA RECEIVED FROM ECM/PCM PU-CAN

1. OUTLINE OF DIAGNOSIS

- Detect malfunction of CAN communication.
- Judge as NG when data received from ECM is not normal.

2. ENABLE CONDITIONS

Secondary Parameters	Enable Conditions
Diagnosis 1	
12V battery system voltage	≥ 10 V
Diagnosis 2	
12V battery system voltage	≥ 10 V

3. DIAGNOSTIC METHOD

• Abnormality Judgment

If the duration of time while the following conditions are met is longer than the time indicated, judge as NG.

Judgment Value

Malfunction Criteria	Threshold Value
Diagnosis 1	
CAN data from ECM	Did not change
Diagnosis 2	
CAN data from ECM	Check sum error

Time Needed for Diagnosis:

- **Diagnosis 1:** 2 s
- **Diagnosis 2:** 3 times

Malfunction Indicator Light Illumination: Illuminates as soon as a malfunction occurs.

• Normality Judgment

Judge as OK and clear the NG if the continuous time while the following conditions are established is more than the predetermined time.

Judgment Value

Malfunction Criteria	Threshold Value
Diagnosis 1	
CAN data from ECM	≠ Did not change
Diagnosis 2	
CAN data from ECM	≠ Check sum error

Time Needed for Diagnosis: 3 seconds

BF:DTC U1594 INVALID DATA RECEIVED FROM HYBRID POWERTRAIN CONTROL MODULE PU-CAN

1. OUTLINE OF DIAGNOSIS

- Detect malfunction of CAN communication.
- Judge as NG when data received from hybrid powertrain CM is not normal.

2. ENABLE CONDITIONS

Secondary Parameters	Enable Conditions
Diagnosis 1	
12V battery system voltage	≥ 10 V
Diagnosis 2	
12V battery system voltage	≥ 10 V

3. DIAGNOSTIC METHOD

• Abnormality Judgment

If the duration of time while the following conditions are met is longer than the time indicated, judge as NG.

Judgment Value

Malfunction Criteria	Threshold Value
Diagnosis 1	
CAN data from HPCM	Did not change
Diagnosis 2	
CAN data from HPCM	Check sum error

Time Needed for Diagnosis:

- **Diagnosis 1:** 2 s
- **Diagnosis 2:** 3 times

Malfunction Indicator Light Illumination: Illuminates as soon as a malfunction occurs.

• Normality Judgment

Judge as OK and clear the NG if the continuous time while the following conditions are established is more than the predetermined time.

Judgment Value

Malfunction Criteria	Threshold Value
Diagnosis 1	
CAN data from HPCM	≠ Did not change
Diagnosis 2	
CAN data from HPCM	≠ Check sum error

Time Needed for Diagnosis: 3 seconds

MANUAL TRANSMISSION AND DIFFERENTIAL

5MT

		Page
1.	General Description	2
2.	Transmission Gear Oil	22
3.	Manual Transmission Assembly	23
4.	Transmission Mounting System	30
5.	Oil Seal	32
6.	Differential Side Retainer Oil Seal	34
7.	Switches and Harness	35
8.	Air Breather Hose	37
9.	Preparation for Overhaul	38
10.	Transfer Case and Extension Case Assembly	39
11.	Transfer Drive Gear	46
12.	Transfer Driven Gear	48
13.	Center Differential	50
14.	Reverse Check Sleeve	51
15.	Transmission Case	54
16.	Main Shaft Assembly for Single-Range	58
17.	Drive Pinion Shaft Assembly	63
18.	Front Differential Assembly	73
19.	Reverse Idler Gear	80
20.	Shifter Fork and Rod	82
21.	General Diagnostic Table	86

1. General Description

A: SPECIFICATION

1. MANUAL TRANSMISSION AND DIFFERENTIAL

Model			Except for XV model	XV model
Type			5-forward speeds and 1-reverse (all stage with synchromesh)	
Transmission gear ratio		1st	3.454	3.545
		2nd	1.888	
		3rd	1.296	
		4th	0.972	
		5th	0.738	0.780
		Reverse	3.333	
Front reduction gear	Final	Type of gear	Hypoid	
		Gear ratio	4.111	4.444
Rear reduction gear	Transfer	Type of gear	Helical	
		Gear ratio	1.000	
	Final	Type of gear	Hypoid	
		Gear ratio	4.111	4.444
Front differential	Type and number of gear		Straight bevel gear (bevel pinion: 2, bevel gear: 2)	
Center differential	Type and number of gear		Straight bevel gear (bevel pinion: 2, bevel gear: 2 and viscous coupling)	
Transmission gear oil			SUBARU EXTRA MT or equivalent gear oil	
Transmission gear oil capacity			3.5 L (3.7 US qt, 3.1 Imp qt)	

2. TRANSMISSION GEAR OIL

Recommended oil:
SUBARU EXTRA MT

Alternative:
GL-5 (75W-90)

CAUTION:
If an alternative transmission oil is used, you may not have expected functionality and performance.

B: COMPONENT

1. TRANSMISSION CASE

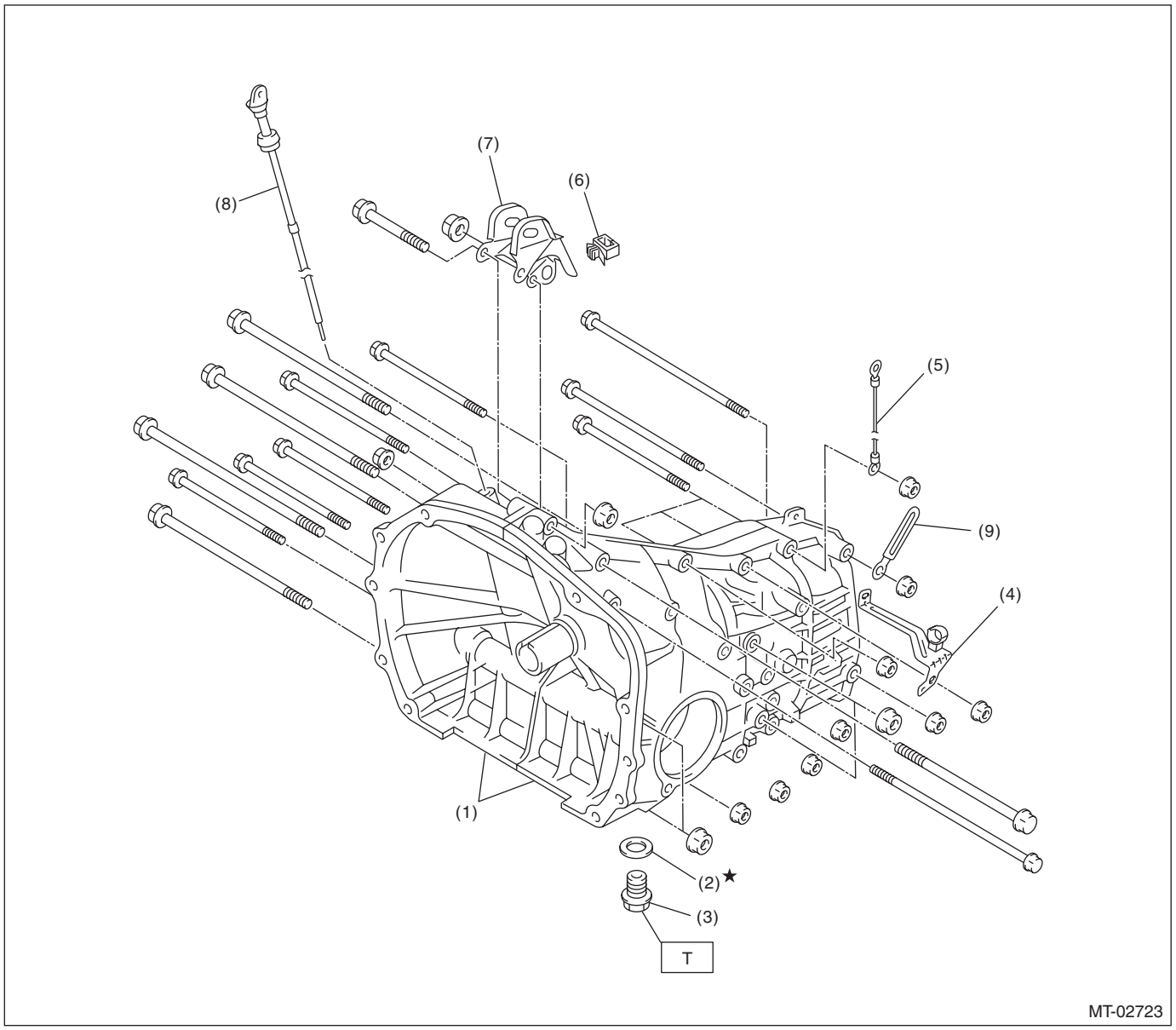

(1)	Transmission case ASSY	(6)	Clamp	***Tightening torque: N·m (kgf-m, ft-lb)***
(2)	Gasket	(7)	Pitching stopper bracket	***T: 44 (4.5, 32.5) (Aluminum gasket, silver)***
(3)	Drain plug	(8)	Oil level gauge	***70 (7.1, 51.6) (Copper gasket, brown)***
(4)	Harness bracket	(9)	Harness clip	***70 (7.1, 51.6) (Metal gasket, black)***
(5)	Transmission radio ground cord			

Transmission case tightening torque

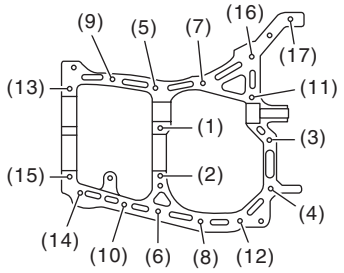

MT-00003

Bolt No.	Bolt size mm	Tightening torque: N·m (kgf-m, ft-lb)
(5) — (15)	8	25 (2.5, 18.4)
(1) — (4) (16), (17)	10	39 (4.0, 28.8)

2. DRIVE PINION ASSEMBLY

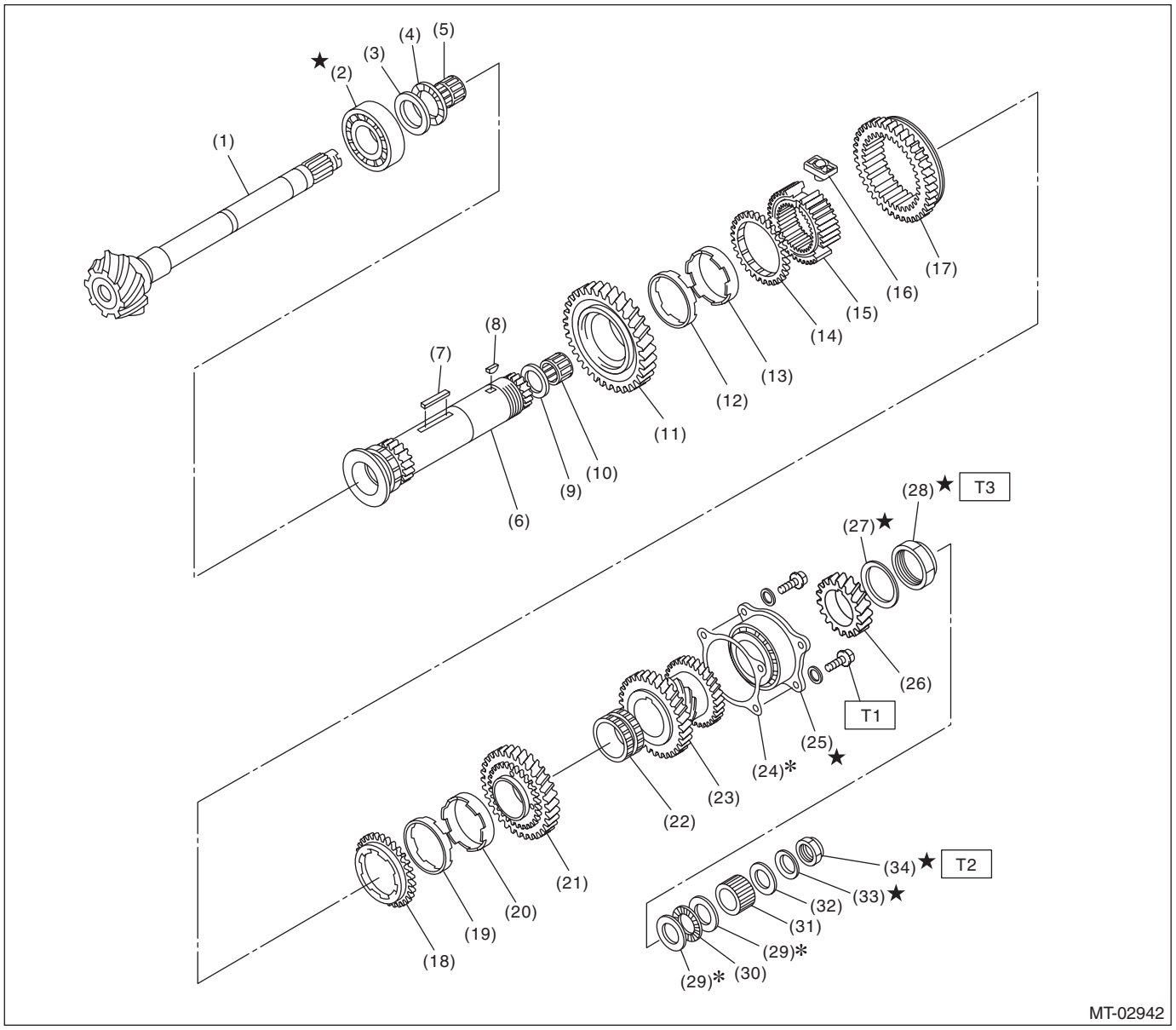

(1) Drive pinion shaft
(2) Roller bearing
(3) Washer
(4) Thrust bearing
(5) Needle bearing
(6) Driven shaft
(7) Key
(8) Woodruff key
(9) Drive pinion collar
(10) Needle bearing
(11) 1st driven gear
(12) Inner baulk ring
(13) Synchro cone
(14) Outer baulk ring
(15) 1st-2nd synchronizer hub
(16) Ball detent
(17) Reverse driven gear
(18) Outer baulk ring
(19) Synchro cone
(20) Inner baulk ring
(21) 2nd driven gear
(22) 2nd driven gear bushing
(23) 3rd-4th driven gear
(24) Drive pinion shim
(25) Double taper roller bearing
(26) 5th driven gear
(27) Lock washer
(28) Lock nut
(29) Adjusting washer
(30) Thrust bearing
(31) Differential bevel gear sleeve
(32) Washer
(33) Lock washer
(34) Lock nut

Tightening torque: N·m (kgf-m, ft-lb)
T1: 30 (3.1, 22.1)
T2: 120 (12.2, 88.5)
T3: 260 (26.5, 191.8)

3. MAIN SHAFT FOR SINGLE-RANGE

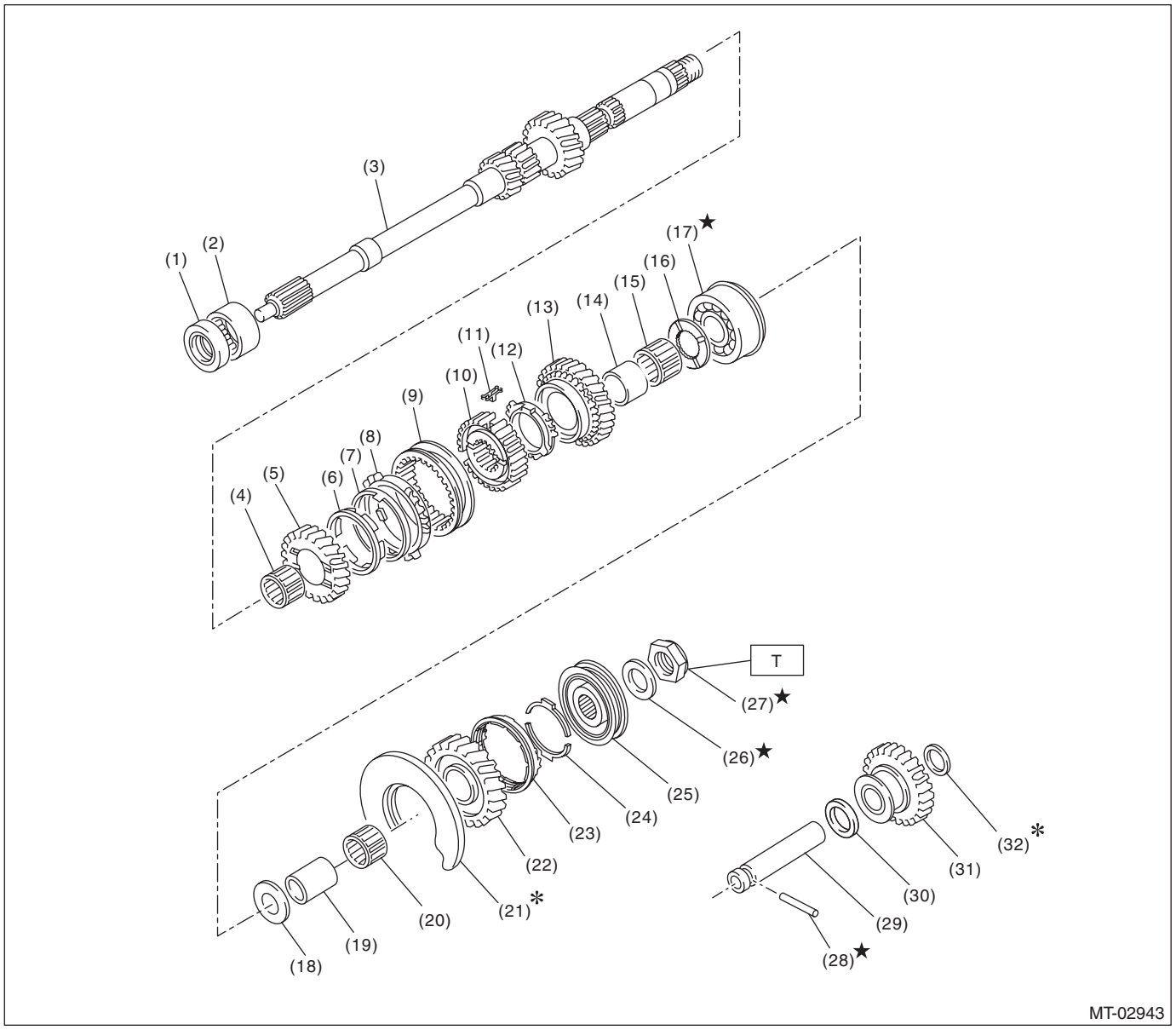

(1) Oil seal
(2) Needle bearing
(3) Main shaft
(4) Needle bearing
(5) 3rd drive gear
(6) Inner baulk ring
(7) 3rd synchro cone
(8) Outer baulk ring
(9) 3rd-4th coupling sleeve
(10) 3rd-4th synchronizer hub
(11) 3rd-4th shifting insert key
(12) 4th baulk ring
(13) 4th drive gear
(14) 4th needle bearing race
(15) Needle bearing
(16) 4th gear thrust washer
(17) Double ball bearing
(18) 5th gear thrust washer
(19) 5th needle bearing race
(20) Needle bearing
(21) Main shaft rear plate
(22) 5th drive gear
(23) 5th baulk ring
(24) Baulk lever
(25) 5th hub & sleeve No. 2
(26) Lock washer
(27) Lock nut
(28) Straight pin
(29) Reverse idler gear shaft
(30) Washer
(31) Reverse idler gear
(32) Adjusting washer

Tightening torque: N·m (kgf-m, ft-lb)
T: 120 (12.2, 88.5)

4. SHIFTER FORK AND SHIFTER ROD

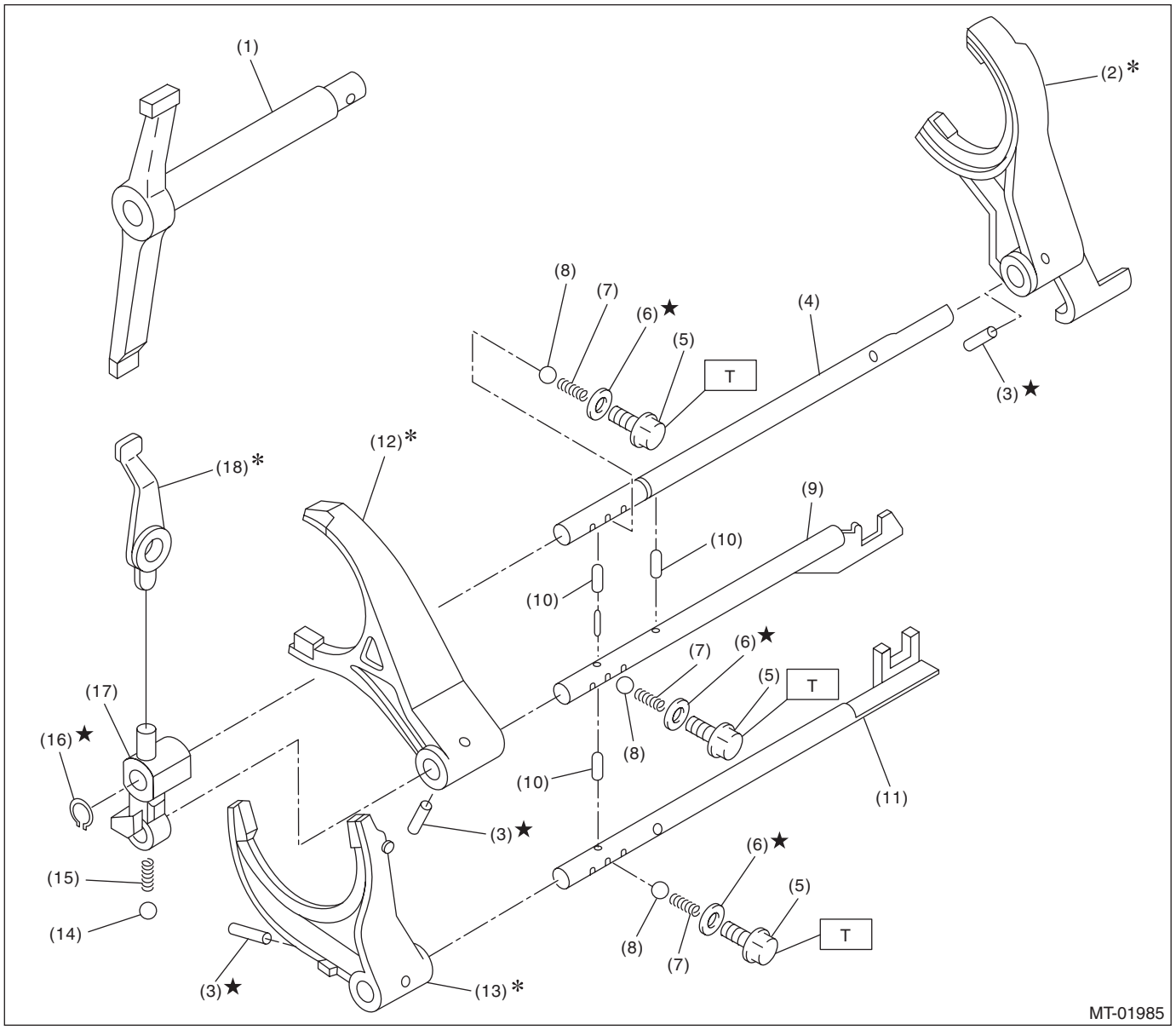

(1) Shifter arm
(2) 5th shifter fork
(3) Straight pin
(4) Reverse fork rod
(5) Checking ball plug
(6) Gasket
(7) Checking ball spring
(8) Ball
(9) 3rd-4th fork rod
(10) Interlock plunger
(11) 1st-2nd fork rod
(12) 3rd-4th shifter fork
(13) 1st-2nd shifter fork
(14) Ball
(15) Spring
(16) Snap ring (outer)
(17) Reverse fork rod arm
(18) Reverse shifter lever

Tightening torque: N·m (kgf-m, ft-lb)
T: 20 (2.0, 14.8)

5. TRANSFER CASE AND EXTENSION

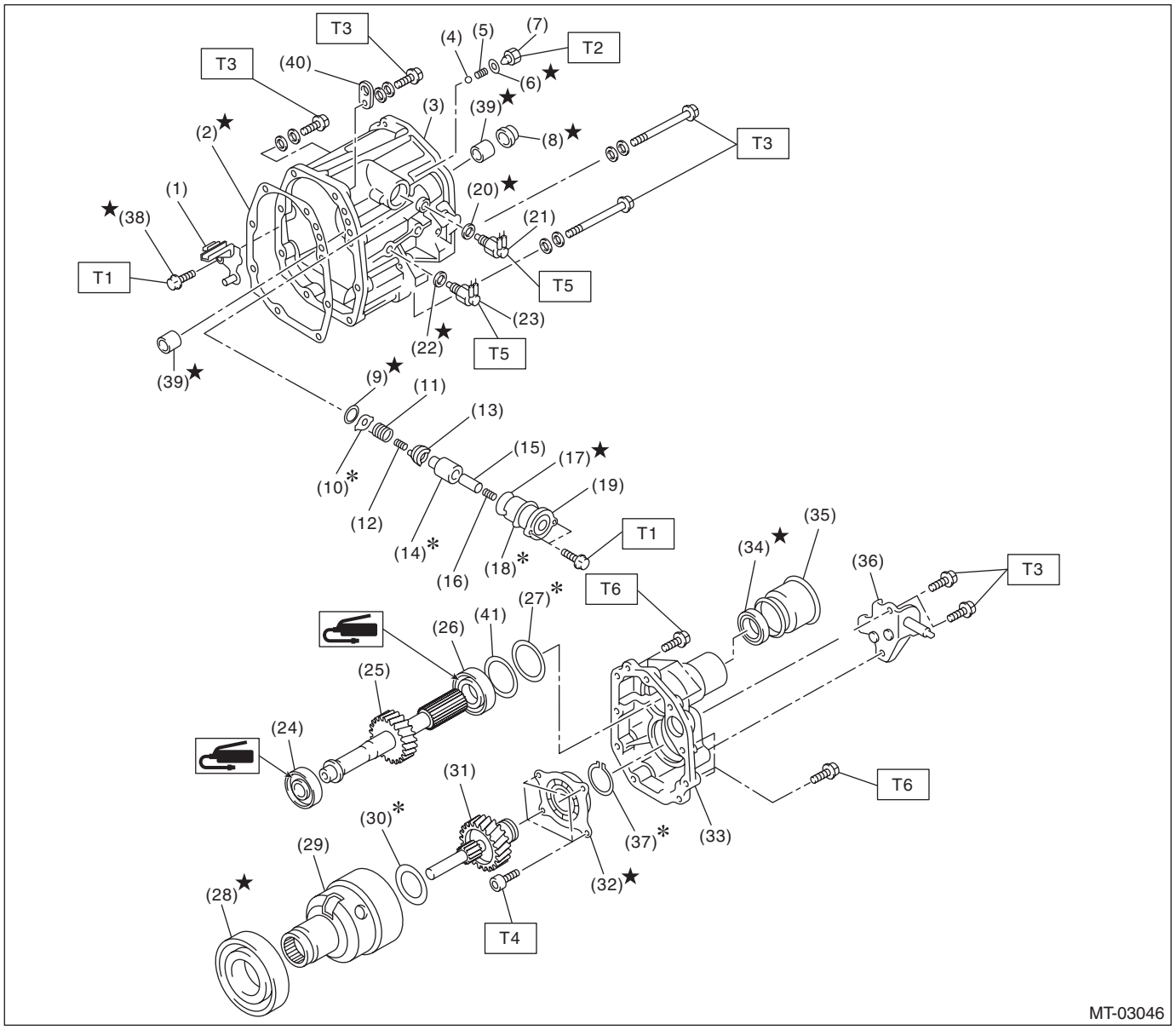

(1) Oil guide
(2) Gasket
(3) Transfer case
(4) Ball
(5) Reverse accent spring
(6) Gasket
(7) Plug
(8) Oil seal
(9) Snap ring (inner)
(10) Reverse check plate
(11) Reverse check spring
(12) Reverse return spring
(13) Reverse check cam
(14) Reverse accent shaft
(15) Return spring cap
(16) Return spring
(17) O-ring
(18) Adjusting select shim
(19) Reverse check sleeve
(20) Gasket
(21) Neutral position switch
(22) Gasket
(23) Back-up light switch
(24) Roller bearing
(25) Transfer driven gear
(26) Roller bearing
(27) Adjusting washer
(28) Ball bearing
(29) Center differential
(30) Adjusting washer
(31) Transfer drive gear
(32) Ball bearing
(33) Extension case
(34) Oil seal
(35) Dust cover
(36) Shift bracket
(37) Snap ring
(38) Precoat bolt
(39) Roller bearing
(40) Transmission hanger
(41) Dish plate

Tightening torque: N·m (kgf-m, ft-lb)
T1: 6.4 (0.7, 4.7)
T2: 9.75 (1.0, 7.2)
T3: 24.5 (2.5, 18.1)
T4: 26 (2.7, 19.2)
T5: 32.3 (3.3, 23.8)
T6: 40 (4.1, 29.5)

6. FRONT DIFFERENTIAL

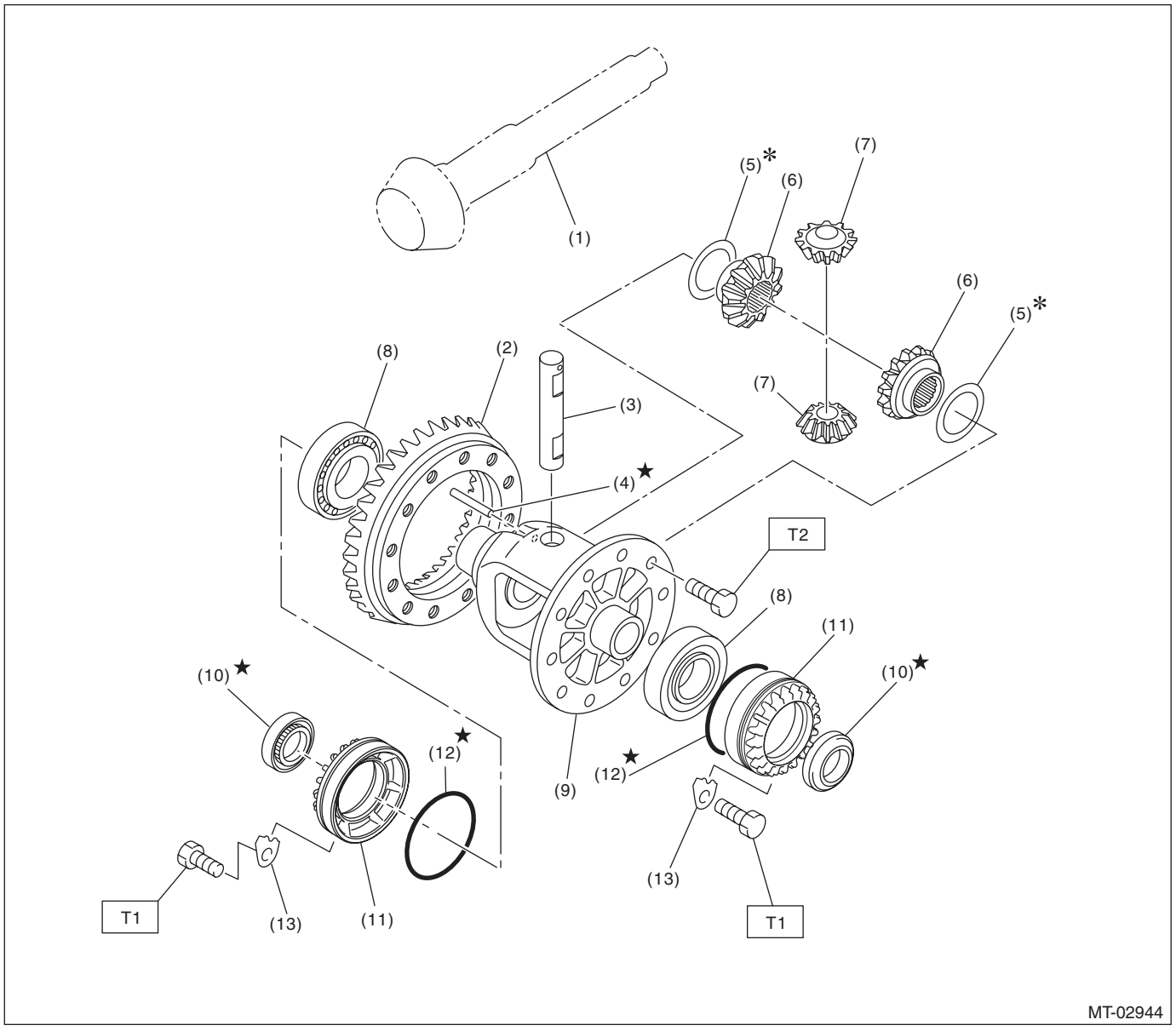

(1) Drive pinion shaft
(2) Hypoid driven gear
(3) Pinion shaft
(4) Straight pin
(5) Adjusting washer
(6) Differential bevel gear
(7) Differential bevel pinion
(8) Roller bearing
(9) Differential case
(10) Oil seal
(11) Differential side retainer
(12) O-ring
(13) Retainer lock plate

Tightening torque: N·m (kgf-m, ft-lb)
T1: 25 (2.5, 18.4)
T2: 62 (6.3, 45.7)

7. TRANSMISSION MOUNTING

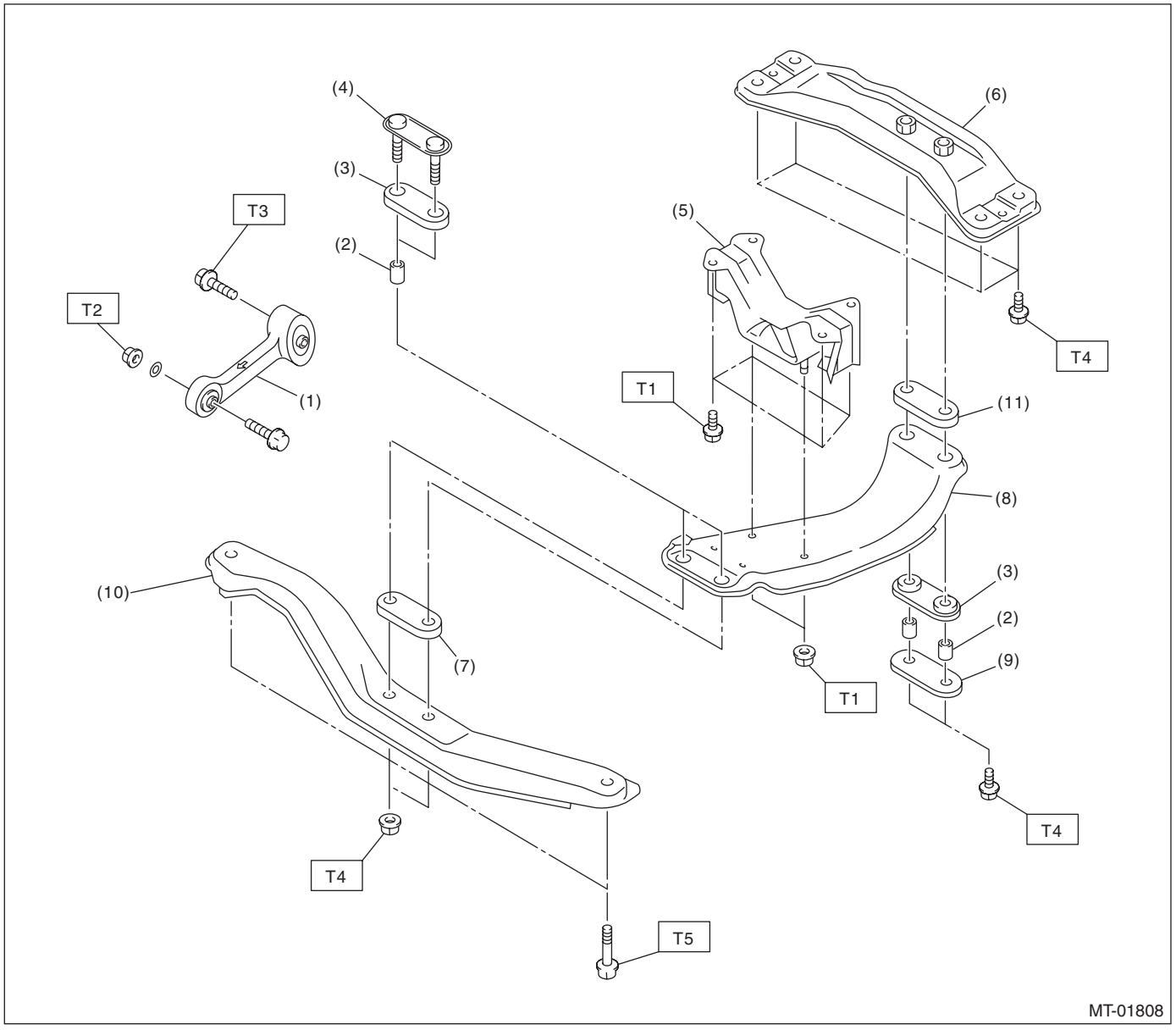

(1) Pitching stopper
(2) Spacer
(3) Lower cushion rubber
(4) Front plate
(5) Transmission cushion rubber
(6) Rear crossmember
(7) Upper cushion rubber
(8) Center crossmember
(9) Rear plate
(10) Front crossmember
(11) Rear cushion rubber

Tightening torque: N·m (kgf-m, ft-lb)
T1: 35 (3.6, 25.8)
T2: 50 (5.1, 36.9)
T3: 58 (5.9, 42.8)
T4: 70 (7.1, 51.6)
T5: 140 (14.3, 103.3)

C: CAUTION

- Wear appropriate work clothing, including a cap, protective goggles and protective shoes when performing any work.
- Remove contamination including dirt and corrosion before removal, installation or disassembly.
- Keep the disassembled parts in order and protect them from dust and dirt.
- Before removal, installation or disassembly, be sure to clarify the failure. Avoid unnecessary removal, installation, disassembly and replacement.
- When disassembling the case and other light alloy parts, use a plastic hammer to force it apart. Do not pry apart with screwdrivers or other tools.
- Vehicle components are extremely hot after driving. Be wary of receiving burns from heated parts.
- Use SUBARU genuine gear oil, grease or equivalent. Do not mix gear oil, grease, etc. of different grades or manufacturers.
- Be sure to tighten fasteners including bolts and nuts to the specified torque.
- Place shop jacks or rigid racks at the specified points.
- Apply gear oil onto sliding or revolving surfaces before installation.
- Replace deformed or damaged snap rings with new parts.
- Before installing O-rings or oil seals, apply sufficient amount of gear oil to avoid damage and deformation.
- Be careful not to incorrectly install or fail to install O-rings, snap rings and other such parts.
- Before securing a part on a vise, place cushioning material such as wood blocks, aluminum plate, or cloth between the part and the vise.
- Avoid damaging the mating surface of the case.
- Before applying liquid gasket, completely remove the old liquid gasket.

D: PREPARATION TOOL

1. SPECIAL TOOL

ILLUSTRATION	TOOL NUMBER	DESCRIPTION	REMARKS
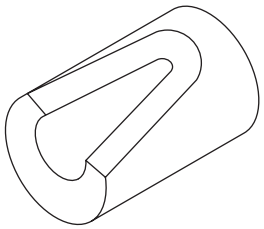 ST-399411700	399411700	ACCENT BALL INSTALLER	Used for installing reverse fork rod arm.
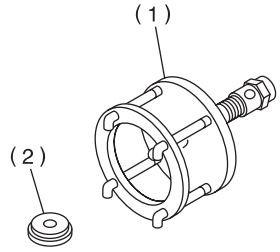 ST-899524100	899524100	PULLER SET	Used for removing the front differential roller bearing. (1) Puller (2) Cap
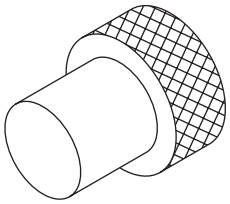 ST-399780104	399780104	WEIGHT	Used for adjusting preload on the front differential roller bearing.
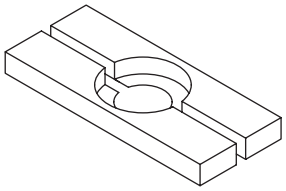 ST-498077000	498077000	REMOVER	• Used for removing the roller bearing of the drive pinion shaft. • Used for removing the roller bearing of the transfer driven gear.

ILLUSTRATION	TOOL NUMBER	DESCRIPTION	REMARKS
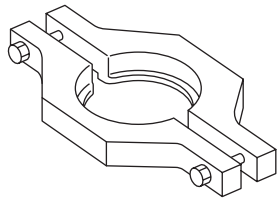 ST-498077300	498077300	CENTER DIFFERENTIAL BEARING REMOVER	Used for removing the center differential ball bearing.
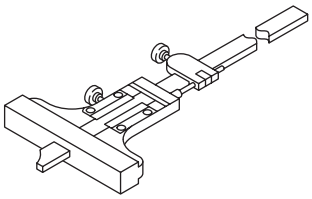 ST-498147001	498147001	DEPTH GAUGE	Used for adjusting the extension end play and main shaft end play.
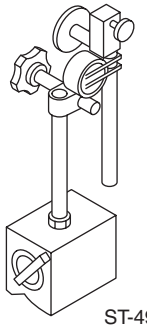 ST-498247001	498247001	MAGNET BASE	• Used for measuring the backlash of bevel pinion gear and hypoid gear. • Used together with DIAL GAUGE (498247100).
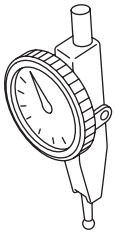 ST-498247100	498247100	DIAL GAUGE	• Used for measuring the backlash of bevel pinion gear and hypoid gear. • Used together with MAGNET BASE (498247001).
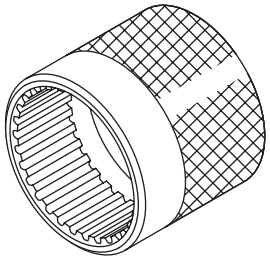 ST-498427100	498427100	STOPPER	• Used for removing and installing the drive pinion shaft assembly lock nut. • Used for measuring the backlash of hypoid gear. • Used for adjusting preload on the front differential roller bearing.

ILLUSTRATION	TOOL NUMBER	DESCRIPTION	REMARKS
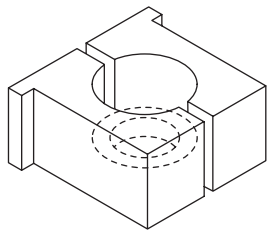 ST-498937000	498937000	TRANSMISSION HOLDER	Used for removing and installing the main shaft lock nut.
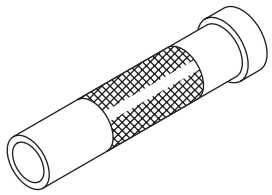 ST-499277100	499277100	BUSHING 1-2 INSTALLER	• Used for installing drive pinion shaft washer. • Used for installing the front differential roller bearing inner race.
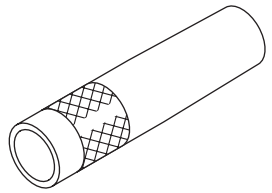 ST-499277200	499277200	INSTALLER	• Used for installing drive pinion shaft washer. • Used for installing the 2nd driven gear bushing, 3rd-4th driven gear, roller bearing and 5th driven gear.
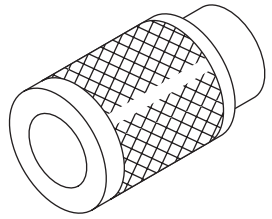 ST-499757002	499757002	INSTALLER	Used for removing the roller bearing and driven gear of the drive pinion shaft.
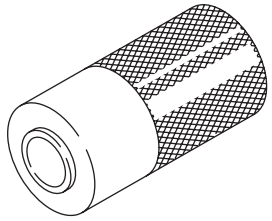 ST-927640000	927640000	INSTALLER	Used for installing the roller bearing (transfer case side) of transfer driven gear.

ILLUSTRATION	TOOL NUMBER	DESCRIPTION	REMARKS
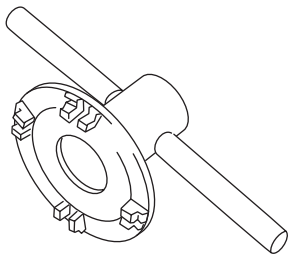 ST18630AA010	18630AA010	WRENCH COMPL RETAINER	• Used for removing and installing the differential side retainer. • Used for backlash adjustment of the front differential hypoid gear and preload adjustment of the roller bearing. • WRENCH ASSY (499787000) can also be used.
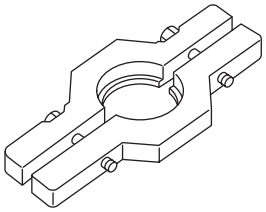 ST-499857000	499857000	5TH DRIVEN GEAR REMOVER	Used for removing the 5th driven gear.
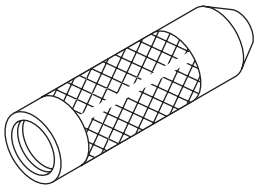 ST-499877000	499877000	RACE 4-5 INSTALLER	• Used for installing the 4th drive gear needle bearing race. • Used together with REMOVER (899714110). • Used for installing the main shaft ball bearing. • Used for installing the 5th drive gear thrust washer.
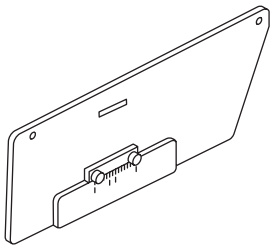 ST-499917500	499917500	DRIVE PINION GAUGE ASSY	Used for adjusting the drive pinion shim.
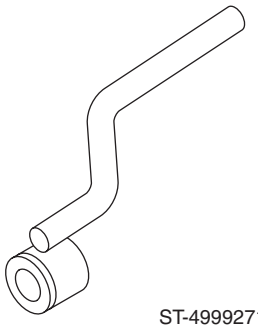 ST-499927100	499927100	HANDLE	Used for backlash adjustment of the front differential hypoid and preload adjustment of the roller bearing.

ILLUSTRATION	TOOL NUMBER	DESCRIPTION	REMARKS
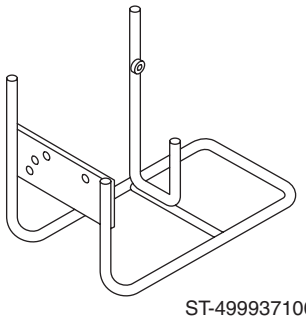 ST-499937100	499937100	TRANSMISSION STAND SET	Used for disassembling and assembling the transmission.
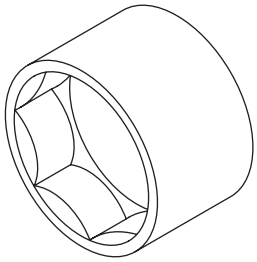 ST-499987003	499987003	SOCKET WRENCH (35)	Used for removing and installing the main shaft lock nut.
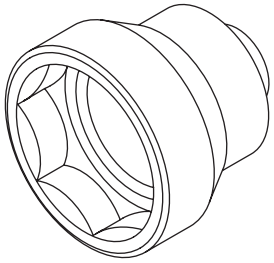 ST-499987300	499987300	SOCKET WRENCH (50)	Used for removing and installing the driven shaft lock nut.
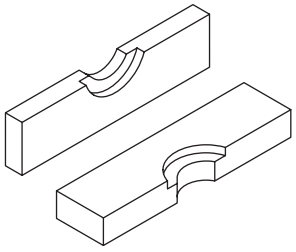 ST-899714110	899714110	REMOVER	Used for removing and installing the parts of main shaft and driven shaft.
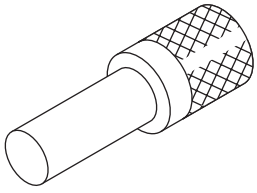 ST-899864100	899864100	REMOVER	• Used for removing the parts of the main shaft. • Used for installing the transfer case roller bearing. • Used for removing the roller bearing of transfer driven gear (transfer case side). • Used for installing the roller bearing of transfer driven gear (extension case side).

ILLUSTRATION	TOOL NUMBER	DESCRIPTION	REMARKS
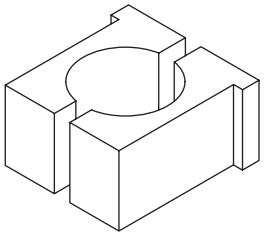 ST-899884100	899884100	HOLDER	• Used for removing and installing the drive pinion shaft lock nut. • Used for removing and installing the driven shaft lock nut. • Used for measuring the starting torque of the drive pinion shaft.
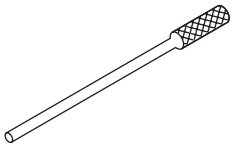 ST-899904100	899904100	STRAIGHT PIN REMOVER	Used for removing and installing the straight pin.
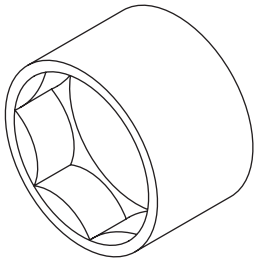 ST-899988608	899988608	SOCKET WRENCH (27)	• Used for removing and installing the drive pinion shaft lock nut. • Used for measuring the starting torque of the drive pinion shaft.
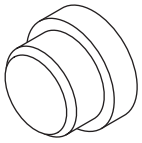 ST-398497701	398497701	ADAPTER	Used for installing the front differential roller bearing.
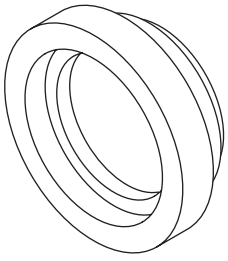 ST-499587000	499587000	INSTALLER	Used for installing the driven shaft parts.

ILLUSTRATION	TOOL NUMBER	DESCRIPTION	REMARKS
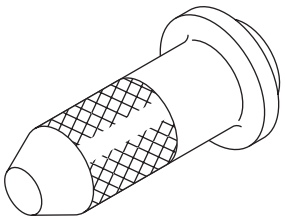 ST-498057300	498057300	INSTALLER	Used for installing the extension oil seal.
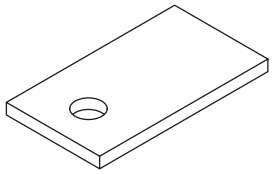 ST-498255400	498255400	PLATE	Used for measuring the hypoid gear backlash.
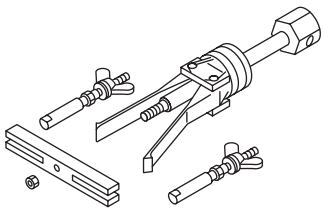 ST-398527700	398527700	PULLER ASSY	• Used for removing the extension oil seal. • Used for removing the bearing outer race and oil seal of front differential side retainer.
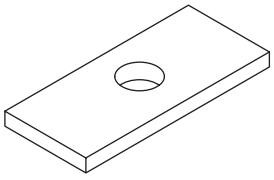 ST-398643600	398643600	GAUGE	Used for adjusting the extension end play.
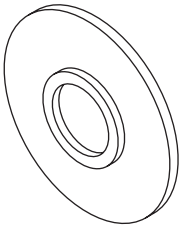 ST-398177700	398177700	INSTALLER	Used for installing the ball bearing of the transfer drive gear.

ILLUSTRATION	TOOL NUMBER	DESCRIPTION	REMARKS
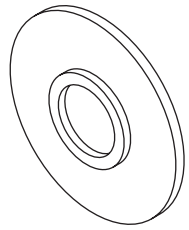 ST-498175500	498175500	INSTALLER	Used for installing the roller bearing of transfer driven gear (extension case side).
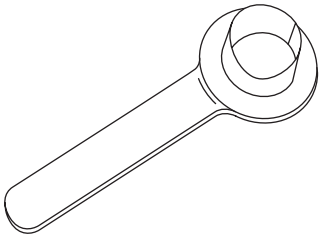 ST28399SA010	28399SA010	OIL SEAL PROTECTOR	Used for protecting oil seal when inserting the front drive shaft.
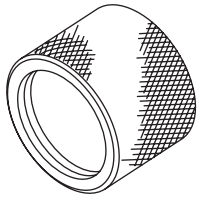 ST18675AA000	18675AA000	DIFFERENTIAL SIDE OIL SEAL INSTALLER	Used for installing the differential side retainer oil seal.
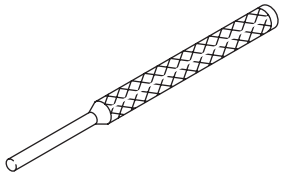 ST-398791700	398791700	STRAIGHT PIN REMOVER 2	Used for removing and installing the straight pin.
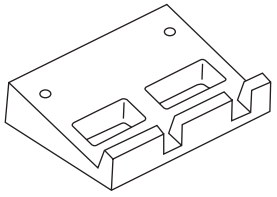 ST-498267200	498267200	CYLINDER HEAD TABLE	Used for removing and installing the roller bearing of the transfer case.

ILLUSTRATION	TOOL NUMBER	DESCRIPTION	REMARKS
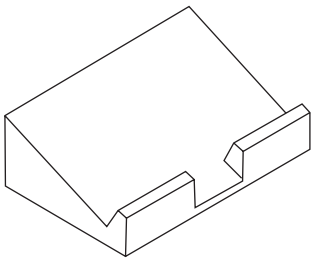 ST-498267300	498267300	CYLINDER HEAD TABLE	Used for removing and installing the roller bearing of the transfer case.
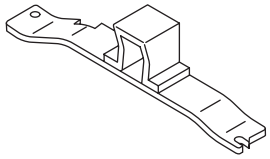 ST41099AA011	41099AA011	ENGINE SUPPORT BRACKET	• Used for supporting engine. • ENGINE SUPPORT BRACKET (41099AA010) can also be used.
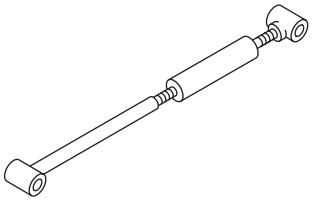 ST41099AA020	41099AA020	ENGINE SUPPORT	Used for supporting engine.

2. GENERAL TOOL

TOOL NAME	REMARKS
Circuit tester	Used for measuring resistance, voltage and current.
TORX® bit T70	Used for removing and installing the drain plug.

2. Transmission Gear Oil

A: INSPECTION

1) Park the vehicle on a level surface.
2) Turn the ignition switch to OFF, and wait until the engine cools.
3) Remove the oil level gauge and wipe it clean.
4) Reinsert the oil level gauge all the way. Be sure that the oil level gauge is correctly inserted in the proper direction.
5) Pull out the oil level gauge again, and check the oil level. If it is below the lower level, add oil through the oil level gauge hole to bring the level up to the upper level.

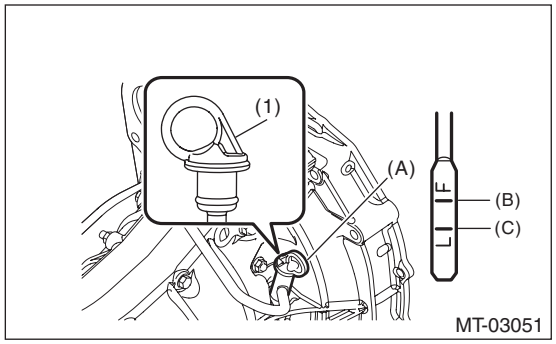

(A) Oil level gauge
(B) Upper level
(C) Lower level

(1) Gray

B: REPLACEMENT

1) Pull out the oil level gauge.
2) Lift up the vehicle.
3) Using the TORX® bit T70, remove the drain plug, and drain the transmission gear oil completely.

CAUTION:
• Immediately after driving the vehicle or after idling for a long time, the transmission gear oil will be hot. Be careful not to receive burns.
• Be careful not to spill the transmission gear oil on the exhaust pipe, to prevent emission of smoke or causing a fire. If gear oil is spilled, wipe it off completely.

4) Tighten the drain plug using TORX® bit T70.

NOTE:
• Tighten the drain plug after draining the transmission gear oil.
• Use a new gasket.

Tightening torque:
44 N·m (4.5 kgf-m, 32.5 ft-lb) (aluminum gasket, silver)
70 N·m (7.1 kgf-m, 51.6 ft-lb) (copper gasket, brown)
70 N·m (7.1 kgf-m, 51.6 ft-lb) (metal gasket, black)

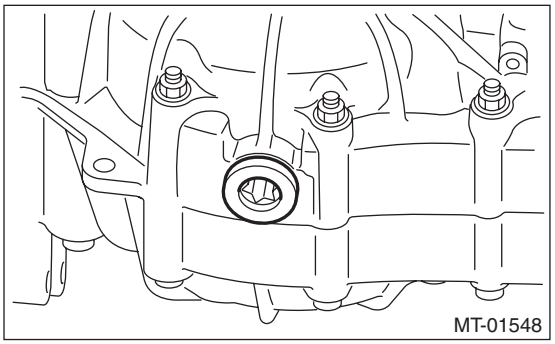

5) Lower the vehicle.
6) Pour gear oil through the oil level gauge hole.

Recommended gear oil:
SUBARU EXTRA MT

Alternative:
GL-5 (75W-90)

CAUTION:
If an alternative transmission gear oil is used, you may not have expected functionality and performance.

Gear oil capacity:
3.5 L (3.7 US qt, 3.1 Imp qt)
7) Measure the transmission gear oil amount, and check that it is within the specification.

3. Manual Transmission Assembly

A: REMOVAL

1) Disconnect the ground cable from battery.
2) Drain transmission gear oil completely. <Ref. to 5MT-22, REPLACEMENT, Transmission Gear Oil.>
3) Remove the clip (A) from the air intake boot.
4) Loosen the clamp (B) connecting the air intake boot and air cleaner case (rear).
5) Loosen the clamp (C) which connects the air intake boot and throttle body.

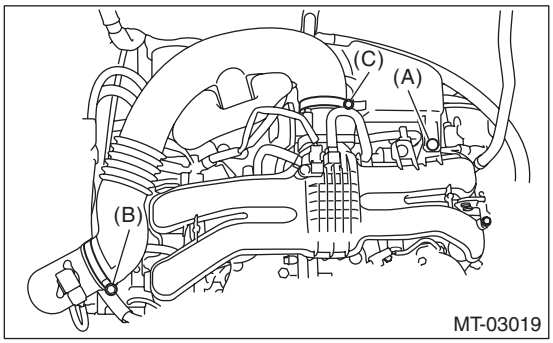

6) Remove the air intake boot from the throttle body, and move it to the left side wheel apron.

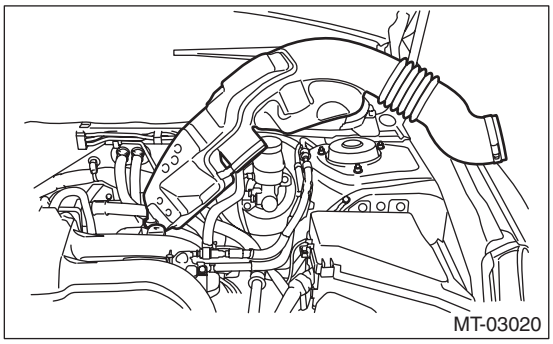

7) Disconnect the following connectors and remove the clip from the bracket.

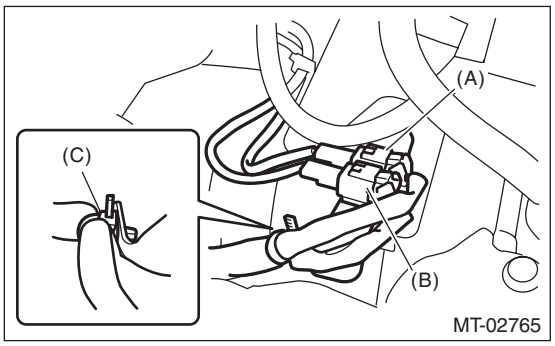

(A) Neutral position switch connector (brown)
(B) Back-up light switch connector (gray)
(C) Clip

8) Disconnect the transmission radio ground cord terminal.

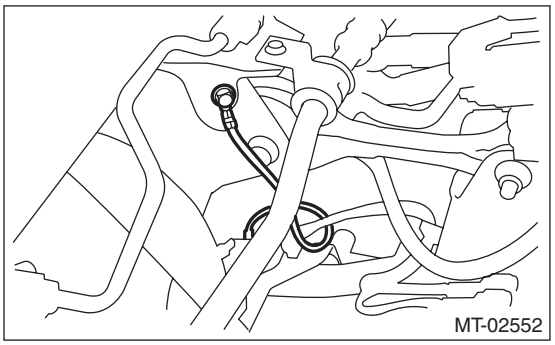

9) Remove the harness bracket, disconnect the engine harness connectors, remove the breather hose, and then remove the engine hanger rear.

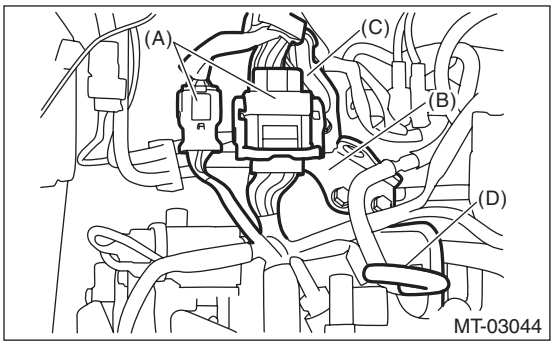

(A) Engine harness connectors
(B) Engine hanger rear
(C) Harness bracket
(D) Breather hose

10) Remove the starter. <Ref. to SC(H4DO(w/o HEV))-9, REMOVAL, Starter.>
11) Remove the operating cylinder from the transmission, and suspend on a wire.

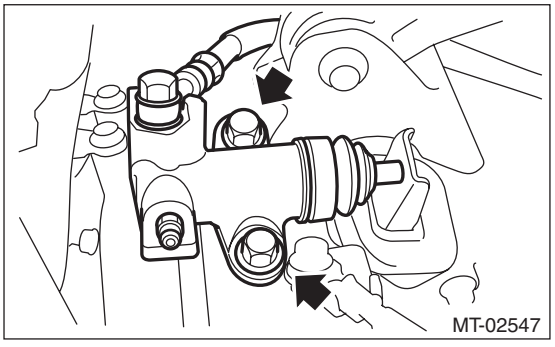

12) Remove the pitching stopper.

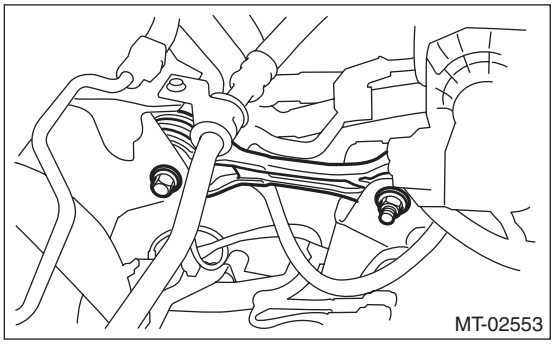

13) Disconnect two ground cables from rear end of the engine.

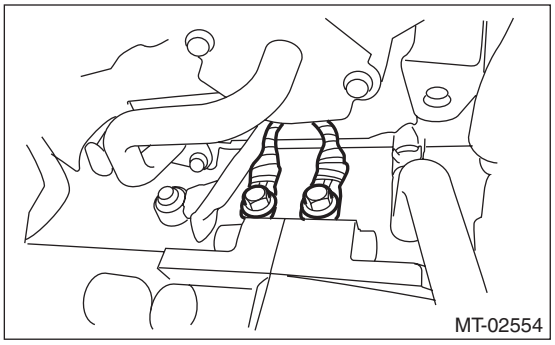

14) Set the ST.

ST1 41099AA010 ENGINE SUPPORT BRACKET (OR 41099AA011)
ST2 41099AA020 ENGINE SUPPORT

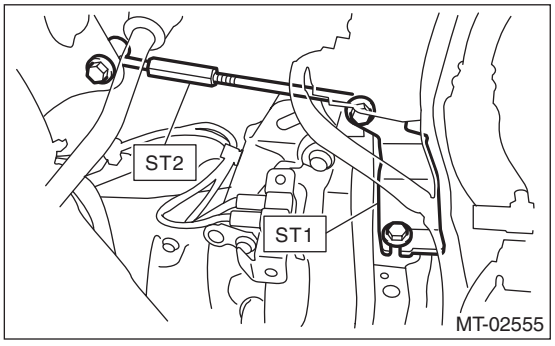

15) Lift up the vehicle.
16) Remove the under cover. <Ref. to EI-29, REMOVAL, Front Under Cover.>
17) Remove the center exhaust pipe. <Ref. to EX(H4DO(w/o HEV))-14, REMOVAL, Center Exhaust Pipe.>
18) Remove the bolts which hold upper side of transmission to engine.

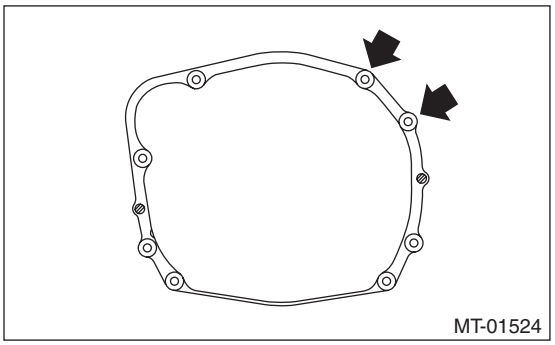

19) Remove the center exhaust cover.

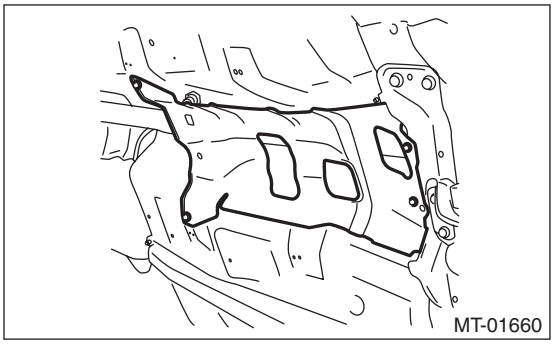

20) Remove the hangar bracket from the transmission.

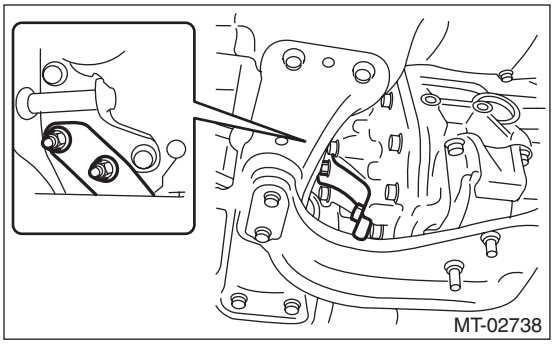

21) Remove the propeller shaft. <Ref. to DS-12, REMOVAL, Propeller Shaft.>
22) Remove the gear shift rod and the stay from the transmission.
(1) Remove the stay from the shift bracket.

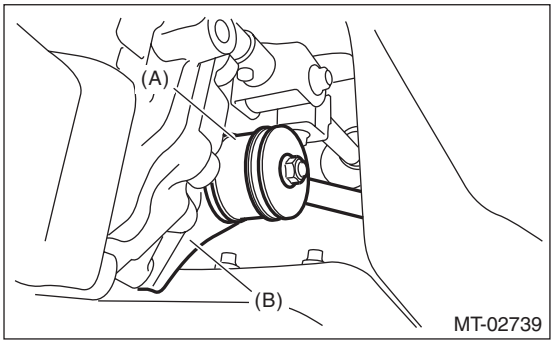

(A) Stay
(B) Shift bracket

(2) Remove the gear shift rod from the transmission.

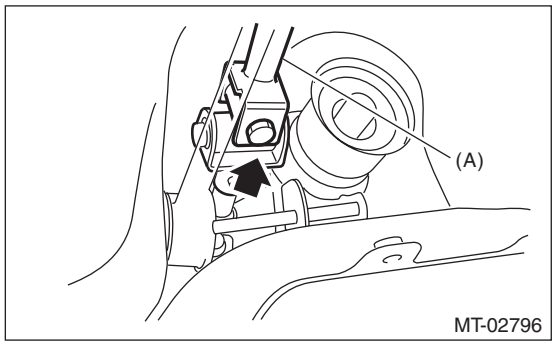

(A) Gear shift rod

23) Disconnect the stabilizer link from the front arm.

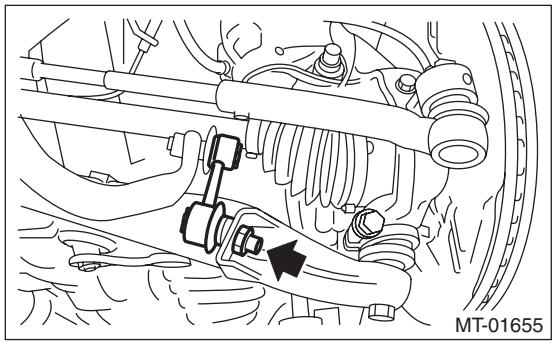

24) Remove the bolt securing the ball joint of the front arm to the housing, then separate the front arms and the housing.

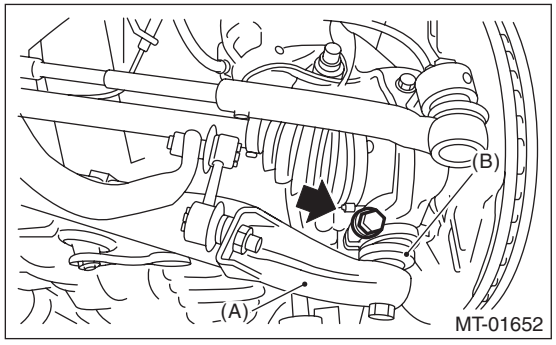

(A) Front arm
(B) Ball joint

25) Using a crowbar, remove the left and right front drive shaft from the transmission.

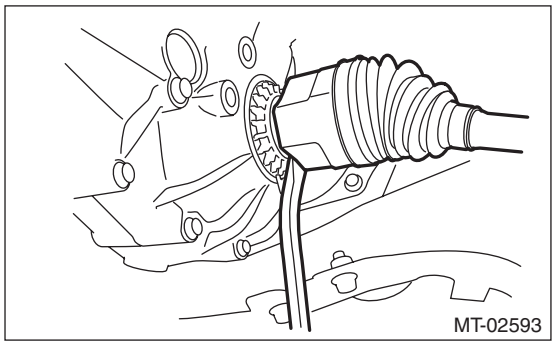

26) Remove the bolts and nuts which hold lower side of transmission to engine.

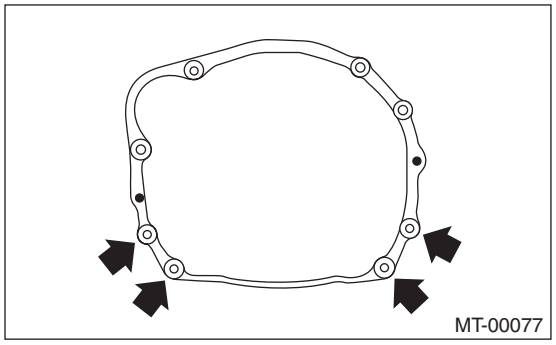

27) Place the transmission jack under the transmission.

CAUTION:
Always support the transmission case with a transmission jack.

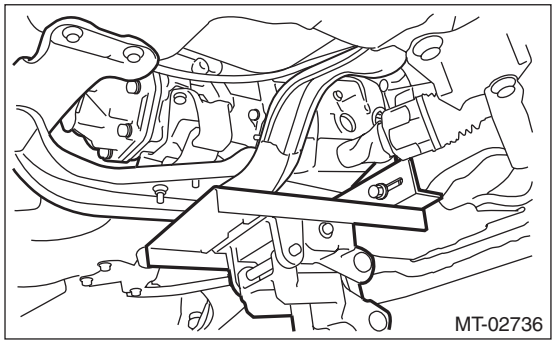

28) Remove the front crossmember and rear crossmember from the vehicle.

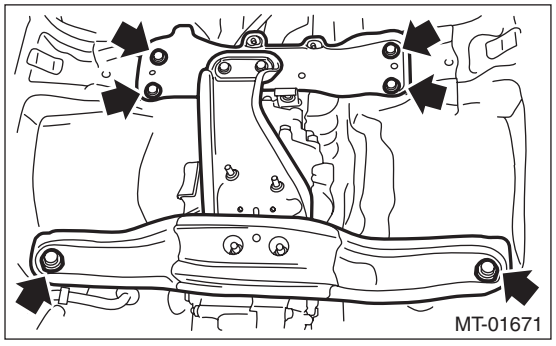

29) While lowering the transmission jack, tighten the turnbuckle of the ST, and incline the engine unit rearward.
30) Remove the transmission.

NOTE:
Move the transmission jack towards the rear until the main shaft is withdrawn from the clutch disc.
31) Separate the transmission assembly from the transmission cushion rubber.

B: INSTALLATION

1) Replace the differential side retainer oil seal. <Ref. to 5MT-34, REPLACEMENT, Differential Side Retainer Oil Seal.>

NOTE:
• Be sure to replace the differential side retainer oil seal after removing the front drive shaft.
• When a new differential side retainer oil seal has been installed, replacement is not required.
2) Strike and bend the transmission hanger of transmission rear with a rubber hammer etc. so that it gets in contact with the transmission case.

CAUTION:
Do not apply excessive load or impact to the transmission case.

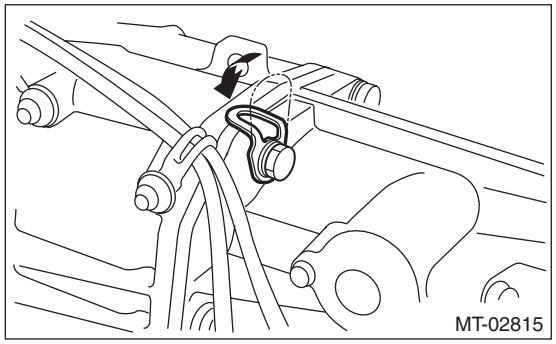
MT-02815

3) Install the transmission cushion rubber to the transmission, and tighten the bolt (A).
4) Install the transmission cushion rubber to the center crossmember, and temporarily tighten the nut (B).

Tightening torque:
Bolt (A)
35 N·m (3.6 kgf-m, 25.8 ft-lb)

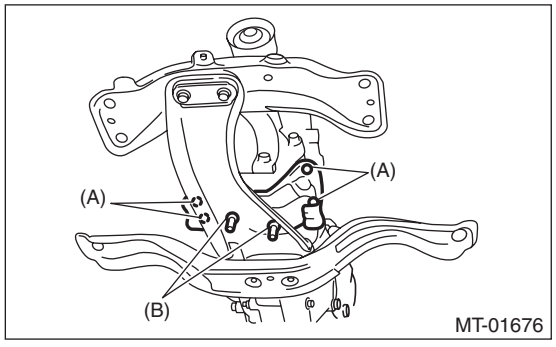

MT-01676

5) Install the transmission onto the engine.
(1) Lift up the transmission gradually using a transmission jack.
(2) Engage at the spline section.

NOTE:
Be careful not to hit the main shaft against the clutch cover.
6) While raising the transmission jack, loosen the turnbuckle of the ST, and set the engine unit to the original position.
7) Install the front crossmember and rear crossmember.
8) Tighten the transmission cushion rubber mounting nut.

Tightening torque:
T1: 70 N·m (7.1 kgf-m, 51.6 ft-lb)
T2: 140 N·m (14.3 kgf-m, 103.3 ft-lb)
T3: 35 N·m (3.6 kgf-m, 25.8 ft-lb)

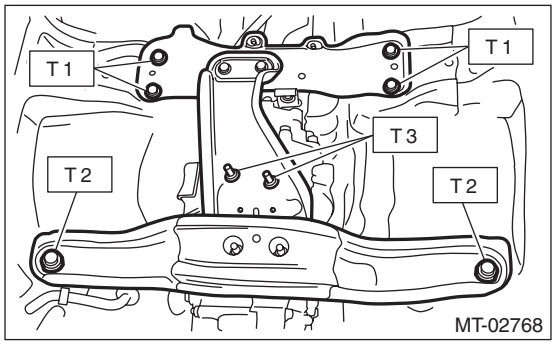

MT-02768

9) Take out the transmission jack.
10) Tighten the bolts and nuts which hold the lower side of transmission to the engine.

Tightening torque:
50 N·m (5.1 kgf-m, 36.9 ft-lb)

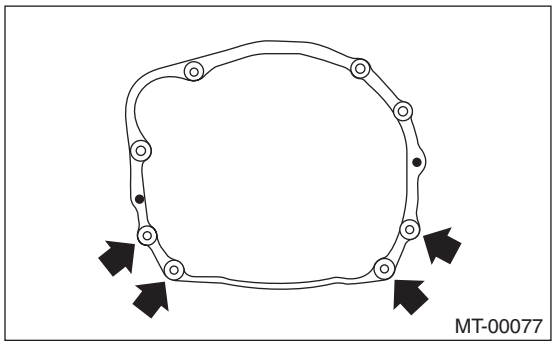
MT-00077

11) Lower the vehicle.
12) Install the starter. <Ref. to SC(H4DO(w/o HEV))-11, INSTALLATION, Starter.>

13) Tighten the bolts which hold the upper side of the transmission to the engine.

Tightening torque:
50 N·m (5.1 kgf-m, 36.9 ft-lb)

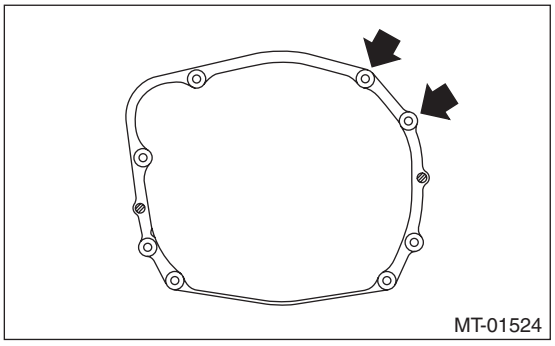

14) Remove the ST.

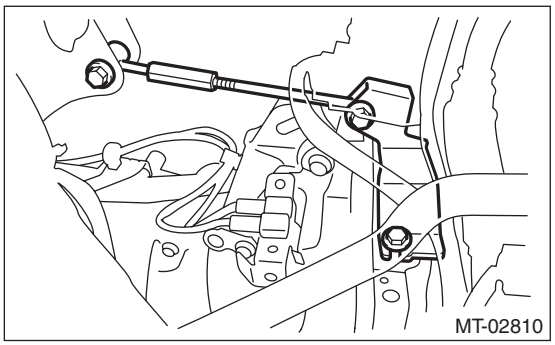

15) Install the ground cable.

Tightening torque:
19 N·m (1.9 kgf-m, 14.0 ft-lb)

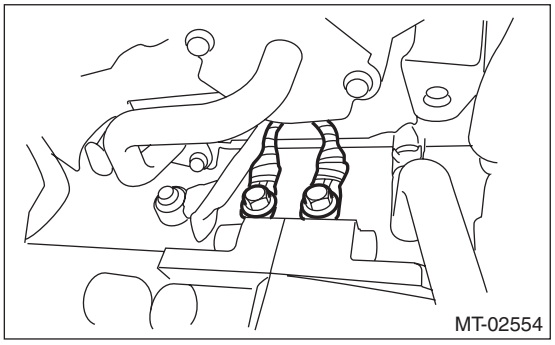

16) Install the pitching stopper.

Tightening torque:
T1: 50 N·m (5.1 kgf-m, 36.9 ft-lb)
T2: 58 N·m (5.9 kgf-m, 42.8 ft-lb)

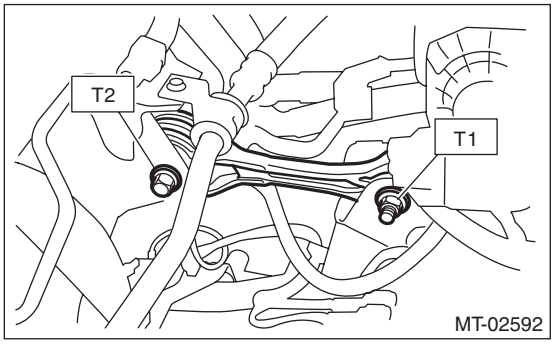

17) Lift up the vehicle.
18) Install the front drive shaft into the transmission.
ST 28399SA010 OIL SEAL PROTECTOR

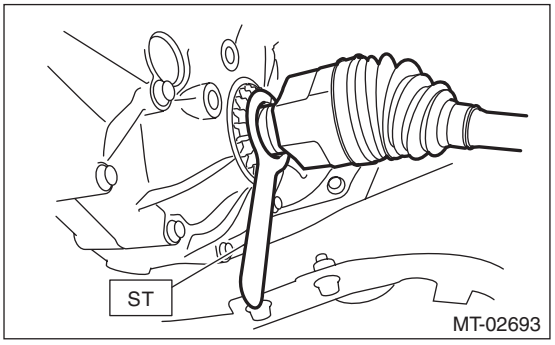

19) Insert the front arm ball joint into the housing lower part, and tighten the mounting bolt.

Tightening torque:
50 N·m (5.1 kgf-m, 36.9 ft-lb)

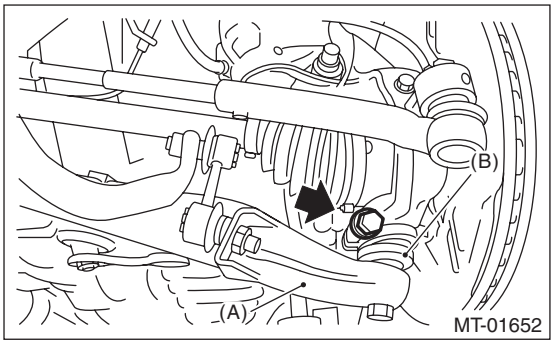

(A) Front arm
(B) Ball joint

20) Attach the stabilizer link to the front arm.

Tightening torque:
30 N·m (3.1 kgf-m, 22.1 ft-lb)

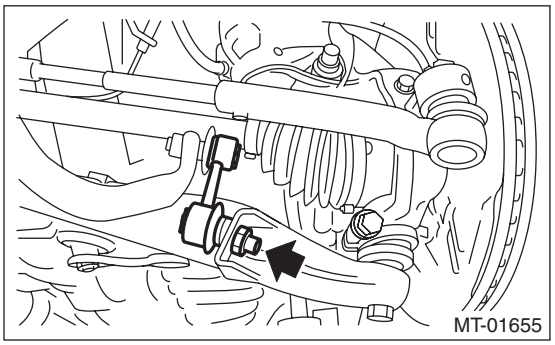

21) Attach the gear shift rod and stay.
(1) Attach the gear shift rod to the transmission.

NOTE:
Use a new self-locking nut.

Tightening torque:
12 N·m (1.2 kgf-m, 8.9 ft-lb)

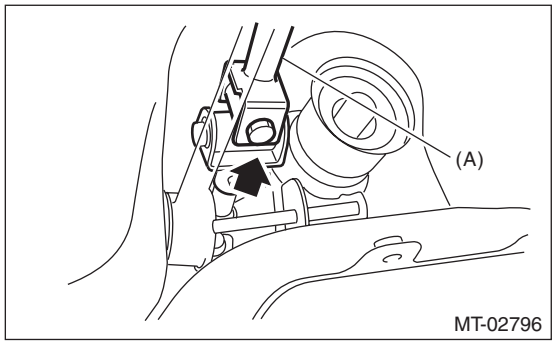

(A) Gear shift rod

(2) Install the stay to the shift bracket.

NOTE:
Use a new self-locking nut.

Tightening torque:
18 N·m (1.8 kgf-m, 13.3 ft-lb)

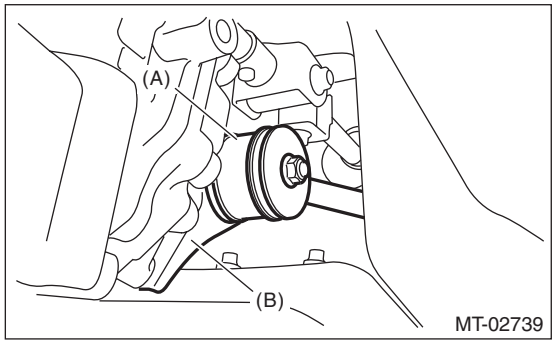

(A) Stay
(B) Shift bracket

22) Install the propeller shaft. <Ref. to DS-13, INSTALLATION, Propeller Shaft.>
23) Install the hanger bracket to the transmission.

Tightening torque:
23 N·m (2.3 kgf-m, 17.0 ft-lb)

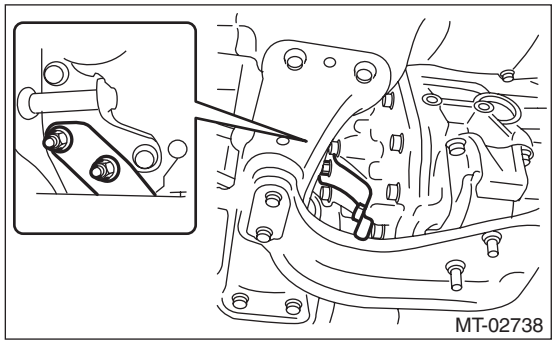

24) Install the center exhaust cover.
Tightening torque:
18 N·m (1.8 kgf-m, 13.3 ft-lb)

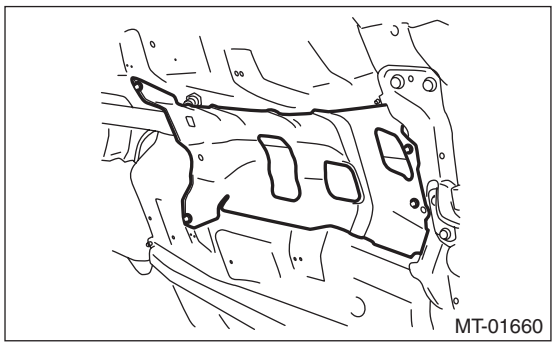

25) Install the center exhaust pipe. <Ref. to EX(H4DO(w/o HEV))-15, INSTALLATION, Center Exhaust Pipe.>
26) Install the under cover. <Ref. to EI-29, INSTALLATION, Front Under Cover.>
27) Install the operating cylinder.

Tightening torque:
37 N·m (3.8 kgf-m, 27.3 ft-lb)

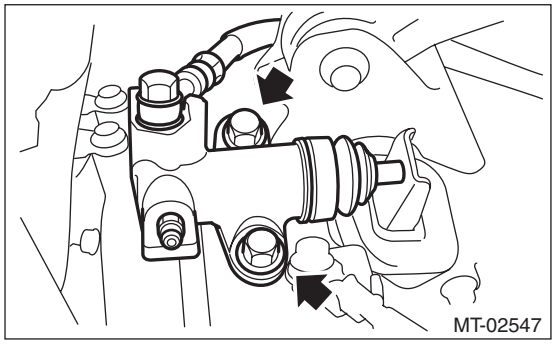

28) Install the transmission radio ground cord terminal.

Tightening torque:
13 N·m (1.3 kgf-m, 9.6 ft-lb)

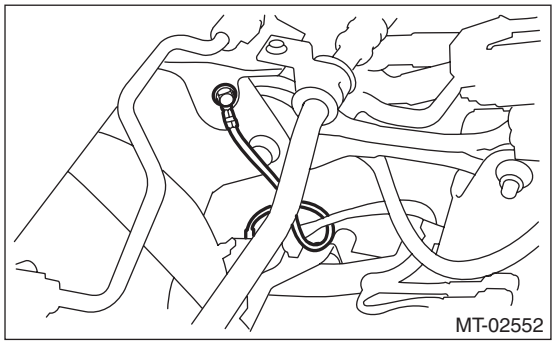

29) Install the engine hanger rear.

Tightening torque:
21 N·m (2.1 kgf-m, 15.5 ft-lb)

30) Install the breather hose.

31) Connect the engine harness connector, then attach the harness bracket.

Tightening torque:
7.5 N·m (0.8 kgf-m, 5.5 ft-lb)

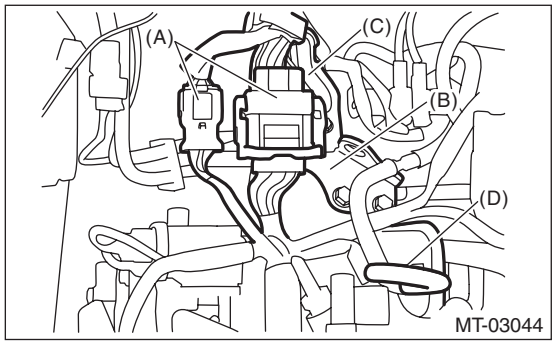

(A) Engine harness connectors
(B) Engine hanger rear
(C) Harness bracket
(D) Breather hose

32) Connect the following connectors and secure the clip on the bracket.

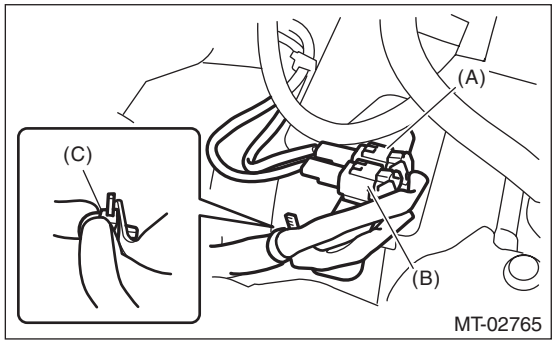

(A) Neutral position switch connector (brown)
(B) Back-up light switch connector (gray)
(C) Clip

33) Install the air intake boot. <Ref. to IN(H4DO(w/o HEV))-12, INSTALLATION, Air Intake Boot.>

34) Connect the battery ground terminal.

35) Remove the lift arm from vehicle.

4. Transmission Mounting System

A: REMOVAL

1. PITCHING STOPPER

1) Disconnect the ground cable from battery.
2) Remove the air intake boot. <Ref. to IN(H4DO(w/o HEV))-12, REMOVAL, Air Intake Boot.>
3) Remove the pitching stopper.

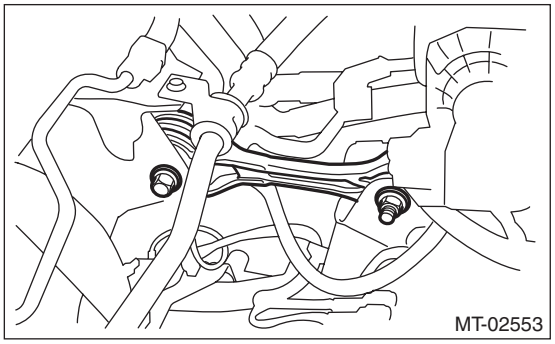

2. CROSSMEMBER AND CUSHION RUBBER

1) Disconnect the ground cable from battery.
2) Lift up the vehicle.
3) Remove the center exhaust pipe. <Ref. to EX(H4DO(w/o HEV))-14, REMOVAL, Center Exhaust Pipe.>
4) Remove the center exhaust cover.

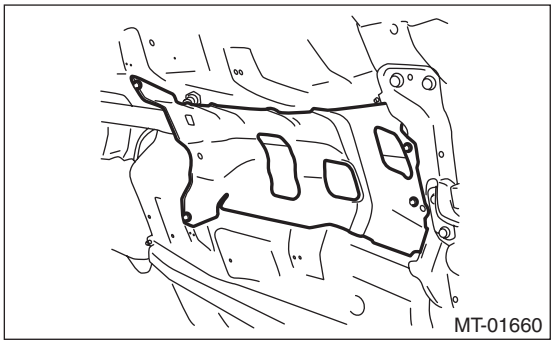

5) Set the transmission jack under the transmission body.

CAUTION:
Always support the transmission case with a transmission jack.

6) Remove the front crossmember and the rear crossmember.

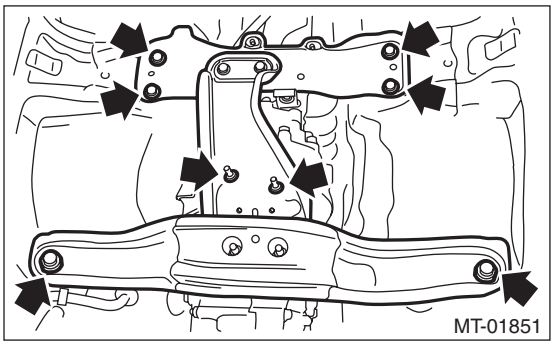

7) Remove the transmission cushion rubber.

B: INSTALLATION

1. PITCHING STOPPER

1) Install the pitching stopper.

Tightening torque:
T1: 50 N·m (5.1 kgf-m, 36.9 ft-lb)
T2: 58 N·m (5.9 kgf-m, 42.8 ft-lb)

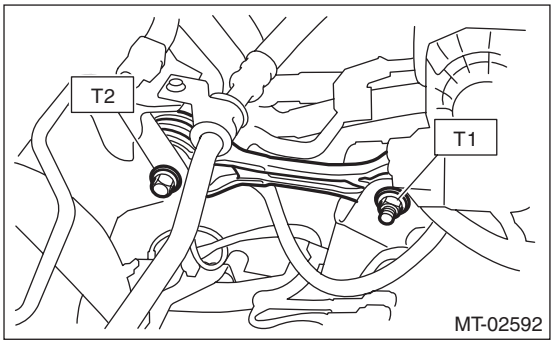

2) Install the air intake boot. <Ref. to IN(H4DO(w/o HEV))-12, INSTALLATION, Air Intake Boot.>
3) Connect the battery ground terminal.

2. CROSSMEMBER AND CUSHION RUBBER

1) Install the transmission cushion rubber to the transmission, and tighten the bolt (A).
2) Install the transmission cushion rubber to the center crossmember, and temporarily tighten the nut (B).

Tightening torque:
Bolt (A)
35 N·m (3.6 kgf-m, 25.8 ft-lb)

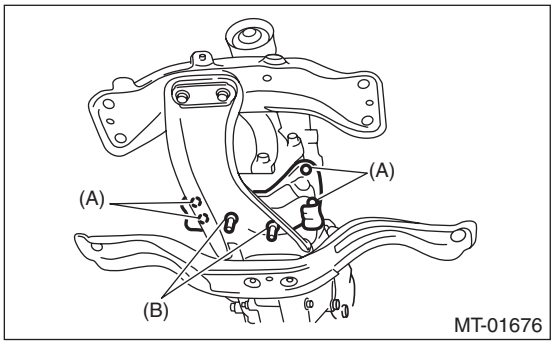

3) Install the front crossmember and rear crossmember.
4) Tighten the transmission cushion rubber mounting nut.

Tightening torque:
T1: 70 N·m (7.1 kgf-m, 51.6 ft-lb)
T2: 140 N·m (14.3 kgf-m, 103.3 ft-lb)
T3: 35 N·m (3.6 kgf-m, 25.8 ft-lb)

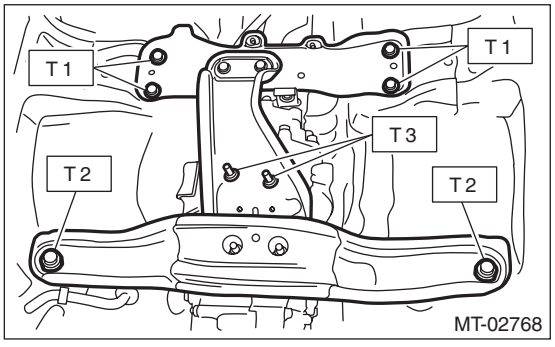

5) Remove the transmission jack.
6) Install the center exhaust cover.

Tightening torque:
18 N·m (1.8 kgf-m, 13.3 ft-lb)

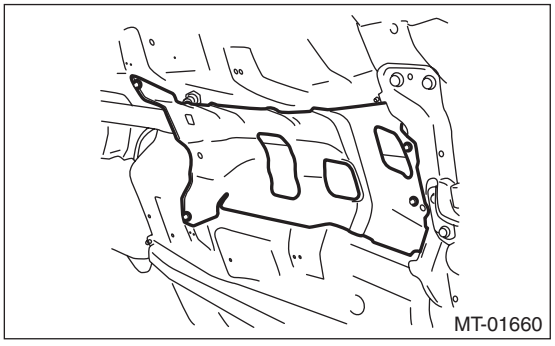

7) Install the center exhaust pipe. <Ref. to EX(H4DO(w/o HEV))-15, INSTALLATION, Center Exhaust Pipe.>
8) Lower the vehicle.
9) Connect the battery ground terminal.

C: INSPECTION

Check the following; repair or replace the faulty parts.

1. PITCHING STOPPER

Check the pitching stopper for bends or damage. Check that the rubber is not stiff, cracked or otherwise damaged.

2. CROSSMEMBER AND CUSHION RUBBER

Check the crossmember for bending or damage. Check that the cushion rubber does not have hardening, cracks or other damages.

5. Oil Seal

A: INSPECTION

Check for leakage of transmission gear oil from the oil seal. If there is oil leakage, replace the oil seal with the new part and check the propeller shaft.

B: REPLACEMENT

1) Disconnect the ground cable from battery.
2) Lift up the vehicle.
3) Clean the transmission exterior.
4) Using the TORX® bit T70, remove the drain plug, and drain the transmission gear oil completely.

CAUTION:
• Immediately after the vehicle has been running or after idling for a long time, the transmission gear oil will be hot. Be careful not to receive burns.
• Be careful not to spill the transmission gear oil on the exhaust pipe, to prevent emission of smoke or causing a fire. If gear oil is spilled, wipe it off completely.
5) Tighten the drain plug using TORX® bit T70.

NOTE:
Use a new gasket.

Tightening torque:
44 N·m (4.5 kgf-m, 32.5 ft-lb) (Aluminum gasket silver)
70 N·m (7.1 kgf-m, 51.6 ft-lb) (Copper gasket brown)
70 N·m (7.1 kgf-m, 51.6 ft-lb) (Metal gasket black)

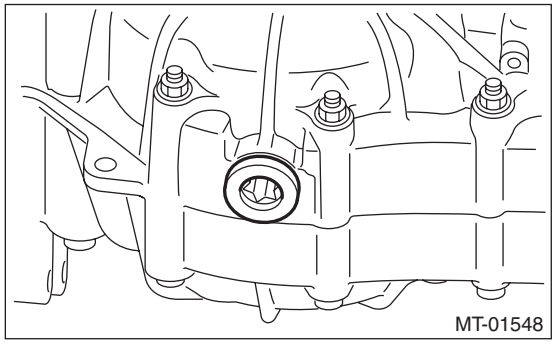
MT-01548

6) Remove the rear exhaust pipe. <Ref. to EX(H4DO(w/o HEV))-18, REMOVAL, Rear Exhaust Pipe.>

7) Remove the center exhaust cover.

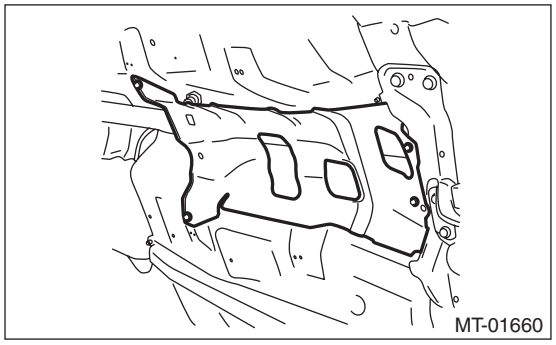
MT-01660

8) Remove the propeller shaft. <Ref. to DS-12, REMOVAL, Propeller Shaft.>
9) Using the ST, remove the oil seal.
ST 398527700 PULLER ASSY

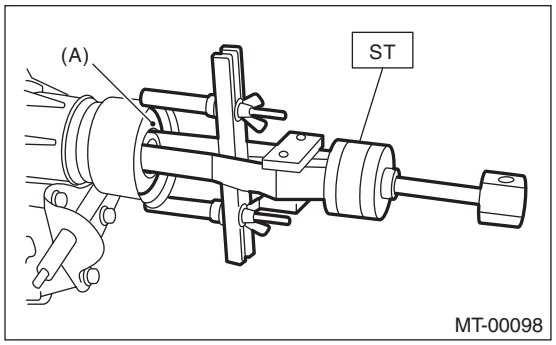

MT-00098

(A) Oil seal

10) Using the ST, install the oil seal.

NOTE:
• When grease is not applied to the oil seal lips, apply the transmission gear oil to the oil seal lips.
• Use a new oil seal.
ST 498057300 INSTALLER

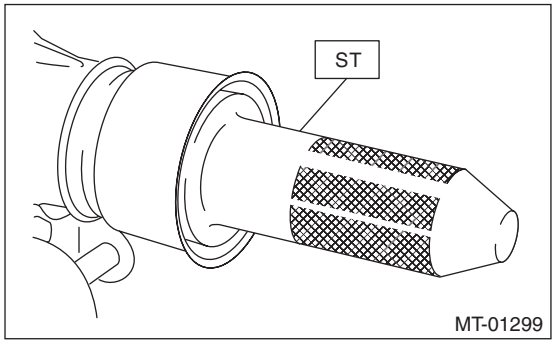

MT-01299

11) Install the propeller shaft. <Ref. to DS-13, INSTALLATION, Propeller Shaft.>

12) Install the center exhaust cover.

Tightening torque:
18 N·m (1.8 kgf-m, 13.3 ft-lb)

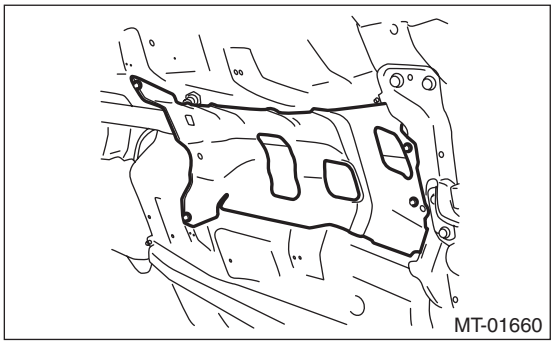

13) Install the rear exhaust pipe. <Ref. to EX(H4DO(w/o HEV))-20, INSTALLATION, Rear Exhaust Pipe.>
14) Pour in transmission gear oil and check the oil level. <Ref. to 5MT-22, Transmission Gear Oil.>
15) Connect the battery ground terminal.

6. Differential Side Retainer Oil Seal

A: INSPECTION

Check for leakage of gear oil from differential side retainer oil seal part. If there is oil leakage, replace the oil seal with the new part and check the drive shaft.

B: REPLACEMENT

1) Disconnect the ground cable from battery.
2) Lift up the vehicle.
3) Using the TORX® bit T70, remove the drain plug, and drain the transmission gear oil completely.

CAUTION:
• Immediately after the vehicle has been running or after idling for a long time, the transmission gear oil will be hot. Be careful not to receive burns.
• Be careful not to spill the transmission gear oil on the exhaust pipe, to prevent emission of smoke or causing a fire. If gear oil is spilled, wipe it off completely.
4) Tighten the drain plug using TORX® bit T70.

NOTE:
Use a new gasket.

Tightening torque:
44 N·m (4.5 kgf-m, 32.5 ft-lb) (Aluminum gasket silver)
70 N·m (7.1 kgf-m, 51.6 ft-lb) (Copper gasket brown)
70 N·m (7.1 kgf-m, 51.6 ft-lb) (Metal gasket black)

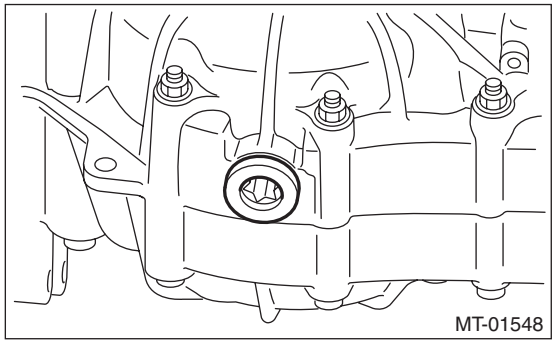

5) Remove the center exhaust pipe. <Ref. to EX(H4DO(w/o HEV))-14, REMOVAL, Center Exhaust Pipe.>
6) Separate the front drive shaft from the transmission. <Ref. to DS-57, REMOVAL, Front Drive Shaft.>
7) Remove the differential side retainer oil seal.

NOTE:
• Be sure to replace the differential side retainer oil seal whenever the front drive shaft is removed from the transmission.
• Use the ST 398527700 PULLER ASSY to remove the oil seal. If removing the oil seal with a flat tip screwdriver, be careful not to scratch the differential side retainer.
8) Using the ST, install the differential side retainer oil seal by lightly tapping with a plastic hammer.

CAUTION:
• Apply transmission gear oil to the oil seal lips, and install the oil seal while being careful not to deform the lip.
• Check the identification marks (R, L) during the installation so as not to mix up the oil seal RH and LH.

NOTE:
Use a new oil seal.
ST 18675AA000 DIFFERENTIAL SIDE OIL SEAL INSTALLER

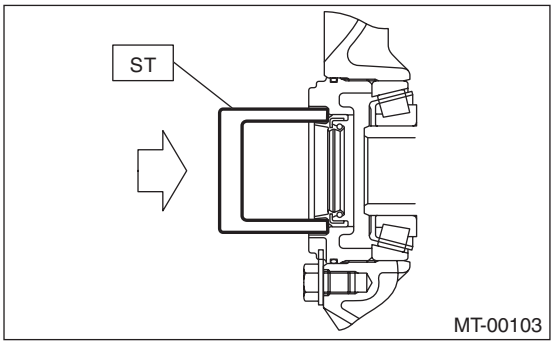

9) Install the front drive shaft. <Ref. to DS-58, INSTALLATION, Front Drive Shaft.>
ST 28399SA010 OIL SEAL PROTECTOR
10) Install the center exhaust pipe. <Ref. to EX(H4DO(w/o HEV))-15, INSTALLATION, Center Exhaust Pipe.>
11) Lower the vehicle.
12) Pour in transmission gear oil and check the oil level. <Ref. to 5MT-22, REPLACEMENT, Transmission Gear Oil.>
13) Connect the battery ground terminal.

7. Switches and Harness

A: REMOVAL

1. BACK-UP LIGHT AND NEUTRAL POSITION SWITCH

1) Disconnect the ground cable from battery.
2) Remove the clip (A) from the air intake boot.
3) Loosen the clamp (B) connecting the air intake boot and air cleaner case (rear).
4) Loosen the clamp (C) which connects the air intake boot and throttle body.

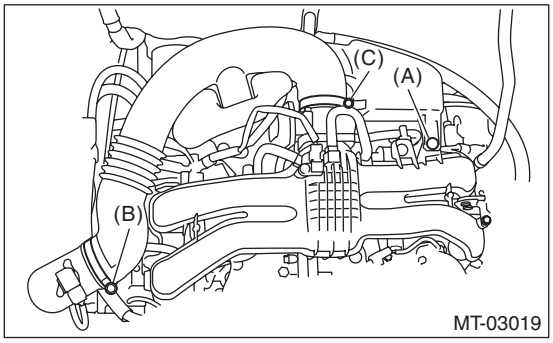

5) Remove the air intake boot from the throttle body, and move it to the left side wheel apron.

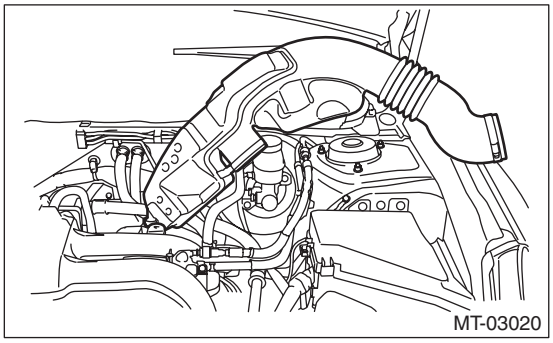

6) Disconnect the connector back-up light switch & neutral position switch.

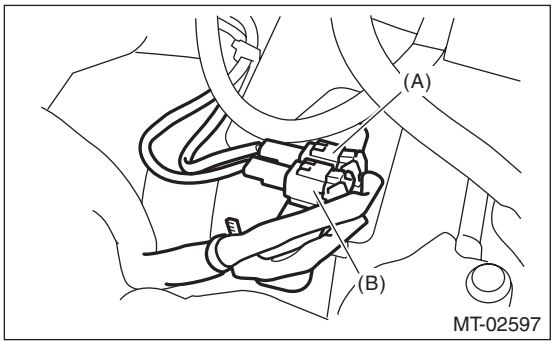

(A) Neutral position switch connector (brown)
(B) Back-up light switch connector (gray)

7) Remove the harness connector from bracket.
8) Lift up the vehicle.
9) Remove the harness from each clip.
10) Remove the back-up light switch & neutral position switch with the harness.

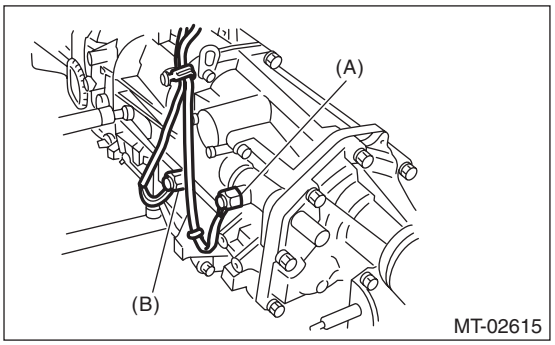

(A) Neutral position switch
(B) Back-up light switch

B: INSTALLATION

1. BACK-UP LIGHT AND NEUTRAL POSITION SWITCH

1) Install the back-up light switch & neutral position switch with the harness.

NOTE:
Use a new gasket.

Tightening torque:
32.3 N·m (3.3 kgf-m, 23.8 ft-lb)

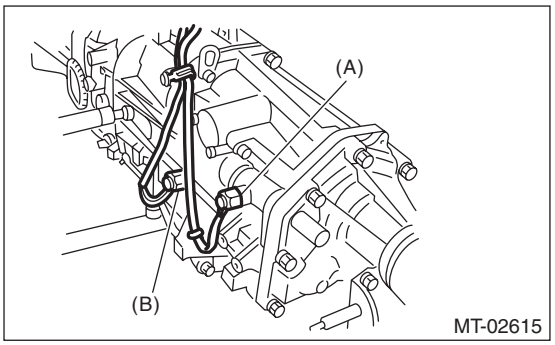

(A) Neutral position switch
(B) Back-up light switch

2) Secure the switch harness on each clip.
3) Lower the vehicle.
4) Connect the connectors for back-up light switch and neutral position switch, and secure the connector to the bracket.
5) Install the air intake boot. <Ref. to IN(H4DO(w/o HEV))-12, INSTALLATION, Air Intake Boot.>
6) Connect the battery ground terminal.

C: INSPECTION

1. BACK-UP LIGHT SWITCH

1) Turn the ignition switch to OFF.
2) Disconnect the back light switch connector.
3) Measure the resistance between the back-up light switch terminals.

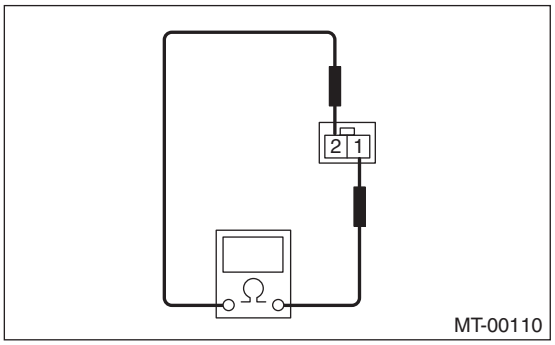

Gear shift position	Terminal No.	Specified resistance
Reverse position	1 and 2	Less than 1 Ω
Other positions		1 MΩ or more

4) Replace faulty parts.

2. NEUTRAL POSITION SWITCH

1) Turn the ignition switch to OFF.
2) Disconnect the connector of neutral position switch.
3) Measure the resistance between neutral position switch terminals.

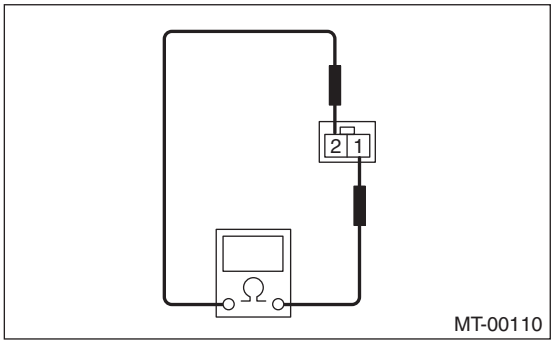

Gear shift position	Terminal No.	Specified resistance
Neutral position	1 and 2	Less than 1 Ω
Other positions		1 MΩ or more

4) Replace faulty parts.

8. Air Breather Hose

A: REMOVAL

1) Remove the clip (A) from the air intake boot.
2) Loosen the clamp (B) connecting the air intake boot and air cleaner case (rear).
3) Loosen the clamp (C) which connects the air intake boot and throttle body.

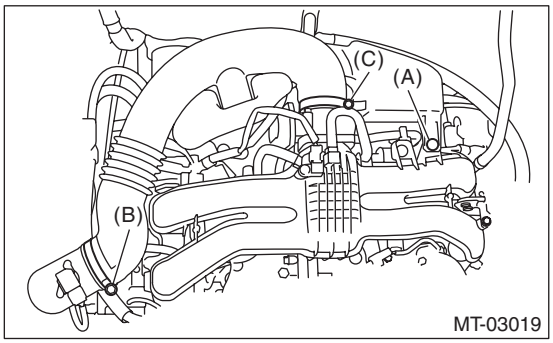

4) Remove the air intake boot from the throttle body, and move it to the left side wheel apron.

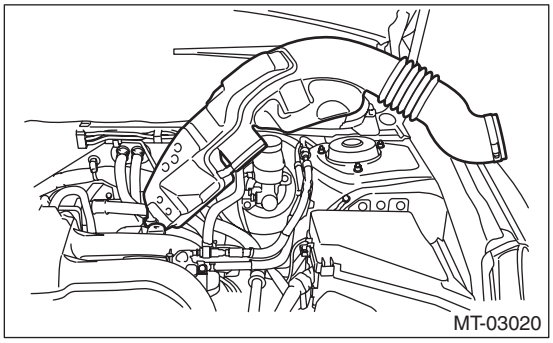

5) Remove the air breather hose.

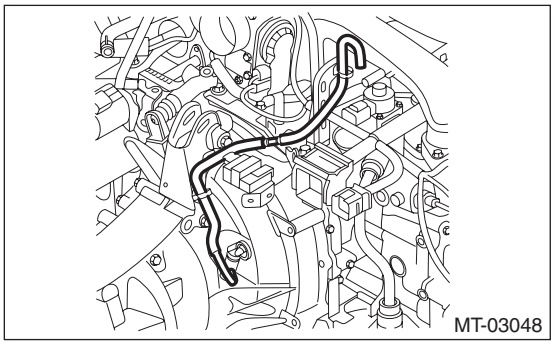

B: INSTALLATION

Install in the reverse order of removal.

C: INSPECTION

Check the hose for peeling, crack or clogging.

9. Preparation for Overhaul

A: PROCEDURE

1) Clean oil, grease, dirt and dust from the transmission.
2) When gear oil remains in the transmission, use the TORX® bit T70 to remove the drain plug, and drain the transmission gear oil completely.
3) Tighten the drain plug using TORX® bit T70.

NOTE:
Use a new gasket.

Tightening torque:
44 N·m (4.5 kgf-m, 32.5 ft-lb) (Aluminum gasket silver)
70 N·m (7.1 kgf-m, 51.6 ft-lb) (Copper gasket brown)
70 N·m (7.1 kgf-m, 51.6 ft-lb) (Metal gasket black)

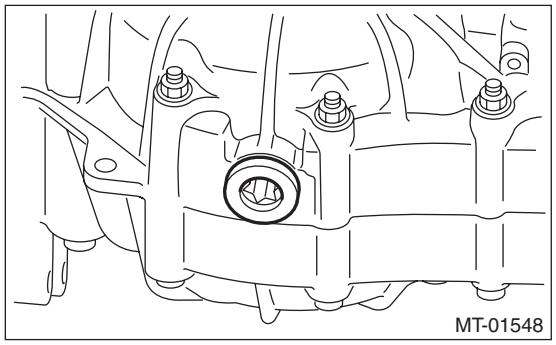

4) Attach the transmission to the ST.
ST 499937100 TRANSMISSION STAND

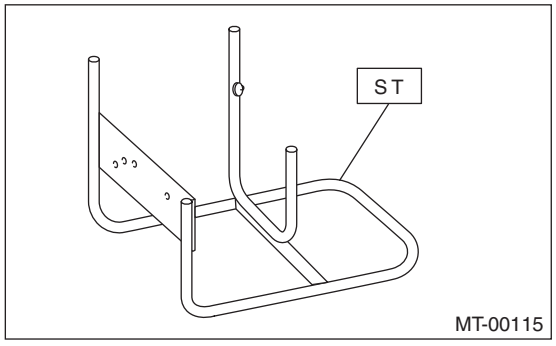

5) Apply oil to rotating parts before assembly.
6) All disassembled parts, if to be reused, should be reinstalled in the original positions and directions.
7) Gaskets, lock washers and lock nuts must be replaced with new ones.
8) Apply liquid gasket to the specified areas to prevent leakage.

10. Transfer Case and Extension Case Assembly

A: REMOVAL

1) Remove the manual transmission assembly from the vehicle. <Ref. to 5MT-23, REMOVAL, Manual Transmission Assembly.>
2) Remove the back-up light switch and the neutral position switch. <Ref. to 5MT-35, REMOVAL, Switches and Harness.>
3) Remove the transfer case together with the extension case assembly.

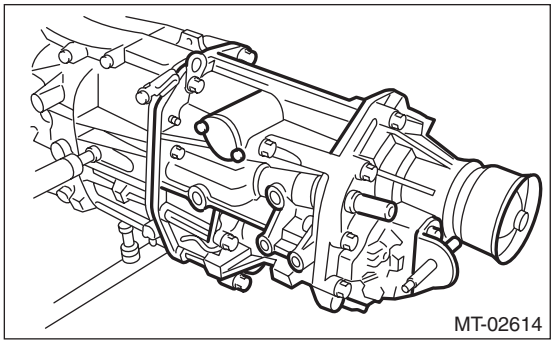
MT-02614

4) Remove the gasket.
5) Remove the shifter arm.
6) Remove the extension case assembly.

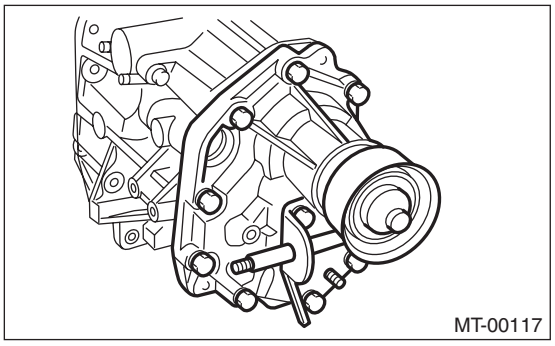
MT-00117

7) Remove the transfer driven gear.
8) Remove the bearing outer race, dish plate and adjusting washer from the extension case.

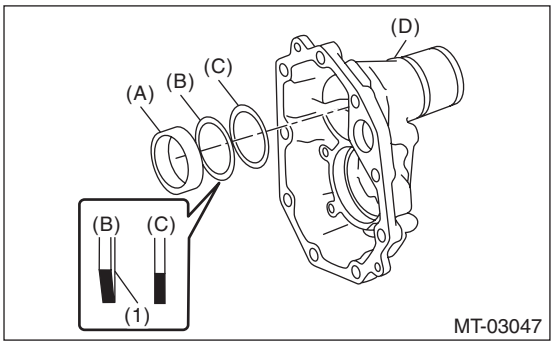

MT-03047

(A) Bearing outer race
(B) Dish plate
(C) Adjusting washer
(D) Extension case

(1) Paint side

B: INSTALLATION

1) Clean the mating surfaces of the transmission case, transfer case and extension case.
2) Apply a coat of grease to the front roller bearing and rear roller bearing of the transfer driven gear.

Grease:
NICHIMOLY N-130 or equivalent

3) Install the center differential and transfer driven gear into the transfer case.

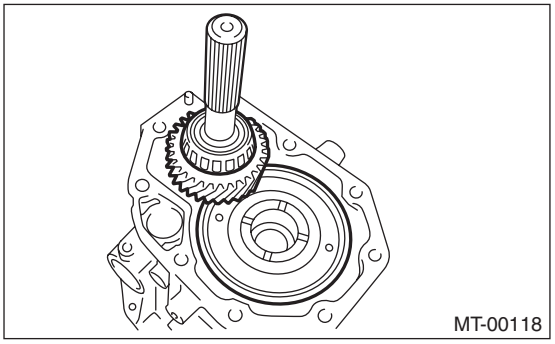
MT-00118

4) Install the bearing outer race to transfer driven gear.
5) While pressing the bearing outer race horizontally, rotate the driven shaft for ten turns.

6) Measure the height “W” between transfer case and taper roller bearing on the transfer driven gear.

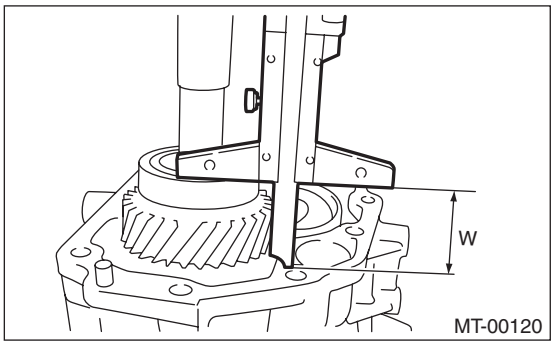

7) Measure depth “X” of bearing insertion part of the extension case.

NOTE:
Measure with bearing outer race, dish plate and adjusting washer removed.

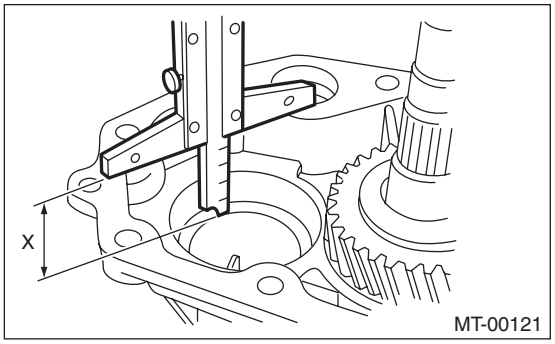

8) Calculate the adjusting washer thickness “t” using the following calculation.
t = X – W – (1.715 — 1.765 mm (0.686 — 0.706 in))
X: Depth of bearing insertion part of the extension case
W: Height between transfer case and taper roller bearing on the transfer driven gear

9) Select the adjusting washer with the nearest value in the following table.

NOTE:
Be sure that it is always within the preload.

Adjusting washer (61 × 50 × t)	
Part No.	Thickness mm (in)
803050060	0.50 (0.0197)
803050061	0.55 (0.0217)
803050062	0.60 (0.0236)
803050063	0.65 (0.0256)
803050064	0.70 (0.0276)
803050065	0.75 (0.0295)
803050066	0.80 (0.0315)
803050067	0.85 (0.0335)
803050068	0.90 (0.0354)
803050069	0.95 (0.0374)
803050070	1.00 (0.0394)
803050071	1.05 (0.0413)
803050072	1.10 (0.0433)
803050073	1.15 (0.0453)
803050074	1.20 (0.0472)
803050075	1.25 (0.0492)
803050076	1.30 (0.0512)
803050077	1.35 (0.0531)
803050078	1.40 (0.0551)
803050079	1.45 (0.0571)

10) Install the selected adjusting washer, dish plate and bearing outer race into the extension case.

NOTE:
Make sure the dish plate is installed in the proper direction.

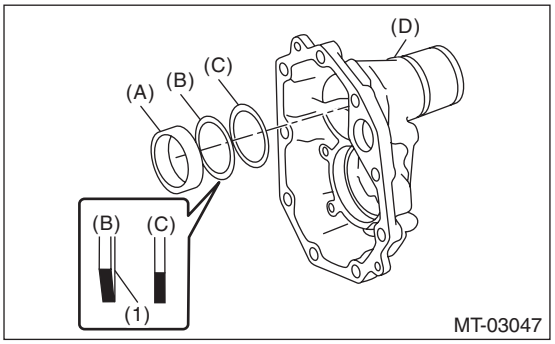

(A) Bearing outer race
(B) Dish plate
(C) Adjusting washer
(D) Extension case

(1) Paint side

11) Measure the depth “S” between the transfer case + ST and the center differential.
ST 398643600 GAUGE

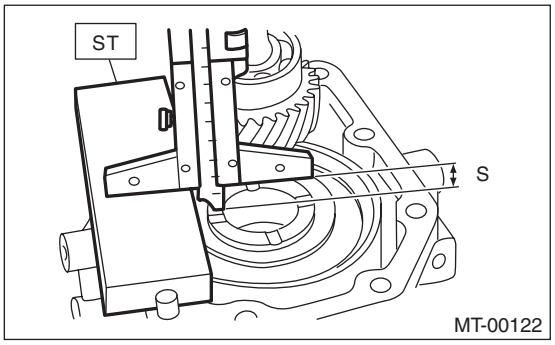

12) Measure the height “T” between the extension case + ST and the transfer drive gear.
ST 398643600 GAUGE

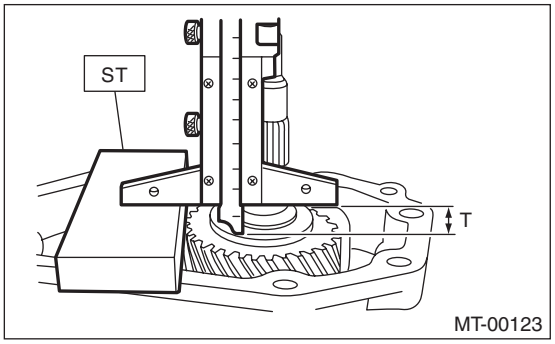

13) Calculate the adjusting washer thickness “U” using the following calculation.
U = S + T – 30 mm (1.18 in) – (0.15 — 0.35 mm (0.0059 — 0.0138 in))
S: Depth between the transfer case + ST and the center differential
T: Height between the extension case + ST and the transfer gear
30 mm (1.18 in): Thickness of ST (× 2 pieces)
0.15 — 0.35 mm (0.0059 — 0.0138 in): Clearance

14) Select a suitable adjusting washer in the following table.

Clearance:
0.15 — 0.35 mm (0.0059 — 0.0138 in)

Adjusting washer	
Part No.	Thickness mm (in)
803036050	0.9 (0.035)
803036054	1.0 (0.039)
803036051	1.1 (0.043)
803036055	1.2 (0.047)
803036052	1.3 (0.051)
803036056	1.4 (0.055)
803036053	1.5 (0.059)
803036057	1.6 (0.063)
803036058	1.7 (0.067)
803036080	1.8 (0.071)
803036081	1.9 (0.075)

15) Install the selected adjusting washer to the center differential.
16) Apply a proper amount of liquid gasket to the transfer case mating surface.

Liquid gasket:
THREE BOND 1215 (Part No. 004403007) or equivalent

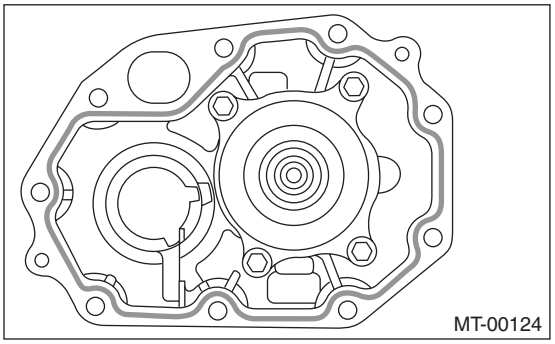

17) Install the extension case assembly to the transfer case.

Tightening torque:
40 N·m (4.1 kgf-m, 29.5 ft-lb)

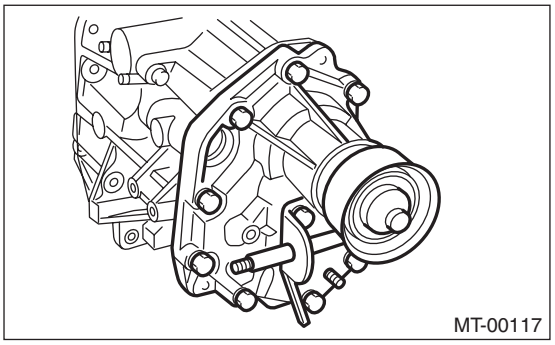

18) Attach the shifter arm to transfer case.

NOTE:
Apply gear oil to the oil seal lips.

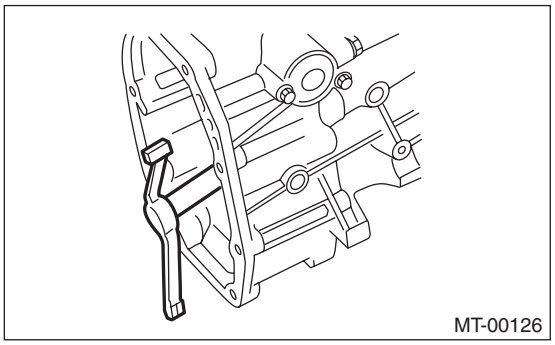
MT-00126

19) Attach the gasket.

NOTE:
Use a new gasket.

20) Hang the shifter arm on 3rd-4th fork rod.

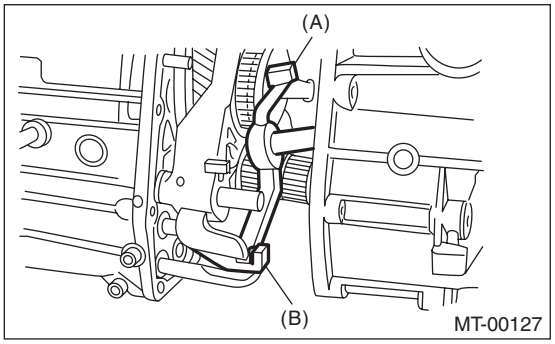

MT-00127

(A) Shifter arm
(B) 3rd-4th fork rod

21) Install the extension case assembly along with the transfer case to the transmission case.

Tightening torque:
24.5 N·m (2.5 kgf-m, 18.1 ft-lb)

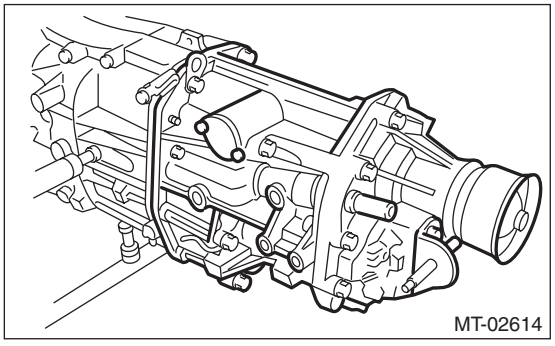
MT-02614

22) Install the back-up light switch and the neutral position switch. <Ref. to 5MT-35, INSTALLATION, Switches and Harness.>

23) Install the manual transmission assembly to the vehicle. <Ref. to 5MT-26, INSTALLATION, Manual Transmission Assembly.>

C: DISASSEMBLY

1. TRANSFER CASE

1) Remove the reverse check sleeve assembly. <Ref. to 5MT-51, REMOVAL, Reverse Check Sleeve.>

2) Remove the oil guide.

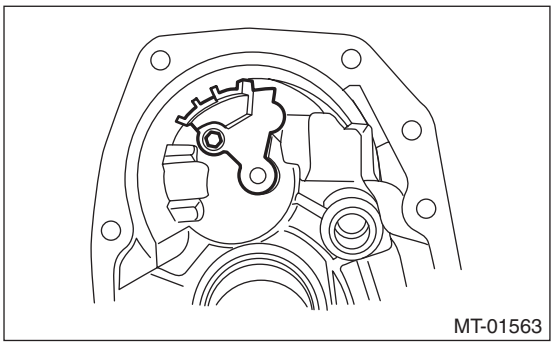
MT-01563

3) Remove the oil seal.

4) Set ST1, ST2 and transfer case to a press.

NOTE:
- Set the ST2 under ST1.
- Set the transfer case so that the hole for shifter arm is positioned vertically.

ST1 498267300 CYLINDER HEAD TABLE
ST2 498267200 CYLINDER HEAD TABLE

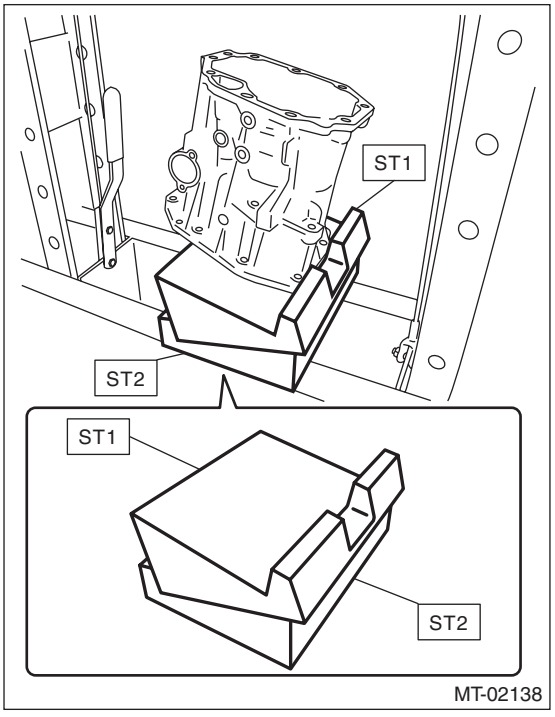

MT-02138

5) Using the round bar with diameter of 22 mm (0.87 in) or 23 mm (0.91 in), remove the roller bearing.

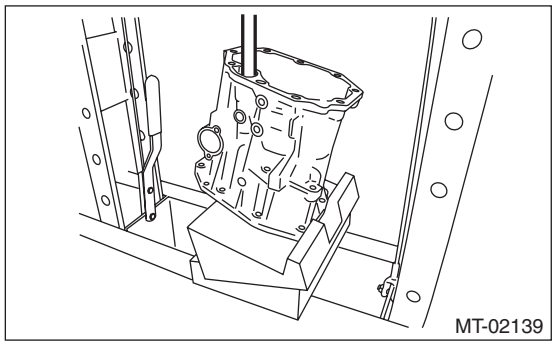

2. EXTENSION CASE

1) Remove the transfer drive gear assembly. <Ref. to 5MT-46, REMOVAL, Transfer Drive Gear.>
2) Remove the shift bracket.

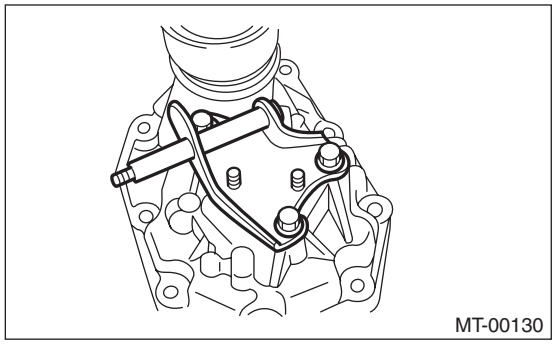

3) Remove the oil seal from the extension case. <Ref. to 5MT-32, Oil Seal.>

D: ASSEMBLY

1. EXTENSION CASE

1) Using the ST, install the oil seal to the extension case. <Ref. to 5MT-32, Oil Seal.>

NOTE:
Use a new oil seal.
2) Install the shift bracket to extension case.

Tightening torque:
24.5 N·m (2.5 kgf-m, 18.1 ft-lb)

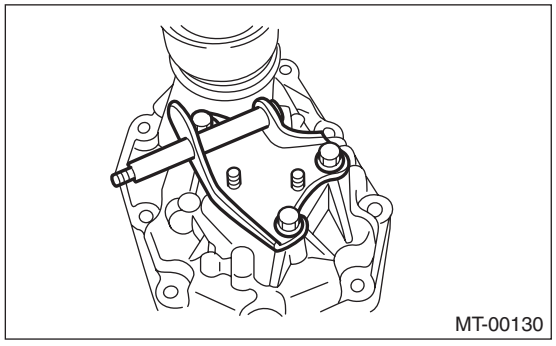

3) Install the transfer drive gear to the extension case. <Ref. to 5MT-46, INSTALLATION, Transfer Drive Gear.>

2. TRANSFER CASE

1) Set the ST1, ST2, iron plate and the transfer case to the press.

NOTE:
- Set the ST2 under ST1.
- Set the transfer case so that the hole for shifter arm is positioned vertically.
- Insert the iron plate which is thicker than the exposed length of the transfer case knock pin between the ST and transfer case.
- Set the iron plate so that the transfer case knock pin does not ride on the iron plate.

ST1 498267300 CYLINDER HEAD TABLE
ST2 498267200 CYLINDER HEAD TABLE

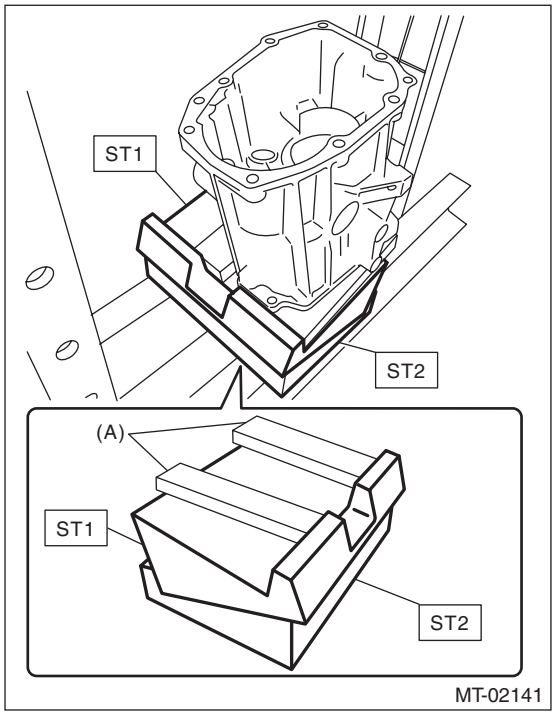

(A) Iron plate

2) Press-fit the roller bearing using the ST.

Press-fit depth of roller bearing:
A: 0±0.2 mm (0±0.01 in) from the end of transfer case

ST 899864100 REMOVER

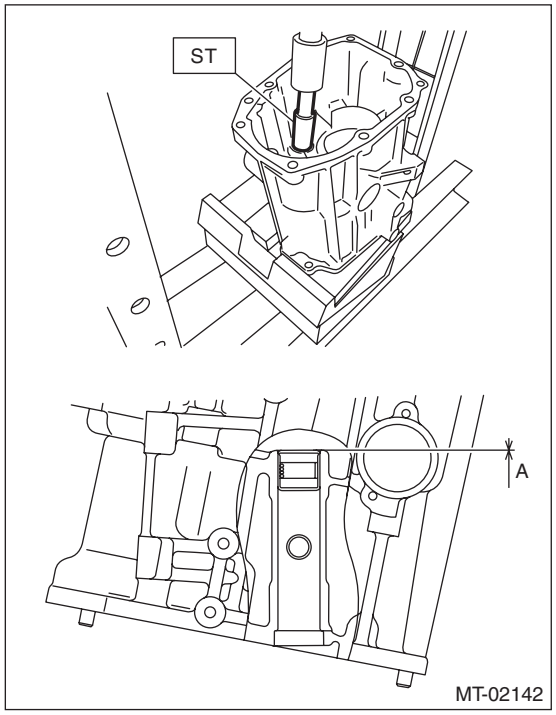

3) Remove the iron plate, and turn over the transfer case.

NOTE:
Set the transfer case so that the hole for shifter arm is positioned vertically.

4) Press-fit the roller bearing using the ST.

Press-fit depth of roller bearing:
A: 0±0.2 mm (0±0.01 in) from the end of transfer case

ST 899864100 REMOVER

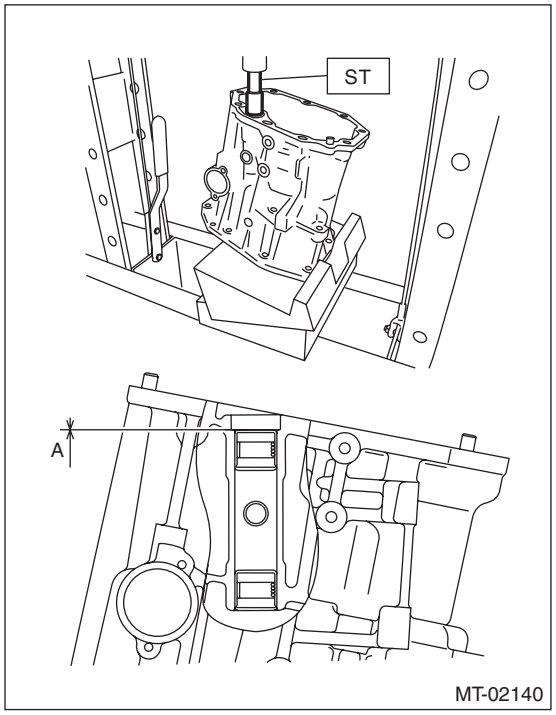

5) Install the shifter arm to the transfer case, and make sure that the shift arm moves smoothly.
6) Install the oil guide to the transfer case.

NOTE:
Use a new installing bolt.

Tightening torque:
6.4 N·m (0.7 kgf-m, 4.7 ft-lb)

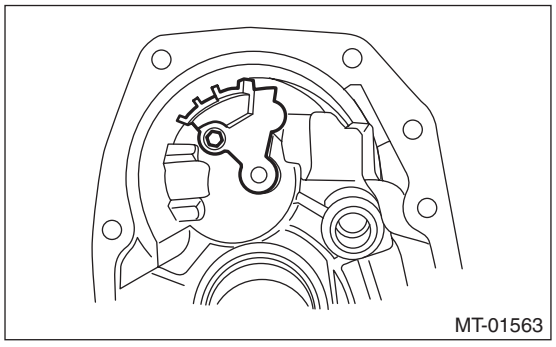

7) Install the reverse check sleeve assembly to the transfer case. <Ref. to 5MT-51, INSTALLATION, Reverse Check Sleeve.>

8) Install the oil seal.

NOTE:
Use a new oil seal.

Press-fit depth of oil seal:
A: 1±0.2 mm (0.04±0.01 in) from the end of transfer case

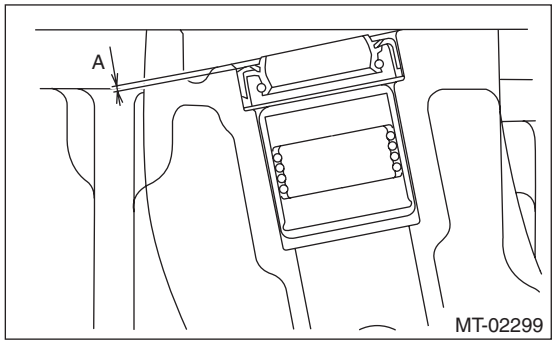

11.Transfer Drive Gear

A: REMOVAL

1) Remove the manual transmission assembly from the vehicle. <Ref. to 5MT-23, REMOVAL, Manual Transmission Assembly.>
2) Remove the back-up light switch and the neutral position switch. <Ref. to 5MT-35, REMOVAL, Switches and Harness.>
3) Remove the transfer case together with the extension case assembly. <Ref. to 5MT-39, REMOVAL, Transfer Case and Extension Case Assembly.>
4) Remove the extension case assembly.
5) Remove the transfer driven gear.
6) Remove the transfer drive gear.

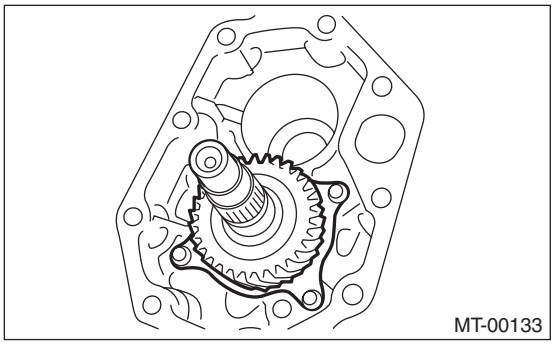
MT-00133

B: INSTALLATION

1) Install the transfer drive gear.

Tightening torque:
26 N·m (2.7 kgf-m, 19.2 ft-lb)

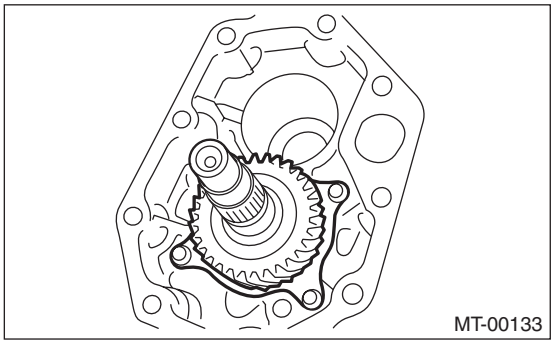
MT-00133

2) Select the adjusting washer. <Ref. to 5MT-39, INSTALLATION, Transfer Case and Extension Case Assembly.>
3) Install the transfer driven gear.
4) Install the extension case assembly. <Ref. to 5MT-39, INSTALLATION, Transfer Case and Extension Case Assembly.>
5) Install the transfer case and the extension case assembly. <Ref. to 5MT-39, INSTALLATION, Transfer Case and Extension Case Assembly.>
6) Install the back-up light switch and the neutral position switch. <Ref. to 5MT-35, INSTALLATION, Switches and Harness.>
7) Install the manual transmission assembly to the vehicle. <Ref. to 5MT-26, INSTALLATION, Manual Transmission Assembly.>

C: DISASSEMBLY

1) Remove the snap ring.

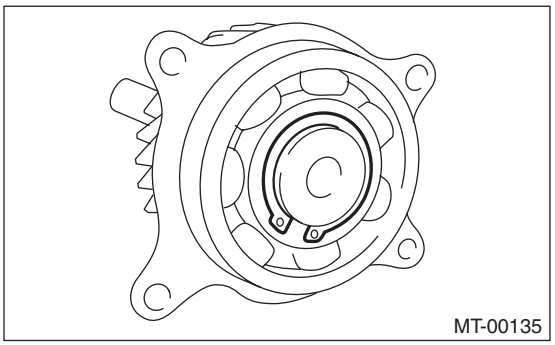
MT-00135

2) Remove the ball bearing.

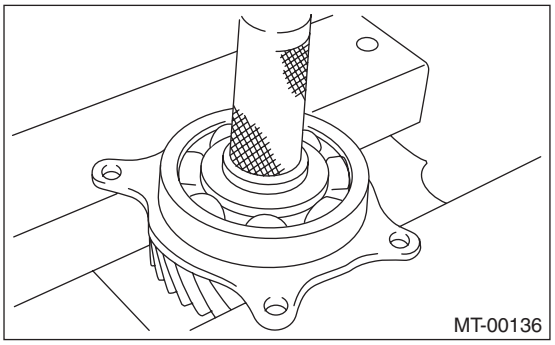
MT-00136

D: ASSEMBLY

1) Set the ST against the inner race of the bearing, and install the drive shaft.

CAUTION:
Do not apply a load in excess of 10 kN (1 ton, 1.1 US ton, 1.0 Imp ton).

NOTE:
Use a new ball bearing.
ST 398177700 INSTALLER

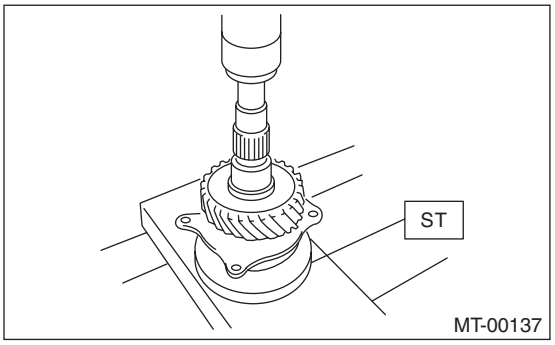

MT-00137

2) Install the snap ring on the transfer drive shaft.
3) Inspect the clearance between the snap ring and the ball bearing. <Ref. to 5MT-47, INSPECTION, Transfer Drive Gear.>

E: INSPECTION

1) Bearing
Replace the bearings in the following cases.
- In case of broken or rusty bearings
- In case of worn or damaged bearings
- When the bearings fail to turn smoothly or emit noise in rotation after gear oil lubrication.

2) Drive gear
If the drive gear tooth surface and shaft are excessively broken or damaged, replace the drive gear.
3) Measure the clearance between snap ring and inner race of ball bearing with a thickness gauge.

Clearance:
0.01 — 0.15 mm (0.0004 — 0.0059 in)

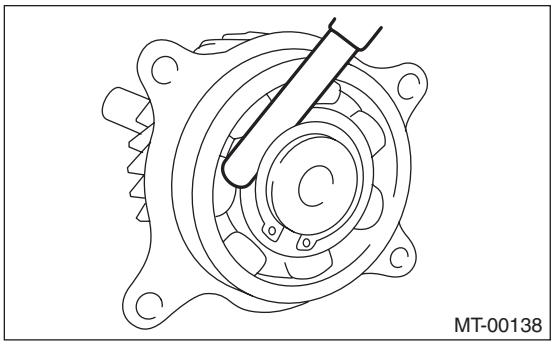

If the measurement is not within specification, select a suitable snap ring and replace it.

Snap ring (outer-30)	
Part No.	Thickness mm (in)
805030041	1.53 (0.0602)
805030042	1.65 (0.0650)
805030043	1.77 (0.0697)

12.Transfer Driven Gear

A: REMOVAL

1) Remove the manual transmission assembly from the vehicle. <Ref. to 5MT-23, REMOVAL, Manual Transmission Assembly.>
2) Remove the back-up light switch and the neutral position switch. <Ref. to 5MT-35, REMOVAL, Switches and Harness.>
3) Remove the transfer case together with the extension case assembly. <Ref. to 5MT-39, REMOVAL, Transfer Case and Extension Case Assembly.>
4) Remove the extension case assembly.
5) Remove the transfer driven gear.

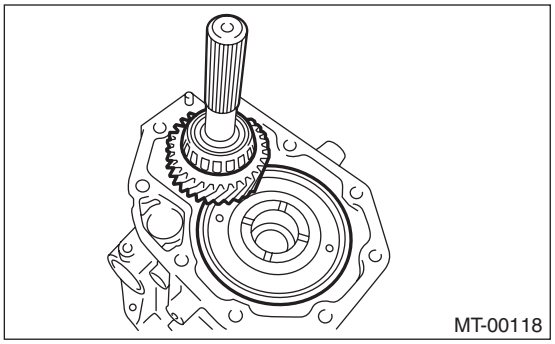

6) Remove bearing outer races from the extension case and transfer case.

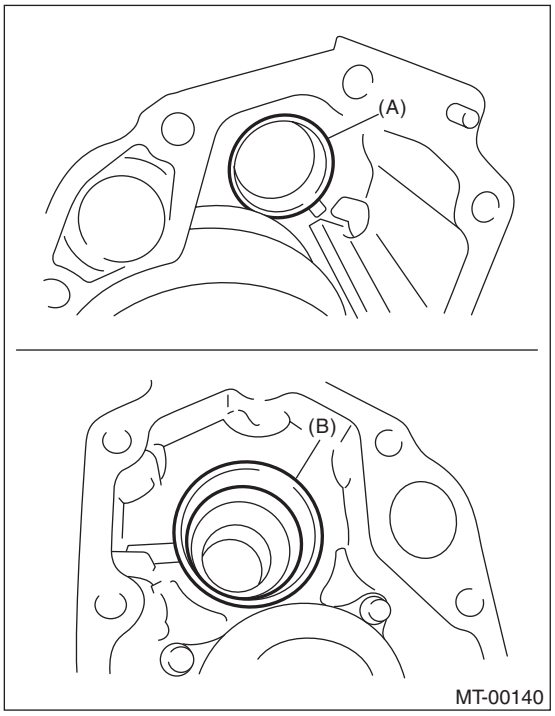

(A) Bearing outer race (Transfer case side)
(B) Bearing outer race (Extension case side)

B: INSTALLATION

1) Install the bearing outer race to transfer case.

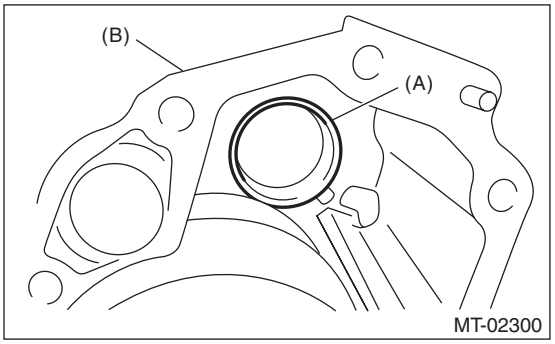

(A) Bearing outer race
(B) Transfer case

2) Apply a coat of grease to the front roller bearing and rear roller bearing of the transfer driven gear.

Grease:
NICHIMOLY N-130 or equivalent

3) Install the transfer driven gear.

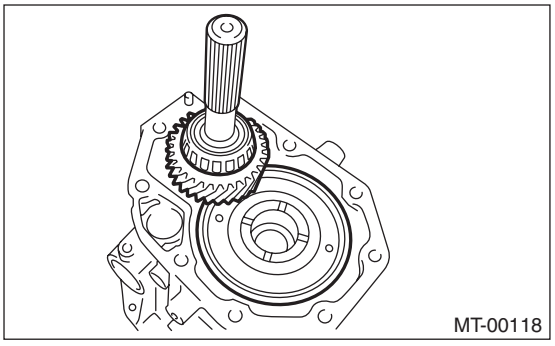

4) Select the adjusting washer. <Ref. to 5MT-39, INSTALLATION, Transfer Case and Extension Case Assembly.>
5) Install the transfer case and the extension case assembly. <Ref. to 5MT-39, INSTALLATION, Transfer Case and Extension Case Assembly.>
6) Install the back-up light switch and the neutral position switch. <Ref. to 5MT-35, INSTALLATION, Switches and Harness.>
7) Install the manual transmission assembly to the vehicle. <Ref. to 5MT-26, INSTALLATION, Manual Transmission Assembly.>

C: DISASSEMBLY

1) Using the ST, remove the roller bearing (extension case side).
ST 498077000 REMOVER

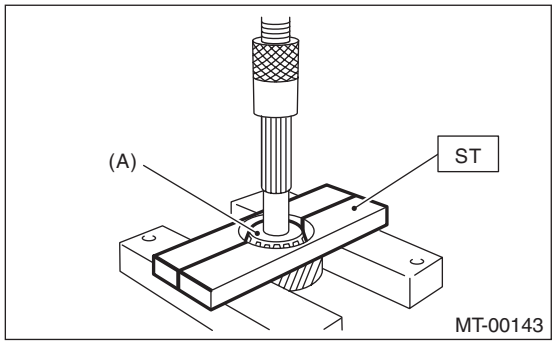

(A) Roller bearing

2) Using ST1 and ST2, remove the roller bearing (transfer case side).
ST1 498077000 REMOVER
ST2 899864100 REMOVER

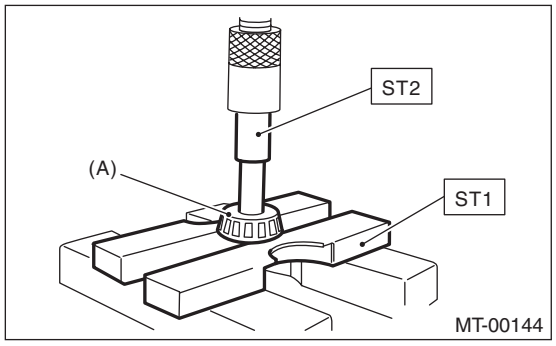

(A) Roller bearing

D: ASSEMBLY

1) Using ST, install the roller bearing (transfer case side).
ST 927640000 INSTALLER

CAUTION:
Do not apply a load in excess of 10 kN (1 ton, 1.1 US ton, 1.0 Imp ton).

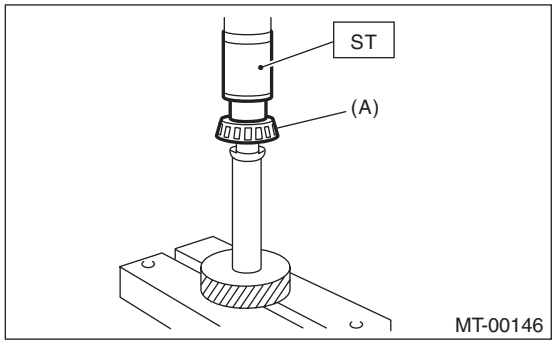

(A) Roller bearing

2) Using the ST, install the roller bearing (extension case side).

CAUTION:
Do not apply a load in excess of 10 kN (1 ton, 1.1 US ton, 1.0 Imp ton).
ST1 498175500 INSTALLER
ST2 899864100 REMOVER

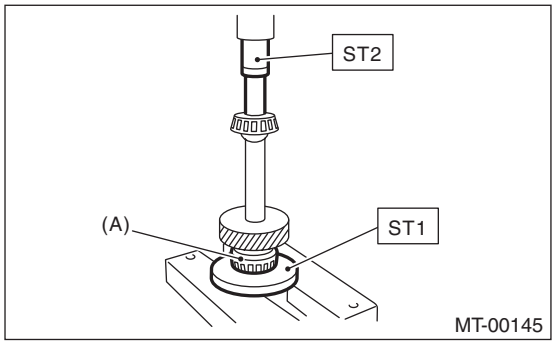

(A) Roller bearing

E: INSPECTION

1) Bearing
Replace the bearings in the following cases.
- In case of broken or rusty bearings
- In case of worn or damaged bearings
- When the bearings fail to turn smoothly or emit noise in rotation after gear oil lubrication.

2) Driven gear
If the tooth face of driven gear and the shaft are excessively broken or damaged, replace the driven gear.

13.Center Differential

A: REMOVAL

1) Remove the manual transmission assembly from the vehicle. <Ref. to 5MT-23, REMOVAL, Manual Transmission Assembly.>
2) Remove the back-up light switch and the neutral position switch. <Ref. to 5MT-35, REMOVAL, Switches and Harness.>
3) Remove the transfer case together with the extension case assembly. <Ref. to 5MT-39, REMOVAL, Transfer Case and Extension Case Assembly.>
4) Remove the extension case assembly. <Ref. to 5MT-39, REMOVAL, Transfer Case and Extension Case Assembly.>
5) Remove the transfer driven gear. <Ref. to 5MT-48, REMOVAL, Transfer Driven Gear.>
6) Remove the center differential.

B: INSTALLATION

1) Attach the center differential to transfer case.
2) Install the transfer driven gear. <Ref. to 5MT-48, INSTALLATION, Transfer Driven Gear.>
3) Install the extension case assembly. <Ref. to 5MT-39, INSTALLATION, Transfer Case and Extension Case Assembly.>
4) Install the transfer case together with the extension case assembly. <Ref. to 5MT-39, INSTALLATION, Transfer Case and Extension Case Assembly.>
5) Install the back-up light switch and the neutral position switch. <Ref. to 5MT-35, INSTALLATION, Switches and Harness.>
6) Install the manual transmission assembly to the vehicle. <Ref. to 5MT-26, INSTALLATION, Manual Transmission Assembly.>

C: DISASSEMBLY

Remove the ball bearing using ST.

NOTE:
Center differential is a non-disassembled part which should not be disassembled.

ST 498077300 CENTER DIFFERENTIAL BEARING REMOVER

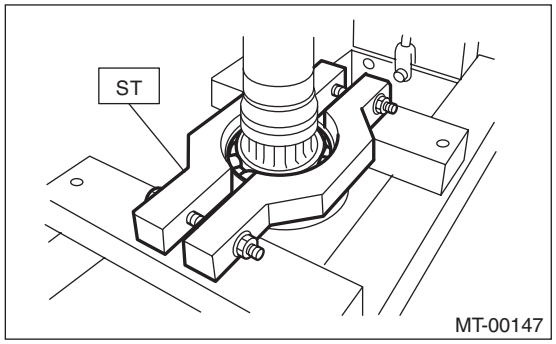

D: ASSEMBLY

Install the ball bearing to the center differential assembly.

CAUTION:
Do not apply a load in excess of 10 kN (1 ton, 1.1 US ton, 1.0 Imp ton).

NOTE:
Use a new ball bearing.

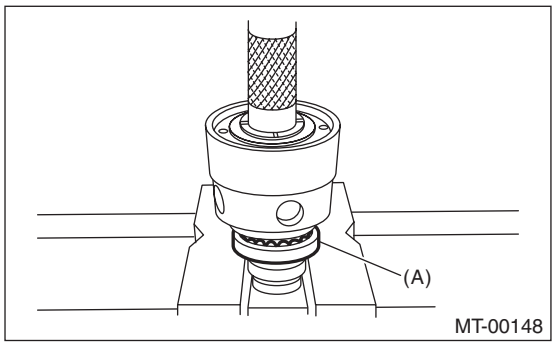

(A) Ball bearing

E: INSPECTION

1) Bearing
Replace the bearings in the following cases.
- In case of broken or rusty bearings
- In case of worn or damaged bearings
- When the bearings fail to turn smoothly or emit noise in rotation after gear oil lubrication.
- When bearing has other defects.

2) Center differential
If there is wear or damage, replace the center differential case assembly.

14.Reverse Check Sleeve

A: REMOVAL

1) Remove the manual transmission assembly from the vehicle. <Ref. to 5MT-23, REMOVAL, Manual Transmission Assembly.>
2) Remove the transfer case together with the extension case assembly. <Ref. to 5MT-39, REMOVAL, Transfer Case and Extension Case Assembly.>
3) Remove the shifter arm.
4) Remove the plug, gasket, reverse accent spring, and reverse check ball.

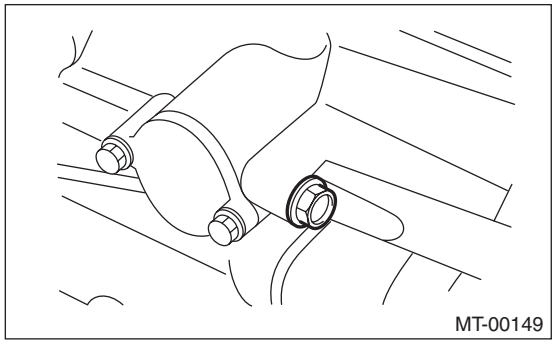
MT-00149

5) Remove the reverse check sleeve.

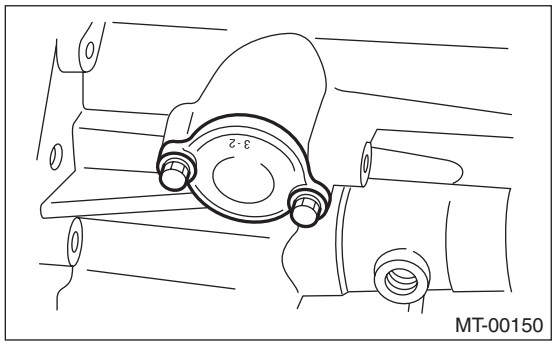

MT-00150

B: INSTALLATION

1) Install the reverse check sleeve.

Tightening torque:
6.4 N·m (0.7 kgf-m, 4.7 ft-lb)

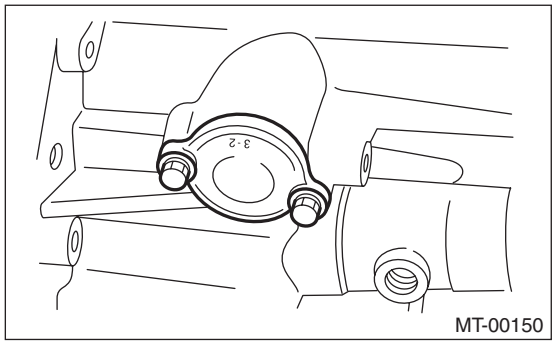

MT-00150

2) Install the reverse check ball, reverse accent spring, gasket, and plug to the transfer case.

NOTE:
Use a new gasket.

Tightening torque:
9.75 N·m (1.0 kgf-m, 7.2 ft-lb)

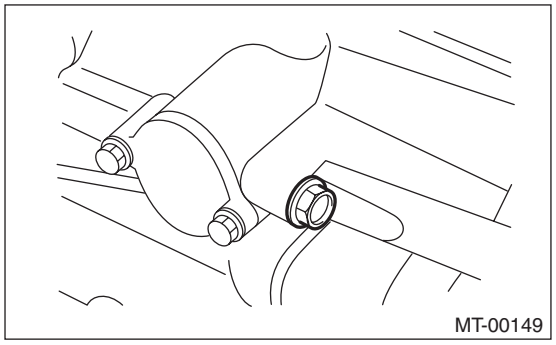
MT-00149

3) Install the transfer case together with the extension case assembly. <Ref. to 5MT-39, INSTALLATION, Transfer Case and Extension Case Assembly.>
4) Install the manual transmission assembly to the vehicle. <Ref. to 5MT-26, INSTALLATION, Manual Transmission Assembly.>

C: DISASSEMBLY

1) Cover the reverse check sleeve with cloth, and remove the snap ring by using screwdriver.

NOTE:
If the snap ring is deformed or the spring repulsive force is not enough, replace with a new snap ring.

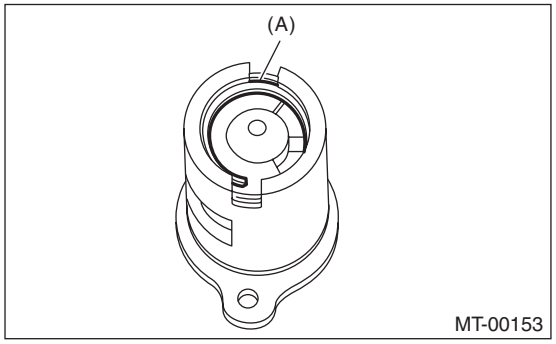

MT-00153

(A) Snap ring

2) Remove the reverse check plate, reverse check spring, reverse check cam, return spring (5th-Reverse), reverse accent shaft, return spring cap, and return spring (1st-2nd).

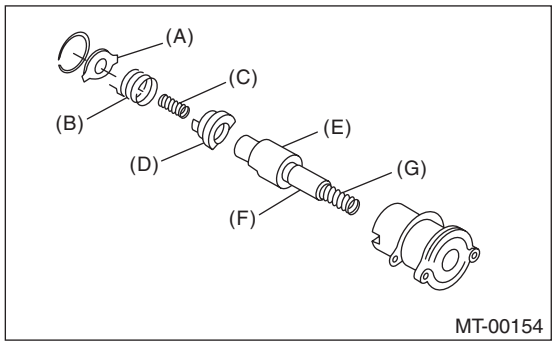

(A) Reverse check plate
(B) Reverse check spring
(C) Return spring (5th-Reverse)
(D) Reverse check cam
(E) Reverse accent shaft
(F) Return spring cap
(G) Return spring (1st-2nd)

3) Remove the O-ring.

NOTE:
Be careful not to damage the adjusting shim between reverse check sleeve assembly and case.

D: ASSEMBLY

1) Install the return spring (1st-2nd), return spring cap, reverse accent shaft, reverse check cam, return spring (5th-Reverse) and reverse check spring to the reverse check sleeve.

NOTE:
Be sure to insert the curved part of reverse check spring into the check cam groove.

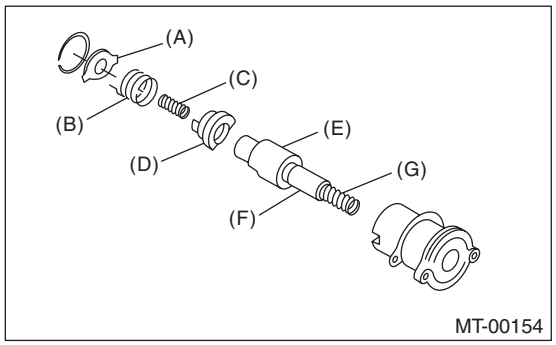

(A) Reverse check plate
(B) Reverse check spring
(C) Return spring (5th-Reverse)
(D) Reverse check cam
(E) Reverse accent shaft
(F) Return spring cap
(G) Return spring (1st-2nd)

2) Hook the curved part of reverse check spring onto the reverse check plate.
3) Rotate the cam so that the protrusion on the reverse check cam is located at the plate opening.
4) While fixing the cam to that position, attach the reverse check plate to the reverse check sleeve, and secure with snap ring.
5) Insert the O-ring into the sleeve groove.

NOTE:
Use new O-rings.

E: INSPECTION

• Make sure the cutout of the reverse accent shaft is aligned with the opening in the reverse check sleeve.
• Turn the cam by hand to check for smooth rotation.
• Move the cam and shaft all the way toward the plate, and make sure it releases.
If the cam does not return properly, replace the reverse check spring. If the shaft does not return, check for scratches on the inner surface of sleeve. If the sleeve is in good order, replace the spring.

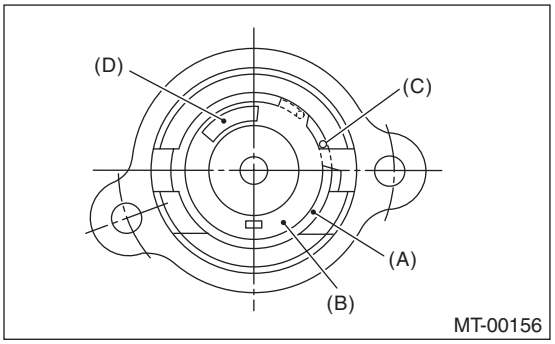

(A) Snap ring
(B) Reverse check plate
(C) Reverse check spring
(D) Reverse check cam

• Select a suitable reverse accent shaft and reverse check plate. <Ref. to 5MT-53, ADJUSTMENT, Reverse Check Sleeve.>

F: ADJUSTMENT

1. NEUTRAL POSITION ADJUSTMENT

1) Shift the gear into 3rd gear position.
2) Because of the return spring, until the arm contacts the stopper the shifter arm will feel lighter moving towards 1st/2nd gear and heavier towards the reverse gear.
3) Make adjustment so that the heavy stroke (reverse side) is a little heavier than the lighter stroke (1st/2nd side).
4) To adjust, remove the bolts holding the reverse check sleeve assembly to the case, and move the sleeve assembly outward, then place an adjustment shim between the sleeve assembly and the case to adjust the clearance.

CAUTION:
Be careful not to damage the O-ring when placing shims.

NOTE:
• When the shim is removed, the neutral position will move closer to reverse; when the shim is added, the neutral position will move closer to 1st gear.
• If it is not possible to adjust the clearance with only shims, replace the reverse accent shaft and re-adjust.

Adjusting shim	
Part No.	Thickness mm (in)
32190AA000	0.15 (0.0059)
32190AA010	0.30 (0.0118)

Reverse accent shaft		
Part No.	Mark	Remarks
32188AA130	S	Neutral position is closer to 1st gear.
32188AA140	T	Standard
32188AA150	U	Neutral position is closer to reverse gear.

2. REVERSE CHECK PLATE ADJUSTMENT

1) Shift the shifter arm to “5th” and then to reverse to see if the reverse check mechanism operates properly.
2) Also check to see if the arm returns to neutral when released from the reverse position. If the arm does not return properly, replace the reverse check plate.

Reverse check plate			
Part No.	(A): No.	Angleθ	Content
32189AA001	0	28°	Arm stops closer to 5th gear.
32189AA011	1	31°	Arm stops closer to 5th gear.
32189AA021	2	34°	Arm stops in the center.
32189AA031	3	37°	Arm stops closer to reverse gear.
32189AA041	4	40°	Arm stops closer to reverse gear.

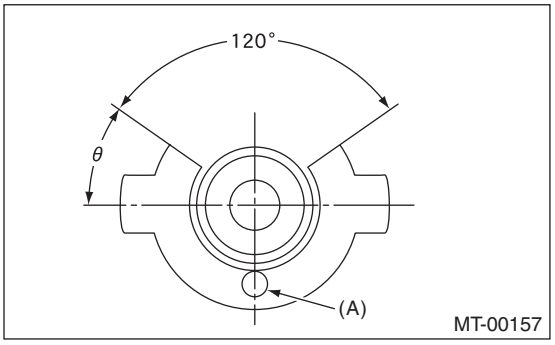

15.Transmission Case

A: REMOVAL

1) Remove the manual transmission assembly from the vehicle. <Ref. to 5MT-23, REMOVAL, Manual Transmission Assembly.>
2) Remove the clutch release lever. <Ref. to CL-13, REMOVAL, Release Bearing and Lever.>
3) Remove the transfer case together with the extension case assembly. <Ref. to 5MT-39, REMOVAL, Transfer Case and Extension Case Assembly.>
4) Remove the bearing mounting bolt.

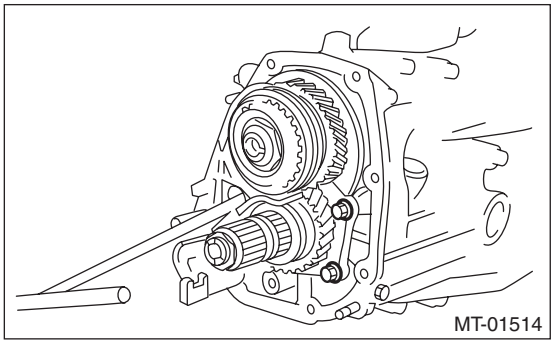
MT-01514

5) Remove the main shaft rear plate.

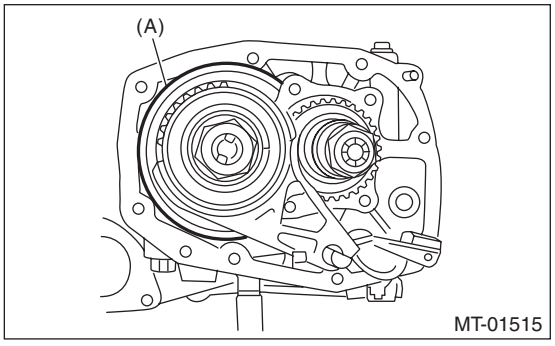

MT-01515

(A) Main shaft rear plate

6) Remove the bolts and nuts, and separate the transmission case into the right and left case.

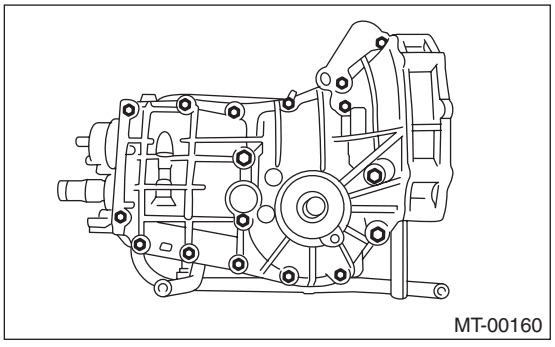
MT-00160

7) Remove the drive pinion shaft assembly.

NOTE:
Use a hammer handle, etc. to remove if too tight.

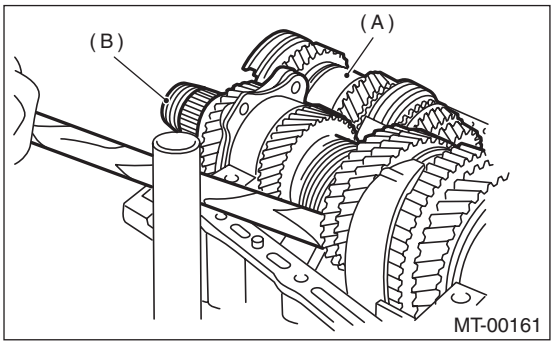

MT-00161

(A) Main shaft ASSY
(B) Drive pinion shaft ASSY

8) Remove the main shaft assembly.
9) Remove the front differential assembly.

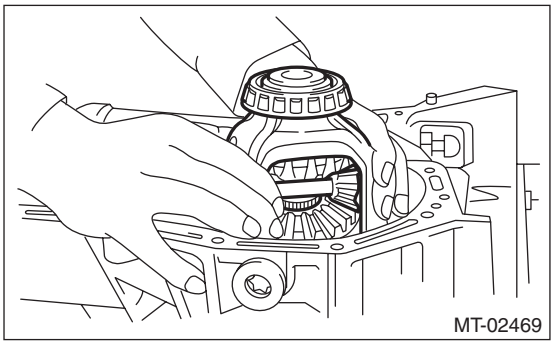
MT-02469

10) Remove the differential side retainers and bearing outer races on the left and right side. <Ref. to 5MT-73, REMOVAL, Front Differential Assembly.>

NOTE:
Do not confuse the right and left roller bearing outer races.

11) Remove the reverse idler gear. <Ref. to 5MT-82, REMOVAL, Shifter Fork and Rod.>
12) Remove the shifter fork and rod. <Ref. to 5MT-82, REMOVAL, Shifter Fork and Rod.>

B: INSTALLATION

1) Wipe off grease, oil and dust on the mating surfaces of transmission cases with cleaning solvent.
2) Install the reverse idler gear. <Ref. to 5MT-80, INSTALLATION, Reverse Idler Gear.>
3) Install the shifter fork and rod. <Ref. to 5MT-83, INSTALLATION, Shifter Fork and Rod.>
4) Select the drive pinion shim. <Ref. to 5MT-63, INSTALLATION, Drive Pinion Shaft Assembly.>
5) Install the bearing outer race to the transmission case LH side, and install the differential side retainer with the O-ring removed.
6) Install the front differential assembly.
7) Install the main shaft assembly.

NOTE:
Align the needle bearing knock pin hole to the transmission case knock pin.
8) Install the selected drive pinion shims and drive pinion shaft assembly.

NOTE:
Align the roller bearing knock pin hole to the transmission case knock pin.
9) Align the left and right side of the transmission case, and tighten it with 17 mounting bolts.

NOTE:
• Insert bolts (11) and (16) from the LH side of the transmission case.
• Match the cases together so that the drive pinion shims are not caught between the cases.

Tightening torque:
8 mm bolt
25 N·m (2.5 kgf-m, 18.4 ft-lb)
★ ***10 mm bolt***
39 N·m (4.0 kgf-m, 28.8 ft-lb)

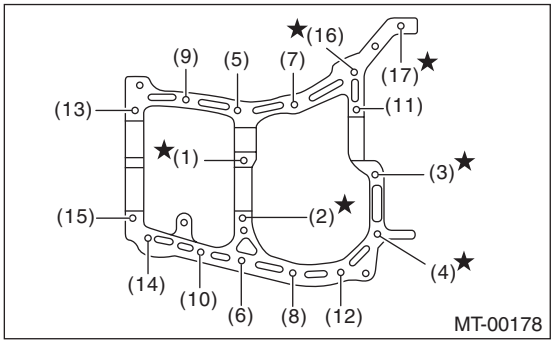

10) Install the bearing outer race to the RH side of the transmission case.
11) Tighten the bearing mounting bolts.

Tightening torque:
30 N·m (3.1 kgf-m, 22.1 ft-lb)

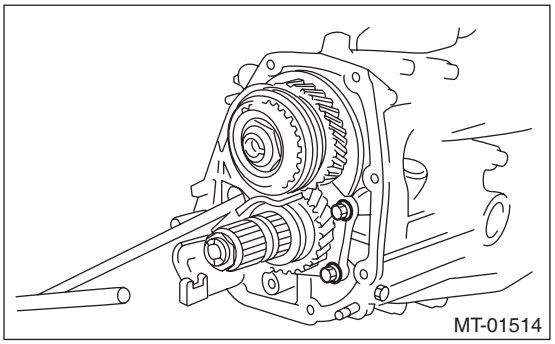

12) Adjust the backlash of the hypoid gear and the preload of the roller bearing.
(1) Attach the ST on drive pinion assembly.
ST 498427100 STOPPER

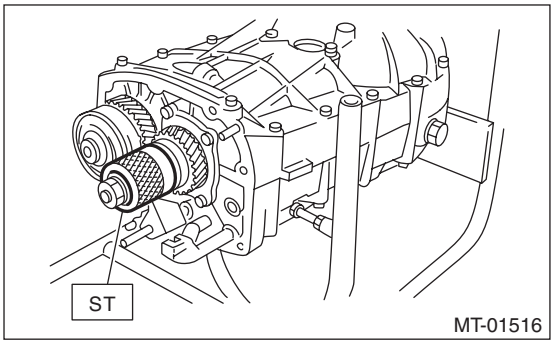

(2) Place the transmission with the LH side of case facing downward, and put ST1 on the bearing outer race.

(3) Screw the retainer assembly from the bottom into left case using ST2. Fit the ST3 on the main shaft. Shift the gear into 4th or 5th, and turn the shaft several times. Screw in the retainer while rotating the ST3 until a slight resistance is felt on ST2.
This is the contact point of the hypoid gear and the drive pinion shaft. Repeat the above sequence several times to ensure the contact point.

ST1 399780104 WEIGHT
ST2 18630AA010 WRENCH COMPL RETAINER
ST3 499927100 HANDLE

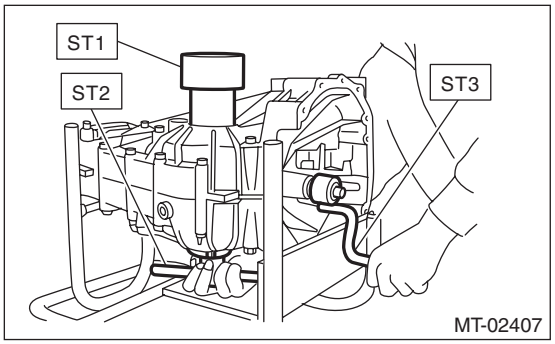

(4) Remove the WEIGHT, and screw in the side retainer without the O-ring into the RH side of the transmission case, and stop at the point where a slight resistance is felt.

NOTE:
In this condition, the backlash between hypoid gear and drive pinion shaft is zero.

ST 18630AA010 WRENCH COMPL RETAINER

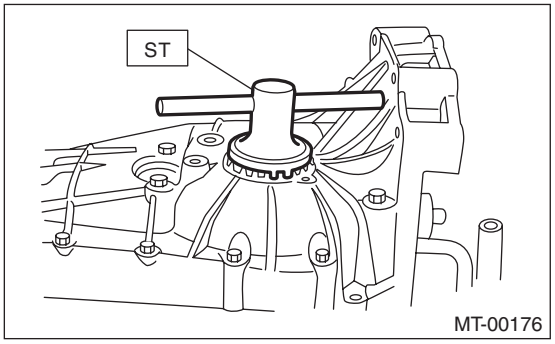

(5) Loosen the side retainer on the LH side of the transmission case by 3 notches, and turn the side retainer on the RH side of the transmission case by the same notches in order to apply backlash.
(6) Screw in the side retainer of the RH side of the transmission case additionally by 1 notch in order to apply preload on taper roller bearing.
(7) Tighten temporarily both the lock plates LH and RH, and put marks on both the side retainer and lock plate for later readjustment.

NOTE:
If it is hard to install the lock plates, reverse the sides and install them.

(8) Turn the main shaft several times while tapping around the retainer lightly with plastic hammer.

13) Inspect and adjust backlash and tooth contact of the hypoid gear. <Ref. to 5MT-76, INSPECTION, Front Differential Assembly.>
14) Separate the transmission case into left and right parts. <Ref. to 5MT-54, REMOVAL, Transmission Case.>
15) Check each shifter fork. <Ref. to 5MT-84, INSPECTION, Shifter Fork and Rod.>
16) Select a main shaft rear plate. <Ref. to 5MT-62, ADJUSTMENT, Main Shaft Assembly for Single-Range.>
17) Apply liquid gasket, then join the right side and left side of the case together.

Liquid gasket:
THREE BOND 1215 (Part No. 004403007) or equivalent

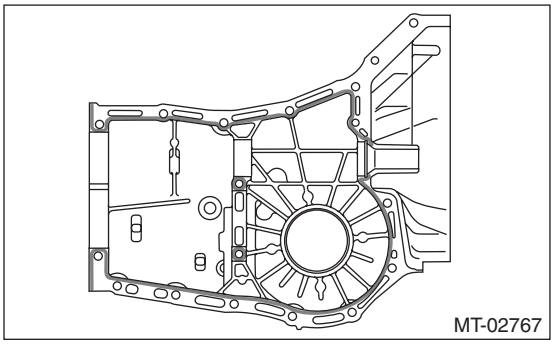

18) With brackets and clips as shown in the figure, tighten the seventeen bolts.

NOTE:
• Insert bolts (11) and (16) from the LH side of the transmission case.
• Match the cases together so that the drive pinion shims are not caught between the cases.

Tightening torque:
8 mm bolt
25 N·m (2.5 kgf-m, 18.4 ft-lb)
★ 10 mm bolt
39 N·m (4.0 kgf-m, 28.8 ft-lb)

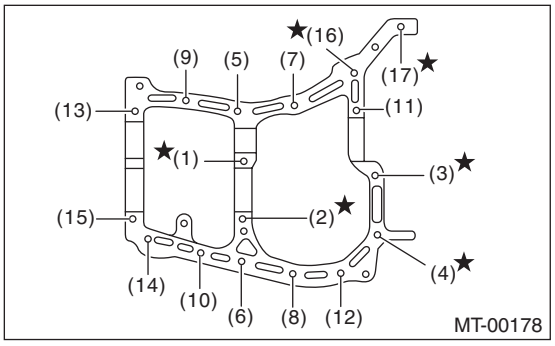

19) Tighten the bearing mounting bolts.

Tightening torque:
30 N·m (3.1 kgf-m, 22.1 ft-lb)

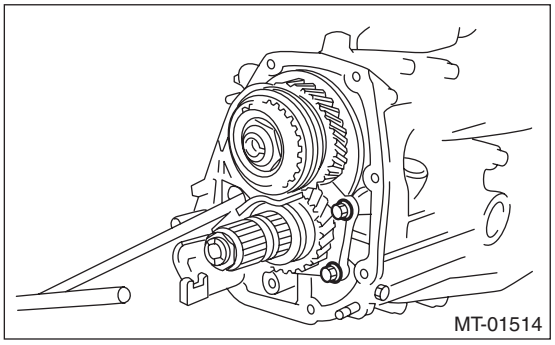

20) Remove the lock plate, and loosen the side retainer until the groove of the O-ring appears. Fit the O-ring into the groove and tighten the side retainer into the position where it was not loosened.

NOTE:
• When loosening the side retainer, record the number of the turns made.
• Perform this for both left and right side retainers.
• Use new O-rings.
• Apply gear oil to O-ring.

21) Install the lock plate.

Tightening torque:
T: 25 N·m (2.5 kgf-m, 18.4 ft-lb)

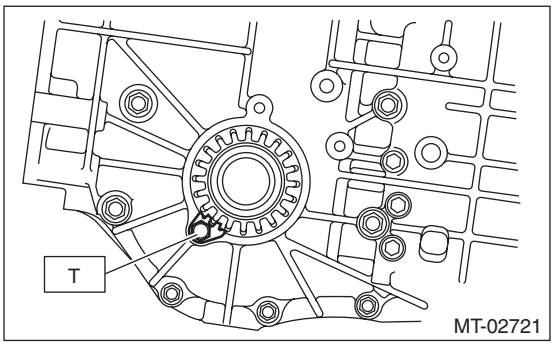

22) Install the transfer case together with the extension case assembly. <Ref. to 5MT-39, INSTALLATION, Transfer Case and Extension Case Assembly.>
23) Install the clutch release lever and bearing. <Ref. to CL-13, INSTALLATION, Release Bearing and Lever.>
24) Install the manual transmission assembly to the vehicle. <Ref. to 5MT-26, INSTALLATION, Manual Transmission Assembly.>

C: INSPECTION

Check the transmission case for cracks, damage, or oil leaks.

16.Main Shaft Assembly for Single-Range

A: REMOVAL

1) Remove the manual transmission assembly from the vehicle. <Ref. to 5MT-23, REMOVAL, Manual Transmission Assembly.>
2) Remove the transfer case together with the extension case assembly. <Ref. to 5MT-39, REMOVAL, Transfer Case and Extension Case Assembly.>
3) Remove the transmission case. <Ref. to 5MT-54, REMOVAL, Transmission Case.>
4) Remove the drive pinion shaft assembly. <Ref. to 5MT-63, REMOVAL, Drive Pinion Shaft Assembly.>
5) Remove the main shaft assembly.

B: INSTALLATION

1) Attach the needle bearing and oil seal to the main shaft assembly.

NOTE:
• Wrap the clutch splined section with vinyl tape to prevent damage to the oil seal.
• Apply NICHIMOLY N-130 (or equivalent) to the sealing lip of the oil seal.
• Use a new oil seal.

2) Fit the knock pin hole of the needle bearing outer race to the transmission case knock pin, and install the main shaft assembly.

NOTE:
• Align the end face of the seal with surface (A) when installing the oil seal.

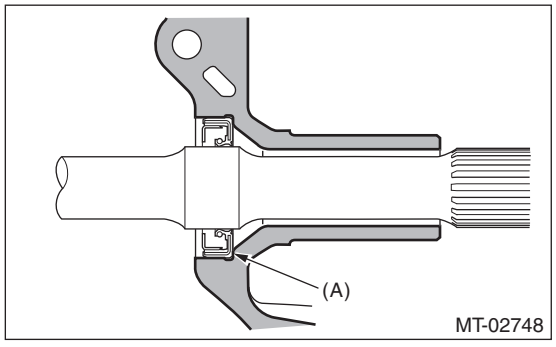

• Face the cutout portion of the snap ring for the ball bearing to the drive pinion shaft assembly.

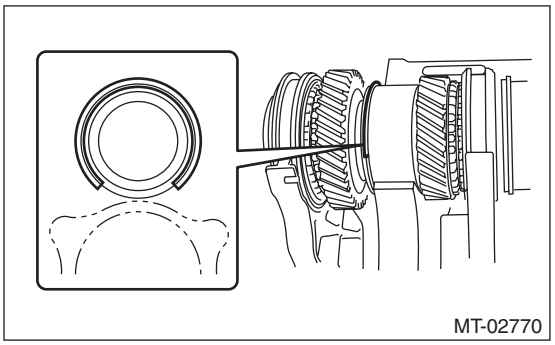

3) Install the drive pinion shaft assembly. <Ref. to 5MT-63, INSTALLATION, Drive Pinion Shaft Assembly.>
4) Check each shifter fork. <Ref. to 5MT-84, INSPECTION, Shifter Fork and Rod.>
5) Select a main shaft rear plate. <Ref. to 5MT-62, ADJUSTMENT, Main Shaft Assembly for Single-Range.>
6) Install the transmission case. <Ref. to 5MT-55, INSTALLATION, Transmission Case.>
7) Install the transfer case together with the extension case assembly. <Ref. to 5MT-39, INSTALLATION, Transfer Case and Extension Case Assembly.>
8) Install the manual transmission assembly to the vehicle. <Ref. to 5MT-26, INSTALLATION, Manual Transmission Assembly.>

C: DISASSEMBLY

1) Put vinyl tape around main shaft spline to protect the oil seal from damage. Then pull out the oil seal and needle bearing by hand.
2) Remove the lock nut and lock washer from the main shaft assembly.

NOTE:
Flatten the lock nut tab before removing the lock nut.

ST1 498937000 TRANSMISSION HOLDER
ST2 499987003 SOCKET WRENCH (35)

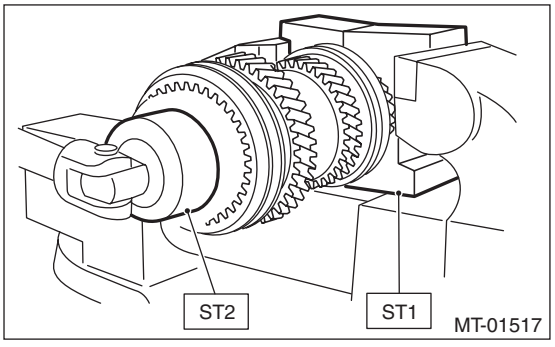

3) Remove the 5th hub & sleeve No. 2, baulk lever, baulk ring, and 5th drive gear & needle bearing.

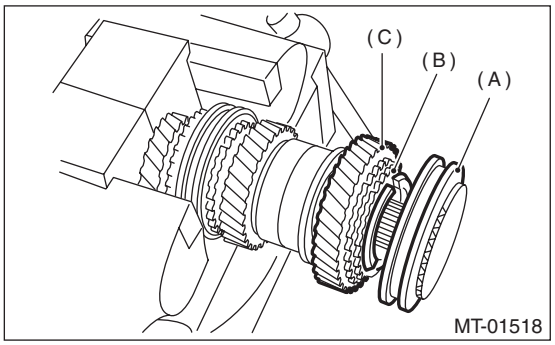

(A) 5th hub & sleeve No. 2
(B) Baulk ring
(C) 5th drive gear

4) Using ST1 and ST2, remove the rest of the parts.

NOTE:
• When replacing the sleeve & hub, replace them as a set.
• Do not disassemble the sleeve & hub; the engaging point is pre-determined.
• If it is necessary to disassemble, mark the engaging points on the splines beforehand.

ST1 899864100 REMOVER
ST2 899714110 REMOVER

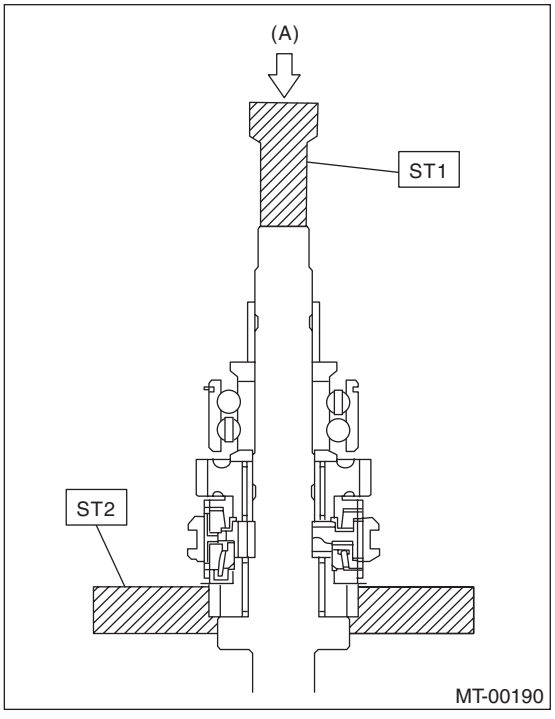

(A) Press

D: ASSEMBLY

1) When the sleeve & hub assemblies have been disassembled, reassemble by aligning the alignment marks.

NOTE:
Position the open ends of the spring 120° apart.

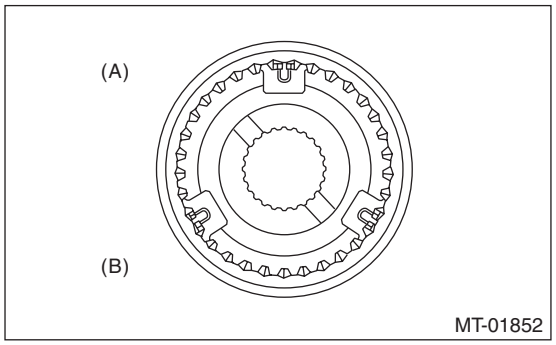

(A) 3rd-4th coupling sleeve & synchronizer hub ASSY
(B) 3rd gear side

2) Install the 3rd drive gear, outer baulk ring, synchro cone, inner baulk ring, 3rd needle bearing and sleeve & hub assembly on the main shaft.

NOTE:
Align the groove in baulk ring with the shifting insert.

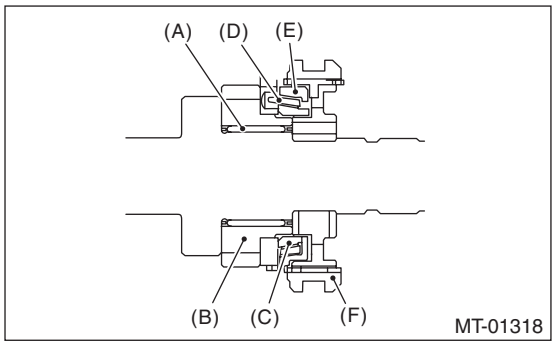

(A) 3rd needle bearing
(B) 3rd drive gear
(C) Inner baulk ring
(D) Synchro cone
(E) Outer baulk ring
(F) Sleeve & hub ASSY

3) Install the 4th needle bearing race onto the main shaft using ST1, ST2 and press.

CAUTION:
Do not apply a load in excess of 10 kN (1 ton, 1.1 US ton, 1.0 Imp ton).

ST1 899714110 REMOVER
ST2 499877000 RACE 4-5 INSTALLER

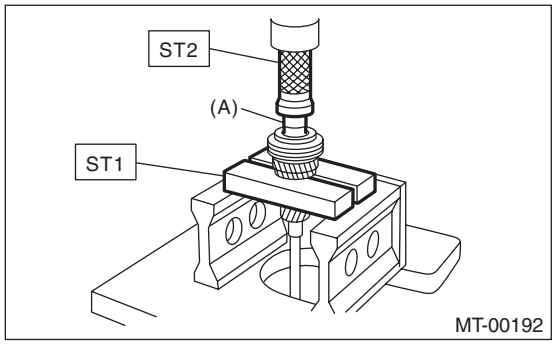

(A) 4th needle bearing race

4) Install the baulk ring, needle bearing, 4th drive gear and 4th gear thrust washer to the main shaft.

NOTE:
• Align the baulk ring and hub & sleeve assembly with the key groove.
• Make sure the thrust washer is facing the correct direction.

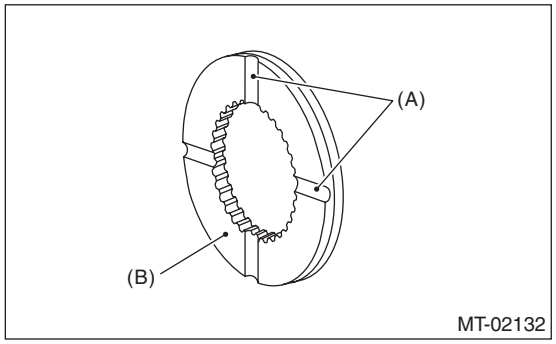

(A) Groove
(B) Face this surface to the 4th gear side.

5) Press-fit the double ball bearing into the rear section of the main shaft using ST1, ST2 and a press.

CAUTION:
Do not apply a load in excess of 10 kN (1 ton, 1.1 US ton, 1.0 Imp ton).

NOTE:
• Install the snap ring side of the double ball bearing facing the 5th drive gear side.
• Use a new double ball bearing.

ST1 899714110 REMOVER
ST2 499877000 RACE 4-5 INSTALLER

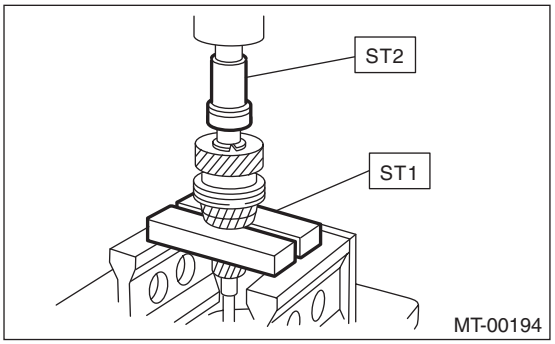

6) Using the ST1 and ST2, install the 5th gear thrust washer and 5th needle bearing race onto the rear section of the main shaft.

CAUTION:
Do not apply a load in excess of 10 kN (1 ton, 1.1 US ton, 1.0 Imp ton).

NOTE:
Make sure the thrust washer is facing the correct direction.

ST1 899714110 REMOVER
ST2 499877000 RACE 4-5 INSTALLER

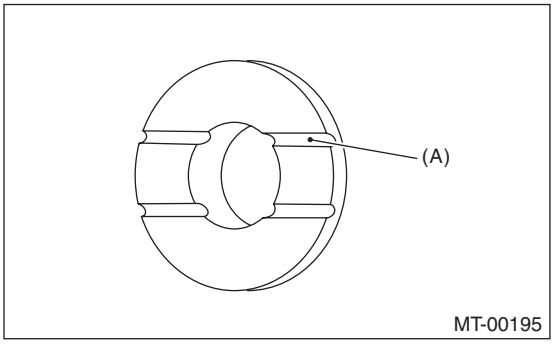

(A) Face this surface to the 5th gear side.

7) Install the rest of the parts to the rear section of the main shaft.

CAUTION:
• Install the baulk lever so that the concave side faces toward the 5th hub.

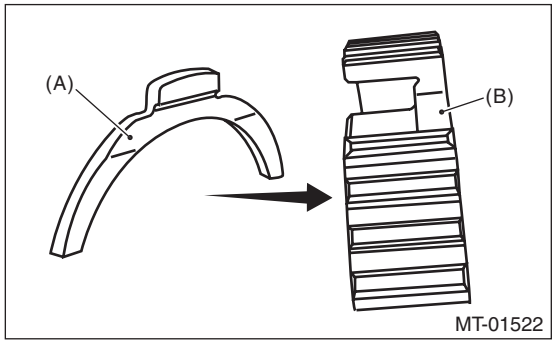

(A) Baulk lever
(B) 5th hub

• Align the protruded section of baulk ring between the baulk levers.

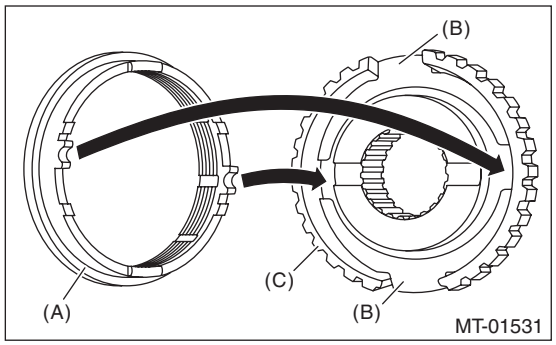

(A) Baulk ring
(B) Baulk lever
(C) 5th hub

8) Tighten the lock nuts to the specified torque using ST1 and ST2.

NOTE:
• Use new lock nuts and lock washers.
• Make sure the lock washer is installed in the proper direction.
ST1 499987003 SOCKET WRENCH (35)
ST2 498937000 TRANSMISSION HOLDER

Tightening torque:
120 N·m (12.2 kgf-m, 88.5 ft-lb)

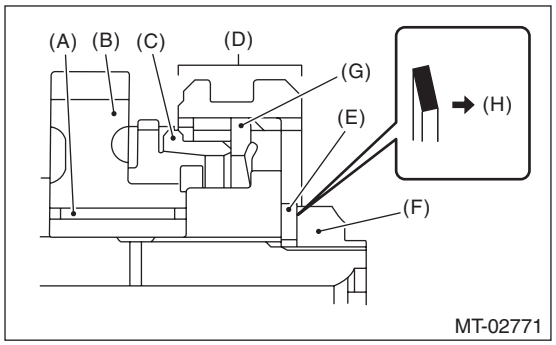

(A) Needle bearing
(B) 5th drive gear
(C) Baulk ring
(D) 5th hub & sleeve No. 2
(E) Lock washer
(F) Lock nut
(G) Baulk lever
(H) Nut side

9) Crimp lock nuts in two locations after tightening.

CAUTION:
When crimping the lock nut, be careful not to crack it.

E: INSPECTION

Disassembled parts should be washed with cleaning solvent first, then inspected carefully.
1) Bearing
Replace the bearings in the following cases.
• When the bearing balls, outer races and inner races are broken or rusty.
• When the bearing is worn.
• When the bearings fail to turn smoothly or emit noise in rotation after gear oil lubrication.
• When bearing has other defects.
2) Bushing (each gear)
Replace the bushing in following cases.
• When the sliding surface is damaged or abnormally worn.
• When the inner wall is abnormally worn.

3) Gear
Replace gears in the following cases.
• Replace the gear with new part if its tooth surfaces are broken, damaged or excessively worn.
• Correct or replace if the contact surface between the cone and baulk ring is rough or damaged.
• Correct or replace if the inner surface or end face is damaged.
4) Baulk ring, synchro cone
Replace the baulk ring and synchro cone in the following cases.
• When the inner surface and end face are damaged.
• When the baulk ring inner surface is abnormally or partially worn down.
• When the contact surface of the baulk ring insert section is cracked or abnormally worn.
• If the gap between the end faces of the baulk ring and the gear splined part is excessively small, check the clearance (A) while pressing the ring against the cone.

Clearance (A):
0.5 mm (0.020 in) or more
Single cone

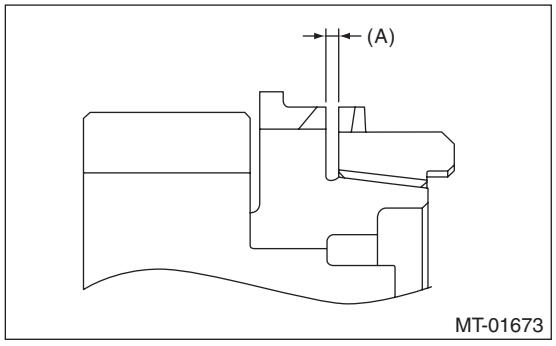

Double cone

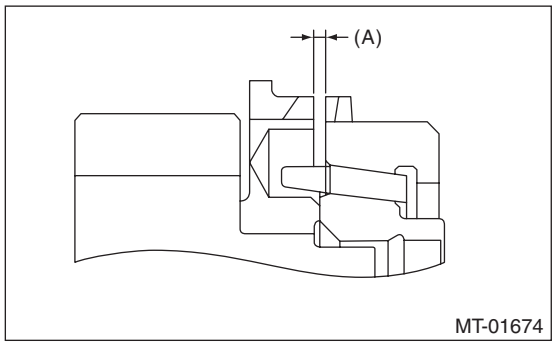

• Apply gear oil to the cone of the gear and while press-fitting the baulk ring, check there is no rotation in the circumferential direction.
5) Shifting insert key
Replace the insert key if deformed, excessively worn or defective in any way.
6) Coupling sleeve and synchronizer hub
• Check the slipping condition of the coupling sleeve.
• Check the splines on the coupling sleeve and synchronizer hub for wear.
7) Oil seal
Replace the oil seal if the lip is deformed, hardened, worn or defective in any way.
8) Gearshift mechanism
Repair or replace the gearshift mechanism if excessively worn, bent or defective in any way.

F: ADJUSTMENT

Selection of main shaft rear plate:
Measure the protrusion amount (A) of ball bearing from transmission main case surface, and select a suitable plate in the following table.

NOTE:
Before measuring, tap the end of main shaft with a plastic hammer lightly in order to make the clearance zero between the main case surface and moving flange of bearing.

Dimension (A) mm (in)	Part No.	Mark
4.00 — 4.13 (0.1575 — 0.1626)	32294AA041	1
3.87 — 4.00 (0.1524 — 0.1575)	32294AA051	2

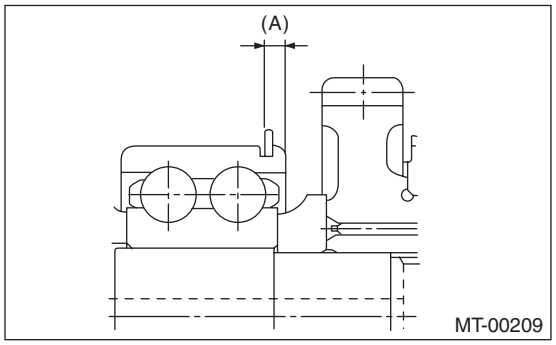

17.Drive Pinion Shaft Assembly

A: REMOVAL

1) Remove the manual transmission assembly from the vehicle. <Ref. to 5MT-23, REMOVAL, Manual Transmission Assembly.>
2) Remove the transfer case together with the extension case assembly. <Ref. to 5MT-39, REMOVAL, Transfer Case and Extension Case Assembly.>
3) Remove the transmission case. <Ref. to 5MT-54, REMOVAL, Transmission Case.>
4) Remove the drive pinion shaft assembly.

NOTE:
Use a hammer handle, etc. to remove if too tight.

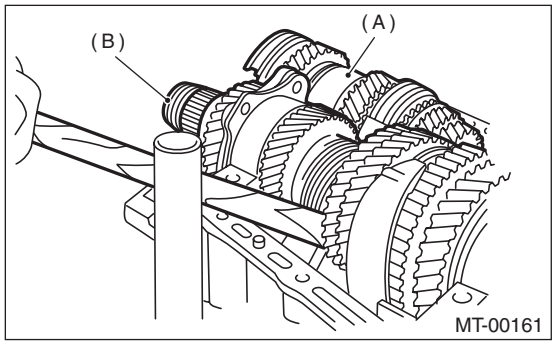

(A) Main shaft ASSY
(B) Drive pinion shaft ASSY

5) Remove the main shaft assembly. <Ref. to 5MT-58, REMOVAL, Main Shaft Assembly for Single-Range.>

B: INSTALLATION

1) Remove the front differential assembly.
2) Hypoid gear set match mark/No.: The number (A) on top of the drive pinion, and the number on the hypoid driven gear are set numbers for the two gears. Use a pair having the same numbers.
The figure (B) below shows a number for shim adjustment. If no number is shown, the value is zero.

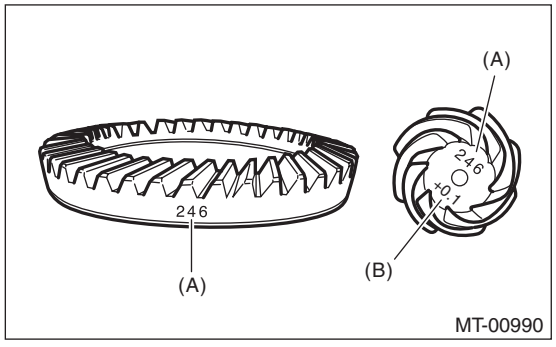

(A) Set number
(B) Number for shim adjustment

3) Place the drive pinion shaft assembly on transmission main case RH without shim and tighten the bearing mounting bolts.
4) Perform the adjustment of ST.
(1) Loosen the two bolts and adjust so that the scale indicates 0.5 correctly when the plate end and the scale end are on the same level.

ST 499917500 DRIVE PINION GAUGE ASSY

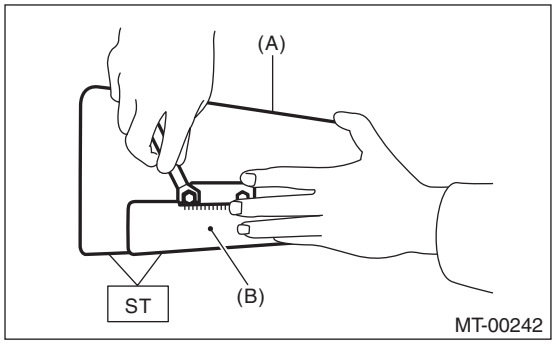

(A) Plate
(B) Scale

(2) Tighten the two bolts.
5) Position the ST by inserting the knock pin of ST into the knock hole of transmission case.

ST 499917500 DRIVE PINION GAUGE ASSY

6) Slide the drive pinion gauge scale with finger tip and read the value at the point where it matches with the end face of drive pinion.

ST 499917500 DRIVE PINION GAUGE ASSY

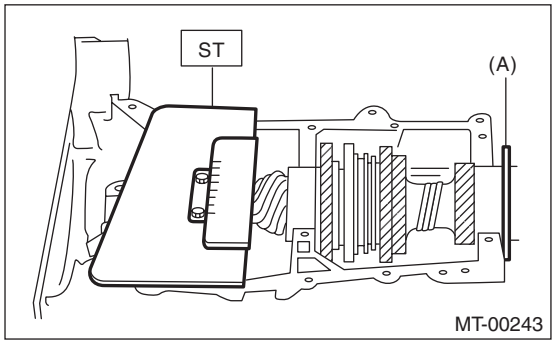

(A) Adjust the clearance to zero without shim.

7) The thickness of shim shall be determined by adding the value indicated on drive pinion to the value indicated on the ST. (Add if the number on drive pinion is prefixed by +, and subtract if the number is prefixed by –.)

ST 499917500 DRIVE PINION GAUGE ASSY

8) Select one to three shims in the following table for the value determined as described above, and take the shim(s) which thickness is closest to the said value.

Drive pinion shim	
Part No.	Thickness mm (in)
32295AA031	0.150 (0.0059)
32295AA041	0.175 (0.0069)
32295AA051	0.200 (0.0079)
32295AA061	0.225 (0.0089)
32295AA071	0.250 (0.0098)
32295AA081	0.275 (0.0108)
32295AA091	0.300 (0.0118)
32295AA101	0.500 (0.0197)

9) Install the front differential assembly. <Ref. to 5MT-73, INSTALLATION, Front Differential Assembly.>

10) Fit the transmission case knock pin to the knock pin hole of the roller bearing and install the drive pinion shaft assembly.

11) Install the main shaft assembly. <Ref. to 5MT-58, INSTALLATION, Main Shaft Assembly for Single-Range.>

12) Check each shifter fork. <Ref. to 5MT-84, INSPECTION, Shifter Fork and Rod.>

13) Install the transmission case. <Ref. to 5MT-55, INSTALLATION, Transmission Case.>

14) Install the transfer case together with the extension case assembly. <Ref. to 5MT-39, INSTALLATION, Transfer Case and Extension Case Assembly.>

15) Install the manual transmission assembly to the vehicle. <Ref. to 5MT-26, INSTALLATION, Manual Transmission Assembly.>

C: DISASSEMBLY

NOTE:
Attach a cloth to the end of driven shaft (on the frictional side of the thrust needle bearing) to prevent damage during disassembly or reassembly.

1) Flatten the tab of the lock nut. Remove the lock nut with ST1, ST2 and ST3.

ST1 899884100 HOLDER
ST2 498427100 STOPPER
ST3 899988608 SOCKET WRENCH (27)

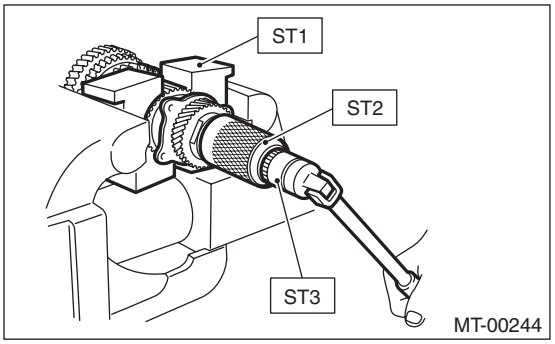

2) Draw out the drive pinion shaft from driven shaft. Remove the differential bevel gear sleeve, adjusting washer No. 1, adjusting washer No. 2, thrust bearing, needle bearing and drive pinion collar.

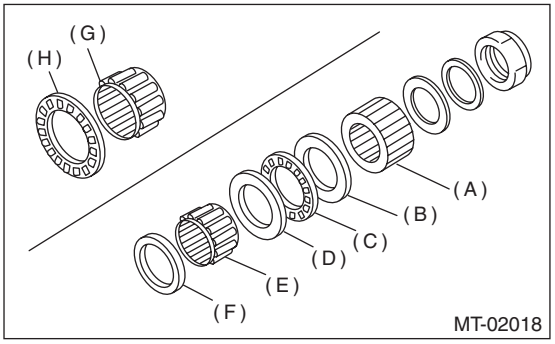

(A) Differential bevel gear sleeve
(B) Adjusting washer No. 1 (25 × 37.5 × t)
(C) Thrust bearing (25 × 37.5 × 3)
(D) Adjusting washer No. 2 (25 × 37.5 × t)
(E) Needle bearing (25 × 30 × 20)
(F) Drive pinion collar
(G) Needle bearing (30 × 37 × 23)
(H) Thrust bearing (33 × 50 × 3)

3) Remove the roller bearing and washer using ST and a press.
ST 498077000 REMOVER

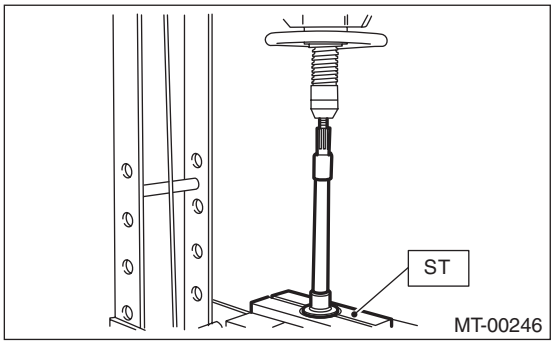

4) Flatten the tab of the lock nut. Remove the lock nut and lock washer using ST1 and ST2.
ST1 499987300 SOCKET WRENCH (50)
ST2 899884100 HOLDER

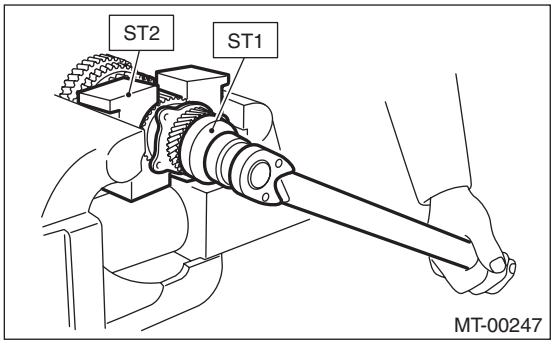

5) Remove the 5th driven gear using ST.
ST 499857000 5TH DRIVEN GEAR REMOVER

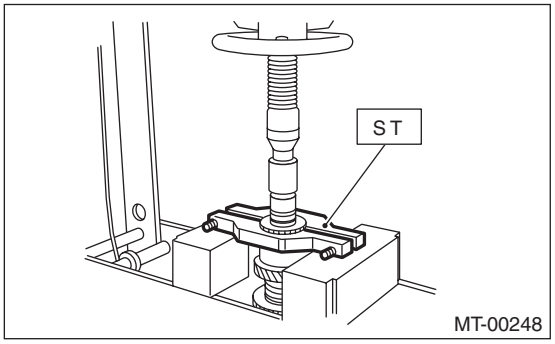

6) Remove the woodruff key.

7) Remove the double taper roller bearing and 3rd-4th driven gear using ST1 and ST2.
ST1 499757002 INSTALLER
ST2 899714110 REMOVER

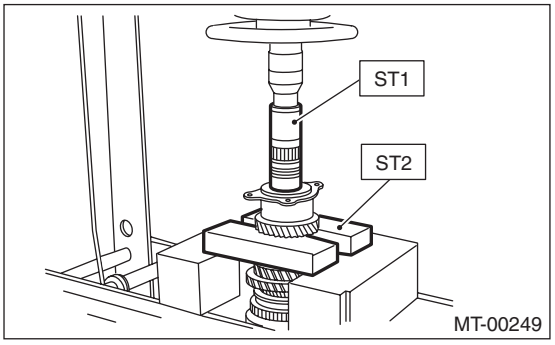

8) Remove the key.
9) Remove the 2nd driven gear, inner baulk ring, synchro cone and outer baulk ring.

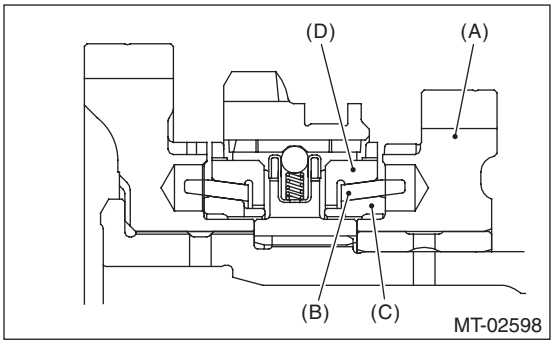

(A) 2nd driven gear
(B) Synchro cone
(C) Inner baulk ring
(D) Outer baulk ring

10) Remove the 1st driven gear, inner baulk ring, synchro cone, outer baulk ring, 2nd gear bushing and gear & hub assembly using ST1 and ST2.

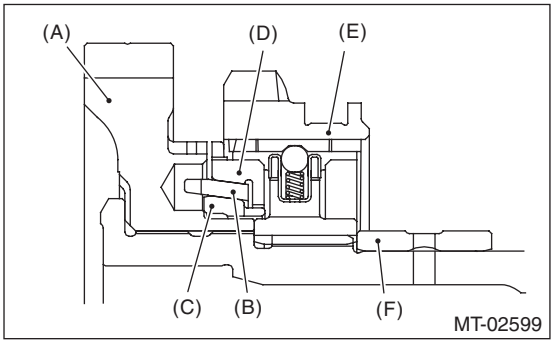

(A) 1st driven gear
(B) Synchro cone
(C) Inner baulk ring
(D) Outer baulk ring
(E) Gear & hub
(F) 2nd gear bushing

NOTE:
If necessary, use a new gear and hub assembly as a set, when replacing the gear or hub. Because these must engage at the specified point, avoid disassembly as much as possible. If it must be disassembled, mark the engaging point on the spline beforehand.
ST1 499757002 INSTALLER
ST2 899714110 REMOVER

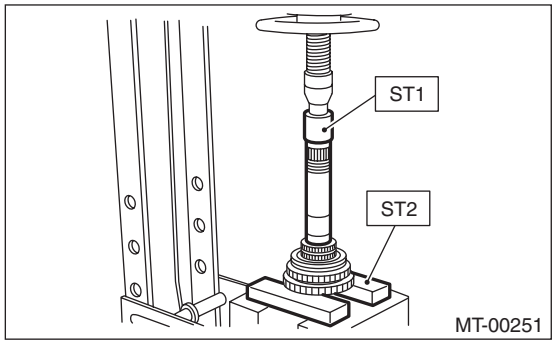

D: ASSEMBLY

1) Install the sleeve and the gear and hub assembly by matching the alignment marks.

NOTE:
• Make sure that there is no large clearance at both sides of ball detent after assembly.

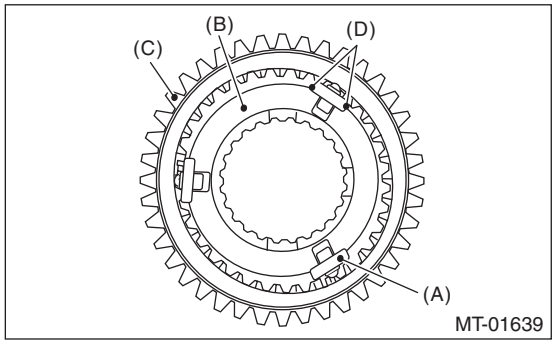

(A) Ball detent
(B) 1st-2nd synchronizer hub
(C) Reverse driven gear
(D) There is no large clearance at this part.

• Use the new gear & hub assembly, if replacing the gear or hub.

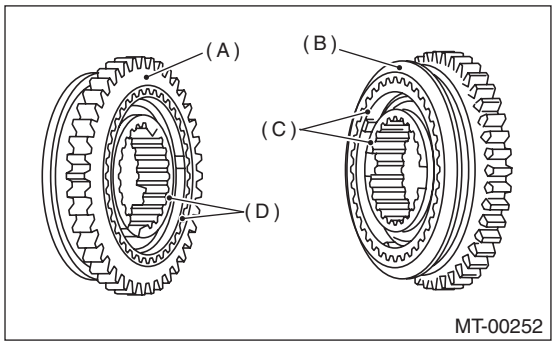

(A) 1st gear side
(B) 2nd gear side
(C) Flush surface
(D) Stepped surface

2) Install the 1st driven gear, inner baulk ring, synchro cone, outer baulk ring, and gear & hub assembly onto driven shaft.

NOTE:
• Install the gear & hub assembly in the proper position while paying attention to the installing direction.
• Align the baulk ring and gear & hub assembly with the key groove.

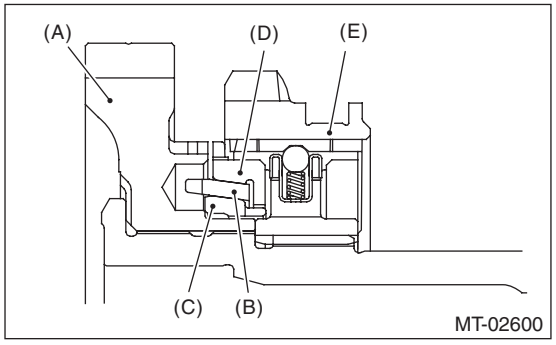

(A) 1st driven gear
(B) Synchro cone
(C) Inner baulk ring
(D) Outer baulk ring
(E) Gear & hub

3) Install the 2nd driven gear bushing onto driven shaft using ST1, ST2 and a press.

CAUTION:
Do not apply a load in excess of 10 kN (1 ton, 1.1 US ton, 1.0 Imp ton).

NOTE:
• Attach a cloth to the end of the driven shaft to prevent damage.
• When press fitting, align the oil holes of the shaft and bushing.
ST1 499277200 INSTALLER
ST2 499587000 INSTALLER

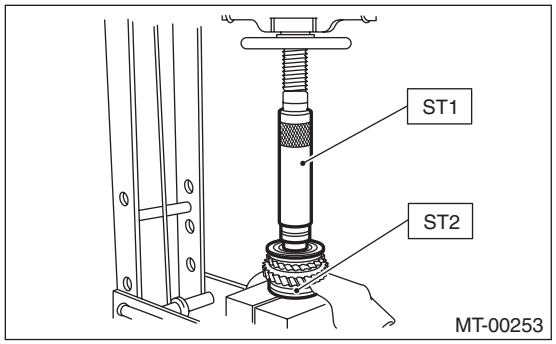

4) Install the 2nd driven gear, inner baulk ring, synchro cone and outer baulk ring, and insert them onto driven shaft.

NOTE:
Align the groove in baulk ring with the insert.

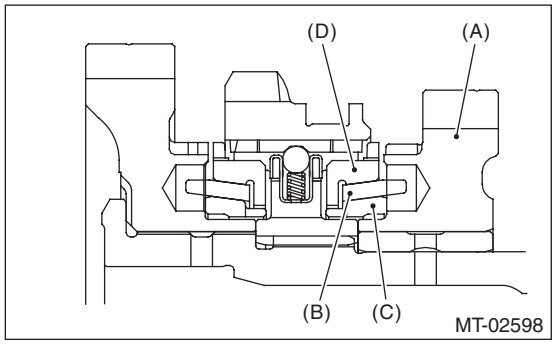

(A) 2nd driven gear
(B) Synchro cone
(C) Inner baulk ring
(D) Outer baulk ring

5) After installing key onto the driven shaft, install the 3rd-4th driven gear using ST1, ST2 and a press.

CAUTION:
Do not apply a load in excess of 10 kN (1 ton, 1.1 US ton, 1.0 Imp ton).
ST1 499277200 INSTALLER
ST2 499587000 INSTALLER

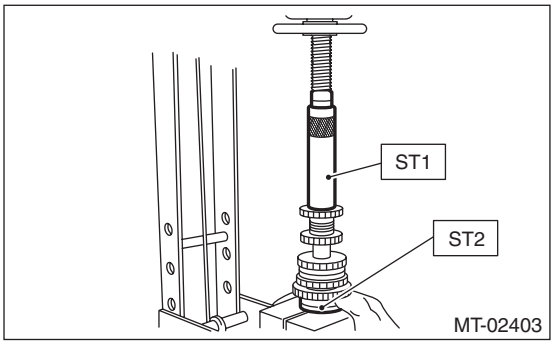

6) Install a set of double taper roller bearings onto the driven shaft using ST1, ST2 and a press.

CAUTION:
Do not apply a load in excess of 10 kN (1 ton, 1.1 US ton, 1.0 Imp ton).

NOTE:
Use a new double taper roller bearing.
ST1 499277200 INSTALLER
ST2 499587000 INSTALLER

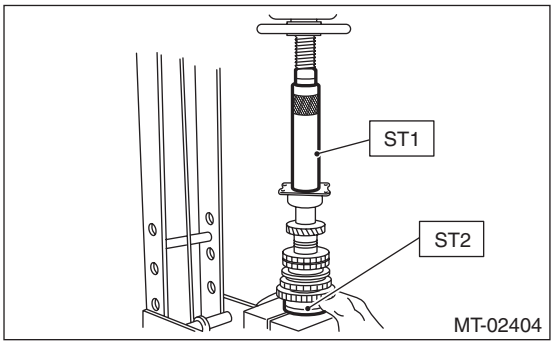

7) Position the woodruff key in groove of the rear of driven shaft. Install the 5th driven gear to the driven shaft using ST1, ST2 and a press.

CAUTION:
Do not apply a load in excess of 10 kN (1 ton, 1.1 US ton, 1.0 Imp ton).
ST1 499277200 INSTALLER
ST2 499587000 INSTALLER

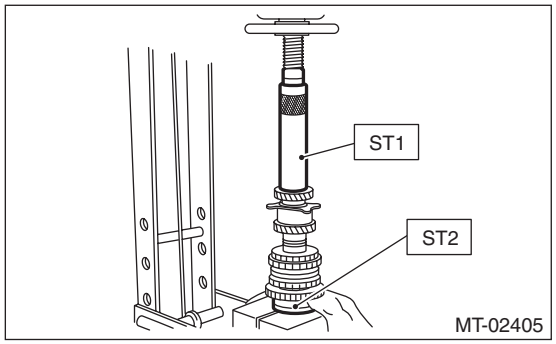

8) Install the lock washer. Tighten the lock nuts to the specified torque using ST1 and ST2.

NOTE:
• Use new lock nuts and lock washers.
• Make sure the lock washer is installed in the proper direction.
ST1 499987300 SOCKET WRENCH (50)
ST2 899884100 HOLDER

Tightening torque:
260 N·m (26.5 kgf-m, 191.8 ft-lb)

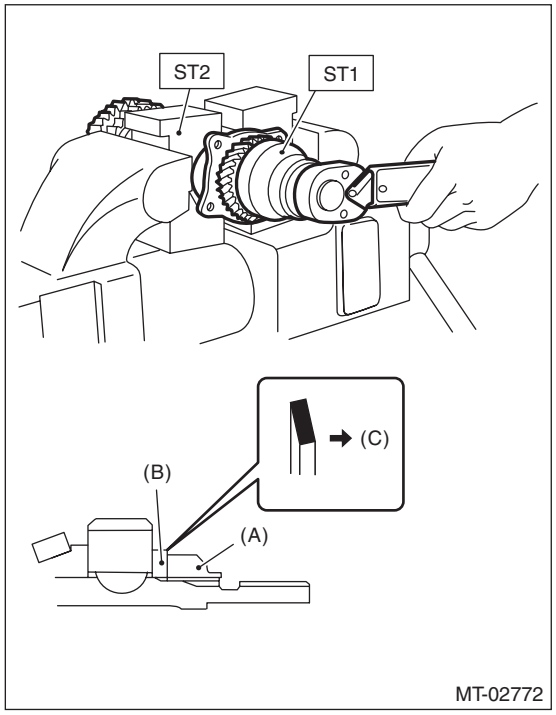

(A) Lock nut
(B) Lock washer
(C) Nut side

9) Using a spring scale, check that starting torque of the double taper roller bearing is 0.1 to 1.5 N (0.01 to 0.15 kgf, 0.02 to 0.34 lbf).

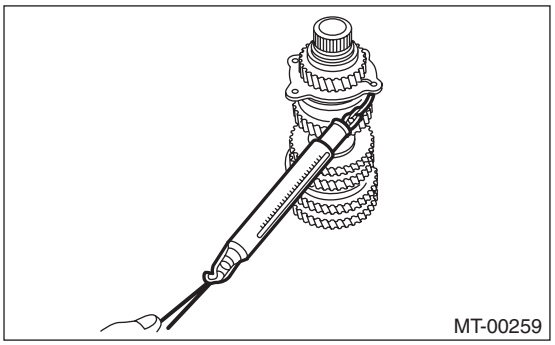

10) Crimp the lock nut at two locations so that the dimension (B) becomes 41.1 mm (1.62 in) or less.

CAUTION:
When crimping the lock nut, be careful not to crack it.

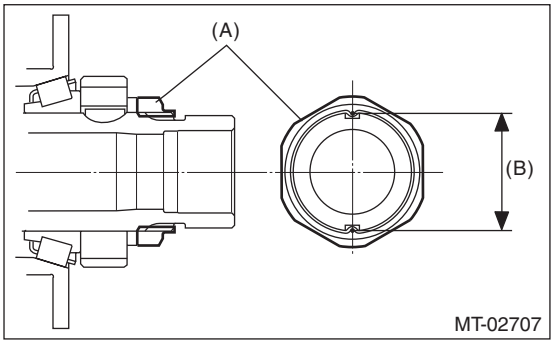

(A) Lock nut
(B) Outer dimension after crimping

11) Install the roller bearing onto the drive pinion shaft.

NOTE:
• Use a new roller bearing.
• When installing the roller bearing, direct the knock pin hole of outer race toward rear.

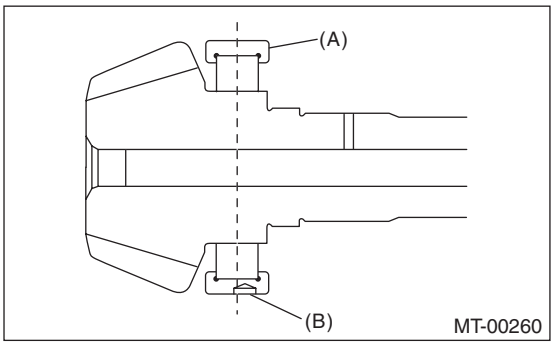

(A) Roller bearing
(B) Knock pin hole

12) Install the washer using ST1, ST2 and a press.

CAUTION:
Do not apply a load in excess of 10 kN (1 ton, 1.1 US ton, 1.0 Imp ton).

ST1 499277100 BUSHING 1-2 INSTALLER
ST2 499277200 INSTALLER

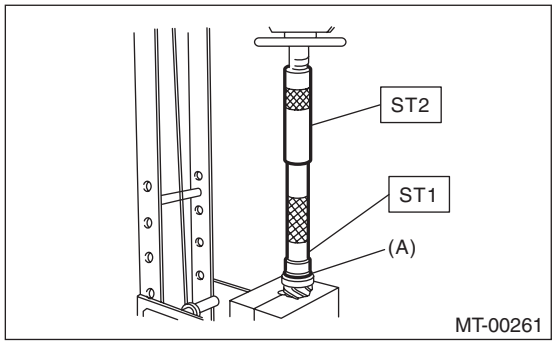

(A) Washer

13) Install the thrust bearing and needle bearing and install the driven shaft assembly.

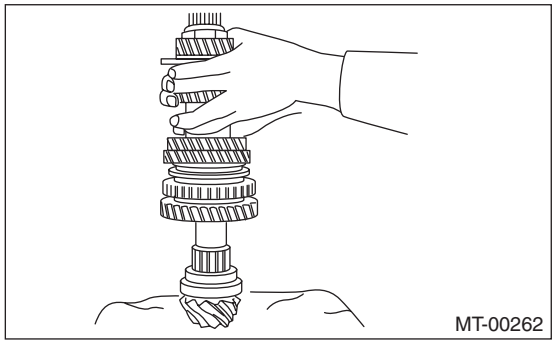

14) Install the drive pinion collar, needle bearing, adjusting washer No. 2, thrust bearing, adjusting washer No. 1 and differential bevel gear sleeve in this order.

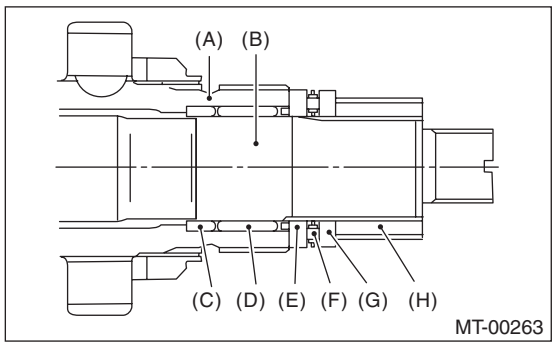

(A) Driven shaft
(B) Drive shaft
(C) Drive pinion collar
(D) Needle bearing (25 × 30 × 20)
(E) Adjusting washer No. 2 (25 × 36 × t)
(F) Thrust bearing (25 × 37.5 × 3)
(G) Adjusting washer No. 1 (25 × 36 × t)
(H) Differential bevel gear sleeve

15) Adjust the thrust bearing preload. <Ref. to 5MT-70, THRUST BEARING PRELOAD, ADJUSTMENT, Drive Pinion Shaft Assembly.>

E: INSPECTION

Disassembled parts should be washed with cleaning solvent first, then inspected carefully.

1) Bearing

Replace the bearings in the following cases.

- When the bearing balls, outer races and inner races are broken or rusty.
- When the bearing is worn.
- When the bearings fail to turn smoothly or emit noise in rotation after gear oil lubrication.
- The ball bearing on the rear side of the drive pinion shaft should be checked for smooth rotation before the drive pinion shaft assembly is disassembled. In this case, because a preload is working on the bearing, its rotation feels like it is slightly dragging unlike other bearings.

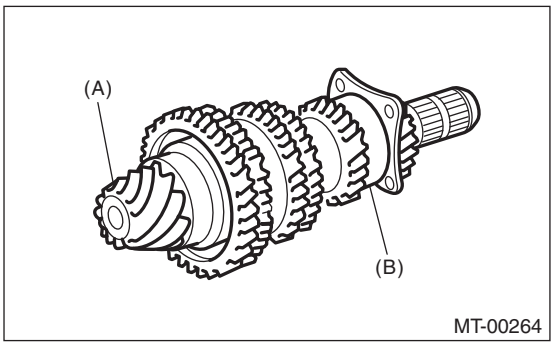

(A) Drive pinion shaft
(B) Ball bearing

- When bearing has other defects.

2) Bushing (each gear)

Replace the bushing in following cases.

- When the sliding surface is damaged or abnormally worn.
- When the inner wall is abnormally worn.

3) Gear

Replace gears in the following cases.

- Replace the gear with new part if its tooth surfaces are broken, damaged or excessively worn.
- Correct or replace if the contact surface between the cone and baulk ring is rough or damaged.
- Correct or replace if the inner surface or end face is damaged.

4) Baulk ring, synchro cone
Replace the baulk ring and synchro cone in the following cases.
• When the inner surface and end face are damaged.
• When the baulk ring inner surface is abnormally or partially worn down.
• When the contact surface of the baulk ring insert section is cracked or abnormally worn.
• If the gap between the end faces of the baulk ring and the gear splined part is excessively small, check the clearance (A) while pressing the ring against the cone.

Clearance (A):
0.5 mm (0.020 in) or more

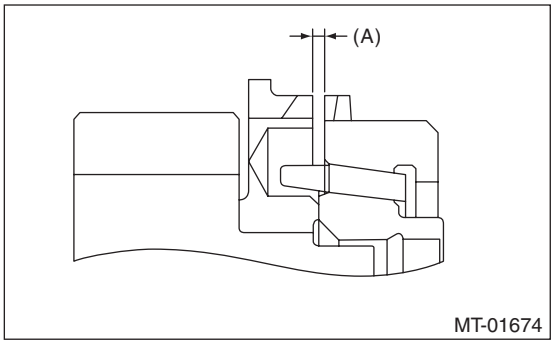

• Apply gear oil to the cone of the gear and while press-fitting the baulk ring, check there is no rotation in the circumferential direction.
5) Coupling sleeve and synchronizer hub
• Check the slipping condition of the coupling sleeve.
• Check the splines on the coupling sleeve and synchronizer hub for wear.
6) Ball detent
Replace the ball detent if deformed, excessively worn or defective in any way.

F: ADJUSTMENT

1. THRUST BEARING PRELOAD

1) Select a suitable adjusting washer No. 1 so that dimension (H) will be zero in a visual check. Position the washer (18.3 × 30 × t) and lock washer (18 × 30 × 2) and attach the lock nut.

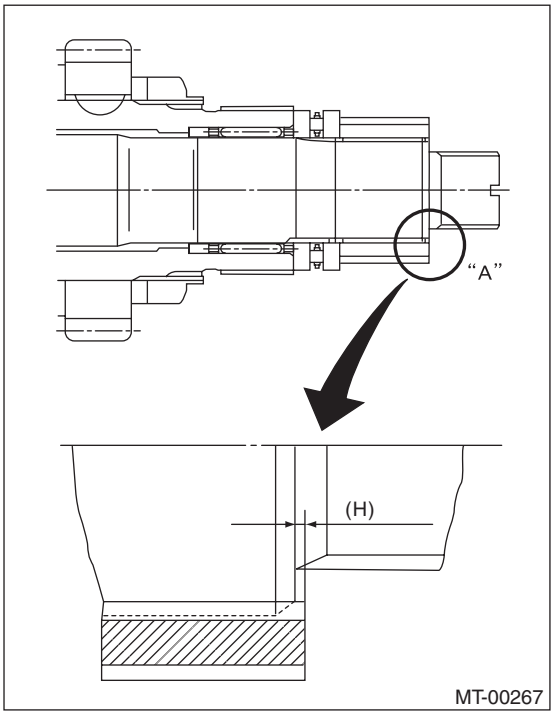

2) Using the ST1, ST2 and ST3, tighten the new lock nut to the specified torque.

NOTE:
- Use new lock nuts and lock washers.
- Make sure the lock washer is installed in the proper direction.

ST1 899884100 HOLDER
ST2 498427100 STOPPER
ST3 899988608 SOCKET WRENCH (27)

Tightening torque:
120 N·m (12.2 kgf-m, 88.5 ft-lb)

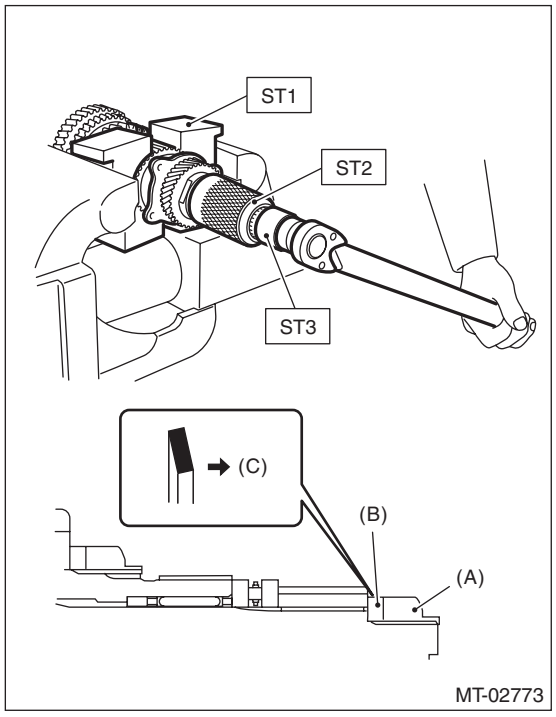

(A) Lock nut
(B) Lock washer
(C) Nut side

3) After removing the ST2, measure the starting torque using torque driver.

ST1 899884100 HOLDER
ST3 899988608 SOCKET WRENCH (27)

Starting torque:
0.3 — 0.8 N·m (0.03 — 0.08 kgf-m, 0.22 — 0.59 ft-lb)

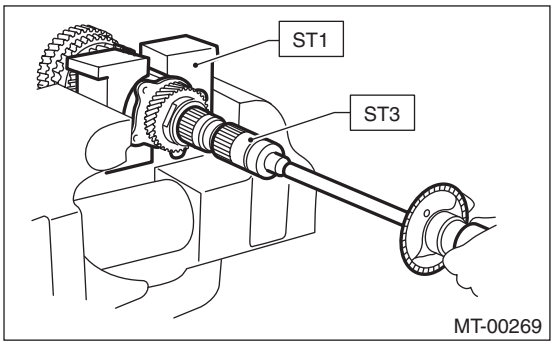

4) If the starting torque is not within the specified limit, select new adjusting washer No. 1 and re-check starting torque.

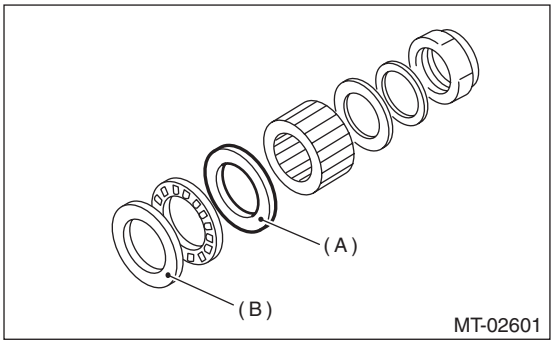

(A) Adjusting washer No. 1
(B) Adjusting washer No. 2

Adjusting washer No. 1	
Part No.	Thickness mm (in)
803025051	3.925 (0.1545)
803025052	3.950 (0.1555)
803025053	3.975 (0.1565)
803025054	4.000 (0.1575)
803025055	4.025 (0.1585)
803025056	4.050 (0.1594)
803025057	4.075 (0.1604)

5) If the specified starting torque cannot be obtained by the selection of adjusting washer No. 1, select adjusting washer No. 2 from the list below. Repeat steps 1) through 4) to adjust starting torque.

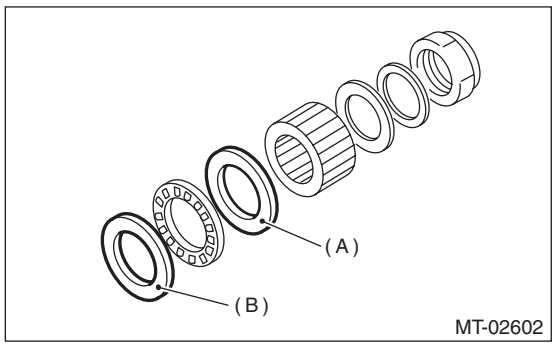

(A) Adjusting washer No. 1
(B) Adjusting washer No. 2

Starting torque	Dimension H	Adjusting washer No. 2
Low	Small	Select thicker one.
High	Large	Select thinner one.

Adjusting washer No. 2	
Part No.	Thickness mm (in)
803025059	3.850 (0.1516)
803025054	4.000 (0.1575)
803025058	4.150 (0.1634)

6) Recheck that the starting torque is within the specified range, then crimp the lock nut at four positions.

CAUTION:
Do not allow the lock nut to be cracked during crimping operation.

18.Front Differential Assembly

A: REMOVAL

1) Remove the manual transmission assembly from the vehicle. <Ref. to 5MT-23, REMOVAL, Manual Transmission Assembly.>
2) Remove the transfer case together with the extension case assembly. <Ref. to 5MT-39, REMOVAL, Transfer Case and Extension Case Assembly.>
3) Remove the transmission case. <Ref. to 5MT-54, REMOVAL, Transmission Case.>
4) Remove the drive pinion shaft assembly. <Ref. to 5MT-63, REMOVAL, Drive Pinion Shaft Assembly.>
5) Remove the main shaft assembly. <Ref. to 5MT-58, REMOVAL, Main Shaft Assembly for Single-Range.>
6) Remove the front differential assembly.

NOTE:
• Do not confuse the right and left roller bearing outer races.
• Be careful not to damage the oil seal of retainer.

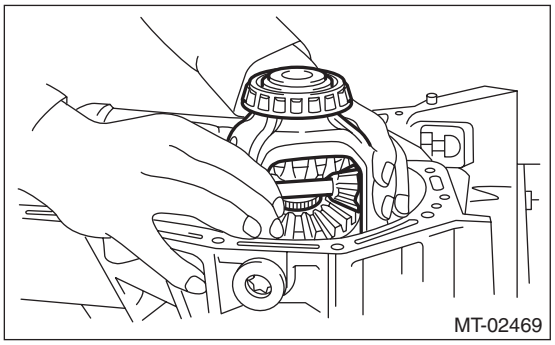

7) Remove the differential side retainers using ST.
ST 18630AA010 WRENCH COMPL RETAINER

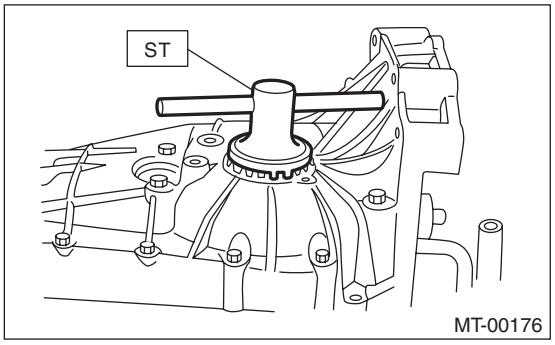

8) Remove the bearing outer race from the transmission case.
ST 398527700 PULLER ASSY

B: INSTALLATION

1) Install the differential side retainers using ST.
ST 18630AA010 WRENCH COMPL RETAINER
2) Install the bearing outer race to the transmission case.
3) Install the front differential assembly.

NOTE:
Be careful not to bend the seal lips of oil seal.

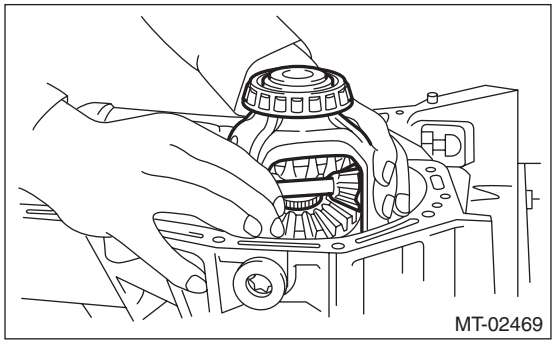

4) Install the main shaft assembly. <Ref. to 5MT-58, INSTALLATION, Main Shaft Assembly for Single-Range.>
5) Install the drive pinion shaft assembly. <Ref. to 5MT-63, INSTALLATION, Drive Pinion Shaft Assembly.>
6) Install the transmission case. <Ref. to 5MT-55, INSTALLATION, Transmission Case.>
7) Install the transfer case together with the extension case assembly. <Ref. to 5MT-39, INSTALLATION, Transfer Case and Extension Case Assembly.>
8) Install the manual transmission assembly to the vehicle. <Ref. to 5MT-26, INSTALLATION, Manual Transmission Assembly.>

C: DISASSEMBLY

1. DIFFERENTIAL CASE ASSEMBLY

1) Remove the twelve bolts and remove hypoid driven gear.

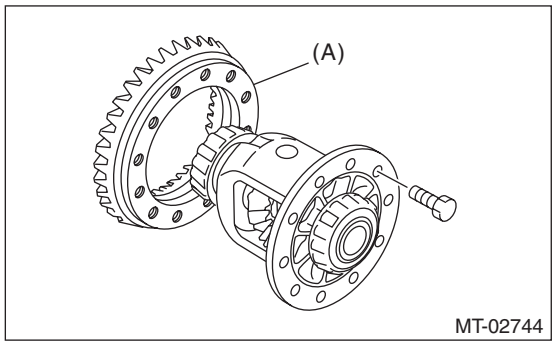

(A) Hypoid driven gear

2) Drive out the straight pin from differential assembly toward hypoid driven gear side.
ST 899904100 STRAIGHT PIN REMOVER

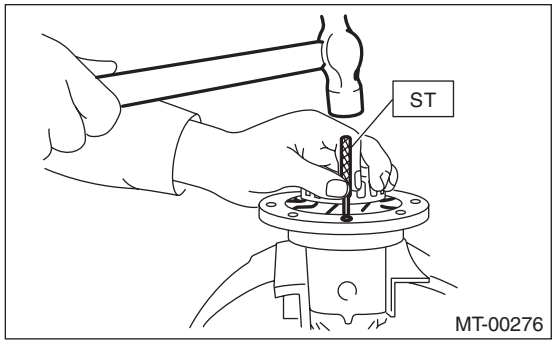

3) Pull out the pinion shaft, and remove the differential bevel pinion, differential bevel gear and washer.

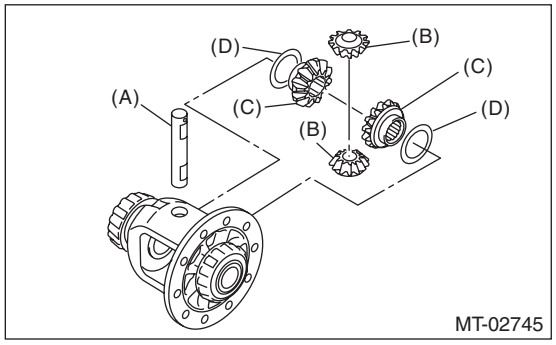

(A) Pinion shaft
(B) Differential bevel pinion
(C) Differential bevel gear
(D) Washer

4) Using the ST, remove the roller bearing.
ST 899524100 PULLER SET

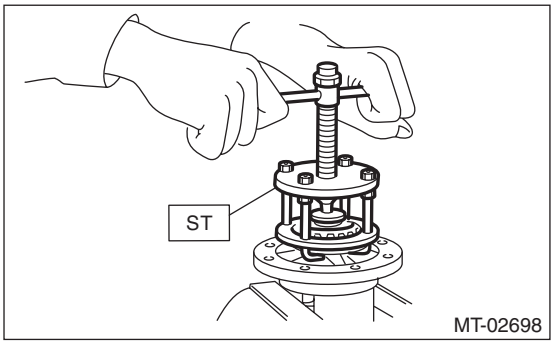

2. SIDE RETAINER

1) Remove the O-ring.

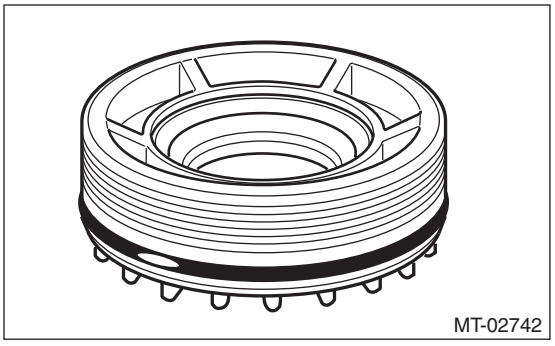

2) Remove the oil seal.

NOTE:
Remove it using a flat tip screwdriver wrapped with cloth or tape, etc.

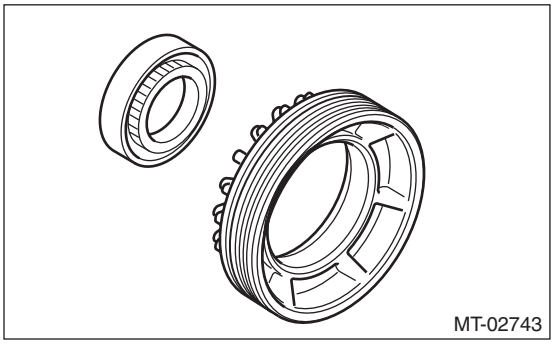

D: ASSEMBLY

1. DIFFERENTIAL CASE ASSEMBLY

1) Install the differential bevel gear and differential bevel pinion together with washer, and insert the pinion shaft.

NOTE:
Face the chamfered side of washer toward gear.

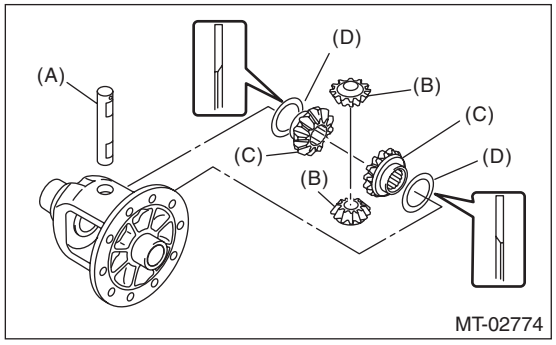

(A) Pinion shaft
(B) Differential bevel pinion
(C) Differential bevel gear
(D) Washer

2) Measure the backlash between differential bevel gear and differential pinion. If the backlash is out of the specified range, install a suitable washer to adjust. <Ref. to 5MT-77, BEVEL PINION GEAR BACKLASH, ADJUSTMENT, Front Differential Assembly.>

NOTE:
Be sure the pinion gear teeth contacts adjacent gear teeth during measurement.
ST1 498247001 MAGNET BASE
ST2 498247100 DIAL GAUGE

Standard backlash
0.13 — 0.18 mm (0.0051 — 0.0071 in)

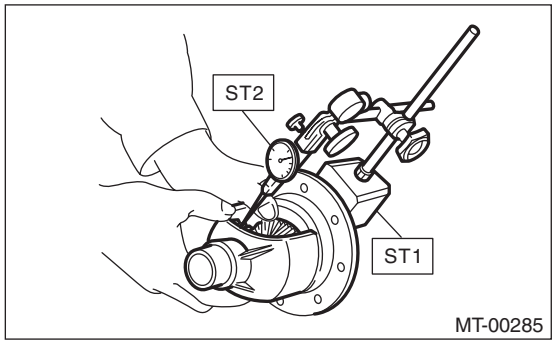

3) Align the pinion shaft and differential case with each hole, and drive the straight pin into the holes from the hypoid driven gear side using the ST.

NOTE:
- Use a new straight pin.
- Lock the straight pin after installing.

ST 899904100 STRAIGHT PIN REMOVER

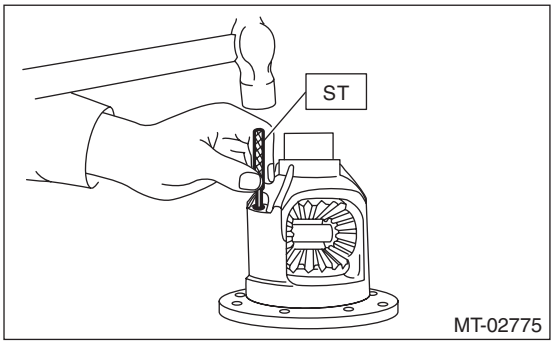

4) Install the roller bearing to differential case.

CAUTION:
Do not apply a load in excess of 10 kN (1 ton, 1.1 US ton, 1.0 Imp ton).

NOTE:
Be careful because the roller bearing outer races are used as a set.
ST1 499277100 BUSHING 1-2 INSTALLER
ST2 398497701 ADAPTER

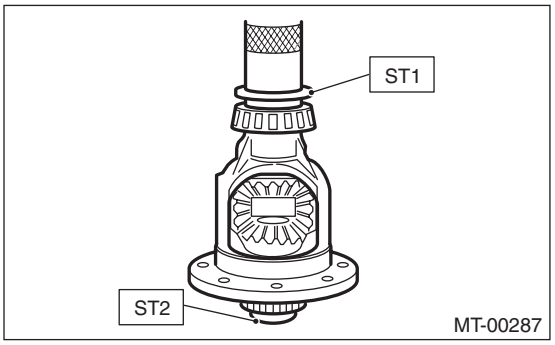

5) Install the hypoid driven gear to the differential case using twelve bolts.

Tightening torque:
T: 62 N·m (6.3 kgf-m, 45.7 ft-lb)

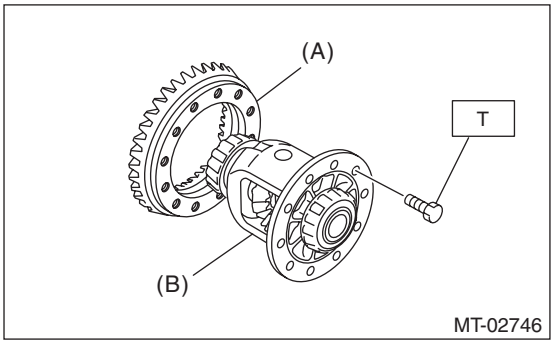

(A) Hypoid driven gear
(B) Differential case

2. SIDE RETAINER

1) Using the ST, install the oil seal by lightly tapping with a plastic hammer.

NOTE:
- Use a new oil seal.
- Apply transmission gear oil to the oil seal lips, and install the oil seal while being careful not to deform the lip.
- Check the identification marks (R, L), and attach the oil seal RH and LH.

ST 18675AA000 DIFFERENTIAL SIDE OIL SEAL INSTALLER

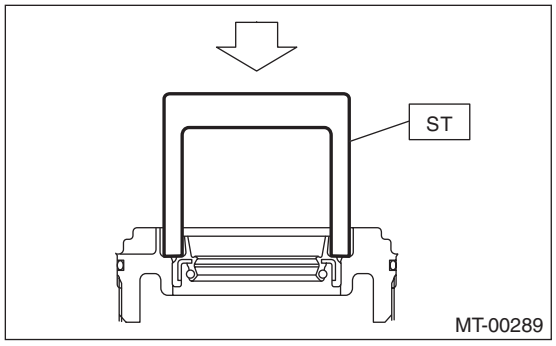

2) Install the O-ring.

NOTE:
- Use new O-rings.
- Apply gear oil to O-ring.
- Do not stretch or damage the O-ring.
- Install the O-ring after adjusting the backlash of the hypoid gear and the preload of the roller bearing.

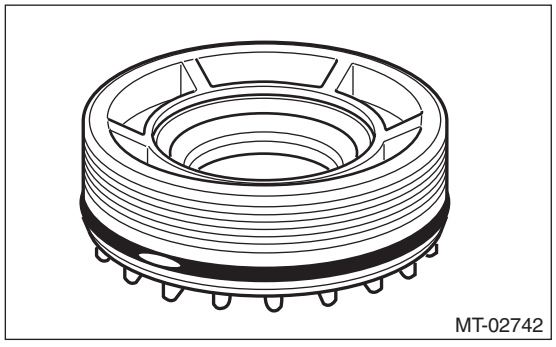

E: INSPECTION

Repair or replace the differential gear in the following cases:
- When the hypoid drive gear and drive pinion shaft tooth surfaces are damaged, excessively worn, or seized.
- When the roller bearing on the drive pinion shaft has a worn or damaged roller path.
- When there is damage, wear or seizure of the differential bevel pinion, differential bevel gear, adjusting washer, pinion shaft or straight pin.
- When the differential case sliding surfaces are worn or damaged.

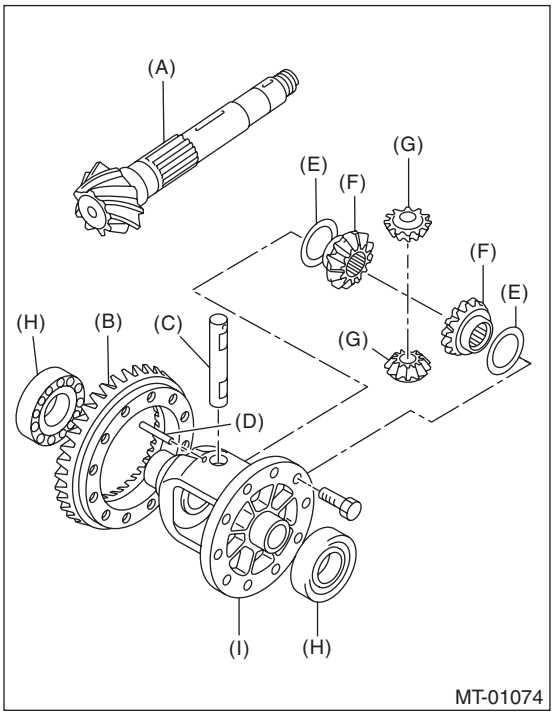

(A) Drive pinion shaft
(B) Hypoid driven gear
(C) Pinion shaft
(D) Straight pin
(E) Adjusting washer
(F) Differential bevel gear
(G) Differential bevel pinion
(H) Roller bearing
(I) Differential case

1. BEVEL PINION GEAR BACKLASH

Measure the backlash between the differential bevel gear and differential bevel pinion. If backlash is outside the specified range, install a suitable adjusting washer to adjust. <Ref. to 5MT-77, ADJUSTMENT, Front Differential Assembly.>

NOTE:
Be sure the pinion gear teeth contacts adjacent gear teeth during measurement.
ST1 498247001 MAGNET BASE
ST2 498247100 DIAL GAUGE

Standard backlash
0.13 — 0.18 mm (0.0051 — 0.0071 in)

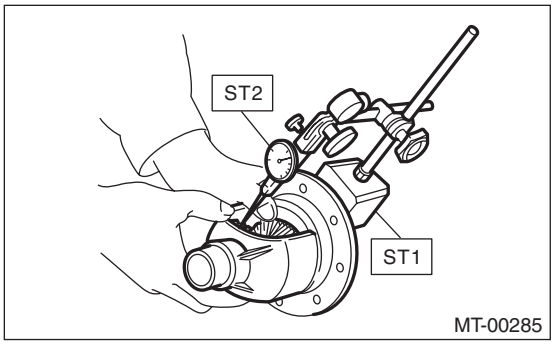

2. HYPOID GEAR BACKLASH

1) Set the ST1, ST2 and ST3. Insert the needle through drain plug hole so that the needle comes in contact with the tooth surface on the right corner, and check the backlash.
ST1 498247001 MAGNET BASE
ST2 498247100 DIAL GAUGE
ST3 498255400 PLATE

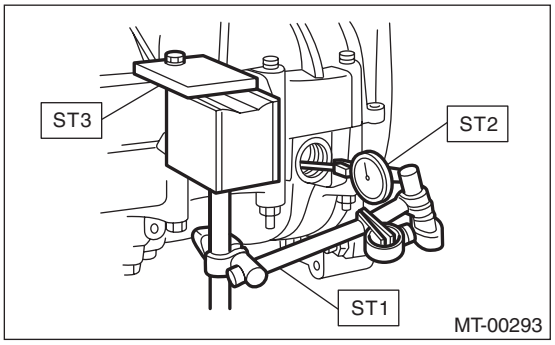

2) Install SUBARU genuine axle shafts to both sides, rotate in the inversion direction so that the gauge contacts the tooth surface, and read the DIAL GAUGE.

NOTE:
If the backlash is outside the specified range, adjust it by turning the side retainer in the right side case.
Part No. 38415AA100Axle shaft

Backlash
0.13 — 0.18 mm (0.0051 — 0.0071 in)

3. TOOTH CONTACT OF HYPOID GEAR

Check tooth contact of hypoid gear as follows: Apply a thin uniform coat of red lead on both teeth surfaces on 3 or 4 teeth of the hypoid gear. Move the hypoid gear back and forth by turning the main shaft until a definite contact pattern is developed on the hypoid gear, and judge whether face contact is correct. When the contact pattern is not correct, adjust. <Ref. to 5MT-77, ADJUSTMENT, Front Differential Assembly.>

- Tooth contact is correct.

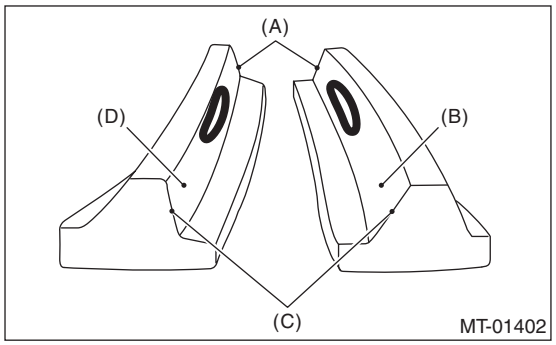

(A) Toe
(B) Coast side
(C) Heel
(D) Drive side

F: ADJUSTMENT

1. BEVEL PINION GEAR BACKLASH

1) Disassemble the front differential assembly. <Ref. to 5MT-74, DISASSEMBLY, Front Differential Assembly.>
2) Select a suitable adjusting washer for the differential bevel gear from the table and install.

Adjusting washer	
Part No.	Thickness mm (in)
803038021	0.925 — 0.950 (0.0364 — 0.0374)
803038022	0.975 — 1.000 (0.0384 — 0.0394)
803038023	1.025 — 1.050 (0.0404 — 0.0413)

3) Adjust until the standard value is obtained.

Backlash:
Standard
0.13 — 0.18 mm (0.0051 — 0.0071 in)

2. HYPOID GEAR BACKLASH

Adjust the backlash by rotating the side retainer in the RH side case.

ST 18630AA010 WRENCH COMPL RETAINER

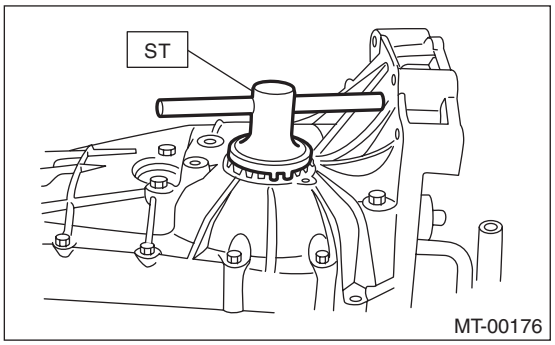

NOTE:
Each time the side retainer rotates by one notch (A), the backlash changes by 0.05 mm (0.020 in).

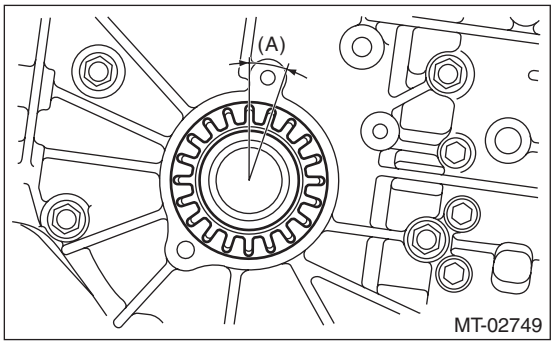

3. TOOTH CONTACT OF HYPOID GEAR

1) Adjust until correct teeth contact is obtained.
2) Check tooth contact, and perform the adjustment as follows.

- Correct tooth contact

Check item: Tooth contact surface is slightly shifted toward the toe side under a no-load condition. (When driving, it moves towards the heel side.)

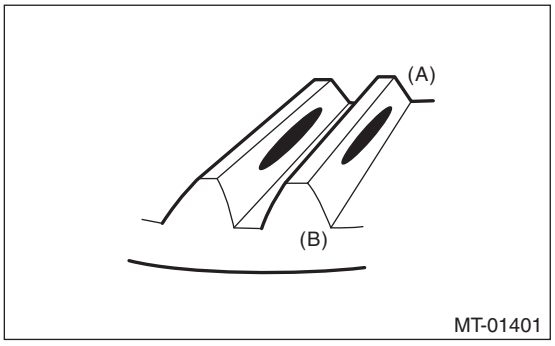

(A) Toe side
(B) Heel side

- Face contact

Check item: Backlash is too large.
Contact pattern

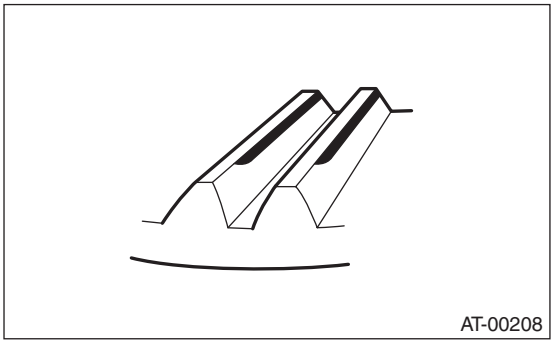

Corrective action: Tighten the side retainer to move the driven gear closer to the drive pinion shaft.

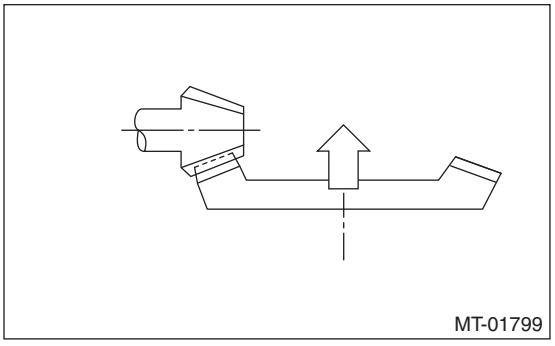

- Flank contact

Check item: Backlash is too small.
Contact pattern

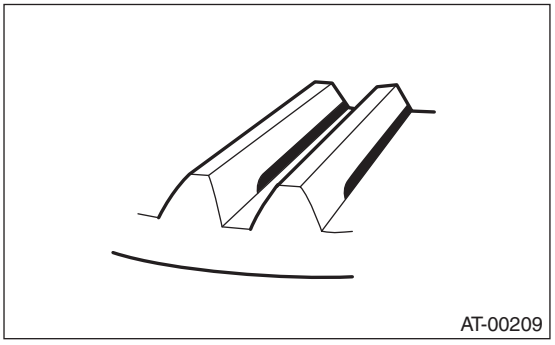

Corrective action: Loosen the side retainer to move the driven gear away from the drive pinion shaft.

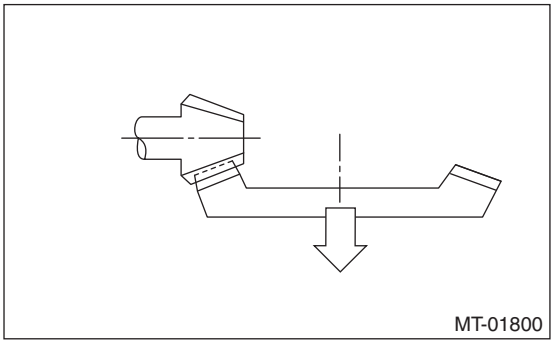

- Toe contact (inside contact)

Check item: Teeth contact area is too small.
Contact pattern

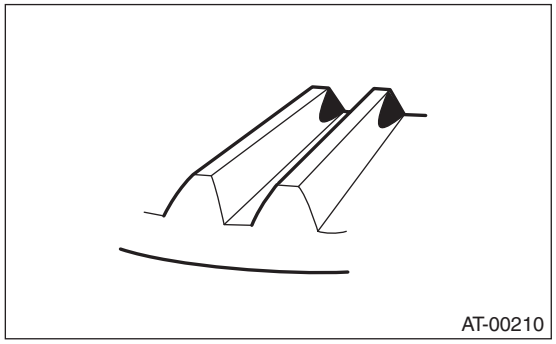

Corrective action: Increase the thickness of drive pinion shim and tighten the side retainer to move the driven gear closer to the drive pinion shaft according to the procedure for bringing drive pinion shaft away from driven gear.

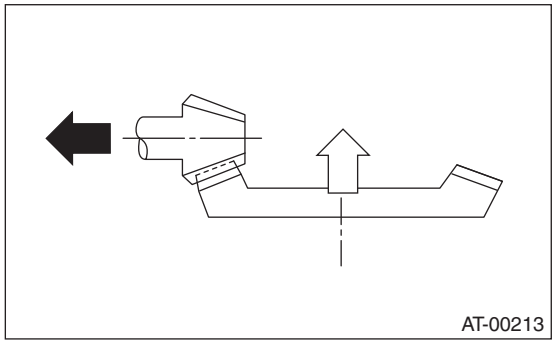

- Heel contact (outside end contact)

Check item: Teeth contact area is too small.
Contact pattern

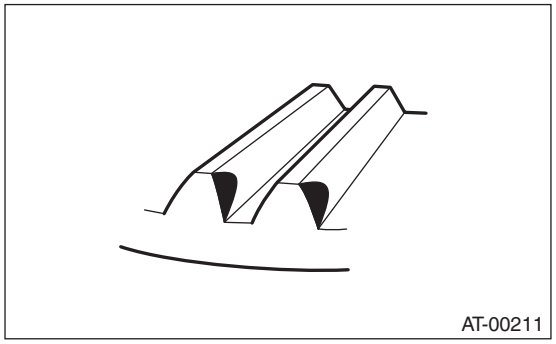

Corrective action: Reduce the thickness of drive pinion shim and loosen the side retainer to move the driven gear away from the drive pinion according to the procedure for moving drive pinion shaft closer to the driven gear.

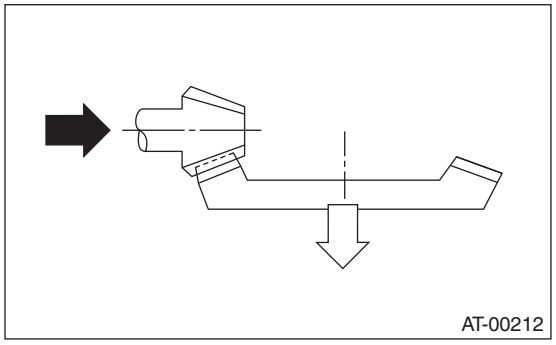

19.Reverse Idler Gear

A: REMOVAL

1) Remove the manual transmission assembly from the vehicle. <Ref. to 5MT-23, REMOVAL, Manual Transmission Assembly.>
2) Remove the back-up light switch and the neutral position switch. <Ref. to 5MT-35, REMOVAL, Switches and Harness.>
3) Remove the transfer case together with the extension case assembly. <Ref. to 5MT-39, REMOVAL, Transfer Case and Extension Case Assembly.>
4) Remove the transmission case. <Ref. to 5MT-54, REMOVAL, Transmission Case.>
5) Remove the drive pinion shaft assembly. <Ref. to 5MT-63, REMOVAL, Drive Pinion Shaft Assembly.>
6) Remove the main shaft assembly. <Ref. to 5MT-58, REMOVAL, Main Shaft Assembly for Single-Range.>
7) Remove the front differential assembly. <Ref. to 5MT-73, REMOVAL, Front Differential Assembly.>
8) Remove the shifter forks and rods. <Ref. to 5MT-82, REMOVAL, Shifter Fork and Rod.>
9) Pull out the straight pin, and remove the reverse idler gear shaft, washer, reverse idler gear and washer.

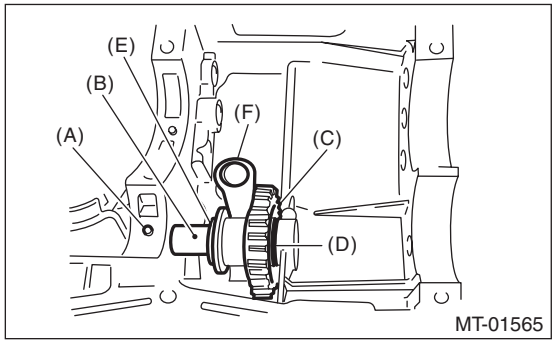

(A) Straight pin
(B) Reverse idler gear shaft
(C) Reverse idler gear
(D) Washer
(E) Washer
(F) Reverse shifter lever

10) Remove the reverse shifter lever.

B: INSTALLATION

1) Install the reverse shifter lever, washer, reverse idler gear, washer and reverse idler gear shaft, and secure them with the straight pin.

NOTE:
- Be sure to install the reverse idler gear shaft from rear side.
- Use a new straight pin.

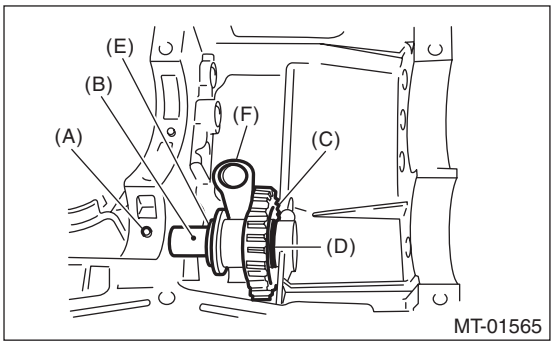

(A) Straight pin
(B) Reverse idler gear shaft
(C) Reverse idler gear
(D) Washer
(E) Washer
(F) Reverse shifter lever

2) Check and adjust clearance between the reverse idler gear and the timing case wall surface. <Ref. to 5MT-80, INSTALLATION, Reverse Idler Gear.> <Ref. to 5MT-81, ADJUSTMENT, Reverse Idler Gear.>
3) Install the shifter forks and rods. <Ref. to 5MT-83, INSTALLATION, Shifter Fork and Rod.>
4) Install the front differential assembly. <Ref. to 5MT-73, INSTALLATION, Front Differential Assembly.>
5) Install the main shaft assembly. <Ref. to 5MT-58, INSTALLATION, Main Shaft Assembly for Single-Range.>
6) Install the drive pinion shaft assembly. <Ref. to 5MT-63, INSTALLATION, Drive Pinion Shaft Assembly.>
7) Install the transmission case. <Ref. to 5MT-55, INSTALLATION, Transmission Case.>
8) Install the transfer case together with the extension case assembly. <Ref. to 5MT-39, INSTALLATION, Transfer Case and Extension Case Assembly.>
9) Install the back-up light switch and the neutral position switch. <Ref. to 5MT-35, INSTALLATION, Switches and Harness.>
10) Install the manual transmission assembly to the vehicle. <Ref. to 5MT-26, INSTALLATION, Manual Transmission Assembly.>

C: INSPECTION

1) Move the reverse shifter rod toward the reverse side. Check the clearance between the reverse idler gear and the transmission case wall surface.
If the value is out of specification, select the appropriate reverse shifter lever and adjust.

Clearance A:
6.0 — 7.5 mm (0.236 — 0.295 in)

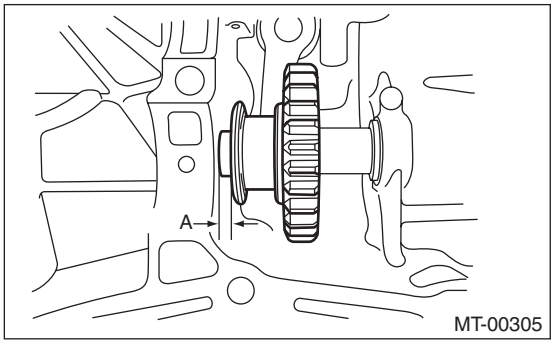

2) After installing a suitable reverse shifter lever, shift into neutral. Check the clearance between the reverse idler gear and the transmission case wall surfaces.
If the value is out of specification, select the appropriate adjusting washer and adjust.

Clearance:
0 — 0.5 mm (0 — 0.020 in)

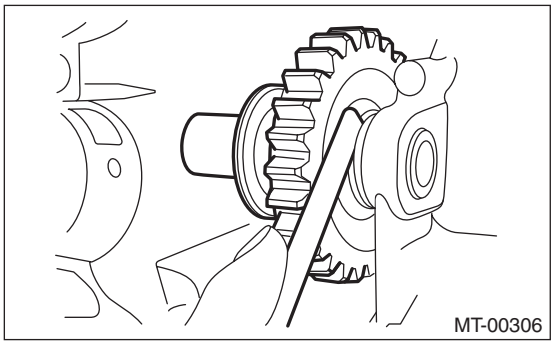

3) Check the reverse idler gear and shaft for damage. Replace if it is damaged.

D: ADJUSTMENT

1) Select the appropriate reverse shifter lever from the table below, and adjust until the clearance between the reverse idler gear and transmission case wall is within specification.

Clearance A:
6.0 — 7.5 mm (0.236 — 0.295 in)

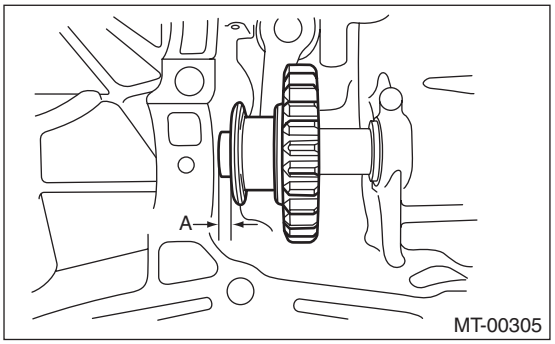

Reverse shifter lever		
Part No.	Mark	Contents
32820AA070	7	Far from case wall
32820AA080	8	Standard
32820AA090	9	Closer to case wall

2) Select the appropriate adjusting washer from the table below, and adjust until the clearance between the reverse idler gear and transmission case wall is within specification.

Clearance:
0 — 0.5 mm (0 — 0.020 in)

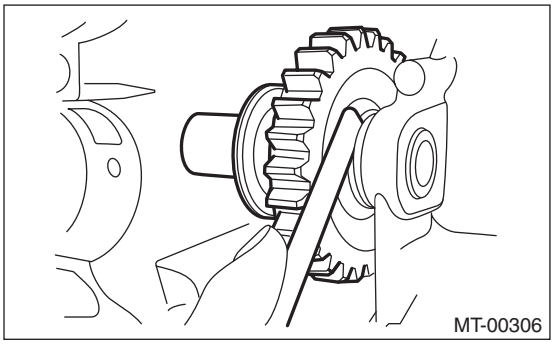

Adjusting washer	
Part No.	Thickness mm (in)
803020151	0.4 (0.016)
803020152	1.1 (0.043)
803020153	1.5 (0.059)
803020154	1.9 (0.075)
803020155	2.3 (0.091)

20.Shifter Fork and Rod

A: REMOVAL

1) Remove the manual transmission assembly from the vehicle. <Ref. to 5MT-23, REMOVAL, Manual Transmission Assembly.>
2) Remove the back-up light switch and the neutral position switch. <Ref. to 5MT-35, REMOVAL, Switches and Harness.>
3) Remove the transfer case together with the extension case assembly. <Ref. to 5MT-39, REMOVAL, Transfer Case and Extension Case Assembly.>
4) Remove the transmission case. <Ref. to 5MT-54, REMOVAL, Transmission Case.>
5) Remove the drive pinion shaft assembly. <Ref. to 5MT-63, REMOVAL, Drive Pinion Shaft Assembly.>
6) Remove the main shaft assembly. <Ref. to 5MT-58, REMOVAL, Main Shaft Assembly for Single-Range.>
7) Remove the front differential assembly. <Ref. to 5MT-73, REMOVAL, Front Differential Assembly.>
8) Drive out the straight pin by tapping it with the ST, and remove the 5th shifter fork.
ST 398791700 STRAIGHT PIN REMOVER 2

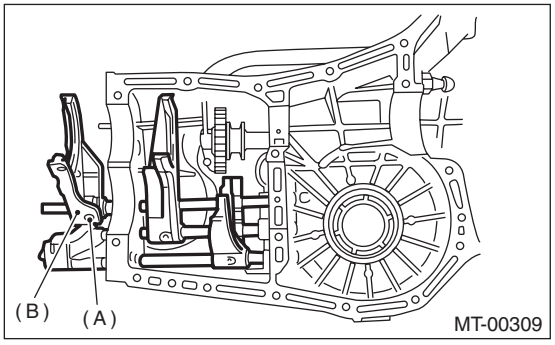

(A) Straight pin
(B) 5th shifter fork

9) Remove the plugs, springs and check balls.
10) Drive out the straight pin by tapping it with the ST, and remove the 3rd – 4th fork rod and shifter fork.

NOTE:
When removing the rod, keep other rods in neutral. When driving out the straight pin, remove it toward the inside of case so that it does not hit against the case.
ST 398791700 STRAIGHT PIN REMOVER 2

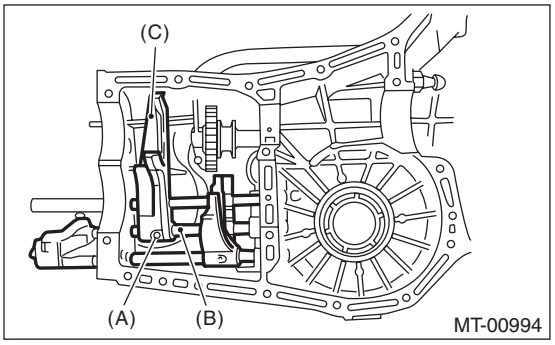

(A) Straight pin
(B) 3rd-4th fork rod
(C) Shifter fork

11) Drive out the straight pin by tapping with the ST, and pull out the 1st – 2nd fork rod and shifter fork.
ST 398791700 STRAIGHT PIN REMOVER 2
12) Remove the snap ring (outer), and pull out the reverse fork rod from the reverse fork rod arm. Then take out the ball, spring and interlock plunger from the reverse fork rod arm. And then remove the rod.

NOTE:
When pulling out the reverse fork rod arm, be careful not to let the ball pop out of arm.
13) Remove the reverse shifter lever.

B: INSTALLATION

1) Install the spring and ball to the reverse fork rod arm, and press in the ST.
ST 399411700 ACCENT BALL INSTALLER
2) Install the reverse fork rod through the hole on the rear of the transmission case. Press out the ST using the reverse fork rod, and fix with outer snap ring.
3) Install the interlock plunger to reverse fork rod arm.

NOTE:
Apply grease to plunger to prevent it from falling.
4) Position the ball, spring and gasket in the reverse fork rod hole on the left side of transmission case, and tighten the checking ball plug.

NOTE:
Use a new gasket.

Tightening torque:
20 N·m (2.0 kgf-m, 14.8 ft-lb)
5) Install the 1st-2nd fork rod into 1st-2nd shifter fork through the hole on the rear of transmission case.

NOTE:
- Set the reverse fork rod to neutral.
- Check that the positions of interlock plunger is correct.

6) Align the holes in the rod and the fork, and drive the new straight pin into these holes using the ST.
ST 398791700 STRAIGHT PIN REMOVER 2
7) Install the interlock plunger (thin) onto the 3rd–4th fork rod.

NOTE:
Apply grease to plunger to prevent it from falling.
8) Attach the 3rd – 4th fork rod into 3rd – 4th shifter fork and reverse fork rod arm through the hole on the rear of the transmission case.
9) Align the holes in the rod and the fork, and drive the new straight pin into these holes.

NOTE:
- Set the reverse fork rod and the 1st – 2nd fork rod to neutral.
- Check that the positions of interlock plunger is correct.

ST 398791700 STRAIGHT PIN REMOVER 2
10) Install the 5th shifter fork onto the rear of reverse fork rod. Align the holes in the two parts and drive new straight pin into the specified place.
ST 398791700 STRAIGHT PIN REMOVER 2

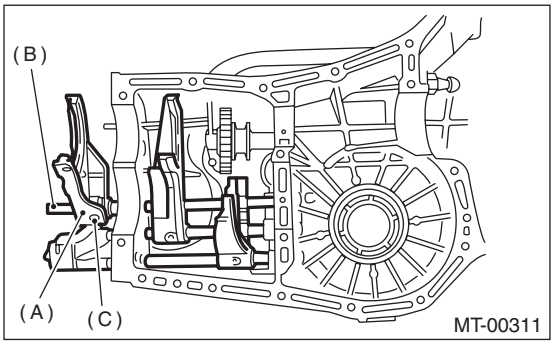

(A) 5th shifter fork
(B) Reverse fork rod
(C) Straight pin

11) Position the balls, checking ball springs and gaskets to the 3rd – 4th fork rod and 1st – 2nd fork rod holes, and install plugs.

NOTE:
Use a new gasket.

Tightening torque:
20 N·m (2.0 kgf-m, 14.8 ft-lb)

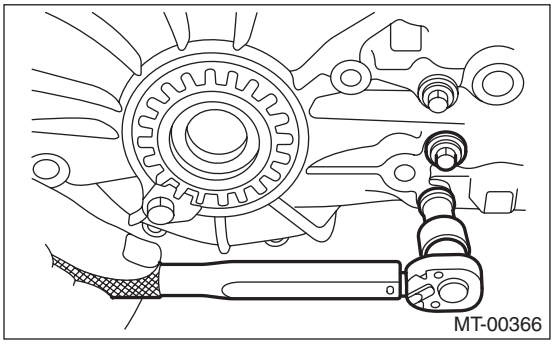

12) Install the front differential assembly. <Ref. to 5MT-73, INSTALLATION, Front Differential Assembly.>
13) Install the main shaft assembly. <Ref. to 5MT-58, INSTALLATION, Main Shaft Assembly for Single-Range.>
14) Install the drive pinion shaft assembly. <Ref. to 5MT-63, INSTALLATION, Drive Pinion Shaft Assembly.>

15) Install the transmission case. <Ref. to 5MT-55, INSTALLATION, Transmission Case.>
16) Install the transfer case together with the extension case assembly. <Ref. to 5MT-39, INSTALLATION, Transfer Case and Extension Case Assembly.>
17) Install the back-up light switch and the neutral position switch. <Ref. to 5MT-35, INSTALLATION, Switches and Harness.>
18) Install the manual transmission assembly to the vehicle. <Ref. to 5MT-26, INSTALLATION, Manual Transmission Assembly.>

C: INSPECTION

1) Check the fork and rod for damage. Replace if it is damaged.
2) Gearshift mechanism
Repair or replace the gearshift mechanism if excessively worn, bent or defective in any way.
3) Inspect the clearance between 1st, 2nd driven gear and reverse driven gear. If any clearance is not within specifications, replace the shifter fork as required.

Clearance (a) and (b):
9.5 mm (0.374 in)

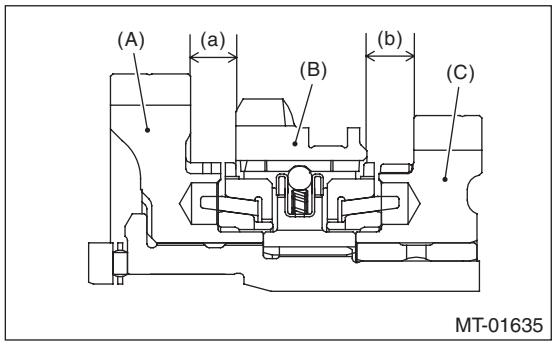

(A) 1st driven gear
(B) Reverse driven gear
(C) 2nd driven gear

1st-2nd shifter fork		
Part No.	Mark	Remarks
32804AA060	1	Approaches 1st gear by 0.2 mm (0.008 in)
32804AA070	No mark	Standard
32804AA080	3	Approaches 2nd gear by 0.2 mm (0.008 in)

4) Inspect the clearance between the 3rd, 4th drive gear and the coupling sleeve. If any clearance is not within specifications, replace the shifter fork as required.

Clearance (a) and (b):
9.3 mm (0.366 in)

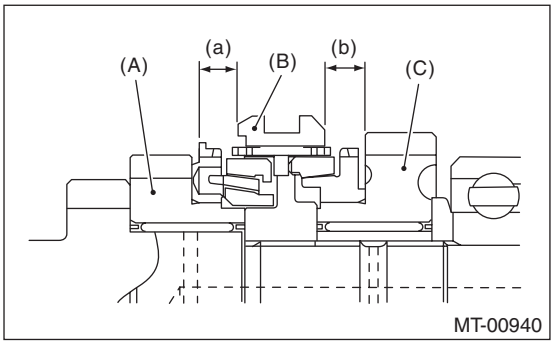

(A) 3rd drive gear
(B) Coupling sleeve
(C) 4th drive gear

3rd-4th shifter fork		
Part No.	Mark	Remarks
32810AA061	1	Approaches 4th gear by 0.2 mm (0.008 in)
32810AA071	No mark	Standard
32810AA101	3	Approaches 3rd gear by 0.2 mm (0.008 in)

5) Inspect the clearance between 5th drive gear and coupling sleeve. If any clearance is not within specifications, replace the shifter fork as required.

Clearance (a):
9.3 mm (0.366 in)

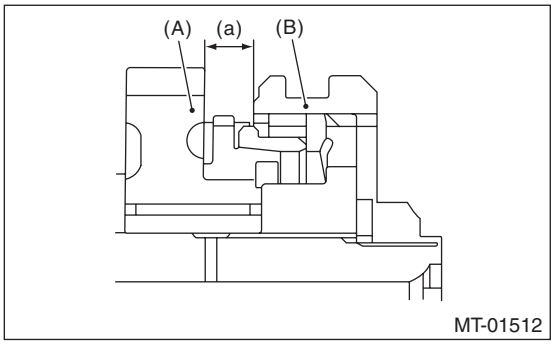

(A) 5th drive gear
(B) Coupling sleeve

5th shifter fork		
Part No.	Mark	Remarks
32812AA201	7	Approaches 5th gear by 0.2 mm (0.008 in).
32812AA211	No mark	Standard
32812AA221	9	Moves away from 5th gear by 0.2 mm (0.008 in).

6) Inspect the rod end clearances (A) and (B). If any clearance is not within specifications, replace the rod or fork as required.

Clearance (A):
3rd-4th — 5th
0.5 — 1.3 mm (0.020 — 0.051 in)

Clearance (B):
1st-2nd — 3rd-4th
0.4 — 1.4 mm (0.016 — 0.055 in)

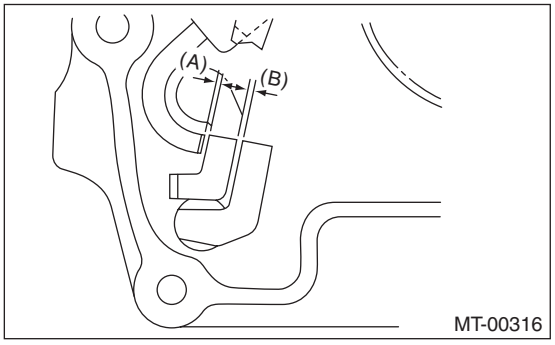

21.General Diagnostic Table

A: INSPECTION

1. MANUAL TRANSMISSION

Symptoms	Possible cause	Corrective action
1. Gears are difficult to intermesh. NOTE: The cause for difficulty in shifting gears can be classified into two types: One is a defective gear shift system and the other is defective transmission. However, if the operation is heavy and engagement of the gears is difficult, a defective clutch disengagement may also be responsible. Check whether the clutch is correctly functioning, before checking the gear shift system and transmission.	(a) Worn, damaged or burred chamfer at internal spline of the sleeve and reverse driven gear	Replace.
	(b) Worn, damaged or burred chamfer of gear spline	Replace.
	(c) Worn or scratched bushings	Replace.
	(d) Incorrect contact or wear between baulk ring and gear cone	Repair or replace.
2. Gear slip-out • Gear slips out when coasting on rough road. • Gear slips out during acceleration.	(a) Defective pitching stopper adjustment	Replace.
	(b) Loose engine mounting bolts	Tighten.
	(c) Worn shifter fork or broken shifter check ball spring	Replace.
	(d) Worn or damaged ball bearing	Replace.
	(e) Excessive clearance between splines of synchronizer hub and synchronizer sleeve	Replace.
	(f) Synchronizer hub tooth step wear	Replace.
	(g) Worn 1st driven gear and driven shaft	Replace.
	(h) Worn 2nd driven gear and bushing	Replace.
	(i) Worn 3rd drive gear and needle bearing	Replace.
	(j) Worn 4th drive gear and needle bearing	Replace.
	(k) Worn 5th drive gear and needle bearing	Replace.
	(l) Worn reverse idler gear and bushing	Replace.
3. Noise emitted from transmission NOTE: If a noise is heard when the vehicle is parked with its engine idling and if a noise ceases when the clutch is disengaged, it may be considered that the noise is coming from the transmission.	(a) Insufficient or improper lubrication	Lubricate with specified oil or replace.
	(b) Worn or damaged gears and bearings NOTE: If the trouble is only wear of the gear teeth surfaces, only a high whirring noise will occur at high speeds, but if any part is broken, rhythmical clicking sounds will be heard even at low speeds.	Replace.

2. DIFFERENTIAL

Symptoms	Possible cause	Corrective action
1. Broken differential (case, gear, bearing, etc.) NOTE: Noise will occur, and eventually the differential will not be able to operate due to broken pieces obstructing the gear revolution.	(a) Insufficient or improper oil	Disassemble the differential and replace broken components. At the same time check other components for any trouble, and replace if necessary.
	(b) Use of vehicle under severe conditions such as excessive load and improper use of the clutch	Readjust the preload and backlash of the bearing, and the contact surface of gear.
	(c) Improper adjustment of taper roller bearing	Adjust.
	(d) Improper adjustment of the drive pinion and the hypoid driven gear	Adjust.
	(e) Excessive backlash of a vehicle under severe operating conditions due to worn differential side gear, washer or differential pinion.	Add recommended oil to the specified level. Do not use vehicle under severe operating conditions.
	(f) Loose hypoid driven gear clamping bolts	Tighten.
2. Differential and hypoid gear noises Troubles of the differential and hypoid gear always appear as noise problems. Therefore noise is the first indication of trouble. However, noises from the engine, muffler, tire, exhaust gas, bearing, body, etc. are easily mistaken for the differential noise. Pay special attention to the hypoid gear noise because it is easily confused with other gear noises. There are the following four kinds of noises. • Gear noise when driving: If noise increases as the vehicle speed increases, it may be due to insufficient gear oil, incorrect gear engagement, damaged gears, etc. • Gear noise when coasting: Damaged gears due to misadjusted bearings and incorrect shim adjustment. • Bearing noise when driving or coasting: Cracked, broken or damaged bearings • Noise mainly when turning: Noise from differential side gear, differential pinion or differential pinion shaft, etc.	(a) Insufficient oil	Replenish or replace with the specified amount of recommended oil.
	(b) Improper adjustment of hypoid driven gear and drive pinion	Check the tooth contact.
	(c) Worn teeth of hypoid driven gear and drive pinion	Replace as a set. Readjust the bearing preload.
	(d) Loose roller bearing	Readjust the backlash of the hypoid driven gear to drive pinion, and check the tooth contact.
	(e) Distorted hypoid driven gear or differential case	Replace.
	(f) Worn washer and differential pinion shaft	Replace.

CLUTCH SYSTEM

CL

		Page
1.	General Description	2
2.	Clutch Disc and Cover	9
3.	Flywheel	12
4.	Release Bearing and Lever	13
5.	Operating Cylinder	15
6.	Master Cylinder	17
7.	Clutch Pipe and Hose	20
8.	Clutch Fluid	22
9.	Clutch Fluid Air Bleeding	23
10.	Clutch Pedal	24
11.	Clutch Switch	28
12.	General Diagnostic Table	32

1. General Description

A: SPECIFICATION

Model			2.0 L
Transmission type			5MT
Clutch cover	Type		Push type
	Diaphragm set load N (kgf, lbf)		5,688 (580, 1,279)
Clutch disc	Facing material		Woven (Non-asbestos)
	O.D. × I.D. × thickness mm (in)	Flywheel side	225 × 150 × 3.2 (8.86 × 5.9 × 0.126)
		Clutch cover side	225 × 150 × 3.5 (8.86 × 5.9 × 0.138)
	Spline outer diameter mm (in)		25.2 (0.992), (Number of teeth: 24)
	Depth of rivet head mm (in)	Flywheel side	1.35 — 1.95 (0.053 — 0.077)
		Clutch cover side	1.65 — 2.25 (0.065 — 0.089)
		Limit of sinking	0.8 (0.031)
	Deflection limit mm (in)		0.7 (0.028) at R = 110 (4.33)
Clutch release lever ratio			1.6
Release bearing			Grease-packed self-aligning
Clutch pedal	Full stroke mm (in)		130 — 135 (5.12 — 5.31)
	Free play mm (in)		4 — 10 (0.16 — 0.39)
Flywheel	Type		Flexible

B: COMPONENT

1. CLUTCH ASSEMBLY

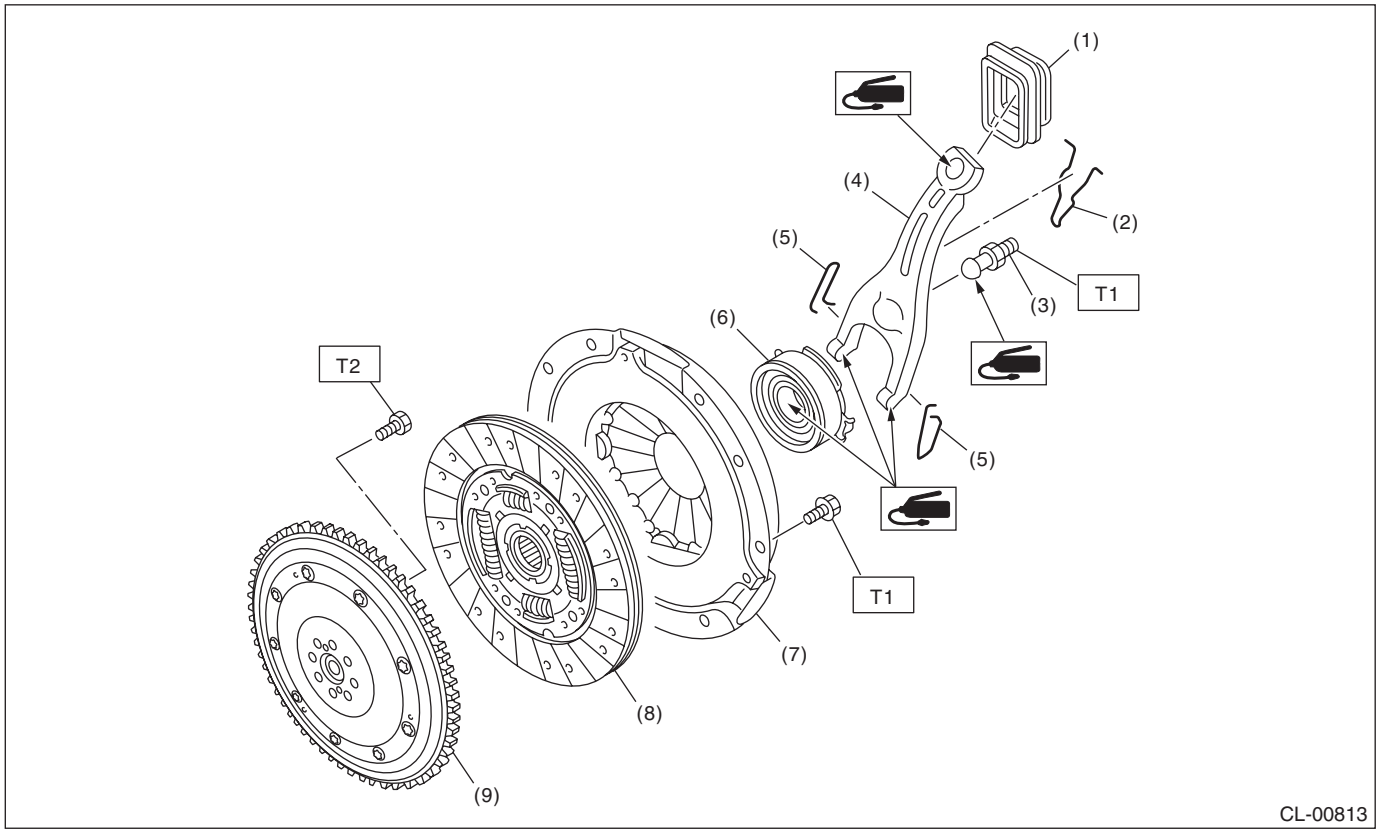

(1) Dust cover
(2) Lever spring
(3) Pivot
(4) Release lever
(5) Clip
(6) Release bearing
(7) Clutch cover
(8) Clutch disc
(9) Flywheel

Tightening torque: N·m (kgf-m, ft-lb)
T1: 16 (1.6, 11.8)
T2: <Ref. to CL-12, INSTALLATION, Flywheel.>

2. CLUTCH PIPE AND HOSE

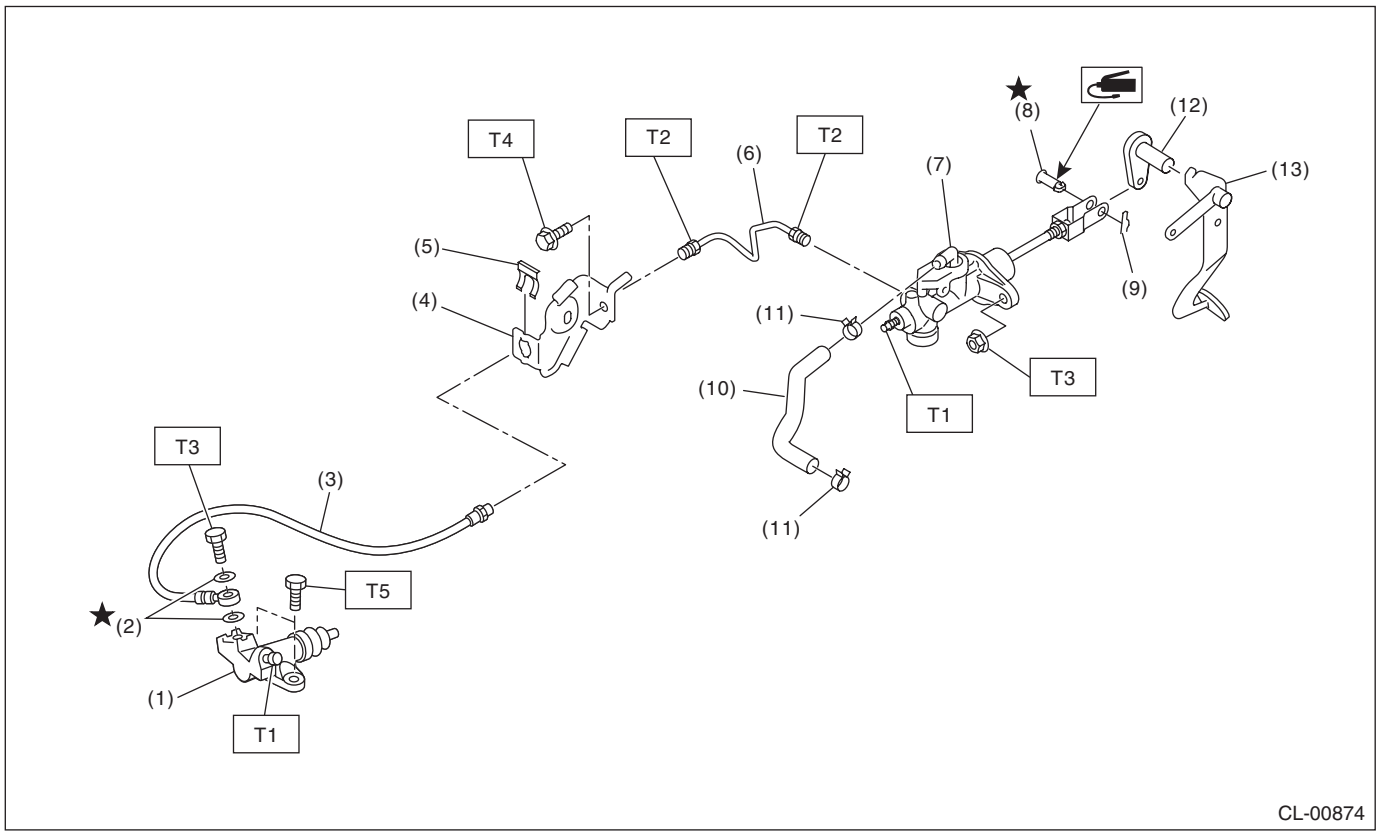

(1)	Operating cylinder	(8)	Clevis pin
(2)	Gasket	(9)	Snap pin
(3)	Clutch hose	(10)	Tank hose
(4)	Bracket	(11)	Clamp
(5)	Clamp	(12)	Lever
(6)	Clutch pipe	(13)	Pedal
(7)	Master cylinder ASSY		

Tightening torque: N·m (kgf-m, ft-lb)

T1: 7.8 (0.8, 5.8)
T2: 15 (1.5, 11.1)
T3: 18 (1.8, 13.3)
T4: 25 (2.5, 18.4)
T5: 37 (3.8, 27.3)

3. MASTER CYLINDER

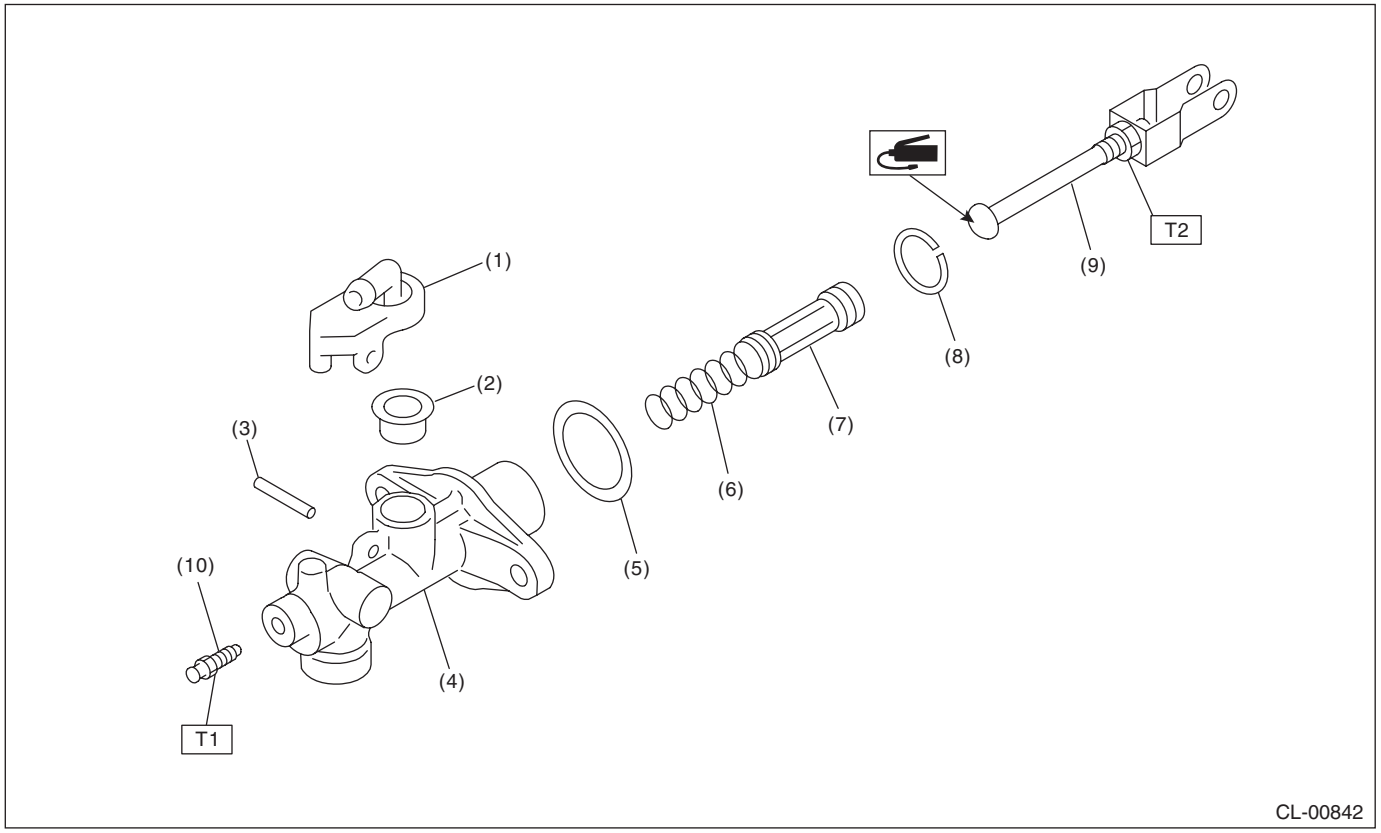

(1)	Nipple	(6)	Return spring
(2)	Oil seal	(7)	Piston
(3)	Straight pin	(8)	Piston stop ring
(4)	Master cylinder	(9)	Push rod ASSY
(5)	Seat	(10)	Breather screw

Tightening torque: N·m (kgf-m, ft-lb)
T1: 7.8 (0.8, 5.8)
T2: 10 (1.0, 7.4)

4. OPERATING CYLINDER

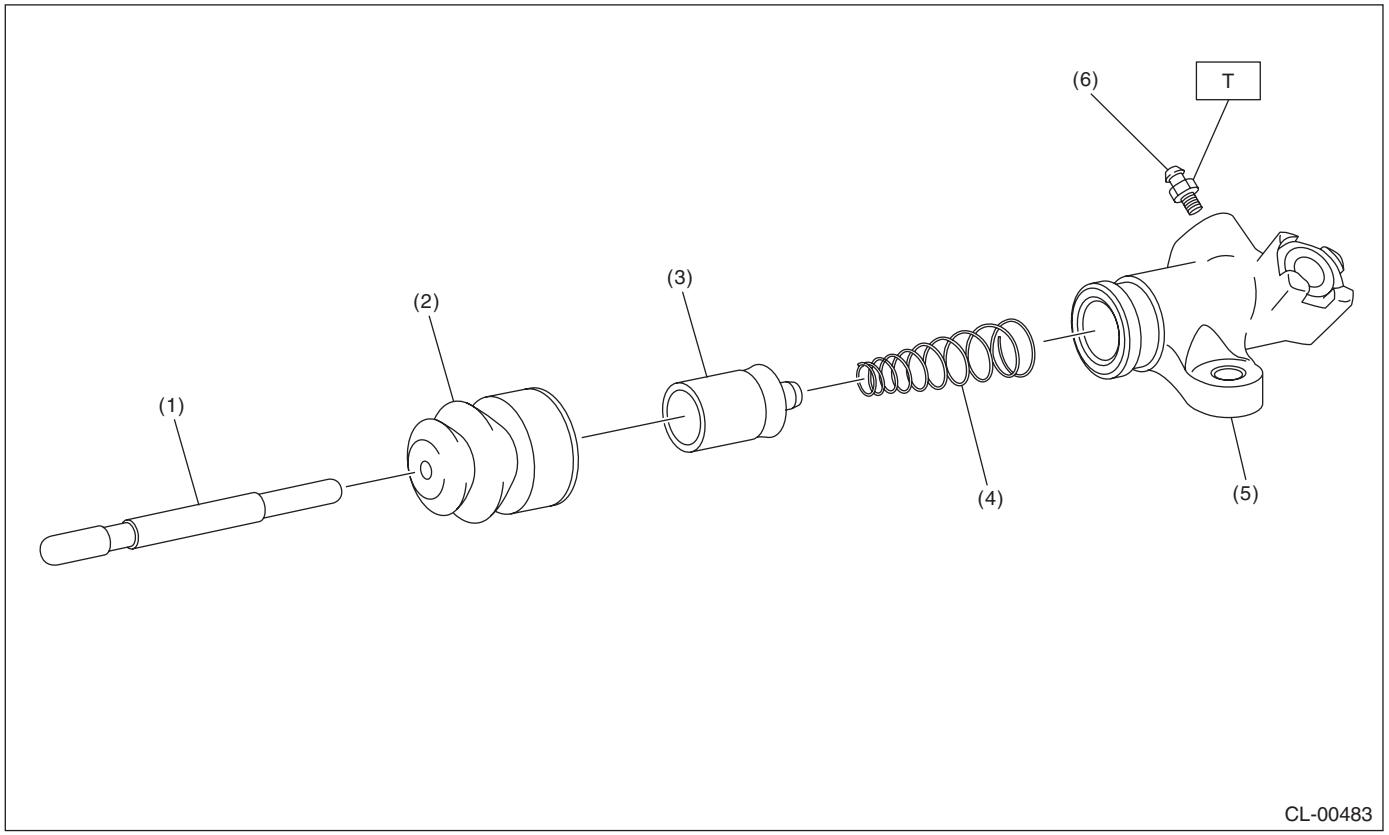

(1) Push rod
(2) Boot
(3) Piston
(4) Piston spring
(5) Operating cylinder
(6) Breather screw

Tightening torque: N·m (kgf-m, ft-lb)
T: 7.8 (0.8, 5.8)

5. CLUTCH PEDAL

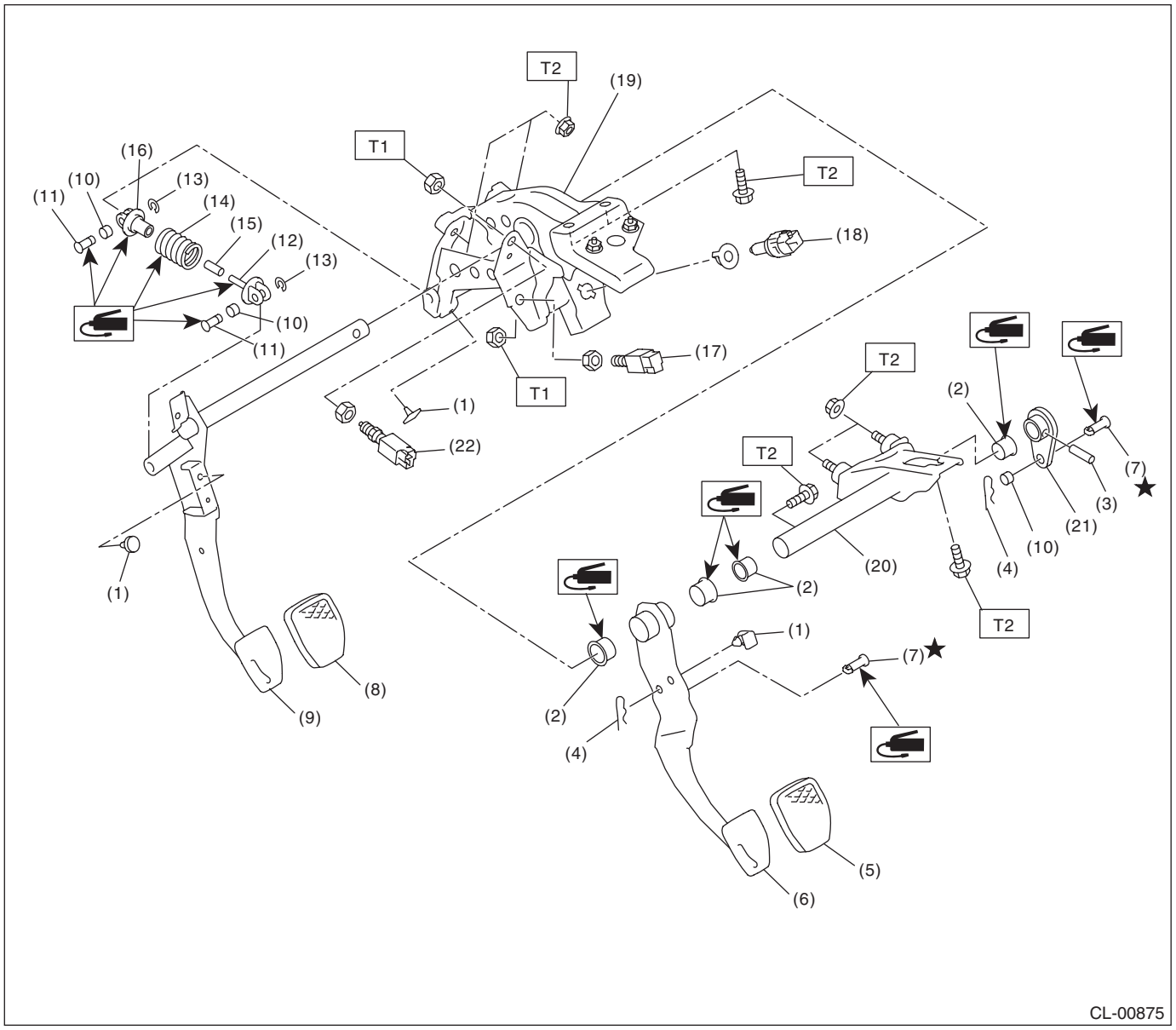

(1) Stopper
(2) Bushing
(3) Spring pin
(4) Snap pin
(5) Brake pedal pad
(6) Brake pedal
(7) Clevis pin
(8) Clutch pedal pad
(9) Clutch pedal
(10) Bushing C
(11) Clutch clevis pin
(12) Assist rod A
(13) Clip
(14) Assist spring
(15) Assist bushing
(16) Assist rod B
(17) Clutch switch
(18) Stop light switch
(19) Pedal bracket
(20) Clutch master cylinder bracket
(21) Lever
(22) Clutch start switch

Tightening torque: N·m (kgf-m, ft-lb)
T1: 8 (0.8, 5.9)
T2: 18 (1.8, 13.3)

C: CAUTION

- Wear appropriate work clothing, including a cap, protective goggles and protective shoes when performing any work.
- Remove contamination including dirt and corrosion before removal, installation or disassembly.
- Keep the disassembled parts in order and protect them from dust and dirt.
- Before removal, installation or disassembly, be sure to clarify the failure. Avoid unnecessary removal, installation, disassembly and replacement.
- Vehicle components are extremely hot after driving. Be wary of receiving burns from heated parts.
- Use SUBARU genuine fluid, grease etc. or equivalent. Do not mix fluid, grease, etc. of different grades or manufacturers.
- Be sure to tighten fasteners including bolts and nuts to the specified torque.
- Place shop jacks or rigid racks at the specified points.
- Apply grease onto sliding or revolving surfaces before installation.
- Before installing O-rings or snap rings, apply sufficient amount of fluid to avoid damage and deformation.
- Before securing a part in a vise, place cushioning material such as wood blocks, aluminum plate or cloth between the part and the vise.
- Keep fluid away from the vehicle body. If any fluid contacts the vehicle body, immediately flush the area with water.

D: PREPARATION TOOL

1. SPECIAL TOOL

ILLUSTRATION	TOOL NUMBER	DESCRIPTION	REMARKS
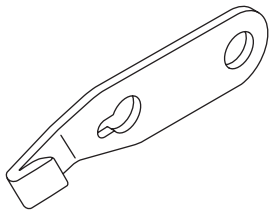 ST-498497100	498497100	CRANKSHAFT STOPPER	Used for stopping rotation of the flywheel when loosening/tightening bolts, etc.
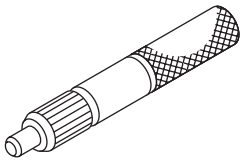 ST-499747100	499747100	CLUTCH DISC GUIDE	Used for installing the clutch disc to the flywheel.

2. GENERAL TOOL

TOOL NAME	REMARKS
Circuit tester	Used for measuring resistance, voltage and current.
Dial gauge	Used for measuring clutch disc run-out.
Depth gauge	Used for measuring clutch disc wear.
Angle gauge	Used for tightening the flywheel.

2. Clutch Disc and Cover

A: REMOVAL

1) Remove the transmission assembly from the vehicle.
<Ref. to 5MT-23, REMOVAL, Manual Transmission Assembly.>
2) Attach the ST on the flywheel.
ST 499747100 CLUTCH DISC GUIDE

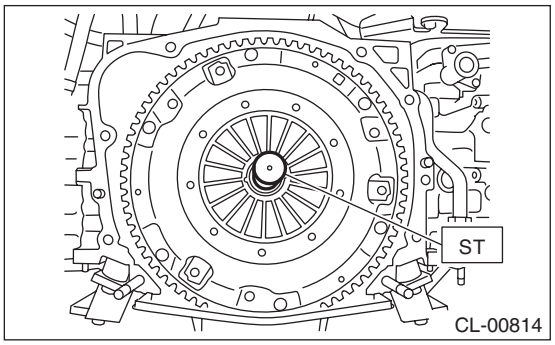

3) Remove the clutch cover and clutch disc.

NOTE:
• Take care not to allow oil to touch the clutch disc face.
• Do not disassemble the clutch cover or clutch disc.

B: INSTALLATION

1) Insert the ST into the clutch disc and attach to the flywheel by inserting the ST end into pilot bearing.

NOTE:
When installing the clutch disc, be careful to attach in the correct direction.
ST 499747100 CLUTCH DISC GUIDE

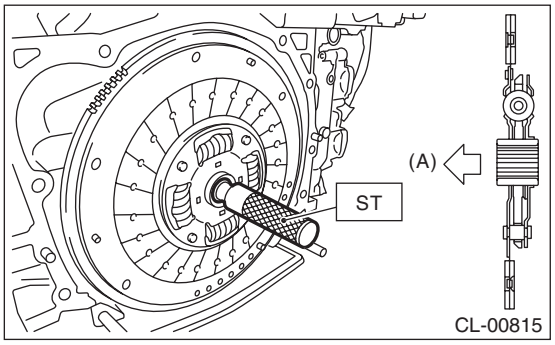

(A) Flywheel side

2) Install the clutch cover to the flywheel and tighten the bolts to the specified torque.

NOTE:
• When installing a clutch cover to the flywheel, position the clutch cover so that the spacing between the unbalance marks (paint mark) on the flywheel and clutch cover is 120° or more apart. (The unbalance mark indicates the direction of residual unbalance.)
• Temporarily tighten the bolts by hand. Each bolt should be tightened to the specified torque in a crisscross order.

Tightening torque:
16 N·m (1.6 kgf-m, 11.8 ft-lb)

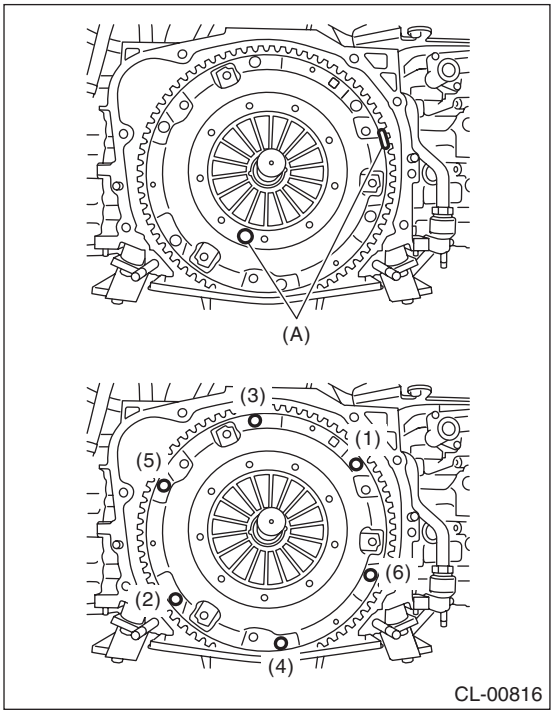

(A) Unbalance mark (paint)

3) Remove the ST.
ST 499747100 CLUTCH DISC GUIDE
4) Install the transmission assembly. <Ref. to 5MT-26, INSTALLATION, Manual Transmission Assembly.>

C: INSPECTION

1. CLUTCH DISC

1) Facing wear
Measure the depth from the facing surface to the rivet head. Replace if the face is worn locally or worn down to less than the specified value.

Depth to rivet head:
Limit of sinking
0.8 mm (0.031 in)

NOTE:
Do not wash the clutch disc with any type of cleaning fluid.

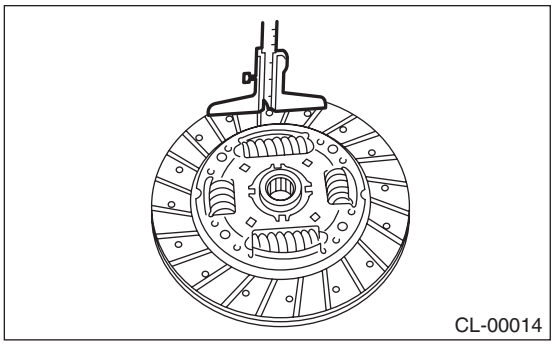

2) Hardened facing
Replace the clutch disc.
3) Oil soakage on facing
Replace the clutch disc and inspect the transmission front oil seal, transmission case mating surface, engine rear oil seal and other locations for oil leakage.

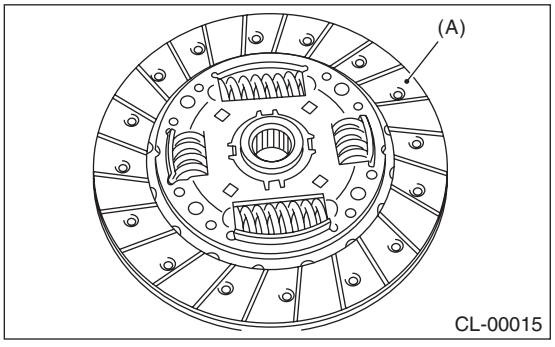

(A) Clutch facing

4) Deflection on facing
If deflection exceeds the specified value at the outer circumference of the facing, replace the clutch disc.
ST 499747100 CLUTCH DISC GUIDE

Limit for deflection:
0.7 mm (0.028 in) at R = 110 mm (4.33 in)

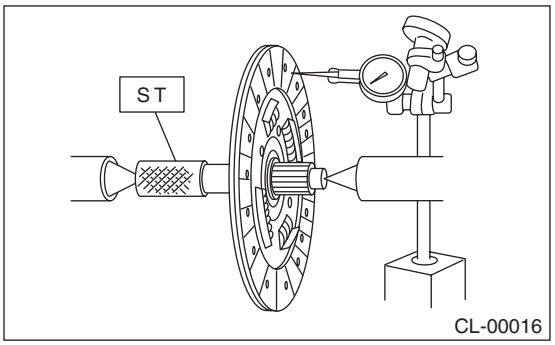

5) If there is spline wear, loose rivets, failed damper springs, etc., replace the clutch disc.

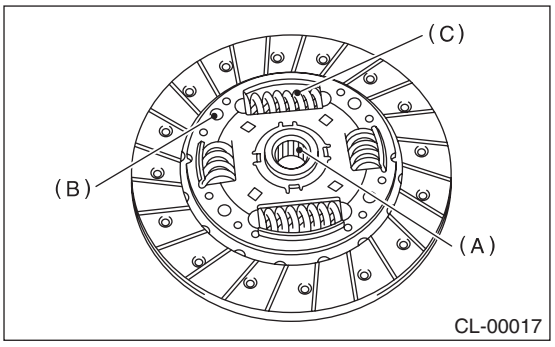

(A) Spline
(B) Rivet
(C) Damper spring

2. CLUTCH COVER

NOTE:
Visually check the following items without disassembling, and replace or repair if defective.
1) Loose thrust rivet
2) Damaged or worn bearing contact area at the center of diaphragm spring

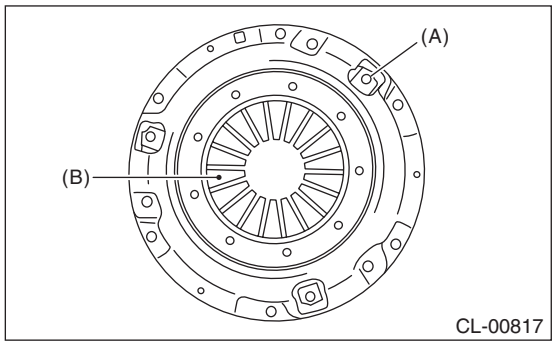

(A) Thrust rivet
(B) Diaphragm spring

3) Damaged or worn disc contact surface of the pressure plate
4) Loose strap plate installation area
5) Worn diaphragm sliding area

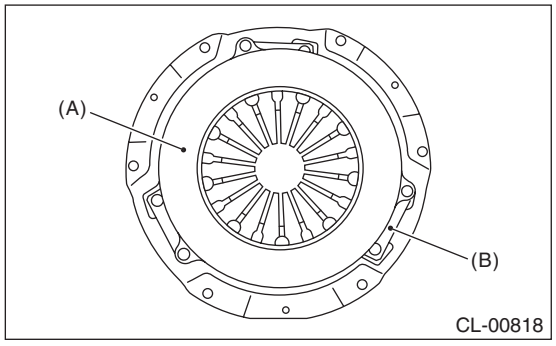

(A) Pressure plate
(B) Strap plate

3. Flywheel

A: REMOVAL

1) Remove the transmission assembly. <Ref. to 5MT-23, REMOVAL, Manual Transmission Assembly.>
2) Remove the clutch cover and clutch disc. <Ref. to CL-9, REMOVAL, Clutch Disc and Cover.>
3) Attach the ST.
ST 498497100 CRANKSHAFT STOPPER

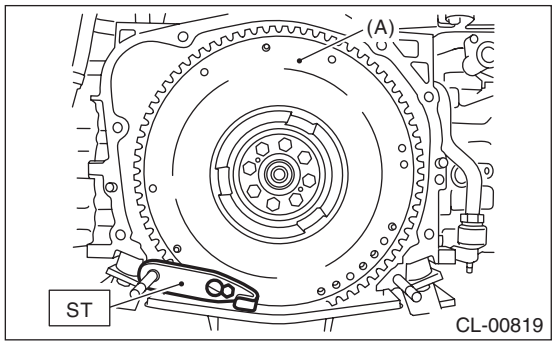

(A) Flywheel

4) Remove the flywheel and crankshaft position sensor plate.

B: INSTALLATION

1) Temporarily tighten the crankshaft position sensor plate and flywheel.

NOTE:
Align the knock pin hole of the crankshaft position sensor plate to the knock pin of the crankshaft to secure the knock pin.
2) Attach the ST.
ST 498497100 CRANKSHAFT STOPPER

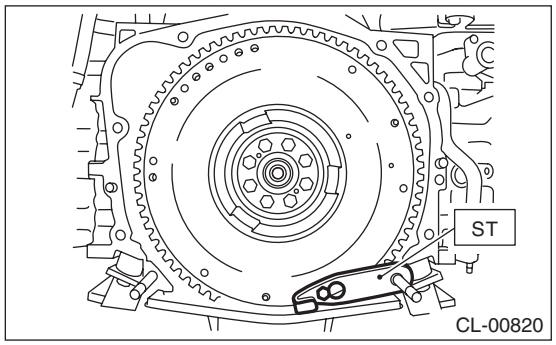

3) Tighten the flywheel mounting bolts in two stages.
(1) Tighten the flywheel attachment bolts.

Tightening torque:
30 N·m (3.1 kgf-m, 22.1 ft-lb)

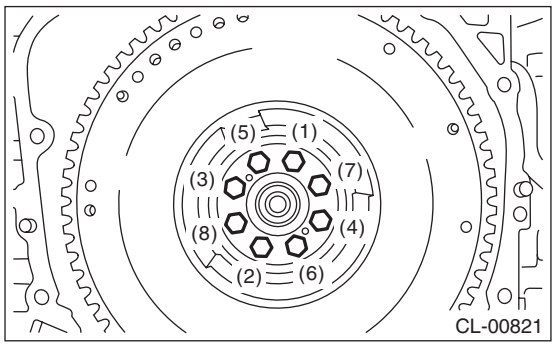

(2) While checking the tightening angle with the angle gauge, further tighten the flywheel mounting bolts.

Tightening angle:
30° — 35°

4) Install the clutch disc and cover. <Ref. to CL-9, INSTALLATION, Clutch Disc and Cover.>
5) Install the transmission assembly. <Ref. to 5MT-26, INSTALLATION, Manual Transmission Assembly.>

C: INSPECTION

CAUTION:
Because the center bearing is grease-sealed and is a non-lubrication type, do not wash with gasoline or solvents.
1) If there is damage or defectiveness in the facing sliding surface or ring gear, replace the flywheel.

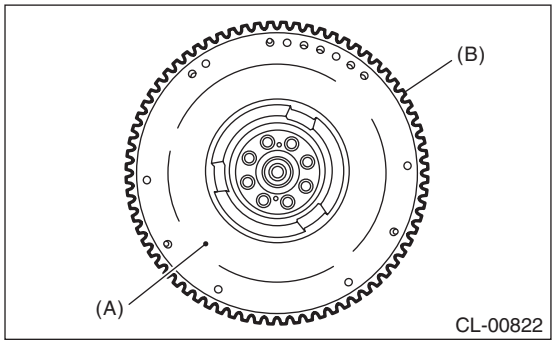

(A) Flywheel
(B) Ring gear

2) Smoothness of rotation
Rotate the ball bearing while applying pressure in the thrust direction.
3) If noise or excessive play is noted, replace the flywheel.

4. Release Bearing and Lever

A: REMOVAL

1) Remove the transmission assembly from the vehicle.
<Ref. to 5MT-23, REMOVAL, Manual Transmission Assembly.>
2) Remove the two clips from the release lever and remove the release bearing.

CAUTION:
Be careful not to deform the clips.
3) Remove the dust cover.

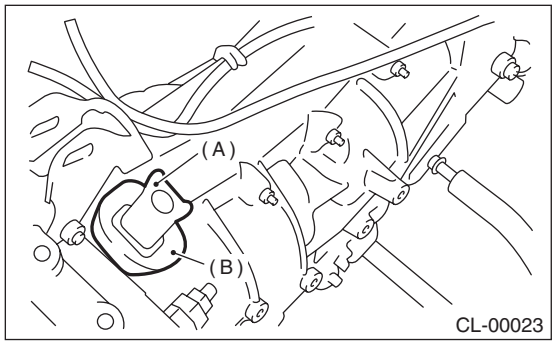

(A) Release lever
(B) Dust cover

4) Remove the lever spring from the pivot with a screwdriver by accessing it through the clutch housing release lever hole. Then remove the release lever.

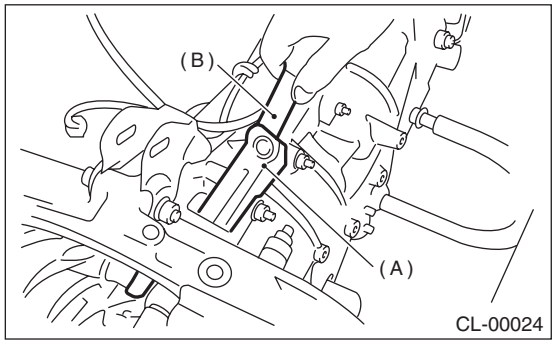

(A) Release lever
(B) Screwdriver

B: INSTALLATION

NOTE:
Apply the specified grease to lubricate to the following points before installation.
- Contact surface of lever and pivot
- Contact surface of lever and bearing
- Transmission main shaft spline
- Contact surface of release bearing and transmission case

Grease
NICHIMOLY N-130 or equivalent
1) While pushing the release lever to the pivot and twisting it to both sides, fit the lever spring onto the raised portion of the pivot.

NOTE:
Observing from the main case hole, check that the lever spring is installed securely.

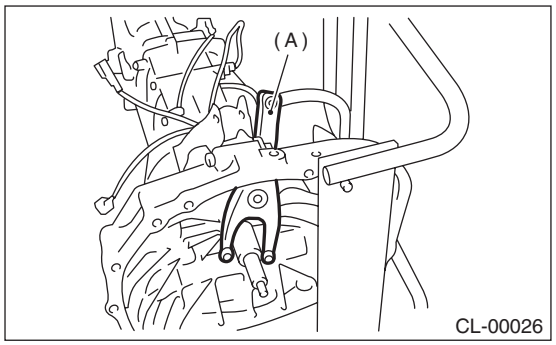

(A) Release lever

2) Install the release bearing and fasten it with two clips.
3) Install the dust cover.

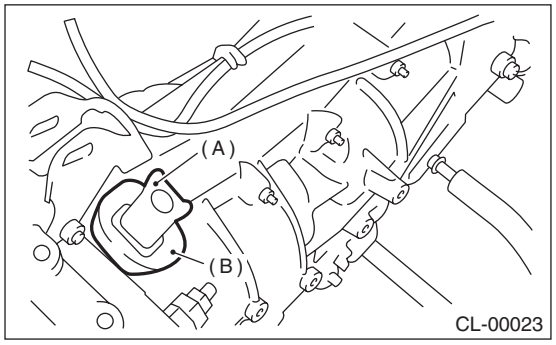

(A) Release lever
(B) Dust cover

4) Check the bearing for smooth movement by operating the release lever.
5) Apply grease to the contact point of the release lever and operating cylinder.

Grease
NICHIMOLY N-130 or equivalent
6) Install the transmission assembly. <Ref. to 5MT-26, INSTALLATION, Manual Transmission Assembly.>

C: INSPECTION

1. RELEASE BEARING

CAUTION:
Since this bearing is grease-sealed and is a non-lubrication type, do not wash with gasoline or any other solvent when servicing the clutch.

1) Check the bearing for smooth movement by applying force to the bearing in the radial direction.

Radial direction stroke:
1.6 mm (0.063 in)

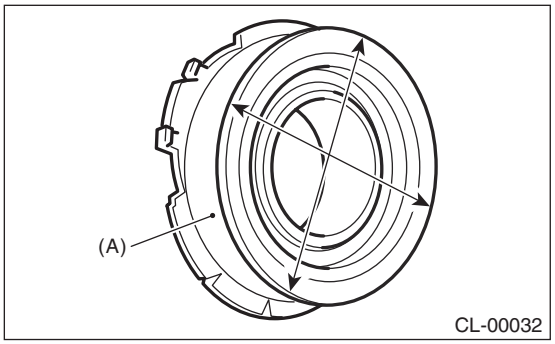

(A) Bearing case

2) While applying force to the bearing in the rotational direction, check the bearing for smooth rotation.

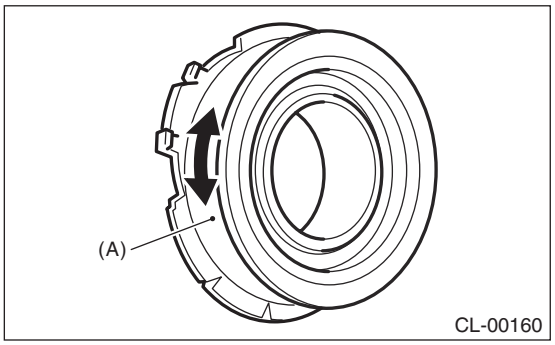

(A) Bearing case

3) Check for wear and damage at the bearing case surface in contact with the lever.

2. RELEASE LEVER

Check the pivot portion of the lever and the contact area with the release bearing case for wear.

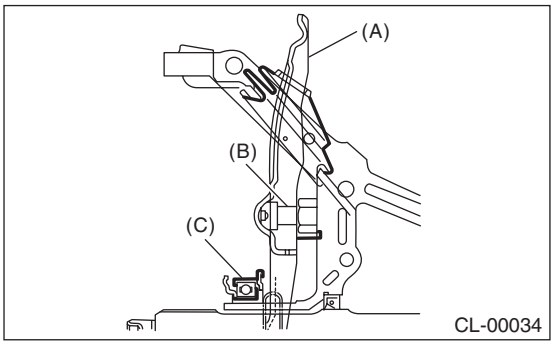

(A) Release lever
(B) Pivot
(C) Release bearing

5. Operating Cylinder

A: REMOVAL

1) Remove the clip (A) from the air intake boot.
2) Loosen the clamp (B) connecting the air intake boot and air cleaner case (rear).
3) Loosen the clamp (C) which connects the air intake boot and throttle body.

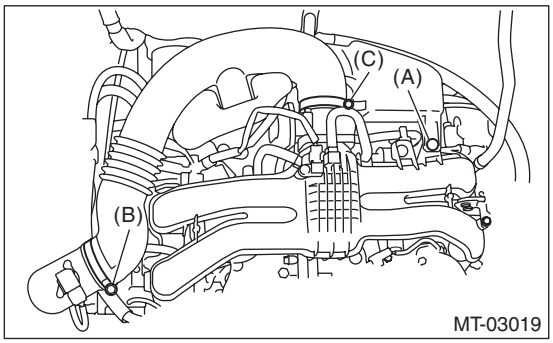

4) Remove the air intake boot from the throttle body, and move it to the left side wheel apron.

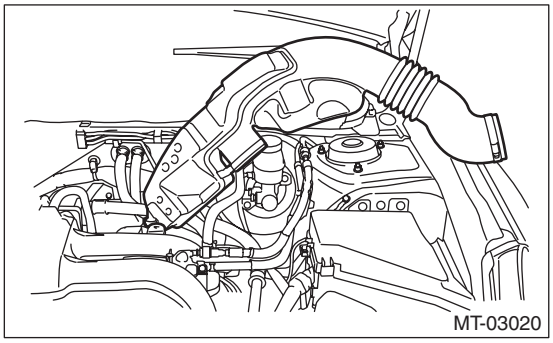

5) Disconnect the clutch hose from the operating cylinder.

CAUTION:
Cover the hose joint to prevent the clutch fluid from flowing out.

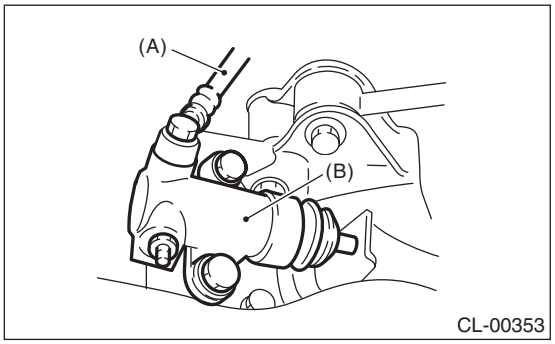

(A) Clutch hose
(B) Operating cylinder

6) Remove the operating cylinder from the transmission.

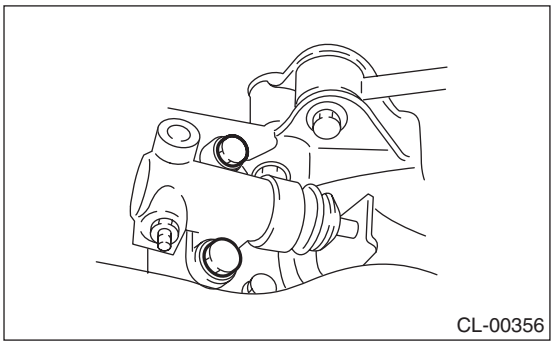

B: INSTALLATION

1) Install in the reverse order of removal.

NOTE:
• Before installing the operating cylinder, apply grease to the contact point of the release lever and operating cylinder.

Grease:
NICHIMOLY N-130 or equivalent
• Be sure to install the clutch hose with the mark side facing upward.
• Be careful not to twist the clutch hose during installation.
• Use a new gasket.

Tightening torque:
T1: 18 N·m (1.8 kgf-m, 13.3 ft-lb)
T2: 37 N·m (3.8 kgf-m, 27.3 ft-lb)

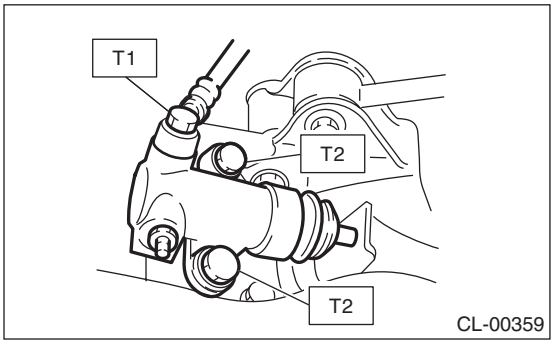

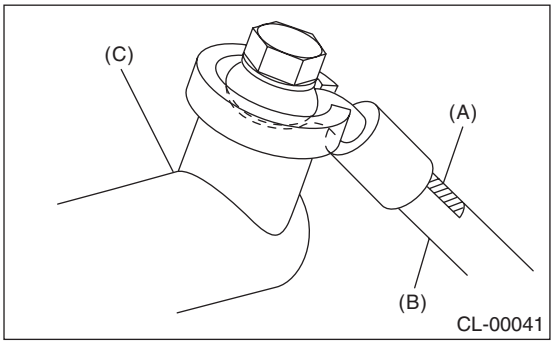

(A) Mark
(B) Clutch hose
(C) Operating cylinder

2) After bleeding air from the operating cylinder, ensure that the clutch operates properly. <Ref. to CL-23, Clutch Fluid Air Bleeding.>

C: DISASSEMBLY

1) Remove the boot and push rod.

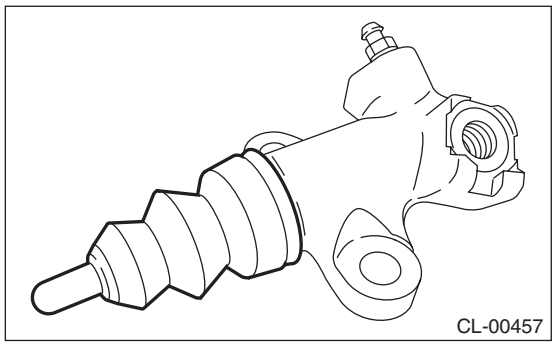

2) Apply compressed air through clutch hose attachment hole.

NOTE:
Face the piston hole down and place a piece of wood underneath to prevent the piston from popping out.

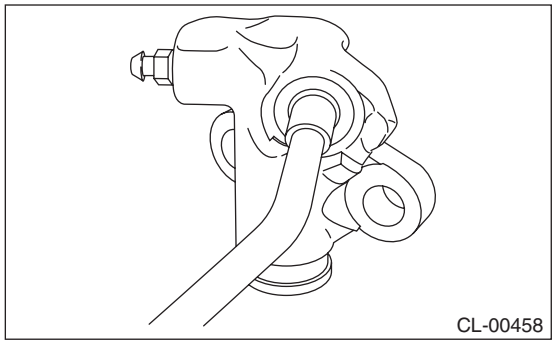

3) Separate the piston and piston spring.

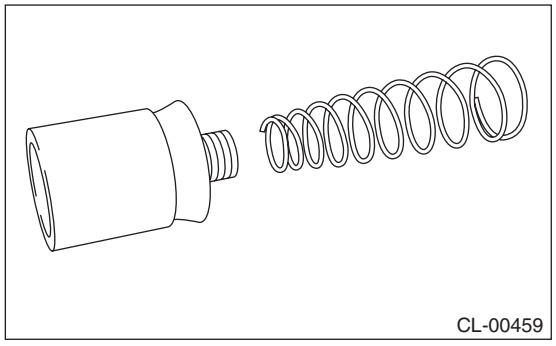

D: ASSEMBLY

NOTE:
During assembly, apply hydraulic oil to all parts.

Recommended clutch fluid:
New FMVSS No. 116 DOT3 or DOT4

1) Install the piston spring onto the piston.

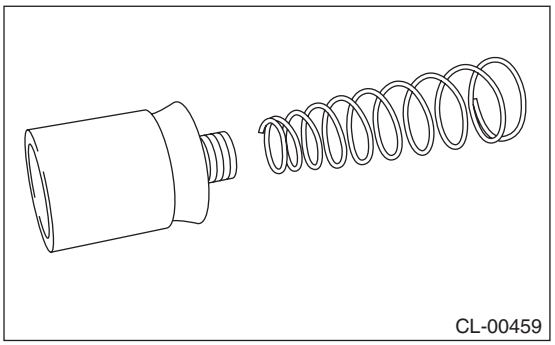

2) Insert piston into the operating cylinder.
3) Install push rod to the boot.
4) Install boot and push rod to the operating cylinder.

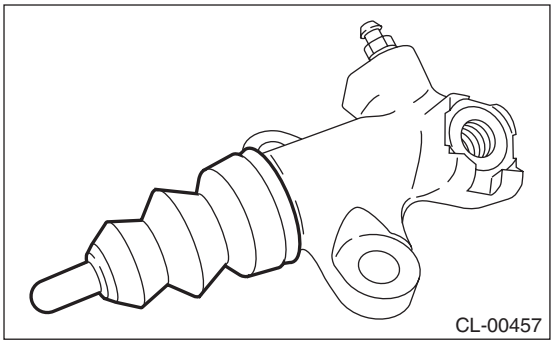

E: INSPECTION

1) Check that the operating cylinder is not damaged. Replace the operating cylinder if it is damaged.
2) Check the clutch fluid leakage on the operating cylinder or the boot for damage. Replace the operating cylinder if clutch fluid leaks or boot damages are noted.

6. Master Cylinder

A: REMOVAL

CAUTION:
Be careful not to spill the brake fluid. Brake fluid spilled on the vehicle body will harm the paint surface; wash it off with water and wipe clean quickly if spilled.

1) Drain the clutch fluid. <Ref. to CL-22, Clutch Fluid.>
2) Remove the cover assembly - instrument panel LWR driver. <Ref. to EI-71, REMOVAL, Instrument Panel Lower Cover.>
3) Remove the snap pin and clevis pin, and then separate the push rod of the master cylinder from clutch pedal.

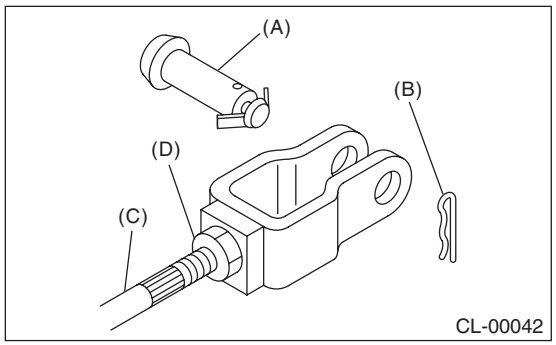

(A) Clevis pin
(B) Snap pin
(C) Push rod
(D) Lock nut

4) Remove the clip (A) from the air intake boot.
5) Loosen the clamp (B) connecting the air intake boot and air cleaner case (rear).
6) Loosen the clamp (C) which connects the air intake boot and throttle body.

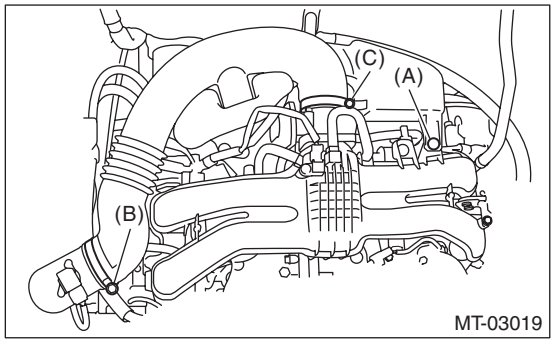

7) Remove the air intake boot from the throttle body, and move it to the left side wheel apron.

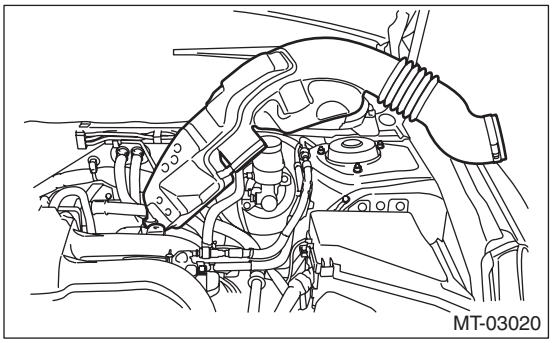

8) Disconnect the clutch pipe and tank hose from the master cylinder.
9) Remove the master cylinder.

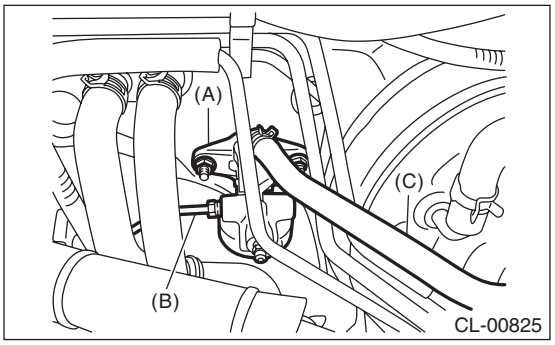

(A) Master cylinder
(B) Clutch pipe
(C) Tank hose

B: INSTALLATION

1) Install the master cylinder to the vehicle body, and connect the clutch pipe and tank hose to the master cylinder.

Tightening torque:
T1: 15 N·m (1.5 kgf-m, 11.1 ft-lb)
T2: 18 N·m (1.8 kgf-m, 13.3 ft-lb)

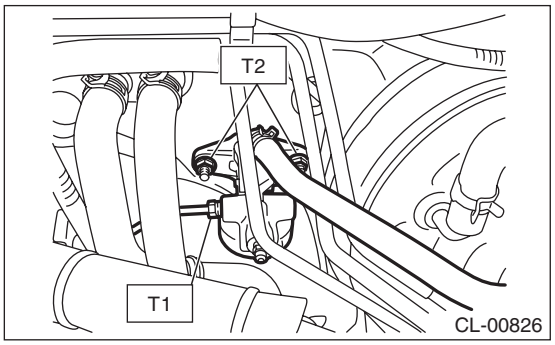

2) Connect the push rod of the master cylinder to the clutch pedal, and install the clevis pin and snap pin.

CAUTION:
Always use a new clevis pin.

NOTE:
Apply grease to the clevis pin.

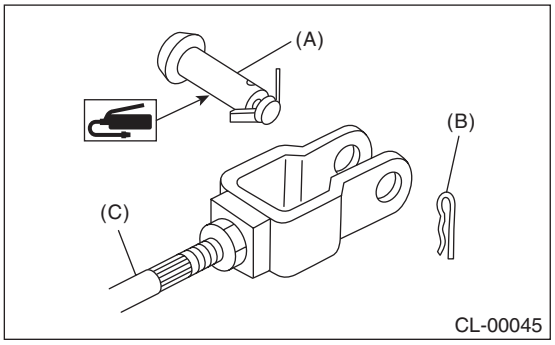

(A) Clevis pin
(B) Snap pin
(C) Push rod

3) Install the cover assembly - instrument panel LWR driver. <Ref. to EI-72, INSTALLATION, Instrument Panel Lower Cover.>
4) After bleeding air from the clutch system, ensure that the clutch operates properly. <Ref. to CL-23, Clutch Fluid Air Bleeding.>
5) Install the air intake boot assembly. <Ref. to IN(H4DO(w/o HEV))-12, INSTALLATION, Air Intake Boot.>

C: DISASSEMBLY

1) Remove the straight pin and nipple.

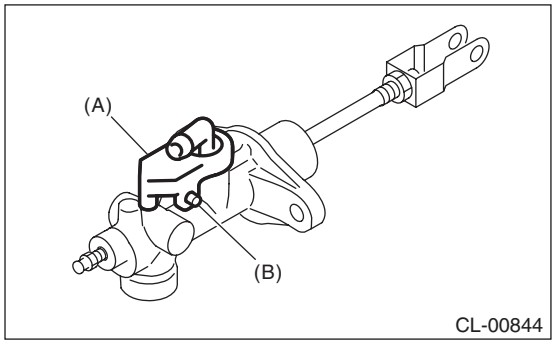

(A) Nipple
(B) Straight pin

2) Remove the oil seal.

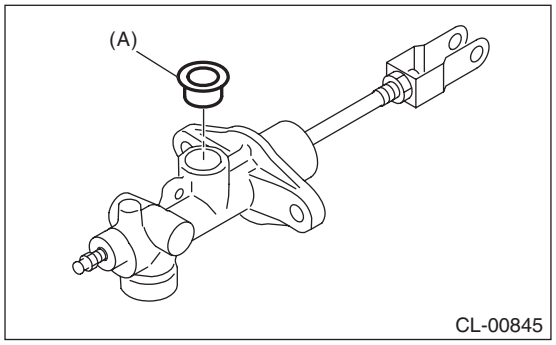

(A) Oil seal

3) Move the seat towards the rear.

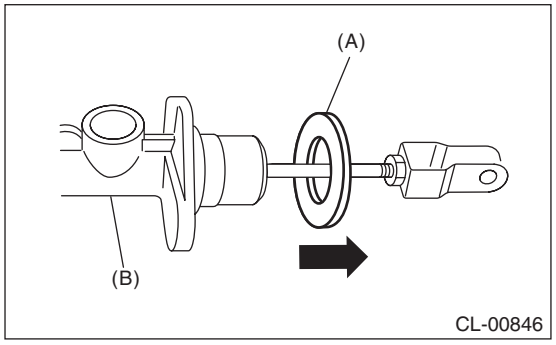

(A) Seat
(B) Master cylinder

4) Remove the piston stop ring.

CAUTION:
When removing the piston stop ring, be careful to prevent the rod, washer, piston and return spring from popping out.

D: ASSEMBLY

1) Apply a coat of grease to the contact surfaces of the push rod and piston before installation.

Grease:
SILICONE GREASE G-40M or equivalent

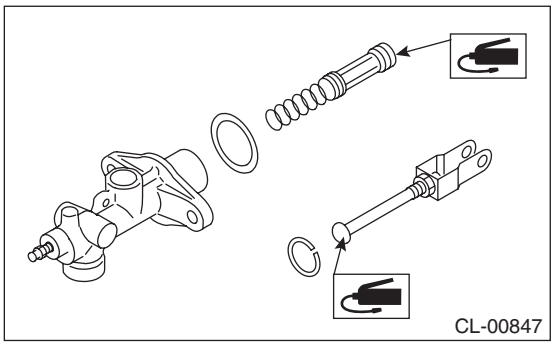

2) Assemble in the reverse order of disassembly.

Tightening torque:
10 N·m (1.0 kgf-m, 7.4 ft-lb)

E: INSPECTION

If any damage, deformation, wear, swelling, rust or other faults are found on the cylinder, piston, push rod, nipple, return spring, breather screw, seat or hose, replace the faulty part.

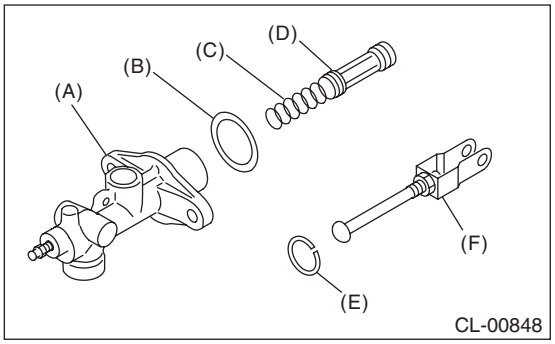

(A) Master cylinder body
(B) Seat
(C) Return spring
(D) Piston
(E) Piston stop ring
(F) Push rod ASSY

7. Clutch Pipe and Hose

A: REMOVAL

1) Remove the clip (A) from the air intake boot.
2) Loosen the clamp (B) connecting the air intake boot and air cleaner case (rear).
3) Loosen the clamp (C) which connects the air intake boot and throttle body.

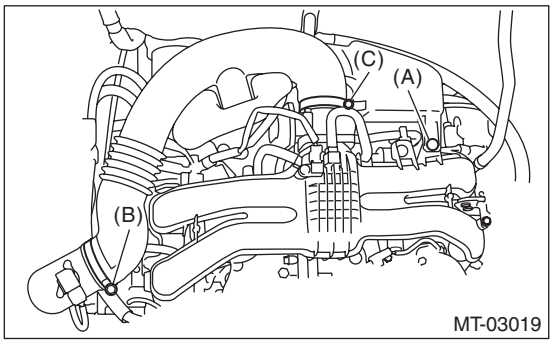

4) Remove the air intake boot from the throttle body, and move it to the left side wheel apron.

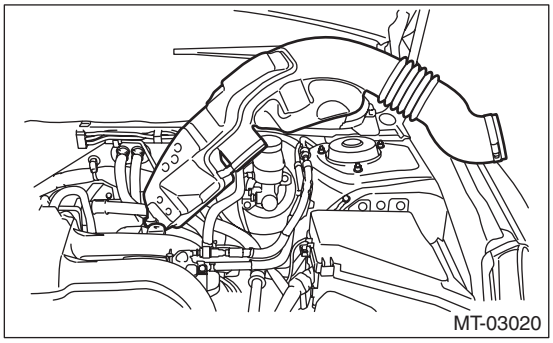

5) Drain the clutch fluid. <Ref. to CL-22, Clutch Fluid.>
6) Disconnect the clutch pipe from the clutch hose and master cylinder.
7) Pull out the clamp, then disconnect the clutch hose from the bracket.

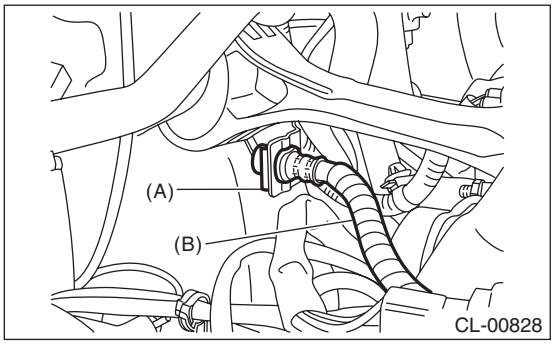

(A) Clamp
(B) Clutch hose

8) Remove the clutch hose from operating cylinder.
9) Remove the harness clip from the bracket.

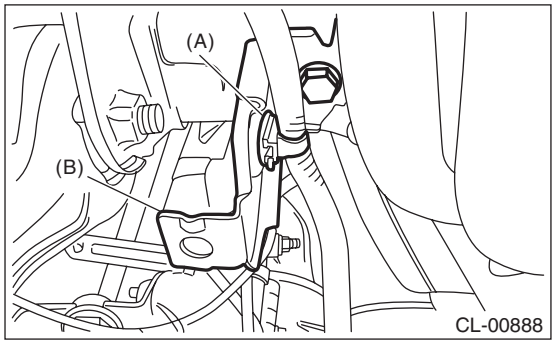

(A) Harness clip
(B) Bracket

10) Remove the bracket.

B: INSTALLATION

Install in the reverse order of removal.

NOTE:
Bleed air from the clutch fluid. <Ref. to CL-23, Clutch Fluid Air Bleeding.>

Tightening torque:
T1: 15 N·m (1.5 kgf-m, 11.1 ft-lb)
T2: 18 N·m (1.8 kgf-m, 13.3 ft-lb)
T3: 25 N·m (2.5 kgf-m, 18.4 ft-lb)

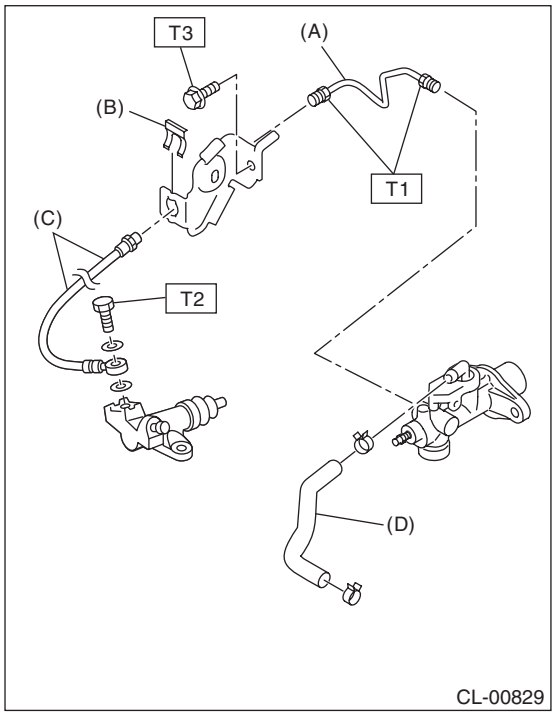

(A) Clutch pipe
(B) Clamp
(C) Clutch hose
(D) Tank hose

C: INSPECTION

Check the pipes and hoses for breaks and damage. Check joints for fluid leakage. If crack, breakage or damage is found, repair or replace the faulty pipe or hose.

8. Clutch Fluid

A: INSPECTION

CAUTION:
Be careful not to spill the brake fluid. Brake fluid spilled on the vehicle body will harm the paint surface; wash it off with water and wipe clean quickly if spilled.

1) Park the vehicle on a level surface.
2) Inspect the fluid level using the scale on the outside of the reservoir tank. If the level is below “MIN”, add fluid to bring it up to “MAX”, and also inspect for leakage.

Recommended brake fluid:
New FMVSS No. 116 DOT3 or DOT4

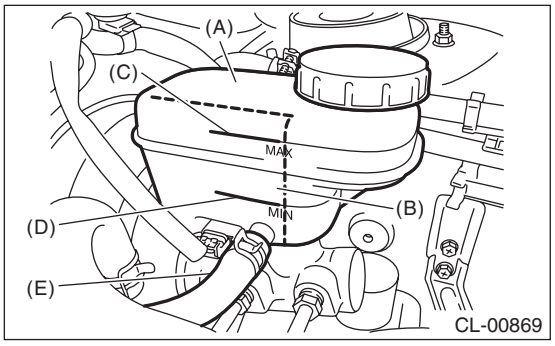

(A) Reservoir tank
(B) Clutch fluid chamber
(C) MAX. level
(D) MIN. level
(E) Tank hose

CAUTION:
This reservoir tank has the brake fluid chamber and the clutch fluid chamber. When checking the fluid level, always check the fluid from the clutch fluid chamber side where the tank hose is connected.

B: REPLACEMENT

CAUTION:
• Be careful not to spill the brake fluid. Brake fluid spilled on the vehicle body will harm the paint surface; wash it off with water and wipe clean quickly if spilled.
• Use new FMVSS No. 116 DOT3 or DOT4.
• Cover the air breather with cloth to prevent brake fluid from being splashed on surrounding parts when loosening the breather.
• Avoid mixing brake fluid of different brands to prevent fluid performance from degrading.
• Be careful not to allow dirt or dust to enter the reservoir tank.

NOTE:
• During the bleeding operation, keep the reservoir tank filled with brake fluid to prevent entry of air.
• Clutch pedal must be operated very slowly.
• Bleed air from the oil line with help of a co-worker.
• The required amount of brake fluid is approximately 150 mL (5.1 US fl oz, 5.3 Imp fl oz) for total clutch system.

1) Remove the clip (A) from the air intake boot.
2) Loosen the clamp (B) connecting the air intake boot and air cleaner case (rear).
3) Loosen the clamp (C) which connects the air intake boot and throttle body.

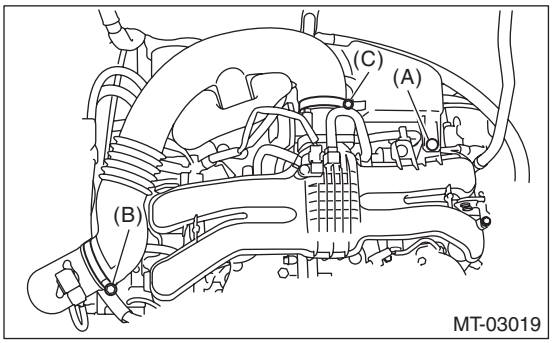

4) Remove the air intake boot from the throttle body, and move it to the left side wheel apron.

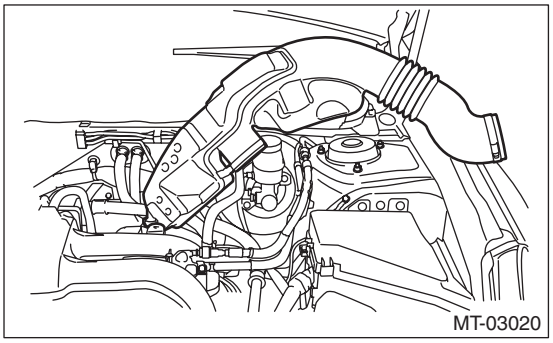

5) Drain the brake fluid from the air breather of the operating cylinder.
6) Refill the reservoir tank with recommended brake fluid.

Recommended brake fluid:
New FMVSS No. 116 DOT3 or DOT4

7) If necessary, bleed air from the clutch fluid. <Ref. to CL-23, Clutch Fluid Air Bleeding.>
8) Install the air intake boot assembly. <Ref. to IN(H4DO(w/o HEV))-12, INSTALLATION, Air Intake Boot.>

9. Clutch Fluid Air Bleeding

A: PROCEDURE

CAUTION:
Be careful not to spill the brake fluid. Brake fluid spilled on the vehicle body will harm the paint surface; wash it off with water and wipe clean quickly if spilled.

NOTE:
Bleed air from the oil line with help of a co-worker.
1) Remove the clip (A) from the air intake boot.
2) Loosen the clamp (B) connecting the air intake boot and air cleaner case (rear).
3) Loosen the clamp (C) which connects the air intake boot and throttle body.

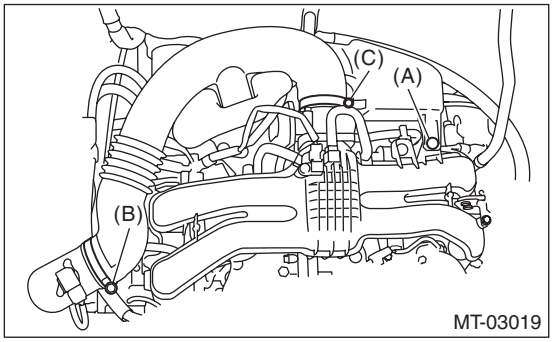

4) Remove the air intake boot from the throttle body, and move it to the left side wheel apron.

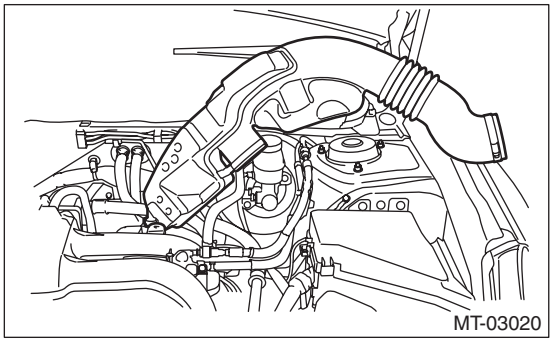

5) Fit one end of a vinyl tube into the air breather of the operating cylinder, and put the other end into a container.

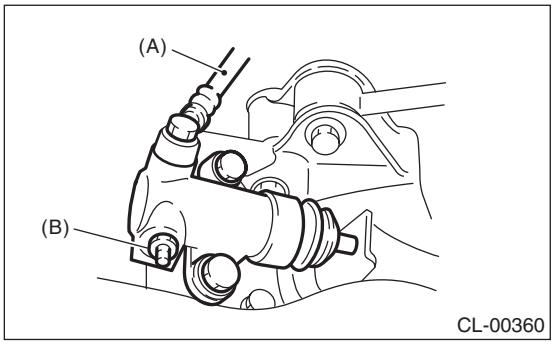

(A) Clutch hose
(B) Air breather

6) Slowly depress the clutch pedal and keep it depressed. Then open the air breather to discharge air together with the fluid.
Release the air breather for 1 or 2 seconds. Next, with the breather closed, slowly release the clutch pedal.

CAUTION:
Cover the breather with cloth to prevent brake fluid from being splashed on surrounding parts when loosening the breather.

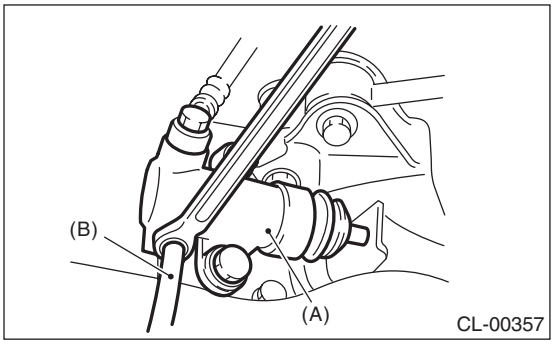

(A) Operating cylinder
(B) Vinyl tube

7) Repeat procedure 3), until there are no more air bubbles appearing from the air breather.
8) Tighten the air breather.

Tightening torque:
T: 7.8 N·m (0.8 kgf-m, 5.8 ft-lb)

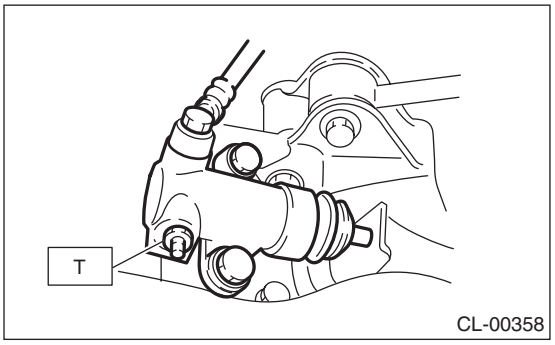

9) After stepping on the clutch pedal, make sure that there are no leaks evident in the entire clutch system.
10) After bleeding the air from clutch system, ensure that the clutch operates properly.
11) Install the air intake boot assembly. <Ref. to IN(H4DO(w/o HEV))-12, INSTALLATION, Air Intake Boot.>

10.Clutch Pedal

A: REMOVAL

1) Disconnect the ground cable from battery.
2) Remove the steering column. <Ref. to PS-18, REMOVAL, Steering Column.>
3) Disconnect the connector from the stop light switch and clutch switch.
4) Remove the snap pins from clevis pins which secure the lever to the push rod and operating rod.
5) Pull out the clevis pins which secures the lever to the push rod and operating rod.

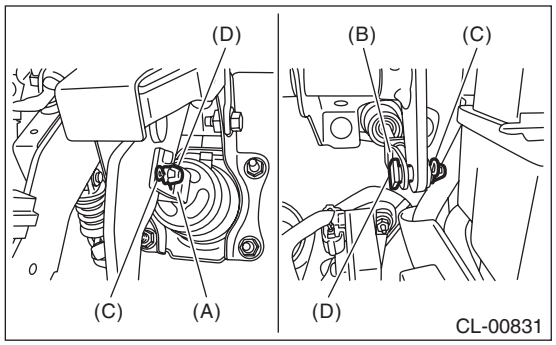

(A) Operating rod
(B) Push rod
(C) Snap pin
(D) Clevis pin

6) Remove the clip (A) from the air intake boot.
7) Loosen the clamp (B) connecting the air intake boot and air cleaner case (rear).
8) Loosen the clamp (C) which connects the air intake boot and throttle body.

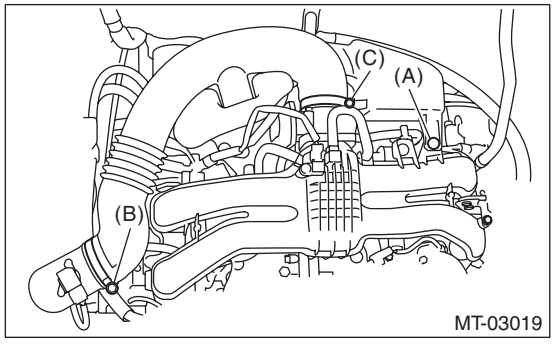

9) Remove the air intake boot from the throttle body, and move it to the left side wheel apron.

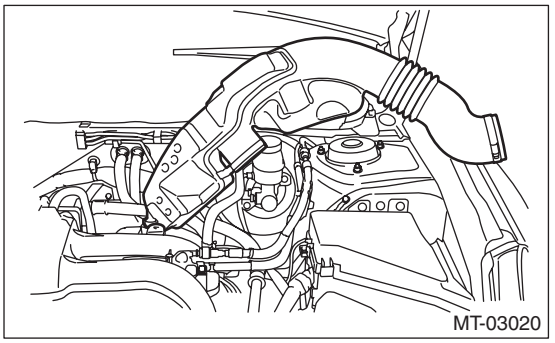

10) Remove the nut which secures the clutch master cylinder.

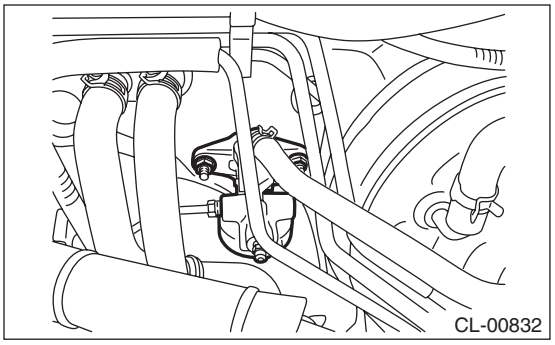

11) Remove the bolts and nuts which secure the brake pedal and clutch pedal, and remove the pedal assembly.

NOTE:
Hold the clutch master cylinder with a wire or a string to avoid the clutch pipe from bending.

B: INSTALLATION

1) Install in the reverse order of removal.

Tightening torque:
18 N·m (1.8 kgf-m, 13.3 ft-lb)

CAUTION:
Always use a new clevis pin.
2) Adjust the clutch pedal after installation. <Ref. to CL-26, ADJUSTMENT, Clutch Pedal.>

C: DISASSEMBLY

1) Remove the clutch switches.
2) Remove the clip, assist spring, rod and bushing.

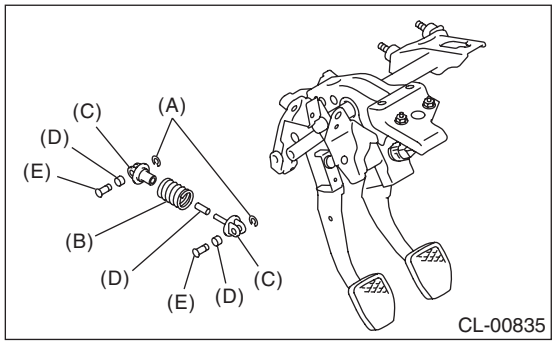

(A) Clip
(B) Assist spring
(C) Assist rod
(D) Bushing
(E) Clevis pin

3) Remove the spring pin and lever.

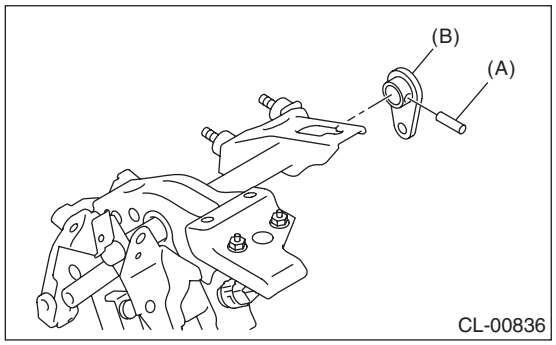

(A) Spring pin
(B) Lever

4) Remove the clutch pedal and bushings.

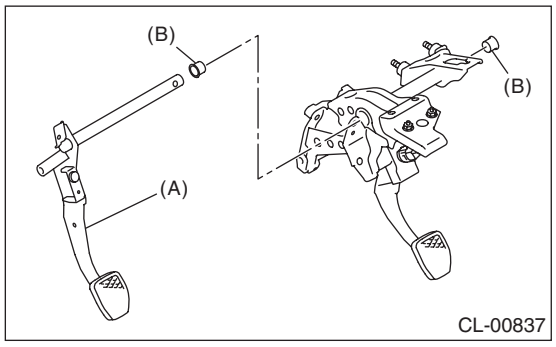

(A) Clutch pedal
(B) Bushing

5) Remove the stopper from the pedal bracket.

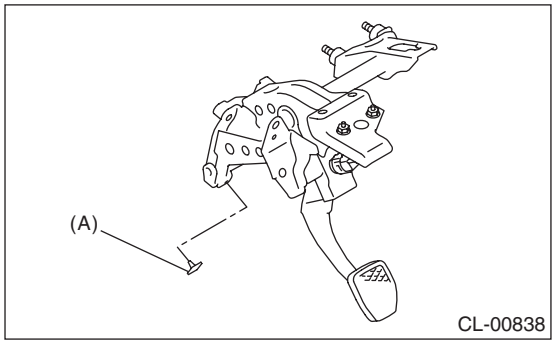

(A) Stopper

6) Remove the clutch pedal pad.

D: ASSEMBLY

1) Install the stopper and pedal pad to the clutch pedal.
2) Install the clutch switch to the pedal bracket.
3) Clean the pedal bushing holes of the clutch pedal and the brake pedal, apply grease, and install the pedal bushings.
4) Install the clutch pedal, brake pedal and lever to the pedal bracket, and fix with a spring pin.
5) Install the assist rod A, assist rod B, assist bushing and assist spring to the clutch pedal and pedal bracket.

E: INSPECTION

Move the clutch pedal pads in the lateral direction with a force of approximately 10 N (1 kgf, 2 lbf) to check that the clutch pedal deflection is within the service limit. If it exceeds the service limit, replace with new bushings.

Deflection of the clutch pedal:
Service limit
4.0 mm (0.157 in) or less

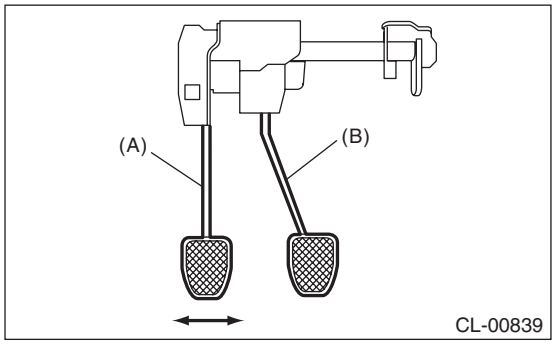

(A) Clutch pedal
(B) Brake pedal

F: ADJUSTMENT

1) Turn the lock nut until the full stroke of clutch pedal becomes within the specification.

CAUTION:
When adjusting the full stroke of clutch pedal, do not turn the clutch switch.

NOTE:
If the lock nut cannot adjust the full stroke of clutch pedal to the specified value, adjust it by turning the master cylinder push rod.

Clutch pedal full stroke A:
130 — 135 mm (5.12 — 5.31 in)

Tightening torque (Clutch switch lock nut):
T: 8 N·m (0.8 kgf-m, 5.9 ft-lb)

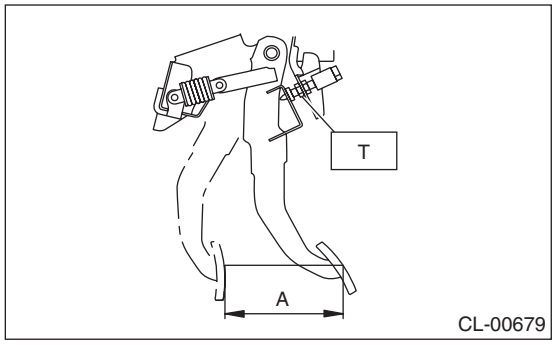

2) If the full stroke is not within the specified value, loosen the clutch switch lock nut to adjust.

Tightening torque:
8 N·m (0.8 kgf-m, 5.9 ft-lb)

3) Loosen the push rod lock nuts.

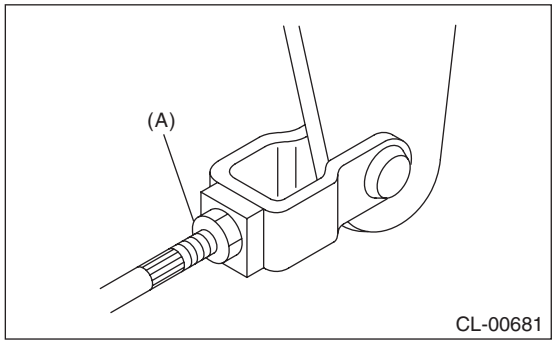

(A) Push rod lock nut

4) Make sure that the clutch pedal contacts the clutch pedal bracket stopper when the clutch pedal is at the maximum stroke position.

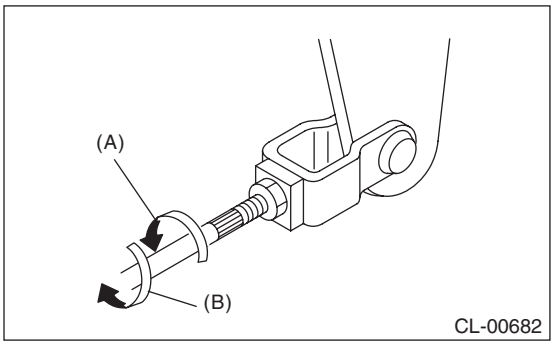

(A) In the longer direction
(B) In the shorter direction

5) Make sure that the clutch pedal contacts the clutch switch side when the pedal is released.
6) Turn the push rod to shorten until a clearance is gained on the clutch switch side.

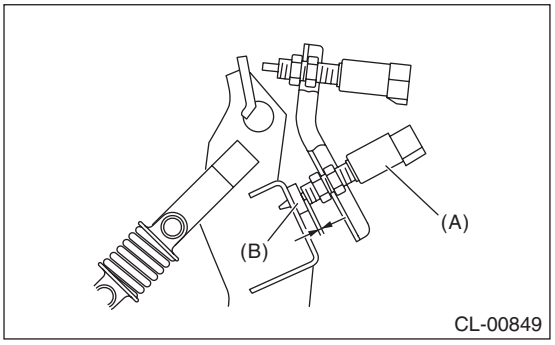

(A) Clutch switch
(B) Stopper

7) Turn the push rod to lengthen until clutch pedal contacts the clutch switch.
8) Turn further in the direction that will shorten the push rod by 270°.

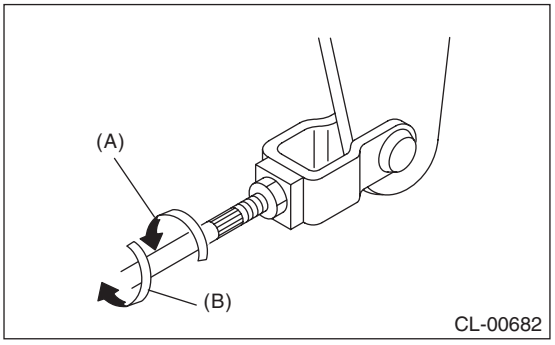

(A) In the longer direction
(B) In the shorter direction

9) Check that the clevis pin moves smoothly by moving it in the left and right directions.
10) Tighten the push rod lock nut.

Tightening torque (Push rod lock nut):
T: 10 N·m (1.0 kgf-m, 7.4 ft-lb)

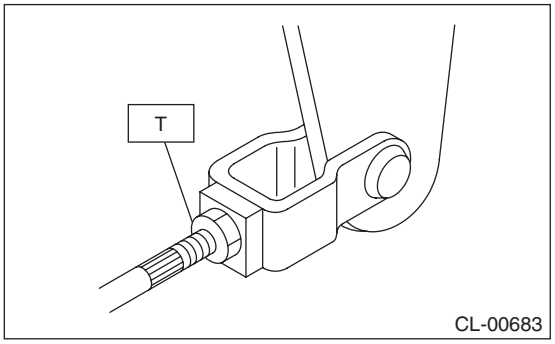

11) Depress and release the clutch pedal two or three times to ensure that the clutch pedal and release lever operate smoothly. If the clutch pedal and release lever do not operate smoothly, bleed air from the clutch hydraulic system. <Ref. to CL-23, Clutch Fluid Air Bleeding.>
12) Measure the clutch pedal full stroke length again to ensure that it is within specifications. If it is not within specifications, repeat adjustment procedures again from the beginning.

Clutch pedal full stroke:
130 — 135 mm (5.12 — 5.31 in)

13) Push the release lever until the operating cylinder push rod retracts. Check that the clutch fluid level in the reservoir tank increases.

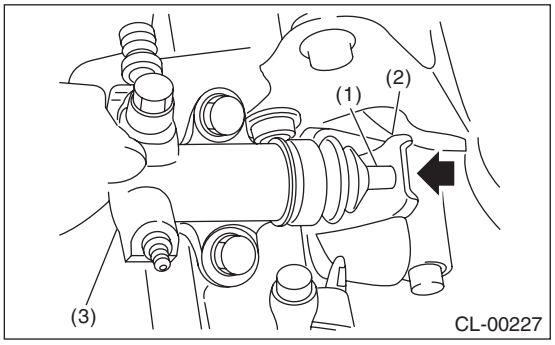

(1) Push rod
(2) Release lever
(3) Operating cylinder

14) If the clutch fluid level increases, hydraulic clutch play is correct.
15) If the clutch fluid level does not increase or push rod does not retract, readjust the clutch pedal.
16) Check the fluid level using the scale on the reservoir tank. <Ref. to CL-22, INSPECTION, Clutch Fluid.>

11.Clutch Switch

A: REMOVAL

1) Disconnect the ground cable from battery.
2) Remove the cover assembly - instrument panel LWR driver. <Ref. to EI-71, REMOVAL, Instrument Panel Lower Cover.>
3) Disconnect the connector of clutch switch.
4) Remove the clutch switches.

B: INSTALLATION

1. CLUTCH SWITCH

1) Move the clevis pin of push rod to left and right, retain it at the position where it moves smoothly, and measure the clutch pedal stroke.

Clutch pedal full stroke A:
130 — 135 mm (5.12 — 5.31 in)

Tightening torque:
T: 8 N·m (0.8 kgf-m, 5.9 ft-lb)

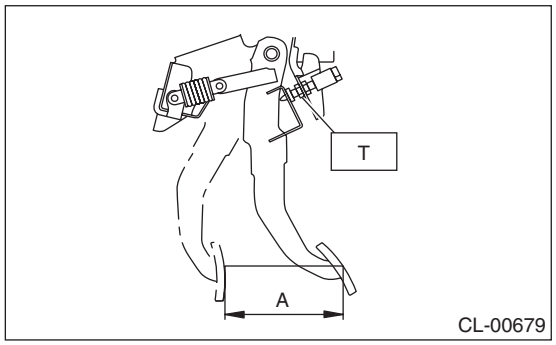

2) If the clutch pedal stroke is out of specification, adjust the stroke. <Ref. to CL-26, ADJUSTMENT, Clutch Pedal.>
3) Connect the clutch switch connector.

2. CLUTCH START SWITCH

1) Remove the snap pin and clevis pin connecting the clutch pedal and operating rod.

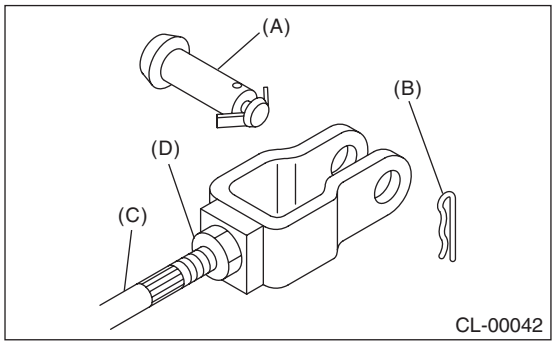

(A) Clevis pin
(B) Snap pin
(C) Push rod
(D) Lock nut

2) Install the clutch start switch so that the clutch switch turns on when the clearance between clutch pedal stopper and clutch pedal is within the specification described below.

Clearance A:
6.3 — 8.6 mm (0.25 — 0.34 in)

Tightening torque:
8 N·m (0.8 kgf-m, 5.9 ft-lb)

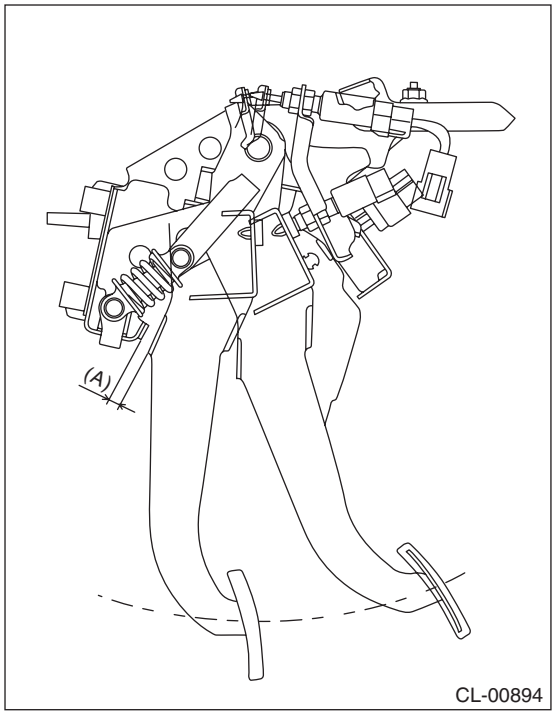

NOTE:
• Using a plate of the same thickness for the clearance facilitates the adjustment operation.
• Using the Subaru Select Monitor or a tester, check the position where the switch turns on.
Check the following figure for the terminal layout of the harness connector.

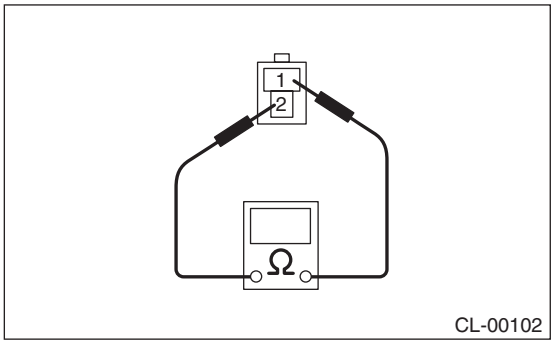

• When performing adjustment by the clearance between clutch start switch and clutch pedal plate, perform installation according to the following gap.

Clearance B:
8.6 — 9.0 mm (0.34 — 0.35 in)

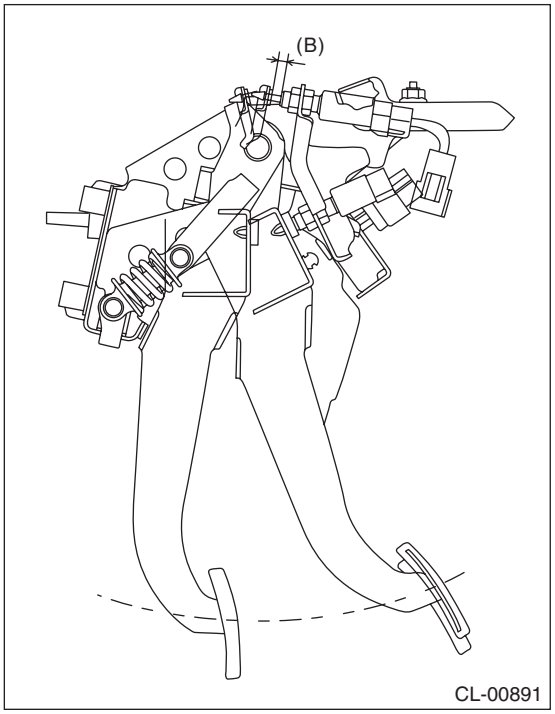

3) Connect the clutch start switch connector.
4) Make sure that engine does not start with clutch pedal not depressed.
5) Make sure that engine starts with clutch pedal depressed.

C: INSPECTION

1. CLUTCH START SWITCH

1) Perform the following inspections. If the clutch start switch does not operate normally, adjust the switch, and check it again. <Ref. to CL-30, ADJUSTMENT, Clutch Switch.>
• Make sure that engine does not start with clutch pedal not depressed.
• Make sure that engine starts with clutch pedal fully depressed.
2) When the clutch start switch does not operate normally even if it is adjusted, check the clutch start switch for continuity.
(1) Remove the clutch start switch. <Ref. to CL-28, REMOVAL, Clutch Switch.>
(2) Measure the resistance between terminal 1 and 2 of the switch. If the resistance is not at the standard value, replace the switch.

Condition	Terminal No.	Specified resistance
ON	No. 1 — No. 2	Less than 1 Ω
OFF	No. 1 — No. 2	1 MΩ or more

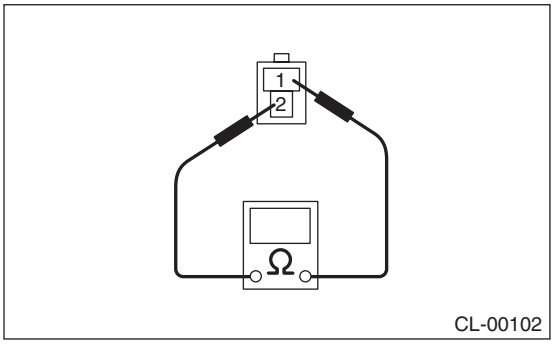

(3) Check that the switch is turned on and off in Dimension L.

Dimension L:
9 — 10 mm (0.35 — 0.39 in)

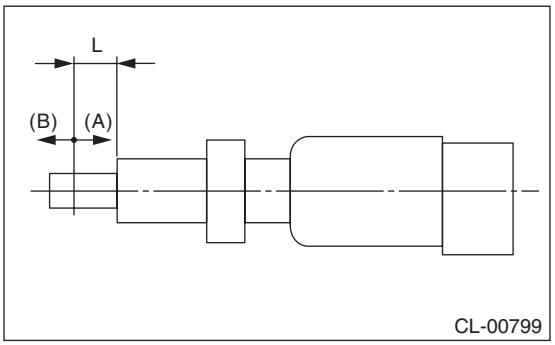

(A) ON
(B) OFF

2. CLUTCH SWITCH

1) Check the clutch switch for continuity.
(1) Disconnect the connector of clutch switch.
(2) Measure the resistance between terminal 1 and 2 of the switch. If the resistance is not within the specification, inspect the clutch stroke and its installing condition, and check again.

Condition	Terminal No.	Specified resistance
When clutch pedal is depressed	No. 1 — No. 2	1 MΩ or more
When the clutch pedal is not depressed	No. 1 — No. 2	Less than 1 Ω

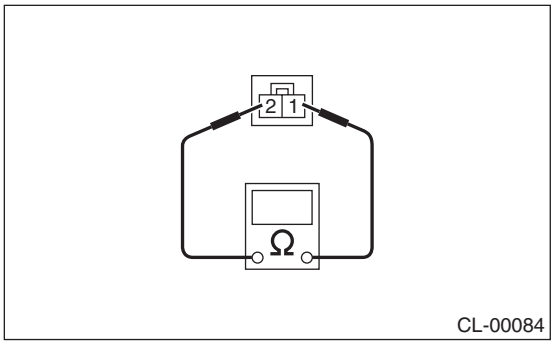

2) If the operation is not normal even when the clutch stroke and its installing condition is normal, check the continuity of the clutch switch.
(1) Remove the clutch switches. <Ref. to CL-28, REMOVAL, Clutch Switch.>
(2) Measure the resistance between terminal 1 and 2 of the switch. If the resistance is not at the standard value, replace the switch.

Condition	Terminal No.	Specified resistance
ON	No. 1 — No. 2	Less than 1 Ω
OFF	No. 1 — No. 2	1 MΩ or more

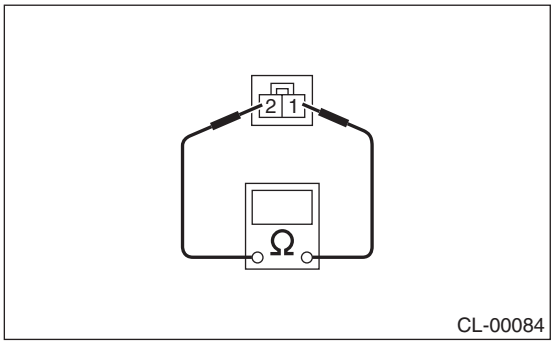

(3) Check that the switch changes between ON/OFF within L dimension.

L dimension:
5 — 6.5 mm (0.2 — 0.26 in)

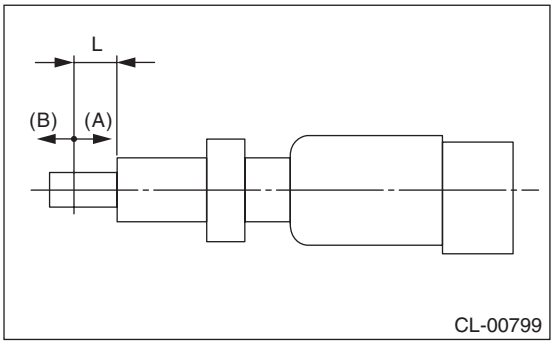

(A) ON
(B) OFF

D: ADJUSTMENT

1) Loosen the lock nut of the clutch start switch.

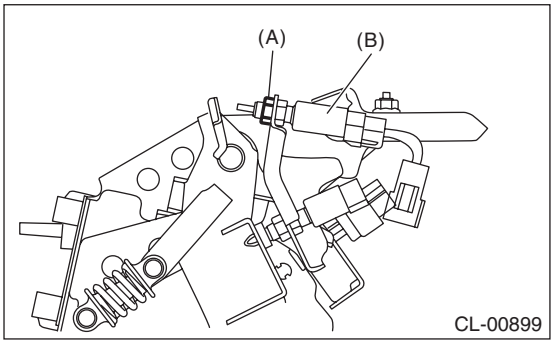

(A) Lock nut
(B) Clutch start switch

2) Disconnect the harness connector of the clutch start switch.
3) Remove the snap pin and clevis pin connecting the clutch pedal and operating rod.

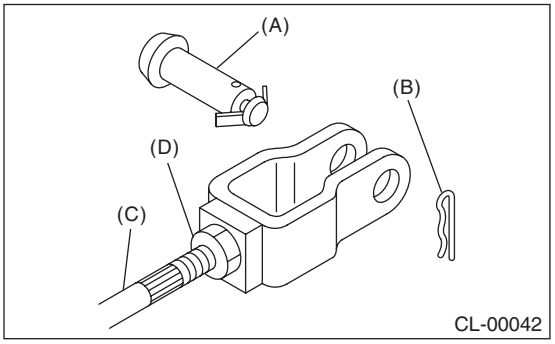

(A) Clevis pin
(B) Snap pin
(C) Push rod
(D) Lock nut

4) Adjust the clutch start switch so that the switch turns on when the clearance between clutch pedal stopper and clutch pedal is within the specification described below, and then tighten the lock nut.

Clearance A:
6.3 — 8.6 mm (0.25 — 0.34 in)

Tightening torque:
8 N·m (0.8 kgf-m, 5.9 ft-lb)

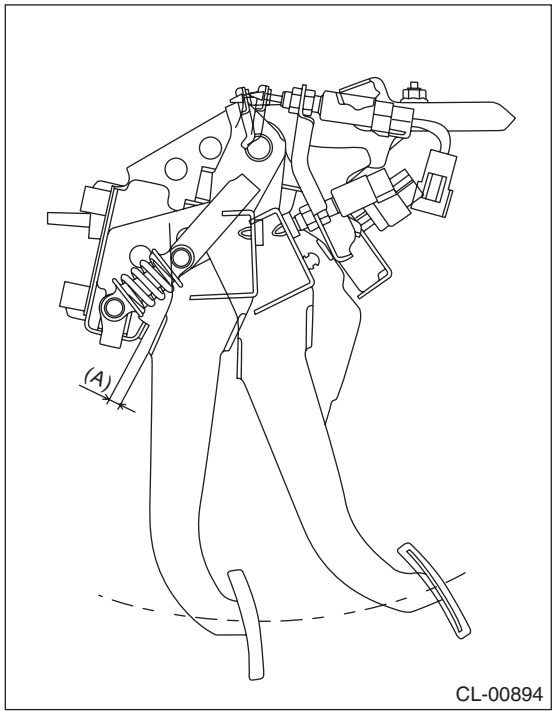

NOTE:
• Using a plate of the same thickness for the clearance facilitates the adjustment operation.
• Using the Subaru Select Monitor or a tester, check the position where the switch turns on.
Check the following figure for the terminal layout of the harness connector.

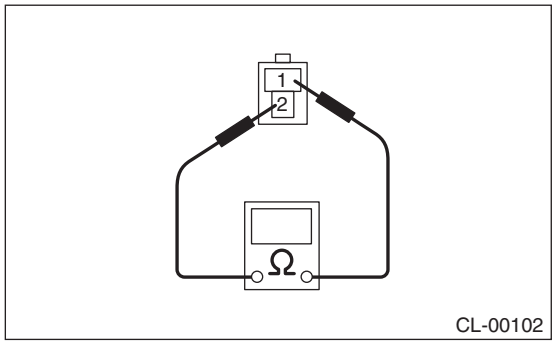

• When performing adjustment by the clearance between clutch start switch and clutch pedal plate, perform installation according to the following gap.

Clearance B:
8.6 — 9.0 mm (0.34 — 0.35 in)

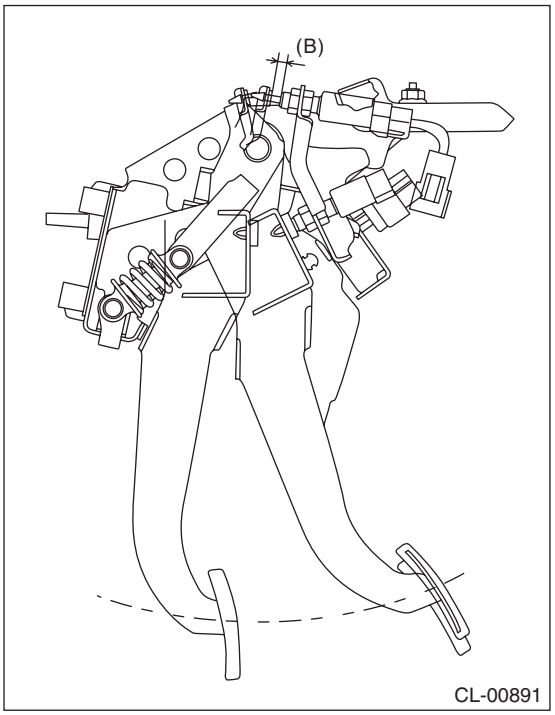

5) Connect the clutch start switch connector.

12.General Diagnostic Table

A: INSPECTION

1. CLUTCH

Symptoms	Possible cause	Corrective action
1. Clutch slippage. It is hard to perceive clutch slippage in the early stage, but pay attention to the following symptoms. • Engine speeds up when shifting. • High-speed driving is not possible; especially rapid acceleration is not possible and vehicle speed does not increase in proportion to the increase in engine speed. • Power drops particularly when ascending a slope, and there is a burning smell of the clutch plate. • Method of testing: Park the vehicle and fully apply the parking brake. Disengage the clutch and shift the transmission gear into the 1st. Gradually increase the engine speed while gradually allowing the clutch to engage. The clutch function is satisfactory if the engine stalls. However, the clutch is slipping if the vehicle does not move forward and the engine does not stall.	(a) Oil on the clutch face	Replace.
	(b) Worn clutch face	Replace.
	(c) Deteriorated diaphragm spring	Replace.
	(d) Warped pressure plate or flywheel	Repair or replace.
	(e) Defective release bearing holder	Repair or replace.
2. Clutch drags. As a symptom of this trouble, a harsh scratching noise occurs and control becomes difficult when shifting gears. The symptom becomes more apparent when shifting into the 1st gear. However, because most trouble of this sort is due to a defective synchronization mechanism, perform the following tests. • Method of testing: <Ref. to CL-33, DIAGNOSTIC DIAGRAM OF CLUTCH DRAG, INSPECTION, General Diagnostic Table.> The problem is caused by insufficient disengagement of the clutch if an abnormal noise occurs during this test.	(a) Worn or rusty clutch disc hub spline	Replace the clutch disc.
	(b) Excessive deflection of clutch disc face	Repair or replace.
	(c) Crankshaft pilot needle bearing sticking	Replace.
	(d) Cracked clutch disc face	Replace.
	(e) Stuck clutch disc (smeared by oil or water)	Replace.
3. Clutch chatters. Clutch chattering is an unpleasant vibration to the whole vehicle when the vehicle is just started with clutch partially engaged.	(a) Adhesion of oil on the clutch face	Replace the clutch disc.
	(b) Weak or broken damper spring	Replace the clutch disc.
	(c) Poor contact of the disc surface or excessively worn disc	Replace the faulty clutch disc.
	(d) Warped pressure plate or flywheel	Repair or replace.
	(e) Loose disc rivets	Replace the clutch disc.
	(f) Loose engine mounting	Retighten or replace mounting.
	(g) Loose pitching stopper	Retighten the pitching stopper. Or replace it.

Symptoms	Possible cause	Corrective action
4. Noisy clutch Noise occurs when the clutch is disengaged, engaged, or partially engaged.	(a) Broken, worn or insufficiently lubricated release bearing	Replace the release bearing.
	(b) Insufficient lubrication of the pilot bearing	Replace the pilot bearing.
	(c) Loose clutch disc hub	Replace the clutch disc.
	(d) Loose damper spring retainer	Replace the clutch disc.
	(e) Deteriorated or broken damper spring	Replace the clutch disc.
5. Clutch grabs suddenly. When starting the vehicle with the clutch partially engaged, the clutch engages suddenly and the vehicle jumps instead of making a smooth start.	(a) Grease or oil on facing	Replace the clutch disc.
	(b) Deteriorated cushioning spring	Replace the clutch disc.
	(c) Worn or rusted spline of clutch disc or main shaft	Take off rust, apply grease or replace clutch disc or main shaft.
	(d) Deteriorated or broken damper spring	Replace the clutch disc.
	(e) Loose engine mounting	Retighten or replace mounting.
	(f) Deteriorated diaphragm spring	Replace.

2. CLUTCH PEDAL

Symptoms	Corrective action
Insufficient clutch pedal free play	Adjust the free play of the pedal.
Excessively worn and damaged pedal shaft and/or bushing	Replace the bushing or shaft with a new part.

3. DIAGNOSTIC DIAGRAM OF CLUTCH DRAG

Step		Check	Yes	No
1	**CHECK GEAR NOISE.** 1) Start the engine. 2) Disengage the clutch and shift quickly from neutral to reverse in idling condition.	Is there any abnormal noise from the transmission gear?	Go to step **2**.	Clutch is normal.
2	**CHECK GEAR NOISE.** Disengage the clutch at idle and shift from neutral to reverse within 0.5 — 1.0 seconds.	Is there any abnormal noise from the transmission gear?	Go to step **3**.	Inspect defective transmission or excessive clutch drag torque, pilot bearing, clutch disc, transmission and clutch disc hub spline.
3	**CHECK GEAR NOISE.** 1) Disengage the clutch at idle and shift from neutral to reverse within 0.5 — 1.0 seconds. 2) With the clutch disengaged, shift from neutral to reverse, reverse to neutral several times.	Is there any abnormal noise from the transmission gear?	Inadequate clutch disengage. Inspect the clutch disc, clutch cover, clutch release, and clutch pedal free play.	Clutch and flywheel seizure. Inspect the clutch disc and the spline of the clutch disc hub.

CHASSIS SECTION

This service manual has been prepared to provide SUBARU service personnel with the necessary information and data for the correct maintenance and repair of SUBARU vehicles.
This manual includes the procedures for maintenance, disassembling, reassembling, inspection and adjustment of components and diagnostics for guidance of experienced mechanics.
Please peruse and utilize this manual fully to ensure complete repair work for satisfying our customers by keeping their vehicle in optimum condition. When replacement of parts during repair work is needed, be sure to use SUBARU genuine parts.

All information, illustration and specifications contained in this manual are based on the latest product information available at the time of publication approval.

FRONT SUSPENSION	FS
REAR SUSPENSION	RS
WHEEL AND TIRE SYSTEM	WT
TIRE PRESSURE MONITORING SYSTEM (DIAGNOSTICS)	TPM(diag)
DIFFERENTIALS	DI
TRANSFER CASE	TC
DRIVE SHAFT SYSTEM	DS
VEHICLE DYNAMICS CONTROL (VDC)	VDC
VEHICLE DYNAMICS CONTROL (VDC) (DIAGNOSTICS)	VDC(diag)
BRAKE	BR
PARKING BRAKE	PB
POWER ASSISTED SYSTEM (POWER STEERING)	PS
POWER ASSISTED SYSTEM (POWER STEERING) (DIAGNOSTICS)	PS(diag)

FRONT SUSPENSION

FS

Page

1. General Description 2
2. Wheel Alignment 7
3. Front Crossmember 18
4. Front Crossmember Support Plate 28
5. Front Stabilizer 30
6. Front Ball Joint 33
7. Front Arm 37
8. Front Strut 44
9. General Diagnostic Table 50

1. General Description

A: SPECIFICATION

Tire size			Standard vehicle height model	SPORT model	XV model
			P195/65R15 P205/55R16 P205/50R17	P205/50R17	P225/55R17 225/55R17
Front	Wheel arch height (Tolerance: $^{+12\ mm}_{-24\ mm}$ ($^{+0.47\ in}_{-0.94\ in}$)) mm (in)		387 (15.24)	392 (15.43)	452 (17.8)
	Camber (tolerance: ±0°45′ Differences between RH and LH: 45′ or less)		–0°20′	–0°15′	0°10′
	Caster (referential value)		6°01′	5°58′	
	Steering angle (tolerance: ±1.5°)	Inner wheel	38.3°		38.5°±1.5°
		Outer wheel	33.7°		34.0°±1.5°
	Toe-in mm (in)		0±3 (0±0.12) Toe angle (sum of both wheels): 0°±0°12′		0±3 (0±0.12) Toe angle (sum of both wheels): 0°±0°10′
	Kingpin angle (referential value)		13°51′	13°44′	13°06′
Rear	Wheel arch height (Tolerance: $^{+12\ mm}_{-24\ mm}$ ($^{+0.47\ in}_{-0.94\ in}$)) mm (in)		368 (14.49)	371 (14.61)	450 (17.72)
	Camber (tolerance: ±0°45′ Differences between RH and LH: 45′ or less)		–1°20′	–1°15′	–0°20′
	Toe-in mm (in)		IN 3±3 (IN 0.12±0.12) Toe angle (sum of both wheels): IN 0°12′±12′		IN 3±3 (IN 0.12±0.12) Toe angle (sum of both wheels): IN 0°10′±10′
	Thrust angle (tolerance: 0°00′±30′)		0°00′		

NOTE:
• Front toe-in, rear toe-in and front camber can be adjusted. Adjust if the value of toe-in or camber exceeds the tolerance range of the specification chart.
• Other items except for front toe-in, rear toe-in and front camber that are described in the specification chart cannot be adjusted. If other items exceed the tolerance range of the specification chart, check the suspension parts and connections for deformation. If defective, replace with new parts.

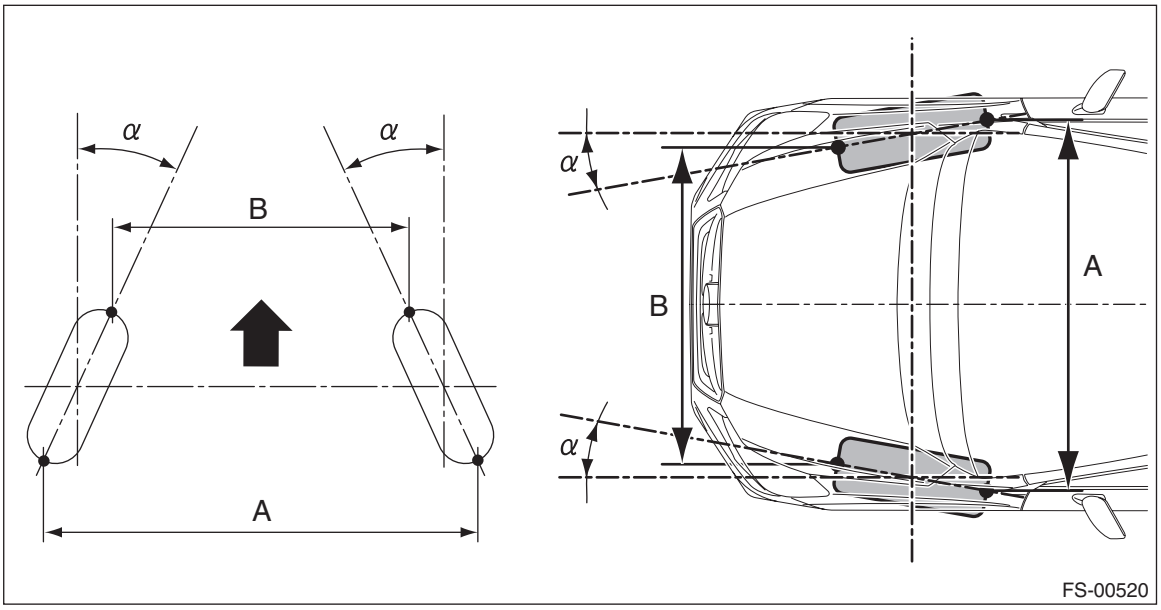

A – B = Positive: Toe-in, Negative: Toe-out

α = Individual toe angles

B: COMPONENT

1. FRONT SUSPENSION

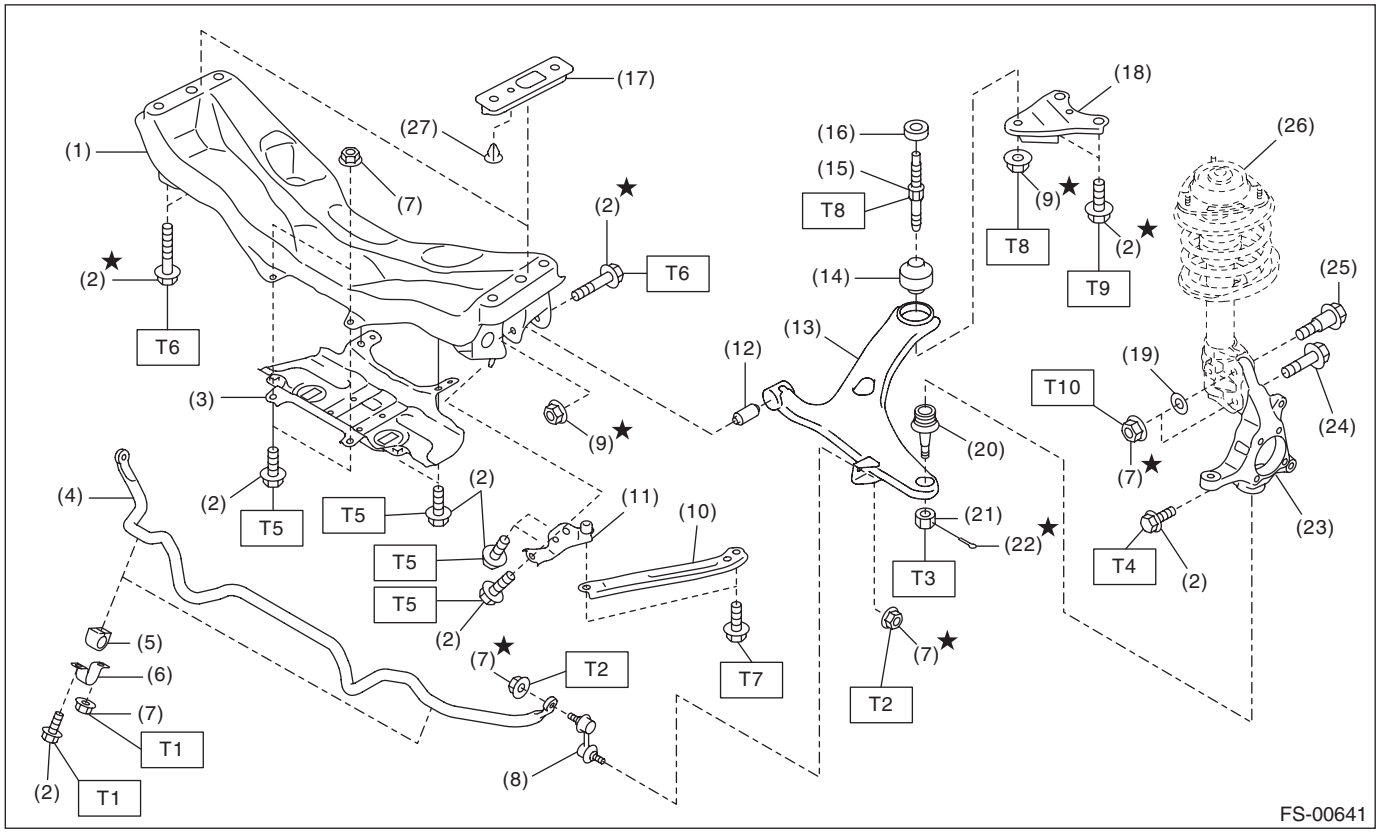

(1)	Front crossmember COMPL	(14)	Bushing rear - front arm	(27)	Clip
(2)	Flange bolt	(15)	Stud bolt		
(3)	Front crossmember support	(16)	Stopper - front arm bushing rear		***Tightening torque: N·m (kgf-m, ft-lb)***
(4)	Front stabilizer	(17)	Adapter (XV model)		***T1: 25 (2.55, 18.4)***
(5)	Bushing - stabilizer	(18)	Front arm rear plate		***T2: Except for XV model: 38 (3.87, 28.0)***
					XV model: 60 (6.12, 44.3)
(6)	Clamp - stabilizer bushing	(19)	Adjusting washer		***T3: 39 (3.98, 28.8)***
(7)	Flange nut	(20)	Ball joint ASSY		***T4: 50 (5.10, 36.9)***
(8)	Stabilizer link ASSY	(21)	Castle nut		***T5: 60 (6.12, 44.3)***
(9)	Self-locking nut	(22)	Cotter pin		***T6: 95 (9.69, 70.1)***
(10)	Front support	(23)	Housing ASSY - front axle		***T7: 100 (10.20, 73.8)***
(11)	Support plate - front crossmember	(24)	Flange bolt		***T8: 110 (11.22, 81.1)***
(12)	Bushing front - front arm	(25)	Adjusting bolt		***T9: 150 (15.30, 110.6)***
(13)	Front arm ASSY	(26)	Front strut ASSY		***T10: 155 (15.81, 114.3)***

2. FRONT STRUT

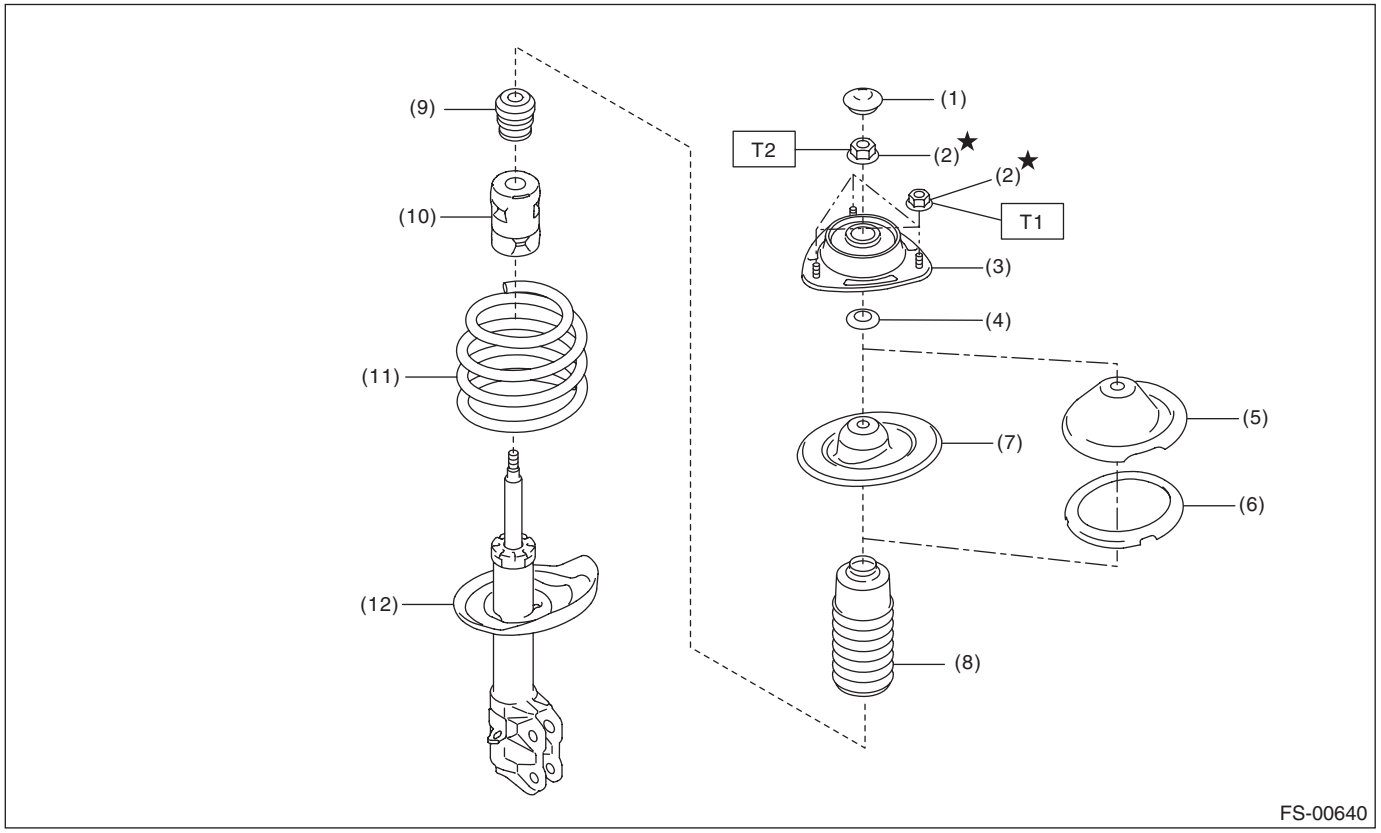

(1)	Dust seal - front strut	(7)	Spring seat - front strut UPR (except for XV model)
(2)	Self-locking nut	(8)	Dust cover - front strut
(3)	Strut mount - front	(9)	Helper - front strut
(4)	Spacer - front strut	(10)	Dust cover inner
(5)	Spring seat - front strut UPR (XV model)	(11)	Coil spring - front
(6)	Rubber seat (XV model)	(12)	Strut COMPL - front

Tightening torque: N·m (kgf-m, ft-lb)

T1: 20 (2.04, 14.8)
T2: 55 (5.61, 40.6)

C: CAUTION

• Wear appropriate work clothing, including a helmet, protective goggles and protective shoes when performing any work.
• Before removal, installation or disassembly, be sure to clarify the failure. Avoid unnecessary removal, installation, disassembly and replacement.
• Use SUBARU genuine grease etc. or equivalent. Do not mix grease etc. of different grades or manufacturers.
• Before securing a part on a vise, place cushioning material such as wood blocks, aluminum plate, or cloth between the part and the vise.
• Be sure to tighten fasteners including bolts and nuts to the specified torque.
• Place shop jacks or rigid racks at the specified points.
• When the suspension-related components have been replaced, perform “VDC sensor midpoint setting mode” of the VDC. <Ref. to VDC-21, VDC SENSOR MIDPOINT SETTING MODE, ADJUSTMENT, VDC Control Module and Hydraulic Control Unit (VDCCM&H/U).>

D: PREPARATION TOOL

1. SPECIAL TOOL

ILLUSTRATION	TOOL NUMBER	DESCRIPTION	REMARKS
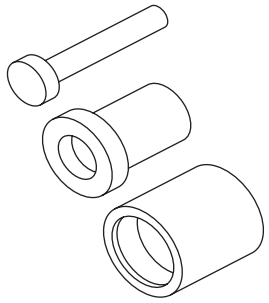 ST-927680000	927680000	INSTALLER & REMOVER SET	Used for replacing the bushing front - front arm of front arm assembly.
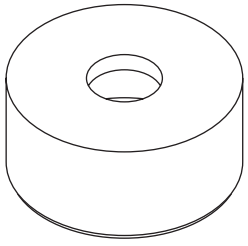 ST20299AG000	20299AG000	REMOVER	• Used for replacing the bushing rear - front arm of front arm assembly. • Used together with BASE (20299AG010).
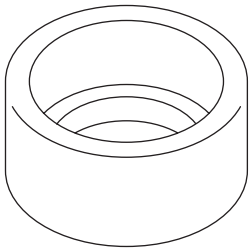 ST20299AG010	20299AG010	BASE	• Used for replacing the bushing rear - front arm of front arm assembly. • Used together with REMOVER (20299AG000).

ILLUSTRATION	TOOL NUMBER	DESCRIPTION	REMARKS
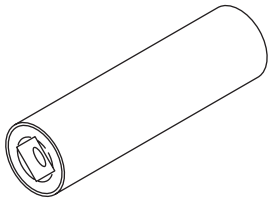 ST20299AG020	20299AG020	STUD BOLT SOCKET	Used for removing and installing the stud bolt for front arm assembly installing portion.
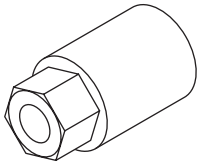 ST20399AG000	20399AG000	STRUT MOUNT SOCKET	Used for disassembling and assembling strut mount.

2. GENERAL TOOL

TOOL NAME	REMARKS
Alignment gauge	Used for measuring wheel alignment.
Alignment gauge adapter	Used for measuring wheel alignment.
Turning radius gauge	Used for measuring wheel alignment.
Toe-in gauge	Used for toe-in measurement.
Tie-rod end puller	Used for disconnecting tie-rod end.
Dial gauge	Used for damper strut measurement.
Coil spring compressor	Used for strut assembly/disassembly.

2. Wheel Alignment

A: INSPECTION

Check the following items before performing the wheel alignment measurement.
- Tire inflation pressure
- Uneven wear of RH and LH tires, or difference of sizes
- Tire runout
- Excessive play and wear of ball joint
- Excessive play and wear of tie-rod end
- Excessive play of wheel bearing
- Right and left wheel base imbalance
- Deformation and excessive play of steering link
- Deformation and excessive play of suspension parts

Check, adjust and measure the wheel alignment in accordance with the following procedures.

1	Wheel arch height (front and rear wheels)	Inspection: <Ref. to FS-10, REAR WHEEL TOE-IN, INSPECTION, Wheel Alignment.>
↓		
2	Camber (front and rear wheels)	Inspection: <Ref. to FS-9, CAMBER, INSPECTION, Wheel Alignment.> Adjustment: <Ref. to FS-11, FRONT CAMBER, ADJUSTMENT, Wheel Alignment.>
↓		
3	Caster (front wheel)	Inspection: <Ref. to FS-9, CASTER, INSPECTION, Wheel Alignment.>
↓		
4	Steering angle	Inspection: <Ref. to FS-10, FRONT WHEEL TOE-IN, INSPECTION, Wheel Alignment.> Adjustment: <Ref. to FS-13, STEERING ANGLE, ADJUSTMENT, Wheel Alignment.>
↓		
5	Front wheel toe-in	Inspection: <Ref. to FS-10, STEERING ANGLE, INSPECTION, Wheel Alignment.> Adjustment: <Ref. to FS-13, FRONT WHEEL TOE-IN, ADJUSTMENT, Wheel Alignment.>
↓		
6	Rear wheel toe-in	Inspection: <Ref. to FS-8, WHEEL ARCH HEIGHT, INSPECTION, Wheel Alignment.> Adjustment: <Ref. to FS-14, REAR WHEEL TOE-IN, ADJUSTMENT, Wheel Alignment.>
↓		
7	Thrust angle	Inspection: <Ref. to FS-11, THRUST ANGLE, INSPECTION, Wheel Alignment.> Adjustment: <Ref. to FS-16, THRUST ANGLE, ADJUSTMENT, Wheel Alignment.>

1. WHEEL ARCH HEIGHT

1) Park the vehicle on a level surface.
2) Empty the vehicle so that it is at “curb weight”. (Empty the luggage compartment, load the spare tire, jack and service tools, and fill up the fuel tank.)
3) Set the steering wheel in a straight-ahead position, and stabilize the suspension by moving the vehicle in a straight line for 5 m (16 ft) or more.
4) Suspend a thread from the wheel arch (point “A” in the figure below) and affix at a position directly above the center of wheel.
5) Measure the distance between the point “A” and the center of wheel.

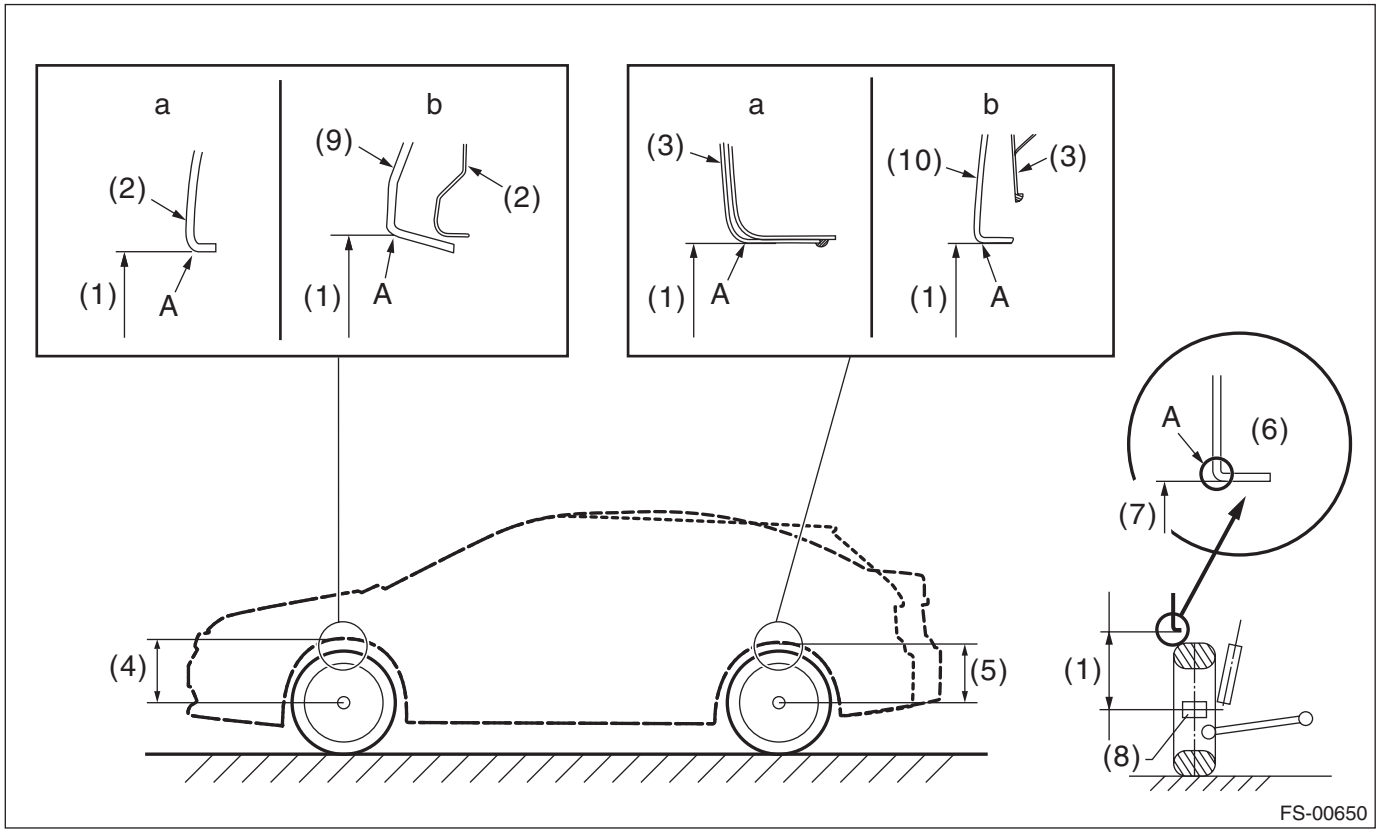

a	Except for XV model	b	XV model		
(1)	Wheel arch height	(5)	Rear wheel arch height	(9)	Garnish fender (XV model)
(2)	Front fender	(6)	Flange bend line	(10)	Garnish ASSY rear quarter (XV model)
(3)	Rear quarter	(7)	Point of measurement		
(4)	Front wheel arch height	(8)	End of spindle		

Wheel arch height specification mm (in) (tolerance: $^{+12\ mm}_{-24\ mm}$ ($^{+0.47\ in}_{-0.94\ in}$))			
Tire size	Standard vehicle height model	SPORT model	XV model
	P195/65R15 P205/55R16 P205/50R17	P205/50R17	P225/55R17 225/55R17
Front	387 (15.24)	392 (15.43)	452 (17.8)
Rear	368 (14.49)	371 (14.61)	450 (17.72)

2. CAMBER

1) Place the front wheel on the turning radius gauge.

NOTE:
Make sure the ground contact surfaces of the front and rear wheels are at the same height.

2) Set the adapter into the center of wheel, and then set the wheel alignment gauge.

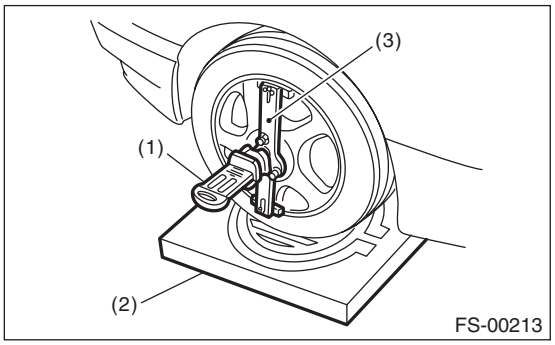

(1) Alignment gauge
(2) Turning radius gauge
(3) Adapter

3) Measure the camber angle in accordance with the operation manual for wheel alignment gauge.

Tire size		Camber (difference between RH and LH 45′ or less)
Standard vehicle height model	P195/65R15 P205/55R16 P205/50R17	–0°20′±0°45′
SPORT model	P205/50R17	–0°15′±0°45′
XV model	P225/55R17 225/55R17	0°10′±0°45′

3. CASTER

1) Place the front wheel on the turning radius gauge. Make sure the ground contact surfaces of the front and rear wheels are at the same height.

2) Set the adapter into the center of wheel, and then set the wheel alignment gauge.

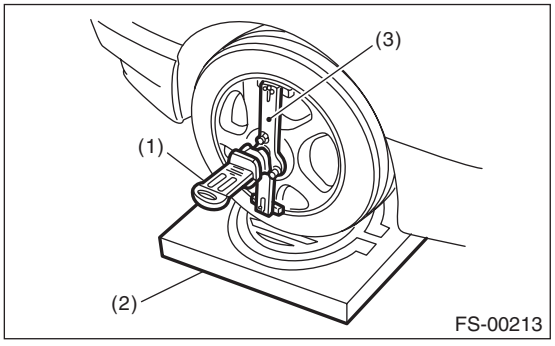

(1) Alignment gauge
(2) Turning radius gauge
(3) Adapter

3) Measure the caster angle in accordance with the operation manual for wheel alignment gauge.

Tire size	Caster
P195/65R15 P205/55R16 P205/50R17*1	6°01′
P205/50R17*2 P225/55R17 225/55R17	5°58′

*1: Except for SPORT model
*2: SPORT model

4. STEERING ANGLE

1) Place the vehicle on turning radius gauge.
2) While depressing the brake pedal, turn the steering wheel fully to the left and right.
3) With the steering wheel held at each fully turned position, measure both the inner and outer wheel steering angles.

Tire size	Inner wheel	Outer wheel
P195/65R15 P205/55R16 P205/50R17	38.3°±1.5°	33.7°±1.5°
P225/55R17 225/55R17	38.5°±1.5°	34.0°±1.5°

5. FRONT WHEEL TOE-IN

Toe-in: Inspection value
0±3 mm (0±0.12 in)

1) Set the toe-in gauge in the position at wheel axis center height behind the right and left front tires.
2) Place a mark at the center of both left and right tires, and measure distance “A” between the marks.
3) Move the vehicle forward to rotate the tires 180°.

NOTE:
Be sure to rotate the tires in the forward direction.

4) Measure the distance “B” between the left and right marks. Find toe-in using the following calculation:

A – B = Toe-in

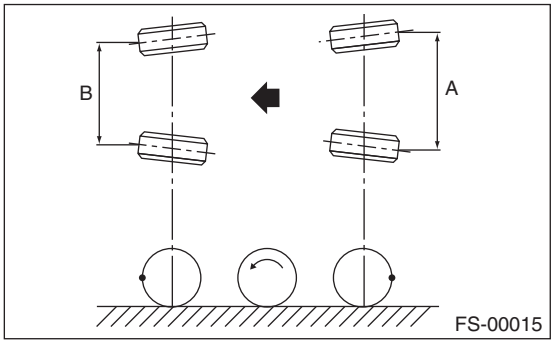

6. REAR WHEEL TOE-IN

Refer to the FRONT WHEEL TOE-IN for rear toe-in inspection procedures. <Ref. to FS-10, FRONT WHEEL TOE-IN, INSPECTION, Wheel Alignment.>

Toe-in: Inspection value
3±3 mm (0.12±0.12 in)

7. THRUST ANGLE

1) Park the vehicle on a level surface.
2) Move the vehicle 3 to 4 meters (10 to 13 feet) straight forward.
3) Draw the center of loci for both the front and rear axles.
4) Measure distance “L” between the center lines of the axle loci.

Thrust angle: Inspection value
0°±30′
Less than 30′ when “L” is 23 mm (0.9 in) or less

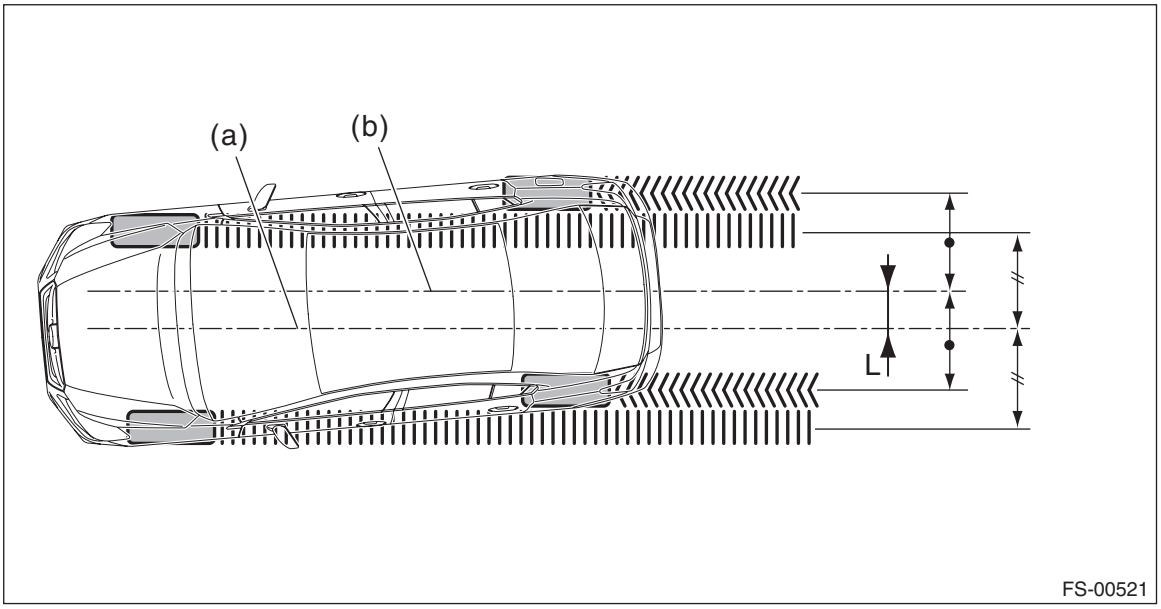

(a) Center line of loci (front axle) (b) Center line of loci (rear axle)

B: ADJUSTMENT

CAUTION:
When the wheel alignment has been adjusted, perform “VDC sensor midpoint setting mode” of the VDC. <Ref. to VDC-21, VDC SENSOR MIDPOINT SETTING MODE, ADJUSTMENT, VDC Control Module and Hydraulic Control Unit (VDCCM&H/U).>

1. FRONT CAMBER

1) Adjust the camber angle to the following value.

Tire size		Camber (difference between RH and LH 45′ or less)
Standard vehicle height model	P195/65R15 P205/55R16 P205/50R17	–0°20′±0°30′
SPORT model	P205/50R17	–0°15′±0°30′
XV model	P225/55R17 225/55R17	0°10′±0°30′

2) Loosen the two flange nuts located at the front lower section of the strut.

NOTE:
When the adjusting bolt needs to be loosened or tightened, hold its head with a wrench and turn the flange nut.

3) Turn the camber adjusting bolt so that the camber is set at specification.

NOTE:
Moving the adjusting bolt by one scale changes the camber by approximately 0°15′.

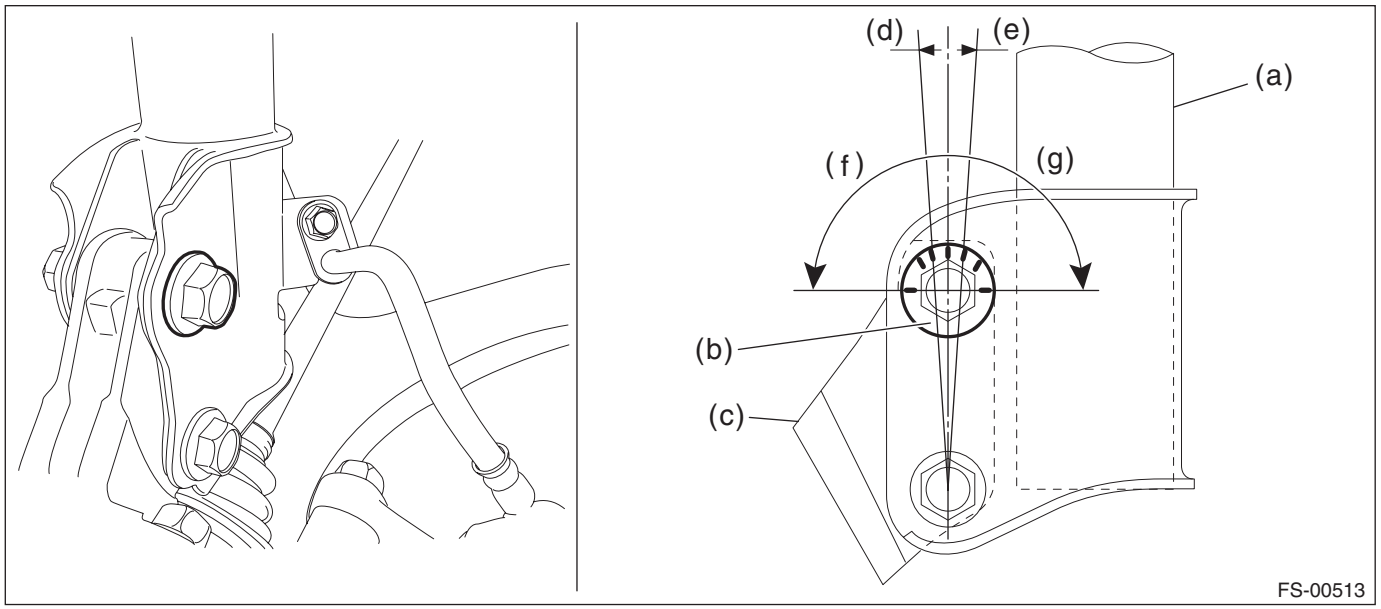

(a) Strut ASSY
(b) Adjusting bolt
(c) Housing ASSY - front axle
(d) Outer direction
(e) Inner direction
(f) Camber is increased.
(g) Camber is decreased.

To increase camber.	
Rotate the left side counterclockwise.	Rotate the right side clockwise.
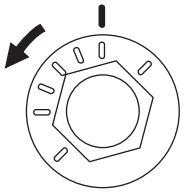 FS-00352	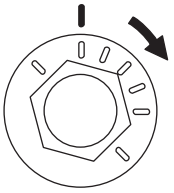 FS-00353

To decrease camber.	
Rotate the left side clockwise.	Rotate the right side counterclockwise.
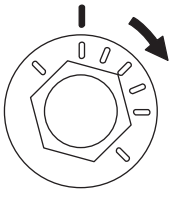 FS-00353	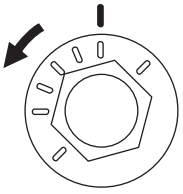 FS-00352

4) Tighten two new flange nuts.

Tightening torque:
155 N·m (15.81 kgf-m, 114.3 ft-lb)

2. STEERING ANGLE

1) Adjust the steering angle of both inner and outer wheels.
(1) Loosen the steering tie-rod lock nut (a), and rotate the tie-rod.

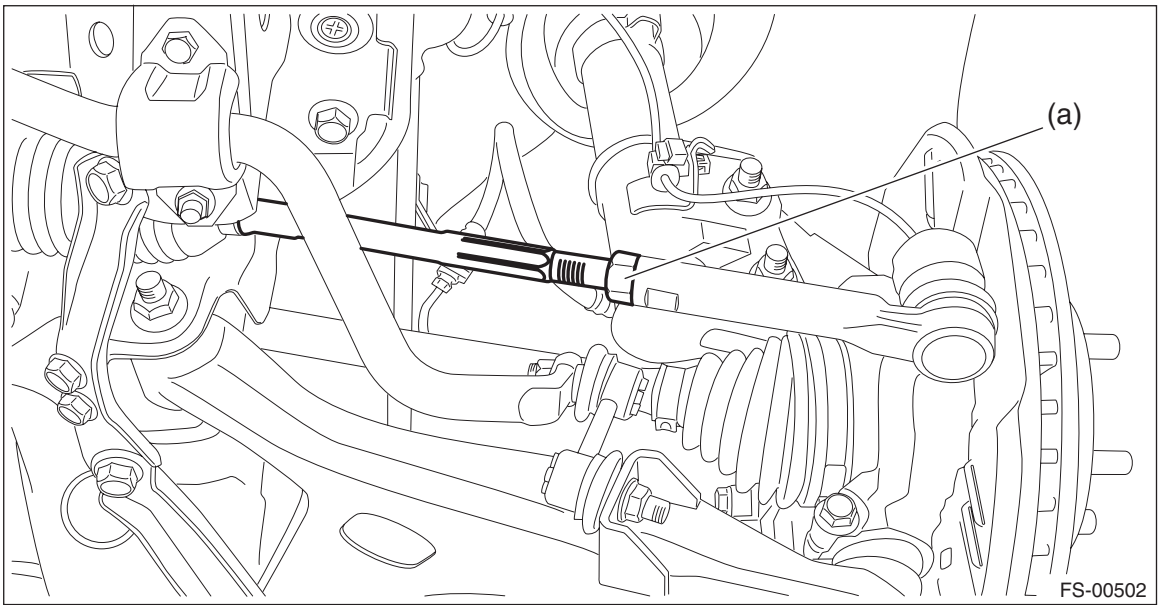

(2) Turn the tie-rod to adjust the steering angle of both inner and outer wheels.
(3) Tighten the steering tie-rod lock nut (a).

Tightening torque:
85 N·m (8.67 kgf-m, 62.7 ft-lb)

NOTE:
Check and correct the tie-rod boot if twisted.
2) Check the toe-in. <Ref. to FS-10, STEERING ANGLE, INSPECTION, Wheel Alignment.>

3. FRONT WHEEL TOE-IN

When adjusting the toe-in, adjust it to the following value. <Ref. to FS-13, STEERING ANGLE, ADJUSTMENT, Wheel Alignment.>

Toe-in: Adjustment value
0±2 mm (0±0.08 in)

1) Check that the left and right wheel steering angles are within specification.
2) Loosen the left and right side steering tie-rod lock nuts (a).
3) Turn the left and right tie-rods by equal amounts until the toe-in is at the specification.

NOTE:
Both the left and right tie-rods are right-hand threaded. To increase toe-in, turn both tie-rods clockwise by equal amount (viewing from the inside of vehicle).

4) Tighten the tie-rod lock nut (a).

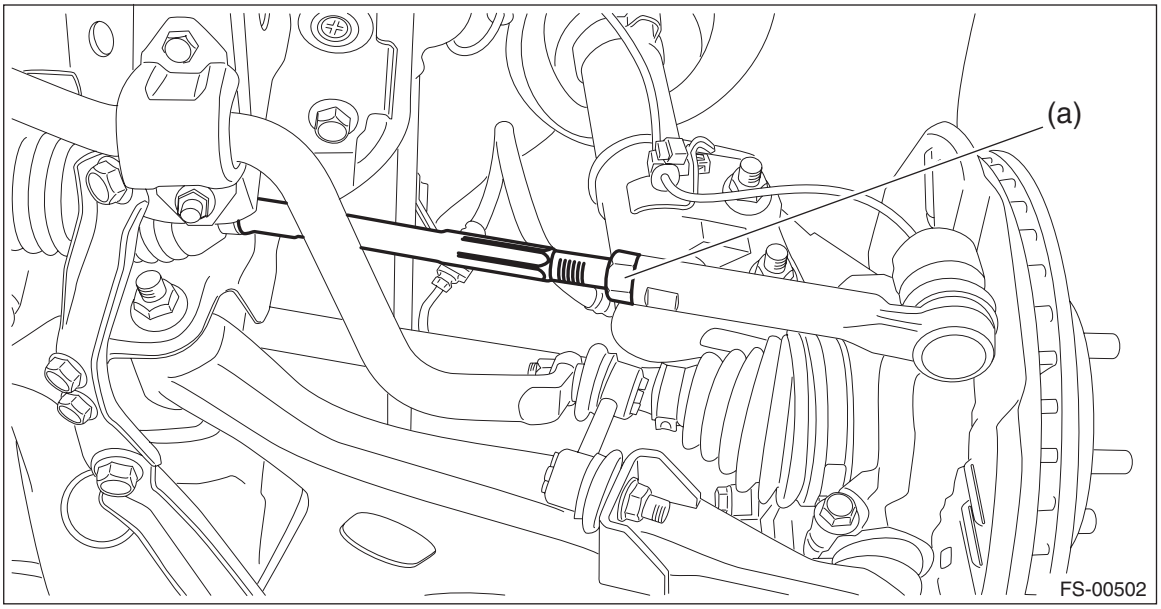

Tightening torque:
85 N·m (8.67 kgf-m, 62.7 ft-lb)

5) Check and correct the tie-rod boot if twisted.

4. REAR WHEEL TOE-IN

When adjusting, adjust it to the following value.

Toe-in: Adjustment value
3±2 mm (0.12±0.08 in)

1) Loosen the self-locking nut for the lateral link assembly - front.

NOTE:
When loosening or tightening the adjusting bolt, hold the bolt head and turn the self-locking nut.

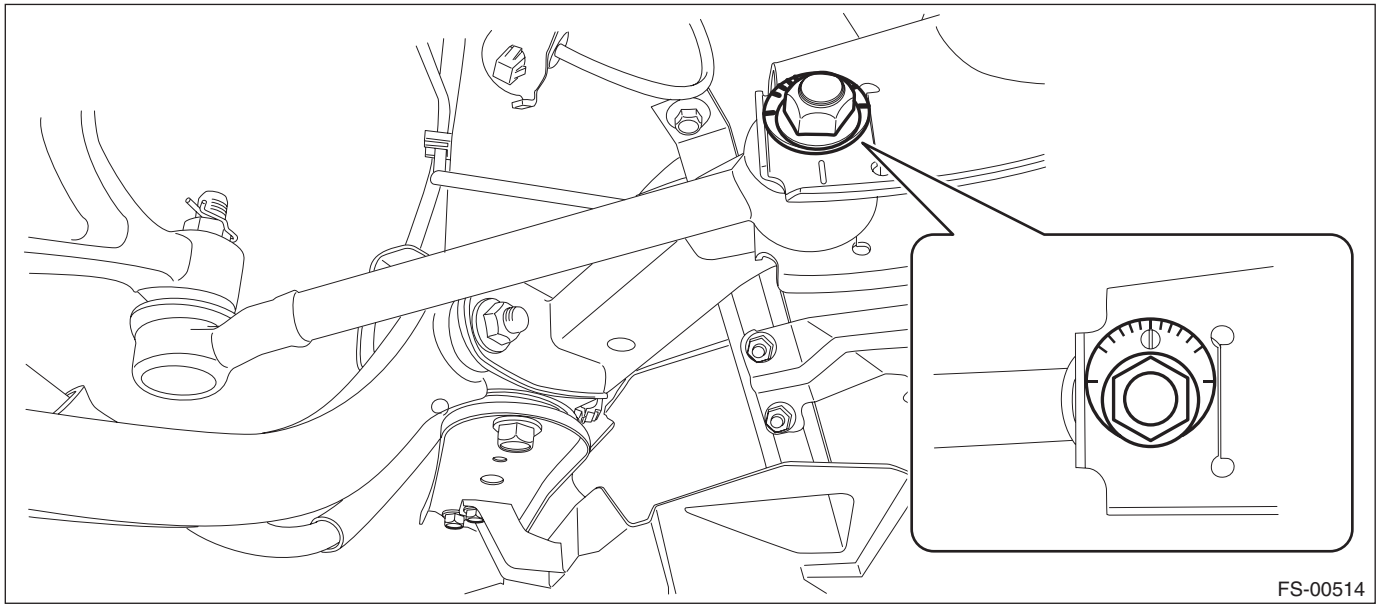

2) Turn the adjusting bolt until toe-in is within the specification.

NOTE:
When the left and right wheels are adjusted for toe-in at the same time, the movement of one scale graduation changes toe-in by approx. 1.3 mm (0.05 in).

To increase toe-in.	
Rotate the left side clockwise.	Rotate the right side counterclockwise.
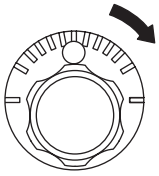 FS-00018	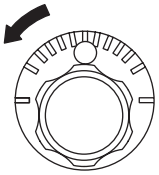 FS-00019

To decrease toe-in.	
Rotate the left side counterclockwise.	Rotate the right side clockwise.
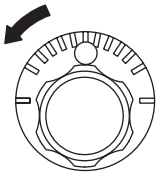 FS-00019	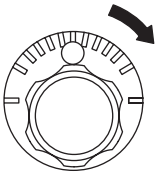 FS-00018

3) Attach and tighten a new self-locking nut.

Tightening torque:
100 N·m (10.20 kgf-m, 73.8 ft-lb)

5. THRUST ANGLE

When adjusting, adjust it to the following value.

Thrust angle: Adjustment value
0°±20′
Less than 20′ when "L" is 15 mm (0.6 in) or less

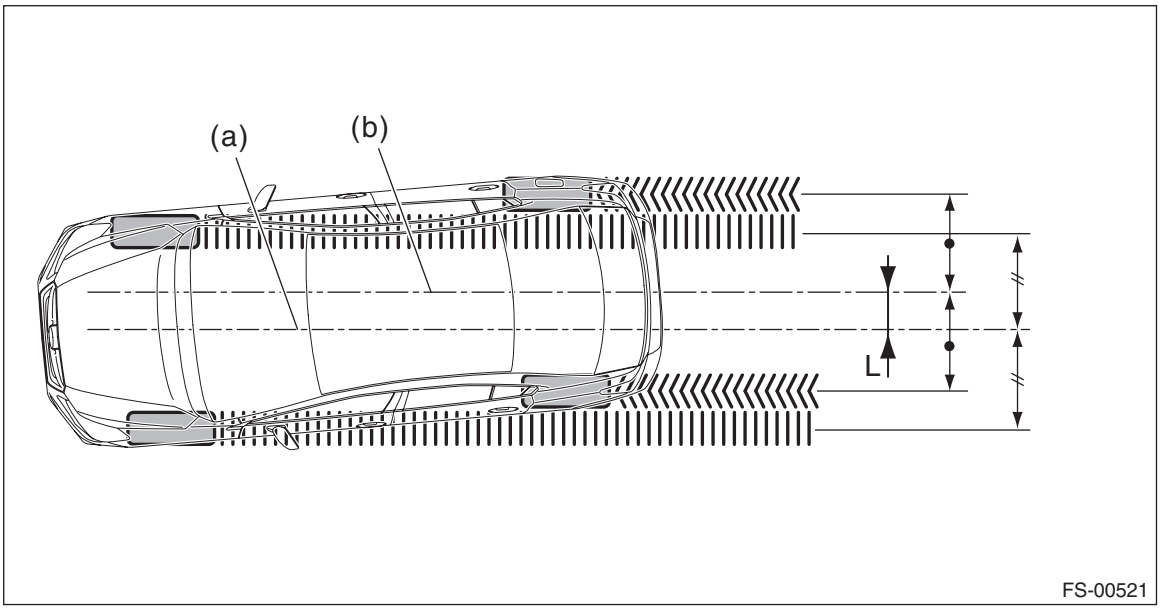

(a) Center line of loci (front axle) (b) Center line of loci (rear axle)

1) Make thrust angle adjustments by turning the toe-in adjusting bolts of the rear suspension equally in the same direction.
2) When one rear wheel is adjusted in a toe-in direction, adjust the other rear wheel equally in toe-out direction, in order to make the thrust angle adjustment.

3) When the left and right adjusting bolts are turned by one graduation, the thrust angle will change approx. 15′. (“L” is approx. 11 mm (0.43 in)).

NOTE:
Thrust angle is a mean value of left and right wheel toe angles in relation to the vehicle body center line. Vehicle is driven straight in the thrust angle direction while slanting in the oblique direction depending on the degree of the mean thrust angle.

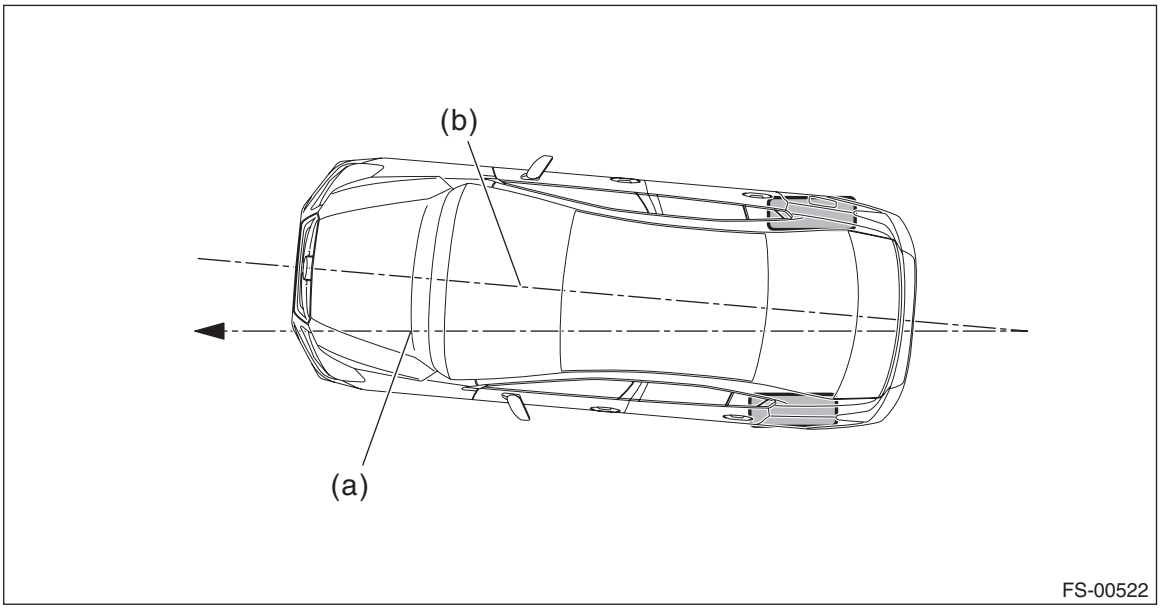

(a) Thrust angle (b) Body center line

Thrust angle:

$\gamma = (\alpha - \beta)/2$

α: Rear RH wheel toe-in angle
β: Rear LH wheel toe-in angle
Substitute only the positive toe-in values from each wheel into α and β in the calculation.

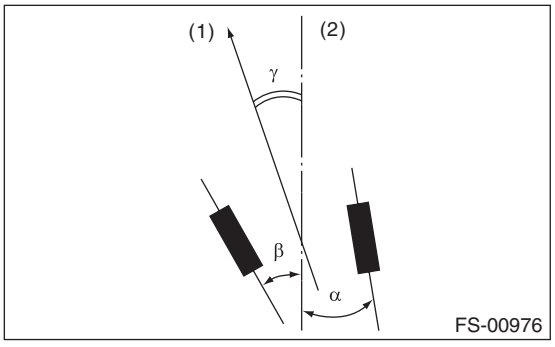

(1) Front
(2) Body center line

3. Front Crossmember

A: REMOVAL

CAUTION:
• The power steering control module continues to operate after the engine stops and calculate the temperature in the control module. Therefore, before starting service of the power steering system which requires disconnection of the connector, stop the engine and allow approx. 30 minutes until the control module becomes cold.
• Before removal or installation, be sure to remove any foreign matter (dust, moisture, oil, etc.) from the power steering control module connector.

1) Disconnect the ground cable from battery. <Ref. to NT-5, BATTERY, NOTE, Note.>

NOTE:
For the 12 volt engine restart battery of HEV model, disconnect the ground terminal from 12V engine restart battery sensor.

2) Adjust the tilt position of the steering column to the lowest position and lock the tilt lever.

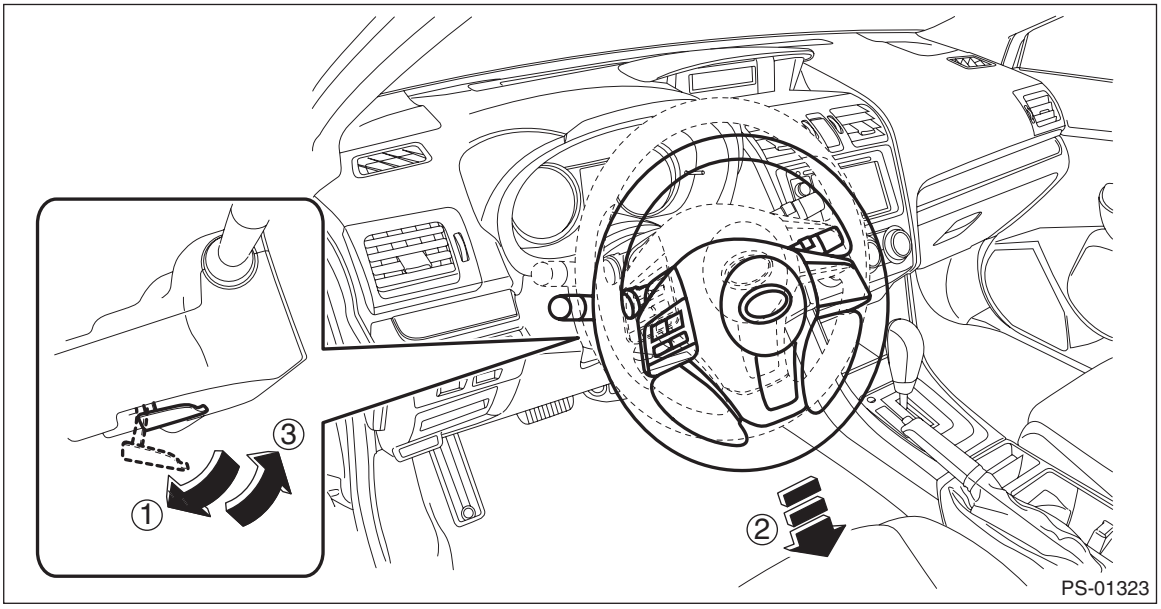

3) Lift up the vehicle, and then remove the front wheels.

4) Remove the bolts and clips, and remove the under cover - front.

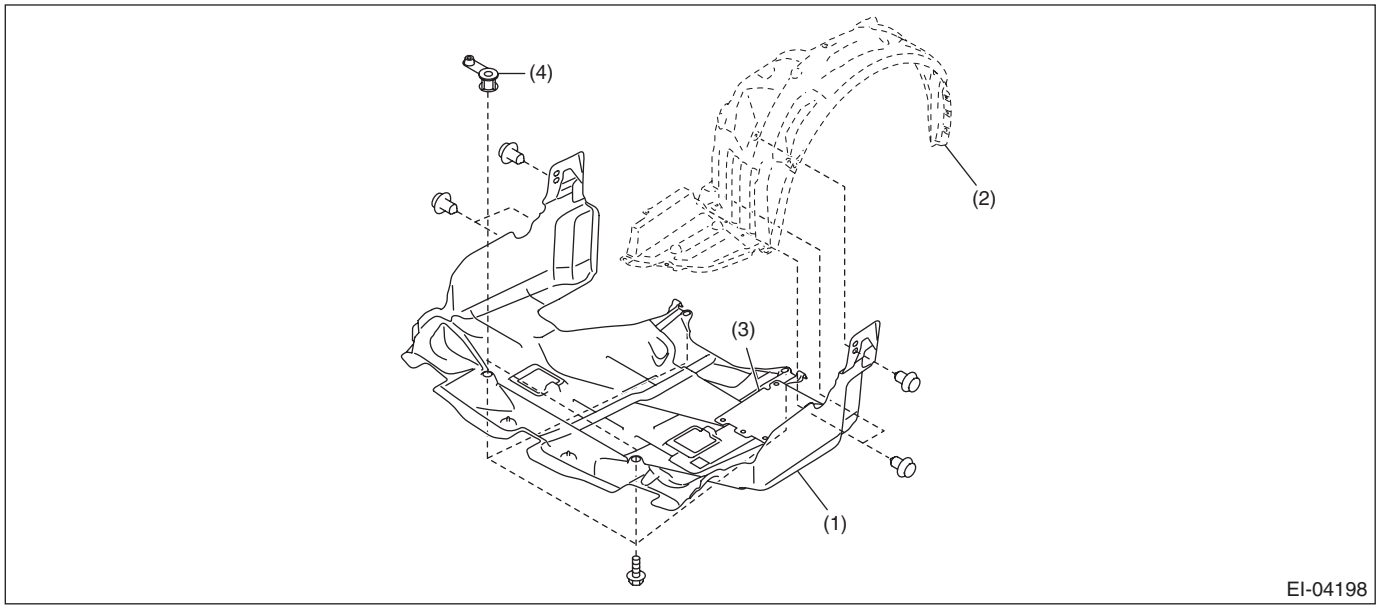

(1) Under cover - front
(2) Mud guard - front
(3) Plate cover - rear (XV model)
(4) Spacer - under cover (XV model)

5) Remove the universal joint assembly - steering.
(1) Place alignment marks on the universal joint assembly - steering.

NOTE:
Place alignment marks on the following positions.
- Between the column assembly - steering and the universal joint assembly - steering
- Between the steering gearbox assembly and the universal joint assembly - steering

(2) Remove the bolt, and remove the universal joint assembly - steering.

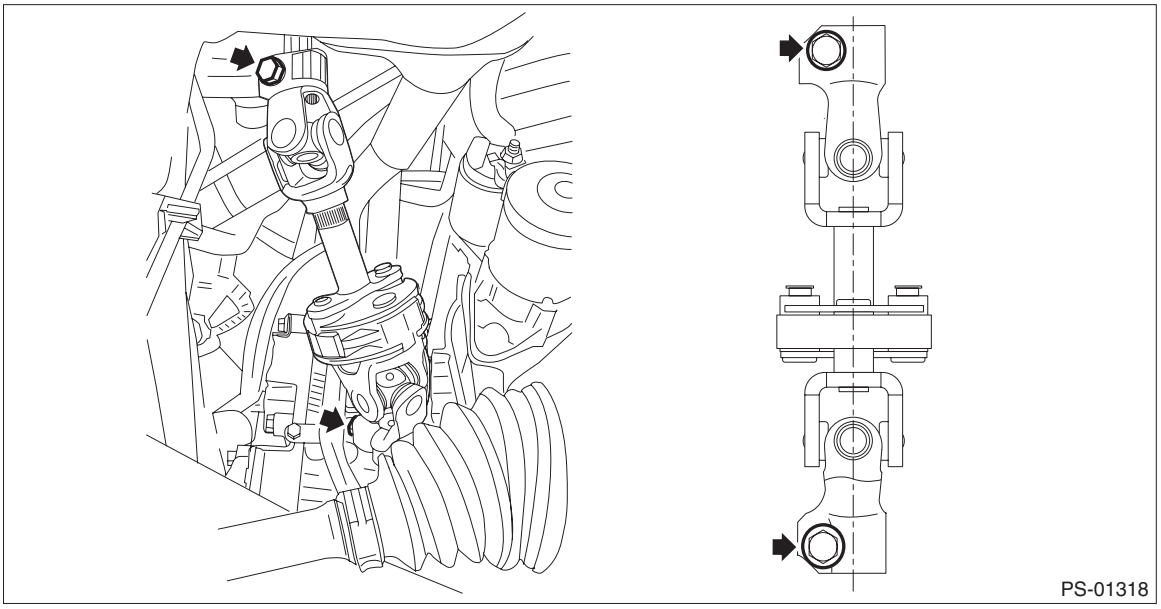

6) Prevent the steering wheel from turning using the seat belt.

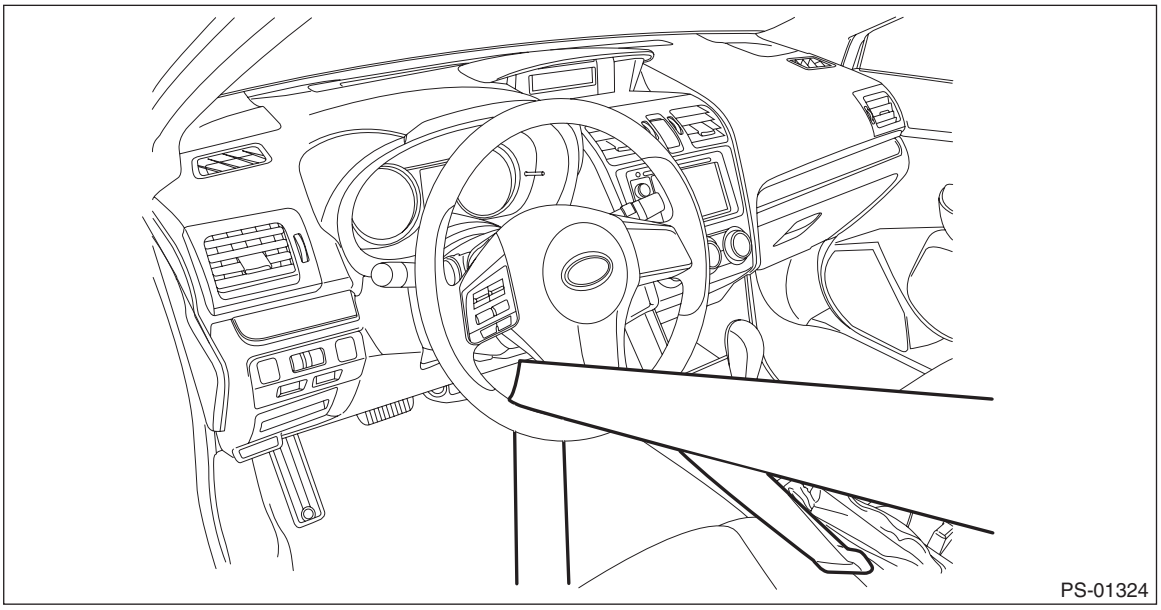

7) Change the front hood stay position from (A) to (B), and completely open the front hood.

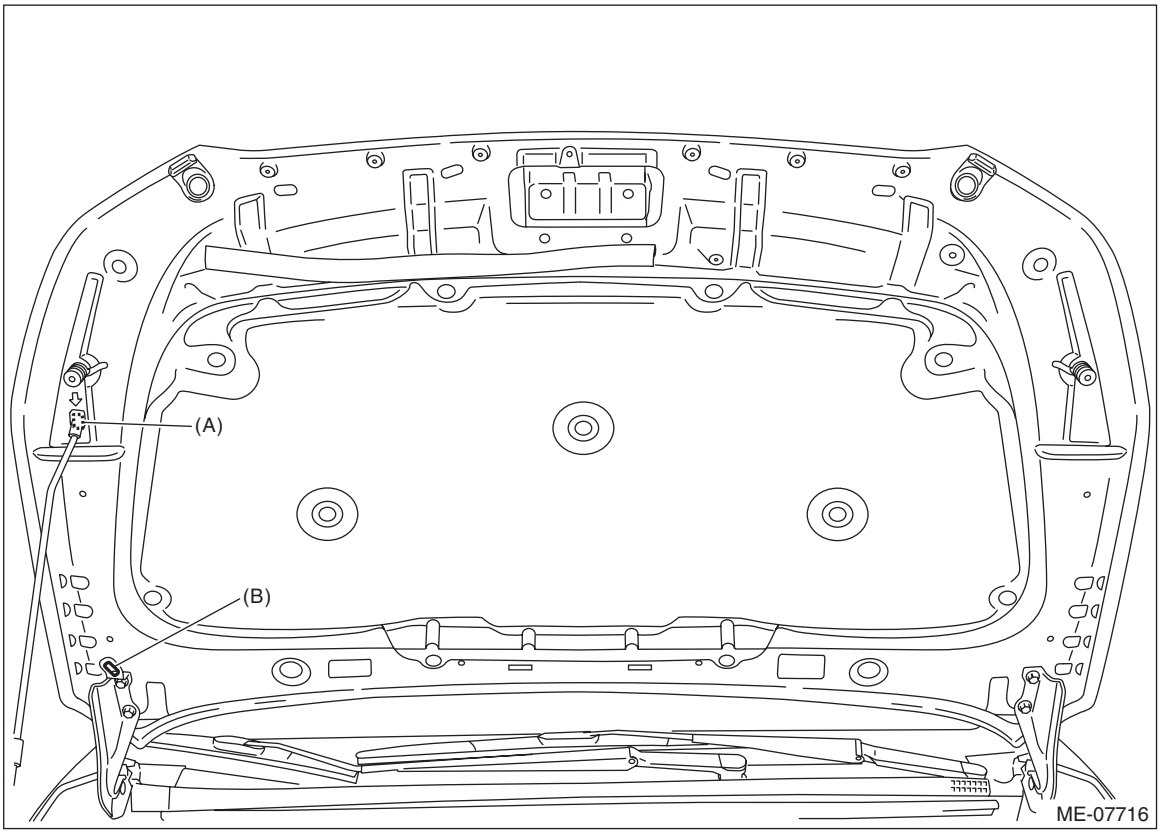

8) Remove the V-belt covers. (Gasoline engine model)

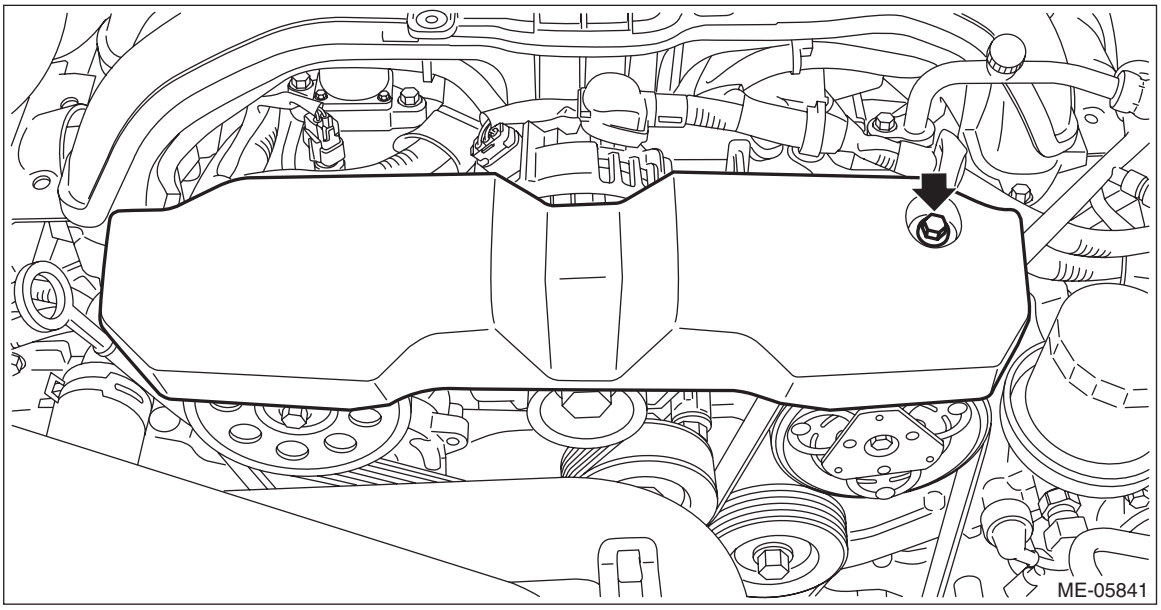

9) Remove the collector cover. (HEV model)
   (1) Pull up the two points at the front of collector cover (A).
   (2) Pull up the two points at the rear of collector cover (B) while moving them rearward.

NOTE:
Be careful not to contact the fuel delivery tube when moving the collector cover rearward.

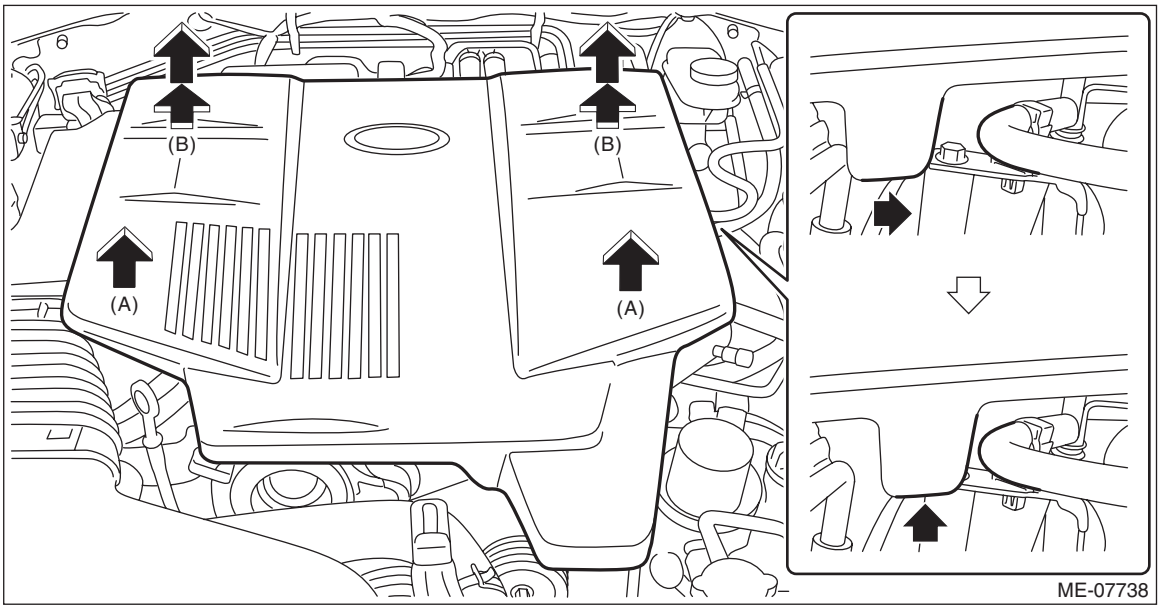

10) Disconnect the connector and harness clamp from power steering control module.
11) Support the engine with a lifting device and wire ropes.
    (1) Support the engine with a lifting device and wire ropes.
    (2) While lifting up the vehicle, also raise up the lifting device.

CAUTION:
When lifting up the vehicle, raise up wire ropes at the same time.

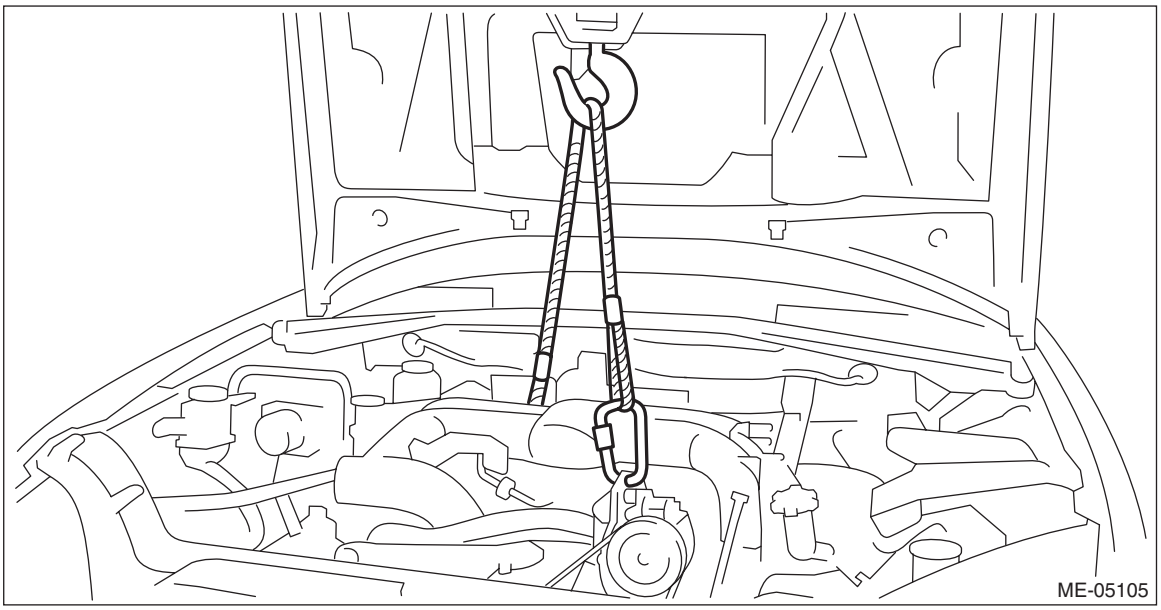

12) Remove the nuts which secure the engine mounting.
    (1) Raise up the lifting device, and lift the engine by approx. 10 mm (0.39 in).
    (2) Remove the nuts which secure the engine mounting to the front crossmember assembly.

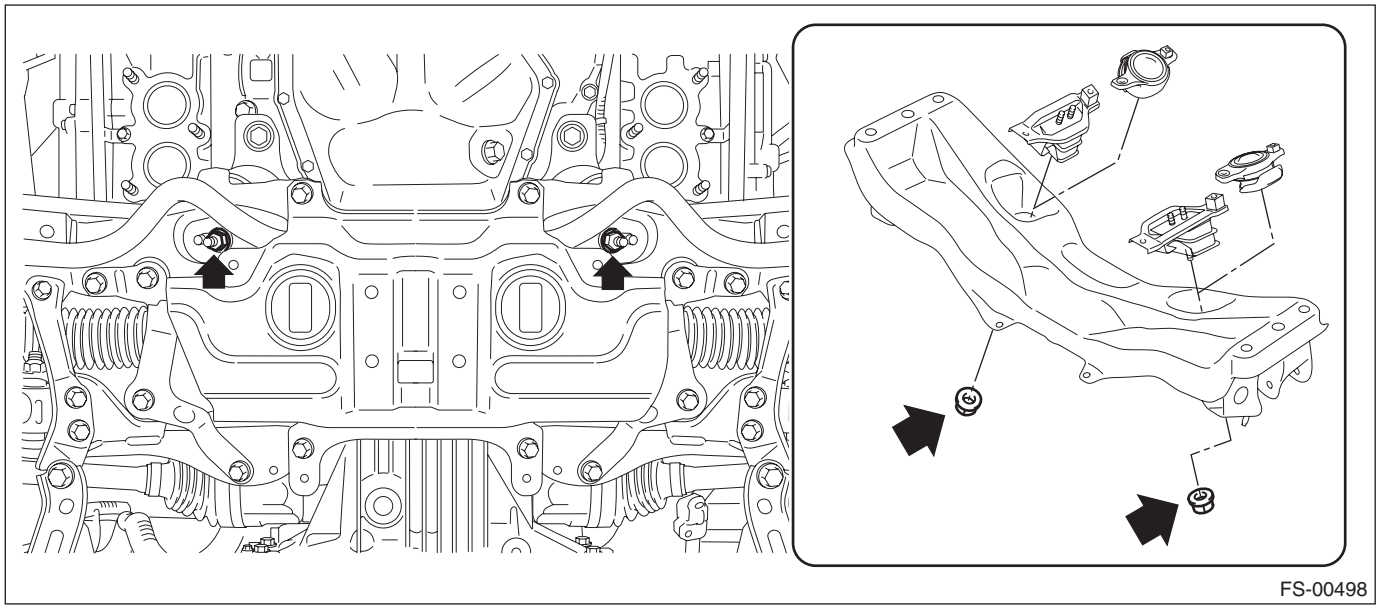

13) Remove the bolt, and remove the front crossmember support.

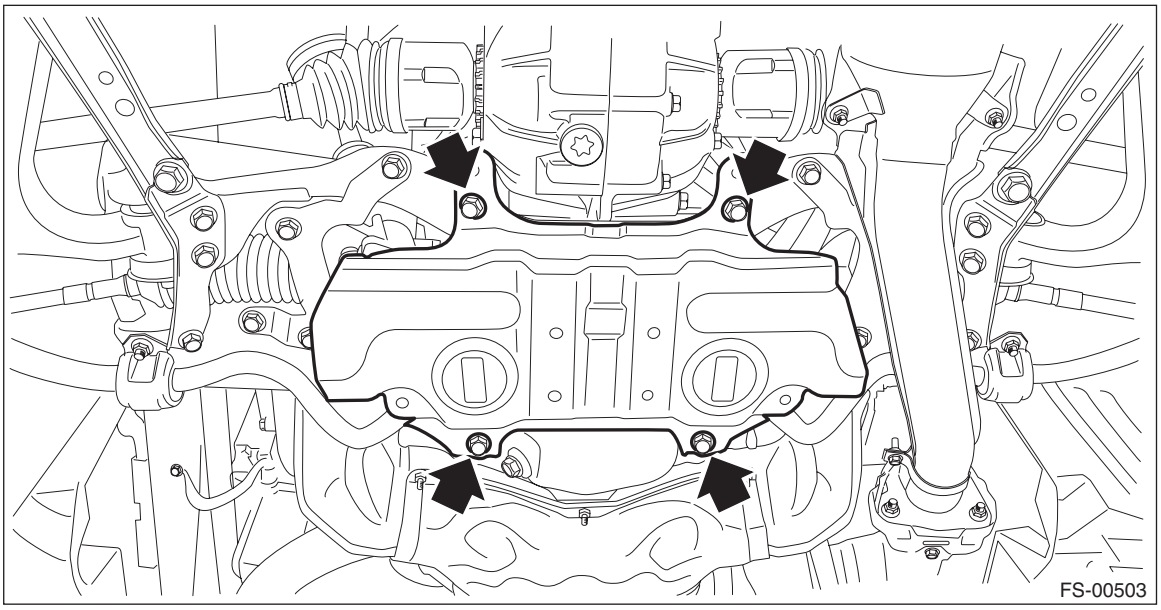

14) Remove the front exhaust pipe. <Ref. to EX(H4DO(w/o HEV))-6, REMOVAL, Front Exhaust Pipe.>
15) Remove the front stabilizer.
    (1) Remove the left and right stabilizer links.
    (2) Remove the clamp - stabilizer bushing on the left and right sides.

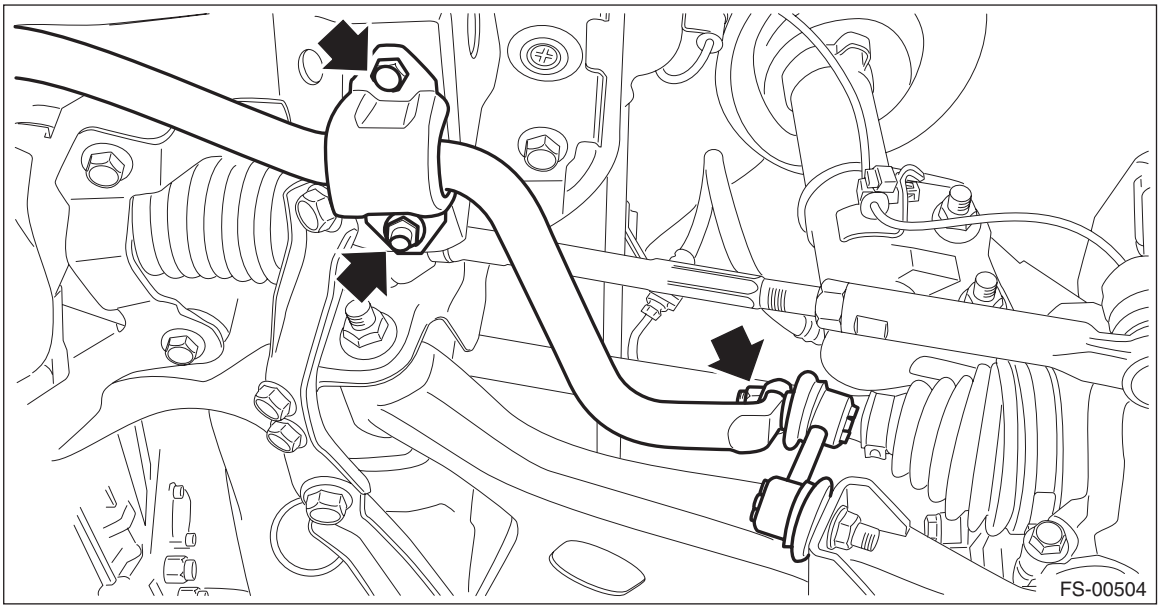

16) Disconnect the tie-rod end.
(1) Pull out the cotter pin (a).
(2) Remove the castle nut (b).
(3) Using a tie-rod ball joint puller, remove the tie-rod end (c).

Preparation tool:
Tie-rod end puller

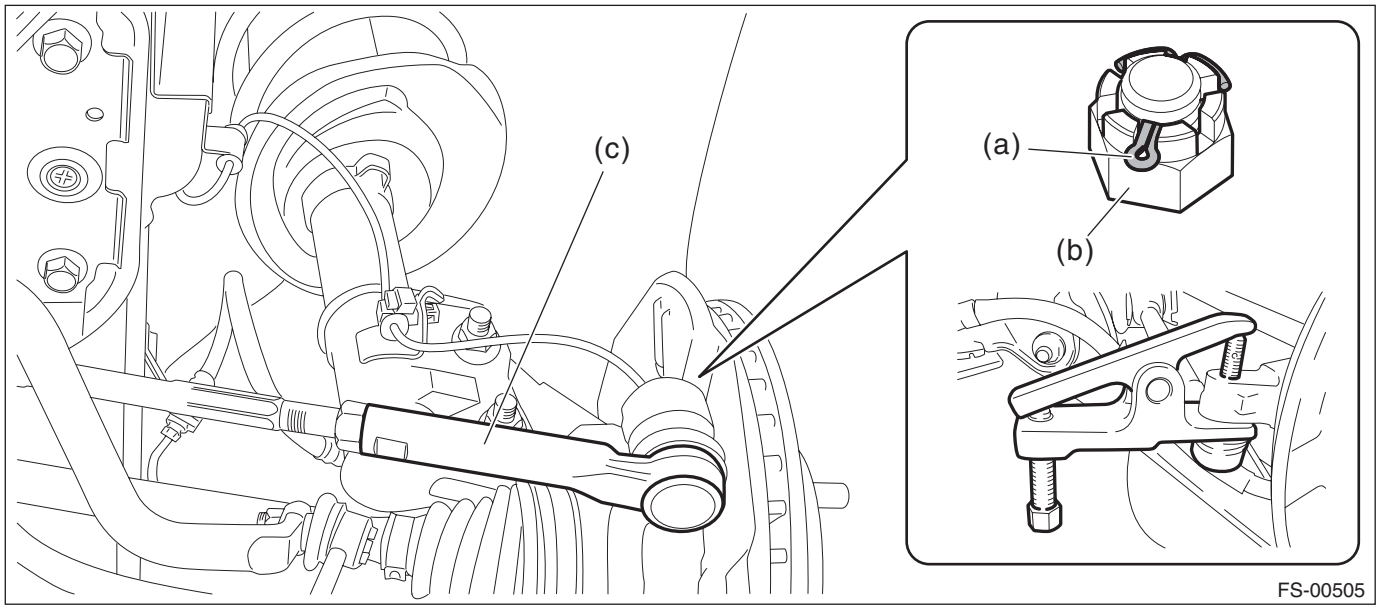

17) Remove the support plate - front crossmember (a).

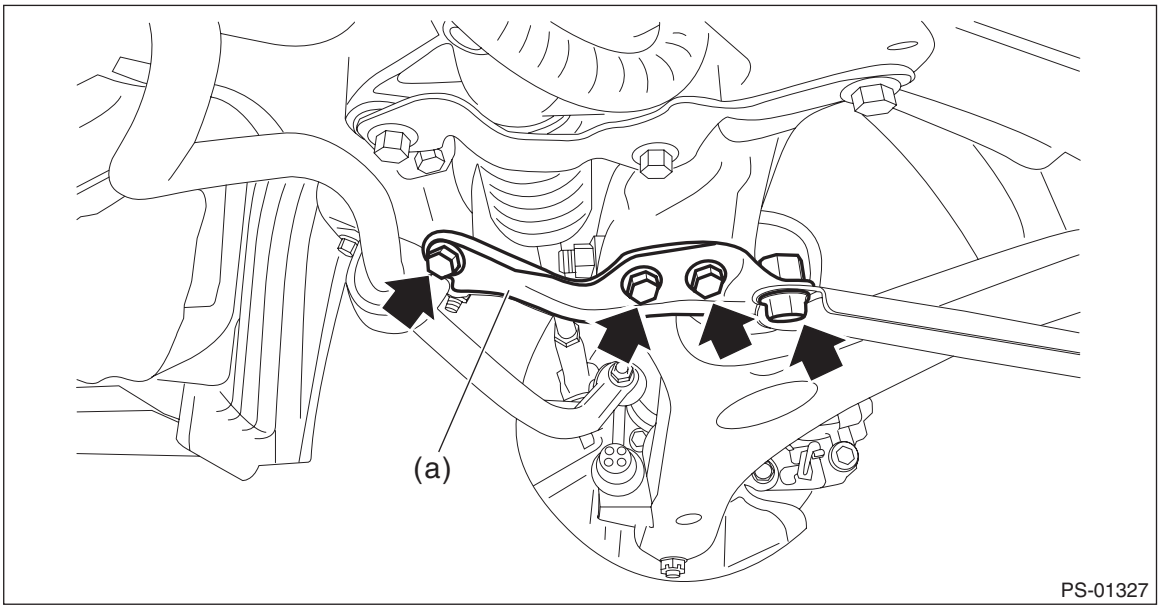

18) Remove the front arm assembly.
(1) Remove the bolt, and then detach the front support.
(2) Remove the bolts and nuts, and then remove the front arm rear plate.
(3) Remove the nut and disconnect the stabilizer link assembly.
(4) Pull out the cotter pin (a), remove the castle nut (b), and remove the ball joint from front arm assembly.
(5) Remove the nuts, pull out the flange bolt, and remove the front arm assembly.

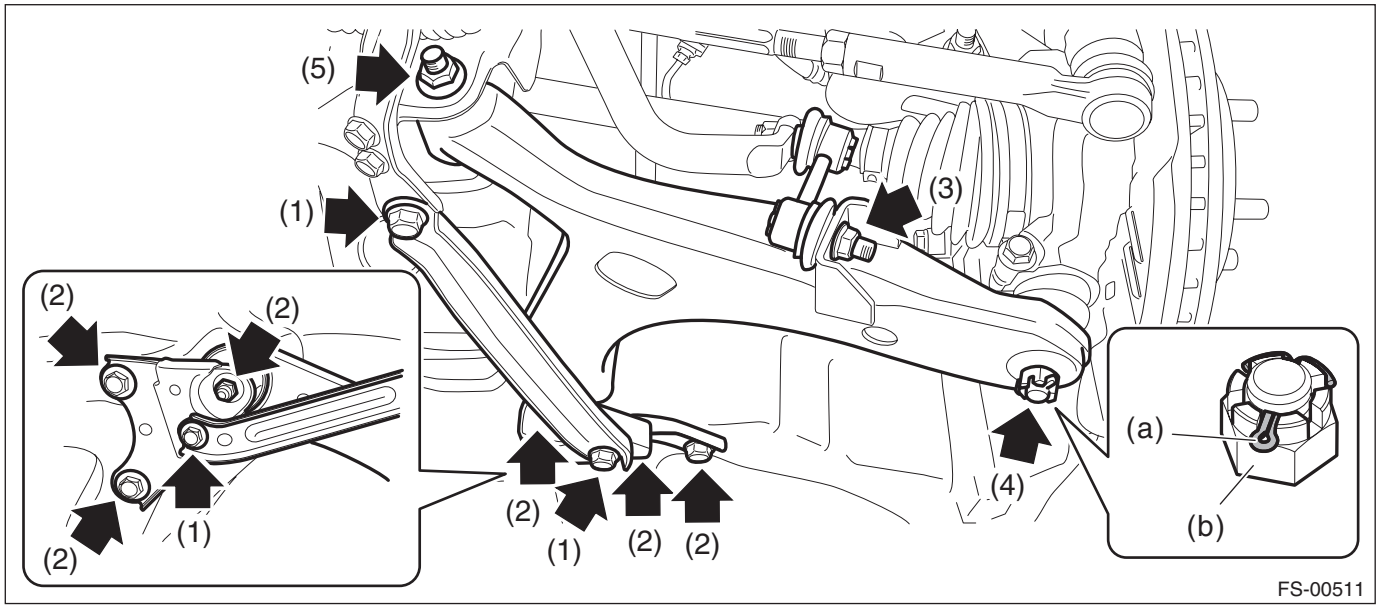

19) Support the front crossmember assembly using a jack, and remove the bolts which hold the crossmember on the body.

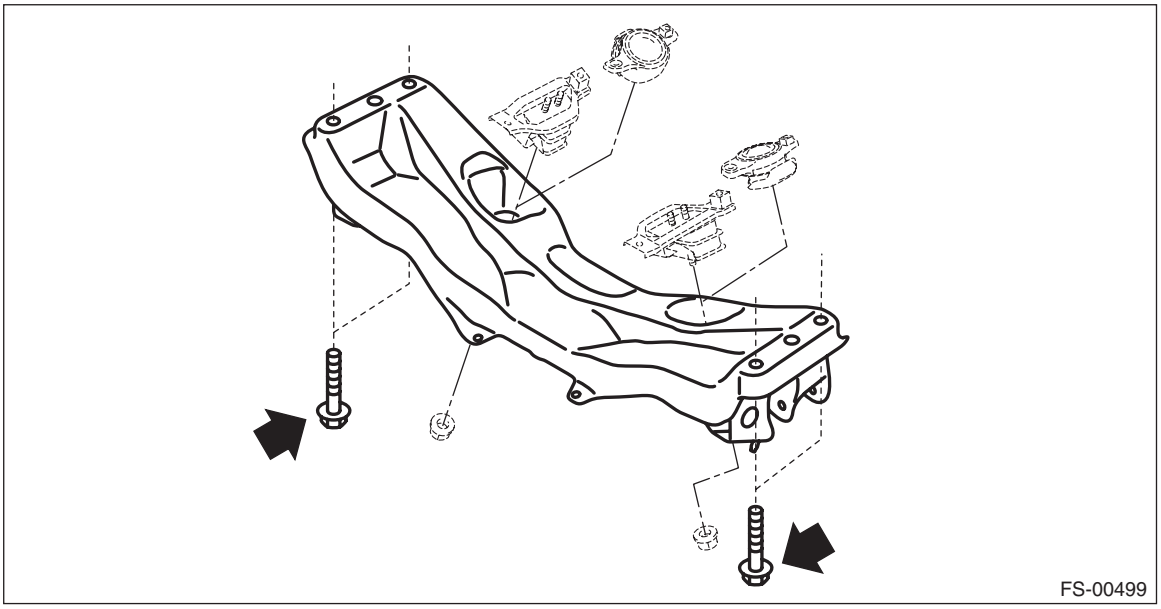

20) Slowly lower the front crossmember assembly with the steering gearbox assembly as a single unit.

CAUTION:
When removing the crossmember, make sure that the tie-rod end does not interfere with the drive shaft boot.

21) Remove the steering gearbox assembly from the front crossmember assembly.

B: INSTALLATION

1) Check the crossmember for damage or cracks, and correct or replace if defective.
2) Install the universal joint assembly - steering. <Ref. to PS-14, INSTALLATION, Universal Joint.>
3) Install each part in the reverse order of removal.

CAUTION:
• Use a new bolt and self-locking nut. For parts which are not reusable, refer to "COMPONENT". <Ref. to FS-3, COMPONENT, General Description.>
• Always tighten the bushing in the state where the vehicle is at curb weight and the wheels are in full contact with the ground.
• Install the clamp - stabilizer bushing with the arrow mark facing the front of the vehicle.

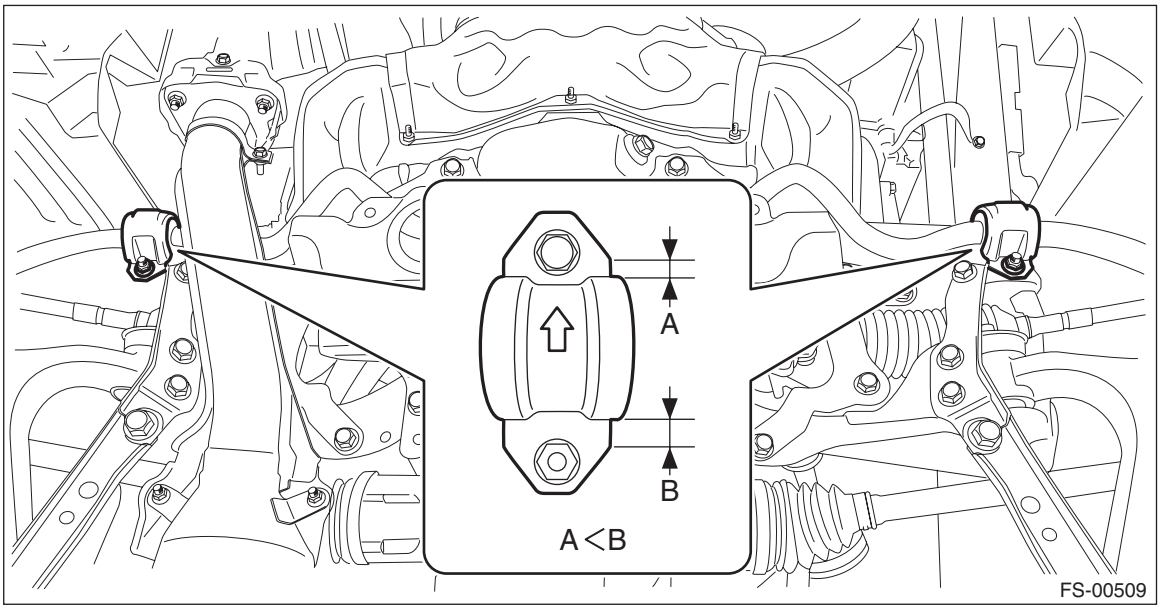

• Install the under cover so that the under cover front end (b) comes inside of the bumper face - front (a).

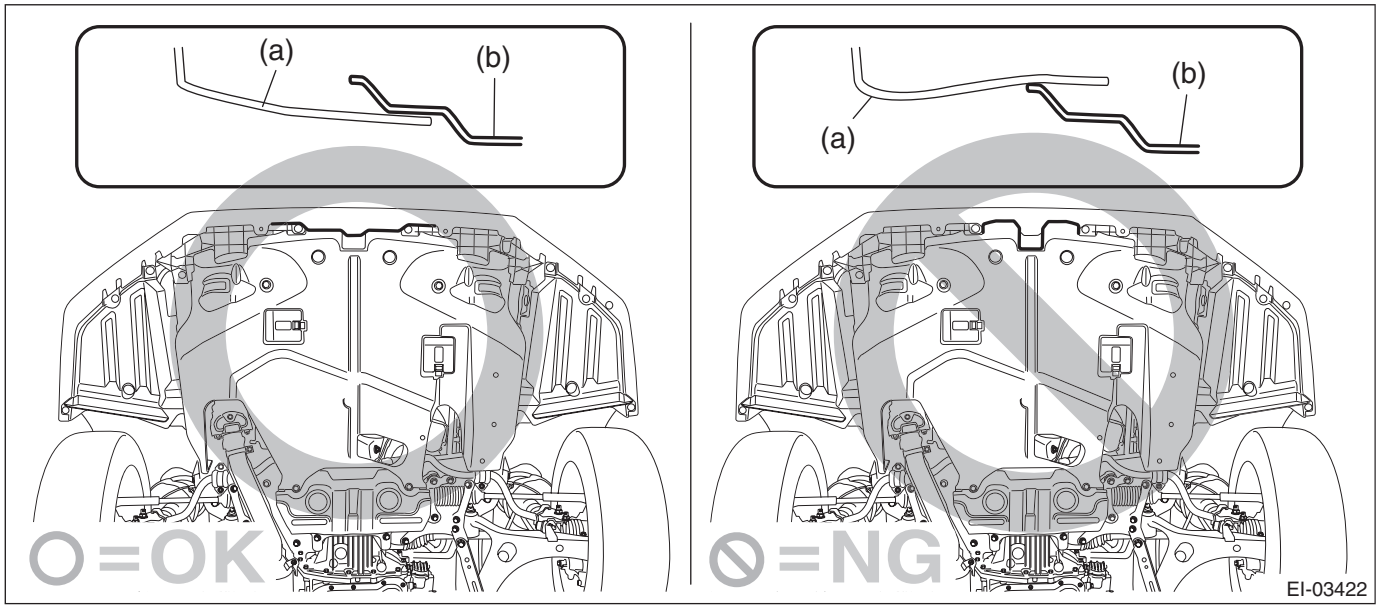

Tightening torque:
Engine mount — front crossmember assembly: 45 N·m (4.59 kgf-m, 33.2 ft-lb)
Universal joint assembly - steering: 24 N·m (2.45 kgf-m, 17.7 ft-lb)
V-belt cover: 7.5 N·m (0.76 kgf-m, 5.5 ft-lb)
Under cover - front: 18 N·m (1.84 kgf-m, 13.3 ft-lb)
Front suspension parts: <Ref. to FS-3, FRONT SUSPENSION, COMPONENT, General Description.>

When tightening the castle nut, tighten the castle nut to the specified torque first, then tighten it further but within 60° until the hole in the ball stud is aligned with a slot in castle nut.

4) Install the front wheels.

Tightening torque:
Except for C4 model: 120 N·m (12.24 kgf-m, 88.5 ft-lb)
C4 model: 100 N·m (10.20 kgf-m, 73.8 ft-lb)

5) Inspect the wheel alignment and adjust if necessary.
- Inspection: <Ref. to FS-7, INSPECTION, Wheel Alignment.>
- Adjustment: <Ref. to FS-11, ADJUSTMENT, Wheel Alignment.>

CAUTION:
When the wheel alignment has been adjusted, perform "VDC sensor midpoint setting mode" of the VDC. <Ref. to VDC-21, ADJUSTMENT, VDC Control Module and Hydraulic Control Unit (VDCCM&H/U).>

6) Perform reinitialization of the auto headlight beam leveler system. (Model with auto headlight beam leveler) <Ref. to LI-18, PROCEDURE, Auto Headlight Beam Leveler System.>

4. Front Crossmember Support Plate

A: REMOVAL

1) Lift up the vehicle.
2) Remove the bolts and clips, and remove the under cover - front.

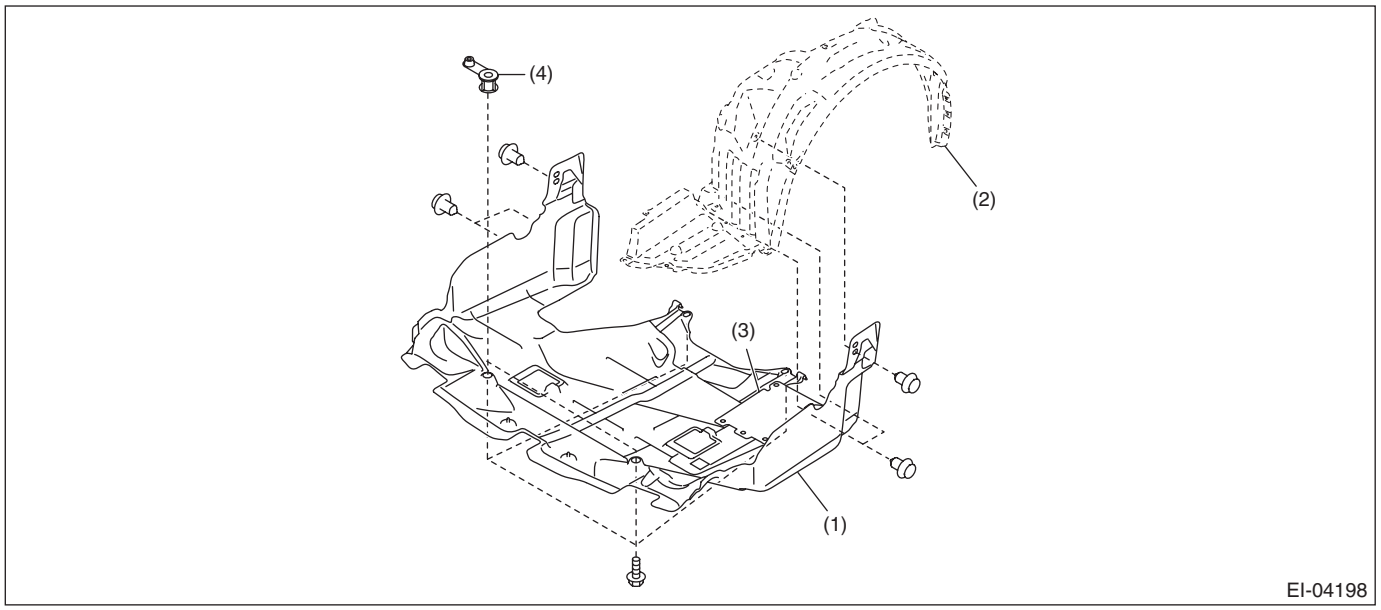

(1) Under cover - front
(2) Mud guard - front
(3) Plate cover - rear (XV model)
(4) Spacer - under cover (XV model)

3) Remove the bolt, and remove the front crossmember support.

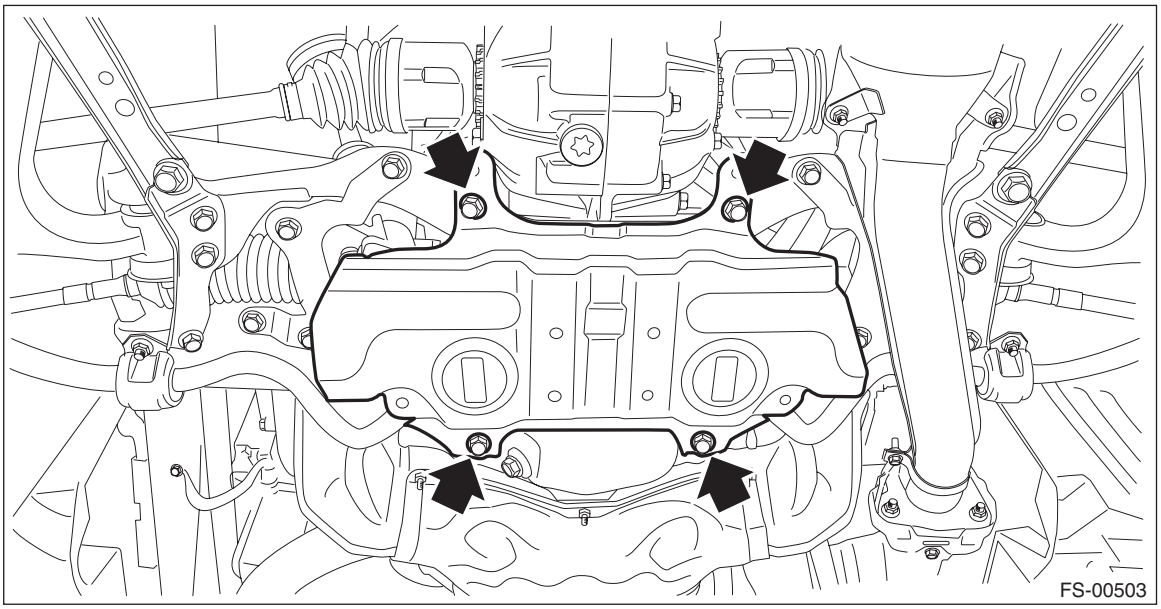

B: INSTALLATION

CAUTION:
Install the under cover so that the under cover front end (b) comes inside of the bumper face - front (a).

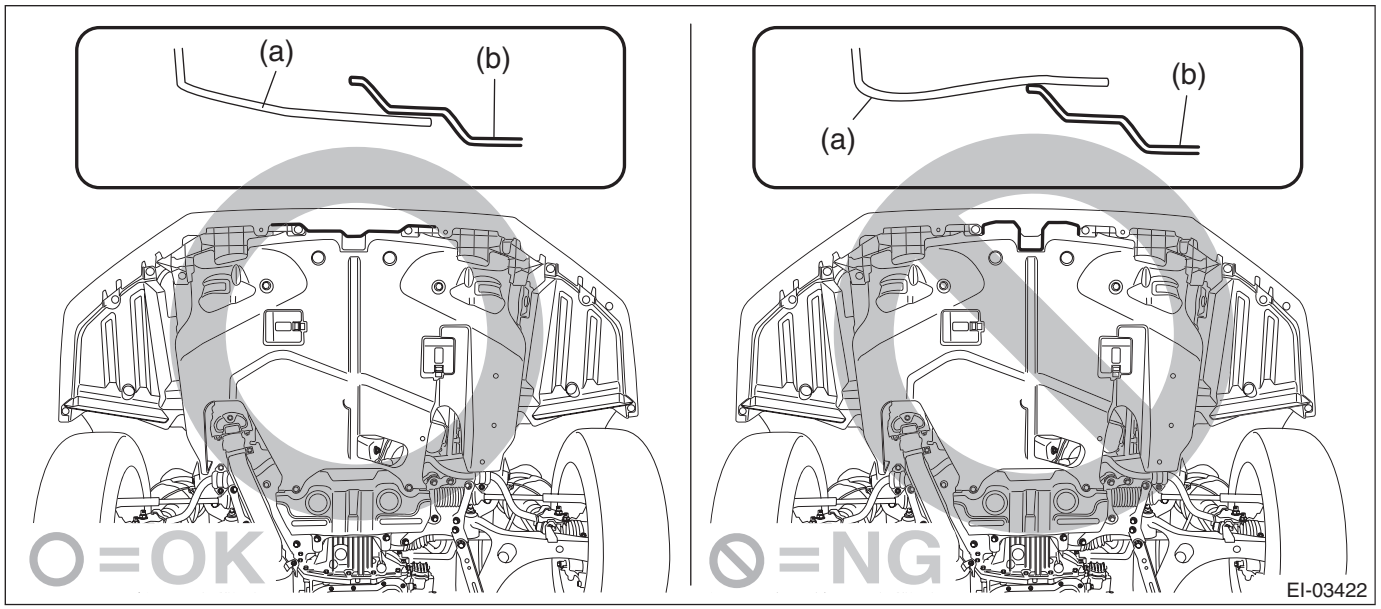

Install each part in the reverse order of removal.

Tightening torque:
Front crossmember support: 60 N·m (6.12 kgf-m, 44.3 ft-lb)
Under cover - front: 18 N·m (1.84 kgf-m, 13.3 ft-lb)

5. Front Stabilizer

A: REMOVAL

1) Lift up the vehicle, and then remove the left and right front wheels.
2) Remove the bolts and clips, and remove the under cover - front.

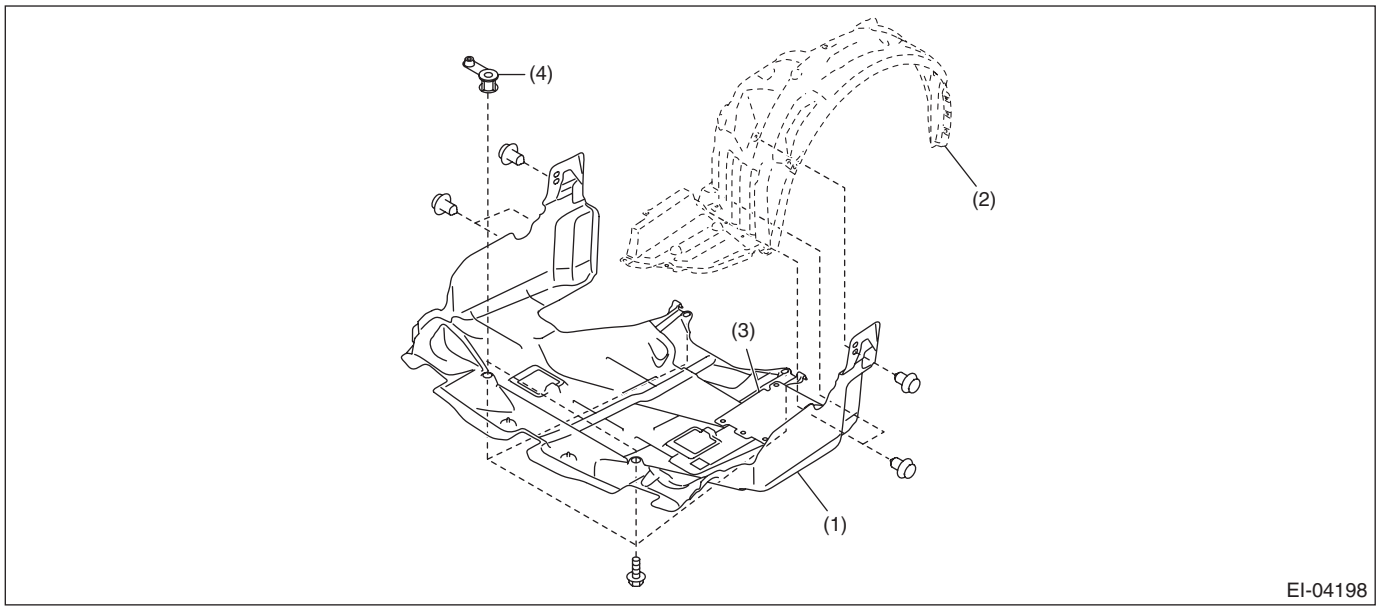

(1) Under cover - front
(2) Mud guard - front
(3) Plate cover - rear (XV model)
(4) Spacer - under cover (XV model)

3) Remove the bolt, and remove the front crossmember support.

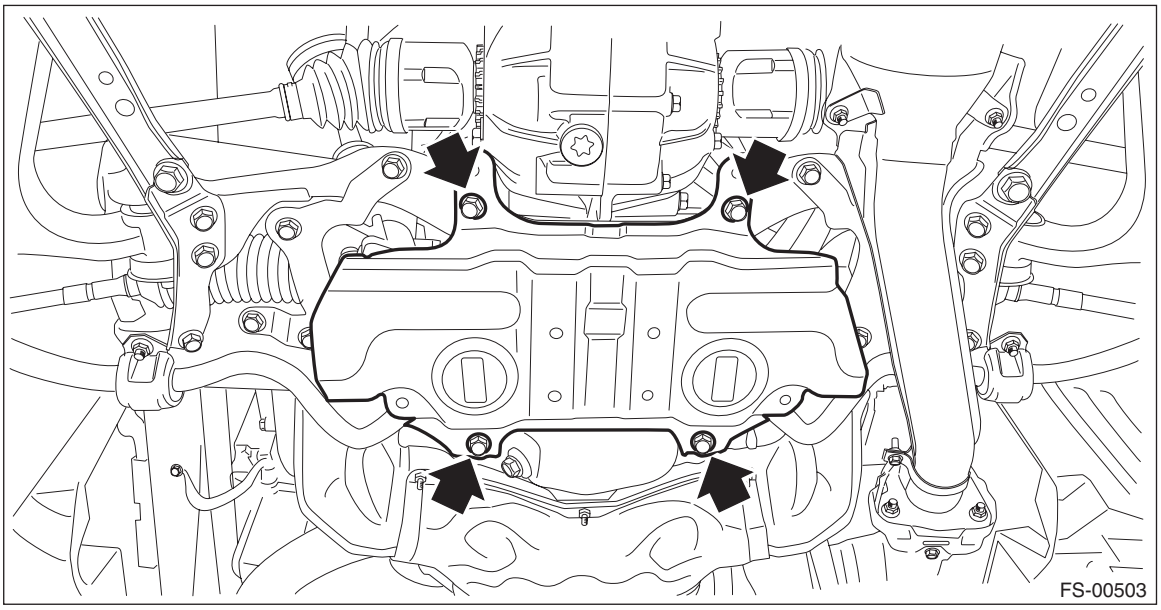

4) Remove the front stabilizer.
(1) Remove the left and right stabilizer links.
(2) Remove the clamp - stabilizer bushing on the left and right sides.

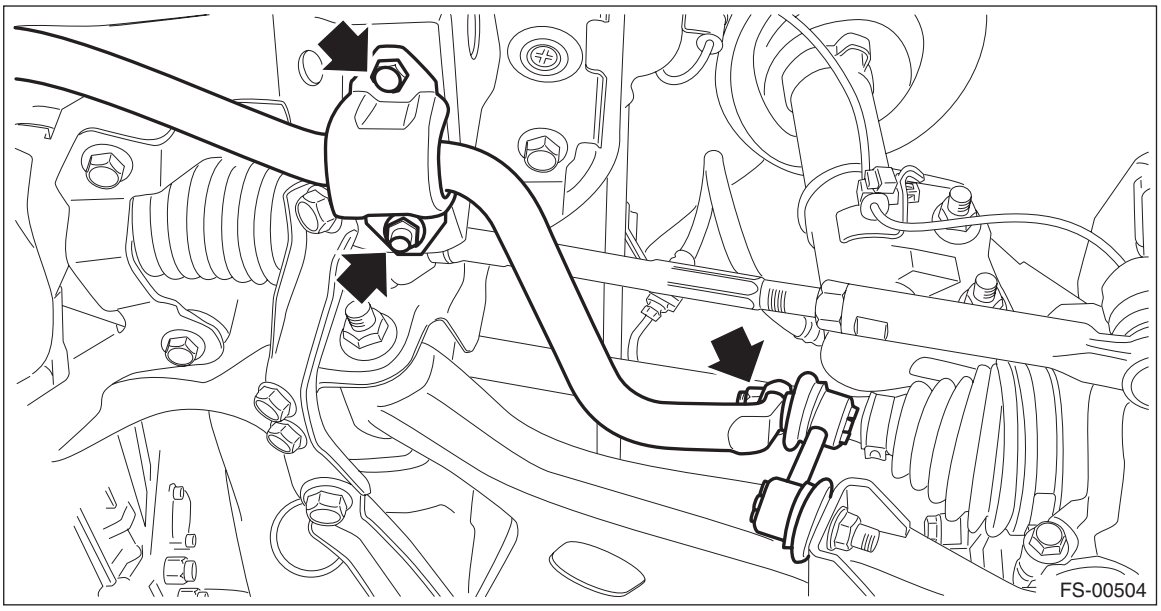

B: INSTALLATION

1) Before installation, inspect the following items and replace any faulty part with a new one.
- Check the bushing - stabilizer for abnormal cracks, fatigue or damage.
- Check the stabilizer link assembly for damage.

2) Install each part in the reverse order of removal.

CAUTION:
- **Install the clamp - stabilizer bushing with the arrow mark facing the front of the vehicle.**

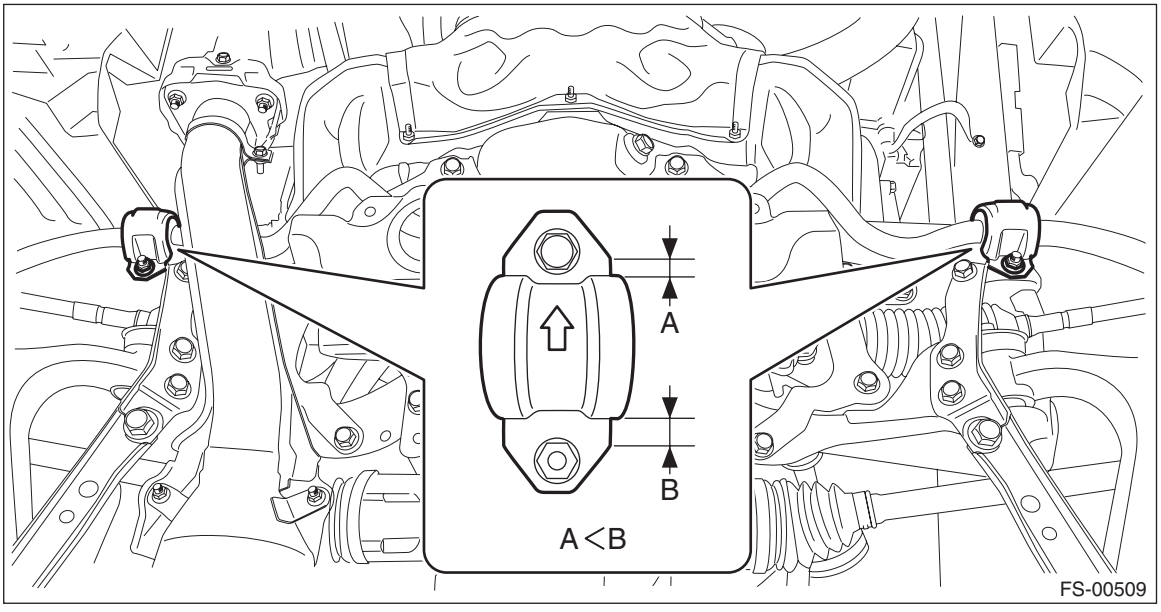

• Install the under cover so that the under cover front end (b) comes inside of the bumper face - front (a).

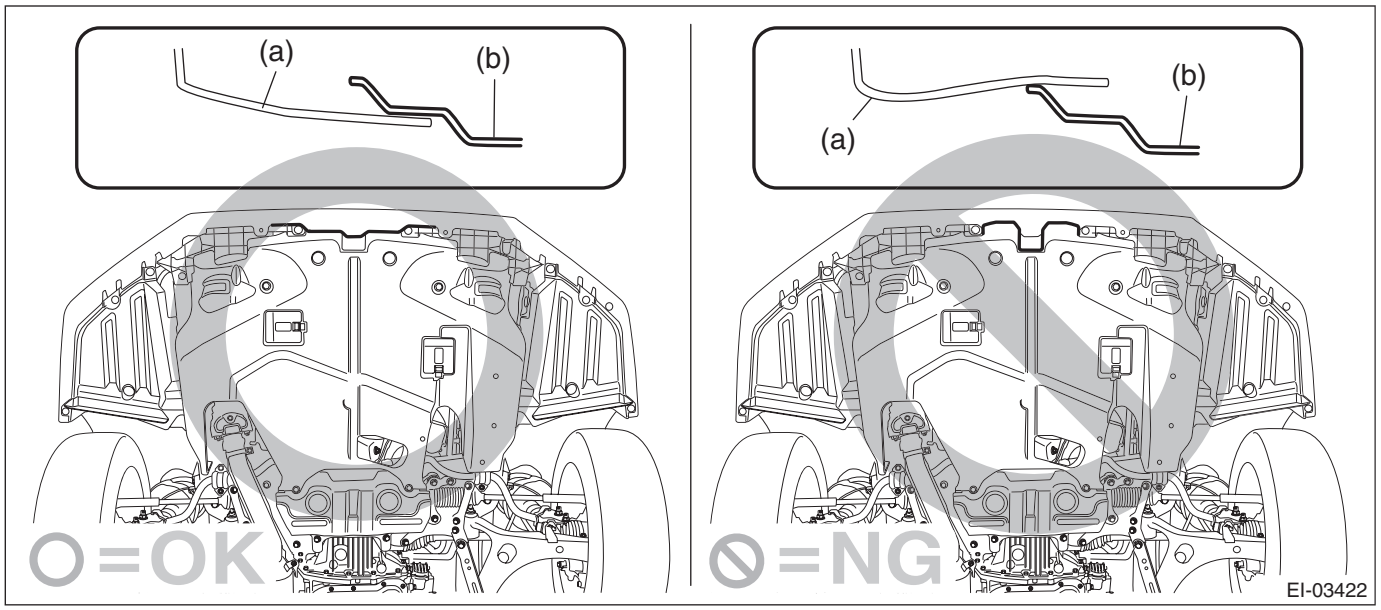

Tightening torque:
Refer to "COMPONENT" of "General Description". <Ref. to FS-3, COMPONENT, General Description.>

3) Install the front wheels.

Tightening torque:
Except for C4 model: 120 N·m (12.24 kgf-m, 88.5 ft-lb)
C4 model: 100 N·m (10.20 kgf-m, 73.8 ft-lb)

6. Front Ball Joint

A: REMOVAL

1) Lift up the vehicle, and then remove the front wheels.
2) Remove the bolts and clips, and remove the under cover - front.

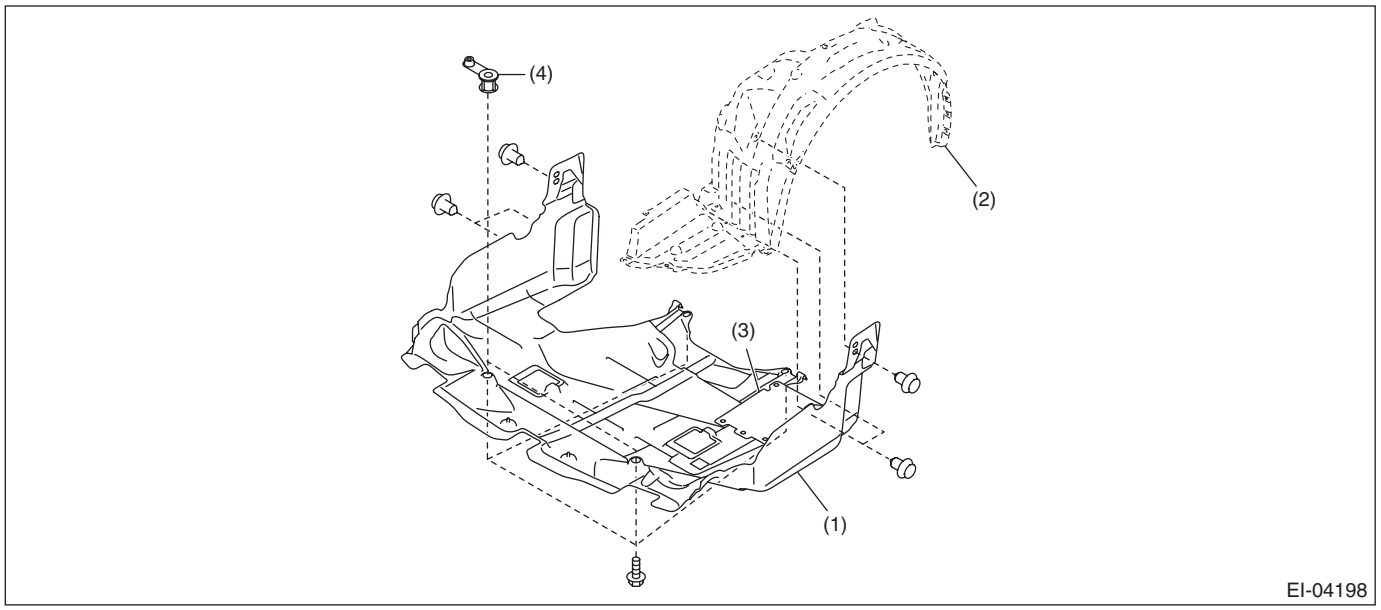

(1) Under cover - front
(2) Mud guard - front
(3) Plate cover - rear (XV model)
(4) Spacer - under cover (XV model)

3) Remove the clamp - stabilizer bushing on the left and right sides.

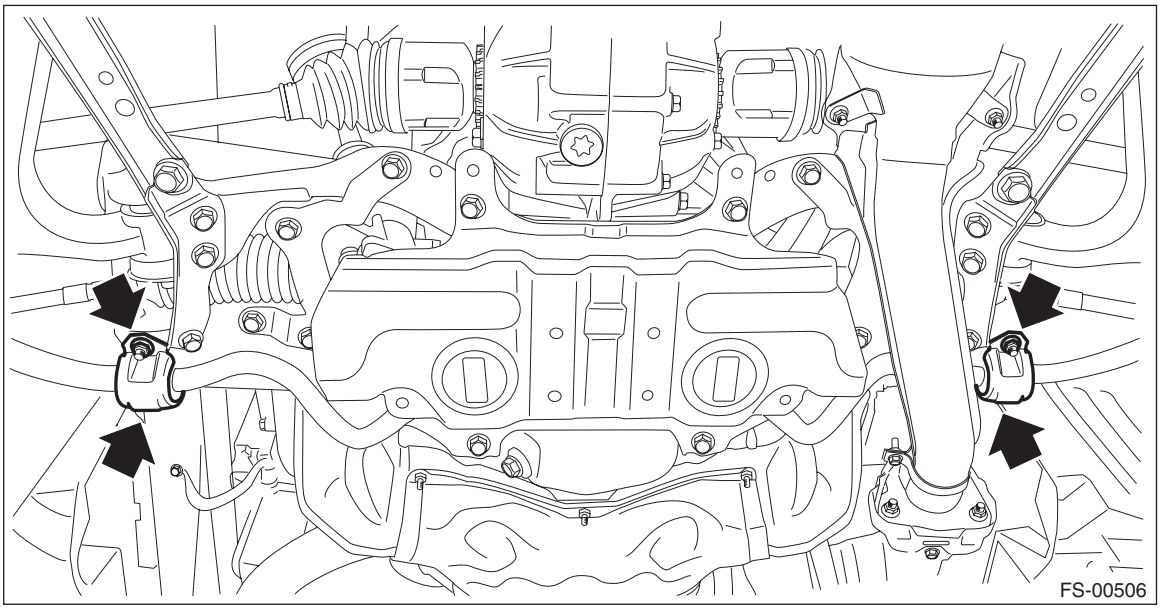

4) Remove the ball joint assembly.
(1) Pull out the cotter pin (a), and remove the castle nut (b).
(2) Lower the front arm assembly, and remove the ball stud.
(3) Remove the bolt from the housing assembly - front axle.

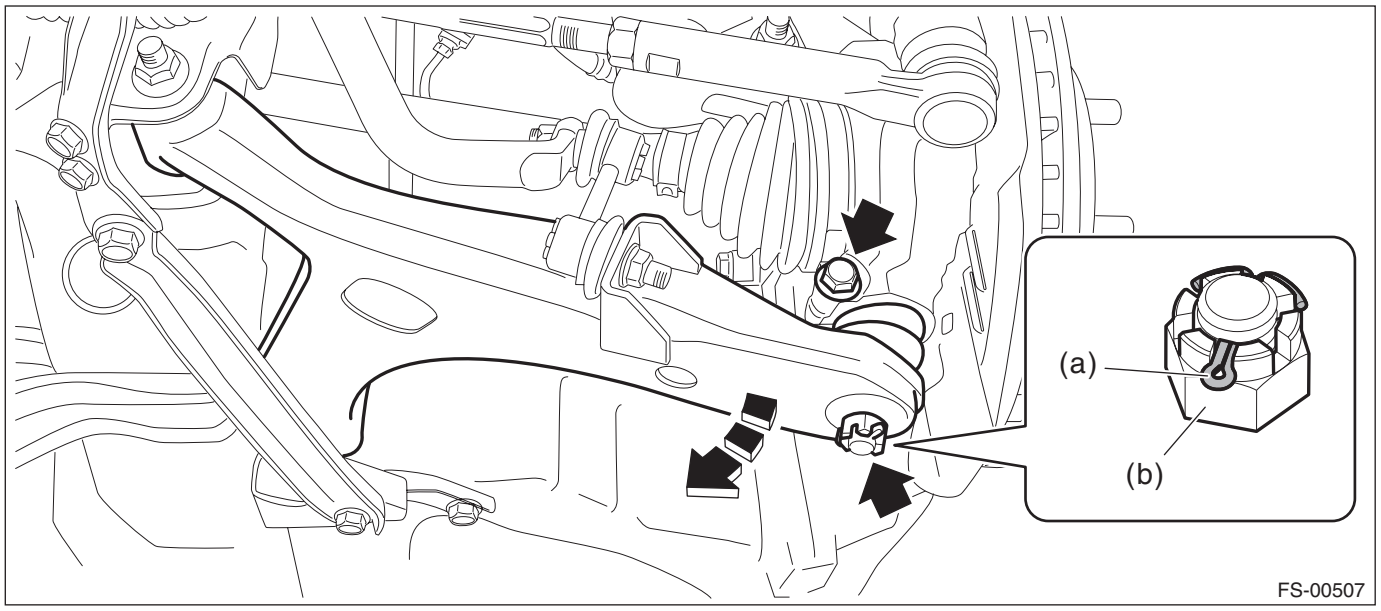

(4) Extract the ball joint assembly from the housing assembly - front axle.

B: INSTALLATION

1) Install the ball joint assembly to the housing assembly - front axle.

CAUTION:
• Do not apply grease to the tapered portion of ball stud.
• Before tightening, make sure the bottom surface of the housing assembly - front axle and the stepped section of ball joint are in contact.

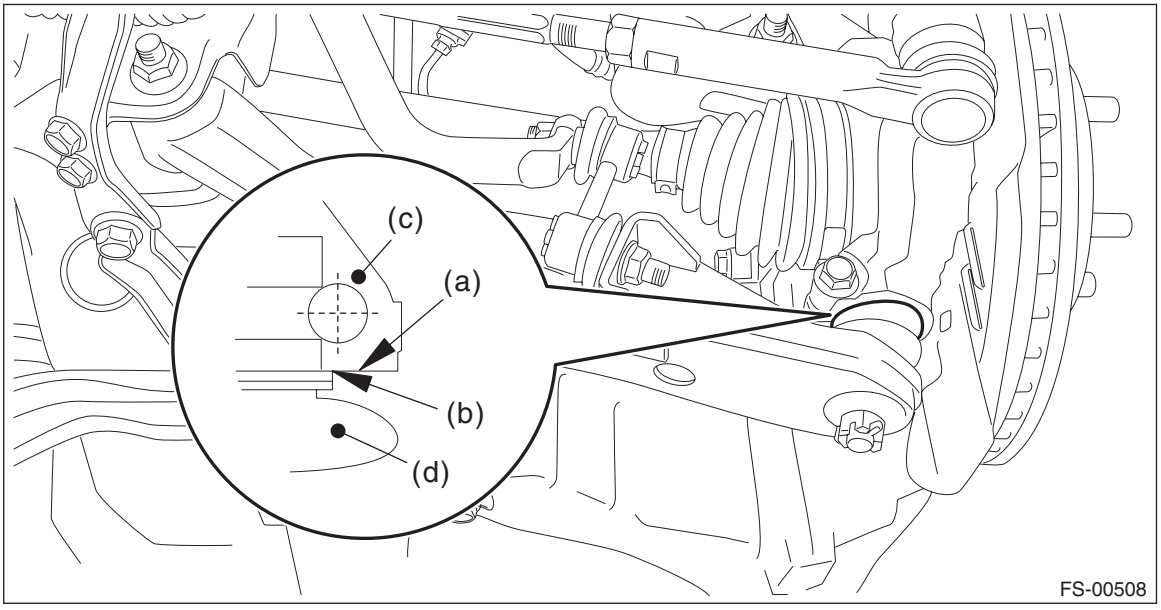

(a) Bottom surface of housing ASSY - front axle
(b) Raised section of ball joint
(c) Housing ASSY - front axle
(d) Ball joint ASSY

Tightening torque:
50 N·m (5.10 kgf-m, 36.9 ft-lb)

2) Install the ball joint assembly to the front arm assembly.
   (1) Connect the ball joint assembly to the front arm assembly.

Tightening torque:
39 N·m (3.98 kgf-m, 28.8 ft-lb)

   (2) Retighten the castle nut further up to 60° until the hole in the ball stud is aligned with a slot in castle nut.
   (3) Insert a new cotter pin and bend it around the castle nut.

3) Install the clamp - stabilizer bushing.

CAUTION:
Install the clamp - stabilizer bushing with the arrow mark facing the front of the vehicle.

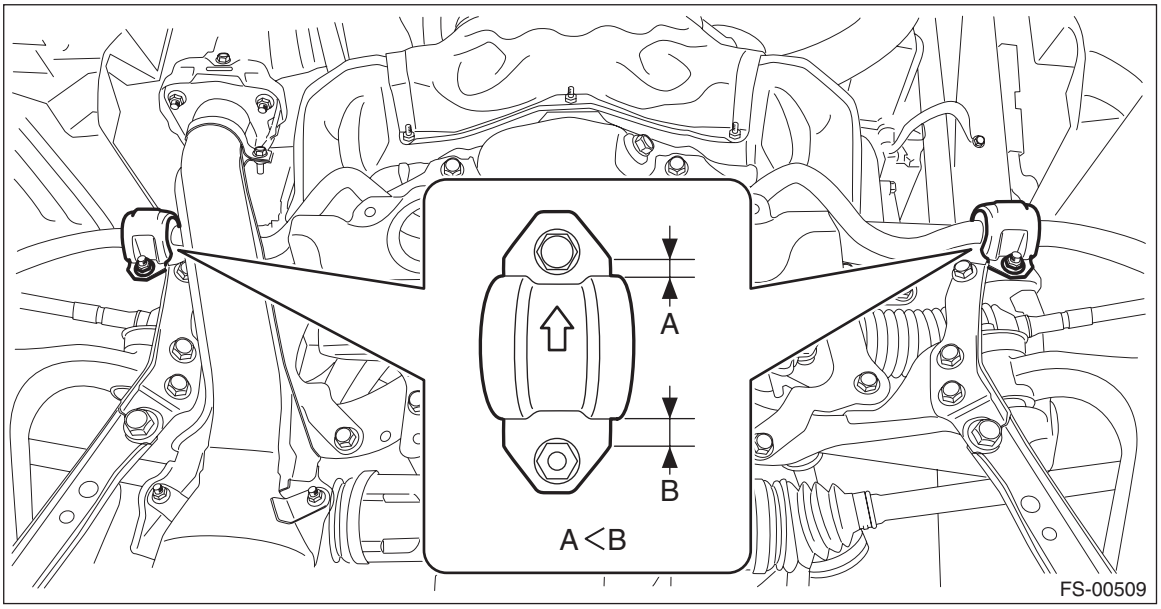

Tightening torque:
25 N·m (2.55 kgf-m, 18.4 ft-lb)

4) Install the under cover - front.

CAUTION:
Install the under cover so that the under cover front end (b) comes inside of the bumper face - front (a).

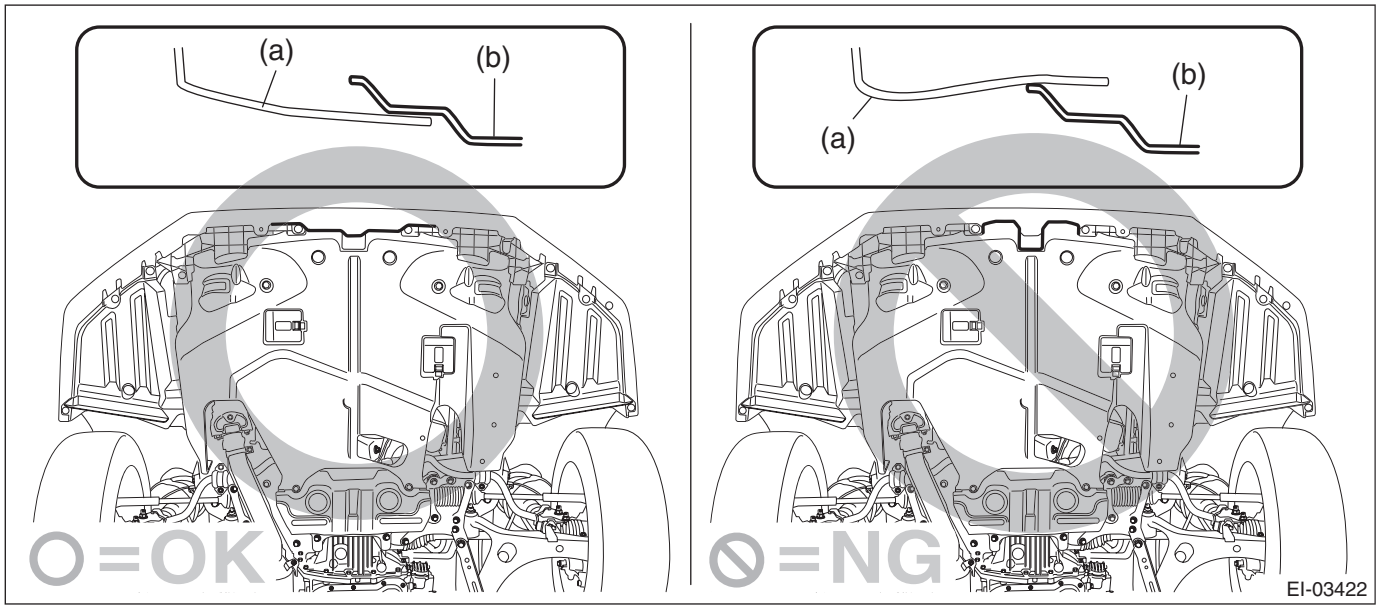

Tightening torque:
18 N·m (1.84 kgf-m, 13.3 ft-lb)

5) Install the front wheels.

Tightening torque:
Except for C4 model: 120 N·m (12.24 kgf-m, 88.5 ft-lb)
C4 model: 100 N·m (10.20 kgf-m, 73.8 ft-lb)

C: INSPECTION

1) Check that there is no play by moving the upper and lower portions of front tire in an axial direction with the brake pedal depressed.

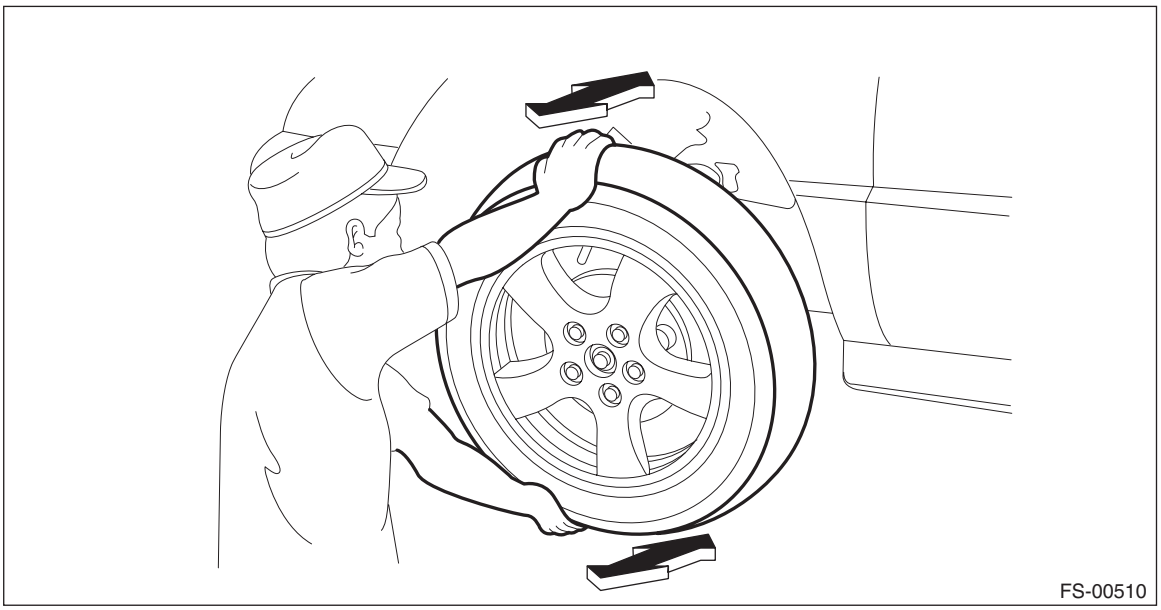

- **Play exists.** → Replace the ball joint assembly. <Ref. to FS-33, REMOVAL, Front Ball Joint.>

2) Check that there is no play by moving the upper and lower portions of front tire in an axial direction with the brake pedal released.

- **Play exists.** → Check the hub unit COMPL - front axle. <Ref. to DS-34, INSPECTION, Front Hub Unit Bearing.>

3) Replace the ball joint assembly if the dust cover is damaged when visually inspecting the dust cover.

7. Front Arm

A: REMOVAL

1) Lift up the vehicle, and then remove the front wheels.
2) Remove the bolts and clips, and remove the under cover - front.

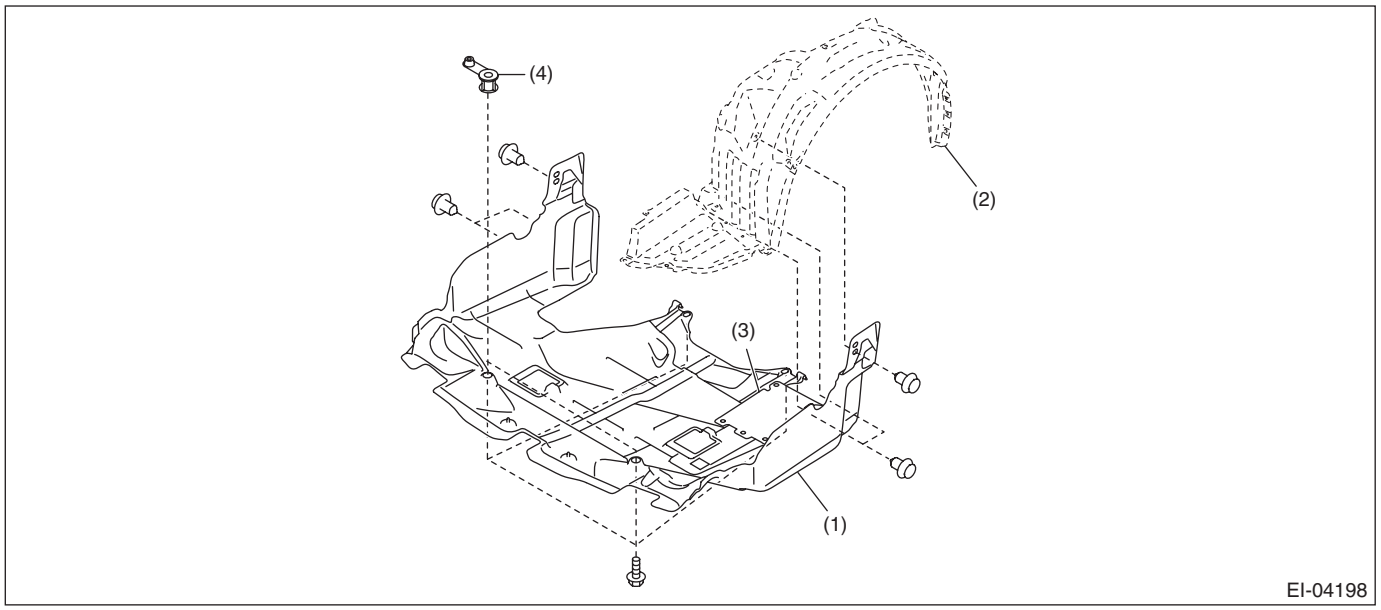

(1) Under cover - front
(2) Mud guard - front
(3) Plate cover - rear (XV model)
(4) Spacer - under cover (XV model)

3) Remove the front arm assembly.
   (1) Remove the bolt, and then detach the front support.
   (2) Remove the bolts and nuts, and then remove the front arm rear plate.
   (3) Remove the nut and disconnect the stabilizer link assembly.
   (4) Pull out the cotter pin (a), remove the castle nut (b), and remove the ball joint assembly from front arm assembly.
   (5) Remove the nuts, pull out the flange bolt, and remove the front arm assembly.

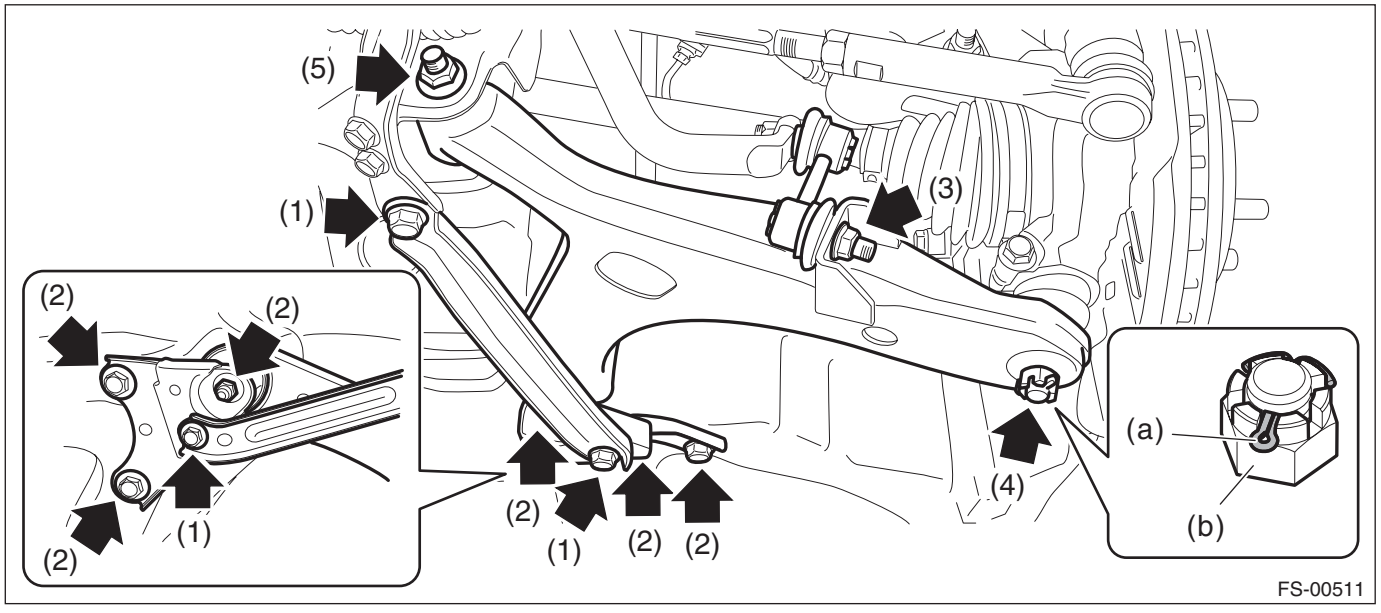

B: INSTALLATION

1) Before installation, inspect the following items and replace any faulty part with a new one.
- Check the front arm assembly for damage or cracks, and replace if defective.
- Visually check the bushing for abnormal cracks, fatigue or damage.
- Visually check the dust cover on the ball joint assembly for damage.

2) Using new self-locking nuts and flange bolts, temporarily tighten the front arm assembly to the front cross-member assembly.
3) Install the ball joint assembly to the housing assembly - front axle.

CAUTION:
Before tightening, make sure the bottom surface of the housing assembly - front axle and the stepped section of ball joint are in contact.

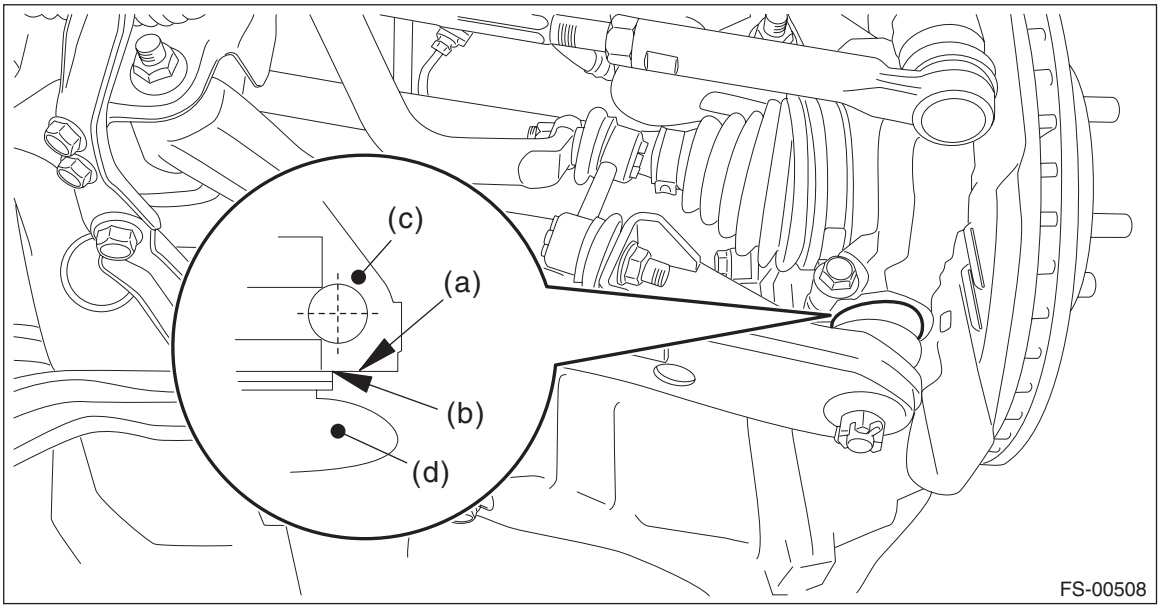

(a) Bottom surface of housing ASSY - front axle
(b) Raised section of ball joint
(c) Housing ASSY - front axle
(d) Ball joint ASSY

Tightening torque:
50 N·m (5.10 kgf-m, 36.9 ft-lb)

4) Install the stabilizer link assembly.

Tightening torque:
Except for XV model: 38 N·m (3.87 kgf-m, 28.0 ft-lb)
XV model: 60 N·m (6.12 kgf-m, 44.3 ft-lb)

5) Install the under cover - front.

CAUTION:
Install the under cover so that the under cover front end (b) comes inside of the bumper face - front (a).

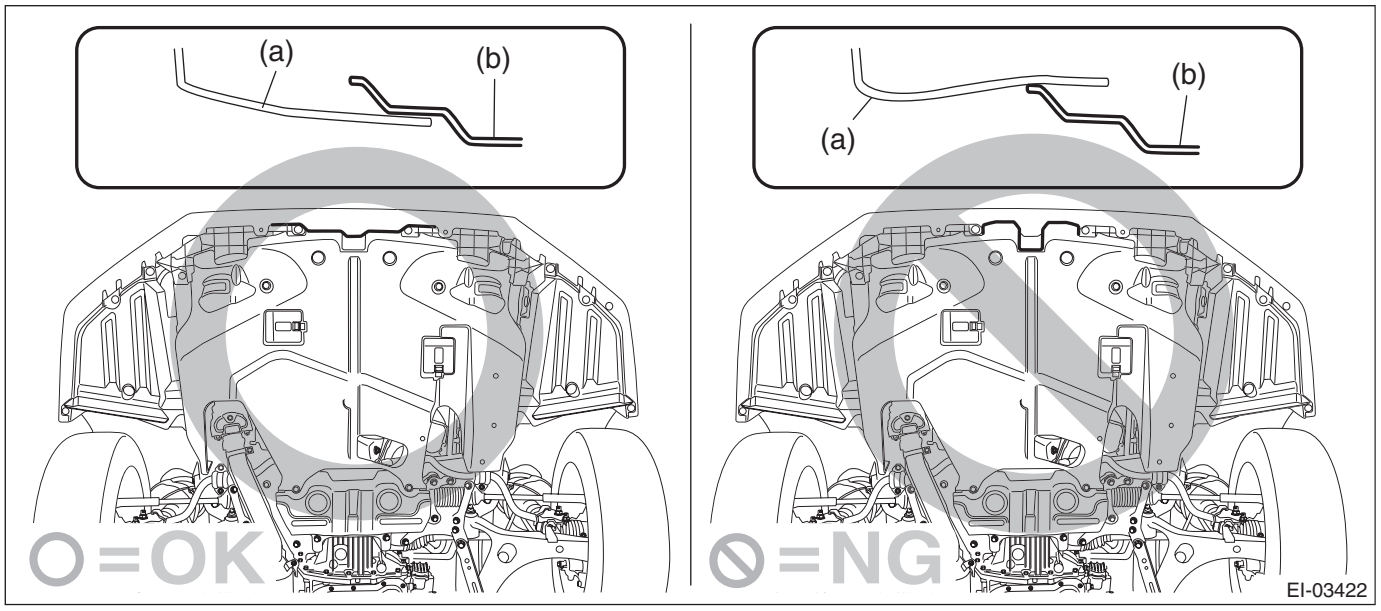

Tightening torque:
18 N·m (1.84 kgf-m, 13.3 ft-lb)

6) Install the front wheels.

Tightening torque:
Except for C4 model: 120 N·m (12.24 kgf-m, 88.5 ft-lb)
C4 model: 100 N·m (10.20 kgf-m, 73.8 ft-lb)

7) Unload the vehicle from the lift, and tighten the bolt which secures the front arm assembly to the front crossmember assembly while the wheels are in full contact with the ground and the vehicle is at curb weight.

Tightening torque:
Busing front - front arm: 95 N·m (9.7 kgf-m, 70.1 ft-lb)
Busing rear - front arm: 110 N·m (11.22 kgf-m, 81.1 ft-lb)

8) Inspect the wheel alignment and adjust if necessary.
- Inspection: <Ref. to FS-7, INSPECTION, Wheel Alignment.>
- Adjustment: <Ref. to FS-11, ADJUSTMENT, Wheel Alignment.>

CAUTION:
When the wheel alignment has been adjusted, perform "VDC sensor midpoint setting mode" of the VDC. <Ref. to VDC-21, ADJUSTMENT, VDC Control Module and Hydraulic Control Unit (VDCCM&H/U).>

9) Perform reinitialization of the auto headlight beam leveler system. (Model with auto headlight beam leveler) <Ref. to LI-18, PROCEDURE, Auto Headlight Beam Leveler System.>

C: DISASSEMBLY

1. BUSHING FRONT - FRONT ARM

1) Put an alignment mark on the front arm assembly based on the split portion of the bushing intermediate plate of the busing front - front arm.

CAUTION:
Always put an alignment mark for aligning the position on bushing installation.

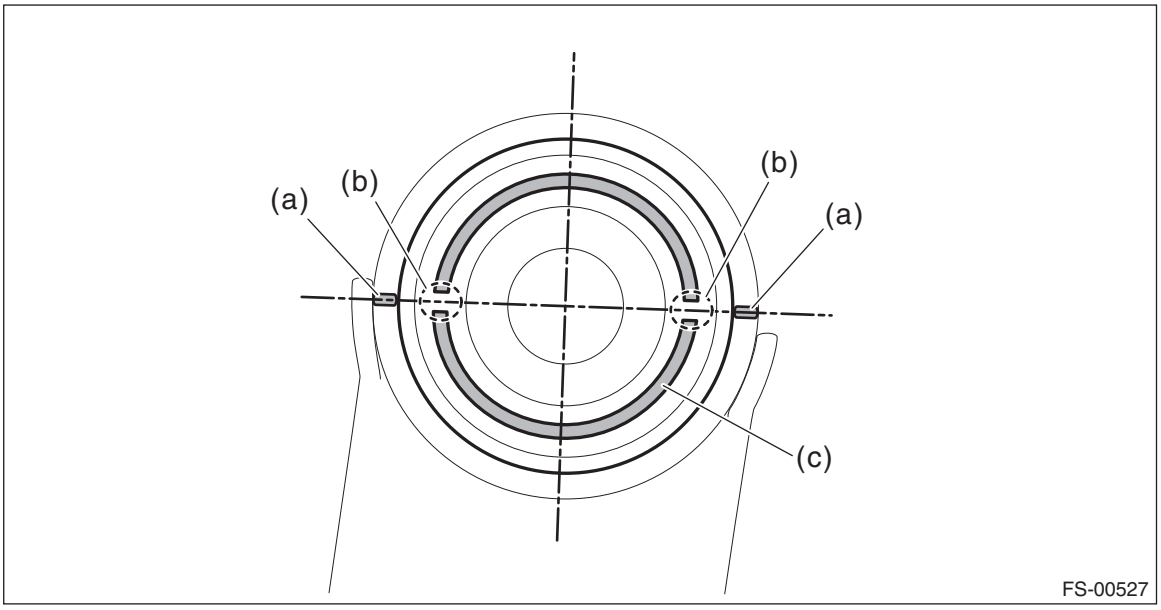

(a) Put an alignment mark.
(b) Split portion of bushing intermediate plate
(c) Bushing intermediate plate

2) Using the ST and a press, remove the busing front - front arm.

PREPARATION TOOL:
ST: INSTALLER & REMOVER SET (927680000)

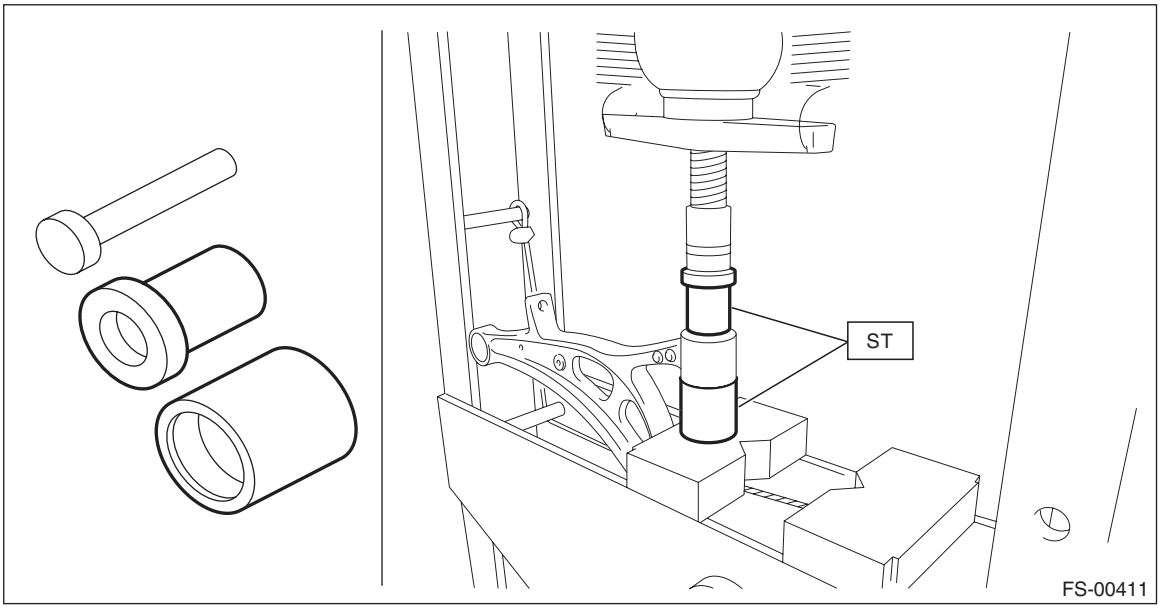

2. BUSHING REAR - FRONT ARM

1) Put an alignment mark on the front arm assembly based on the center of recess portion of the busing rear - front arm.
2) Using the ST and a press, remove the busing rear - front arm.

PREPARATION TOOL:
ST1: REMOVER (20299AG000)
ST2: BASE (20299AG010)

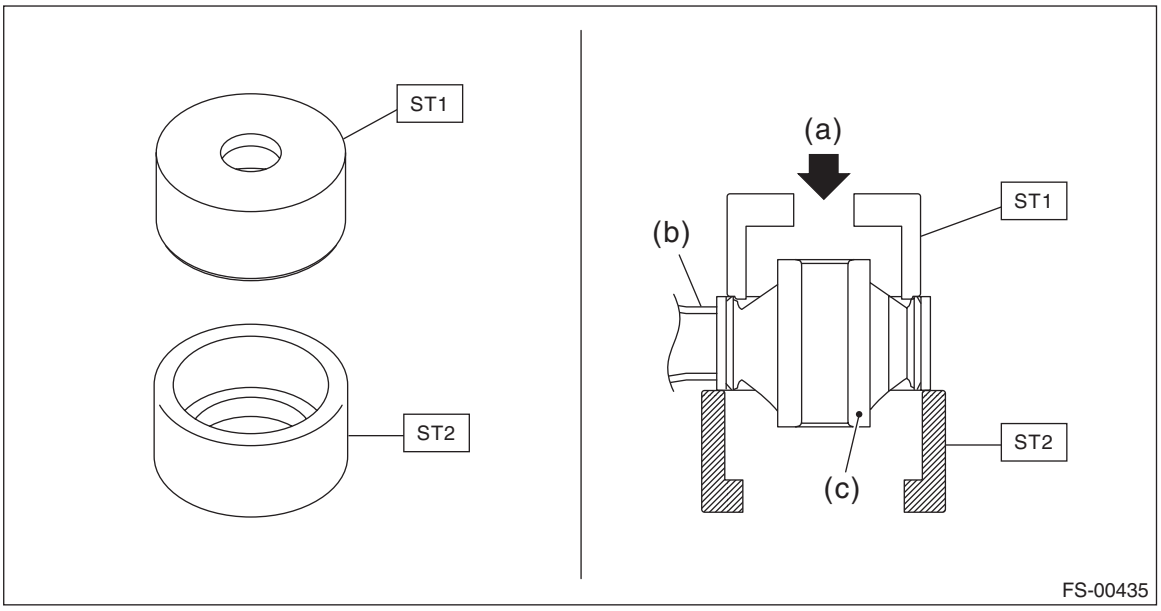

(a) Press (b) Front arm ASSY (c) Bushing rear - front arm

D: ASSEMBLY

1. BUSHING FRONT - FRONT ARM

1) Before assembly, inspect the following items and replace any faulty part with a new one.
- Check the front arm assembly for damage or cracks, and replace if defective.
- Visually check the bushing for abnormal cracks, fatigue or damage.
- Visually check the dust cover on the ball joint assembly for damage.

2) Align the alignment mark on the front arm assembly to the split portion of the bushing intermediate plate of the busing front - front arm.
3) Using the ST and a press, assemble the busing front - front arm.

PREPARATION TOOL:
ST: INSTALLER & REMOVER SET (927680000)

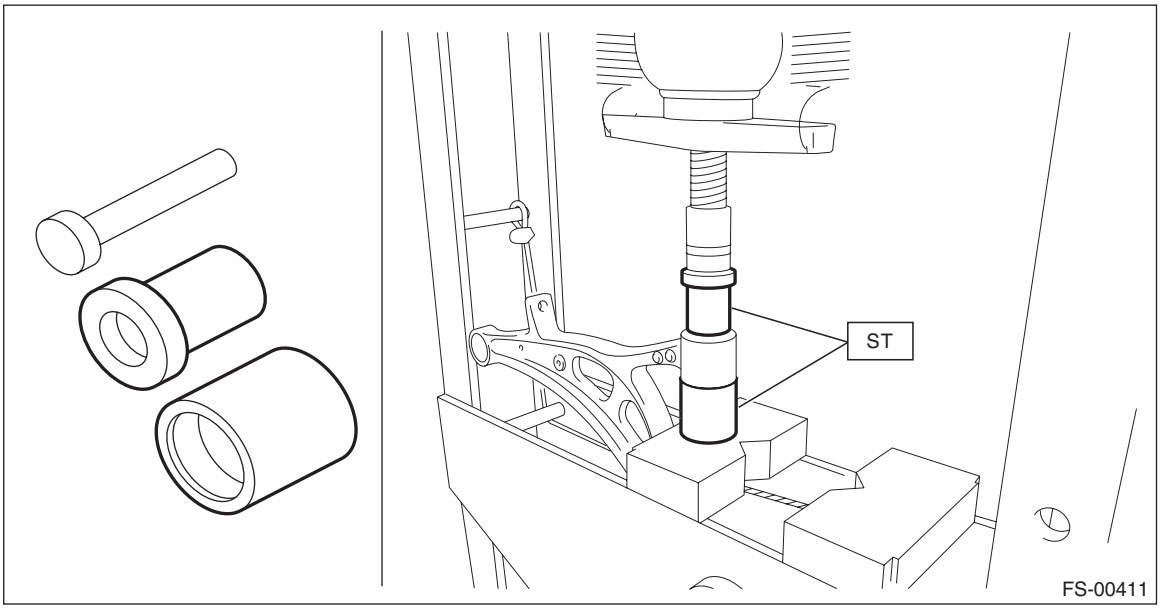

2. BUSHING REAR - FRONT ARM

1) Before installation, inspect the following items and replace any faulty part with a new one.
- Check the front arm assembly for damage or cracks, and replace if defective.
- Visually check the bushing for abnormal cracks, fatigue or damage.
- Visually check the dust cover on the ball joint assembly for damage.

2) Align a line extending from the center of recess portion with the ball joint after placing the protrusion (A) of recess portion to the ball joint side of the front arm assembly.

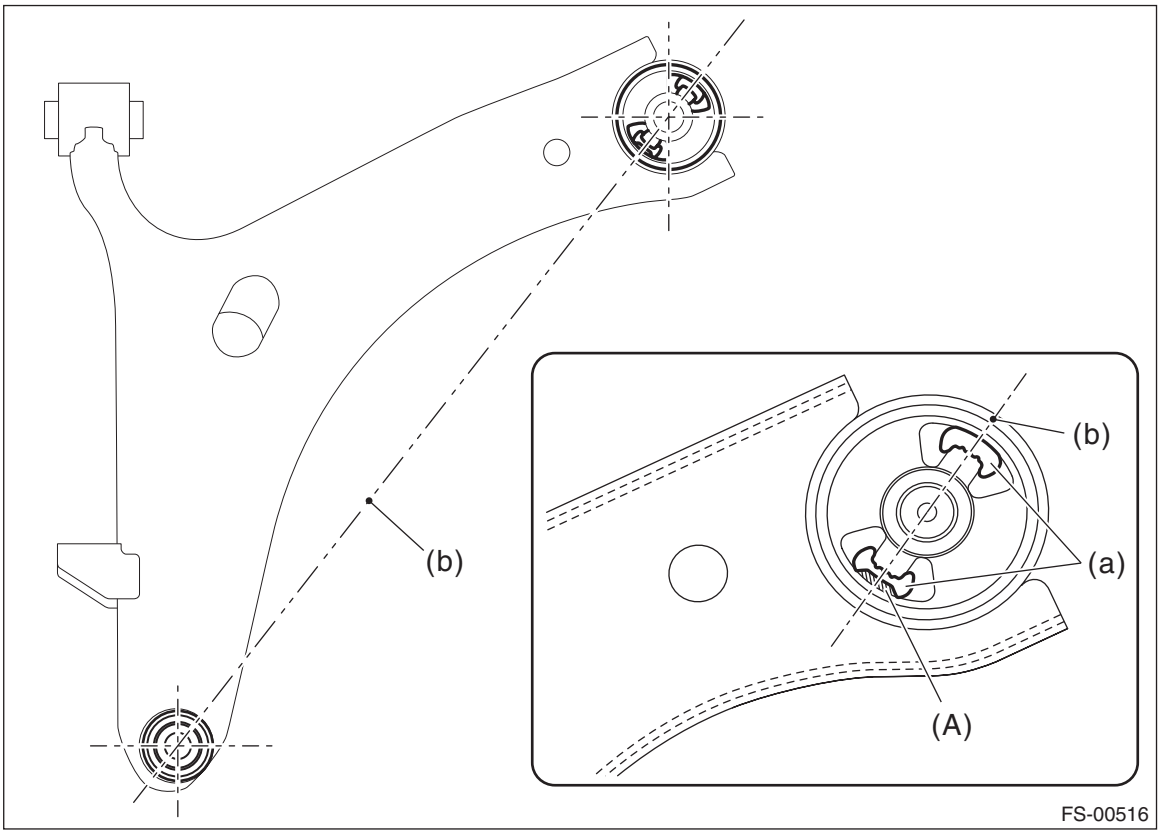

(a) Recess section
(b) Center line of recess section

3) Using the ST and a press, install the busing rear - front arm.

CAUTION:
Align the upper face of front arm assembly and the end of bushing during installation.

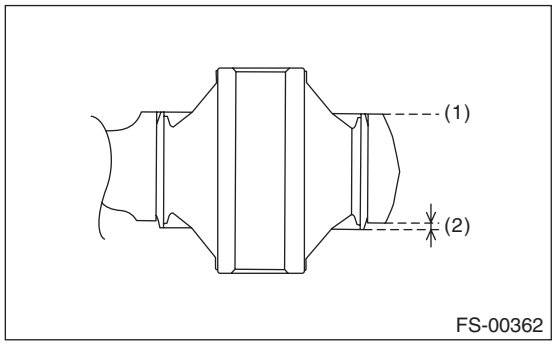

(1) Aligned
(2) Not aligned

PREPARATION TOOL:
ST1: REMOVER (20299AG000)
ST2: BASE (20299AG010)

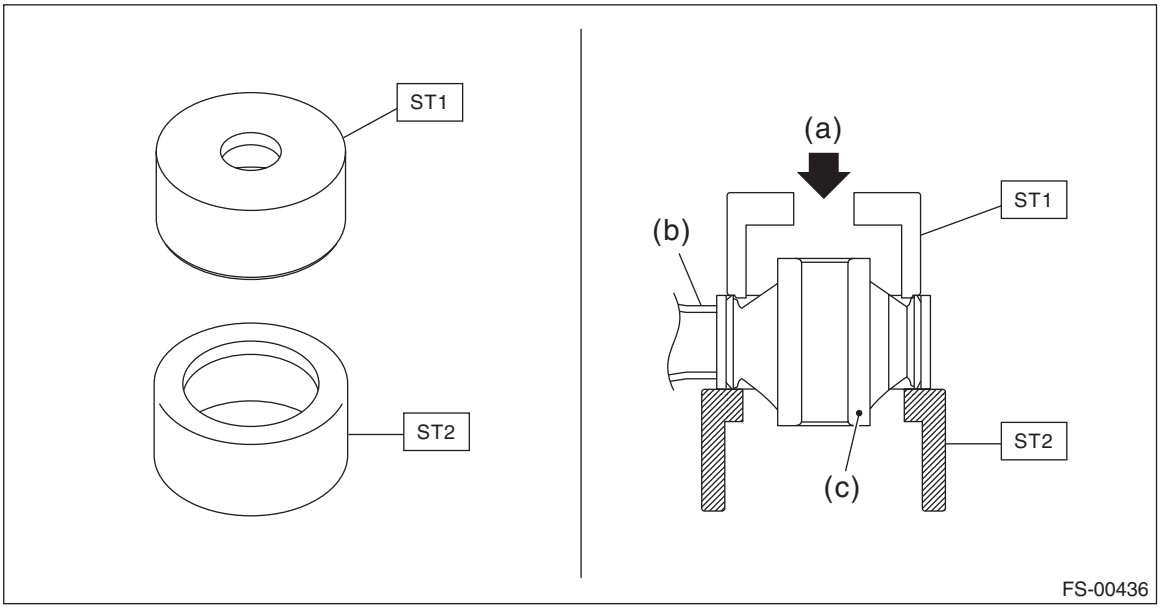

(a) Press
(b) Front arm ASSY
(c) Bushing rear - front arm

8. Front Strut

A: REMOVAL

1) Lift up the vehicle, and then remove the front wheels.
2) Remove the front strut assembly.
   (1) Place an alignment mark (a) on the adjusting bolt and the strut.
   (2) Remove the brake hose bracket.
   (3) Remove the clamp of ABS wheel speed sensor harness.
   (4) Remove the adjusting bolts and flange bolts for the strut assembly.

CAUTION:
While holding the head of the adjusting bolt, loosen the flange nut.

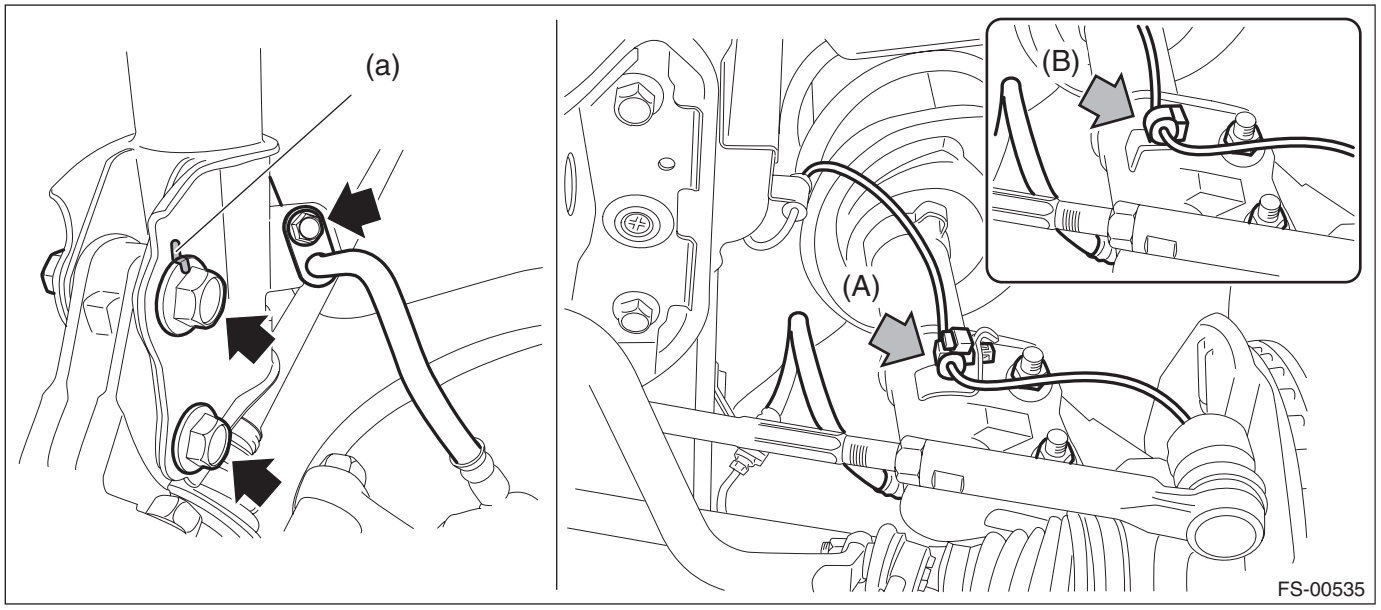

(A) Except for XV model (B) XV model

(5) Remove the three nuts securing strut mount to body.

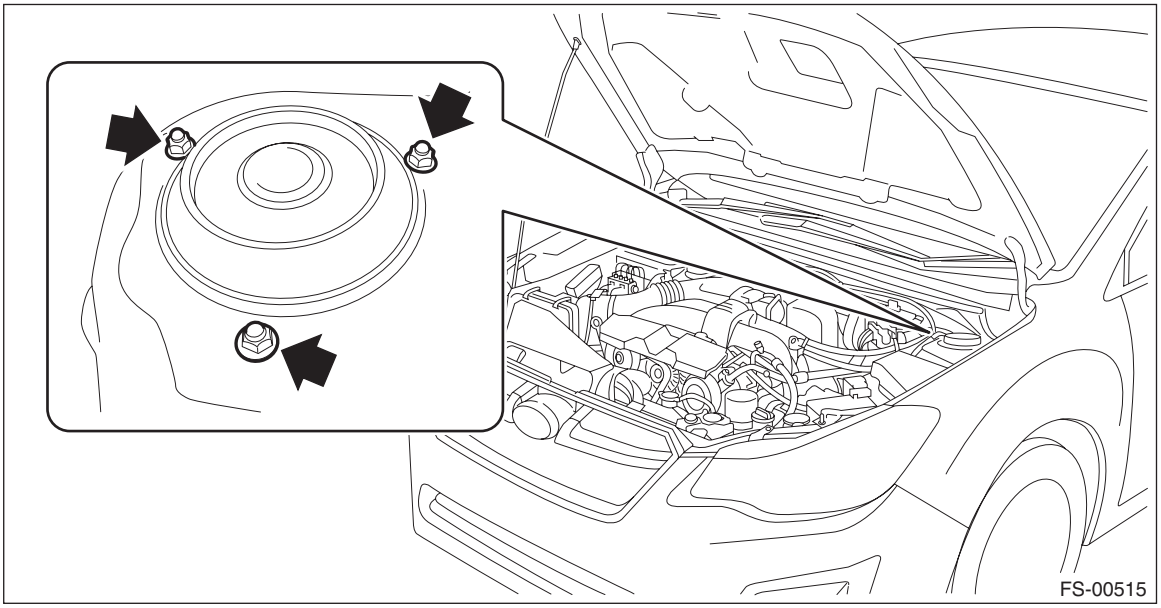

B: INSTALLATION

1) Install the strut mount - front at the upper side of the strut to the body, and tighten it with new self-locking nuts.

Tightening torque:
20 N·m (2.04 kgf-m, 14.8 ft-lb)

2) Align alignment marks on the camber adjusting bolt and strut.
Using new self-locking nuts, install the strut to the housing assembly - front axle.

NOTE:
While holding the head of adjusting bolt, tighten the nut.

Tightening torque:
155 N·m (15.81 kgf-m, 114.3 ft-lb)

3) Secure the ABS wheel speed sensor harness bracket to the strut.

CAUTION:
During the installation, make sure that the marking of ABS wheel speed sensor harness does not twist.

4) Install the brake hose bracket.

Tightening torque:
33 N·m (3.36 kgf-m, 24.3 ft-lb)

5) Install the front wheels.

Tightening torque:
Except for C4 model: 120 N·m (12.24 kgf-m, 88.5 ft-lb)
C4 model: 100 N·m (10.20 kgf-m, 73.8 ft-lb)

6) Inspect the wheel alignment and adjust if necessary.
- Inspection: <Ref. to FS-7, INSPECTION, Wheel Alignment.>
- Adjustment: <Ref. to FS-11, ADJUSTMENT, Wheel Alignment.>

CAUTION:
When the wheel alignment has been adjusted, perform "VDC sensor midpoint setting mode" of the VDC. <Ref. to VDC-21, ADJUSTMENT, VDC Control Module and Hydraulic Control Unit (VDCCM&H/U).>

7) Perform reinitialization of the auto headlight beam leveler system. (Model with auto headlight beam leveler) <Ref. to LI-18, PROCEDURE, Auto Headlight Beam Leveler System.>

C: DISASSEMBLY

1) Using a coil spring compressor, compress the coil spring - front.
2) Using the ST, remove the self-locking nut.

PREPARATION TOOL:
ST: STRUT MOUNT SOCKET (20399AG000)

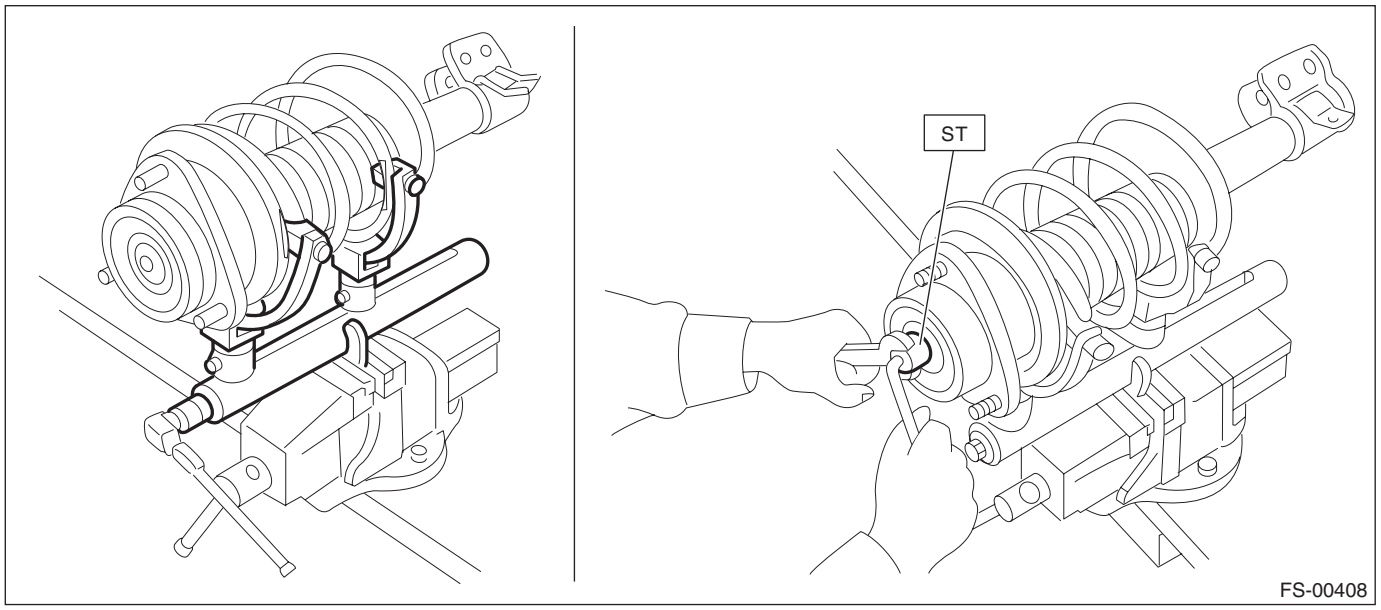

3) Remove the strut mount - front, spacer - front strut and spring seat - front strut UPR from the strut.
4) Gradually decrease the compression pressure of compressor, and remove the coil spring - front.
5) Remove the dust cover - inner and the helper - front strut.

D: ASSEMBLY

1) Before assembly, check each part. <Ref. to FS-48, INSPECTION, Front Strut.>
2) Using a coil spring compressor, compress the coil spring - front.

NOTE:
Make sure that the vertical installation direction of the coil spring - front is as shown in the figure.

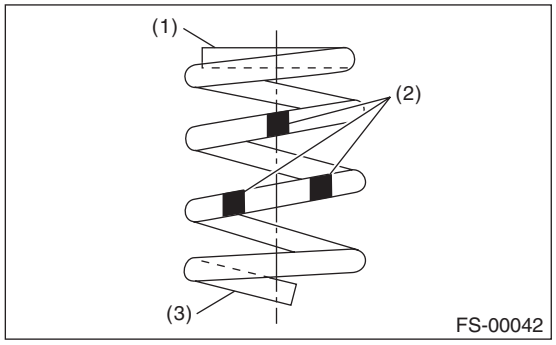

(1) Diameter is small (Upper part)
(2) Identification paint
(3) Diameter is large (Bottom part)

3) Set the coil spring - front correctly so that its end face (a) contacts the vertical surface (b) of the spring seat - front strut UPR as shown in the figure.

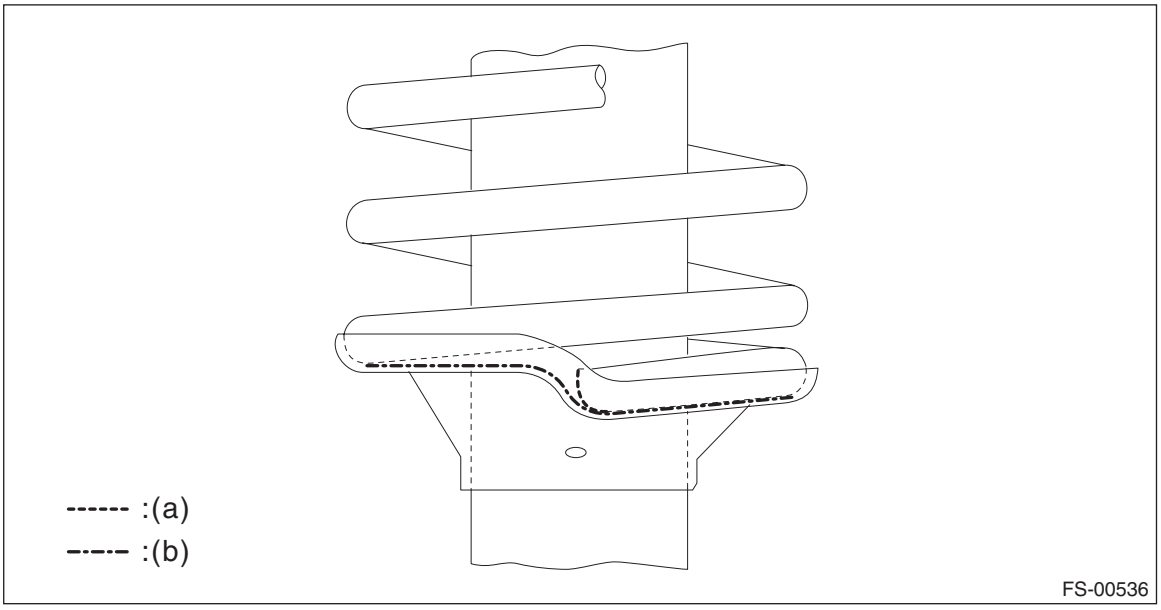

4) Install the dust cover - inner and the helper - front strut to the piston rod.

5) Pull the piston rod fully upward, and install the spring seat.

NOTE:
Position the spring seat - front strut UPR as shown in the figure.

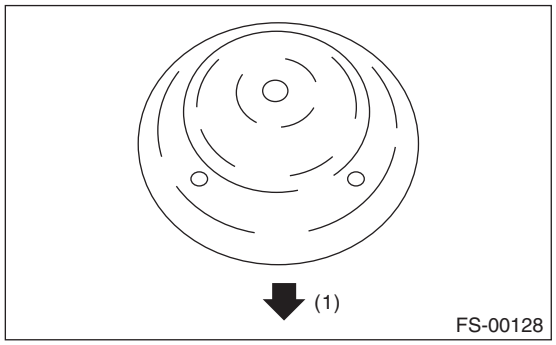

(1) Outside of body

6) Install the spacer - front strut and the strut mount - front to the piston rod, and temporarily tighten a new self-locking nut.
7) Using a hexagon wrench to prevent strut rod from turning, tighten the new self-locking nut with ST.

PREPARATION TOOL:
ST: STRUT MOUNT SOCKET (20399AG000)

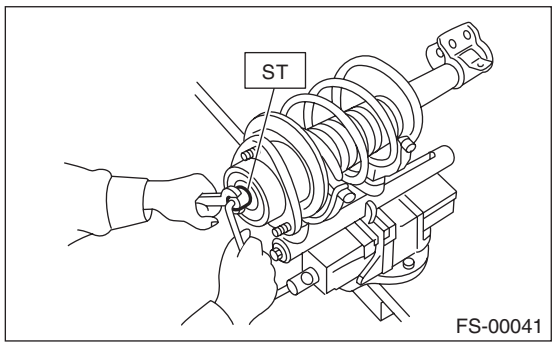

Tightening torque:
55 N·m (5.61 kgf-m, 40.6 ft-lb)
8) Loosen the coil spring compressor carefully.

E: INSPECTION

Check the removed part for wear, damage and cracks, and then repair or replace it if defective.

1. STRUT

1) Check for oil leaks.
2) Move the piston rod up and down to check that it operates smoothly without any hitch.

3) Check the piston rod for play.
(1) Fix the outer shell in place and fully extend the rod.
(2) Set the dial gauge on the end of the rod L [10 mm (0.39 in)].
(3) While applying a force of W [20 N (2 kgf, 4 lbf)] to the threaded part, read the dial gauge indication P_1.
(4) Apply a force of 20 N (2 kgf, 4 lbf) from the opposite direction of "W", and then read the dial gauge indication P_2.

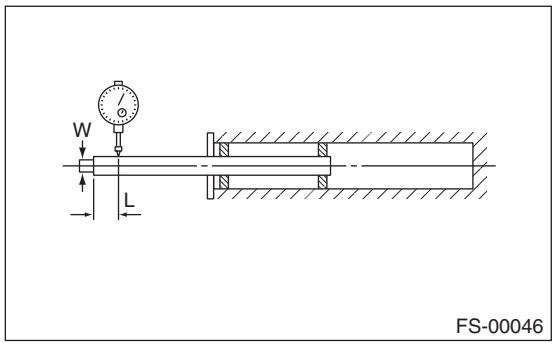

Play limit ($P_1 + P_2$): 0.8 mm (0.031 in)
4) Replace the strut if faulty is found in the inspection or limit value is exceeded.

2. STRUT MOUNT - FRONT
Check the rubber part for deformation, cracks or deterioration, and then replace it with a new part if defective.

3. DUST COVER - INNER
If cracks or damage are found, replace it with a new part.

4. COIL SPRING - FRONT
If a permanent strain is found, replace it with a new part.

5. HELPER - FRONT STRUT
If major cracks or damage are found, replace it with a new part.

F: DISPOSAL
CAUTION:
- **Before handling struts, be sure to wear goggles to protect eyes from gas, oil and cutting powder.**
- **Do not disassemble the strut damper or throw into flames.**
- **When discarding gas filled struts, drill holes in them to purge the gas.**

1) Place the strut on a level surface with the piston rod fully expanded.
2) Using a 2 — 3 mm (0.08 — 0.12 in) dia. drill, make holes in areas shown in the figure.

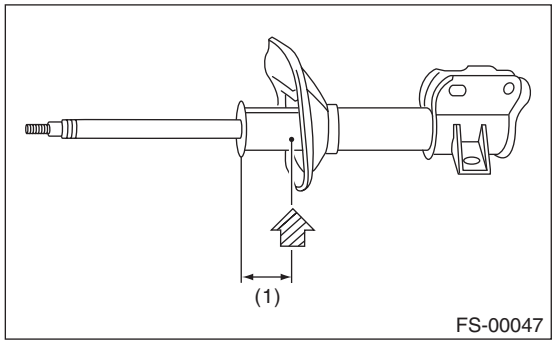

(1) 40 mm (1.57 in)

9. General Diagnostic Table

A: INSPECTION

1. IMPROPER VEHICLE POSTURE OR IMPROPER WHEEL ARCH HEIGHT

Possible cause	Corrective action
(1) Permanent distortion or damage of the coil spring	Replace.
(2) Rough operation of strut or shock absorber	Replace.
(3) Improper installation of strut or shock absorber	Replace with appropriate parts.
(4) Installation of the wrong coil spring	Replace with appropriate parts.

2. POOR RIDE COMFORT

1) Large rebound shock
2) Rocking of the vehicle continues too long after running over bump and hump.
3) Excessive shock in bumping

Possible cause	Corrective action
(1) Damaged coil spring	Replace.
(2) Overinflation of tires	Adjust.
(3) Improper wheel arch height	Replace the coil springs with new parts.
(4) Fault in operation of strut or shock absorber	Replace.
(5) Damage or deformation of strut mount or shock absorber mount	Replace.
(6) Unsuitable length (maximum or minimum) of strut or shock absorber	Replace with appropriate parts.
(7) Abnormal deformation or loss of bushing	Replace.
(8) Deformation or damage of helper in strut assembly or shock absorber	Replace.
(9) Oil leakage from the strut or shock absorber	Replace.

3. NOISE

Possible cause	Corrective action
(1) Wear or damage of strut or shock absorber component parts	Replace.
(2) Loosening of the suspension link installing bolt	Tighten to the specified torque.
(3) Abnormal deformation or loss of bushing	Replace.
(4) Unsuitable length (maximum or minimum) of strut or shock absorber	Replace with appropriate parts.
(5) Damaged coil spring	Replace.
(6) Wear or damage of the ball joint	Replace.
(7) Deformation of the clamp - stabilizer bushing	Replace.

REAR SUSPENSION

RS

Page

1. General Description 2
2. Wheel Alignment 8
3. Rear Sub Frame 9
4. Rear Stabilizer 16
5. Rear Trailing Link 18
6. Upper Arm 21
7. Front Lateral Link 23
8. Rear Lateral Link 26
9. Rear Shock Absorber 29
10. General Diagnostic Table 36

1. General Description

A: SPECIFICATION

Refer to “SPECIFICATIONS” in “FRONT SUSPENSION” section for rear suspension specifications. <Ref. to FS-2, SPECIFICATION, General Description.>

NOTE:
• Front toe-in, rear toe-in and front camber can be adjusted. Adjust if the value of toe-in or camber exceeds the tolerance range of the specification chart.
• Other items except for front toe-in, rear toe-in and front camber that are described in the specification chart cannot be adjusted. If other items exceed the tolerance range of the specification chart, check the suspension parts and connections for deformation. If defective, replace with new parts.

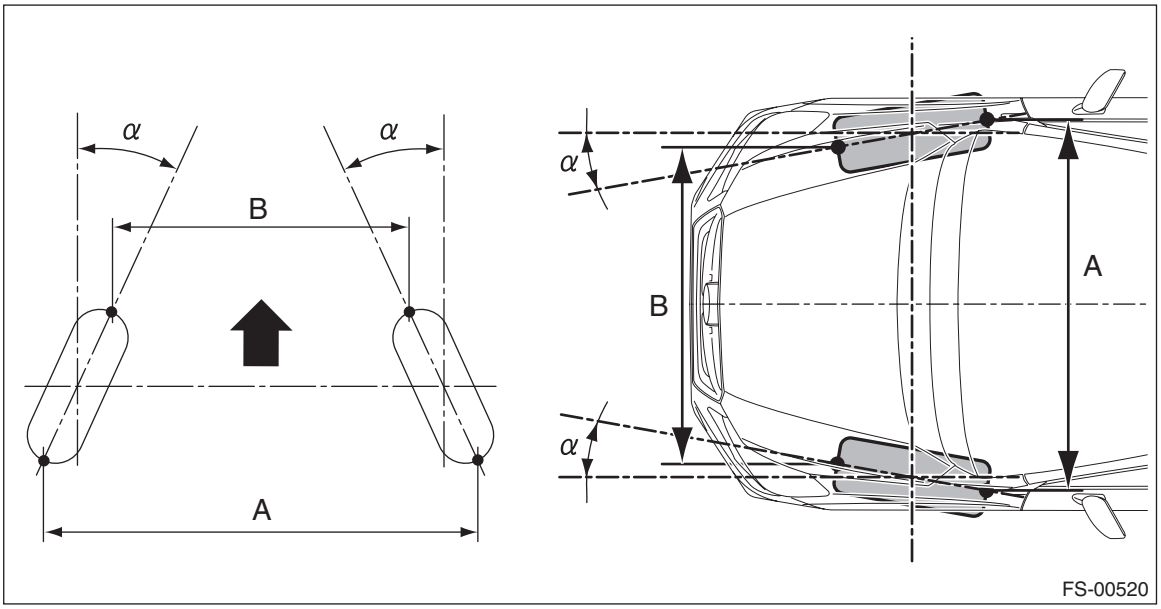

A – B = Positive: Toe-in, Negative: Toe-out

α = Individual toe angles

B: COMPONENT

1. REAR SUSPENSION

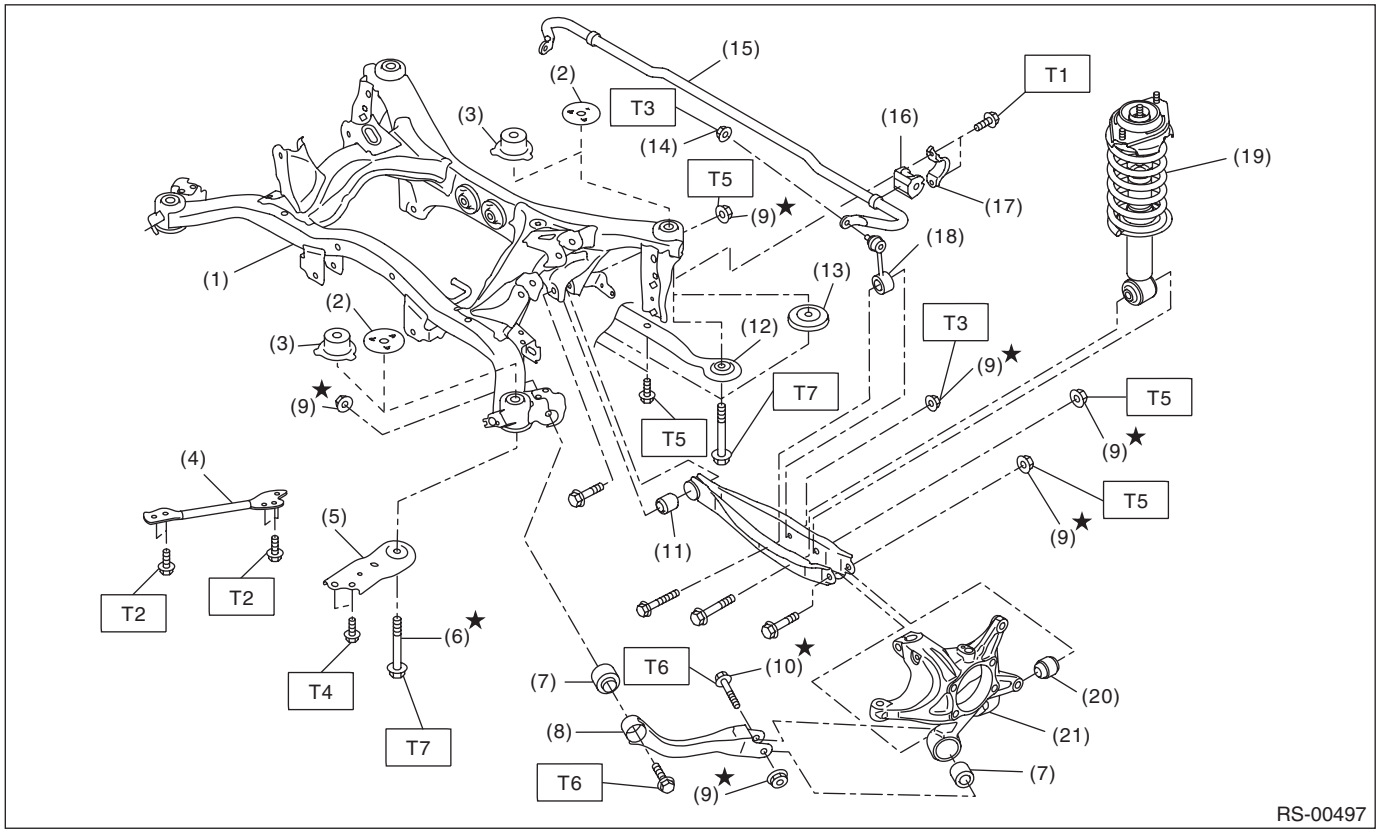

(1)	Rear sub frame ASSY	(12)	Rear support sub frame (HEV model)	***Tightening torque: N·m (kgf-m, ft-lb)***
(2)	Stopper UPR (except for XV model)	(13)	Stopper LWR (gasoline engine model)	***T1: 30 (3.06, 22.1)***
(3)	Stopper UPR (XV model)	(14)	Flange nut	***T2: 33 (3.36, 24.3)***
(4)	Stay - rear frame COMPL (XV model)	(15)	Rear stabilizer	***T3: 38 (3.87, 28.0)***
(5)	Front sub frame support	(16)	Bushing - stabilizer	***T4: 70 (7.14, 51.6)***
(6)	Flange bolt A	(17)	Clamp - stabilizer bushing	***T5: 80 (8.16, 59.0)***
(7)	Bushing - trailing link	(18)	Stabilizer link ASSY	***T6: 90 (9.18, 66.4)***
(8)	Trailing link	(19)	Rear shock absorber ASSY	***T7: 145 (14.79, 106.9)***
(9)	Self-locking nut	(20)	Bushing - pillow ball	
(10)	Flange bolt B	(21)	Housing ASSY - rear axle	
(11)	Bushing C - lateral link rear			

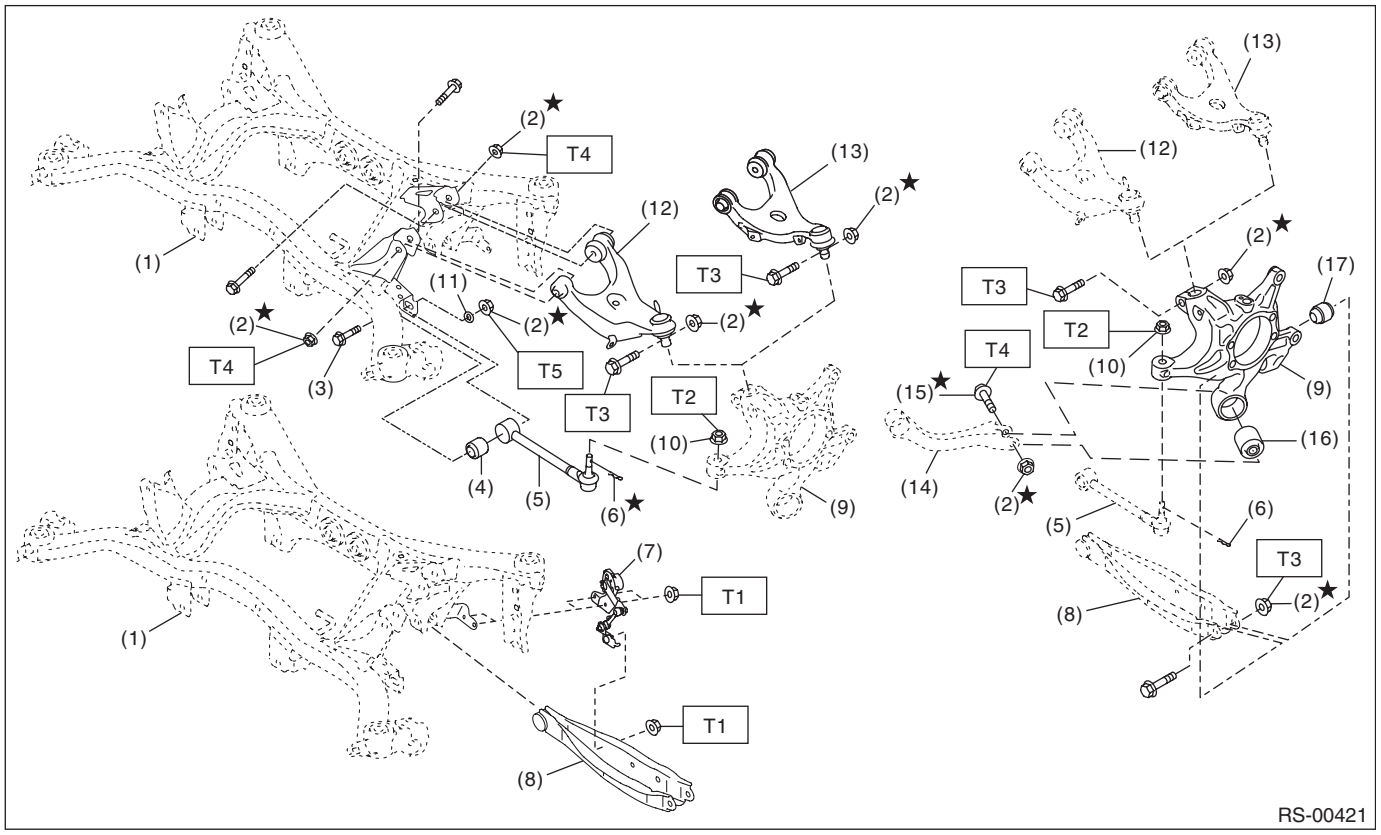

(1)	Rear sub frame ASSY	(9)	Housing ASSY - rear axle	(17)	Bushing - rear axle housing
(2)	Self-locking nut	(10)	Flange nut		
(3)	Adjusting bolt	(11)	Adjusting washer	***Tightening torque: N·m (kgf-m, ft-lb)***	
(4)	Bushing B - lateral link	(12)	Rear upper arm ASSY	***T1: 7.5 (0.76, 5.5)***	
(5)	Lateral link ASSY - front	(13)	Rear upper arm ASSY (XV model)	***T2: 60 (6.12, 44.3)***	
(6)	Snap pin	(14)	Trailing link	***T3: 80 (8.16, 59)***	
(7)	Sensor ASSY - headlight beam leveler (models with auto headlight beam leveler only)	(15)	Flange bolt	***T4: 90 (9.18, 66.4)***	
(8)	Lateral link ASSY - rear	(16)	Bushing - trailing link	***T5: 100 (10.20, 73.8)***	

2. REAR STRUT

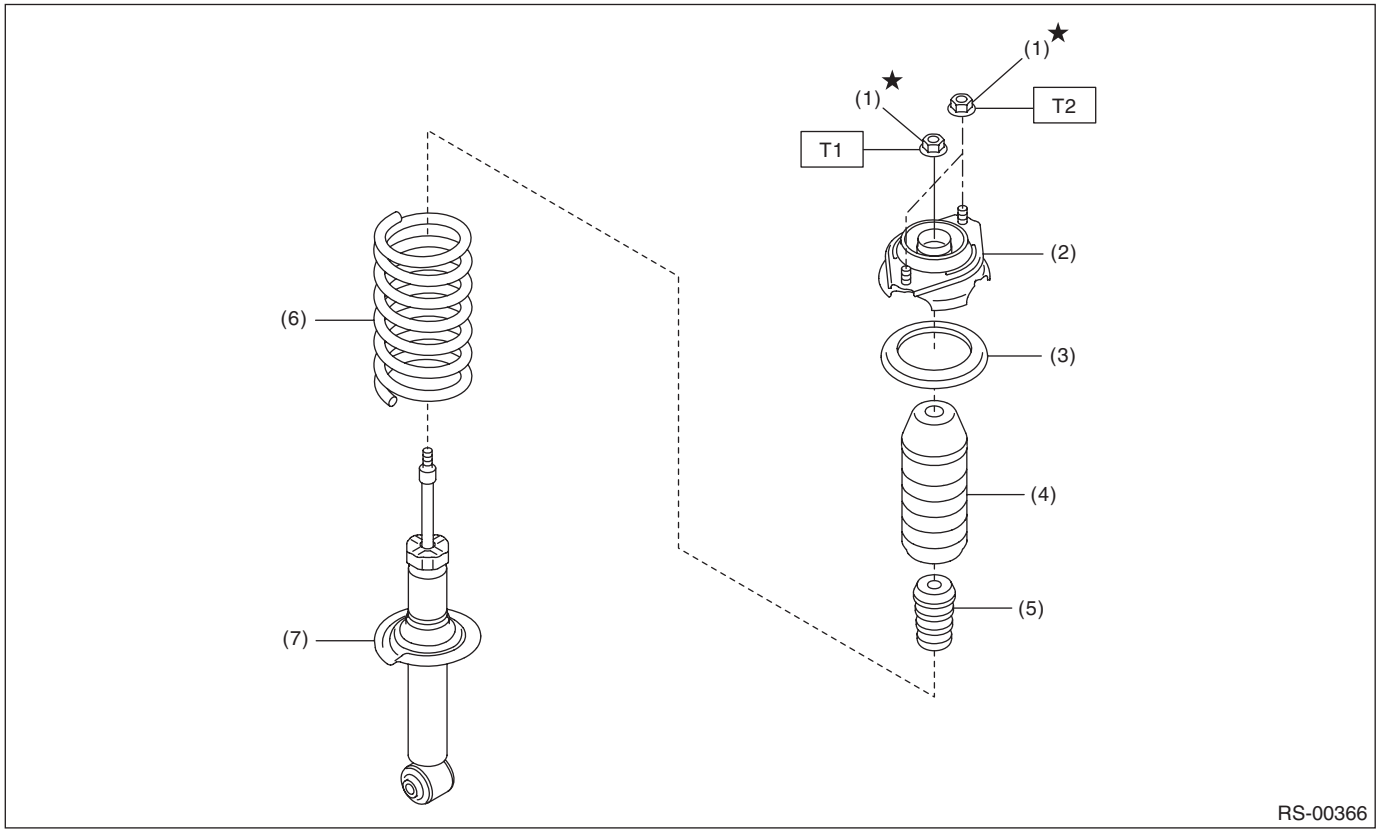

(1) Self-locking nut
(2) Strut mount - rear
(3) Rubber seat - strut UPR
(4) Dust cover - rear strut
(5) Helper - rear
(6) Coil spring - rear
(7) Shock absorber ASSY - rear

Tightening torque: N·m (kgf-m, ft-lb)
T1: 25 (2.55, 18.4)
T2: 30 (3.06, 22.1)

C: CAUTION

Please clearly understand and adhere to the following general precautions. They must be strictly followed to avoid minor or serious injury to the person doing the work or people in the area.

1. EACH PROCEDURE

• Wear appropriate work clothing, including a helmet, protective goggles and protective shoes when performing any work.
• Before disposing of shock absorbers, be sure to bleed the gas out completely. Also, do not expose to flames or fire.
• Before removal, installation or disassembly, be sure to clarify the failure. Avoid unnecessary removal, installation, disassembly and replacement.
• Use SUBARU genuine grease etc. or equivalent. Do not mix grease etc. of different grades or manufacturers.
• Before securing a part on a vise, place cushioning material such as wood blocks, aluminum plate, or cloth between the part and the vise.
• Be sure to tighten fasteners including bolts and nuts to the specified torque.
• Place shop jacks or rigid racks at the specified points.
• When the suspension-related components have been replaced, perform “VDC sensor midpoint setting mode” of the VDC. <Ref. to VDC-21, ADJUSTMENT, VDC Control Module and Hydraulic Control Unit (VDCCM&H/U).>

2. OIL

When handling oil, adhere to the following to prevent unexpected accident.
• Prepare container and waste cloths when performing work which oil could possibly spill. If oil spills, wipe it off immediately to prevent from penetrating into floor or flowing outside, for environmental protection.
• Follow all government regulations concerning disposal of refuse when disposing.

D: PREPARATION TOOL

1. SPECIAL TOOL

ILLUSTRATION	TOOL NUMBER	DESCRIPTION	REMARKS
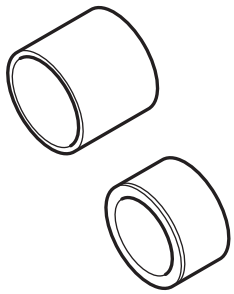 ST20099PA010	20099PA010	INSTALLER & REMOVER	• Used for replacing the bushing A - trailing link of the housing assembly - rear axle. • Used together with BUSHING REMOVER (20099FG000).
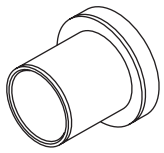 ST20099FG000	20099FG000	BUSHING REMOVER	• Used for replacing the bushing A - trailing link of the housing assembly - rear axle. • Used together with base part of INSTALLER & REMOVER (20099PA000).

ILLUSTRATION	TOOL NUMBER	DESCRIPTION	REMARKS
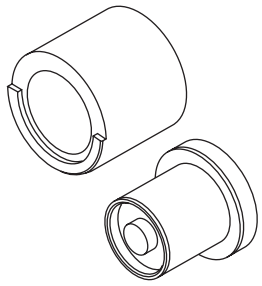 ST20099AE000	20099AE000	INSTALLER & REMOVER	Used for replacing the bushing B - lateral link.
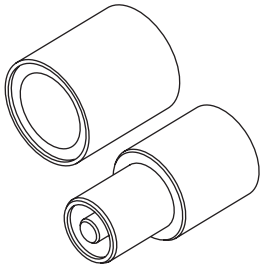 ST20099AE010	20099AE010	INSTALLER & REMOVER	Used for replacing the bushing C - lateral link.
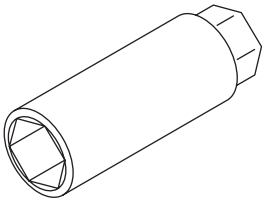 ST20399FG000	20399FG000	STRUT MOUNT SOCKET	• Used for removing and installing strut mount. • Used for checking torque of strut mount center nut.

2. GENERAL TOOL

TOOL NAME	REMARKS
Alignment tester	Used for measuring wheel alignment.
Toe-in gauge	Used for toe-in measurement.
Jack	Used for removing and installing suspension.
Bearing puller	Used for removing bushings.
Tie-rod ball joint puller	Used for disconnecting the lateral link assembly - front.
Coil spring compressor	Used for disassembling and assembling shock absorber.

2. Wheel Alignment

A: INSPECTION

NOTE:
Measure and adjust the front and rear wheel alignment at a time. Refer to “Wheel Alignment” in “FRONT SUSPENSION” section for measurement or adjustment of wheel alignment.

- Inspection: <Ref. to FS-7, INSPECTION, Wheel Alignment.>
- Adjustment: <Ref. to FS-11, ADJUSTMENT, Wheel Alignment.>

3. Rear Sub Frame

A: REMOVAL

1) Disconnect the ground cable from battery. <Ref. to NT-5, BATTERY, NOTE, Note.>

NOTE:
For the 12 volt engine restart battery of HEV model, disconnect the ground terminal from 12V engine restart battery sensor.
2) Lift up the vehicle, and then remove the rear wheels.
3) Remove the propeller shaft assembly. <Ref. to DS-12, REMOVAL, Propeller Shaft.>
4) Remove the clip and bolt on the harness clamp, and remove the rear ABS wheel speed sensor.

CAUTION:
- **Be careful not to damage the sensor.**
- **Do not apply excessive force to the sensor harness.**
- **Leave the sensor harness clamp (white arrow) on the vehicle side.**
- Except for XV model

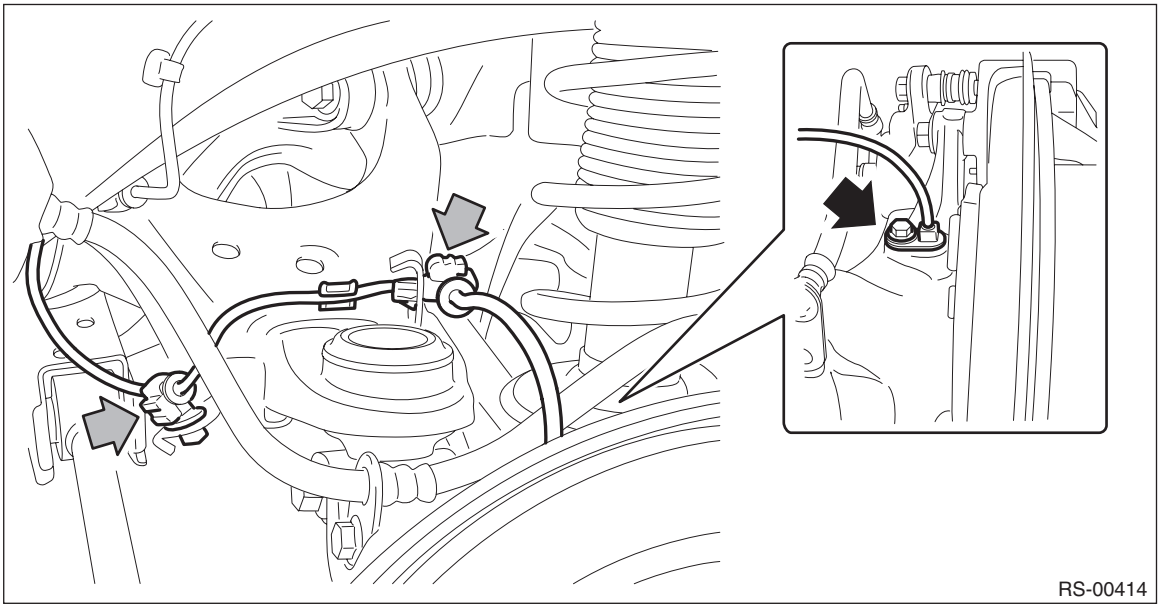

- XV model

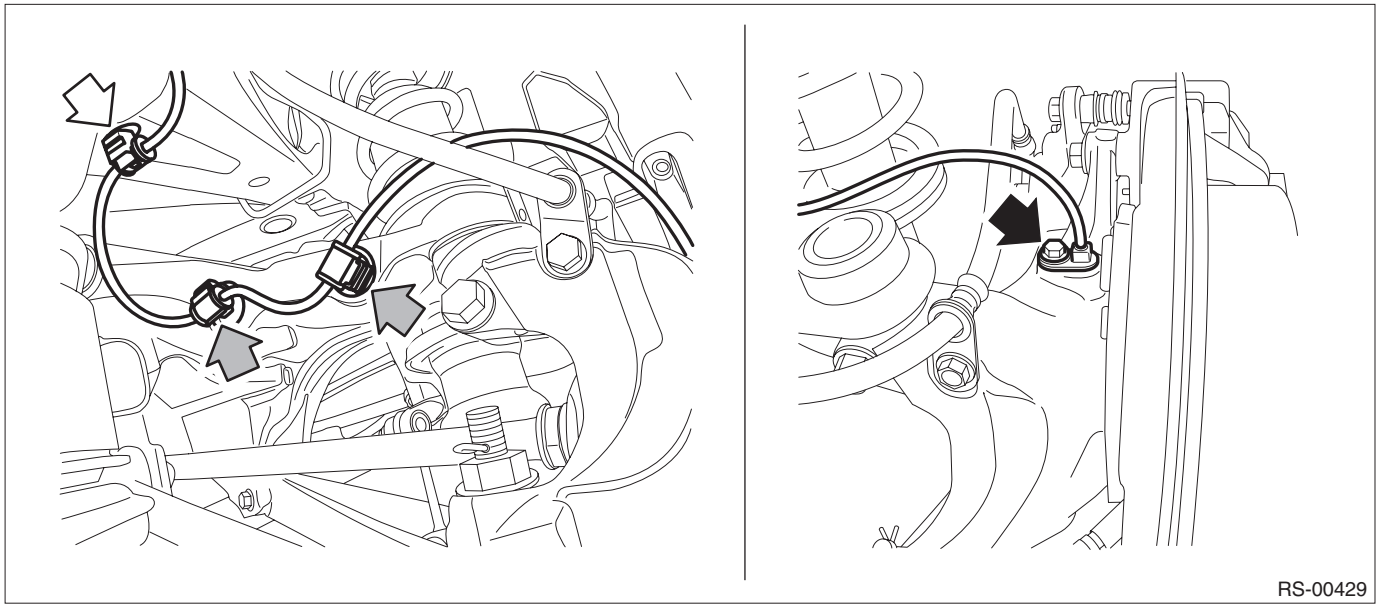

5) Remove the caliper body assembly from the housing assembly - rear axle.
(1) Remove the bolts and then remove the brake hose bracket and caliper body assembly.

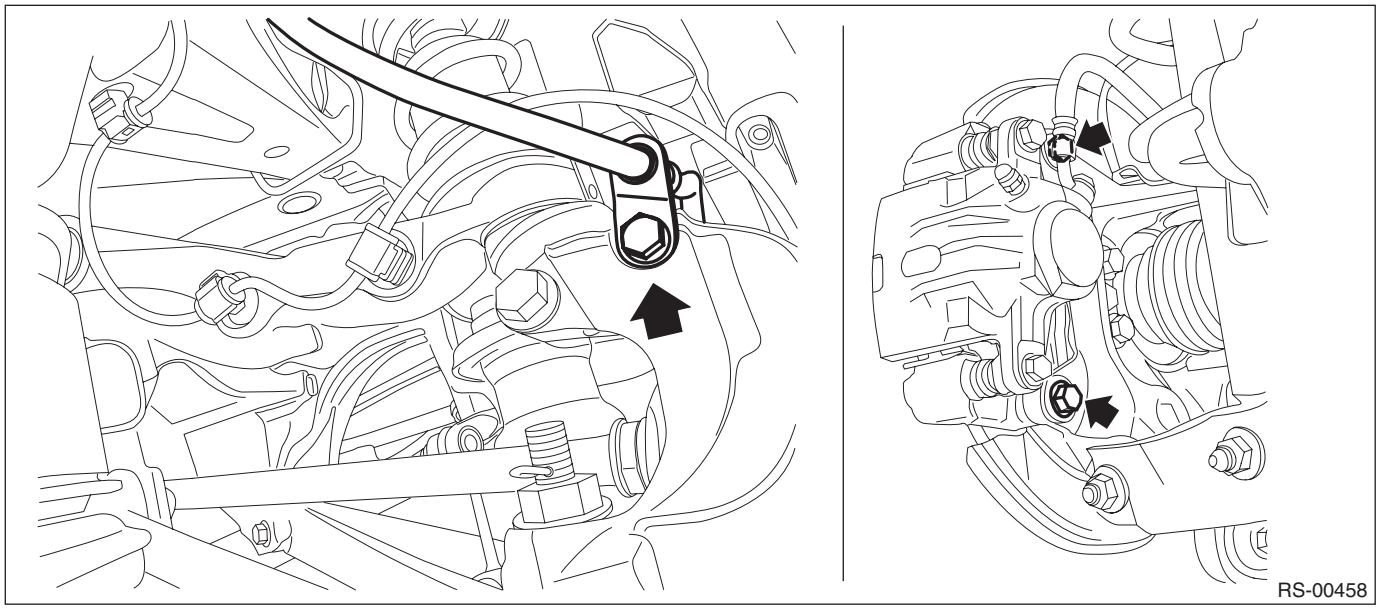

(2) Prepare wiring harnesses etc. to be discarded, and suspend the caliper body assembly from the strut assembly.

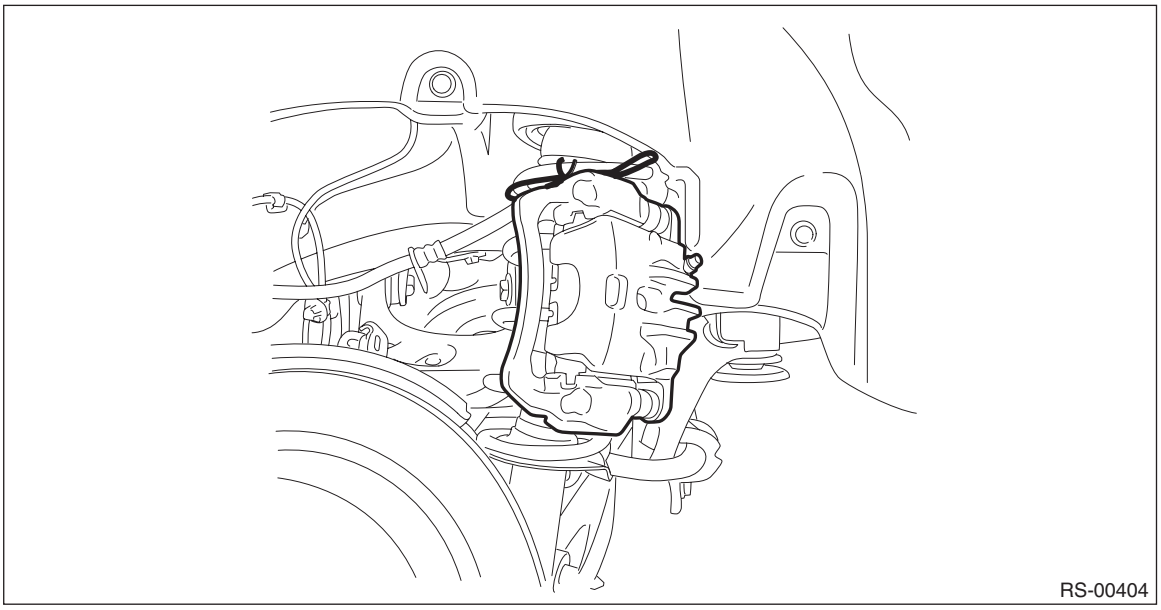

6) Remove the rear parking brake cable from the parking brake assembly. <Ref. to PB-14, REMOVAL, Parking Brake Assembly (Rear Disc Brake).>
7) Remove the rear parking brake cable from the back plate - rear brake.
(1) Remove the clamp B - hand brake cable (a) from the back plate - rear brake.
(2) Remove the cable clamp (b) from the back plate - rear brake.
(3) Remove the cable clamp (c) and pull out the cable assembly - parking brake.

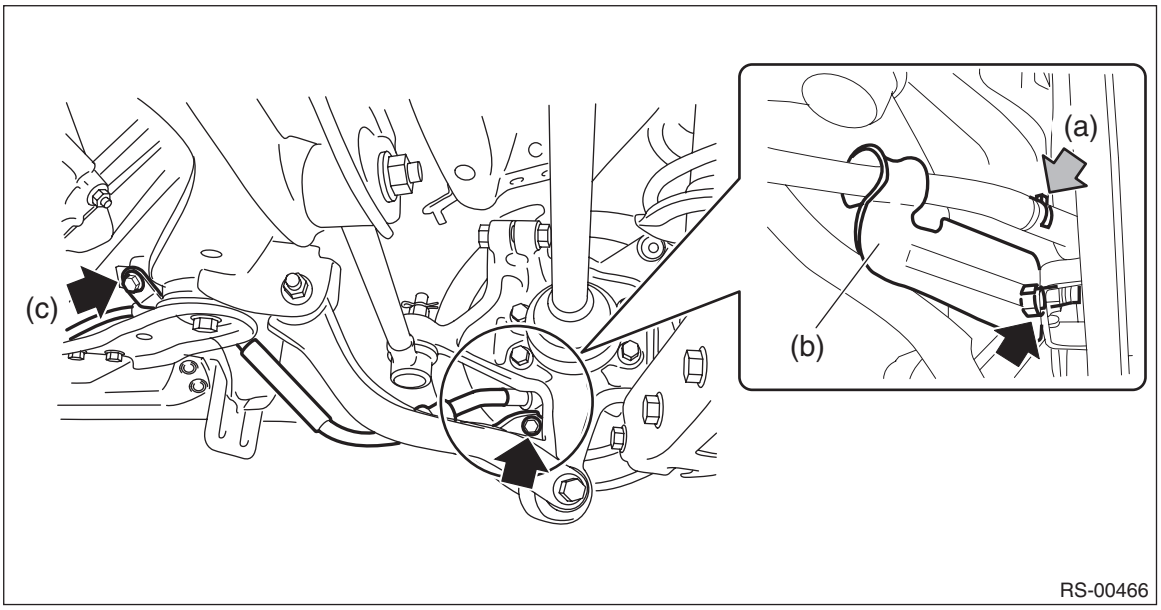

8) Remove the clamp of the sub rear harness.

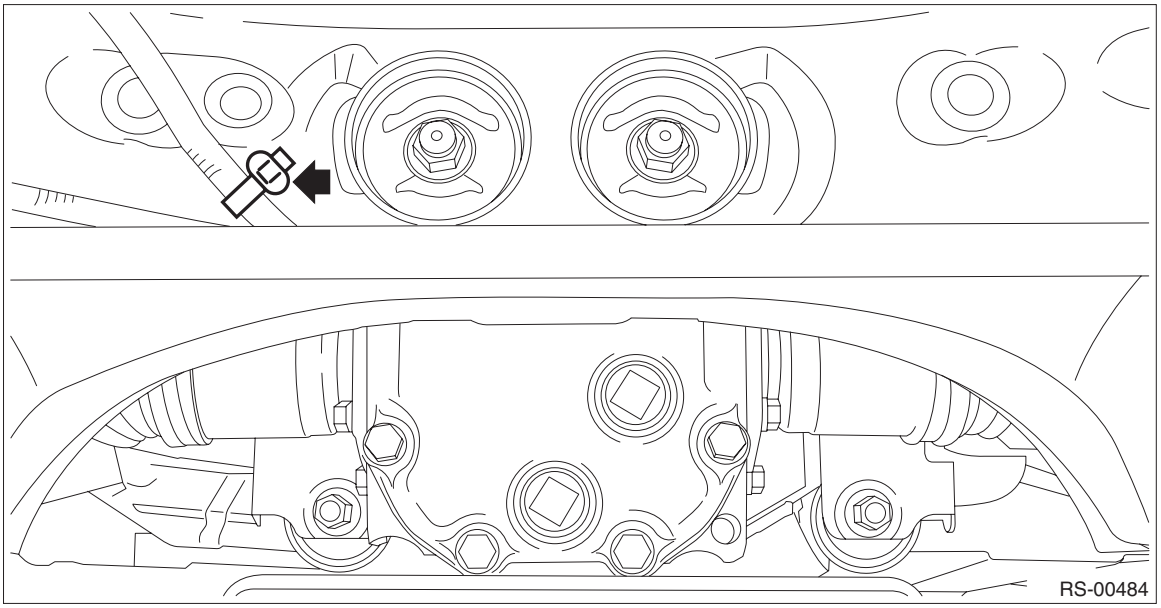

9) Remove the sensor assembly - headlight beam leveler. (Model with auto headlight beam leveler, left side only)

CAUTION:
Do not apply impact to the sensor assembly - headlight beam leveler or forcibly move the arm. Doing so may cause sensor damage and malfunction.

(1) Disconnect the connector of the sensor assembly - headlight beam leveler.
(2) Remove the nuts, and remove the sensor assembly - headlight beam leveler.

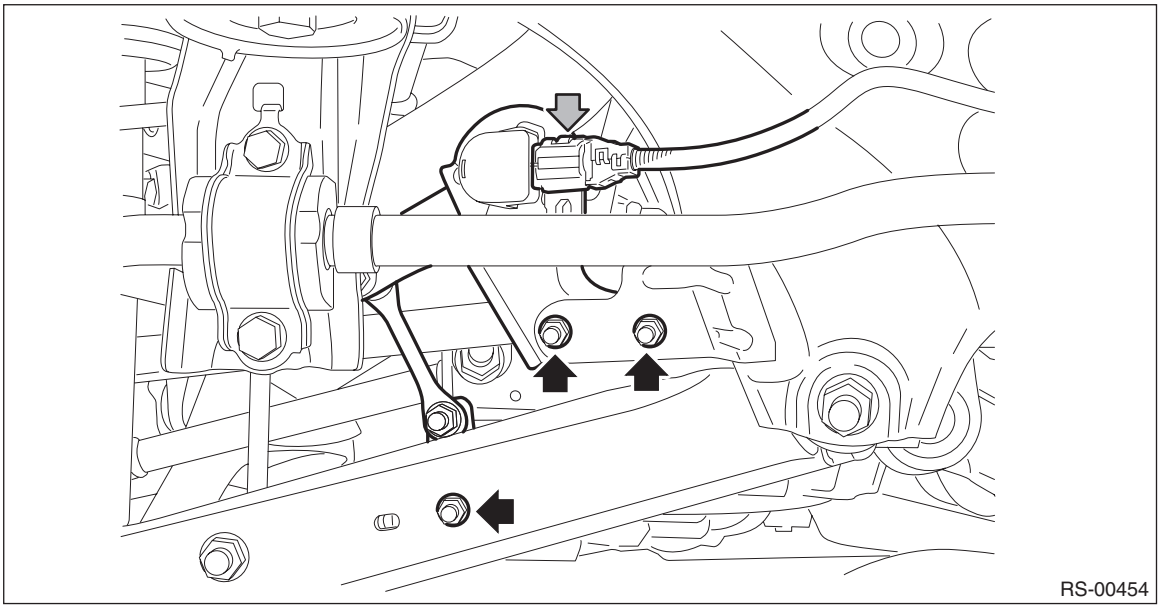

10) Remove the bolt and nuts and remove the fuel tank protector.

- Gasoline engine model: <Ref. to FU(H4DO(w/o HEV))-121, REMOVAL, Fuel Tank Protector.>
- HEV model: <Ref. to FU(H4DO(HEV))-104, REMOVAL, Fuel Tank Protector.>

11) Remove the rear sub frame assembly.
(1) Remove the bolts, and remove the stay - rear frame COMPL. (XV model)

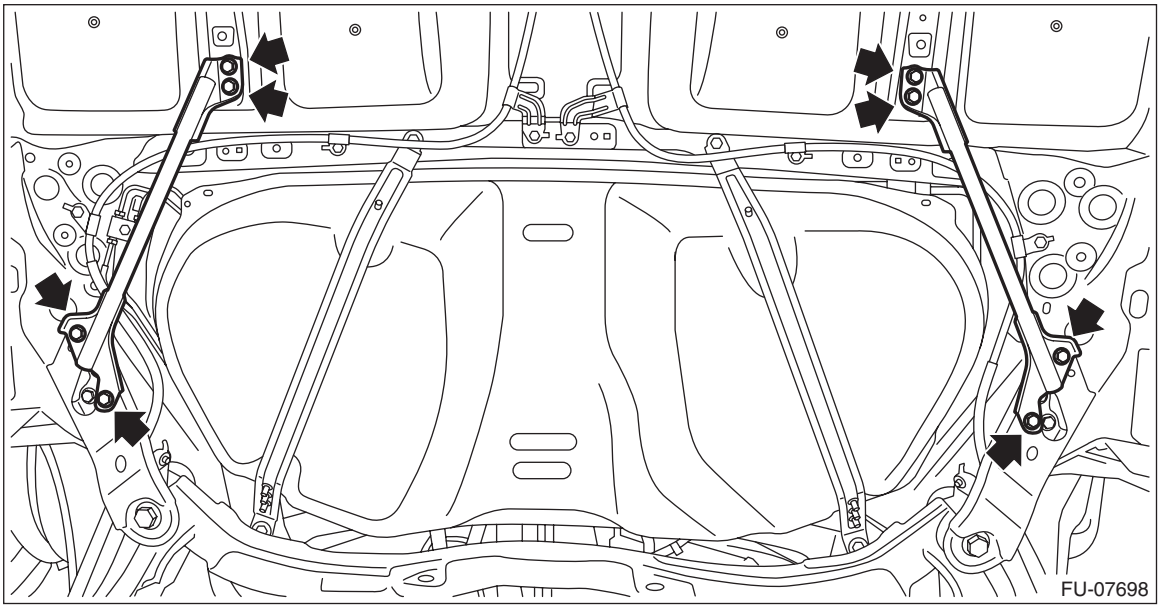

(2) Remove the bolts at the bottom of rear strut assembly.

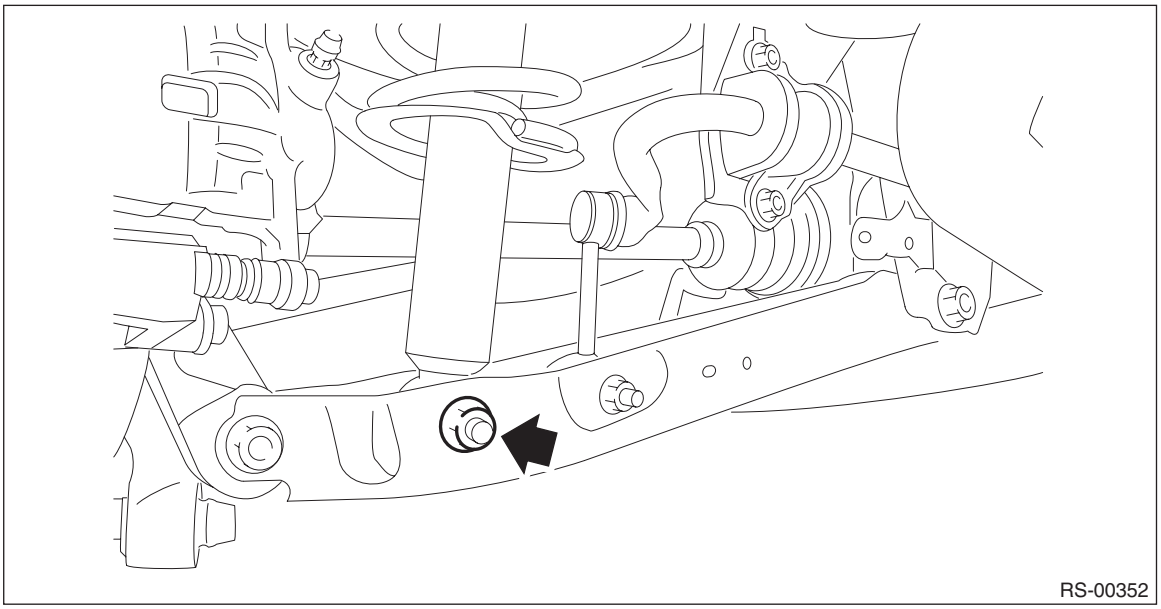

(3) Support the rear sub frame assembly using a transmission jack.
(4) Remove the bolt, and remove the left and right sub frame supports.
(5) Remove the bolts, then remove the rear sub frame assembly.

- Gasoline engine model

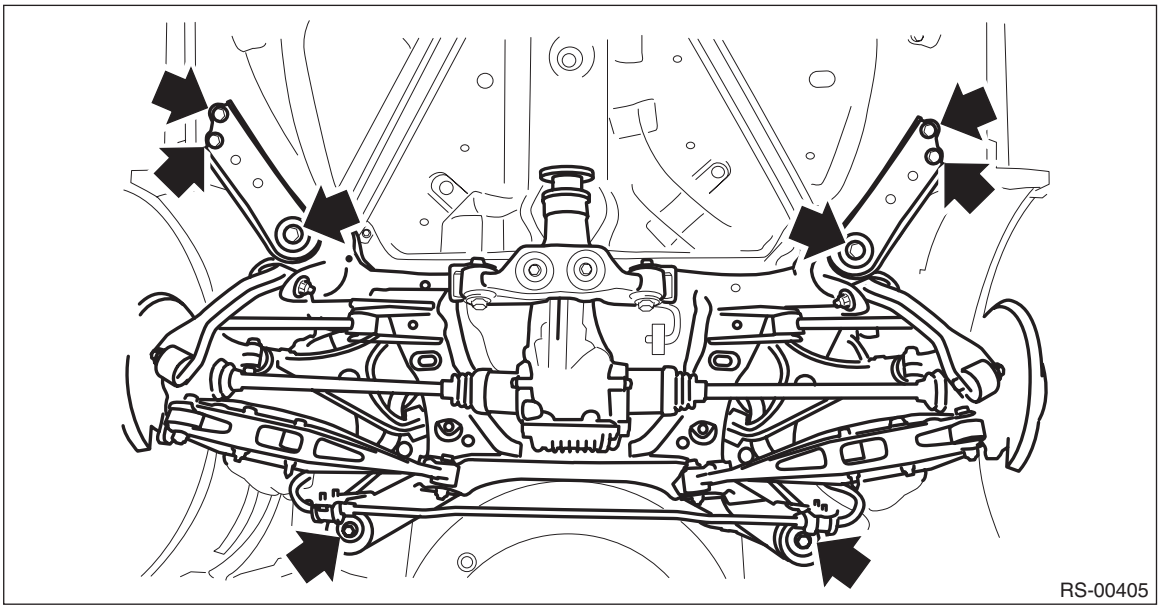

- HEV model

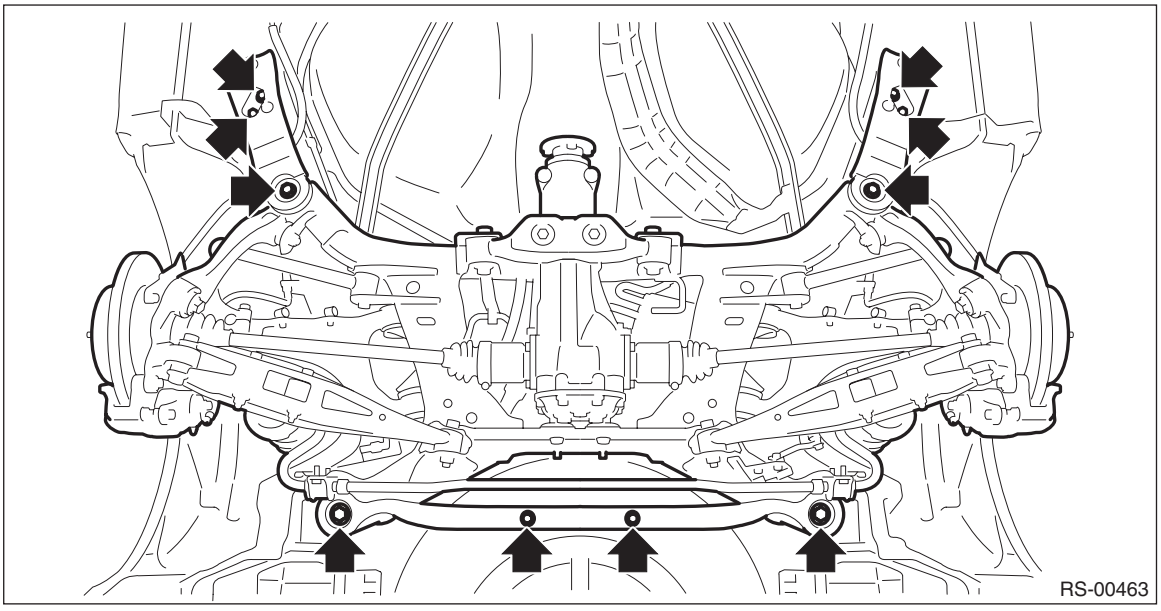

12) As necessary, remove each part from the rear sub frame assembly.

B: INSTALLATION

CAUTION:
- **Be sure to use a new self-locking nut.**
- **Always tighten the bushing in the state where the vehicle is at curb weight and the wheels are in full contact with the ground.**

1) Check the removed parts for wear, damage and crack, and repair or replace them if faulty.
2) Install each part in the reverse order of removal.

Tightening torque:

- ***Rear suspension parts: <Ref. to RS-3, COMPONENT, General Description.>***
- ***Fuel tank protector (gasoline engine model): <Ref. to FU(H4DO(w/o HEV))-121, REMOVAL, Fuel Tank Protector.>***
- ***Fuel tank protector (HEV model): <Ref. to FU(H4DO(HEV))-104, REMOVAL, Fuel Tank Protector.>***
- ***Rear disc brake parts: <Ref. to BR-6, REAR DISC BRAKE, COMPONENT, General Description.>***
- ***Parking brake parts: <Ref. to PB-3, PARKING BRAKE LEVER & CABLE, COMPONENT, General Description.>***
- ***Exhaust pipe parts: <Ref. to EX(H4DO(w/o HEV))-2, FRONT EXHAUST PIPE AND CENTER EXHAUST PIPE, COMPONENT, General Description.>***
- ***Propeller shaft parts: <Ref. to DS-13, INSTALLATION, Propeller Shaft.>***

3) Bleed air from brake system. <Ref. to BR-62, BRAKE LINE, PROCEDURE, Air Bleeding.>
4) Install the rear wheels.

Tightening torque:
Except for C4 model: 120 N·m (12.24 kgf-m, 88.5 ft-lb)
C4 model: 100 N·m (10.20 kgf-m, 73.8 ft-lb)

5) Inspect the wheel alignment and adjust if necessary.
- Inspection: <Ref. to FS-7, INSPECTION, Wheel Alignment.>
- Adjustment: <Ref. to FS-11, ADJUSTMENT, Wheel Alignment.>

CAUTION:
When the wheel alignment has been adjusted, perform "VDC sensor midpoint setting mode" of the VDC. <Ref. to VDC-21, ADJUSTMENT, VDC Control Module and Hydraulic Control Unit (VDCCM&H/U).>

6) Connect the battery ground terminal.
7) Perform reinitialization of the auto headlight beam leveler system. (Model with auto headlight beam leveler) <Ref. to LI-18, PROCEDURE, Auto Headlight Beam Leveler System.>

C: INSPECTION

Check the removed parts for wear, damage and crack, and repair or replace them if faulty.

4. Rear Stabilizer

A: REMOVAL

1) Lift up the vehicle, and then remove the rear wheels.
2) Remove the rear stabilizer.
   (1) Remove the left and right stabilizer link assemblies.
   (2) Detach the clamp - stabilizer bushing and remove the rear stabilizer.

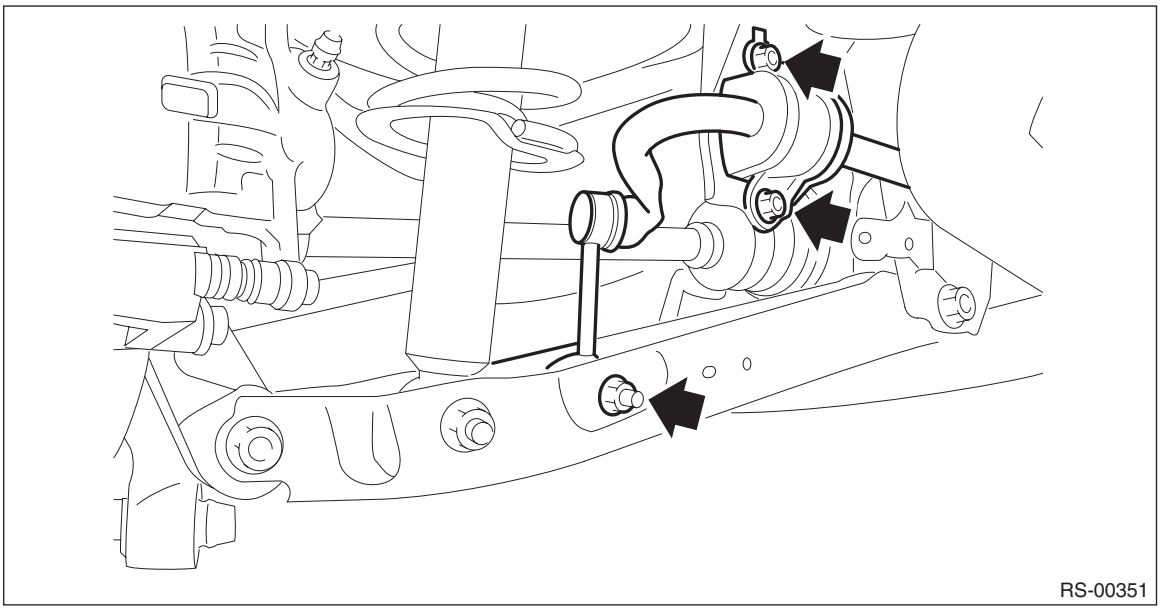

B: INSTALLATION

CAUTION:
- **Be sure to use a new flange nut and self-locking nut.**
- **Always tighten the bushing in the state where the vehicle is at curb weight and the wheels are in full contact with the ground.**
- **Install the clamp - stabilizer bushing with the "G" character facing upward.**
- **When installing, align the edge of identification paint (a) to the end face of the bushing (b).**

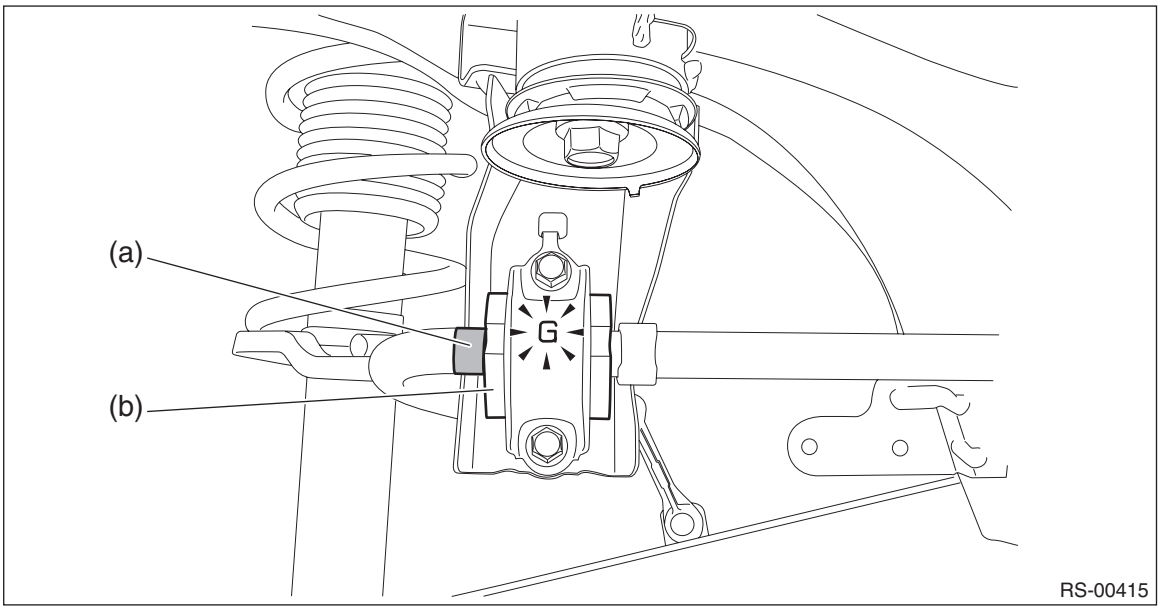

1) Before installation, inspect the following items and replace any faulty part with a new one.
- Check the bushing - stabilizer for abnormal cracks, fatigue or damage.
- Check the stabilizer link assembly for damage.

2) Install each part in the reverse order of removal.

Tightening torque:
Clamp - stabilizer bushing: 30 N·m (3.06 kgf-m, 22.1 ft-lb)
Stabilizer link assembly: 38 N·m (3.87 kgf-m, 28.0 ft-lb)

3) Install the rear wheels.

Tightening torque:
Except for C4 model: 120 N·m (12.24 kgf-m, 88.5 ft-lb)
C4 model: 100 N·m (10.20 kgf-m, 73.8 ft-lb)

5. Rear Trailing Link

A: REMOVAL

1) Lift up the vehicle, and then remove the rear wheels.
2) Remove the bolts and nuts, and then remove the trailing link.

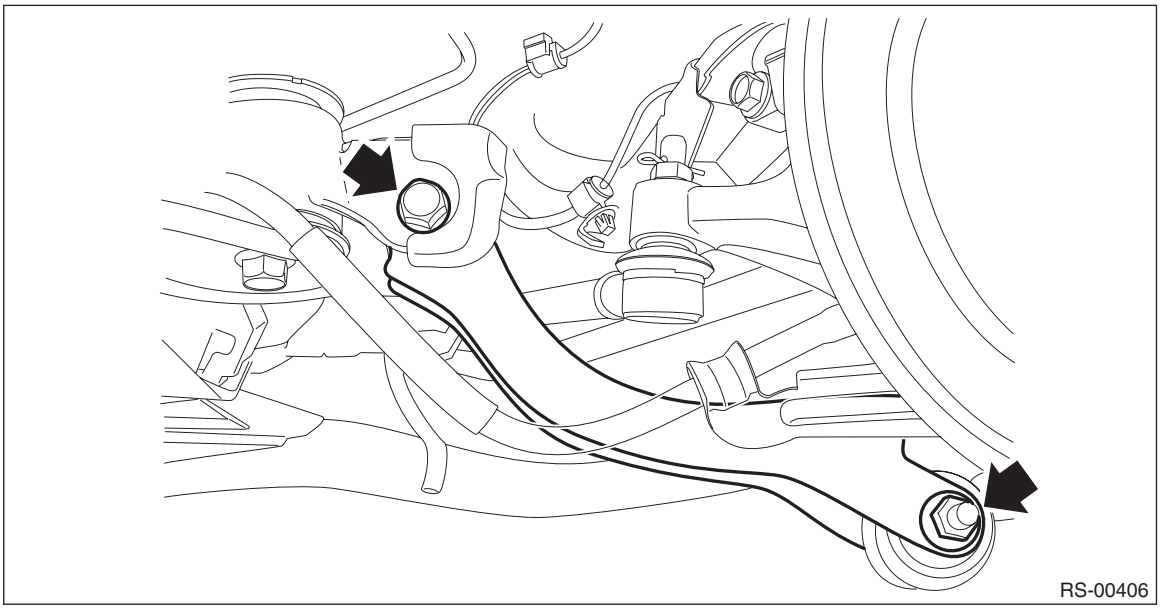

B: INSTALLATION

CAUTION:
- **Be sure to use a new self-locking nut.**
- **Always tighten the bushing in the state where the vehicle is at curb weight and the wheels are in full contact with the ground.**

1) Install each part in the reverse order of removal.

Tightening torque:
Refer to "COMPONENT" of "General Description". <Ref. to RS-3, COMPONENT, General Description.>

2) Install the rear wheels.

Tightening torque:
Except for C4 model: 120 N·m (12.24 kgf-m, 88.5 ft-lb)
C4 model: 100 N·m (10.20 kgf-m, 73.8 ft-lb)

C: DISASSEMBLY

1. BUSHING A - TRAILING LINK

Using the ST, push out the bushing A - trailing link.

Preparation tool:
ST-A: INSTALLER (899874100)
ST-B: INSTALLER & REMOVER (BASE) (20099PA010)

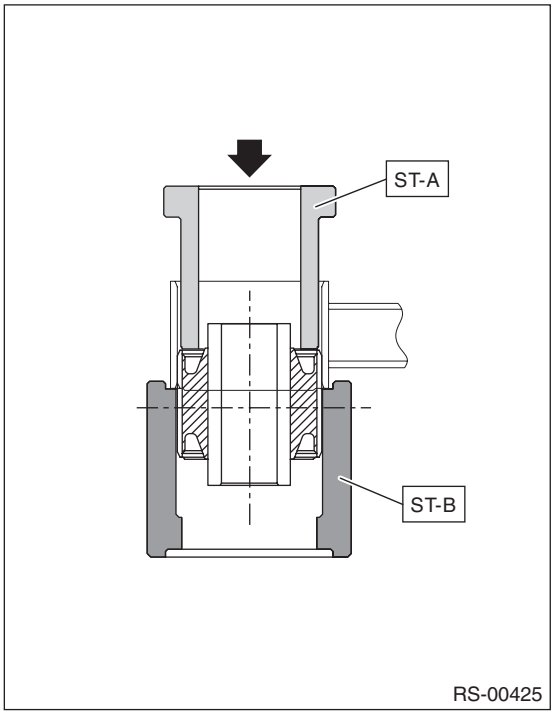

2. BUSHING - TRAILING LINK

For the removal procedure of bushing - trailing link, refer to “Rear Axle” in the “DRIVE SHAFT SYSTEM” section. <Ref. to DS-44, BUSHING - TRAILING LINK, DISASSEMBLY, Rear Axle.>

D: ASSEMBLY

1. BUSHING A - TRAILING LINK

1) Before assembly, inspect the following items and replace any faulty part with a new one.
- Perform visual check for damage or bend on the trailing link.
- Visually check the bushing for abnormal cracks, fatigue or damage.

2) Using the ST-A and ST-B, press-fit the bushing.

CAUTION:
Make sure to press the bushing straight in.

Preparation tool:
ST-A: INSTALLER (899874100)
ST-B: INSTALLER & REMOVER (BASE) (20099PA010)

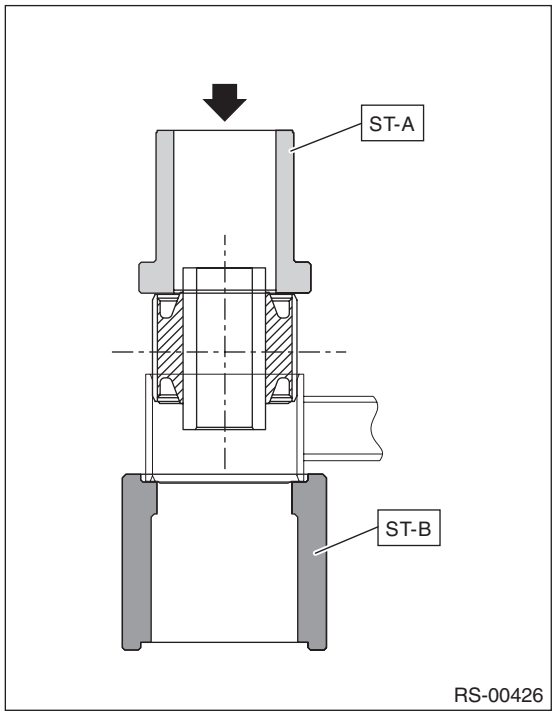

2. BUSHING - TRAILING LINK

For the installation procedure of bushing - trailing link, refer to “Rear Axle” in the “DRIVE SHAFT SYSTEM” section. <Ref. to DS-44, BUSHING - TRAILING LINK, DISASSEMBLY, Rear Axle.>

6. Upper Arm

A: REMOVAL

1) Remove the rear sub frame assembly. <Ref. to RS-9, REMOVAL, Rear Sub Frame.>
2) Remove the bolts and nuts to remove the upper arm assembly.

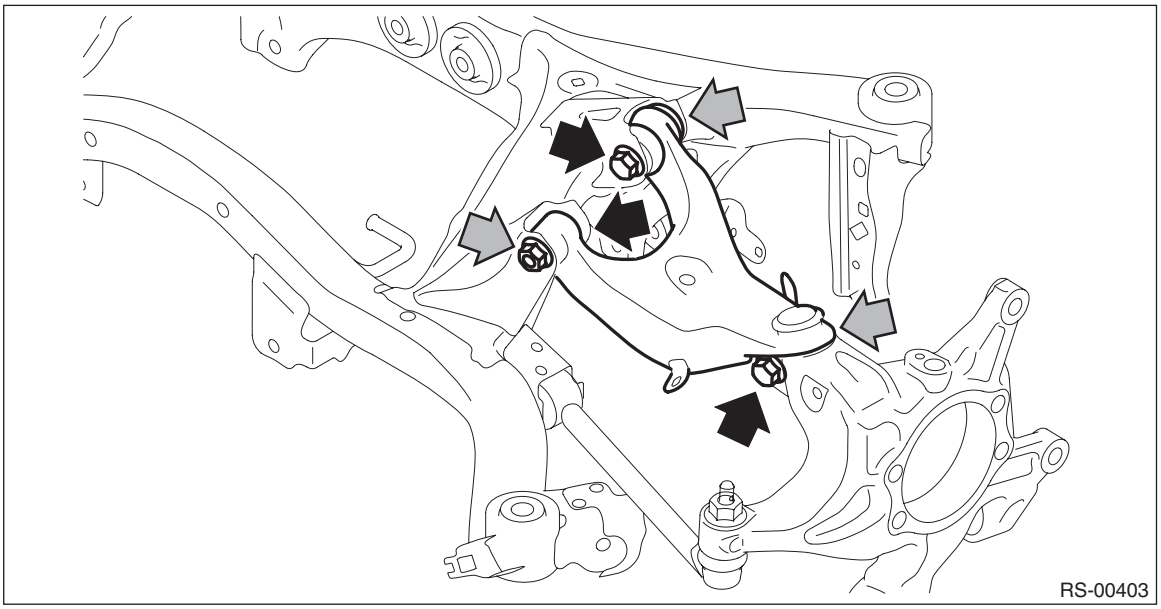

B: INSTALLATION

CAUTION:
- **Use a new self-locking nut.**
- **Always tighten the bushing when the arm is positioned in the state where the vehicle is at curb weight and the wheels are in full contact with the ground.**

1) Before installation, inspect the following items and replace any faulty part with a new one.
- Visually check the upper arm assembly for damage and deformation.
- Visually check the bushing for abnormal cracks, fatigue or damage.
- Visually check the dust cover on the ball joint for abnormal cracks, fatigue or damage.

2) Install the upper arm assembly to the rear sub frame assembly.
   (1) Make the installation sections of the rear lateral link assembly (the bolt on the housing assembly - rear axle side and the bolt on the rear sub frame assembly side) horizontal.
   (2) Install the upper arm assembly to the rear sub frame assembly.

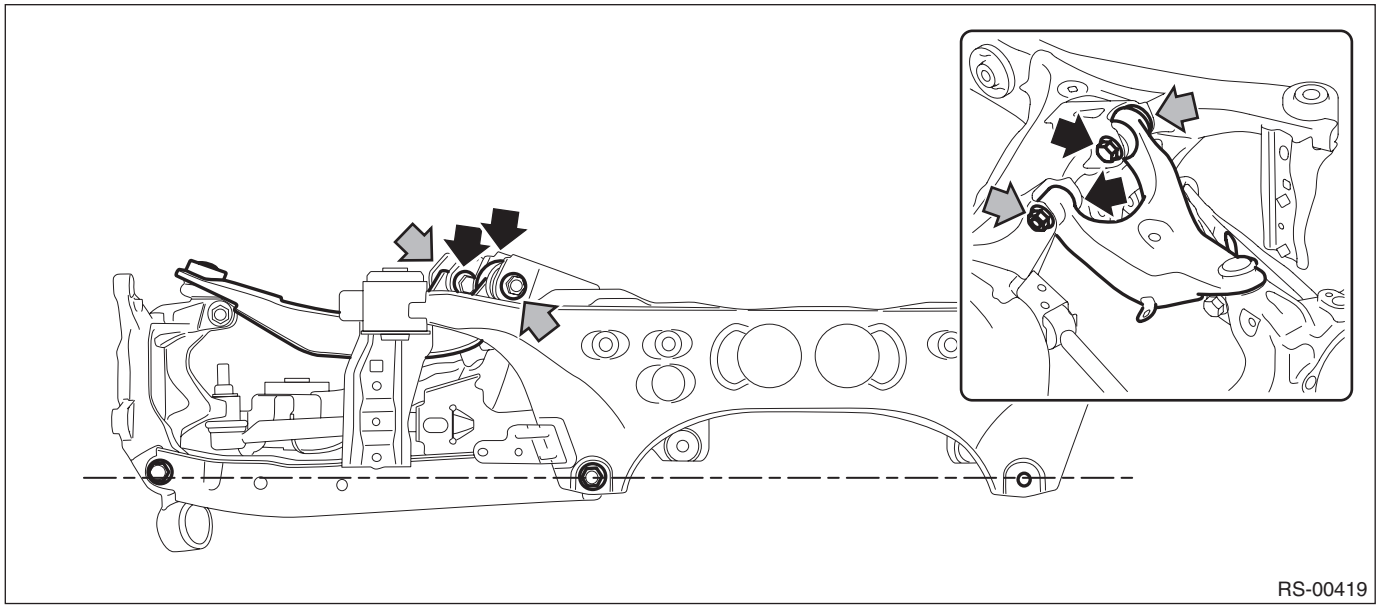

Tightening torque:
Upper arm assembly — rear sub frame assembly: 90 N·m (9.18 kgf-m, 66.4 ft-lb)
3) Connect the upper arm assembly and the housing assembly - rear axle.

Tightening torque:
Upper arm assembly — housing assembly - rear axle: 80 N·m (8.16 kgf-m, 59.0 ft-lb)
4) Install the rear sub frame assembly in the reverse order of removal. <Ref. to RS-15, INSTALLATION, Rear Sub Frame.>
5) Route the rear ABS wheel speed sensor cable to the upper arm assembly.
6) Install the rear wheels.

Tightening torque:
Except for C4 model: 120 N·m (12.24 kgf-m, 88.5 ft-lb)
C4 model: 100 N·m (10.20 kgf-m, 73.8 ft-lb)
7) Inspect the wheel alignment and adjust if necessary.
- Inspection: <Ref. to FS-7, INSPECTION, Wheel Alignment.>
- Adjustment: <Ref. to FS-11, ADJUSTMENT, Wheel Alignment.>

CAUTION:
When the wheel alignment has been adjusted, perform "VDC sensor midpoint setting mode" of the VDC. <Ref. to VDC-21, ADJUSTMENT, VDC Control Module and Hydraulic Control Unit (VDCCM&H/U).>
8) Connect the battery ground terminal.
9) Perform reinitialization of the auto headlight beam leveler system. (Model with auto headlight beam leveler) <Ref. to LI-18, PROCEDURE, Auto Headlight Beam Leveler System.>

7. Front Lateral Link

A: REMOVAL

1) Lift up the vehicle, and then remove the rear wheels.
2) Remove the bolts and nuts, and then remove the trailing link.

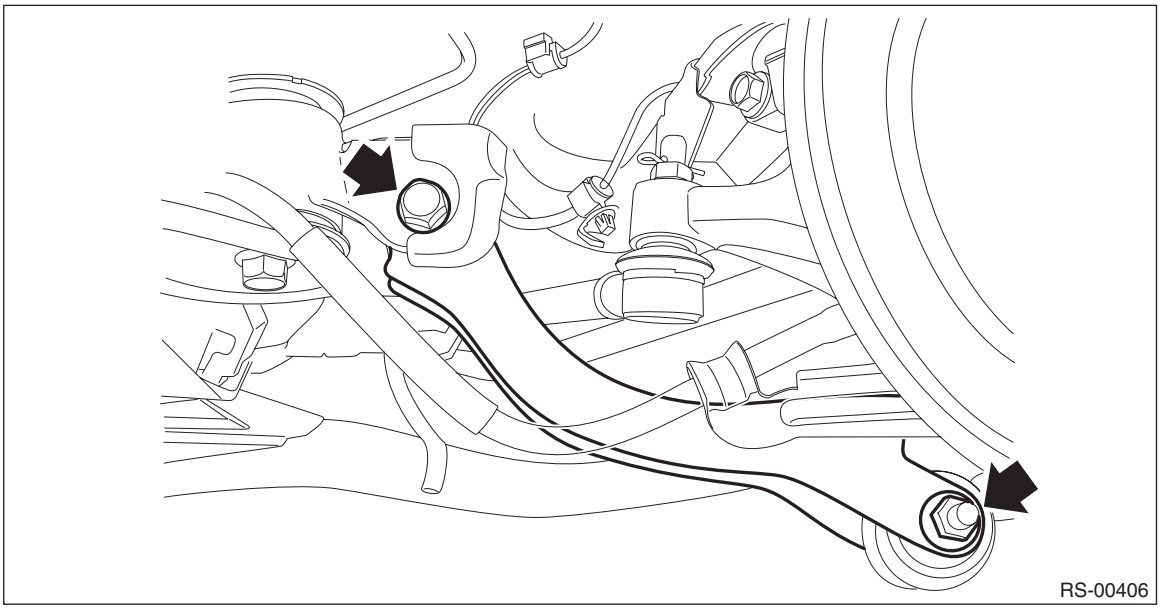

3) Remove the lateral link assembly - front.
   (1) Remove the snap pin (a) and nut (b).
   (2) Remove the ball joint from the housing assembly - rear axle.

Preparation tool:
Tie-rod ball joint puller

   (3) Scribe alignment marks (c) on the adjusting bolt for lateral link assembly - front and on the rear sub frame assembly.
   (4) Remove the adjusting bolt (d), and remove the lateral link assembly - front.

CAUTION:
When removing the adjusting bolt (d), make sure to fix the bolt head in place when loosening the nut (e).

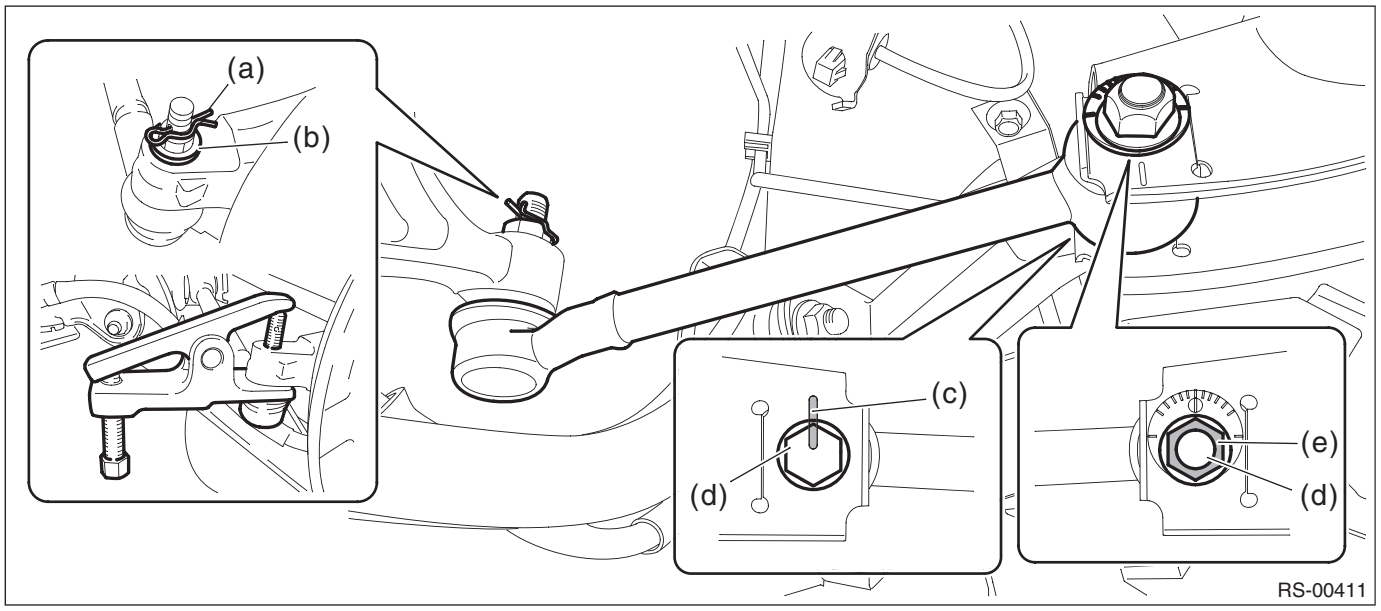

B: INSTALLATION

CAUTION:
- **Be sure to use a new self-locking nut.**
- **Always tighten the bushing in the state where the vehicle is at curb weight and the wheels are in full contact with the ground.**

1) Before installation, inspect the following items and replace any faulty part with a new one.
- Visually check the lateral link assembly - front for damage and deformation.
- Visually check the bushing for abnormal cracks, fatigue or damage.
- Visually check the dust cover on the ball joint for abnormal cracks, fatigue or damage.

2) Install each part in the reverse order of removal.

Tightening torque:
Refer to "COMPONENT" of "General Description". <Ref. to RS-3, COMPONENT, General Description.>

3) Install the rear wheels.

Tightening torque:
Except for C4 model: 120 N·m (12.24 kgf-m, 88.5 ft-lb)
C4 model: 100 N·m (10.20 kgf-m, 73.8 ft-lb)

4) Inspect the wheel alignment and adjust if necessary.
- Inspection: <Ref. to FS-7, INSPECTION, Wheel Alignment.>
- Adjustment: <Ref. to FS-11, ADJUSTMENT, Wheel Alignment.>

CAUTION:
When the wheel alignment has been adjusted, perform "VDC sensor midpoint setting mode" of the VDC. <Ref. to VDC-21, ADJUSTMENT, VDC Control Module and Hydraulic Control Unit (VDCCM&H/U).>

C: DISASSEMBLY

Using the ST, push out the bushing B - lateral link.

PREPARATION TOOL:
ST-A & ST-B: INSTALLER & REMOVER (20299AE000)

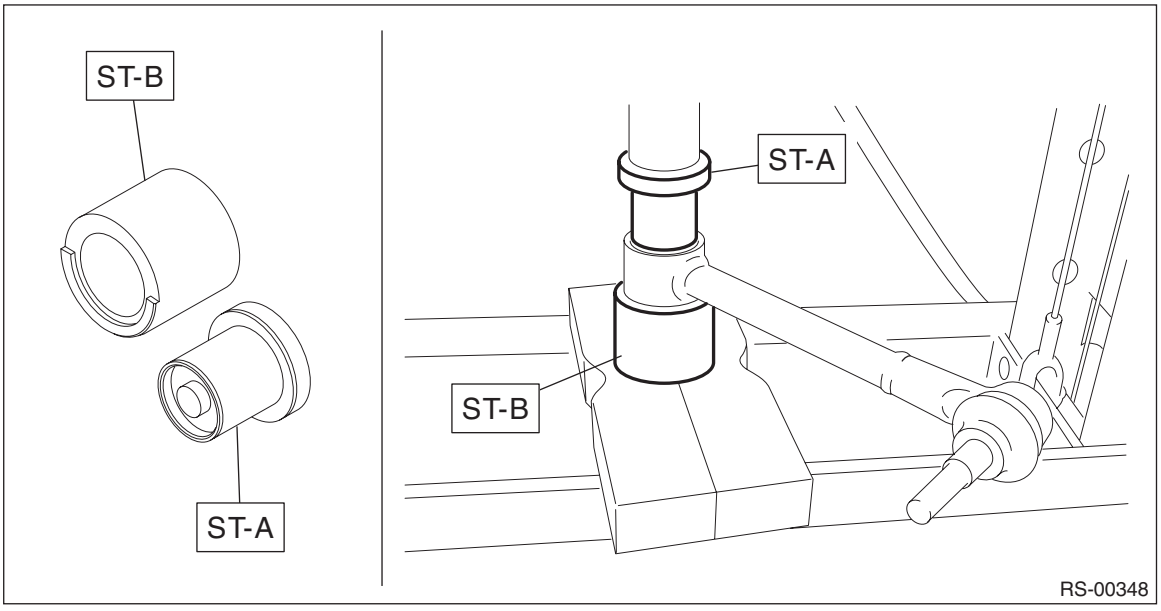

D: ASSEMBLY

1) Before assembly, inspect the following items and replace any faulty part with a new one.
- Visually check the lateral link assembly - front for damage and deformation.
- Visually check the bushing for abnormal cracks, fatigue or damage.
- Visually check the dust cover on the ball joint for damage.

2) Using the ST, press-fit the bushing B - lateral link.

CAUTION:
Make sure to press the bushing straight in.

Preparation tool:
ST-A & ST-B: INSTALLER & REMOVER (20299AE000)

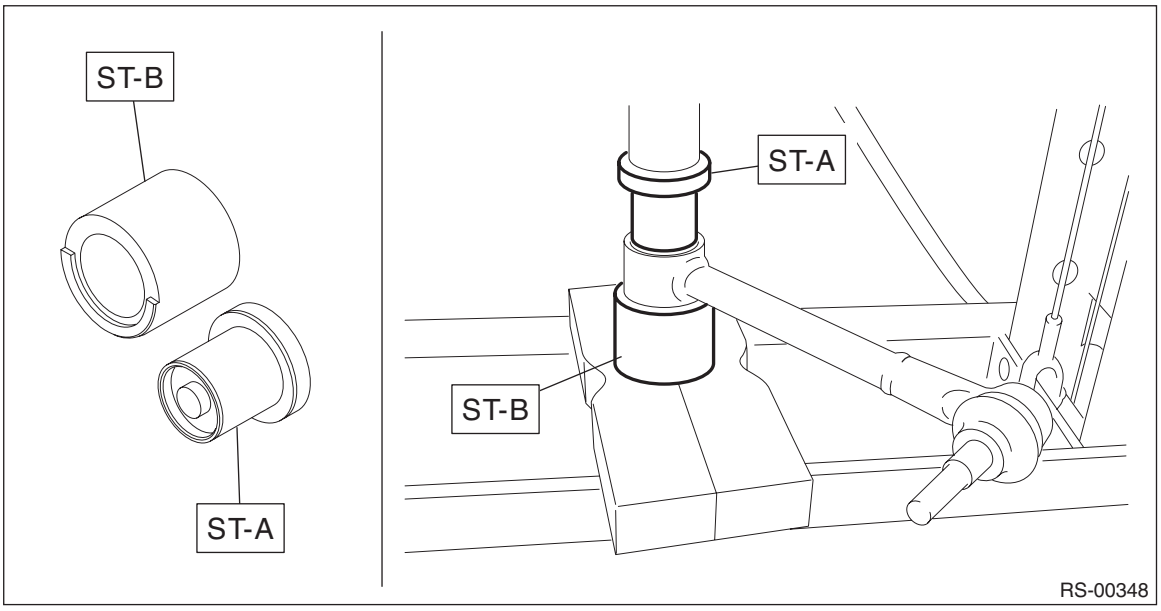

8. Rear Lateral Link

A: REMOVAL

1) Disconnect the ground cable from battery. <Ref. to NT-5, BATTERY, NOTE, Note.>

NOTE:
For the 12 volt engine restart battery of HEV model, disconnect the ground terminal from 12V engine restart battery sensor.

2) Lift up the vehicle, and then remove the rear wheels.

3) Remove the sensor assembly - headlight beam leveler. (Model with auto headlight beam leveler, left side only)

CAUTION:
Do not apply impact to the sensor assembly - headlight beam leveler or forcibly move the arm. Doing so may cause sensor damage and malfunction.

(1) Disconnect the connector of the sensor assembly - headlight beam leveler.

(2) Remove the nuts, and remove the sensor assembly - headlight beam leveler.

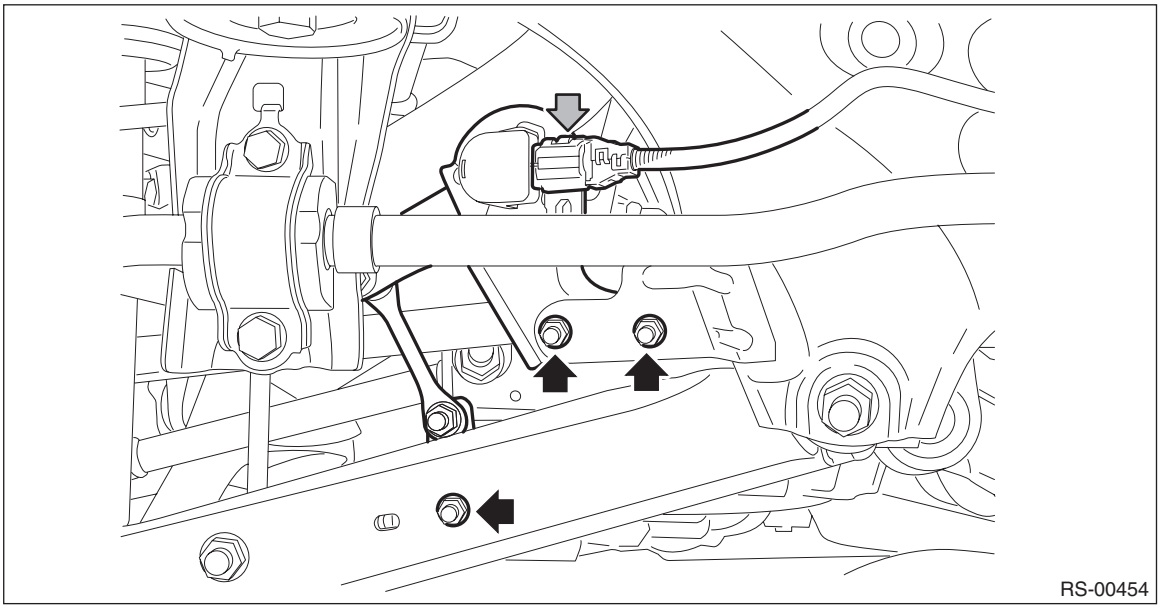

4) Remove the bolts and nuts, and remove the lateral link assembly - rear on the left and right sides.
   (1) Remove the nut and disconnect the rear stabilizer link assembly.
   (2) Remove the bolts at the bottom of rear strut assembly.
   (3) Disconnect the lateral link assembly - rear.

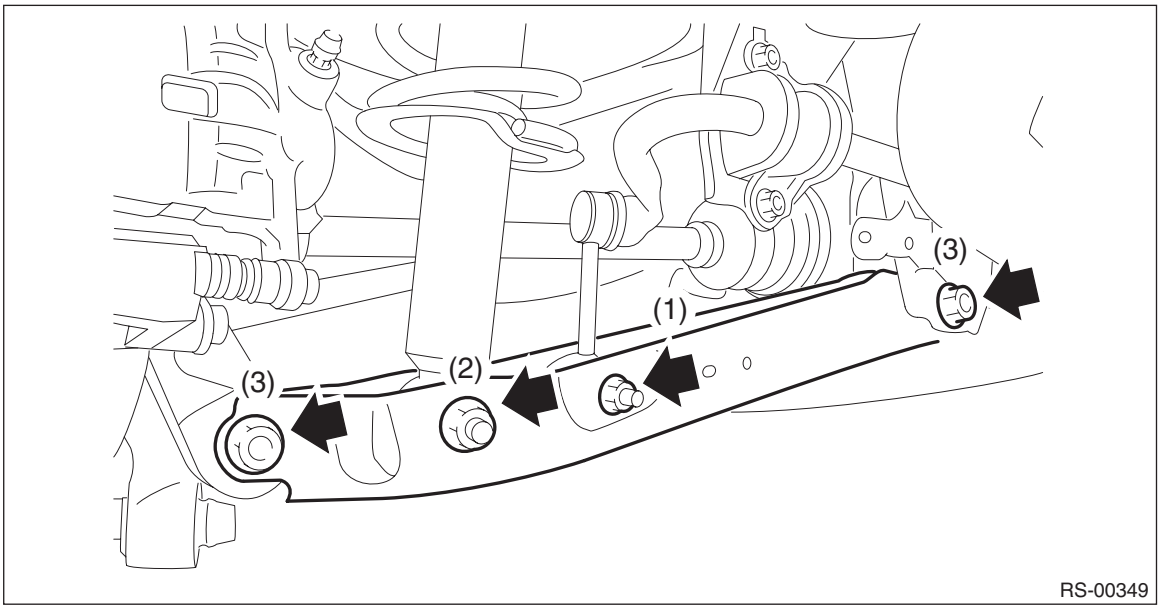

B: INSTALLATION

CAUTION:
- **Be sure to use a new self-locking nut.**
- **Always tighten the bushing in the state where the vehicle is at curb weight and the wheels are in full contact with the ground.**

1) Before installation, inspect the following items and replace any faulty part with a new one.
- Visually check the lateral link assembly - rear for damage and deformation.
- Visually check the bushing for abnormal cracks, fatigue or damage.

2) Install each part in the reverse order of removal.

Tightening torque:
Refer to "COMPONENT" of "General Description". <Ref. to RS-3, COMPONENT, General Description.>

3) Install the rear wheels.

Tightening torque:
Except for C4 model: 120 N·m (12.24 kgf-m, 88.5 ft-lb)
C4 model: 100 N·m (10.20 kgf-m, 73.8 ft-lb)

4) Inspect the wheel alignment and adjust if necessary.
- Inspection: <Ref. to FS-7, INSPECTION, Wheel Alignment.>
- Adjustment: <Ref. to FS-11, ADJUSTMENT, Wheel Alignment.>

CAUTION:
When the wheel alignment has been adjusted, perform "VDC sensor midpoint setting mode" of the VDC. <Ref. to VDC-21, ADJUSTMENT, VDC Control Module and Hydraulic Control Unit (VDCCM&H/U).>

5) Perform reinitialization of the auto headlight beam leveler system. (Model with auto headlight beam leveler) <Ref. to LI-18, REINITIALIZATION, PROCEDURE, Auto Headlight Beam Leveler System.>

C: DISASSEMBLY

Using the ST, push out the bushing.

Preparation tool:
ST-A & ST-B: INSTALLER & REMOVER (20099AE010)

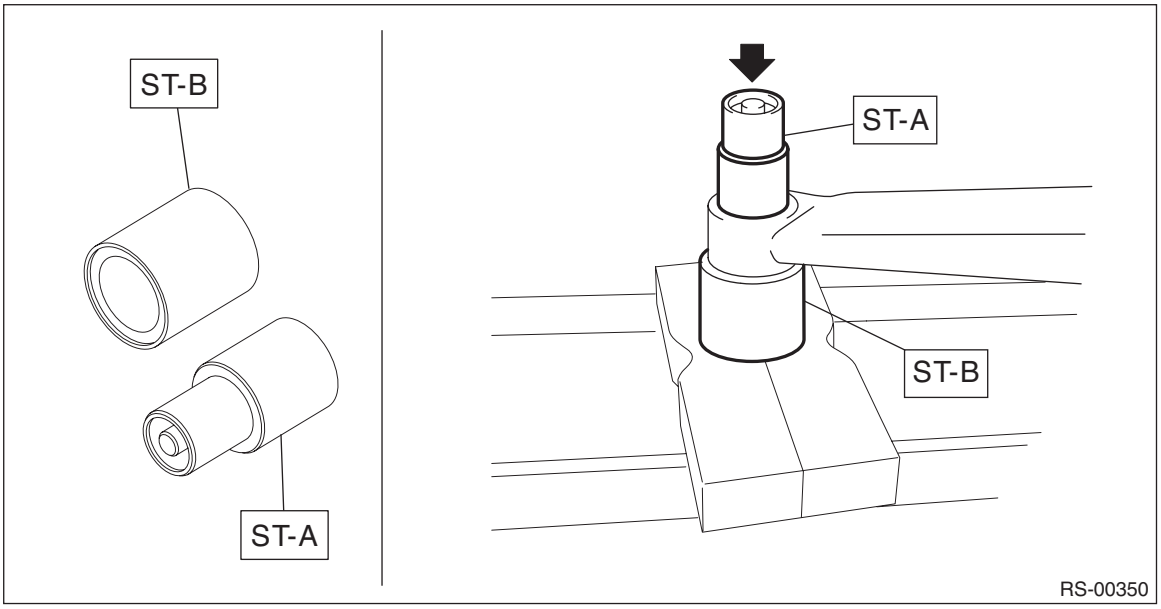

D: ASSEMBLY

1) Before assembly, inspect the following items and replace any faulty part with a new one.
- Visually check the lateral link assembly - rear for damage and deformation.
- Visually check the bushing for abnormal cracks, fatigue or damage.

2) Using the ST, press the bushing into place.

Preparation tool:
ST-A & ST-B: INSTALLER & REMOVER (20099AE010)

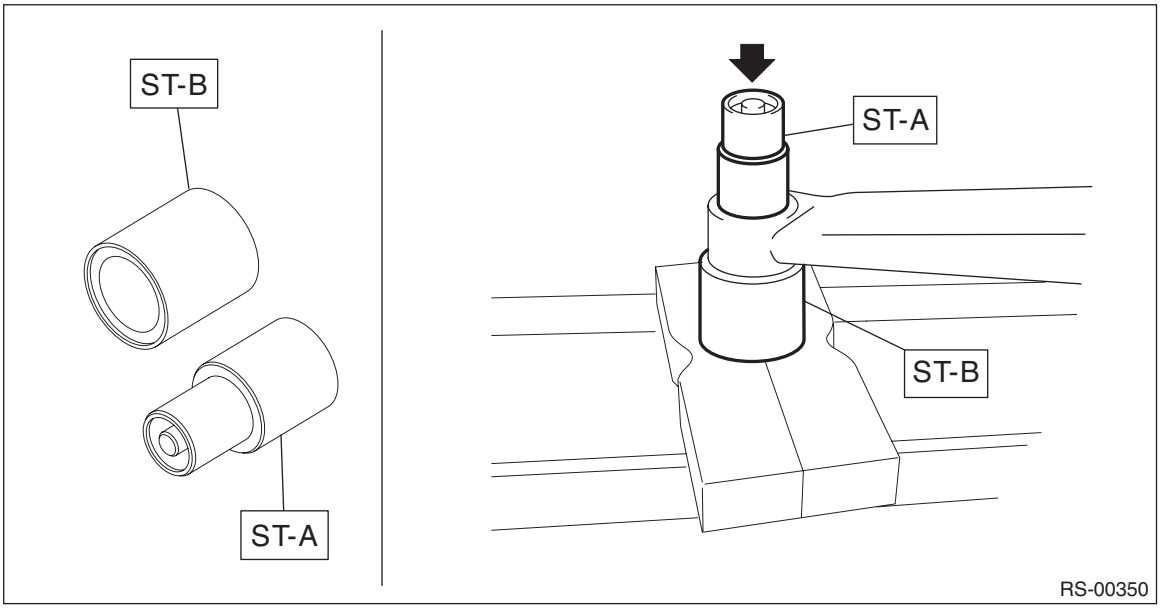

9. Rear Shock Absorber

A: REMOVAL

1. 4 DOOR MODEL

1) Disconnect the ground cable from battery.
2) Lift up the vehicle, and then remove the rear wheels.
3) Remove the sensor assembly - headlight beam leveler. (Model with auto headlight beam leveler, left side only)

CAUTION:
Do not apply impact to the sensor assembly - headlight beam leveler or forcibly move the arm. Doing so may cause sensor damage and malfunction.

(1) Disconnect the connector of the sensor assembly - headlight beam leveler.
(2) Remove the nuts, and remove the sensor assembly - headlight beam leveler.

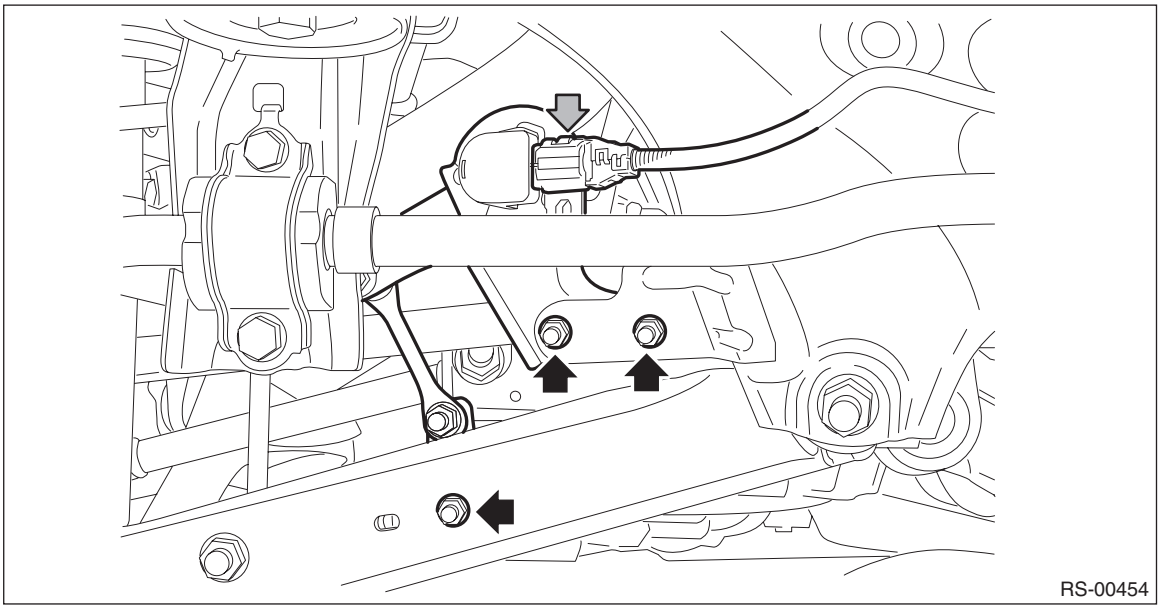
RS-00454

4) Remove the bolts and nuts, and lower the lateral link assembly - rear.
(1) Remove the nut and disconnect the rear stabilizer link assembly. (Model with rear stabilizer)
(2) Remove the bolts at the bottom of rear strut assembly.
(3) Disconnect the housing assembly - rear axle from the lateral link assembly - rear.

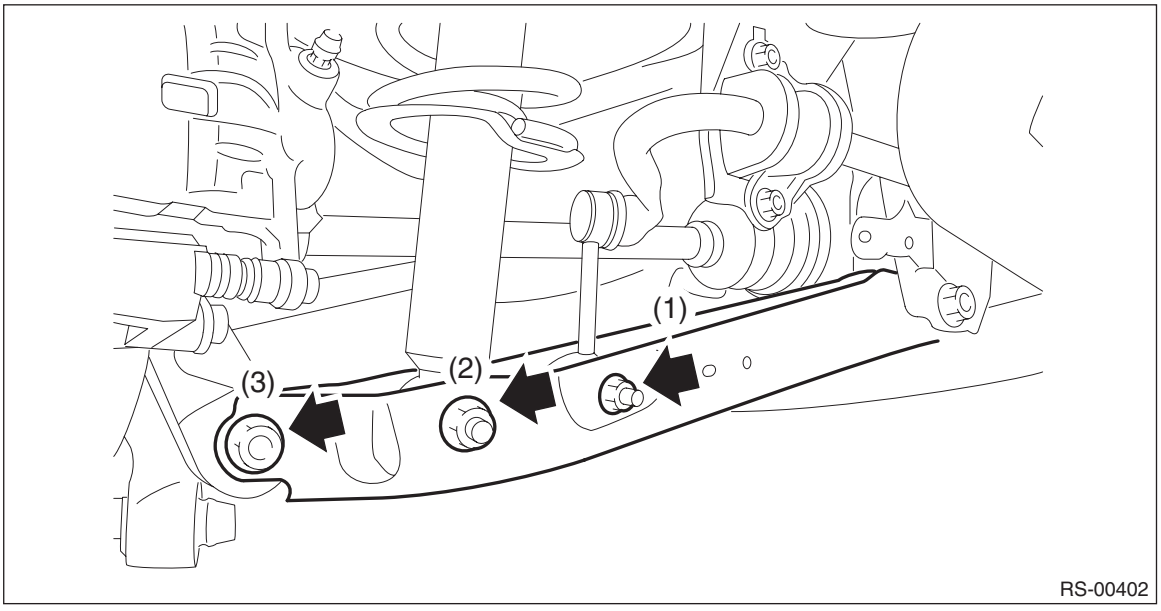

RS-00402

5) Take out the trunk mat.
6) Fold down the rear seat backrest.
7) Remove the clips, and turn over the trim panel - trunk side.

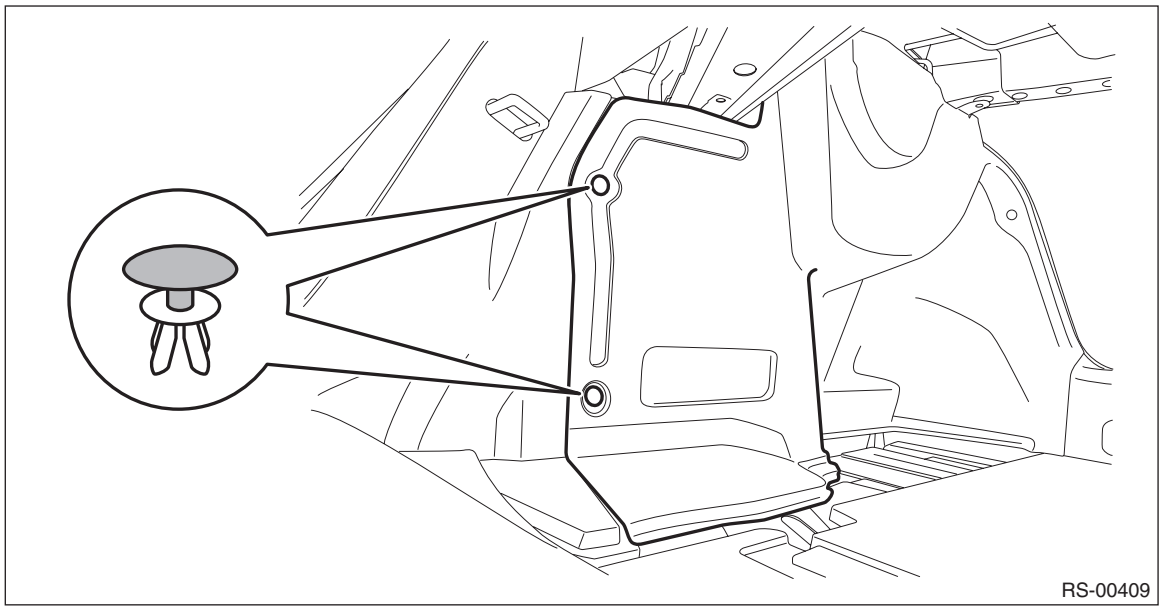

8) Remove the nuts on the upper side of rear strut assembly.

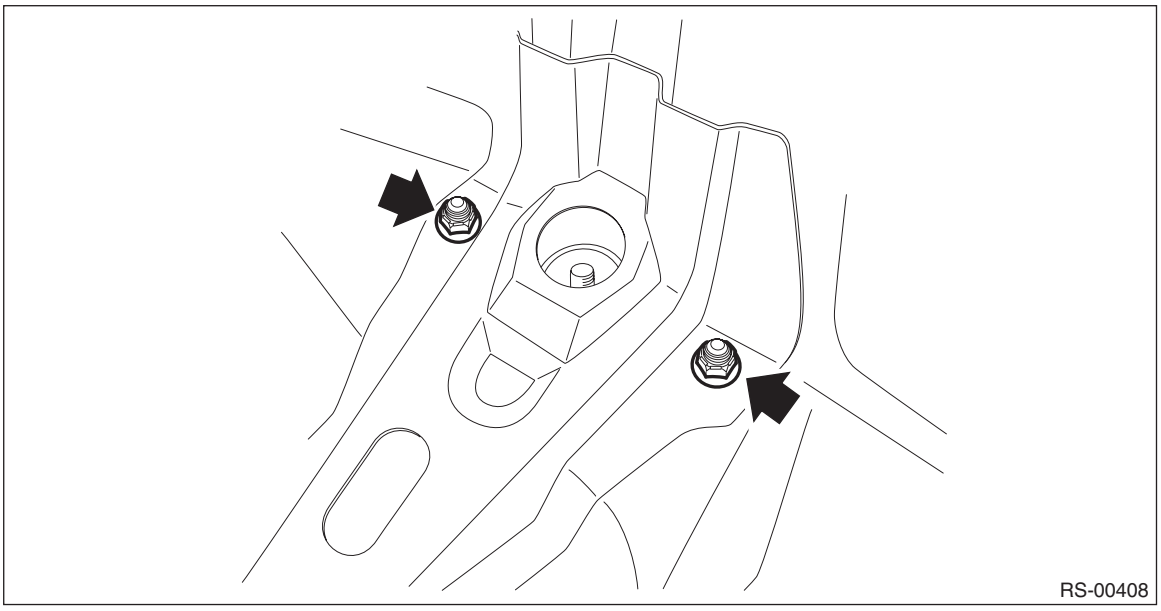

9) Lower the lateral link assembly - rear, and remove the rear strut assembly.

2. 5 DOOR MODEL/XV MODEL

1) Disconnect the ground cable from battery. <Ref. to NT-5, BATTERY, NOTE, Note.>

NOTE:
For the 12 volt engine restart battery of HEV model, disconnect the ground terminal from 12V engine restart battery sensor.

2) Lift up the vehicle, and then remove the rear wheels.

3) Remove the sensor assembly - headlight beam leveler. (Model with auto headlight beam leveler, left side only)

CAUTION:
Do not apply impact to the sensor assembly - headlight beam leveler or forcibly move the arm. Doing so may cause sensor damage and malfunction.

(1) Disconnect the connector of the sensor assembly - headlight beam leveler.
(2) Remove the nuts, and remove the sensor assembly - headlight beam leveler.

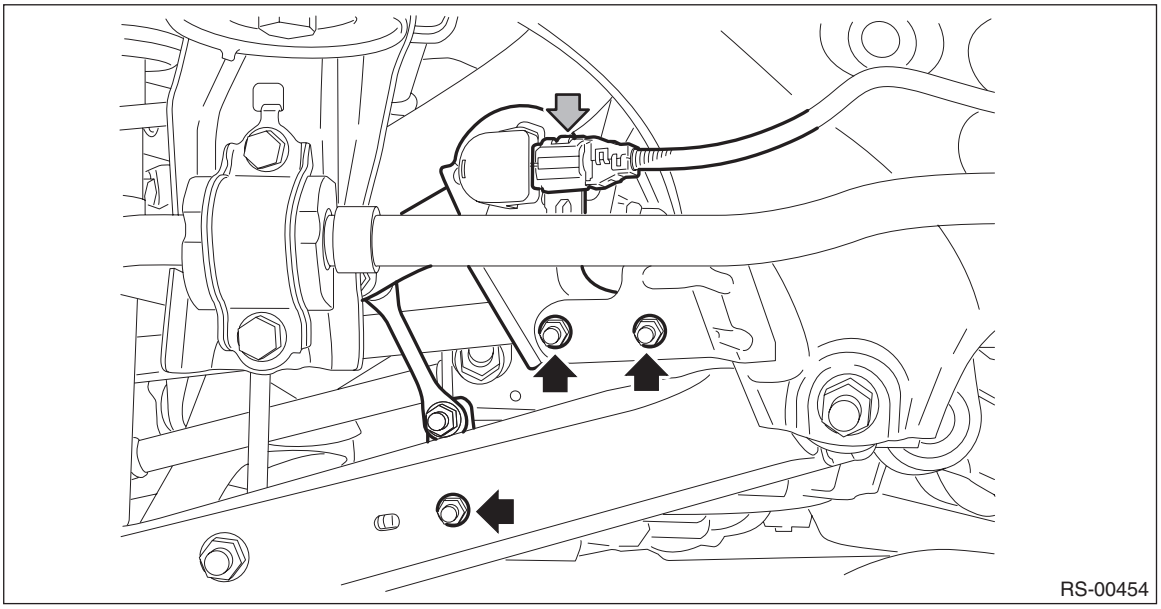
RS-00454

4) Remove the bolts and nuts, and lower the lateral link assembly - rear.

(1) Remove the nut and disconnect the rear stabilizer link assembly. (Model with rear stabilizer)
(2) Remove the bolts at the bottom of rear strut assembly.
(3) Disconnect the housing assembly - rear axle from the lateral link assembly - rear.

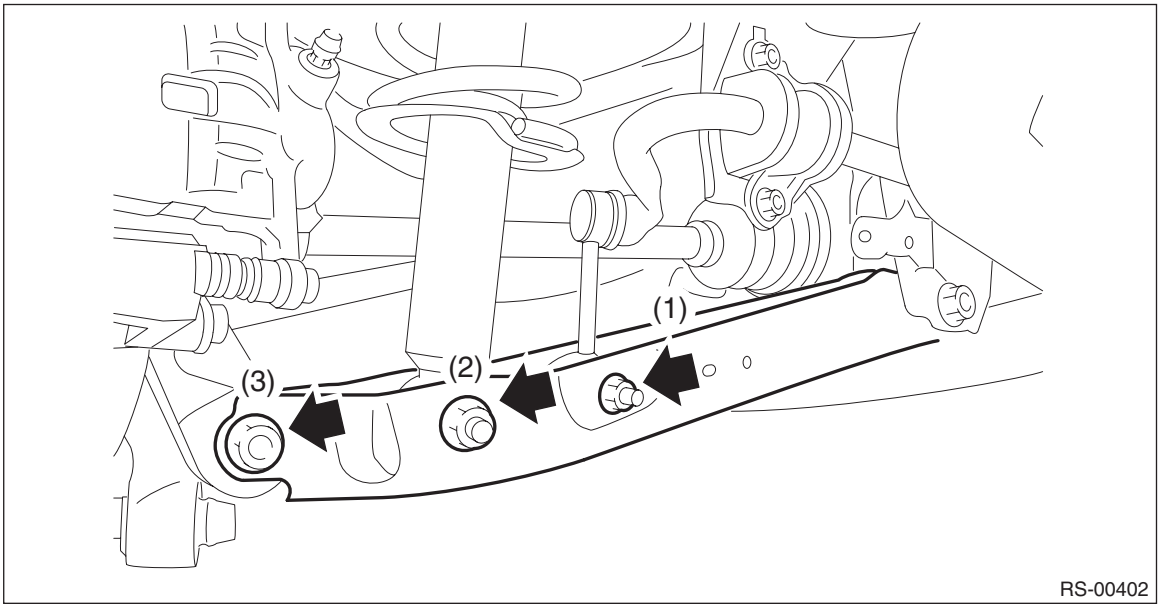

RS-00402

5) Remove the mat - rear floor CTR and the spacer - rear floor side. (Gasoline engine model)

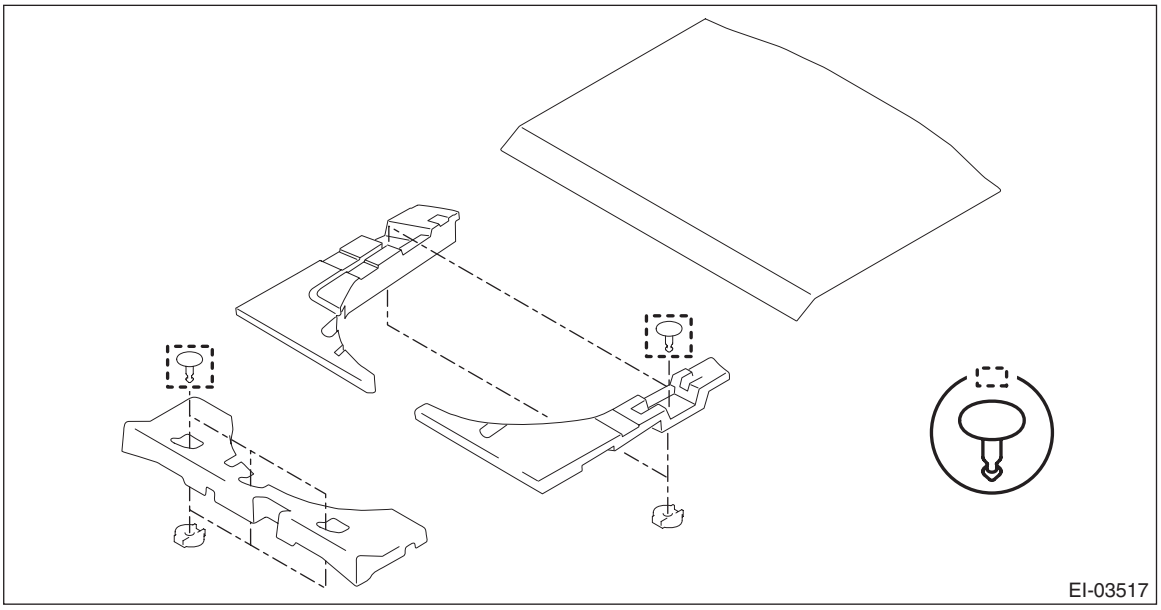

6) Remove the clips, and remove the trim panel - rear skirt. (Gasoline engine model)

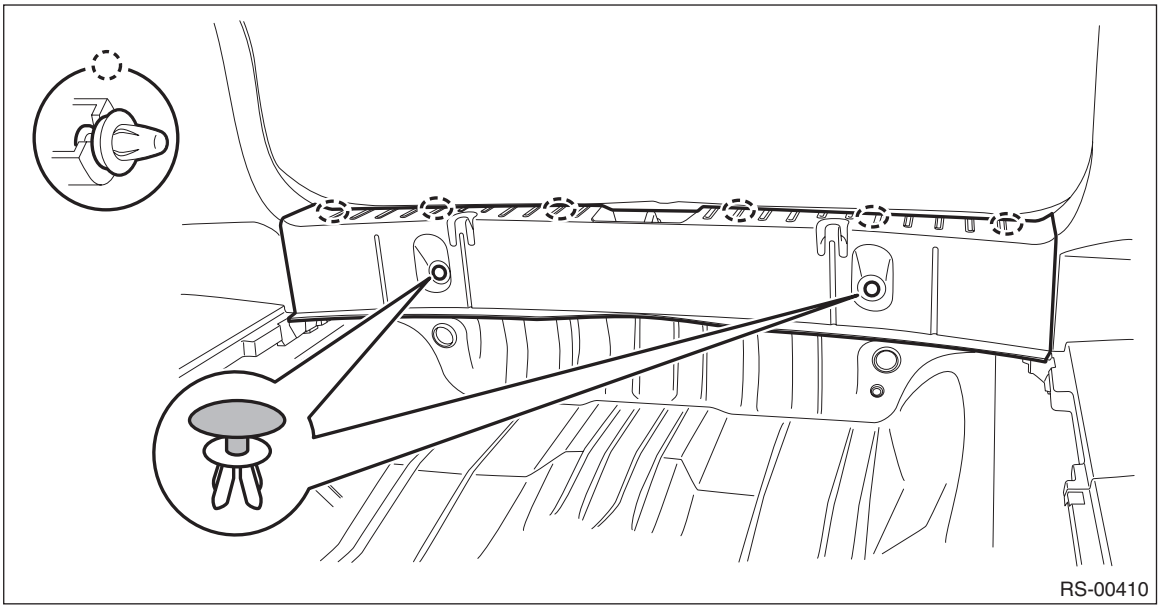

7) Remove the lid upper rear (a) and the cap - rear strut (b) in the order from (1) to (6). (Gasoline engine model)

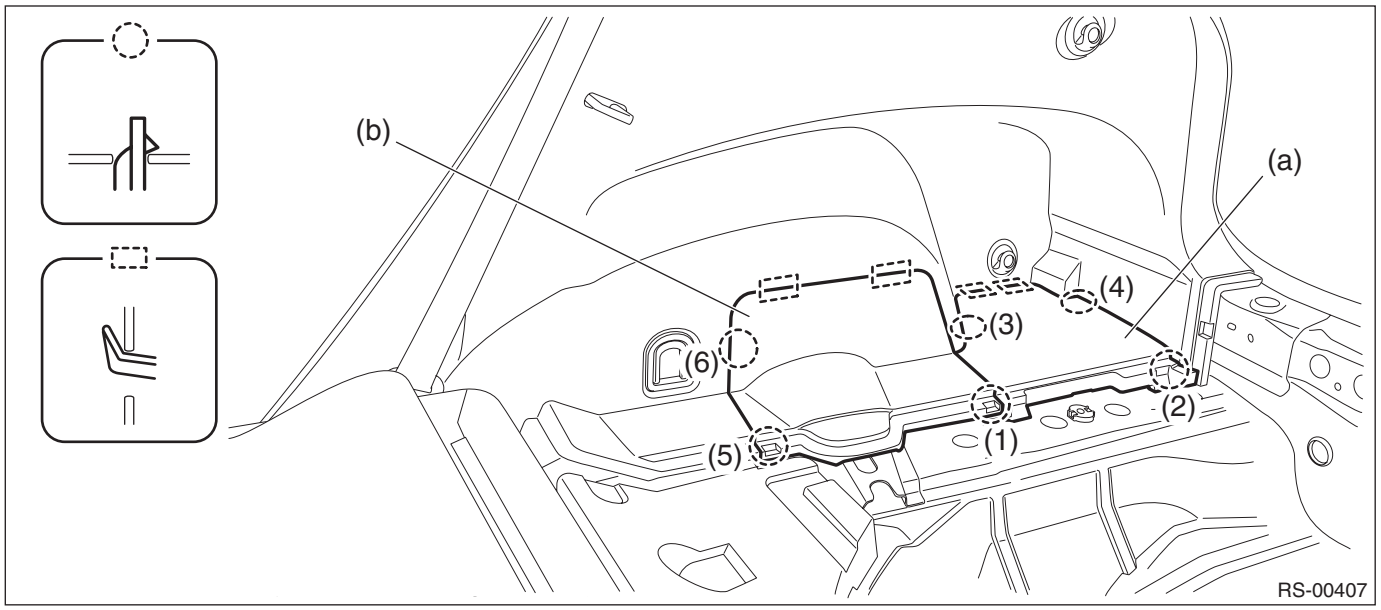

8) Remove the sub-trunk box and side spacers. (HEV model)
   (1) Release the clips and side spacers, then detach the sub-trunk box.
   (2) Remove the clips and detach the side spacers.

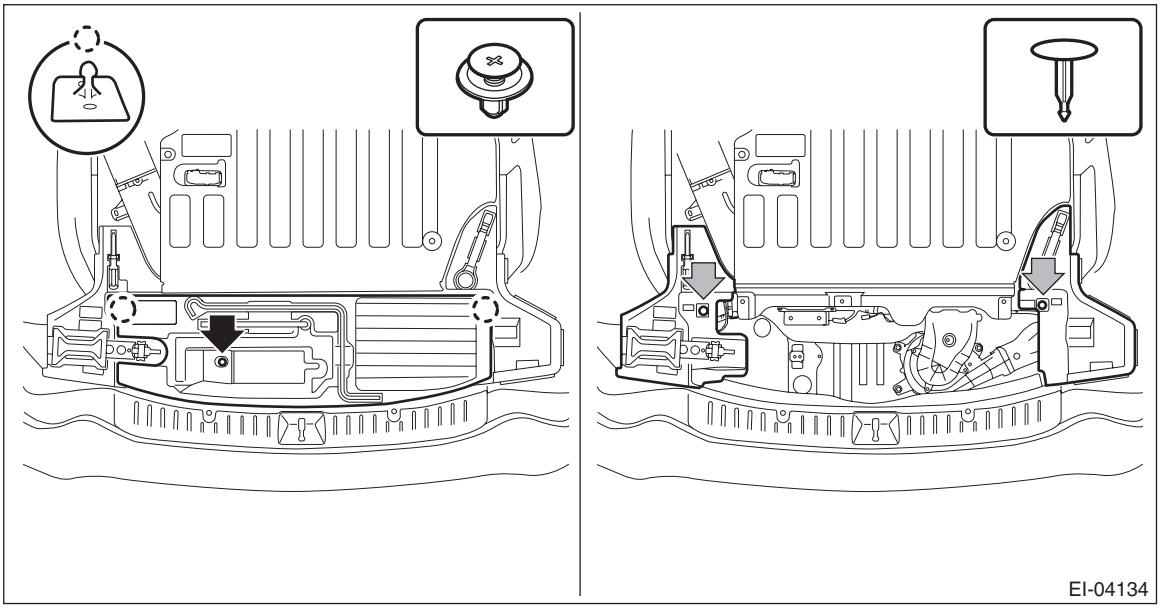

9) Remove the cap - rear strut. (HEV model)

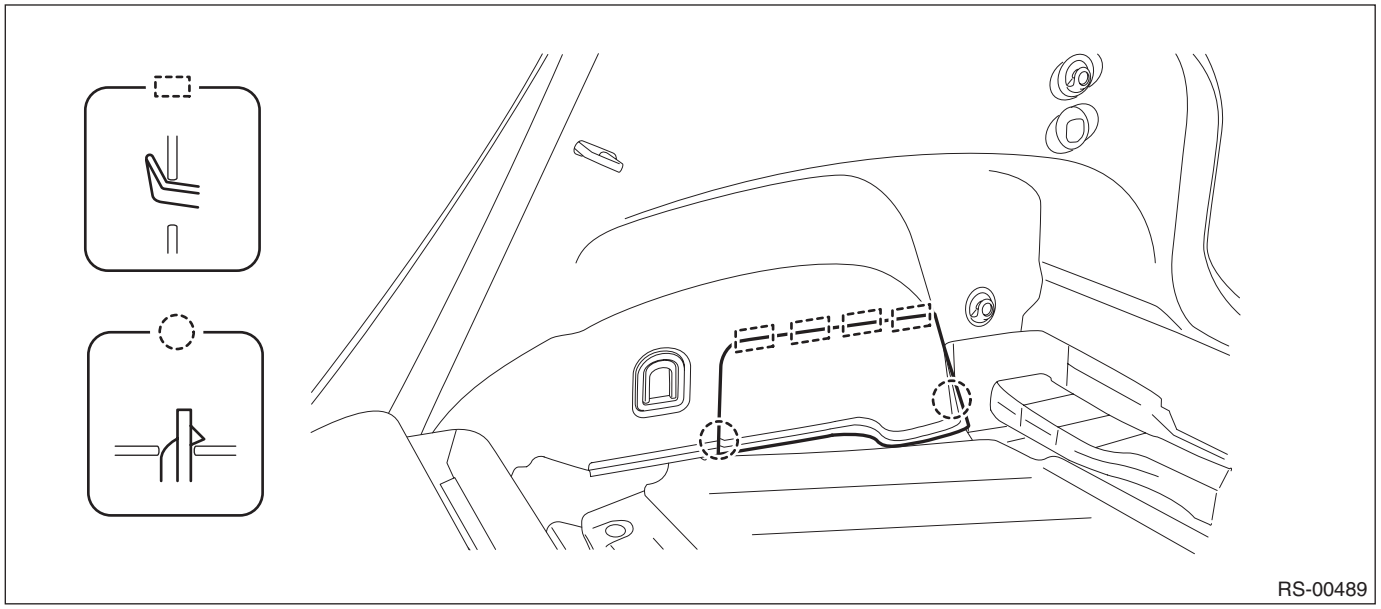

10) Remove the nuts on the upper side of rear strut assembly.

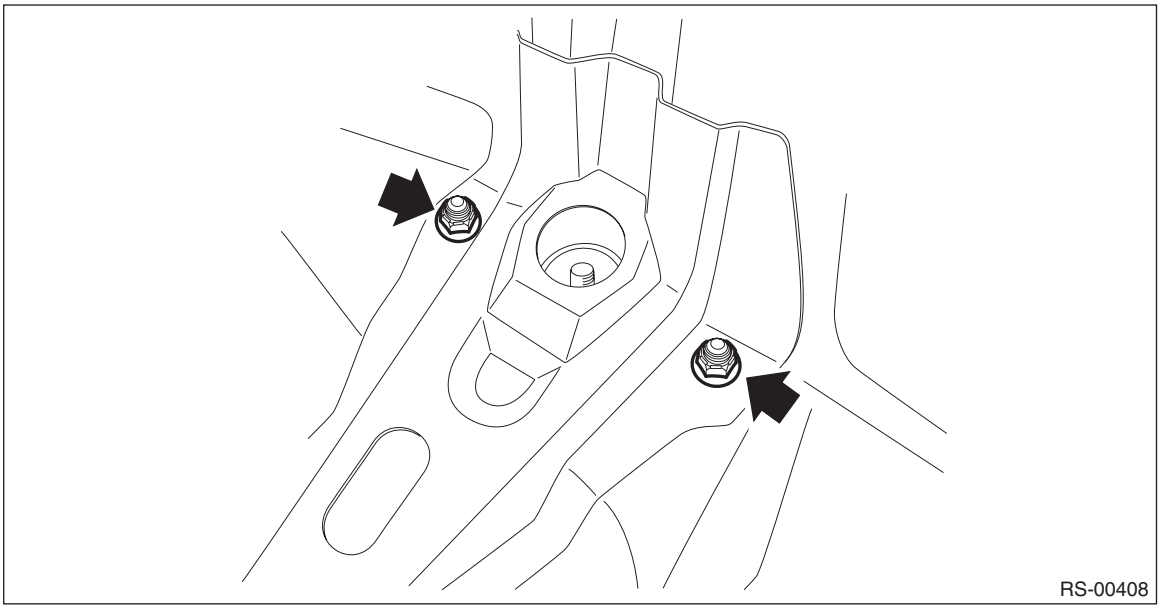

11) Lower the lateral link assembly - rear, and remove the rear strut assembly.

B: INSTALLATION

CAUTION:
- **Be sure to use a new self-locking nut.**
- **Always tighten the bushing in the state where the vehicle is at curb weight and the wheels are in full contact with the ground.**

1) Install each part in the reverse order of removal.

Tightening torque:
Refer to "COMPONENT" of "General Description" for the tightening torque. <Ref. to RS-3, COMPONENT, General Description.>

2) Install the rear wheels.

Tightening torque:
Except for C4 model: 120 N·m (12.24 kgf-m, 88.5 ft-lb)
C4 model: 100 N·m (10.20 kgf-m, 73.8 ft-lb)

3) Inspect the wheel alignment and adjust if necessary.
- Inspection: <Ref. to FS-7, INSPECTION, Wheel Alignment.>
- Adjustment: <Ref. to FS-11, ADJUSTMENT, Wheel Alignment.>

CAUTION:
When the wheel alignment has been adjusted, perform "VDC sensor midpoint setting mode" of the VDC. <Ref. to VDC-21, ADJUSTMENT, VDC Control Module and Hydraulic Control Unit (VDCCM&H/U).>

4) Perform reinitialization of the auto headlight beam leveler system. (Model with auto headlight beam leveler) <Ref. to LI-18, REINITIALIZATION, PROCEDURE, Auto Headlight Beam Leveler System.>

C: DISASSEMBLY

Refer to "Front Strut" in "FRONT SUSPENSION" section for disassembly. <Ref. to FS-46, DISASSEMBLY, Front Strut.>

D: ASSEMBLY

Refer to "Front Strut" in "FRONT SUSPENSION" section for assembly. <Ref. to FS-47, ASSEMBLY, Front Strut.>

E: INSPECTION

Refer to "Front Strut" in "FRONT SUSPENSION" section for inspection procedures. <Ref. to FS-48, INSPECTION, Front Strut.>

F: DISPOSAL

CAUTION:
- **Before discarding the shock absorber, be sure to wear goggles to protect eyes from gas, oil and cutting powder.**
- **Do not disassemble the shock absorber or place it into a fire.**
- **When discarding gas filled shock absorbers, drill holes in them to purge the gas.**

1) Place the shock absorber on a level surface with the piston rod fully expanded.
2) Make a hole into the specified position 30 mm (1.18 in) deep using a drill with 2 — 3 mm (0.08 — 0.12 in) diameter.

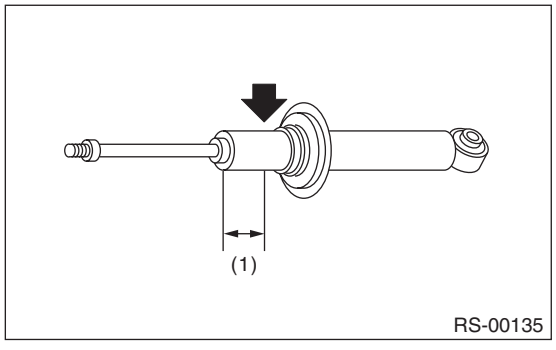

(1) 40 mm (1.57 in)

10.General Diagnostic Table

A: INSPECTION

1. IMPROPER VEHICLE POSTURE OR IMPROPER WHEEL ARCH HEIGHT

Possible cause	Corrective action
(1) Permanent distortion or damaged coil spring	Replace.
(2) Rough operation of shock absorber	Replace.
(3) Installation of the wrong shock absorber	Replace with proper parts.
(4) Installation of the wrong coil spring	Replace with proper parts.

2. POOR RIDE COMFORT

1) Large rebound shock
2) Rocking of the vehicle continues too long after running over bump and hump.
3) Excessive shock in bumping

Possible cause	Corrective action
(1) Damaged coil spring	Replace.
(2) Overinflation of tires	Adjust.
(3) Improper wheel arch height	Replace the coil springs with new parts.
(4) Defective operation of shock absorber	Replace.
(5) Damage or deformation of shock absorber mount	Replace.
(6) Unsuitable length (maximum or minimum) of shock absorber	Replace with appropriate parts.
(7) Deformation or loss of bushing	Replace.
(8) Deformation or damage of helper in shock absorber	Replace.
(9) Oil leakage from the shock absorber	Replace.

3. NOISE

Possible cause	Corrective action
(1) Wear or damage of shock absorber component parts	Replace.
(2) Loosening of the suspension link or arm installing bolt	Tighten to the specified torque.
(3) Deformation or loss of bushing	Replace.
(4) Unsuitable length (maximum or minimum) of shock absorber	Replace with appropriate parts.
(5) Damaged coil spring	Replace.
(6) Wear or damage of the ball joint	Replace.
(7) Deformation of the clamp - stabilizer bushing	Replace.

WHEEL AND TIRE SYSTEM

WT

Page

1. General Description 2
2. Tire and Wheel 4
3. “T-type” Tire 6
4. Full Wheel Cap 7
5. Tire Pressure Monitoring System 8
6. Tire Repair Kit 10
7. General Diagnostic Table 14

1. General Description

A: SPECIFICATION

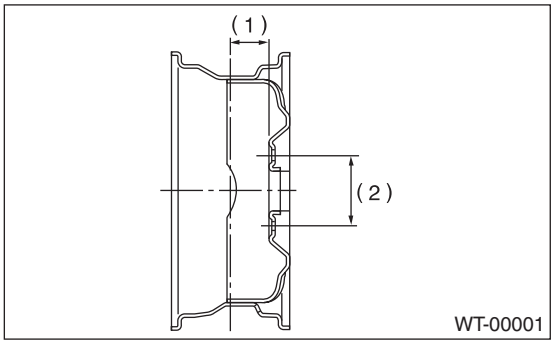

(1) Inset
(2) P.C.D.

- Except for XV model

Tire size	Wheel size	Inset mm (in)	P.C.D. mm (in)	Tire inflation pressure kPa (kgf/cm^2, psi)	
				Front wheel	Rear wheel
P195/65R15 89H	15 × 6J	48 (1.89)	100 (3.94)	230 (2.3, 33)	220 (2.2, 32)
P205/55R16 89V	16 × 6$^1/_2$J				
P205/50R17 88V	17 × 7J			220 (2.2, 32)	210 (2.1, 30)
	17 × 7JJ				
T135/80D16 101M	16 × 4T	20 (0.79)		–	420 (4.2, 60)

- XV model

Tire size	Wheel size	Inset mm (in)	P.C.D. mm (in)	Tire inflation pressure kPa (kgf/cm^2, psi)		
				Front wheel		Rear wheel
P225/55R17 95H	17 × 7J	20 (0.79)	100 (3.94)	MT	220 (2.2, 32)	210 (2.1, 30)
225/55R17 97V				CVT	230 (2.3, 33)	220 (2.2, 32)
T145/90D16 106M	16 × 4T			–		420 (4.2, 60)
185/65R17 90M	17 × 6JJ	55 (2.17)	100 (3.94)	–		290 (3.0, 42)

NOTE:
Size and inflation pressure of the standard equipment tire and spare tire for emergency are described on the “Tire inflation pressure” label attached to the body side of the driver’s door.

1. SERVICE DATA

Part	Axial runout	Radial runout
Steel wheel	1.5 mm (0.059 in)	
Aluminum wheel	1.0 mm (0.039 in)	

Wheel balancing	Standard	Service limit
Dynamic unbalance	5 g (0.18 oz) or less	

B: COMPONENT

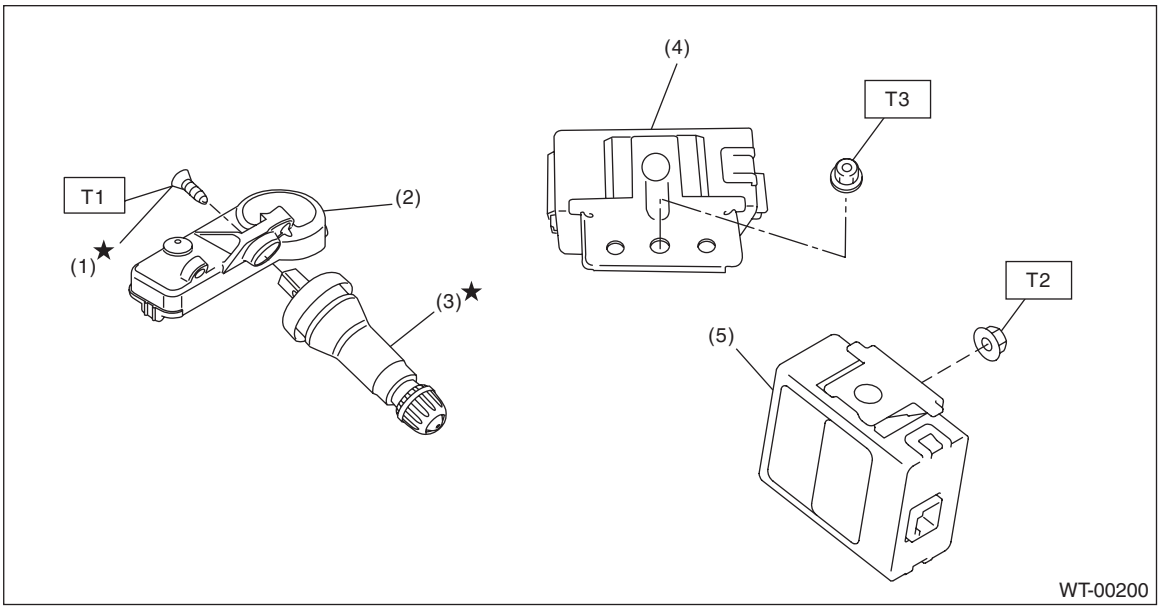

(1) Screw
(2) Transmitter (snap in type)
(3) Valve
(4) TPMS & keyless entry control module
(5) TPMS CM

Tightening torque: N·m (kgf-m, ft-lb)

T1: 1.4 (0.14, 1.0)
T2: 7.5 (0.76, 5.5)
T3: 13 (1.33, 9.6)

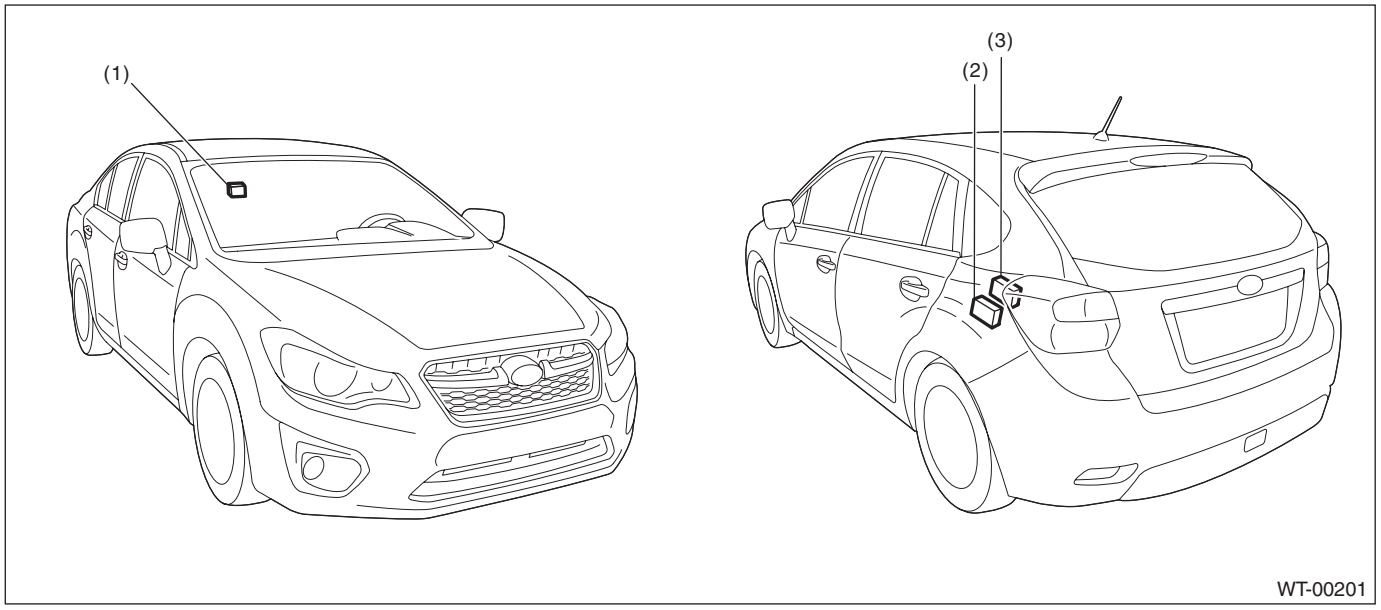

(1) TPMS & keyless entry control module (4 door model)
(2) TPMS CM
(3) TPMS & keyless entry control module (5 door model)

C: PREPARATION TOOL

1. GENERAL TOOL

TOOL NAME	REMARKS
Air pressure gauge	Used for measuring tire air pressure.
Dial gauge	Used for measuring wheel runout.
Wheel balancer	Used for adjusting wheel balance.

2. Tire and Wheel

A: REMOVAL

1) Remove the hubcap. (model with hubcap) <Ref. to WT-7, REMOVAL, Full Wheel Cap.>
2) Lift up the vehicle.
3) Remove the wheel nut.
4) Remove the wheels.

CAUTION:
When removing the wheels, be careful not to damage the bolt - hub.

B: INSTALLATION

1) Install the wheels to vehicle.
2) Tighten the wheel nuts to the specified torque.

Tightening torque:
Except for C4 model: 120 N·m (12.24 kgf-m, 88.5 ft-lb)
C4 model: 100 N·m (10.20 kgf-m, 73.8 ft-lb)

C: INSPECTION

1. TIRE

CAUTION:
When replacing a tire, make sure to use tires of the same size, construction and load range as originally installed.

1) Tire size and tire inflation pressure check <Ref. to WT-2, SPECIFICATION, General Description.>
2) Cracks, damage and wear check
3) Tire runout check
   (1) Lift up the vehicle.
   (2) Slowly rotate the wheel to check rim “runout” using a dial gauge.

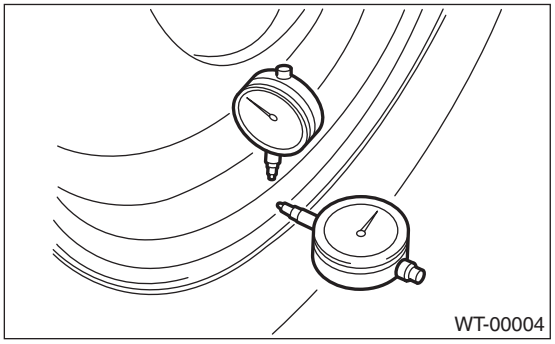

- Aluminum wheel

Axial runout limit	Radial runout limit
1.0 mm (0.039 in)	

- Steel wheel

Axial runout limit	Radial runout limit
1.5 mm (0.059 in)	

   (3) If the rim runout exceeds service limit, replace the wheel.

2. TIRE ROTATION

NOTE:
Rotate tires periodically (12,500 km/7,500 miles) in order to prolong life and to prevent uneven wear.
Rotate tires as shown in the figure depending on whether or not the direction of the tire rotation is specified.

- When the direction of tire rotation is not specified

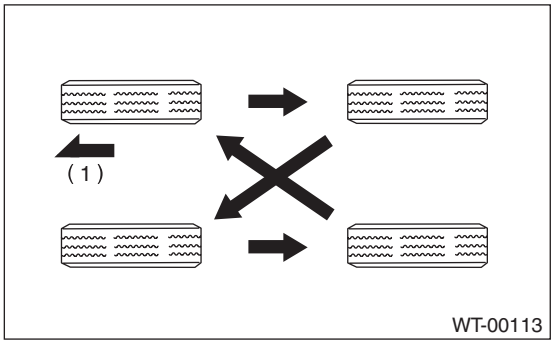

(1) Front side of vehicle

- When the direction of tire rotation is specified

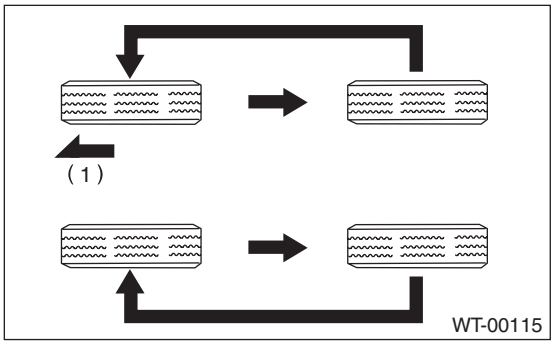

(1) Front side of vehicle

3. WHEEL BALANCING

1) Using the wheel balancer, measure wheel balance.
2) Adjust the wheel balancing.

NOTE:
- Unbalance after adjusting the wheel balancing should be 5 g (0.18 oz) or less.
- When using the adhesive type weight, degrease the surface where the adhesive type weight will be applied securely.
- After applying the adhesive type weight, apply a force to the weight and attain full adhesion.
- Using the knock-on type weight, check the size of the knock-on part.

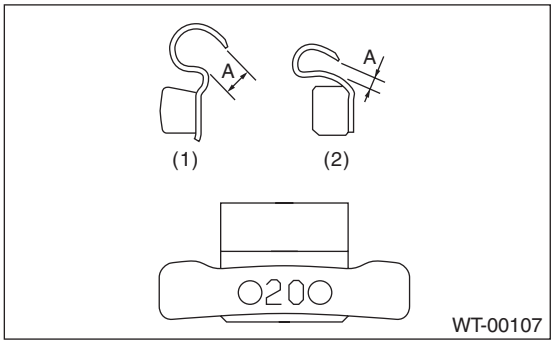

(1) Knock-on type weight for aluminum wheel
(2) Knock-on type weight for steel wheel

Service limit A:
Knock-on type weight for steel wheel: 2.0 mm (0.079 in)
Knock-on type weight for aluminum wheel: 5.0 mm (0.197 in)

3. “T-type” Tire

A: NOTE

“T-type” tire for temporary use is prepared as a spare tire.

CAUTION:
- **The “T-type” tire is only for temporary use. Replace with a conventional tire as soon as possible.**
- **Do not use tire chains for “T-type” tires. Doing so can damage the vehicle and the tires because the tires are too small in size to attach chains to.**
- **Do not drive at a speed greater than 80 km/h (50 MPH).**
- **Drive at as low a speed as possible and avoid bumps on the road.**

B: REPLACEMENT

Refer to “Tire & Wheel” for removal and installation of the “T-type” tire. <Ref. to WT-4, Tire and Wheel.>

C: INSPECTION

Refer to “Tire & Wheel” for inspection of the “T-type” tire. <Ref. to WT-4, TIRE, INSPECTION, Tire and Wheel.>

4. Full Wheel Cap

A: REMOVAL

Insert a remover into the notch located diagonally to the valve, and remove the cap by prying the remover to the tire side.

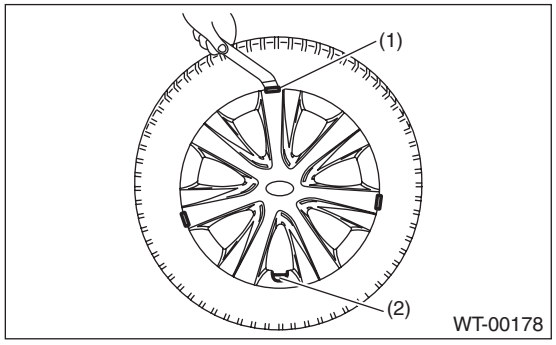

(1) Cutout portion
(2) Valve hole

B: INSTALLATION

1) Align the valve with the valve hole in the hubcap.
2) Install the hubcap by tapping it in the order from (1) to (3) described in the figure.

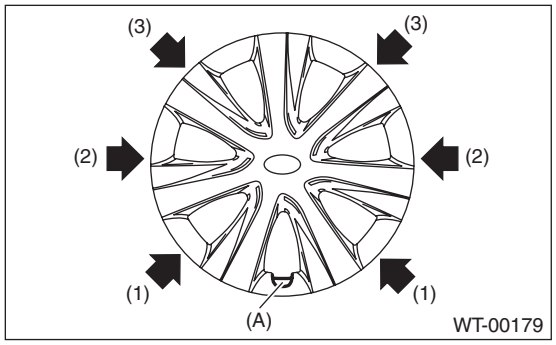

(A) Valve hole

C: INSPECTION

Check for damage on the hubcap.

5. Tire Pressure Monitoring System

A: REMOVAL

1. TRANSMITTER (TIRE INFLATION PRESSURE SENSOR)

1) Remove the wheels from the vehicle. <Ref. to WT-4, REMOVAL, Tire and Wheel.>
2) Remove the tires from wheels.

CAUTION:
Use a tire changer when removing the tire from the wheel.
3) Loosen the screw to remove the transmitter from the valve stem.

CAUTION:
Do not reuse the valve and screw.
Replace the valve and screw with a new part even when reusing transmitter.

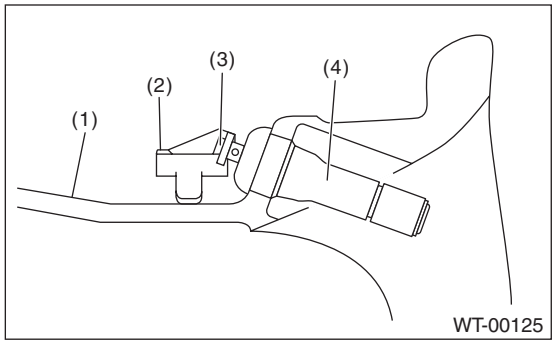

(1) Wheel
(2) Transmitter
(3) Screw
(4) Valve

4) Remove the valve from the wheel.

2. TPMS & KEYLESS CONTROL MODULE

NOTE:
TPMS control module is integrated with the keyless entry control module.

4 door model

1) Disconnect the ground cable from battery.
2) Remove the trim panel assembly - rear shelf. <Ref. to EI-120, REMOVAL, Rear Shelf Trim.>
3) Remove the TPMS & keyless control module.
   (1) Disconnect the connector.
   (2) Remove the bolt and then remove the TPMS & keyless control module.

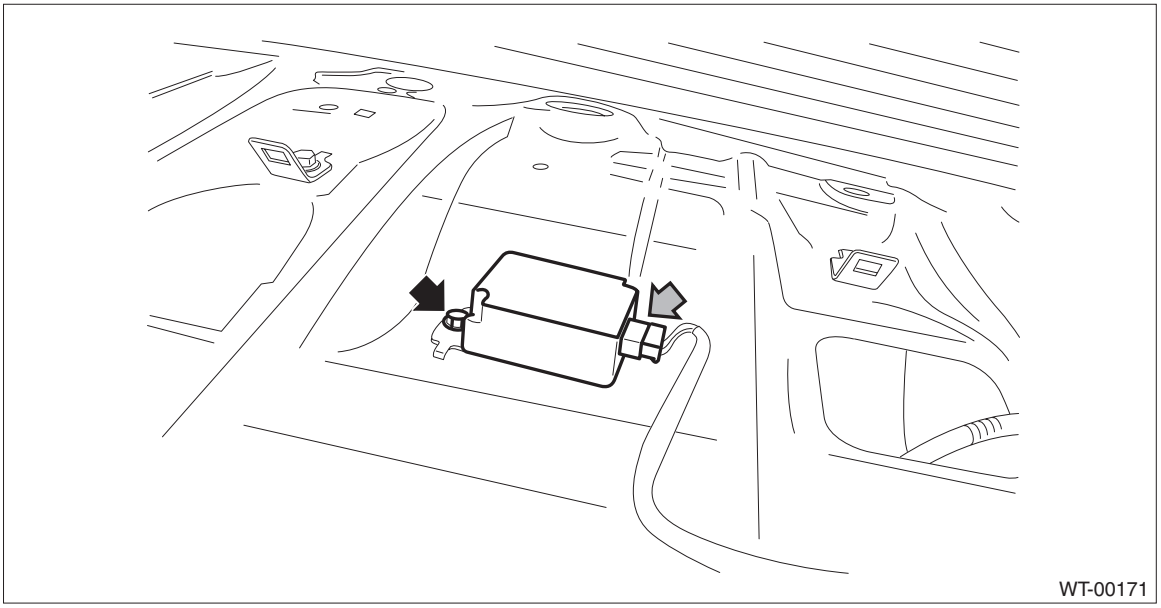

5 door model (keyless entry model)

1) Disconnect the ground cable from battery and wait for at least 60 seconds before starting work. <Ref. to NT-5, BATTERY, NOTE, Note.>

NOTE:
For the 12 volt engine restart battery of HEV model, disconnect the ground terminal from 12V engine restart battery sensor.
2) Remove the trim panel - rear apron LH. <Ref. to EI-115, 5 DOOR MODEL/XV MODEL, REMOVAL, Rear Quarter Trim.>
3) Remove the TPMS & keyless control module.
   (1) Disconnect the connector.
   (2) Remove the bolt and then remove the TPMS & keyless control module.

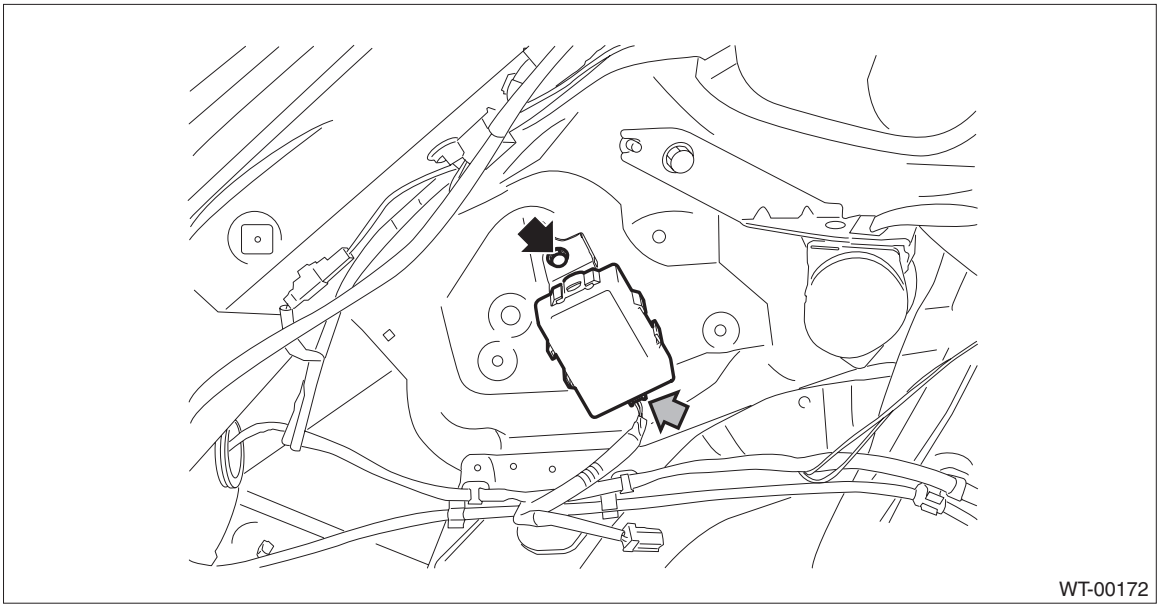

3. TPMS CM

NOTE:
TPMS control module is separate from the keyless entry control module.
1) Disconnect the ground cable from battery and wait for at least 60 seconds before starting work. <Ref. to NT-5, BATTERY, NOTE, Note.>

NOTE:
For the 12 volt engine restart battery of HEV model, disconnect the ground terminal from 12V engine restart battery sensor.
2) Remove the trim panel - rear apron LH. <Ref. to EI-115, 5 DOOR MODEL/XV MODEL, REMOVAL, Rear Quarter Trim.>
3) Remove the TPMS CM.
   (1) Disconnect the connector.
   (2) Remove the bolt and then remove the TPMS CM.

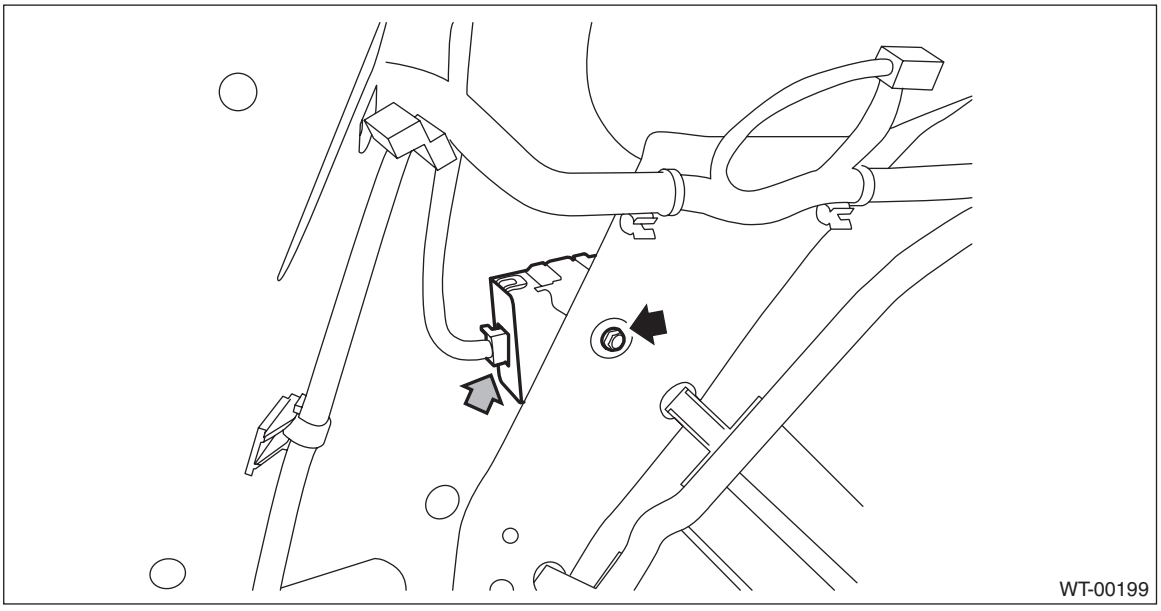

B: INSTALLATION

1. TRANSMITTER (TIRE INFLATION PRESSURE SENSOR)

CAUTION:
Use the new transmitter assembly or replace the new valve and screw, when installing.
1) Replace the valve and screw with a new part when reusing transmitter.

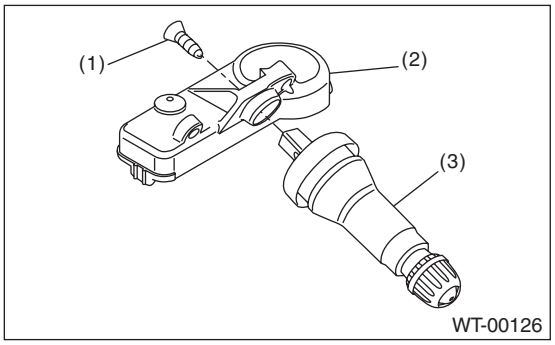

(1) Screw
(2) Transmitter
(3) Valve

Tightening torque:
1.4 N·m (0.14 kgf-m, 1.0 ft-lb)

2) Install the transmitter to the wheel by aligning it with valve hole.

NOTE:
When using the jig that pulls the valve cap by hooking its neck part, use another short-type cap.
3) Install the tires to wheels.

CAUTION:
- **Use a tire changer when installing tire to wheel.**
- **To prevent damaging the transmitter, set the tire changer boom in the position as shown in the figure.**

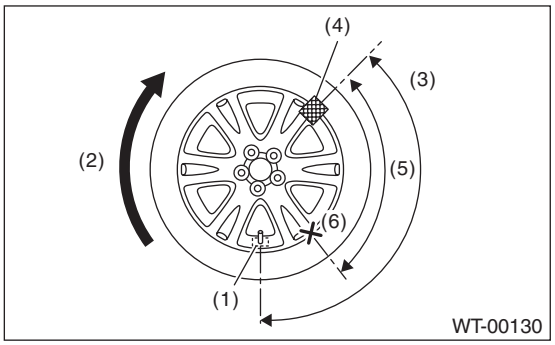

(1) Transmitter
(2) Direction of turn table rotation
(3) 135°
(4) Tire changer boom
(5) 90°
(6) Starting point for fitting the bead to the rim

4) Install the wheels to vehicle. <Ref. to WT-4, INSTALLATION, Tire and Wheel.>
5) Register the transmitter ID to the TPMS & keyless control module. <Ref. to TPM(diag)-15, Register Transmitter (ID).>

2. TPMS & KEYLESS CONTROL MODULE

Install each part in the reverse order of removal.

Tightening torque:
13 N·m (1.33 kgf-m, 9.6 ft-lb)

3. TPMS CM

Install each part in the reverse order of removal.

Tightening torque:
7.5 N·m (0.76 kgf-m, 5.5 ft-lb)

C: ADJUSTMENT

Re-register the transmitter ID when transmitter has been replaced. <Ref. to TPM(diag)-15, Register Transmitter (ID).>

6. Tire Repair Kit

A: NOTE

- Refer to the owner's manual for the tire puncture repair.
- Replace the expired sealant with a new part.
- The expiration date of a tire puncture repair sealant is shown on the label of the sealant bottle. The expired sealant is not included in the warranty.

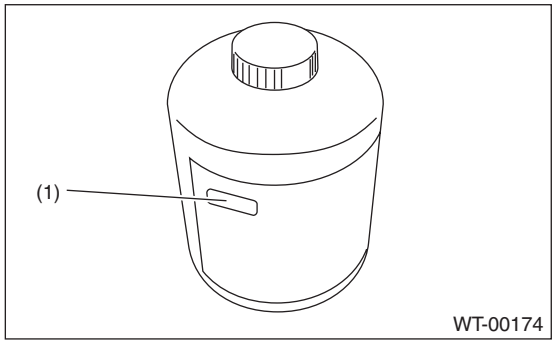

(1) Label

B: REPLACEMENT

1. CLEARING THE TIRE PUNCTURE REPAIR SEALANT

CAUTION:
- **Do not dispose the tire filled with repair sealant.**
- **Expired sealant, recovered sealant, or empty bottles and hoses of sealant used for repair work, contains ethylene glycol that is to be treated as industrial waste. Take appropriate measures to these materials at the time of disposal.**
- **Perform this operation in a well-ventilated space.**
- **During the operation, use appropriate protection tools to prevent the sealant from adhering to eyes, skin and clothes.**
- **After work, wash hands, face etc. well to wash away the sealant completely.**
- **If the sealant enters the mouth or eyes, wash it away with plenty of water, and consult a doctor.**

1) Using a tire changer, remove the tire from the wheel.

NOTE:
Cover the tire changer and floor with cloth, and work while being careful not to spill the sealant.

2) Clear the sealant remaining inside the tire.

3) Wipe off the sealant adhered to the wheel, inside the tire, tire changer and on the floor with cloth carefully.

CAUTION:
- **Completely wipe off the sealant in the mating surface of wheel rim and bead.**
- **Do not use the tire repaired with the tire puncture repair kit.**
- **Wheel can be reused even after repaired by using the tire puncture repair kit. Tire valve cannot be reused.**

2. REPLACEMENT OF REPAIR SEALANT AND INJECTION CAP

NOTE:
After using the repair kit for the repair work, replace the repair sealant and injection cap with new parts.

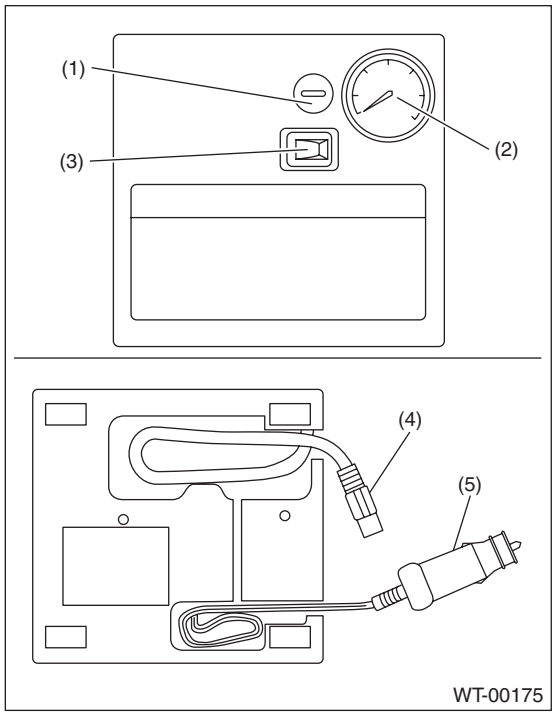

(1) Air bleeding button
(2) Pressure gauge
(3) Power switch
(4) Hose
(5) Power cord

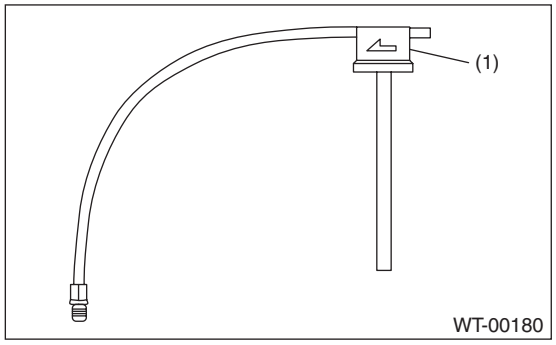

(1) Injection cap

Place a new repair sealant bottle, injection cap and compressor back into the bag, and store the bag at the specified position of the vehicle.

7. General Diagnostic Table

A: INSPECTION

Symptoms	Possible cause	Corrective action
Wheel is out of balance.	Improperly inflated tire.	Adjust the tire pressure.
	Uneven wear	Check the tire referring to “Abnormal tire wear” in this table, carry out the procedure and replace the tire.
	Front wheel alignment	Check or adjust the front wheel alignment. • Inspection: <Ref. to FS-7, INSPECTION, Wheel Alignment.> • Adjustment: <Ref. to FS-11, ADJUSTMENT, Wheel Alignment.>
	Rear wheel alignment	Check or adjust the rear wheel alignment. • Inspection: <Ref. to FS-7, INSPECTION, Wheel Alignment.> • Adjustment: <Ref. to FS-11, ADJUSTMENT, Wheel Alignment.>
	Front strut	Check the front strut. <Ref. to FS-48, INSPECTION, Front Strut.>
	Rear shock absorber	Check the rear shock absorber. <Ref. to RS-35, INSPECTION, Rear Shock Absorber.>
	Housing ASSY - front axle	Check the housing assembly - front axle. <Ref. to DS-34, INSPECTION, Front Hub Unit Bearing.>
	Hub unit COMPL - front axle	Check the hub unit COMPL - front axle. <Ref. to DS-34, INSPECTION, Front Hub Unit Bearing.>
	Hub unit COMPL - rear axle	Check the hub unit COMPL - rear axle. <Ref. to DS-56, INSPECTION, Rear Hub Unit Bearing.>
Vehicle is abnormally out of balance.	Improperly inflated tire.	Adjust the tire pressure.
	Uneven wear	Check the tire referring to “Abnormal tire wear” in this table, carry out the procedure and replace the tire.
	Front stabilizer	Inspect the front stabilizer.
	Front wheel alignment	Check or adjust the front wheel alignment. • Inspection: <Ref. to FS-7, INSPECTION, Wheel Alignment.> • Adjustment: <Ref. to FS-11, ADJUSTMENT, Wheel Alignment.>
	Rear wheel alignment	Check or adjust the rear wheel alignment. • Inspection: <Ref. to FS-7, INSPECTION, Wheel Alignment.> • Adjustment: <Ref. to FS-11, ADJUSTMENT, Wheel Alignment.>
Abnormal wheel vibration	Improperly inflated tire.	Adjust the tire pressure.
	Uneven wear	Check the tire referring to “Abnormal tire wear” in this table, carry out the procedure and replace the tire.
	Improper wheel balancing	Check the wheel balance. <Ref. to WT-5, WHEEL BALANCING, INSPECTION, Tire and Wheel.>
	Housing ASSY - front axle	Check the housing assembly - front axle. <Ref. to DS-34, INSPECTION, Front Hub Unit Bearing.>
	Hub unit COMPL - front axle	Check the hub unit COMPL - front axle. <Ref. to DS-34, INSPECTION, Front Hub Unit Bearing.>
	Hub unit COMPL - rear axle	Check the hub unit COMPL - rear axle. <Ref. to DS-56, INSPECTION, Rear Hub Unit Bearing.>

Symptoms	Possible cause	Corrective action
Abnormal tire wear	Improperly inflated tire.	Adjust the tire pressure.
	Improper wheel balancing	Check the wheel balance. <Ref. to WT-5, WHEEL BALANCING, INSPECTION, Tire and Wheel.>
	Front wheel alignment	Check or adjust the front wheel alignment. • Inspection: <Ref. to FS-7, INSPECTION, Wheel Alignment.> • Adjustment: <Ref. to FS-11, ADJUSTMENT, Wheel Alignment.>
	Rear wheel alignment	Check or adjust the rear wheel alignment. • Inspection: <Ref. to FS-7, INSPECTION, Wheel Alignment.> • Adjustment: <Ref. to FS-11, ADJUSTMENT, Wheel Alignment.>

TIRE PRESSURE MONITORING SYSTEM (DIAGNOSTICS)

TPM(diag)

		Page
1.	Basic Diagnostic Procedure	2
2.	General Description	4
3.	Electrical Component Location	6
4.	Control Module I/O Signal	8
5.	Subaru Select Monitor	9
6.	Read Diagnostic Trouble Code (DTC)	12
7.	Clear Memory Mode	13
8.	Read Current Data	14
9.	Register Transmitter (ID)	15
10.	Display Transmitter (ID)	16
11.	Inspection Mode	17
12.	Tire Pressure Warning Light / Trouble Indicator Light Illumination Pattern	18
13.	List of Diagnostic Trouble Code (DTC)	23
14.	Diagnostic Procedure with Diagnostic Trouble Code (DTC)	25
15.	General Diagnostic Table	36

1. Basic Diagnostic Procedure

A: PROCEDURE

CAUTION:
Before removal or installation, be sure to remove any foreign matter (dust, moisture, oil, etc.) from the TPMS & keyless entry CM connector or TPMS CM connector.

NOTE:
To check harness for open or short circuits, shake the suspected trouble spot or connector.

	Step	Check	Yes	No
1	**CHECK PRE-INSPECTION.** 1) Check with the user regarding when the warning light lit or started blinking. 2) Before performing diagnostics, check all components which may adversely affect the tire pressure monitor system. <Ref. to TPM(diag)-4, INSPECTION, General Description.>	Is the component that might affect the tire pressure monitor system normal?	Go to step **2**.	Repair or replace each component.
2	**CHECK DIAGNOSTIC TROUBLE CODE (DTC).** 1) Turn the ignition switch to OFF. 2) Connect the Subaru Select Monitor to data link connector. 3) Turn the ignition switch to ON and run the Subaru Select Monitor. NOTE: If the communication function of the Subaru Select Monitor cannot be executed normally, check the communication circuit. <Ref. to TPM(diag)-9, COMMUNICATION FOR INITIALIZING IMPOSSIBLE, INSPECTION, Subaru Select Monitor.> 4) Read the DTC. <Ref. to TPM(diag)-12, OPERATION, Read Diagnostic Trouble Code (DTC).>	Is DTC displayed?	Go to step **4**.	Go to step **3**.
3	**PERFORM GENERAL DIAGNOSTICS.** 1) Perform the inspection by referring to “General Diagnostic Table”. <Ref. to TPM(diag)-36, General Diagnostic Table.> 2) Perform the Clear Memory Mode. <Ref. to TPM(diag)-13, OPERATION, Clear Memory Mode.> 3) Perform the Inspection Mode. <Ref. to TPM(diag)-17, Inspection Mode.> 4) Read the DTC. <Ref. to TPM(diag)-12, OPERATION, Read Diagnostic Trouble Code (DTC).> Check the DTC is not displayed.	Does the tire pressure warning light illuminates for about 2 seconds and then foes off after turning on the ignition switch, and then go out?	Finish the diagnosis.	Check the tire inflation pressure warning light. <Ref. to TPM(diag)-18, Tire Pressure Warning Light / Trouble Indicator Light Illumination Pattern.>

	Step	Check	Yes	No
4	**CHECK FOR REPRODUCTION OF MALFUNCTION.** 1) Perform the drive test. Drive the vehicle at 40 km/h (25 MPH) or faster for at least 10 minutes. 2) Read the DTC. <Ref. to TPM(diag)-12, OPERATION, Read Diagnostic Trouble Code (DTC).>	Is the DTC displayed as "Current malfunction"?	Go to step **5**.	When DTC is detected as "Past faults", the circuit has returned to a normal condition at this time. Reproduce the failure, and then perform the diagnosis again. NOTE: In this case, a temporary communication error due to radio wave environment inside and outside the vehicle may be possible.
5	**PERFORM DIAGNOSIS.** 1) Refer to "List of Diagnostic Trouble Code (DTC)". 2) Correct the cause of trouble. 3) Perform the Clear Memory Mode. <Ref. to TPM(diag)-13, OPERATION, Clear Memory Mode.> 4) Perform the drive test. Drive the vehicle at 40 km/h (25 MPH) or faster for at least 10 minutes. 5) Read the DTC. <Ref. to TPM(diag)-12, OPERATION, Read Diagnostic Trouble Code (DTC).>	Is DTC displayed?	Repeat steps 1 to 4 until DTC is not shown.	Finish the diagnosis.

2. General Description

A: CAUTION

1. SUPPLEMENTAL RESTRAINT SYSTEM "AIRBAG"

Airbag system wiring harness is routed near the TPM control module.

CAUTION:
- **Do not use electrical test equipment on any of the airbag system wiring harness circuits.**
- **Be careful not to damage the wiring harness of the airbag system when servicing the TPMS & keyless entry CM or TPMS CM.**

2. TPMS & KEYLESS ENTRY CM OR TPMS CM

- If the transmitter is replaced, ID registration for the transmitter is required. <Ref. to TPM(diag)-15, OPERATION, Register Transmitter (ID).>
- When adjusting tire pressure indoors in winter, there is a big temperature difference between the indoor facilities and outside. Once the car is outside where the temperature is lower, the air pressure in the tires will drop, causing the tire pressure warning light to illuminate, even if the pressure in the tires was adjusted to standard values indoors. To avoid this, it is necessary to adjust the tire pressure to the high side in consideration of the difference in temperature between inside and outside according to the following table.
- P195/65R15, P205/55R16, P225/55R17 (CVT)

Temperature °C (°F)	Indoor temperature	15.5 (60)		
	Ambient temperature	–1 (30)	–12 (10)	–23 (–10)
Air pressure kPa (psi)	Front	250 (36)	265 (38)	280 (40)
	Rear	240 (35)	255 (37)	270 (39)

- P205/50R17, P225/55R17 (MT)

Temperature °C (°F)	Indoor temperature	15.5 (60)		
	Ambient temperature	–1 (30)	–12 (10)	–23 (–10)
Air pressure kPa (psi)	Front	240 (35)	255 (37)	270 (39)
	Rear	230 (33)	245 (35)	255 (37)

B: INSPECTION

Before performing diagnosis, check the following item which might affect the quality of the tire pressure monitoring system.

1. TIRE

- Inspect that the tire pressure is within the specification while the tire is cool. (Refer to Tire Caution Label.)
- Check the tires for damage or the insertion of foreign matters.

2. BATTERY

Check that amount of battery fluid, gravity and voltage are within the specifications.

NOTE:
For HEV model, check the 12 volt auxiliary battery. <Ref. to SC(H4DO(HEV))-38, Battery.>

Standard voltage: 12 V or more

Specific gravity: 1.260 or more

C: PREPARATION TOOL

1. SPECIAL TOOL

ILLUSTRATION	TOOL NUMBER	DESCRIPTION	REMARKS
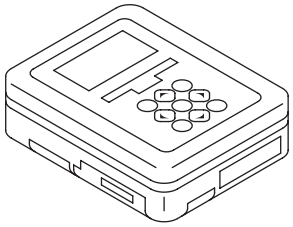 ST1B022XU0	1B022XU0	SUBARU SELECT MONITOR III KIT	Used for troubleshooting the electrical system.

2. GENERAL TOOL

TOOL NAME	REMARKS
Circuit tester	Used for measuring resistance, voltage and current.
Transmitter registration tool	Used to register the transmitter ID. Manufacturer: Kent-Moore Item number: J45295

3. Electrical Component Location

A: LOCATION

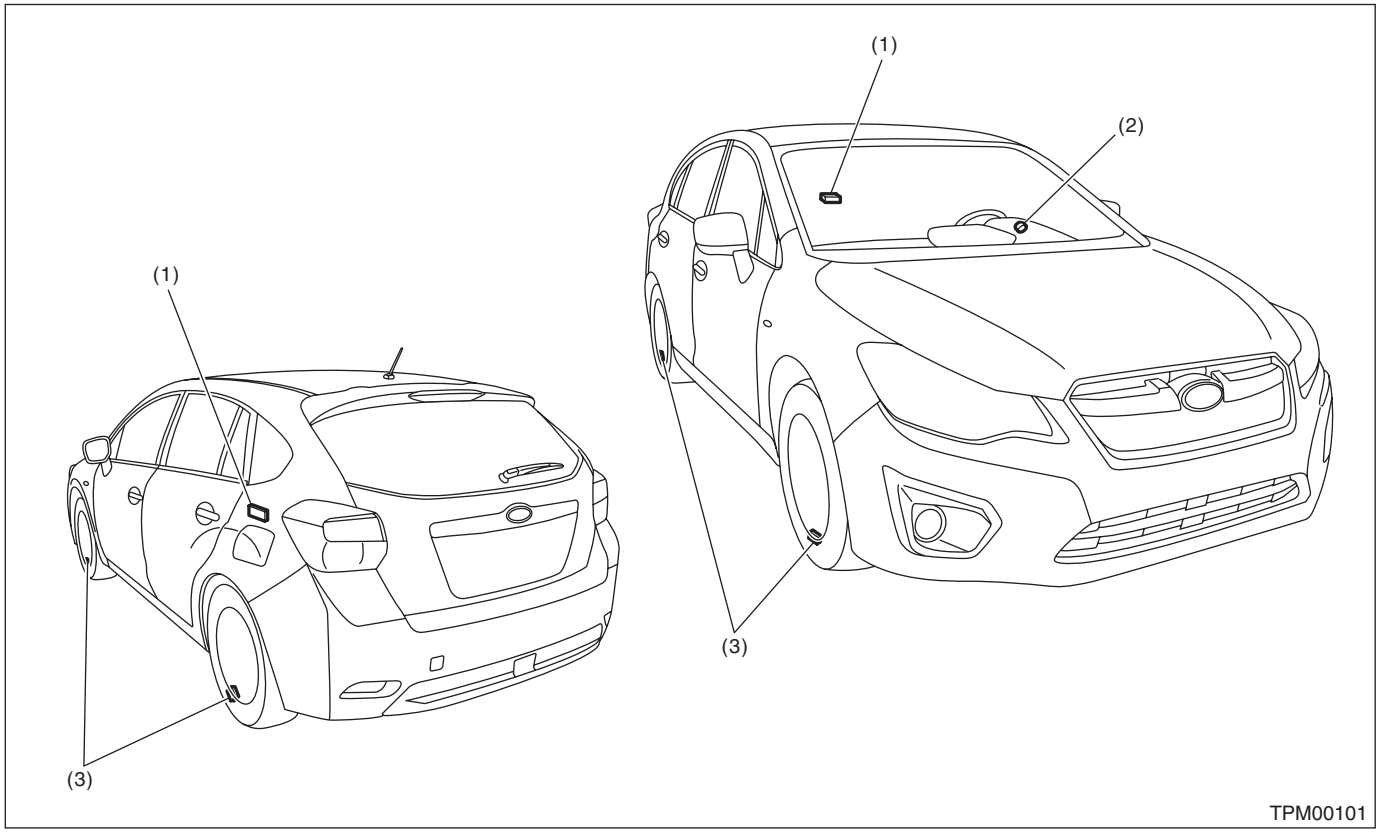

(1) TPMS & keyless entry CM or TPMS CM
(2) Tire pressure warning light
(3) Snap-in type transmitter

- 5 door model (model without keyless access)

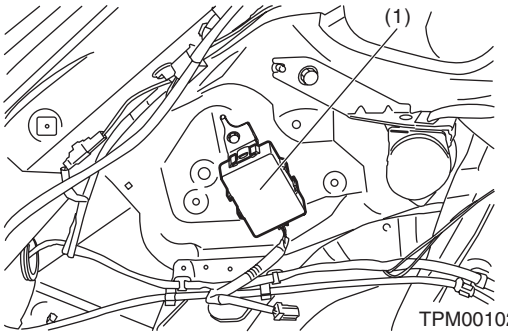

TPM00102

- 5 door model (model with keyless access)

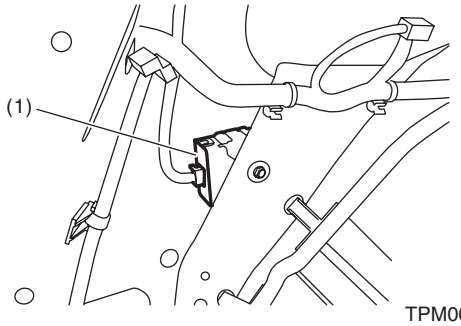

TPM00127

- 4 door model

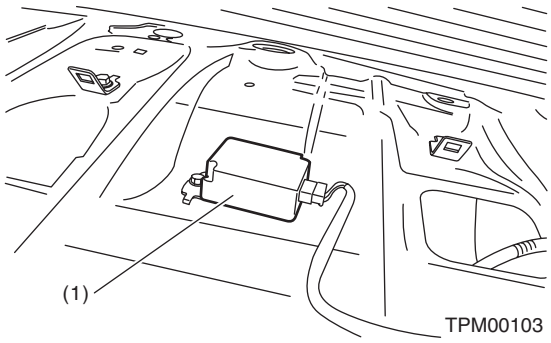

TPM00103

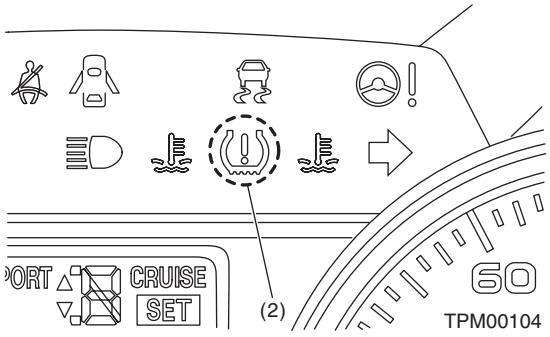

TPM00104

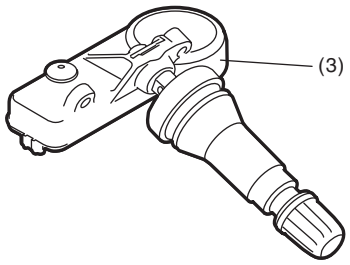

TPM00049

4. Control Module I/O Signal

A: ELECTRICAL SPECIFICATION

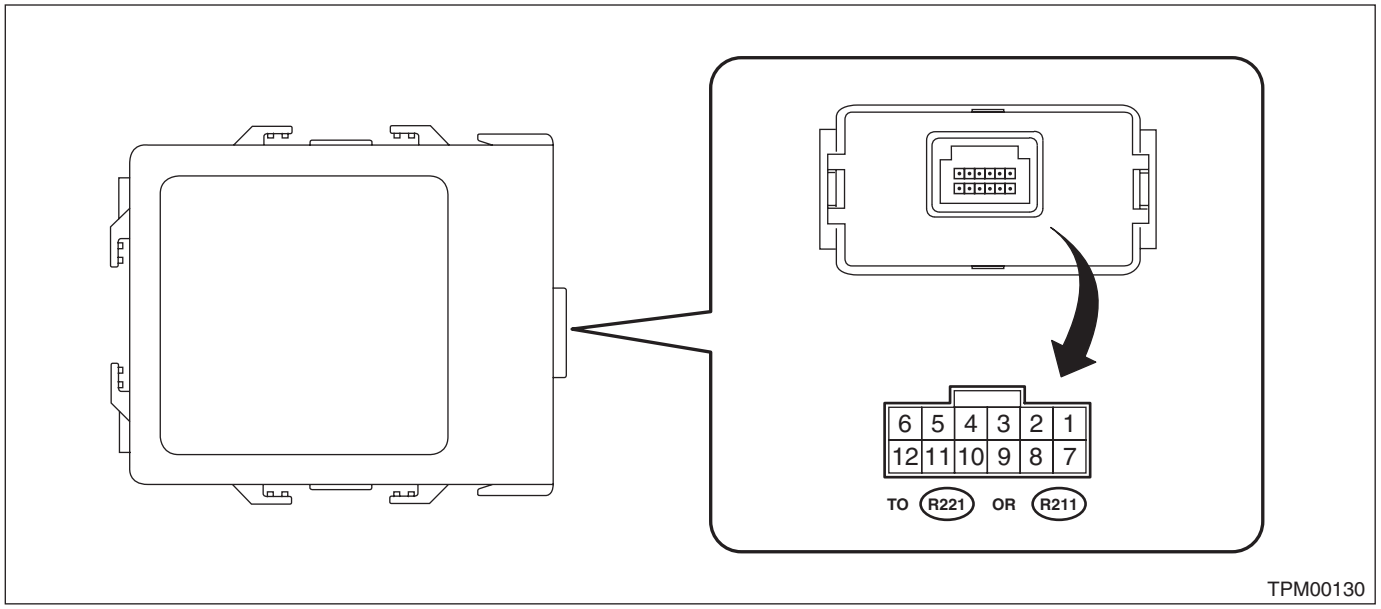

Terminal No.	Content	Measured value and measuring conditions	Remarks
1	—	—	—
2	—	—	—
3	—	—	—
4	Ignition power supply	10 — 13 V (when the ignition switch is ON)	—
5	GND	0 V (always)	—
6	Battery power supply	10 — 13 V (always)	—
7	—	—	—
8	—	—	—
9	—	—	—
10	—	—	—
11	Body integrated unit	—	—
12	—	—	—

B: WIRING DIAGRAM

Refer to “Tire Pressure Monitoring System” in the wiring diagram. <Ref. to WI(w/o HEV)-148, WIRING DIAGRAM, Tire Pressure Monitoring System.> <Ref. to WI(HEV)-210, WIRING DIAGRAM, Tire Pressure Monitoring System.>

5. Subaru Select Monitor

A: OPERATION

For the operation procedure, refer to the “PC application help for Subaru Select Monitor”.

NOTE:
If TPMS & keyless entry CM or TPMS CM and Subaru Select Monitor cannot communicate, check the communication circuit. <Ref. to TPM(diag)-9, INSPECTION, Subaru Select Monitor.>

B: INSPECTION

1. COMMUNICATION FOR INITIALIZING IMPOSSIBLE

DETECTING CONDITION:
Defective harness connector
TROUBLE SYMPTOM:
Communication is impossible between the TPMS & keyless entry CM or TPMS CM and the Subaru Select Monitor.
WIRING DIAGRAM:
Tire Pressure Monitoring System <Ref. to WI(w/o HEV)-148, WIRING DIAGRAM, Tire Pressure Monitoring System.> <Ref. to WI(HEV)-210, WIRING DIAGRAM, Tire Pressure Monitoring System.>

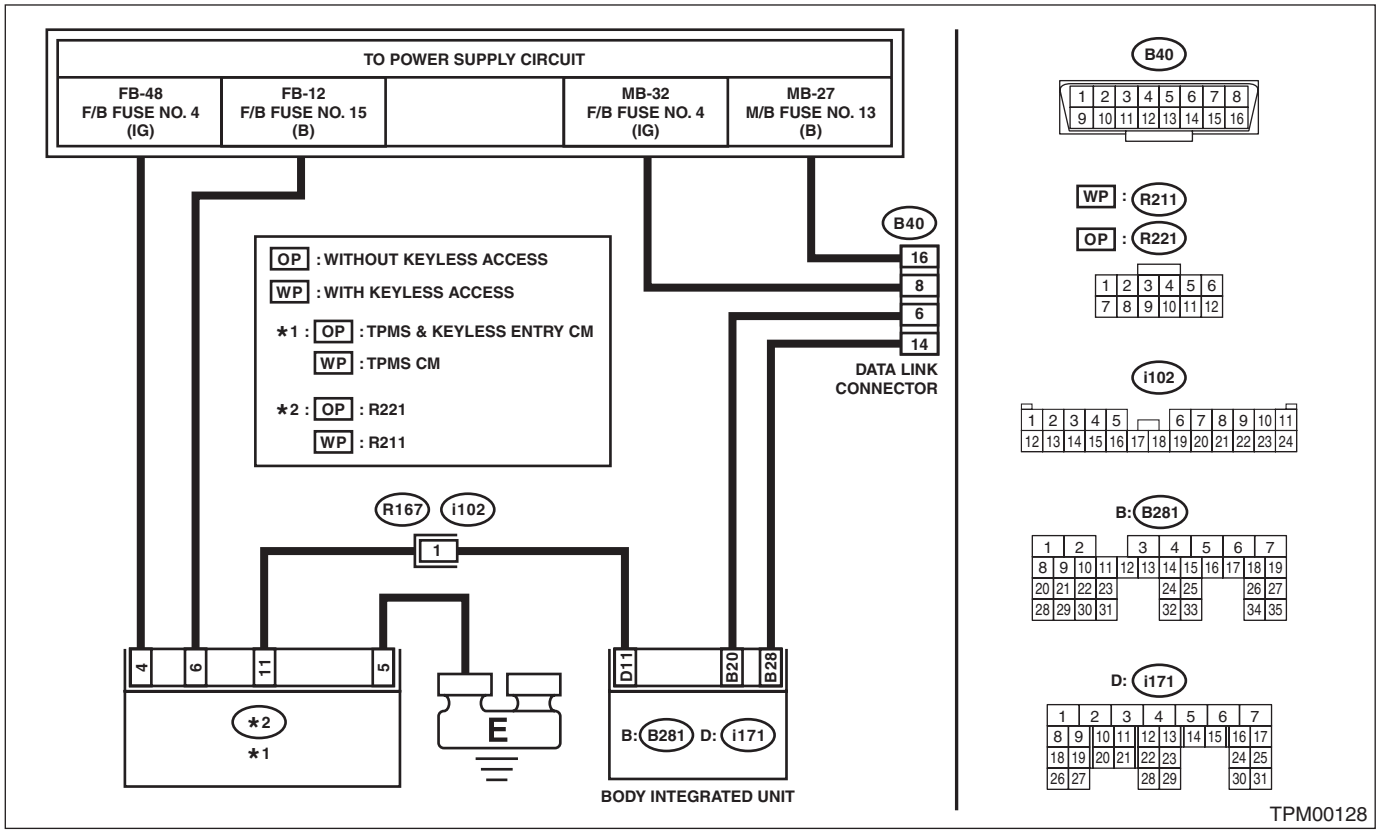

Step		Check	Yes	No
1	**CHECK IGNITION SWITCH.**	Is the ignition switch ON?	Go to step **2**.	Turn the ignition switch to ON, and select TPM mode using Subaru Select Monitor.
2	**CHECK BATTERY.** Check the battery voltage. NOTE: For HEV model, check the 12 volt auxiliary battery. <Ref. to SC(H4DO(HEV))-38, Battery.>	Is the voltage 11 V or more?	Go to step **3**.	Charge or replace the battery.

	Step	Check	Yes	No
3	**CHECK BATTERY TERMINAL.** Check the battery terminal. NOTE: For HEV model, check the 12 volt auxiliary battery. <Ref. to SC(H4DO(HEV))-38, Battery.>	Is there poor contact at battery terminal?	Repair or tighten the battery terminal.	Go to step **4**.
4	**CHECK SUBARU SELECT MONITOR COMMUNICATION.** 1) Turn the ignition switch to ON. 2) Using the Subaru Select Monitor, check whether communication to other systems can be executed normally.	Is the system name displayed on Subaru Select Monitor?	Go to step **8**.	Go to step **5**.
5	**CHECK SUBARU SELECT MONITOR COMMUNICATION.** 1) Turn the ignition switch to OFF. 2) Disconnect the TPMS & keyless entry CM connector or TPMS CM connector. 3) Turn the ignition switch to ON. 4) Check whether communication to other systems can be executed normally.	Is the system name displayed on Subaru Select Monitor?	Replace the TPMS & keyless entry CM or TPMS CM. <Ref. to WT-8, Tire Pressure Monitoring System.>	Go to step **6**.
6	**CHECK HARNESS CONNECTOR BETWEEN EACH CONTROL MODULE AND BODY INTEGRATED UNIT.** 1) Turn the ignition switch to OFF. 2) Disconnect the TPMS & keyless entry CM connector or TPMS CM connector. 3) Measure the resistance between the body integrated unit and chassis ground. ***Connector & terminal*** ***(B40) No. 6 — Chassis ground:*** ***(B40) No. 14 — Chassis ground:***	Is the resistance 1 MΩ or more?	Go to step **7**.	Repair the harness and connector between each control module and body integrated unit.
7	**CHECK OUTPUT SIGNAL TO TPMS & KEYLESS ENTRY CM OR TPMS CM.** 1) Turn the ignition switch to ON. 2) Measure the voltage between TPMS & keyless entry CM or TPMS CM and chassis ground. ***Connector & terminal*** ***(B40) No. 6 (+) — Chassis ground (–):*** ***(B40) No. 14 (+) — Chassis ground (–):***	Is the voltage less than 1 V?	Go to step **8**.	Repair the harness and connector between each control module and body integrated unit.
8	**CHECK HARNESS CONNECTOR BETWEEN TPMS & KEYLESS ENTRY CM OR TPMS CM AND BODY INTEGRATED UNIT.** 1) Turn the ignition switch to OFF. 2) Measure the resistance between TPMS & keyless entry CM connector or TPMS CM connector and body integrated unit. ***Connector & terminal*** ***Without keyless access*** ***(R221) No. 11 — (i171) No. 11:*** ***With keyless access*** ***(R211) No. 11 — (i171) No. 11:***	Is the resistance less than 0.5 Ω?	Go to step **9**.	Repair the harness and connector between TPMS & keyless entry CM or TPMS CM and body integrated unit.
9	**CHECK TPMS & KEYLESS ENTRY CM CONNECTOR OR TPMS CM CONNECTOR.**	Is the connector inserted into the TPMS & keyless entry CM or TPMS CM until it locks?	Go to step **10**.	Insert the connector into the TPMS & keyless entry CM or TPMS CM.

	Step	Check	Yes	No
10	**CHECK POWER SUPPLY CIRCUIT.** 1) Turn the ignition switch to ON. 2) Measure the ignition power supply voltage between TPMS & keyless entry CM connector or TPMS CM connector and chassis ground. ***Connector & terminal*** ***Without keyless access*** ***(R221) No. 4 (+) — Chassis ground (–):*** ***With keyless access*** ***(R211) No. 4 (+) — Chassis ground (–):***	Is the voltage 10 — 15 V?	Go to step **11**.	Repair open circuit of the harness between TPMS & keyless entry CM or TPMS CM and battery.
11	**CHECK HARNESS CONNECTOR BETWEEN TPMS & KEYLESS ENTRY CM OR TPMS CM AND CHASSIS GROUND.** 1) Turn the ignition switch to OFF. 2) Disconnect the connector from TPMS & keyless entry CM or TPMS CM. 3) Measure the resistance of harness between TPMS & keyless entry CM or TPMS CM and chassis ground. ***Connector & terminal*** ***Without keyless access*** ***(R221) No. 5 — Chassis ground:*** ***With keyless access*** ***(R211) No. 5 — Chassis ground:***	Is the resistance less than 0.5 Ω?	Go to step **12**.	Repair open circuit of the harness of TPMS & keyless entry CM or TPMS CM.
12	**CHECK POOR CONTACT OF CONNECTOR.**	Is there poor contact in TPMS & keyless entry CM power supply or TPMS CM power supply, ground circuit and body integrated unit?	Repair the connector.	Replace the TPMS & keyless entry CM or TPMS CM. <Ref. to WT-8, Tire Pressure Monitoring System.>

6. Read Diagnostic Trouble Code (DTC)

A: OPERATION

For operation procedures, refer to the “PC application help for Subaru Select Monitor”.

NOTE:
- For details concerning DTCs, refer to List of Diagnostic Trouble Code (DTC). <Ref. to TPM(diag)-23, List of Diagnostic Trouble Code (DTC).>
- All DTCs detected will be displayed.
- If a particular DTC is not properly stored in memory (due to a voltage drop of the TPMS & keyless entry CM or TPMS CM power supply, etc.) when a problem occurs, a DTC suffixed with a question mark appears on the Subaru Select Monitor display. This shows it may be an unreliable reading.
- When DTC is not displayed, check the indicator circuit and communication circuit. <Ref. to TPM(diag)-18, Tire Pressure Warning Light / Trouble Indicator Light Illumination Pattern.>

7. Clear Memory Mode

A: OPERATION

For operation procedures, refer to the “PC application help for Subaru Select Monitor”.

8. Read Current Data

A: OPERATION

For the operation procedure, refer to the “PC application help for Subaru Select Monitor”.

B: LIST

Display	Contents to be displayed	Unit of measure
Tire 1 FN code	LEARN, LOW BAT, OFF, WAKE, RE ME, NORMAL	LEARN: Transmitted transmitter ID using the transmitter registration tool LOW BAT: Transmitter battery voltage running low OFF: Transmitter function stops (no data transmission) RE ME: Tire air changes ±8.4 kPa WAKE: When data transmission is started from a stopped state. NORMAL: Conditions other than above
Tire 2 FN code		
Tire 3 FN code		
Tire 4 FN code		
Tire 1 air pressure	Value converted to tire pressure from data delivered from transmitter is displayed. (The figure may differ from the actual measured values.)	kPa, psig, mmHg, inHg
Tire 2 air pressure		kPa, psig, mmHg, inHg
Tire 3 air pressure		kPa, psig, mmHg, inHg
Tire 4 air pressure		kPa, psig, mmHg, inHg
Vehicle Speed	Vehicle speed signal which is input in control module	km/h, MPH
Pressure warning	Threshold where tire pressure warning light illuminates	kPa, psig, mmHg, inHg
Return pressure	Threshold where tire pressure warning light goes out	kPa, psig, mmHg, inHg

9. Register Transmitter (ID)

A: OPERATION

Perform the registration procedure of the transmitter in the following cases:
- Transmitter was replaced.
- TPMS & keyless entry CM or TPMS CM is replaced.

NOTE:
- If registration of the transmitter ID is not possible after two attempts, replace the TPMS & keyless entry CM or TPMS CM. <Ref. to WT-8, Tire Pressure Monitoring System.>
- During the registration, turn the ignition switch to OFF and end the Subaru Select Monitor. Or if the registration is not performed for 5 minutes or more, the registration mode is cancelled.
- When rotating tires, there is no affect on the performance or functions of the tire pressure monitoring control module even if the transmitter (ID) is not registered, however, the tire position displayed on the Subaru Select Monitor will be incorrect.

1) Adjust all tire pressures to the specifications.
2) Connect Subaru Select Monitor and select the {Each System Check} on the «Main Menu».
3) On «System Selection Menu» display, select {Tire pressure monitor}.
4) After the {Tire pressure monitor} is displayed, select [OK].
5) On «Tire pressure monitor diagnosis» display, select {Transmitter ID regist confirm}.
6) {ID registration mode When execute Registered ID is deleted Continue?} is displayed, select [OK].
7) Contact the transmitter registration tool to the side wall area near the air valve on the front left tire, and press the switch. The transmitter ID is sent to the TPMS & keyless entry CM or TPMS CM. (At this time, the tire pressure warning light blinks to confirm that the registration has started.)

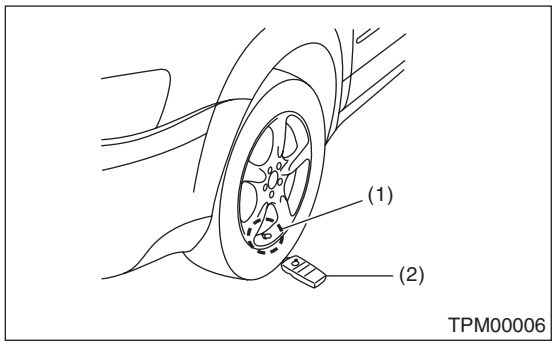

(1) Air valve (transmitter)
(2) Transmitter registration tool

NOTE:
- The registration order of transmitter ID is not specified.
- The transmitter registration tool is used by touching the side wall area near the transmitter.
- When registration of each tire is completed, {ID registration completed} is displayed on the Select Monitor screen.
- If registration procedure stop in the halfway (turning ignition switch to OFF, wrong registration order, etc), proceed from step 5).

8) When ID registration is completed, the tire pressure warning light remains lit for approximately 2 seconds, to end the registration. Switch to the screen displaying the transmitter ID on the Subaru Select Monitor display. <Ref. to TPM(diag)-16, Display Transmitter (ID).>
9) Check the transmitter ID that was registered, then perform a driving test. <Ref. to TPM(diag)-17, Inspection Mode.>

10.Display Transmitter (ID)

A: OPERATION

For operation procedures, refer to the “PC application help for Subaru Select Monitor”.

11.Inspection Mode

A: PROCEDURE

Reproduce the malfunction occurrence condition as much as possible. Drive the vehicle at 40 km/h (25 MPH) or faster for at least ten minutes.

12. Tire Pressure Warning Light / Trouble Indicator Light Illumination Pattern

A: INSPECTION

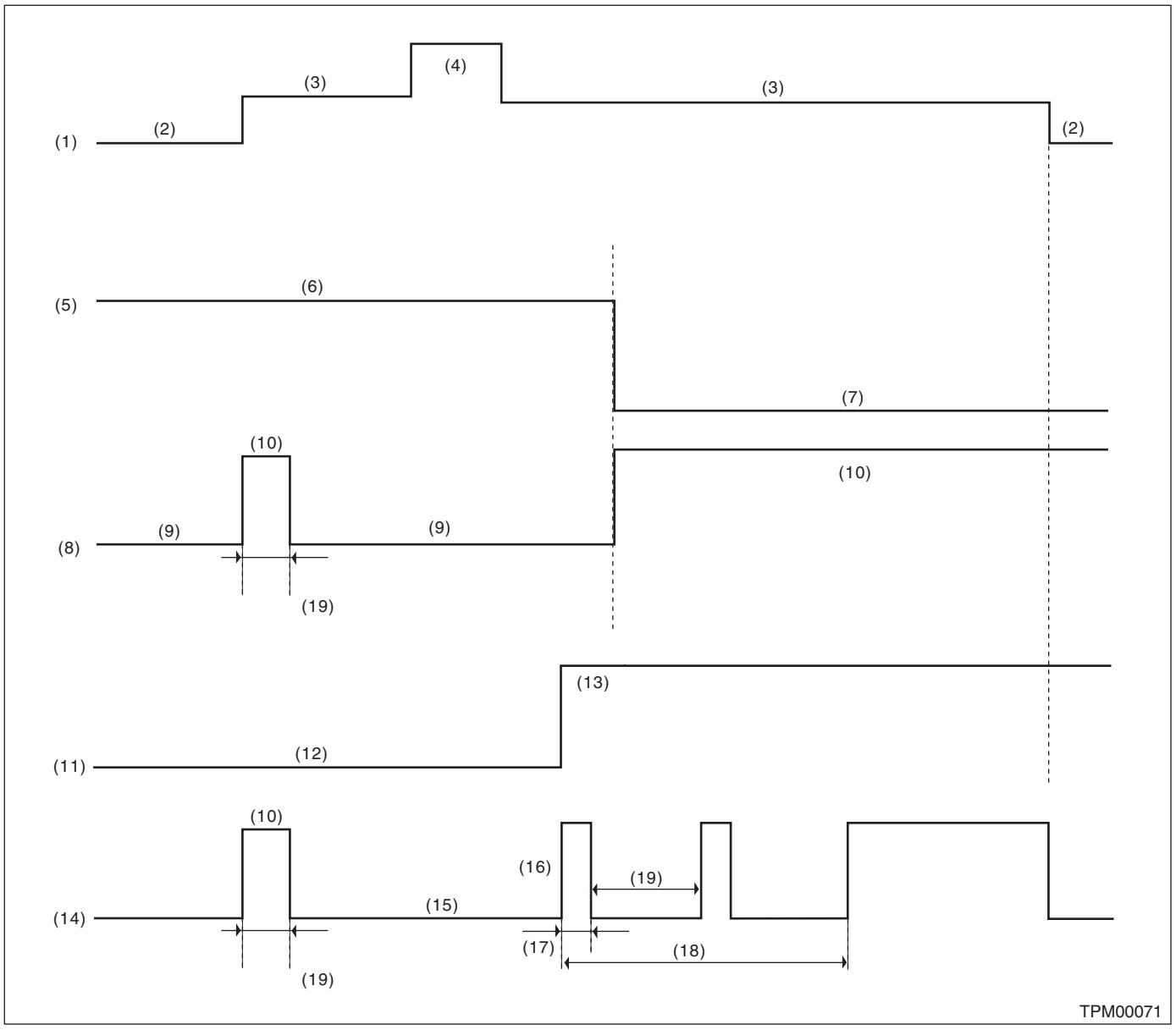

(1) Ignition switch
(2) OFF
(3) ON
(4) Start
(5) Tire inflation pressure condition
(6) Meet the specification
(7) Less than standard value (For the pressure warning level, refer to “CURRENT DATA”.) <Ref. to TPM(diag)-14, LIST, Read Current Data.>
(8) Tire inflation pressure warning light (pressure condition)
(9) Light OFF
(10) Light ON
(11) System status
(12) Normal
(13) Malfunction
(14) Tire inflation pressure warning light (system condition)
(15) Light OFF
(16) Blink
(17) 1 second
(18) Blinks 25 times
(19) 2 second

1) When the tire pressure warning light does not illuminate in accordance with this illumination pattern, there must be an electrical malfunction.
2) If the tire pressure warning light does not go off, check the TPMS & keyless entry CM or TPMS CM/warning light circuit and the combination meter circuit. <Ref. to TPM(diag)-20, TIRE PRESSURE WARNING LIGHT DOES NOT COME OFF, Tire Pressure Warning Light / Trouble Indicator Light Illumination Pattern.>

NOTE:
If the problem is fixed while driving at approximately 40 km/h (25 MPH) after the tire pressure warning light blinks/lights, the warning light goes out and the tire pressure monitor system operates normally. (If there is a decrease in tire pressure, or a malfunction of the system, the malfunction history is displayed.)

B: TIRE PRESSURE WARNING LIGHT DOES NOT COME ON

DETECTING CONDITION:
Defective combination meter

TROUBLE SYMPTOM:
When the ignition switch is turned to ON, the tire pressure warning light does not turn on (for approx. 2 seconds).

	Step	Check	Yes	No
1	**CHECK DIAGNOSTIC TROUBLE CODE (DTC).** Connect the Subaru Select Monitor, and read the Diagnostic Trouble Code. <Ref. to TPM(diag)-12, OPERATION, Read Diagnostic Trouble Code (DTC).>	Is diagnostics code (DTC) displayed?	Perform the diagnosis according to the DTC. <Ref. to TPM(diag)-23, List of Diagnostic Trouble Code (DTC).>	Replace the combination meter. <Ref. to IDI-16, REMOVAL, Combination Meter.>

C: TIRE PRESSURE WARNING LIGHT DOES NOT COME OFF

DETECTING CONDITION:

- Defective combination meter
- Tires pressure drop
- Transmitter ID not registered

TROUBLE SYMPTOM:

Tire pressure warning light remains illuminating after engine starts.

	Step	Check	Yes	No
1	**CHECK DTC.** Connect the Subaru Select Monitor, and read the Diagnostic Trouble Code. <Ref. to TPM(diag)-12, OPERATION, Read Diagnostic Trouble Code (DTC).>	Is a DTC displayed?	Perform the diagnosis according to the DTC. <Ref. to TPM(diag)-23, List of Diagnostic Trouble Code (DTC).>	Go to step **2**.
2	**CHECK TRANSMITTER (ID).** Display the transmitter ID of the tire pressure monitor system.	Is the transmitter ID registered?	Go to step **3**.	Register the transmitter ID. <Ref. to TPM(diag)-15, OPERATION, Register Transmitter (ID).>
3	**CHECK TRANSMITTER DATA OUTPUT.** 1) Select data display of the tire pressure monitoring. 2) Start the engine and check the tire pressure warning light output.	Is the warning light output ON?	Replace the TPMS & keyless entry CM or TPMS CM. <Ref. to WT-8, Tire Pressure Monitoring System.>	Replace the combination meter. <Ref. to IDI-16, REMOVAL, Combination Meter.>

D: TIRE PRESSURE WARNING LIGHT IS 25 TIMES BLINKING AND TURN ON

DETECTING CONDITION:

- Defective TPMS & keyless entry CM or TPMS CM
- Defective harness
- Transmitter is faulty.

TROUBLE SYMPTOM:

Every time the engine starts, tire pressure warning light blinks 25 times and then illuminates.

WIRING DIAGRAM:

Tire Pressure Monitoring System <Ref. to WI(w/o HEV)-148, WIRING DIAGRAM, Tire Pressure Monitoring System.> <Ref. to WI(HEV)-210, WIRING DIAGRAM, Tire Pressure Monitoring System.>

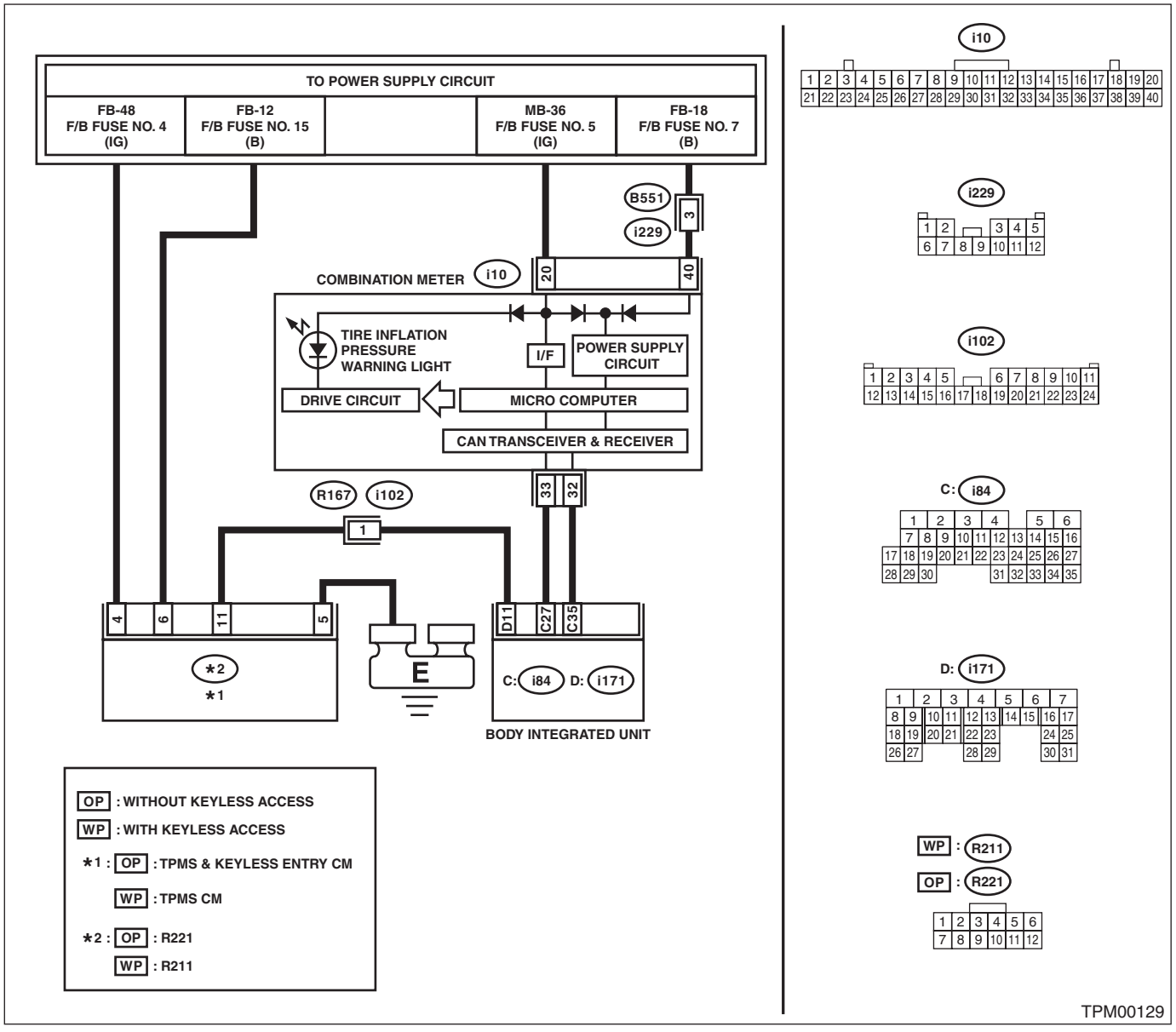

Step		Check	Yes	No
1	**CHECK DTC.** Connect the Subaru Select Monitor, and read the Diagnostic Trouble Code. <Ref. to TPM(diag)-12, OPERATION, Read Diagnostic Trouble Code (DTC).>	Is diagnostics code (DTC) displayed?	Perform the diagnosis according to the DTC. <Ref. to TPM(diag)-23, List of Diagnostic Trouble Code (DTC).>	Go to step **2**.

Step		Check	Yes	No
2	**CHECK LAN COMMUNICATION.** Inspect LAN system. <Ref. to LAN(w/o HEV)(diag)-2, PROCEDURE, Basic Diagnostic Procedure.> <Ref. to LAN(HEV)(diag)-2, PROCEDURE, Basic Diagnostic Procedure.>	Is there any fault?	Repair it according to the diagnosis for LAN system.	Go to step **3**.
3	**CHECK HARNESS.** Measure the resistance between TPMS & keyless entry CM or TPMS CM and body integrated unit. ***Connector & terminal*** ***Without keyless access (R221) No. 11 — (i171) No. 11:*** ***With keyless access (R211) No. 11 — (i171) No. 11:***	Is the resistance less than 10 Ω?	Go to step **4**.	Repair the harness.
4	**CHECK CONNECTOR.** Check each connector.	Is there poor contact or any other faults?	Repair the connector.	Replace the TPMS & keyless entry CM or TPMS CM. <Ref. to WT-8, Tire Pressure Monitoring System.>

13.List of Diagnostic Trouble Code (DTC)

A: LIST

DTC	Item	Contents of diagnosis	Remarks
C2021	Tire 1 Air Pressure Decrease	Tire pressure of tire 1 is reduced.	<Ref. to TPM(diag)-25, DTC C2021 TIRE 1 AIR PRESSURE DECREASE, Diagnostic Procedure with Diagnostic Trouble Code (DTC).>
C2022	Tire 2 Air Pressure Decrease	Tire pressure of tire 2 is reduced.	<Ref. to TPM(diag)-25, DTC C2022 TIRE 2 AIR PRESSURE DECREASE, Diagnostic Procedure with Diagnostic Trouble Code (DTC).>
C2023	Tire 3 Air Pressure Decrease	Tire pressure of tire 3 is reduced.	<Ref. to TPM(diag)-25, DTC C2023 TIRE 3 AIR PRESSURE DECREASE, Diagnostic Procedure with Diagnostic Trouble Code (DTC).>
C2024	Tire 4 Air Pressure Decrease	Tire pressure of tire 4 is reduced.	<Ref. to TPM(diag)-25, DTC C2024 TIRE 4 AIR PRESSURE DECREASE, Diagnostic Procedure with Diagnostic Trouble Code (DTC).>
C2121	Transmitter 1 No Data	Data cannot be received from transmitter 1.	<Ref. to TPM(diag)-26, DTC C2121 TRANSMITTER 1 NO DATA, Diagnostic Procedure with Diagnostic Trouble Code (DTC).>
C2122	Transmitter 2 No Data	Data cannot be received from transmitter 2.	<Ref. to TPM(diag)-26, DTC C2122 TRANSMITTER 2 NO DATA, Diagnostic Procedure with Diagnostic Trouble Code (DTC).>
C2123	Transmitter 3 No Data	Data cannot be received from transmitter 3.	<Ref. to TPM(diag)-26, DTC C2123 TRANSMITTER 3 NO DATA, Diagnostic Procedure with Diagnostic Trouble Code (DTC).>
C2124	Transmitter 4 No Data	Data cannot be received from transmitter 4.	<Ref. to TPM(diag)-27, DTC C2124 TRANSMITTER 4 NO DATA, Diagnostic Procedure with Diagnostic Trouble Code (DTC).>
C2221	Transmitter 1 Pressure Data Abnormal	Transmitter 1 data contents are abnormal.	<Ref. to TPM(diag)-28, DTC C2221 TRANSMITTER 1 PRESSURE DATA ABNORMAL, Diagnostic Procedure with Diagnostic Trouble Code (DTC).>
C2222	Transmitter 2 Pressure Data Abnormal	Transmitter 2 data contents are abnormal.	<Ref. to TPM(diag)-28, DTC C2222 TRANSMITTER 2 PRESSURE DATA ABNORMAL, Diagnostic Procedure with Diagnostic Trouble Code (DTC).>
C2223	Transmitter 3 Pressure Data Abnormal	Transmitter 3 data contents are abnormal.	<Ref. to TPM(diag)-28, DTC C2223 TRANSMITTER 3 PRESSURE DATA ABNORMAL, Diagnostic Procedure with Diagnostic Trouble Code (DTC).>
C2224	Transmitter 4 Pressure Data Abnormal	Transmitter 4 data contents are abnormal.	<Ref. to TPM(diag)-29, DTC C2224 TRANSMITTER 4 PRESSURE DATA ABNORMAL, Diagnostic Procedure with Diagnostic Trouble Code (DTC).>
C2321	Transmitter 1 Function Code Abnormal	Function code has error.	<Ref. to TPM(diag)-30, DTC C2321 TRANSMITTER 1 FUNCTION CODE ABNORMAL, Diagnostic Procedure with Diagnostic Trouble Code (DTC).>

DTC	Item	Contents of diagnosis	Remarks
C2322	Transmitter 2 Function Code Abnormal	Function code has error.	<Ref. to TPM(diag)-30, DTC C2322 TRANSMITTER 2 FUNCTION CODE ABNORMAL, Diagnostic Procedure with Diagnostic Trouble Code (DTC).>
C2323	Transmitter 3 Function Code Abnormal	Function code has error.	<Ref. to TPM(diag)-30, DTC C2323 TRANSMITTER 3 FUNCTION CODE ABNORMAL, Diagnostic Procedure with Diagnostic Trouble Code (DTC).>
C2324	Transmitter 4 Function Code Abnormal	Function code has error.	<Ref. to TPM(diag)-31, DTC C2324 TRANSMITTER 4 FUNCTION CODE ABNORMAL, Diagnostic Procedure with Diagnostic Trouble Code (DTC).>
C2421	Transmitter 1 Battery Voltage Decrease	Transmitter battery voltage is low.	<Ref. to TPM(diag)-32, DTC C2421 TRANSMITTER 1 BATTERY VOLTAGE DECREASE, Diagnostic Procedure with Diagnostic Trouble Code (DTC).>
C2422	Transmitter 2 Battery Voltage Decrease	Transmitter battery voltage is low.	<Ref. to TPM(diag)-32, DTC C2422 TRANSMITTER 2 BATTERY VOLTAGE DECREASE, Diagnostic Procedure with Diagnostic Trouble Code (DTC).>
C2423	Transmitter 3 Battery Voltage Decrease	Transmitter battery voltage is low.	<Ref. to TPM(diag)-32, DTC C2423 TRANSMITTER 3 BATTERY VOLTAGE DECREASE, Diagnostic Procedure with Diagnostic Trouble Code (DTC).>
C2424	Transmitter 4 Battery Voltage Decrease	Transmitter battery voltage is low.	<Ref. to TPM(diag)-33, DTC C2424 TRANSMITTER 4 BATTERY VOLTAGE DECREASE, Diagnostic Procedure with Diagnostic Trouble Code (DTC).>
C2521	Vehicle Speed Is Abnormal	Vehicle speed signal is not input to the control module when the vehicle speed is 6 km/h (3.7 MPH) or more.	<Ref. to TPM(diag)-34, DTC C2521 VEHICLE SPEED IS ABNORMAL, Diagnostic Procedure with Diagnostic Trouble Code (DTC).>

14.Diagnostic Procedure with Diagnostic Trouble Code (DTC)

A: DTC C2021 TIRE 1 AIR PRESSURE DECREASE

NOTE:
Refer to DTC C2024 for diagnostic procedure. <Ref. to TPM(diag)-25, DTC C2024 TIRE 4 AIR PRESSURE DECREASE, Diagnostic Procedure with Diagnostic Trouble Code (DTC).>

B: DTC C2022 TIRE 2 AIR PRESSURE DECREASE

NOTE:
Refer to DTC C2024 for diagnostic procedure. <Ref. to TPM(diag)-25, DTC C2024 TIRE 4 AIR PRESSURE DECREASE, Diagnostic Procedure with Diagnostic Trouble Code (DTC).>

C: DTC C2023 TIRE 3 AIR PRESSURE DECREASE

NOTE:
Refer to DTC C2024 for diagnostic procedure. <Ref. to TPM(diag)-25, DTC C2024 TIRE 4 AIR PRESSURE DECREASE, Diagnostic Procedure with Diagnostic Trouble Code (DTC).>

D: DTC C2024 TIRE 4 AIR PRESSURE DECREASE

DTC DETECTING CONDITION:
Inflation pressure of tires dropped below the specified value.

NOTE:
For the specifications, refer to “CURRENT DATA”. <Ref. to TPM(diag)-14, LIST, Read Current Data.>
TROUBLE SYMPTOM:
Tire pressure warning light illuminates.

	Step	Check	Yes	No
1	**CHECK TIRES.** Lift up the vehicle and check for damage in the tires.	Are there cracks or damage?	Replace the tire.	Go to step **2**.
2	**CHECK TIRES.** Check the tire air pressure.	Is the tire pressure in the specifications?	Go to step **3**.	Adjust the air pressure.
3	**CHECK TRANSMITTER.** Drive the vehicle at 40 km/h (25 MPH) or faster and compare the data from the transmitter on the four wheels.	Is there a transmitter with different data?	Replace the transmitter (tire pressure sensor). <Ref. to WT-8, Tire Pressure Monitoring System.>	Go to step **4**.
4	**PERFORM DRIVING TEST.** 1) Perform the Clear Memory Mode. <Ref. to TPM(diag)-13, OPERATION, Clear Memory Mode.> 2) Perform a driving test. <Ref. to TPM(diag)-17, PROCEDURE, Inspection Mode.> 3) Read the DTC. <Ref. to TPM(diag)-12, OPERATION, Read Diagnostic Trouble Code (DTC).>	Is DTC displayed?	Inspect by referring to “Diagnostic Procedure with Diagnostic Trouble Code (DTC)”. <Ref. to TPM(diag)-25, Diagnostic Procedure with Diagnostic Trouble Code (DTC).>	Finish the diagnosis.

CAUTION:
When driving vehicle to perform driving test, there should be always 2 persons (driver and checker) to check.

E: DTC C2121 TRANSMITTER 1 NO DATA

NOTE:
Refer to DTC C2124 for diagnostic procedure. <Ref. to TPM(diag)-27, DTC C2124 TRANSMITTER 4 NO DATA, Diagnostic Procedure with Diagnostic Trouble Code (DTC).>

F: DTC C2122 TRANSMITTER 2 NO DATA

NOTE:
Refer to DTC C2124 for diagnostic procedure. <Ref. to TPM(diag)-27, DTC C2124 TRANSMITTER 4 NO DATA, Diagnostic Procedure with Diagnostic Trouble Code (DTC).>

G: DTC C2123 TRANSMITTER 3 NO DATA

NOTE:
Refer to DTC C2124 for diagnostic procedure. <Ref. to TPM(diag)-27, DTC C2124 TRANSMITTER 4 NO DATA, Diagnostic Procedure with Diagnostic Trouble Code (DTC).>

H: DTC C2124 TRANSMITTER 4 NO DATA

DTC DETECTING CONDITION:
Data from each transmitter is not received for 8 minutes.
TROUBLE SYMPTOM:
Tire pressure warning light blinks 25 times and then illuminates.

	Step	Check	Yes	No
1	**CHECK FOR REPRODUCTION OF MALFUNCTION.** 1) Perform the drive test. Drive the vehicle at 40 km/h (25 MPH) or faster for at least 10 minutes. 2) Read the DTC. <Ref. to TPM(diag)-12, OPERATION, Read Diagnostic Trouble Code (DTC).>	Is the DTC displayed as "Current malfunction"?	Go to step **2**.	When DTC is detected as "Past faults", the circuit has returned to a normal condition at this time. Reproduce the failure, and then perform the diagnosis again. NOTE: In this case, a temporary communication error due to radio wave environment inside and outside the vehicle may be possible.
2	**START FL TRANSMITTER.** 1) Connect the Subaru Select Monitor and then turn the ignition switch to ON. 2) Select "Transmit ID data monitor". <Ref. to TPM(diag)-16, OPERATION, Display Transmitter (ID).> 3) Use the transmitter registration tool and transmit the ID from the FL transmitter to check "Latest reception ID".	Is "Latest reception ID" updated?	Go to step **3**.	Replace front left transmitter. <Ref. to WT-8, Tire Pressure Monitoring System.>
3	**CHECK FL TRANSMITTER ID.** Check the ID displayed in the updated ID display and the tire 1 registered ID.	Are the two IDs same?	Go to step **4**.	Record the received ID update as the FL transmitter. Go to step **4**.
4	**START FR TRANSMITTER.** Use the transmitter registration tool and transmit the ID from the FR transmitter to check "Latest reception ID".	Is "Latest reception ID" updated?	Go to step **5**.	Replace the front right transmitter. <Ref. to WT-8, Tire Pressure Monitoring System.>
5	**CHECK FR TRANSMITTER ID.** Check the ID displayed in the updated ID display and the tire 2 registered ID.	Are the two IDs same?	Go to step **6**.	Record the received ID update as the FR transmitter. Go to step **6**.
6	**START RR TRANSMITTER.** Use the transmitter registration tool and transmit the ID from the RR transmitter to check "Latest reception ID".	Is "Latest reception ID" updated?	Go to step **7**.	Replace the RR transmitter. <Ref. to WT-8, Tire Pressure Monitoring System.>
7	**CHECK RR TRANSMITTER ID.** Check the ID displayed in the updated ID display and the tire 3 registered ID.	Are the two IDs same?	Go to step **8**.	Record the received ID update as the RR transmitter. Go to step **8**.

	Step	Check	Yes	No
8	**START RL TRANSMITTER.** Use the transmitter registration tool and transmit the ID from the RL transmitter to check "Latest reception ID".	Is "Latest reception ID" updated?	Go to step **9**.	Replace the RL transmitter. <Ref. to WT-8, Tire Pressure Monitoring System.>
9	**CHECK RL TRANSMITTER ID.** Check the ID displayed in the updated ID display and the tire 4 registered ID.	Are the two IDs same?	Go to step **10**.	Record the received ID update as the RL transmitter. Go to step **10**.
10	**CHECK MALFUNCTION TRANSMITTER.**	Is ID recorded by this procedure?	Go to step **11**.	Go to step **2**.
11	**CHECK MALFUNCTION TRANSMITTER.** Check the registered ID of the transmitter indicated by DTC.	Is there checked ID in the record?	Replace the transmitter of the recorded position. <Ref. to WT-8, Tire Pressure Monitoring System.>	Replace the transmitter showing the latest ID that is not included in the registered IDs. <Ref. to WT-8, Tire Pressure Monitoring System.>

CAUTION:
When driving vehicle to perform driving test, there should be always 2 persons (driver and checker) to check.

I: DTC C2221 TRANSMITTER 1 PRESSURE DATA ABNORMAL

NOTE:
Refer to DTC C2224 for diagnostic procedure. <Ref. to TPM(diag)-29, DTC C2224 TRANSMITTER 4 PRESSURE DATA ABNORMAL, Diagnostic Procedure with Diagnostic Trouble Code (DTC).>

J: DTC C2222 TRANSMITTER 2 PRESSURE DATA ABNORMAL

NOTE:
Refer to DTC C2224 for diagnostic procedure. <Ref. to TPM(diag)-29, DTC C2224 TRANSMITTER 4 PRESSURE DATA ABNORMAL, Diagnostic Procedure with Diagnostic Trouble Code (DTC).>

K: DTC C2223 TRANSMITTER 3 PRESSURE DATA ABNORMAL

NOTE:
Refer to DTC C2224 for diagnostic procedure. <Ref. to TPM(diag)-29, DTC C2224 TRANSMITTER 4 PRESSURE DATA ABNORMAL, Diagnostic Procedure with Diagnostic Trouble Code (DTC).>

L: DTC C2224 TRANSMITTER 4 PRESSURE DATA ABNORMAL

DTC DETECTING CONDITION:

- When comparing the data from each transmitter to the previous data, the change is large.
- The pressure exceeds what the transmitter can measure. (Excessive pressure)

TROUBLE SYMPTOM:

Tire pressure warning light blinks 25 times and then illuminates.

	Step	Check	Yes	No
1	**CHECK FOR REPRODUCTION OF MALFUNCTION.** 1) Perform the drive test. Drive the vehicle at 40 km/h (25 MPH) or faster for at least 10 minutes. 2) Read the DTC. <Ref. to TPM(diag)-12, OPERATION, Read Diagnostic Trouble Code (DTC).>	Is the DTC displayed as "Current malfunction"?	Go to step **2**.	When DTC is detected as "Past faults", the circuit has returned to a normal condition at this time. Reproduce the failure, and then perform the diagnosis again. NOTE: In this case, a temporary communication error due to radio wave environment inside and outside the vehicle may be possible.
2	**START FL TRANSMITTER.** 1) Connect the Subaru Select Monitor and then turn the ignition switch to ON. 2) Select "Transmit ID data monitor". <Ref. to TPM(diag)-16, OPERATION, Display Transmitter (ID).> 3) Use the transmitter registration tool and transmit the ID from the FL transmitter to check "Latest reception ID".	Is "Latest reception ID" updated?	Go to step **3**.	Replace front left transmitter. <Ref. to WT-8, Tire Pressure Monitoring System.>
3	**CHECK FL TRANSMITTER ID.** Check the ID displayed in the updated ID display and the tire 1 registered ID.	Are the two IDs same?	Go to step **4**.	Record the received ID update as the FL transmitter. Go to step **4**.
4	**START FR TRANSMITTER.** Use the transmitter registration tool and transmit the ID from the FR transmitter to check "Latest reception ID".	Is "Latest reception ID" updated?	Go to step **5**.	Replace the front right transmitter. <Ref. to WT-8, Tire Pressure Monitoring System.>
5	**CHECK FR TRANSMITTER ID.** Check the ID displayed in the updated ID display and the tire 2 registered ID.	Are the two IDs same?	Go to step **6**.	Record the received ID update as the FR transmitter. Go to step **6**.
6	**START RR TRANSMITTER.** Use the transmitter registration tool and transmit the ID from the RR transmitter to check "Latest reception ID".	Is "Latest reception ID" updated?	Go to step **7**.	Replace the RR transmitter. <Ref. to WT-8, Tire Pressure Monitoring System.>
7	**CHECK RR TRANSMITTER ID.** Check the ID displayed in the updated ID display and the tire 3 registered ID.	Are the two IDs same?	Go to step **8**.	Record the received ID update as the RR transmitter. Go to step **8**.

	Step	Check	Yes	No
8	**START RL TRANSMITTER.** Use the transmitter registration tool and transmit the ID from the RL transmitter to check "Latest reception ID".	Is "Latest reception ID" updated?	Go to step **9**.	Replace the RL transmitter. <Ref. to WT-8, Tire Pressure Monitoring System.>
9	**CHECK RL TRANSMITTER ID.** Check the ID displayed in the updated ID display and the tire 4 registered ID.	Are the two IDs same?	Go to step **10**.	Record the received ID update as the RL transmitter. Go to step **10**.
10	**CHECK MALFUNCTION TRANSMITTER.**	Is ID recorded by this procedure?	Go to step **11**.	Go to step **2**.
11	**CHECK MALFUNCTION TRANSMITTER.** Check the registered ID of the transmitter indicated by DTC.	Is there checked ID in the record?	Replace the transmitter of the recorded position. <Ref. to WT-8, Tire Pressure Monitoring System.>	Replace the transmitter showing the latest ID that is not included in the registered IDs. <Ref. to WT-8, Tire Pressure Monitoring System.>

M: DTC C2321 TRANSMITTER 1 FUNCTION CODE ABNORMAL

NOTE:
Refer to DTC C2324 for diagnostic procedure. <Ref. to TPM(diag)-31, DTC C2324 TRANSMITTER 4 FUNCTION CODE ABNORMAL, Diagnostic Procedure with Diagnostic Trouble Code (DTC).>

N: DTC C2322 TRANSMITTER 2 FUNCTION CODE ABNORMAL

NOTE:
Refer to DTC C2324 for diagnostic procedure. <Ref. to TPM(diag)-31, DTC C2324 TRANSMITTER 4 FUNCTION CODE ABNORMAL, Diagnostic Procedure with Diagnostic Trouble Code (DTC).>

O: DTC C2323 TRANSMITTER 3 FUNCTION CODE ABNORMAL

NOTE:
Refer to DTC C2324 for diagnostic procedure. <Ref. to TPM(diag)-31, DTC C2324 TRANSMITTER 4 FUNCTION CODE ABNORMAL, Diagnostic Procedure with Diagnostic Trouble Code (DTC).>

P: DTC C2324 TRANSMITTER 4 FUNCTION CODE ABNORMAL

DTC DETECTING CONDITION:
Unexpected function codes received from each transmitter.
TROUBLE SYMPTOM:
Tire pressure warning light blinks 25 times and then illuminates.

	Step	Check	Yes	No
1	**CHECK FOR REPRODUCTION OF MALFUNCTION.** 1) Perform the drive test. Drive the vehicle at 40 km/h (25 MPH) or faster for at least 10 minutes. 2) Read the DTC. <Ref. to TPM(diag)-12, OPERATION, Read Diagnostic Trouble Code (DTC).>	Is the DTC displayed as "Current malfunction"?	Go to step **2**.	When DTC is detected as "Past faults", the circuit has returned to a normal condition at this time. Reproduce the failure, and then perform the diagnosis again. NOTE: In this case, a temporary communication error due to radio wave environment inside and outside the vehicle may be possible.
2	**START FL TRANSMITTER.** 1) Connect the Subaru Select Monitor and then turn the ignition switch to ON. 2) Select "Transmit ID data monitor". <Ref. to TPM(diag)-16, OPERATION, Display Transmitter (ID).> 3) Use the transmitter registration tool and transmit the ID from the FL transmitter to check "Latest reception ID".	Is "Latest reception ID" updated?	Go to step **3**.	Replace front left transmitter. <Ref. to WT-8, Tire Pressure Monitoring System.>
3	**CHECK FL TRANSMITTER ID.** Check the ID displayed in the updated ID display and the tire 1 registered ID.	Are the two IDs same?	Go to step **4**.	Record the received ID update as the FL transmitter. Go to step **4**.
4	**START FR TRANSMITTER.** Use the transmitter registration tool and transmit the ID from the FR transmitter to check "Latest reception ID".	Is "Latest reception ID" updated?	Go to step **5**.	Replace the front right transmitter. <Ref. to WT-8, Tire Pressure Monitoring System.>
5	**CHECK FR TRANSMITTER ID.** Check the ID displayed in the updated ID display and the tire 2 registered ID.	Are the two IDs same?	Go to step **6**.	Record the received ID update as the FR transmitter. Go to step **6**.
6	**START RR TRANSMITTER.** Use the transmitter registration tool and transmit the ID from the RR transmitter to check "Latest reception ID".	Is "Latest reception ID" updated?	Go to step **7**.	Replace the RR transmitter. <Ref. to WT-8, Tire Pressure Monitoring System.>
7	**CHECK RR TRANSMITTER ID.** Check the ID displayed in the updated ID display and the tire 3 registered ID.	Are the two IDs same?	Go to step **8**.	Record the received ID update as the RR transmitter. Go to step **8**.

	Step	Check	Yes	No
8	**START RL TRANSMITTER.** Use the transmitter registration tool and transmit the ID from the RL transmitter to check "Latest reception ID".	Is "Latest reception ID" updated?	Go to step **9**.	Replace the RL transmitter. <Ref. to WT-8, Tire Pressure Monitoring System.>
9	**CHECK RL TRANSMITTER ID.** Check the ID displayed in the updated ID display and the tire 4 registered ID.	Are the two IDs same?	Go to step **10**.	Record the received ID update as the RL transmitter. Go to step **10**.
10	**CHECK MALFUNCTION TRANSMITTER.**	Is ID recorded by this procedure?	Go to step **11**.	Replace the transmitter indicated by diagnostics trouble code (DTC). <Ref. to WT-8, Tire Pressure Monitoring System.>
11	**CHECK MALFUNCTION TRANSMITTER.** Check the registered ID of the transmitter indicated by DTC.	Is there checked ID in the record?	Replace the transmitter of the recorded position. <Ref. to WT-8, Tire Pressure Monitoring System.>	Replace the transmitter indicated by diagnostics trouble code (DTC). <Ref. to WT-8, Tire Pressure Monitoring System.>

Q: DTC C2421 TRANSMITTER 1 BATTERY VOLTAGE DECREASE

NOTE:
Refer to DTC C2424 for diagnostic procedure. <Ref. to TPM(diag)-33, DTC C2424 TRANSMITTER 4 BATTERY VOLTAGE DECREASE, Diagnostic Procedure with Diagnostic Trouble Code (DTC).>

R: DTC C2422 TRANSMITTER 2 BATTERY VOLTAGE DECREASE

NOTE:
Refer to DTC C2424 for diagnostic procedure. <Ref. to TPM(diag)-33, DTC C2424 TRANSMITTER 4 BATTERY VOLTAGE DECREASE, Diagnostic Procedure with Diagnostic Trouble Code (DTC).>

S: DTC C2423 TRANSMITTER 3 BATTERY VOLTAGE DECREASE

NOTE:
Refer to DTC C2424 for diagnostic procedure. <Ref. to TPM(diag)-33, DTC C2424 TRANSMITTER 4 BATTERY VOLTAGE DECREASE, Diagnostic Procedure with Diagnostic Trouble Code (DTC).>

T: DTC C2424 TRANSMITTER 4 BATTERY VOLTAGE DECREASE

DTC DETECTING CONDITION:
Low battery signals received 20 times from each transmitter.
TROUBLE SYMPTOM:
Tire pressure warning light blinks 25 times and then illuminates.

	Step	Check	Yes	No
1	**CHECK FOR REPRODUCTION OF MALFUNCTION.** 1) Perform the drive test. Drive the vehicle at 40 km/h (25 MPH) or faster for at least 10 minutes. 2) Read the DTC. <Ref. to TPM(diag)-12, OPERATION, Read Diagnostic Trouble Code (DTC).>	Is the DTC displayed as "Current malfunction"?	Go to step **2**.	When DTC is detected as "Past faults", the circuit has returned to a normal condition at this time. Reproduce the failure, and then perform the diagnosis again. NOTE: In this case, a temporary communication error due to radio wave environment inside and outside the vehicle may be possible.
2	**CHECK TRANSMITTER.** 1) Replace all transmitters and register their IDs. <Ref. to TPM(diag)-15, OPERATION, Register Transmitter (ID).> 2) Perform the Clear Memory Mode, and perform driving test.	Is the fault eliminated?	Internal battery of the transmitter had worn out.	Replace the TPMS & keyless entry CM or TPMS CM. <Ref. to WT-8, Tire Pressure Monitoring System.>

U: DTC C2521 VEHICLE SPEED IS ABNORMAL

DTC DETECTING CONDITION:
Vehicle speed function codes were received from the transmitter, but the vehicle speed signal was not input to the module.

TROUBLE SYMPTOM:
Tire pressure warning light blinks 25 times and then illuminates.

WIRING DIAGRAM:
Tire Pressure Monitoring System <Ref. to WI(w/o HEV)-148, WIRING DIAGRAM, Tire Pressure Monitoring System.> <Ref. to WI(HEV)-210, WIRING DIAGRAM, Tire Pressure Monitoring System.>

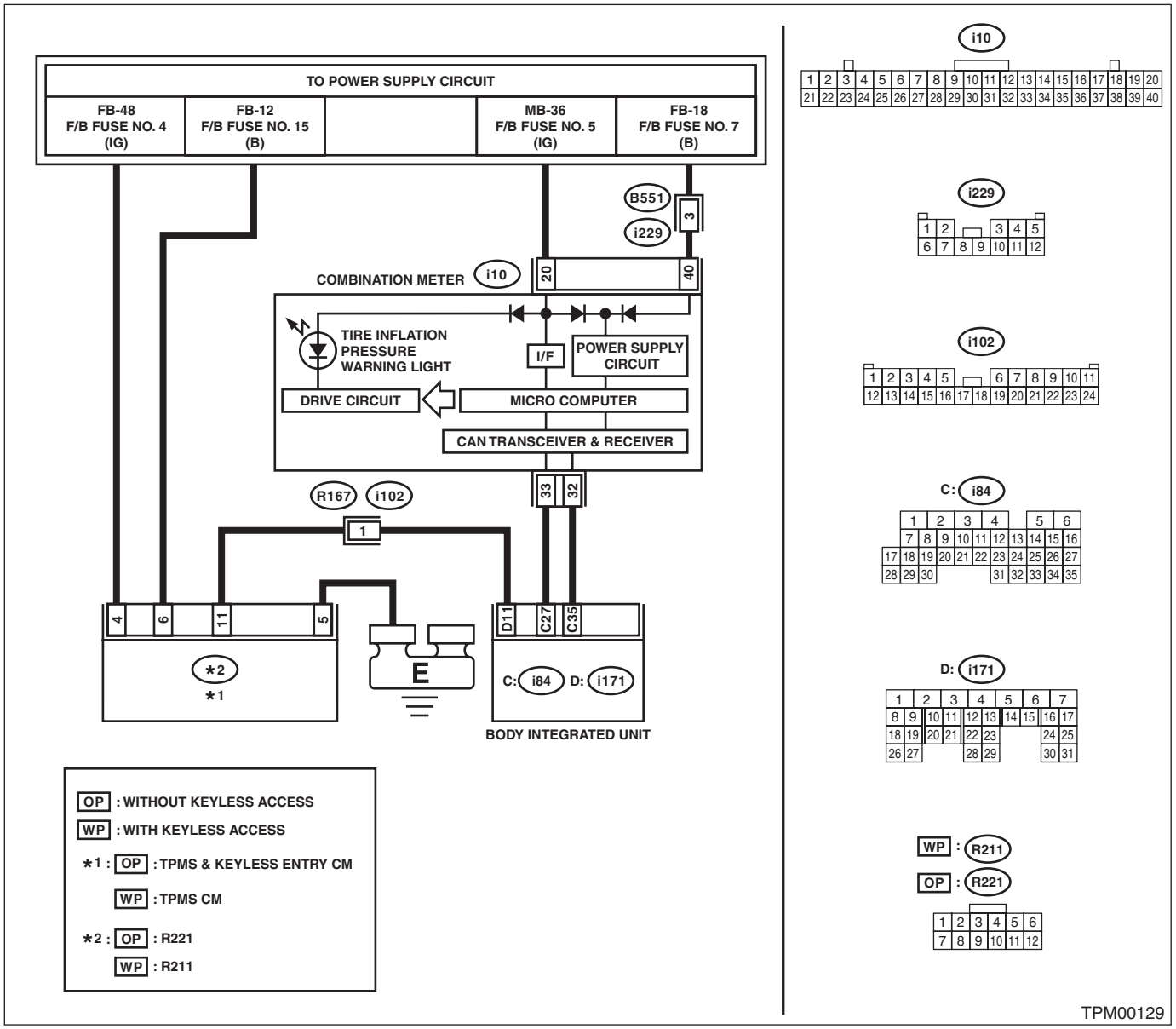

Step		Check	Yes	No
1	**CHECK LAN COMMUNICATION.** Inspect LAN system. <Ref. to LAN(w/o HEV)(diag)-2, PROCEDURE, Basic Diagnostic Procedure.> <Ref. to LAN(HEV)(diag)-2, PROCEDURE, Basic Diagnostic Procedure.>	Is there any fault?	Repair it according to the diagnosis for LAN system.	Go to step **2**.

	Step	Check	Yes	No
2	**CHECK HARNESS.** Measure the resistance between TPMS & keyless entry CM or TPMS CM and body integrated unit. ***Connector & terminal*** ***Without keyless access*** ***(R221) No. 11 — (i171) No. 11:*** ***With keyless access*** ***(R211) No. 11 — (i171) No. 11:***	Is the resistance less than 10 Ω?	Go to step **3**.	Repair the harness.
3	**CHECK CONNECTOR.** Check each connector.	Is there poor contact or any other faults?	Repair the connector.	Replace the TPMS & keyless entry CM or TPMS CM. <Ref. to WT-8, Tire Pressure Monitoring System.>

15.General Diagnostic Table

A: INSPECTION

Symptoms		Faulty parts
Tire pressure warning light illuminates.	Tire pressure is reduced.	• Improper tire pressure adjustment • Punctured tire
Tire pressure warning light blinks 25 times and then illuminates.	Tire pressure monitoring system has malfunction.	• Air pressure sensor malfunction • Air pressure sensor is out of battery. • Defective TPMS & keyless entry CM or TPMS CM • Defective vehicle harness • Defective combination meter
Tire pressure is dropping but the warning light does not illuminate.	Tire pressure warning light does not illuminate.	• Air pressure sensor is faulty. • Defective TPMS & keyless entry CM or TPMS CM • Defective combination meter

DIFFERENTIALS

DI

		Page
1.	General Description	2
2.	Differential Gear Oil	19
3.	Front Differential Assembly	21
4.	Rear Differential (T-type)	22
5.	Rear Differential (VA-type)	42
6.	Rear Differential Front Oil Seal	58
7.	Rear Differential Side Oil Seal	60
8.	Rear Differential Front Member	61
9.	Rear Differential Mount Bushing	62
10.	Rear Differential Inspection Mode	66
11.	General Diagnostic Table	67

1. General Description

A: SPECIFICATION

1. REAR DIFFERENTIAL

When replacing a rear differential assembly, select the correct one according to the following table.

NOTE:
• Using a different rear differential assembly will cause the drive train and tires to drag or emit abnormal noise.
• For option code, refer to “ID” section. <Ref. to ID-2, IDENTIFICATION, Identification.>

Model	2.0 L non-turbo		
	CVT	5MT	
		Except for XV model	XV model
Rear differential type	VA1-type	T-type	
Identification	XD	T2	TP
LSD type	—		
Type of gear	Hypoid gear		
Gear ratio (Number of gear teeth)	3.700 (37/10)	4.111 (37/9)	4.444 (40/9)
Oil capacity	0.8 L (0.8 US qt, 0.7 Imp qt)		
Rear differential gear oil	GL–5		

2. IDENTIFICATION

Identification positions are shown in the following figures. For details concerning identification, refer to the “ID” section.
• T-type

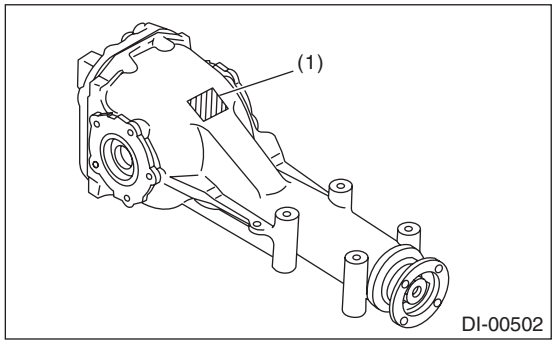

(1) Identification

• VA1-type

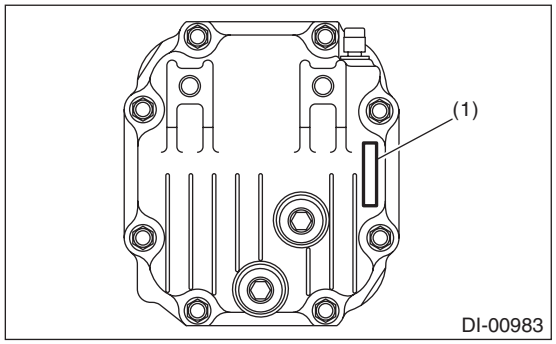

(1) Identification

3. REAR DIFFERENTIAL GEAR OIL

Recommended gear oil:
GL–5 (75W–90)

Alternative:
Equivalent product

CAUTION:
- **If an alternative product is used, you may not have the expected functionality and performance.**
- **Each oil manufacturer has its base oil and additives. Thus, do not mix two or more brands.**

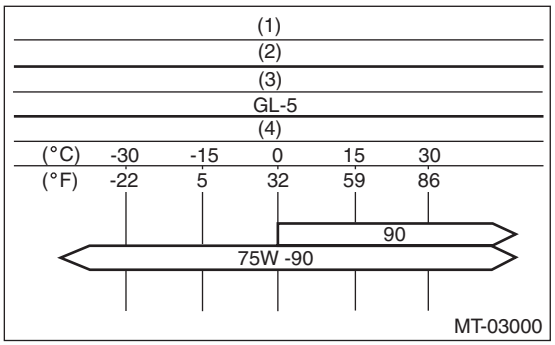

(1) Item
(2) Rear differential gear oil
(3) API classification
(4) SAE viscosity No. and applicable temperature

4. SERVICE DATA

Drive pinion bearing preload (for new bearing)	Measured with spring measurement (measured from the companion flange bolt)	N (kgf, lbf)	T-type	18.1 — 38.8 (1.8 — 4.0, 4.1 — 8.7)
			VA1-type	12.7 — 32.2 (1.3 — 3.3, 2.9 — 7.2)
	Measured with torque wrench	N·m (kgf-m, ft-lb)	T-type	0.69 — 1.47 (0.07 — 0.15, 0.51 — 1.08)
			VA1-type	0.48 — 1.22 (0.05 — 0.12, 0.35 — 0.90)
Side gear backlash		mm (in)	T-type	0.10 — 0.20 (0.004 — 0.008)
			VA1-type	0.05 — 0.15 (0.002 — 0.006)
Hypoid driven gear backlash		mm (in)	T-type	0.10 — 0.20 (0.004 — 0.008)
			VA1-type	0.10 — 0.15 (0.004 — 0.006)
Hypoid driven gear runout on its back surface		mm (in)	T-type	0.05 (0.002)
Total preload (measured from the companion flange bolt hole)		N (kgf, lbf)	T-type	20.7 — 54.4 (2.1 — 5.5, 4.7 — 12.2)
Companion flange mating surface runout		mm (in)		0.08 (0.003)
Companion flange runout on its inner side		mm (in)		0.08 (0.003)

B: COMPONENT

1. REAR DIFFERENTIAL (T-TYPE)

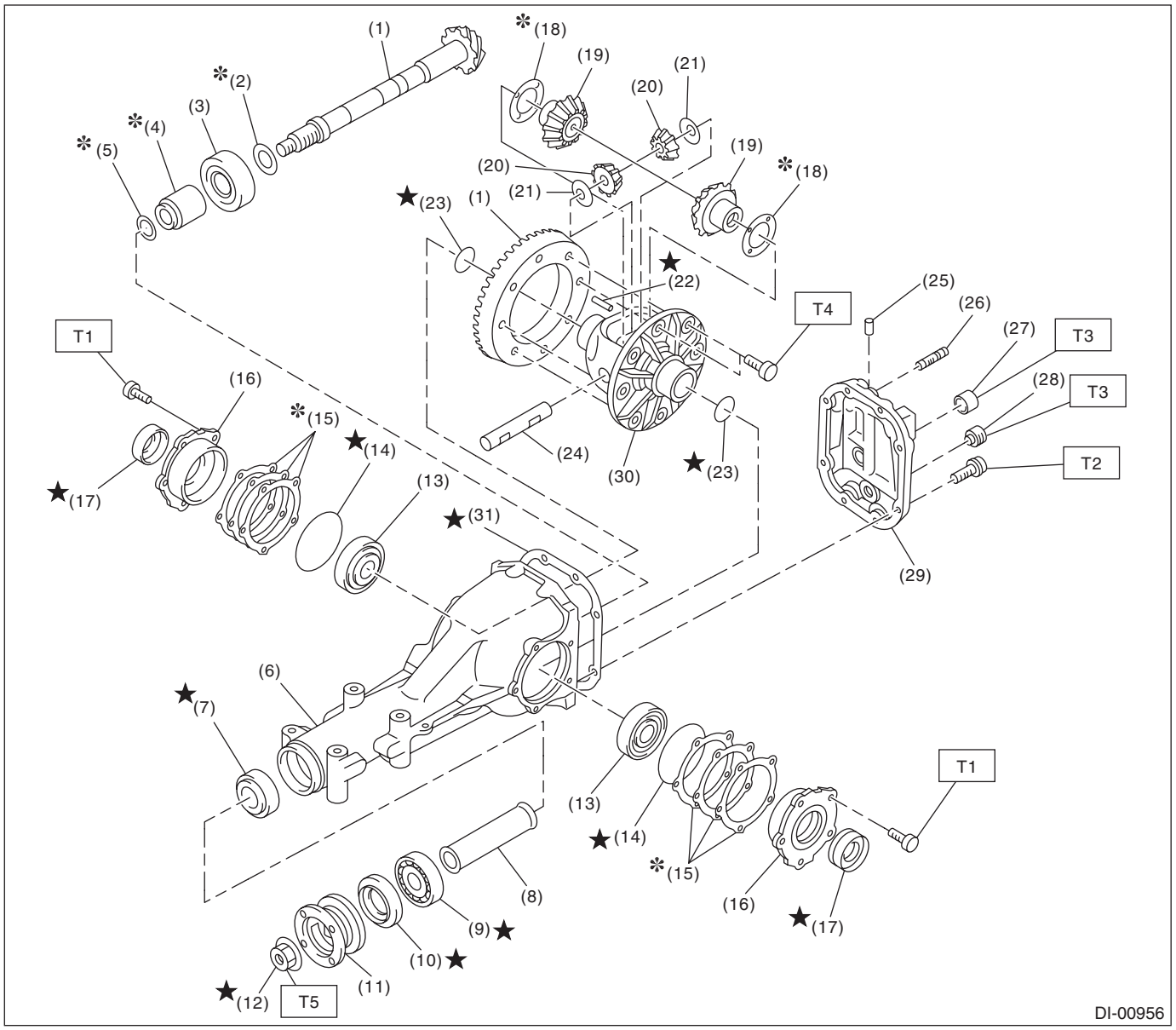

(1)	Hypoid driven gear and drive pinion set	(14)	O-ring	(27)	Filler plug
(2)	Pinion height adjusting washer	(15)	Side retainer shim	(28)	Drain plug
(3)	Rear bearing	(16)	Side retainer	(29)	Rear cover
(4)	Preload adjusting spacer	(17)	Side oil seal	(30)	Differential case
(5)	Preload adjusting washer	(18)	Side gear thrust washer	(31)	Gasket
(6)	Differential carrier	(19)	Side gear		
(7)	Front bearing	(20)	Pinion mate gear		
(8)	Spacer	(21)	Pinion mate gear washer		
(9)	Pilot bearing	(22)	Pinion shaft lock pin		
(10)	Front oil seal	(23)	Snap ring		
(11)	Companion flange	(24)	Pinion mate shaft		
(12)	Self-locking nut	(25)	Air breather cap		
(13)	Side bearing	(26)	Stud bolt		

Tightening torque: N·m (kgf-m, ft-lb)

T1: 10.5 (1.1, 7.7)
T2: 29.5 (3.0, 21.8)
T3: 49 (5.0, 36.1)
T4: 103 (10.5, 76.0)
T5: 181.5 (18.5, 133.9)

2. REAR DIFFERENTIAL (VA1-TYPE)

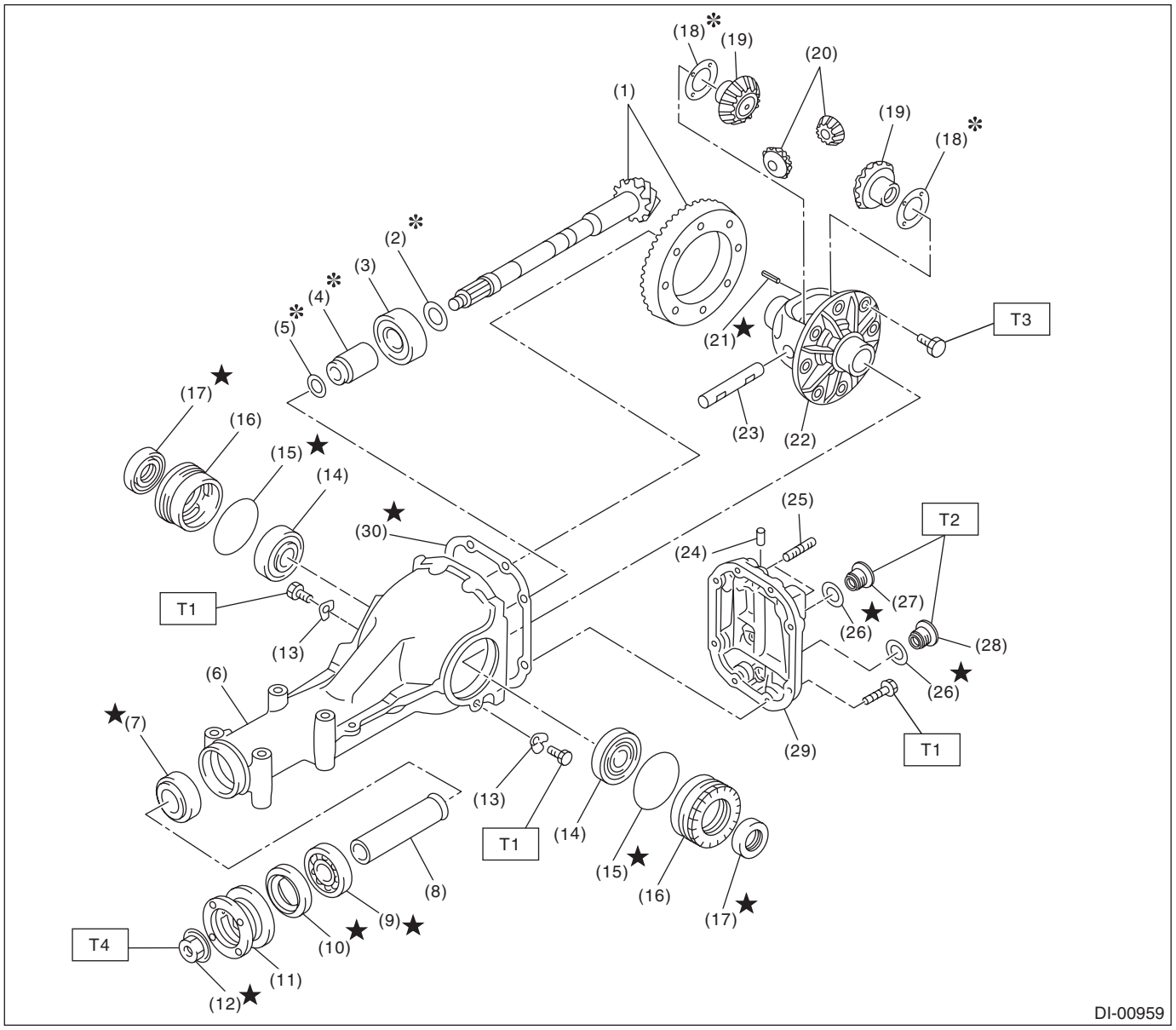

(1)	Hypoid driven gear and drive pinion set	(13)	Lock plate	(25)	Stud bolt
(2)	Pinion height adjusting washer	(14)	Side bearing	(26)	Gasket
(3)	Rear bearing	(15)	O-ring	(27)	Filler plug
(4)	Preload adjusting spacer	(16)	Side retainer	(28)	Drain plug
(5)	Preload adjusting washer	(17)	Side oil seal	(29)	Rear cover
(6)	Differential carrier	(18)	Side gear thrust washer	(30)	Gasket
(7)	Front bearing	(19)	Side gear		
(8)	Spacer	(20)	Pinion mate gear	***Tightening torque: N·m (kgf-m, ft-lb)***	
(9)	Pilot bearing	(21)	Spring pin	***T1:***	***25 (2.5, 18.4)***
(10)	Front oil seal	(22)	Differential case	***T2:***	***50 (5.1, 36.9)***
(11)	Companion flange	(23)	Pinion mate shaft	***T3:***	***<Ref. to DI-45, ASSEMBLY, Rear Differential (VA-type).>***
(12)	Self-locking nut	(24)	Air breather cap	***T4:***	***191 (19.5, 140.9)***

3. REAR DIFFERENTIAL MOUNTING SYSTEM

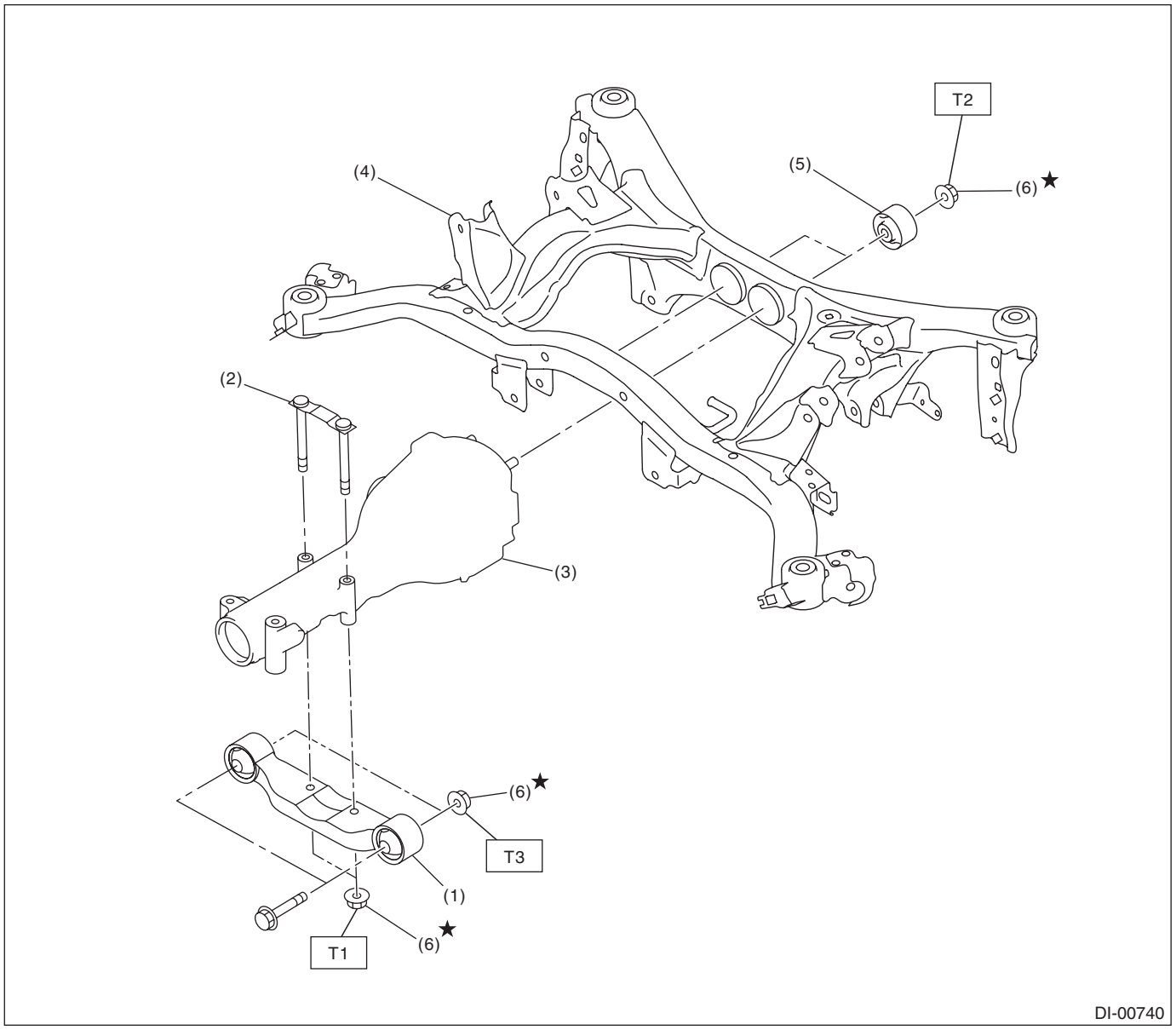

(1)	Rear differential front member	(4)	Rear sub frame	
(2)	Rear differential member plate	(5)	Rear differential mount bushing	
(3)	Rear differential ASSY	(6)	Self-locking nut	

Tightening torque: N·m (kgf-m, ft-lb)
T1: 50 (5.1, 36.9)
T2: 70 (7.1, 51.6)
T3: 110 (11.2, 81.1)

C: CAUTION

- Wear appropriate work clothing, including a cap, protective goggles and protective shoes when performing any work.
- Remove contamination including dirt and corrosion before removal, installation or disassembly.
- Keep the disassembled parts in order and protect them from dust and dirt.
- Before removal, installation or disassembly, be sure to clarify the failure. Avoid unnecessary removal, installation, disassembly and replacement.
- Vehicle components are extremely hot after driving. Be wary of receiving burns from heated parts.
- Use SUBARU genuine gear oil, grease or equivalent. Do not mix gear oil, grease, etc. of different grades or manufacturers.
- Be sure to tighten fasteners including bolts and nuts to the specified torque.
- Place shop jacks or rigid racks at the specified points.
- Apply gear oil onto sliding or revolving surfaces before installation.
- Before installing the O-ring or snap ring, apply a sufficient amount of gear oil to avoid damage and deformation.
- Before securing a part on a vise, place cushioning material such as wood blocks, aluminum plate, or cloth between the part and the vise.
- Avoid damaging the mating surface of the case.

D: PREPARATION TOOL

1. SPECIAL TOOL

ILLUSTRATION	TOOL NUMBER	DESCRIPTION	REMARKS
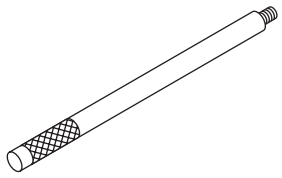 ST-398477701	398477701	HANDLE	• Used for installing the rear bearing race. • Used for installing the front bearing race.
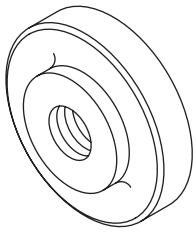 ST-398477702	398477702	DRIFT	• Used for installing the front bearing race. (T-type) • Used for installing the rear bearing race. (VA1-type) • Used for installing side bearing race. (VA1-type)
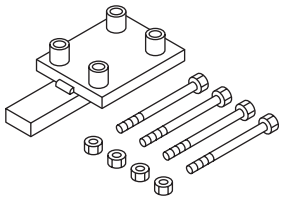 ST-398217700	398217700	ATTACHMENT SET	Stand for rear differential carrier disassembly and assembly.
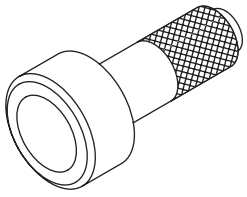 ST-498447120	498447120	INSTALLER	Used for installing the front oil seal.

ILLUSTRATION	TOOL NUMBER	DESCRIPTION	REMARKS
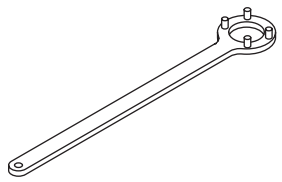 ST-498427200	498427200	FLANGE WRENCH	Used for stopping rotation of companion flange when removing and tightening self-lock nut.
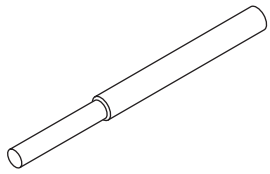 ST-398467700	398467700	DRIFT	Used for removing drive pinion shaft, pilot bearing and front bearing cone.
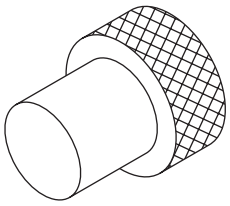 ST-399780104	399780104	WEIGHT	• Used for installing the front bearing cone and the companion flange. • Used for installing the pilot bearing.
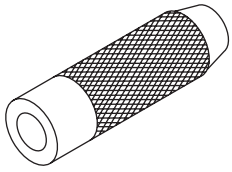 ST-899580100	899580100	INSTALLER	Used for installing the front bearing cone and the pilot bearing.
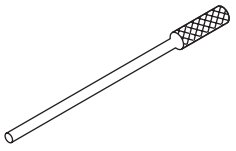 ST-899904100	899904100	STRAIGHT PIN REMOVER	• Used for removing and installing the pinion mate shaft lock pin. (T-type) • Used for removing and installing the pinion mate shaft spring pin. (VA1-type)

ILLUSTRATION	TOOL NUMBER	DESCRIPTION	REMARKS
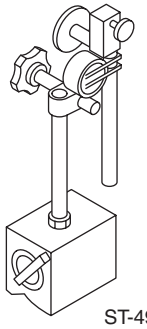 ST-498247001	498247001	MAGNET BASE	• Used for measuring backlash between side gear and pinion, and hypoid gear. • Used together with DIAL GAUGE (498247100).
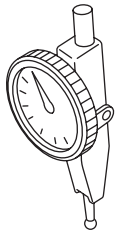 ST-498247100	498247100	DIAL GAUGE	• Used for measuring backlash between side gear and pinion, and hypoid gear. • Used together with MAGNET BASE (498247001).
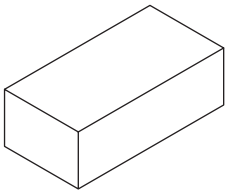 ST-398507704	398507704	BLOCK	Used for adjusting pinion height and preload.
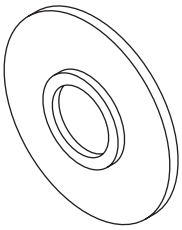 ST-398177700	398177700	INSTALLER	Used for installing the rear bearing cone. (T-type)
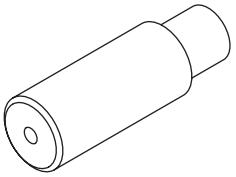 ST-398457700	398457700	ATTACHMENT	Used for removing the side retainer. (T-type)

ILLUSTRATION	TOOL NUMBER	DESCRIPTION	REMARKS
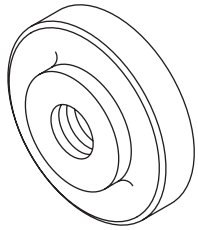 ST-398477703	398477703	DRIFT 2	Used for installing the rear bearing race. (T-type)
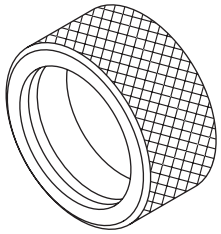 ST-398437700	398437700	DRIFT	Used for installing the side oil seal. (T-type)
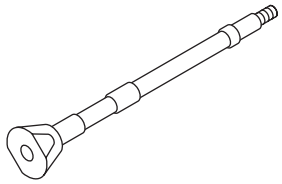 ST-398507702	398507702	DUMMY SHAFT	Used for adjusting pinion height and preload. (T-type)
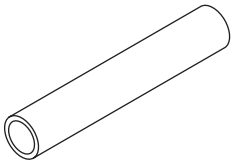 ST-398507703	398507703	DUMMY COLLAR	Used for adjusting pinion height and preload. (T-type)
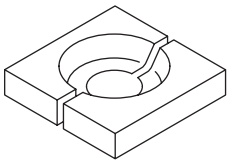 ST-398517700	398517700	REPLACER	Used for removing rear bearing cone. (T-type)

ILLUSTRATION	TOOL NUMBER	DESCRIPTION	REMARKS
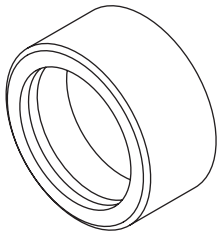 ST-398487700	398487700	DRIFT	Used for installing side bearing cone. (T-type)
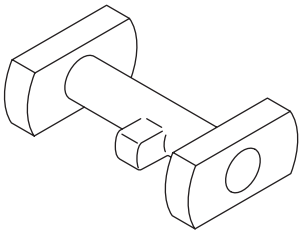 ST-398507701	398507701	DIFFERENTIAL CARRIER GAUGE	Used for adjusting pinion height. (T-type)
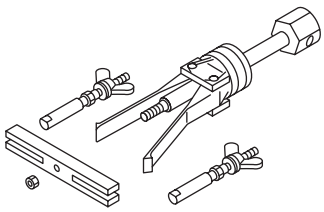 ST-398527700	398527700	PULLER ASSY	• Used for removing front oil seal. • Used for removing the side bearing race. (T-type) • Used for removing side oil seal.
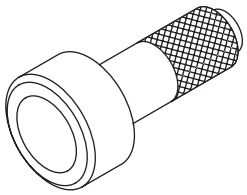 ST-398417700	398417700	DRIFT	Used for installing side bearing race. (T-type)
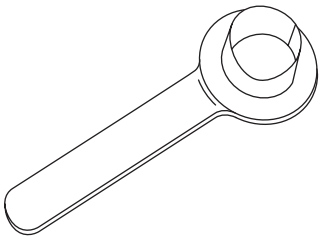 ST28099PA090	28099PA090	OIL SEAL PROTECTOR	Used for installing the rear drive shaft to the rear differential. (For oil seal protection)

ILLUSTRATION	TOOL NUMBER	DESCRIPTION	REMARKS
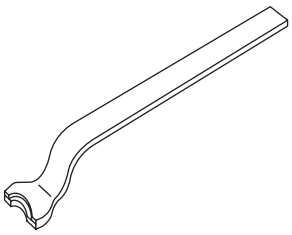 ST28099PA100	28099PA100	DRIVE SHAFT REMOVER	Used for removing the rear drive shaft from rear differential. (T-type)
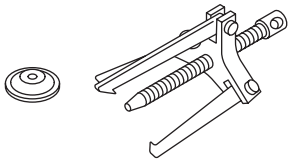 ST-399703600	399703600	PULLER ASSY	Used for removing companion flange.
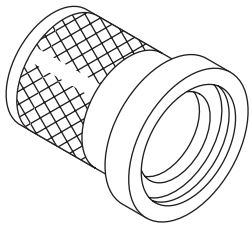 ST-899874100	899874100	INSTALLER	Used for installing the companion flange.
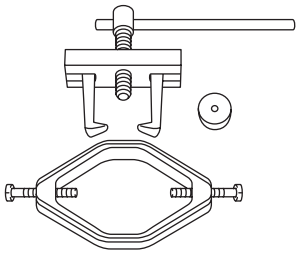 ST18759AA000	18759AA000	PULLER ASSY	Used for removing the side bearing cone. (T-type)
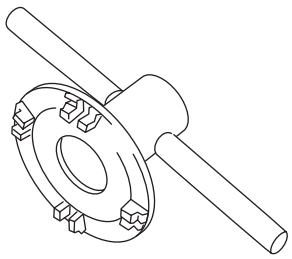 ST18630AA010	18630AA010	WRENCH COMPL RETAINER	• Used for removing and installing the side retainer. (VA1-type) • WRENCH ASSY (499787000) can also be used.

ILLUSTRATION	TOOL NUMBER	DESCRIPTION	REMARKS
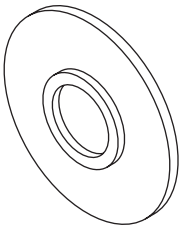 ST-498175500	498175500	INSTALLER	Used for installing the rear bearing cone. (VA1-type)
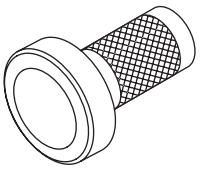 ST498447100	498447100	INSTALLER	Used for installing the side oil seal. (VA1-type)
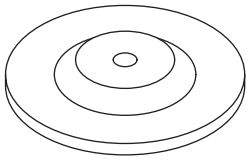 ST-399520105	399520105	SEAT	• Used for removing the side bearing cone. (VA1-type) • Used together with PULLER SET (899524100). (VA1-type)
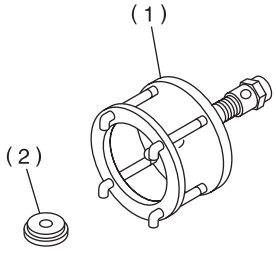 ST-899524100	899524100	PULLER SET	• Used for removing the side bearing cone. (VA1-type) • Used together with SEAT (399520105). (1) Puller (2) Cap
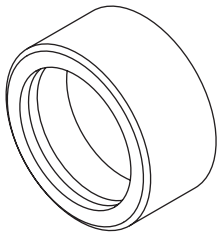 ST-498485400	498485400	DRIFT	Used for installing side bearing cone. (VA1-type)

ILLUSTRATION	TOOL NUMBER	DESCRIPTION	REMARKS
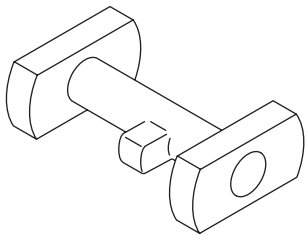 ST-498505501	498505501	DIFFERENTIAL CARRIER GAUGE	Used for adjusting pinion height. (VA1-type)
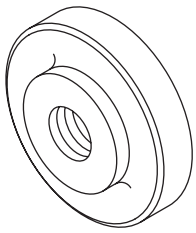 ST-498447110	498447110	DRIFT	Used for installing the front bearing race. (VA1-type)
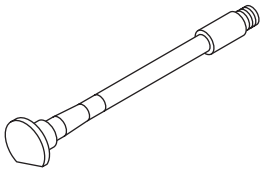 ST-498447150	498447150	DUMMY SHAFT	Used for adjusting pinion height and preload. (VA1-type)
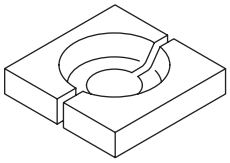 ST-498515500	498515500	REPLACER	Used for removing rear bearing cone. (VA1-type)
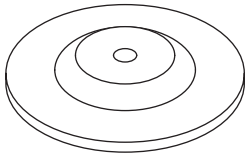 ST-499705404	499705404	SEAT	• Used for removing the side bearing race. (VA1-type) • Used together with PULLER ASSY (499705401).

ILLUSTRATION	TOOL NUMBER	DESCRIPTION	REMARKS
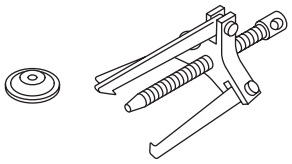 ST-499705401	499705401	PULLER ASSY	• Used for removing the side bearing race. (VA1-type) • Used together with SEAT (499705404).
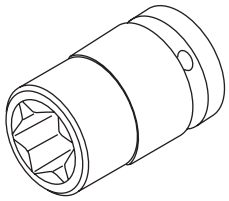 ST18270KA020	18270KA020	SOCKET (E20)	Used for removing and installing the hypoid driven gear. (VA1-type)
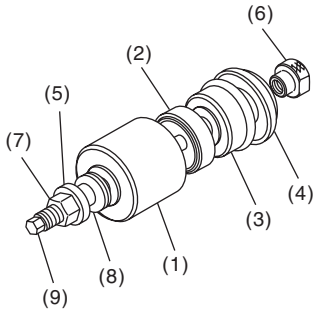 ST41399FG001	41399FG001	SPECIAL TOOL ASSY	• Used for removing and installing the rear differential mount bushing. • Use (1), (3), (5), (6), (7), (8) and (9) for removal. • Use (2), (4), (5), (6), (7), (8) and (9) for installation. (1) SPECIAL TOOL A (41399FG010) (2) SPECIAL TOOL B (41399FG020) (3) SPECIAL TOOL C (41399FG031) (4) SPECIAL TOOL D (41399FG041) (5) SPECIAL TOOL SLEEVE (41399FG050) (6) SPECIAL TOOL RING (41399FG061) (7) SPECIAL TOOL NUT (41399FG070) (8) SPECIAL TOOL BEARING (41399FG080) (9) SPECIAL TOOL SHAFT (41399FG091)
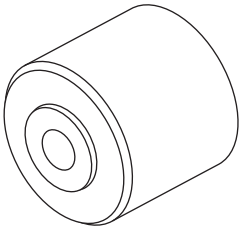 ST41399FG010	41399FG010	SPECIAL TOOL A	• Used for removing the rear differential mount bushing. • For combination of tools for removal, refer to “SPECIAL TOOL ASSY (41399FG001)”.

ILLUSTRATION	TOOL NUMBER	DESCRIPTION	REMARKS
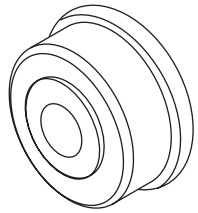 ST41399FG020	41399FG020	SPECIAL TOOL B	• Used for installing the rear differential mount bushing. • For combination of tools for installation, refer to “SPECIAL TOOL ASSY (41399FG001)”.
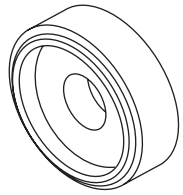 ST41399FG031	41399FG031	SPECIAL TOOL C	• Used for removing the rear differential mount bushing. • For combination of tools for removal, refer to “SPECIAL TOOL ASSY (41399FG001)”.
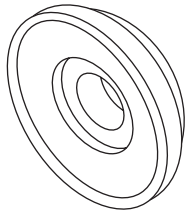 ST41399FG041	41399FG041	SPECIAL TOOL D	• Used for installing the rear differential mount bushing. • For combination of tools for installation, refer to “SPECIAL TOOL ASSY (41399FG001)”.
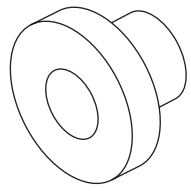 ST41399FG050	41399FG050	SPECIAL TOOL SLEEVE	• Used for removing and installing the rear differential mount bushing. • For combination of tools for removal and installation, refer to “SPECIAL TOOL ASSY (41399FG001)”.
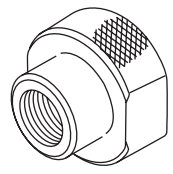 ST41399FG061	41399FG061	SPECIAL TOOL RING	• Used for removing and installing the rear differential mount bushing. • For combination of tools for removal and installation, refer to “SPECIAL TOOL ASSY (41399FG001)”.

ILLUSTRATION	TOOL NUMBER	DESCRIPTION	REMARKS
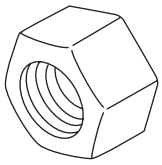 ST41399FG070	41399FG070	SPECIAL TOOL NUT	• Used for removing and installing the rear differential mount bushing. • For combination of tools for removal and installation, refer to “SPECIAL TOOL ASSY (41399FG001)”.
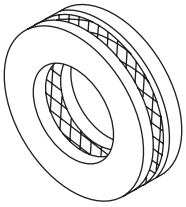 ST41399FG080	41399FG080	SPECIAL TOOL BEARING	• Used for removing and installing the rear differential mount bushing. • For combination of tools for removal and installation, refer to “SPECIAL TOOL ASSY (41399FG001)”.
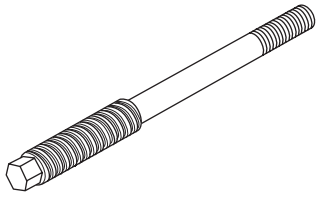 ST41399FG091	41399FG091	SPECIAL TOOL SHAFT	• Used for removing and installing the rear differential mount bushing. • For combination of tools for removal and installation, refer to “SPECIAL TOOL ASSY (41399FG001)”.
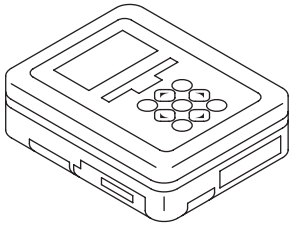 ST1B022XU0	1B022XU0	SUBARU SELECT MONITOR III KIT	Used for troubleshooting the electrical system.

2. GENERAL TOOL

TOOL NAME	REMARKS
Transmission jack	Used for removing and installing the rear differential.
Puller	Used for removing the side bearing retainer.
Thickness gauge	Used for measuring clearance.
Hexagon wrench	Used for installing and removing the filler plug and drain plug.
Tire lever	Used for removing the rear drive shaft. (VA1-type)
Angle gauge	Used for installing the hypoid driven gear. (VA1-type)

2. Differential Gear Oil

A: INSPECTION

1) Lift up the vehicle.
2) Remove the filler plug, and then check the gear oil. Replace the gear oil if it is contaminated, deteriorated or cloudy. <Ref. to DI-19, REPLACEMENT, Differential Gear Oil.>
3) Check that the gear oil level is within –5 mm (–0.2 in) from the bottom of the filler plug hole. If the level is low, make sure that there is no oil leakage and refill up to the bottom of filler plug hole.

NOTE:
On VA1-types at factory settings, the oil level may be within –14 mm (–0.6 in) from the bottom of the filler plug. This is at normal level, requiring no oil refill.

- T-type

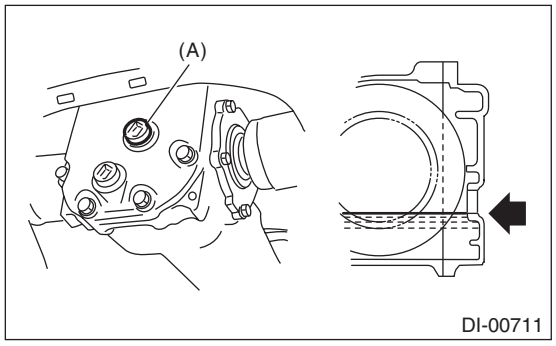

(A) Filler plug

- VA1-type

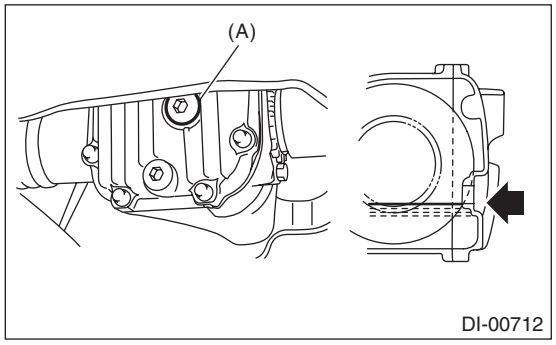

(A) Filler plug

4) Install the filler plug.

NOTE:
- For the T-type, apply liquid gasket to the filler plug.

Liquid gasket:
THREE BOND 1105 (Part No. 004403010) or equivalent
- For VA type, use a new gasket.

Tightening torque:
T-type:
49 N·m (5.0 kgf-m, 36.1 ft-lb)
VA-type:
50 N·m (5.1 kgf-m, 36.9 ft-lb)

B: REPLACEMENT

CAUTION:
- **Gear oil is extremely hot just after driving. Be wary of receiving burns.**
- **Be careful not to spill the differential gear oil on exhaust pipe. If gear oil is spilled, wipe it off completely.**

1) Lift up the vehicle.
2) Remove the drain plug and filler plug, and drain the gear oil.

- T-type

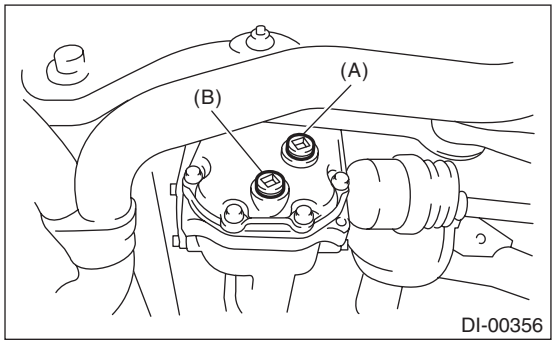

(A) Filler plug
(B) Drain plug

- VA1-type

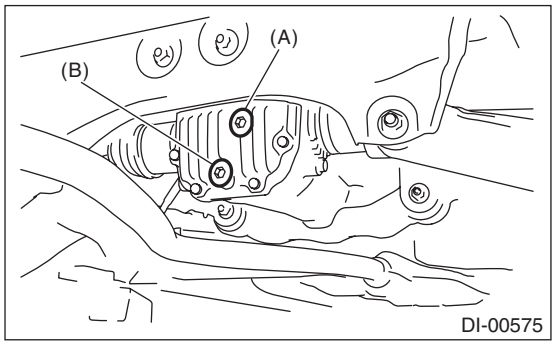

(A) Filler plug
(B) Drain plug

3) Tighten the drain plug.

NOTE:
• For the T-type, apply liquid gasket to the drain plug.

Liquid gasket:
THREE BOND 1105 (Part No. 004403010) or equivalent
• For VA type, use a new gasket.

Tightening torque:
T-type
49 N·m (5.0 kgf-m, 36.1 ft-lb)
VA-type:
50 N·m (5.1 kgf-m, 36.9 ft-lb)

4) Fill the differential carrier with gear oil to the bottom of filler plug.

NOTE:
Carefully refill gear oil while watching the level. Excessive or insufficient oil must be avoided.

Recommended gear oil:
<Ref. to DI-2, SPECIFICATION, General Description.>

Oil capacity:
0.8 L (0.8 US qt, 0.7 Imp qt)
• T-type

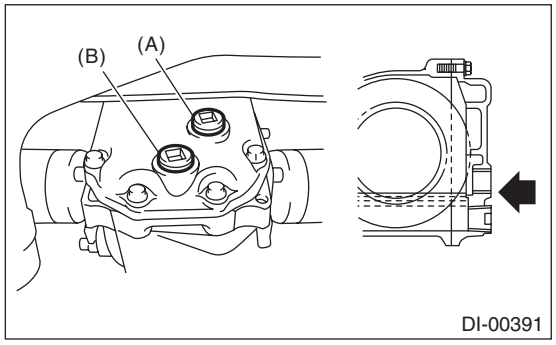

(A) Filler plug
(B) Drain plug

• VA1-type

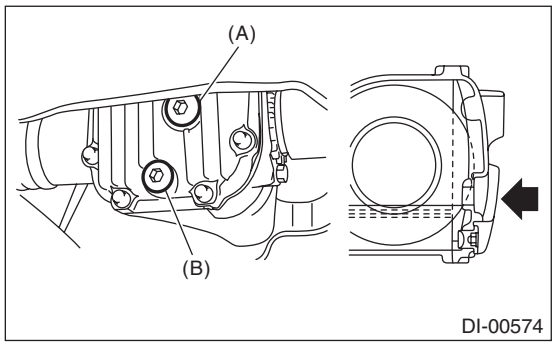

(A) Filler plug
(B) Drain plug

5) Install the filler plug.

NOTE:
• For the T-type, apply liquid gasket to the filler plug.

Liquid gasket:
THREE BOND 1105 (Part No. 004403010) or equivalent
• For VA type, use a new gasket.

Tightening torque:
T-type:
49 N·m (5.0 kgf-m, 36.1 ft-lb)
VA-type:
50 N·m (5.1 kgf-m, 36.9 ft-lb)

3. Front Differential Assembly

A: NOTE

1. CVT MODEL

For front differential for the CVT model, refer to the “CVT” section. <Ref. to CVT(TR580)-302, Front Differential Assembly.>

2. MT MODEL

For front differential for the 5MT model, refer to the “5MT” section. <Ref. to 5MT-73, Front Differential Assembly.>

4. Rear Differential (T-type)

A: REMOVAL

1) Shift the select lever or gear shift lever to neutral.
2) Disconnect the ground cable from battery.
3) Release the parking brake.
4) Loosen the wheel nuts.
5) Lift up the vehicle.
6) Remove the rear wheels.
7) Drain differential gear oil. <Ref. to DI-19, REPLACEMENT, Differential Gear Oil.>
8) Remove the rear exhaust pipe. <Ref. to EX(H4DO(w/o HEV))-18, REMOVAL, Rear Exhaust Pipe.>
9) Remove the center exhaust cover.

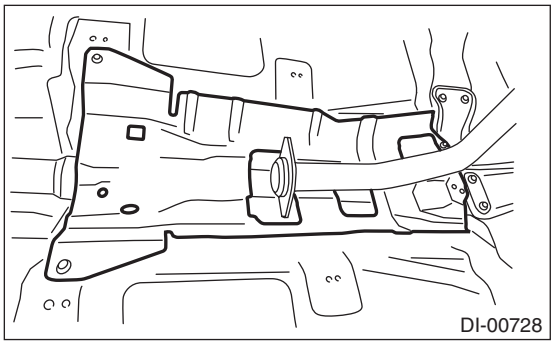
DI-00728

10) Remove the propeller shaft. <Ref. to DS-12, REMOVAL, Propeller Shaft.>
11) Loosen the self-lock nuts which hold the rear differential to the rear sub frame assembly.

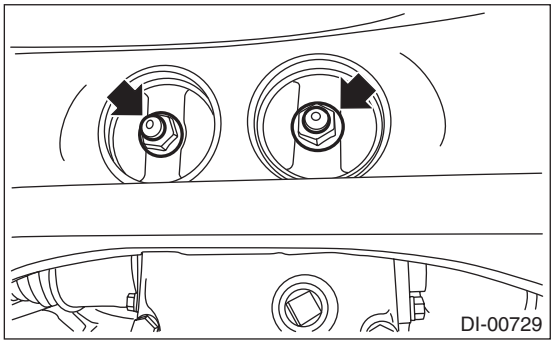
DI-00729

12) Remove the DOJ of rear drive shaft from rear differential using ST or tire lever.

NOTE:
- For the T-type, use the ST.
- For the VA-type, use the tire lever.
- When removing the DOJ from the rear differential, fit the tire lever or ST to the bolts as shown in the figure so as not to damage the side retainer.

T-type

ST 28099PA100 DRIVE SHAFT REMOVER

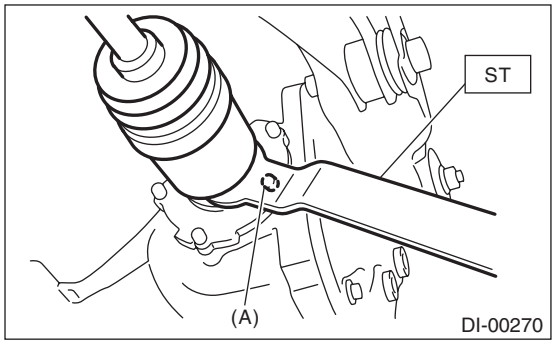

DI-00270

(A) Bolt

VA-type

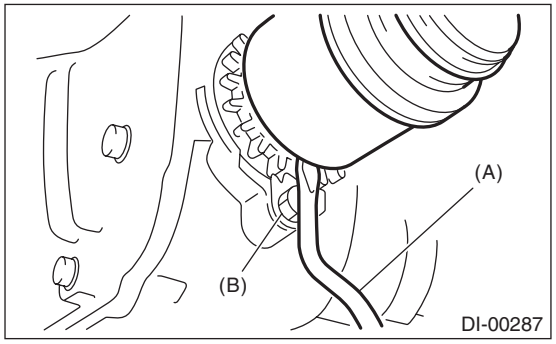

DI-00287

(A) Tire lever
(B) Bolt

13) Set the rear differential to transmission jack.

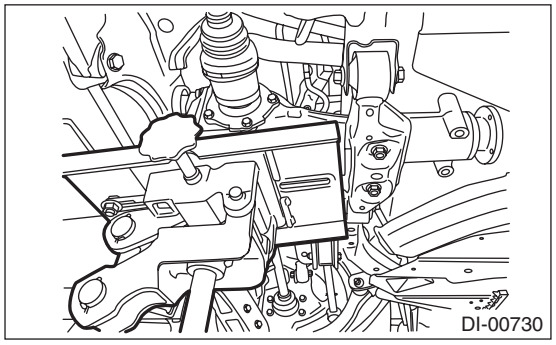
DI-00730

14) Remove the rear differential front member.

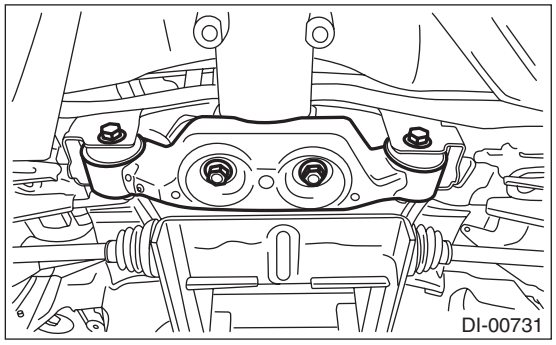

15) Remove the self-lock nuts which hold the rear differential to the rear sub frame assembly.

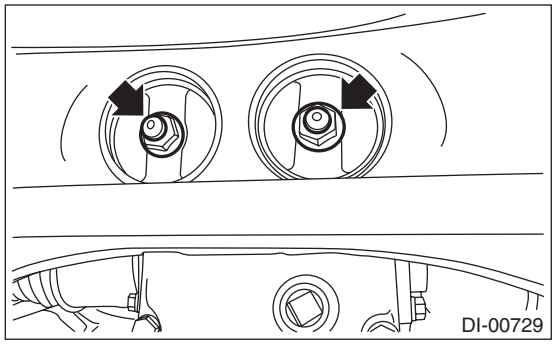

16) Pull out the rear differential stud bolt from rear differential mount bushing.

NOTE:
When removing the stud bolt from the rear differential mount bushing, carefully adjust the angle and location of transmission jack and jack stand, if necessary.

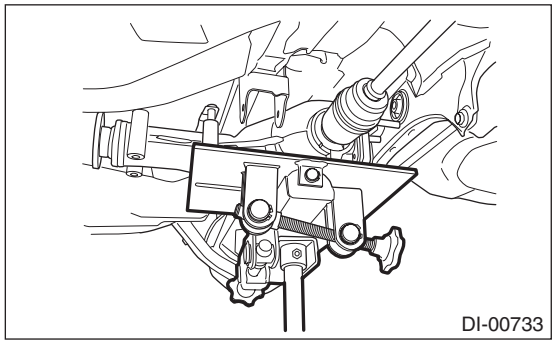

17) Lower the transmission jack.

18) Pull out the rear drive shaft from the rear differential.

NOTE:
If it is difficult to pull out the rear drive shaft from rear differential, use the ST for T-type and the tire lever for VA-type.
ST 28099PA100 DRIVE SHAFT REMOVER

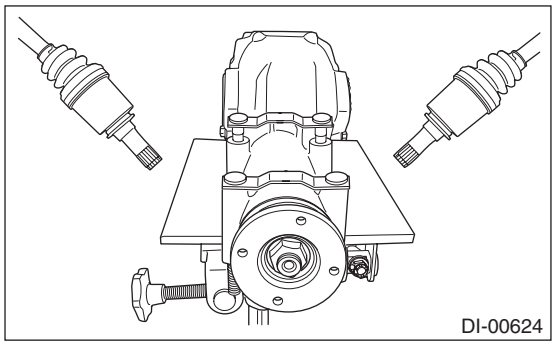

19) Lower the transmission jack.
20) Secure the rear drive shaft to rear lateral link using wire.

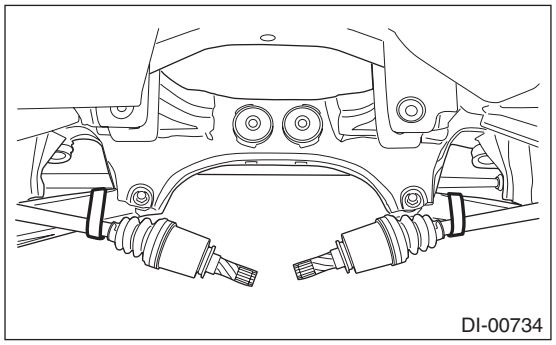

21) Remove the rear differential member plate from rear differential.

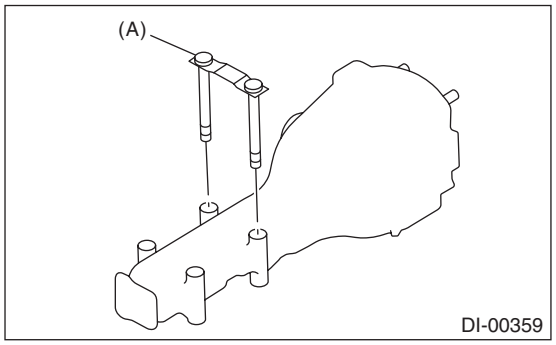

(A) Rear differential member plate

B: INSTALLATION

1) Attach the rear differential member plate to the rear differential.

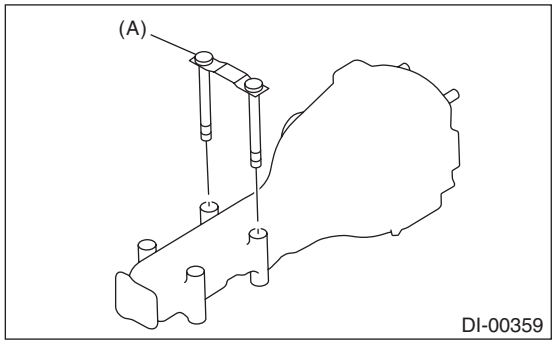

(A) Rear differential member plate

2) Set the rear differential to transmission jack.
3) Set the ST to the rear differential.
ST 28099PA090 OIL SEAL PROTECTOR

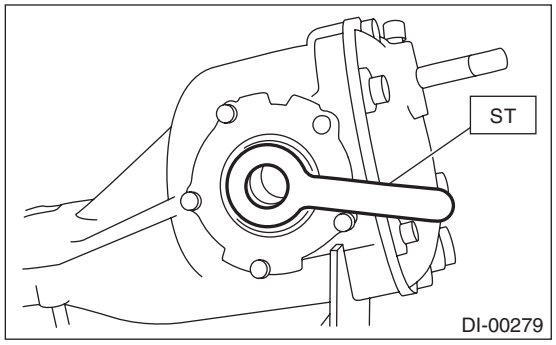

4) Insert the rear drive shaft until the spline portion of the rear drive shaft exceeds the side oil seal.

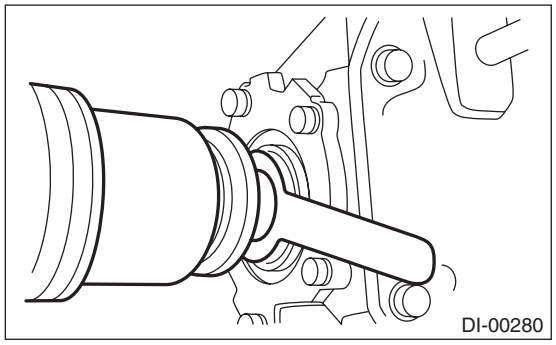

5) Remove ST from rear differential.

6) Push the rear differential from side to side to insert the DOJ into rear differential completely.

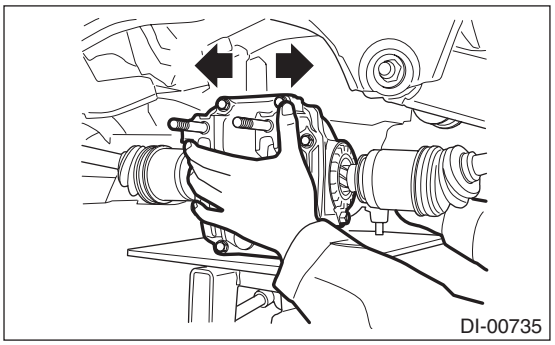

7) Adjust the transmission jack, if necessary, and insert the rear differential stud bolt into the rear differential mount bushing properly.

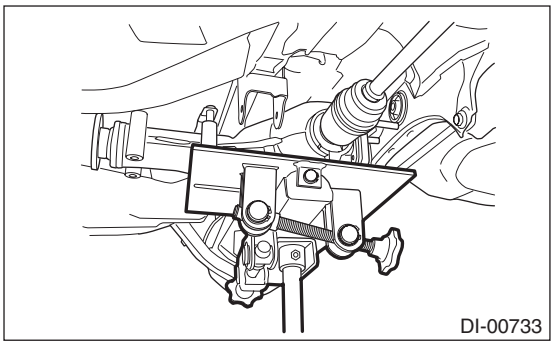

8) After inserting the rear differential stud bolt into the rear differential mount bushing, lift up the transmission jack and align the rear differential to its attachment position.

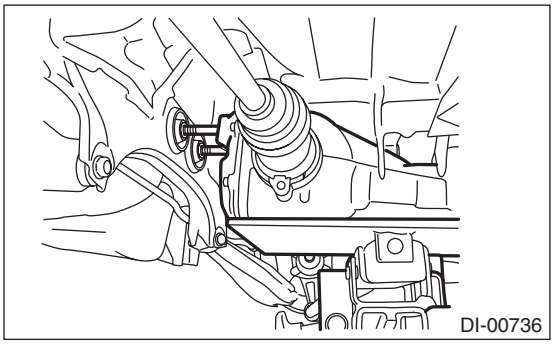

9) Tighten a new self-locking nut temporarily to the rear differential stud bolt.

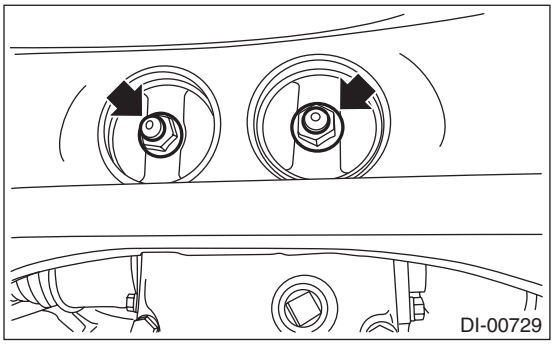

10) Install the rear differential front member, and temporarily attach and tighten a new self-locking nut.

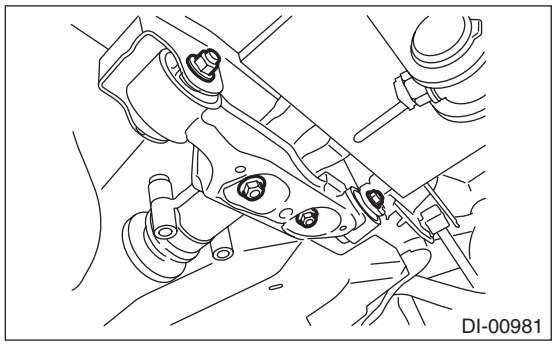

11) Remove the transmission jack.
12) Tighten the self-locking nut.

Tightening torque:
T1: 50 N·m (5.1 kgf-m, 36.9 ft-lb)
T2: 110 N·m (11.2 kgf-m, 81.1 ft-lb)

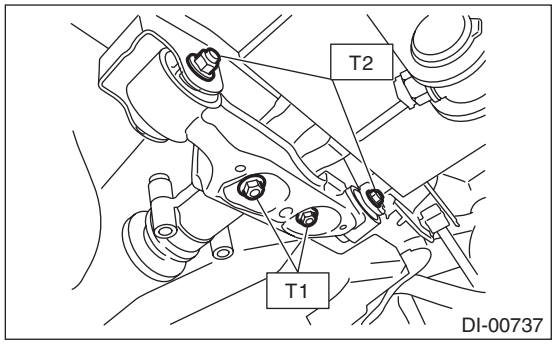

13) Tighten the self-locking nut.

Tightening torque:
70 N·m (7.1 kgf-m, 51.6 ft-lb)

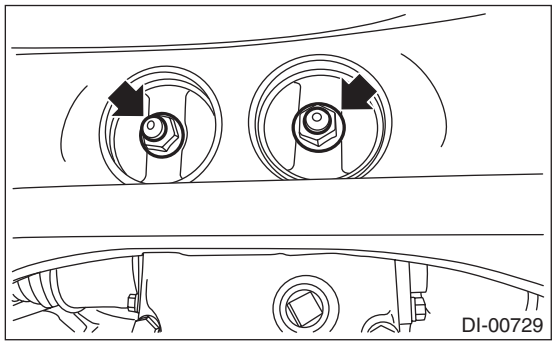

14) Install the propeller shaft. <Ref. to DS-13, INSTALLATION, Propeller Shaft.>

15) Install the center exhaust cover.

Tightening torque:
18 N·m (1.8 kgf-m, 13.3 ft-lb)

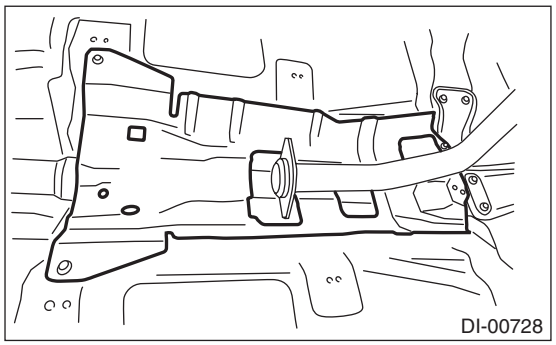

16) Install the rear exhaust pipe. <Ref. to EX(H4DO(w/o HEV))-20, INSTALLATION, Rear Exhaust Pipe.>
17) Fill differential gear oil. <Ref. to DI-19, REPLACEMENT, Differential Gear Oil.>
18) Installing procedure hereafter is in the reverse order of removal.
19) Perform “Rear differential inspection mode” using the Subaru Select Monitor. (CVT model) <Ref. to DI-66, Rear Differential Inspection Mode.>

CAUTION:
Be sure to perform rear differential inspection mode when the following work has been performed.
- **Replacement of rear differential**
- **Replacement of rear differential hypoid gear set**
- **Replacement of transmission assembly**
- **Replacement of front differential hypoid gear set**

C: DISASSEMBLY

To detect the real cause of trouble, inspect the following items before disassembling.
• Tooth contact and backlash between hypoid driven gear and drive pinion
• Hypoid driven gear runout on its back surface
• Total preload of drive pinion
1) Set the ST on vise and install the differential assembly to ST.
ST 398217700 ATTACHMENT SET

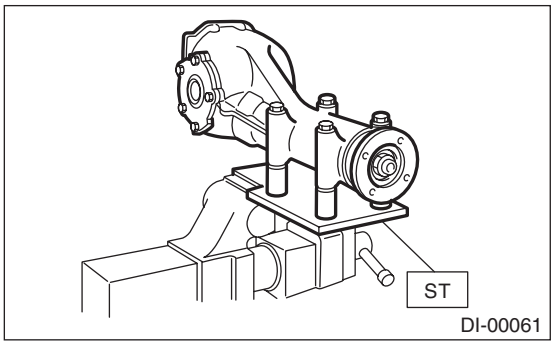

2) Remove the drain plug and filler plug.
3) Remove the air breather cap.

NOTE:
• Do not attempt to remove the air breather cap unless necessary.
• Whenever the air breather cap is removed, replace it with a new part.

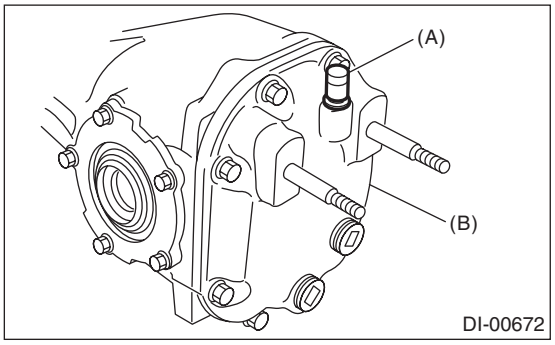

(A) Air breather cap
(B) Rear cover

4) Remove the bolts, and then remove the rear cover.
5) Remove the side retainer attachment bolts, set the ST to differential case, and extract the side retainers RH and LH with a puller.

NOTE:
• Side retainer shim of each side should be kept together with its mating retainer.
• Keep the side retainers separate by attaching tags or in similar ways to make it possible to identify RH and LH sides during reassembly.
ST 398457700 ATTACHMENT

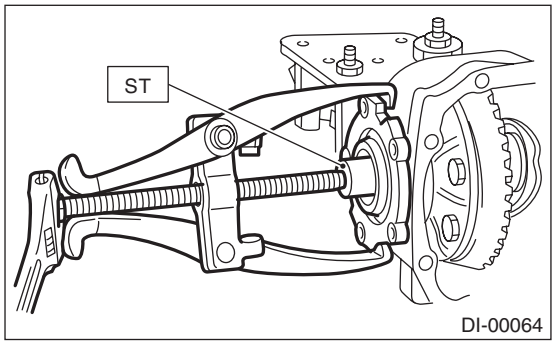

6) Pull out the differential case assembly from the differential carrier.

NOTE:
Be careful not to hit the teeth of hypoid driven gear against the differential carrier.

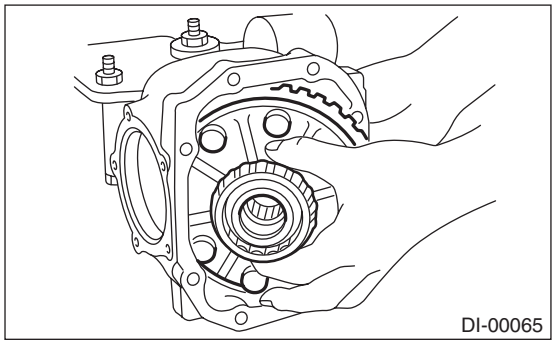

7) Remove the oil seal and O-ring from the side retainer.
8) When replacing the side bearing, remove the bearing race from the side retainer using ST.
ST 398527700 PULLER ASSY

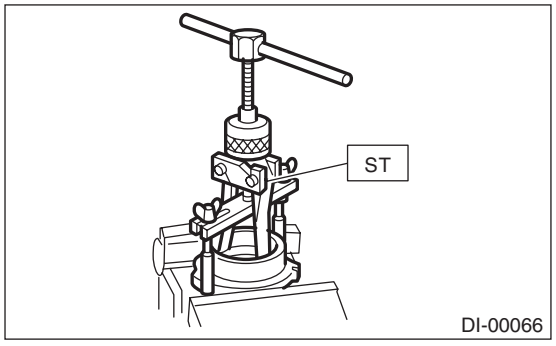

9) Using the ST, remove the bearing cone.

NOTE:
• Do not attempt to disassemble the parts unless necessary.
• Set the ST so that its claws catch the edge of the bearing cone.
• Never mix up the RH and LH bearing races and cones.

ST 18759AA000 PULLER ASSY

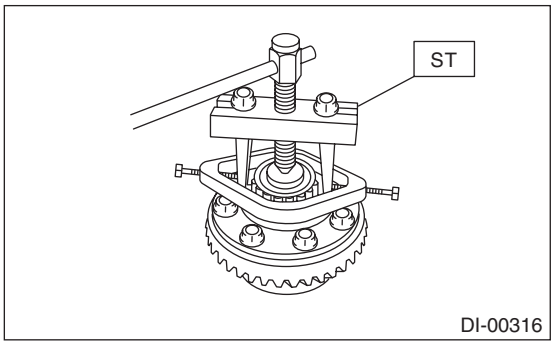

10) Remove the hypoid driven gear by loosening hypoid driven gear bolts.

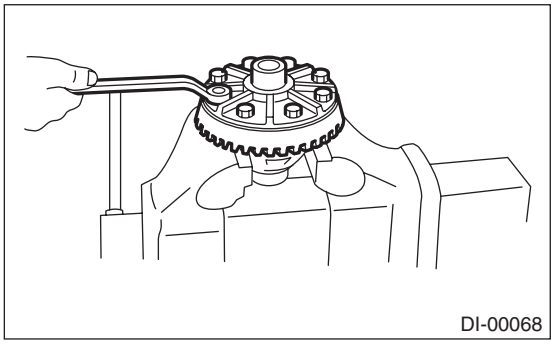

11) Remove the pinion shaft lock pin from hypoid driven gear side using ST.

ST 899904100 STRAIGHT PIN REMOVER

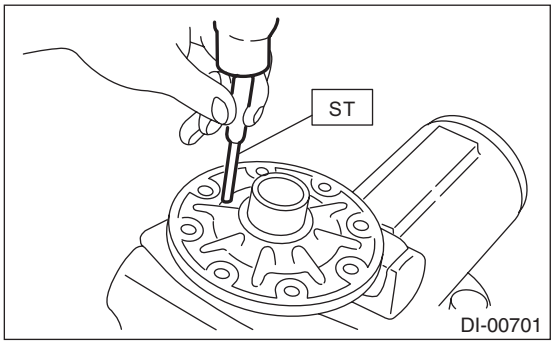

12) Draw out the pinion mate shaft, and remove pinion mate gears, pinion mate gear washers, side gears, and side gear thrust washers.

NOTE:
The gears and washers should be marked with RH or LH, front or rear, or kept separately.

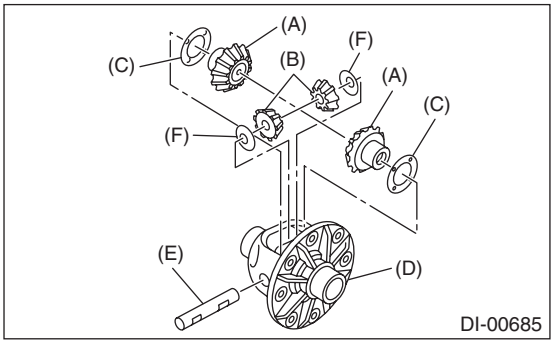

(A) Side gear
(B) Pinion mate gear
(C) Side gear thrust washer
(D) Differential case
(E) Pinion mate shaft
(F) Pinion mate gear washer

13) Remove the self-locking nut while securing the companion flange with ST.

ST 498427200 FLANGE WRENCH

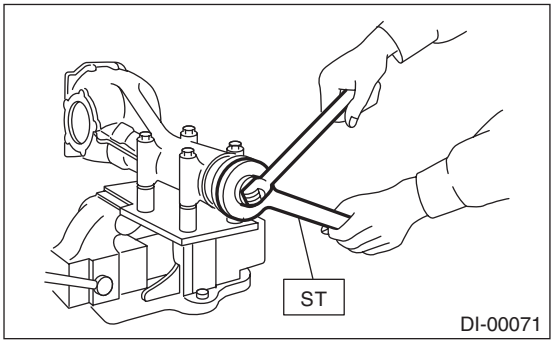

14) Extract the companion flange with a puller.

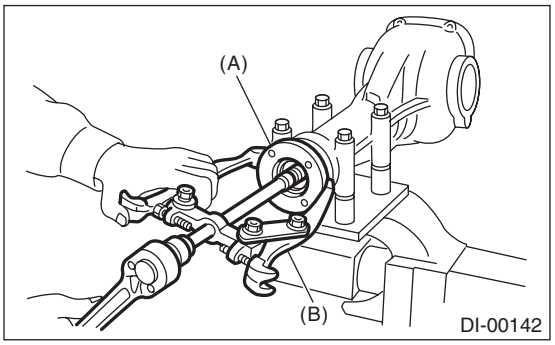

(A) Companion flange
(B) Puller

15) Press the end of drive pinion shaft using ST and remove the rear bearing cone, pinion height adjusting washer, preload adjusting spacer and washer.

NOTE:
Hold the drive pinion so as not to drop it.
ST 398467700 DRIFT

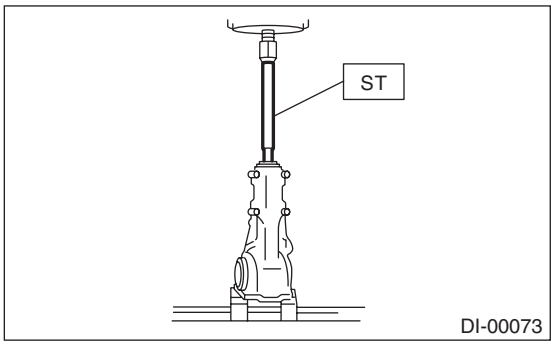

16) Remove the rear bearing cone from drive pinion by supporting the cone with ST.

NOTE:
Place the replacer so that its center-recessed side faces the bearing cone.
ST 398517700 REPLACER

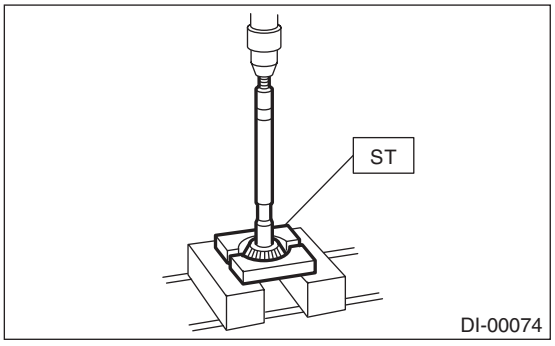

17) Remove the front oil seal from differential carrier using ST.
ST 398527700 PULLER ASSY

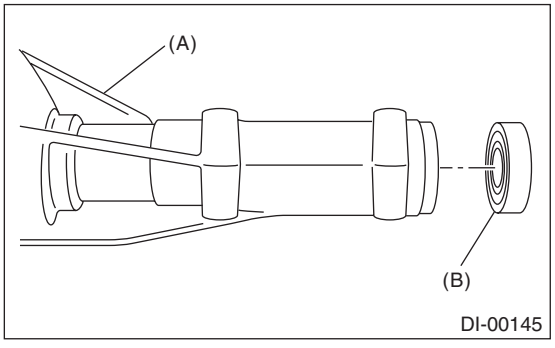

(A) Differential carrier
(B) Front oil seal

18) Remove the pilot bearing together with the front bearing cone and spacer using the ST.
ST 398467700 DRIFT

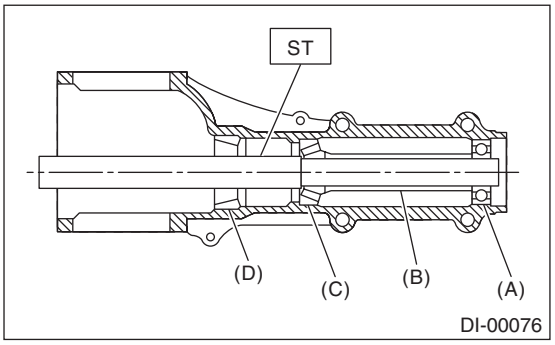

(A) Pilot bearing
(B) Spacer
(C) Front bearing
(D) Rear bearing race

19) When replacing the bearings, use a brass bar to tap out the front bearing race and rear bearing race in this order to remove them.

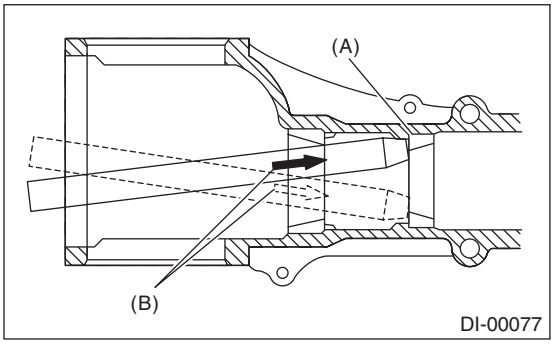

(A) 2 cutout portions along diagonal lines
(B) Tap alternately with brass bar.

D: ASSEMBLY

NOTE:
- Assemble in the reverse order of disassembly.
- Check and adjust each part during assembly.
- Keep the shims and washers in order, so that they are not improperly installed.
- Thoroughly clean the surfaces on which the shims, washers and bearings are to be installed.
- Apply gear oil when installing the bearings and thrust washers.
- Be careful not to mix up the RH and LH bearing races.
- Use a new O-ring and gasket.
- Replace the oil seal with a new part at every disassembly.
- Be careful not to mix up the oil seal RH and LH.
- Apply differential gear oil to the lips when installing the oil seal.

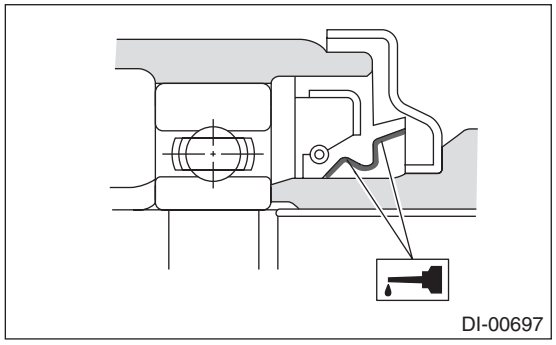

1) Adjusting preload for front and rear bearings

NOTE:
Adjust the bearing preload between front and rear bearings with preload adjusting spacer and washer. Pinion height adjusting washer is not affected by this adjustment. The adjustment must not be carried out with oil seal inserted.

(1) Install the rear bearing race into the differential carrier using ST1 and ST2.

ST1 398477701 HANDLE
ST2 398477703 DRIFT 2

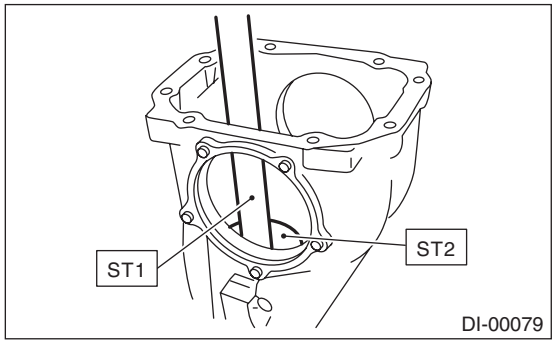

(2) Install the front bearing race to the differential carrier using ST1 and ST2.

ST1 398477701 HANDLE
ST2 398477702 DRIFT

(3) Insert ST1 into the differential carrier with the pinion height adjusting washer and rear bearing cone fitted onto it.

NOTE:
If tooth contact (drive pinion, hypoid driven gear) is normal in the inspection before disassembling, verify that the washer is not deformed, and then re-use the used washer.

(4) Install the preload adjusting spacer and washer, front bearing cone, ST2, companion flange and self-locking nut.

NOTE:
Use new front bearing cone.

ST1 398507702 DUMMY SHAFT
ST2 398507703 DUMMY COLLAR

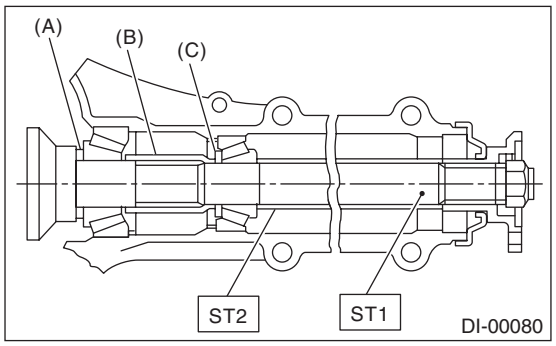

(A) Pinion height adjusting washer
(B) Preload adjusting spacer
(C) Preload adjusting washer

(5) Turn the ST1 by hand to smooth the bearing, and tighten the self-locking nut while measuring the initial load or initial torque with a spring scale or torque wrench. Select the preload adjusting washer and spacer so that the specified preload is obtained when nut is tightened to the specified torque.

NOTE:
- Use a new self-locking nut.
- Measure the preload in direction of tangent to the flange.
- Be careful not to give excessive preload.
- When tightening the self-locking nut, lock ST1 with ST2 as shown in the figure.

ST1 398507702 DUMMY SHAFT
ST2 398507704 BLOCK

Tightening torque:
181.5 N·m (18.5 kgf-m, 133.9 ft-lb)

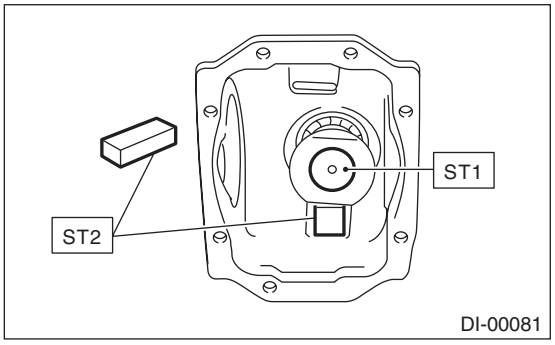

Initial load:
18.1 — 38.8 N (1.8 — 4.0 kgf, 4.1 — 8.7 lbf)

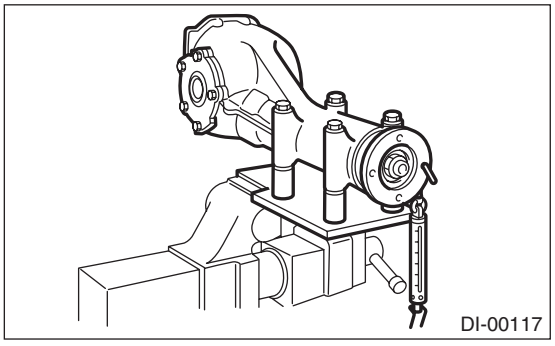

Initial torque:
0.69 — 1.47 N·m (0.07 — 0.15 kgf-m, 0.51 — 1.08 ft-lb)

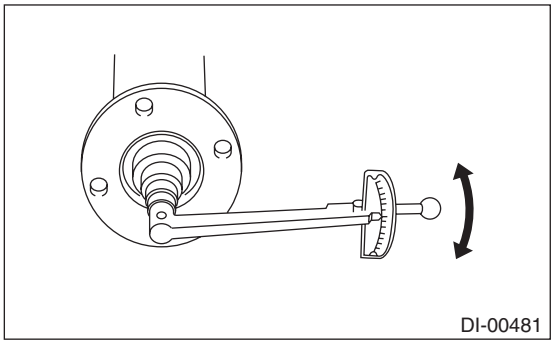

Preload adjusting washer	
Part No.	Thickness mm (in)
383705200	2.59 (0.1020)
383715200	2.57 (0.1012)
383725200	2.55 (0.1004)
383735200	2.53 (0.0996)
383745200	2.51 (0.0988)
383755200	2.49 (0.0980)
383765200	2.47 (0.0972)
383775200	2.45 (0.0965)
383785200	2.43 (0.0957)
383795200	2.41 (0.0949)
383805200	2.39 (0.0941)
383815200	2.37 (0.0933)
383825200	2.35 (0.0925)
383835200	2.33 (0.0917)
383845200	2.31 (0.0909)

Preload adjusting spacer	
Part No.	Length mm (in)
383695201	56.2 (2.213)
383695202	56.4 (2.220)
383695203	56.6 (2.228)
383695204	56.8 (2.236)
383695205	57.0 (2.244)
383695206	57.2 (2.252)

2) Adjusting drive pinion height:
Adjust the drive pinion height with pinion height adjusting washer installed between the rear bearing cone and the back of pinion gear.

(1) Attach the ST2.

NOTE:
At this time, install a provisionally selected or previously used pinion height adjusting washer. Measure and record the thickness.

ST1 398507702 DUMMY SHAFT
ST2 398507701 DIFFERENTIAL CARRIER GAUGE
ST3 398507703 DUMMY COLLAR

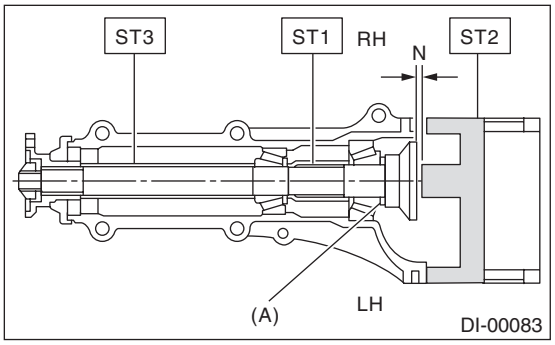

(A) Pinion height adjusting washer

(2) Measure the clearance “N” between the end of ST2 and the end surface of ST1 by using a thickness gauge.

NOTE:
Make sure there is no clearance between the differential carrier and ST2.

ST1 398507702 DUMMY SHAFT
ST2 398507701 DIFFERENTIAL CARRIER GAUGE

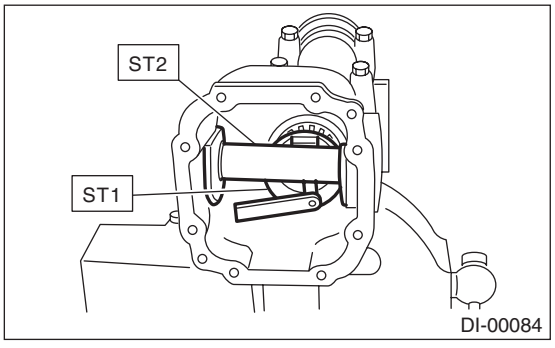

(3) Obtain the thickness of pinion height adjusting washer to be inserted from the following formula, and replace the temporarily installed washer with this one.
T = To + N – (H × 0.01) – 0.20 mm (0.0079 in)

T	Thickness of pinion height adjusting washer mm (in)	
To	Thickness of washer temporarily inserted mm (in)	
N	Clearance of thickness gauge mm (in)	
H	Figure marked on drive pinion head	
Memo:		

(Example of calculation)
To = 3.39 mm (0.1335 in)
N = 0.24 mm (0.0094 in)
H = + 1
T = 3.39 mm (0.1335 in) + 0.24 mm (0.0094 in) – 0.01 mm (0.0004 in) – 0.20 mm (0.0079 in) = 3.42 mm (0.1346 in)
Result: Thickness = 3.42 mm (0.1346 in)
Therefore use washer 383605200.

Pinion height adjusting washer	
Part No.	Thickness mm (in)
383495200	3.09 (0.1217)
383505200	3.12 (0.1228)
383515200	3.15 (0.1240)
383525200	3.18 (0.1252)
383535200	3.21 (0.1264)
383545200	3.24 (0.1276)
383555200	3.27 (0.1287)
383565200	3.30 (0.1299)
383575200	3.33 (0.1311)
383585200	3.36 (0.1323)
383595200	3.39 (0.1335)
383605200	3.42 (0.1346)
383615200	3.45 (0.1358)
383625200	3.48 (0.1370)
383635200	3.51 (0.1382)
383645200	3.54 (0.1394)
383655200	3.57 (0.1406)
383665200	3.60 (0.1417)
383675200	3.63 (0.1429)
383685200	3.66 (0.1441)

3) Install the selected pinion height adjusting washer on drive pinion, and press the rear bearing cone into position with ST.
ST 398177700 INSTALLER

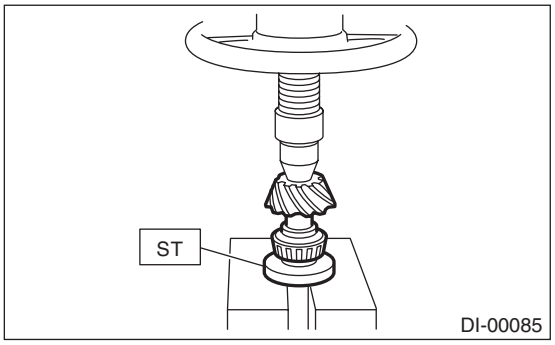

4) Insert the drive pinion into the differential carrier, and install the preselected preload adjusting spacer and washer.

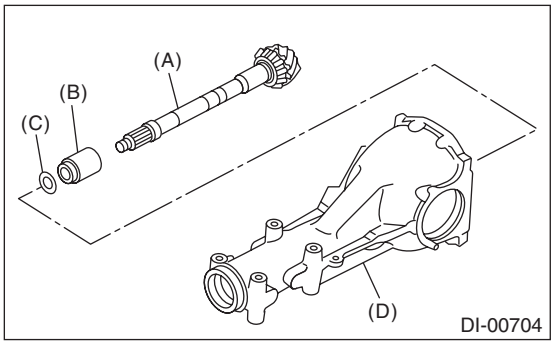

(A) Drive pinion
(B) Preload adjusting spacer
(C) Preload adjusting washer
(D) Differential carrier

5) Press-fit the front bearing cone with ST1, ST2 and ST3.

NOTE:
Use new front bearing cone.
ST1 398507703 DUMMY COLLAR
ST2 399780104 WEIGHT
ST3 899580100 INSTALLER

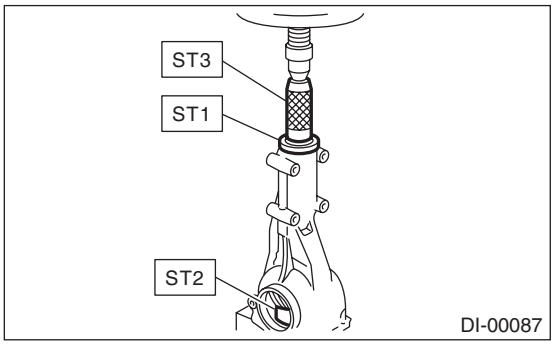

6) Insert the spacer, then press-fit the pilot bearing with ST1 and ST2.

NOTE:
Use a new pilot bearing.
ST1 399780104 WEIGHT
ST2 899580100 INSTALLER

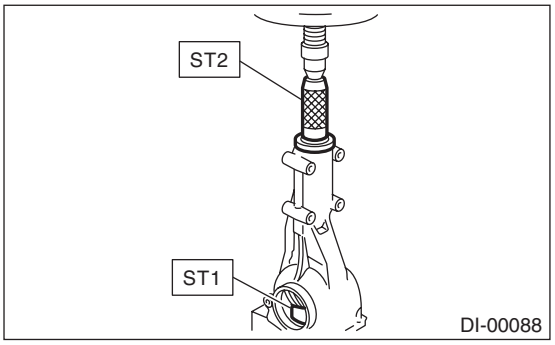

7) Using the ST, install the oil seal.

NOTE:
- Use a new oil seal.
- Press-fit until the oil seal end comes 1 mm (0.04 in) inward from end of carrier.
- Apply differential gear oil to the oil seal lips.

ST 498447120 INSTALLER

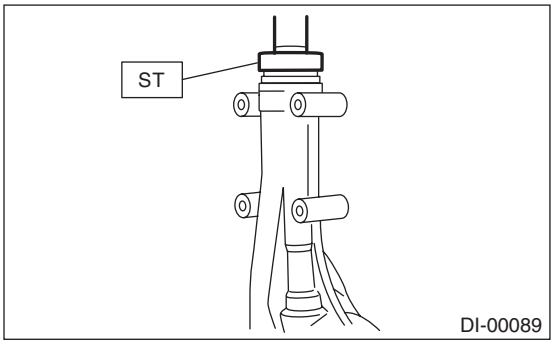

8) Press-fit the companion flange with ST1 and ST2.

NOTE:
Be careful not to damage the bearing.
ST1 899874100 INSTALLER
ST2 399780104 WEIGHT

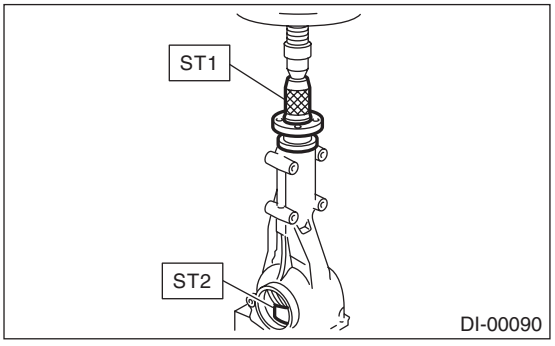

9) Apply seal material on the drive pinion shaft thread and new self-locking nut seat.

Seal material:
THREE BOND 1324 (Part No. 004403042) or equivalent

10) Attach the new self-locking nut and use the ST to fix the companion flange in place, then tighten the self-locking nut.

Tightening torque:
181.5 N·m (18.5 kgf-m, 133.9 ft-lb)

ST 498427200 FLANGE WRENCH

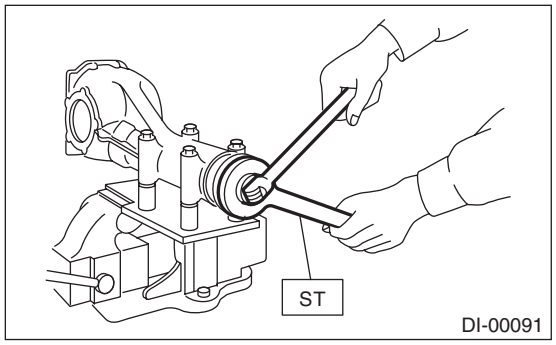

11) Check the initial torque or initial load.

Initial load:
18.1 — 38.8 N (1.8 — 4.0 kgf, 4.1 — 8.7 lbf)

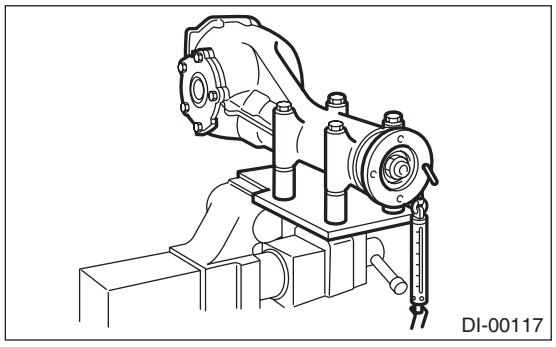

Initial torque:
0.69 — 1.47 N·m (0.07 — 0.15 kgf-m, 0.51 — 1.08 ft-lb)

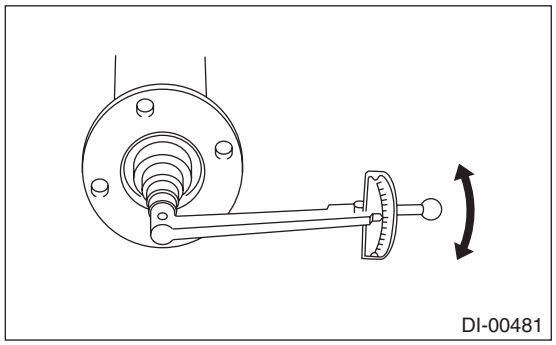

12) Assembling differential case

(1) Install the side gears and pinion mate gears, with their side gear thrust washers, pinion mate gear washer, and pinion mate shaft, into the differential case.

NOTE:

• Apply gear oil on both sides of the washer and on the pinion mate shaft before installing.

• Insert the pinion mate shaft into the differential case by aligning the pin holes.

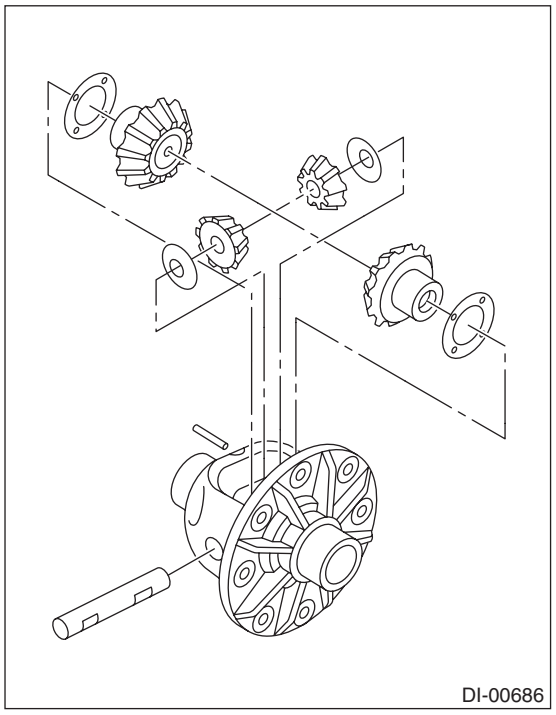

(2) Measure the side gear backlash.

Side gear backlash:
0.10 — 0.20 mm (0.004 — 0.008 in)

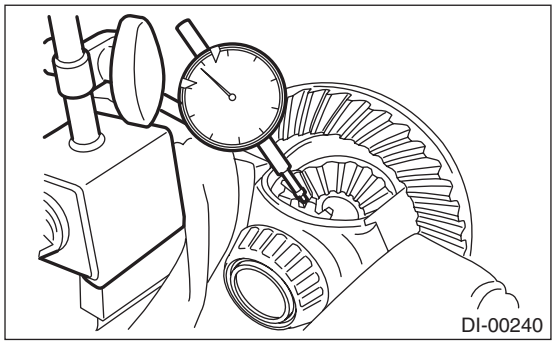

(3) Adjust the backlash as specified by selecting side gear thrust washer.

Side gear thrust washer	
Part No.	Thickness mm (in)
383445201	0.75 — 0.80 (0.0295 — 0.0315)
383445202	0.80 — 0.85 (0.0315 — 0.0335)
383445203	0.85 — 0.90 (0.0335 — 0.0354)

(4) Check the condition of rotation after applying oil to the gear tooth surfaces and washer surfaces.
(5) Drive the pinion shaft lock pin into the differential case.

NOTE:
Use a new pinion shaft lock pin.
ST 899904100 STRAIGHT PIN REMOVER
13) Install the driven gear to the differential case.

NOTE:
• Before installing bolts, apply seal material to bolt threads.

Seal material:
THREE BOND 1324 (Part No. 004403042) or equivalent
• Make sure there is no clearance between the differential case and driven gear.
• Tighten opposing bolts in order.

Tightening torque:
103 N·m (10.5 kgf-m, 76.0 ft-lb)

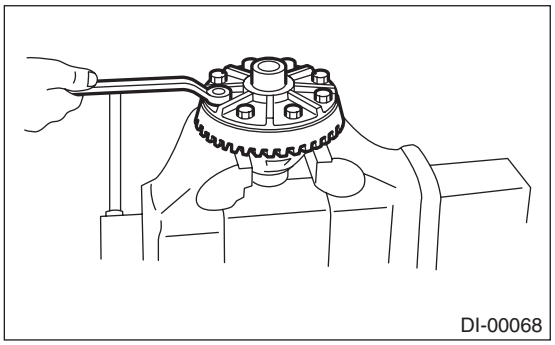
DI-00068

14) Using the ST, press-fit the side bearing to the differential case.
ST 398487700 DRIFT

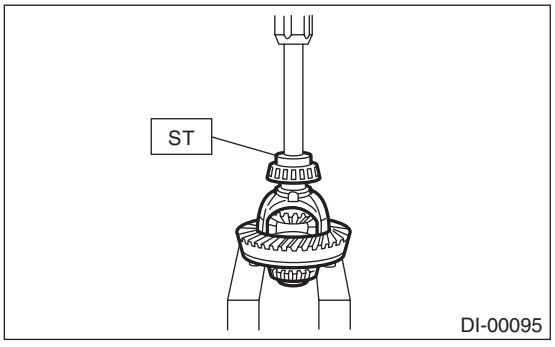

DI-00095

15) Using the ST, press-fit the side bearing outer race to the side retainer.

CAUTION:
Make sure that the bearing outer races and cones are properly assembled.
ST 398417700 DRIFT

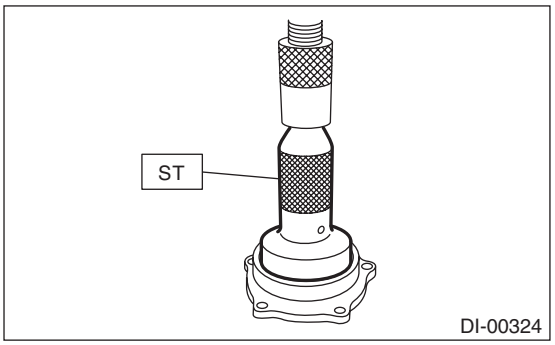

DI-00324

16) Side retainer shim adjustment
(1) The hypoid driven gear backlash and side bearing preload can be adjusted by the side retainer shim thickness.
(2) Install the differential case assembly into differential carrier in the reverse order of disassembly.

NOTE:
Be careful not to hit the teeth of hypoid driven gear against the differential carrier.

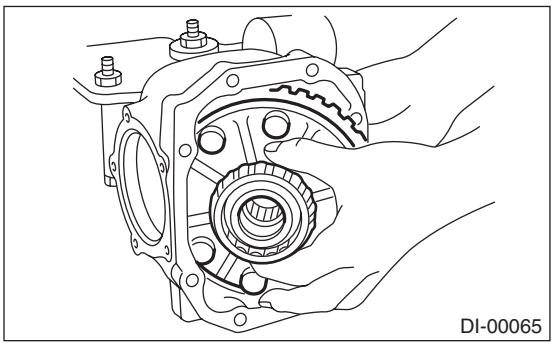
DI-00065

(3) Install the side retainer shim.

NOTE:
• Be careful not to mix up the side retainer shim RH and LH.
• Replace broken or corroded side retainer shims with a new part of the same thickness.

Side retainer shim	
Part No.	Thickness mm (in)
383475201	0.20 (0.0079)
383475202	0.25 (0.0098)
383475203	0.30 (0.0118)
383475204	0.40 (0.0157)
383475205	0.50 (0.0197)

(4) Align the arrow mark on the differential carrier with the arrow mark on the side retainer when installing the side retainer.

NOTE:
Be careful that the side bearing outer race is not damaged by the bearing roller.

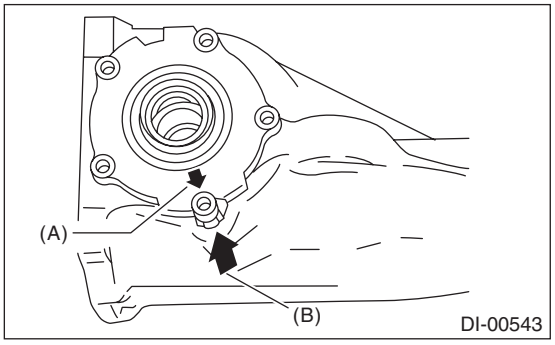

(A) Arrow mark (on the side retainer)
(B) Arrow mark (on the differential carrier)

(5) Tighten the side retainer bolts.

Tightening torque:
10.5 N·m (1.1 kgf-m, 7.7 ft-lb)

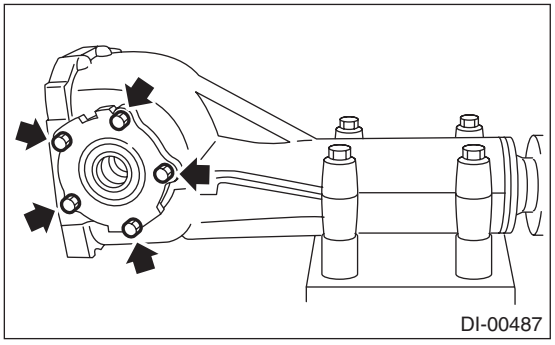

(6) Measure the hypoid driven gear to drive pinion backlash. Set the magnet base on differential carrier. Align the contact point of dial gauge with tooth face of hypoid driven gear, and move hypoid driven gear while holding drive pinion still. Read the value indicated on dial gauge. If the backlash is outside the standard range, adjust the side retainer shim by the following method.

• When backlash is less than 0.1 mm (0.004 in):
Reduce the thickness of shim on the back side of the hypoid driven gear and increase the thickness of shims on the teeth side of the hypoid driven gear.

• When backlash exceeds 0.2 mm (0.008 in):
Increase the thickness of shim on the back side of the hypoid driven gear and reduce the thickness of shims on the teeth side of the hypoid driven gear.

Backlash:
0.10 — 0.20 mm (0.004 — 0.008 in)

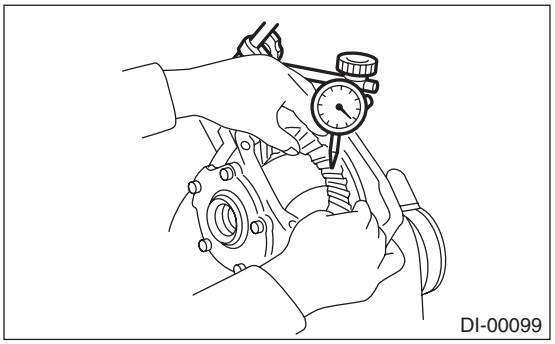

(7) Measure the total preload of the drive pinion. If the total preload is outside the specification range, adjust the thickness of side retainer shims, increasing/reducing both shims by an even amount at a time.

Total preload:
20.7 — 54.4 N (2.1 — 5.5 kgf, 4.7 — 12.2 lbf)

17) Recheck the hypoid driven gear to drive pinion backlash.

Backlash:
0.10 — 0.20 mm (0.004 — 0.008 in)

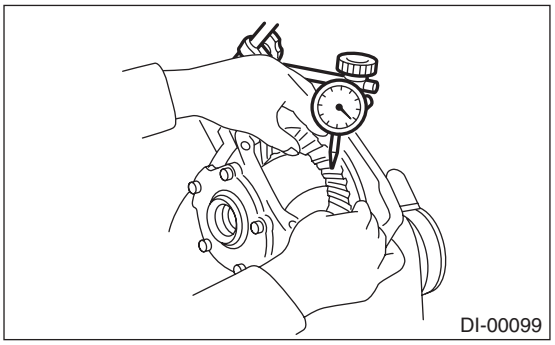

18) Check pinion and hypoid driven gears rotate smoothly and make sure of the hypoid driven gear runout on its back surface. If the hypoid driven gear runout on its back surface exceeds the specification, check for any foreign objects between the hypoid driven gear and differential case, and for any deformation of the differential case or hypoid driven gear.

Hypoid driven gear back surface runout:
0.05 mm (0.002 in)

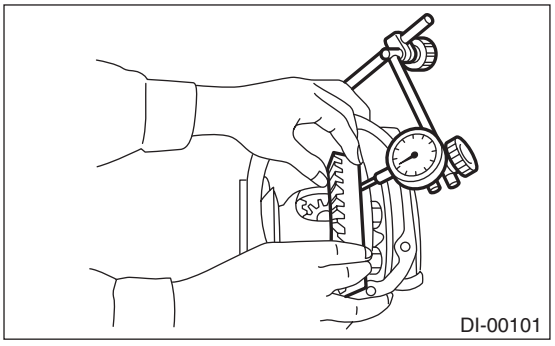

19) Check and adjustment of the tooth contact of hypoid driven gear and drive pinion

(1) Apply lead-free red dye evenly on the both sides of three to four teeth of the hypoid driven gear. Check the contact pattern after rotating the hypoid driven gear several revolutions back and forth until a definite contact pattern appears on the hypoid driven gear.

(2) When the contact pattern is not correct, re-adjust.

NOTE:
Be sure to wipe off the lead-free red dye completely after the adjustment is completed.

- Correct tooth contact

Check item: Tooth contact pattern is slightly shifted toward toe side under no-load rotation. (When driving, it moves towards the heel side.)

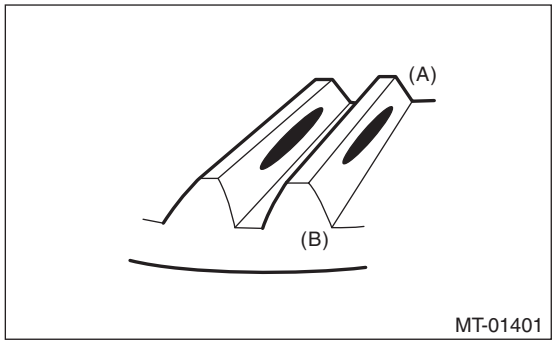

(A) Toe side
(B) Heel side

- Face contact

Check item: Backlash is too large.
Contact pattern

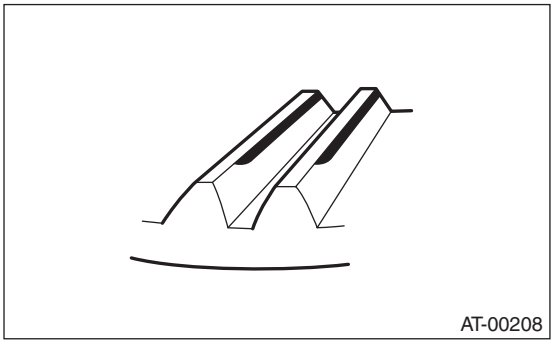

Corrective action: Increase thickness of pinion height adjusting washer according to the procedure for bringing drive pinion close to hypoid driven gear side.

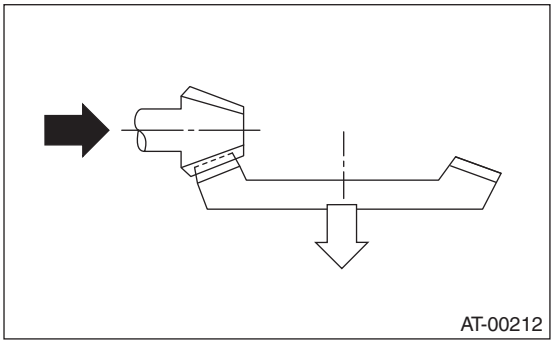

- Flank contact

Check item: Backlash is too small.

Contact pattern

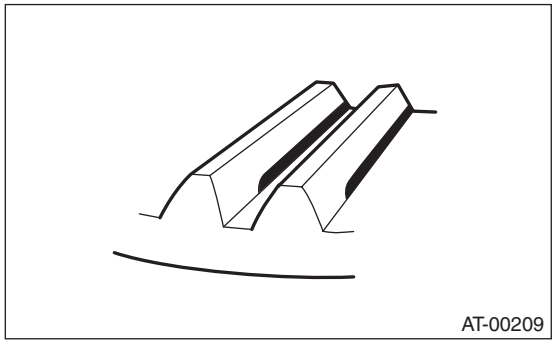

Corrective action: Reduce the thickness of pinion height adjusting washer according to the procedure for bringing drive pinion away from hypoid driven gear.

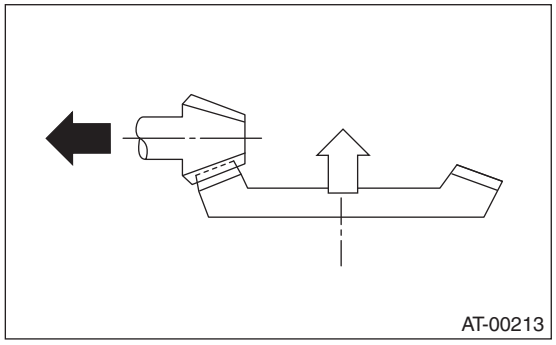

- Toe contact (inside contact)

Check item: Teeth contact area is too small.

Contact pattern

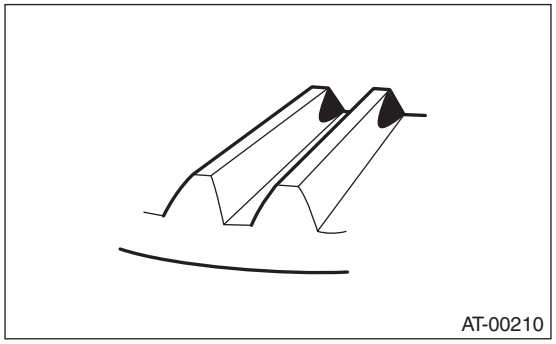

Corrective action: Reduce the thickness of pinion height adjusting washer according to the procedure for bringing drive pinion away from hypoid driven gear.

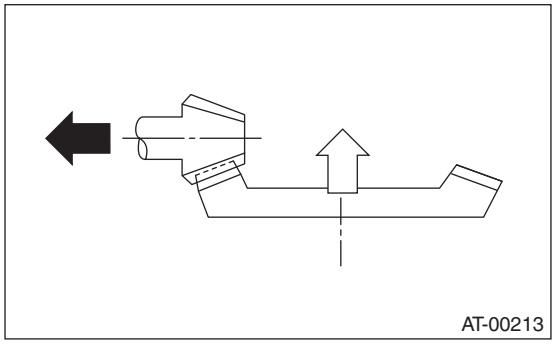

• Heel contact (outside end contact)
Check item: Teeth contact area is too small.
Contact pattern

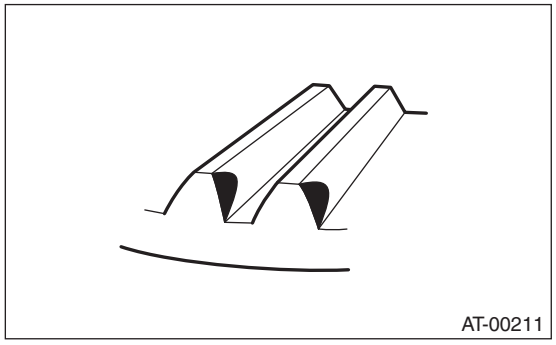

Corrective action: Increase thickness of pinion height adjusting washer according to the procedure for bringing drive pinion close to hypoid driven gear side.

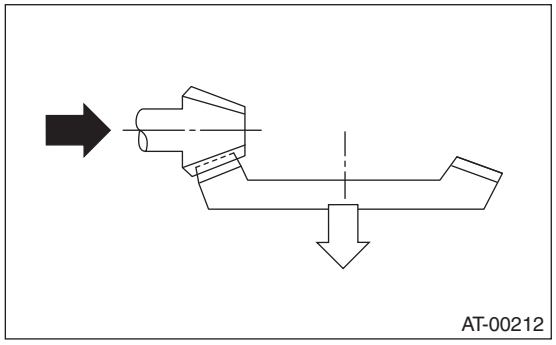

20) If proper tooth contact is not obtained, readjust the drive pinion height by changing the RH and LH side retainer shims and the hypoid gear backlash.
(1) Drive pinion height

ST1 398507702 DUMMY SHAFT
ST2 398507701 DIFFERENTIAL CARRIER GAUGE

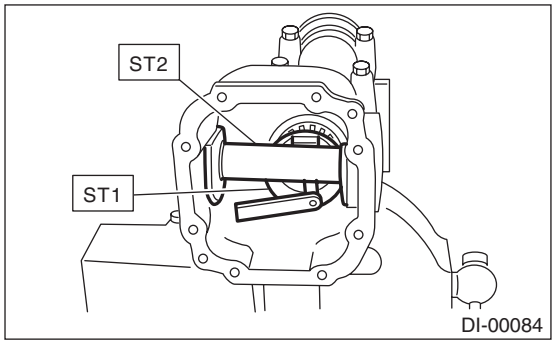

T = To + N – (H × 0.01) – 0.20 mm (0.0079 in)

T	Thickness of pinion height adjusting washer mm (in)	
To	Thickness of washer temporarily inserted mm (in)	
N	Clearance of thickness gauge mm (in)	
H	Figure marked on drive pinion head	
Memo:		

(2) Hypoid gear backlash

Backlash:
0.10 — 0.20 mm (0.004 — 0.008 in)

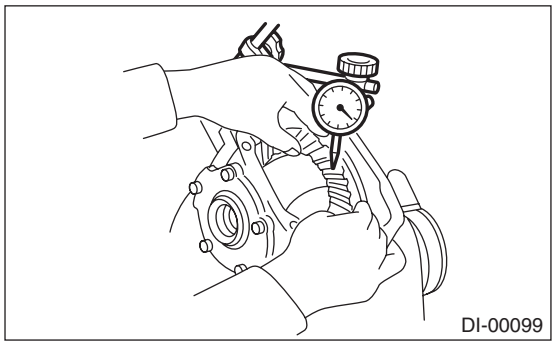

21) Remove the RH and LH side retainers.
22) Install the O-ring to left and right side retainers.

NOTE:
Use new O-rings.

23) Install the oil seal to the side retainers on both sides. <Ref. to DI-60, REPLACEMENT, Rear Differential Side Oil Seal.>

24) Align the arrow mark on the differential carrier with the arrow mark on the side retainer when installing the side retainer.

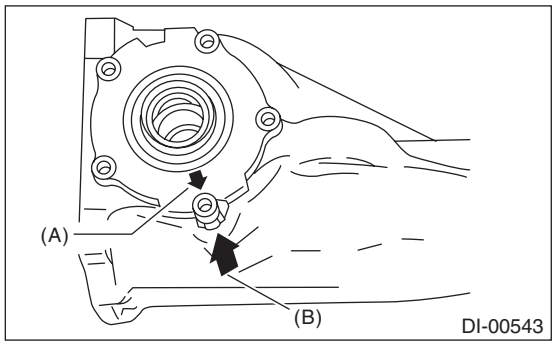

(A) Arrow mark (on the side retainer)
(B) Arrow mark (on the differential carrier)

25) Apply liquid gasket to the bolts indicated by arrows, and tighten the bolts.

Liquid gasket:
THREE BOND 1110F, THREE BOND 1110B or equivalent

Tightening torque:
10.5 N·m (1.1 kgf-m, 7.7 ft-lb)

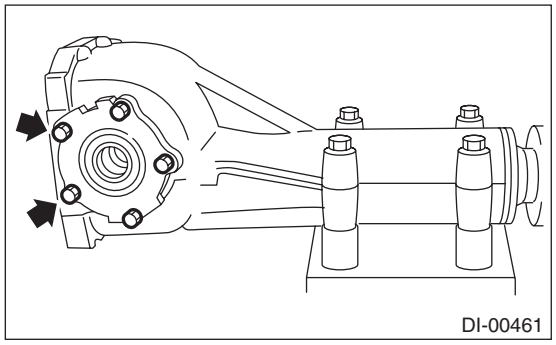

26) Install the gasket and rear cover, and tighten the bolts to specified torque.

NOTE:
Use a new gasket.

Tightening torque:
29.5 N·m (3.0 kgf-m, 21.8 ft-lb)

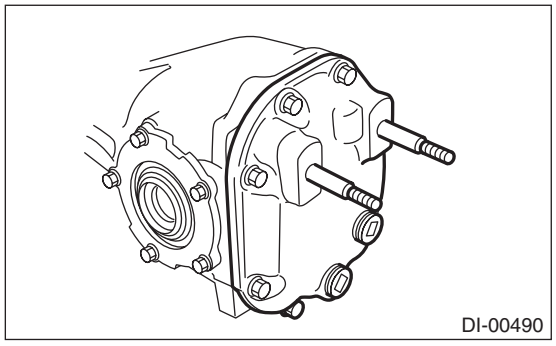

27) Install the air breather cap.

NOTE:
When installing the air breather cap, do not tap section (A). Be sure to tap section (B) to install.

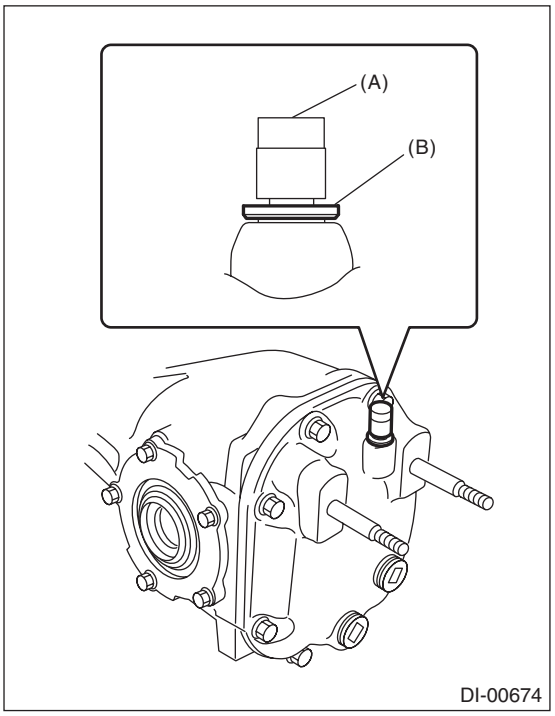

28) Install the drain plug.

NOTE:
Apply liquid gasket to the drain plug.

Liquid gasket:
THREE BOND 1105 (Part No. 004403010) or equivalent

Tightening torque:
49 N·m (5.0 kgf-m, 36.1 ft-lb)

29) Install the filler plug.

NOTE:
After installing the rear differential assembly to the vehicle, fill the gear oil, then apply liquid gasket, and tighten to the specified torque. <Ref. to DI-19, REPLACEMENT, Differential Gear Oil.>

E: INSPECTION

Wash all the disassembled parts clean, and examine them for wear, damage and other defects. Repair or replace the defective parts as necessary.
1) Hypoid driven gear and drive pinion
• If there is evidently an abnormal tooth contact, find out the cause and adjust until the teeth contact correctly. Replace the gear if there is an excessive worn or an incapable adjustment.
• If crack, cutout or seizure is found, replace the parts as a set. Slight damage of some teeth can be corrected by oil stone or the like.
2) Side gear and pinion mate gear
• Replace if cracks, scoring or other defects are evident on the tooth surface.
• Replace if thrust washer contact surface is worn or scored. Slight damages of the surface can be corrected by oil stones or equivalent.
3) Bearing
Replace if seizure, peeling, wear, rust, dragging during rotation, noise or other defect is evident.
4) Thrust washer of the side gear and pinion mate gear
Replace if seized, flawed, abnormally worn or having other defects.
5) Oil seal
Replace if deformed or damaged, and at every disassembling.
6) Differential carrier
Replace if the bearing bores are worn or damaged.
7) Differential case
Replace if sliding surfaces are abnormally worn, burned, or cracked.
8) Companion flange
Replace if the oil seal lip contact surface shows cracking.

1. SIDE GEAR BACKLASH

Using a dial gauge, check the backlash of side gear.

Side gear backlash:
0.10 — 0.20 mm (0.004 — 0.008 in)
If the side gear backlash is not within the specified range, select the side gear thrust washer and adjust the side gear backlash as specified.

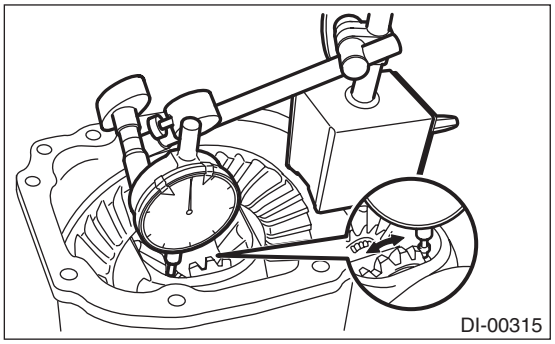
DI-00315

2. HYPOID DRIVEN GEAR BACKLASH

Using a dial gauge, check the backlash of hypoid driven gear.

Hypoid driven gear backlash:
0.10 — 0.20 mm (0.004 — 0.008 in)
If the hypoid driven gear backlash is outside the specification range, adjust the side bearing preload and repair if necessary.

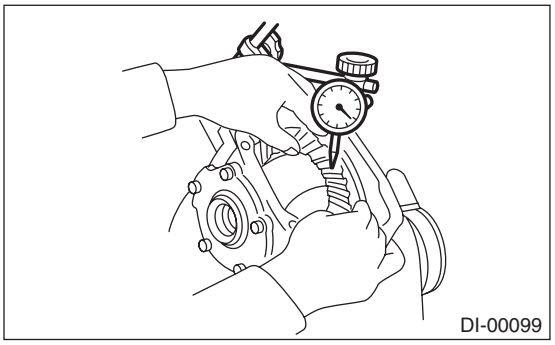
DI-00099

3. HYPOID DRIVEN GEAR RUNOUT ON ITS BACK SURFACE

Using a dial gauge, check the hypoid driven gear back surface runout.

Hypoid driven gear back surface runout:
0.05 mm (0.002 in)
If the hypoid driven gear runout on its back surface exceeds the limit, replace the hypoid driven gear.

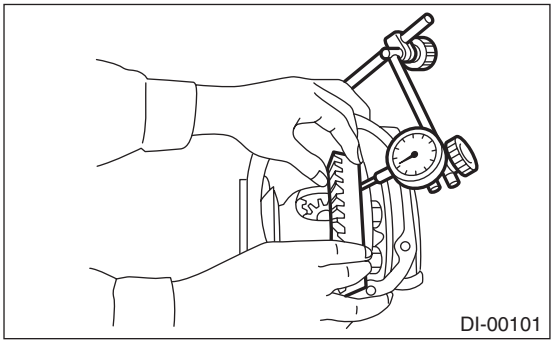
DI-00101

4. TOOTH CONTACT BETWEEN HYPOID DRIVEN GEAR AND DRIVE PINION

Inspect the tooth contact between the hypoid driven gear and drive pinion. <Ref. to DI-29, ASSEMBLY, Rear Differential (T-type).>

5. TOTAL PRELOAD

Using a spring scale, check the total preload.

Total preload:
20.7 — 54.4 N (2.1 — 5.5 kgf, 4.7 — 12.2 lb)

If the total preload is not within the specified range, adjust the side retainer shim.

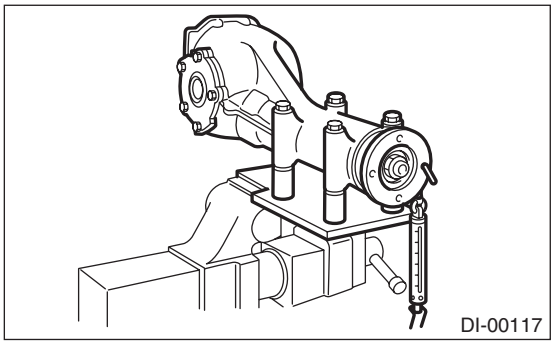
DI-00117

6. COMPANION FLANGE

1) If rust or dirt is attached to the companion flange, remove them.
2) Set a dial gauge at a companion flange surface (mating surface of propeller shaft and companion flange), and then measure the companion flange runout.

Limit of runout:
0.08 mm (0.003 in)

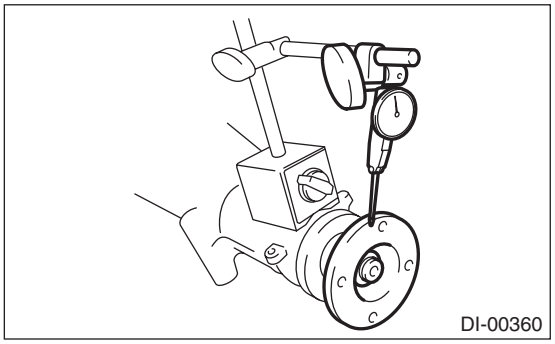
DI-00360

3) Set the gauge inside of the companion flange, and measure the runout.

Limit of runout:
0.08 mm (0.003 in)

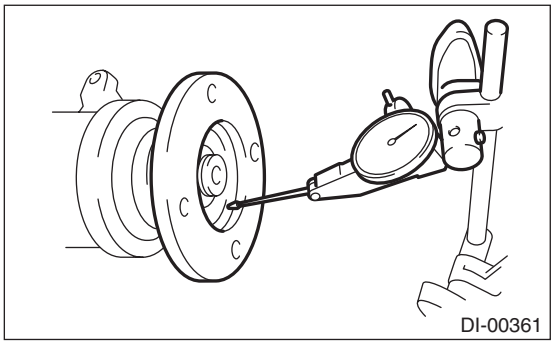
DI-00361

4) If either runout exceeds the limit, move the phase of companion flange and drive pinion 90° each, and find the point where the runout is within the limit.
5) If the runout exceeds the limit even after changing the phase, replace the companion flange and recheck the runout.
6) If the runout exceeds the limit after replacing the companion flange, the drive pinion may be assembled incorrectly or bearing is faulty.

F: ADJUSTMENT

1. SIDE GEAR BACKLASH

Adjust the side gear backlash. <Ref. to DI-29, ASSEMBLY, Rear Differential (T-type).>

2. HYPOID DRIVEN GEAR BACKLASH

Adjust hypoid driven gear backlash. <Ref. to DI-29, ASSEMBLY, Rear Differential (T-type).>

3. TOOTH CONTACT BETWEEN HYPOID DRIVEN GEAR AND DRIVE PINION

Adjust the tooth contact between hypoid driven gear and drive pinion gear. <Ref. to DI-29, ASSEMBLY, Rear Differential (T-type).>

4. TOTAL PRELOAD

Adjust the side retainer shim. <Ref. to DI-29, ASSEMBLY, Rear Differential (T-type).>

5. Rear Differential (VA-type)

A: REMOVAL

The removal procedure for VA-type is included in “REMOVAL” for T-type. <Ref. to DI-22, REMOVAL, Rear Differential (T-type).>

B: INSTALLATION

The installation procedure for VA-type is included in “INSTALLATION” for T-type. <Ref. to DI-24, INSTALLATION, Rear Differential (T-type).>

C: DISASSEMBLY

To detect the real cause of trouble, inspect the following items before disassembling.

• Tooth contact and backlash between hypoid driven gear and drive pinion

1) Set the ST on vise and install the differential assembly to ST.

ST 398217700 ATTACHMENT SET

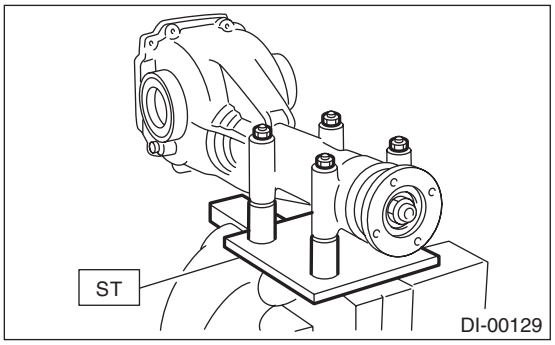

2) Remove the drain plug and filler plug.

3) Remove the rear cover by removing retaining bolts.

NOTE:
Remove it by tapping with a plastic hammer.

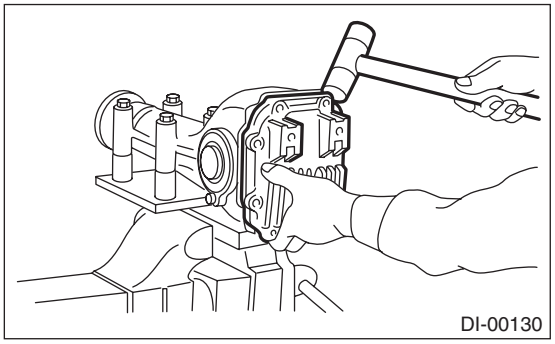

4) Remove the air breather cap.

NOTE:

• Do not attempt to remove the air breather cap unless necessary.

• Whenever the air breather cap is removed, replace it with a new part.

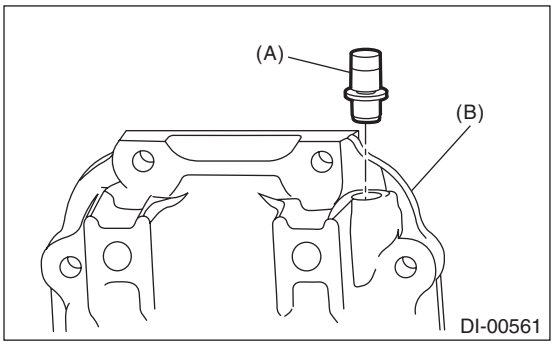

(A) Air breather cap
(B) Rear cover

5) Remove the lock plate RH and LH.

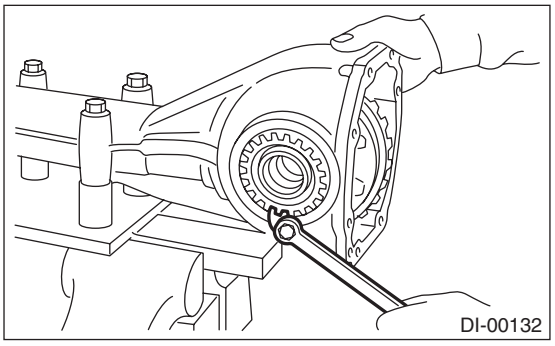

6) Remove the side retainer RH and LH with ST.

NOTE:
When keeping the retainers aside, use labels etc. to avoid confusing the left and right.

ST 18630AA010 WRENCH COMPL RETAINER

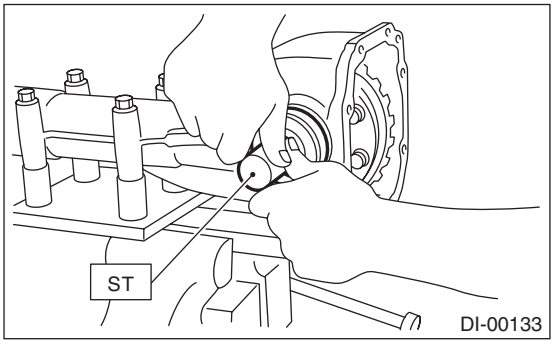

7) Pull out the differential case assembly from differential carrier.

NOTE:
Be careful not to hit the teeth of hypoid driven gear against the differential carrier.

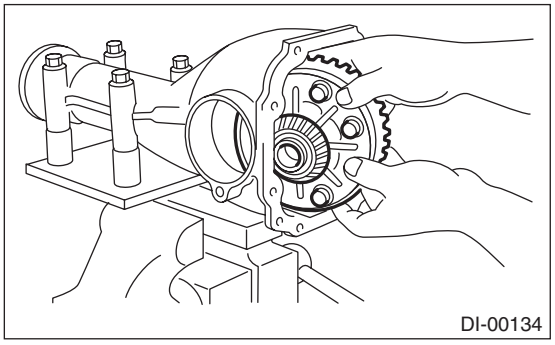

8) Remove the bearing race from side retainer RH and LH with ST1 and ST2.
ST1 499705401 PULLER ASSY
ST2 499705404 SEAT

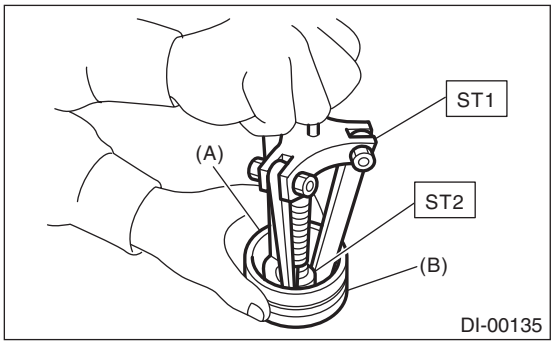

(A) Bearing race
(B) Side retainer

9) Remove the oil seal from RH and LH side retainers.

NOTE:
Perform this operation only when changing oil seal.

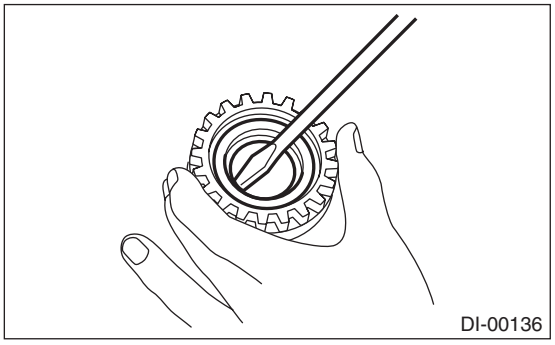

10) Remove the O-ring.

11) Extract the bearing cone with ST1 and ST2.

NOTE:
• Do not attempt to disassemble the parts unless necessary.
• Set the puller so that its claws catch the edge of the bearing cone.
• Store so that the right and left side bearing races and cones are not mixed together.
ST1 899524100 PULLER SET
ST2 399520105 SEAT

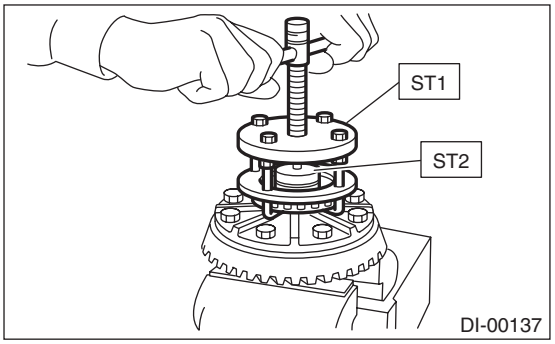

12) Using the ST, loosen the hypoid driven gear bolt and remove the hypoid driven gear.
ST 18270KA020 SOCKET (E20)

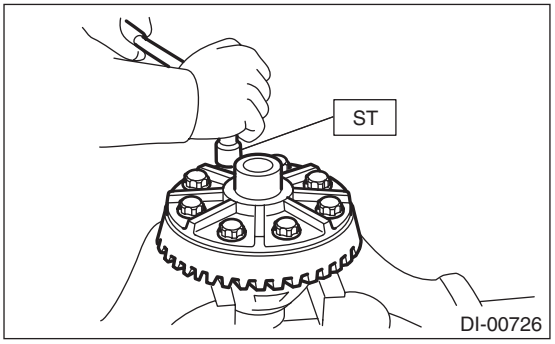

13) Remove the spring pin from hypoid driven gear side using ST.
ST 899904100 STRAIGHT PIN REMOVER

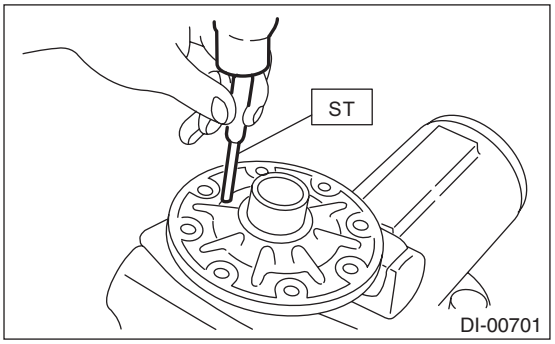

14) Draw out the pinion mate shaft and remove pinion mate gears, side gears and side gear thrust washers.

NOTE:
The gears and washers should be marked with RH or LH, front or rear, or kept separately.

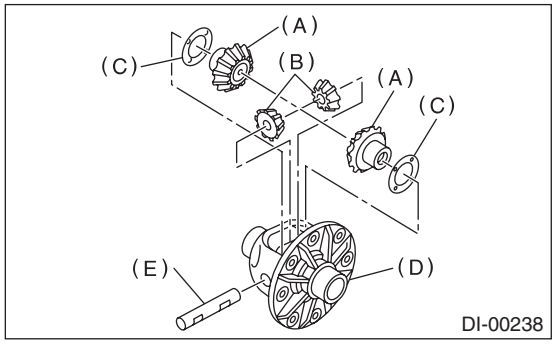

(A) Side gear
(B) Pinion mate gear
(C) Side gear thrust washer
(D) Differential case
(E) Pinion mate shaft

15) Remove the self-locking nut while securing the companion flange with ST.
ST 498427200 FLANGE WRENCH

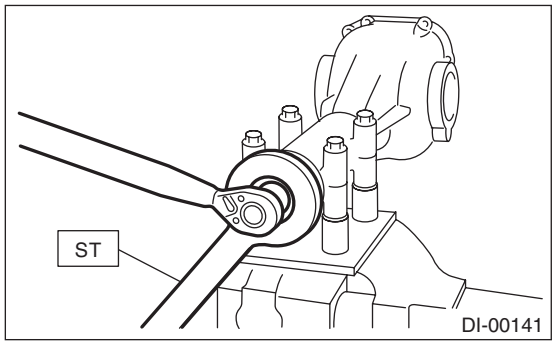

16) Extract the companion flange with a puller.

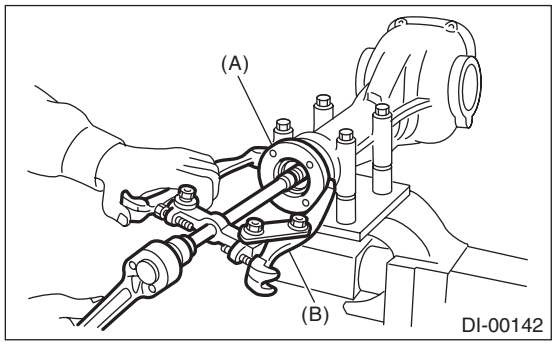

(A) Companion flange
(B) Puller

17) Press the end of drive pinion shaft using ST and remove the rear bearing cone, pinion height adjusting washer, preload adjusting spacer and washer.

NOTE:
Hold the drive pinion so as not to drop it.
ST 398467700 DRIFT

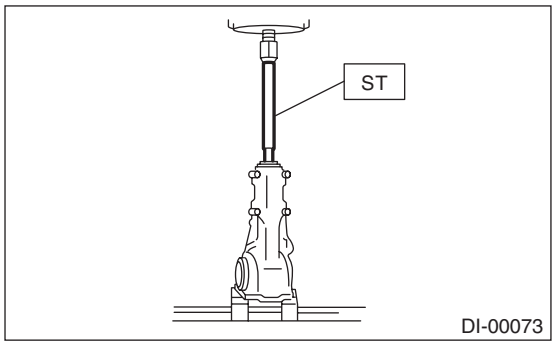

18) Remove the rear bearing cone from drive pinion by supporting the cone with ST.

NOTE:
Place the replacer so that its center-recessed side faces the bearing cone.
ST 498515500 REPLACER

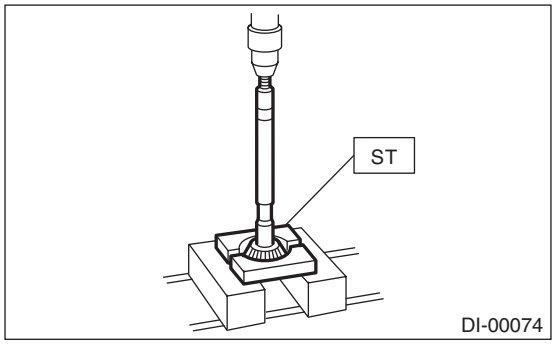

19) Remove the front oil seal from differential carrier using ST.
ST 398527700 PULLER ASSY

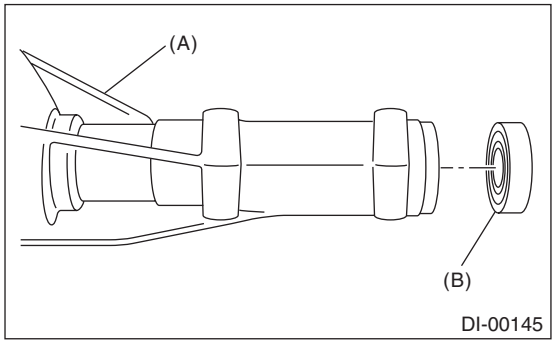

(A) Differential carrier
(B) Front oil seal

20) Remove the pilot bearing together with the front bearing cone and spacer using the ST.
ST 398467700 DRIFT

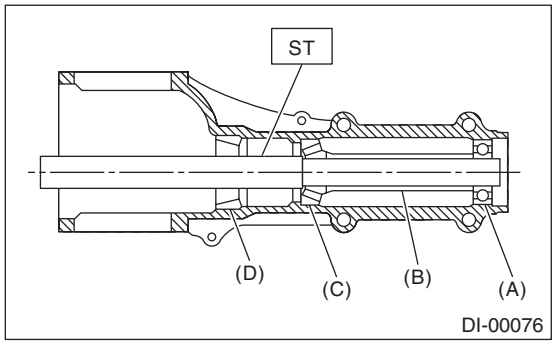

(A) Pilot bearing
(B) Spacer
(C) Front bearing
(D) Rear bearing race

21) When replacing the bearings, tap out and remove the front bearing race and rear bearing race in this order using a brass bar.

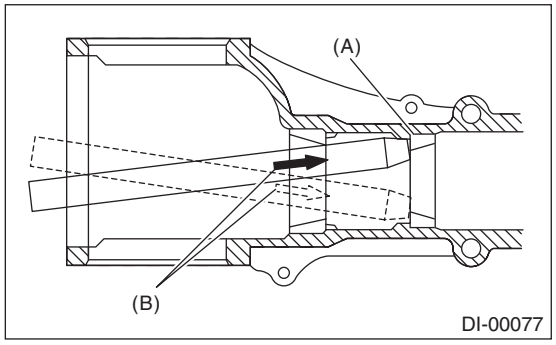

(A) 2 cutout portions along diagonal lines
(B) Tap alternately with brass bar.

D: ASSEMBLY

NOTE:
- Assemble in the reverse order of disassembly.
- Check and adjust each part during assembly.
- Use new gaskets and O-rings.
- Keep the shims and washers in order, so that they are not improperly installed.
- Thoroughly clean the surfaces on which the shims, washers and bearings are to be installed.
- Apply gear oil when installing the bearings and thrust washers.
- Be careful not to mix up the RH and LH bearing races.
- Replace the oil seal and O-ring with a new part at every disassembly.
- Be careful not to mix up the side oil seal RH and LH.
- Apply differential gear oil to the lips when installing the oil seal.

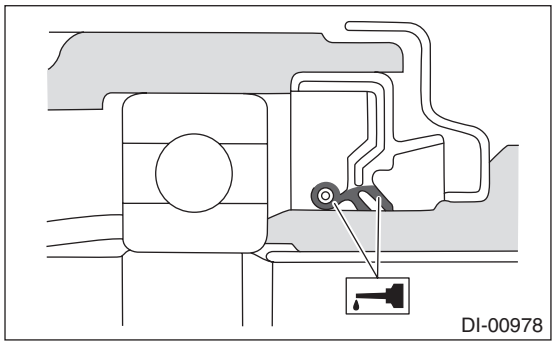

1) Adjusting preload for front and rear bearings

NOTE:
Adjust the bearing preload between front and rear bearings with preload adjusting spacer and washer. Pinion height adjusting washer is not affected by this adjustment. The adjustment must be carried out with oil seal removed.

(1) Install the rear bearing race into the differential carrier using ST1 and ST2.

ST1 398477701 HANDLE
ST2 398477702 DRIFT

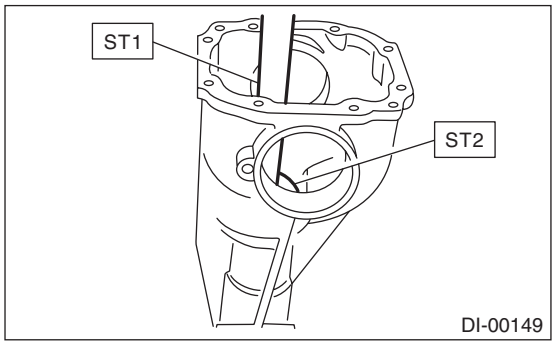

(2) Install the front bearing race to the differential carrier using ST1 and ST2.

NOTE:
Use a new front bearing race.
ST1 398477701 HANDLE
ST2 498447110 DRIFT

(3) Insert the front bearing cone.

NOTE:
Use new front bearing cone.

(4) Measure and record the thickness of pinion height adjusting washer.

NOTE:
If tooth contact (drive pinion and hypoid driven gear) is normal in the inspection before disassembling, verify that the washer is not deformed, and then reuse the used washer.

(5) Insert the ST (DUMMY SHAFT) into case with the pinion height adjusting washer and rear bearing cone fitted onto it.

(6) Install the preload adjusting spacer, washer, front bearing cone, spacer, pilot bearing, companion flange, and self-locking nut.

NOTE:
Use a new pilot bearing.
ST 498447150 DUMMY SHAFT
Part No. 32285AA000 Spacer

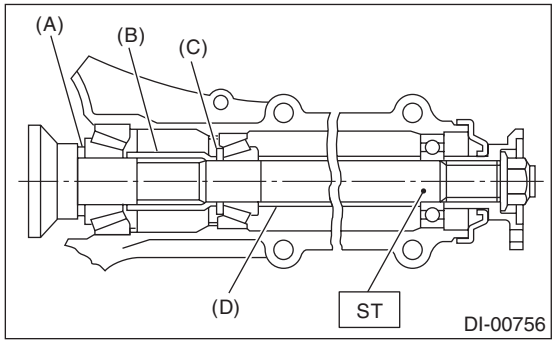

(A) Pinion height adjusting washer
(B) Preload adjusting spacer
(C) Preload adjusting washer
(D) Spacer (SUBARU genuine parts)

(7) Turn the ST by hand to slowly seat the bearing, and tighten the self-locking nut while measuring the initial load or initial torque with a spring scale or torque wrench. Select the preload adjusting washer and spacer so that the specified preload is obtained when nut is tightened to the specified torque.

NOTE:
- Use a new self-locking nut.
- Measure the preload in direction of tangent to the flange.
- Be careful not to give excessive preload.
- When tightening the self-locking nut, lock ST1 with ST2 as shown in the figure.

ST1 498447150 DUMMY SHAFT
ST2 398507704 BLOCK

Tightening torque:
191 N·m (19.5 kgf-m, 140.9 ft-lb)

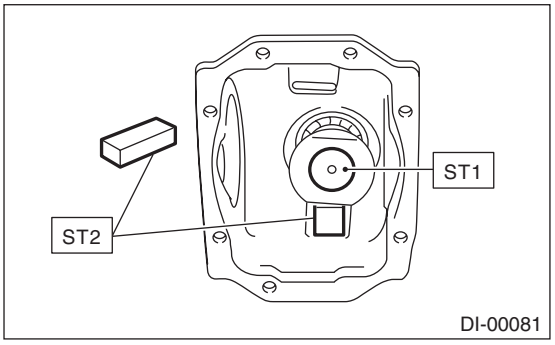

Initial load:
12.7 — 32.2 N (1.3 — 3.3 kgf, 2.9 — 7.2 lbf)

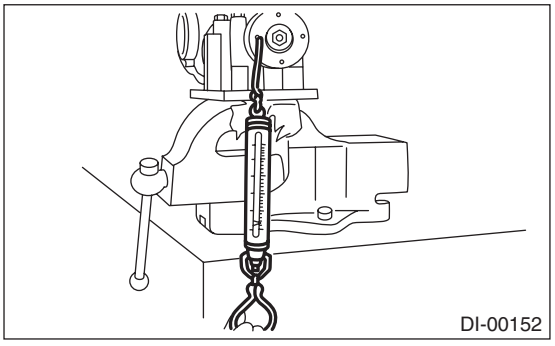

Initial torque:
0.48 — 1.22 N·m (0.05 — 0.12 kgf-m, 0.35 — 0.90 ft-lb)

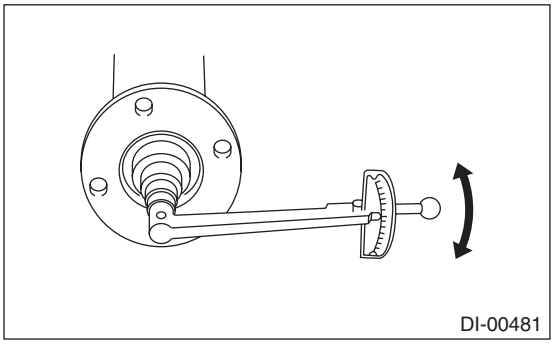

Preload adjusting washer	
Part No.	Thickness mm (in)
38336AA000	1.500 (0.0591)
38336AA120	1.513 (0.0596)
38336AA010	1.525 (0.0600)
38336AA130	1.538 (0.0606)
38336AA020	1.550 (0.0610)
38336AA140	1.563 (0.0615)
38336AA030	1.575 (0.0620)
38336AA150	1.588 (0.0625)
38336AA040	1.600 (0.0630)
38336AA160	1.613 (0.0635)
38336AA050	1.625 (0.0640)
38336AA170	1.638 (0.0645)
38336AA060	1.650 (0.0650)
38336AA180	1.663 (0.0655)
38336AA070	1.675 (0.0659)
38336AA190	1.688 (0.0665)
38336AA080	1.700 (0.0669)
38336AA200	1.713 (0.0674)
38336AA090	1.725 (0.0679)
38336AA210	1.738 (0.0684)
38336AA100	1.750 (0.0689)
38336AA220	1.763 (0.0694)
38336AA110	1.775 (0.0699)

Preload adjusting spacer	
Part No.	Length mm (in)
32288AA040	52.3 (2.059)
32288AA050	52.5 (2.067)
31454AA100	52.6 (2.071)
32288AA060	52.7 (2.075)
31454AA110	52.8 (2.079)
32288AA070	52.9 (2.083)
31454AA120	53.0 (2.087)
32288AA080	53.1 (2.091)
32288AA090	53.3 (2.098)

2) Adjusting drive pinion height:
Adjust the drive pinion height with pinion height adjusting washer installed between the rear bearing cone and the back of pinion gear.

(1) Attach the ST2.

NOTE:
At this time, install a provisionally selected or previously used pinion height adjusting washer.
ST1 498447150 DUMMY SHAFT
ST2 498505501 DIFFERENTIAL CARRIER GAUGE
Part No. 32285AA000 Spacer

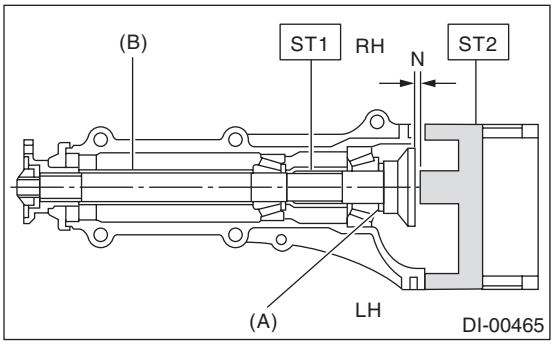

(A) Pinion height adjusting washer
(B) Spacer (SUBARU genuine parts)

(2) Measure the clearance “N” between the end of ST2 and the end surface of ST1 by using a thickness gauge.

NOTE:
Make sure there is no clearance between the differential carrier and ST2.
ST1 498447150 DUMMY SHAFT
ST2 498505501 DIFFERENTIAL CARRIER GAUGE

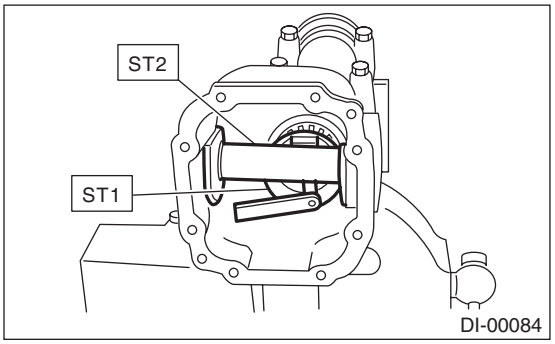

(3) Obtain the thickness of pinion height adjusting washer to be inserted from the following formula, and replace the temporarily installed washer with this one.

NOTE:
Adjust it using the 1 — 3 washers.

T = To + N – 0.05 mm (0.0020 in)

T	Thickness of pinion height adjusting washer mm (in)	
To	Thickness of washer temporarily inserted mm (in)	
N	Clearance of thickness gauge mm (in)	
Memo:		

(Example of calculation)
To = 0.15 mm (0.0059 in)
N = 0.1 mm (0.0039 in)
T = 0.15 + 0.1 – 0.05 = 0.2 mm (0.0079 in)
Result: Thickness = 0.2 mm (0.0079 in)
Therefore use part number 32295AA220.

Pinion height adjusting washer	
Part No.	Thickness mm (in)
32295AA200	0.150 (0.0059)
32295AA210	0.175 (0.0069)
32295AA220	0.200 (0.0079)
32295AA230	0.225 (0.0089)
32295AA240	0.250 (0.0098)
32295AA250	0.275 (0.0108)

3) Install the selected pinion height adjusting washer on drive pinion, and press the rear bearing cone into position with ST.
ST 498175500 INSTALLER

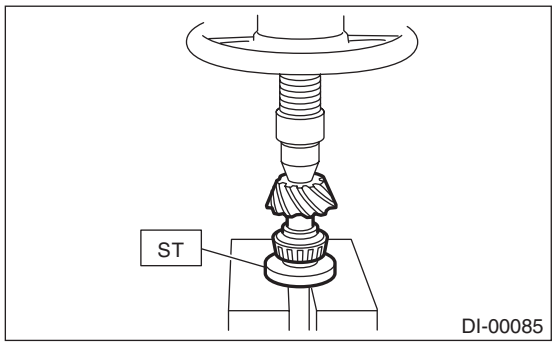

4) Insert the drive pinion into the differential carrier, and install the preselected preload adjusting spacer and washer.

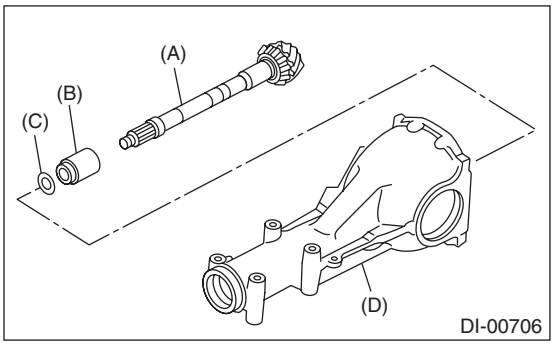

(A) Drive pinion
(B) Preload adjusting spacer
(C) Preload adjusting washer
(D) Differential carrier

5) Press-fit the front bearing cone into the carrier with ST1, ST2 and the spacer.

NOTE:
Use new front bearing cone.
ST1 399780104 WEIGHT
ST2 899580100 INSTALLER
Part No. 32285AA000 Spacer

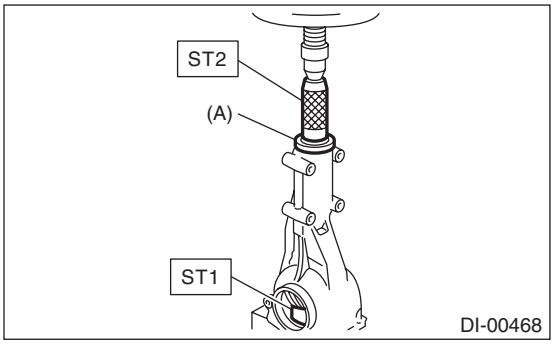

(A) Spacer (SUBARU genuine parts)

6) Insert the spacer, then press-fit the pilot bearing with ST1 and ST2.

NOTE:
Use a new pilot bearing.
ST1 399780104 WEIGHT
ST2 899580100 INSTALLER

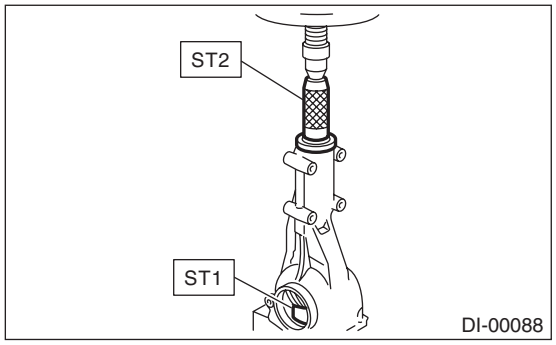

7) Using the ST, install the oil seal.

NOTE:
- Use a new oil seal.
- Press-fit until the oil seal end comes 1 mm (0.04 in) inward from end of carrier.
- Apply differential gear oil to the oil seal lips.

ST 498447120 INSTALLER

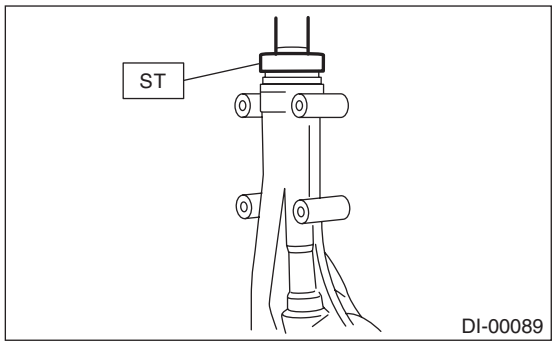

8) Press-fit the companion flange with ST1 and ST2.

NOTE:
Be careful not to damage the pilot bearing.
ST1 899874100 INSTALLER
ST2 399780104 WEIGHT

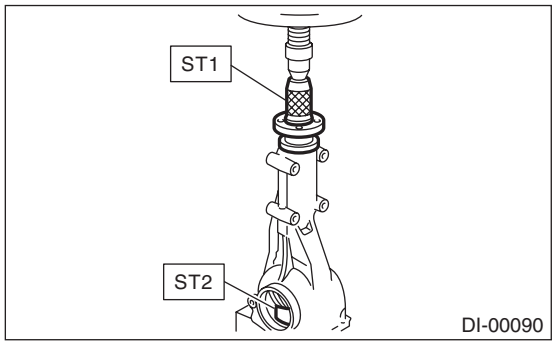

9) Attach the self-locking nut and use the ST to fix the companion flange in place, then tighten the self-locking nut.

NOTE:
- Use a new self-locking nut.
- Before installing the self-locking nut, apply the seal material to the threads of the drive pinion shaft and to the seating surface of the self-locking nut.

Seal material:
THREE BOND 1324 (Part No. 004403042) or equivalent

Tightening torque:
191 N·m (19.5 kgf-m, 140.9 ft-lb)

ST 498427200 FLANGE WRENCH

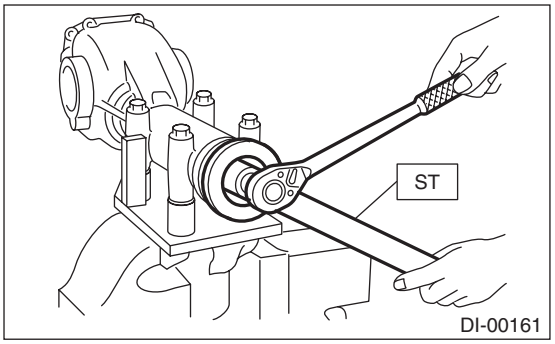

10) Check the initial torque or initial load.

Initial load:
12.7 — 32.2 N (1.3 — 3.3 kgf, 2.9 — 7.2 lbf)

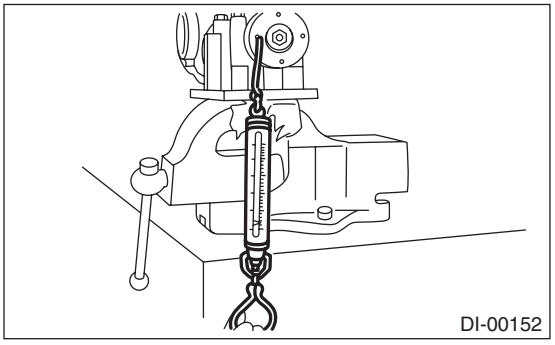

Initial torque:
0.48 — 1.22 N·m (0.05 — 0.12 kgf-m, 0.35 — 0.90 ft-lb)

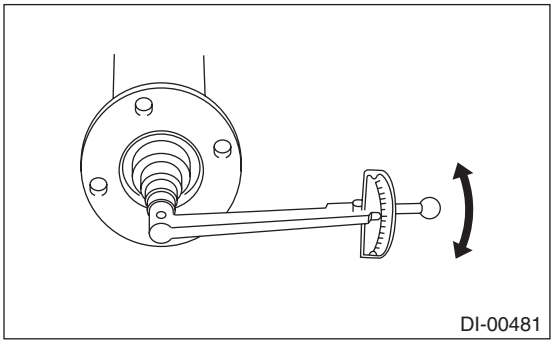

11) Assembling differential case
(1) Install the side gears and pinion mate gears, with their thrust washers and pinion mate shaft, into the differential case.

NOTE:
• Apply gear oil on both sides of the washer and on the side gear shaft before installing.
• Insert the pinion mate shaft into the differential case by aligning the pin holes.
• The side gear thrust washer inner surface has a chamfered side. Install the washer with the chamfered side facing toward the side gear.

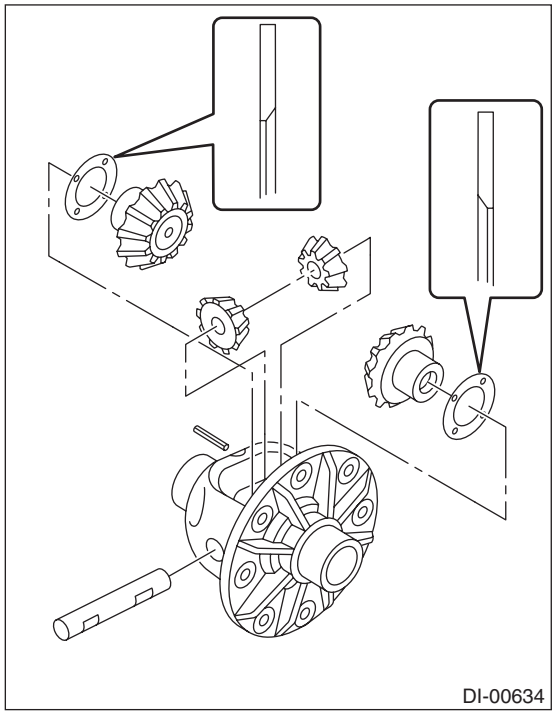
DI-00634

(2) Measure the side gear backlash.

Side gear backlash:
0.05 — 0.15 mm (0.002 — 0.006 in)

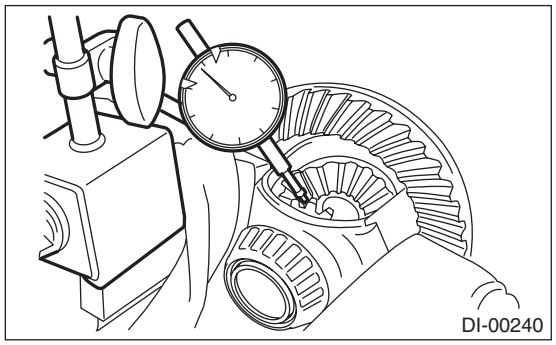
DI-00240

(3) Adjust the side gear backlash by selecting side gear thrust washer.

Side gear thrust washer	
Part No.	Thickness mm (in)
803135011	0.925 — 0.950 (0.0364 — 0.0374)
803135012	0.950 — 0.975 (0.0374 — 0.0384)
803135013	0.975 — 1.000 (0.0384 — 0.0394)
803135014	1.000 — 1.025 (0.0394 — 0.0404)
803135015	1.025 — 1.050 (0.0404 — 0.0413)

(4) Check the condition of rotation after applying oil to the gear tooth surfaces and washer surfaces.
(5) Drive the spring pin into the differential case.

NOTE:
Use new spring pin.

12) Install the hypoid driven gear to differential case.

NOTE:
• Before installing bolts, apply seal material to bolt threads.

Seal material:
THREE BOND 1324 (Part No. 004403042) or equivalent
• Tighten opposing bolts in order.
(1) Tighten the hypoid driven gear mounting bolts to the specified torque using the ST.

ST 18270KA020 SOCKET (E20)

Tightening torque:
20 N·m (2.0 kgf-m, 14.8 ft-lb)

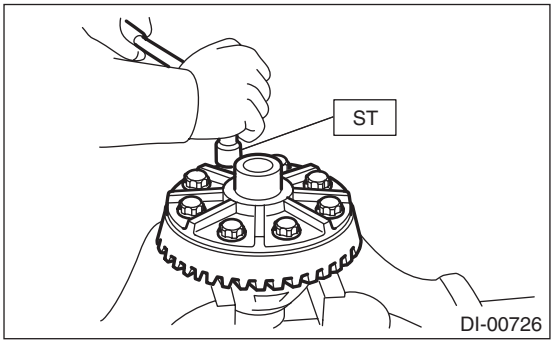

DI-00726

(2) While checking the tightening angle with the angle gauge, further tighten the hypoid driven gear mounting bolts.

Tightening angle:
35°±2°

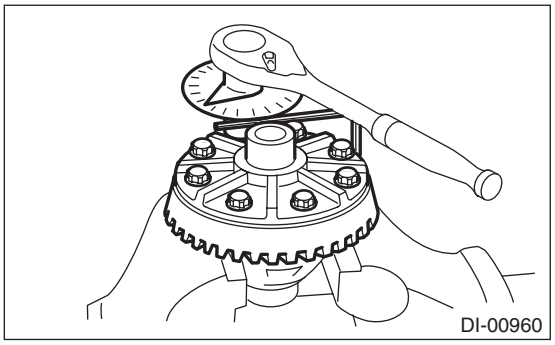

13) Using the ST, press-fit the side bearing to the differential case.
ST 498485400 DRIFT

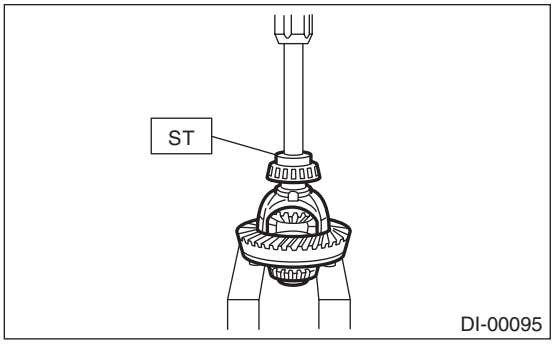

14) Assemble the side retainer.
(1) Install the oil seal into side retainer RH and LH.

CAUTION:
Pay attention to the left and right of the oil seal.

NOTE:
- Use a new oil seal.
- Apply differential gear oil to the oil seal lip.

ST 498447100 INSTALLER

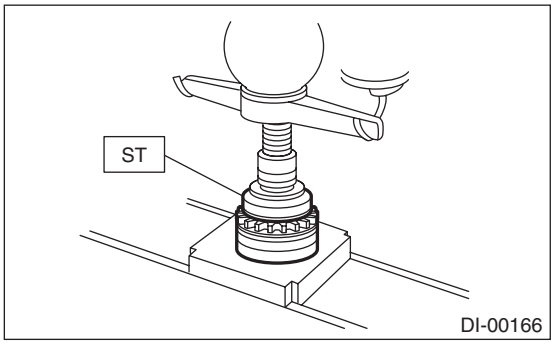

(2) Install the bearing race into side retainer RH and LH.

CAUTION:
Make sure that the bearing outer races and cones are properly assembled.

ST 398477702 DRIFT

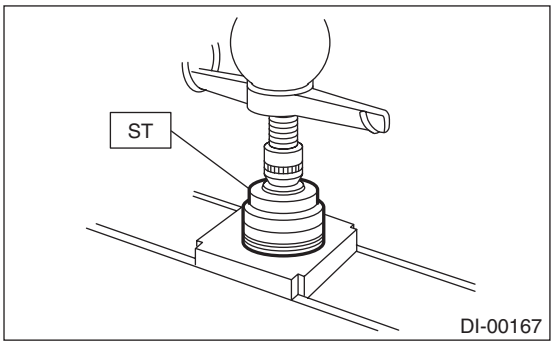

(3) Install the differential case assembly into differential carrier in the reverse order of disassembly.

NOTE:
Be careful not to hit the teeth of hypoid driven gear against the differential carrier.

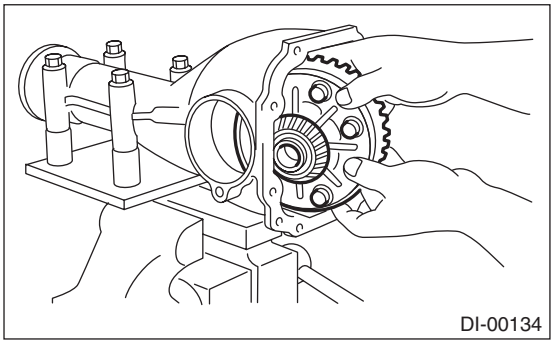

(4) Temporally tighten the side retainers RH and LH in differential carrier to install.

15) Perform the backlash adjustment between the hypoid driven gear and drive pinion, and preload adjustment of differential side bearing.
(1) Turn the drive pinion with ST for better fitting of differential side bearing.

ST 498427200 FLANGE WRENCH

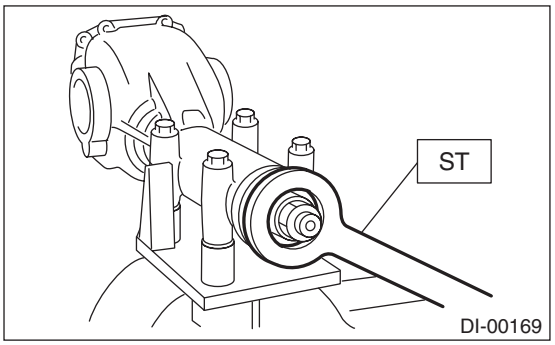

(2) Using the ST, tighten side retainer RH, and then tighten side retainer LH until there is no backlash.

ST 18630AA010 WRENCH COMPL RETAINER

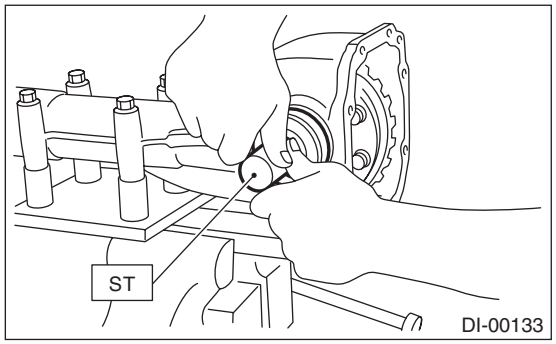

(3) Loosen the side retainer LH by approx. 1 and 1/2 teeth, and tighten the side retainer RH by approx. 2 teeth [amount that the side retainer LH is turned back (approx. 1 and 1/2 teeth) + approx. 1/2 teeth]. Difference between [amount that the side retainer LH is turned back (approx. 1 and 1/2 teeth)] and [amount that the side retainer RH is tightened (approx. 2 teeth)] gives preload.

(4) Temporarily tighten the lock plate.

NOTE:
Turn over the lock plate to shift the holder by 1/2 teeth.

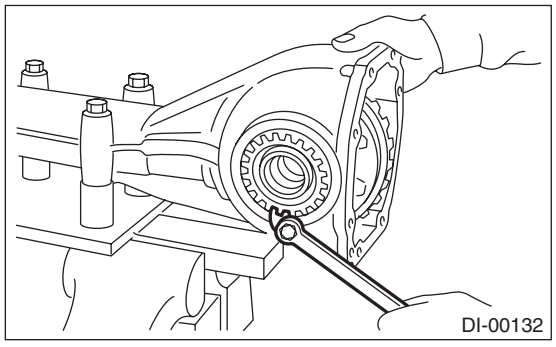

(5) Measure the hypoid driven gear-to-drive pinion backlash. Set the magnet base on differential carrier. Align the contact point of dial gauge with tooth face of hypoid driven gear, and move hypoid driven gear while holding drive pinion still. Read the value indicated on dial gauge.

NOTE:
If measured value of backlash is not within the specified range, repeat the procedures for pinion driven gear set backlash adjustment and the differential side bearing preload adjustment.

Backlash:
0.10 — 0.15 mm (0.004 — 0.006 in)

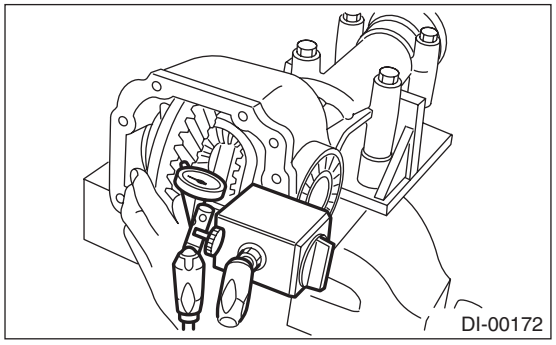

16) Put alignment marks on both the differential carrier and side retainer. Remove the side retainers one side at a time. After installing an O-ring and applying oil to the threaded portion, restore them to the original position.

NOTE:
Use new O-rings.

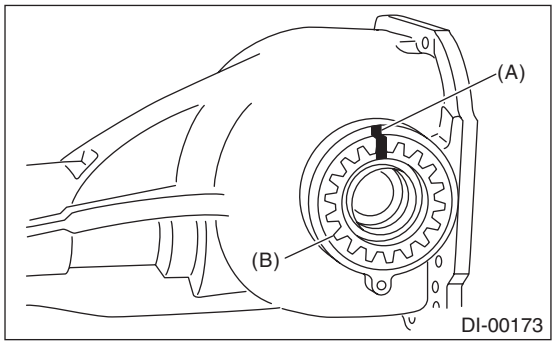

(A) Alignment mark
(B) Side retainer

17) Install the lock plate, and tighten the bolts to the specified torque.

Tightening torque:
25 N·m (2.5 kgf-m, 18.4 ft-lb)

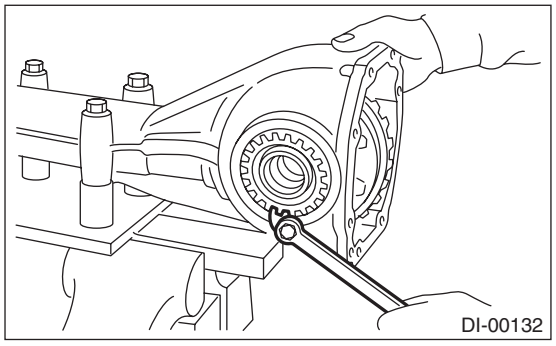

18) Recheck the backlash between hypoid driven gear and drive pinion.

Backlash:
0.10 — 0.15 mm (0.004 — 0.006 in)

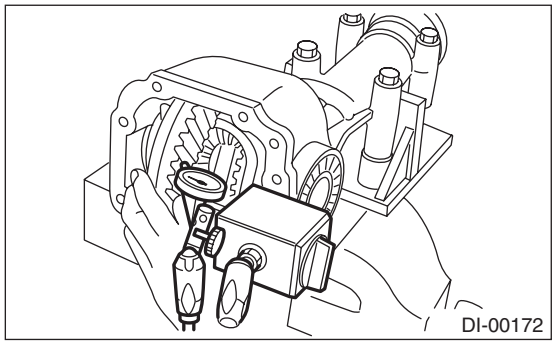

19) Checking and adjusting the tooth contact of hypoid driven gear

(1) Apply lead-free red dye evenly on the both sides of three to four teeth of the hypoid driven gear. Check the contact pattern after rotating the hypoid driven gear several revolutions back and forth until a definite contact pattern appears on the hypoid driven gear.

(2) When the contact pattern is not correct, re-adjust.

NOTE:
Be sure to wipe off the lead-free red dye completely after the adjustment is completed.

- Correct tooth contact

Check item: Tooth contact pattern is slightly shifted toward toe side under no-load rotation. (When driving, it moves towards the heel side.)

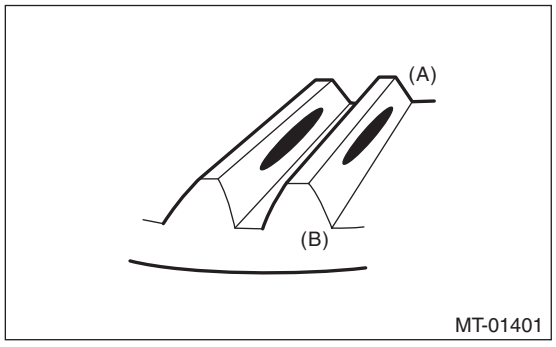

(A) Toe side
(B) Heel side

- Face contact

Check item: Backlash is too large.
Contact pattern

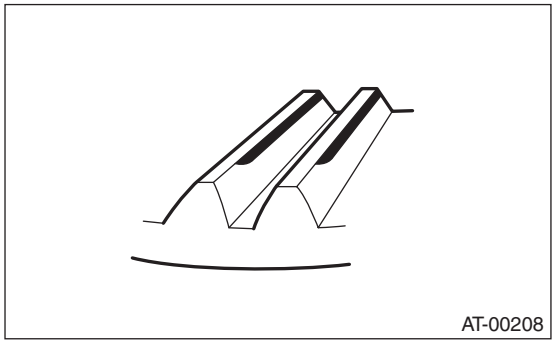

Corrective action: Increase thickness of pinion height adjusting washer according to the procedure for bringing drive pinion close to hypoid driven gear side.

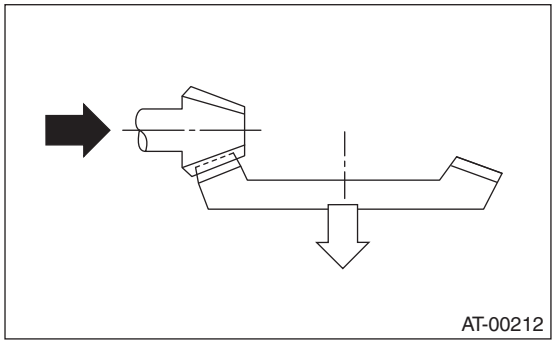

• Flank contact

Check item: Backlash is too small.

Contact pattern

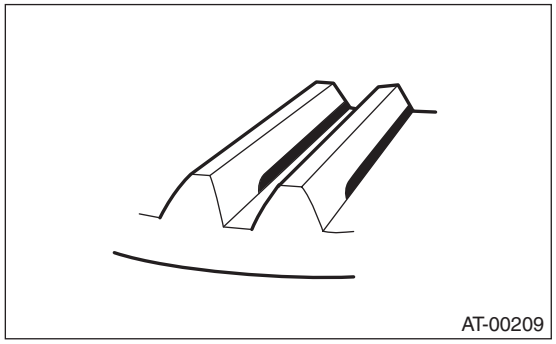

Corrective action: Reduce the thickness of pinion height adjusting washer according to the procedure for bringing drive pinion away from hypoid driven gear.

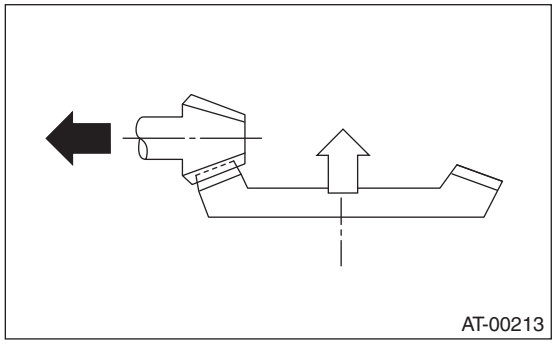

• Toe contact (inside contact)

Check item: Teeth contact area is too small.

Contact pattern

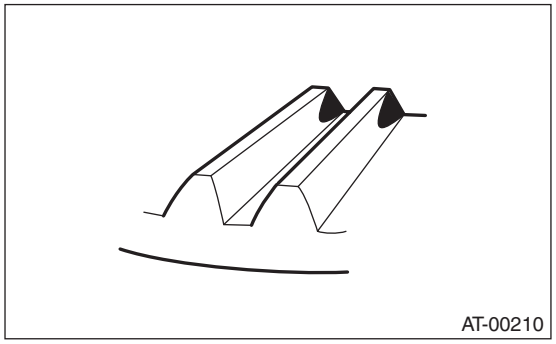

Corrective action: Reduce the thickness of pinion height adjusting washer according to the procedure for bringing drive pinion away from hypoid driven gear side.

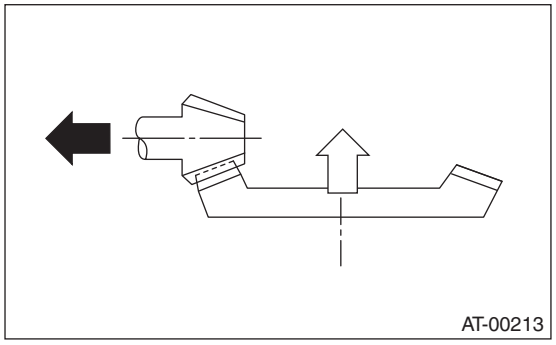

• Heel contact (outside end contact)
Check item: Teeth contact area is too small.
Contact pattern

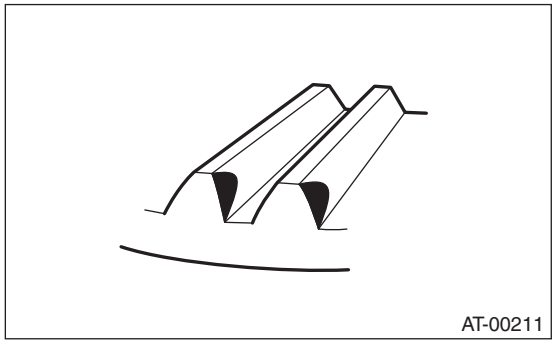

Corrective action: Increase thickness of pinion height adjusting washer according to the procedure for bringing drive pinion close to hypoid driven gear side.

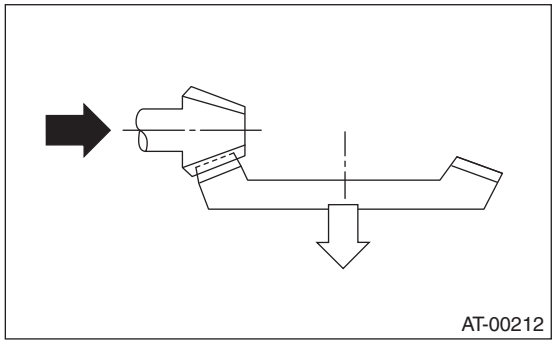

20) If correct tooth contact is not obtained, readjust the drive pinion height and the differential side bearing preload (already mentioned) and the hypoid gear backlash.
21) Install the gasket and rear cover to the differential carrier, and tighten the bolts to specified torque.

NOTE:
Use a new gasket.

Tightening torque:
25 N·m (2.5 kgf-m, 18.4 ft-lb)

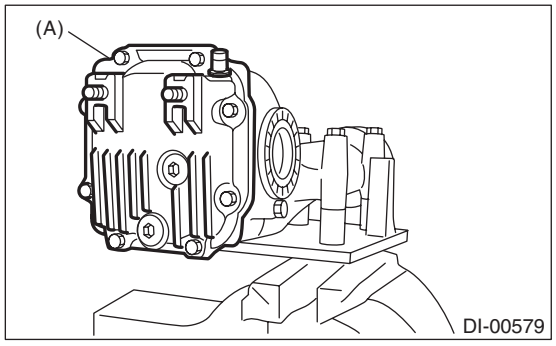

(A) Rear cover

22) Install the air breather cap.

NOTE:
When installing the air breather cap, do not tap section (A). Be sure to tap section (B) to install.

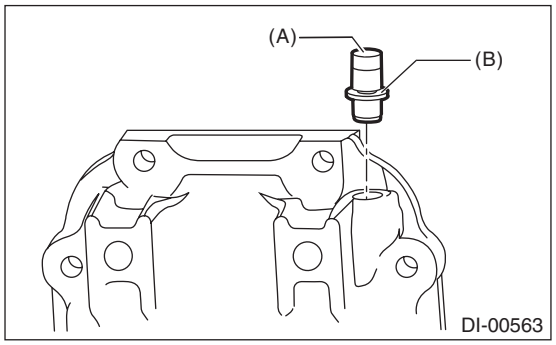

23) Install the drain plug.

NOTE:
Use a new gasket.

Tightening torque:
50 N·m (5.1 kg-m, 36.9 ft-lb)
24) Install the filler plug.

NOTE:
After installing the rear differential assembly to the vehicle, fill the gear oil, then use a new gasket, and tighten to the specified torque. <Ref. to DI-19, REPLACEMENT, Differential Gear Oil.>

E: INSPECTION

Wash all the disassembled parts clean, and examine them for wear, damage or other defects. Repair or replace the defective parts as necessary.

1) Hypoid driven gear and drive pinion

• If there is evidently an abnormal tooth contact, find out the cause and adjust until the teeth contact correctly. Replace the gear if there is an excessive worn or an incapable adjustment.

• If crack, cutout or seizure is found, replace the parts as a set. Slight damage of some teeth can be corrected by oil stone or the like.

2) Side gear and pinion mate gear

• Replace if cracks, scoring or other defects are evident on the tooth surface.

• Replace if thrust washer contact surface is worn or seized. Slight damages of the surface can be corrected by oil stones or equivalent.

3) Bearing

Replace if seizure, peeling, wear, rust, dragging during rotation, noise or other defect is evident.

4) Thrust washer of the side gear and pinion mate gear:

Replace if seized, flawed, abnormally worn or having other defects.

5) Oil seal

Replace if deformed or damaged, and at every disassembling.

6) Differential carrier

Replace if the bearing bores are worn or damaged.

7) Differential case

Replace if its sliding surfaces are abnormally worn, burned, or cracked.

8) Companion flange

Replace if the oil seal lip contact surface shows cracking.

1. SIDE GEAR BACKLASH

Using a dial gauge, check the backlash of side gear.

Side gear backlash:
0.05 — 0.15 mm (0.002 — 0.006 in)

If the side gear backlash is outside the specification range, select the side gear thrust washer and adjust the side gear backlash as specified.

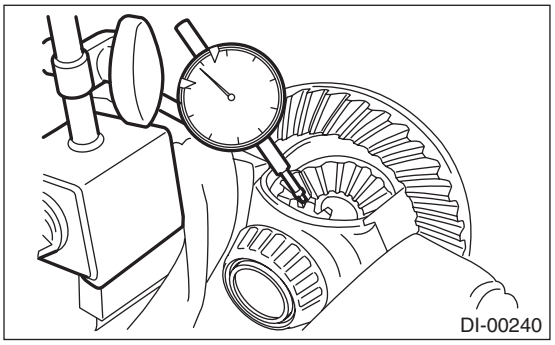

2. HYPOID DRIVEN GEAR BACKLASH

Using a dial gauge, check the backlash of hypoid driven gear.

Hypoid driven gear backlash:
0.10 — 0.15 mm (0.004 — 0.006 in)

If the hypoid driven gear backlash is outside the specification range, adjust the side bearing preload and repair if necessary.

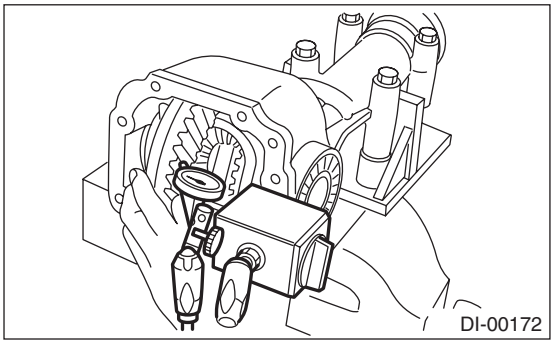

3. COMPANION FLANGE

1) If rust or dirt is attached to the companion flange, remove them.
2) Set a dial gauge at a companion flange surface (mating surface of propeller shaft and companion flange), and then measure the companion flange runout.

Limit of runout:
0.08 mm (0.003 in)

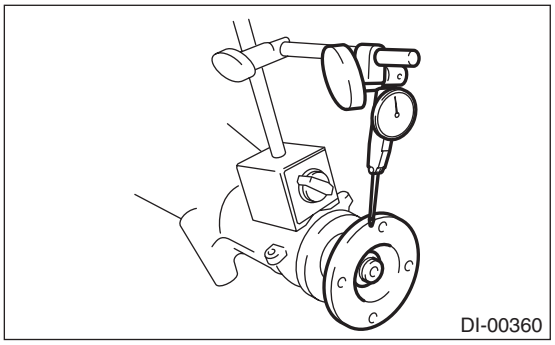

3) Set the gauge inside of the companion flange, and measure the runout.

Limit of runout:
0.08 mm (0.003 in)

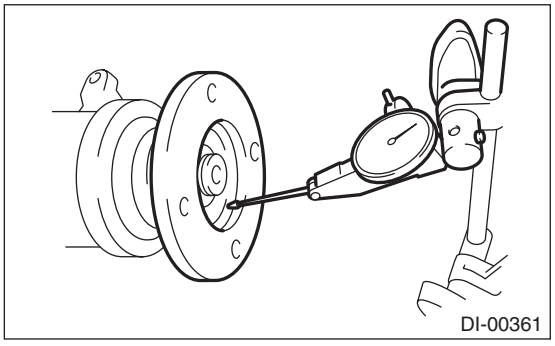

4) If either runout exceeds the limit, move the phase of companion flange and drive pinion 90° each, and find the point where the runout is within the limit.
5) If the runout exceeds the limit even after changing the phase, replace the companion flange and recheck the runout.
6) If the runout exceeds the limit after replacing the companion flange, the drive pinion may be assembled incorrectly or bearing is faulty.

4. TOOTH CONTACT BETWEEN HYPOID DRIVEN GEAR AND DRIVE PINION

Inspect the tooth contact between the hypoid driven gear and drive pinion. <Ref. to DI-45, ASSEMBLY, Rear Differential (VA-type).>

F: ADJUSTMENT

1. SIDE GEAR BACKLASH

Adjust the side gear backlash. <Ref. to DI-45, ASSEMBLY, Rear Differential (VA-type).>

2. HYPOID DRIVEN GEAR BACKLASH

Adjust hypoid driven gear backlash. <Ref. to DI-45, ASSEMBLY, Rear Differential (VA-type).>

3. TOOTH CONTACT BETWEEN HYPOID DRIVEN GEAR AND DRIVE PINION

Adjust the tooth contact between hypoid driven gear and drive pinion gear. <Ref. to DI-45, ASSEMBLY, Rear Differential (VA-type).>

6. Rear Differential Front Oil Seal

A: INSPECTION

Make sure that there is no leakage from front oil seal portion. If there is any leakage, replace the oil seal and inspect the propeller shaft.

B: REPLACEMENT

1) Shift the select lever or gear shift lever to neutral.
2) Disconnect the ground cable from battery.
3) Release the parking brake.
4) Lift up the vehicle.
5) Drain differential gear oil. <Ref. to DI-19, REPLACEMENT, Differential Gear Oil.>
6) Remove the rear exhaust pipe. <Ref. to EX(H4DO(w/o HEV))-18, REMOVAL, Rear Exhaust Pipe.>
7) Remove the center exhaust cover.

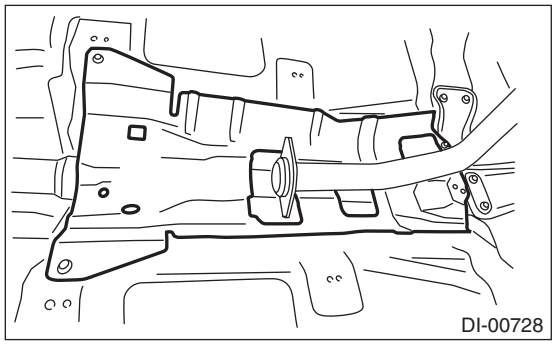
DI-00728

8) Remove the propeller shaft. <Ref. to DS-12, REMOVAL, Propeller Shaft.>
9) Check the initial torque and write it down.
10) Remove the self-locking nut while holding the companion flange with ST.
ST 498427200 FLANGE WRENCH

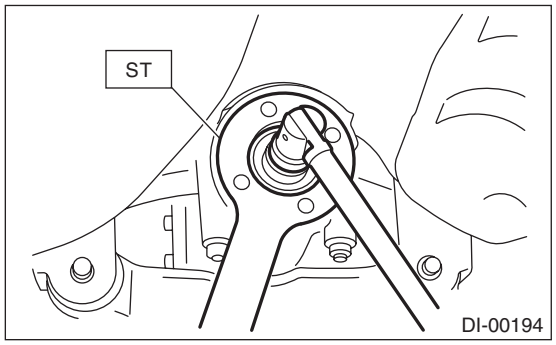

DI-00194

11) Extract the companion flange using the ST.
ST 399703600 PULLER ASSY

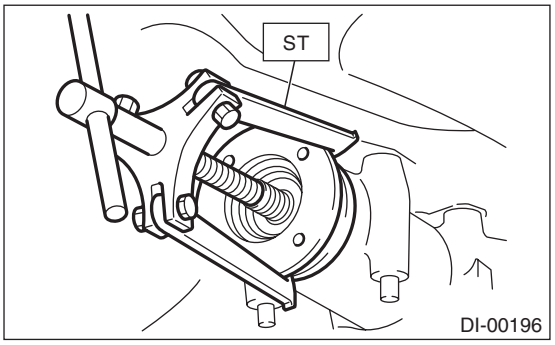

DI-00196

12) Remove the oil seal using ST or screwdriver.
ST 398527700 PULLER ASSY

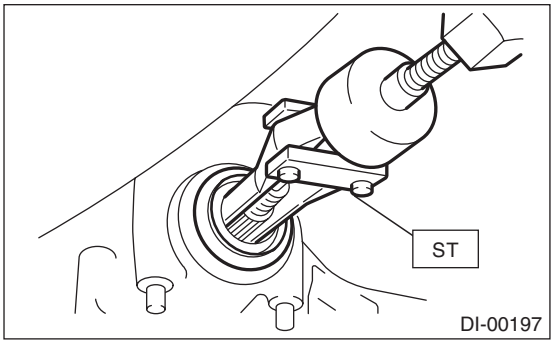

DI-00197

13) Using the ST, install the oil seal.

NOTE:
- Use a new oil seal.
- Apply differential gear oil to the oil seal lips.

ST 498447120 INSTALLER

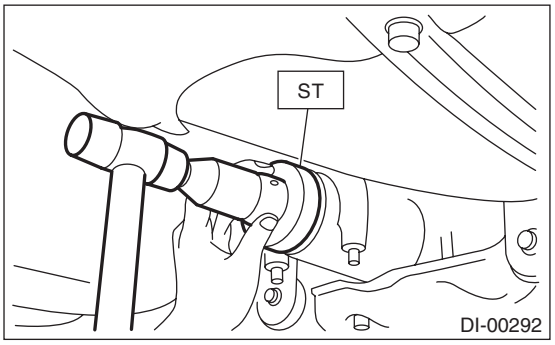

DI-00292

14) Install the companion flange.

NOTE:
Use a plastic hammer to install companion flange.

15) Tighten the self-locking nut to the specified torque so that the initial torque of companion flange becomes the same as that before replacing the oil seal.

NOTE:
- Use a new self-locking nut.
- Before installing the self-locking nut, apply the seal material to the threads of the drive pinion shaft and to the seating surface of the self-locking nut.

Seal material:
THREE BOND 1324 (Part No. 004403042) or equivalent

Tightening torque:
T-type
167 — 196 N·m (17.0 — 20.0 kgf-m, 123.2 — 144.6 ft-lb)
VA-type
162 — 220 N·m (16.5 — 22.5 kgf-m, 119.5 — 162.3 ft-lb)

ST 498427200 FLANGE WRENCH

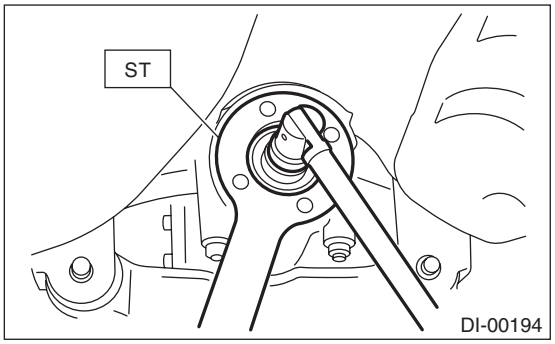

16) Hereafter, perform assembly in the reverse order of disassembly.
17) Fill differential gear oil. <Ref. to DI-19, REPLACEMENT, Differential Gear Oil.>

7. Rear Differential Side Oil Seal

A: INSPECTION

Make sure that there is no leakage from side oil seal. If there is any leakage, replace the oil seal.

B: REPLACEMENT

1) Remove the rear differential. <Ref. to DI-22, REMOVAL, Rear Differential (T-type).> <Ref. to DI-42, REMOVAL, Rear Differential (VA-type).>
2) Remove the rear differential side oil seal using a ST or screwdriver wrapped with vinyl tape to prevent the side retainer from scratching.
ST 398527700 PULLER ASSY

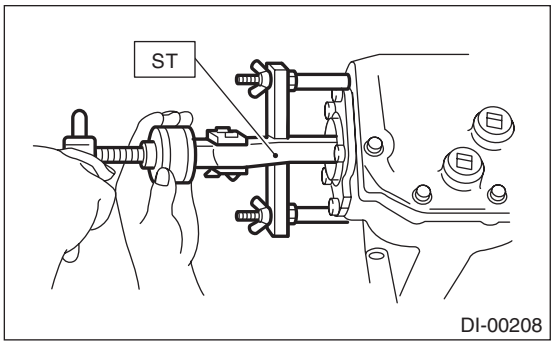

3) Using the ST, install the oil seal.

NOTE:
- Use a new oil seal.
- Apply differential gear oil to the oil seal lips.
- T-type

ST 398437700 DRIFT

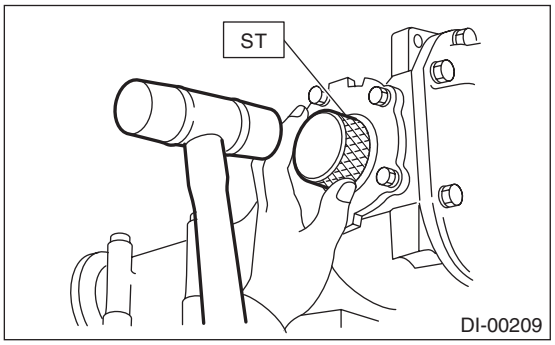

- VA1-type

ST 498447100 INSTALLER

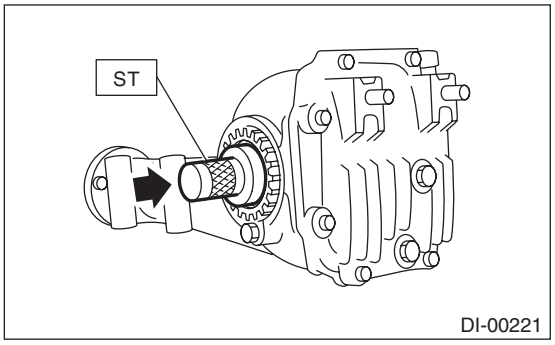

4) Install the rear differential. <Ref. to DI-24, INSTALLATION, Rear Differential (T-type).> <Ref. to DI-42, INSTALLATION, Rear Differential (VA-type).>

8. Rear Differential Front Member

A: REMOVAL

1) Disconnect the ground cable from battery.
2) Lift up the vehicle.
3) Support the rear differential using transmission jack, and then remove the rear differential front member.

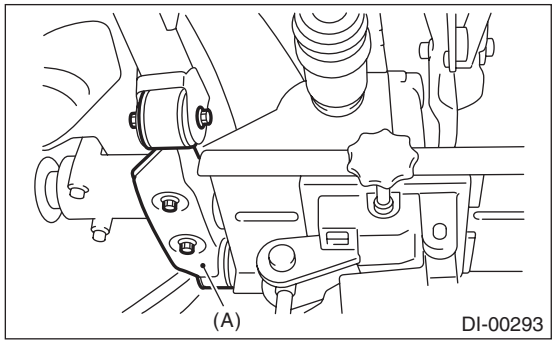

(A) Rear differential front member

B: INSTALLATION

1) Install the rear differential front member, and temporarily attach and tighten a new self-locking nut.

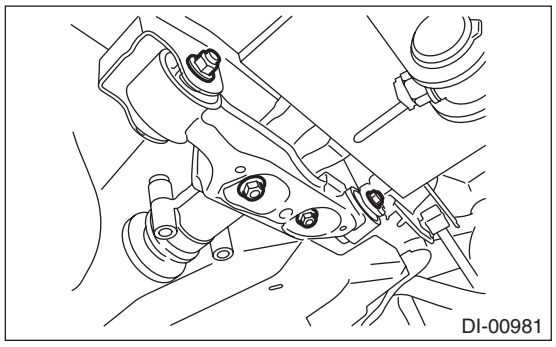

2) Remove the transmission jack.
3) Tighten the self-locking nut.

Tightening torque:
T1: 50 N·m (5.1 kgf-m, 36.9 ft-lb)
T2: 110 N·m (11.2 kgf-m, 81.1 ft-lb)

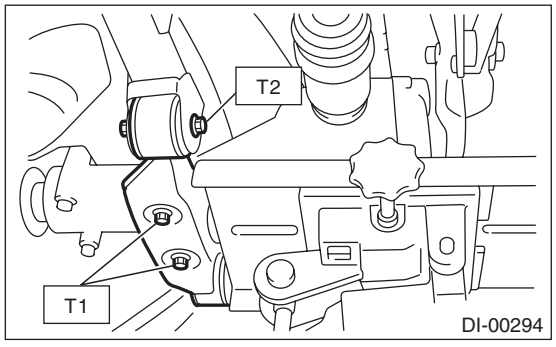

C: INSPECTION

1) Check the rear differential front member for damage, bend and corrosion.
If damage, bend or corrosion is excessive, replace the rear differential front member.
2) Check the bushings of rear differential member for cracking, hardening and damage. If cracking, hardening or damage is excessive, replace rear differential front member.

9. Rear Differential Mount Bushing

A: INSPECTION

Check the rear differential mount bushing for cracks, hardening or damage. If cracking, hardening or damage is excessive, replace rear differential mount bushing.

B: REPLACEMENT

CAUTION:
• If there was so much rust in the rear differential mount bushing, remove the rust before starting work.
• Apply the molybdenum grease on the square thread of the ST (shaft and nut) before use.
1) Remove the rear differential. <Ref. to DI-22, REMOVAL, Rear Differential (T-type).> <Ref. to DI-42, REMOVAL, Rear Differential (VA-type).>
2) Fit the ST to the periphery of the sub frame cylinder, and make sure that the ST does not contact with welded spots or spatters.
ST 41399FG010 SPECIAL TOOL A

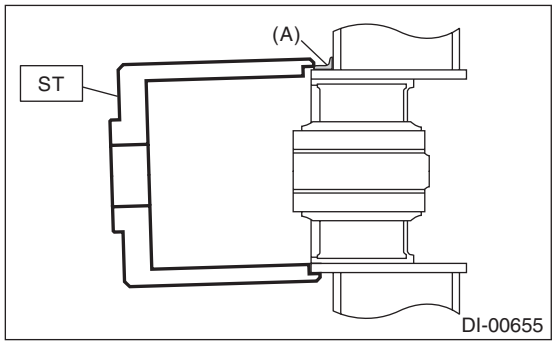

(A) Welded spot

3) If the ST contacts with welded spots or spatters, remove the excessive welds or spatters with sander or the equivalent so that the ST contacts the cylinder peripheral part.

CAUTION:
Performing the operation with the ST contacting with welded spots or spatters may break the ST. Be sure to remove excessive welds or spatters before the operation.

4) Set ST1, ST2, ST3, ST4 and ST5 as shown in the figure.
ST1 41399FG091 SPECIAL TOOL SHAFT
ST2 41399FG070 SPECIAL TOOL NUT
ST3 41399FG050 SPECIAL TOOL SLEEVE
ST4 41399FG080 SPECIAL TOOL BEARING
ST5 41399FG010 SPECIAL TOOL A

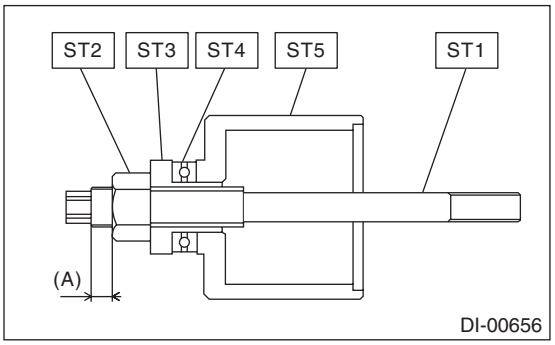

(A) 5 mm (0.2 in) or less

5) Fit and hold the ST1 and ST2 to the rear differential mount bushing from the rear side of vehicle.
ST1 41399FG031 SPECIAL TOOL C
ST2 41399FG061 SPECIAL TOOL RING

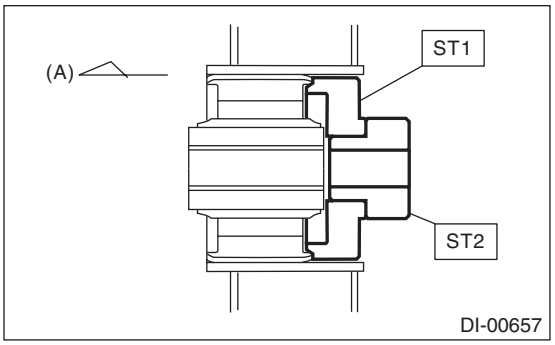

(A) Front side of vehicle

6) Insert the ST set in the step 4) through the rear differential mount bushing hole from the front side of vehicle, and screw in the ST1 by hand till the front end of ST1 comes out slightly from the rear end of ST2.
ST1 41399FG091 SPECIAL TOOL SHAFT
ST2 41399FG061 SPECIAL TOOL RING

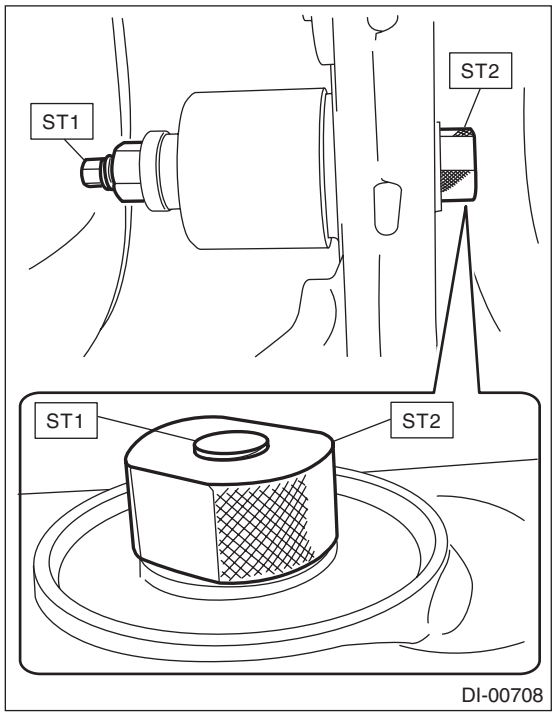

7) Hold the ST1 to prevent it from rotating, and screw in the ST3 by hand till there is no loose fit on the ST2.

CAUTION:
When setting the ST to the vehicle, always make sure that the ST2 fits the periphery of the sub frame cylinder and is not tilted.
ST1 41399FG091 SPECIAL TOOL SHAFT
ST2 41399FG010 SPECIAL TOOL A
ST3 41399FG070 SPECIAL TOOL NUT

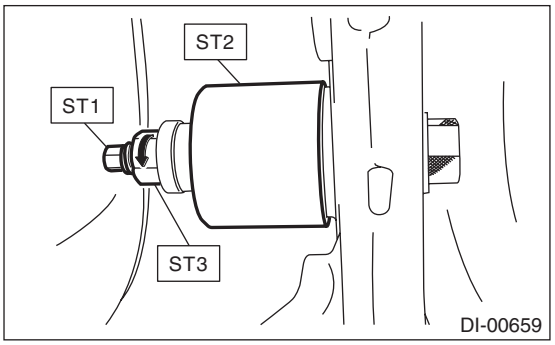

8) Hold the ST1 with a tool to prevent it from rotating, and screw in the ST2 to remove the rear differential mount bushing.

CAUTION:
• Rotation of ST1 will damage the screw at the rear end of rear differential mount bushing. Never rotate the ST1.
• If the ST starts to tilt while removing the rear differential mount bushing, stop the work and set the ST again.
ST1 41399FG091 SPECIAL TOOL SHAFT
ST2 41399FG070 SPECIAL TOOL NUT

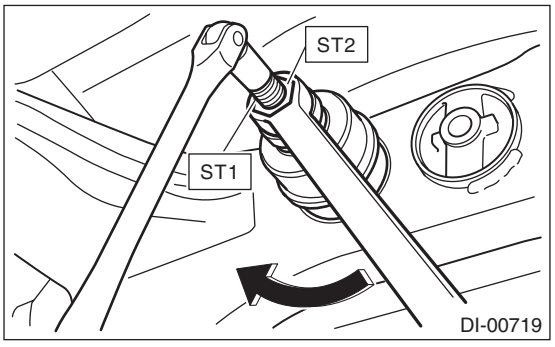

9) Set ST1, ST2, ST3, ST4, ST5 and rear differential mount bushing as shown in the figure.

NOTE:
- Set the ST2 nut near to the end of ST1 screw.
- Hold the rear differential mount bushing with the arrow marked side facing toward the rear of the vehicle, and set the rear differential mount bushing to the ST so that the arrow mark faces upward.
- Mark the bottom end of rear differential mount bushing to identify the installing direction.

ST1 41399FG091 SPECIAL TOOL SHAFT
ST2 41399FG070 SPECIAL TOOL NUT
ST3 41399FG050 SPECIAL TOOL SLEEVE
ST4 41399FG080 SPECIAL TOOL BEARING
ST5 41399FG020 SPECIAL TOOL B

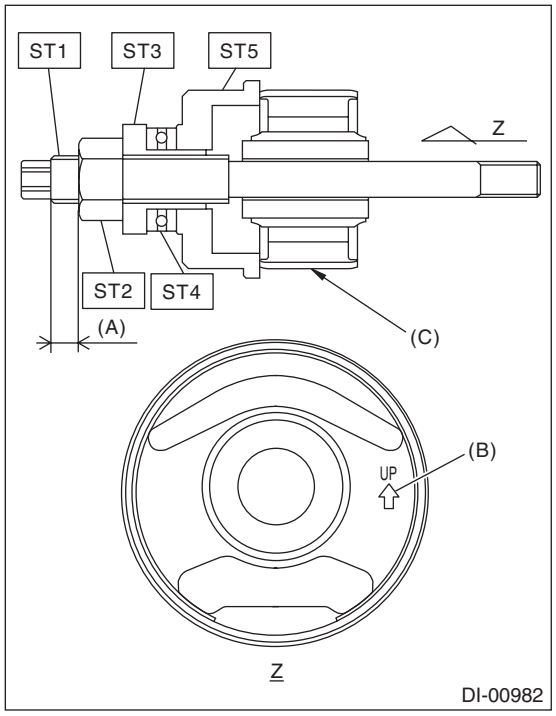

(A) 8 mm (0.31 in) or more
(B) Arrow mark
(C) Marked position

10) Attach ST1 to the ST2, and fit and hold the STs as a unit to the sub frame from the rear side of vehicle.

ST1 41399FG061 SPECIAL TOOL RING
ST2 41399FG041 SPECIAL TOOL D

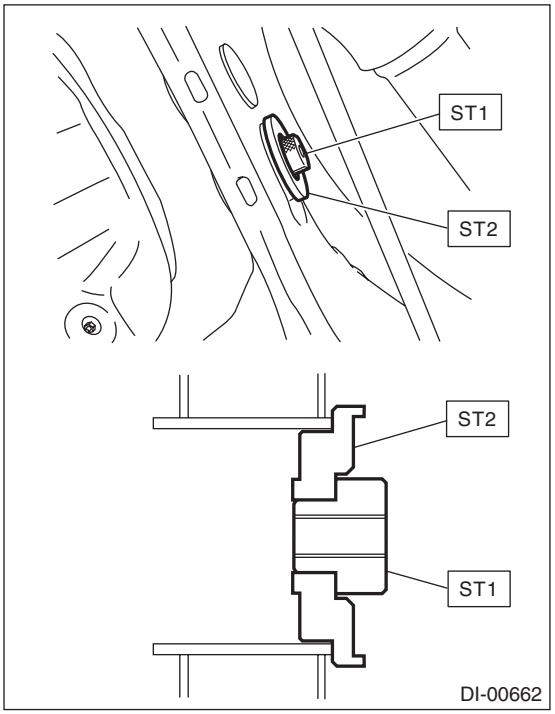

11) Insert the ST and rear differential mount bushing set in the step 9) through the sub frame from the front side of vehicle, and screw in the ST1 by hand till the front end of ST1 comes out slightly from the rear end of ST2.

CAUTION:
Set the rear differential mount bushing with its mark facing the bottom end direction.
ST1 41399FG091 SPECIAL TOOL SHAFT
ST2 41399FG061 SPECIAL TOOL RING

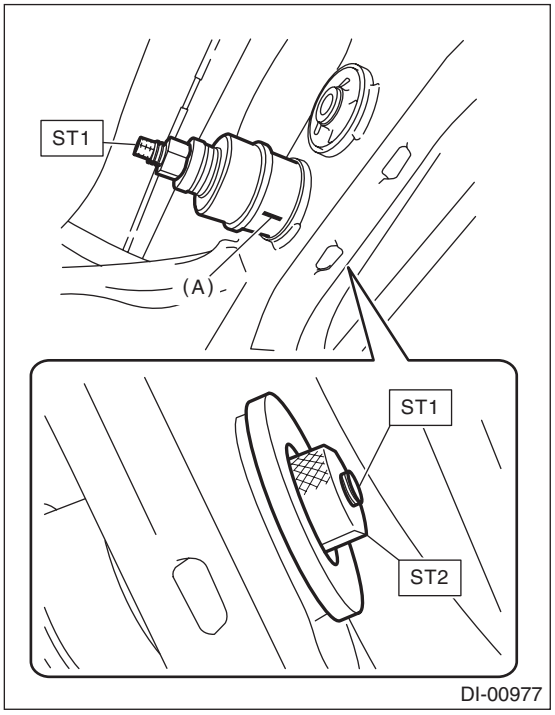

(A) Mark

12) Hold the ST1 to prevent it from rotating, and screw in the ST2 by hand till there is no loose fit on the ST and the rear differential mount bushing.

CAUTION:
Make sure that the ST and rear differential mount bushing are not tilted.
ST1 41399FG091 SPECIAL TOOL SHAFT
ST2 41399FG070 SPECIAL TOOL NUT

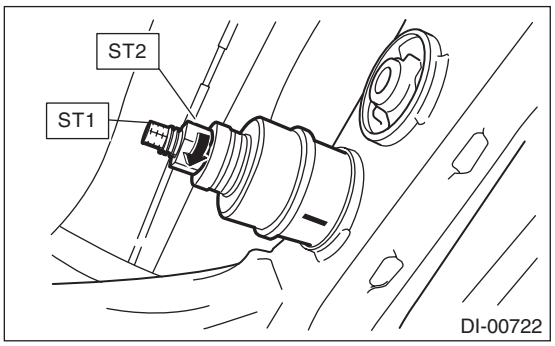

13) Screw in the ST2 while holding the ST1 with a tool to prevent it from rotating, and press-fit the rear differential mount bushing to the front end of sub frame cylinder.
ST1 41399FG091 SPECIAL TOOL SHAFT
ST2 41399FG070 SPECIAL TOOL NUT

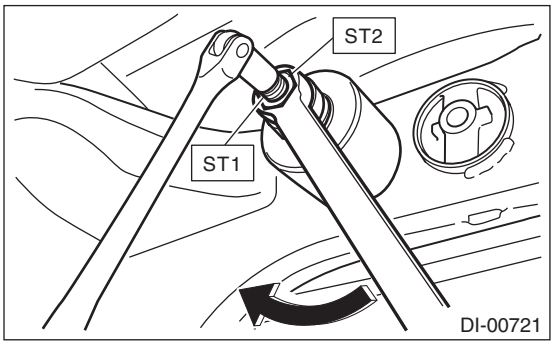

14) Make sure that the rear differential mount bushing is inserted to the front end of sub frame cylinder.

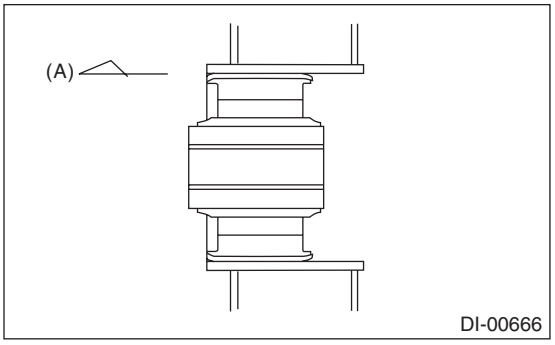

(A) Front side of vehicle

15) Install the rear differential. <Ref. to DI-24, INSTALLATION, Rear Differential (T-type).> <Ref. to DI-42, INSTALLATION, Rear Differential (VA-type).>

10.Rear Differential Inspection Mode

A: GENERAL DESCRIPTION

CAUTION:
Be sure to perform rear differential inspection mode.
- Follow the messages displayed on the Subaru Select Monitor when working.
- “Rear differential inspection mode” using the Subaru Select Monitor is available only for the CVT model.
- Perform rear differential inspection mode when the following work has been performed.

Transmission assembly replacement/Replacement of rear differential/Replacement of front differential hypoid gear set/Replacement of rear differential hypoid gear set

B: PROCEDURE

CAUTION:
Do not turn the power of the Subaru Select Monitor OFF during work, and do not disconnect the data link connector.

1) Shift the select lever to “P” range.
2) Apply the parking brake.
3) Lift up the vehicle.

WARNING:
Lift up the vehicle until the tire bottom is 30 cm or more above the ground.

4) Connect the Subaru Select Monitor to data link connector.
5) Turn the ignition switch to ON.
6) Select {Work Support} in the «Transmission Diagnosis» screen of Subaru Select Monitor.
7) Select {Maintenance mode} in the «Work Support» screen of Subaru Select Monitor.
8) Select {Rear differential inspection mode} in the «Maintenance mode» screen of the Subaru Select Monitor.
9) Follow the messages displayed on the Subaru Select Monitor screen when working.
10) The results of the rear differential inspection mode are displayed on the Subaru Select Monitor screen.
- When ended normally: “The rear differential has been replaced normally.”
- When ended abnormally: “A rear differential abnormality has been detected. Reinspect the items at the time of rear differential installation.”
- When interrupted: “Inspection is stopped. Restart this inspection mode from the beginning.”

11) After the message “Inspection has been completed. Set the ignition switch to OFF.” appears, the rear differential inspection mode completes.

NOTE:
- When the rear differential inspection mode is completed properly, the following warning lights may illuminate. But this is not a malfunction. If warning light illuminates, clear the memory.

VDC/ABS, engine, power steering
- For detailed operation procedures, refer to “PC application help for Subaru Select Monitor”.
- If the rear differential inspection mode does not end normally, repeat the mode until it ends normally.
- When the inspection mode does not end normally, the AWD warning light will start blinking at 2 Hz.
- When the rear differential inspection mode ends abnormally, the front differential and rear differential may be different from the specifications for the vehicle.
- When the rear differential inspection mode is interrupted, the following reasons are possible.

Message	Main reasons for abnormal termination
• “Inspection is stopped.” • “Inspection is stopped. Restart this inspection mode from the beginning.”	• TCM has detected a failure. • VDC has a failure. • Brake is applied after start during automatic running. • Too delayed operation to the instructions displayed on the Subaru Select Monitor.
“TCM incompatible. Rear differential inspection mode is stopped.”	The model does not support the rear differential inspection mode.
The TCM has detected a fault. Inspect following the manual.	TCM has detected a failure.

12) Perform “Function Check Sequence” for VDC. <Ref. to VDC(diag)-17, FREEZE FRAME DATA, OPERATION, Subaru Select Monitor.> <Ref. to VDC-21, ADJUSTMENT, VDC Control Module and Hydraulic Control Unit (VDCCM&H/U).>

11.General Diagnostic Table

A: INSPECTION

Symptom or trouble	Possible cause	Remedy
1. Oil leakage	(1) Worn, scratched, or incorrectly seated front or side oil seal. Scored, battered or excessively worn sliding surface of companion flange.	Repair or replace.
	(2) Clogged or damaged air breather cap.	Clean, repair or replace.
	(3) Loose bolts on the side retainer, or incorrectly fitted O-ring.	Tighten the bolts to specified torque. Replace the O-ring.
	(4) Loose rear cover attachment bolts or damaged gasket.	Replace the gasket, and tighten the bolts to specified torque.
	(5) Loose filler plug or drain plug.	• Apply liquid gasket, and tighten to the specified torque. (T-type) • Replace the gasket, and tighten to the specified torque. (VA-type)
	(6) Wear, damage or incorrect fitting of drive shaft, side retainer or oil seal.	Repair or replace.
2. Seizure NOTE: Seized or damaged parts should be replaced, and also other parts should be thoroughly checked for any defect and should be repaired or replaced as required.	(1) Insufficient backlash for hypoid gear.	Readjust or replace.
	(2) Excessive preload for side, rear or front bearing.	Readjust or replace.
	(3) Insufficient or improper oil used.	Add recommended oil to the specified level.
3. Damage NOTE: Damaged parts should be replaced, and also other parts should be thoroughly checked for any defect and should be repaired or replaced as required.	(1) Improper backlash for hypoid gear.	Readjust or replace.
	(2) Insufficient or excessive preload for side, rear or front bearing.	Readjust or replace.
	(3) Excessive backlash for differential gear.	Replace gear or thrust washer.
	(4) Loose bolts and nuts such as hypoid driven gear bolt.	Retighten.
	(5) Damage due to overloading.	Replace.
4. Noises when starting or shifting gears NOTE: Noises may be caused by differential assembly, universal joint, wheel bearing, etc. Find out what is actually making noise before disassembling.	(1) Improper tooth contact of hypoid driven gear and drive pinion	Readjust. (drive pinion adjustment and backlash adjustment)
	(2) Excessive backlash for hypoid driven gear	Replace the gear or the pinion height adjusting washer.
	(3) Excessive backlash for side gear.	Replace gear or thrust washer.
	(4) Insufficient preload for front or rear bearing.	Readjust.
	(5) Loose drive pinion nut.	Tighten to the specified torque.
	(6) Loose bolts and nuts such as side retainer attachment bolt.	Tighten to the specified torque.
5. Noises when cornering	(1) Damaged differential gear.	Replace.
	(2) Excessive wear or damage of thrust washer.	Replace.
	(3) Broken pinion mate shaft.	Replace.
	(4) Stuck or damaged side bearing	Replace.

Symptom or trouble	Possible cause	Remedy
6. Gear Noise NOTE: Since noises from engine, muffler, transmission, propeller shaft, wheel bearings, tires, and body are sometimes mistaken for noises from differential assembly, be careful in checking them. Inspection methods to locate noises include coasting, accelerating, cruising, and lifting-up all four wheels. Perform these inspections according to the condition of trouble. When listening to noises, shift the gear into four-wheel drive and fourth speed position, trying to pick up only differential noise.	(1) Improper tooth contact of hypoid driven gear and drive pinion	Readjust or replace the hypoid gear set.
	(2) Improper backlash of the hypoid driven gear	Readjust.
	(3) Scored or chipped teeth of hypoid gear.	Replace hypoid gear set.
	(4) Scuffed hypoid gear	Replace hypoid gear set.
	(5) Improper preload for front or rear bearings.	Readjust.
	(6) Stuck, scored or chipped teeth of front or rear bearing	Replace.
	(7) Stuck, scored or chipped teeth of side bearing	Replace.
	(8) Vibrating differential gear.	Replace the differential gear.

TRANSFER CASE

TC

Page

1. General Description 2
2. Transfer Case and Extension Case Assembly 3
3. Transfer Clutch 4
4. Extension Case 5
5. Oil Seal 6
6. Transfer Drive Gear 7
7. Transfer Driven Gear 8
8. Reduction Drive Gear 9
9. Reduction Driven Gear 10
10. Center Differential 11
11. Transfer Clutch Pressure Test 12

1. General Description

A: NOTE

For general description, refer to “CVT” or “5MT” section.
CVT model:
<Ref. to CVT(TR580)-3, General Description.>
<Ref. to CVT(TH58A)-3, General Description.>
5MT model:
<Ref. to 5MT-2, General Description.>

2. Transfer Case and Extension Case Assembly

A: NOTE

For removal, installation and inspection, refer to “5MT” section. <Ref. to 5MT-39, Transfer Case and Extension Case Assembly.>

3. Transfer Clutch

A: NOTE

For removal, installation and inspection, refer to “CVT” section. <Ref. to CVT(TR580)-166, Transfer Clutch.> <Ref. to CVT(TH58A)-183, Transfer Clutch.>

4. Extension Case

A: NOTE

For removal, installation and inspection, refer to “CVT” section. <Ref. to CVT(TR580)-162, Extension Case.> <Ref. to CVT(TH58A)-179, Extension Case.>

5. Oil Seal

A: NOTE

For removal, installation and inspection, refer to “CVT” or “5MT” section.
CVT model:
<Ref. to CVT(TR580)-85, Extension Case Oil Seal.> <Ref. to CVT(TH58A)-90, Extension Case Oil Seal.>
5MT model:
<Ref. to 5MT-32, Oil Seal.>

6. Transfer Drive Gear

A: NOTE

For removal, installation and inspection, refer to “CVT” or “5MT” section.
CVT model:
<Ref. to CVT(TH58A)-200, Transfer Drive Gear.>
5MT model:
<Ref. to 5MT-46, Transfer Drive Gear.>

7. Transfer Driven Gear

A: NOTE

For removal, installation and inspection, refer to “CVT” or “5MT” section.
CVT model:
<Ref. to CVT(TR580)-180, Transfer Driven Gear.>
<Ref. to CVT(TH58A)-197, Transfer Driven Gear.>
5MT model:
<Ref. to 5MT-48, Transfer Driven Gear.>

8. Reduction Drive Gear

A: NOTE

For removal, installation and inspection, refer to “CVT” section. <Ref. to CVT(TR580)-212, Reduction Drive Gear.> <Ref. to CVT(TH58A)-256, Reduction Drive Gear.>

9. Reduction Driven Gear

A: NOTE

For removal, installation and inspection, refer to “CVT” section. <Ref. to CVT(TR580)-185, Reduction Driven Gear.>

10.Center Differential

A: NOTE

For removal, installation and inspection, refer to “5MT” section. <Ref. to 5MT-50, Center Differential.>

11.Transfer Clutch Pressure Test

A: NOTE

For inspection, refer to the “CVT” section. <Ref. to CVT(TR580)-50, Transfer Clutch Pressure Test.> <Ref. to CVT(TH58A)-59, Transfer Clutch Pressure Test.>

DRIVE SHAFT SYSTEM

DS

Page

1. General Description 2
2. Propeller Shaft 12
3. Front Axle 17
4. Front Hub Unit Bearing 25
5. Rear Axle 35
6. Rear Hub Unit Bearing 46
7. Front Drive Shaft 57
8. Rear Drive Shaft 74
9. General Diagnostic Table 88

1. General Description

A: SPECIFICATION

1. PROPELLER SHAFT

Car line		Gasoline engine model		HEV model
		For C4	Other than for C4	
Propeller shaft type		3UJ	EDJ	
Front propeller shaft joint-to-joint length: L_1	CVT	643.0 mm (25.31 in)	675.5 mm (26.59 in)	562 mm (22.13 in)
	MT	703.0 mm (27.68 in)	735.5 mm (28.96 in)	-
Rear propeller shaft joint-to-joint length: L_2		755.0 mm (29.72 in)	723 mm (28.46 in)	
Outer diameter of tube:	D_1	63.5 mm (2.50 in)	63.5 mm (2.50 in)	
	D_2	57.0 mm (2.24 in)	57.5 mm (2.26 in)	

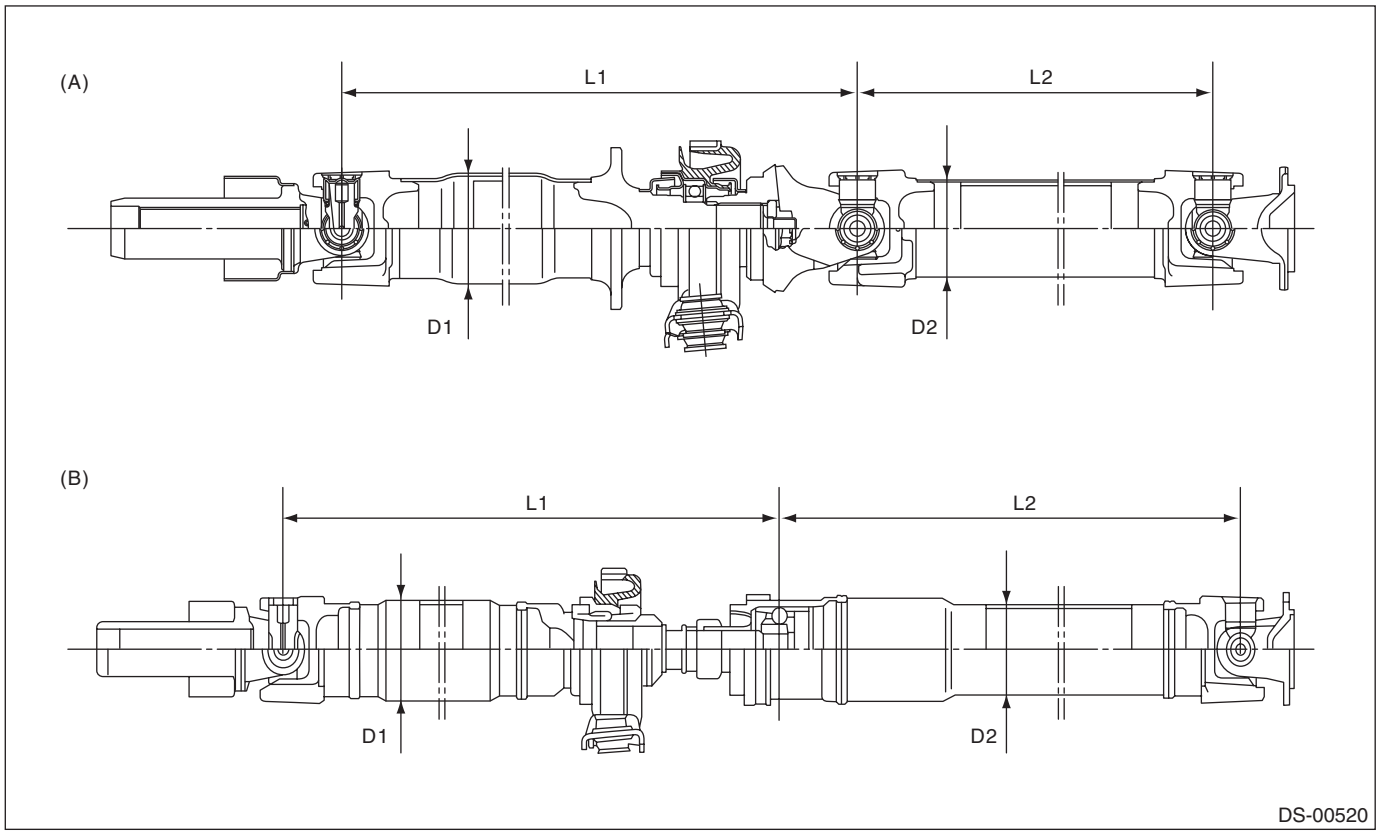

(A) 3UJ type (B) EDJ type

2. FRONT AXLE SHAFT ASSEMBLY

Model	Axle shaft type	Axle diameter ϕ mm (in)	Axle length mm (in)
Except for XV model	AC + AAR	22 (0.87)	351.5 (13.84)
XV model	EBJ + PTJ	22 (0.87)	361.4 (14.23)

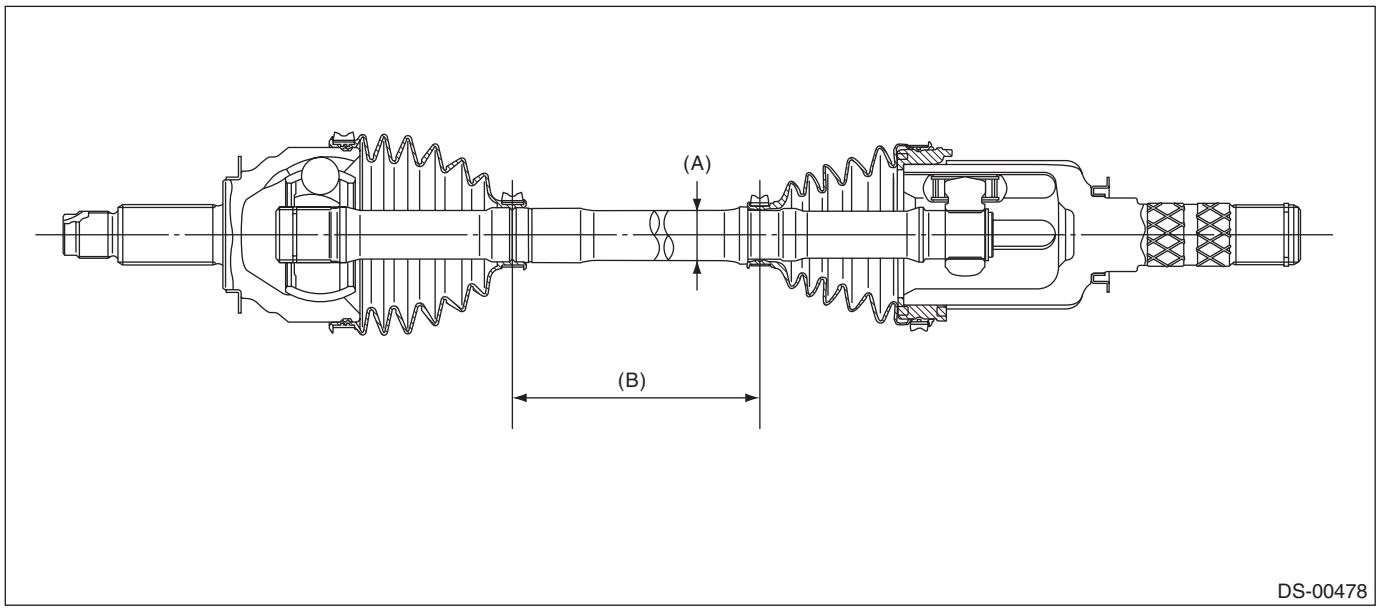

(A) Axle diameter (B) Axle length

3. REAR AXLE SHAFT ASSEMBLY

- Except for XV model

T/M type	Axle shaft type	Axle diameter ϕ mm (in)	Axle length mm (in)
CVT	BJ + DOJ	22 (0.87)	357.45 (14.07)
MT	EBJ + DOJ	22 (0.87)	372.5 (14.67)

- XV model

T/M type	Axle shaft type	Axle diameter ϕ mm (in)	Axle length mm (in)
CVT	BJ + DOJ	22 (0.87)	388.6 (15.30)
MT	EBJ + DOJ	22 (0.87)	388.5 (15.30)

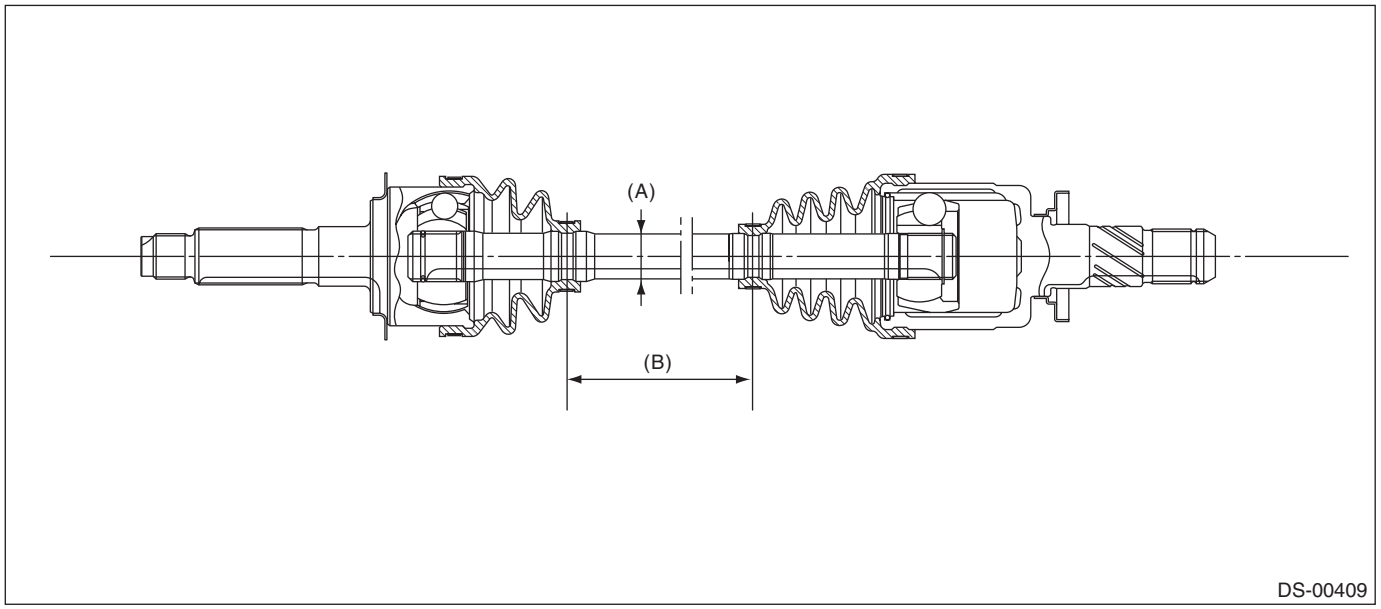

(A) Axle diameter (B) Axle length

B: COMPONENT

1. PROPELLER SHAFT

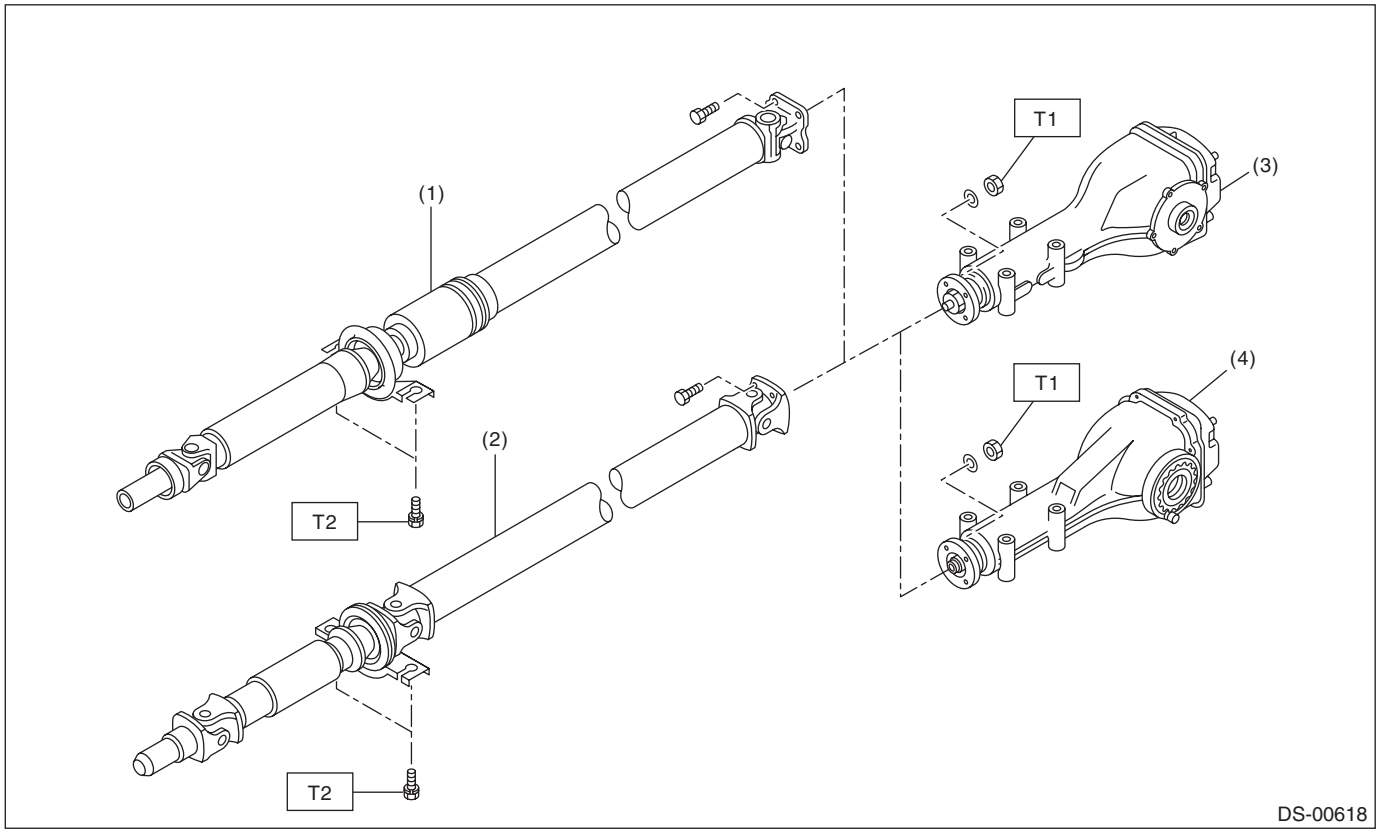

(1) Propeller shaft (EDJ type)
(2) Propeller shaft (3UJ type)
(3) Rear differential (T-type)
(4) Rear differential (VA1-type)

Tightening torque: N·m (kgf-m, ft-lb)
T1: 31 (3.16, 22.9)
T2: 52 (5.30, 38.4)

2. FRONT AXLE

- AC + AAR type

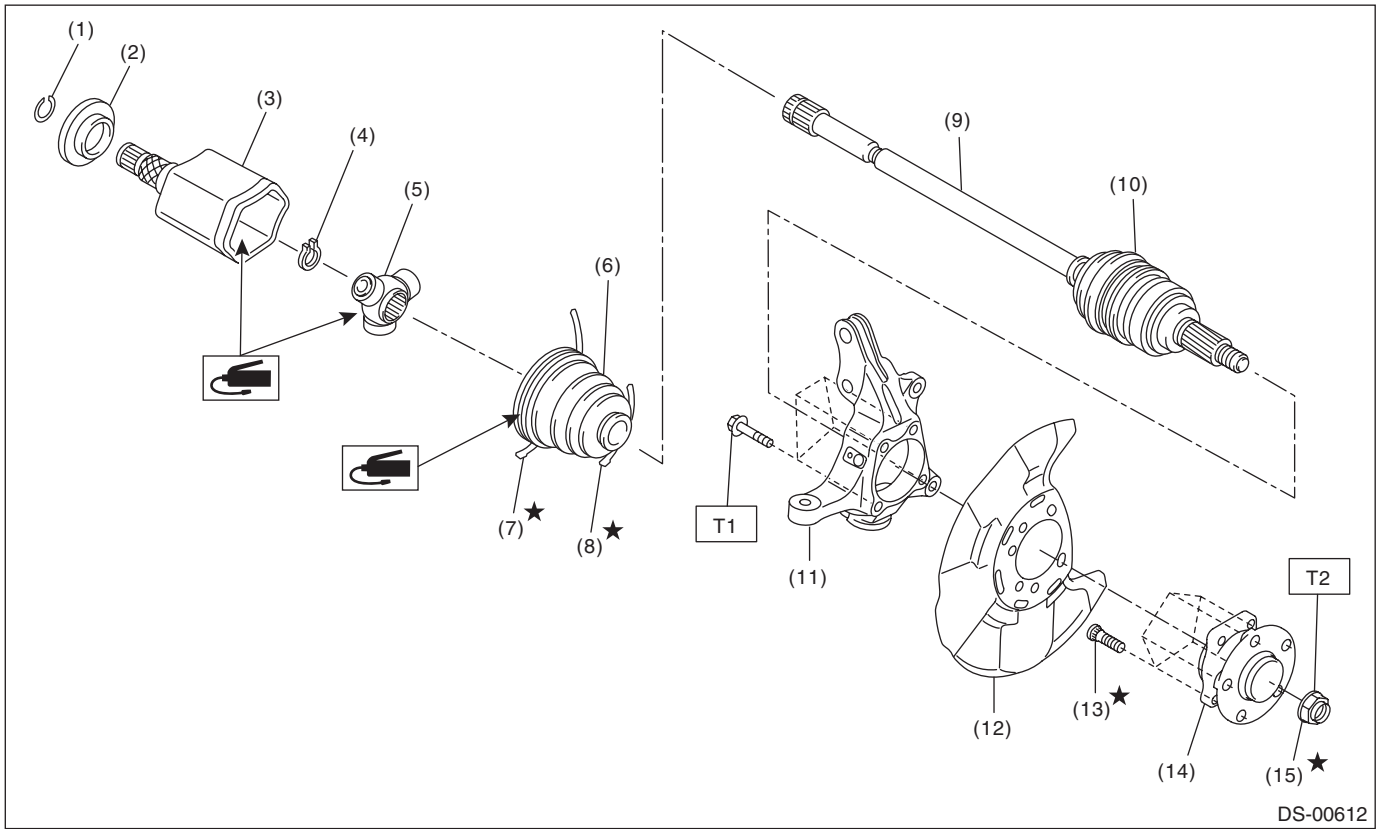

(1) Circlip
(2) Baffle plate
(3) Outer race (AAR)
(4) Snap ring
(5) Trunnion
(6) Boot (AAR)
(7) Band - drive shaft A
(8) Band - drive shaft D
(9) Axle shaft ASSY
(10) Boot (AC)
(11) Housing ASSY - front axle
(12) Back plate - front brake
(13) Bolt - hub
(14) Hub unit COMPL - front axle
(15) Nut - axle

Tightening torque: N·m (kgf-m, ft-lb)
T1: 65 (6.63, 47.9)
T2: 220 (22.43, 162.3)

- EBJ + PTJ type

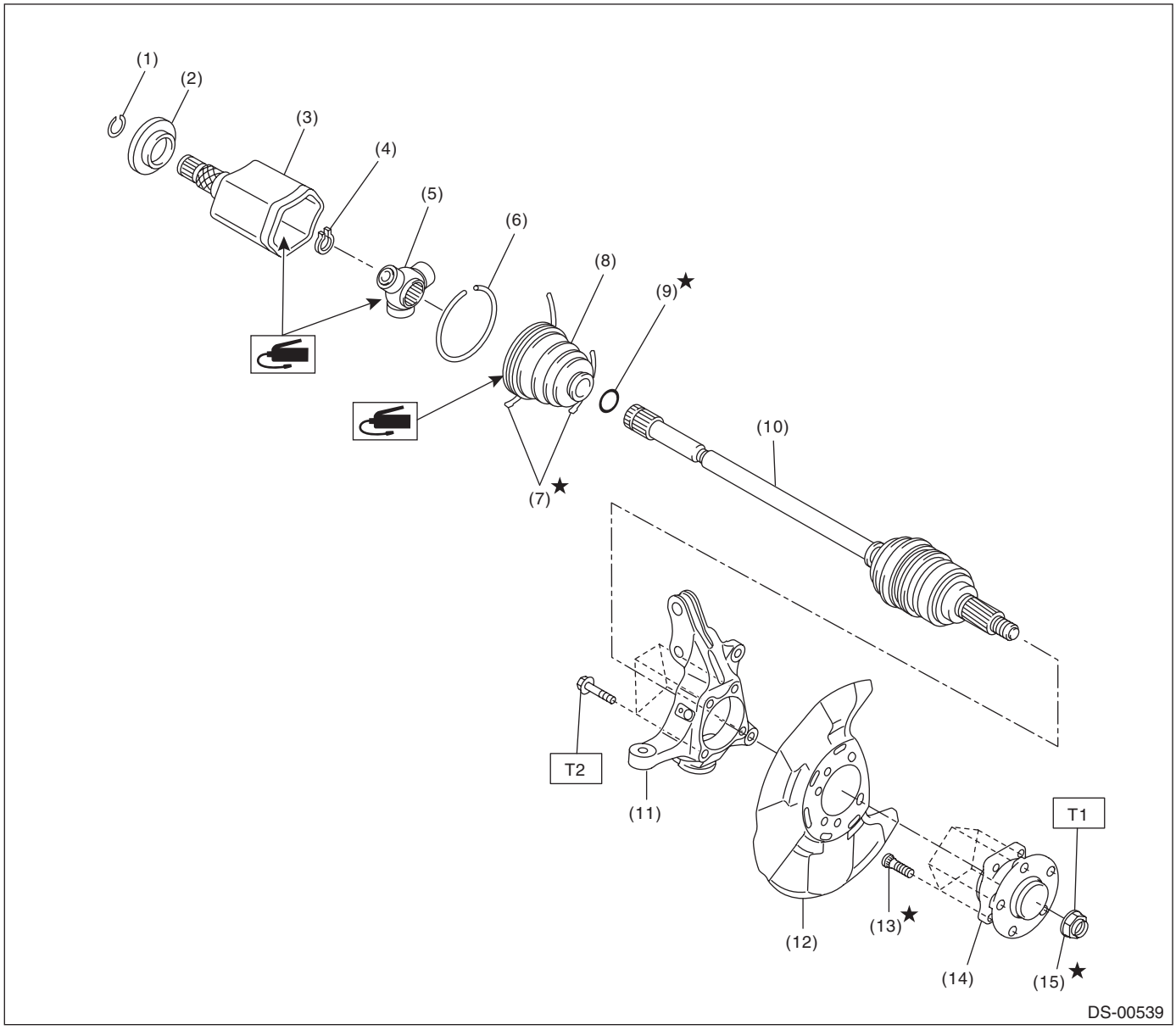

(1) Circlip
(2) Baffle plate
(3) Outer race (PTJ)
(4) Snap ring
(5) Trunnion
(6) Snap ring
(7) Boot band
(8) Boot (PTJ)
(9) O-ring
(10) EBJ shaft ASSY
(11) Housing ASSY - front axle
(12) Back plate - front brake
(13) Bolt - hub
(14) Hub unit COMPL - front axle
(15) Nut - axle

Tightening torque: N·m (kgf-m, ft-lb)
T1: 220 (22.43, 162.3)
T2: 65 (6.63, 47.9)

3. REAR AXLE

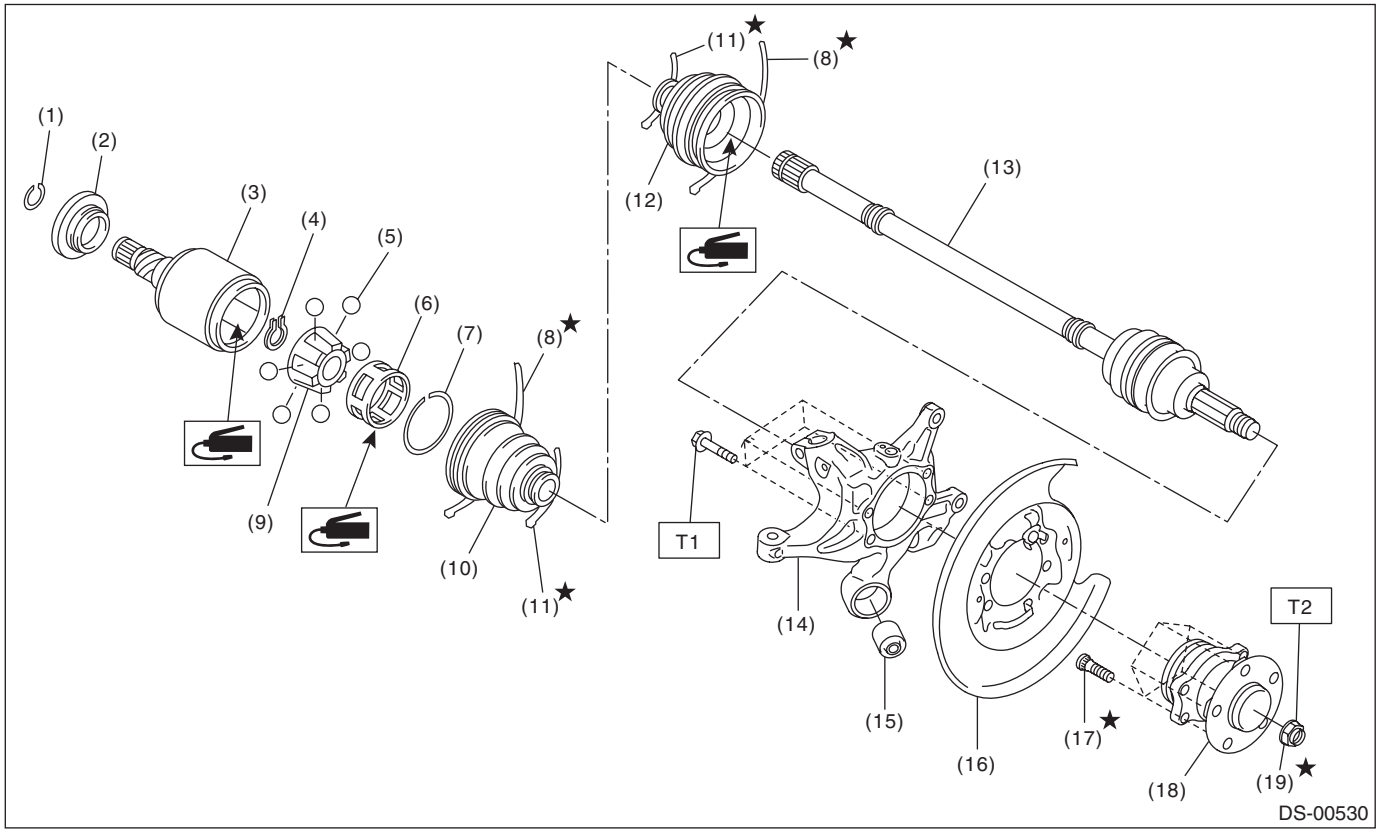

(1) Circlip A
(2) Baffle plate
(3) Outer race (DOJ)
(4) Snap ring
(5) Ball
(6) Cage
(7) Circlip B
(8) Band - drive shaft A
(9) Inner race
(10) Boot - drive shaft (DOJ)
(11) Band - drive shaft B
(12) Boot - drive shaft (BJ)
Boot - drive shaft (EBJ)
(13) Shaft ASSY (EBJ) (CVT model)
Shaft ASSY (EBJ) (MT model)
(14) Housing ASSY - rear axle
(15) Bushing - trailing link
(16) Back plate - rear brake
(17) Bolt - hub
(18) Hub unit COMPL - rear axle
(19) Nut - axle

Tightening torque: N·m (kgf-m, ft-lb)

T1: 65 (6.63, 47.9)
T2: 190 (19.37, 140.1)

C: CAUTION

• Wear appropriate work clothing, including a helmet, protective goggles and protective shoes when performing any work.
• Remove contamination including dirt and corrosion before removal, installation or disassembly.
• Keep the disassembled parts in order and protect them from dust and dirt.
• Before removal, installation or disassembly, be sure to clarify the failure. Avoid unnecessary removal, installation, disassembly and replacement.
• Vehicle components are extremely hot after driving. Be wary of receiving burns from heated parts.
• Use SUBARU genuine grease etc. or equivalent. Do not mix grease etc. of different grades or manufacturers.
• Be sure to tighten fasteners including bolts and nuts to the specified torque.
• Place shop jacks or rigid racks at the specified points.
• Apply grease onto sliding or revolving surfaces before installation.
• Before installing snap rings, apply sufficient amount of grease to avoid damage and deformation.
• Before securing a part on a vise, place cushioning materials such as wood blocks, aluminum plates, or waste cloth between the part and the vise.
• When the suspension-related components have been removed and installed, be sure to adjust the steering sensor. <Ref. to VDC-21, VDC SENSOR MIDPOINT SETTING MODE, ADJUSTMENT, VDC Control Module and Hydraulic Control Unit (VDCCM&H/U).>

D: PREPARATION TOOL

1. SPECIAL TOOL

ILLUSTRATION	Part No.	DESCRIPTION	REMARKS
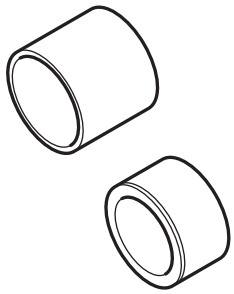 ST20099PA010	20099PA010	INSTALLER & REMOVER	• Used for replacing the bushing - trailing link of the housing assembly - rear axle. • Used together with BUSHING REMOVER (20099FG000).
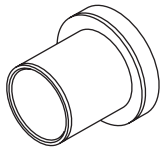 ST20099FG000	20099FG000	BUSHING REMOVER	• Used for replacing the bushing - trailing link of the housing assembly - rear axle. • Used together with base part of INSTALLER & REMOVER (20099PA010).

ILLUSTRATION	Part No.	DESCRIPTION	REMARKS
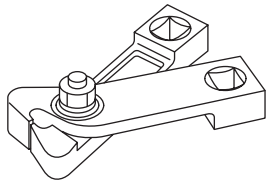 ST28099AC000	28099AC000	BOOT BAND PLIER	Used for tightening the band - boot. (for front axle shaft)
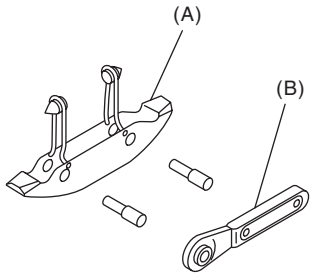 ST-925091000	925091000	BAND TIGHTENING TOOL	Used for tightening the band - boot. (A) Jig for the band (B) Ratchet wrench
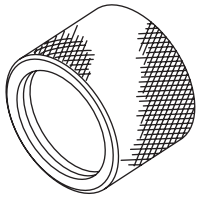 ST18675AA000	18675AA000	DIFFERENTIAL SIDE OIL SEAL INSTALLER	Used for installing the differential side retainer oil seal.
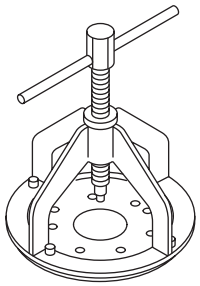 ST-926470000	926470000	AXLE SHAFT PULLER	• Used for removing the axle shaft. • Used together with AXLE SHAFT PULLER PLATE (28099PA110).
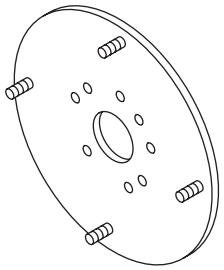 ST28099PA110	28099PA110	AXLE SHAFT PULLER PLATE	Exchange with the plate of the AXLE SHAFT PULLER (926470000) to use.

ILLUSTRATION	Part No.	DESCRIPTION	REMARKS
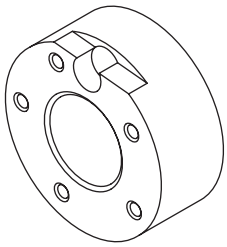 ST-927080000	927080000	HUB STAND	Used for assembling the bolt - hub of the hub.
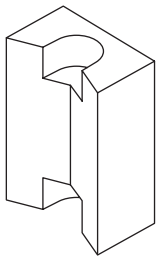 ST28399AG000	28399AG000	HUB STAND	Used for extracting the bolt - hub.
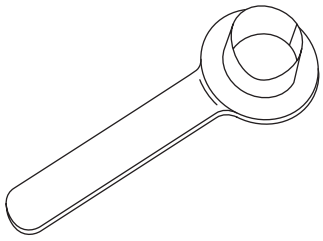 ST28399SA010	28399SA010	OIL SEAL PROTECTOR	• Used for installing the front axle shaft into the front differential. • For protecting the oil seal.
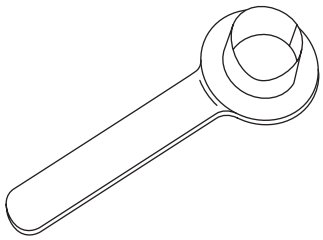 ST28099PA090	28099PA090	OIL SEAL PROTECTOR	• Used for installing the rear axle shaft into the rear differential. • For protecting the oil seal.

2. GENERAL TOOL

TOOL NAME	REMARKS
Tie-rod ball joint puller	Used for disconnecting joints.
Dial gauge	Used for inspecting the propeller shaft run-out.
Extension cap	Used for preventing leakage of gear oil or ATF.
Crowbar	Used for extracting the axle shaft.
Needle nose pliers	Used for tightening the band - boot of the rear axle shaft. • Snap-on 96BCP Or equivalent.

2. Propeller Shaft

A: REMOVAL

CAUTION:
- **Before removing propeller shaft, wrap metal parts with a cloth or rubber material.**
- **Do not disassemble the center EDJ of the propeller shaft.**
- **Before removing propeller shaft, wrap the metal parts attached to the rubber boot of center EDJ with a cloth or rubber material, as shown in the figure. The rubber boot may be damaged due to interference with adjacent metal parts while bending the EDJ during removal.**

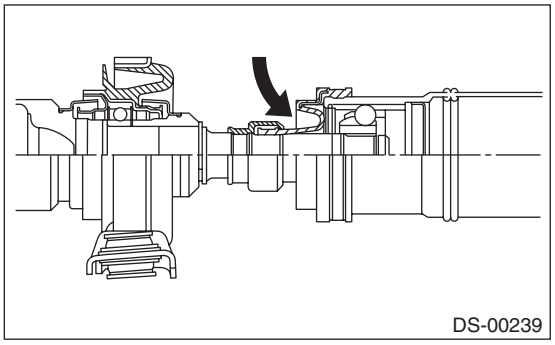
DS-00239

1) Shift the select lever or gear shift lever to neutral.
2) Release the parking brake.
3) Lift up the vehicle.
4) Remove the center exhaust pipe, rear exhaust pipe, and muffler.
- Center exhaust pipe & rear exhaust pipe: <Ref. to EX(H4DO(w/o HEV))-18, REMOVAL, Rear Exhaust Pipe.>
- Muffler: <Ref. to EX(H4DO(w/o HEV))-22, REMOVAL, Muffler.>

5) Remove the bolts to remove the front heat shield cover.

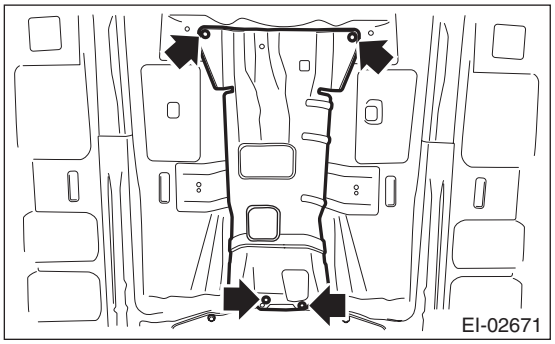
EI-02671

6) Remove the propeller shaft assembly.

CAUTION:
Do not disassemble the propeller shaft.

(1) Place alignment marks (A) on the flange yoke and rear differential.
(2) Remove four bolts holding the propeller shaft to the rear differential.

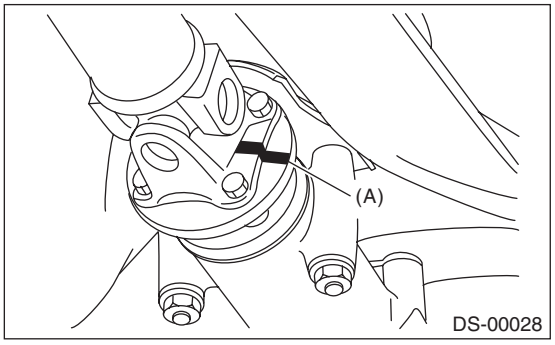

DS-00028

(3) Remove the center bearing.

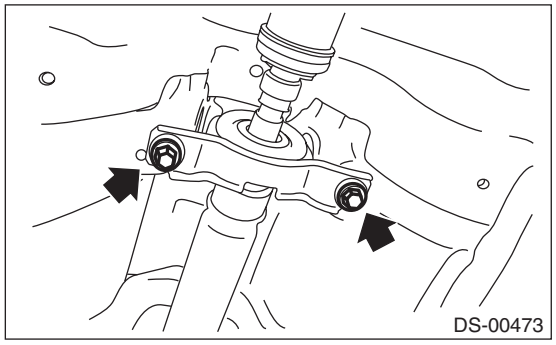

(4) Remove the propeller shaft from transmission.

CAUTION:
Be careful not to damage oil seals and contact surface of the sleeve yoke.

NOTE:
- Use a container to catch ATF or oil flowing from propeller shaft.
- To prevent ATF from leaking, install extension cap etc. to the transmission.

B: INSTALLATION

1) Before installation, check the following items, and replace the propeller shaft assembly as necessary.
- Dents or cracks on the tube surface
- Splines for deformation or abnormal wear
- Unsmooth joint operation or abnormal noise
- Center bearing for free play, noise or non-smooth operation.
- Oil seals for abnormal wear or damage
- Damaged center bearing

2) Apply fluid or gear oil to the oil seal lip and the propeller shaft.
- CVT model: SUBARU CVT OIL FOR LINEARTRONIC
- MT model: GL-5

3) Insert the sleeve yoke into the transmission and attach center bearing to body.

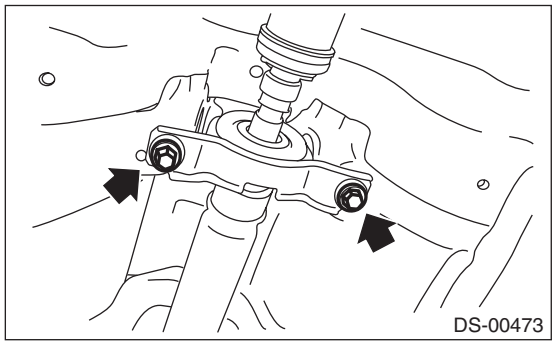

Tightening torque:
52 N·m (5.30 kgf-m, 38.4 ft-lb)

4) Align the alignment marks (A), and connect the yoke flange and rear differential.

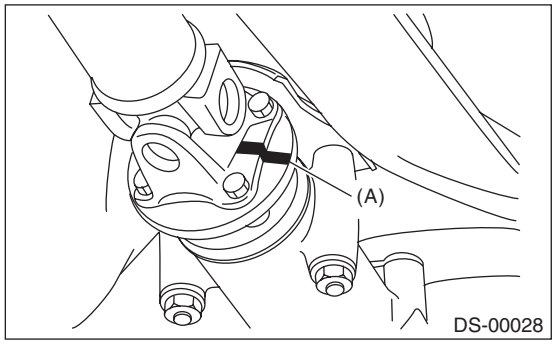

Tightening torque:
31 N·m (3.16 kgf-m, 22.9 ft-lb)

5) Check the propeller shaft with the propeller shaft installed to the vehicle. <Ref. to DS-15, INSPECTION, Propeller Shaft.>

6) Install the heat shield cover.

Tightening torque:
18 N·m (1.84 kgf-m, 13.3 ft-lb)

7) Install the center exhaust pipe and rear exhaust pipe.

8) Install the under cover - front.

CAUTION:
• Install the under cover so that the under cover front end (b) comes inside of the bumper face - front (a).

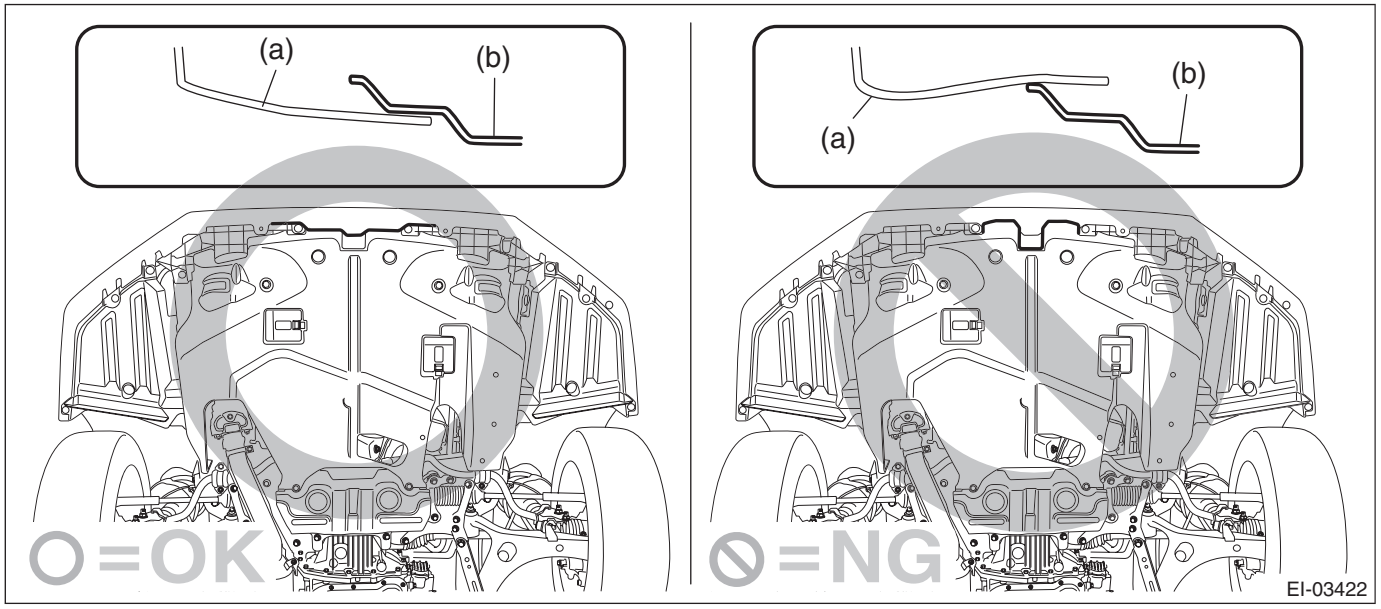

Tightening torque:
18 N·m (1.84 kgf-m, 13.3 ft-lb)

9) Lower the vehicle.

C: INSPECTION

Check the propeller shaft with the propeller shaft installed to the vehicle.
1) Remove the front exhaust pipe. <Ref. to EX(H4DO(w/o HEV))-6, REMOVAL, Front Exhaust Pipe.>
2) Remove the center exhaust pipe, rear exhaust pipe, and muffler.
• Center exhaust pipe & rear exhaust pipe: <Ref. to EX(H4DO(w/o HEV))-18, REMOVAL, Rear Exhaust Pipe.>
• Muffler: <Ref. to EX(H4DO(w/o HEV))-22, REMOVAL, Muffler.>
3) Remove the bolts to remove the front heat shield cover.

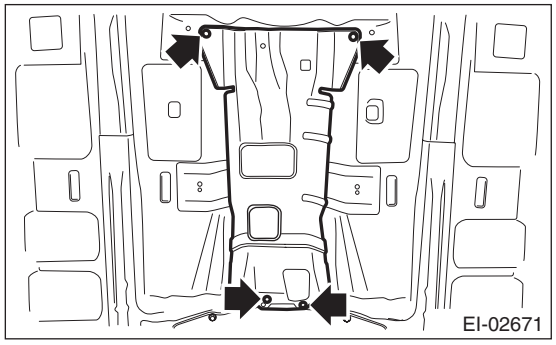

4) Check the propeller shaft mounting bolt for looseness.
(1) Yoke flange mounting bolts which connect to the rear differential
(2) Center bearing bracket mounting bolts

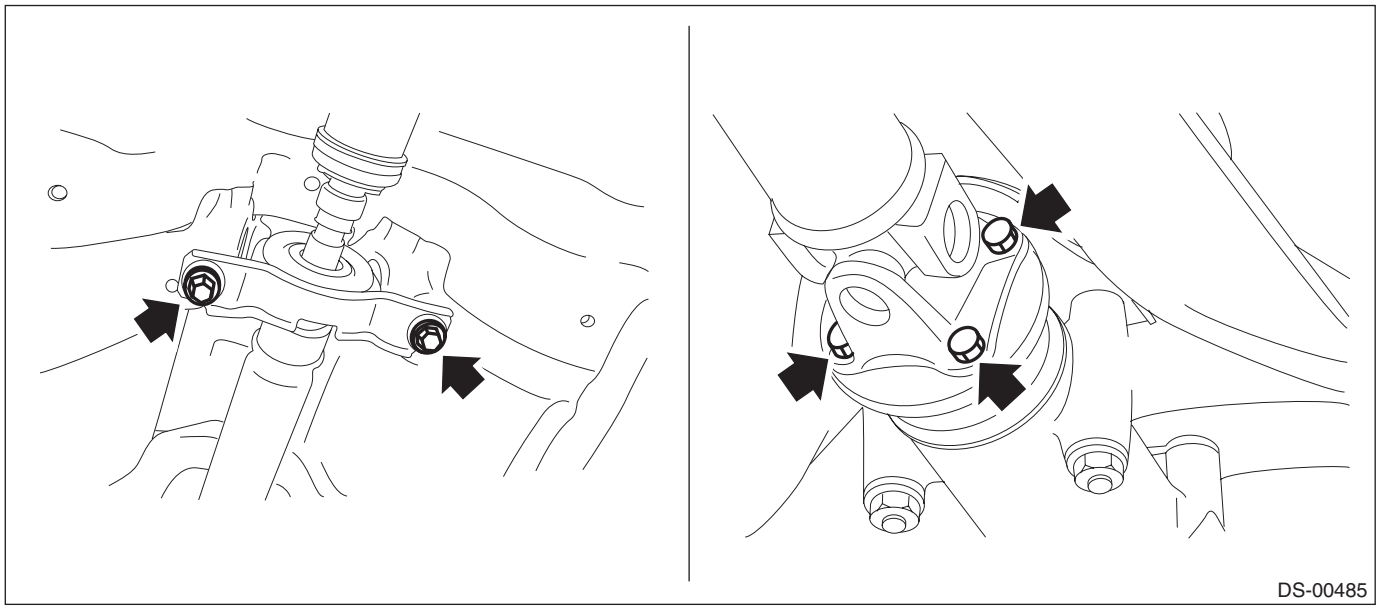

5) Check the spline and bearing for the propeller shaft.
(1) Turn the propeller shaft by hand to check if abnormal free play exists at splines.
(2) Also move yokes to check if abnormal free play exists at spiders and bearings.

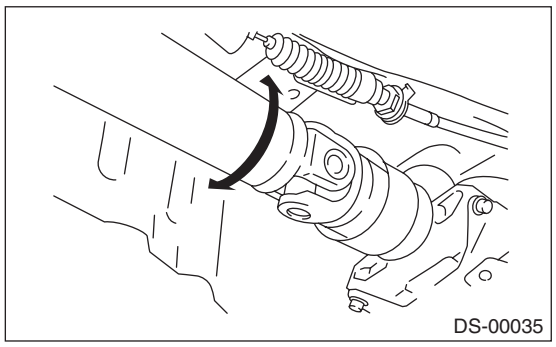

6) Measure the deflection of the propeller shaft.
   (1) Set the dial gauge (B) with its indicator stem at the center of the propeller shaft (A).
   (2) Turn the propeller shaft (A) slowly by hands to check for runout of the propeller shaft.

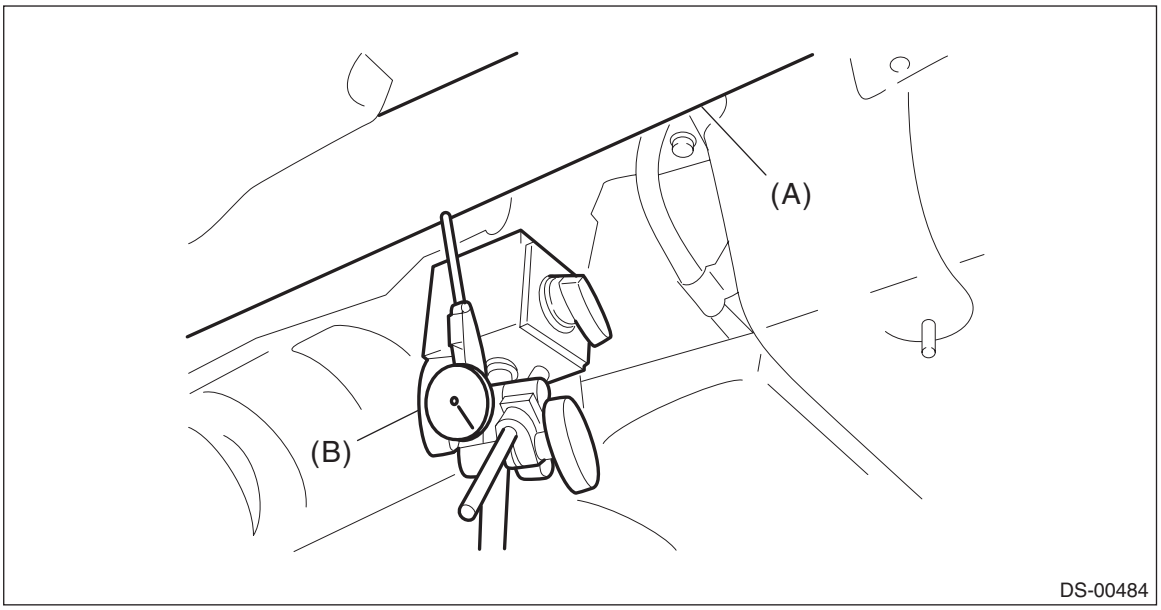

Runout:
Limit: 0.6 mm (0.024 in)

7) Check the center bearing for free play.
Move the propeller shaft near the center bearing up, down, left, right by hand, to check for any abnormal free play of the bearings.

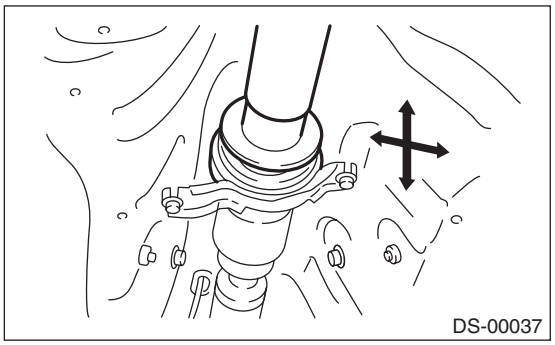

8) Replace the propeller shaft assembly if faulty is found in the inspection.

3. Front Axle

A: REMOVAL

1) Lift up the vehicle, and then remove the front wheels.
2) Remove the nut - axle.

CAUTION:
Do not loosen the nut - axle while the front axle is loaded. Doing so may damage the hub unit COMPL.

(1) Lift the crimped section of the nut - axle.
(2) Remove the nut - axle using a socket wrench while depressing the brake pedal.

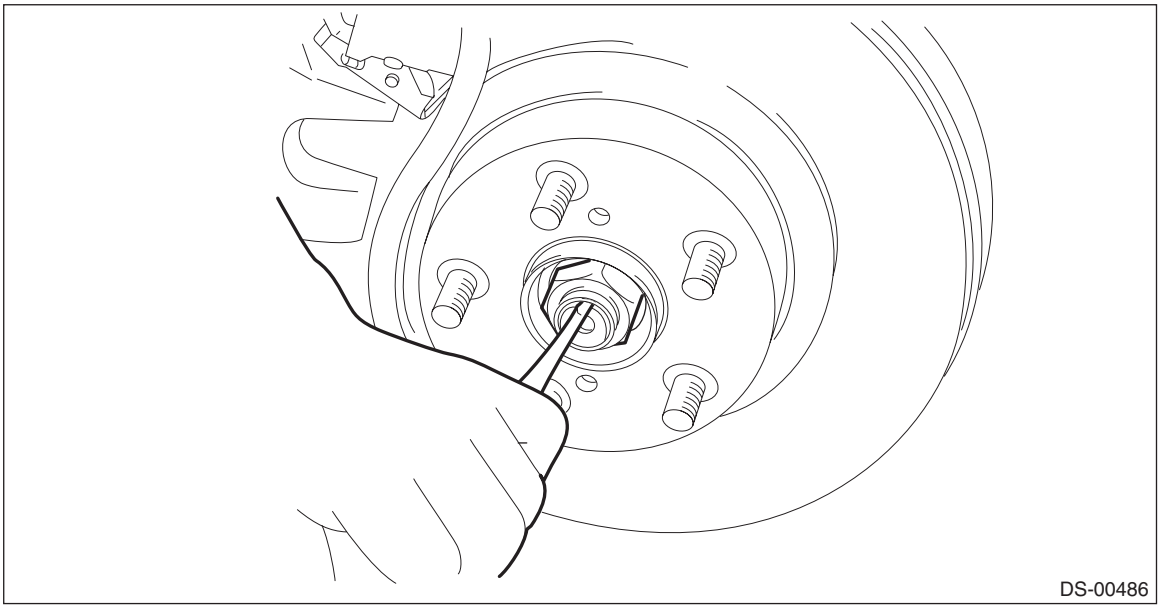

3) Remove the caliper body assembly from the housing assembly - front axle.
(1) Remove the mounting bolts and the brake hose bracket, and remove the caliper body assembly.
(2) Prepare wiring harnesses etc. to be discarded, and suspend the caliper body assembly from the strut assembly.

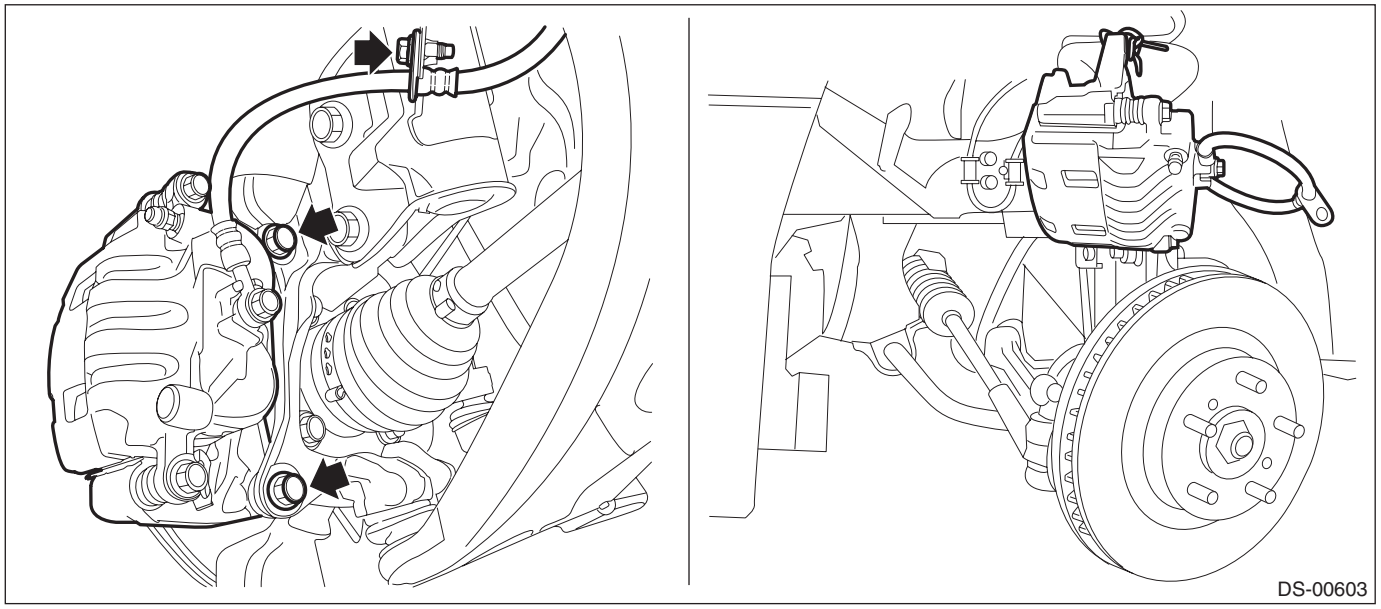

4) Remove the disc rotor.

NOTE:
When the disc rotor is difficult to be removed from the hub unit COMPL - front axle, screw in 8 mm (0.31 in) bolt to the threaded part of the disc rotor (A), and remove the disc rotor.

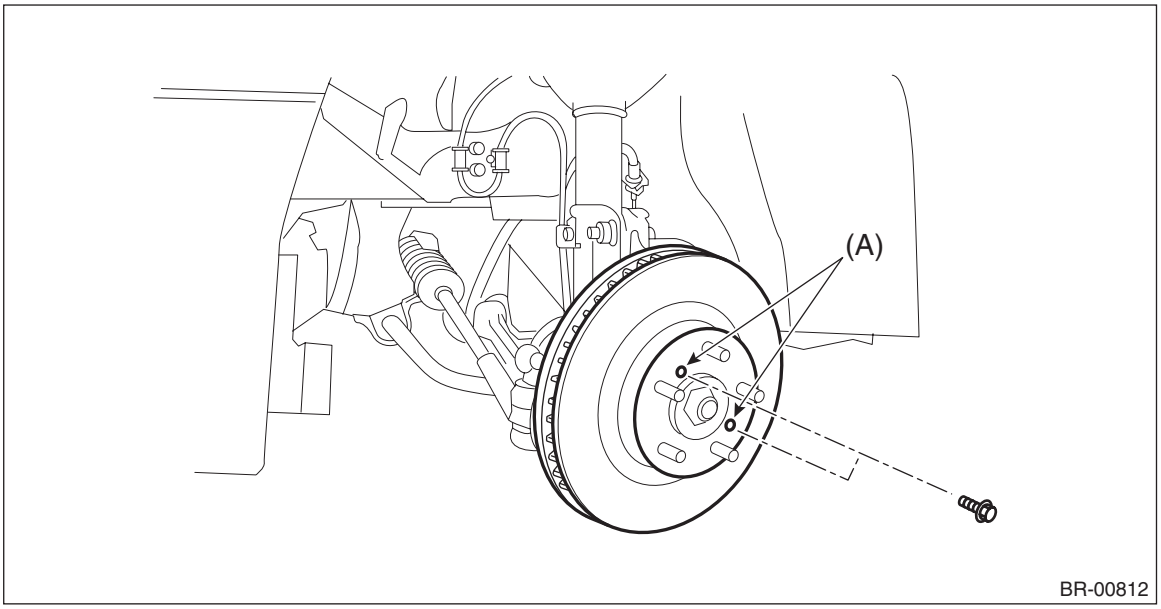

5) Disconnect the tie-rod end.
   (1) Pull out the cotter pin (a).
   (2) Remove the castle nut (b).
   (3) Using a tie-rod ball joint puller, remove the tie-rod end (c).

CAUTION:
Be careful not to damage the boot of the joint.

Preparation tool:
Tie-rod ball joint puller

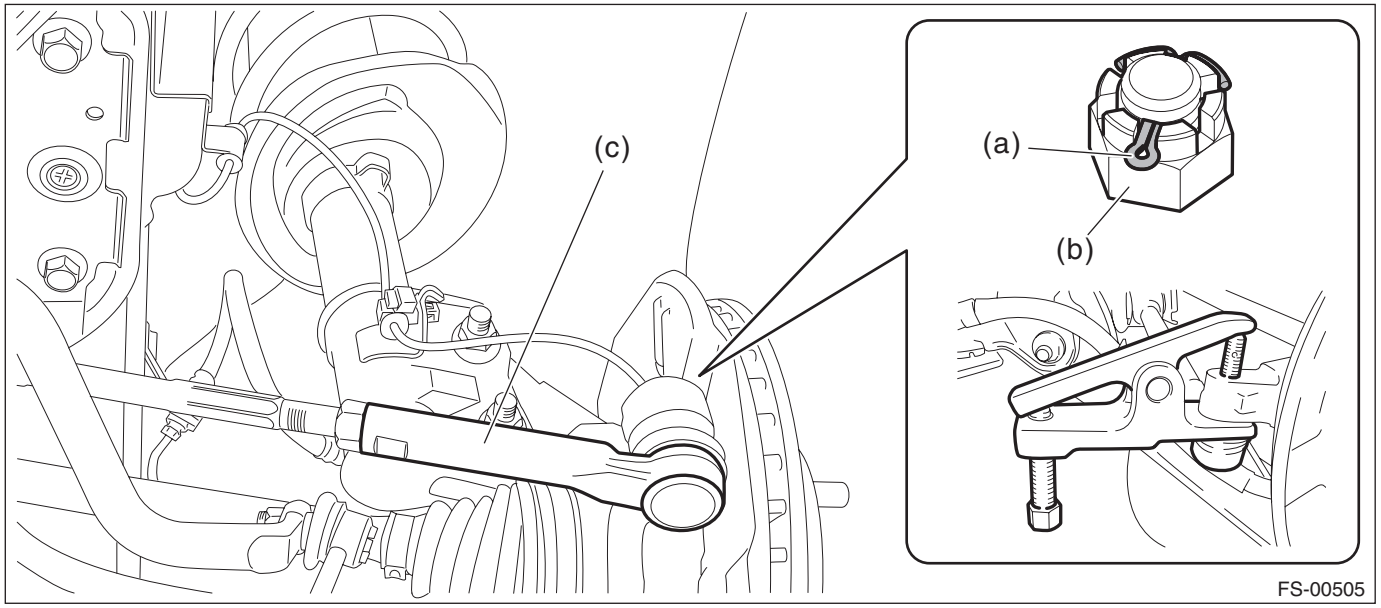

6) Remove the bolts, and remove the front ABS wheel speed sensor.

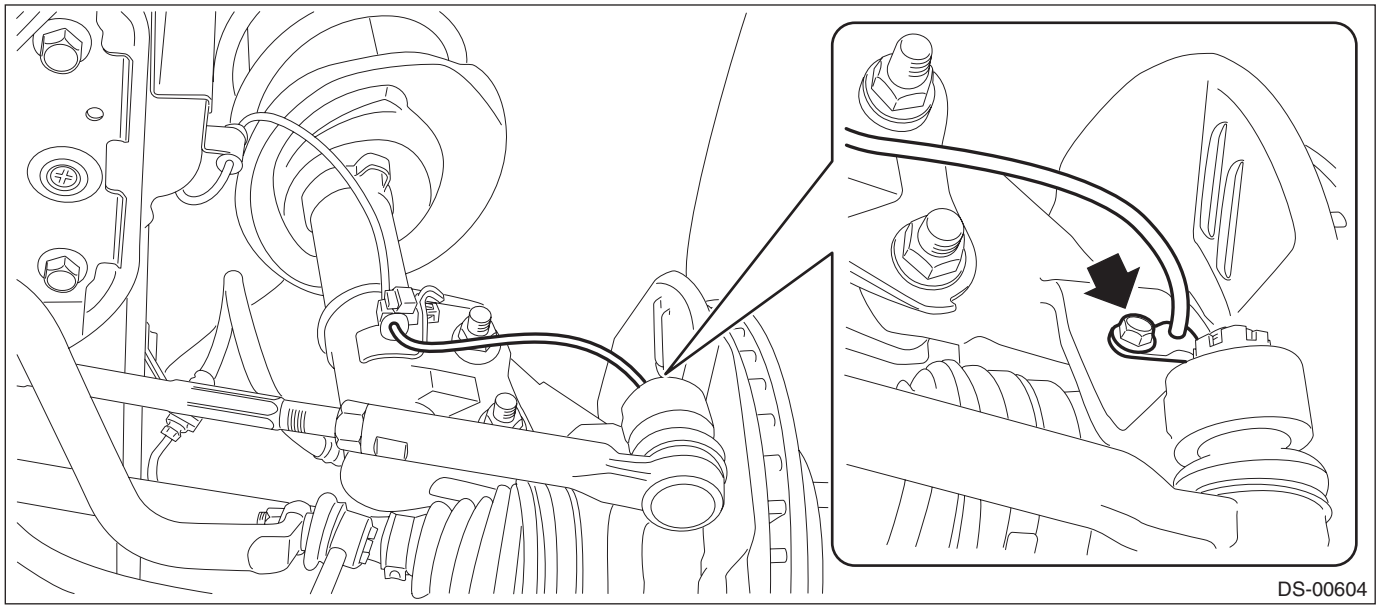

7) Remove the stabilizer link and ball joint.

CAUTION:
Be careful not to damage the boot of the joint.

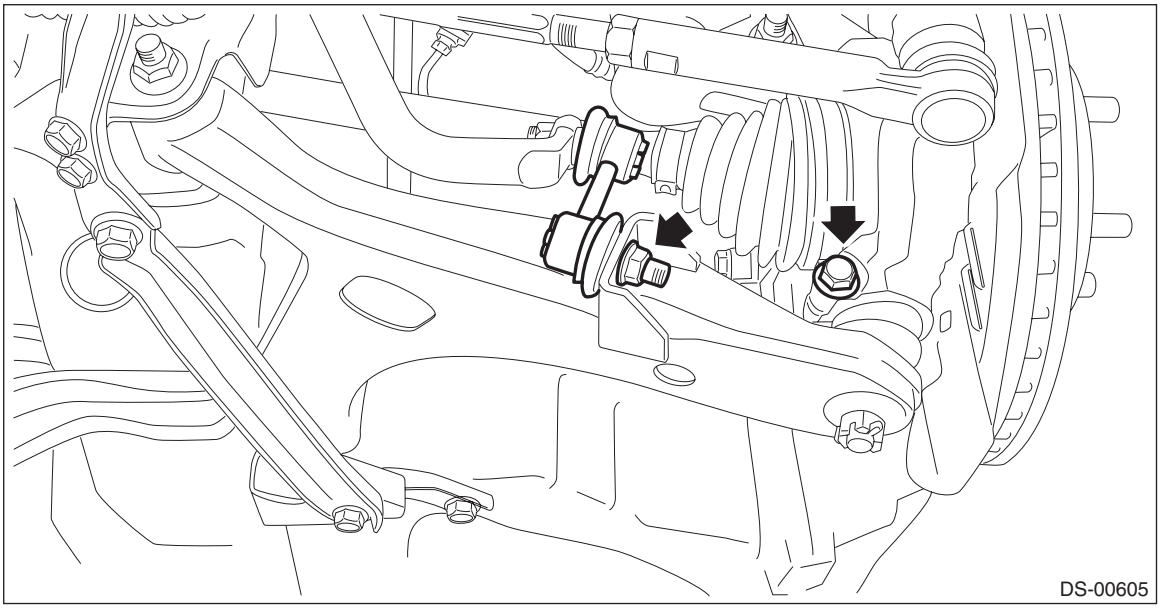

8) Using a crowbar, remove the front axle shaft from the transmission.

CAUTION:
Be careful not to allow the bar to damage holder area.

9) Remove the front axle shaft assembly from the hub unit COMPL - front axle.

Preparation tool:
ST1: AXLE SHAFT PULLER (926470000)
ST2: AXLE SHAFT PULLER PLATE (28099PA110)

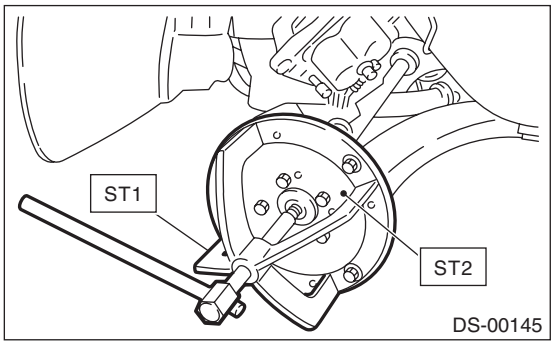

NOTE:
If it is hard to remove, use the ST.

10) Remove the housing assembly - front axle.
(1) Place an alignment mark (a) on the adjusting bolt and the strut.
(2) Remove the adjusting bolts and flange bolts for the strut assembly, and then remove the housing assembly - front axle.

CAUTION:
- **While holding the head of the adjusting bolt, loosen the flange nut.**
- **Be careful of the weight of the housing assembly - front axle.**
- **Be careful not to damage the spline portion of the axle shaft.**

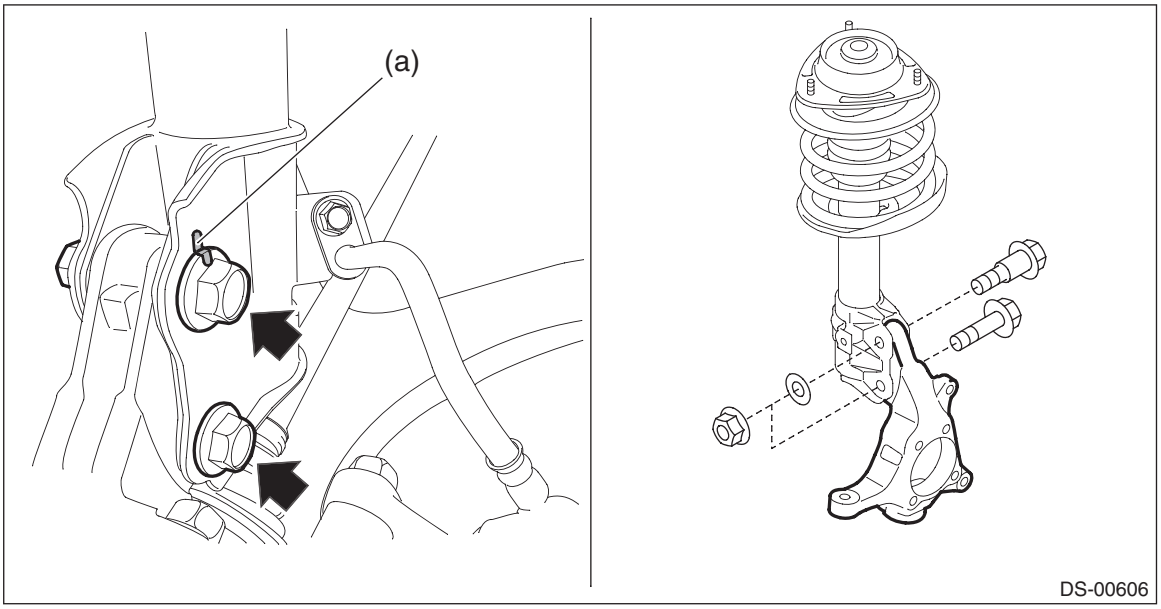

11) For removal of the hub unit COMPL - front axle, refer to “Front Hub Unit Bearing”. <Ref. to DS-25, REMOVAL, Front Hub Unit Bearing.>

B: INSTALLATION

1) Install the front axle shaft assembly.

CAUTION:
- **Do not tap the axle shaft using a hammer when installing axle shaft assembly.**
- **Use new nut - axle.**

(1) Insert the axle shaft assembly into the hub spline, and pull in the axle shaft assembly into specified position.
(2) Temporarily tighten the nut - axle.

2) Install the ball joint assembly to the housing assembly - front axle.

CAUTION:
- **Before tightening, make sure the bottom surface of the housing assembly - front axle and the stepped section of ball joint are in contact.**
- **Be careful not to damage the boot of the joint.**

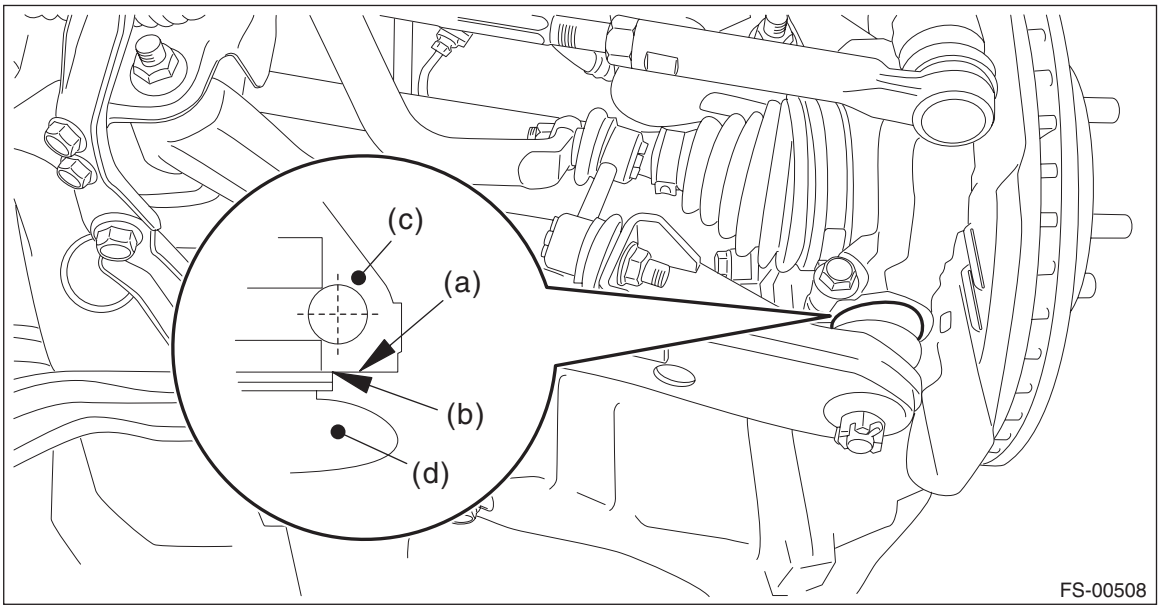

(a) Bottom surface of housing ASSY - front axle
(c) Housing ASSY - front axle
(d) Ball joint ASSY
(b) Raised section of ball joint

Tightening torque:
50 N·m (5.10 kgf-m, 36.9 ft-lb)

3) Install the front ABS wheel speed sensor.

Tightening torque:
7.5 N·m (0.76 kgf-m, 5.5 ft-lb)

4) Install the disc rotor.
5) Install the caliper body assembly.

Tightening torque:
80 N·m (8.16 kgf-m, 59.0 ft-lb)

6) Install the brake hose bracket.

Tightening torque:
33 N·m (3.36 kgf-m, 24.3 ft-lb)

7) Install the stabilizer link assembly.
- Except for XV model

Tightening torque:
38 N·m (3.87 kgf-m, 28.0 ft-lb)
- XV model

Tightening torque:
60 N·m (6.12 kgf-m, 44.3 ft-lb)

8) Connect the tie-rod ends.
(1) Connect the tie-rod ends to the housing assembly - front axle.
(2) Tighten the castle nuts to the specified torque.

CAUTION:
When connecting the tie-rod, do not hit the cap at bottom of tie-rod end with a hammer.

Tightening torque:
27 N·m (2.75 kgf-m, 19.9 ft-lb)

(3) Tighten the castle nut within the range of 60° so that the cotter pin hole and cutout portion of the castle nut are aligned.
(4) Insert the cotter pin, and bend the tip of the pin to fix it.

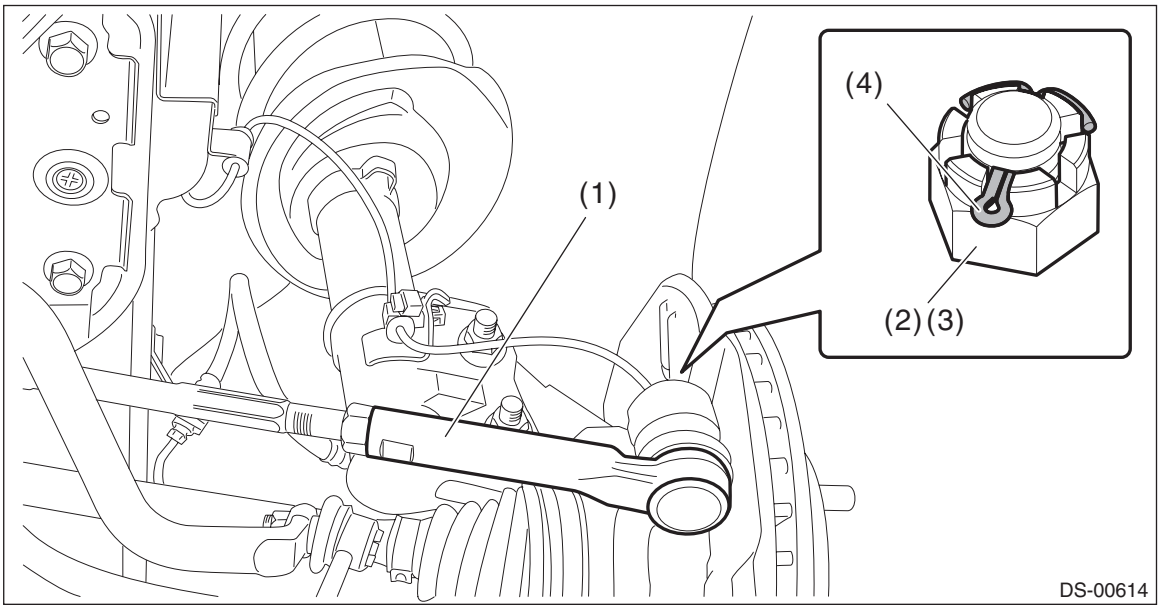

9) While depressing the brake pedal, tighten a new nut - axle to the specified torque and lock it securely.

CAUTION:
Do not load the front axle before tightening the nut - axle. Doing so may damage the hub unit COMPL.

Tightening torque:
220 N·m (22.43 kgf-m, 162.3 ft-lb)

10) Inspect the lean of axis direction using a dial gauge. Replace the hub unit COMPL - front axle if the play exceeds the limit.

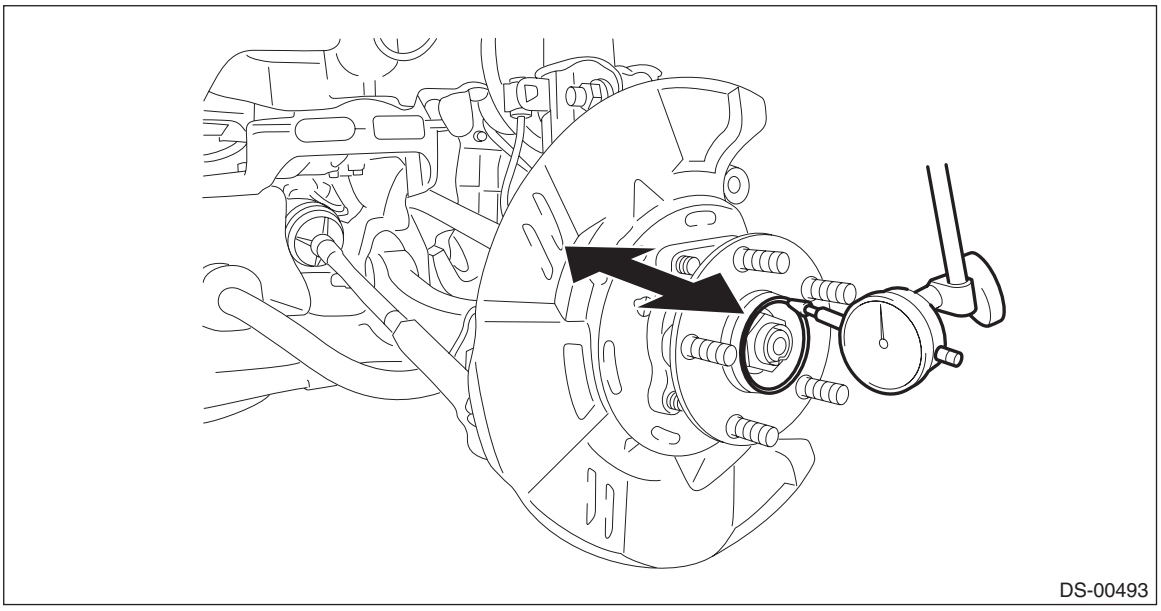
DS-00493

Service limit:
Maximum: 0.05 mm (0.0020 in)

11) After tightening the nut - axle, lock it securely.

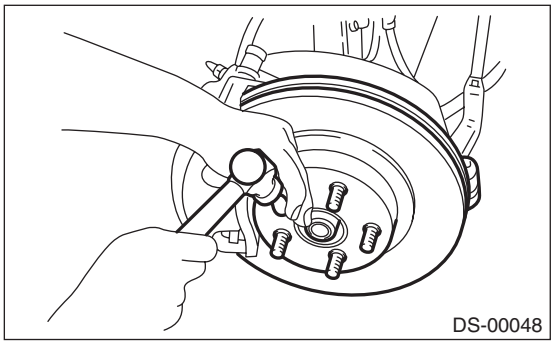
DS-00048

12) Install the front wheels, and perform the following inspections.

Tightening torque:
Except for C4 model: 120 N·m (12.24 kgf-m, 88.5 ft-lb)
C4 model: 100 N·m (10.20 kgf-m, 73.8 ft-lb)

1. Check the wheels for smooth rotation.
2. Check that there is no play by moving the upper and lower portions of front tire in an axial direction with the brake pedal released.

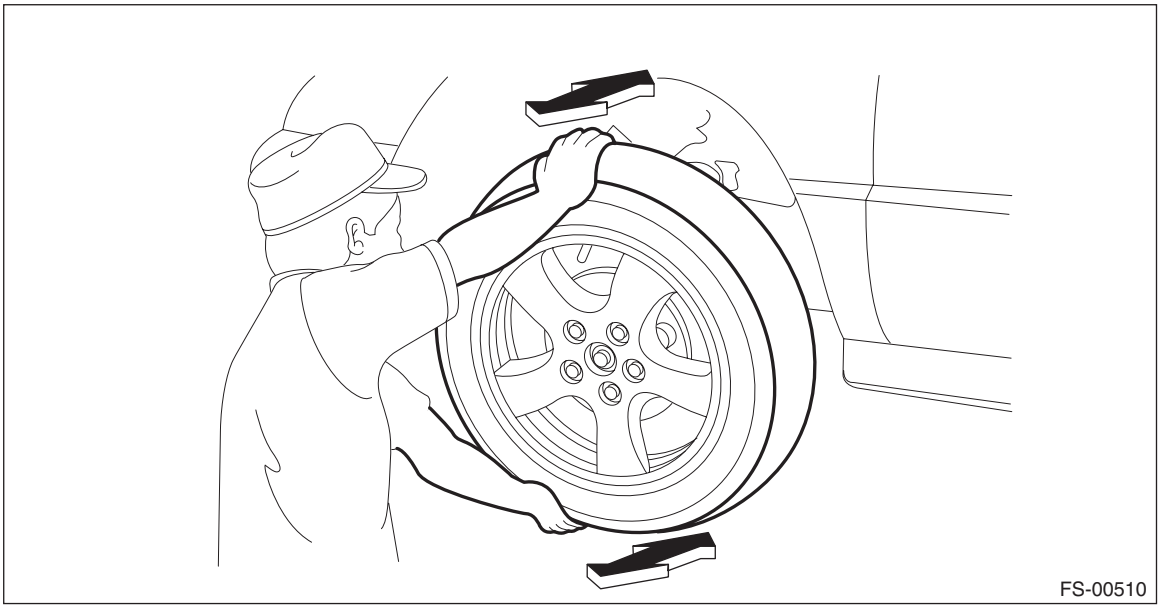

- **Play exists** → Check the hub unit COMPL - front axle. <Ref. to DS-34, INSPECTION, Front Hub Unit Bearing.>

3. Check that there is no play by moving the upper and lower portions of front tire in an axial direction with the brake pedal depressed.
   - **Play exists** → Replace the ball joint assembly. <Ref. to FS-33, REMOVAL, Front Ball Joint.>

13) Inspect the wheel alignment and adjust if necessary.
- Inspection: <Ref. to FS-7, INSPECTION, Wheel Alignment.>
- Adjustment: <Ref. to FS-11, ADJUSTMENT, Wheel Alignment.>

CAUTION:
When the wheel alignment has been adjusted, perform "VDC sensor midpoint setting mode". <Ref. to VDC-21, VDC SENSOR MIDPOINT SETTING MODE, ADJUSTMENT, VDC Control Module and Hydraulic Control Unit (VDCCM&H/U).>

14) Perform reinitialization of the auto headlight beam leveler system. (Model with auto headlight beam leveler) <Ref. to LI-18, PROCEDURE, Auto Headlight Beam Leveler System.>

4. Front Hub Unit Bearing

A: REMOVAL

1) Lift up the vehicle, and then remove the front wheels.
2) Remove the nut - axle.

CAUTION:
Do not loosen the nut - axle while the front axle is loaded. Doing so may damage the hub unit COMPL.

(1) Lift the crimped section of the nut - axle.
(2) Remove the nut - axle using a socket wrench while depressing the brake pedal.

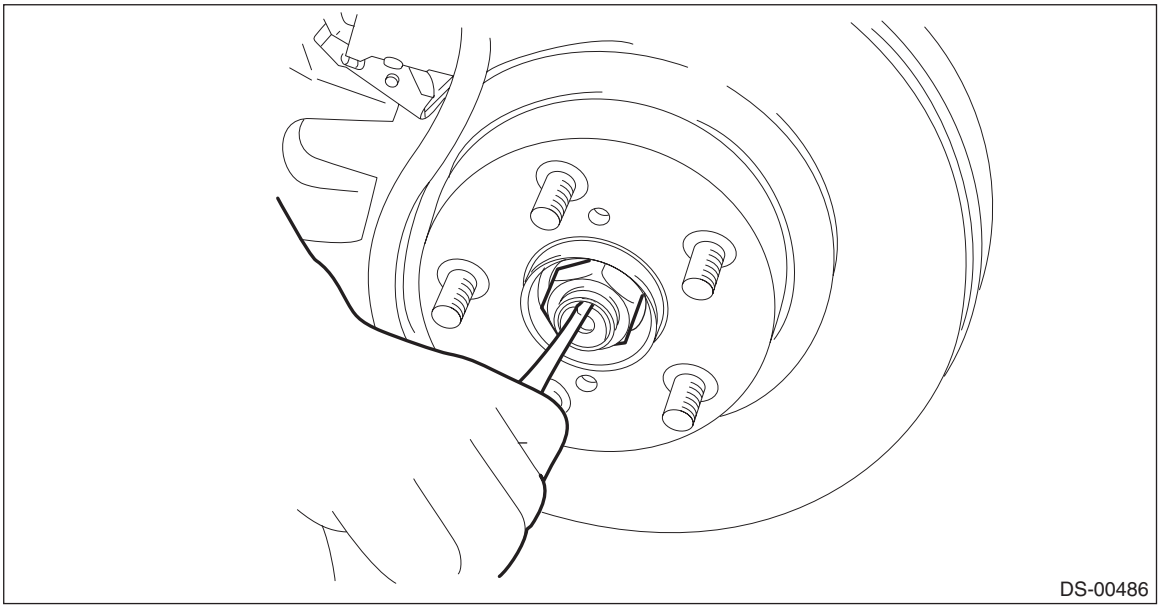

3) Remove the caliper body assembly from the housing assembly - front axle.
(1) Remove the mounting bolts and the brake hose bracket, and remove the caliper body assembly.
(2) Prepare wiring harnesses etc. to be discarded, and suspend the caliper body assembly from the strut assembly.

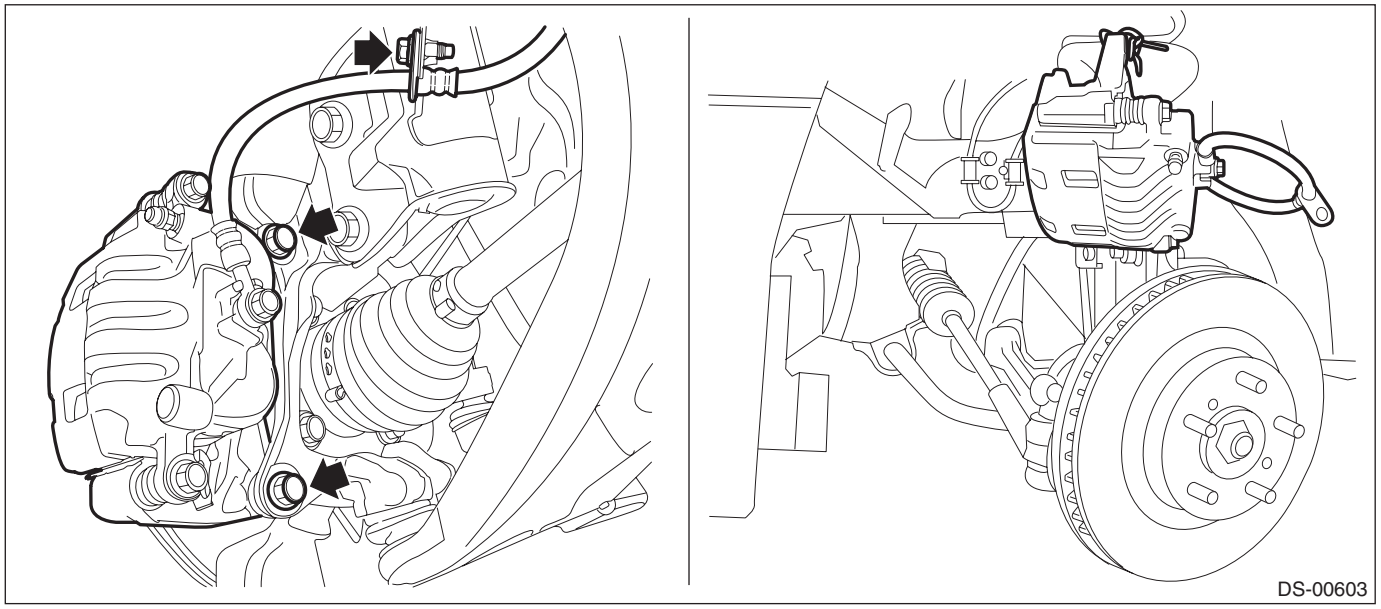

4) Remove the disc rotor.

NOTE:
When the disc rotor is difficult to be removed from the hub unit COMPL - front axle, screw in 8 mm (0.31 in) bolt to the threaded part of the disc rotor (A), and remove the disc rotor.

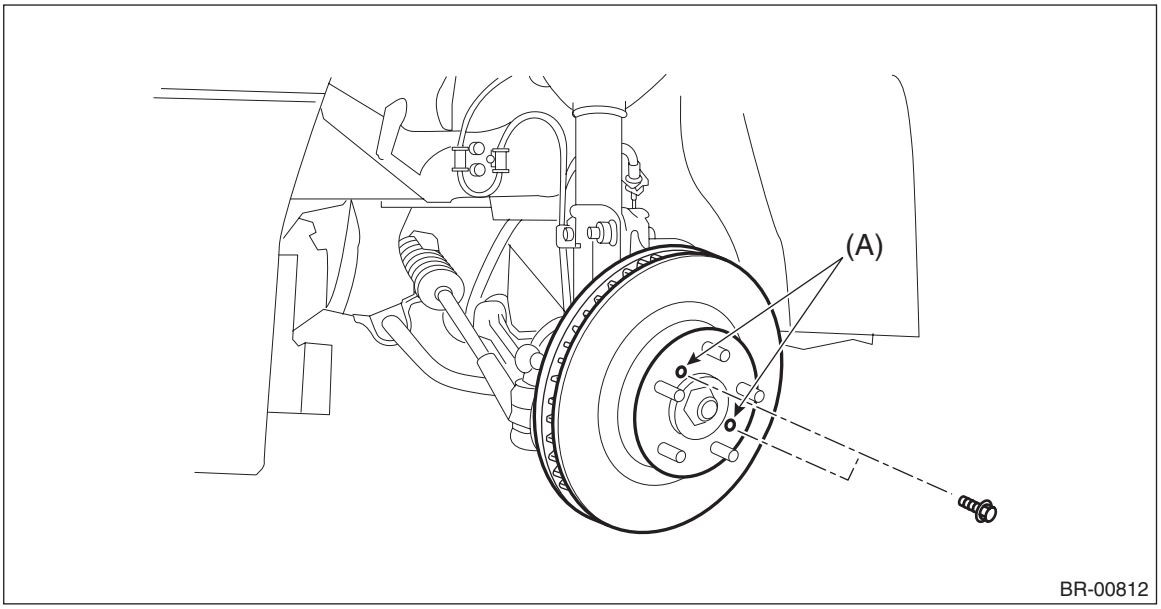

5) Remove the bolts, and remove the front ABS wheel speed sensor.

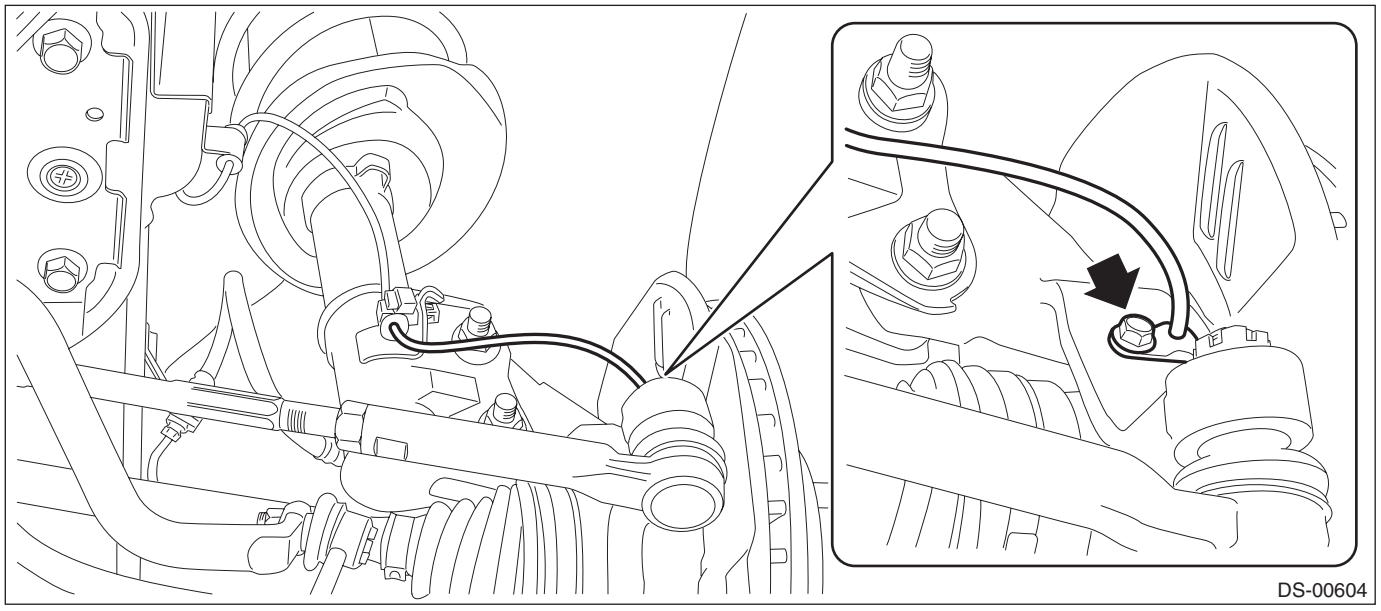

6) Remove the bolts from the housing assembly - front axle, and then remove the hub unit COMPL - front axle.

CAUTION:
- **Do not get closer the tool which charged magnetism to magnetic encoder.**
- **Be careful not to damage the magnetic encoder.**

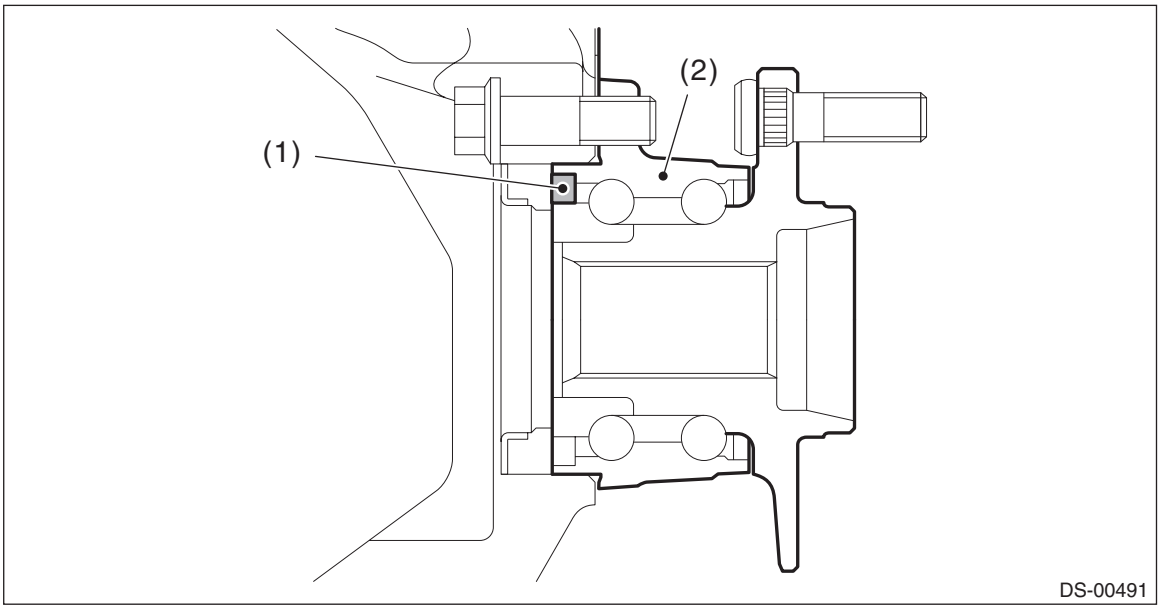

(1) Magnetic encoder (2) Hub unit COMPL - front axle

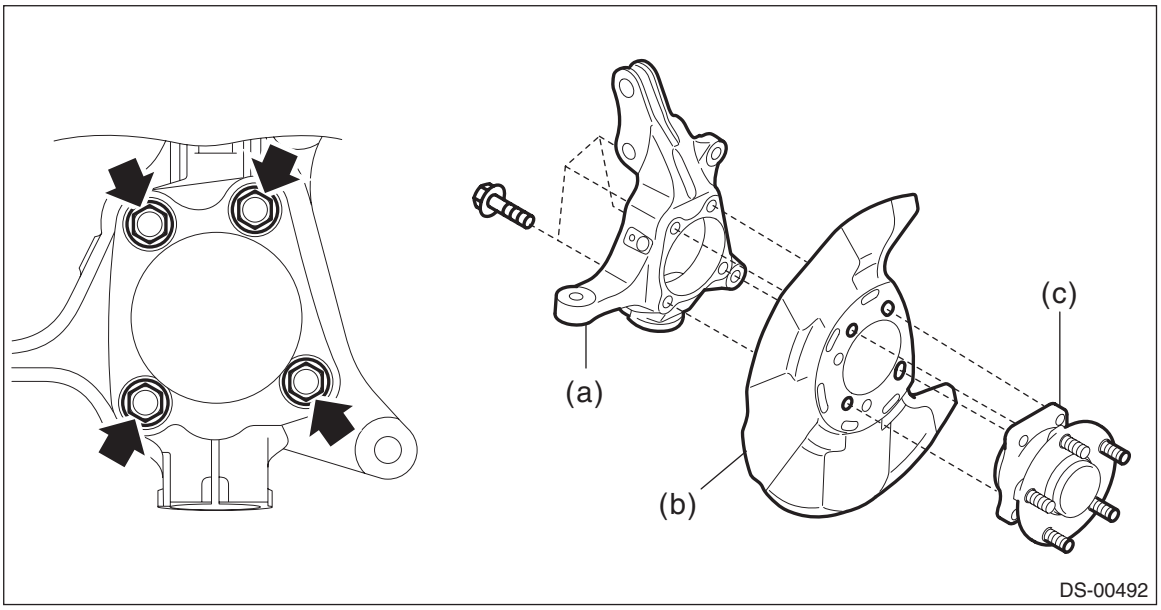

(a) Housing ASSY - front axle (b) Back plate - front brake (c) Hub unit COMPL - front axle

NOTE:
If it is hard to remove, use the ST.

Preparation tool:
ST1: AXLE SHAFT PULLER (926470000)
ST2: AXLE SHAFT PULLER PLATE (28099PA110)

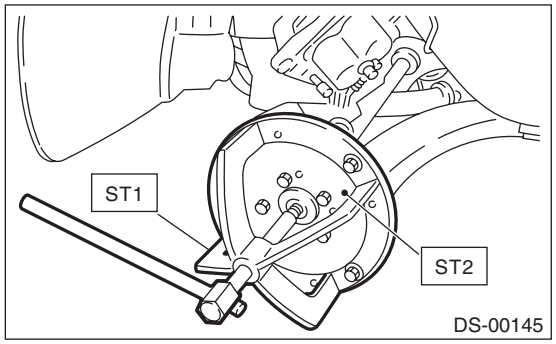

B: INSTALLATION

1) Place the back plate - front brake between the housing assembly - front axle and the hub unit COMPL - front axle, and tighten the bolt.

CAUTION:
- **Do not get closer the tool which charged magnetism to magnetic encoder.**
- **Be careful not to damage the magnetic encoder.**

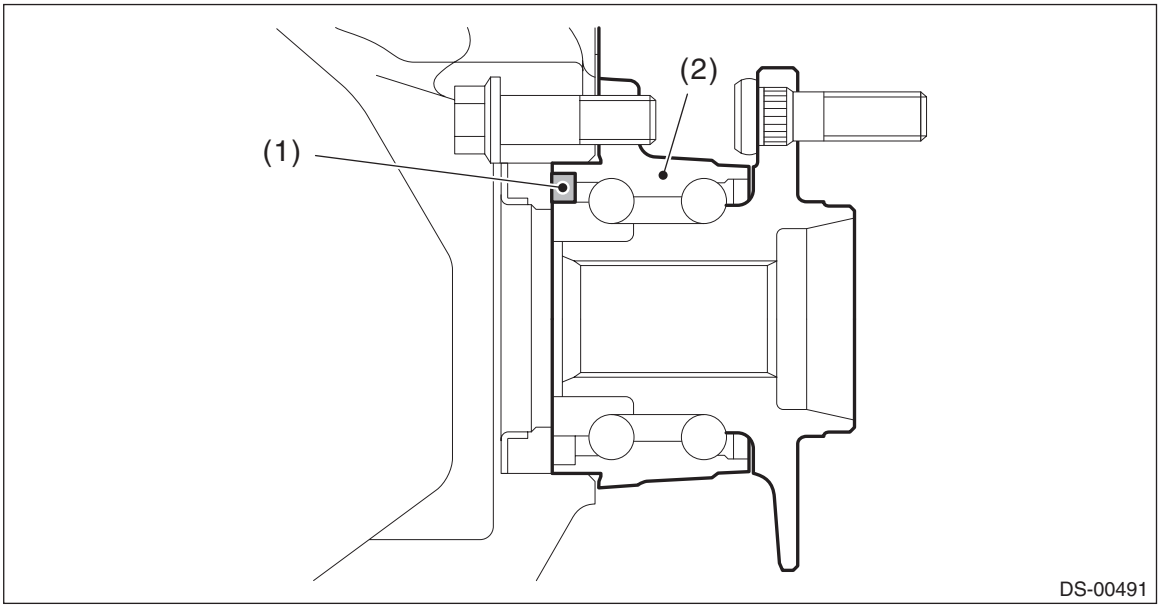

(1) Magnetic encoder
(2) Hub unit COMPL - front axle

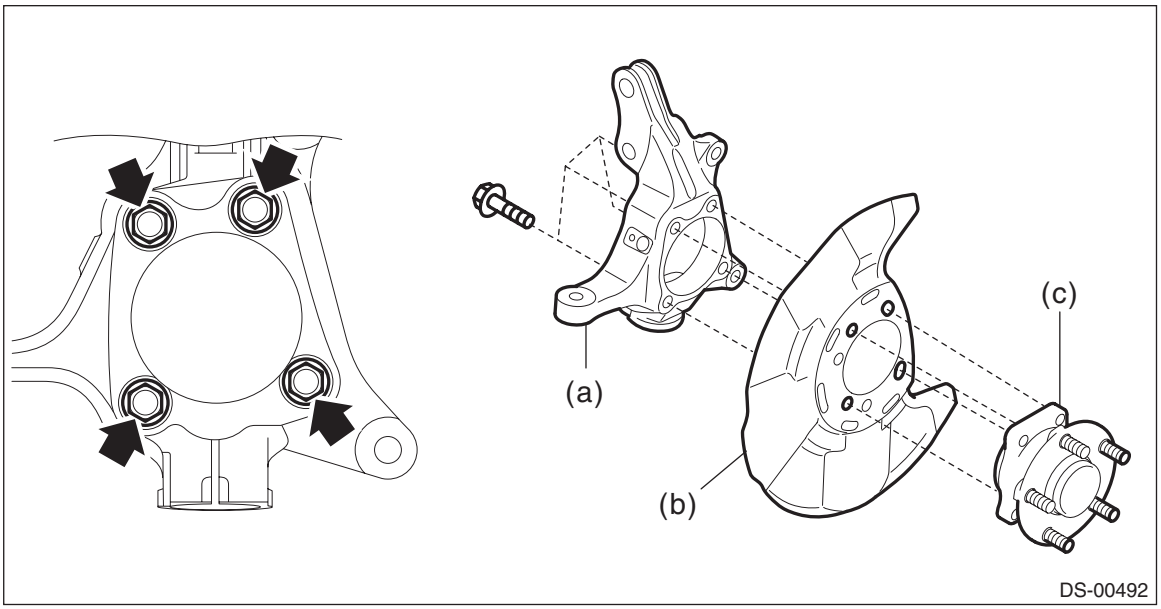

(a) Housing ASSY - front axle (b) Back plate - front brake (c) Hub unit COMPL - front axle

Tightening torque:
65 N·m (6.63 kgf-m, 47.9 ft-lb)

2) Install the front axle shaft assembly.

CAUTION:
- **Do not tap the axle shaft using a hammer when installing axle shaft assembly.**
- **Use new nut - axle.**

(1) Insert the axle shaft assembly into the hub spline, and pull in the axle shaft assembly into specified position.
(2) Temporarily tighten the nut - axle.

3) Install the disc rotor to the hub unit COMPL - front axle.
4) Install the caliper body assembly to the housing assembly - front axle.

Tightening torque:
80 N·m (8.16 kgf-m, 59.0 ft-lb)

5) Install the brake hose bracket.

Tightening torque:
33 N·m (3.36 kgf-m, 24.3 ft-lb)

6) Install the front ABS wheel speed sensor.

Tightening torque:
7.5 N·m (0.76 kgf-m, 5.5 ft-lb)

7) While depressing the brake pedal, tighten new nuts - axle to the specified torque.

CAUTION:
Do not load the front axle before tightening the nut - axle. Doing so may damage the hub unit COMPL.

Tightening torque:
220 N·m (22.43 kgf-m, 162.3 ft-lb)

8) Inspect the lean of axis direction using a dial gauge. Replace the hub unit COMPL - front axle if the play exceeds the limit.

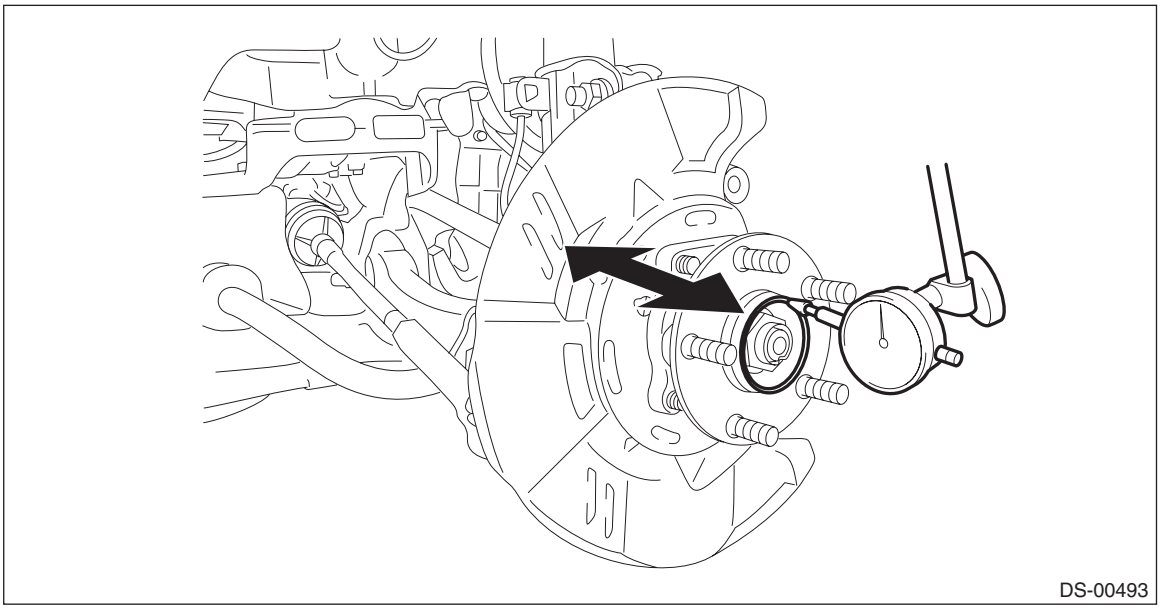

Service limit:
Maximum: 0.05 mm (0.0020 in)

9) After tightening the nut - axle, lock it securely.

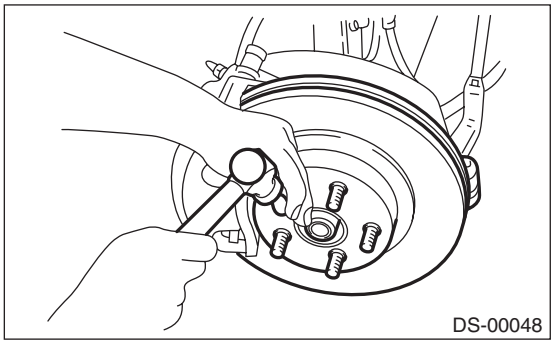

10) Install the front wheels, and perform the following inspections.

Tightening torque:
Except for C4 model: 120 N·m (12.24 kgf-m, 88.5 ft-lb)
C4 model: 100 N·m (10.20 kgf-m, 73.8 ft-lb)

1. Check the wheels for smooth rotation.
2. Check that there is no play by moving the upper and lower portions of front tire in an axial direction with the brake pedal released.

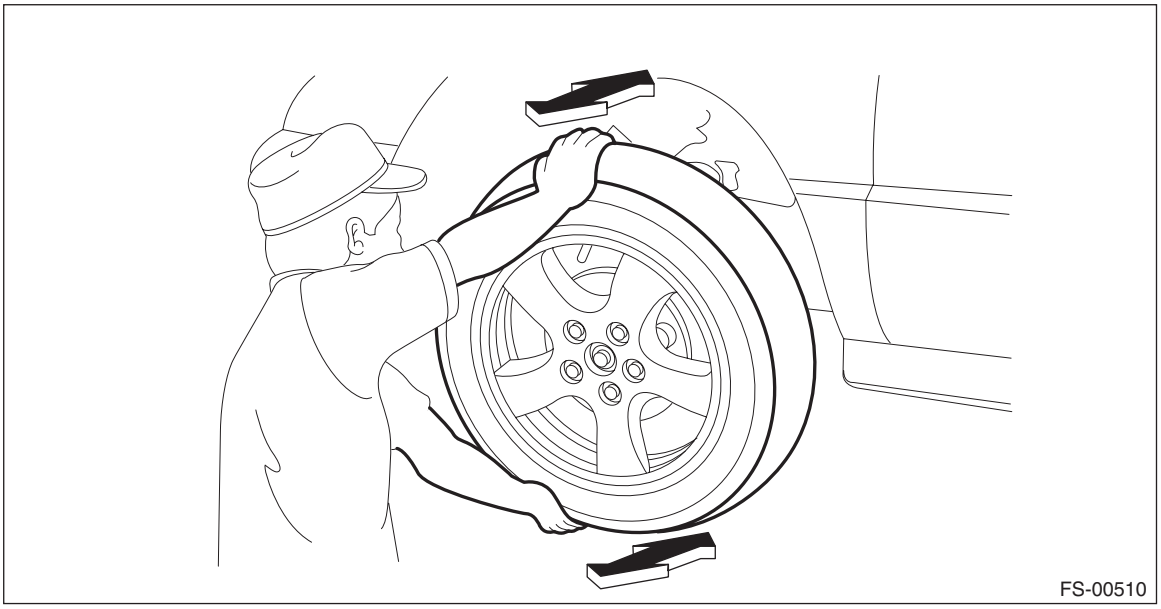

- **Play exists** → Check the hub unit COMPL - front axle. <Ref. to DS-34, INSPECTION, Front Hub Unit Bearing.>

3. Check that there is no play by moving the upper and lower portions of front tire in an axial direction with the brake pedal depressed.
   - **Play exists** → Replace the ball joint assembly. <Ref. to FS-33, REMOVAL, Front Ball Joint.>

C: DISASSEMBLY

Using the ST or a hydraulic press, push out the bolt - hub (b) from the hub unit COMPL - front axle (a).

CAUTION:
- **Be careful not to hammer the bolts - hub. This may deform the hub unit COMPL.**
- **Do not reuse the bolt - hub.**

PREPARATION TOOL:
ST: HUB STAND (28399AG000)

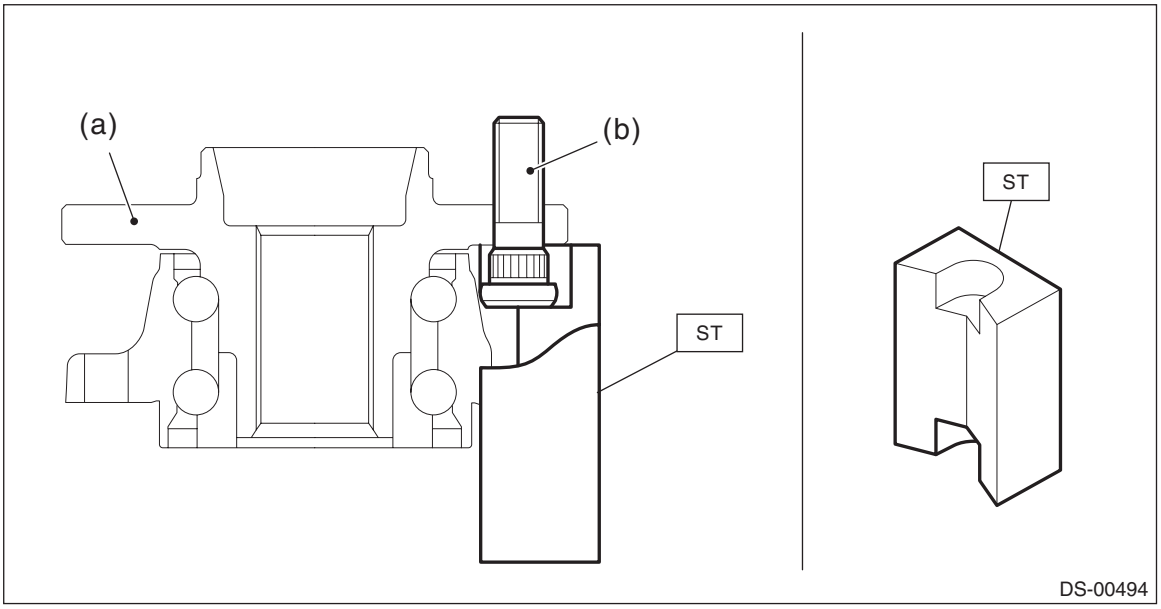

NOTE:
Since the hub unit COMPL can not be disassembled, only bolts - hub can be removed.

D: ASSEMBLY

1) Install the hub unit COMPL to the ST securely.

PREPARATION TOOL:
ST: HUB STAND (927080000)

2) Using a press, press new bolts - hub (b) until their seating surfaces contact the hub unit COMPL (a).

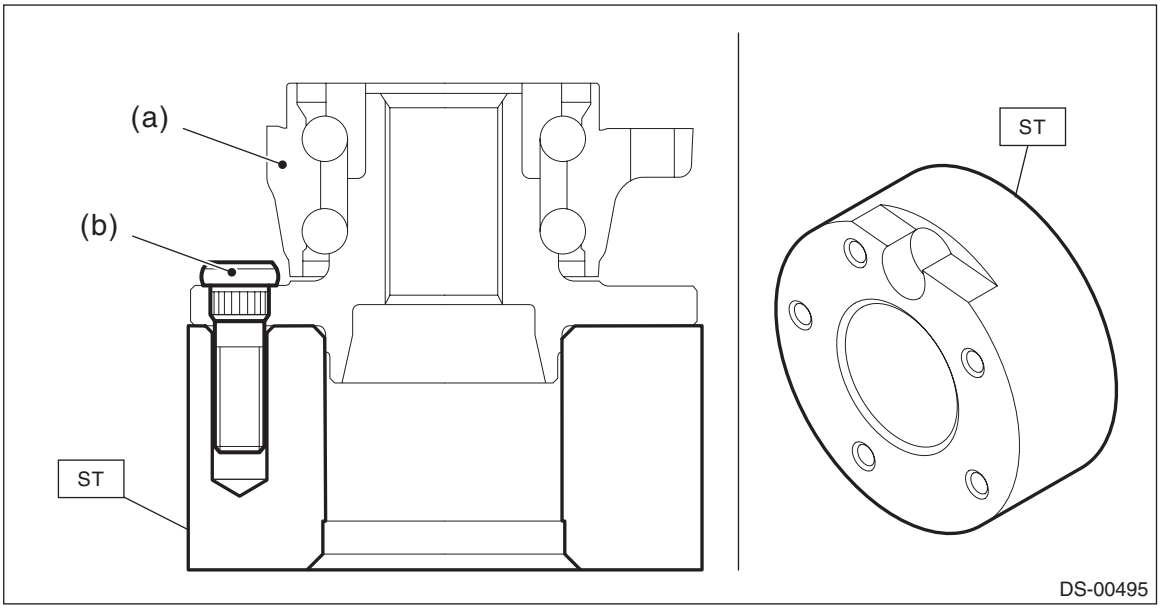

NOTE:
Use the 12 mm (0.47 in) dia. holes in the HUB STAND to prevent bolts from tilting.

E: INSPECTION

1) Moving the front tire up and down by hand, check there is no play in bearing, and check the wheel rotates smoothly.

CAUTION:
If there is any fault in the bearing, replace the hub unit COMPL.

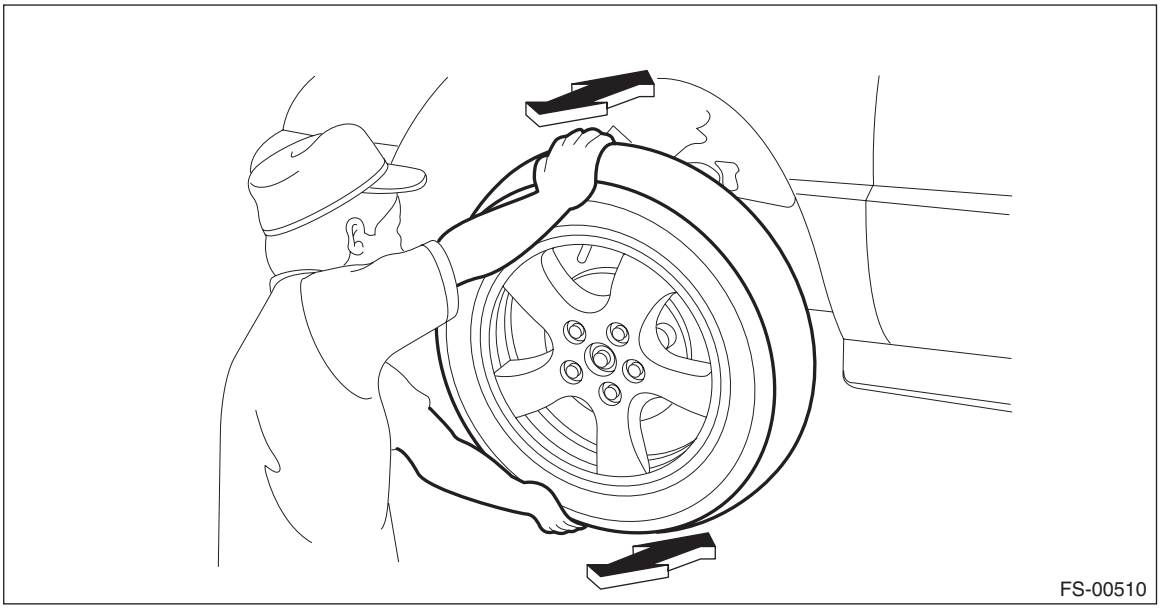

2) Inspect the lean of axis direction using a dial gauge. Replace the hub unit COMPL if the play exceeds the limit.

Service limit:
Maximum: 0.05 mm (0.0020 in)

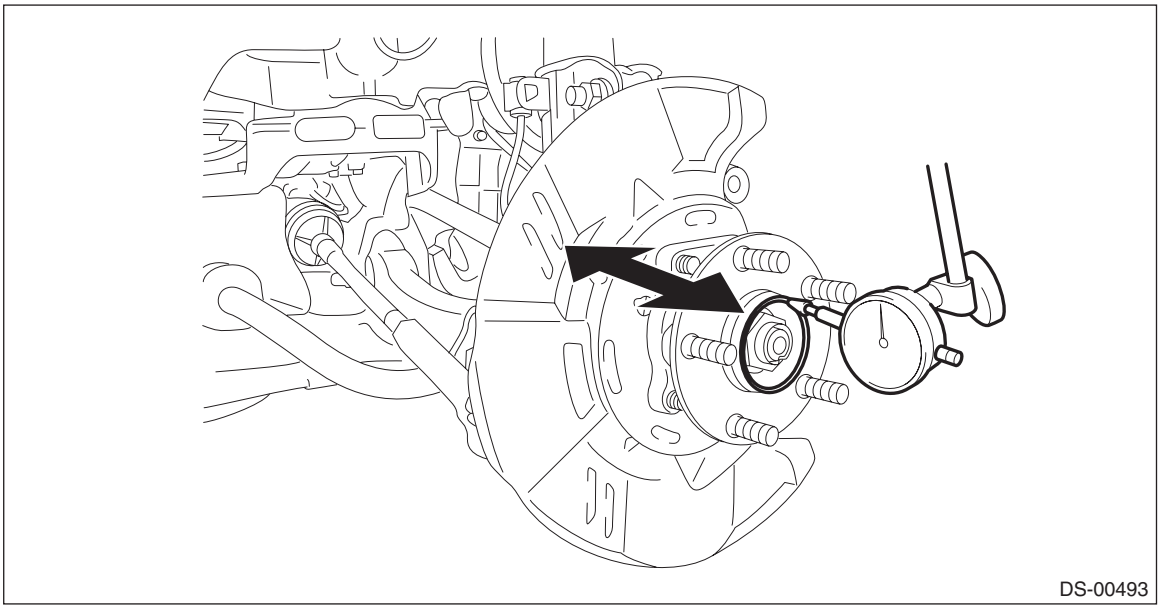

5. Rear Axle

A: REMOVAL

1) Disconnect the ground cable from battery. <Ref. to NT-5, BATTERY, NOTE, Note.>

NOTE:
For the 12 volt engine restart battery of HEV model, disconnect the ground terminal from 12V engine restart battery sensor.
2) Lift up the vehicle, and then remove the rear wheels.
3) Remove the nut - axle.

CAUTION:
Do not loosen the nut - axle while the rear axle is loaded. Doing so may damage the hub unit COMPL.
(1) Lift the crimped section of the nut - axle.
(2) Remove the nut - axle using a socket wrench while depressing the brake pedal.

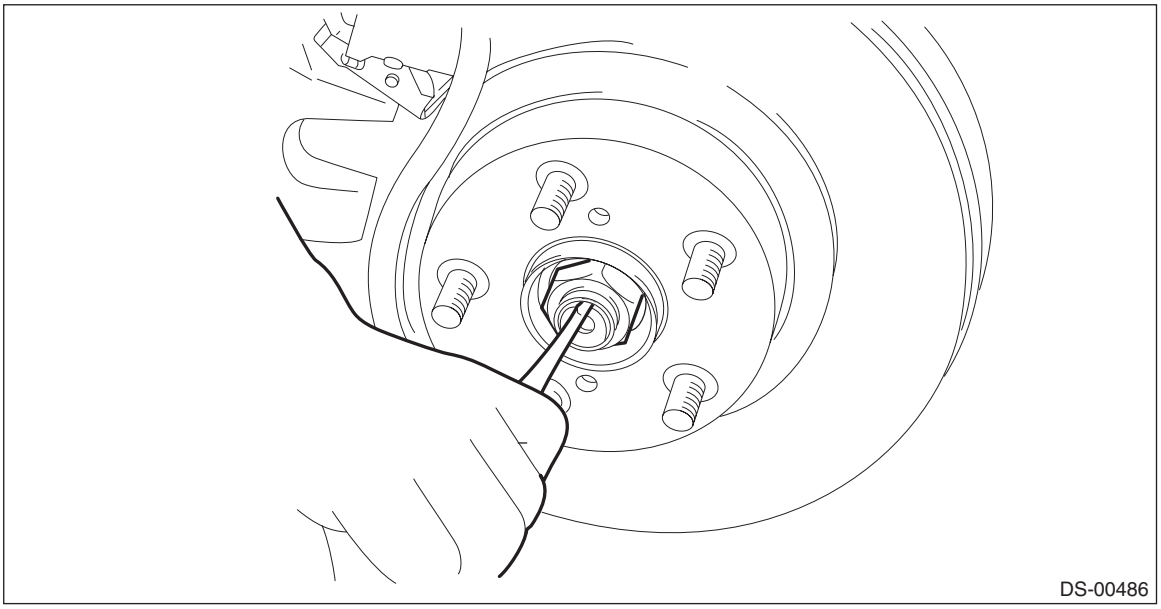

4) Disconnect the sensor assembly - headlight beam leveler. (Model with auto headlight beam leveler)

CAUTION:
Do not apply impact to the sensor assembly - headlight beam leveler or forcibly move the arm. Doing so may cause sensor damage and malfunction.

(1) Disconnect the connector of the sensor assembly - headlight beam leveler.
(2) Remove the bolts and nuts, and remove the sensor assembly - headlight beam leveler.

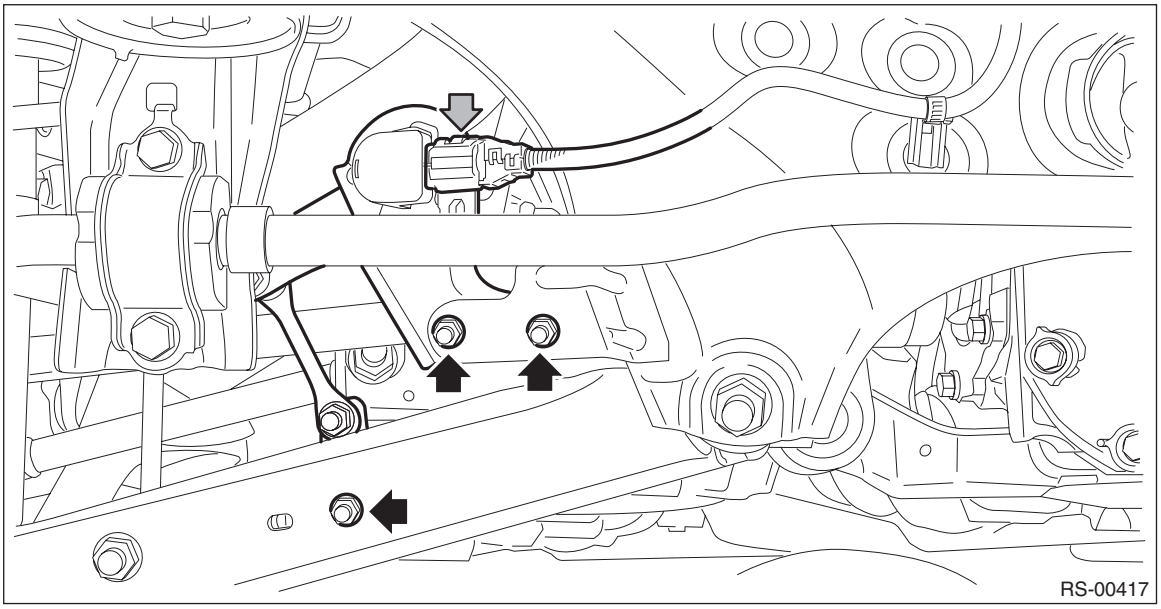

5) Remove the bolts and nuts, and lower the lateral link assembly - rear.
(1) Remove the nut and disconnect the rear stabilizer link assembly. (Model with rear stabilizer)
(2) Remove the bolts at the bottom of rear strut assembly.
(3) Disconnect the housing assembly - rear axle from the lateral link assembly - rear.

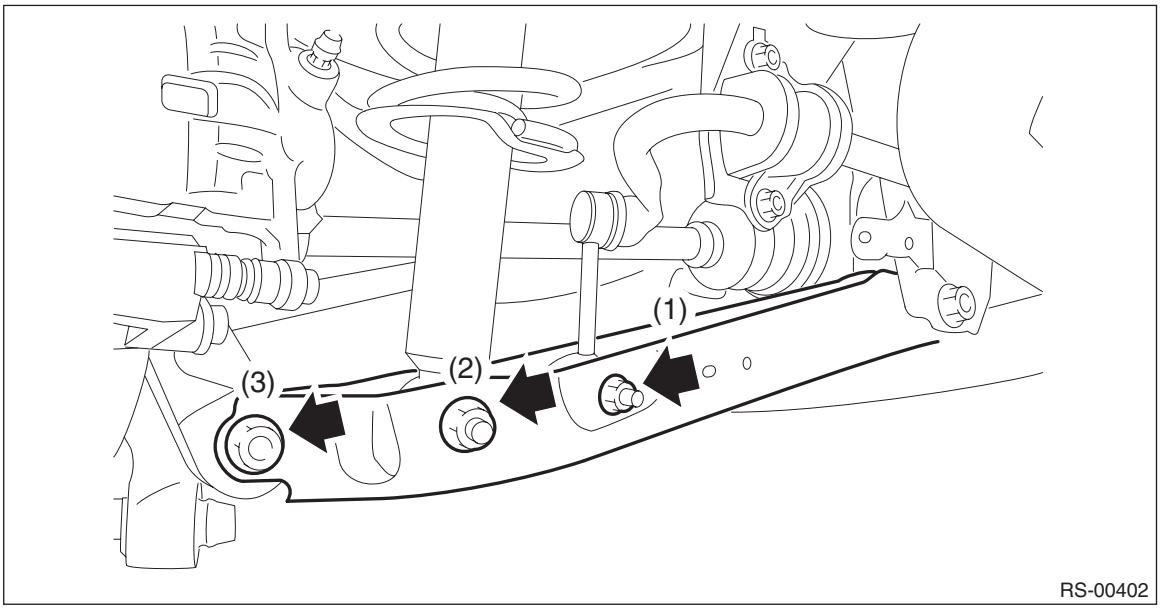

6) Remove the rear ABS wheel speed sensor from the housing assembly - rear axle.
   (1) Remove the bolts, and remove the ABS wheel speed sensor.
   (2) Remove the rear ABS wheel speed sensor harness from the upper arm.

CAUTION:
- **Be careful not to damage the sensor.**
- **Do not apply excessive force to the sensor harness.**
- **Leave the sensor harness clamp (white arrow) on the vehicle side.**
  - Except for XV model

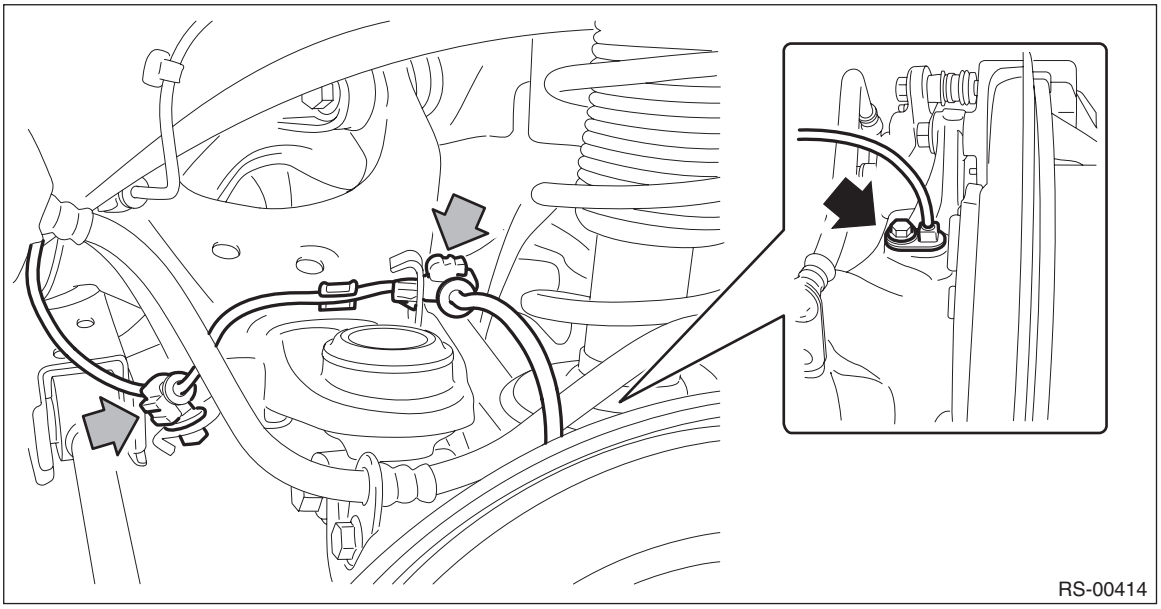

  - XV model

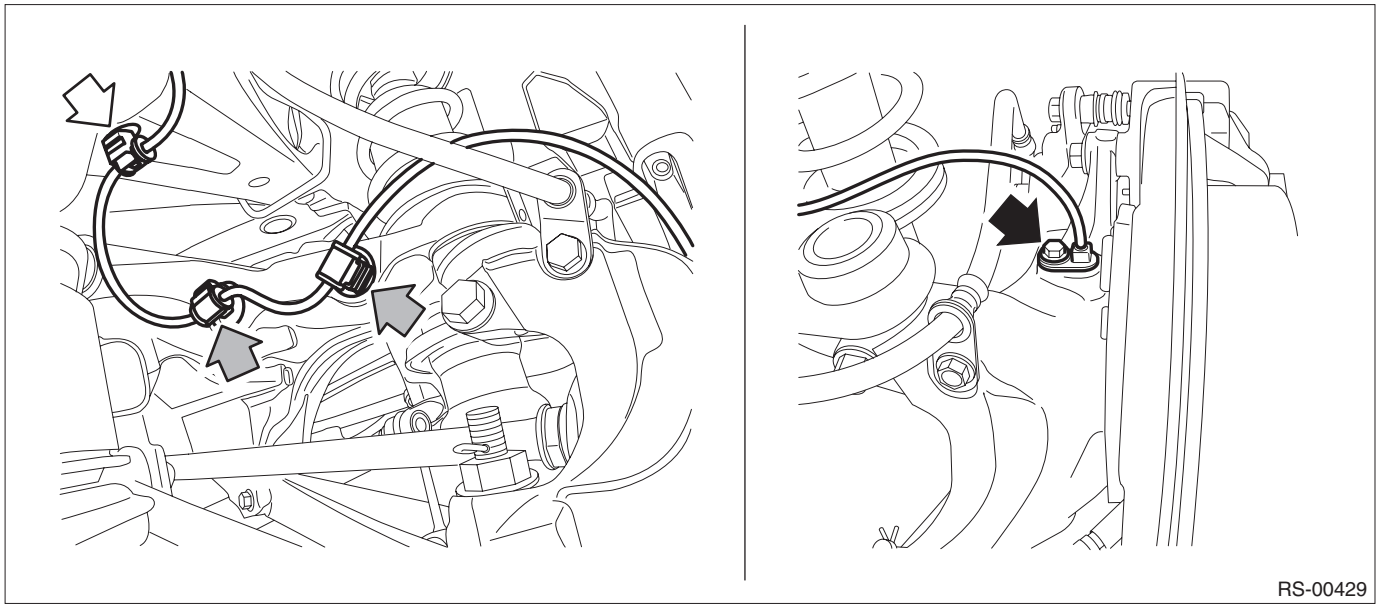

7) Remove the caliper body assembly from the housing assembly - rear axle.
(1) Remove the bolts and then remove the brake hose bracket and caliper body assembly.

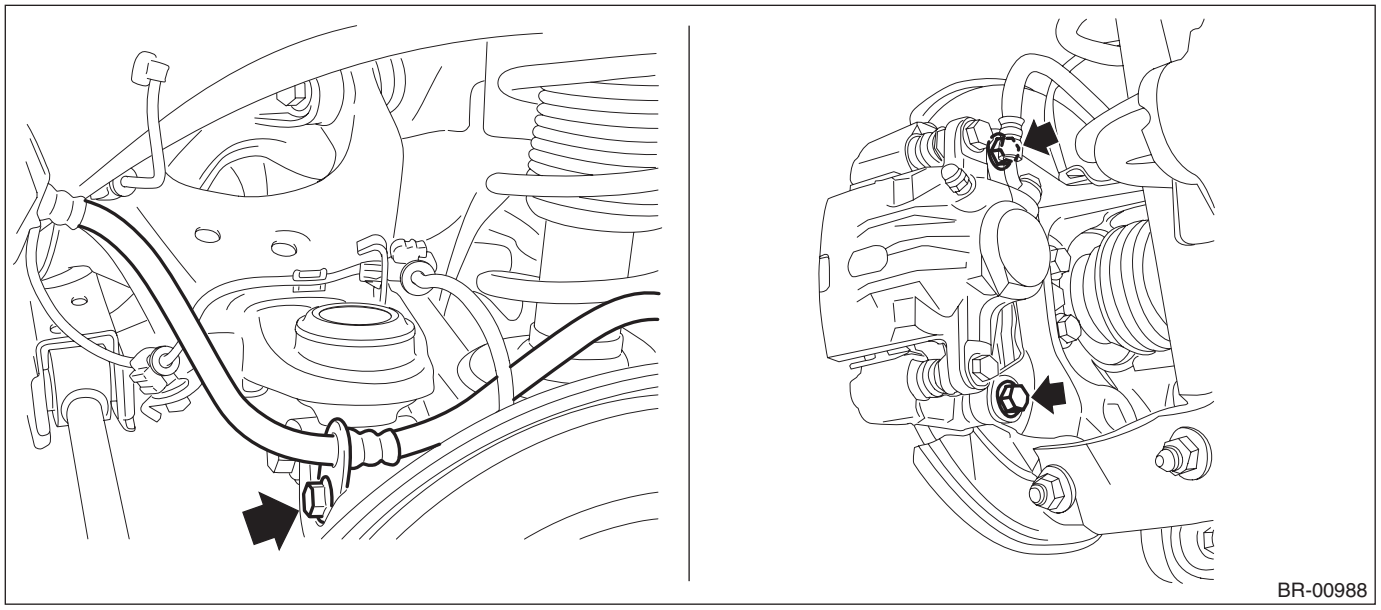

(2) Prepare wiring harnesses etc. to be discarded, and suspend the caliper body assembly from the strut assembly.

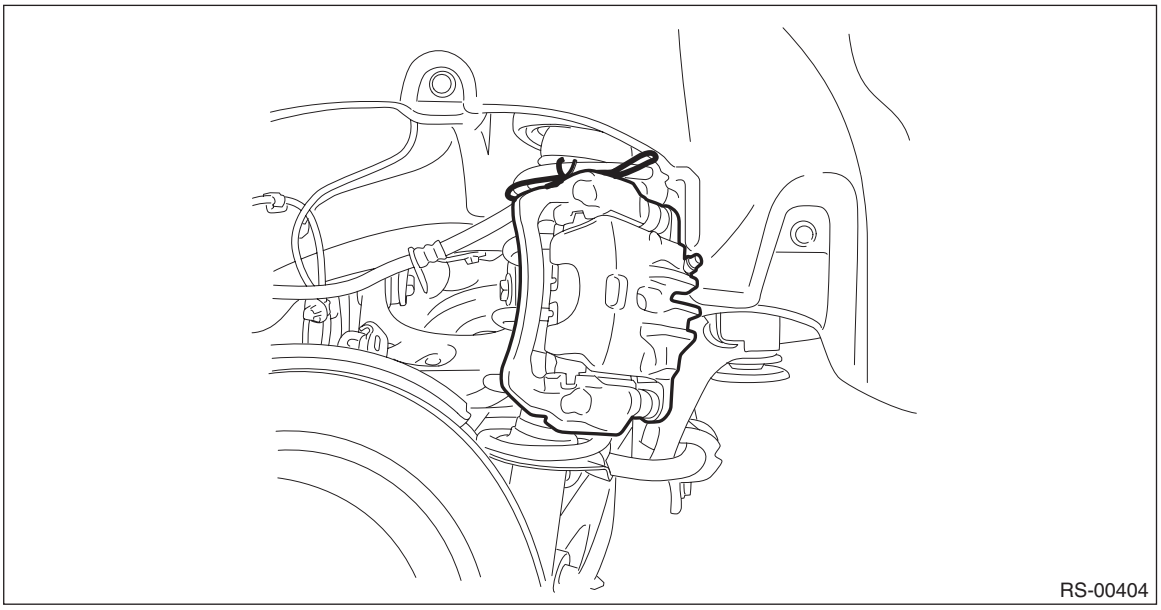

8) Remove the rear disc rotor.

NOTE:
If it is difficult to remove the rear disc rotor, perform the following two methods in order.
1. Remove the adjusting hole cover (A), insert the flat tip screwdriver, and rotate the adjuster assembly - rear brake until the brake shoe moves far enough to remove the disc rotor.

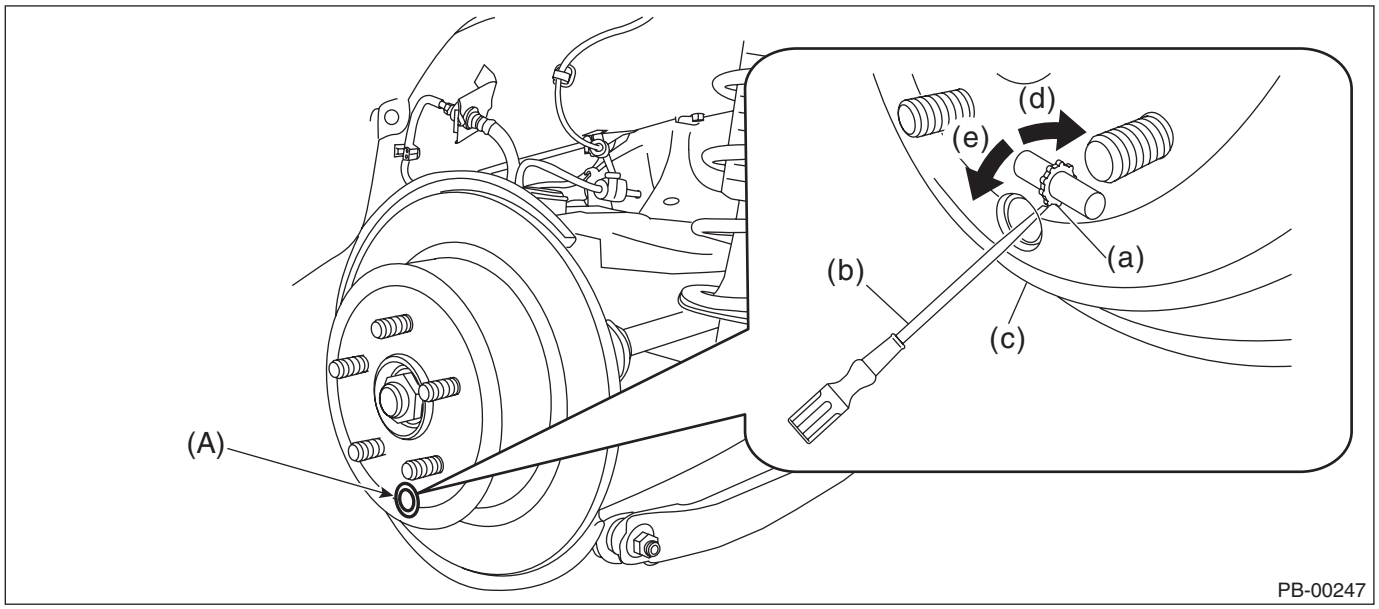

(a) Adjuster ASSY - rear brake
(b) Flat tip screwdriver
(c) Disc rotor
(d) Extend the adjuster ASSY - rear brake
(e) Shorten the adjuster ASSY - rear brake

2. If the disc rotor is not removed after performing above step, screw in an 8 mm (0.31 in) bolt to the threaded part (A) of the disc rotor, and remove the disc rotor.

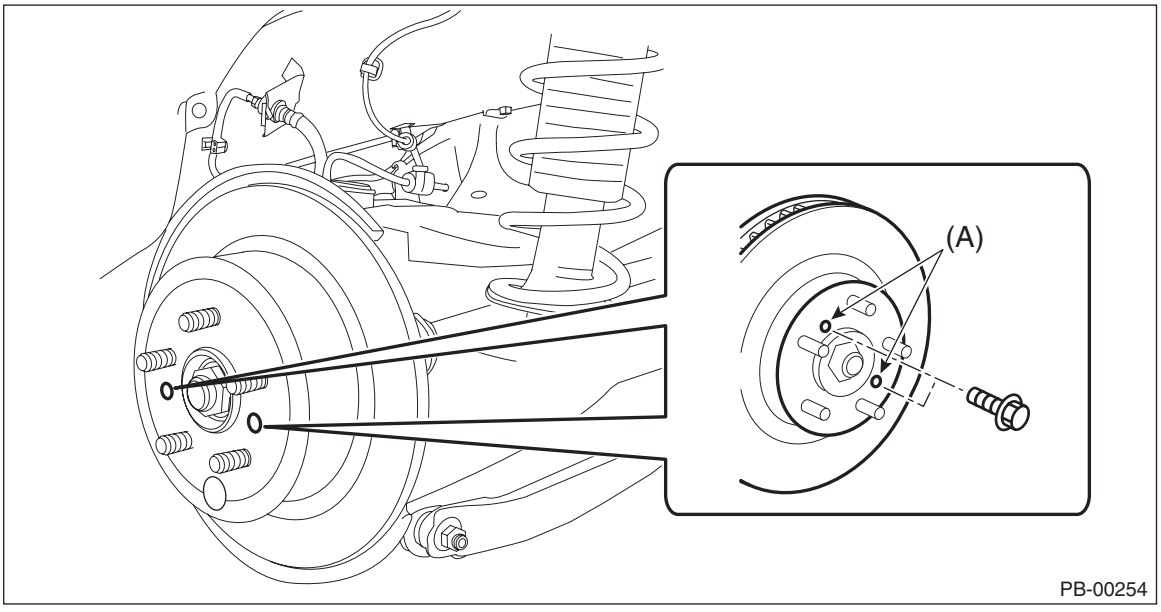

9) Remove the rear axle shaft assembly from the hub unit COMPL - rear axle.

Preparation tool:
ST1: AXLE SHAFT PULLER (926470000)
ST2: AXLE SHAFT PULLER PLATE (28099PA110)

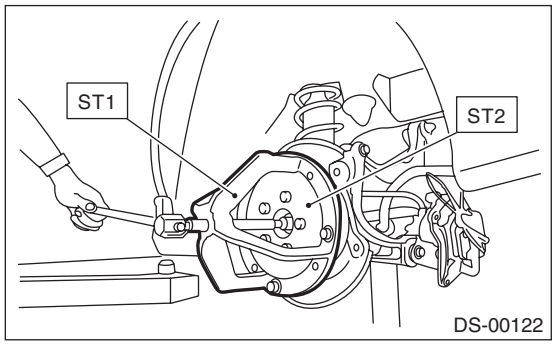

NOTE:
If it is hard to remove, use the ST.

10) Remove the lateral link assembly - front.
(1) Remove the snap pin (a) and nut (b).
(2) Remove the ball joint from the housing assembly - rear axle.

CAUTION:
Be careful not to damage the boot of the joint.

Preparation tool:
Tie-rod ball joint puller

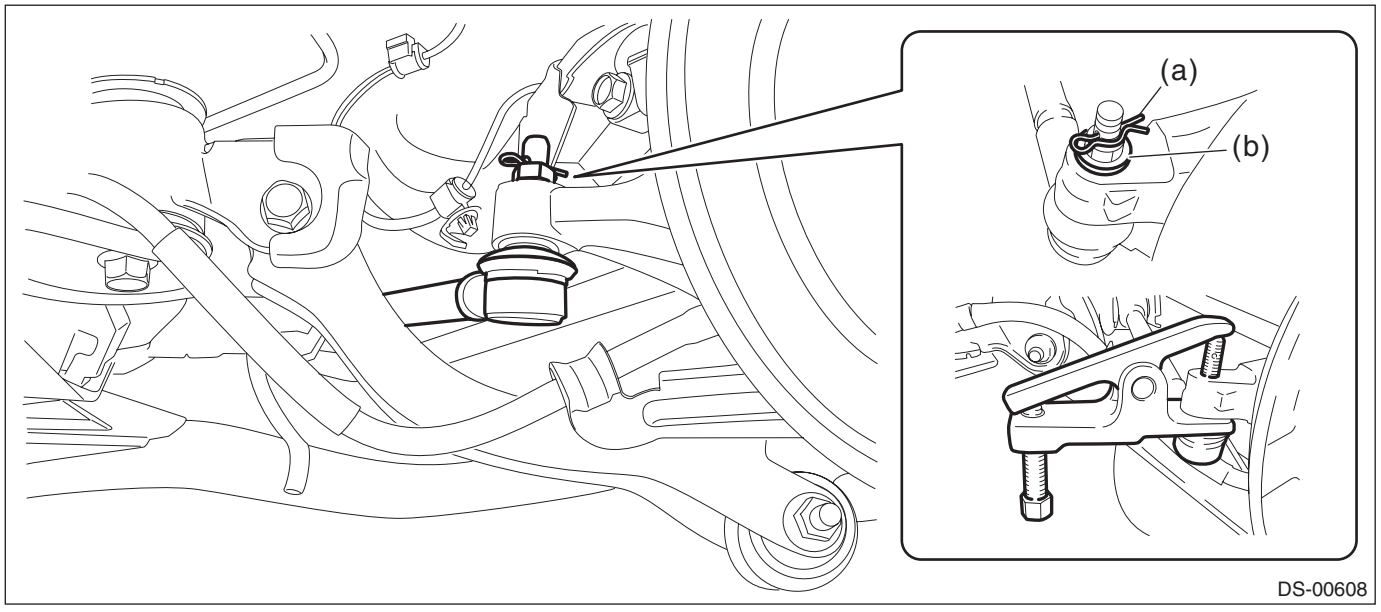

11) Remove the housing assembly - rear axle.
(1) Remove the bolts for the upper arm, the trailing link, and the lateral link assembly - rear, and then separate the housing assembly - rear axle.

CAUTION:
Be careful not to damage the boot of the joint.

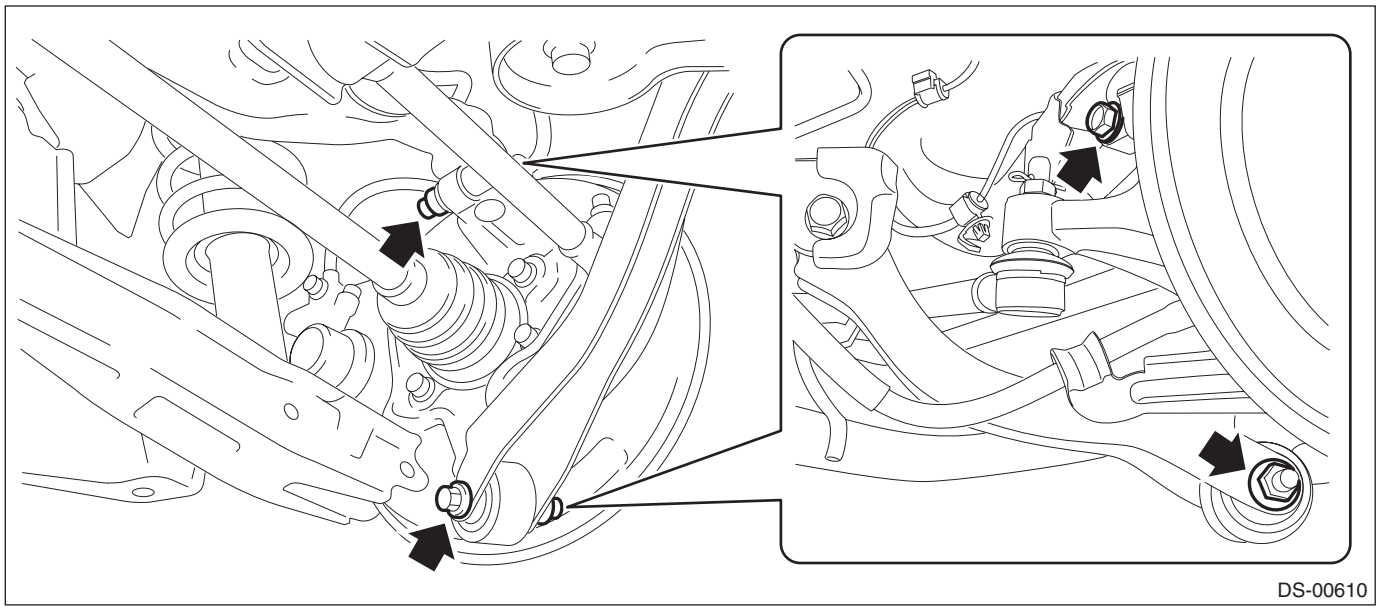

(2) Remove the housing assembly - rear axle.

CAUTION:
- **Be careful of the weight of the housing assembly - rear axle.**
- **Be careful not to damage the spline portion of the axle shaft.**

12) Refer to “Rear Hub Unit Bearing” for removal of the hub unit COMPL - rear axle. <Ref. to DS-46, REMOVAL, Rear Hub Unit Bearing.>

B: INSTALLATION

1) Temporarily tighten the housing assembly - rear axle to the upper arm assembly.
2) Install the rear axle shaft assembly.

CAUTION:
- **Do not tap the axle shaft using a hammer when installing axle shaft assembly.**
- **Use new nut - axle.**

(1) Insert the axle shaft assembly into the hub spline, and pull in the axle shaft assembly into specified position.
(2) Temporarily tighten the nut - axle.

3) Tighten the rear strut assembly, rear stabilizer link assembly and other links to the specified torque.

Tightening torque:
Rear suspension: <Ref. to RS-3, REAR SUSPENSION, COMPONENT, General Description.>
Rear strut: <Ref. to RS-5, REAR STRUT, COMPONENT, General Description.>

4) Install the rear disc rotor.
5) Install the caliper body assembly.

Tightening torque:
66 N·m (6.73 kgf-m, 48.7 ft-lb)

6) Install the brake hose bracket and rear ABS wheel speed sensor.

Tightening torque:
Brake hose bracket: 33 N·m (3.36 kgf-m, 24.3 ft-lb)
Rear ABS wheel speed sensor: 7.5 N·m (0.76 kgf-m, 5.5 ft-lb)

7) Install the sensor assembly - headlight beam leveler. (Model with auto headlight beam leveler)

Tightening torque:
7.5 N·m (0.76 kgf-m, 5.5 ft-lb)
8) While depressing the brake pedal, tighten new nuts - axle to the specified torque.

CAUTION:
Do not load the rear axle before tightening the nut - axle. Doing so may damage the hub unit COMPL.

Tightening torque:
190 N·m (19.37 kgf-m, 140.1 ft-lb)
9) Inspect the lean of axis direction using a dial gauge. Replace the hub unit COMPL - rear axle if the play exceeds the limit.

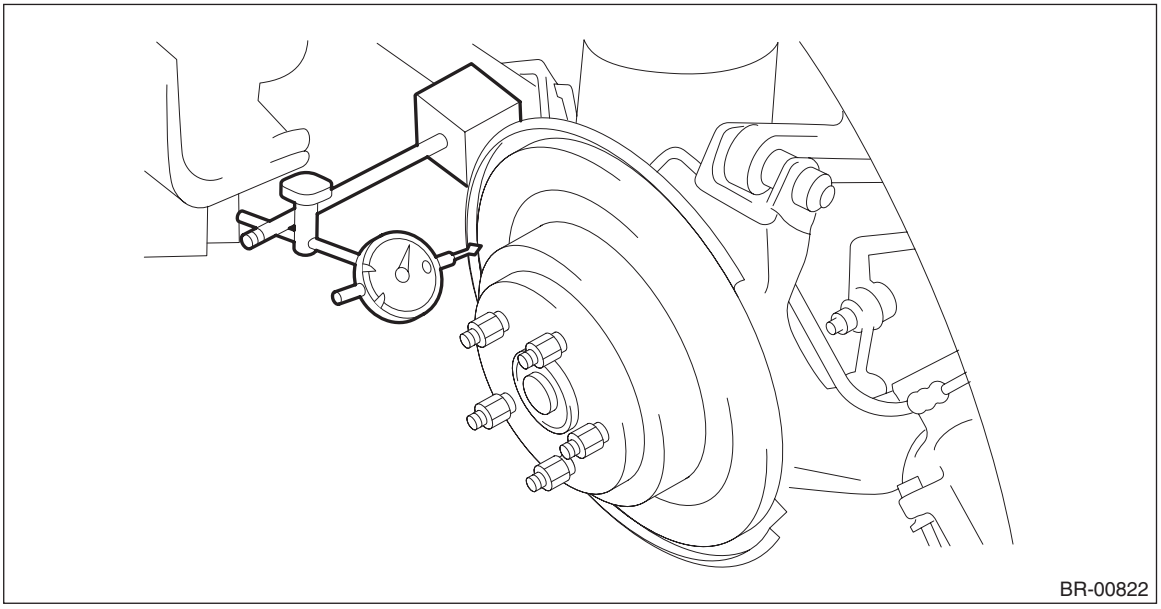
BR-00822

Service limit:
Maximum: 0.05 mm (0.0020 in)
10) After tightening the nut - axle, lock it securely.

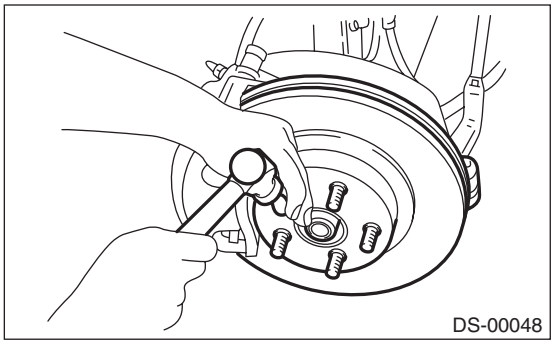
DS-00048

11) Install the rear wheels, and perform the following inspections.

Tightening torque:
Except for C4 model: 120 N·m (12.24 kgf-m, 88.5 ft-lb)
C4 model: 100 N·m (10.20 kgf-m, 73.8 ft-lb)

1. Check the wheels for smooth rotation.
2. Check that there is no play by moving the upper and lower portions of rear tire in an axial direction with the brake pedal released.

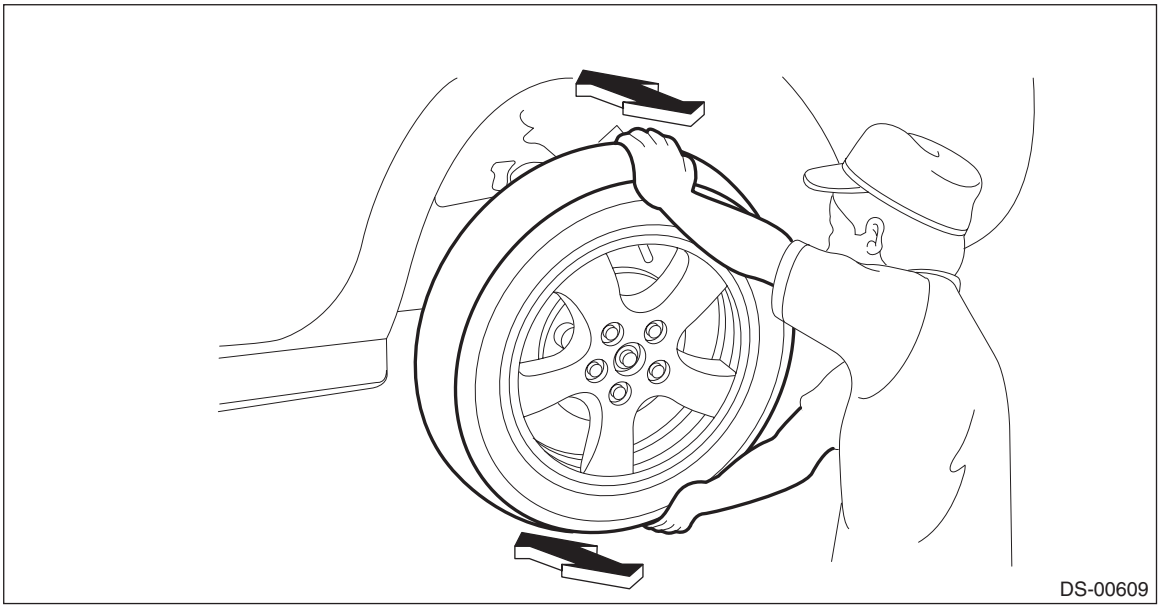

- **Play exists** → Check the hub unit COMPL - rear axle. <Ref. to DS-56, INSPECTION, Rear Hub Unit Bearing.>

12) Inspect the wheel alignment and adjust if necessary.
- Inspection: <Ref. to FS-7, INSPECTION, Wheel Alignment.>
- Adjustment: <Ref. to FS-11, ADJUSTMENT, Wheel Alignment.>

13) Perform reinitialization of the auto headlight beam leveler system. (Model with auto headlight beam leveler) <Ref. to LI-18, PROCEDURE, Auto Headlight Beam Leveler System.>

C: DISASSEMBLY

1. BUSHING - REAR AXLE HOUSING

Do not remove the housing assembly - rear axle because the bushing - rear axle housing cannot be replaced. If it is removed, replace the housing assembly - rear axle.

2. BUSHING - TRAILING LINK

1) Remove the housing assembly - rear axle. <Ref. to DS-35, REMOVAL, Rear Axle.>
2) Using the ST and a hydraulic press, push out the bushing.

Preparation tool:
ST1: BUSHING REMOVER (20099FG000)
ST2: INSTALLER & REMOVER (BASE) (20099PA010)

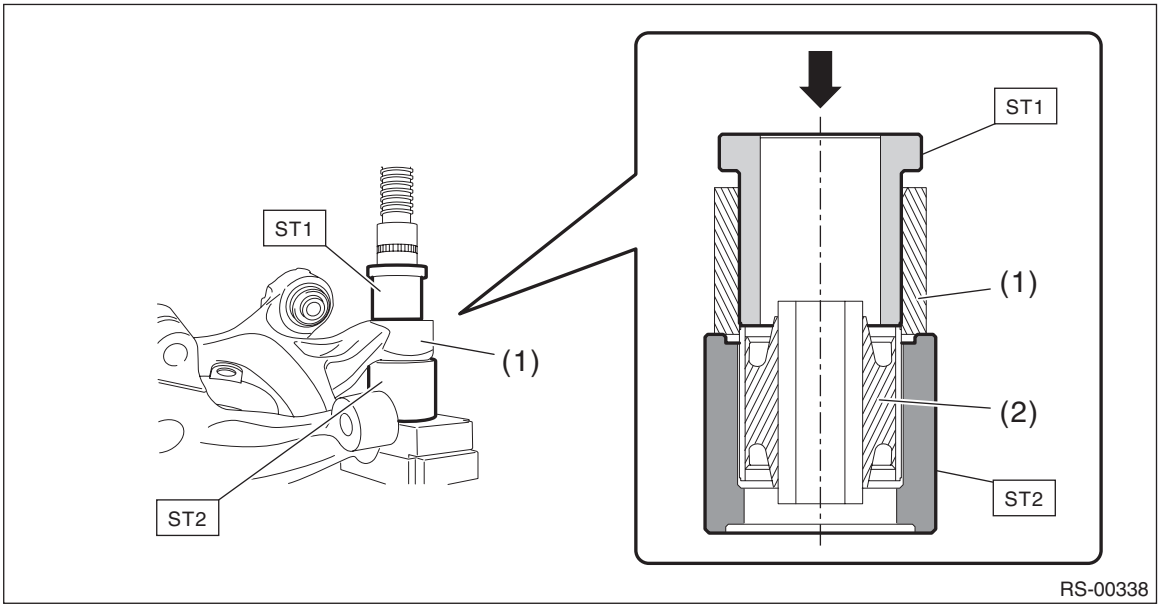

(1) Housing ASSY - rear axle
(2) Bushing - trailing link

D: ASSEMBLY

1. BUSHING - REAR AXLE HOUSING

Do not remove the housing assembly - rear axle because the bushing - rear axle housing cannot be replaced. If it is removed, replace the housing assembly - rear axle.

2. BUSHING - TRAILING LINK

1) Before assembly, inspect the following items and replace any faulty part with a new one.
- Perform visual check for damage or bend on the trailing link.
- Visually check the bushing for abnormal cracks, fatigue or damage.

2) Press-fit the bushing using ST and the hydraulic press.

CAUTION:
Make sure to press the bushing straight in.

Preparation tool:
ST1: BUSHING REMOVER (20099FG000)
ST2: INSTALLER & REMOVER (BASE) (20099PA010)

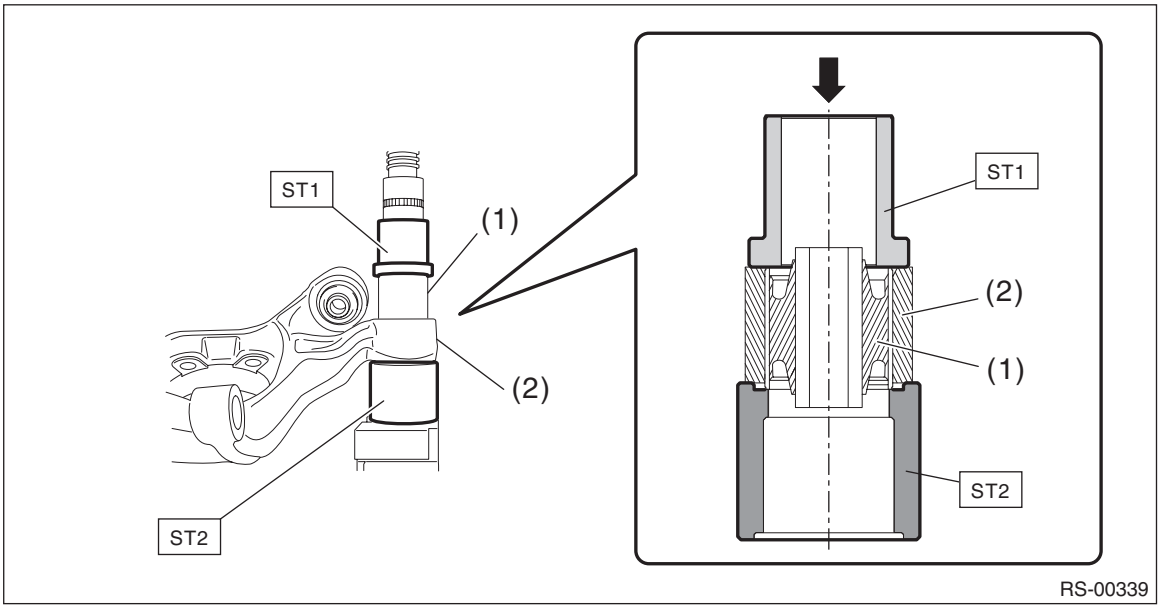

(1) Bushing
(2) Housing ASSY - rear axle

6. Rear Hub Unit Bearing

A: REMOVAL

1) Lift up the vehicle, and then remove the rear wheels.
2) Remove the nut - axle.

CAUTION:
Do not loosen the nut - axle while the rear axle is loaded. Doing so may damage the hub unit COMPL.

(1) Lift the crimped section of the nut - axle.
(2) Remove the nut - axle using a socket wrench while depressing the brake pedal.

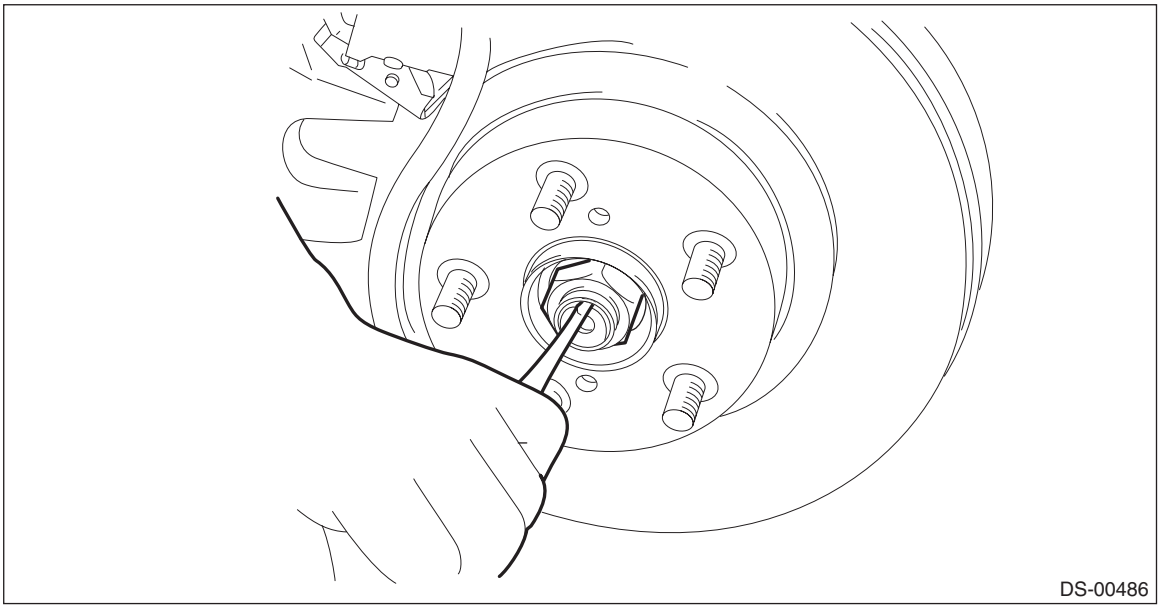

3) Remove the rear ABS wheel speed sensor from the rear axle housing.
   (1) Remove the bolts, and remove the rear ABS wheel speed sensor.
   (2) Remove the rear ABS wheel speed sensor harness from the upper arm.

CAUTION:
- **Be careful not to damage the sensor.**
- **Do not apply excessive force to the sensor harness.**
- **Leave the sensor harness clamp (white arrow) on the vehicle side.**
  - Except for XV model

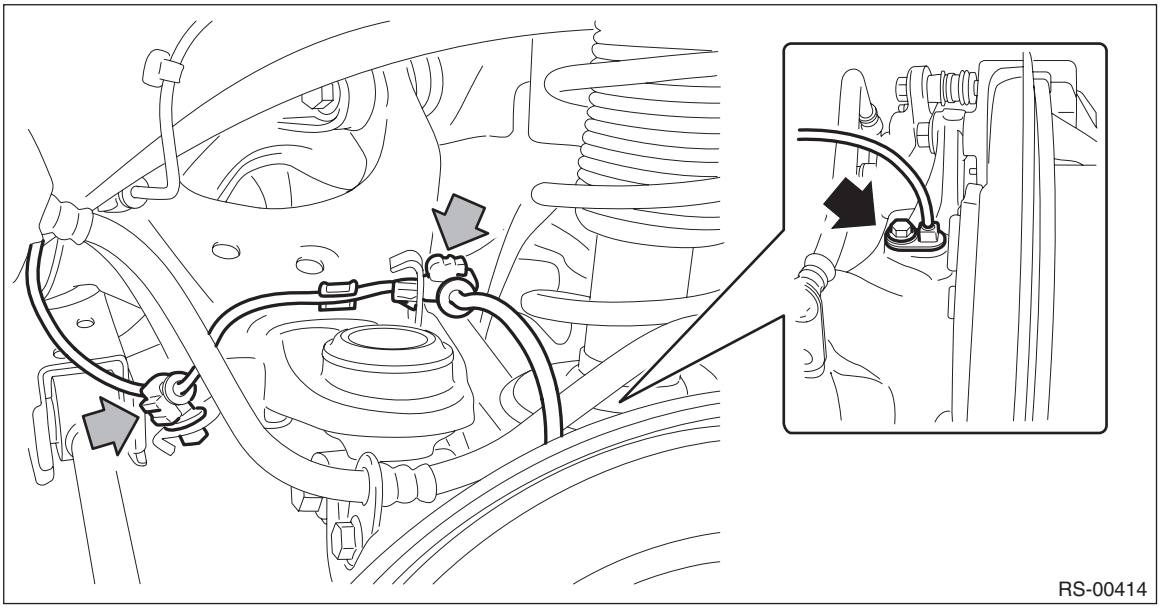

  - XV model

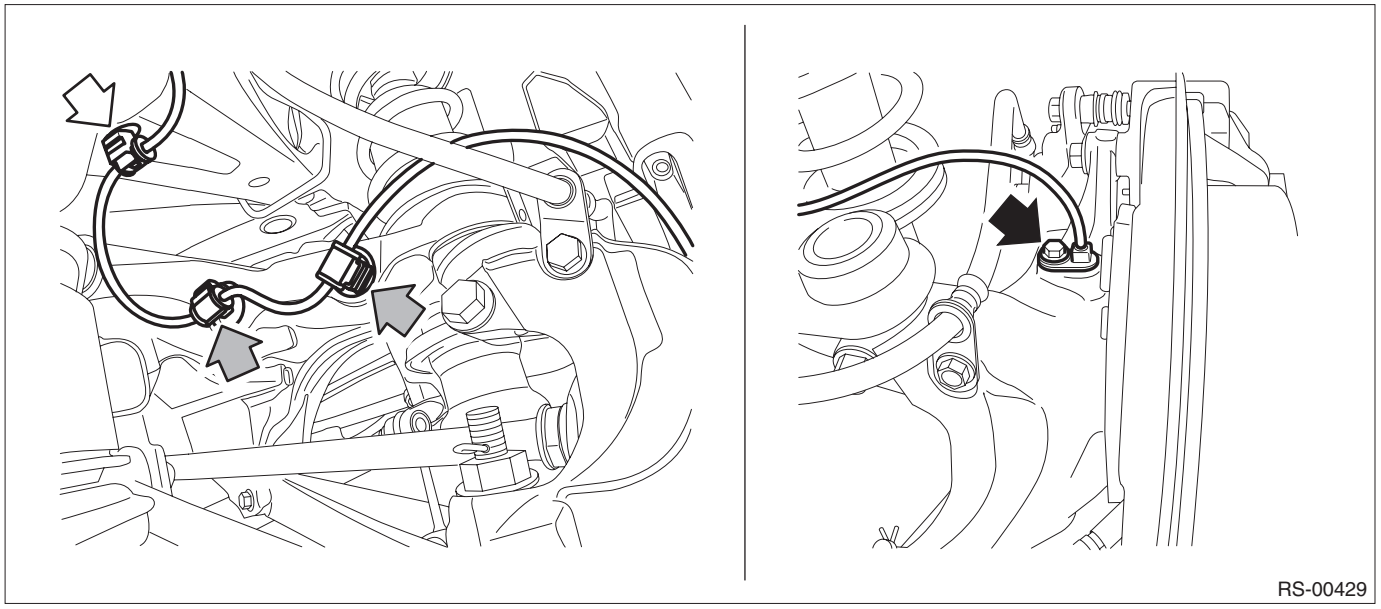

4) Remove the caliper body assembly from the housing assembly - rear axle.
(1) Remove the bolts and then remove the brake hose bracket and caliper body assembly.

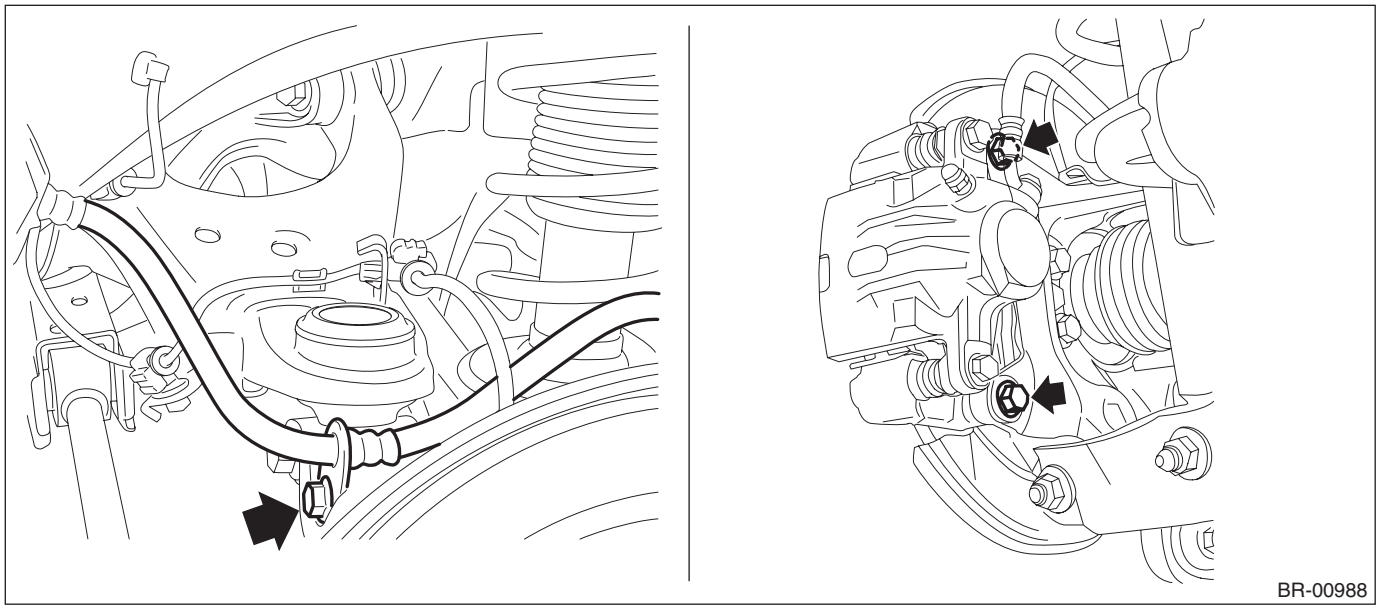

(2) Prepare wiring harnesses etc. to be discarded, and suspend the caliper body assembly from the strut assembly.

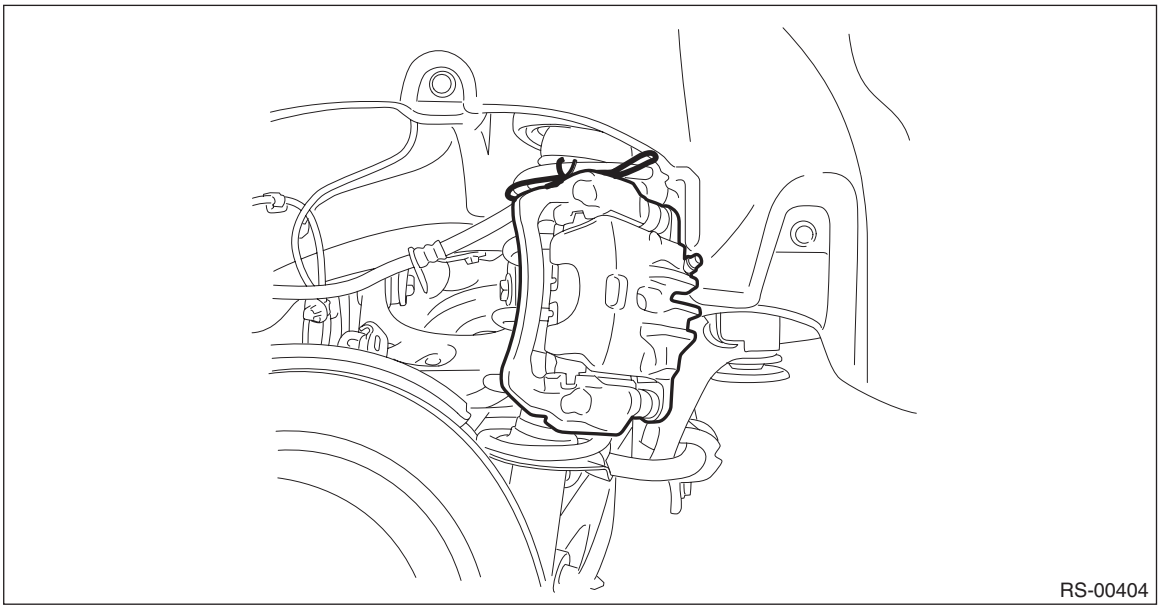

5) Remove the rear disc rotor.

NOTE:
If it is difficult to remove the rear disc rotor, perform the following two methods in order.
1. Remove the adjusting hole cover (A), insert the flat tip screwdriver, and rotate the adjuster assembly - rear brake until the brake shoe moves far enough to remove the disc rotor.

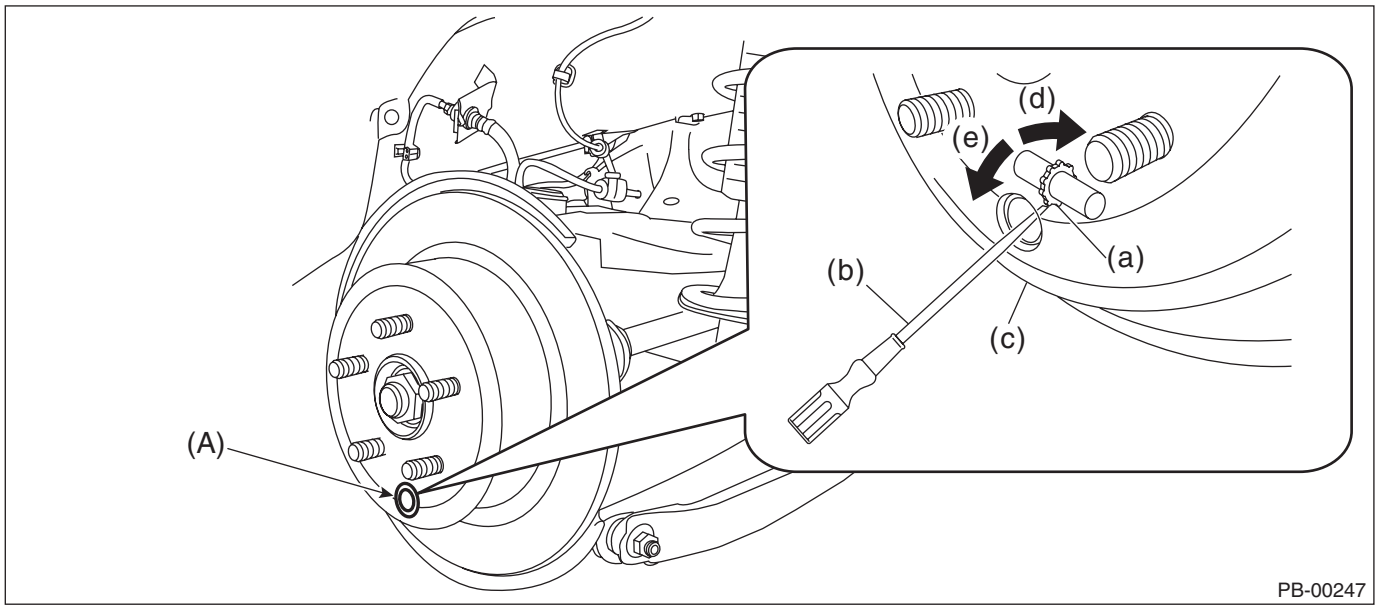

(a)	Adjuster ASSY - rear brake	(c)	Disc rotor	(e)	Shorten the adjuster ASSY - rear brake
(b)	Flat tip screwdriver	(d)	Extend the adjuster ASSY - rear brake		

2. If the disc rotor is not removed after performing above step, screw in an 8 mm (0.31 in) bolt to the threaded part (A) of the disc rotor, and remove the disc rotor.

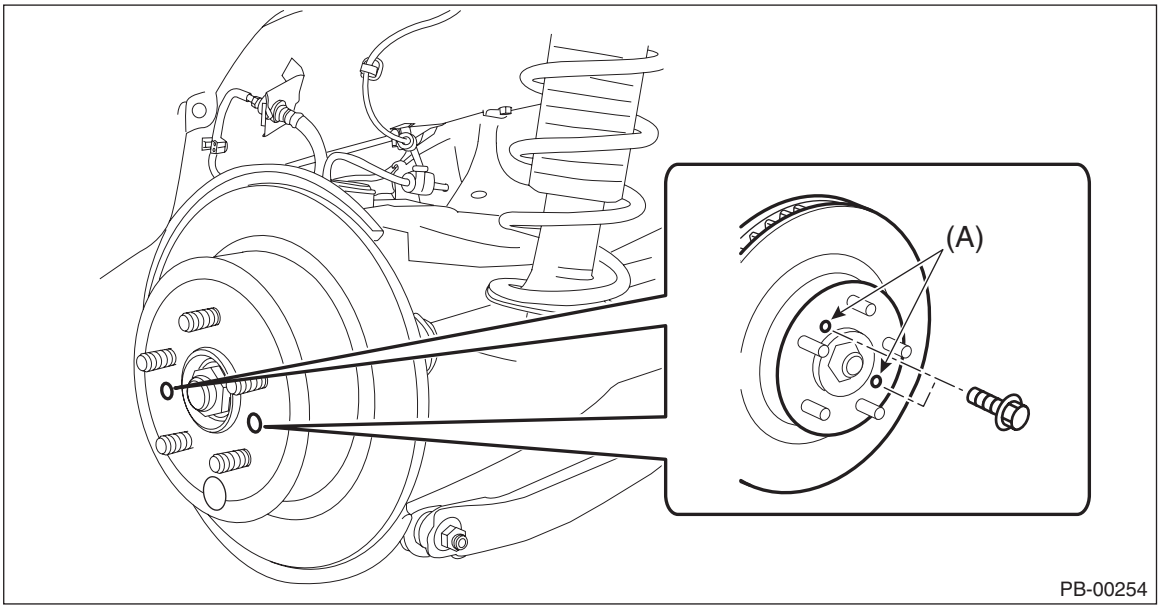

6) Remove the bolts from the housing assembly - rear axle, and then remove the hub unit COMPL - rear axle.

CAUTION:
- **Be careful not to damage the magnetic encoder.**
- **Do not get closer the tool which charged magnetism to magnetic encoder.**

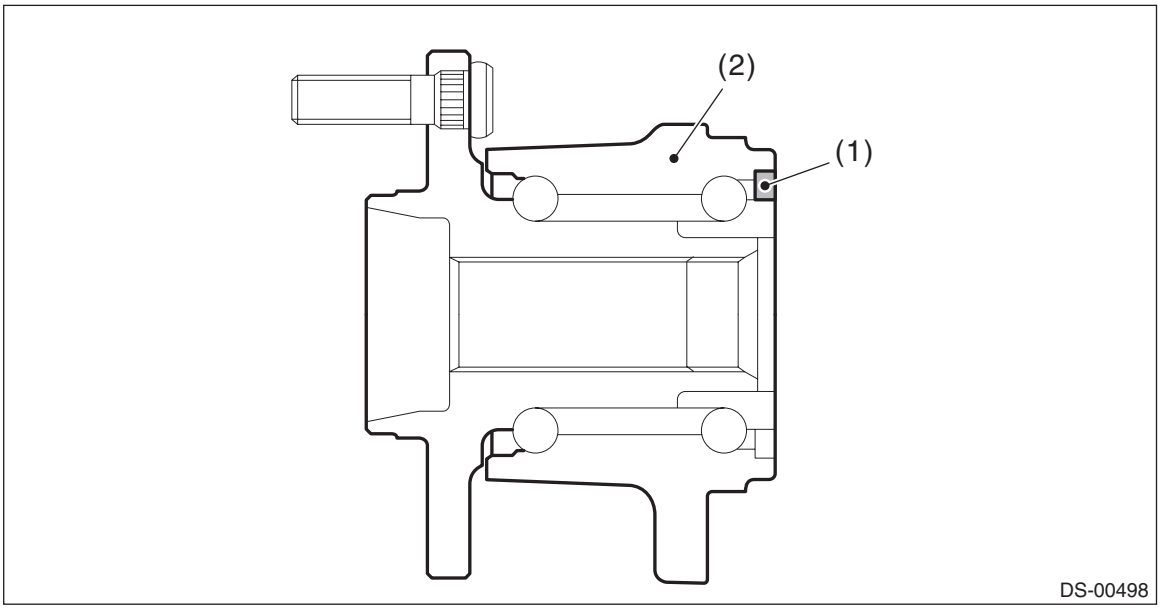

(1) Magnetic encoder (2) Hub unit COMPL - rear axle

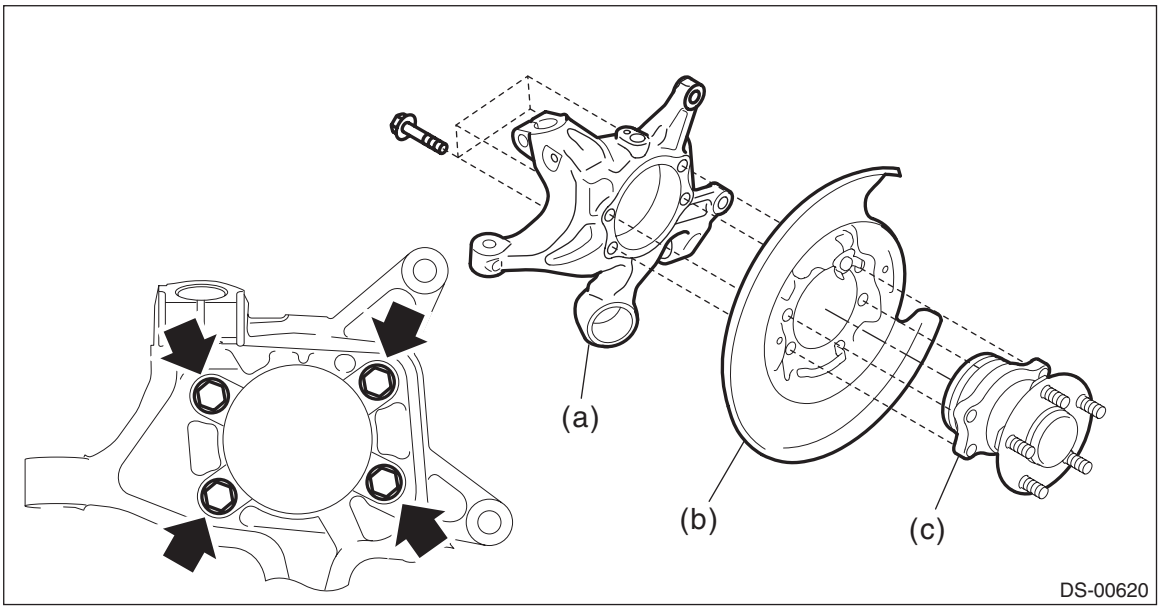

(a) Housing ASSY - rear axle (b) Back plate - rear brake (c) Hub unit COMPL - rear axle

NOTE:
If it is hard to remove, use the ST.

Preparation tool:
ST1: AXLE SHAFT PULLER (926470000)
ST2: AXLE SHAFT PULLER PLATE (28099PA110)

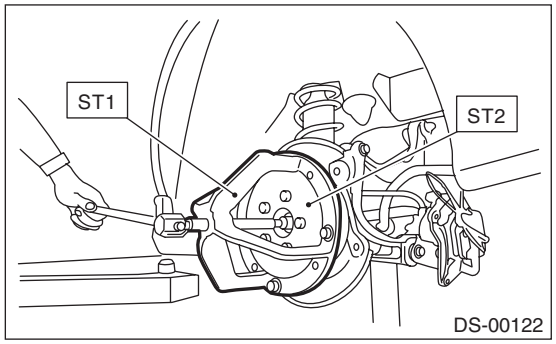

B: INSTALLATION

1) Place the back plate - rear brake between the housing assembly - rear axle and the hub unit COMPL - rear axle, and tighten the bolt.

CAUTION:
- **Be careful not to damage the magnetic encoder.**
- **Do not get closer the tool which charged magnetism to magnetic encoder.**

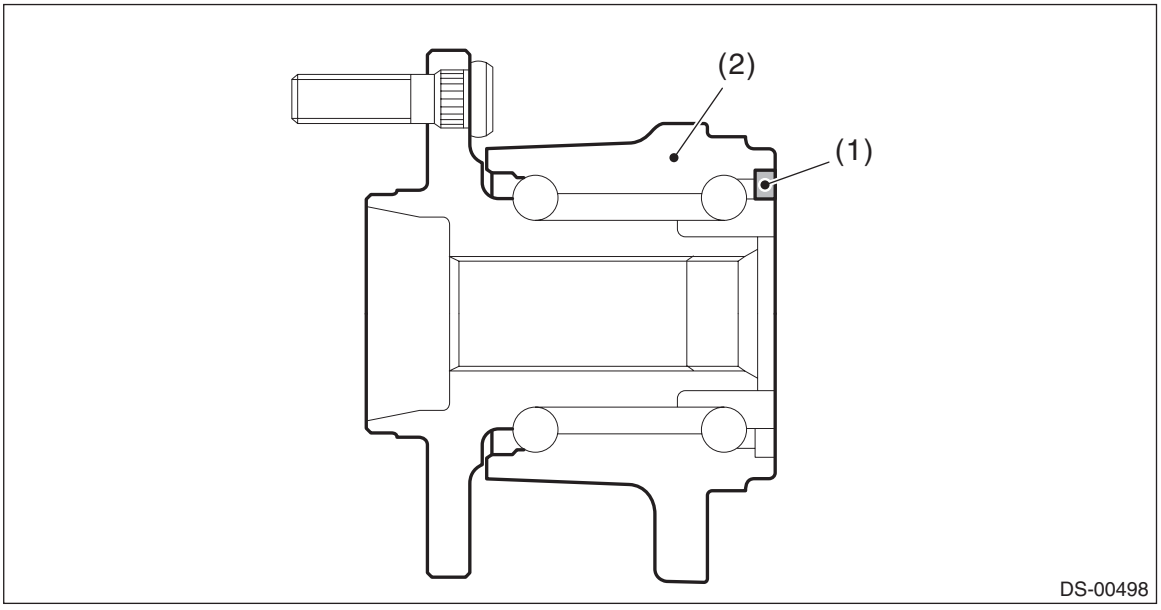

(1) Magnetic encoder (2) Hub unit COMPL - rear axle

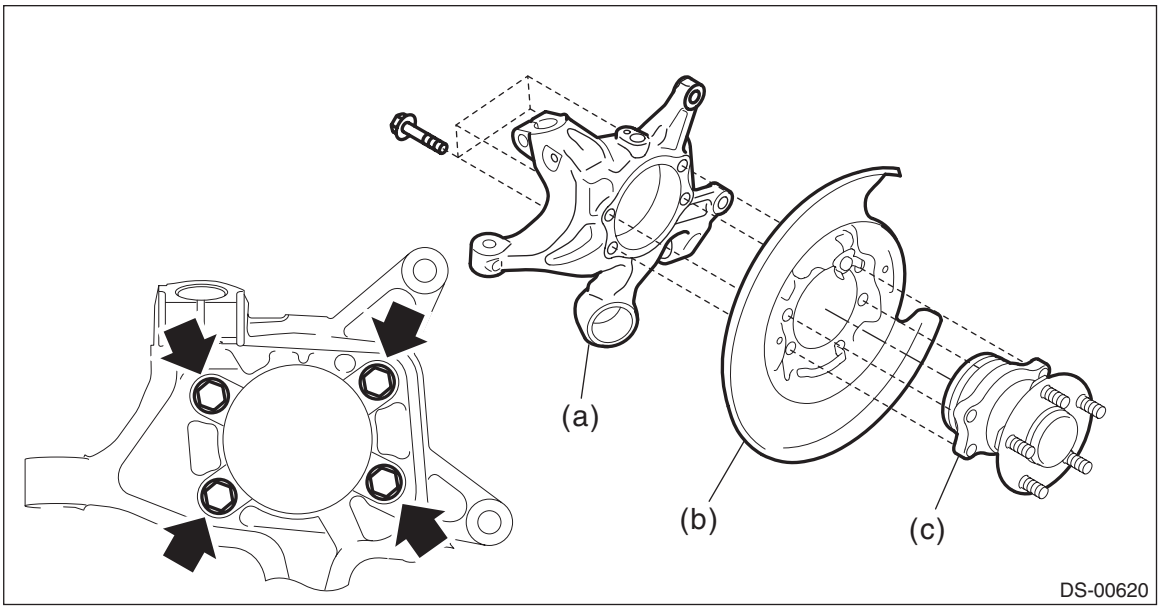

(a) Housing ASSY - rear axle (b) Back plate - rear brake (c) Hub unit COMPL - rear axle

Tightening torque:
65 N·m (6.63 kgf-m, 47.9 ft-lb)

2) Install the rear axle shaft assembly.

CAUTION:
- **Do not tap the axle shaft using a hammer when installing axle shaft assembly.**
- **Use new nut - axle.**

(1) Insert the axle shaft assembly into the hub spline, and pull in the axle shaft assembly into specified position.
(2) Temporarily tighten the nut - axle.

3) Install the disc rotor to the hub unit COMPL - rear axle.
4) Install the caliper body assembly to the housing assembly - rear axle.

Tightening torque:
66 N·m (6.73 kgf-m, 48.7 ft-lb)

5) Install the brake hose bracket.

Tightening torque:
33 N·m (3.36 kgf-m, 24.3 ft-lb)

6) Install the rear ABS wheel speed sensor.

Tightening torque:
7.5 N·m (0.76 kgf-m, 5.5 ft-lb)

7) While depressing the brake pedal, tighten new nuts - axle to the specified torque.

CAUTION:
Do not load the rear axle before tightening the nut - axle. Doing so may damage the hub unit COMPL.

Tightening torque:
190 N·m (19.37 kgf-m, 140.1 ft-lb)

8) Inspect the lean of axis direction using a dial gauge. Replace the hub unit COMPL - rear axle if the play exceeds the limit.

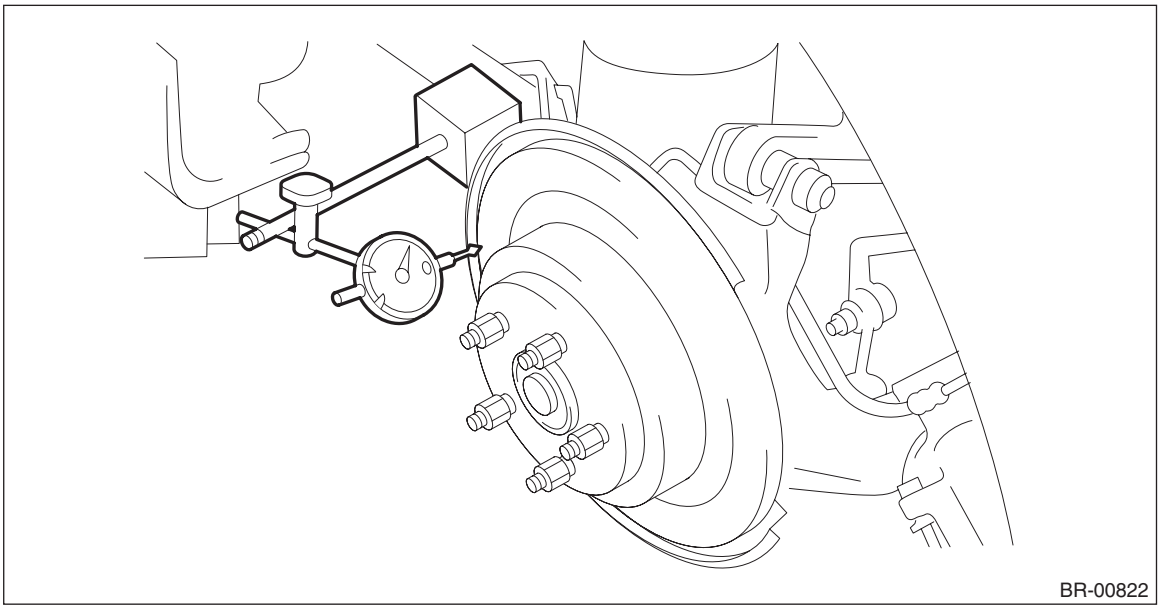

Service limit:
Maximum: 0.05 mm (0.0020 in)

9) After tightening the nut - axle, lock it securely.

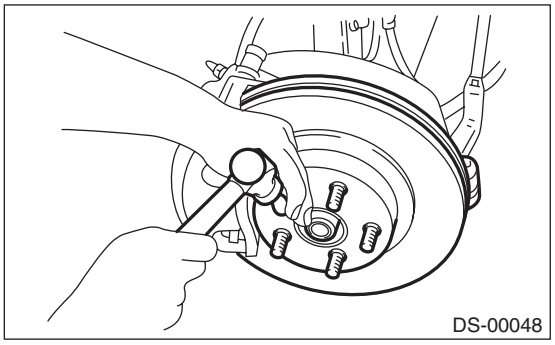

10) Install the rear wheels, and perform the following inspections.

Tightening torque:
Except for C4 model: 120 N·m (12.24 kgf-m, 88.5 ft-lb)
C4 model: 100 N·m (10.20 kgf-m, 73.8 ft-lb)

1. Check the wheels for smooth rotation.
2. Check that there is no play by moving the upper and lower portions of rear tire in an axial direction with the brake pedal released.

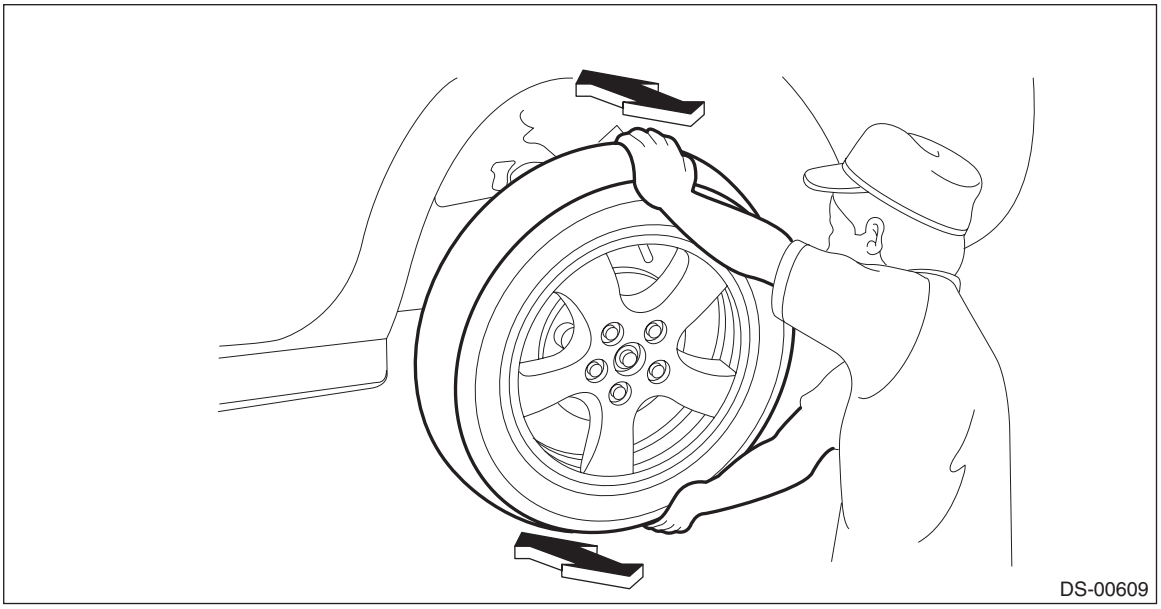

- **Play exists** → Check the hub unit COMPL - rear axle. <Ref. to DS-56, INSPECTION, Rear Hub Unit Bearing.>

C: DISASSEMBLY

Using the ST or a hydraulic press, push out the bolt - hub (b) from the hub unit COMPL - rear axle (a).

CAUTION:
- **Be careful not to hammer the bolts - hub. This may deform the hub unit COMPL.**
- **Do not reuse the bolt - hub.**

PREPARATION TOOL:
ST: HUB STAND (28399AG000)

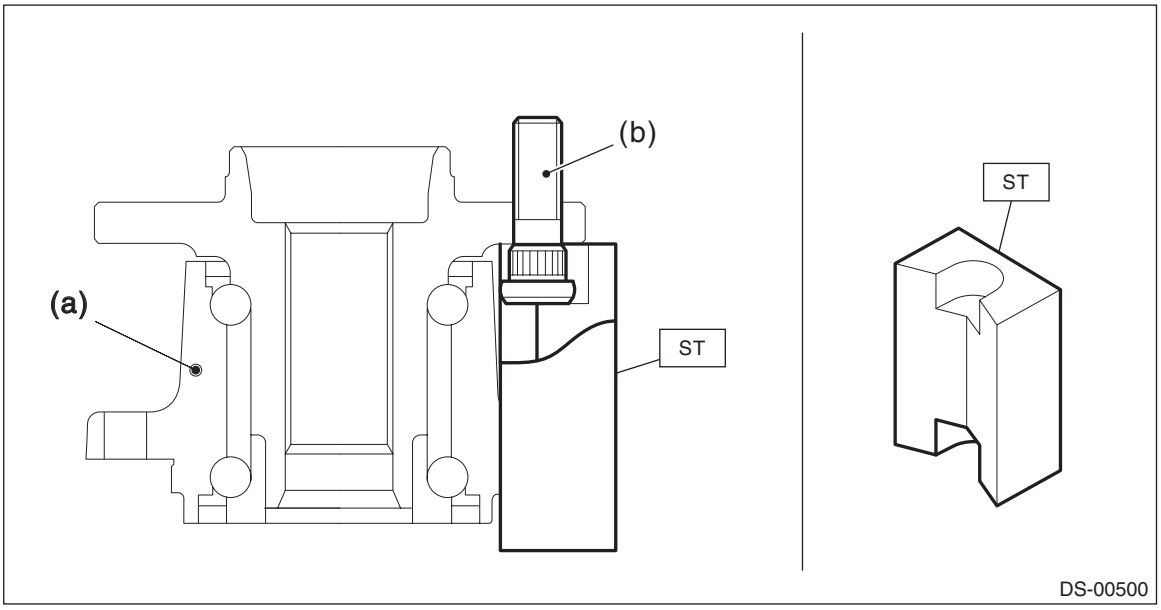

NOTE:
Since the hub unit COMPL - rear axle cannot be disassembled, only bolts - hub can be removed.

D: ASSEMBLY

1) Install the hub unit COMPL - rear axle to the ST securely.

Preparation tool:
ST: HUB STAND (927080000)

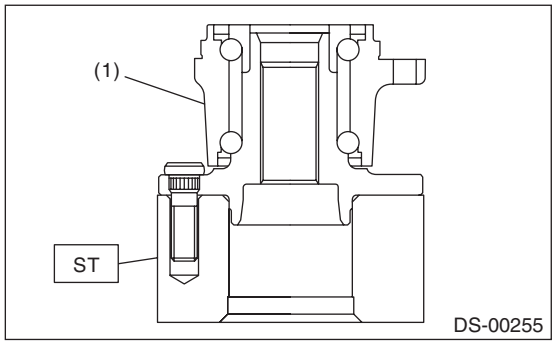

(1) Hub unit COMPL - rear axle

2) Using a press, press new bolts - hub (b) until their seating surfaces contact the hub unit COMPL - rear axle (a).

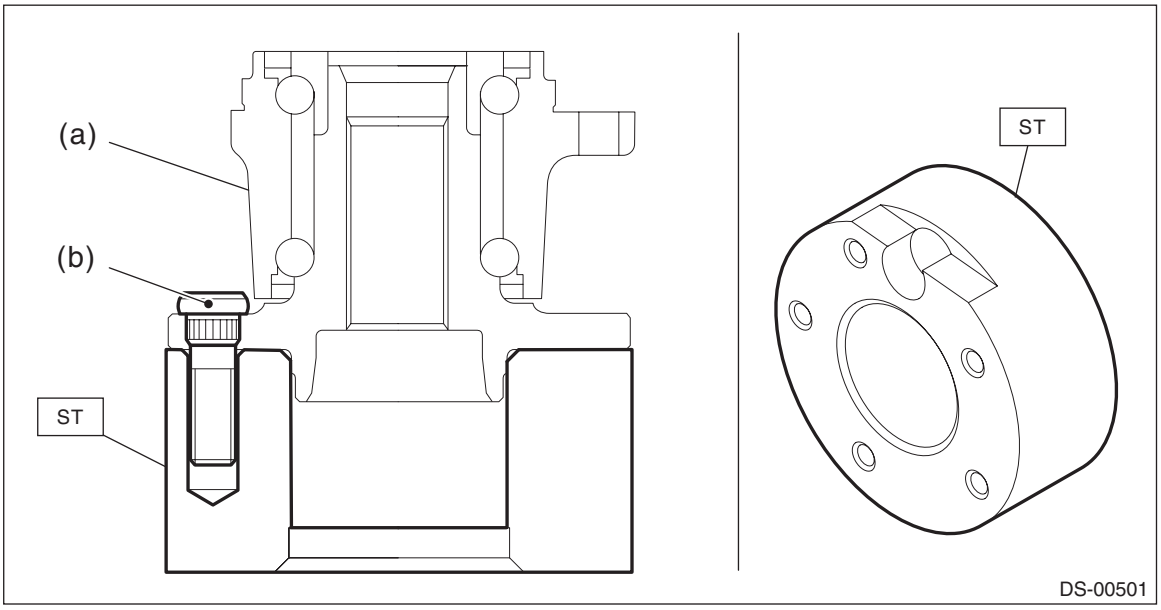

NOTE:
Use the 12 mm (0.47 in) dia. holes in the HUB STAND to prevent bolts from tilting.

E: INSPECTION

1) Moving the rear tire up and down by hand, check there is no backlash in bearing, and check the wheel rotates smoothly.

CAUTION:
If there is any fault in the bearing, replace the hub unit COMPL - rear axle.

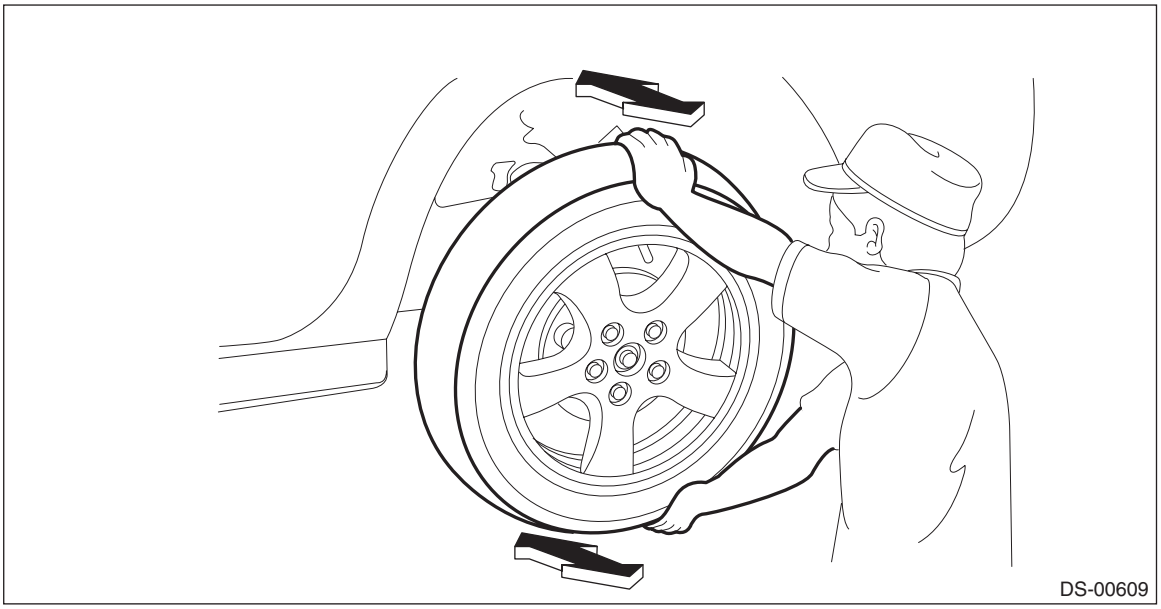

2) Inspect the lean of axis direction using a dial gauge. Replace the hub unit COMPL - rear axle if the play exceeds the limit.

Service limit:
Maximum: 0.05 mm (0.0020 in)

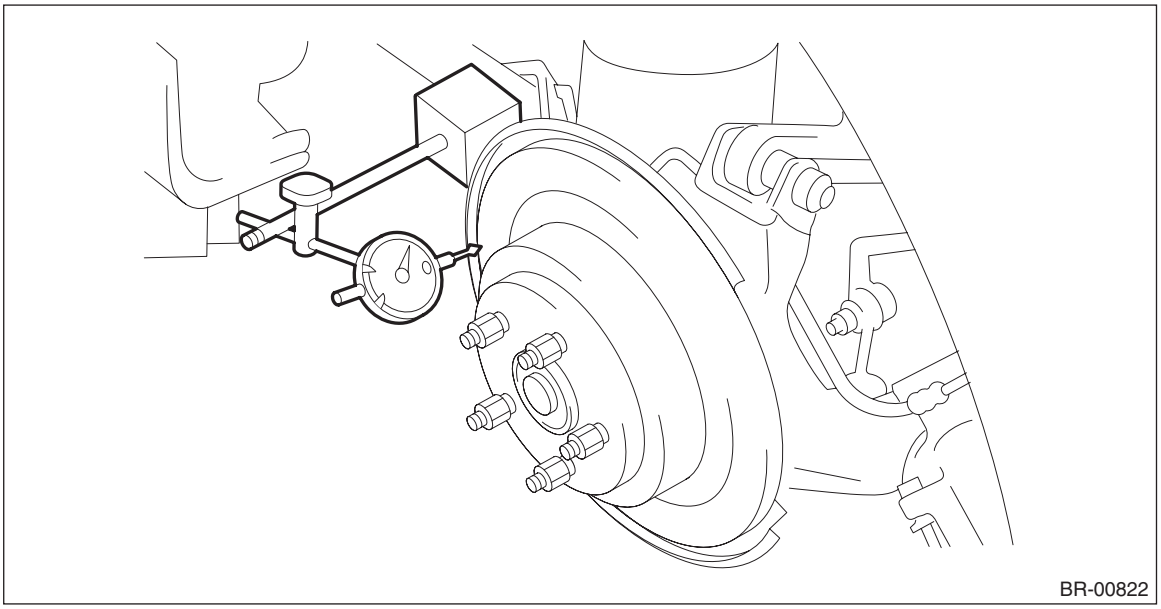

7. Front Drive Shaft

A: REMOVAL

1) Lift up the vehicle, and then remove the front wheels.
2) Remove the nut - axle.

CAUTION:
Do not loosen the nut - axle while the front axle is loaded. Doing so may damage the hub unit COMPL.

(1) Lift the crimped section of the nut - axle.
(2) Remove the nut - axle using a socket wrench while depressing the brake pedal.

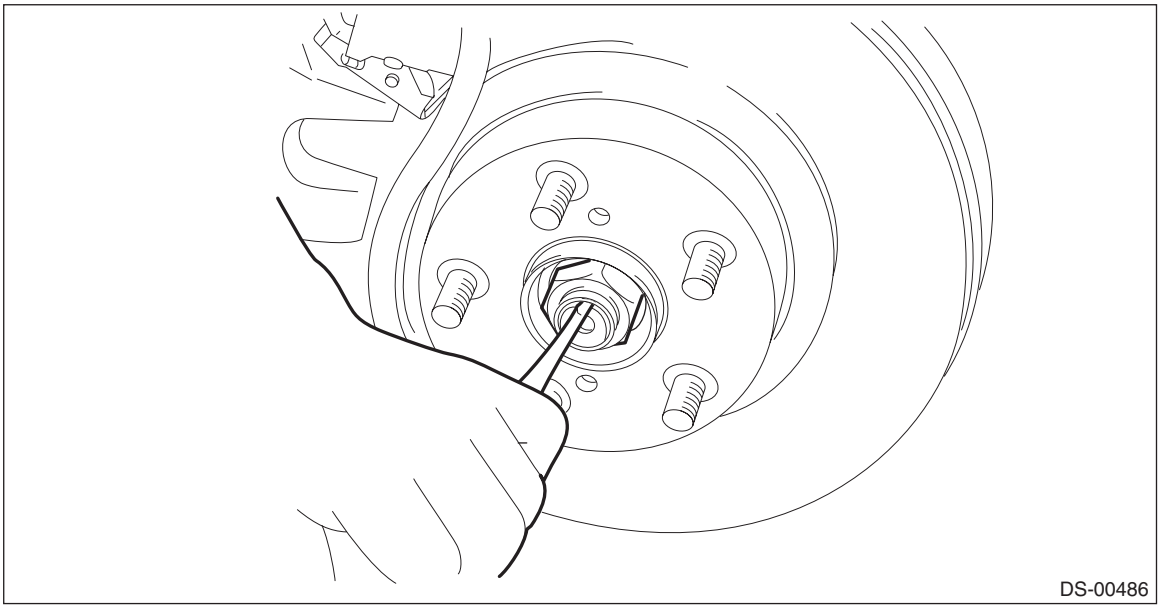

3) Drain the transmission gear oil. (MT model)
4) Drain differential gear oil. (CVT model)
5) Disconnect the ball joint assembly.

(1) Remove the nut and disconnect the front stabilizer link.
(2) Remove the bolts, disconnect the front arm ball joint, and lower the front arm assembly.

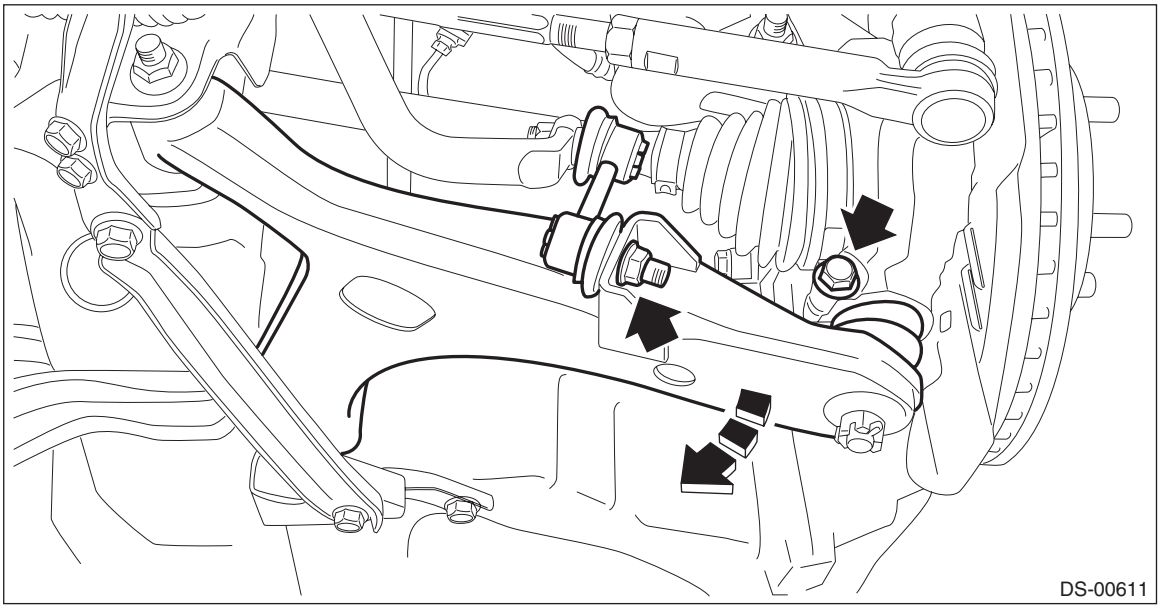

6) Remove the front axle shaft assembly from the housing assembly - front axle.

NOTE:
If it is hard to remove, use the ST.

PREPARATION TOOL:
ST1: AXLE SHAFT PULLER (926470000)
ST2: AXLE SHAFT PULLER PLATE (28099PA110)

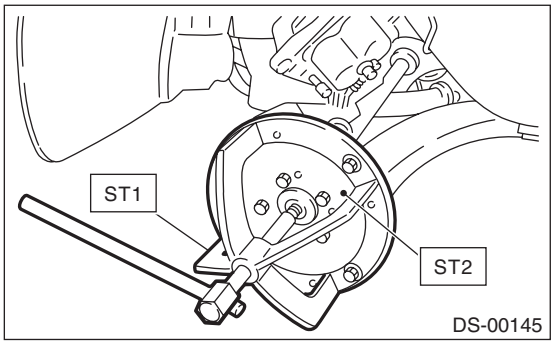

7) Using a crowbar, remove the front axle shaft assembly from the transmission.

CAUTION:
Be careful not to allow the bar to damage holder area.

B: INSTALLATION

1) Before installation, check the axle shaft assembly. <Ref. to DS-73, INSPECTION, Front Drive Shaft.>
2) Replace the differential side retainer oil seal with a new part.
- MT model: <Ref. to 5MT-34, REPLACEMENT, Differential Side Retainer Oil Seal.>
- CVT model: <Ref. to CVT(TR580)-87, REPLACEMENT, Differential Side Retainer Oil Seal.>

NOTE:
After pulling out the axle shaft assembly, be sure to replace with a new oil seal.
3) Insert the axle shaft assembly into the hub spline, and pull in the axle shaft assembly into specified position.

CAUTION:
Do not tap the axle shaft using a hammer when installing axle shaft assembly.
4) Temporarily tighten the nut - axle.

5) Using the ST, install the front axle shaft assembly to the transmission.

Preparation tool:
ST: OIL SEAL PROTECTOR (28399SA010)

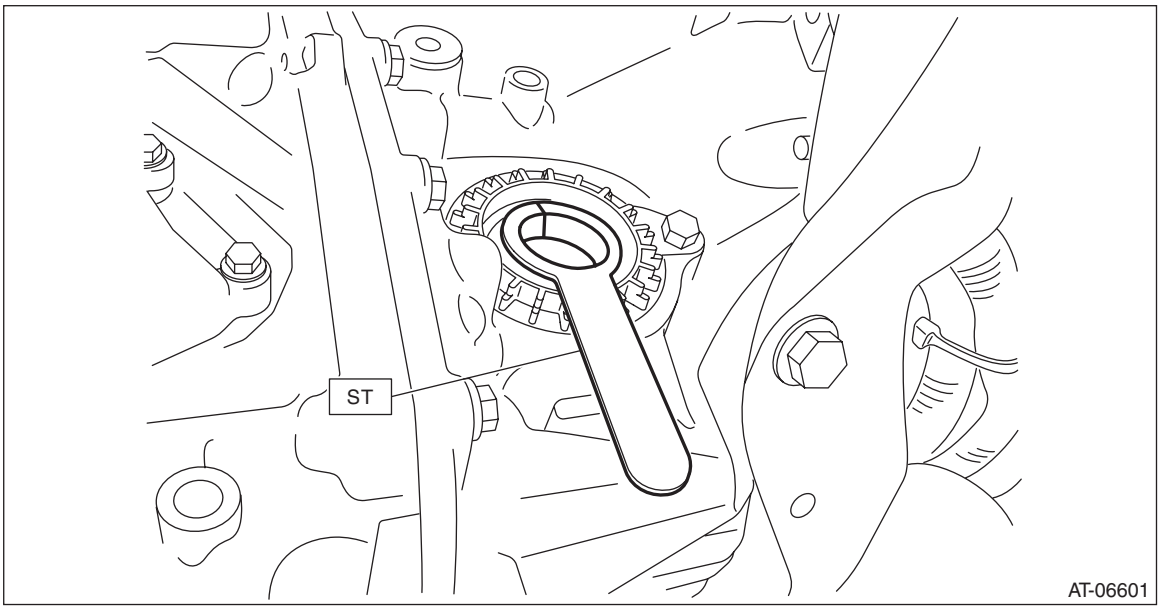

6) Install the ball joint assembly to the housing assembly - front axle.

CAUTION:
Before tightening, make sure the bottom surface of the housing assembly - front axle and the stepped section of ball joint are in contact.

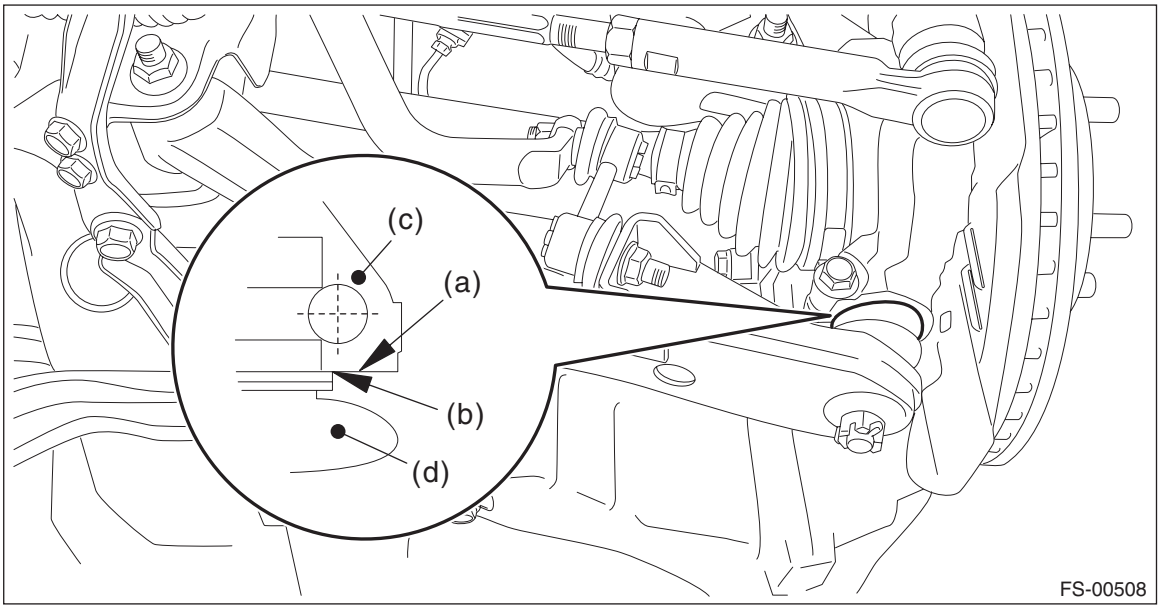

(a) Bottom surface of housing ASSY - front axle
(b) Raised section of ball joint
(c) Housing ASSY - front axle
(d) Ball joint

Tightening torque:
50 N·m (5.10 kgf-m, 36.9 ft-lb)

7) Install the stabilizer link.
- Except for XV model

Tightening torque:
38 N·m (3.87 kgf-m, 28.0 ft-lb)
- XV model

Tightening torque:
60 N·m (6.12 kgf-m, 44.3 ft-lb)
8) While depressing the brake pedal, tighten new nuts - axle to the specified torque.

CAUTION:
Do not load the front axle before tightening the nut - axle. Doing so may damage the hub unit COMPL.

Tightening torque:
220 N·m (22.43 kgf-m, 162.3 ft-lb)
9) After tightening the nut - axle, lock it securely.
10) Fill transmission gear oil. (MT model)
11) Fill differential gear oil. (CVT model)
12) Install the front wheels.

Tightening torque:
Except for C4 model: 120 N·m (12.24 kgf-m, 88.5 ft-lb)
C4 model: 100 N·m (10.20 kgf-m, 73.8 ft-lb)
13) Inspect the wheel alignment and adjust if necessary.
- Inspection: <Ref. to FS-7, INSPECTION, Wheel Alignment.>
- Adjustment: <Ref. to FS-11, ADJUSTMENT, Wheel Alignment.>

CAUTION:
When the wheel alignment has been adjusted, perform "VDC sensor midpoint setting mode". <Ref. to VDC-21, VDC SENSOR MIDPOINT SETTING MODE, ADJUSTMENT, VDC Control Module and Hydraulic Control Unit (VDCCM&H/U).>
14) Perform reinitialization of the auto headlight beam leveler system. (Model with auto headlight beam leveler) <Ref. to LI-18, PROCEDURE, Auto Headlight Beam Leveler System.>

C: DISASSEMBLY

1. AC + AAR TYPE

1) Remove the AAR outer race from shaft assembly.

CAUTION:
Be careful not to damage the boot.

(1) Place alignment marks on the shaft and outer race.

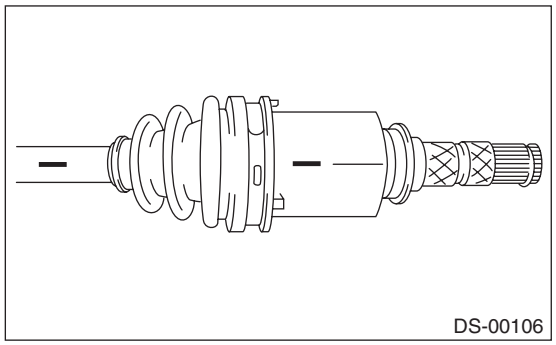

(2) Remove the AAR boot band and boot.

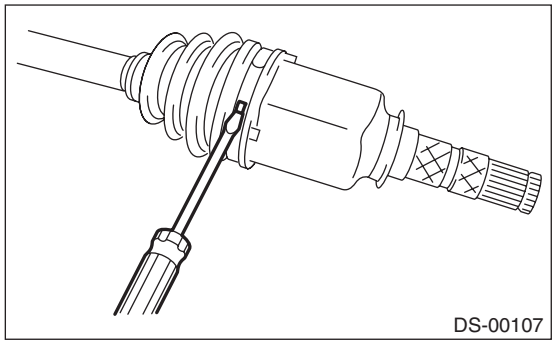

(3) Place the axle shaft between wooden blocks and fix it on a vise.

CAUTION:
Do not set the axle shaft directly on a vise.

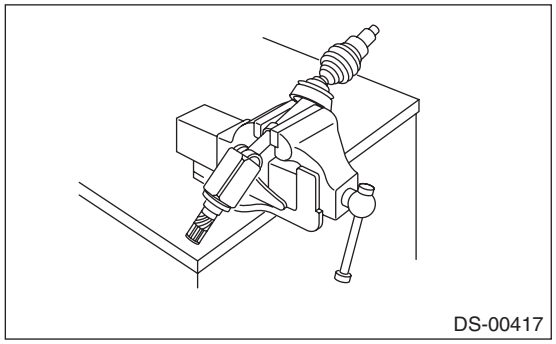

(4) Tap the staking are of the outer race alternately with a plastic or wooden bar, and remove one roller at a time.

CAUTION:
- **Tap the staking area (A) of the outer race.**
- **Do not use a metal bar as the outer race may deform.**
- **Be careful not to damage the roller parts.**

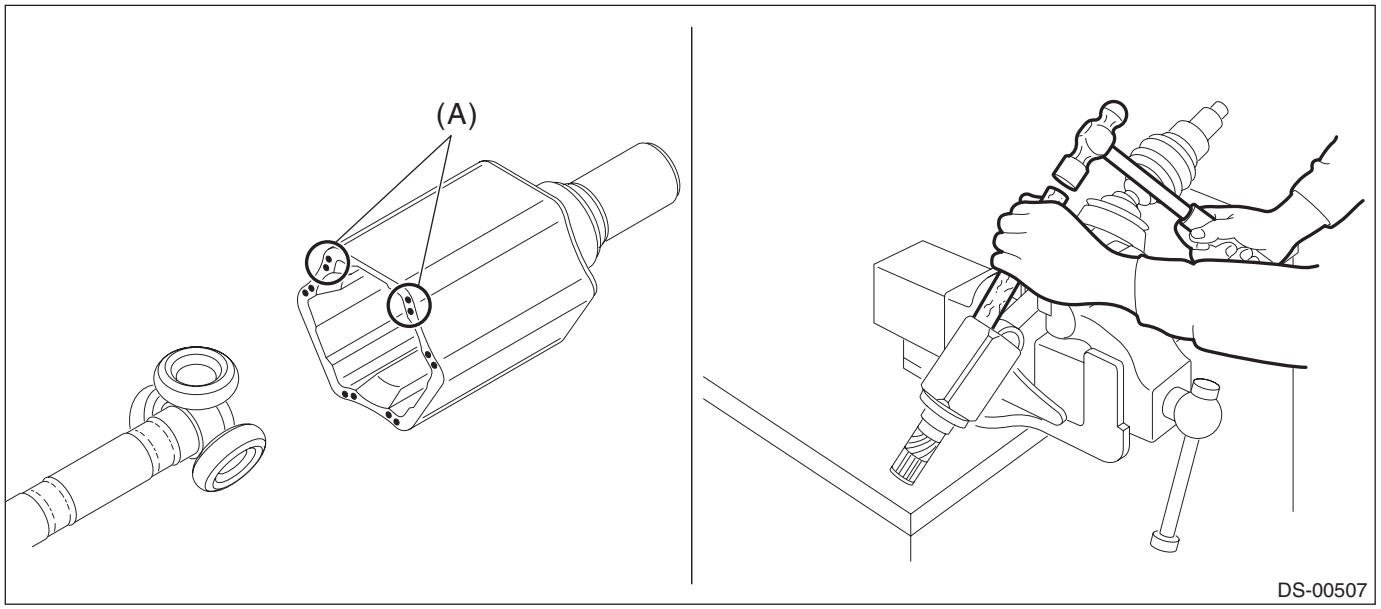

(5) Remove the outer race from shaft assembly.

CAUTION:
Make sure to have your associate held the outer race when removing the third roller to prevent the outer race from falling.

(6) Wipe off grease.

CAUTION:
The grease is a special type of grease. Do not mix with other grease.

2) Remove the roller kit from trunnion.

CAUTION:
Be careful with the roller kit position.

(1) Place alignment marks on the roller kit and trunnion.

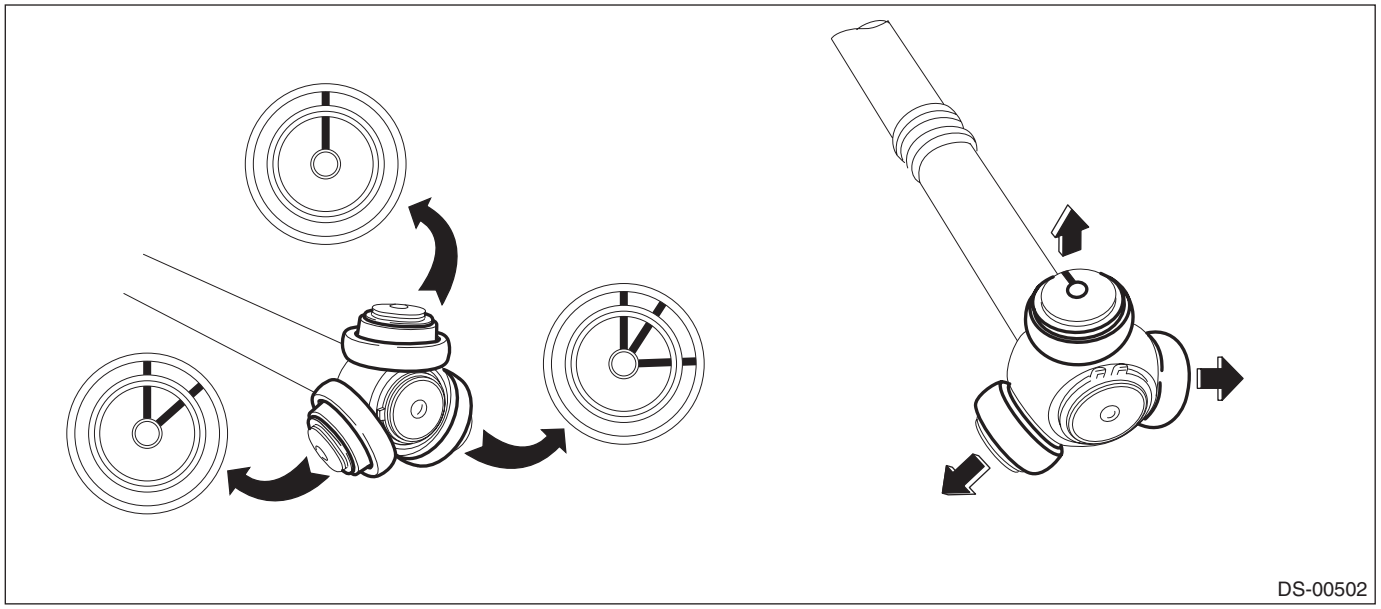

(2) Remove the roller kit from trunnion.

3) Remove the trunnion from the shaft.

(1) Place alignment marks on the trunnion and shaft.

(2) Remove the snap ring and trunnion.

CAUTION:
Be sure to wrap shaft splines with vinyl tape to protect the boot from scratches.

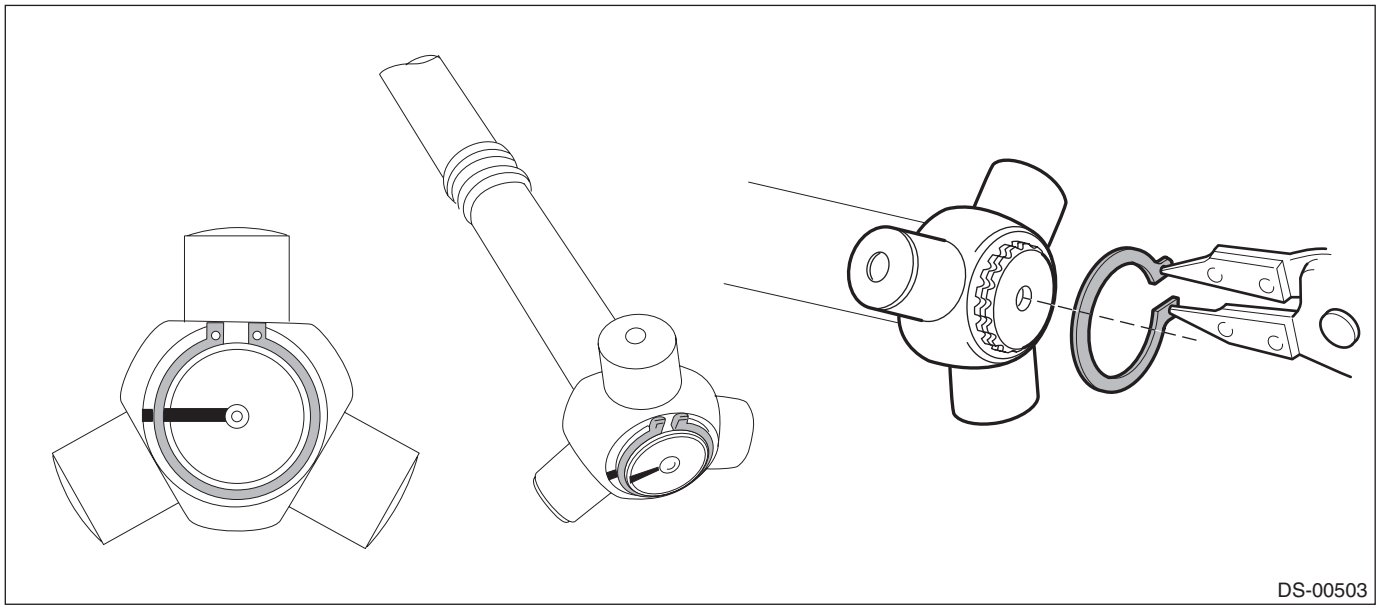

4) Remove the AAR boot.

NOTE:
The AC is a non-disassembly part, so the axle shaft disassembly stops here.

2. EBJ + PTJ TYPE

1) Place alignment marks on the shaft and outer race.

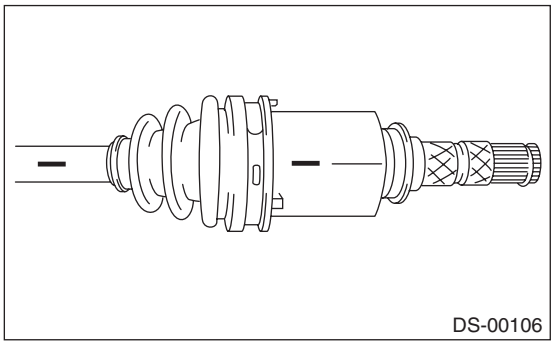

2) Remove the PTJ boot band and boot.

CAUTION:
Be careful not to damage the boot.

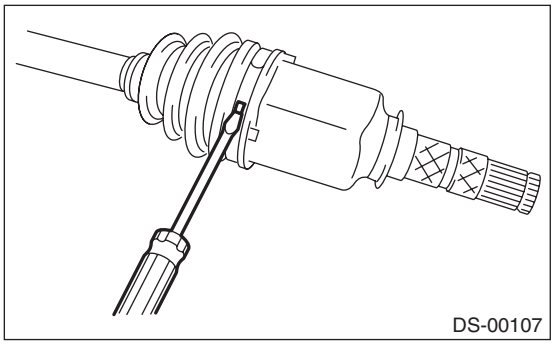

3) Remove the snap ring from PTJ outer race.

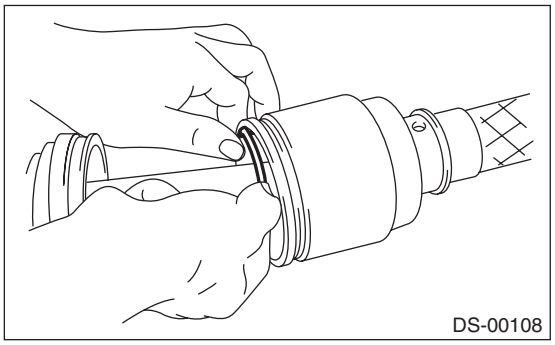

4) Remove the PTJ outer race from shaft assembly.
5) Wipe off grease.

CAUTION:
The grease is a special type of grease. Do not mix with other grease.

6) Place alignment marks on the roller kit and trunnion.

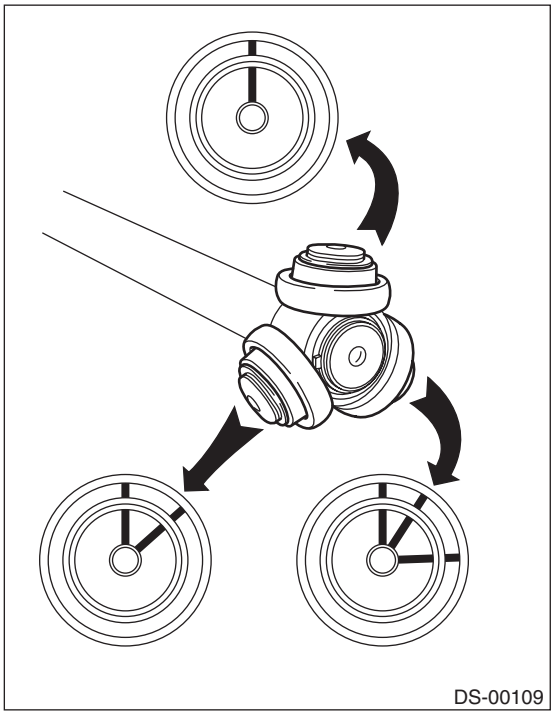

7) Remove the roller kit from trunnion.

CAUTION:
Be careful with the roller kit position.

8) Place alignment marks on the trunnion and shaft.

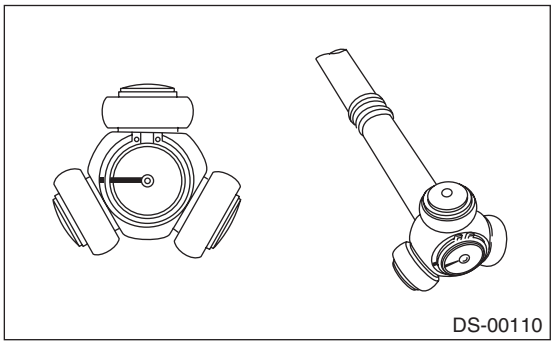

9) Remove the snap ring and trunnion.

CAUTION:
Be sure to wrap shaft splines with vinyl tape to protect the boot from scratches.

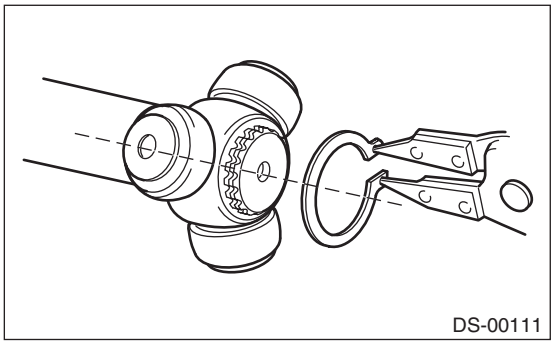

10) Remove the PTJ boot.
11) Remove the O-ring from the groove of the shaft.

NOTE:
The EBJ is a non-disassembly part, so the axle disassembly stops here.

D: ASSEMBLY

1. AC + AAR TYPE

NOTE:
Use specified grease.

AAR side:
One-Luber C

1) Pass the AAR boot through the shaft.
2) Install the trunnion to the shaft.
   (1) Match the alignment marks, and attach the trunnion onto the shaft.
   (2) Attach the snap ring to the shaft.

CAUTION:
Confirm that the snap ring is completely fitted in the shaft groove.

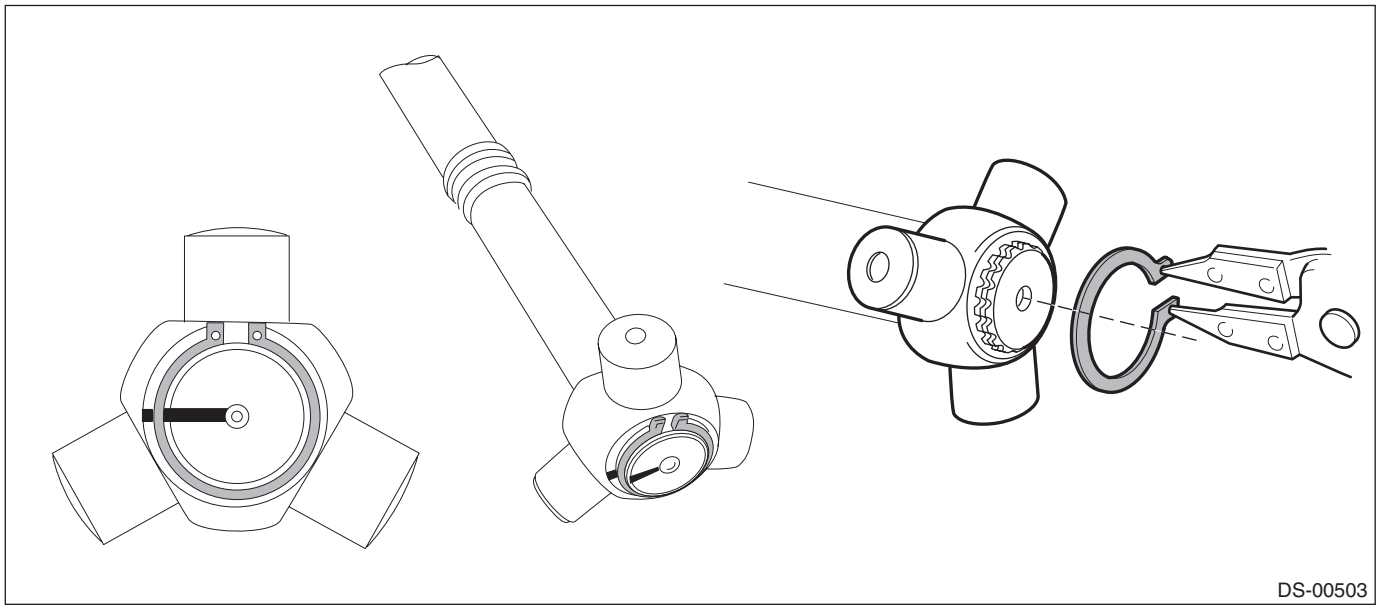

3) Fill 50 to 60 g (1.76 to 2.12 oz) of specified grease into the interior of AAR outer race.
4) Install the trunnion to the roller kit.
   (1) Apply a thin coat of specified grease to the roller kit and trunnion.
   (2) Place the axle shaft between wooden blocks and fix it on a vise.

CAUTION:
Do not set the axle shaft directly on a vise.
5) Align the alignment marks on the shaft and outer race.

6) Tap the insertion upper part of the outer race alternately using a plastic or wood bar shown in the figure, and then insert the roller one by one.

CAUTION:
- **Do not use a metal bar as the outer race may deform.**
- **Do not tap on the end of outer race (shaft part).**
- **Be careful not to deform the baffle plate.**

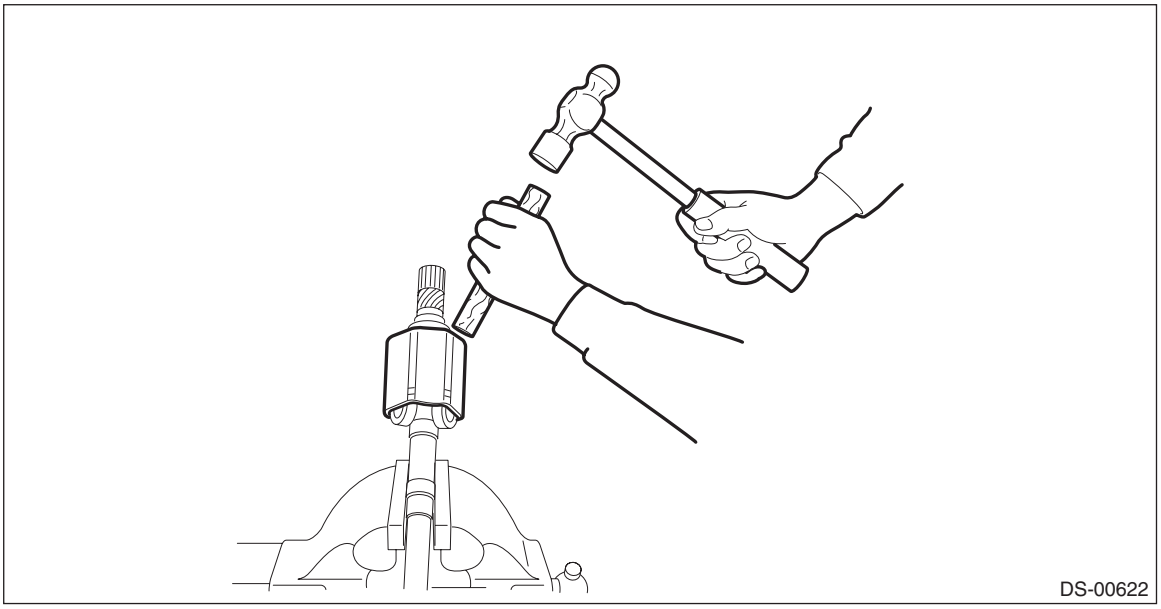

7) Apply an even coat of the specified grease 30 to 40 g (1.06 to 1.41 oz) to the entire inner surface of boot.
8) Install the AAR boot taking care not to twist it.

CAUTION:
Do not let grease get on groove of the outer race side.

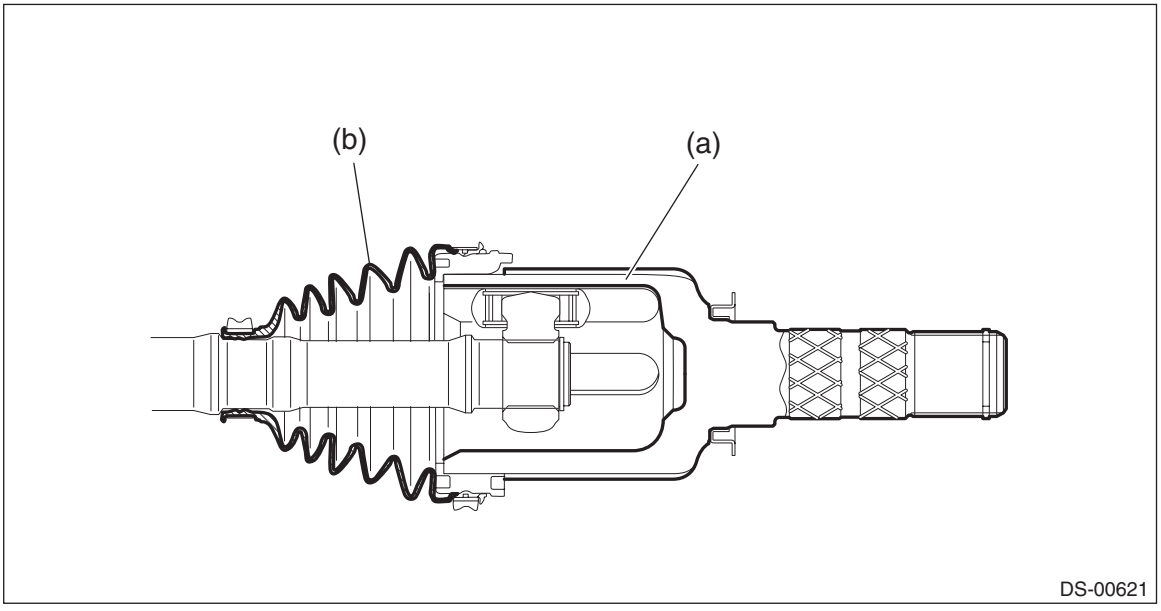

(a) Outer race
(b) Boot

9) Insert a flat tip screwdriver, etc. between outer race and boot to make pressure inside of boot as high as barometric pressure.
10) Tighten the boot band.
(1) Install the new large boot band and small boot band at the required positions.
(2) Connect the torque wrench and socket flex handle to the ST.

Preparation tool:
ST: BOOT BAND PLIER (28099AC000)
Torque wrench
Socket flex handle
(3) Use a prepared tool, tighten the boot band.

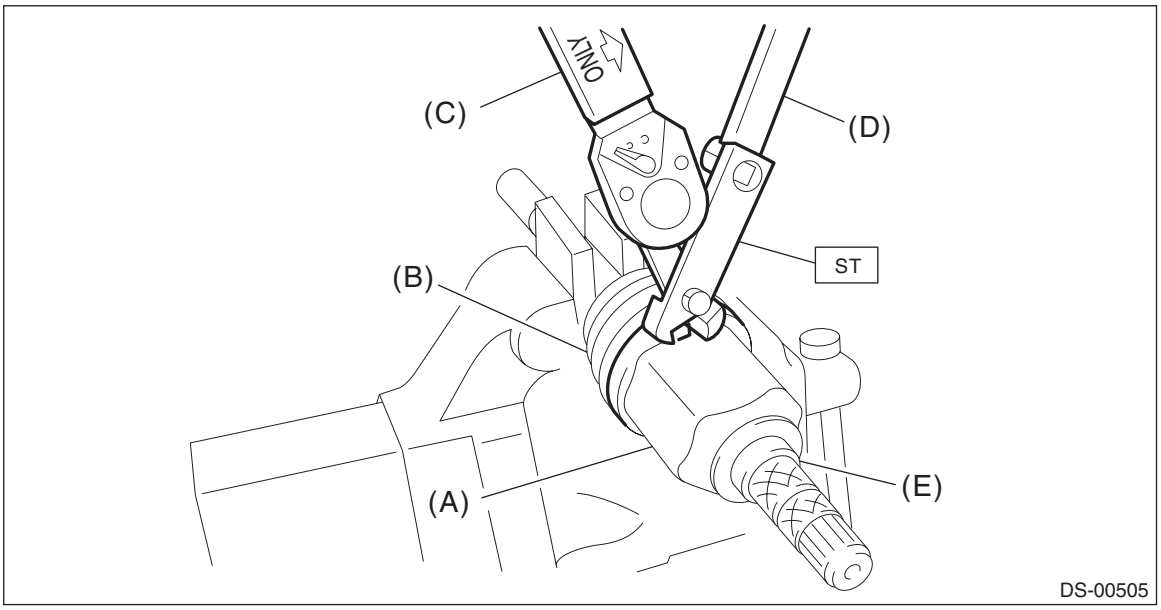

(A) Large boot band
(B) Boot
(C) Torque wrench
(D) Socket flex handle
(E) Outer race

Clearance at the crimped section of the boot band:
Large boot band: 1 mm (0.04 in) or less
Small boot band: 1 mm (0.04 in) or less

Tightening torque:
Large boot band: 178 N·m (18.15 kgf-m, 131.3 ft-lb)
Small boot band: 145 N·m (14.79 kgf-m, 106.9 ft-lb)
11) Extend and retract the AAR repeatedly to provide an equal coating of grease.

2. EBJ + PTJ TYPE

1) Roll up a thick piece of paper to a size where the shaft can pass through, and affix with tape to form a cylinder.
2) Attach a new O-ring on this cylinder.

CAUTION:
- **Always use a new O-ring.**
- **Be careful that the O-ring does not become scratched and that there are no foreign objects attached to it.**
- **Make sure to install the O-ring so that it does not twist as much as possible.**
- **Do not stretch the O-ring to 30 mm (1.18 in) inner diameter or more.**

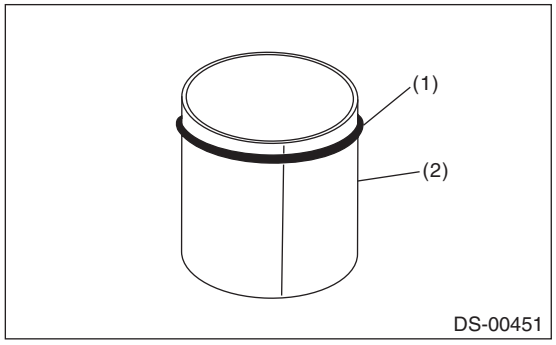

(1) O-ring
(2) Cylinder made with thick paper, etc.

3) Pass the cylinder material onto the shaft, and slide in the direction of the shaft axis.

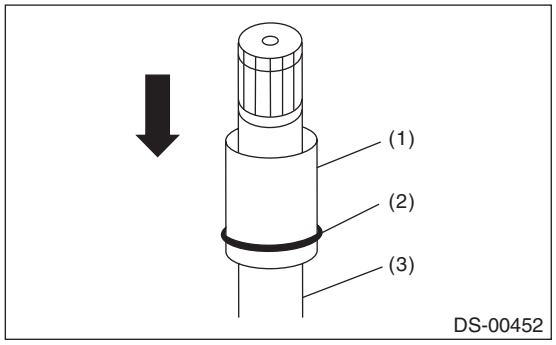

(1) Cylinder material
(2) O-ring
(3) Shaft

4) Clean the shaft boot groove, and wipe off the grease.

5) Slide the cylinder material near the shaft boot groove, and move the O-ring from the cylinder material onto the shaft boot groove.

CAUTION:
- **Attach the O-ring to the shaft boot groove center.**
- **Be careful that the O-ring does not become scratched and that there are no foreign objects attached to it.**
- **Make sure to install the O-ring so that it does not twist as much as possible.**
- **With the O-ring attached, do not wash with kerosene, gasoline, etc.**

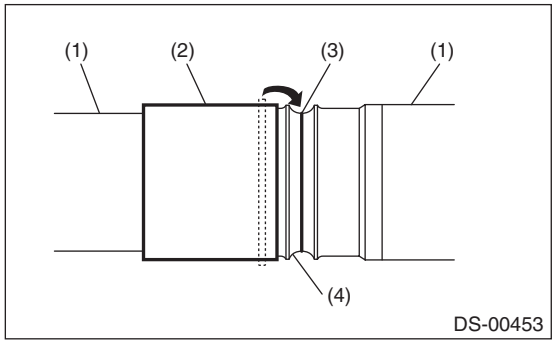

(1) Shaft
(2) Cylinder material
(3) O-ring
(4) Boot groove

6) Pass the PTJ small diameter boot band through the shaft.
7) Wrap vinyl tape around the splines of the shaft.

CAUTION:
To prevent damage to the boots, make sure to always wrap with vinyl tape for protection.
8) Install a new PTJ boot.

CAUTION:
Make sure to fit securely on the boot groove of the shaft.

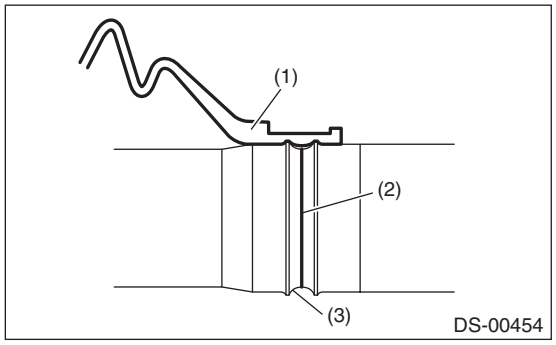

(1) PTJ boot
(2) O-ring
(3) Boot groove

9) Match the alignment marks, and attach the trunnion onto the shaft.

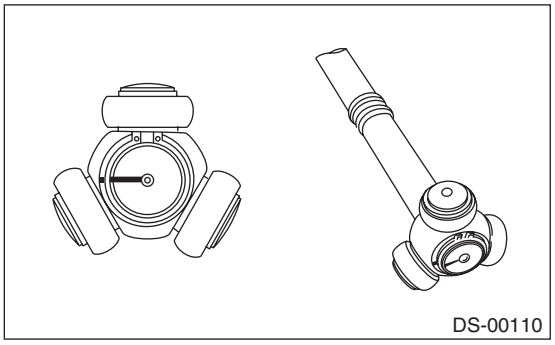

10) Attach the snap ring to the shaft.

CAUTION:
Confirm that the snap ring is completely fitted in the shaft groove.

11) Fill 100 to 110 g (3.53 to 3.88 oz) of specified grease into the interior of the PTJ outer race.

Grease:
NKG302

12) Apply a thin coat of specified grease to the roller kit and trunnion.
13) Match the alignment marks of the roller kit and trunnion, and attach the roller kit.

CAUTION:
Be careful with the roller kit position.

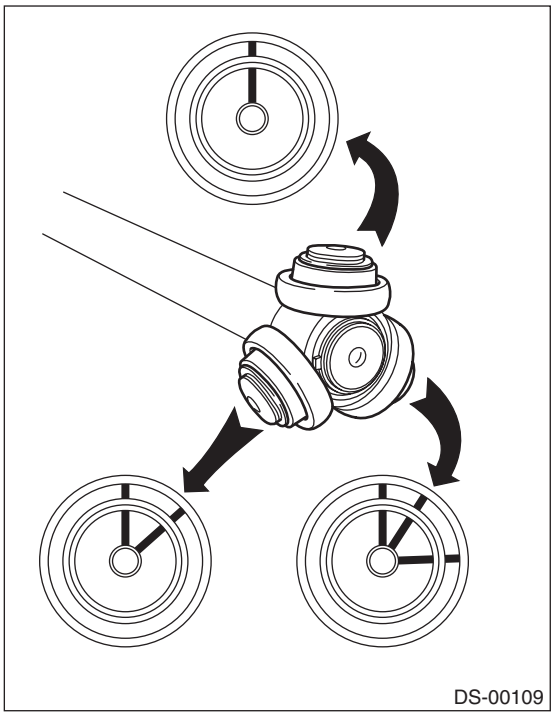

14) Match the alignment marks of the shaft and outer race, and attach the outer race.

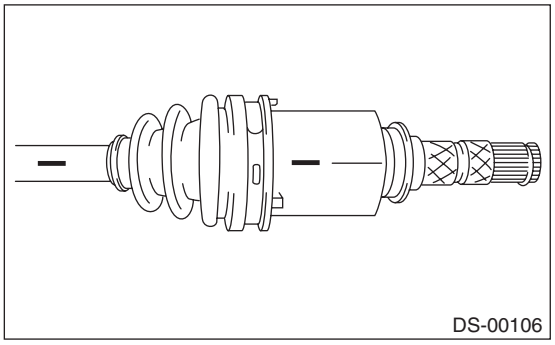

15) Install the snap ring in the groove of the PTJ outer race.

CAUTION:
Pull the shaft lightly and make sure that the snap ring is completely fitted in the groove.

16) Apply an even coat of the specified grease 30 to 40 g (1.06 to 1.41 oz) to the entire inner surface of boot.
17) Attach the PTJ boot taking care not to twist it.

CAUTION:
• Clean the large end of PTJ boot and the boot groove well, and remove the grease and other substances.
• When installing the PTJ boot, position the outer race of the PTJ at center of the stroke.

18) Set the new boot band at the specified position.
19) Tighten the boot bands using ST, torque wrench and socket flex handle.

CAUTION:
The large boot band is to be tightened so that the omega shaped part is at the position indicated in the figure below.

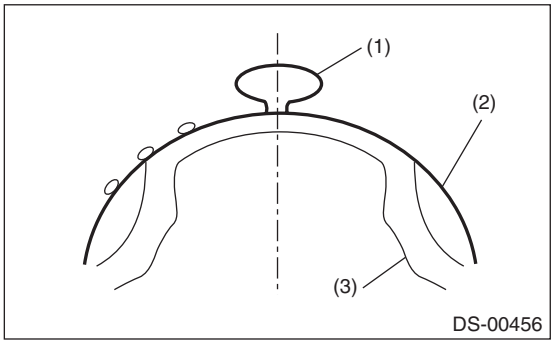

(1) Omega shaped part
(2) Boot band
(3) Outer race

ST 28099AC000 BOOT BAND PLIER

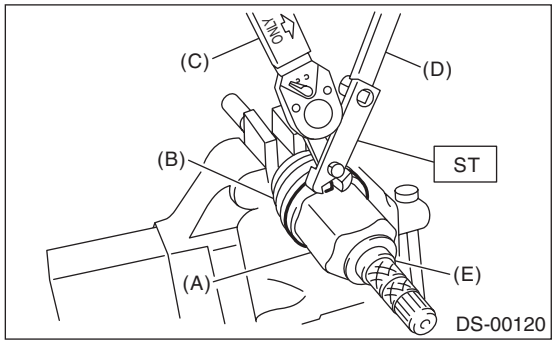

(A) Large boot band
(B) Boot
(C) Torque wrench
(D) Socket flex handle
(E) Outer race

Tightening torque:
Large boot band
178 N·m (18.15 kgf-m, 131.3 ft-lb)
Small boot band
145 N·m (14.79 kgf-m, 106.9 ft-lb)

20) Extend and retract the PTJ repeatedly so that grease is spread evenly.

E: INSPECTION

Check the removed parts for damage, wear, corrosion etc. If faulty, repair or replace.

- **AAR and AC:**

Check for seizure, corrosion, damage, wear and excessive play.

- **PTJ (Pillow Tripod Joint):**

Check for seizure, corrosion, damage, wear and excessive play.

- **EBJ (High-Efficiency Compact Ball fixed Joint):**

Check for seizure, corrosion, damage and excessive play.

- **Shaft:**

Check for excessive bending, twisting, damage and wear.

- **Boot:**

Check for wear, warping, breakage and scratches.

- **Grease:**

Check for discoloration and fluidity.

8. Rear Drive Shaft

A: REMOVAL

1) Disconnect the ground cable from battery. <Ref. to NT-5, BATTERY, NOTE, Note.>

NOTE:
For the 12 volt engine restart battery of HEV model, disconnect the ground terminal from 12V engine restart battery sensor.
2) Lift up the vehicle, and then remove the rear wheels.
3) Remove the nut - axle.

CAUTION:
Do not loosen the nut - axle while the rear axle is loaded. Doing so may damage the hub unit COMPL.
(1) Lift the crimped section of the nut - axle.
(2) Remove the nut - axle using a socket wrench while depressing the brake pedal.

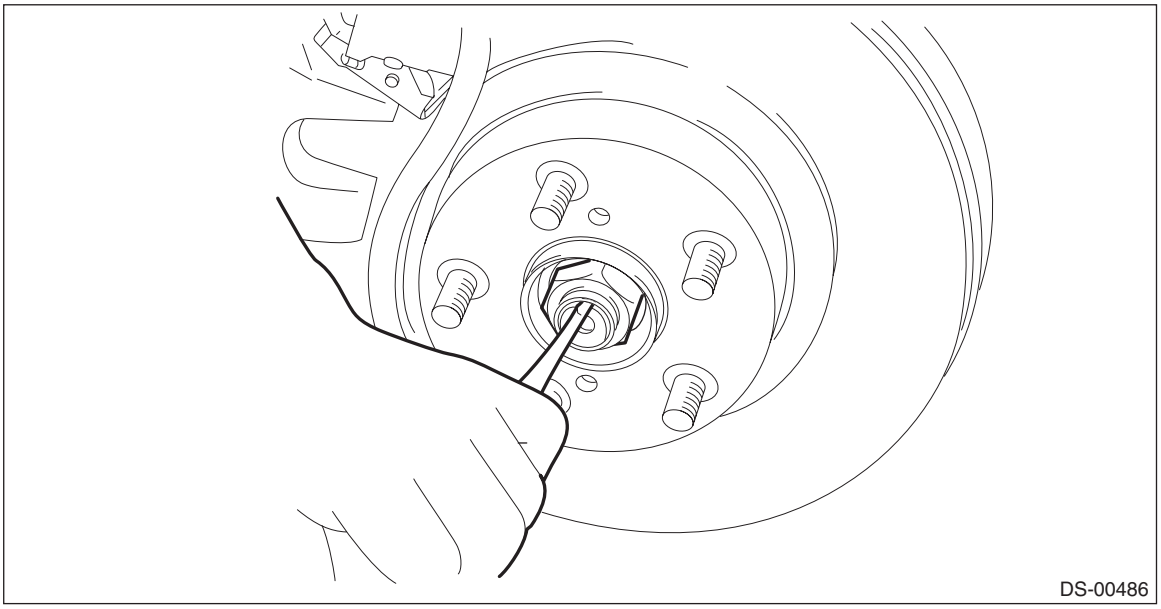

4) Remove the sensor assembly - headlight beam leveler. (Model with auto headlight beam leveler)

CAUTION:
Do not apply impact to the sensor assembly - headlight beam leveler or forcibly move the arm. Doing so may cause sensor damage and malfunction.

(1) Disconnect the connector of the sensor assembly - headlight beam leveler.
(2) Remove the nuts, and remove the sensor assembly - headlight beam leveler.

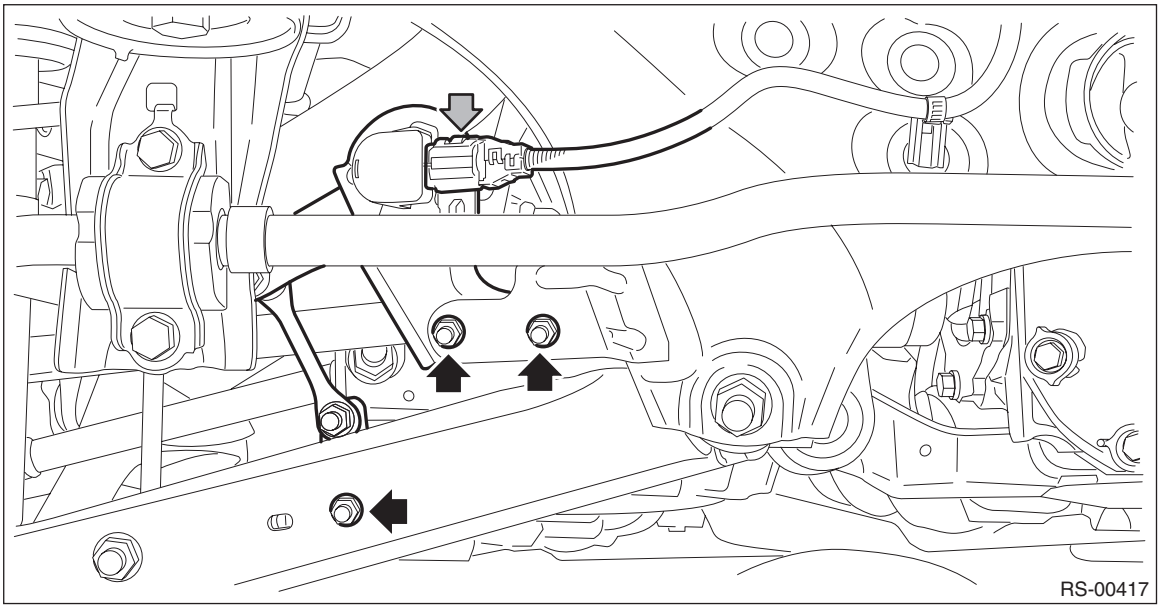

5) Drain differential gear oil.
6) Remove the propeller shaft. <Ref. to DS-12, REMOVAL, Propeller Shaft.>
7) Loosen the joint of rear differential assembly and rear axle shaft assembly.

- T type: Pull out the rear axle shaft assembly by fitting the ST to the bolt (a) as shown in the figure.

CAUTION:
Fit the ST to the bolts as shown in the figure to prevent damage of the side bearing retainer.

Preparation tool:
ST: DRIVE SHAFT REMOVER (28099PA100)

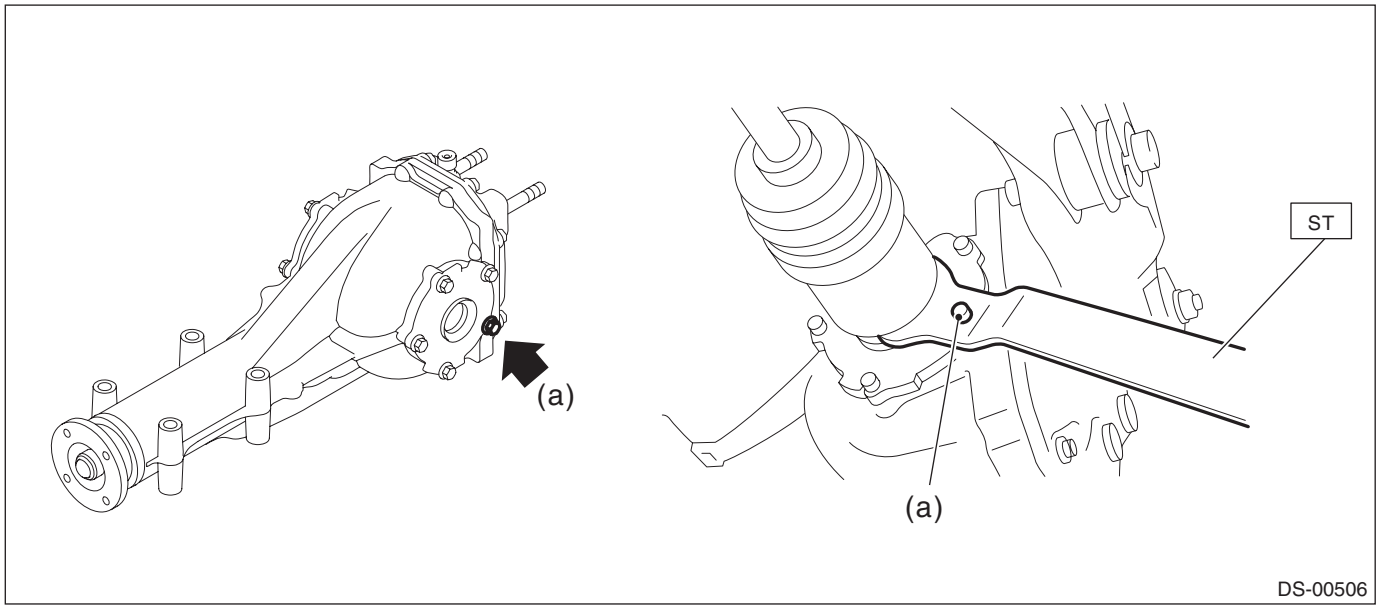

• VA type: Pull out the rear axle shaft assembly by fitting the tire lever (b) to the bolt (a) as shown in the figure.

CAUTION:
To prevent damage to the side bearing retainer, use by placing the tire lever against the bolt as shown in the figure.

Preparation tool:
Tire lever

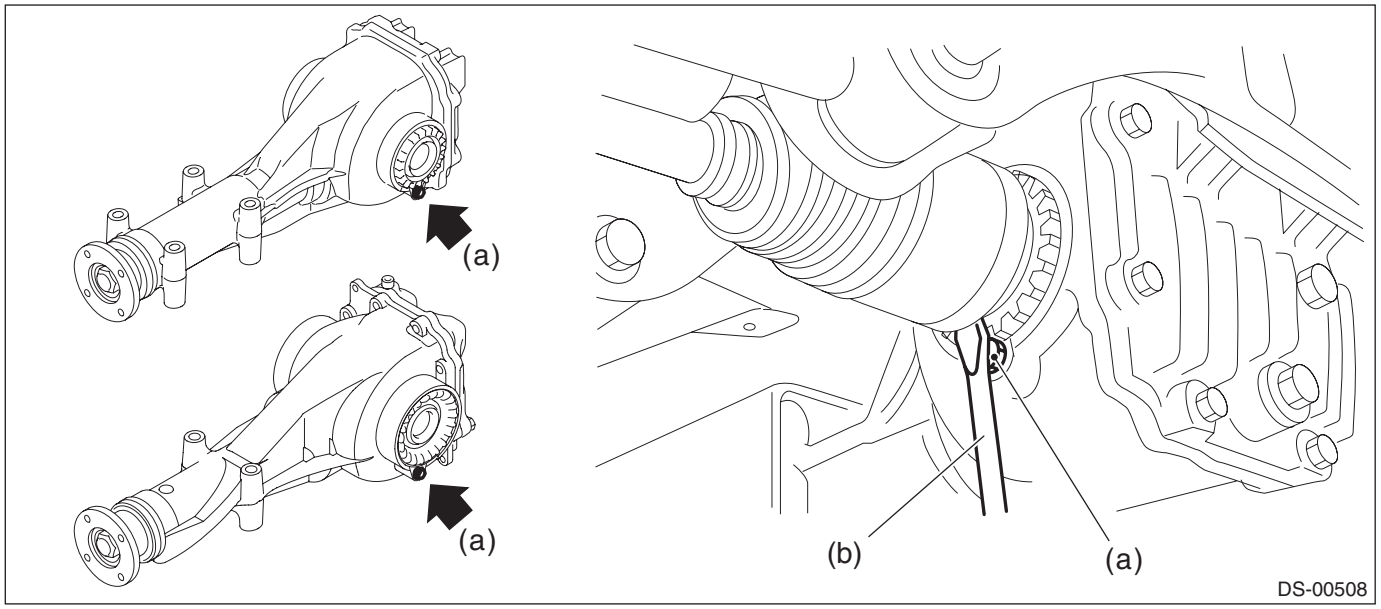

8) Remove the installation section of rear differential assembly.
(1) Support the rear differential assembly with a transmission jack.
(2) Remove the bolts which hold the rear differential front crossmember from the rear sub frame assembly.

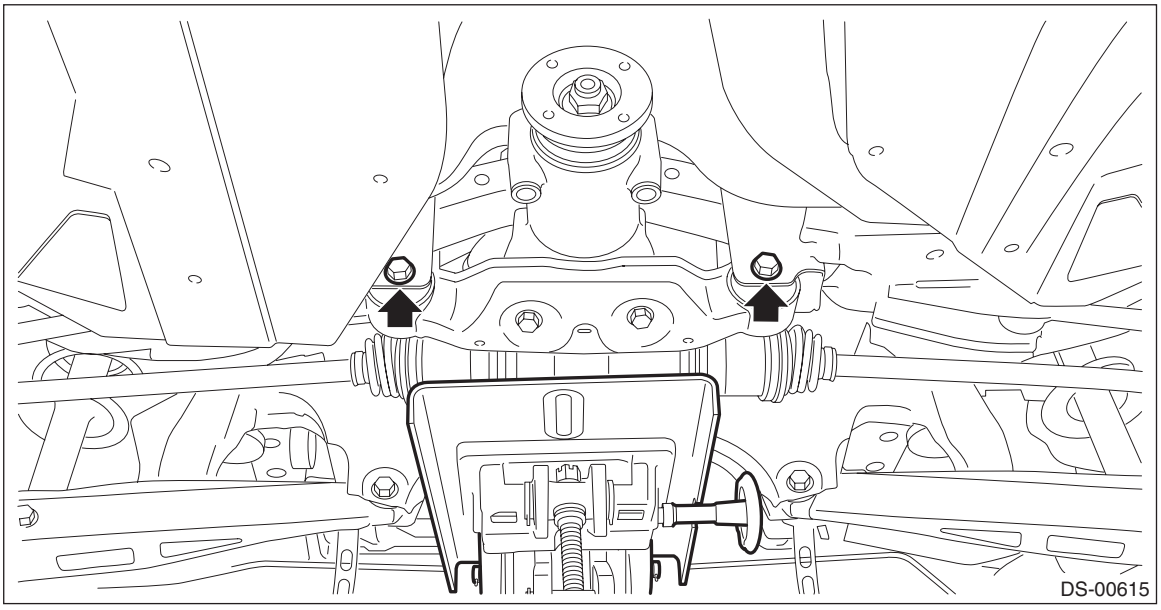

(3) Remove the self-locking nuts which hold the rear differential to the rear sub frame assembly.

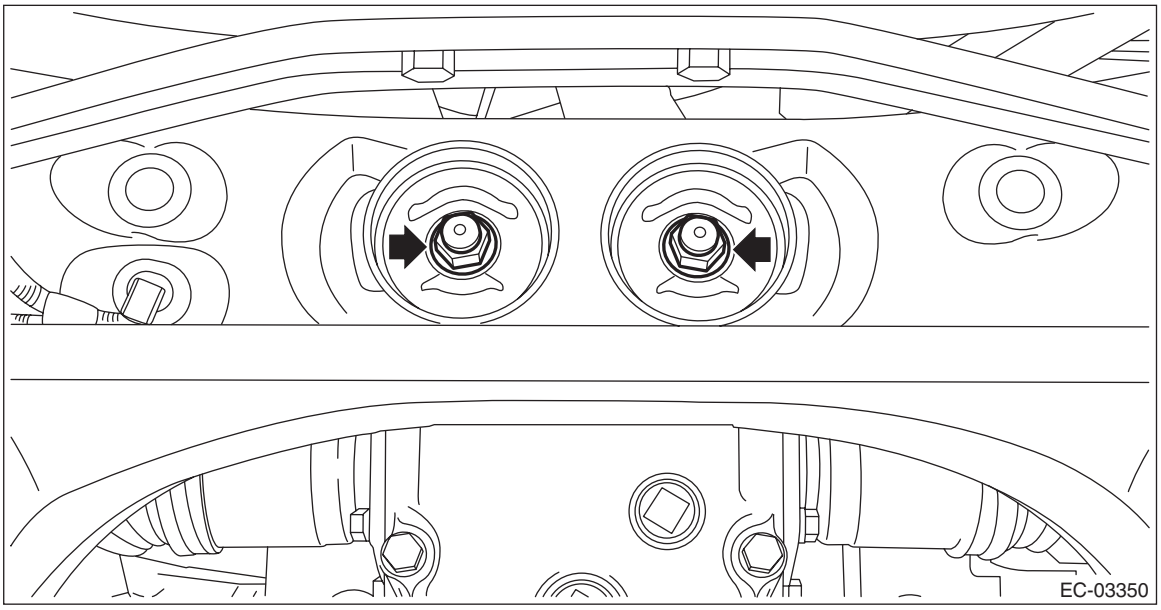

9) Completely pull out the rear axle shaft assembly while lowering the rear differential.

CAUTION:
Pay attention to avoid damaging the boot of axle shaft.

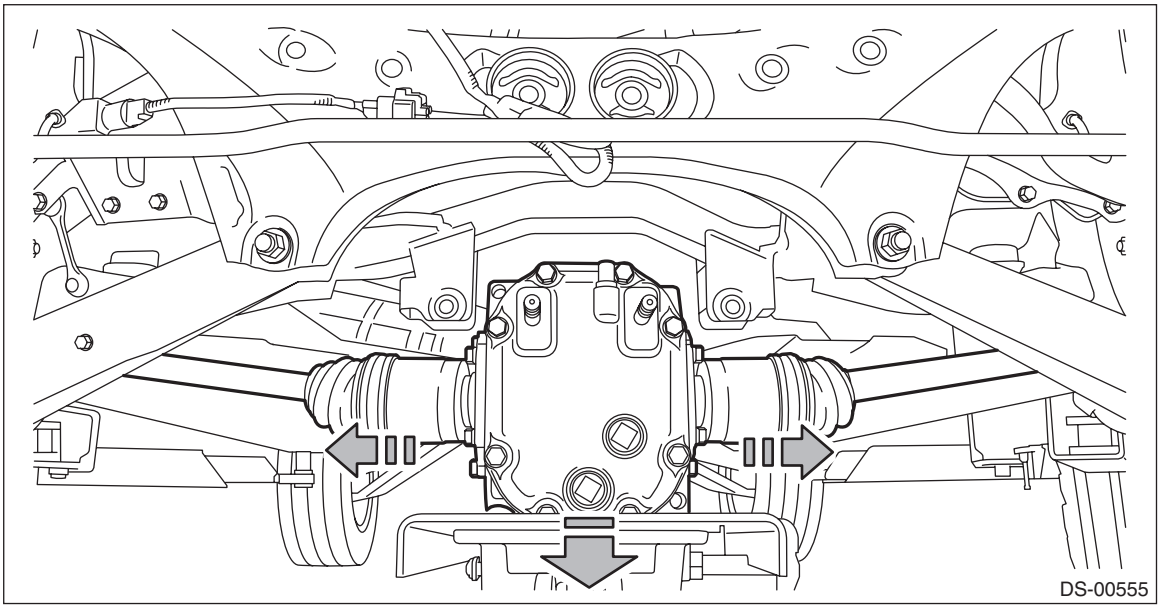

10) Remove the rear axle shaft assembly from the housing assembly - rear axle.

NOTE:
If it is hard to remove, use the ST.

Preparation tool:
ST1: AXLE SHAFT PULLER (926470000)
ST2: AXLE SHAFT PULLER PLATE (28099PA110)

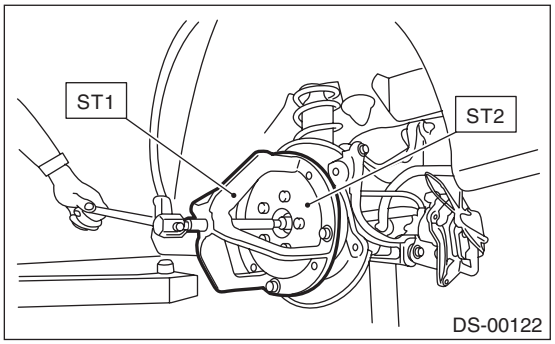

B: INSTALLATION

1) Replace the rear differential side oil seal. <Ref. to DI-60, REPLACEMENT, Rear Differential Side Oil Seal.>

NOTE:
After pulling out the axle shaft assembly, be sure to replace with a new oil seal.
2) Insert the axle shaft assembly into the rear hub spline, and pull in the axle shaft assembly into specified position.

CAUTION:
- **Be careful not to damage the magnetic encoder.**
- **Do not get closer the tool which charged magnetism to magnetic encoder.**
- **Do not tap the axle shaft using a hammer when installing axle shaft assembly.**

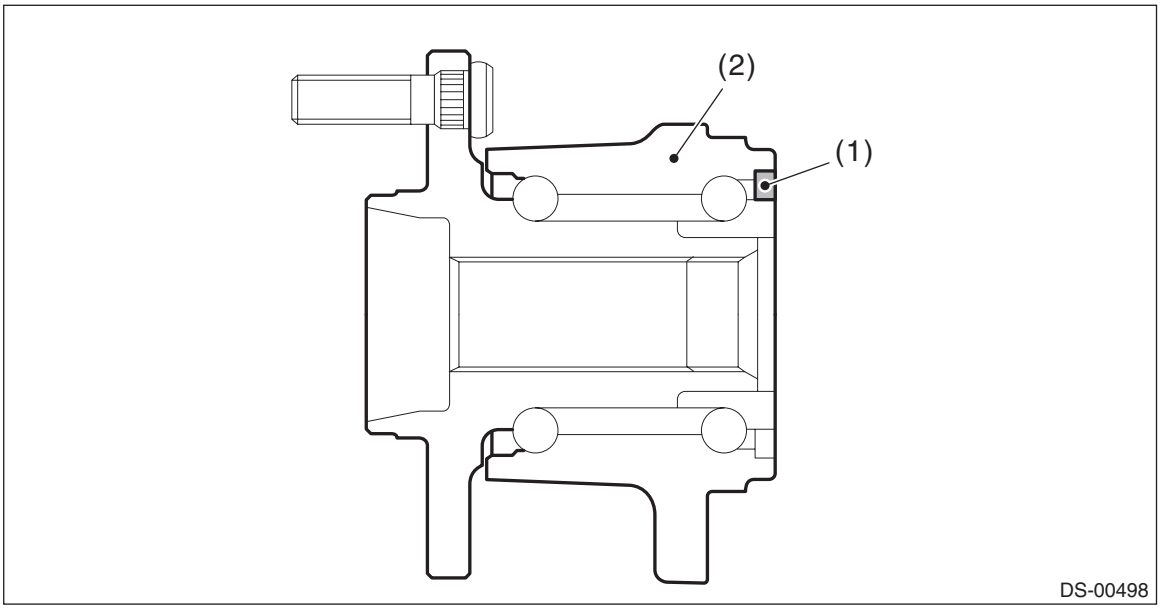

(1) Magnetic encoder (2) Hub unit COMPL - rear axle

3) Temporarily tighten the nut - axle.
4) Using the ST, install the rear axle shaft assembly to the rear differential.

Preparation tool:
ST: OIL SEAL PROTECTOR (28099PA090)

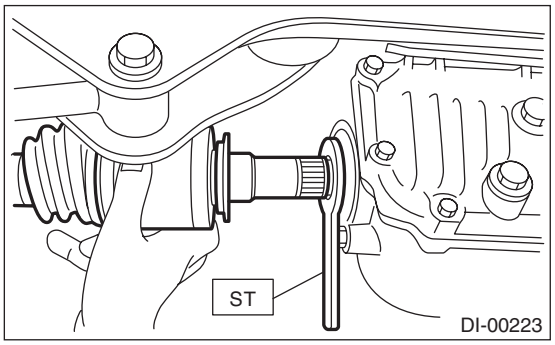

5) Install the rear differential assembly to the rear sub frame assembly.

CAUTION:
Be sure to use a new self-locking nut.

Tightening torque:
Differential assembly — bushing - differential: 70 N·m (7.14 kgf-m, 51.6 ft-lb)
Differential assembly — rear sub frame assembly: 110 N·m (11.22 kgf-m, 81.1 ft-lb)
6) Install the sensor assembly - headlight beam leveler.

Tightening torque:
7.5 N·m (0.76 kgf-m, 5.5 ft-lb)
7) While pressing the brake pedal, tighten the new axle nuts to the specified torque.

CAUTION:
Do not load the rear axle before tightening the nut - axle. Doing so may damage the hub unit COMPL.

Tightening torque:
190 N·m (19.37 kgf-m, 140.1 ft-lb)
8) Lock the nut - axle securely.

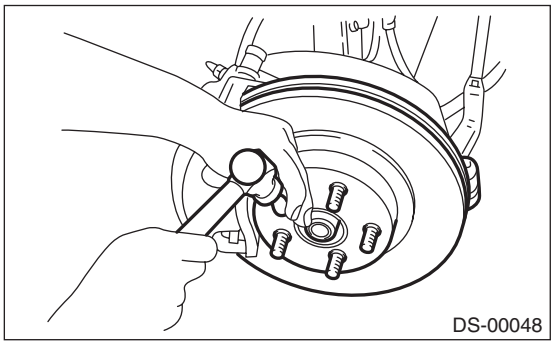

9) Fill differential gear oil.
10) Install the rear wheels.

Tightening torque:
Except for C4 model: 120 N·m (12.24 kgf-m, 88.5 ft-lb)
C4 model: 100 N·m (10.20 kgf-m, 73.8 ft-lb)
11) Perform reinitialization of the auto headlight beam leveler system. (Model with auto headlight beam leveler) <Ref. to LI-18, PROCEDURE, Auto Headlight Beam Leveler System.>

C: DISASSEMBLY

1) Take out the DOJ outer race from the shaft assembly.

CAUTION:
Be careful not to damage the boot.

(1) Using a flat tip screwdriver or plier, loosen the boot band on the large end of DOJ boot.

CAUTION:
Be careful not to damage the boot.

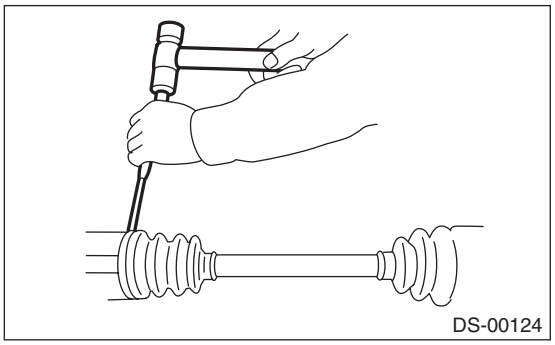

(2) Remove the boot band on the small end of DOJ boot in the same manner.
(3) Remove the large end of DOJ boot from DOJ outer race.
(4) Remove the round snap ring at the neck of DOJ outer race with a flat tip screwdriver.

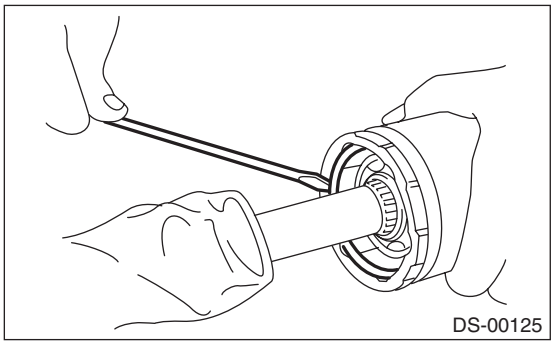

(5) Take out the DOJ outer race from the shaft assembly.
(6) Wipe off the grease and take out the ball bearings.

CAUTION:
The grease is a special grease (grease for constant velocity joints). Do not mix with other greases.

NOTE:
Disassemble the parts taking care not to lose balls.

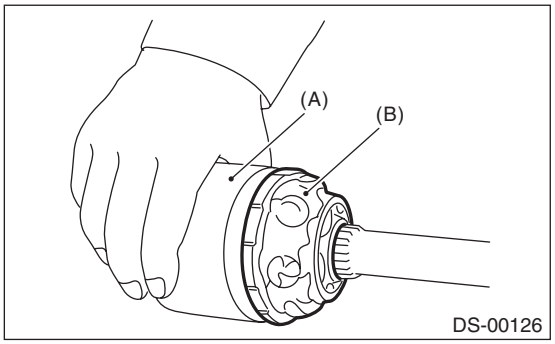

(A) Outer race
(B) Grease

2) Remove the cage from the inner race.
(1) Turn the cage by a half pitch to the track groove of inner race and shift the cage.
(2) Using pliers, remove the snap ring fixing the inner race to the shaft.

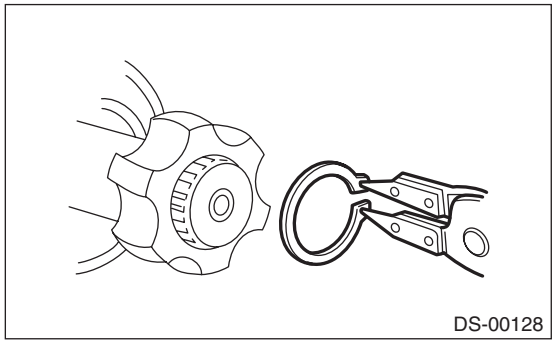

(3) Take out the DOJ inner race.
(4) Take off the DOJ cage from shaft and remove the DOJ boot.

CAUTION:
Wrap shaft splines with vinyl tape to protect the boot from scratches.

3) Remove the BJ boot or EBJ boot in the same procedure as the DOJ boot.

NOTE:
The BJ is a non-disassembly part, so the axle shaft disassembly stops here.

D: ASSEMBLY

1. MT MODEL EXCEPT FOR XV MODEL AND XV MODEL

CAUTION:
Wrap shaft splines with vinyl tape to protect the boot from scratches.

NOTE:
Use specified grease.

Grease:
BJ, EBJ side: NKG814
DOJ side: NKG814

1) Install the DOJ inner race to the shaft.
(1) Install the BJ or EBJ boot in specified position, and fill it with 50 to 60 g (1.76 to 2.12 oz) of specified grease.
(2) Place the DOJ boot at the center of shaft.
(3) Insert the DOJ cage onto shaft.

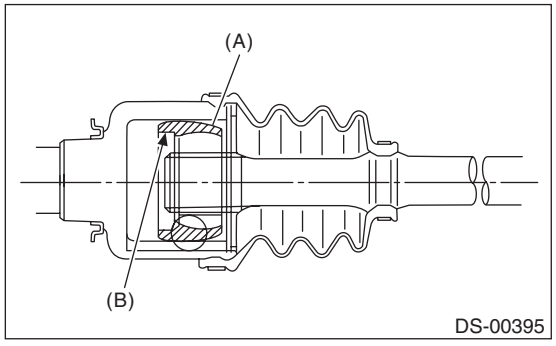

(A) Cage
(B) Cutout portion

NOTE:
Insert the cage with the cutout portion facing the shaft end, since the cage has an orientation.

(4) Install the DOJ inner race on shaft and fix the snap ring in place with pliers.

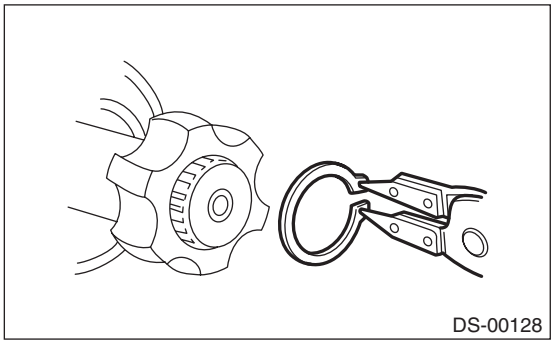
DS-00128

NOTE:
Confirm that the snap ring is completely fitted in the shaft groove.

2) Install the cage to the inner race.

(1) Install the cage (B) with the protruding section aligned with the track on the inner race (A), and turn by a half pitch.

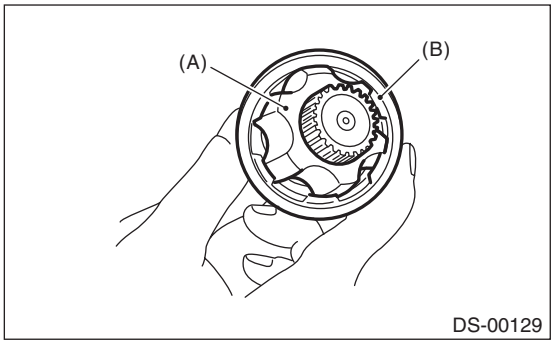

DS-00129

(2) Fill 80 to 90 g (2.82 to 3.17 oz) of specified grease into the inner side of the DOJ outer race.
(3) Apply a thin coat of specified grease to the cage pocket and ball.
(4) Insert the ball bearings into the cage pocket.

3) Connect the shaft assembly to the outer race.

(1) Align the outer race track and ball positions, and place the shaft, inner race, cage and ball bearings in the original positions, and then fix outer race in place.

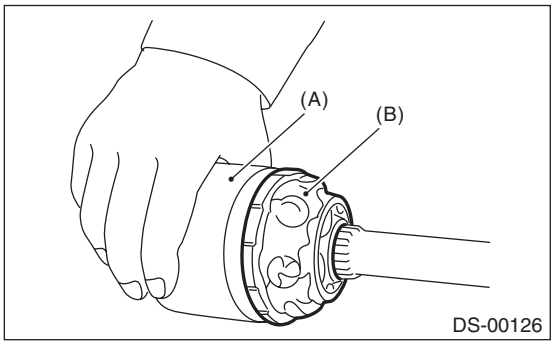

DS-00126

(A) Outer race
(B) Grease

(2) Install the snap ring in the groove on the DOJ outer race.

CAUTION:
Be careful of the following items during installation:
- **Make sure that the balls, cage and inner race are completely fitted in the outer race of DOJ.**
- **Use care not to place the matched position of snap ring in the ball groove of outer race.**
- **Pull the shaft lightly and assure that the circlip is completely fitted in the groove.**

(3) Apply an even coat of the specified grease [20 to 30 g (0.71 to 1.06 oz)] to the entire inner surface of boot. Also apply grease to the shaft.
(4) Install the DOJ boot taking care not to twist it.

NOTE:
• The inside of the large end of DOJ boot and the boot groove shall be cleaned so as to be free from grease and other substances.
• When installing the DOJ boot, position the outer race of DOJ at center of the stroke.
(5) Put a new band through the clip and wind twice in the band groove of the boot.
(6) Pinch the end of band with pliers. Hold the clip and tighten securely.

NOTE:
When tightening boot, use care so that the air within the boot is appropriate.
(7) Tighten the band using the ST.

Preparation tool:
ST: BAND TIGHTENING TOOL (925091000)

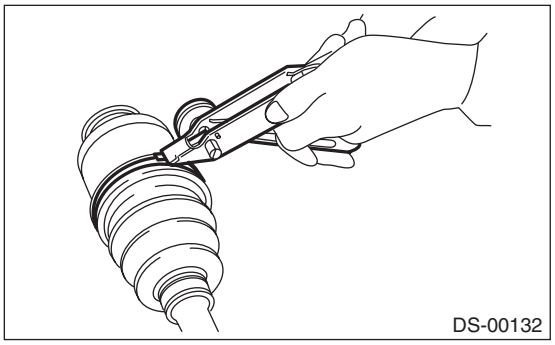
DS-00132

NOTE:
Tighten the band until it cannot be moved by hand.
(8) Tap the clip with the punch provided at the end of the ST.

Preparation tool:
ST: BAND TIGHTENING TOOL (925091000)

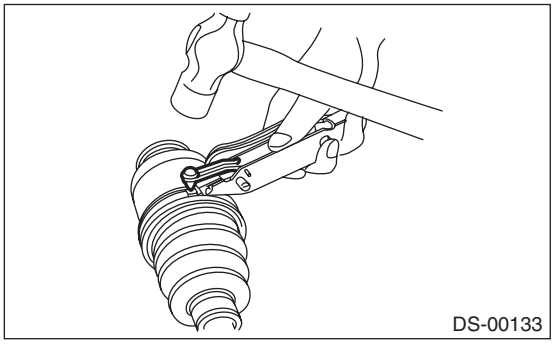
DS-00133

NOTE:
Tap to an extent that the boot underneath is not damaged.
(9) Cut off the band with an allowance of about 10 mm (0.39 in) left from the clip and bend this allowance over the clip.

CAUTION:
Make sure that the end of the band is in close contact with clip.
4) Extend and retract the DOJ repeatedly to provide an equal coating of grease.

2. CVT MODEL EXCEPT FOR XV MODEL

CAUTION:
Wrap shaft splines with vinyl tape to protect the boot from scratches.

NOTE:
Use specified grease.

Grease:
BJ side: Raremax LF-G
DOJ side: Raremax LF-G

1) Install the DOJ inner race to the shaft.
   (1) Install the BJ boot to the specified position, and fill it with 50 to 60 g (1.76 to 2.12 oz) of specified grease.
   (2) Place the DOJ boot at the center of shaft.
   (3) Insert the DOJ cage onto shaft.

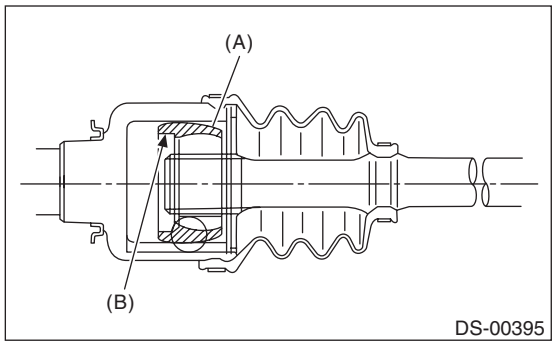

(A) Cage
(B) Cutout portion

NOTE:
Insert the cage with the cutout portion facing the shaft end, since the cage has an orientation.

   (4) Install the DOJ inner race on shaft and fix the snap ring in place with pliers.

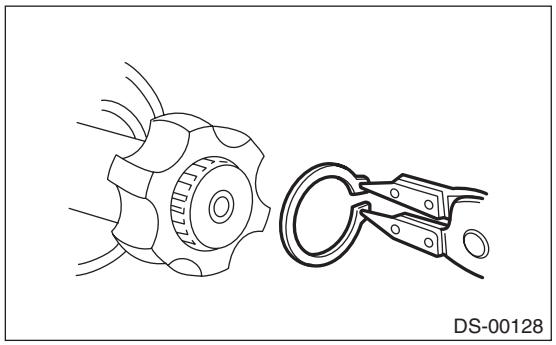

NOTE:
Confirm that the snap ring is completely fitted in the shaft groove.

2) Install the cage to the inner race.
(1) Install the cage (B) with the protruding section aligned with the track on the inner race (A), and turn by a half pitch.

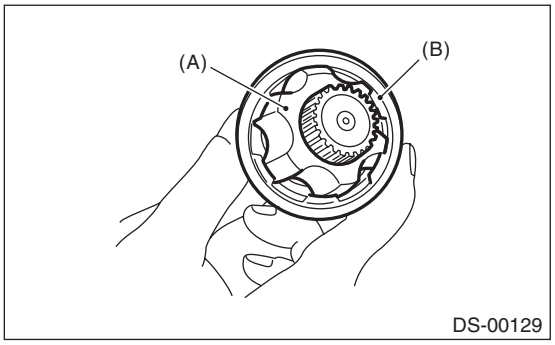

(2) Fill 80 to 90 g (2.82 to 3.17 oz) of specified grease into the inner side of the DOJ outer race.
(3) Apply a thin coat of specified grease to the cage pocket and ball.
(4) Insert the ball bearings into the cage pocket.
3) Connect the shaft assembly to the outer race.
(1) Align the outer race track and ball positions, and place the shaft, inner race, cage and ball bearings in the original positions, and then fix outer race in place.

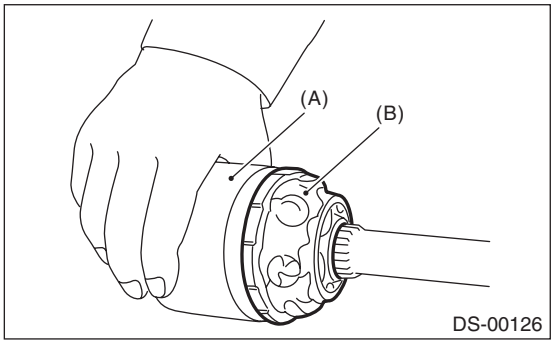

(A) Outer race
(B) Grease

(2) Install the snap ring in the groove on the DOJ outer race.

CAUTION:
Be careful of the following items during installation:
- **Make sure that the balls, cage and inner race are completely fitted in the outer race of DOJ.**
- **Use care not to place the matched position of snap ring in the ball groove of outer race.**
- **Pull the shaft lightly and assure that the circlip is completely fitted in the groove.**

(3) Apply an even coat of the specified grease [20 to 30 g (0.71 to 1.06 oz)] to the entire inner surface of boot. Also apply grease to the shaft.
(4) Install the DOJ boot and BJ boot taking care not to twist it.

NOTE:
- The inside of the large end of DOJ boot and the boot groove shall be cleaned so as to be free from grease and other substances.
- When installing the DOJ boot, position the outer race of DOJ at center of the stroke.

(5) Prepare a new band, pinch (a) and (e) of the band with needle nose pliers, and align it with the groove of the boot.

CAUTION:
- **Be careful not to damage the boot.**
- **When tightening boot, use care so that the air within the boot is appropriate.**

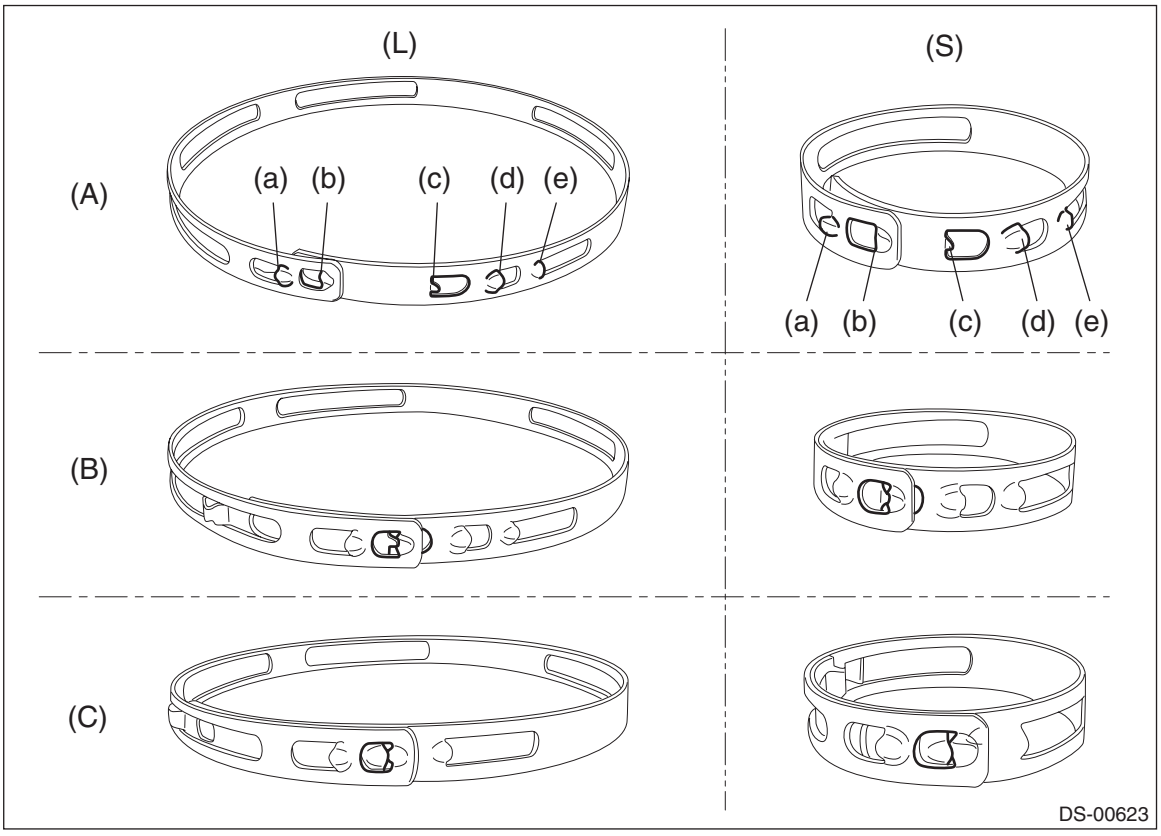

(L)	Band for large diameter	(S)	Band for small diameter		
(A)	Free position	(B)	Temporarily tightening position	(C)	Fully tightening position
(a)	Holding portion using pliers	(c)	Convex claw for temporarily tightening position	(e)	Holding portion using pliers
(b)	Concave claw	(d)	Convex claw		

(6) Pinch (a) and (e) of the band with needle nose pliers, and align the concave claw (b) with the convex claw (c) for temporarily tightening position.

Preparation tool:
Needle nose pliers

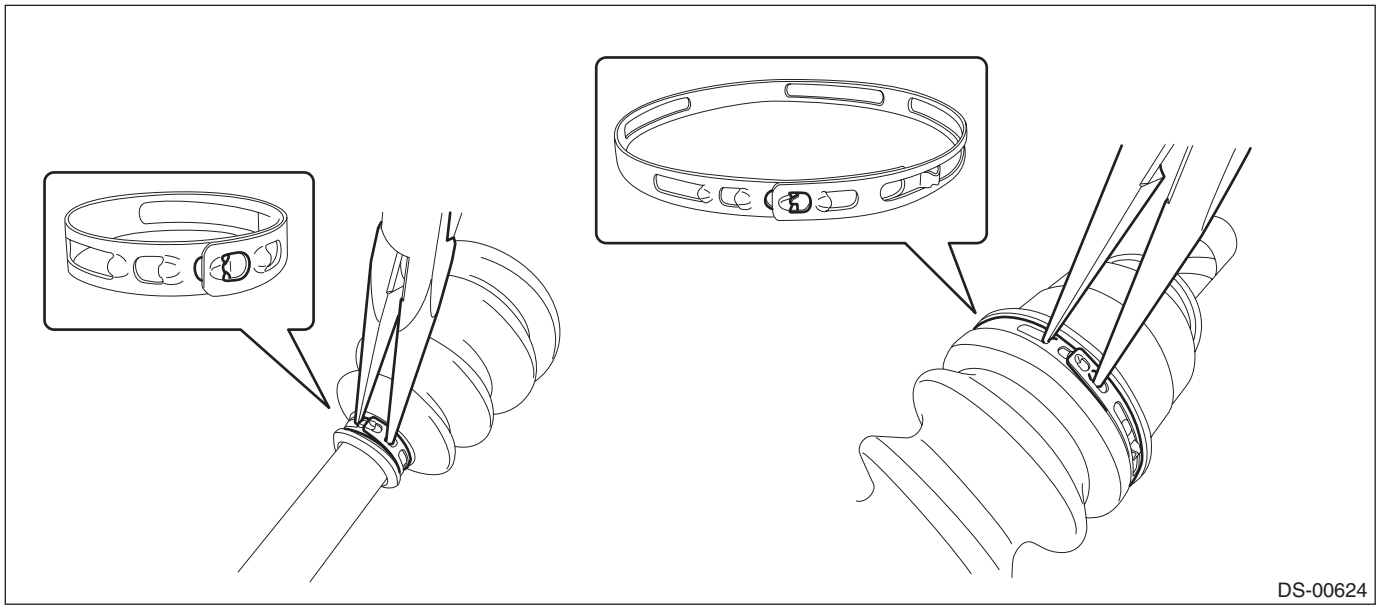

(7) Check the positions of the boot and band, align the concave claw (b) with the convex claw (d), and tighten the band.

4) Extend and retract the DOJ repeatedly to provide an equal coating of grease.

E: INSPECTION

Check the removed parts for damage, wear, corrosion etc. Repair or replace if defective.

- **DOJ (Double Offset Joint):**

Check for seizure, corrosion, damage, wear and excessive play.

- **BJ (Bell Joint):**

Check for seizure, corrosion, damage and excessive play.

- **EBJ (High-Efficiency Compact Ball fixed Joint):**

Check for seizure, corrosion, damage and excessive play.

- **Shaft:**

Check for excessive bending, twisting, damage and wear.

- **Boot:**

Check for wear, warping, breakage and scratches.

- **Grease:**

Check for discoloration and fluidity.

9. General Diagnostic Table

A: INSPECTION

NOTE:
Vibration while cruising may be caused by an unbalanced tire, improper tire inflation pressure, improper wheel alignment, etc.

Symptoms	Possible cause	Corrective action
Noise or vibration from propeller shaft	• Center bearing • Runout of propeller shaft • Loose or gap at connections	Inspect the propeller shaft. <Ref. to DS-15, INSPECTION, Propeller Shaft.>
Abnormal wheel vibration	Wheel is out of balance.	Check the wheel balance. <Ref. to WT-5, WHEEL BALANCING, INSPECTION, Tire and Wheel.>
	Front wheel alignment	Check the front wheel alignment. <Ref. to FS-7, INSPECTION, Wheel Alignment.>
	Rear wheel alignment	Check the rear wheel alignment. <Ref. to RS-8, INSPECTION, Wheel Alignment.>
	Front strut	Check the front strut. <Ref. to FS-48, INSPECTION, Front Strut.>
	Rear shock absorber	Check the rear shock absorber. <Ref. to RS-35, INSPECTION, Rear Shock Absorber.>
	Front axle shaft	Check the front axle shaft. <Ref. to DS-73, INSPECTION, Front Drive Shaft.>
	Rear axle shaft	Check the rear axle shaft. <Ref. to DS-87, INSPECTION, Rear Drive Shaft.>
	Hub unit COMPL - front axle	Check the hub unit COMPL - front axle. <Ref. to DS-34, INSPECTION, Front Hub Unit Bearing.>
	Hub unit COMPL - rear axle	Check the hub unit COMPL - rear axle. <Ref. to DS-56, INSPECTION, Rear Hub Unit Bearing.>
Noise from the underbody	Wheel is out of balance.	Check the wheel balance. <Ref. to WT-5, WHEEL BALANCING, INSPECTION, Tire and Wheel.>
	Front wheel alignment	Check the front wheel alignment. <Ref. to FS-7, INSPECTION, Wheel Alignment.>
	Rear wheel alignment	Check the rear wheel alignment. <Ref. to RS-8, INSPECTION, Wheel Alignment.>
	Front strut	Check the front strut. <Ref. to FS-48, INSPECTION, Front Strut.>
	Rear shock absorber	Check the rear shock absorber. <Ref. to RS-35, INSPECTION, Rear Shock Absorber.>

VEHICLE DYNAMICS CONTROL (VDC)

VDC

		Page
1.	General Description	2
2.	Relay and Fuse	7
3.	Vehicle Dynamics Control System	8
4.	VDC Control Module and Hydraulic Control Unit (VDCCM&H/U)	9
5.	ABS Sequence Control	22
6.	VDC Sequence Control	25
7.	Yaw Rate and G Sensor	28
8.	Steering Angle Sensor	29
9.	Front ABS Wheel Speed Sensor	33
10.	Rear ABS Wheel Speed Sensor	36
11.	Front Magnetic Encoder	45
12.	Rear Magnetic Encoder	46
13.	VDC OFF Switch	47

1. General Description

A: SPECIFICATION

Item				Specification or identification
ABS wheel speed sensor	ABS wheel speed sensor gap (for reference)	Front		0.77 — 1.43 mm (0.030 — 0.056 in)
		Rear		0.44 — 1.76 mm (0.017 — 0.069 in)
	Identifications of harness (symbol)	Front	RH	Z1
			LH	Z2
		Rear	RH (except for XV model)	Z3
			RH (XV model)	Z5
			LH (except for XV model)	Z4
			LH (XV model)	Z6
VDCCM&H/U identification		Gasoline engine model		XP
		HEV model		XM

B: COMPONENT

1. ABS WHEEL SPEED SENSOR

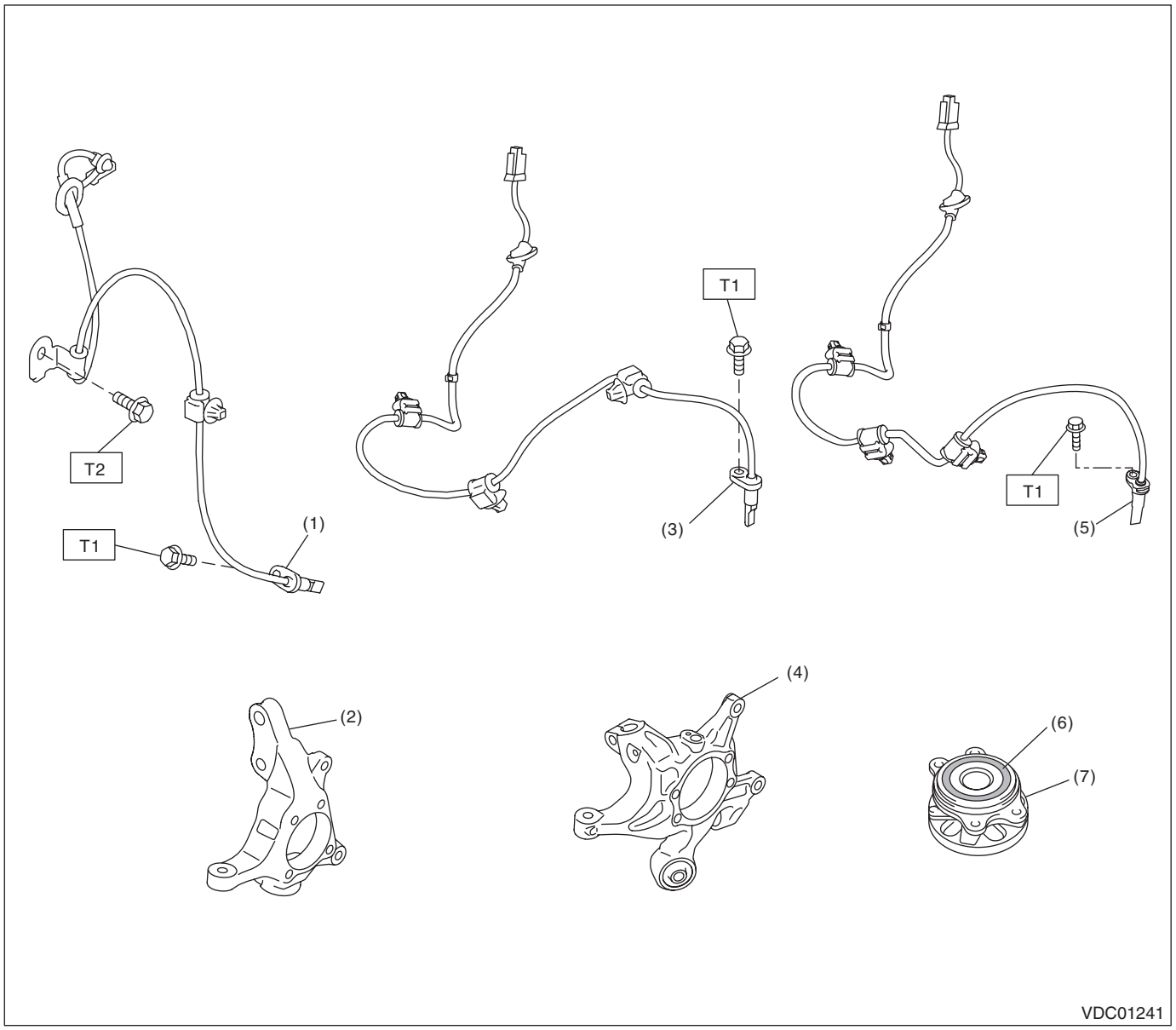

(1) Front ABS wheel speed sensor
(2) Housing ASSY - front axle
(3) Rear ABS wheel speed sensor (except for XV model)
(4) Housing ASSY - rear axle
(5) Rear ABS wheel speed sensor (XV model)
(6) Magnetic encoder
(7) Hub unit COMPL

Tightening torque: N·m (kgf-m, ft-lb)

T1: 7.5 (0.76, 5.5)
T2: 33 (3.36, 24.3)

2. STEERING ANGLE SENSOR

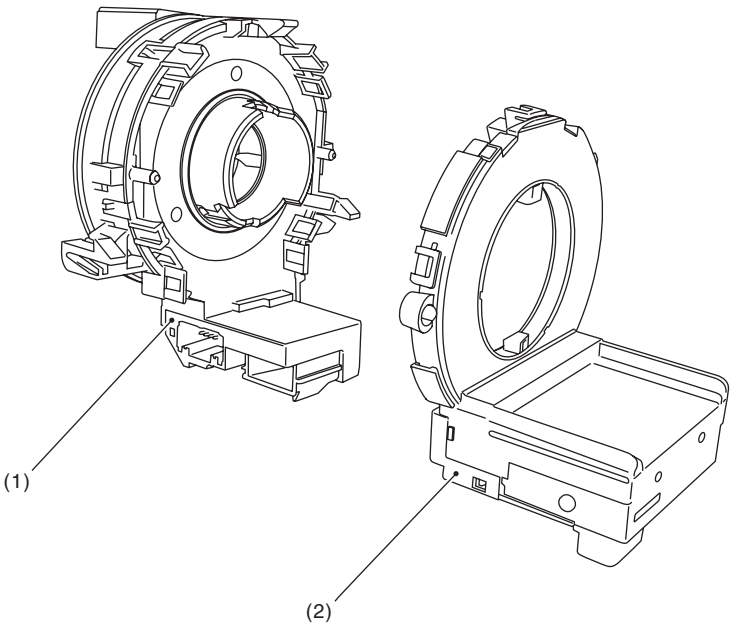

(1) Steering roll connector
(2) Steering angle sensor

3. VDC CONTROL MODULE & HYDRAULIC CONTROL UNIT (VDCCM&H/U)

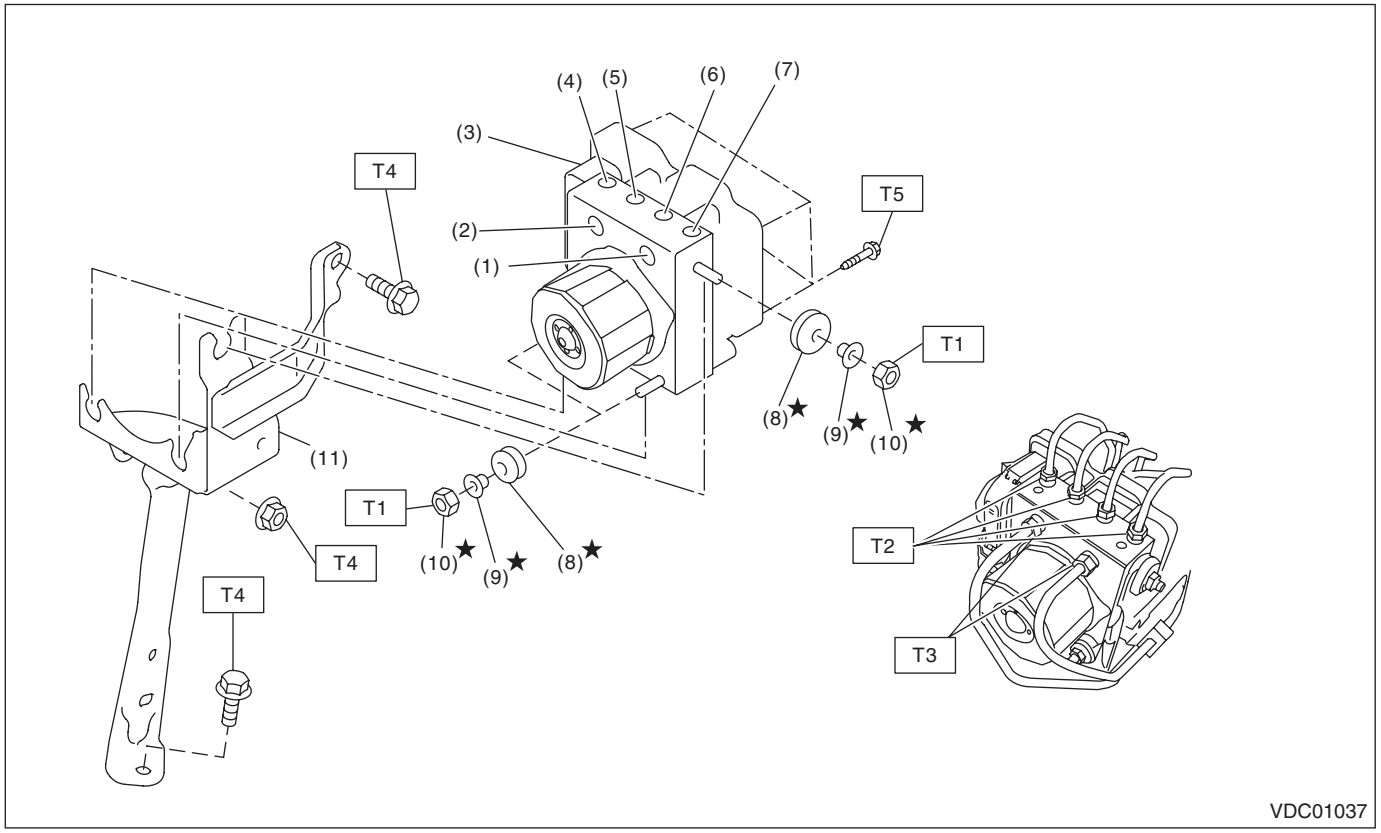

(1)	Primary inlet	(7)	Rear LH outlet
(2)	Secondary inlet	(8)	Damper - hydraulic unit
(3)	VDC control module and hydraulic control unit (VDCCM&H/U)	(9)	Spacer
(4)	Rear RH outlet	(10)	Nut
(5)	Front LH outlet	(11)	Bracket - hydraulic unit
(6)	Front RH outlet		

Tightening torque: N·m (kgf-m, ft-lb)

- ***T1: 7.5 (0.76, 5.5)***
- ***T2: 15 (1.53, 11.1)***
- ***T3: 19 (1.94, 14.0)***
- ***T4: 33 (3.36, 24.3)***
- ***T5: <Ref. to VDC-18, REPLACEMENT, VDC Control Module and Hydraulic Control Unit (VDCCM&H/U).>***

C: CAUTION

• Wear appropriate work clothing, including a helmet, protective goggles and protective shoes when performing any work.
• Remove contamination including dirt and corrosion before removal, installation or disassembly.
• Keep the disassembled parts in order and protect them from dust and dirt.
• Before disconnecting connectors of sensors or units, be sure to disconnect the ground cable from battery.
• Before removal, installation or disassembly, be sure to clarify the failure. Avoid unnecessary removal, installation, disassembly and replacement.
• Vehicle components are extremely hot after driving. Be wary of receiving burns from heated parts.
• Be sure to tighten fasteners including bolts and nuts to the specified torque.
• Place shop jacks or rigid racks at the specified points.
• When removing, installing or replacing the VDCCM&H/U, VDCCM&H/U bracket, steering wheel or steering angle sensor, perform “VDC sensor midpoint setting mode” of the VDC. <Ref. to VDC-21, VDC SENSOR MIDPOINT SETTING MODE, ADJUSTMENT, VDC Control Module and Hydraulic Control Unit (VDCCM&H/U).>

D: PREPARATION TOOL

1. SPECIAL TOOL

ILLUSTRATION	TOOL NUMBER	DESCRIPTION	REMARKS
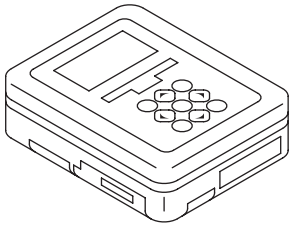 ST1B022XU0	1B022XU0	SUBARU SELECT MONITOR III KIT	Used for setting of each function and troubleshooting for electrical system.

2. GENERAL TOOL

TOOL NAME	REMARKS
Circuit tester	Used for measuring resistance and voltage.
Pressure gauge	Used for measuring oil pressure.
Oscilloscope	Used for measuring the sensor.
Steering wheel puller	Used for removing the steering wheel.

2. Relay and Fuse

A: LOCATION

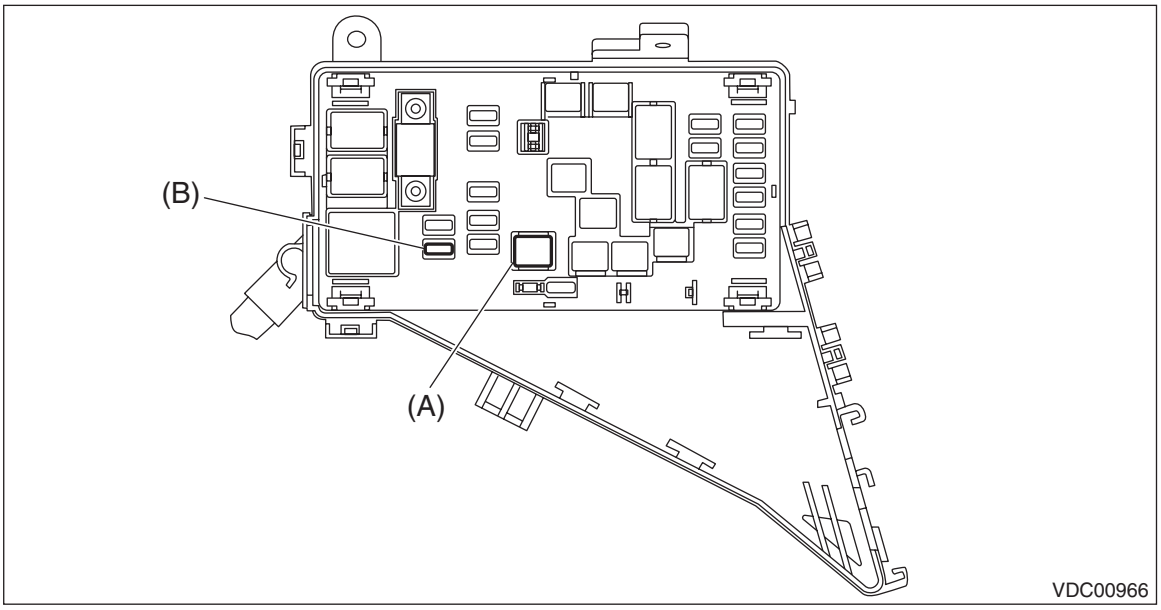

Main fuse box	Fuse 50A (VDC CM&H/U)	(A)
	Fuse 30A (VDC CM&H/U)	(B)

NOTE:
For other related fuses, refer to the wiring diagram. <Ref. to WI(w/o HEV)-15, Power Supply Circuit.>

B: INSPECTION

1. CHECK FUSE

1) Remove the fuse and inspect visually.
2) If the fuse is blown out, replace the fuse.

3. Vehicle Dynamics Control System

A: WIRING DIAGRAM

Refer to “Vehicle Dynamics Control System” in the wiring diagram. <Ref. to WI(w/o HEV)-152, WIRING DIAGRAM, Vehicle Dynamics Control System.>

B: ELECTRICAL SPECIFICATION

Refer to the Control Module I/O Signal of the “Vehicle Dynamics Control System (VDC) (DIAGNOSTICS)”. <Ref. to VDC(diag)-12, ELECTRICAL SPECIFICATION, Control Module I/O Signal.>

C: INSPECTION

Refer to the “Vehicle Dynamics Control System (VDC) (DIAGNOSTICS)”. <Ref. to VDC(diag)-91, INSPECTION, General Diagnostic Table.>

D: NOTE

For operation procedures of each component of the vehicle dynamics control system, refer to the respective section.

- VDC control module & hydraulic control unit (VDCCM&H/U): <Ref. to VDC-9, VDC Control Module and Hydraulic Control Unit (VDCCM&H/U).>
- Yaw rate & G sensor: <Ref. to VDC-28, Yaw Rate and G Sensor.>
- Steering angle sensor: <Ref. to VDC-29, Steering Angle Sensor.>
- Front ABS wheel speed sensor: <Ref. to VDC-33, Front ABS Wheel Speed Sensor.>
- Rear ABS wheel speed sensor: <Ref. to VDC-36, Rear ABS Wheel Speed Sensor.>
- Front magnetic encoder: <Ref. to VDC-45, Front Magnetic Encoder.>
- Rear magnetic encoder: <Ref. to VDC-46, Rear Magnetic Encoder.>
- VDC OFF switch: <Ref. to VDC-47, VDC OFF Switch.>

4. VDC Control Module and Hydraulic Control Unit (VDCCM&H/U)

A: REMOVAL

1) Disconnect the ground cable from battery. <Ref. to NT-5, BATTERY, NOTE, Note.>

NOTE:
For the 12 volt engine restart battery of HEV model, disconnect the ground terminal from 12V engine restart battery sensor.

2) Remove the air intake boot. (Gasoline engine model) <Ref. to IN(H4DO(w/o HEV))-12, REMOVAL, Air Intake Boot.>

3) Remove the air intake duct. (HEV model) <Ref. to IN(H4DO(HEV))-16, REMOVAL, Intake Duct.>

CAUTION:
Move aside the intake boot to perform the operation without disconnecting the PCV hose.

4) Remove the bolts which secure the 12V battery relay, and move the 12V battery relay. (HEV model)

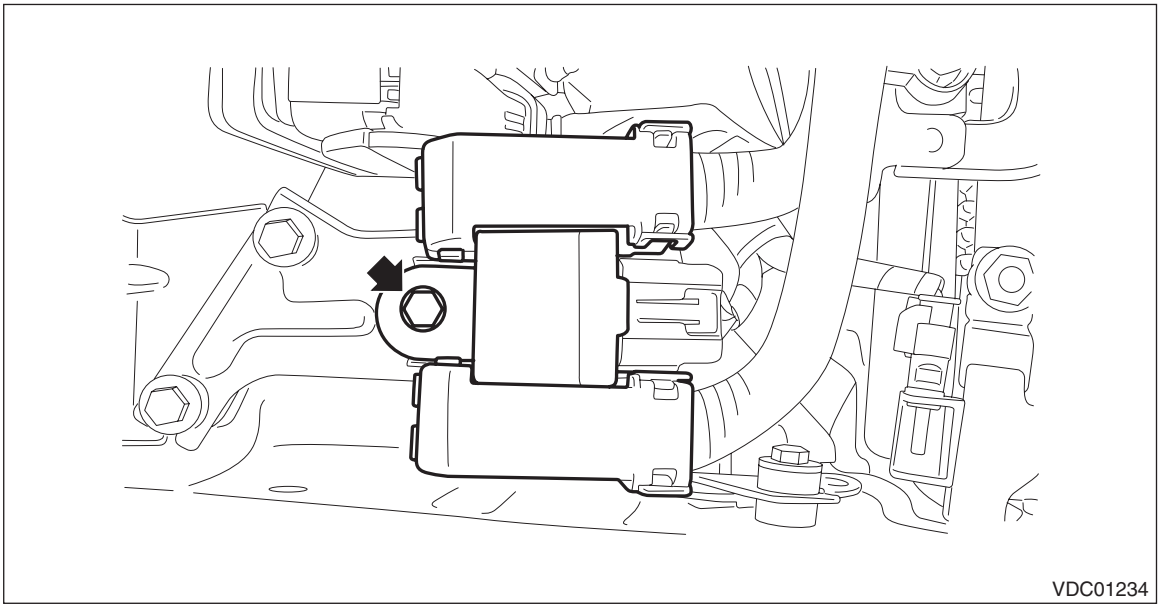

5) Remove the VDC control module & hydraulic control unit (VDCCM&H/U).
(1) Remove any dirt from around the VDCCM&H/U.
(2) Pull up the lock lever (b) while pressing the lock button (a) and disconnect the VDCCM&H/U connector.

CAUTION:
Do not pull on the harness when disconnecting the connector.

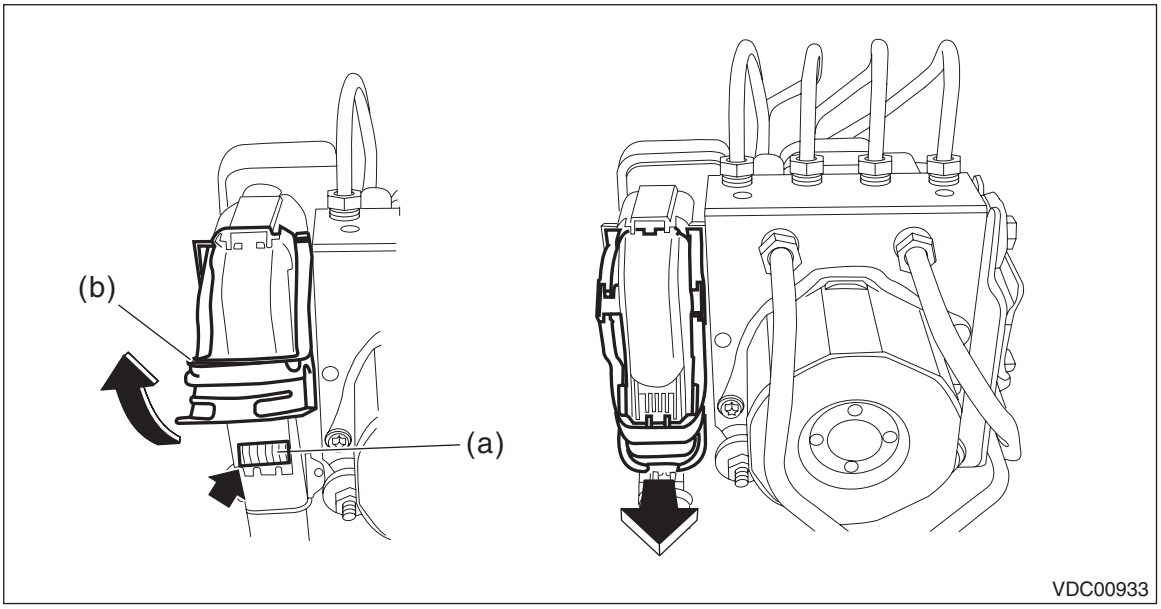

(3) Using a flare nut wrench, disconnect each brake pipe from VDCCM&H/U.

CAUTION:
• Wrap the brake pipe with a vinyl bag so as not to spill the brake fluid on the painted surface of the vehicle body.
• If brake fluid is spilled on the painted surface of the vehicle body, wash it off immediately with water and wipe clean.

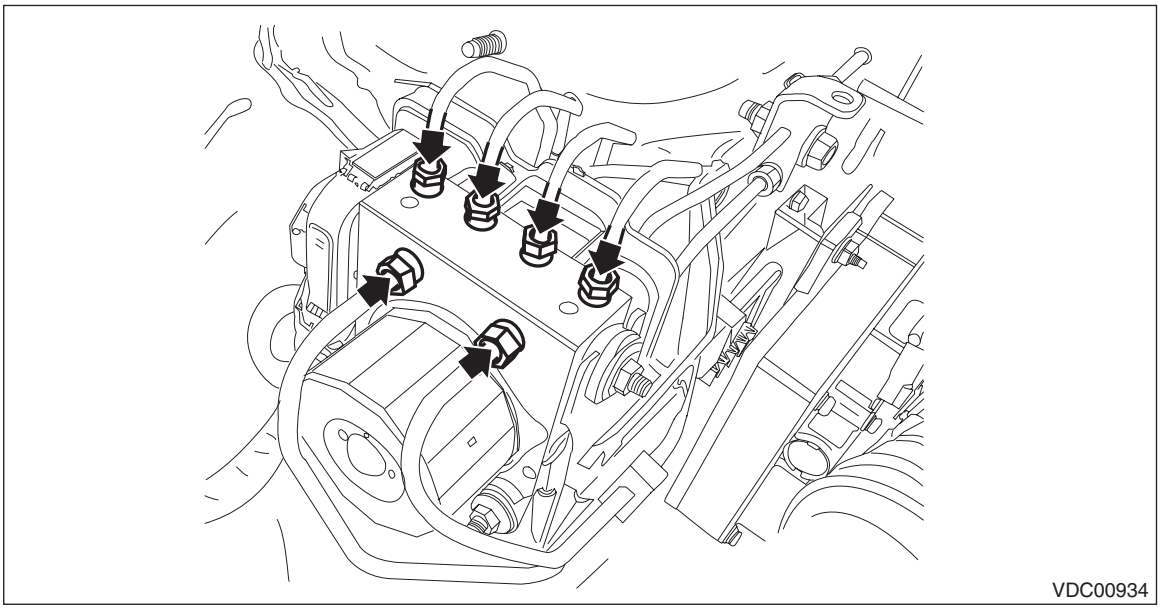

(4) Remove the nuts and remove the VDCCM&H/U from the bracket - hydraulic unit.

CAUTION:
- **Do not drop or bump the VDCCM&H/U.**
- **Do not turn the VDCCM&H/U upside down or place it sideways for storage.**
- **Be careful not to let foreign matter enter the VDCCM&H/U.**
- **Be careful that no water and fluid enter the connectors.**

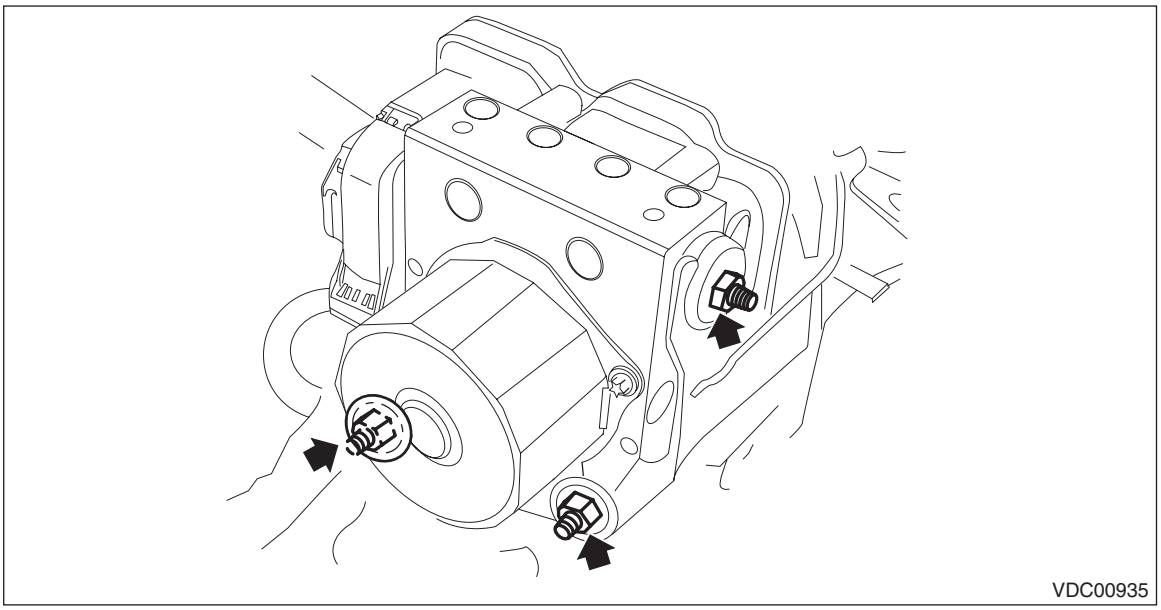

B: INSTALLATION

CAUTION:
- **When installing the VDCCM&H/U to the bracket - hydraulic unit, make sure that there is no oil adhered to the bolts and the threads of VDCCM&H/U. If the oil is adhered, degrease it carefully before tightening.**
- **Connect the VDCCM&H/U connector securely.**
- **When installing the VDCCM&H/U, replace the damper - hydraulic unit, spacer and nut with new parts.**

1) Install each part in the reverse order of removal.

Tightening torque:
Refer to "COMPONENT" of "General Description". <Ref. to VDC-5, VDC CONTROL MODULE & HYDRAULIC CONTROL UNIT (VDCCM&H/U), COMPONENT, General Description.>

2) Install the air intake boot. (Gasoline engine model) <Ref. to IN(H4DO(w/o HEV))-12, INSTALLATION, Air Intake Boot.>

3) Install the air intake duct. (HEV model) <Ref. to IN(H4DO(HEV))-17, INSTALLATION, Intake Duct.>

4) Install the 12V battery relay. (HEV model)

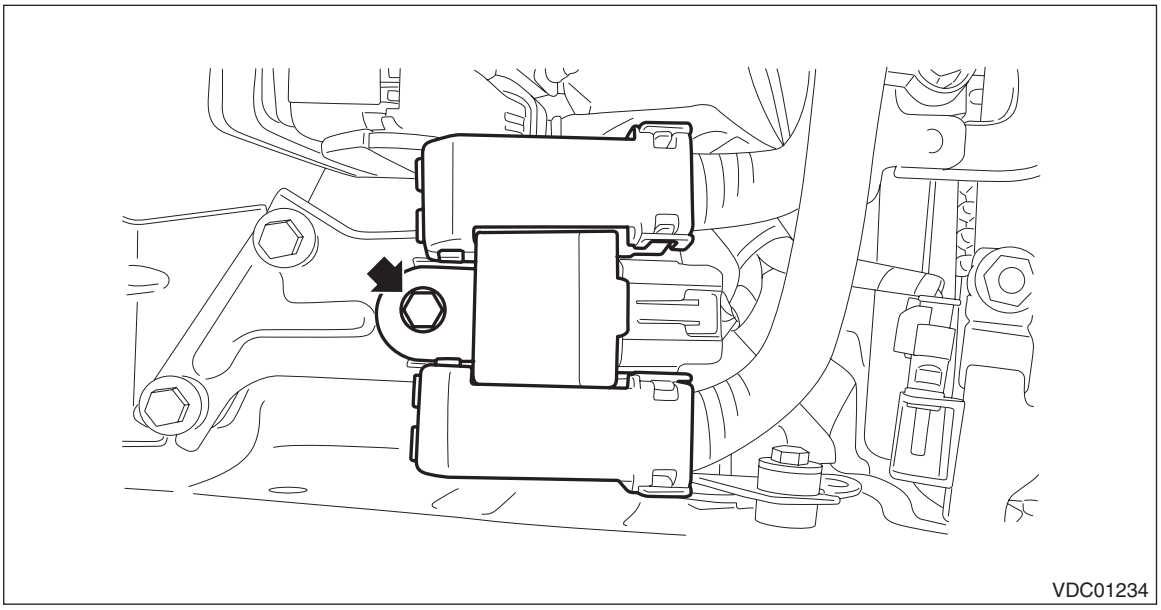

Tightening torque:
7.5 N·m (0.8 kgf-m, 5.5 ft-lb)

5) Bleed air from the brake system. <Ref. to BR-61, Air Bleeding.>
6) Perform parameter confirmation, selection, and registration.

NOTE:
• When the VDCCM&H/U is replaced with a new part, be sure to perform the selection · registration operation.
• Be sure to use the Subaru Select Monitor for the selection and registration of parameter.
• When the registration has not been performed, the DTC code “Parameter selection error” is detected together with the ABS/EBD/VDC warning light illumination.
(1) Check that the applied model and grade of the relevant vehicle are included. <Ref. to VDC(diag)-18, PARAMETER CHECK, OPERATION, Subaru Select Monitor.>
(2) On {Confirm on parameter} display, enter the applied model of the relevant vehicle and check if it is correct. If the information is not correct, perform parameter selection and registration. <Ref. to VDC(diag)-18, PARAMETER SELECTION, OPERATION, Subaru Select Monitor.>
7) Adjust the steering angle sensor. <Ref. to VDC-21, ADJUSTMENT, VDC Control Module and Hydraulic Control Unit (VDCCM&H/U).>

C: INSPECTION

1) Check the identification (a) of the VDC control module & hydraulic control unit (VDCCM&H/U).

NOTE:
For the identification, refer to “SPECIFICATION” in “General Description”. <Ref. to VDC-2, SPECIFICATION, General Description.>

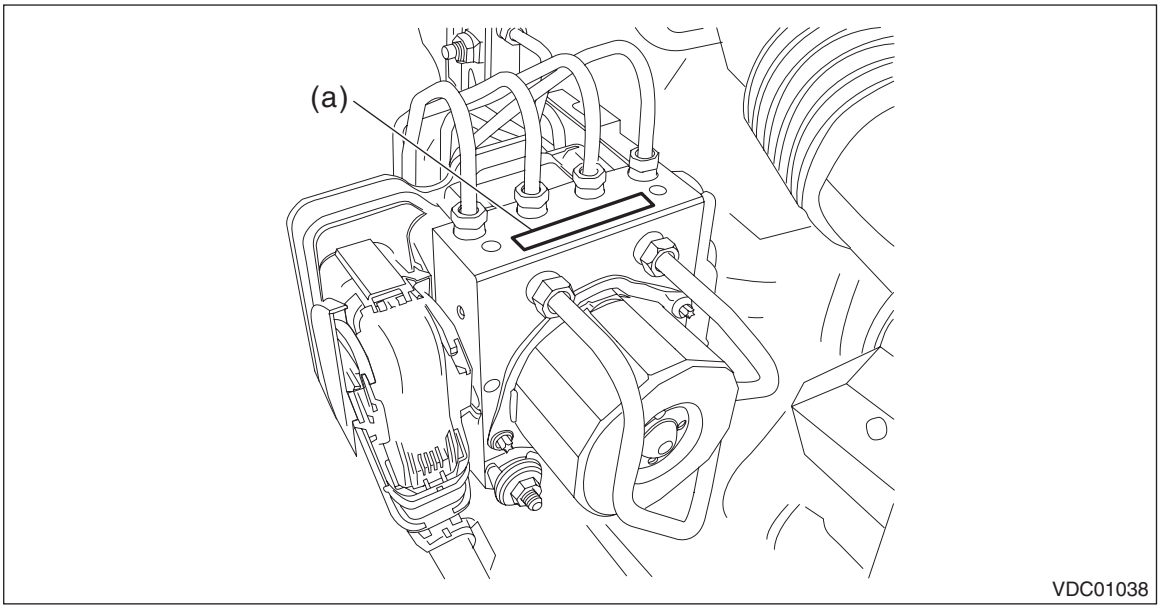

2) Check the condition of connection and settlement of connector, and correct or replace if defective.

1. CHECKING THE HYDRAULIC UNIT ABS OPERATION BY PRESSURE GAUGE

1) Lift up the vehicle, and then remove the wheel.
2) Remove the bleeder - screws from the FL and FR caliper bodies.
3) Connect two pressure gauges to FL and FR caliper bodies.

CAUTION:
- **Use a pressure gauge used exclusively for brake fluid measurement.**
- **Do not use the pressure gauge used for the measurement of transmission oil. Doing so will cause the piston seal to expand and deform.**

NOTE:
Wrap sealing tape around the pressure gauge.

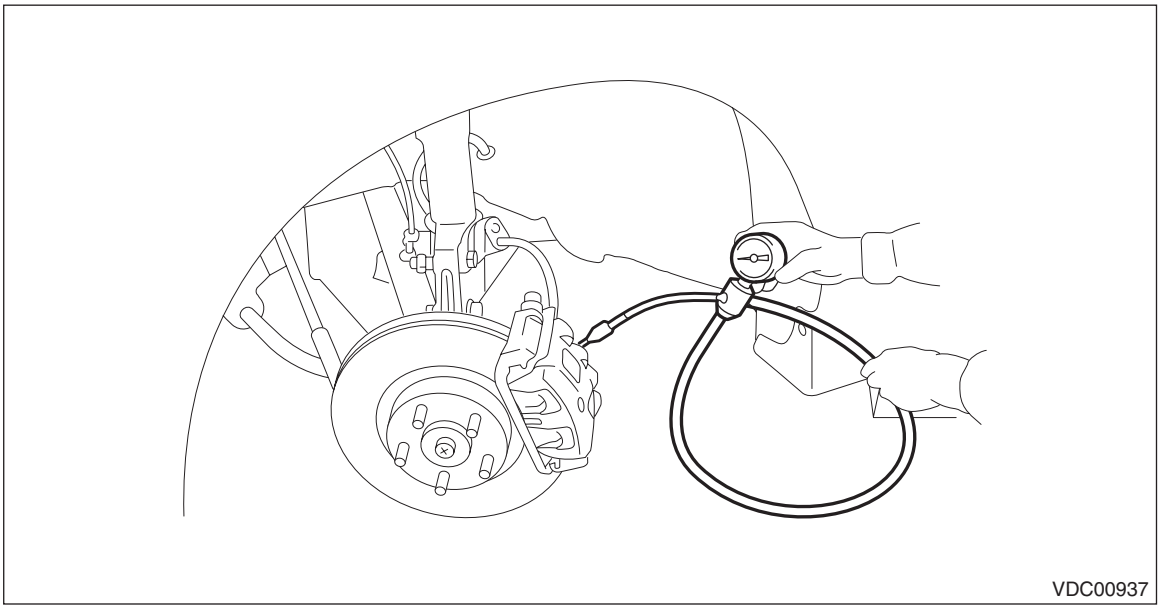

4) Bleed air from the pressure gauges and the FL and FR caliper bodies.
5) Perform ABS sequence control. <Ref. to VDC-22, ABS Sequence Control.>

NOTE:
When the hydraulic unit begins to work, first the FL side performs decompression, hold and compression, and then the FR side performs decompression, hold and compression.
6) Read values indicated on the pressure gauge and check if the fluctuation of the values between decompression and compression meets the standard values. Depress the brake pedal and check that the kick-back is normal, and tightness is normal.

Inspection conditions	Front wheel	Rear wheel
Initial value	3,500 kPa (36 kgf/cm^2, 511 psi)	3,500 kPa (36 kgf/cm^2, 511 psi)
When depressurized	500 kPa (5 kgf/cm^2, 73 psi) or less	500 kPa (5 kgf/cm^2, 73 psi) or less
When pressurized	3,500 kPa (36 kgf/cm^2, 511 psi) or more	3,500 kPa (36 kgf/cm^2, 511 psi) or more

7) Disconnect the pressure gauges from FL and FR caliper bodies.
8) Install the bleeder - screws of FL and FR caliper bodies.
9) Remove the bleeder - screws from RL and RR caliper bodies.
10) Connect two pressure gauges to RL and RR caliper bodies.
11) Bleed air from RL and RR caliper bodies, and pressure gauge.
12) Perform ABS sequence control. <Ref. to VDC-22, ABS Sequence Control.>

NOTE:
When the hydraulic unit begins to work, first the RR side performs decompression, hold and compression, and then the RL side performs decompression, hold and compression.
13) Read values indicated on the pressure gauge and check if the fluctuation of the values between decompression and compression meets specification. Depress the brake pedal and check that the kick-back is normal, and tightness is normal.
14) Disconnect the pressure gauge from the RL and RR caliper bodies.
15) Install the bleeder - screws of RL and RR caliper bodies.
16) Bleed air from the brake system. <Ref. to BR-61, Air Bleeding.>

2. CHECKING THE HYDRAULIC UNIT ABS OPERATION WITH THE BRAKE TESTER

1) Set wheels other than the one to measure on free rollers.
2) Prepare for the ABS sequence control operation. <Ref. to VDC-22, ABS Sequence Control.>
3) Set the front wheels or rear wheels on the brake tester (a) and set the gear to neutral.

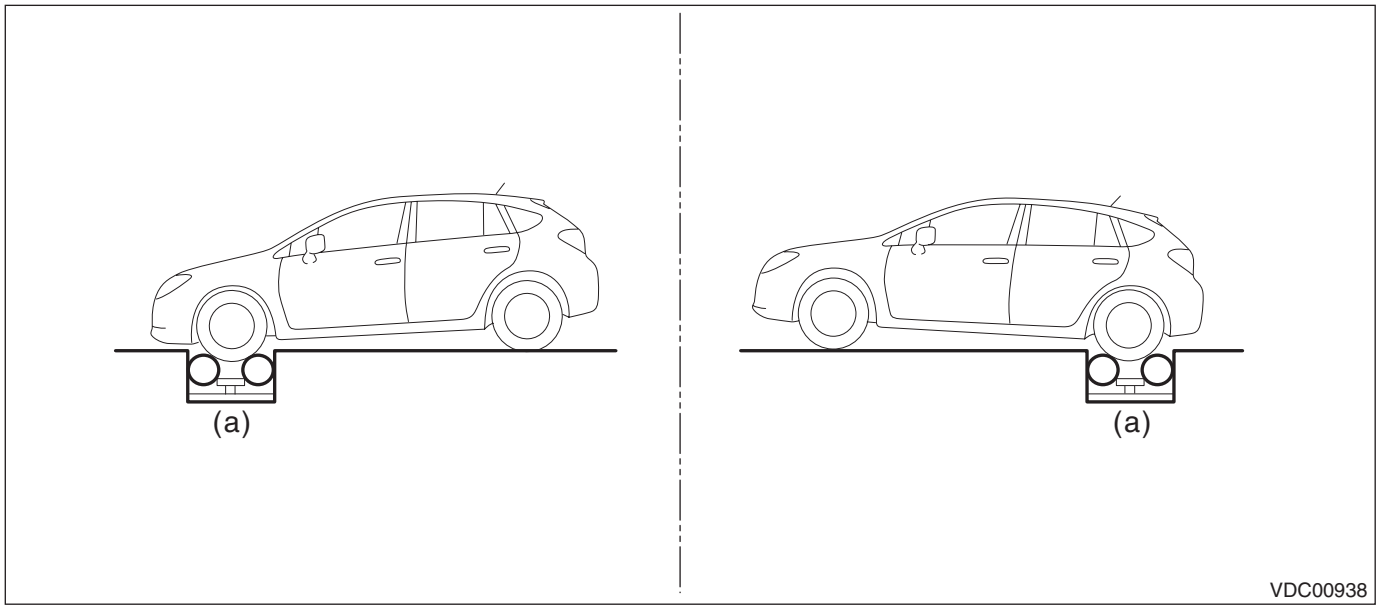

4) Operate the brake tester.
5) Perform ABS sequence control. <Ref. to VDC-22, ABS Sequence Control.>
6) When the hydraulic unit begins to work, check the following work sequence.
   (1) The FL wheel performs decompression, hold and compression in sequence, and subsequently the FR wheel repeats the cycle.
   (2) The RR wheel performs decompression, hold and compression in sequence, and subsequently the RL wheel repeats the cycle.
7) Read values indicated on the brake tester and check if the fluctuation of the values between decompression and compression meets specification.

Inspection conditions	Front wheel	Rear wheel
Initial value	1,000 N (102 kgf, 225 lb)	1,000 N (102 kgf, 225 lb)
When depressurized	500 N (51 kgf, 112 lb) or less	500 N (51 kgf, 112 lb) or less
When pressurized	1,000 N (102 kgf, 225 lb) or more	1,000 N (102 kgf, 225 lb) or more

8) After the inspection, depress the brake pedal and check that it is not abnormally hard, and tightness is normal.

3. CHECKING THE HYDRAULIC UNIT VDC OPERATION USING A PRESSURE GAUGE

1) Lift up the vehicle, and then remove the wheel.
2) Remove the bleeder - screws from FL and FR caliper bodies.
3) Connect two pressure gauges to FL and FR caliper bodies.

CAUTION:
- **Use a pressure gauge used exclusively for brake fluid measurement.**
- **Do not use a pressure gauge used for the measuring transmission oil pressure, as the piston seal may expand and deform.**

NOTE:
Wrap sealing tape around the pressure gauge.

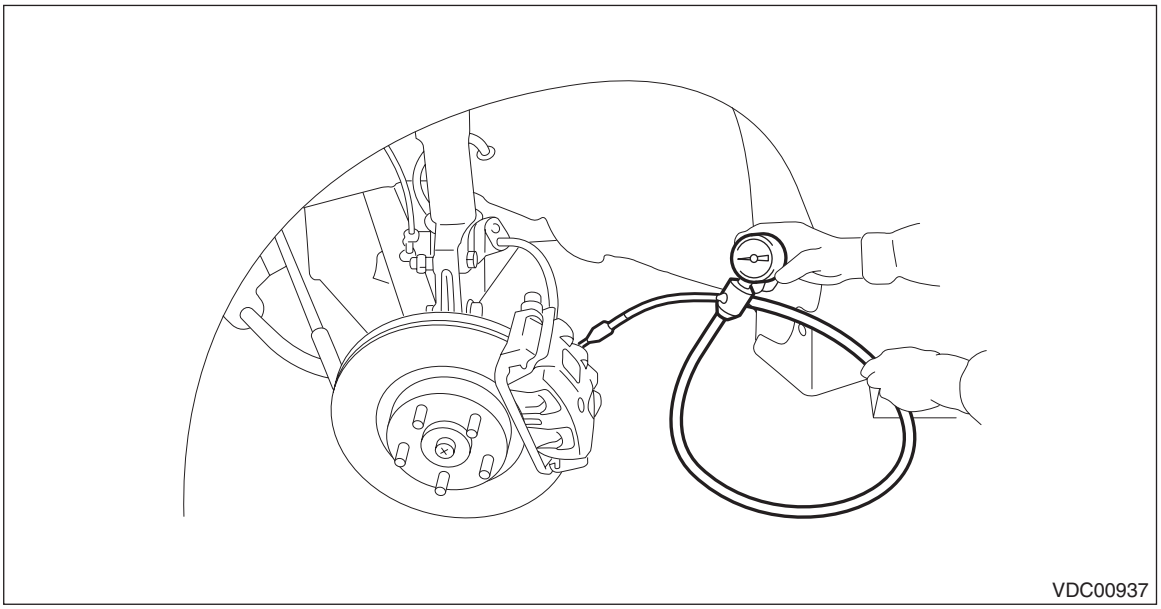

4) Bleed air from the pressure gauge.
5) Perform VDC sequence control. <Ref. to VDC-25, VDC Sequence Control.>

NOTE:
When the hydraulic unit begins to work, first the FL side performs compression, hold, and decompression, and then the FR side performs compression, hold, and decompression.
6) Read values indicated on the pressure gauge and check if the fluctuation of the values between decompression and compression meets specification. Depress the brake pedal and check that it is not abnormally hard, and tightness is normal.

Inspection conditions	Front wheel	Rear wheel
When pressurized	3,000 kPa (31 kgf/cm^2, 441 psi) or more	3,000 kPa (31 kgf/cm^2, 441 psi) or more
When depressurized	500 kPa (5 kgf/cm^2, 73 psi) or less	500 kPa (5 kgf/cm^2, 73 psi) or less

7) Disconnect the pressure gauges from FL and FR caliper bodies.
8) Install the bleeder - screws of FL and FR caliper bodies.
9) Remove the bleeder - screws from RL and RR caliper bodies.
10) Connect two pressure gauges to RL and RR caliper bodies.
11) Bleed air from RL and RR caliper bodies, and pressure gauge.

12) Perform VDC sequence control. <Ref. to VDC-25, VDC Sequence Control.>

NOTE:
When the hydraulic unit begins to work, first the RR side performs compression, hold, and decompression, and then the RL side performs compression, hold, and decompression.

13) Read the values indicated on the pressure gauges and check if it is within specification. Depress the brake pedal and check that it is not abnormally hard, and tightness is normal.
14) Disconnect the pressure gauge from the RL and RR caliper bodies.
15) Install the bleeder - screws of RL and RR caliper bodies.
16) Bleed air from the brake system. <Ref. to BR-61, Air Bleeding.>

4. CHECK HYDRAULIC UNIT VDC OPERATION WITH BRAKE TESTER

1) Set wheels other than the one to measure on free rollers.
2) Prepare to operate the VDC sequence control. <Ref. to VDC-25, VDC Sequence Control.>
3) Set the front wheels or rear wheels on the brake tester (a) and set the gear to neutral.

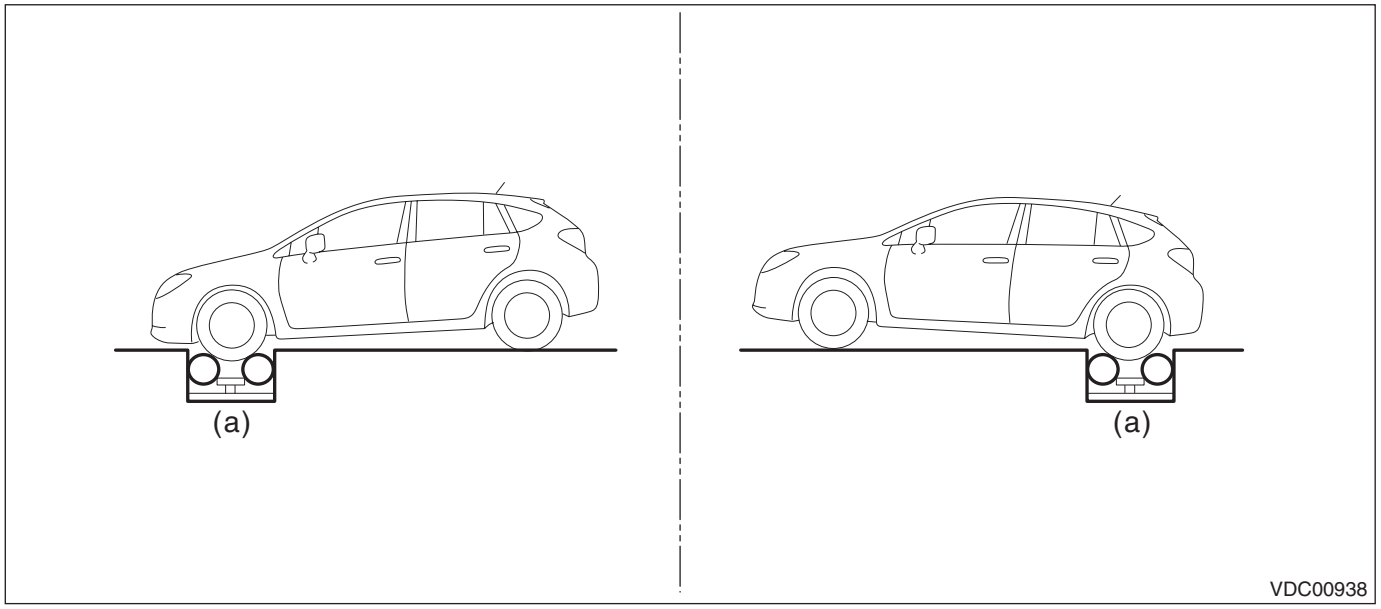

4) Operate the brake tester.
5) Perform VDC sequence control. <Ref. to VDC-25, VDC Sequence Control.>
6) When the hydraulic unit begins to work, check the following work sequence.
   (1) The FL wheel performs compression, hold and decompression in sequence, and subsequently the FR wheel repeats the cycle.
   (2) The RR wheel performs compression, hold and decompression in sequence, and subsequently the RL wheel repeats the cycle.
7) Read values indicated on the brake tester and check if the fluctuation of the values between decompression and compression meets specification.

Inspection conditions	Front wheel	Rear wheel
When pressurized	2,000 N (204 kgf, 450 lbf) or more	2,000 N (204 kgf, 450 lbf) or more
When depressurized	500 N (51 kgf, 112 lbf) or less	500 N (51 kgf, 112 lbf) or less

8) After the inspection, depress the brake pedal and check that it is not abnormally hard, and tightness is normal.

D: REPLACEMENT

CAUTION:
• Because the pressure sensor built into the H/U is easily damaged by static electricity, start the operation after performing static electricity measures.
• Be careful not to touch the sensors in the H/U to prevent damage.
• Because the seal of the VDCCM cannot be replaced, do not pull or peel it by lifting it up.
• Because the screw of the H/U will become slightly worn in every replacement procedure, 5 times is the maximum number of times for replacement. If a problem is found such as not being able to torque the screw to specifications even before 5 replacement operations are performed, replace the H/U body.
• When installing the VDCCM, always use new screws.
• When the sealing surface of the VDCCM or H/U is dirty or damaged and it cannot be cleaned or repaired, replace with a new part.
1) Remove the VDCCM&H/U. <Ref. to VDC-9, REMOVAL, VDC Control Module and Hydraulic Control Unit (VDCCM&H/U).>
2) To prevent entry of foreign objects and brake fluid leakage, plug the oil pressure port of the VDCCM&H/U using a screw plug, etc.
3) Set the pump motor section of the removed VDCCM&H/U face down on a vise.

NOTE:
Before securing a part on a vise, place cushioning material such as wood blocks, aluminum plate, or cloth between the part and the vise.

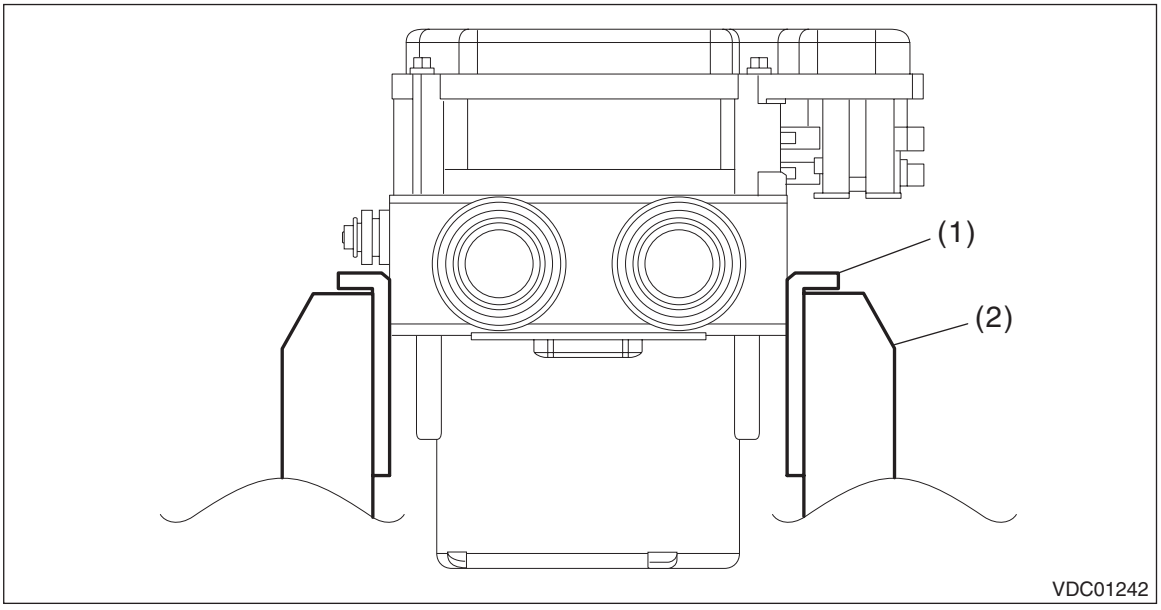

(1) Aluminum plate, etc. (2) Vise

4) Using TORX® bit E5, remove the four screws of VDCCM.

CAUTION:
Do not re-use the screws.

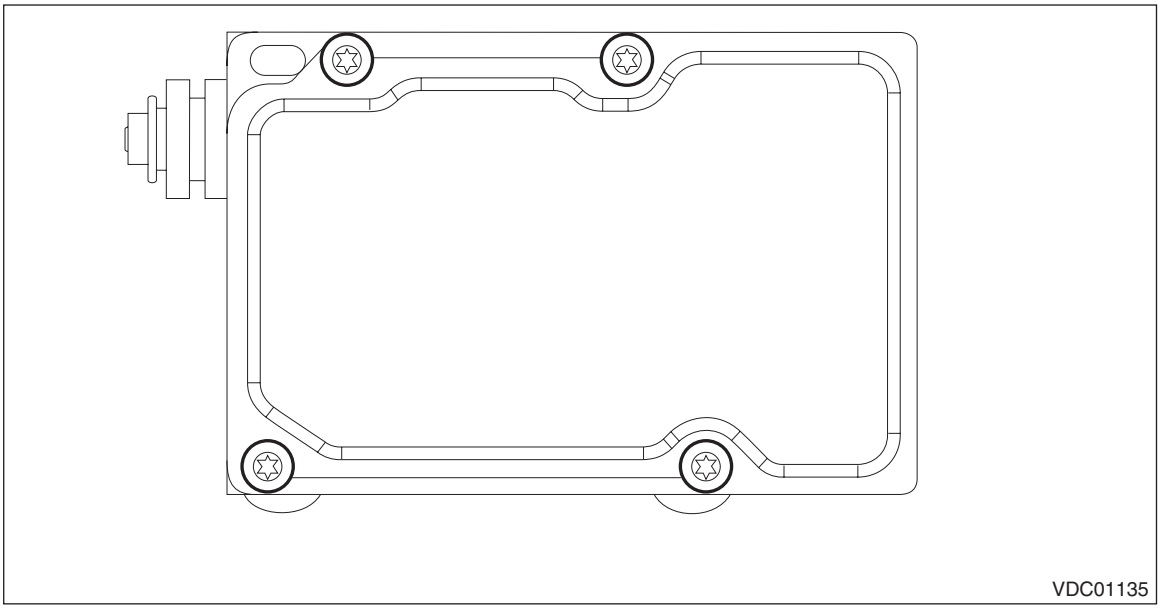

5) Slowly pull out the VDCCM upward from the H/U.

NOTE:
To prevent damaging of coil section, remove the VDCCM straight up from H/U without twisting.
6) Make sure there is no dirt or damage on the sealing surface of the H/U.

CAUTION:
- **Do not clean the VDCCM&H/U by applying compressed air.**
- **Even if damage is found on the H/U seal, do not attempt repair by filing or with a metal scraper. To remove the seal residue, always use a plastic scraper. Do not use chemical such as paint thinner, etc., to clean.**

7) Position the coil of the new VDCCM to align with the H/U valve.
8) To prevent deformation of the VDCCM housing cover, hold the corner of VDCCM and install it to the H/U without tilting.

9) Using a TORX® bit E5, attach/tighten new screws in the order of (1) through (4).

CAUTION:
Always use new screws.

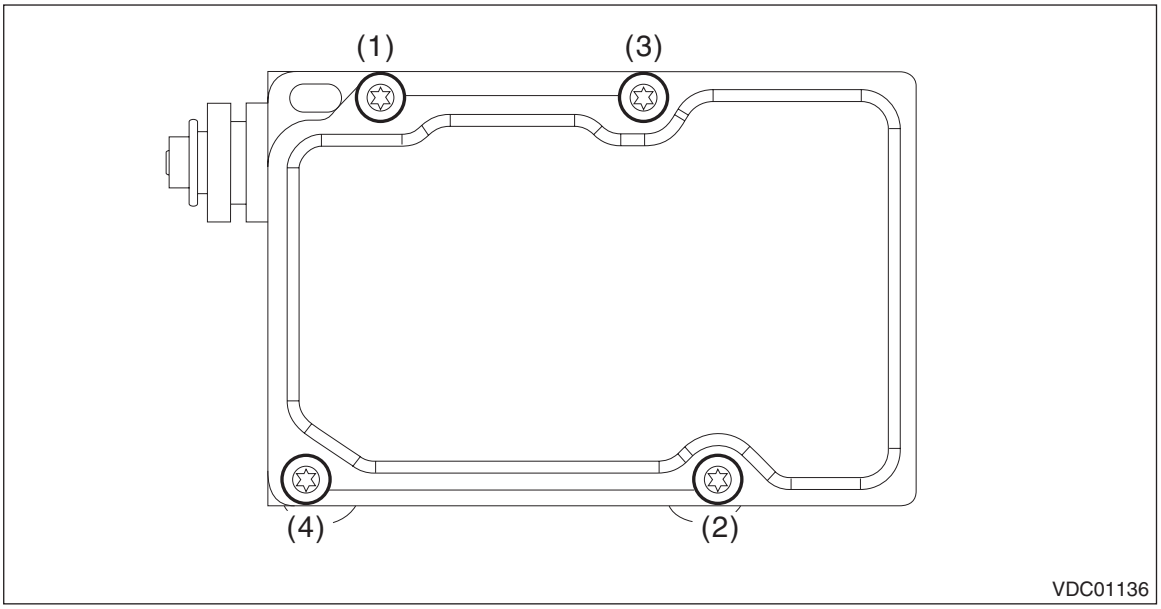

Tightening torque:
1.5 N·m (0.15 kgf-m, 1.1 ft-lb)

10) Check that there is no foreign matter in mating surface between the VDCCM&H/U.
11) Using a TORX® bit E5, tighten the screws in the order of (1) through (4) again.

Tightening torque:
3.0 N·m (0.31 kgf-m, 2.2 ft-lb)

12) Check that there is no gap in the mating surface between VDCCM&H/U.
13) Install the VDCCM&H/U to the vehicle.

CAUTION:
When installing the VDCCM&H/U, replace the damper - hydraulic unit, spacer and nut with new parts.

14) Bleed air from the brake system. <Ref. to BR-61, PROCEDURE, Air Bleeding.>
15) Perform the selection and registration operation of parameter. <Ref. to VDC(diag)-18, PARAMETER SELECTION, OPERATION, Subaru Select Monitor.>

NOTE:
- After replacing the VDCCM, be sure to perform the selection · registration operation of parameter.
- For the selection and registration of parameter, the Subaru Select Monitor is required.
- When the registration has not been performed, the DTC code “Parameter selection error” is detected together with the ABS/EBD/VDC warning light illumination.

16) Check the parameter to confirm that the applied models and grades of the relevant vehicle are included. <Ref. to VDC(diag)-18, PARAMETER CHECK, OPERATION, Subaru Select Monitor.>
17) If the applied models and grades of the relevant vehicle are not included, perform the selection · registration operation of parameter with the {Confirm on parameter} screen again. <Ref. to VDC(diag)-18, PARAMETER SELECTION, OPERATION, Subaru Select Monitor.>
18) Execute Clear Memory after parameter selection and registration operations because the DTC for “Parameter selection error” is memorized.

E: ADJUSTMENT

1. VDC SENSOR MIDPOINT SETTING MODE

After installing, replacing or adjusting the following parts, perform the VDC sensor midpoint setting mode.
- Steering angle sensor
- Steering wheel
- Suspension parts
- Wheel alignment
- VDCCM&H/U
- VDCCM&H/U bracket

1) Park the vehicle on a level surface, and set the steering wheel to the neutral position.
2) Connect the Subaru Select Monitor to data link connector.
   (1) Run the “PC application for Subaru Select Monitor”.
   (2) On «Main Menu» display, select {Each System Check}.
   (3) Select {Brake Control System}. When {VDC} is displayed, select the [OK] button.
   (4) From {Current Data Display & Save}, select {Steer Angle Sensor Op}, {Longitudinal G Sensor} and {Lateral G sensor Output}.
3) Check that the steering angle sensor output value is between –10 and 10 deg.
4) Check that output values for the longitudinal G sensor and lateral G sensor are -2 — 2 m/s^2.
5) From {Work Support}, select {VDC sensor midpoint setting mode}, and perform the setting according to the procedure displayed on the Subaru Select Monitor Screen.
6) Drive the vehicle for 10 minutes, and check that there is no system malfunction or the warning light illumination while driving.
7) Make sure that the DTC is not stored.

5. ABS Sequence Control

A: OPERATION

1) While the ABS sequence control is being performed, the operation of the hydraulic unit can be checked using the brake tester or pressure gauge after the hydraulic unit solenoid valve operation.
2) ABS sequence control can be started by the Subaru Select Monitor.

1. ABS SEQUENCE CONTROL WITH SUBARU SELECT MONITOR

NOTE:
In the event of any trouble, the ABS sequence control will not operate.
1) Connect the Subaru Select Monitor to data link connector.
   (1) Run the “PC application for Subaru Select Monitor”.
   (2) On «Main Menu» display, select {Each System Check}.
   (3) Select {Brake Control System}. When {VDC} is displayed, select the [OK] button.
   (4) Select the {ABS Sequence Control Mode} from {Work Support}.
2) Follow the procedures displayed in the Subaru Select Monitor to execute the following.
   (1) When using a brake tester, depress the brake pedal with a force of 100 N (10.2 kgf, 22.5 lbf).
   (2) When using a pressure gauge, press the brake pedal so that the pressure gauge indicates 3,500 kPa (36 kgf/cm^2, 511 psi).
3) The brake system being operated is displayed on the Subaru Select Monitor.

2. CONDITIONS FOR ABS SEQUENCE CONTROL

NOTE:
The control operation starts at point A.

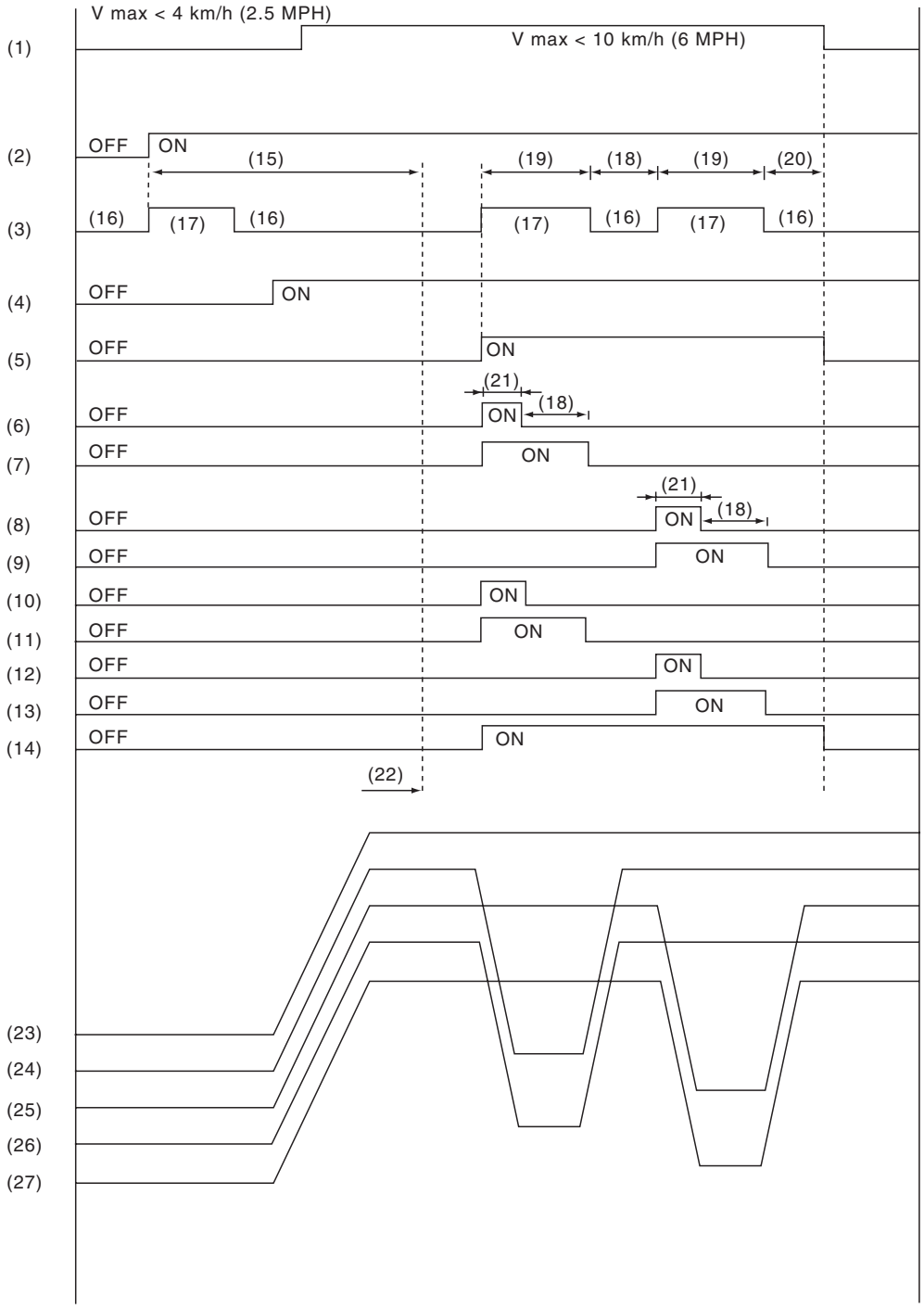

VDC00988

(1) All wheel speed
(2) Ignition key
(3) ABS warning light
(4) Switch - stop light
(5) Valve relay
(6) FL decompression valve
(7) FL compression valve
(8) FR decompression valve
(9) FR compression valve
(10) RR decompression valve
(11) RR compression valve
(12) RL decompression valve
(13) RL compression valve
(14) Pump motor
(15) A few seconds
(16) Light OFF
(17) Light ON
(18) 1.0 second
(19) 1.4 seconds
(20) 0.6 seconds
(21) 0.4 seconds
(22) Point A
(23) Master cylinder pressure
(24) FL wheel cylinder pressure
(25) FR wheel cylinder pressure
(26) RR wheel cylinder pressure
(27) RL wheel cylinder pressure

B: SPECIFICATION

1. CONDITIONS FOR COMPLETION OF ABS SEQUENCE CONTROL

When the following conditions develop, the ABS sequence control stops and ABS operation is returned to the normal control mode.

- When the speed of at least one wheel reaches 10 km/h (6 MPH).
- When the brake pedal is released during ABS sequence control and the switch - stop light becomes OFF.
- After completion of ABS sequence control.
- When a malfunction is detected.

6. VDC Sequence Control

A: OPERATION

1) While the VDC sequence control is performed, the operation of the hydraulic unit can be checked using the brake tester or pressure gauge after the hydraulic unit solenoid valve is operated.
2) VDC sequence control can be started by Subaru Select Monitor.

1. VDC SEQUENCE CONTROL WITH SUBARU SELECT MONITOR

NOTE:
In the event of any trouble, sequence control will not operate.
1) Connect the Subaru Select Monitor to data link connector.
   (1) Run the “PC application for Subaru Select Monitor”.
   (2) On «Main Menu» display, select {Each System Check}.
   (3) Select {Brake Control System}. When {VDC} is displayed, select the [OK] button.
   (4) Select the {VDC Function Check Mode} from {Work Support}.
2) Operate according to the procedures displayed in the Subaru Select Monitor.
3) The brake system being operated is displayed on the Subaru Select Monitor.

2. CONDITIONS FOR VDC SEQUENCE CONTROL

NOTE:
The control operation starts at point A.

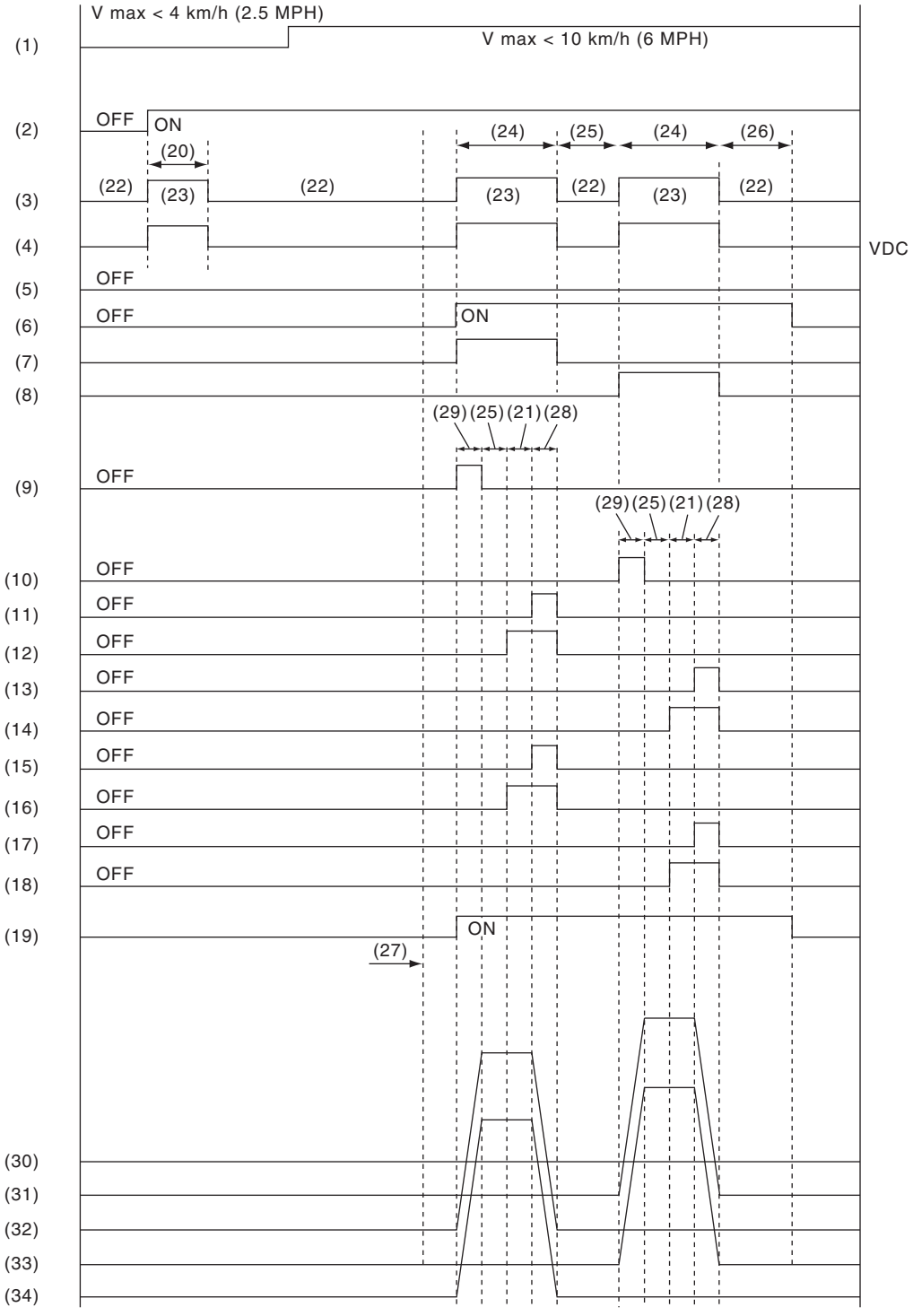

(1) All wheel speed
(2) Ignition key
(3) ABS warning light
(4) VDC warning light
(5) Switch - stop light
(6) Valve relay
(7) VDC switching valve 1 FL
(8) VDC switching valve 1 FR
(9) VDC switching valve 2 FL
(10) VDC switching valve 2 FR
(11) FL decompression valve
(12) FL compression valve
(13) FR decompression valve
(14) FR compression valve
(15) RR decompression valve
(16) RR compression valve
(17) RL decompression valve
(18) RL compression valve
(19) Pump motor
(20) A few seconds
(21) 1.2 seconds
(22) Light OFF
(23) Light ON
(24) 3.4 seconds
(25) 1 second
(26) 1.6 seconds
(27) Point A
(28) 0.4 seconds
(29) 0.8 seconds
(30) Master cylinder pressure
(31) FR wheel cylinder pressure
(32) FL wheel cylinder pressure
(33) RL wheel cylinder pressure
(34) RR wheel cylinder pressure

B: SPECIFICATION

1. CONDITIONS FOR COMPLETION OF VDC SEQUENCE CONTROL

When the following conditions develop, the VDC sequence control stops and VDC operation is returned to the normal control mode.

- When the speed of at least one wheel reaches 10 km/h (6 MPH).
- After completion of VDC sequence control.
- When a malfunction is detected.

7. Yaw Rate and G Sensor

A: NOTE

Yaw rate & longitudinal G and lateral G sensor are integrated with the VDC control module & hydraulic control module (VDCCM&H/U).

B: INSPECTION

1. YAW RATE & LONGITUDINAL G AND LATERAL G SENSOR SIGNAL

	Step	Check	Yes	No
1	**CHECK YAW RATE & G SENSOR.** 1) Check the installation condition of the VDC control module & hydraulic control module (VDCCM&H/U). 2) Select “Current Data Display & Save” on the Subaru Select Monitor. 3) Read the output of yaw rate & G sensor.	When the vehicle is placed horizontally, are the displayed values –1.5 — 1.5 m/s^2 for longitudinal G and lateral G sensor, and –4 — 4 deg/s for yaw rate sensor?	Go to step **2**.	Replace the VDC control module & hydraulic control unit (VDCCM&H/U).
2	**PERFORM DRIVING TEST.** Drive for approximately 10 minutes, and check that there is no system malfunction or the warning light illumination while driving.	Is there any abnormal movement or the warning light illumination while driving?	Perform the diagnosis according to DTCs for the VDC system. <Ref. to VDC(diag)-37, List of Diagnostic Trouble Code (DTC).>	G sensor is normal.

8. Steering Angle Sensor

A: REPLACEMENT

CAUTION:
If the steering wheel and steering angle sensor are removed, perform "VDC sensor midpoint setting mode" of the VDC. <Ref. to VDC-21, VDC SENSOR MIDPOINT SETTING MODE, ADJUSTMENT, VDC Control Module and Hydraulic Control Unit (VDCCM&H/U).>

1) Position the front wheels straight ahead. (After moving a vehicle 5 m (16 ft) or more with front wheels positioned straight ahead, make sure that the vehicle moves straight ahead.)
2) Turn the ignition switch to OFF.
3) Disconnect the ground cable from battery and wait for at least 60 seconds before starting work. <Ref. to NT-5, BATTERY, NOTE, Note.>

NOTE:
For the 12 volt engine restart battery of HEV model, disconnect the ground terminal from 12V engine restart battery sensor.

4) Remove the driver's airbag module.

CAUTION:
Before performing service on the airbag module, always refer to "CAUTION" of "General Description" in "AIRBAG SYSTEM" section. <Ref. to AB-11, CAUTION, General Description.>

(1) Using a hexagon wrench etc. wrapped by protective tape, insert the snap pins and release the locks (3 locations).

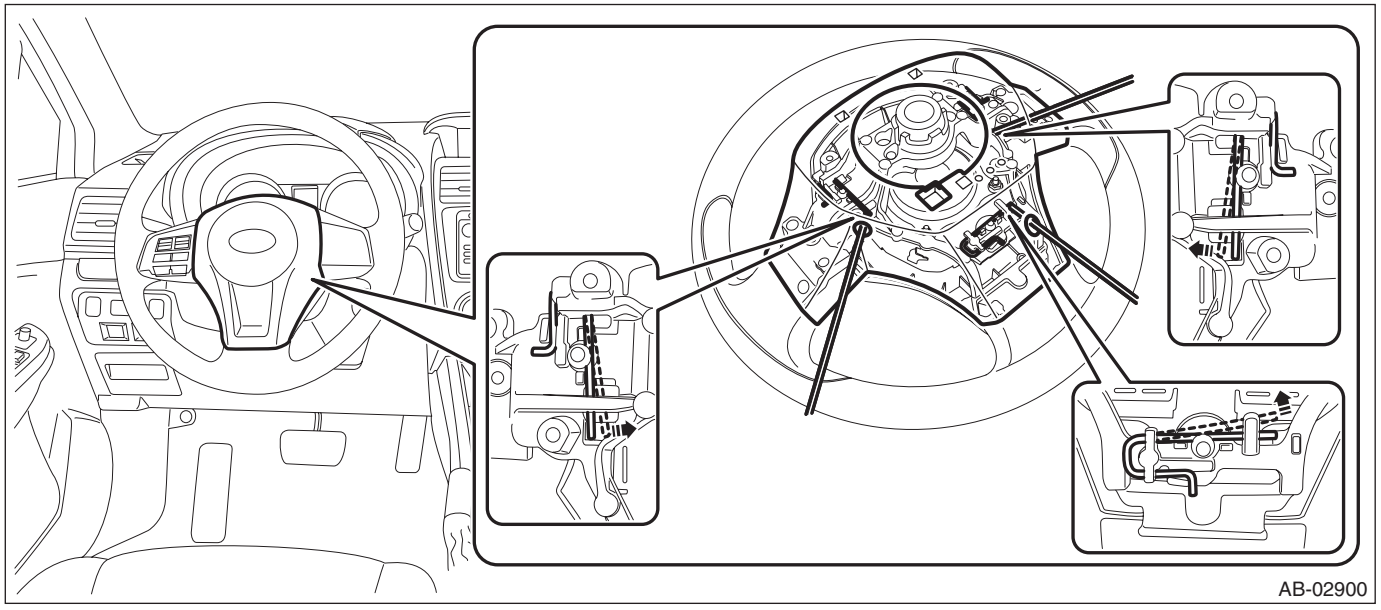

(2) Disconnect the horn harness and airbag connector, and remove the airbag module. <Ref. to AB-23, DRIVER'S AIRBAG MODULE, CURTAIN AIRBAG MODULE & PRETENSIONER, PROCEDURE, Airbag Connector.>

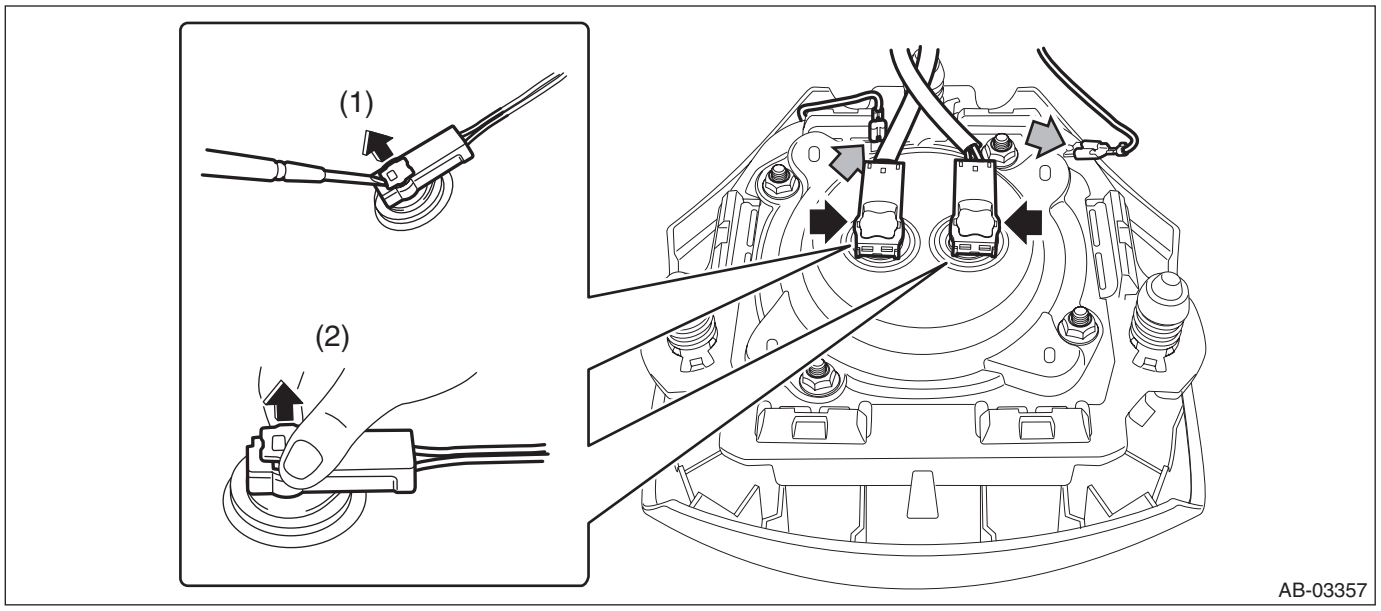

5) Remove the steering wheel.

CAUTION:
• Always use the steering wheel puller for removal to avoid deforming the steering wheel.
• If the steering wheel has been removed, make sure that the steering roll connector is not turned from the original position.

Preparation tool:
Steering wheel puller
(1) Disconnect the connector and remove the nut.
(2) Put alignment marks and remove the steering wheel.

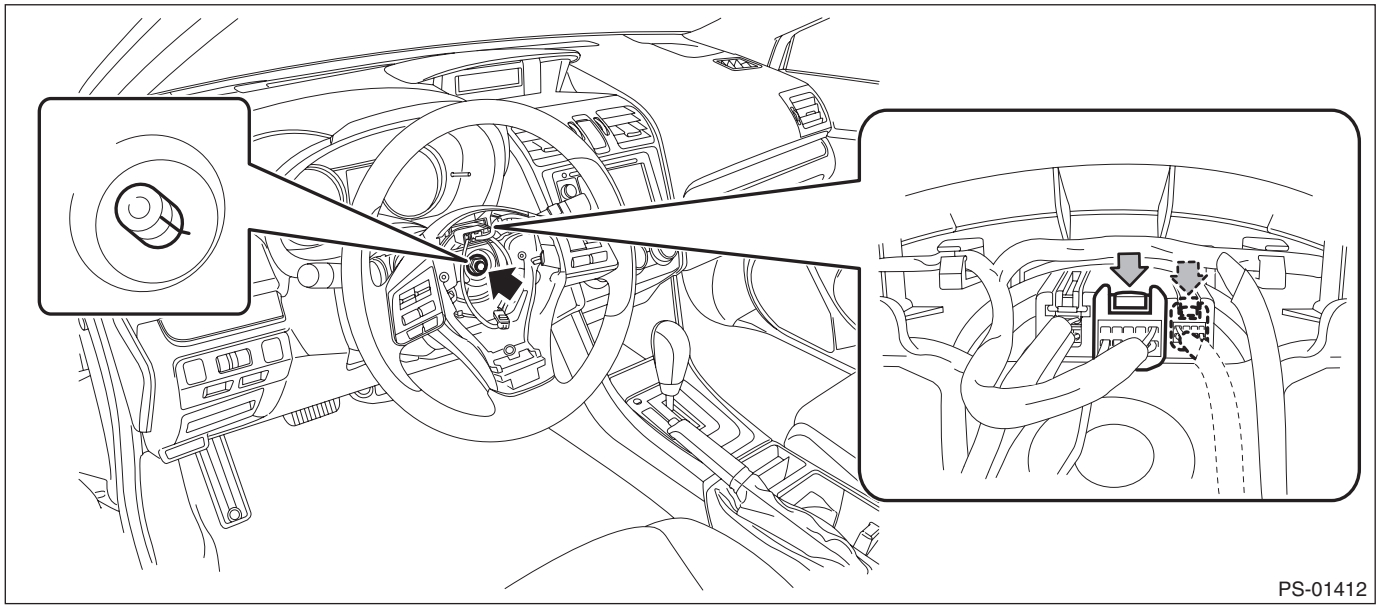

6) Remove the cover assembly - column.
(1) Release the screws and claws.
(2) Remove the cap - key cylinder (a). (Model with keyless access)
(3) Remove the cover assembly - column UPR and the cover assembly - column LWR.

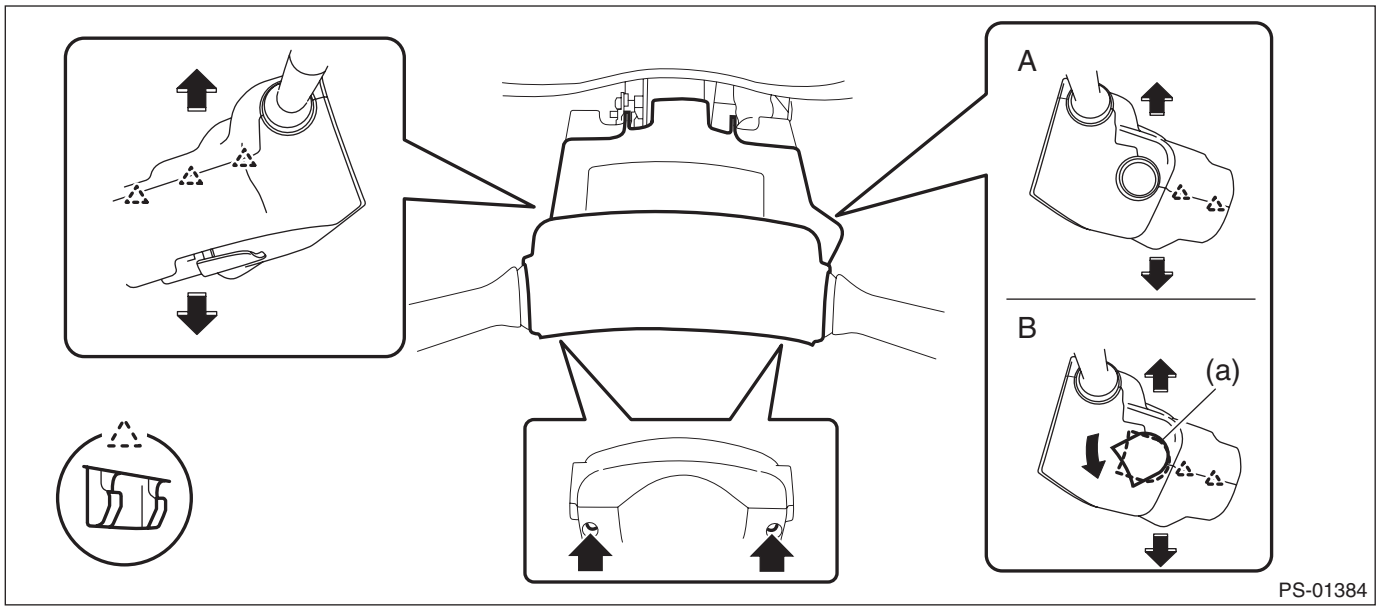

A Models without keyless access B Models with keyless access

7) Remove the steering roll connector.

CAUTION:
Make sure that the steering roll connector is not turned from the original position.
(1) Disconnect the connector under the steering roll connector.
(2) Release the claws and remove the steering roll connector.

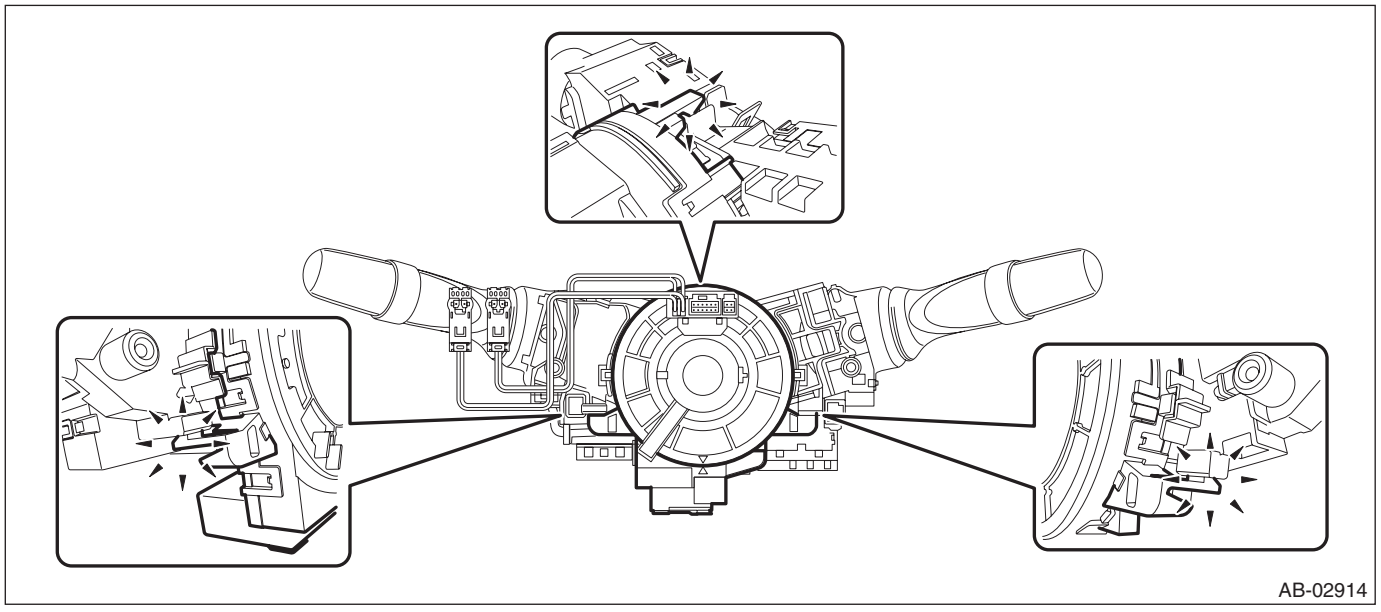

8) Remove the steering angle sensor.
(1) Release the claws and remove the steering angle sensor (b) from the steering roll connector (a).

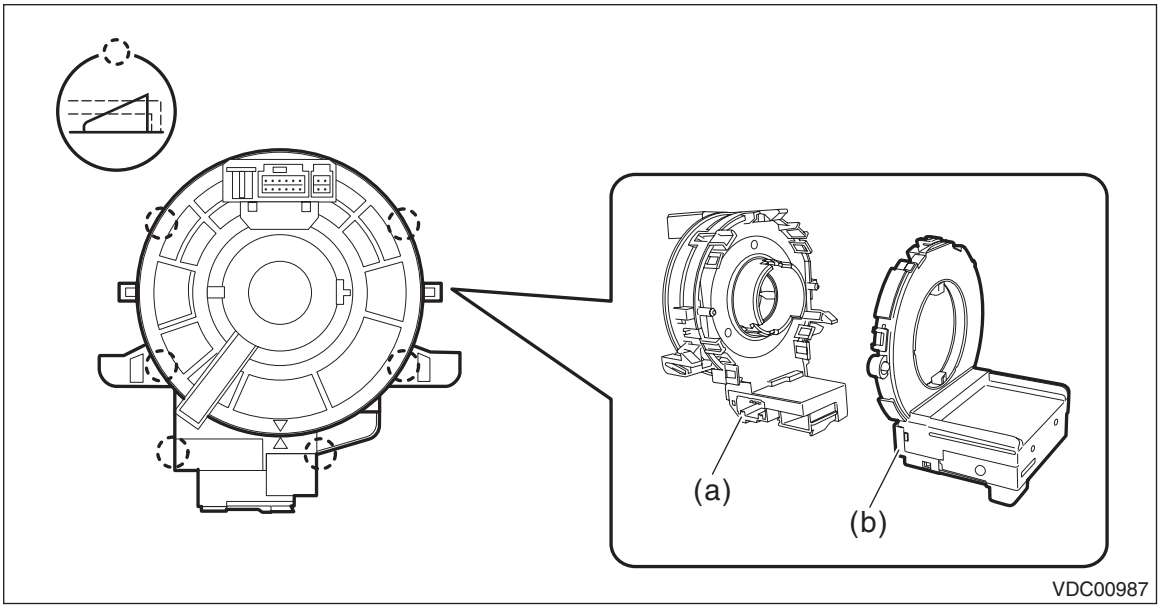

9) Install the steering angle sensor.
(1) Apply grease to the protrusion (a) of the new steering angle sensor.

CAUTION:
Do not rotate the steering angle sensor protrusion.

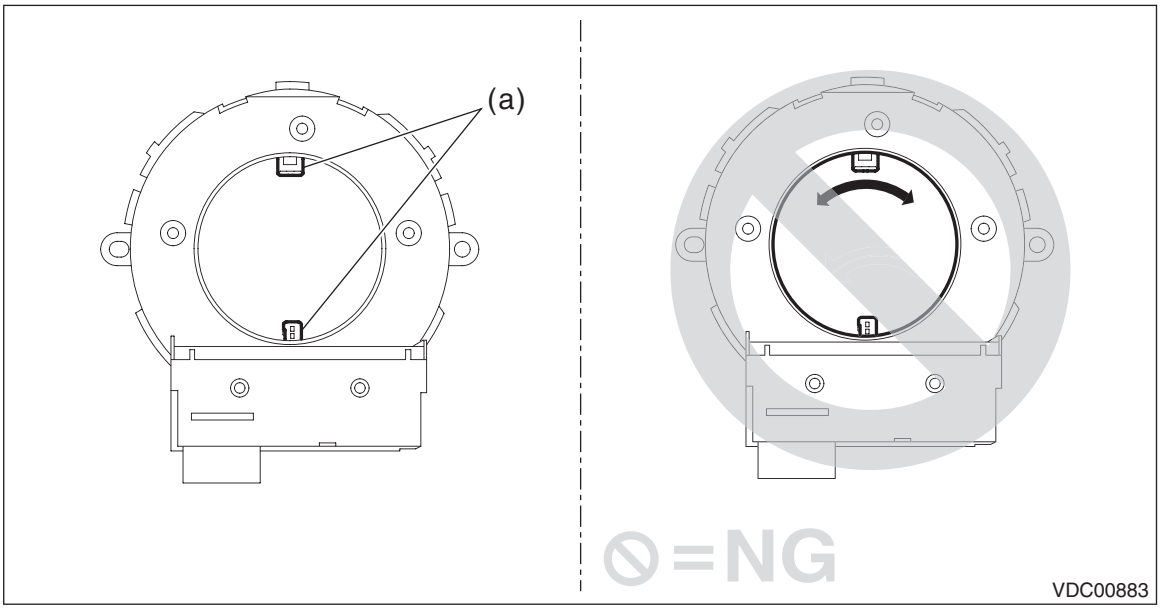

(2) Align the center of steering roll connector. <Ref. to AB-108, INSTALLATION, Roll Connector.>
(3) Align the position of the protrusion and install the steering angle sensor to the steering roll connector.
10) Install each part in the reverse order of removal.

Tightening torque:
Steering wheel: 39 N·m (3.98 kgf-m, 28.8 ft-lb)

Clearance:
Between cover assembly - column and steering wheel: 4 — 6 mm (0.16 — 0.24 in)
11) After installation, perform the neutral position setting of the steering angle sensor. <Ref. to VDC-21, VDC SENSOR MIDPOINT SETTING MODE, ADJUSTMENT, VDC Control Module and Hydraulic Control Unit (VDCCM&H/U).>

9. Front ABS Wheel Speed Sensor

A: REMOVAL

1) Disconnect the ground cable from battery. <Ref. to NT-5, BATTERY, NOTE, Note.>

NOTE:
For the 12 volt engine restart battery of HEV model, disconnect the ground terminal from 12V engine restart battery sensor.
2) Lift up the vehicle, and then remove the front wheels.
3) Remove the front ABS wheel speed sensor.

CAUTION:
- **Be careful not to damage the sensor.**
- **Do not apply excessive force to the sensor harness.**
- **Leave the sensor harness clamp (white arrow) on the vehicle side.**

(1) Disconnect the connector of the front ABS wheel speed sensor in the engine compartment.

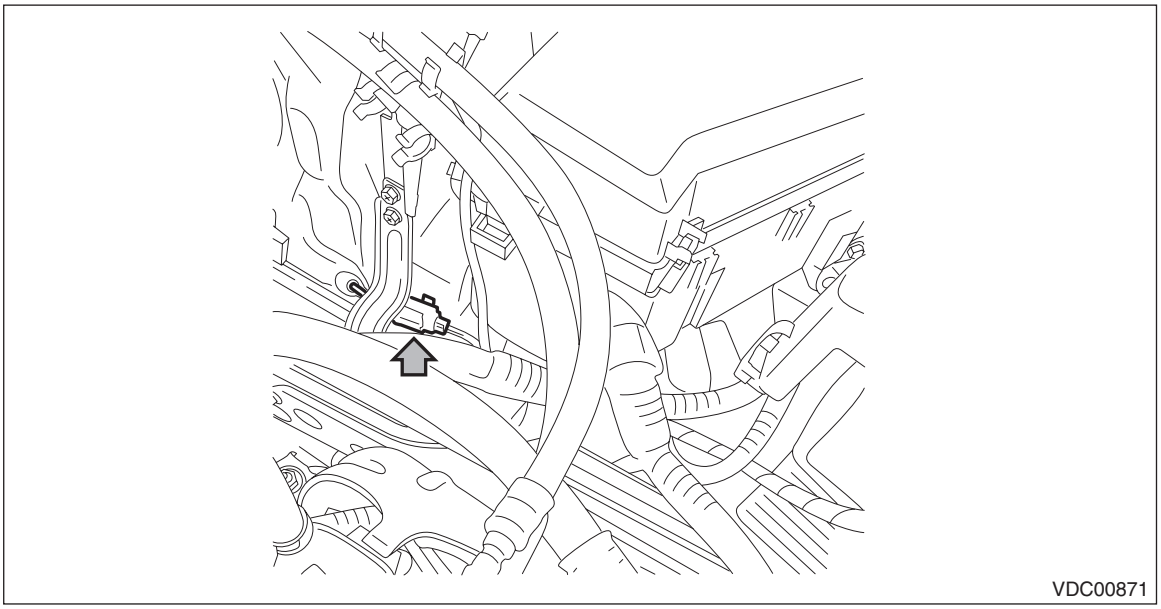

(2) Remove each harness clip and grommet.
(3) Remove the bolts, and remove the front ABS wheel speed sensor from the housing assembly - front axle.

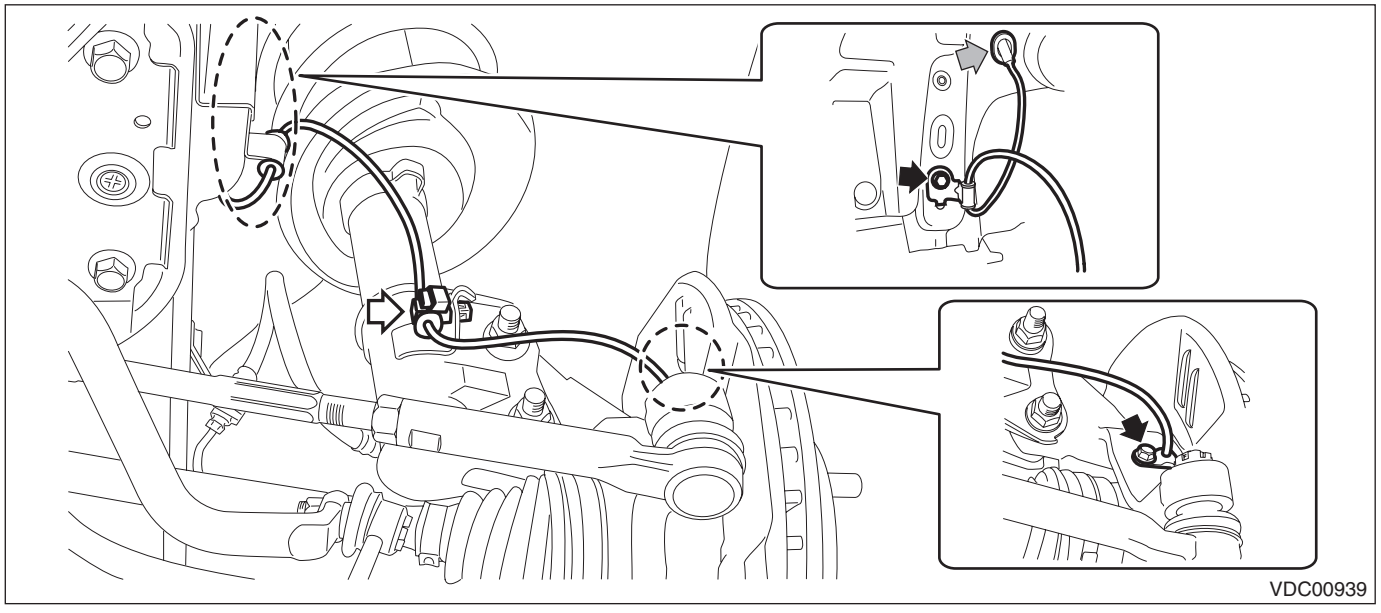

B: INSTALLATION

CAUTION:
- **Be careful not to damage the sensor.**
- **Do not apply excessive force to the sensor harness.**

Install each part in the reverse order of removal.

NOTE:
- Check the identification (mark) on the harness to make sure there is no warpage. <Ref. to VDC-2, SPECIFICATION, General Description.>
- Check if the harness is not pulled and does not come in contact with the suspension or body while operating the steering.

Tightening torque:
Front ABS wheel speed sensor: 7.5 N·m (0.76 kgf-m, 5.5 ft-lb)
Front ABS wheel speed sensor bracket: 33 N·m (3.36 kgf-m, 24.3 ft-lb)
Front wheel: Except for C4 model
120 N·m (12.24 kgf-m, 88.5 ft-lb)
Front wheel: C4 model
100 N·m (10.20 kgf-m, 73.8 ft-lb)

C: INSPECTION

1. CHECK WITH SUBARU SELECT MONITOR

1) Connect the Subaru Select Monitor to data link connector.
   (1) Run the “PC application for Subaru Select Monitor”.
   (2) On «Main Menu» display, select {Each System Check}.
   (3) Select {Brake Control System}. When {VDC} is displayed, select the [OK] button.
   (4) From {Current Data Display & Save}, select {FR Wheel Speed} and {FL Wheel Speed}.
2) Check if the speed indicated on the display changes in the same manner as the speedometer reading during acceleration/deceleration when the steering wheel is in the straight-ahead position.
3) If the speed indicated on the display does not change in the inspection, check the ABS wheel speed sensor. <Ref. to VDC-35, CHECK ABS WHEEL SPEED SENSOR UNIT, INSPECTION, Front ABS Wheel Speed Sensor.>

2. CHECK ABS WHEEL SPEED SENSOR UNIT

1) Visually check the tip of the ABS wheel speed sensor for foreign particles or damage. If necessary, clean the tip or replace the ABS wheel speed sensor.
2) Disconnect the ABS wheel speed sensor connector.
3) Check the ABS wheel speed sensor cable for discontinuity. If defective, replace the ABS wheel speed sensor.
4) Connect a 12 V power supply to No. 1 terminal of ABS wheel speed sensor connector, then attach resistance to the No. 2 terminal. Rotate the wheel at about 2.75 km/h (2 MPH), and measure the voltage using an oscilloscope.

Standard value of output voltage:
0.7 — 1.4 V

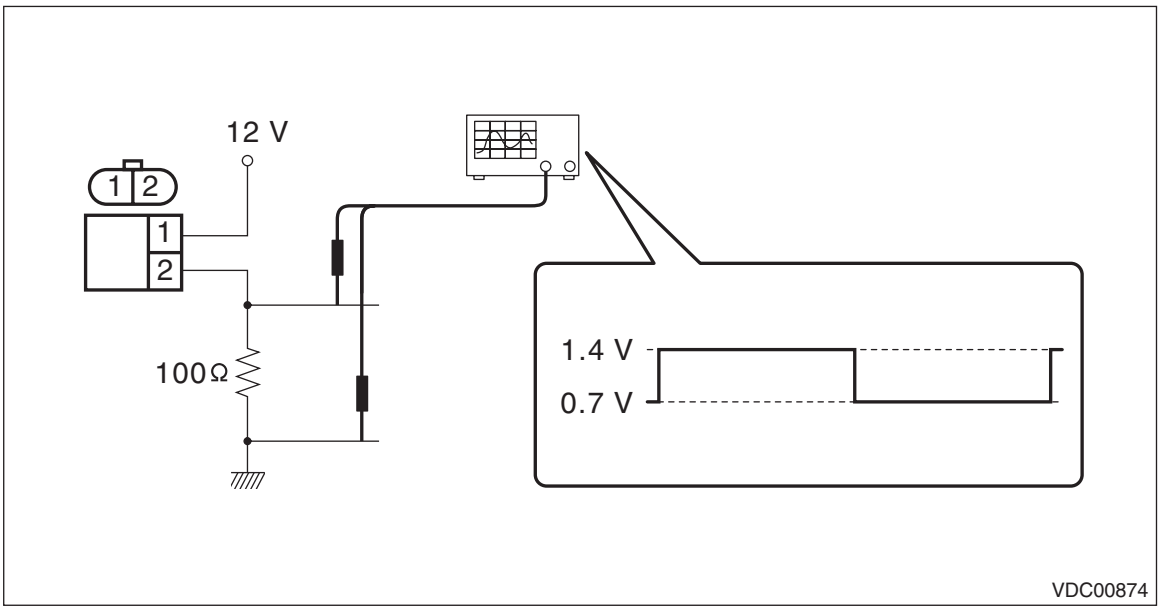

5) Replace the ABS wheel speed sensor if the inspection result is not within the standard value.

10.Rear ABS Wheel Speed Sensor

A: REMOVAL

1. 4 DOOR MODEL

1) Disconnect the ground cable from battery.
2) Lift up the vehicle, and then remove the rear wheels.
3) Remove the rear ABS wheel speed sensor.

CAUTION:
- **Be careful not to damage the sensor.**
- **Do not apply excessive force to the sensor harness.**
- **Leave the sensor harness clamp (white arrow) on the vehicle side.**

(1) Take out the trunk mat.
(2) Tilt the backrest assembly of the rear seat forward.
(3) Remove the clips located at the bottom of the cover COMPL - rear backrest LH and RH of the rear seat back.

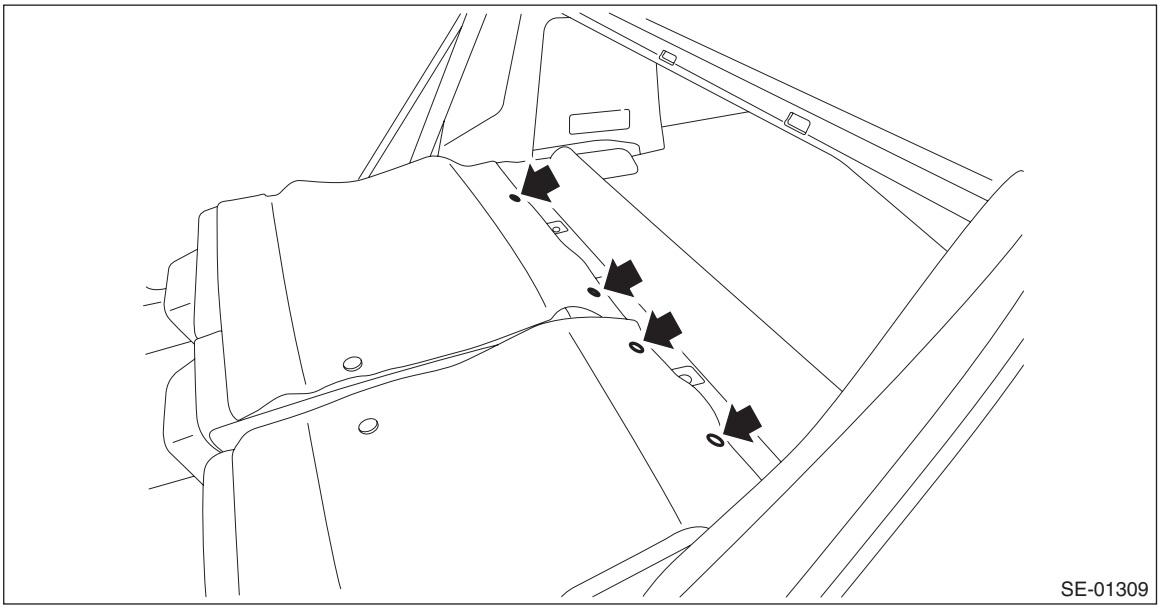

(4) Remove the clips, and turn over the trim panel - trunk side.

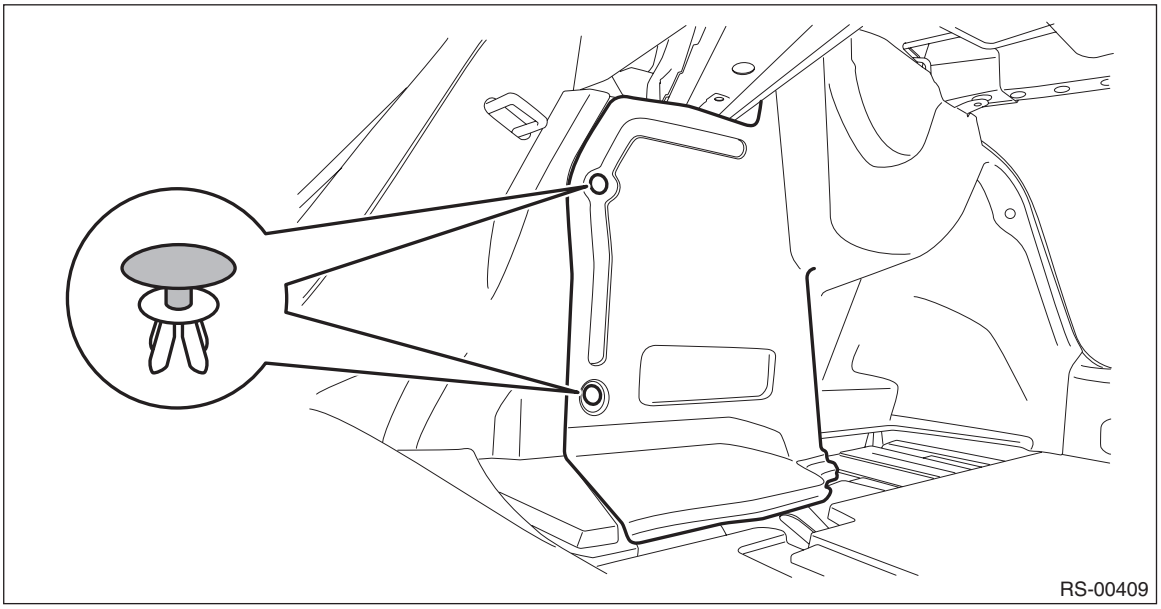

(5) Disconnect the connector of the rear ABS wheel speed sensor.

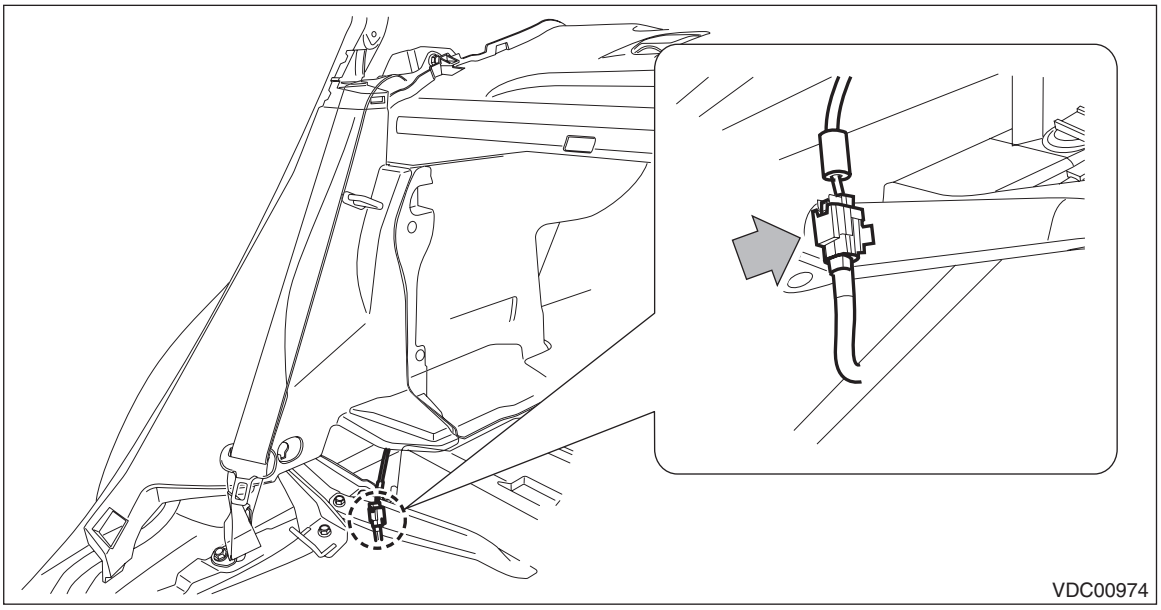

(6) Remove the grommet from the rear wheel housing, and pull out the connector of the rear ABS wheel speed sensor.
(7) Remove the harness clip and bolt, and remove the rear ABS wheel speed sensor.

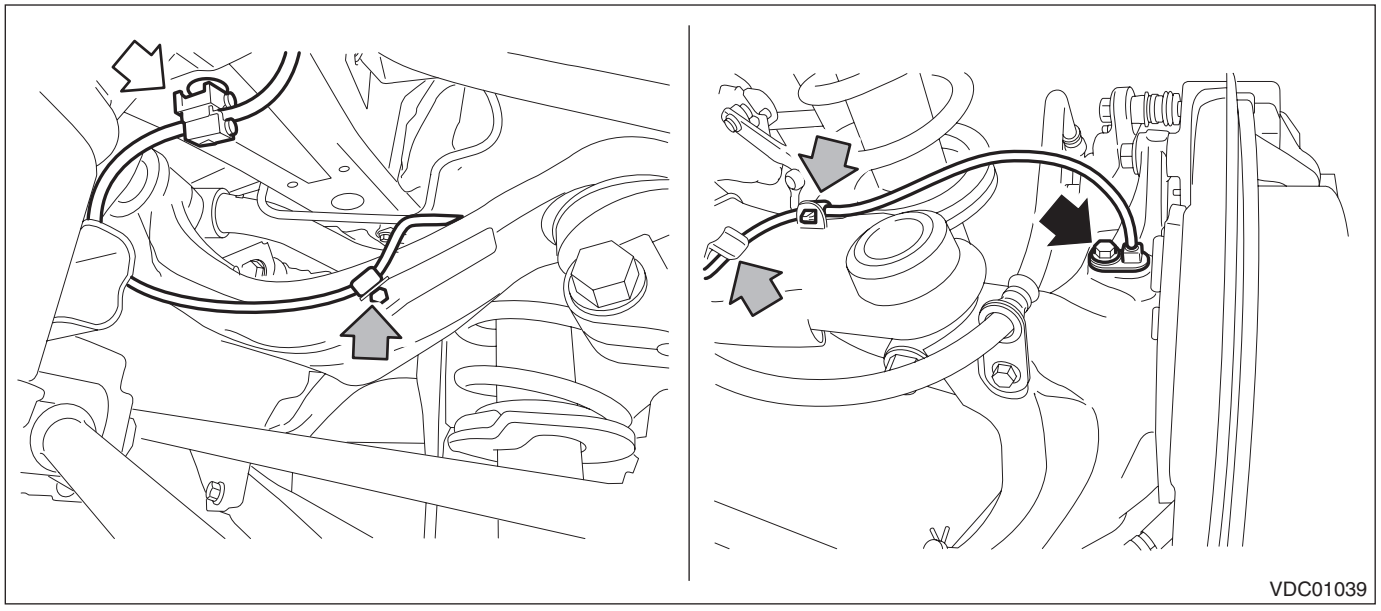

2. 5 DOOR MODEL (GASOLINE ENGINE MODEL)

NOTE:
For removal relating to HEV model, refer to “HEV model”. <Ref. to VDC-41, HEV MODEL, REMOVAL, Rear ABS Wheel Speed Sensor.>
1) Disconnect the ground cable from battery.
2) Lift up the vehicle, and then remove the rear wheels.
3) Remove the rear ABS wheel speed sensor.

CAUTION:
- **Be careful not to damage the sensor.**
- **Do not apply excessive force to the sensor harness.**
- **Leave the sensor harness clamp (white arrow) on the vehicle side.**

(1) Tilt the backrest assembly of the rear seat forward.
(2) Remove the clips located at the bottom of the cover COMPL - rear backrest LH and RH of the rear seat back.

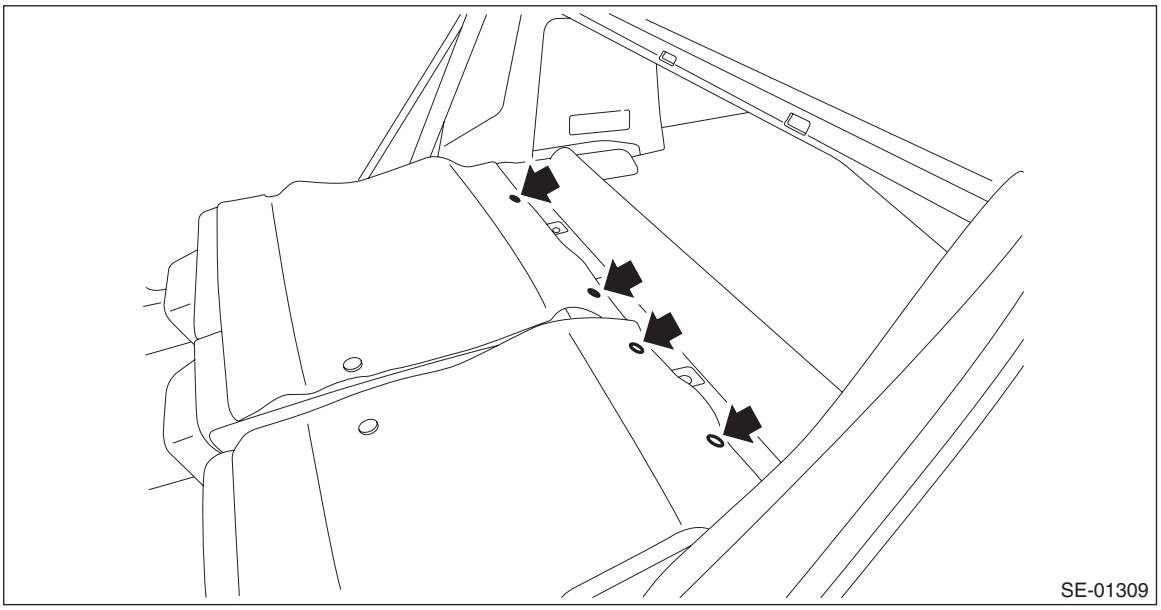
SE-01309

(3) Remove the mat - rear floor CTR and the spacer - rear floor side.

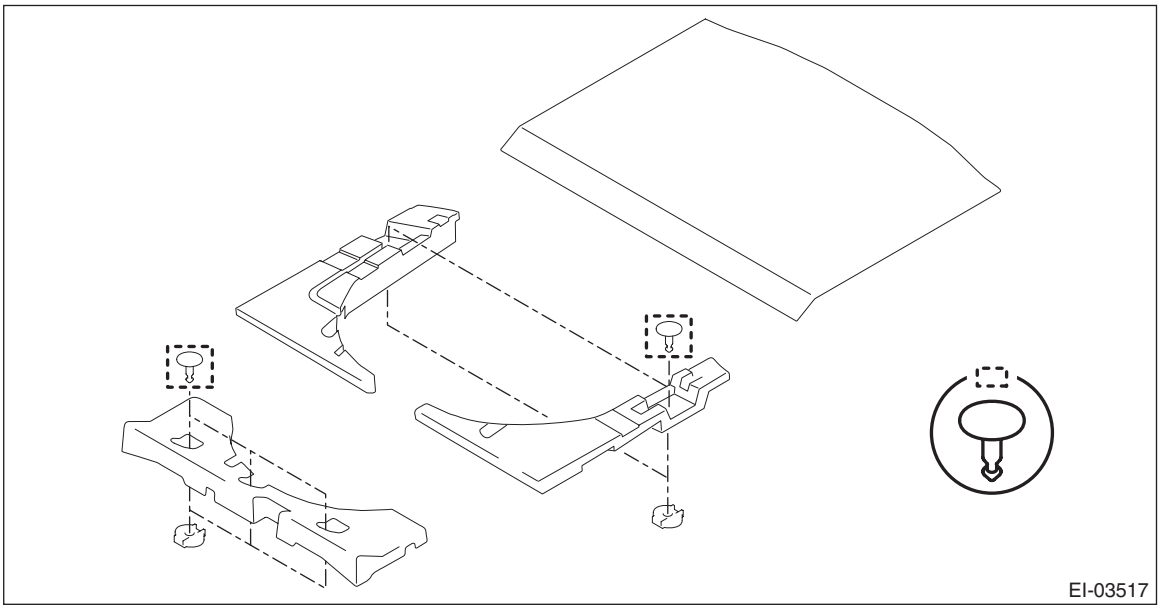
EI-03517

(4) Remove the clips, and remove the trim panel - rear skirt.

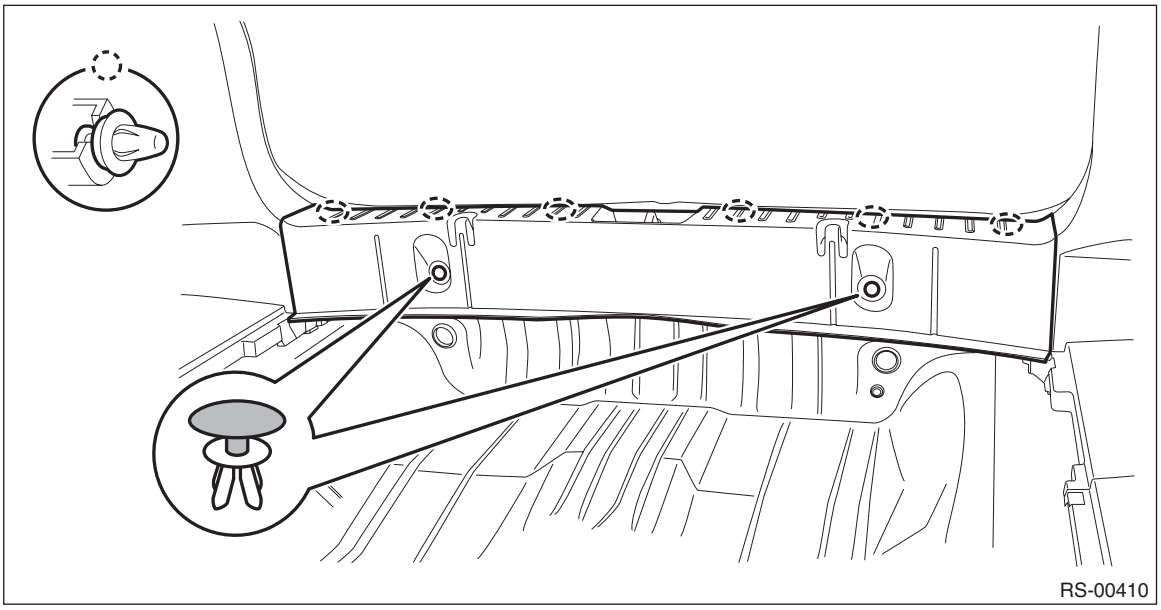

(5) Remove the lid upper rear (a) and the cap - rear strut (b) in the order from (1) to (6).

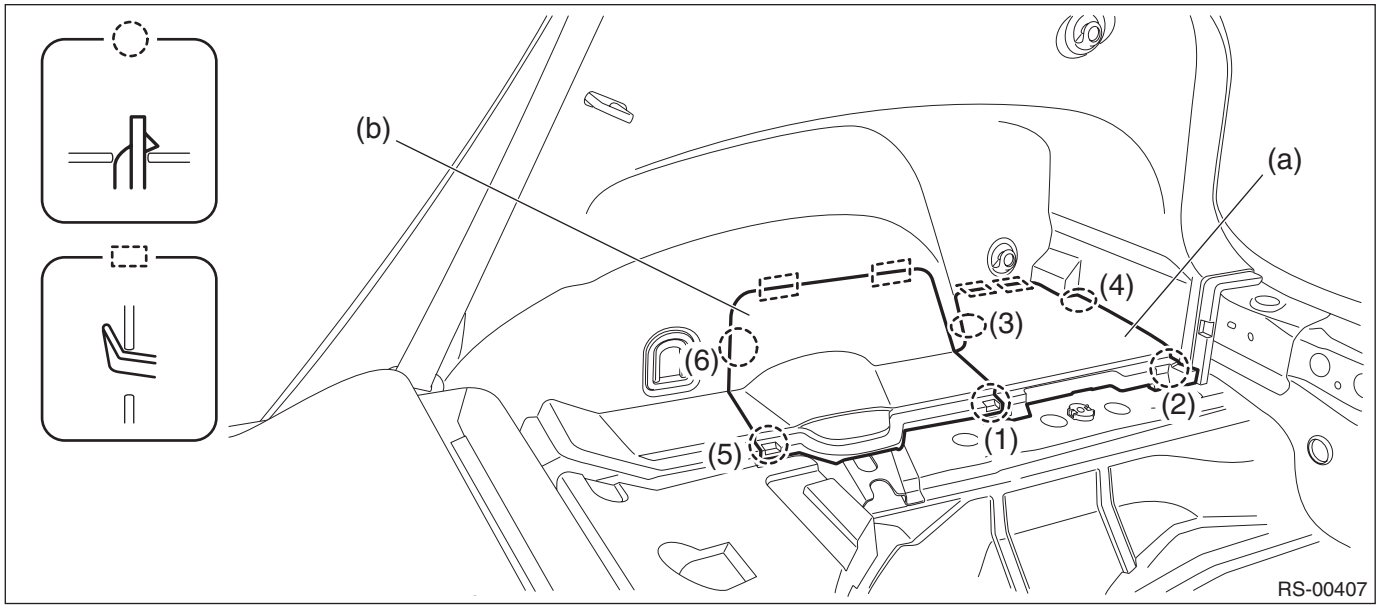

(6) Disconnect the connector of the rear ABS wheel speed sensor.

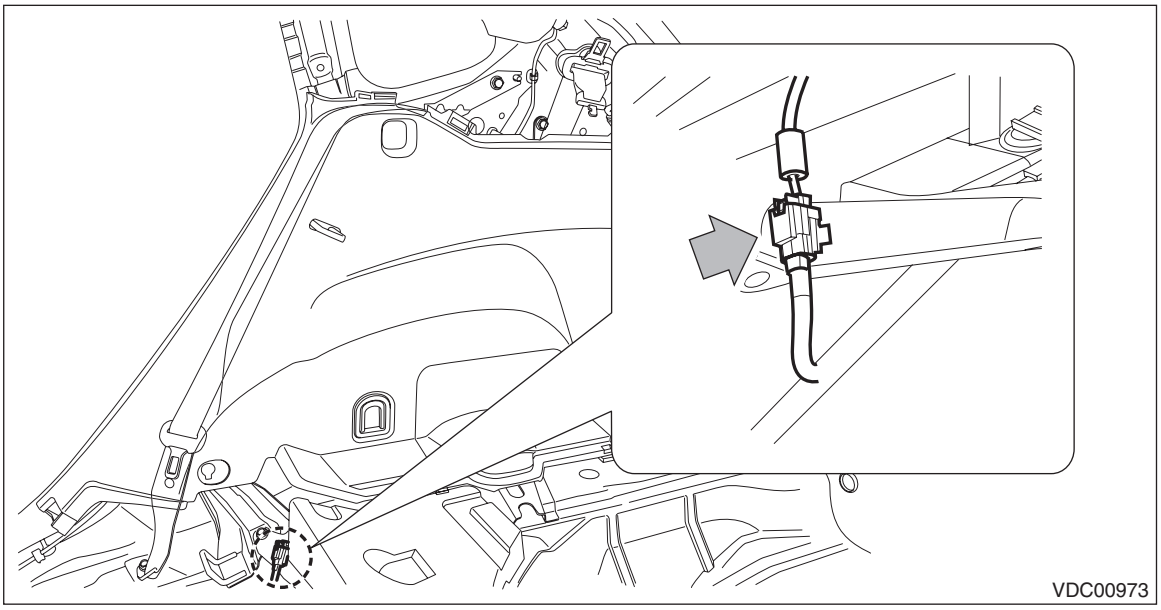

(7) Remove the grommet from the rear wheel housing, and pull out the connector of the rear ABS wheel speed sensor.
(8) Remove the harness clip and bolt, and remove the rear ABS wheel speed sensor.

- Except for XV model

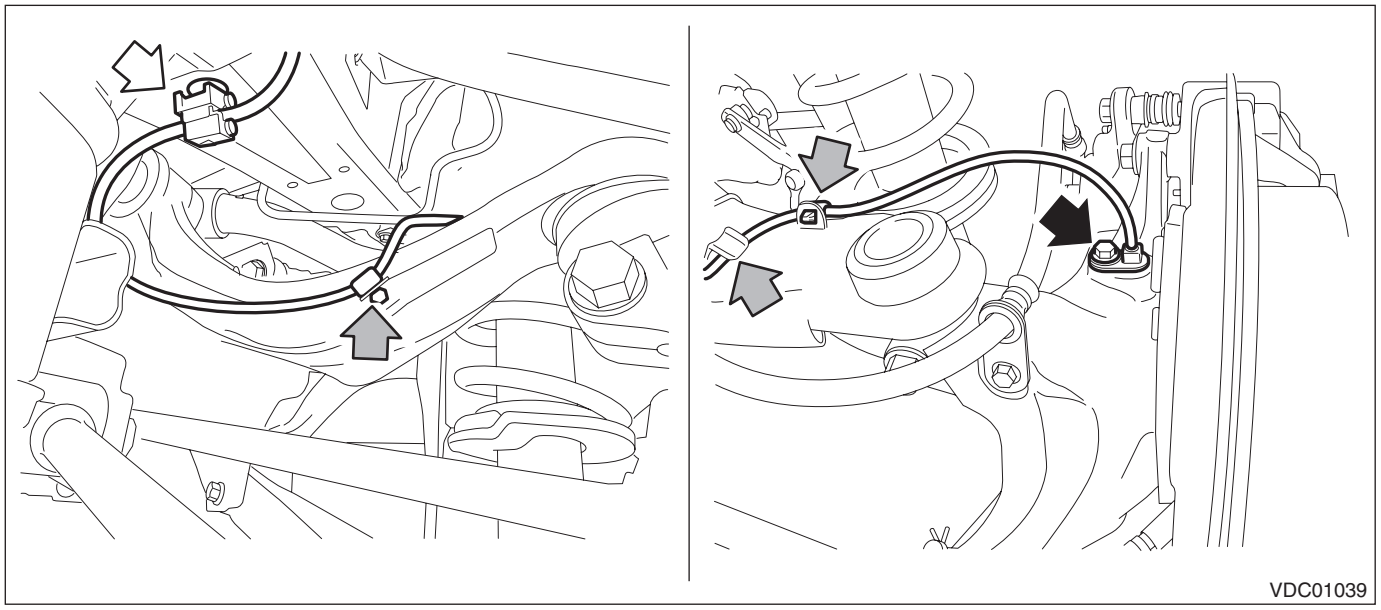

- XV model

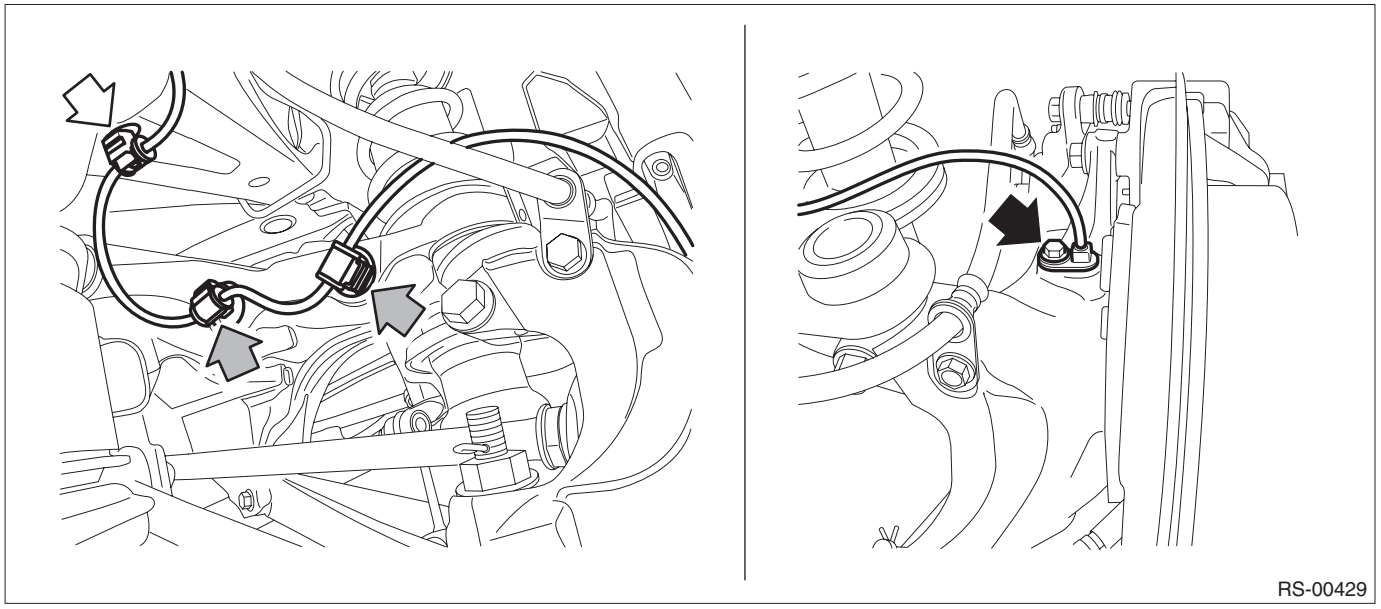

3. HEV MODEL

1) Disconnect the ground cable from battery. <Ref. to NT-5, BATTERY, NOTE, Note.>

NOTE:
For the 12 volt engine restart battery, disconnect the ground terminal from 12V engine restart battery sensor.
2) Lift up the vehicle, and then remove the rear wheels.
3) Remove the rear ABS wheel speed sensor.

CAUTION:
- **Be careful not to damage the sensor.**
- **Do not apply excessive force to the sensor harness.**
- **Leave the sensor harness clamp (white arrow) on the vehicle side.**

(1) Tilt the backrest assembly of the rear seat forward.
(2) Remove the clips located at the bottom of the cover COMPL - rear backrest LH and RH of the rear seat back.

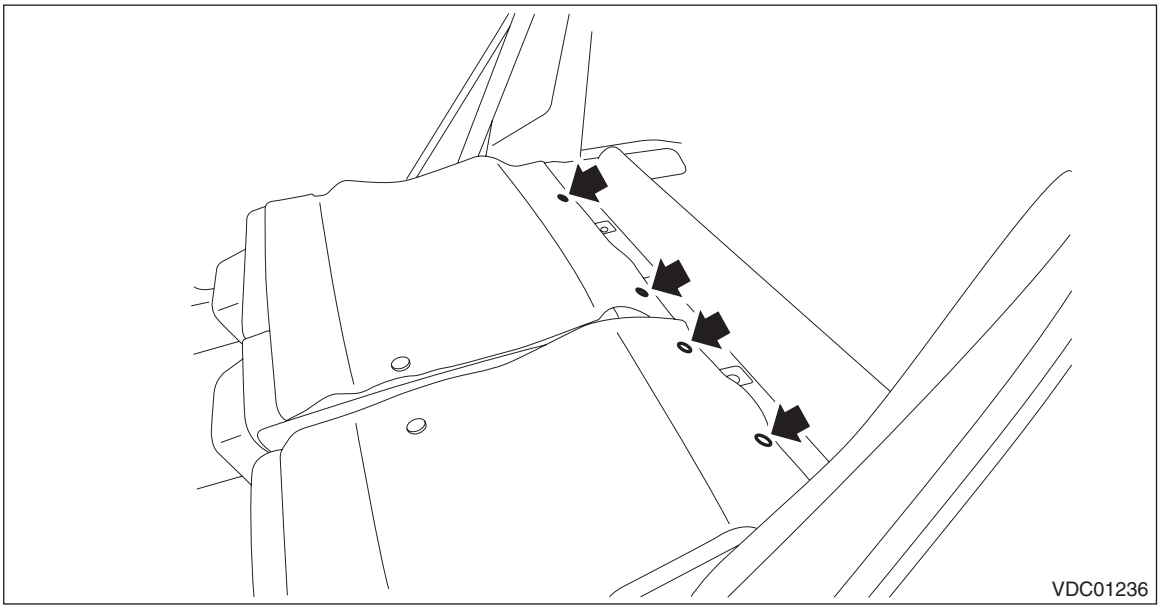

(3) Remove the mat - rear floor CTR.
(4) Release the clips and side spacers, then detach the sub-trunk box.

(5) Remove the clips and detach the side spacers.

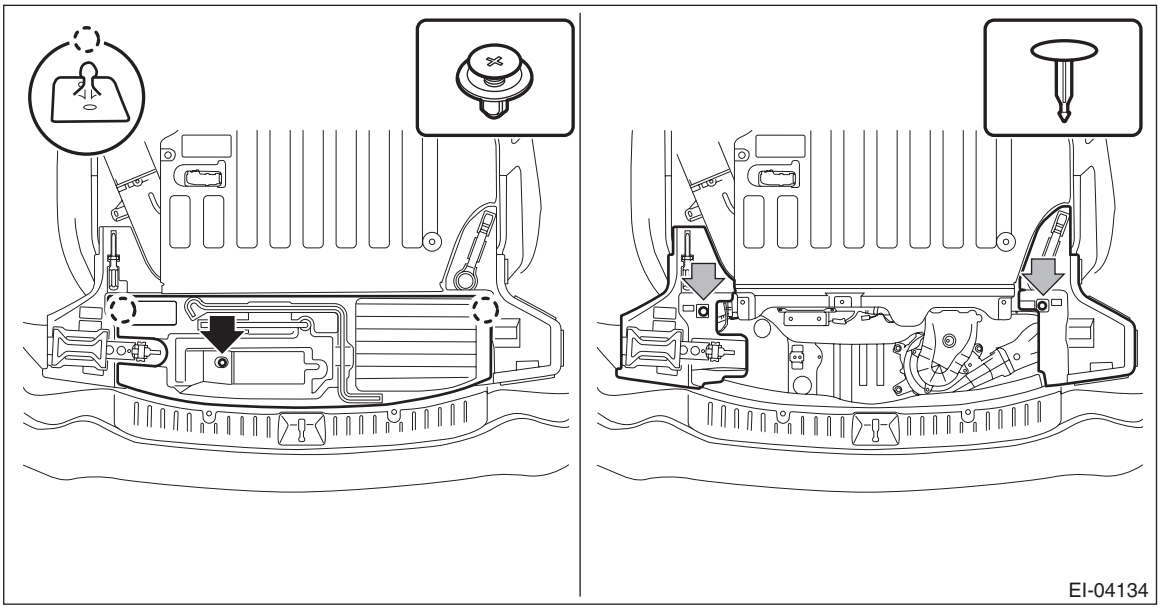

(6) Remove the cap - rear strut.

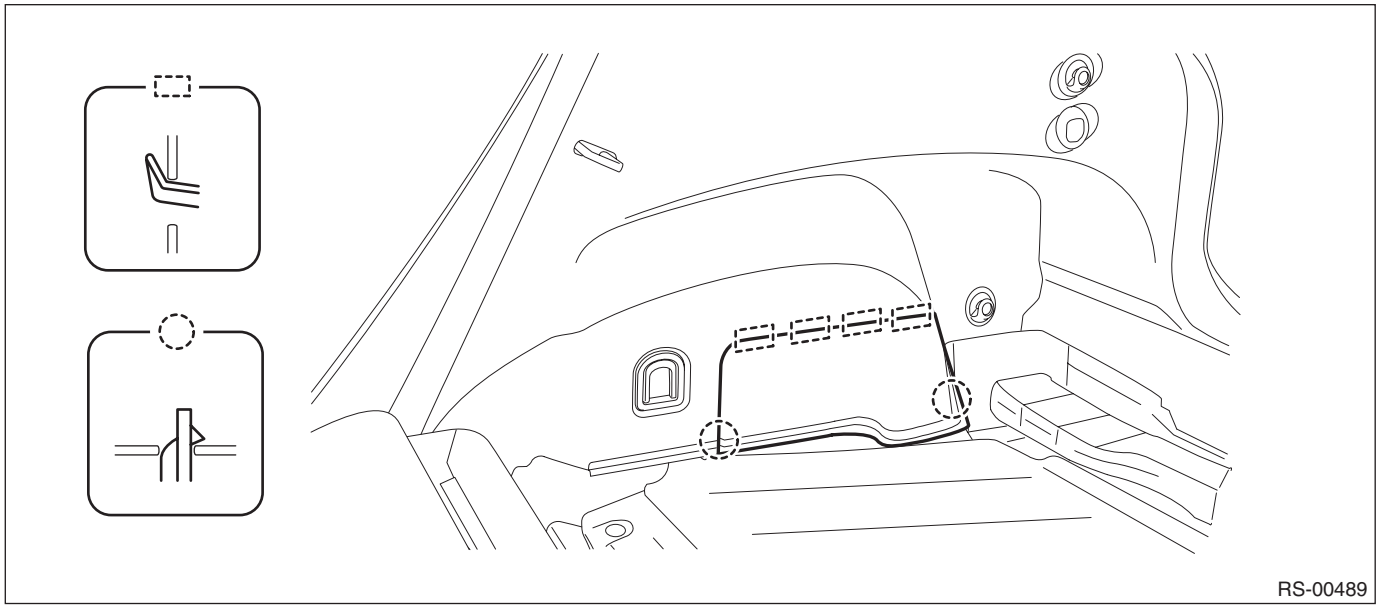

(7) Remove the clips, and disconnect the rear ABS wheel speed sensor connector.

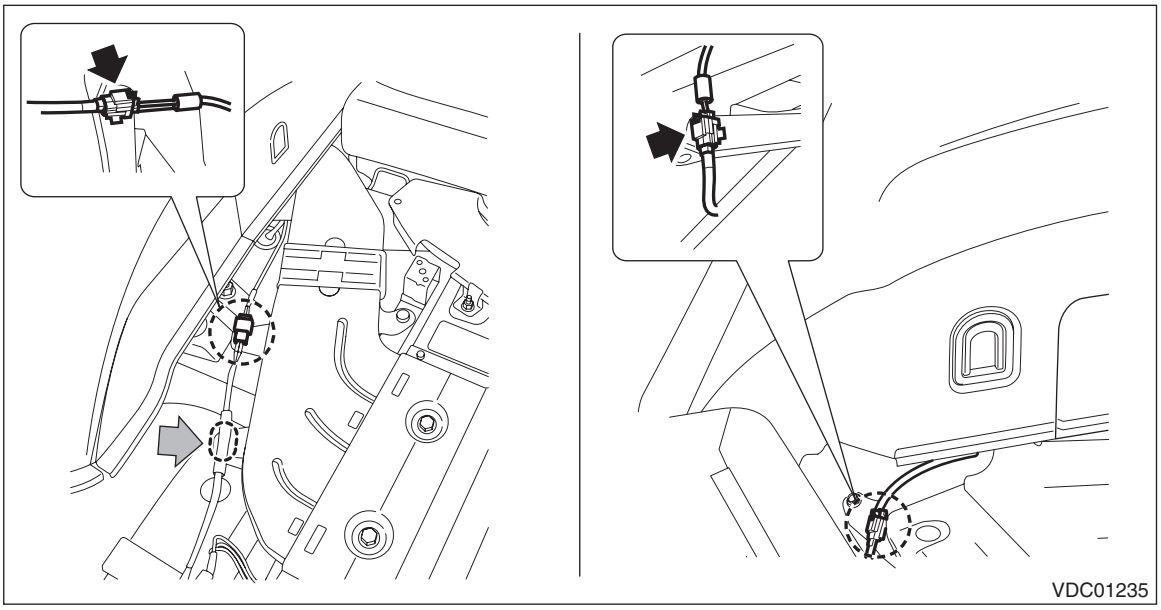

(8) Remove the grommet from the rear wheel housing, and pull out the connector of the rear ABS wheel speed sensor.
(9) Remove the harness clip and bolt, and remove the rear ABS wheel speed sensor.

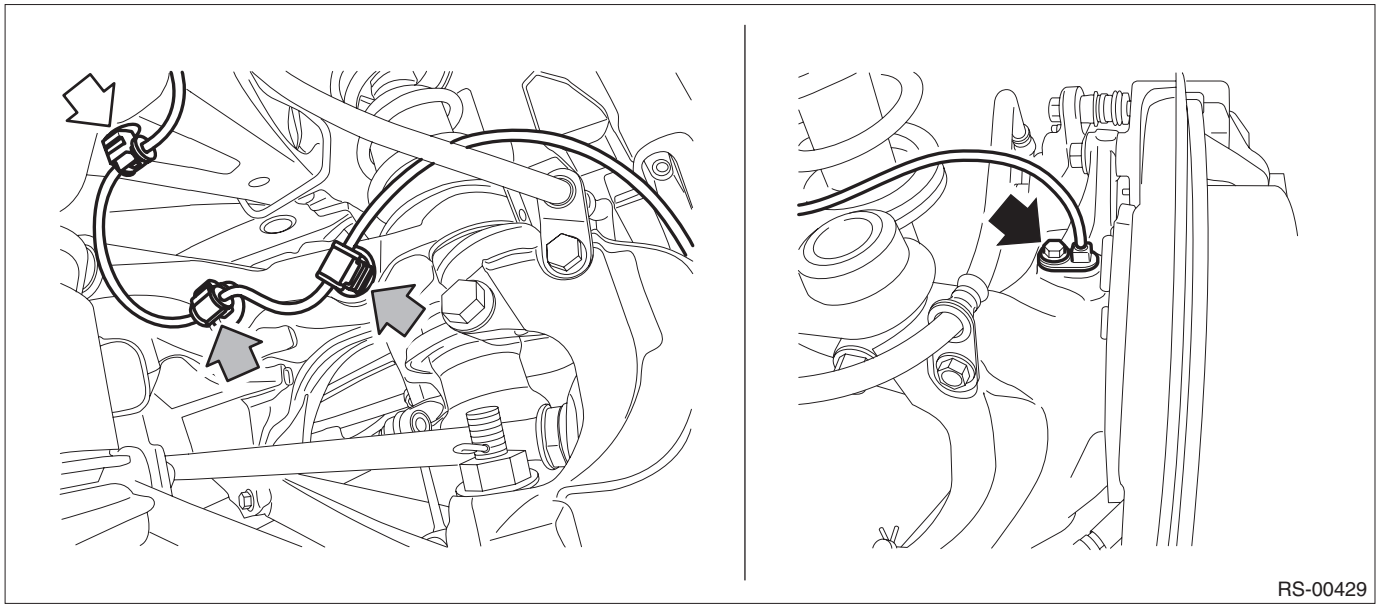

B: INSTALLATION

CAUTION:
Be careful not to damage the sensor.
1) Install each part in the reverse order of removal.
2) Route the rear ABS wheel speed sensor cable to the upper arm assembly.

NOTE:
Check the identification (mark) on the harness to make sure there is no warpage. <Ref. to VDC-2, SPECIFICATION, General Description.>

Tightening torque:
Rear ABS wheel speed sensor: 7.5 N·m (0.76 kgf-m, 5.5 ft-lb)
Rear wheel: Except for C4 model
120 N·m (12.24 kgf-m, 88.5 ft-lb)
Rear wheel: C4 model
100 N·m (10.20 kgf-m, 73.8 ft-lb)

C: INSPECTION

1. ABS WHEEL SPEED SENSOR

For inspection of rear ABS wheel speed sensor, refer to inspection of front ABS wheel speed sensor. <Ref. to VDC-35, CHECK ABS WHEEL SPEED SENSOR UNIT, INSPECTION, Front ABS Wheel Speed Sensor.>

11.Front Magnetic Encoder

A: REMOVAL

Refer to “Front Hub Unit Bearing” for removal, because the front magnetic encoder is integrated with the hub unit COMPL - front axle. <Ref. to DS-25, REMOVAL, Front Hub Unit Bearing.>

B: INSTALLATION

Refer to “Front Hub Unit Bearing” for installation, because the front magnetic encoder is integrated with the hub unit COMPL - front axle. <Ref. to DS-28, INSTALLATION, Front Hub Unit Bearing.>

C: INSPECTION

Visually check the magnetic encoder for any damage. If necessary, replace with a new hub unit COMPL - front axle.

NOTE:
Because the magnetic encoder is integrated with hub unit COMPL, replace the hub unit COMPL with a new part if there is any defect found on the magnetic encoder.

12.Rear Magnetic Encoder

A: REMOVAL

Refer to “Rear Hub Unit Bearing” for removal, because the rear magnetic encoder is integrated with the hub unit COMPL - rear axle. <Ref. to DS-46, REMOVAL, Rear Hub Unit Bearing.>

B: INSTALLATION

Refer to “Rear Hub Unit Bearing” for installation, because the rear magnetic encoder is integrated with the hub unit COMPL - rear axle. <Ref. to DS-51, INSTALLATION, Rear Hub Unit Bearing.>

C: INSPECTION

Visually check the magnetic encoder parts for any damage. If necessary, replace with a new hub unit COMPL - rear axle.

NOTE:
Because the magnetic encoder is integrated with hub unit COMPL, replace the hub unit COMPL with a new part if there is any defect found on the magnetic encoder.

13.VDC OFF Switch

A: REMOVAL

1) Disconnect the ground cable from battery. <Ref. to NT-5, BATTERY, NOTE, Note.>

NOTE:
For the 12 volt engine restart battery of HEV model, disconnect the ground terminal from 12V engine restart battery sensor.

2) Remove the clips, and remove the cover - instrument panel side LH.

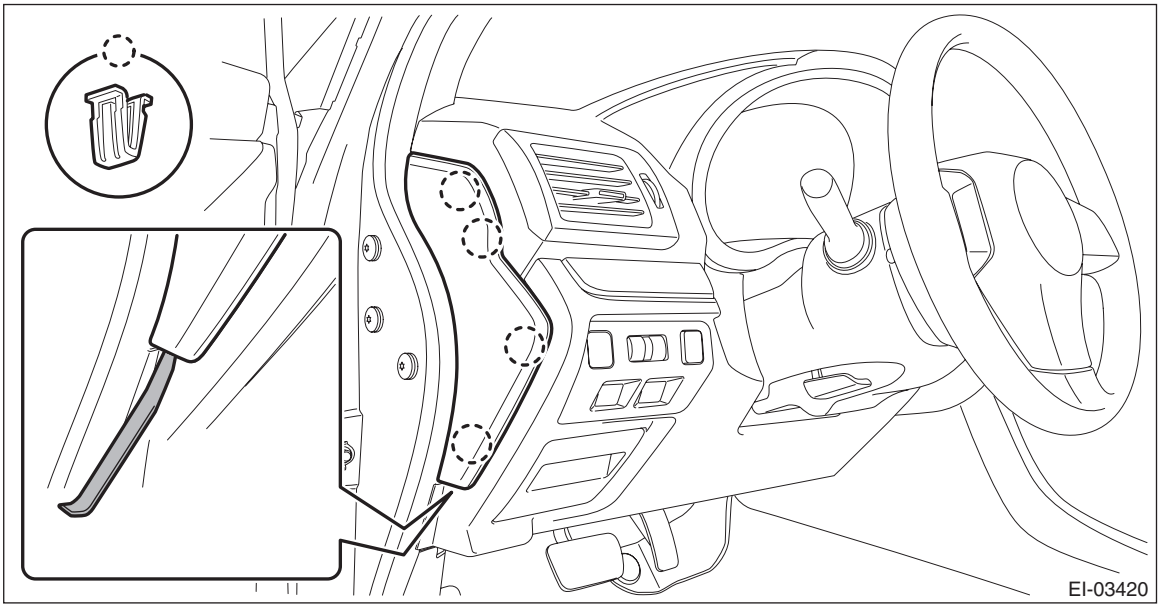

NOTE:
Using a plastic remover, open the cover - instrument panel side LH.

3) Remove the cover assembly - instrument panel LWR driver OUT.

CAUTION:
When removing the cover assembly - instrument panel LWR driver, be sure to pull it toward you. If attempting to remove by turning it upward, the claws may be damaged.

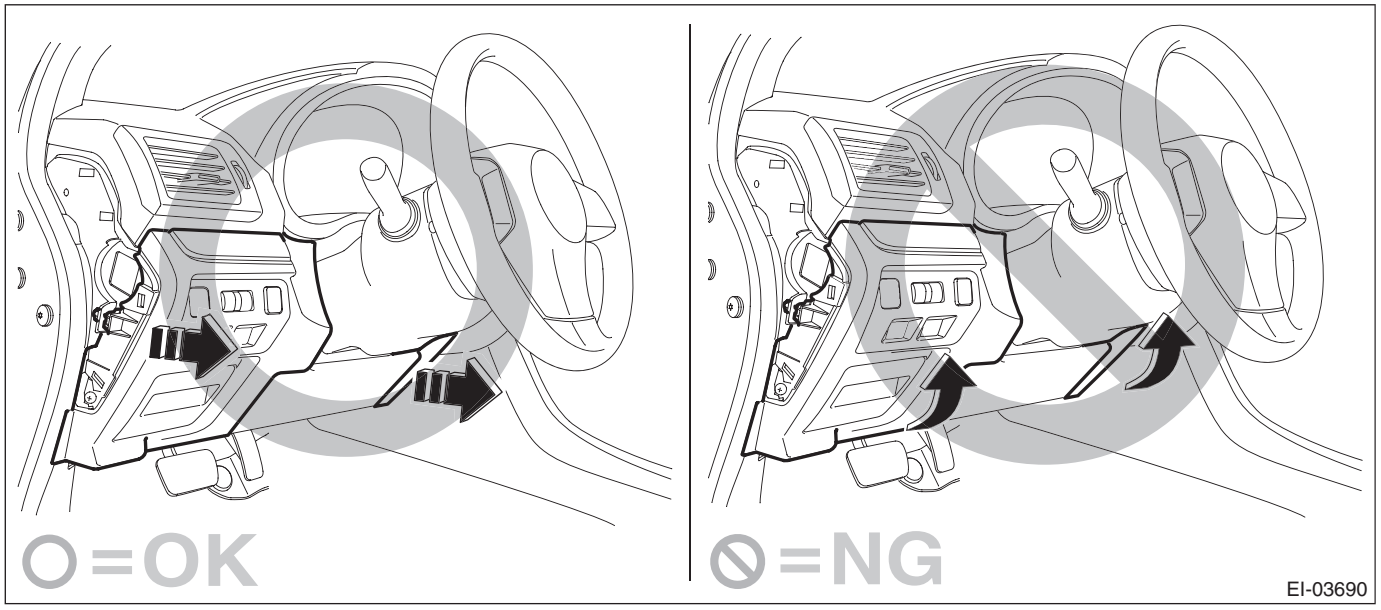

(1) Remove the screws and release the clips and claws.
(2) Disconnect the harness connectors, and remove the cover assembly - instrument panel LWR driver OUT.

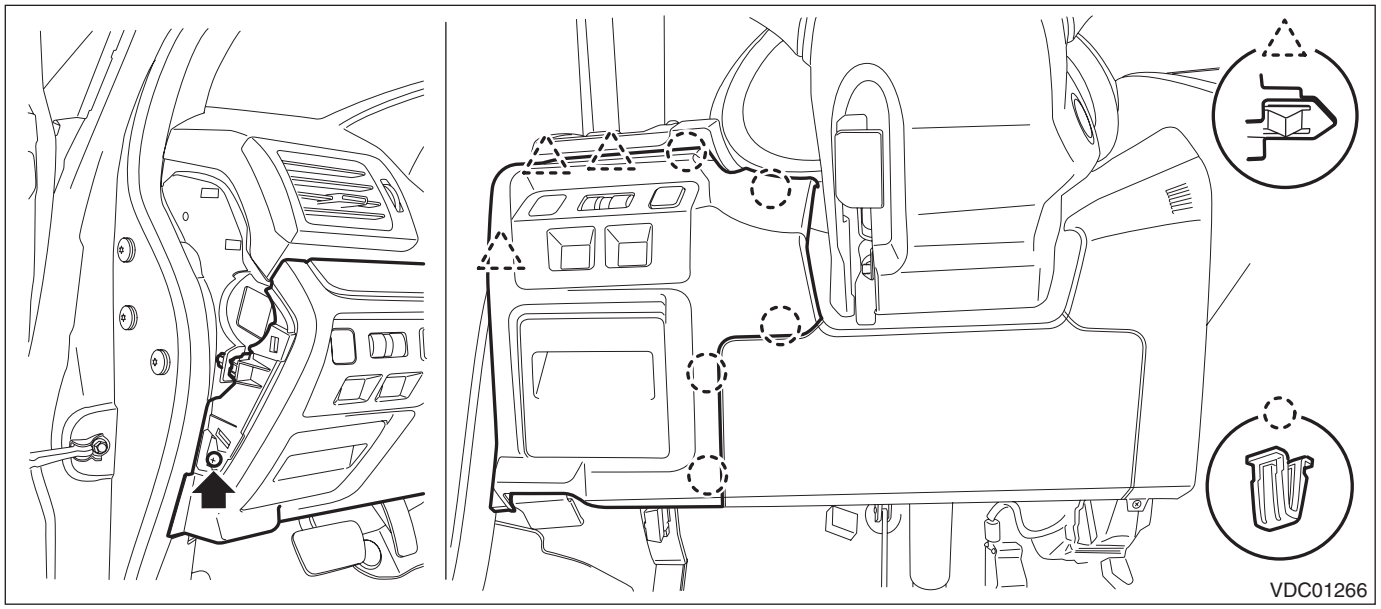

4) Remove the screws and release the claws, then detach the cover.

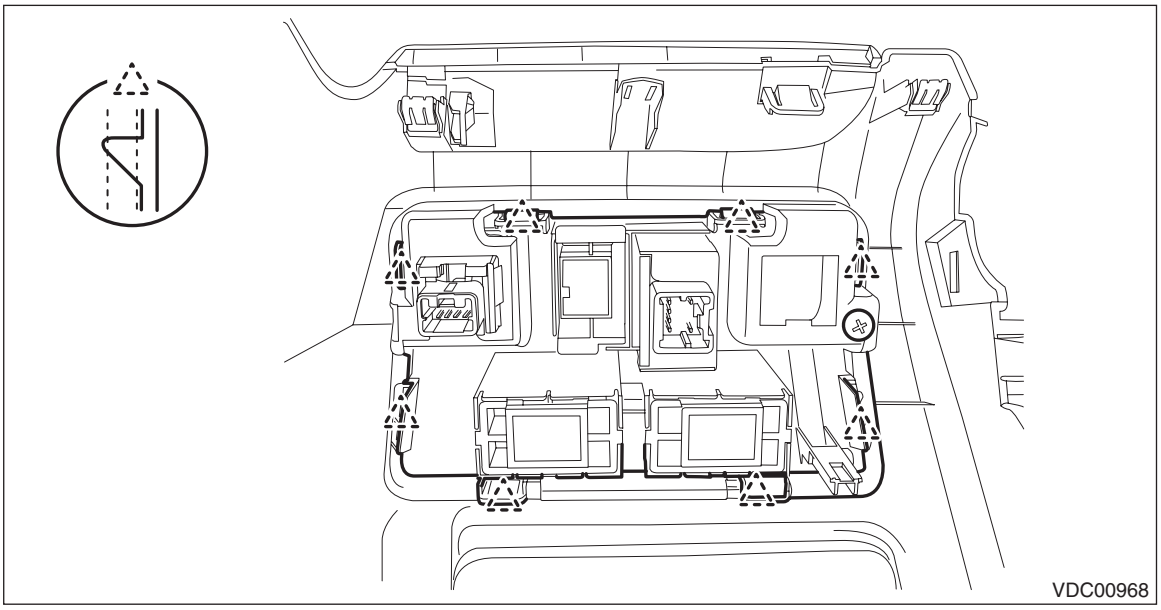

5) Release the claws and remove the VDC OFF switch.

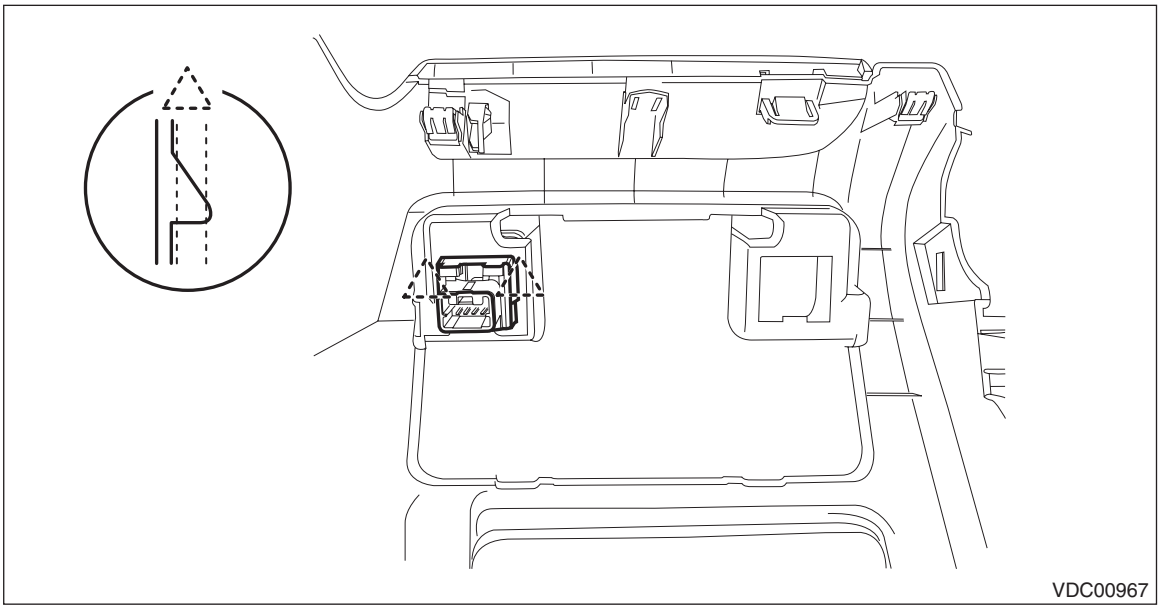

B: INSTALLATION

Install each part in the reverse order of removal.

C: INSPECTION

1) Disconnect the VDC OFF switch connector.
2) Check the resistance between the VDC OFF switch terminals.

PREPARATION TOOL:
Circuit tester

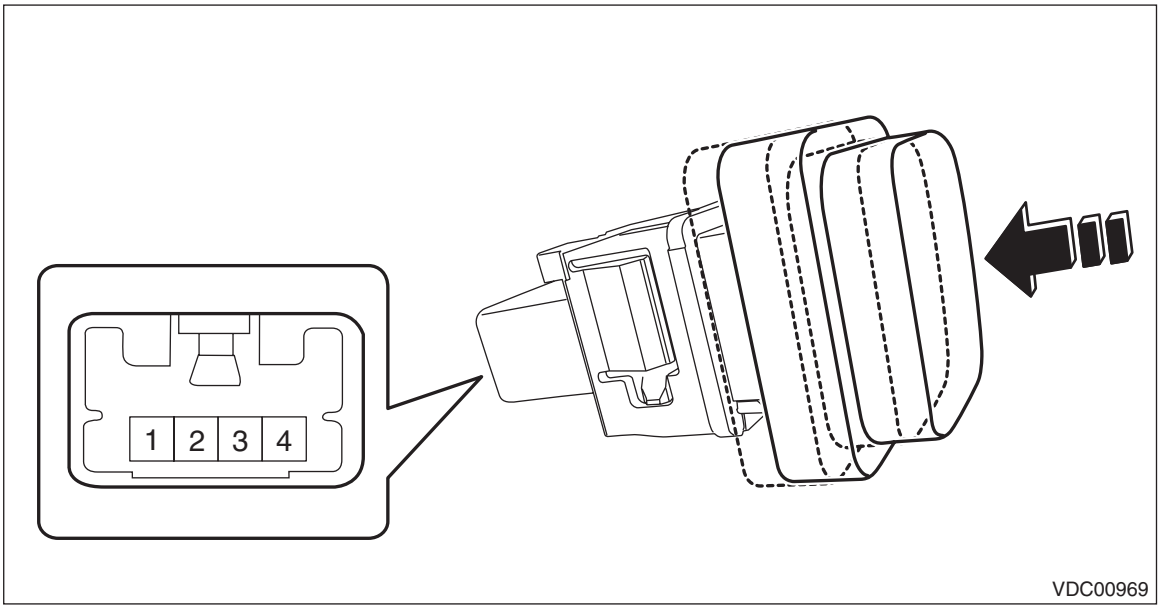

Terminal No.	Inspection conditions	Standard
2 — 3	Switch OFF	1 MΩ or more
	Switch ON	Less than 1 Ω

3) Replace the VDC OFF switch if the inspection result is not within the standard value.

VEHICLE DYNAMICS CONTROL (VDC) (DIAGNOSTICS)

VDC(diag)

		Page
1.	Basic Diagnostic Procedure	2
2.	Check List for Interview	4
3.	General Description	8
4.	Electrical Component Location	10
5.	Control Module I/O Signal	12
6.	Subaru Select Monitor	15
7.	Read Diagnostic Trouble Code (DTC)	21
8.	Inspection Mode	22
9.	Clear Memory Mode	23
10.	Warning Light Illumination Pattern	24
11.	List of Diagnostic Trouble Code (DTC)	37
12.	Diagnostic Procedure with Diagnostic Trouble Code (DTC)	41
13.	General Diagnostic Table	91

1. Basic Diagnostic Procedure

A: PROCEDURE

CAUTION:
Remove foreign matter (dust, water, oil etc.) from the VDCCM&H/U connector during removal and installation.

NOTE:
- To check the harness for open or short circuits, shake problem spot or connector.
- Refer to “Check List for Interview”. <Ref. to VDC(diag)-4, Check List for Interview.>

	Step	Check	Yes	No
1	**CHECK PRE-INSPECTION.** 1) Ask the customer when and how the trouble occurred using the interview check list. <Ref. to VDC(diag)-4, Check List for Interview.> 2) Before performing diagnostics, check the component which might affect VDC problems. <Ref. to VDC(diag)-8, INSPECTION, General Description.>	Is the component that might influence the VDC problem normal?	Go to step **2**.	Repair or replace each component.
2	**CHECK INDICATION OF DTC.** 1) Turn the ignition switch to OFF. 2) Connect the Subaru Select Monitor to data link connector. 3) Turn the ignition switch to ON and run the Subaru Select Monitor. 4) Read the DTC using the Subaru Select Monitor. <Ref. to VDC(diag)-21, OPERATION, Read Diagnostic Trouble Code (DTC).> NOTE: If the communication function of the Subaru Select Monitor cannot be executed properly, check the communication circuit. <Ref. to VDC(diag)-19, COMMUNICATION FOR INITIALIZING IMPOSSIBLE, INSPECTION, Subaru Select Monitor.>	Is DTC displayed on Subaru Select Monitor?	Record the DTC, time stamp and freeze frame data. Go to step **4**. NOTE: • For the time stamp, refer to LAN section. <Ref. to LAN(w/o HEV)(diag)-6, TIME STAMP, CAUTION, General Description.> <Ref. to LAN(HEV)(diag)-6, TIME STAMP, CAUTION, General Description.> • Depending on DTCs, time stamp may not be stored.	Go to step **3**.

	Step	Check	Yes	No
3	**PERFORM GENERAL DIAGNOSTICS.** 1) Perform the inspection by referring to “General Diagnostic Table”. <Ref. to VDC(diag)-91, INSPECTION, General Diagnostic Table.> 2) Perform the Clear Memory Mode. <Ref. to VDC(diag)-23, OPERATION, Clear Memory Mode.> 3) Perform the Inspection Mode. <Ref. to VDC(diag)-22, PROCEDURE, Inspection Mode.> 4) Read the DTC. <Ref. to VDC(diag)-21, OPERATION, Read Diagnostic Trouble Code (DTC).> 5) Check the DTC is not displayed.	Do the VDC warning light & VDC indicator light, VDC OFF indicator light and ABS warning light go off after starting the engine?	Finish the diagnosis.	Check the combination meter circuit. <Ref. to VDC(diag)-28, ABS WARNING LIGHT DOES NOT GO OFF, Warning Light Illumination Pattern.> <Ref. to VDC(diag)-29, VDC WARNING LIGHT AND VDC INDICATOR LIGHT DO NOT GO OFF, Warning Light Illumination Pattern.> <Ref. to VDC(diag)-30, VDC OFF INDICATOR LIGHT DOES NOT GO OFF, Warning Light Illumination Pattern.>
4	**PERFORM DIAGNOSIS.** 1) Refer to “List of Diagnostic Trouble Code (DTC)”. NOTE: For the DTC list, refer to “List of Diagnostic Trouble Code (DTC)”. <Ref. to VDC(diag)-37, LIST, List of Diagnostic Trouble Code (DTC).> 2) Correct the cause of trouble. 3) Perform the Clear Memory Mode. <Ref. to VDC(diag)-23, OPERATION, Clear Memory Mode.> 4) Perform the Inspection Mode. <Ref. to VDC(diag)-22, PROCEDURE, Inspection Mode.> 5) Read the DTC. <Ref. to VDC(diag)-21, OPERATION, Read Diagnostic Trouble Code (DTC).>	Is DTC displayed?	Repeat step 4 until DTC is not shown.	Finish the diagnosis.

2. Check List for Interview

A: CHECK

Check the following item about the vehicle's state.

1. STATE OF ABS WARNING LIGHT

ABS warning light illuminates.	❑ Always ❑ Sometimes ❑ Only once ❑ Does not illuminate • When/How long does it illuminate?		
Ignition key position	❑ LOCK ❑ ACC ❑ ON (before starting engine) ❑ START ❑ ON (after starting engine, engine is running) ❑ ON (after starting engine, engine is at a standstill)		
Timing	❑ Immediately after turning the ignition switch to ON ❑ Immediately after turning the ignition switch to START		
	❑ While accelerating	—	km/h
		—	MPH
	❑ While driving at a constant speed	km/h	MPH
	❑ While decelerating	—	km/h
		—	MPH
	❑ When turning to the right	Steering angle:	deg
		Steering time:	Sec.
	❑ When turning to the left	Steering angle:	deg
		Steering time:	Sec.
	❑ When other electrical parts are operating		
	• Part name: • Operating condition:		

2. STATE OF VDC WARNING LIGHT & VDC INDICATOR LIGHT

VDC warning light & VDC indicator light illuminates.	❑ Always ❑ Sometimes ❑ Only once ❑ Does not illuminate • When/How long does it illuminate?		
Ignition key position	❑ LOCK ❑ ACC ❑ ON (before starting engine) ❑ START ❑ ON (after starting engine, engine is running) ❑ ON (after starting engine, engine is at a standstill)		
Timing	❑ Immediately after turning the ignition switch to ON ❑ Immediately after turning the ignition switch to START		
	❑ While accelerating	—	km/h
		—	MPH
	❑ While driving at a constant speed	km/h	MPH
	❑ While decelerating	—	km/h
		—	MPH
	❑ When turning to the right	Steering angle:	deg
		Steering time:	Sec.
	❑ When turning to the left	Steering angle:	deg
		Steering time:	Sec.
	❑ When other electrical parts are operating		
	• Part name: • Operating condition:		

3. STATE OF VDC OFF INDICATOR LIGHT

VDC OFF indicator light illuminates.	❑ Always ❑ Sometimes ❑ Only once ❑ Does not illuminate • When/How long does it illuminate?		
Ignition key position	❑ LOCK ❑ ACC ❑ ON (before starting engine) ❑ START ❑ ON (after starting engine, engine is running) ❑ ON (after starting engine, engine is at a standstill)		
Timing	❑ Immediately after turning the ignition switch to ON ❑ Immediately after turning the ignition switch to START		
	❑ While accelerating	—	km/h
		—	MPH
	❑ While driving at a constant speed	km/h	MPH
	❑ While decelerating	—	km/h
		—	MPH
	❑ When turning to the right	Steering angle:	deg
		Steering time:	Sec.
	❑ When turning to the left	Steering angle:	deg
		Steering time:	Sec.
	❑ When other electrical parts are operating		
	• Part name: • Operating condition:		

4. CONDITIONS UNDER WHICH TROUBLE OCCURS

Environment	a) Weather	❑ Fine ❑ Cloudy ❑ Rainy ❑ Snowy ❑ Others:
	b) Ambient temperature	°C (°F)
	c) Road	❑ Inner city ❑ Suburbs ❑ Highway ❑ Local street ❑ Uphill ❑ Downhill ❑ Paved road ❑ Gravel road ❑ Muddy road ❑ Sandy place ❑ Straight road ❑ Sharp curve ❑ Gentle curve ❑ S-curve ❑ Road with a slope on both sides ❑ Others:
	d) Road surface	❑ Dry ❑ Wet ❑ Covered with fresh snow ❑ Covered with hardened snow ❑ Frozen slope ❑ Others:

Check List for Interview

Condition	a) Brakes	Deceleration:	G
		❑ continuous / ❑ intermittent	
	b) Accelerator	Acceleration:	G
		❑ continuous / ❑ intermittent	
	c) Vehicle speed	km/h	MPH
		❑ Advancing ❑ While accelerating ❑ While decelerating ❑ At low speed ❑ When turning ❑ Others:	
	d) Tire inflation pressure	Front RH tire:	kPa
		Front LH tire:	kPa
		Rear RH tire:	kPa
		Rear LH tire:	kPa
	e) Degree of wear	Front RH tire:	mm (in)
		Front LH tire:	mm (in)
		Rear RH tire:	mm (in)
		Rear LH tire:	mm (in)
	f) Steering wheel	❑ Sharp turning ❑ Gentle turning ❑ Straight forward motion ❑ Gentle return ❑ Sharp return	
	g) Tire/Wheel size	❑ Specified size ❑ Except specification ( )	
	h) Tire variation	❑ Summer tire ❑ Studless tire (Brand:)	
	i) Tire chain is attached: ❑ Yes / ❑ No		
	j) Using T-type tires: ❑ Yes / ❑ No		
	k) Condition of suspension alignment:		
	l) Load condition:		
	m) Repaired parts are used: ❑ Yes / ❑ No		
	• Content:		
	n) Others:		

3. General Description

A: CAUTION

1. SUPPLEMENTAL RESTRAINT SYSTEM "AIRBAG"

Airbag system wiring harness is routed near the ABS wheel speed sensor and VDCCM&H/U.

CAUTION:
• Do not use electrical test equipment on wiring harness and connector circuits of the airbag system.
• Be careful not to damage the airbag system wiring harness when servicing the ABS wheel speed sensor and VDCCM&H/U.

B: INSPECTION

Before performing diagnosis, check the following items which might affect VDC problems.

1. BATTERY

Measure the battery voltage and check electrolyte.

Standard voltage:
12 V or more

Specific gravity:
1.260 or more

NOTE:
For HEV model, 12 volt auxiliary battery.

2. GROUND

Check the tightening torque of the ground bolt for VDC.

3. BRAKE FLUID

1) Check the brake fluid level.
2) Check the brake fluid for leaks.

4. HYDRAULIC UNIT

Check the hydraulic unit.
• When using the brake tester <Ref. to VDC-15, CHECKING THE HYDRAULIC UNIT ABS OPERATION WITH THE BRAKE TESTER, INSPECTION, VDC Control Module and Hydraulic Control Unit (VDCCM&H/U).>
• When not using the brake tester <Ref. to VDC-13, CHECKING THE HYDRAULIC UNIT ABS OPERATION BY PRESSURE GAUGE, INSPECTION, VDC Control Module and Hydraulic Control Unit (VDCCM&H/U).>

5. BRAKE DRAG

Check for brake drag.

6. BRAKE PAD AND ROTOR

Check the brake pad and rotor.
• Front <Ref. to BR-20, INSPECTION, Front Brake Pad.> <Ref. to BR-22, INSPECTION, Front Disc Rotor.>
• Rear <Ref. to BR-34, INSPECTION, Rear Brake Pad.> <Ref. to BR-37, INSPECTION, Rear Disc Rotor.>

7. TIRES

Check the tire specifications, tire wear and air pressure. <Ref. to WT-2, SPECIFICATION, General Description.>

C: PREPARATION TOOL

1. SPECIAL TOOL

ILLUSTRATION	TOOL NUMBER	DESCRIPTION	REMARKS
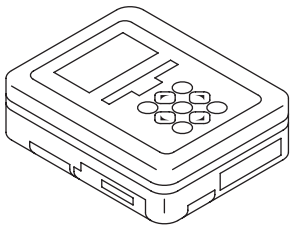 ST1B022XU0	1B022XU0	SUBARU SELECT MONITOR III KIT	Used for troubleshooting the electrical system.

2. GENERAL TOOL

TOOL NAME	REMARKS
Circuit tester	Used for measuring resistance, voltage and current.
Oscilloscope	Used for measuring the sensor.

4. Electrical Component Location

A: LOCATION

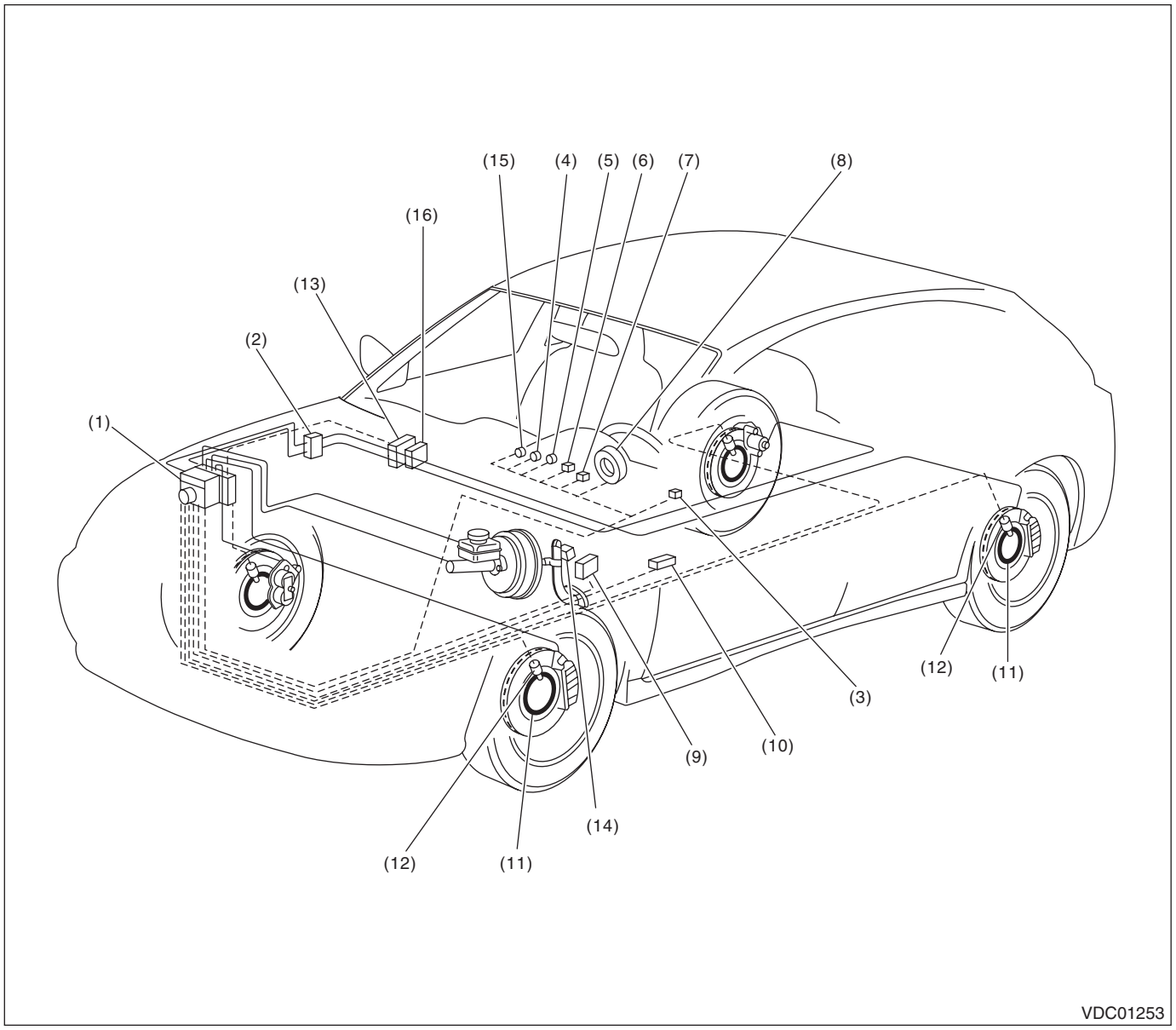

(1) VDC control module and hydraulic control unit (VDCCM&H/U)
(2) Connector
(3) VDC OFF switch
(4) ABS warning light
(5) Brake warning light (EBD warning light)
(6) VDC warning light & VDC indicator light
(7) VDC OFF indicator light
(8) Steering angle sensor
(9) Transmission control module (TCM)
(10) Data link connector
(11) Magnetic encoder
(12) ABS wheel speed sensor
(13) Engine control module (ECM)
(14) Stop light switch
(15) Hill start assist warning light
(16) Hybrid powertrain control module (HPCM)

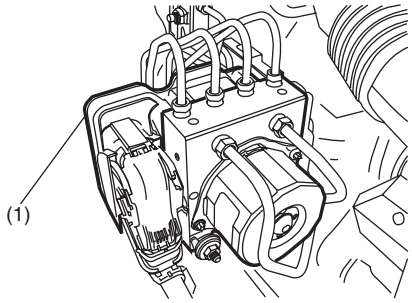

VDC00948

• Gasoline engine model

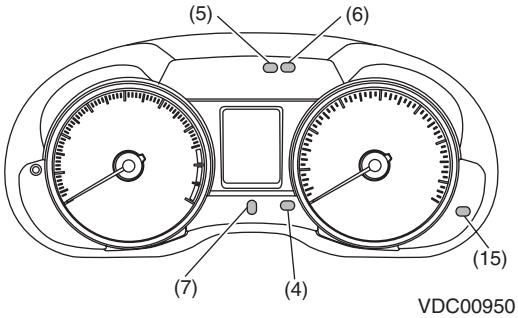

VDC00950

• HEV model

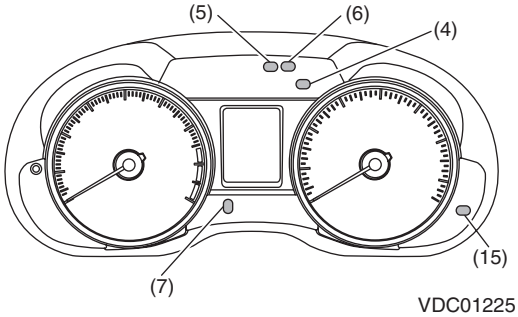

VDC01225

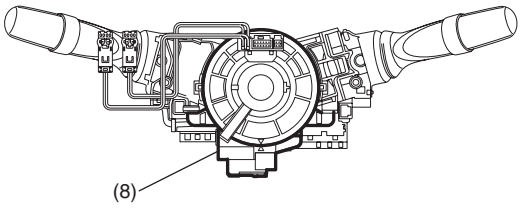

VDC00952

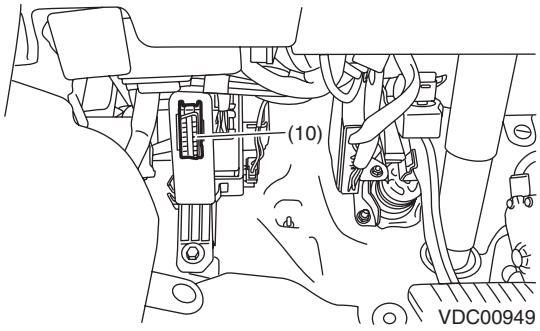

VDC00949

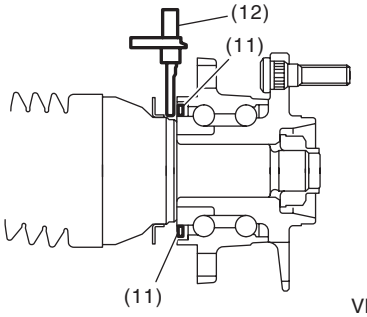

VDC00741

5. Control Module I/O Signal

A: ELECTRICAL SPECIFICATION

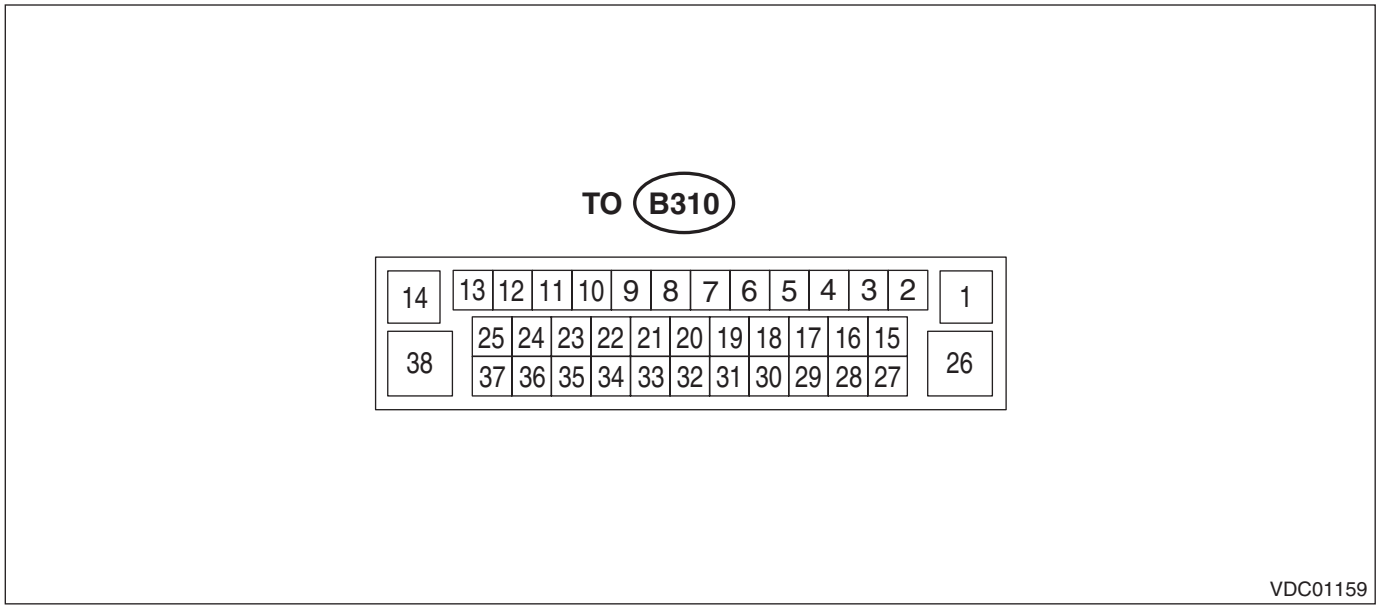

NOTE:
- Terminal numbers in VDCCM&H/U connector (on the control module side) are shown in the figure.
- When the connector is removed from the VDCCM&H/U, the brake warning light (EBD warning light), ABS warning light, VDC warning light & VDC indicator light, VDC OFF indicator light, and the hill start assist warning light illuminate.

Content			Terminal No. (+) — (–)	Input/Output signal
				Measured value and measuring conditions
Power supply			4 — 14	10 — 15 V when the ignition switch is ON.
ABS wheel speed sensor	Front LH wheel	Power supply	20 — 14	0 — 18 V
		Signal	8	7 — 14 mA: Rectangle waveform
	Front RH wheel	Power supply	17 — 14	0 — 18 V
		Signal	29	7 — 14 mA: Rectangle waveform
	Rear LH wheel	Power supply	7 — 14	0 — 18 V
		Signal	19	7 — 14 mA: Rectangle waveform
	Rear RH wheel	Power supply	18 — 14	0 — 18 V
		Signal	5	7 — 14 mA: Rectangle waveform
CAN communication line (H)			2	2.75 — 4.5 V pulse signal
CAN communication line (L)			15	0.5 — 2.25 V pulse signal
Valve relay power supply			1 — 14	10 — 15 V when the ignition switch is ON.
Motor relay power supply			26 — 38	10 — 15 V when the ignition switch is ON.
Stop light switch			6 — 14	1.5 V or less when the stop light is OFF; otherwise, 10 — 15 V when the stop light is ON.
Vehicle speed output signal			27	0 ←→ 12 V pulse
VDC OFF switch			37 — 14	1 Ω or less when the OFF switch is “ON”; 1 MΩ or more when the switch is “OFF”.
Ground			14	—
Ground			38	—

B: WIRING DIAGRAM

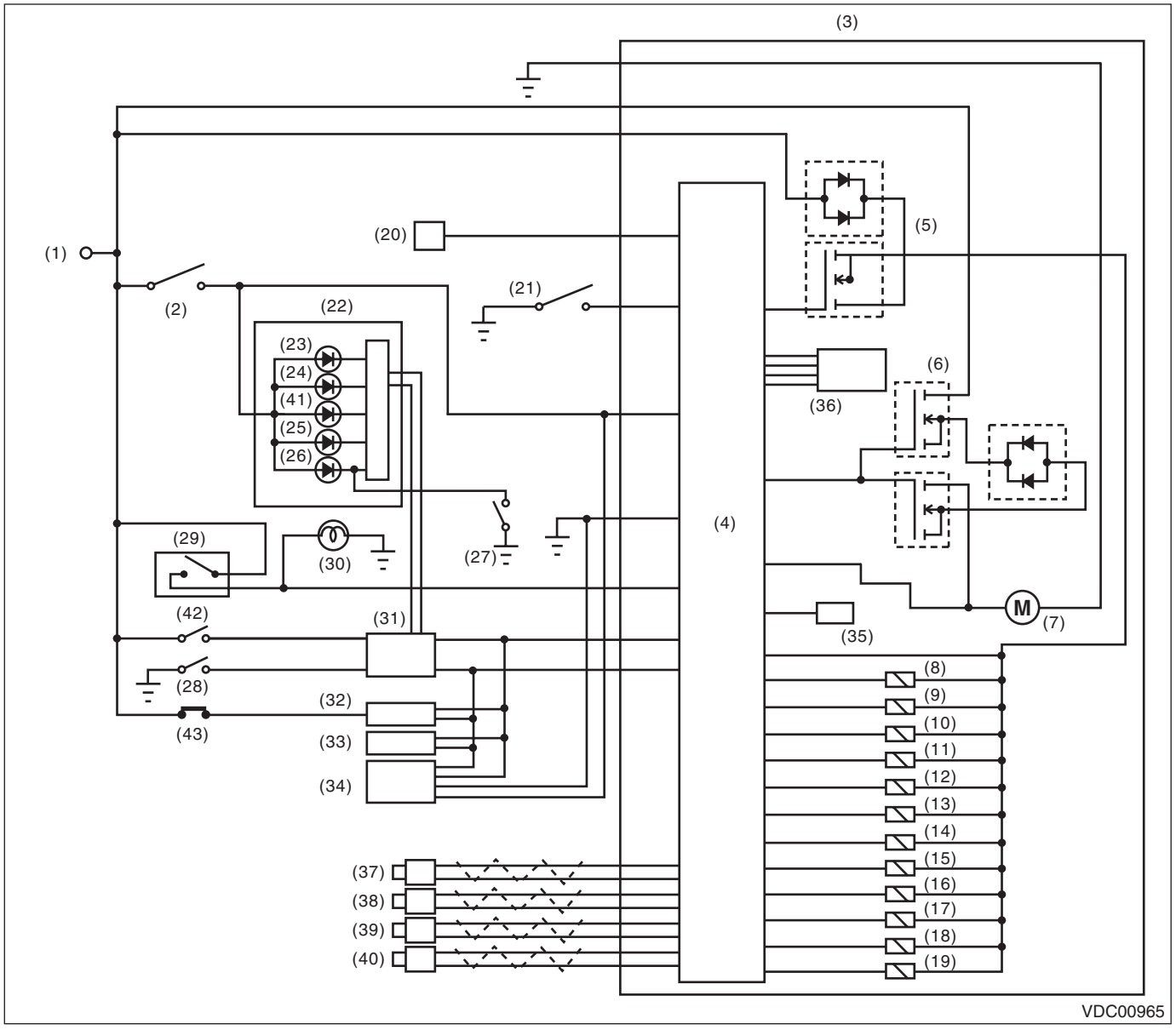

(1) Battery
(2) Ignition switch
(3) VDC control module and hydraulic control unit (VDCCM&H/U)
(4) VDC control module
(5) Valve relay
(6) Motor relay
(7) Motor
(8) Front inlet solenoid valve LH
(9) Front outlet solenoid valve LH
(10) Front inlet solenoid valve RH
(11) Front outlet solenoid valve RH
(12) Rear inlet solenoid valve LH
(13) Rear outlet solenoid valve LH
(14) Rear inlet solenoid valve RH
(15) Rear outlet solenoid valve RH
(16) Primary cut solenoid valve
(17) Primary suction solenoid valve
(18) Secondary cut solenoid valve
(19) Secondary suction solenoid valve
(20) Data link connector
(21) VDC OFF switch
(22) Combination meter
(23) VDC OFF indicator light
(24) VDC warning light & VDC indicator light
(25) ABS warning light
(26) Brake warning light (EBD warning light)
(27) Brake fluid level switch
(28) Parking brake switch
(29) Stop light switch
(30) Stop light
(31) Body integrated unit
(32) Engine control module (ECM)
(33) Transmission control module (TCM) (CVT model)
(34) Steering angle sensor
(35) Yaw rate & G sensor
(36) Pressure sensor
(37) Front ABS wheel speed sensor LH
(38) Front ABS wheel speed sensor RH
(39) Rear ABS wheel speed sensor LH
(40) Rear ABS wheel speed sensor RH
(41) Hill start assist warning light
(42) Back-up light switch (MT model)
(43) Clutch switch (MT model)

6. Subaru Select Monitor

A: OPERATION

1. HOW TO USE SUBARU SELECT MONITOR

1) Prepare the Subaru Select Monitor kit. <Ref. to VDC(diag)-9, SPECIAL TOOL, PREPARATION TOOL, General Description.>

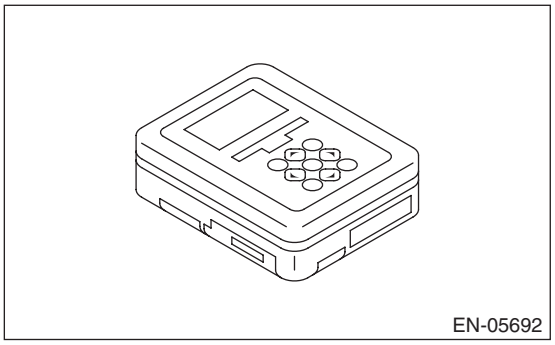

2) Prepare PC with Subaru Select Monitor installed.
3) Connect the USB cable to SDI (Subaru Diagnosis Interface) and USB port on the personal computer (dedicated port for the Subaru Select Monitor).

NOTE:
The dedicated port for the Subaru Select Monitor means the USB port which was used to install the Subaru Select Monitor.

4) Connect the diagnosis cable to SDI.
5) Connect SDI to data link connector located in the lower portion of the instrument panel (on the driver's side).

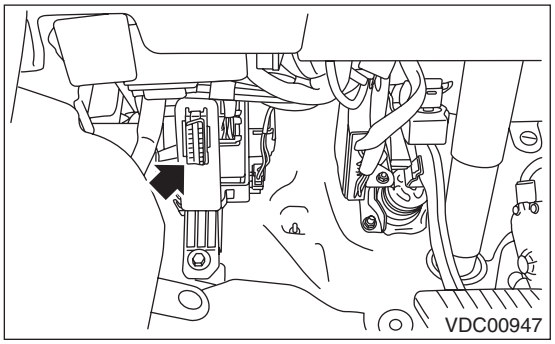

CAUTION:
Do not connect scan tools other than the Subaru Select Monitor.

6) Start the PC.
7) Turn the ignition switch to ON (engine OFF) and run the "PC application for Subaru Select Monitor".

NOTE:
For detailed operation procedures, refer to "PC application help for Subaru Select Monitor".

8) If VDC and Subaru Select Monitor cannot communicate, check the communication circuit. <Ref. to VDC(diag)-19, COMMUNICATION FOR INITIALIZING IMPOSSIBLE, INSPECTION, Subaru Select Monitor.>
9) Record the DTC and data.

2. READ CURRENT DATA

1) On «Main Menu» display, select {Each System Check}.
2) On «System Selection Menu» display, select {Brake Control System}.
3) When {VDC} is displayed, select the [OK] button.
4) On «Brake Control Diagnosis» display, select {Current Data Display & Save}.
5) On «Data Display Menu» display, select the data display method.
6) Using the scroll key, scroll the display screen up or down until necessary data is shown.

- A list of the support data is shown in the following table.

Display	Contents to be displayed	Unit of measure
FR Wheel Speed	Wheel speed detected by front ABS wheel speed sensor RH is displayed.	km/h or MPH
FL Wheel Speed	Wheel speed detected by front ABS wheel speed sensor LH is displayed.	km/h or MPH
RR Wheel Speed	Wheel speed detected by rear ABS wheel speed sensor RH is displayed.	km/h or MPH
RL Wheel Speed	Wheel speed detected by rear ABS wheel speed sensor LH is displayed.	km/h or MPH
Steering Angle Sensor	Steering angle detected by steering angle sensor is displayed.	deg
Yaw Rate Sensor	Vehicle angular speed detected by yaw rate sensor is displayed.	deg/s
Pressure Sensor	Brake fluid pressure detected by pressure sensor is displayed.	bar
Longitudinal G Sensor	Vehicle longitudinal acceleration detected by longitudinal G sensor is displayed.	m/s^2
Lateral G Sensor	Vehicle lateral acceleration detected by lateral G sensor is displayed.	m/s^2
Voltage of IGN	Voltage supplied to VDCCM&H/U is displayed.	V
M. Relay monitor Voltage	Voltage applied to the motor relay is displayed.	V
Motor Relay Signal	Motor relay driving signal is displayed.	ON or OFF
Valve Relay Signal	Valve relay driving signal is displayed.	ON or OFF
EBD Warning Light	ON operation of the EBD warning light is displayed.	ON or OFF
ABS Warning Lamp	ON operation of the ABS warning light is displayed.	ON or OFF
VDC Warning Lamp	ON operation of the VDC warning light is displayed.	ON or OFF
EBD Control Flag	EBD operation condition is displayed.	ON or OFF
ABS Control Flag	ABS operation condition is displayed.	ON or OFF
TCS Control Flag	TCS operation condition is displayed.	ON or OFF
VDC Control Flag	VDC operation condition is displayed.	ON or OFF
E/G Control Stop Flag	Engine control command signal is displayed.	1 or 0
E/G torques up Control Stop Flag	Engine control command signal is displayed. (HEV model)	1 or 0
HPCM Control Stop Flag	The command signal of the hybrid powertrain control module is displayed. (HEV model)	1 or 0
HPCM torques up Control Stop Flag	The command signal of the hybrid powertrain control module is displayed. (HEV model)	1 or 0
VDC-OFF Light	ON/OFF condition of VDC OFF indicator light is displayed.	ON or OFF
OFF SW Signal	Operation condition of VDC OFF switch is displayed.	ON or OFF
Brake Light Switch	Brake ON/OFF is displayed.	ON or OFF
Clutch switch	Clutch ON/OFF is displayed. (For MT model only. For CVT model: OFF fixed)	ON or OFF
Reverse Signal	Reverse gear ON/OFF is displayed. (For MT model only. For CVT model: OFF fixed)	ON or OFF

NOTE:
For detailed operation procedures, refer to “PC application help for Subaru Select Monitor”.

3. FUNCTION CHECK

Display	Contents of display	Index No.
ABS Sequence Control Mode	Operate the valve and pump motor continuously to perform the ABS sequence control.	<Ref. to VDC-22, ABS Sequence Control.>
VDC Function Check Mode	Operate the valve and pump motor continuously to perform the VDC sequence control.	<Ref. to VDC-25, VDC Sequence Control.>
VDC sensor midpoint setting mode	Set the steering angle sensor neutral position, and the lateral G sensor and longitudinal G sensor “0” point.	<Ref. to VDC-21, VDC SENSOR MIDPOINT SETTING MODE, ADJUSTMENT, VDC Control Module and Hydraulic Control Unit (VDCCM&H/U).>

4. FREEZE FRAME DATA

NOTE:
- Data stored at the time of trouble occurrence is shown on display.
- Each time a trouble occurs, the latest information is stored in the freeze frame data in memory.
- If a freeze frame data is not properly stored in memory (due to a drop in VDCCM power supply, etc.), a DTC suffixed with a question mark “?” appears on the Subaru Select Monitor display. This shows it may be an unreliable reading.

Display	Contents to be displayed
FR Wheel Speed	Wheel speed detected by front ABS wheel speed sensor RH is displayed in km/h or MPH.
FL Wheel Speed	Wheel speed detected by front ABS wheel speed sensor LH is displayed in km/h or MPH.
RR Wheel Speed	Wheel speed detected by rear ABS wheel speed sensor RH is displayed in km/h or MPH.
RL Wheel Speed	Wheel speed detected by rear ABS wheel speed sensor LH is displayed in km/h or MPH.
Vehicle speed	Vehicle speed calculated by VDC control module is displayed.
Steering Angle Sensor	Steering angle detected by steering angle sensor is displayed.
Yaw Rate Sensor	Vehicle angular speed detected by yaw rate sensor is displayed.
Pressure Sensor	Brake fluid pressure detected by pressure sensor is displayed.
Longitudinal G Sensor	Vehicle longitudinal acceleration detected by longitudinal G sensor is displayed.
Lateral G Sensor	Vehicle lateral acceleration detected by lateral G sensor is displayed.
Voltage of IGN	Voltage supplied to VDC control module is displayed.
Accelerator Pedal Position	Accelerator pedal opening angle is displayed.
Engine Speed	Engine speed on malfunction occurrence is displayed.
Steering angle flag	Whether the absolute angle of the steering angle sensor was determined is displayed.
EBD Control Flag	EBD control condition is displayed.
ABS Control Flag	ABS control condition is displayed.
TCS Control Flag	TCS control condition is displayed.
VDC Control Flag	VDC control condition is displayed.
E/G Control Stop Flag	Engine control command signal is displayed.
E/G torques up Control Stop Flag	Engine control command signal is displayed. (HEV model)
HPCM Control Stop Flag	The command signal of the hybrid powertrain control module is displayed. (HEV model)
HPCM torques up Control Stop Flag	The command signal of the hybrid powertrain control module is displayed. (HEV model)
OFF Switch Detection	ON/OFF condition of the VDC operated by the driver is displayed.
Brake Light Switch	Brake ON/OFF is displayed.
Clutch switch	Clutch ON/OFF is displayed. (For MT model only. For CVT model: OFF fixed)
Reverse Signal	Reverse gear ON/OFF is displayed. (For MT model only. For CVT model: OFF fixed)

5. PARAMETER SELECTION

CAUTION:
• Subaru Select Monitor is required for parameter selection.
• This function can be used for the replacement part of VDCCM&H/U.

NOTE:
• When the VDCCM&H/U is replaced with a replacement part, be sure to perform the parameter selection/registration to the VDCCM&H/U using this function.
• To confirm the applied model, refer to the “model number plate” attached on the vehicle. <Ref. to ID-2, IDENTIFICATION, Identification.>
• When the applied model is entered wrong, re-entry is possible.
• When the registration has not been performed, the DTC code “Parameter” is detected together with the ABS/EBD/VDC warning light illumination.
1) Connect the Subaru Select Monitor.
2) On «Main Menu» display, select {Each System Check}.
3) On «System Selection Menu» display, select {Brake Control System}.
4) When {VDC} is displayed, select the [OK] button.
5) On «Brake Control Diagnosis» display, select {Work Support}.
6) On «Work Support» display, select {Select Parameter}.
7) Check the applied model and option code indicated in the “Model number plate”. <Ref. to ID-2, IDENTIFICATION, Identification.>
8) Enter the applied model of 7-digit alphanumeric characters and press the [Enter] key.
9) When the option code input screen appears after entering the applied model, enter the option code consisting of 4-digit alphanumeric characters, and press the [Enter] key When the option code is 3 digits, add “0” (zero) in front and enter the code as 4 digits.
10) When the confirmation screen indicating the vehicle information appears, check that the correct applied model and grade are displayed and click the [OK] button.

NOTE:
When the displayed applied model and grade are different from those of the vehicle, perform registration operations again after clicking the [OK] button.
11) Execute the Clear Memory Mode after parameter selection and registration operations because the DTC for “Parameter selection error” is memorized. <Ref. to VDC(diag)-23, Clear Memory Mode.>

6. PARAMETER CHECK

NOTE:
The parameter data registered in the VDCCM is shown on the display.
1) Connect the Subaru Select Monitor.
2) On «Main Menu» display, select {Each System Check}.
3) On «System Selection Menu» display, select {Brake Control System}.
4) When {VDC} is displayed, select the [OK] button.
5) On «Brake Control Diagnosis» display, select {Work Support}.
6) On «Work Support» display, select {Confirm on parameter}.
7) On the {Confirm on parameter} display screen, check that the applied model and grade of the target vehicle are included, and click the [OK] button.
8) If the applied model and grade of the target vehicle are not included on the {Confirm on parameter} display screen, perform “parameter selection and registration”. <Ref. to VDC(diag)-18, PARAMETER SELECTION, OPERATION, Subaru Select Monitor.>

B: INSPECTION

1. COMMUNICATION FOR INITIALIZING IMPOSSIBLE

DETECTING CONDITION:
Defective harness connector
TROUBLE SYMPTOM:
Communication is impossible between VDC and Subaru Select Monitor.
WIRING DIAGRAM:
Vehicle dynamics control system <Ref. to WI(w/o HEV)-152, Vehicle Dynamics Control System.> <Ref. to WI(HEV)-216, Vehicle Dynamics Control System.>

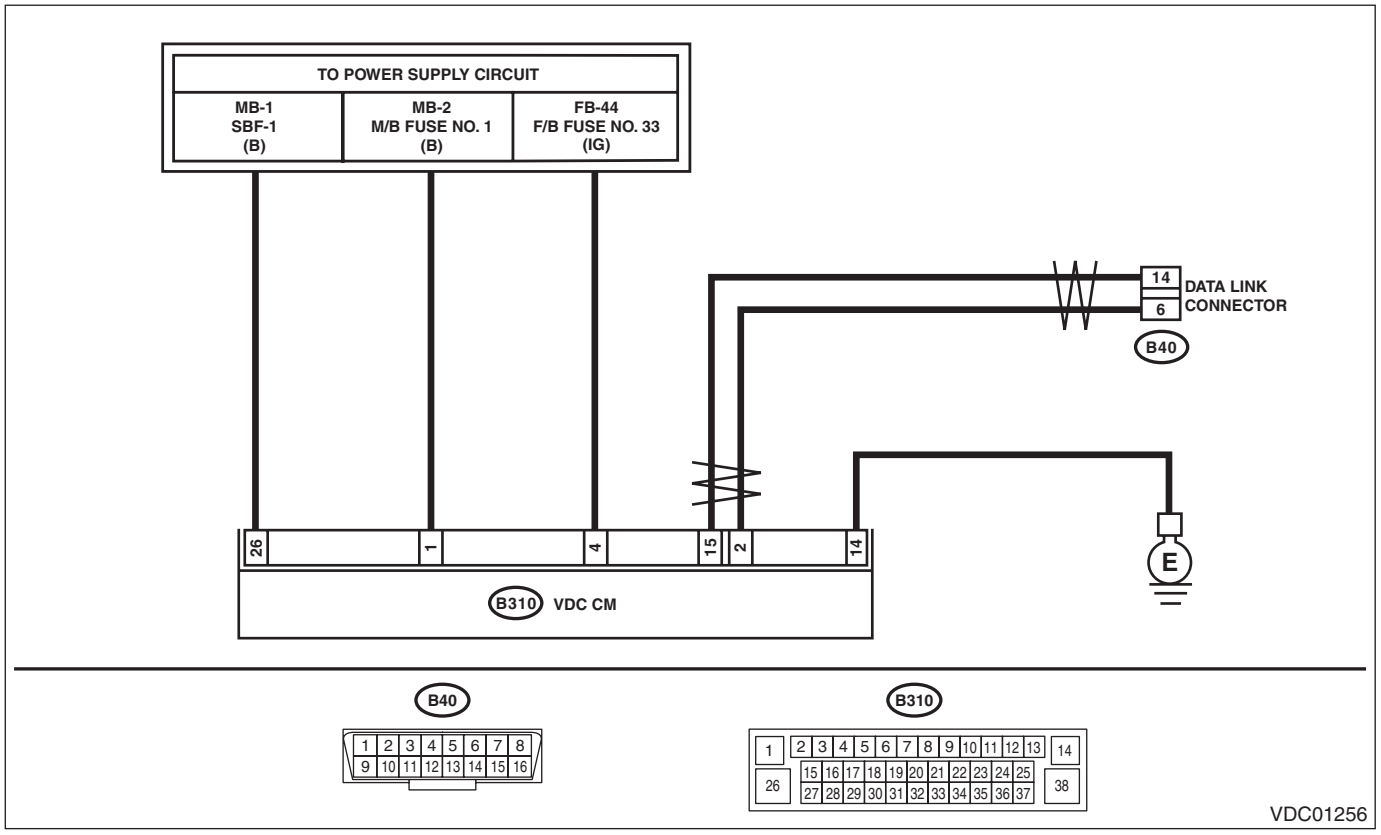

	Step	Check	Yes	No
1	**CHECK IGNITION SWITCH.**	Is the ignition switch ON?	Go to step **2**.	Turn the ignition switch to ON, and select VDC mode using Subaru Select Monitor.
2	**CHECK BATTERY.** 1) Turn the ignition switch to OFF. 2) Measure the battery voltage.	Is the voltage 11 V or more?	Go to step **3**.	Charge or replace the battery.
3	**CHECK BATTERY TERMINAL.**	Is there poor contact at battery terminal?	Repair or tighten the battery terminal.	Go to step **5**.
4	**CHECK INSTALLATION OF VDCCM&H/U CONNECTOR.** Turn the ignition switch to OFF.	Is the VDCCM&H/U connector inserted into VDCCM&H/U until the clamp locks onto it?	Go to step **5**.	Insert VDCCM&H/U connector into VDCCM&H/U.

	Step	Check	Yes	No
5	**CHECK LAN SYSTEM.** Perform the diagnosis for LAN system. <Ref. to LAN(w/o HEV)(diag)-2, Basic Diagnostic Procedure.> <Ref. to LAN(HEV)(diag)-2, Basic Diagnostic Procedure.>	Is there any fault in LAN system?	Perform the diagnosis according to DTC for LAN system. <Ref. to LAN(w/o HEV)(diag)-50, List of Diagnostic Trouble Code (DTC).> <Ref. to LAN(HEV)(diag)-87, List of Diagnostic Trouble Code (DTC).>	Go to step **6**.
6	**CHECK SUBARU SELECT MONITOR COMMUNICATION.** 1) Turn the ignition switch to ON. 2) Check whether communication to VDC system can be executed normally.	Is the system name displayed on Subaru Select Monitor?	Check the DTC in VDC system. <Ref. to VDC(diag)-21, Read Diagnostic Trouble Code (DTC).>	Go to step **7**.
7	**CHECK POWER SUPPLY CIRCUIT.** 1) Turn the ignition switch to ON. (engine OFF) 2) Measure the ignition power supply voltage between VDCCM&H/U connector and chassis ground. ***Connector & terminal*** ***(B310) No. 4 (+) — Chassis ground (–):*** ***(B310) No. 1 (+) — Chassis ground (–):*** ***(B310) No. 26 (+) — Chassis ground (–):***	Is the voltage 10 — 15 V?	Go to step **8**.	Repair open circuit in harness between VDCCM&H/U and battery.
8	**CHECK HARNESS CONNECTOR BETWEEN VDCCM&H/U AND CHASSIS GROUND.** 1) Turn the ignition switch to OFF. 2) Disconnect the connector from the VDCCM&H/U. 3) Measure the resistance of harness between VDCCM&H/U connector and chassis ground. ***Connector & terminal*** ***(B310) No. 14 — Chassis ground:***	Is the resistance less than 10 Ω?	Go to step **9**.	Repair the open circuit of VDCCM&H/U ground circuit and poor contact of connector.
9	**CHECK POOR CONTACT OF CONNECTOR.**	Is there poor contact of control module power supply, ground circuit and data link connector?	Repair the connector.	Replace the VDCCM&H/U. <Ref. to VDC-9, VDC Control Module and Hydraulic Control Unit (VDCCM&H/U).>

7. Read Diagnostic Trouble Code (DTC)

A: OPERATION

• For detailed operation procedures, refer to “PC application help for Subaru Select Monitor”.
• For details concerning DTCs, refer to “List of Diagnostic Trouble Code (DTC)”. <Ref. to VDC(diag)-37, List of Diagnostic Trouble Code (DTC).>

8. Inspection Mode

A: PROCEDURE

Reproduce the malfunction occurrence condition as much as possible.
Drive the vehicle at least ten minutes.

NOTE:
Make sure the vehicle is not dragged to one side under usual driving condition.

9. Clear Memory Mode

A: OPERATION

For detailed operation procedures, refer to “PC application help for Subaru Select Monitor”.

10.Warning Light Illumination Pattern

A: INSPECTION

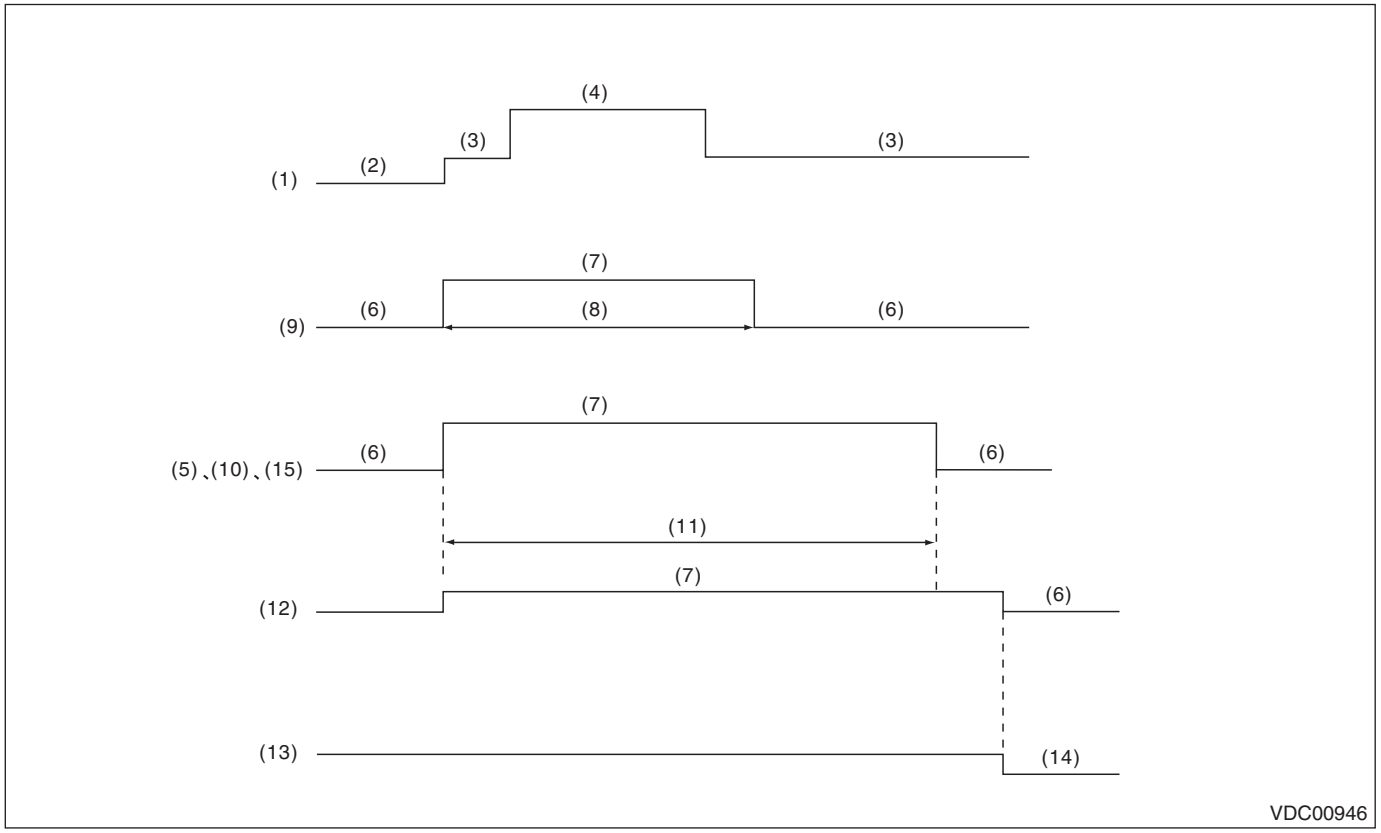

(1)	Ignition switch	(6)	Light OFF	(11)	2 seconds or more
(2)	OFF	(7)	Light ON	(12)	Brake warning light (EBD warning light)
(3)	ON	(8)	2 seconds	(13)	Parking brake
(4)	Engine start	(9)	VDC OFF indicator light	(14)	Released
(5)	ABS warning light	(10)	VDC warning light & VDC indicator light	(15)	Hill start assist warning light

NOTE:
Hill start assist warning light always illuminates when the hill start assist is in the OFF mode.

Warning Light Illumination Pattern

1) When warning lights or indicator lights do not illuminate in accordance with this illumination pattern, there must be an electrical malfunction.
2) When the warning lights or indicator lights remain constantly OFF, check the combination meter circuit. <Ref. to VDC(diag)-26, EBD WARNING LIGHT, ABS WARNING, VDC OFF INDICATOR LIGHT, VDC WARNING LIGHT AND VDC INDICATOR LIGHT DO NOT COME ON, Warning Light Illumination Pattern.> <Ref. to VDC(diag)-27, HILL START ASSIST WARNING LIGHT DOES NOT COME ON, Warning Light Illumination Pattern.>
3) When the ABS warning light, VDC OFF indicator light, VDC warning light & VDC indicator light, and hill start assist warning light do not go off, check the combination meter circuit or CAN communication circuit. <Ref. to VDC(diag)-28, ABS WARNING LIGHT DOES NOT GO OFF, Warning Light Illumination Pattern.> <Ref. to VDC(diag)-30, VDC OFF INDICATOR LIGHT DOES NOT GO OFF, Warning Light Illumination Pattern.> <Ref. to VDC(diag)-29, VDC WARNING LIGHT AND VDC INDICATOR LIGHT DO NOT GO OFF, Warning Light Illumination Pattern.> <Ref. to VDC(diag)-32, HILL START ASSIST WARNING LIGHT DOES NOT GO OFF, Warning Light Illumination Pattern.>

NOTE:
- Even though the ABS warning light, and the VDC warning light & VDC indicator light do not go off in 2 seconds after illuminating, the ABS and VDC functions are normal if the warning lights go off while the vehicle is driven at approximately 38 km/h (23 MPH). However, while these lights are on, the functions with their warning lights illuminated do not operate.
- It may take several minutes before the VDC warning light & VDC indicator light goes off, if the vehicle is parked under low temperature for a specified time. This is not defective because it is resulted from low engine coolant temperature. Perform the Clear Memory Mode because DTC may be recorded at this time. <Ref. to VDC(diag)-23, Clear Memory Mode.>
- With the vehicle jack-up/lift-up or set on free rollers, when the wheels lock or spin after starting the engine, ABS warning light, and VDC warning light & VDC indicator light may illuminate because VDCCM&H/U detects the abnormal conditions from ABS wheel speed sensor or longitudinal G sensor. In this case, this is not a malfunction. Perform the Clear Memory Mode. <Ref. to VDC(diag)-23, Clear Memory Mode.>

B: EBD WARNING LIGHT, ABS WARNING, VDC OFF INDICATOR LIGHT, VDC WARNING LIGHT AND VDC INDICATOR LIGHT DO NOT COME ON

DETECTING CONDITION:
Defective combination meter

TROUBLE SYMPTOM:
When the ignition switch is turned to ON (engine OFF), EBD warning light, ABS warning light, VDC OFF indicator light, and VDC warning light & VDC indicator light do not illuminate.

NOTE:
When pressing the VDC OFF switch for 10 seconds or more, the VDC OFF indicator light goes off and cannot operate any more. When turning the ignition switch from OFF to ON, the OFF operation enabled status is restored.

	Step	Check	Yes	No
1	**CHECK OTHER INDICATOR LIGHT.** Turn the ignition switch to ON.	Does other indicator light illuminate soon after “ON”?	Go to step **2**.	Check the combination meter. <Ref. to IDI-7, SELF-DIAGNOSIS DISPLAY MODE, OPERATION, Combination Meter System.>
2	**CHECK VDCCM.** When the engine does not start, display the current data of VDCCM using Subaru Select Monitor.	Immediately after the ignition switch is turned to ON, is the «EBD Warning Light» ON?	Go to step **3**.	Replace the VDCCM only. <Ref. to VDC-18, REPLACEMENT, VDC Control Module and Hydraulic Control Unit (VDCCM&H/U).>
3	**CHECK VDCCM.** When the engine does not start, display the current data of VDCCM using Subaru Select Monitor.	Immediately after the ignition switch is turned to ON, is the «ABS Warning Lamp» ON?	Go to step **4**.	Replace the VDCCM only. <Ref. to VDC-18, REPLACEMENT, VDC Control Module and Hydraulic Control Unit (VDCCM&H/U).>
4	**CHECK VDCCM.** When the engine does not start, display the current data of VDCCM using Subaru Select Monitor.	Immediately after the ignition switch is turned to ON, is the «VDC Warning Lamp» ON?	Check the combination meter. <Ref. to IDI-7, SELF-DIAGNOSIS DISPLAY MODE, OPERATION, Combination Meter System.>	Replace the VDCCM only. <Ref. to VDC-18, REPLACEMENT, VDC Control Module and Hydraulic Control Unit (VDCCM&H/U).>

C: HILL START ASSIST WARNING LIGHT DOES NOT COME ON

DETECTING CONDITION:
Defective combination meter

TROUBLE SYMPTOM:
When the ignition switch is turned to ON (engine OFF), hill start assist warning light does not illuminate.

	Step	Check	Yes	No
1	**CHECK OTHER INDICATOR LIGHT.** Turn the ignition switch to ON. (engine OFF)	Do other indicator lights illuminate?	Go to step **2**.	Check the combination meter. <Ref. to IDI-7, SELF-DIAGNOSIS DISPLAY MODE, OPERATION, Combination Meter System.>
2	**READ DTC.** Read the DTC. <Ref. to VDC(diag)-21, Read Diagnostic Trouble Code (DTC).>	Is DTC displayed?	Perform the diagnosis according to DTC. <Ref. to VDC(diag)-37, List of Diagnostic Trouble Code (DTC).>	Go to step **3**.
3	**CHECK LAN SYSTEM.** Perform the diagnosis for LAN system. <Ref. to LAN(w/o HEV)(diag)-2, Basic Diagnostic Procedure.> <Ref. to LAN(HEV)(diag)-2, Basic Diagnostic Procedure.>	Is there any fault in LAN system?	Perform the diagnosis according to DTC for LAN system. <Ref. to LAN(w/o HEV)(diag)-50, List of Diagnostic Trouble Code (DTC).> <Ref. to LAN(HEV)(diag)-87, List of Diagnostic Trouble Code (DTC).>	Go to step **4**.
4	**CHECK COMBINATION METER.** Check the combination meter. <Ref. to IDI-7, SELF-DIAGNOSIS DISPLAY MODE, OPERATION, Combination Meter System.>	Is combination meter OK?	Replace the VDCCM only. <Ref. to VDC-18, REPLACEMENT, VDC Control Module and Hydraulic Control Unit (VDCCM&H/U).>	Replace the combination meter. <Ref. to IDI-16, Combination Meter.>

D: ABS WARNING LIGHT DOES NOT GO OFF

DETECTING CONDITION:

- Defective combination meter
- Defective CAN communication

TROUBLE SYMPTOM:

When starting the engine, the ABS warning light is kept on.

	Step	Check	Yes	No
1	**READ DTC.** Read the DTC. <Ref. to VDC(diag)-21, Read Diagnostic Trouble Code (DTC).>	Is DTC displayed?	Perform the diagnosis according to DTC. <Ref. to VDC(diag)-37, List of Diagnostic Trouble Code (DTC).>	Go to step **2**.
2	**CHECK VDCCM.** Display the current data of VDCCM using Subaru Select Monitor.	Is the «ABS Warning Lamp» ON?	Go to step **3**.	Go to step **4**.
3	**READ DTC.** Read the DTC after driving the vehicle at 40 km/h (25 MPH) or more.	Is DTC displayed?	Perform the diagnosis according to DTC. <Ref. to VDC(diag)-37, List of Diagnostic Trouble Code (DTC).>	Go to step **4**.
4	**CHECK LAN SYSTEM.** Perform the diagnosis for LAN system. <Ref. to LAN(w/o HEV)(diag)-2, Basic Diagnostic Procedure.> <Ref. to LAN(HEV)(diag)-2, Basic Diagnostic Procedure.>	Is there any fault in LAN system?	Perform the diagnosis according to DTC for LAN system. <Ref. to LAN(w/o HEV)(diag)-50, List of Diagnostic Trouble Code (DTC).> <Ref. to LAN(HEV)(diag)-87, List of Diagnostic Trouble Code (DTC).>	Go to step **5**.
5	**CHECK COMBINATION METER.** Check the combination meter. <Ref. to IDI-7, SELF-DIAGNOSIS DISPLAY MODE, OPERATION, Combination Meter System.>	Is combination meter OK?	Replace the VDCCM only. <Ref. to VDC-18, REPLACEMENT, VDC Control Module and Hydraulic Control Unit (VDCCM&H/U).>	Replace the combination meter. <Ref. to IDI-16, Combination Meter.>

E: VDC WARNING LIGHT AND VDC INDICATOR LIGHT DO NOT GO OFF

DETECTING CONDITION:

- Defective combination meter
- Defective engine
- Defective CAN communication

TROUBLE SYMPTOM:

When starting the engine, the VDC warning light & VDC indicator light remains lit.

	Step	Check	Yes	No
1	**READ DTC.** Read the DTC. <Ref. to VDC(diag)-21, Read Diagnostic Trouble Code (DTC).>	Is DTC displayed?	Perform the diagnosis according to DTC. <Ref. to VDC(diag)-37, List of Diagnostic Trouble Code (DTC).>	Go to step **2**.
2	**CHECK VDCCM.** Display the current data of VDCCM using Subaru Select Monitor.	Is the «VDC Warning Lamp» ON?	Go to step **3**.	Go to step **4**.
3	**READ DTC.** Read the DTC after driving the vehicle at 40 km/h (25 MPH) or more.	Is DTC displayed?	Perform the diagnosis according to DTC. <Ref. to VDC(diag)-37, List of Diagnostic Trouble Code (DTC).>	Go to step **4**.
4	**CHECK LAN SYSTEM.** Perform the diagnosis for LAN system. <Ref. to LAN(w/o HEV)(diag)-2, Basic Diagnostic Procedure.> <Ref. to LAN(HEV)(diag)-2, Basic Diagnostic Procedure.>	Is there any fault in LAN system?	Perform the diagnosis according to DTC for LAN system. <Ref. to LAN(w/o HEV)(diag)-50, List of Diagnostic Trouble Code (DTC).> <Ref. to LAN(HEV)(diag)-87, List of Diagnostic Trouble Code (DTC).>	Go to step **5**.
5	**CHECK COMBINATION METER.** Check the combination meter. <Ref. to IDI-7, SELF-DIAGNOSIS DISPLAY MODE, OPERATION, Combination Meter System.>	Is combination meter OK?	Replace the VDCCM only. <Ref. to VDC-18, REPLACEMENT, VDC Control Module and Hydraulic Control Unit (VDCCM&H/U).>	Replace the combination meter. <Ref. to IDI-16, Combination Meter.>

F: VDC OFF INDICATOR LIGHT DOES NOT GO OFF

DETECTING CONDITION:

- Defective combination meter
- Defective CAN communication
- VDC OFF switch is shorted.

TROUBLE SYMPTOM:

When starting the engine, VDC OFF indicator light is kept ON.

WIRING DIAGRAM:

Vehicle dynamics control system <Ref. to WI(w/o HEV)-152, Vehicle Dynamics Control System.> <Ref. to WI(HEV)-216, Vehicle Dynamics Control System.>

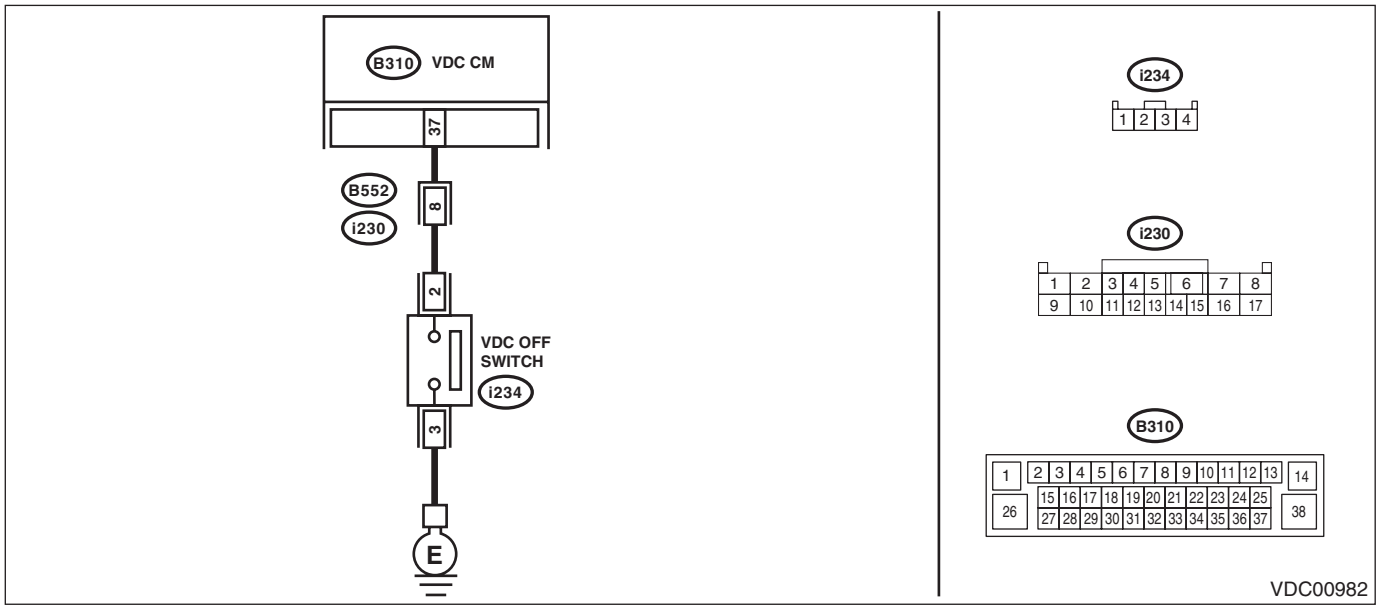

Step		Check	Yes	No
1	**READ DTC.** Read the DTC. <Ref. to VDC(diag)-21, Read Diagnostic Trouble Code (DTC).>	Is DTC displayed?	Perform the diagnosis according to DTC. <Ref. to VDC(diag)-37, List of Diagnostic Trouble Code (DTC).>	Go to step **2**.
2	**CHECK VDC OFF SWITCH.** Remove and check VDC OFF switch. <Ref. to VDC-47, VDC OFF Switch.>	Is the VDC OFF switch normal?	Go to step **3**.	Replace the VDC OFF switch. <Ref. to VDC-47, VDC OFF Switch.>
3	**CHECK VDC OFF SWITCH CIRCUIT.** 1) Disconnect the connector from the VDCCM&H/U. 2) Measure the resistance between VDCCM&H/U connector and chassis ground. ***Connector & terminal*** ***(B310) No. 37 — Chassis ground:***	Is the resistance less than 10 Ω?	Check the VDC OFF switch circuit.	Go to step **4**.

	Step	Check	Yes	No
4	**CHECK LAN SYSTEM.** Perform the diagnosis for LAN system. <Ref. to LAN(w/o HEV)(diag)-2, Basic Diagnostic Procedure.> <Ref. to LAN(HEV)(diag)-2, Basic Diagnostic Procedure.>	Is there any fault in LAN system?	Perform the diagnosis according to DTC for LAN system. <Ref. to LAN(w/o HEV)(diag)-50, List of Diagnostic Trouble Code (DTC).> <Ref. to LAN(HEV)(diag)-87, List of Diagnostic Trouble Code (DTC).>	Go to step **5**.
5	**CHECK COMBINATION METER.** Check the combination meter. <Ref. to IDI-7, SELF-DIAGNOSIS DISPLAY MODE, OPERATION, Combination Meter System.>	Is combination meter OK?	Replace the VDCCM only. <Ref. to VDC-18, REPLACEMENT, VDC Control Module and Hydraulic Control Unit (VDCCM&H/U).>	Replace the combination meter. <Ref. to IDI-16, Combination Meter.>

G: HILL START ASSIST WARNING LIGHT DOES NOT GO OFF

DETECTING CONDITION:

- Defective combination meter
- Defective CAN communication

TROUBLE SYMPTOM:

When starting the engine, the hill start assist warning light continues to illuminate.

	Step	Check	Yes	No
1	**READ DTC.** Read the DTC. <Ref. to VDC(diag)-21, Read Diagnostic Trouble Code (DTC).>	Is DTC displayed?	Perform the diagnosis according to DTC. <Ref. to VDC(diag)-37, List of Diagnostic Trouble Code (DTC).>	Go to step **2**.
2	**CHECK LAN SYSTEM.** Perform the diagnosis for LAN system. <Ref. to LAN(w/o HEV)(diag)-2, Basic Diagnostic Procedure.> <Ref. to LAN(HEV)(diag)-2, Basic Diagnostic Procedure.>	Is there any fault in LAN system?	Perform the diagnosis according to DTC for LAN system. <Ref. to LAN(w/o HEV)(diag)-50, List of Diagnostic Trouble Code (DTC).> <Ref. to LAN(HEV)(diag)-87, List of Diagnostic Trouble Code (DTC).>	Go to step **3**.
3	**CHECK COMBINATION METER.** Check the combination meter. <Ref. to IDI-7, SELF-DIAGNOSIS DISPLAY MODE, OPERATION, Combination Meter System.>	Is combination meter OK?	Replace the VDCCM only. <Ref. to VDC-18, REPLACEMENT, VDC Control Module and Hydraulic Control Unit (VDCCM&H/U).>	Replace the combination meter. <Ref. to IDI-16, Combination Meter.>

H: BRAKE WARNING LIGHT DOES NOT GO OFF

DETECTING CONDITION:

- Brake warning light circuit is shorted.
- Defective sensor/connector
- Defective CAN communication

TROUBLE SYMPTOM:

After starting the engine, the brake warning light remains lit though the parking lever is released.

WIRING DIAGRAM:

Parking brake / brake fluid level warning light system <Ref. to WI(w/o HEV)-115, Parking Brake / Brake Fluid Level Warning Light System.> <Ref. to WI(HEV)-175, Parking Brake / Brake Fluid Level Warning Light System.>

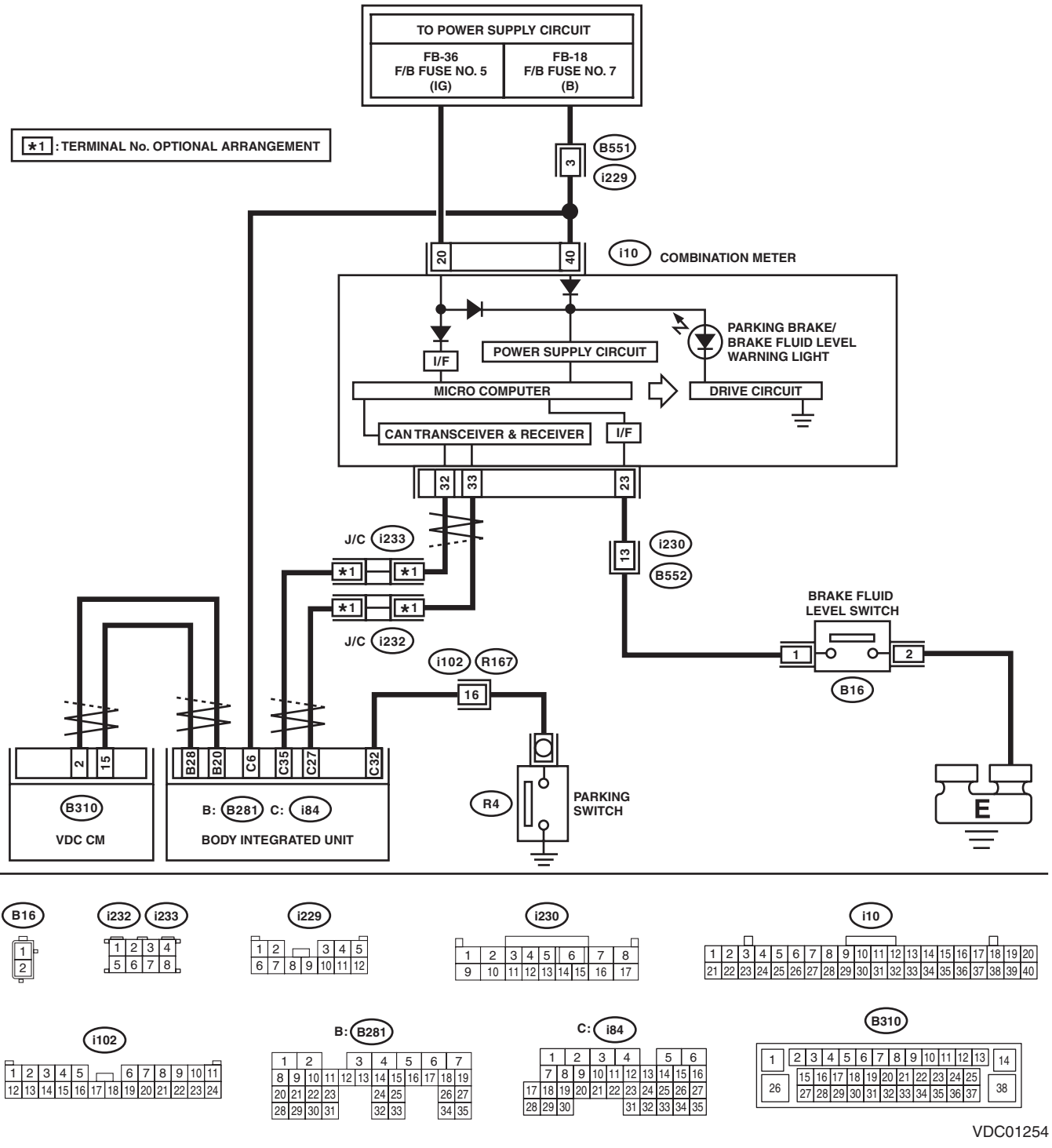

VDC01254

	Step	Check	Yes	No
1	**CHECK INSTALLATION OF VDCCM&H/U CONNECTOR.** 1) Turn the ignition switch to OFF. 2) Check that the VDCCM&H/U connector is inserted until it is locked by clamp.	Is the connector firmly inserted?	Go to step **2**.	Insert the VDCCM&H/U connector until it is locked by clamp.
2	**READ DTC.** Read the DTC. <Ref. to VDC(diag)-21, Read Diagnostic Trouble Code (DTC).>	Is DTC displayed?	Perform the diagnosis according to DTC. <Ref. to VDC(diag)-37, List of Diagnostic Trouble Code (DTC).>	Go to step **3**.
3	**CHECK BRAKE FLUID AMOUNT.** Check the amount of brake fluid in the reservoir tank of master cylinder.	Does the level of the brake fluid amount fall between the lines of "MAX" and "MIN"?	Go to step **4**.	Replenish brake fluid to the specified value.
4	**CHECK BRAKE FLUID LEVEL SWITCH.** 1) Turn the ignition switch to OFF. 2) Disconnect the level switch connector (B16) from master cylinder. 3) Measure the resistance of master cylinder terminals. ***Terminals*** ***No. 1 — No. 2:***	Is the resistance 1 MΩ or more?	Go to step **5**.	Replace the master cylinder. <Ref. to BR-46, Master Cylinder.>
5	**CHECK GROUND SHORT OF HARNESS.** 1) Disconnect the connector (i10) from combination meter. 2) Measure the resistance between combination meter connector and chassis ground. ***Connector & terminal*** ***(i10) No. 23 — Chassis ground:***	Is the resistance 1 MΩ or more?	Go to step **6**.	Repair the harness between combination meter and brake fluid level switch.
6	**CHECK PARKING BRAKE SWITCH.** 1) Disconnect the connector (R4) from parking brake switch. 2) Release the parking brake. 3) Measure the resistance between parking brake switch terminal and chassis ground.	Is the resistance 1 MΩ or more?	Go to step **7**.	Replace the parking brake switch.
7	**CHECK GROUND SHORT OF HARNESS.** 1) Disconnect the connector (i84) from body integrated unit. 2) Measure the resistance between body integrated unit connector and chassis ground. ***Connector & terminal*** ***(i84) No. 32 — Chassis ground:***	Is the resistance 1 MΩ or more?	Go to step **8**.	Repair the harness between body integrated unit and parking brake switch.
8	**CHECK POOR CONTACT OF CONNECTOR.** Check for poor contact of all connectors.	Is there poor contact?	Repair the connector.	Go to step **9**.
9	**CHECK LAN SYSTEM.** Perform the diagnosis for LAN system. <Ref. to LAN(w/o HEV)(diag)-2, Basic Diagnostic Procedure.> <Ref. to LAN(HEV)(diag)-2, Basic Diagnostic Procedure.>	Is there any fault in LAN system?	Perform the diagnosis according to DTC for LAN system. <Ref. to LAN(w/o HEV)(diag)-50, List of Diagnostic Trouble Code (DTC).> <Ref. to LAN(HEV)(diag)-87, List of Diagnostic Trouble Code (DTC).>	Go to step **10**.

Step		Check	Yes	No
10	**CHECK COMBINATION METER.** Check the combination meter. <Ref. to IDI-7, SELF-DIAGNOSIS DISPLAY MODE, OPERATION, Combination Meter System.>	Is combination meter OK?	Replace the VDCCM only. <Ref. to VDC-18, REPLACEMENT, VDC Control Module and Hydraulic Control Unit (VDCCM&H/U).>	Replace the combination meter. <Ref. to IDI-16, Combination Meter.>

11.List of Diagnostic Trouble Code (DTC)

A: LIST

DTC	Item	Content of diagnosis	Reference
C1211	FR Wheel Speed Sensor System Wire Break/ Excessive Input	Open/high input of front ABS wheel speed sensor RH	<Ref. to VDC(diag)-41, DTC C1211 FR WHEEL SPEED SENSOR SYSTEM WIRE BREAK/EXCESSIVE INPUT, Diagnostic Procedure with Diagnostic Trouble Code (DTC).>
C1212	FR Wheel Speed Sensor System	Front ABS wheel speed sensor RH signal malfunction	<Ref. to VDC(diag)-44, DTC C1212 FR WHEEL SPEED SENSOR SYSTEM, Diagnostic Procedure with Diagnostic Trouble Code (DTC).>
C1221	FL Wheel Speed Sensor System Wire Break/ Excessive Input	Open/high input of front ABS wheel speed sensor LH	<Ref. to VDC(diag)-41, DTC C1221 FL WHEEL SPEED SENSOR SYSTEM WIRE BREAK/ EXCESSIVE INPUT, Diagnostic Procedure with Diagnostic Trouble Code (DTC).>
C1222	FL Wheel Speed Sensor System	Front ABS wheel speed sensor LH signal malfunction	<Ref. to VDC(diag)-44, DTC C1222 FL WHEEL SPEED SENSOR SYSTEM, Diagnostic Procedure with Diagnostic Trouble Code (DTC).>
C1231	RR Wheel Speed Sensor System Wire Break/ Excessive Input	Open/high input of rear ABS wheel speed sensor RH	<Ref. to VDC(diag)-41, DTC C1231 RR WHEEL SPEED SENSOR SYSTEM WIRE BREAK/EXCESSIVE INPUT, Diagnostic Procedure with Diagnostic Trouble Code (DTC).>
C1232	RR Wheel Speed Sensor System	Rear ABS wheel speed sensor RH signal malfunction	<Ref. to VDC(diag)-44, DTC C1232 RR WHEEL SPEED SENSOR SYSTEM, Diagnostic Procedure with Diagnostic Trouble Code (DTC).>
C1241	RL Wheel Speed Sensor System Wire Break/ Excessive Input	Open/high input of rear ABS wheel speed sensor LH	<Ref. to VDC(diag)-42, DTC C1241 RL WHEEL SPEED SENSOR SYSTEM WIRE BREAK/EXCESSIVE INPUT, Diagnostic Procedure with Diagnostic Trouble Code (DTC).>
C1242	RL Wheel Speed Sensor System	Rear ABS wheel speed sensor LH signal malfunction	<Ref. to VDC(diag)-45, DTC C1242 RL WHEEL SPEED SENSOR SYSTEM, Diagnostic Procedure with Diagnostic Trouble Code (DTC).>
C1251	Wheel Speed Sensor System	Wheel speed sensor malfunction	<Ref. to VDC(diag)-47, DTC C1251 WHEEL SPEED SENSOR SYSTEM, Diagnostic Procedure with Diagnostic Trouble Code (DTC).>
C1252	Wheel Speed Sensor Signal of One of The Wheels	ABS wheel speed sensor signal malfunction in one of four wheels	<Ref. to VDC(diag)-48, DTC C1252 WHEEL SPEED SENSOR SIGNAL OF ONE OF THE WHEELS, Diagnostic Procedure with Diagnostic Trouble Code (DTC).>
C1311	FR Inlet Solenoid Valve System	Front inlet solenoid valve RH malfunction in VDCCM&H/U	<Ref. to VDC(diag)-49, DTC C1311 FR INLET SOLENOID VALVE SYSTEM, Diagnostic Procedure with Diagnostic Trouble Code (DTC).>
C1312	FR Outlet Solenoid Valve System	Front outlet solenoid valve RH malfunction in VDCCM&H/U	<Ref. to VDC(diag)-49, DTC C1312 FR OUTLET SOLENOID VALVE SYSTEM, Diagnostic Procedure with Diagnostic Trouble Code (DTC).>
C1321	FL Inlet Solenoid Valve System	Front inlet solenoid valve LH malfunction in VDCCM&H/U	<Ref. to VDC(diag)-49, DTC C1321 FL INLET SOLENOID VALVE SYSTEM, Diagnostic Procedure with Diagnostic Trouble Code (DTC).>
C1322	FL Outlet Solenoid Valve System	Front outlet solenoid valve LH malfunction in VDCCM&H/U	<Ref. to VDC(diag)-49, DTC C1322 FL OUTLET SOLENOID VALVE SYSTEM, Diagnostic Procedure with Diagnostic Trouble Code (DTC).>

DTC	Item	Content of diagnosis	Reference
C1331	RR Inlet Solenoid Valve System	Rear inlet solenoid valve RH malfunction in VDCCM&H/U	<Ref. to VDC(diag)-49, DTC C1331 RR INLET SOLENOID VALVE SYSTEM, Diagnostic Procedure with Diagnostic Trouble Code (DTC).>
C1332	RR Outlet Solenoid Valve System	Rear outlet solenoid valve RH malfunction in VDCCM&H/U	<Ref. to VDC(diag)-50, DTC C1332 RR OUTLET SOLENOID VALVE SYSTEM, Diagnostic Procedure with Diagnostic Trouble Code (DTC).>
C1341	RL Inlet Solenoid Valve System	Rear inlet solenoid valve LH malfunction in VDCCM&H/U	<Ref. to VDC(diag)-50, DTC C1341 RL INLET SOLENOID VALVE SYSTEM, Diagnostic Procedure with Diagnostic Trouble Code (DTC).>
C1342	RL Outlet Solenoid Valve System	Rear outlet solenoid valve LH malfunction in VDCCM&H/U	<Ref. to VDC(diag)-50, DTC C1342 RL OUTLET SOLENOID VALVE SYSTEM, Diagnostic Procedure with Diagnostic Trouble Code (DTC).>
C1351	VDC Change-Over Valve 1 (P)	Primary cut valve malfunction in VDCCM&H/U	<Ref. to VDC(diag)-50, DTC C1351 VDC CHANGE-OVER VALVE 1 (P), Diagnostic Procedure with Diagnostic Trouble Code (DTC).>
C1352	VDC Change-Over Valve 1 (S)	Secondary cut valve malfunction in VDCCM&H/U	<Ref. to VDC(diag)-50, DTC C1352 VDC CHANGE-OVER VALVE 1 (S), Diagnostic Procedure with Diagnostic Trouble Code (DTC).>
C1361	VDC Change-Over Valve 2 (P)	Primary suction valve malfunction in VDCCM&H/U	<Ref. to VDC(diag)-50, DTC C1361 VDC CHANGE-OVER VALVE 2 (P), Diagnostic Procedure with Diagnostic Trouble Code (DTC).>
C1362	VDC Change-Over Valve 2 (S)	Secondary suction valve malfunction in VDCCM&H/U	<Ref. to VDC(diag)-51, DTC C1362 VDC CHANGE-OVER VALVE 2 (S), Diagnostic Procedure with Diagnostic Trouble Code (DTC).>
C1411	ECU	VDC control module malfunction	<Ref. to VDC(diag)-53, DTC C1411 ECU, Diagnostic Procedure with Diagnostic Trouble Code (DTC).>
C1412	Parameter	VDC control module parameter failure	<Ref. to VDC(diag)-55, DTC C1412 PARAMETER, Diagnostic Procedure with Diagnostic Trouble Code (DTC).>
C1413	Power Supply Volt Error	Power voltage malfunction	<Ref. to VDC(diag)-56, DTC C1413 POWER SUPPLY VOLT ERROR, Diagnostic Procedure with Diagnostic Trouble Code (DTC).>
C1421	ECM Control System	Prohibition of coordinate control for engine control module	<Ref. to VDC(diag)-58, DTC C1421 ECM CONTROL SYSTEM, Diagnostic Procedure with Diagnostic Trouble Code (DTC).>
C1422	VDC Interruption for Engine Convenience	VDC interrupted due to some reasons of the engine	<Ref. to VDC(diag)-59, DTC C1422 VDC INTERRUPTION FOR ENGINE CONVENIENCE, Diagnostic Procedure with Diagnostic Trouble Code (DTC).>
C1423	Different ECU Specifications	Different VDC control module specification	<Ref. to VDC(diag)-60, DTC C1423 DIFFERENT ECU SPECIFICATIONS, Diagnostic Procedure with Diagnostic Trouble Code (DTC).>
C1424	ECM Failure	Engine control module is faulty	<Ref. to VDC(diag)-62, DTC C1424 ECM FAILURE, Diagnostic Procedure with Diagnostic Trouble Code (DTC).>
C1431	AT Abnormal	Transmission control module is faulty	<Ref. to VDC(diag)-63, DTC C1431 AT ABNORMAL, Diagnostic Procedure with Diagnostic Trouble Code (DTC).>
C1432	Different ECU Specifications	Different VDC control module specification	<Ref. to VDC(diag)-63, DTC C1432 DIFFERENT ECU SPECIFICATIONS, Diagnostic Procedure with Diagnostic Trouble Code (DTC).>
C1451	HPCM Control System	Prohibition of coordinate control for hybrid powertrain control module	<Ref. to VDC(diag)-64, DTC C1451 HPCM CONTROL SYSTEM, Diagnostic Procedure with Diagnostic Trouble Code (DTC).>

DTC	Item	Content of diagnosis	Reference
C1452	Pygmy Interrupted Due to EGI Reason	VDC interrupted due to some reasons of the hybrid powertrain control module	<Ref. to VDC(diag)-64, DTC C1452 HPCM INTERRUPTED DUE TO EGI REASON, Diagnostic Procedure with Diagnostic Trouble Code (DTC).>
C1511	Valve Relay	Defective valve relay	<Ref. to VDC(diag)-65, DTC C1511 VALVE RELAY, Diagnostic Procedure with Diagnostic Trouble Code (DTC).>
C1512	Valve System	Defective valve system	<Ref. to VDC(diag)-66, DTC C1512 VALVE SYSTEM, Diagnostic Procedure with Diagnostic Trouble Code (DTC).>
C1521	Motor Relay	Motor relay malfunction	<Ref. to VDC(diag)-67, DTC C1521 MOTOR RELAY, Diagnostic Procedure with Diagnostic Trouble Code (DTC).>
C1531	BLS Off Fault	Stop light switch malfunction	<Ref. to VDC(diag)-70, DTC C1531 BLS OFF FAULT, Diagnostic Procedure with Diagnostic Trouble Code (DTC).>
C1532	BLS On Fault	Stop light switch malfunction	<Ref. to VDC(diag)-73, DTC C1532 BLS ON FAULT, Diagnostic Procedure with Diagnostic Trouble Code (DTC).>
C1541	Clutch Off Fault	Clutch signal malfunction	<Ref. to VDC(diag)-75, DTC C1541 CLUTCH OFF FAULT, Diagnostic Procedure with Diagnostic Trouble Code (DTC).>
C1542	Clutch On Fault	Clutch signal malfunction	<Ref. to VDC(diag)-76, DTC C1542 CLUTCH ON FAULT, Diagnostic Procedure with Diagnostic Trouble Code (DTC).>
C1561	Reverse Off Fault	Reverse signal malfunction	<Ref. to VDC(diag)-77, DTC C1561 REVERSE OFF FAULT, Diagnostic Procedure with Diagnostic Trouble Code (DTC).>
C1562	Reverse On Fault	Reverse signal malfunction	<Ref. to VDC(diag)-78, DTC C1562 REVERSE ON FAULT, Diagnostic Procedure with Diagnostic Trouble Code (DTC).>
C1711	Steering Angle Sensor Abnormal	Steering angle sensor malfunction	<Ref. to VDC(diag)-80, DTC C1711 STEERING ANGLE SENSOR ABNORMAL, Diagnostic Procedure with Diagnostic Trouble Code (DTC).>
C1721	Yaw Rate Sensor Abnormal	Defective yaw rate sensor	<Ref. to VDC(diag)-83, DTC C1721 YAW RATE SENSOR ABNORMAL, Diagnostic Procedure with Diagnostic Trouble Code (DTC).>
C1731	G Sensor Abnormal	Defective G sensor	<Ref. to VDC(diag)-84, DTC C1731 G SENSOR ABNORMAL, Diagnostic Procedure with Diagnostic Trouble Code (DTC).>
C1732	Lateral G Sensor Abnormal	Defective lateral G sensor	<Ref. to VDC(diag)-85, DTC C1732 LATERAL G SENSOR ABNORMAL, Diagnostic Procedure with Diagnostic Trouble Code (DTC).>
C1733	Longitudinal G Sensor Abnormal	Defective longitudinal G sensor	<Ref. to VDC(diag)-86, DTC C1733 LONGITUDINAL G SENSOR ABNORMAL, Diagnostic Procedure with Diagnostic Trouble Code (DTC).>
C1741	Pressure Sensor	Defective pressure sensor	<Ref. to VDC(diag)-87, DTC C1741 PRESSURE SENSOR, Diagnostic Procedure with Diagnostic Trouble Code (DTC).>
C1811	System Failure	System malfunction	<Ref. to VDC(diag)-88, DTC C1811 SYSTEM FAILURE, Diagnostic Procedure with Diagnostic Trouble Code (DTC).>

DTC	Item	Content of diagnosis	Reference
U0073	Control Module Communication Bus Off	Defective CAN communication	<Ref. to VDC(diag)-89, DTC U0073 CONTROL MODULE COMMUNICATION BUS OFF, Diagnostic Procedure with Diagnostic Trouble Code (DTC).>
U0100	Lost Communication With ECM/PCM “A”	Defective CAN communication	<Ref. to VDC(diag)-90, DTC U0100 LOST COMMUNICATION WITH ECM/PCM “A”, Diagnostic Procedure with Diagnostic Trouble Code (DTC).>
U0101	Lost Communication With TCM	Defective CAN communication	<Ref. to VDC(diag)-90, DTC U0101 LOST COMMUNICATION WITH TCM, Diagnostic Procedure with Diagnostic Trouble Code (DTC).>
U0126	Lost Communication With Steering Angle Sensor Module	Defective CAN communication	<Ref. to VDC(diag)-90, DTC U0126 LOST COMMUNICATION WITH STEERING ANGLE SENSOR MODULE, Diagnostic Procedure with Diagnostic Trouble Code (DTC).>
U0140	Lost Communication With Body Control Module	Defective CAN communication	<Ref. to VDC(diag)-90, DTC U0140 LOST COMMUNICATION WITH BODY CONTROL MODULE, Diagnostic Procedure with Diagnostic Trouble Code (DTC).>
U0293	Lost Communication With Hybrid Powertrain Control Module	Defective CAN communication	<Ref. to VDC(diag)-90, DTC U0293 LOST COMMUNICATION WITH HYBRID POWERTRAIN CONTROL MODULE, Diagnostic Procedure with Diagnostic Trouble Code (DTC).>
U0401	Invalid Data Received From ECM/PCM “A”	Defective CAN communication	<Ref. to VDC(diag)-90, DTC U0401 INVALID DATA RECEIVED FROM ECM/PCM “A”, Diagnostic Procedure with Diagnostic Trouble Code (DTC).>
U0402	Invalid Data Received From TCM	Defective CAN communication	<Ref. to VDC(diag)-90, DTC U0402 INVALID DATA RECEIVED FROM TCM, Diagnostic Procedure with Diagnostic Trouble Code (DTC).>
U0422	Invalid Data Received From Body Control Module	Defective CAN communication	<Ref. to VDC(diag)-90, DTC U0422 INVALID DATA RECEIVED FROM BODY CONTROL MODULE, Diagnostic Procedure with Diagnostic Trouble Code (DTC).>
U0428	Invalid Data Received From Steering Angle Sensor Module	Defective CAN communication	<Ref. to VDC(diag)-90, DTC U0428 INVALID DATA RECEIVED FROM STEERING ANGLE SENSOR MODULE, Diagnostic Procedure with Diagnostic Trouble Code (DTC).>
U0594	Invalid Data Received From Hybrid Powertrain Control Module	Defective CAN communication	<Ref. to VDC(diag)-90, DTC U0594 INVALID DATA RECEIVED FROM HYBRID POWERTRAIN CONTROL MODULE, Diagnostic Procedure with Diagnostic Trouble Code (DTC).>

12. Diagnostic Procedure with Diagnostic Trouble Code (DTC)

A: DTC C1211 FR WHEEL SPEED SENSOR SYSTEM WIRE BREAK/EXCESSIVE INPUT

NOTE:
For the diagnostic procedure, refer to “DTC C1241 RL WHEEL SPEED SENSOR SYSTEM WIRE BREAK/EXCESSIVE INPUT”. <Ref. to VDC(diag)-42, DTC C1241 RL WHEEL SPEED SENSOR SYSTEM WIRE BREAK/EXCESSIVE INPUT, Diagnostic Procedure with Diagnostic Trouble Code (DTC).>

B: DTC C1221 FL WHEEL SPEED SENSOR SYSTEM WIRE BREAK/EXCESSIVE INPUT

NOTE:
For the diagnostic procedure, refer to “DTC C1241 RL WHEEL SPEED SENSOR SYSTEM WIRE BREAK/EXCESSIVE INPUT”. <Ref. to VDC(diag)-42, DTC C1241 RL WHEEL SPEED SENSOR SYSTEM WIRE BREAK/EXCESSIVE INPUT, Diagnostic Procedure with Diagnostic Trouble Code (DTC).>

C: DTC C1231 RR WHEEL SPEED SENSOR SYSTEM WIRE BREAK/EXCESSIVE INPUT

NOTE:
For the diagnostic procedure, refer to “DTC C1241 RL WHEEL SPEED SENSOR SYSTEM WIRE BREAK/EXCESSIVE INPUT”. <Ref. to VDC(diag)-42, DTC C1241 RL WHEEL SPEED SENSOR SYSTEM WIRE BREAK/EXCESSIVE INPUT, Diagnostic Procedure with Diagnostic Trouble Code (DTC).>

D: DTC C1241 RL WHEEL SPEED SENSOR SYSTEM WIRE BREAK/EXCESSIVE INPUT

DTC DETECTING CONDITION:

- Defective ABS wheel speed sensor (broken wire, input voltage too high)
- Defective harness connector

TROUBLE SYMPTOM:

- ABS does not operate.
- VDC does not operate.
- Hill start assist does not operate.

CAUTION:

For HEV model, perform Clear Memory Mode for VDC system after diagnosis, turn the ignition switch to OFF, and wait for 30 seconds. Next, perform Clear Memory Mode for hybrid system, turn the ignition switch to OFF, and wait for 30 seconds. <Ref. to VDC(diag)-23, Clear Memory Mode.> <Ref. to HEV(diag)-24, HYBRID POWERTRAIN CONTROL SYSTEM, OPERATION, Clear Memory Mode.>

WIRING DIAGRAM:

Vehicle dynamics control system <Ref. to WI(w/o HEV)-152, Vehicle Dynamics Control System.> <Ref. to WI(HEV)-216, Vehicle Dynamics Control System.>

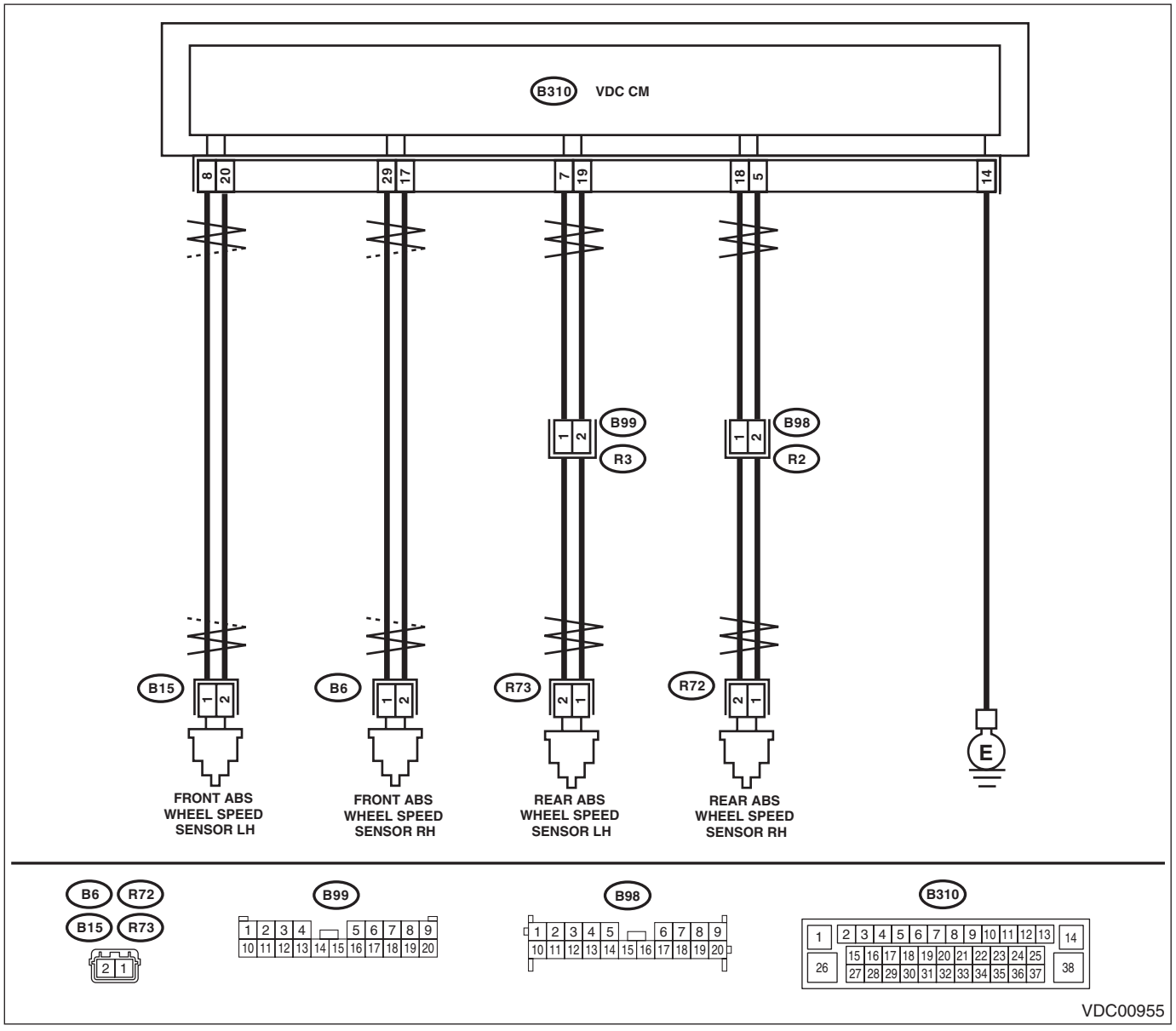

	Step	Check	Yes	No
1	**CHECK POOR CONTACT OF CONNECTOR.** Check if there is poor contact between VDCCM&H/U and ABS wheel speed sensor.	Is there poor contact?	Repair the connector.	Go to step **2**.
2	**CHECK HARNESS CONNECTOR BETWEEN VDCCM&H/U AND ABS WHEEL SPEED SENSOR.** 1) Disconnect the connector (B310) from the VDCCM&H/U. 2) Disconnect the connector from ABS wheel speed sensor. 3) Measure the resistance between VDCCM&H/U connector and ABS wheel speed sensor connector. ***Connector & terminal*** ***DTC C1211*** ***(B310) No. 29 — (B6) No. 1:*** ***(B310) No. 17 — (B6) No. 2:*** ***DTC C1221*** ***(B310) No. 8 — (B15) No. 1:*** ***(B310) No. 20 — (B15) No. 2:*** ***DTC C1231*** ***(B310) No. 5 — (R72) No. 1:*** ***(B310) No. 18 — (R72) No. 2:*** ***DTC C1241*** ***(B310) No. 19 — (R73) No. 1:*** ***(B310) No. 7 — (R73) No. 2:***	Is the resistance less than 1 Ω?	Go to step **3**.	Repair the harness connector between VDCCM&H/U and ABS wheel speed sensor.
3	**CHECK GROUND SHORT OF HARNESS.** Measure the resistance between VDCCM&H/U connector and chassis ground. ***Connector & terminal*** ***DTC C1211*** ***(B310) No. 29 — Chassis ground:*** ***DTC C1221*** ***(B310) No. 8 — Chassis ground:*** ***DTC C1231*** ***(B310) No. 5 — Chassis ground:*** ***DTC C1241*** ***(B310) No. 19 — Chassis ground:***	Is the resistance 1 MΩ or more?	Go to step **4**.	Repair the harness connector between VDCCM&H/U and ABS wheel speed sensor.
4	**CHECK ABS WHEEL SPEED SENSOR POWER SUPPLY CIRCUIT.** 1) Connect the VDCCM&H/U connector. 2) Turn the ignition switch to ON. 3) Measure the voltage between ABS wheel speed sensor connector and chassis ground. ***Connector & terminal*** ***DTC C1211*** ***(B6) No. 2 (+) — Chassis ground (–):*** ***DTC C1221*** ***(B15) No. 2 (+) — Chassis ground (–):*** ***DTC C1231*** ***(R72) No. 2 (+) — Chassis ground (–):*** ***DTC C1241*** ***(R73) No. 2 (+) — Chassis ground (–):***	Is the voltage 5 — 16 V?	Go to step **6**.	Go to step **5**.

	Step	Check	Yes	No
5	**CHECK VDCCM&H/U POWER SUPPLY CIRCUIT.** 1) Turn the ignition switch to OFF. 2) Disconnect the VDCCM&H/U connector. 3) Turn the ignition switch to ON. 4) Measure the voltage between VDCCM&H/U connector terminals. ***Connector & terminal*** ***(B310) No. 4 (+) — (B310) No. 14 (–):*** ***(B310) No. 1 (+) — (B310) No. 14 (–):*** ***(B310) No. 26 (+) — (B310) No. 14 (–):***	Is the voltage 10 — 15 V?	Go to step **6**.	Check the generator, battery and VDCCM&H/U power supply circuit.
6	**CHECK ABS WHEEL SPEED SENSOR SIGNAL.** 1) Install the ABS wheel speed sensor. 2) Prepare an oscilloscope. 3) Check the ABS wheel speed sensor. <Ref. to VDC-35, CHECK ABS WHEEL SPEED SENSOR UNIT, INSPECTION, Front ABS Wheel Speed Sensor.>	Is the pattern the same waveform as shown in the figure?	Go to step **7**.	Replace the ABS wheel speed sensor. <Ref. to VDC-33, Front ABS Wheel Speed Sensor.>
7	**CHECK VDCCM&H/U.** 1) Connect all connectors. 2) Clear the memory. <Ref. to VDC(diag)-23, Clear Memory Mode.> 3) Perform the Inspection Mode. <Ref. to VDC(diag)-22, Inspection Mode.> 4) Read the DTC.	Is the same DTC displayed?	Replace the VDCCM only. <Ref. to VDC-18, REPLACEMENT, VDC Control Module and Hydraulic Control Unit (VDCCM&H/U).>	Go to step **8**.
8	**CHECK OTHER DTC DETECTION.**	Is any other DTC displayed?	Perform the diagnosis according to DTC. <Ref. to VDC(diag)-37, List of Diagnostic Trouble Code (DTC).>	It results from a temporary noise interference.

E: DTC C1212 FR WHEEL SPEED SENSOR SYSTEM

NOTE:
For the diagnostic procedure, refer to “DTC C1242 RL WHEEL SPEED SENSOR SYSTEM”. <Ref. to VDC(diag)-45, DTC C1242 RL WHEEL SPEED SENSOR SYSTEM, Diagnostic Procedure with Diagnostic Trouble Code (DTC).>

F: DTC C1222 FL WHEEL SPEED SENSOR SYSTEM

NOTE:
For the diagnostic procedure, refer to “DTC C1242 RL WHEEL SPEED SENSOR SYSTEM”. <Ref. to VDC(diag)-45, DTC C1242 RL WHEEL SPEED SENSOR SYSTEM, Diagnostic Procedure with Diagnostic Trouble Code (DTC).>

G: DTC C1232 RR WHEEL SPEED SENSOR SYSTEM

NOTE:
For the diagnostic procedure, refer to “DTC C1242 RL WHEEL SPEED SENSOR SYSTEM”. <Ref. to VDC(diag)-45, DTC C1242 RL WHEEL SPEED SENSOR SYSTEM, Diagnostic Procedure with Diagnostic Trouble Code (DTC).>

H: DTC C1242 RL WHEEL SPEED SENSOR SYSTEM

DTC DETECTING CONDITION:

- Defective ABS wheel speed sensor signal (noise, irregular signal, etc.)
- Defective harness connector

TROUBLE SYMPTOM:

- ABS does not operate.
- VDC does not operate.
- Hill start assist does not operate.

CAUTION:

For HEV model, perform Clear Memory Mode for VDC system after diagnosis, turn the ignition switch to OFF, and wait for 30 seconds. Next, perform Clear Memory Mode for hybrid system, turn the ignition switch to OFF, and wait for 30 seconds. <Ref. to VDC(diag)-23, Clear Memory Mode.> <Ref. to HEV(diag)-24, HYBRID POWERTRAIN CONTROL SYSTEM, OPERATION, Clear Memory Mode.>

	Step	Check	Yes	No
1	**CHECK OUTPUT OF ABS WHEEL SPEED SENSOR USING SUBARU SELECT MONITOR.** 1) Select “Current Data Display & Save” and “Freeze Frame Data display” on the Subaru Select Monitor. 2) Read the defective ABS wheel speed sensor output.	Does the speed indicated on the current data change in response to the speedometer reading during acceleration/deceleration when the steering wheel is in the straight-ahead position? In addition, are the wheel speeds of the freeze frame data for 4 wheels almost the same?	Go to step **2**.	Go to step **7**.
2	**CHECK POOR CONTACT OF CONNECTOR.** Turn the ignition switch to OFF.	Is there poor contact of connectors between VDCCM&H/U and ABS wheel speed sensor?	Repair the connector.	Go to step **3**.
3	**CHECK CAUSE OF SIGNAL NOISE.** Make sure the radio wave devices and electronic components are installed correctly.	Are the radio wave devices and electronic components installed correctly?	Go to step **4**.	Install the radio wave devices and electronic components properly.
4	**CHECK CAUSE OF SIGNAL NOISE.** Check if the noise sources (such as an antenna) are installed near the sensor harness.	Are noise sources installed?	Install the noise sources apart from sensor harness.	Go to step **5**.
5	**CHECK VDCCM&H/U.** 1) Connect all connectors. 2) Clear the memory. <Ref. to VDC(diag)-23, Clear Memory Mode.> 3) Perform the Inspection Mode. <Ref. to VDC(diag)-22, Inspection Mode.> 4) Read the DTC.	Is the same DTC displayed?	Replace the VDCCM only. <Ref. to VDC-18, REPLACEMENT, VDC Control Module and Hydraulic Control Unit (VDCCM&H/U).>	Go to step **6**.
6	**CHECK OTHER DTC DETECTION.**	Is any other DTC displayed?	Perform the diagnosis according to DTC. <Ref. to VDC(diag)-37, List of Diagnostic Trouble Code (DTC).>	It results from a temporary noise interference.
7	**CHECK INSTALLATION OF ABS WHEEL SPEED SENSOR.**	Is the ABS wheel speed sensor installation bolt tightened to 7.5 N·m (0.76 kgf-m, 5.5 ft-lb)?	Go to step **8**.	Tighten the ABS wheel speed sensor installation bolts.

	Step	Check	Yes	No
8	**CHECK ABS WHEEL SPEED SENSOR SIGNAL.** 1) Install the ABS wheel speed sensor. 2) Prepare an oscilloscope. 3) Check the ABS wheel speed sensor. <Ref. to VDC-35, CHECK ABS WHEEL SPEED SENSOR UNIT, INSPECTION, Front ABS Wheel Speed Sensor.>	Does the oscilloscope indicate the waveform pattern like shown in the figure when the tire is slowly turned? Does the oscilloscope indication repeat the waveform pattern like shown in the figure when the tire is slowly turned in equal speed for one rotation or more?	Go to step **10**.	Go to step **9**.
9	**CHECK ABS WHEEL SPEED SENSOR OR MAGNETIC ENCODER.**	Are there foreign matter, breakage or damage at the tip of ABS wheel speed sensor or magnetic encoder?	Remove dirt thoroughly. Also replace the ABS wheel speed sensor or magnetic encoder as a unit with hub unit bearing if it is broken or damaged.	Go to step **10**.
10	**CHECK CAUSE OF SIGNAL NOISE.** Make sure the radio wave devices and electronic components are installed correctly.	Are the radio wave devices and electronic components installed correctly?	Go to step **11**.	Install the radio wave devices and electronic components properly.
11	**CHECK CAUSE OF SIGNAL NOISE.** Check if the noise sources (such as an antenna) are installed near the sensor harness.	Are noise sources installed?	Install the noise sources apart from sensor harness.	Go to step **12**.
12	**CHECK VDCCM&H/U.** 1) Connect all connectors. 2) Clear the memory. <Ref. to VDC(diag)-23, Clear Memory Mode.> 3) Perform the Inspection Mode. <Ref. to VDC(diag)-22, Inspection Mode.> 4) Read the DTC.	Is the same DTC displayed?	Go to step **13**.	Go to step **14**.
13	**CHECK FREEZE FRAME DATA OF ABS WHEEL SPEED SENSOR USING SUBARU SELECT MONITOR.** 1) Using the Subaru Select Monitor, select “Freeze Frame Data display”. 2) Read the ABS wheel speed sensor output.	Is the ABS wheel speed sensor output different compared with other wheels?	Replace the ABS wheel speed sensor which has a difference. <Ref. to VDC-33, Front ABS Wheel Speed Sensor.> <Ref. to VDC-36, Rear ABS Wheel Speed Sensor.>	Replace the VDCCM only. <Ref. to VDC-18, REPLACEMENT, VDC Control Module and Hydraulic Control Unit (VDCCM&H/U).>
14	**CHECK OTHER DTC DETECTION.**	Is any other DTC displayed?	Perform the diagnosis according to DTC. <Ref. to VDC(diag)-37, List of Diagnostic Trouble Code (DTC).>	It results from a temporary noise interference. NOTE: Though the ABS warning light may remain on at this time, this is normal. Drive the vehicle at 60 km/h (37 MPH) or more in order to turn ABS warning light off. Be sure to drive the vehicle and check that the warning light goes off.

I: DTC C1251 WHEEL SPEED SENSOR SYSTEM

NOTE:
For the diagnostic procedure, refer to “DTC C1241 RL WHEEL SPEED SENSOR SYSTEM WIRE BREAK/ EXCESSIVE INPUT”. <Ref. to VDC(diag)-42, DTC C1241 RL WHEEL SPEED SENSOR SYSTEM WIRE BREAK/EXCESSIVE INPUT, Diagnostic Procedure with Diagnostic Trouble Code (DTC).>

J: DTC C1252 WHEEL SPEED SENSOR SIGNAL OF ONE OF THE WHEELS

DTC DETECTING CONDITION:

- Defective ABS wheel speed sensor signal (noise, irregular signal, etc.)
- Defective magnetic encoder
- When a wheel is turned freely for a long time

TROUBLE SYMPTOM:

- ABS does not operate.
- VDC does not operate.
- EBD may not operate.
- Hill start assist does not operate.

CAUTION:

For HEV model, perform Clear Memory Mode for VDC system after diagnosis, turn the ignition switch to OFF, and wait for 30 seconds. Next, perform Clear Memory Mode for hybrid system, turn the ignition switch to OFF, and wait for 30 seconds. <Ref. to VDC(diag)-23, Clear Memory Mode.> <Ref. to HEV(diag)-24, HYBRID POWERTRAIN CONTROL SYSTEM, OPERATION, Clear Memory Mode.>

NOTE:
Brake warning light comes on as well as ABS warning light when EBD does not operate.

	Step	Check	Yes	No
1	**WHETHER A WHEEL TURNED FREELY OR NOT.** Check if the wheels have been turned freely for one minute or more, such as when the vehicle is jacked-up, under full-lock cornering or when the wheels are not in contact with road surface.	Did the wheels turn freely?	VDC is normal. Clear the memory. NOTE: This diagnostic trouble code may sometimes occur if the wheels turn freely for a long time, for example when the vehicle is towed or jacked-up, or when steering wheel is continuously turned all the way.	Go to step **2**.
2	**CHECK TIRE SPECIFICATIONS.** Turn the ignition switch to OFF.	Are the tire specifications correct?	Go to step **3**.	Replace the tire.
3	**CHECK WEAR OF TIRE.**	Is the tire worn excessively?	Replace the tire.	Go to step **4**.
4	**CHECK TIRE INFLATION PRESSURE.**	Is the tire pressure correct?	Go to step **5**.	Adjust the tire pressure.
5	**CHECK INSTALLATION OF ABS WHEEL SPEED SENSOR.**	Are the ABS wheel speed sensor installation bolts tightened to 7.5 N·m (0.76 kgf-m, 5.5 ft-lb)? (For four wheels)	Go to step **6**.	Tighten the ABS wheel speed sensor installation bolts.
6	**CHECK ABS WHEEL SPEED SENSOR SIGNAL.** 1) Install the ABS wheel speed sensor. 2) Prepare an oscilloscope. 3) Check the ABS wheel speed sensor. <Ref. to VDC-35, CHECK ABS WHEEL SPEED SENSOR UNIT, INSPECTION, Front ABS Wheel Speed Sensor.>	Does the oscilloscope indicate the waveform pattern like shown in the figure when the tire is slowly turned? Does the oscilloscope indication repeat the waveform pattern like shown in the figure when the tire is slowly turned in equal speed for one rotation or more? (For all four wheels)	Go to step **8**.	Go to step **7**.

	Step	Check	Yes	No
7	**CHECK ABS WHEEL SPEED SENSOR OR MAGNETIC ENCODER.**	Are there foreign matter, breakage or damage at the tip of ABS wheel speed sensor or magnetic encoder? (For all four wheels)	Remove dirt thoroughly. Also replace the ABS wheel speed sensor or magnetic encoder as a unit with hub unit bearing if it is broken or damaged.	Go to step **8**.
8	**CHECK VDCCM&H/U.** 1) Connect all connectors. 2) Clear the memory. <Ref. to VDC(diag)-23, Clear Memory Mode.> 3) Perform the Inspection Mode. <Ref. to VDC(diag)-22, Inspection Mode.> 4) Read the DTC.	Is the same DTC displayed?	Replace the VDCCM only. <Ref. to VDC-18, REPLACEMENT, VDC Control Module and Hydraulic Control Unit (VDCCM&H/U).>	Go to step **9**.
9	**CHECK OTHER DTC DETECTION.**	Is any other DTC displayed?	Perform the diagnosis according to DTC. <Ref. to VDC(diag)-37, List of Diagnostic Trouble Code (DTC).>	It results from a temporary noise interference.

K: DTC C1311 FR INLET SOLENOID VALVE SYSTEM

NOTE:
For the diagnostic procedure, refer to “DTC C1362 VDC CHANGE-OVER VALVE 2 (S)”. <Ref. to VDC(diag)-51, DTC C1362 VDC CHANGE-OVER VALVE 2 (S), Diagnostic Procedure with Diagnostic Trouble Code (DTC).>

L: DTC C1312 FR OUTLET SOLENOID VALVE SYSTEM

NOTE:
For the diagnostic procedure, refer to “DTC C1362 VDC CHANGE-OVER VALVE 2 (S)”. <Ref. to VDC(diag)-51, DTC C1362 VDC CHANGE-OVER VALVE 2 (S), Diagnostic Procedure with Diagnostic Trouble Code (DTC).>

M: DTC C1321 FL INLET SOLENOID VALVE SYSTEM

NOTE:
For the diagnostic procedure, refer to “DTC C1362 VDC CHANGE-OVER VALVE 2 (S)”. <Ref. to VDC(diag)-51, DTC C1362 VDC CHANGE-OVER VALVE 2 (S), Diagnostic Procedure with Diagnostic Trouble Code (DTC).>

N: DTC C1322 FL OUTLET SOLENOID VALVE SYSTEM

NOTE:
For the diagnostic procedure, refer to “DTC C1362 VDC CHANGE-OVER VALVE 2 (S)”. <Ref. to VDC(diag)-51, DTC C1362 VDC CHANGE-OVER VALVE 2 (S), Diagnostic Procedure with Diagnostic Trouble Code (DTC).>

O: DTC C1331 RR INLET SOLENOID VALVE SYSTEM

NOTE:
For the diagnostic procedure, refer to “DTC C1362 VDC CHANGE-OVER VALVE 2 (S)”. <Ref. to VDC(diag)-51, DTC C1362 VDC CHANGE-OVER VALVE 2 (S), Diagnostic Procedure with Diagnostic Trouble Code (DTC).>

P: DTC C1332 RR OUTLET SOLENOID VALVE SYSTEM

NOTE:
For the diagnostic procedure, refer to “DTC C1362 VDC CHANGE-OVER VALVE 2 (S)”. <Ref. to VDC(diag)-51, DTC C1362 VDC CHANGE-OVER VALVE 2 (S), Diagnostic Procedure with Diagnostic Trouble Code (DTC).>

Q: DTC C1341 RL INLET SOLENOID VALVE SYSTEM

NOTE:
For the diagnostic procedure, refer to “DTC C1362 VDC CHANGE-OVER VALVE 2 (S)”. <Ref. to VDC(diag)-51, DTC C1362 VDC CHANGE-OVER VALVE 2 (S), Diagnostic Procedure with Diagnostic Trouble Code (DTC).>

R: DTC C1342 RL OUTLET SOLENOID VALVE SYSTEM

NOTE:
For the diagnostic procedure, refer to “DTC C1362 VDC CHANGE-OVER VALVE 2 (S)”. <Ref. to VDC(diag)-51, DTC C1362 VDC CHANGE-OVER VALVE 2 (S), Diagnostic Procedure with Diagnostic Trouble Code (DTC).>

S: DTC C1351 VDC CHANGE-OVER VALVE 1 (P)

NOTE:
For the diagnostic procedure, refer to “DTC C1362 VDC CHANGE-OVER VALVE 2 (S)”. <Ref. to VDC(diag)-51, DTC C1362 VDC CHANGE-OVER VALVE 2 (S), Diagnostic Procedure with Diagnostic Trouble Code (DTC).>

T: DTC C1352 VDC CHANGE-OVER VALVE 1 (S)

NOTE:
For the diagnostic procedure, refer to “DTC C1362 VDC CHANGE-OVER VALVE 2 (S)”. <Ref. to VDC(diag)-51, DTC C1362 VDC CHANGE-OVER VALVE 2 (S), Diagnostic Procedure with Diagnostic Trouble Code (DTC).>

U: DTC C1361 VDC CHANGE-OVER VALVE 2 (P)

NOTE:
For the diagnostic procedure, refer to “DTC C1362 VDC CHANGE-OVER VALVE 2 (S)”. <Ref. to VDC(diag)-51, DTC C1362 VDC CHANGE-OVER VALVE 2 (S), Diagnostic Procedure with Diagnostic Trouble Code (DTC).>

V: DTC C1362 VDC CHANGE-OVER VALVE 2 (S)

DTC DETECTING CONDITION:

- Defective harness connector
- Defective VDCH/U solenoid valve

TROUBLE SYMPTOM:

- ABS does not operate.
- EBD does not operate.
- VDC does not operate.
- Hill start assist does not operate.

WIRING DIAGRAM:

Vehicle dynamics control system <Ref. to WI(w/o HEV)-152, Vehicle Dynamics Control System.> <Ref. to WI(HEV)-216, Vehicle Dynamics Control System.>

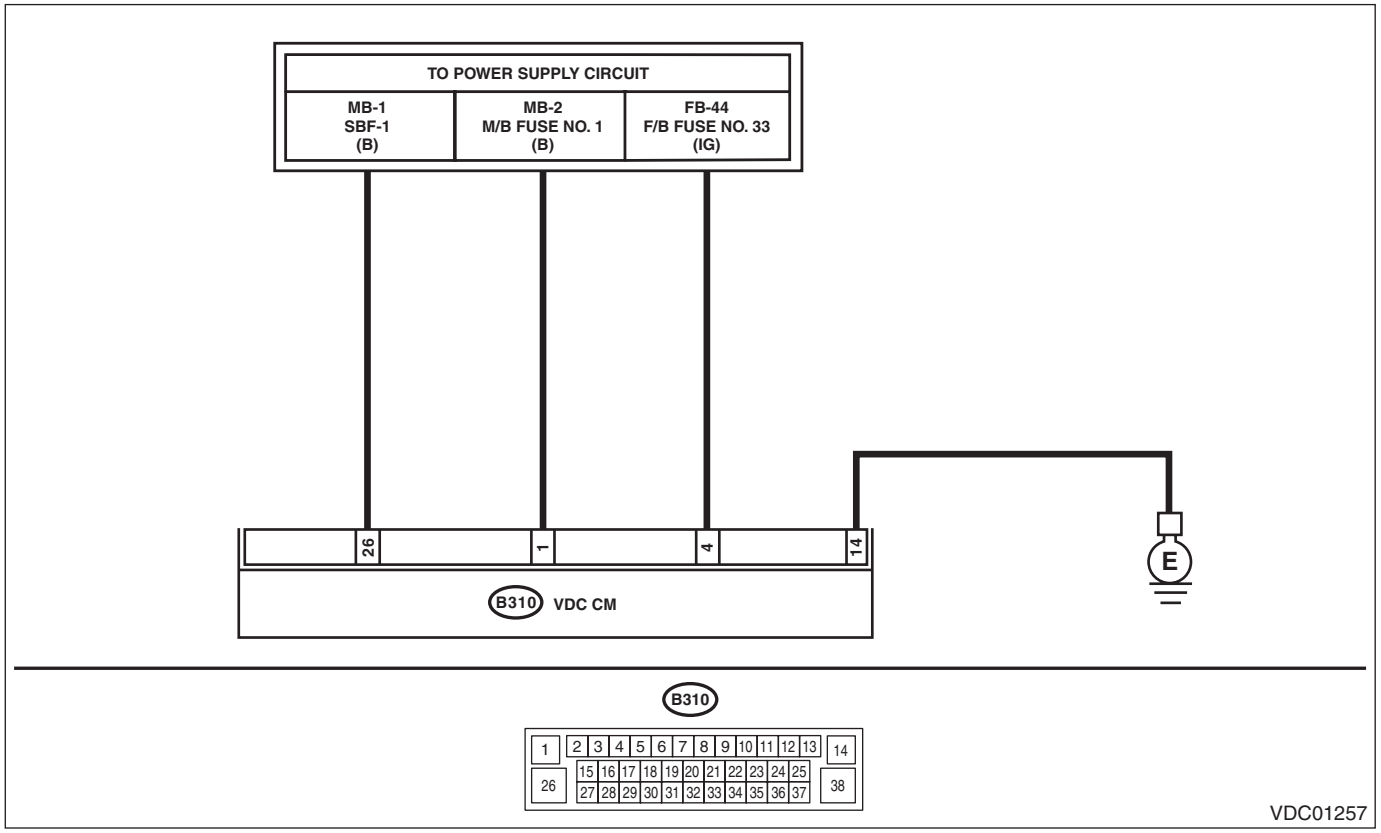

Step		Check	Yes	No
1	**CHECK VDCCM&H/U INPUT VOLTAGE.** 1) Turn the ignition switch to OFF. 2) Disconnect the connector from the VDCCM&H/U. 3) Run the engine at idle. 4) Measure the voltage between VDCCM&H/U connector and chassis ground. ***Connector & terminal*** ***(B310) No. 4 (+) — (B310) No. 14 (–):*** ***(B310) No. 1 (+) — (B310) No. 14 (–):*** ***(B310) No. 26 (+) — (B310) No. 14 (–):***	Is the voltage 10 — 15 V?	Go to step **2**.	Repair the power supply circuit.
2	**CHECK VDCCM&H/U GROUND CIRCUIT.** 1) Turn the ignition switch to OFF. 2) Measure the resistance between VDCCM&H/U connector and chassis ground. ***Connector & terminal*** ***(B310) No. 14 — Chassis ground:***	Is the resistance less than 10 Ω?	Go to step **3**.	Repair the VDCCM&H/U ground harness.

	Step	Check	Yes	No
3	**CHECK POOR CONTACT OF CONNECTORS.**	Is there poor contact of connector between generator, battery and VDCCM&H/U?	Repair the connector.	Go to step **4**.
4	**CHECK VDCCM&H/U.** 1) Connect all connectors. 2) Clear the memory. <Ref. to VDC(diag)-23, Clear Memory Mode.> 3) Perform the Inspection Mode. <Ref. to VDC(diag)-22, Inspection Mode.> 4) Read the DTC.	Is the same DTC displayed?	Replace the VDCCM&H/U. <Ref. to VDC-9, VDC Control Module and Hydraulic Control Unit (VDCCM&H/U).>	Go to step **5**.
5	**CHECK OTHER DTC DETECTION.**	Is any other DTC displayed?	Perform the diagnosis according to DTC. <Ref. to VDC(diag)-37, List of Diagnostic Trouble Code (DTC).>	Temporary poor contact occurs.

W: DTC C1411 ECU

DTC DETECTING CONDITION:
Defective VDCCM

TROUBLE SYMPTOM:
- ABS does not operate.
- EBD does not operate.
- VDC does not operate.
- Hill start assist does not operate.

WIRING DIAGRAM:
Vehicle dynamics control system <Ref. to WI(w/o HEV)-152, Vehicle Dynamics Control System.> <Ref. to WI(HEV)-216, Vehicle Dynamics Control System.>

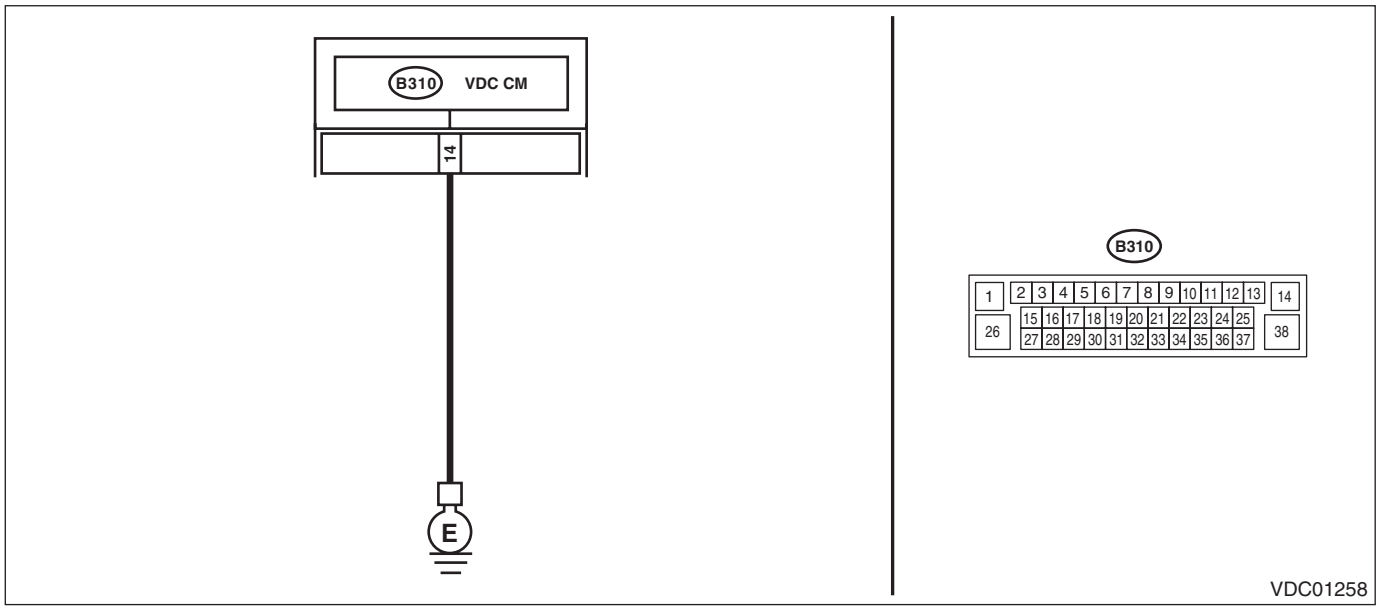

Step		Check	Yes	No
1	**CHECK VDCCM&H/U GROUND CIRCUIT.** 1) Turn the ignition switch to OFF. 2) Disconnect the connector from the VDCCM&H/U. 3) Measure the resistance between VDCCM&H/U and chassis ground. ***Connector & terminal*** ***(B310) No. 14 — Chassis ground:***	Is the resistance less than 10 Ω?	Go to step **2**.	Repair the VDCCM&H/U ground harness.
2	**CHECK POOR CONTACT OF CONNECTORS.**	Is there poor contact of the connector between the battery, ignition switch and VDCCM&H/U?	Repair the connector.	Go to step **3**.
3	**CHECK CAUSE OF SIGNAL NOISE.**	Are the radio wave devices and electronic components installed correctly?	Go to step **4**.	Install the radio wave devices and electronic components properly.
4	**CHECK CAUSE OF SIGNAL NOISE.**	Is there a noise source (such as an antenna) installed near the sensor harness and VDCCM?	Install the noise sources apart from sensor harness and VDCCM.	Go to step **5**.

	Step	Check	Yes	No
5	**CHECK VDCCM&H/U.** 1) Connect all connectors. 2) Clear the memory. <Ref. to VDC(diag)-23, Clear Memory Mode.> 3) Perform the Inspection Mode. <Ref. to VDC(diag)-22, Inspection Mode.> 4) Read the DTC.	Is the same DTC displayed?	Replace the VDCCM only. <Ref. to VDC-18, REPLACEMENT, VDC Control Module and Hydraulic Control Unit (VDCCM&H/U).>	Go to step **6**.
6	**CHECK OTHER DTC DETECTION.**	Is any other DTC displayed?	Perform the diagnosis according to DTC. <Ref. to VDC(diag)-37, List of Diagnostic Trouble Code (DTC).>	Temporary poor contact occurs.

X: DTC C1412 PARAMETER

DTC DETECTING CONDITION:
VDCCM parameter selection error
TROUBLE SYMPTOM:
- ABS does not operate.
- EBD does not operate.
- VDC does not operate.
- Hill start assist does not operate.

NOTE:
When the VDCCM or VDCCM&H/U is replaced, this DTC may be stored.

	Step	Check	Yes	No
1	**CHECK VDCCM&H/U IDENTIFICATION SYMBOL.** Check the identification symbol attached on the H/U. <Ref. to VDC-2, SPECIFICATION, General Description.>	Is the identification symbol correct?	Go to step **2**.	Replace the VDCCM&H/U. <Ref. to VDC-9, VDC Control Module and Hydraulic Control Unit (VDCCM&H/U).>
2	**CHECK PARAMETER SELECTED IN VDCCM.** <Ref. to VDC(diag)-18, PARAMETER CHECK, OPERATION, Subaru Select Monitor.>	Does the parameter registered in the VDCCM match the relevant vehicle?	Replace the VDCCM&H/U. <Ref. to VDC-9, VDC Control Module and Hydraulic Control Unit (VDCCM&H/U).>	Select and register the correct parameter. <Ref. to VDC(diag)-18, PARAMETER SELECTION, OPERATION, Subaru Select Monitor.>

Y: DTC C1413 POWER SUPPLY VOLT ERROR

DTC DETECTING CONDITION:
Improper VDCCM&H/U power supply voltage
TROUBLE SYMPTOM:
- ABS does not operate.
- EBD may not operate.
- VDC does not operate.
- Hill start assist does not operate.

NOTE:
Warning lights go off if voltage returns.
WIRING DIAGRAM:
Vehicle dynamics control system <Ref. to WI(w/o HEV)-152, Vehicle Dynamics Control System.> <Ref. to WI(HEV)-216, Vehicle Dynamics Control System.>

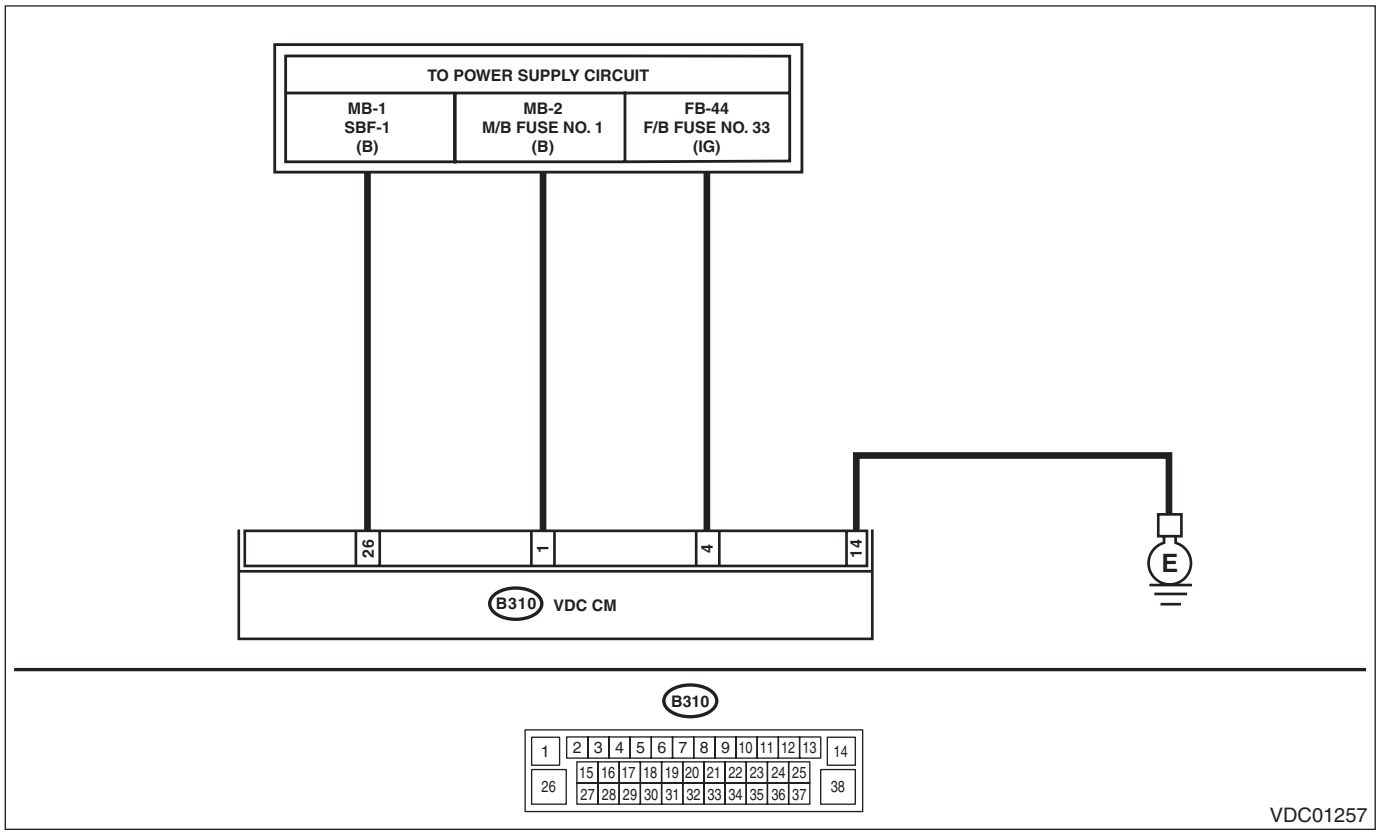

Step		Check	Yes	No
1	**CHECK GENERATOR.** 1) Start the engine. 2) Run the engine at idle after warming up. 3) Measure the voltage between generator terminal B and chassis ground. ***Terminals*** ***Generator terminal B (+) — Chassis ground (–):***	Is the voltage 10 — 15 V?	Go to step **2**.	Repair the generator.
2	**CHECK BATTERY TERMINAL.** Turn the ignition switch to OFF.	Are the positive and negative battery terminals clamped tightly?	Go to step **3**.	Tighten the terminal.

	Step	Check	Yes	No
3	**CHECK VDCCM&H/U INPUT VOLTAGE.** 1) Disconnect the connector from the VDCCM&H/U. 2) Run the engine at idle. 3) Operate devices such as headlights, air conditioner, rear defogger, etc. which produce an electrical load. 4) Measure the voltage between VDCCM&H/U connector and chassis ground. ***Connector & terminal*** ***(B310) No. 4 (+) — (B310) No. 14 (–):*** ***(B310) No. 1 (+) — (B310) No. 14 (–):*** ***(B310) No. 26 (+) — (B310) No. 14 (–):***	Is the voltage 10 — 15 V?	Go to step **4**.	Repair the power supply circuit.
4	**CHECK VDCCM&H/U GROUND CIRCUIT.** 1) Turn the ignition switch to OFF. 2) Measure the resistance between VDCCM&H/U connector and chassis ground. ***Connector & terminal*** ***(B310) No. 14 — Chassis ground:***	Is the resistance less than 10 Ω?	Go to step **5**.	Repair the VDCCM&H/U ground harness.
5	**CHECK POOR CONTACT OF CONNECTORS.**	Is there poor contact of connector between generator, battery and VDCCM&H/U?	Repair the connector.	Go to step **6**.
6	**CHECK VDCCM&H/U.** 1) Connect all connectors. 2) Clear the memory. <Ref. to VDC(diag)-23, Clear Memory Mode.> 3) Perform the Inspection Mode. <Ref. to VDC(diag)-22, Inspection Mode.> 4) Read the DTC.	Is the same DTC displayed?	Replace the VDCCM only. <Ref. to VDC-18, REPLACEMENT, VDC Control Module and Hydraulic Control Unit (VDCCM&H/U).>	Go to step **7**.
7	**CHECK OTHER DTC DETECTION.**	Is any other DTC displayed?	Perform the diagnosis according to DTC. <Ref. to VDC(diag)-37, List of Diagnostic Trouble Code (DTC).>	Temporary poor contact occurs.

Z: DTC C1421 ECM CONTROL SYSTEM

DTC DETECTING CONDITION:
ECM malfunctioning
TROUBLE SYMPTOM:
- ABS does not operate.
- VDC does not operate.
- Hill start assist does not operate.

	Step	Check	Yes	No
1	**CHECK COOPERATION CONTROL FEASIBILITY OF ECM USING SUBARU SELECT MONITOR.** 1) Start the engine, and run the engine at idle approximately 5 minutes. 2) Connect Subaru Select Monitor, and select “Current Data Display & Save”. 3) Check the «E/G Control Stop Flag» displayed on screen.	Is the «E/G Control Stop Flag» “1”?	Go to step **4**.	Go to step **2**.
2	**CHECK WARNING LIGHT.** Check whether the VDC warning light illuminates after driving for 1 minute or more at a speed of 10 km/h (6 MPH) or more.	Does the VDC warning light illuminate?	Go to step **3**.	VDC is normal. Perform the Clear Memory Mode. NOTE: DTC may be recorded if cranking is performed during driving.
3	**CHECK POOR CONTACT OF CONNECTORS.**	Is there poor contact of ECM connector?	Repair the connector.	Go to step **4**.
4	**CHECK ECM.** Refer to the basic diagnostic procedure of ENGINE (DIAGNOSTICS). <Ref. to EN(H4DO w/o HEV)(diag)-2, Basic Diagnostic Procedure.> <Ref. to EN(H4DO HEV)(diag)-2, Basic Diagnostic Procedure.>	Is ECM normal?	Go to step **5**.	Replace the ECM. <Ref. to FU(H4DO(w/o HEV))-106, Engine Control Module (ECM).> <Ref. to FU(H4DO(HEV))-85, Engine Control Module (ECM).>
5	**CHECK VDCCM&H/U.** 1) Connect all connectors. 2) Perform the Clear Memory Mode. <Ref. to VDC(diag)-23, Clear Memory Mode.> 3) Perform the Inspection Mode. <Ref. to VDC(diag)-22, Inspection Mode.> 4) Read the DTC.	Is the same DTC displayed?	Replace the VDCCM only. <Ref. to VDC-18, REPLACEMENT, VDC Control Module and Hydraulic Control Unit (VDCCM&H/U).>	Go to step **6**.
6	**CHECK OTHER DTC DETECTION.**	Is any other DTC displayed?	Perform the diagnosis according to DTC. <Ref. to VDC(diag)-37, List of Diagnostic Trouble Code (DTC).>	It results from a temporary noise interference.

AA:DTC C1422 VDC INTERRUPTION FOR ENGINE CONVENIENCE

DTC DETECTING CONDITION:
ECM prohibits the cooperation control.
TROUBLE SYMPTOM:
VDC does not operate.

NOTE:
- For the diagnostic procedure, refer to “DTC C1421 ECM CONTROL SYSTEM”. <Ref. to VDC(diag)-58, DTC C1421 ECM CONTROL SYSTEM, Diagnostic Procedure with Diagnostic Trouble Code (DTC).>
- Warning lights go off if the cooperation control of ECM returns.

AB:DTC C1423 DIFFERENT ECU SPECIFICATIONS

DTC DETECTING CONDITION:
Different control module specification
TROUBLE SYMPTOM:
- ABS does not operate.
- VDC does not operate.
- Hill start assist does not operate.

NOTE:
When parameter selection for VDCCM is improper, this DTC may be memorized.

	Step	Check	Yes	No
1	**CHECK VDCCM&H/U IDENTIFICATION SYMBOL.** Check the identification symbol attached on the H/U. <Ref. to VDC-2, SPECIFICATION, General Description.>	Is the identification symbol correct?	Go to step **2**.	Replace the VDCCM&H/U. <Ref. to VDC-9, VDC Control Module and Hydraulic Control Unit (VDCCM&H/U).>
2	**CHECK PARAMETER SELECTED IN VDCCM.** <Ref. to VDC(diag)-18, PARAMETER CHECK, OPERATION, Subaru Select Monitor.>	Does the parameter registered in the VDCCM match the relevant vehicle?	CVT model: Go to step **3**. MT model: Go to step **5**.	Select and register the correct parameter. <Ref. to VDC(diag)-18, PARAMETER SELECTION, OPERATION, Subaru Select Monitor.>
3	**CHECK TCM SPECIFICATION.** Check the TCM specification.	Is the specification of TCM same as vehicle specification?	Go to step **4**.	Replace the TCM. <Ref. to CVT(TR580)-139, Transmission Control Module (TCM).> <Ref. to CVT(TH58A)-156, Transmission Control Module (TCM).>
4	**CHECK CVT SYSTEM.** 1) Start the engine. 2) Check the DTC in CVT system.	Is DTC of CVT system displayed?	Perform the diagnosis according to DTC. <Ref. to CVT(w/o HEV)(diag)-31, List of Diagnostic Trouble Code (DTC).> <Ref. to CVT(HEV)(diag)-32, List of Diagnostic Trouble Code (DTC).>	Go to step **5**.
5	**CHECK ECM SPECIFICATION.** Check the ECM specification.	Is the specification of ECM same as vehicle specification?	Go to step **6**.	Replace the ECM. <Ref. to FU(H4DO(w/o HEV))-106, Engine Control Module (ECM).> <Ref. to FU(H4DO(HEV))-85, Engine Control Module (ECM).>

	Step	Check	Yes	No
6	**CHECK VDCCM&H/U.** 1) Connect all connectors. 2) Clear the memory. <Ref. to VDC(diag)-23, Clear Memory Mode.> 3) Perform the Inspection Mode. <Ref. to VDC(diag)-22, Inspection Mode.> 4) Read the DTC.	Is the same DTC displayed?	Replace the VDCCM only. <Ref. to VDC-18, REPLACEMENT, VDC Control Module and Hydraulic Control Unit (VDCCM&H/U).>	Go to step **7**.
7	**CHECK OTHER DTC DETECTION.**	Is any other DTC displayed?	Perform the diagnosis according to DTC. <Ref. to VDC(diag)-37, List of Diagnostic Trouble Code (DTC).>	It results from a temporary noise interference.

AC:DTC C1424 ECM FAILURE

DTC DETECTING CONDITION:
ECM malfunctioning
TROUBLE SYMPTOM:
- ABS does not operate.
- VDC does not operate.
- Hill start assist does not operate.

	Step	Check	Yes	No
1	**CHECK ECM.** 1) Start the engine. 2) Check DTC of ECM.	Is DTC displayed?	Perform the diagnosis according to DTC.	Go to step **2**.
2	**CHECK VDCCM&H/U.** 1) Connect all connectors. 2) Clear the memory. <Ref. to VDC(diag)-23, Clear Memory Mode.> 3) Perform the Inspection Mode. <Ref. to VDC(diag)-22, Inspection Mode.> 4) Read the DTC.	Is the same DTC displayed?	Replace the VDCCM only. <Ref. to VDC-18, REPLACEMENT, VDC Control Module and Hydraulic Control Unit (VDCCM&H/U).>	Go to step **3**.
3	**CHECK OTHER DTC DETECTION.**	Is any other DTC displayed?	Perform the diagnosis according to DTC. <Ref. to VDC(diag)-37, List of Diagnostic Trouble Code (DTC).>	It results from a temporary noise interference.

AD:DTC C1431 AT ABNORMAL

DTC DETECTING CONDITION:
Defective TCM
TROUBLE SYMPTOM:
- ABS does not operate.
- VDC does not operate.
- Hill start assist does not operate.

	Step	Check	Yes	No
1	**CHECK TCM.** 1) Start the engine. 2) Check DTC of TCM.	Is DTC displayed?	Perform the diagnosis according to DTC.	Go to step **2**.
2	**CHECK VDCCM&H/U.** 1) Turn the ignition switch to OFF. 2) After turning the ignition switch to ON for approx. 10 seconds, turn it to OFF. 3) Turn the ignition switch to ON again. 4) Clear the memory. <Ref. to VDC(diag)-23, Clear Memory Mode.> 5) Perform the Inspection Mode. <Ref. to VDC(diag)-22, Inspection Mode.> 6) Read the DTC.	Is the same DTC displayed?	Replace the VDCCM only. <Ref. to VDC-18, REPLACEMENT, VDC Control Module and Hydraulic Control Unit (VDCCM&H/U).>	Go to step **3**.
3	**CHECK OTHER DTC DETECTION.**	Is any other DTC displayed?	Perform the diagnosis according to DTC. <Ref. to VDC(diag)-37, List of Diagnostic Trouble Code (DTC).>	It results from a temporary noise interference.

AE:DTC C1432 DIFFERENT ECU SPECIFICATIONS

NOTE:
For the diagnostic procedure, refer to “DTC C1423 DIFFERENT ECU SPECIFICATIONS”. <Ref. to VDC(diag)-60, DTC C1423 DIFFERENT ECU SPECIFICATIONS, Diagnostic Procedure with Diagnostic Trouble Code (DTC).>

AF:DTC C1451 HPCM CONTROL SYSTEM

DTC DETECTING CONDITION:
Defective HPCM
TROUBLE SYMPTOM:
- ABS does not operate.
- VDC does not operate.
- Hill start assist does not operate.

	Step	Check	Yes	No
1	**CHECK COOPERATION CONTROL FEASIBILITY OF HPCM USING SUBARU SELECT MONITOR.** 1) Start the engine, and run the engine at idle approximately 5 minutes. 2) Connect Subaru Select Monitor, and select “Current Data Display & Save”. 3) Check the «HPCM Control Stop Flag» displayed on screen.	Is the «HPCM Control Stop Flag» “1”?	Go to step **4**.	Go to step **2**.
2	**CHECK WARNING LIGHT.** Check whether the VDC warning light illuminates after driving for 1 minute or more at a speed of 10 km/h (6 MPH) or more.	Does the VDC warning light illuminate?	Go to step **3**.	VDC is normal. Perform the Clear Memory Mode. NOTE: DTC may be recorded if cranking is performed during driving.
3	**CHECK POOR CONTACT OF CONNECTORS.**	Is there poor contact of HPCM connector?	Repair the connector.	Go to step **4**.
4	**CHECK HPCM.** Refer to the basic diagnostic procedure for HYBRID ELECTRIC VEHICLE (DIAGNOSTICS). <Ref. to HEV(diag)-2, Basic Diagnostic Procedure.>	Is HPCM normal?	Go to step **5**.	Replace the HPCM. <Ref. to HEV-37, Hybrid Powertrain Control Module.>
5	**CHECK VDCCM&H/U.** 1) Connect all connectors. 2) Perform the Clear Memory Mode. <Ref. to VDC(diag)-23, Clear Memory Mode.> 3) Perform the Inspection Mode. <Ref. to VDC(diag)-22, Inspection Mode.> 4) Read the DTC.	Is the same DTC displayed?	Replace the VDCCM only. <Ref. to VDC-18, REPLACEMENT, VDC Control Module and Hydraulic Control Unit (VDCCM&H/U).>	Go to step **6**.
6	**CHECK OTHER DTC DETECTION.**	Is any other DTC displayed?	Perform the diagnosis according to DTC. <Ref. to VDC(diag)-37, List of Diagnostic Trouble Code (DTC).>	It results from a temporary noise interference.

AG:DTC C1452 HPCM INTERRUPTED DUE TO EGI REASON

DTC DETECTING CONDITION:
HPCM prohibits the cooperation control.
TROUBLE SYMPTOM:
VDC does not operate.

NOTE:
- For the diagnostic procedure, refer to “DTC C1451 HPCM CONTROL SYSTEM”. <Ref. to VDC(diag)-64, DTC C1451 HPCM CONTROL SYSTEM, Diagnostic Procedure with Diagnostic Trouble Code (DTC).>
- Warning lights go off if the cooperation control of HPCM returns.

AH:DTC C1511 VALVE RELAY

DTC DETECTING CONDITION:
Defective valve relay

TROUBLE SYMPTOM:
- ABS does not operate.
- EBD does not operate.
- VDC does not operate.
- Hill start assist does not operate.

WIRING DIAGRAM:
Vehicle dynamics control system <Ref. to WI(w/o HEV)-152, Vehicle Dynamics Control System.> <Ref. to WI(HEV)-216, Vehicle Dynamics Control System.>

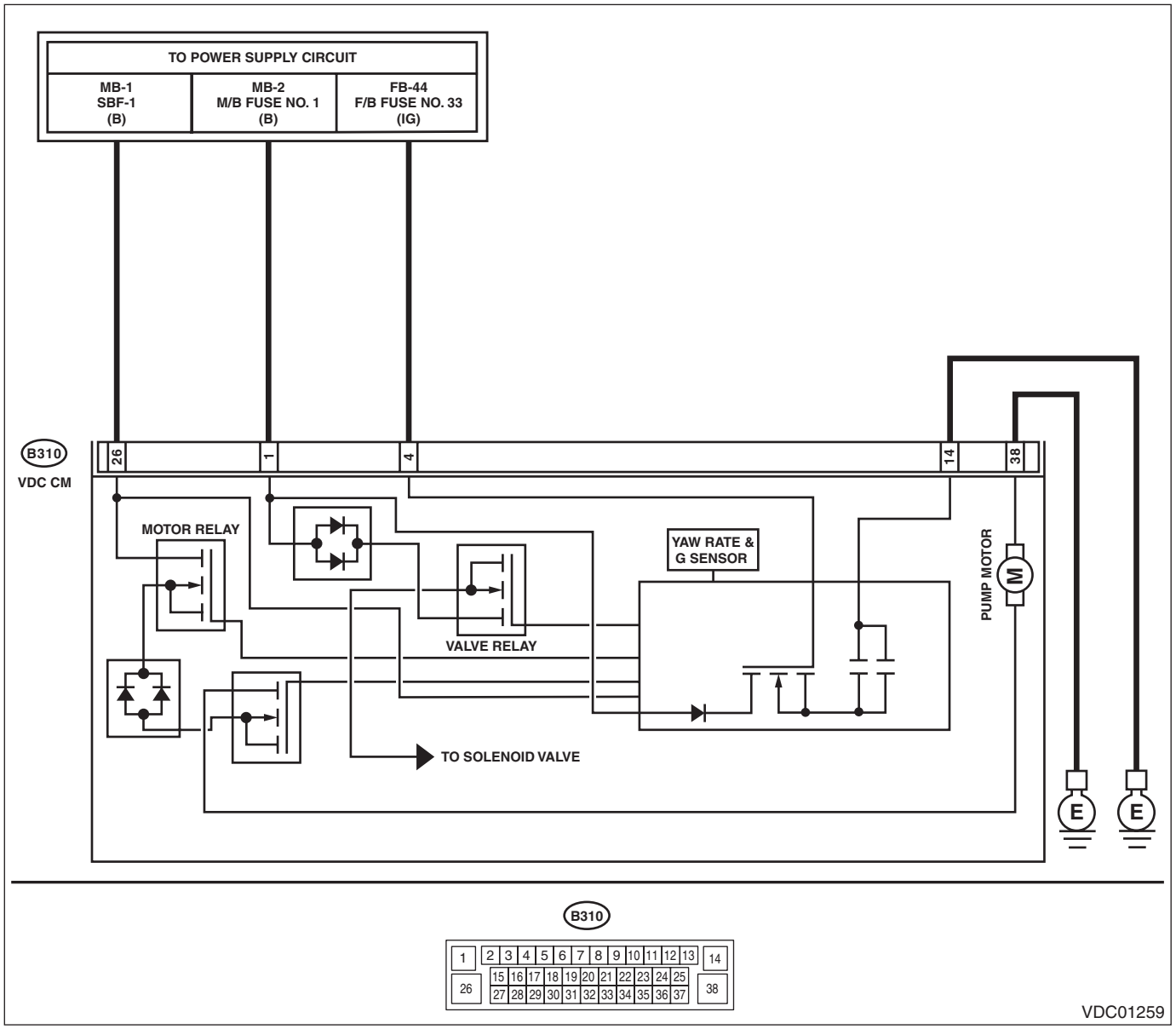

	Step	Check	Yes	No
1	**CHECK VDCCM&H/U INPUT VOLTAGE.** 1) Turn the ignition switch to OFF. 2) Disconnect the connector from the VDCCM&H/U. 3) Run the engine at idle. 4) Measure the voltage between VDCCM&H/U connector and chassis ground. ***Connector & terminal*** ***(B310) No. 1 (+) — Chassis ground (–):*** ***(B310) No. 4 (+) — Chassis ground (–):***	Is the voltage 10 — 15 V?	Go to step **2**.	Repair the power supply circuit.
2	**CHECK VDCCM&H/U INPUT VOLTAGE.** Calculate the voltage difference measured in step 1. A: (B310) No. 1 (+) — Chassis ground (–): B: (B310) No. 4 (+) — Chassis ground (–):	Is the voltage difference between A and B 2 V or more?	Repair the power supply circuit.	Go to step **3**.
3	**CHECK VDCCM&H/U GROUND CIRCUIT.** 1) Turn the ignition switch to OFF. 2) Measure the resistance between VDCCM&H/U connector and chassis ground. ***Connector & terminal*** ***(B310) No. 14 — Chassis ground:***	Is the resistance less than 10 Ω?	Go to step **4**.	Repair the VDCCM&H/U ground harness.
4	**CHECK POOR CONTACT OF CONNECTORS.**	Is there poor contact of connector between generator, battery and VDCCM&H/U?	Repair the connector.	Go to step **5**.
5	**CHECK VDCCM&H/U.** 1) Connect all connectors. 2) Clear the memory. <Ref. to VDC(diag)-23, Clear Memory Mode.> 3) Perform the Inspection Mode. <Ref. to VDC(diag)-22, Inspection Mode.> 4) Read the DTC.	Is the same DTC displayed?	Replace the VDCCM only. <Ref. to VDC-18, REPLACEMENT, VDC Control Module and Hydraulic Control Unit (VDCCM&H/U).>	Go to step **6**.
6	**CHECK OTHER DTC DETECTION.**	Is any other DTC displayed?	Perform the diagnosis according to DTC. <Ref. to VDC(diag)-37, List of Diagnostic Trouble Code (DTC).>	Temporary poor contact occurs.

AI: DTC C1512 VALVE SYSTEM

NOTE:
For the diagnostic procedure, refer to “DTC C1362 VDC CHANGE-OVER VALVE 2 (S)”. <Ref. to VDC(diag)-76, DTC C1542 CLUTCH ON FAULT, Diagnostic Procedure with Diagnostic Trouble Code (DTC).>

AJ:DTC C1521 MOTOR RELAY

DTC DETECTING CONDITION:

- Defective motor and motor relay
- Defective harness connector

TROUBLE SYMPTOM:

- ABS does not operate.
- VDC does not operate.
- EBD may not operate.
- Hill start assist does not operate.

WIRING DIAGRAM:

Vehicle dynamics control system <Ref. to WI(w/o HEV)-152, Vehicle Dynamics Control System.> <Ref. to WI(HEV)-216, Vehicle Dynamics Control System.>

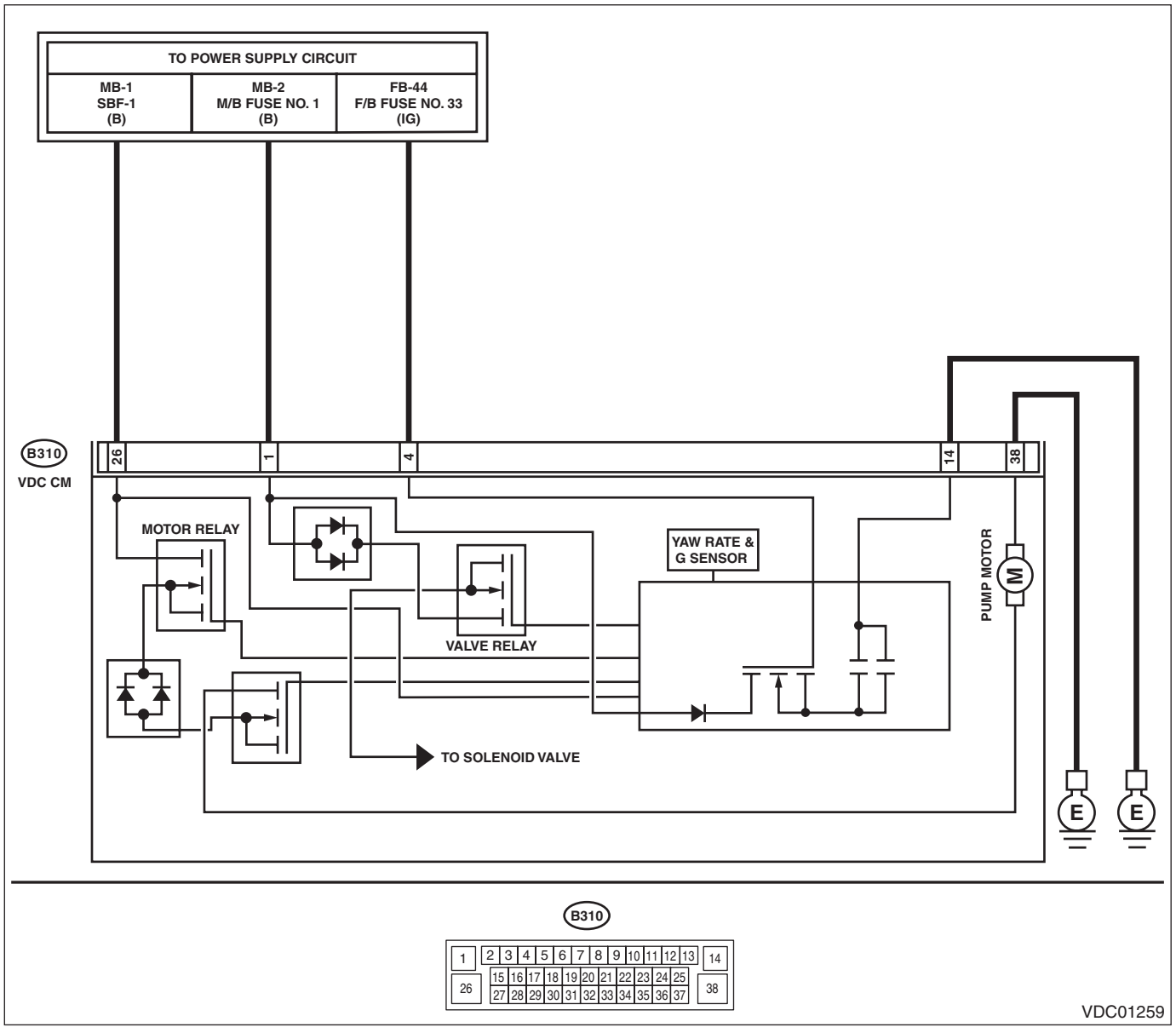

	Step	Check	Yes	No
1	**CHECK VDCCM&H/U INPUT VOLTAGE.** 1) Turn the ignition switch to OFF. 2) Disconnect the connector from the VDCCM&H/U. 3) Turn the ignition switch to ON. 4) Measure the voltage between VDCCM&H/U connector and chassis ground. ***Connector & terminal*** ***(B310) No. 4 (+) — Chassis ground (–):*** ***(B310) No. 26 (+) — Chassis ground (–):***	Is the voltage 10 — 15 V?	Go to step **2**.	Repair the VDCCM&H/U power supply circuit.
2	**CHECK VDCCM&H/U INPUT VOLTAGE.** Calculate the voltage difference measured in step 1. A: (B310) No. 4 (+) — Chassis ground (–): B: (B310) No. 26 (+) — Chassis ground (–):	Is the voltage difference between A and B 2 V or more?	Repair the power supply circuit.	Go to step **3**.
3	**CHECK INSTALLATION OF VDCCM&H/U GROUND.**	Is the VDCCM&H/U ground terminal installation bolt tightened to 13 N·m (1.3 kgf-m, 9.6 ft-lb)?	Go to step **4**.	Tighten the VDCCM&H/U ground terminal installation bolt.
4	**CHECK VDCCM&H/U GROUND CIRCUIT.** 1) Turn the ignition switch to OFF. 2) Measure the resistance between VDCCM&H/U connector and chassis ground. ***Connector & terminal*** ***(B310) No. 14 — Chassis ground:*** ***(B310) No. 38 — Chassis ground:***	Is the resistance less than 10 Ω?	Go to step **5**.	Repair the VDCCM&H/U ground harness.
5	**CHECK VDCCM&H/U MOTOR RELAY.** Measure the resistance between VDCCM&H/U terminals. ***Terminals*** ***No. 26 — No. 38:***	Is the resistance 1 MΩ or more?	Go to step **6**.	Replace the VDCCM&H/U. <Ref. to VDC-9, VDC Control Module and Hydraulic Control Unit (VDCCM&H/U).>
6	**CHECK POOR CONTACT OF CONNECTORS.** Turn the ignition switch to OFF.	Is there poor contact of connector between generator, battery and VDCCM&H/U?	Repair the connector.	Go to step **7**.
7	**CHECK VDCCM&H/U.** 1) Connect all connectors. 2) Clear the memory. <Ref. to VDC(diag)-23, Clear Memory Mode.> 3) Perform the Inspection Mode. <Ref. to VDC(diag)-22, Inspection Mode.> 4) Read the DTC.	Is the same DTC displayed?	Replace the VDCCM&H/U. <Ref. to VDC-9, VDC Control Module and Hydraulic Control Unit (VDCCM&H/U).>	Go to step **8**.

Step		Check	Yes	No
8	CHECK OTHER DTC DETECTION.	Is any other DTC displayed?	Perform the diagnosis according to DTC. <Ref. to VDC(diag)-37, List of Diagnostic Trouble Code (DTC).>	Temporary poor contact occurs. NOTE: Though the ABS warning light, and the VDC warning light & VDC indicator light may remain lit at this point, this is normal. Drive the vehicle at 40 km/h (25 MPH) or more in order to turn off the ABS warning light, and the VDC warning light & VDC indicator light. Be sure to drive the vehicle and check that the warning light goes off.

AK:DTC C1531 BLS OFF FAULT

DTC DETECTING CONDITION:
Defective stop light switch
TROUBLE SYMPTOM:
- ABS does not operate.
- VDC does not operate.
- Hill start assist does not operate.

WIRING DIAGRAM:
- Gasoline engine model

Stop light system <Ref. to WI(w/o HEV)-145, Stop Light System.>

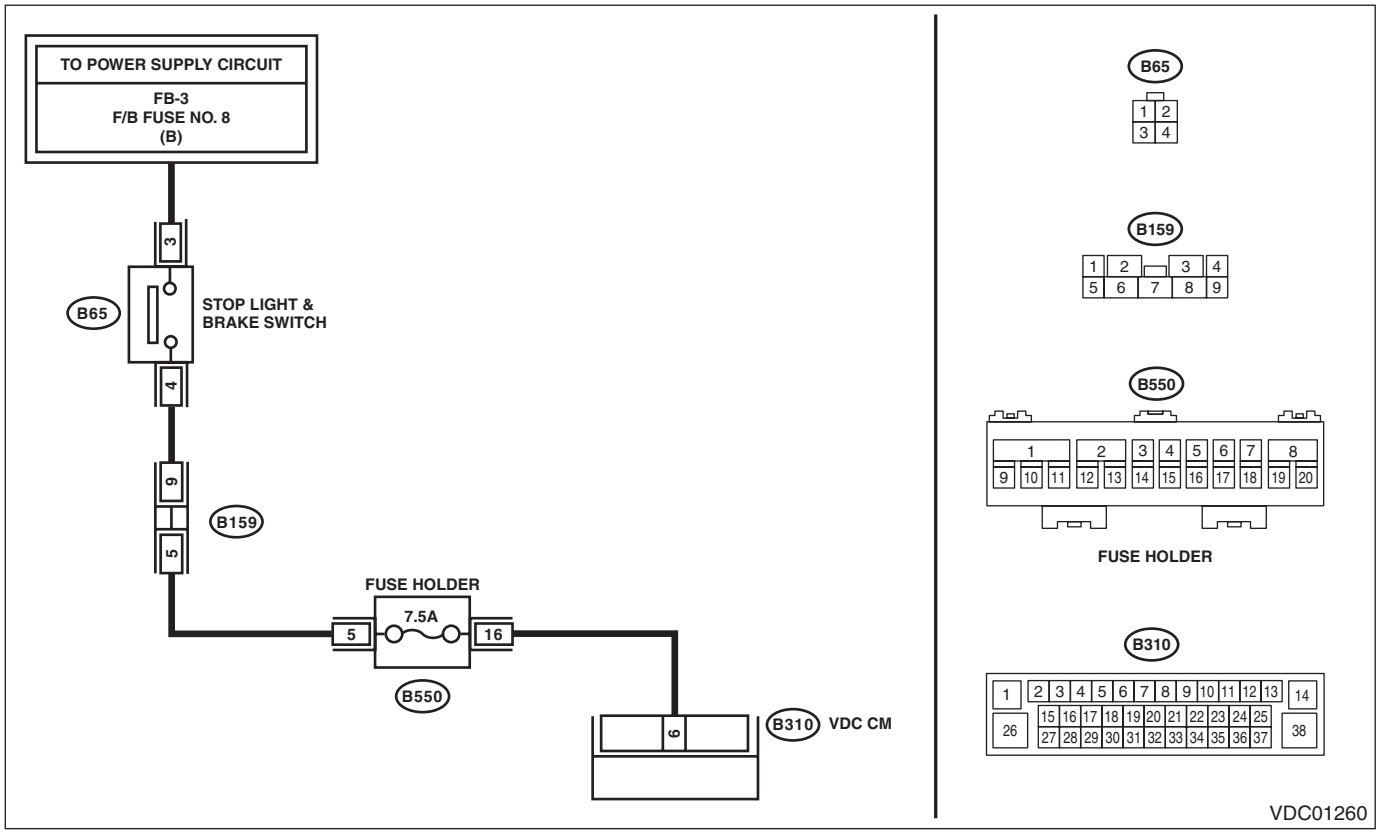

• HEV model

Stop light system <Ref. to WI(HEV)-208, Stop Light System.>

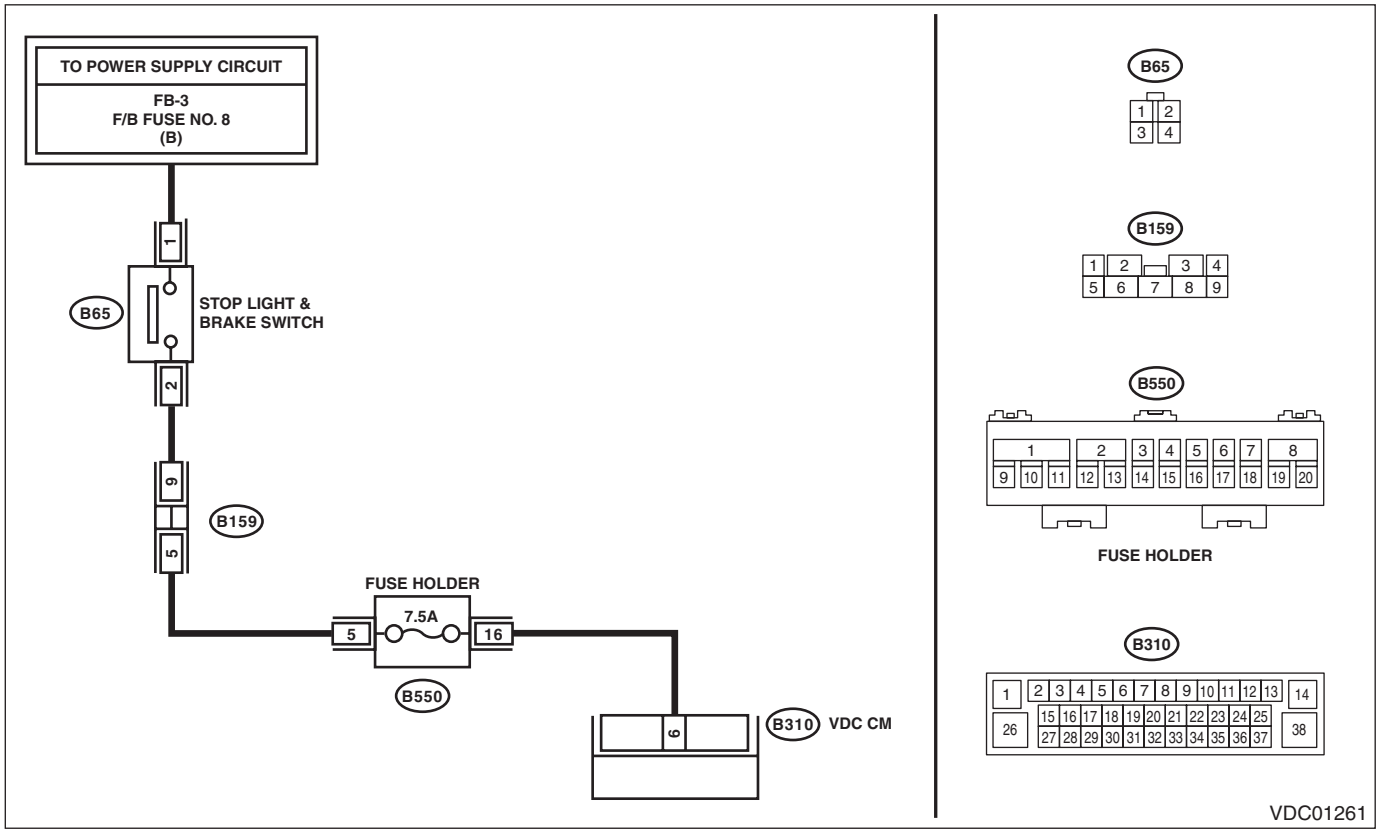

Step		Check	Yes	No
1	**CHECK STOP LIGHT SWITCH.** Check the stop light switch. <Ref. to BR-73, INSTALLATION, Stop Light Switch.>	Is the installation position of the stop light switch correct?	Go to step **2**.	Adjust the installation position of the stop light switch. <Ref. to BR-73, INSTALLATION, Stop Light Switch.>
2	**CHECK STOP LIGHT SWITCH.** 1) Turn the ignition switch to OFF. 2) Disconnect the stop light switch connector. 3) Measure the resistance of stop light switch terminals. ***Connector & terminal*** ***Gasoline engine model*** ***(B65) No. 3 — No. 4:*** ***HEV model*** ***(B65) No. 1 — No. 2:***	Is the resistance 1 Ω or less when the switch is ON (when pedal is depressed)?	Go to step **3**.	Replace the stop light switch. <Ref. to BR-72, Stop Light Switch.>
3	**CHECK STOP LIGHT POWER SUPPLY.** Measure the voltage between stop light switch terminal and chassis ground. ***Connector & terminal*** ***Gasoline engine model*** ***(B65) No. 3 (+) — Chassis ground (–):*** ***HEV model*** ***(B65) No. 1 (+) — Chassis ground (–):***	Is the voltage 10 — 15 V?	Go to step **4**.	Repair the stop light power supply circuit.

	Step	Check	Yes	No
4	**CHECK STOP LIGHT SWITCH HARNESS.** 1) Disconnect the connector from the VDCCM&H/U. 2) Measure the resistance between VDCCM&H/U and stop light switch. ***Connector & terminal*** ***Gasoline engine model*** ***(B65) No. 4 — (B310) No. 6:*** ***HEV model*** ***(B65) No. 2 — (B310) No. 6:***	Is the resistance less than 1 Ω?	Go to step **5**.	Repair the stop light switch circuit.
5	**CHECK POOR CONTACT OF CONNECTORS.**	Is there poor contact of connector between stop light switch and VDCCM&H/U?	Repair the connector.	Go to step **6**.
6	**CHECK VDCCM&H/U.** 1) Connect all connectors. 2) Clear the memory. <Ref. to VDC(diag)-23, Clear Memory Mode.> 3) Perform the Inspection Mode. <Ref. to VDC(diag)-22, Inspection Mode.> 4) Read the DTC.	Is the same DTC displayed?	Replace the VDCCM only. <Ref. to VDC-18, REPLACEMENT, VDC Control Module and Hydraulic Control Unit (VDCCM&H/U).>	Go to step **7**.
7	**CHECK OTHER DTC DETECTION.**	Is any other DTC displayed?	Perform the diagnosis according to DTC. <Ref. to VDC(diag)-37, List of Diagnostic Trouble Code (DTC).>	Temporary poor contact occurs.

AL:DTC C1532 BLS ON FAULT

DTC DETECTING CONDITION:

Defective stop light switch

TROUBLE SYMPTOM:

- ABS does not operate.
- VDC does not operate.
- Hill start assist does not operate.

WIRING DIAGRAM:

- Gasoline engine model

Stop light system <Ref. to WI(w/o HEV)-145, Stop Light System.>

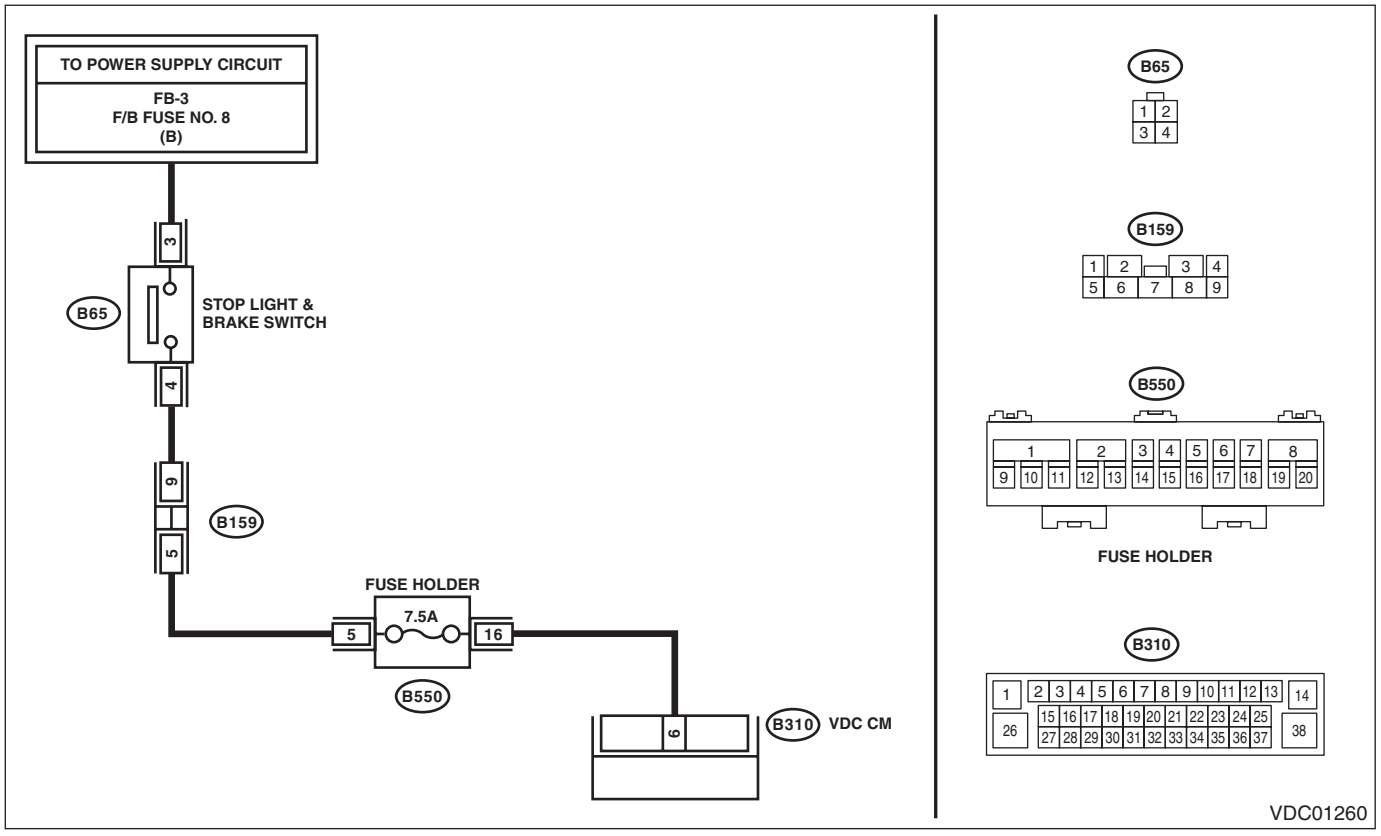

- HEV model

Stop light system <Ref. to WI(HEV)-208, Stop Light System.>

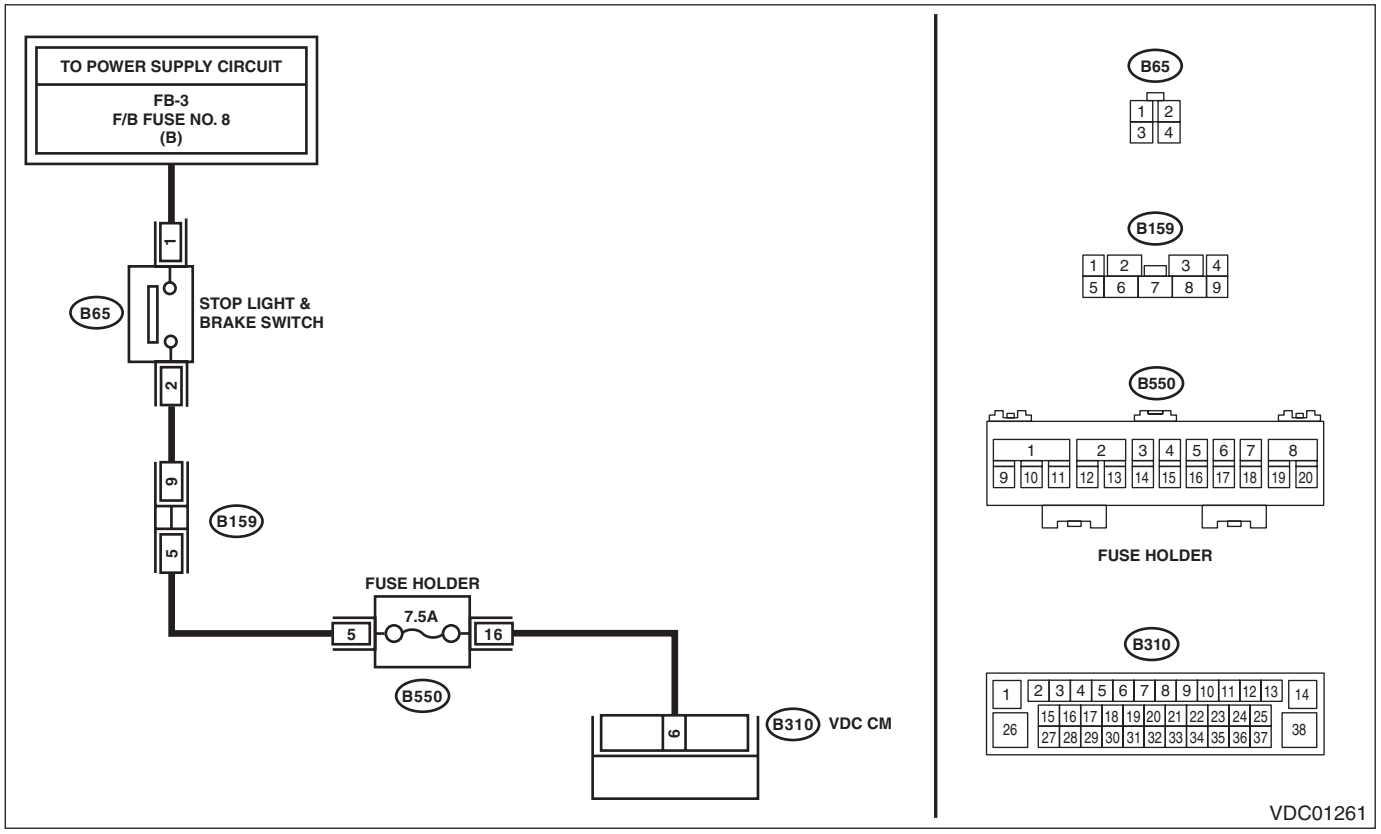

Step		Check	Yes	No
1	**CHECK STOP LIGHT SWITCH.** 1) Turn the ignition switch to OFF. 2) Disconnect the stop light switch connector. 3) Measure the resistance of stop light switch terminals. ***Connector & terminal*** ***Gasoline engine model*** ***(B65) No. 3 — No. 4:*** ***HEV model*** ***(B65) No. 1 — No. 2:***	Is the resistance 1 MΩ or more when switch is OFF (when pedal is not depressed)?	Go to step **2**.	Replace the stop light switch. <Ref. to BR-72, Stop Light Switch.>
2	**CHECK STOP LIGHT SWITCH HARNESS.** 1) Disconnect the connector from the VDCCM&H/U. 2) Measure the resistance between VDCCM&H/U connector and chassis ground. ***Connector & terminal*** ***(B310) No. 6 — Chassis ground:***	Is the resistance less than 1 MΩ?	Go to step **3**.	Repair the stop light switch circuit.
3	**INTERVIEW CUSTOMERS.** Make sure that the operation was performed in which accelerator pedal and brake pedal were depressed simultaneously (with depressing brake pedal with left foot).	Were the acceleration pedal and brake pedal depressed simultaneously?	System is normal. (DTC may be recorded while brake is applied during driving.)	Go to step **4**.

	Step	Check	Yes	No
4	**CHECK VDCCM&H/U.** 1) Connect all connectors. 2) Clear the memory. <Ref. to VDC(diag)-23, Clear Memory Mode.> 3) Perform the Inspection Mode. <Ref. to VDC(diag)-22, Inspection Mode.> 4) Read the DTC.	Is the same DTC displayed?	Replace the VDCCM only. <Ref. to VDC-18, REPLACEMENT, VDC Control Module and Hydraulic Control Unit (VDCCM&H/U).>	Go to step **5**.
5	**CHECK OTHER DTC DETECTION.**	Is any other DTC displayed?	Perform the diagnosis according to DTC. <Ref. to VDC(diag)-37, List of Diagnostic Trouble Code (DTC).>	Temporary poor contact occurs.

AM:DTC C1541 CLUTCH OFF FAULT

NOTE:
For the diagnostic procedure, refer to “DTC C1542 CLUTCH ON FAULT”. <Ref. to VDC(diag)-76, DTC C1542 CLUTCH ON FAULT, Diagnostic Procedure with Diagnostic Trouble Code (DTC).>

AN:DTC C1542 CLUTCH ON FAULT

DTC DETECTING CONDITION:
Abnormal clutch signal
TROUBLE SYMPTOM:
Hill start assist does not operate.

NOTE:
Depending on the user clutch operation patterns, the hill start assist warning light may illuminate for a while, and then go off.
Illumination condition:
While the vehicle speed is 10 km/h (6 MPH) or above, and the clutch switch signal ON (depressed) condition continues five minutes or more, if the vehicle speed lowers to 10 km/h (6 MPH) or below, the module judges as abnormal (clutch switch stuck ON), and then turns on the warning light.
Turning off condition:
If the clutch switch signal OFF (foot released) condition continues for 2 second, the module turns off the warning light.
The hill start assist function does not operate, while the warning light illuminates.
WIRING DIAGRAM:
Engine electrical system <Ref. to WI(w/o HEV)-74, Engine Electrical System.>
CAN communication system <Ref. to WI(w/o HEV)-46, CAN Communication System.>

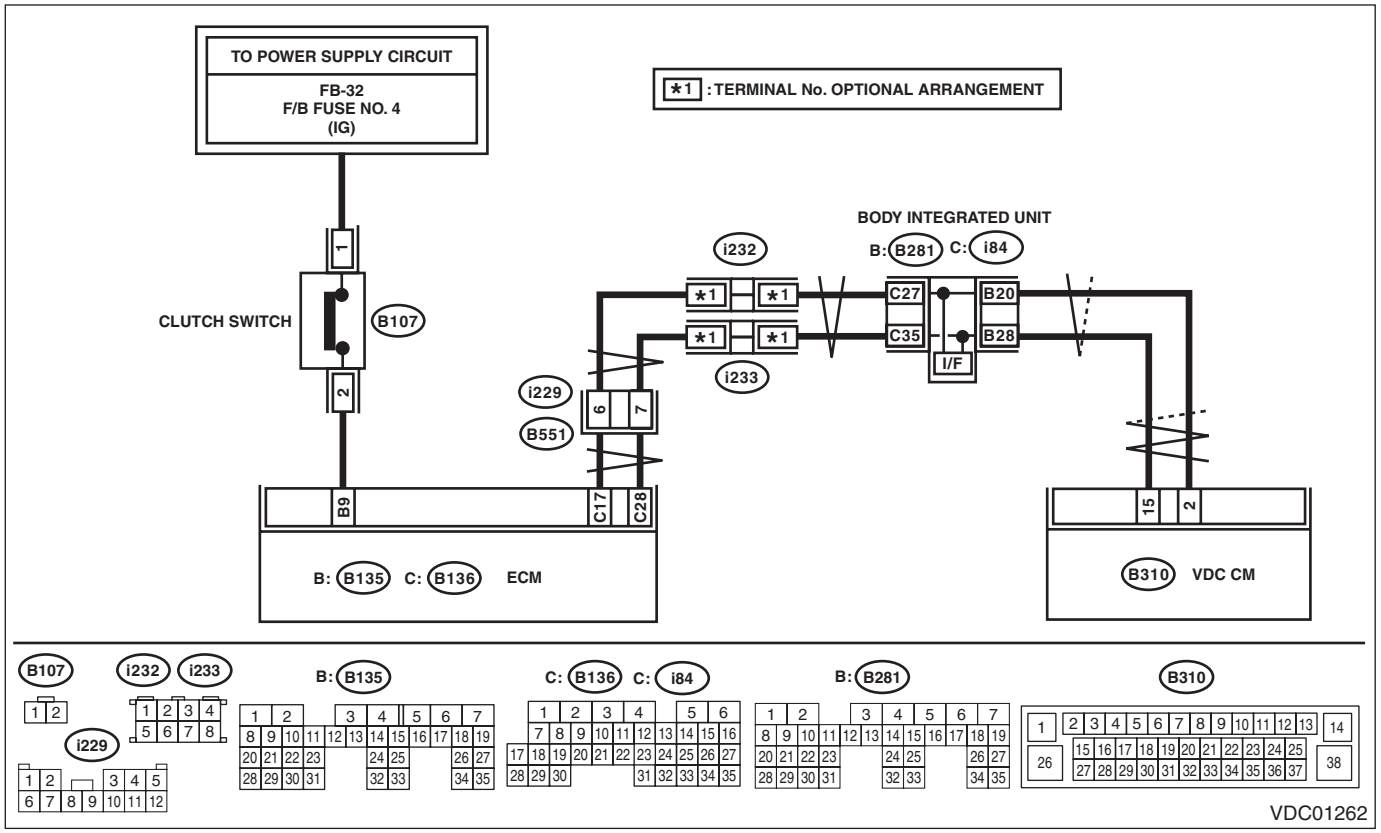

Step		Check	Yes	No
1	**CHECK LAN SYSTEM.** Perform the diagnosis for LAN system. <Ref. to LAN(w/o HEV)(diag)-2, Basic Diagnostic Procedure.>	Is there any fault in LAN system?	Perform the diagnosis according to DTC for LAN system. <Ref. to LAN(w/o HEV)(diag)-50, List of Diagnostic Trouble Code (DTC).>	Go to step **2**.

	Step	Check	Yes	No
2	**CHECK CLUTCH SIGNAL USING SUBARU SELECT MONITOR.** 1) Select “Current Data Display & Save” on the Subaru Select Monitor. <Ref. to VDC(diag)-16, READ CURRENT DATA, OPERATION, Subaru Select Monitor.> 2) Read the «Clutch Switch» displayed on display.	Is “OFF” displayed when the clutch pedal is not depressed, and is “ON” displayed when depressed?	Go to step **5**.	Go to step **3**.
3	**CHECK CLUTCH SIGNAL OF ECM USING SUBARU SELECT MONITOR.** 1) Select “Current Data Display & Save” on Subaru Select Monitor. <Ref. to EN(H4DO w/o HEV)(diag)-42, READ FREEZE FRAME DATA FOR ENGINE (OBD MODE), OPERATION, Subaru Select Monitor.> 2) Read the «Clutch Switch» displayed on display.	Is “OFF” displayed when the clutch pedal is not depressed, and is “ON” displayed when depressed?	Go to step **5**.	Go to step **4**.
4	**CHECK HARNESS BETWEEN ECM AND CLUTCH SWITCH.** 1) Turn the ignition switch to OFF. 2) Disconnect the connectors from ECM and clutch switch. 3) Measure the resistance of harness between ECM and clutch switch connector. ***Connector & terminal*** ***(B135) No. 9 — (B107) No. 2:***	Is the resistance less than 1 Ω?	Repair the power supply circuit of clutch switch. Or replace the clutch switch. <Ref. to CL-28, Clutch Switch.>	Repair the harness between ECM and clutch switch connector.
5	**CHECK VDCCM&H/U.** 1) Connect all connectors. 2) Clear the memory. <Ref. to VDC(diag)-23, Clear Memory Mode.> 3) Perform the Inspection Mode. <Ref. to VDC(diag)-22, Inspection Mode.> 4) Read the DTC.	Is the same DTC displayed?	Replace the VDCCM&H/U. <Ref. to VDC-9, VDC Control Module and Hydraulic Control Unit (VDCCM&H/U).>	Go to step **6**.
6	**CHECK OTHER DTC DETECTION.**	Is any other DTC displayed?	Perform the diagnosis according to DTC. <Ref. to VDC(diag)-37, List of Diagnostic Trouble Code (DTC).>	Temporary poor contact occurs.

AO:DTC C1561 REVERSE OFF FAULT

NOTE:
For the diagnostic procedure, refer to “DTC C1562 REVERSE ON FAULT”. <Ref. to VDC(diag)-78, DTC C1562 REVERSE ON FAULT, Diagnostic Procedure with Diagnostic Trouble Code (DTC).>

AP:DTC C1562 REVERSE ON FAULT

DTC DETECTING CONDITION:
Abnormal reverse signal
TROUBLE SYMPTOM:
Hill start assist does not operate.
WIRING DIAGRAM:
Back-up light system <Ref. to WI(w/o HEV)-45, Back-up Light System.>
CAN communication system <Ref. to WI(w/o HEV)-46, CAN Communication System.>

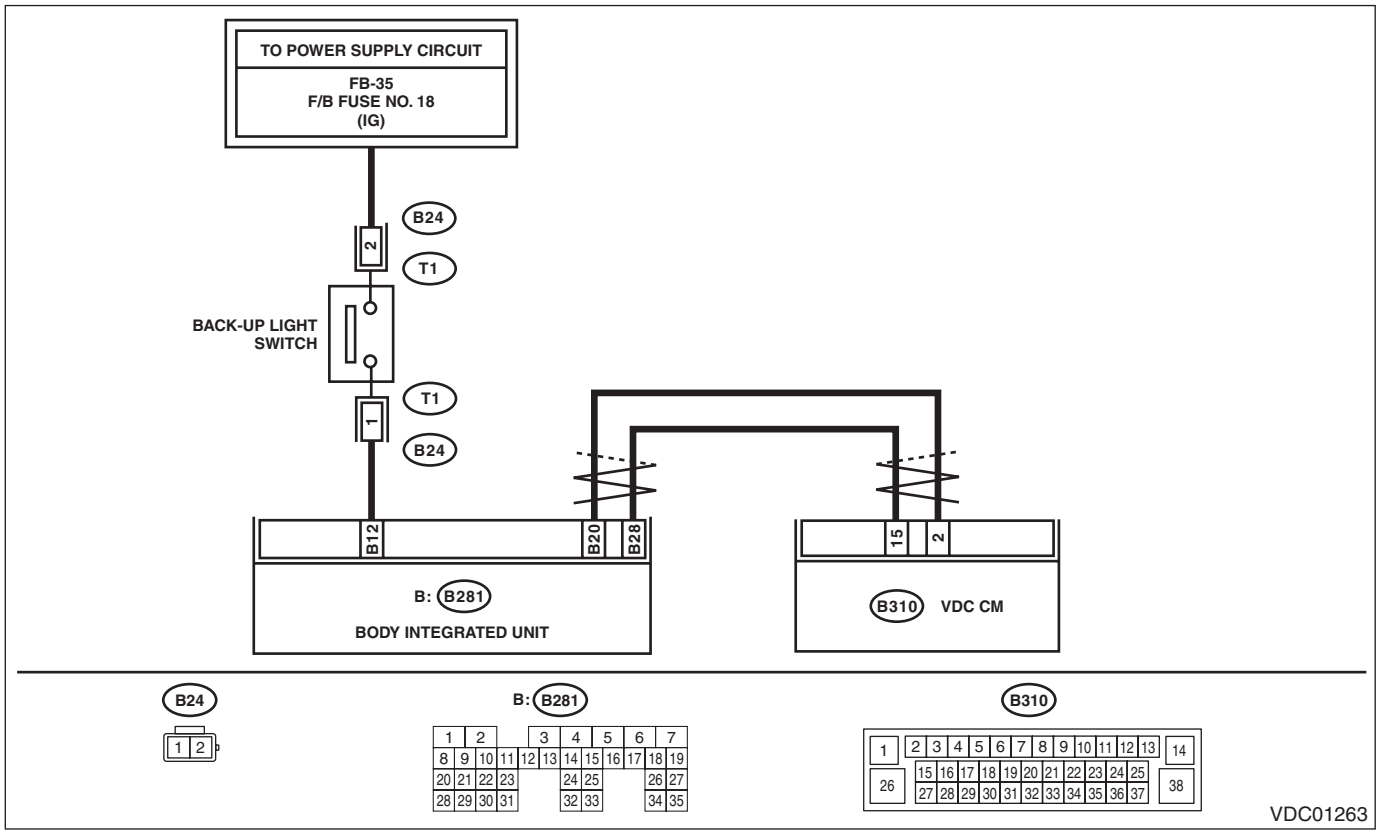

	Step	Check	Yes	No
1	**CHECK LAN SYSTEM.** Perform the diagnosis for LAN system. <Ref. to LAN(w/o HEV)(diag)-2, Basic Diagnostic Procedure.>	Is there any fault in LAN system?	Perform the diagnosis according to DTC for LAN system. <Ref. to LAN(w/o HEV)(diag)-50, List of Diagnostic Trouble Code (DTC).>	Go to step **2**.
2	**CHECK REVERSE SIGNAL USING SUBARU SELECT MONITOR.** 1) Select “Current Data Display & Save” on the Subaru Select Monitor. <Ref. to VDC(diag)-16, READ CURRENT DATA, OPERATION, Subaru Select Monitor.> 2) Read the «Reverse Signal» displayed on display.	Is “OFF” displayed when the shift lever is placed in any position other than reverse, and is “ON” displayed in reverse position?	Go to step **5**.	Go to step **3**.
3	**CHECK BACK-UP LIGHT ILLUMINATION.** 1) Turn the ignition switch to ON. 2) Place the shift lever in reverse position.	Does the back-up light illuminate?	Go to step **4**.	Repair the back-up light circuit.

	Step	Check	Yes	No
4	**CHECK HARNESS BETWEEN BODY INTEGRATED UNIT AND BACK-UP LIGHT SWITCH.** 1) Turn the ignition switch to OFF. 2) Disconnect the connectors from body integrated unit and back-up light switch. 3) Measure the resistance of harness between body integrated unit and back-up light switch connector. ***Connector & terminal*** ***(B280) No. 12 — (B24) No. 1:***	Is the resistance less than 1 Ω?	Replace the back-up light switch. <Ref. to 5MT-35, Switches and Harness.>	Repair the harness between body integrated unit and back-up light switch connector.
5	**CHECK VDCCM&H/U.** 1) Connect all connectors. 2) Clear the memory. <Ref. to VDC(diag)-23, Clear Memory Mode.> 3) Perform the Inspection Mode. <Ref. to VDC(diag)-22, Inspection Mode.> 4) Read the DTC.	Is the same DTC displayed?	Replace the VDCCM&H/U. <Ref. to VDC-9, VDC Control Module and Hydraulic Control Unit (VDCCM&H/U).>	Go to step **6**.
6	**CHECK OTHER DTC DETECTION.**	Is any other DTC displayed?	Perform the diagnosis according to DTC. <Ref. to VDC(diag)-37, List of Diagnostic Trouble Code (DTC).>	Temporary poor contact occurs.

AQ:DTC C1711 STEERING ANGLE SENSOR ABNORMAL

DTC DETECTING CONDITION:
Defective steering angle sensor
TROUBLE SYMPTOM:
- ABS does not operate.
- VDC does not operate.
- Hill start assist does not operate.

WIRING DIAGRAM:
Vehicle dynamics control system <Ref. to WI(w/o HEV)-152, Vehicle Dynamics Control System.> <Ref. to WI(HEV)-216, Vehicle Dynamics Control System.>

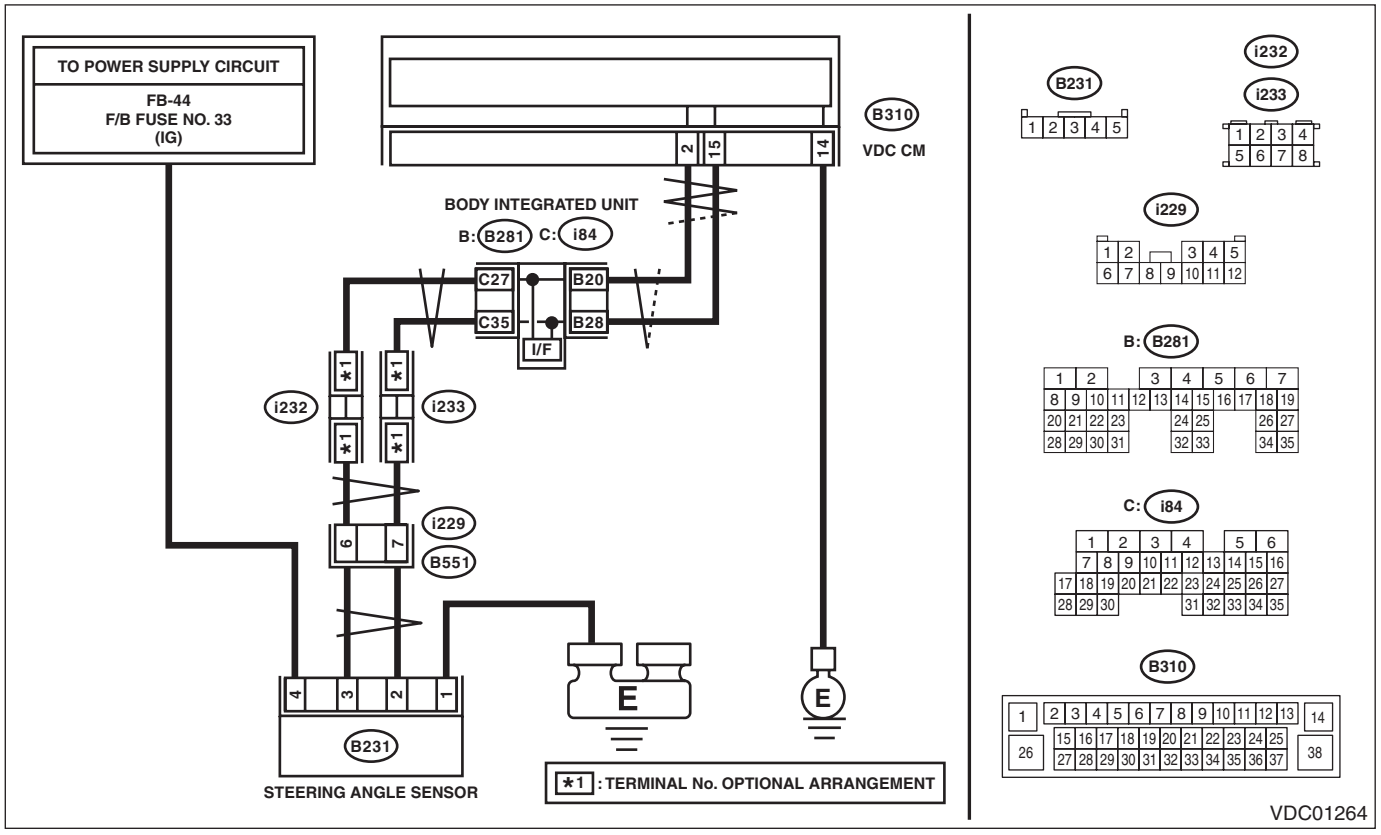

Step		Check	Yes	No
1	**CHECK POWER SUPPLY FOR STEERING ANGLE SENSOR.** 1) Turn the ignition switch to OFF. 2) Disconnect the connector from steering angle sensor. 3) Turn the ignition switch to ON. 4) Measure the voltage between steering angle sensor and chassis ground. ***Connector & terminal*** ***(B231) No. 4 (+) — Chassis ground (–):***	Is the voltage 10 — 15 V?	Go to step **2**.	Repair the steering angle sensor power supply circuit.
2	**CHECK GROUND CIRCUIT OF STEERING ANGLE SENSOR.** Measure the resistance between steering angle sensor and chassis ground. ***Connector & terminal*** ***(B231) No. 1 — Chassis ground:***	Is the resistance less than 10 Ω?	Go to step **3**.	Repair ground circuit in the steering angle sensor.

	Step	Check	Yes	No
3	**CHECK STEERING ANGLE SENSOR HARNESS.** 1) Disconnect the connector from the VDCCM&H/U. 2) Measure the resistance between VDCCM&H/U and steering angel sensor. ***Connector & terminal*** ***(B231) No. 2 — (B310) No. 15:*** ***(B231) No. 3 — (B310) No. 2:***	Is the resistance less than 1 Ω?	Go to step **4**.	Repair the harness between the steering angle sensor and VDCCM&H/U.
4	**CHECK GROUND SHORT CIRCUIT OF STEERING ANGLE SENSOR HARNESS.** Measure the resistance between steering angle sensor and chassis ground. ***Connector & terminal*** ***(B231) No. 2 — Chassis ground:*** ***(B231) No. 3 — Chassis ground:***	Is the resistance 10 Ω or more?	Go to step **5**.	Repair the harness between the steering angle sensor and VDCCM&H/U.
5	**CHECK STEERING WHEEL.** 1) Drive the vehicle on a flat road. 2) Park the vehicle straight. 3) Check the steering wheel for deviation from center.	Is the deviation from the center of steering wheel less than 5°?	Go to step **6**.	Perform the centering adjustment of steering wheel, and perform the VDC sensor midpoint setting mode. <Ref. to VDC-21, VDC SENSOR MIDPOINT SETTING MODE, ADJUSTMENT, VDC Control Module and Hydraulic Control Unit (VDCCM&H/U).>
6	**CHECK OUTPUT OF STEERING ANGLE SENSOR USING SUBARU SELECT MONITOR.** 1) Adjust steering wheel to the center position. 2) Connect Subaru Select Monitor, and select “Current Data Display & Save”. 3) Read the «Steering Angle Sensor» displayed on display.	Is the indicated reading of the «Steering Angle Sensor» on the monitor display –10° — 10°?	Perform the VDC sensor midpoint setting mode. Go to step **7**. <Ref. to VDC-21, VDC SENSOR MIDPOINT SETTING MODE, ADJUSTMENT, VDC Control Module and Hydraulic Control Unit (VDCCM&H/U).>	Check the installation of the steering wheel and steering angle sensor.
7	**CHECK STEERING ANGLE SENSOR USING SUBARU SELECT MONITOR.** 1) Turn the ignition switch to OFF. 2) Connect all connectors. 3) Clear the memory. <Ref. to VDC(diag)-23, Clear Memory Mode.> 4) Perform the Inspection Mode. <Ref. to VDC(diag)-22, Inspection Mode.> 5) Read the DTC.	Is the same DTC displayed?	Go to step **8**.	Go to step **9**.

	Step	Check	Yes	No
8	**CHECK VDCCM&H/U.** 1) Turn the ignition switch to OFF. 2) Replace the steering angle sensor. <Ref. to VDC-29, Steering Angle Sensor.> 3) Clear the memory. <Ref. to VDC(diag)-23, Clear Memory Mode.> 4) Perform the Inspection Mode. <Ref. to VDC(diag)-22, Inspection Mode.> 5) Read the DTC.	Is the same DTC displayed?	Replace the VDCCM only. <Ref. to VDC-18, REPLACEMENT, VDC Control Module and Hydraulic Control Unit (VDCCM&H/U).>	Go to step **10**.
9	**CHECK OTHER DTC DETECTION.**	Is any other DTC displayed?	Perform the diagnosis according to DTC. <Ref. to VDC(diag)-37, List of Diagnostic Trouble Code (DTC).>	Temporary poor contact occurs.
10	**CHECK OTHER DTC DETECTION.**	Is any other DTC displayed?	Perform the diagnosis according to DTC. <Ref. to VDC(diag)-37, List of Diagnostic Trouble Code (DTC).>	Original steering angle sensor malfunction

AR:DTC C1721 YAW RATE SENSOR ABNORMAL

DTC DETECTING CONDITION:
Defective yaw rate & G sensor
TROUBLE SYMPTOM:
- ABS does not operate.
- VDC does not operate.
- Hill start assist does not operate.

	Step	Check	Yes	No
1	**INTERVIEW CUSTOMERS.** Check if the vehicle ran the road with banks or sandy surface (which does not mean a dirt road).	Did the vehicle run the road with banks or sandy surface (which does not mean a dirt road)?	VDCCM&H/U may record DTC when the vehicle ran the road with banks or sandy surface (which does not mean a dirt road).	Go to step **2**.
2	**CHECK INSTALLATION OF VDCCM&H/U.**	Is VDCCM&H/U installed properly without being tilted? Is the bracket deformation-free? Are the VDCCM&H/U installation bolts installed without missing or getting loose?	Go to step **3**.	Repair the defective part. Go to step **3**. • Install VDCCM&H/U properly. • Replace the bracket if faulty. • Tighten the VDCCM&H/U installation bolt. <Ref. to VDC-5, VDC CONTROL MODULE & HYDRAULIC CONTROL UNIT (VDCCM&H/U), COMPONENT, General Description.>
3	**CHECK OUTPUT OF YAW RATE & G SENSOR WITH SUBARU SELECT MONITOR.** 1) Drive the vehicle on a flat road. 2) Park the vehicle straight. 3) Select “Current Data Display & Save” on the Subaru Select Monitor. 4) Read the «Yaw Rate Sensor» displayed on display.	Is the reading indicated on monitor display –4 — 4 deg/s?	Go to step **4**.	Replace the VDCCM only. <Ref. to VDC-18, REPLACEMENT, VDC Control Module and Hydraulic Control Unit (VDCCM&H/U).>
4	**CHECK OUTPUT OF STEERING ANGLE SENSOR WITH SUBARU SELECT MONITOR.** 1) Drive the vehicle on a flat road. 2) Park the vehicle straight. 3) Select “Current Data Display & Save” on the Subaru Select Monitor. 4) Read the «Steering Angle Sensor» displayed on display.	Is the reading indicated on monitor display –10 — 10°?	Go to step **5**.	Perform the centering adjustment of steering wheel.

	Step	Check	Yes	No
5	**CHECK VDCCM&H/U.** 1) Turn the ignition switch to OFF. 2) Clear the memory. <Ref. to VDC(diag)-23, Clear Memory Mode.> 3) Perform the Inspection Mode. <Ref. to VDC(diag)-22, Inspection Mode.> 4) Read the DTC.	Is the same DTC displayed?	Replace the VDCCM only. <Ref. to VDC-18, REPLACEMENT, VDC Control Module and Hydraulic Control Unit (VDCCM&H/U).>	Go to step **6**.
6	**CHECK OTHER DTC DETECTION.**	Is any other DTC displayed?	Perform the diagnosis according to DTC. <Ref. to VDC(diag)-37, List of Diagnostic Trouble Code (DTC).>	It results from a temporary noise interference.

AS:DTC C1731 G SENSOR ABNORMAL

NOTE:
For the diagnostic procedure, refer to “DTC C1732 LATERAL G SENSOR ABNORMAL”. <Ref. to VDC(diag)-85, DTC C1732 LATERAL G SENSOR ABNORMAL, Diagnostic Procedure with Diagnostic Trouble Code (DTC).>

AT:DTC C1732 LATERAL G SENSOR ABNORMAL

DTC DETECTING CONDITION:
Defective lateral G sensor
TROUBLE SYMPTOM:
- ABS does not operate.
- VDC does not operate.
- Hill start assist does not operate.

	Step	Check	Yes	No
1	**CHECK INSTALLATION OF VDCCM&H/U.**	Is VDCCM&H/U installed properly without being tilted? Is the bracket deformation-free? Are the VDCCM&H/U installation bolts installed without missing or getting loose?	Go to step **2**.	Repair the defective part. Go to step **2**. • Install VDCCM&H/U properly. • Replace the bracket if faulty. • Tighten the VDCCM&H/U installation bolt. <Ref. to VDC-5, VDC CONTROL MODULE & HYDRAULIC CONTROL UNIT (VDCCM&H/U), COMPONENT, General Description.>
2	**CHECK OUTPUT OF STEERING ANGLE SENSOR USING SUBARU SELECT MONITOR.** 1) Park the vehicle straight on a level surface. 2) Connect Subaru Select Monitor, and select "Current Data Display & Save". 3) Read the «Steering Angle Sensor» displayed on display.	Is the indicated reading of the steering angle sensor on the monitor display –10° — 10°?	Go to step **3**.	Check the installation of steering angle sensor.
3	**CHECK OUTPUT OF LATERAL G SENSOR AND LONGITUDINAL G SENSOR WITH SUBARU SELECT MONITOR.** 1) Park the vehicle straight on a level surface. 2) Connect Subaru Select Monitor, and select "Current Data Display & Save". 3) Read the «Lateral G Sensor» and « Longitudinal G Sensor » displayed on display.	Is the indicated reading of the lateral G sensor and longitudinal G sensor on the monitor display –2 — 2 m/s^2?	Go to step **4**.	Recheck from step 1, and if the problem is not solved, go to next. Go to step **7**.
4	**SET 0 POINT OF LATERAL G SENSOR AND LONGITUDINAL G SENSOR WITH SUBARU SELECT MONITOR.** 1) Select "Work Support" on Subaru Select Monitor. 2) Perform the VDC sensor midpoint setting mode. <Ref. to VDC-21, VDC SENSOR MIDPOINT SETTING MODE, ADJUSTMENT, VDC Control Module and Hydraulic Control Unit (VDCCM&H/U).>	Is the 0 point setting successful?	Go to step **5**.	Recheck from step 1, and when the 0 point setting is not possible, replace the VDCCM only. <Ref. to VDC-18, REPLACEMENT, VDC Control Module and Hydraulic Control Unit (VDCCM&H/U).>

	Step	Check	Yes	No
5	**PERFORM DRIVING TEST.** Drive approximately 10 minutes, and check if the warning lights illuminate or improperly operate during driving. In a safe place, drive the vehicle while alternating acceleration and deceleration as much as possible.	Did the ABS warning light or VDC warning light remain off? Does ABS or VDC operate without malfunction?	Go to step **6**.	Recheck from step 1, and when the warning lights illuminate or improperly operate, replace the VDCCM only. <Ref. to VDC-18, REPLACEMENT, VDC Control Module and Hydraulic Control Unit (VDCCM&H/U).>
6	**CHECK OUTPUT OF LATERAL G SENSOR AND LONGITUDINAL G SENSOR WITH SUBARU SELECT MONITOR.** 1) Park the vehicle on a level surface. 2) Connect Subaru Select Monitor, and select "Current Data Display & Save". 3) Read the «Lateral G Sensor» and « Longitudinal G Sensor » displayed on display.	Is the indicated reading of the lateral G sensor and longitudinal G sensor on the monitor display –1.5 — 1.5 m/s^2?	It results from a temporary noise interference.	Recheck from step 1, and if the problem is not solved, replace the VDCCM only. <Ref. to VDC-18, REPLACEMENT, VDC Control Module and Hydraulic Control Unit (VDCCM&H/U).>
7	**CHECK OUTPUT OF LATERAL G SENSOR AND LONGITUDINAL G SENSOR WITH SUBARU SELECT MONITOR.** 1) Remove the VDCCM&H/U installation bolt and bracket. 2) Keep VDCCM&H/U in a horizontal position. 3) Connect Subaru Select Monitor, and select "Current Data Display & Save". 4) Read the «Lateral G Sensor» and « Longitudinal G Sensor » displayed on display.	When the VDCCM&H/U is in a horizontal position, is the indicated reading of the lateral G sensor and longitudinal G sensor on the monitor display –1.5 — 1.5 m/s^2?	Check the bracket and brake pipe, and install VDCCM&H/U in a horizontal position to the vehicle.	Replace the VDCCM only. <Ref. to VDC-18, REPLACEMENT, VDC Control Module and Hydraulic Control Unit (VDCCM&H/U).>

AU:DTC C1733 LONGITUDINAL G SENSOR ABNORMAL

DTC DETECTING CONDITION:

Defective longitudinal G sensor

TROUBLE SYMPTOM:

- ABS does not operate.
- VDC does not operate.
- Hill start assist does not operate.

NOTE:

For the diagnostic procedure, refer to "DTC C1732 LATERAL G SENSOR ABNORMAL". <Ref. to VDC(diag)-85, DTC C1732 LATERAL G SENSOR ABNORMAL, Diagnostic Procedure with Diagnostic Trouble Code (DTC).>

AV:DTC C1741 PRESSURE SENSOR

DTC DETECTING CONDITION:
Defective pressure sensor
TROUBLE SYMPTOM:
- ABS does not operate.
- VDC does not operate.
- Hill start assist does not operate.

	Step	Check	Yes	No
1	**CHECK STOP LIGHT SWITCH CIRCUIT.** Check stop light switch open circuit.	Is the stop light switch circuit OK?	Go to step **2**.	Repair the stop light switch circuit. NOTE: If there is malfunction in the stop light circuit, DTC may be recorded in the memory.
2	**CHECK OUTPUT OF PRESSURE SENSOR WITH SUBARU SELECT MONITOR.** 1) Select “Current Data Display & Save” in Subaru Select Monitor. <Ref. to VDC(diag)-16, READ CURRENT DATA, OPERATION, Subaru Select Monitor.> 2) Read the «Pressure Sensor» displayed on display.	With the brake pedal released, is the displayed value 0 — 11 bar?	Go to step **3**.	Replace the VDCCM&H/U. <Ref. to VDC-9, VDC Control Module and Hydraulic Control Unit (VDCCM&H/U).>
3	**CHECK OUTPUT OF PRESSURE SENSOR WITH SUBARU SELECT MONITOR.** 1) Select “Current Data Display & Save” in Subaru Select Monitor. <Ref. to VDC(diag)-16, READ CURRENT DATA, OPERATION, Subaru Select Monitor.> 2) Read the «Pressure Sensor» displayed on display.	When the brake pedal is operated, does the pressure sensor output value displayed on the display change in accordance with the brake pedal?	Go to step **4**.	Replace the VDCCM&H/U. <Ref. to VDC-9, VDC Control Module and Hydraulic Control Unit (VDCCM&H/U).>
4	**CHECK PRESSURE SENSOR.** 1) Clear the memory. <Ref. to VDC(diag)-23, Clear Memory Mode.> 2) Perform the Inspection Mode. <Ref. to VDC(diag)-22, Inspection Mode.> 3) Read the DTC.	Is the same DTC displayed?	Replace the VDCCM&H/U. <Ref. to VDC-9, VDC Control Module and Hydraulic Control Unit (VDCCM&H/U).>	Go to step **5**.
5	**CHECK OTHER DTC DETECTION.**	Is any other DTC displayed?	Perform the diagnosis according to DTC. <Ref. to VDC(diag)-37, List of Diagnostic Trouble Code (DTC).>	It results from a temporary noise interference.

AW:DTC C1811 SYSTEM FAILURE

DTC DETECTING CONDITION:
ABS and VDC long time sequential control
TROUBLE SYMPTOM:
- ABS does not operate.
- VDC does not operate.
- EBD may not operate.
- Hill start assist does not operate.

	Step	Check	Yes	No
1	**CHECK INSTALLATION OF VDCCM&H/U.**	Is VDCCM&H/U installed properly without being tilted? Is the bracket deformation-free? Are the VDCCM&H/U installation bolts installed without missing or getting loose?	Go to step **2**.	Repair the defective part. Go to step **2**. • Install VDCCM&H/U properly. • Replace the bracket if faulty. • Tighten the VDCCM&H/U installation bolt. <Ref. to VDC-5, VDC CONTROL MODULE & HYDRAULIC CONTROL UNIT (VDCCM&H/U), COMPONENT, General Description.>
2	**CHECK STEERING WHEEL.** 1) Drive the vehicle on a flat road. 2) Park the vehicle straight. 3) Check the steering wheel for deviation from center.	Is the deviation from the center of steering wheel less than 5°?	Go to step **3**.	Perform the centering adjustment of steering wheel, and perform the VDC sensor midpoint setting mode. Go to step **3**. <Ref. to VDC-21, VDC SENSOR MIDPOINT SETTING MODE, ADJUSTMENT, VDC Control Module and Hydraulic Control Unit (VDCCM&H/U).>
3	**CHECK OUTPUT OF STEERING ANGLE SENSOR USING SUBARU SELECT MONITOR.** 1) Adjust steering wheel to the center position. 2) Connect Subaru Select Monitor, and select “Current Data Display & Save”. 3) Read the «Steer Angle Sensor Op» displayed on display.	Is the indicated reading of the «Steer Angle Sensor Op» on the monitor display –10° — 10°?	Go to step **4**.	Check the installation of the steering wheel and steering angle sensor, and replace the parts if necessary.

	Step	Check	Yes	No
4	**CHECK OUTPUT OF SENSORS USING SUBARU SELECT MONITOR.** 1) Drive the vehicle on a flat road. 2) Park the vehicle straight. 3) Connect Subaru Select Monitor, and select "Current Data Display & Save". 4) Read output of sensors displayed on display.	Are the indicated reading of sensor outputs following values? Lateral G sensor Output: –2 — 2 m/s^2 Fr Rr G sensor Output: –2 — 2 m/s^2 Yaw Rate Sensor Output: –4 — 4 deg/s	Go to step **5**.	Recheck from step 1, and if the problem is not solved, go to next. Go to step **8**.
5	**SET 0 POINT FOR LONGITUDINAL G SENSOR USING SUBARU SELECT MONITOR.** 1) Select "Work Support" on Subaru Select Monitor. 2) Perform the VDC sensor midpoint setting mode. <Ref. to VDC-21, VDC SENSOR MIDPOINT SETTING MODE, ADJUSTMENT, VDC Control Module and Hydraulic Control Unit (VDCCM&H/U).>	Is the 0 point setting successful?	Go to step **6**.	Recheck from step 1, and when the 0 point setting is not possible, replace the VDCCM and the steering angle sensor. <Ref. to VDC-18, REPLACEMENT, VDC Control Module and Hydraulic Control Unit (VDCCM&H/U).> <Ref. to VDC-29, Steering Angle Sensor.>
6	**PERFORM DRIVING TEST.** Drive approximately 10 minutes, and check if the warning lights illuminate or improperly operate during driving.	Did the ABS warning light or VDC warning light remain off? Does ABS or VDC operate without malfunction?	Go to step **7**.	Recheck from step 1, and when the warning lights illuminate or improperly operate, replace the VDCCM only. <Ref. to VDC-18, REPLACEMENT, VDC Control Module and Hydraulic Control Unit (VDCCM&H/U).>
7	**CHECK OUTPUT OF SENSORS USING SUBARU SELECT MONITOR.** 1) Park the vehicle on a level surface. 2) Connect Subaru Select Monitor, and select "Current Data Display & Save". 3) Read output of sensors displayed on display.	Are the indicated reading of sensor outputs following values? Lateral G sensor Output: –2 — 2 m/s^2 Fr Rr G sensor Output: –2 — 2 m/s^2 Yaw Rate Sensor Output: –4 — 4 deg/s	It results from a temporary noise interference.	Replace the VDCCM only. <Ref. to VDC-18, REPLACEMENT, VDC Control Module and Hydraulic Control Unit (VDCCM&H/U).>
8	**CHECK OUTPUT OF SENSORS USING SUBARU SELECT MONITOR.** 1) Remove the VDCCM&H/U installation bolt and bracket. 2) Keep VDCCM&H/U in a horizontal position. 3) Connect Subaru Select Monitor, and select "Current Data Display & Save". 4) Read output of sensors displayed on display.	When VDCCM&H/U is in a horizontal position, are the indicated reading of sensor outputs following values? Lateral G sensor Output: –1.5 — 1.5 m/s^2 Fr Rr G sensor Output: –1.5 — 1.5 m/s^2 Yaw Rate Sensor Output: –4 — 4 deg/s	Check the bracket and brake pipe, and install VDCCM&H/U in a horizontal position to the vehicle.	Replace the VDCCM only. <Ref. to VDC-18, REPLACEMENT, VDC Control Module and Hydraulic Control Unit (VDCCM&H/U).>

AX:DTC U0073 CONTROL MODULE COMMUNICATION BUS OFF

NOTE:
Refer to "LAN SYSTEM" for diagnostic procedure. <Ref. to LAN(w/o HEV)(diag)-2, Basic Diagnostic Procedure.> <Ref. to LAN(HEV)(diag)-2, Basic Diagnostic Procedure.>

AY:DTC U0100 LOST COMMUNICATION WITH ECM/PCM “A”

NOTE:
Refer to “LAN SYSTEM” for diagnostic procedure. <Ref. to LAN(w/o HEV)(diag)-2, Basic Diagnostic Procedure.> <Ref. to LAN(HEV)(diag)-2, Basic Diagnostic Procedure.>

AZ:DTC U0101 LOST COMMUNICATION WITH TCM

NOTE:
Refer to “LAN SYSTEM” for diagnostic procedure. <Ref. to LAN(w/o HEV)(diag)-2, Basic Diagnostic Procedure.> <Ref. to LAN(HEV)(diag)-2, Basic Diagnostic Procedure.>

BA:DTC U0126 LOST COMMUNICATION WITH STEERING ANGLE SENSOR MODULE

NOTE:
Refer to “LAN SYSTEM” for diagnostic procedure. <Ref. to LAN(w/o HEV)(diag)-2, Basic Diagnostic Procedure.> <Ref. to LAN(HEV)(diag)-2, Basic Diagnostic Procedure.>

BB:DTC U0140 LOST COMMUNICATION WITH BODY CONTROL MODULE

NOTE:
Refer to “LAN SYSTEM” for diagnostic procedure. <Ref. to LAN(w/o HEV)(diag)-2, Basic Diagnostic Procedure.> <Ref. to LAN(HEV)(diag)-2, Basic Diagnostic Procedure.>

BC:DTC U0293 LOST COMMUNICATION WITH HYBRID POWERTRAIN CONTROL MODULE

NOTE:
Refer to “LAN SYSTEM” for diagnostic procedure. <Ref. to LAN(HEV)(diag)-2, Basic Diagnostic Procedure.>

BD:DTC U0401 INVALID DATA RECEIVED FROM ECM/PCM “A”

NOTE:
Refer to “LAN SYSTEM” for diagnostic procedure. <Ref. to LAN(w/o HEV)(diag)-2, Basic Diagnostic Procedure.> <Ref. to LAN(HEV)(diag)-2, Basic Diagnostic Procedure.>

BE:DTC U0402 INVALID DATA RECEIVED FROM TCM

NOTE:
Refer to “LAN SYSTEM” for diagnostic procedure. <Ref. to LAN(w/o HEV)(diag)-2, Basic Diagnostic Procedure.> <Ref. to LAN(HEV)(diag)-2, Basic Diagnostic Procedure.>

BF:DTC U0422 INVALID DATA RECEIVED FROM BODY CONTROL MODULE

NOTE:
Refer to “LAN SYSTEM” for diagnostic procedure. <Ref. to LAN(w/o HEV)(diag)-2, Basic Diagnostic Procedure.> <Ref. to LAN(HEV)(diag)-2, Basic Diagnostic Procedure.>

BG:DTC U0428 INVALID DATA RECEIVED FROM STEERING ANGLE SENSOR MODULE

NOTE:
Refer to “LAN SYSTEM” for diagnostic procedure. <Ref. to LAN(w/o HEV)(diag)-2, Basic Diagnostic Procedure.> <Ref. to LAN(HEV)(diag)-2, Basic Diagnostic Procedure.>

BH:DTC U0594 INVALID DATA RECEIVED FROM HYBRID POWERTRAIN CONTROL MODULE

NOTE:
Refer to “LAN SYSTEM” for diagnostic procedure. <Ref. to LAN(HEV)(diag)-2, Basic Diagnostic Procedure.>

13.General Diagnostic Table

A: INSPECTION

Symptoms		Main probable cause	Other probable cause
Poor brake performance	Long braking/ stopping distance	• VDCCM&H/U • Brake pad • Aeration to brake line • Tire specifications, tire wear and air pressures • Incorrect wiring or piping connections	• Defective ABS wheel speed sensor or sensor gap • Defective steering angle sensor or improper neutral position • Defective yaw rate & G sensor or improper installation of VDCCM&H/U. • Master cylinder • Brake caliper • Disc rotor • Brake pipe • Brake booster
	Wheel lock	• VDCCM&H/U • Defective ABS wheel speed sensor or sensor gap • Incorrect wiring or piping connections	• Defective steering angle sensor or improper neutral position • Defective yaw rate & G sensor or improper installation of VDCCM&H/U. • Brake caliper • Brake pipe
	Brake drag	• VDCCM&H/U • Defective ABS wheel speed sensor or sensor gap • Master cylinder • Brake caliper • Parking brake • Axle and wheels • Brake pedal play	• Defective steering angle sensor or improper neutral position • Defective yaw rate & G sensor or improper installation of VDCCM&H/U. • Brake pad • Brake pipe
	Long brake pedal stroke	• Aeration to brake line • Brake pedal play	• VDCCM&H/U • Master cylinder • Brake caliper • Brake pad • Brake pipe • Brake booster
	Vehicle vertical pitching	• VDCCM&H/U • Road surface (uneven) • Suspension play or fatigue (reduced damping) • Incorrect wiring or piping connections	• Defective ABS wheel speed sensor or sensor gap • Defective steering angle sensor or improper neutral position • Defective yaw rate & G sensor or improper installation of VDCCM&H/U.
Poor brake performance	Unstable or uneven braking	• VDCCM&H/U • Defective ABS wheel speed sensor or sensor gap • Brake caliper • Brake pad • Road surface (uneven) • Tire specifications, tire wear and air pressures • Incorrect wiring or piping connections	• Defective ABS wheel speed sensor or sensor gap • Defective steering angle sensor or improper neutral position • Defective yaw rate & G sensor or improper installation of VDCCM&H/U. • Master cylinder • Disc rotor • Brake pipe • Axle and wheels • Road with crowns or banks • Suspension play or fatigue (reduced damping)

General Diagnostic Table

Symptoms		Main probable cause	Other probable cause
Vibration or noise • When braking suddenly • When accelerating suddenly • While driving on a slippery road	Excessive brake pedal vibration	• Road surface (uneven) • Incorrect wiring or piping connections	• VDCCM&H/U • Brake booster • Suspension play or fatigue (reduced damping)
	Noise from VDCH/U	• VDCCM&H/U (mount bushing) • Defective ABS wheel speed sensor or sensor gap • Brake pipe	• VDCCM&H/U • Defective steering angle sensor or improper neutral position • Defective yaw rate & G sensor or improper installation of VDCCM&H/U.
	Noise from the front side of vehicle	• VDCCM&H/U (mount bushing) • Defective ABS wheel speed sensor or sensor gap • Master cylinder • Brake caliper • Brake pad • Disc rotor • Brake pipe • Brake booster • Suspension play or fatigue (reduced damping)	• Axle and wheels • Tire specifications, tire wear and air pressures
	Noise from the rear side of vehicle	• Defective ABS wheel speed sensor or sensor gap • Brake caliper • Brake pad • Disc rotor • Parking brake • Brake pipe • Suspension play or fatigue (reduced damping)	• Axle and wheels • Tire specifications, tire wear and air pressures
Engine does not accelerate or goes into a stall when accelerating suddenly or driving on a slippery surface.		• VDCCM&H/U • Defective ABS wheel speed sensor or sensor gap • Master cylinder • Brake caliper • Parking brake • Incorrect wiring or piping	• Defective steering angle sensor or improper neutral position • Defective yaw rate & G sensor or improper installation of VDCCM&H/U. • Brake pad • Brake pipe

General Diagnostic Table

Symptoms		Main probable cause	Other probable cause
Poor change-direction-operation stability of TCS	Deviation to right or left direction	• VDCCM&H/U • Defective ABS wheel speed sensor or sensor gap • Defective steering angle sensor or improper neutral position • Defective yaw rate & G sensor or improper installation of VDCCM&H/U. • Brake caliper • Brake pad • Wheel alignment • Road surface (uneven) • Road with crowns or banks • Tire specifications, tire wear and air pressures • Incorrect wiring or piping connections	• Disc rotor • Brake pipe • Axle and wheels • Suspension play or fatigue (reduced damping)
	Vehicle spin	• VDCCM&H/U • Defective ABS wheel speed sensor or sensor gap • Defective steering angle sensor or improper neutral position • Defective yaw rate & G sensor or improper installation of VDCCM&H/U. • Brake pad • Tire specifications, tire wear and air pressures • Incorrect wiring or piping connections	• Brake caliper • Brake pipe
Steering wheel drag while driving		• VDCCM&H/U • Defective ABS wheel speed sensor or sensor gap • Defective steering angle sensor or improper neutral position • Defective yaw rate & G sensor or improper installation of VDCCM&H/U. • Incorrect wiring or piping connections • Power steering system	• Brake caliper • Brake pad • Disc rotor • Wheel alignment • Road surface (uneven) • Road with crowns or banks • Suspension play or fatigue (reduced damping) • Tire specifications, tire wear and air pressures
VDC operates while driving normally.		• VDCCM&H/U • Defective ABS wheel speed sensor or sensor gap • Defective steering angle sensor or improper neutral position • Defective yaw rate & G sensor or improper installation of VDCCM&H/U. • Wheel alignment • Road surface (uneven) • Road with crowns or banks • Suspension play or fatigue (reduced damping) • Tire specifications, tire wear and air pressures • Incorrect wiring or piping connections • Power steering system	

Symptoms	Main probable cause	Other probable cause
VDC OFF indicator light does not illuminate when the VDC OFF switch is depressed. NOTE: When pressing VDC OFF switch for 10 seconds or more, VDC OFF indicator light goes off and cannot operate any more. When turning the ignition switch from OFF to ON, the previous status is restored.	• Harness • Combination meter • VDC OFF switch	

BRAKE

BR

		Page
1.	General Description	2
2.	Relay and Fuse	16
3.	Front Brake Pad	17
4.	Front Disc Rotor	21
5.	Front Disc Brake Assembly	24
6.	Rear Brake Pad	32
7.	Rear Disc Rotor	35
8.	Rear Disc Brake Assembly	39
9.	Master Cylinder	46
10.	Brake Booster	49
11.	Brake Fluid	60
12.	Air Bleeding	61
13.	Brake Hose	64
14.	Brake Pipe	67
15.	Brake Pedal	68
16.	Stop Light Switch	72
17.	Brake Vacuum Pump	78
18.	General Diagnostic Table	81

1. General Description

A: SPECIFICATION

Front disc brake	Size		15-inch type	16-inch type
	Type		Disc (floating type, ventilated)	
	Effective disc diameter	mm (in)	228 (8.98)	244 (9.61)
	Disc thickness × Diameter	mm (in)	24 × 277 (0.94 × 10.91)	24 × 294 (0.94 × 11.57)
	Effective cylinder diameter	mm (in)	42.8 (1.685) × 2	42.8 (1.685) × 2
	Pad dimensions (Length × Width × Thickness)	mm (in)	117.8 × 50.5 × 11.0 (4.638 × 1.988 × 0.433)	117.8 × 50.5 × 11.0 *4 (4.638 × 1.988 × 0.433)
	Clearance adjustment		Automatic adjustment	
Rear disc brake	Size		15-inch type	
	Type		Disc (floating type, solid)	
	Effective disc diameter	mm (in)	238 (9.37)	
	Disc thickness × Diameter	mm (in)	10 × 274 (0.39 × 10.79)	
	Effective cylinder diameter	mm (in)	38.1 (1.500)	
	Pad dimensions (Length × Width × Thickness)	mm (in)	92.0 × 33.0 × 9.0 (3.622 × 1.299 × 0.354)	
	Clearance adjustment		Automatic adjustment	
Master cylinder	Type		Tandem	
	Effective diameter	mm (in)	23.8 (15/16)	
	Reservoir type		Sealed type	
	Brake fluid reservoir capacity	cm^3 (cu in)	240 (14.64)	
Brake booster	Type		Vacuum suspended	
	Effective diameter	mm (in)	208 + 229 (8.19 + 9.02)	
Brake line			Dual circuit system	
Brake fluid			FMVSS No. 116, DOT3, or DOT4 **CAUTION:** **• Avoid mixing brake fluid of different brands to prevent fluid performance from degrading.** **• When filling with brake fluid, be careful not to allow any dust to enter the reservoir.** **• Use new SUBARU genuine brake fluid when replacing or refilling the fluid.**	

NOTE:
Refer to “PARKING BRAKE” for parking brake specifications. <Ref. to PB-2, SPECIFICATION, General Description.>

Item			Standard	Limit
Front brake	Pad thickness	All models mm (in)	11 (0.43)	1.5 (0.059)
	Disc thickness	All models mm (in)	24 (0.94)	22 (0.87)
	Disc runout	mm (in)	—	0.05 (0.0020)
Rear brake (disc type)	Pad thickness mm (in)	Solid disc	9.0 (0.354)	1.5 (0.059)
	Disc thickness mm (in)	Solid disc	10 (0.39)	8.5 (0.335)
	Disc runout	mm (in)	—	0.05 (0.0020)
Parking brake	Inside diameter	mm (in)	170 (6.69)	171 (6.73)
	Lining thickness	mm (in)	3.5 (0.14)	1.5 (0.059)

		Brake pedal force N (kgf, lbf)	Fluid pressure kPa (kgf/cm^2, psi)
Brake booster	Brake fluid pressure with engine stopped	147 (15, 33)	553 (5, 77)
		294 (30, 66)	1,551 (16, 225)
	Brake fluid pressure with engine running and vacuum pressure at 66.7 kPa (500 mmHg, 19.69 inHg)	147 (15, 33)	6,177 (63, 896)
		294 (30, 66)	11,273 (115, 1,635)

Brake pedal	Free play mm (in)	0.5 — 2 (0.020 — 0.079) [When pulling the brake pedal upward with a force of less than 10 N (1 kgf, 2 lbf)]

B: COMPONENT

1. FRONT DISC BRAKE

- 15-inch type

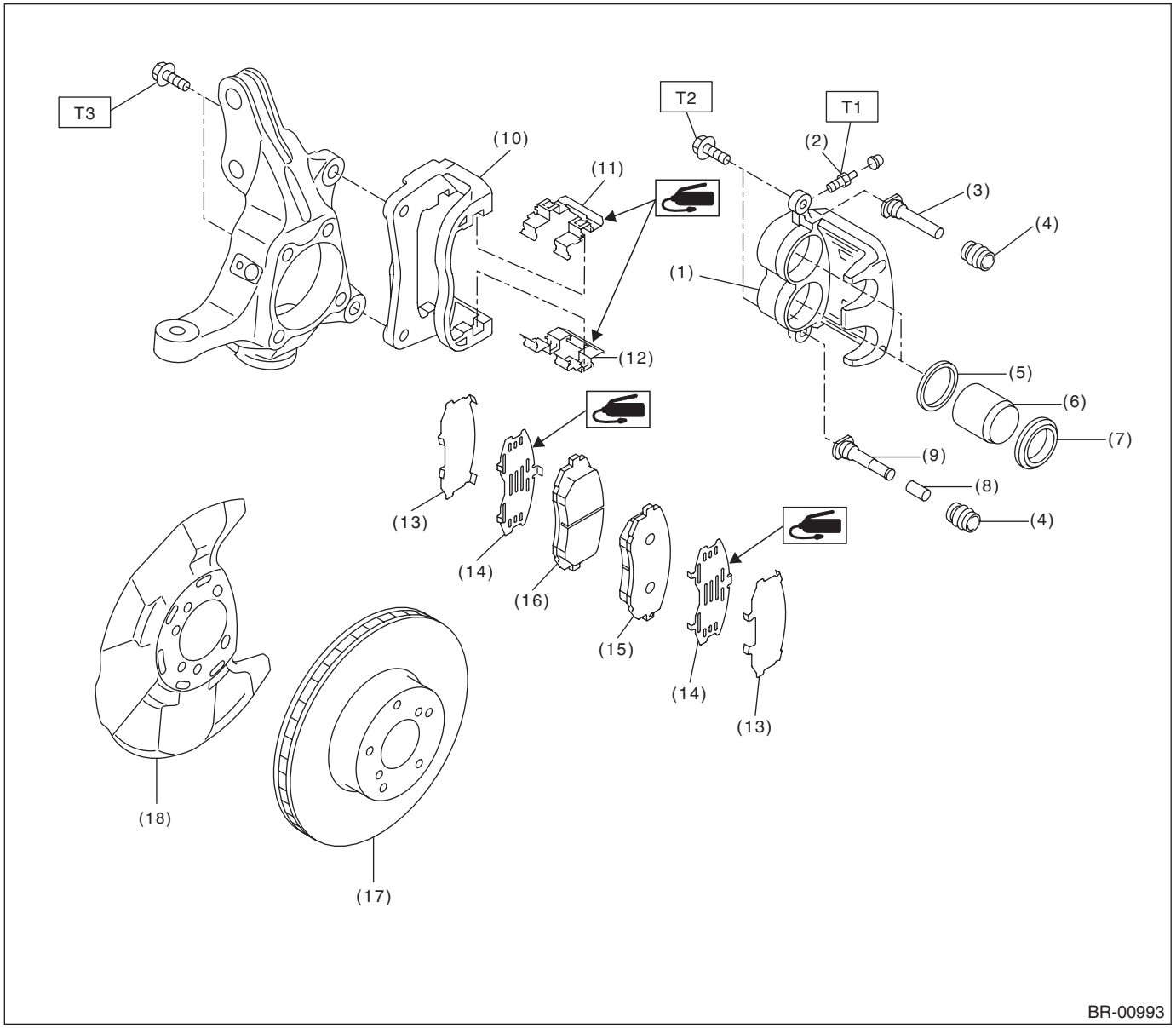

(1)	Caliper body	(9)	Lock pin - front brake (silver)	(17)	Disc rotor
(2)	Bleeder - screw	(10)	Support - front disc brake	(18)	Back plate - front brake
(3)	Guide pin - front brake (black)	(11)	Pad clip - upper		
(4)	Pin boot	(12)	Pad clip - lower		
(5)	Piston seal	(13)	Shim - disc brake front outer		
(6)	Piston - disc brake	(14)	Shim - disc brake front inner		
(7)	Piston boot	(15)	Pad - disc brake front outer		
(8)	Lock pin - sleeve	(16)	Pad - disc brake front inner		

Tightening torque: N·m (kgf-m, ft-lb)

T1: 8 (0.82, 5.9)

T2: 27 (2.75, 19.9)

T3: 80 (8.16, 59)

- 16-inch type

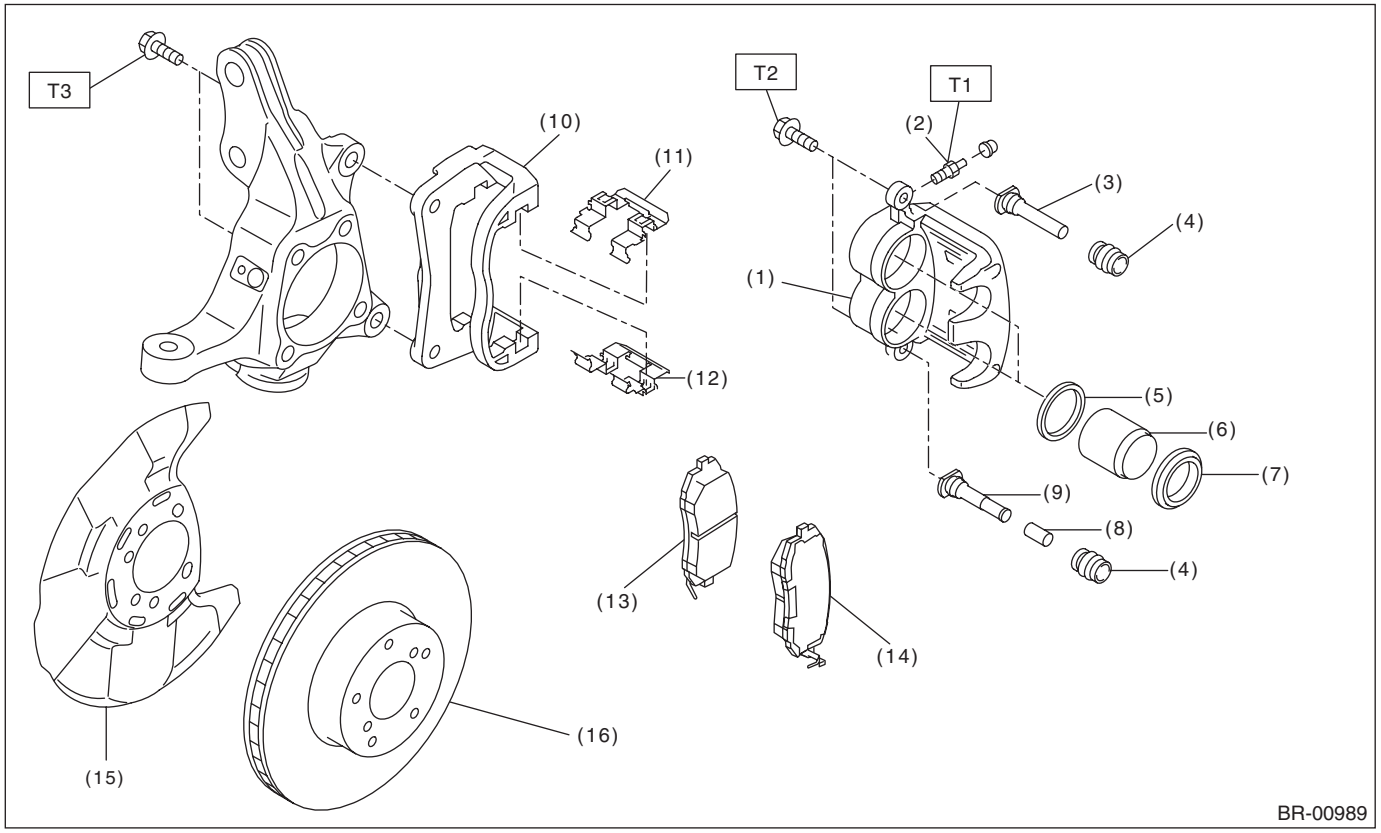

(1)	Caliper body	(9)	Lock pin - front brake (silver)
(2)	Bleeder - screw	(10)	Support - front disc brake
(3)	Guide pin - front brake (black)	(11)	Pad clip - upper
(4)	Pin boot	(12)	Pad clip - lower
(5)	Piston seal	(13)	Pad - disc brake front inner
(6)	Piston - disc brake	(14)	Pad - disc brake front outer
(7)	Piston boot	(15)	Back plate - front brake
(8)	Lock pin - sleeve	(16)	Disc rotor

Tightening torque: N·m (kgf-m, ft-lb)

T1: 8 (0.82, 5.9)

T2: 27 (2.75, 19.9)

T3: 80 (8.16, 59.0)

2. REAR DISC BRAKE

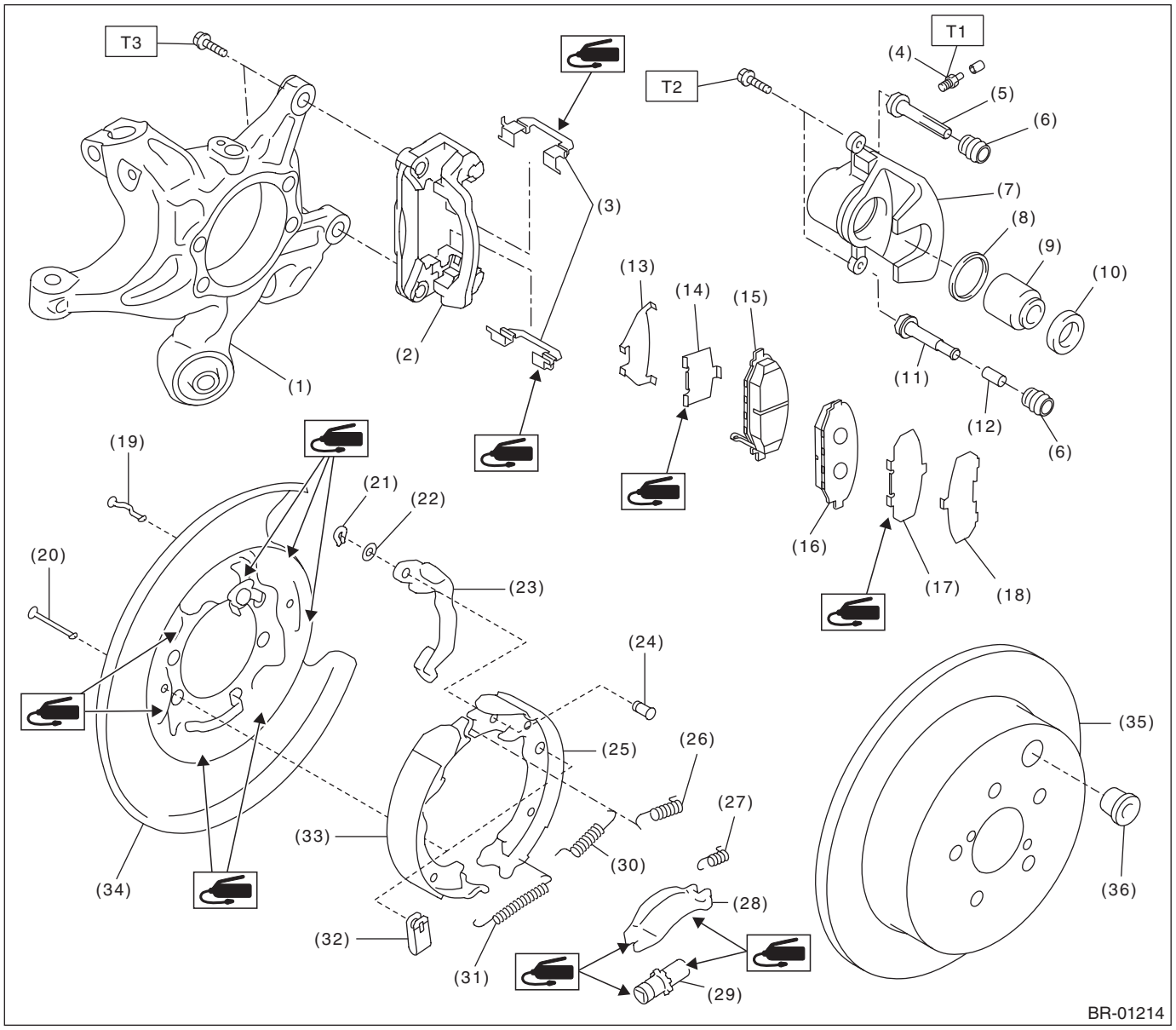

(1) Housing ASSY - rear axle
(2) Support - rear disc brake
(3) Pad clip - rear brake
(4) Bleeder - screw
(5) Guide pin - rear brake (black)
(6) Pin boot
(7) Caliper body
(8) Piston seal
(9) Piston - disc brake
(10) Piston boot
(11) Lock pin - rear brake (silver)
(12) Lock pin - sleeve
(13) Shim - disc brake rear outer
(14) Shim - disc brake rear inner
(15) Pad - disc brake rear inner
(16) Pad - disc brake rear outer
(17) Shim - disc brake rear inner
(18) Shim - disc brake rear outer
(19) Pin - secondary shoe hold-down
(20) Pin - primary shoe hold-down
(21) Retainer - rear brake
(22) Spring washer - rear brake
(23) Parking lever - rear
(24) Pin - parking lever
(25) Parking brake shoe (secondary)
(26) Spring - secondary shoe return
(27) Spring - strut
(28) Strut - brake
(29) Adjuster ASSY - rear brake
(30) Spring - primary shoe return
(31) Spring - adjuster
(32) Cup - shoe hold-down
(33) Parking brake shoe (primary)
(34) Back plate - rear brake
(35) Disc rotor (solid type)
(36) Adjusting hole cover

Tightening torque: N·m (kgf-m, ft-lb)
T1: 8 (0.82, 5.9)
T2: 27 (2.75, 19.9)
T3: 66 (6.73, 48.7)

3. MASTER CYLINDER

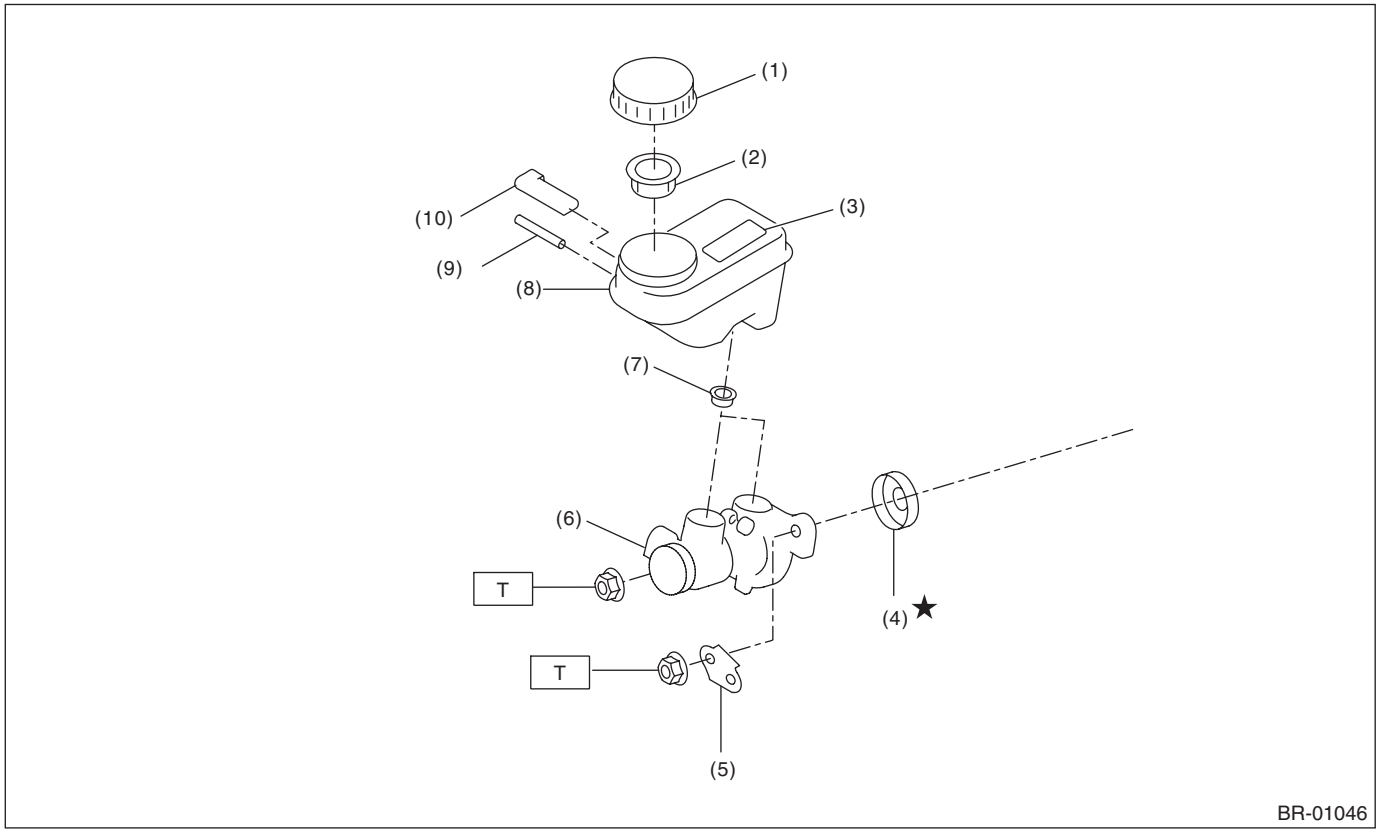

(1)	Cap - reservoir tank	(6)	Cylinder body ASSY
(2)	Filter - master cylinder	(7)	Seal
(3)	Caution label (model with caution label)	(8)	Reservoir tank
(4)	Seal sub ASSY	(9)	Pin
(5)	Bracket - master cylinder	(10)	Level - indicator

Tightening torque: N·m (kgf-m, ft-lb)
T: 13 (1.33, 9.6)

4. FRONT BRAKE PIPES AND HOSES

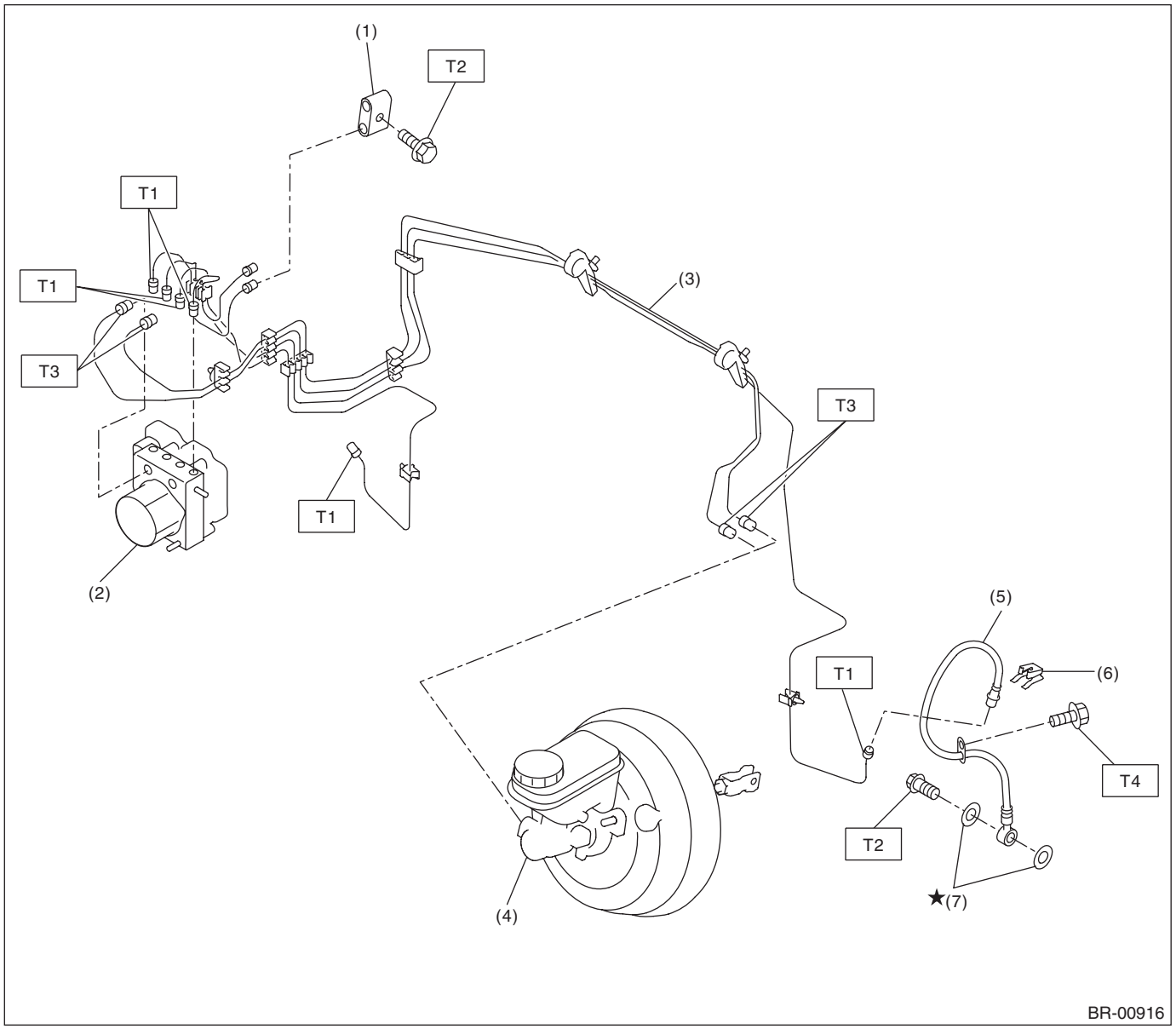

(1)	Connector - two-way	(5)	Front brake hose RH/LH	***Tightening torque: N·m (kgf-m, ft-lb)***
(2)	VDC control module and hydraulic control unit (VDCCM&H/U)	(6)	Clamp	***T1: 15 (1.53, 11.1)***
(3)	Front brake pipe ASSY	(7)	Gasket	***T2: 18 (1.84, 13.3)***
(4)	Master cylinder ASSY			***T3: 19 (1.94, 14.0)***
				T4: 33 (3.36, 24.3)

5. CENTER AND REAR BRAKE PIPES AND HOSES

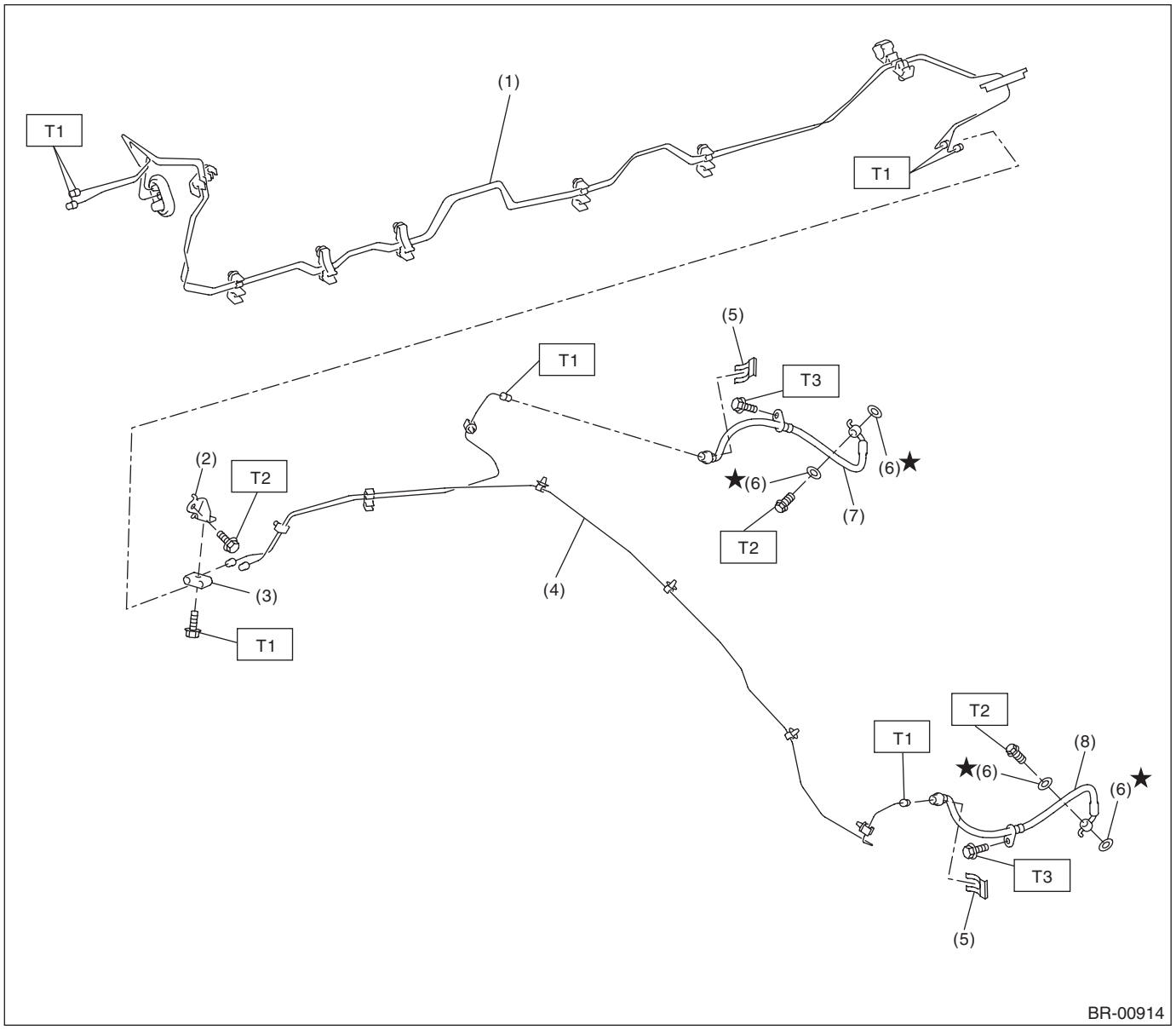

(1)	Center brake pipe ASSY	(5)	Clamp	***Tightening torque: N·m (kgf-m, ft-lb)***
(2)	Bracket	(6)	Gasket	***T1: 15 (1.53, 11.1)***
(3)	Connector	(7)	Rear brake hose RH	***T2: 18 (1.84, 13.3)***
(4)	Rear brake pipe ASSY	(8)	Rear brake hose LH	***T3: 33 (3.36, 24.3)***

6. BRAKE BOOSTER

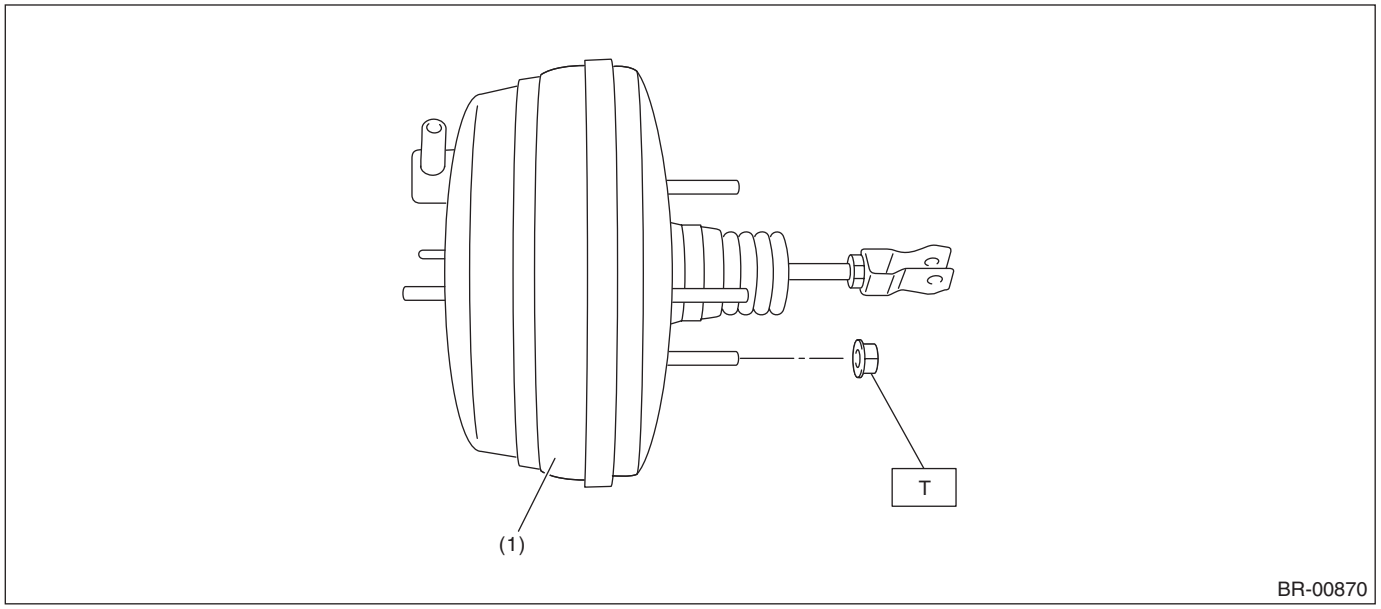

(1) Vacuum booster ASSY

Tightening torque: N·m (kgf-m, ft-lb)
T: 18 (1.84, 13.3)

7. BRAKE PEDAL

- CVT model

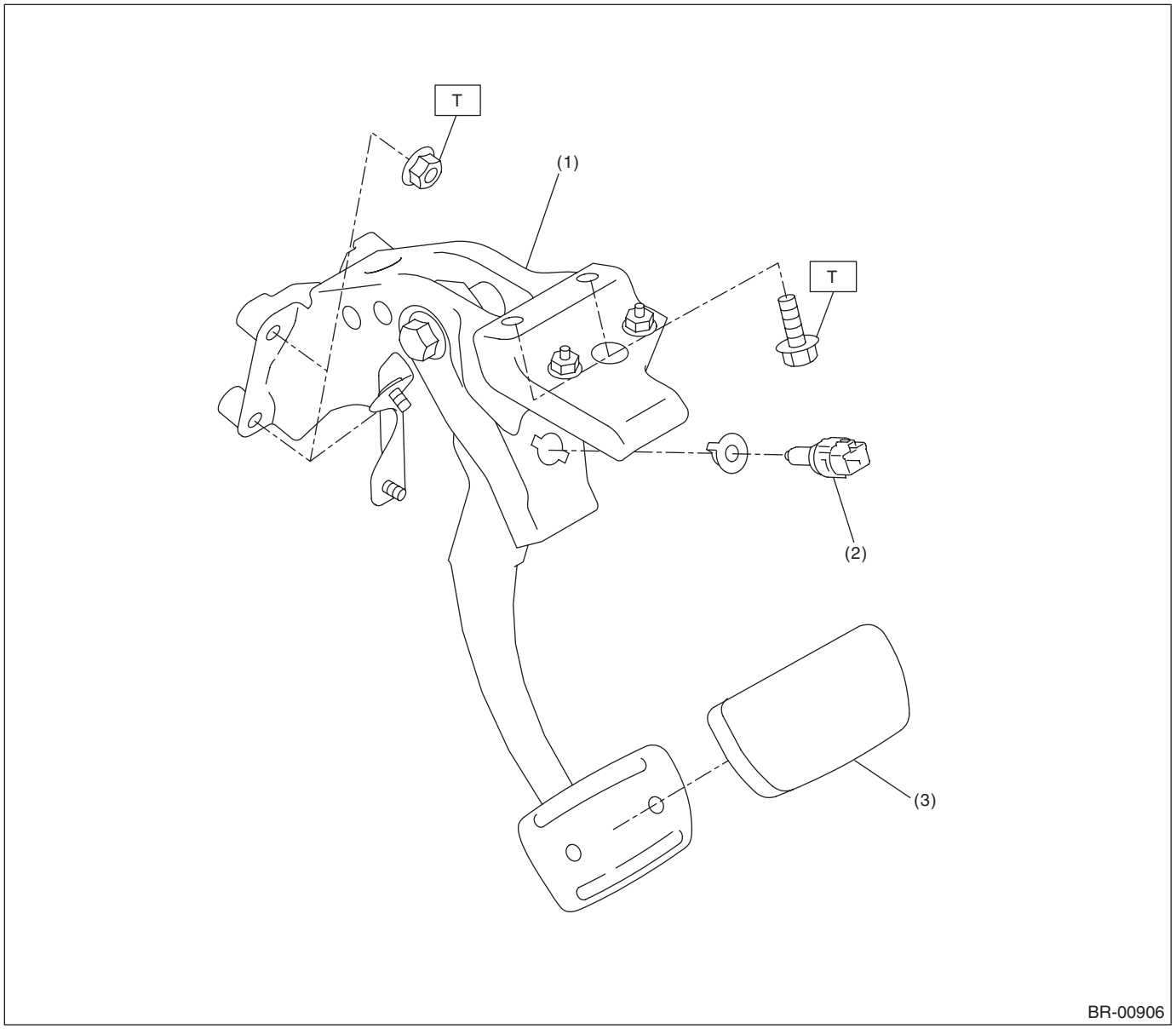

(1) Brake pedal ASSY
(2) Switch - stop light
(3) Pad - brake pedal

Tightening torque: N·m (kgf-m, ft-lb)
T: 18 (1.84, 13.3)

- MT model

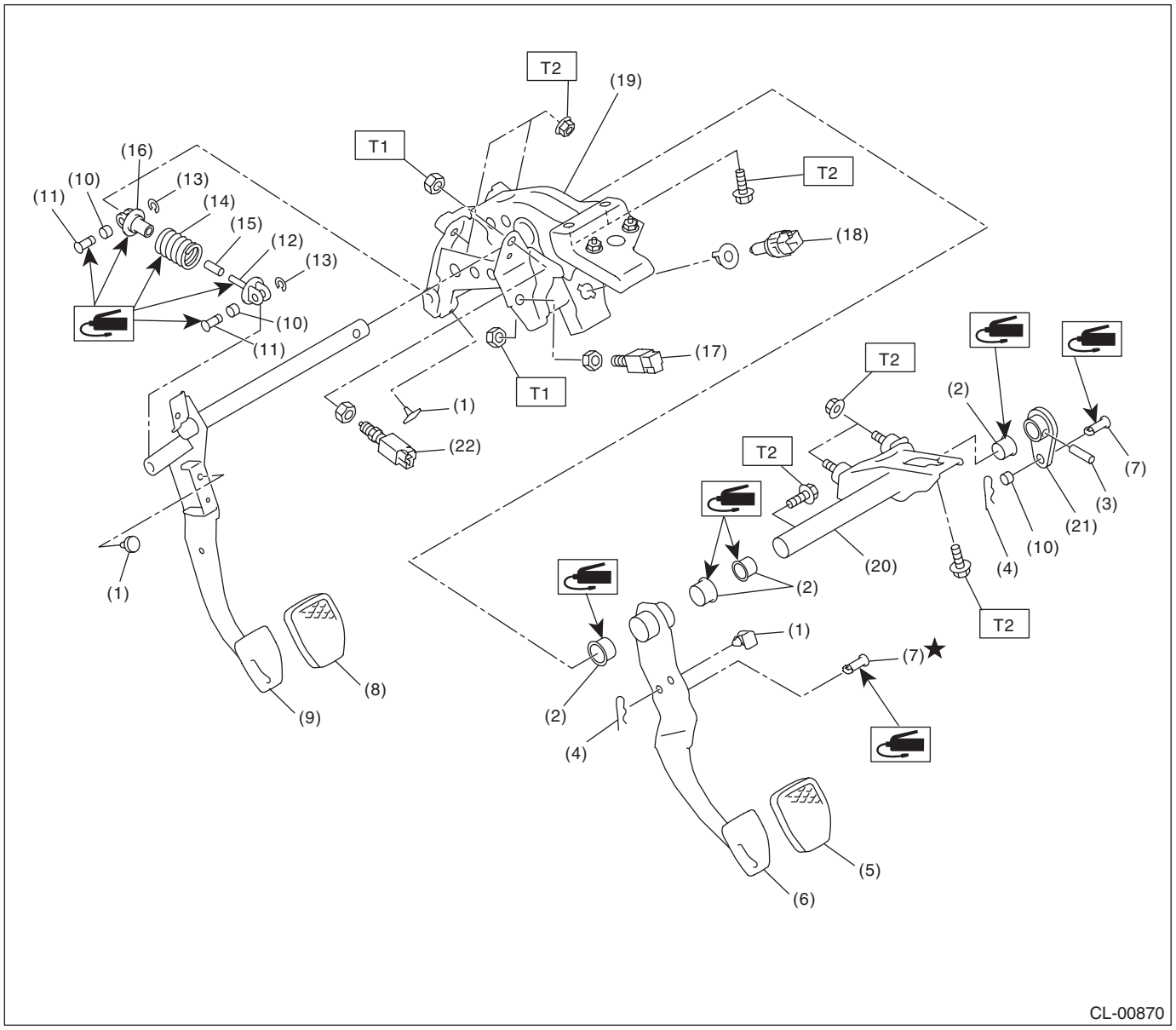

(1) Stopper
(2) Bushing
(3) Spring pin
(4) Snap pin
(5) Pad - brake pedal
(6) Brake pedal
(7) Clevis pin
(8) Pad - clutch pedal
(9) Clutch pedal
(10) Bushing C
(11) Clutch clevis pin
(12) Assist rod A
(13) Clip
(14) Assist spring
(15) Assist bushing
(16) Assist rod B
(17) Clutch switch
(18) Switch - stop light
(19) Pedal bracket
(20) Clutch master cylinder bracket
(21) Lever
(22) Clutch start switch

Tightening torque: N·m (kgf-m, ft-lb)
T1: 8 (0.82, 5.9)
T2: 18 (1.84, 13.3)

- HEV model

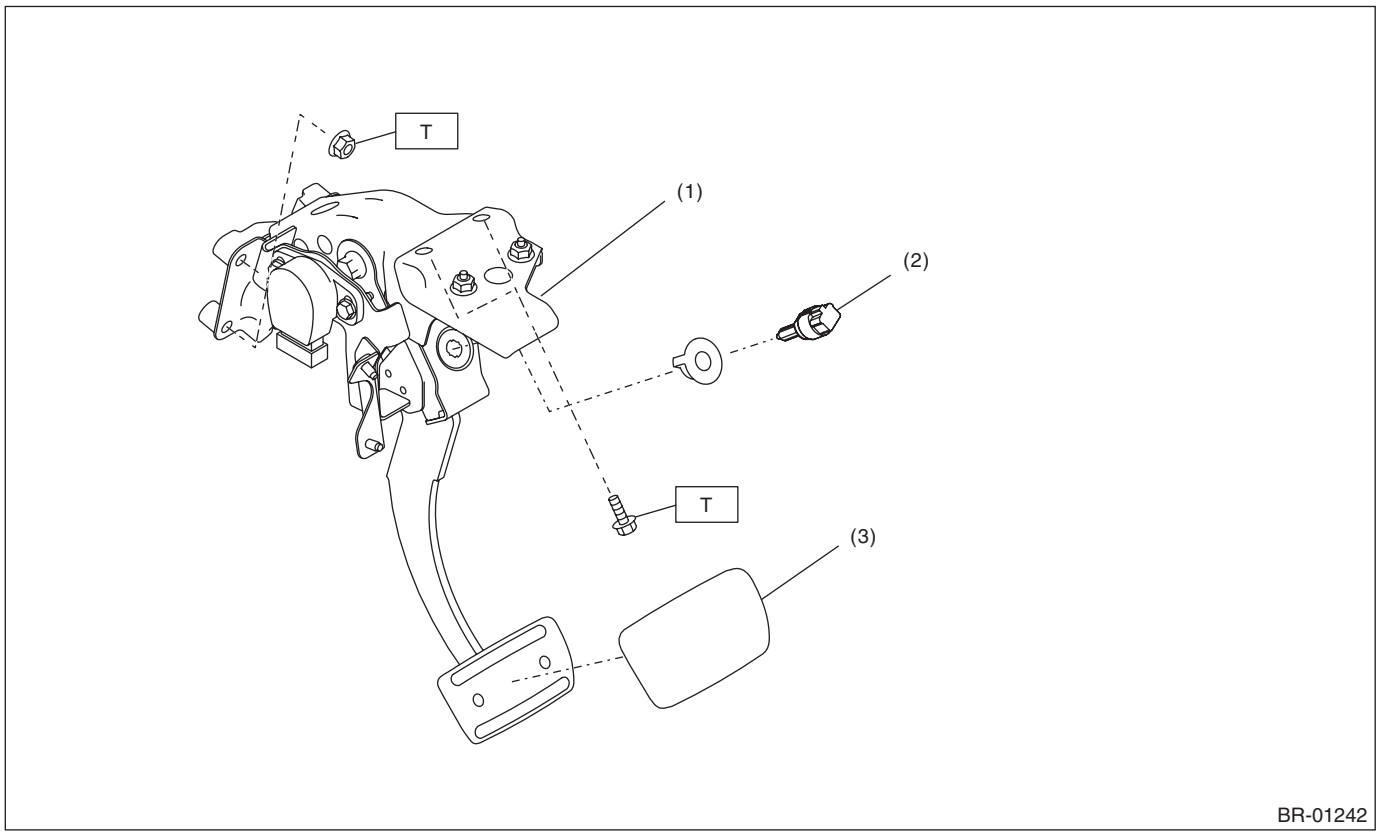

(1) Brake pedal ASSY
(2) Switch - stop light
(3) Pad - brake pedal

Tightening torque: N·m (kgf-m, ft-lb)
T: 18 (1.84, 13.3)

8. BRAKE VACUUM PUMP

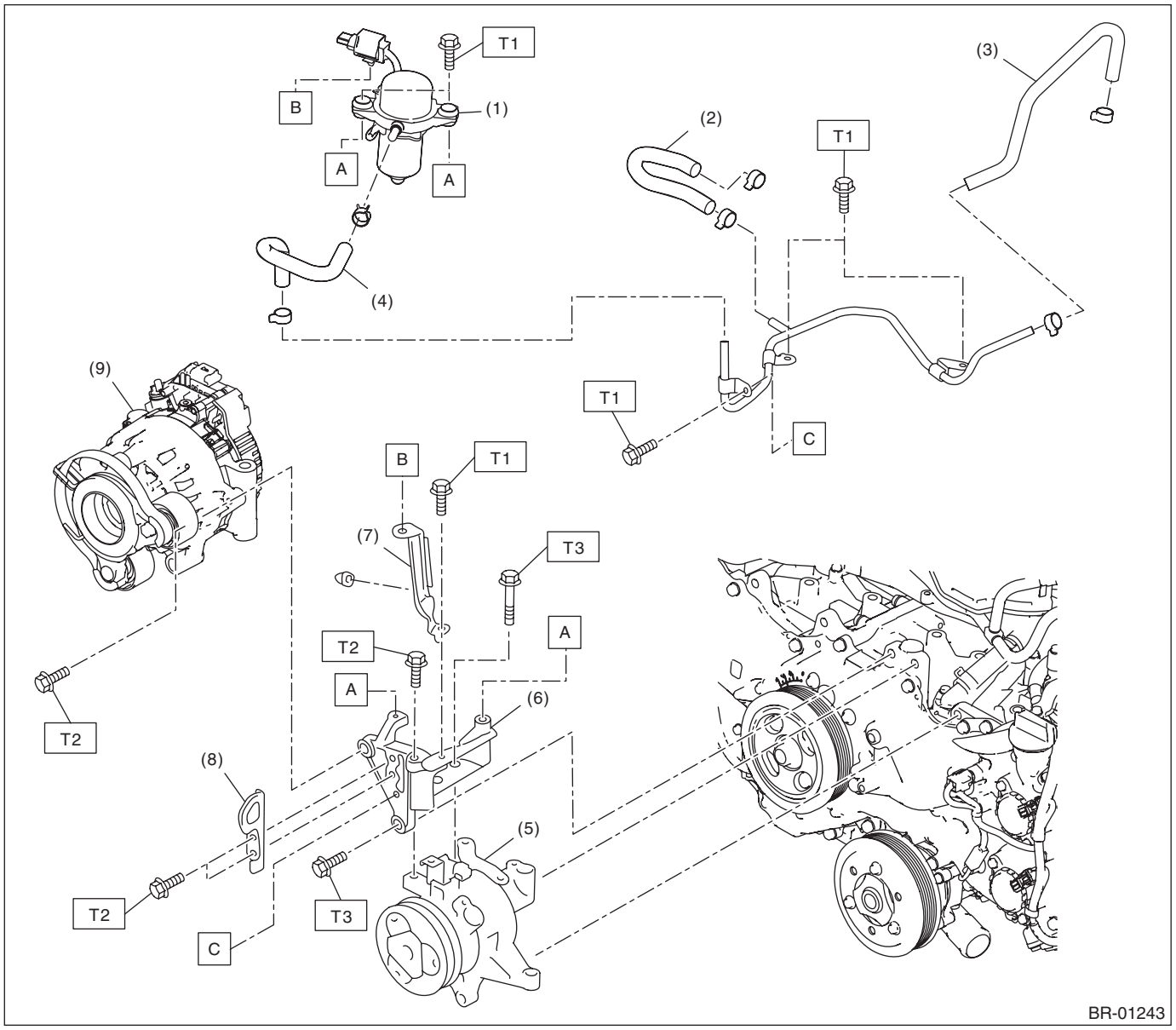

(1) Vacuum pump ASSY
(2) Vacuum hose - COMPL A
(3) Vacuum hose - COMPL B
(4) Vacuum hose - COMPL C
(5) Compressor ASSY
(6) Bracket COMPL - vacuum pump
(7) Bracket - vacuum pump connector
(8) Hanger - engine front
(9) Integrated starter generator

Tightening torque: N·m (kgf-m, ft-lb)
T1: 6.4 (0.65, 4.7)
T2: 18 (1.84, 13.3)
T3: 36 (3.67, 26.6)

C: CAUTION

- Wear appropriate work clothing, including a helmet, protective goggles and protective shoes when performing any work.
- Before removal, installation or disassembly, be sure to clarify the failure. Avoid unnecessary removal, installation, disassembly and replacement.
- Use SUBARU genuine grease etc. or equivalent. Do not mix grease etc. of different grades or manufacturers.
- Before securing a part on a vise, place cushioning material such as wood blocks, aluminum plate, or cloth between the part and the vise.
- Be sure to tighten fasteners including bolts and nuts to the specified torque.
- Place shop jacks or rigid racks at the specified points.

2. Relay and Fuse

A: LOCATION

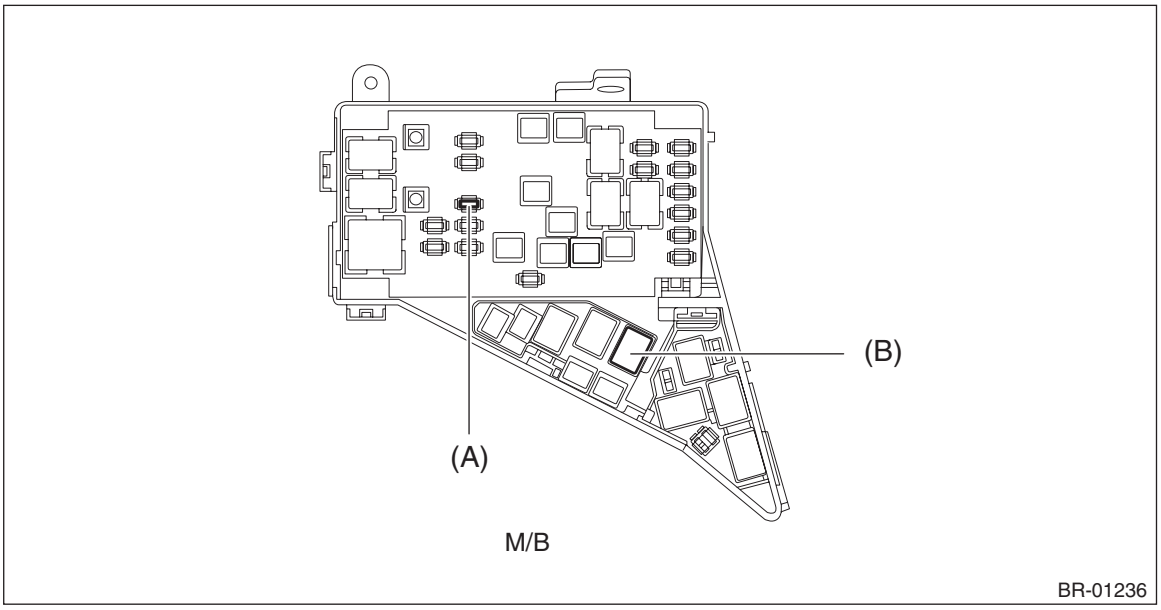

Main fuse box	Fuse 15 A (vacuum pump - relay)	(A)
	Fuse 30 A (vacuum pump - relay)	(B)

NOTE:
For other related fuses, refer to the wiring diagram.
- Gasoline engine model: <Ref. to WI(w/o HEV)-15, Power Supply Circuit.>
- HEV model: <Ref. to WI(HEV)-20, Power Supply Circuit.>

B: INSPECTION

1. CHECK FUSE

1) Remove the fuse and inspect visually.
2) If the fuse is blown out, replace the fuse.

NOTE:
If the fuse is blown again, check the system wiring harness.

2. CHECK RELAY

1) Check the resistance between relay terminals.

Terminal No.	Inspection conditions	Standard	Circuit
1 — 2	Always	1 MΩ or more	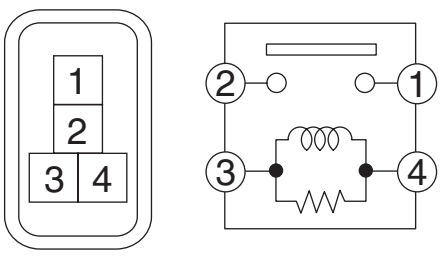
1 — 2	4 — Apply battery voltage between three terminals.	Less than 1 Ω	

2) Replace the relay if the inspection result is not within the standard value.

3. Front Brake Pad

A: REMOVAL

1) Lift up the vehicle, and then remove the front wheels.
2) Remove the front brake pad.
   (1) Remove the caliper bolt on the lower side.
   (2) Raise the caliper body assembly and support it.

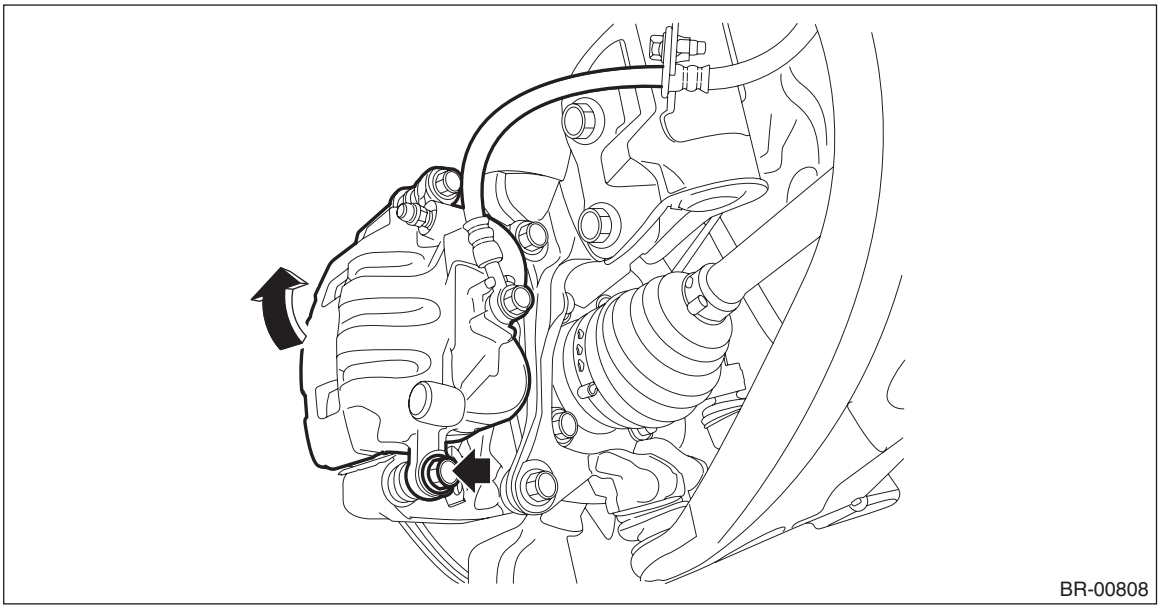
BR-00808

NOTE:
Do not disconnect the brake hose from the caliper body assembly.
   (3) Remove the brake pad from support - front disc brake.

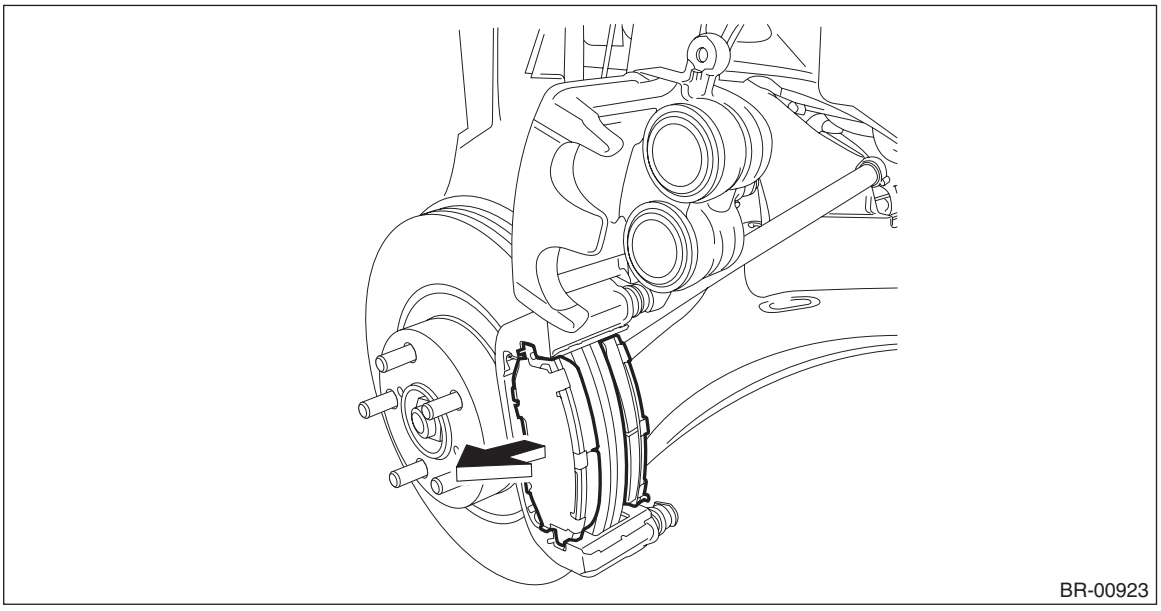
BR-00923

B: INSTALLATION

NOTE:
Before installation, remove mud and foreign matter from the caliper body assembly and support - front disc brake.
1) Check the brake pad. <Ref. to BR-20, INSPECTION, Front Brake Pad.>
2) Apply a thin coat of grease to the pad clip. (A)

Grease:
Grease contained in the pad kit or equivalent
3) Apply a thin coat of grease to the pad and both sides of the shim - disc brake front inner (a). (B)

Grease:
Molykote AS880N or an item contained in the pad kit

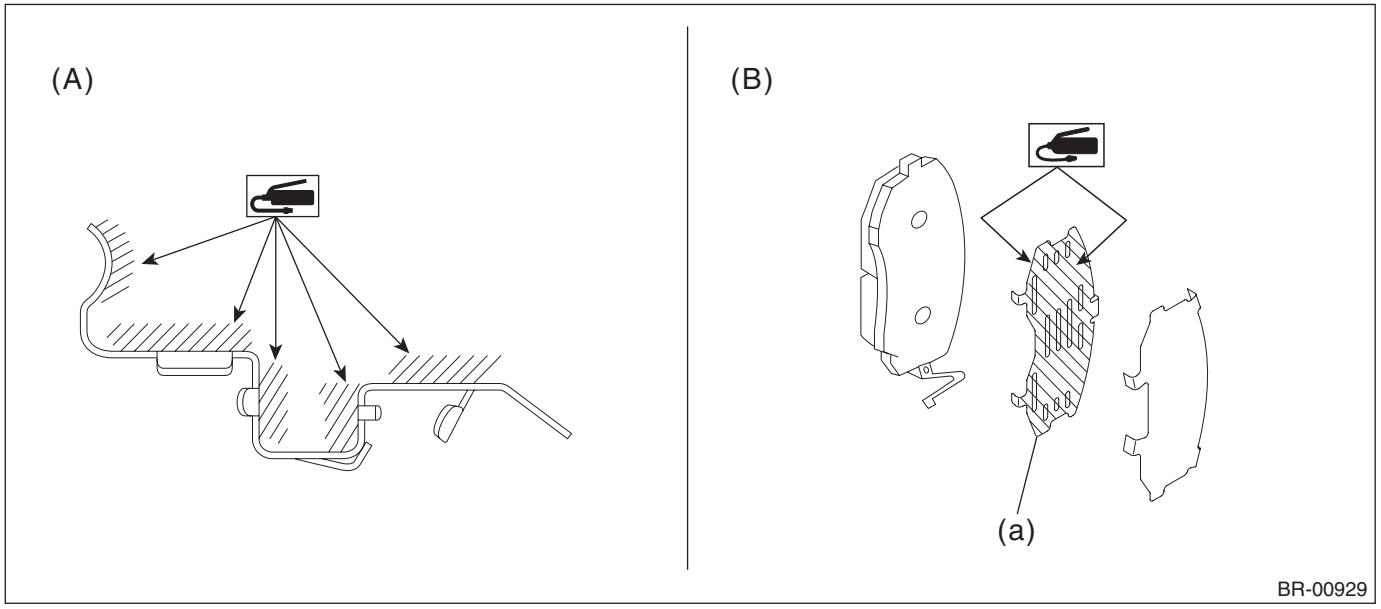

4) Install the brake pad to the support - front disc brake.

CAUTION:
• Be sure to install so that the pad return spring faces the input side of the direction of brake rotor rotation, as shown in the figure.
• Correctly install the pad return spring to the supporting surface of the pad clip as shown in the figure.
• If the pad return spring is deformed or damaged, replace the brake pad with a new part.

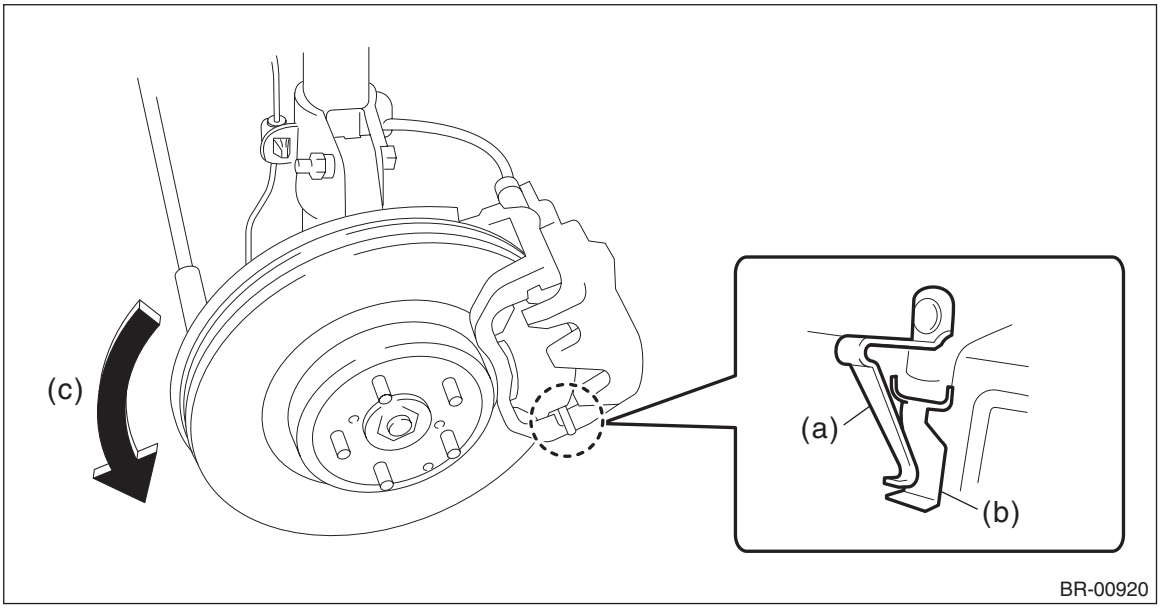

(a) Pad return spring
(b) Supporting surface of pad clip
(c) Direction of brake rotor rotation

NOTE:
Install the brake pad indicator in proper direction.

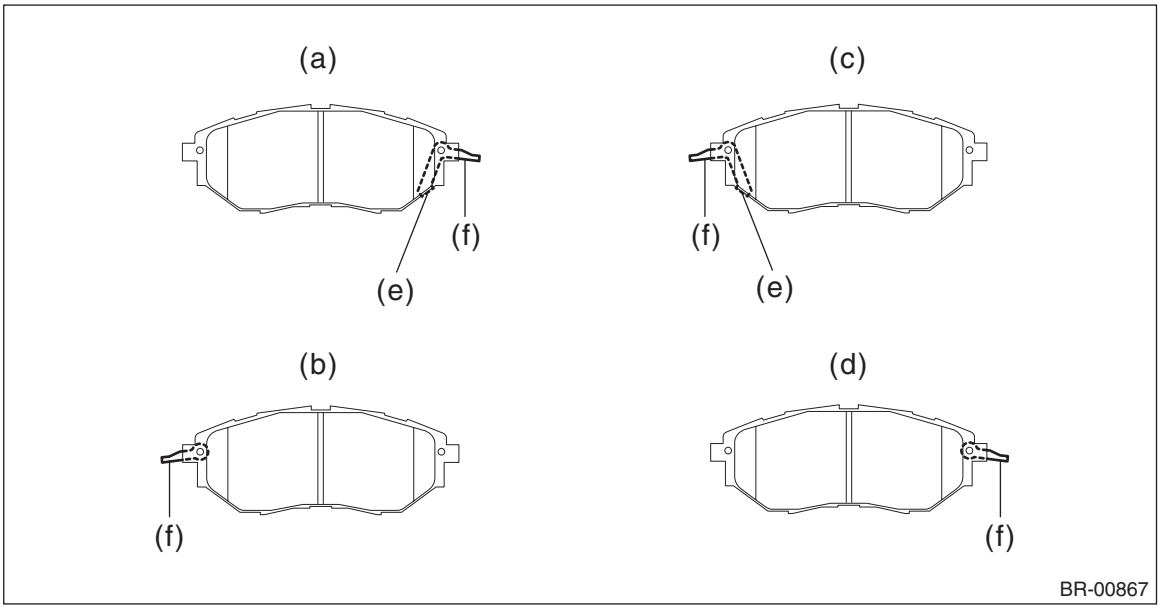

(a) LH — IN
(b) LH — OUT
(c) RH — IN
(d) RH — OUT
(e) Pad indicator
(f) Pad return spring

5) Install the caliper body assembly to the support - front disc brake.

Tightening torque:
Caliper bolt: 27 N·m (2.75 kgf-m, 19.9 ft-lb)

6) Install the front wheels.

Tightening torque:
Except for C4 model: 120 N·m (12.24 kgf-m, 88.5 ft-lb)
C4 model: 100 N·m (10.20 kgf-m, 73.8 ft-lb)

C: INSPECTION

1) Check the pad thickness (A).

NOTE:
- Always replace the pads of both wheels and both sides as a set.
- Replace pad clips if they are twisted or worn.
- Replace the pad if there is oil or grease on it.

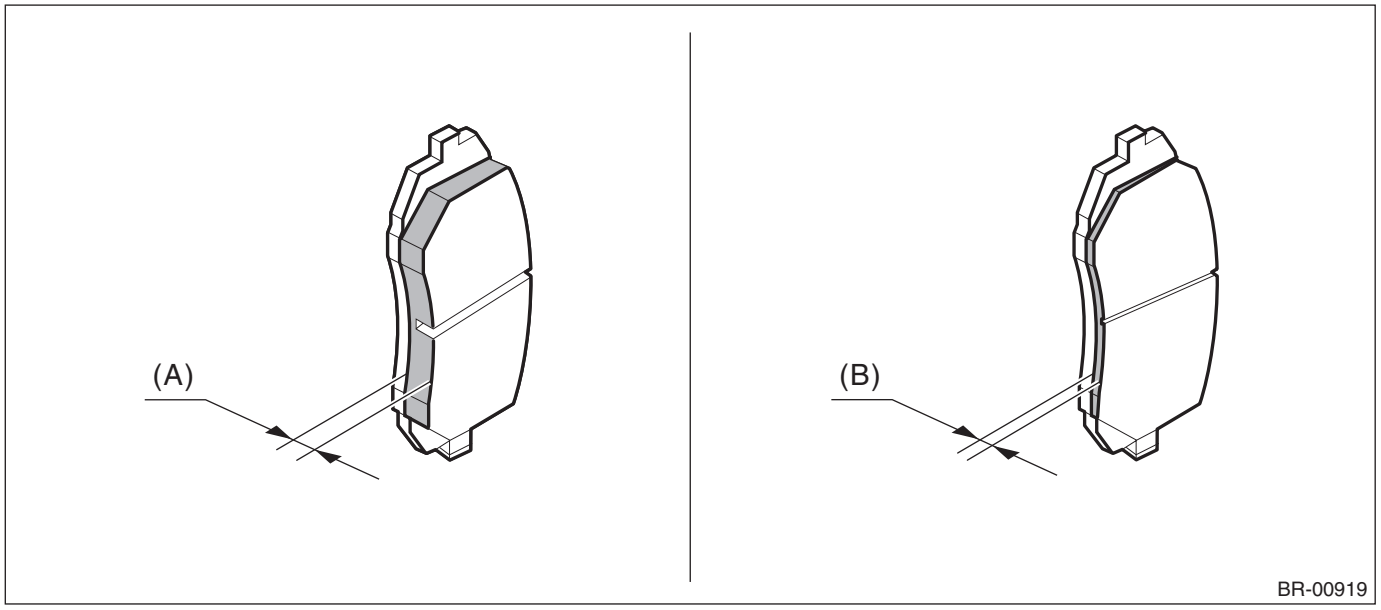

	Standard (A)	Wear limit (B)
Pad thickness	11 mm (0.43 in)	1.5 mm (0.059 in)

NOTE:
- Always replace the pads of both wheels and both sides as a set.
- Replace pad clips if they are twisted or worn.
- Wear indicators are installed on the inner and outer disc brake pads.

If the pad is worn to the limit, the end of wear indicator contacts disc rotor, and a squeaking sound is heard as the wheel rotates. If the sound is heard, replace the pad.
- Replace the pad if there is oil or grease on it.

2) If the wear limit is exceeded in the inspection, replace the brake pad.

4. Front Disc Rotor

A: REMOVAL

1) Lift up the vehicle, and then remove the front wheels.
2) Remove the caliper body assembly from the housing assembly - front axle.
   (1) Remove the bolt from the brake hose bracket.
   (2) Remove the mounting bolt, and remove the caliper body assembly.
   (3) Prepare wiring harnesses etc. to be discarded, and suspend the caliper body assembly from the strut assembly.

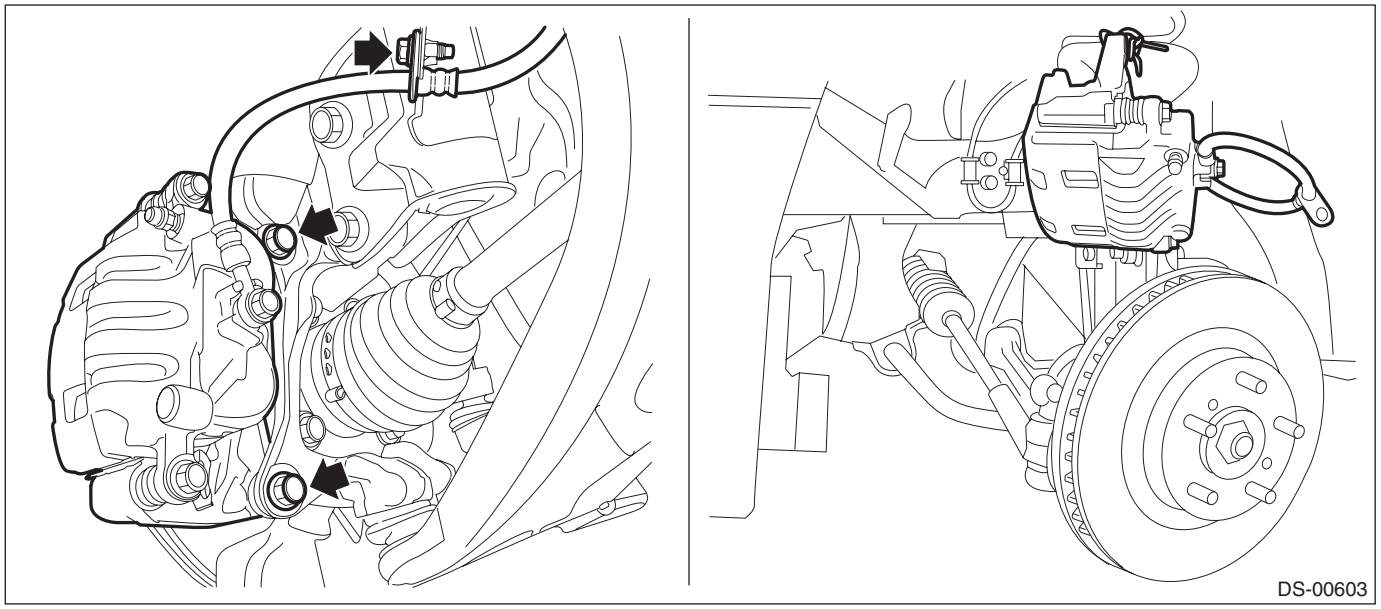

3) Remove the front disc rotor.

NOTE:
When the disc rotor is difficult to be removed from the hub unit COMPL - front axle, screw in 8 mm (0.31 in) bolt to the threaded part of the disc rotor (A), and remove the disc rotor.

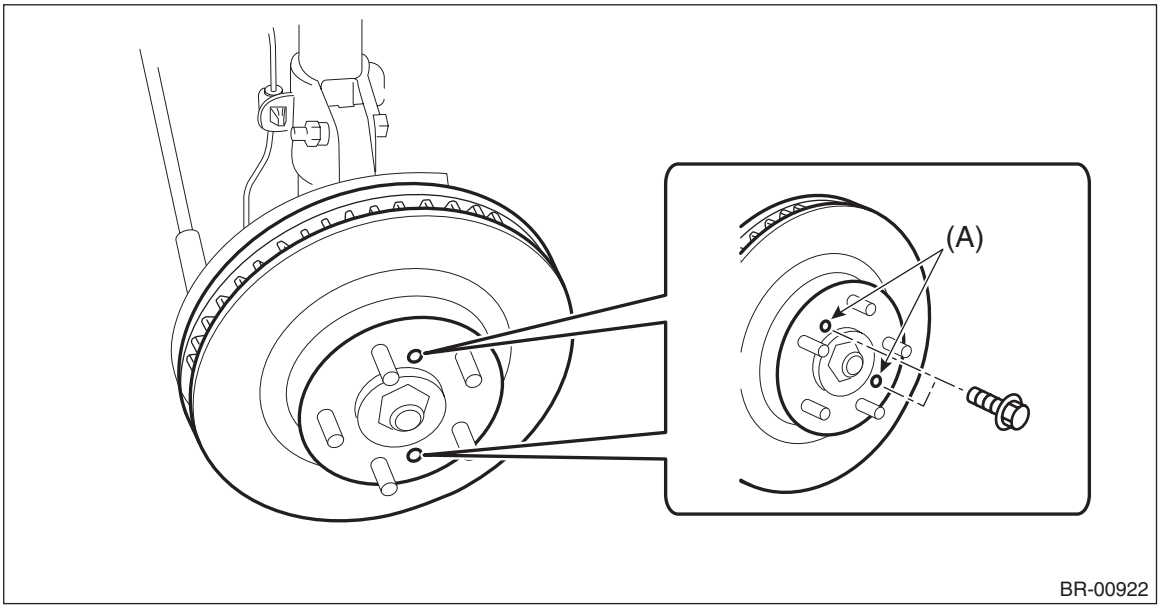

B: INSTALLATION

NOTE:
Before installation, remove mud and foreign matter from the caliper body assembly.
1) Before installation, check the front disc rotor. <Ref. to BR-22, INSPECTION, Front Disc Rotor.>
2) Install each part in the reverse order of removal.

Tightening torque:
Brake hose bracket: 33 N·m (3.36 kgf-m, 24.3 ft-lb)
Mounting bolt: 80 N·m (8.16 kgf-m, 59.0 ft-lb)
Front wheel: Except for C4 model
120 N·m (12.24 kgf-m, 88.5 ft-lb)
Front wheel: C4 model
100 N·m (10.20 kgf-m, 73.8 ft-lb)

C: INSPECTION

1. DISC ROTOR RUNOUT CHECK

1) Check the hub unit COMPL - front axle for free play and runout before the inspection of disc rotor runout limit. <Ref. to DS-34, INSPECTION, Front Hub Unit Bearing.>
2) Tighten the wheel nuts to secure disc rotor.
3) Set a dial gauge 10 mm (0.39 in) inward from the disc rotor outer circumference, and check the disc rotor runout while rotating the disc rotor.

Disc rotor runout limit: 0.05 mm (0.0020 in)

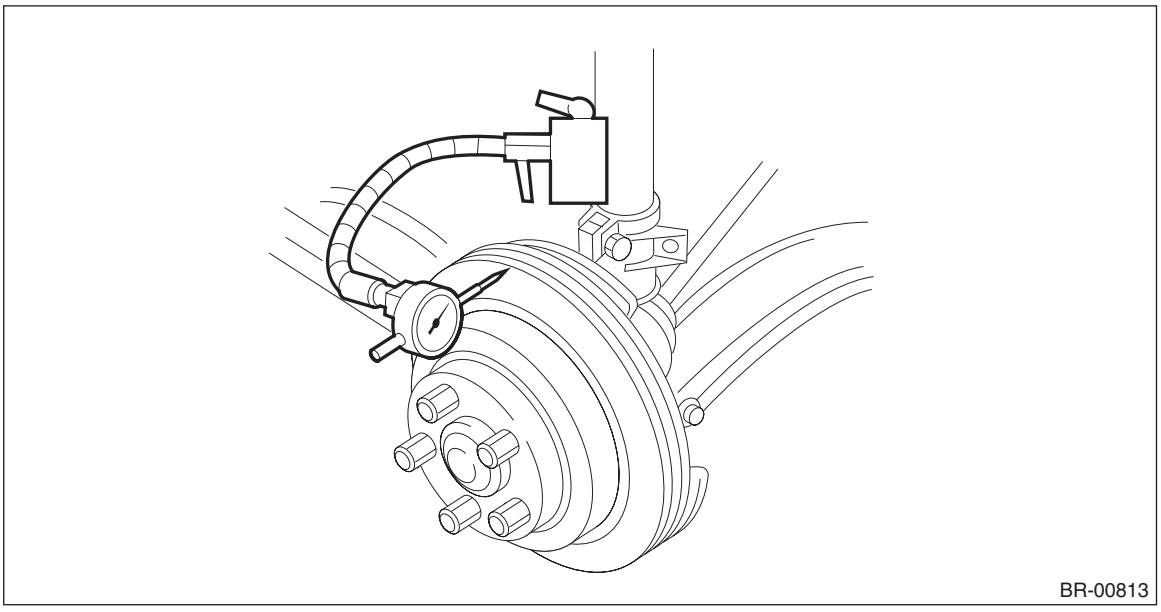

4) If the disc rotor runout exceeds the limit, resurface the disc rotor.
5) After grinding, check the thickness of the disc rotor. <Ref. to BR-23, DISC ROTOR THICKNESS CHECK, INSPECTION, Front Disc Rotor.>

2. DISC ROTOR THICKNESS CHECK

1) Set a micrometer 10 mm (0.39 in) inward from the disc rotor outer perimeter, and then measure the disc rotor thickness (A).

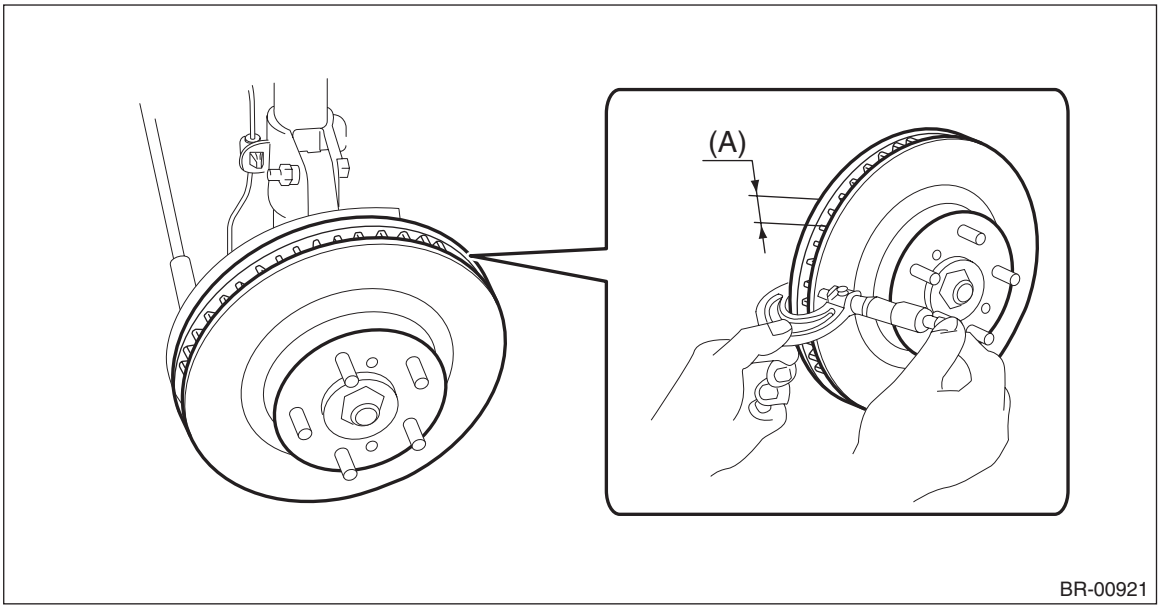

	Size	Standard	Wear limit	Disc rotor outer diameter
Disc rotor thickness (A)	15-inch	24 mm (0.94 in)	22 mm (0.87 in)	277 mm (10.91 in)
	16-inch			294 mm (11.57 in)

2) If the wear limit is exceeded in the inspection, replace the disc rotor.

5. Front Disc Brake Assembly

A: REMOVAL

CAUTION:
Do not allow brake fluid to come in contact with the painted surface of the vehicle body. If it does, wash off with water and wipe away completely.

1) Lift up the vehicle, and then remove the front wheels.
2) Remove the caliper body assembly.
   (1) Remove the union bolt and caliper bolt, and remove the caliper body assembly from the support - front disc brake.

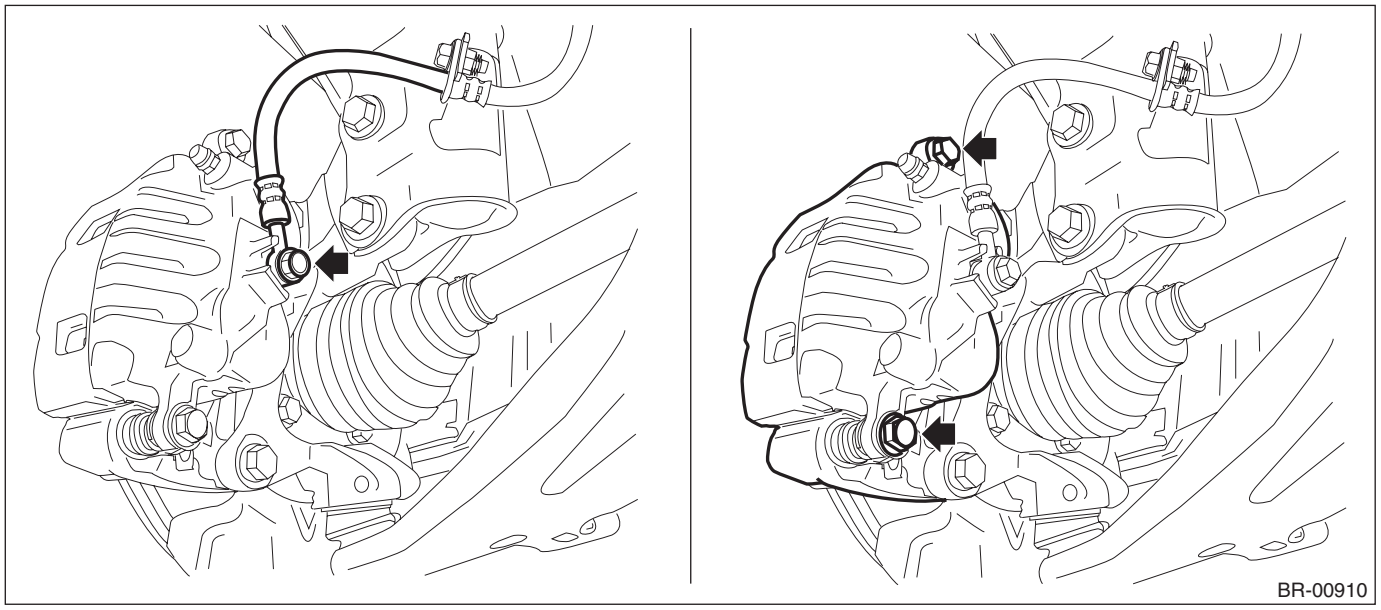

3) Remove the support - front disc brake.

NOTE:
Remove the support - front disc brake only when replacing the disc rotor or the support - front disc brake. It is not necessary to remove it when servicing the caliper body assembly.
   (1) Remove the brake pad from support - front disc brake.

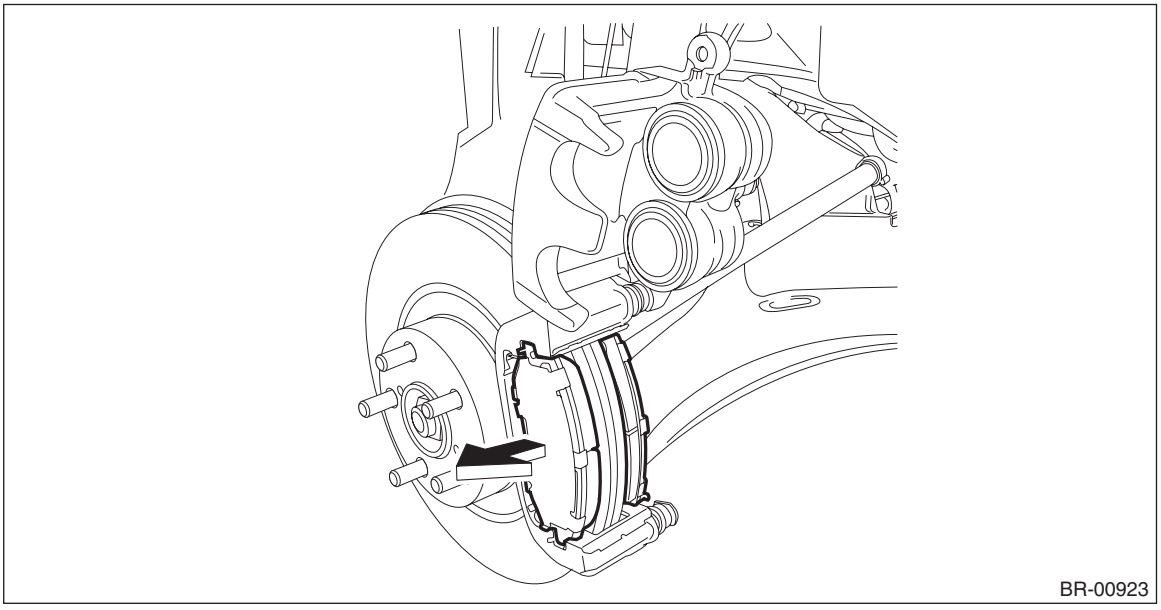

(2) Remove the mounting bolts, and then remove the support - front disc brake from the housing assembly - front axle.

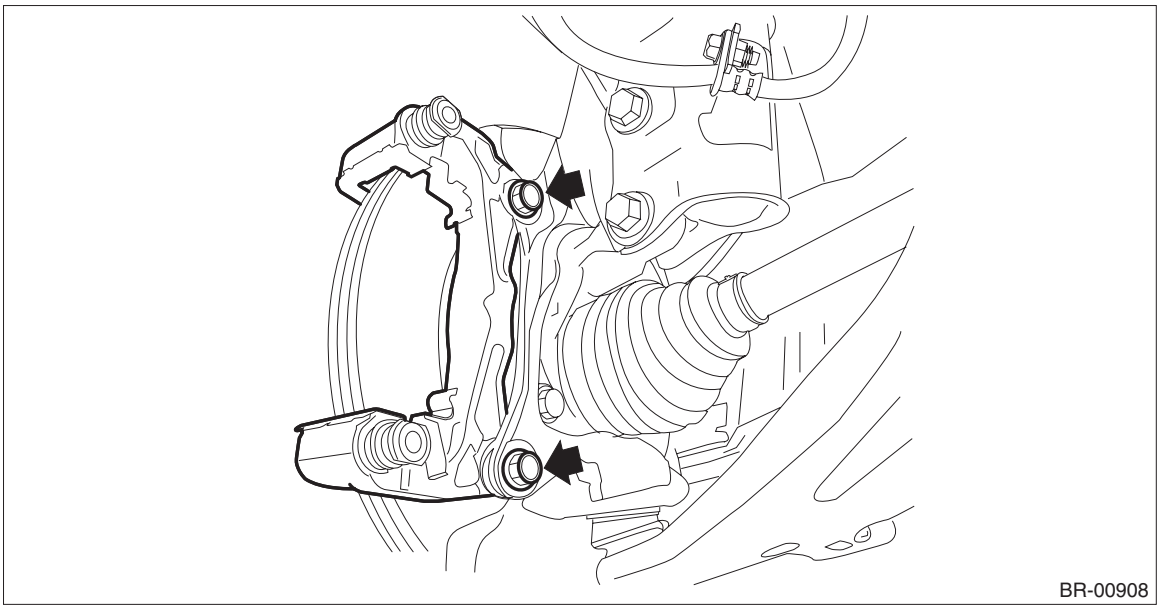

B: INSTALLATION

NOTE:
Before installation, remove mud and foreign matter from the caliper body assembly and support - front disc brake.
1) Check each part. <Ref. to BR-31, INSPECTION, Front Disc Brake Assembly.>
2) Apply a thin coat of grease to the support - front disc brake.

Grease:
Grease contained in the pad kit or equivalent

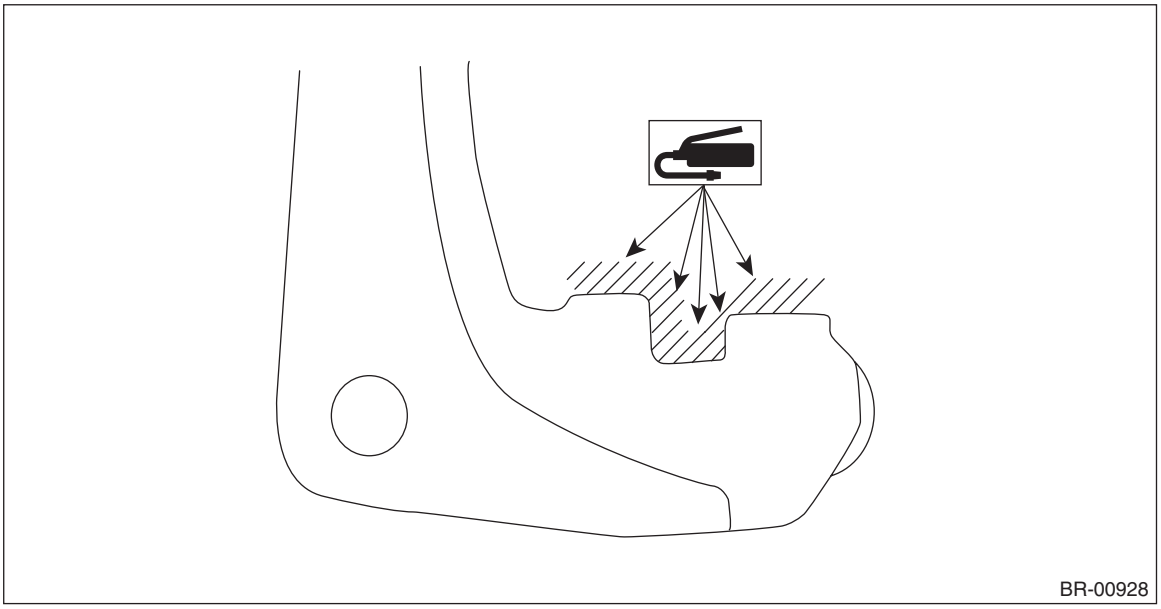

3) Install the support - front disc brake to the housing assembly - front axle.

Tightening torque:
Mounting bolt: 80 N·m (8.16 kgf-m, 59.0 ft-lb)

4) Apply a thin coat of grease to the pad clip. (A)

Grease:
Grease contained in the pad kit or equivalent

5) Apply a thin coat of grease to the pad and both sides of the shim - disc brake front inner (a). (B)

Grease:
Molykote AS880N or an item contained in the pad kit

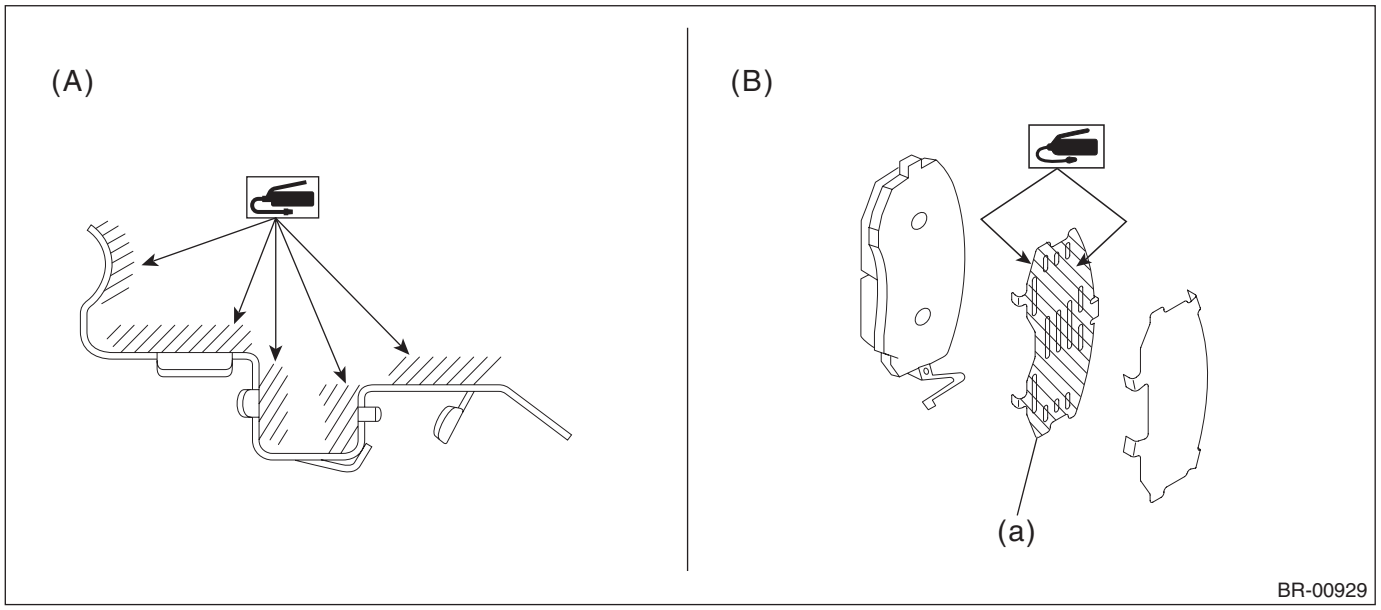

6) Install the brake pad to the support - front disc brake.

CAUTION:
• Be sure to install so that the pad return spring faces the input side of the direction of brake rotor rotation, as shown in the figure.
• Correctly install the pad return spring to the supporting surface of the pad clip as shown in the figure.
• If the pad return spring is deformed or damaged, replace the brake pad with a new part.

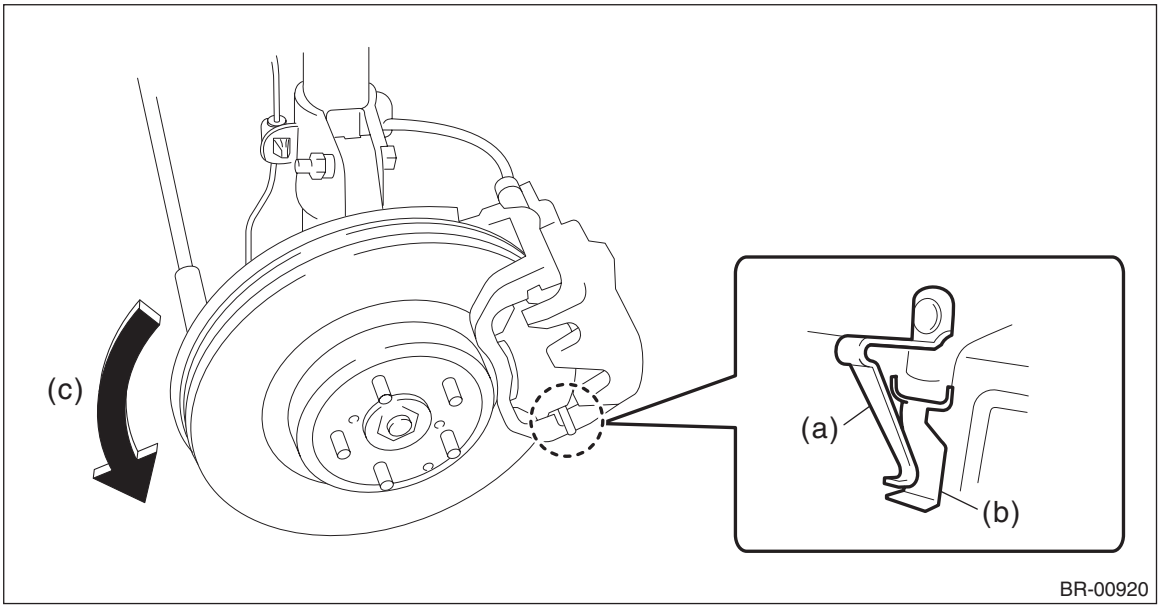

(a) Pad return spring
(b) Supporting surface of pad clip
(c) Direction of brake rotor rotation

NOTE:
Install the brake pad indicator in proper direction.

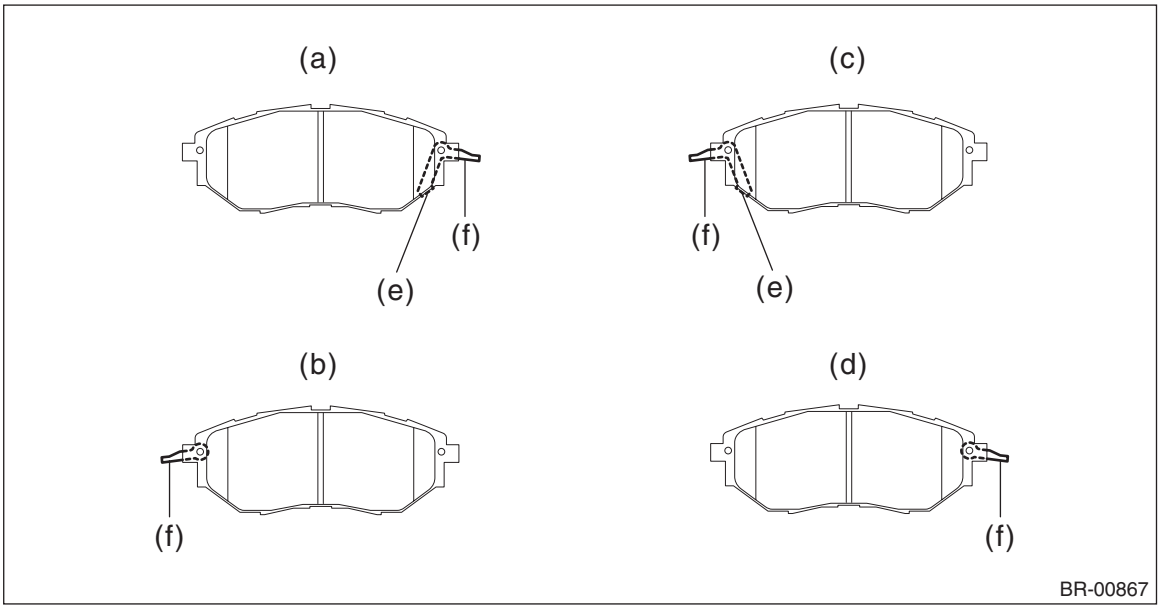

(a) LH — IN
(b) LH — OUT
(c) RH — IN
(d) RH — OUT
(e) Pad indicator
(f) Pad return spring

7) Install the caliper body assembly to the support - front disc brake.

Tightening torque:
Caliper bolt: 27 N·m (2.75 kgf-m, 19.9 ft-lb)
8) Connect the brake hose using a new brake hose gasket.

Tightening torque:
Union bolt: 18 N·m (1.84 kgf-m, 13.3 ft-lb)
9) Bleed air from the brake system. <Ref. to BR-62, BRAKE LINE, PROCEDURE, Air Bleeding.>
10) Install the front wheels.

Tightening torque:
Except for C4 model: 120 N·m (12.24 kgf-m, 88.5 ft-lb)
C4 model: 100 N·m (10.20 kgf-m, 73.8 ft-lb)

C: DISASSEMBLY

CAUTION:
Be careful not to allow foreign matter to enter the brake hose connector.
1) Remove mud and foreign matter from the caliper body.
2) Remove the piston - disc brake.
(1) Place a wooden block in the caliper body as shown in the figure to prevent the piston - disc brake from jumping out and being damaged.
(2) Using an air gun, gradually apply compressed air via the brake hose installation hole to push out the piston - disc brake.

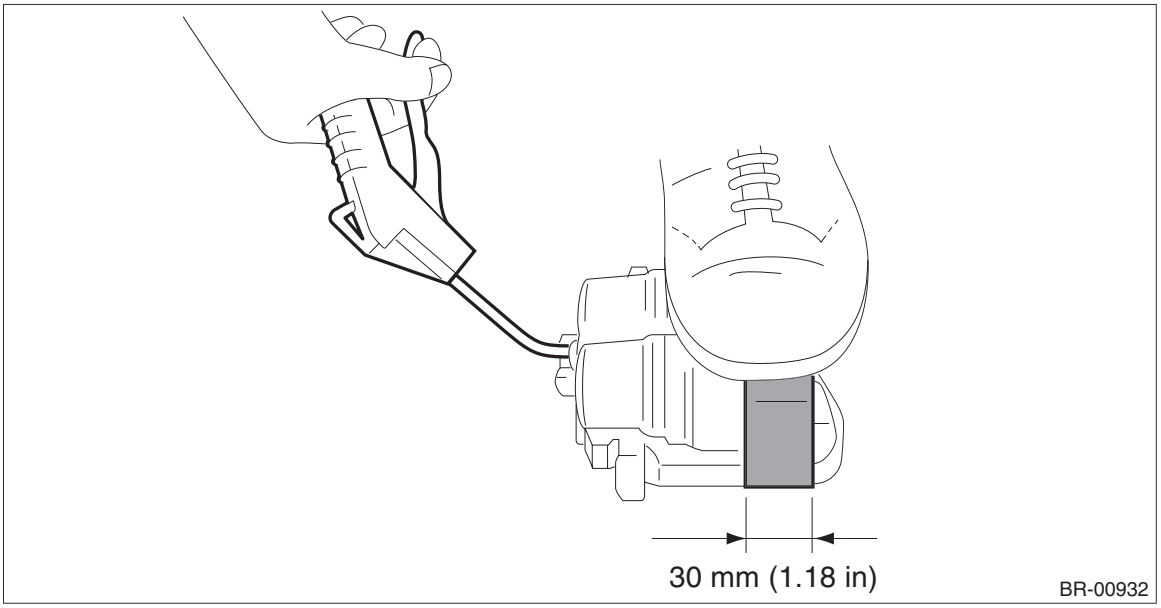

3) Remove the piston boot (b) and piston seal (c) from the caliper body cylinder (a).

CAUTION:
Do not damage the cylinder and piston seal groove.

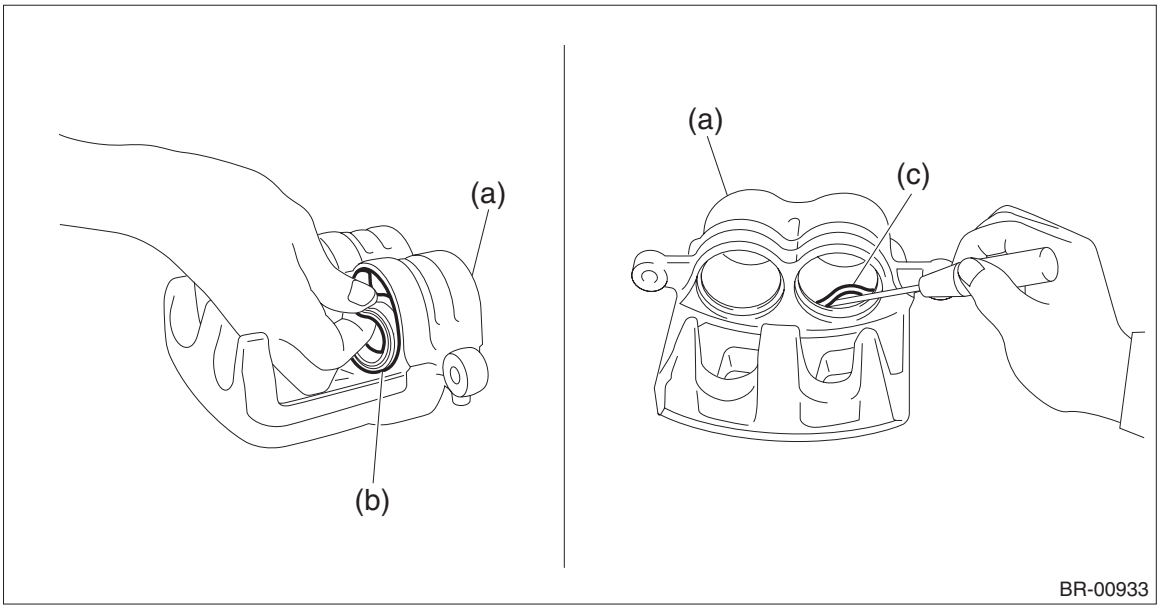

4) Remove the guide pin - front brake, lock pin - front brake, lock pin - sleeve, and pin boot from the support - front disc brake.

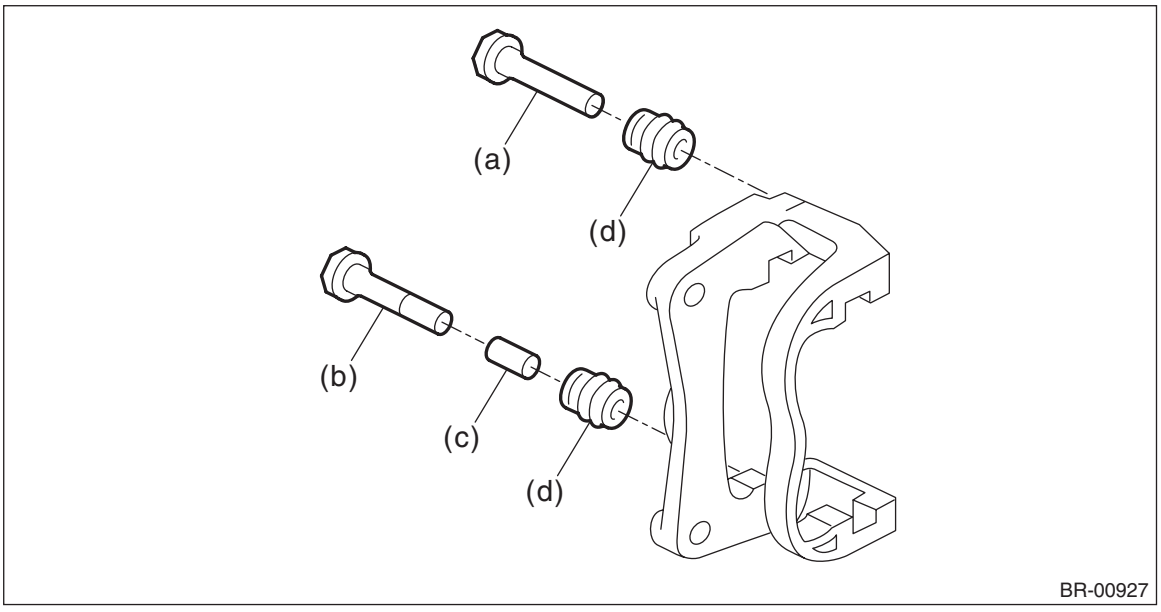

(a) Guide pin - front brake (black)
(b) Lock pin - front brake (silver)
(c) Lock pin - sleeve
(d) Pin boot

D: ASSEMBLY

1) Before assembly, check each part. <Ref. to BR-31, INSPECTION, Front Disc Brake Assembly.>
2) Clean the inside of the caliper body cylinder using brake fluid.
3) Apply a coat of brake fluid to piston seal and install the piston seal to the caliper body cylinder groove.
4) Apply a coat of brake fluid to the inner surface of caliper body cylinder and the entire outer surface of the piston - disc brake.
5) Apply grease contained in the piston seal kit to the piston boot, and install it to the groove at the end of the cylinder.
6) Insert the piston - disc brake into the caliper body cylinder.
7) Position the piston boot in the grooves on the piston - disc brake and the caliper body cylinder.

CAUTION:
Do not force the piston - disc brake into the caliper body cylinder.

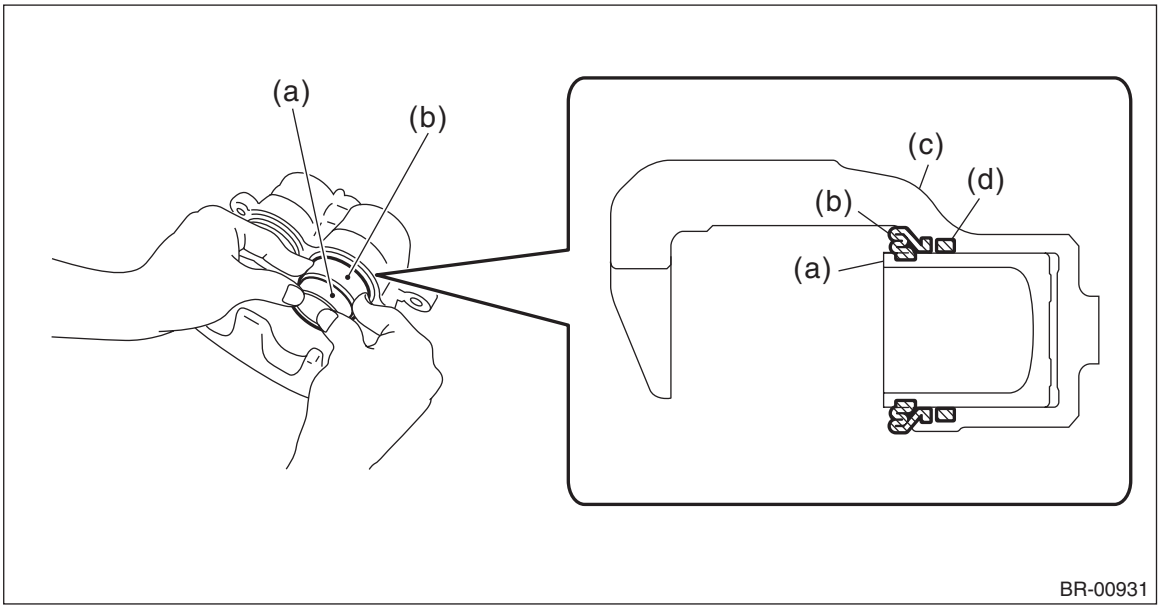

(a) Piston - disc brake
(b) Piston boot
(c) Caliper body assembly
(d) Piston seal

8) Apply grease contained in the piston seal kit to the lock pin - front brake, the outer surface of guide pin - front brake, the inner surface of support cylinder, and the grooves of pin boot.

9) Install the pin boot to the lock pin - front brake and guide pin - front brake, and insert them into the support cylinder.

CAUTION:
Insert the lock pin - front brake and guide pin - front brake into specified position, and make sure that they slide and seat properly.

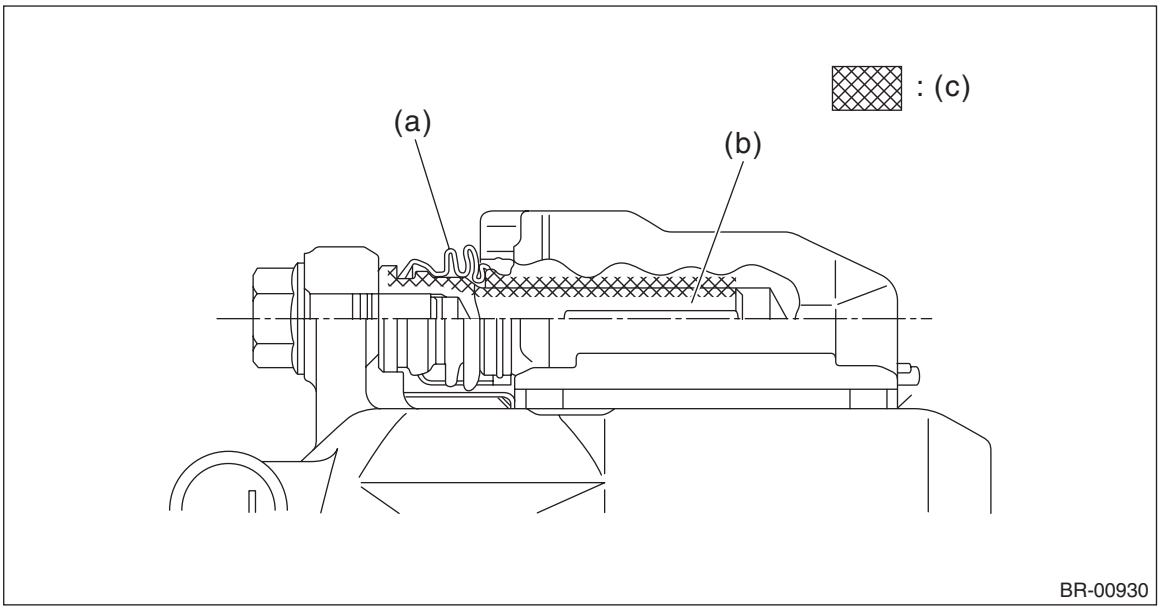

(a) Pin boot
(b) Lock pin - front brake or guide pin - front brake
(c) Grease applied area

E: INSPECTION

1) Check the caliper body cylinder and piston for uneven wear, damage or rust.
2) Check the rubber parts for damage or deterioration.
3) If faulty is found in the inspection, replace the relevant part.

6. Rear Brake Pad

A: REMOVAL

1) Lift up the vehicle, and then remove the rear wheels.
2) Remove the rear brake pad.
   (1) Remove the bolts and remove the brake hose bracket.
   (2) Remove the caliper bolt, and raise and hold the caliper body assembly.

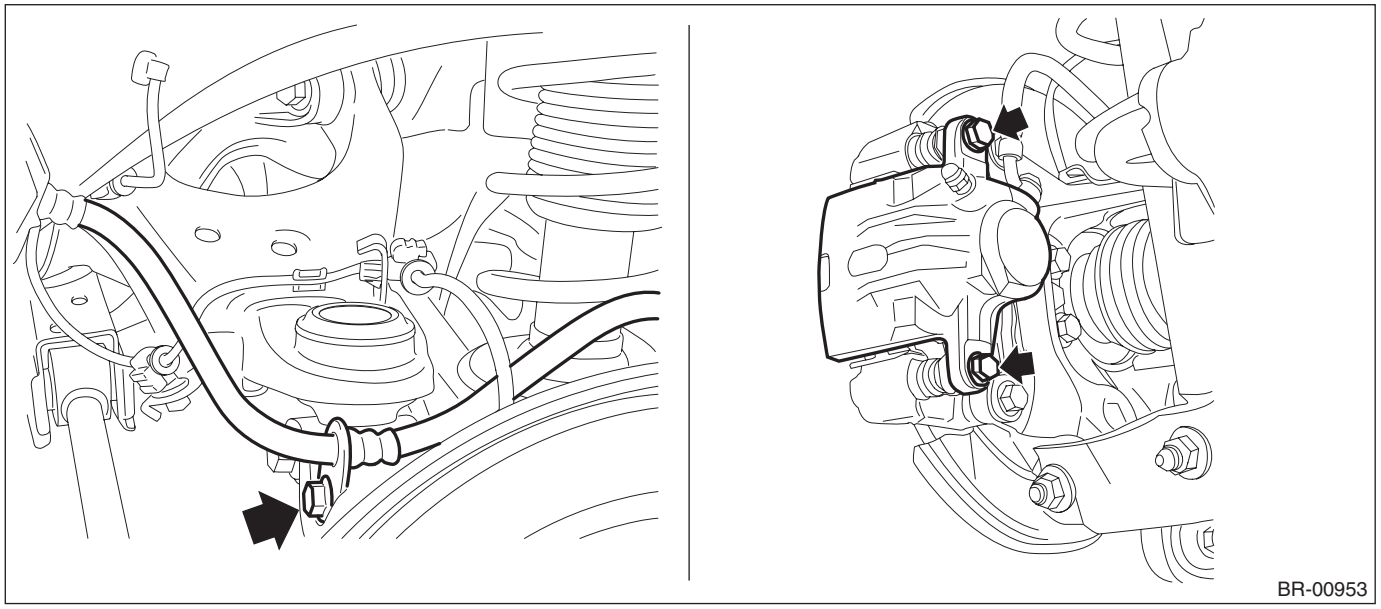

NOTE:
Do not disconnect the brake hose from the caliper body assembly.
   (3) Remove the brake pad from support - rear disc brake.

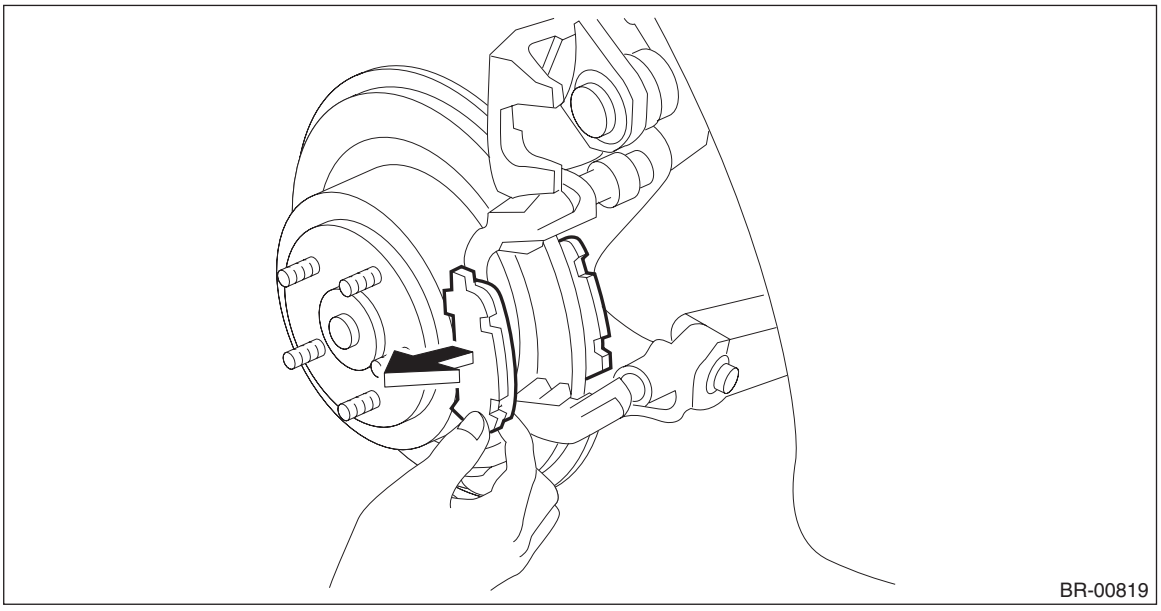

B: INSTALLATION

NOTE:
Before installation, remove mud and foreign matter from the caliper body assembly and support - rear disc brake.
1) Before installation, check the brake pad. <Ref. to BR-34, INSPECTION, Rear Brake Pad.>
2) Apply a thin coat of grease to the pad clip.

Grease:
Grease contained in the pad kit or equivalent

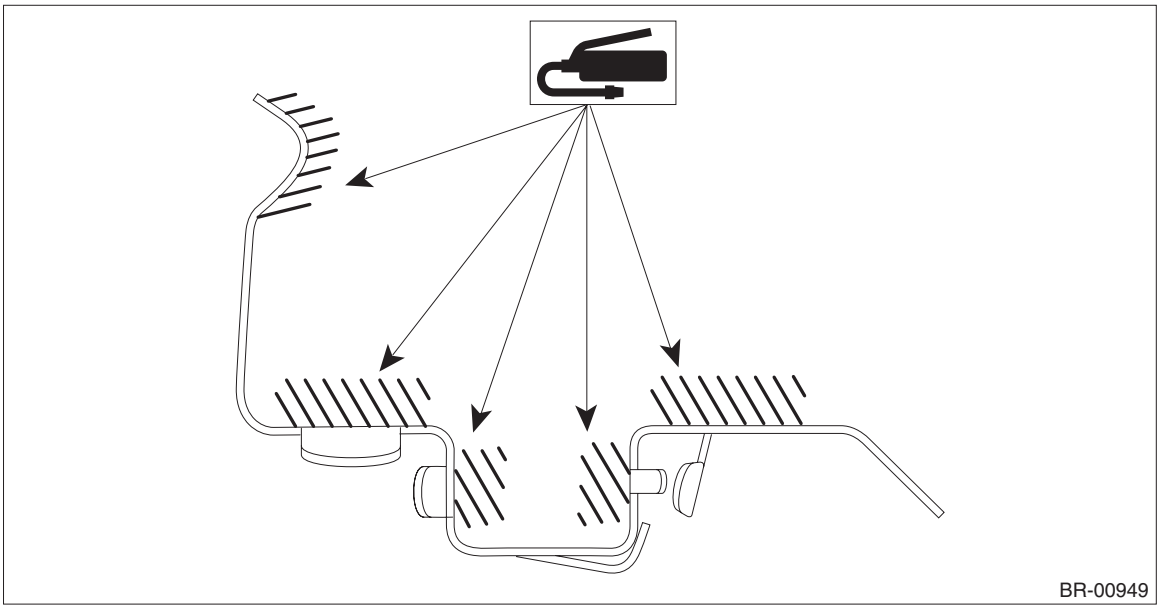

3) Apply a thin coat of grease to the shim - disc brake rear inner (a) and the shim - disc brake rear outer (b).

Grease:
Grease contained in the pad kit or WAKO grease V160

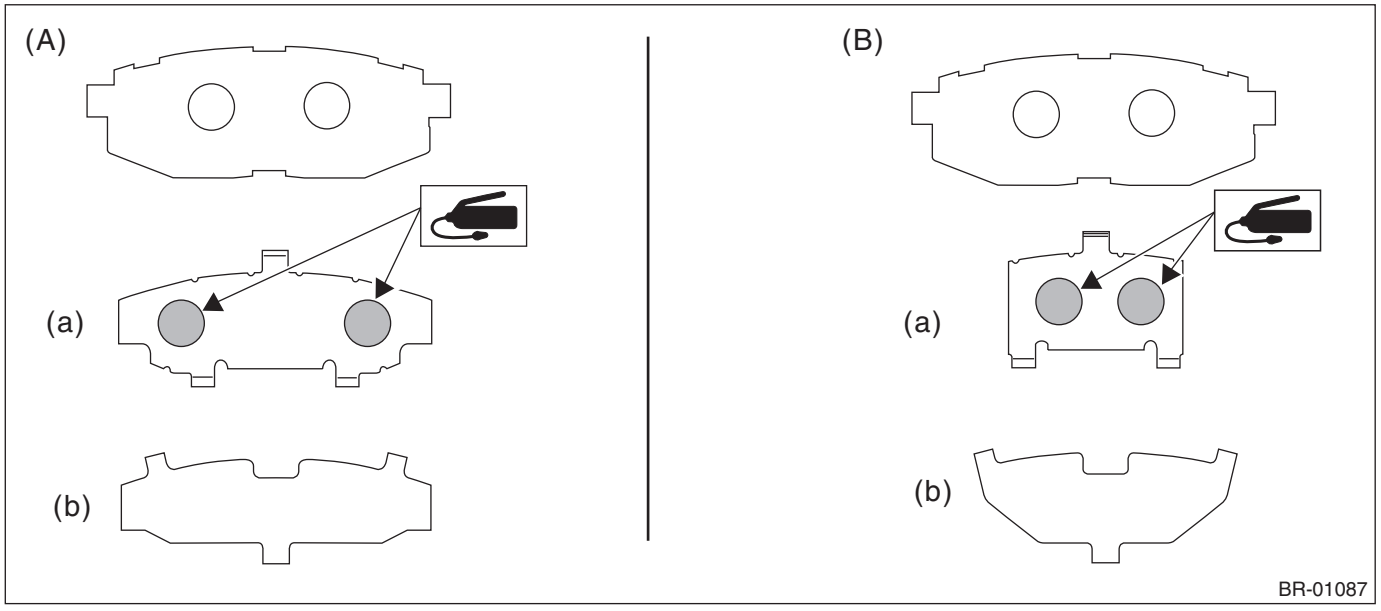

(A) Pad - disc brake rear outer (B) Pad - disc brake rear inner

4) Install the brake pad to the support - rear disc brake.
5) Install the caliper body assembly to the support - rear disc brake.

Tightening torque:
Caliper bolt: 27 N·m (2.75 kgf-m, 19.9 ft-lb)
6) Install the brake hose bracket.

Tightening torque:
Brake hose bracket: 33 N·m (3.36 kgf-m, 24.3 ft-lb)
7) Install the rear wheels.

Tightening torque:
Except for C4 model: 120 N·m (12.24 kgf-m, 88.5 ft-lb)
C4 model: 100 N·m (10.20 kgf-m, 73.8 ft-lb)

C: INSPECTION

1) Check the pad thickness.

NOTE:
- Always replace the pads of both wheels and both sides as a set.
- Replace pad clips if they are twisted or worn.
- Replace the pad if there is oil or grease on it.
- A wear indicator is installed on the pad - disc brake rear inner. If the pad is worn to the limit, the end of wear indicator contacts disc rotor, and a squeaking sound is heard as the wheel rotates. If the sound is heard, replace the pad.

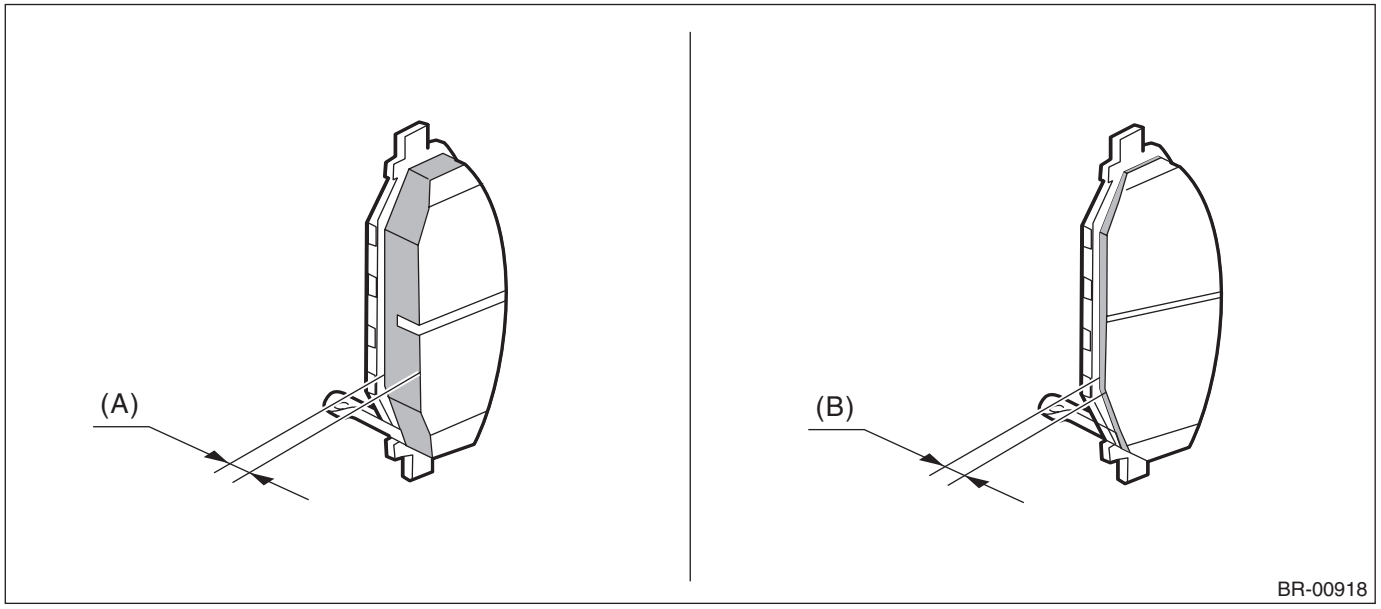

	Disc rotor type	Standard (A)	Wear limit (B)
Pad thickness	Solid	9 mm (0.35 in)	1.5 mm (0.059 in)

2) If the wear limit is exceeded in the inspection, replace the brake pad.

7. Rear Disc Rotor

A: REMOVAL

1) Lift up the vehicle, and then remove the rear wheels.
2) Release the lever assembly - hand brake.
3) Remove the caliper body assembly from the housing assembly - rear axle.
   (1) Remove the bolt from the brake hose bracket.
   (2) Remove the mounting bolt, and remove the caliper body assembly.

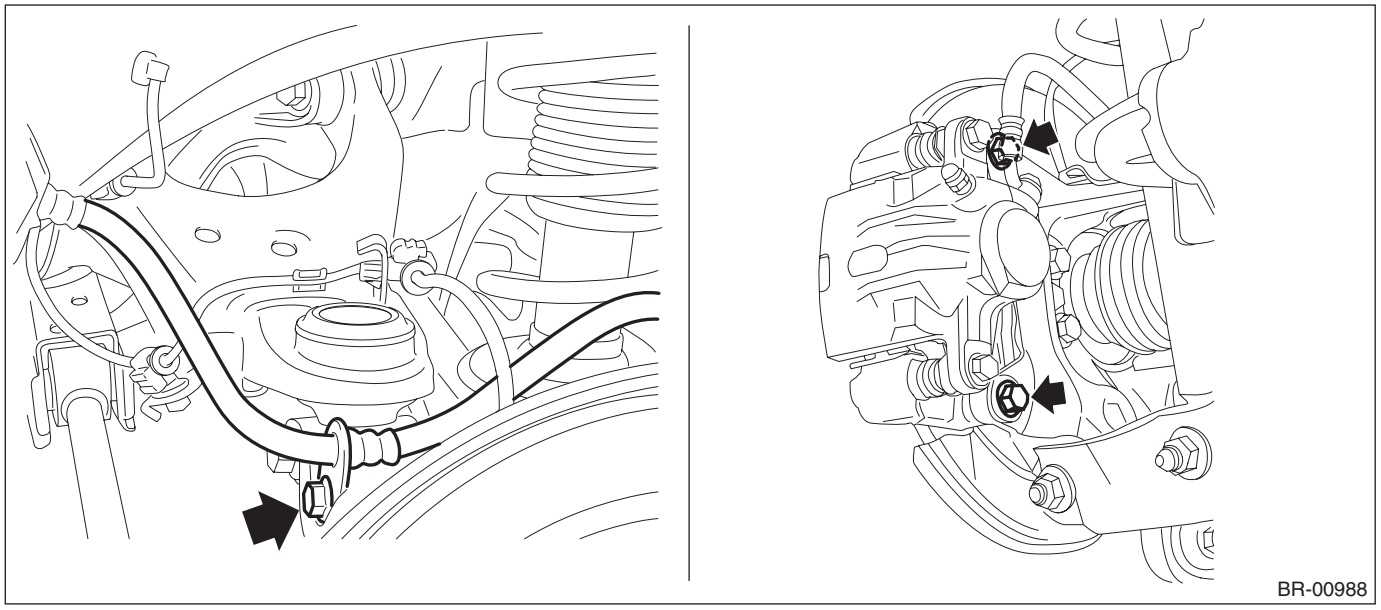

   (3) Prepare wiring harnesses etc. to be discarded, and suspend the caliper body assembly from the strut assembly.

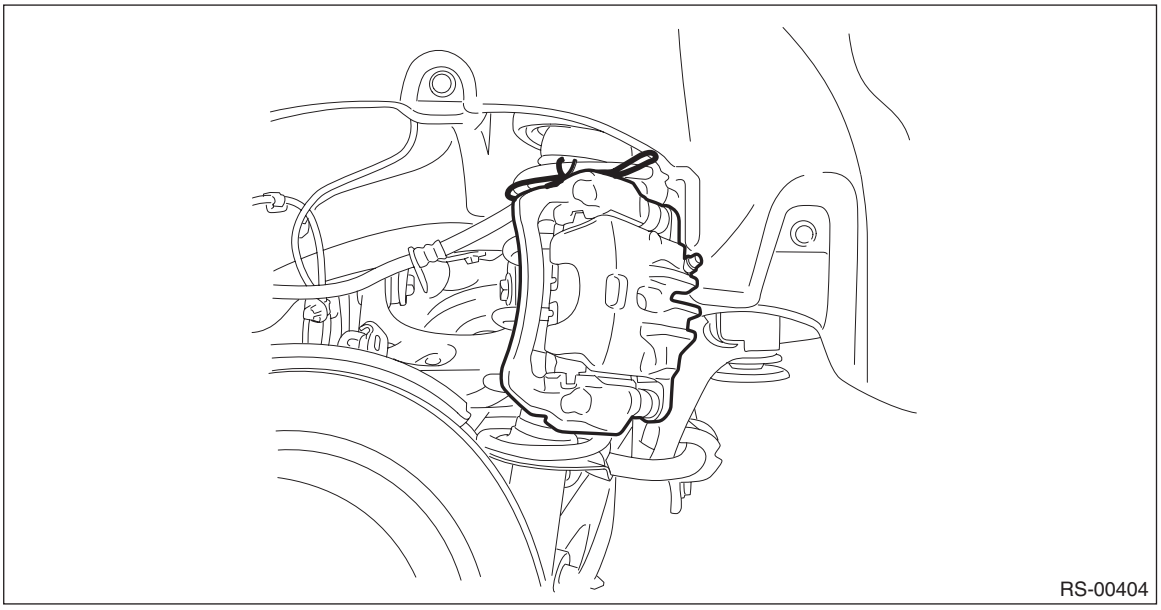

4) Remove the rear disc rotor.

NOTE:
If it is difficult to remove the disc rotor, perform the following two methods in order.
1. Remove the adjusting hole cover (A), insert the flat tip screwdriver, and rotate the adjuster assembly - rear brake until the brake shoe moves far enough to remove the disc rotor.

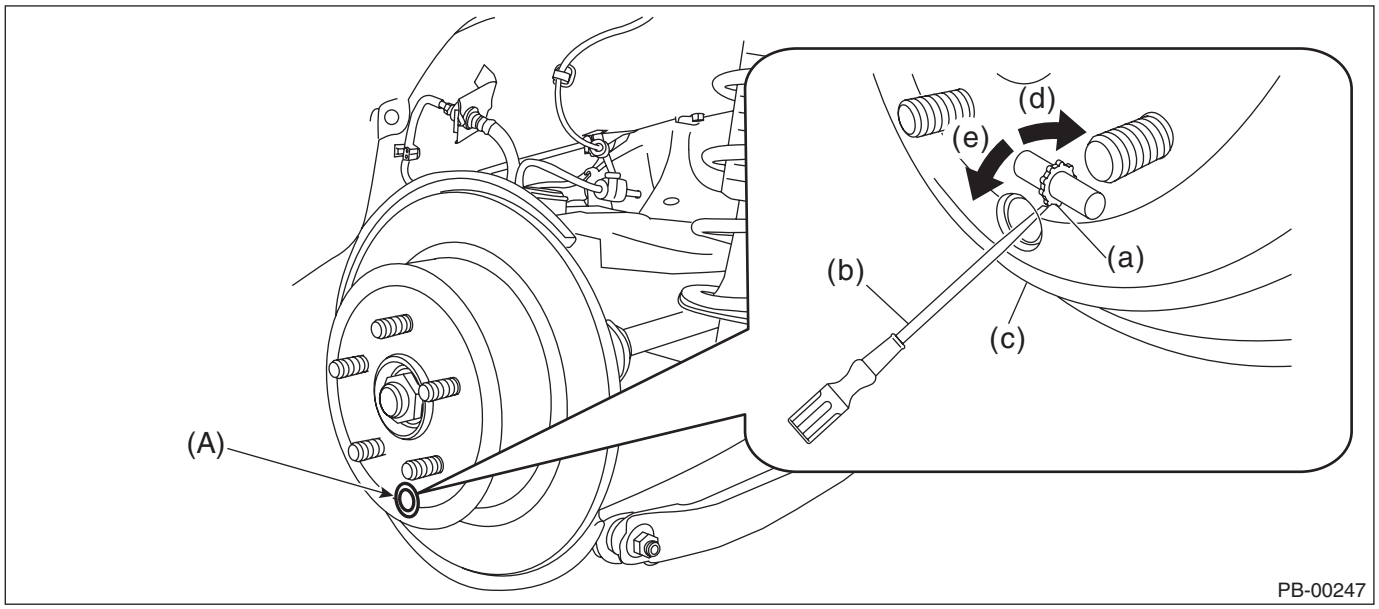

(a)	Adjuster ASSY - rear brake	(c)	Disc rotor	(e)	Shorten the adjuster ASSY - rear brake
(b)	Flat tip screwdriver	(d)	Extend the adjuster ASSY - rear brake		

2. When the disc rotor is difficult to be removed from the hub unit COMPL - rear axle, screw in 8 mm (0.31 in) bolt to the threaded part of the disc rotor (A), and remove the disc rotor.

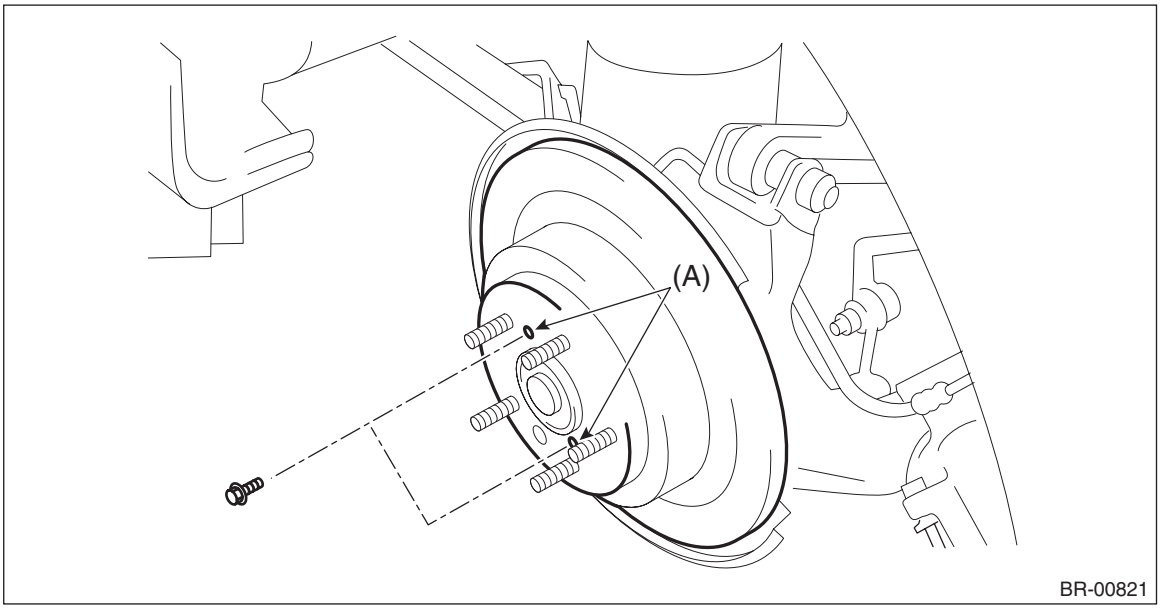

B: INSTALLATION

NOTE:
Before installation, remove mud and foreign matter from the caliper body assembly.
1) Before installation, check the rear disc rotor. <Ref. to BR-37, INSPECTION, Rear Disc Rotor.>
2) Install each part in the reverse order of removal.
3) Adjust the parking brake. <Ref. to PB-21, ADJUSTMENT, Parking Brake Assembly (Rear Disc Brake).>

Tightening torque:
Brake hose bracket: 33 N·m (3.36 kgf-m, 24.3 ft-lb)
Mounting bolt: 66 N·m (6.73 kgf-m, 48.7 ft-lb)
Rear wheel: Except for C4 model
120 N·m (12.24 kgf-m, 88.5 ft-lb)
Rear wheel: C4 model
100 N·m (10.20 kgf-m, 73.8 ft-lb)

C: INSPECTION

1. DISC ROTOR RUNOUT CHECK

1) Check the hub unit COMPL - rear axle for free play and runout before the inspection of disc rotor runout limit. <Ref. to DS-56, INSPECTION, Rear Hub Unit Bearing.>
2) Secure the disc rotor by tightening the five wheel nuts.
3) Set a dial gauge 10 mm (0.39 in) inward from the disc rotor outer circumference, and check the disc rotor runout while rotating the disc rotor.

Disc rotor runout limit:
0.05 mm (0.0020 in)

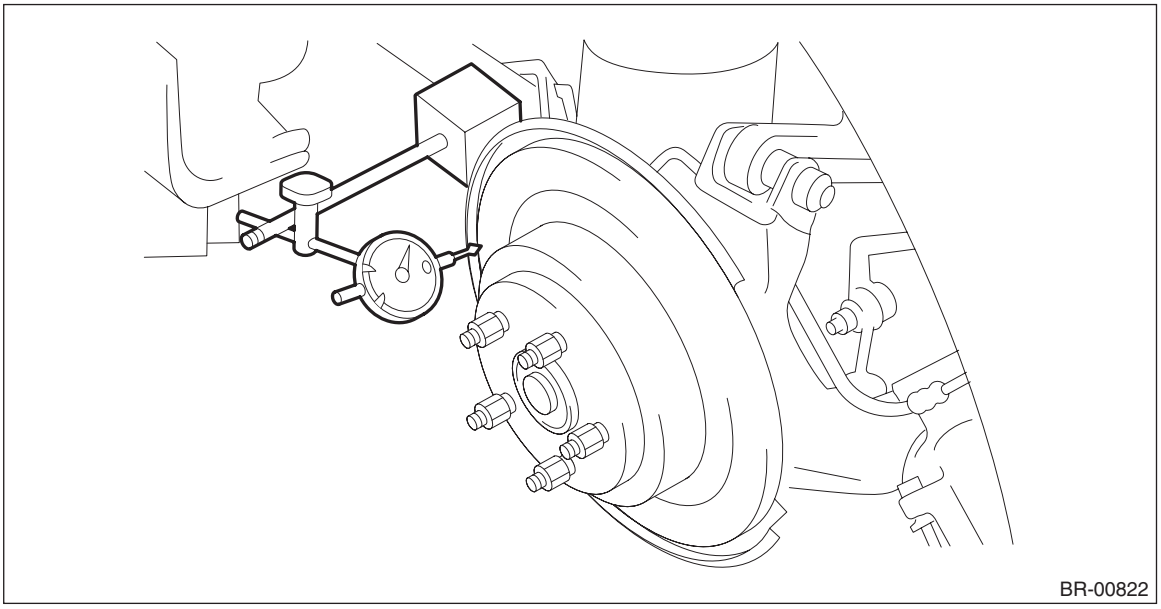
BR-00822

4) If the disc rotor runout exceeds the limit, resurface the disc rotor.
5) After grinding, check the thickness of the disc rotor. <Ref. to BR-38, DISC ROTOR THICKNESS CHECK, INSPECTION, Rear Disc Rotor.>

2. DISC ROTOR THICKNESS CHECK

1) Set a micrometer 10 mm (0.39 in) inward from the disc rotor outer perimeter, and then measure the disc rotor thickness (A).

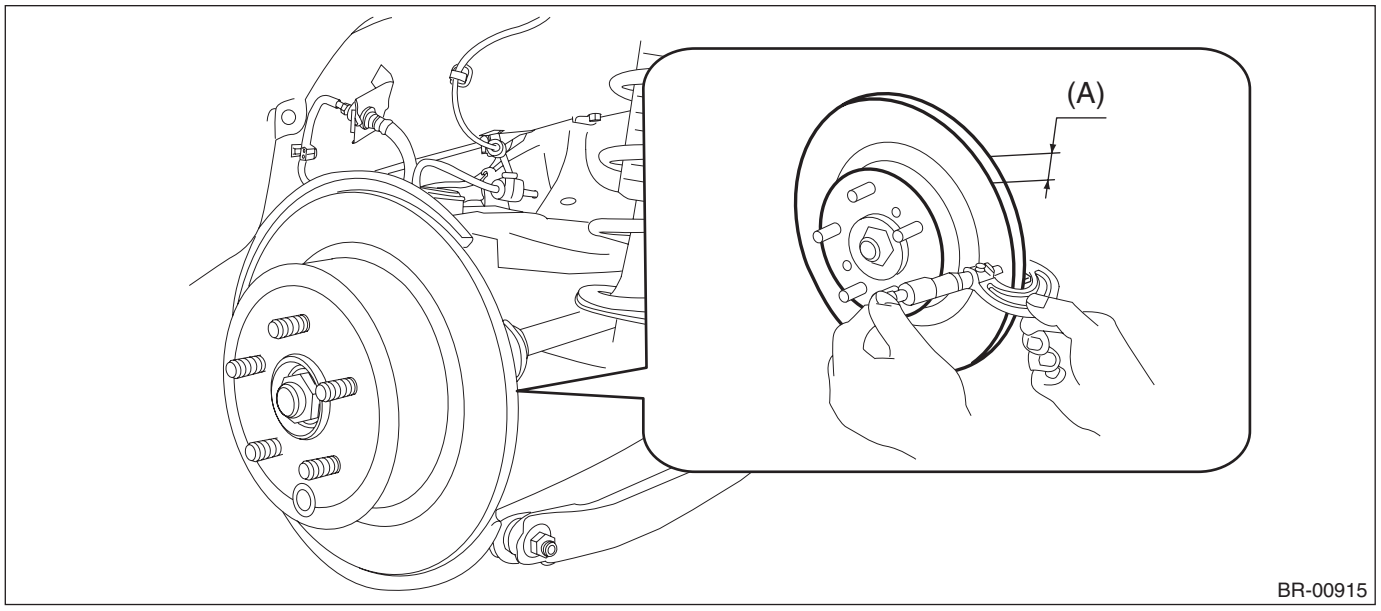

	Type of disc rotor	Standard	Wear limit	Disc rotor outer diameter
Disc rotor thickness (A)	Solid disc	10 mm (0.39 in)	8.5 mm (0.33 in)	274 mm (10.79 in)

2) If the wear limit is exceeded in the inspection, replace the disc rotor.

8. Rear Disc Brake Assembly

A: REMOVAL

CAUTION:
Do not allow brake fluid to come in contact with the painted surface of the vehicle body. If it does, wash off with water and wipe away completely.

1) Lift up the vehicle, and then remove the rear wheels.
2) Remove the caliper body assembly from the support - rear disc brake.
   (1) Remove the brake hose bracket and union bolt.

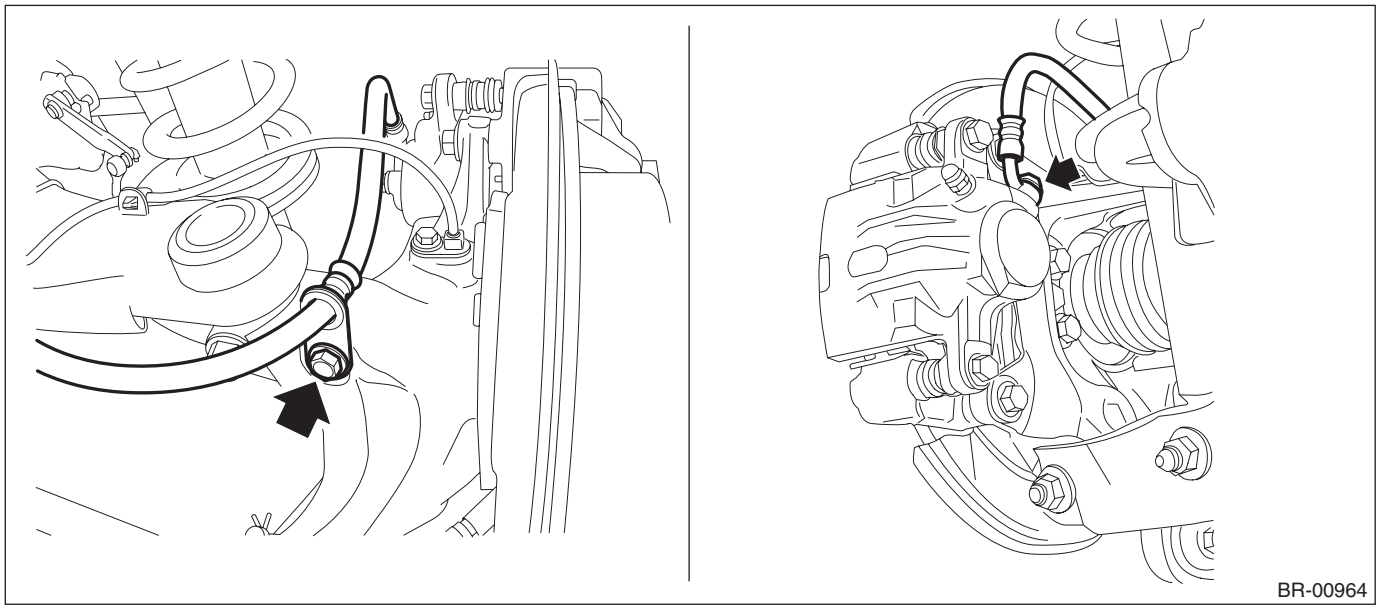
BR-00964

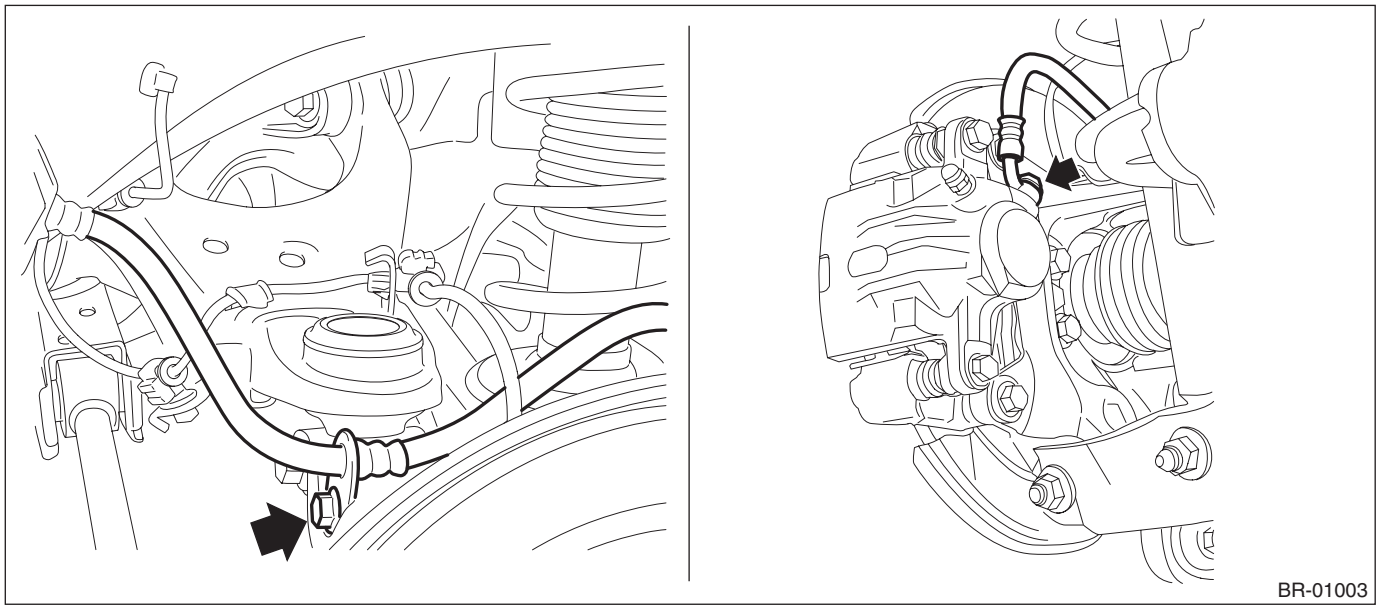
BR-01003

(2) Remove the caliper bolt, and remove the caliper body assembly.

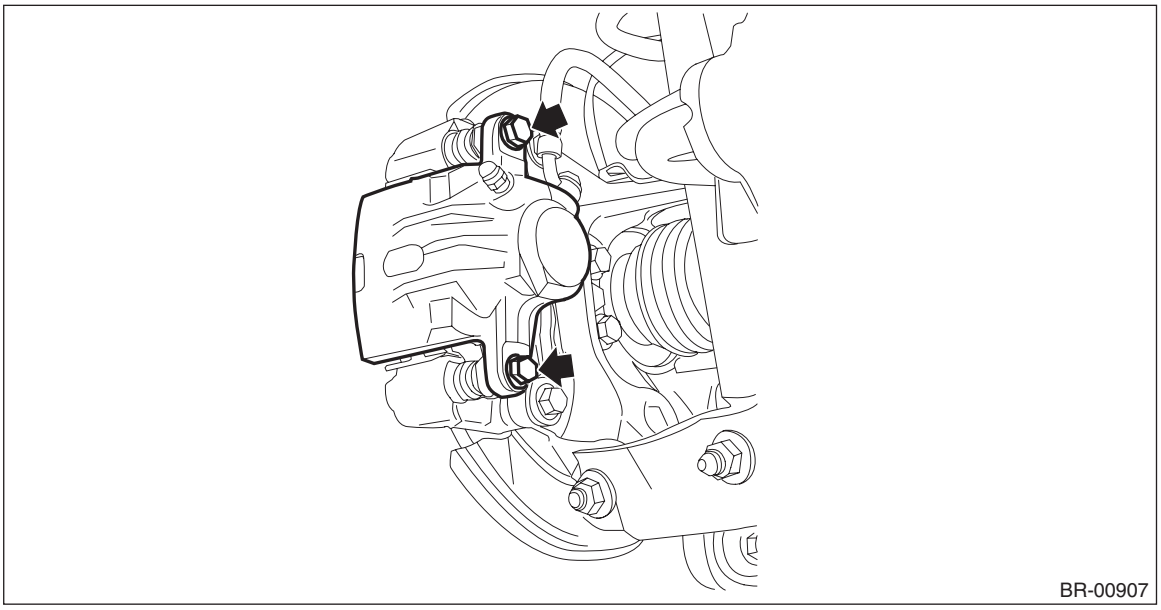

3) Remove the support - rear disc brake.

NOTE:
Remove the support - rear disc brake only when replacing the disc rotor or the support - rear disc brake.
It is not necessary to remove it when servicing the caliper body assembly.

(1) Remove the brake pad from support - rear disc brake.

(2) Remove the mounting bolts, and then remove the support - rear disc brake from the housing assembly - rear axle.

B: INSTALLATION

NOTE:
Before installation, remove mud and foreign matter from the caliper body assembly and support - rear disc brake.

1) Before installation, check each part. <Ref. to BR-45, INSPECTION, Rear Disc Brake Assembly.>

2) Apply a thin coat of grease contained in the pad kit to the support - rear disc brake.

Grease:

Grease contained in the pad kit or equivalent

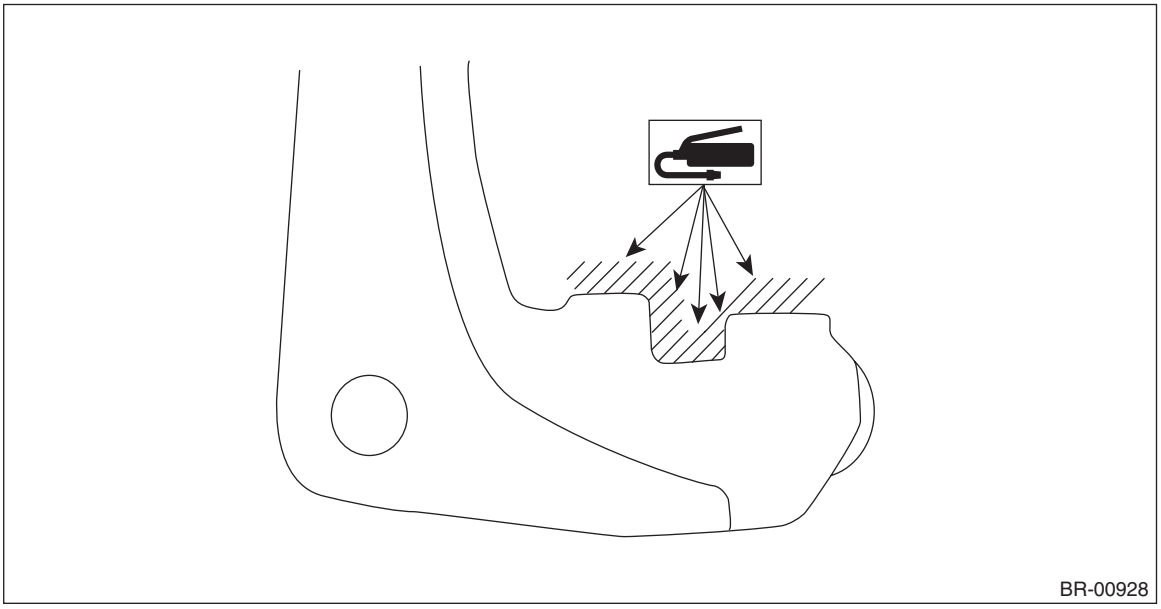

3) Install the support - rear disc brake to the housing assembly - rear axle.

Tightening torque:
Mounting bolt: 66 N·m (6.73 kgf-m, 48.7 ft-lb)

4) Apply a thin coat of grease to the pad clip.

Grease:
Grease contained in the pad kit or equivalent

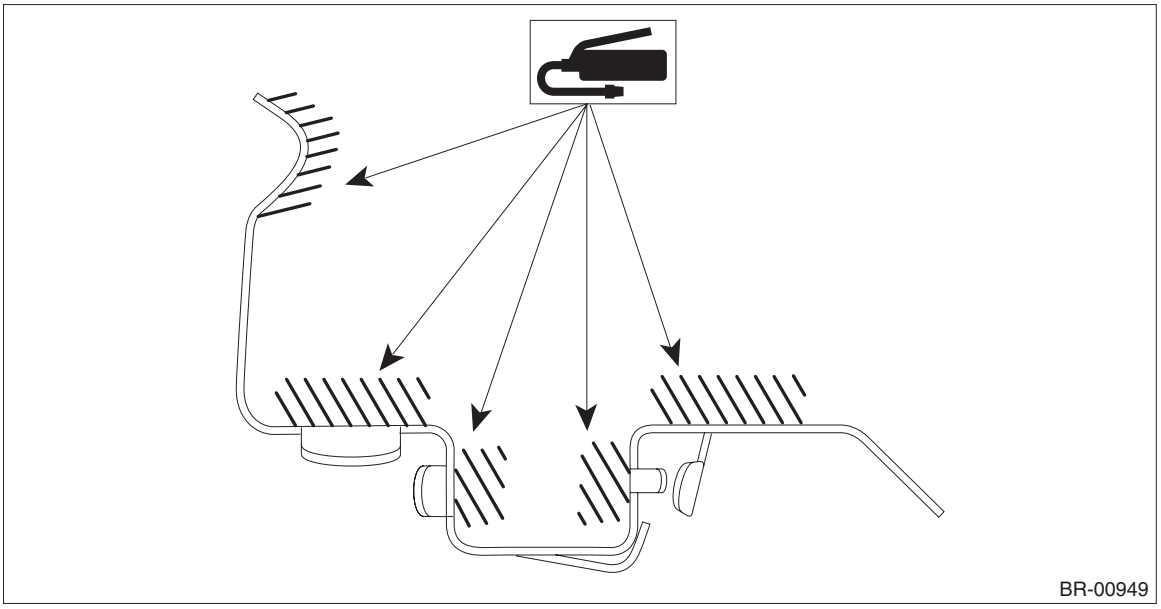

5) Apply a thin coat of grease to the shim - disc brake rear inner (a) and the shim - disc brake rear outer (b).

Grease:
Grease contained in the pad kit or WAKO grease V160

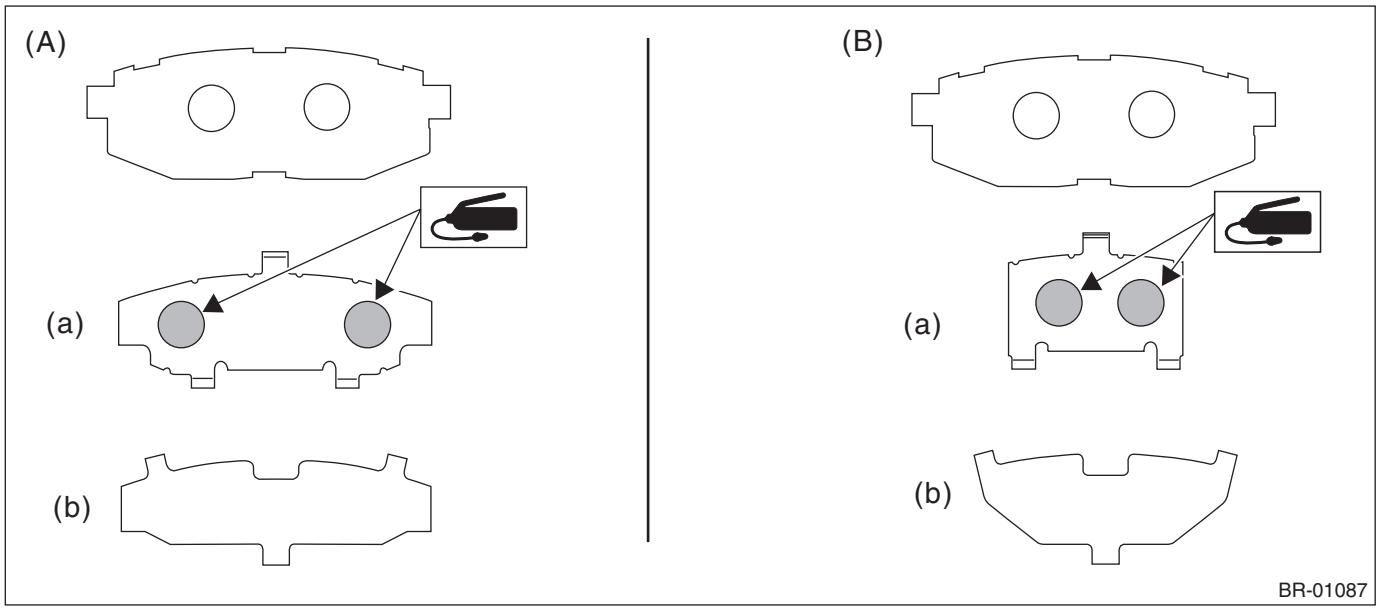

(A) Pad - disc brake rear outer (B) Pad - disc brake rear inner

6) Install the brake pad to the support - rear disc brake.
7) Install the caliper body assembly to the support - rear disc brake.

Tightening torque:
Caliper bolt: 27 N·m (2.75 kgf-m, 19.9 ft-lb)
8) Install the brake hose bracket.

Tightening torque:
Brake hose bracket: 33 N·m (3.36 kgf-m, 14.3 ft-lb)
9) Connect the brake hose using a new brake hose gasket.

Tightening torque:
Union bolt: 18 N·m (1.84 kgf-m, 13.3 ft-lb)
10) Bleed air from the brake system. <Ref. to BR-62, BRAKE LINE, PROCEDURE, Air Bleeding.>
11) Install the rear wheels.

Tightening torque:
Except for C4 model: 120 N·m (12.24 kgf-m, 88.5 ft-lb)
C4 model: 100 N·m (10.20 kgf-m, 73.8 ft-lb)

C: DISASSEMBLY

CAUTION:
Be careful not to allow foreign matter to enter the brake hose connector.
1) Remove mud and foreign matter from the caliper body assembly.
2) Remove the piston boot from caliper body cylinder.

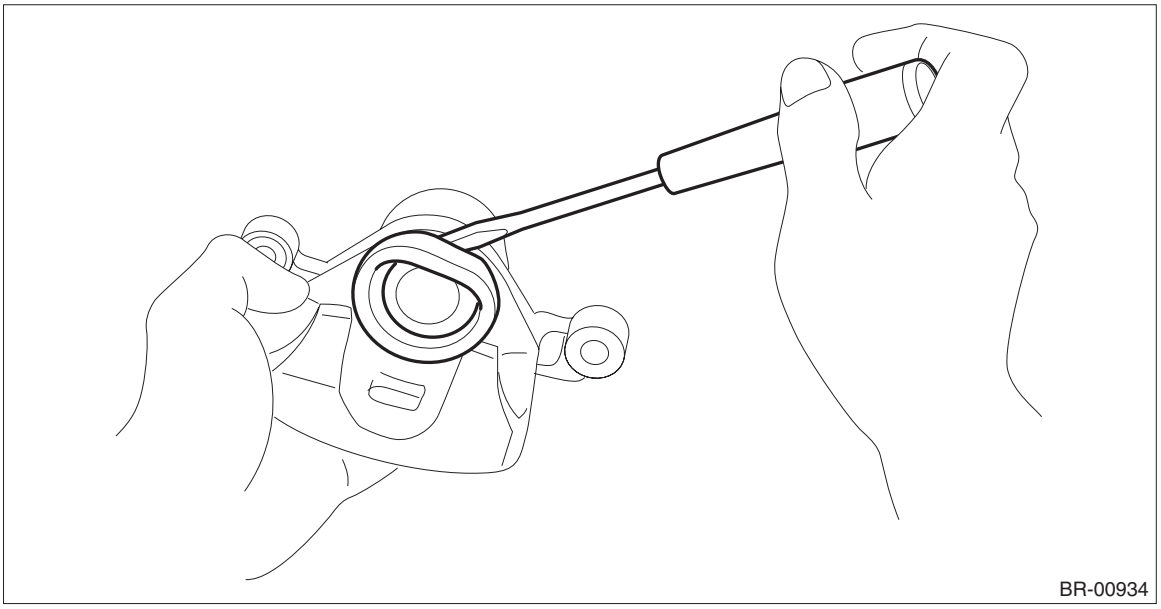
BR-00934

3) Remove the piston - disc brake.
(1) Place a wooden block in the caliper body assembly as shown in the figure to prevent the piston - disc brake from jumping out and being damaged.
(2) Using an air gun, gradually apply compressed air via the brake hose installation hole to push out the piston - disc brake.

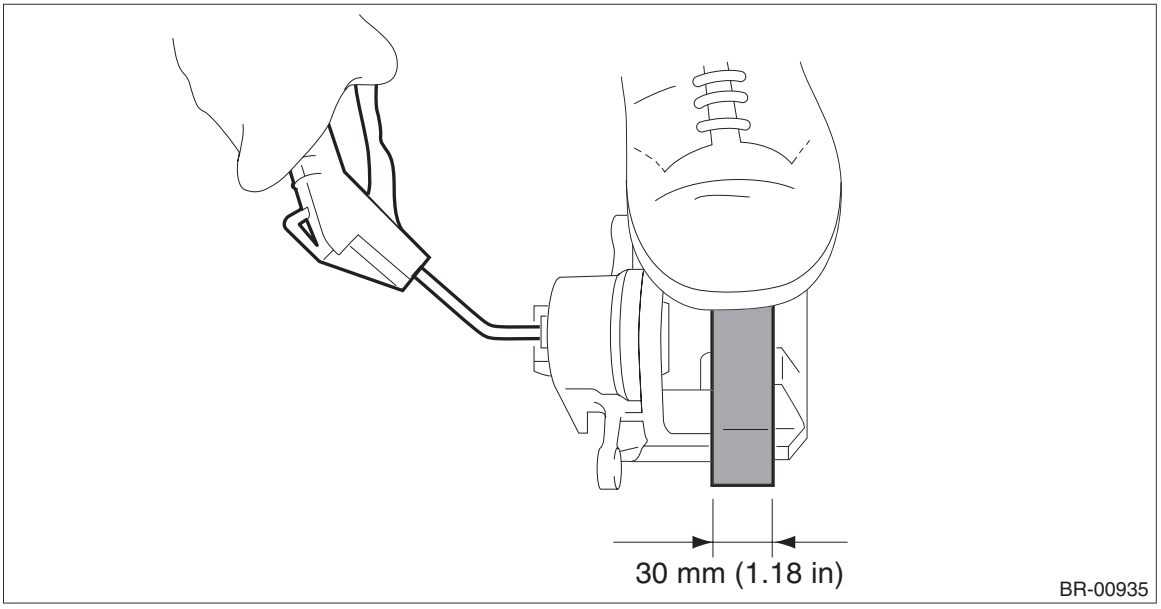

4) Remove the piston seal from caliper body cylinder.

CAUTION:
Do not damage the cylinder and piston seal groove.

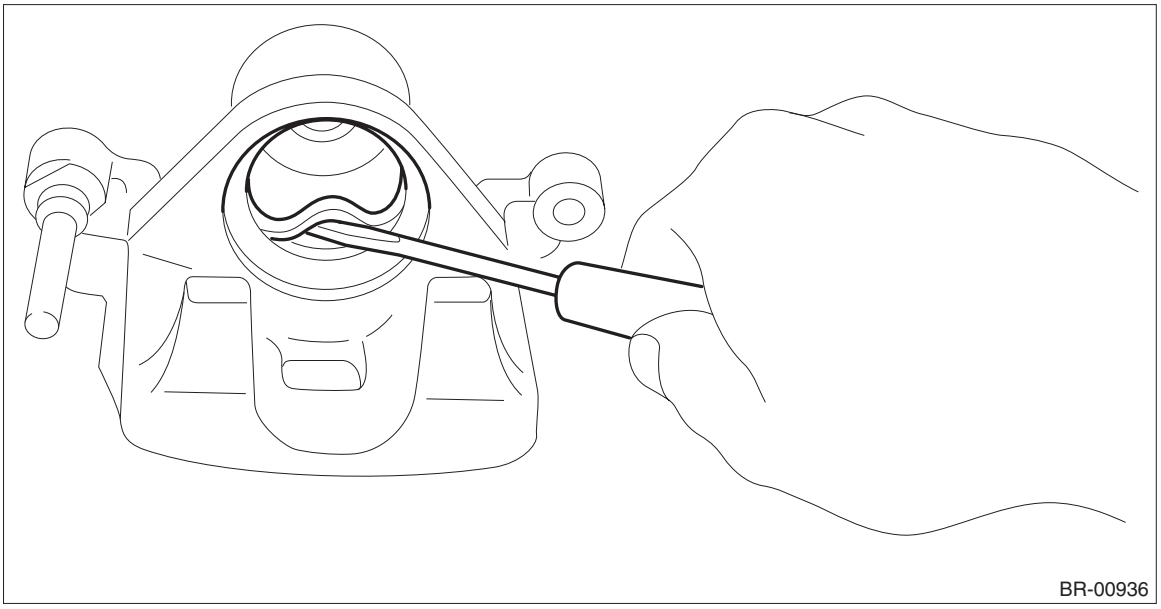

5) Remove the guide pin - rear brake, lock pin - rear brake, lock pin - sleeve, and pin boot from the support - rear disc brake.

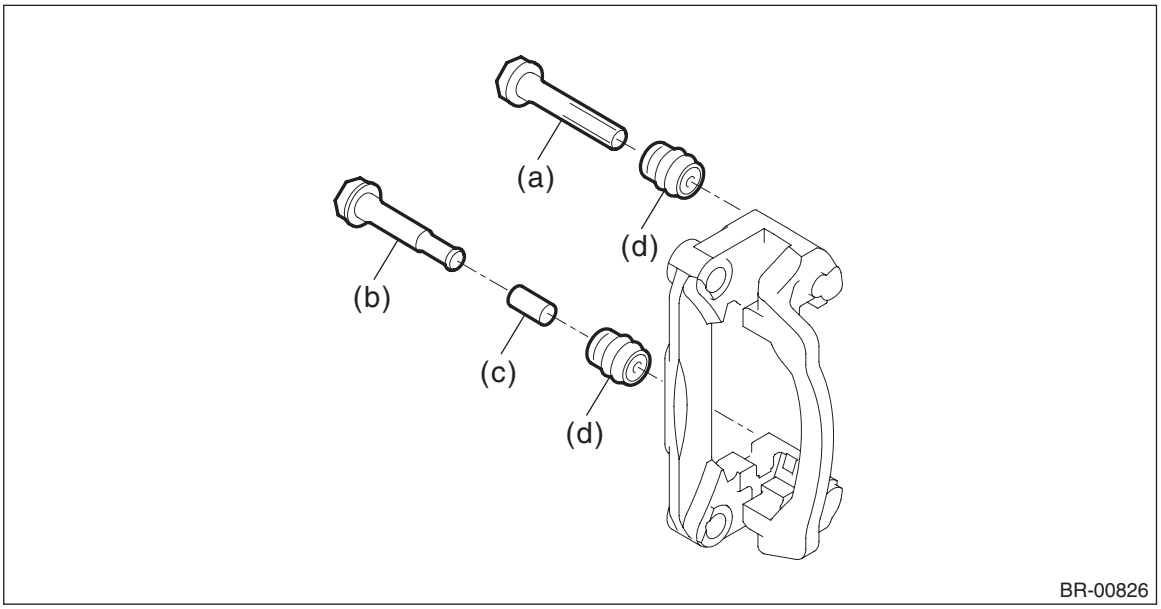

(a) Guide pin - rear brake (black)
(b) Lock pin - rear brake (silver)
(c) Lock pin - sleeve
(d) Pin boot

D: ASSEMBLY

1) Before installation, check each part. <Ref. to BR-45, INSPECTION, Rear Disc Brake Assembly.>
2) Clean the inside of the caliper body cylinder using brake fluid.
3) Apply a coat of brake fluid to piston seal and install the piston seal to the caliper body cylinder groove.
4) Apply a coat of brake fluid to the inner surface of caliper body cylinder and the entire outer surface of the piston - disc brake.
5) Apply grease contained in the piston seal kit to the piston boot, and install it to the groove at the end of the cylinder.
6) Insert the piston - disc brake into the caliper body cylinder.

CAUTION:
Do not force the piston - disc brake into the caliper body cylinder.

7) Position the piston boot in the grooves on the piston - disc brake and the caliper body cylinder.

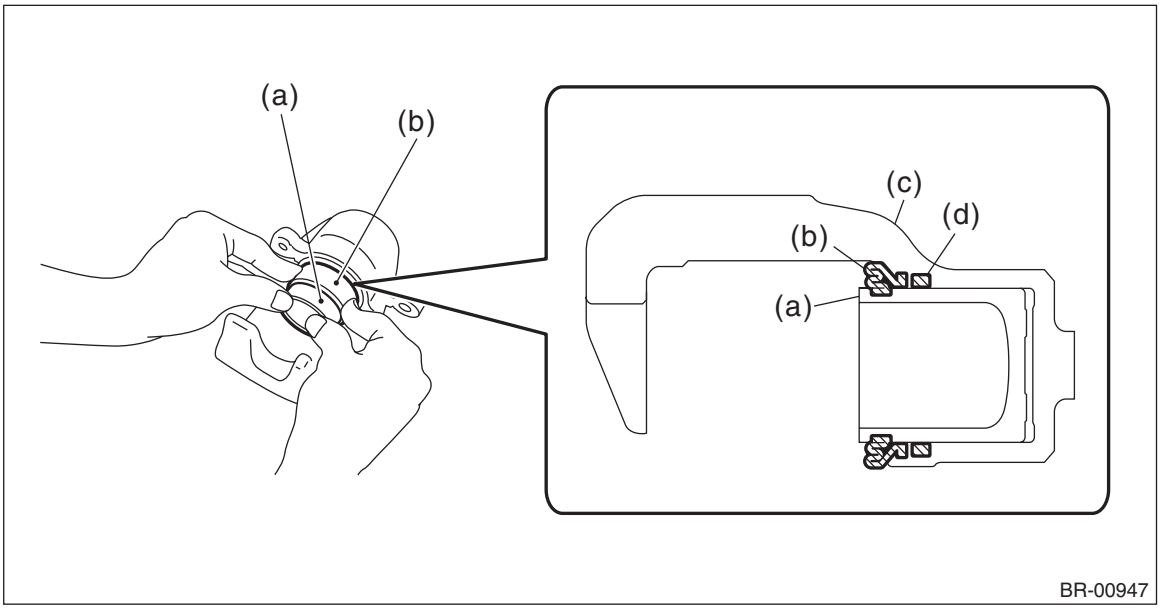

(a) Piston - disc brake
(b) Piston boot
(c) Caliper body
(d) Piston seal

8) Apply grease contained in the piston seal kit to the lock pin - rear brake, the outer surface of guide pin - rear brake, the inner surface of support cylinder, and the grooves of pin boot.
9) Install the pin boot to the lock pin - rear brake and guide pin - rear brake, and insert them into the support cylinder.

CAUTION:
Insert the lock pin - rear brake and guide pin - rear brake into specified position, and make sure that they slide and seat properly.

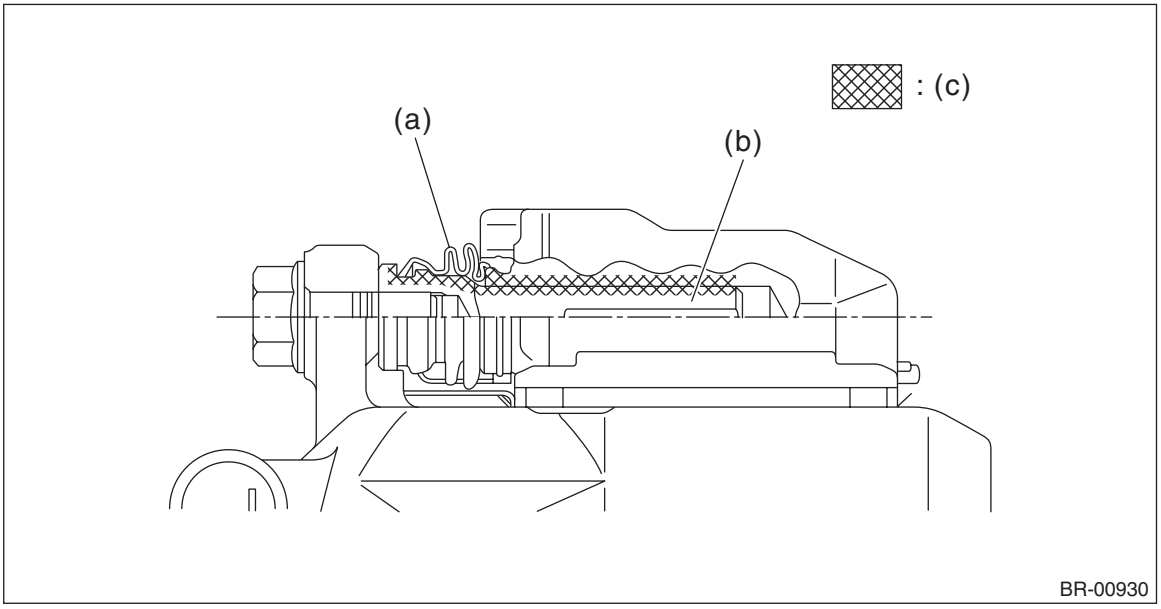

(a) Pin boot
(b) Lock pin - rear brake or guide pin - rear brake
(c) Grease applied area

E: INSPECTION

1) Check the caliper body cylinder and piston - disc brake for uneven wear, damage or rust.
2) Check the rubber parts for damage or deterioration.
3) If faulty is found in the inspection, replace the relevant part.

9. Master Cylinder

A: REMOVAL

CAUTION:
Do not allow brake fluid to come in contact with the painted surface of the vehicle body. If it does, wash off with water and wipe away completely.

1) Disconnect the ground cable from battery. <Ref. to NT-5, BATTERY, NOTE, Note.>

NOTE:
For the 12 volt engine restart battery of HEV model, disconnect the ground terminal from 12V engine restart battery sensor.

2) Remove the collector cover. (HEV model)
   (1) Pull up the two points at the front of collector cover (A).
   (2) Pull up the two points at the rear of collector cover (B) while moving them rearward.

NOTE:
Be careful not to contact the fuel delivery tube when moving the collector cover rearward.

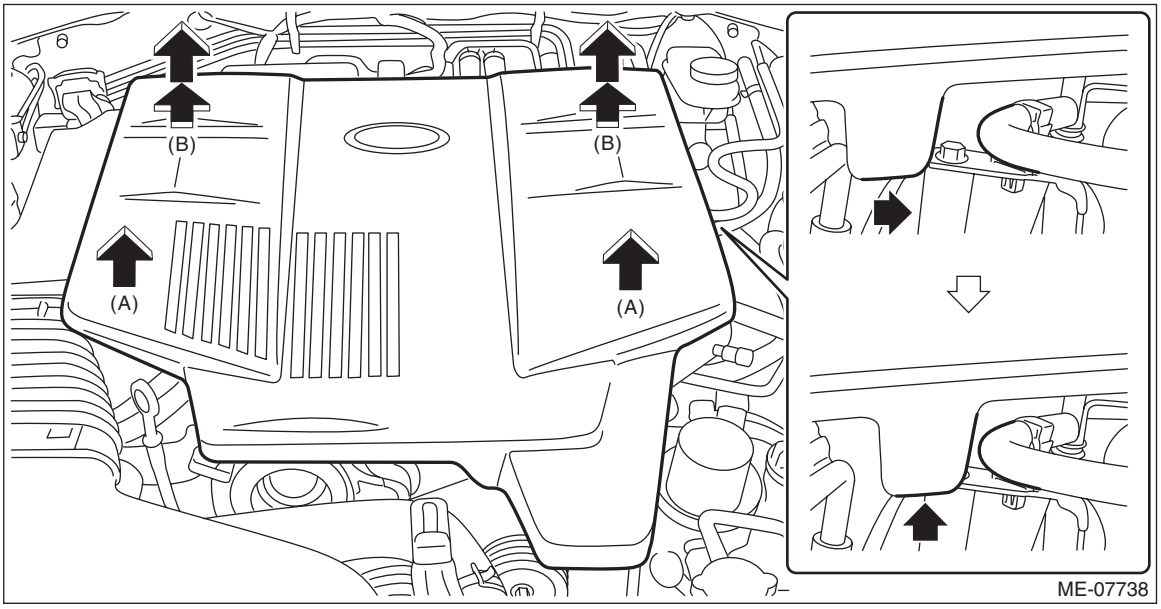

3) Drain brake fluid from the reservoir tank completely.

4) Remove the master cylinder assembly.
(1) Disconnect the fluid level gauge connector (a).
(2) Disconnect the clutch hose (b). (MT model)
(3) Disconnect the brake pipe (c).
(4) Remove the nut (d), and slowly remove the master cylinder assembly from the vacuum booster assembly.

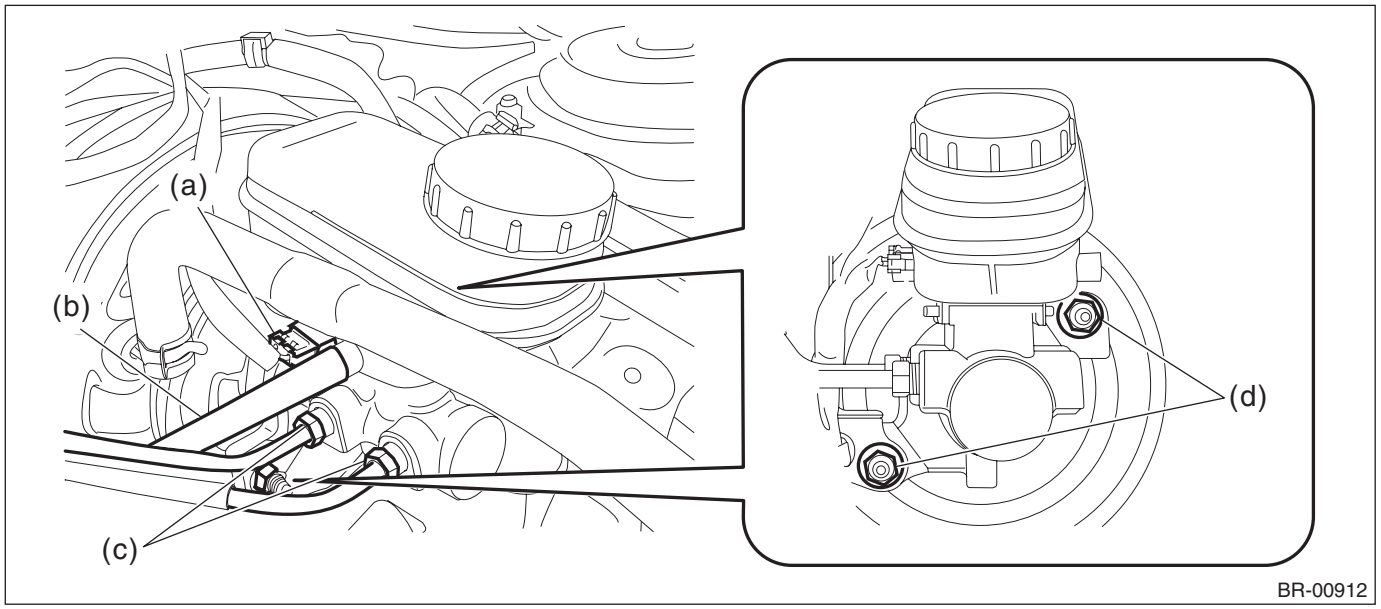

B: INSTALLATION

1) Replace the seal sub assembly for the master cylinder assembly with a new part.

CAUTION:
Be careful not to install the seal sub assembly in the wrong location.

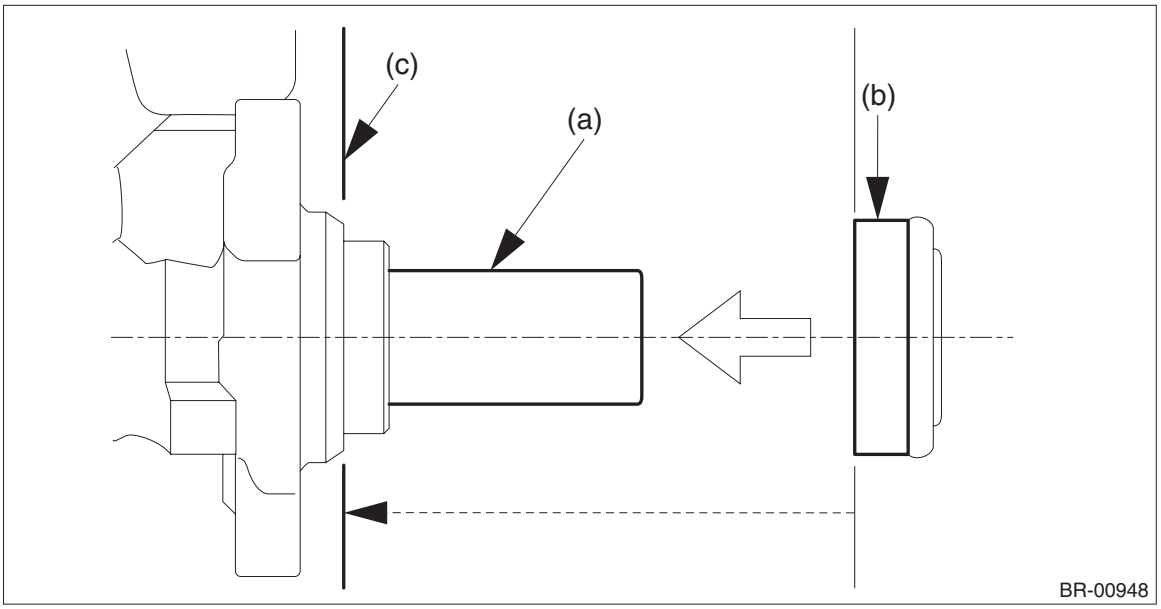

(a) Primary piston
(b) Seal sub ASSY
(c) Install the seal sub assembly to this surface.

2) Install each part in the reverse order of removal.

Tightening torque:
Master cylinder assembly: 13 N·m (1.33 kgf-m, 9.6 ft-lb)
Brake pipe flare nut: 19 N·m (1.94 kgf-m, 14.0 ft-lb)

3) Bleed air from the brake system. <Ref. to BR-61, PROCEDURE, Air Bleeding.>

C: REPLACEMENT

CAUTION:
Since the master cylinder assembly cannot be disassembled, disassembly and cleaning are prohibited. When replacing, replace the master cylinder assembly.

10.Brake Booster

A: REMOVAL

CAUTION:
Do not allow brake fluid to come in contact with the painted surface of the vehicle body. If it does, wash off with water and wipe away completely.

1) Disconnect the ground cable from battery. <Ref. to NT-5, BATTERY, NOTE, Note.>

NOTE:
For the 12 volt engine restart battery of HEV model, disconnect the ground terminal from 12V engine restart battery sensor.

2) Remove the collector cover. (HEV model)
   (1) Pull up the two points at the front of collector cover (A).
   (2) Pull up the two points at the rear of collector cover (B) while moving them rearward.

NOTE:
Be careful not to contact the fuel delivery tube when moving the collector cover rearward.

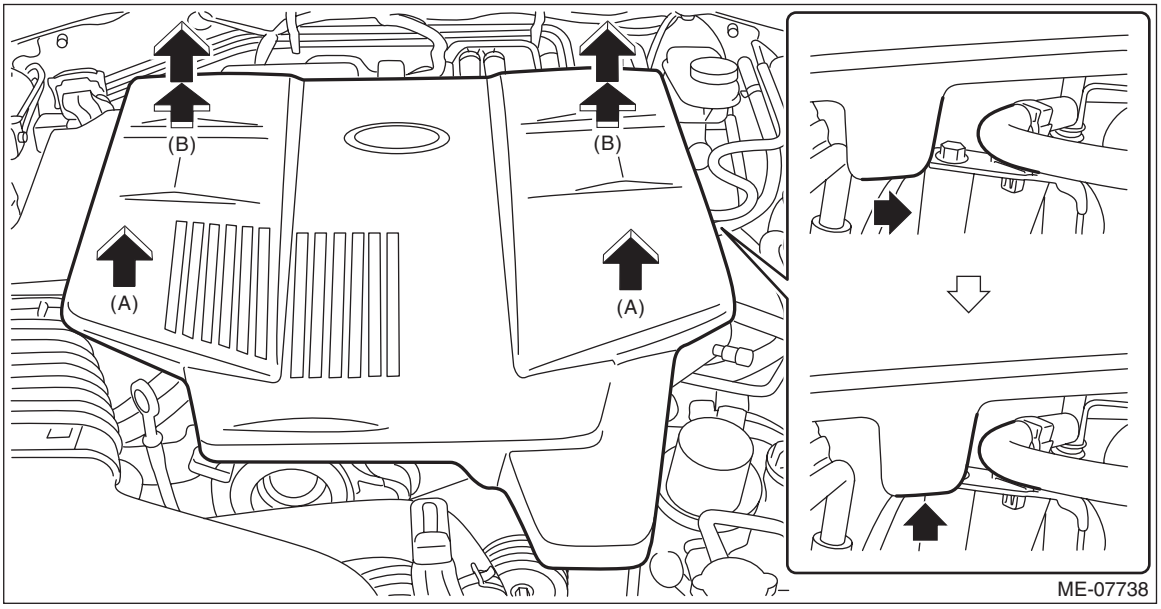

3) Remove the air cleaner case. (HEV model) <Ref. to IN(H4DO(HEV))-6, REMOVAL, Air Cleaner Case.>
4) Remove the column assembly - steering. <Ref. to PS-18, REMOVAL, Steering Column.>
5) Drain brake fluid from the reservoir tank completely.
6) Disconnect the air conditioner pipe. <Ref. to AC-74, REMOVAL, Hose and Pipe.>
7) Remove the power steering control module. <Ref. to PS-43, REMOVAL, Power Steering Control Module.>

8) Remove the master cylinder assembly.
(1) Disconnect the fluid level gauge connector (a).
(2) Disconnect the clutch hose (b). (MT model)
(3) Disconnect the brake pipe (c).
(4) Disconnect the vacuum sensor connector (e). (HEV model)
(5) Remove the nut (d), and slowly remove the master cylinder assembly from the vacuum booster assembly.

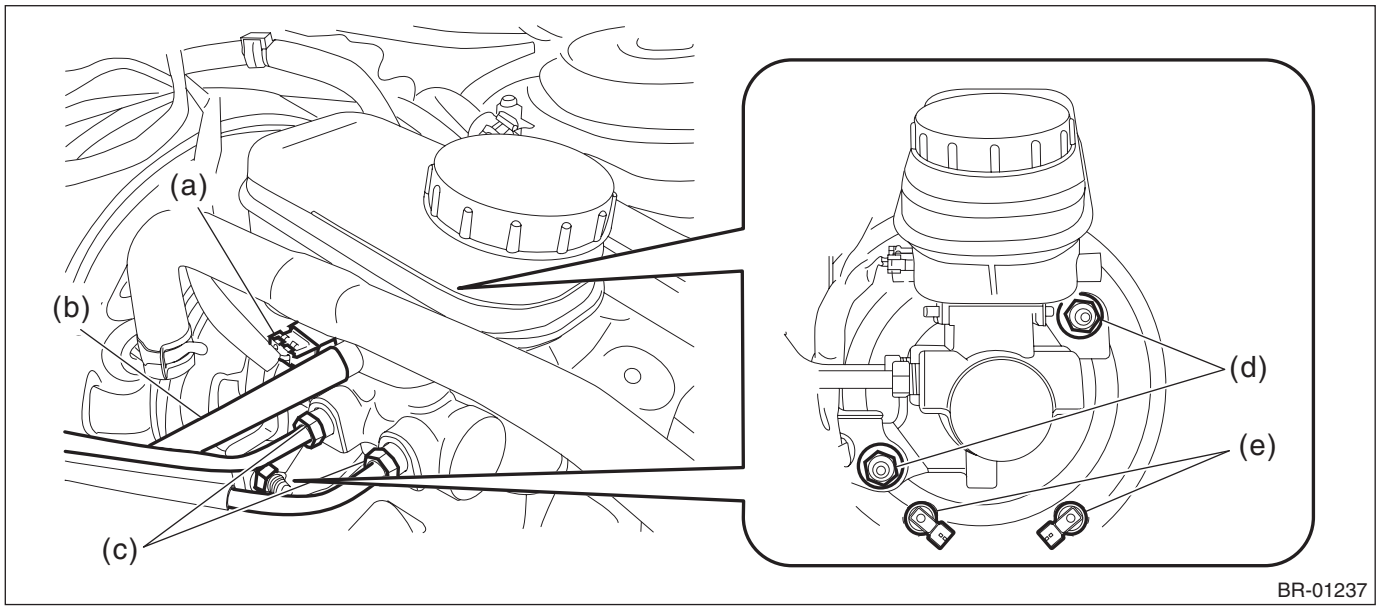

9) Remove the clamp and remove the vacuum hose.

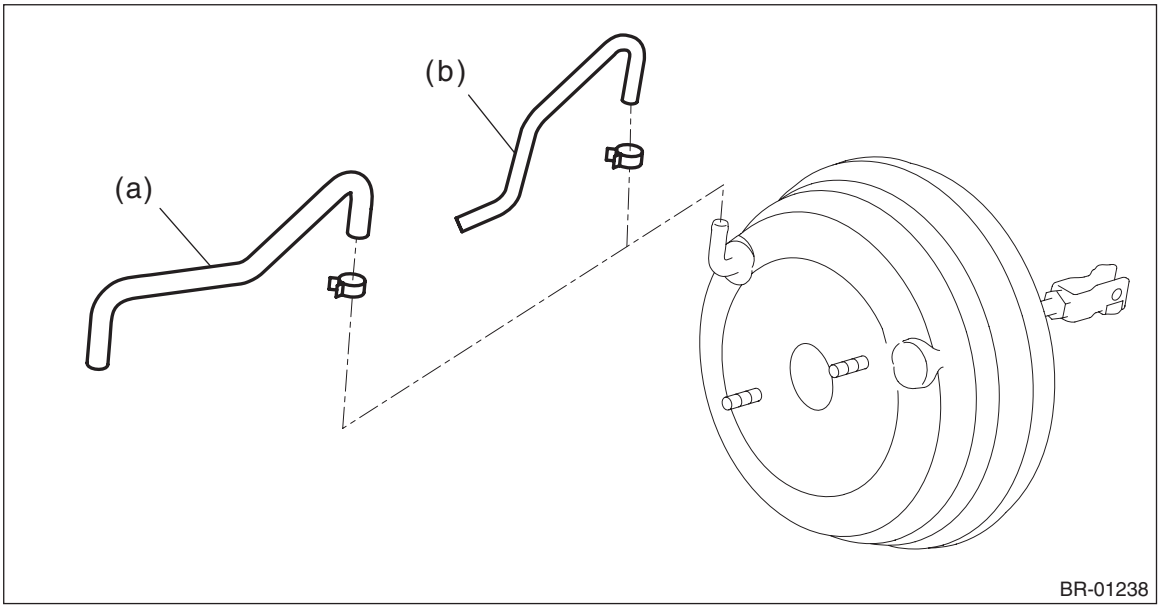

(a) Gasoline engine model (b) HEV model

10) Remove the brake pipe assembly (a).
(1) Disconnect the starter connector (b) and harness clip (c).
(2) Remove the brake pipe assembly (a) from the pipe clip (d).

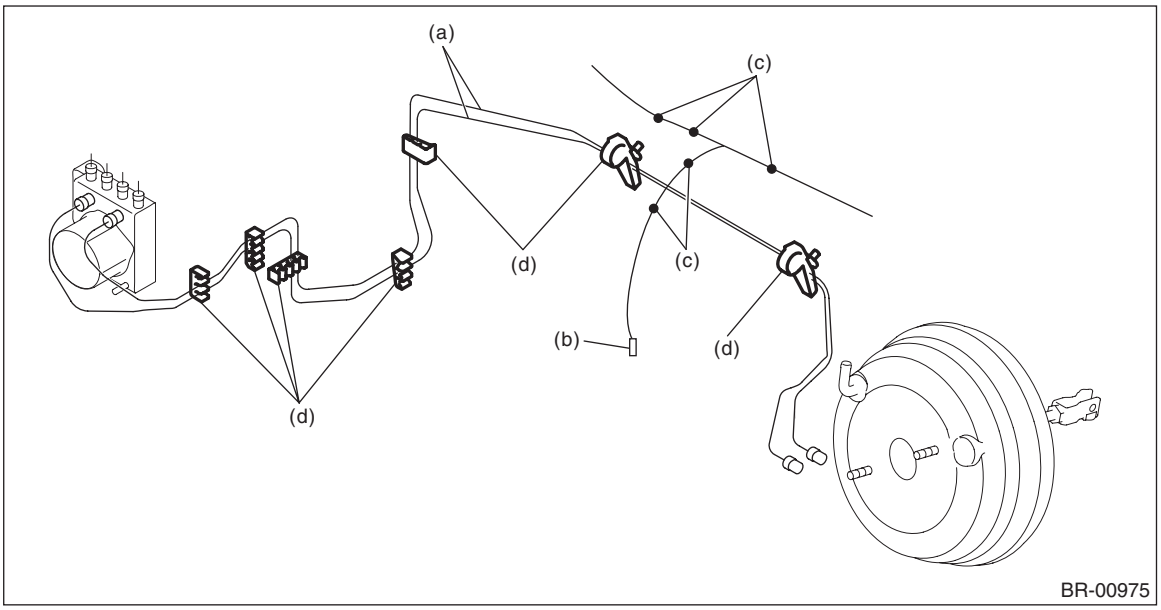

11) Remove the snap pin (a) and clevis pin (b), and remove the operating rod from the brake pedal.

CAUTION:
• Be careful not to apply excessive force to the operating rod when handling the operating rod. The angle may change by ±3°, and it may result in damage to power piston cylinder.
• Do not change the push rod length.

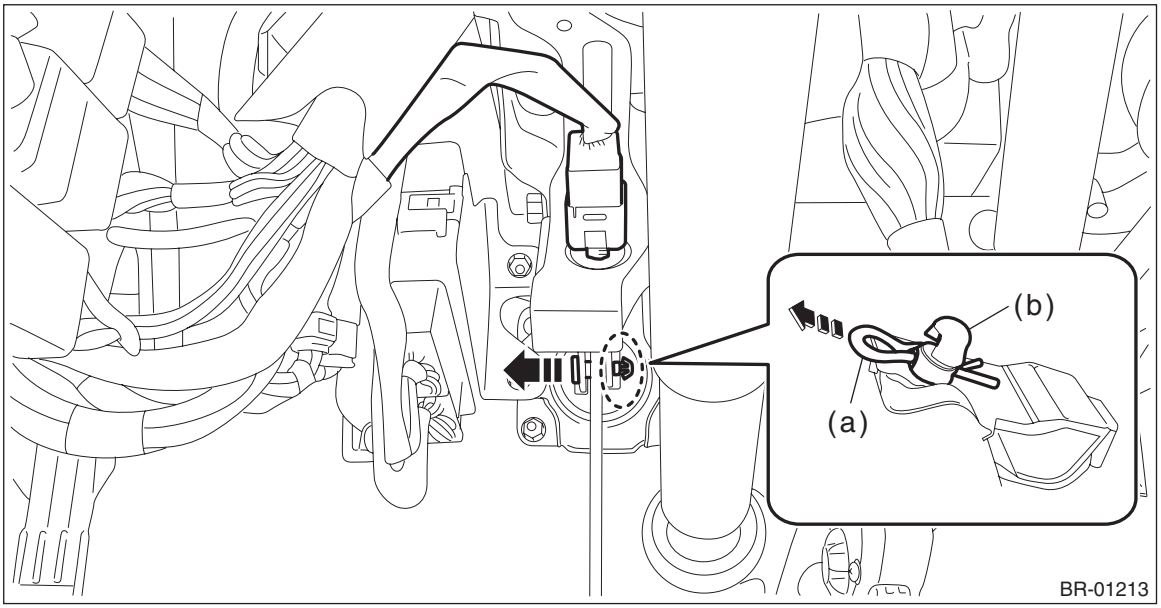

12) Remove the vacuum booster assembly.

CAUTION:
- **Do not disassemble the vacuum booster assembly.**
- **Make sure that the booster shell and vacuum pipe are not subject to strong impacts.**
- **Be careful not to drop the vacuum booster assembly. If the vacuum booster assembly is dropped accidentally, replace it.**
- **Be careful when placing the vacuum booster assembly on floor.**
- **If external force (a) is applied from above when the vacuum booster assembly is placed in this position, the resin portion as indicated by "P" may become damaged.**

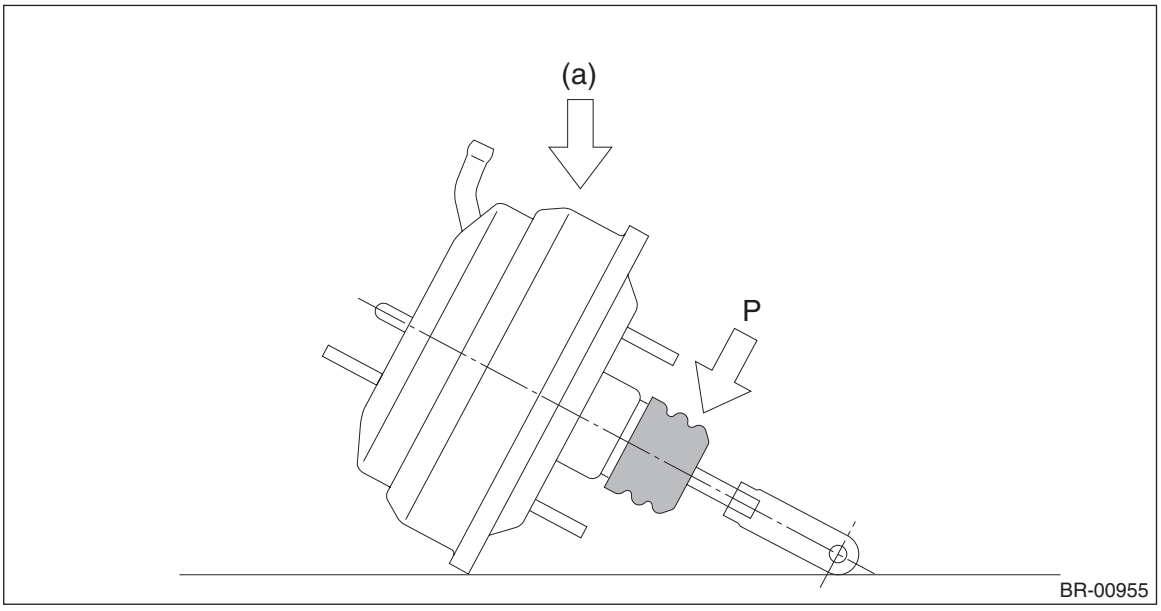

(1) Remove the nuts, and then remove the vacuum booster assembly.

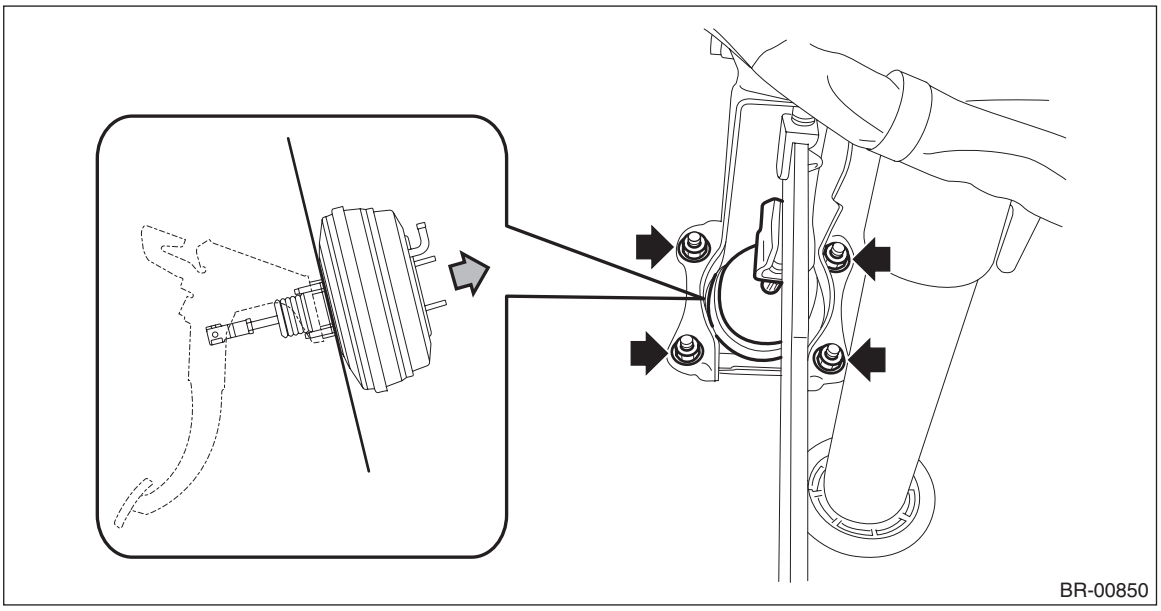

B: INSTALLATION

CAUTION:
When replacing the brake booster, adhere the label to the position shown in the figure. (C0 model)

Label:
C0 model
Part No. 25080GA010

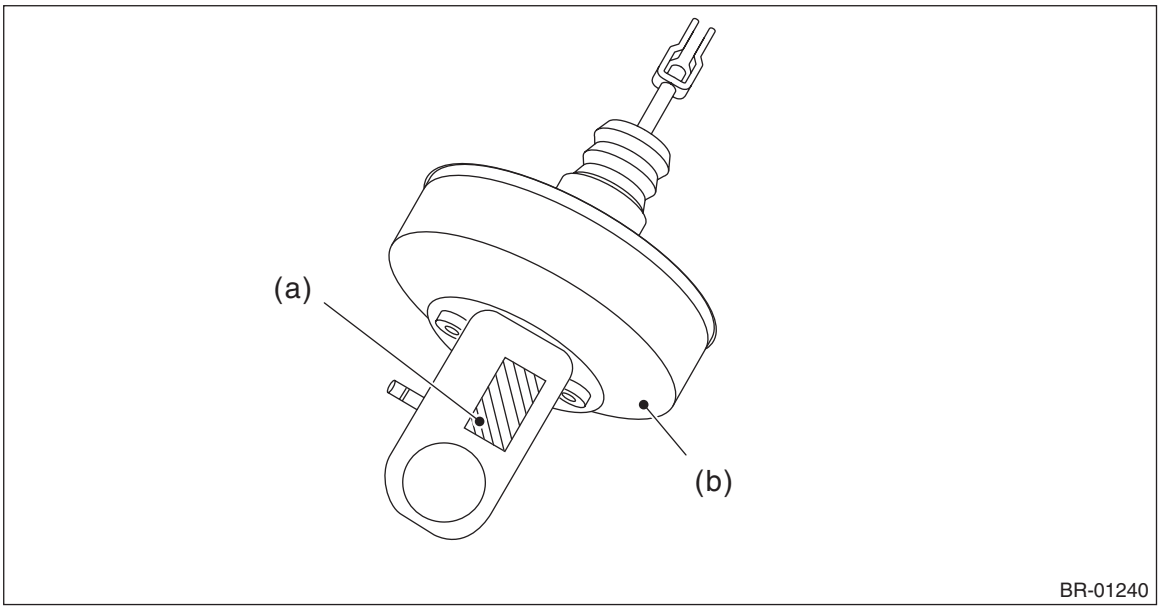

(a) Label (b) Brake booster

1) Check and adjust the operating rod of the vacuum booster assembly.
(1) Measure the length between the vacuum booster assembly mounting surface and clevis pin hole.
(2) If it is not within the specification, loosen the lock nut, rotate the vacuum booster assembly operating rod to adjust the rod length.

Specification L:
136.3 mm (5.37 in)

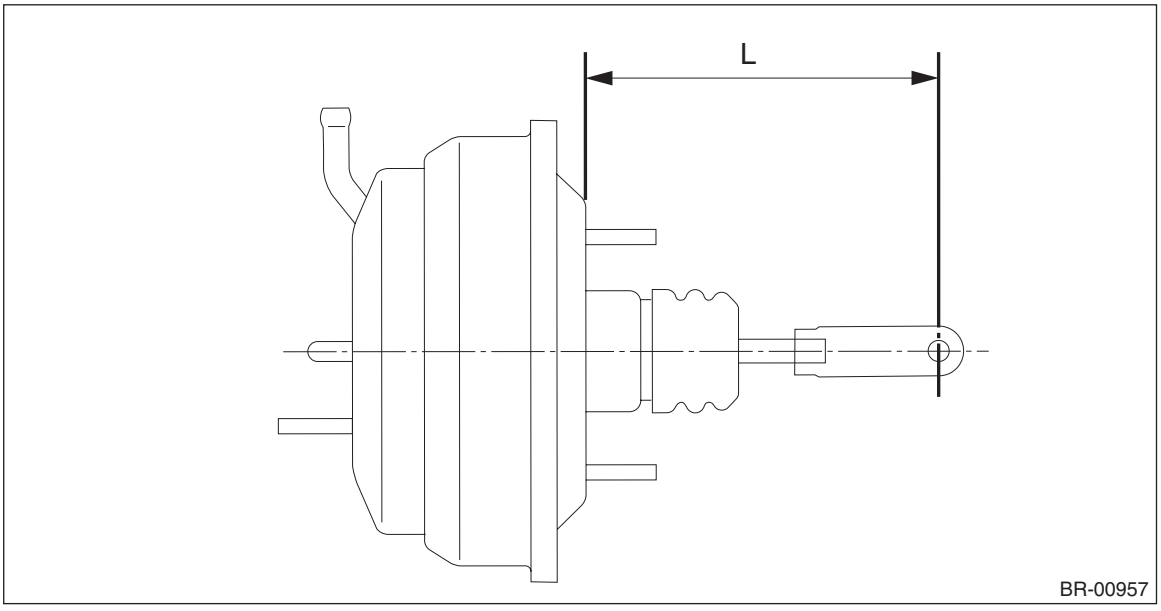

2) Install each part in the reverse order of removal.

CAUTION:
• Apply grease to the snap pin to prevent the operating rod from wear.
• Replace the clevis pin with new parts, and apply thin coat of NIGTIGHT LYW No. 2 grease to the clevis pin.
• When installing the master cylinder assembly, replace the seal sub assembly with a new part, and install it to the vacuum booster assembly.

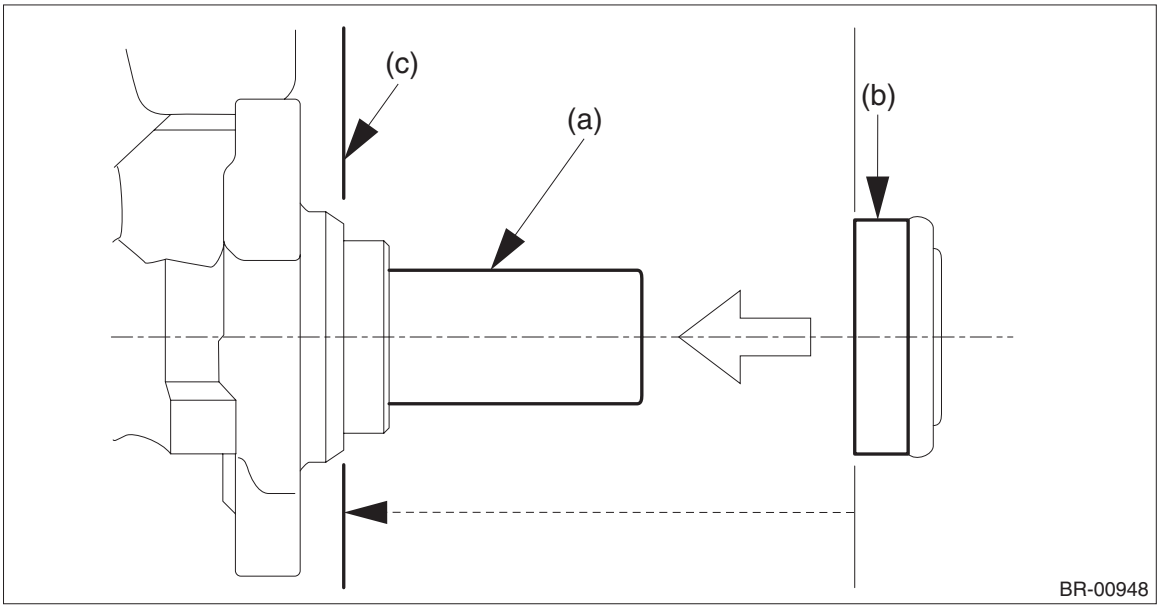

(a) Primary piston
(b) Seal sub ASSY
(c) Install the seal sub ASSY to this surface.

Tightening torque:
Vacuum booster assembly: 18 N·m (1.84 kgf-m, 13.3 ft-lb)
Master cylinder assembly: 13 N·m (1.33 kgf-m, 9.6 ft-lb)
Brake pipe flare nut: 19 N·m (1.94 kgf-m, 14.0 ft-lb)
Operating lock nut: 22 N·m (2.24 kgf-m, 16.2 ft-lb)
Knee airbag module: 7.5 N·m (0.76 kgf-m, 5.5 ft-lb)

3) Install the air conditioner pipe. <Ref. to AC-12, AIR CONDITIONING UNIT, COMPONENT, General Description.>
4) Charge refrigerant. <Ref. to AC-30, PROCEDURE, Refrigerant Charging Procedure.>
5) Bleed air from the brake system. <Ref. to BR-61, PROCEDURE, Air Bleeding.>
6) Perform a road test to make sure the brakes do not drag.

C: INSPECTION

1. OPERATION CHECK WHEN NOT USING MEASURING DEVICES

CAUTION:
When checking operation, be sure to apply the parking brake securely.
When an operation check is performed with no measuring devices, a faulty part cannot be identified correctly. But it is possible to identify the outline of the defect by performing the check according to the following procedures.

- **Air tightness check**

1) Start the engine, and idle it for 1 to 2 minutes, then turn it OFF.
2) Depress the brake pedal several times applying the normal pedal force.

NOTE:
The pedal stroke should be the longest at the 1st depression, and it should become shorter at each successive depression.
3) If no change occurs in the pedal height when pressed, the vacuum booster assembly is faulty.

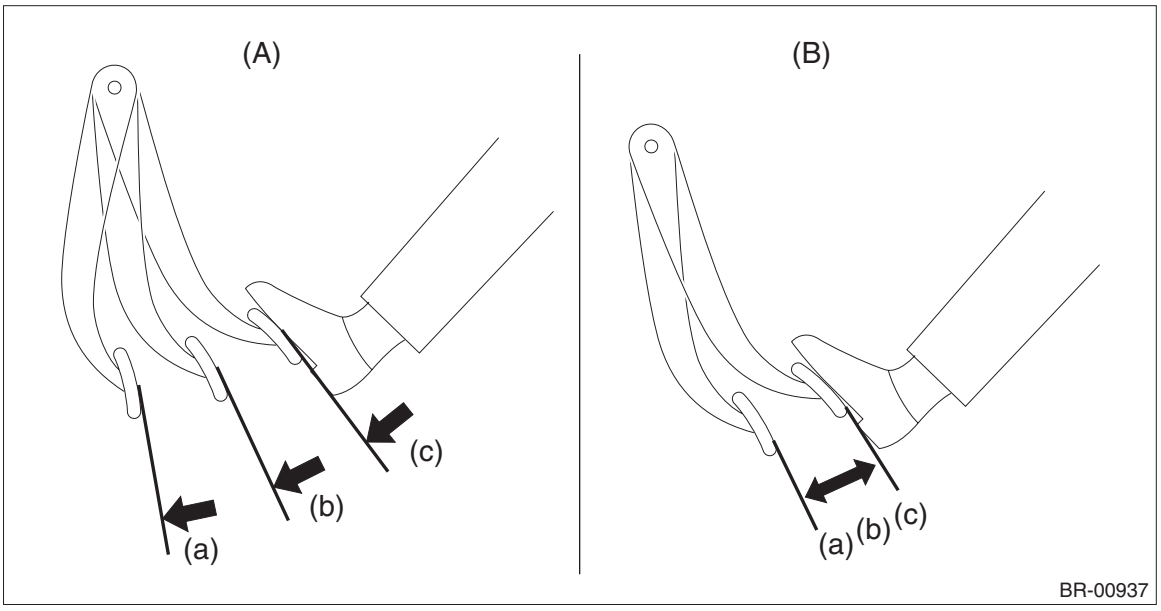

(A) Normal (B) Not OK

(a) 1st (b) 2nd (c) 3rd

NOTE:
- In case of defective operation, inspect the condition of the check valve and vacuum hose as well.
- Replace them if faulty, and perform the test again.
- If no improvement is observed, check precisely with gauges.

- **Check operation**

1) While the engine is OFF, depress the brake pedal several times applying the same pedal force, to check for a change in pedal height.

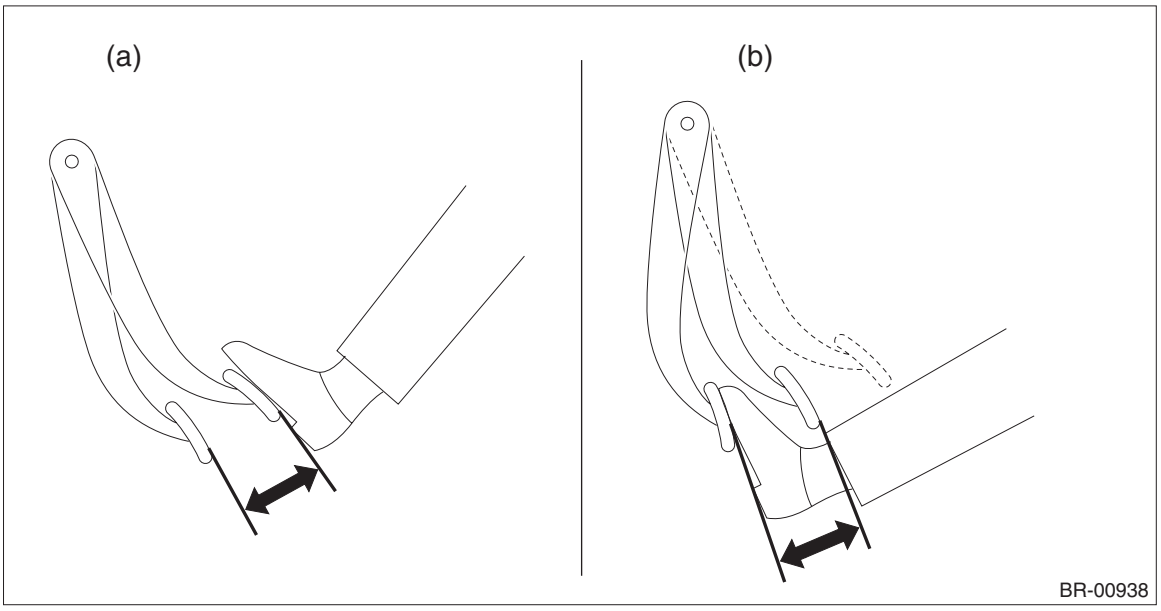

(a) When engine is stopped (b) When engine is started

2) With the brake pedal depressed, start the engine.
3) As the engine starts, the brake pedal should move slowly toward the floor. If the pedal height does not change, the vacuum booster assembly is faulty.

NOTE:
If a faulty part is detected after inspection, check precisely with measuring devices.

- **Loaded air tightness check**

Depress the brake pedal while the engine is running, and turn the engine to OFF while the pedal is depressed.
Keep the pedal depressed for 30 seconds. If the pedal height does not change, the function of vacuum booster assembly is normal. If the pedal height increases, it is faulty.

NOTE:
If a faulty part is detected after inspection, check precisely with measuring devices.

2. OPERATION CHECK WHEN USING MEASURING DEVICES

CAUTION:
When checking operation, be sure to apply the parking brake securely.

• Check with measuring devices

Connect a measuring device as shown in the figure. After bleeding air from the pressure gauge, perform each check.

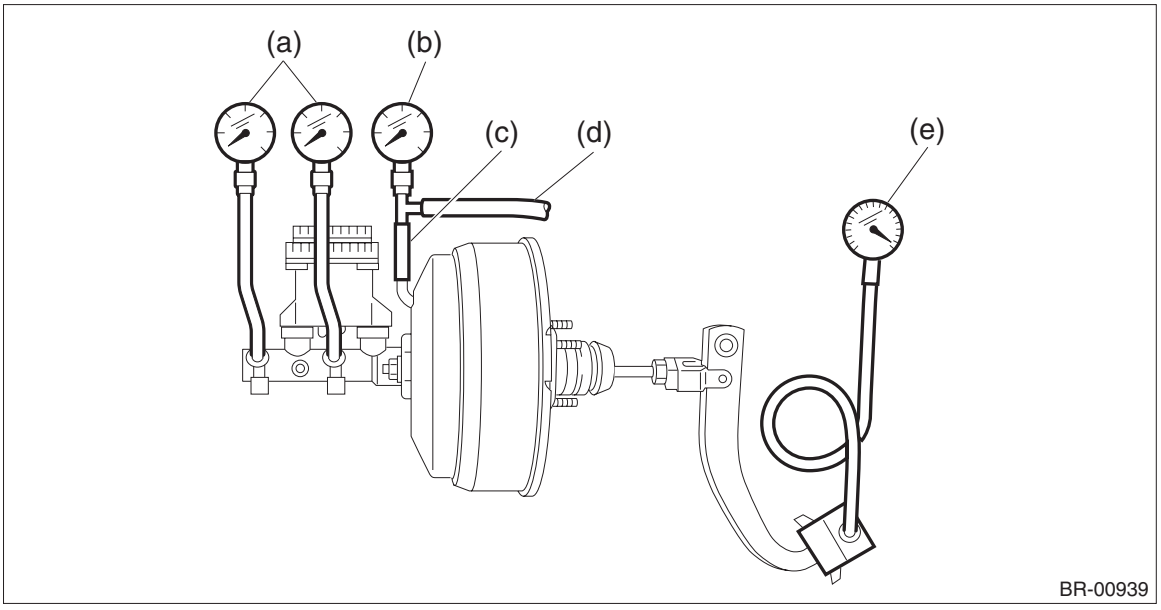

(a) Pressure gauge
(b) Vacuum gauge
(c) Adapter hose
(d) Vacuum hose
(e) Pedal force gauge

• Air tightness check

1) Start the engine and keep it running at idle until vacuum pressure indicates 66.7 kPa (500 mmHg, 19.69 inHg) while the brake pedal is not depressed.

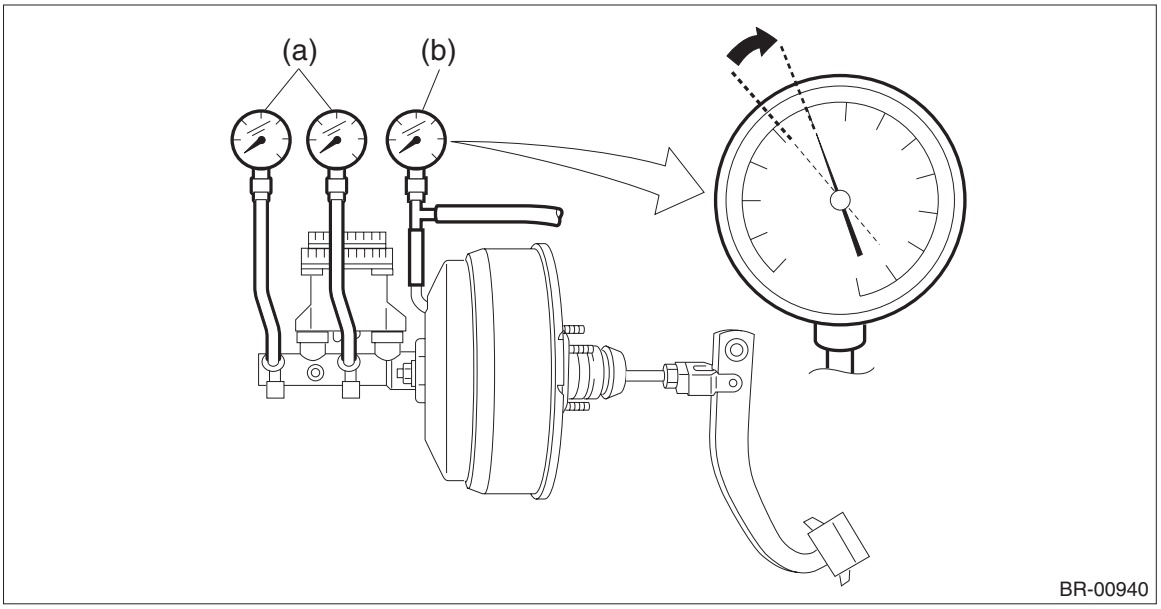

(a) Pressure gauge
(b) Vacuum gauge

2) Stop the engine and check the vacuum pressure.
If the value matches the following standard, the vacuum booster assembly function is normal.

Vacuum pressure: standard
The range of vacuum pressure drop within 15 seconds after stopping the engine is 3.3 kPa (25 mmHg, 0.98 inHg) or less.

If a faulty part is detected after inspection, it may results from one of the following causes.
- Check valve malfunction
- Leak from vacuum hose
- Leak from shell joint section or stud bolt welded section
- Damaged diaphragm
- Leak from valve body seal and bearing section
- Leak from plate and seal assembly section
- Leak from poppet valve assembly section

• Loaded air tightness check

1) Start the engine and depress the brake pedal with a pedal force of 196 N (20 kgf, 44 lbf).
2) Keep the engine running at idle and the pedal depressed until vacuum pressure of the vacuum gauge indicates 66.7 kPa (500 mmHg, 19.69 inHg).

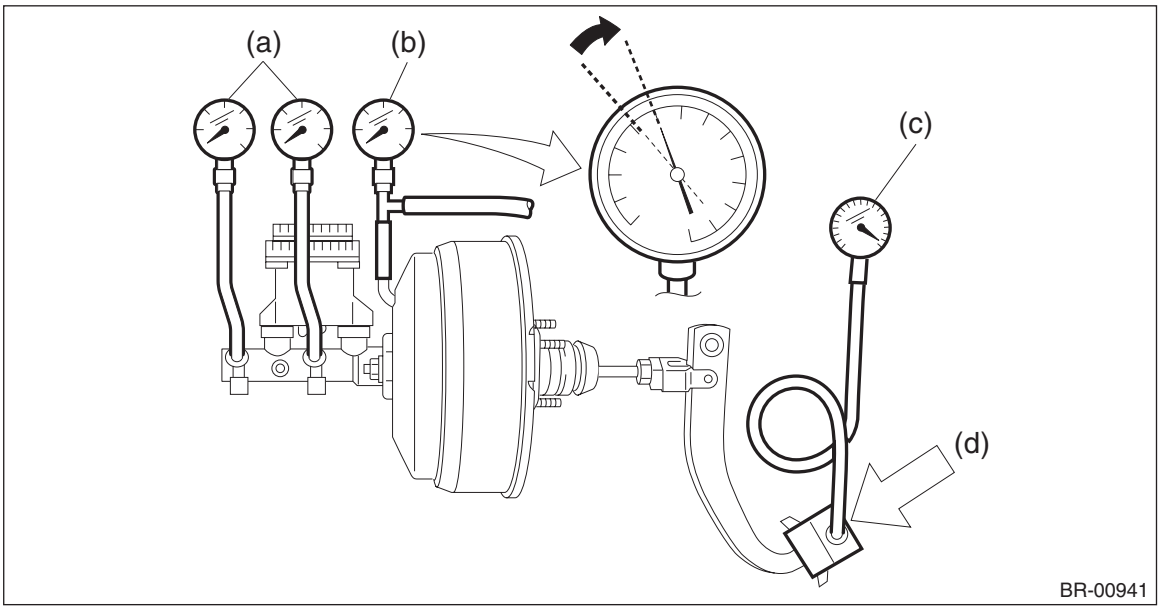

(a) Pressure gauge
(b) Vacuum gauge
(c) Pedal force gauge
(d) Depressed

3) Stop the engine and check the vacuum gauge.
If the value matches the following standard, the vacuum booster function is normal.

Vacuum pressure: standard
The range of vacuum pressure drop within 15 seconds after stopping the engine is 3.3 kPa (25 mmHg, 0.98 inHg) or less.

If a faulty part is detected after inspection, refer to “AIR TIGHTNESS CHECK”.
<Ref. to BR-55, INSPECTION, Brake Booster.>
4) If the vacuum booster assembly is faulty, replace it with a new part.

• Lack of boost action check

1) Turn the engine OFF, and set the value of the vacuum gauge to “0”.
2) Check the fluid pressure when the brake pedal is depressed. The pressure must be greater than the specification listed.

Brake pedal force: N (kgf, lbf)	147 (15, 33)	294 (30, 66)
Fluid pressure: kPa (kgf/cm^2, psi)	533 (5, 77)	1,551 (16, 225)

• Boosting action check

1) Set the vacuum gauge reading to 66.7 kPa (500 mmHg, 19.69 inHg) with the engine running.
2) Check the fluid pressure when the brake pedal is depressed. The pressure must be greater than the specification listed.

Brake pedal force: N (kgf, lbf)	147 (15, 33)	294 (30, 66)
Fluid pressure: kPa (kgf/cm^2, psi)	6,177 (63, 896)	11,273 (115, 1,635)

11.Brake Fluid

A: INSPECTION

1) Check that the amount of brake fluid is between the lines of “MIN” (a) and “MAX” (b) from a straight view or within 90° to the right and left forward.
If out of the specified range, refill with brake fluid (c) or drain it.
If the brake fluid level is close to “MIN”, check the brake pad for wear and refill with brake fluid.

CAUTION:
Always check the level using the specified direction because there is a partition in the reservoir tank.

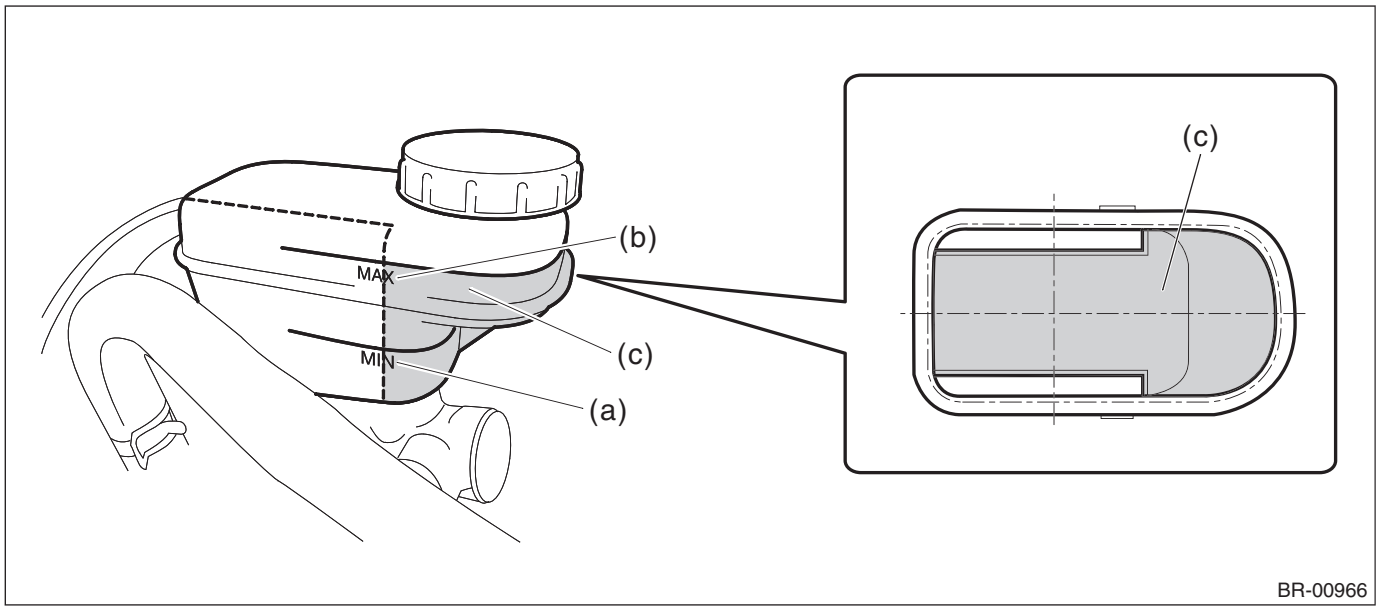

2) Check the fluid for discoloration. If the fluid is extremely discolored, replace with the new fluid.

B: REPLACEMENT

CAUTION:
• Do not let brake fluid come into contact with the painted surface of the vehicle body. Wash away with water immediately and wipe off if it is spilled by accident.
• Avoid mixing brake fluid of different brands to prevent fluid performance from degrading.
• Be careful not to allow dirt or dust to enter the reservoir tank.

NOTE:
• During the operation, keep the reservoir tank filled with brake fluid to prevent entry of air.
• Operate the brake pedal slowly.
• For convenience and safety, perform the work with 2 people.
• The required amount of brake fluid is approximately 500 mL (16.9 US fl oz, 17.6 Imp fl oz) for the entire brake system.
1) Lift up the vehicle and set rigid racks at the specified locations, or keep the vehicle lifted.
2) Remove both the front and rear wheels.
3) Drain brake fluid from the reservoir tank.
4) Refill the reservoir tank with recommended brake fluid.

Recommended brake fluid:
FMVSS No. 116, DOT3, or DOT4
Perform the same procedure as for bleeding the brake line, until new brake fluid comes out from vinyl tube. <Ref. to BR-61, PROCEDURE, Air Bleeding.>

12.Air Bleeding

A: PROCEDURE

CAUTION:
• Do not let brake fluid come into contact with the painted surface of the vehicle body. Wash away with water immediately and wipe off if it is spilled by accident.
• Avoid mixing brake fluid of different brands to prevent fluid performance from degrading.
• Be careful not to allow dirt or dust to enter the reservoir tank.

1. MASTER CYLINDER

NOTE:
• When the master cylinder assembly is replaced or the reservoir tank is empty, bleed the brake master cylinder and the clutch master cylinder (MT model).
• If bleeding of the master cylinder assembly is not necessary, omit the following procedures, and perform bleeding of the brake line. <Ref. to BR-62, BRAKE LINE, PROCEDURE, Air Bleeding.>
1) Add the brake fluid to the reservoir tank of the master cylinder assembly.

NOTE:
• MT model: Add the brake fluid until it flows out from the clutch hose nipple.
• Except for MT model: Add the brake fluid up to the “MAX” level.
• While bleeding air, keep the reservoir tank filled with brake fluid at MIN level or higher to prevent entry of air.
2) Disconnect the brake line at primary and secondary sides.
3) Wrap the master cylinder assembly with a plastic bag.
4) Depress the brake pedal slowly and hold it.

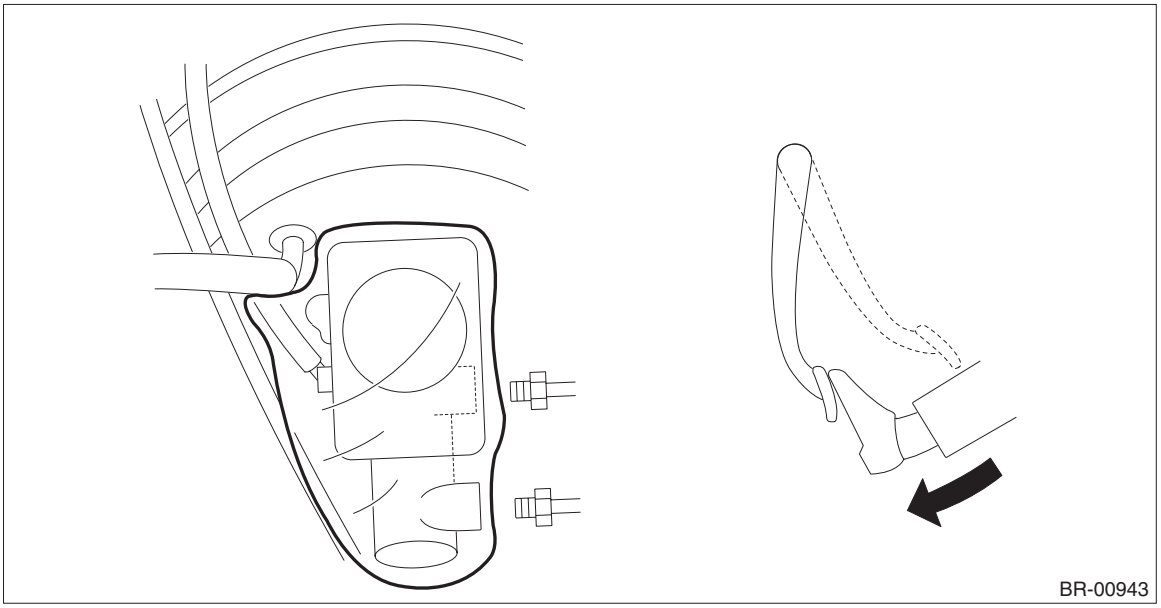

5) Plug the outlet plug with your finger, and then release the brake pedal.

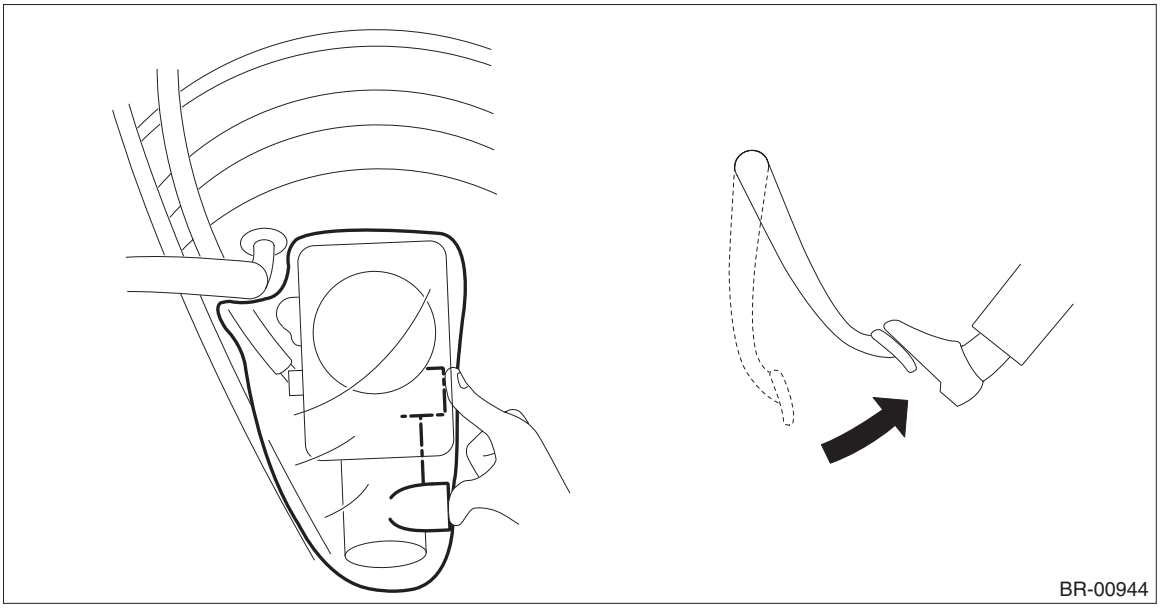

6) Repeat the step 4) and 5) several times.
7) Remove the plastic bag.
8) Install the brake pipe to the master cylinder assembly.

Tightening torque:
Brake pipe flare nut: 19 N·m (1.94 kgf-m, 14.0 ft-lb)

9) Bleed air from the brake line. <Ref. to BR-62, BRAKE LINE, PROCEDURE, Air Bleeding.>

2. BRAKE LINE

1) When the master cylinder assembly is replaced or the reservoir tank is empty, bleed the master cylinder assembly before bleeding the brake line. <Ref. to BR-61, MASTER CYLINDER, PROCEDURE, Air Bleeding.>
2) Fill the reservoir tank of the master cylinder assembly with brake fluid.

NOTE:
While bleeding air, keep the reservoir tank filled with brake fluid to prevent entry of air.
3) Attach one end of the vinyl tube to the bleeder - screw and the other end to the brake fluid container.

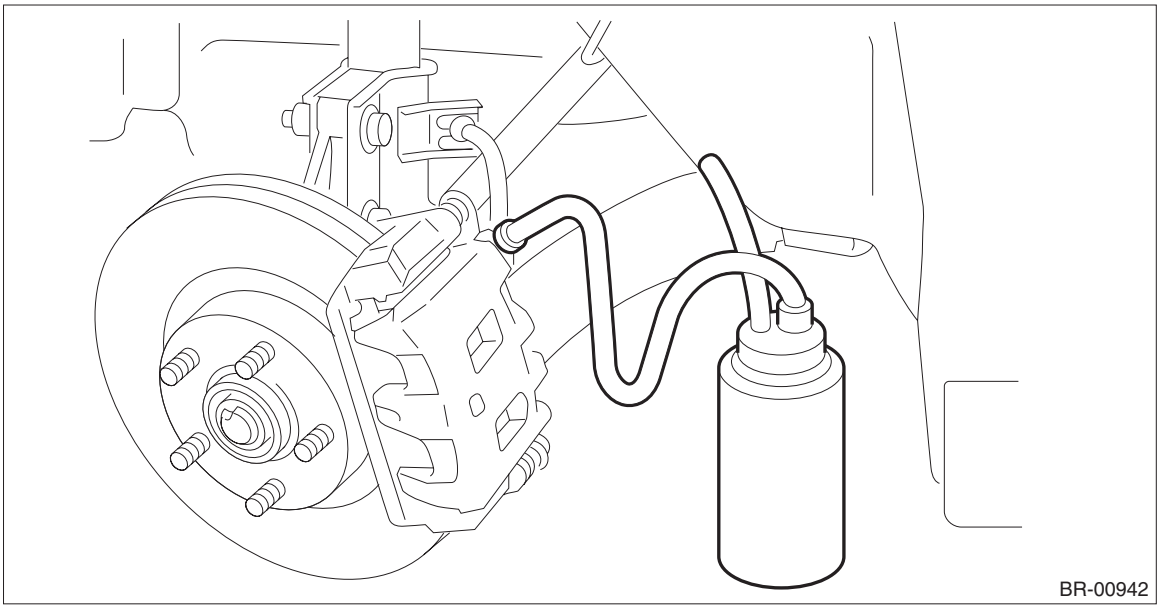

4) Depress the brake pedal several times, and hold it.
5) Loosen the bleeder - screw to drain brake fluid. Tighten the bleeder - screw quickly, and release the brake pedal.
6) Repeat the steps 4) to 5) until there are no more air bubbles in the vinyl tube.
7) Repeat the steps from 2) to 6) above to bleed air from each wheel.

NOTE:
Perform air bleed starting in the order from the farthest wheel cylinder from the master cylinder assembly.
8) Securely tighten the bleeder - screw.

Tightening torque:
Bleeder - screw: 8 N·m (0.82 kgf-m, 5.9 ft-lb)
9) Check that there are no brake fluid leaks in the entire brake system.
10) Check the pedal stroke.
(1) Warm up the engine until the engine speed stabilizes.
(2) Depress and hold the brake pedal with a force of 500 N (51 kgf, 112 lbf).
(3) Adjust the tilt position of the steering wheel to the lowest position.
(4) Measure the distance between brake pedal and steering wheel.
(5) Release the pedal, and measure the distance between pedal and steering wheel again.

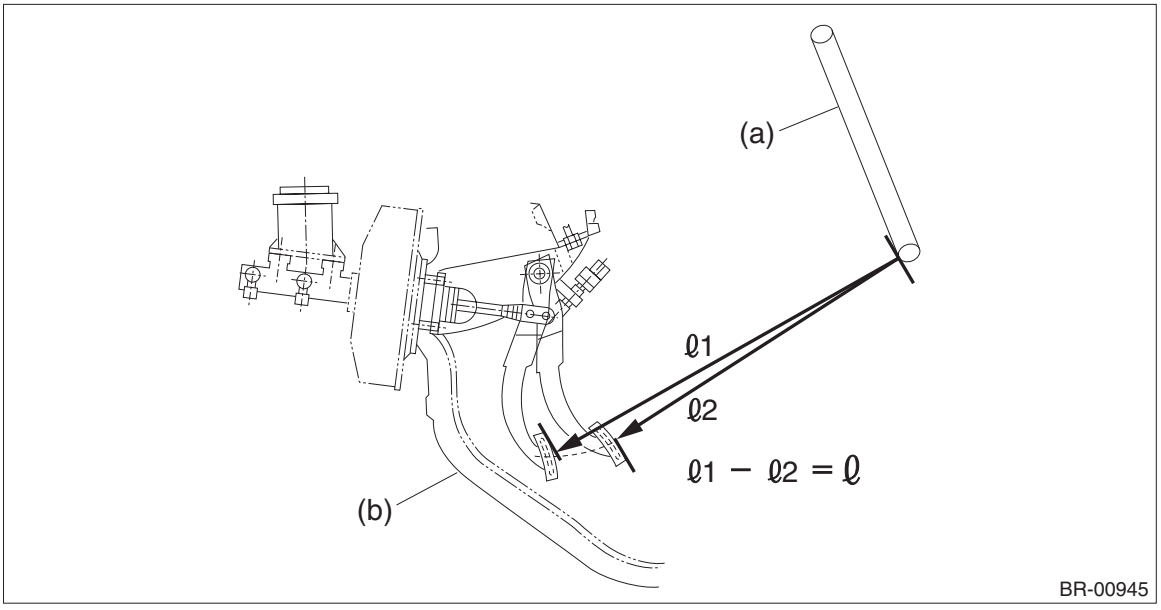

(a) Steering wheel (b) Toe board

Specification of pedal stroke:
110 mm (4.33 in) or less when depressing the pedal with a force of 500 N (51 kgf, 112 lbf)
11) If the distance is more than specification, there is a possibility of air being caught in the brake line. Bleed the brake line of all air until the pedal stroke meets the specification.
12) Operate the hydraulic control unit in the sequence control mode. <Ref. to VDC-22, ABS Sequence Control.>
13) Check the pedal stroke again.
14) If the distance is more than specification, there is a possibility of air being caught in the hydraulic unit. Repeat above steps 2) to 9) until the pedal stroke meets the specification.
15) Fill the reservoir tank with brake fluid up to the “MAX” level.
16) Perform a road test and ensure that the brakes operate normally.

13.Brake Hose

A: REMOVAL

1. FRONT BRAKE HOSE

1) Separate the brake pipe (b) from brake hose (a) using a flare nut wrench.
2) Remove the clamp, strut mounting bolt and union bolt, and remove the front brake hose.

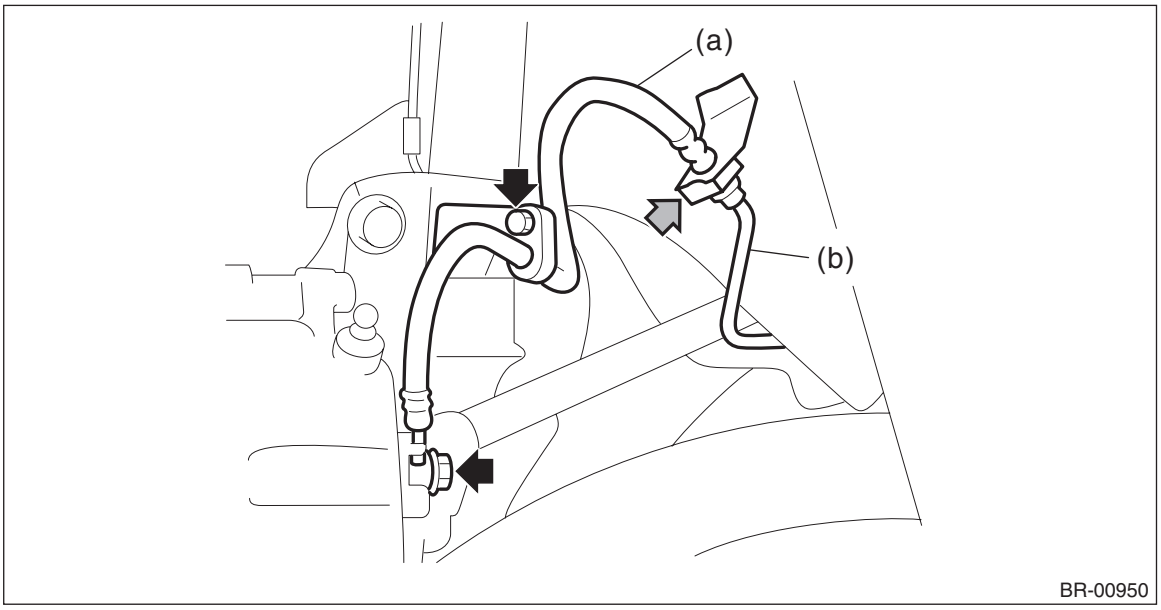

2. REAR BRAKE HOSE

1) Remove the brake hose bracket bolt and union bolt.

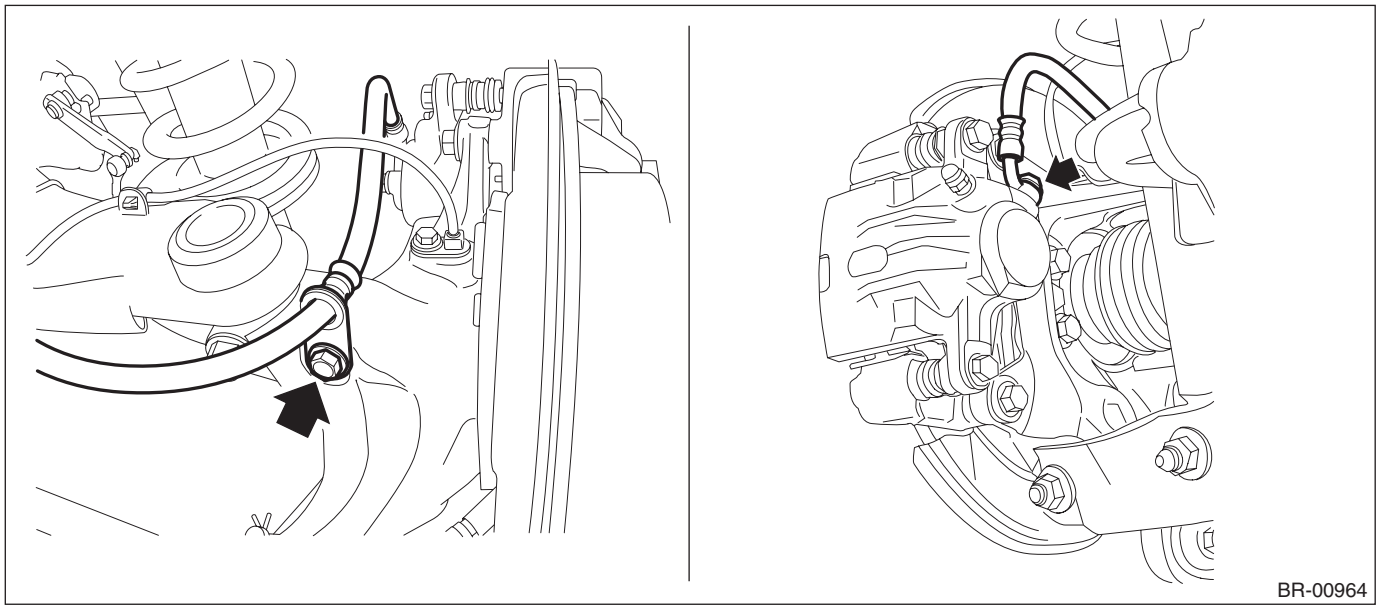

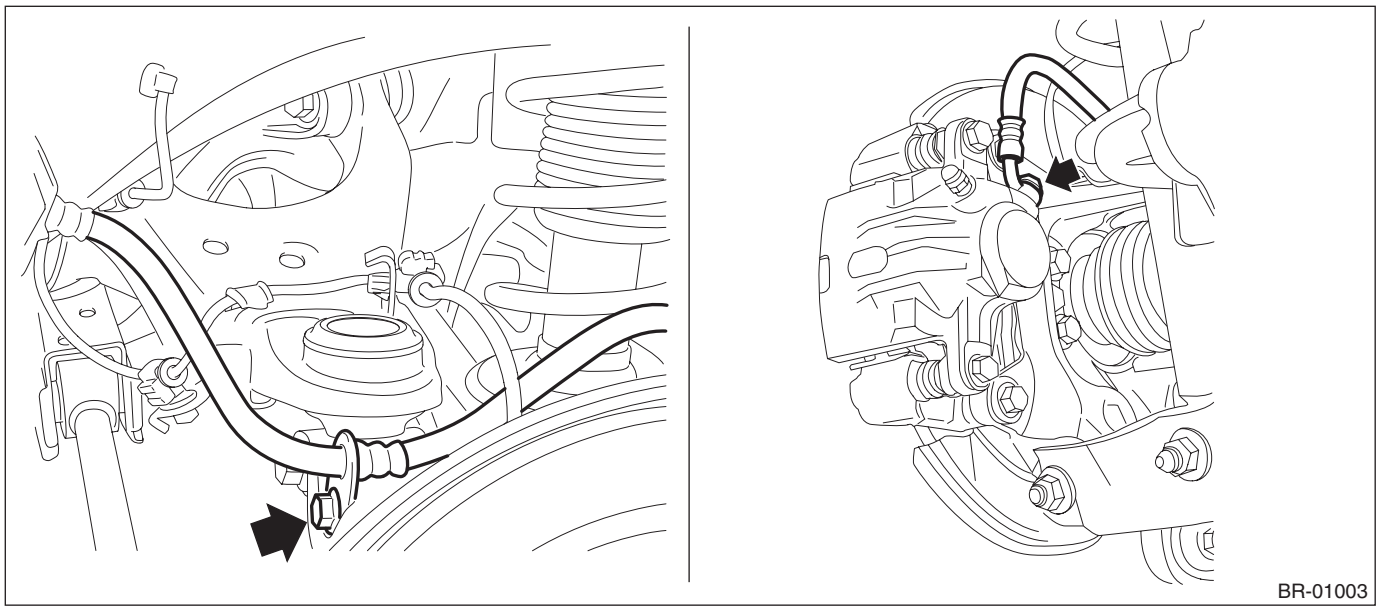

2) Separate the brake pipe (a) using a flare nut wrench.
3) Remove the brake hose clamp (b), and remove the rear brake hose (c).

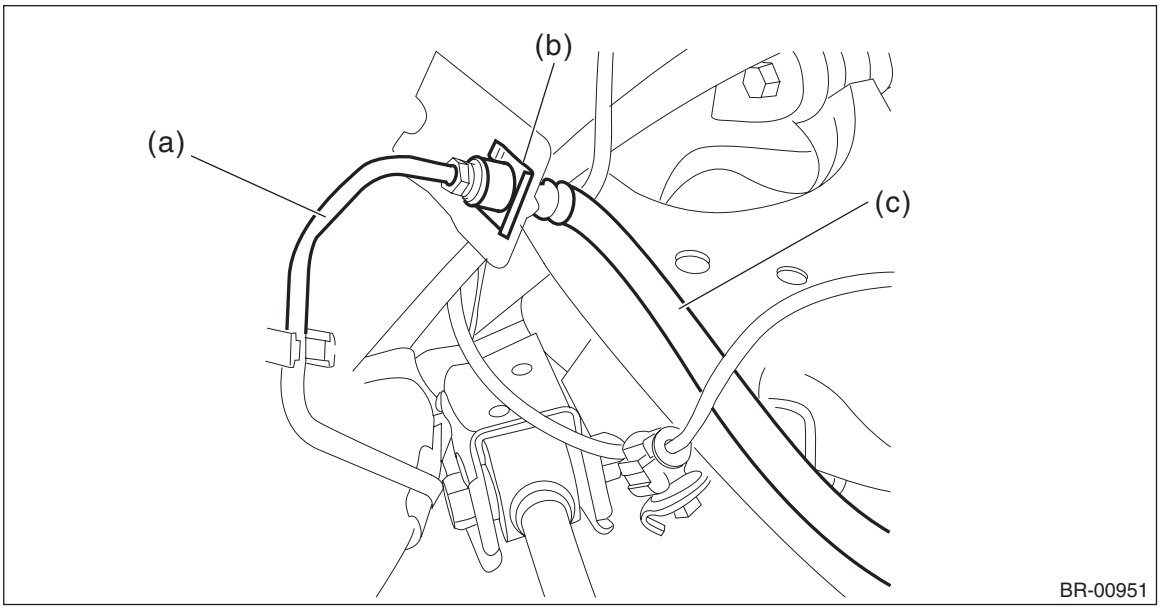

B: INSTALLATION

1. FRONT BRAKE HOSE

1) Secure the brake hose to strut mount.

Tightening torque:
Brake hose: 33 N·m (3.36 kgf-m, 24.3 ft-lb)

2) Connect the brake hose to the front caliper body assembly using a new gasket.

Tightening torque:
Union bolt: 18 N·m (1.84 kgf-m, 13.3 ft-lb)

3) Position the disc in straight position and route the brake hose through the hole in the bracket on the wheel apron side.

CAUTION:
Do not twist the brake hose.

4) Temporarily tighten the flare nut which connects brake pipe and hose.
5) Secure the brake hose to wheel apron bracket with clamp.
6) Tighten the flare nut to the specified torque.

Tightening torque:
Brake pipe flare nut: 15 N·m (1.53 kgf-m, 11.1 ft-lb)

7) Bleed air from the brake system. <Ref. to BR-61, PROCEDURE, Air Bleeding.>

2. REAR BRAKE HOSE

1) Route the brake hose through the hole of bracket, and lightly tighten the flare nut to connect brake pipe.
2) Insert the clamp to secure brake hose.

Tightening torque:
Brake hose bracket: 33 N·m (3.36 kgf-m, 24.3 ft-lb)

3) Install the brake hose to rear caliper body using a new gasket.

Tightening torque:
Union bolt: 18 N·m (1.84 kgf-m, 13.3 ft-lb)

4) Tighten the flare nut to the specified torque.

Tightening torque:
Brake pipe flare nut: 15 N·m (1.53 kgf-m, 11.1 ft-lb)

5) Bleed air from the brake system. <Ref. to BR-61, PROCEDURE, Air Bleeding.>

C: INSPECTION

Check the hose for crack, interference with other parts, damage, and fluid leakage on connecting sections. If any faulty is found, repair or replace the relevant part.

14.Brake Pipe

A: REMOVAL

CAUTION:
• Yellow connectors and harnesses with yellow tapes around them are the connectors and harnesses for the airbag system. Using a tester above such circuits may cause malfunction of airbag system. Follow the cautions for "AIRBAG SYSTEM" in this case. <Ref. to AB-11, CAUTION, General Description.>
• Be careful not to damage the airbag system wiring harness when servicing the center brake pipe.
• When removing the brake pipe, do not bend.

NOTE:
The airbag system wiring harness is routed near the center brake pipe.

B: INSTALLATION

CAUTION:
• Yellow connectors and harnesses with yellow tapes around them are the connectors and harnesses for the airbag system. Using a tester above such circuits may cause malfunction of airbag system. Follow the cautions for "AIRBAG SYSTEM" in this case. <Ref. to AB-11, CAUTION, General Description.>
• Be careful not to damage the airbag system wiring harness when servicing the center brake pipe.
• When installing the brake pipe, do not bend.
• After installing the brake pipe and hose, perform air bleed.
• After installing the brake hoses, make sure that they do not contact the tires or suspension assembly, etc.

NOTE:
The airbag system wiring harness is routed near the center brake pipe.

Tightening torque:
Front brake pipes & hoses: <Ref. to BR-8, FRONT BRAKE PIPES AND HOSES, COMPONENT, General Description.>
Center & rear brake pipes and hoses: <Ref. to BR-9, CENTER AND REAR BRAKE PIPES AND HOSES, COMPONENT, General Description.>

C: INSPECTION

Check the pipe for crack and damage, and also check the connection for fluid leakage. If any faulty is found, repair or replace the relevant part.

NOTE:
Use a mirror when inspecting back sides and other locations which are hard to see.

15.Brake Pedal

A: REMOVAL

1. CVT MODEL

1) Disconnect the ground cable from battery. <Ref. to NT-5, BATTERY, NOTE, Note.>

NOTE:
For the 12 volt engine restart battery of HEV model, disconnect the ground terminal from 12V engine restart battery sensor.

2) Remove the column assembly - steering. <Ref. to PS-18, REMOVAL, Steering Column.>
3) Remove the brake pedal assembly.
   (1) Disconnect the switch - stop light connector.
   (2) Disconnect the brake stroke sensor connector (c). (HEV model)
   (3) Remove the snap pin (a) and clevis pin (b), and remove the operating rod from the brake pedal.

CAUTION:
- **Be careful not to apply excessive force to the operating rod when handling the operating rod. The angle may change by ±3°, and it may result in damage to power piston cylinder.**
- **Do not change the push rod length.**

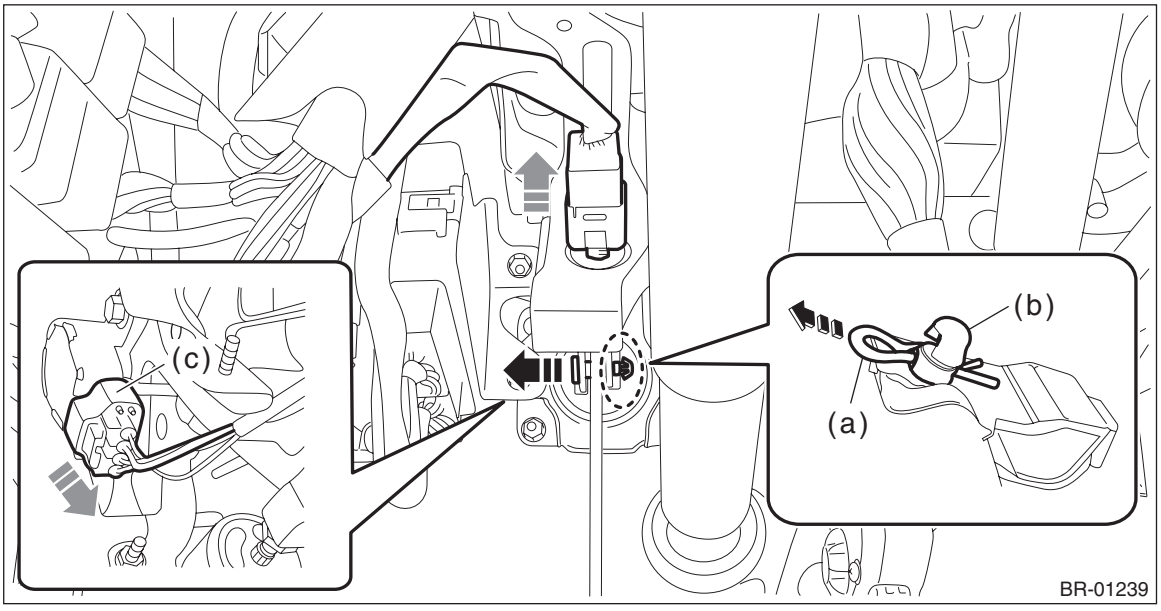

(4) Remove the bolt and nut, and then detach the brake pedal assembly.

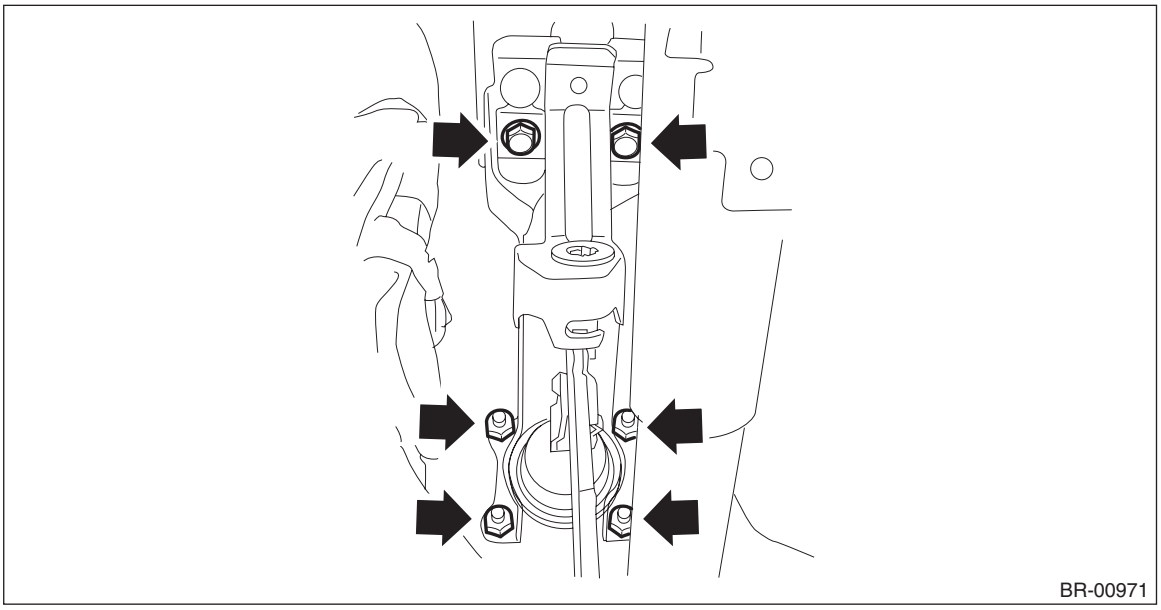

2. MT MODEL

NOTE:
Brake pedal is integrated with the clutch pedal.
For removal procedures of the brake pedal, refer to Clutch section. <Ref. to CL-24, REMOVAL, Clutch Pedal.>

B: INSTALLATION

1) Install each part in the reverse order of removal.

CAUTION:
- **Apply grease to the snap pin to prevent the operating rod from wear.**
- **Replace the clevis pin with new parts, and apply thin coat of NIGTIGHT LYW No. 2 grease to the clevis pin.**

Tightening torque:
Brake pedal: 18 N·m (1.84 kgf-m, 13.3 ft-lb)
Knee airbag module: 7.5 N·m (0.76 kgf-m, 5.5 ft-lb)

2) Check that the brake light operate properly.
3) Check the brake pedal after installation. <Ref. to BR-70, INSPECTION, Brake Pedal.>

C: INSPECTION

1) Move the pad - brake pedal in a horizontal direction with a force of approx. 10 N (1 kgf, 2 lbf), and check that the pedal deflection is in the range of specifications.

CAUTION:
If excessive deflection is noted, replace with a new bushing.

Deflection of brake pedal:
Wear limit: 5.0 mm (0.197 in) or less

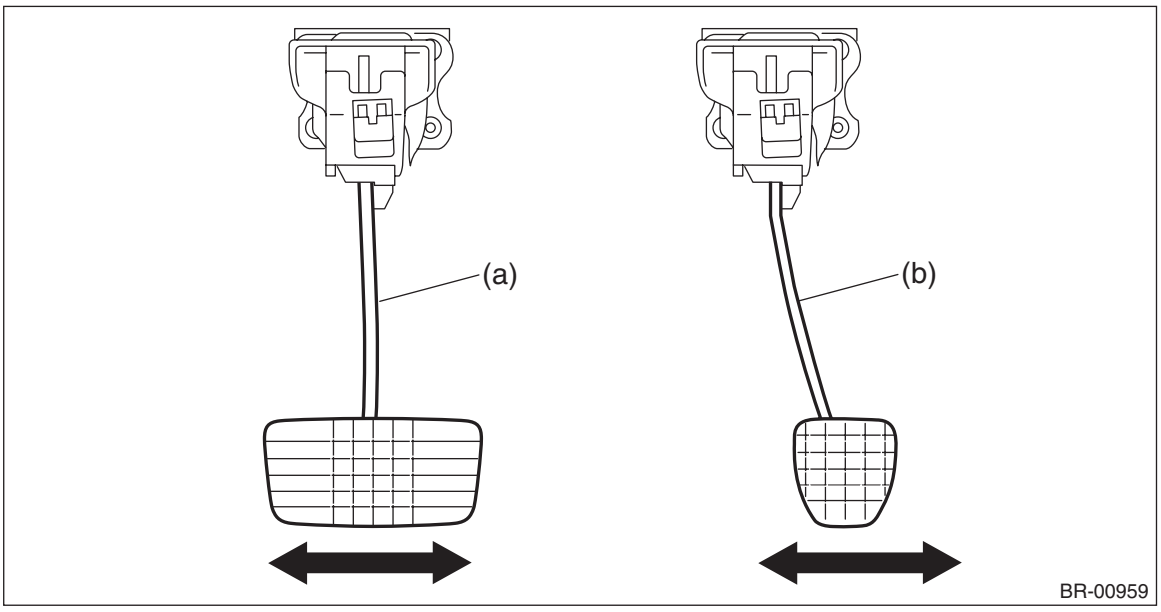

(a) Brake pedal (except for MT model) (b) Brake pedal (MT model)

2) Check the position of the pedal pad.

Pedal height L:
140 — 150 mm (5.51 — 5.91 in)

Brake pedal free play A:
0.5 — 2 mm (0.020 — 0.079 in) [When pulling the brake pedal upward with a force of less than 10 N (1 kgf, 2 lbf).]

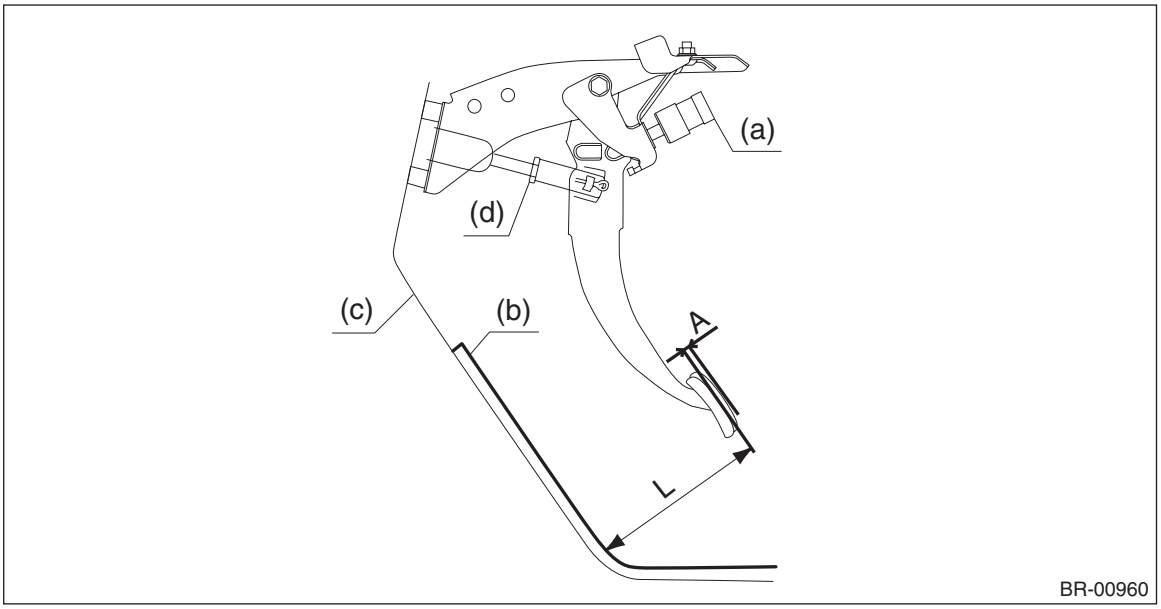

(a) Switch - stop light
(b) Mat
(c) Toe board
(d) Brake booster operating rod

3) If it is not within the specification, loosen the lock nuts of vacuum booster operating rod, and rotate the rod to adjust the pedal height L within the specification.
4) Tighten the lock nut.

Tightening torque:
Operating lock nut: 22 N·m (2.24 kgf-m, 16.2 ft-lb)

NOTE:
Check the brake pedal height. When adjusting, also adjust the switch - stop light.

16.Stop Light Switch

A: REMOVAL

1) Disconnect the ground cable from battery. <Ref. to NT-5, BATTERY, NOTE, Note.>

NOTE:
For the 12 volt engine restart battery of HEV model, disconnect the ground terminal from 12V engine restart battery sensor.

2) Remove the cover assembly - instrument panel LWR driver. <Ref. to EI-71, REMOVAL, Instrument Panel Lower Cover.>

3) Remove the nuts to remove the knee airbag module and disconnect the harness connector. <Ref. to AB-31, KNEE AIRBAG MODULE, PROCEDURE, Airbag Connector.>

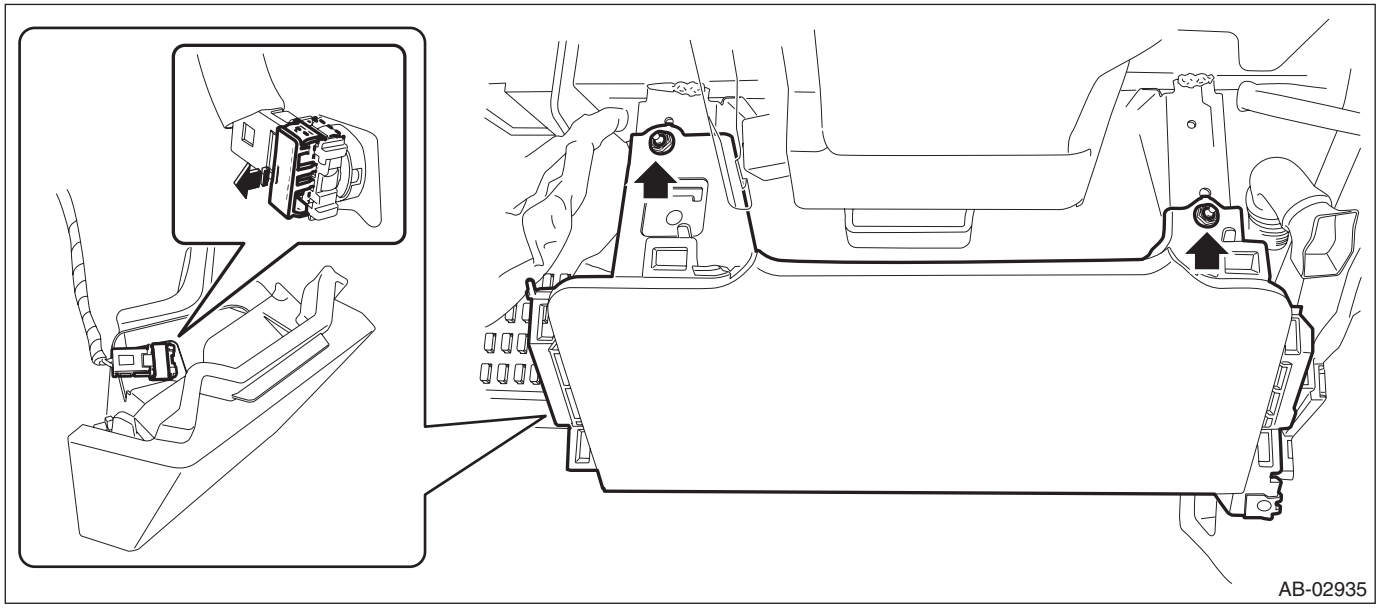

4) Remove the stop light switch.
   (1) Disconnect the stop light switch connector.
   (2) Remove the stop light switch by turning it counterclockwise.

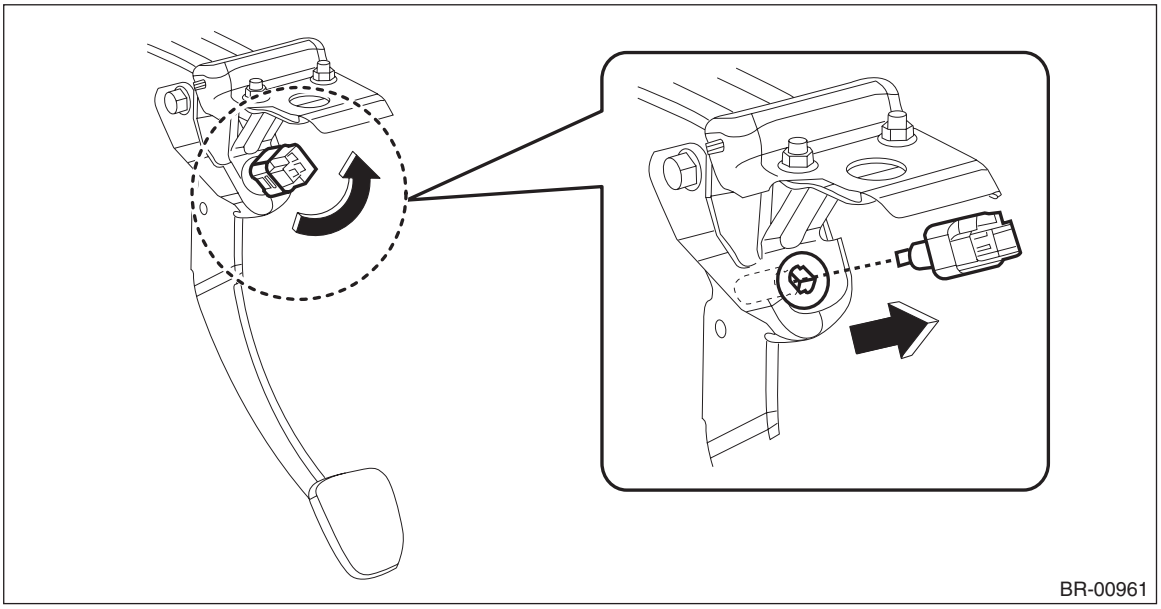

B: INSTALLATION

1. GASOLINE ENGINE MODEL

1) Install the stop light switch.

CAUTION:
• Turn the stop light switch clockwise when installing so that it can return backward by approximately 1 mm (0.04 in) and clearance is automatically adjusted.
• If it is hard to turn the switch, reduce the switch pushing force and turn it again.

(1) While pulling up the brake pedal toward you, contact the stop light switch to the stopper and temporarily install it by rotating it clockwise.
(2) Adjust the stop light switch position, and install it. <Ref. to BR-76, ADJUSTMENT, Stop Light Switch.>
(3) Install the stop light switch connector.

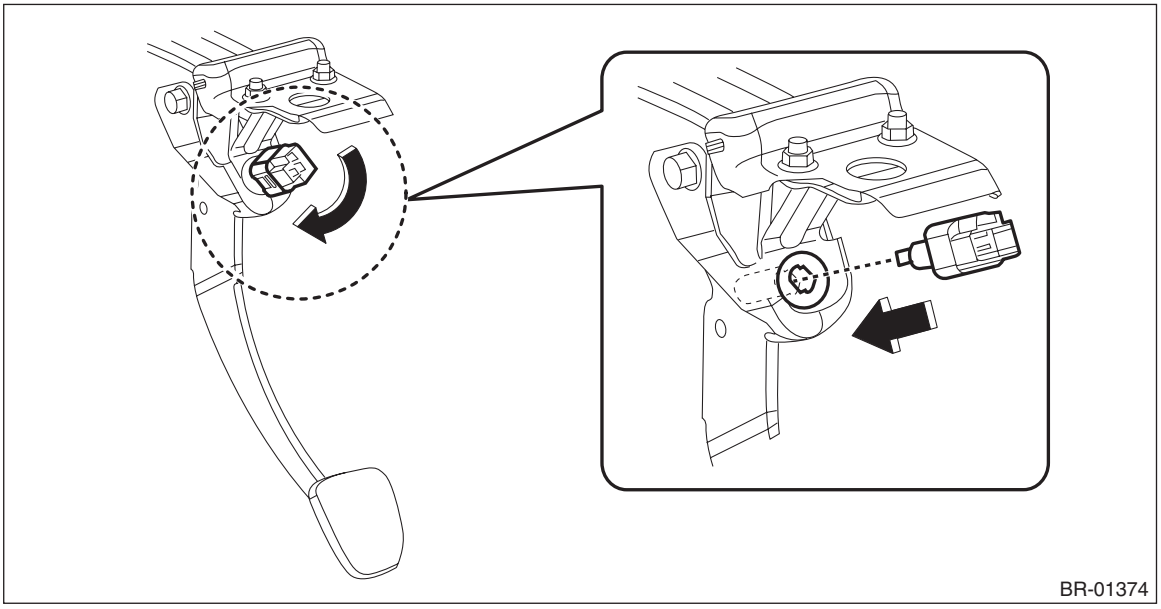

2) Install the cover assembly - instrument panel LWR driver.
3) Connect the battery ground terminal.
4) Check that the brake light operate properly.
5) Check the stop light switch operation.
(1) Turn the ignition switch to OFF and connect the Subaru Select Monitor.
(2) Start the engine and warm it up to a sufficient temperature.

NOTE:
Perform the following operations with the engine running.

(3) Display the data of «Brake Switch» and «Pressure Sensor Output» by following the Subaru Select Monitor display screen.
(4) Check that the stop light switch is ON with the brake pedal not depressed.
(5) Quickly depress the brake pedal 5 times.
(6) Slowly release the brake pedal depressed at the fifth time and check that the master cylinder pressure is within the standard value when the stop light switch changes from ON to OFF.

Specification:
Less than 1 Mpa (10 bar)

2. HEV MODEL

1) Adjust the stop light switch position, and then secure the stop light switch by turning it clockwise. <Ref. to BR-76, ADJUSTMENT, Stop Light Switch.>
2) Install each part in the reverse order of removal.

C: INSPECTION

1. CLEARANCE CHECK

NOTE:
Check for clearance is applied only to HEV model.
1) Measure the clearance between the end of the stop light switch and the stopper.

Specification:
Clearance (A) of the stop light switch: 1 mm — 2 mm (0.04 in — 0.08 in)

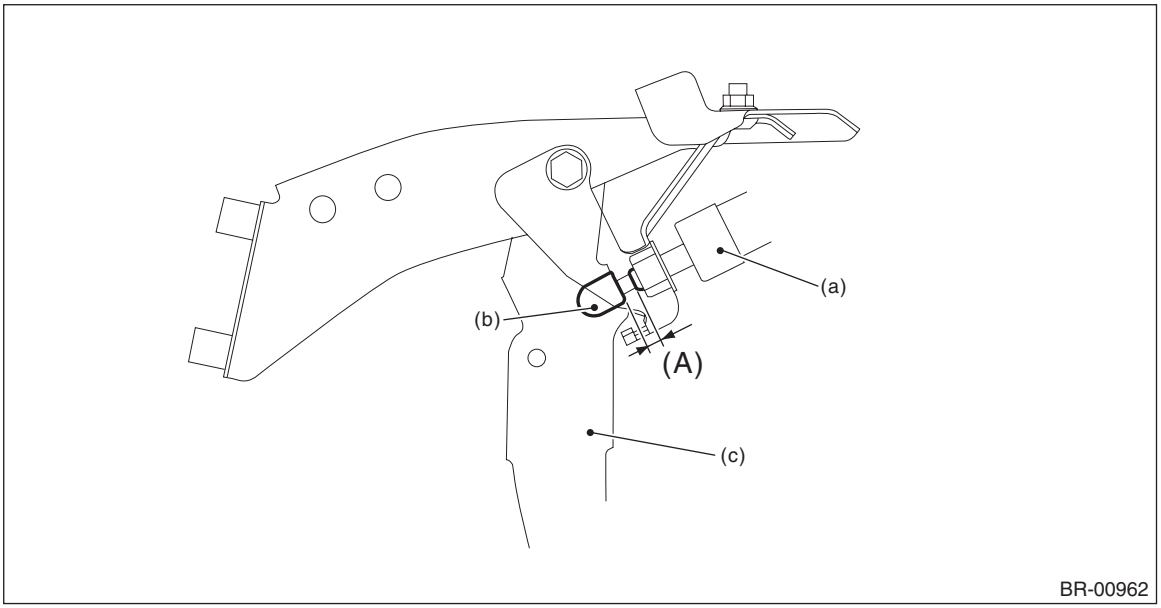

(a) Stop light switch (b) Stopper (c) Brake pedal

2) Adjust the position of the stop light switch if the inspection result is not within the standard value. <Ref. to BR-76, ADJUSTMENT, Stop Light Switch.>

2. CHECK RESISTANCE

1) Disconnect the stop light switch connector.
2) Measure the resistance between stop light switch terminals.

Preparation tool:
Circuit tester

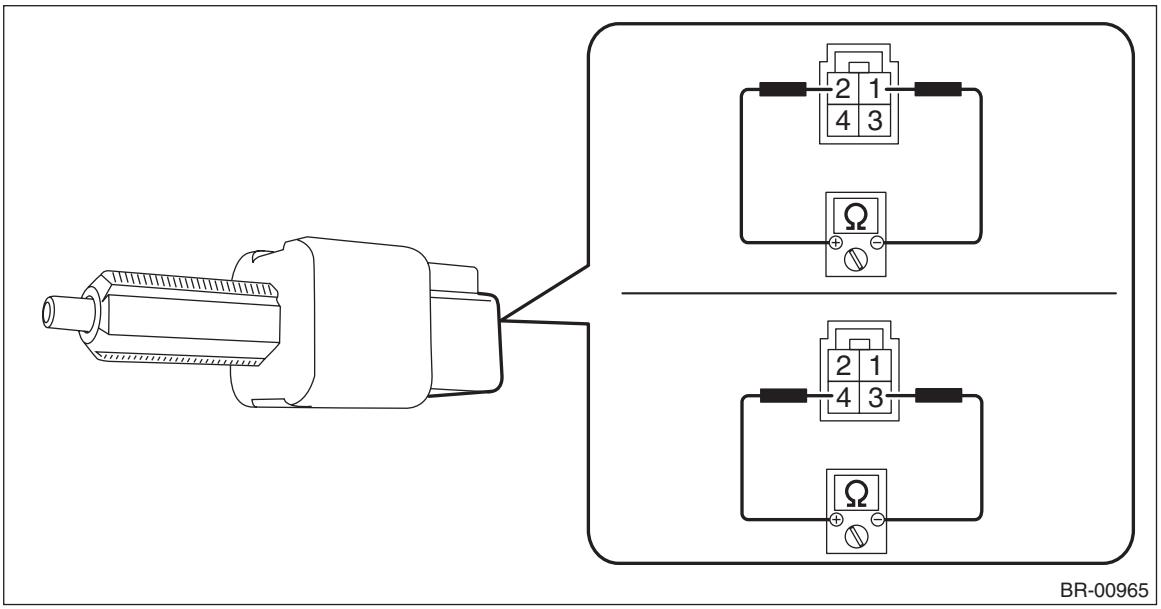

- Gasoline engine model

Terminal No.	Inspection conditions	Standard
1 — 2	When brake pedal is depressed	1 MΩ or more
	When brake pedal is released	Less than 1 Ω
3 — 4	When brake pedal is depressed	Less than 1 Ω
	When brake pedal is released	1 MΩ or more

- HEV model

Terminal No.	Inspection conditions	Standard
1 — 2	When brake pedal is depressed	Less than 1 Ω
	When brake pedal is released	1 MΩ or more
3 — 4	When brake pedal is depressed	1 MΩ or more
	When brake pedal is released	Less than 1 Ω

3) Replace the stop light switch if the inspection result is not within the standard value.

D: ADJUSTMENT

1. GASOLINE ENGINE MODEL

CAUTION:
• Turn the stop light switch clockwise when installing so that it can return backward by approximately 1 mm (0.04 in) and clearance is automatically adjusted.
• If it is hard to turn the switch, reduce the switch pushing force and turn it again.
• After adjustment, if the pedal stroke is less than 3 mm (0.12 in), it may lead to an incorrect light illumination by vibrations etc.

1) Mark the threaded portion of the stop light switch (a).

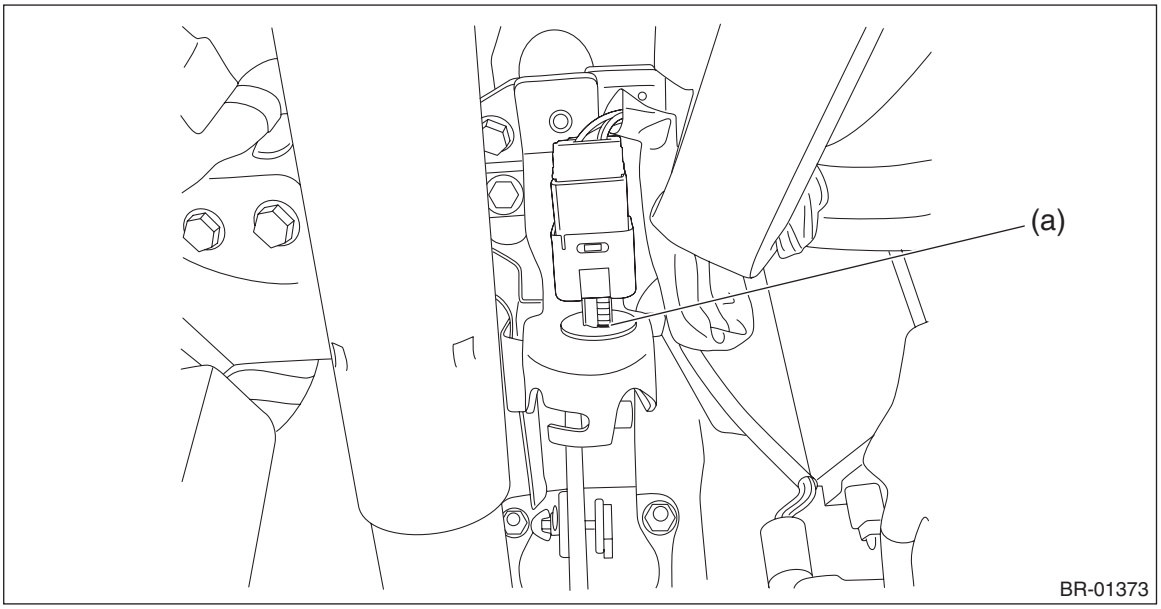

2) Measure the brake pedal stroke which turns on the stop light switch.
   (1) Measure the distance (a) from the floor mat to the end of brake pedal pad.
   (2) Hold the pedal to a position that the stop light illuminates, and measure the distance (b) from the floor mat to the end of brake pedal pad.
   (3) Calculate the difference (stroke value) between the values (a) and (b) measured as above.

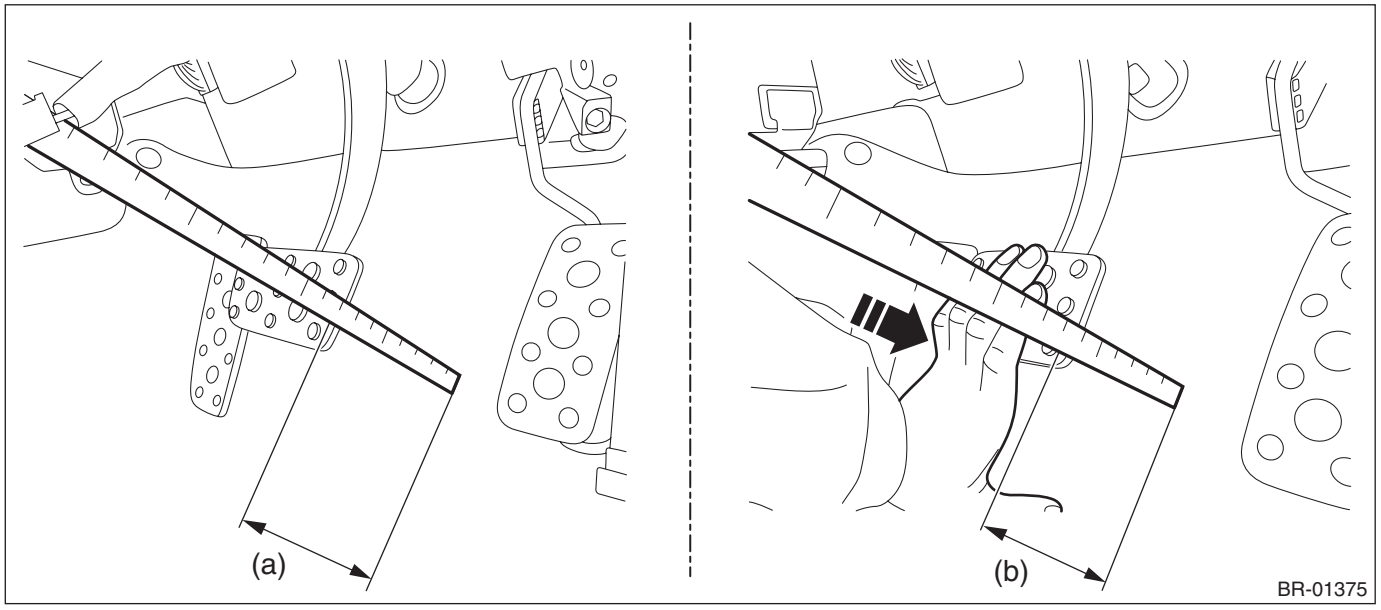

3) Adjust so that the calculated difference of stroke value fit within the specified value, and install the stop light switch.

Specification:
3 mm (0.12 in) or more, less than 8 mm (0.31 in)

NOTE:
Pedal stroke volume per a pitch becomes approx. 5 mm (0.2 in).

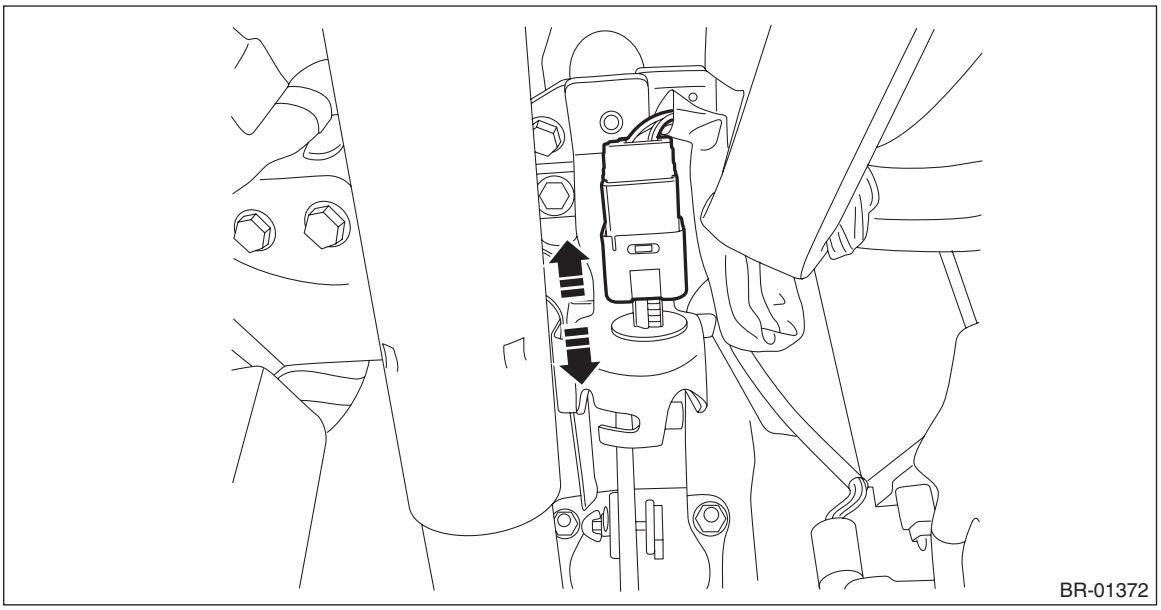

4) After adjustment, make sure that the stop light switch illuminates normally.

2. HEV MODEL

1) While pulling up the brake pedal (c) toward you, insert the stop light switch (a) until it reaches the stopper (b).
2) Install the stop light switch by turning it clockwise.

CAUTION:
Turn the stop light switch clockwise when installing so that it can return backward by approximately 1 mm (0.04 in) and clearance is automatically adjusted.
Insert until it contacts the stopper, and make sure that clearance (A) of the end of stop light switch and the stopper is 1 mm — 2 mm (0.04 in — 0.08 in).

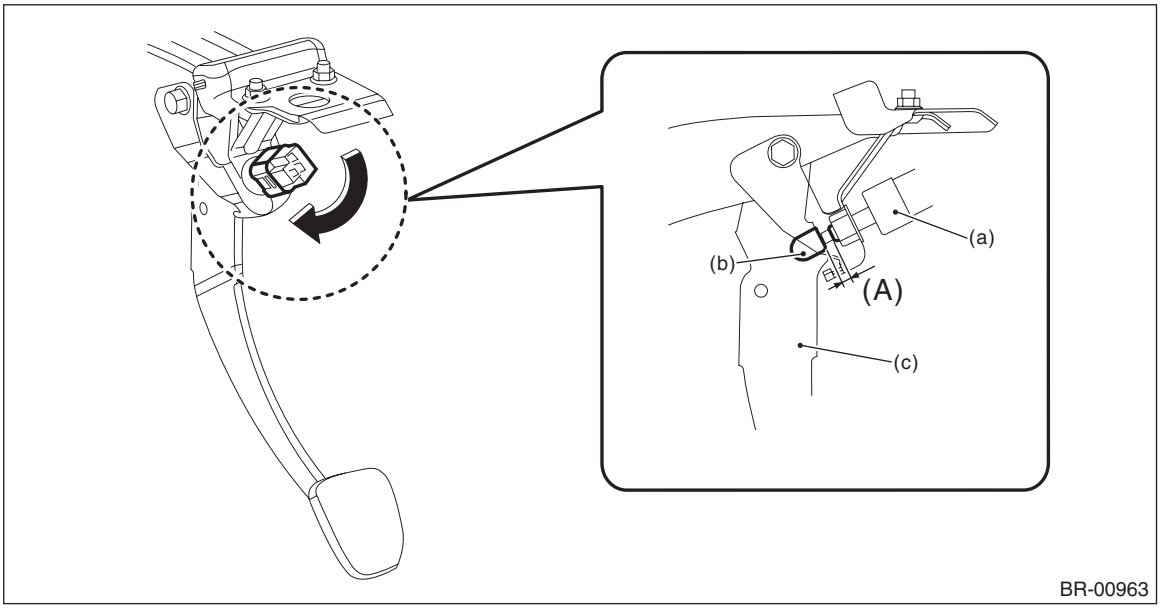

(a) Stop light switch (b) Stopper (c) Brake pedal

17.Brake Vacuum Pump

A: REMOVAL

1. BRAKE VACUUM PUMP

1) Disconnect the ground cable from battery. <Ref. to NT-5, BATTERY, NOTE, Note.>

NOTE:
For the 12 volt engine restart battery, disconnect the ground terminal from 12V engine restart battery sensor.

2) Remove the collector cover. (HEV model)
   (1) Pull up the two points at the front of collector cover (A).
   (2) Pull up the two points at the rear of collector cover (B) while moving them rearward.

NOTE:
Be careful not to contact the fuel delivery tube when moving the collector cover rearward.

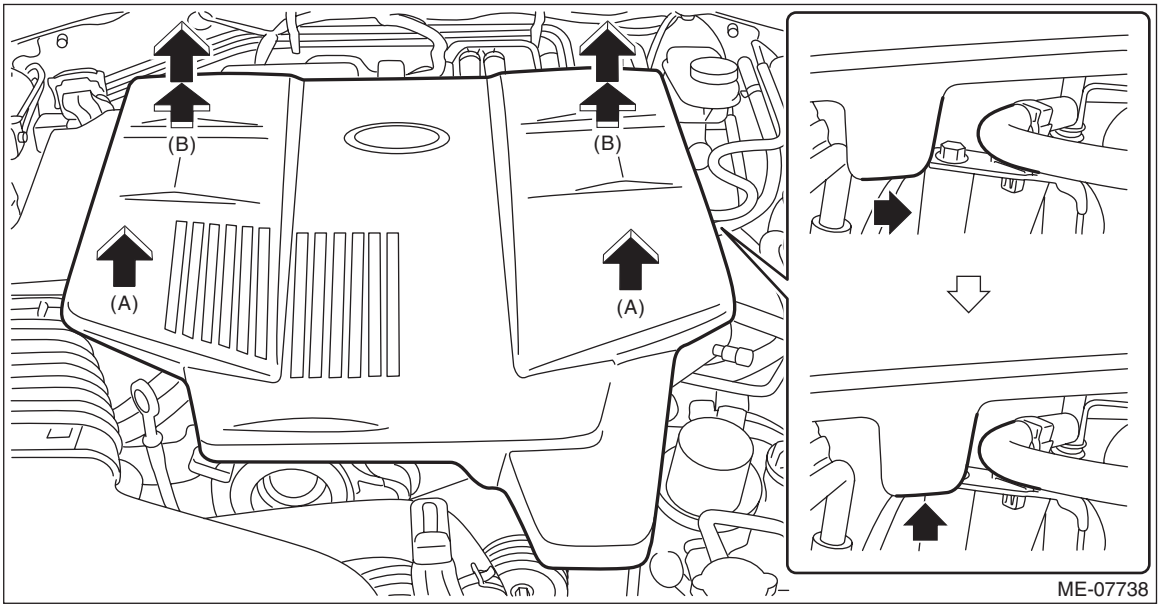

3) Remove the brake vacuum pump.
   (1) Remove the clamp and remove the vacuum hose.
   (2) Remove the connector and the connector clip, and then remove the harness from the harness clip.
   (3) Remove the brake vacuum pipe bracket bolts which are installed to the engine hanger.
   (4) Remove the bolt, and remove the brake vacuum pump.

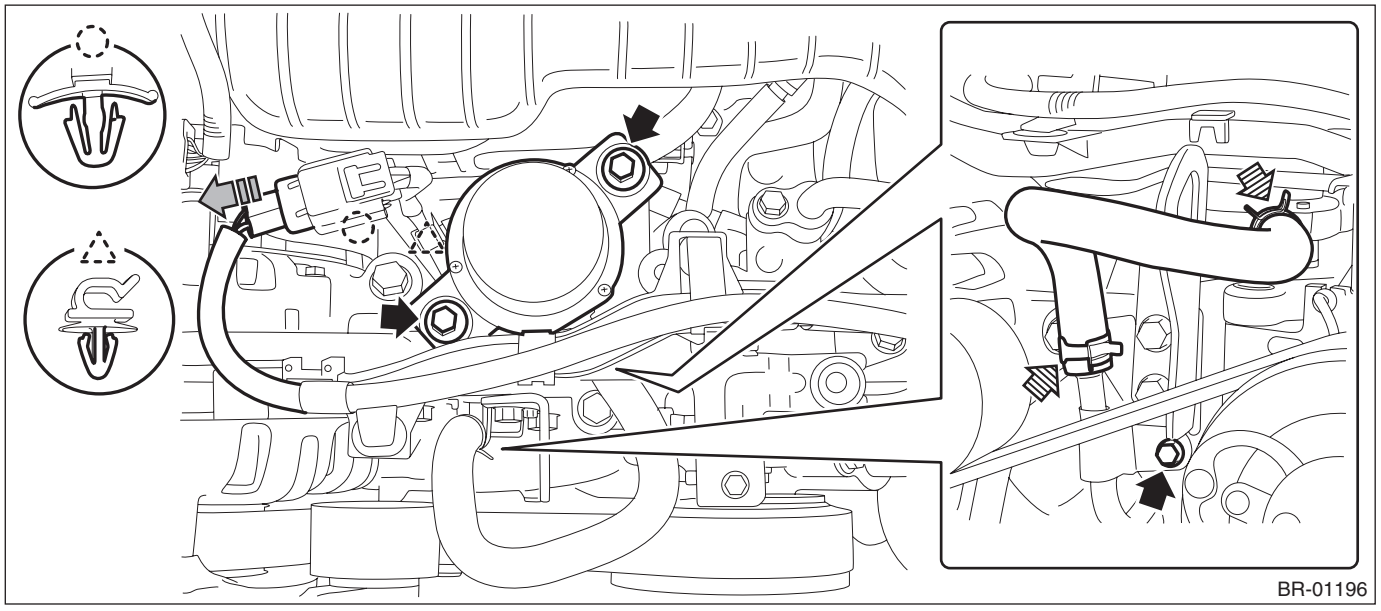

4) Remove the bolts, and remove the engine hanger.
5) Remove the bolts, and make a clearance between the harness bracket and the brake vacuum pump bracket.

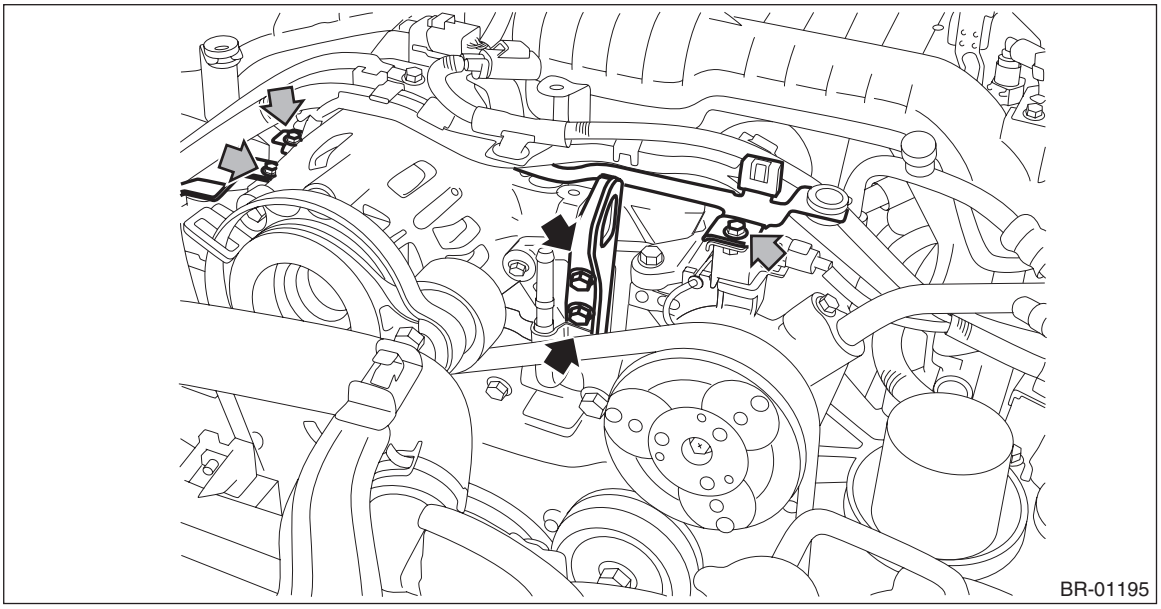

6) Remove the bolt, and remove the brake vacuum pump bracket.

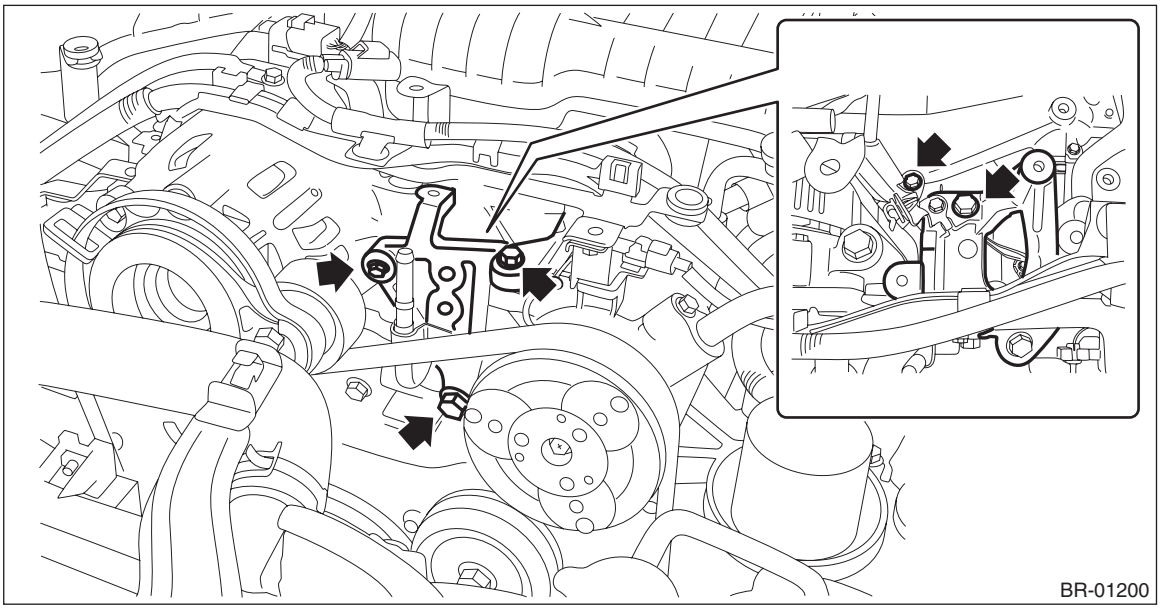

2. BRAKE VACUUM PIPE AND HOSE

1) Remove the brake vacuum pump. <Ref. to BR-78, BRAKE VACUUM PUMP, REMOVAL, Brake Vacuum Pump.>
2) Remove the intake manifold. <Ref. to FU(H4DO(HEV))-20, REMOVAL, Intake Manifold.>

3) Remove the brake vacuum pipe.

CAUTION:
Be careful not to damage the engine harness.

(1) Remove the clamp, and then remove the brake vacuum hose.
(2) Remove the bolt, and remove the brake vacuum pipe.

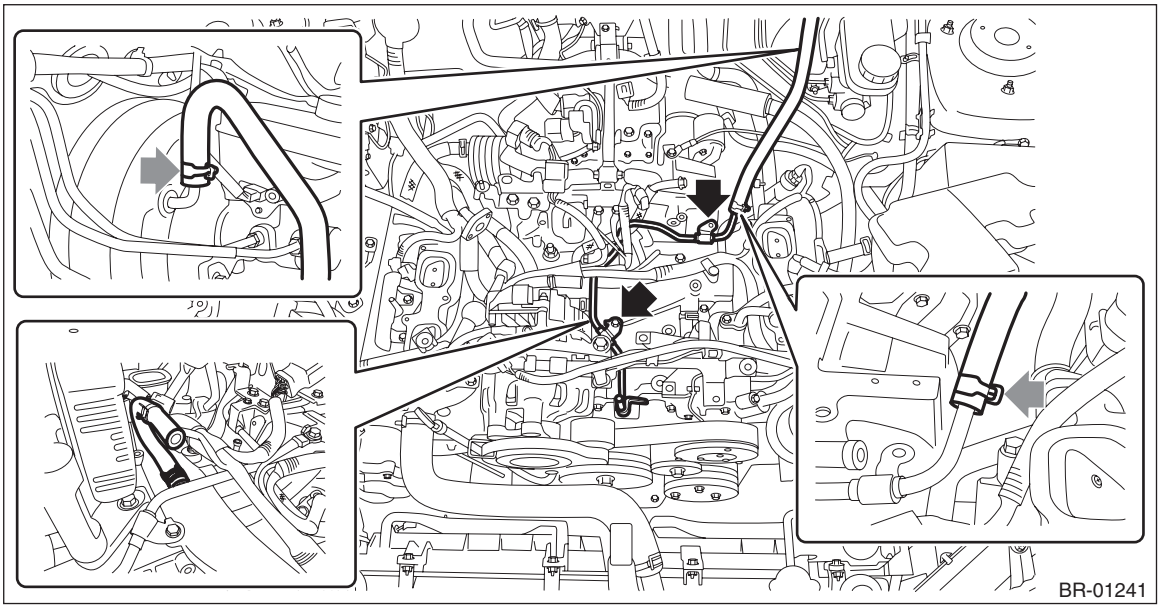

B: INSTALLATION

1. BRAKE VACUUM PUMP

CAUTION:
If the brake vacuum pump is reused, clean the vacuum hose mounting section of the pump before installation. If it is not cleaned, a malfunction of pump or disconnection of hose may result.
Install each part in the reverse order of removal.

Tightening torque:
Refer to "COMPONENT" of "General Description". <Ref. to BR-14, BRAKE VACUUM PUMP, COMPONENT, General Description.>

2. BRAKE VACUUM PIPE AND HOSE

Install each part in the reverse order of removal.

Tightening torque:
Refer to "COMPONENT" of "General Description". <Ref. to BR-14, BRAKE VACUUM PUMP, COMPONENT, General Description.>

C: INSPECTION

1. BRAKE VACUUM PUMP

Refer to "Read Diagnostic Trouble Code (DTC)" of "BRAKE VACUUM CONTROL". <Ref. to HEV(diag)-23, OPERATION, Read Diagnostic Trouble Code (DTC).>

2. BRAKE VACUUM PIPE AND HOSE

- Check the pipe for cracks or damage. Replace the brake vacuum pipe if it is found defective.
- Check to see that air only flows in one direction, when air is blown into or sucked from the hose. Replace the brake vacuum hose if it is found defective.
- Make sure that there is no foreign matter inside the pipe and hose.

18.General Diagnostic Table

A: INSPECTION

	Trouble and possible cause	Corrective action
1. Insufficient braking	(1) Fluid leakage from the hydraulic mechanism	Repair or replace. (cup, piston seal, piston boot, master cylinder piston kit, pipe or hose)
	(2) Entry of air into the hydraulic mechanism	Bleed air.
	(3) Wear, deteriorated surface material, water or fluid on lining	Replace, grind or clean.
	(4) Improper operation of master cylinder assembly, disc caliper, vacuum booster assembly or check valve	Repair or replace.
2. Unstable or uneven braking	(1) Fluid on lining or rotor	Correct the cause of fluid leakage, and clean or replace.
	(2) Rotor defective	Repair or replace the rotor.
	(3) Improper lining contact, deteriorated surface, deteriorated or worn lining material	Repair by grinding, or replace.
	(4) Deformed back plate	Repair or replace.
	(5) Overinflation of tires	Adjust the air pressure.
	(6) Defective wheel alignment	Adjust alignment.
	(7) Loose back plate or support installation bolt	Tighten to the specified torque.
	(8) Defective hub unit COMPL	Replace.
	(9) Defective hydraulic system	Replace the cylinder, brake pipe or hose.
	(10) Unstable performance of the parking brake	Check, adjust or replace the rear brake and cable system.
	(11) Defective brake stroke sensor (HEV model)	Replace the brake pedal assembly.
3. Excessive pedal stroke	(1) Entry of air into the hydraulic mechanism	Bleed air.
	(2) Excessive play in the master cylinder push rod	Adjust.
	(3) Fluid leakage from the hydraulic mechanism	Repair or replace. (cup, piston seal, piston boot, master cylinder piston kit, pipe or hose)
	(4) Improper lining contact or worn lining	Repair or replace.
4. Brake dragging or improper brake return	(1) Insufficient pedal play	Adjust play.
	(2) Improper master cylinder return	Clean or replace the cylinder.
	(3) Clogged hydraulic system	Replace.
	(4) Improper return or adjustment of parking brake	Repair or adjust.
	(5) Weakened spring tension or breakage of shoe return spring	Replace the spring.
	(6) Improper disc caliper operation	Repair or replace.
	(7) Faulty wheel bearing	Replace.
	(8) Defective brake stroke sensor (HEV model)	Replace the brake pedal assembly.
5. Brake noise (1) (creaking sound)	(1) Hardened or deteriorated brake pad	Replace the pad.
	(2) Worn brake pad	Replace the pad.
	(3) Loose back plate or support installation bolt	Tighten to the specified torque.
	(4) Loose hub unit COMPL	Tighten to the specified torque.
	(5) Dirty rotor	Clean the rotor, or clean and replace brake assembly.
6. Brake noise (2) (hissing sound)	(1) Worn brake pad	Replace the pad.
	(2) Improperly installed pad	Correct or replace the pad.
	(3) Loose or bent rotor	Retighten or replace.
7. Brake noise (3) (click sound)	Excessively worn pad or support	Replace the pad or the support.

PARKING BRAKE

PB

Page

1. General Description 2
2. Parking Brake Lever 4
3. Parking Brake Cable 9
4. Parking Brake Assembly (Rear Disc Brake) 14
5. General Diagnostic Table 23

1. General Description

A: SPECIFICATION

Model		Rear disc brake
Type		Mechanical, drum in disc rear brakes
Effective drum diameter	mm (in)	170 (6.69)
Lining dimensions (Length × Width × Thickness)	mm (in)	147.7 × 30.0 × 3.5 (5.81 × 1.181 × 0.14)
Clearance adjustment		Manual adjustment
Lever stroke	Notches/N (kgf, lbf)	7 — 8/200 (20.4, 45)

B: COMPONENT

1. PARKING BRAKE (REAR DISC BRAKE)

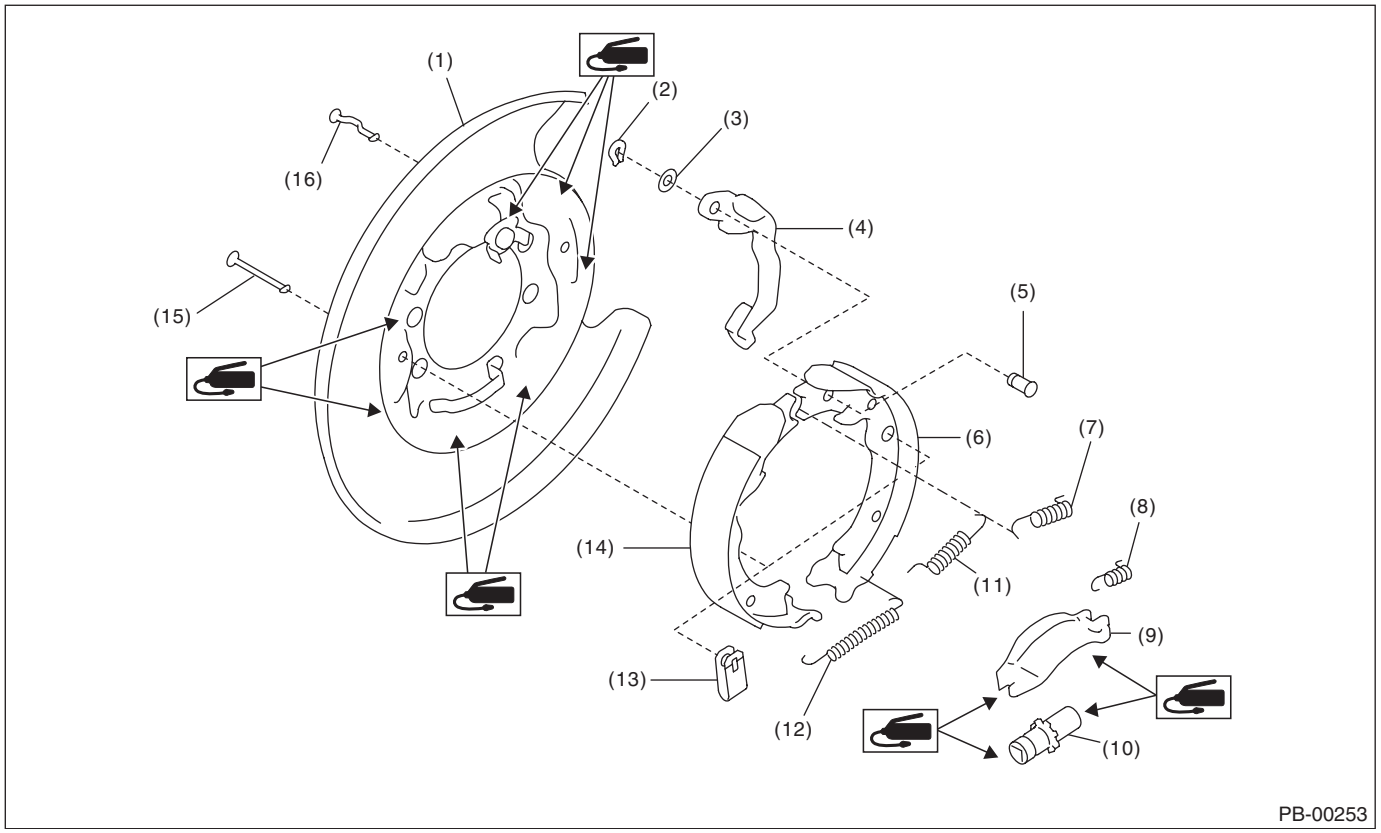

(1) Back plate - rear brake
(2) Retainer - rear brake
(3) Spring washer - rear brake
(4) Parking lever - rear
(5) Pin - parking lever
(6) Parking brake shoe (secondary)
(7) Spring - secondary shoe return
(8) Spring - strut
(9) Strut - brake
(10) Adjuster ASSY - rear brake
(11) Spring - primary shoe return
(12) Spring - adjuster
(13) Cup - shoe hold-down
(14) Parking brake shoe (primary)
(15) Pin - primary shoe hold-down
(16) Pin - secondary shoe hold-down

2. PARKING BRAKE LEVER & CABLE

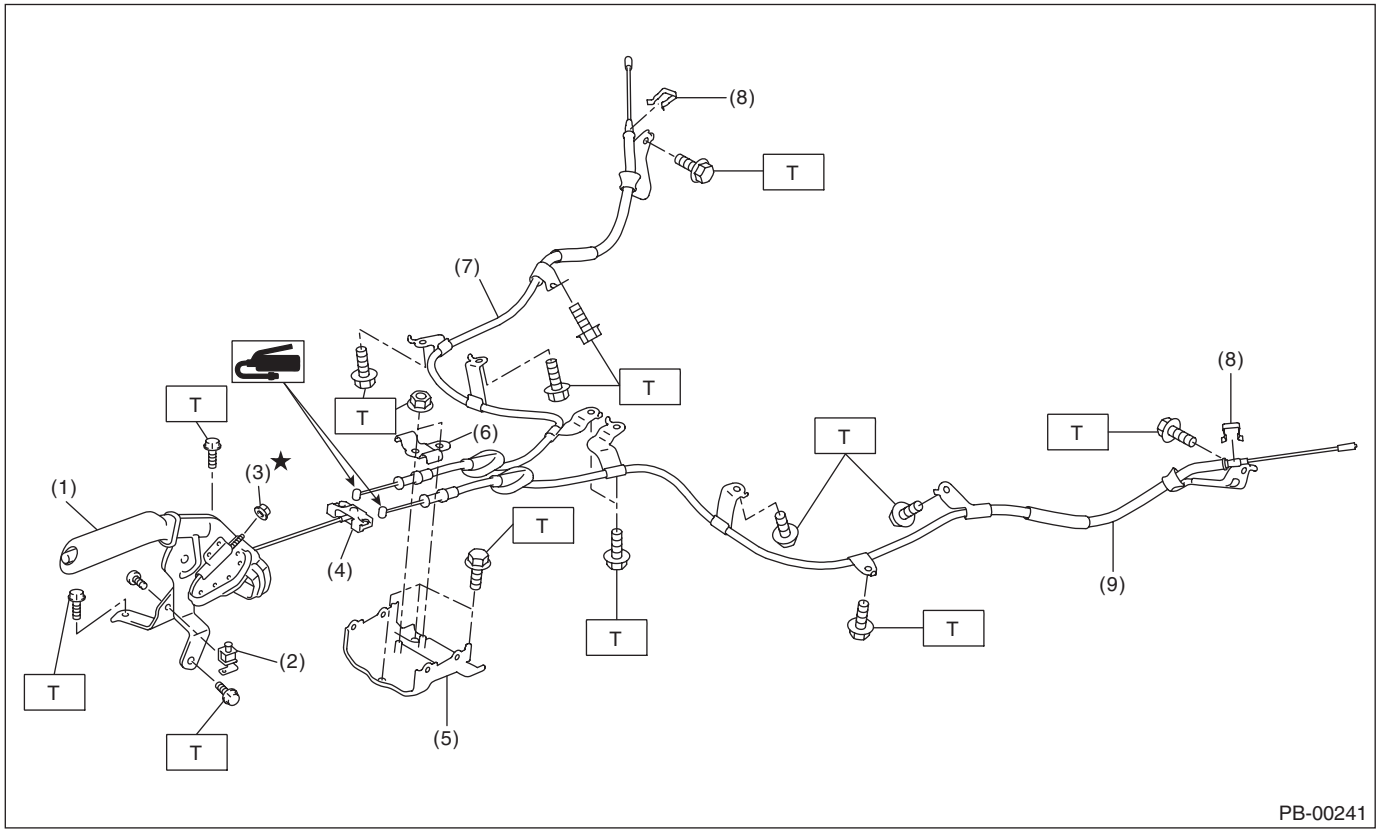

(1)	Lever assembly - hand brake	(5)	Bracket	(9)	Cable ASSY - parking brake LH
(2)	Switch ASSY - hand brake	(6)	Clamp A - hand brake cable		
(3)	Adjusting nut (self-locking nut)	(7)	Cable ASSY - parking brake RH	***Tightening torque: N·m (kgf-m, ft-lb)***	
(4)	Equalizer	(8)	Clamp B - hand brake cable	***T: 18 (1.84, 13.3)***	

C: CAUTION

- Wear appropriate work clothing, including a helmet, protective goggles and protective shoes when performing any work.
- Before removal, installation or disassembly, be sure to clarify the failure. Avoid unnecessary removal, installation, disassembly and replacement.
- Vehicle components are extremely hot after driving. Be wary of receiving burns from heated parts.
- Use SUBARU genuine grease etc. or equivalent. Do not mix grease etc. of different grades or manufacturers.
- Be sure to tighten fasteners including bolts and nuts to the specified torque.
- Place shop jacks or rigid racks at the specified points.
- Make sure grease does not come into contact with the parking shoes.

D: PREPARATION TOOL

1. GENERAL TOOL

TOOL NAME	REMARKS
Circuit tester	Used for measuring resistance and voltage.

2. Parking Brake Lever

A: REMOVAL

1) Set the wheel stoppers to tires.
2) Remove the headrest assembly - front.
3) Move the passenger's seat towards the front.
4) Remove the driver's seat outside the vehicle.
   (1) Tilt the backrest assembly forward and move the front seat to the front most position.
   (2) Remove the cover - bolt rear (A) and remove the bolts.

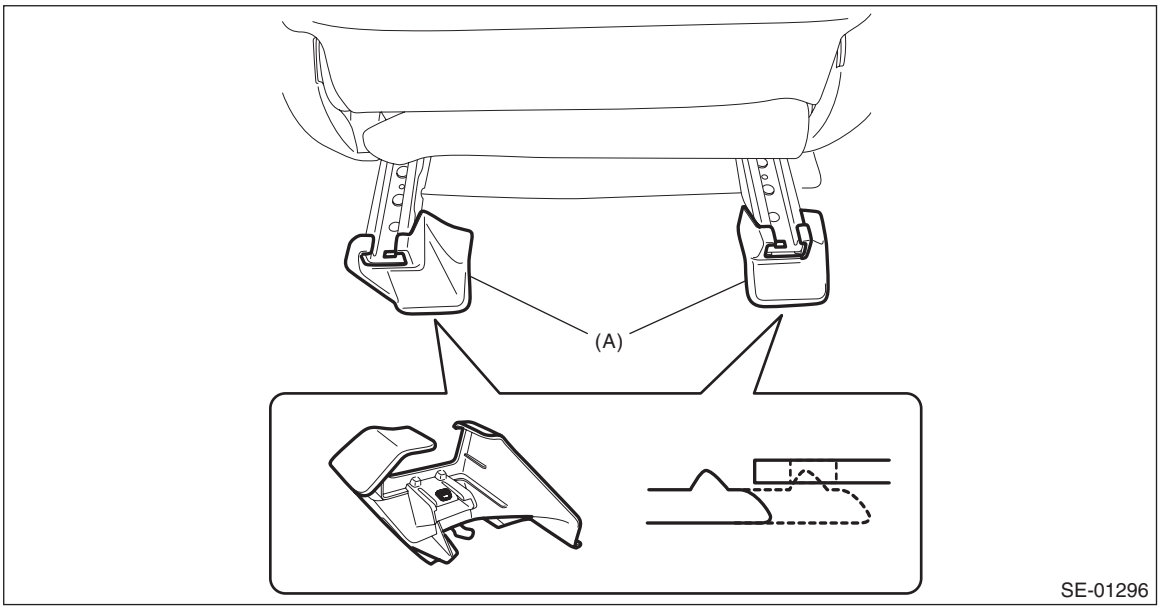

   (3) Move the front seat to the rearmost position, and remove the bolts.
5) Disconnect the ground cable from battery and wait for at least 60 seconds before starting work. <Ref. to NT-5, BATTERY, NOTE, Note.>

CAUTION:
• For the 12 volt engine restart battery of HEV model, disconnect the ground terminal from 12V engine restart battery sensor.
• The airbag system is fitted with a backup power supply. After disconnecting the battery ground cable, the airbag may operate if you do not wait for 60 seconds before starting the service of airbag system.
6) Disconnect the connector under the front seat.
- Seat belt warning light connector (driver's seat)
- Side airbag connector <Ref. to AB-29, SIDE AIRBAG MODULE, PROCEDURE, Airbag Connector.>
- Seat heater connector (model with seat heater)

7) Take out the front seat from the vehicle.

CAUTION:
Be careful not to damage the body.

8) Remove the console box assembly.
(1) Release the claws, and then remove the boot - parking brake.

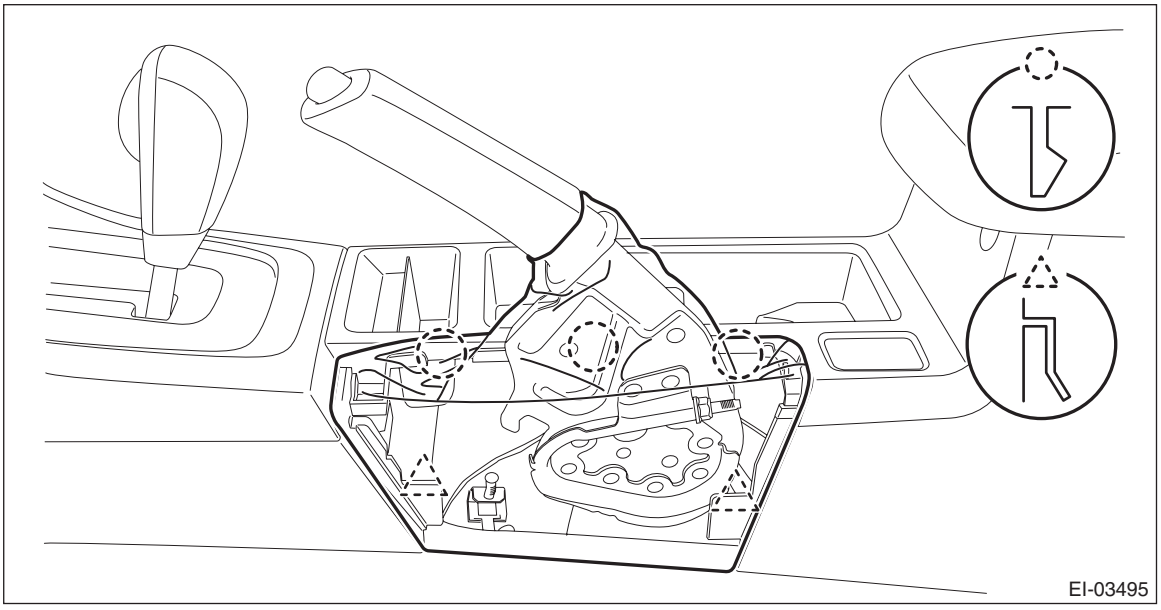

(2) Move the seat forward, and remove the bolts after detaching the left and right caps.
(3) Remove the screws and clips, disconnect the harness connector and remove the console box assembly.

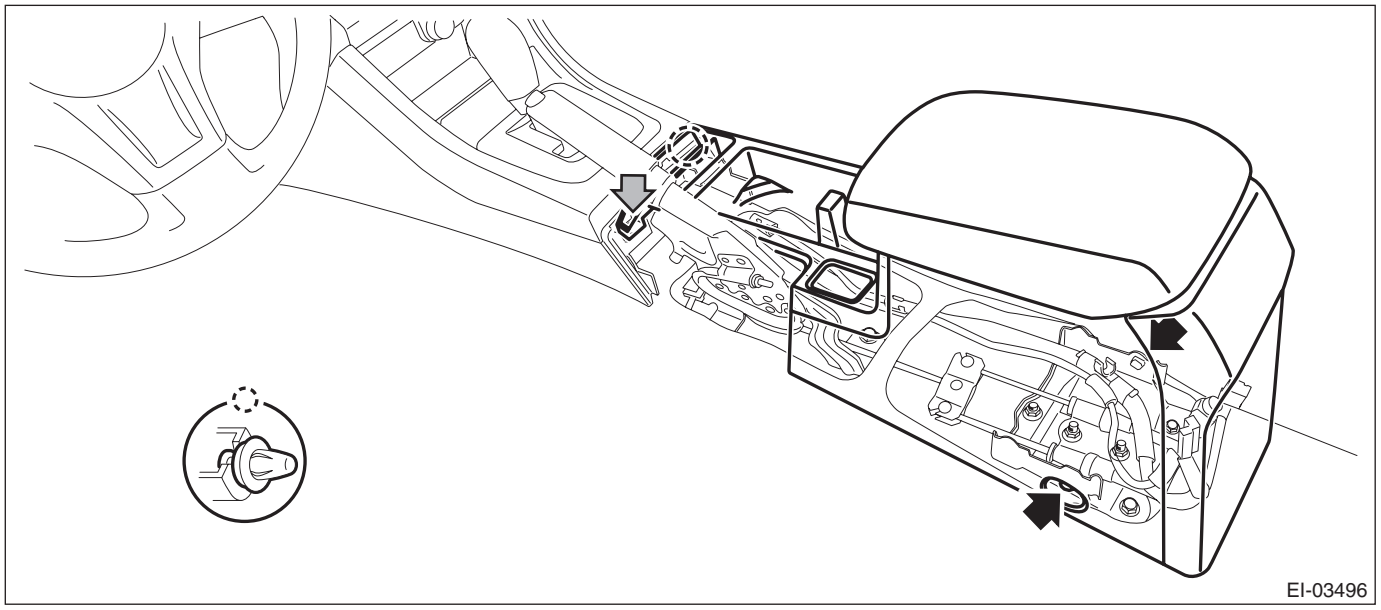

9) Remove the lever assembly - hand brake.
(1) Disconnect the connector (a) of the switch assembly - hand brake.
(2) Remove the adjusting nut (b).

CAUTION:
A self-locking nut is used for the adjusting nut of parking cable. Therefore, replace the self-locking nut with a new one when disassembling.

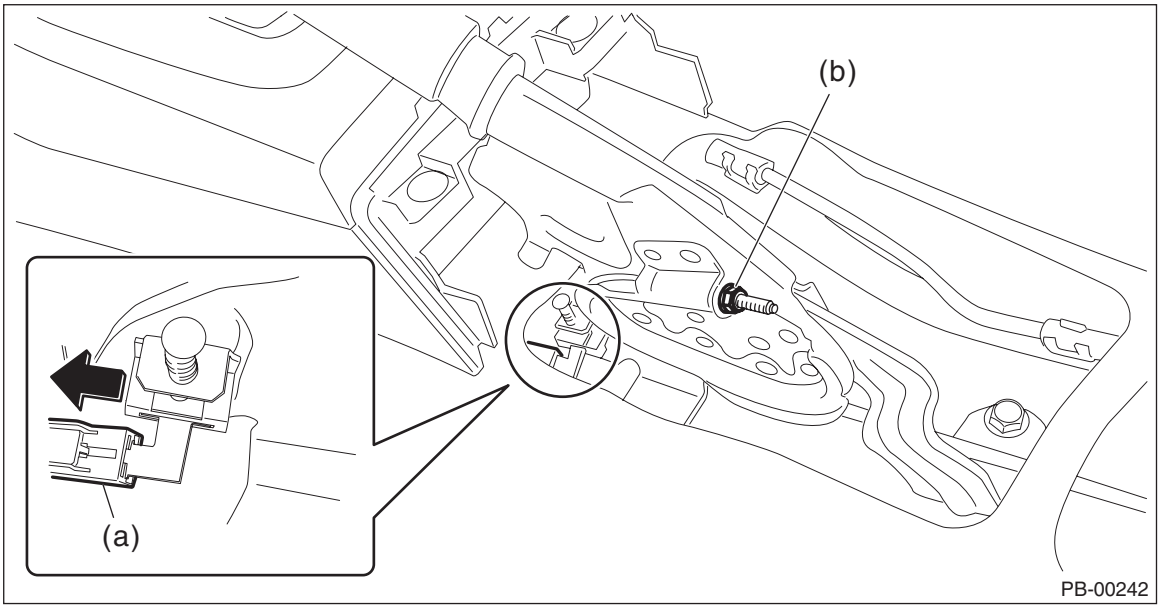

(3) Remove the bolt, and then remove the lever assembly - hand brake.

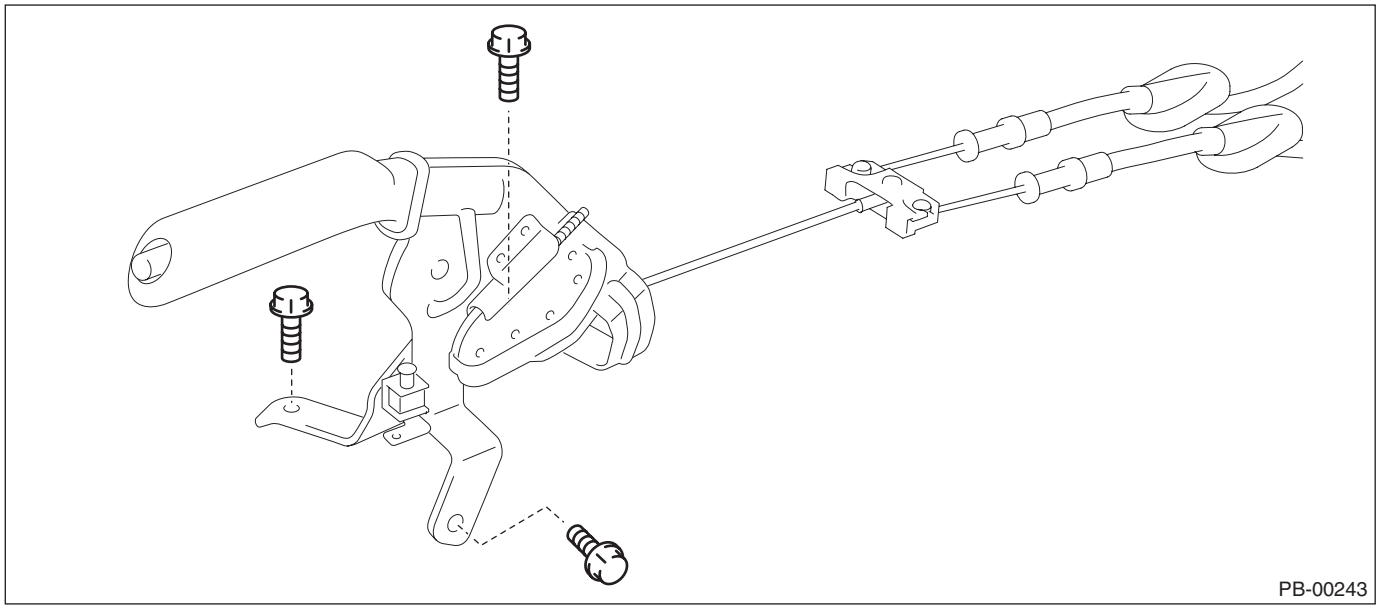

10) Remove the inner cable end (a) from the equalizer (b).

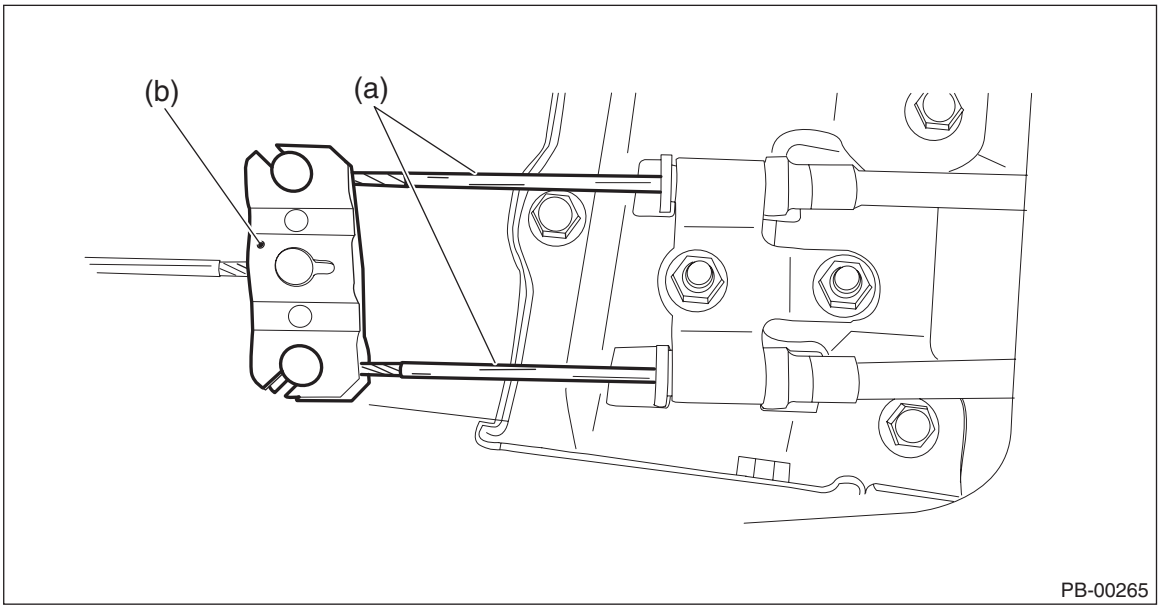

B: INSTALLATION

1) Install each part in the reverse order of removal.

CAUTION:
• The front seat mounting bolts differ between the front mounting points and the rear mounting points. When installing the front seat, make sure that you are using correct bolts at correct positions.
• Tighten the slide rail assembly installing bolts in the order as shown in the figure, in several steps by gradually increasing the torque until they reach the specified torque.

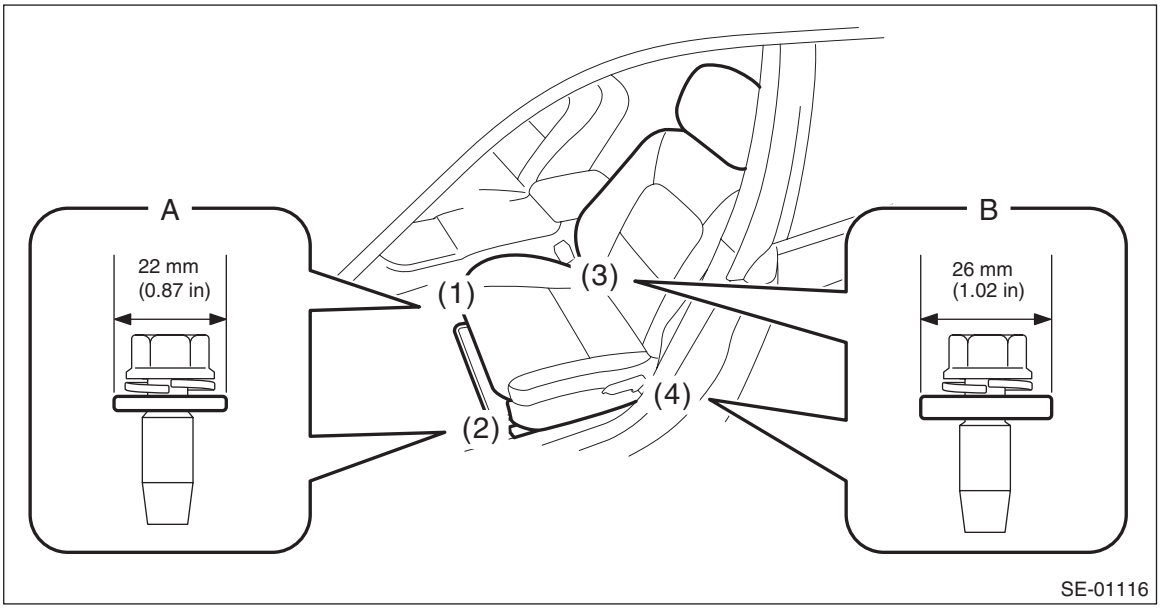

- **Front (bolt A): Washer diameter 22 mm (0.87 in)**
- **Rear (bolt B): Washer diameter 26 mm (1.02 in)**

Tightening torque:
Front seat assembly: 53 N·m (5.40 kgf-m, 39.1 ft-lb)

Tightening torque:
Lever assembly - hand brake: 18 N·m (1.84 kgf-m, 13.3 ft-lb)
Console box assembly: 6.5 N·m (0.66 kgf-m, 4.8 ft-lb)

2) Install a new adjusting nut (self-locking nut).
3) Be sure to adjust the lever stroke. <Ref. to PB-8, ADJUSTMENT, Parking Brake Lever.>

C: INSPECTION

1. LEVER ASSY

1) Operate the lever assembly - hand brake 3 to 4 times and fully return the lever assembly - hand brake.
2) While slowly pulling up the lever assembly - hand brake, count the notches.

Lever stroke:
7 to 8 notches when pulled with a force of 200 N (20.4 kgf, 45 lbf)
If it is not within the specified value, adjust the parking brake. <Ref. to PB-21, ADJUSTMENT, Parking Brake Assembly (Rear Disc Brake).>

2. SWITCH ASSEMBLY

1) Measure the resistance between the switch assembly - hand brake and chassis ground.

Preparation tool:
Circuit tester

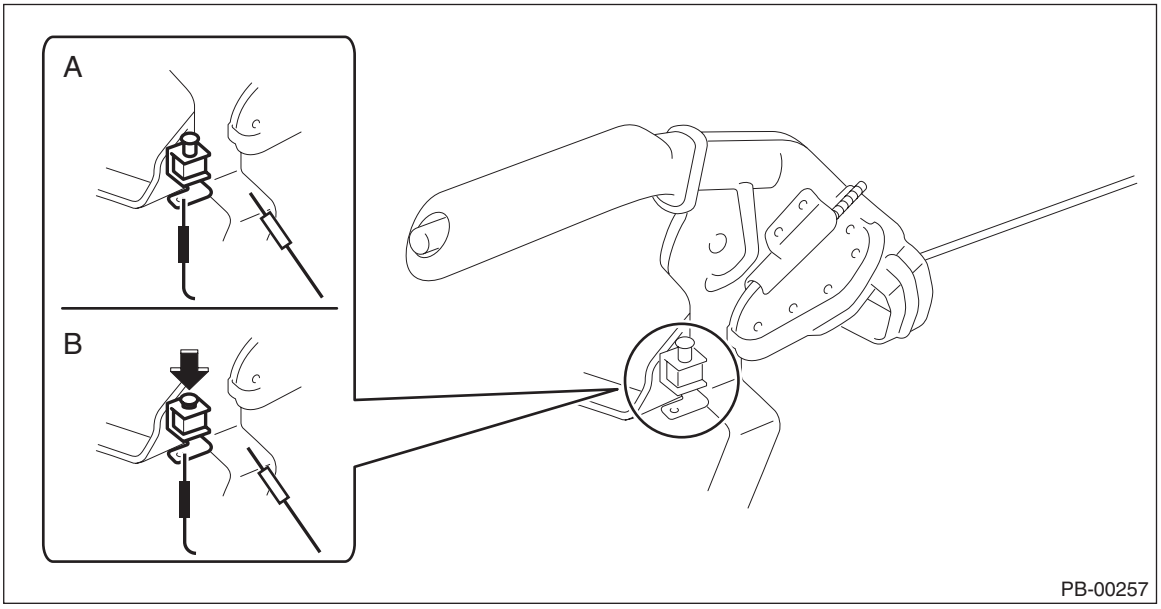

	Switch position	Standard
A	When shaft is free (ON)	Less than 1 Ω
B	When shaft is pressed in (OFF)	10 kΩ or more

If it is not within the specified value, replace the switch assembly - hand brake.

D: ADJUSTMENT

Adjust the parking lever stroke. <Ref. to PB-22, LEVER STROKE, ADJUSTMENT, Parking Brake Assembly (Rear Disc Brake).>

3. Parking Brake Cable

A: REMOVAL

CAUTION:
• Airbag system satellite safing sensor is located in the lower of the rear seat cushion center. Before removing the rear seat, refer to "CAUTION" of "General Description" in "AIRBAG SYSTEM" section. <Ref. to AB-11, CAUTION, General Description.>
• The airbag system is fitted with a backup power supply. After disconnecting the battery ground cable, the airbag may operate if you do not wait for 60 seconds before starting the service of airbag system.

1) Remove the lever assembly - hand brake. <Ref. to PB-4, REMOVAL, Parking Brake Lever.>
2) Remove the nut and remove the clamp A - hand brake cable (a).
3) Remove the inner cable end (c) from the equalizer (b).

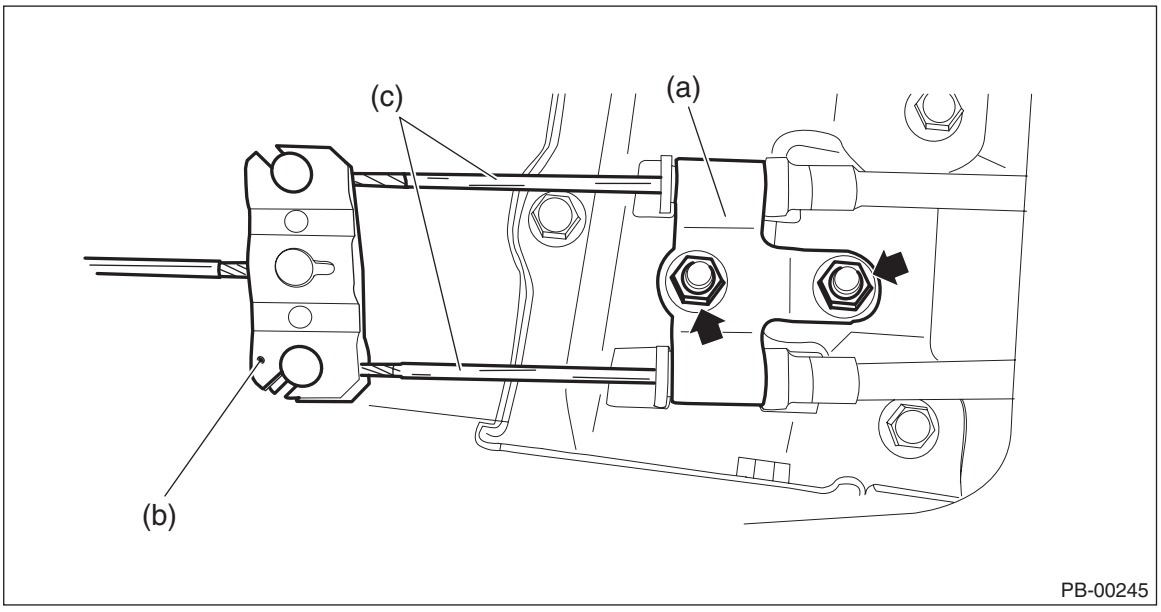

4) Remove the rear seat cushion assembly.
(1) Push the corners of the rear seat cushion from above.
(2) While pushing the corners of the rear seat cushion from above, pull the knob of the hook - seat cushion rear towards yourself.
(3) While pulling the knob towards yourself, disconnect the hooks by lifting up the rear seat cushion.

NOTE:
Pull the left side of the knob to disconnect the LH side hook, and pull the right side of the knob to disconnect the RH side hook.

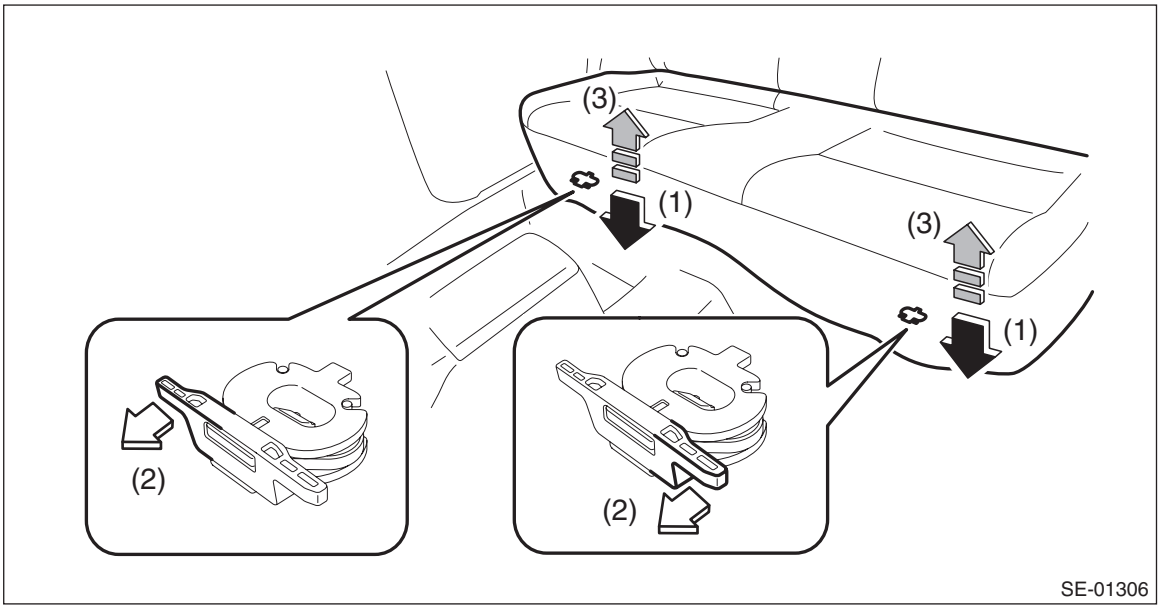

(4) Remove the hook (A) by pushing it back while lifting the front side of the rear seat cushion, and remove the rear seat cushion.

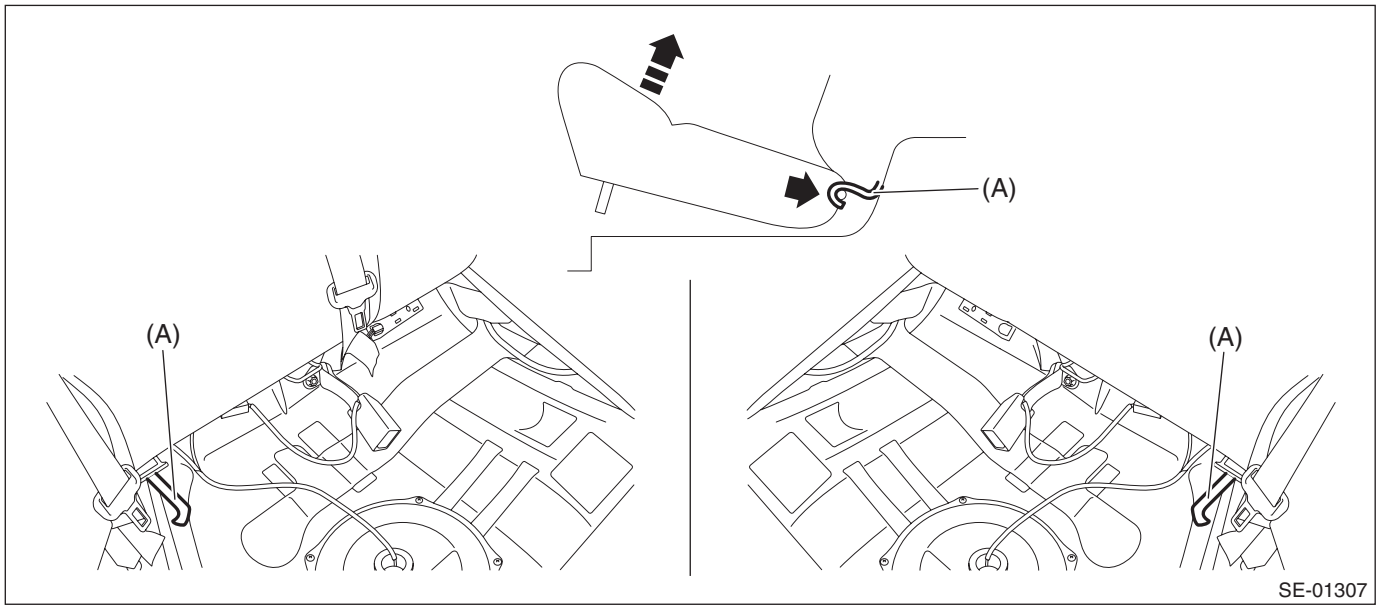

5) Release the clips and claws, and remove the side sill covers - rear INN on the left and right sides.

CAUTION:
Do not pull with excessive force. Doing so may damage the claws of the side sill cover - rear INN.

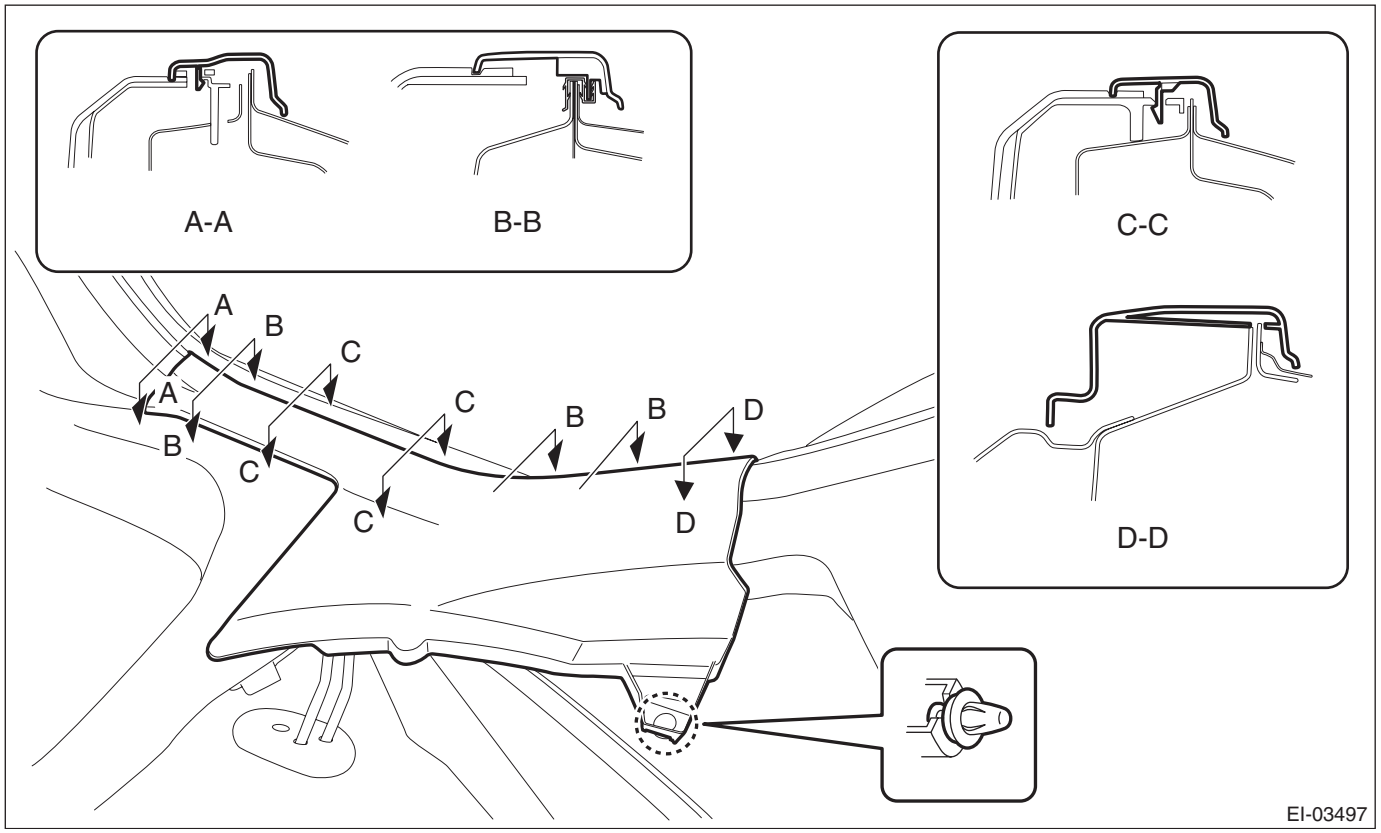

6) Remove the clips and knobs of the hook - seat cushion rear.

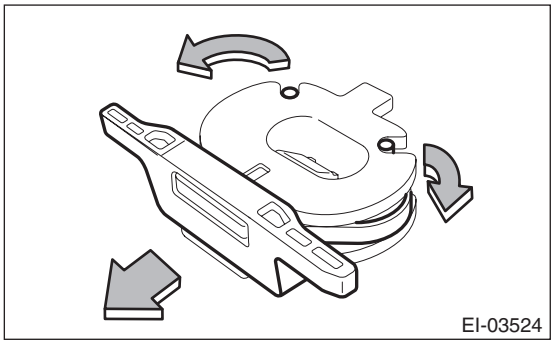

7) Turn over the floor carpet and remove the grommet of the cable assembly - parking brake from the rear floor.
8) Lift up the vehicle, and then remove the rear wheels.
9) Remove the fuel tank protector.
- Gasoline engine model <Ref. to FU(H4DO(w/o HEV))-121, REMOVAL, Fuel Tank Protector.>
- HEV model <Ref. to FU(H4DO(HEV))-104, REMOVAL, Fuel Tank Protector.>

10) Remove the exhaust pipe and muffler.
- Center exhaust pipe & rear exhaust pipe: <Ref. to EX(H4DO(w/o HEV))-18, REMOVAL, Rear Exhaust Pipe.>
- Muffler: <Ref. to EX(H4DO(w/o HEV))-22, REMOVAL, Muffler.>

11) Remove the bolts to remove the front heat shield cover.

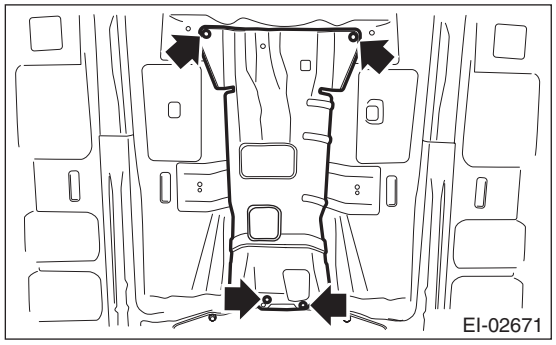

12) Remove the propeller shaft assembly.

CAUTION:
Do not disassemble the propeller shaft.

(1) Place alignment marks (A) on the flange yoke and rear differential.
(2) Remove four bolts holding the propeller shaft to the rear differential.

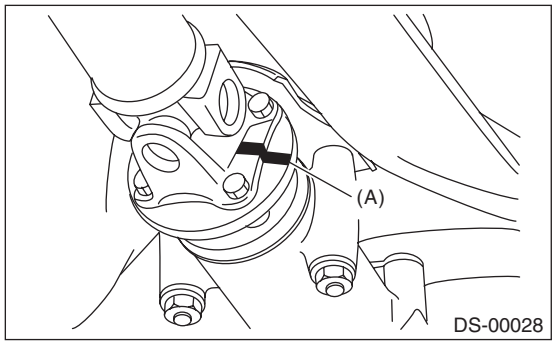

(3) Remove the center bearing.

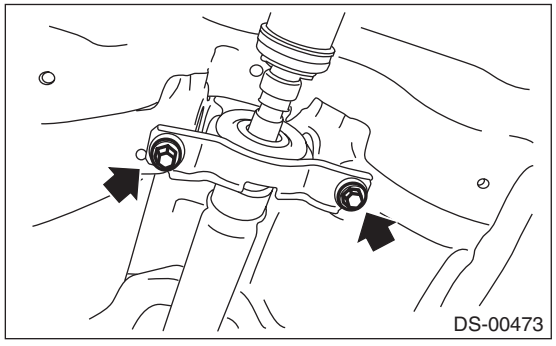

(4) Remove the propeller shaft from transmission.

CAUTION:
Be careful not to damage oil seals and contact surface of the sleeve yoke.

NOTE:
- Use a container to catch ATF or oil flowing from propeller shaft.
- To prevent ATF from leaking, install extension cap etc. to the transmission.

13) Remove the cable assembly - parking brake from the lever section of parking brake shoe. <Ref. to PB-14, REMOVAL, Parking Brake Assembly (Rear Disc Brake).>
14) Remove the clamp B - hand brake cable (a) from the rear brake.
15) Remove the cable clamp (b) from the back plate - rear brake.

16) Remove the cable clamp (c) from the rear floor, and remove the cable assembly - parking brake.

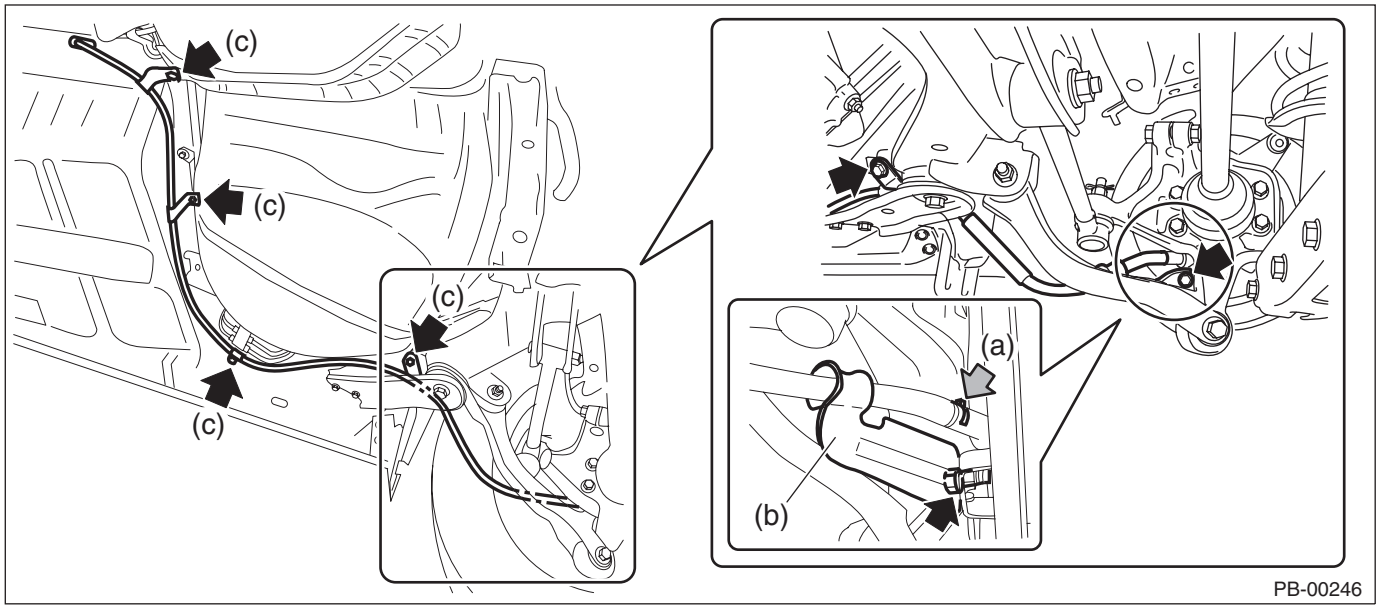

B: INSTALLATION

1) Install each part in the reverse order of removal.

Tightening torque:
Cable clamp: 18 N·m (1.84 kgf-m, 13.3 ft-lb)
Rear wheel: Except for C4 model
120 N·m (12.24 kgf-m, 88.5 ft-lb)
Rear wheel: C4 model
100 N·m (10.20 kgf-m, 73.8 ft-lb)

NOTE:
- Apply grease to the cable guide inside the tunnel, and pass the cable through.
- After installing the backrest assembly, make sure that each seat belt operates normally.
- Make sure that they are properly secured on each hook on the vehicle side.

2) Be sure to adjust the lever stroke. <Ref. to PB-8, ADJUSTMENT, Parking Brake Lever.>

C: INSPECTION

Check the removed cable and replace if damaged, rusty or malfunctioning.
1) Check the cable for smooth operation.
2) Check the inner cable for damage and rust.
3) Check the outer cable for damage, bends and cracks.

4. Parking Brake Assembly (Rear Disc Brake)

A: REMOVAL

1) Release the parking brake.
2) Lift up the vehicle, and then remove the rear wheels.
3) Remove the brake hose bracket.
4) Remove the attachment bolts and remove the rear disc brake caliper assembly.

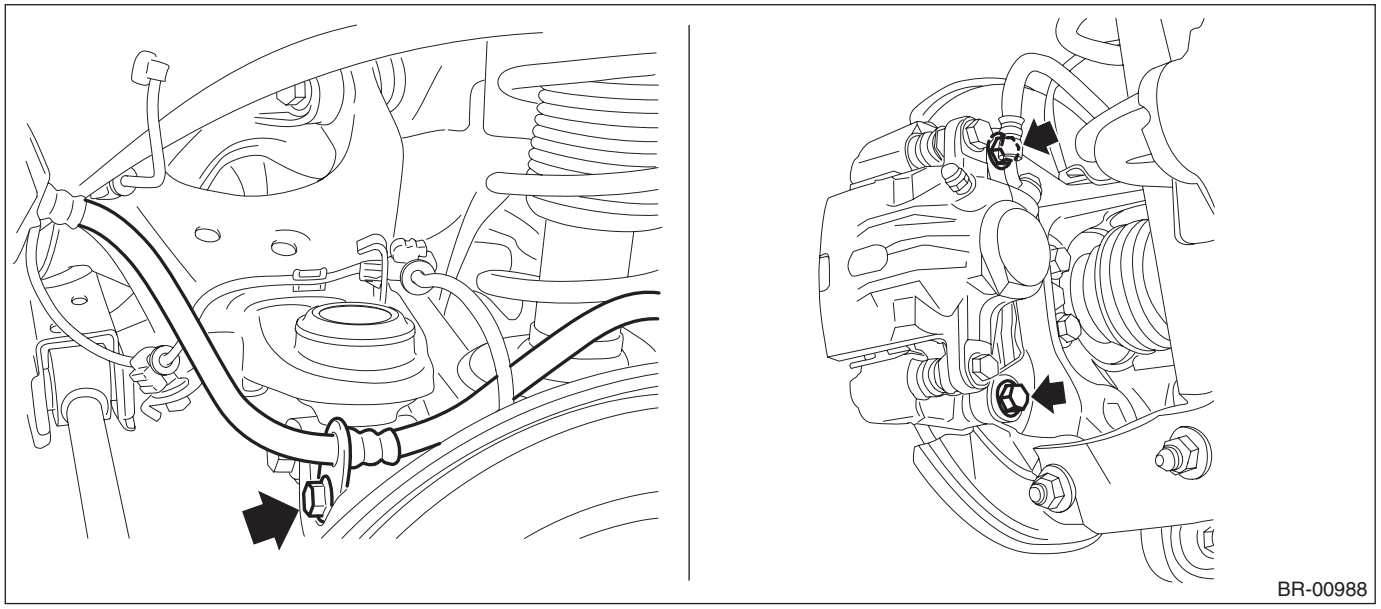

5) Suspend the rear disc brake caliper assembly so that the brake hose is not stretched.

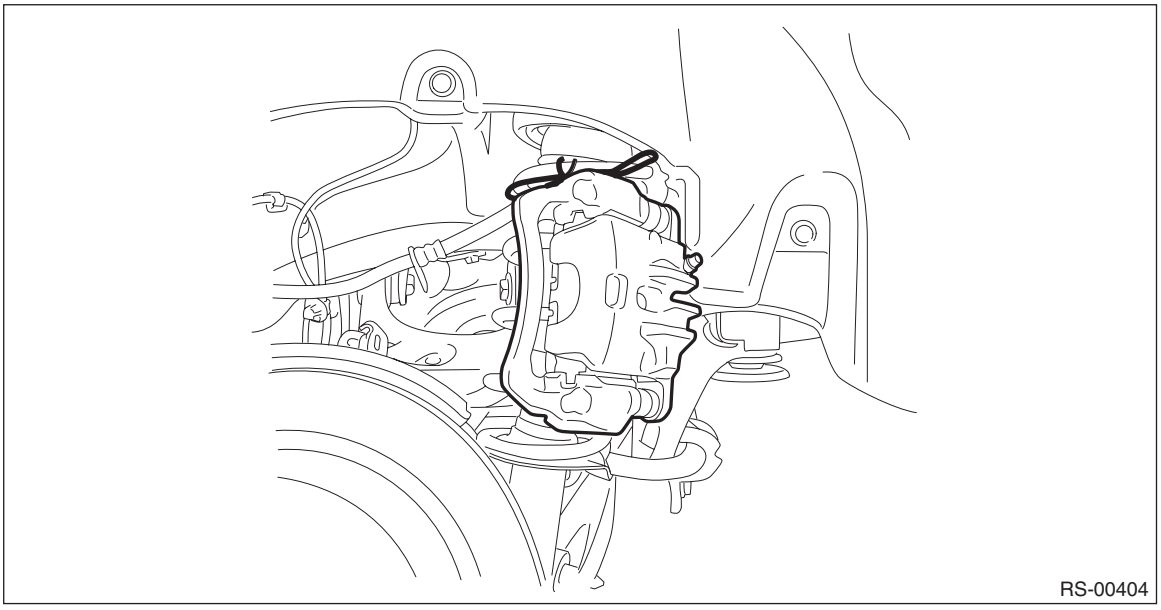

6) Mark an alignment mark on the rear disc brake rotor and the hub unit COMPL - rear axle, and then remove the rear disc rotor.

NOTE:
If it is difficult to remove the rear disc rotor, perform the following two methods in order.

(1) Remove the adjusting hole cover (A), insert the flat tip screwdriver, and rotate the adjuster assembly - rear brake until the brake shoe moves far enough to remove the disc rotor.

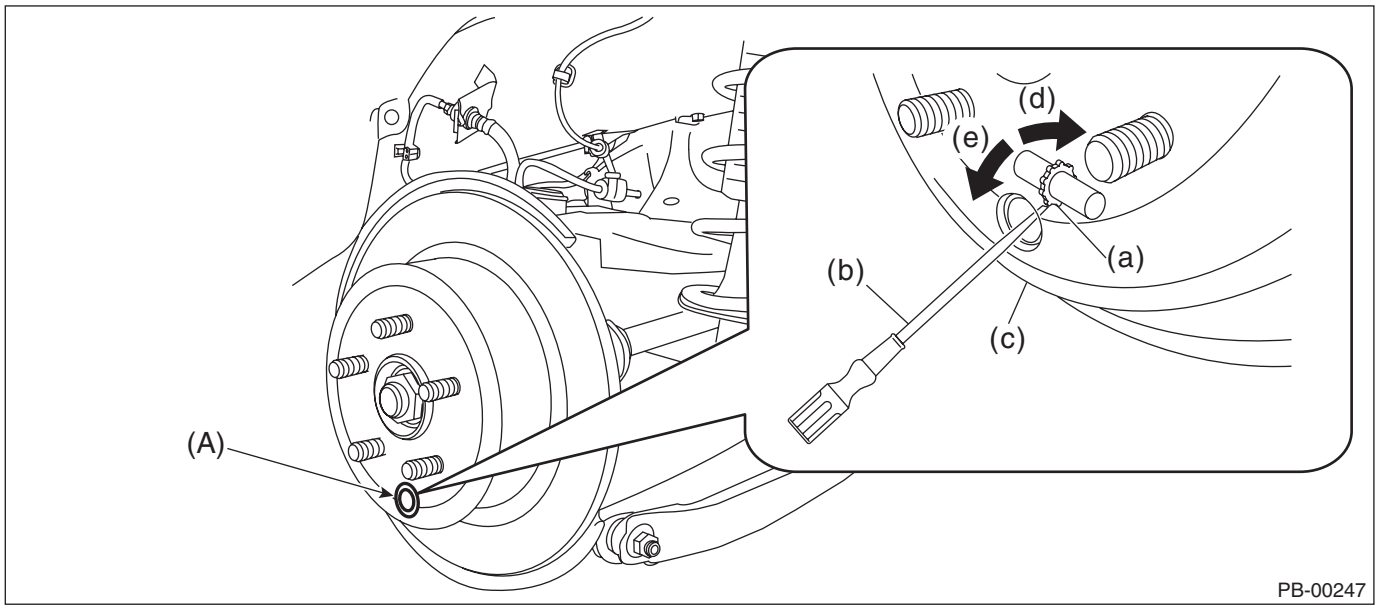

(a) Adjuster ASSY - rear brake
(b) Flat tip screwdriver
(c) Rear disc rotor
(d) Extend the adjuster ASSY - rear brake
(e) Shorten the adjuster ASSY - rear brake

(2) If the disc rotor is not removed after performing above step, screw in an 8 mm (0.31 in) bolt to the threaded part (A) of the disc rotor, and remove the disc rotor.

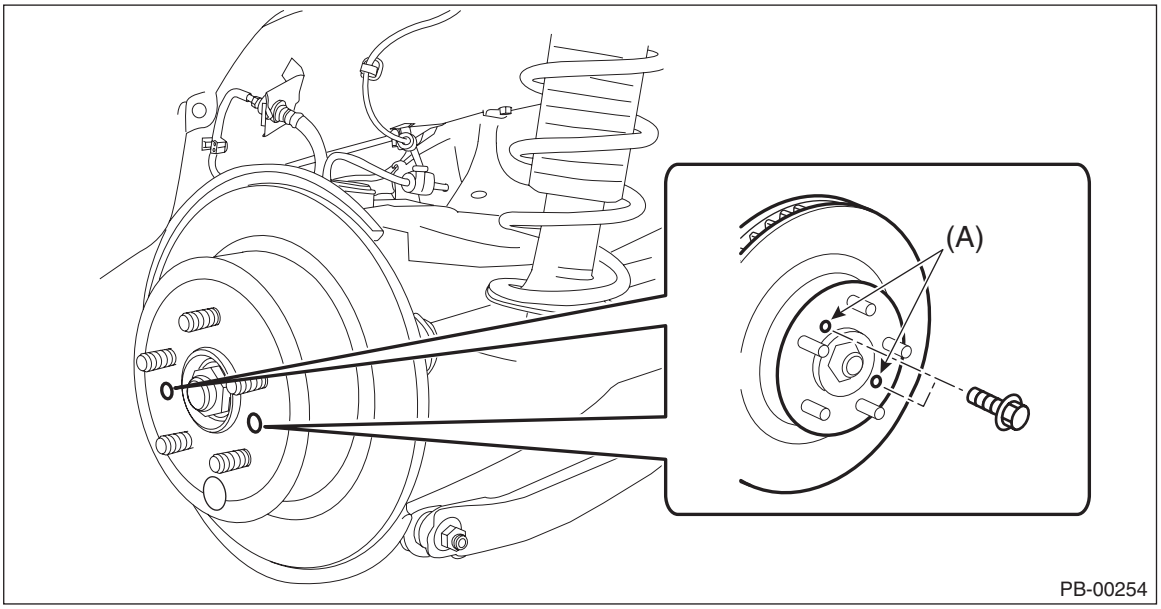

7) Remove the spring - primary shoe return and the spring - secondary shoe return.

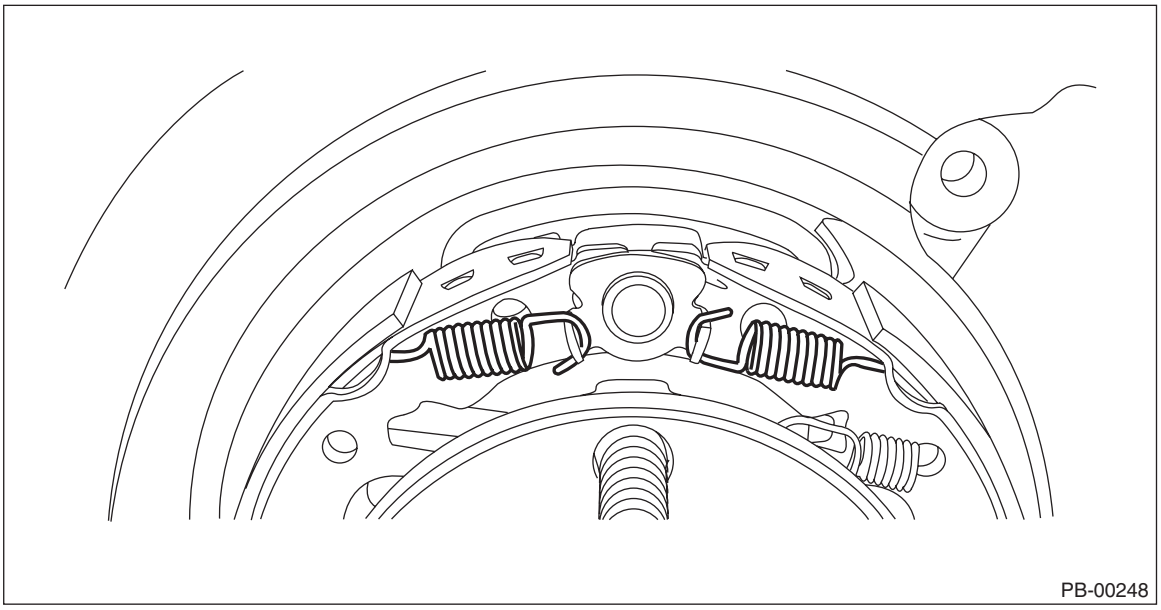

8) Remove the parking brake shoe on the primary side.
(1) Remove the cup - shoe hold-down (a) and the spring - adjuster, and remove the parking brake shoe (b).

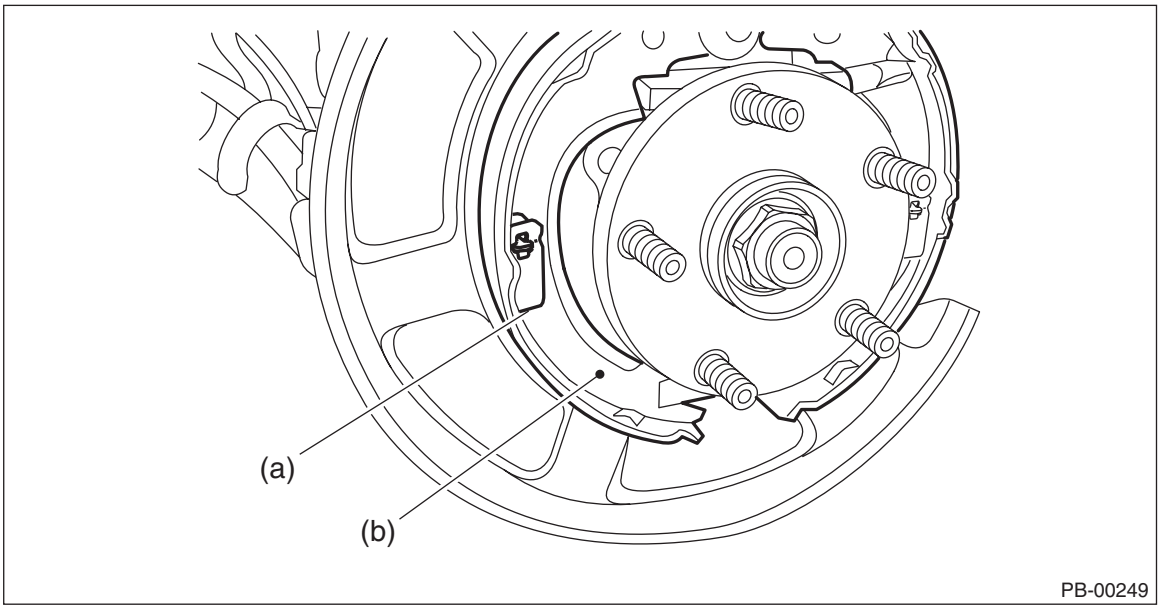

(2) Remove the strut - brake and the spring - strut.
(3) Remove the adjuster assembly - rear brake.

9) Remove the parking brake shoe on the secondary side.
(1) Rotate the cup - shoe hold-down in the direction of the front side of the vehicle.

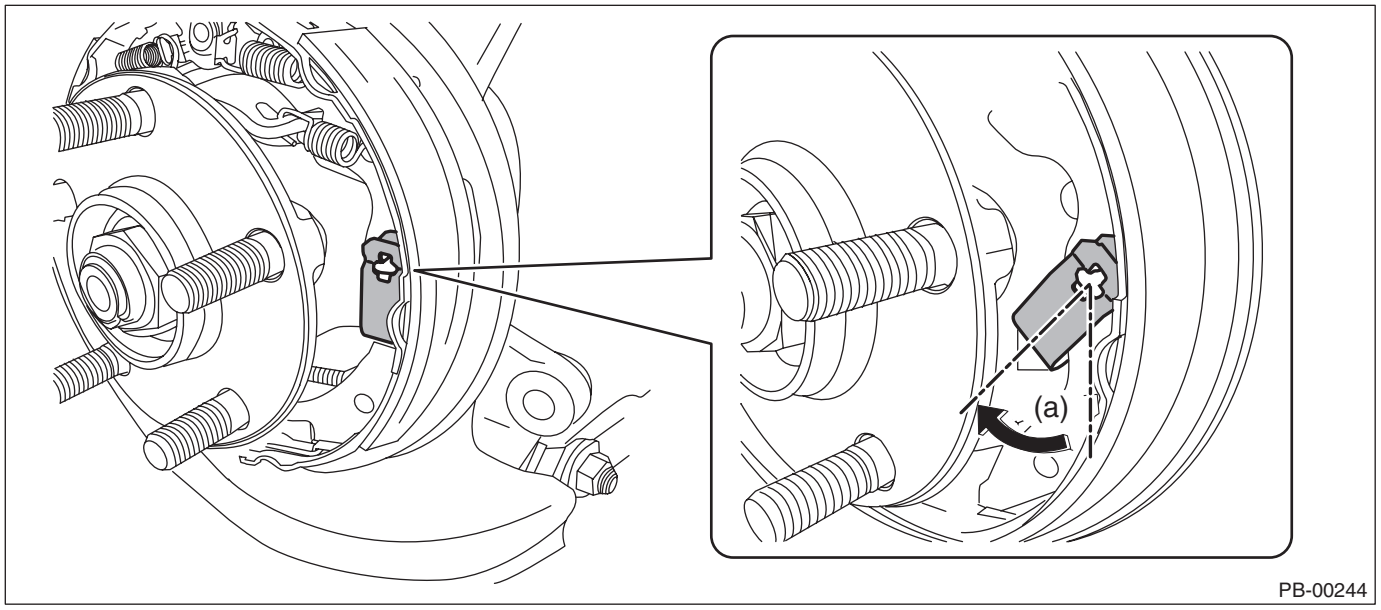

(a) Approx. 45°

(2) Press and shorten the cup - shoe hold-down.
(3) Rotate the pin - secondary shoe hold-down in the opposite direction, and pull out the pin - shoe hold-down.

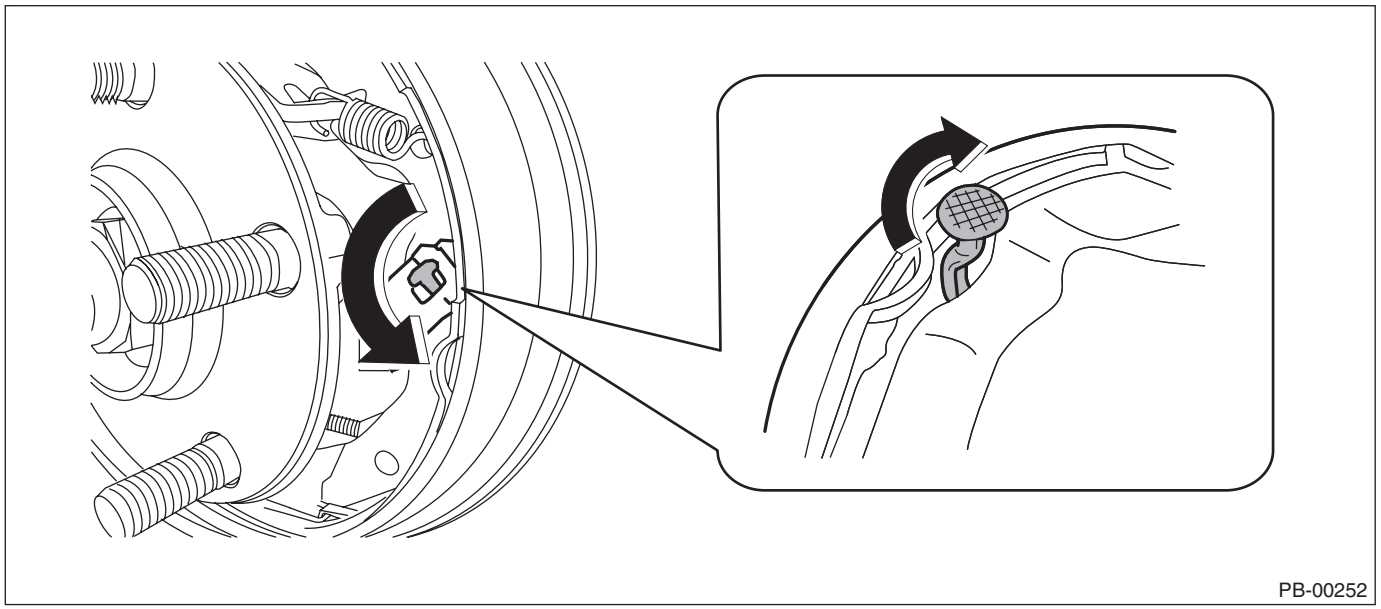

10) Remove the cable assembly - hand brake cable (a) from the parking lever - rear (b).

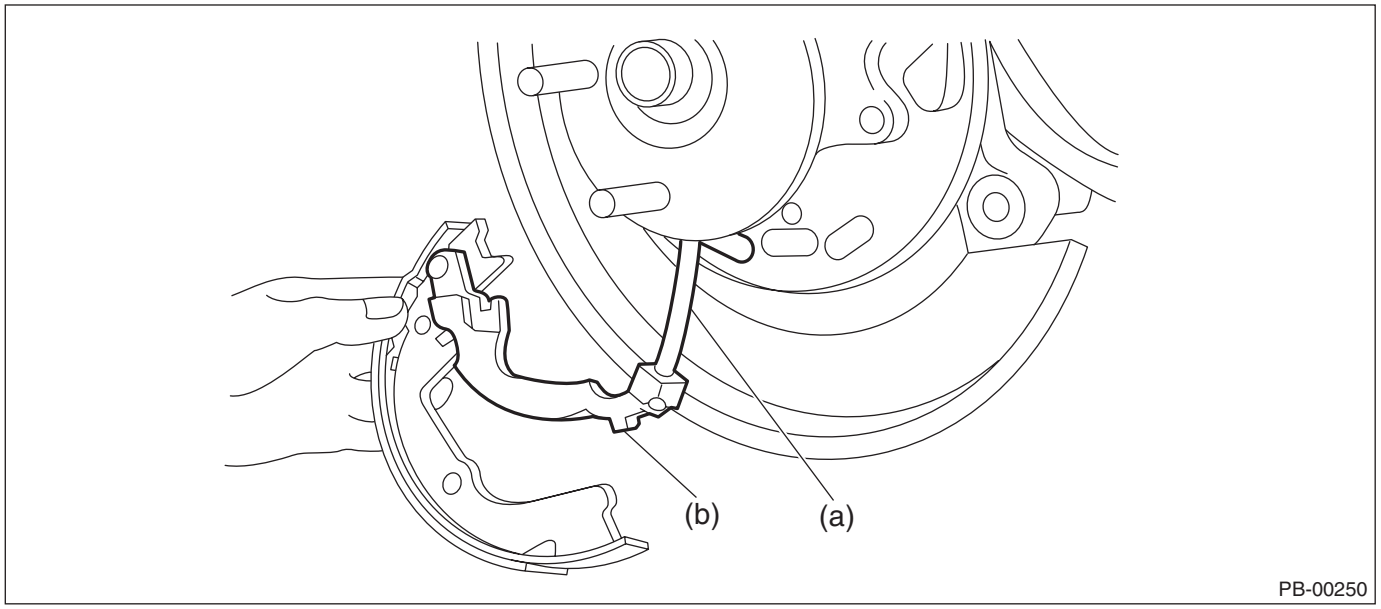

11) Remove the retainer - rear brake from the secondary side parking brake shoe. Remove the parking lever - rear from the brake shoe.

B: INSTALLATION

CAUTION:
Be sure the lining surface is free from brake fluid and grease.
1) Apply brake grease to the following locations.

Brake grease:
Molykote 44MA or equivalent
- Six contact surfaces of the parking brake shoe rim and back plate - rear brake
- Contact surface of the parking brake shoe and the anchor pin
- Contact surface of the parking lever assembly - rear and the strut - brake
- Contact surface of the parking brake shoe and the adjuster assembly - rear brake
- Contact surface of the parking brake shoe and the strut - brake
- Contact surface of the parking lever - rear and the parking brake shoe

2) Install the spring washer - rear brake and the lever to the secondary side parking brake shoe pin, and lock the retainer - rear brake securely.
3) Install the cable assembly - parking brake to the lever.

4) Attach the adjuster assembly - rear brake and the spring - adjuster to the parking brake shoe.

NOTE:
Install the adjuster assembly - rear brake with the screw section facing to the direction shown in the figure below.

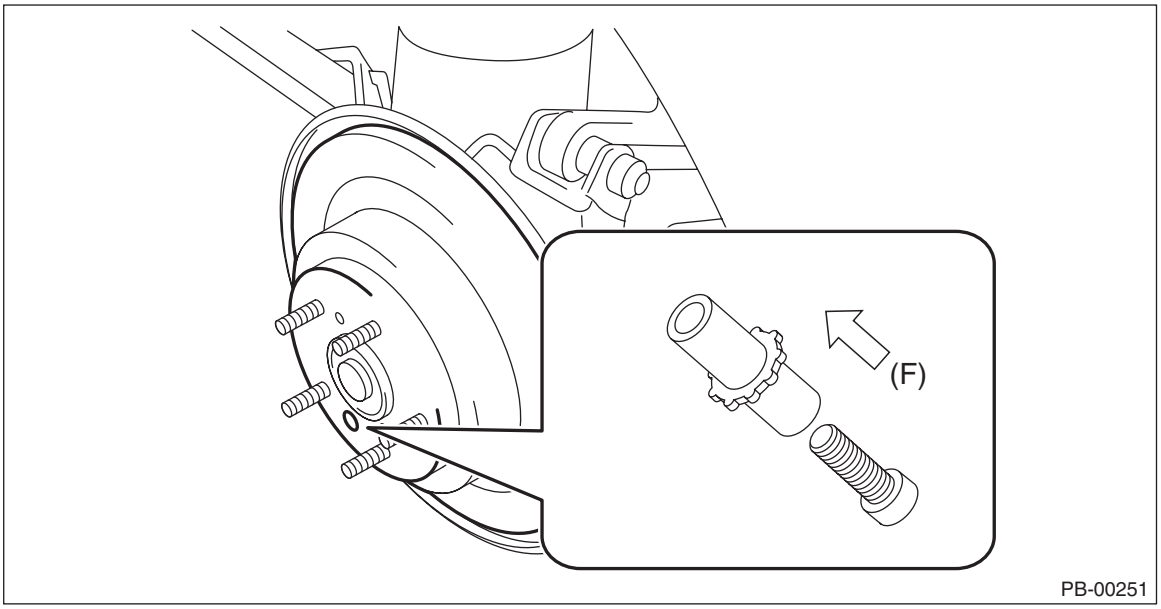

(F) Left wheel: front side of vehicle,
right wheel: rear side of vehicle

5) Check that the cable assembly - parking brake does not fall from the cable guide.
6) Install the parking brake shoes to the back plate - rear brake with the pins - shoe hold-down and the cups - shoe hold-down.

NOTE:
- Do not reversely install the pin - primary shoe hold-down (a) and the pin - secondary shoe hold-down (b).
- When installing the pin - secondary shoe hold-down (b), face the convex portion to the rear of the vehicle not to contact with the parking lever - rear.

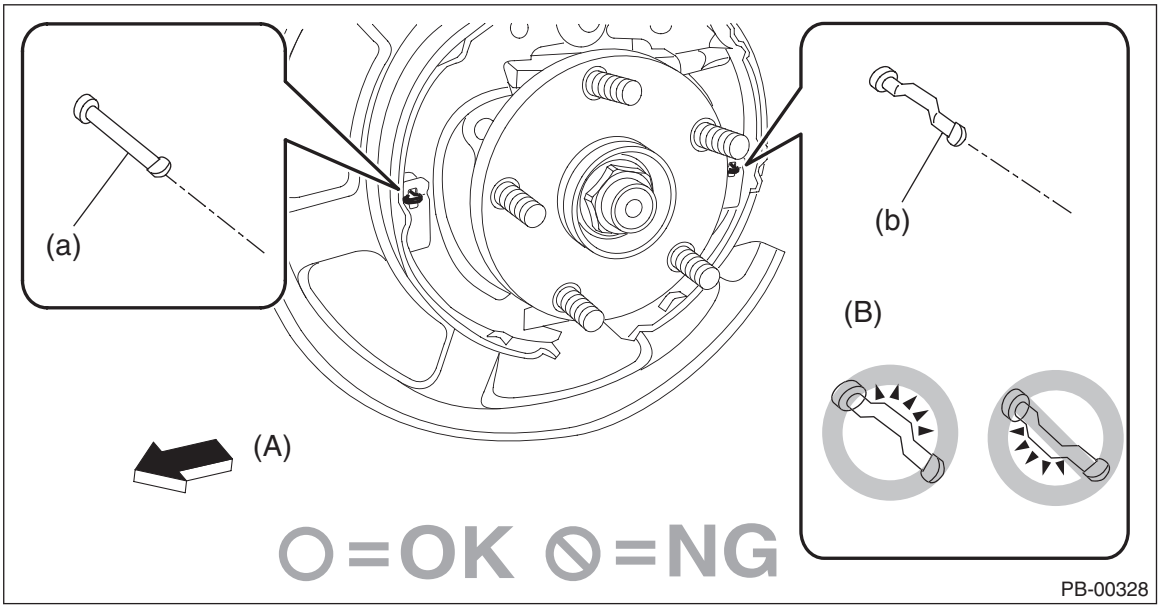

(A) Front side of vehicle

(B) Orientation of pin - shoe hold-down relative to the front of the vehicle

7) Install the strut - brake and the spring - strut to the parking brake shoes.

NOTE:
Install the spring - strut so that it comes towards the front side of the vehicle.
8) Install the return springs on the primary side first, and then the secondary side.
9) Install the brake disc rotor and the brake caliper assembly.
10) Install the brake hose bracket.

Tightening torque:
Refer to "COMPONENT" of "General Description". <Ref. to BR-4, COMPONENT, General Description.>
11) Adjust the parking brake. <Ref. to PB-21, ADJUSTMENT, Parking Brake Assembly (Rear Disc Brake).>
12) Install the rear wheels.

Tightening torque:
Except for C4 model: 120 N·m (12.24 kgf-m, 88.5 ft-lb)
C4 model: 100 N·m (10.20 kgf-m, 73.8 ft-lb)
13) If new parking brake shoes are replaced, drive the vehicle to break-in the parking brake lining.
(1) Drive the vehicle at approximately 35 km/h (22 MPH) or more.
(2) While pressing the button of lever assembly - hand brake, pull the lever assembly - hand brake with a force of 150 N (15.3 kgf, 33.7 lbf).
(3) Drive the vehicle for about 200 m (0.12 mile) in this condition.
(4) Wait 5 to 10 minutes for the parking brake to cool down. Repeat steps (1) through (3) again.
(5) After breaking-in, re-adjust the parking brakes.

C: INSPECTION

1) Measure the inner diameter of the rear disc rotor. If scoring or worn is found on the disc, replace the rear disc rotor.

Disc rotor inner diameter:
Specification: 170 mm (6.69 in)
Service limit: 171 mm (6.73 in)
2) Measure the lining thickness. If it exceeds the limit, replace the brake shoe.

Lining thickness:
Specification: 3.5 mm (0.14 in)
Service limit: 1.5 mm (0.059 in)

NOTE:
Replace the right and left parking brake shoe as a set.

D: ADJUSTMENT

1. SHOE CLEARANCE

1) Return the lever assembly - hand brake completely.
2) Loosen the adjusting nut, and make the cable free.
3) Remove the adjusting hole cover (A) from the rear disc rotor.
4) Insert the flat tip screwdriver (b) into the brake adjustment hole (A), and rotate the adjuster assembly - rear brake (a) until the parking brake shoe contacts the rear disc rotor (until the disc rotor cannot be rotated by hand).

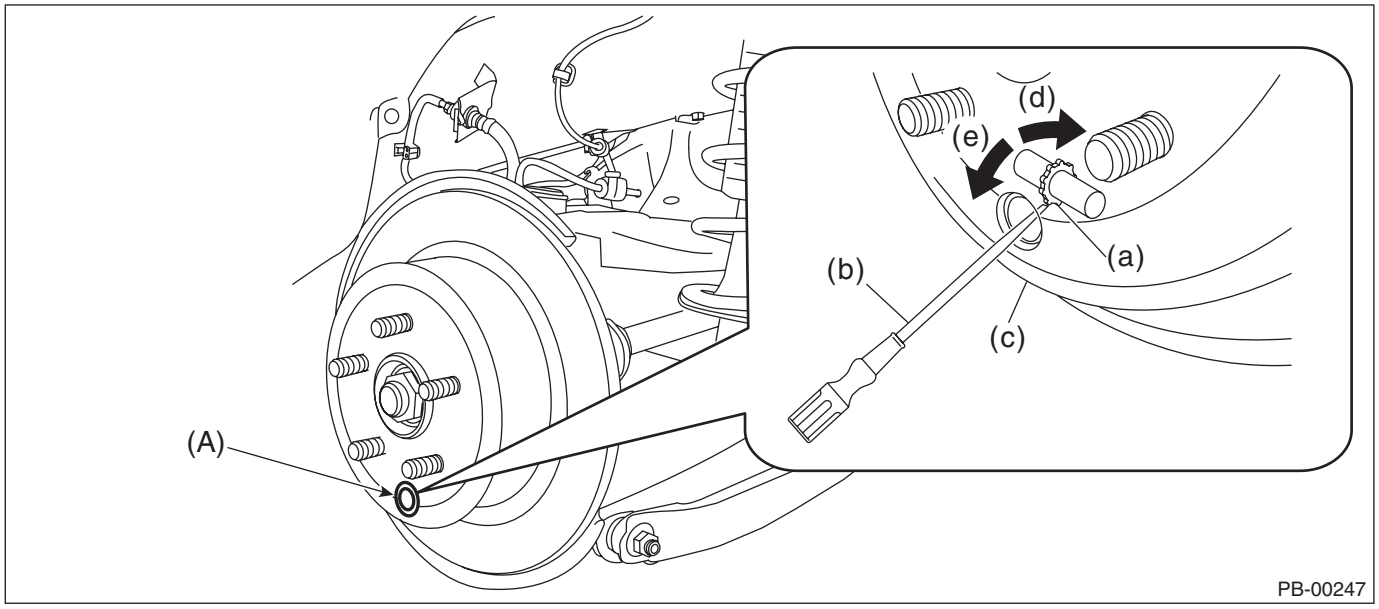

(a)	Adjuster ASSY - rear brake	(c)	Disc rotor	(e)	Shorten the adjuster ASSY - rear brake
(b)	Flat tip screwdriver	(d)	Extend the adjuster ASSY - rear brake		

5) Loosen the adjuster assembly - rear brake by 10 notches in the direction of the arrow (e).

CAUTION:
- **Check there is no brake drag.**
- **Make sure that the adjuster assembly - rear brake is loosened by 10 notches. If it is not loosened sufficiently, dragging may occur.**

6) Install the adjusting hole cover to the disc rotor.
7) Adjust the parking lever stroke. <Ref. to PB-22, LEVER STROKE, ADJUSTMENT, Parking Brake Assembly (Rear Disc Brake).>

2. LEVER STROKE

1) Adjust the shoe clearance before adjusting lever stroke. <Ref. to PB-21, SHOE CLEARANCE, ADJUSTMENT, Parking Brake Assembly (Rear Disc Brake).>
2) Release the claws, and then remove the boot - parking brake.

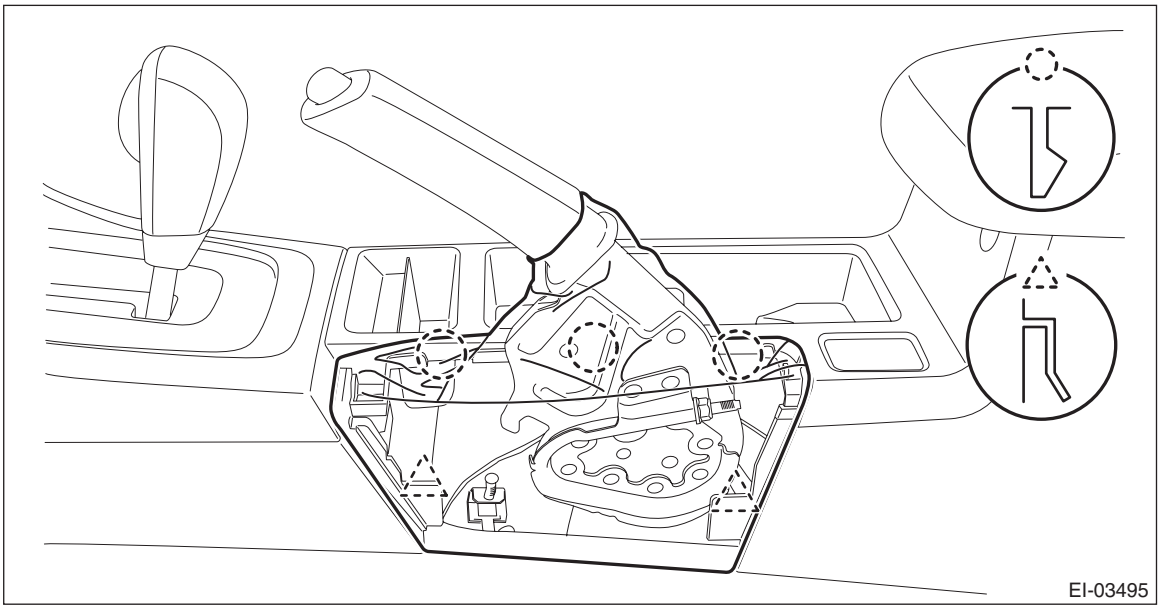

3) Pull the lever assembly - hand brake hard 3 to 5 times.
4) Turn the adjusting nut (a) until the lever stroke is at the specified value.

Lever stroke:
7 to 8 notches when pulled with a force of 200 N (20.4 kgf, 45 lbf)

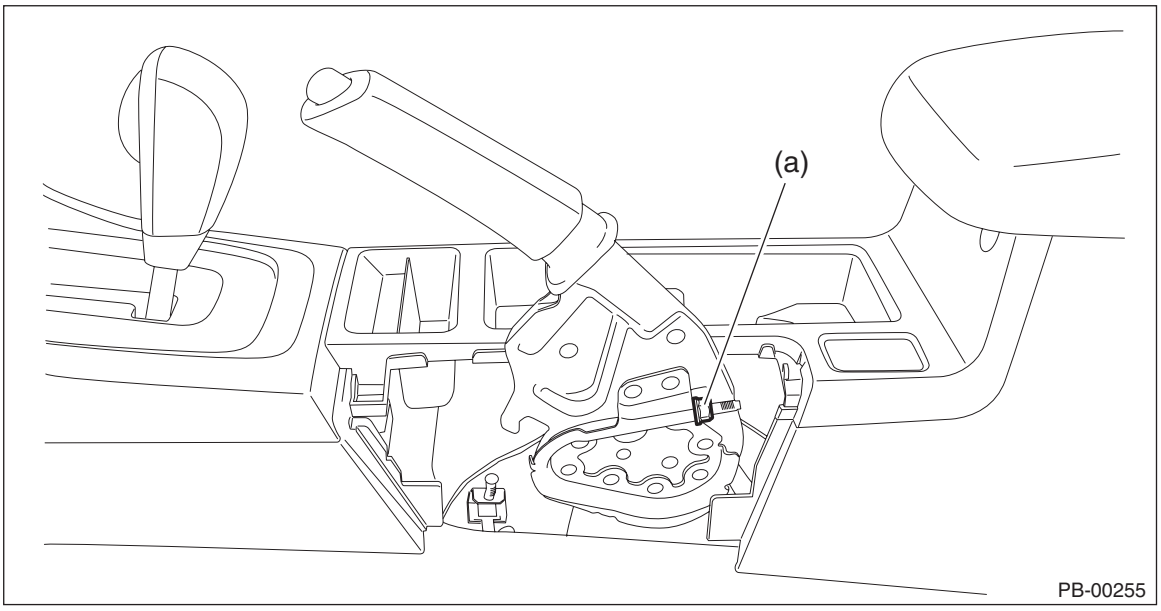

5) Check there is no brake drag.
6) Check that the brake warning light illuminates when the lever assembly - hand brake is operated.

NOTE:
The light must illuminate when the first notch is reached after pulling the lever.
7) Install the boot - parking brake.

5. General Diagnostic Table

A: INSPECTION

Symptoms	Possible cause	Corrective action
Brake dragging	Lever assembly - hand brake is maladjusted.	Adjust.
	Parking brake cable does not move.	Repair or replace.
	Parking brake shoe clearance is maladjusted.	Adjust.
	Spring - shoe return is faulty.	Replace.
Noise from brake	Spring - shoe return is faulty.	Replace.
	Cup - shoe hold-down is faulty.	Replace.

POWER ASSISTED SYSTEM (POWER STEERING)

PS

		Page
1.	General Description	2
2.	Power Steering System	7
3.	Steering Wheel	8
4.	Universal Joint	13
5.	Steering Column	18
6.	Electric Power Steering Gearbox	27
7.	Power Steering Control Module	43
8.	General Diagnostic Table	44

1. General Description

A: SPECIFICATION

Model				Except for XV model	XV model	
					Gasoline engine model	HEV model
Whole system	Minimum turning radius		m (ft)	5.3 (17.39)		
	Steering angle	Inner wheel		38.3°±1.5°	38.2°±1.5°	
		Outer wheel		33.7°±1.5°	33.6°±1.5°	
	Steering wheel diameter		mm (in)	375 (14.76)		
	Lock-to-lock revolution number			3.2	3.1	2.8
Gearbox	Type			Rack & pinion type		
	Backlash			0 (automatic adjusting)		
Motor (Temperature 20°C (68°F))	Rated voltage		V	12		
	Rated torque		N·m (kgf-m, ft-lb)	4.5 (0.46, 3.31)		
	Rated revolution speed		rpm	1,140		
	Rated current		A	85		
	Rated output		W	561		

Model				Except for XV model	XV model	
					Gasoline engine model	HEV model
Steering wheel	Free play		mm (in)	17 (0.67) or less		
Steering shaft	Clearance between the steering wheel and column cover		mm (in)	4 — 6 (0.16 — 0.24)		
Steering gearbox (Power steering system)	Sliding resistance		N (kgf, lbf)	350 (36, 79) or less Difference between right and left sliding resistance: 20% or less	333 (34, 75) or less Difference between right and left sliding resistance: 20% or less	303 (31, 68) or less Difference between right and left sliding resistance: 20% or less
	Rack shaft play in the radial direction	Right-turn steering	mm (in)	Horizontal play: 0.6 (0.024) or less Vertical play: 0.4 (0.016) or less		
		Left-turn steering	mm (in)	0.4 (0.016) or less		
	Input shaft play	In radial direction	mm (in)	0.18 (0.0071) or less		
		In axial direction	mm (in)	0.27 (0.0106) or less		
	Rotational resistance		N (kgf, lbf)	Maximum allowable value: 18.3 (1.9, 4.1) or less Difference between right and left sliding resistance: 20% or less	Maximum allowable value: 17.7 (1.8, 4.0) or less Difference between right and left sliding resistance: 20% or less	Maximum allowable value: 18.0 (1.8, 4.0) or less Difference between right and left sliding resistance: 20% or less
Steering wheel effort (Power steering system)	At standstill with engine idling on paved road		N (kgf, lbf)	29.4 (3.0, 6.6) or less		
	At standstill with engine stalled on paved road		N (kgf, lbf)	294.2 (30, 66.2) or less		

B: COMPONENT

1. STEERING WHEEL AND COLUMN

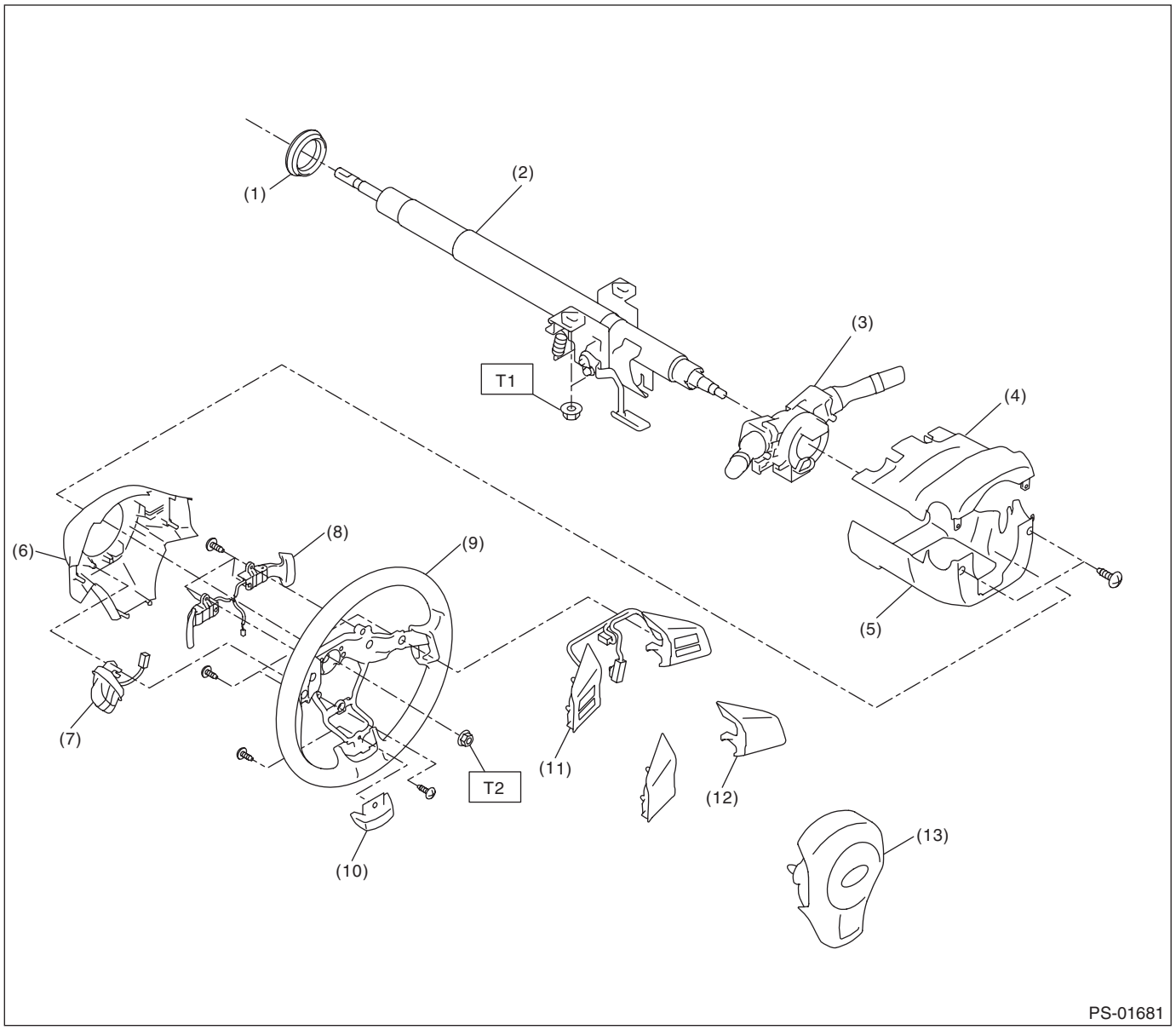

(1) Bushing
(2) Column ASSY - steering
(3) Switch ASSY - combination
(4) Cover ASSY - column UPR
(5) Cover ASSY - column LWR
(6) Cover - steering wheel LWR
(7) Satellite switch
(8) Paddle shift
(9) Steering wheel
(10) Cover - spoke
(11) Switch
(12) Cover - switch
(13) Airbag module

Tightening torque: N·m (kgf-m, ft-lb)
T1: 20 (2.04, 14.8)
T2: 39 (3.98, 28.8)

2. STEERING GEARBOX

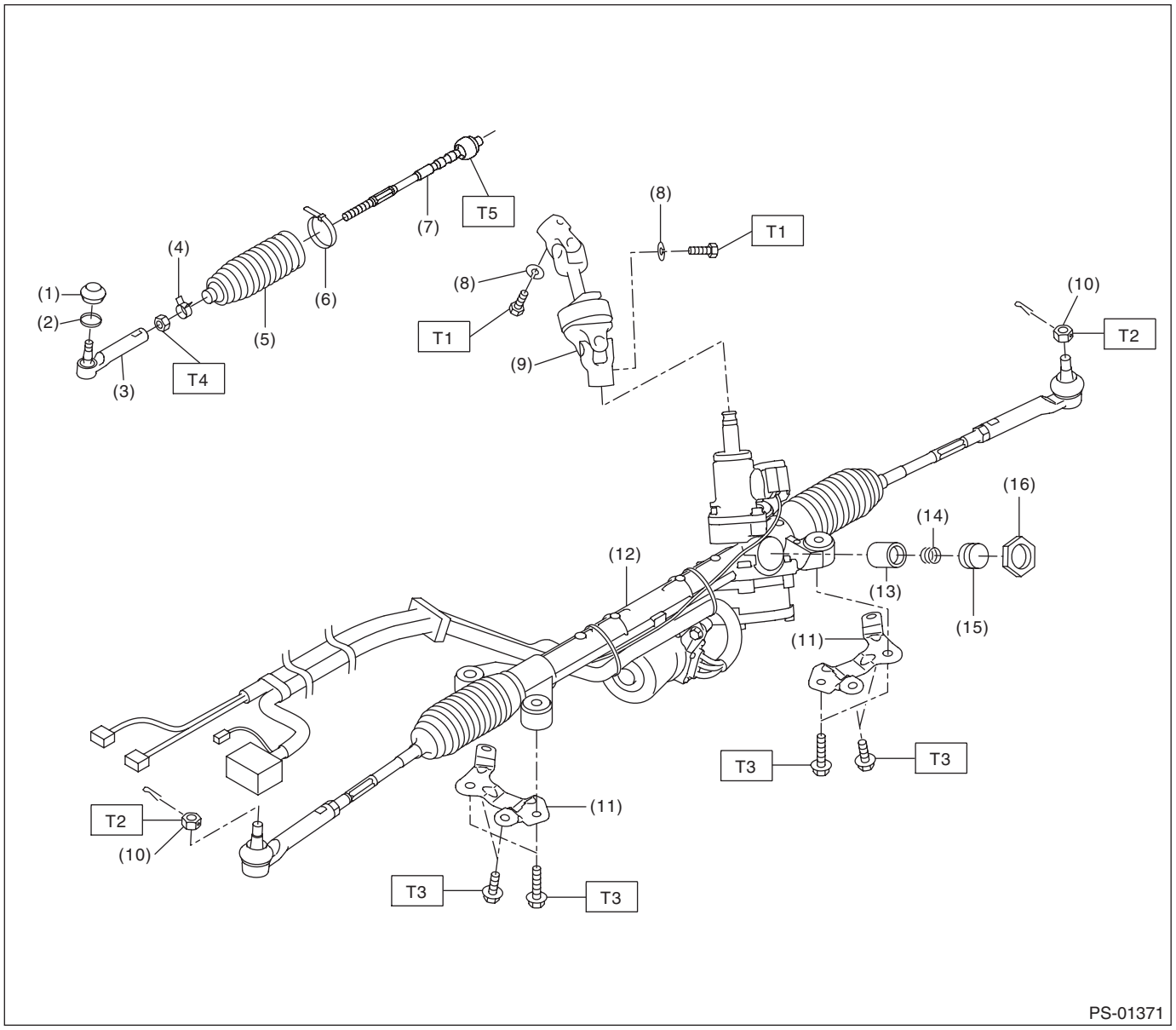

(1)	Dust seal	(9)	Universal joint ASSY - steering
(2)	Clip - boot tie-rod end B	(10)	Castle nut
(3)	Tie-rod end	(11)	Stiffener
(4)	Clip - boot tie-rod end A	(12)	Steering gearbox ASSY
(5)	Boot - steering gearbox	(13)	Pad - pressure
(6)	Band - boot	(14)	Spring - gearbox
(7)	Tie-rod	(15)	Adjusting screw
(8)	Spring washer	(16)	Lock nut

Tightening torque: N·m (kgf-m, ft-lb)
T1: 24 (2.45, 17.7)
T2: 27 (2.75, 19.9)
T3: 60 (6.12, 44.3)
T4: 85 (8.67, 62.7)
T5: 90 (9.18, 66.4)

3. ELECTRIC POWER STEERING CONTROL MODULE

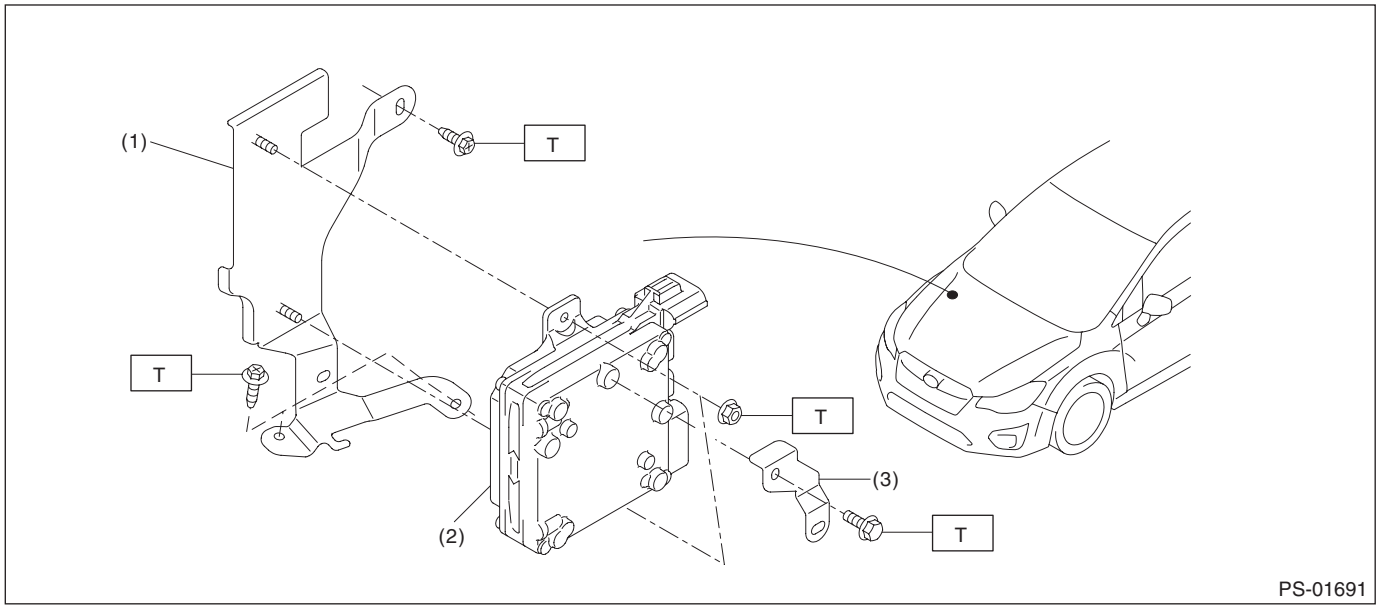

(1) Bracket - control module
(2) Power steering control module
(3) Harness bracket

Tightening torque: N·m (kgf-m, ft-lb)
T: 7.5 (0.76, 5.5)

C: CAUTION

• Wear appropriate work clothing, including a helmet, protective goggles and protective shoes when performing any work.
• Before removal, installation or disassembly, be sure to clarify the failure. Avoid unnecessary removal, installation, disassembly and replacement.
• Vehicle components are extremely hot after driving. Be wary of receiving burns from heated parts.
• Use grease and oil of Subaru genuine or the equivalent products. Do not mix them of different grades or manufacturers.
• Be sure to tighten fasteners including bolts and nuts to the specified torque.
• Place shop jacks or rigid racks at the specified points.
• Before securing a part on a vise, place cushioning material such as wooden blocks, aluminum plate or cloth between the part and the vise.

D: PREPARATION TOOL

1. SPECIAL TOOL

ILLUSTRATION	TOOL NUMBER	DESCRIPTION	REMARKS
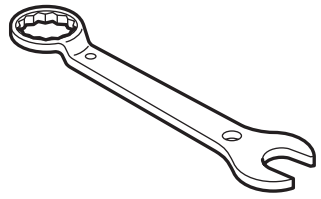 ST34099PA100	34099PA100	SPANNER	Used when measuring the rotating resistance of gearbox assembly.

2. GENERAL TOOL

TOOL NAME	REMARKS
Steering wheel puller	Used for removing the steering wheel.

2. Power Steering System

A: WIRING DIAGRAM

Refer to “Electric Power Steering System” in the wiring diagram. <Ref. to WI(w/o HEV)-152, WIRING DIAGRAM, Vehicle Dynamics Control System.>

B: ELECTRICAL SPECIFICATION

Refer to Control Module I/O Signal of “POWER ASSISTED SYSTEM (POWER STEERING) (DIAGNOSTICS)”. <Ref. to PS(diag)-11, ELECTRICAL SPECIFICATION, Control Module I/O Signal.>

C: INSPECTION

Refer to “POWER ASSISTED SYSTEM (POWER STEERING) (DIAGNOSTICS)”. <Ref. to PS(diag)-2, Basic Diagnostic Procedure.>

D: NOTE

For procedure of each component in the power steering system, refer to the respective section.

- Steering wheel: <Ref. to PS-8, Steering Wheel.>
- Universal joint assembly - steering: <Ref. to PS-13, Universal Joint.>
- Steering column: <Ref. to PS-18, Steering Column.>
- Electric power steering gearbox: <Ref. to PS-27, Electric Power Steering Gearbox.>
- Power steering control module: <Ref. to PS-43, Power Steering Control Module.>

3. Steering Wheel

A: REMOVAL

1) Disconnect the negative terminal from the battery, and wait for 60 seconds or more. <Ref. to NT-5, BATTERY, NOTE, Note.>

NOTE:
For the 12 volt engine restart battery of HEV model, disconnect the ground terminal from 12V engine restart battery sensor.

2) Set the tire to the straight-ahead position.

3) Remove the driver's airbag module.

CAUTION:
Before performing service on the airbag module, always refer to "CAUTION" of "General Description" in "AIRBAG SYSTEM" section. <Ref. to AB-11, CAUTION, General Description.>

(1) Using a hexagon wrench etc. wrapped by protective tape, insert the snap pins and release the locks (3 locations).

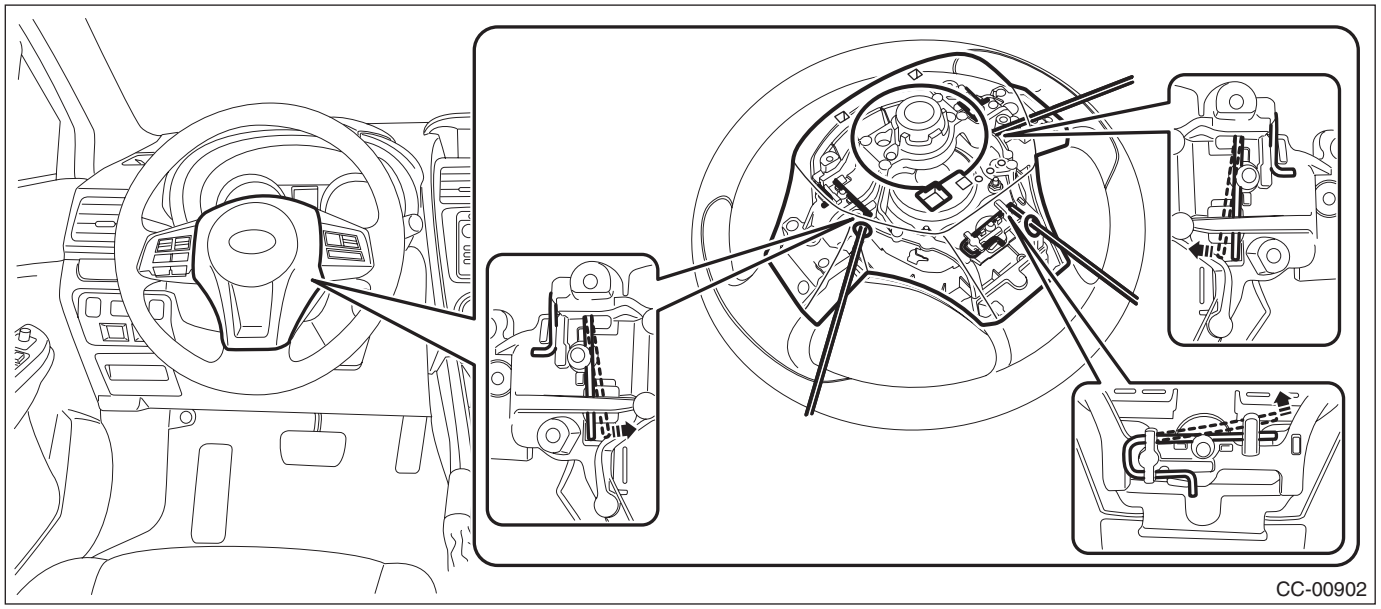

(2) Disconnect the horn harness and airbag connector, and remove the airbag module. <Ref. to AB-23, DRIVER'S AIRBAG MODULE, CURTAIN AIRBAG MODULE & PRETENSIONER, PROCEDURE, Airbag Connector.>

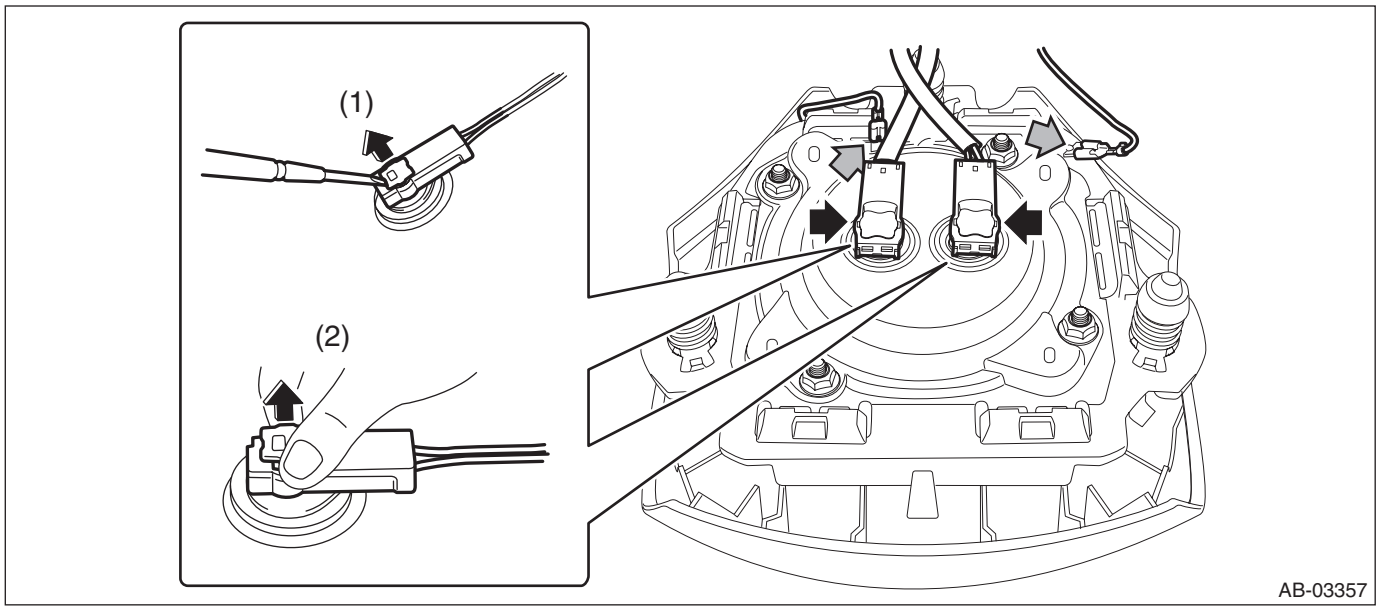

4) Remove the steering wheel.

CAUTION:
• Always use the steering wheel puller for removal to avoid deforming the steering wheel.
• If the steering wheel has been removed, make sure that the steering roll connector is not turned from the original position.

(1) Disconnect the connector and remove the nut.
(2) Put alignment marks and remove the steering wheel.

Preparation tool:
Steering wheel puller

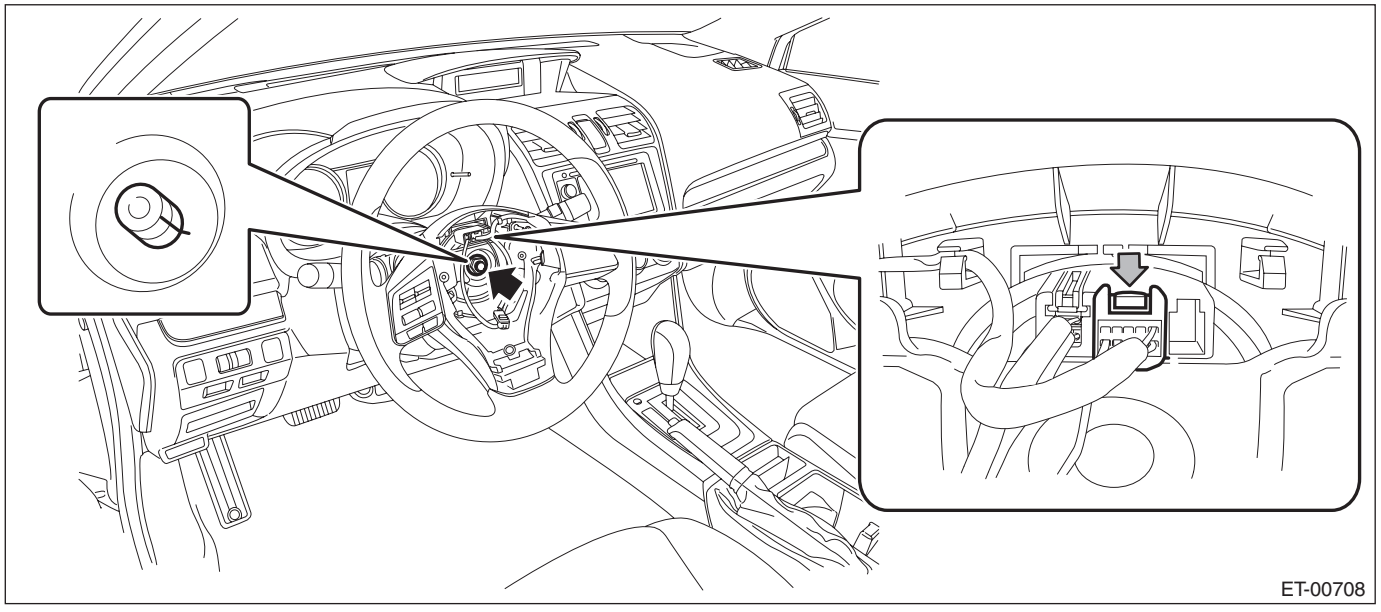

B: INSTALLATION

CAUTION:
• Before handling the airbag module, refer to "CAUTION" of "General Description" in "AIRBAG SYSTEM". <Ref. to AB-11, CAUTION, General Description.>
• If the steering wheel and steering angle sensor are removed, perform "VDC sensor midpoint setting mode" of the VDC. <Ref. to VDC-21, VDC SENSOR MIDPOINT SETTING MODE, ADJUSTMENT, VDC Control Module and Hydraulic Control Unit (VDCCM&H/U).>
1) Align the center position of the steering roll connector. <Ref. to AB-110, ADJUSTMENT, Roll Connector.>
2) Install each part in the reverse order of removal.

NOTE:
Align the alignment marks on the steering wheel and the column assembly - steering.

Tightening torque:
Steering wheel: 39 N·m (3.98 kgf-m, 28.8 ft-lb)

Clearance:
Between cover assembly - column and steering wheel: 4 — 6 mm (0.16 — 0.24 in)

C: DISASSEMBLY

1) Remove the screw, disconnect the connector and remove the paddle shift switch. (Model with paddle shift)

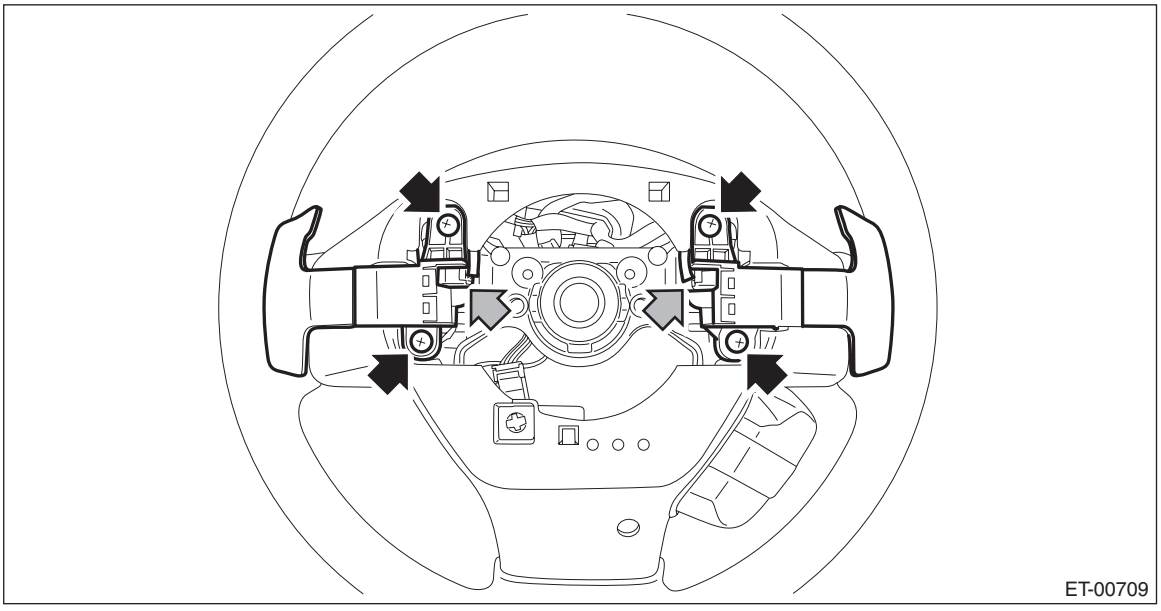

2) Release the claws and clips, and remove the cover - steering wheel LWR.

NOTE:
For model with steering switch, remove the connector and screw.

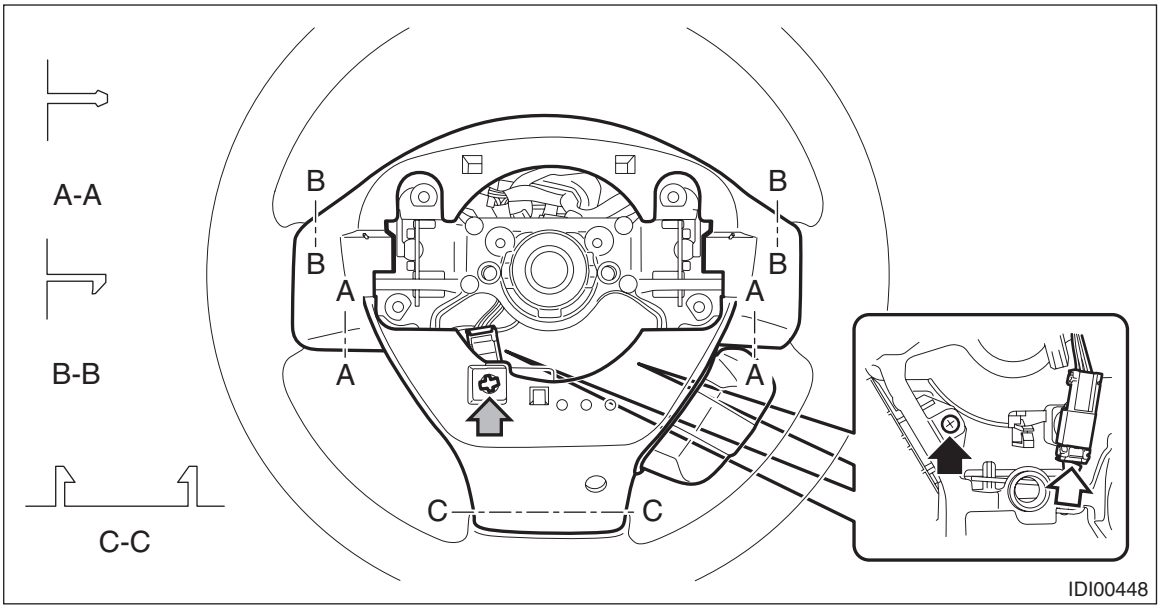

3) Remove the screws and then remove the satellite switch assembly.

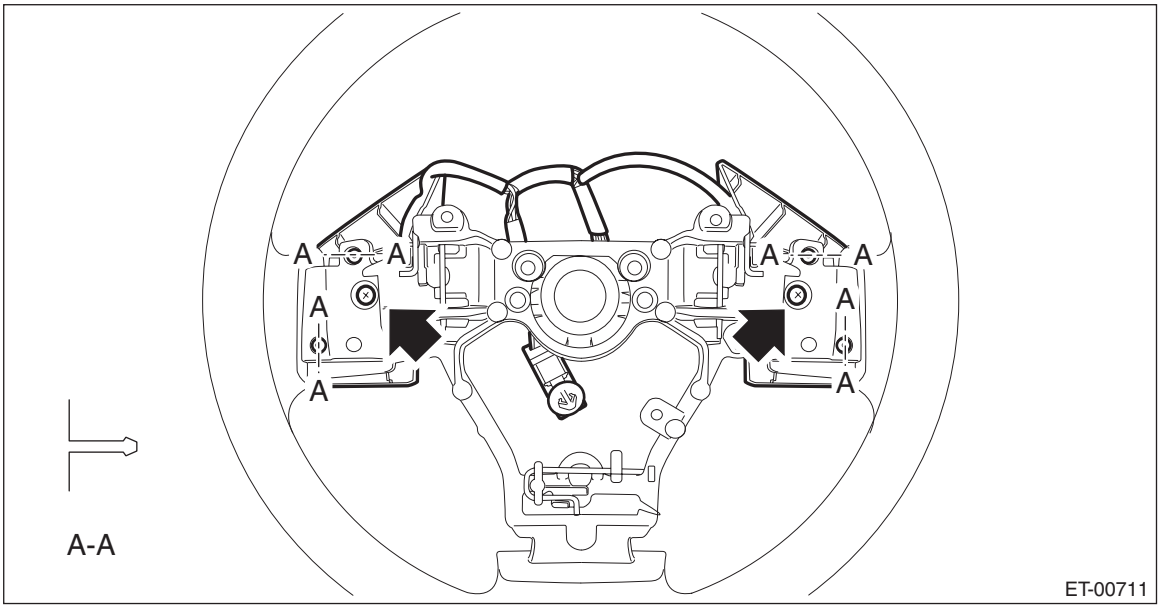

D: ASSEMBLY

Assemble each part in the reverse order of disassembly.

E: INSPECTION

Check the resistance of paddle switch.

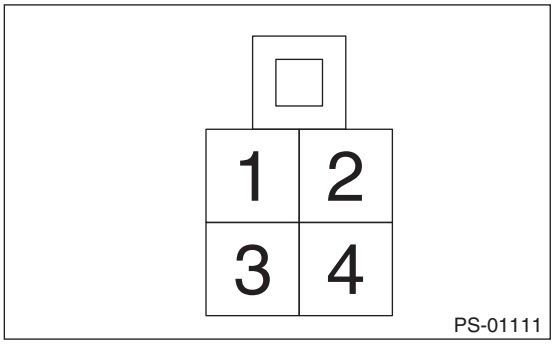

Step		Check	Yes	No
1	**SHIFT-UP SWITCH CONTINUITY CHECK.** 1) Operate the + side of paddle shift assembly and hold it. 2) Measure the resistance between terminals of the paddle shift assembly connector. ***Terminals*** ***Gasoline engine model*** ***No. 1 — No. 3:*** ***HEV model*** ***No. 4 — No. 3:***	Is the resistance less than 10 Ω?	Go to step **2**.	Replace the paddle shift assembly.
2	**SHIFT-DOWN SWITCH CONTINUITY CHECK.** 1) Operate the – side of paddle shift assembly and hold it. 2) Measure the resistance between terminals of the paddle shift assembly connector. ***Terminals*** ***No. 1 — No. 4:***	Is the resistance less than 10 Ω?	Go to step **3**.	Replace the paddle shift assembly.
3	**CHECK SHIFT SWITCH INSULATION.** 1) Do not operate the paddle shift assembly. 2) Measure the resistance between terminals of the paddle shift assembly connector. ***Terminals*** ***Gasoline engine model*** ***No. 1 — No. 3:*** ***No. 1 — No. 4:*** ***HEV model*** ***No. 4 — No. 3:*** ***No. 1 — No. 4:***	Is the resistance 1 MΩ or more?	Paddle shift assembly is normal.	Replace the paddle shift assembly.

Replace the paddle switch if the inspection result is not within the standard value.

4. Universal Joint

A: REMOVAL

1) Adjust the tilt position of the column assembly - steering to the lowest position and lock the tilt lever.

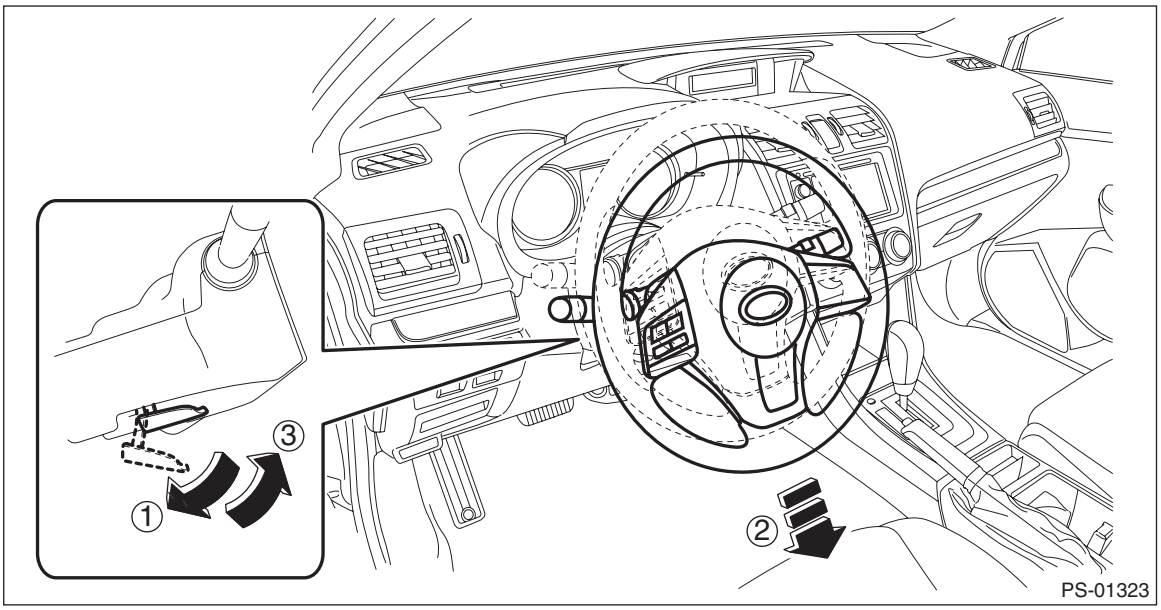

2) Remove the universal joint assembly - steering.
   (1) Place alignment marks on the universal joint assembly - steering.

NOTE:
Place alignment marks on the following positions.
- Between the column assembly - steering and the universal joint assembly - steering
- Between the steering gearbox assembly and the universal joint assembly - steering

   (2) Remove the bolt, and remove the universal joint assembly - steering.

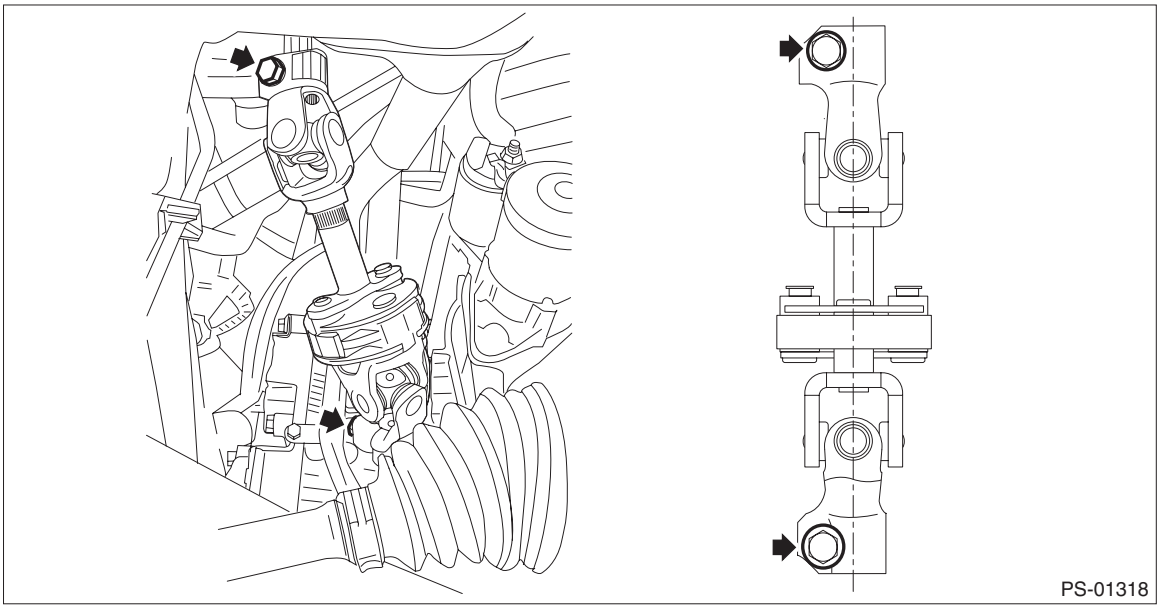

3) Prevent the steering wheel from turning using the seat belt.

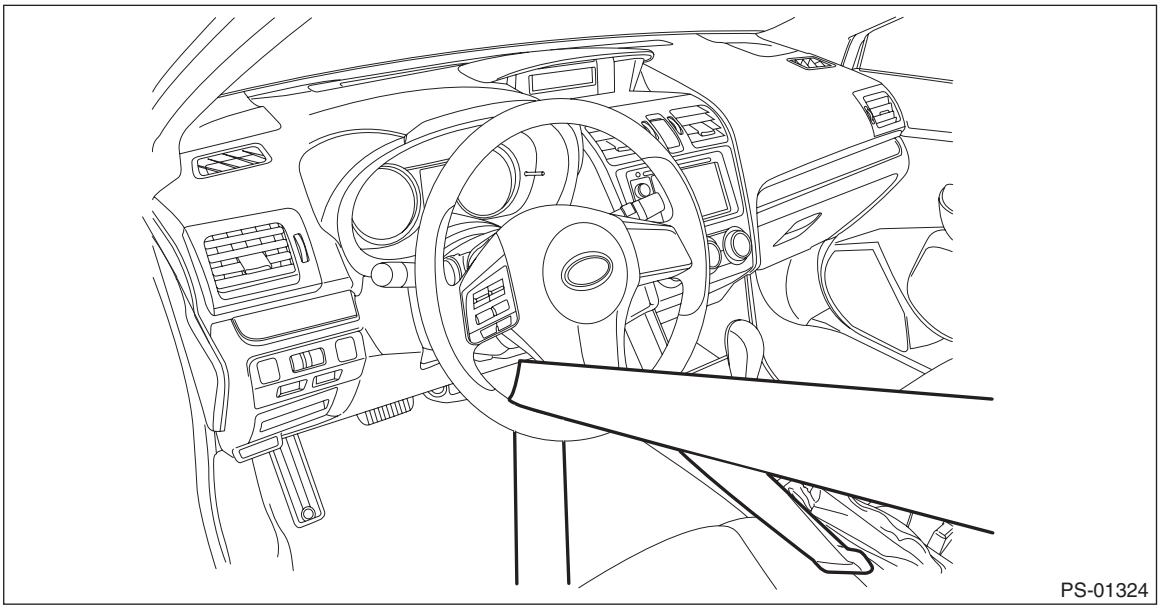

B: INSTALLATION

1) Before installation, check the universal joint assembly - steering. <Ref. to PS-16, INSPECTION, Universal Joint.>
2) Adjust the tilt position of the column assembly - steering to the neutral position and lock the tilt lever.

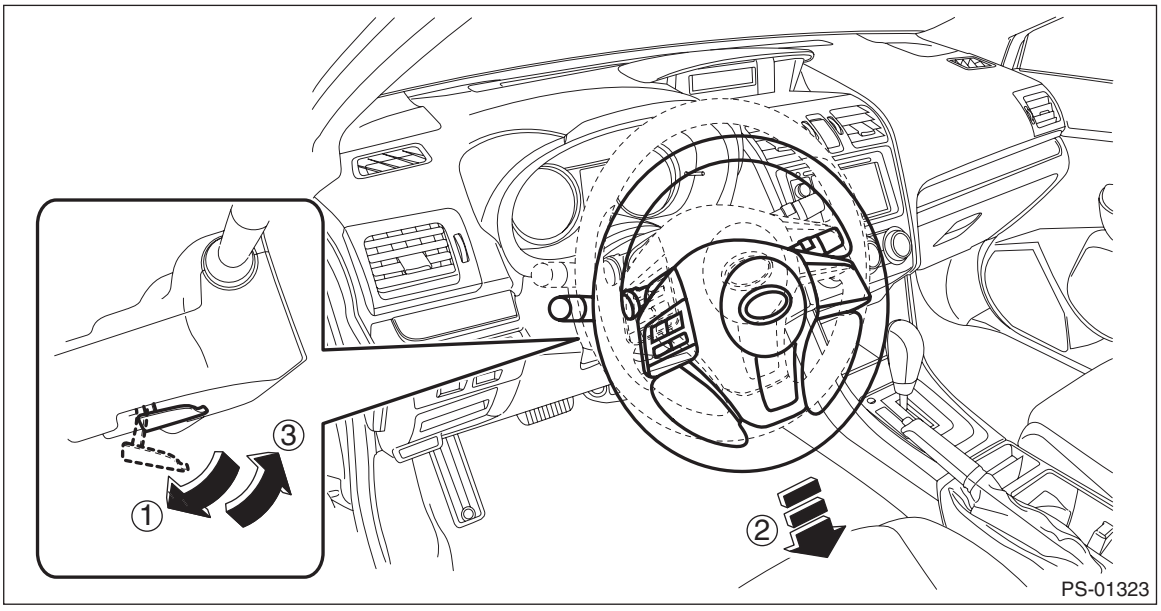

3) Align the cutout portion (a) at serrated section of the column shaft (c) and yoke (b), then install the universal joint assembly - steering into column shaft.

CAUTION:
Be sure to align the protruded portion (a) of the column shaft with the cutout portion (a) at serrated section. If another cutout portions (d) are used for alignment, the bolt of the universal joint assembly - steering cannot be assembled.

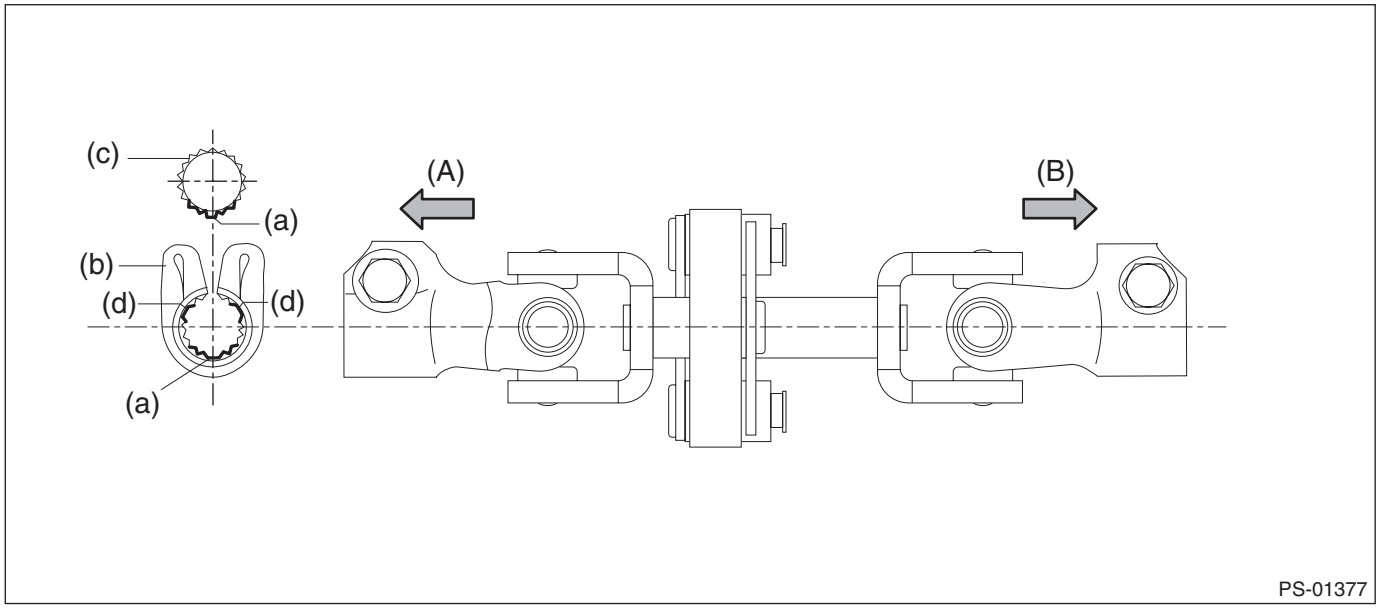

(A) Column shaft side (B) Gearbox side

4) Install the universal joint assembly - steering to the serrations of the gearbox assembly by matching the alignment marks.
5) Tighten the bolts on the gearbox side first, and then the column shaft side.

CAUTION:
Be sure to follow the tightening order and tightening torque of the universal joint assembly - steering to avoid the steering effort from becoming heavy.

Tightening torque:
24 N·m (2.45 kgf-m, 17.7 ft-lb)

Clearance:
Universal joint assembly - steering coupling to adjacent parts: 15 mm (0.59 in) or more

C: INSPECTION

Check for wear, damage or any other faults.
1) Check the universal joint assembly - steering for excessive looseness.

Service limit:
Play of the universal joint assembly - steering: 0 mm (0 in)

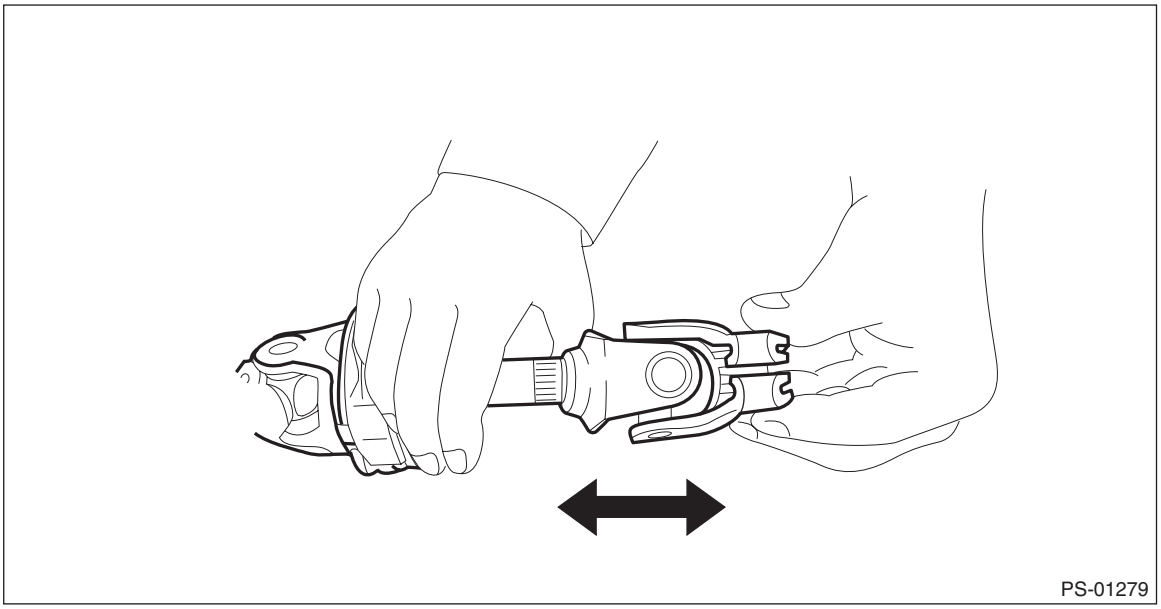

2) Measure the swing torque of the universal joint assembly - steering.
(1) Place the universal joint assembly - steering between wooden blocks and fix it on a vise.
(2) With the yoke (a) of gearbox side facing up, measure the swing torque in two directions.

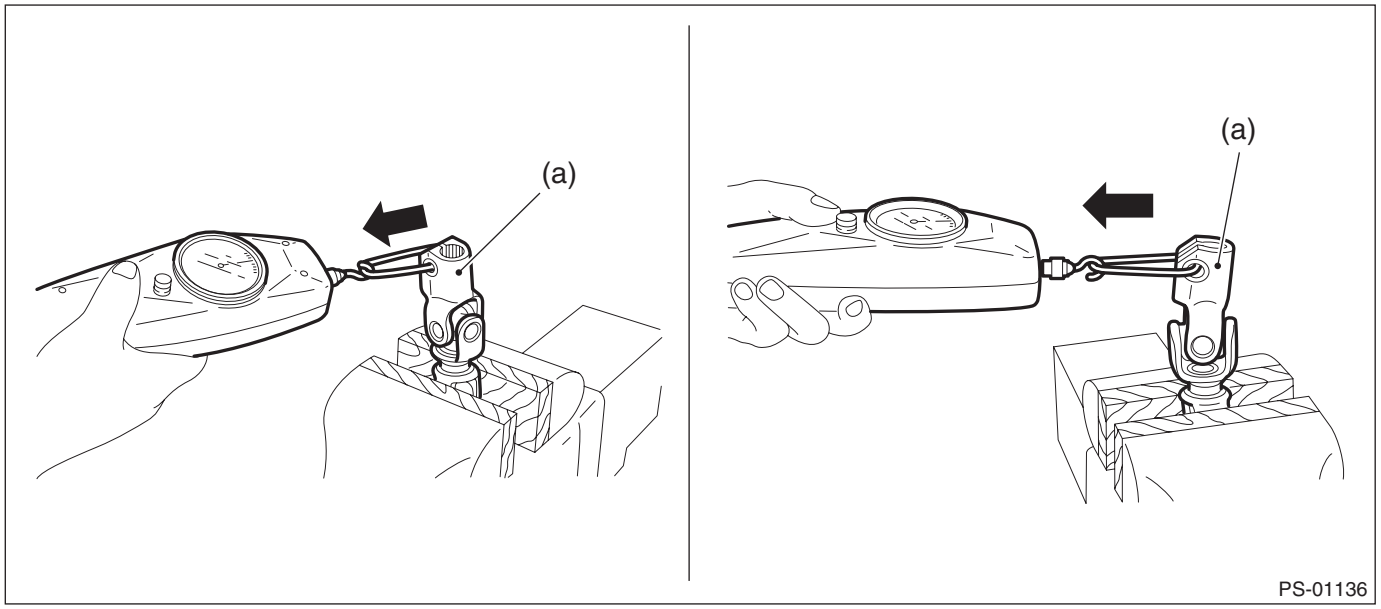

Service limit:
Maximum load: 3.8 N (0.39 kgf, 0.86 lbf) or less

(3) With the yoke (b) of column assembly - steering side facing up, measure the swing torque in two directions.

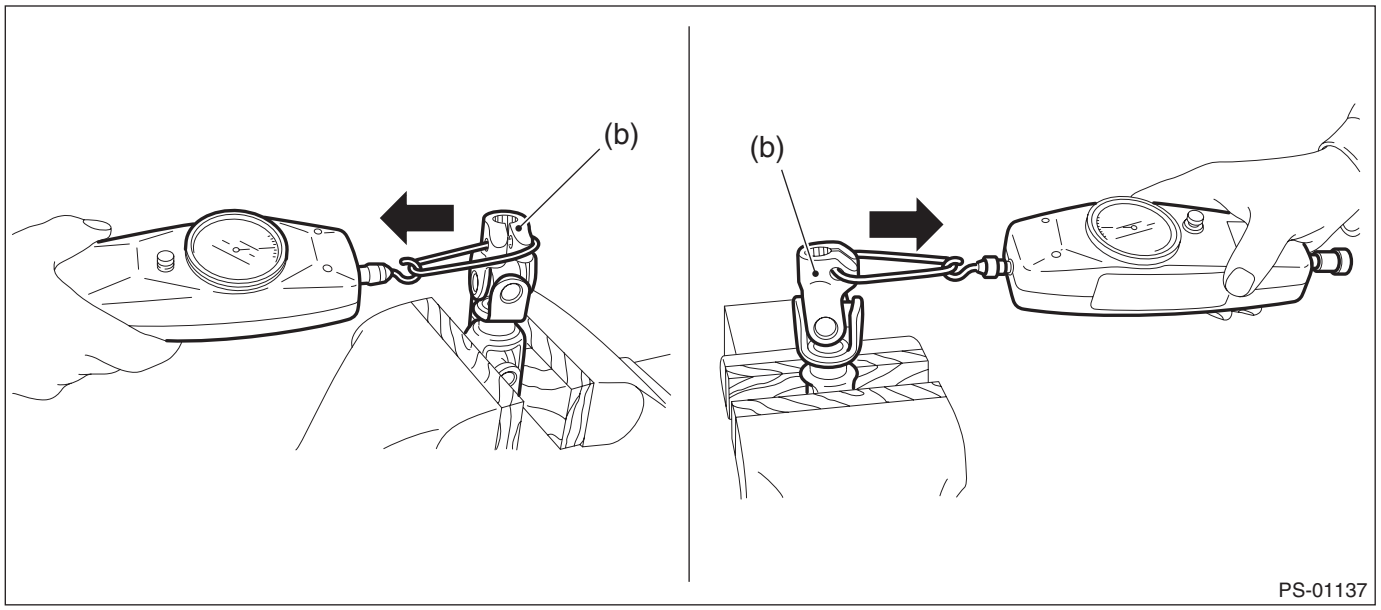

Service limit:

Maximum load: 7.3 N (0.74 kgf, 1.64 lbf) or less

(4) Replace as necessary, if it is found defective.

5. Steering Column

A: REMOVAL

1) Disconnect the ground cable from battery and wait for at least 60 seconds before starting work. <Ref. to NT-5, BATTERY, NOTE, Note.>

NOTE:
For the 12 volt engine restart battery of HEV model, disconnect the ground terminal from 12V engine restart battery sensor.

2) Remove the driver's airbag module.

CAUTION:
Before performing service on the airbag module, always refer to "CAUTION" of "General Description" in "AIRBAG SYSTEM" section. <Ref. to AB-11, CAUTION, General Description.>

(1) Using a hexagon wrench etc. wrapped by protective tape, insert the snap pins and release the locks (3 locations).

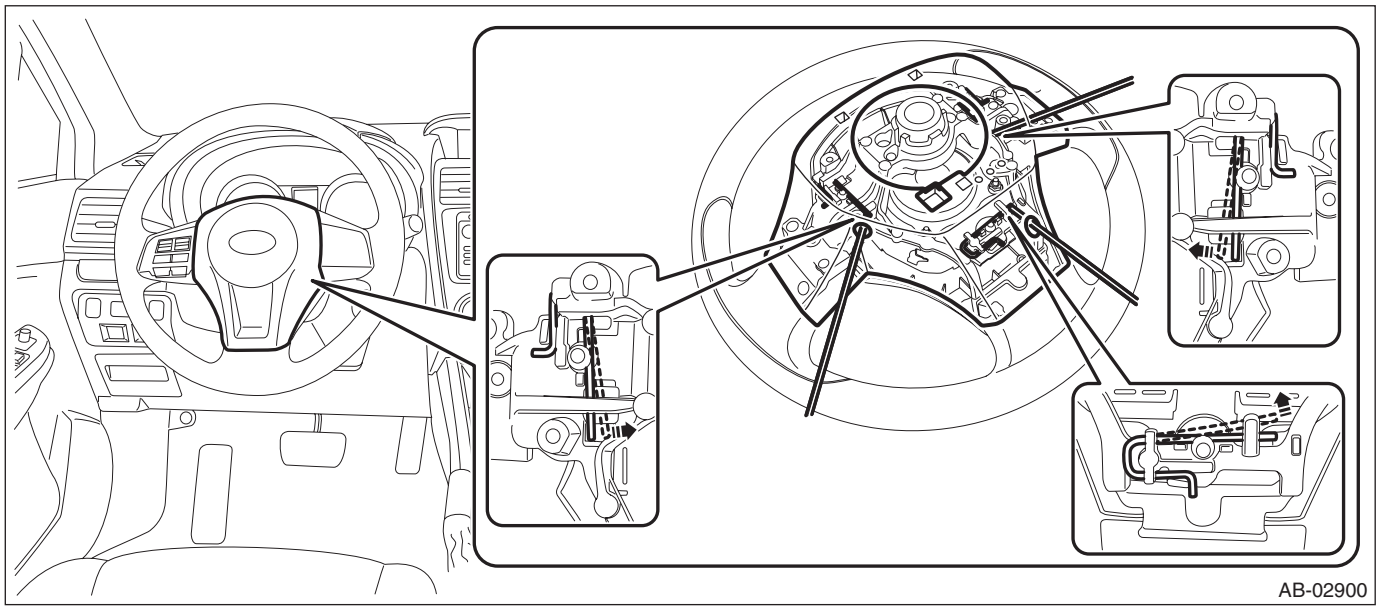

(2) Disconnect the horn harness and airbag connector, and remove the airbag module.

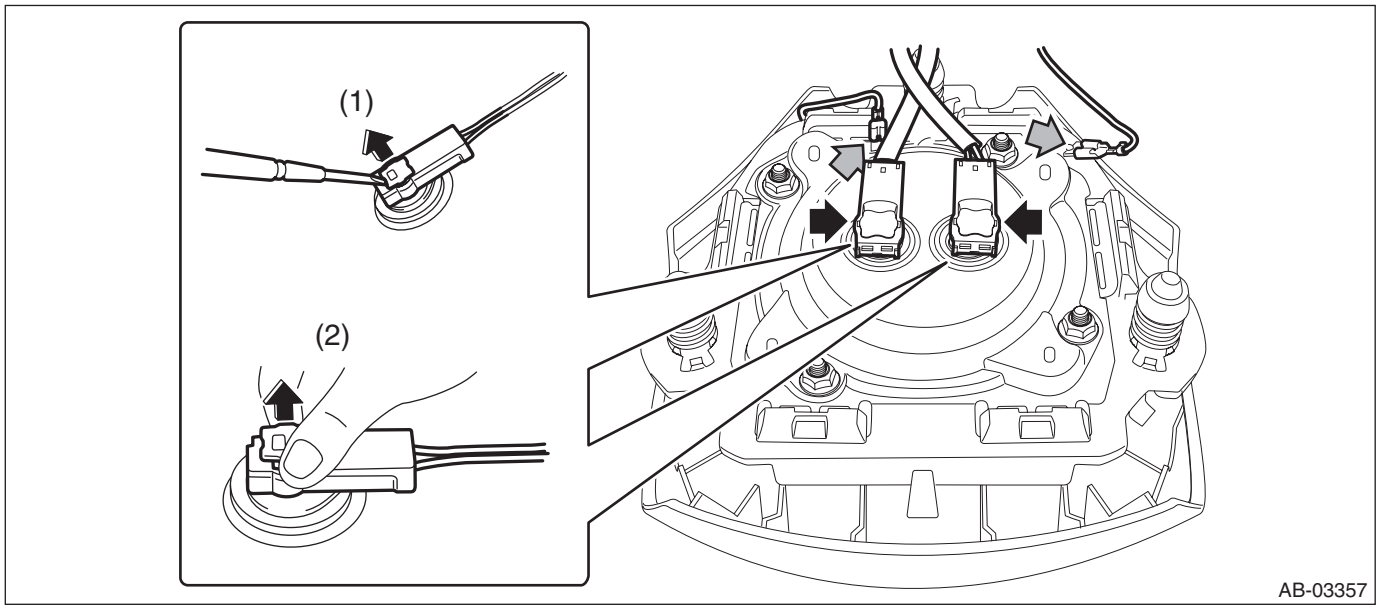

3) Remove the steering wheel.

CAUTION:
- **Always use the steering wheel puller for removal to avoid deforming the steering wheel.**
- **If the steering wheel has been removed, make sure that the steering roll connector is not turned from the original position.**

(1) Disconnect the connector and remove the nut.
(2) Put alignment marks and remove the steering wheel.

Preparation tool:
Steering wheel puller

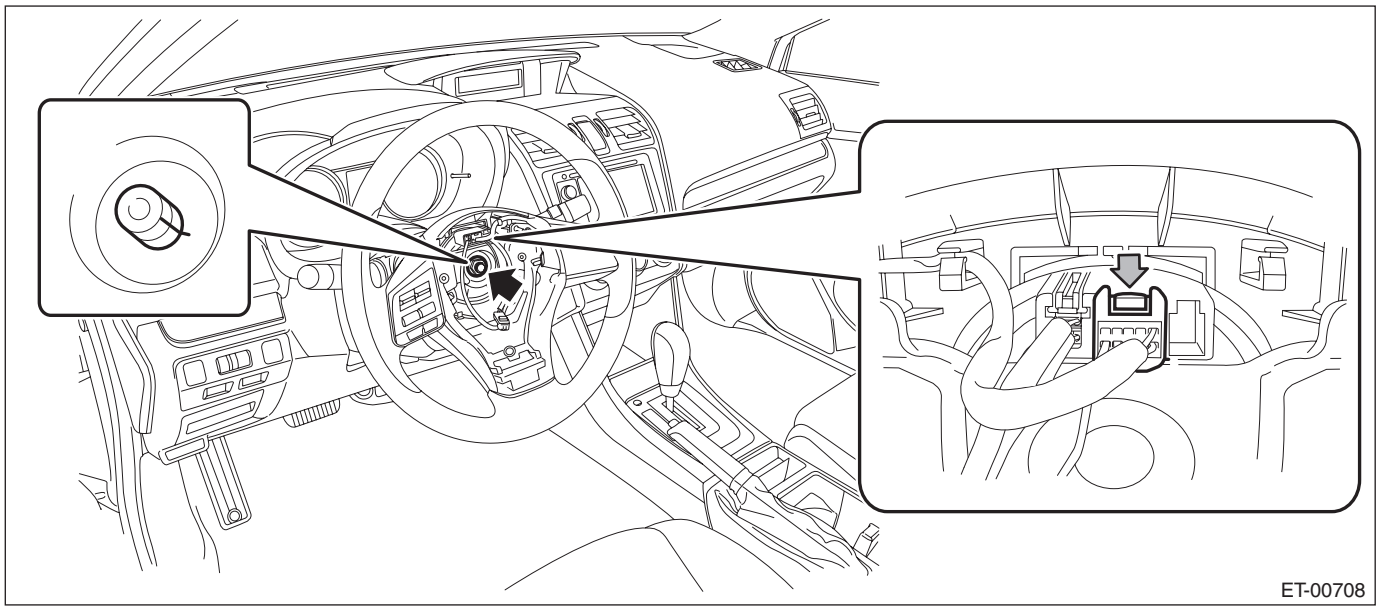

4) Remove the clips, and remove the cover - instrument panel side LH.

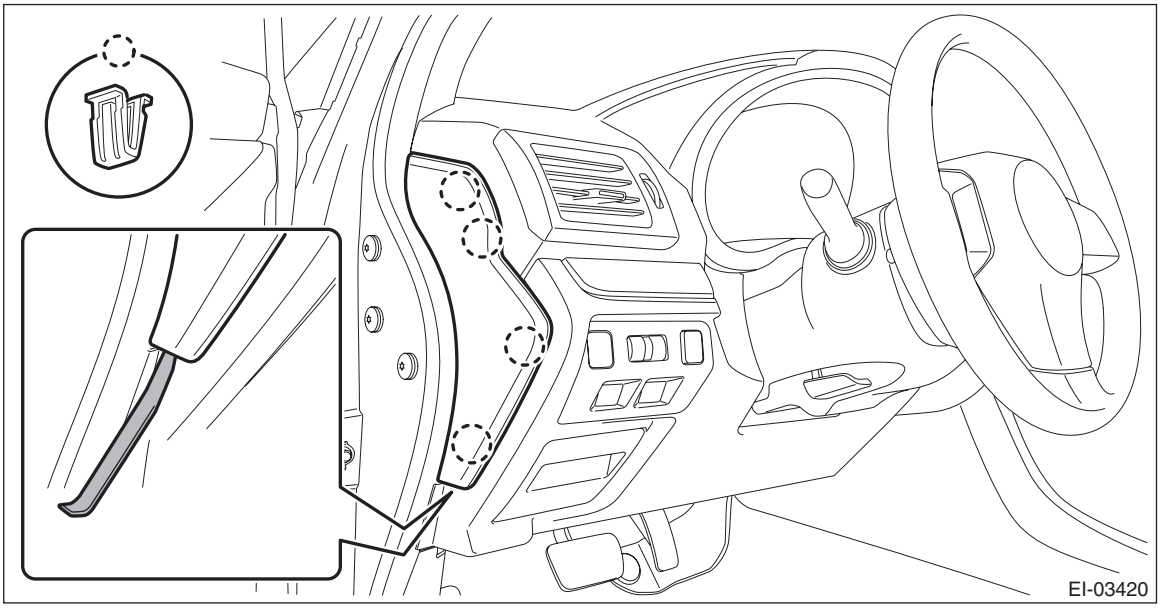

NOTE:
Using a plastic remover, open the cover - instrument panel side LH.

5) Remove the cover assembly - instrument panel LWR driver INN and OUT.

CAUTION:
When removing the cover assembly - instrument panel LWR driver, be sure to pull it toward you. If attempting to remove by turning it upward, the claws may be damaged.

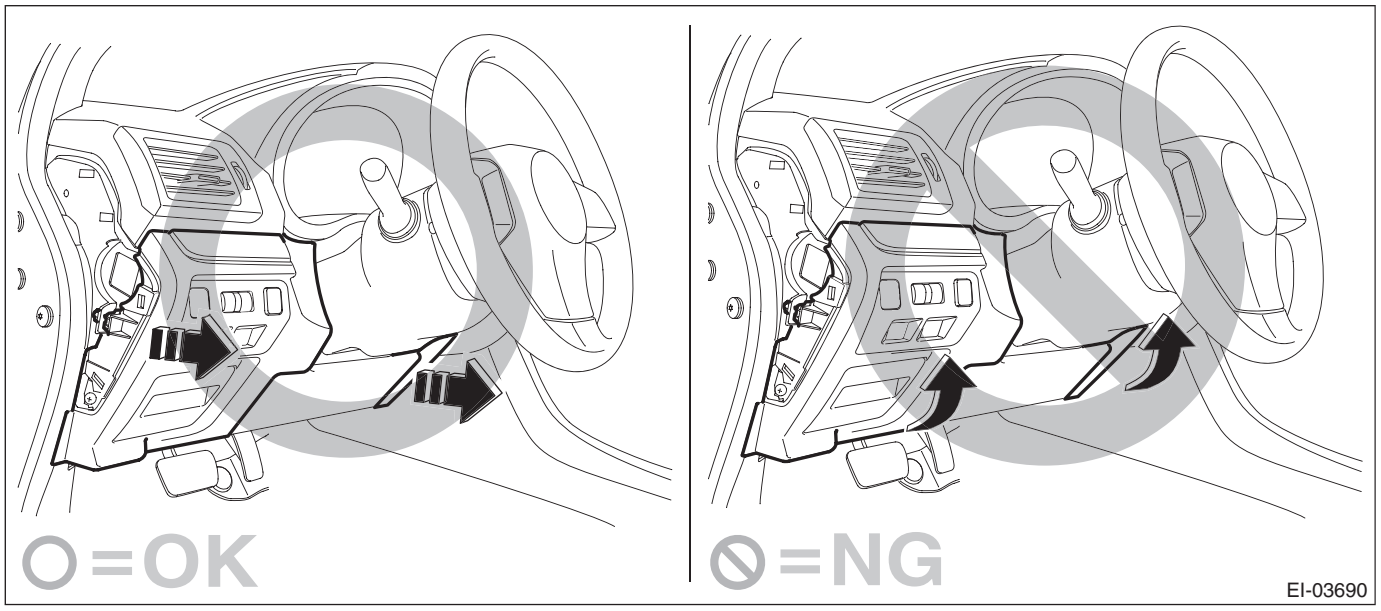

(1) Remove the screws and release the clips and claws.
(2) Disconnect the harness connectors, and remove the cover assembly - instrument panel LWR driver INN and OUT.

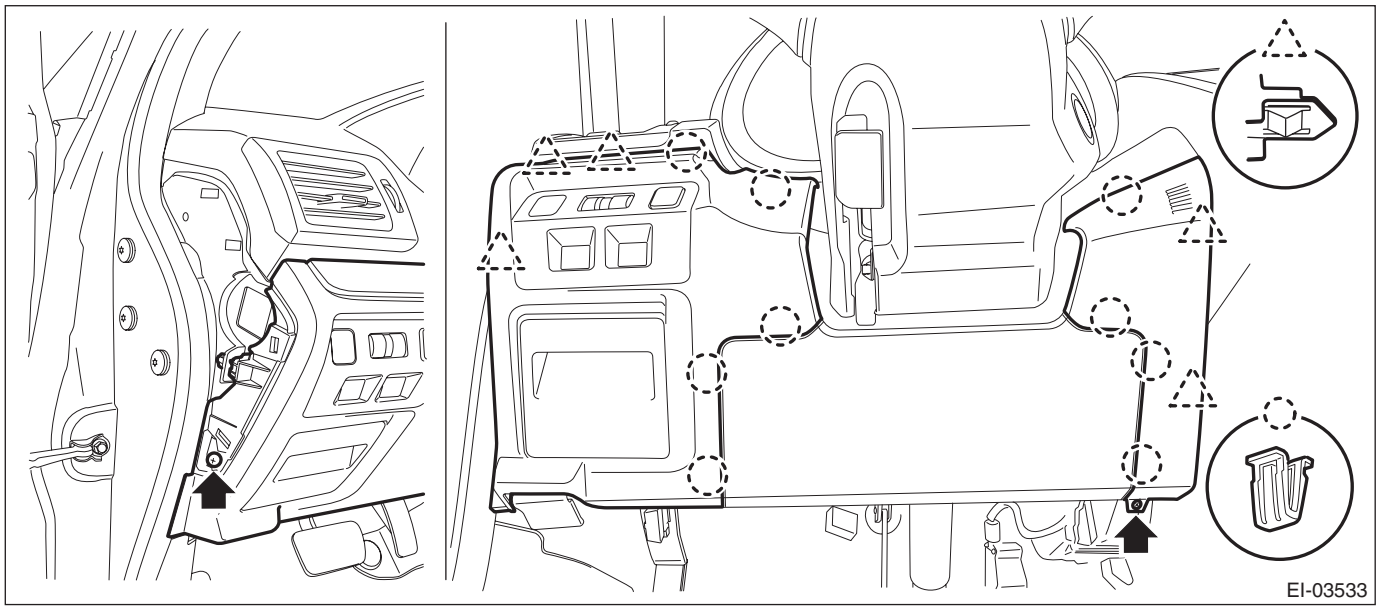

6) Remove the nuts to remove the knee airbag module and disconnect the harness connector. <Ref. to AB-31, KNEE AIRBAG MODULE, PROCEDURE, Airbag Connector.>

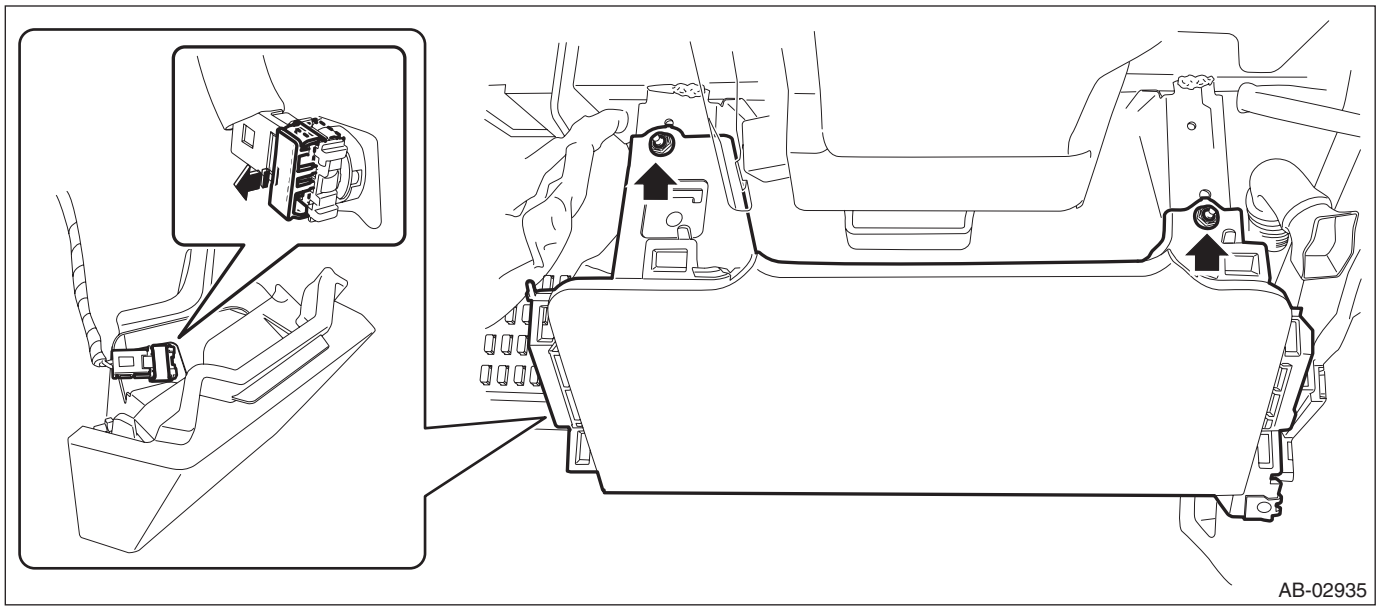

7) Remove the cover assembly - column.
   (1) Release the screws and claws.
   (2) Remove the cap - key cylinder (a). (Model with keyless access)
   (3) Remove the cover assembly - column UPR and the cover assembly - column LWR.

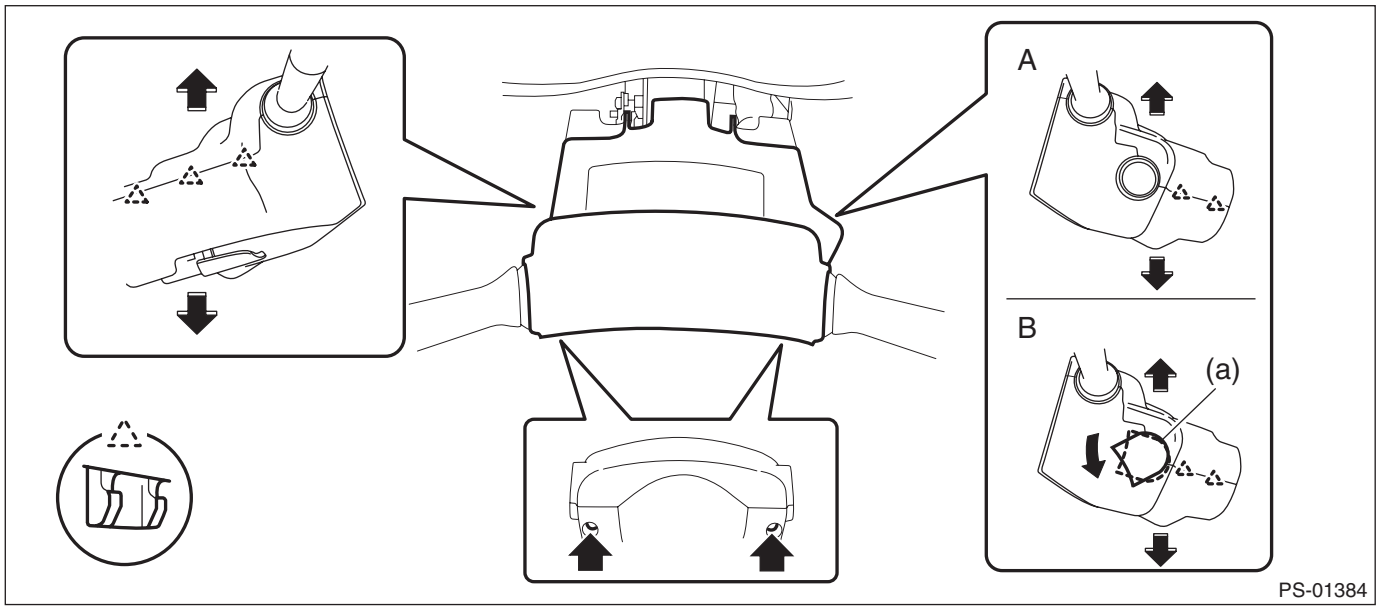

A Models without keyless access B Models with keyless access

8) Remove the switch assembly - combination.
(1) Disconnect the connector, and loosen the clamp to release the claws.
(2) Pull out the switch assembly - combination from the column assembly - steering.

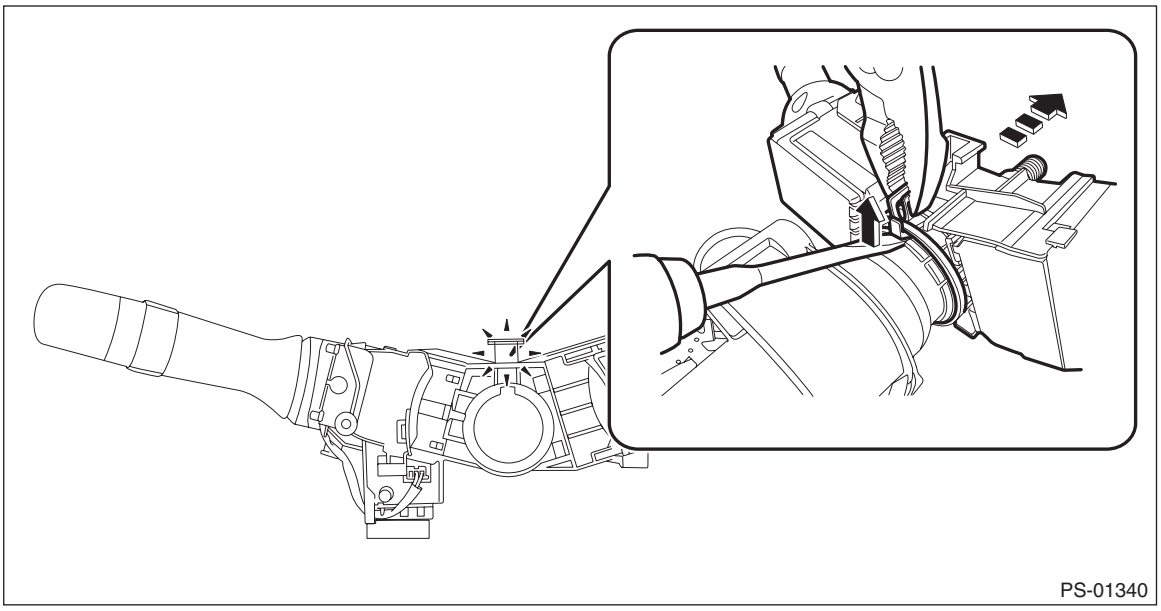

9) Remove all connectors from the column assembly - steering.
10) Remove the universal joint assembly - steering.

CAUTION:
To prevent damage to the universal joint assembly - steering and error of handling force, make sure to remove the universal joint assembly - steering.
(1) Place alignment marks on the universal joint assembly - steering.

NOTE:
Place alignment marks on the following positions.
- Between the column assembly - steering and the universal joint assembly - steering
- Between the steering gearbox assembly and the universal joint assembly - steering

(2) Remove the bolt, and remove the universal joint assembly - steering.

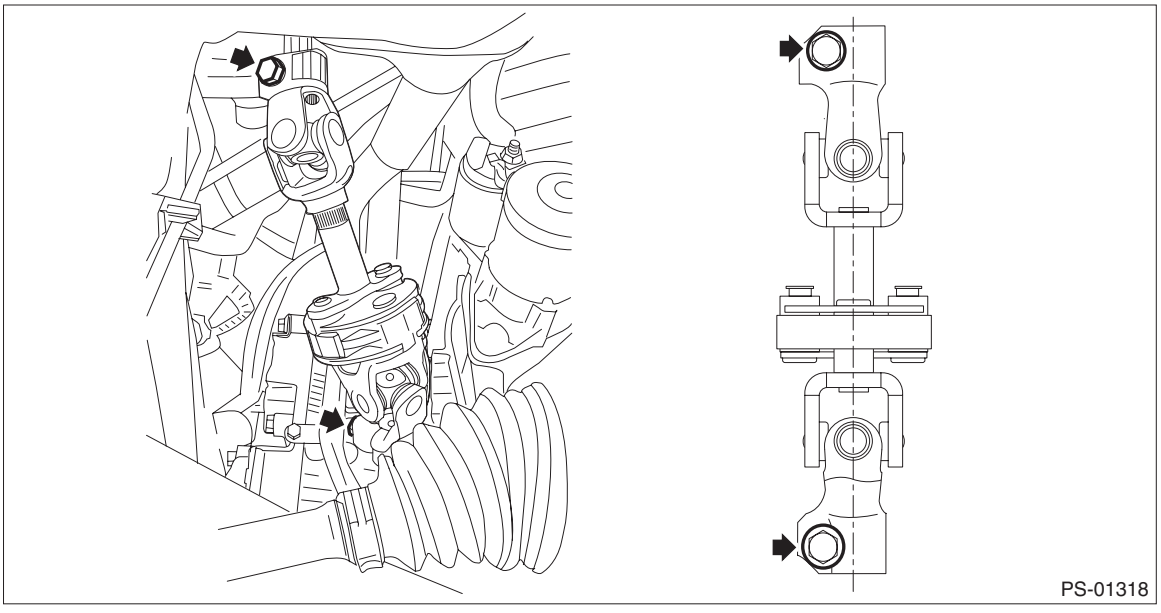

11) Remove the two nuts under the beam COMPL - steering securing the column assembly - steering.

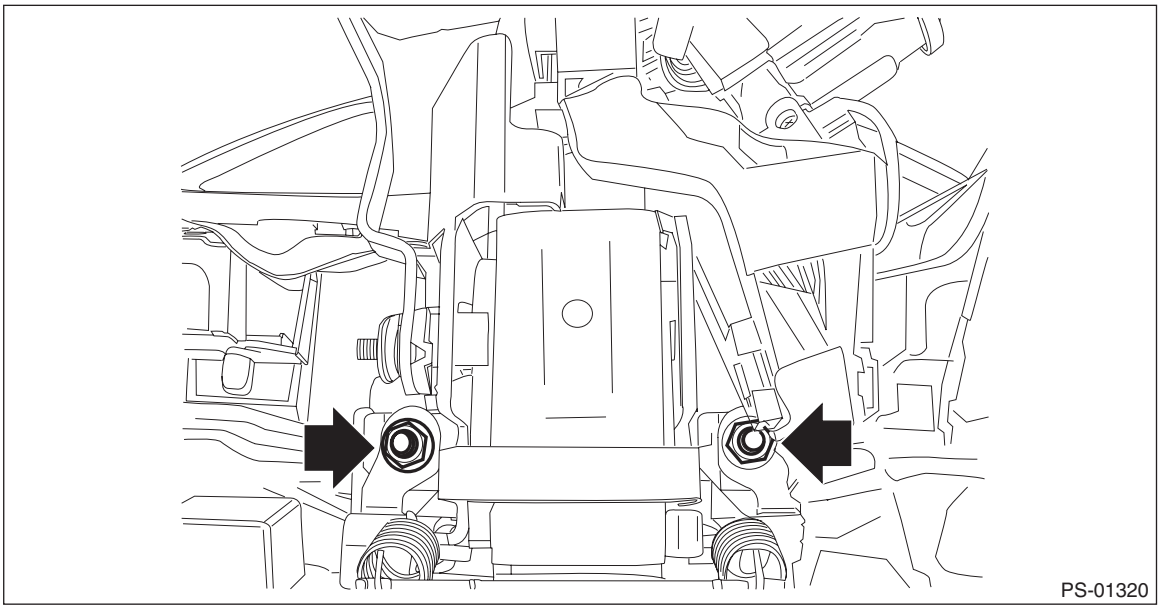

12) Pull out the column assembly - steering from the hole on toe board.

CAUTION:
Do not loosen the tilt lever when the column assembly - steering is not secured to the vehicle.

13) Remove the ignition key lock from the column assembly - steering. <Ref. to SL-65, REPLACEMENT, Ignition Key Lock.>

B: INSTALLATION

CAUTION:
If the steering wheel and steering angle sensor are removed, perform "VDC sensor midpoint setting mode" of the VDC. <Ref. to VDC-21, VDC SENSOR MIDPOINT SETTING MODE, ADJUSTMENT, VDC Control Module and Hydraulic Control Unit (VDCCM&H/U).>

1) Install the grommet to the toe board.

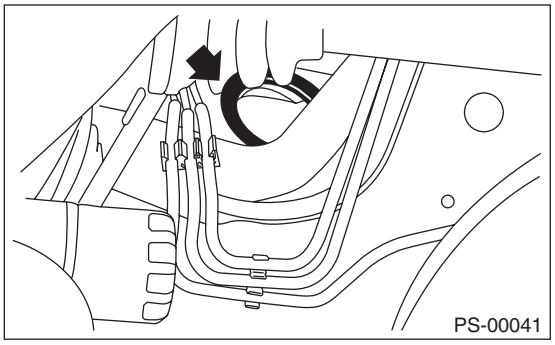

2) Insert the end of the column assembly - steering into the toe board grommet.
3) Tighten the column assembly - steering installation bolt located under the beam COMPL - steering with the tilt lever fixed.

Tightening torque:
20 N·m (2.04 kgf-m, 14.8 ft-lb)

4) Connect all connectors located under the beam COMPL - steering.
5) Connect the horn harness and airbag connector, and install the airbag module.
6) Install the knee airbag module. <Ref. to AB-45, INSTALLATION, Knee Airbag Module.>
7) Install the cover assembly - instrument panel LWR driver INN and OUT.

8) Install the universal joint assembly - steering. <Ref. to PS-14, INSTALLATION, Universal Joint.>

CAUTION:
• Always install the universal joint assembly - steering after installing the steering column to avoid damage to the universal joint assembly - steering.
• Be sure to follow the tightening order and tightening torque of the universal joint assembly - steering to avoid the steering effort from becoming heavy.

9) Align the center position of the steering roll connector. <Ref. to AB-110, ADJUSTMENT, Roll Connector.>
10) Install the steering wheel. <Ref. to PS-10, INSTALLATION, Steering Wheel.>

C: DISASSEMBLY

1) Remove the cover assembly - column.
   (1) Release the screws and claws.
   (2) Remove the cap - key cylinder (a). (Model with keyless access)
   (3) Remove the cover assembly - column UPR and the cover assembly - column LWR.

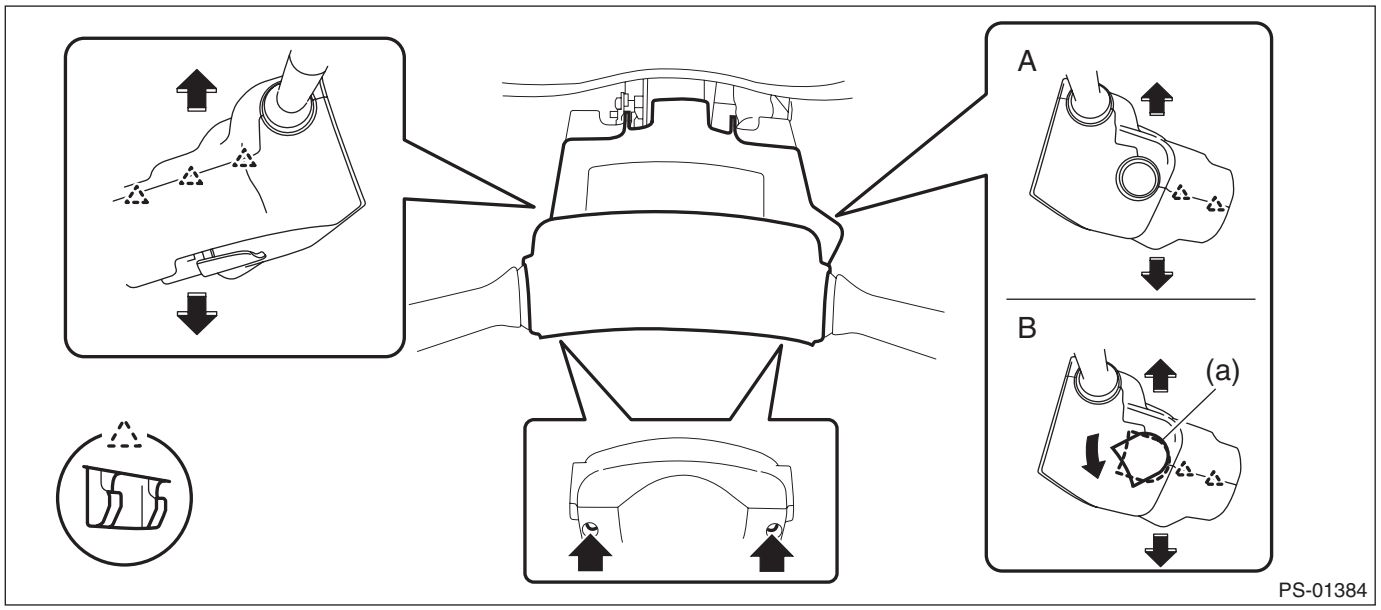

A Models without keyless access B Models with keyless access

2) Remove the switch assembly - combination.
   (1) Disconnect the connector, and loosen the clamp to release the claws.
   (2) Pull out the switch assembly - combination from the column assembly - steering.

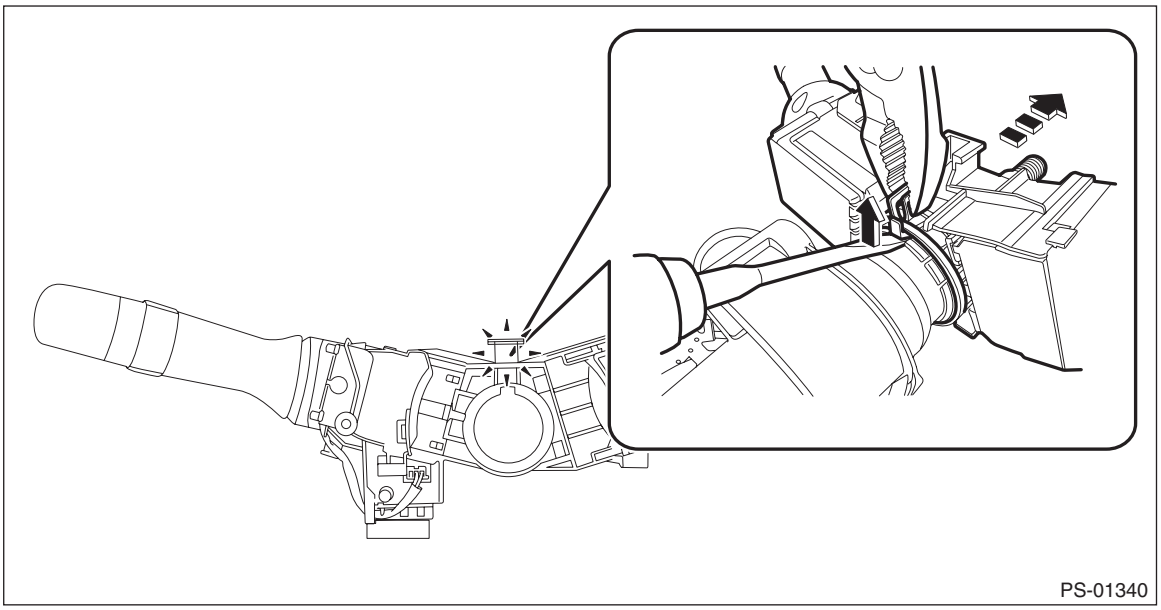
PS-01340

D: ASSEMBLY

Assemble each part in the reverse order of disassembly.

E: INSPECTION

1. UNIT INSPECTION

Check the following items, and if there is anything out of standard value, it is considered to be damaged. If so, replace it with a new part.

- Measure the whole length of the column assembly - steering.

Standard: Overall length L
Tilt and telescopic column (measure while minimized)
$819.7^{+1.5}_{-1.5}$ mm ($32.27^{+0.059}_{-0.059}$ in)

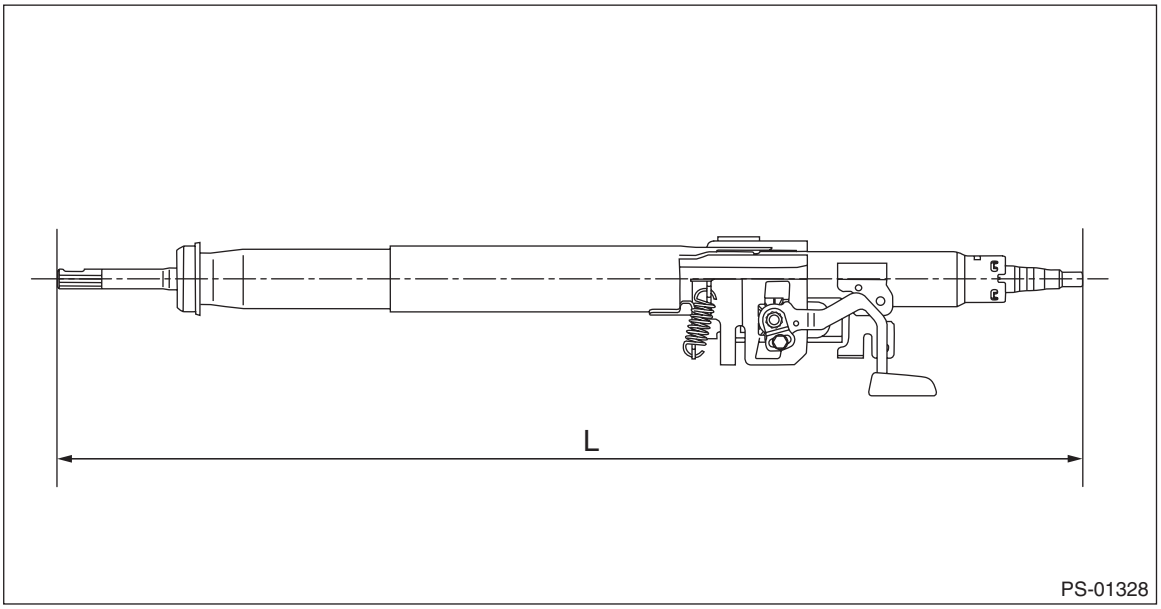

PS-01328

- Check the steering wheel deflection in axial and vertical directions.

Specification:
Axial deflection A (deflection of steering wheel)
Less than 6 mm (0.24 in)
Vertical deflection L (runout of steering wheel)
Less than 17 mm (0.68 in)

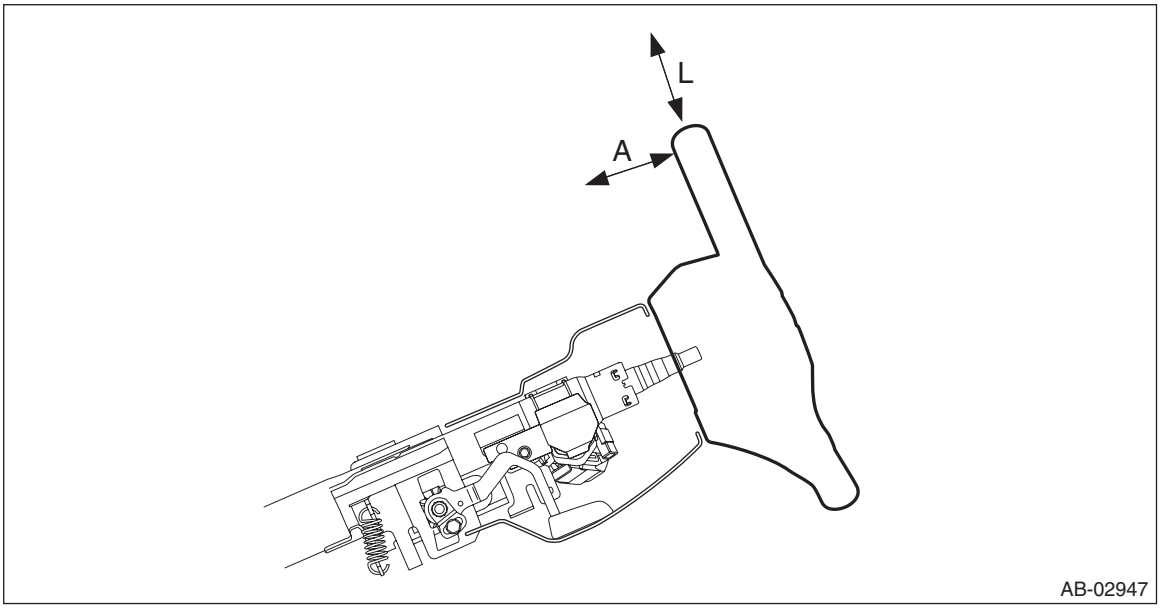

2. INSPECTION OF AIRBAG SYSTEM

Refer to “Airbag System” for airbag inspection procedure. <Ref. to AB-42, INSTALLATION, Driver’s Airbag Module.>

6. Electric Power Steering Gearbox

A: REMOVAL

CAUTION:
• The power steering control module continues to operate after the engine stops and calculate the temperature in the control module. Therefore, before starting service of the power steering system which requires disconnection of the connector, stop the engine and allow approx. 30 minutes until the control module becomes cold.
• Before removal or installation, be sure to remove any foreign matter (dust, moisture, oil, etc.) from the power steering control module connector.
1) Disconnect the ground cable from battery. <Ref. to NT-5, BATTERY, NOTE, Note.>

NOTE:
For the 12 volt engine restart battery of HEV model, disconnect the ground terminal from 12V engine restart battery sensor.
2) Adjust the tilt position of the column assembly - steering to the lowest position and lock the tilt lever.

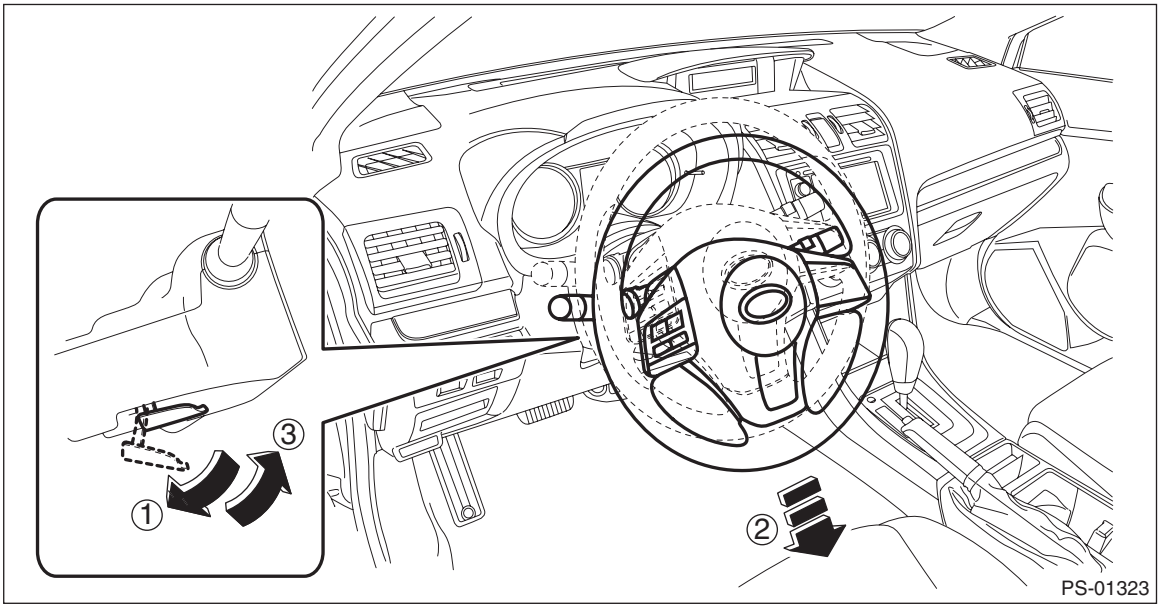

3) Remove the universal joint assembly - steering.
(1) Place alignment marks on the universal joint assembly - steering.

NOTE:
Place alignment marks on the following positions.
- Between the column assembly - steering and the universal joint assembly - steering
- Between the steering gearbox assembly and the universal joint assembly - steering

(2) Remove the bolt, and remove the universal joint assembly - steering.

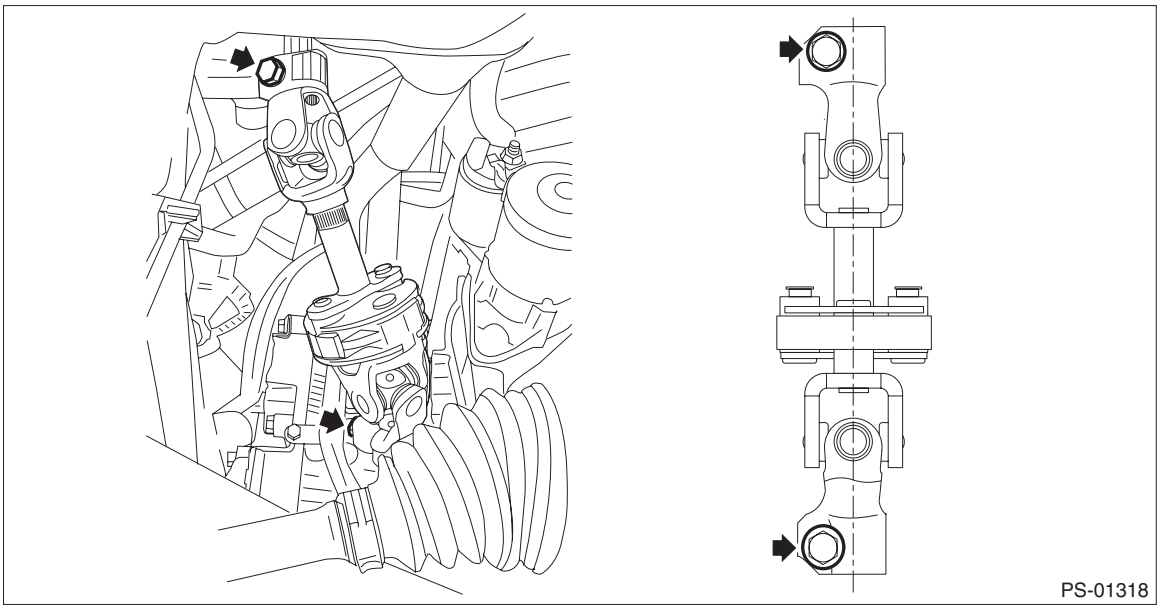

4) Prevent the steering wheel from turning using the seat belt.

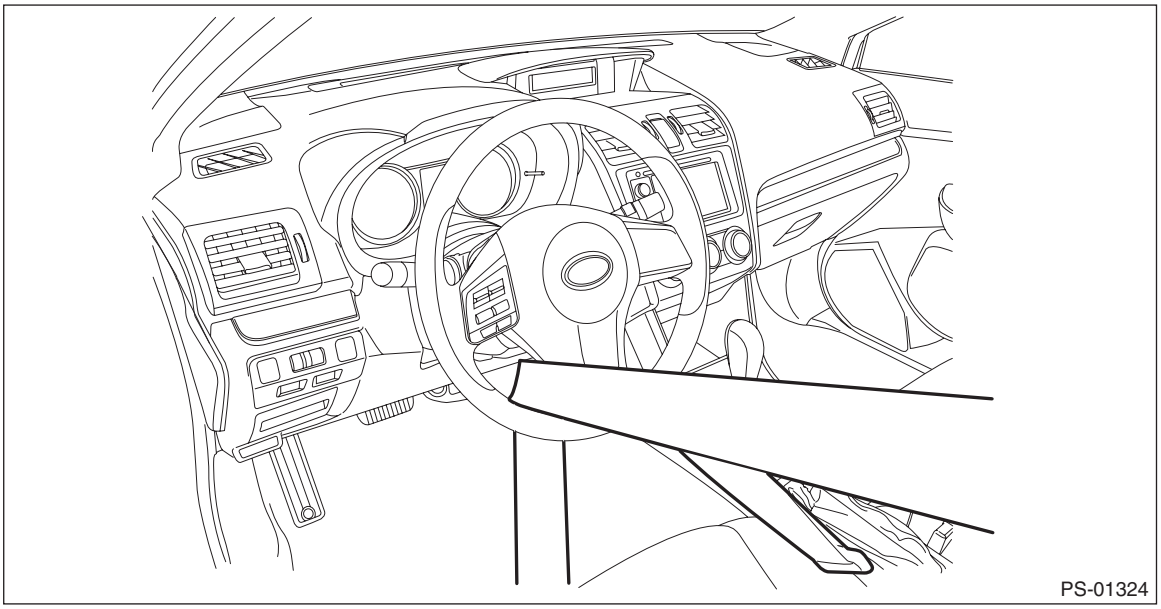

5) Disconnect the connector and harness clamp from power steering control module.

6) Remove the bolts and clips, and remove the under cover - front.

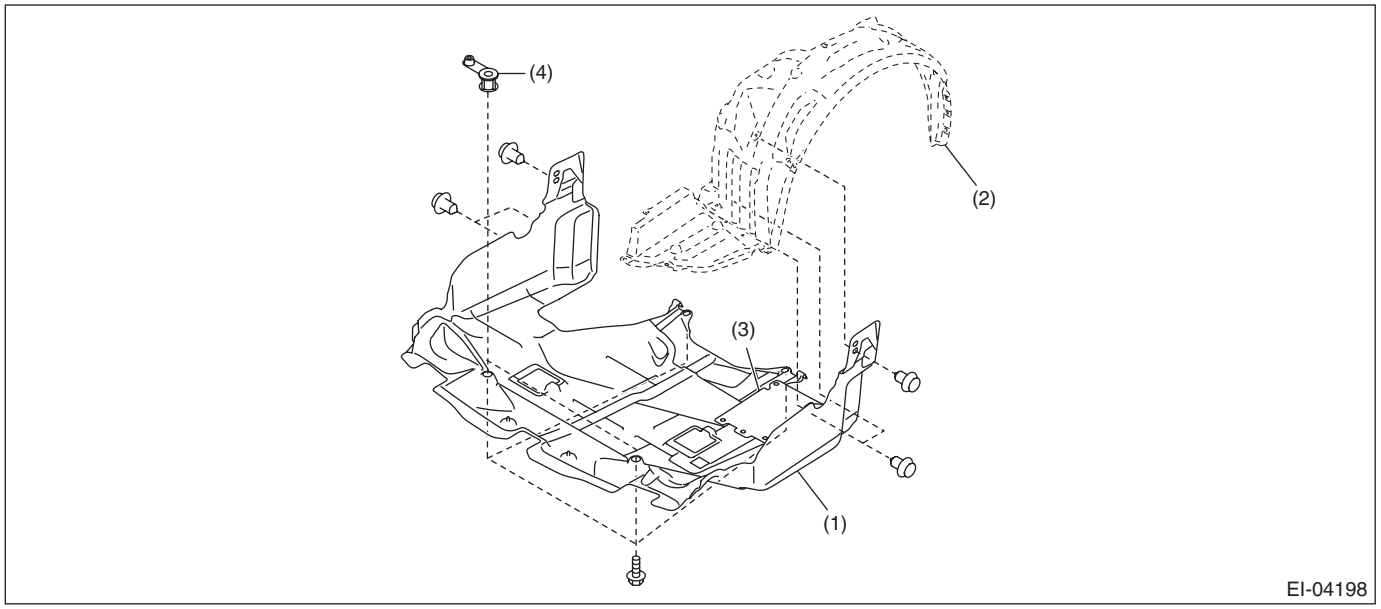

(1) Under cover - front
(2) Mud guard - front
(3) Plate cover - rear (XV model)
(4) Spacer - under cover (XV model)

7) Remove the front wheels.
8) Disconnect the tie-rod end.
   (1) Pull out the cotter pin (a).
   (2) Remove the castle nut (b).
   (3) Using a tie-rod ball joint puller, remove the tie-rod end (c).

Preparation tool:
Tie-rod ball joint puller

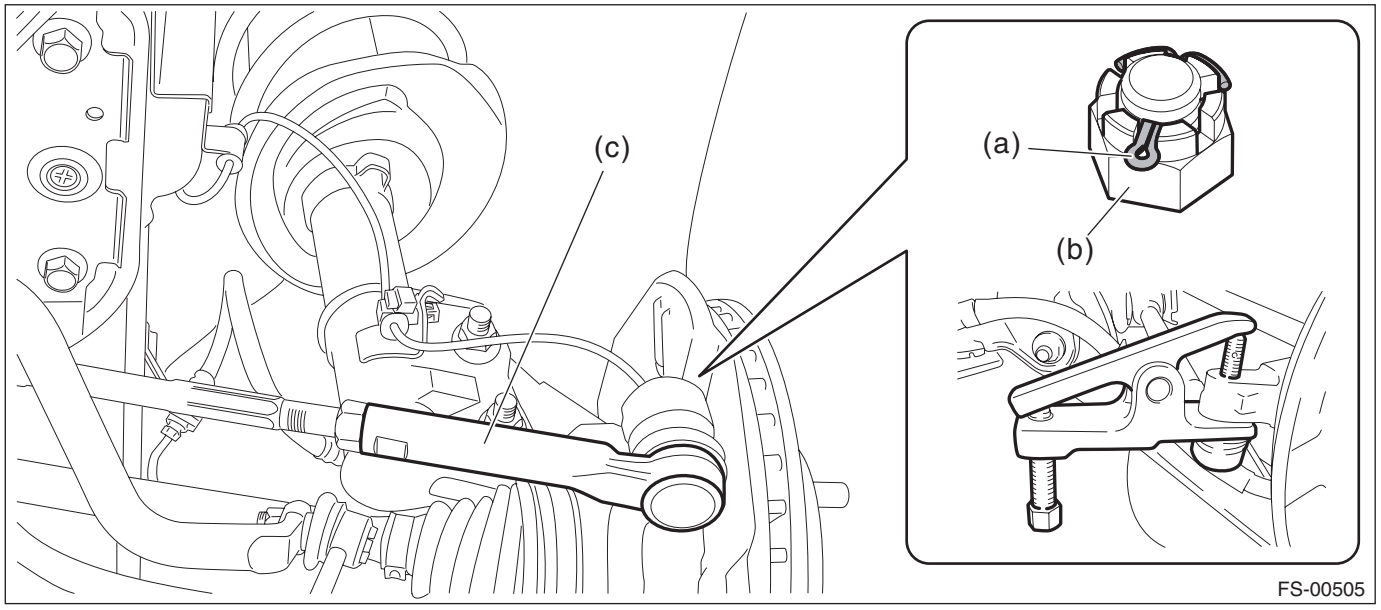

9) Remove the front crossmember support.

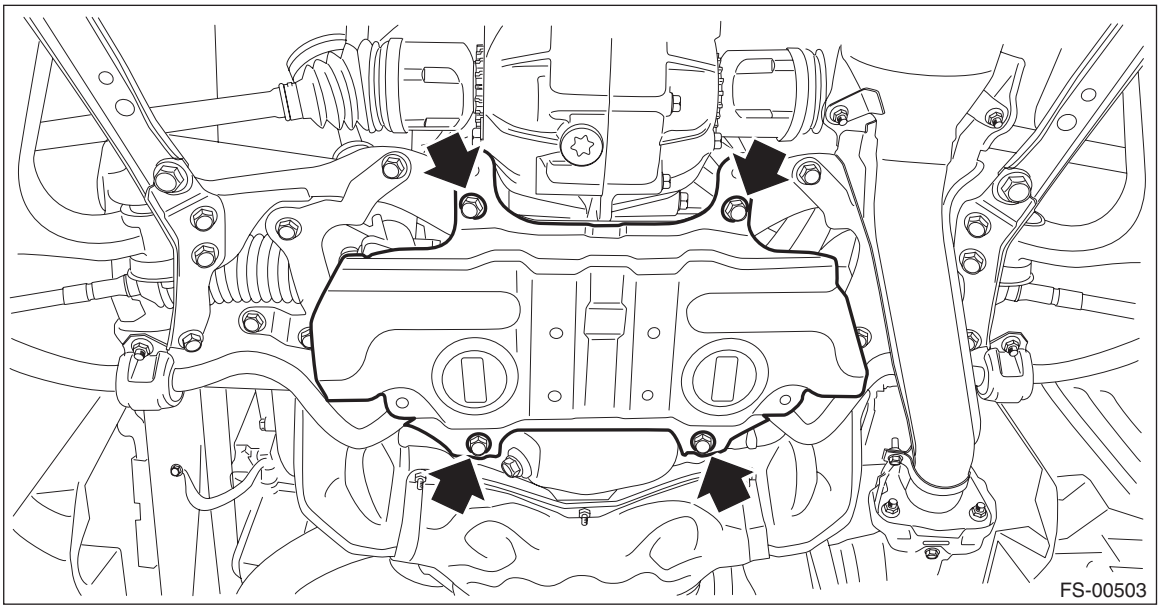

10) Remove the front exhaust pipe assembly. <Ref. to EX(H4DO(w/o HEV))-6, REMOVAL, Front Exhaust Pipe.>

11) Remove the support plate - front crossmember (a).

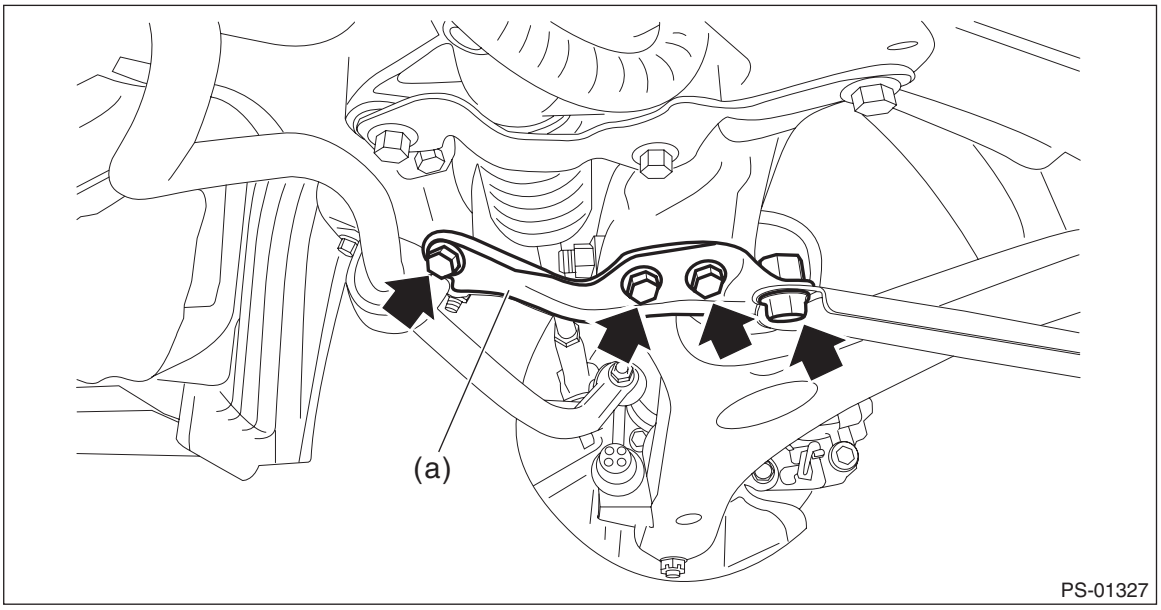

12) Remove the bolts securing the steering gearbox assembly, and remove the stiffener (a) and steering gearbox assembly.

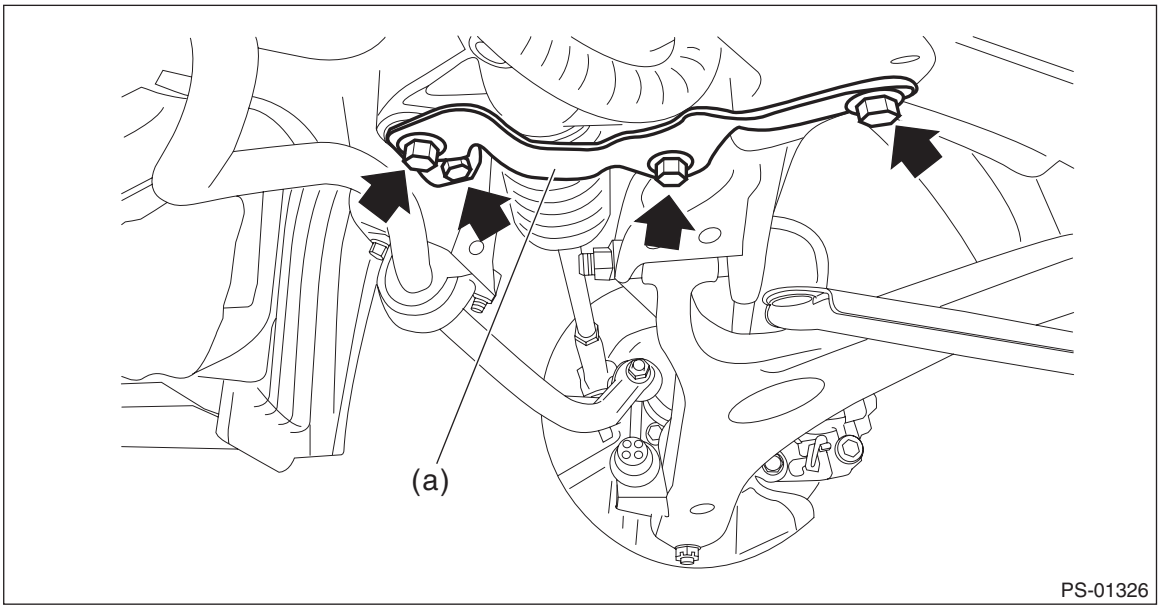

B: INSTALLATION

1) Insert the steering gearbox assembly into crossmember, being careful not to damage the boot of the steering gearbox assembly.
2) Install the steering gearbox assembly to the crossmember by tightening the bolts through the stiffener (a) to the specified torque.

Tightening torque:
60 N·m (6.12 kgf-m, 44.3 ft-lb)

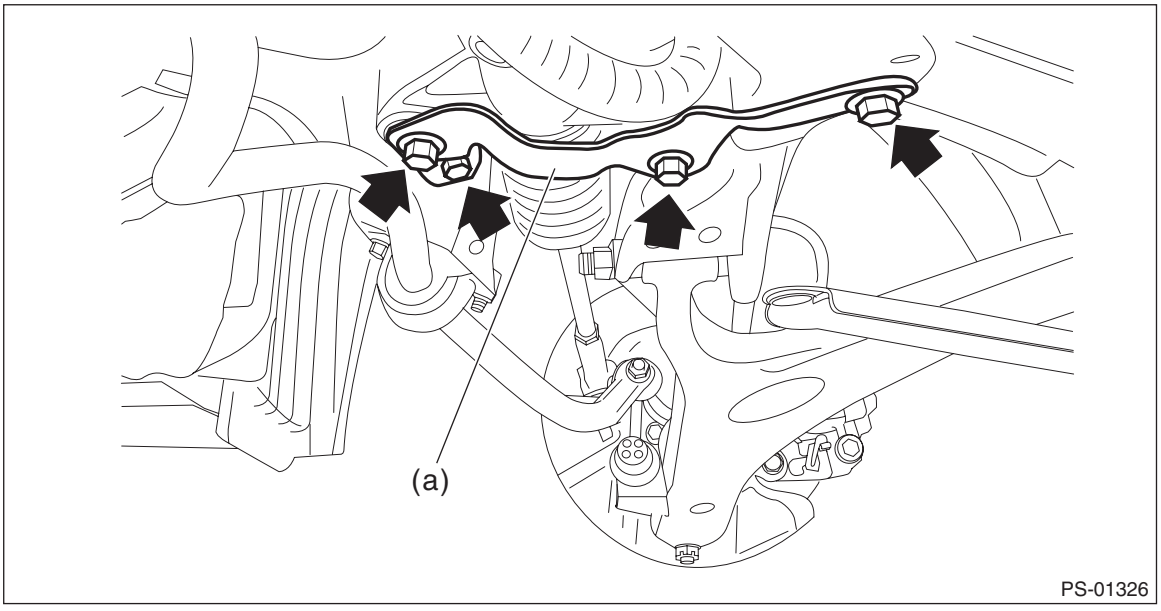

3) Install the universal joint assembly - steering. <Ref. to PS-14, INSTALLATION, Universal Joint.>

CAUTION:
Tighten the bolts of the universal joint assembly - steering in the order of steering gearbox side and column shaft side.

4) Install the support plate - front crossmember (a).

Tightening torque:
Support plate - front crossmember: 60 N·m (6.12 kgf-m, 44.3 ft-lb)
Front support: 100 N·m (10.20 kgf-m, 73.8 ft-lb)

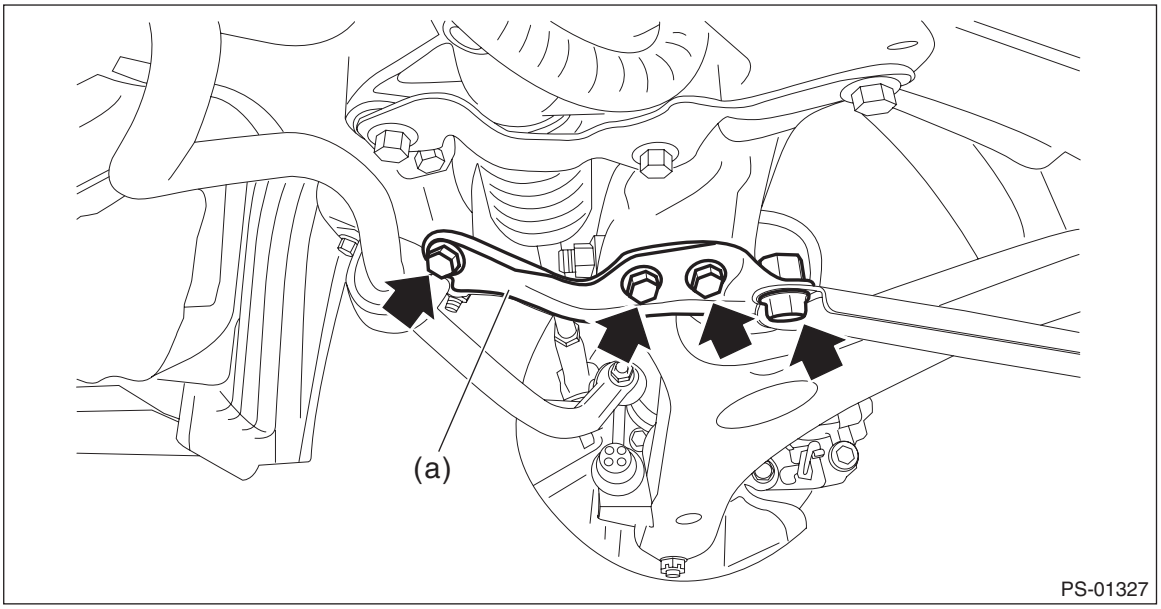

5) Connect the tie-rod ends and knuckle arm.
(1) Connect the tie-rod end (a) to the housing assembly - front axle.
(2) Tighten the castle nuts (b) to the specified torque.

CAUTION:
During connection, do not hit the cap at bottom of tie-rod end with a hammer.

Castle nut tightening torque:
27 N·m (2.75 kgf-m, 19.9 ft-lb)
(3) Tighten within the range of 60° so that the cotter pin hole and cutout portion of the castle nut (b) are aligned.
(4) Insert the cotter pin (c), and bend the tip of the pin to fix it.

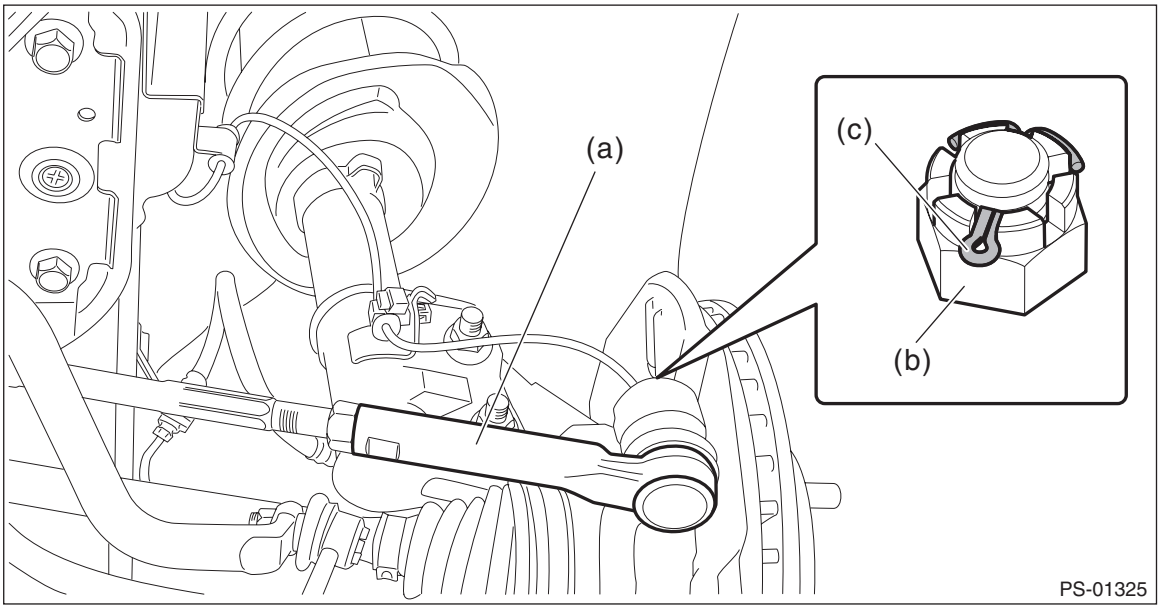

6) Install the front crossmember - support.

Tightening torque:
60 N·m (6.12 kgf-m, 44.3 ft-lb)

7) Install the front exhaust pipe assembly. <Ref. to EX(H4DO(w/o HEV))-8, INSTALLATION, Front Exhaust Pipe.>
8) Install the under cover - front. <Ref. to EI-29, INSTALLATION, Front Under Cover.>
9) Install the front wheels.
10) Lower the vehicle.
11) Tighten the wheel nuts to the specified torque.

Tightening torque:
Except for C4 model: 120 N·m (12.24 kgf-m, 88.5 ft-lb)
C4 model: 100 N·m (10.20 kgf-m, 73.8 ft-lb)

12) Connect the power steering control module harness connector.
13) Connect the battery ground terminal.

CAUTION:
When the wheel alignment has been adjusted, perform the adjustment of the steering angle sensor. <Ref. to VDC-21, ADJUSTMENT, VDC Control Module and Hydraulic Control Unit (VDCCM&H/U).>

14) After adjusting toe-in and steering angle, tighten the lock nut on tie-rod end.

Tightening torque:
85 N·m (8.67 kgf-m, 62.7 ft-lb)

NOTE:
When adjusting toe-in, hold the boot - steering gearbox as shown to prevent it from being rotated or twisted. If it becomes twisted, straighten it.

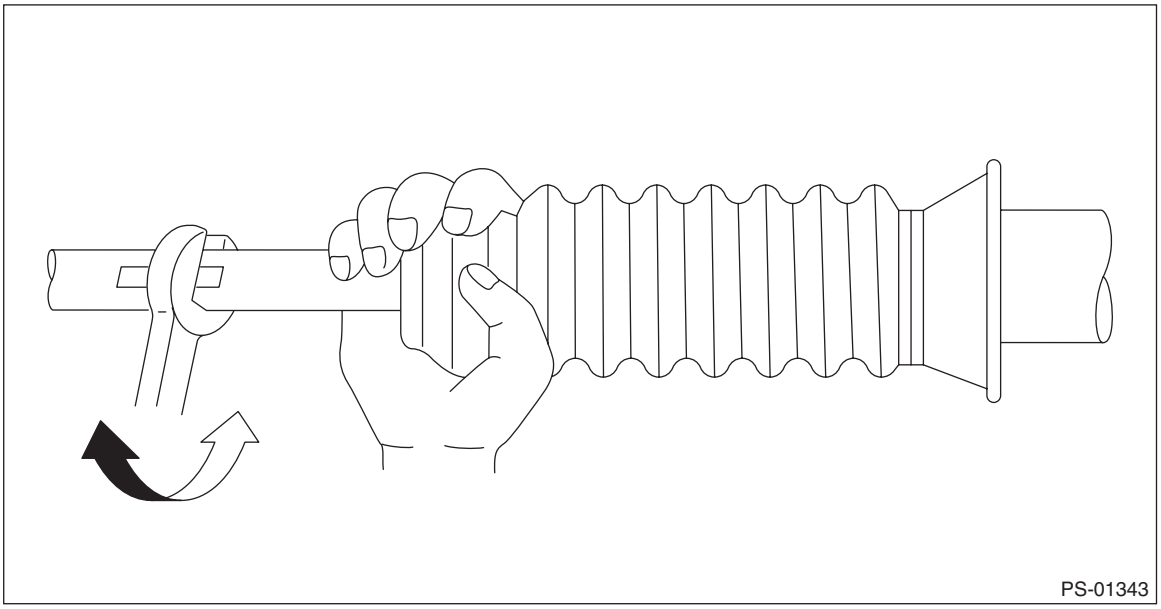

C: DISASSEMBLY

CAUTION:
• Nut for fixing the rack is on the driver's side only. When removing the tie-rod on the passenger's side, turn over the boot - steering gearbox on the driver's side, and fix the rack during operation.
• When fixing the steering gearbox assembly in a vise, apply a wooden piece on the flange portion.
1) Remove the tie-rod end (a) and lock nut (b) from the steering gearbox assembly.
2) Remove the clip - boot tie-rod (c) located outside the boot - steering gearbox using the pliers, and then slide the boot - steering gearbox to the tie-rod end side.

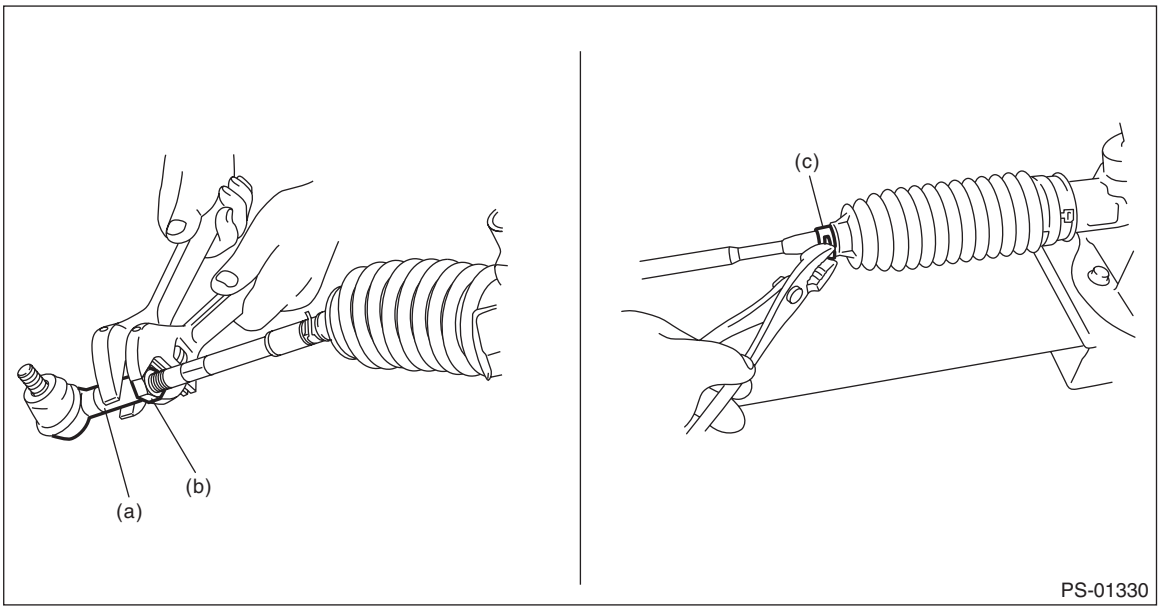

3) Remove the tie-rod (b) from the gearbox assembly.
(1) Using a flat tip screwdriver, remove the band - boot (a) from the boot - steering gearbox.

NOTE:
Replace the boot - steering gearbox or the band - boot (a) if there is damage, cracks or deterioration.
(2) Remove the tie-rod (b).

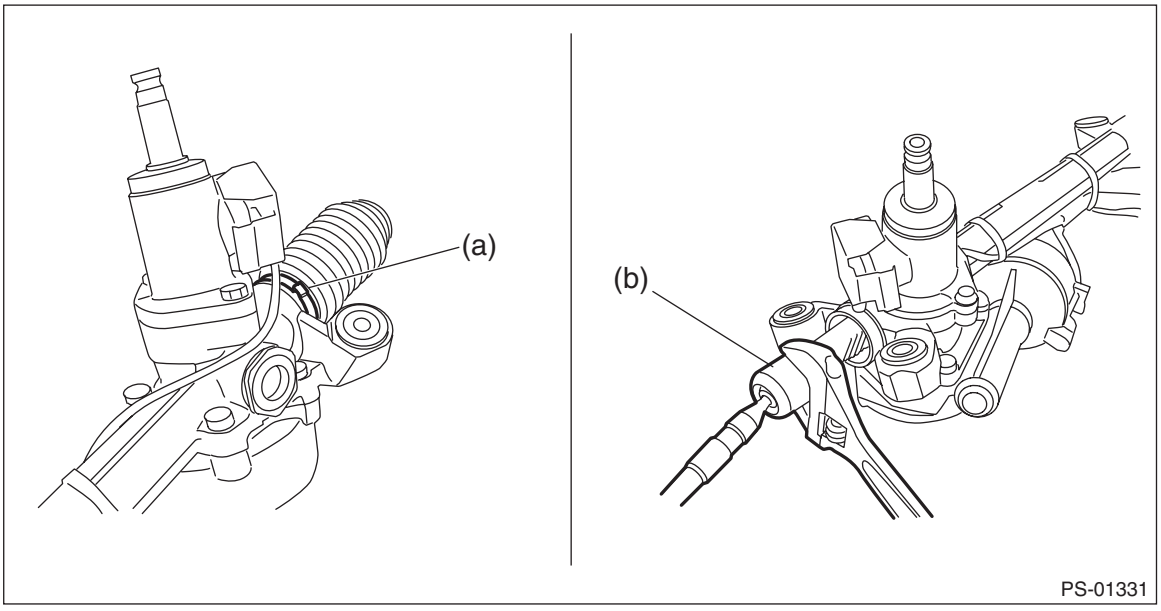

D: ASSEMBLY

1) Install the tie-rod into rack.

Tightening torque:
90 N·m (9.18 kgf-m, 66.4 ft-lb)

NOTE:
Check the mating face of rack and tie-rod for foreign matter such as dust etc.
2) Apply a coat of grease to the tie-rod groove, and then install the boot - steering gearbox to the housing.

NOTE:
Make sure that the boot - steering gearbox is installed without unusual inflation or deflation.

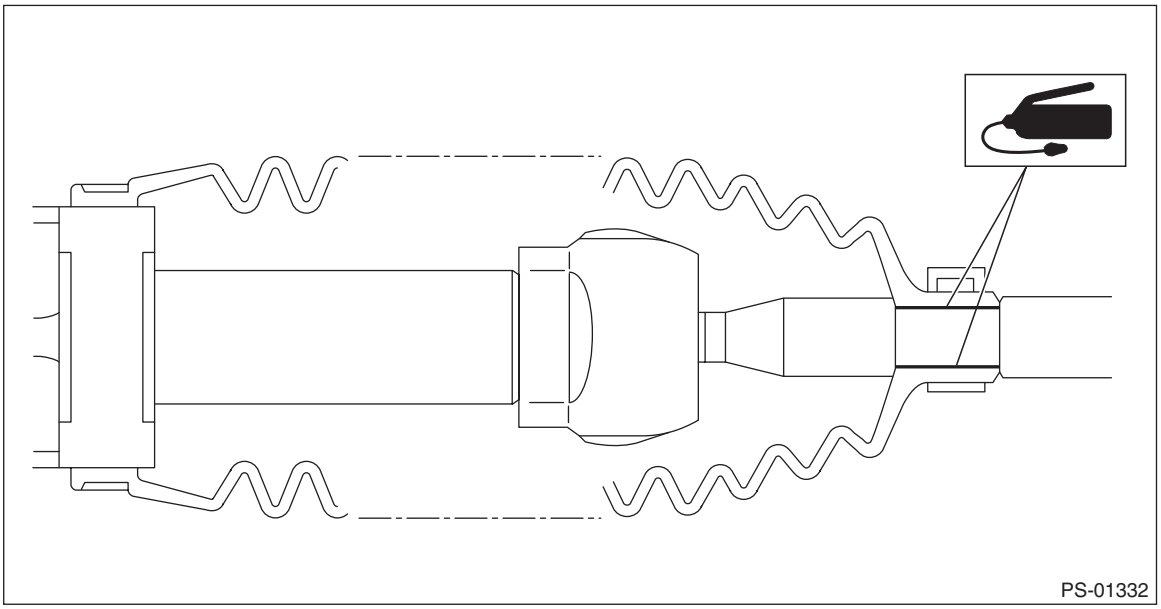

3) Using the boot clamp pliers, crimp the boot so that the clearance (b) of the band - boot (a) crimp portion becomes 2 mm (0.08 in) or less.

NOTE:
Use a new band - boot.

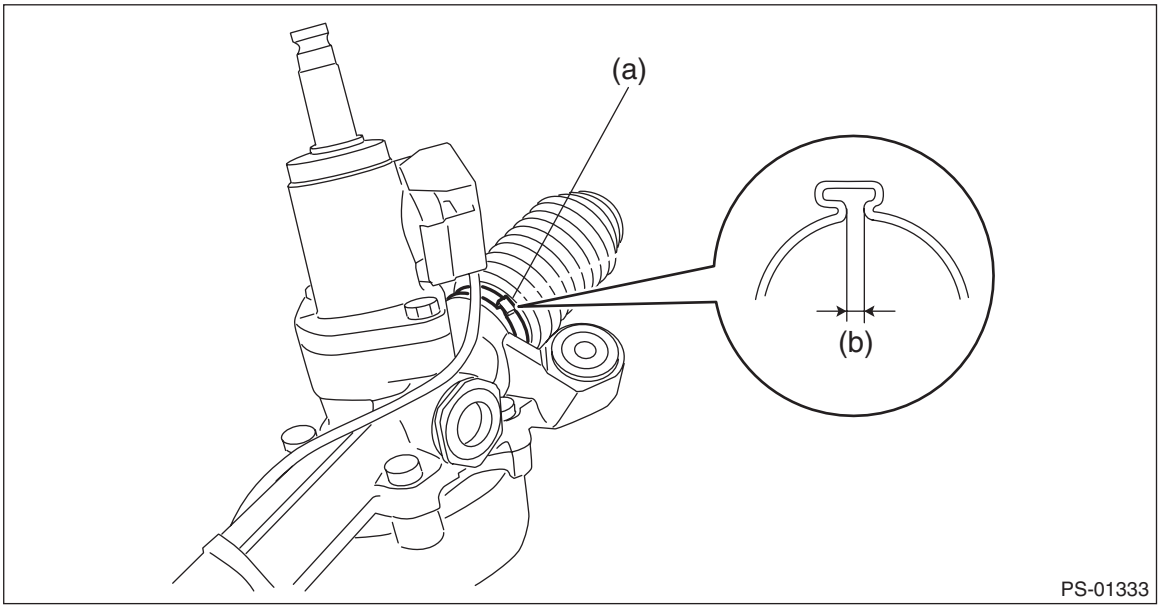

4) Fix the end of the boot - steering gearbox with clip - boot tie-rod (a).

5) After installation, check that the end of the boot - steering gearbox is installed to the groove (b) of the tie-rod.

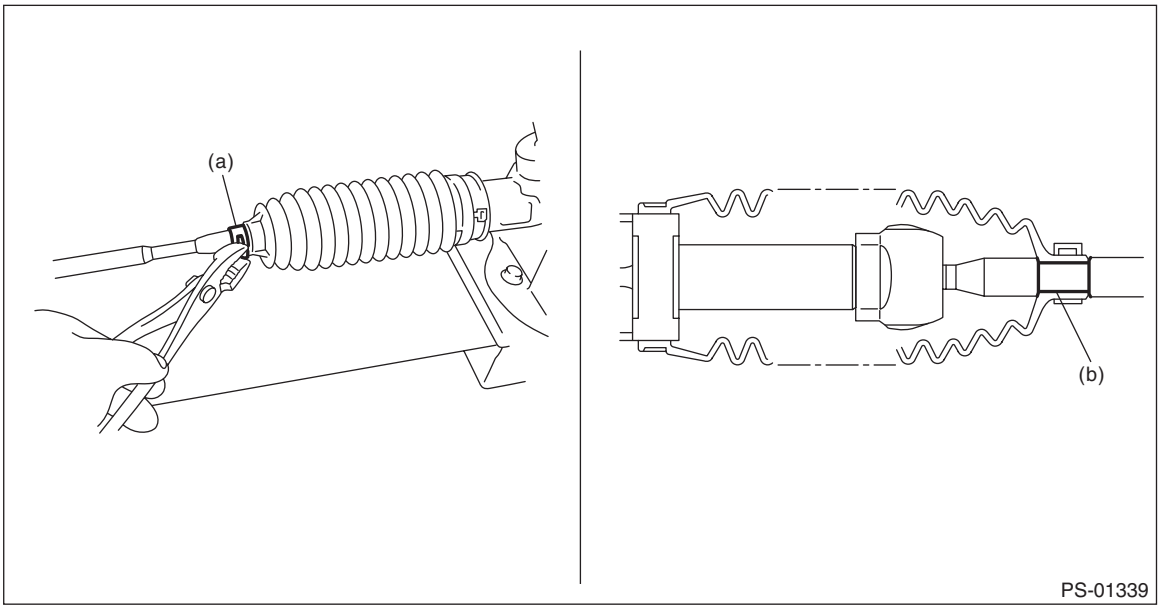

6) If the tie-rod end has been removed, screw in lock nut and tie-rod end to the screwed portion of tie-rod, and tighten the lock nut temporarily in a position as shown in the figure.

Installed tie-rod length L:
33 mm (1.3 in)

7) Inspect the steering gearbox assembly as follows:
1. “A” Holding the tie-rod end, repeat lock to lock several times as quickly as possible.
2. “B” Holding the tie-rod end, turn it slowly at a radius several times as large as possible.
3. Finally, make sure that the boot - steering gearbox is installed in the specified position without inflating.

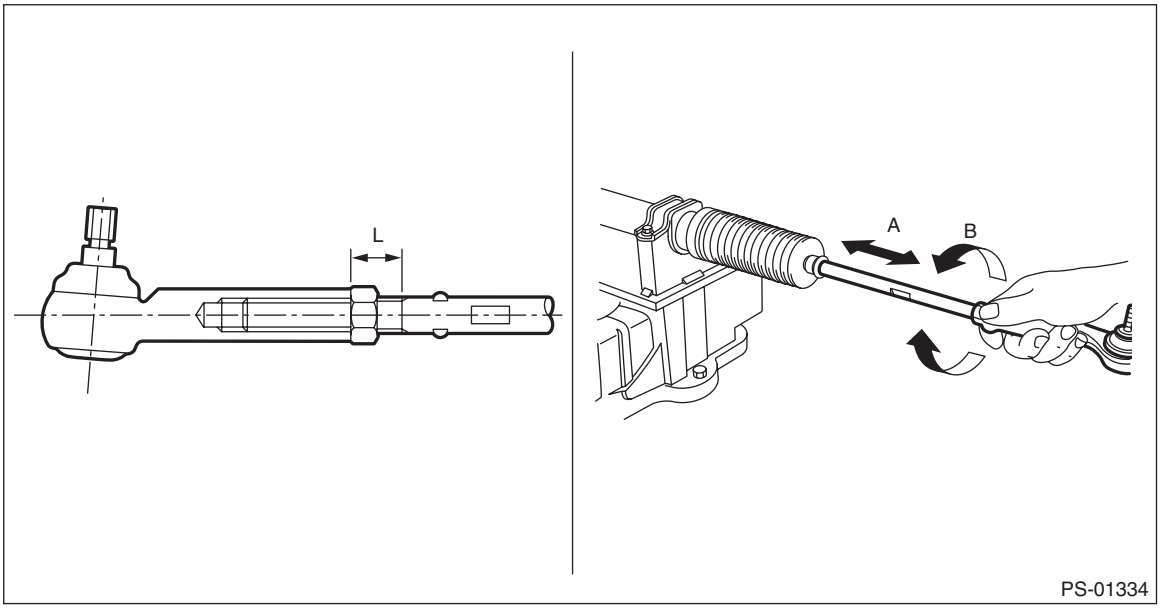

8) Remove the steering gearbox assembly from ST.

E: INSPECTION

1. UNIT INSPECTION

Check components for wear, damage or other faults. Adjust or replace if necessary.

2. LIMIT

Make a measurements as follows. If it exceeds the specified service limits, adjust or replace.

NOTE:
When fixing the steering gearbox assembly in a vise, apply a wooden piece on the flange portion.

Rack shaft sliding resistance (except for XV model and HEV model):
Limit: 350 N (36 kgf, 79 lbf) or less
Left/right differential of sliding resistance: 20% or less

Rack shaft sliding resistance (XV model):
Limit: 333 N (34 kgf, 75 lbf) or less
Left/right differential of sliding resistance: 20% or less

Rack shaft sliding resistance (HEV model):
Limit: 303 N (31 kgf, 68 lbf) or less
Left/right differential of sliding resistance: 20% or less

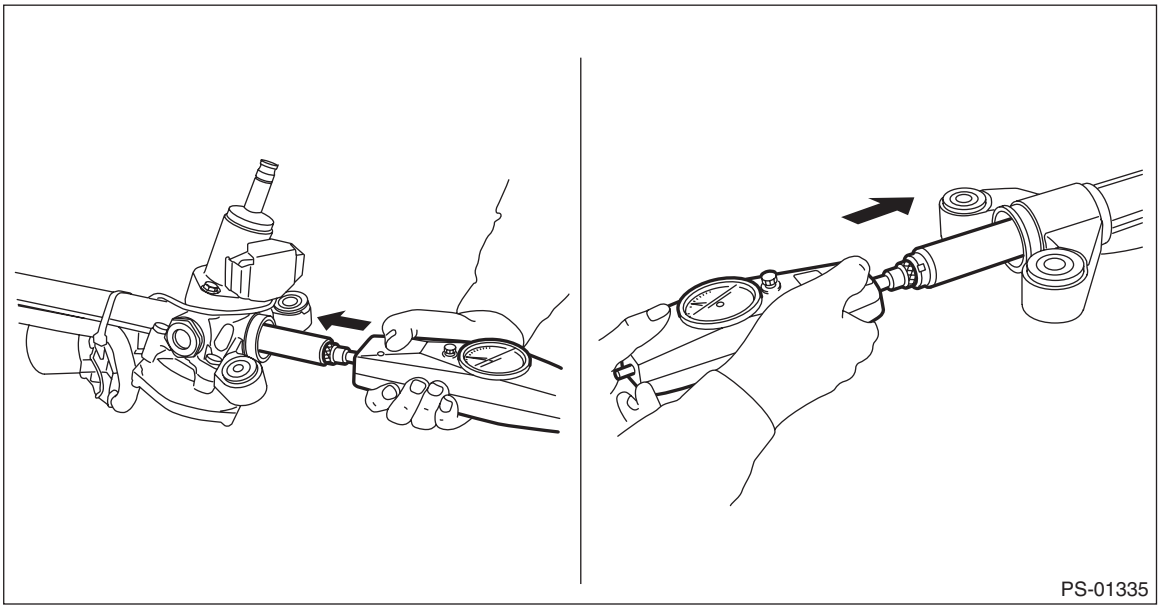

3. RACK SHAFT PLAY IN THE RADIAL DIRECTION

Right-turn steering:
Service limit:
Direction ⬅ ➡: 0.4 mm (0.016 in) or less
Direction ⇦ ⇨: 0.6 mm (0.024 in) or less

Left-turn steering:
Service limit:
Direction ⇦ ⇨ ⬅ ➡: 0.4 mm (0.016 in) or less

Condition:
L: 5 mm (0.20 in)
P: 98 N (10 kgf, 22 lbf)

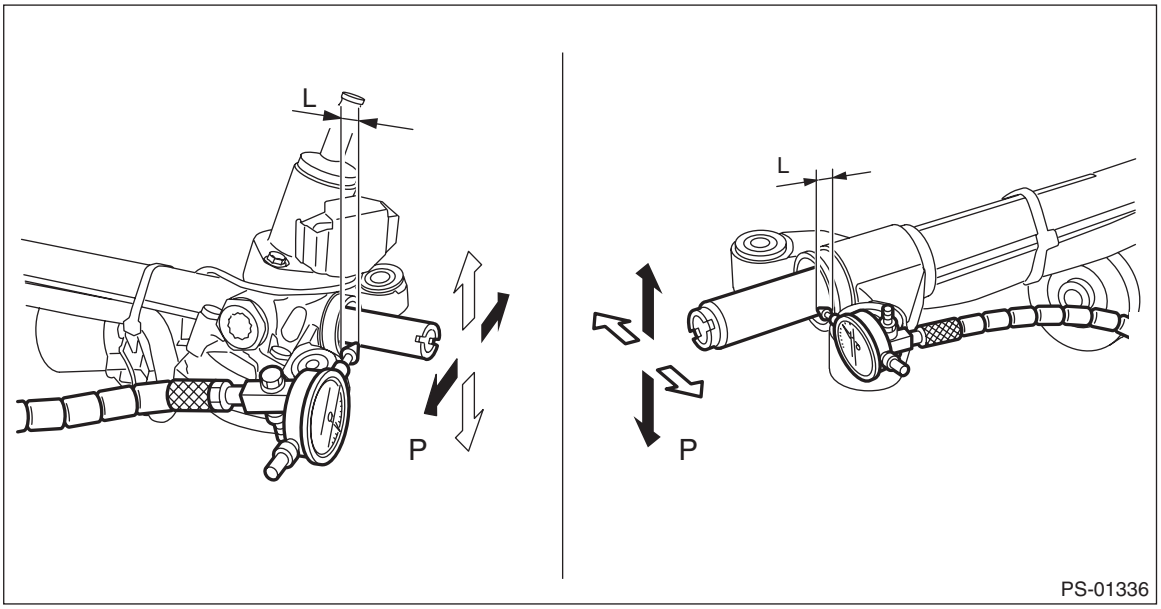

4. INPUT SHAFT PLAY

In radial direction:
Wear limit: 0.18 mm (0.0071 in) or less
Condition: P = 98 N (10 kgf, 22 lbf)

In axial direction:
Service limit: 0.27 mm (0.0106 in) or less
Condition: P = 20 — 49 N (2 — 5 kgf, 4 — 11 lbf)

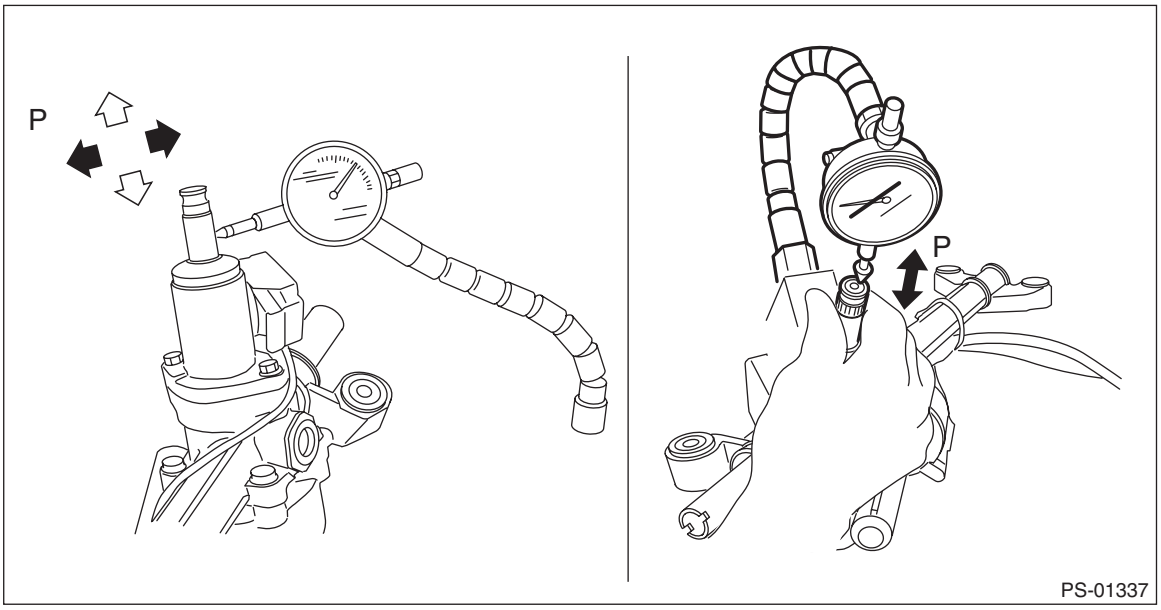

5. TURNING RESISTANCE OF GEARBOX

1) Using the ST, measure the rotational resistance of the steering gearbox assembly.

Preparation tool:
ST: SPANNER (34099PA100)

Service limit (except for XV model and HEV model):
Maximum allowable resistance: 18.3 N (1.9 kgf, 4.1 lbf) or less
Difference between right and left rotational resistance: 20% or less

Service limit (XV model):
Maximum allowable resistance: 17.7 N (1.8 kgf, 4.0 lbf) or less
Difference between right and left rotational resistance: 20% or less

Service limit (HEV model):
Maximum allowable resistance: 18.0 N (1.8 kgf, 4.0 lbf) or less
Difference between right and left rotational resistance: 20% or less

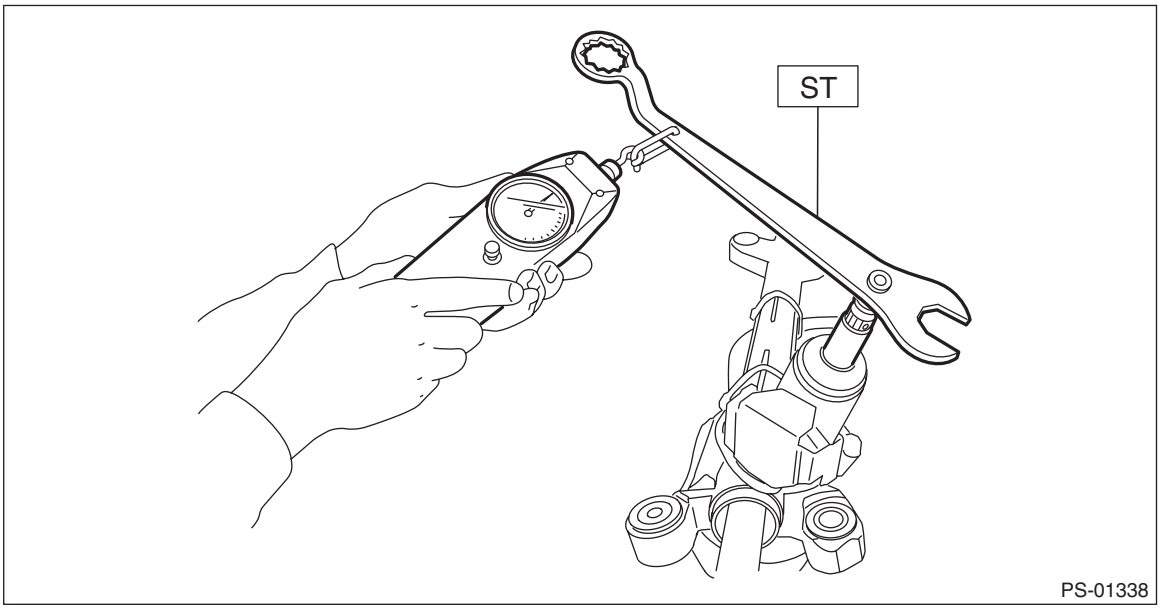

F: ADJUSTMENT

1. GEARBOX BACKLASH ADJUSTMENT

1) Remove the steering gearbox assembly. <Ref. to PS-27, REMOVAL, Electric Power Steering Gearbox.>
2) Loosen the lock nut and adjusting screw.
3) Apply a coat of grease to the sliding surface (B) of the pad - pressure (a) and seating surface (C) of spring - gearbox (b), and then insert the pad - pressure (a) into steering body.
4) Charge the adjusting screw (c) with grease (D), and then insert the spring - gearbox (b) into adjusting screw. Then install on the steering body.

Grease:
Multemp AC-P

5) Apply liquid gasket to 1/3 or more (A) of entire perimeter of adjusting screw thread (c).

Liquid gasket:
THREE BOND TB-1111B

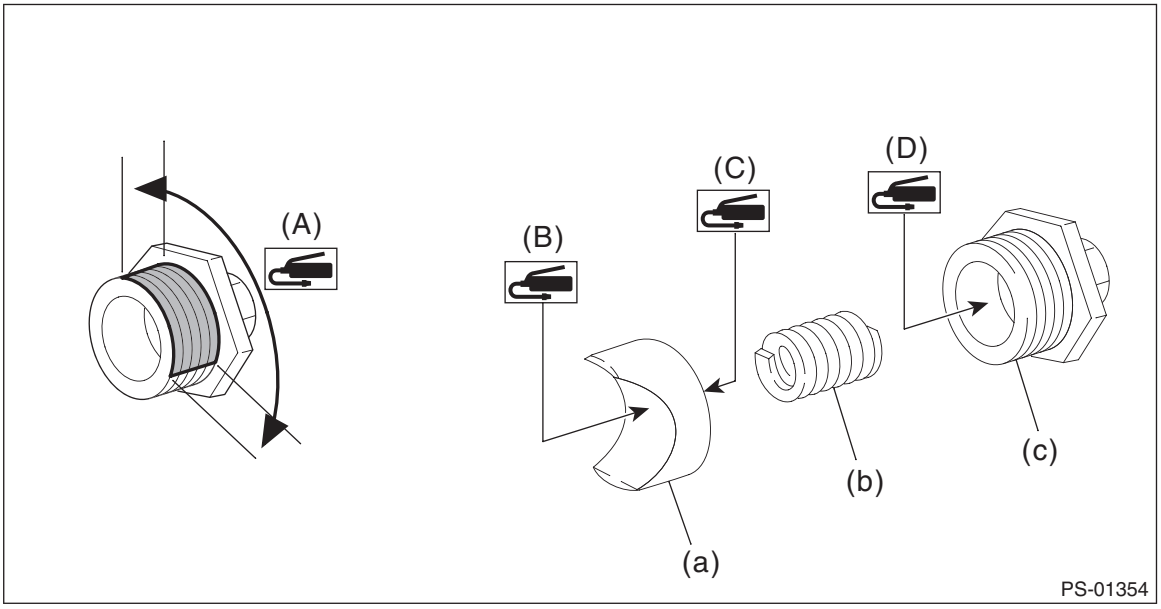

6) Tighten the adjusting screw to 9.8 N·m (1.0 kgf-m, 7.2 ft-lb), then loosen it.
7) Tighten the adjusting screw to 6 N·m (0.6 kgf-m, 4.4 ft-lb).
8) Loosen the adjusting screw by 20°.
9) While fixing the adjusting screw, tighten the lock nuts.

Tightening torque:
49.4 N·m (5.04 kgf-m, 36.4 ft-lb)

2. FRONT WHEEL ALIGNMENT ADJUSTMENT

1) Adjust the front toe. <Ref. to FS-13, FRONT WHEEL TOE-IN, ADJUSTMENT, Wheel Alignment.>
2) Check the steering angle of the wheels.

Standard of steering angle:

Model	*Except for XV model*	*XV model*
Inner wheel	*38.3°±1.5°*	*38.2°±1.5°*
Outer wheel	*33.7°±1.5°*	*33.6°±1.5°*

3) When the steering wheel is in the following condition, perform the steering wheel installation over again.
- When wheels are set in the straight ahead position, the steering wheel spokes are not horizontal.
- Error is more than 5° on the periphery of the steering wheel.

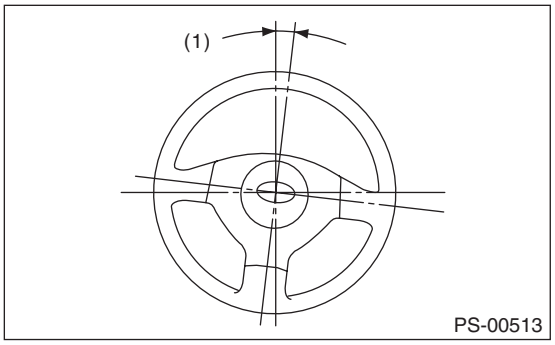

(1) 5° or less

4) If the steering wheel spokes are not horizontal with vehicle set in the straight ahead position after this adjustment, correct it by turning the right and left tie-rods in the opposite direction from each other by the same angle. Also check that there are no abnormal steering force, failure of the steering wheel to return or other faults.

7. Power Steering Control Module

A: REMOVAL

1) Disconnect the ground cable from battery. <Ref. to NT-5, BATTERY, NOTE, Note.>

NOTE:
For the 12 volt engine restart battery of HEV model, disconnect the ground terminal from 12V engine restart battery sensor.

2) Remove the power steering control module.
   (1) Disconnect the connector of the power steering control module.
   (2) Remove the nuts, and remove the power steering control module.

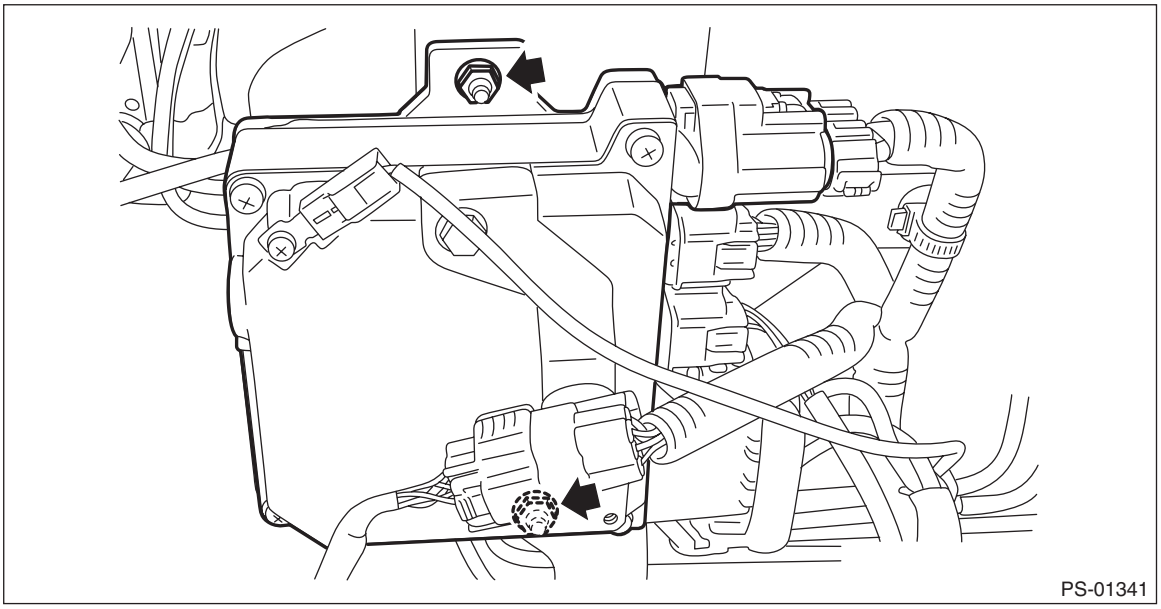

B: INSTALLATION

1) Install each part in the reverse order of removal.

CAUTION:
Make sure that the connector is securely locked.

Tightening torque:
Power steering control module: 7.5 N·m (0.76 kgf-m, 5.5 ft-lb)

8. General Diagnostic Table

A: INSPECTION

Trouble	Possible cause	Corrective action
• Steering effort is heavy in all ranges. • Steering effort is heavy at stand still. • Steering wheel vibrates when turning.	1. Tire and wheel • Improper tire out of specifications • Improper wheel out of specification • Tires not properly inflated	Replace or reinflate.
	2. Measure the steering wheel effort. <Ref. to PS-40, TURNING RESISTANCE OF GEARBOX, INSPECTION, Electric Power Steering Gearbox.>	Adjust or replace.
• Vehicle leads to one side or the other. • Returning force of steering wheel to center is poor. • Steering wheel vibrates when turning.	1. Tire and wheel • Flat tire • Mixed use of different tires • Mixed use of different wheels • Abnormal wear of tire • Unequal tread remaining • Unequal pressure of tire	Adjust, fix or replace.
	2. Front wheel alignment • Improper or unequal caster • Improper or unequal toe-in • Loose suspension connections	Adjust or retighten.
	3. Measure the steering wheel effort. <Ref. to PS-40, TURNING RESISTANCE OF GEARBOX, INSPECTION, Electric Power Steering Gearbox.>	Adjust or replace.

NOTE:
When performing repeated steering operation with the vehicle at standstill, the steering effort may be temporarily heavy because the heat generated in the system activates the power steering protection control. This is not a malfunction caused by the steering system. After a while, it will return to normal steering effort. (In this case, the steering warning light will not come on and there will be no DTC.)

1. NOISE AND VIBRATION

NOTE:
• When turning the steering wheel with the brake applied when the vehicle is parked, a screeching noise may be generated by the brake disc and pads. This is not a fault in the steering system.
• There may be a small vibration around the steering devices when turning the steering wheel at standstill, even though the component parts are operating properly.

Trouble	Possible cause	Corrective action
Rattling noise (intermittent) While engine is running.	Interference with adjacent parts	Check the clearance. Correct if necessary.
	Looseness of linkage, play of steering, improper tightening (looseness) of suspension joint or column assembly - steering	Retighten or replace.
	Noise emitted from inside of the gearbox	Replace the gearbox assembly.
Knocking When turning steering wheel in both directions with small angle repeatedly at engine ON or OFF.	Excessive backlash Loosened lock nut for adjusting backlash	Adjust the backlash. When the noise remains after adjustment, replace the gearbox assembly.
	Insufficient tightening or play in the tie-rod or tie-rod end	Retighten or replace.
Grinding noise (intermittent) While engine is running. (While operating the steering.)	Fault inside of gearbox	Replace the gearbox assembly.
	Faulty bearing of the column assembly - steering	Apply grease or replace.
	Occurs when turning the steering wheel with brakes (service or parking) applied.	If the noise goes off when brake is released, it is normal.
Vibration While engine is running. (with/without steering turned)	Excessive play in steering, looseness of suspension parts	Retighten.

2. MEASUREMENT OF STEERING EFFORT

	Step	Check	Yes	No
1	**CHECK STEERING WARNING LIGHT.**	Does the STEERING warning light illuminate?	Read the DTC, and inspect according to it.	Go to step **2**.
2	**CHECK STEERING WARNING LIGHT.** 1) Connect the Subaru Select Monitor, and turn the steering wheel. (One lock to lock) 2) Check the “EPS operation flag” in the current data.	Is the EPS operation flag normal without displaying any DTC code?	Go to step **3**.	If the EPS operation flag is “Assist limitation”, stop the engine for approx. 10 minutes and perform the procedures from step 1 again.
3	**CHECK STEERING EFFORT.** 1) Stop the vehicle on paved road. 2) Set the tire air pressure to the specification. 3) Start the engine. 4) Run the engine at idle. 5) Install a spring scale on the steering wheel. 6) Pull the spring scale at a right angle to the steering wheel, and measure both right and left steering wheel efforts. 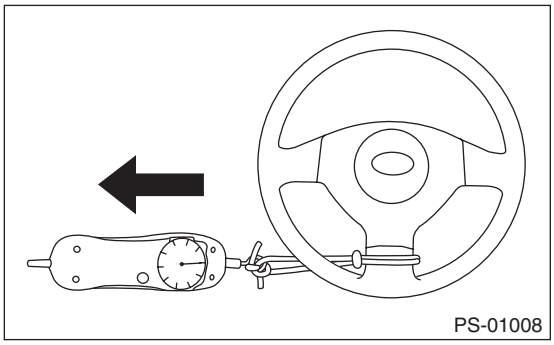 PS-01008	Is the steering effort less than 29.4 N (3.0 kgf, 6.6 lbf)?	Go to step **4**.	Go to step **8**.
4	**CHECK STEERING EFFORT.** 1) Stop the engine. 2) Pull the spring scale at a right angle to the steering wheel, and measure both right and left steering wheel efforts.	Is the steering effort less than 294.2 N (30 kgf, 66.2 lbf)?	Go to step **5**.	Perform the inspection or adjustment around the suspension part.
5	**CHECK TORQUE SENSOR OUTPUT VALUE.** 1) Connect the Subaru Select Monitor. 2) Read the output of torque sensor voltage. NOTE: When measuring, place the steering wheel at the center position.	Is the voltage 2.425 — 2.575 V?	Go to step **6**.	Replace the gearbox assembly. <Ref. to PS-27, Electric Power Steering Gearbox.>
6	**CHECK TORQUE SENSOR OUTPUT VALUE.** 1) Remove the universal joint assembly - steering. 2) Connect the Subaru Select Monitor. 3) Read the output of torque sensor voltage.	Is the voltage 2.425 — 2.575 V?	Go to step **7**.	Replace the gearbox assembly. <Ref. to PS-27, Electric Power Steering Gearbox.>

	Step	Check	Yes	No
7	**CHECK TORQUE SENSOR OUTPUT VALUE.** 1) Remove the universal joint assembly - steering. NOTE: Check that the universal joint assembly - steering moves up and down smoothly without installing the bolt. Then tighten the bolts first on the gearbox side and then on the column shaft side. 2) Connect the Subaru Select Monitor. 3) Read the output of torque sensor voltage.	Is the voltage 2.425 — 2.575 V?	Go to step **8**.	Check the universal joint assembly - steering. <Ref. to PS-27, Electric Power Steering Gearbox.>
8	**CHECK STEERING WHEEL EFFORT.** 1) Remove the universal joint assembly - steering. 2) Measure the steering wheel effort.	Is the steering effort less than 2.26 N (0.23 kgf, 0.51 lbf)?	Go to step **9**.	Replace the column assembly - steering. <Ref. to PS-27, Electric Power Steering Gearbox.>
9	**CHECK STEERING WHEEL EFFORT.** Measure the steering wheel effort.	Is the difference of steering effort between right and left less than 20%?	Go to step **10**.	Replace the column assembly - steering. <Ref. to PS-18, Steering Column.>
10	**CHECK UNIVERSAL JOINT ASSEMBLY - STEERING.** Measure the swing torque of joint. (Yoke of column assembly - steering side) <Ref. to PS-16, INSPECTION, Universal Joint.>	Is the swing torque of the universal joint assembly - steering less than 7.3 N (0.74 kgf, 1.64 lbf)?	Go to step **11**.	Replace the universal joint assembly - steering with a new part. <Ref. to PS-13, Universal Joint.>
11	**CHECK UNIVERSAL JOINT ASSEMBLY - STEERING.** Measure the swing torque of joint. (Yoke of gearbox side) <Ref. to PS-16, INSPECTION, Universal Joint.>	Is the swing torque of the universal joint assembly - steering less than 3.8 N (0.39 kgf, 0.86 lbf)?	Go to step **12**.	Replace the universal joint assembly - steering with a new part. <Ref. to PS-13, Universal Joint.>
12	**CHECK FRONT WHEEL.** Check the front wheels.	Does the front wheels have unsteady revolution or rattling, or does the brake drag?	Inspect, readjust and replace if necessary.	Go to step **13**.
13	**CHECK TIE-ROD ENDS.** Remove the tie-rod ends.	Does the tie-rod ends of suspension have unsteady revolution or rattling?	Inspect and replace if necessary.	Go to step **14**.
14	**CHECK BALL JOINT.** Remove the ball joint.	Does the ball joints of suspension have unsteady revolution or rattling?	Inspect and replace if necessary.	Go to step **15**.

Step		Check	Yes	No
15	**CHECK GEARBOX.** Measure the rotating of gearbox. <Ref. to PS-37, LIMIT, INSPECTION, Electric Power Steering Gearbox.>	Except for XV model and HEV model: Is the turn resistance of the steering gearbox less than 18.3 N (1.9 kgf, 4.1 lbf)? Is the difference between the right and left rotational resistances less than 20%? XV model: Is the turn resistance of the steering gearbox less than 17.7 N (1.8 kgf, 4.0 lbf)? Is the difference between the right and left rotational resistances less than 20%? HEV model: Is the turn resistance of the steering gearbox less than 18.0 N (1.8 kgf, 4.0 lbf)? Is the difference between the right and left rotational resistances less than 20%?	Go to step **16**.	Replace the gearbox assembly. <Ref. to PS-27, Electric Power Steering Gearbox.>
16	**CHECK GEARBOX.** Measure the sliding of gearbox.	Except for XV model and HEV model: Is the sliding resistance of the steering gearbox less than 350 N (35 kgf, 79 lbf)? Is the difference between the right and left sliding resistance less than 20%? XV model: Is the sliding resistance of the steering gearbox less than 333 N (34 kgf, 75 lbf)? Is the difference between the right and left sliding resistances less than 20%? HEV model: Is the sliding resistance of the steering gearbox less than 303 N (31 kgf, 68 lbf)? Is the difference between the right and left sliding resistance less than 20%?	Steering effort is normal.	Replace the gearbox assembly. <Ref. to PS-27, Electric Power Steering Gearbox.>

POWER ASSISTED SYSTEM (POWER STEERING) (DIAGNOSTICS)

PS(diag)

		Page
1.	Basic Diagnostic Procedure	2
2.	Check List for Interview	4
3.	General Description	7
4.	Electrical Component Location	9
5.	Control Module I/O Signal	11
6.	Subaru Select Monitor	13
7.	Read Diagnostic Trouble Code (DTC)	20
8.	Inspection Mode	21
9.	Clear Memory Mode	22
10.	STEERING Warning Light	23
11.	List of Diagnostic Trouble Code (DTC)	26
12.	Diagnostic Procedure with Diagnostic Trouble Code (DTC)	28

1. Basic Diagnostic Procedure

A: PROCEDURE

CAUTION:
• The power steering control module continues to operate after the engine stops and calculate the temperature in the control module. Therefore, before starting service of the power steering system which requires disconnection of the connector, stop the engine and allow approx. 10 minutes until the control module becomes cold.
• Before removal or installation, be sure to remove any foreign matter (dust, moisture, oil, etc.) from the power steering control module connector.

NOTE:
• Shake the connector at the suspected trouble location to check for open or short circuits of the harness.
• Refer to “Check List for Interview”. <Ref. to PS(diag)-4, Check List for Interview.>

	Step	Check	Yes	No
1	**CHECK PRE-INSPECTION.** 1) Ask the customer when and how the trouble occurred using the interview check list. <Ref. to PS(diag)-4, Check List for Interview.> 2) Check the illumination status of the steering warning light while the engine is running. 3) Before performing diagnostics, check components which might affect power steering problems. <Ref. to PS(diag)-7, INSPECTION, General Description.> 4) Save the data of «Overheating protection intervention history» «IGN count from overheating protection (most recent) (previous) (before previous)» «Assist limit history (low voltage, high voltage)» using Subaru Select Monitor. <Ref. to PS(diag)-14, READ CURRENT DATA, OPERATION, Subaru Select Monitor.>	Are components that might influence the power steering problem operating properly?	Go to step **2**.	Repair or replace each component.
2	**CHECK INDICATION OF DTC.** 1) Turn the ignition switch to OFF. 2) Connect the Subaru Select Monitor to data link connector. 3) Turn the ignition switch to ON and run the Subaru Select Monitor. 4) Read the DTC using the Subaru Select Monitor. <Ref. to PS(diag)-20, OPERATION, Read Diagnostic Trouble Code (DTC).> NOTE: If the communication function of the Subaru Select Monitor cannot be executed properly, check the communication circuit. <Ref. to PS(diag)-15, COMMUNICATION FOR INITIALIZING IMPOSSIBLE, INSPECTION, Subaru Select Monitor.>	Is DTC displayed?	Record the DTC. Go to step **4**.	Go to step **3**.
3	**PERFORM GENERAL DIAGNOSTICS.** 1) If the steering warning light is illuminated while the engine is running, perform the Clear Memory Mode. <Ref. to PS(diag)-22, OPERATION, Clear Memory Mode.> 2) Perform the Inspection Mode. <Ref. to PS(diag)-21, Inspection Mode.> 3) Read the DTC. <Ref. to PS(diag)-20, OPERATION, Read Diagnostic Trouble Code (DTC).> Check the DTC is not displayed.	Does the steering warning light illuminate at ignition switch ON, and turn off two seconds after the engine is started?	Finish the diagnosis.	<Ref. to PS(diag)-19, WITHOUT DTC, INSPECTION, Subaru Select Monitor.>

Step		Check	Yes	No
4	**CHECK FREEZE FRAME DATA.** Using the Subaru Select Monitor, check the freeze frame data for the power steering control module.	Are freeze frame data recorded?	Record the freeze frame data. Go to step **5**.	Go to step **5**.
5	**PERFORM DIAGNOSIS.** 1) Refer to “List of Diagnostic Trouble Code (DTC)”. <Ref. to PS(diag)-26, LIST, List of Diagnostic Trouble Code (DTC).> 2) Correct the cause of trouble. 3) Check the illumination status of the steering warning light while the engine is running, and if the warning light is lit, perform Clear Memory Mode. <Ref. to PS(diag)-22, OPERATION, Clear Memory Mode.> 4) Perform the Inspection Mode. <Ref. to PS(diag)-21, Inspection Mode.> 5) Read the DTC. <Ref. to PS(diag)-20, OPERATION, Read Diagnostic Trouble Code (DTC).>	Is DTC displayed?	Repeat step 5 until DTC is not shown.	Finish the diagnosis.

2. Check List for Interview

A: CHECK

Check the following items regarding condition of the vehicle.

1. TROUBLE STATUS

Phenomenon of the vehicle	❑ Steering is heavy ❑ Steering is not smooth ❑ Steering is unstable (wondering) ❑ Steering does not return to center ❑ Steering is not straight
	❑ Steering force required is not the same for right and left turn ❑ Steering force required is not even ❑ Steering is too light
	❑ Noise ❑ Vibration ❑ STEERING warning light illuminates ❑ Other
Frequency	❑ Always ❑ Sometimes ❑ Immediately after starting the engine ❑ Only once ❑ Other
	❑ Recovers after leaving it for minutes
Steering wheel operation	❑ Dry steering ❑ When turning ❑ Quick steering ❑ Slow steering ❑ Returning the steering wheel
	❑ Releasing the steering wheel ❑ Only supporting the steering wheel by hand ❑ Repetitive dry steering
Steering wheel status / direction	❑ Around center position ❑ Near end of lock to lock
	❑ When turning the steering to right ❑ When turning the steering to left ❑ Both to right and to left ❑ (1) Steering angle: degrees ❑ (2) Maneuvering time: minutes
	❑ Slow steering ❑ Quick steering ❑ While holding the steering ❑ When repeating the dry wheel operation
Vehicle speed	❑ Stall 0 km/h (0 MPH) ❑ Very low speed — 20 km/h (— 12 MPH) ❑ Low speed — 40 km/h (— 25 MPH) ❑ Medium speed — 80 km/h (— 50 MPH) ❑ High speed — 80 km/h or more (— 50 MPH or more)
	❑ At starting ❑ While accelerating ❑ While decelerating ❑ When accelerating rapidly ❑ When decelerating rapidly
	❑ Other
Engine speed	❑ Idling ❑ (1) Around rpm ❑ (2) rpm — rpm ❑ (3) rpm or more / or less

2. STATE OF STEERING WARNING LIGHT

STEERING warning light illuminates	❑ Always ❑ Sometimes ❑ Only once ❑ Does not illuminate ❑ Other
Ignition key position	❑ LOCK ❑ ACC ❑ ON (when starting engine) ❑ START ❑ ON (when starting engine, while engine is running) ❑ ON (when starting engine, when engine is at a standstill)
Timing	❑ Immediately after turning the ignition ON ❑ Immediately after turning the ignition to START
	❑ Idling ❑ While accelerating ❑ While decelerating ❑ When cruising at — km/h (MPH)
	❑ When other electrical parts are operating (parts name: operating condition:)

3. ENVIRONMENT

a) Weather	❑ Fine ❑ Cloudy ❑ Rainy ❑ Snowy ❑ Others:
b) Outside temperature	❑ °C (°F)
c) Road	❑ Inner city ❑ Suburbs ❑ Highway ❑ Local street ❑ Alley way ❑ Private road ❑ Parking lot ❑ Mountain road ❑ Paved road ❑ Unpaved road ❑ Gravel road ❑ Sandy place ❑ Muddy road ❑ Concrete road ❑ Stone pavement ❑ Racetrack ❑ Others:
d) Road surface	❑ Dry ❑ Wet ❑ Covered with fresh snow ❑ Covered with hardened snow ❑ Others:
e) Tire	❑ Tire chain ❑ Studless tire ❑ T-type tire (front RH, front LH, rear RH, rear LH)
f) Tire inflation pressure	Front RH: kPa Front LH: kPa Rear RH: kPa Rear LH: kPa
g) Degree of wear	Front RH: mm (in) Front LH: mm (in) Rear RH: mm (in) Rear LH: mm (in)
h) Genuine part	❑ Yes ❑ No Record after-market parts if any. (Steering wheel, audio, tires, and similar parts)
i) Condition of suspension alignment	
j) Electrical load conditions	❑ Audio ❑ Air conditioner ❑ Other
k) Loaded state	Condition:
l) Repair parts	❑ None ❑ Provided Contents:
m) Others	

3. General Description

A: CAUTION

1. SRS AIRBAG SYSTEM

The airbag system wiring harness is routed near the power steering control module.

CAUTION:
• Do not use the electrical test equipment on the airbag system wiring harnesses or connector circuits.
• Be careful not to damage the airbag system wiring harness during maintenance of the power steering control module.

B: INSPECTION

Before performing diagnosis, check the following items which might be affecting the power steering problem.

1. BATTERY

Measure the battery voltage and check electrolyte.

Standard voltage: 12 V or more (must not drop below 10 V during operation under electrical load)

Specific gravity: 1.260 or more

NOTE:
For HEV model, 12 volt auxiliary battery.

2. TIRES

Check the tire specifications, tire wear and air pressure. <Ref. to WT-2, SPECIFICATION, General Description.>

C: PREPARATION TOOL

1. SPECIAL TOOL

ILLUSTRATION	TOOL NUMBER	DESCRIPTION	REMARKS
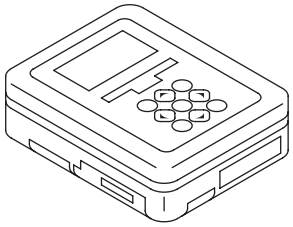 ST1B022XU0	1B022XU0	SUBARU SELECT MONITOR III KIT	Used for troubleshooting the electrical system.
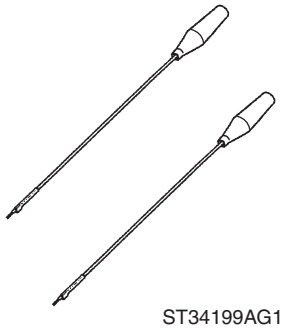 ST34199AG100	34199AG100	SPECIAL TOOL HARNESS	Used for troubleshooting the electrical system.

2. GENERAL TOOL

TOOL NAME	REMARKS
Circuit tester	Used for measuring resistance, voltage and current.
Oscilloscope	Used for measuring the sensor.

4. Electrical Component Location

A: LOCATION

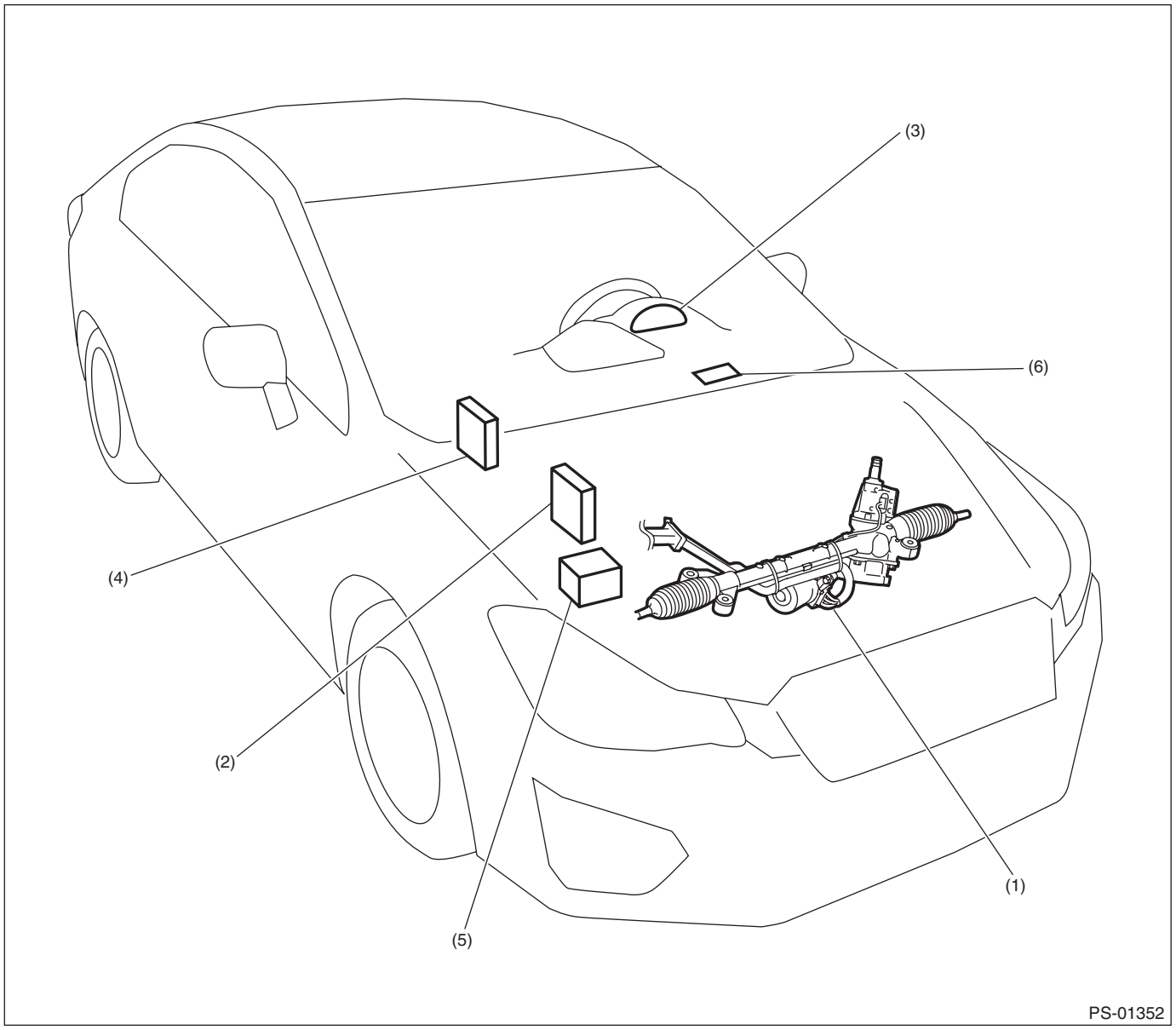

(1) Steering gearbox
(2) Power steering control module
(3) STEERING warning light
(4) Engine control module (ECM)
(5) VDCCM&H/U
(6) Data link connector (for Subaru Select Monitor)

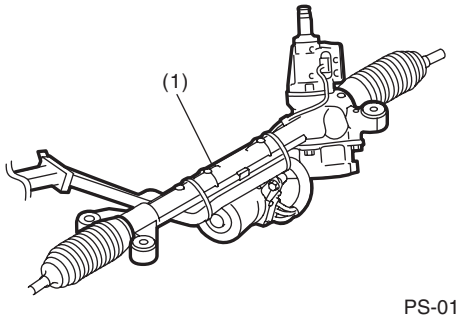

PS-01290

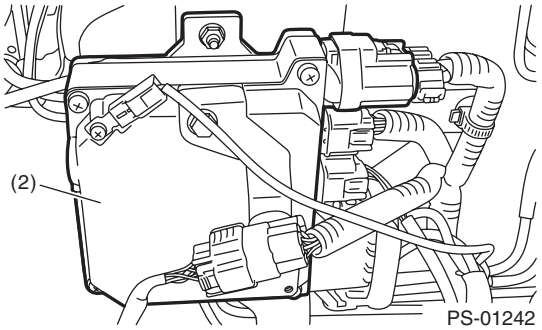

PS-01242

- Gasoline engine model (U5, U6 model)

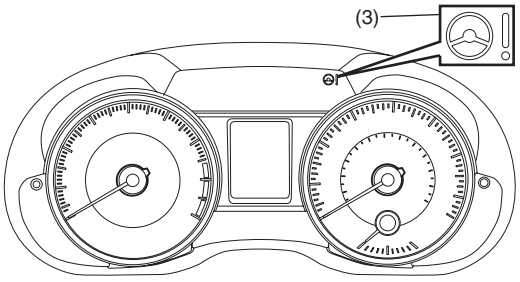

PS-01296

- Gasoline engine model (C0 model)

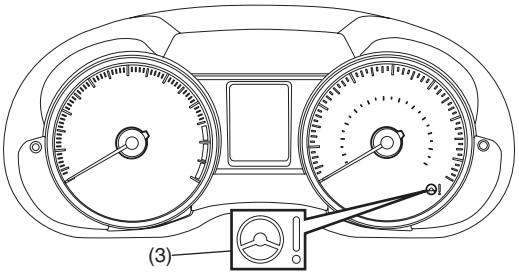

PS-01347

- HEV model

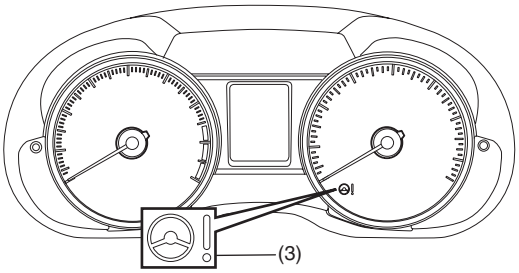

PS-01663

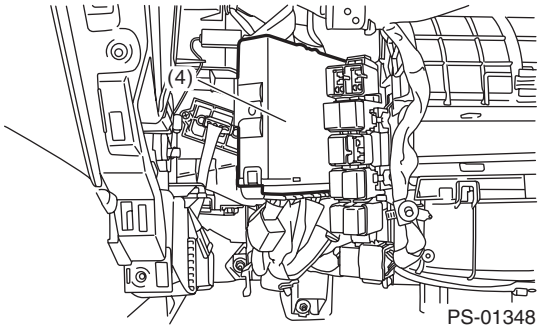

PS-01348

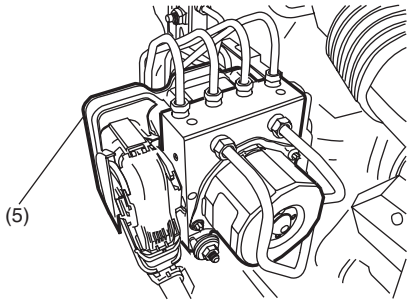

PS-01349

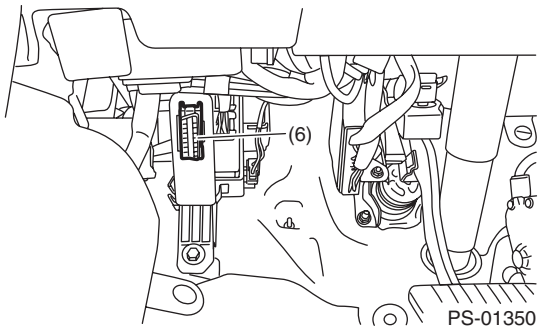

PS-01350

5. Control Module I/O Signal

A: ELECTRICAL SPECIFICATION

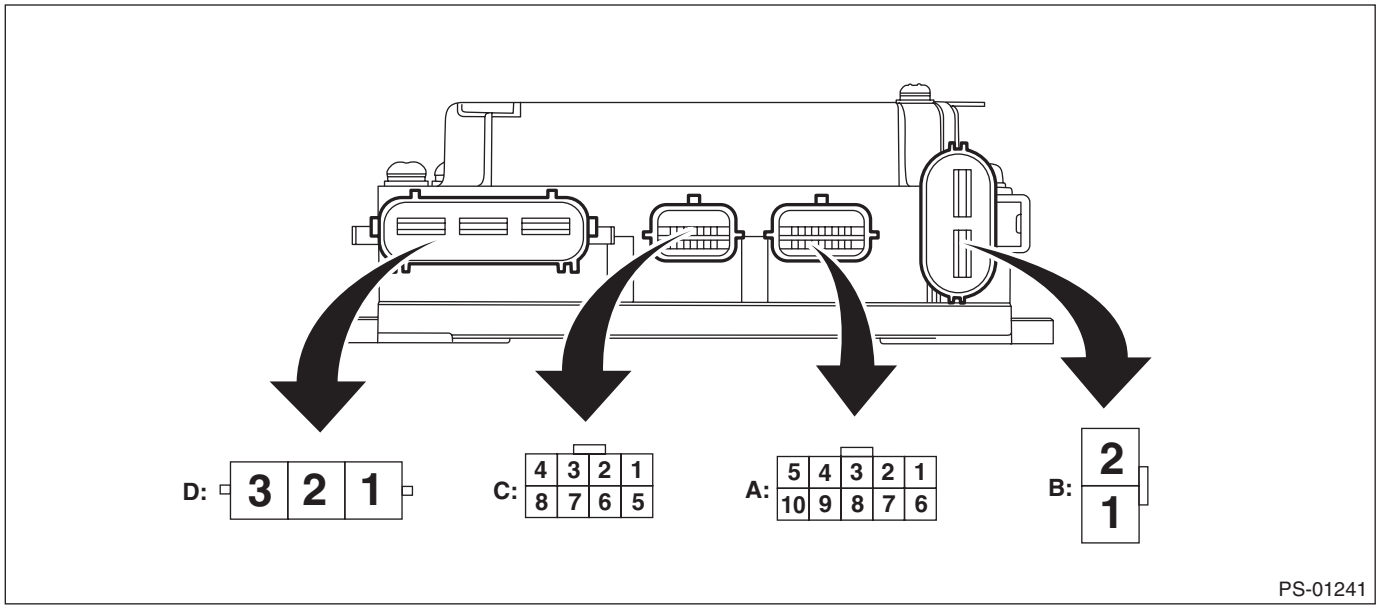

NOTE:
The terminal numbers of the power steering control module connectors are as indicated in the figure.

Description	Terminal No.	Input/output signal
		Measured value and measuring conditions
Power supply (IG SW)	A1	Battery voltage is detected with the ignition switch ON when measuring between A1 — B1.
Subaru Select Monitor communication line	A2	Digital signal; can not be measured
Shield GND	A3	0 V is constantly detected.
Main torque sensor	A4	The voltage changes when the steering is operated to the right or left with the ignition switch ON.
Sub torque sensor	A5	The voltage changes when the steering is operated to the right or left with the ignition switch ON.
CAN communication	A6	Digital signal; can not be measured
CAN communication	A7	Digital signal; can not be measured
Torque sensor operating power supply	A8	Approximately 8 V is detected with ignition switch ON.
Torque sensor ground	A9	0 V is constantly detected.
Torque sensor standard power supply	A10	Approximately 3 V is detected with ignition switch ON.
Ground	B1	Battery voltage is constantly detected when measuring between B1 — B2.
Power supply	B2	
Resolver S1	C1	Varies depending on the operational status of the motor.
Resolver S3	C2	
Resolver S2	C3	
Resolver S4	C4	
Excitation power supply for resolver	C5	
Common output	C6	
Motor U phase	D1	Varies depending on the motor output.
Motor V phase	D2	
Motor W phase	D3	

B: WIRING DIAGRAM

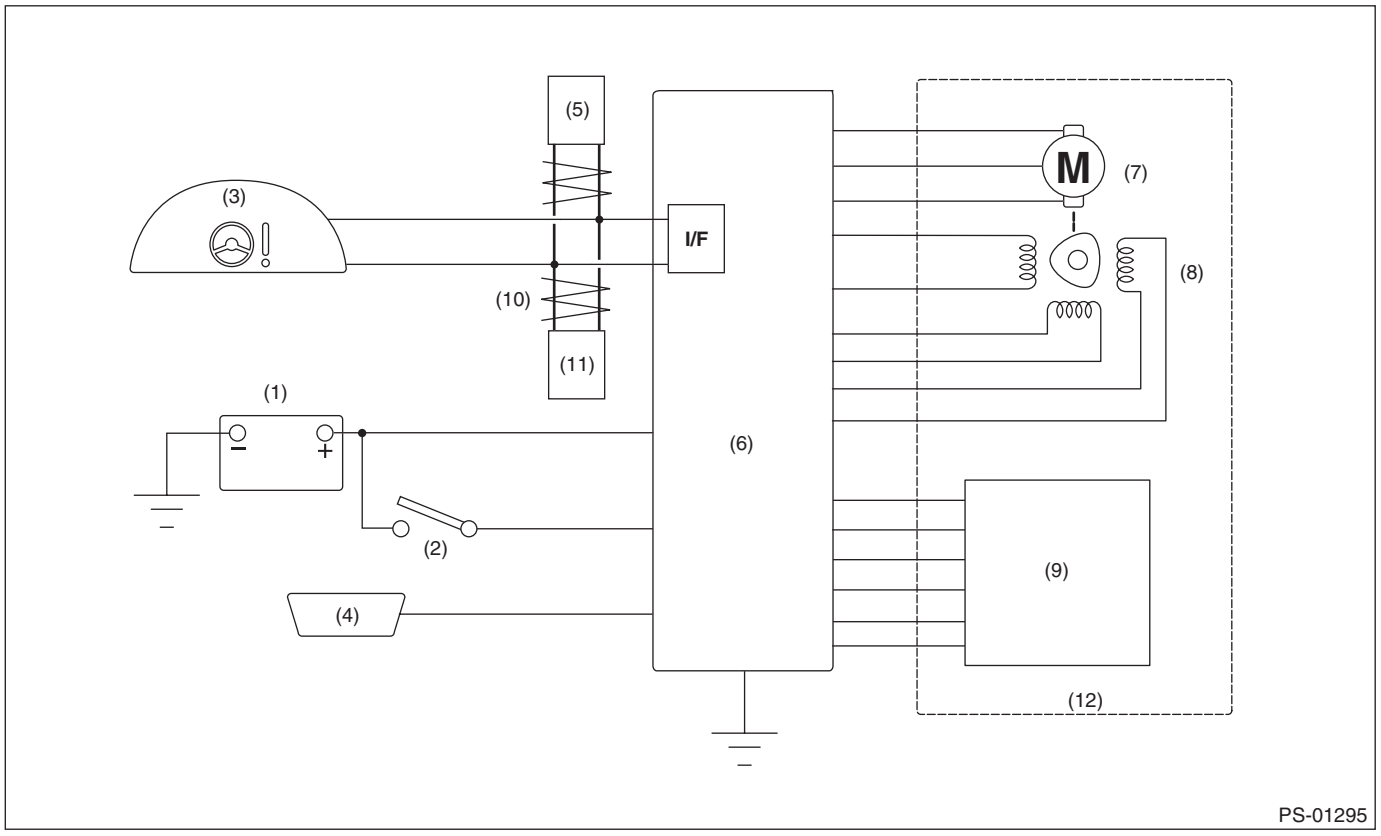

(1)	Battery	(5)	Engine control module (ECM)	(9)	Torque sensor (main & sub)
(2)	Ignition switch	(6)	Power steering control module	(10)	CAN communication
(3)	STEERING warning light (combination meter)	(7)	Motor	(11)	VDC CM
(4)	Data link connector (for Subaru Select Monitor)	(8)	Resolver sensor	(12)	Steering gearbox

6. Subaru Select Monitor

A: OPERATION

1. HOW TO USE SUBARU SELECT MONITOR

1) Prepare the Subaru Select Monitor kit. <Ref. to PS(diag)-8, SPECIAL TOOL, PREPARATION TOOL, General Description.>

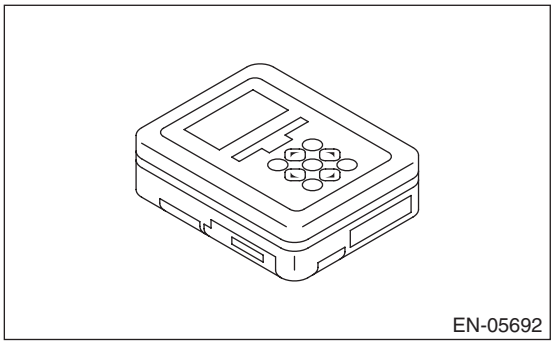

2) Prepare PC with Subaru Select Monitor installed.
3) Connect the USB cable to SDI (Subaru Diagnosis Interface) and USB port on the personal computer (dedicated port for the Subaru Select Monitor).

NOTE:
The dedicated port for the Subaru Select Monitor means the USB port which was used to install the Subaru Select Monitor.

4) Connect the diagnosis cable to SDI.
5) Connect SDI to data link connector located in the lower portion of the instrument panel (on the driver's side).

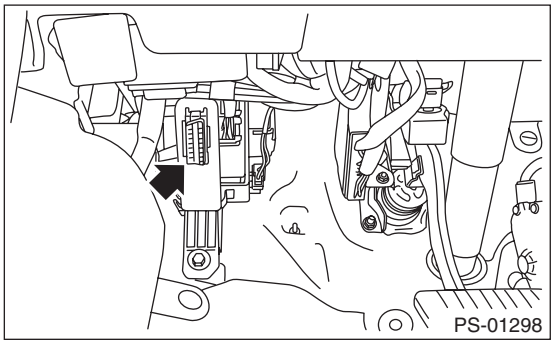

CAUTION:
Do not connect scan tools other than the Subaru Select Monitor.

6) Start the PC.
7) Turn the ignition switch to ON (engine OFF) and run the "PC application for Subaru Select Monitor".
8) Record the DTC and data.

NOTE:
For detailed operation procedures, refer to "PC application help for Subaru Select Monitor".

9) If the power steering control module and Subaru Select Monitor can not communicate, check the communication circuit. <Ref. to PS(diag)-15, COMMUNICATION FOR INITIALIZING IMPOSSIBLE, INSPECTION, Subaru Select Monitor.>

2. READ CURRENT DATA

1) On «Main Menu» display, select {Each System Check}.
2) On «System Selection Menu» display, select {Power Steering System}.
3) On «Power Steering Diagnosis» display, select {Current Data Display & Save}.
4) Using the scroll key, scroll the display screen up or down until the desired data is shown.
The list is indicated in the following table.

Display	Contents to be displayed	Range	Unit
Torque sensor main output	Main torque sensor output voltage is displayed.	0 — 5	V
Torque sensor sub output	Sub torque sensor output voltage is displayed.	0 — 5	V
Torque sensor reference voltage	Torque sensor standard voltage is displayed.	0 — 5	V
Power current	The current flowing to CM is displayed.	–128 — 127	A
Vehicle speed	Vehicle speed is displayed. (CAN communication data)	0 — 255	km/h
Engine speed	Engine speed is displayed. (CAN communication data)	0 — 12750	rpm
Detection current at ECM	The current flowing to the motor relay is displayed.	–128 — 127	A
3-phase motor current (U-phase)	The U phase actual current value as calculated by the microcomputer from the torque sensor input is displayed.	–128 — 127	A
3-phase motor current (V-phase)	The V phase actual current value as calculated by the microcomputer from the torque sensor input is displayed.	–128 — 127	A
Motor angular speed	Data from the resolver sensor is displayed.	–4096 — 4064	rpm
ECM Temperature	The thermistor temperature of the steering control module is displayed.	–50 — 205	°C
Power supply voltage	Battery voltage is displayed.	0 — 25.5	V
Torque sensor power supply voltage	The power supply voltage output to the torque sensor is displayed.	0 — 10.2	V
IG voltage	The power supply voltage supplied to the ECM is displayed.	0 — 25.5	V
CAN bus status	Either Active/Passive/Bus Off is displayed.	Active	—
EPS operating condition	Either Normal/Assist Stop/Assist Limitation is displayed.	Normal	—
Target Current at ECM	The motor target current value required for assist is displayed.	–128 — 127	A
Steering angle	Steering angle of steering wheel is displayed.	–640 — 635	deg
Reading assist MAP	Either MAP1/MAP2/MAP3 is displayed.	MAP1	—
Overheating protection intervention history	Number of interventions to the overheat protection control (assist limitation for protecting the power steering from overheating) *1	0 — 250	times
IGN count from overheating protection (most recent)	Number of times the ignition switch is ON from the intervention to overheat protection control (most recent) until now *2	0 — 65000	times
IGN count from overheating protection (previous)	Number of times the ignition switch is ON from the intervention to overheat protection control (previous) until now *2	0 — 65000	times
IGN count from overheating protection (before previous)	Number of times the ignition switch is ON from the intervention to overheat protection control (before previous) until now *2	0 — 65000	times
Assist limit history (low voltage, high voltage)	Number of intervention to assist limit when the power supply voltage is low or high *1	0 — 250	times

NOTE:
- *1 When the value exceeds the maximum of 250 times, 250 is displayed.
- *2 When there is no intervention of the overheating protection control, “65535” is displayed. If an error such as control unit memory error, etc. occurs, “65534” is displayed.

3. FREEZE FRAME DATA

NOTE:
- Freeze frame data stored at the time of trouble occurrence is shown on the display.
- Each time a trouble occurs, the latest information is stored in the freeze frame data in memory.
- One freeze frame data will be stored.

B: INSPECTION

1. COMMUNICATION FOR INITIALIZING IMPOSSIBLE

DETECTING CONDITION:

- Defective harness connector
- Defective power steering control module

TROUBLE SYMPTOM:

- Communication is impossible between the power steering control module and Subaru Select Monitor.
- After starting the engine, the STEERING warning light does not illuminate but steering effort is heavy.

WIRING DIAGRAM:

- Gasoline engine model

Electric power steering system <Ref. to WI(w/o HEV)-73, Electric Power Steering System.>

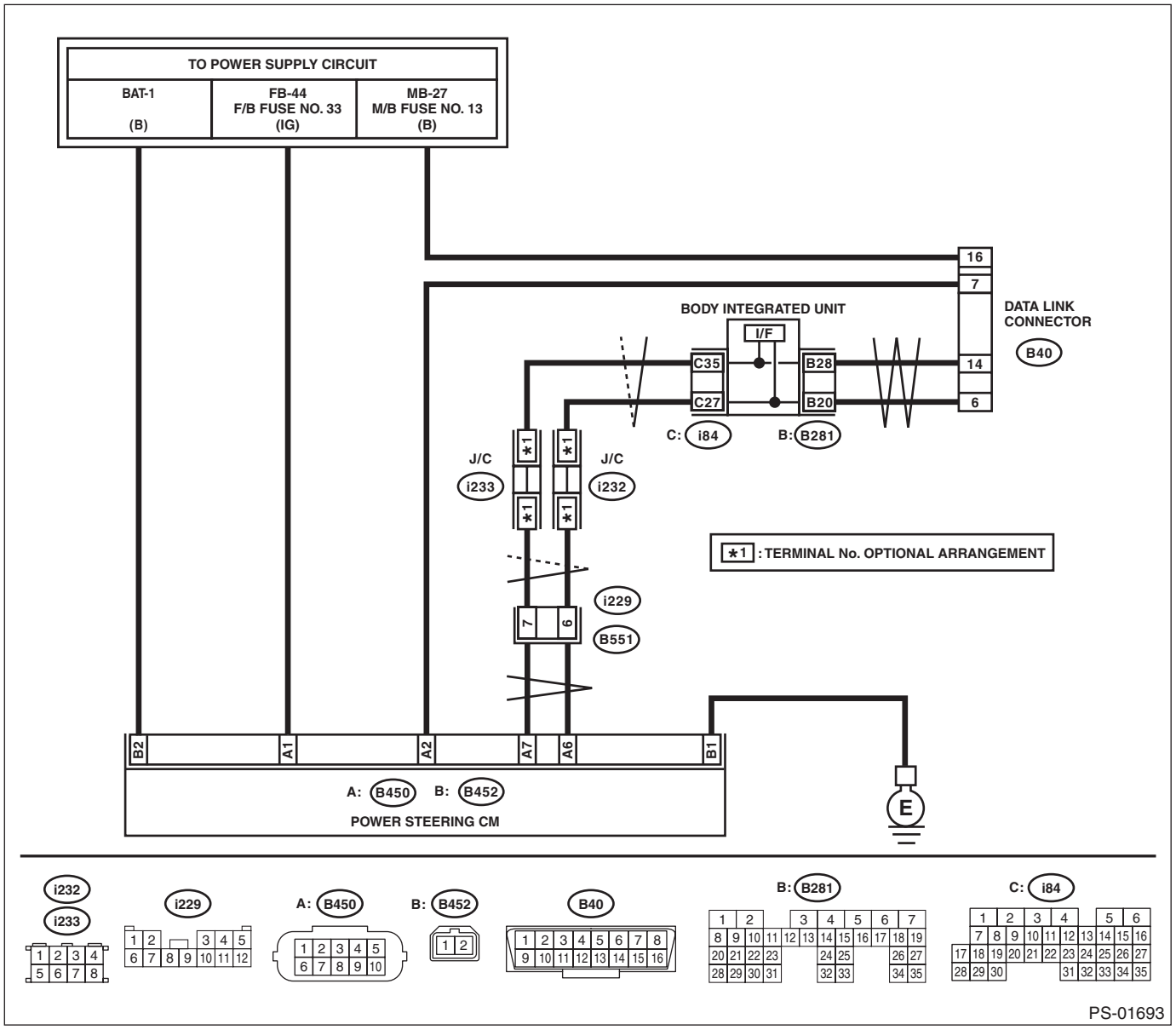

- HEV model

Electric power steering system <Ref. to WI(HEV)-98, Electric Power Steering System.>

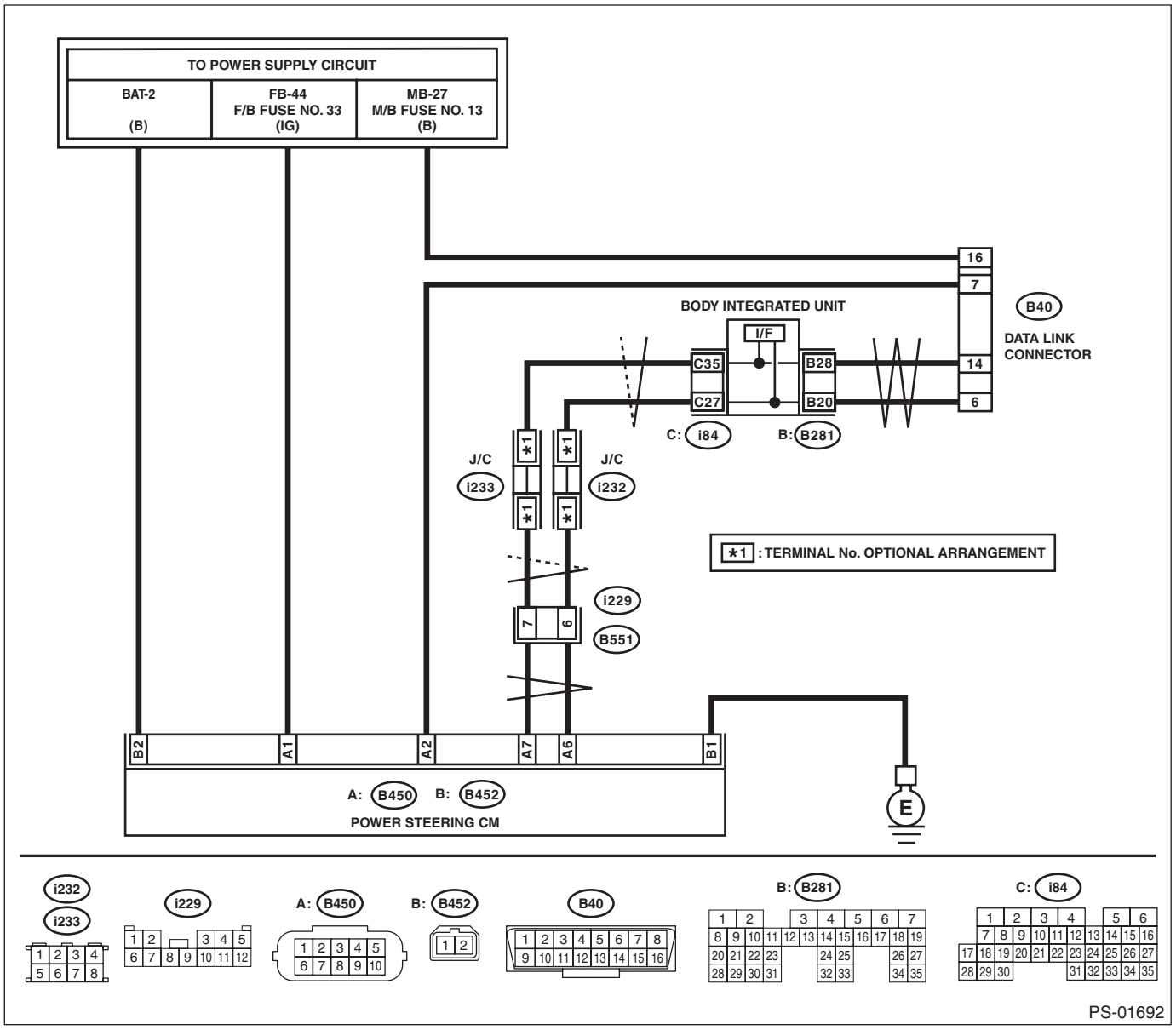

Step		Check	Yes	No
1	**CHECK IGNITION SWITCH.**	Is the ignition switch ON?	Go to step **2**.	Turn the ignition switch to ON, and select the power steering mode using the Subaru Select Monitor.
2	**CHECK BATTERY.** 1) Turn the ignition switch to OFF. 2) Measure the battery voltage.	Is the voltage 12 V or more?	Go to step **3**.	Charge or replace the battery.
3	**CHECK BATTERY TERMINAL.**	Is there poor contact at battery terminal?	Repair or tighten the battery terminal.	Go to step **4**.

	Step	Check	Yes	No
4	**CHECK SUBARU SELECT MONITOR COMMUNICATION.** 1) Turn the ignition switch to ON. 2) Using the Subaru Select Monitor, check whether communication to other systems can be executed normally.	Is the system name displayed on Subaru Select Monitor?	Go to step **8**.	Go to step **5**.
5	**CHECK SUBARU SELECT MONITOR COMMUNICATION.** 1) Turn the ignition switch to OFF. 2) Disconnect the power steering control module connector. 3) Turn the ignition switch to ON. 4) Check whether communication to other systems can be executed normally.	Is the system name displayed on Subaru Select Monitor?	Replace the power steering control module. <Ref. to PS-43, Power Steering Control Module.>	Go to step **6**.
6	**CHECK HARNESS CONNECTOR BETWEEN EACH CONTROL MODULE AND DATA LINK CONNECTOR.** 1) Turn the ignition switch to OFF. 2) Disconnect the connectors from ECM, VDC CM, airbag CM and body integrated unit. **CAUTION:** **When disconnecting the connector from airbag CM, always follow the precautions on AB section. <Ref. to AB-11, CAUTION, General Description.>** 3) Measure the resistance between data link connector and chassis ground. ***Connector & terminal*** ***(B40) No. 7 — Chassis ground:***	Is the resistance 1 MΩ or more?	Go to step **7**.	Repair the short circuit to ground in harness and connector between each control module and data link connector.
7	**CHECK HARNESS CONNECTOR BETWEEN POWER STEERING CONTROL MODULE AND DATA LINK CONNECTOR.** 1) Turn the ignition switch to ON. 2) Measure the voltage between the power steering control module and chassis ground. ***Connector & terminal*** ***(B40) No. 7 (+) — Chassis ground (–):***	Is the voltage less than 1 V?	Go to step **8**.	Repair the short circuit to power supply in harness and connector between each control module and data link connector.
8	**CHECK HARNESS CONNECTOR BETWEEN POWER STEERING CONTROL MODULE AND DATA LINK CONNECTOR.** Measure the resistance between the power steering control module connector and the data link connector. ***Connector & terminal*** ***(B450) No. 2 — (B40) No. 7:***	Is the resistance less than 0.5 Ω?	Go to step **9**.	Repair the open circuit or poor contact of harness and connectors between the power steering control module and data link connector.
9	**CHECK POWER STEERING CONTROL MODULE CONNECTOR INSTALLATION.** Turn the ignition switch to OFF.	Is the power steering control module connector inserted into the power steering control module until the clamp locks?	Go to step **10**.	Insert the power steering control module connector into the power steering control module.

	Step	Check	Yes	No
10	**CHECK POWER SUPPLY CIRCUIT.** 1) Turn the ignition switch to OFF. 2) Disconnect the power steering control module connector (B452). 3) Turn the ignition switch to ON. (engine OFF) 4) Measure the ignition power supply voltage between the power steering control module connector and chassis ground. ***Connector & terminal*** ***(B450) No. 1 (+) — Chassis ground (–):*** ***(B452) No. 2 (+) — Chassis ground (–):***	Is the voltage 10 — 15 V?	Go to step **11**.	Repair the open circuit of harness or the poor contact of connector between the power steering control module and the battery.
11	**CHECK HARNESS CONNECTOR BETWEEN POWER STEERING CONTROL MODULE AND CHASSIS GROUND.** 1) Turn the ignition switch to OFF. 2) Disconnect the connector from the power steering control module. 3) Measure the resistance in the harness between the power steering control module and chassis ground. ***Connector & terminal*** ***(B452) No. 1 — Chassis ground:***	Is the resistance less than 0.5 Ω?	Go to step **12**.	Repair the open circuit or poor contact of the harness between the power steering control module and chassis ground.
12	**CHECK POOR CONTACT OF CONNECTOR.**	Is there poor contact of the power steering control module power supply, ground circuit line and data link connector?	Repair the connector.	Replace the power steering control module. <Ref. to PS-43, Power Steering Control Module.>

2. WITHOUT DTC

DETECTING CONDITION:

- Defective combination meter
- Open circuit of harness

TROUBLE SYMPTOM:

- The STEERING warning light will not turn off.
- “No diagnostic Code Present” will be displayed on the Subaru Select Monitor.

NOTE:
When the STEERING warning light is OFF and “No diagnostic Code Present” is displayed on Subaru Select Monitor when all DTCs are read, the system is operating properly.

	Step	Check	Yes	No
1	**CHECK LAN SYSTEM.** Perform the diagnosis for LAN system using the Subaru Select Monitor. <Ref. to LAN(w/o HEV)(diag)-2, Basic Diagnostic Procedure.> <Ref. to LAN(HEV)(diag)-2, Basic Diagnostic Procedure.>	Is DTC U0131 detected?	Perform the diagnosis according to DTC for LAN system. <Ref. to LAN(w/o HEV)(diag)-50, List of Diagnostic Trouble Code (DTC).> <Ref. to LAN(HEV)(diag)-87, List of Diagnostic Trouble Code (DTC).>	Go to step **2**.
2	**CHECK COMBINATION METER.** Check the STEERING warning light when the ignition switch is turned from OFF to ON.	Does the STEERING warning light illuminate at ignition switch ON, and turn off two seconds after the engine is started?	Finish the diagnosis.	Replace the combination meter. <Ref. to IDI-16, Combination Meter.>

7. Read Diagnostic Trouble Code (DTC)

A: OPERATION

• For detailed operation procedures, refer to “PC application help for Subaru Select Monitor”.
• For details concerning the DTC, refer to “List of Diagnostic Trouble Code (DTC)”. <Ref. to PS(diag)-26, List of Diagnostic Trouble Code (DTC).>

8. Inspection Mode

A: PROCEDURE

Reproduce the malfunction occurrence condition as much as possible.

9. Clear Memory Mode

A: OPERATION

• For detailed operation procedures, refer to “PC application help for Subaru Select Monitor”.
• Before performing memory clear, check the current data, and if there are any data of DTC, trouble status information, overheating protection intervention history, IGN count from overheating protection and assist limit history, save them.

10.STEERING Warning Light

A: STEERING WARNING LIGHT DOES NOT COME ON

1. POWER STEERING ASSIST ENABLED

DETECTING CONDITION:

- Defective combination meter
- Defective harness

TROUBLE SYMPTOM:

When the ignition switch is turned to ON (engine OFF), the STEERING warning light does not illuminate.

NOTE:
It is operating normally if the warning light illuminates when the ignition switch is turned to ON (engine OFF), and turns off approximately two seconds after engine start.

	Step	Check	Yes	No
1	**CHECK ILLUMINATION OF OTHER LIGHTS.** Turn the ignition switch to ON. (engine OFF)	Do other warning lights illuminate?	Go to step **2**.	Check the combination meter. <Ref. to IDI-10, INSPECTION, Combination Meter System.>
2	**CHECK LAN SYSTEM.** Perform the diagnosis for LAN system using the Subaru Select Monitor. <Ref. to LAN(w/o HEV)(diag)-2, Basic Diagnostic Procedure.> <Ref. to LAN(HEV)(diag)-2, Basic Diagnostic Procedure.>	Is a DTC of the CAN communication displayed?	Perform the diagnosis according to DTC. <Ref. to LAN(w/o HEV)(diag)-50, List of Diagnostic Trouble Code (DTC).> <Ref. to LAN(HEV)(diag)-87, List of Diagnostic Trouble Code (DTC).>	Go to step **3**.
3	**CHECK COMBINATION METER.** Perform the self-diagnosis of combination meter. <Ref. to IDI-7, SELF-DIAGNOSIS DISPLAY MODE, OPERATION, Combination Meter System.>	Is the self diagnosis normal?	The combination meter is normal.	Check the combination meter. <Ref. to IDI-10, INSPECTION, Combination Meter System.>

2. POWER STEERING ASSIST DISABLED

DETECTING CONDITION:
CAN communication error (Engine rpm signal not received)
TROUBLE SYMPTOM:
The STEERING warning light is normal but there is no power steering assist (steering feels heavy).

NOTE:
• Power steering assist is not started unless an ignition switch ON signal or engine speed signal is input.
• In any of the following cases, the power steering assist is limited and steering wheel operation may become heavy.
If the steering wheel is held to an end for a long time, or the steering wheel turning to right and left at slow speed is repeated during parking, the assist limitation (overheat protection control) may operate to prevent failures by overheat.
In this case, by stopping the engine for approx. 10 minutes for cooling, the assist will start operating. While assist limitation (overheat protection control) is in active, “Assist limitation” is displayed in the «EPS operating condition» in the Subaru Select Monitor “Current Data Display & Save”.
• History can be confirmed on «Overheating protection intervention history» or «IGN count from overheating protection» of “Current Data Display & Save”.
• The overheat protection control system is normal operation, therefore, the STEERING warning light will not come on and there will be no DTC displayed.
• If the power steering system connector is disconnected while cooling under the overheat protection control, different DTC may be recorded. If there is no DTC and assist limitation is in active, stop the engine for approx. 10 minutes for cooling.

	Step	Check	Yes	No
1	**CHECK BATTERY.** Check the battery.	Is the voltage 12 V or more? Is the specific gravity 1.260 or more? Is the battery terminal installed properly? Is the fuse OK?	Go to step **2**.	Repair the defective part.
2	**CHECK DTC.** Using the Subaru Select Monitor, read all DTCs.	Is DTC related to VDC system or ignition power supply system displayed?	Perform the diagnosis according to DTC. <Ref. to VDC(diag)-37, List of Diagnostic Trouble Code (DTC).>	Go to step **3**.
3	**CHECK CURRENT DATA.** 1) Start the engine. 2) Display the current data «Engine Speed» of the power steering control module using the Subaru Select Monitor.	Is «Engine Speed» the same as that in the combination meter?	Go to step **4**.	Check the CAN communication. <Ref. to LAN(w/o HEV)(diag)-2, Basic Diagnostic Procedure.>
4	**CHECK CURRENT DATA.** Display the current data «EPS Status» of the power steering control module using the Subaru Select Monitor.	Is “Assist limitation” displayed?	It is possible that temporary assist limitation has occurred due to overheat protection. Stop the engine for approx. 10 minutes, and check again.	Go to step **5**.
5	**CHECK CURRENT DATA.** 1) Display the current data «Torque sensor main output» and «Torque sensor sub output» of the power steering control module using the Subaru Select Monitor. 2) Move the steering wheel to the left and right.	Do the values of «Torque sensor main output» and «Torque sensor sub output» change according to the operations?	Go to step **6**.	Check the installation status of torque sensor, and check again.

	Step	Check	Yes	No
6	**CHECK CURRENT DATA.** Display the current data «IG Voltage» of the power steering control module using the Subaru Select Monitor.	Is the value of «IG Voltage» steady? (While shaking the harness)	Go to step **7**.	Check the ignition switch and IG voltage harness, and repair the defective part.
7	**CHECK CONNECTOR.** 1) Turn the ignition switch to OFF. 2) Disconnect the connector (B450).	Are there any damages to terminal or other parts either on the power steering control module side or on the connector side?	Repair the terminal.	Replace the power steering control module. <Ref. to PS-43, Power Steering Control Module.>

B: STEERING WARNING LIGHT DOES NOT GO OFF

DETECTING CONDITION:

- Defective combination meter
- Open circuit of harness

TROUBLE SYMPTOM:

When starting the engine, the STEERING warning light continues to illuminate.

	Step	Check	Yes	No
1	**CHECK DTC.** Read the DTC of the power steering control module using the Subaru Select Monitor. <Ref. to PS(diag)-20, Read Diagnostic Trouble Code (DTC).>	Is DTC displayed?	Perform the diagnosis according to DTC. <Ref. to PS(diag)-26, List of Diagnostic Trouble Code (DTC).>	Go to step **2**.
2	**CHECK LAN SYSTEM.** Perform the diagnosis for LAN system using the Subaru Select Monitor. <Ref. to LAN(w/o HEV)(diag)-2, Basic Diagnostic Procedure.> <Ref. to LAN(HEV)(diag)-2, Basic Diagnostic Procedure.>	Is a DTC of the CAN communication detected?	Perform the diagnosis according to DTC. <Ref. to LAN(w/o HEV)(diag)-50, List of Diagnostic Trouble Code (DTC).> <Ref. to LAN(HEV)(diag)-87, List of Diagnostic Trouble Code (DTC).>	Check the combination meter. <Ref. to IDI-10, INSPECTION, Combination Meter System.>

11.List of Diagnostic Trouble Code (DTC)

A: LIST

DTC	Item	Content of diagnosis	Note
None	Without DTC	Normal	<Ref. to PS(diag)-19, WITHOUT DTC, INSPECTION, Subaru Select Monitor.>
	“Assist limitation” is displayed in the current data «EPS operating condition».	Assist limitation is performed due to overheat protection control.	<Ref. to PS(diag)-24, POWER STEERING ASSIST DISABLED, STEERING WARNING LIGHT DOES NOT COME ON, STEERING Warning Light.>
	“Overheating protection intervention history” in current data display shows 1 or more.	There are previous records of intervention to overheat protection control.	<Ref. to PS(diag)-24, POWER STEERING ASSIST DISABLED, STEERING WARNING LIGHT DOES NOT COME ON, STEERING Warning Light.>
C2511	Torque Sensor Failure 1 (Main)	• Poor connector contact • Forgot to connect connector • Faulty torque sensor section circuit • Faulty torque sensor coil	<Ref. to PS(diag)-28, DTC C2511 TORQUE SENSOR FAILURE 1 (MAIN), Diagnostic Procedure with Diagnostic Trouble Code (DTC).>
C2512	Torque Sensor Failure 2 (Sub)		<Ref. to PS(diag)-29, DTC C2512 TORQUE SENSOR FAILURE 2 (SUB), Diagnostic Procedure with Diagnostic Trouble Code (DTC).>
C2513	Torque Sensor Failure 3 (Much Tolerance)		<Ref. to PS(diag)-29, DTC C2513 TORQUE SENSOR FAILURE 3 (MUCH TOLERANCE), Diagnostic Procedure with Diagnostic Trouble Code (DTC).>
C2514	Torque Sensor Power Supply Failure		<Ref. to PS(diag)-30, DTC C2514 TORQUE SENSOR POWER SUPPLY FAILURE, Diagnostic Procedure with Diagnostic Trouble Code (DTC).>
C2521	Motor Failure 1 (Motor)	• Poor connector contact • Forgot to connect connector • Harness open/short circuit • Motor open circuit • Power transistor shorted/open • Terminal power supply or ground short	<Ref. to PS(diag)-31, DTC C2521 MOTOR FAILURE 1 (MOTOR), Diagnostic Procedure with Diagnostic Trouble Code (DTC).>
C2522	Motor Failure 2 (Angle Abnormal)		<Ref. to PS(diag)-32, DTC C2522 MOTOR FAILURE 2 (ANGLE ABNORMAL), Diagnostic Procedure with Diagnostic Trouble Code (DTC).>
C2531	ECU Failure 1 (CPU Failure)	Faulty main unit of power steering control module	<Ref. to PS(diag)-32, DTC C2531 ECU FAILURE 1 (CPU FAILURE), Diagnostic Procedure with Diagnostic Trouble Code (DTC).>
C2532	ECU Failure 2 (Peripheral Circuit Failure)	Faulty main unit of power steering control module	<Ref. to PS(diag)-33, DTC C2532 ECU FAILURE 2 (PERIPHERAL CIRCUIT FAILURE), Diagnostic Procedure with Diagnostic Trouble Code (DTC).>
C2533	ECM Failure 3 (Board Temperature Sensor Failure)	Faulty main unit of power steering control module	<Ref. to PS(diag)-34, DTC C2533 ECM FAILURE 3 (BOARD TEMPERATURE SENSOR FAILURE), Diagnostic Procedure with Diagnostic Trouble Code (DTC).>
C2541	Vehicle Speed Is Abnormal	• Poor connector contact • Forgot to connect connector • Harness open/short circuit	<Ref. to PS(diag)-35, DTC C2541 VEHICLE SPEED IS ABNORMAL, Diagnostic Procedure with Diagnostic Trouble Code (DTC).>
C2543	Error Passive Status	Defective CAN communication	<Ref. to PS(diag)-36, DTC C2543 ERROR PASSIVE STATUS, Diagnostic Procedure with Diagnostic Trouble Code (DTC).>
C2551	Power Supply Relay Failure	• Power supply voltage malfunction • Faulty relay contact	<Ref. to PS(diag)-37, DTC C2551 POWER SUPPLY RELAY FAILURE, Diagnostic Procedure with Diagnostic Trouble Code (DTC).>

DTC	Item	Content of diagnosis	Note
C2552	Motor Relay Abnormal	Faulty relay	<Ref. to PS(diag)-39, DTC C2552 MOTOR RELAY ABNORMAL, Diagnostic Procedure with Diagnostic Trouble Code (DTC).>
U0073	Control Module Communication Bus Off	Defective CAN communication	<Ref. to PS(diag)-39, DTC U0073 CONTROL MODULE COMMUNICATION BUS OFF, Diagnostic Procedure with Diagnostic Trouble Code (DTC).>
U0122	Lost Communication With Vehicle Dynamics Control Module	Defective CAN communication	<Ref. to PS(diag)-39, DTC U0122 LOST COMMUNICATION WITH VEHICLE DYNAMICS CONTROL MODULE, Diagnostic Procedure with Diagnostic Trouble Code (DTC).>
U0416	Invalid Data Received From Vehicle Dynamics Control Module	Defective CAN communication	<Ref. to PS(diag)-39, DTC U0416 INVALID DATA RECEIVED FROM VEHICLE DYNAMICS CONTROL MODULE, Diagnostic Procedure with Diagnostic Trouble Code (DTC).>
U1120	Lost Communication With Autostart Stop Control Module	Defective CAN communication	<Ref. to PS(diag)-39, DTC U1120 LOST COMMUNICATION WITH AUTOSTART STOP CONTROL MODULE, Diagnostic Procedure with Diagnostic Trouble Code (DTC).>

12.Diagnostic Procedure with Diagnostic Trouble Code (DTC)

A: DTC C2511 TORQUE SENSOR FAILURE 1 (MAIN)

TROUBLE SYMPTOM:

- The steering wheel operation feels heavy.
- STEERING warning light illuminates.

WIRING DIAGRAM:

Electric power steering system <Ref. to WI(w/o HEV)-73, Electric Power Steering System.> <Ref. to WI(HEV)-98, Electric Power Steering System.>

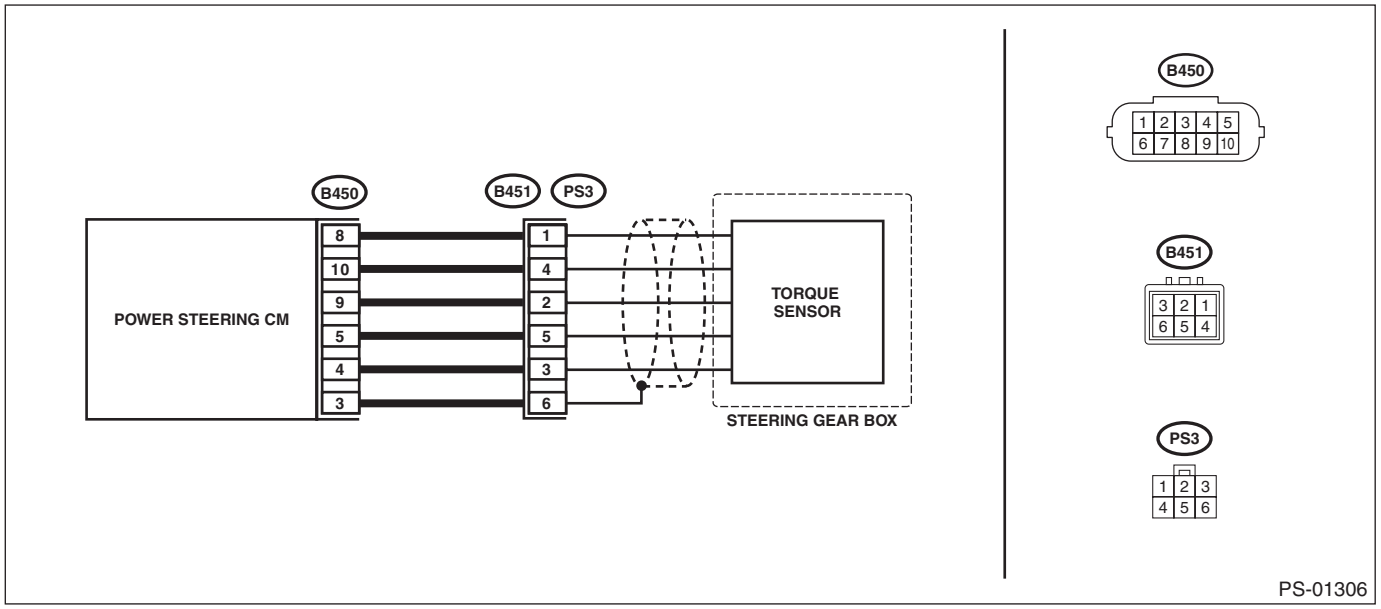

Step		Check	Yes	No
1	**CHECK TORQUE SENSOR SIGNAL.** 1) Display the current data of the power steering control module using the Subaru Select Monitor. 2) Check the voltage of «Torque sensor main output», «Torque sensor sub output», «Torque sensor reference voltage» and «Torque sensor power supply voltage».	Are the voltage of «Torque sensor main output» and «Torque sensor sub output» 2.5±0.1 V? Is the voltage of «Torque sensor reference voltage» 3±0.1 V? Is the voltage of «Torque sensor power supply voltage» 8±0.4 V?	Check for poor contact of the connector, and check the conditions again. If the condition recur, go to the next step. Go to step **2**. If it does not recur, complete the inspection.	Go to step **2**.
2	**CHECK HARNESS.** 1) Turn the ignition switch to OFF. 2) Disconnect the connectors (B450, B451). 3) Using a tester and test harness, check the internal resistance of the harness terminals. ***Connector & terminal*** ***(B450) No. 4 — (B451) No. 3:*** ***(B450) No. 5 — (B451) No. 5:*** ***(B450) No. 8 — (B451) No. 1:*** ***(B450) No. 9 — (B451) No. 2:*** ***(B450) No. 10 — (B451) No. 4:***	Is the resistance less than 10 Ω?	Go to step **3**.	Repair or replace the harness.

	Step	Check	Yes	No
3	**CHECK POWER STEERING CONTROL MODULE.** 1) Connect the connector (B450) to the power steering control module. 2) Turn the ignition switch to ON. 3) Short the circuit between connector (B451) terminals. ***Terminals*** ***No. 4 — No. 3:*** ***No. 4 — No. 5:*** 4) Using the Subaru Select Monitor, check the voltages of «Torque sensor main output» and «Torque sensor sub output».	Are the voltages of «Torque sensor main output» and «Torque sensor sub output» before you short the circuit 0±0.1 V? Are the voltages of «Torque sensor main output» and «Torque sensor sub output» after you short the circuit 3±0.1 V?	Replace the steering gearbox. <Ref. to PS-27, Electric Power Steering Gearbox.>	Replace the power steering control module. <Ref. to PS-43, Power Steering Control Module.>

B: DTC C2512 TORQUE SENSOR FAILURE 2 (SUB)

NOTE:
For the diagnostic procedures, refer to “DTC 2511 TORQUE SENSOR FAILURE 1 (MAIN)”. <Ref. to PS(diag)-28, DTC C2511 TORQUE SENSOR FAILURE 1 (MAIN), Diagnostic Procedure with Diagnostic Trouble Code (DTC).>

C: DTC C2513 TORQUE SENSOR FAILURE 3 (MUCH TOLERANCE)

NOTE:
For the diagnostic procedures, refer to “DTC 2511 TORQUE SENSOR FAILURE 1 (MAIN)”. <Ref. to PS(diag)-28, DTC C2511 TORQUE SENSOR FAILURE 1 (MAIN), Diagnostic Procedure with Diagnostic Trouble Code (DTC).>

D: DTC C2514 TORQUE SENSOR POWER SUPPLY FAILURE

TROUBLE SYMPTOM:

- The steering wheel operation feels heavy.
- STEERING warning light illuminates.

WIRING DIAGRAM:

Electric power steering system <Ref. to WI(w/o HEV)-73, Electric Power Steering System.> <Ref. to WI(HEV)-98, Electric Power Steering System.>

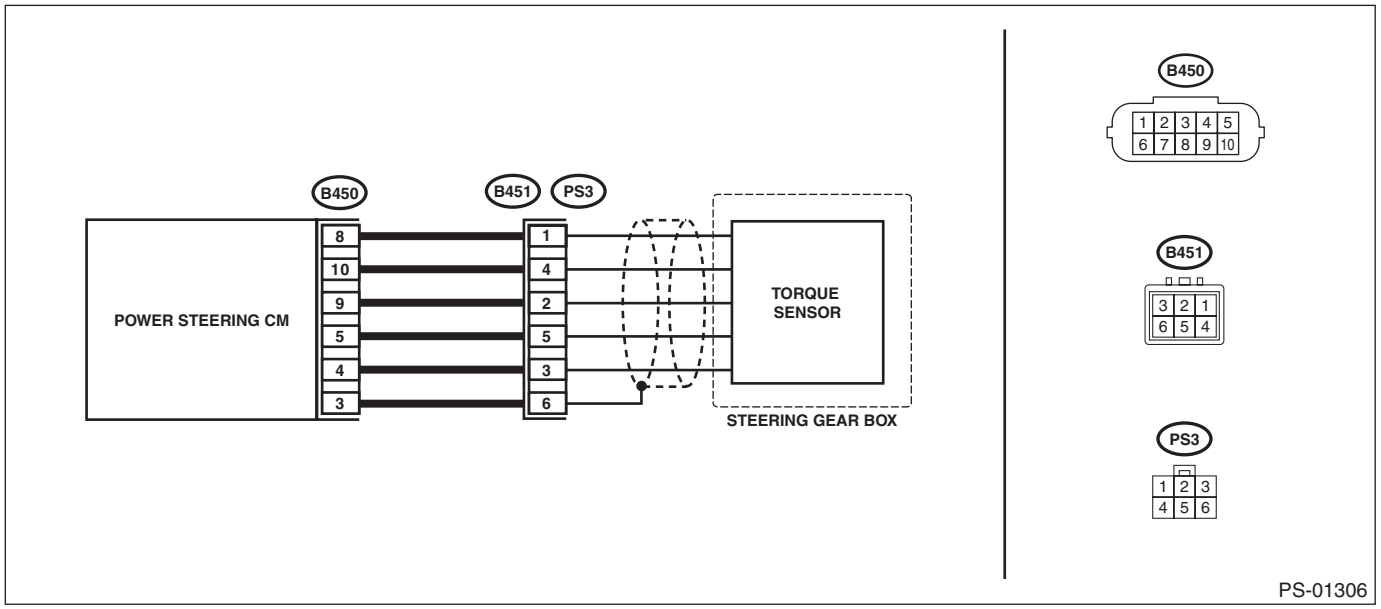

Step		Check	Yes	No
1	**CHECK TORQUE SENSOR SIGNAL.** 1) Display the current data of the power steering control module using the Subaru Select Monitor. 2) Check the voltage of «Torque sensor main output», «Torque sensor sub output», «Torque sensor reference voltage» and «Torque sensor power supply voltage».	Are the voltage of «Torque sensor main output» and «Torque sensor sub output» 2.5±0.1 V? Is the voltage of «Torque sensor reference voltage» 3±0.1 V? Is the voltage of «Torque sensor power supply voltage» 8±0.4 V?	Check for poor contact of the connector, and check the conditions again. If the condition recur, go to the next step. Go to step **2**. If it does not recur, complete the inspection.	Go to step **2**.
2	**CHECK HARNESS.** 1) Turn the ignition switch to OFF. 2) Disconnect the connector (B451). 3) Using a tester and test harness, check the internal resistance of the harness terminals. ***Connector & terminal*** ***(B450) No. 4 — (B451) No. 3:*** ***(B450) No. 5 — (B451) No. 5:*** ***(B450) No. 8 — (B451) No. 1:*** ***(B450) No. 9 — (B451) No. 2:*** ***(B450) No. 10 — (B451) No. 4:***	Is the resistance less than 10 Ω?	Replace the power steering control module. <Ref. to PS-43, Power Steering Control Module.>	Repair or replace the harness.

E: DTC C2521 MOTOR FAILURE 1 (MOTOR)

TROUBLE SYMPTOM:

- The steering wheel operation feels heavy.
- STEERING warning light illuminates.

WIRING DIAGRAM:

Electric power steering system <Ref. to WI(w/o HEV)-73, Electric Power Steering System.> <Ref. to WI(HEV)-98, Electric Power Steering System.>

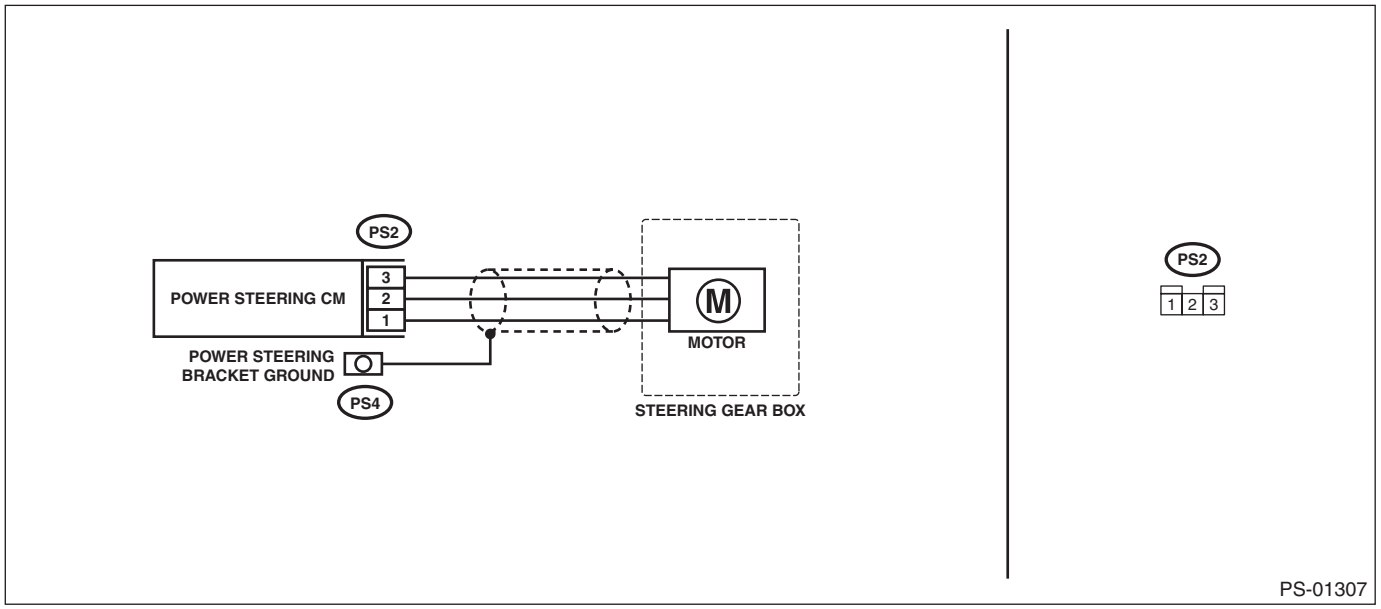

Step		Check	Yes	No
1	**CHECK MOTOR UNIT.** 1) Turn the ignition switch to OFF. 2) Disconnect the connector (PS2) from the power steering control module. 3) Use a tester to check for continuity in the motor. ***Connector & terminal*** ***(PS2) No. 1 — No. 2:*** ***(PS2) No. 1 — No. 3:*** ***(PS2) No. 2 — No. 3:***	Is there continuity?	Go to step **2**.	Replace the steering gearbox. <Ref. to PS-27, Electric Power Steering Gearbox.>
2	**CHECK MOTOR INSULATION.** Use a tester to check for short circuits in the motor. ***Connector & terminal*** ***(PS2) No. 1 — Steering gearbox body:*** ***(PS2) No. 2 — Steering gearbox body:*** ***(PS2) No. 3 — Steering gearbox body:***	Is the resistance 1 MΩ or more?	Replace the power steering control module. <Ref. to PS-43, Power Steering Control Module.>	Replace the steering gearbox. <Ref. to PS-27, Electric Power Steering Gearbox.>

F: DTC C2522 MOTOR FAILURE 2 (ANGLE ABNORMAL)

TROUBLE SYMPTOM:

- The steering wheel operation feels heavy.
- STEERING warning light illuminates.

WIRING DIAGRAM:

Electric power steering system <Ref. to WI(w/o HEV)-73, Electric Power Steering System.> <Ref. to WI(HEV)-98, Electric Power Steering System.>

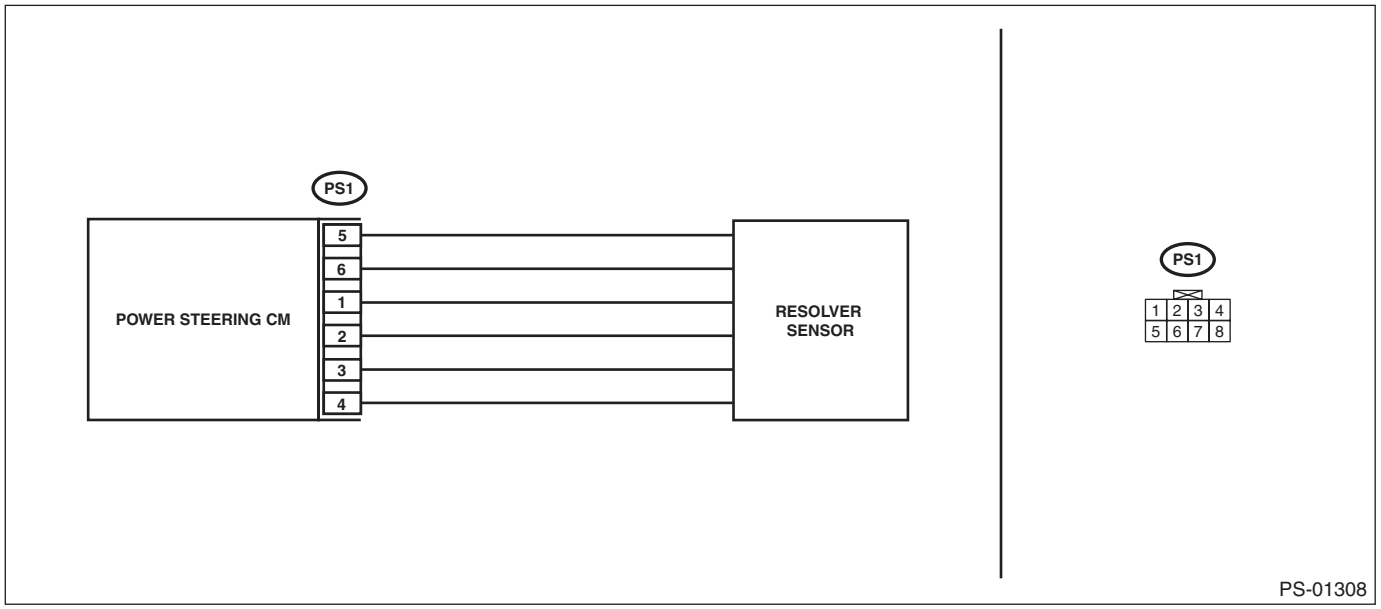

Step		Check	Yes	No
1	**CHECK MOTOR UNIT.** 1) Turn the ignition switch to OFF. 2) Disconnect the connector (PS1) from the power steering control module. 3) Use a tester to check for continuity in the resolver sensor. ***Connector & terminal*** ***(PS1) No. 1 — No. 2 :*** ***(PS1) No. 3 — No. 4 :*** ***(PS1) No. 5 — No. 6 :***	Is there continuity?	Go to step **2**.	Replace the steering gearbox. <Ref. to PS-27, Electric Power Steering Gearbox.>
2	**CHECK RESOLVER SENSOR INSULATION.** Using a tester, check for short circuits in the resolver sensor. ***Connector & terminal*** ***(PS1) No. 1 — Steering gearbox body:*** ***(PS1) No. 2 — Steering gearbox body:*** ***(PS1) No. 3 — Steering gearbox body:*** ***(PS1) No. 4 — Steering gearbox body:*** ***(PS1) No. 5 — Steering gearbox body:*** ***(PS1) No. 6 — Steering gearbox body:***	Is the resistance 1 MΩ or more?	Replace the power steering control module. <Ref. to PS-43, Power Steering Control Module.>	Replace the steering gearbox. <Ref. to PS-27, Electric Power Steering Gearbox.>

G: DTC C2531 ECU FAILURE 1 (CPU FAILURE)

TROUBLE SYMPTOM:

- The steering wheel operation feels heavy.
- STEERING warning light illuminates.

NOTE:
When this code is displayed, replace the power steering control module with new parts. <Ref. to PS-43, Power Steering Control Module.>

H: DTC C2532 ECU FAILURE 2 (PERIPHERAL CIRCUIT FAILURE)

TROUBLE SYMPTOM:

- The steering wheel operation feels heavy.
- STEERING warning light illuminates.

WIRING DIAGRAM:

Electric power steering system <Ref. to WI(w/o HEV)-73, Electric Power Steering System.>

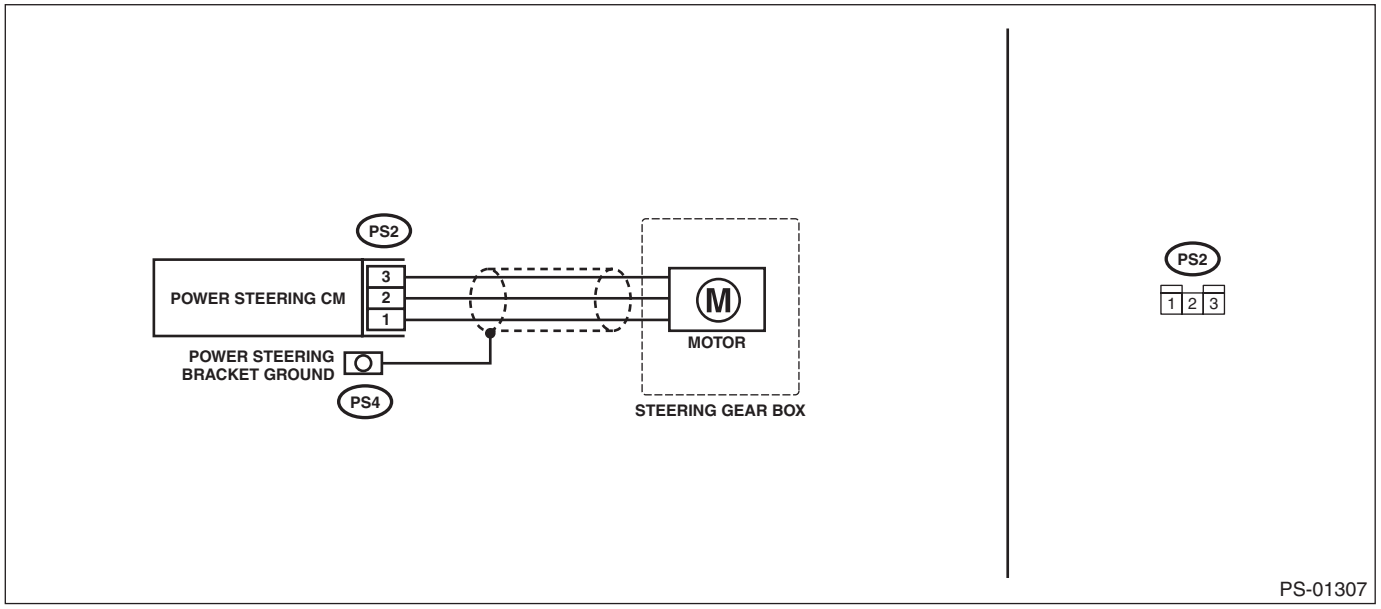

	Step	Check	Yes	No
1	**CHECK CONNECTOR.** Check the connection status of the power steering control module and motor harness (PS2).	Is the connector firmly installed?	Go to step **2**.	Install the connector, and check again.
2	**CHECK CONNECTOR.** Check the appearance at connection of the power steering control module and motor harness (PS2).	Is the motor harness grommet coming out from the connector?	Replace the steering gearbox. <Ref. to PS-27, Electric Power Steering Gearbox.>	Go to step **3**.
3	**CHECK MOTOR UNIT.** 1) Turn the ignition switch to OFF. 2) Disconnect the connector (PS2) from the power steering control module. 3) Use a tester to check for continuity in the motor. ***Connector & terminal*** ***(PS2) No. 1 — No. 2:*** ***(PS2) No. 1 — No. 3:*** ***(PS2) No. 2 — No. 3:***	Is there continuity? (While shaking the harness)	Go to step **4**.	Replace the steering gearbox. <Ref. to PS-27, Electric Power Steering Gearbox.>
4	**CHECK MOTOR INSULATION.** Use a tester to check for short circuits in the motor. ***Connector & terminal*** ***(PS2) No. 1 — Steering gearbox body:*** ***(PS2) No. 2 — Steering gearbox body:*** ***(PS2) No. 3 — Steering gearbox body:***	Is the resistance 1 MΩ or more? (While shaking the harness)	Replace the power steering control module. <Ref. to PS-43, Power Steering Control Module.>	Replace the steering gearbox. <Ref. to PS-27, Electric Power Steering Gearbox.>

I: DTC C2533 ECM FAILURE 3 (BOARD TEMPERATURE SENSOR FAILURE)

TROUBLE SYMPTOM:
The steering wheel operation feels heavy.

NOTE:
When this code is displayed, replace the power steering control module with new parts. <Ref. to PS-43, Power Steering Control Module.>

J: DTC C2541 VEHICLE SPEED IS ABNORMAL

TROUBLE SYMPTOM:
The steering wheel operation feels heavy.

	Step	Check	Yes	No
1	**CHECK DTC.** Read all DTCs using the Subaru Select Monitor.	Are VDC CM or vehicle speed-related DTCs detected?	Perform the diagnosis according to the DTC.	Go to step **2**.
2	**CHECK LAN SYSTEM.** Perform the diagnosis for LAN system using the Subaru Select Monitor. <Ref. to LAN(w/o HEV)(diag)-2, Basic Diagnostic Procedure.> <Ref. to LAN(HEV)(diag)-2, Basic Diagnostic Procedure.>	Is a DTC of the CAN communication detected?	Perform the diagnosis according to the DTC. <Ref. to LAN(w/o HEV)(diag)-50, List of Diagnostic Trouble Code (DTC).> <Ref. to LAN(HEV)(diag)-87, List of Diagnostic Trouble Code (DTC).>	Go to step **3**.
3	**CHECK VEHICLE SPEED SIGNAL.** 1) Using the Subaru Select Monitor, display the current data «Vehicle Speed» of the power steering control module. 2) Lift up the vehicle (so that the wheels turn freely), start the engine, and raise engine speed in gear. **CAUTION:** **Be careful that no one is near the spinning tires and nothing gets caught in them.** 3) Check for whether the data changes according to vehicle speed.	Is the data in sync with the vehicle speed?	It is possible that temporary poor communication occurs. Perform memory clear.	Replace the power steering control module. <Ref. to PS-43, Power Steering Control Module.>

K: DTC C2543 ERROR PASSIVE STATUS

TROUBLE SYMPTOM:
The steering wheel operation feels heavy.

	Step	Check	Yes	No
1	**CHECK LAN SYSTEM.** Perform the diagnosis for LAN system using the Subaru Select Monitor. <Ref. to LAN(w/o HEV)(diag)-2, Basic Diagnostic Procedure.> <Ref. to LAN(HEV)(diag)-2, Basic Diagnostic Procedure.>	Is a DTC of the CAN communication detected?	Perform the diagnosis according to the DTC. <Ref. to LAN(w/o HEV)(diag)-50, List of Diagnostic Trouble Code (DTC).> <Ref. to LAN(HEV)(diag)-87, List of Diagnostic Trouble Code (DTC).>	Check for poor contact of the connector, and check the conditions again. If the condition recurs, perform the diagnosis according to the DTC. <Ref. to LAN(w/o HEV)(diag)-50, List of Diagnostic Trouble Code (DTC).> <Ref. to LAN(HEV)(diag)-87, List of Diagnostic Trouble Code (DTC).> If it does not recur, complete the inspection.

L: DTC C2551 POWER SUPPLY RELAY FAILURE

TROUBLE SYMPTOM:

- The steering wheel operation feels heavy.
- STEERING warning light illuminates.

NOTE:
If power supply voltage failure exists at the vehicle side, the warning light goes off if the normal voltage returns.

WIRING DIAGRAM:

- Gasoline engine model

Electric power steering system <Ref. to WI(w/o HEV)-73, Electric Power Steering System.>

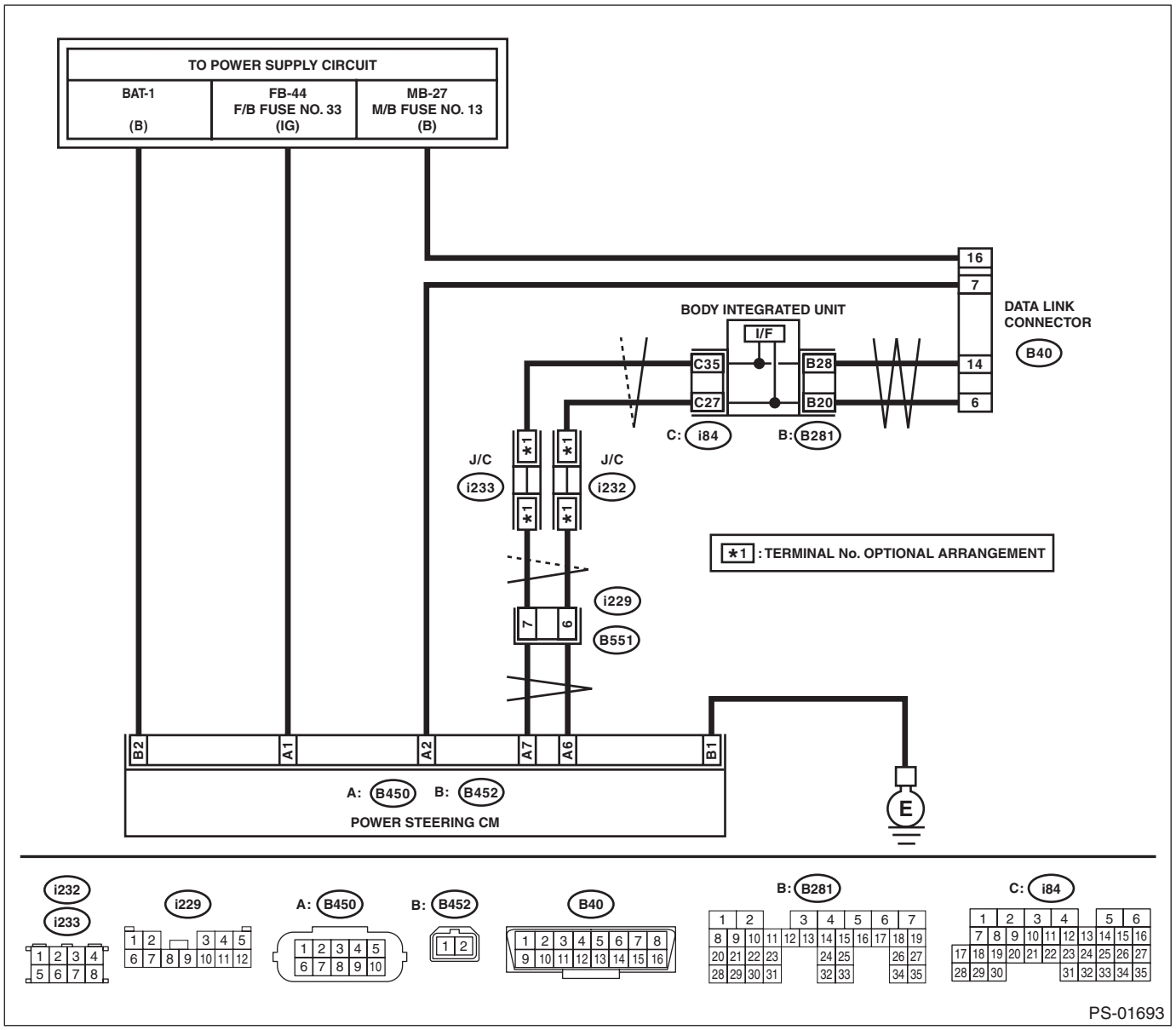

- HEV model

Electric power steering system <Ref. to WI(HEV)-98, Electric Power Steering System.>

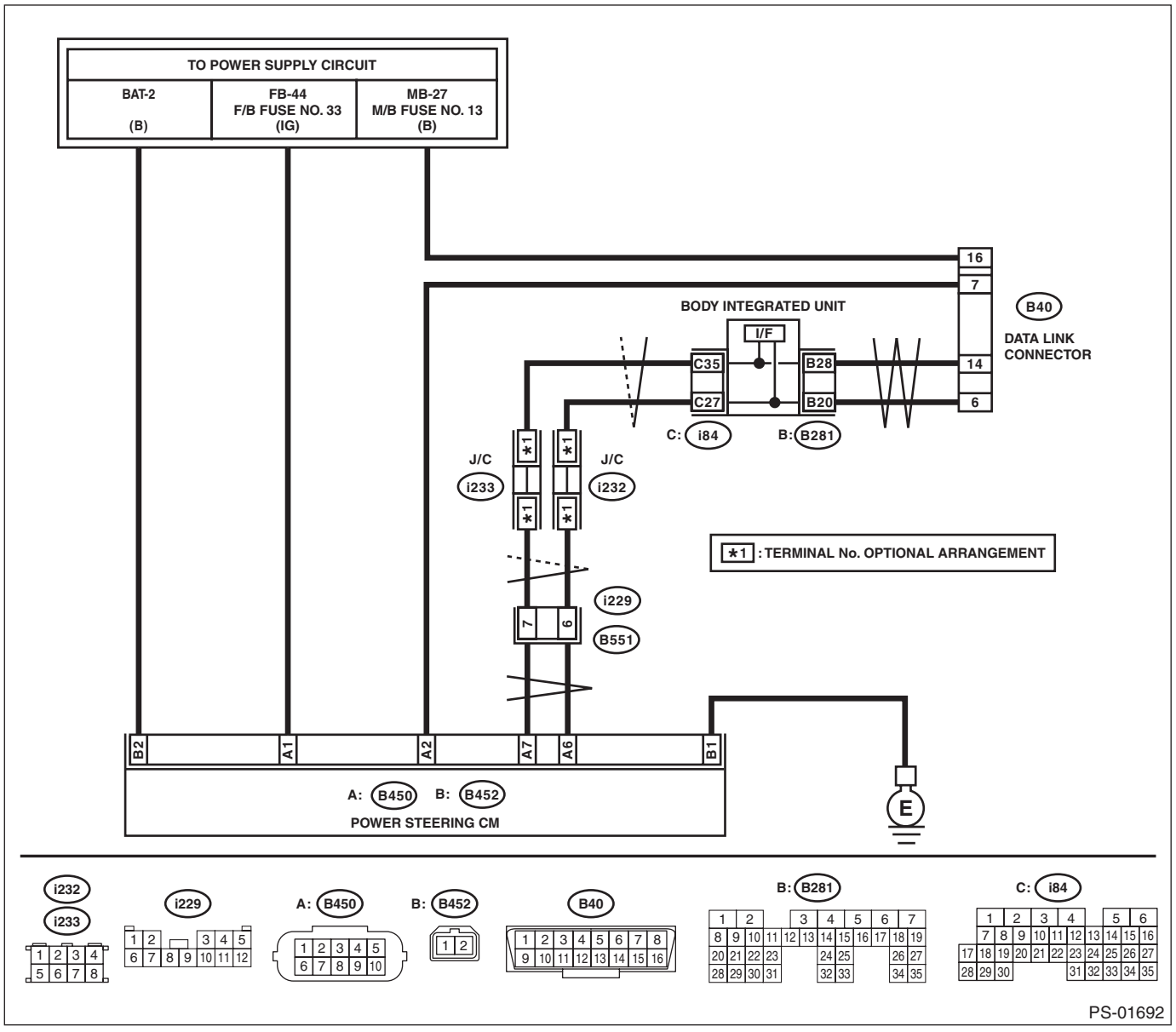

Step		Check	Yes	No
1	**CHECK BATTERY.** 1) Measure the battery voltage. 2) Measure the battery specific gravity.	Is the voltage 12 V or more? Is the specific gravity 1.260 or more?	Go to step **2**.	Charge or replace the battery.
2	**CHECK WIRING HARNESS.** 1) Disconnect the connector of the power steering control module. 2) Turn the ignition switch to ON. 3) Using a tester and test harness, check the voltage between terminals. ***Connector & terminal*** ***(B452) No. 2 (+) — Chassis ground (–):***	Is the voltage 12 V or more?	Go to step **3**.	Repair the open circuit of harness or the poor contact of connector between the power steering control module and the battery.

Step		Check	Yes	No
3	**CHECK GROUND CIRCUIT.** 1) Turn the ignition switch to OFF. 2) Using a tester and test harness, check the resistance between terminals. ***Connector & terminal*** ***(B452) No. 1 — Chassis ground:***	Is the resistance less than 1 Ω?	Check for poor contact of terminals in the power steering control module, and if there are no malfunctions, replace the power steering control module. <Ref. to PS-43, Power Steering Control Module.>	Repair the open circuit or poor contact of the harness between the power steering control module and chassis ground.

M: DTC C2552 MOTOR RELAY ABNORMAL

TROUBLE SYMPTOM:

- The steering wheel operation feels heavy.
- STEERING warning light illuminates.

NOTE:
When this code is displayed, replace the power steering control module with new parts. <Ref. to PS-43, Power Steering Control Module.>

N: DTC U0073 CONTROL MODULE COMMUNICATION BUS OFF

NOTE:
Refer to “LAN SYSTEM” for diagnostic procedure. <Ref. to LAN(w/o HEV)(diag)-2, Basic Diagnostic Procedure.> <Ref. to LAN(HEV)(diag)-2, Basic Diagnostic Procedure.>

O: DTC U0122 LOST COMMUNICATION WITH VEHICLE DYNAMICS CONTROL MODULE

NOTE:
Refer to “LAN SYSTEM” for diagnostic procedure. <Ref. to LAN(w/o HEV)(diag)-2, Basic Diagnostic Procedure.> <Ref. to LAN(HEV)(diag)-2, Basic Diagnostic Procedure.>

P: DTC U0416 INVALID DATA RECEIVED FROM VEHICLE DYNAMICS CONTROL MODULE

NOTE:
Refer to “LAN SYSTEM” for diagnostic procedure. <Ref. to LAN(w/o HEV)(diag)-2, Basic Diagnostic Procedure.> <Ref. to LAN(HEV)(diag)-2, Basic Diagnostic Procedure.>

Q: DTC U1120 LOST COMMUNICATION WITH AUTOSTART STOP CONTROL MODULE

NOTE:
Refer to “LAN SYSTEM” for diagnostic procedure. <Ref. to LAN(w/o HEV)(diag)-2, Basic Diagnostic Procedure.>

BODY 1 SECTION

This service manual has been prepared to provide SUBARU service personnel with the necessary information and data for the correct maintenance and repair of SUBARU vehicles.
This manual includes the procedures for maintenance, disassembling, reassembling, inspection and adjustment of components and diagnostics for guidance of experienced mechanics.
Please peruse and utilize this manual fully to ensure complete repair work for satisfying our customers by keeping their vehicle in optimum condition. When replacement of parts during repair work is needed, be sure to use SUBARU genuine parts.

All information, illustration and specifications contained in this manual are based on the latest product information available at the time of publication approval.

HVAC SYSTEM (HEATER, VENTILATOR AND A/C)	AC
HVAC SYSTEM (AUTO A/C) (DIAGNOSTICS)	AC(diag)
AIRBAG SYSTEM	AB
AIRBAG SYSTEM (DIAGNOSTICS)	AB(diag)
OCCUPANT DETECTION SYSTEM (DIAGNOSTICS)	OD(diag)
SEAT BELT SYSTEM	SB
LIGHTING SYSTEM	LI
AUTO HEADLIGHT BEAM LEVELER SYSTEM (DIAGNOSTICS)	AL(diag)
WIPER AND WASHER SYSTEMS	WW
ENTERTAINMENT	ET
COMMUNICATION SYSTEM	COM
GLASS/WINDOWS/MIRRORS	GW
BODY STRUCTURE	BS
INSTRUMENTATION/DRIVER INFO	IDI
INSTRUMENTATION/DRIVER INFO (DIAGNOSTICS)	IDI(diag)
SEATS	SE

FUJI HEAVY INDUSTRIES LTD.

HVAC SYSTEM (HEATER, VENTILATOR AND A/C)

AC

		Page
1.	General Description	2
2.	Air Conditioning System	23
3.	Refrigerant Pressure with Manifold Gauge Set	24
4.	Refrigerant Recovery Procedure	28
5.	Refrigerant Charging Procedure	30
6.	Refrigerant Leak Check	33
7.	Relay and Fuse	35
8.	Compressor Oil	37
9.	Blower Motor Unit Assembly	38
10.	Blower Motor	40
11.	Power Transistor (Auto A/C Model)	42
12.	Blower Resistor (Manual A/C Model)	43
13.	Heater Core	44
14.	Control Panel	50
15.	Compressor	54
16.	Condenser	59
17.	Heater and Cooling Unit	63
18.	Evaporator	66
19.	Expansion Valve	72
20.	Hose and Pipe	74
21.	Pressure Switch (Triple Pressure Switch)	78
22.	Ambient Sensor	79
23.	Sunload Sensor (Auto A/C Model)	83
24.	In-Vehicle Sensor (Auto A/C Model)	85
25.	Temperature and Humidity Sensor	89
26.	Evaporator Sensor	92
27.	Heater Core Sensor	97
28.	FRESH/RECIRC Door Actuator	100
29.	Mode Door Actuator	104
30.	Air Mix Door Actuator	105
31.	Air Vent Grille	107
32.	Heater Duct	110
33.	Heater Vent Duct	111
34.	A/C Filter	112
35.	Diagnostics with Phenomenon	113

1. General Description

A: SPECIFICATION

1. HEATER SYSTEM

Item		Specifications	Condition
Heating capacity		5.0 kW (4,299 kcal/h, 17,059 BTU/h) or more	• Air flow control dial or switch: FOOT • Temperature control dial: HI (MAX HOT) • Temperature difference between hot water and inlet air: 65°C (149°F) • Hot water flow rate: 360 L (95.1 US gal, 79.2 Imp gal)/h
Air flow rate		290 m^3 (10,243 cu ft)/h	FOOT mode (FRESH), MAX HOT at 12.5 V
Max air flow rate		480 m^3 (16,954 cu ft)/h	• Temperature control dial: LO (MAX COOL) • Fan dial: HI (MAX) Auto A/C model: 7th position Manual A/C model: 4th position • FRESH/RECIRC switch: RECIRC
Heater core	Dimensions (W × H × T)	257.5 × 118.5 × 27 mm (10.1 × 4.67 × 1.06 in)	—
Blower motor	Type	Magnet motor 300 W or less	12 V
	Fan type and size (diameter × width)	Sirocco fan type 150 × 75 mm (5.91 × 2.95 in)	—

2. A/C SYSTEM

Item		Specifications
Type of air conditioner		Reheat air-mix type
Cooling capacity		5.0 kW (4,299 kcal/h, 17,059 BTU/h)
Refrigerant		HFC-134a (CH_2FCF_3) [0.475±0.025 kg (1.05±0.06 lb)]
Compressor	Type	Rotary fixed capacity (DKV-10Z)
	Discharge	105 cc (6.41 cu in)/rev
	Max. permissible speed	7,700 rpm
Magnet clutch	Type	Dry, single-disc type
	Power consumption	45 W
	Type of belt	Gasoline engine model: V-belt 6 PK HEV model: V-belt 7 PK
	Pulley dia. (effective dia.)	110 mm (4.33 in)
	Pulley ratio	1.3
Condenser	Type	Sub cool type
	Core face area	0.188 m^2 (2.002 sq ft)
	Core thickness	16 mm (0.63 in)
	Radiation area	4.5 m^2 (48.44 sq ft)
Expansion valve	Type	Block
Evaporator	Type	Dual-tank
	Dimensions (W × H × T)	290.1 × 172 × 39 mm (11.42 × 6.77 × 1.54 in)
Blower fan	Fan type	Sirocco fan
	Outer diameter × Width	150 × 75 mm (5.91 × 2.95 in)
	Power consumption	280 W
Condenser fan (sub fan)	Motor type	Magnet
	Power consumption	120 W
	Fan outer diameter	318.5 mm (12.5 in)

Item			Specifications
Radiator fan (main fan)		Motor type	Magnet
		Power consumption	120 W
		Fan outer diameter	318.5 mm (12.5 in)
Idle speed		No load	650±100 rpm
		A/C ON	800 — 900±50 rpm
Triple switch (Pressure switch)	Low-pressure switch operating pressure	ON → OFF	196±25 kPa (2.00±0.25 kgf/cm^2, 28.4±3.6 psi)
		OFF → ON	225±30 kPa (2.29±0.31 kgf/cm^2, 32.6±4.3 psi)
	High-pressure switch operating pressure	ON → OFF	2,940±200 kPa (29.98±2.04 kgf/cm^2, 426.3±29 psi)
		OFF → ON	2,350±200 kPa (24.00±2.04 kgf/cm^2, 340.7±29.0 psi)
	Middle-pressure switch operating pressure	ON → OFF	1,470±120 kPa (14.99±1.22 kgf/cm^2, 213.15±17.4 psi)
		OFF → ON	1,770±100 kPa (18.05±1.02 kgf/cm^2, 256.65±14.5 psi)
Thermo-control amplifier working temperature			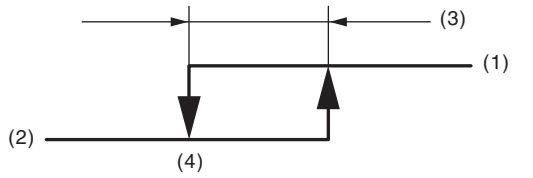 AC-00601 (1) ON (2) OFF (3) 1.5±0.3°C (34.7±0.5°F) (4) 1.0±0.5°C (33.8±0.9°F)

3. BASIC OPERATION

The cooling system cools down the compartment by using the pipes connecting parts and cycling the evaporable liquid (refrigerant) within the sealed system in a repeated process of “vaporization — liquefaction — re-vaporization”.

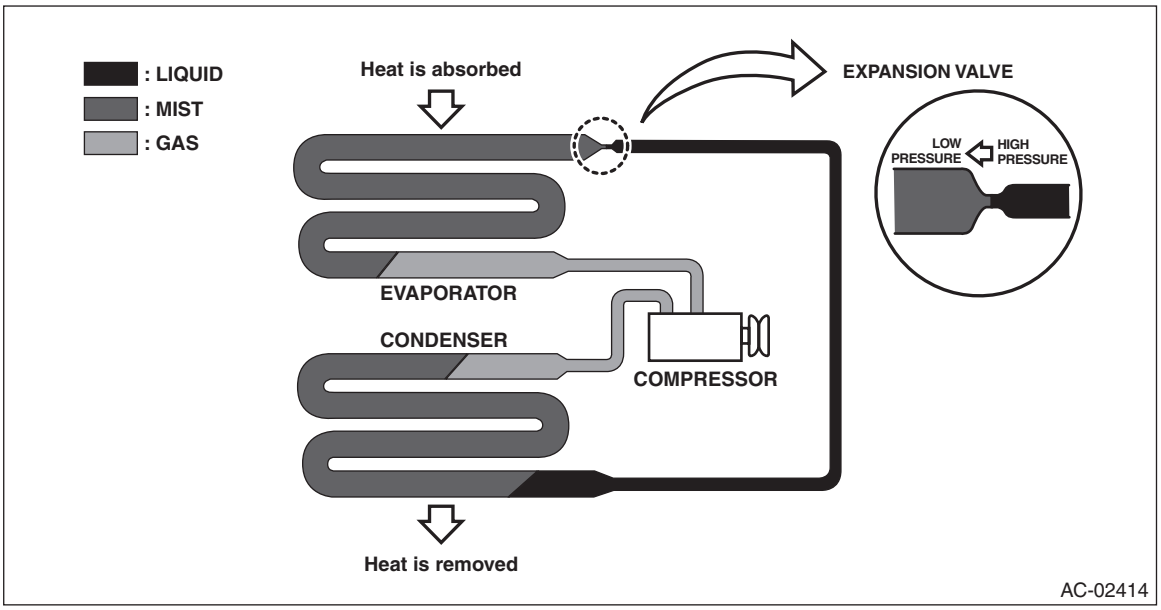

Item	Operation
Compressor	Sucks and pressurizes the low temperature, low pressure refrigerant gas that was vaporized at the evaporator by absorbing heat from the compartment, and sends the high temperature, high pressure refrigerant gas to the condenser.
Condenser	Cools the high temperature, high pressure refrigerant gas sent from the compressor for condense and liquefaction.
Expansion valve	• Sprays the high temperature, high pressure liquid refrigerant from the small hole in order to let the refrigerant expand rapidly to turn it into low temperature, low pressure mist. • The refrigerant amount is adjusted according to the refrigerant vaporization condition in the evaporator.
Evaporator	The evaporator turns into a low temperature condition when the mist refrigerant that was turned into a low temperature, low pressure condition at the expansion valve is vaporized in large quantity in the evaporator. Passing air flow through the low temperature evaporator emits cold air.

B: LOCATION

1. ELECTRICAL COMPONENT (ACTUATORS AND SENSORS)

- Engine compartment

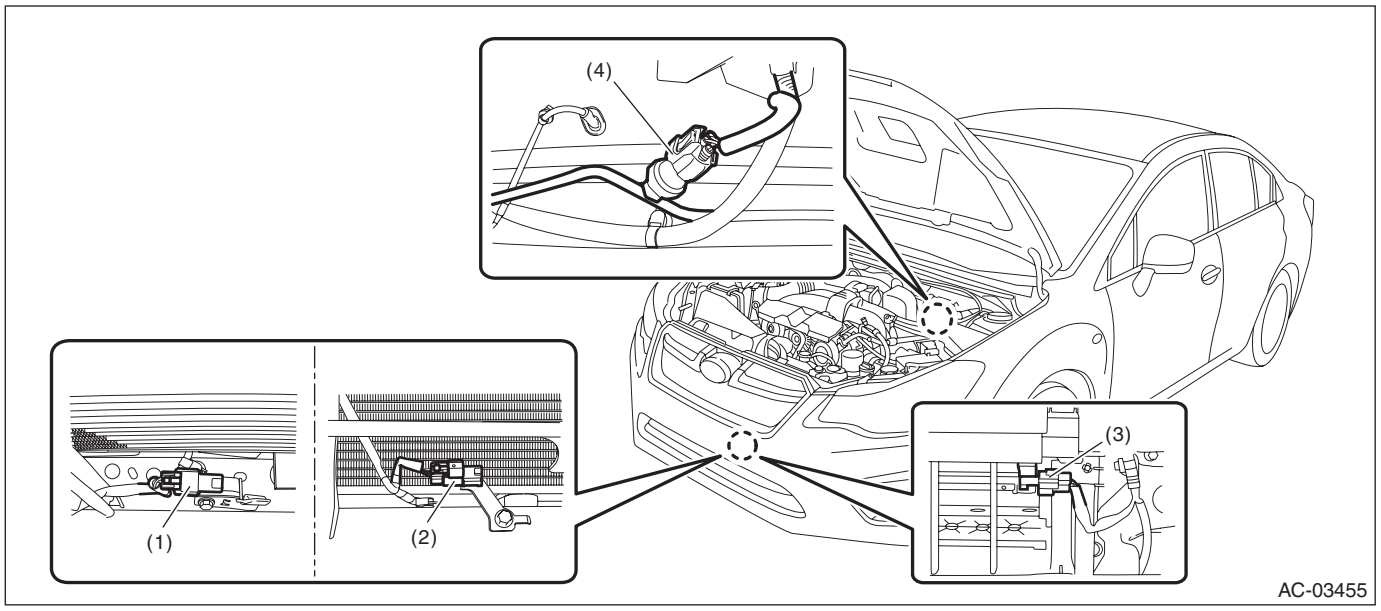

(1) Ambient sensor (gasoline engine, except for XV model)
(2) Ambient sensor (gasoline engine, XV model)
(3) Ambient sensor (HEV model)
(4) Pressure switch

- Compartment

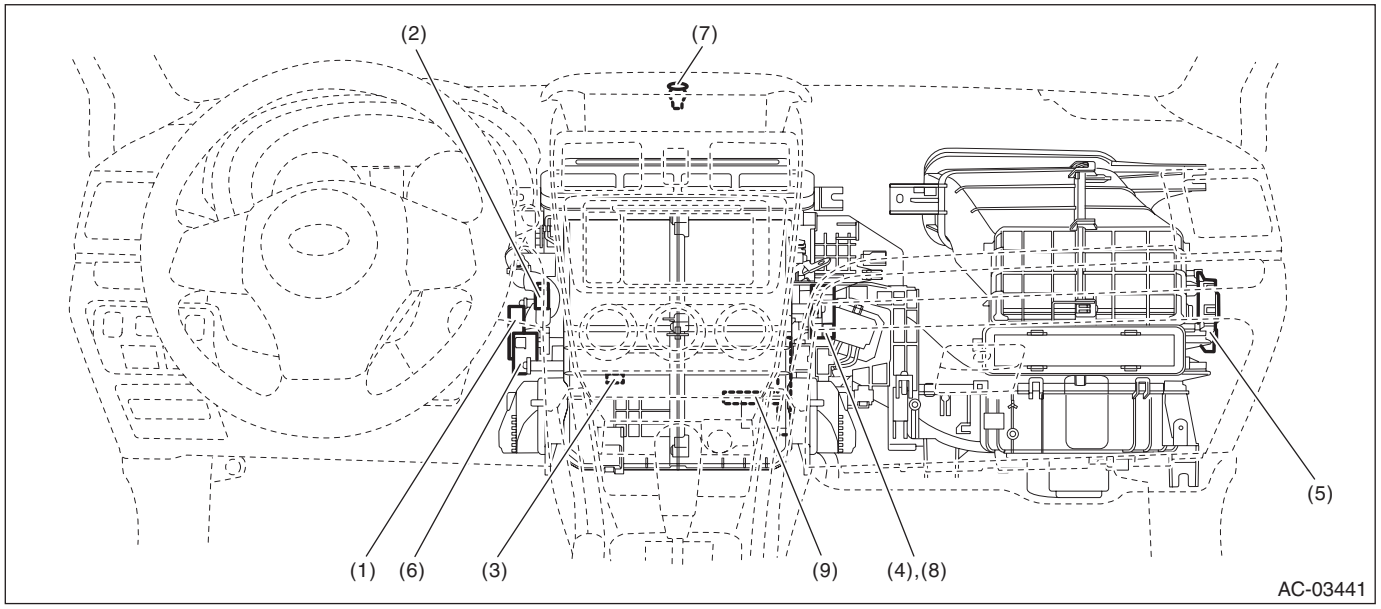

(1) Dual A/C air mix door actuator LH
(2) In-vehicle sensor
(3) Evaporator sensor
(4) Dual A/C air mix door actuator RH
(5) Intake door actuator
(6) Mode door actuator
(7) Sunload sensor
(8) Single A/C air mix door actuator
(9) Heater core sensor (HEV model)

C: COMPONENT

1. HEATER AND COOLING UNIT

- Manual A/C model

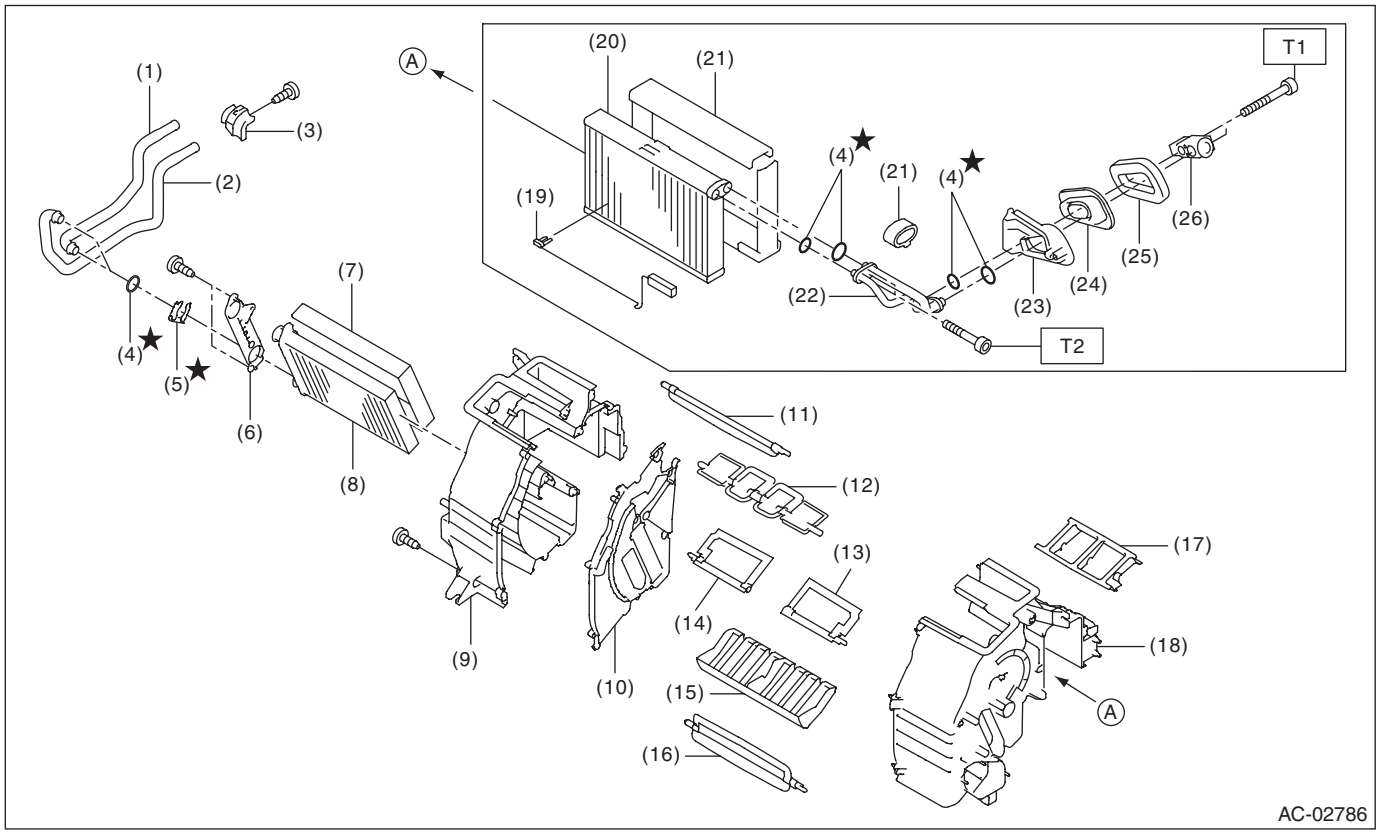

(1) Pipe - inlet
(2) Pipe - outlet
(3) Clamp - pipe
(4) Seal O-ring
(5) Clamp
(6) Plate - heater core
(7) Packing - heater core
(8) Heater core
(9) Case - heater unit UPR LH
(10) Plate CTR
(11) Shutter - defroster
(12) Shutter - vent
(13) Shutter - air mix RH
(14) Shutter - air mix LH
(15) Guide - heater unit
(16) Shutter - foot
(17) Case - vent duct
(18) Case - heater unit UPR RH
(19) Thermostat - cooling
(20) Evaporator ASSY - cooling
(21) Packing - evaporator core
(22) Pipe - evaporator core
(23) Case - expansion valve
(24) Seal - cooling
(25) Packing - heater unit
(26) Expansion valve - cooling

Tightening torque: N·m (kgf-m, ft-lb)
T1: 5.0 (0.51, 3.7)
T2: 6.7 (0.68, 4.9)

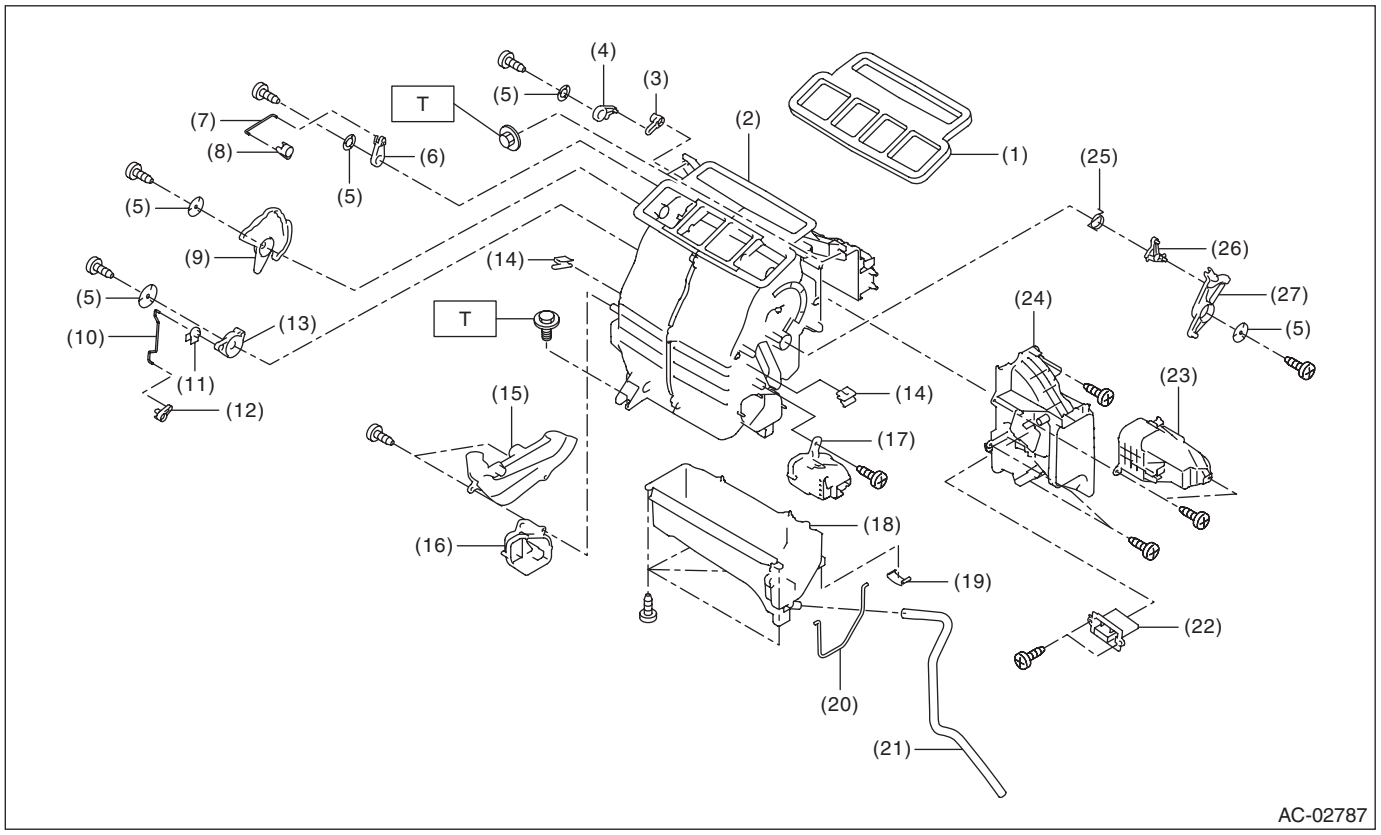

(1) Packing - heater unit
(2) Case - heater unit
(3) Lever - defroster
(4) Lever - defroster sub
(5) Washer - heater
(6) Lever - ventilator sub
(7) Rod - ventilator
(8) Lever - ventilator door
(9) Lever - mode
(10) Rod - foot
(11) Clip
(12) Lever - foot
(13) Lever - foot sub
(14) Clamp - cable
(15) Cover - heater pipe
(16) Duct - foot LH
(17) Duct - foot RH
(18) Case - heater LWR
(19) Clip - case
(20) Packing - evaporator cover
(21) Hose - drain
(22) Resistor
(23) Cover
(24) Cover - heater unit
(25) Spring - heater unit
(26) Lever A
(27) Lever B

Tightening torque: N·m (kgf-m, ft-lb)
T: 7.5 (0.76, 5.5)

- Auto A/C model

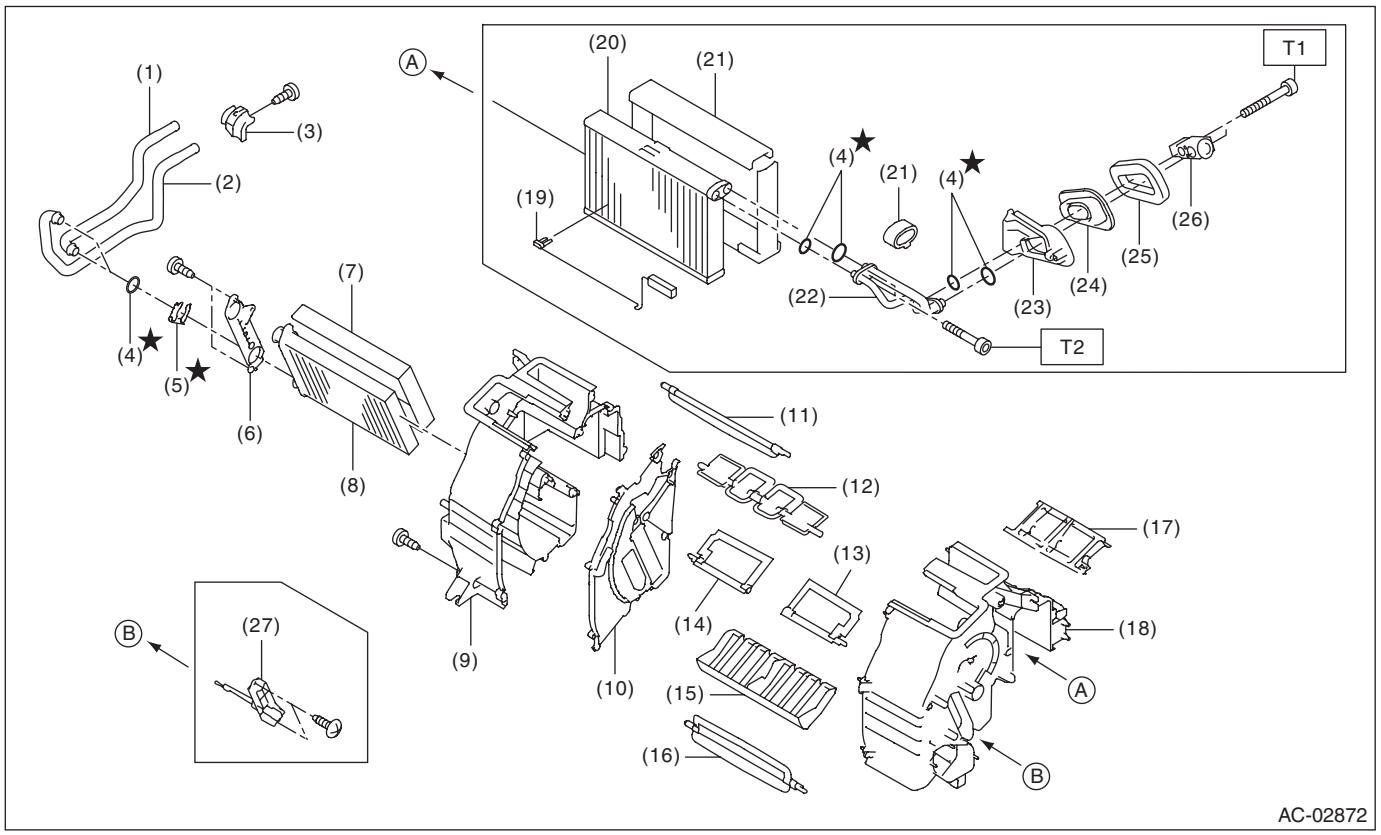

(1) Pipe - inlet
(2) Pipe - outlet
(3) Clamp - pipe
(4) Seal O-ring
(5) Clamp
(6) Plate - heater core
(7) Packing - heater core
(8) Heater core
(9) Case - heater unit UPR LH
(10) Plate CTR
(11) Shutter - defroster
(12) Shutter - vent
(13) Shutter - air mix RH
(14) Shutter - air mix LH
(15) Guide - heater unit
(16) Shutter - foot
(17) Case - vent duct
(18) Case - heater unit UPR RH
(19) Thermostat - cooling
(20) Evaporator ASSY - cooling
(21) Packing - evaporator core
(22) Pipe - evaporator core
(23) Case - expansion valve
(24) Seal - cooling
(25) Packing - heater unit
(26) Expansion valve - cooling
(27) Heater core sensor (HEV model)

Tightening torque: N·m (kgf-m, ft-lb)
T1: 5.0 (0.51, 3.7)
T2: 6.7 (0.68, 4.9)

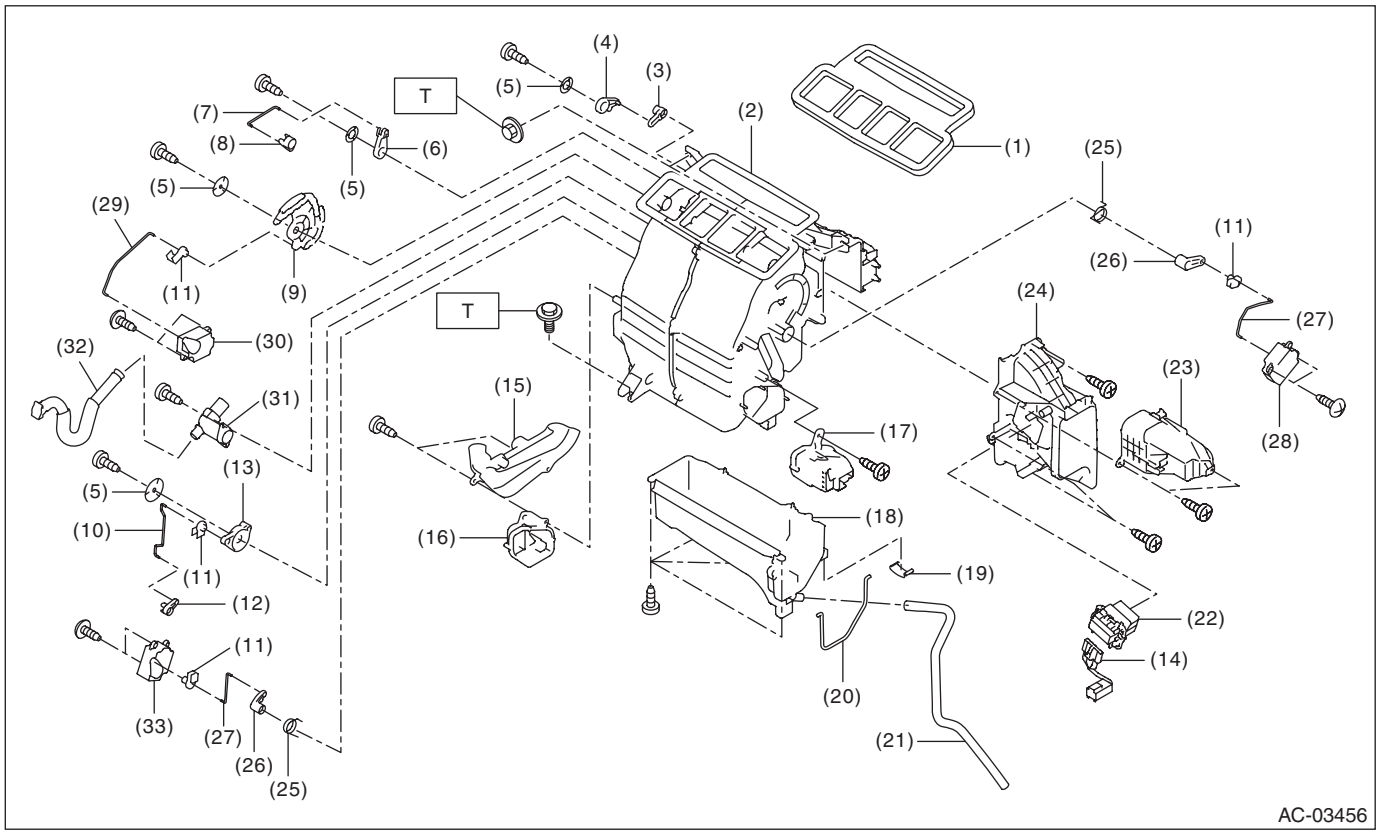

(1) Packing - heater unit
(2) Case - heater unit
(3) Lever - defroster
(4) Lever - defroster sub
(5) Washer - heater
(6) Lever - ventilator sub
(7) Rod - ventilator
(8) Lever - ventilator door
(9) Lever - mode
(10) Rod - foot
(11) Clip
(12) Lever - foot
(13) Lever - foot sub
(14) Harness - heater unit
(15) Cover - heater pipe
(16) Duct - foot LH
(17) Duct - foot RH
(18) Case - heater LWR
(19) Clip - case
(20) Packing - evaporator cover
(21) Hose - drain
(22) Power transistor
(23) Cover
(24) Cover - heater unit
(25) Spring - heater unit
(26) Lever - air mix
(27) Rod - air mix
(28) Motor - actuator mix RH
(29) Rod - mode
(30) Motor - actuator mode
(31) Aspirator - heater unit
(32) Aspirator hose
(33) Motor - actuator mix LH (dual A/C model)

Tightening torque: N·m (kgf-m, ft-lb)
T: 7.5 (0.76, 5.5)

2. BLOWER MOTOR UNIT

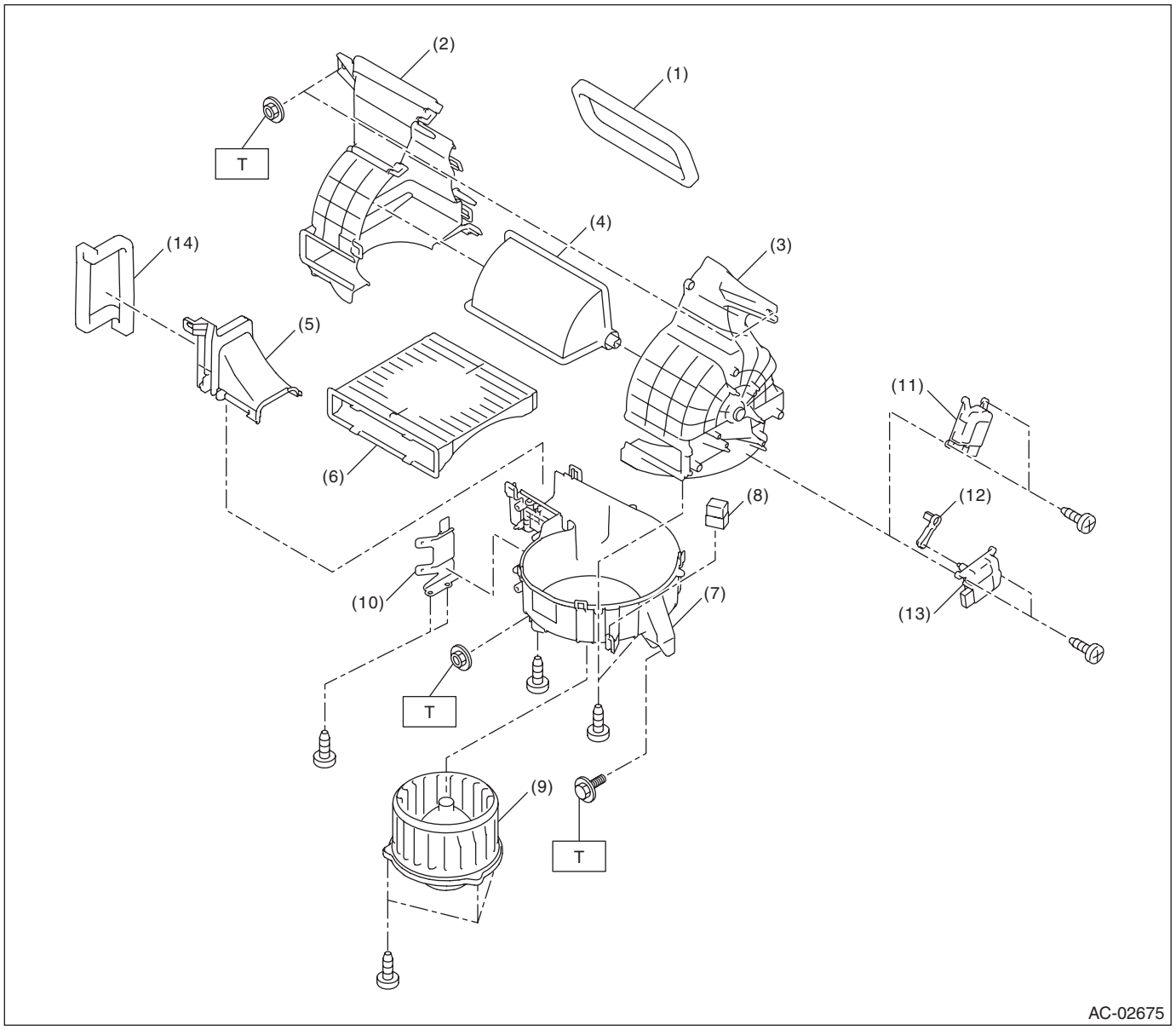

(1) Packing - blower
(2) Case - blower intake LH
(3) Case - blower intake RH
(4) Shutter - blower
(5) Case upper - blower
(6) Filter kit
(7) Case lower - blower
(8) Blower motor relay
(9) Blower - motor
(10) Bracket
(11) Motor - actuator blower (auto A/C model)
(12) Lever
(13) Motor - actuator blower (manual A/C model)
(14) Packing

Tightening torque: N·m (kgf-m, ft-lb)
T: 7.5 (0.76, 5.5)

3. CONTROL PANEL

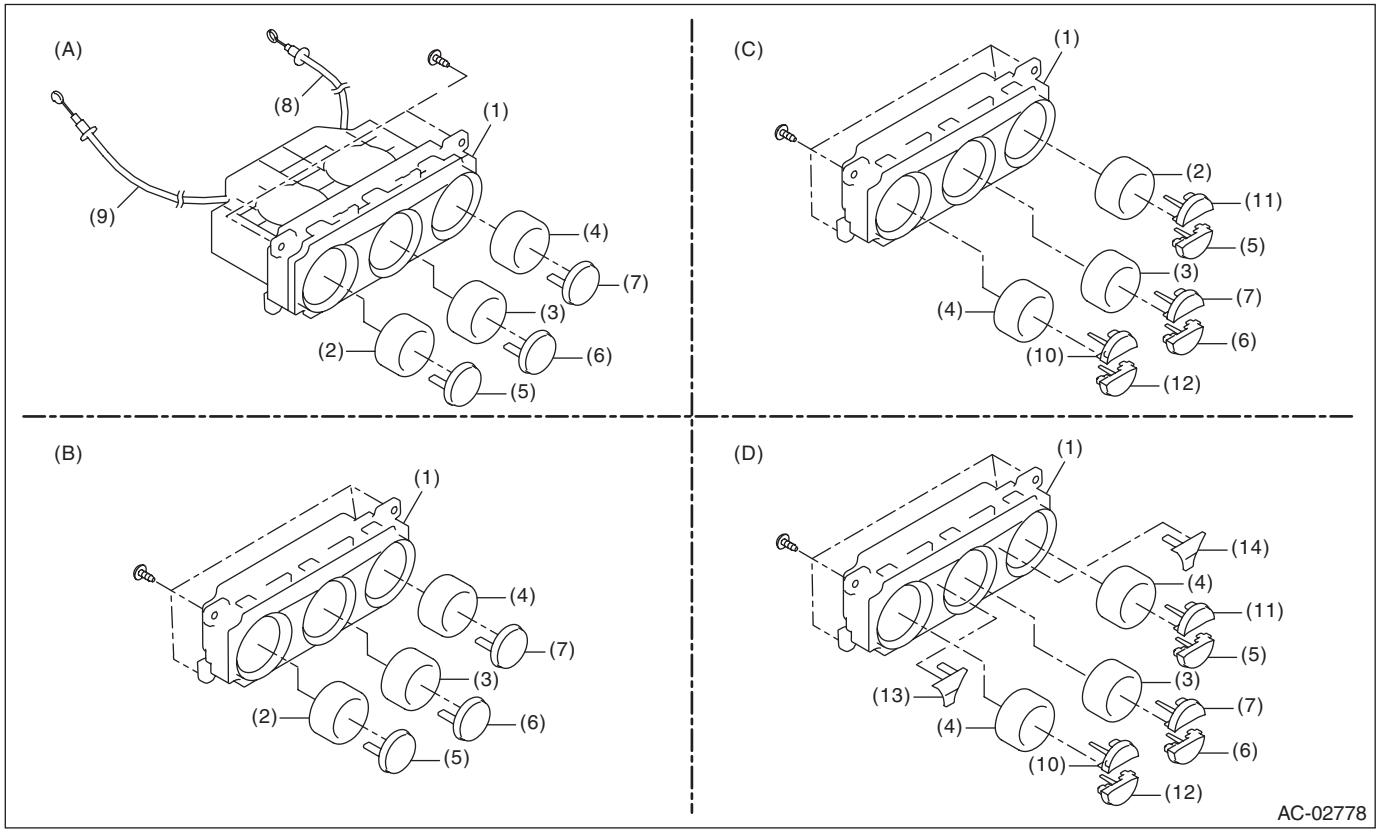

(A) Manual A/C model

(B) Single auto A/C model (with standard MFD)

(C) Single auto A/C model (with high grade MFD)

(D) Dual auto A/C model

(1) Control case
(2) Air flow control dial
(3) Fan dial
(4) Temperature adjustment dial
(5) Rear window defogger switch
(6) FRESH/RECIRC switch
(7) A/C switch
(8) Temperature control cable
(9) Air flow control cable
(10) AUTO switch
(11) Defroster switch
(12) OFF switch
(13) Air flow control switch
(14) Dual switch

4. AIR CONDITIONING UNIT

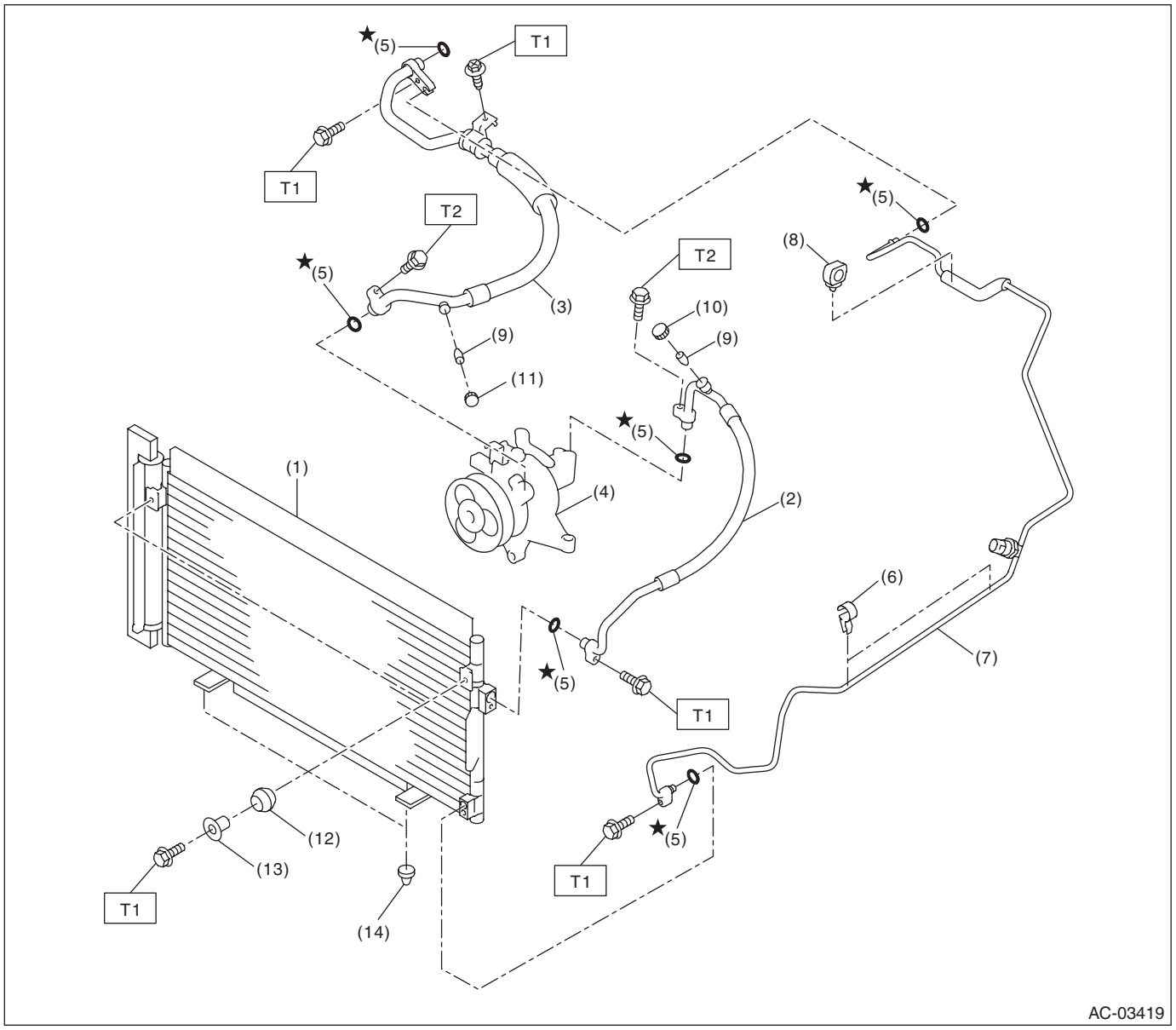

(1) Condenser ASSY - air conditioner
(2) Hose - pressure discharge
(3) Hose - pressure suction
(4) Compressor ASSY
(5) Seal O-ring
(6) Clip - pipe
(7) Pipe - evaporator cooling
(8) Clip
(9) Valve - hose pressure
(10) Cap - hose pressure discharge
(11) Cap - hose pressure suction
(12) Grommet
(13) Spacer
(14) Bushing - condenser

Tightening torque: N·m (kgf-m, ft-lb)
T1: 7.5 (0.76, 5.5)
T2: 10 (1.02, 7.4)

5. HEATER HOSE

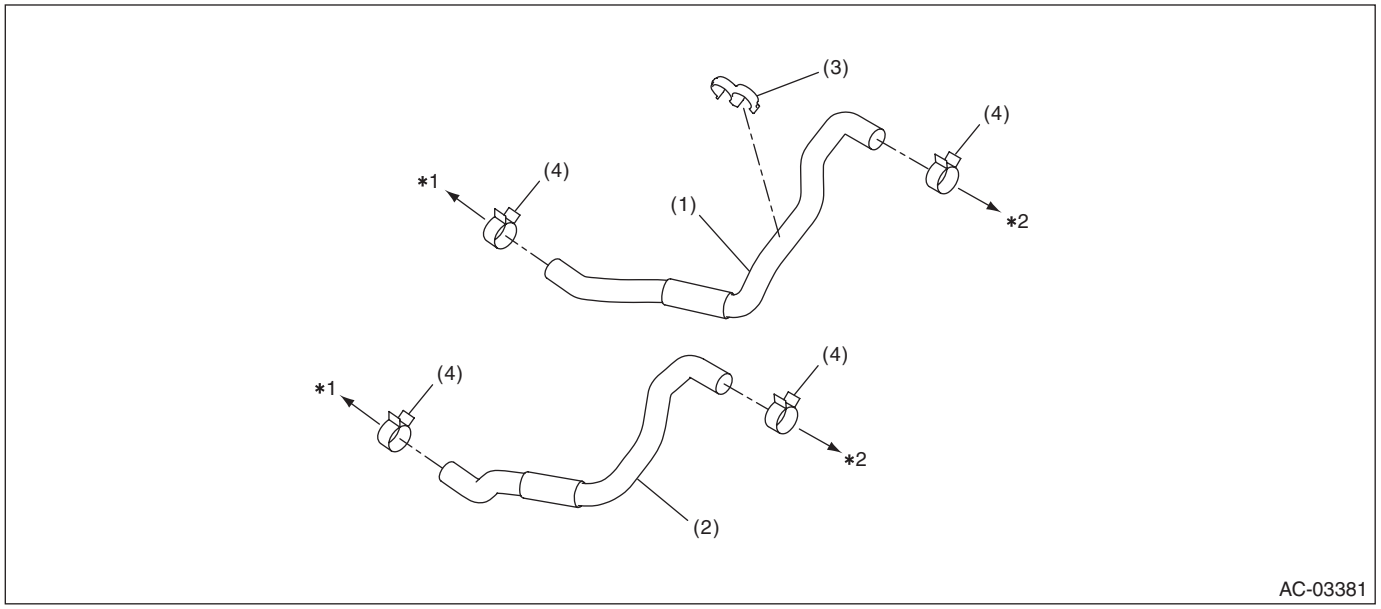

(1) Hose - heater outlet
(2) Hose - heater inlet
(3) Clip
(4) Clamp

*1: Engine side
*2: Heater core side

6. COMPRESSOR

- Gasoline engine model

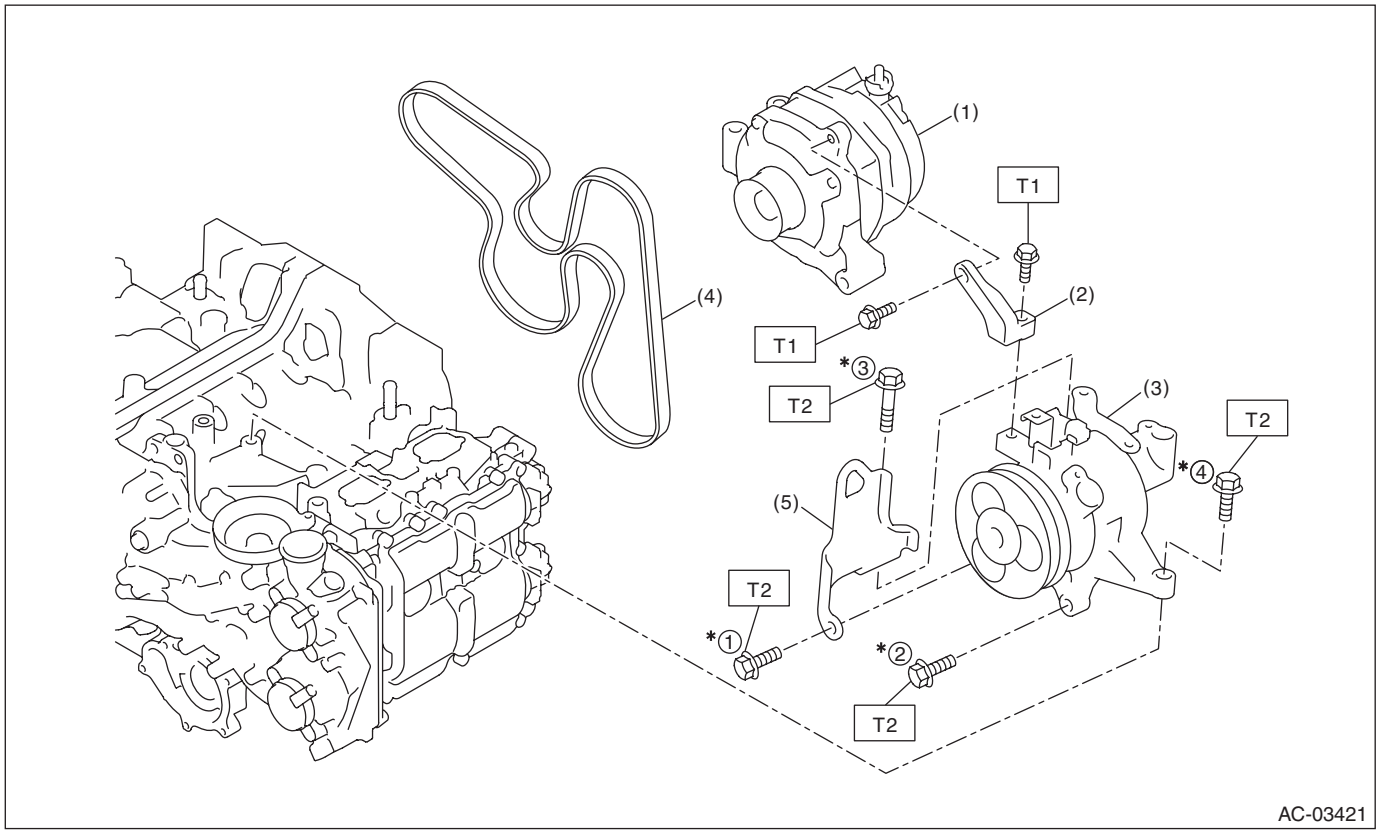

(1) Generator ASSY
(2) Bracket ASSY - compressor
(3) Compressor ASSY
(4) V-belt (6 PK)
(5) Hanger - engine front

*: Tighten the compressor in the numerical order as shown in the figure.

Tightening torque: N·m (kgf-m, ft-lb)
T1: 25 (2.55, 18.4)
T2: 36 (3.67, 26.6)

- HEV model

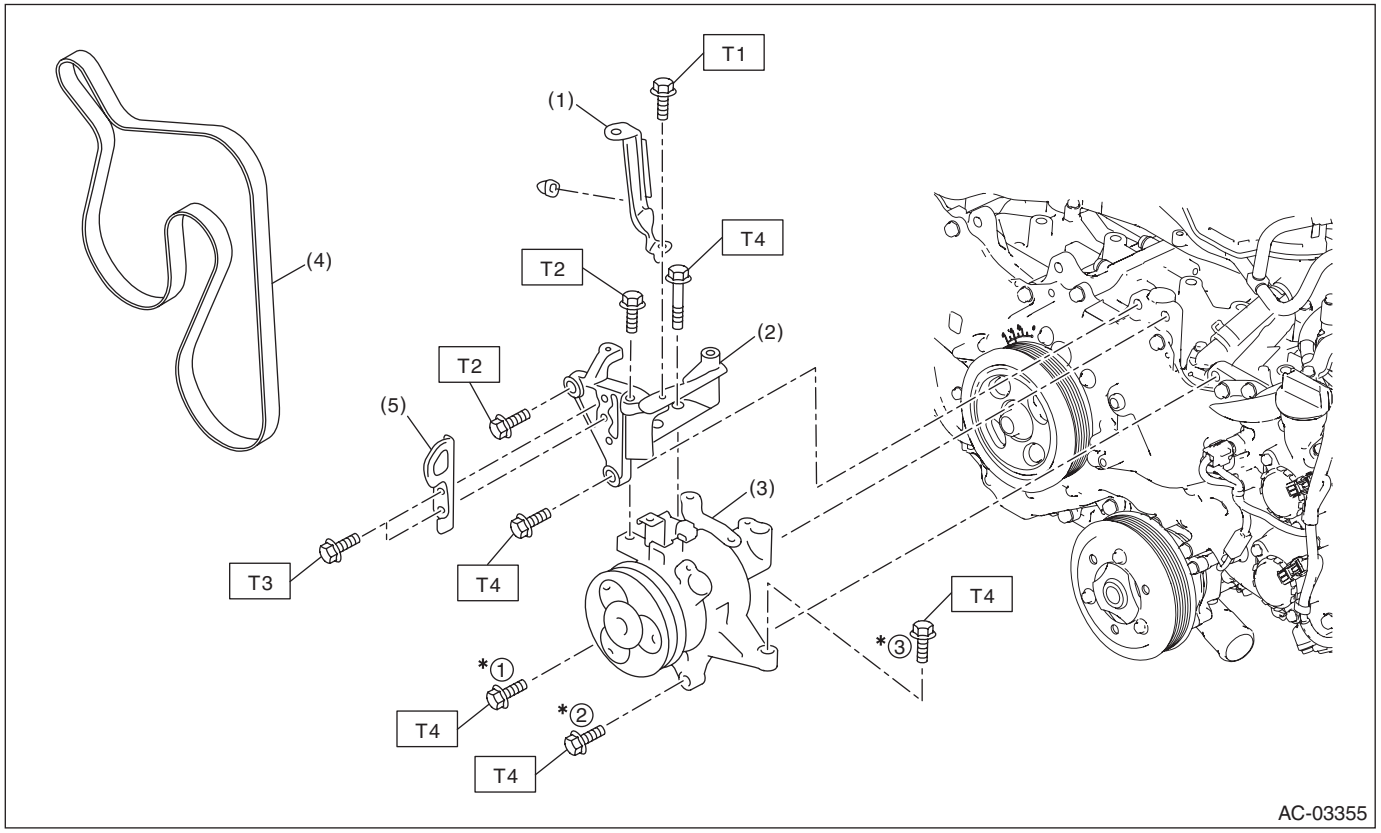

(1) Bracket - vacuum pump connector
(2) Bracket COMPL - vacuum pump
(3) Compressor ASSY
(4) V-belt (7 PK)
(5) Hanger - engine front

Tightening torque: N·m (kgf-m, ft-lb)
T1: 6.4 (0.65, 4.7)
T2: 18 (1.84, 13.3)
T3: 19 (1.94, 14)
T4: 36 (3.67, 26.6)

*: Tighten the compressor in the numerical order as shown in the figure.

7. HEATER DUCT

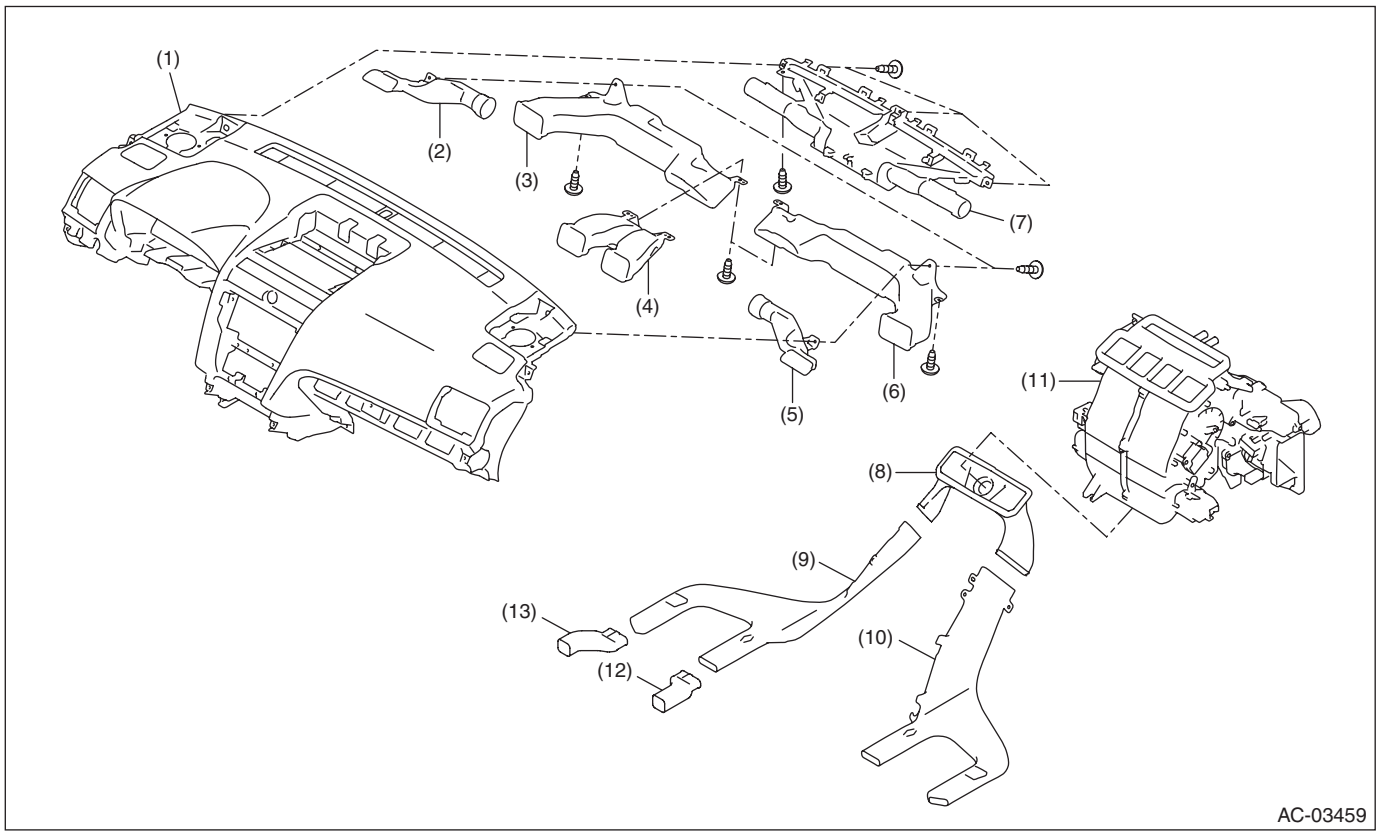

(1) Panel COMPL - instrument
(2) Duct - side defroster LH
(3) Duct - side ventilation LH
(4) Duct - center vent
(5) Duct - side defroster RH
(6) Duct - side ventilation RH
(7) Nozzle - front defroster
(8) Duct - rear heater CTR
(9) Duct - rear heater LH
(10) Duct - rear heater RH
(11) Heater and cooling unit ASSY
(12) Duct - extension LH (HEV model)
(13) Duct - extension RH (HEV model)

D: CAUTION

• Before disassembling or reassembling parts, always disconnect the battery ground cable from battery. When replacing the radio, control module, and other parts provided with memory functions, record the memory contents before disconnecting the battery ground cable. Otherwise, the memory is cleared.
• Reassemble the parts in the reverse order of disassembly procedure unless otherwise indicated.
• Connect the connectors securely during reassembly.
• After reassembly, make sure that each component operates normally.

1. HFC-134A A/C SYSTEM

• The cooling system components for the HFC-134a system such as the refrigerant and compressor oil are different from the conventional CFC-12 system components and they are incompatible with each other.
• Vehicles with the HFC-134a system can be identified by the label (A) attached to the vehicle.
Before maintenance, check A/C system which is installed to the vehicle.

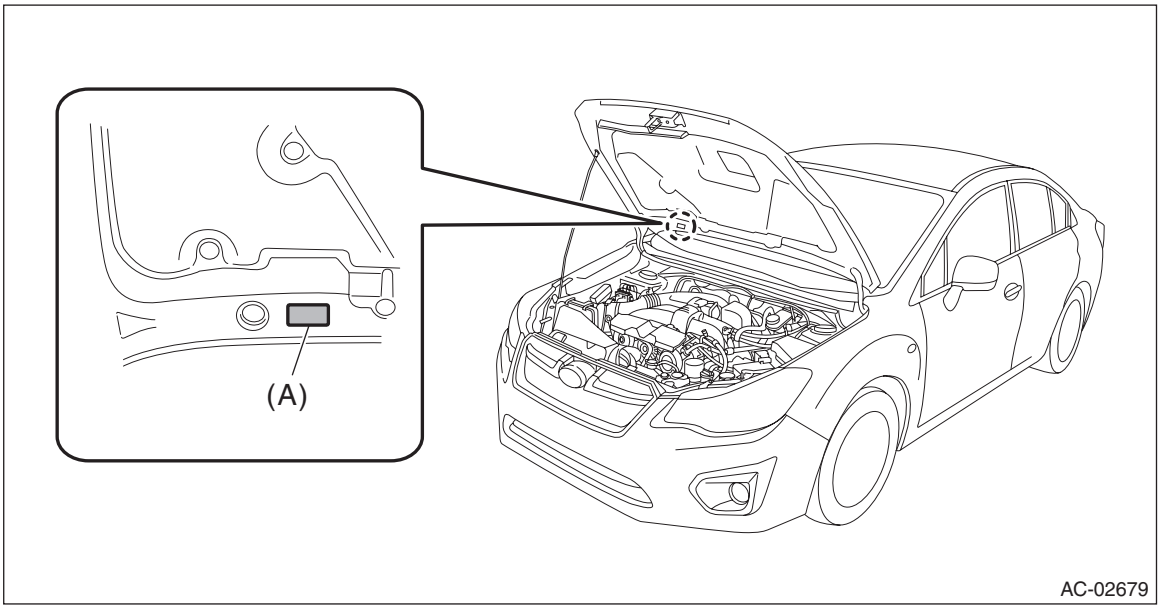

2. COMPRESSOR OIL

• HFC-134a compressor oil has no compatibility with that of CFC-12 system.
• Use only the manufacturer-authorized compressor oil for the HFC-134a system; only use DH-PR (ZXL200PG).
• Do not mix multiple compressor oils.
If CFC-12 compressor oil is used in the HFC-134a A/C system, the compressor may become stuck due to poor lubrication, or the refrigerant may leak due to swelling of rubber parts.
On the other hand, if HFC-134a compressor oil is used in a CFC-12 A/C system, the durability of the A/C system will be lowered.
• HFC-134a compressor oil is very hygroscopic. When replacing or installing/removing A/C parts, immediately isolate the oil from atmosphere using a plug or tape. In order to avoid moisture, store the oil in a container with its cap tightly closed.

3. REFRIGERANT

• CFC-12 refrigerant cannot be used in a HFC-134a A/C system. HFC-134a refrigerant, also cannot be used in a CFC-12 A/C system.
• If an incorrect or no refrigerant is used, it will result in poor lubrication and the compressor itself may be damaged.

4. HANDLING OF REFRIGERANT

• The refrigerant boils at approx. –30°C (–22°F). When handling it, be sure to wear protective goggles and protective gloves. Direct contact of the refrigerant with skin may cause frostbite.
If the refrigerant gets into your eye, avoid rubbing your eyes with your hands. Wash your eye with plenty of water, and receive medical treatment from an eye doctor.
• Do not heat a service can. If a service can is directly heated, or put into boiling water, the inside pressure will become extremely high. This may cause the can to explode. If a service can must be warmed up, use warm water of 40°C (104°F) or less.
• Do not drop or impact a service can. (Observe the precautions and operation procedure described on the refrigerant can.)
• When the engine is running, do not open the high-pressure valve of manifold gauge. The high-pressure gas will back-flow resulting in an explosion of the can.
• Provide good ventilation and do not work in a closed area.
• In order to prevent global warming, avoid releasing HFC-134a into the atmosphere. Using a refrigerant recovery system, discharge and recycle the gas.

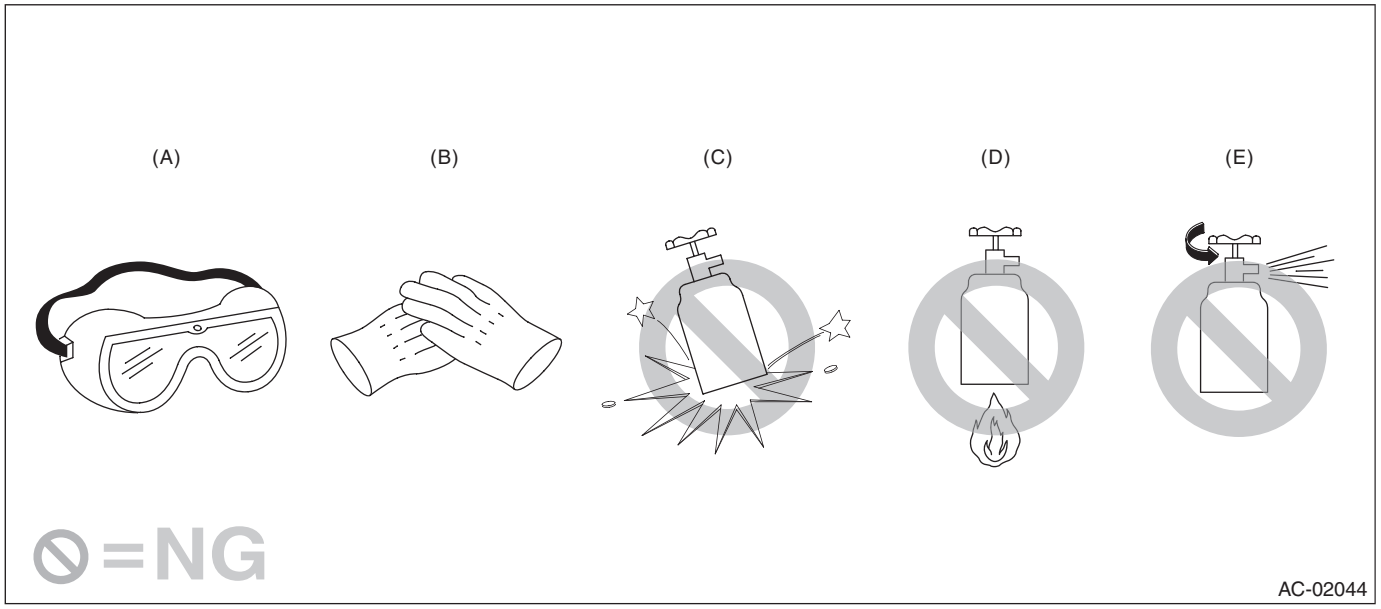

(A) Goggles
(B) Gloves
(C) Do not apply impact.
(D) No direct heat on container
(E) Do not discharge

5. O-RING CONNECTIONS

• Always use a new O-ring.
• In order to keep the O-rings free of lint which will cause a refrigerant gas leak, perform work without using gloves or waste cloths.
• Apply compressor oil to O-rings to avoid sticking, before installation.
• Use a torque wrench to tighten the O-ring fittings. Over-tightening will result in damage of the O-ring and deformation of the pipe end.
• If the work is interrupted before completing pipe connections, recap the pipes, components and fittings with a plug or tape to prevent foreign matter from entering.
• Visually check the surfaces and mating surfaces of O-rings, threads and connecting points. If a failure is found, replace the applicable parts.

- Install the O-rings straight against the pipe groove.

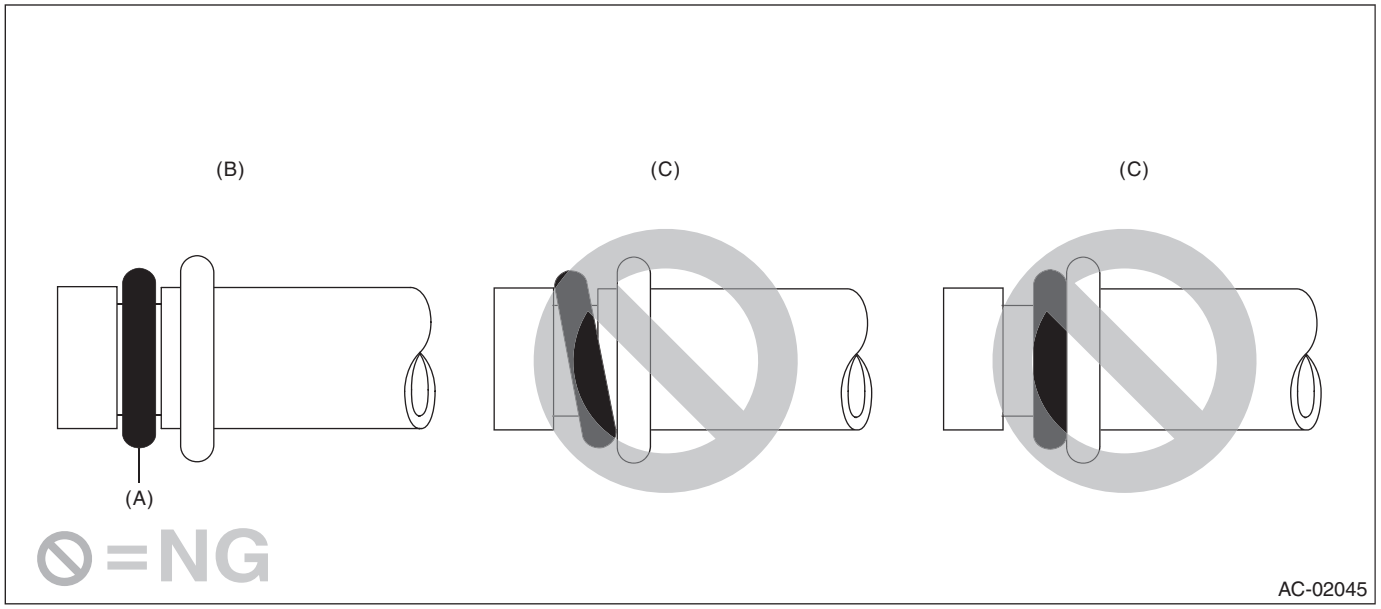

(A) O-ring (B) OK (C) NG

- Use compressor oil specified in the service manual to lubricate the O-rings.

Apply oil to the top and sides of O-rings before installation.
Apply compressor oil to the pipe grooves.

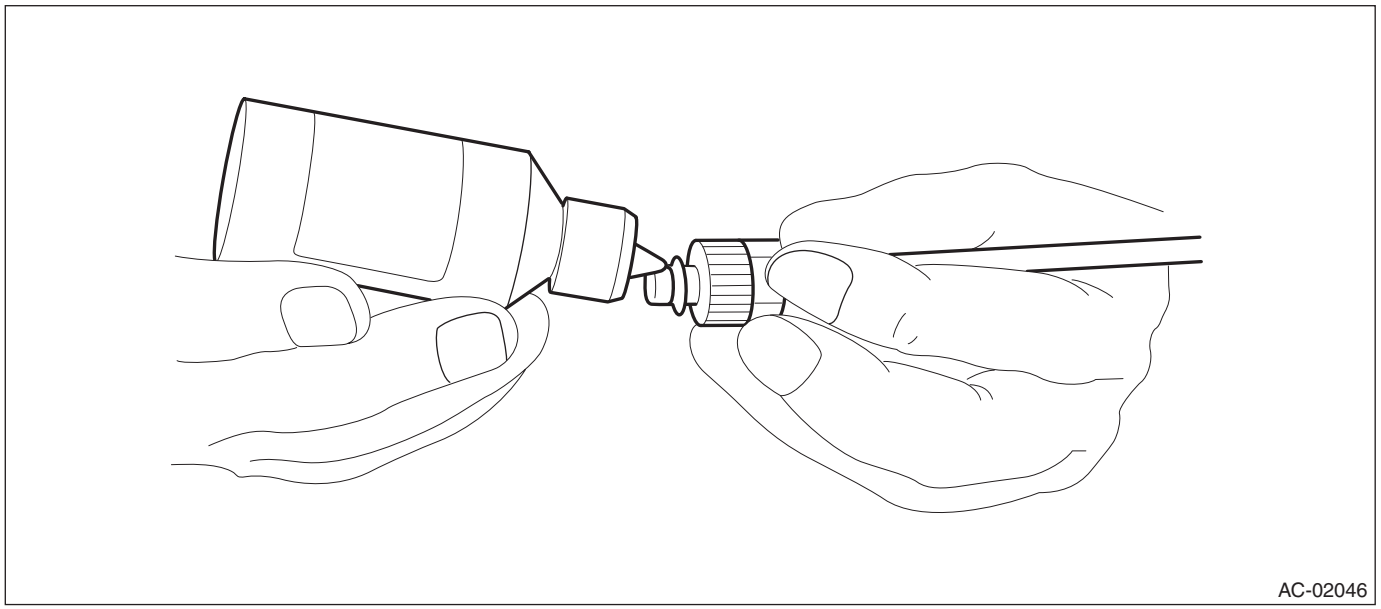

- After tightening, use a clean cloth to remove excess compressor oil from the connections and any oil which may have run on the vehicle body or other parts.
- If any leakage is suspected after tightening, do not tighten the connections further, but disconnect the connections, remove the O-rings, and check the O-rings, threads, and connections.

E: PREPARATION TOOL

1. SPECIAL TOOL

ILLUSTRATION	TOOL NUMBER	DESCRIPTION	REMARKS
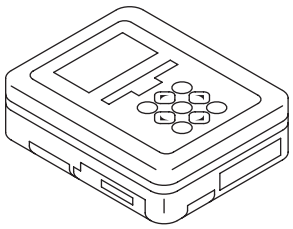 ST1B022XU0	1B022XU0	SUBARU SELECT MONITOR III KIT	Used for troubleshooting the electrical system. NOTE: For detailed operation procedures of SUBARU SELECT MONITOR III KIT, refer to “PC application help for Subaru Select Monitor”.

2. GENERAL TOOL

CAUTION:
When working on vehicles with a HFC-134a system, only use HFC-134a specified tools and parts. Do not mix CFC-12 tools and parts. If HFC-134a and CFC-12 refrigerant or compressor oil is mixed, it will result in poor lubrication and the compressor itself may be damaged.
In order to prevent the mixture of HFC-134a and CFC-12 parts and liquid, the type of tool and screw, and the replacement valves used are different. The gas leak detectors for the HFC-134a and CFC-12 systems must also not be interchanged.

	HFC-134a	CFC-12
Tool & screw type	Millimeter size	Inch size
Valve type	Quick joint type	Screw-in type

Illustration	Tools and Equipment
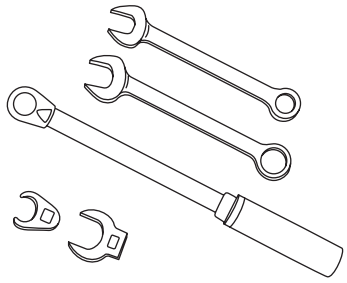 AC-00213	Wrench Various **WRENCHES** will be required to service any A/C system.7 — 40 N·m (0.7 to 4.1 kgf-m, 5 to 30 ft-lb) torque wrench and various crowfoot wrenches will be needed. Open end or flare nut wrenches will be needed to affix the pipe and hose fittings.
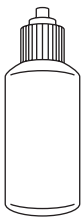 AC-00012	Applicator bottle A small **APPLICATOR BOTTLE** is recommended to apply compressor oil to the various parts. It can be available at a hardware store.

Illustration	Tools and Equipment
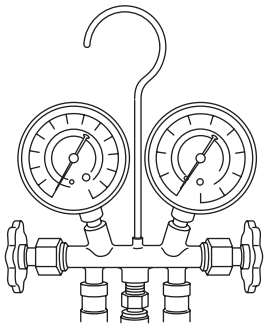 AC-00013	Manifold gauge set A **MANIFOLD GAUGE SET** (with hoses) is available at either a refrigerant supplier or an automotive equipment supplier.
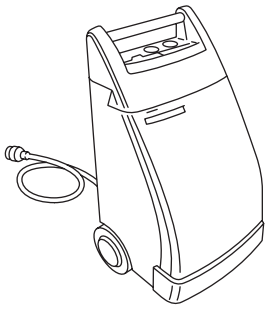 AC-00014	Refrigerant recovery system A **REFRIGERANT RECOVERY SYSTEM** is used for the recovery and recycling of A/C system refrigerant after contaminants and moisture have been removed from the refrigerant.
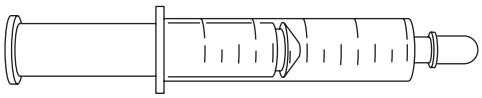 AC-00015	Syringe A graduated plastic **SYRINGE** will be needed to add oil into the system again. A syringe can be available at a pharmacy or drug store.
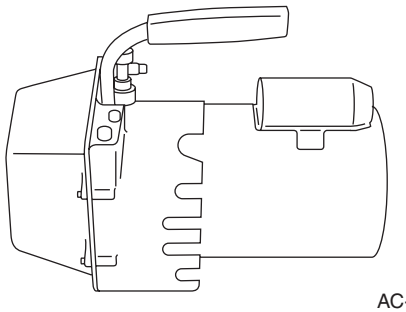 AC-00016	Vacuum pump A **VACUUM PUMP** is necessary (for a good working condition), and may be available at either a refrigerant supplier or an automotive equipment supplier.
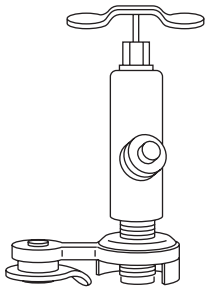 AC-00017	Can tap A **CAN TAP** for the 397 g (14 oz.) can is available at an automotive equipment supplier.

Illustration	Tools and Equipment
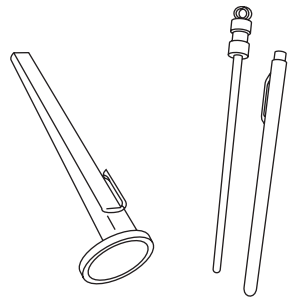 AC-00018	Thermometer A Pocket **THERMOMETER** is available at either a industrial hardware store or a refrigerant supplier.
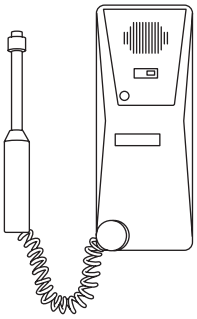 AC-00019	Electronic leak detector An **ELECTRONIC LEAK DETECTOR** can be available at either a specialty tool supplier or an A/C equipment supplier.
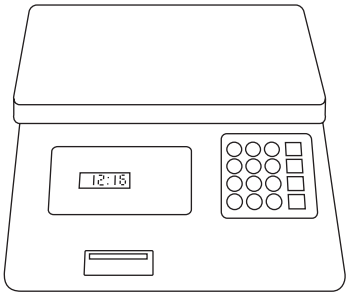 AC-00020	Weight scale A **WEIGHT SCALE** such as an electronic charging scale or a bathroom scale with digital display will be needed, if a 13.6 kg (30 lb) refrigerant container is used.

2. Air Conditioning System

A: WIRING DIAGRAM

Refer to “Air Conditioning System” in the wiring diagram.

- Gasoline engine model

Manual A/C model: <Ref. to WI(w/o HEV)-35, MANUAL A/C MODEL, WIRING DIAGRAM, Air Conditioning System.>
Auto A/C model: <Ref. to WI(w/o HEV)-37, AUTO A/C MODEL, WIRING DIAGRAM, Air Conditioning System.>

- HEV model: <Ref. to WI(HEV)-55, WIRING DIAGRAM, Air Conditioning System.>

B: ELECTRICAL SPECIFICATION

Refer to “Auto A/C Control Module I/O Signal” of “HVAC SYSTEM (AUTO A/C) (DIAGNOSTICS)” section. <Ref. to AC(diag)-6, ELECTRICAL SPECIFICATION, Auto A/C Control Module I/O Signal.>

C: INSPECTION

Refer to “Basic Diagnostic Procedure” for “HVAC SYSTEM (AUTO A/C) (DIAGNOSTICS)” section. <Ref. to AC(diag)-2, Basic Diagnostic Procedure.>

D: NOTE

For procedure of each component in the air conditioning system, refer to the respective section.

- Blower motor unit assembly: <Ref. to AC-38, Blower Motor Unit Assembly.>
- Blower motor: <Ref. to AC-40, Blower Motor.>
- Power transistor (auto A/C model): <Ref. to AC-42, Power Transistor (Auto A/C Model).>
- Blower resistor (manual A/C model): <Ref. to AC-43, Blower Resistor (Manual A/C Model).>
- Control panel: <Ref. to AC-50, Control Panel.>
- Compressor: <Ref. to AC-54, Compressor.>
- Condenser: <Ref. to AC-59, Condenser.>
- Heater and cooling unit: <Ref. to AC-63, Heater and Cooling Unit.>
- Evaporator: <Ref. to AC-66, Evaporator.>
- Expansion valve: <Ref. to AC-72, Expansion Valve.>
- Hose & pipe: <Ref. to AC-74, Hose and Pipe.>
- Ambient sensor: <Ref. to AC-79, Ambient Sensor.>
- Sunload sensor (auto A/C model): <Ref. to AC-83, Sunload Sensor (Auto A/C Model).>
- In-vehicle sensor (auto A/C model) (gasoline engine model): <Ref. to AC-85, In-Vehicle Sensor (Auto A/C Model).>
- Evaporator sensor: <Ref. to AC-92, Evaporator Sensor.>
- Intake door actuator: <Ref. to AC-100, FRESH/RECIRC Door Actuator.>
- Mode door actuator: <Ref. to AC-104, Mode Door Actuator.>
- Air mix door actuator: <Ref. to AC-105, Air Mix Door Actuator.>
- Temperature and humidity sensor (HEV model): <Ref. to AC-89, Temperature and Humidity Sensor.>

3. Refrigerant Pressure with Manifold Gauge Set

A: PROCEDURE

1. REFRIGERANT GAS PRESSURE INSPECTION

Preparation tool:
Manifold gauge set
Thermometer and hygrometer

1) Prepare the vehicle.

NOTE:
Check that the ambient temperature is 25 — 40°C (77 — 104°F) and that the humidity is 30% — 80%.

- Place the vehicle in the shade and windless condition, and open the front hood.
- Open the front windows and close all doors.

2) Connect the manifold gauge set, and then check the refrigerant pressure.
(1) Connect the manifold gauge set, and start the engine.
(2) Set the vehicle to the following conditions.

Item	Condition
Engine	Warmed up (Engine coolant temperature indicator light: OFF)
Air vent grille	Shutter is fully open.
A/C switch	ON
Temperature adjustment dial	LO (MAX COOL)
FRESH/RECIRC switch	RECIRC
Air flow control dial or switch	VENT
Fan dial	Auto A/C model: 5/7 level
	Manual A/C model: 3/4 level

(3) In the condition of step (2), idle the engine for 30 minutes.
(4) Read the gauge values on both high pressure side and low pressure side for manifold gauge.

3) Measure the air vent grille outlet opening temperature, ambient temperature and humidity.

NOTE:
For outlet opening temperature, measure the average temperature of center grille assembly and side grille assembly.

4) Check that the high and low pressures and outlet opening temperature for ambient temperature and humidity is within the standard value described in the chart below.

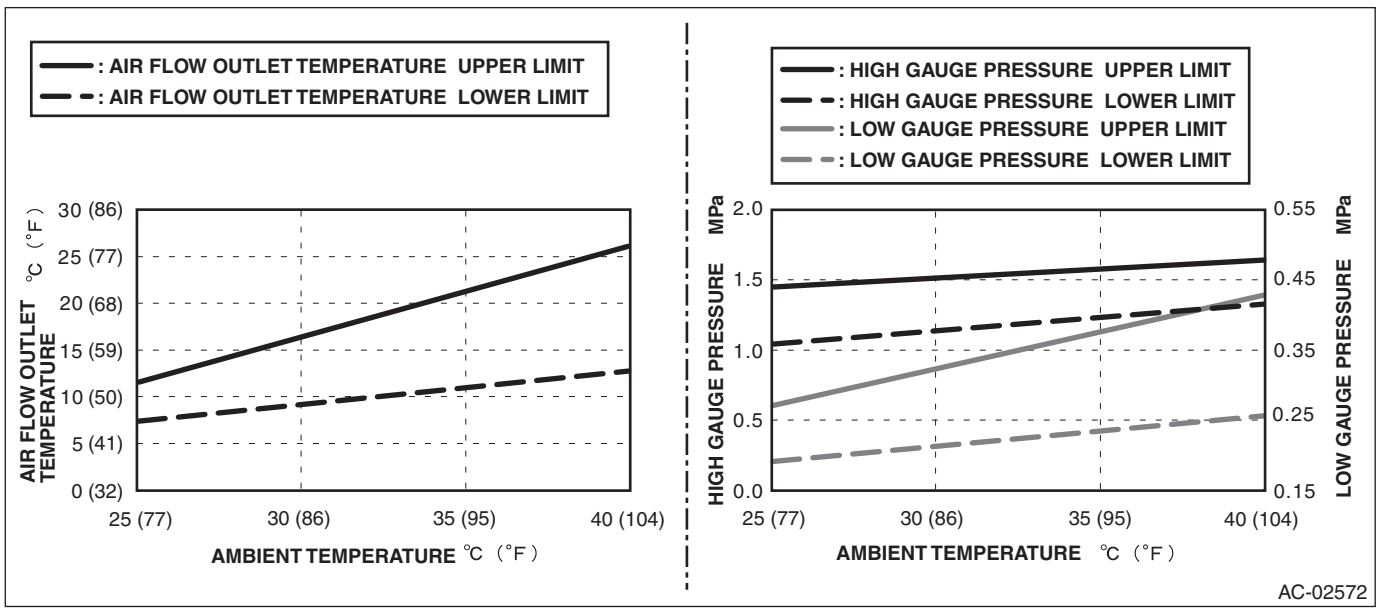

5) Refer to “DIAGNOSIS WITH SYMPTOM” if the inspection result is not within the standard value. <Ref. to AC-25, INSPECTION WITH PRESSURE SYMPTOMS, INSPECTION, Refrigerant Pressure with Manifold Gauge Set.>

B: INSPECTION

1. INSPECTION WITH PRESSURE SYMPTOMS

Symptoms	Reference
Both high and low pressure sides are low.	<Ref. to AC-25, BOTH HIGH AND LOW PRESSURE SIDES ARE LOW, INSPECTION, Refrigerant Pressure with Manifold Gauge Set.>
Both high and low pressure sides are high.	<Ref. to AC-25, BOTH HIGH AND LOW PRESSURE SIDES ARE HIGH, INSPECTION, Refrigerant Pressure with Manifold Gauge Set.>
Both high and low pressure sides are equal, or high-pressure side is low.	<Ref. to AC-26, BOTH HIGH AND LOW PRESSURE SIDES ARE EQUAL, OR HIGH-PRESSURE SIDE IS LOW, INSPECTION, Refrigerant Pressure with Manifold Gauge Set.>
High-pressure side is high.	<Ref. to AC-26, HIGH-PRESSURE SIDE IS HIGH, INSPECTION, Refrigerant Pressure with Manifold Gauge Set.>
Low-pressure side is low.	<Ref. to AC-27, LOW-PRESSURE SIDE IS LOW, INSPECTION, Refrigerant Pressure with Manifold Gauge Set.>
Low-pressure side is high.	<Ref. to AC-27, LOW-PRESSURE SIDE IS HIGH, INSPECTION, Refrigerant Pressure with Manifold Gauge Set.>

2. BOTH HIGH AND LOW PRESSURE SIDES ARE LOW

	Step	Check	Yes	No
1	**CHECK REFRIGERANT LEAKAGE.** Check the refrigerant for leakage. <Ref. to AC-33, INSPECTION, Refrigerant Leak Check.> NOTE: When the pressure on the high-pressure side is less than 0.69 Mpa: Go to Step 2.	Are there any refrigerant leakage?	Repair the refrigerant leakage.	Go to step **2**.
2	**FILL PROPER AMOUNT OF REFRIGERANT.** Drain the refrigerant completely, and then refill the proper amount of refrigerant. • Recovery: <Ref. to AC-28, PROCEDURE, Refrigerant Recovery Procedure.> • Refill: <Ref. to AC-30, PROCEDURE, Refrigerant Charging Procedure.>	Is the refrigerant pressure within the specified range?	Refrigerant pressure is normal.	Perform appropriate inspection with pressure symptoms.

3. BOTH HIGH AND LOW PRESSURE SIDES ARE HIGH

	Step	Check	Yes	No
1	**FILL PROPER AMOUNT OF REFRIGERANT.** Drain the refrigerant completely, and then refill the proper amount of refrigerant. • Recovery: <Ref. to AC-28, PROCEDURE, Refrigerant Recovery Procedure.> • Refill: <Ref. to AC-30, PROCEDURE, Refrigerant Charging Procedure.>	Is the refrigerant pressure within the specified range?	Refrigerant pressure is normal.	Perform appropriate inspection with pressure symptoms.

4. BOTH HIGH AND LOW PRESSURE SIDES ARE EQUAL, OR HIGH-PRESSURE SIDE IS LOW

	Step	Check	Yes	No
1	**CHECK REFRIGERANT LEAKAGE.** Check the refrigerant for leakage. <Ref. to AC-33, INSPECTION, Refrigerant Leak Check.> NOTE: When the pressure on the high-pressure side is less than 0.69 Mpa: Go to Step 2.	Are there any refrigerant leakage?	Repair the refrigerant leakage.	Go to step **2**.
2	**FILL PROPER AMOUNT OF REFRIGERANT.** Drain the refrigerant completely, and then refill the proper amount of refrigerant. • Recovery: <Ref. to AC-28, PROCEDURE, Refrigerant Recovery Procedure.> • Refill: <Ref. to AC-30, PROCEDURE, Refrigerant Charging Procedure.>	Is the refrigerant pressure within the specified range?	Refrigerant pressure is normal.	Inspect the compressor. <Ref. to AC(diag)-34, COOL AIR DOES NOT COME OUT WHEN PRESSING THE A/C SWITCH. FOG CANNOT BE CLEARED. (COMPRESSOR DOES NOT OPERATE.), DIAGNOSTIC PROCEDURE WITH PHENOMENON, Diagnostics with Phenomenon.>

5. HIGH-PRESSURE SIDE IS HIGH

	Step	Check	Yes	No
1	**CHECK CONDENSER.** Check the condenser. <Ref. to AC-62, INSPECTION, Condenser.>	Is condenser normal?	Go to step **2**.	Clean or replace the condenser.
2	**CHECK RADIATOR FAN.** Check the radiator fan system. <Ref. to CO(H4DO(w/o HEV))-10, Radiator Fan System.>	Is radiator fan system normal?	Go to step **3**.	Repair or replace the faulty parts of the radiator fan system.
3	**FILL PROPER AMOUNT OF REFRIGERANT.** Drain the refrigerant completely, and then refill the proper amount of refrigerant. • Recovery: <Ref. to AC-28, PROCEDURE, Refrigerant Recovery Procedure.> • Refill: <Ref. to AC-30, PROCEDURE, Refrigerant Charging Procedure.>	Is the refrigerant pressure within the specified range?	Refrigerant pressure is normal.	Check the high-pressure hose and condenser for deformation or clogging, and replace if defective.

6. LOW-PRESSURE SIDE IS LOW

	Step	Check	Yes	No
1	**CHECK REFRIGERANT LEAKAGE.** Check the refrigerant for leakage. <Ref. to AC-33, INSPECTION, Refrigerant Leak Check.> NOTE: When the pressure on the high-pressure side is less than 0.69 Mpa: Go to Step 2.	Are there any refrigerant leakage?	Repair the refrigerant leakage.	Go to step **2**.
2	**FILL PROPER AMOUNT OF REFRIGERANT.** Drain the refrigerant completely, and then refill the proper amount of refrigerant. • Recovery: <Ref. to AC-28, PROCEDURE, Refrigerant Recovery Procedure.> • Refill: <Ref. to AC-30, PROCEDURE, Refrigerant Charging Procedure.>	Is the refrigerant pressure within the specified range?	Refrigerant pressure is normal.	Go to step **3**.
3	**REPLACE EXPANSION VALVE.** Replace the expansion valve. <Ref. to AC-72, REMOVAL, Expansion Valve.>	Is the refrigerant pressure within the specified range?	Refrigerant pressure is normal.	Inspect the compressor. <Ref. to AC(diag)-34, COOL AIR DOES NOT COME OUT WHEN PRESSING THE A/C SWITCH. FOG CANNOT BE CLEARED. (COMPRESSOR DOES NOT OPERATE.), DIAGNOSTIC PROCEDURE WITH PHENOMENON, Diagnostics with Phenomenon.>

7. LOW-PRESSURE SIDE IS HIGH

	Step	Check	Yes	No
1	**FILL PROPER AMOUNT OF REFRIGERANT.** Drain the refrigerant completely, and then refill the proper amount of refrigerant. • Recovery: <Ref. to AC-28, PROCEDURE, Refrigerant Recovery Procedure.> • Refill: <Ref. to AC-30, PROCEDURE, Refrigerant Charging Procedure.>	Is the refrigerant pressure within the specified range?	Refrigerant pressure is normal.	Go to step **2**.
2	**REPLACE EXPANSION VALVE.** Replace the expansion valve. <Ref. to AC-72, REMOVAL, Expansion Valve.>	Is the refrigerant pressure within the specified range?	Refrigerant pressure is normal.	Replace the evaporator. <Ref. to AC-66, REMOVAL, Evaporator.>

4. Refrigerant Recovery Procedure

A: PROCEDURE

Preparation tool:
Manifold gauge set
Refrigerant recovery system

CAUTION:
• During operation, be sure to wear protective goggles and protective gloves.
• Connect the refrigerant recovery system with the manifold gauge set to discharge the refrigerant from the A/C system and recycle the gas.
• When recycling the discharged refrigerant, keep service cans on hand. Because the recovery rate with the recovery system is approx. 90%, service cans are necessary to charge the refrigerant.
• Follow the detailed operation procedure described in the operation manual attached to the refrigerant recovery system.

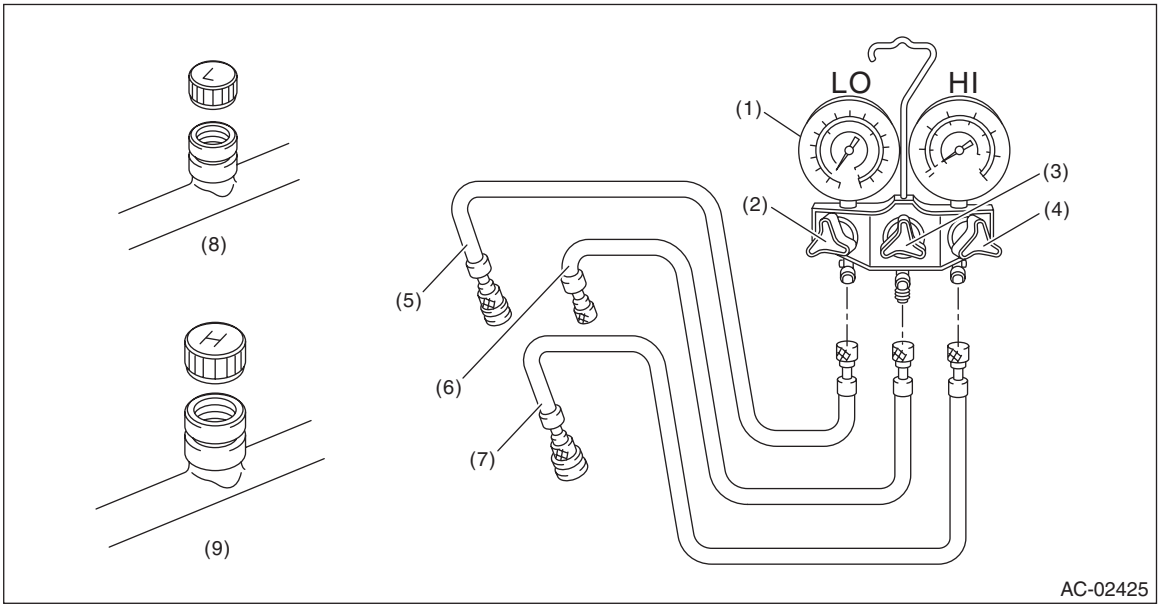

(1)	Manifold gauge	(4)	High pressure valve	(7)	High-pressure hose
(2)	Low pressure valve	(5)	Low-pressure hose	(8)	Low-pressure side service port
(3)	Center valve	(6)	Center manifold hose (vacuum pump and charge)	(9)	High-pressure side service port

1) Perform compressor oil return operation. <Ref. to AC-37, PROCEDURE, Compressor Oil.>
2) Turn the ignition switch to OFF.

3) Remove the collector cover. (HEV model)
   (1) Pull up the two points at the front of collector cover (A).
   (2) Pull up the two points at the rear of collector cover (B) while moving them rearward.

NOTE:
Be careful not to contact the fuel delivery tube when moving the collector cover rearward.

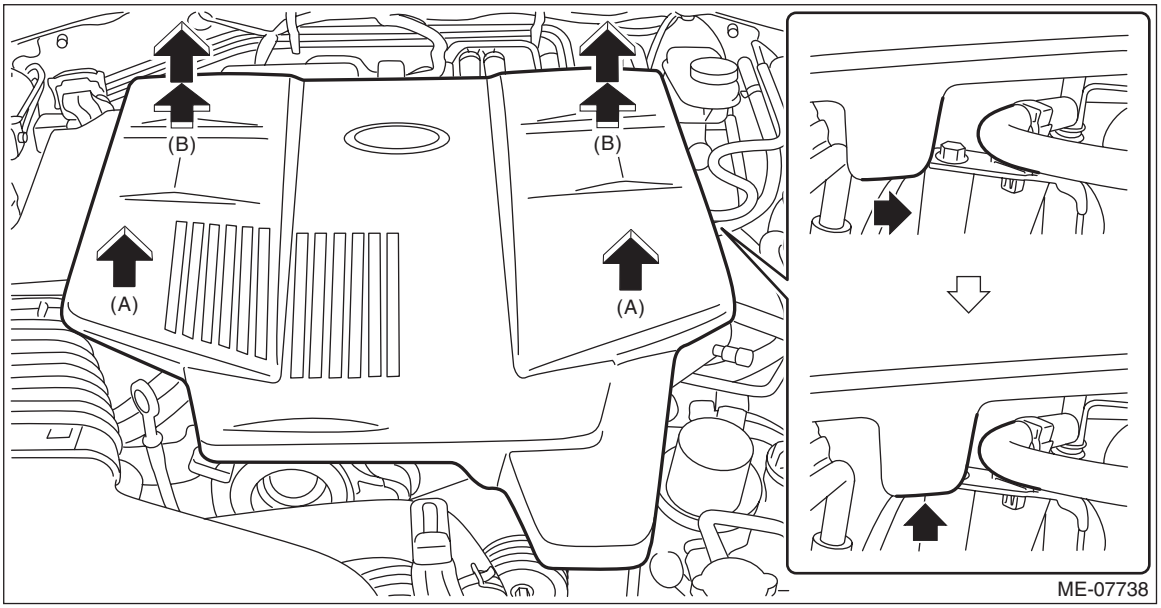

4) Attach the manifold gauge set.
   (1) Check that all valves are fully closed.
   (2) Install the low/high pressure hoses to the service ports on the low/high pressure sides of the vehicle respectively.

CAUTION:
Confirm that the connections are secure.
   (3) Connect the center hose to the refrigerant recovery system.
5) Follow the operation manual attached to the refrigerant recovery system to collect the refrigerant.

5. Refrigerant Charging Procedure

A: PROCEDURE

Preparation tool:
Manifold gauge set
Vacuum pump
Can tap
Weight scale

CAUTION:
• While working, be sure to wear protective goggles and protective gloves.
• Air in the cycle can cause insufficient air conditioning, and water in the cycle can cause clogging in the cycle (icing) and rust. To remove this air and water content, use a vacuum pump to perform evacuation before filling with refrigerant. By making the inside of the cycle a vacuum, the water content will evaporate even at normal temperatures, and can be removed.

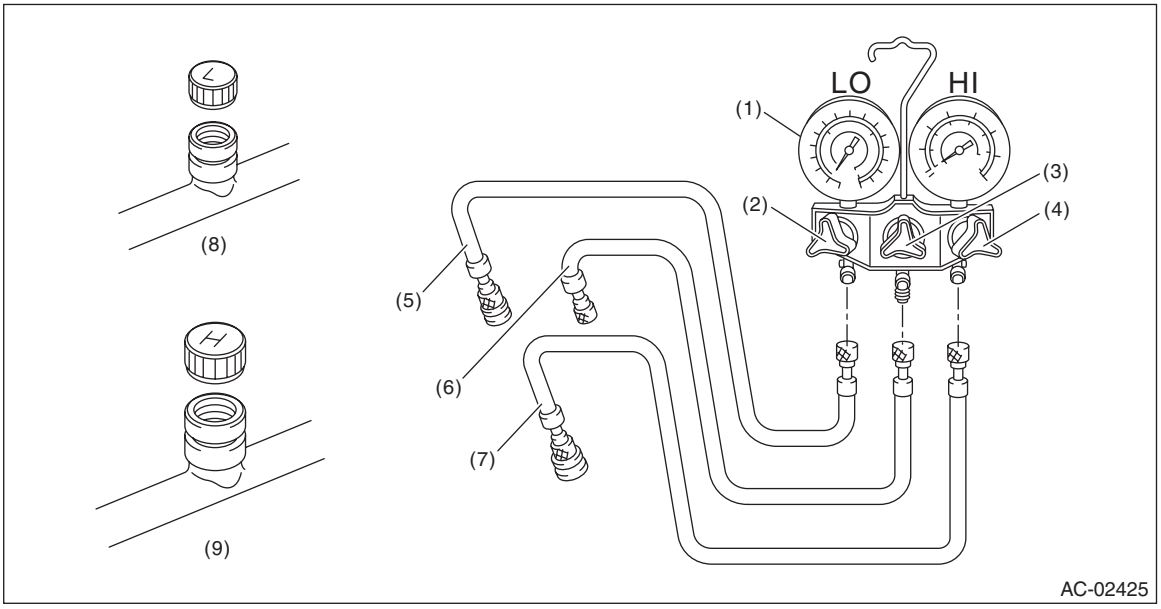

(1) Manifold gauge
(2) Low pressure valve
(3) Center valve
(4) High pressure valve
(5) Low-pressure hose
(6) Center manifold hose (vacuum pump and charge)
(7) High-pressure hose
(8) Low-pressure side service port
(9) High-pressure side service port

1) Attach the manifold gauge set.
   (1) Check that all valves are fully closed.
   (2) Install the low/high pressure hoses to the service ports on the low/high pressure sides of the vehicle respectively.

CAUTION:
Confirm that the connections are secure.
   (3) Connect the center manifold hose of the manifold gauge to the vacuum pump.
2) Perform evacuation.

CAUTION:
Make sure to perform evacuation using a vacuum pump.
   (1) Open the low-pressure valve, high-pressure valve and center valve.
   (2) Operate the vacuum pump.
   (3) Perform evacuation for 5 minutes or more, and when the low pressure gauge needle reaches -0.1 MPa (-1.0 kgf/cm^2, –14 psi), close the center manifold hose valve, and stop the vacuum pump.
   (4) Leave alone for 5 to 10 minutes after closing the low pressure side and high pressure side valves, and check whether there is any change in the low pressure gauge needle indication.
   If the needle position changes, this indicates a leak. Check the pipe and hose connections, and repair the location with the problem.
   After repair, retry charging the refrigerant from the step 1).
   (5) If there is no leakage, continue evacuation for additional 20 — 30 minutes, close all valves and then stop the vacuum pump.
3) Charge refrigerant.
   (1) Follow the can tap operation manual to attach it to the refrigerant can.
   (2) Disconnect the center manifold hose from the vacuum pump, and connect the hose to the tap valve.

NOTE:
When 13.6 kg (30 lb) refrigerant container (1) is used, measure the amount of refrigerant with a refrigerant charging scale (2), and connect with the center manifold hose.

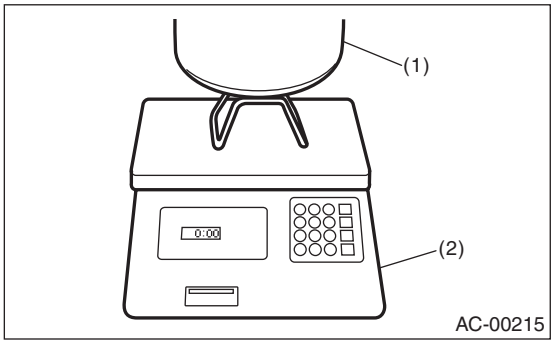

   (3) Open the tap valve of HFC-134a supply container (refrigerant can or refrigerant container).
   (4) Loosen the center manifold hose connection on the manifold gauge for a few seconds (if there is a purge valve on the manifold gauge, push this instead) to allow the air in the center manifold hose to be bled by the refrigerant pressure.
   (5) Open the low-pressure side and high-pressure side valves of the manifold gauge to fill with refrigerant.

NOTE:
If the HFC-134a supply container is empty, close all manifold gauge valves and the tap valve of HFC-134a supply container, and replace the empty supply container with a new one. After replacing with a new HFC-134a supply container, perform air purge, and resume the filling operation.
   (6) If the low pressure gauge indicates approximately 0.2 MPa (2.0 kgf/cm^2, 29 psi) or refrigerant filling efficiency drops, close the low-pressure side valve and high-pressure side valve.
   (7) Check that the low-pressure side valve and high-pressure side valve are closed, turn off the A/C switch and start the engine.

CAUTION:
When filling with the engine running, do not open the high pressure side valve. Always fill from the low pressure side.

(8) To prevent damage to the compressor, push the A/C switch ON-OFF quickly a few times.
(9) Set the vehicle to the following conditions.

Item	Condition
Engine speed	1,500 rpm
A/C switch	ON
Temperature adjustment dial	LO (MAX COOL)
Fan dial	HI (MAX)
FRESH/RECIRC switch	RECIRC
Air flow control dial or switch	VENT
WINDOW	OPEN

(10) Open the low-pressure side valve, check the refrigerant pressure with a manifold gauge and fill with refrigerant up to the specified amount. <Ref. to AC-25, INSPECTION WITH PRESSURE SYMPTOMS, INSPECTION, Refrigerant Pressure with Manifold Gauge Set.>

4) Using an electronic leak detector (leak tester), check for refrigerant leaks in the system. <Ref. to AC-33, INSPECTION, Refrigerant Leak Check.>
5) After filling with refrigerant, close all valves and remove the manifold gauge set.
6) Attach cap to the service port of the low-pressure side and high-pressure side.

6. Refrigerant Leak Check

A: INSPECTION

PREPARATION TOOL:
Manifold gauge set
Electronic leak detector

1) Attach the manifold gauge set.
   (1) Confirm that all valves are fully closed.
   (2) Install the low/high pressure hoses to the service ports on the low/high pressure sides of the vehicle respectively.

CAUTION:
Confirm that the connections are secure.

   (3) Start the engine to operate the A/C system for approx. 10 minutes, and check that the high-pressure side shows at least 0.69 MPa (7.0 kgf/cm^2, 100 psi).

2) Stop the engine to start the leak test.

Inspection parts	Condition	Corrective action
Pipe	Check the connection between pipe and expansion valve.	Check the O-ring and tightening torque on the connection. If necessary, replace each part.
	Check the connection between pressure switch or pressure sensor and high-pressure pipe.	Replace the pressure switch or pressure sensor.
	Check the connection between pipe and condenser.	Check the O-ring and tightening torque on the connection. If necessary, replace each part.
Condenser	Check the welded spot of condenser and the core.	Replace the condenser.
Hose (high-pressure)	Check the connection between hose (high-pressure) and compressor.	Check the O-ring and tightening torque on the connection. If necessary, replace each part.
	Check the connection between hose (high-pressure) and condenser.	Check the O-ring and tightening torque on the connection. If necessary, replace each part.
	Check the rubber part of the flexible hose and the seam between hose and pipe. **CAUTION:** **Carefully check the external surface of flexible hose and pipe at approx. 25 mm (0.98 in) per second.**	Replace the hose (high-pressure).
	Check the valve and cap in the service port.	Check the rubber seal of the valve and cap. If necessary, replace valve or cap.
Compressor	Check the compressor pulley and the vicinity of shaft seal. **CAUTION:** **Some shaft seals will show a slight amount of leakage, about 3 g (0.1 oz) per year. This is not a problem.**	Replace the compressor.

Inspection parts	Condition	Corrective action
Hose (low-pressure)	Check the connection between hose (low-pressure) and expansion valve.	Check the O-ring and tightening torque on the connection. If necessary, replace each part.
	Check the connection between hose (low-pressure) and compressor.	Check the O-ring and tightening torque on the connection. If necessary, replace each part.
	Check the rubber part of the flexible hose and the seam between hose and pipe. **CAUTION:** **Carefully check the external surface of flexible hose and pipe at approx. 25 mm (0.98 in) per second.**	Replace the hose (low-pressure).
	Check the valve and cap in the service port.	Check the rubber seal of the valve and cap. If necessary, replace valve or cap.
Evaporator	Remove the drain hose from the heater case, and check the end portion for 10 seconds or more.	Replace the evaporator.
	Check the air vent grille. NOTE: Turn the ignition switch to ON, and run the blower at high speed for approx. 1 minute. Stop the blower to check the air vent grille on the instrument panel. While moving the tester closer to the grille, run the blower for 1 or 2 seconds, then stop it. Check the grille at that position for at least 10 seconds.	Replace the evaporator.

7. Relay and Fuse

A: LOCATION

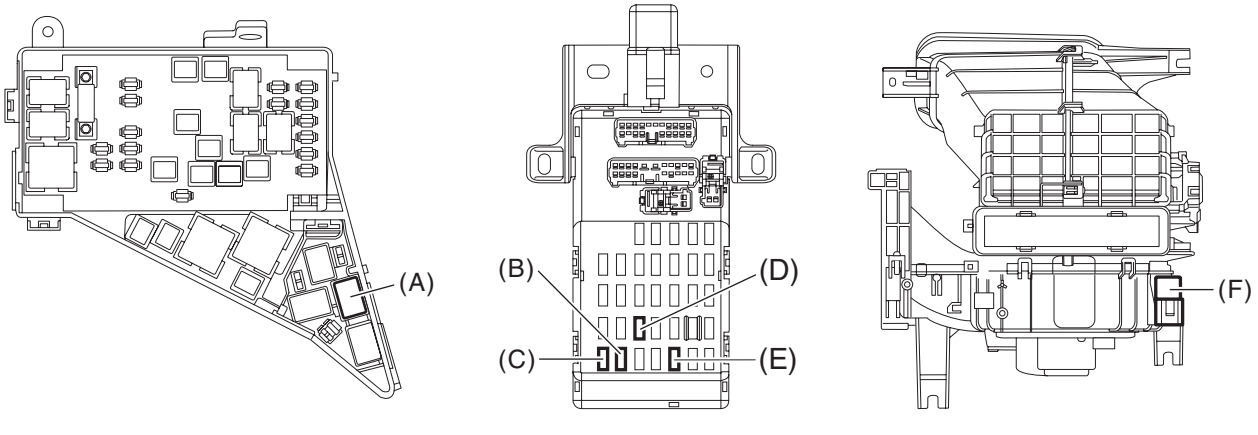

Main fuse box	A/C relay	(A)
Relay & fuse box	Fuse 15 A (blower motor relay)	(B)
	Fuse 15 A (blower motor relay)	(C)
	Fuse 10 A (A/C control panel)	(D)
	Fuse 7.5 A (A/C control panel)	(E)
Blower motor unit	Blower motor relay	(F)

NOTE:
For other related fuses, refer to the wiring diagram. <Ref. to WI(w/o HEV)-15, Power Supply Circuit.>
- Gasoline engine model: <Ref. to WI(w/o HEV)-15, Power Supply Circuit.>
- HEV model: <Ref. to WI(HEV)-20, Power Supply Circuit.>

B: INSPECTION

1. CHECK FUSE

1) Remove the fuse and inspect visually.
2) If the fuse is blown out, replace the fuse.

NOTE:
If the fuse is blown again, check the system wiring harness.

2. CHECK RELAY

1) Check the resistance between relay terminals.
- A/C relay

Terminal No.	Inspection conditions	Standard	Circuit
1 — 2	Always	1 MΩ or more	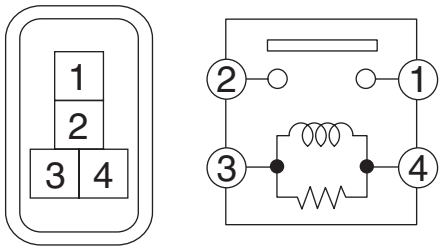 LI-01273
1 — 2	Apply battery voltage between terminals 4 and 3.	Less than 1 Ω	

- Blower motor relay

Terminal No.	Inspection conditions	Standard	Circuit
1 — 4	Always	1 MΩ or more	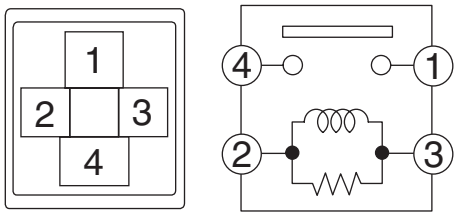 AC-02796
1 — 4	Apply battery voltage between terminals 2 and 3.	Less than 1 Ω	

2) Replace the relay if the inspection result is not within the standard.

8. Compressor Oil

A: PROCEDURE

NOTE:
Before making repairs, perform the oil return operation to return the compressor oil in circulation with the refrigerant to the compressor assembly.
1) Increase the engine to 1,500 rpm.
2) Turn the A/C switch to ON.
3) Turn the temperature control dial to LO (MAX COOL).
4) Turn the FRESH/RECIRC switch to RECIRC position.
5) Turn the fan dial to HI (MAX).
6) Leave in this condition for 10 minutes.

B: ADJUSTMENT

- If a component has been replaced, add an appropriate amount of compressor oil (same as the amount of remaining oil in removed component).
- When replacing the compressor assembly, the new compressor assembly will already have the specified amount of oil in it. Adjust the oil amount (so that the amount remains the same as that of the removed compressor assembly) and install the new compressor assembly.

NOTE:
Since the hygroscopicity of compressor oil is high, perform this series of works quickly.

9. Blower Motor Unit Assembly

A: REMOVAL

1) Disconnect the ground cable from battery. <Ref. to NT-5, BATTERY, NOTE, Note.>

NOTE:
For the 12 volt engine restart battery of HEV model, disconnect the ground terminal from 12V engine restart battery sensor.

2) Remove the glove box. <Ref. to EI-73, REMOVAL, Glove Box.>
3) Remove the engine control module (ECM).
- Gasoline engine model: <Ref. to FU(H4DO(w/o HEV))-106, REMOVAL, Engine Control Module (ECM).>
- HEV model: <Ref. to FU(H4DO(HEV))-85, REMOVAL, Engine Control Module (ECM).>

4) Remove the blower motor unit assembly.
   (1) Release the claws, and then remove the grille assembly - ventilation RH.
   (2) Disconnect the blower motor relay and each connector.

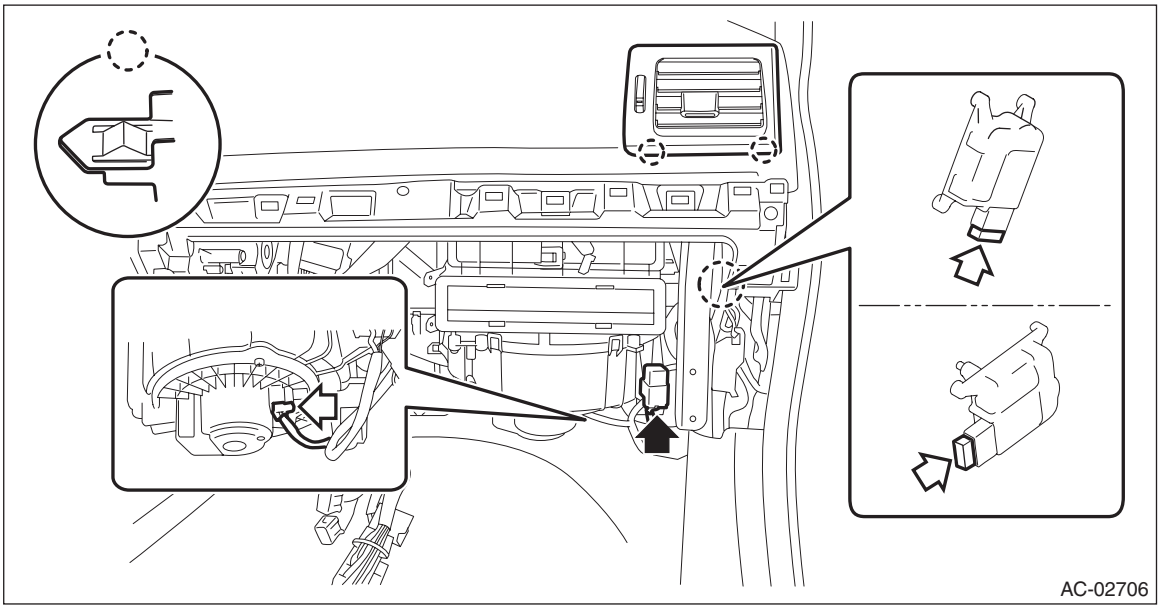
AC-02706

   (3) Remove the bolts and nuts to remove blower motor unit assembly.

NOTE:
Remove the RH upper nut from the mounting portion of the grille assembly - ventilation RH.

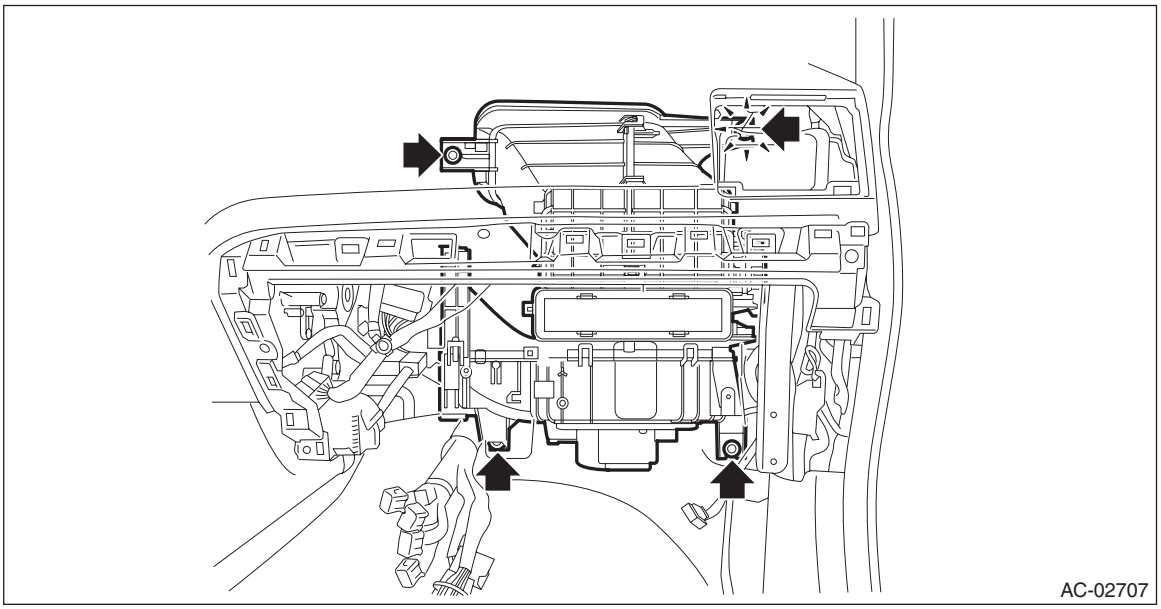
AC-02707

B: INSTALLATION

CAUTION:
After installing the grille assembly - ventilation RH, check that the air vent grille of the grille assembly - ventilation RH is inserted correctly into the air vent duct.
Install each part in the reverse order of removal.

Tightening torque:
Blower motor unit: <Ref. to AC-10, BLOWER MOTOR UNIT, COMPONENT, General Description.>

10.Blower Motor

A: REMOVAL

1) Disconnect the ground cable from battery. <Ref. to NT-5, BATTERY, NOTE, Note.>

NOTE:
For the 12 volt engine restart battery of HEV model, disconnect the ground terminal from 12V engine restart battery sensor.

2) Release the clips, and remove the under cover assembly - passenger.

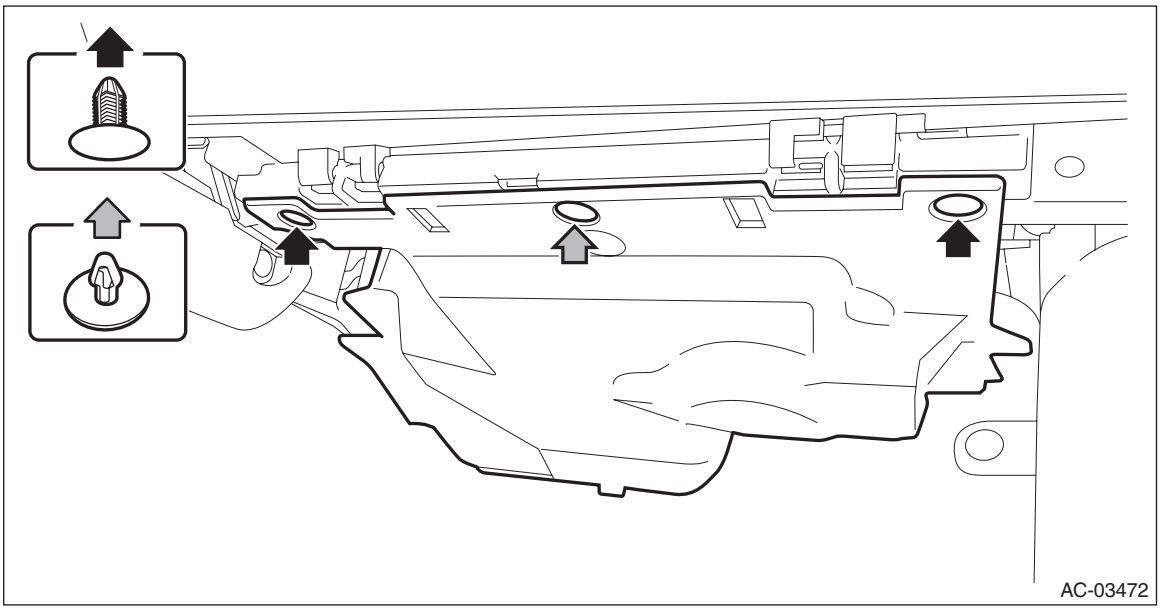

3) Remove the blower - motor.
   (1) Disconnect the connector.
   (2) Remove the screws and detach the blower - motor.

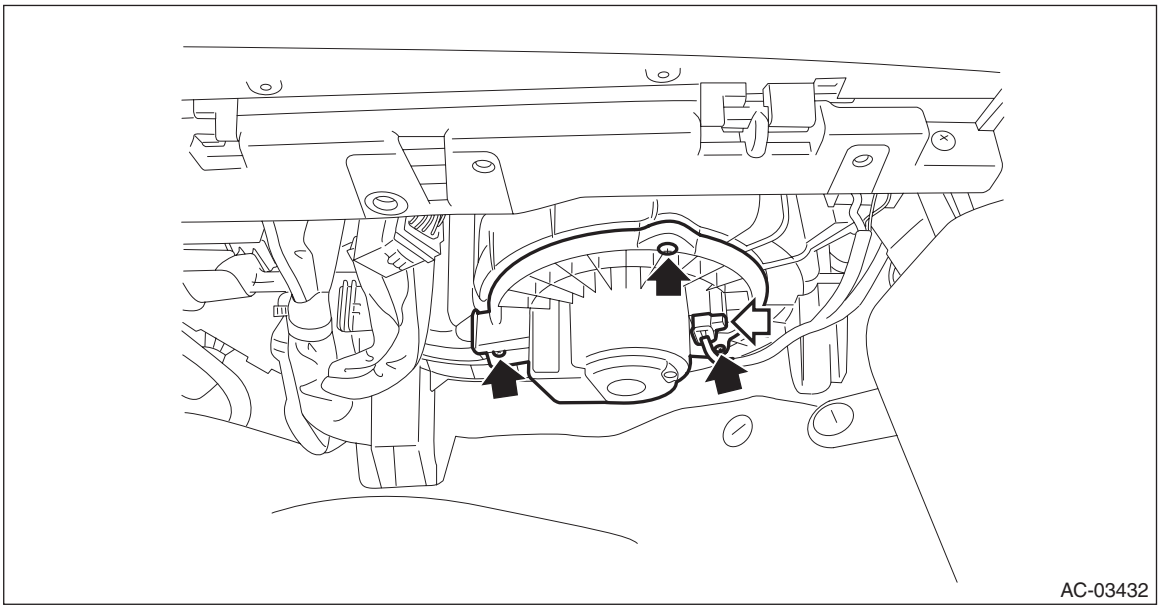

B: INSTALLATION

Install each part in the reverse order of removal.

C: INSPECTION

UNIT INSPECTION

1) Check the motor operation when battery voltage is applied between the terminals of motor.

Terminal No.	Inspection conditions	Specification	Connection diagram
2 (+) — 1 (–)	Connect battery to the terminals	Speed	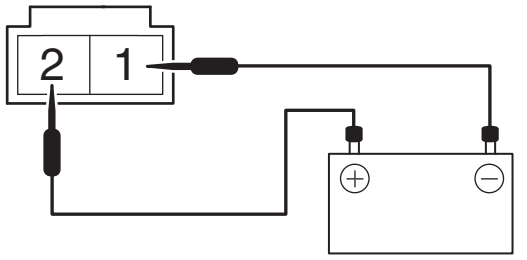 AC-02797

2) If it does not operate normally, replace the blower - motor.

11.Power Transistor (Auto A/C Model)

A: REMOVAL

1) Disconnect the ground cable from battery. <Ref. to NT-5, BATTERY, NOTE, Note.>

NOTE:
For the 12 volt engine restart battery of HEV model, disconnect the ground terminal from 12V engine restart battery sensor.

2) Remove the glove box. <Ref. to EI-73, REMOVAL, Glove Box.>
3) Remove the screws and remove the duct - foot RH.

NOTE:
Remove the connector and clip of the motor - actuator mix RH, and move the harness aside.

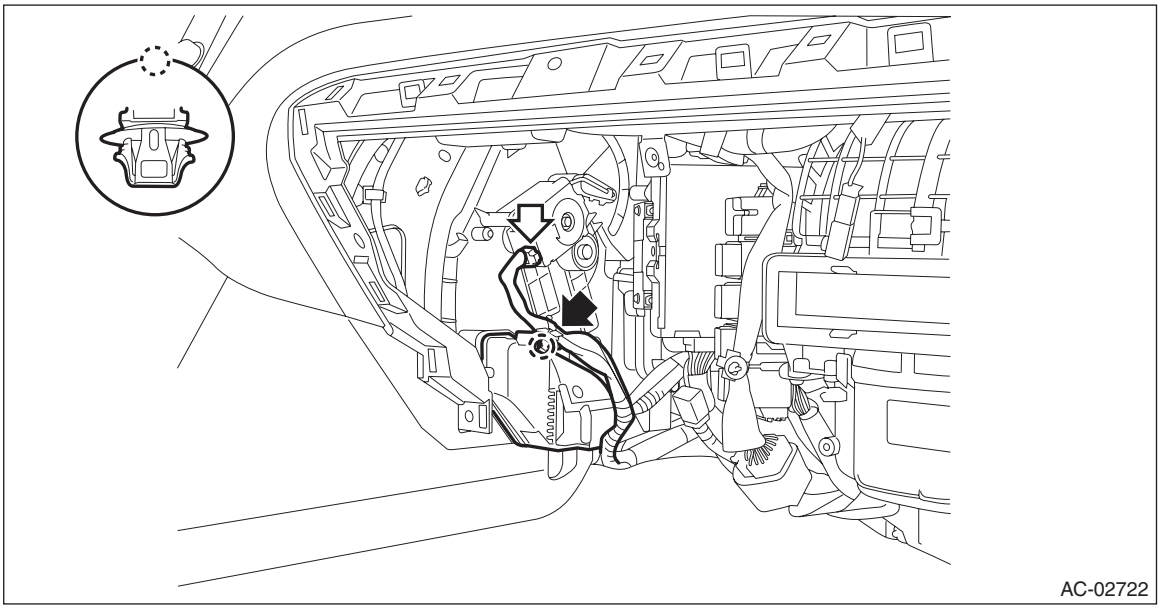

4) Remove the power transistor.
   (1) Disconnect the connector.
   (2) Remove the power transistor while pressing the power transistor body claw part and sliding it.

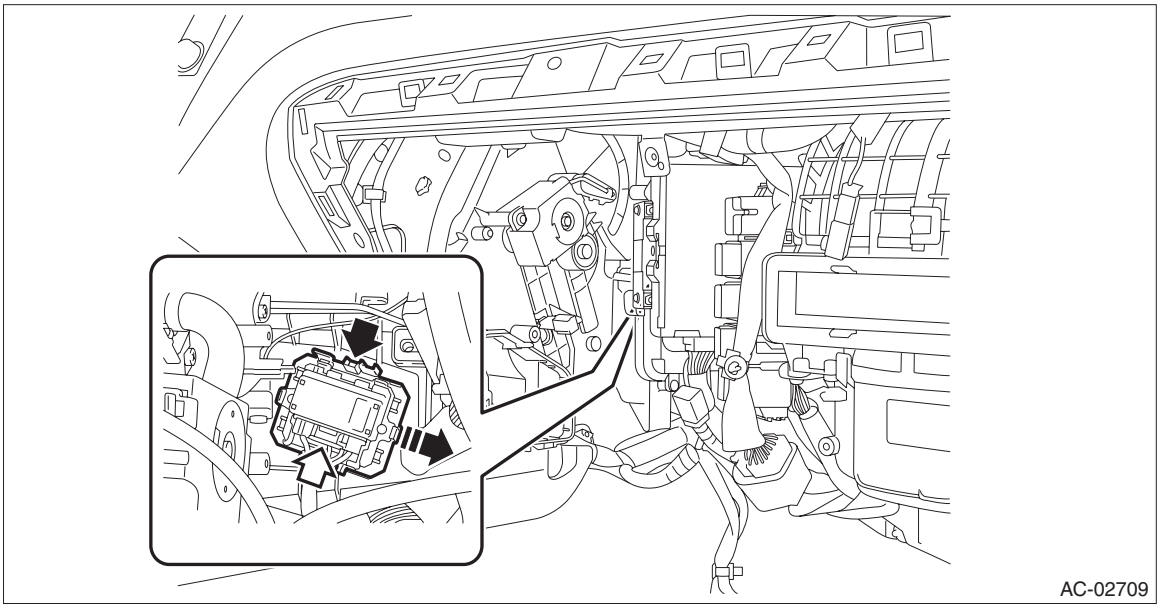

B: INSTALLATION

Install each part in the reverse order of removal.

12.Blower Resistor (Manual A/C Model)

A: REMOVAL

1) Disconnect the ground cable from battery.
2) Remove the glove box. <Ref. to EI-73, REMOVAL, Glove Box.>
3) Remove the engine control module (ECM). <Ref. to FU(H4DO(w/o HEV))-106, REMOVAL, Engine Control Module (ECM).>
4) Remove the resistor.
   (1) Disconnect the connector.
   (2) Remove the screw and remove the resistor.

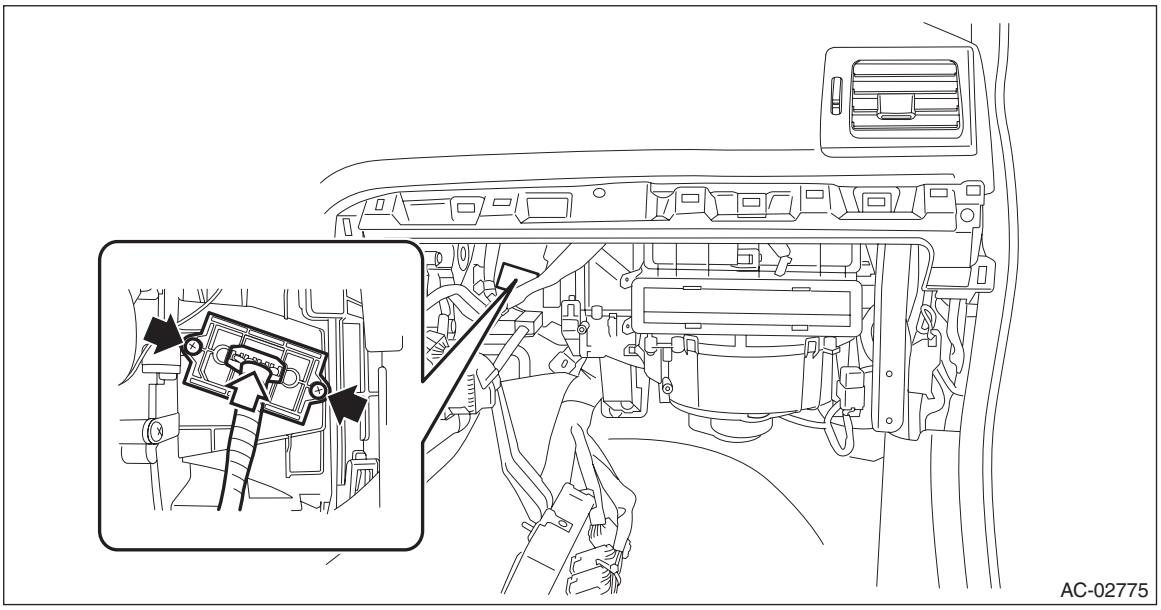

B: INSTALLATION

Install each part in the reverse order of removal.

C: INSPECTION

UNIT INSPECTION

PREPARATION TOOL:
Circuit tester

1) Check the resistance between resistor terminals.

Terminal No.	Standard	Connection diagram
4 — 3	Approx. 0.43 Ω	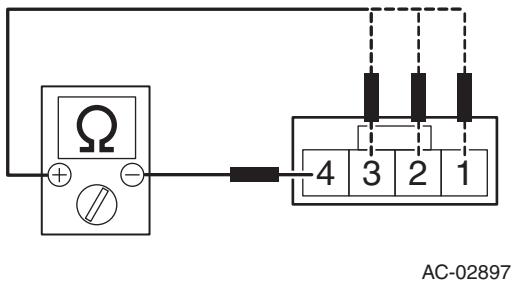
4 — 2	Approx. 1.03 Ω	
4 — 1	Approx. 3 Ω	

2) Replace the resistor if the inspection result is not within the standard.

13.Heater Core

A: REMOVAL

1) Disconnect the ground cable from battery. <Ref. to NT-5, BATTERY, NOTE, Note.>

NOTE:
For the 12 volt engine restart battery of HEV model, disconnect the ground terminal from 12V engine restart battery sensor.
2) Using the refrigerant recovery system, discharge refrigerant. <Ref. to AC-28, PROCEDURE, Refrigerant Recovery Procedure.>
3) Drain the coolant from the radiator. <Ref. to CO(H4DO(w/o HEV))-16, DRAINING OF ENGINE COOLANT, REPLACEMENT, Engine Coolant.>
4) Remove the intake boot. (Gasoline engine model) <Ref. to IN(H4DO(w/o HEV))-12, REMOVAL, Air Intake Boot.>

CAUTION:
Move aside the intake boot to perform the operation without disconnecting the PCV hose.
5) Remove the air cleaner case. (HEV model) <Ref. to IN(H4DO(HEV))-6, REMOVAL, Air Cleaner Case.>
6) Remove the bolt, and remove the hose - pressure suction and the pipe - evaporator cooling from the expansion valve - cooling.

CAUTION:
Seal the disconnected hose and engaging part of expansion valve with a plug or vinyl tape to prevent foreign matter from entering.
7) Loosen the heater hose clamps and remove the hoses.

NOTE:
Put alignment marks to hoses, clamps, etc. and remove them.

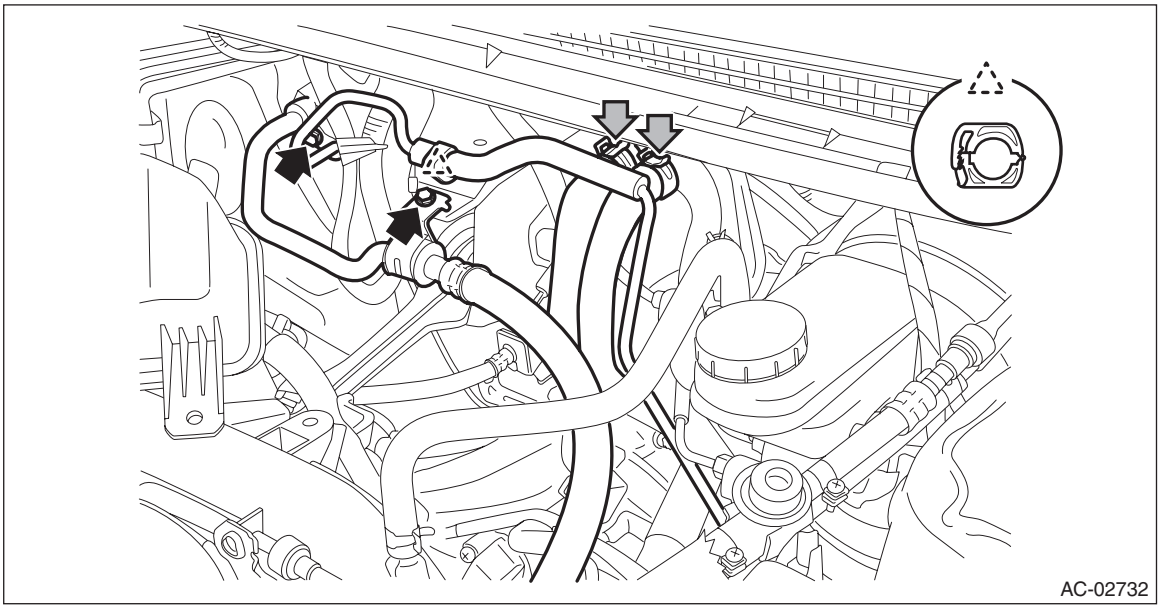

8) Remove the instrument panel assembly. <Ref. to EI-80, REMOVAL, Instrument Panel Assembly.>
9) Remove the engine control module (ECM).
- Gasoline engine model: <Ref. to FU(H4DO(w/o HEV))-106, REMOVAL, Engine Control Module (ECM).>
- HEV model: <Ref. to FU(H4DO(HEV))-85, REMOVAL, Engine Control Module (ECM).>

10) Remove the blower motor unit assembly.
(1) Disconnect the blower motor relay and each connector.

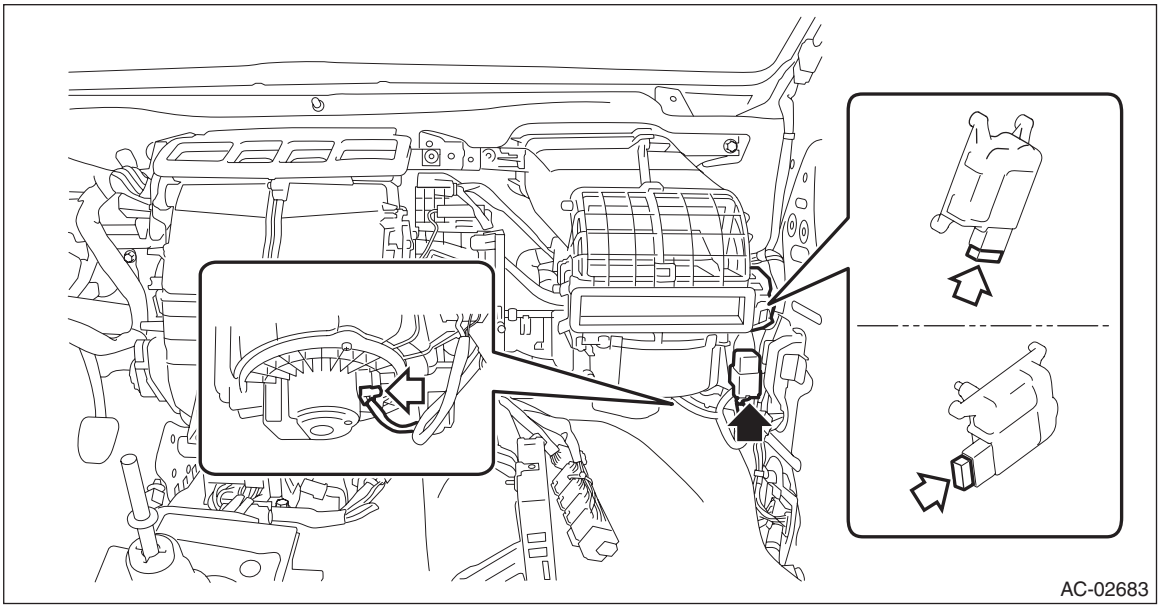

(2) Remove the bolts and nuts to remove blower motor unit assembly.

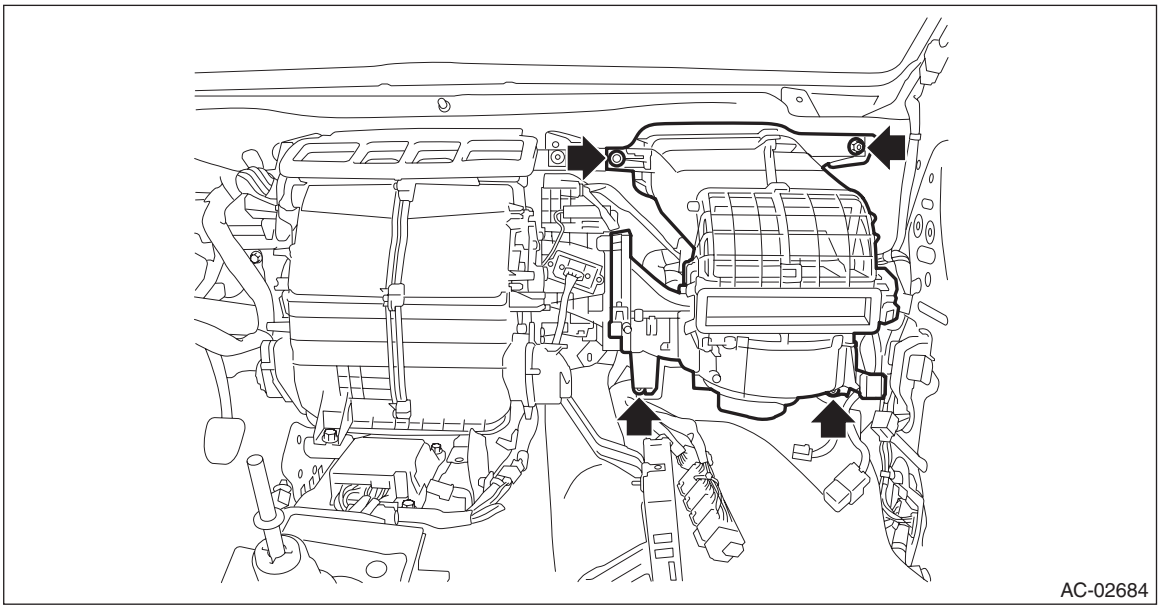

11) Remove the heater and cooling unit assembly.
(1) Disconnect each connector and the hose - drain.

NOTE:
For HEV model, disconnect the heater core sensor connector.

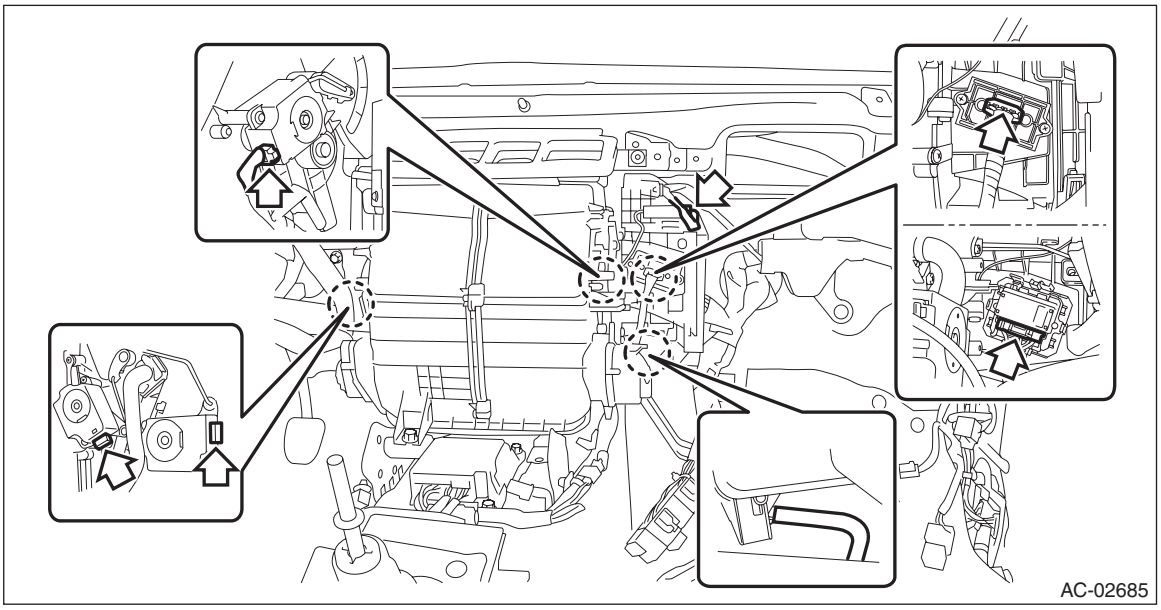

(2) Remove the bolt and nuts, and remove the heater & cooling unit assembly.

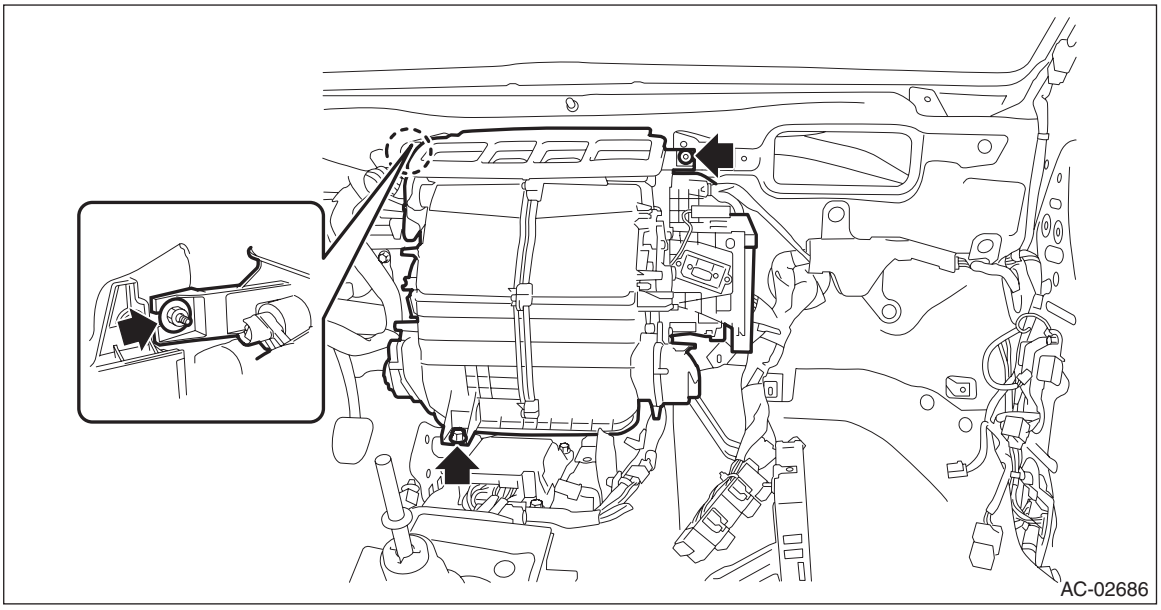

12) Remove the heater core.
(1) Remove the screw and detach the clamp - pipe.

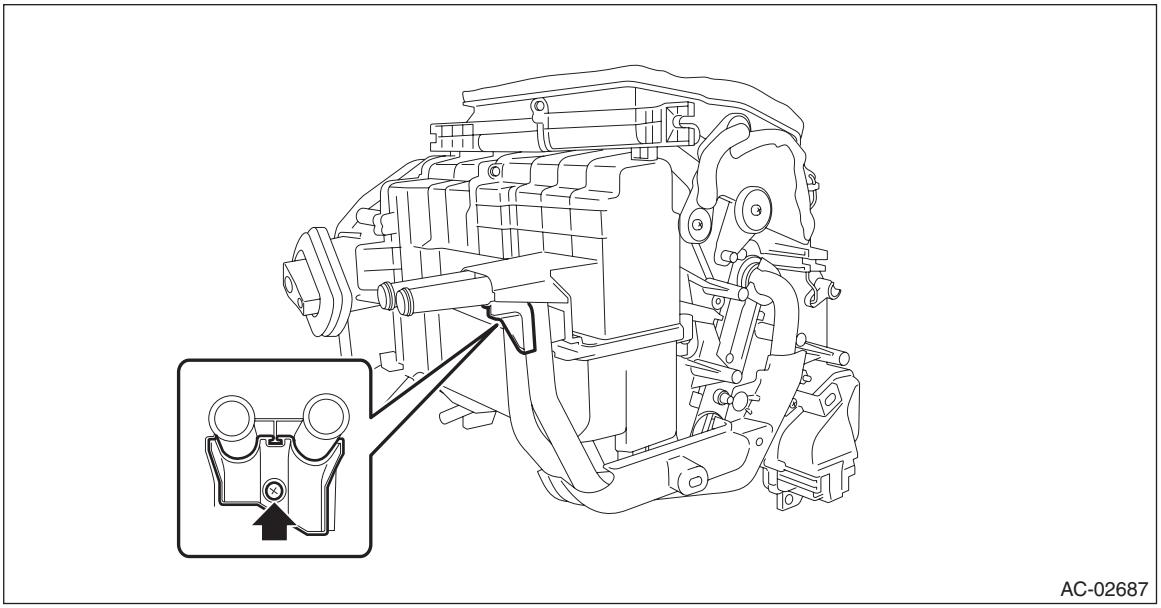
AC-02687

(2) Remove the screws and detach the cover - heater pipe.

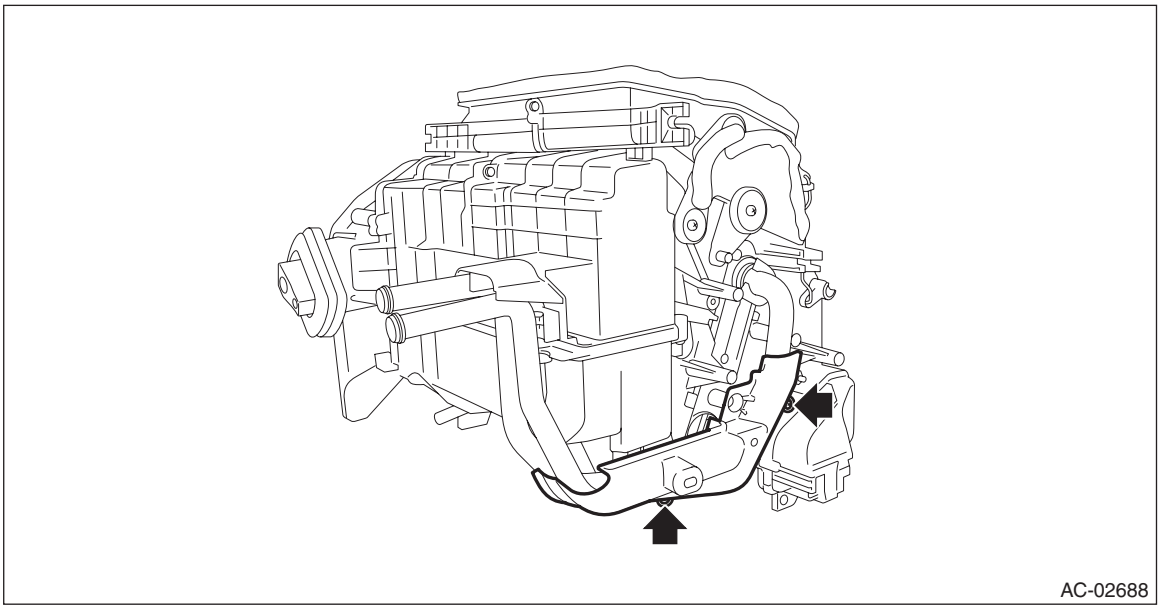
AC-02688

(3) Remove the clamp, and remove the pipe - inlet and outlet.

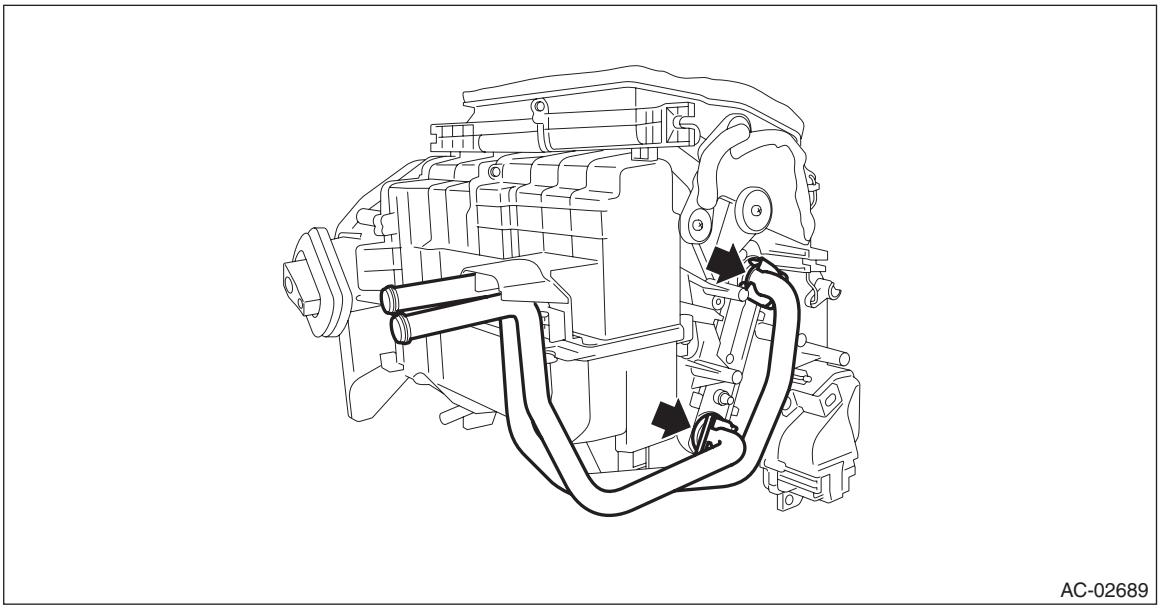

(4) Remove the screws and detach the plate - heater core.

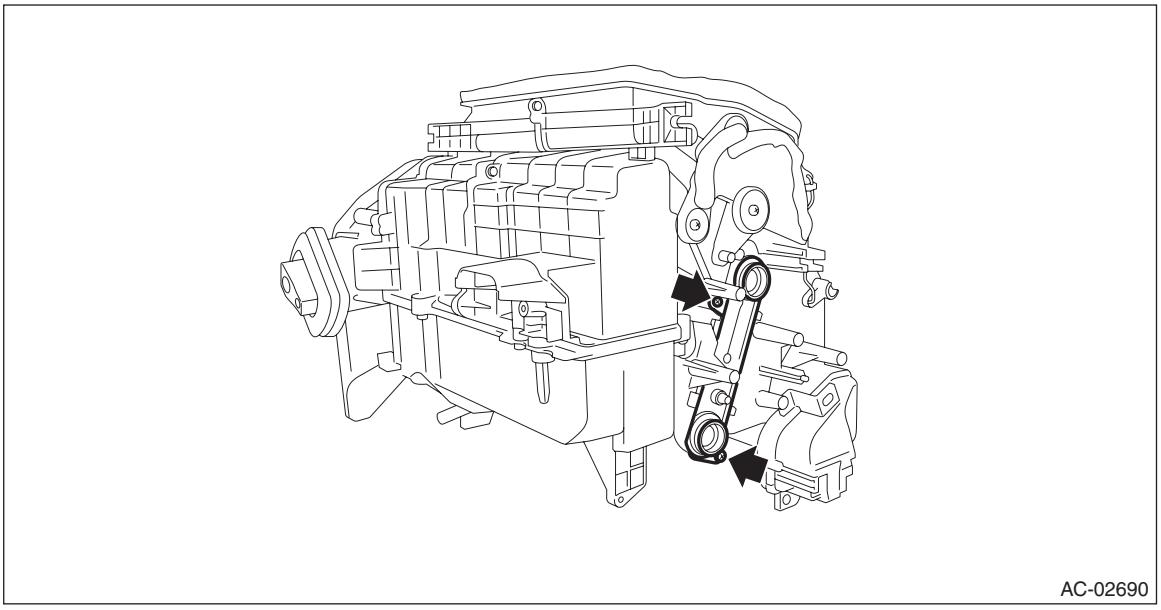

(5) Pull out the heater core from the case - heater unit.

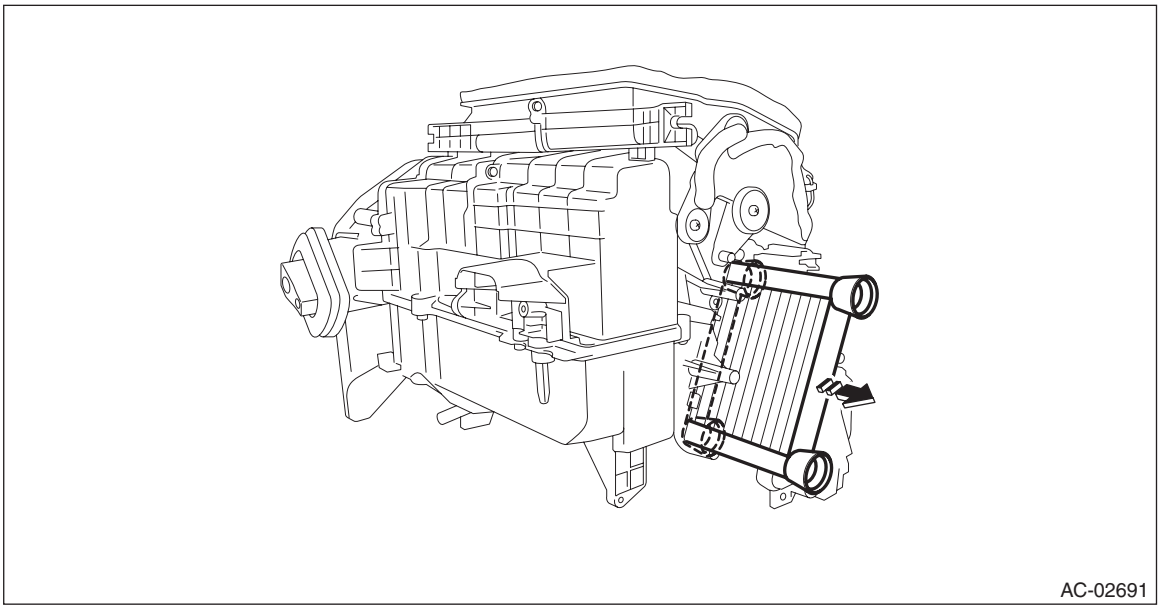

B: INSTALLATION

CAUTION:
Replace O-rings and clamps with new parts and install securely.
1) Install each part in the reverse order of removal.

Tightening torque:
Heater and cooling unit: <Ref. to AC-6, HEATER AND COOLING UNIT, COMPONENT, General Description.>
Blower motor unit: <Ref. to AC-10, BLOWER MOTOR UNIT, COMPONENT, General Description.>
Air conditioning unit: <Ref. to AC-12, AIR CONDITIONING UNIT, COMPONENT, General Description.>
2) Fill engine coolant. <Ref. to CO(H4DO(w/o HEV))-17, FILLING OF ENGINE COOLANT, REPLACEMENT, Engine Coolant.>
3) Charge refrigerant. <Ref. to AC-30, PROCEDURE, Refrigerant Charging Procedure.>

14.Control Panel

A: REMOVAL

1) Disconnect the ground cable from battery. <Ref. to NT-5, BATTERY, NOTE, Note.>

NOTE:
For the 12 volt engine restart battery of HEV model, disconnect the ground terminal from 12V engine restart battery sensor.
2) On manual A/C models, disconnect the control cables from both sides of the heater and cooling unit assembly.

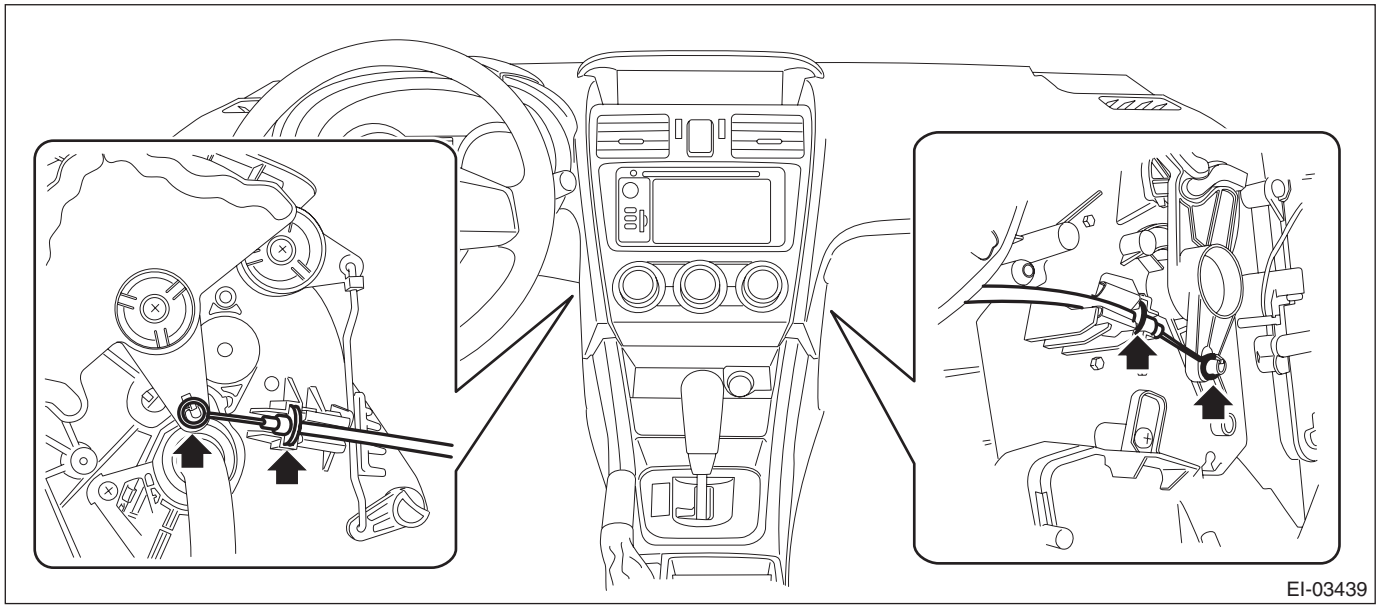

NOTE:
Remove the glove box pocket assembly on the passenger's side.
3) Remove the panel center assembly.

CAUTION:
- **Do not put your finger on the fin of the air vent grille. Doing so may damage the fin.**
- **Pull the panel center assembly slowly. Pulling with excessive force may damage the connector.**

(1) Insert a plastic remover to the three areas shown by the arrows, and slightly lift up the panel center assembly.
(2) With the panel center assembly lifted up slightly, release the claw by using a clip remover wrapped with protective tape.
(3) Release the rest of the claws, and pull out the panel center assembly.

(4) Disconnect the connectors, and remove the panel center assembly.

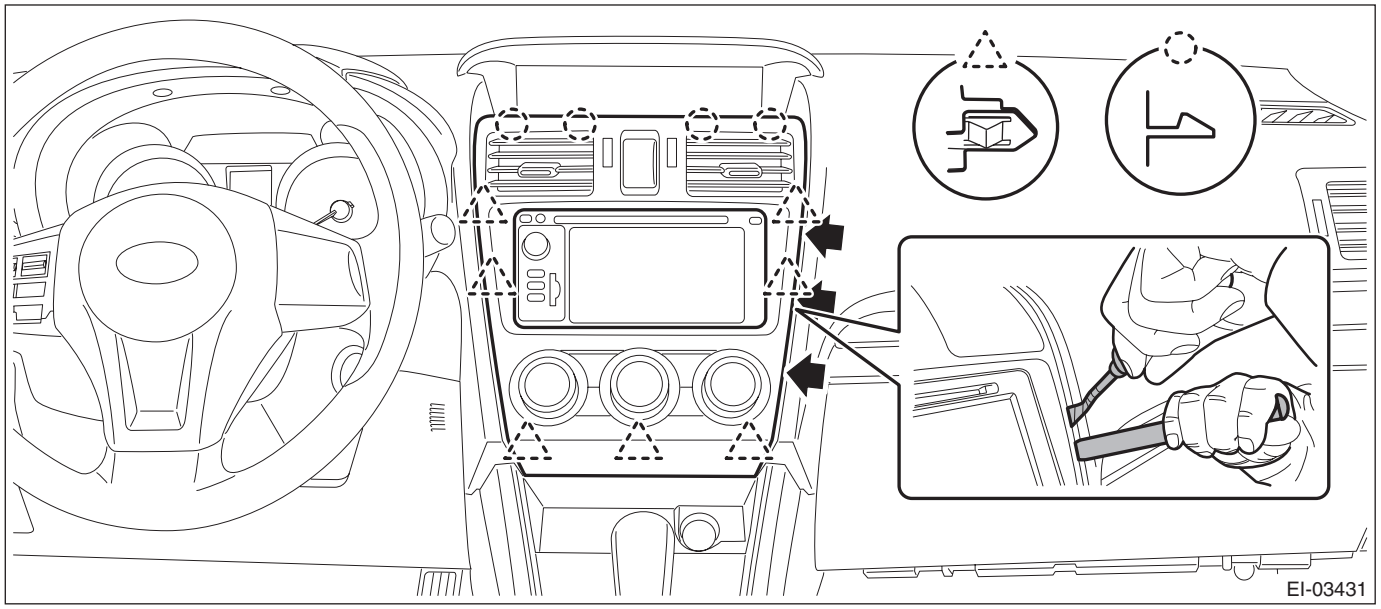

4) Remove the heater control assembly.
(1) Remove the screws.
(2) Release the claws, and then remove the heater control assembly from the panel center assembly.

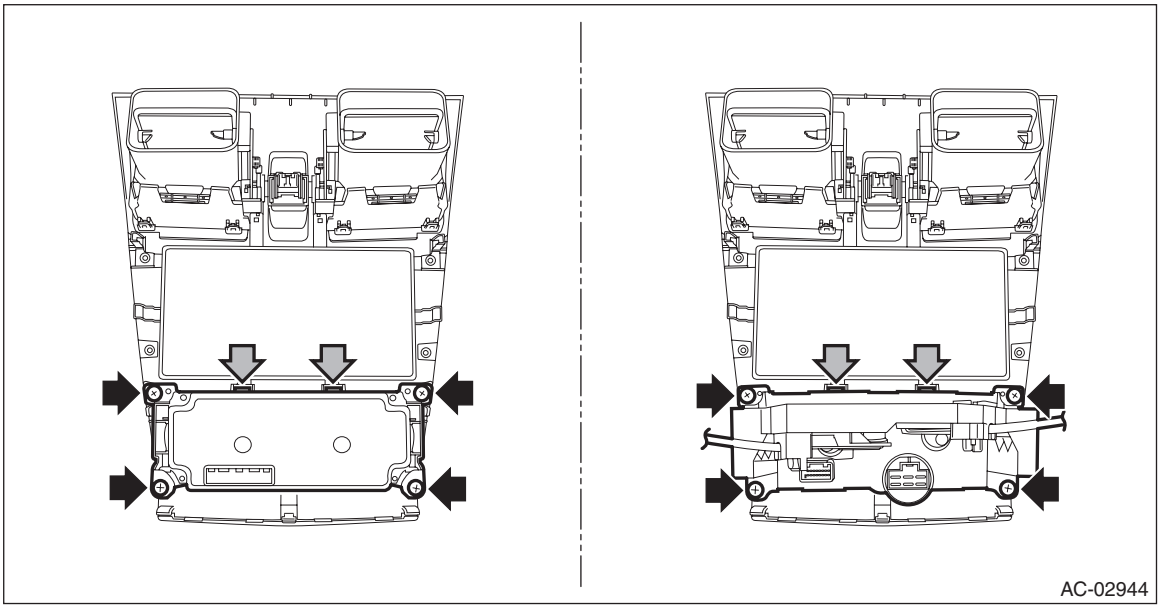

B: INSTALLATION

CAUTION:
After installing the panel center assembly, check that the air vent grille of the panel center assembly is inserted correctly into the air vent duct.
Install each part in the reverse order of removal.

C: INSPECTION

1. CHECK ILLUMINATION

UNIT INSPECTION

1) Check the illumination operation when battery voltage is applied between the terminals of control panel.

- Manual A/C model

Terminal No.	Inspection conditions	Specification	Connection diagram
14 (+) — 12 (–)	Connect battery to the terminals	Light ON	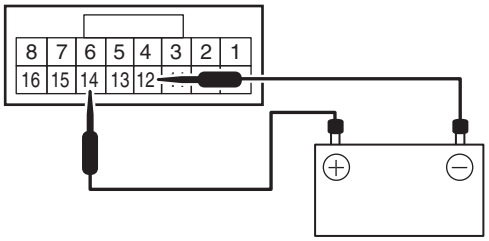 AC-02733

- Auto A/C model

Terminal No.	Inspection conditions	Specification	Connection diagram
37 (+) — 35 (–)	Connect battery to the terminals	Light ON	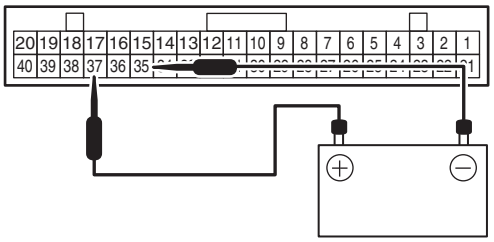 AC-02734

2) If it does not operate normally, replace the heater control assembly.

2. BLOWER SWITCH (MANUAL A/C MODEL)

UNIT INSPECTION

PREPARATION TOOL:

Circuit tester

1) Measure the resistance between the control panel terminals.

Terminal No.	Inspection conditions	Standard	Connection diagram
—	OFF	—	—
1 — 2, 4	1 (LO)	Less than 1 Ω	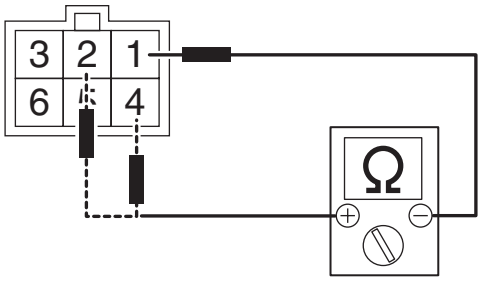 AC-02798
1 — 3, 4	2 (M1)	Less than 1 Ω	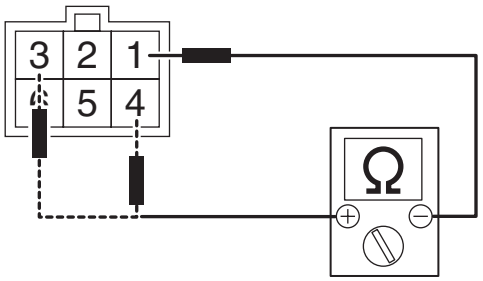 AC-02799
1 — 4, 6	3 (M2)	Less than 1 Ω	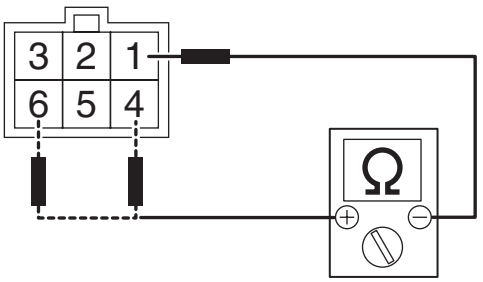 AC-02800
1 — 4, 5	4 (HI)	Less than 1 Ω	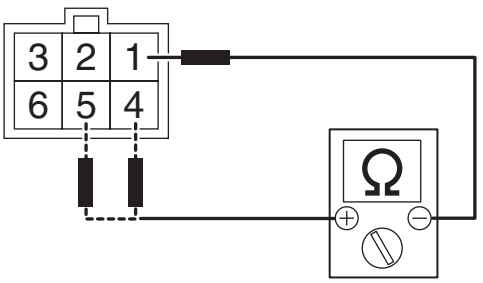 AC-02801

2) Replace the heater control assembly if the inspection result is not within the standard.

15.Compressor

A: REMOVAL

1. GASOLINE ENGINE MODEL

1) Perform compressor oil return operation. <Ref. to AC-37, PROCEDURE, Compressor Oil.>
2) Turn the A/C switch to OFF and stop the engine.
3) Using the refrigerant recovery system, discharge refrigerant. <Ref. to AC-28, PROCEDURE, Refrigerant Recovery Procedure.>
4) Disconnect the ground cable from battery.
5) Remove the V-belts. <Ref. to ME(H4DO(w/o HEV))-120, REMOVAL, V-belt.>
6) Remove the bolts and remove the V-belt cover bracket.

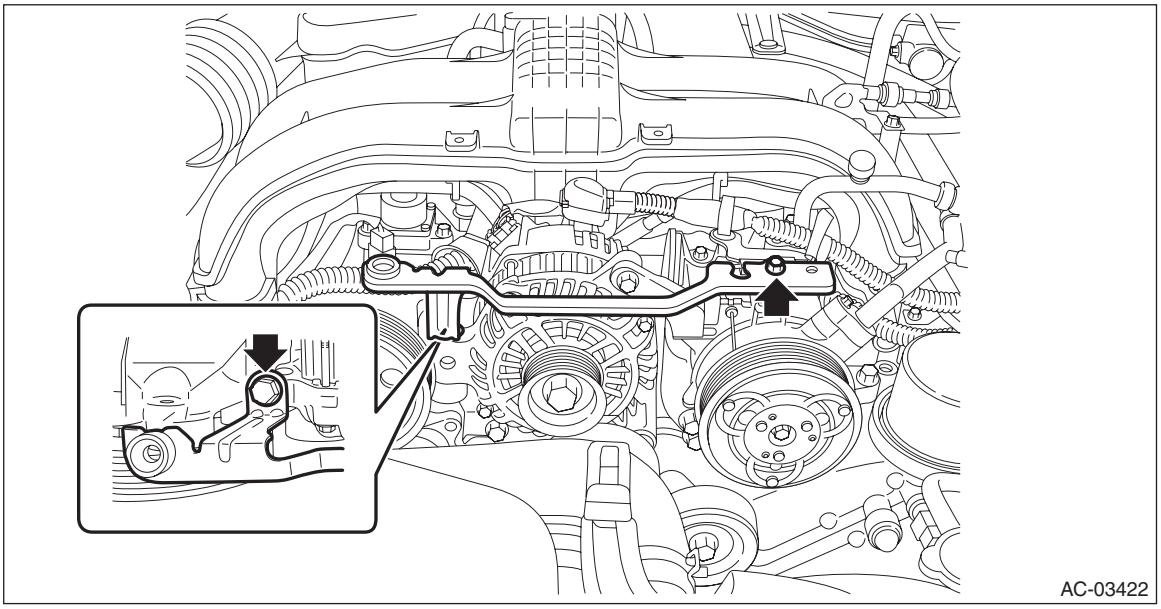
AC-03422

7) Remove the bolt, and detach the hose - pressure suction and the hose - pressure discharge.

CAUTION:
Seal the disconnected hose and engaging part of compressor with a plug or vinyl tape to prevent foreign matter from entering.

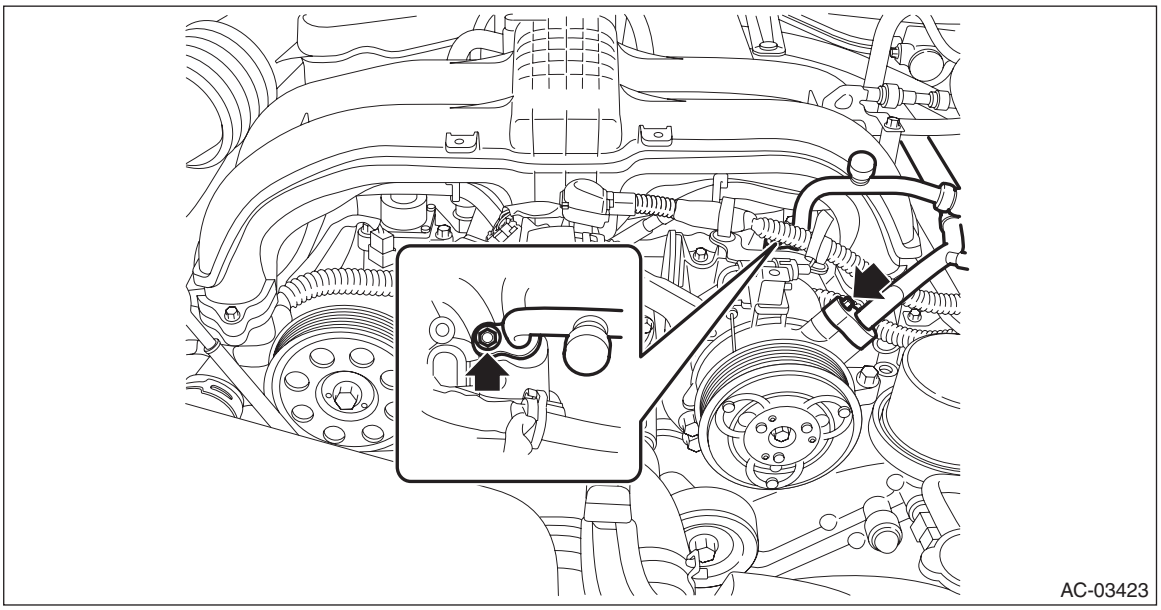
AC-03423

8) Disconnect the nut and each connector, and move the generator harness to the right.

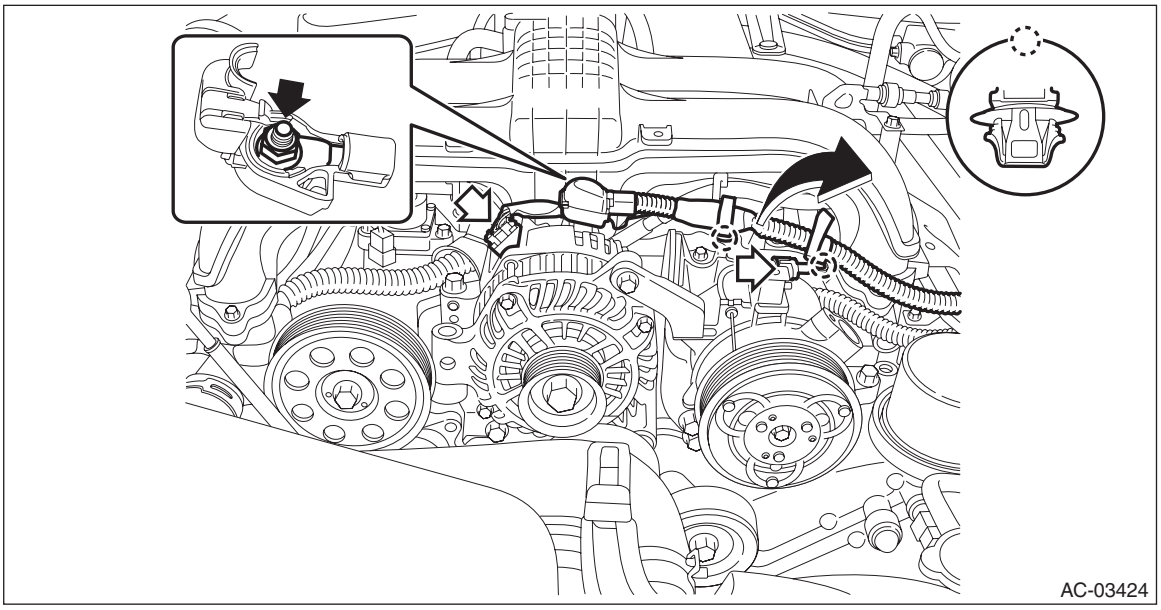

9) Remove the compressor assembly.
   (1) Remove the bolts, and then remove the generator bracket.

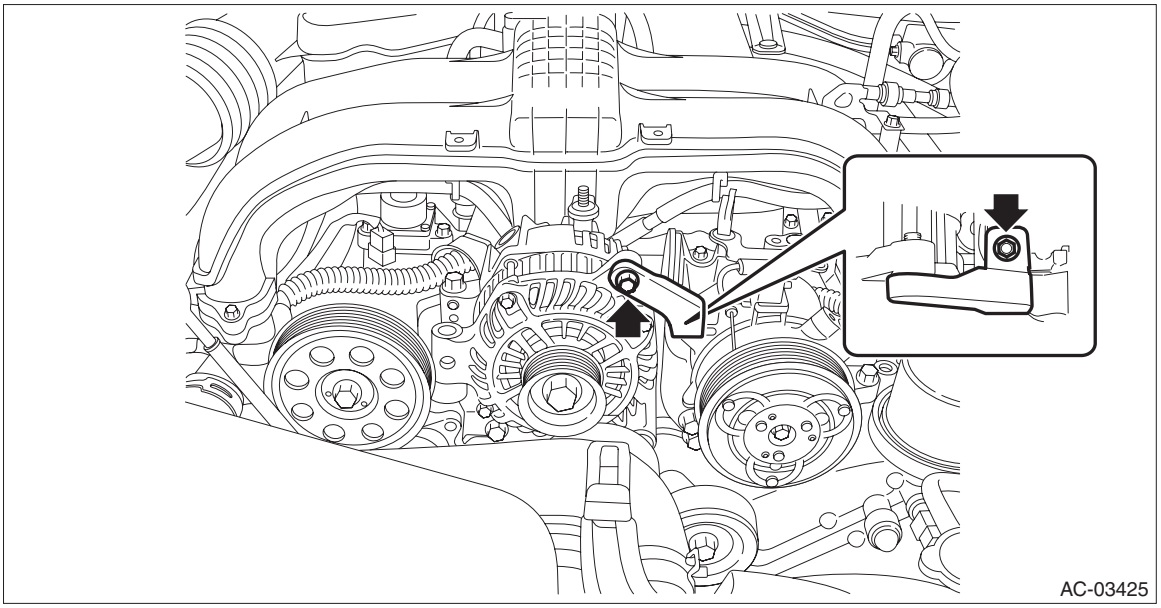

(2) Remove the bolts and remove the compressor assembly.

NOTE:
Tighten the engine hanger together with the compressor assembly.

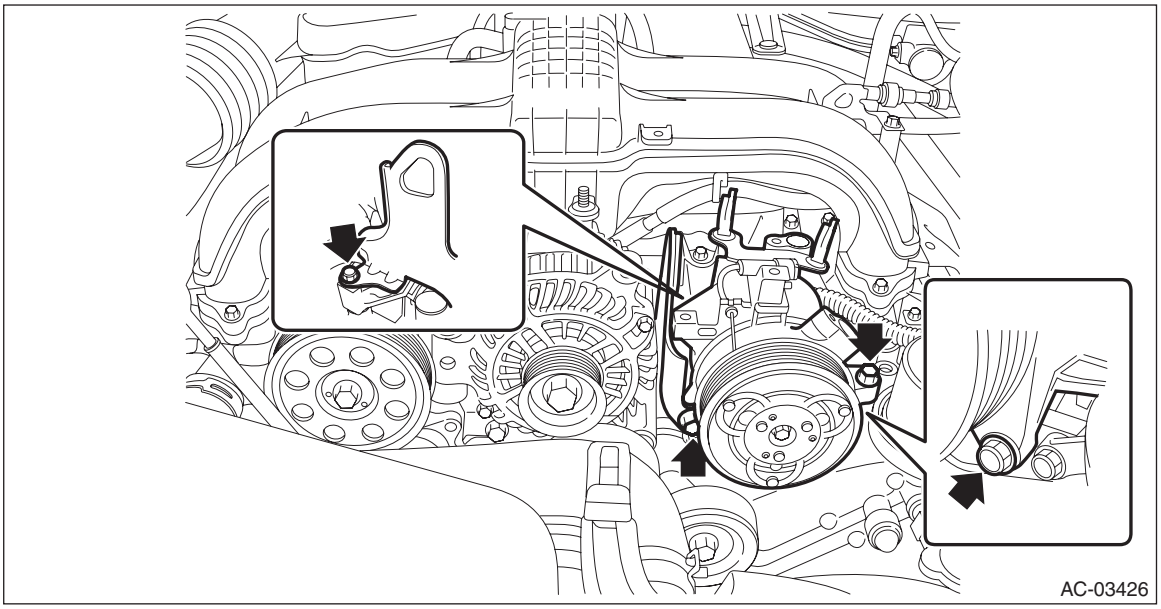

2. HEV MODEL

1) Perform compressor oil return operation. <Ref. to AC-37, PROCEDURE, Compressor Oil.>
2) Turn the A/C switch to OFF, and turn the ignition switch to OFF.
3) Using the refrigerant recovery system, discharge refrigerant. <Ref. to AC-28, PROCEDURE, Refrigerant Recovery Procedure.>
4) Disconnect the ground cable from battery. <Ref. to NT-5, BATTERY, NOTE, Note.>

NOTE:
For the 12 volt engine restart battery, disconnect the ground terminal from 12V engine restart battery sensor.
5) Remove the brake vacuum pump and bracket. <Ref. to BR-78, REMOVAL, Brake Vacuum Pump.>
6) Loosen the V-belt, and remove the V-belt from the compressor pulley. <Ref. to ME(H4DO(w/o HEV))-122, HEV MODEL, REMOVAL, V-belt.>

7) Remove the bolt, and detach the hose - pressure suction and the hose - pressure discharge.

CAUTION:
Seal the disconnected hose and engaging part of compressor assembly with a plug or vinyl tape to prevent foreign matter from entering.

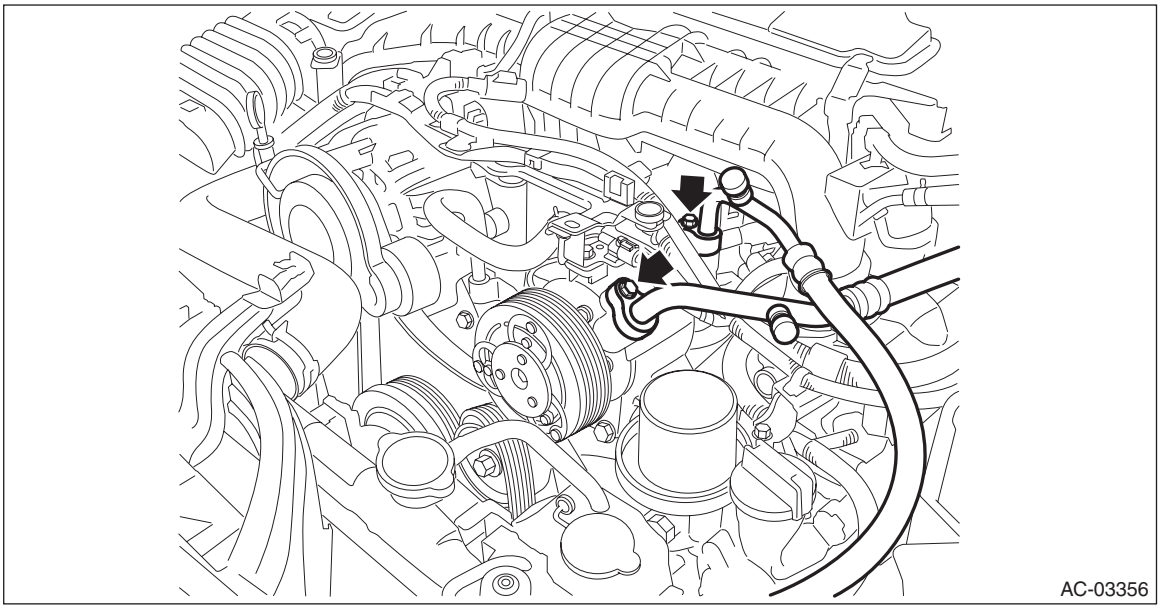

8) Remove the compressor assembly.
(1) Disconnect the connector.
(2) Remove the bolts and remove the compressor assembly.

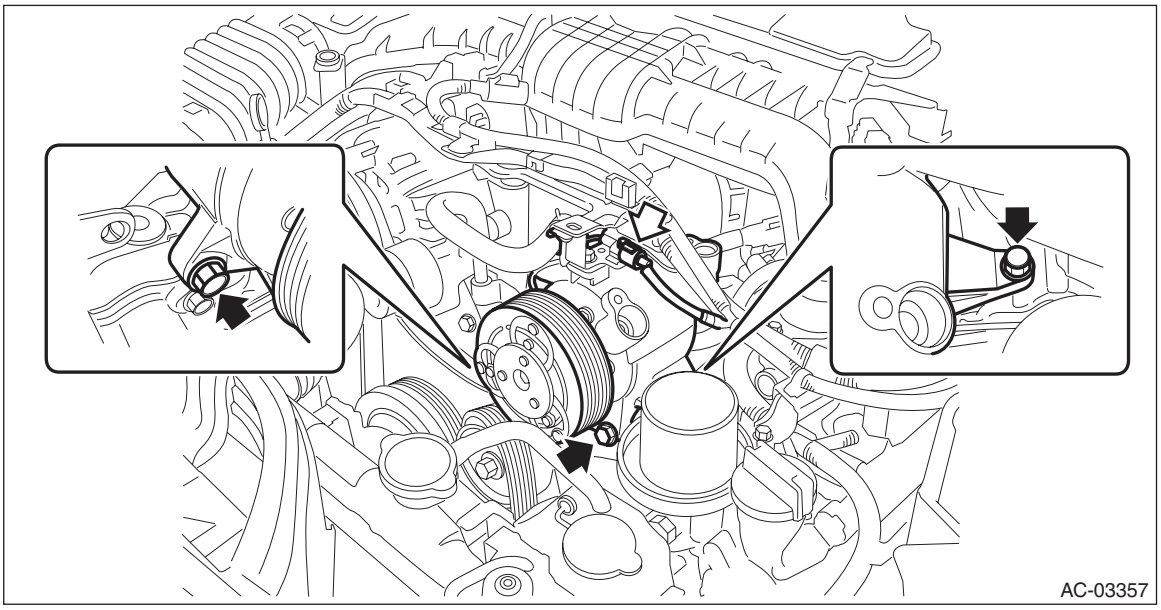

B: INSTALLATION

CAUTION:
• Replace the O-rings on the hose - pressure suction and discharge with new parts, and then apply compressor oil.
• After replacing the compressor assembly, adjust the amount of the compressor oil. <Ref. to AC-37, ADJUSTMENT, Compressor Oil.>
1) Install each part in the reverse order of removal.

Tightening torque:
Air conditioning unit: <Ref. to AC-12, AIR CONDITIONING UNIT, COMPONENT, General Description.>
Compressor: <Ref. to AC-14, COMPRESSOR, COMPONENT, General Description.>
V-belt cover bracket and generator bracket: <Ref. to SC(H4DO(w/o HEV))-5, GENERATOR BRACKET, COMPONENT, General Description.>
2) Charge refrigerant. <Ref. to AC-30, PROCEDURE, Refrigerant Charging Procedure.>

C: INSPECTION

1. MAGNET CLUTCH CLEARANCE INSPECTION

1) Check the clearance of entire circumference around the drive plate and pulley.

Specification:
0.3 — 0.6 mm (0.0118 — 0.0236 in)
2) Replace the compressor assembly if the inspection result is not within the standard.

2. MAGNET CLUTCH OPERATION INSPECTION

UNIT INSPECTION
1) Check the magnet clutch operation when battery voltage is applied to the compressor terminal.

Terminal No.	Inspection conditions	Specification	Connection diagram
1 (+) — chassis ground (–)	Battery connection between compressor terminal and chassis ground	Engagement of magnet clutch	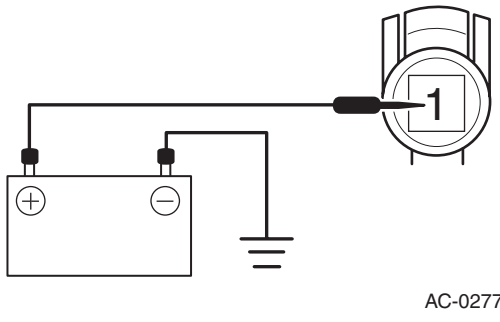 AC-02772

2) If it does not operate normally, replace the compressor assembly.

16.Condenser

A: REMOVAL

1) Using the refrigerant recovery system, discharge refrigerant. <Ref. to AC-28, PROCEDURE, Refrigerant Recovery Procedure.>
2) Remove the clips and remove the air intake duct.

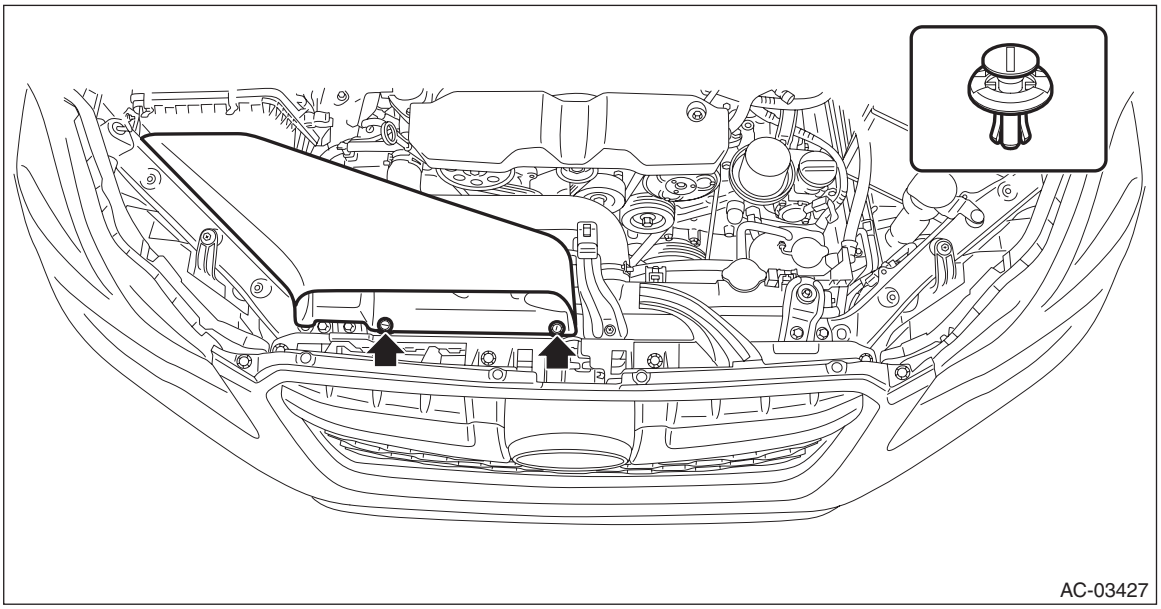

3) Remove the clip, and remove the bracket - grille.

NOTE:
To prevent damage to the bracket - grille, make sure to remove all clips.

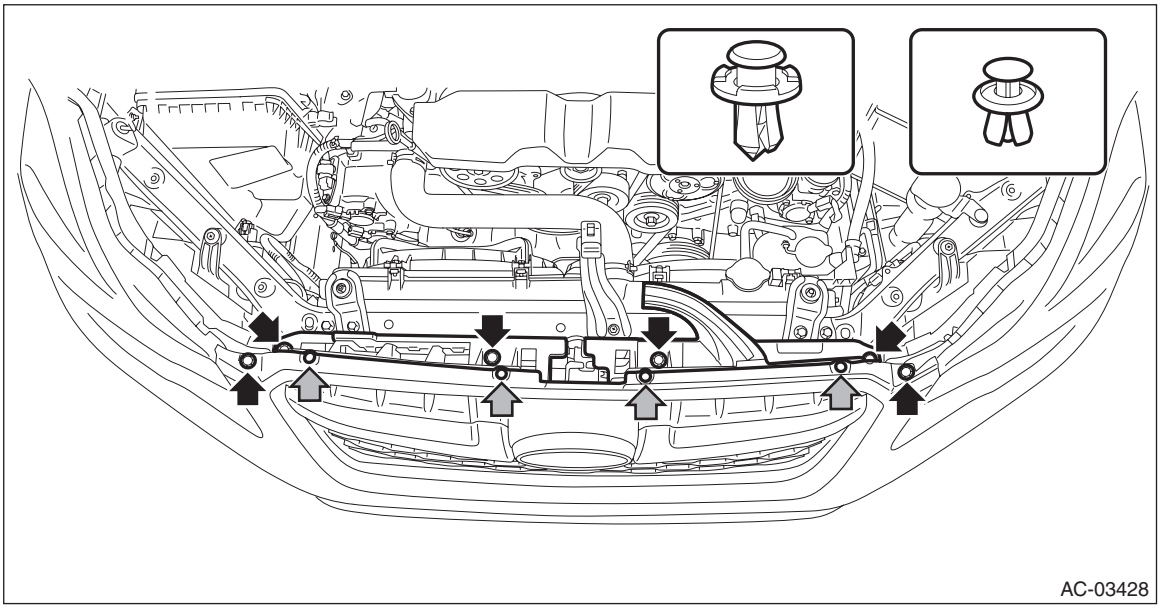

4) Remove the bolt, and disconnect the hose - pressure discharge and the pipe - evaporator cooling from the condenser assembly - air conditioner.

CAUTION:
Seal the disconnected hose, pipe and engaging part of condenser assembly with a plug or vinyl tape to prevent foreign matter from entering.

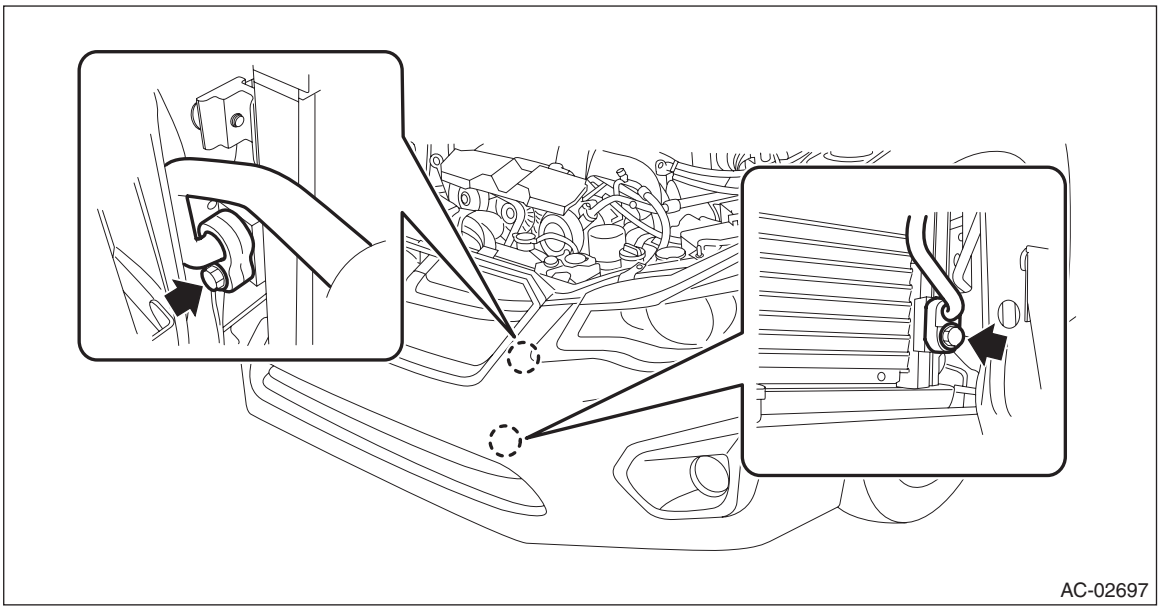

5) Remove the bolts and remove the radiator upper bracket.

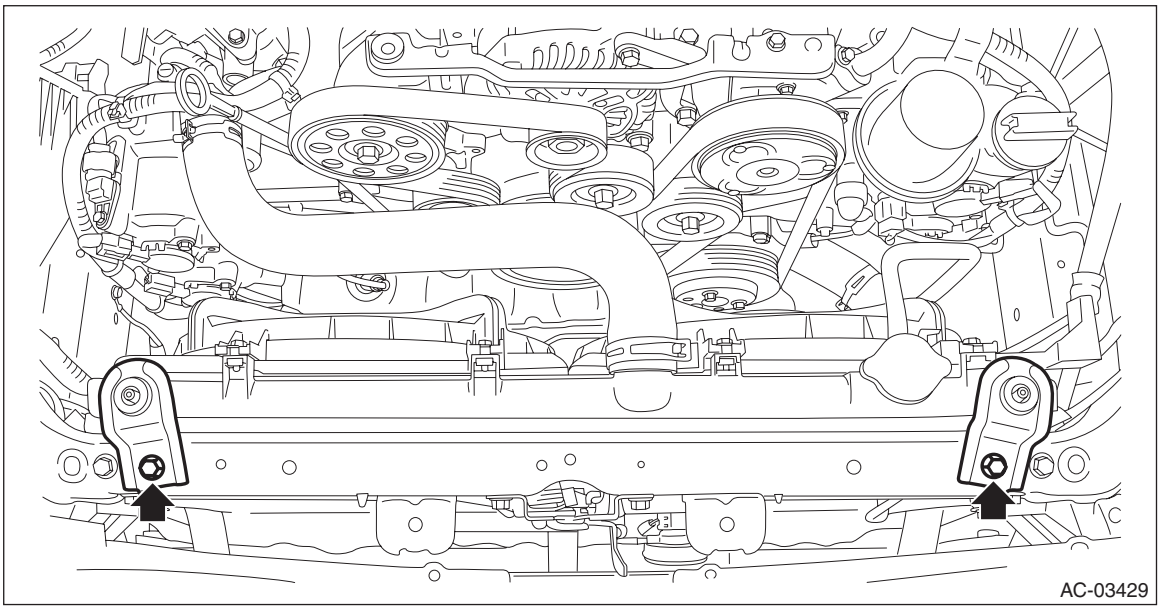

6) Remove the condenser assembly - air conditioner.
(1) Remove the bolt.

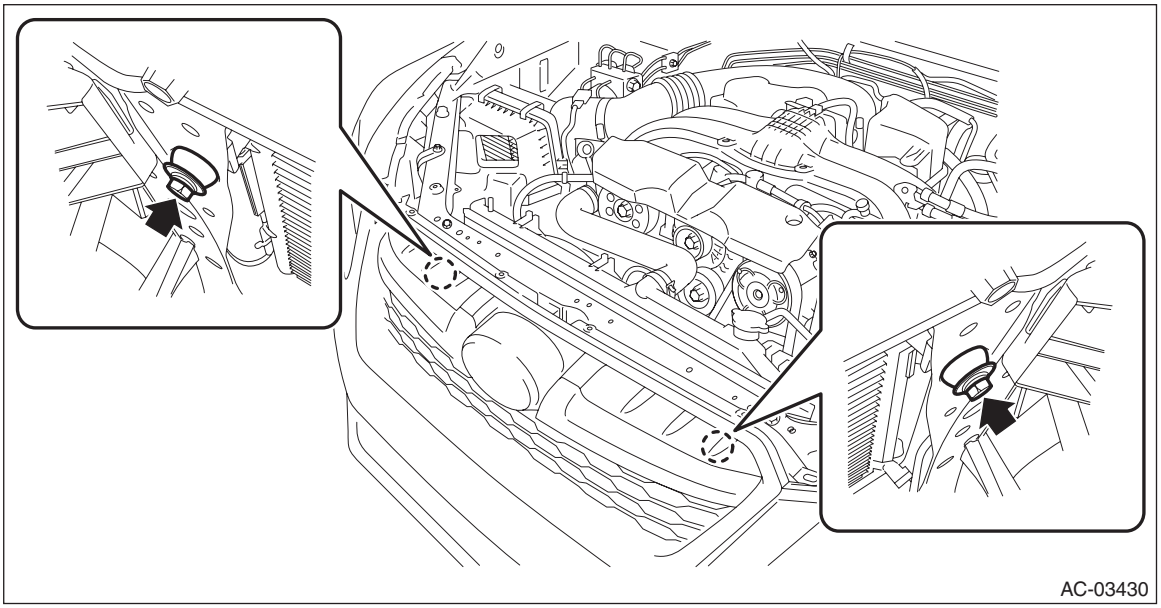

(2) By lifting the condenser assembly - air conditioner, pull it out through the space between the radiator and the radiator panel.

CAUTION:
Be careful not to damage the condenser and radiator fin. If a damaged fin is found, repair it using a thin screwdriver.

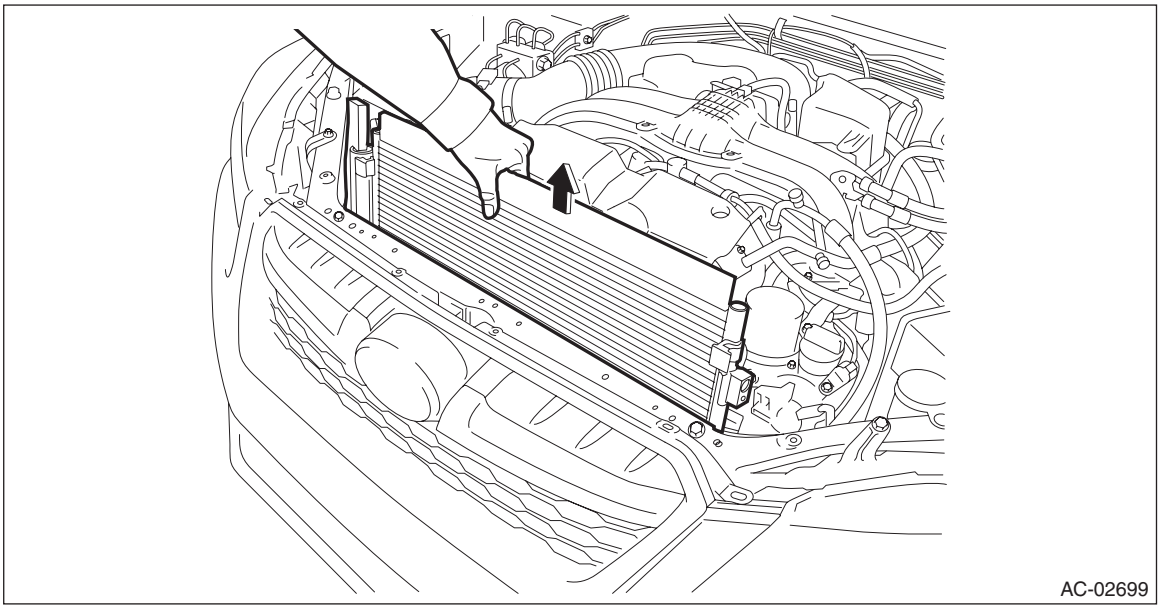

B: INSTALLATION

CAUTION:
• If the condenser assembly - air conditioner has been replaced, add an appropriate amount of compressor oil. <Ref. to AC-37, ADJUSTMENT, Compressor Oil.>
• Replace the O-rings with new parts, and then apply compressor oil.
• Confirm that lower guide (A) of condenser assembly - air conditioner fits into holes on radiator panel.

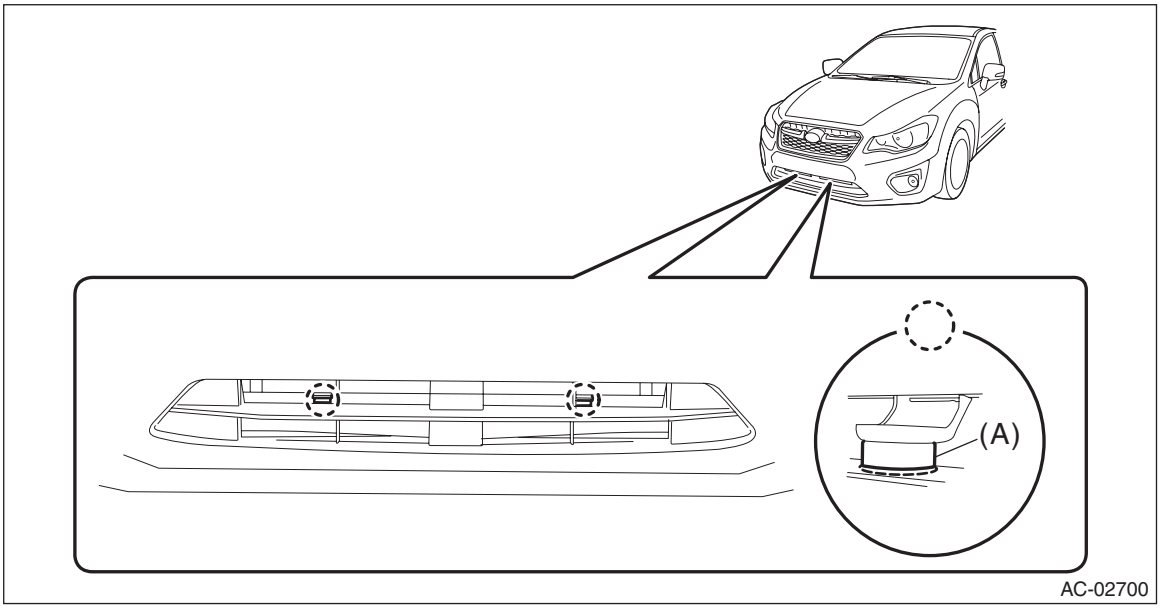

1) Install each part in the reverse order of removal.

Tightening torque:
Air conditioning unit: <Ref. to AC-12, AIR CONDITIONING UNIT, COMPONENT, General Description.>
Radiator upper bracket: <Ref. to CO(H4DO(w/o HEV))-7, RADIATOR & RADIATOR FAN, COMPONENT, General Description.>
2) Charge refrigerant. <Ref. to AC-30, PROCEDURE, Refrigerant Charging Procedure.>

C: INSPECTION

1) Check to see that the condenser fins are not clogged with debris or insects. Blow with compressed air or flush fins with water as needed.
2) If any oil leak is found, replace the condenser assembly - air conditioner.

17.Heater and Cooling Unit

A: REMOVAL

1) Disconnect the ground cable from battery. <Ref. to NT-5, BATTERY, NOTE, Note.>

NOTE:
For the 12 volt engine restart battery of HEV model, disconnect the ground terminal from 12V engine restart battery sensor.
2) Using the refrigerant recovery system, discharge refrigerant. <Ref. to AC-28, PROCEDURE, Refrigerant Recovery Procedure.>
3) Drain the coolant from the radiator. <Ref. to CO(H4DO(w/o HEV))-16, DRAINING OF ENGINE COOLANT, REPLACEMENT, Engine Coolant.>
4) Remove the intake boot. (Gasoline engine model) <Ref. to IN(H4DO(w/o HEV))-12, REMOVAL, Air Intake Boot.>

CAUTION:
Move aside the intake boot to perform the operation without disconnecting the PCV hose.
5) Remove the air cleaner case. (HEV model) <Ref. to IN(H4DO(HEV))-6, REMOVAL, Air Cleaner Case.>
6) Remove the clips and bolts, and remove the hose - pressure suction and the pipe - evaporator cooling from the expansion valve - cooling.

CAUTION:
Seal the disconnected hose and engaging part of expansion valve with a plug or vinyl tape to prevent foreign matter from entering.
7) Loosen the heater hose clamps and remove the hoses.

NOTE:
Put alignment marks to hoses, clamps, etc. and remove them.

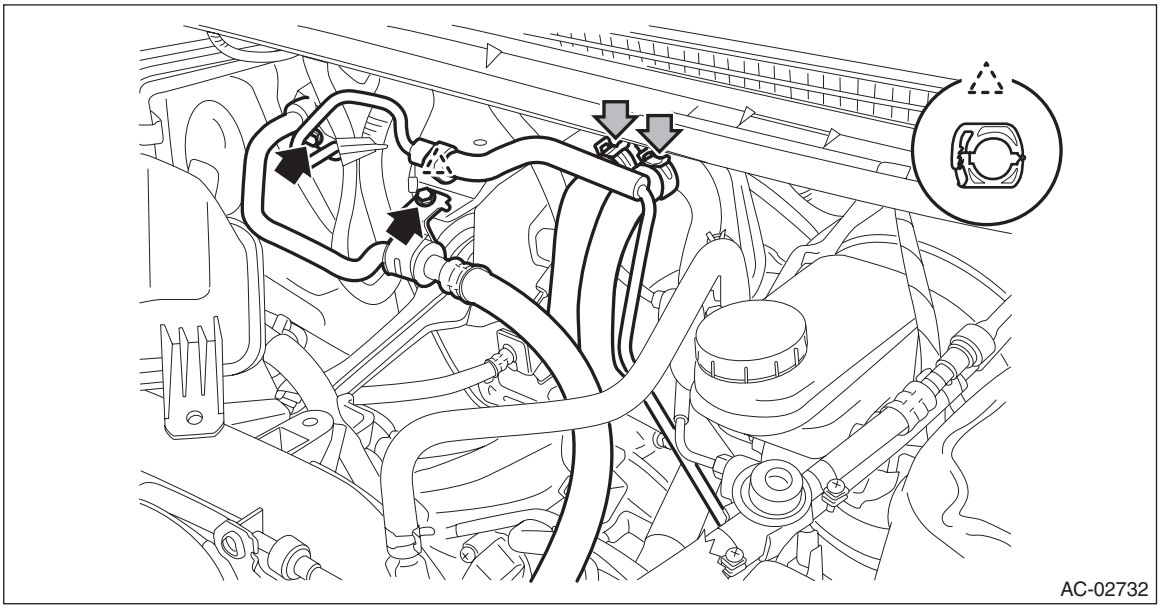

8) Remove the instrument panel assembly. <Ref. to EI-80, REMOVAL, Instrument Panel Assembly.>
9) Remove the engine control module (ECM).
- Gasoline engine model: <Ref. to FU(H4DO(w/o HEV))-106, REMOVAL, Engine Control Module (ECM).>
- HEV model: <Ref. to FU(H4DO(HEV))-85, REMOVAL, Engine Control Module (ECM).>

10) Remove the blower motor unit assembly.
(1) Disconnect the blower motor relay and each connector.

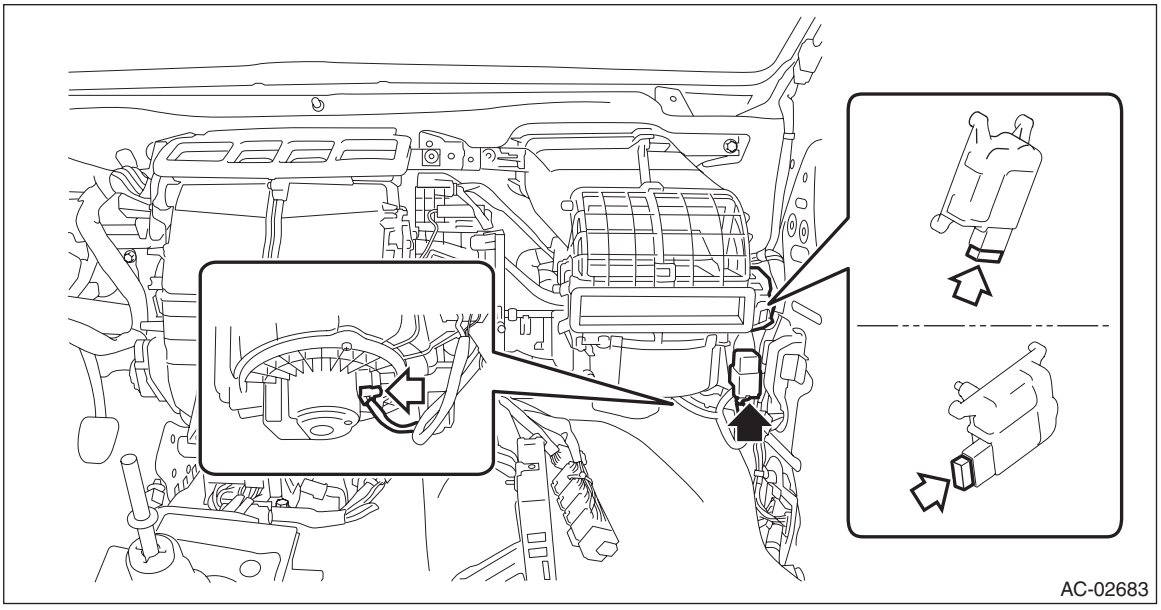

(2) Remove the bolts and nuts to remove blower motor unit assembly.

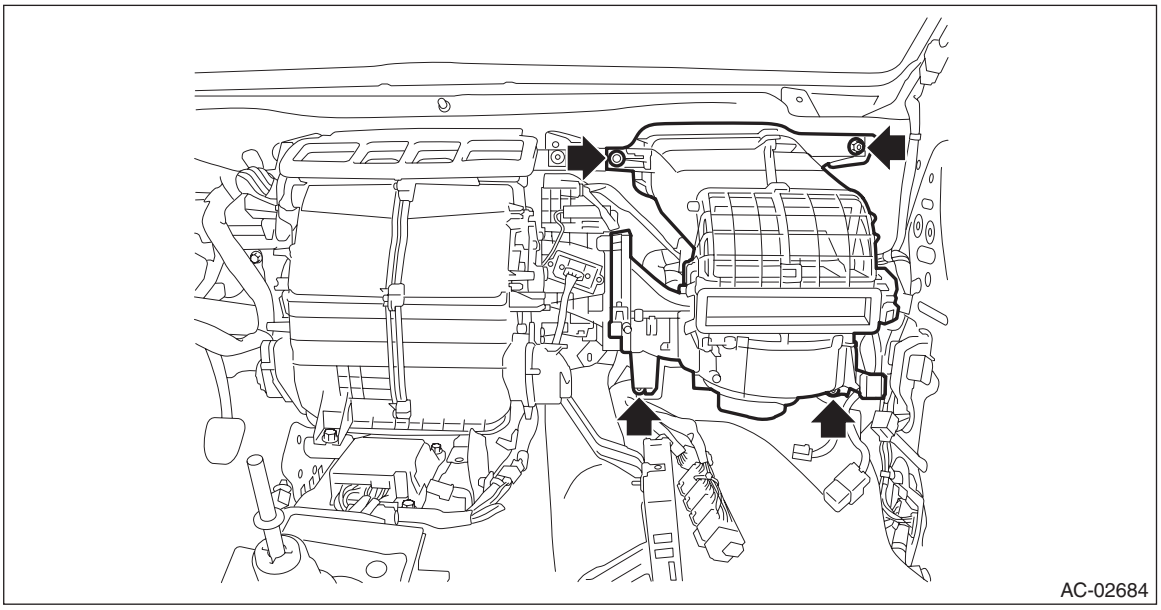

11) Remove the heater and cooling unit assembly.
(1) Disconnect each connector and the hose - drain.

NOTE:
For HEV model, disconnect the heater core sensor connector.

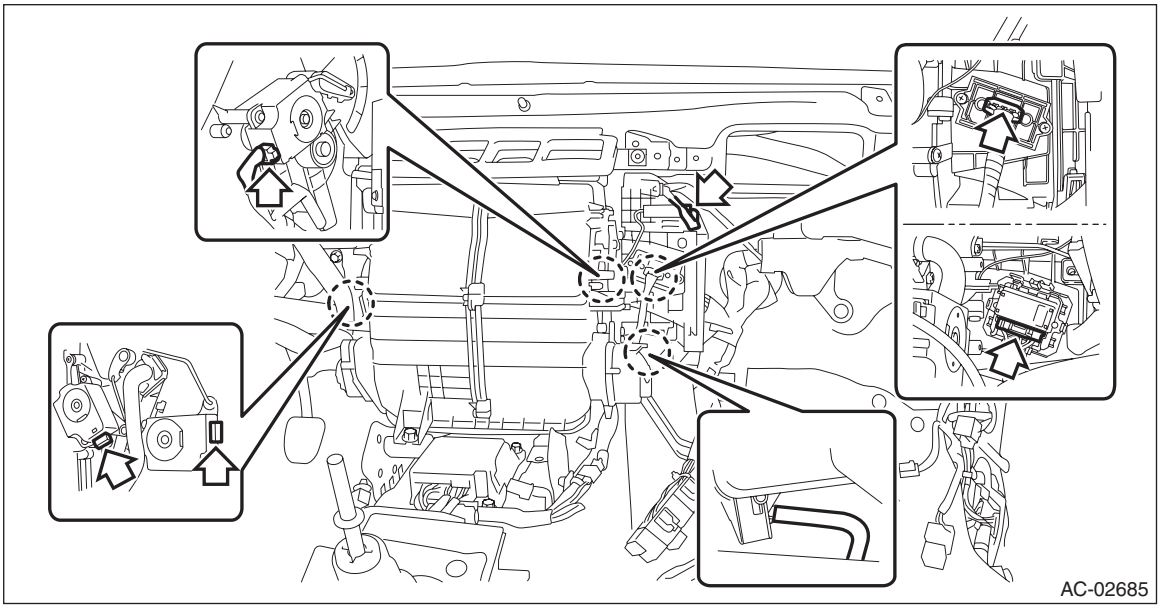

(2) Remove the bolt and nuts, and remove the heater & cooling unit assembly.

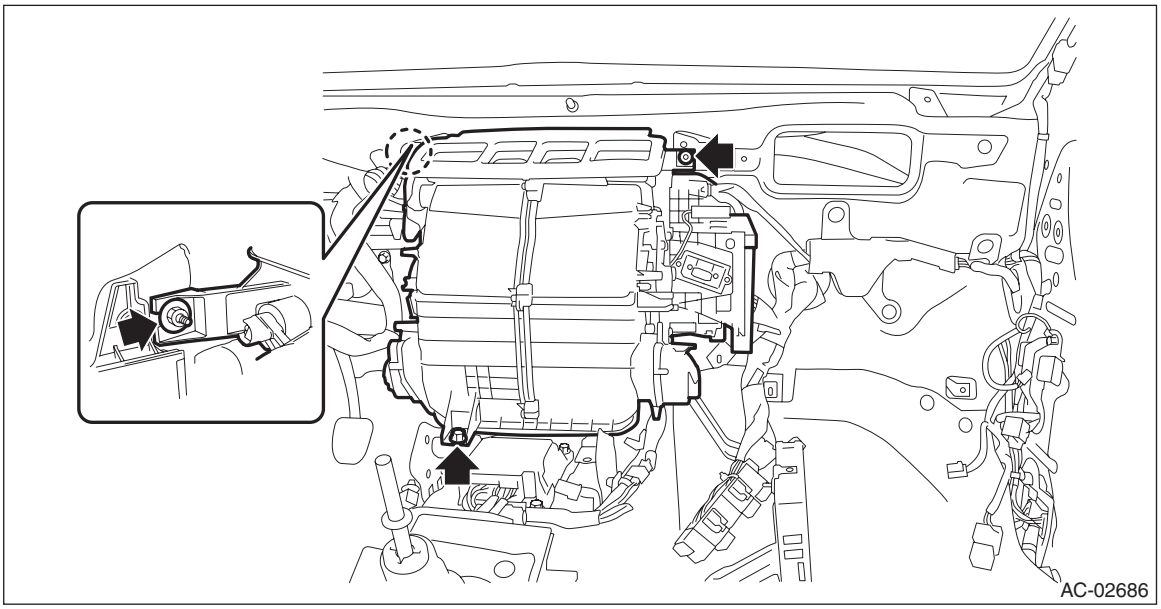

B: INSTALLATION

CAUTION:
Replace the O-rings with new parts, and then apply compressor oil.
1) Install each part in the reverse order of removal.

Tightening torque:
Heater and cooling unit: <Ref. to AC-6, HEATER AND COOLING UNIT, COMPONENT, General Description.>
Blower motor unit: <Ref. to AC-10, BLOWER MOTOR UNIT, COMPONENT, General Description.>
Air conditioning unit: <Ref. to AC-12, AIR CONDITIONING UNIT, COMPONENT, General Description.>

2) Fill engine coolant. <Ref. to CO(H4DO(w/o HEV))-17, FILLING OF ENGINE COOLANT, REPLACEMENT, Engine Coolant.>
3) Charge refrigerant. <Ref. to AC-30, PROCEDURE, Refrigerant Charging Procedure.>

18.Evaporator

A: REMOVAL

1) Disconnect the ground cable from battery. <Ref. to NT-5, BATTERY, NOTE, Note.>

NOTE:
For the 12 volt engine restart battery of HEV model, disconnect the ground terminal from 12V engine restart battery sensor.
2) Using the refrigerant recovery system, discharge refrigerant. <Ref. to AC-28, PROCEDURE, Refrigerant Recovery Procedure.>
3) Remove the intake boot. (Gasoline engine model) <Ref. to IN(H4DO(w/o HEV))-12, REMOVAL, Air Intake Boot.>

CAUTION:
Move aside the intake boot to perform the operation without disconnecting the PCV hose.
4) Remove the air cleaner case. (HEV model) <Ref. to IN(H4DO(HEV))-6, REMOVAL, Air Cleaner Case.>
5) Remove the expansion valve - cooling.
(1) Remove the clips and bolts, and detach the hose - pressure suction and the pipe - evaporator cooling.

CAUTION:
Seal the disconnected hose, pipe and engaging part of expansion valve with a plug or vinyl tape to prevent foreign matter from entering.

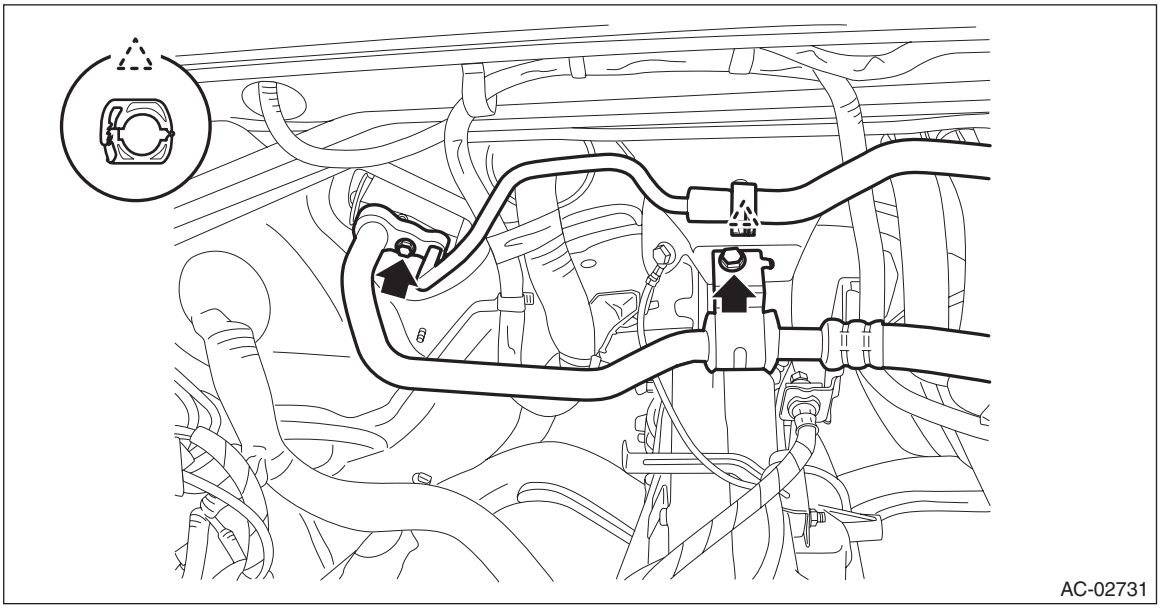

(2) Remove the bolt, and remove the expansion valve - cooling.

CAUTION:
Seal the pipe and engaging part of expansion valve with a plug or vinyl tape to prevent foreign matter from entering.

Preparation tool:
Hexagon wrench: 4 mm (0.16 in)

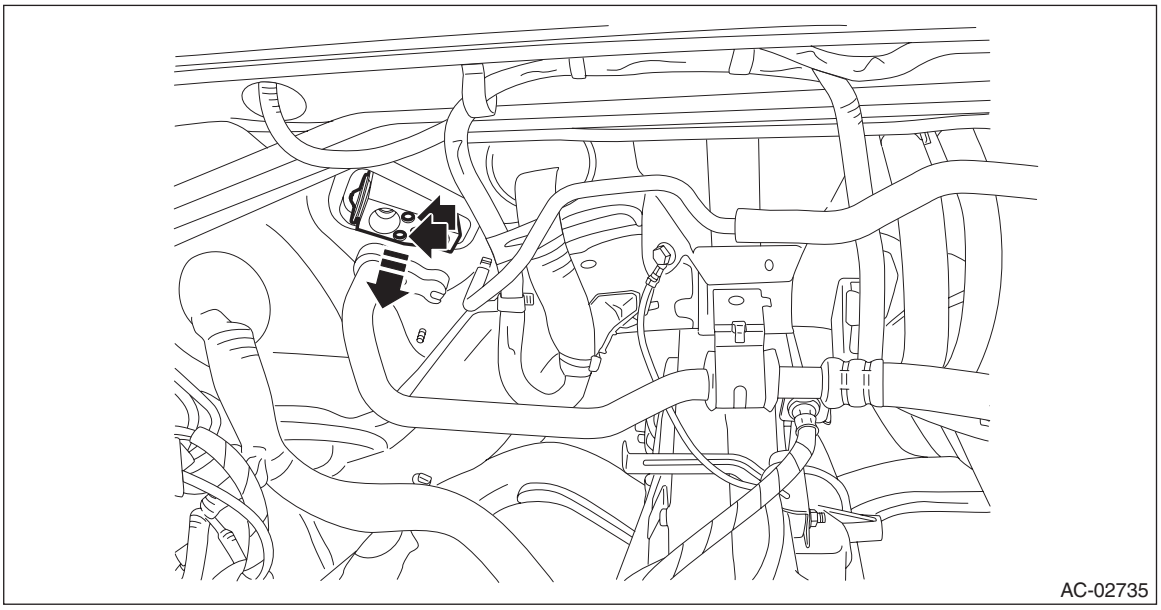

6) Remove the glove box. <Ref. to EI-73, REMOVAL, Glove Box.>
7) Remove the engine control module (ECM).
- Gasoline engine model: <Ref. to FU(H4DO(w/o HEV))-106, REMOVAL, Engine Control Module (ECM).>
- HEV model: <Ref. to FU(H4DO(HEV))-85, REMOVAL, Engine Control Module (ECM).>

8) Remove the blower motor unit assembly.
(1) Release the claws, and then remove the grille assembly - ventilation RH.
(2) Disconnect the blower motor relay and each connector.

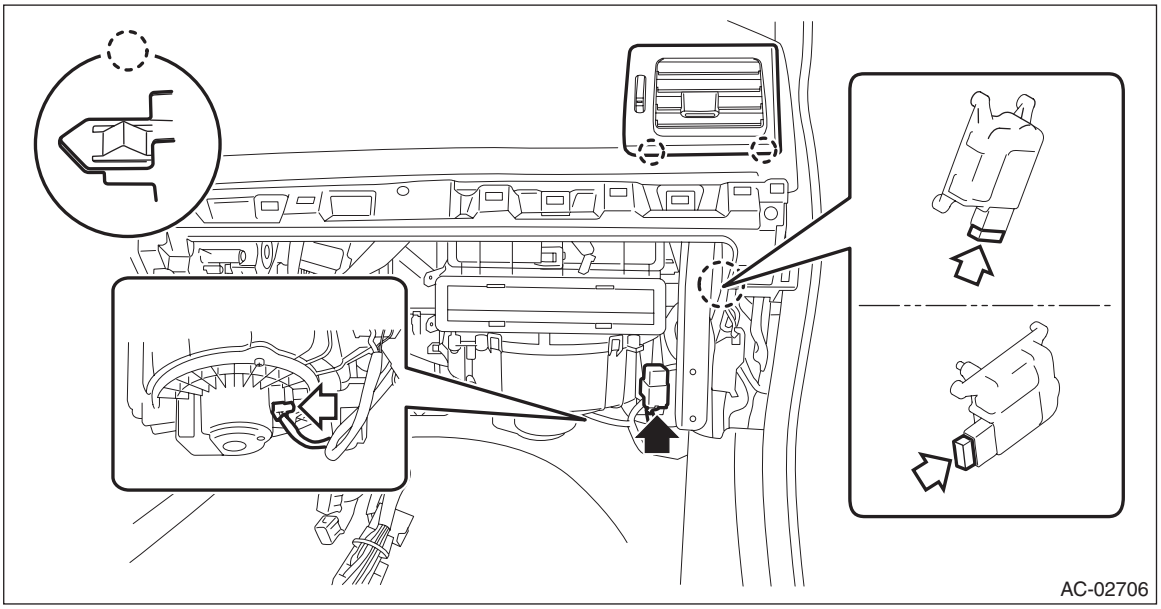

(3) Remove the bolts and nuts to remove blower motor unit assembly.

NOTE:
Remove the RH upper nut from the mounting portion of the grille assembly - ventilation RH.

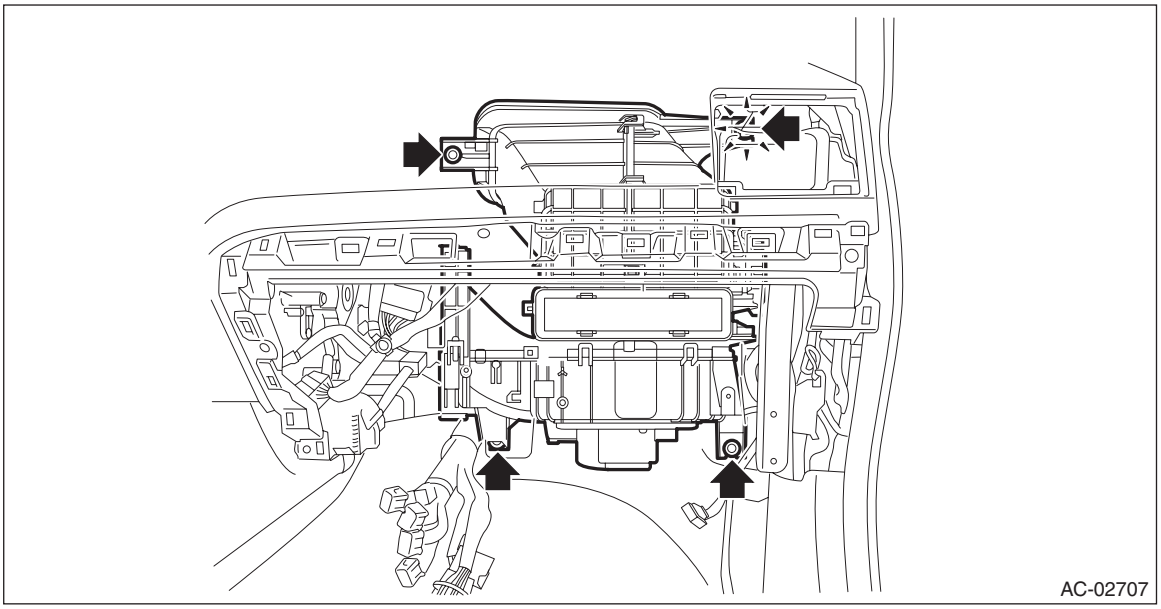

9) Remove the evaporator assembly - cooling.
(1) Disconnect the connector and lock of the thermostat - cooling.
(2) Remove the screws and detach the cover.

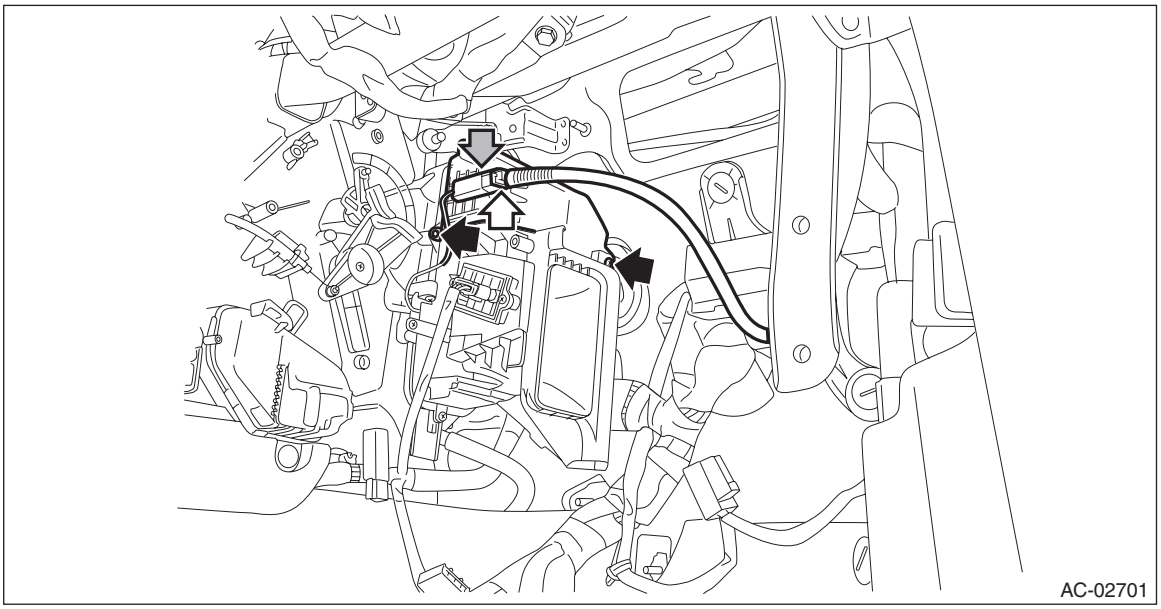

(3) Remove the cover - heater unit.
1. Disconnect the connector for the power transistor or resistor.
2. Remove the screws and clips to remove the cover - heater unit.

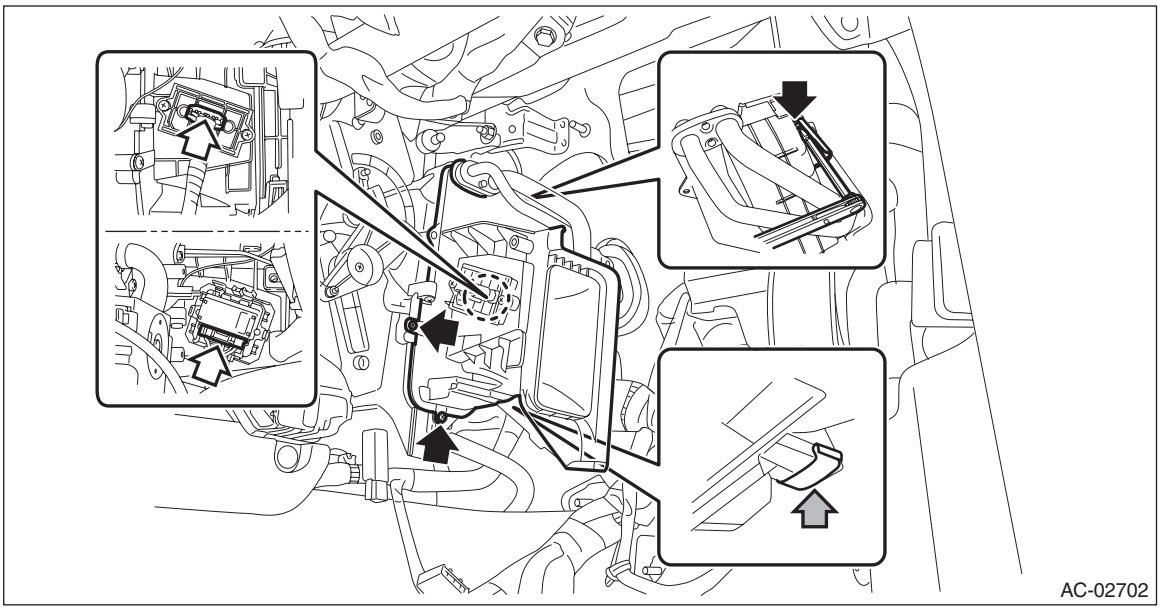

(4) Remove the bolt, and detach the pipe - evaporator core.

CAUTION:
Seal the disconnected pipe and engaging part of evaporator assembly with a plug or vinyl tape to prevent foreign matter from entering.

Preparation tool:
Hexagon wrench: 4 mm (0.16 in)

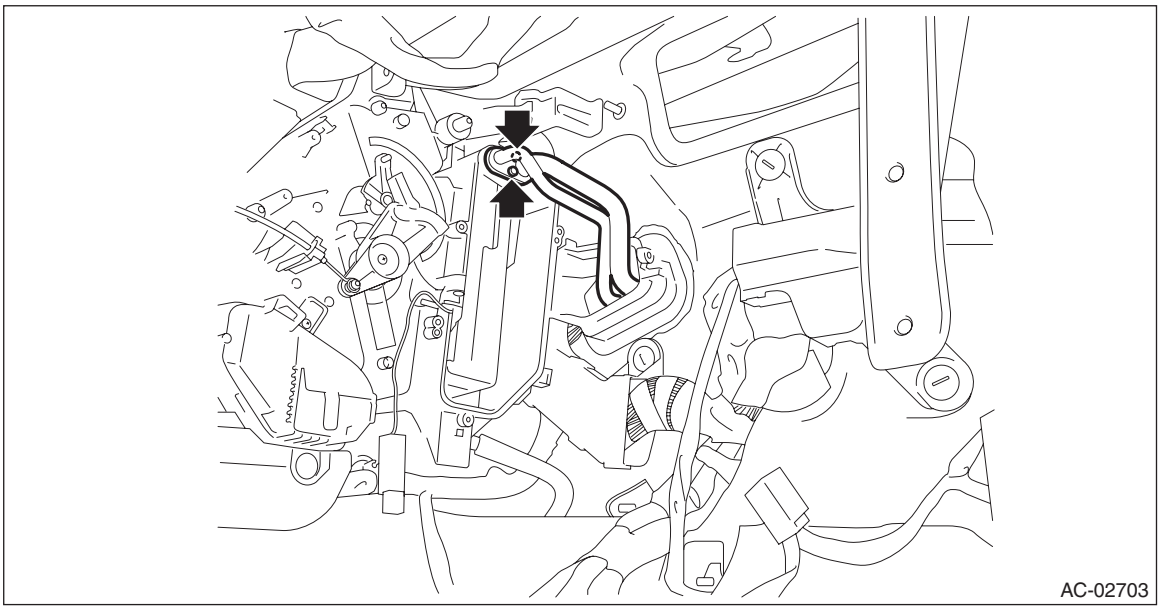

(5) Pull out the evaporator assembly - cooling from the case - heater unit.

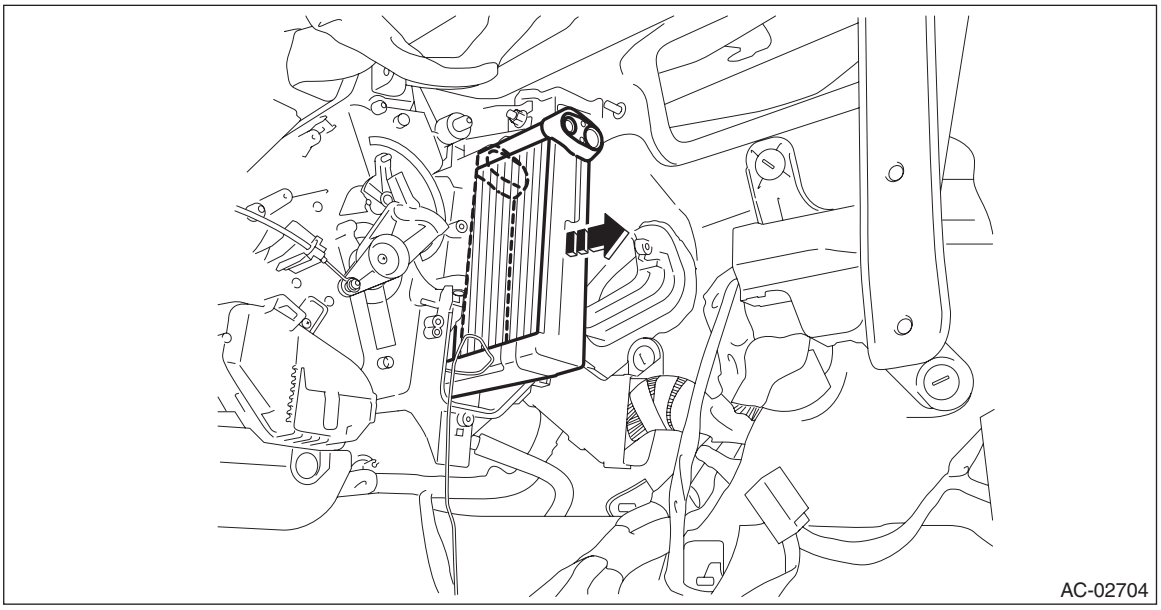

(6) Remove the thermostat - cooling from the evaporator assembly - cooling.

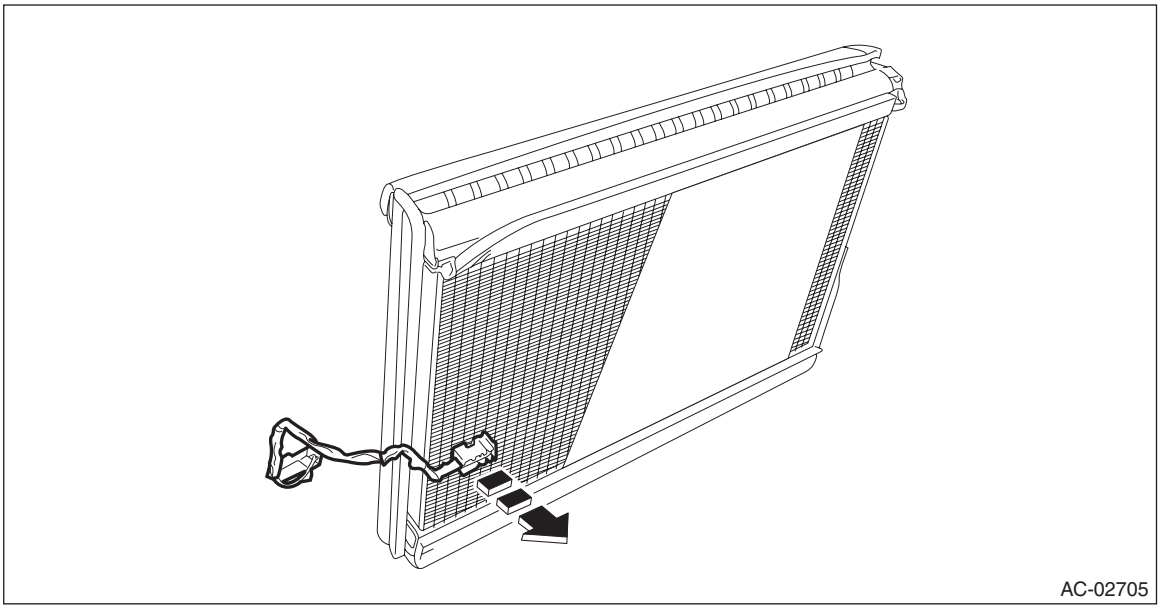

B: INSTALLATION

CAUTION:
• If the evaporator assembly - cooling has been replaced, add an appropriate amount of compressor oil. <Ref. to AC-37, ADJUSTMENT, Compressor Oil.>
• When the evaporator assembly - cooling has been replaced, replace the packing of the expansion valve - cooling with a new one, and then apply compressor oil.
• Make sure that the water seal packing on the cover attachment area is securely attached.
• Replace the O-rings with new parts, and then apply compressor oil.
• After installing the grille assembly - ventilation RH, check that the air vent grille of the grille assembly - ventilation RH is inserted correctly into the air vent duct.
1) Install the thermostat - cooling to the specified position. <Ref. to AC-92, INSTALLATION, Evaporator Sensor.>
2) Install each part in the reverse order of removal.

Tightening torque:
Heater and cooling unit: <Ref. to AC-6, HEATER AND COOLING UNIT, COMPONENT, General Description.>
Blower motor unit: <Ref. to AC-10, BLOWER MOTOR UNIT, COMPONENT, General Description.>
Air conditioning unit: <Ref. to AC-12, AIR CONDITIONING UNIT, COMPONENT, General Description.>
3) Charge refrigerant. <Ref. to AC-30, PROCEDURE, Refrigerant Charging Procedure.>

C: INSPECTION

1) Check the evaporator fin for dust. Blow with compressed air or flush fins with water as needed.
2) If any oil leak is found, replace the evaporator assembly - cooling.

19.Expansion Valve

A: REMOVAL

1) Disconnect the ground cable from battery. <Ref. to NT-5, BATTERY, NOTE, Note.>

NOTE:
For the 12 volt engine restart battery of HEV model, disconnect the ground terminal from 12V engine restart battery sensor.
2) Using the refrigerant recovery system, discharge refrigerant. <Ref. to AC-28, PROCEDURE, Refrigerant Recovery Procedure.>
3) Remove the intake boot. (Gasoline engine model) <Ref. to IN(H4DO(w/o HEV))-12, REMOVAL, Air Intake Boot.>

CAUTION:
Move aside the intake boot to perform the operation without disconnecting the PCV hose.
4) Remove the air cleaner case. (HEV model) <Ref. to IN(H4DO(HEV))-6, REMOVAL, Air Cleaner Case.>
5) Remove the expansion valve - cooling.
(1) Remove the clips and bolts, and detach the hose - pressure suction and the pipe - evaporator cooling.

CAUTION:
Seal the disconnected hose, pipe and engaging part of expansion valve with a plug or vinyl tape to prevent foreign matter from entering.

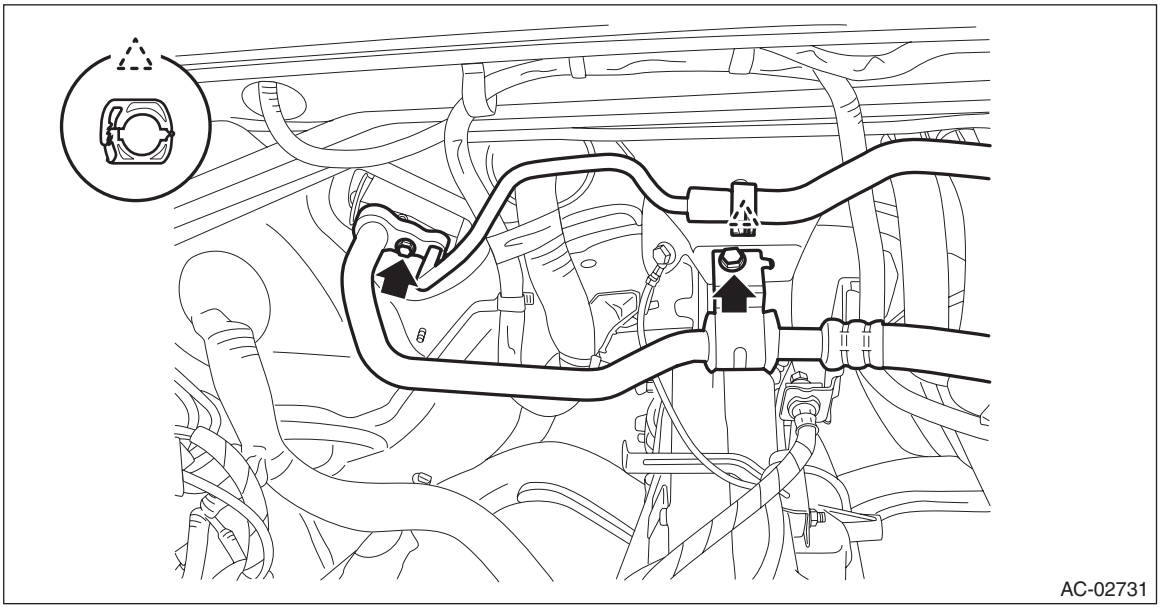

(2) Remove the bolt, and remove the expansion valve - cooling.

CAUTION:
Seal the pipe and engaging part of expansion valve with a plug or vinyl tape to prevent foreign matter from entering.

Preparation tool:
Hexagon wrench: 4 mm (0.16 in)

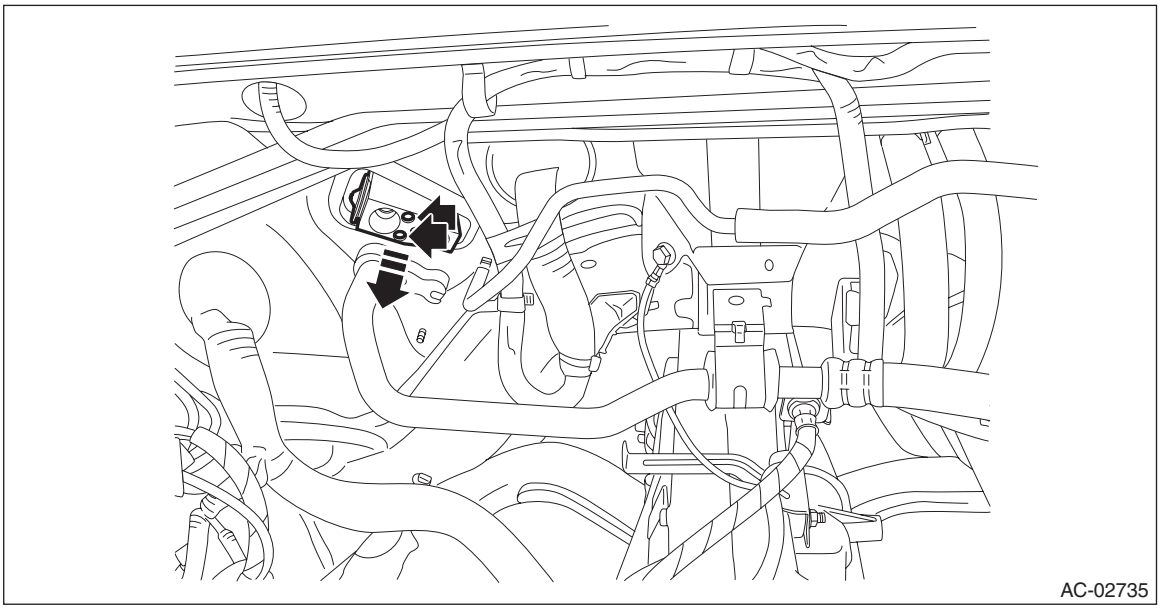

B: INSTALLATION

CAUTION:
Replace the O-rings with new parts, and then apply compressor oil.
1) Install each part in the reverse order of removal.

Tightening torque:
Heater and cooling unit: <Ref. to AC-6, HEATER AND COOLING UNIT, COMPONENT, General Description.>
Air conditioning unit: <Ref. to AC-12, AIR CONDITIONING UNIT, COMPONENT, General Description.>
2) Charge refrigerant. <Ref. to AC-30, PROCEDURE, Refrigerant Charging Procedure.>

20.Hose and Pipe

A: REMOVAL

1. LOW-PRESSURE HOSE

1) Using the refrigerant recovery system, discharge refrigerant. <Ref. to AC-28, PROCEDURE, Refrigerant Recovery Procedure.>
2) Remove the intake boot. (Gasoline engine model) <Ref. to IN(H4DO(w/o HEV))-12, REMOVAL, Air Intake Boot.>

CAUTION:
Move aside the intake boot to perform the operation without disconnecting the PCV hose.
3) Remove the air cleaner case. (HEV model) <Ref. to IN(H4DO(HEV))-6, REMOVAL, Air Cleaner Case.>
4) Remove the bolts and remove the hose - pressure suction.

CAUTION:
- **Do not apply excessive force to the hose.**
- **Seal the disconnected hose, compressor and engaging part of expansion valve with a plug or vinyl tape to prevent foreign matter from entering.**

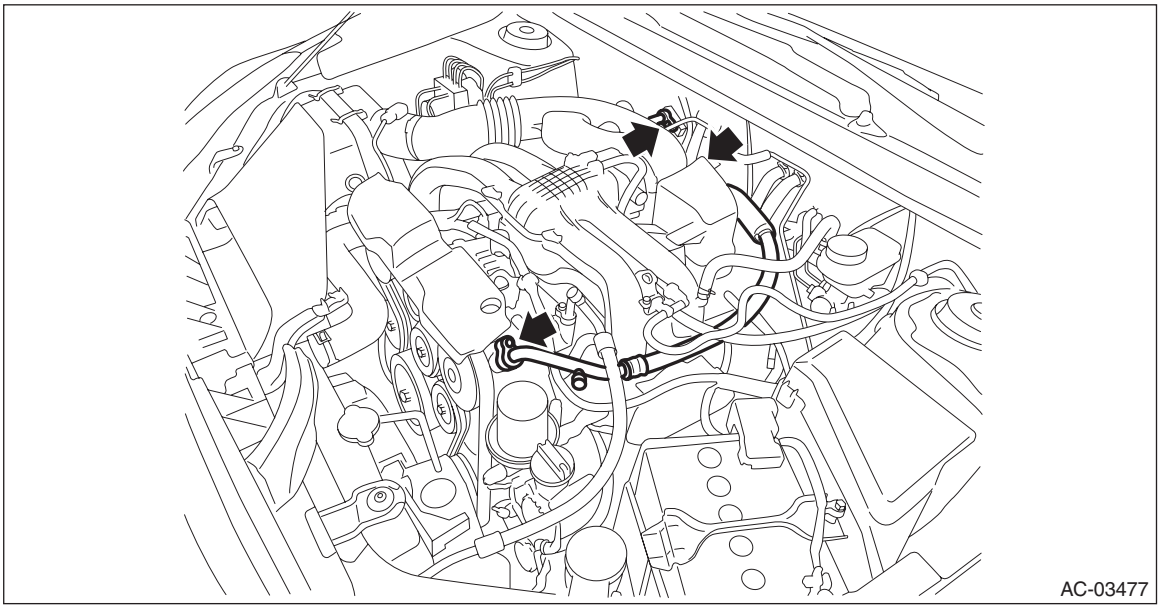

2. HIGH-PRESSURE HOSE

1) Using the refrigerant recovery system, discharge refrigerant. <Ref. to AC-28, PROCEDURE, Refrigerant Recovery Procedure.>
2) Remove the reservoir tank. <Ref. to CO(H4DO(w/o HEV))-97, REMOVAL, Reservoir Tank.>
3) Remove the bolts and remove the hose - pressure discharge.

CAUTION:
• Do not apply excessive force to the hose.
• Seal the disconnected hose, compressor and engaging part of compressor with a plug or vinyl tape to prevent foreign matter from entering.

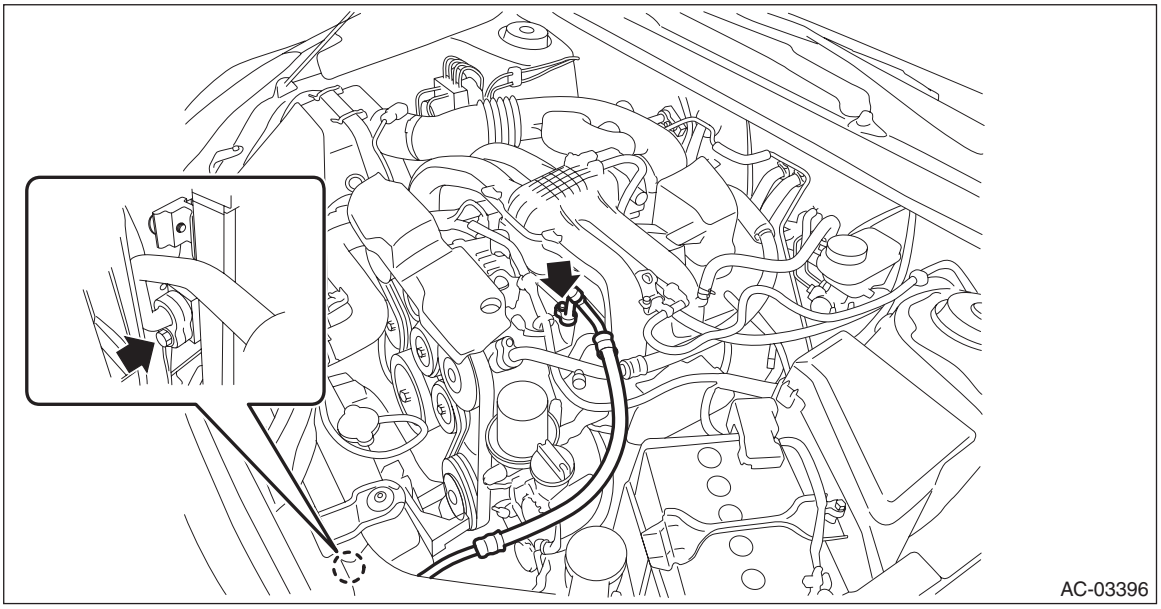

3. A/C PIPE

1) Using the refrigerant recovery system, discharge refrigerant. <Ref. to AC-28, PROCEDURE, Refrigerant Recovery Procedure.>
2) Remove the battery. (Gasoline engine model) <Ref. to SC(H4DO(w/o HEV))-55, REMOVAL, Battery.>
3) Remove the 12 volt auxiliary battery. (HEV model) <Ref. to SC(H4DO(HEV))-38, 12 VOLT AUXILIARY BATTERY, REMOVAL, Battery.>
4) Remove the reservoir tank. <Ref. to CO(H4DO(w/o HEV))-97, REMOVAL, Reservoir Tank.>
5) Remove the intake boot. (Gasoline engine model) <Ref. to IN(H4DO(w/o HEV))-12, REMOVAL, Air Intake Boot.>

CAUTION:
Move aside the intake boot to perform the operation without disconnecting the PCV hose.
6) Remove the air cleaner case. (HEV model) <Ref. to IN(H4DO(HEV))-6, REMOVAL, Air Cleaner Case.>

7) Remove the pipe - evaporator cooling.
(1) Remove the cable clamps and bolts, and remove the battery cable stay.
(2) Remove the battery cable clamp. (HEV model)
(3) Disconnect the pressure switch connector.
(4) Remove the bolts, and detach the hose - pressure suction from the expansion valve - cooling.

CAUTION:
• Do not apply excessive force to the hose.
• Seal the disconnected hose and engaging part of expansion valve with a plug or vinyl tape to prevent foreign matter from entering.

(5) Remove the bolts, and detach the pipe - evaporator cooling from the condenser assembly - air conditioner.

CAUTION:
• Do not apply excessive force to the pipe.
• Seal the disconnected pipe and engaging part of condenser with a plug or vinyl tape to prevent foreign matter from entering.

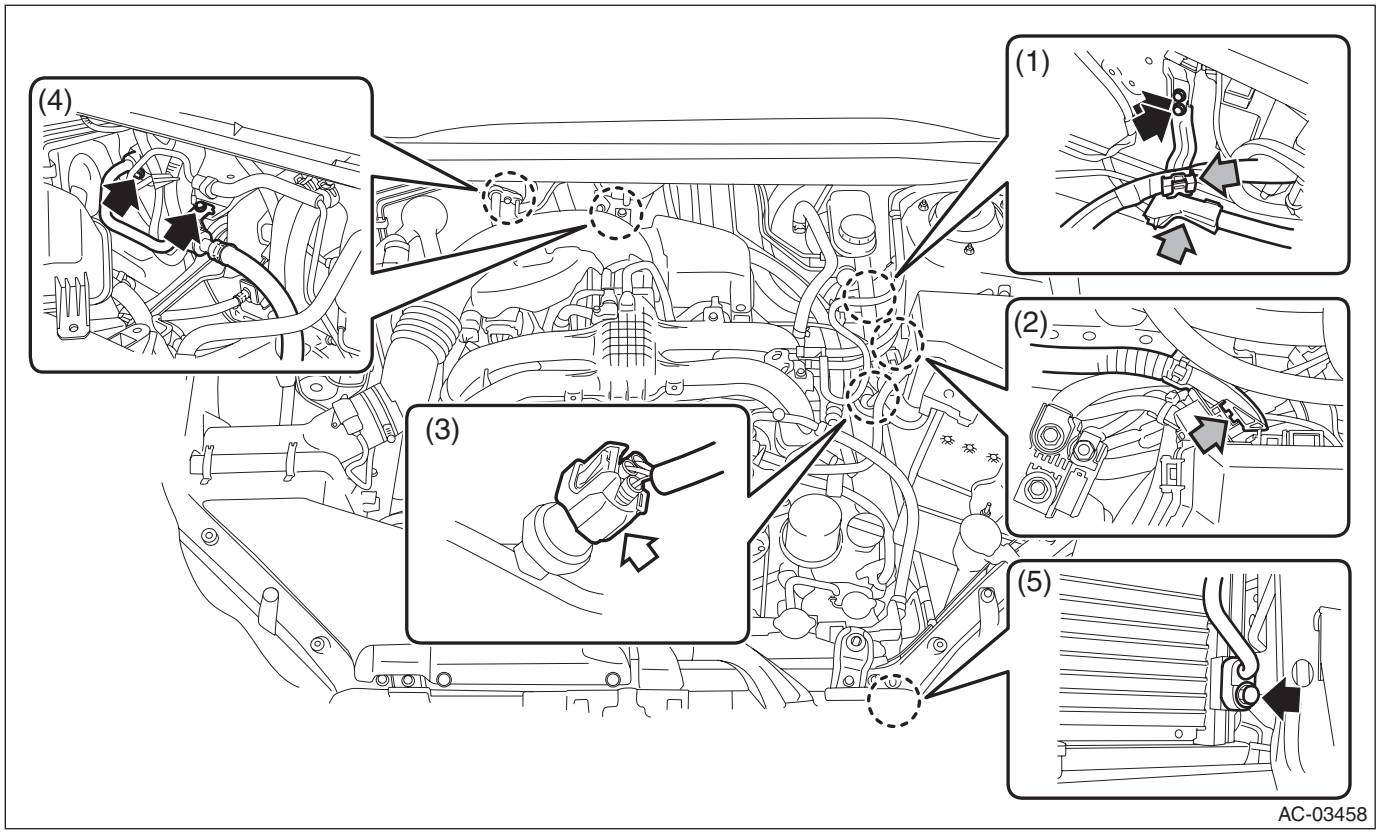

(6) Remove the pipe - evaporator cooling from the clip and expansion valve, and remove the pipe - evaporator cooling in numerical order as shown in the figure.

CAUTION:
• Do not apply excessive force to the pipe.
• Seal the disconnected pipe and engaging part of expansion valve with a plug or vinyl tape to prevent foreign matter from entering.
• Do not pull the harness and cable forcibly.

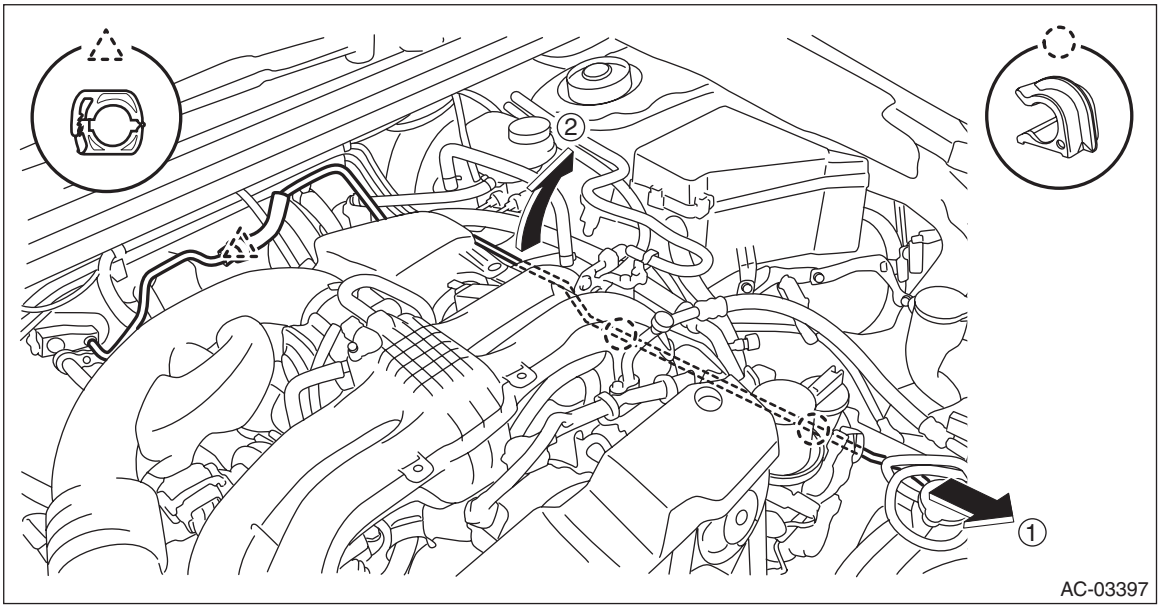

B: INSTALLATION

CAUTION:
• If the hose and pipe have been replaced, add an appropriate amount of compressor oil to the compressor. <Ref. to AC-37, ADJUSTMENT, Compressor Oil.>
• Replace the O-rings with new parts, and then apply compressor oil.
• When connecting hoses and pipes, do not apply excessive force. After installing, check that no torsion or excessive tension applied to the hoses.
1) Install each part in the reverse order of removal.

Tightening torque:
Air conditioning unit: <Ref. to AC-12, AIR CONDITIONING UNIT, COMPONENT, General Description.>
Battery cable stay: 7.5 N·m (0.76 kgf-m, 5.5 ft-lb)
2) Charge refrigerant. <Ref. to AC-30, PROCEDURE, Refrigerant Charging Procedure.>

C: INSPECTION

1) Check the hoses for cracks, damage and expansion. Replace the hose if faulty.
2) Check the pipes for crack or damage. Replace the pipe if faulty.

21.Pressure Switch (Triple Pressure Switch)

A: INSPECTION

1) Connect the manifold gauge to the service valve on the high-pressure side.
2) Disconnect the connector.
3) Start the air conditioner, and check the operating pressure of switch by turning the compressor assembly (magnet clutch) to ON/OFF. Operation of each switch is as follows.

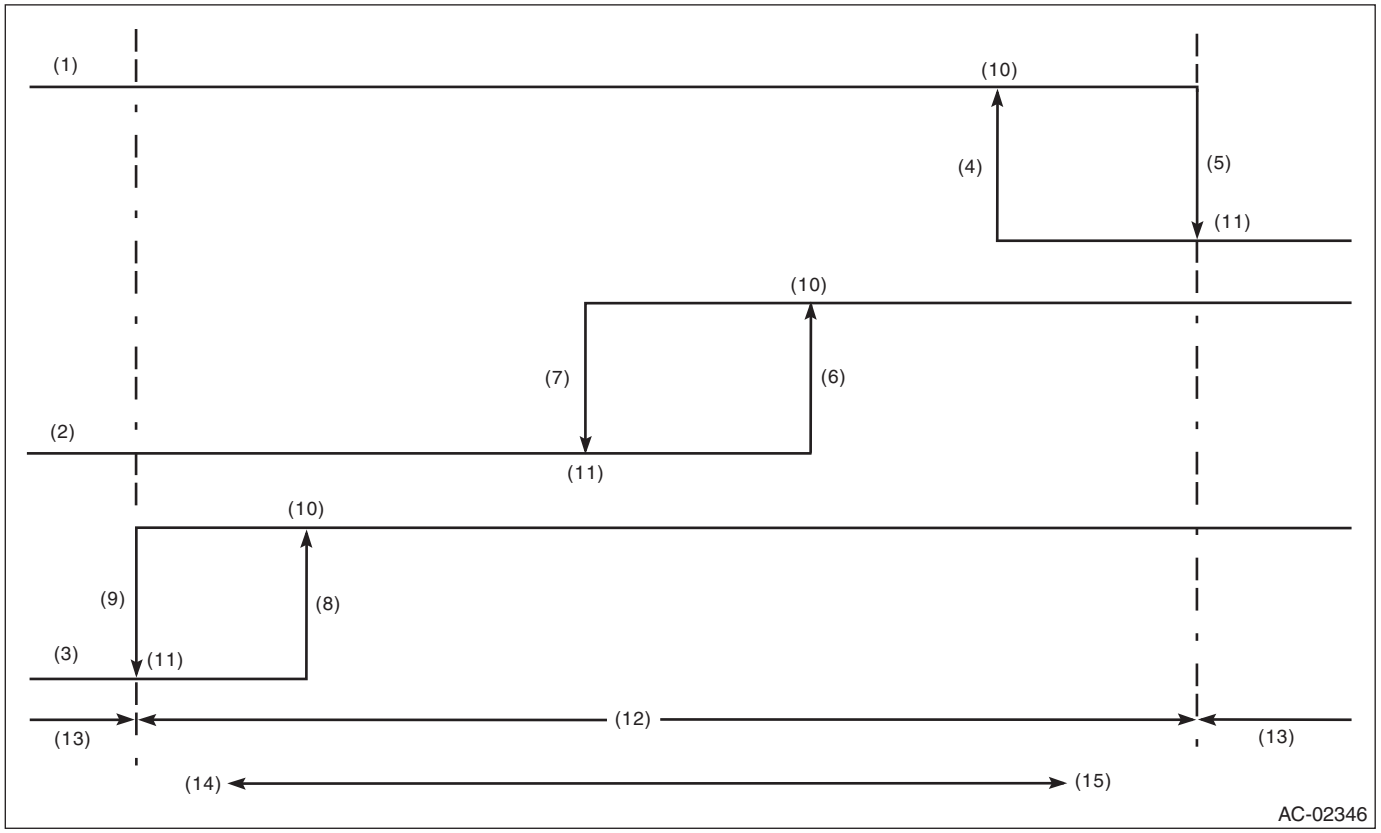

(1)	High pressure switch	(6)	1,770±100 kPa (18.05±1.02 kg/cm^2, 256.65±14.5 psi)	(11)	OFF
(2)	Middle pressure switch	(7)	1,470±120 kPa (14.99±1.22 kg/cm^2, 213.15±17.4 psi)	(12)	Operative range of compressor assembly
(3)	Low pressure switch	(8)	225±30 kPa (2.29±0.31 kg/cm^2, 32.6±4.3 psi)	(13)	Inoperative range of compressor assembly
(4)	2,350±200 kPa (24.00±2.04 kg/cm^2, 340.7±29.0 psi)	(9)	196±25 kPa (2.00±0.25 kg/cm^2, 28.4±3.6 psi)	(14)	Low pressure
(5)	2940±200 kPa (29.98±2.04 kg/cm^2, 426.3±29.0 psi)	(10)	ON	(15)	High pressure

NOTE:
• High pressure switch turns the compressor assembly (magnet clutch) to OFF when the refrigerant pressure becomes extremely high to prevent the evaporator, air conditioner piping and expansion valve from getting damaged or frozen, etc.
• The middle pressure switch is used to effectively control the radiator fan output by judging high load/low load in normal pressure range.
• The low pressure switch detects a refrigerant shortage and deactivates the compressor assembly (magnet clutch) if the refrigerant pressure is abnormally low. (Because any further compressor assembly operation in such a state may lead to compressor seizure)

22.Ambient Sensor

A: REMOVAL

1. GASOLINE ENGINE MODEL

Except for XV model

1) Disconnect the ground cable from battery.
2) Remove the clip, and remove the bracket - grille.

NOTE:
To prevent damage to the bracket - grille, make sure to remove all clips.

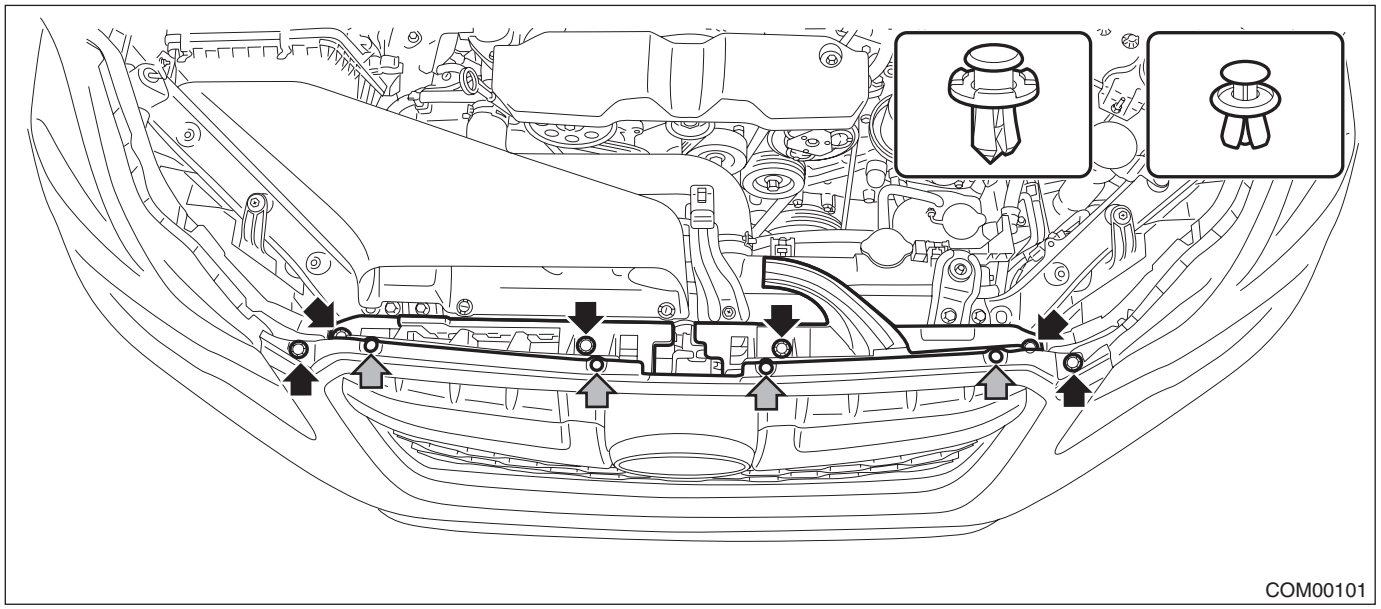

3) Remove the horn assembly - Lo.
   (1) Disconnect the connector.
   (2) Remove the horn bracket mounting bolt, and remove the horn assembly - Lo.

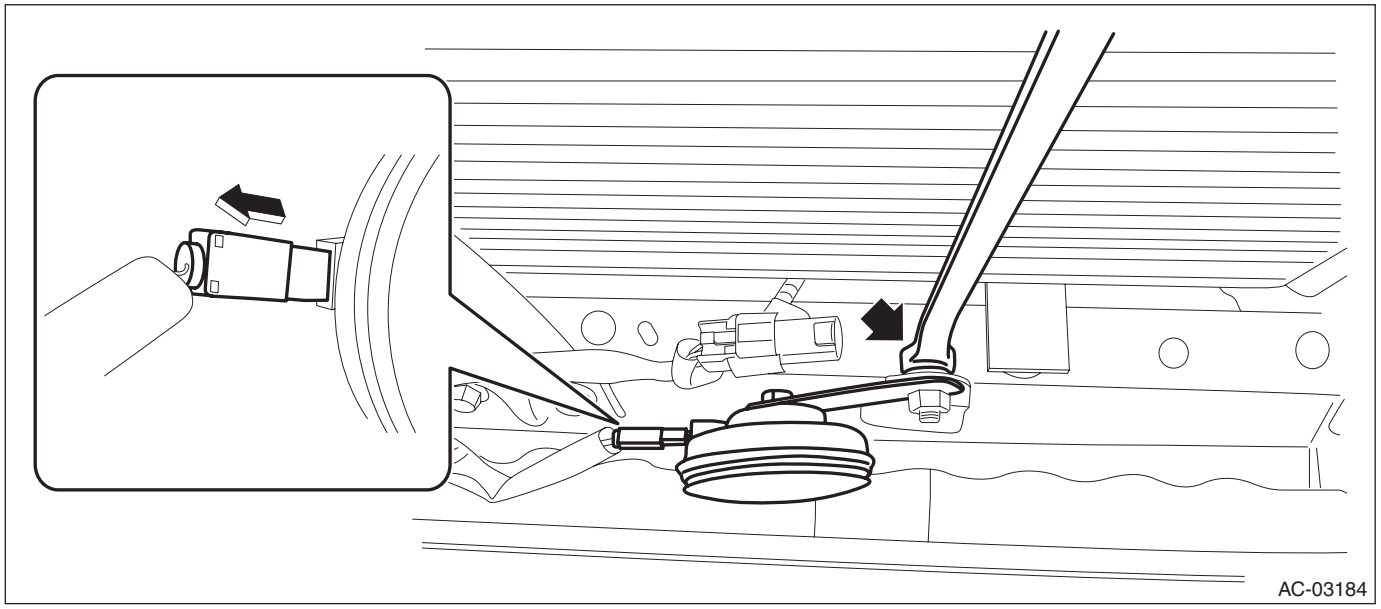

4) Remove the ambient sensor.
   (1) Disconnect the connector.
   (2) Release the claws, and then remove the ambient sensor from the bracket.

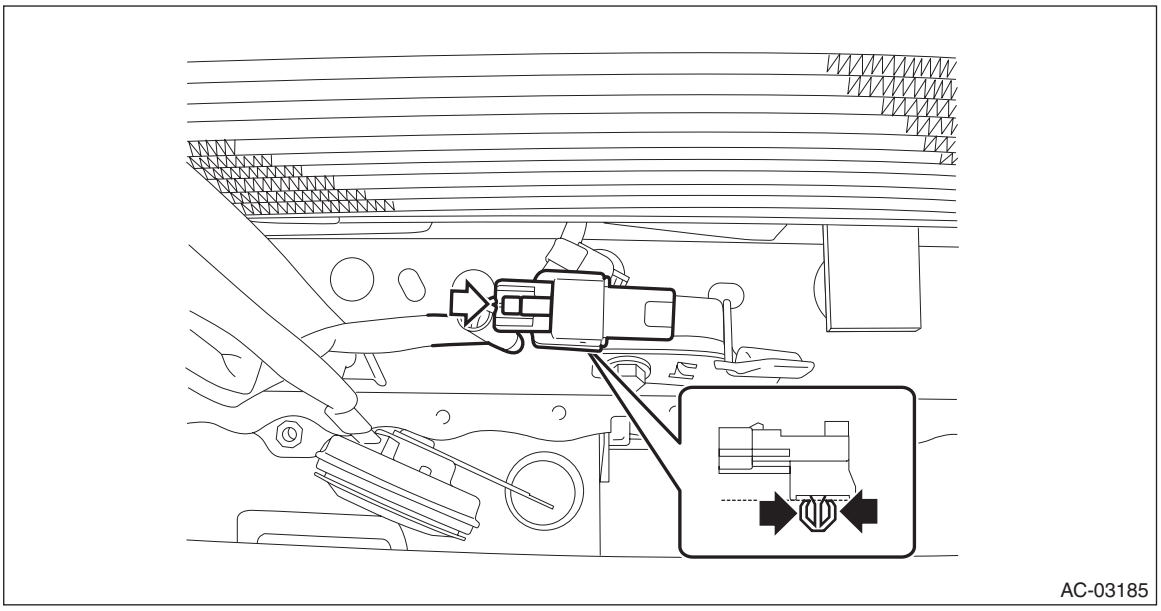

XV model

1) Disconnect the ground cable from battery.
2) Remove the ambient sensor.
   (1) Disconnect the connector.
   (2) Release the claws, and then remove the ambient sensor from the bracket.

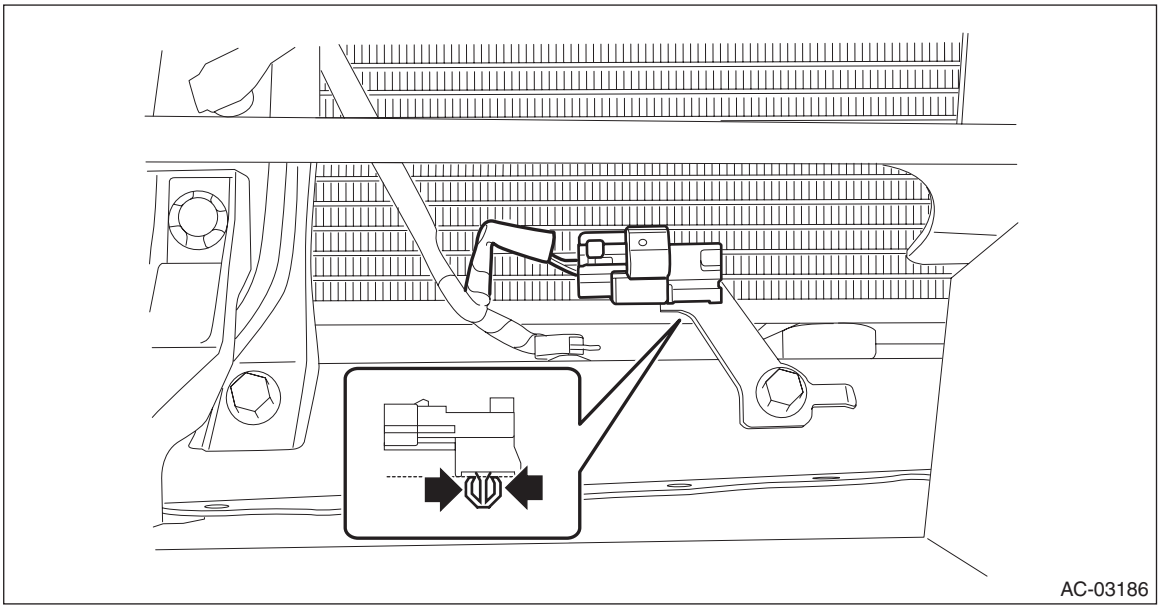

2. HEV MODEL

1) Disconnect the ground cable from battery. <Ref. to NT-5, BATTERY, NOTE, Note.>

NOTE:
For the 12 volt engine restart battery, disconnect the ground terminal from 12V engine restart battery sensor.

2) Remove the ambient sensor.
   (1) Release the claws and pull out the ambient sensor.
   (2) Disconnect the connector and remove the ambient sensor.

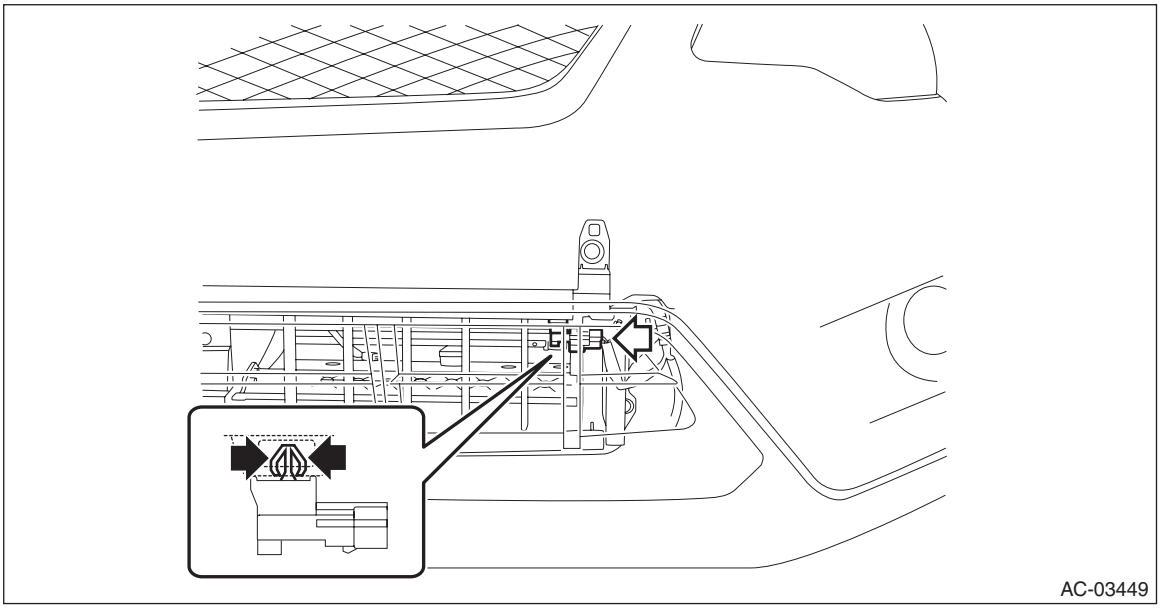

B: INSTALLATION

Install each part in the reverse order of removal.

Tightening torque:
Horn assembly - Lo (gasoline engine, except for XV model): 18 N·m (1.84 kgf-m, 13.3 ft-lb)

C: INSPECTION

UNIT INSPECTION

Preparation tool:
Circuit tester

1) Visually check the ambient sensor for dirt or damage, and clean or replace as necessary.
2) Check the resistance between ambient sensor terminals.

CAUTION:
During inspection, be careful not to touch the sensor end in order to avoid misjudgment due to body temperature.

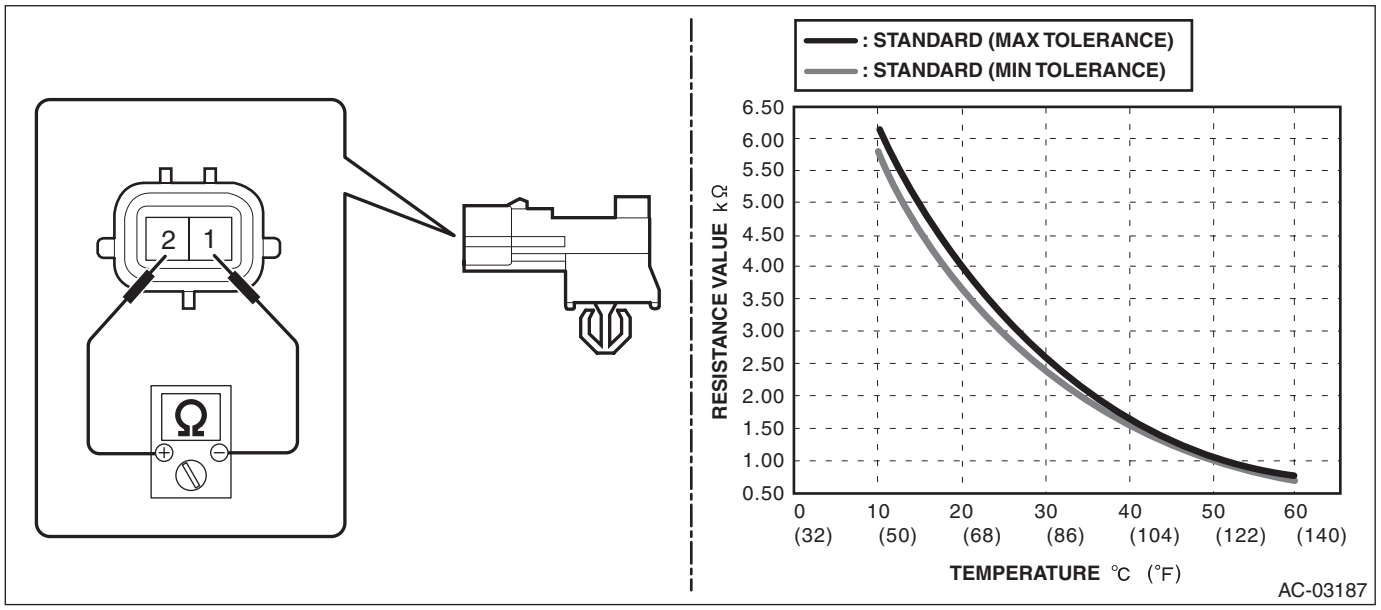

Terminal No.	Inspection conditions	Standard
1 — 2	10°C	5.82 — 6.18 kΩ
	15°C	4.58 — 4.87 kΩ
	20°C	3.64 — 3.86 kΩ
	25°C	2.91 — 3.09 kΩ
	30°C	2.35 — 2.49 kΩ
	35°C	1.9 — 2.02 kΩ
	40°C	1.56 — 1.65 kΩ
	45°C	1.28 — 1.36 kΩ
	50°C	1.06 — 1.12 kΩ
	55°C	0.88 — 0.93 kΩ
	60°C	0.74 — 0.78 kΩ

3) Replace the ambient sensor if the inspection result is not within the standard value.

23.Sunload Sensor (Auto A/C Model)

A: REMOVAL

CAUTION:
Be careful not to damage the sensors and interior trims when removing.
1) Disconnect the ground cable from battery. <Ref. to NT-5, BATTERY, NOTE, Note.>

NOTE:
For the 12 volt engine restart battery of HEV model, disconnect the ground terminal from 12V engine restart battery sensor.
2) Remove the sensor - sunload.
(1) Release the connector and claws, and remove the panel COMPL - instrument UPR.

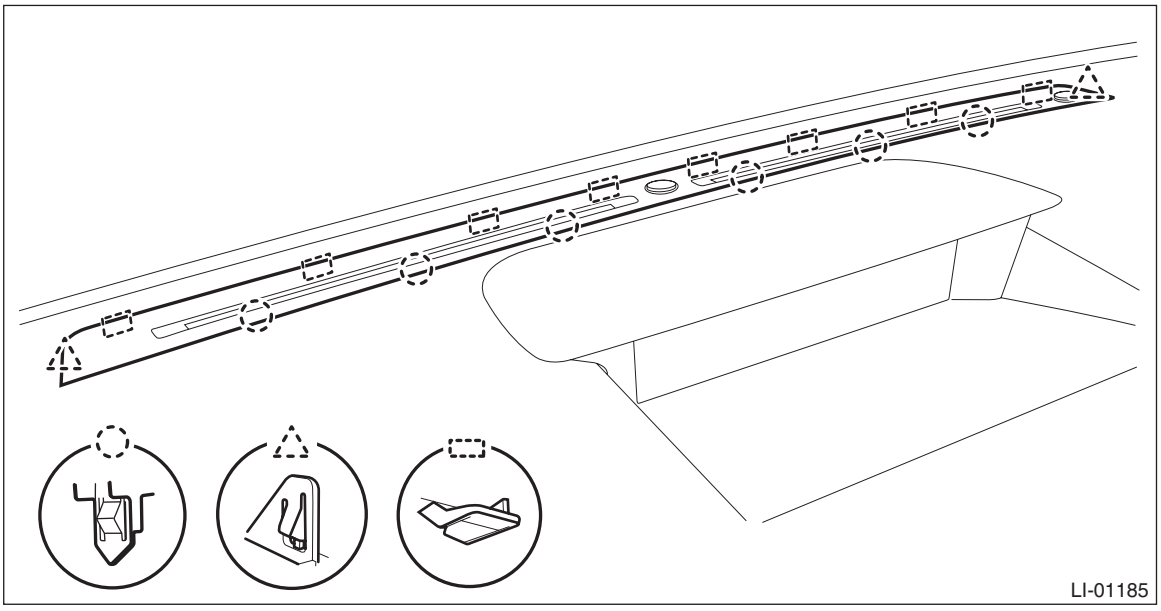

(2) Press the left and right claws to remove the sensor - sunload from the panel COMPL - instrument UPR.

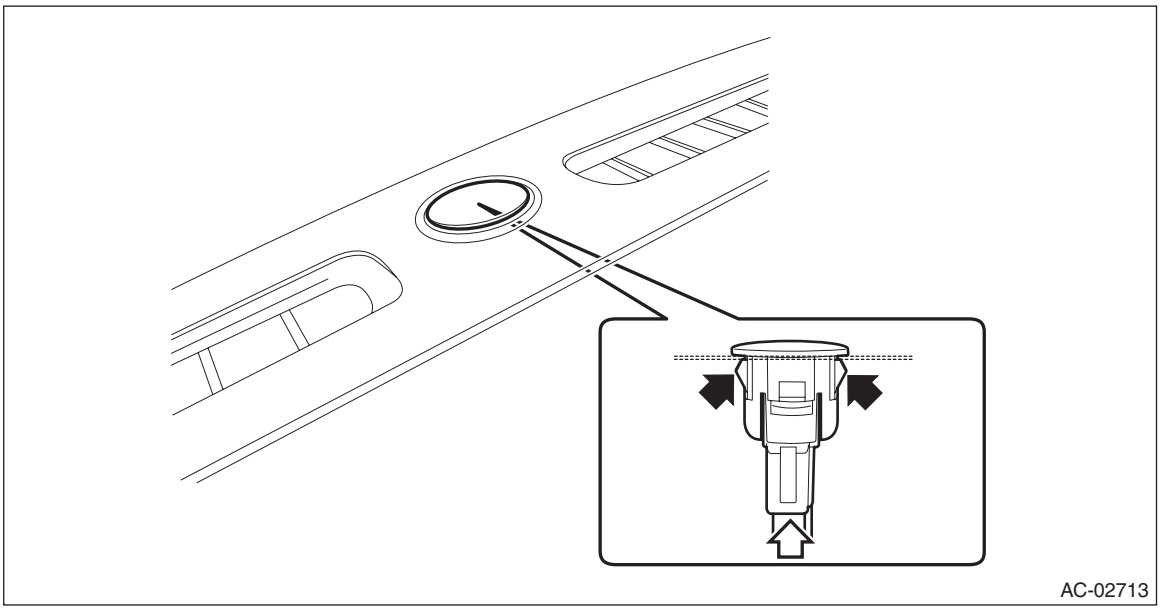

B: INSTALLATION

Install each part in the reverse order of removal.

C: INSPECTION

On the vehicle inspection

PREPARATION TOOL:
SUBARU SELECT MONITOR III KIT

1) Check if there is anything that affects sensing, around the sensor - sunload.
   (1) Is there anything placed on the sensor - sunload that disturbs sensing?
   (2) Is there anything on the windshield glass, such as sticker and film, that disturbs sensing?
   - **No** → Go to step 2).
   - **Yes** → Remove everything that affects sensing.

2) Using the Subaru Select Monitor, check «Quantity of Sunload».

NOTE:
For detailed procedures, refer to “PC application help for Subaru Select Monitor”.
   (1) Cover the sensor - sunload with cloth.
   (2) Does the «Quantity of Sunload» indicate 0 W/m^2 when the direct sunlight is shielded?
   - **Yes** → Go to step 3).
   - **No** → Replace the sensor - sunload.

3) From the condition in step 2), expose the sensor - sunload to light.
   (1) Place intense light such as incandescent light at 30 cm or less from the sunload sensor.
   (2) Does «Quantity of Sunload» indicate 2000 W/m^2 or less?

CAUTION:
The value changes depending on the angle of light.
   - **Yes** → The sensor - sunload is normal.
   - **No** → Replace the sensor - sunload.

24.In-Vehicle Sensor (Auto A/C Model)

A: REMOVAL

CAUTION:
Be careful not to damage the sensors and interior trims when removing.

1) Remove the knee airbag module. <Ref. to AB-43, REMOVAL, Knee Airbag Module.>
2) Remove the in-vehicle sensor.
   (1) Disconnect the connector, and remove the aspirator hose.

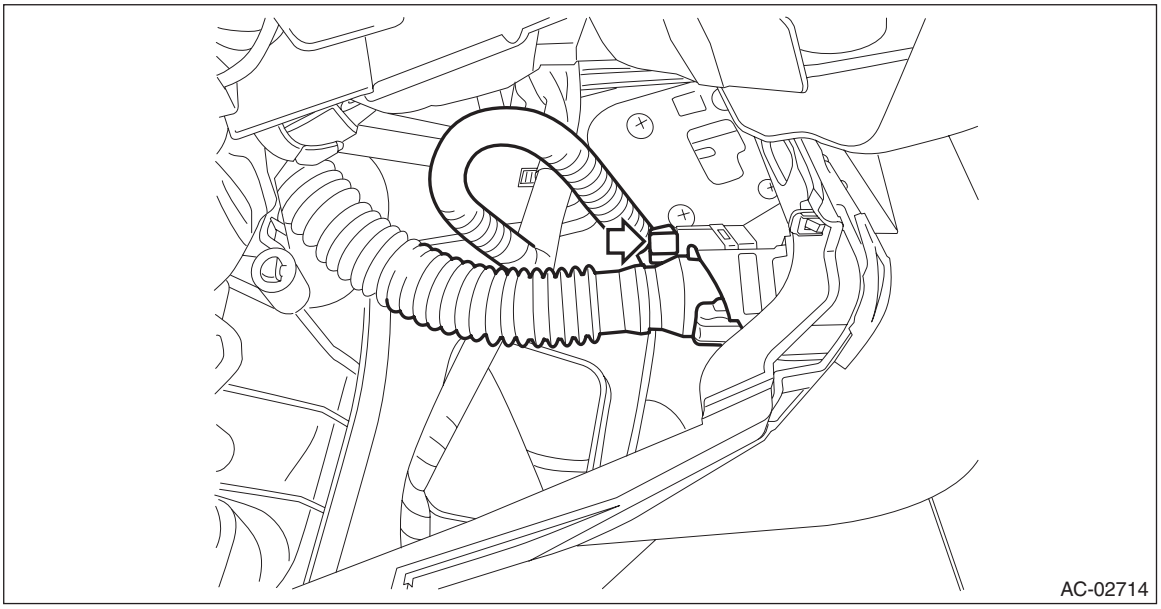

   (2) Release the claws and remove the cover switch - starter.
   (3) Remove the screw and remove the in-vehicle sensor from the cover switch - starter.

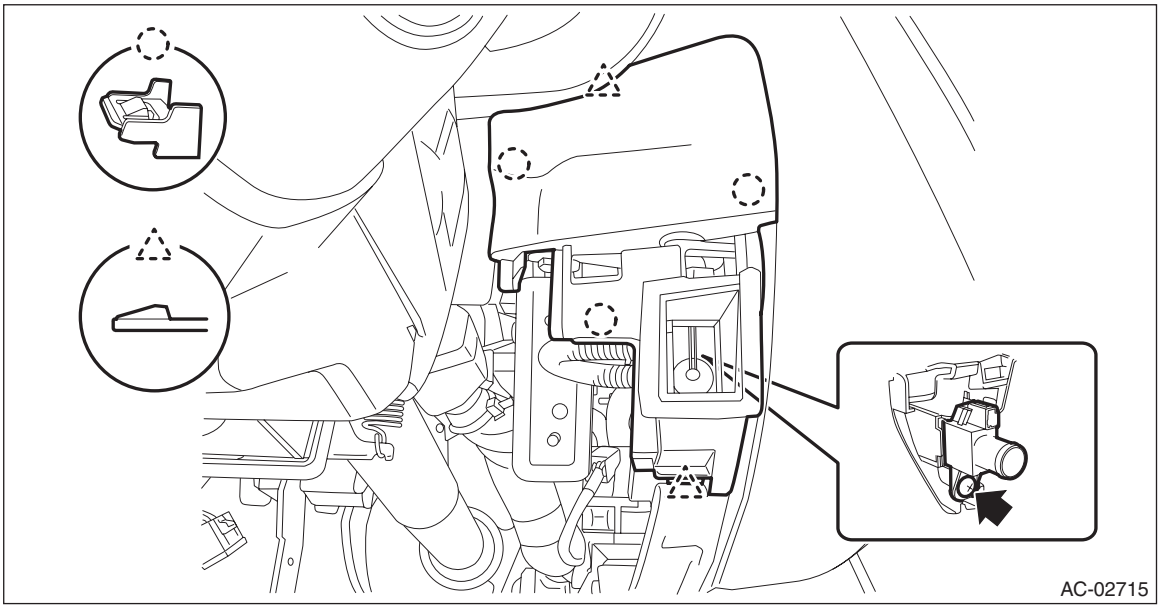

B: INSTALLATION

Install each part in the reverse order of removal.

C: INSPECTION

On the vehicle inspection

Preparation tool:
Circuit tester

1) Set the vehicle to the following conditions.

Item	Condition
Ignition switch	ON
A/C switch	ON
Temperature adjustment dial	HI (MAX HOT)
Air flow control dial or switch	DEF
Fan dial	HI (MAX)

2) Check the suction port (A) for in-vehicle sensor of the cover assembly - instrument panel LWR driver INN.

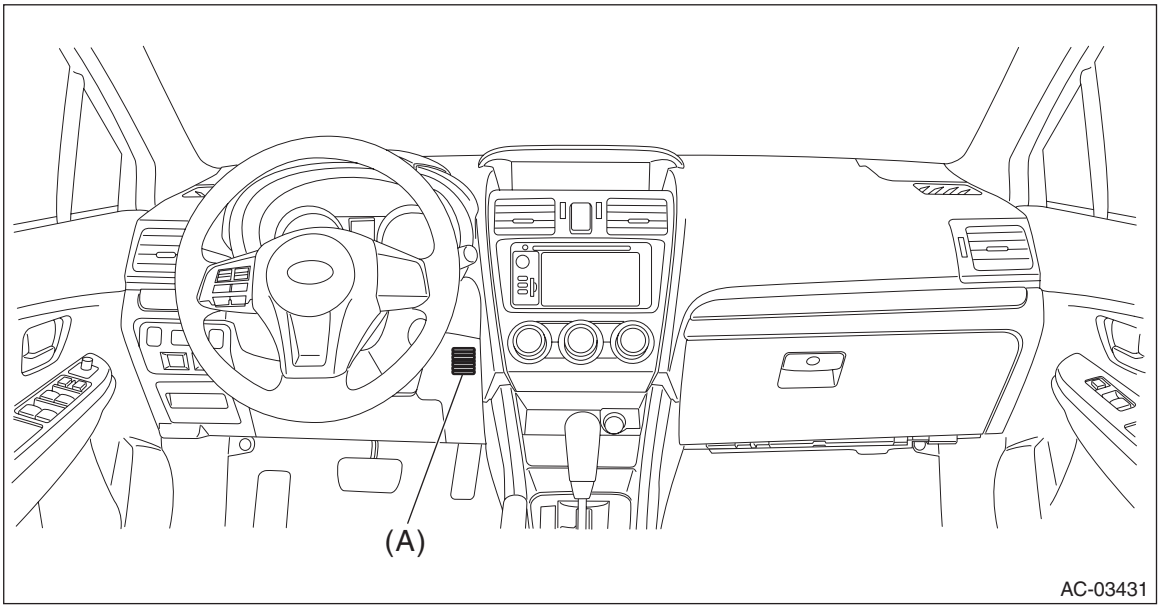

(1) Put a strip of paper close to the front side of the suction port (A).
(2) Can you see the paper moving towards the port and the air being sucked into the port?

CAUTION:
Be careful not to let the paper get sucked into the port.

- **Yes** → Go to step 5).
- **No** → Go to step 3).

3) Remove the cover assembly - instrument panel LWR driver INN, and check the aspirator hose (A).

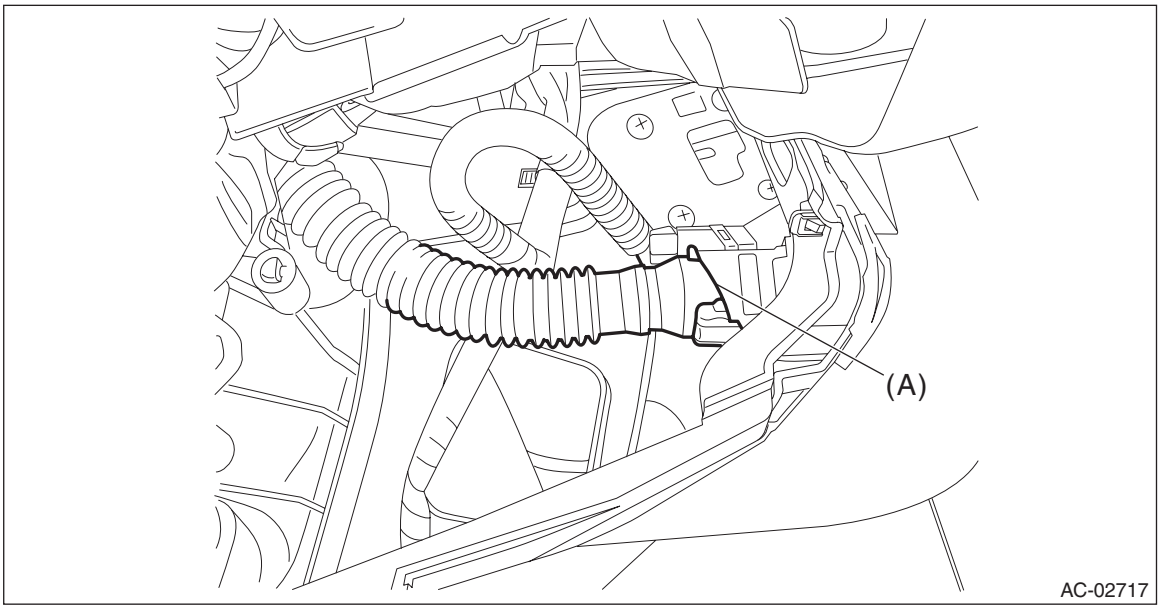

(1) Are the aspirator hoses on both sides of the case and sensor connected securely?
(2) Is the aspirator hose free from any kinks or cracks?
- **Yes** → Go to step 4).
- **No** → Repair or replace the aspirator hose if necessary.

4) Check if there is anything that affects sensing, around the in-vehicle sensor.
(1) Is the in-vehicle sensor hole free from clogging?
(2) Is the peripheral area of in-vehicle sensor free from any heat-producing parts (such as audio, navigation system etc.)?
- **Yes** → Go to step 5).
- **No** → Remove everything that affects sensing.

5) Perform the inspection of in-vehicle sensor unit.
(1) Disconnect the in-vehicle sensor connector.
(2) Is the resistance between terminals of in-vehicle sensor within standard value?

CAUTION:
During inspection, be careful not to touch the sensor end in order to avoid misjudgment due to body temperature.

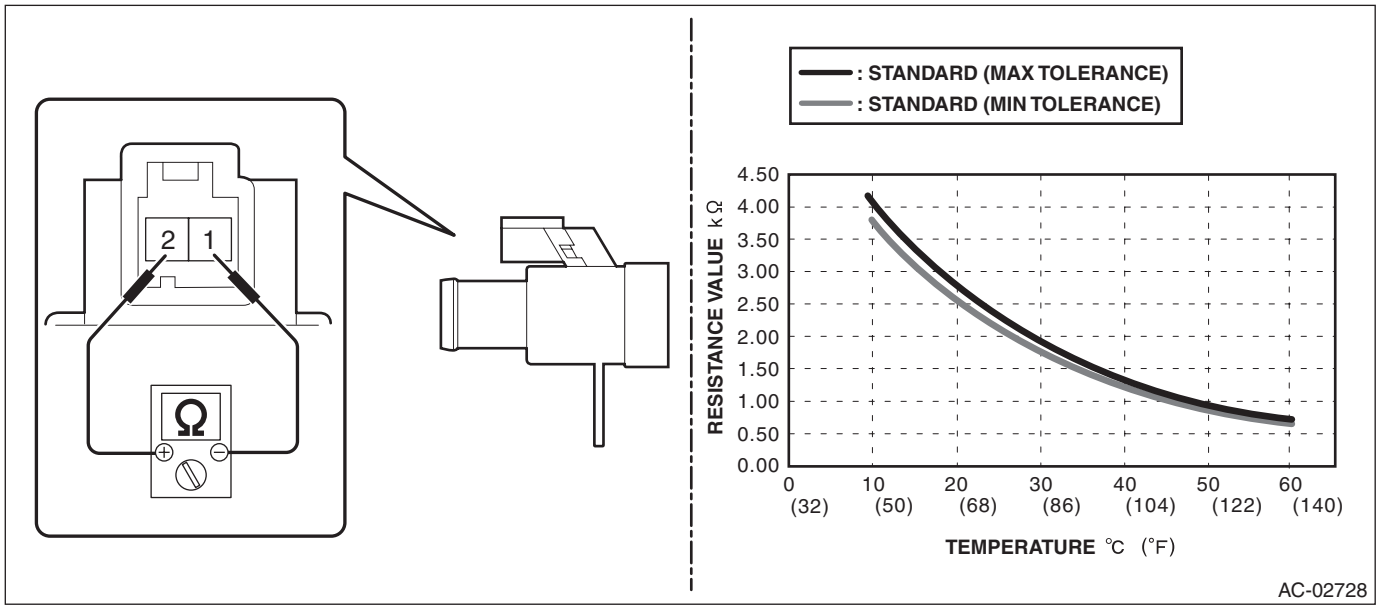

Terminal No.	Inspection conditions	Standard
1 — 2	10°C	3.772 — 4.101 kΩ
	15°C	3.096 — 3.338 kΩ
	20°C	2.556 — 2.734 kΩ
	25°C	2.121 — 2.251 kΩ
	30°C	1.756 — 1.878 kΩ
	35°C	1.462 — 1.574 kΩ
	40°C	1.223 — 1.326 kΩ
	45°C	1.028 — 1.122 kΩ
	50°C	0.868 — 0.9542 kΩ
	55°C	0.7363 — 0.8147 kΩ
	60°C	0.6273 — 0.6984 kΩ

- **Yes** → The in-vehicle sensor is normal.
- **No** → Replace the in-vehicle sensor.

25.Temperature and Humidity Sensor

A: REMOVAL

For operation procedures, refer to “In-vehicle Sensor” section. <Ref. to AC-85, REMOVAL, In-Vehicle Sensor (Auto A/C Model).>

B: INSTALLATION

Install each part in the reverse order of removal.

C: INSPECTION

On the vehicle inspection

Preparation tool:
Circuit tester

1) Set the vehicle to the following conditions.

Item	Condition
Ambient temperature	Approx. 25°C (77°F)
Ignition switch	ON
A/C switch	ON
Temperature adjustment dial	HI (MAX HOT)
Mode change switch	DEF
Fan dial	HI (MAX)

2) Check the suction port (A) for the temperature and humidity sensor of the cover assembly - instrument panel LWR driver.

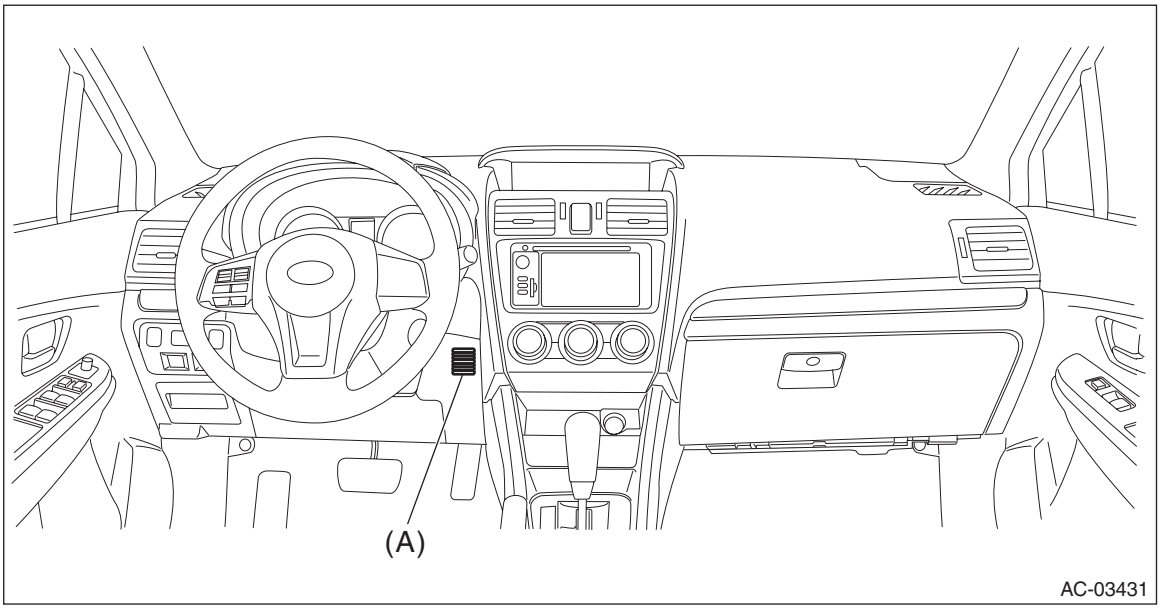

(1) Put a strip of paper close to the front side of the suction port (A).
(2) Can you see the paper moving towards the port and the air being sucked into the port?

CAUTION:
Be careful not to let the paper get sucked into the port.

- **Yes** → Go to step 5).
- **No** → Go to step 3).

3) Remove the cover assembly - instrument panel LWR driver, and check the aspirator hose (A).

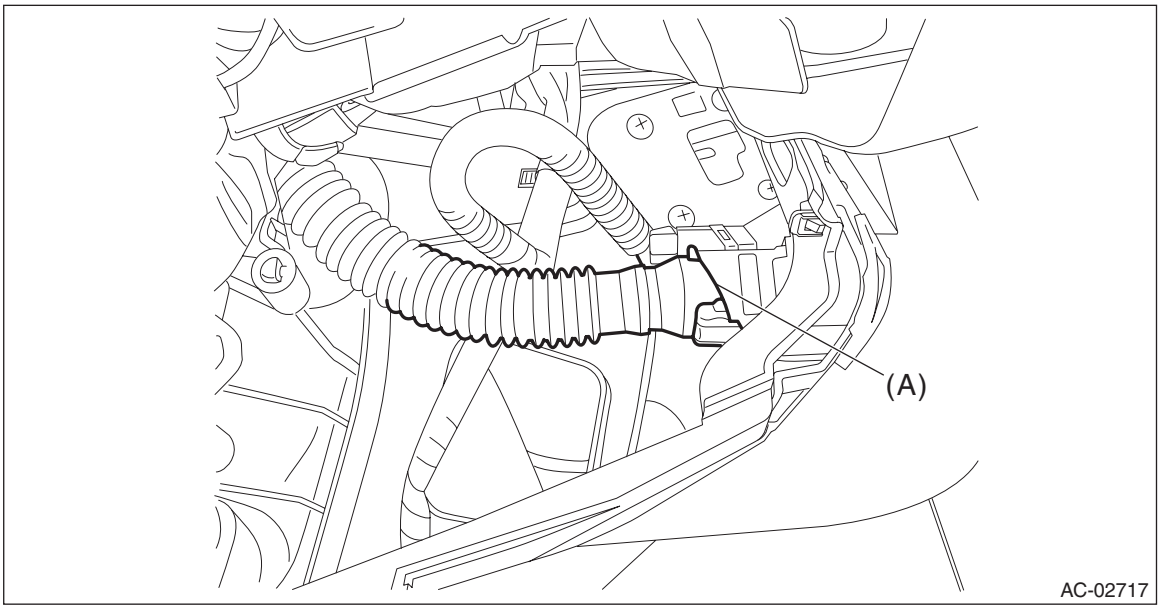

(1) Are the aspirator hoses on both sides of the case and sensor connected securely?
(2) Is the aspirator hose free from any kinks or cracks?

- **Yes** → Go to step 4).
- **No** → Repair or replace the aspirator hose if necessary.

4) Check if there is anything that affects sensing around the temperature and humidity sensor.
(1) Is the temperature and humidity sensor hole free from clogging?
(2) Is the peripheral area of the temperature and humidity sensor free from any heat-producing parts (such as audio, navigation system etc.)?

- **Yes** → Go to step 5).
- **No** → Remove everything that affects sensing.

5) Perform the inspection of temperature and humidity sensor unit.
(1) Disconnect the temperature and humidity sensor connector.
(2) Is the voltage between terminals of temperature and humidity sensor within standard value?

CAUTION:
During inspection, be careful not to touch the sensor end in order to avoid misjudgment due to body temperature.

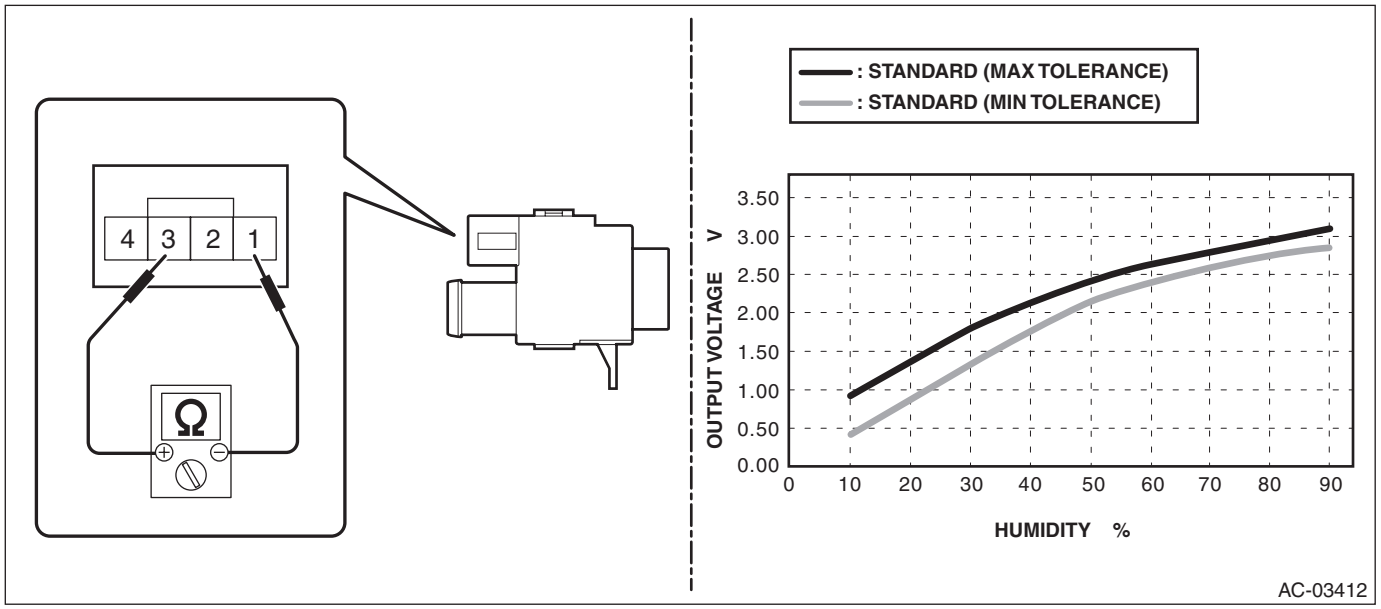

Terminal No.	Inspection conditions	Standard
1 — 3	10%	0.46 — 0.94 V
	20%	0.90 — 1.35 V
	30%	1.35 — 1.78 V
	40%	1.78 — 2.11 V
	50%	2.11 — 2.36 V
	60%	2.34 — 2.59 V
	70%	2.55 — 2.78 V
	80%	2.73 — 2.96 V
	90%	2.90 — 3.15 V

- **Yes** → The temperature and humidity sensor is normal.
- **No** → Replace the temperature and humidity sensor.

26.Evaporator Sensor

A: REMOVAL

1) Remove the evaporator assembly - cooling. <Ref. to AC-66, REMOVAL, Evaporator.>
2) Remove the thermostat - cooling from the evaporator assembly - cooling.

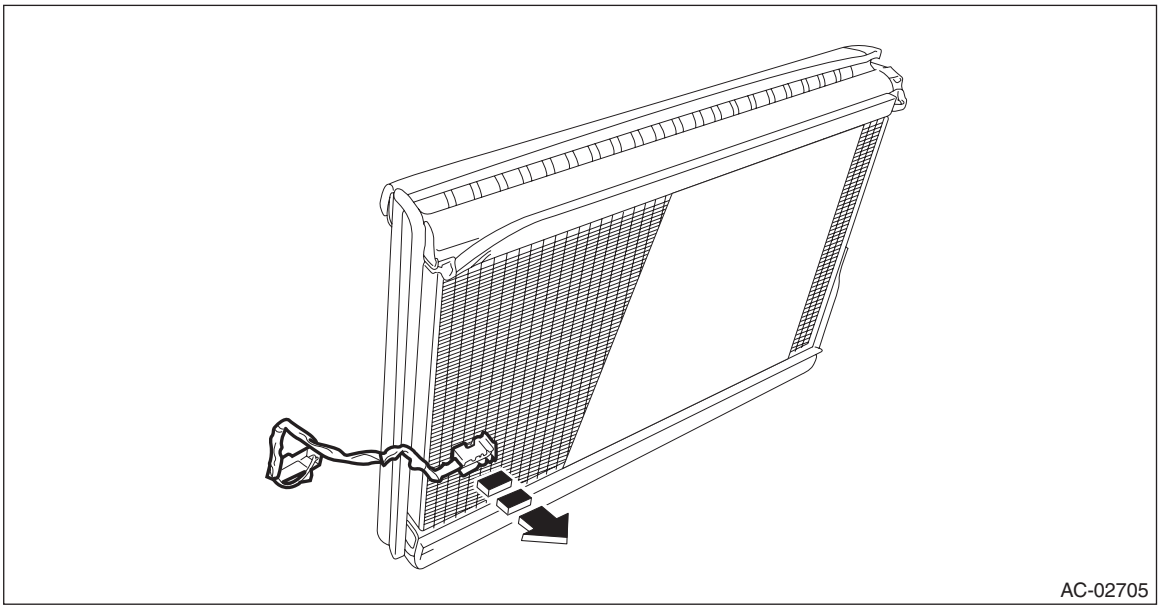

B: INSTALLATION

CAUTION:
- **Make sure that the water seal packing on the cover attachment area is securely attached.**
- **Replace the O-rings with new parts, and then apply compressor oil.**

1) Install the thermostat - cooling at the position shown in the figure below.

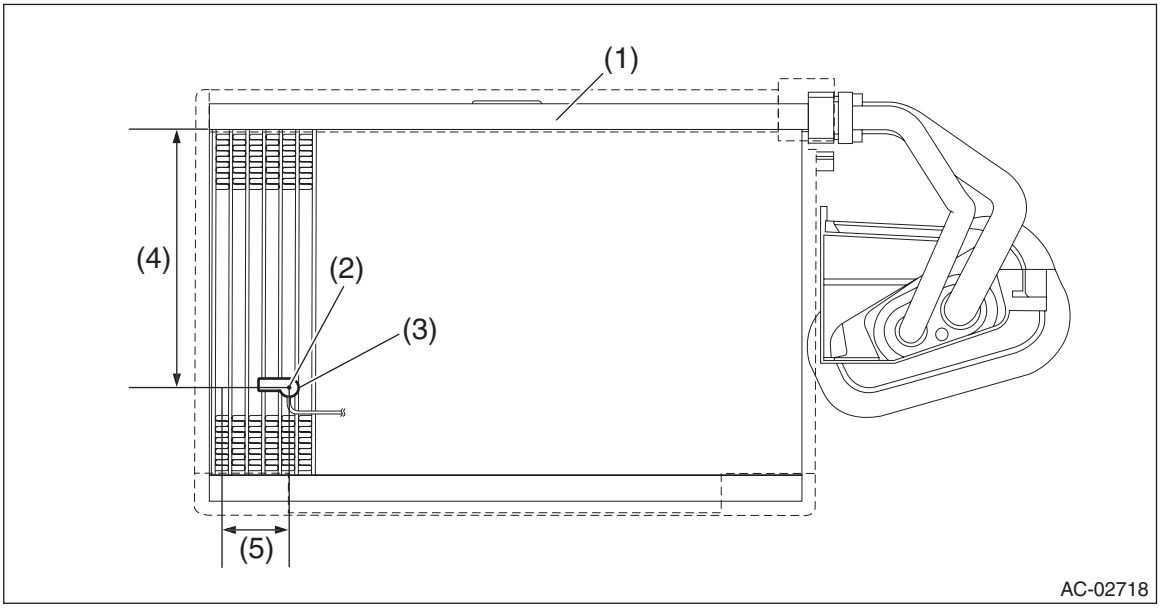

(1) Evaporator ASSY - cooling
(2) Center
(3) Thermostat - cooling
(4) 130 mm (5.12 in) from the upper end of the fins
(5) Fifth row fin from the left end

2) Install each part in the reverse order of removal.
3) Charge refrigerant. <Ref. to AC-30, PROCEDURE, Refrigerant Charging Procedure.>

C: INSPECTION

1. MANUAL A/C MODEL

Preparation tool:
Circuit tester
Thermometer and hygrometer

WIRING DIAGRAM:

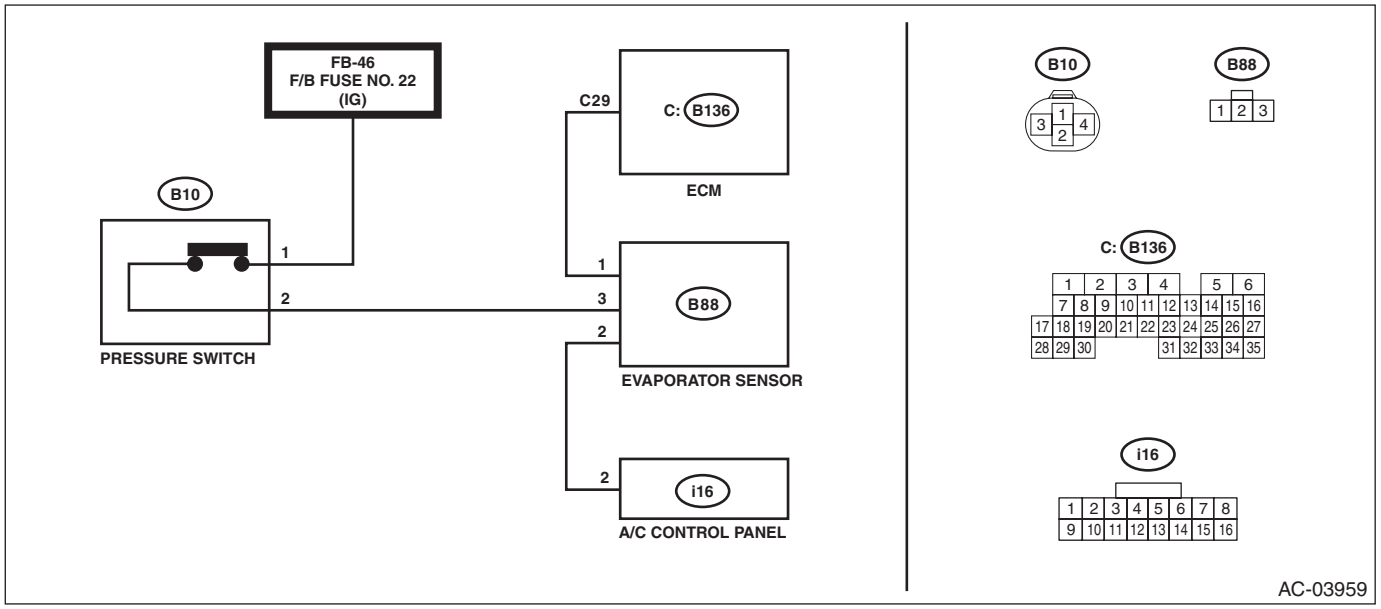

1) Prepare the vehicle.

NOTE:
Check that the ambient temperature is 25 — 40°C (77 — 104°F) and that the humidity is 30% — 80%.
- Place the vehicle in the workshop or in the shade and windless condition.
- Open all windows.

2) Set the vehicle to the following conditions and idle the engine for 15 minutes.

Item	Condition
Engine	Idling
Air vent grille	Shutter is fully open.
A/C switch	OFF
Temperature adjustment dial	LO (MAX COOL)
FRESH/RECIRC switch	RECIRC
Air flow control dial	VENT
Fan dial	3/4 level

3) Check evaporator sensor power supply input
(1) Turn the ignition to OFF.
(2) Disconnect the evaporator sensor connector.
(3) Turn the ignition to ON.
(4) Measure the voltage between evaporator sensor connector and chassis ground.

Connector & terminal
(B88) No. 3 (+) — Chassis ground (–):
(5) Is the voltage approx. 12 V?
- **Yes** → Go to step 4).
- **No** → Repair or replace the harness.

4) Check evaporator sensor ground circuit
   (1) Turn the ignition to OFF.
   (2) Check continuity between evaporator sensor connector and chassis ground.

Connector & terminal
(B88) No. 2 — Chassis ground:
   (3) Is there continuity?
   - **Yes** → Go to step 6).
   - **No** → Go to step 5).

5) Check open circuit in evaporator sensor ground circuit
   (1) Disconnect the control panel connector.
   (2) Check continuity between evaporator sensor connector and control panel connector.

Connector & terminal
(B88) No. 2 — (i16) No. 2:
   (3) Is there continuity?
   - **Yes** → Replace the control panel.
   - **No** → Repair or replace the harness.

6) Check evaporator sensor signal output
   (1) Connect the evaporator sensor connector and the control panel connector.
   (2) Disconnect the engine control module (ECM) connector.
   (3) Turn the ignition to ON.
   (4) Turn the A/C switch to ON.
   (5) Measure the voltage between engine control module (ECM) connector and chassis ground.

Connector & terminal
(B136) No. 29 — Chassis ground (–):
   (6) Is the voltage approx. 8 V or more?
   - **Yes** → Evaporator sensor is normal.
   - **No** → Go to step 7).

7) Check open circuit in evaporator sensor signal output circuit
   (1) Turn the ignition to OFF.
   (2) Disconnect the evaporator sensor connector.
   (3) Check continuity between evaporator sensor connector and engine control module (ECM) connector.

Connector & terminal
(B88) No. 1 — (B136) No. 29:
   (4) Is there continuity?
   - **Yes** → Replace the evaporator sensor.
   - **No** → Repair or replace the harness.

2. AUTO A/C MODEL

Preparation tool:
Subaru Select Monitor III kit
Circuit tester
Thermometer and hygrometer

1) Prepare the vehicle.

NOTE:
Check that the ambient temperature is 25 — 40°C (77 — 104°F) and that the humidity is 30% — 80%.
- Place the vehicle in the workshop or in the shade and windless condition.
- Open all windows.

2) Set the vehicle to the following conditions.

Item	Condition
Engine	Idling
Air vent grille	Shutter is fully open.
A/C switch	OFF
Temperature adjustment dial	LO (MAX COOL)
FRESH/RECIRC switch	RECIRC
Air flow control dial or switch	VENT
Fan dial	5/7 level

3) Using the Subaru Select Monitor, check «Evaporator Temperature».

NOTE:
For detailed procedures, refer to “PC application help for Subaru Select Monitor”.

(1) Idle the engine for 15 minutes, and then compare the air flow outlet temperature with «Evaporator Temperature».

NOTE:
For outlet opening temperature, measure the average temperature of center grille assembly and side grille assembly.

(2) Do the air flow outlet temperature and «Evaporator Temperature» differ by 3°C (5.4°F) or more?
- **Yes** → Go to step 4).
- **No** → Evaporator sensor is normal.

4) Check the evaporator sensor.
(1) Disconnect the evaporator sensor connector.
(2) Is the resistance between terminals of evaporator sensor within standard value?

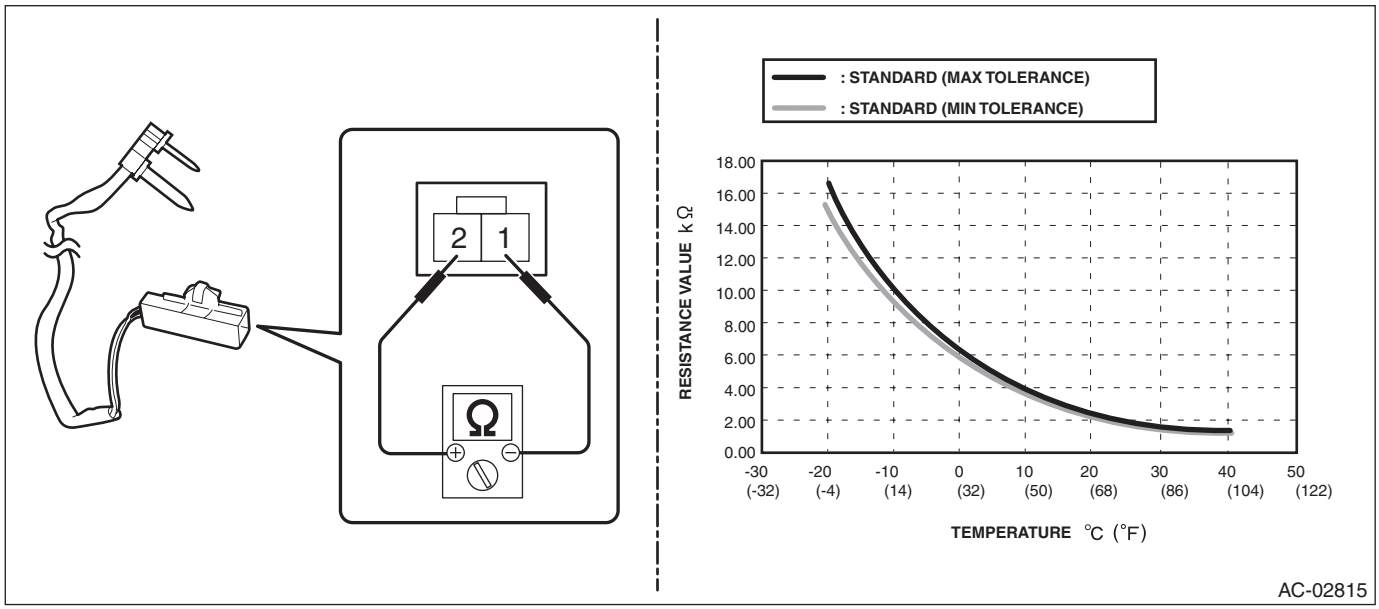

Terminal No.	Inspection conditions	Standard
1 — 2	-20°C	15.37 — 16.62 kΩ
	-15°C	12.09 — 12.87 kΩ
	-10°C	9.576 — 10.05 kΩ
	-5°C	7.636 — 7.899 kΩ
	0°C	6.132 — 6.256 kΩ
	5°C	4.891 — 5.057 kΩ
	10°C	3.928 — 4.113 kΩ
	15°C	3.174 — 3.366 kΩ
	20°C	2.581 — 2.77 kΩ
	25°C	2.111 — 2.292 kΩ
	30°C	1.737 — 1.907 kΩ
	35°C	1.437 — 1.595 kΩ
	40°C	1.195 — 1.34 kΩ

- **Yes** → Evaporator sensor is normal.
- **No** → Replace the evaporator sensor.

27.Heater Core Sensor

A: REMOVAL

1) Remove the glove box. <Ref. to EI-73, REMOVAL, Glove Box.>
2) Remove the heater core sensor.
   (1) Disconnect the connector.
   (2) Remove the screw and remove the heater core sensor.

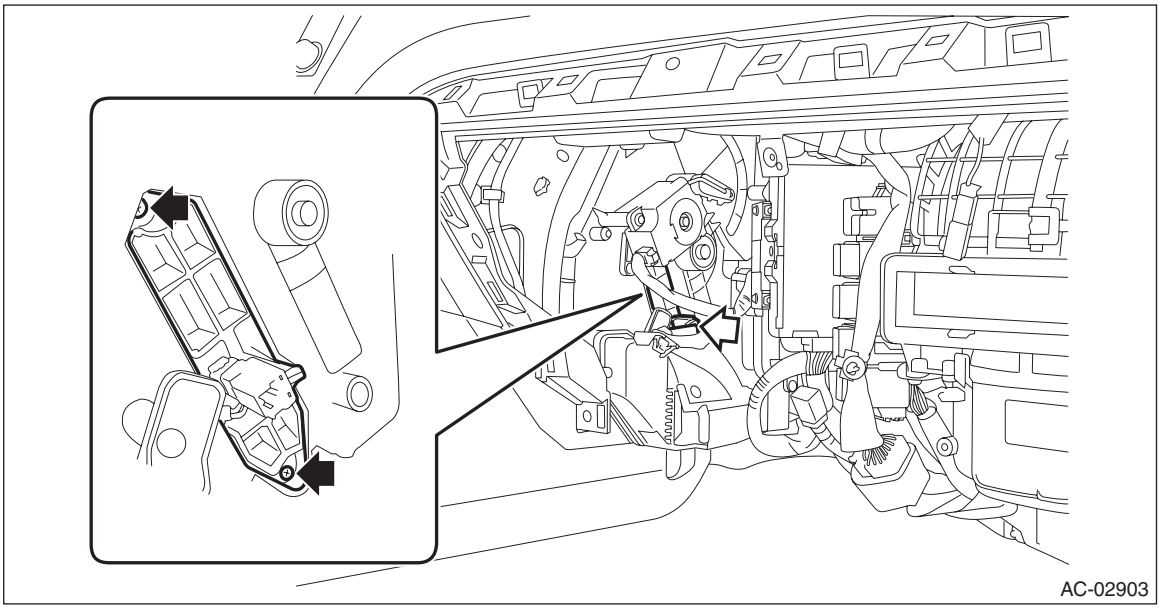

B: INSTALLATION

Install each part in the reverse order of removal.

C: INSPECTION

UNIT INSPECTION

Preparation tool:
Circuit tester

1) Measure the resistance between heater core sensor terminals.

CAUTION:
During inspection, be careful not to touch the sensor end in order to avoid misjudgment due to body temperature.

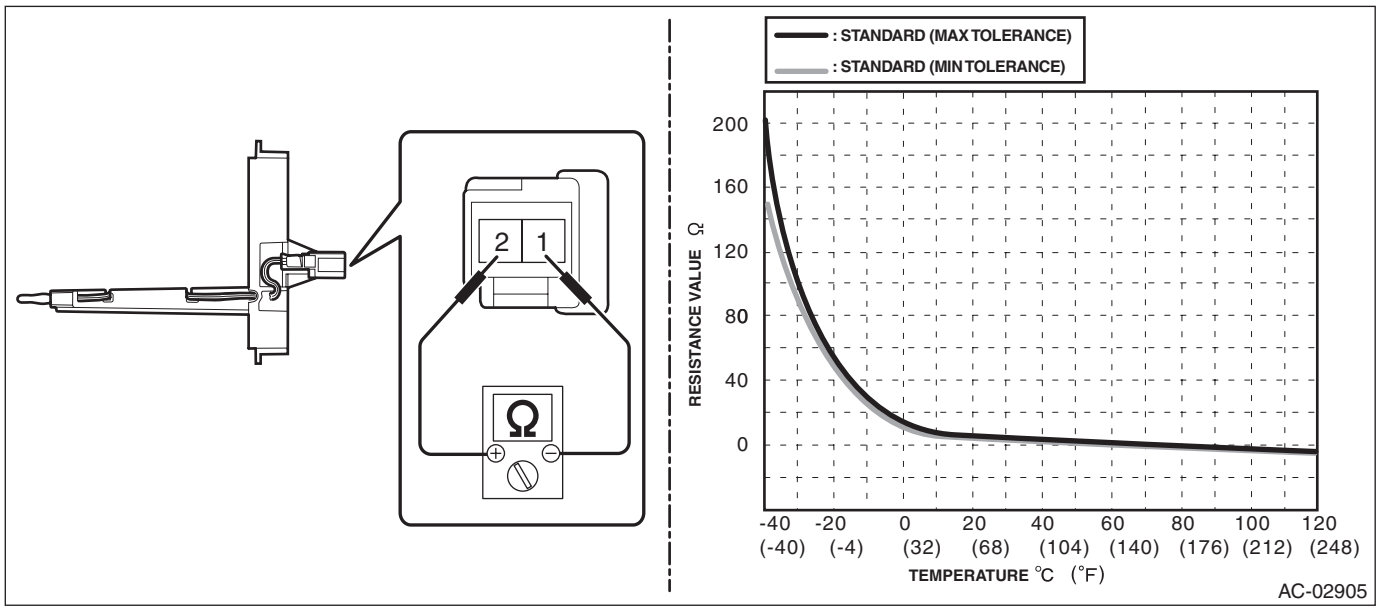

Terminal No.	Inspection conditions	Standard
1 — 2	-40°C	151.6 — 201.1 Ω
	-35°C	109.9 — 142.7 Ω
	-30°C	80.55 — 102.4 Ω
	-25°C	59.69 — 74.44 Ω
	-20°C	44.69 — 54.69 Ω
	-15°C	33.79 — 40.61 Ω
	-10°C	25.79 — 30.45 Ω
	-5°C	19.86 — 23.06 Ω
	0°C	15.42 — 17.61 Ω
	5°C	12.05 — 13.55 Ω
	10°C	9.497 — 10.52 Ω
	15°C	7.538 — 8.229 Ω
	20°C	6.026 — 6.487 Ω
	25°C	4.85 — 5.15 Ω
	30°C	3.877 — 4.172 Ω
	35°C	3.12 — 3.4 Ω
	40°C	2.527 — 2.788 Ω
	45°C	2.059 — 2.299 Ω
	50°C	1.687 — 1.905 Ω
	55°C	1.39 — 1.588 Ω
	60°C	1.152 — 1.33 Ω
	65°C	0.9587 — 1.119 Ω
	70°C	0.8021 — 0.9457 Ω
	75°C	0.6743 — 0.8029 Ω
	80°C	0.5693 — 0.6846 Ω
	85°C	0.4828 — 0.586 Ω
	90°C	0.4112 — 0.5036 Ω
	95°C	0.3516 — 0.4345 Ω
	100°C	0.3017 — 0.3761 Ω
	105°C	0.26 — 0.3268 Ω
	110°C	0.2248 — 0.2849 Ω
	115°C	0.195 — 0.2491 Ω
	120°C	0.1697 — 0.2186 Ω

2) Replace the heater core sensor if the inspection result is not within the standard value.

28.FRESH/RECIRC Door Actuator

A: REMOVAL

1) Disconnect the ground cable from battery. <Ref. to NT-5, BATTERY, NOTE, Note.>

NOTE:
For the 12 volt engine restart battery of HEV model, disconnect the ground terminal from 12V engine restart battery sensor.

2) Remove the glove box. <Ref. to EI-73, REMOVAL, Glove Box.>
3) Remove the engine control module (ECM).
- Gasoline engine model: <Ref. to FU(H4DO(w/o HEV))-106, REMOVAL, Engine Control Module (ECM).>
- HEV model: <Ref. to FU(H4DO(HEV))-85, REMOVAL, Engine Control Module (ECM).>

4) Remove the blower motor unit assembly.
   (1) Release the claws, and then remove the grille assembly - ventilation RH.
   (2) Disconnect the blower motor relay and each connector.

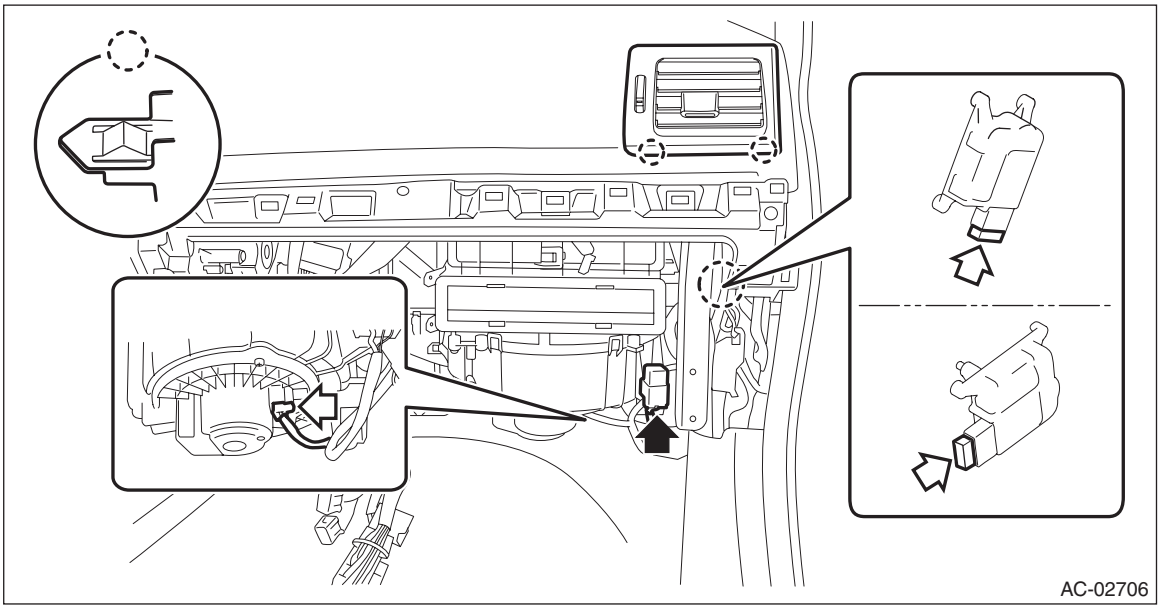
AC-02706

   (3) Remove the bolts and nuts to remove blower motor unit assembly.

NOTE:
Remove the RH upper nut from the mounting portion of the grille assembly - ventilation RH.

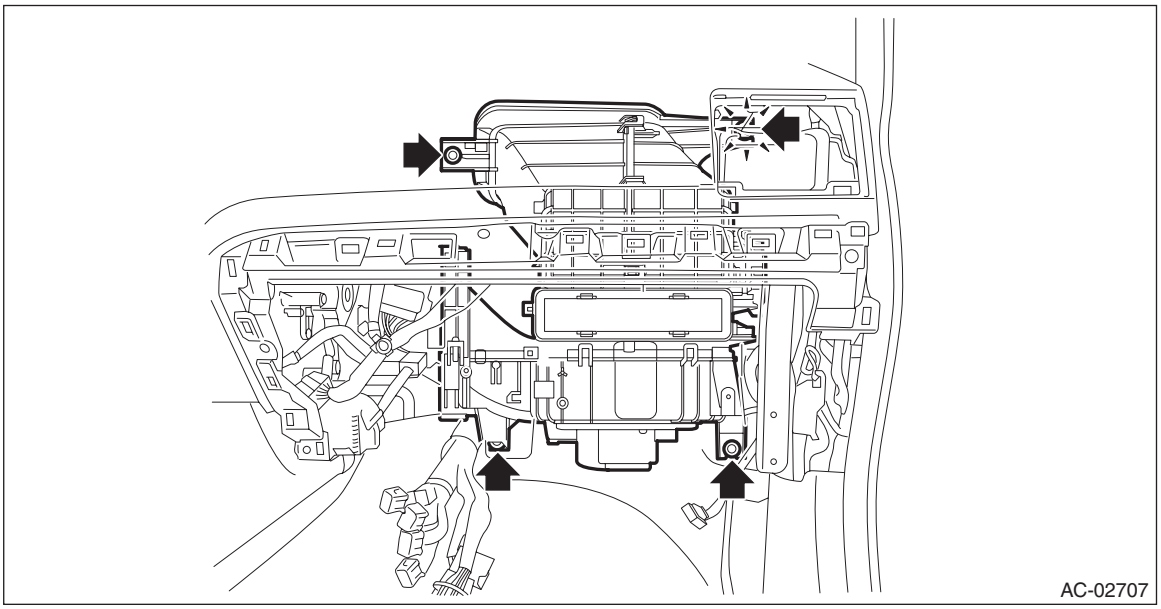
AC-02707

5) Remove the screws and detach the motor - actuator blower.

- Manual A/C model

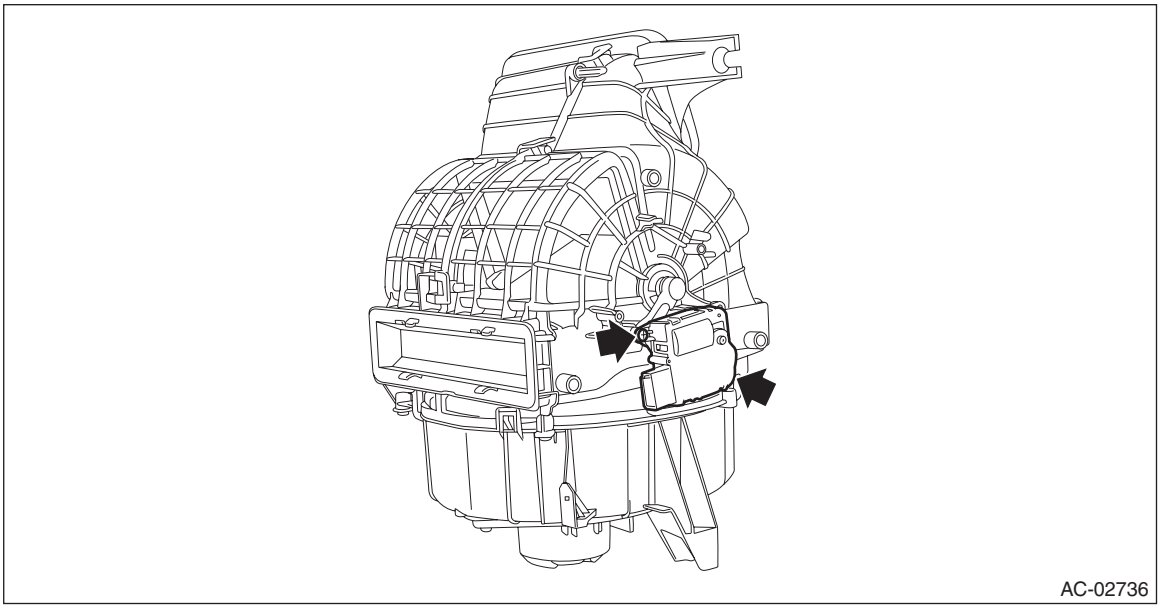
AC-02736

- Auto A/C model

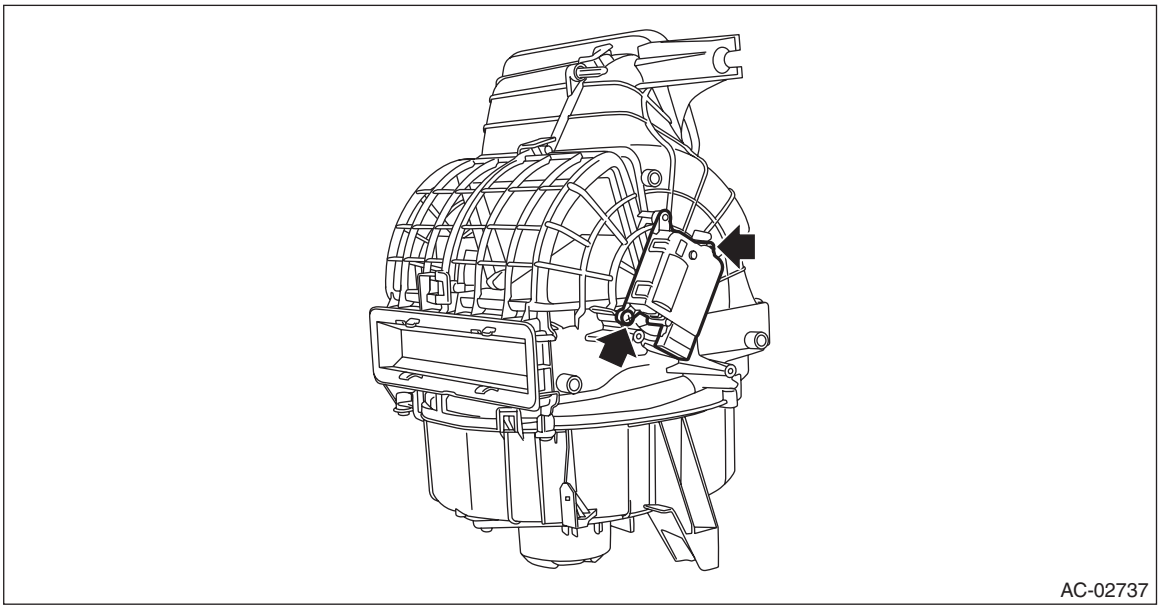
AC-02737

B: INSTALLATION

CAUTION:
After installing the grille assembly - ventilation RH, check that the air vent grille of the grille assembly - ventilation RH is inserted correctly into the air vent duct.
Install each part in the reverse order of removal.

Tightening torque:
Blower motor unit: <Ref. to AC-10, BLOWER MOTOR UNIT, COMPONENT, General Description.>

C: INSPECTION

1. CHECK LINK

1) Visually check the operation range of the link, and remove the foreign material if any.
2) Operate the FRESH/RECIRC switch to check that the link operates normally.
3) If it does not operate normally as the result of inspection, check the motor - actuator blower.

2. CHECK ACTUATOR

UNIT INSPECTION
1) Check the actuator operation when battery voltage is applied between the terminals of actuator.

CAUTION:
Remove the battery immediately once the actuator stops operating. Otherwise, damage to the motor can occur.
- Manual A/C model

<table>
<tr><th>Terminal No.</th><th>Inspection conditions</th><th>Position</th><th>Connection diagram</th></tr>
<tr><td>5 (+) — 1 (–)</td><td rowspan="2">Connect battery to the terminals</td><td>RECIRC</td><td> 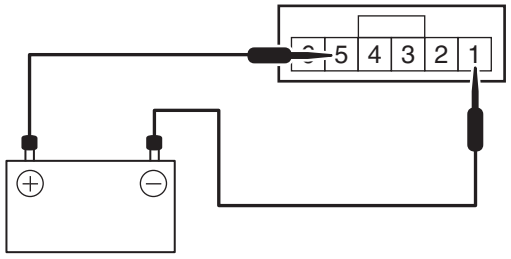

AC-02738</td></tr>
<tr><td>1 (+) — 5 (–)</td><td>FRESH</td><td> 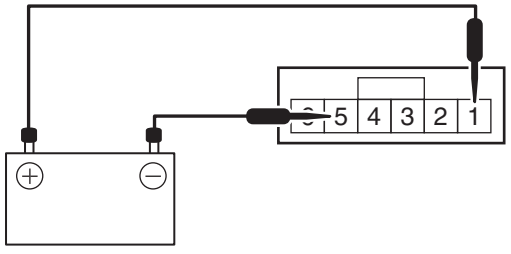

AC-02739</td></tr>
</table>

- Auto A/C model

Terminal No.	Inspection conditions	Position	Connection diagram
1 (+) — 2 (–)	Connect battery to the terminals	RECIRC	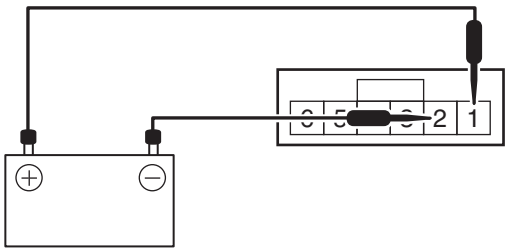 AC-02742
2 (+) — 1 (–)		FRESH	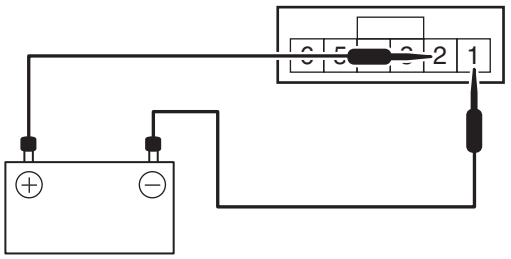 AC-02741

2) If it does not operate normally as the result of inspection, replace the motor - actuator blower.

29.Mode Door Actuator

A: REMOVAL

1) Remove the knee airbag module. <Ref. to AB-43, REMOVAL, Knee Airbag Module.>
2) Remove the motor - actuator mode.
   (1) Disconnect the connector, and remove the rod from the rod clamp.
   (2) Remove the screws and detach the motor - actuator mode.

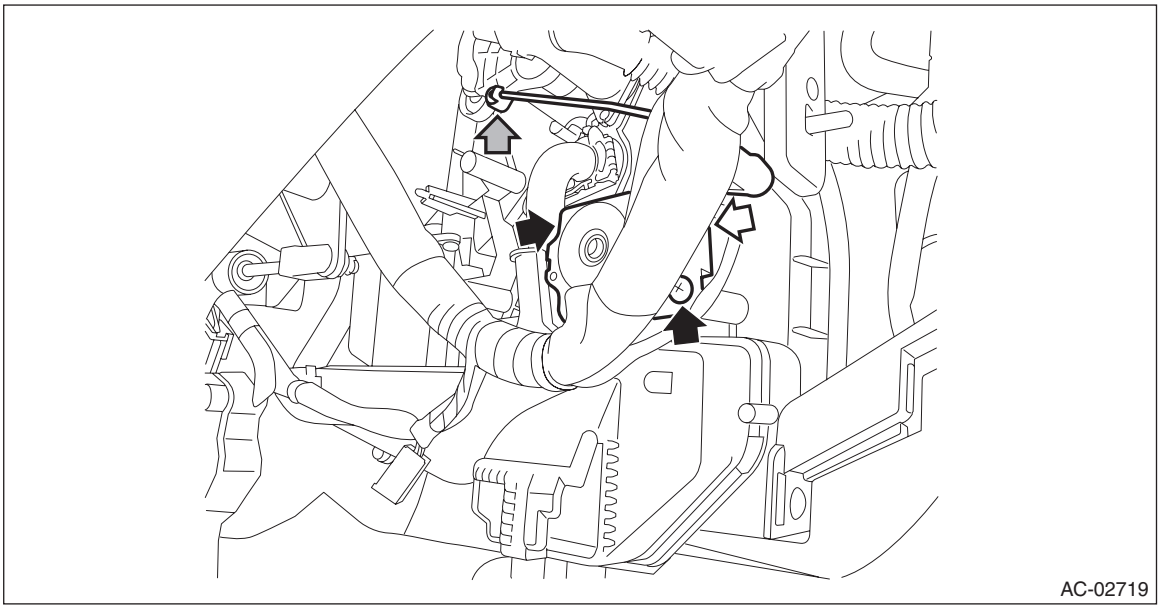

B: INSTALLATION

Install each part in the reverse order of removal.

C: INSPECTION

1. CHECK LINK

1) Visually check the operation range of the link, and remove the foreign material if any.
2) Operate the air flow control dial or switch to check that the link operates normally.
3) If it does not operate normally as the result of inspection, check the motor - actuator mode.

2. CHECK ACTUATOR

UNIT INSPECTION

PREPARATION TOOL:
Circuit tester

1) Check the resistance between actuator terminals.

Terminal No.	Inspection conditions	Standard	Connector sketch
3 — 1	Always	80 — 100 Ω	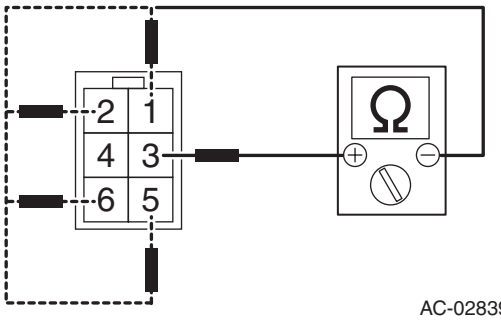
3 — 2			
3 — 5			
3 — 6			

2) Replace the motor - actuator mode if it is found defective as a result of inspection.

30.Air Mix Door Actuator

A: REMOVAL

1. LH

1) Remove the knee airbag module. <Ref. to AB-43, REMOVAL, Knee Airbag Module.>
2) Remove the motor - actuator mix.
   (1) Disconnect the connector, and remove the rod from the rod clamp.
   (2) Remove the screws and detach the motor - actuator mix.

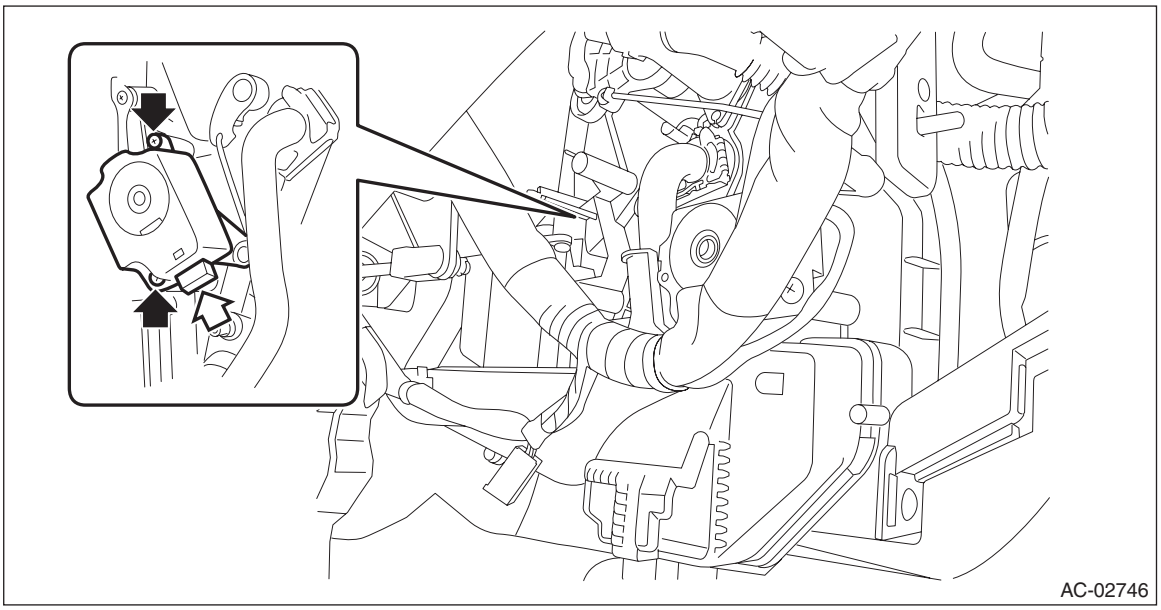

2. RH

1) Remove the glove box. <Ref. to EI-73, REMOVAL, Glove Box.>
2) Remove the motor - actuator mix.
   (1) Disconnect the connector, and remove the rod from the rod clamp.
   (2) Remove the screws and detach the motor - actuator mix.

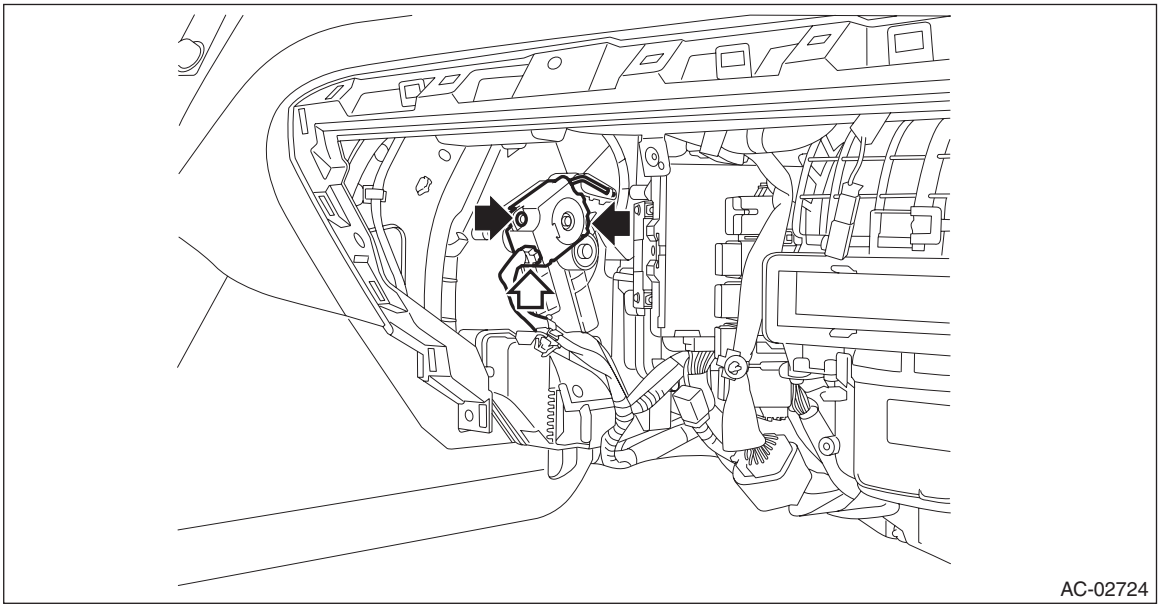

B: INSTALLATION

Install each part in the reverse order of removal.

C: INSPECTION

1. CHECK LINK

1) Visually check the operation range of the link, and remove the foreign material if any.
2) Operate the temperature control dial to check that the link operates normally.
3) If it does not operate normally as the result of inspection, check the motor - actuator mix.

2. CHECK ACTUATOR

UNIT INSPECTION

PREPARATION TOOL:

Circuit tester

1) Check the resistance between actuator terminals.

Terminal No.	Inspection conditions	Standard	Connector sketch
3 — 1	Always	80 — 100 Ω	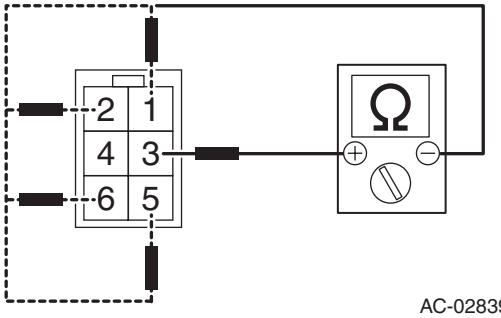
3 — 2			
3 — 5			
3 — 6			

2) Replace the motor - actuator mix if it is found defective as a result of inspection.

31.Air Vent Grille

A: REMOVAL

1. CENTER GRILLE ASSEMBLY

CAUTION:
Be careful not to damage the interior trims when removing.
1) Disconnect the ground cable from battery. <Ref. to NT-5, BATTERY, NOTE, Note.>

NOTE:
For the 12 volt engine restart battery of HEV model, disconnect the ground terminal from 12V engine restart battery sensor.
2) On manual A/C models, disconnect the control cables from both sides of the heater and cooling unit assembly.

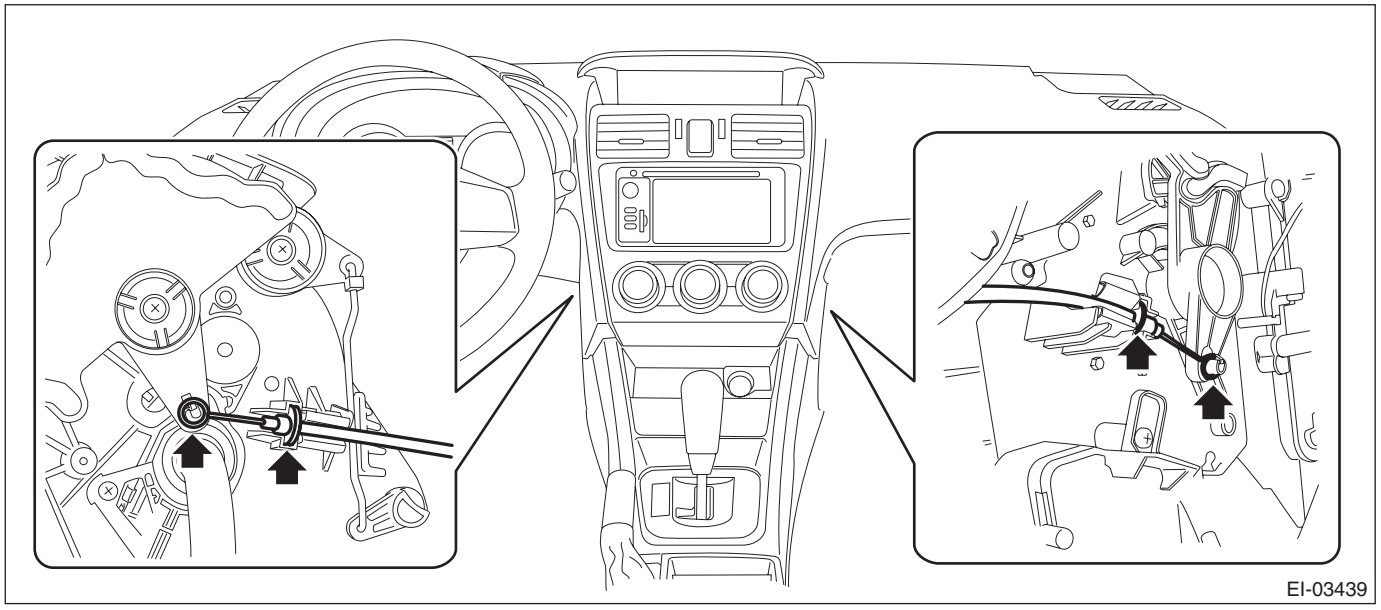

NOTE:
Remove the glove box pocket assembly on the passenger's side.

3) Remove the panel center assembly.

CAUTION:
- **Do not put your finger on the fin of the air vent grille. Doing so may damage the fin.**
- **Pull the panel center assembly slowly. Pulling with excessive force may damage the connector.**

(1) Insert a plastic remover to the three areas shown by the arrows, and slightly lift up the panel center assembly.
(2) With the panel center assembly lifted up slightly, release the claw by using a clip remover wrapped with protective tape.
(3) Release the rest of the claws, and pull out the panel center assembly.
(4) Disconnect the connectors, and remove the panel center assembly.

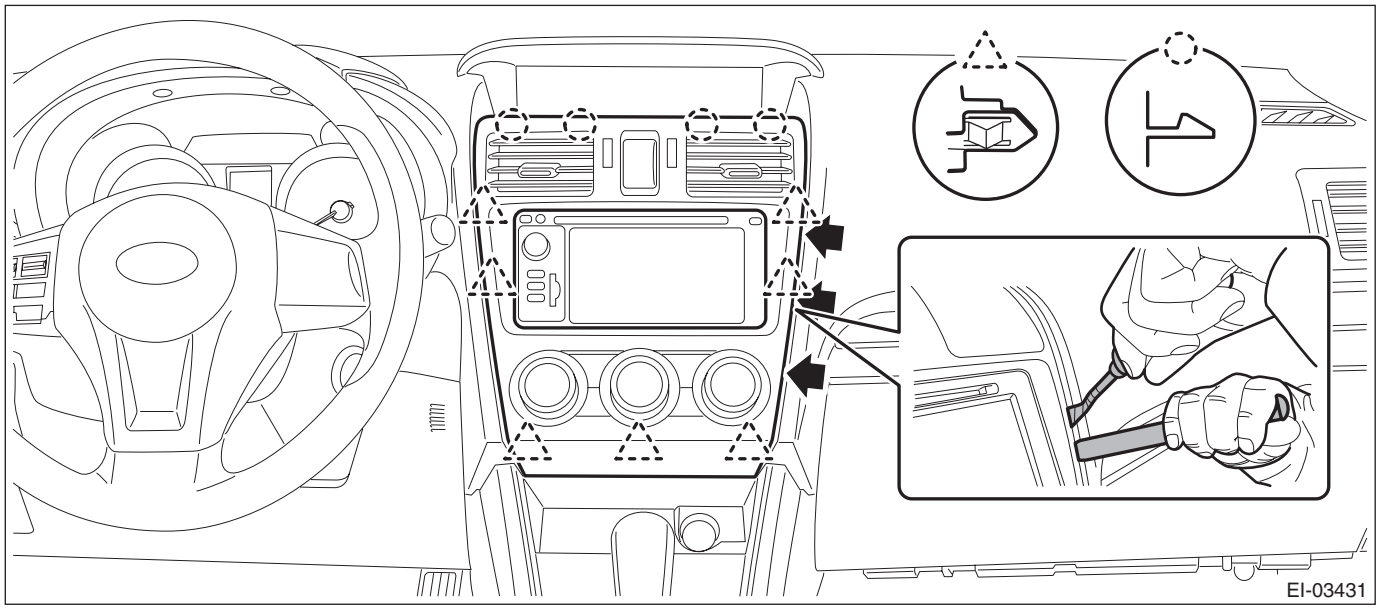

4) Release the claws, and then remove the grille assembly - CTR ventilation from the panel center assembly.

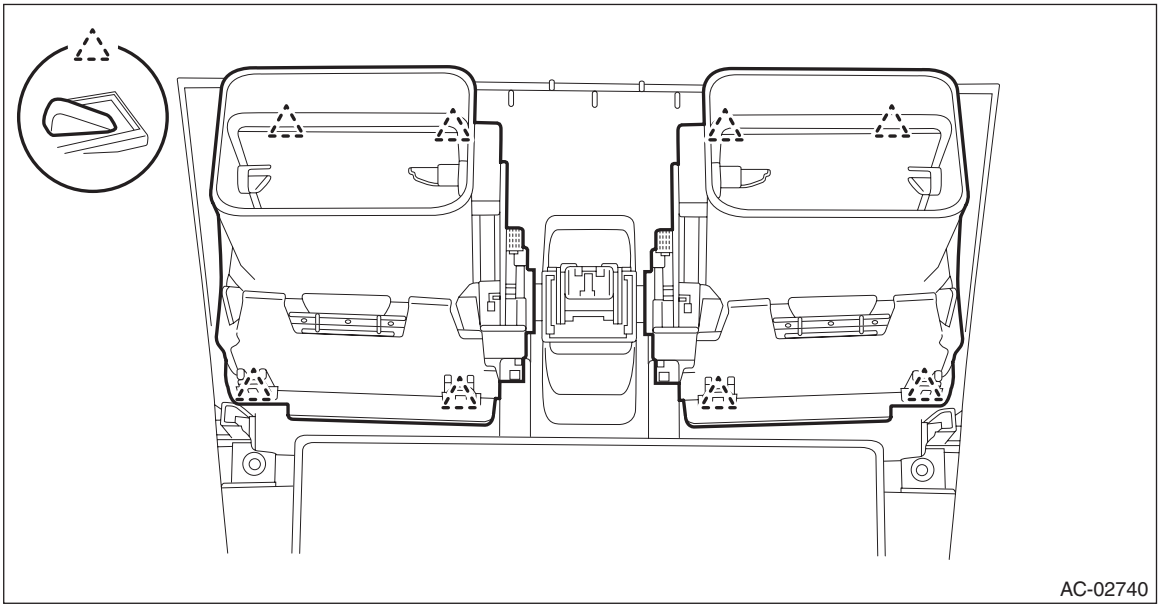

2. SIDE GRILLE ASSEMBLY

Release the claws, and then remove the grille assembly - ventilation RH.

- LH

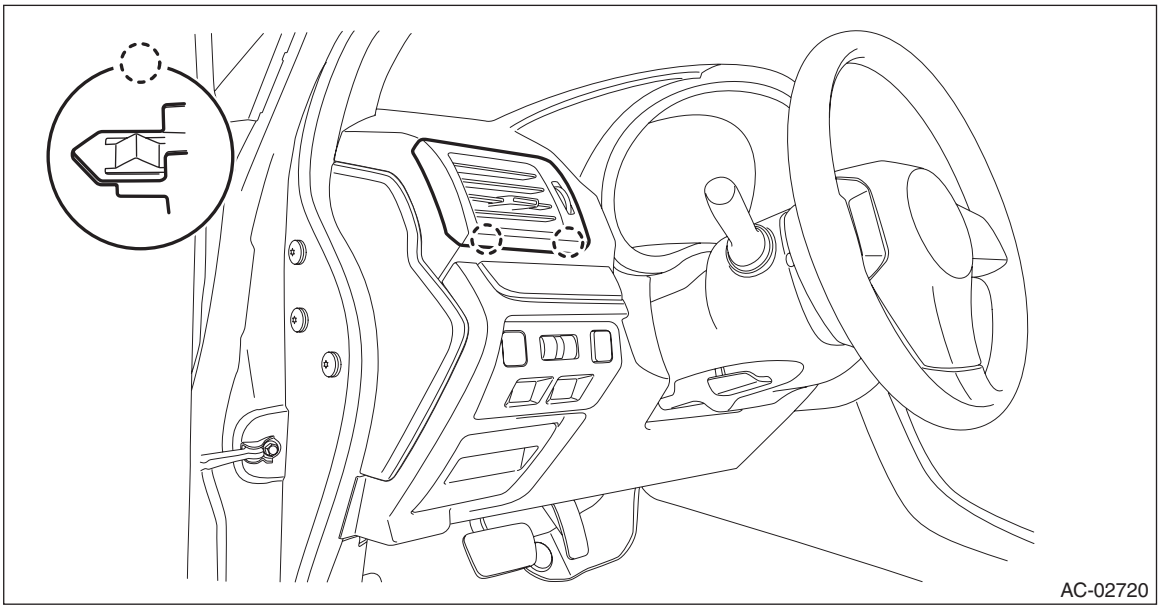

- RH

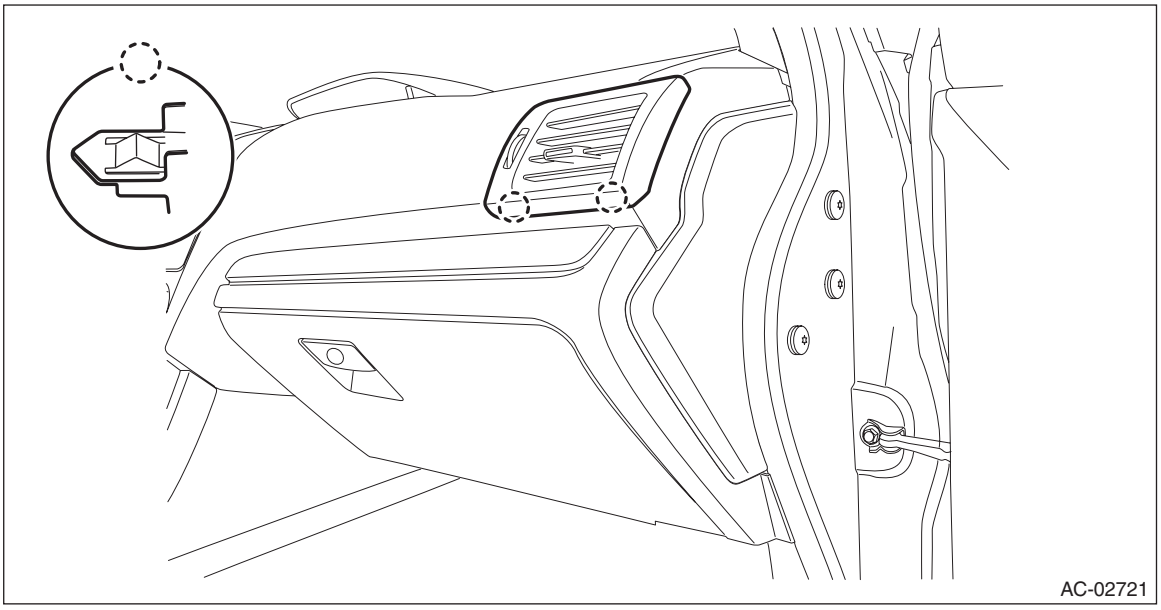

B: INSTALLATION

CAUTION:
After installing the panel center assembly or grille assembly - ventilation, check that the air vent grille is inserted correctly into the air vent duct.
Install each part in the reverse order of removal.

C: INSPECTION

1) Check that the direction and amount of air can be adjusted smoothly. Replace the grille assembly - ventilation if faulty.
2) Check that the adjustment can be maintained in each position. Replace the grille assembly - ventilation if faulty.

32.Heater Duct

A: REMOVAL

1) Remove the heater and cooling unit assembly. <Ref. to AC-63, REMOVAL, Heater and Cooling Unit.>
2) Turn over the floor mat. <Ref. to EI-159, REMOVAL, Floor Mat.>.
3) Remove the duct - rear heater.
   (1) Remove the clips, and remove the duct - rear heater CTR (A).
   (2) Release the claws, and remove the duct - rear heater (B) on LH and RH sides.

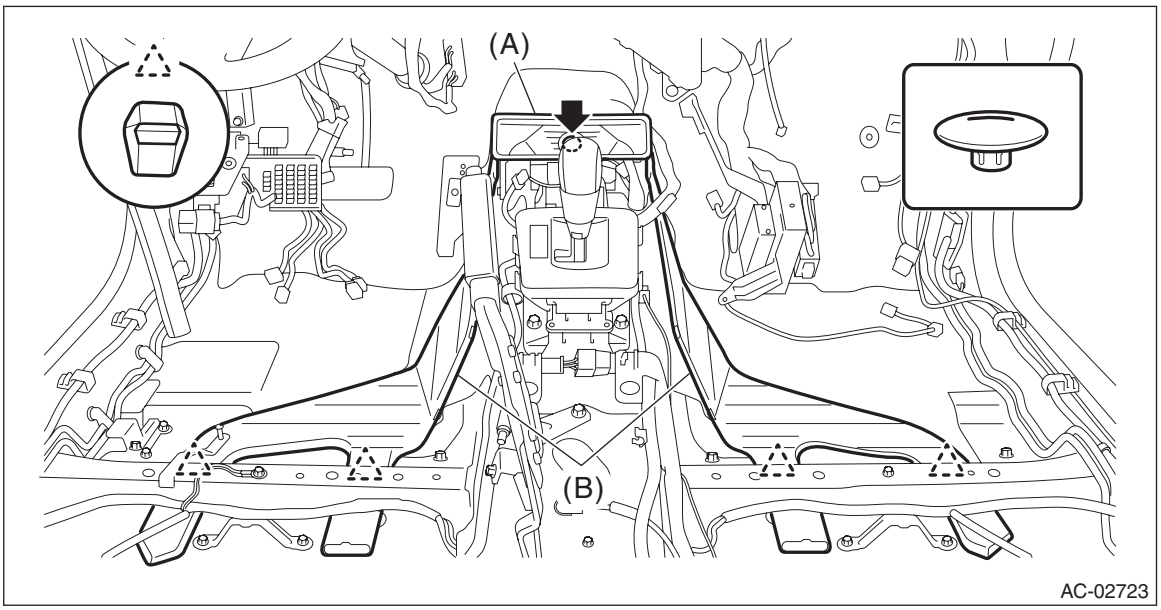

NOTE:
For HEV model, remove the duct - extension.

B: INSTALLATION

Install each part in the reverse order of removal.

33.Heater Vent Duct

A: REMOVAL

1) Remove the instrument panel assembly. <Ref. to EI-80, REMOVAL, Instrument Panel Assembly.>
2) Remove the screws and remove the duct - center vent (A) and the duct - side ventilation (B) on LH and RH sides.

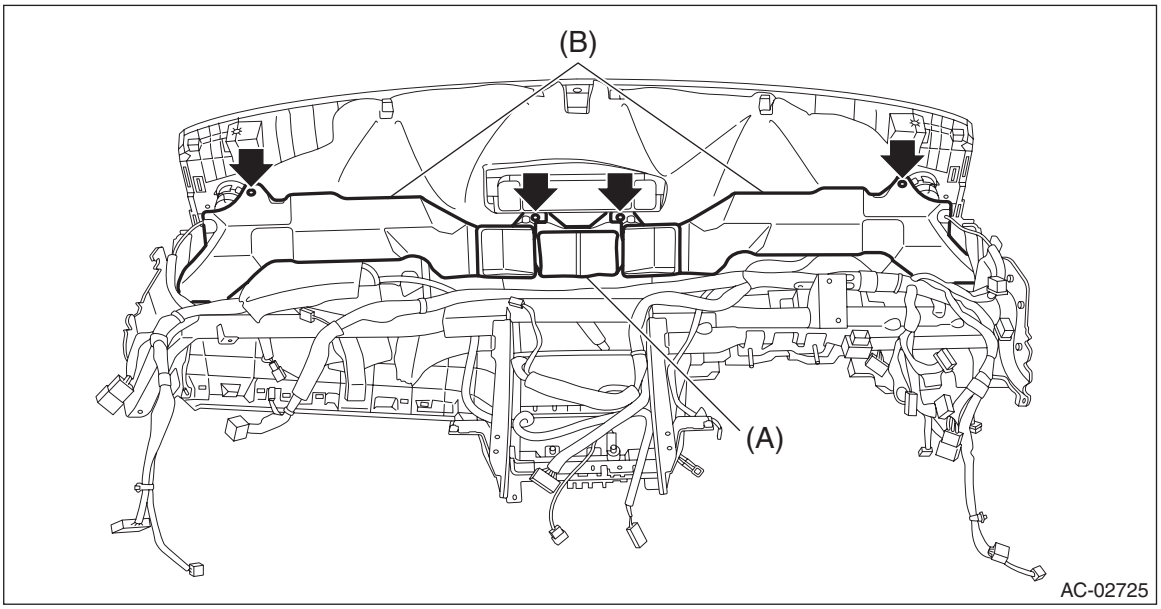

B: INSTALLATION

Install each part in the reverse order of removal.

34.A/C Filter

A: REPLACEMENT

1) Remove the pocket assembly.
   (1) Attach the protective tape (a) to the panel center LWR.
   (2) Remove the damper COMPL - pocket.
   (3) Release the stoppers and remove the pocket assembly by pulling it toward you.

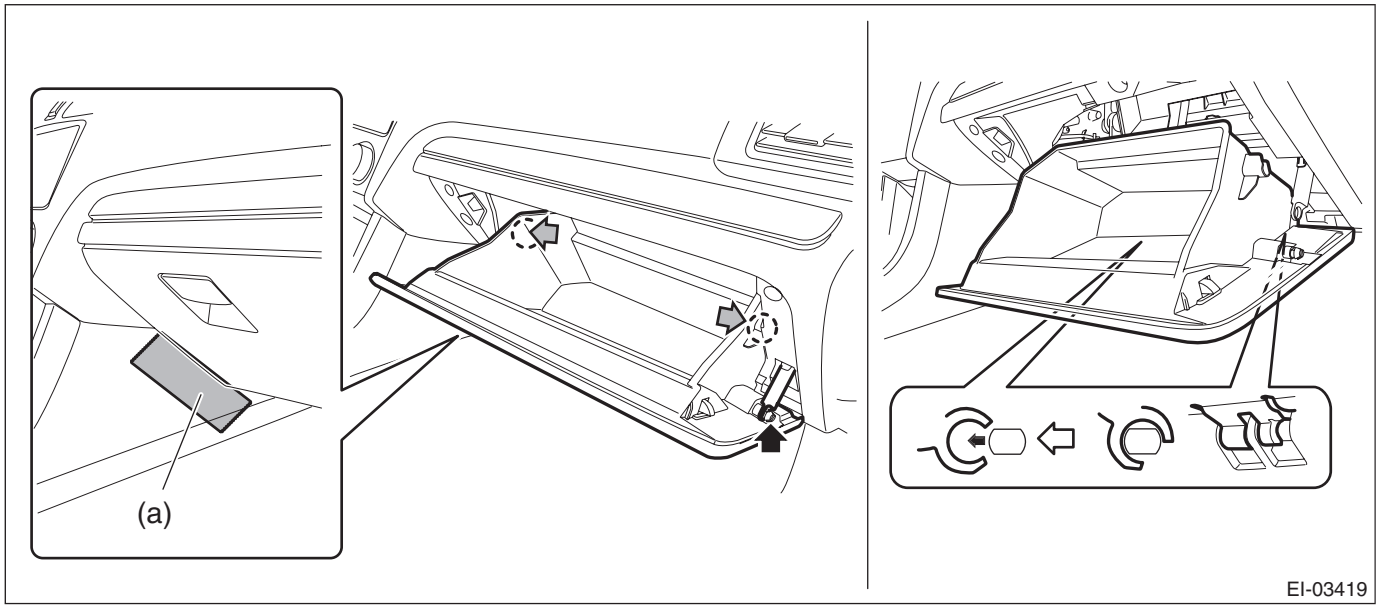

2) Pinch the tabs to release the lock, and remove the filter kit.

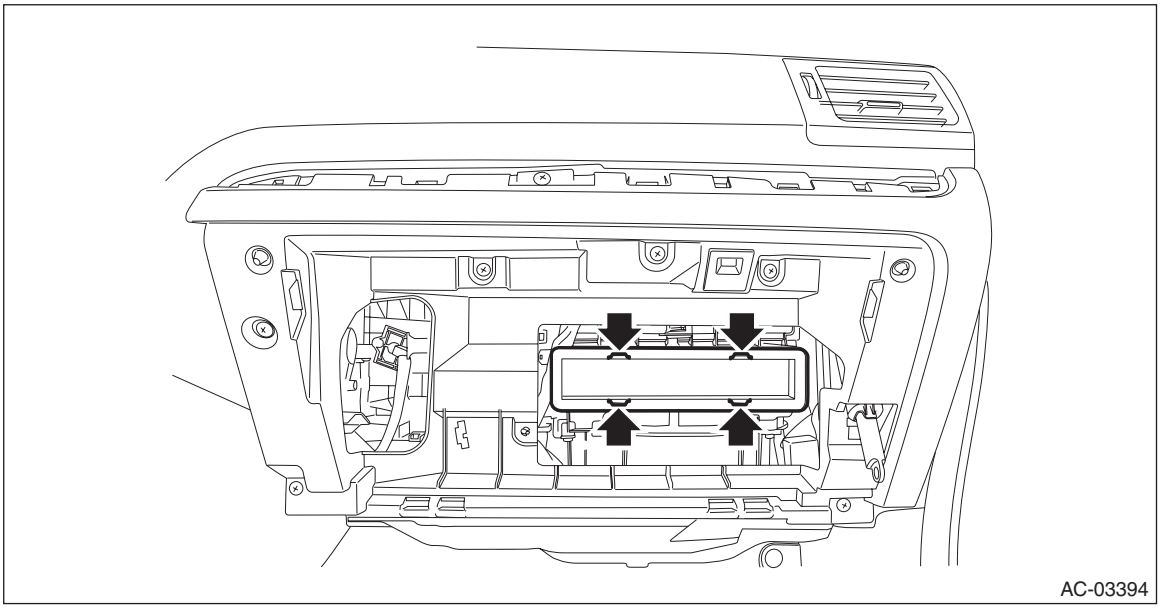

3) Install each part in the reverse order of removal.

35.Diagnostics with Phenomenon

A: INSPECTION

Refer to “Diagnostics with Phenomenon” for “HVAC SYSTEM (AUTO A/C) (DIAGNOSTICS)” section. <Ref. to AC(diag)-16, Diagnostics with Phenomenon.>

HVAC SYSTEM (AUTO A/C) (DIAGNOSTICS)

AC(diag)

Page

1. Basic Diagnostic Procedure 2
2. General Description 3
3. Electrical Component Location 4
4. Auto A/C Control Module I/O Signal 6
5. Diagnostic Chart for Self-Diagnosis 8
6. Diagnostics with Phenomenon 16
7. Subaru Select Monitor 41
8. Read Diagnostic Trouble Code (DTC) 42
9. Clear Memory Mode 43
10. Read Current Data 44
11. Diagnostic Procedure for Subaru Select Monitor Communication 46
12. List of Diagnostic Trouble Code (DTC) 48
13. Diagnostic Procedure with Diagnostic Trouble Code (DTC) 50

1. Basic Diagnostic Procedure

A: PROCEDURE

NOTE:
When the sunload sensor check is performed indoors or in the shade, it could be diagnosed as sensor having an open circuit. Always perform the inspection in direct sunlight.

	Step	Check	Yes	No
1	**START INSPECTIONS.** 1) Prepare the tools. <Ref. to AC-20, PREPARATION TOOL, General Description.> 2) Perform the pre-inspection. <Ref. to AC(diag)-3, INSPECTION, General Description.>	Is any malfunction found in pre-inspection?	Fix the malfunction found in pre-inspection, and go to the next inspection step. Go to step **2**.	Go to step **2**.
2	**PREPARE SUBARU SELECT MONITOR.** Prepare the Subaru Select Monitor.	Is the Subaru Select Monitor ready?	Go to step **3**.	Go to step **4**.
3	**CHECK DTC.** 1) Under the failure condition, leave the vehicle for one minute or more. 2) Read the DTC using Subaru Select Monitor. NOTE: • If the communication function of the Subaru Select Monitor cannot be executed properly, check the communication circuit. <Ref. to AC(diag)-46, COMMUNICATION FOR INITIALIZING IMPOSSIBLE, Diagnostic Procedure for Subaru Select Monitor Communication.> • Record the time stamp and the freeze frame data recorded together with the DTC. For time stamp, refer to “LAN SYSTEM”. <Ref. to LAN(w/o HEV)(diag)-6, TIME STAMP, CAUTION, General Description.> <Ref. to LAN(HEV)(diag)-6, TIME STAMP, CAUTION, General Description.>	Is DTC displayed?	<Ref. to AC(diag)-48, LIST, List of Diagnostic Trouble Code (DTC).>	Refer to Diagnostics with Phenomenon. <Ref. to AC(diag)-16, INSPECTION, Diagnostics with Phenomenon.>
4	**A/C CONTROL PANEL SELF-DIAGNOSIS.** 1) Under the failure condition, leave the vehicle for one minute or more. 2) Perform the self-diagnosis of A/C control panel. <Ref. to AC(diag)-8, OPERATION, Diagnostic Chart for Self-Diagnosis.>	Is a malfunction detected?	Perform the diagnosis according to the self-diagnosis procedure.	Refer to Diagnostics with Phenomenon. <Ref. to AC(diag)-16, INSPECTION, Diagnostics with Phenomenon.>

2. General Description

A: CAUTION

1) Never connect the battery in reverse polarity.
• Doing so may immediately damage the A/C control panel.
2) Do not disconnect the battery cables while the engine is running.
• A large counter electromotive force will be generated in the generator, and this voltage may damage electronic parts such as A/C control panel etc.
3) Before disconnecting the connectors of sensors and the A/C control panel, be sure to turn off the ignition switch.
• A/C control panel may be damaged.
4) Every A/C-related part is a precision part. Do not drop them.
5) Airbag system harness is routed near the A/C control panel and junction box.

CAUTION:
• Do not use electrical test equipment on the airbag system harness and connector.
• Be careful not to damage the airbag system harness when servicing the A/C control panel and junction box.

B: INSPECTION

Before performing diagnosis, check the following items which might affect the A/C system problems.

1. BATTERY

Check the battery. <Ref. to SC(H4DO(w/o HEV))-55, INSPECTION, Battery.> <Ref. to SC(H4DO(HEV))-41, INSPECTION, Battery.>

NOTE:
If the battery voltage does not reach the specified value, recharge or replace the battery.

C: PREPARATION TOOL

1. SPECIAL TOOL

ILLUSTRATION	TOOL NUMBER	DESCRIPTION	REMARKS
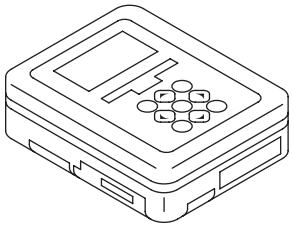 ST1B022XU0	1B022XU0	SUBARU SELECT MONITOR III KIT	Used for troubleshooting the electrical system.

2. GENERAL TOOL

TOOL NAME	REMARKS
Circuit tester	Used for measuring resistance, voltage and current.

3. Electrical Component Location

A: LOCATION

1. OUTSIDE VEHICLE

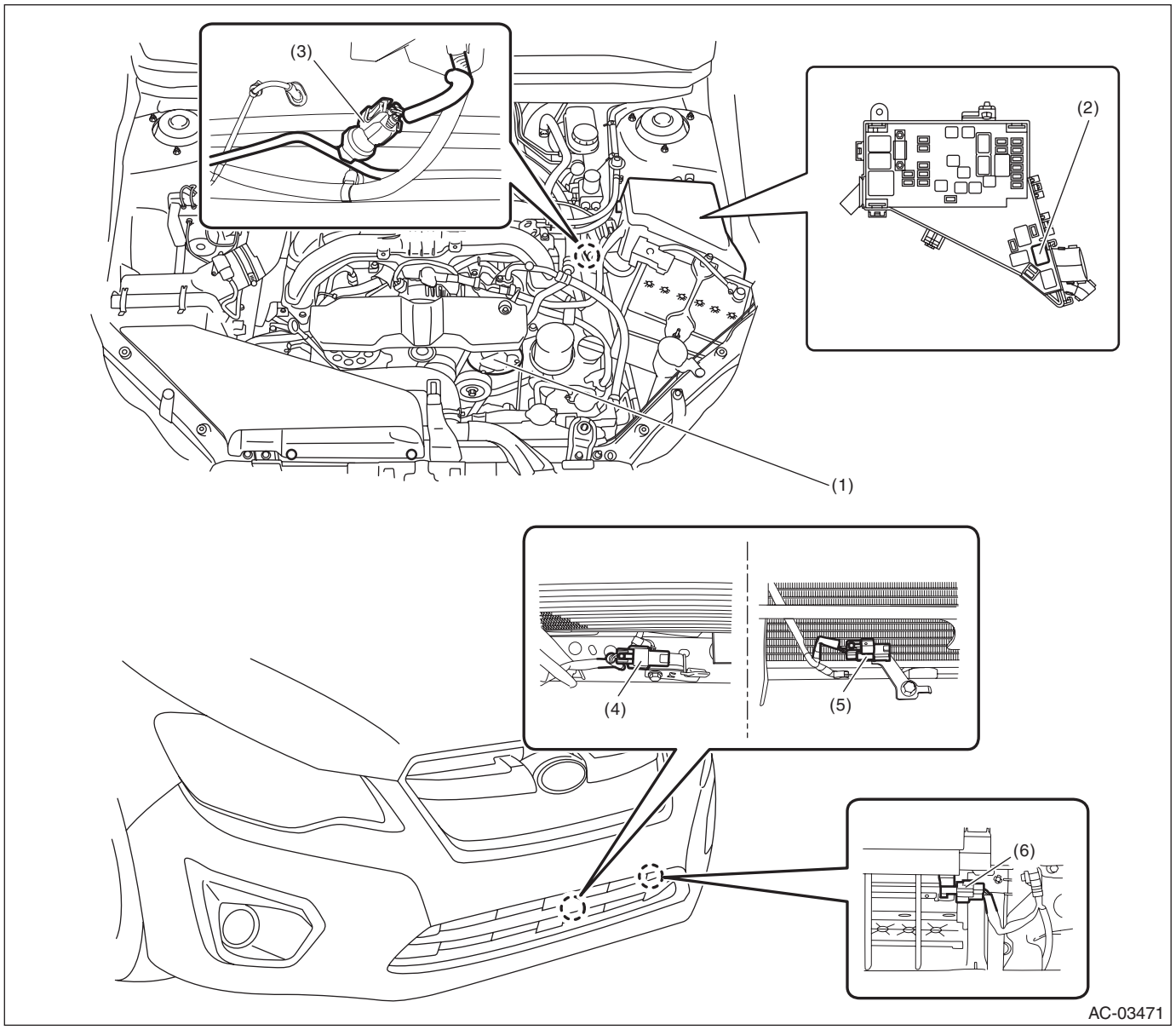

(1) A/C compressor
(2) A/C relay
(3) Pressure switch
(4) Ambient sensor (gasoline engine, except for XV model)
(5) Ambient sensor (gasoline engine, XV model)
(6) Ambient sensor (HEV model)

2. COMPARTMENT

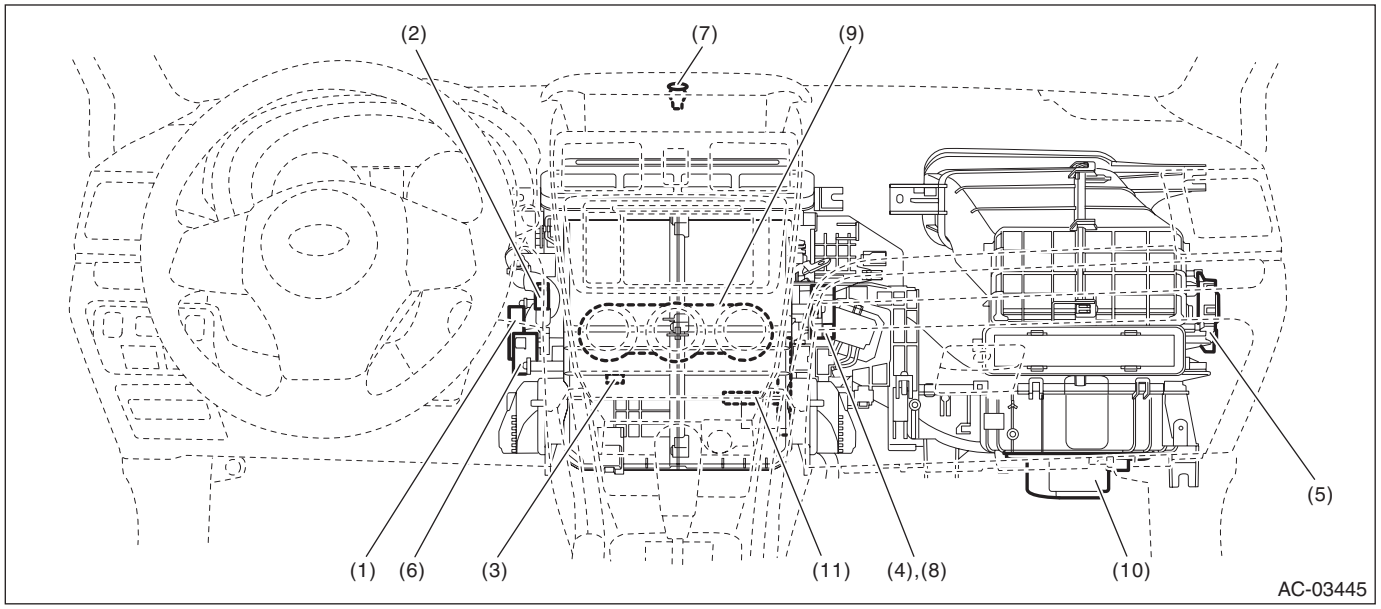

(1)	Air mix door actuator LH*2	(5)	Intake door actuator	(9)	A/C control panel
(2)	In-vehicle sensor or temperature and humidity sensor *3	(6)	Mode door actuator	(10)	Blower motor
(3)	Evaporator sensor	(7)	Sunload sensor	(11)	Heater core sensor *3
(4)	Air mix door actuator RH*2	(8)	Air mix door actuator*1		

*1: Without left/right independent air conditioning function
*2: With left/right independent air conditioning function
*3: HEV model

4. Auto A/C Control Module I/O Signal

A: ELECTRICAL SPECIFICATION

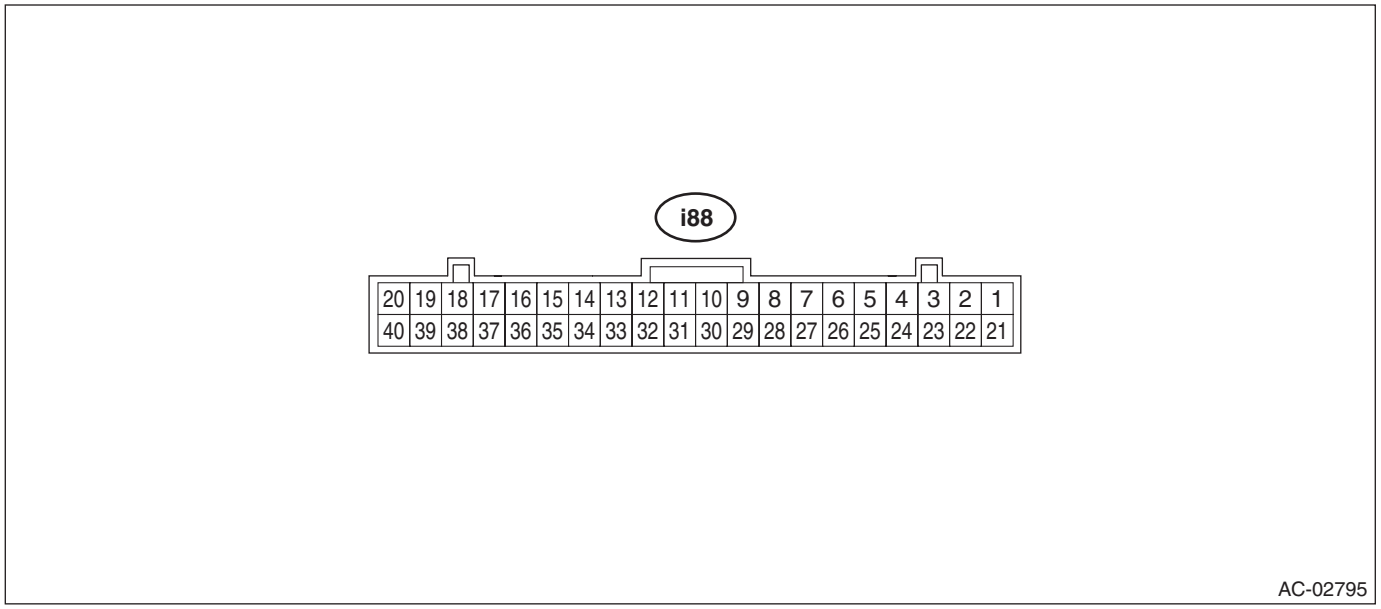

Terminal No.	Description	Measuring condition	Standard
1	Mode door actuator #4	Digital signal; can not be measured	—
2	Mode door actuator #3	Digital signal; can not be measured	—
3	Mode door actuator #2	Digital signal; can not be measured	—
4	Mode door actuator #1	Digital signal; can not be measured	—
6	Intake door actuator (FRESH)	FRESH mode	8 V or more
8	Intake door actuator (RECIRC)	RECIRC mode	8 V or more
9	Blower fan ON signal	Blower fan is ON	1 V or less
10	Intake door potentiometer power supply	Ignition switch ON	5 V
11	A/C cut-off signal	A/C is cut off	1 V or less
12	Intake door potentiometer signal	Ignition switch ON	0 — 5 V
14	GND for sensors	Always	1 V or less
15	ACC power supply	ACC ON	Battery voltage
16	Sunload sensor	Sunlight is contacting sensor	1 — 4 V
17	RECIRC sensor	Ignition switch ON	25°C: 2.5 V
18	Post evaporator sensor	Depends on temperature after the evaporator.	1 — 4.5 V
19	CAN Lo	Digital signal; can not be measured	—
20	CAN Hi	Digital signal; can not be measured	—
21	Air mix door actuator LH #4*2	Digital signal; can not be measured	—
22	Air mix door actuator LH #3*2	Digital signal; can not be measured	—
23	Air mix door actuator LH #2*2	Digital signal; can not be measured	—
24	Air mix door actuator LH #1*2	Digital signal; can not be measured	—
25	Air mix door actuator #4 *1 or air mix door actuator RH #4 *2	Digital signal; can not be measured	—
26	Air mix door actuator #3 *1 or air mix door actuator RH #3 *2	Digital signal; can not be measured	—
27	Air mix door actuator #2 *1 or air mix door actuator RH #2 *2	Digital signal; can not be measured	—
28	Air mix door actuator #1 *1 or air mix door actuator RH #1 *2	Digital signal; can not be measured	—

Terminal No.	Description	Measuring condition		Standard
31	BATT	Always		Battery voltage
32	IGN	Ignition ON		Battery voltage
33	Humidity sensor *3	Ignition ON (fluctuates depending on humidity of the vehicle interior.)		1 — 4.5 V
34	GND	Always		1 V or less
35	ILL–	Illumination ON (measure between 37 — 35)		Battery voltage
37	ILL+			
39	Heater core sensor *3	Ignition ON (fluctuates depending on temperature after the heater core.)		0.5 — 4.0 V
40	Fan control signal	Ignition switch: ON, Blower switch: ON	1st	Approx. 9 V
			2nd	Approx. 8 V
			3rd	Approx. 7 V
			4th	Approx. 6 V
			5th	Approx. 5 V
			6th	Approx. 3.5 V
			7th	Approx. 0.5 V

*1: Without left/right independent air conditioning function
*2: With left/right independent air conditioning function
*3: HEV model

B: WIRING DIAGRAM

1. AIR CONDITIONER AUTO A/C MODEL

Refer to “Air Conditioning System” in the wiring diagram. <Ref. to WI(w/o HEV)-35, WIRING DIAGRAM, Air Conditioning System.> <Ref. to WI(HEV)-55, WIRING DIAGRAM, Air Conditioning System.>

5. Diagnostic Chart for Self-Diagnosis

A: OPERATION

- Without left/right independent air conditioning function (without high grade MFD)

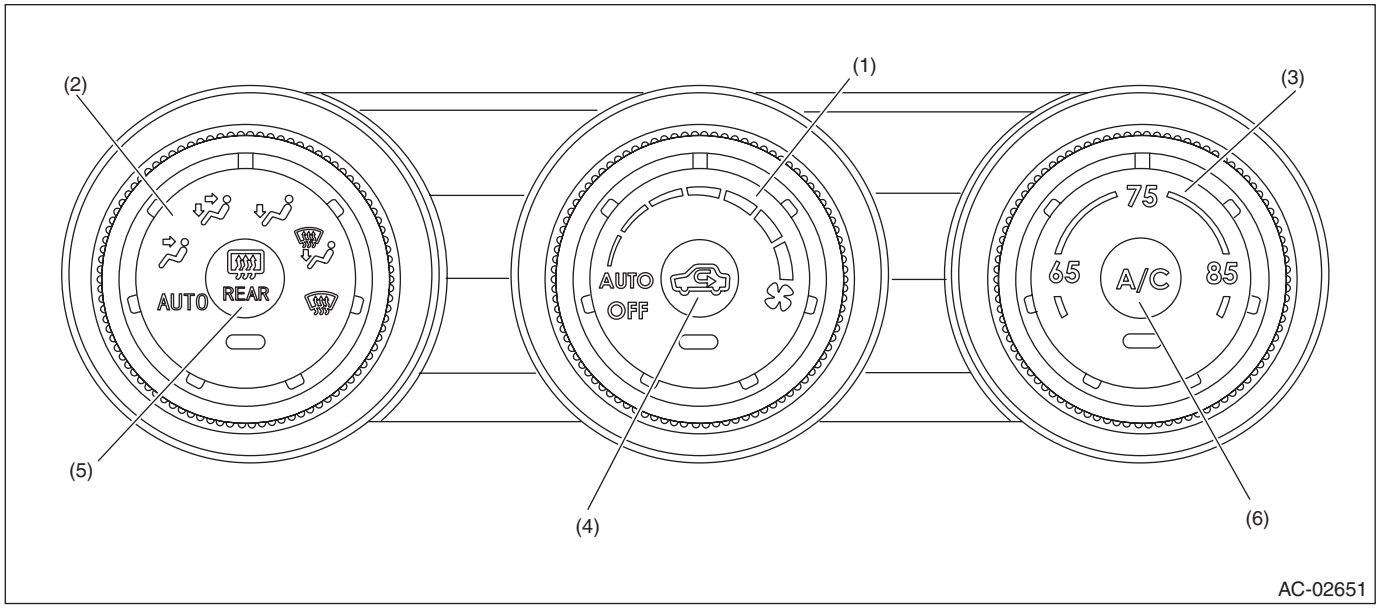

(1) Fan dial
(2) Air flow control dial
(3) Temperature adjustment dial
(4) FRESH/RECIRC switch
(5) Rear window defogger switch
(6) A/C switch

- Without left/right independent air conditioning function (with high grade MFD)

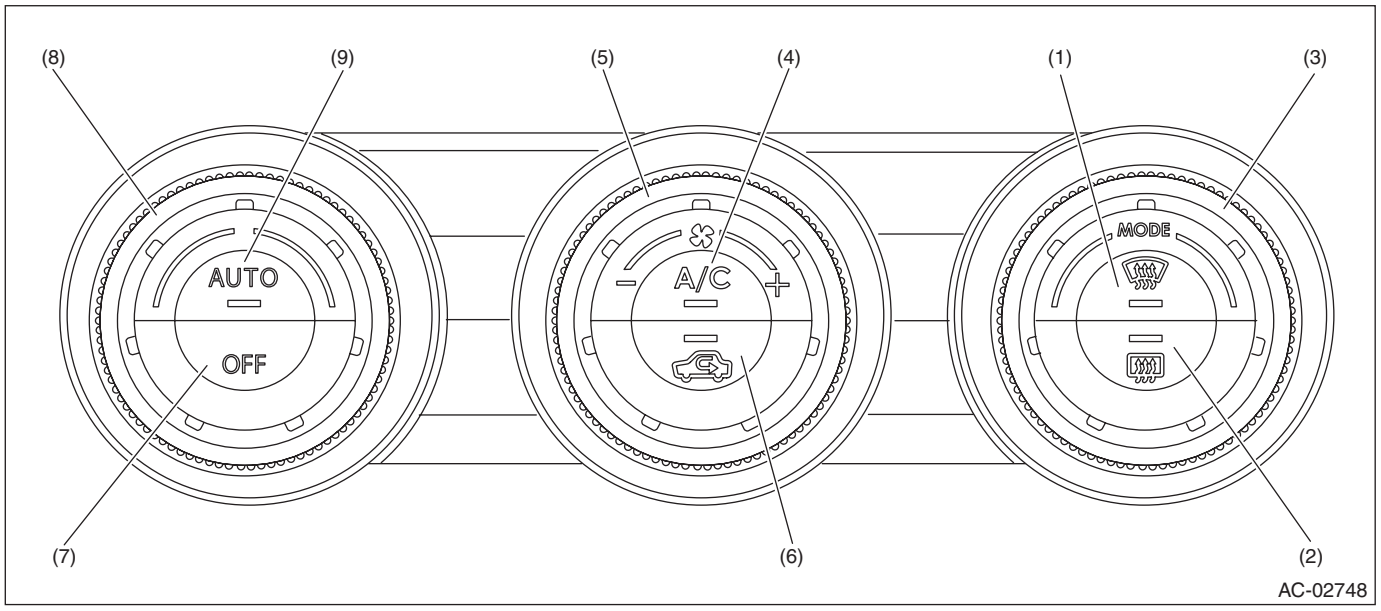

(1) Defroster switch
(2) Rear window defogger switch
(3) Air flow control dial
(4) A/C switch
(5) Fan dial
(6) FRESH/RECIRC switch
(7) OFF switch
(8) Temperature adjustment dial
(9) AUTO switch

- With left/right independent air conditioning function

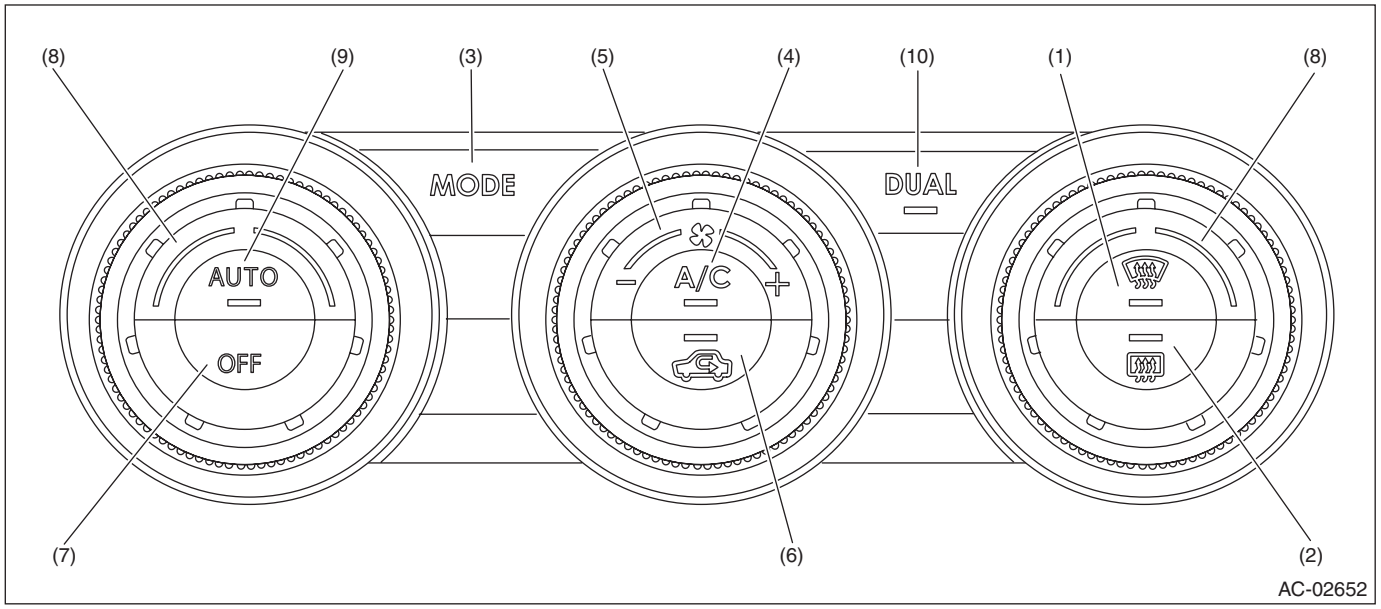

(1) Defroster switch
(2) Rear window defogger switch
(3) Air flow control switch
(4) A/C switch
(5) Fan dial
(6) FRESH/RECIRC switch
(7) OFF switch
(8) Temperature adjustment dial
(9) AUTO switch
(10) Dual switch

1. A/C CONTROL PANEL SELF-DIAGNOSIS

- Without left/right independent air conditioning function (without high grade MFD)

	Step	Check	Yes	No
1	**SELECT SELF-DIAGNOSIS MODE IN THE CONTROL MODULE.** 1) Set the air flow control dial and fan dial to the AUTO position. 2) Start the engine with the A/C switch and the FRESH/RECIRC switch pressed.	Does the self-diagnosis mode operate?	Go to step **2**.	<Ref. to AC(diag)-17, NOTHING IS DISPLAYED ON THE SCREEN. NO ILLUMINATION APPEARS ON THE INDICATOR, DIAGNOSTIC PROCEDURE WITH PHENOMENON, Diagnostics with Phenomenon.>
2	**CHECK THE LIGHTING OF THE LED.** Make sure that all switch LEDs on the control panel illuminate.	Do all LEDs blink eight times?	Go to step **3**.	Replace the A/C control panel. <Ref. to AC-50, REMOVAL, Control Panel.>
3	**CHECK SENSOR MALFUNCTION.** 1) Set the air flow control dial and fan dial to the AUTO position. 2) If the system has trouble for each sensor, the FRESH/RECIRC switch LED blinks or is turned off. 3) If the system has no malfunctions, the FRESH/RECIRC switch LED is illuminated.	Does the FRESH/RECIRC switch LED illuminate?	Go to step **5**.	Go to step **4**.

	Step	Check	Yes	No
4	**CONFIRM MALFUNCTIONING SENSOR.** 1) Set the air flow control dial to AUTO. 2) Turn the fan dial to each mode position, and check each switch LED illumination according to sensor check table. <Ref. to AC(diag)-12, SENSOR CHECK TABLE, OPERATION, Diagnostic Chart for Self-Diagnosis.>	When turning the fan dial to each mode position, does the FRESH/RECIRC switch LED go off?	Go to step **5**.	Repair the defective sensor.
5	**CHECK AIR MIX DOOR AND MODE DOOR POSITION OPERATION SIGNALS.** 1) Set the air flow control dial to FACE. 2) Turn the fan dial to AUTO. 3) If there is a system malfunction in the air mix door signal or the mode door position signal, the FRESH/RECIRC switch LED goes off or blinks. 4) If the system has no malfunctions, the FRESH/RECIRC switch LED is illuminated.	Does the FRESH/RECIRC switch LED illuminate?	Go to step **8**.	Go to step **6**.
6	**CHECK AIR MIX DOOR POSITION DRIVE SIGNALS.** 1) Set the air flow control dial to FACE. 2) Place the fan dial in each position and then check each LED illumination conditions. <Ref. to AC(diag)-14, DRIVE SIGNAL CHECK TABLE, OPERATION, Diagnostic Chart for Self-Diagnosis.>	Do the LEDs illuminate in accordance with operation signal table?	Go to step **7**.	Check the air mix door actuator circuit.
7	**CHECK MODE DOOR POSITION DRIVE SIGNAL.** 1) Press the A/C switch. 2) Place the fan dial in each position and then check each LED illumination conditions. <Ref. to AC(diag)-14, DRIVE SIGNAL CHECK TABLE, OPERATION, Diagnostic Chart for Self-Diagnosis.>	Do the LEDs illuminate in accordance with operation signal table?	Go to step **8**.	Check the mode door actuator circuit.
8	**CHECK OPERATION OF EACH ACTUATOR, BLOWER FAN AND COMPRESSOR CLUTCH.** 1) Set the air flow control dial to B/L. 2) Turn the fan dial from AUTO to 7th, and select operating modes. 3) Check the operation of each mode according to operating mode table. <Ref. to AC(diag)-13, OPERATING MODE TABLE, OPERATION, Diagnostic Chart for Self-Diagnosis.>	Does the operation of each mode match to operating mode table?	Turn the fan dial to OFF or the ignition switch to OFF in order to complete self-diagnosis.	Repair the malfunctioning part in accordance with each diagnostic chart.

• Without left/right independent air conditioning function (with high grade MFD), with left/right independent air conditioning function

	Step	Check	Yes	No
1	**SELECT SELF-DIAGNOSIS MODE IN THE CONTROL MODULE.** Start the engine with the A/C switch and the FRESH/RECIRC switch pressed.	Does the self-diagnosis mode operate?	Go to step **2**.	<Ref. to AC(diag)-17, NOTHING IS DISPLAYED ON THE SCREEN. NO ILLUMINATION APPEARS ON THE INDICATOR, DIAGNOSTIC PROCEDURE WITH PHENOMENON, Diagnostics with Phenomenon.>
2	**CHECK INDICATOR BLINKS.** Make sure that all switch indicators on the control panel blink.	Do all indicators blink eight times?	Go to step **3**.	Replace the A/C control panel. <Ref. to AC-50, REMOVAL, Control Panel.>
3	**CHECK SENSOR MALFUNCTION.** 1) The inspection mode for sensor is initiated by turning the fan dial one click to the right. (The auto switch indicator blinks two times.) 2) If all sensors have no malfunctions, the A/C switch indicator illuminates. If any sensor has a malfunction, the A/C switch indicator blinks. 3) Identify defective sensors according to the sensor check table. <Ref. to AC(diag)-12, SENSOR CHECK TABLE, OPERATION, Diagnostic Chart for Self-Diagnosis.>	Does the A/C switch indicator illuminate?	Go to step **4**.	Repair the defective sensor.
4	**CHECK ACTUATOR DRIVE SIGNAL.** 1) The inspection mode for actuator is initiated by turning the fan dial one click to the right. (The AUTO switch indicator blinks three times.) 2) If all actuators have no malfunctions, the defroster indicator illuminates. If any actuator has a malfunction, the defroster indicator blinks. 3) Identify defective actuator circuit according to the drive signal check table. <Ref. to AC(diag)-14, DRIVE SIGNAL CHECK TABLE, OPERATION, Diagnostic Chart for Self-Diagnosis.>	Does the defroster switch indicator illuminate?	Go to step **5**.	Repair the defective actuator circuit.
5	**CHECK OPERATION OF EACH ACTUATOR, BLOWER FAN AND COMPRESSOR CLUTCH.** 1) The inspection mode for blower fan, actuator and compressor is initiated by turning the fan dial one click to the right. (The AUTO switch indicator blinks four times.) 2) The number of blinking of A/C switch indicator changes and the operation mode changes each time the A/C switch is pressed. 3) Check each operation according to the operating mode table. <Ref. to AC(diag)-13, OPERATING MODE TABLE, OPERATION, Diagnostic Chart for Self-Diagnosis.>	Does each operation match to operating mode table?	System is normal. Press the OFF switch or turn the ignition switch to OFF in order to complete self-diagnosis.	Repair the defective part in accordance with each diagnostic chart.

2. SENSOR CHECK TABLE

- Without left/right independent air conditioning function (without high grade MFD)

NOTE:

- When the sunload sensor check is performed indoors or in the shade, it could be diagnosed as having an open circuit. Always check the sunload sensor at a location exposed to direct sunlight.
- Past malfunction will illuminate if four malfunctions or more were detected previously.
- To cancel the past malfunction, perform either of the following procedures: Disconnect the negative terminal from battery (12 volt auxiliary battery for HEV model), or press and hold the FRESH/RECIRC switch for 5 seconds or more while performing self-diagnosis step 3 — 7.

Air flow control dial position	Fan dial position	Sensor	No trouble	Short circuit	Open circuit	When currently malfunctioning	When having malfunctioned in the past
AUTO	AUTO	In-vehicle sensor or temperature and humidity sensor	FRESH/ RECIRC switch LED is turned off	FRESH/RECIRC switch LED blinks (Illuminates for 0.2 sec. ←→ turns off for 0.2 sec.)	FRESH/ RECIRC switch LED blinks (Illuminates for 1 sec. ←→ turns off for 1 sec.)	Rear window defogger switch LED is turned off	Rear window defogger switch LED illuminates
	1st	Ambient sensor		FRESH/RECIRC switch LED blinks (Illuminates for 0.2 sec. ←→ turns off for 0.2 sec.)			
	2nd	Evaporator sensor		FRESH/RECIRC switch LED blinks (Illuminates for 0.2 sec. ←→ turns off for 0.2 sec.)			
	3rd	Engine coolant temperature sensor		—			
	4th	Sunload sensor		FRESH/RECIRC switch LED blinks (Illuminates for 0.2 sec. ←→ turns off for 0.2 sec.)			
	5th	CAN communication		—			
	6th	FRESH/ RECIRC potentiometer		FRESH/RECIRC switch LED blinks (Illuminates for 0.2 sec. ←→ turns off for 0.2 sec.)			
	7th	Heater core sensor *1		FRESH/RECIRC switch LED blinks (Illuminates for 0.2 sec. ←→ turns off for 0.2 sec.)			

*1: HEV model

• Without left/right independent air conditioning function (with high grade MFD), with left/right independent air conditioning function

NOTE:
• When the sunload sensor check is performed indoors or in the shade, it could be diagnosed as having an open circuit. Always check the sunload sensor at a location exposed to direct sunlight.
• If there are multiple defective sensors, a malfunction is displayed in the sequence of priority (1, 2, 3, etc.). The display changes in the sequence of priority (1, 2, 3, etc.) each time the A/C switch is pressed.
• Past malfunction will illuminate if four malfunctions or more were detected previously.
• To cancel the past malfunction, perform either of the following procedures: Disconnect the negative terminal from battery (12 volt auxiliary battery for HEV model), or press and hold the FRESH/RECIRC switch for 5 seconds or more while performing self-diagnosis step 3 — 4.

Sensor	A/C switch indicator	FRESH/RECIRC switch indicator				Rear window defogger switch indicator*2	
		Open	Sequence of priority	Short	Sequence of priority	Current malfunction	Past malfunction
In-vehicle sensor or temperature and humidity sensor	Once	Light OFF	1	Light ON	2	Light OFF	Light ON
Ambient sensor	Twice	Light OFF	3	Light ON	4	Light OFF	Light ON
Evaporator sensor	3 times	Light OFF	5	Light ON	6	Light OFF	Light ON
Engine coolant temperature sensor	4 times	Light OFF			7	Light OFF	Light ON
Sunload sensor	5 times	Light OFF*1	8	Light ON	9	Light OFF	Light ON
CAN communication	6 times	Light OFF	10	—		Light OFF	Light ON
FRESH/RECIRC potentiometer	7 times	Light OFF	11	Light ON	12	Light OFF	Light ON
Heater core sensor*3	8 times	Light OFF	13	Light ON	14	Light OFF	Light ON

*1: Displays current malfunction only.
*2: If the same diagnostic object contains a current malfunction and a past malfunction, the current malfunctions is displayed.
*3: HEV model

3. OPERATING MODE TABLE

• Without left/right independent air conditioning function (without high grade MFD)

Operation	Fan dial position							
	AUTO	1st	2nd	3rd	4th	5th	6th	7th
Blower fan	4 V	4 V	4.9 V	5.9 V	7.0 V	8.3 V	9.8 V	14 V
FRESH/RECIRC door	RECIRC	RECIRC	MIX	FRESH	FRESH	FRESH	FRESH	FRESH
Air flow control door	FACE	FACE	FACE	B/L	HEAT	HEAT	D/H	DEF
Air mix door	0%	0%	0%	50%	50%	100%	100%	100%
A/C compressor	OFF	ON	ON	ON	ON	ON	ON	ON

• Without left/right independent air conditioning function (with high grade MFD), with left/right independent air conditioning function

Operation	Number of blinking of A/C switch indicator							
	Once	Twice	3 times	4 times	5 times	6 times	7 times	8 times
Blower fan	4 V	4 V	4.9 V	5.9 V	7.0 V	8.3 V	9.8 V	14 V
FRESH/RECIRC door	RECIRC	RECIRC	MIX	FRESH	FRESH	FRESH	FRESH	FRESH
Air flow control door	FACE	FACE	FACE	B/L	HEAT	HEAT	D/H	DEF
Air mix door *1 or air mix door RH *2	0%	0%	0%	50%	50%	100%	100%	100%
Air mix door LH *2	0%	0%	0%	50%	50%	100%	100%	100%
A/C compressor	OFF	ON	ON	ON	ON	ON	ON	ON

*1: Without left/right independent air conditioning function
*2: With left/right independent air conditioning function

4. DRIVE SIGNAL CHECK TABLE

• Without left/right independent air conditioning function (without high grade MFD)

NOTE:
• Past malfunction will illuminate if four malfunctions or more were detected previously.
• To cancel the past malfunction, perform either of the following procedures: Disconnect the negative terminal from battery (12 volt auxiliary battery for HEV model), or press and hold the FRESH/RECIRC switch for 5 seconds or more while performing self-diagnosis step 3 — 7.

<table>
<tr><th>Air flow control dial position</th><th>Fan dial position</th><th>Drive signal to check</th><th>A/C switch LED</th><th>No trouble</th><th>Short circuit</th><th>Open circuit</th><th>When currently malfunctioning</th><th>When having malfunctioned in the past</th></tr>
<tr><td rowspan="10">FACE</td><td>AUTO</td><td>MIX #1</td><td rowspan="5">Blinking (Illuminates for 0.2 sec. ←→ turns off for 0.2 sec.)</td><td rowspan="10">FRESH/ RECIRC switch LED is turned off</td><td rowspan="2">FRESH/ RECIRC switch LED blinks (Illuminates for 0.2 sec. ←→ turns off for 0.2 sec.)</td><td rowspan="2">FRESH/ RECIRC switch LED blinks (Illuminates for 1 sec. ←→ turns off for 1 sec.)</td><td rowspan="2">Rear window defogger switch LED is turned off</td><td rowspan="10">Rear window defogger switch LED illuminates</td></tr>
<tr><td>1st</td><td>MIX #2</td></tr>
<tr><td>2nd</td><td>MIX #3</td><td rowspan="2">FRESH/RECIRC switch LED blinks (Illuminates for 1 sec. ←→ turns off for 1 sec.)</td><td rowspan="2">—</td></tr>
<tr><td>3rd</td><td>MIX #4</td></tr>
<tr><td>4th to 7th</td><td>Intake door actuator lock</td></tr>
<tr><td>AUTO</td><td>MODE #1</td><td rowspan="5">Blinking (Illuminates for 1 sec. ←→ turns off for 1 sec.)</td><td rowspan="2">FRESH/ RECIRC switch LED blinks (Illuminates for 0.2 sec. ←→ turns off for 0.2 sec.)</td><td rowspan="2">FRESH/ RECIRC switch LED blinks (Illuminates for 1 sec. ←→ turns off for 1 sec.)</td><td rowspan="2">Rear window defogger switch LED is turned off</td></tr>
<tr><td>1st</td><td>MODE #2</td></tr>
<tr><td>2nd</td><td>MODE #3</td><td rowspan="2">FRESH/RECIRC switch LED blinks (Illuminates for 1 sec. ←→ turns off for 1 sec.)</td><td rowspan="2">—</td></tr>
<tr><td>3rd</td><td>MODE #4</td></tr>
<tr><td>4th to 7th</td><td>Intake door actuator lock</td></tr>
</table>

• Without left/right independent air conditioning function (with high grade MFD), with left/right independent air conditioning function

NOTE:
• If there are multiple defective sensors, a malfunction is displayed in the sequence of priority (1, 2, 3, etc.). The display changes in the sequence of priority (1, 2, 3, etc.) each time the A/C switch is pressed.
• Past malfunction will illuminate if four malfunctions or more were detected previously.
• To cancel the past malfunction, perform either of the following procedures: Disconnect the negative terminal from battery (12 volt auxiliary battery for HEV model), or press and hold the FRESH/RECIRC switch for 5 seconds or more while performing self-diagnosis step 3 — 4.

Drive signal		Defroster indicator	A/C switch indicator	FRESH/RECIRC switch indicator				Rear window defogger switch indicator*3	
				Open	Sequence of priority	Short	Sequence of priority	Current malfunction	Past malfunction
Air mix door actuator*1 or air mix door actuator RH*2	#1	Once	Once	Light OFF	1	Light ON	2	Light OFF	Light ON
	#2		Twice	Light OFF	3	Light ON	4	Light OFF	Light ON
	#3		3 times	Light OFF	5	Light ON	6	Light OFF	Light ON
	#4		4 times	Light OFF	7	Light ON	8	Light OFF	Light ON
Air mix door actuator LH*2	#1	Twice	Once	Light OFF	9	Light ON	10	Light OFF	Light ON
	#2		Twice	Light OFF	11	Light ON	12	Light OFF	Light ON
	#3		3 times	Light OFF	13	Light ON	14	Light OFF	Light ON
	#4		4 times	Light OFF	15	Light ON	16	Light OFF	Light ON
Air flow control door actuator	#1	3 times	Once	Light OFF	17	Light ON	18	Light OFF	Light ON
	#2		Twice	Light OFF	19	Light ON	20	Light OFF	Light ON
	#3		3 times	Light OFF	21	Light ON	22	Light OFF	Light ON
	#4		4 times	Light OFF	23	Light ON	24	Light OFF	Light ON
Intake door actuator		4 times	Light ON	Light ON				—	Light ON

*1: Without left/right independent air conditioning function
*2: With left/right independent air conditioning function
*3: If the same diagnostic object contains a current malfunction and a past malfunction, the current malfunctions is displayed.

5. DIAGNOSTIC PROCEDURE IF A/C CONTROL PANEL SELF DIAGNOSIS FAILS TO OPERATE

NOTE:
For the diagnostic procedures, refer to Diagnostics with Phenomenon “Nothing is displayed on the screen. No illumination appears on the indicator.” <Ref. to AC(diag)-17, NOTHING IS DISPLAYED ON THE SCREEN. NO ILLUMINATION APPEARS ON THE INDICATOR, DIAGNOSTIC PROCEDURE WITH PHENOMENON, Diagnostics with Phenomenon.>

6. Diagnostics with Phenomenon

A: INSPECTION

1. Perform the diagnosis according to the diagnostic procedure of the corresponding symptom that is shown in the symptom list.
2. If there are multiple symptoms, perform the diagnosis in the symptom sequence (1 → 2 → ... → 13).

1. SYMPTOM LIST

Symptoms		Diagnostic procedure
1	Nothing is displayed on the screen. No illumination appears on the indicator.	<Ref. to AC(diag)-17, NOTHING IS DISPLAYED ON THE SCREEN. NO ILLUMINATION APPEARS ON THE INDICATOR, DIAGNOSTIC PROCEDURE WITH PHENOMENON, Diagnostics with Phenomenon.>
2	Air conditioner does not stop when pressing the OFF switch.	<Ref. to AC(diag)-19, AIR CONDITIONER DOES NOT STOP WHEN PRESSING THE OFF SWITCH, DIAGNOSTIC PROCEDURE WITH PHENOMENON, Diagnostics with Phenomenon.>
3	Windshield grass does not clear when pressing the DEF switch.	<Ref. to AC(diag)-20, WINDSHIELD GRASS DOES NOT CLEAR WHEN PRESSING THE DEF SWITCH, DIAGNOSTIC PROCEDURE WITH PHENOMENON, Diagnostics with Phenomenon.>
4	Cold air not emitted.	<Ref. to AC(diag)-21, COLD AIR NOT EMITTED, DIAGNOSTIC PROCEDURE WITH PHENOMENON, Diagnostics with Phenomenon.>
5	Warm air not emitted.	<Ref. to AC(diag)-23, WARM AIR NOT EMITTED, DIAGNOSTIC PROCEDURE WITH PHENOMENON, Diagnostics with Phenomenon.>
6	Compartment temperature is lower than setting temperature.	<Ref. to AC(diag)-25, COMPARTMENT TEMPERATURE IS LOWER THAN SETTING TEMPERATURE, DIAGNOSTIC PROCEDURE WITH PHENOMENON, Diagnostics with Phenomenon.>
7	Compartment temperature is higher than setting temperature.	<Ref. to AC(diag)-27, COMPARTMENT TEMPERATURE IS HIGHER THAN SETTING TEMPERATURE, DIAGNOSTIC PROCEDURE WITH PHENOMENON, Diagnostics with Phenomenon.>
8	Air does not come out. Airflow is low. (Blower motor does not rotate.)	<Ref. to AC(diag)-29, AIR DOES NOT COME OUT. AIRFLOW IS LOW, DIAGNOSTIC PROCEDURE WITH PHENOMENON, Diagnostics with Phenomenon.>
9	Airflow cannot be adjusted. (Blower motor turns at a high speed.)	<Ref. to AC(diag)-32, AIR CANNOT BE CONTROLLED, DIAGNOSTIC PROCEDURE WITH PHENOMENON, Diagnostics with Phenomenon.>
10	Cool air does not come out when pressing the A/C switch. Fog cannot be cleared. (Compressor does not operate.)	<Ref. to AC(diag)-34, COOL AIR DOES NOT COME OUT WHEN PRESSING THE A/C SWITCH. FOG CANNOT BE CLEARED. (COMPRESSOR DOES NOT OPERATE.), DIAGNOSTIC PROCEDURE WITH PHENOMENON, Diagnostics with Phenomenon.>
11	Unable to switch suction vents.	<Ref. to AC(diag)-38, UNABLE TO SWITCH SUCTION VENTS, DIAGNOSTIC PROCEDURE WITH PHENOMENON, Diagnostics with Phenomenon.>
12	Unable to switch blow vents.	<Ref. to AC(diag)-38, UNABLE TO SWITCH VENTS, DIAGNOSTIC PROCEDURE WITH PHENOMENON, Diagnostics with Phenomenon.>
13	Illumination does not illuminate or cannot be dimmed.	<Ref. to AC(diag)-39, ILLUMINATION DOES NOT ILLUMINATE OR CANNOT BE DIMMED, DIAGNOSTIC PROCEDURE WITH PHENOMENON, Diagnostics with Phenomenon.>

B: DIAGNOSTIC PROCEDURE WITH PHENOMENON

1. NOTHING IS DISPLAYED ON THE SCREEN. NO ILLUMINATION APPEARS ON THE INDICATOR

TROUBLE SYMPTOM:

- When the AUTO button is pressed with IGN ON, nothing is displayed on the screen or indicators do not illuminate.
- Self diagnosis using A/C control panel does not operate.

TROUBLE CAUSES:

- A/C control panel power supply circuit failure
- CAN communication failure

WIRING DIAGRAM:

Air conditioning system <Ref. to WI(w/o HEV)-35, WIRING DIAGRAM, Air Conditioning System.> <Ref. to WI(HEV)-55, WIRING DIAGRAM, Air Conditioning System.>

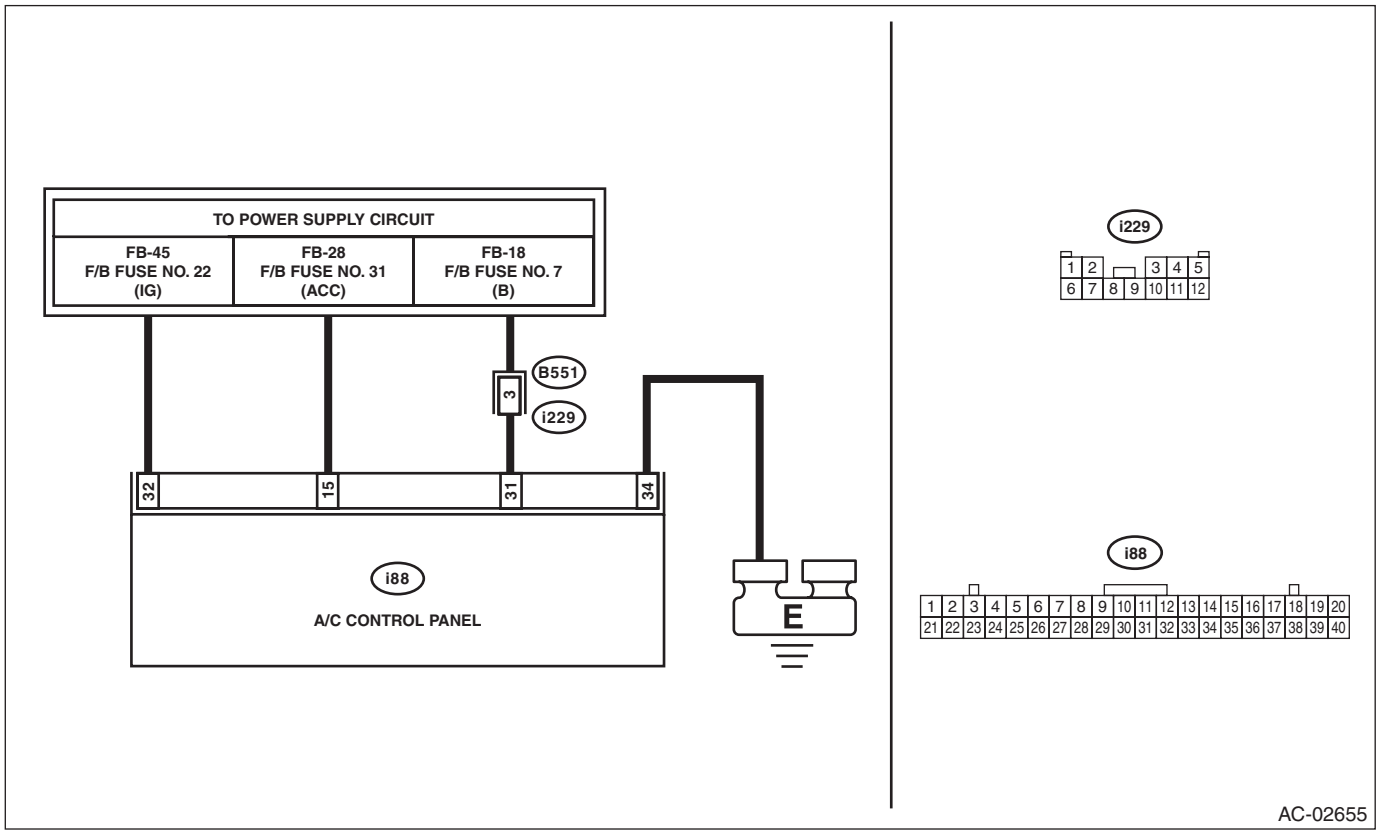

Step		Check	Yes	No
1	**CHECK FUSE.** 1) Turn the ignition switch to OFF. 2) Remove a fuse from fuse & relay box. 3) Check the condition of fuse.	Is the fuse blown out?	Replace the fuse.	Go to step **2**.
2	**CHECK CONNECTOR.** Check for poor contact of connector.	Is there poor contact of connector?	Repair the connector.	Go to step **3**.

	Step	Check	Yes	No
3	**CHECK A/C CONTROL PANEL POWER CIRCUIT.** 1) Remove the A/C control panel. 2) Disconnect the A/C control panel connector. 3) Measure the voltage between A/C control panel connector terminal and chassis ground after turning the ignition switch to ON. ***Connector & terminal*** ***(i88) No. 15 (+) — Chassis ground (–):*** ***(i88) No. 31 (+) — Chassis ground (–):*** ***(i88) No. 32 (+) — Chassis ground (–):***	Is the voltage 10 V or more?	Go to step **4**.	Check for open or short circuit in the harness between A/C control panel and fuse.
4	**CHECK A/C CONTROL PANEL GROUND CIRCUIT.** Measure the resistance of harness between A/C control panel and chassis ground after turning the ignition switch to OFF. ***Connector & terminal*** ***(i88) No. 34 — Chassis ground:***	Is the resistance less than 10 Ω?	Go to step **5**.	Repair the harness for ground line.
5	**CHECK FOR POOR CONTACT.** Check poor contact of A/C control panel connector.	Is there poor contact of connector?	Repair the connector.	Replace the A/C control panel. <Ref. to AC-50, REMOVAL, Control Panel.>

2. AIR CONDITIONER DOES NOT STOP WHEN PRESSING THE OFF SWITCH

TROUBLE SYMPTOM:

Blower fan does not switch to OFF, inlet opening does not switch to FRESH, and compressor does not switch to OFF, when pressing the OFF switch.

TROUBLE CAUSE:

- CAN communication failure
- A/C control panel failure
- Blower motor failure
- Intake actuator failure
- Compressor failure

	Step	Check	Yes	No
1	**CHECK A/C CONTROL PANEL.** 1) Turn the ignition switch to ON. 2) Press the OFF switch located on the A/C panel. 3) Check the following data in “Read Current Data” using the Subaru Select Monitor. • Blower Fan Level • Fresh/Recircle Air Door Actuator Position Target	Does “Blower Fan Level” indicate 0 and “Fresh/Recircle Air Door Actuator Position Target” indicate 100%?	Go to step **2**.	Replace the A/C control panel. <Ref. to AC-50, REMOVAL, Control Panel.>
2	**CHECK BLOWER MOTOR.** Check the blower motor operation with the OFF switch pressed.	Does the blower motor stop?	Go to step **3**.	<Ref. to AC(diag)-32, AIR CANNOT BE CONTROLLED, DIAGNOSTIC PROCEDURE WITH PHENOMENON, Diagnostics with Phenomenon.>
3	**CHECK INTAKE ACTUATOR.** Check the intake door operation with the OFF switch pressed.	Is the intake door FRESH?	Go to step **4**.	<Ref. to AC(diag)-38, UNABLE TO SWITCH SUCTION VENTS, DIAGNOSTIC PROCEDURE WITH PHENOMENON, Diagnostics with Phenomenon.>
4	**CHECK COMPRESSOR.** Check the compressor operation with the OFF switch pressed.	Does the compressor stop?	System is normal.	<Ref. to AC(diag)-34, COOL AIR DOES NOT COME OUT WHEN PRESSING THE A/C SWITCH. FOG CANNOT BE CLEARED. (COMPRESSOR DOES NOT OPERATE.), DIAGNOSTIC PROCEDURE WITH PHENOMENON, Diagnostics with Phenomenon.>

3. WINDSHIELD GRASS DOES NOT CLEAR WHEN PRESSING THE DEF SWITCH

TROUBLE SYMPTOM:

Even when the DEF switch is pressed, the defroster indicator does not illuminate, the outlet opening is not set to DEF, the compressor does not turn on and the FRESH/RECIRC does not switch to FRESH.

TROUBLE CAUSES:

- CAN communication failure
- A/C control panel failure
- Mode door actuator failure
- Compressor failure
- Intake door actuator failure

	Step	Check	Yes	No
1	**CHECK A/C CONTROL PANEL.** 1) Turn the ignition switch to ON. 2) Press the DEF switch of the A/C control panel. 3) Using Subaru Select Monitor, check the following data in “Read Current Data”. • Mode Door Actuator Position Target • Fresh/Recircle Air Door Actuator Position Target	Does “Mode Door Actuator Position Target” indicate 100% and “Fresh/Recircle Air Door Actuator Position Target” indicate 100%?	Go to step **2**.	Replace the A/C control panel. <Ref. to AC-50, REMOVAL, Control Panel.>
2	**CHECK MODE DOOR ACTUATOR.** With the DEF switch ON, check the mode door operation.	Does the air come out from the DEF outlet opening?	Go to step **3**.	<Ref. to AC(diag)-38, UNABLE TO SWITCH VENTS, DIAGNOSTIC PROCEDURE WITH PHENOMENON, Diagnostics with Phenomenon.>
3	**CHECK INTAKE DOOR ACTUATOR.** With the DEF switch ON, check the FRESH/RECIRC door operation.	Is the FRESH/RECIRC set to FRESH?	Go to step **4**.	<Ref. to AC(diag)-38, UNABLE TO SWITCH SUCTION VENTS, DIAGNOSTIC PROCEDURE WITH PHENOMENON, Diagnostics with Phenomenon.>
4	**CHECK COMPRESSOR.** With the DEF switch ON, check the compressor operation.	Does the compressor operate?	System is normal.	<Ref. to AC(diag)-34, COOL AIR DOES NOT COME OUT WHEN PRESSING THE A/C SWITCH. FOG CANNOT BE CLEARED. (COMPRESSOR DOES NOT OPERATE.), DIAGNOSTIC PROCEDURE WITH PHENOMENON, Diagnostics with Phenomenon.>

4. COLD AIR NOT EMITTED

TROUBLE SYMPTOM:
Cold air not emitted.
TROUBLE CAUSES:
- Airflow capacity failure
- Refrigerant pressure failure
- CAN communication failure
- A/C control panel failure
- Air mix actuator RH failure
- Air mix actuator LH failure (only with left/right independent air conditioning function)
- Intake door actuator failure
- Evaporator sensor failure
- In-vehicle sensor failure
- Ambient sensor failure
- Sunload sensor failure

	Step	Check	Yes	No
1	**CHECK MAX COOL.** Set the A/C control panel dials as follows. Temperature control dial: MAX COOL FRESH/RECIRC switch: RECIRC Mode switch or mode dial: VENT A/C switch: ON	Does cold air come out?	Go to step **2**.	Go to step **4**.
2	**CHECK AIRFLOW CAPACITY.** Check the airflow capacity. <Ref. to AC(diag)-29, AIR DOES NOT COME OUT. AIRFLOW IS LOW, DIAGNOSTIC PROCEDURE WITH PHENOMENON, Diagnostics with Phenomenon.>	Is the airflow capacity normal?	Go to step **3**.	Perform repair according to inspection procedure.
3	**CHECK AMOUNT OF REFRIGERANT PRESSURE.** Check the refrigerant pressure. <Ref. to AC-24, REFRIGERANT GAS PRESSURE INSPECTION, PROCEDURE, Refrigerant Pressure with Manifold Gauge Set.>	Is the refrigerant pressure normal?	Go to step **4**.	Perform repair according to refrigerant pressure inspection.
4	**CHECK A/C CONTROL PANEL.** 1) Turn the temperature control dials (driver's side) and (passenger's side) to MAX COOL. 2) Using Subaru Select Monitor, display the following data in "Read Current Data". • Heater Control Panel Setting Value (driver's) • Heater Control Panel Setting Value (passenger's)	Do "Heater Control Panel Setting Value (Driver's)" and "Heater Control Panel Setting Value (Passenger's)" indicate "60"*1?	Go to step **5**.	Replace the A/C control panel. <Ref. to AC-50, REMOVAL, Control Panel.>
5	**CHECK A/C CONTROL PANEL.** 1) Turn the temperature control dials (driver's side) and (passenger's side) to MAX HOT. 2) Using Subaru Select Monitor, display the following data in "Read Current Data". • Heater Control Panel Setting Value (driver's) • Heater Control Panel Setting Value (passenger's)	Do "Heater Control Panel Setting Value (Driver's)" and "Heater Control Panel Setting Value (Passenger's)" indicate "90"*2?	Go to step **6**.	Replace the A/C control panel. <Ref. to AC-50, REMOVAL, Control Panel.>
6	**CHECK DTC.** 1) Turn the ignition switch to ON. 2) Turn the temperature control dial at MAX COOL and leave for 16 seconds or more. (For vehicles with left/right independent air conditioner, perform setting on both sides.) 3) Read the DTC using Subaru Select Monitor.	Is DTC B14E1, B14E2, B14E3 or B14E4 displayed?	Perform the diagnosis according to DTC.	Go to step **7**.

	Step	Check	Yes	No
7	**CHECK DTC.** 1) Turn the ignition switch to ON. 2) Turn the temperature control dial at MAX HOT and leave for 16 seconds or more. (For vehicles with left/right independent air conditioner, perform setting on both sides.) 3) Read the DTC using Subaru Select Monitor.	Is DTC B14E1, B14E2, B14E3 or B14E4 displayed?	Perform the diagnosis according to DTC.	Go to step **8**.
8	**CHECK INTAKE DOOR ACTUATOR.** Visually check the intake door actuator operation.	Is the intake door actuator normal?	Go to step **9**.	Check the intake door actuator. <Ref. to AC(diag)-38, UNABLE TO SWITCH SUCTION VENTS, DIAGNOSTIC PROCEDURE WITH PHENOMENON, Diagnostics with Phenomenon.>
9	**CHECK EVAPORATOR SENSOR UNIT.** Perform the inspection of evaporator sensor unit. <Ref. to AC-93, INSPECTION, Evaporator Sensor.>	Is the evaporator sensor normal?	Go to step **10**.	Replace the evaporator sensor. <Ref. to AC-92, REMOVAL, Evaporator Sensor.>
10	**CHECK IN-VEHICLE SENSOR OR TEMPERATURE AND HUMIDITY SENSOR UNIT.** Check the in-vehicle sensor or temperature and humidity sensor. <Ref. to AC-86, INSPECTION, In-Vehicle Sensor (Auto A/C Model).>	Is the in-vehicle sensor or temperature and humidity sensor normal?	Go to step **11**.	Replace the in-vehicle sensor or temperature and humidity sensor. <Ref. to AC-85, REMOVAL, In-Vehicle Sensor (Auto A/C Model).>
11	**CHECK AMBIENT SENSOR UNIT.** Check the ambient sensor. <Ref. to AC-82, INSPECTION, Ambient Sensor.>	Is the ambient sensor normal?	Go to step **12**.	Replace the ambient sensor. <Ref. to AC-79, REMOVAL, Ambient Sensor.>
12	**CHECK SUNLOAD SENSOR UNIT.** Check the sunload sensor unit. <Ref. to AC-84, INSPECTION, Sunload Sensor (Auto A/C Model).>	Is the sunload sensor normal?	System is normal.	Replace the sunload sensor. <Ref. to AC-83, REMOVAL, Sunload Sensor (Auto A/C Model).>

*1: For the 75°F center specification. 18 for the 25°C center specification.
*2: For the 75°F center specification. 32 for the 25°C center specification.

5. WARM AIR NOT EMITTED

TROUBLE SYMPTOM:
Warm air not emitted.
TROUBLE CAUSES:
- Airflow capacity failure
- Coolant level failure
- CAN communication failure
- A/C control panel failure
- Air mix actuator RH failure
- Air mix actuator LH failure (only with left/right independent air conditioning function)
- Intake door actuator failure
- Evaporator sensor failure
- In-vehicle sensor failure
- Ambient sensor failure
- Sunload sensor failure

	Step	Check	Yes	No
1	**CHECK MAX HOT.** Set the A/C control panel dials as follows. Temperature control dial: MAX HOT FRESH/RECIRC switch: FRESH Mode switch or mode dial: HEAT A/C switch: OFF	Does warm air come out?	Go to step **2**.	Go to step **4**.
2	**CHECK AIRFLOW CAPACITY.** Check the airflow capacity. <Ref. to AC(diag)-29, AIR DOES NOT COME OUT. AIRFLOW IS LOW, DIAGNOSTIC PROCEDURE WITH PHENOMENON, Diagnostics with Phenomenon.>	Is the airflow capacity normal?	Go to step **3**.	Perform repair according to inspection procedure.
3	**CHECK ENGINE COOLANT.** Check engine coolant amount.	Is the engine coolant level within the specification?	Go to step **4**.	Fill engine coolant. If there is coolant leakage, repair the leaks according to Engine Cooling System Trouble in General. <Ref. to CO(H4DO(w/o HEV))-98, Engine Cooling System Trouble in General.>
4	**CHECK A/C CONTROL PANEL.** 1) Turn the temperature control dials (driver's side) and (passenger's side) to MAX COOL. 2) Using Subaru Select Monitor, display the following data in "Read Current Data". • Heater Control Panel Setting Value (driver's) • Heater Control Panel Setting Value (passenger's)	Do "Heater Control Panel Setting Value (Driver's)" and "Heater Control Panel Setting Value (Passenger's)" indicate "60"*1?	Go to step **5**.	Replace the A/C control panel. <Ref. to AC-50, REMOVAL, Control Panel.>
5	**CHECK A/C CONTROL PANEL.** 1) Turn the temperature control dials (driver's side) and (passenger's side) to MAX HOT. 2) Using Subaru Select Monitor, display the following data in "Read Current Data". • Heater Control Panel Setting Value (driver's) • Heater Control Panel Setting Value (passenger's)	Do "Heater Control Panel Setting Value (Driver's)" and "Heater Control Panel Setting Value (Passenger's)" indicate "90"*2?	Go to step **6**.	Replace the A/C control panel. <Ref. to AC-50, REMOVAL, Control Panel.>

	Step	Check	Yes	No
6	**CHECK DTC.** 1) Turn the ignition switch to ON. 2) Turn the temperature control dial at MAX COOL and leave for 16 seconds or more. (For vehicles with left/right independent air conditioner, perform setting on both sides.) 3) Read the DTC using Subaru Select Monitor.	Is DTC B14E1, B14E2, B14E3 or B14E4 displayed?	Perform the diagnosis according to DTC.	Go to step **7**.
7	**CHECK DTC.** 1) Turn the ignition switch to ON. 2) Turn the temperature control dial at MAX HOT and leave for 16 seconds or more. (For vehicles with left/right independent air conditioner, perform setting on both sides.) 3) Read the DTC using Subaru Select Monitor.	Is DTC B14E1, B14E2, B14E3 or B14E4 displayed?	Perform the diagnosis according to DTC.	Go to step **8**.
8	**CHECK INTAKE DOOR ACTUATOR.** Visually check the intake door actuator operation.	Is the intake door actuator normal?	Go to step **9**.	Check the intake door actuator. <Ref. to AC(diag)-38, UNABLE TO SWITCH SUCTION VENTS, DIAGNOSTIC PROCEDURE WITH PHENOMENON, Diagnostics with Phenomenon.>
9	**CHECK EVAPORATOR SENSOR UNIT.** Perform the inspection of evaporator sensor unit. <Ref. to AC-93, INSPECTION, Evaporator Sensor.>	Is the evaporator sensor normal?	Go to step **10**.	Replace the evaporator sensor. <Ref. to AC-92, REMOVAL, Evaporator Sensor.>
10	**CHECK IN-VEHICLE SENSOR OR TEMPERATURE AND HUMIDITY SENSOR UNIT.** Check the in-vehicle sensor or temperature and humidity sensor circuit. <Ref. to AC-86, INSPECTION, In-Vehicle Sensor (Auto A/C Model).>	Is the in-vehicle sensor or temperature and humidity sensor circuit normal?	Go to step **11**.	Replace the in-vehicle sensor or temperature and humidity sensor. <Ref. to AC-85, REMOVAL, In-Vehicle Sensor (Auto A/C Model).>
11	**CHECK AMBIENT SENSOR UNIT.** Check the ambient sensor. <Ref. to AC-82, INSPECTION, Ambient Sensor.>	Is the ambient sensor normal?	Go to step **12**.	Replace the ambient sensor. <Ref. to AC-79, REMOVAL, Ambient Sensor.>
12	**CHECK SUNLOAD SENSOR UNIT.** Check the sunload sensor unit. <Ref. to AC-84, INSPECTION, Sunload Sensor (Auto A/C Model).>	Is the sunload sensor normal?	System is normal.	Replace the sunload sensor. <Ref. to AC-83, REMOVAL, Sunload Sensor (Auto A/C Model).>

*1: For the 75°F center specification. 18 for the 25°C center specification.
*2: For the 75°F center specification. 32 for the 25°C center specification.

6. COMPARTMENT TEMPERATURE IS LOWER THAN SETTING TEMPERATURE

TROUBLE SYMPTOM:

Compartment temperature is excessively lower than setting temperature.

TROUBLE CAUSES:

- Large airflow capacity
- Refrigerant pressure failure
- CAN communication failure
- A/C control panel failure
- Air mix actuator RH failure
- Air mix actuator LH failure (only with left/right independent air conditioning function)
- Evaporator sensor failure
- In-vehicle sensor failure
- Ambient sensor failure
- Sunload sensor failure

	Step	Check	Yes	No
1	**CHECK AIRFLOW CAPACITY.** Check the airflow capacity. <Ref. to AC(diag)-32, AIR CANNOT BE CONTROLLED, DIAGNOSTIC PROCEDURE WITH PHENOMENON, Diagnostics with Phenomenon.>	Is the airflow capacity normal?	Go to step **2**.	Perform repair according to inspection procedure.
2	**CHECK AMOUNT OF REFRIGERANT PRESSURE.** Check the refrigerant pressure. <Ref. to AC-24, REFRIGERANT GAS PRESSURE INSPECTION, PROCEDURE, Refrigerant Pressure with Manifold Gauge Set.>	Is the refrigerant pressure normal?	Go to step **3**.	Perform repair according to refrigerant pressure inspection.
3	**CHECK A/C CONTROL PANEL.** 1) Turn the temperature control dials (driver's side) and (passenger's side) to MAX COOL. 2) Using Subaru Select Monitor, display the following data in "Read Current Data". • Heater Control Panel Setting Value (driver's) • Heater Control Panel Setting Value (passenger's)	Do "Heater Control Panel Setting Value (Driver's)" and "Heater Control Panel Setting Value (Passenger's)" indicate "60"*1?	Go to step **4**.	Replace the A/C control panel. <Ref. to AC-50, REMOVAL, Control Panel.>
4	**CHECK A/C CONTROL PANEL.** 1) Turn the temperature control dials (driver's side) and (passenger's side) to MAX HOT. 2) Using Subaru Select Monitor, display the following data in "Read Current Data". • Heater Control Panel Setting Value (driver's) • Heater Control Panel Setting Value (passenger's)	Do "Heater Control Panel Setting Value (Driver's)" and "Heater Control Panel Setting Value (Passenger's)" indicate "90"*2?	Go to step **5**.	Replace the A/C control panel. <Ref. to AC-50, REMOVAL, Control Panel.>
5	**CHECK DTC.** 1) Turn the ignition switch to ON. 2) Turn the temperature control dial at MAX COOL and leave for 16 seconds or more. (For vehicles with left/right independent air conditioner, perform setting on both sides.) 3) Read the DTC using Subaru Select Monitor.	Is DTC B14E1, B14E2, B14E3 or B14E4 displayed?	Perform the diagnosis according to DTC.	Go to step **6**.
6	**CHECK DTC.** 1) Turn the ignition switch to ON. 2) Turn the temperature control dial at MAX HOT and leave for 16 seconds or more. (For vehicles with left/right independent air conditioner, perform setting on both sides.) 3) Read the DTC using Subaru Select Monitor.	Is DTC B14E1, B14E2, B14E3 or B14E4 displayed?	Perform the diagnosis according to DTC.	Go to step **7**.

	Step	Check	Yes	No
7	**CHECK EVAPORATOR SENSOR UNIT.** Perform the inspection of evaporator sensor unit. <Ref. to AC-93, INSPECTION, Evaporator Sensor.>	Is the evaporator sensor normal?	Go to step **8**.	Replace the evaporator sensor. <Ref. to AC-92, REMOVAL, Evaporator Sensor.>
8	**CHECK IN-VEHICLE SENSOR OR TEMPERATURE AND HUMIDITY SENSOR UNIT.** Check the in-vehicle sensor or temperature and humidity sensor circuit. <Ref. to AC-86, INSPECTION, In-Vehicle Sensor (Auto A/C Model).>	Is the in-vehicle sensor or temperature and humidity sensor circuit normal?	Go to step **9**.	Replace the in-vehicle sensor or temperature and humidity sensor. <Ref. to AC-85, REMOVAL, In-Vehicle Sensor (Auto A/C Model).>
9	**CHECK AMBIENT SENSOR UNIT.** Check the ambient sensor. <Ref. to AC-82, INSPECTION, Ambient Sensor.>	Is the ambient sensor normal?	Go to step **10**.	Replace the ambient sensor. <Ref. to AC-79, REMOVAL, Ambient Sensor.>
10	**CHECK SUNLOAD SENSOR UNIT.** Check the sunload sensor unit. <Ref. to AC-84, INSPECTION, Sunload Sensor (Auto A/C Model).>	Is the sunload sensor normal?	System is normal.	Replace the sunload sensor. <Ref. to AC-83, REMOVAL, Sunload Sensor (Auto A/C Model).>

*1: For the 75°F center specification. 18 for the 25°C center specification.
*2: For the 75°F center specification. 32 for the 25°C center specification.

7. COMPARTMENT TEMPERATURE IS HIGHER THAN SETTING TEMPERATURE

TROUBLE SYMPTOM:

Compartment temperature is excessively higher than setting temperature.

TROUBLE CAUSES:

- Large airflow capacity
- CAN communication failure
- A/C control panel failure
- Air mix actuator RH failure
- Air mix actuator LH failure (only with left/right independent air conditioning function)
- Intake door actuator failure
- Evaporator sensor failure
- In-vehicle sensor failure
- Ambient sensor failure
- Sunload sensor failure

	Step	Check	Yes	No
1	**CHECK AIRFLOW CAPACITY.** Check the airflow capacity. <Ref. to AC(diag)-32, AIR CANNOT BE CONTROLLED, DIAGNOSTIC PROCEDURE WITH PHENOMENON, Diagnostics with Phenomenon.>	Is the airflow capacity normal?	Go to step **2**.	Perform repair according to inspection procedure.
2	**CHECK A/C CONTROL PANEL.** 1) Turn the temperature control dials (driver's side) and (passenger's side) to MAX COOL. 2) Using Subaru Select Monitor, display the following data in "Read Current Data". • Heater Control Panel Setting Value (driver's) • Heater Control Panel Setting Value (passenger's)	Do "Heater Control Panel Setting Value (Driver's)" and "Heater Control Panel Setting Value (Passenger's)" indicate "60"*1?	Go to step **3**.	Replace the A/C control panel. <Ref. to AC-50, REMOVAL, Control Panel.>
3	**CHECK A/C CONTROL PANEL.** 1) Turn the temperature control dials (driver's side) and (passenger's side) to MAX HOT. 2) Using Subaru Select Monitor, display the following data in "Read Current Data". • Heater Control Panel Setting Value (driver's) • Heater Control Panel Setting Value (passenger's)	Do "Heater Control Panel Setting Value (Driver's)" and "Heater Control Panel Setting Value (Passenger's)" indicate "90"*2?	Go to step **4**.	Replace the A/C control panel. <Ref. to AC-50, REMOVAL, Control Panel.>
4	**CHECK DTC.** 1) Turn the ignition switch to ON. 2) Turn the temperature control dial at MAX COOL and leave for 16 seconds or more. (For vehicles with left/right independent air conditioner, perform setting on both sides.) 3) Read the DTC using Subaru Select Monitor.	Is DTC B14E1, B14E2, B14E3 or B14E4 displayed?	Perform the diagnosis according to DTC.	Go to step **5**.
5	**CHECK DTC.** 1) Turn the ignition switch to ON. 2) Turn the temperature control dial at MAX HOT and leave for 16 seconds or more. (For vehicles with left/right independent air conditioner, perform setting on both sides.) 3) Read the DTC using Subaru Select Monitor.	Is DTC B14E1, B14E2, B14E3 or B14E4 displayed?	Perform the diagnosis according to DTC.	Go to step **6**.

	Step	Check	Yes	No
6	**CHECK INTAKE DOOR ACTUATOR.** Visually check the intake door actuator operation.	Is the intake door actuator normal?	Go to step **7**.	Check the intake door actuator. <Ref. to AC(diag)-38, UNABLE TO SWITCH SUCTION VENTS, DIAGNOSTIC PROCEDURE WITH PHENOMENON, Diagnostics with Phenomenon.>
7	**CHECK EVAPORATOR SENSOR UNIT.** Perform the inspection of evaporator sensor unit. <Ref. to AC-93, INSPECTION, Evaporator Sensor.>	Is the evaporator sensor normal?	Go to step **8**.	Replace the evaporator sensor. <Ref. to AC-92, REMOVAL, Evaporator Sensor.>
8	**CHECK IN-VEHICLE SENSOR OR TEMPERATURE AND HUMIDITY SENSOR UNIT.** Check the in-vehicle sensor or temperature and humidity sensor circuit. <Ref. to AC-86, INSPECTION, In-Vehicle Sensor (Auto A/C Model).>	Is the in-vehicle sensor or temperature and humidity sensor circuit normal?	Go to step **9**.	Replace the in-vehicle sensor or temperature and humidity sensor. <Ref. to AC-85, REMOVAL, In-Vehicle Sensor (Auto A/C Model).>
9	**CHECK AMBIENT SENSOR UNIT.** Check the ambient sensor. <Ref. to AC-82, INSPECTION, Ambient Sensor.>	Is the ambient sensor normal?	Go to step **10**.	Replace the ambient sensor. <Ref. to AC-79, REMOVAL, Ambient Sensor.>
10	**CHECK SUNLOAD SENSOR UNIT.** Check the sunload sensor unit. <Ref. to AC-84, INSPECTION, Sunload Sensor (Auto A/C Model).>	Is the sunload sensor normal?	System is normal.	Replace the sunload sensor. <Ref. to AC-83, REMOVAL, Sunload Sensor (Auto A/C Model).>

*1: For the 75°F center specification. 18 for the 25°C center specification.
*2: For the 75°F center specification. 32 for the 25°C center specification.

8. AIR DOES NOT COME OUT. AIRFLOW IS LOW

TROUBLE SYMPTOM:

- Airflow capacity is insufficient.
- Air does not come out when operating the fan dial.

TROUBLE CAUSES:

- Airflow capacity failure
- CAN communication failure
- A/C control panel failure
- Blower motor failure

WIRING DIAGRAM:

Air conditioning system <Ref. to WI(w/o HEV)-35, WIRING DIAGRAM, Air Conditioning System.> <Ref. to WI(HEV)-55, WIRING DIAGRAM, Air Conditioning System.>

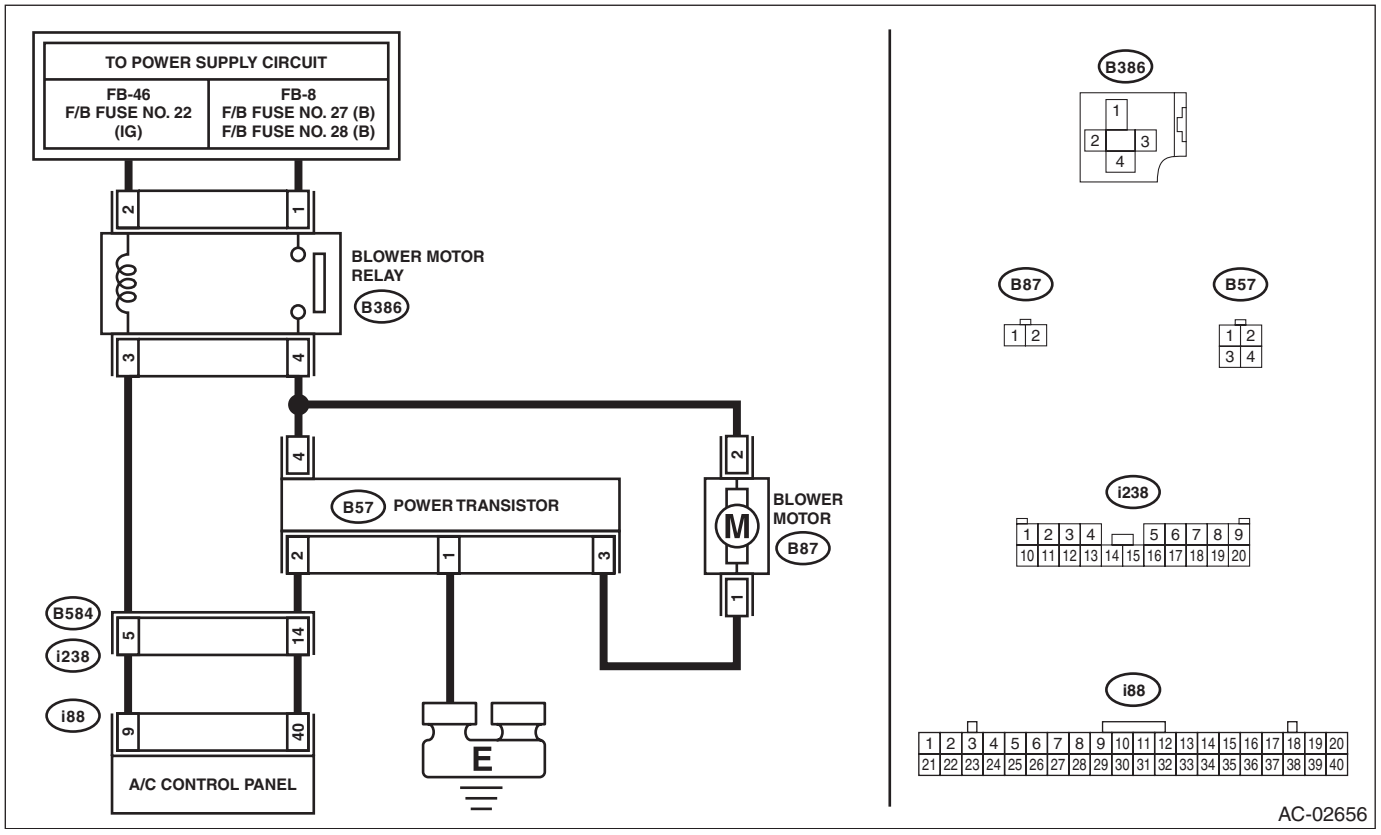

Step		Check	Yes	No
1	**CHECK A/C CONTROL PANEL.** 1) Using Subaru Select Monitor, display the following data in "Read Current Data". • Air mix door actuator position (driver's side) • Air mix door actuator position (passenger's) • Blower fan level 2) Turn the temperature control dial at MAX COOL and increase and decrease the A/C control panel fan dial. (For vehicles with left/right independent air conditioner, perform setting on both sides.)	Do "Air mix door actuator position (driver's side)" and "Air mix door actuator position (passenger's side)" indicate "0%"? Also, does the value of "Blower Fan Level" increase or decrease in conjunction with the fan dial operation?	Go to step **2**.	Go to step **5**.
2	**CHECK AIRFLOW CAPACITY.** Turn the temperature control dial to LO (both dials for the models equipped with left/right independent air conditioning function), A/C control panel fan dial to MAX and FRESH/RECIRC switch to RECIRC.	Is the airflow capacity insufficient for the same model?	Go to step **3**.	System is normal.

	Step	Check	Yes	No
3	**CHECK A/C FILTER.** Check the A/C filter.	Is the A/C filter normal?	Go to step **4**.	Clean or replace the A/C filter.
4	**CHECK EACH DUCT.** Check each duct joint for disconnection or clogging.	Is each duct normal?	Go to step **5**.	Repair the faulty duct.
5	**CHECK A/C CONTROL PANEL.** 1) Turn the ignition switch to ON. 2) Turn the fan dial to the maximum position. 3) Using the Subaru Select Monitor, check "Blower Fan Level" of the current data from the A/C diagnosis.	Does "Blower Fan Level" indicate "7"?	Go to step **6**.	Replace the A/C control panel. <Ref. to AC-50, REMOVAL, Control Panel.>
6	**CHECK A/C CONTROL PANEL.** 1) Turn the fan dial to the minimum position. 2) Using the Subaru Select Monitor, check "Blower Fan Level" of the current data from the A/C diagnosis.	Does "Blower Fan Level" indicate "1"?	Go to step **7**.	Replace the A/C control panel. <Ref. to AC-50, REMOVAL, Control Panel.>
7	**CHECK CONNECTOR.** Check for poor contact of connector.	Is there poor contact of connector?	Repair the connector.	Go to step **8**.
8	**CHECK FUSE.** 1) Remove a fuse in the fuse & relay box. 2) Check the condition of fuse.	Is the fuse blown out?	Replace the fuse.	Go to step **9**.
9	**CHECK BLOWER MOTOR RELAY ON SIGNAL.** 1) Stop the engine. 2) Turn the fan dial OFF. 3) Turn the ignition switch to ON. 4) Using a tester, measure the voltage between the A/C control panel connector (i88) and chassis ground. ***Connector & terminal*** ***(i88) No. 9 (+) — Chassis ground (–):***	Is the voltage 10 V or more?	Go to step **10**.	• Check for open or short circuit in the harness between fuse and ECM. • Check the blower relay connector and relay unit. <Ref. to AC-36, CHECK RELAY, INSPECTION, Relay and Fuse.>
10	**CHECK BLOWER MOTOR RELAY ON SIGNAL.** 1) Start the engine. 2) Turn the fan dial to ON. 3) Using a tester, measure the voltage between the A/C control panel connector (i88) and chassis ground. ***Connector & terminal*** ***(i88) No. 9 (+) — Chassis ground (–):***	Is the voltage 0 V?	Go to step **11**.	Replace the A/C control panel. <Ref. to AC-50, REMOVAL, Control Panel.>
11	**CHECK BLOWER MOTOR POWER SUPPLY CIRCUIT.** 1) Turn the ignition switch to ON. 2) Turn the fan dial to ON. 3) Use a tester to measure the voltage between the blower motor connector (B87) and chassis ground. ***Connector & terminal*** ***(B87) No. 2 (+) — Chassis ground (–):***	Is the voltage 10 V or more?	Go to step **12**.	• Check the blower motor power supply line harness for open circuit or connector disconnection. • Check the blower relay connector and relay unit. <Ref. to AC-36, CHECK RELAY, INSPECTION, Relay and Fuse.>

	Step	Check	Yes	No
12	**CHECK BLOWER MOTOR UNIT.** Check the blower motor. <Ref. to AC-41, INSPECTION, Blower Motor.>	Is the blower motor OK?	Go to step **13**.	Replace the blower motor. <Ref. to AC-40, REMOVAL, Blower Motor.>
13	**CHECK HARNESS.** 1) Disconnect the power transistor and A/C control panel connector. 2) Using a tester, measure the resistance between harness terminals. ***Connector & terminal*** ***(B386) No. 4 — (B57) No. 4:*** ***(B87) No. 1 — (B57) No. 3:*** ***(B57) No. 2 — (i88) No. 40:*** ***(B57) No. 1 — Chassis ground:***	Is the resistance less than 1 Ω?	Go to step **14**.	Repair or replace the open circuit of harness.
14	**CHECK HARNESS.** Use a tester to measure the harness resistance between the power transistor connector and chassis ground. ***Connector & terminal*** ***(B57) No. 2 — Chassis ground:***	Is the resistance less than 1 Ω?	Repair or replace the short circuit of the harness.	Go to step **15**.
15	**CHECK POWER TRANSISTOR.** Replace the power transistor with a properly functioning part.	Does the blower motor rotate?	Replace the power transistor. <Ref. to AC-42, REMOVAL, Power Transistor (Auto A/C Model).>	Replace the A/C control panel. <Ref. to AC-50, REMOVAL, Control Panel.>

9. AIR CANNOT BE CONTROLLED

TROUBLE SYMPTOM:

- The blower rotates even though the blower switch is not turned on.
- The blower motor continues to rotate at high speed. (Not adjustable.)

TROUBLE CAUSES:

- Airflow capacity failure
- CAN communication failure
- A/C control panel failure
- Blower motor failure

WIRING DIAGRAM:

Air conditioning system <Ref. to WI(w/o HEV)-35, WIRING DIAGRAM, Air Conditioning System.> <Ref. to WI(HEV)-55, WIRING DIAGRAM, Air Conditioning System.>

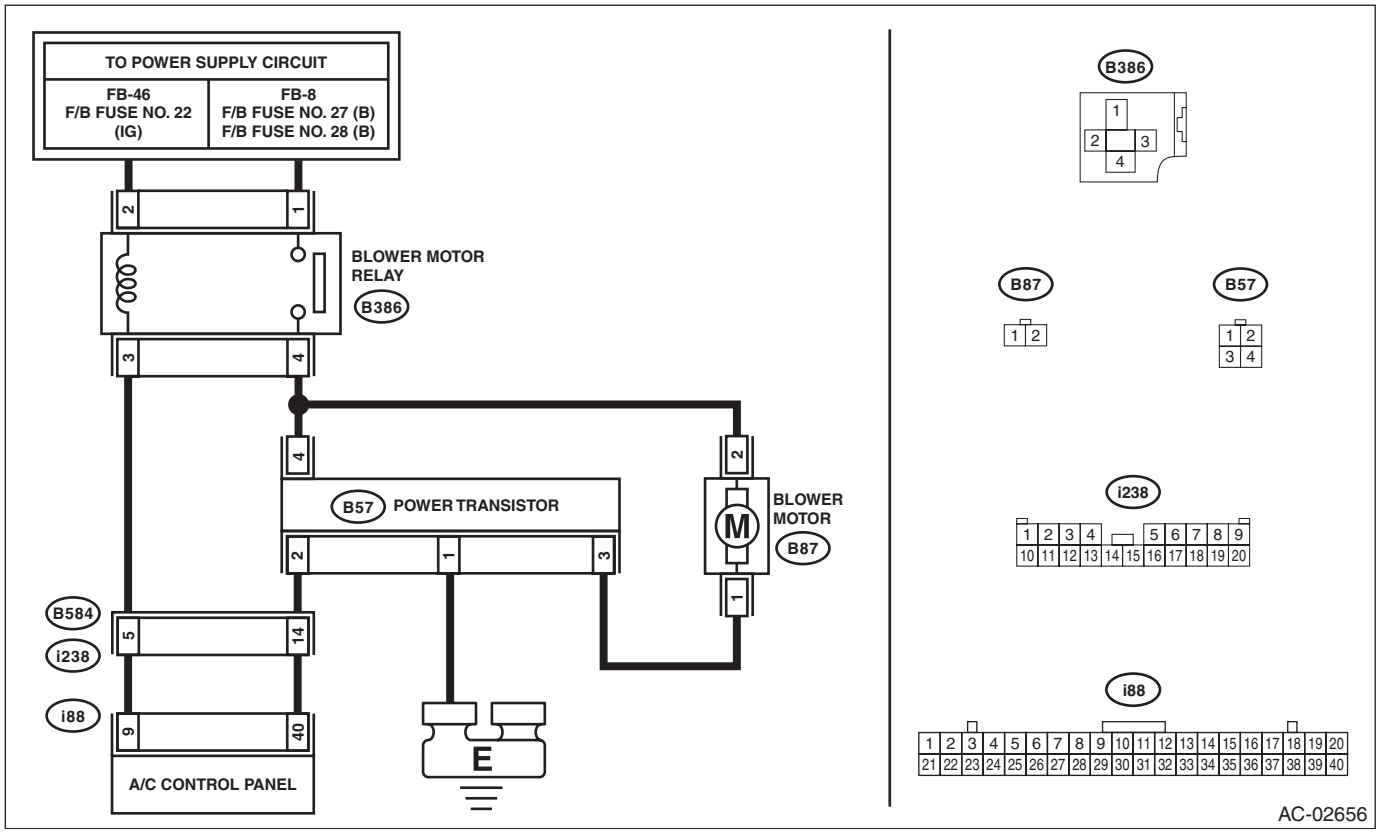

Step		Check	Yes	No
1	**CHECK A/C CONTROL PANEL.** 1) Turn the ignition switch to ON. 2) Turn the fan dial to the maximum position. 3) Using the Subaru Select Monitor, check "Blower Fan Level" of the current data from the A/C diagnosis.	Does "Blower Fan Level" indicate "7"?	Go to step **2**.	Replace the A/C control panel. <Ref. to AC-50, REMOVAL, Control Panel.>
2	**CHECK A/C CONTROL PANEL.** 1) Turn the fan dial to the minimum position. 2) Using the Subaru Select Monitor, check "Blower Fan Level" of the current data from the A/C diagnosis.	Does "Blower Fan Level" indicate "1"?	Go to step **3**.	Replace the A/C control panel. <Ref. to AC-50, REMOVAL, Control Panel.>

	Step	Check	Yes	No
3	**CHECK HARNESS.** 1) Turn the ignition switch to OFF. 2) Disconnect the power transistor connector. 3) Use a tester to measure the resistance between the power transistor connector and chassis ground. ***Connector & terminal*** ***(B57) No. 4 — Chassis ground:***	Is the resistance less than 1 Ω?	Repair or replace the short circuit of the harness between blower motor and power transistor.	Go to step **4**.
4	**CHECK HARNESS.** 1) Remove the A/C control panel. 2) Turn the ignition switch to ON. 3) Use a tester to measure the resistance between the power transistor connector and chassis ground. ***Connector & terminal*** ***(B57) No. 2 — Chassis ground:***	Is the resistance less than 1 Ω?	Repair or replace the short circuit of the harness between A/C control panel and power transistor.	Go to step **5**.
5	**CHECK HARNESS.** 1) Connect the disconnected connectors. 2) Turn the ignition switch to ON. 3) Use a tester to measure the voltage between the power transistor connector and chassis ground. ***Connector & terminal*** ***(B57) No. 2 (+) — Chassis ground (–):***	Is the voltage approx. 9 V when fan dial in 1st, and approx. 3.5 V when fan dial in 6th?	Replace the power transistor. <Ref. to AC-42, REMOVAL, Power Transistor (Auto A/C Model).>	Go to step **6**.
6	**CHECK A/C CONTROL PANEL.** 1) Turn the fan dial OFF. 2) Disconnect the power transistor connector. 3) Use a tester to measure the resistance between the power transistor connector and chassis ground. ***Connector & terminal*** ***(B57) No. 2 — Chassis ground:***	When the fan dial is OFF and other than OFF, does the resistance change?	Replace the power transistor. <Ref. to AC-42, REMOVAL, Power Transistor (Auto A/C Model).>	Replace the A/C control panel. <Ref. to AC-50, REMOVAL, Control Panel.>

10.COOL AIR DOES NOT COME OUT WHEN PRESSING THE A/C SWITCH. FOG CANNOT BE CLEARED. (COMPRESSOR DOES NOT OPERATE.)

TROUBLE SYMPTOM:

Compressor does not operate after turning the A/C switch to ON and fan dial between LO and HI.

TROUBLE CAUSES:

Compressor failure

WIRING DIAGRAM:

- Gasoline engine model

Air conditioning system <Ref. to WI(w/o HEV)-35, WIRING DIAGRAM, Air Conditioning System.>

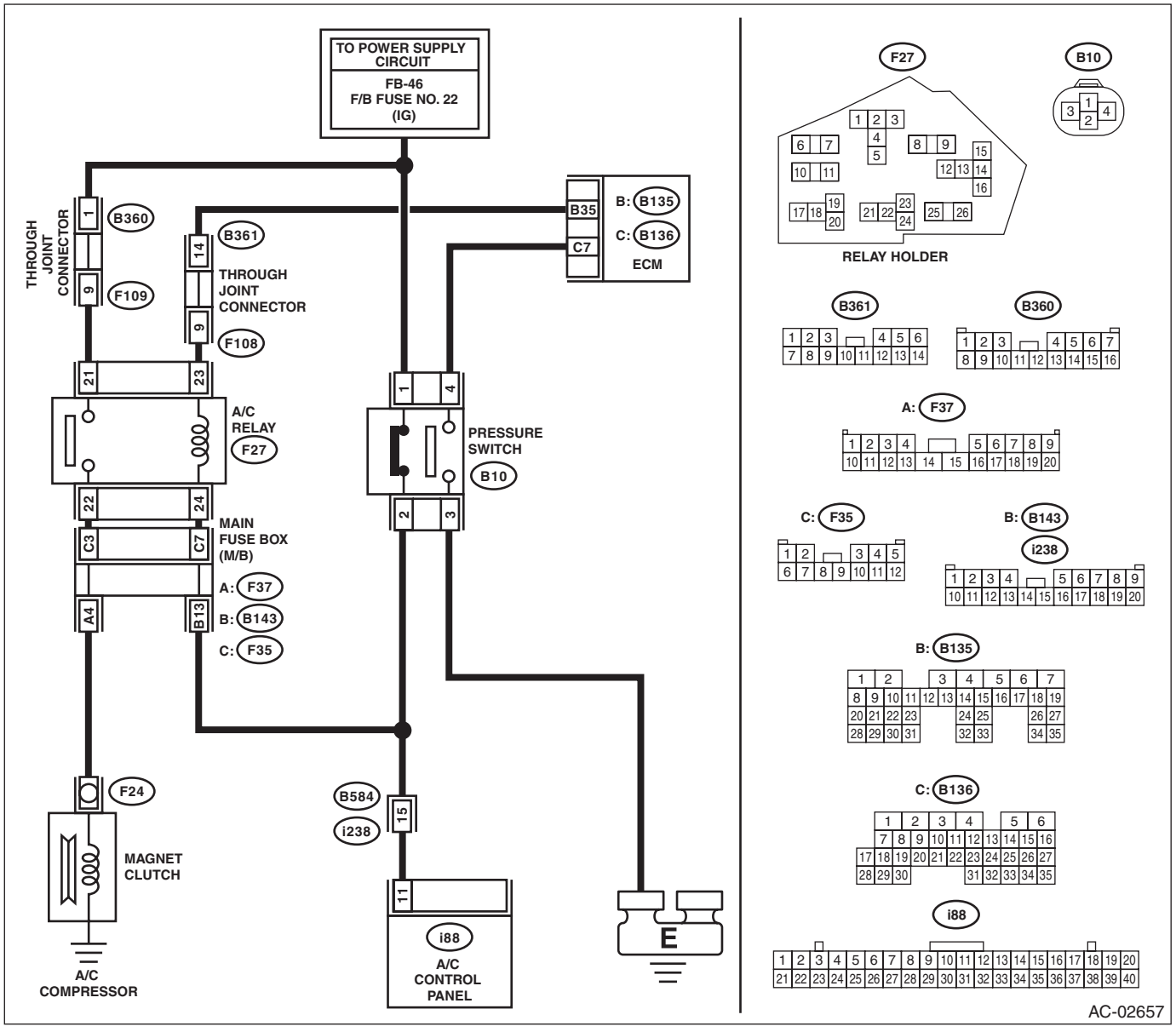

- HEV model

Air conditioning system <Ref. to WI(HEV)-55, WIRING DIAGRAM, Air Conditioning System.>

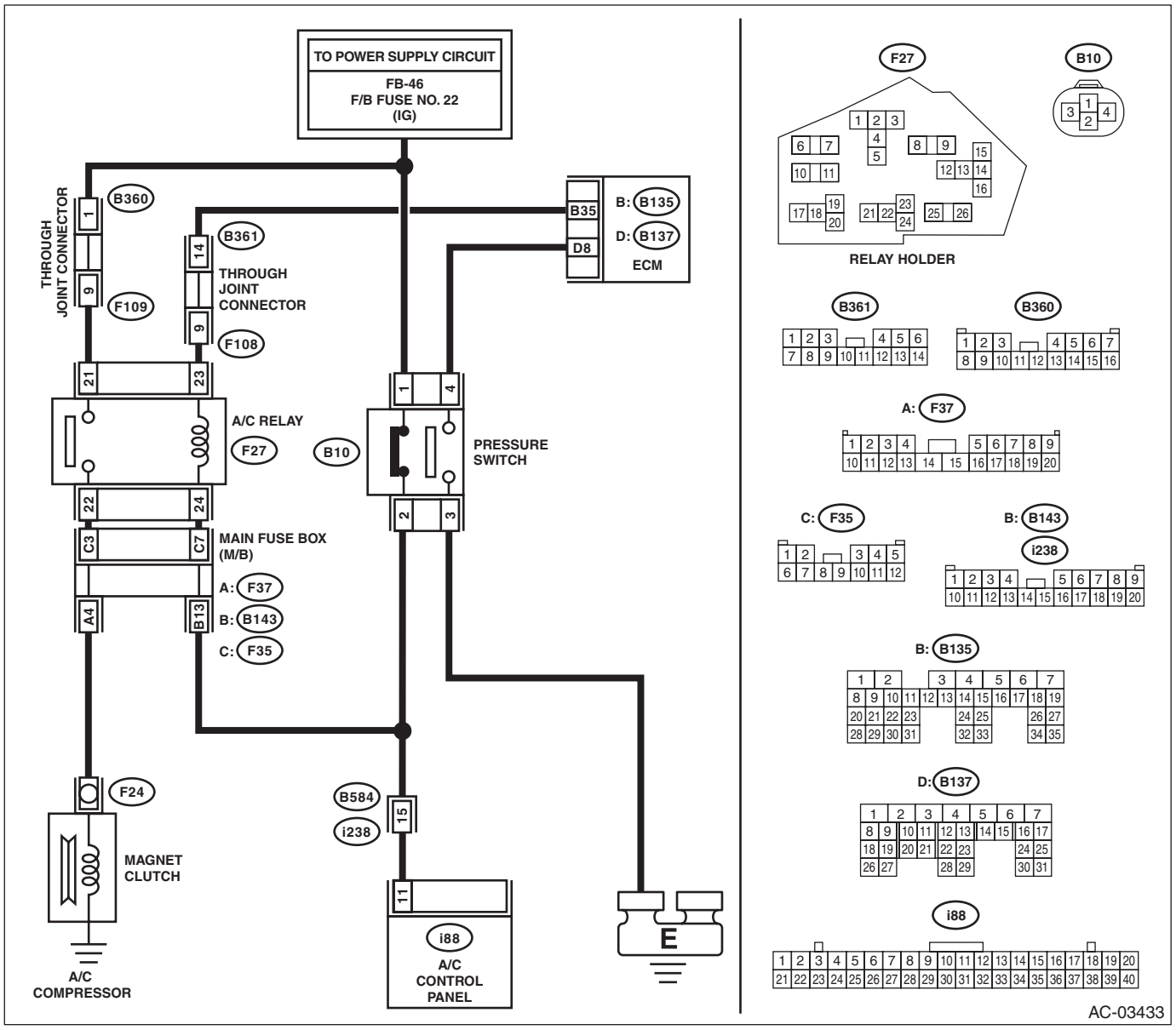

Step		Check	Yes	No
1	**CHECK A/C CONTROL PANEL.** 1) Leave the vehicle under the condition at ambient temperature of 15°C (59°F) or more. 2) Turn the ignition switch to ON. 3) Turn the fan dial to the maximum position. 4) Press the A/C switch.	Is "A/C" displayed on the A/C control panel?	Go to step **2**.	Replace the A/C control panel. <Ref. to AC-50, REMOVAL, Control Panel.>
2	**CHECK EVAPORATOR SENSOR.** Using the Subaru Select Monitor, check "Evaporator Temp." of the current data from the A/C diagnosis.	Does the data indicate -0.5 degree or more?	Go to step **4**.	Go to step **3**.
3	**CHECK EVAPORATOR SENSOR.** Check the evaporator sensor. <Ref. to AC-93, INSPECTION, Evaporator Sensor.>	Is the sensor normal?	Go to step **4**.	Replace the evaporator sensor. <Ref. to AC-92, REMOVAL, Evaporator Sensor.>

	Step	Check	Yes	No
4	**CHECK PRESSURE SWITCH.** Check the pressure switch connection.	Is the connector normal?	Go to step **5**.	Repair the connector.
5	**CHECK PRESSURE SWITCH.** Using the Subaru Select Monitor, check "Pressure Switch" of the current data from Air Conditioning Diagnosis.	Does the data indicate normal?	Go to step **10**.	Go to step **6**.
6	**CHECK AMOUNT OF REFRIGERANT PRESSURE.** Check the refrigerant pressure. <Ref. to AC-24, REFRIGERANT GAS PRESSURE INSPECTION, PROCEDURE, Refrigerant Pressure with Manifold Gauge Set.>	Is the refrigerant pressure normal?	Go to step **7**.	Perform repair according to refrigerant pressure inspection.
7	**CHECK CONNECTOR.** Check poor contact of A/C control panel connector.	Is the connector normal?	Go to step **8**.	Repair the connector.
8	**CHECK FUSE.** 1) Turn the ignition switch to ON. 2) Remove a fuse in the fuse & relay box. 3) Check the fuse.	Is the fuse normal?	Go to step **9**.	Replace the fuse.
9	**CHECK PRESSURE SWITCH SIGNAL.** 1) Turn the ignition switch to OFF. 2) Disconnect the A/C control panel connector. 3) Turn the ignition switch to ON. 4) Measure the voltage between A/C control panel connector terminal and chassis ground. ***Connector & terminal*** ***(i88) No. 11 (+) — Chassis ground (–):***	Is the voltage 10 V or more?	Replace the A/C control panel. <Ref. to AC-50, REMOVAL, Control Panel.>	• Check for open or short circuit in the harness between fuse and A/C control panel. • Check for poor contact of pressure switch connector.
10	**CHECK CAN COMMUNICATION CIRCUIT.** Using the Subaru Select Monitor, check "A/C Switch" of the current data from Engine Diagnosis.	Does the data indicate ON?	Go to step **12**.	Go to step **11**.
11	**CHECK CAN COMMUNICATION CIRCUIT.** Perform the diagnosis for LAN system. <Ref. to LAN(w/o HEV)(diag)-2, PROCEDURE, Basic Diagnostic Procedure.>	Is the system normal?	Repair it according to DTC of LAN system.	Replace the A/C control panel. <Ref. to AC-50, REMOVAL, Control Panel.>
12	**CHECK A/C RELAY ON SIGNAL.** 1) Disconnect the ECM connector. 2) Turn the ignition switch to ON. 3) Measure the voltage between ECM connector terminal and chassis ground. ***Connector & terminal*** ***(B135) No. 35 (+) — Chassis ground (–):***	Is the voltage 10 V or more?	Go to step **13**.	• Check for open or short in the harness between pressure switch and ECM. • Check poor contact of A/C relay connector. • Check the A/C relay. <Ref. to AC-36, INSPECTION, Relay and Fuse.>
13	**CHECK A/C RELAY ON SIGNAL.** 1) Start the engine. 2) Turn the A/C switch to ON. 3) Turn the temperature control dial at maximum cool position. 4) Measure the voltage between ECM connector terminal and chassis ground. ***Connector & terminal*** ***(B135) No. 35 (+) — Chassis ground (–):***	Is the voltage 0 V?	Go to step **14**.	Replace the ECM.

	Step	Check	Yes	No
14	**CHECK MAGNET CLUTCH POWER SUPPLY CIRCUIT.** 1) Stop the engine. 2) Disconnect the magnet clutch connector. 3) Start the engine. 4) Turn the A/C switch to ON. 5) Turn the temperature control dial at maximum cool position. 6) Measure the voltage between magnet clutch connector terminal and chassis ground. ***Connector & terminal*** ***(F24) No. 1 (+) — Chassis ground (–):***	Is the voltage 10 V or more?	Check the magnet clutch.	• Check for open or short circuit in the harness between fuse and magnet clutch. • Check poor contact of A/C relay connector. • Check the A/C relay. <Ref. to AC-36, INSPECTION, Relay and Fuse.>

11.UNABLE TO SWITCH SUCTION VENTS

TROUBLE SYMPTOM:
Inlet opening does not switch RECIRC → FRESH or FRESH → RECIRC each time pressing the FRESH/RECIRC switch.
TROUBLE CAUSE:
Intake actuator failure.

	Step	Check	Yes	No
1	**VISUALLY CHECK INTAKE DOOR OPERATION.** 1) Remove the glove box. <Ref. to EI-73, REMOVAL, Glove Box.> 2) Visually check the intake door operation by operating the FRESH/RECIRC switch.	Does the intake door operate normally? Is the portion between intake door and intake door case sealed completely?	System is normal.	Go to step **2**.
2	**CHECK A/C CONTROL PANEL.** 1) Turn the ignition switch to ON. 2) Using the Subaru Select Monitor, check "Fresh/Recircle Air Door Actuator Position Target" of the current data from Air Conditioning Diagnosis. 3) Operate the FRESH/RECIRC switch.	Does "Fresh/Recircle Air Door Actuator Position Target" indicate 0 ←→ 100?	Go to step **3**.	Replace the A/C control panel. <Ref. to AC-50, REMOVAL, Control Panel.>
3	**CHECK DTC.** 1) Turn the FRESH/RECIRC switch to RECIRC, and leave for 16 seconds or more. 2) Read the DTC using Subaru Select Monitor.	Is DTC B14E9, B14EA and B14EB displayed?	Perform the diagnosis according to DTC.	Go to step **4**.
4	**CHECK DTC.** 1) Turn the FRESH/RECIRC switch to FRESH, and leave for 16 seconds or more. 2) Read the DTC using Subaru Select Monitor.	Is DTC B14E9, B14EA and B14EB displayed?	Perform the diagnosis according to DTC.	System is normal.

12.UNABLE TO SWITCH VENTS

TROUBLE SYMPTOM:
- Unable to switch blow vents.
- Outlet opening does not switch in the sequence of FACE → B/L → FOOT → F/D after operating the mode switch or mode dial.

TROUBLE CAUSE:
Mode actuator failure.

	Step	Check	Yes	No
1	**CHECK A/C CONTROL PANEL.** 1) Turn the ignition switch to ON. 2) Using the Subaru Select Monitor, check "Mode Door Actuator Position Target" of the current data from Air Conditioning Diagnosis. 3) Operate the air flow control switch.	Does the value of "Mode Door Actuator Position Target" change?	Go to step **2**.	Replace the A/C control panel. <Ref. to AC-50, REMOVAL, Control Panel.>
2	**CHECK DTC.** 1) Turn the air flow control switch to DEF, and leave for 16 seconds or more. 2) Read the DTC using Subaru Select Monitor.	Is DTC B14E5 and B14E6 displayed?	Perform the diagnosis according to DTC.	Go to step **3**.
3	**CHECK DTC.** 1) Turn the air flow control switch to VENT, and leave for 16 seconds or more. 2) Using the Subaru Select Monitor, read DTC of A/C control panel.	Is DTC B14E5 and B14E6 displayed?	Perform the diagnosis according to DTC.	System is normal.

13.ILLUMINATION DOES NOT ILLUMINATE OR CANNOT BE DIMMED

TROUBLE SYMPTOM:

Even when the lighting switch is operated, the illumination does not come on. Even when the illumination control is operated, the illumination does not dim.

TROUBLE SYMPTOM:

Open circuit in illumination circuit

WIRING DIAGRAM:

Clearance Light and Illumination Light System <Ref. to WI(w/o HEV)-49, WIRING DIAGRAM, Clearance Light and Illumination Light System.> <Ref. to WI(HEV)-69, WIRING DIAGRAM, Clearance Light and Illumination Light System.>

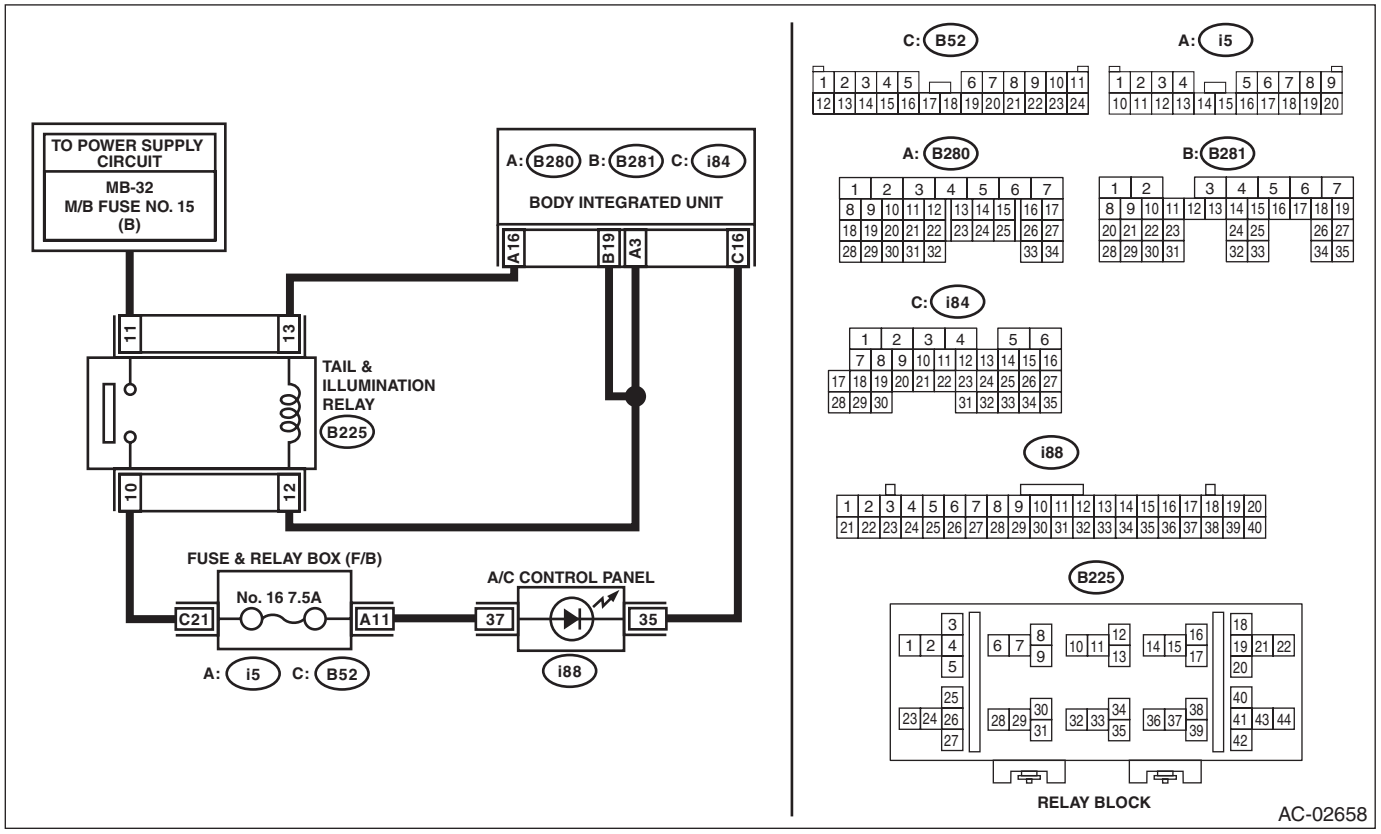

Step		Check	Yes	No
1	**CHECK ILLUMINATION.** Make sure that all illuminations except A/C come on.	Do other illuminations come on?	Go to step **2**.	<Ref. to LI-10, INSPECTION, Clearance Light and Illumination Light System.>
2	**CHECK CONNECTOR.** Check for poor contact of connector.	Is there poor contact?	Repair the connector.	Go to step **3**.
3	**CHECK HARNESS.** 1) Turn the lighting switch to ON. 2) Using a tester, measure the voltage between the A/C control panel connector and chassis ground. ***Connector & terminal*** ***(i88) No. 37 (+) — Chassis ground (–):***	Is the voltage 10 V or more?	Go to step **4**.	Repair or replace the open circuit of harness.

	Step	Check	Yes	No
4	**CHECK HARNESS.** 1) Turn the lighting switch to OFF. 2) Measure the resistance between A/C control panel connector and body integrated unit connector. ***Connector & terminal*** ***(i88) No. 35 — (i84) No. 16:***	Is the resistance less than 10 Ω?	Go to step **5**.	Repair or replace the open circuit of harness.
5	**CHECK A/C CONTROL PANEL UNIT.** Check the A/C control panel. <Ref. to AC-50, REMOVAL, Control Panel.>	Is A/C control panel OK?	A/C control panel illumination circuit is normal.	Replace the A/C control panel. <Ref. to AC-50, REMOVAL, Control Panel.>

7. Subaru Select Monitor

A: OPERATION

For details of basic operations, refer to “PC application help for Subaru Select Monitor”.

NOTE:
If the communication for initializing of Subaru Select Monitor is impossible, perform the diagnosis using “Diagnostic Procedure for Subaru Select Monitor Communication Error”.

8. Read Diagnostic Trouble Code (DTC)

A: OPERATION

For detailed operation procedures, refer to “PC application help for Subaru Select Monitor”.

9. Clear Memory Mode

A: OPERATION

For detailed operation procedures, refer to “PC application help for Subaru Select Monitor”.

10.Read Current Data

A: OPERATION

For detailed operation procedures, refer to “PC application help for Subaru Select Monitor”.

B: LIST

Items to be displayed	Unit of measure	Remarks	Note
In-vehicle Sensor Temperature	°C (°F)	A/C control panel input value	—
Quantity of Sunload	W/m^2	A/C control panel input value	—
A/C Pressure Switch	ON/OFF	A/C control panel input value	—
Heater Water Temperature	°C (°F)	Data value received by CAN	—
Heater Control Panel Setting Value (Driver’s)	LO: 18°C (60°F) HI: 32°C (90°F)	Control panel display value	—
Heater Control Panel Setting Value (Passenger’s)	LO: 18°C (60°F) HI: 32°C (90°F)	Control panel display value	For models with left/right independent air conditioning function only
Blower outlet request temperature (Driver’s)	°C (°F)	A/C control panel internal setting value	For models with left/right independent air conditioning function only
Blower outlet request temperature (Passenger’s)	°C (°F)	A/C control panel internal setting value	For models with left/right independent air conditioning function only
Air mix door actuator position (driver’s side)	%	A/C control panel input value	—
Air mix door actuator position (passenger’s side)	%	A/C control panel input value	For models with left/right independent air conditioning function only
Mode Door Actuator Position	%	A/C control panel input value	—
Fresh/Recircle Air Door Actuator Position	%	A/C control panel input value	—
Target air mix door actuator position (driver’s side)	%	A/C control panel input value	—
Target air mix door actuator position (passenger’s side)	%	A/C control panel input value	—
Mode Door Actuator Position Target	%	A/C control panel input value	—
Fresh/Recircle Air Door Actuator Position Target	%	A/C control panel input value	—
Blower Fan Level	Level	A/C control panel internal output value	—
Ambient Air Temperature	°C (°F)	Data value received by CAN	—
Compressor operation status	OFF/AUTO	A/C control panel input value	—
Blower Fan Operating Condition	MANU/AUTO	A/C control panel input value	—
A/C Operating Condition	MANU/AUTO	A/C control panel input value	—
Fresh/Recircle Air Operating Condition	MANU/AUTO	A/C control panel input value	—

Items to be displayed	Unit of measure	Remarks	Note
Mode Operating Condition	MANU/AUTO	A/C control panel input value	—
Rear Defogger	ON/OFF	A/C control panel input value	—
Engine Speed	rpm	Data value received by CAN	—
Vehicle speed	km/h	Data value received by CAN	—
Evaporator Temperature	°C (°F)	A/C control panel input value	—
Evaporator Temperature Target	°C (°F)	A/C control panel input value	—
Blower outlet Door Request Temperature	°C (°F)	A/C control panel internal setting value	—
PTC permitted number	0 — 3	A/C control panel input value	Not supported
PTC operation steps	0 — 3	A/C control panel input value	Not supported
PTC Heater 1	Inoperative/Operate	A/C control panel input value	Not supported
PTC Heater 2	Inoperative/Operate	A/C control panel input value	Not supported
PTC Heater 3	Inoperative/Operate	A/C control panel input value	Not supported
Request engine speed	0: Without Request 1: Cooler H 2: Heater H 3: Cooler L 4: Heater L	A/C control panel internal output value	—
Heater core Temp.	°C (°F)	A/C control panel input value	HEV model only
Humidity	%	A/C control panel input value	HEV model only

NOTE:
For detailed operation procedures, refer to “PC application help for Subaru Select Monitor”.

11.Diagnostic Procedure for Subaru Select Monitor Communication

A: COMMUNICATION FOR INITIALIZING IMPOSSIBLE

DIAGNOSIS:
Defective CAN communication circuit
TROUBLE SYMPTOM:
- LAN system is abnormal.
- Communication failure between Subaru Select Monitor and A/C control panel

WIRING DIAGRAM:
Air conditioning system <Ref. to WI(w/o HEV)-35, WIRING DIAGRAM, Air Conditioning System.> <Ref. to WI(HEV)-55, WIRING DIAGRAM, Air Conditioning System.>

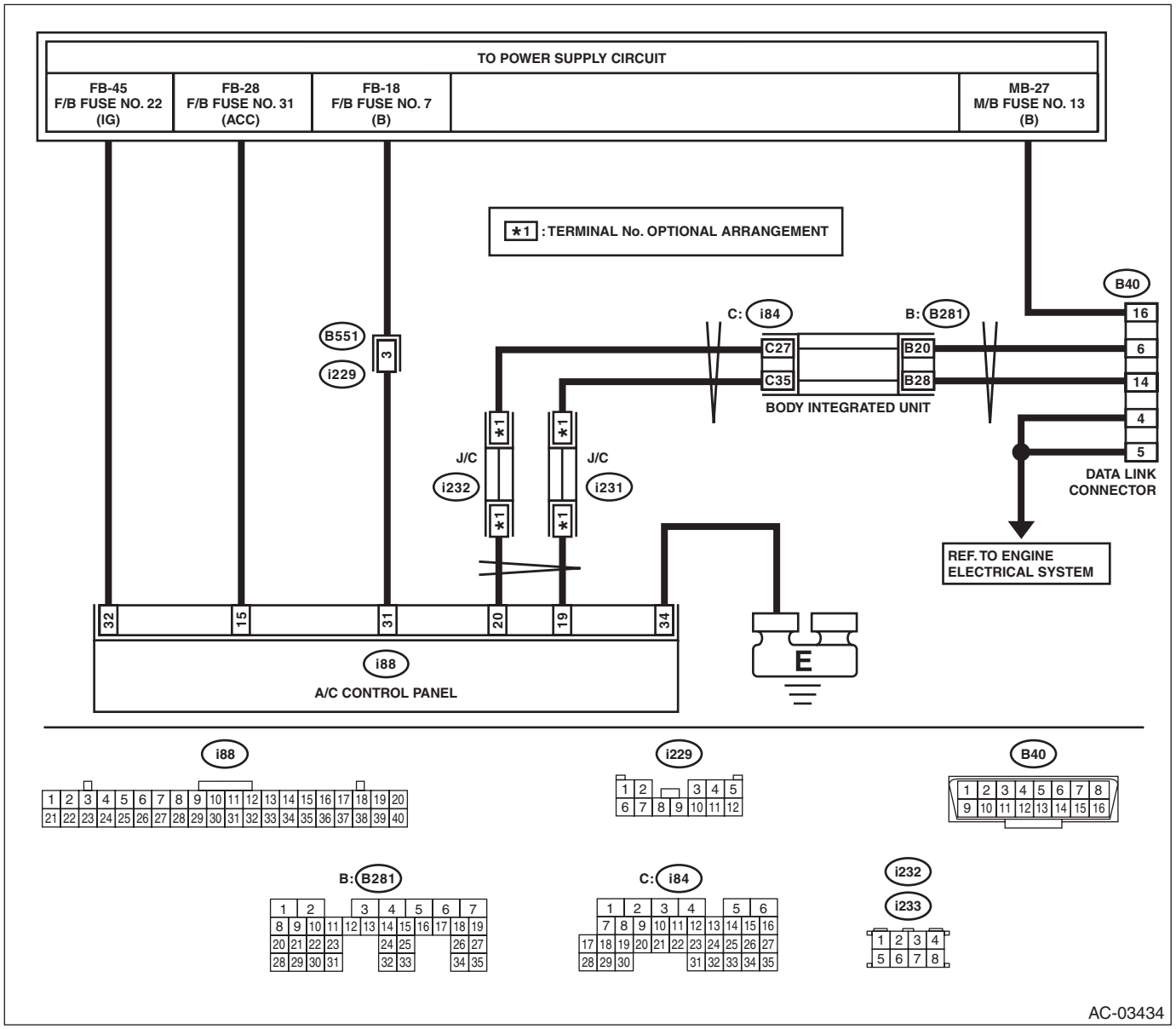

Step		Check	Yes	No
1	**CHECK POWER SUPPLY CIRCUIT.** Connect SDI (Subaru Diagnosis Interface) to the data link connector.	Is SDI powered on?	Go to step **4**.	Go to step **2**.

	Step	Check	Yes	No
2	**CHECK POWER SUPPLY CIRCUIT.** Measure the voltage between data link connector and chassis ground. ***Connector & terminal*** ***(B40) No. 16 (+) — Chassis ground (–):***	Is the voltage 10 V or more?	Go to step **3**.	Repair the power supply circuit. NOTE: In this case, repair the following item: • Open or ground short circuit of harness between battery and data link connector • Blown out of fuse (M/B No. 12)
3	**CHECK HARNESS BETWEEN DATA LINK CONNECTOR AND CHASSIS GROUND.** 1) Turn the ignition switch to OFF. 2) Measure the resistance of harness between data link connector and chassis ground. ***Connector & terminal*** ***(B40) No. 4 — Chassis ground:*** ***(B40) No. 5 — Chassis ground:***	Is the resistance less than 5 Ω?	Repair the poor contact of data link connector.	Repair the harness and connector.
4	**CHECK SUBARU SELECT MONITOR.** 1) Connect the Subaru Select Monitor to a normal vehicle. 2) Start the engine and perform communication between the Subaru Select Monitor and vehicle.	Is communication possible?	Go to step **5**.	Use another Subaru Select Monitor because the CAN communication circuit of the Subaru Select Monitor is faulty.
5	**CHECK LAN SYSTEM.** Check the LAN system. <Ref. to LAN(w/o HEV)(diag)-2, PROCEDURE, Basic Diagnostic Procedure.>	Is LAN system normal?	Go to step **6**.	Repair it according to the diagnosis for LAN system.
6	**CHECK CONNECTOR.** Check for poor contact of power supply circuit connector.	Is there poor contact of connector?	Repair the connector.	Go to step **7**.
7	**CHECK FUSE.** 1) Turn the ignition switch to OFF. 2) Remove a fuse from the fuse box. 3) Check the fuse.	Is the fuse blown out?	Replace the fuse.	Go to step **8**.
8	**CHECK A/C CONTROL PANEL POWER CIRCUIT.** 1) Disconnect the A/C control panel connector. 2) Measure the voltage between A/C control panel connector terminal and chassis ground after turning the ignition switch to ON. ***Connector & terminal*** ***(i88) No. 15 (+) — Chassis ground (–):*** ***(i88) No. 31 (+) — Chassis ground (–):*** ***(i88) No. 32 (+) — Chassis ground (–):***	Is the voltage 10 V or more?	Go to step **9**.	Check for open or short circuit in the harness between A/C control panel and fuse.
9	**CHECK A/C CONTROL PANEL GROUND CIRCUIT.** Measure the resistance of harness between A/C control panel and chassis ground. ***Connector & terminal*** ***(i88) No. 34 — Chassis ground:***	Is the resistance less than 5 Ω?	Check the connection between the data link connector and Subaru Select Monitor.	Repair the harness for ground line.

12.List of Diagnostic Trouble Code (DTC)

A: LIST

DTC	Item	Content of diagnosis	Note
B1430	Room Temperature Sensor Circuit Wire Break	In-vehicle air temperature sensor circuit or temperature and humidity sensor circuit is open.	<Ref. to AC(diag)-50, DTC B1430 ROOM TEMPERATURE SENSOR CIRCUIT WIRE BREAK, Diagnostic Procedure with Diagnostic Trouble Code (DTC).>
B1431	Room Temperature Sensor Circuit Short-Circuit	In-vehicle air temperature sensor circuit or temperature and humidity sensor circuit is shorted.	<Ref. to AC(diag)-52, DTC B1431 ROOM TEMPERATURE SENSOR CIRCUIT SHORT-CIRCUIT, Diagnostic Procedure with Diagnostic Trouble Code (DTC).>
B1432	Outside Air Sensor Circuit Wire Break (Air-Conditioning)	Ambient air temperature sensor circuit is open.	<Ref. to AC(diag)-54, DTC B1432 OUTSIDE AIR SENSOR CIRCUIT WIRE BREAK (AIR-CONDITIONING), Diagnostic Procedure with Diagnostic Trouble Code (DTC).>
B1433	Outside Air Sensor Circuit Short-Circuit (Air-Conditioning)	Ambient air temperature sensor circuit is shorted.	<Ref. to AC(diag)-57, DTC B1433 OUTSIDE AIR SENSOR CIRCUIT SHORT-CIRCUIT (AIR-CONDITIONING), Diagnostic Procedure with Diagnostic Trouble Code (DTC).>
B1434	Ambient Temperature Sensor Circuit Wire Break	Post evaporator sensor circuit is open.	<Ref. to AC(diag)-59, DTC B1434 AMBIENT TEMPERATURE SENSOR CIRCUIT WIRE BREAK, Diagnostic Procedure with Diagnostic Trouble Code (DTC).>
B1435	Evaporator Sensor Circuit Short-Circuit	Post evaporator sensor circuit is shorted.	<Ref. to AC(diag)-60, DTC B1435 EVAPORATOR SENSOR CIRCUIT SHORT-CIRCUIT, Diagnostic Procedure with Diagnostic Trouble Code (DTC).>
B14A1	Sunload Sensor Circuit Open	Sunload sensor circuit is open.	<Ref. to AC(diag)-61, DTC B14A1 SUNLOAD SENSOR CIRCUIT OPEN, Diagnostic Procedure with Diagnostic Trouble Code (DTC).>
B14A2	Sunload Sensor Circuit Short	Sunload sensor circuit is shorted.	<Ref. to AC(diag)-62, DTC B14A2 SUNLOAD SENSOR CIRCUIT SHORT, Diagnostic Procedure with Diagnostic Trouble Code (DTC).>
B14E1	Air Mix Door Actuator Stepping Motor Circuit Wire Break (Driver's Seat)	Air mix door actuator stepping motor circuit is open.	<Ref. to AC(diag)-63, DTC B14E1 AIR MIX DOOR ACTUATOR STEPPING MOTOR CIRCUIT WIRE BREAK (DRIVER'S SEAT), Diagnostic Procedure with Diagnostic Trouble Code (DTC).>
B14E2	Air Mix Door Actuator Stepping Motor Circuit Short-Circuit (Driver's Seat)	Air mix door actuator stepping motor circuit is shorted.	<Ref. to AC(diag)-65, DTC B14E2 AIR MIX DOOR ACTUATOR STEPPING MOTOR CIRCUIT SHORT-CIRCUIT (DRIVER'S SEAT), Diagnostic Procedure with Diagnostic Trouble Code (DTC).>
B14E3	Air Mix Door Actuator Stepping Motor Circuit Wire Break (Passenger's Seat)	Air mix door actuator stepping motor circuit is open.	<Ref. to AC(diag)-67, DTC B14E3 AIR MIX DOOR ACTUATOR STEPPING MOTOR CIRCUIT WIRE BREAK (PASSENGER'S SEAT), Diagnostic Procedure with Diagnostic Trouble Code (DTC).>
B14E4	Air Mix Door Actuator Stepping Motor Circuit Short-Circuit (Passenger's Seat)	Air mix door actuator stepping motor circuit is shorted.	<Ref. to AC(diag)-69, DTC B14E4 AIR MIX DOOR ACTUATOR STEPPING MOTOR CIRCUIT SHORT-CIRCUIT (PASSENGER'S SEAT), Diagnostic Procedure with Diagnostic Trouble Code (DTC).>
B14E5	Mode Door Actuator Stepping Motor Circuit Wire Break	Mode door actuator stepping motor circuit is open.	<Ref. to AC(diag)-71, DTC B14E5 MODE DOOR ACTUATOR STEPPING MOTOR CIRCUIT WIRE BREAK, Diagnostic Procedure with Diagnostic Trouble Code (DTC).>
B14E6	Mode Door Actuator Stepping Motor Circuit Short-Circuit	Mode door actuator stepping motor circuit is shorted.	<Ref. to AC(diag)-73, DTC B14E6 MODE DOOR ACTUATOR STEPPING MOTOR CIRCUIT SHORT-CIRCUIT, Diagnostic Procedure with Diagnostic Trouble Code (DTC).>
B14E7	Heater Core Rear Sensor Circuit Wire Break	Heater core sensor circuit is open.	<Ref. to AC(diag)-75, DTC B14E7 HEATER CORE REAR SENSOR CIRCUIT WIRE BREAK, Diagnostic Procedure with Diagnostic Trouble Code (DTC).>

DTC	Item	Content of diagnosis	Note
B14E8	Heater Core Rear Sensor Circuit Short-Circuit	Heater core sensor circuit is shorted.	<Ref. to AC(diag)-76, DTC B14E8 HEATER CORE REAR SENSOR CIRCUIT SHORT-CIRCUIT, Diagnostic Procedure with Diagnostic Trouble Code (DTC).>
B14E9	Intake Door Actuator Potentiometer Circuit Wire Break	Intake door actuator potentiometer circuit is open.	<Ref. to AC(diag)-77, DTC B14E9 INTAKE DOOR ACTUATOR POTENTIOMETER CIRCUIT WIRE BREAK, Diagnostic Procedure with Diagnostic Trouble Code (DTC).>
B14EA	Intake Door Actuator Potentiometer Circuit Short-Circuit	Intake door actuator potentiometer circuit is shorted.	<Ref. to AC(diag)-79, DTC B14EA INTAKE DOOR ACTUATOR POTENTIOMETER CIRCUIT SHORT-CIRCUIT, Diagnostic Procedure with Diagnostic Trouble Code (DTC).>
B14EB	Intake Door Actuator Lock	Intake door actuator is locked.	<Ref. to AC(diag)-81, DTC B14EB INTAKE DOOR ACTUATOR LOCK, Diagnostic Procedure with Diagnostic Trouble Code (DTC).>
B14EC	Humidity Sensor Circuit Open	Humidity sensor circuit is open.	<Ref. to AC(diag)-83, DTC B14EC HUMIDITY SENSOR CIRCUIT OPEN, Diagnostic Procedure with Diagnostic Trouble Code (DTC).>
B14ED	Humidity Sensor Circuit Short	Humidity sensor circuit is shorted.	<Ref. to AC(diag)-84, DTC B14ED HUMIDITY SENSOR CIRCUIT SHORT, Diagnostic Procedure with Diagnostic Trouble Code (DTC).>
U0073	Control Module Communication Bus Off	CAN communication error occurred.	<Ref. to AC(diag)-85, DTC U0073 CONTROL MODULE COMMUNICATION BUS OFF, Diagnostic Procedure with Diagnostic Trouble Code (DTC).>
U0100	Lost Communication With ECM/PCM “A”	ECM data receive error occurred.	<Ref. to AC(diag)-85, DTC U0100 LOST COMMUNICATION WITH ECM/PCM “A”, Diagnostic Procedure with Diagnostic Trouble Code (DTC).>
U0101	Lost Communication With TCM	TCM data receive error occurred.	<Ref. to AC(diag)-85, DTC U0101 LOST COMMUNICATION WITH TCM, Diagnostic Procedure with Diagnostic Trouble Code (DTC).>
U0122	Lost Communication With Vehicle Dynamics Control Module	VDC data receive error occurred.	<Ref. to AC(diag)-85, DTC U0122 LOST COMMUNICATION WITH VEHICLE DYNAMICS CONTROL MODULE, Diagnostic Procedure with Diagnostic Trouble Code (DTC).>
U0140	Lost Communication With Body Control Module	BIU data receive error occurred.	<Ref. to AC(diag)-85, DTC U0140 LOST COMMUNICATION WITH BODY CONTROL MODULE, Diagnostic Procedure with Diagnostic Trouble Code (DTC).>
U0155	Lost Communication With Instrument Panel Cluster (IPC) Control Module	METER data receive error occurred.	<Ref. to AC(diag)-85, DTC U0155 LOST COMMUNICATION WITH INSTRUMENT PANEL CLUSTER (IPC) CONTROL MODULE, Diagnostic Procedure with Diagnostic Trouble Code (DTC).>
U0401	Invalid Data Received From ECM/PCM “A”	An error occurred in ECM data.	<Ref. to AC(diag)-85, DTC U0401 INVALID DATA RECEIVED FROM ECM/PCM “A”, Diagnostic Procedure with Diagnostic Trouble Code (DTC).>
U0402	Invalid Data Received From TCM	An error occurred in TCM data.	<Ref. to AC(diag)-85, DTC U0402 INVALID DATA RECEIVED FROM TCM, Diagnostic Procedure with Diagnostic Trouble Code (DTC).>
U0416	Invalid Data Received From Vehicle Dynamics Control Module	An error occurred in VDC data.	<Ref. to AC(diag)-86, DTC U0416 INVALID DATA RECEIVED FROM VEHICLE DYNAMICS CONTROL MODULE, Diagnostic Procedure with Diagnostic Trouble Code (DTC).>
U0422	Invalid Data Received From Body Control Module	An error occurred in BIU data.	<Ref. to AC(diag)-86, DTC U0422 INVALID DATA RECEIVED FROM BODY CONTROL MODULE, Diagnostic Procedure with Diagnostic Trouble Code (DTC).>
U0423	Invalid Data Received From Instrument Panel Cluster Control Module	An error occurred in METER data.	<Ref. to AC(diag)-86, DTC U0423 INVALID DATA RECEIVED FROM INSTRUMENT PANEL CLUSTER CONTROL MODULE, Diagnostic Procedure with Diagnostic Trouble Code (DTC).>

13.Diagnostic Procedure with Diagnostic Trouble Code (DTC)

A: DTC B1430 ROOM TEMPERATURE SENSOR CIRCUIT WIRE BREAK

DTC DETECTING CONDITION:

In-vehicle sensor or temperature and humidity sensor circuit is open.

TROUBLE SYMPTOM:

In-vehicle air temperature is falsely recognized as 25°C (77°F), and the compartment temperature is adjusted.

WIRING DIAGRAM:

- Gasoline engine model

Air conditioning system <Ref. to WI(w/o HEV)-35, WIRING DIAGRAM, Air Conditioning System.>

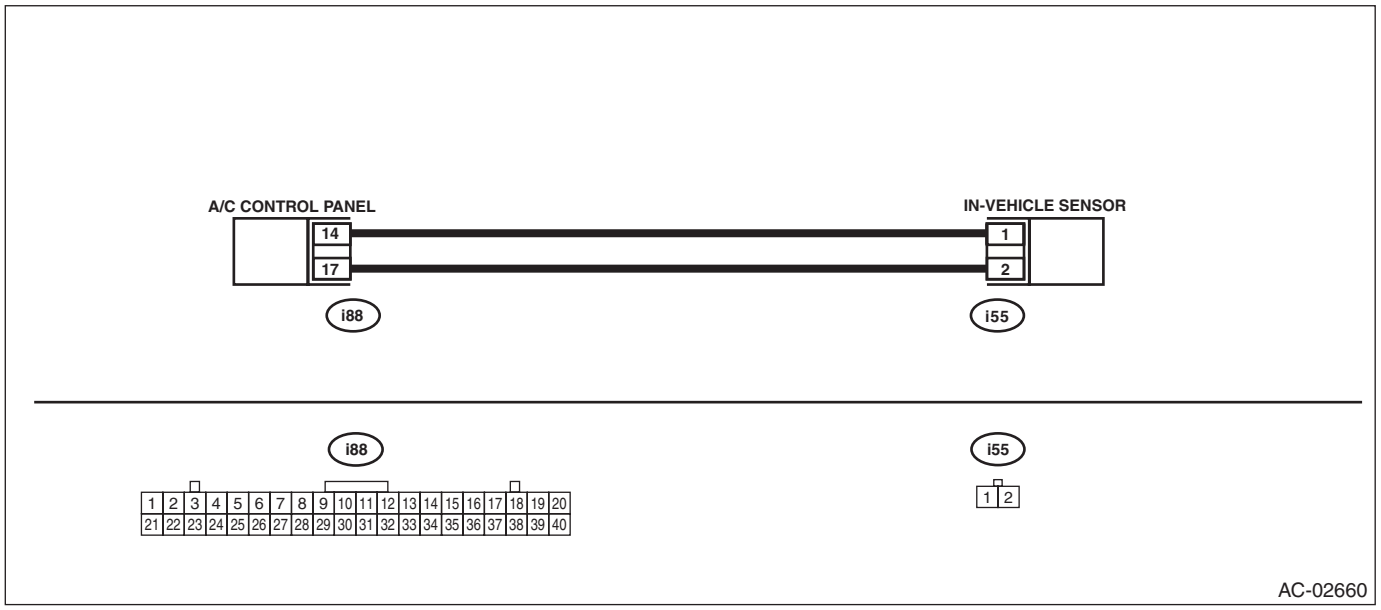

- HEV model

Air conditioning system <Ref. to WI(HEV)-55, WIRING DIAGRAM, Air Conditioning System.>

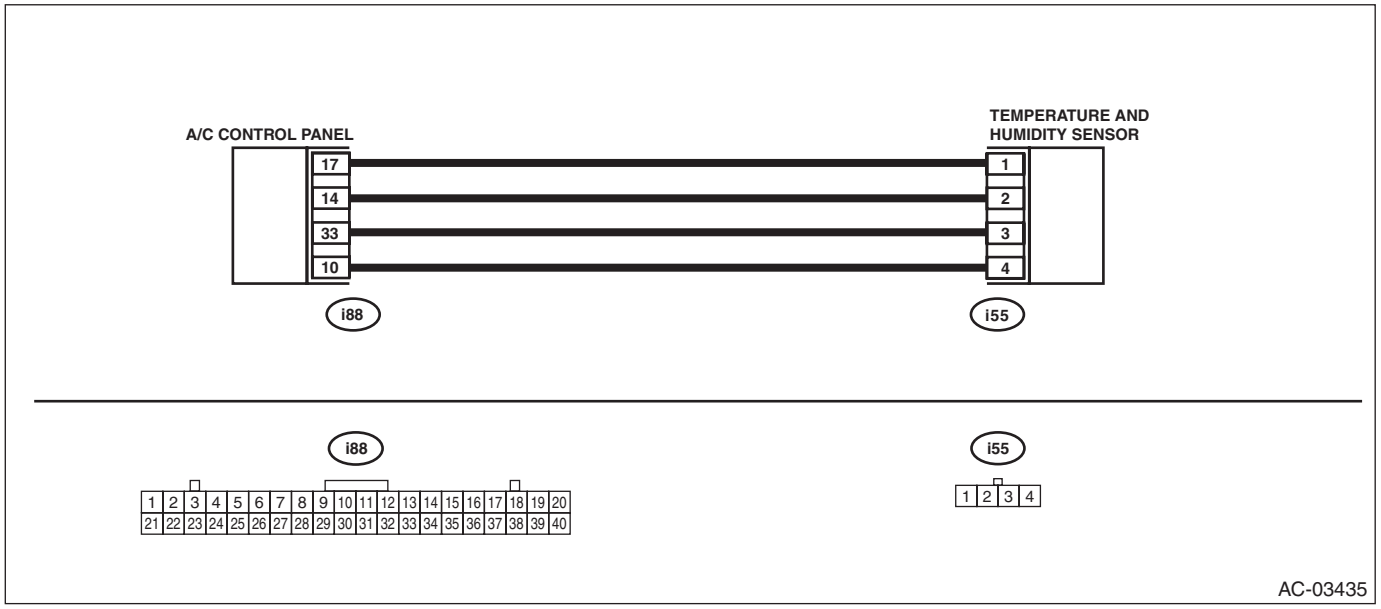

	Step	Check	Yes	No
1	**CHECK CONNECTOR.** 1) Check the condition of connector connection. 2) Read the DTC using Subaru Select Monitor.	Is B1430 displayed?	Go to step **2**.	Check the connection of the in-vehicle sensor or temperature and humidity sensor circuit.
2	**CHECK IN-VEHICLE SENSOR OR TEMPERATURE AND HUMIDITY SENSOR.** 1) Disconnect the in-vehicle sensor or temperature and humidity sensor. 2) Short the connector. 3) Read the DTC relating the ECM using the Subaru Select Monitor.	Is B1431 displayed?	Replace the in-vehicle sensor or temperature and humidity sensor. <Ref. to AC-85, REMOVAL, In-Vehicle Sensor (Auto A/C Model).>	Go to step **3**.
3	**CHECK HARNESS.** 1) Turn the ignition switch to ON. 2) Using the tester, measure the voltage between terminals. ***Connector & terminal*** ***Gasoline engine model*** ***(i55) No. 2 (+) — No. 1 (–):*** ***HEV model*** ***(i55) No. 1 (+) — No. 2 (–):***	Is the voltage 4.5 — 5.0 V?	Go to step **4**.	Repair or replace the open circuit of harness.
4	**CHECK HARNESS.** 1) Disconnect the connector from the A/C control panel. 2) Using a tester, check continuity between terminals. ***Connector & terminal*** ***Gasoline engine model*** ***(i55) No. 1 — (i88) No. 14:*** ***(i55) No. 2 — (i88) No. 17:*** ***HEV model*** ***(i55) No. 1 — (i88) No. 17:*** ***(i55) No. 2 — (i88) No. 14:***	Is there continuity?	Replace the A/C control panel. <Ref. to AC-50, REMOVAL, Control Panel.>	Repair or replace the open circuit of harness.

B: DTC B1431 ROOM TEMPERATURE SENSOR CIRCUIT SHORT-CIRCUIT

DTC DETECTING CONDITION:

In-vehicle sensor or temperature and humidity sensor circuit is shorted.

TROUBLE SYMPTOM:

In-vehicle air temperature is falsely recognized as 25°C (77°F), and the compartment temperature is adjusted.

WIRING DIAGRAM:

- Gasoline engine model

Air conditioning system <Ref. to WI(w/o HEV)-35, WIRING DIAGRAM, Air Conditioning System.>

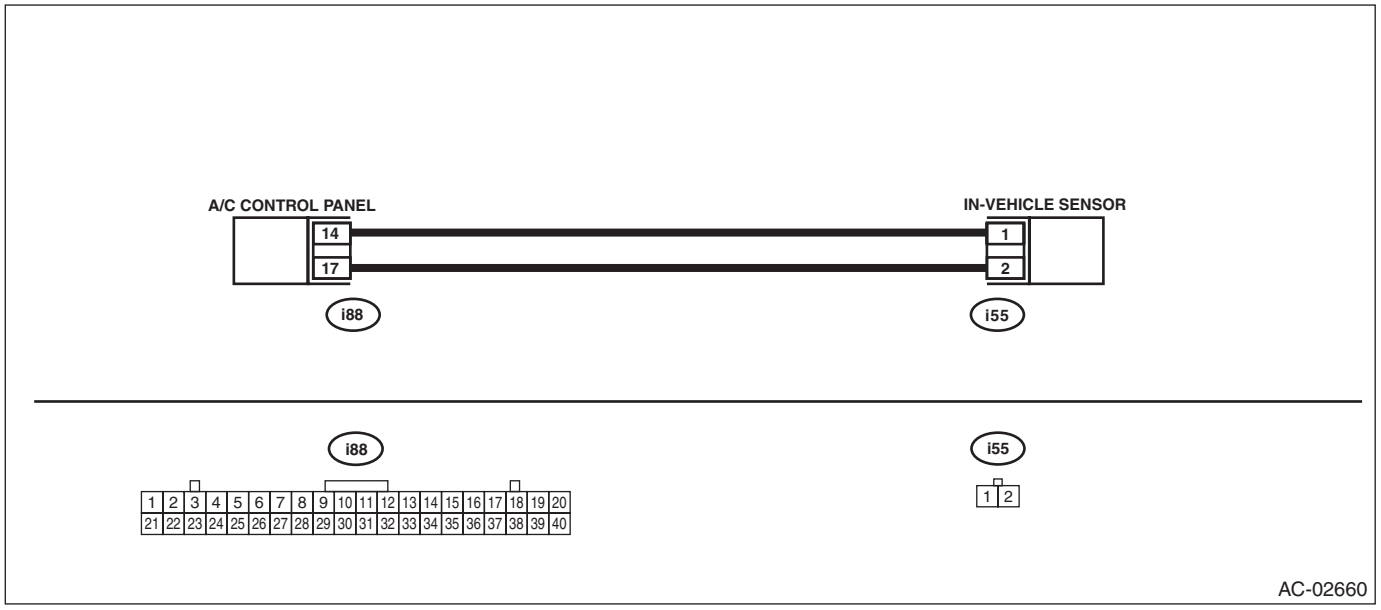

- HEV model

Air conditioning system <Ref. to WI(HEV)-55, WIRING DIAGRAM, Air Conditioning System.>

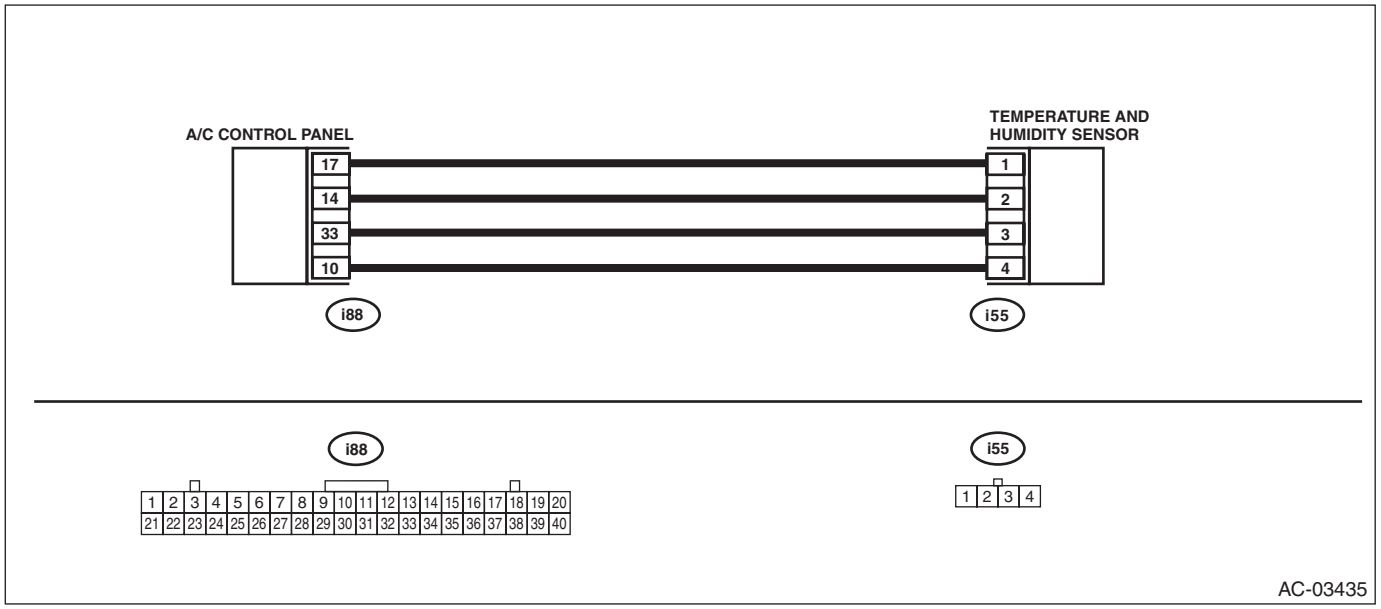

	Step	Check	Yes	No
1	**CHECK CONNECTOR.** 1) Check the condition of connector connection. 2) Read the DTC using Subaru Select Monitor.	Is B1431 displayed?	Go to step **2**.	Check the connection of the in-vehicle sensor or temperature and humidity sensor circuit.

	Step	Check	Yes	No
2	**CHECK IN-VEHICLE SENSOR OR TEMPERATURE AND HUMIDITY SENSOR.** 1) Disconnect the in-vehicle sensor or temperature and humidity sensor. <Ref. to AC-85, REMOVAL, In-Vehicle Sensor (Auto A/C Model).> 2) Read the DTC using Subaru Select Monitor.	Is B1430 displayed?	Replace the in-vehicle sensor or temperature and humidity sensor. <Ref. to AC-85, REMOVAL, In-Vehicle Sensor (Auto A/C Model).>	Go to step **3**.
3	**CHECK HARNESS.** 1) Turn the ignition switch to ON. 2) Using the tester, measure the voltage between terminals. ***Connector & terminal*** ***Gasoline engine model*** ***(i55) No. 2 (+) — No. 1 (–):*** ***HEV model*** ***(i55) No. 1 (+) — No. 2 (–):***	Is the voltage 4.5 — 5.0 V?	Check the connection of the in-vehicle sensor or temperature and humidity sensor circuit.	Go to step **4**.
4	**CHECK HARNESS.** 1) Disconnect the connector from the A/C control panel. 2) Using a tester, check continuity between terminals. ***Connector & terminal*** ***(i55) No. 1 — No. 2:***	Is there continuity?	Repair or replace the short circuit of the harness.	Replace the A/C control panel. <Ref. to AC-50, REMOVAL, Control Panel.>

C: DTC B1432 OUTSIDE AIR SENSOR CIRCUIT WIRE BREAK (AIR-CONDITIONING)

DTC DETECTING CONDITION:
Ambient sensor circuit is open.
TROUBLE SYMPTOM:
Ambient temperature is falsely recognized, and the compartment temperature is adjusted.
WIRING DIAGRAM:
- Gasoline engine model

Air conditioning system <Ref. to WI(w/o HEV)-35, WIRING DIAGRAM, Air Conditioning System.>

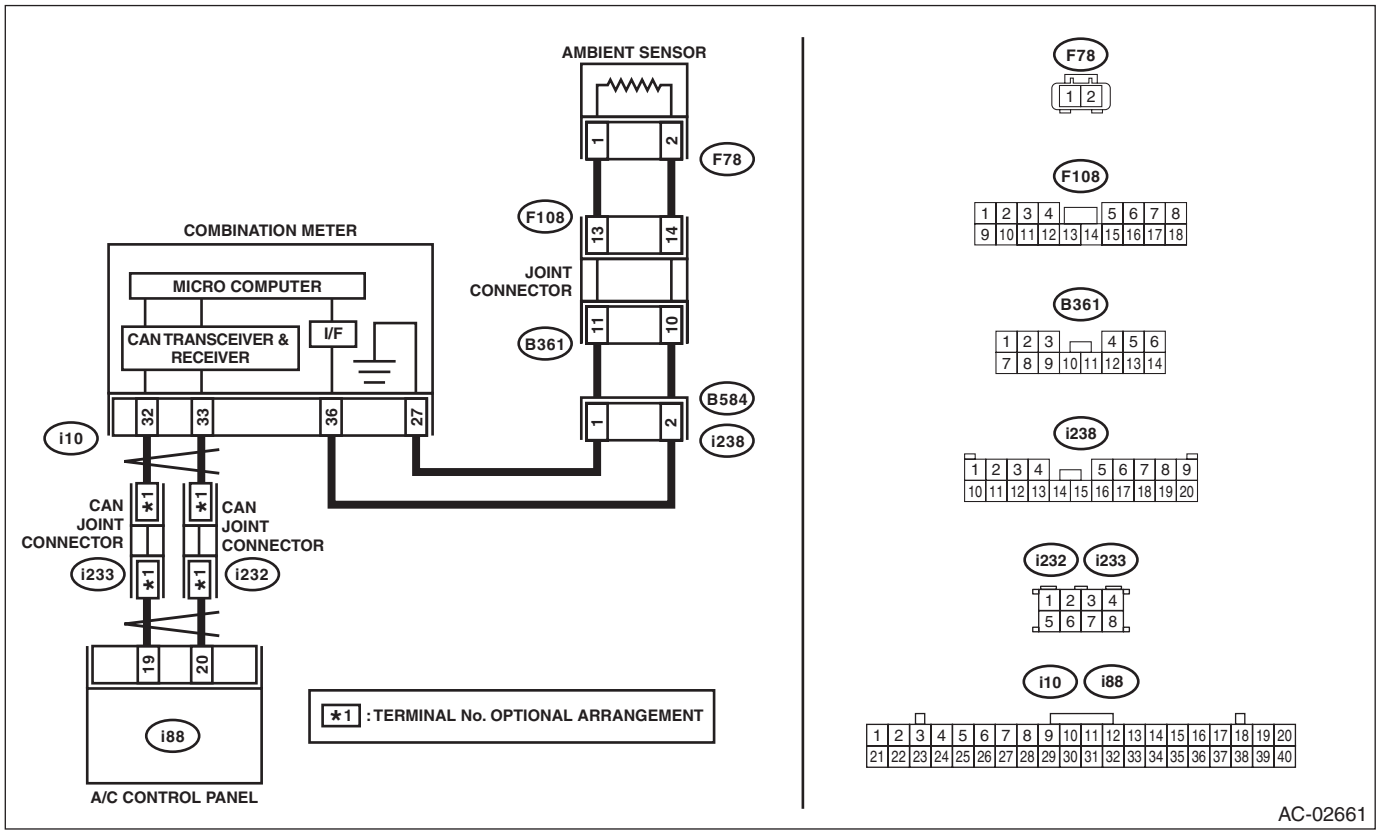

• HEV model

Air conditioning system <Ref. to WI(HEV)-55, WIRING DIAGRAM, Air Conditioning System.>

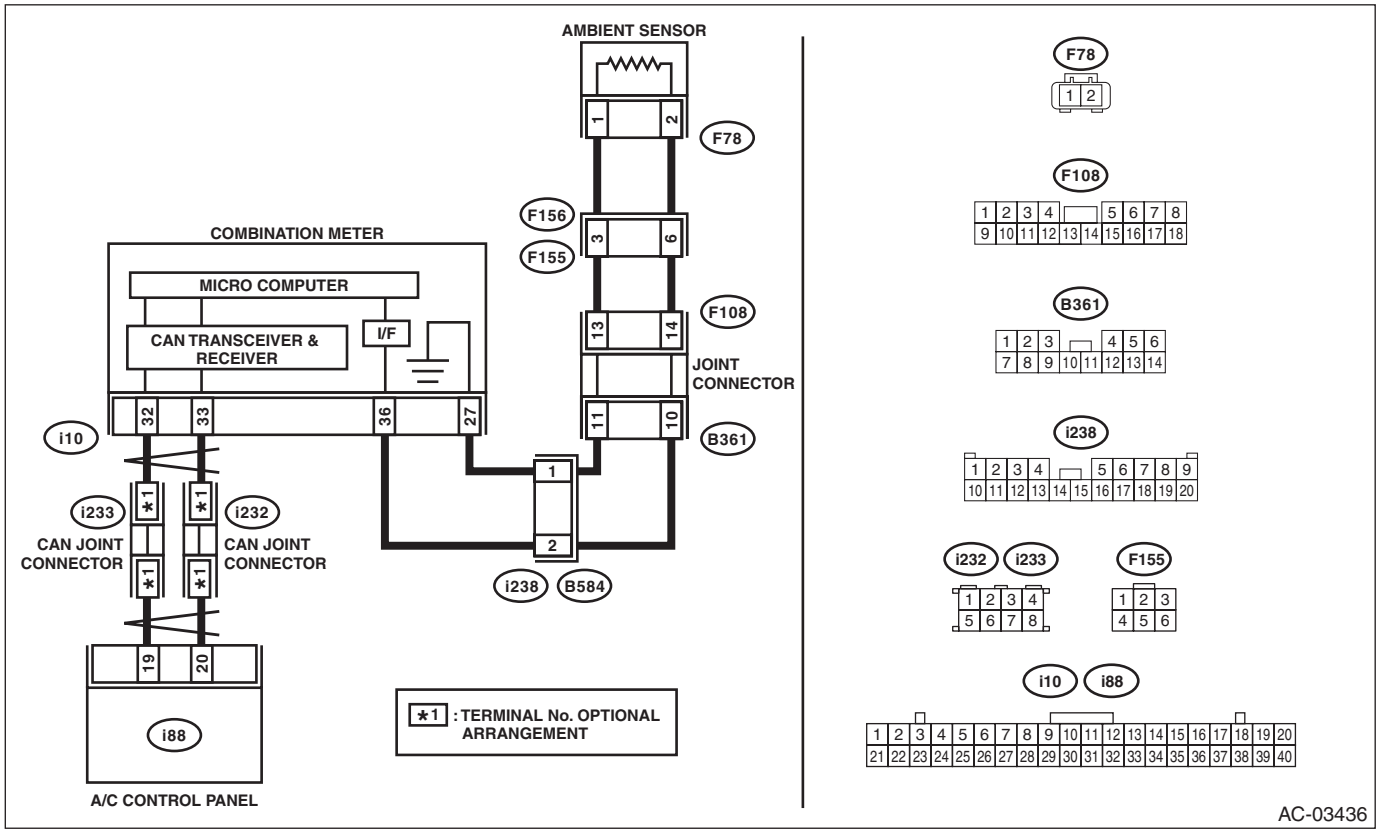

Step		Check	Yes	No
1	**CHECK AMBIENT SENSOR.** Perform the inspection of ambient sensor unit. <Ref. to AC-82, INSPECTION, Ambient Sensor.>	Is the sensor normal?	Go to step **2**.	Replace the ambient sensor. <Ref. to AC-79, REMOVAL, Ambient Sensor.>
2	**CHECK HARNESS.** 1) Turn the ignition switch to ON. 2) Using the tester, measure the voltage between terminals. ***Connector & terminal*** ***(F78) No. 2 (+) — No. 1 (–):***	Is the voltage 4.5 — 5.0 V?	Replace the combination meter. <Ref. to IDI-16, REMOVAL, Combination Meter.>	Go to step **3**.
3	**CHECK COMBINATION METER OUTPUT SIGNAL.** 1) Turn the ignition switch to OFF. 2) Pull out the combination meter. 3) Disconnect the connector from the combination meter. 4) Turn the ignition switch to ON. 5) Measure the voltage between the combination meter connector terminals. ***Connector & terminal*** ***(i10) No. 36 (+) — No. 27 (–):***	Is the voltage 4.5 — 5.0 V?	Go to step **4**.	Replace the combination meter. <Ref. to IDI-16, REMOVAL, Combination Meter.>

	Step	Check	Yes	No
4	**CHECK HARNESS.** 1) Disconnect the connector from the A/C control panel. 2) Using a tester, check continuity between terminals. ***Connector & terminal*** ***(F78) No. 1 — (i10) No. 27:*** ***(F78) No. 2 — (i10) No. 36:***	Is there continuity?	Go to step **5**.	Repair or replace the open circuit of harness.
5	**CHECK FOR POOR CONTACT.** Check for poor contact of combination meter connector.	Is there poor contact of connector?	Repair the connector.	Replace the combination meter. <Ref. to IDI-16, REMOVAL, Combination Meter.>

D: DTC B1433 OUTSIDE AIR SENSOR CIRCUIT SHORT-CIRCUIT (AIR-CONDITIONING)

DTC DETECTING CONDITION:
Ambient sensor circuit is shorted.
TROUBLE SYMPTOM:
Ambient temperature is falsely recognized, and the compartment temperature is adjusted.
WIRING DIAGRAM:
- Gasoline engine model

Air conditioning system <Ref. to WI(w/o HEV)-35, WIRING DIAGRAM, Air Conditioning System.>

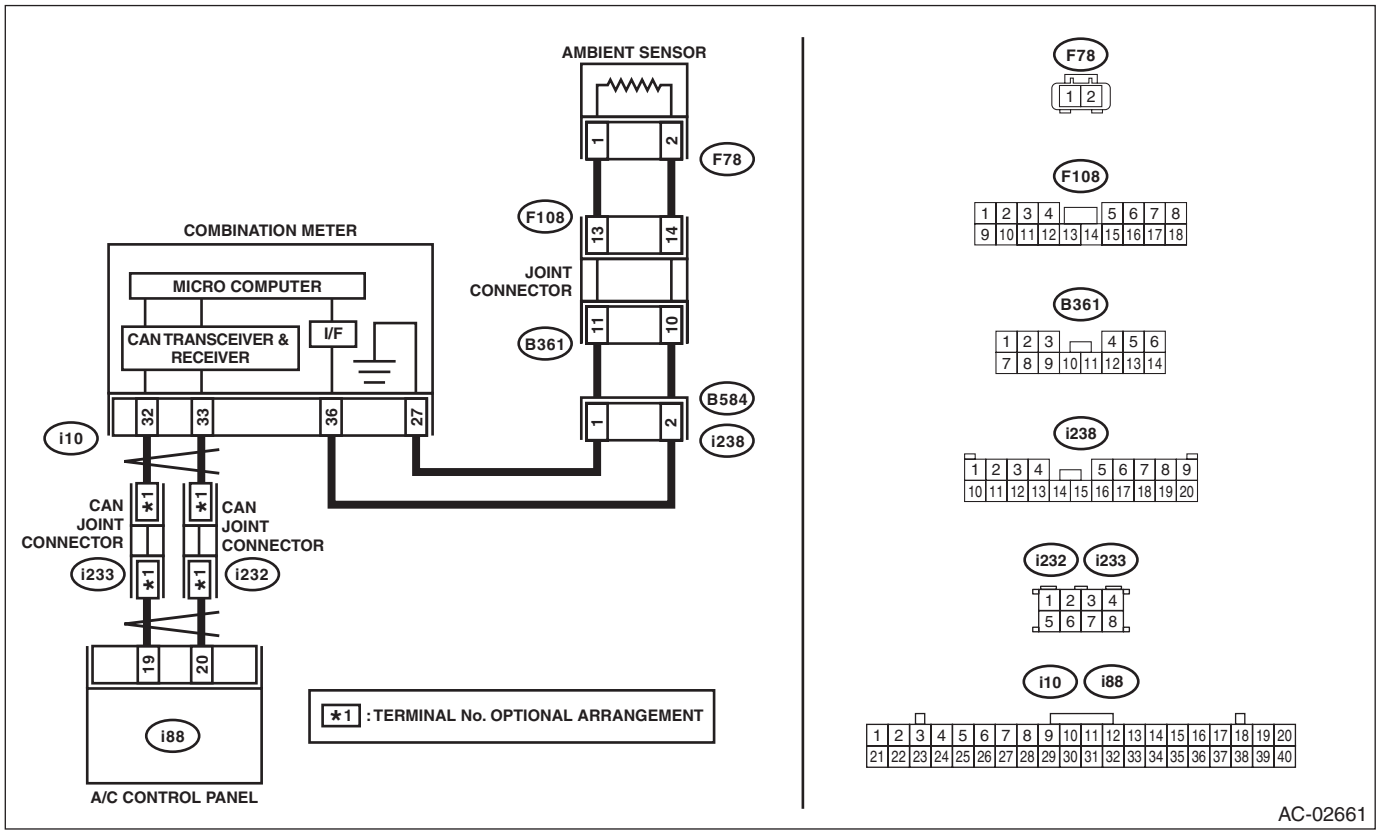

- HEV model

Air conditioning system <Ref. to WI(HEV)-55, WIRING DIAGRAM, Air Conditioning System.>

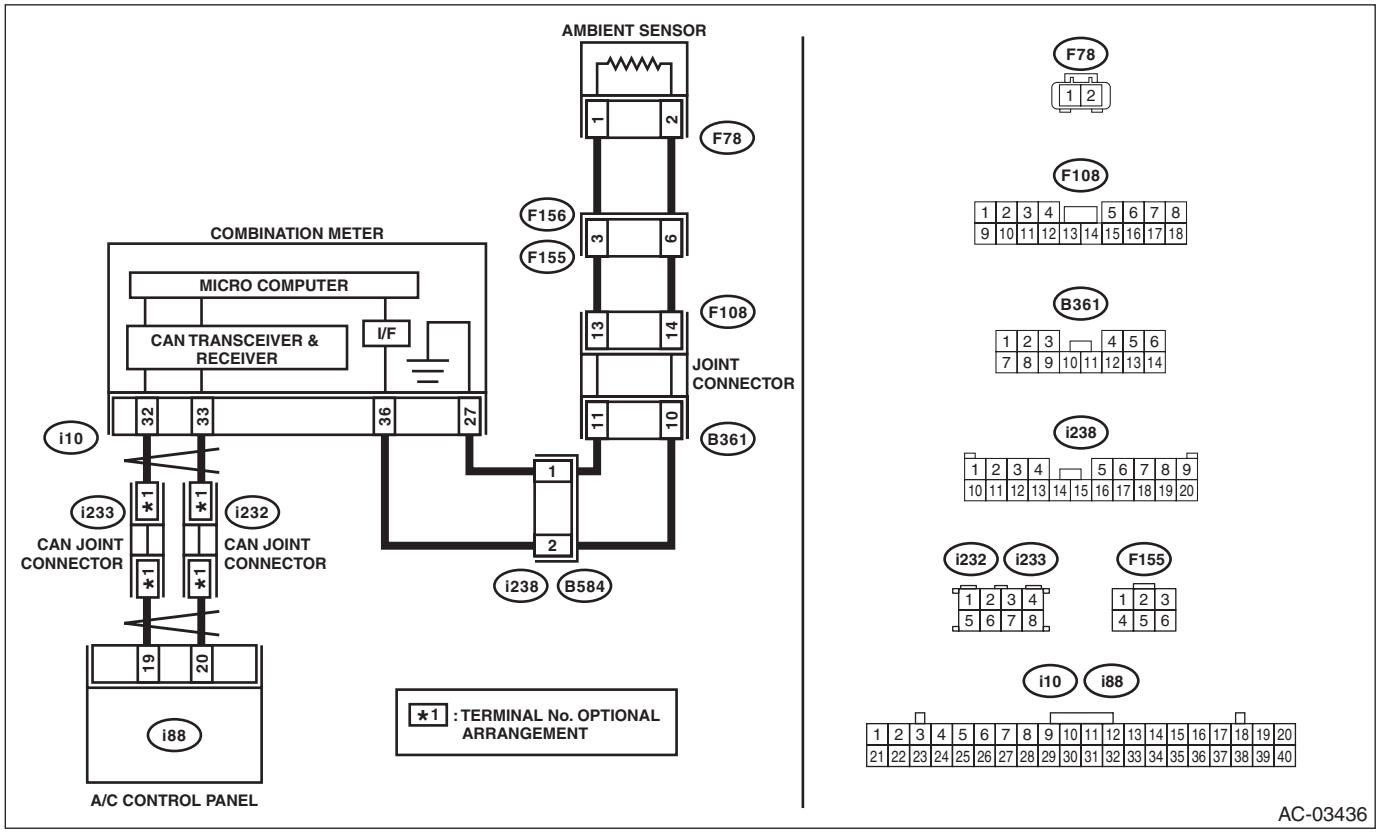

Step		Check	Yes	No
1	**CHECK AMBIENT SENSOR.** Perform the inspection of ambient sensor unit. <Ref. to AC-82, INSPECTION, Ambient Sensor.>	Is the sensor normal?	Go to step **2**.	Replace the ambient sensor. <Ref. to AC-79, REMOVAL, Ambient Sensor.>
2	**CHECK HARNESS.** 1) Turn the ignition switch to ON. 2) Using the tester, measure the voltage between terminals. ***Connector & terminal*** ***(F78) No. 2 (+) — No. 1 (–):***	Is the voltage 4.5 — 5.0 V?	Replace the combination meter. <Ref. to IDI-16, REMOVAL, Combination Meter.>	Go to step **3**.
3	**CHECK COMBINATION METER OUTPUT SIGNAL.** 1) Turn the ignition switch to OFF. 2) Pull out the combination meter. 3) Disconnect the connector from the combination meter. 4) Turn the ignition switch to ON. 5) Measure the voltage between the combination meter connector terminals. ***Connector & terminal*** ***(i10) No. 36 (+) — No. 27 (–):***	Is the voltage 4.5 — 5.0 V?	Go to step **4**.	Replace the combination meter. <Ref. to IDI-16, REMOVAL, Combination Meter.>
4	**CHECK HARNESS.** 1) Disconnect the connector from the A/C control panel. 2) Using a tester, check continuity between terminals. ***Connector & terminal*** ***(F78) No. 1 — (F78) No. 2:***	Is there continuity?	Repair or replace the short circuit of the harness.	Replace the combination meter. <Ref. to IDI-16, REMOVAL, Combination Meter.>

E: DTC B1434 AMBIENT TEMPERATURE SENSOR CIRCUIT WIRE BREAK

DTC DETECTING CONDITION:
Evaporator sensor circuit is open.
TROUBLE SYMPTOM:
Evaporator temperature is falsely recognized as low, and the compartment temperature is adjusted.
WIRING DIAGRAM:
Air conditioning system <Ref. to WI(w/o HEV)-35, WIRING DIAGRAM, Air Conditioning System.> <Ref. to WI(HEV)-55, WIRING DIAGRAM, Air Conditioning System.>

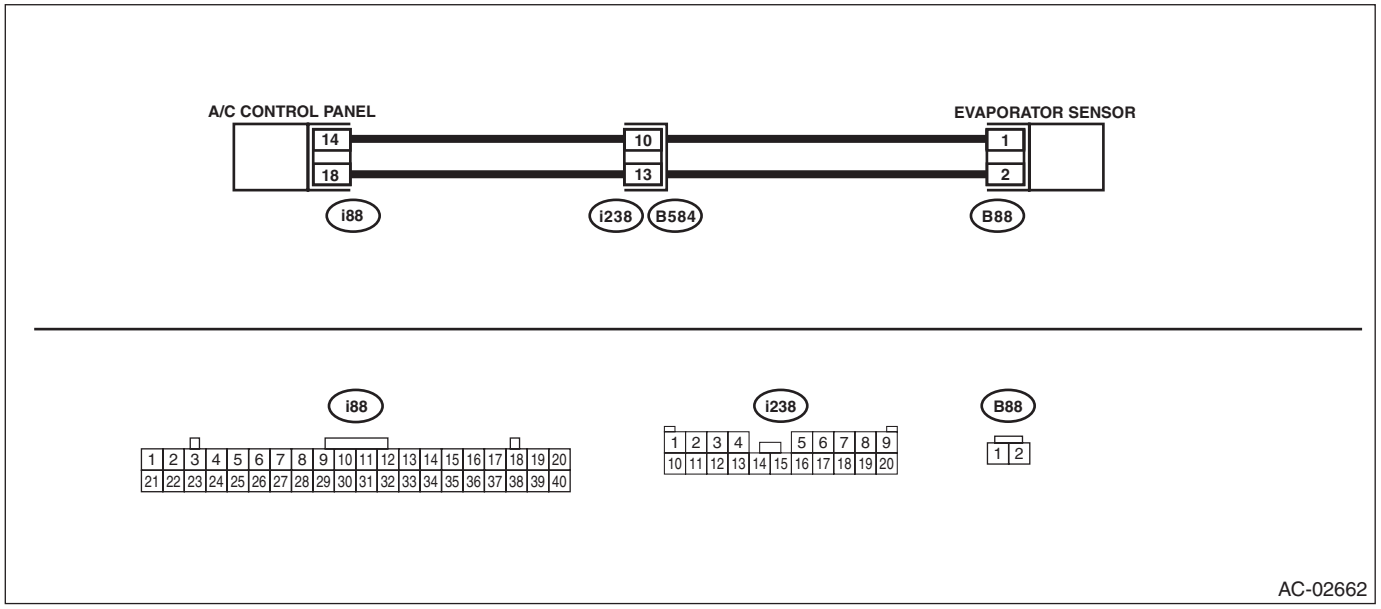

Step		Check	Yes	No
1	**CHECK CONNECTOR.** 1) Check the condition of connector connection. 2) Read the DTC using Subaru Select Monitor.	Is B1434 displayed?	Go to step **2**.	Check the connection of the evaporator sensor circuit.
2	**CHECK EVAPORATOR SENSOR.** 1) Disconnect the evaporator sensor. 2) Short the evaporator sensor connector (B88). 3) Read the DTC using Subaru Select Monitor.	Is B1435 displayed?	Replace the evaporator sensor. <Ref. to AC-66, REMOVAL, Evaporator.>	Go to step **3**.
3	**CHECK HARNESS.** 1) Turn the ignition switch to ON. 2) Using the tester, measure the voltage between terminals. ***Connector & terminal*** ***(B88) No. 2 (+) — No. 1 (–):***	Is the voltage 4.5 — 5.0 V?	Go to step **4**.	Repair or replace the open circuit of harness.
4	**CHECK HARNESS.** 1) Disconnect the connector from the A/C control panel. 2) Using a tester, check continuity between terminals. ***Connector & terminal*** ***(B88) No. 1 — (i88) No. 18:*** ***(B88) No. 2 — (i88) No. 14:***	Is there continuity?	Replace the A/C control panel. <Ref. to AC-50, REMOVAL, Control Panel.>	Repair or replace the open circuit of harness.

F: DTC B1435 EVAPORATOR SENSOR CIRCUIT SHORT-CIRCUIT

DTC DETECTING CONDITION:
Evaporator sensor circuit is shorted.
TROUBLE SYMPTOM:
Evaporator temperature is falsely recognized as high, and the compartment temperature is adjusted.
WIRING DIAGRAM:
Air conditioning system <Ref. to WI(w/o HEV)-35, WIRING DIAGRAM, Air Conditioning System.> <Ref. to WI(HEV)-55, WIRING DIAGRAM, Air Conditioning System.>

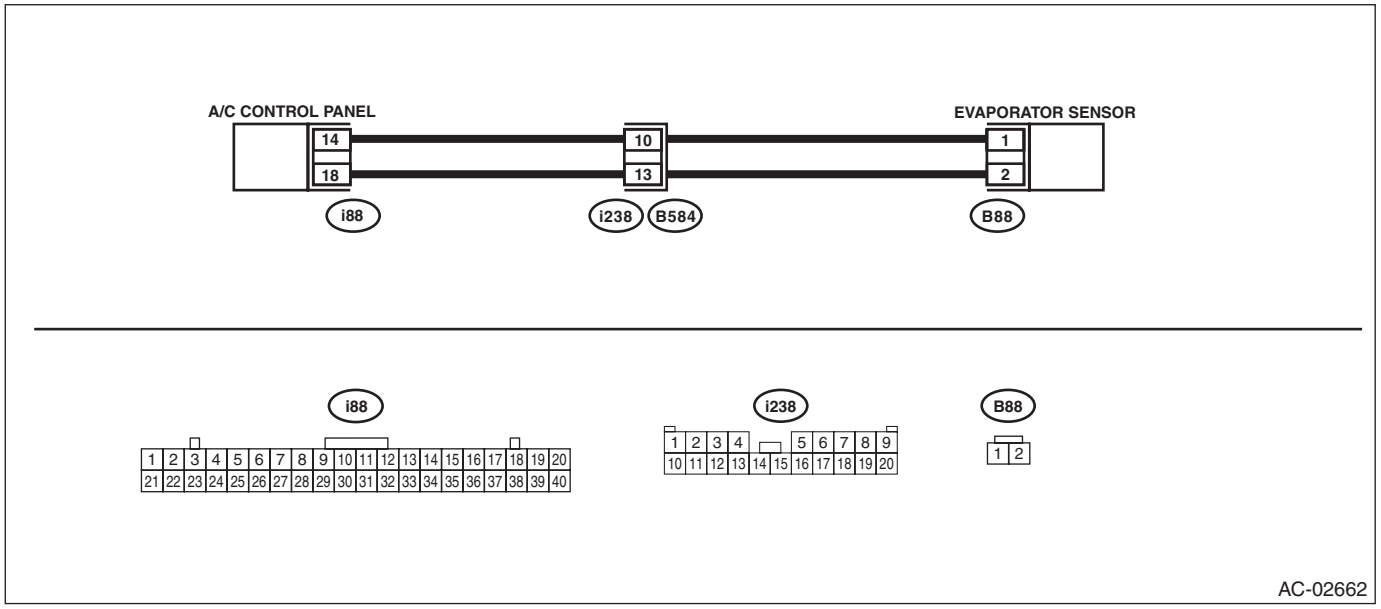

	Step	Check	Yes	No
1	**CHECK CONNECTOR.** 1) Check the condition of connector connection. 2) Read the DTC using Subaru Select Monitor.	Is B1435 displayed?	Go to step **2**.	Check the connection of the evaporator sensor circuit.
2	**CHECK EVAPORATOR SENSOR.** 1) Disconnect the evaporator sensor. 2) Read the DTC using Subaru Select Monitor.	Is B1434 displayed?	Replace the evaporator sensor. <Ref. to AC-66, REMOVAL, Evaporator.>	Go to step **3**.
3	**CHECK HARNESS.** 1) Turn the ignition switch to ON. 2) Using the tester, measure the voltage between terminals. ***Connector & terminal (B88) No. 2 (+) — No. 1 (–):***	Is the voltage 4.5 — 5.0 V?	Check the connection of the evaporator sensor circuit.	Go to step **4**.
4	**CHECK HARNESS.** 1) Disconnect the connector from the A/C control panel. 2) Using a tester, check continuity between terminals. ***Connector & terminal (B88) No. 1 — No. 2:***	Is there continuity?	Repair or replace the short circuit of the harness.	Replace the A/C control panel. <Ref. to AC-50, REMOVAL, Control Panel.>

G: DTC B14A1 SUNLOAD SENSOR CIRCUIT OPEN

DTC DETECTING CONDITION:
Sunload sensor circuit is open. (Displayed for current malfunction)

NOTE:
When the sunload sensor check is performed indoors or in the shade, it could be diagnosed as having an open circuit. Always check the sunload sensor in direct sunlight.

TROUBLE SYMPTOM:
Operation is performed as no sunload.

WIRING DIAGRAM:
Air conditioning system <Ref. to WI(w/o HEV)-35, WIRING DIAGRAM, Air Conditioning System.> <Ref. to WI(HEV)-55, WIRING DIAGRAM, Air Conditioning System.>

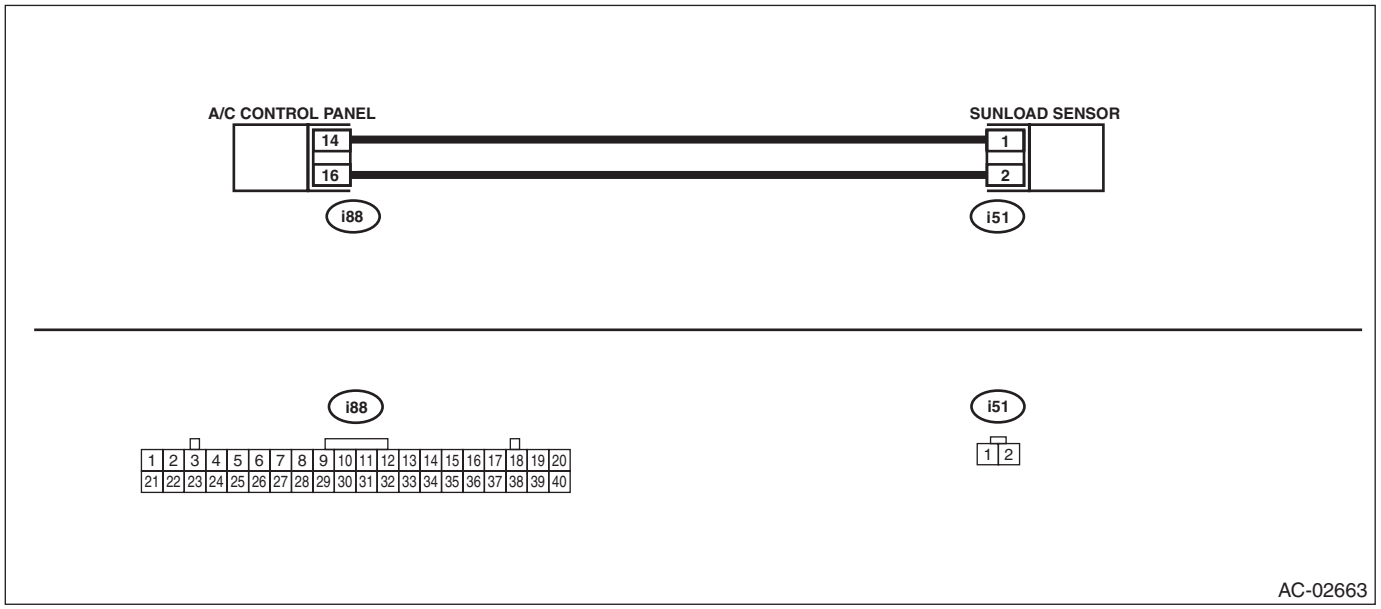

	Step	Check	Yes	No
1	**CHECK CONNECTOR.** 1) Check the condition of connector connection. 2) Read the DTC using Subaru Select Monitor.	Is B14A1 displayed?	Go to step **2**.	Check the connection of the sunload sensor circuit.
2	**CHECK SUNLOAD SENSOR.** 1) Disconnect the sunload sensor. 2) Short the connector. 3) Read the DTC using Subaru Select Monitor.	Is B14A2 displayed?	Replace the sunload sensor. <Ref. to AC-83, REMOVAL, Sunload Sensor (Auto A/C Model).>	Go to step **3**.
3	**CHECK HARNESS.** 1) Turn the ignition switch to ON. 2) Using the tester, measure the voltage between terminals. ***Connector & terminal*** ***(i51) No. 2 (+) — No. 1 (–):***	Is the voltage 4.5 — 5.0 V?	Go to step **4**.	Repair or replace the open circuit of the harness.
4	**CHECK HARNESS.** 1) Disconnect the connector from the A/C control panel. 2) Using a tester, check continuity between terminals. ***Connector & terminal*** ***(i51) No. 1 — (i88) No. 14:*** ***(i51) No. 1 — (i88) No. 16:***	Is there continuity?	Replace the A/C control panel. <Ref. to AC-50, REMOVAL, Control Panel.>	Repair or replace the short circuit of the harness.

H: DTC B14A2 SUNLOAD SENSOR CIRCUIT SHORT

DTC DETECTING CONDITION:
Sunload sensor circuit is shorted.
TROUBLE SYMPTOM:
Operation is performed as no sunload.
WIRING DIAGRAM:
Air conditioning system <Ref. to WI(w/o HEV)-35, WIRING DIAGRAM, Air Conditioning System.> <Ref. to WI(HEV)-55, WIRING DIAGRAM, Air Conditioning System.>

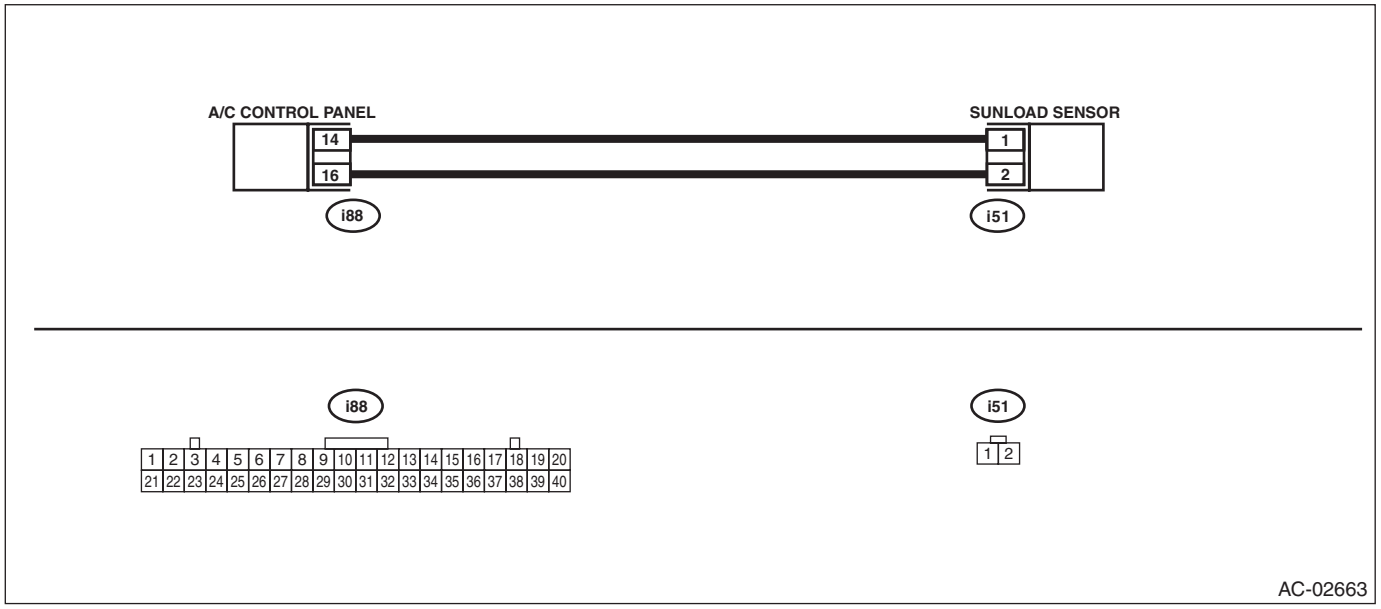

	Step	Check	Yes	No
1	**CHECK CONNECTOR.** 1) Check the condition of connector connection. 2) Read the DTC using Subaru Select Monitor.	Is B14A2 displayed?	Go to step **2**.	Check the connection of the sunload sensor circuit.
2	**CHECK SUNLOAD SENSOR.** 1) Disconnect the sunload sensor. 2) Read the DTC using Subaru Select Monitor.	Is B14A1 displayed?	Replace the sunload sensor. <Ref. to AC-83, REMOVAL, Sunload Sensor (Auto A/C Model).>	Go to step **3**.
3	**CHECK HARNESS.** 1) Turn the ignition switch to ON. 2) Using the tester, measure the voltage between terminals. ***Connector & terminal*** ***(i51) No. 2 (+) — No. 1 (–):***	Is the voltage 4.5 — 5.0 V?	Check the connection of the sunload sensor circuit.	Go to step **4**.
4	**CHECK HARNESS.** 1) Disconnect the connector from the A/C control panel. 2) Using a tester, check continuity between terminals. ***Connector & terminal*** ***(i51) No. 1 — No. 2:***	Is there continuity?	Repair or replace the short circuit of the harness.	Replace the A/C control panel. <Ref. to AC-50, REMOVAL, Control Panel.>

I: DTC B14E1 AIR MIX DOOR ACTUATOR STEPPING MOTOR CIRCUIT WIRE BREAK (DRIVER'S SEAT)

DTC DETECTING CONDITION:
Air mix door actuator stepping motor circuit is open.
TROUBLE SYMPTOM:
Temperature cannot be adjusted.
WIRING DIAGRAM:
Air conditioning system <Ref. to WI(w/o HEV)-35, WIRING DIAGRAM, Air Conditioning System.> <Ref. to WI(HEV)-55, WIRING DIAGRAM, Air Conditioning System.>

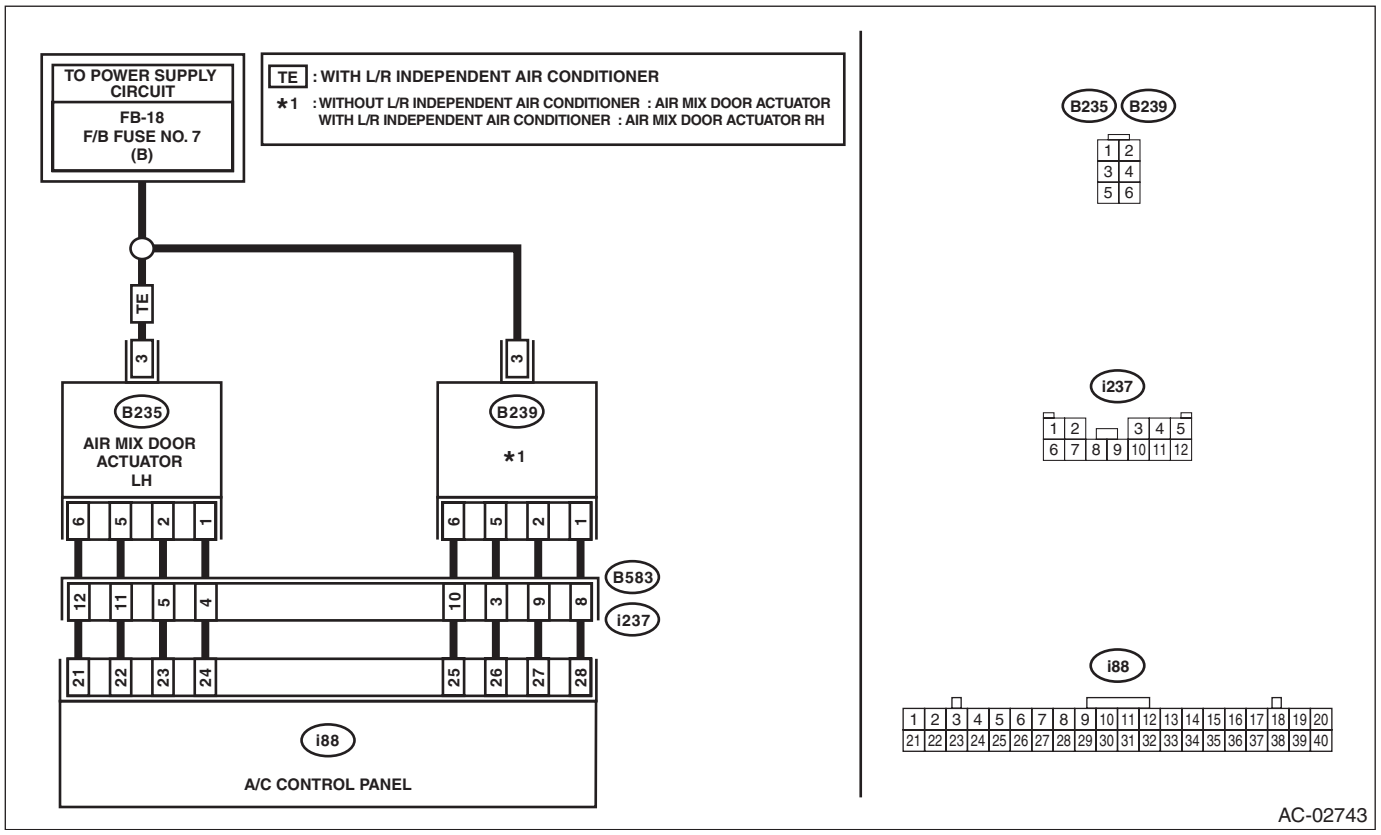

Step		Check	Yes	No
1	**CHECK CONNECTOR.** 1) Check the condition of connector connection. 2) Read the DTC using Subaru Select Monitor.	Is B14E1 displayed?	Go to step **2**.	Repair the poor contact of connector.
2	**CHECK ACTUATOR.** 1) Turn the ignition switch to OFF. 2) Disconnect the air mix door actuator connector. 3) Turn the ignition switch to ON. 4) Measure the voltage between the air mix door actuator connector terminal and chassis ground. ***Connector & terminal*** ***Without left/right independent air conditioning function*** ***(B239) No. 3 (+) — Chassis ground (–):*** ***With left/right independent air conditioning function*** ***(B235) No. 3 (+) — Chassis ground (–):***	Is the voltage approx. 10 V or more?	Go to step **3**.	Check the DC power supply circuit.

	Step	Check	Yes	No
3	**CHECK AIR MIX DOOR ACTUATOR.** 1) Turn the ignition switch to OFF. 2) Measure the resistance between air mix door actuator terminals using a tester. ***Connector & terminal*** ***Without left/right independent air conditioning function*** ***(B239) No. 3 — No. 1:*** ***(B239) No. 3 — No. 2:*** ***(B239) No. 3 — No. 5:*** ***(B239) No. 3 — No. 6:*** ***With left/right independent air conditioning function*** ***(B235) No. 3 — No. 1:*** ***(B235) No. 3 — No. 2:*** ***(B235) No. 3 — No. 5:*** ***(B235) No. 3 — No. 6:***	Is the resistance 80 — 100 Ω?	Go to step **4**.	Replace the actuator. <Ref. to AC-105, REMOVAL, Air Mix Door Actuator.>
4	**CHECK HARNESS BETWEEN A/C CONTROL PANEL AND AIR MIX DOOR ACTUATOR.** 1) Disconnect the A/C control panel connector. 2) Measure the resistance between A/C control panel and air mix door actuator connector. ***Connector & terminal*** ***Without left/right independent air conditioning function*** ***(B239) No. 1 — (i88) No. 28:*** ***(B239) No. 2 — (i88) No. 27:*** ***(B239) No. 5 — (i88) No. 26:*** ***(B239) No. 6 — (i88) No. 25:*** ***With left/right independent air conditioning function*** ***(B235) No. 1 — (i88) No. 24:*** ***(B235) No. 2 — (i88) No. 23:*** ***(B235) No. 5 — (i88) No. 22:*** ***(B235) No. 6 — (i88) No. 21:***	Is there continuity?	Replace the A/C control panel. <Ref. to AC-50, REMOVAL, Control Panel.>	Repair or replace the open circuit of harness.

J: DTC B14E2 AIR MIX DOOR ACTUATOR STEPPING MOTOR CIRCUIT SHORT-CIRCUIT (DRIVER'S SEAT)

DTC DETECTING CONDITION:
Air mix door actuator stepping motor circuit is shorted.
TROUBLE SYMPTOM:
Temperature cannot be adjusted.
WIRING DIAGRAM:
Air conditioning system <Ref. to WI(w/o HEV)-35, WIRING DIAGRAM, Air Conditioning System.> <Ref. to WI(HEV)-55, WIRING DIAGRAM, Air Conditioning System.>

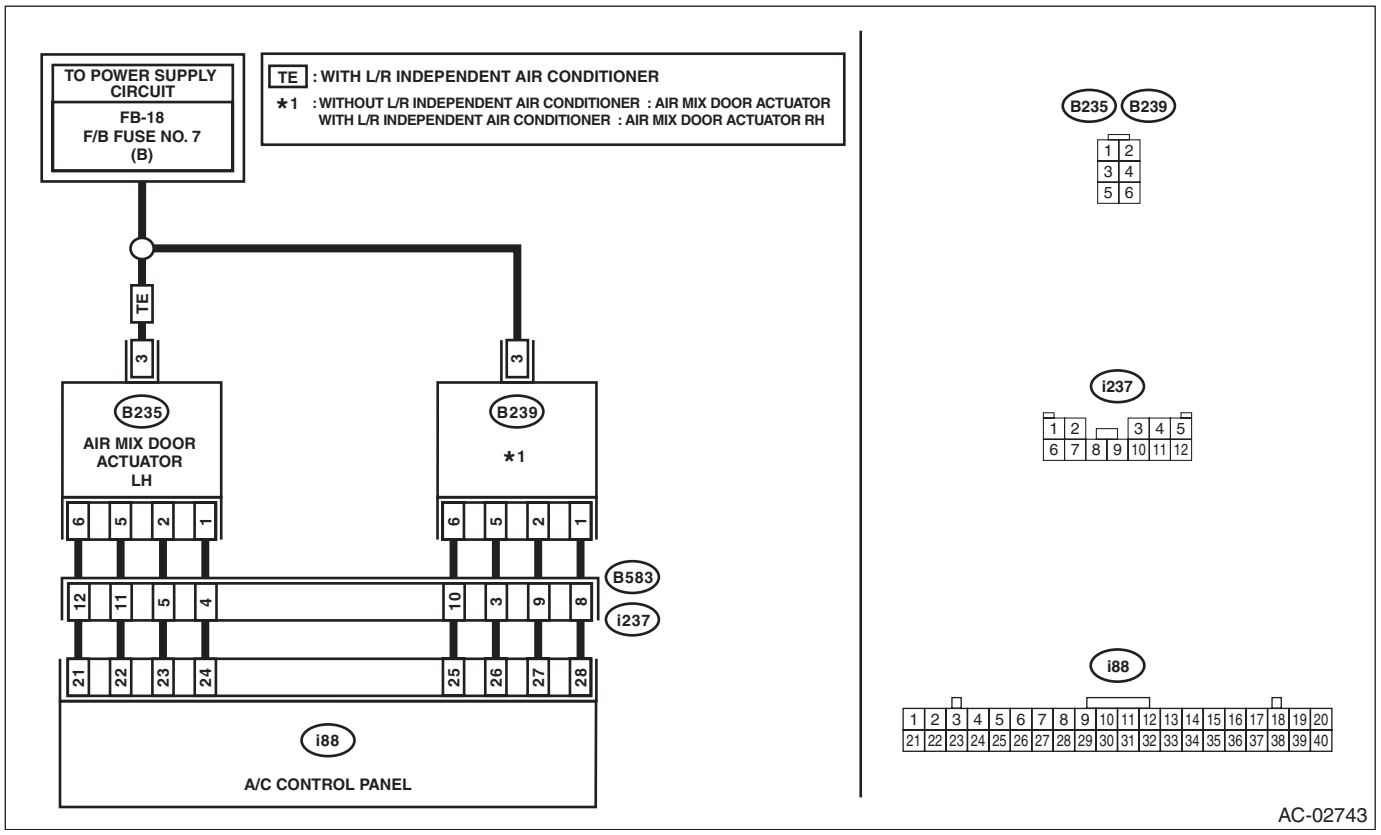

Step		Check	Yes	No
1	**CHECK CONNECTOR.** 1) Check the condition of connector connection. 2) Read the DTC using Subaru Select Monitor.	Is B14E2 displayed?	Go to step **2**.	Repair the poor contact of connector.
2	**CHECK POWER SUPPLY OF AIR MIX DOOR ACTUATOR.** 1) Turn the ignition switch to OFF. 2) Disconnect the air mix door actuator connector. 3) Turn the ignition switch to ON. 4) Measure the voltage between the air mix door actuator connector terminal and chassis ground. ***Connector & terminal*** ***Without left/right independent air conditioning function*** ***(B239) No. 3 (+) — Chassis ground (–):*** ***With left/right independent air conditioning function*** ***(B235) No. 3 (+) — Chassis ground (–):***	Is the voltage approx. 10 V or more?	Go to step **3**.	Check the DC power supply circuit.

	Step	Check	Yes	No
3	**CHECK AIR MIX DOOR ACTUATOR.** 1) Turn the ignition switch to OFF. 2) Measure the resistance between air mix door actuator terminals using a tester. ***Connector & terminal*** ***Without left/right independent air conditioning function*** ***(B239) No. 3 — No. 1:*** ***(B239) No. 3 — No. 2:*** ***(B239) No. 3 — No. 5:*** ***(B239) No. 3 — No. 6:*** ***With left/right independent air conditioning function*** ***(B235) No. 3 — No. 1:*** ***(B235) No. 3 — No. 2:*** ***(B235) No. 3 — No. 5:*** ***(B235) No. 3 — No. 6:***	Is the resistance 80 — 100 Ω?	Go to step **4**.	Replace the actuator. <Ref. to AC-105, REMOVAL, Air Mix Door Actuator.>
4	**CHECK HARNESS BETWEEN A/C CONTROL PANEL AND AIR MIX DOOR ACTUATOR.** 1) Disconnect the A/C control panel connector. 2) Measure the voltage between air mix door actuator connector and chassis ground. ***Connector & terminal*** ***Without left/right independent air conditioning function*** ***(B239) No. 1 (+) — Chassis ground (–):*** ***(B239) No. 2 (+) — Chassis ground (–):*** ***(B239) No. 5 (+) — Chassis ground (–):*** ***(B239) No. 6 (+) — Chassis ground (–):*** ***With left/right independent air conditioning function*** ***(B235) No. 1 (+) — Chassis ground (–):*** ***(B235) No. 2 (+) — Chassis ground (–):*** ***(B235) No. 5 (+) — Chassis ground (–):*** ***(B235) No. 6 (+) — Chassis ground (–):***	Is there any voltage?	Repair or replace the short circuit of the harness.	Replace the A/C control panel. <Ref. to AC-50, REMOVAL, Control Panel.>

K: DTC B14E3 AIR MIX DOOR ACTUATOR STEPPING MOTOR CIRCUIT WIRE BREAK (PASSENGER'S SEAT)

DTC DETECTING CONDITION:
Air mix door actuator stepping motor circuit is open.
TROUBLE SYMPTOM:
Temperature cannot be adjusted.
WIRING DIAGRAM:
Air conditioning system <Ref. to WI(w/o HEV)-35, WIRING DIAGRAM, Air Conditioning System.> <Ref. to WI(HEV)-55, WIRING DIAGRAM, Air Conditioning System.>

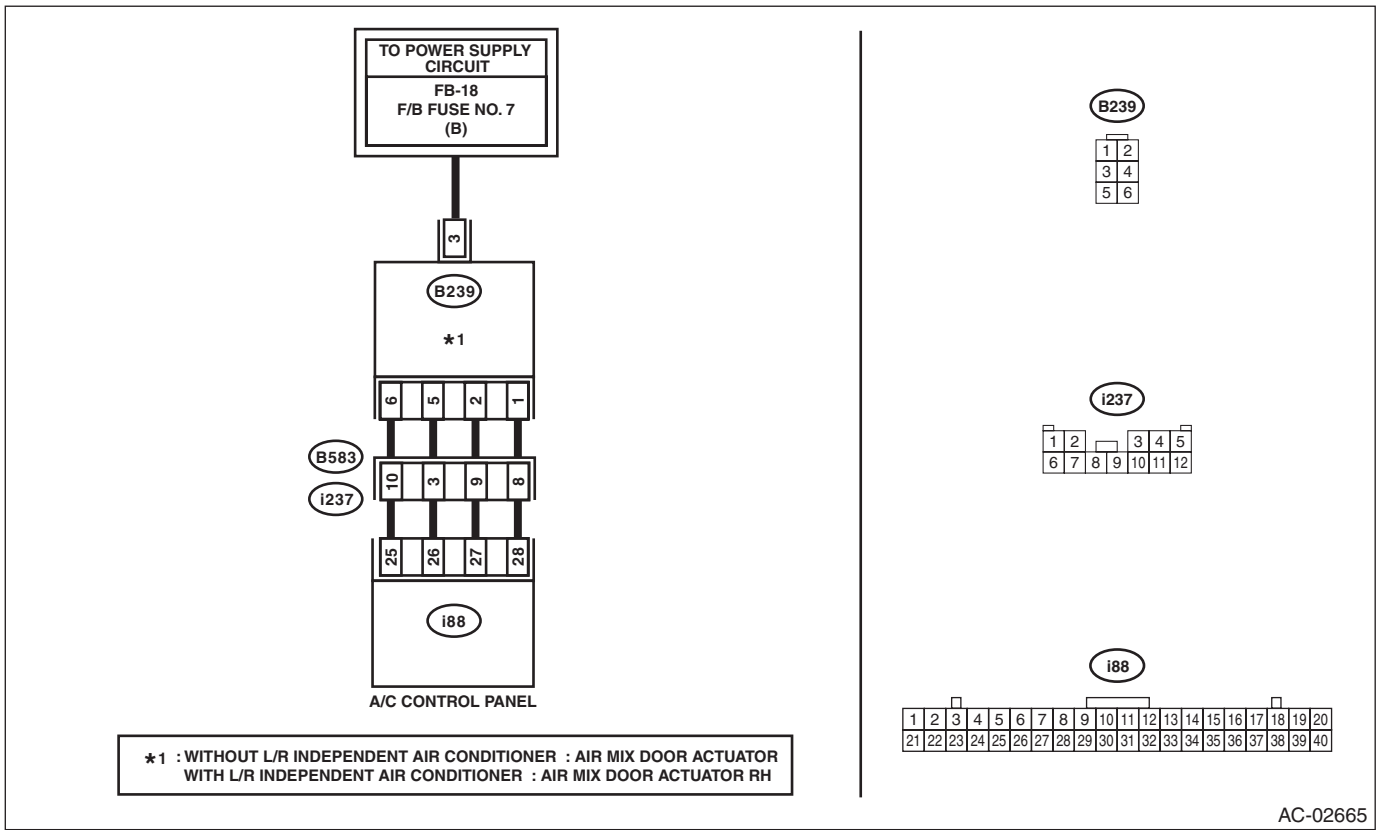

Step		Check	Yes	No
1	**CHECK CONNECTOR.** 1) Check the condition of connector connection. 2) Read the DTC using Subaru Select Monitor.	Is B14E3 displayed?	Go to step **2**.	Repair the poor contact of connector.
2	**CHECK ACTUATOR.** 1) Turn the ignition switch to OFF. 2) Disconnect the air mix door actuator connector. 3) Turn the ignition switch to ON. 4) Measure the voltage between the air mix door actuator connector terminal and chassis ground. ***Connector & terminal*** ***(B239) No. 3 (+) — Chassis ground (–):***	Is the voltage approx. 10 V or more?	Go to step **3**.	Check the DC power supply circuit.

	Step	Check	Yes	No
3	**CHECK AIR MIX DOOR ACTUATOR.** 1) Turn the ignition switch to OFF. 2) Measure the resistance between air mix door actuator terminals using a tester. ***Connector & terminal*** ***(B239) No. 3 — No. 1:*** ***(B239) No. 3 — No. 2:*** ***(B239) No. 3 — No. 5:*** ***(B239) No. 3 — No. 6:***	Is the resistance 80 — 100 Ω?	Go to step **4**.	Replace the actuator. <Ref. to AC-105, REMOVAL, Air Mix Door Actuator.>
4	**CHECK HARNESS BETWEEN A/C CONTROL PANEL AND AIR MIX DOOR ACTUATOR.** 1) Disconnect the A/C control panel connector. 2) Measure the resistance between A/C control panel and air mix door actuator connector. ***Connector & terminal*** ***(B239) No. 1 — (i88) No. 28:*** ***(B239) No. 2 — (i88) No. 27:*** ***(B239) No. 5 — (i88) No. 26:*** ***(B239) No. 6 — (i88) No. 25:***	Is there continuity?	Replace the A/C control panel. <Ref. to AC-50, REMOVAL, Control Panel.>	Repair or replace the open circuit of harness.

L: DTC B14E4 AIR MIX DOOR ACTUATOR STEPPING MOTOR CIRCUIT SHORT-CIRCUIT (PASSENGER'S SEAT)

DTC DETECTING CONDITION:
Air mix door actuator stepping motor circuit is shorted.
TROUBLE SYMPTOM:
Temperature cannot be adjusted.
WIRING DIAGRAM:
Air conditioning system <Ref. to WI(w/o HEV)-35, WIRING DIAGRAM, Air Conditioning System.> <Ref. to WI(HEV)-55, WIRING DIAGRAM, Air Conditioning System.>

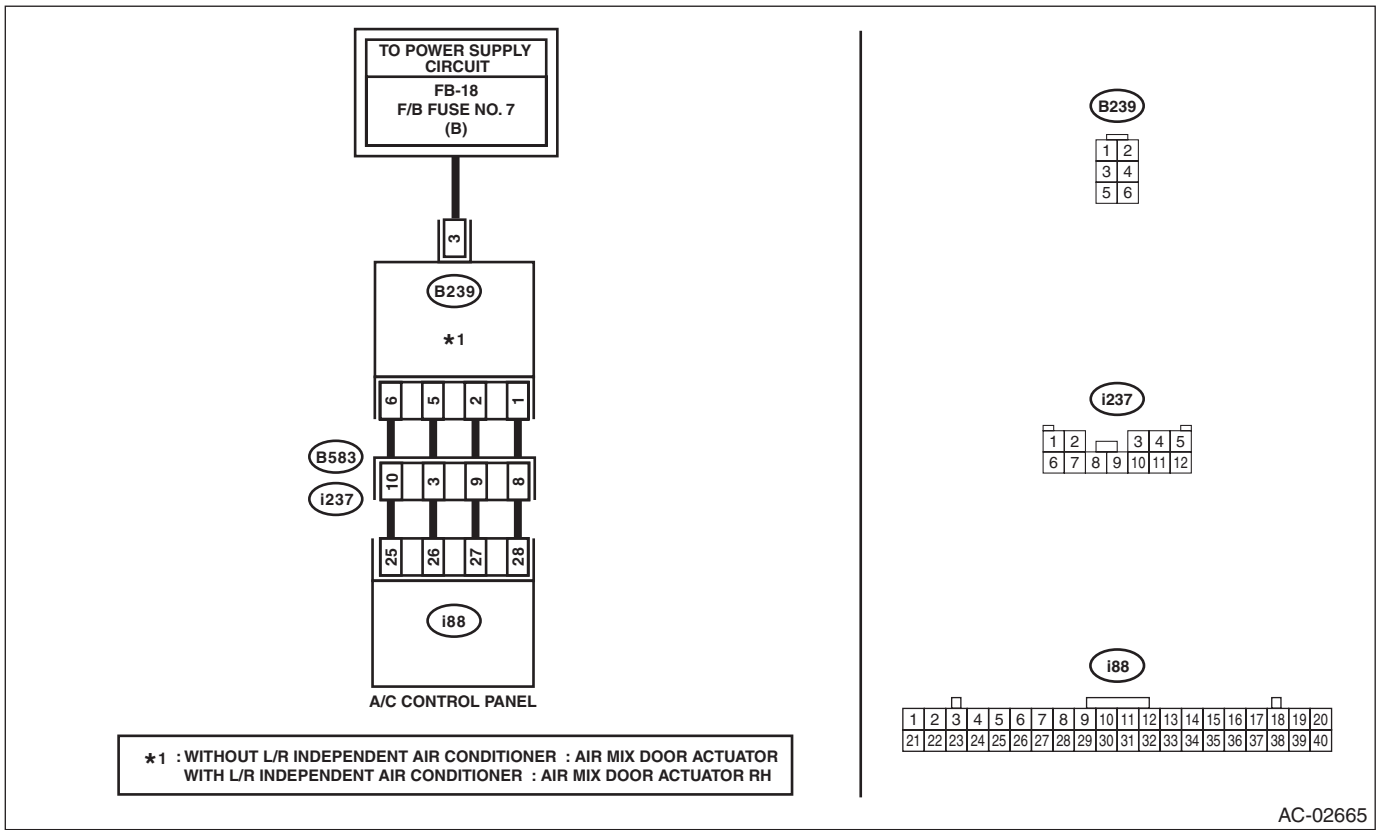

Step		Check	Yes	No
1	**CHECK CONNECTOR.** 1) Check the condition of connector connection. 2) Read the DTC using Subaru Select Monitor.	Is B14E4 displayed?	Go to step **2**.	Repair the poor contact of connector.
2	**CHECK POWER SUPPLY OF AIR MIX DOOR ACTUATOR.** 1) Turn the ignition switch to OFF. 2) Disconnect the air mix door actuator connector. 3) Turn the ignition switch to ON. 4) Measure the voltage between the air mix door actuator connector terminal and chassis ground. ***Connector & terminal*** ***(B239) No. 3 (+) — Chassis ground (–):***	Is the voltage approx. 10 V or more?	Go to step **3**.	Check the DC power supply circuit.

	Step	Check	Yes	No
3	**CHECK AIR MIX DOOR ACTUATOR.** 1) Turn the ignition switch to OFF. 2) Measure the resistance between air mix door actuator terminals using a tester. ***Connector & terminal*** ***(B239) No. 3 — No. 1:*** ***(B239) No. 3 — No. 2:*** ***(B239) No. 3 — No. 5:*** ***(B239) No. 3 — No. 6:***	Is the resistance 80 — 100 Ω?	Go to step **4**.	Replace the actuator. <Ref. to AC-105, REMOVAL, Air Mix Door Actuator.>
4	**CHECK HARNESS BETWEEN A/C CONTROL PANEL AND AIR MIX DOOR ACTUATOR.** 1) Disconnect the A/C control panel connector. 2) Measure the voltage between air mix door actuator connector and chassis ground. ***Connector & terminal*** ***(B239) No. 1 (+) — Chassis ground (–):*** ***(B239) No. 2 (+) — Chassis ground (–):*** ***(B239) No. 5 (+) — Chassis ground (–):*** ***(B239) No. 6 (+) — Chassis ground (–):***	Is there any voltage?	Repair or replace the short circuit of the harness.	Replace the A/C control panel. <Ref. to AC-50, REMOVAL, Control Panel.>

M: DTC B14E5 MODE DOOR ACTUATOR STEPPING MOTOR CIRCUIT WIRE BREAK

DTC DETECTING CONDITION:
Mode door actuator stepping motor circuit is open.
TROUBLE SYMPTOM:
Vent does not change.
WIRING DIAGRAM:
Air conditioning system <Ref. to WI(w/o HEV)-35, WIRING DIAGRAM, Air Conditioning System.> <Ref. to WI(HEV)-55, WIRING DIAGRAM, Air Conditioning System.>

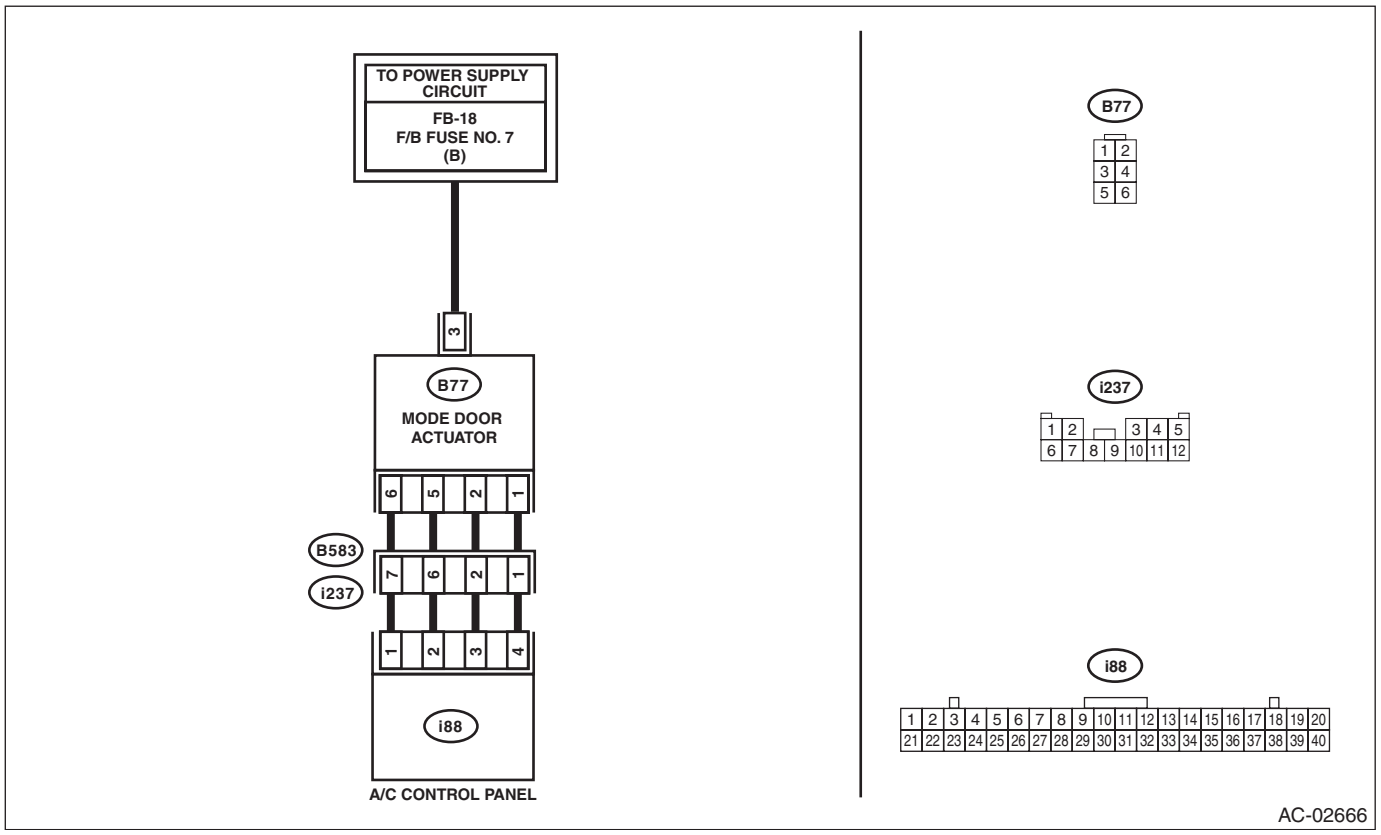

Step		Check	Yes	No
1	**CHECK CONNECTOR.** 1) Check the condition of connector connection. 2) Read the DTC using Subaru Select Monitor.	Is B14E5 displayed?	Go to step **2**.	Repair the poor contact of connector.
2	**CHECK ACTUATOR.** 1) Turn the ignition switch to OFF. 2) Disconnect the mode door actuator connector. 3) Turn the ignition switch to ON. 4) Measure the voltage between the mode door actuator connector terminal and chassis ground. ***Connector & terminal*** ***(B77) No. 3 (+) — Chassis ground (–):***	Is the voltage approx. 10 V or more?	Go to step **3**.	Check the DC power supply circuit.

	Step	Check	Yes	No
3	**CHECK AIR MIX DOOR ACTUATOR.** 1) Turn the ignition switch to OFF. 2) Measure the resistance between mode door actuator terminals using a tester. ***Connector & terminal*** ***(B77) No. 3 — No. 1:*** ***(B77) No. 3 — No. 2:*** ***(B77) No. 3 — No. 5:*** ***(B77) No. 3 — No. 6:***	Is the resistance 80 — 100 Ω?	Go to step **4**.	Replace the actuator. <Ref. to AC-104, REMOVAL, Mode Door Actuator.>
4	**CHECK HARNESS BETWEEN A/C CONTROL PANEL AND MODE DOOR ACTUATOR.** 1) Disconnect the A/C control panel connector. 2) Measure the resistance between A/C control panel and air mix door actuator connector. ***Connector & terminal*** ***(B77) No. 1 — (i88) No. 4:*** ***(B77) No. 2 — (i88) No. 3:*** ***(B77) No. 5 — (i88) No. 2:*** ***(B77) No. 6 — (i88) No. 1:***	Is there continuity?	Replace the A/C control panel. <Ref. to AC-50, REMOVAL, Control Panel.>	Repair or replace the open circuit of harness.

N: DTC B14E6 MODE DOOR ACTUATOR STEPPING MOTOR CIRCUIT SHORT-CIRCUIT

DTC DETECTING CONDITION:
Mode door actuator stepping motor circuit is shorted.
TROUBLE SYMPTOM:
Vent does not change.
WIRING DIAGRAM:
Air conditioning system <Ref. to WI(w/o HEV)-35, WIRING DIAGRAM, Air Conditioning System.> <Ref. to WI(HEV)-55, WIRING DIAGRAM, Air Conditioning System.>

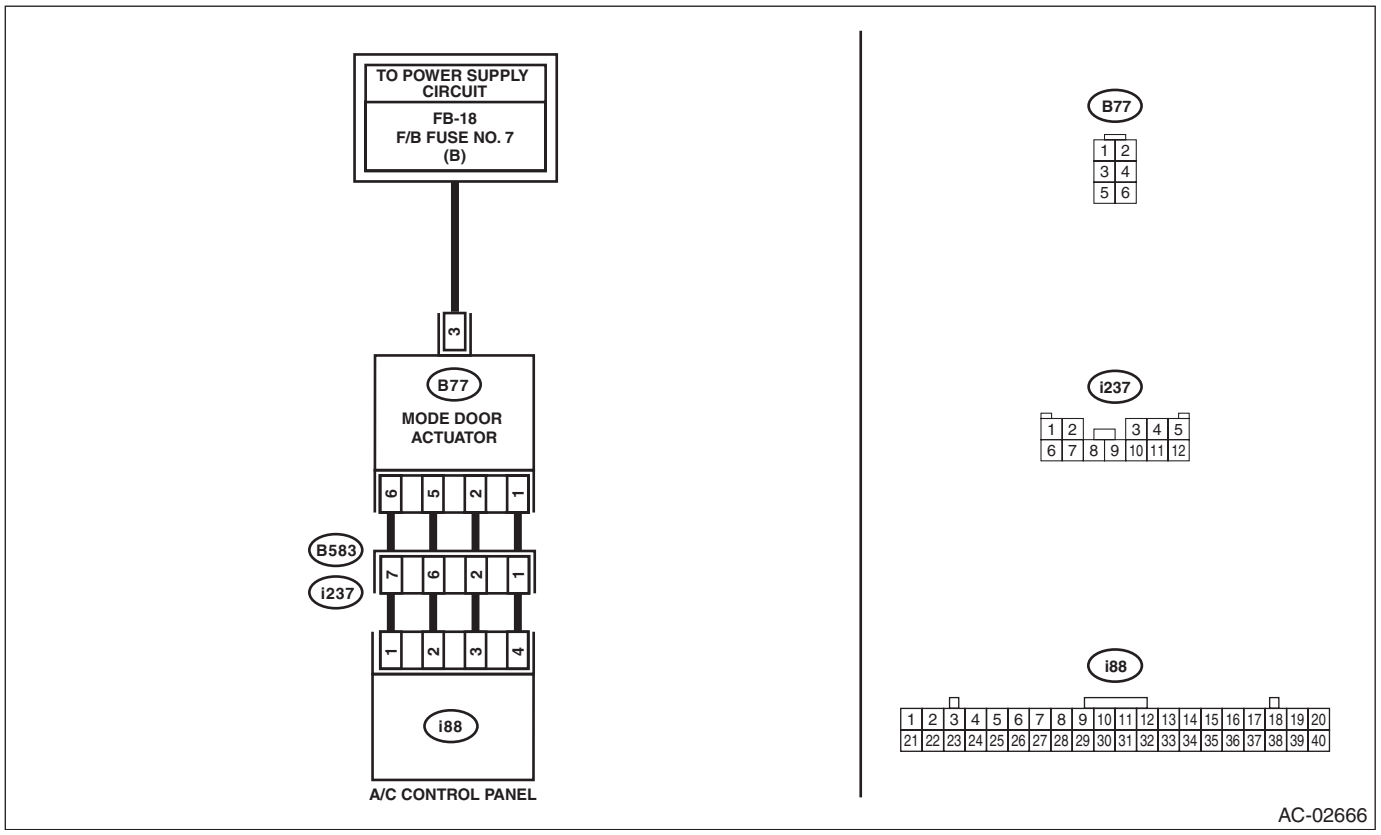

Step		Check	Yes	No
1	**CHECK CONNECTOR.** 1) Check the condition of connector connection. 2) Read the DTC using Subaru Select Monitor.	Is B14E6 displayed?	Go to step **2**.	Repair the poor contact of connector.
2	**CHECK POWER SUPPLY FOR MODE DOOR ACTUATOR.** 1) Turn the ignition switch to OFF. 2) Disconnect the mode door actuator connector. 3) Turn the ignition switch to ON. 4) Measure the voltage between the mode door actuator connector terminal and chassis ground. ***Connector & terminal*** ***(B77) No. 3 (+) — Chassis ground (–):***	Is the voltage approx. 10 V or more?	Go to step **3**.	Check the DC power supply circuit.

	Step	Check	Yes	No
3	**CHECK MODE DOOR ACTUATOR.** 1) Turn the ignition switch to OFF. 2) Measure the resistance between mode door actuator terminals using a tester. ***Connector & terminal*** ***(B77) No. 3 — No. 1:*** ***(B77) No. 3 — No. 2:*** ***(B77) No. 3 — No. 5:*** ***(B77) No. 3 — No. 6:***	Is the resistance 80 — 100 Ω?	Go to step **4**.	Replace the actuator. <Ref. to AC-104, REMOVAL, Mode Door Actuator.>
4	**CHECK HARNESS BETWEEN A/C CONTROL PANEL AND MODE DOOR ACTUATOR.** 1) Disconnect the A/C control panel connector. 2) Measure the voltage between mode door actuator connector and chassis ground. ***Connector & terminal*** ***(B77) No. 1 (+) — Chassis ground (–):*** ***(B77) No. 2 (+) — Chassis ground (–):*** ***(B77) No. 5 (+) — Chassis ground (–):*** ***(B77) No. 6 (+) — Chassis ground (–):***	Is there any voltage?	Repair or replace the short circuit of the harness.	Replace the A/C control panel. <Ref. to AC-50, REMOVAL, Control Panel.>

O: DTC B14E7 HEATER CORE REAR SENSOR CIRCUIT WIRE BREAK

DTC DETECTING CONDITION:
Heater core sensor circuit is open.
TROUBLE SYMPTOM:
Proper outlet air temperature cannot be kept during Auto Start Stop.
WIRING DIAGRAM:
Air conditioning system <Ref. to WI(HEV)-55, WIRING DIAGRAM, Air Conditioning System.>

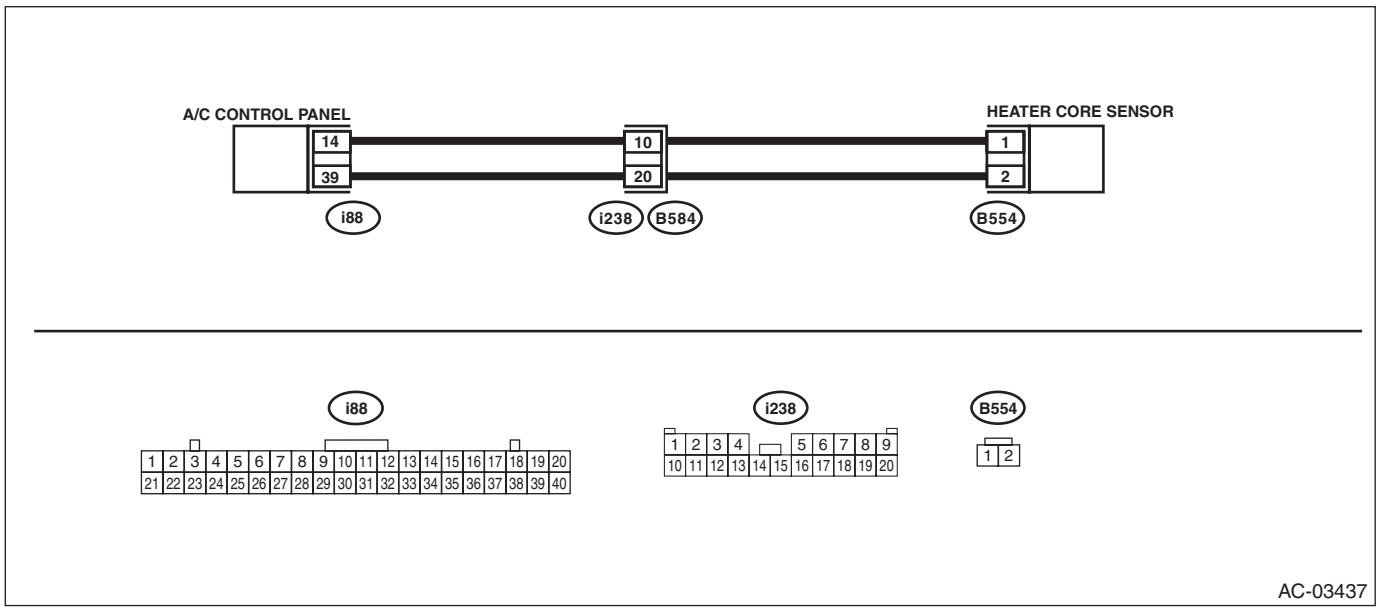

Step		Check	Yes	No
1	**CHECK CONNECTOR.** 1) Check the condition of connector connection. 2) Read the DTC using Subaru Select Monitor.	Is B14E7 displayed?	Go to step **2**.	Check the connection of the heater core sensor circuit.
2	**CHECK HEATER CORE SENSOR.** 1) Disconnect the heater core sensor. 2) Short the heater core sensor connector (B554). 3) Read the DTC using Subaru Select Monitor.	Is B14E8 displayed?	Replace the heater core sensor. <Ref. to AC-97, REMOVAL, Heater Core Sensor.>	Go to step **3**.
3	**CHECK HARNESS.** 1) Turn the ignition switch to ON. 2) Using the tester, measure the voltage between terminals. ***Connector & terminal*** ***(B554) No. 2 (+) — No. 1 (–):***	Is the voltage 4.5 — 5.0 V?	Go to step **4**.	Repair or replace the open circuit of harness.
4	**CHECK HARNESS.** 1) Disconnect the connector from the A/C control panel. 2) Using a tester, check continuity between terminals. ***Connector & terminal*** ***(B554) No. 2 — (i88) No. 14:*** ***(B554) No. 2 — (i88) No. 39:***	Is there continuity?	Replace the A/C control panel. <Ref. to AC-50, REMOVAL, Control Panel.>	Repair or replace the open circuit of harness.

P: DTC B14E8 HEATER CORE REAR SENSOR CIRCUIT SHORT-CIRCUIT

DTC DETECTING CONDITION:
Heater core sensor circuit is shorted.
TROUBLE SYMPTOM:
Proper outlet air temperature cannot be kept during Auto Start Stop.
WIRING DIAGRAM:
Air conditioning system <Ref. to WI(HEV)-55, WIRING DIAGRAM, Air Conditioning System.>

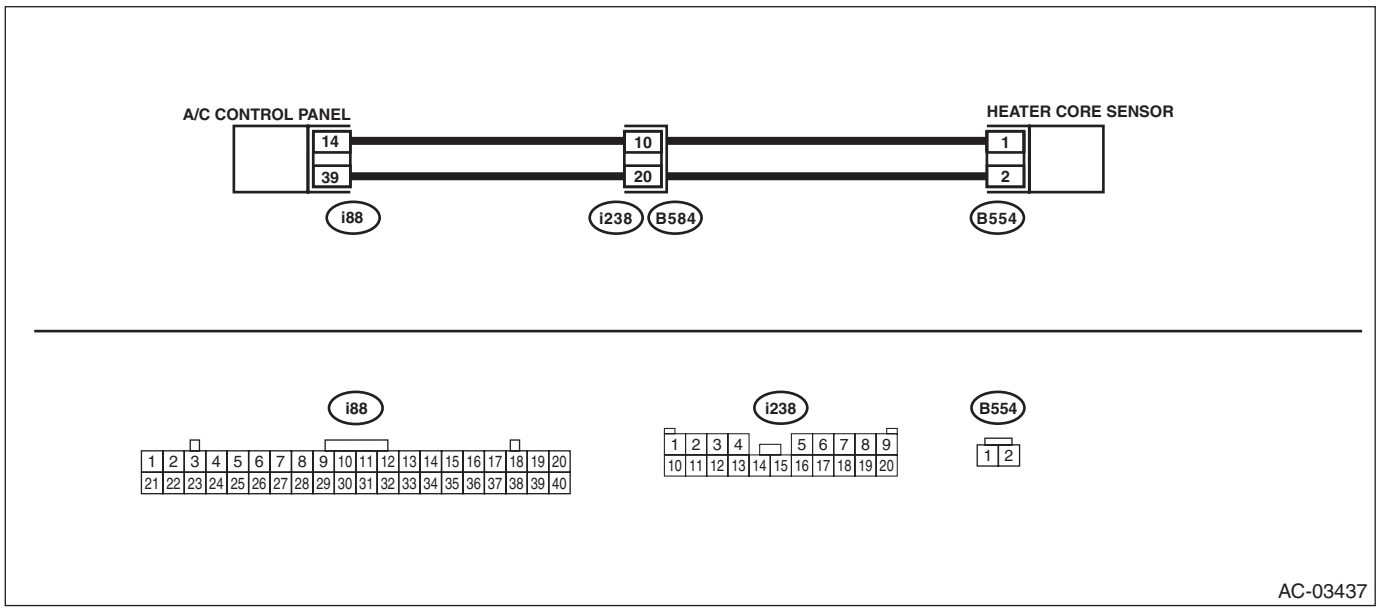

	Step	Check	Yes	No
1	**CHECK CONNECTOR.** 1) Check the condition of connector connection. 2) Read the DTC using Subaru Select Monitor.	Is B14E8 displayed?	Go to step **2**.	Check the connection of the heater core sensor circuit.
2	**CHECK HEATER CORE SENSOR.** 1) Disconnect the heater core sensor. 2) Read the DTC using Subaru Select Monitor.	Is B14E7 displayed?	Replace the heater core sensor. <Ref. to AC-97, REMOVAL, Heater Core Sensor.>	Go to step **3**.
3	**CHECK HARNESS.** 1) Turn the ignition switch to ON. 2) Using the tester, measure the voltage between terminals. ***Connector & terminal*** ***(B554) No. 2 (+) — No. 1 (–):***	Is the voltage 4.5 — 5.0 V?	Check the connection of the heater core sensor circuit.	Go to step **4**.
4	**CHECK HARNESS.** 1) Disconnect the connector from the A/C control panel. 2) Using a tester, check continuity between terminals. ***Connector & terminal*** ***(B554) No. 1 — No. 2:***	Is there continuity?	Repair or replace the short circuit of the harness.	Replace the A/C control panel. <Ref. to AC-50, REMOVAL, Control Panel.>

Q: DTC B14E9 INTAKE DOOR ACTUATOR POTENTIOMETER CIRCUIT WIRE BREAK

DTC DETECTING CONDITION:
Intake door actuator potentiometer circuit is open.
TROUBLE SYMPTOM:
FRESH/RECIRC does not operate.
WIRING DIAGRAM:
Air conditioning system <Ref. to WI(w/o HEV)-35, WIRING DIAGRAM, Air Conditioning System.> <Ref. to WI(HEV)-55, WIRING DIAGRAM, Air Conditioning System.>

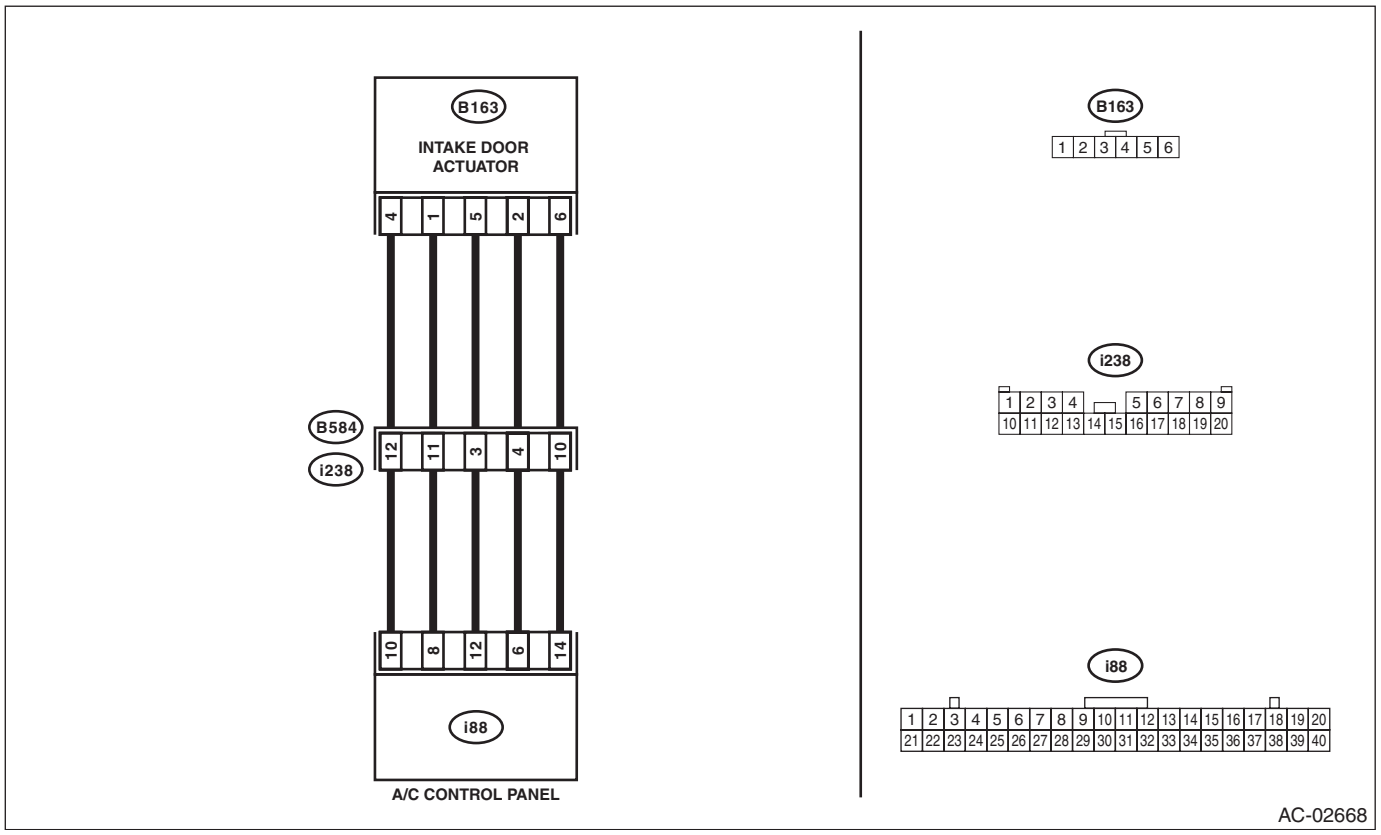

Step		Check	Yes	No
1	**CHECK CONNECTOR.** 1) Check the condition of connector connection. 2) Read the DTC using Subaru Select Monitor.	Is B14E9 displayed?	Go to step **2**.	Repair the poor contact of connector.
2	**CHECK HARNESS.** 1) Turn the ignition switch to ON. 2) Using the tester, measure the voltage between terminals. ***Connector & terminal*** ***(B163) No. 4 (+) — No. 6 (–):***	Is the voltage 4.5 — 5.0 V?	Go to step **3**.	Repair or replace the open circuit of harness.
3	**CHECK HARNESS.** 1) Turn the ignition switch to OFF. 2) Using a tester, check continuity between terminals. ***Connector & terminal*** ***(B163) No. 1 — (i88) No. 8:*** ***(B163) No. 2 — (i88) No. 6:*** ***(B163) No. 4 — (i88) No. 10:*** ***(B163) No. 5 — (i88) No. 12:*** ***(B163) No. 6 — (i88) No. 14:***	Is there continuity?	Go to step **4**.	Repair or replace the open circuit of harness.

	Step	Check	Yes	No
4	**CHECK ACTUATOR.** 1) Turn the ignition switch to ON. 2) Using the tester, measure the voltage between terminals. ***Connector & terminal (B163) No. 5 (+) — No. 6 (–):***	Is the voltage 0.5 — 4.5 V?	Replace the A/C control panel. <Ref. to AC-50, REMOVAL, Control Panel.>	Go to step **5**.
5	**CHECK HARNESS.** 1) Turn the ignition switch to OFF. 2) Using the tester, measure the resistance between terminals. ***Connector & terminal (B163) No. 4 — No. 5:***	Is the resistance less than 1 Ω?	Repair or replace the short circuit of the harness.	Replace the actuator. <Ref. to AC-100, REMOVAL, FRESH/RECIRC Door Actuator.>

R: DTC B14EA INTAKE DOOR ACTUATOR POTENTIOMETER CIRCUIT SHORT-CIRCUIT

DTC DETECTING CONDITION:
Intake door actuator potentiometer circuit is shorted.
TROUBLE SYMPTOM:
FRESH/RECIRC does not operate.
WIRING DIAGRAM:
Air conditioning system <Ref. to WI(w/o HEV)-35, WIRING DIAGRAM, Air Conditioning System.> <Ref. to WI(HEV)-55, WIRING DIAGRAM, Air Conditioning System.>

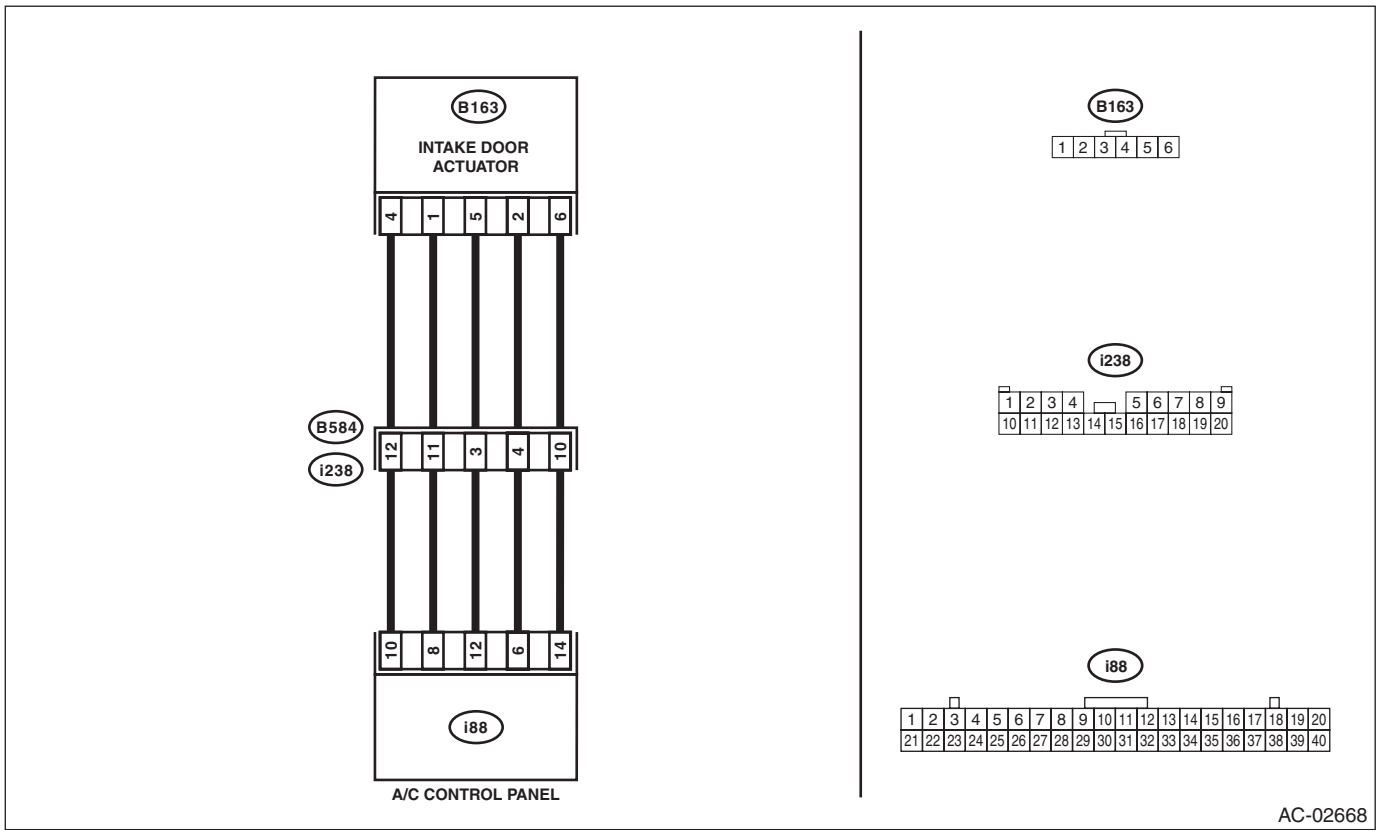

Step		Check	Yes	No
1	**CHECK CONNECTOR.** 1) Check the condition of connector connection. 2) Read the DTC using Subaru Select Monitor.	Is B14EA displayed?	Go to step **2**.	Repair the poor contact of connector.
2	**CHECK ACTUATOR.** 1) Turn the ignition switch to ON. 2) Using the tester, measure the voltage between terminals. ***Connector & terminal*** ***(B163) No. 4 (+) — No. 6 (–):***	Is the voltage 4.5 — 5.0 V?	Go to step **3**.	Repair or replace the open circuit of harness.
3	**CHECK HARNESS.** 1) Turn the ignition switch to OFF. 2) Using a tester, check continuity between terminals. ***Connector & terminal*** ***(B163) No. 4 — (i88) No. 10:*** ***(B163) No. 5 — (i88) No. 12:*** ***(B163) No. 6 — (i88) No. 14:***	Is there continuity?	Go to step **4**.	Repair or replace the open circuit of harness.

	Step	Check	Yes	No
4	**CHECK ACTUATOR.** 1) Turn the ignition switch to ON. 2) Using the tester, measure the voltage between terminals. ***Connector & terminal (B163) No. 5 (+) — No. 6 (–):***	Is the voltage 0.5 — 4.5 V?	Replace the A/C control panel. <Ref. to AC-50, REMOVAL, Control Panel.>	Go to step **5**.
5	**CHECK HARNESS.** 1) Turn the ignition switch to OFF. 2) Using the tester, measure the resistance between terminals. ***Connector & terminal (B163) No. 5 — No. 6:***	Is the resistance less than 1 Ω?	Repair or replace the short circuit of the harness.	Replace the actuator. <Ref. to AC-100, REMOVAL, FRESH/RECIRC Door Actuator.>

S: DTC B14EB INTAKE DOOR ACTUATOR LOCK

DTC DETECTING CONDITION:

- Intake door actuator is locked.
- The potentiometer value of the actuator does not change.

TROUBLE SYMPTOM:

FRESH/RECIRC does not operate.

WIRING DIAGRAM:

Air conditioning system <Ref. to WI(w/o HEV)-35, WIRING DIAGRAM, Air Conditioning System.> <Ref. to WI(HEV)-55, WIRING DIAGRAM, Air Conditioning System.>

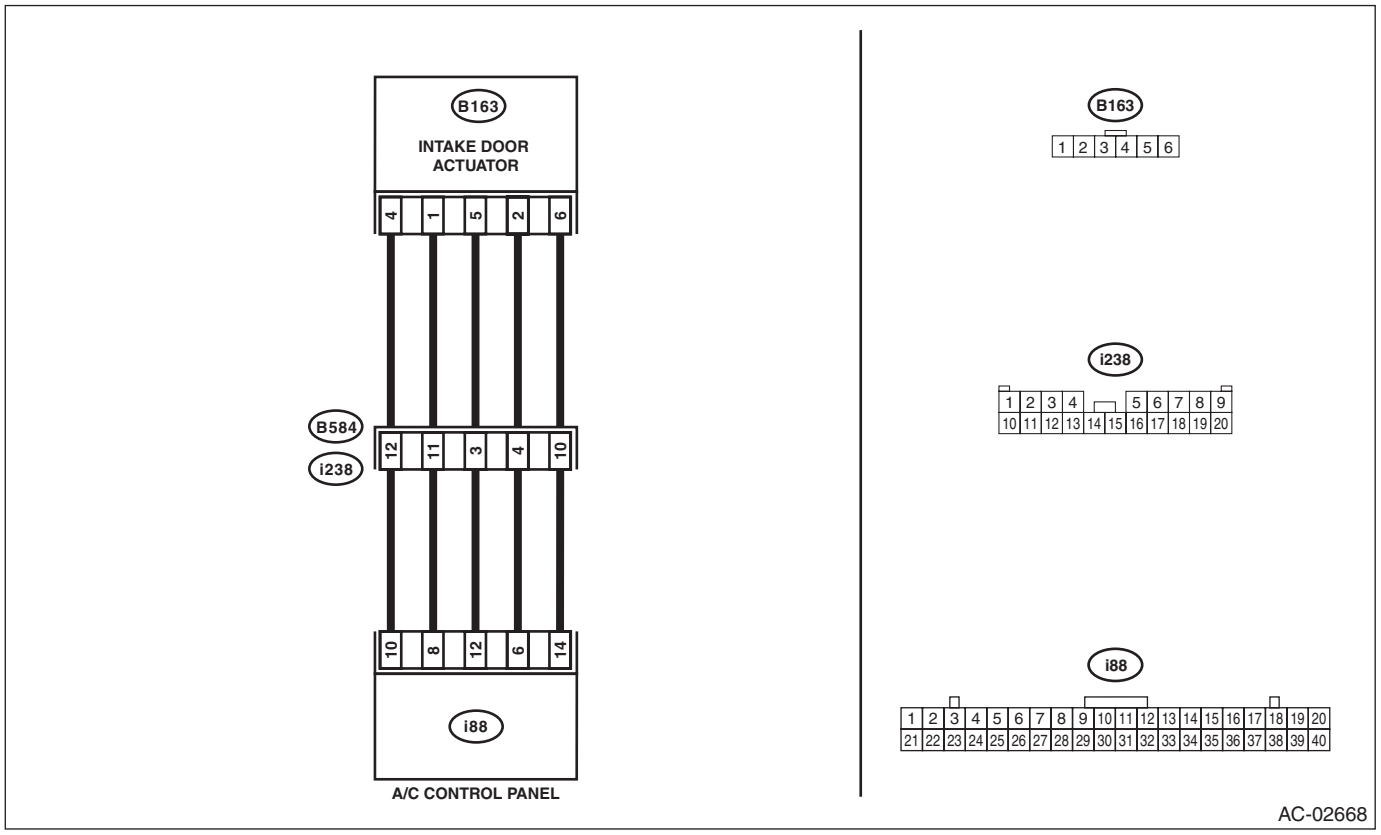

	Step	Check	Yes	No
1	**CHECK CONNECTOR.** 1) Check the condition of connector connection. 2) Read the DTC using Subaru Select Monitor.	Is B14EB displayed?	Go to step **2**.	Repair the poor contact of connector.
2	**CHECK CURRENT DATA.** Using the Subaru Select Monitor, change the setting of "Fresh/Rec Air Dr Act Trgt Open Angle" from Air Conditioning Diagnosis and perform the active test**.**	Did the actuator move to the specified target opening angle?	Intake door actuator circuit is normal.	Go to step **3**.
3	**CHECK HARNESS.** 1) Turn the ignition switch to ON. 2) Using the tester, measure the voltage between terminals. ***Connector & terminal*** ***(i176) No. 4 (+) — No. 6 (–):***	Is the voltage 4.5 — 5.0 V?	Go to step **4**.	Repair or replace the open circuit of harness.

	Step	Check	Yes	No
4	**CHECK HARNESS.** 1) Disconnect the connector from the A/C control panel. 2) Using a tester, check continuity between terminals. ***Connector & terminal*** ***(i163) No. 1 — (i88) No. 8:*** ***(i163) No. 2 — (i88) No. 6:*** ***(i163) No. 4 — (i88) No. 10:*** ***(i163) No. 5 — (i88) No. 12:*** ***(i163) No. 6 — (i88) No. 14:***	Is there continuity?	Go to step **5**.	Repair or replace the open circuit of harness.
5	**CHECK INTAKE DOOR ACTUATOR.** Check the intake door actuator parts.	Is the actuator normal?	Replace the A/C control panel. <Ref. to AC-50, REMOVAL, Control Panel.>	Replace the actuator. <Ref. to AC-100, REMOVAL, FRESH/RECIRC Door Actuator.>

T: DTC B14EC HUMIDITY SENSOR CIRCUIT OPEN

DTC DETECTING CONDITION:
Temperature and humidity sensor circuit is open.
TROUBLE SYMPTOM:
Proper outlet air temperature cannot be kept during Auto Start Stop.
WIRING DIAGRAM:
Air conditioning system <Ref. to WI(HEV)-55, WIRING DIAGRAM, Air Conditioning System.>

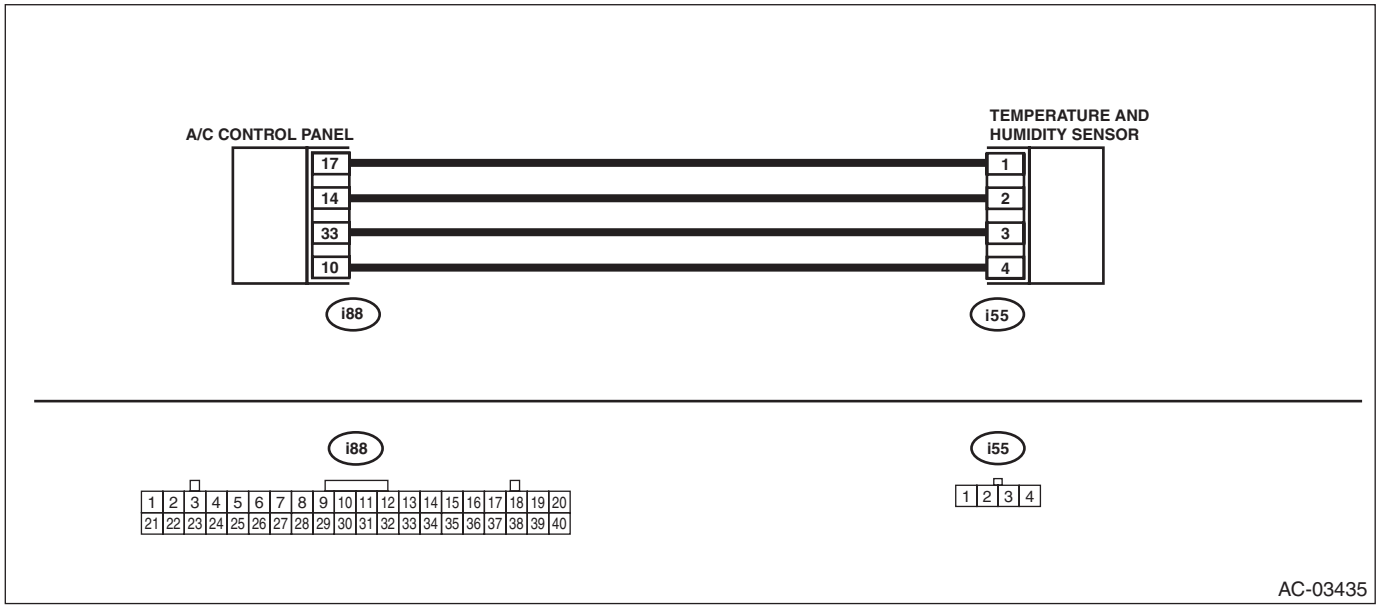

	Step	Check	Yes	No
1	**CHECK CONNECTOR.** 1) Check the condition of connector connection. 2) Read the DTC using Subaru Select Monitor.	Is B14EC displayed?	Go to step **2**.	Check the connection of the temperature and humidity sensor circuit.
2	**CHECK TEMPERATURE AND HUMIDITY SENSOR.** 1) Disconnect the temperature and humidity sensor. 2) Short the temperature and humidity sensor connector (i55). 3) Read the DTC using Subaru Select Monitor.	Is B14ED displayed?	Replace the temperature and humidity sensor.	Go to step **3**.
3	**CHECK HARNESS.** 1) Turn the ignition switch to ON. 2) Using the tester, measure the voltage between terminals. ***Connector & terminal*** ***(i55) No. 4 (+) — No. 3 (–):***	Is the voltage 4.5 — 5.0 V?	Go to step **4**.	Repair or replace the open circuit of harness.
4	**CHECK HARNESS.** 1) Disconnect the connector from the A/C control panel. 2) Using a tester, check continuity between terminals. ***Connector & terminal*** ***(i55) No. 3 — (i88) No. 33:*** ***(i55) No. 4 — (i88) No. 10:***	Is there continuity?	Replace the A/C control panel. <Ref. to AC-50, REMOVAL, Control Panel.>	Repair or replace the open circuit of harness.

U: DTC B14ED HUMIDITY SENSOR CIRCUIT SHORT

DTC DETECTING CONDITION:
Temperature and humidity sensor circuit is shorted.
TROUBLE SYMPTOM:
Proper outlet air temperature cannot be kept during Auto Start Stop.
WIRING DIAGRAM:
Air conditioning system <Ref. to WI(HEV)-55, WIRING DIAGRAM, Air Conditioning System.>

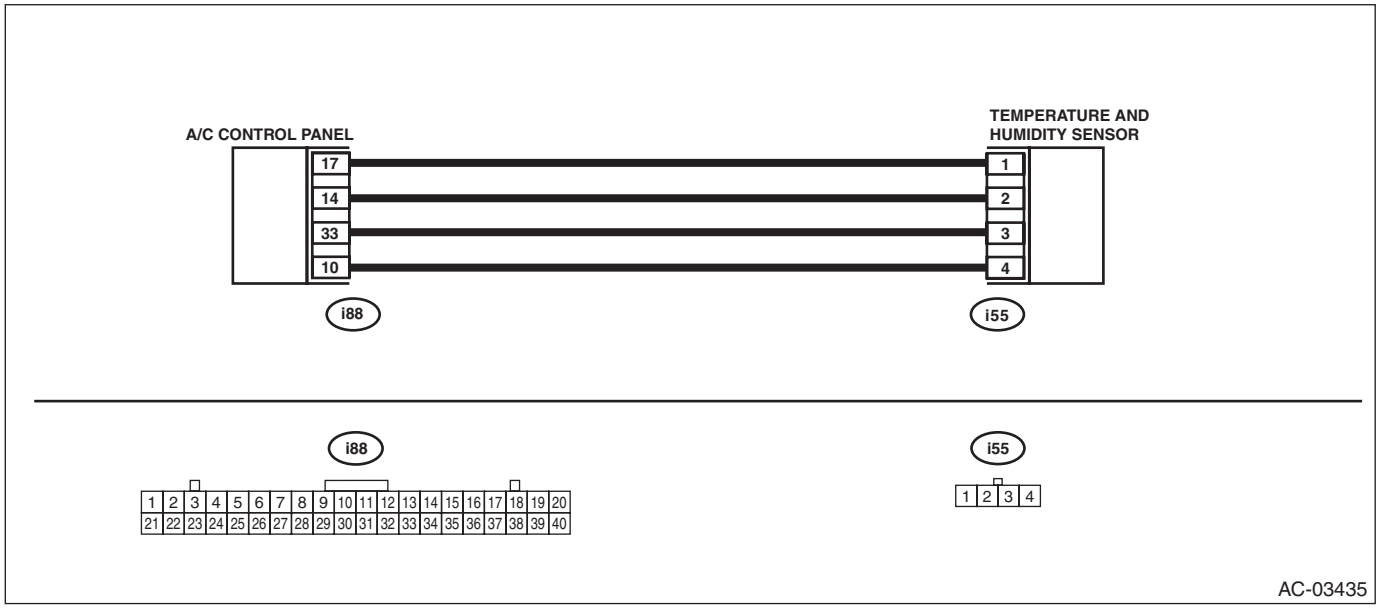

	Step	Check	Yes	No
1	**CHECK CONNECTOR.** 1) Check the condition of connector connection. 2) Read the DTC using Subaru Select Monitor.	Is B14ED displayed?	Go to step **2**.	Check the connection of the temperature and humidity sensor circuit.
2	**CHECK TEMPERATURE AND HUMIDITY SENSOR.** 1) Disconnect the temperature and humidity sensor. 2) Read the DTC using Subaru Select Monitor.	Is B14EC displayed?	Replace the temperature and humidity sensor.	Go to step **3**.
3	**CHECK HARNESS.** 1) Turn the ignition switch to ON. 2) Using the tester, measure the voltage between terminals. ***Connector & terminal (i55) No. 4 (+) — No. 3 (–):***	Is the voltage 4.5 — 5.0 V?	Check the connection of the temperature and humidity sensor circuit.	Go to step **4**.
4	**CHECK HARNESS.** 1) Disconnect the connector from the A/C control panel. 2) Using a tester, check continuity between terminals. ***Connector & terminal (i55) No. 4 — No. 3:***	Is there continuity?	Repair or replace the short circuit of the harness.	Replace the A/C control panel. <Ref. to AC-50, REMOVAL, Control Panel.>

V: DTC U0073 CONTROL MODULE COMMUNICATION BUS OFF

Detected when CAN line abnormality is detected.

NOTE:
Perform the diagnosis for LAN system. <Ref. to LAN(w/o HEV)(diag)-2, PROCEDURE, Basic Diagnostic Procedure.>

W: DTC U0100 LOST COMMUNICATION WITH ECM/PCM “A”

Detected when CAN data is not received from engine control module (ECM).

NOTE:
Perform the diagnosis for LAN system. <Ref. to LAN(w/o HEV)(diag)-2, PROCEDURE, Basic Diagnostic Procedure.>

X: DTC U0101 LOST COMMUNICATION WITH TCM

Detected when CAN data is not received from TCM.

NOTE:
Perform the diagnosis for LAN system. <Ref. to LAN(w/o HEV)(diag)-2, PROCEDURE, Basic Diagnostic Procedure.>

Y: DTC U0122 LOST COMMUNICATION WITH VEHICLE DYNAMICS CONTROL MODULE

Detected when CAN data is not received from VDC.

NOTE:
Perform the diagnosis for LAN system. <Ref. to LAN(w/o HEV)(diag)-2, PROCEDURE, Basic Diagnostic Procedure.>

Z: DTC U0140 LOST COMMUNICATION WITH BODY CONTROL MODULE

This is detected when CAN signal is not received from BIU.

NOTE:
Perform the diagnosis for LAN system. <Ref. to LAN(w/o HEV)(diag)-2, PROCEDURE, Basic Diagnostic Procedure.>

AA:DTC U0155 LOST COMMUNICATION WITH INSTRUMENT PANEL CLUSTER (IPC) CONTROL MODULE

This is detected when CAN signal is not received from meter.

NOTE:
Perform the diagnosis for LAN system. <Ref. to LAN(w/o HEV)(diag)-2, PROCEDURE, Basic Diagnostic Procedure.>

AB:DTC U0401 INVALID DATA RECEIVED FROM ECM/PCM “A”

This is detected when CAN data from engine control module (ECM) is abnormal.

NOTE:
Perform the diagnosis for LAN system. <Ref. to LAN(w/o HEV)(diag)-2, PROCEDURE, Basic Diagnostic Procedure.>

AC:DTC U0402 INVALID DATA RECEIVED FROM TCM

This is detected when CAN data from TCM is abnormal.

NOTE:
Perform the diagnosis for LAN system. <Ref. to LAN(w/o HEV)(diag)-2, PROCEDURE, Basic Diagnostic Procedure.>

AD:DTC U0416 INVALID DATA RECEIVED FROM VEHICLE DYNAMICS CONTROL MODULE

This is detected when CAN data from VDC is abnormal.

NOTE:
Perform the diagnosis for LAN system. <Ref. to LAN(w/o HEV)(diag)-2, PROCEDURE, Basic Diagnostic Procedure.>

AE:DTC U0422 INVALID DATA RECEIVED FROM BODY CONTROL MODULE

This is detected when CAN data from BIU is abnormal.

NOTE:
Perform the diagnosis for LAN system. <Ref. to LAN(w/o HEV)(diag)-2, PROCEDURE, Basic Diagnostic Procedure.>

AF:DTC U0423 INVALID DATA RECEIVED FROM INSTRUMENT PANEL CLUSTER CONTROL MODULE

This is detected when CAN data from meter is abnormal.

NOTE:
Perform the diagnosis for LAN system. <Ref. to LAN(w/o HEV)(diag)-2, PROCEDURE, Basic Diagnostic Procedure.>

AIRBAG SYSTEM

AB

		Page
1.	General Description	2
2.	Airbag Connector	20
3.	Inspection Locations after a Collision	33
4.	Driver's Airbag Module	41
5.	Knee Airbag Module	43
6.	Passenger's Airbag Module	46
7.	Side Airbag Module	66
8.	Curtain Airbag Module	74
9.	Airbag Control Module	78
10.	Front Sub Sensor	82
11.	Front Door Impact Sensor	86
12.	Side Airbag Sensor	89
13.	Curtain Airbag Sensor	94
14.	Satellite Safing Sensor	102
15.	Roll Connector	105

1. General Description

A: COMPONENT

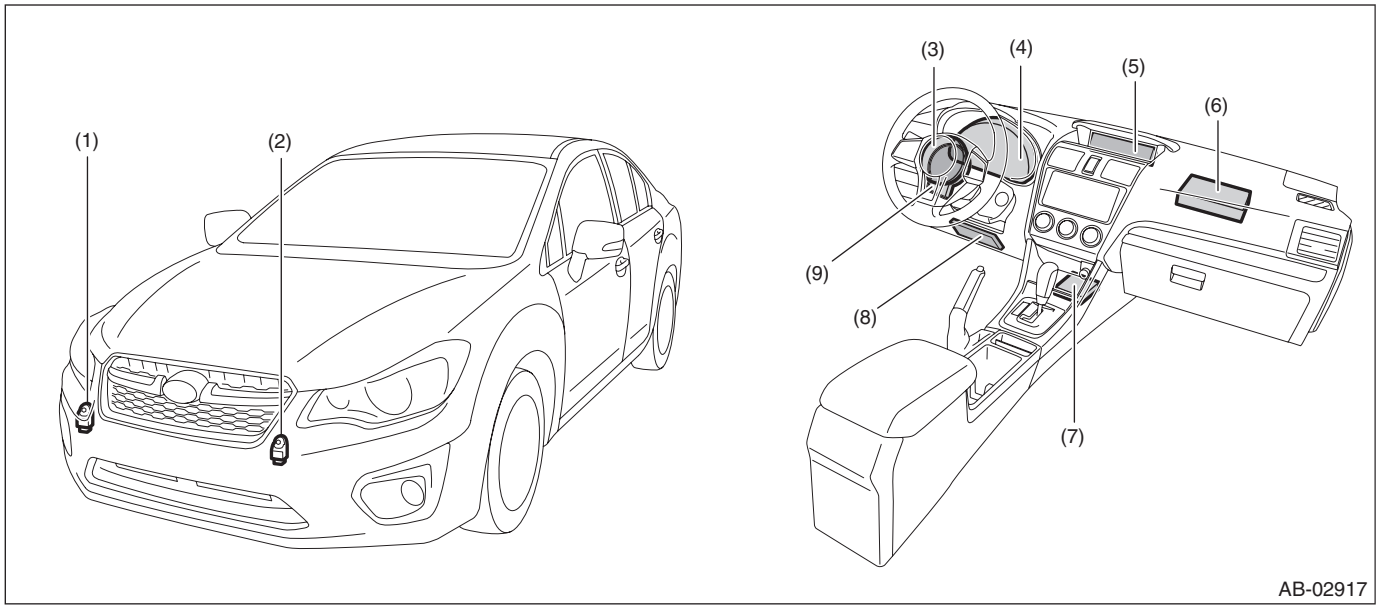

(1)	Front sub sensor RH	(4)	Airbag warning light (in combination meter)	(7)	Airbag control module
(2)	Front sub sensor LH	(5)	Airbag ON/OFF indicator light (MFD)	(8)	Knee airbag module
(3)	Driver's airbag module	(6)	Passenger's airbag module	(9)	Steering roll connector

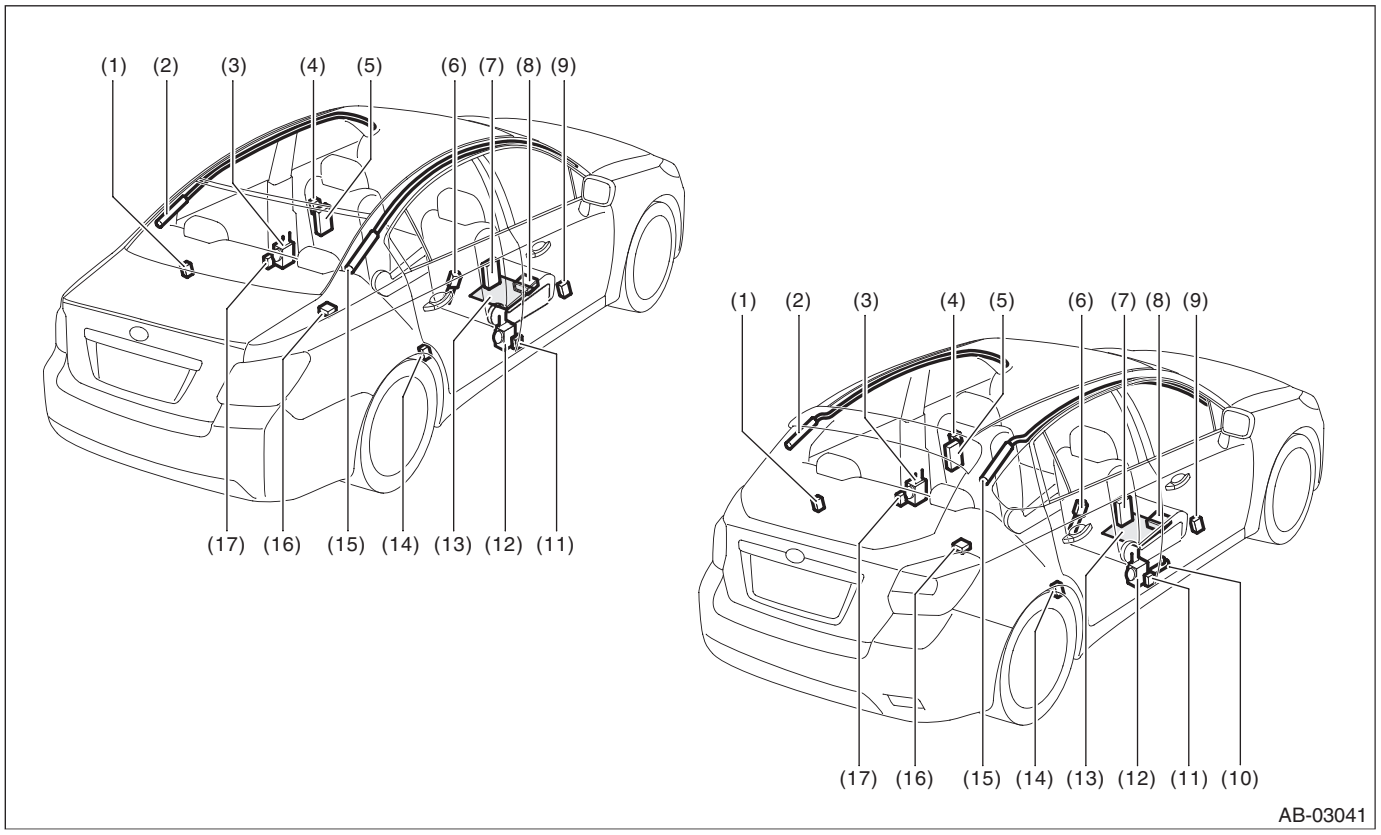

(1) Curtain airbag sensor LH
(2) Curtain airbag module LH
(3) Seat belt pretensioner LH
(4) Front door impact sensor LH
(5) Side airbag module LH
(6) Buckle switch RH
(7) Side airbag module RH
(8) Occupant detection control module
(9) Front door impact sensor RH
(10) Lap seat belt pretensioner RH (XV model)
(11) Side airbag sensor RH
(12) Seat belt pretensioner RH
(13) Occupant detection sensor
(14) Curtain airbag sensor RH
(15) Curtain airbag module RH
(16) Satellite safing sensor
(17) Side airbag sensor LH

1. DRIVER'S AIRBAG MODULE

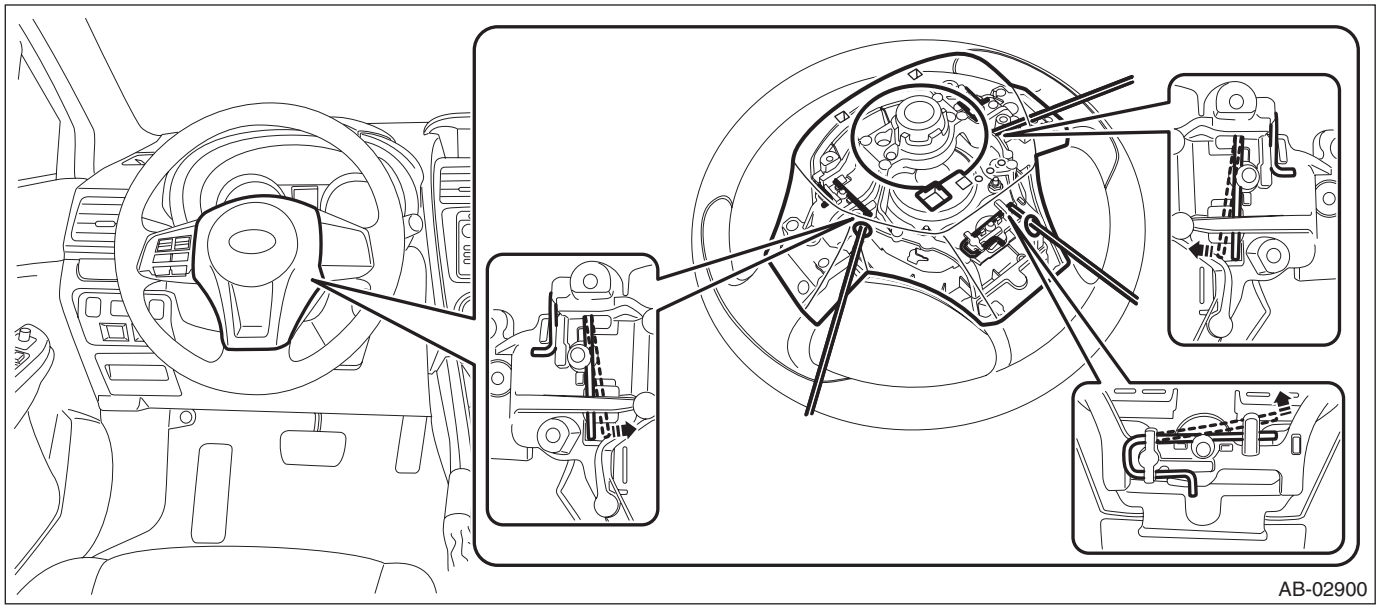

2. KNEE AIRBAG MODULE

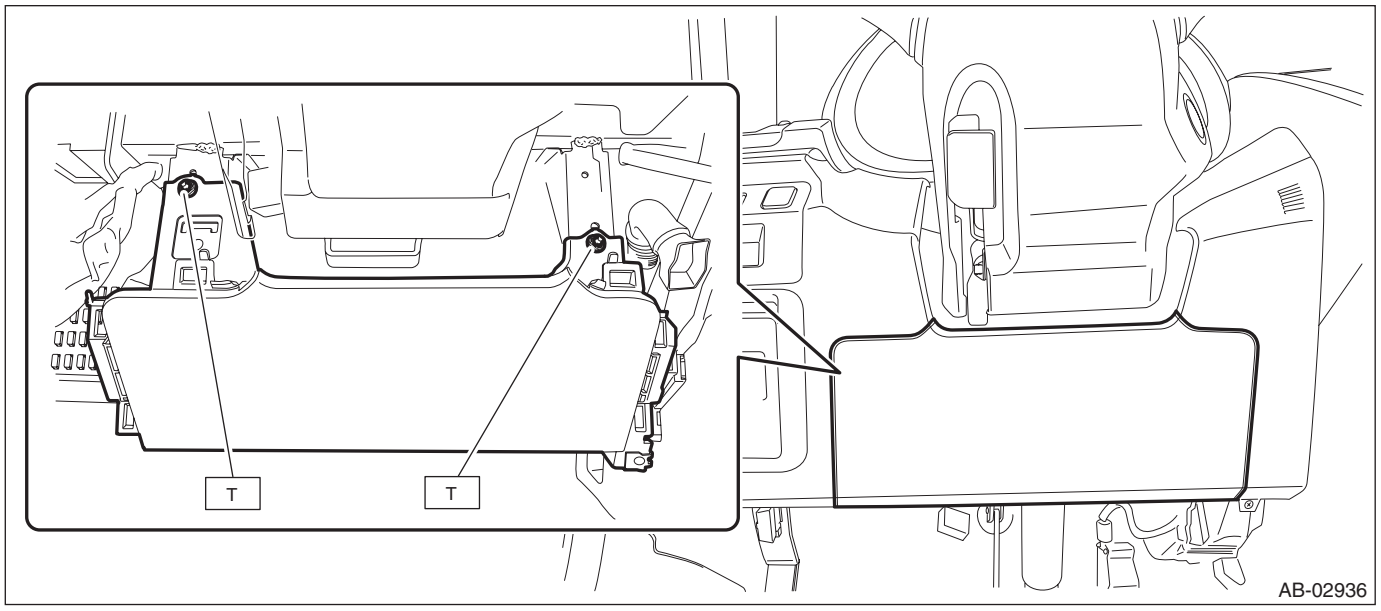

Tightening torque:
7.5 N·m (0.76 kgf-m, 5.5 ft-lb)

3. PASSENGER'S AIRBAG MODULE

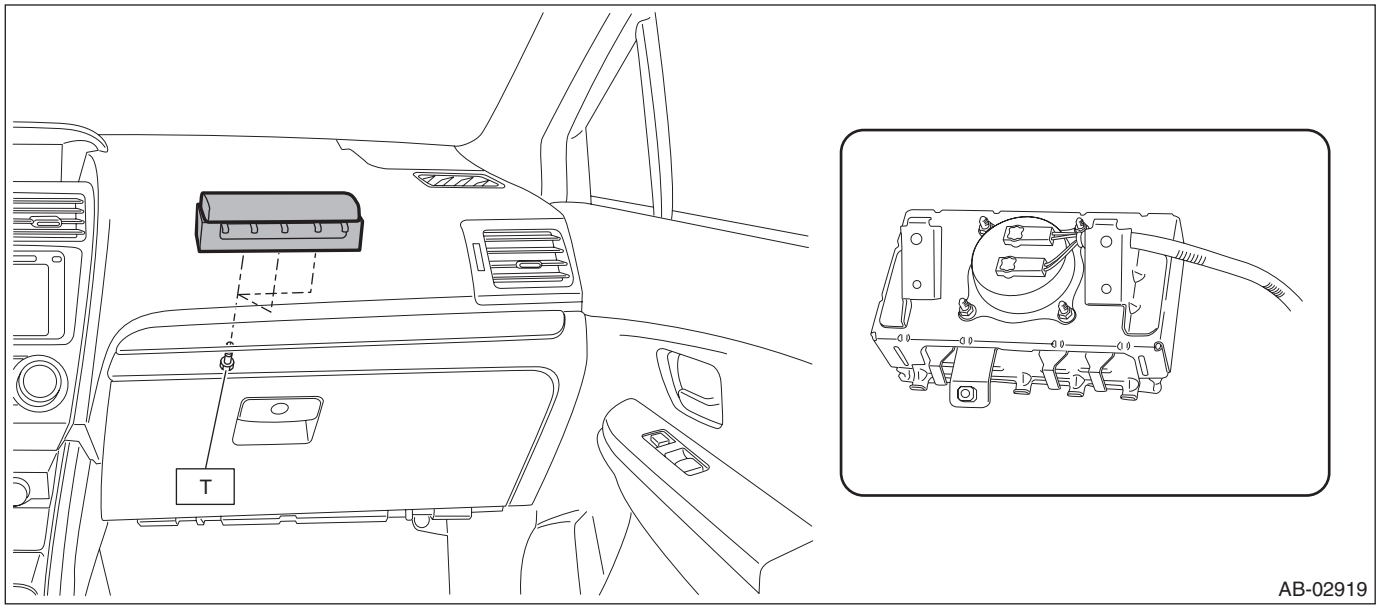

Tightening torque:
7.5 N·m (0.76 kgf-m, 5.5 ft-lb)

4. SIDE AIRBAG MODULE

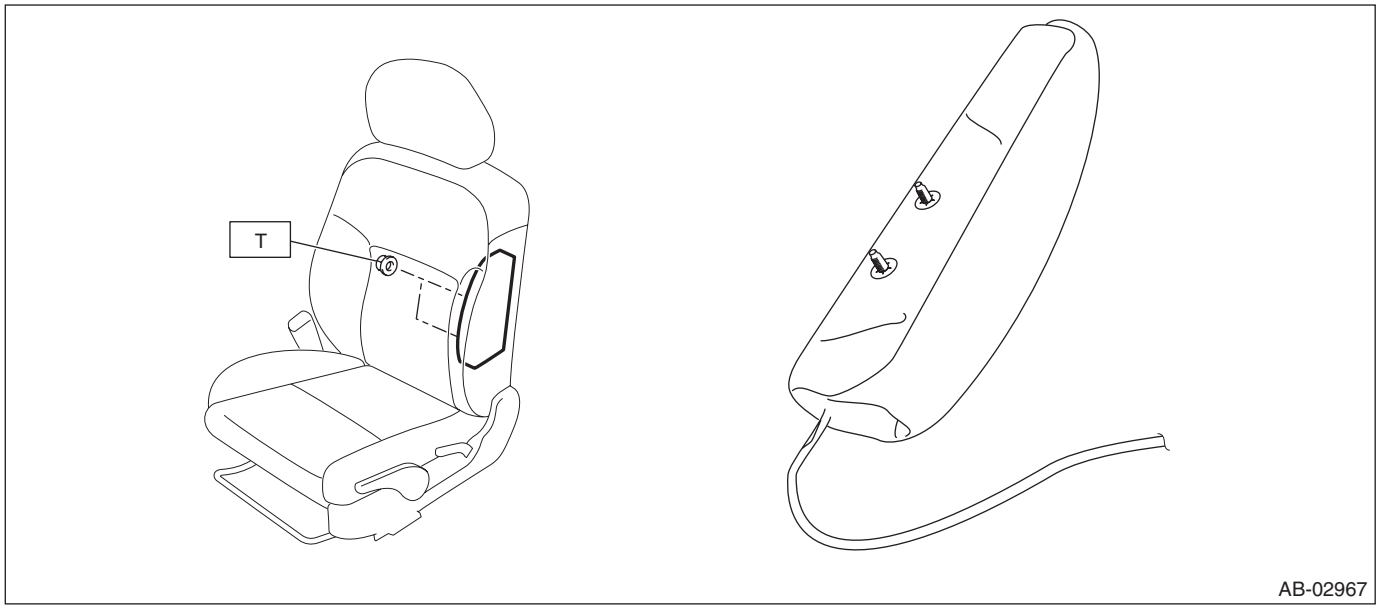

Tightening torque:
6 N·m (0.61 kgf-m, 4.4 ft-lb)

5. CURTAIN AIRBAG MODULE

- 4 door model

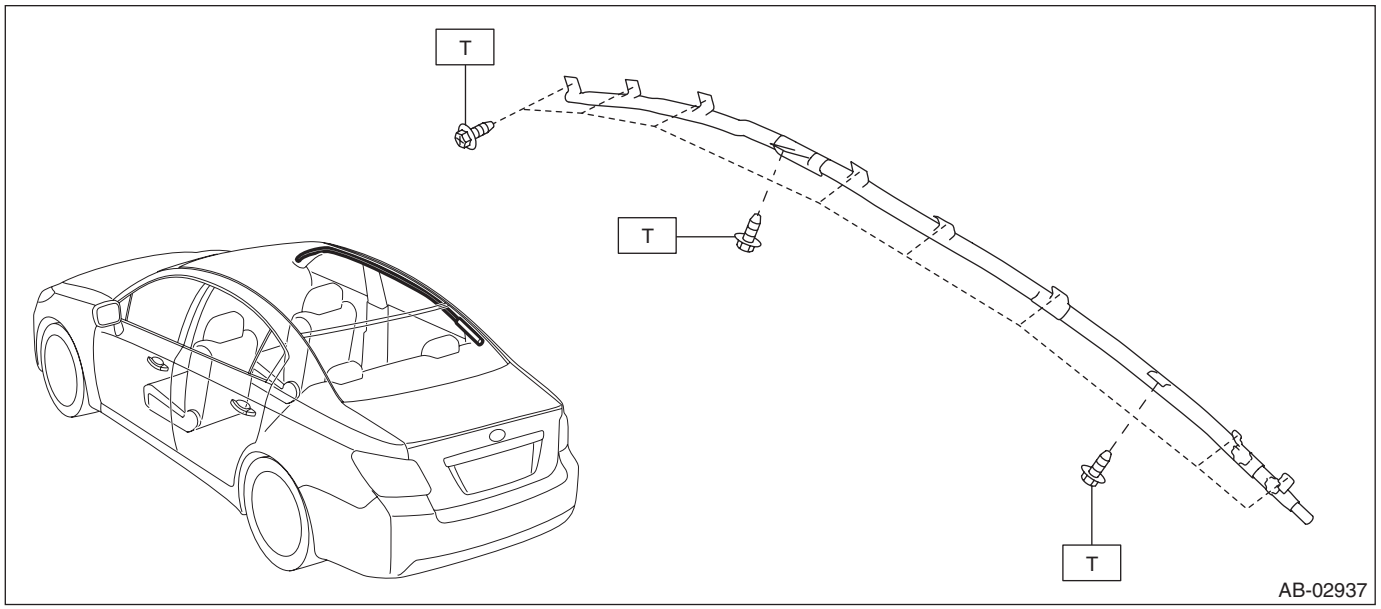

- 5 door model/XV model

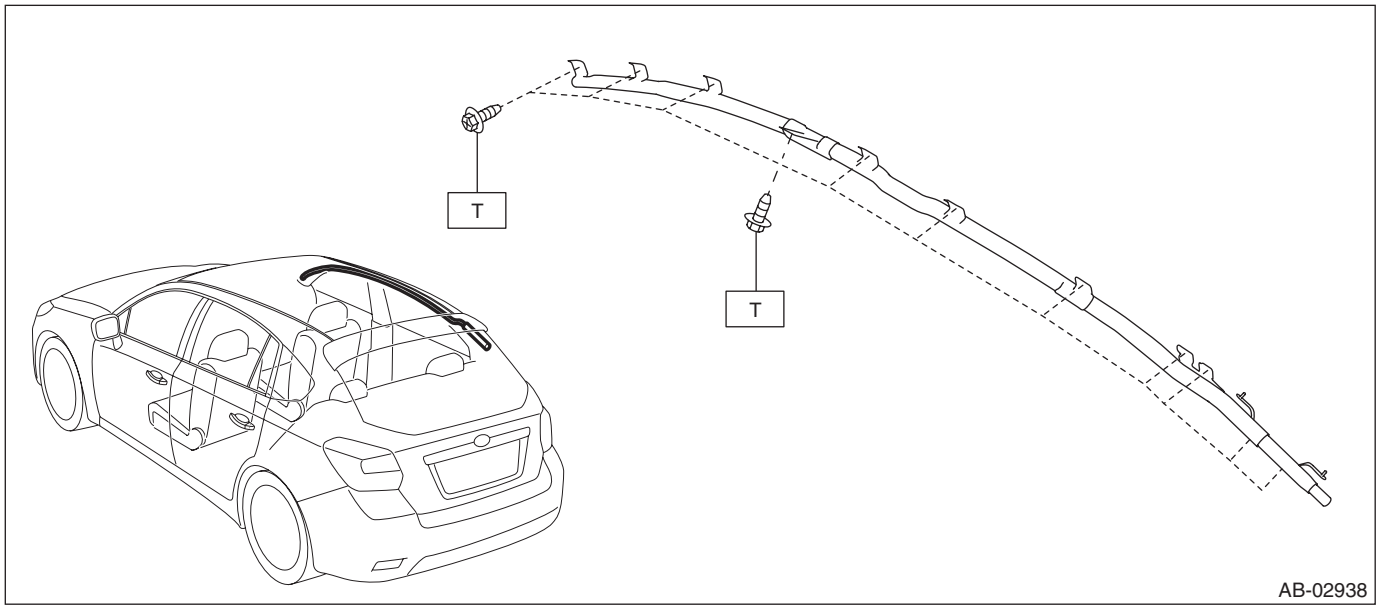

Tightening torque:
7.5 N·m (0.76 kgf-m, 5.5 ft-lb)

6. AIRBAG CONTROL MODULE

CAUTION:
Do not reuse mounting bolts and nuts.

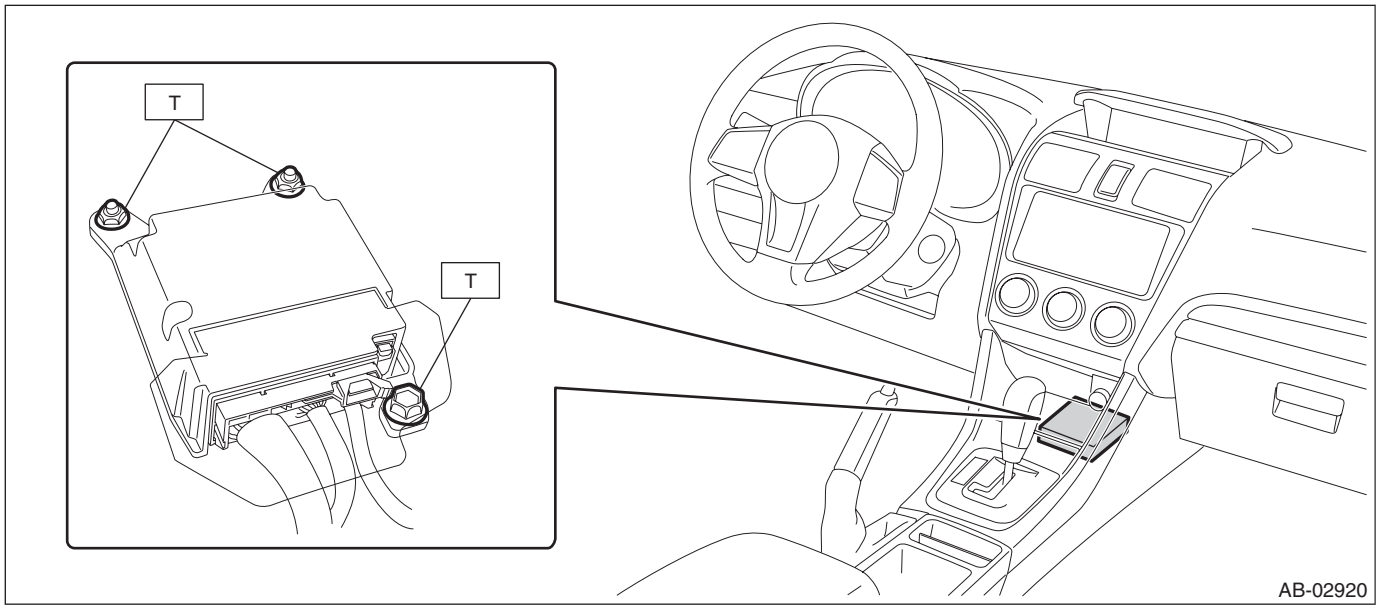

Tightening torque:
25 N·m (2.55 kgf-m, 18.4 ft-lb)

7. FRONT SUB SENSOR

CAUTION:
Do not reuse mounting bolts and nuts.

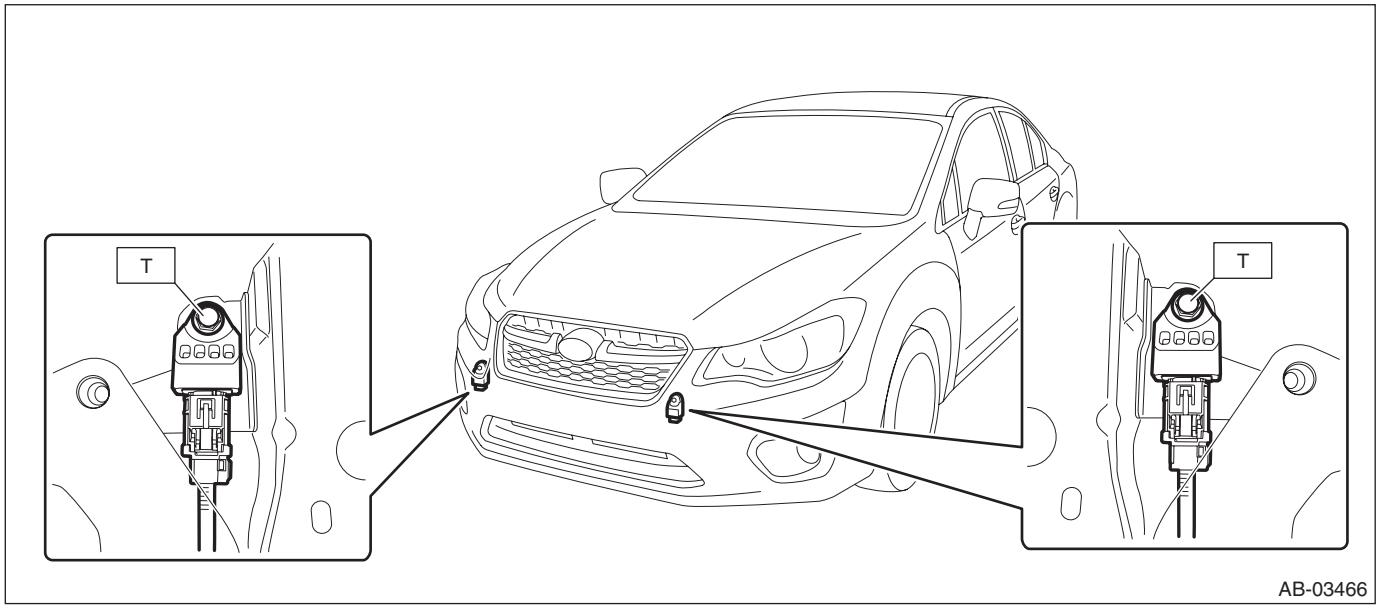

Tightening torque:
13 N·m (1.33 kgf-m, 9.6 ft-lb)

8. FRONT DOOR IMPACT SENSOR

CAUTION:
Do not reuse mounting bolts and nuts.

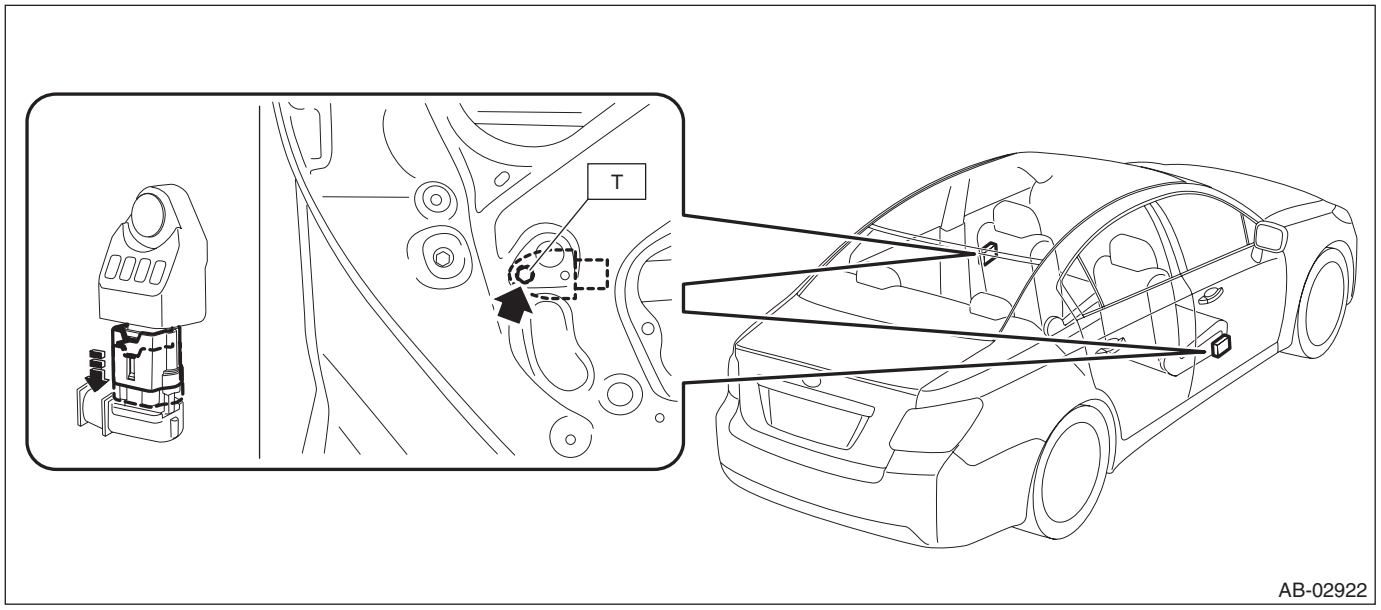

Tightening torque:
7.5 N·m (0.76 kgf-m, 5.5 ft-lb)

9. SIDE AIRBAG SENSOR

CAUTION:
Do not reuse mounting bolts and nuts.

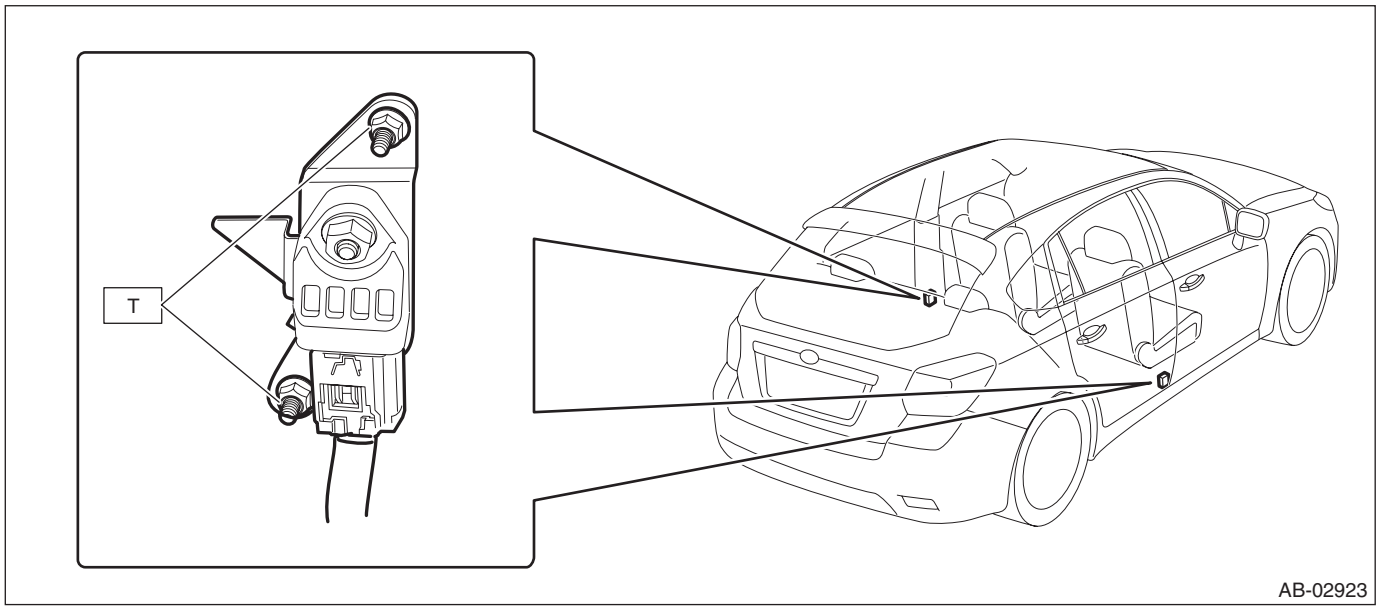

Tightening torque:
7.5 N·m (0.76 kgf-m, 5.5 ft-lb)

10.CURTAIN AIRBAG SENSOR

CAUTION:
Do not reuse mounting bolts and nuts.

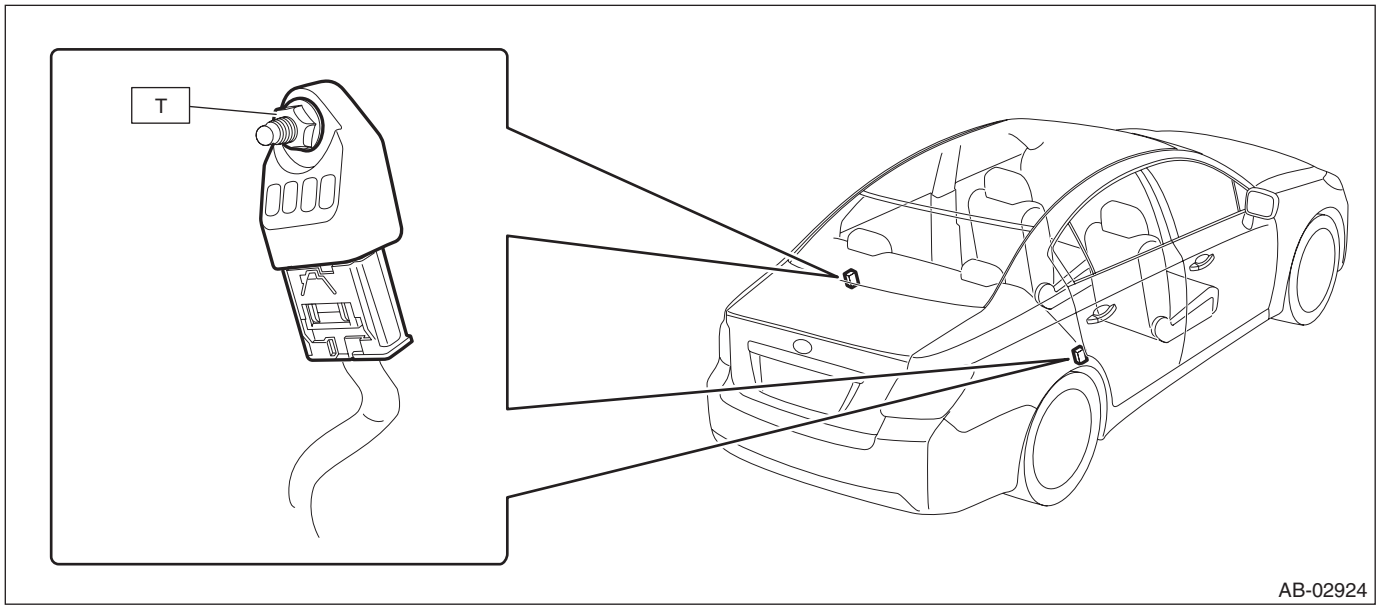

Tightening torque:
7.5 N·m (0.76 kgf-m, 5.5 ft-lb)

11.SATELLITE SAFING SENSOR

CAUTION:
Do not reuse mounting bolts and nuts.

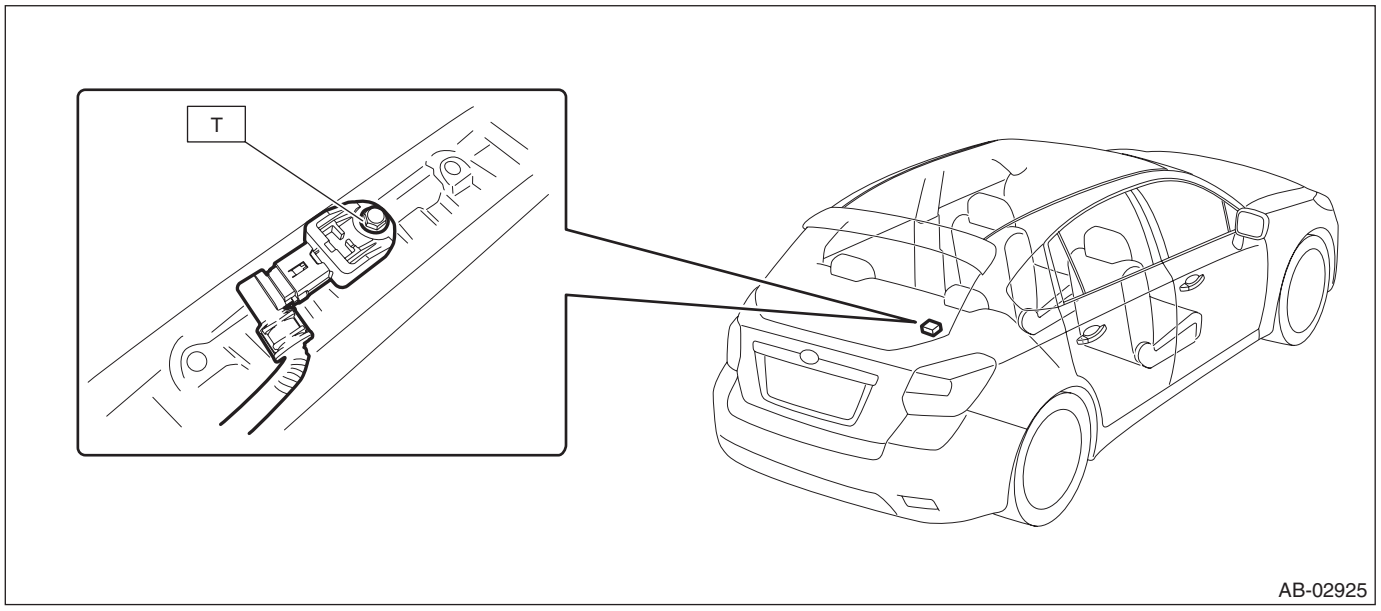

Tightening torque:
7.5 N·m (0.76 kgf-m, 5.5 ft-lb)

12.STEERING ROLL CONNECTOR

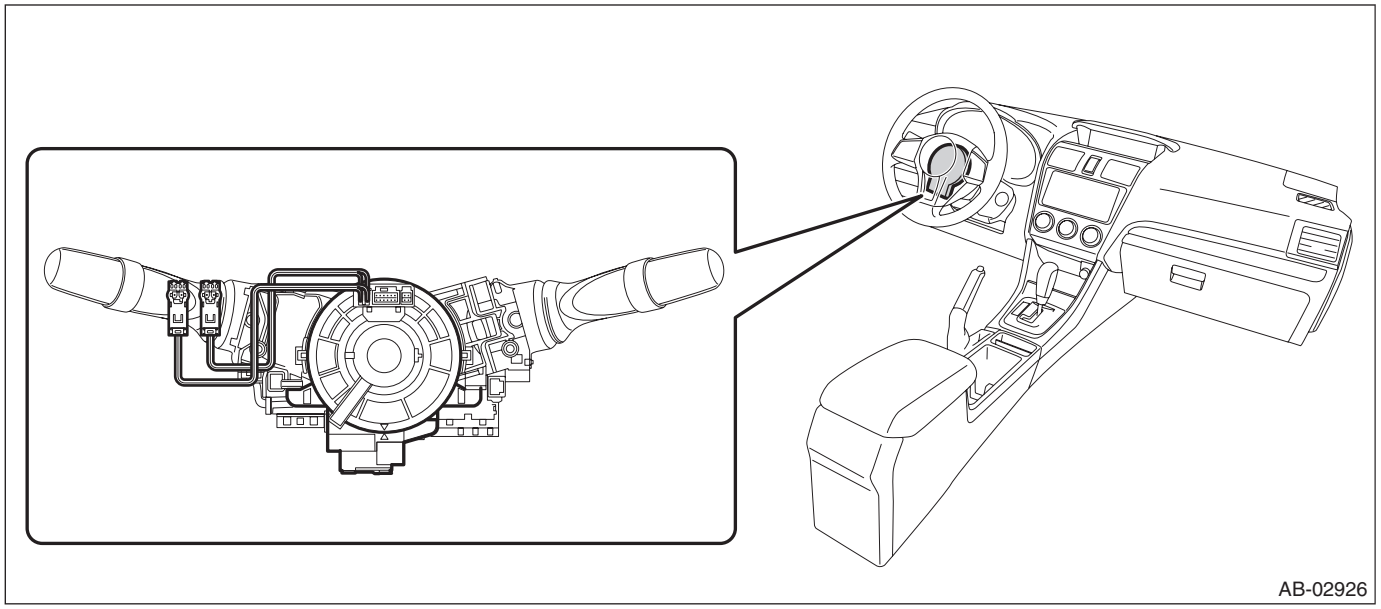

B: CAUTION

1. BEFORE STARTING ALL WORKS

• The airbag system is fitted with a backup power supply. After disconnecting the battery ground cable, the airbag may operate if you do not wait for 60 seconds or more before starting the service of airbag system.
• For the 12 volt engine restart battery of HEV model, disconnect the ground terminal from 12V engine restart battery sensor.
• If the airbag warning light illuminates, check or repair the vehicle immediately to prevent it from airbag system malfunction.
• Do not allow water or oil to come in contact with the connector terminals. Also, do not touch the connector terminals directly.

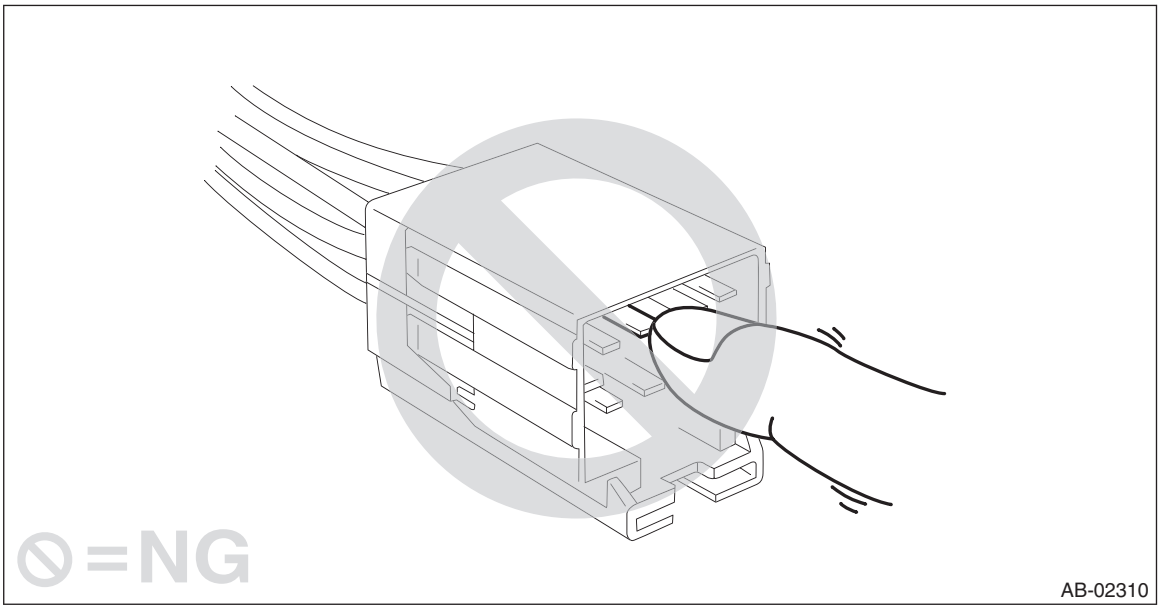

• If damage, open circuit or rust is found on airbag system wiring harness, do not repair the harness. Always replace the faulty harness with a new genuine part.

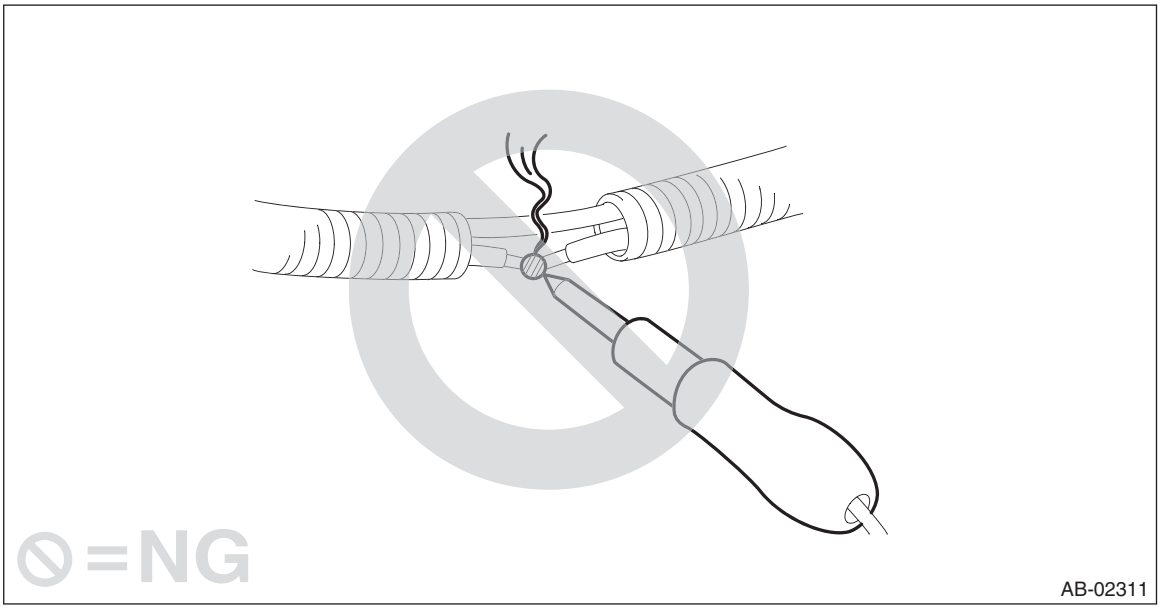

• When painting or performing sheet metal work on the front part of the vehicle, including the front wheel apron, front fender and radiator panel side, remove the front sub sensors and wiring harness of airbag system.

• When painting or performing sheet metal work on the side of the vehicle, including the side sill, center pillar and front and rear doors, remove the front door impact sensor, side airbag sensors, curtain airbag sensor, satellite safing sensor and wiring harness of the airbag system.

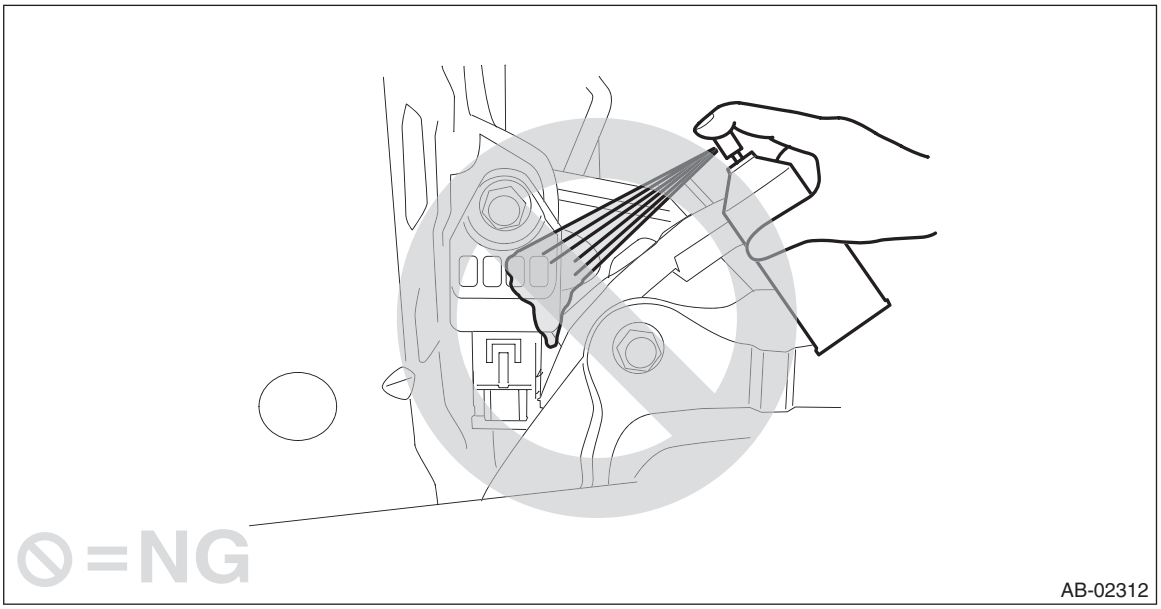

• When attaching the steering wheel and steering roll connector, be sure to adjust the steering roll connector.

2. BEFORE STARTING PARTS REPLACEMENT

• If airbag sensors, airbag module, airbag control module, pretensioners, harnesses, or the cover - satellite safing are deformed or damaged, replace with new parts.

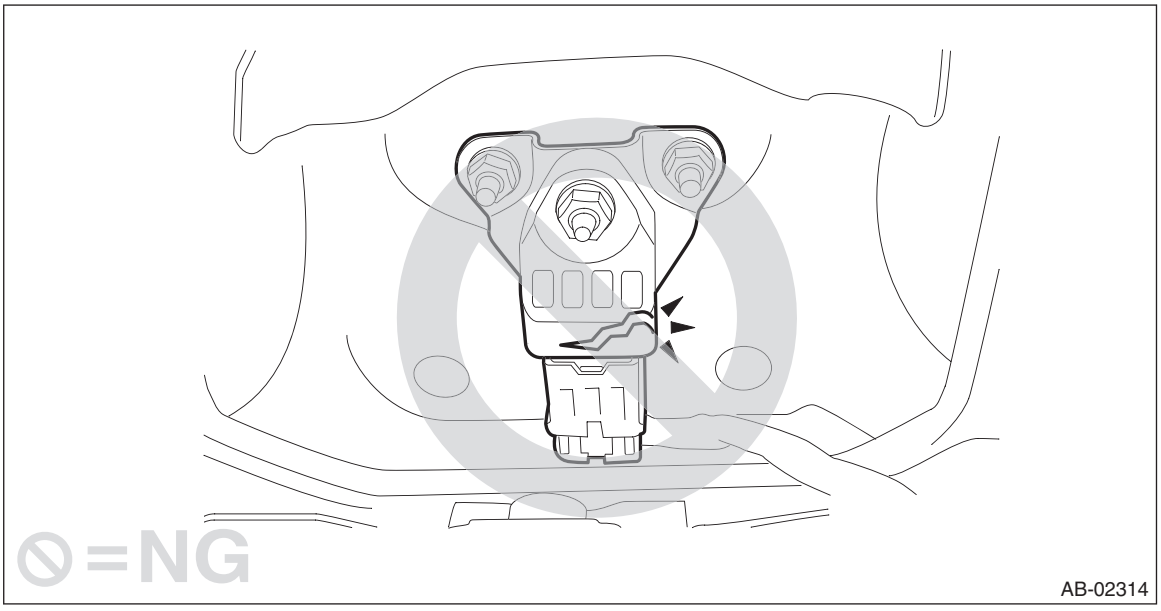

- Install the wiring harness securely with the specified clips to avoid interference or tangled with other parts.

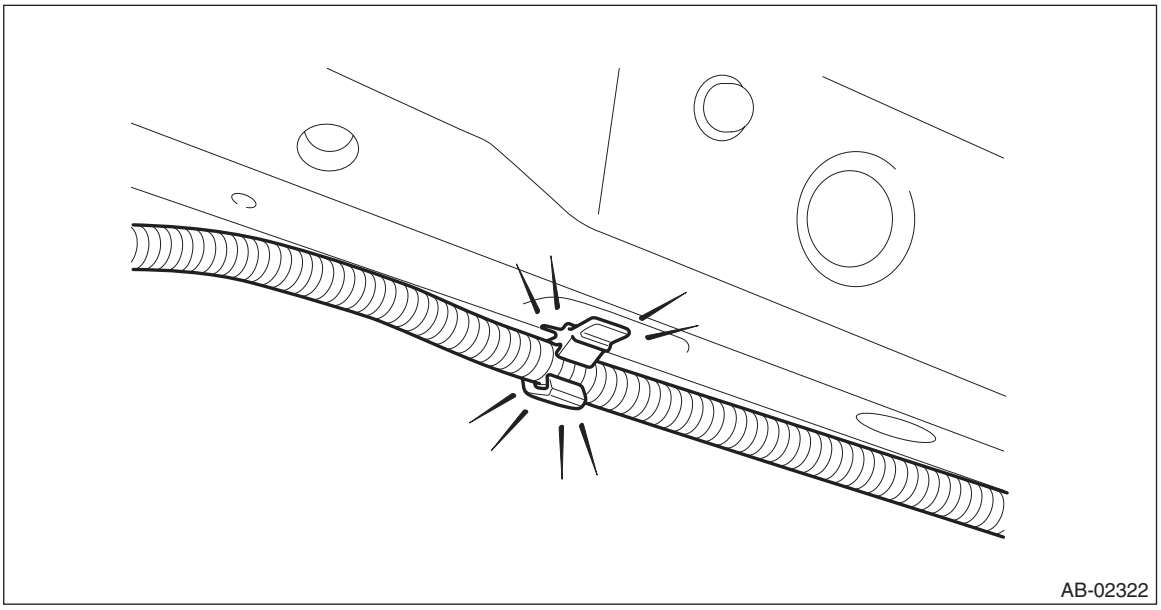
AB-02322

- Do not use the airbag or pretensioner parts from other vehicles. Always replace the defective parts with new parts.
- Never reuse any activated airbag module and pretensioner.
- Do not discard undeployed airbag or pretensioner.
- When airbag control module, front sub sensor, front door impact sensor, side airbag sensor, curtain airbag sensor and satellite safing sensor are removed, do not reuse the bolts and nuts of them. Always replace with the specified new bolts and nuts.
- When attaching the steering wheel and steering roll connector, be sure to adjust the steering roll connector.
- After removing each parts of the airbag system, keep them with the pad side facing upward on a dry, clean and flat surface away from heat, light sources, moisture and dust.

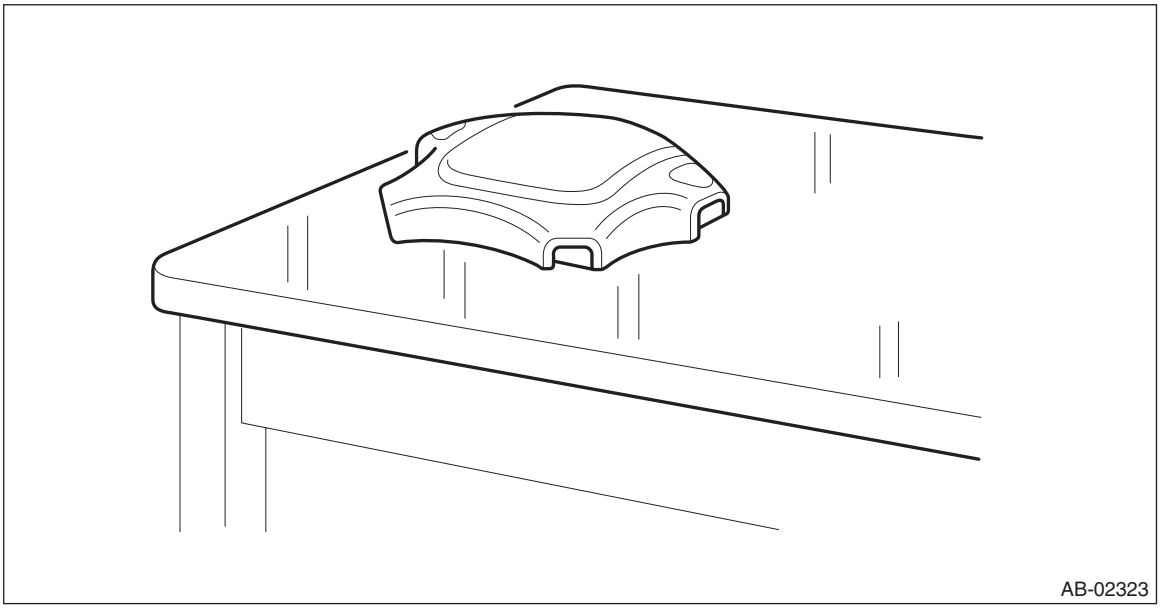
AB-02323

• Do not drop any airbag component, store them under high temperature of 85°C (185°F) or more, or let water, oil or grease get on them; the internal parts may be damaged or the reliability may be greatly lowered.

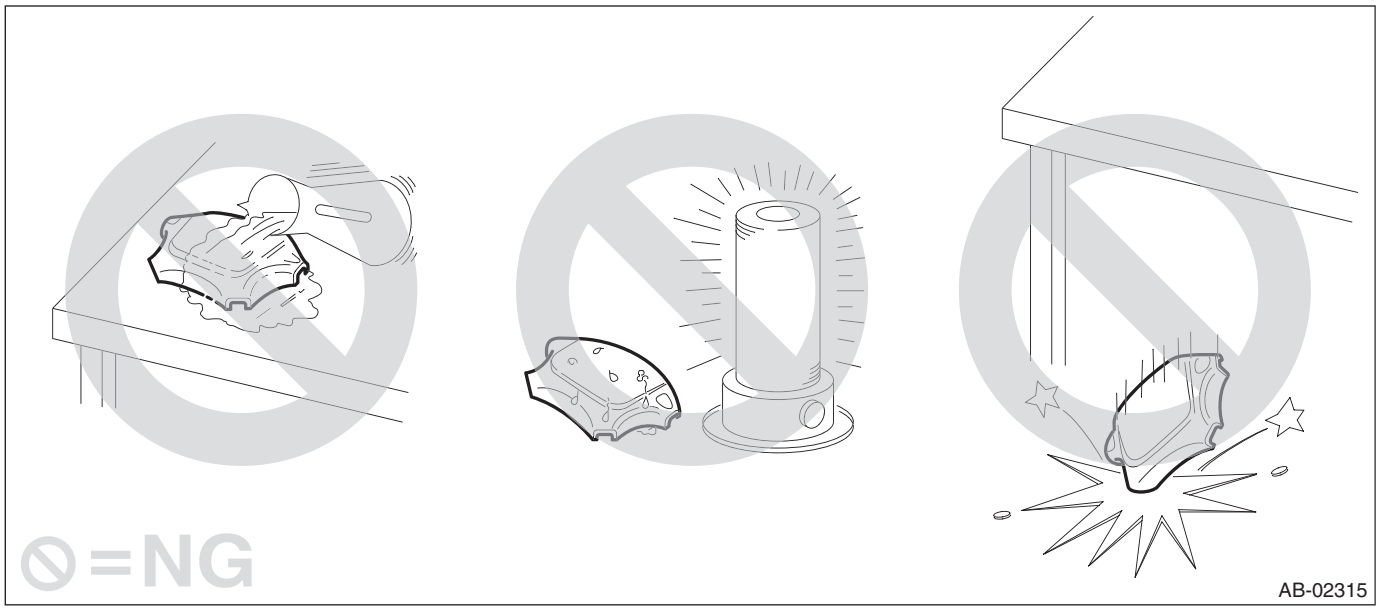

• When storing a removed airbag module, do not place it with the pad side facing downward. Do not place any objects on the airbag module. Do not pile up the airbag module. If the pad of the airbag module is in contact with other objects, it may cause a serious accident if the airbag accidentally operates.

• Driver's airbag module

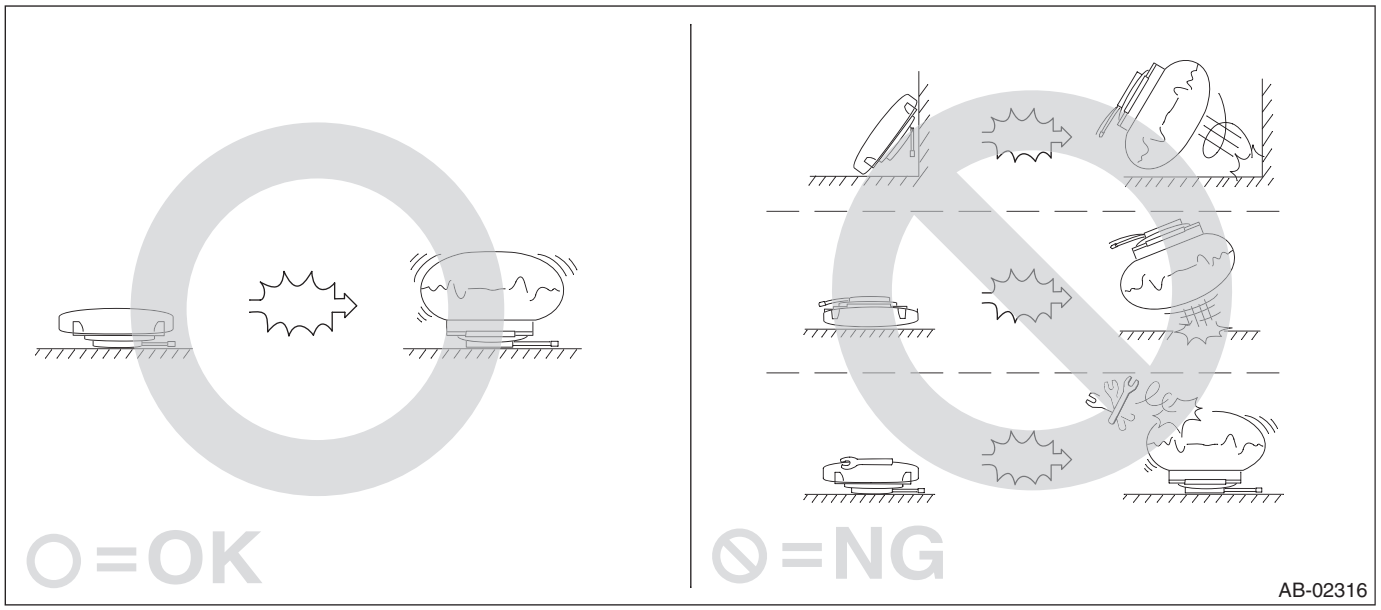

- Passenger's airbag module and side airbag module

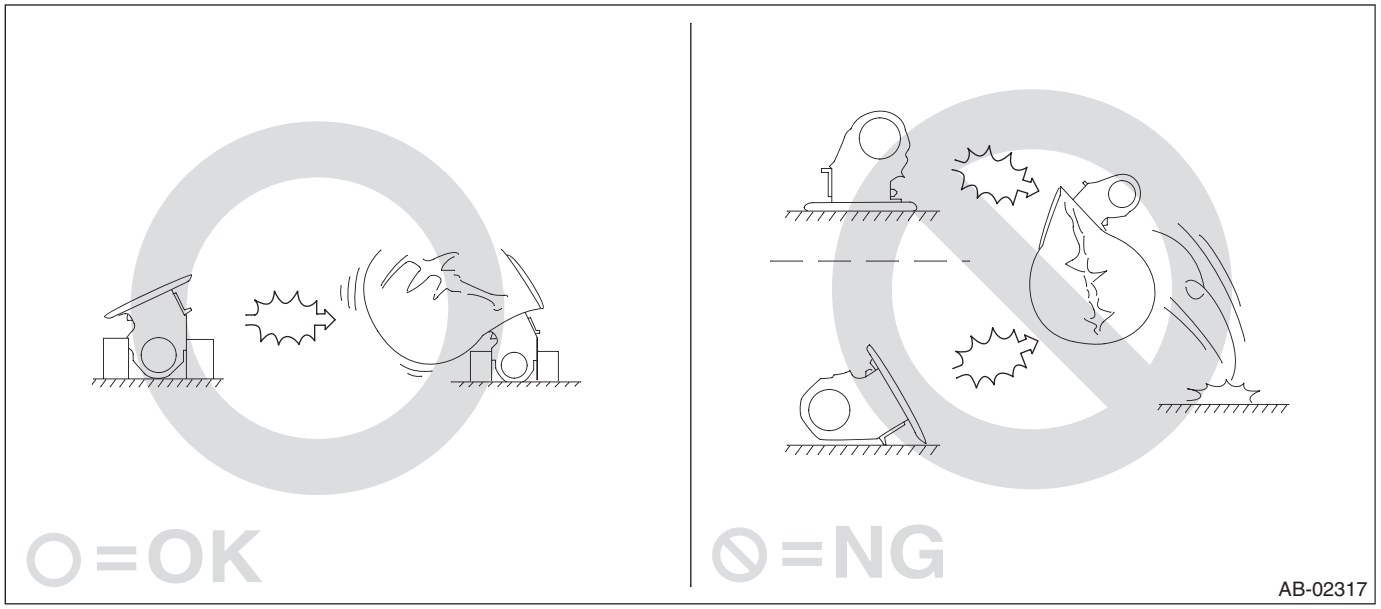

- Do not disassemble driver's airbag module, knee airbag module, passenger's airbag module, side airbag module, curtain airbag module or pretensioner.

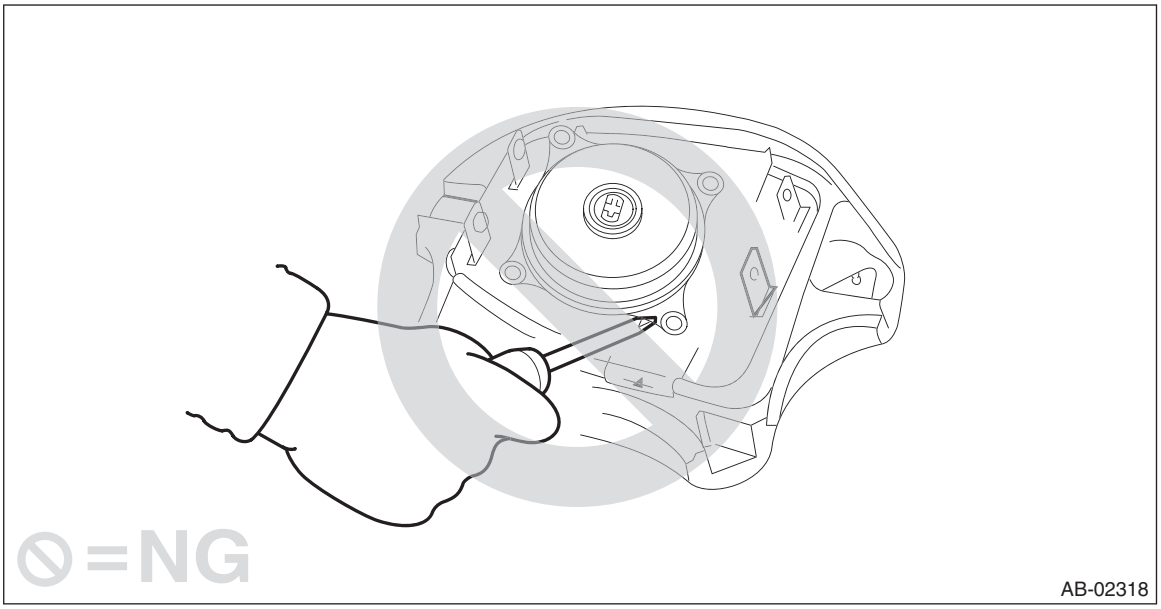

• The removed front seat with airbag module must be kept at least 200 mm (8 in) away from walls and other objects.

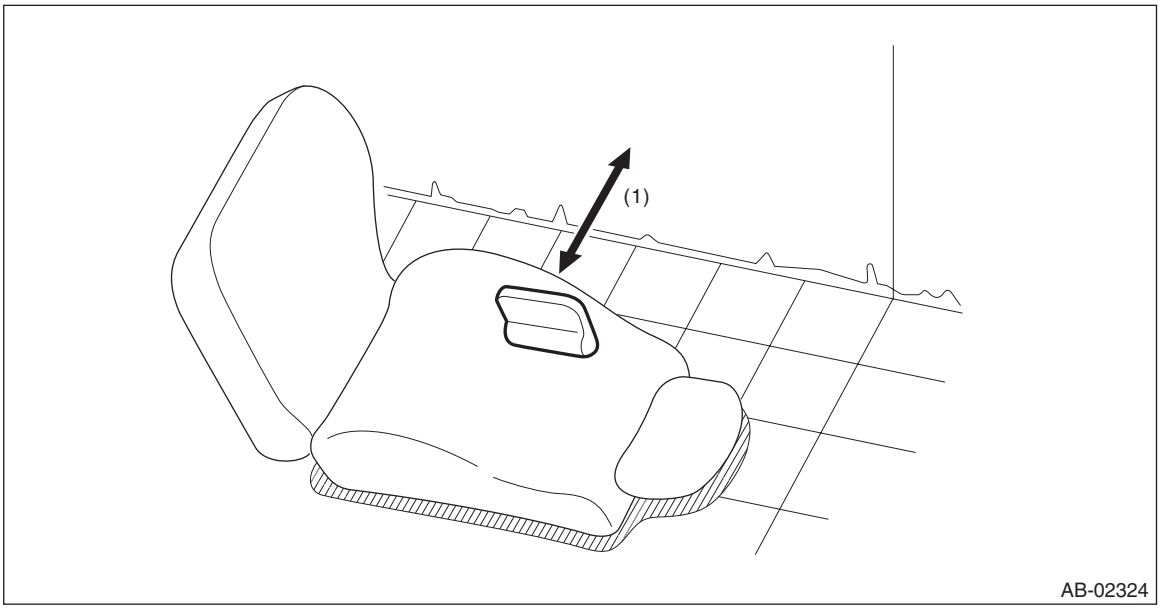

(1) 200 mm (8 in) or more

3. BEFORE STARTING TROUBLESHOOTING

• Even if any part must be replaced as the result of troubleshooting, do not use an airbag part or pretensioner part from other vehicles. Always replace the defective parts with new parts.
• When checking the airbag system, be sure to use a digital circuit tester. Use of an analog circuit tester may cause the airbag to activate erroneously due to a minimal current inside tester.

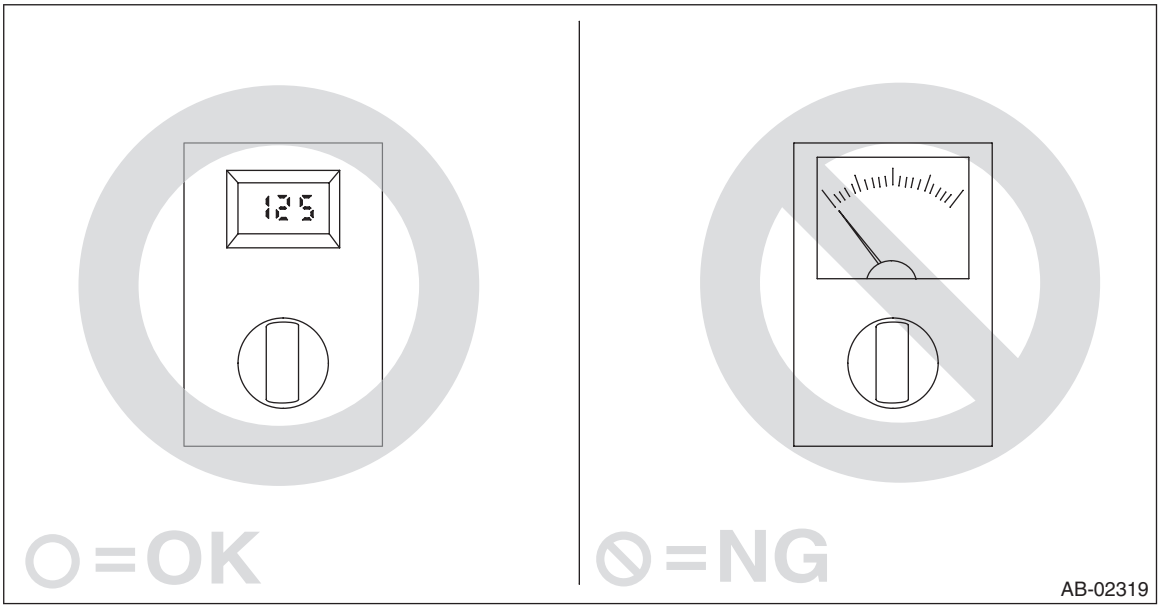

• Do not allow water or oil to come in contact with the connector terminals. Also, do not touch the connector terminals directly.

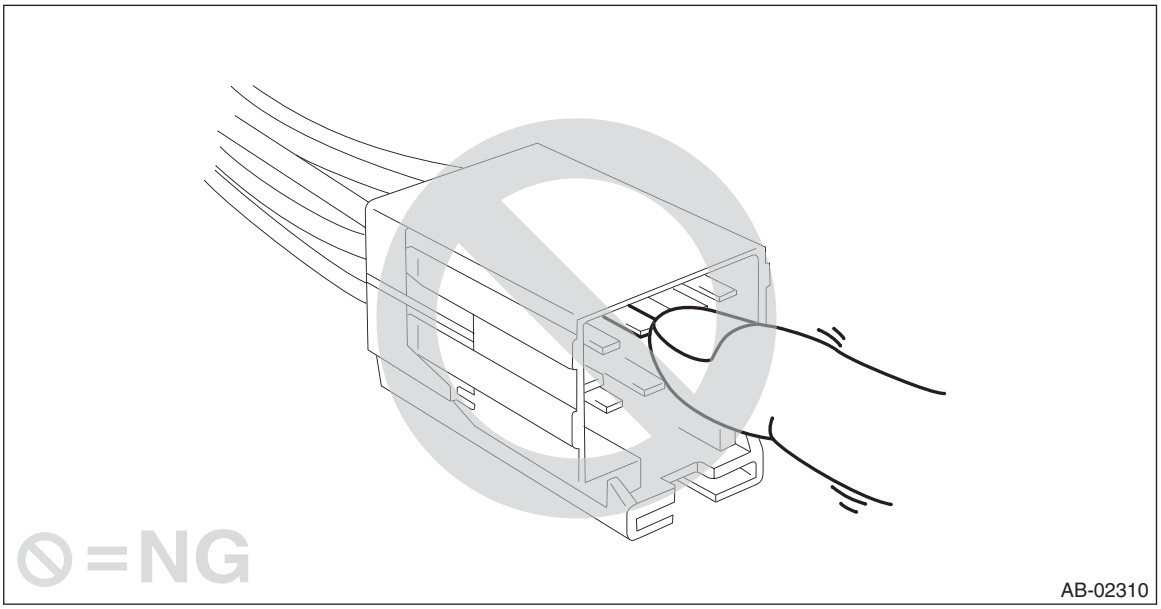

• When checking, use a test harness (1). Damage to connector terminal causes malfunction. Do not directly put the tester probe on airbag connector terminal.

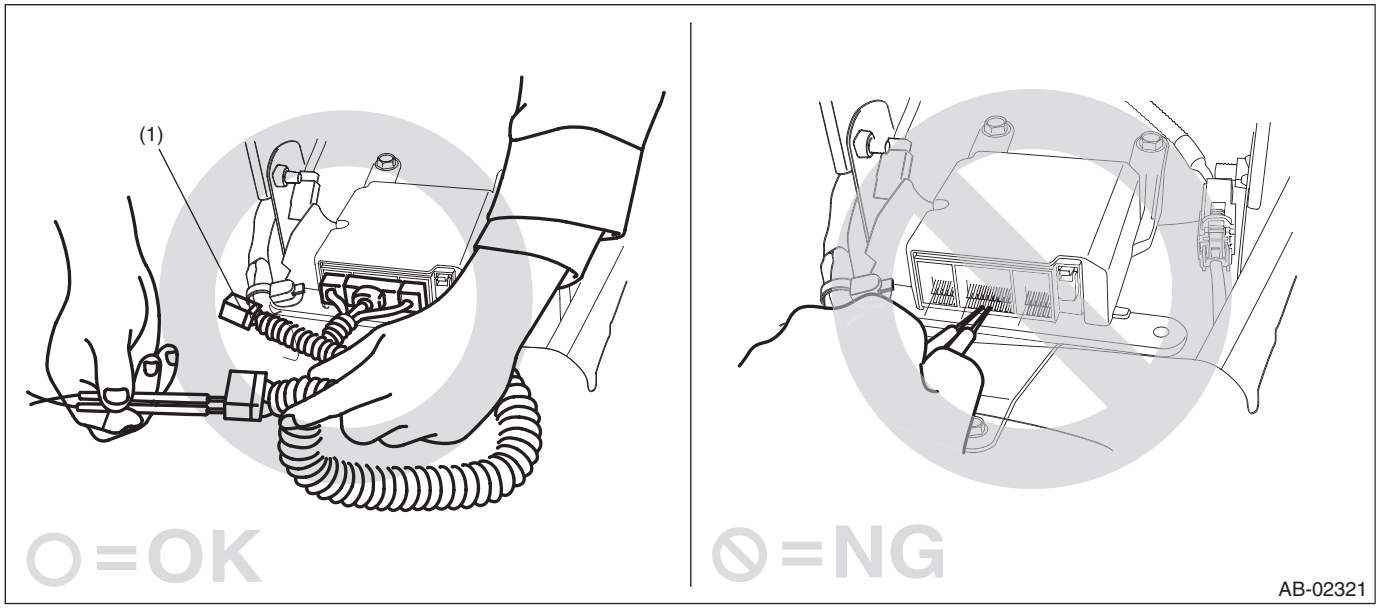

• Do not check continuity of the driver's airbag module, knee airbag module, passenger's airbag module, side airbag module, curtain airbag module or pretensioner.

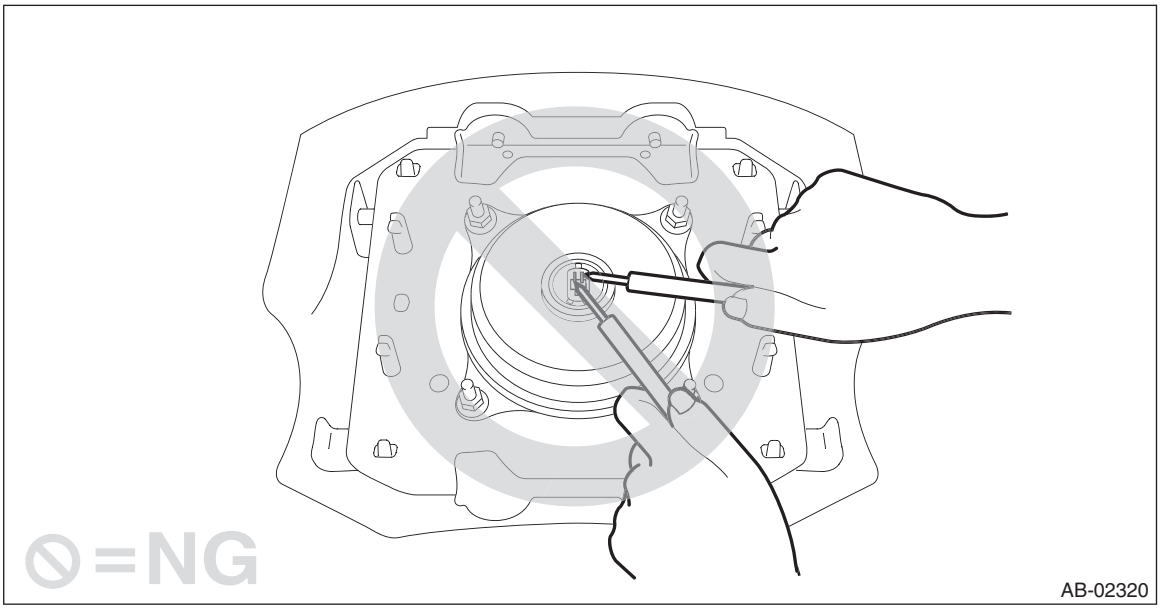

• If damage, open circuit or rust is found on airbag system wiring harness, do not repair the harness. Always replace the faulty harness with a new genuine part.

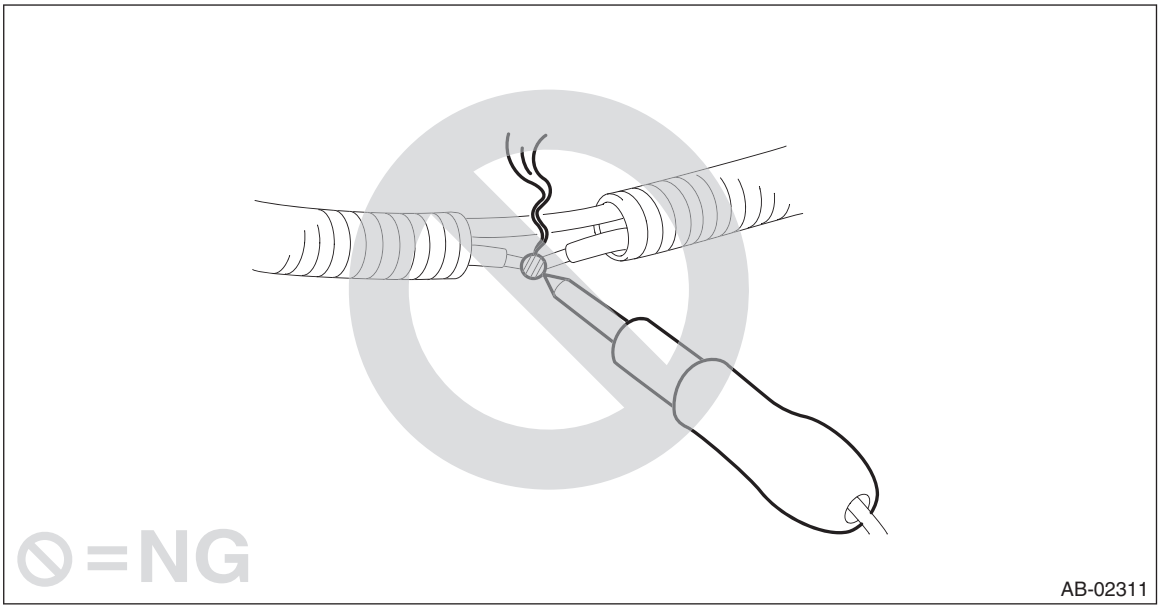

C: PREPARATION TOOL

1. SPECIAL TOOL

ILLUSTRATION	TOOL NUMBER	DESCRIPTION	REMARKS
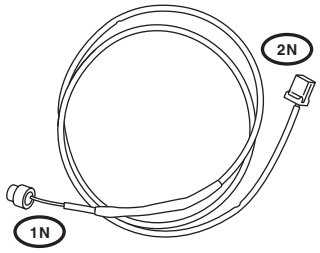 ST98299SA000	98299SA000	TEST HARNESS N	Used for unit inspection of steering roll connector.
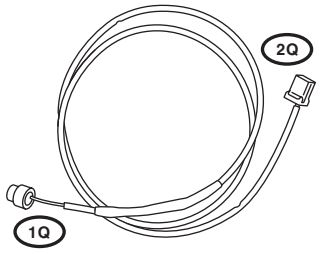 ST98299SA040	98299SA040	TEST HARNESS Q	Used for unit inspection of steering roll connector.

2. GENERAL TOOL

TOOL NAME	REMARKS
Steering wheel puller	Used for removing the steering wheel.
TORX® T40	Used for removing and installing the beam COMPL - steering.

2. Airbag Connector

A: PROCEDURE

1. POWER SUPPLY

1) How to disconnect:

CAUTION:
When pulling the slide lock or disconnecting connector, be sure to hold the connector, not the harness.

(1) Push the lock (A).
(2) While holding down the lock (A), disconnect the connector.

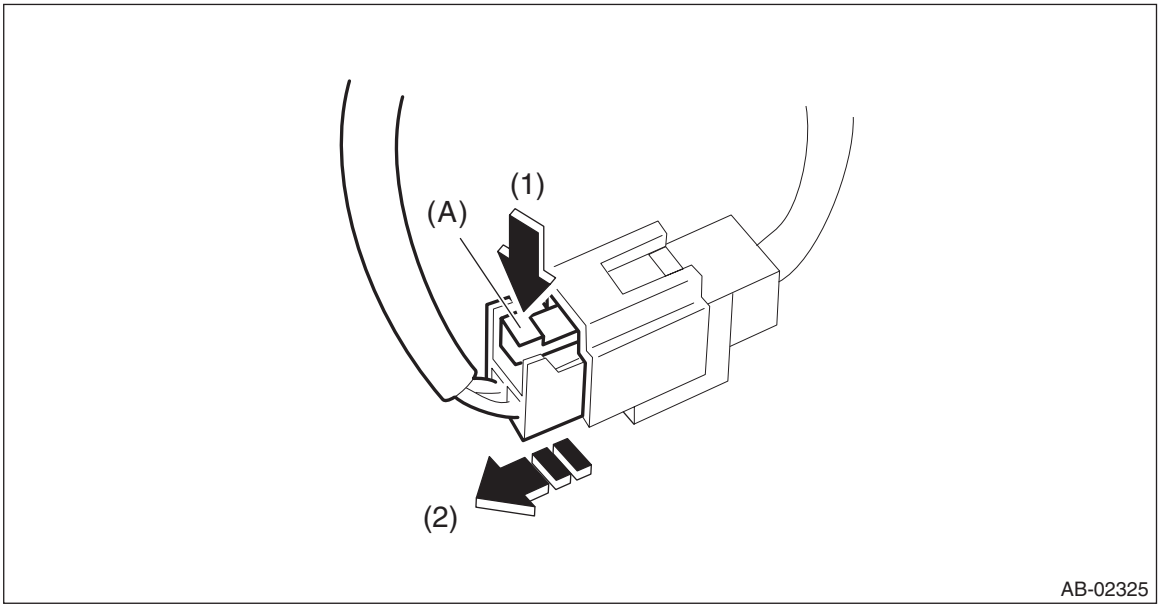

2) How to connect:

CAUTION:
Be sure to insert the connector in until it is locked. Then pull it gently to make sure that it is locked.
Holding the connector, push it in securely until a clicking sound is heard.

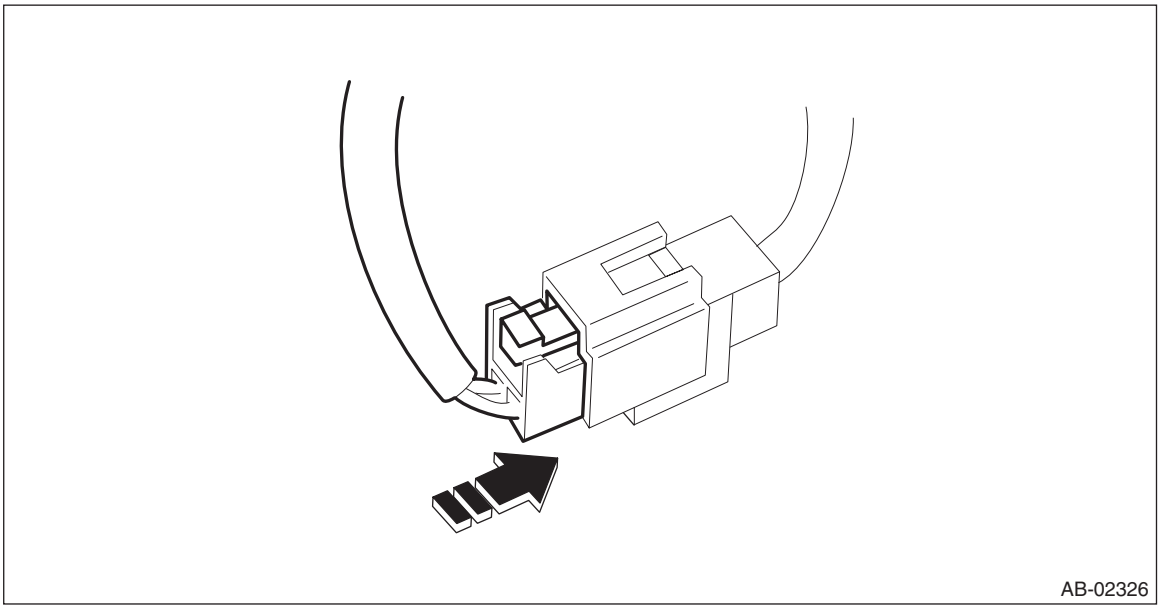

2. AIRBAG CONTROL MODULE

1) How to disconnect:
   (1) Push the lock lever plate (A).
   (2) While holding down the lock lever plate (A), pull the lever toward you.

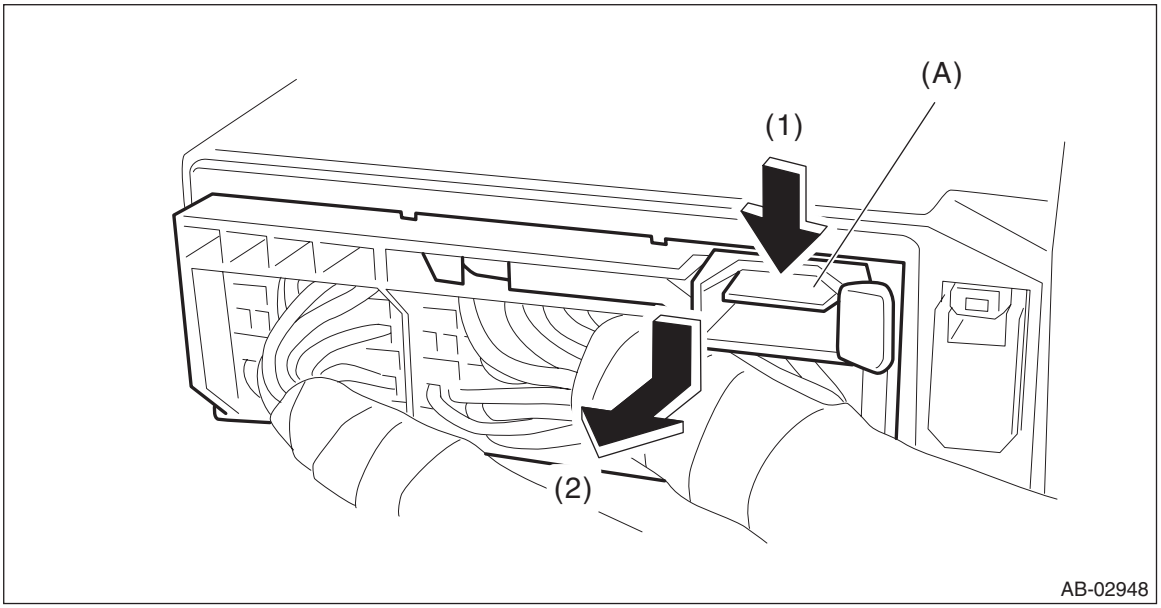

2) How to connect:

CAUTION:
Be sure to insert the connector in until it is locked. Then pull it gently to make sure that it is locked.
Insert the connector and push the lock lever in securely.

3. DRIVER'S AIRBAG MODULE (ROLL CONNECTOR)

1) How to disconnect:

CAUTION:
When pulling the slide lock or disconnecting connector, be sure to hold the connector, not the harness.
   (1) Pull the slide lock (A) in the direction of arrow.
   (2) With the slide lock pulled, disconnect the connector.

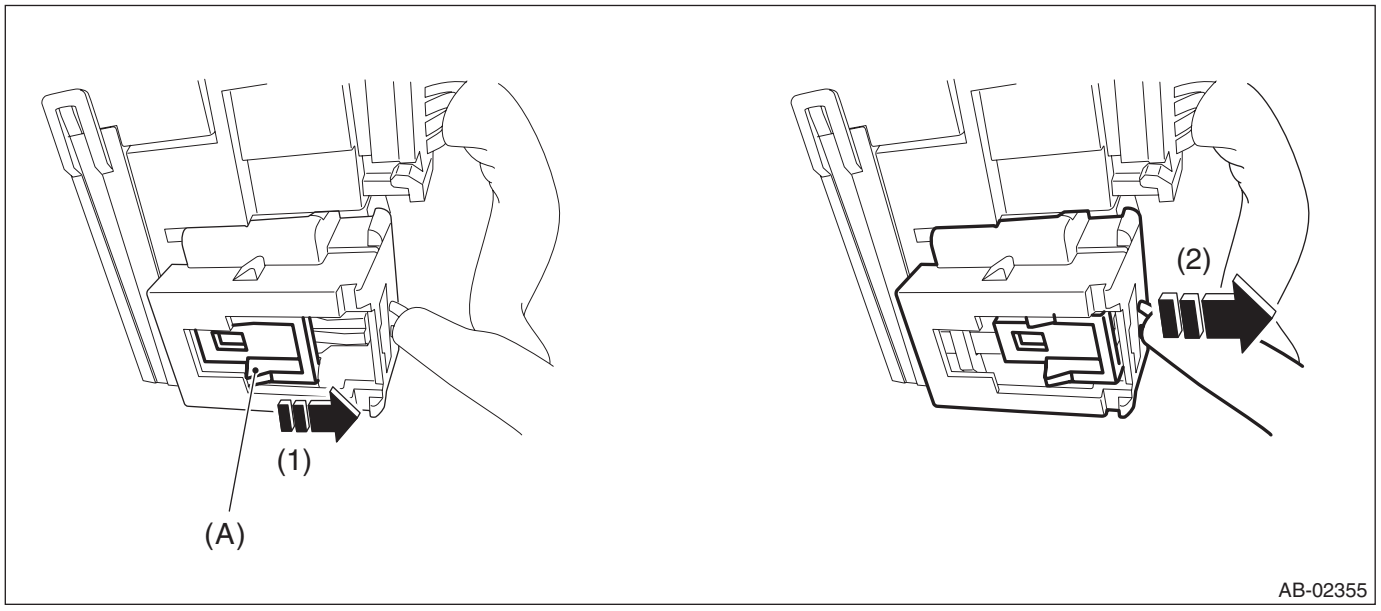

2) How to connect:

CAUTION:
Be sure to insert the connector in until it is locked. Then pull it gently to make sure that it is locked.
Holding the connector, push it in securely until a clicking sound is heard.

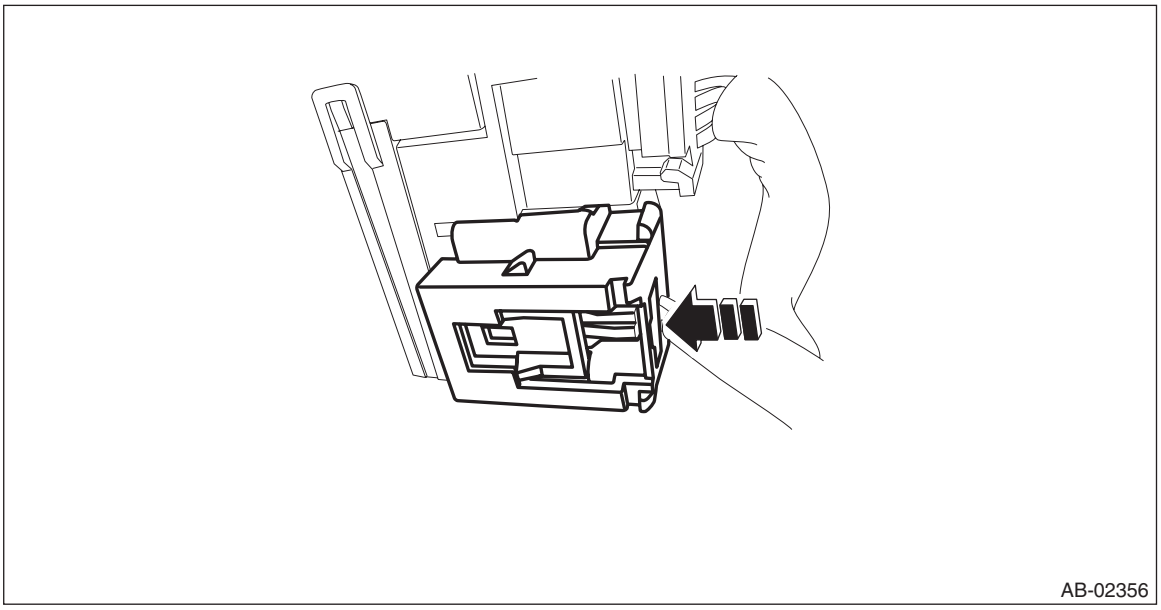

4. PASSENGER'S AIRBAG MODULE

1) How to disconnect:

CAUTION:
When pulling the slide lock or disconnecting connector, be sure to hold the connector, not the harness.

(1) Pull the slide lock (A) in the direction of arrow.
(2) With the slide lock pulled, disconnect the connector.

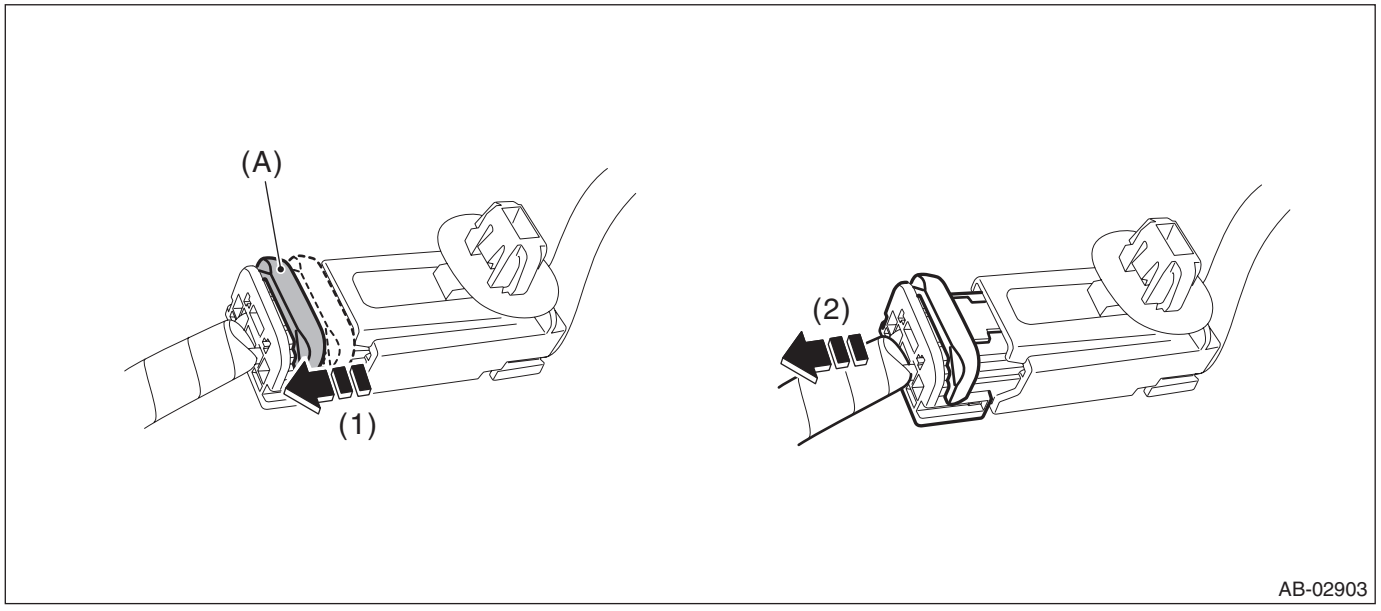

2) How to connect:

CAUTION:
Be sure to insert the connector in until it is locked. Then pull it gently to make sure that it is locked.
Holding the connector, push it in securely until a clicking sound is heard.

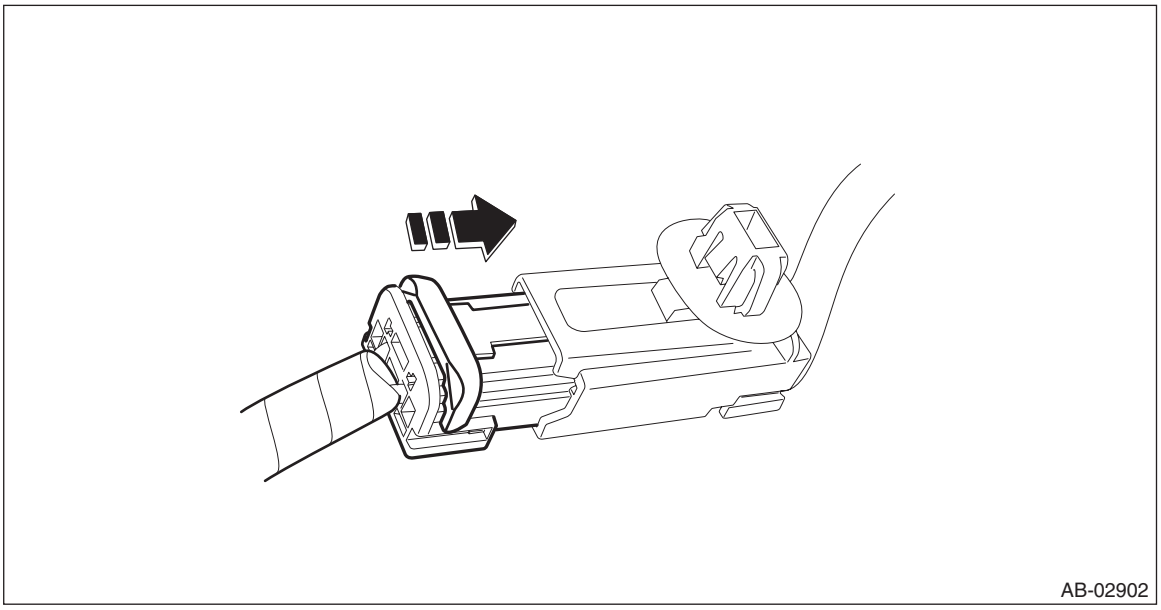

5. DRIVER'S AIRBAG MODULE, CURTAIN AIRBAG MODULE & PRETENSIONER

1) How to disconnect:
(1) Using a flat tip screwdriver, pry the push lock upward to unlock.
(2) Pull the connector to disconnect from the airbag module assembly or the retractor assembly.

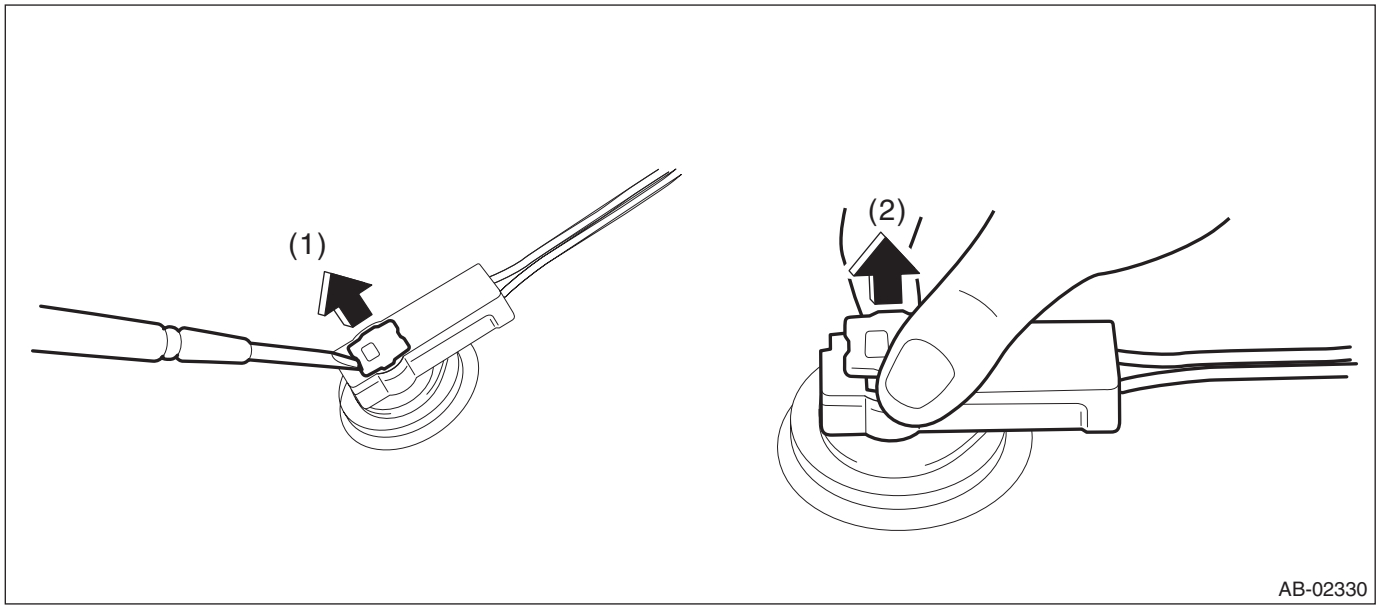

2) How to connect:

CAUTION:
- **Be sure to insert the connector in until it is locked.**
- **Press in the push lock securely. Then pull it gently to make sure that it is locked.**

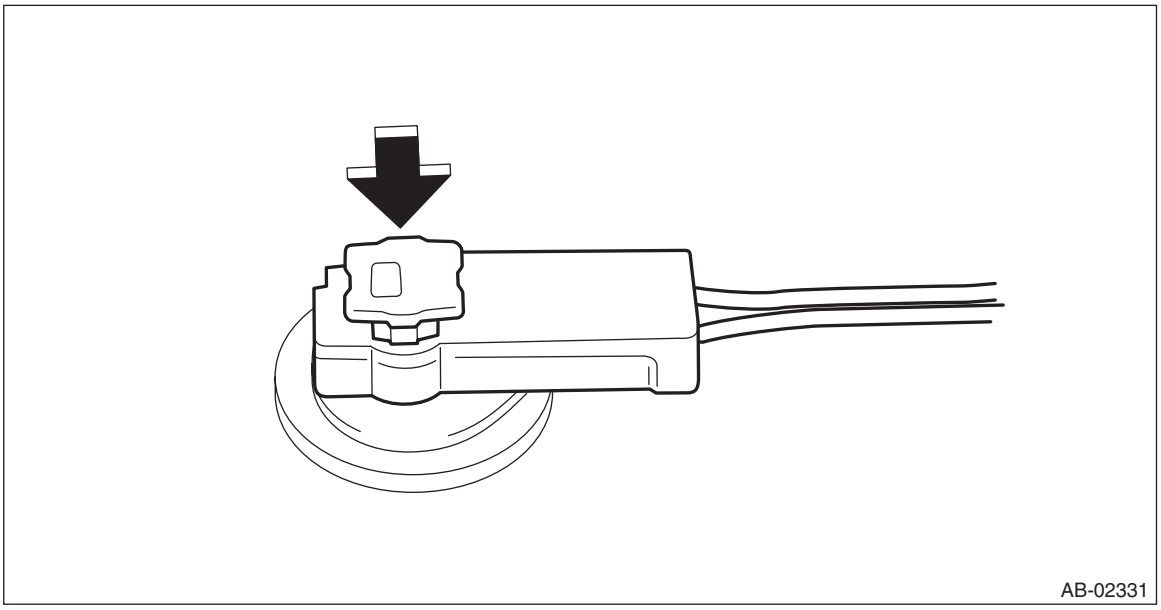

Connect the connector in the reverse order of disconnecting. At this time, be sure to insert until a clicking sound is heard.

6. FRONT SUB SENSOR

1) How to disconnect:

CAUTION:
When pulling the slide lock or disconnecting connector, be sure to hold the connector, not the harness.

(1) Push the lock arm.
(2) Holding outer part, pull it one step in the direction of arrow.

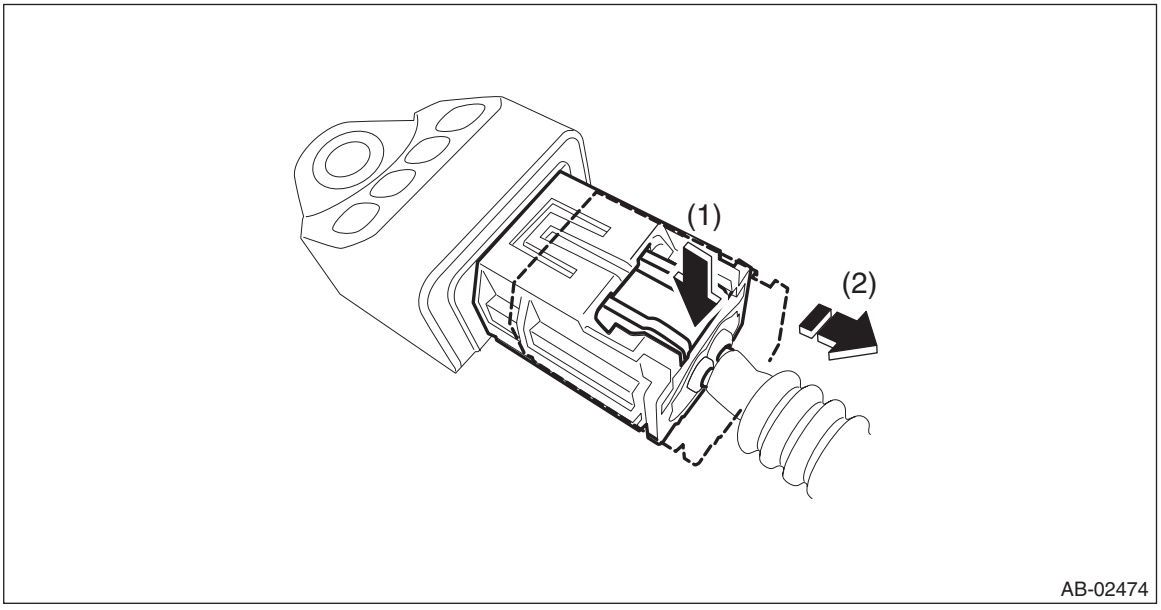

(3) Push the lock arm again.
(4) Holding outer part, pull it in the direction of arrow to disconnect the connector.

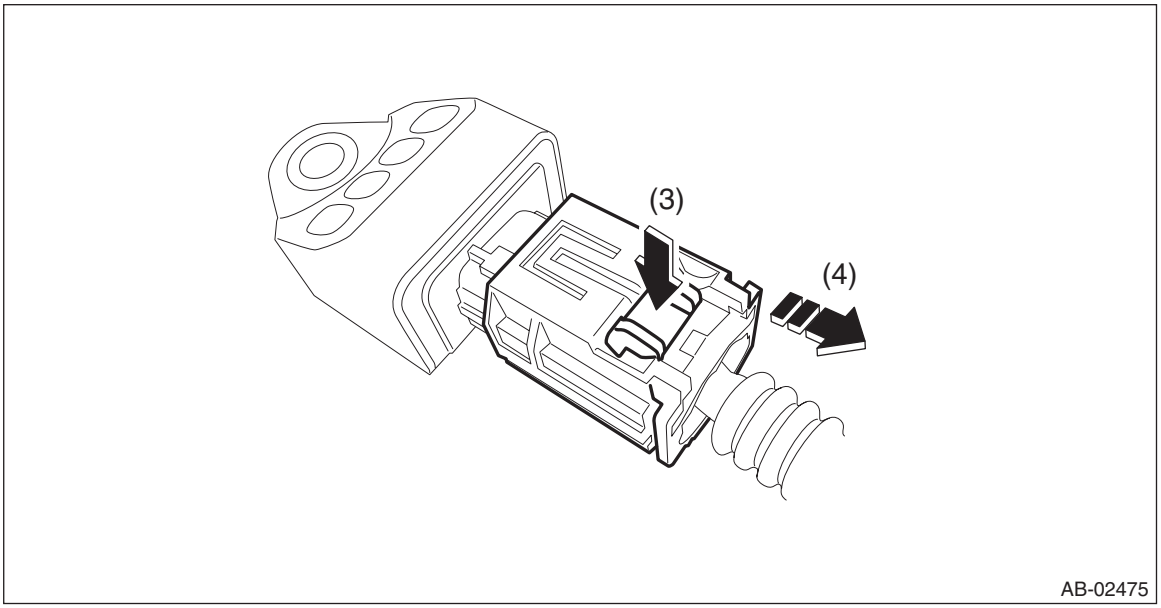

2) How to connect:

CAUTION:
Be sure to insert the connector in until it is locked. Then pull it gently to make sure that it is locked.
Holding the connector, push it in securely until a clicking sound is heard.

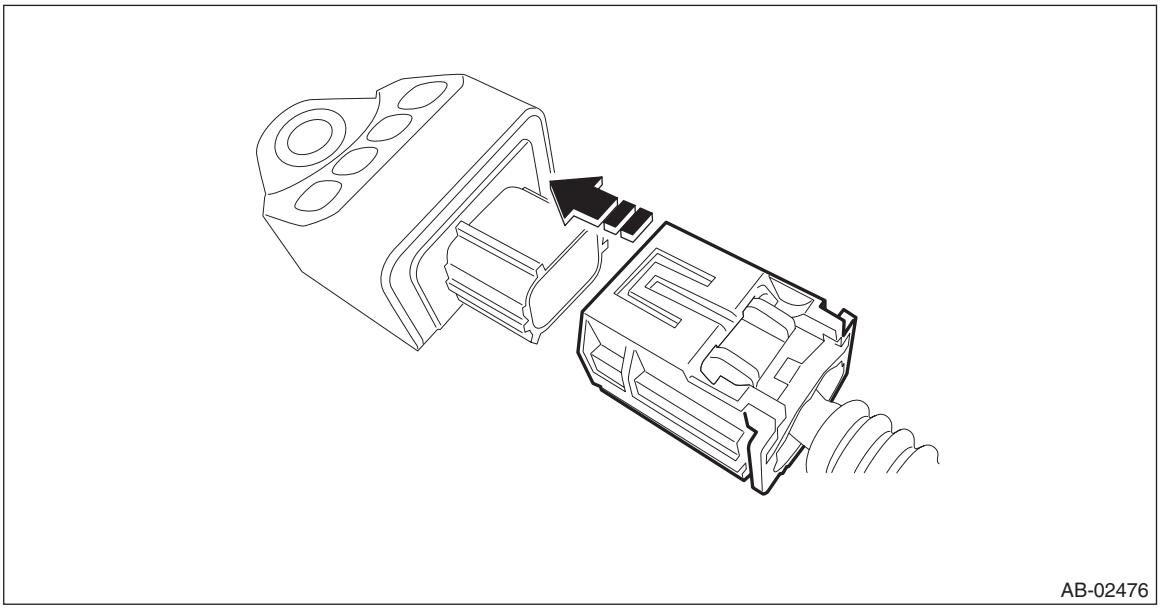

7. FRONT DOOR IMPACT SENSOR AND SATELLITE SAFING SENSOR

1) How to disconnect:

CAUTION:
When pulling the slide lock or disconnecting connector, be sure to hold the connector, not the harness.
Holding outer part (A), pull it in the direction of arrow.

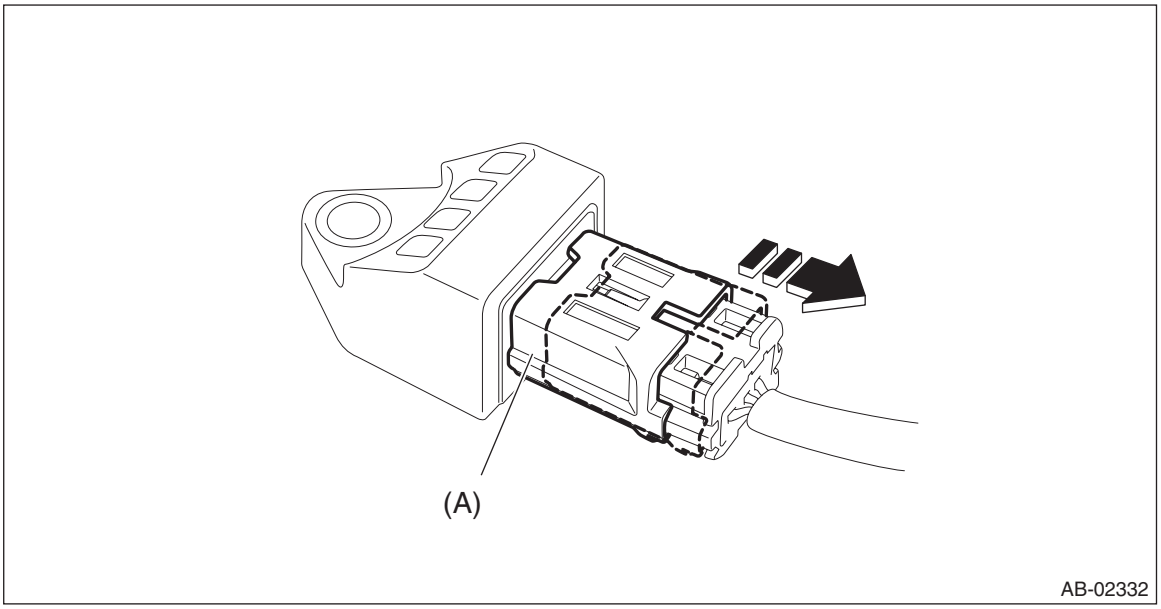

2) How to connect:

CAUTION:
- **Do not touch the outer side section or else the outer side (A) will move back.**
- **Be sure to insert the connector in until it is locked. Then pull it gently to make sure that it is locked.**

Holding the connector, push it in securely until a clicking sound is heard.

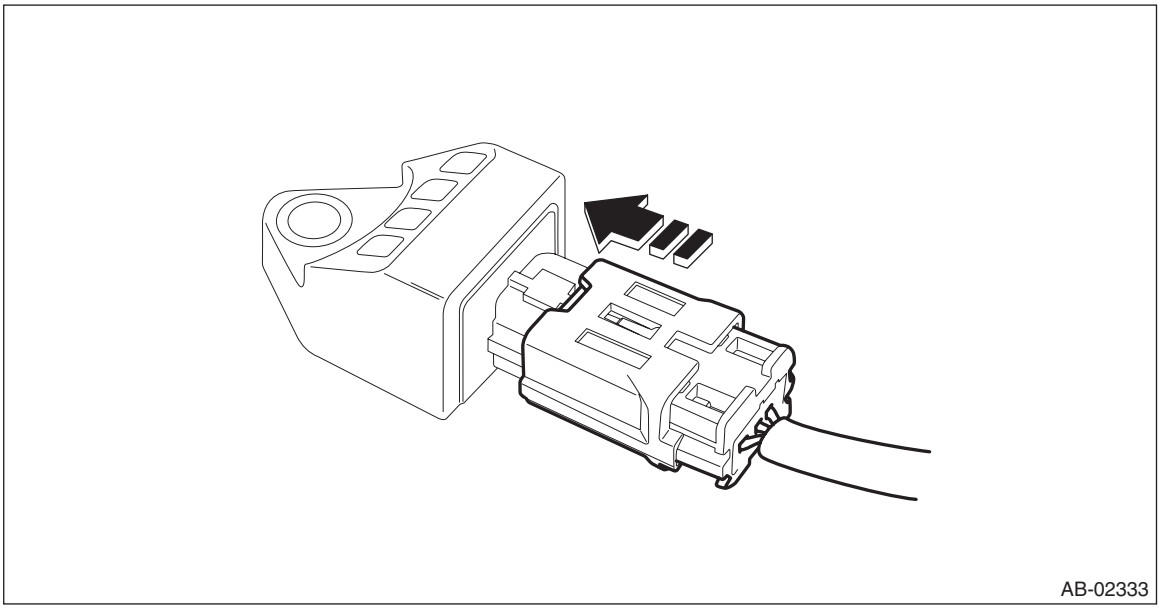

8. FRONT DOOR IMPACT SENSOR (BETWEEN AIRBAG REAR HARNESS AND DOOR HARNESS)

1) How to disconnect:

CAUTION:
When pulling the slide lock or disconnecting connector, be sure to hold the connector, not the harness.

(1) Pull the slide lock (A) in the direction of arrow.
(2) With the slide lock pulled, disconnect the connector.

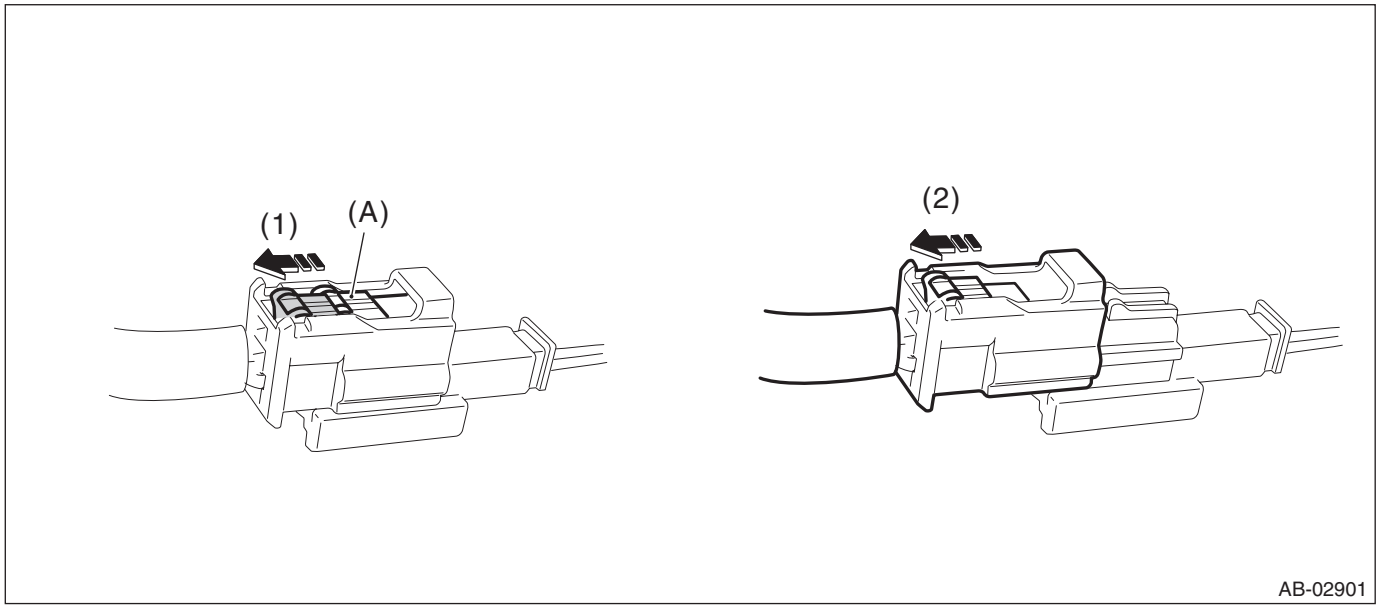

2) How to connect:

CAUTION:
- **Outer side (A) moves back, and so do not touch the outer part.**
- **Be sure to insert the connector in until it is locked. Then pull it gently to make sure that it is locked.**

Holding the connector, push it in securely until a clicking sound is heard.

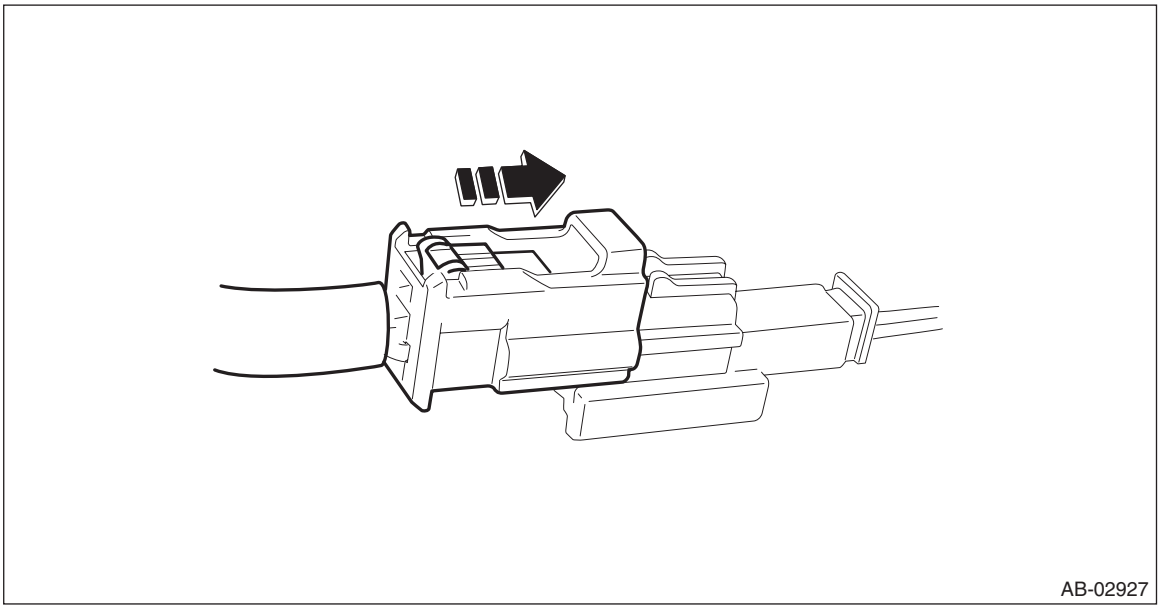

9. SIDE AIRBAG SENSOR AND CURTAIN AIRBAG SENSOR

1) How to disconnect:

CAUTION:
When pulling the slide lock or disconnecting connector, be sure to hold the connector, not the harness.

(1) Push the lock arm.
(2) Holding outer part, pull it one step in the direction of arrow.

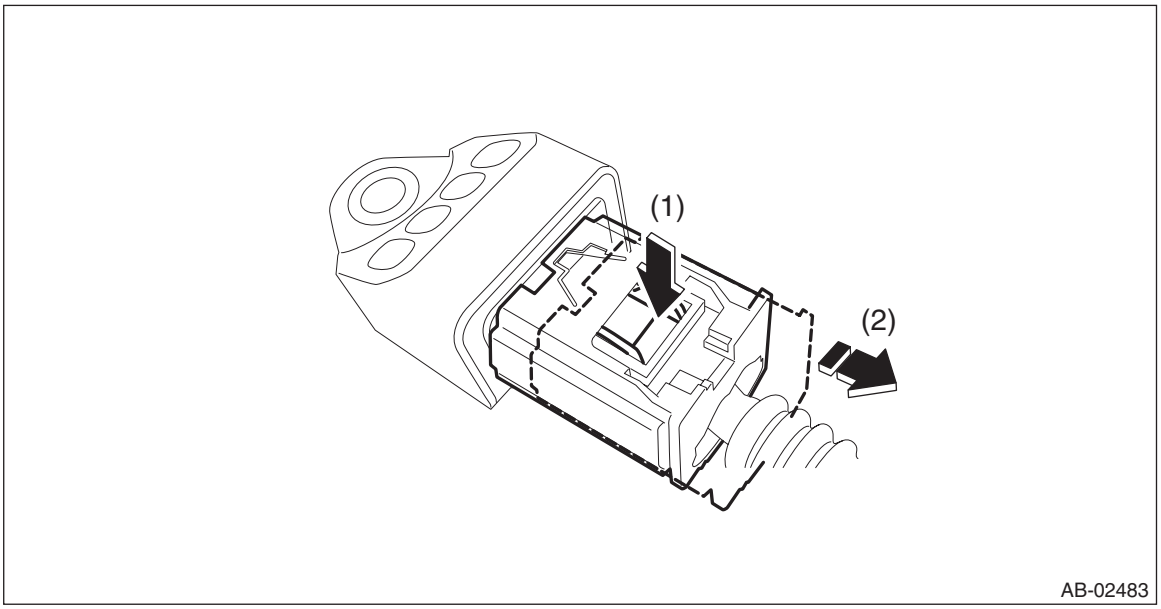

(3) Push the lock arm again.
(4) Holding outer part, pull it in the direction of arrow to disconnect the connector.

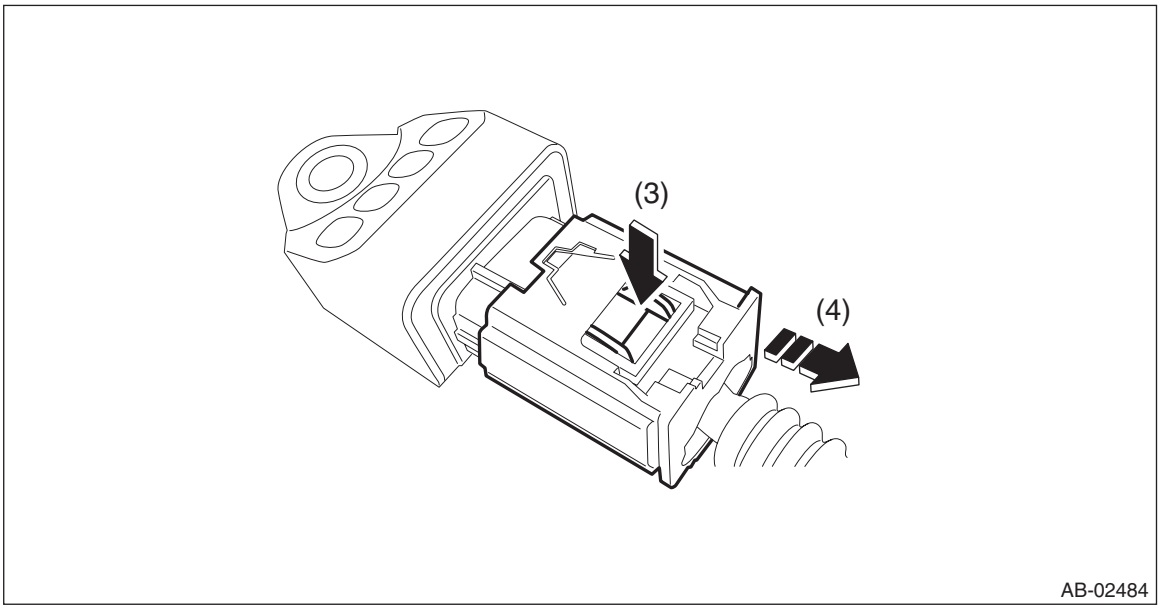

2) How to connect:

CAUTION:
Be sure to insert the connector in until it is locked. Then pull it gently to make sure that it is locked.
Holding the connector, push it in securely until a clicking sound is heard.

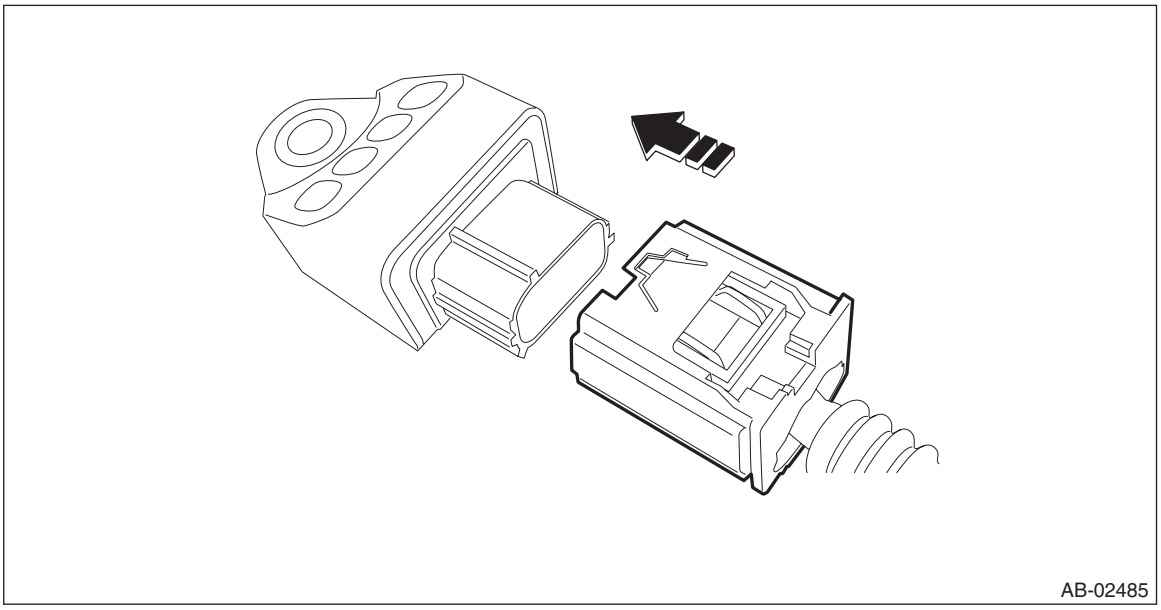
AB-02485

10.SIDE AIRBAG MODULE

1) How to disconnect:

CAUTION:
When pulling the slide lock or disconnecting connector, be sure to hold the connector, not the harness.

(1) Move the slide lock (A) in the direction of arrow and hold it.
(2) While holding the slide lock (A) in place, pull the connector (B) to the direction of arrow.

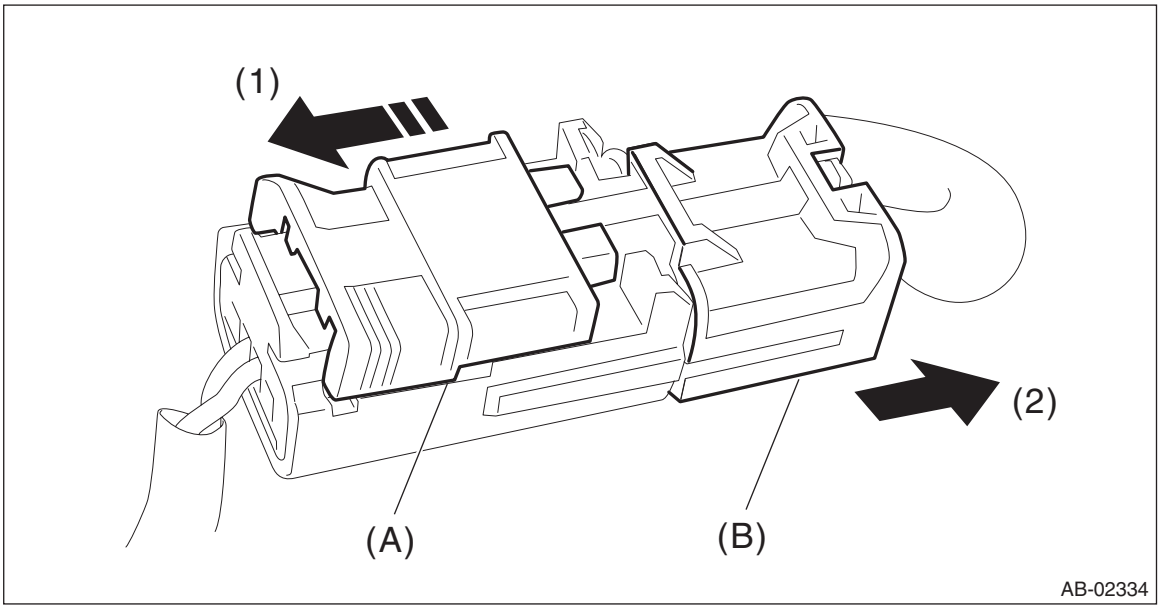

AB-02334

2) How to connect:

CAUTION:
Be sure to insert the connector in until it is locked. Then pull it gently to make sure that it is locked.
Holding the connector, push it in securely until a clicking sound is heard.

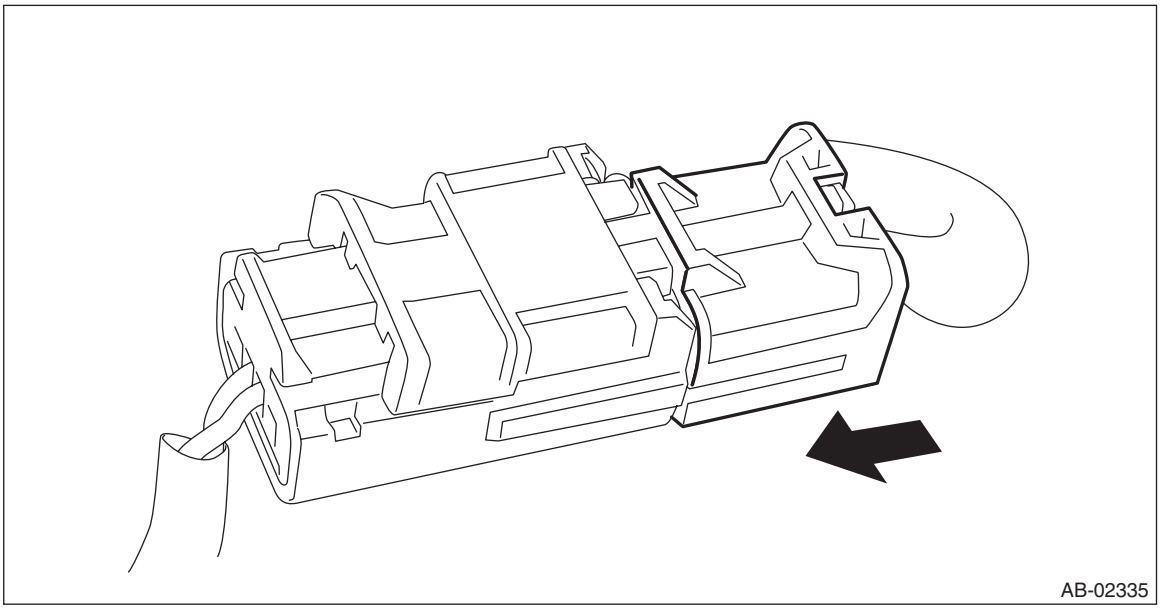

11.BUCKLE SWITCH RH

1) How to disconnect:

CAUTION:
When pulling the slide lock or disconnecting connector, be sure to hold the connector, not the harness.

(1) Move the slide lock (A) in the direction of arrow and hold it.
(2) While holding the slide lock (A), pull the connector (B) in the direction of arrow.

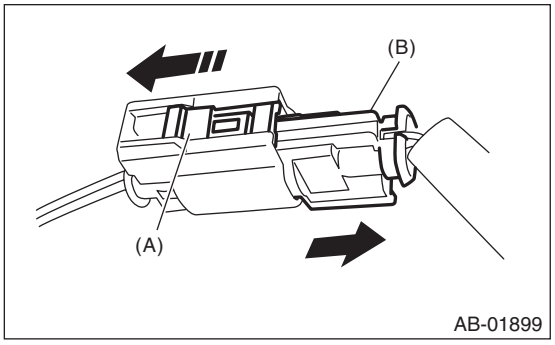

2) How to connect:

CAUTION:
Be sure to insert the connector in until it is locked. Then pull it gently to make sure that it is locked.
Holding the connector, push it in securely until a clicking sound is heard.

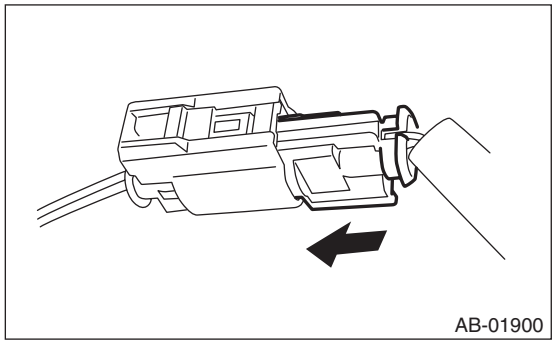

12.OCCUPANT DETECTION SYSTEM (BETWEEN AIRBAG REAR HARNESS AND SEAT HARNESS)

Refer to “OCCUPANT DETECTION SYSTEM” section. <Ref. to OD(diag)-9, OCCUPANT DETECTION SYSTEM (BETWEEN AIRBAG REAR HARNESS AND SEAT HARNESS), PROCEDURE, Airbag Connector.>

13.KNEE AIRBAG MODULE

1) How to disconnect:
   (1) Using a flat tip screwdriver, pry the push lock upward to unlock.
   (2) Pull the connector to disconnect from the airbag module assembly.

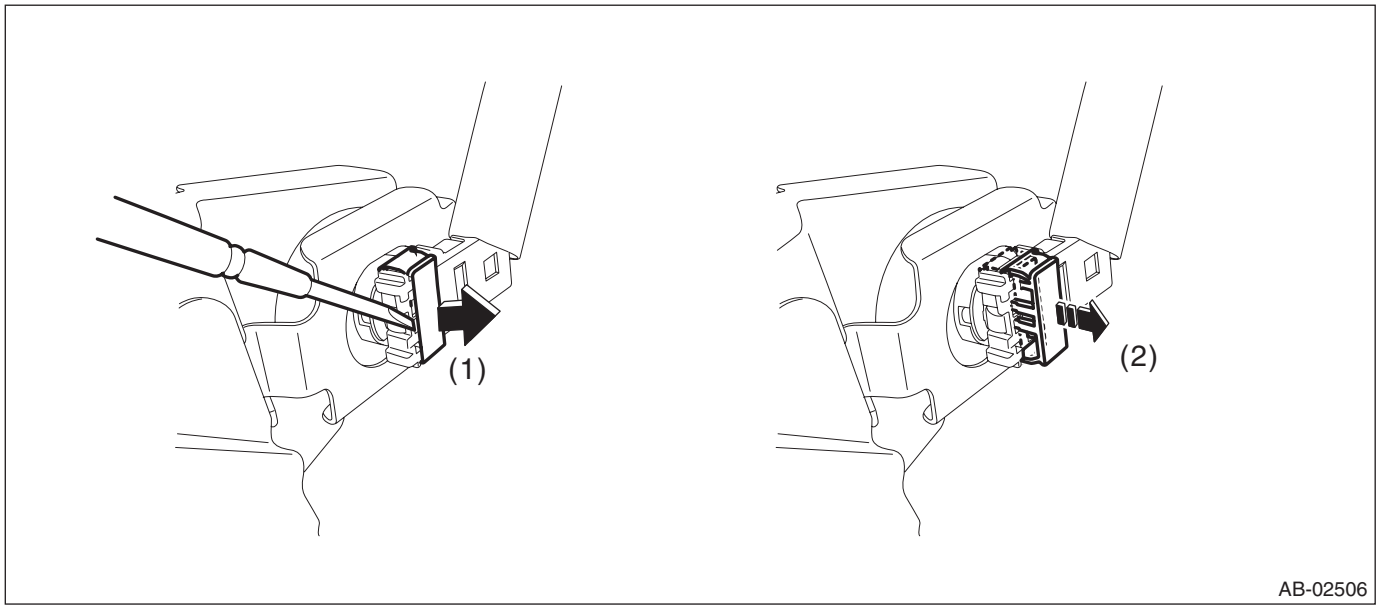

2) How to connect:

CAUTION:
- **Be sure to insert the connector in until it is locked.**
- **Press in the push lock securely. Then pull it gently to make sure that it is locked.**

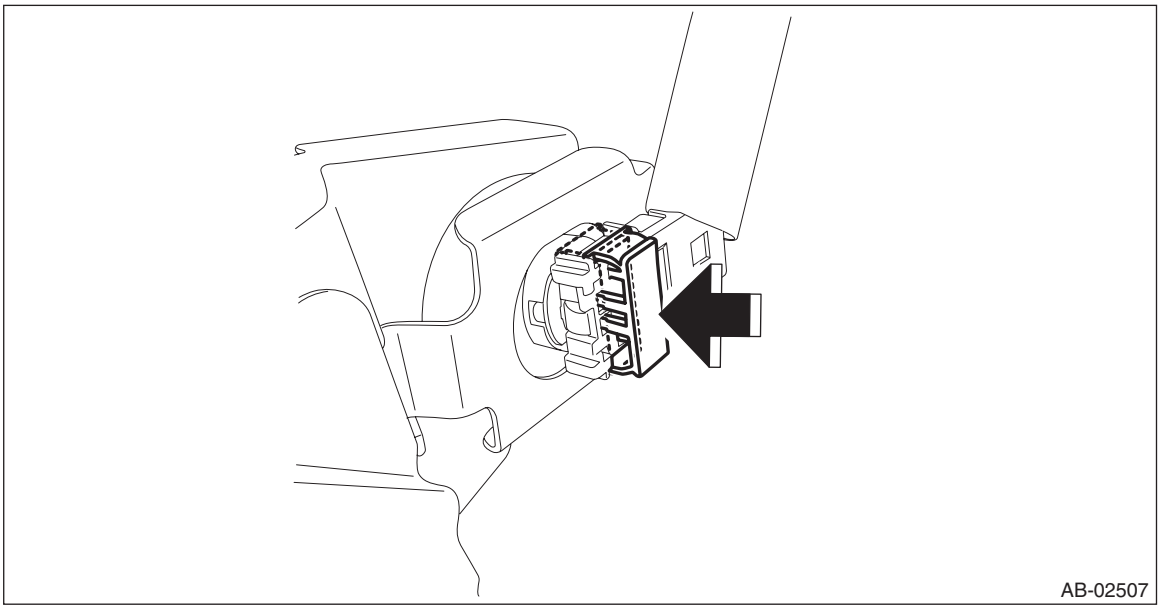

Connect the connector in the reverse order of disconnecting. At this time, be sure to insert until a clicking sound is heard.

3. Inspection Locations after a Collision

A: INSPECTION

If the vehicle is involved in a collision, even if it is a slight collision, be sure to check the following systems.

1. DRIVER'S AIRBAG MODULE ASSEMBLY

1) Frontal collision (driver's airbag module assembly activated)

1. Replace the following parts with new ones.
   - Airbag control module
   - Driver's airbag module
   - Knee airbag module
   - Passenger's airbag module (if deployed)
   - Curtain airbag module (both sides / if deployed)
   - Seat belt pretensioner (right and left)
   - Lap seat belt pretensioner (XV model - passenger's side only)
   - Front sub sensor (right and left)
   - Instrument panel assembly (because it is integrated with passenger's airbag module) (if passenger's airbag module is deployed)
   - Column ASSY - steering
   - Roll connector
   - Trim panel - roof assembly (if the curtain airbag is deployed)
   - Trim panel of each pillar (if the curtain airbag is deployed)
2. Visually inspect the following items and replace any damaged part with a new one.
   - Steering wheel
   - Beam COMPL - steering
   - Instrument panel harness and connector on body side

2) Frontal collision (driver's airbag module not activated)

Visually inspect the following items and replace any damaged or cracked part with a new one.
Specially inspect the damage of airbag module body, mounting bracket and harness connector.

- Driver's airbag module
- Knee airbag module
- Passenger's airbag module
- Seat belt pretensioner (right and left)
- Lap seat belt pretensioner (XV model - passenger's side only)
- Front sub sensor (right and left)
- Instrument panel assembly (because it is integrated with passenger's airbag module)

3) No frontal collision

Visually inspect the airbag modules for damage or contamination and replace any faulty part with a new one.

2. KNEE AIRBAG MODULE

1) Frontal collision (knee airbag module activated)

1. Replace the following parts with new ones.
   - Airbag control module
   - Driver's airbag module
   - Knee airbag module
   - Passenger's airbag module (if deployed)
   - Curtain airbag module (both sides / if deployed)
   - Seat belt pretensioner (right and left)
   - Lap seat belt pretensioner (XV model - passenger's side only)
   - Front sub sensor (right and left)
   - Instrument panel assembly (because it is integrated with passenger's airbag module) (if passenger's airbag module is deployed)
   - Column ASSY - steering
   - Roll connector
   - Trim panel - roof assembly (if the curtain airbag is deployed)
   - Trim panel of each pillar (if the curtain airbag is deployed)
2. Visually inspect the following items and replace any damaged part with a new one.
   - Steering wheel
   - Beam COMPL - steering
   - Instrument panel harness and connector on body side

2) Frontal collision (knee airbag module not activated)

Visually inspect the following items and replace any damaged or cracked part with a new one.
Specially inspect the damage of airbag module body, mounting bracket and harness connector.

- Driver's airbag module
- Knee airbag module
- Passenger's airbag module
- Seat belt pretensioner (right and left)
- Lap seat belt pretensioner (XV model - passenger's side only)
- Front sub sensor (right and left)
- Instrument panel assembly (because it is integrated with passenger's airbag module)

3) No frontal collision

Visually inspect the airbag modules for damage or contamination and replace any faulty part with a new one.

3. PASSENGER'S AIRBAG MODULE

1) Frontal collision (passenger's airbag module activated)

1. Replace the following parts with new ones.
   - Airbag control module
   - Driver's airbag module
   - Knee airbag module
   - Passenger's airbag module
   - Curtain airbag module (both sides / if deployed)
   - Seat belt pretensioner (right and left)
   - Lap seat belt pretensioner (XV model - passenger's side only)
   - Front sub sensor (right and left)
   - Instrument panel assembly (because it is integrated with passenger's airbag module)
   - Trim panel - roof assembly (if the curtain airbag is deployed)
   - Trim panel of each pillar (if the curtain airbag is deployed)
2. Visually inspect the following items and replace any damaged part with a new one.
   - Beam COMPL - steering
   - Instrument panel harness and connector on body side

2) Frontal collision (passenger's airbag module not activated)
Visually inspect the following items and replace any damaged or cracked part with a new one.
Specially inspect the damage of airbag module body, mounting bracket and harness connector.
- Driver's airbag module
- Knee airbag module
- Passenger's airbag module
- Seat belt pretensioner (right and left)
- Lap seat belt pretensioner (XV model - passenger's side only)
- Front sub sensor (right and left)
- Instrument panel assembly (because it is integrated with passenger's airbag module)

3) No frontal collision
Visually inspect the airbag modules for damage or contamination and replace any faulty part with a new one.

4. SIDE AIRBAG MODULE

1) Side impact (side airbag module activated)
1. Replace the following parts with new ones.
   - Airbag control module
   - Satellite safing sensor
   - Cover - satellite safing
   - Front door impact sensor
   - Seat belt pretensioner (collision side / if deployed)
   - Side airbag module (collision side)
   - Side airbag sensor (collision side)
   - Curtain airbag module (collision side)
   - Curtain airbag sensor (collision side)
   - Pad assembly - front seat backrest (collision side)
   - Frame assembly - front backrest (collision side)
   - Cover COMPL - front backrest (collision side)
   - Trim panel - roof assembly (collision side)
   - Trim panel for each pillar (collision side)
2. Visually inspect the following items and replace any damaged part with a new one.
   - Headrest assembly
   - Bushing - lock headrest
   - Slide rail ASSY - OUT
   - Slide rail ASSY - INN
   - Cover - hinge front seat
   - Knob - lifter
   - Lever - reclining
   - Side airbag harness and connector on body side

2) Side impact (side airbag module not activated)
Visually inspect the following items and replace any damaged or cracked part (collision side) with a new one.
Specially inspect the damage of airbag module body, mounting bracket and harness connector.
- Pad assembly - front seat backrest
- Frame assembly - front backrest
- Cover COMPL - front backrest
- Sensor assembly - satellite safing
- Cover - satellite safing
- Front door impact sensor
- Side airbag module
- Side airbag sensor
- Curtain airbag module
- Curtain airbag sensor

3) No side impact
Visually inspect the airbag modules for contamination and replace any faulty part (collision side) with a new one.

5. CURTAIN AIRBAG MODULE

1) Side impact or roll over (curtain airbag module activated)

1. Replace the following parts with new ones.
   - Airbag control module
   - Satellite safing sensor
   - Cover - satellite safing
   - Curtain airbag module (operating side)
   - Seat belt pretensioner (if deployed)
   - Front door impact sensor (operating side)
   - Side airbag sensor (operating side)
   - Curtain airbag sensor (operating side)
   - Pad assembly - front seat backrest (collision side)
   - Frame assembly - front backrest (collision side)
   - Cover COMPL - front backrest (collision side)
   - Trim panel - roof assembly
   - Trim panel for each pillar (operating side)
   - Airbag bracket (model with sunroof) (operating side)
2. Visually inspect the following items and replace any damaged part with a new one.
   - Assist rail - front and rear
   - Bracket - assist rail front and rear
   - Curtain airbag harness and connector on body side.

2) Side impact (curtain airbag module not activated)

Visually inspect the following items and replace any damaged or cracked part with a new one.
Specially inspect the damage of airbag module body, mounting bracket and harness connector.

- Trim panel - roof assembly
- Trim panel for each pillar
- Curtain airbag module
- Satellite safing sensor
- Cover - satellite safing
- Front door impact sensor
- Side airbag sensor
- Curtain airbag sensor

3) No side impact or roll over

Visually inspect the airbag covers for damage or contamination and replace any faulty part with a new one.

6. AIRBAG CONTROL MODULE

Check for the following, and replace the damaged parts with new parts.

- Control module is cracked or deformed.
- Mounting bracket is cracked or deformed.
- Connector is scratched, cracked or deformed.
- Driver’s airbag module has been activated.
- Knee airbag module has been activated.
- Passenger’s airbag module has been activated.
- Side airbag module has been activated.
- Curtain airbag module has been activated.
- Seat belt pretensioner has been activated.
- Lap seat belt pretensioner has been activated.

7. FRONT SUB SENSOR

If the section of vehicle as shown in the figure is damaged, check the following items and replace the damaged parts with new parts.

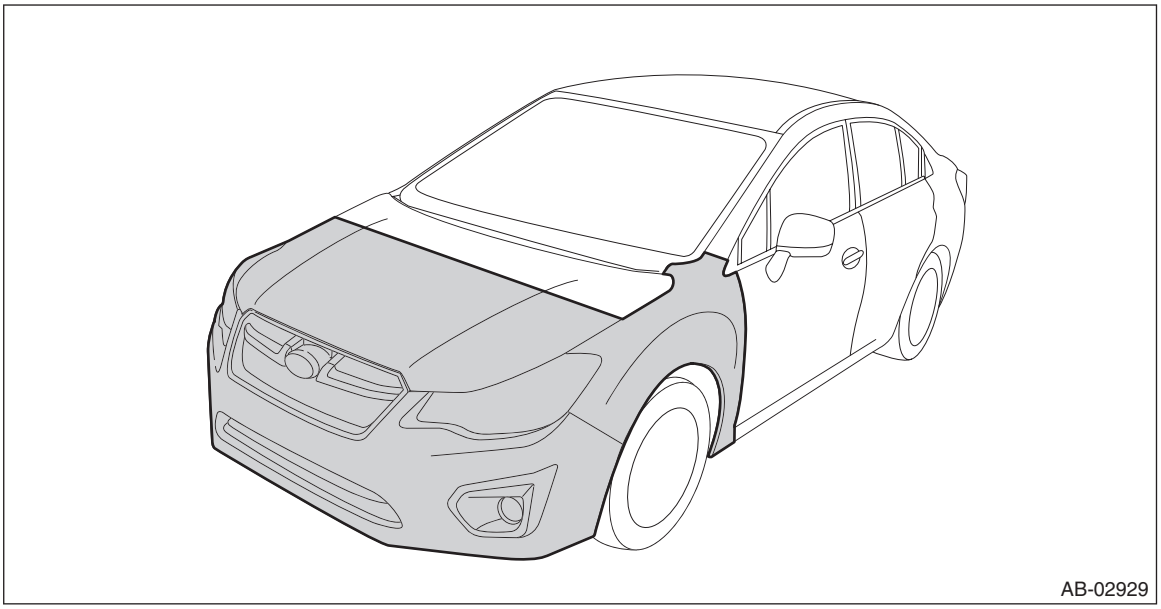

- Front sub sensor is cracked or deformed.
- Connector is scratched, cracked or deformed.
- Driver's airbag module, knee airbag module or passenger's airbag module has been activated.

8. FRONT DOOR IMPACT SENSOR, SATELLITE SAFING SENSOR, SIDE AIRBAG SENSOR AND CURTAIN AIRBAG SENSOR

If the section of vehicle as shown in the figure is damaged, check the following items and replace the damaged parts with new parts.

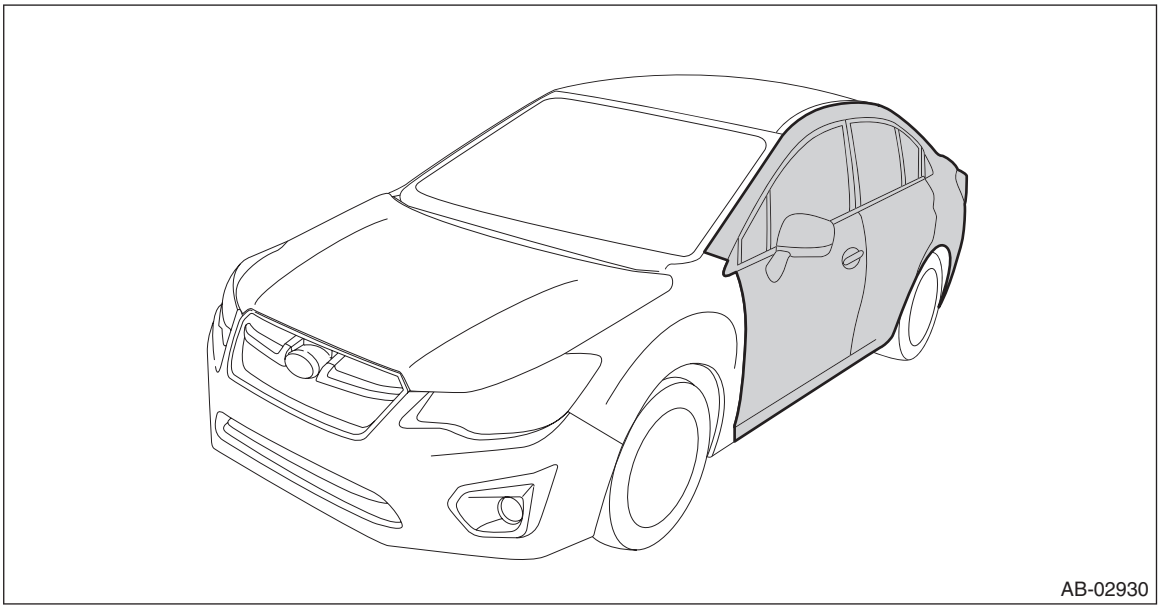

- Front door impact sensor, satellite safing sensor, side airbag sensor and curtain airbag sensor are cracked or deformed.
- Mounting bracket is cracked or deformed.
- Connector is scratched, cracked or deformed.
- Side airbag module or curtain airbag module has been activated. (operating side)

9. ROLL CONNECTOR

Check the following items and replace any damaged, cracked, or deformed parts with new parts.
- Combination switch
- Steering roll connector

10.COLUMN ASSEMBLY - STEERING & STEERING WHEEL

Check the following items, and if there is anything out of standard, it is considered to be damaged. If so, replace it with a new part.
- Measure the whole length of the column assembly - steering.

Standard: Overall length L

Tilt and telescopic column (measure while minimized)
$819.7^{+1.5}_{-1.5}$ mm ($32.27^{+0.059}_{-0.059}$ in)

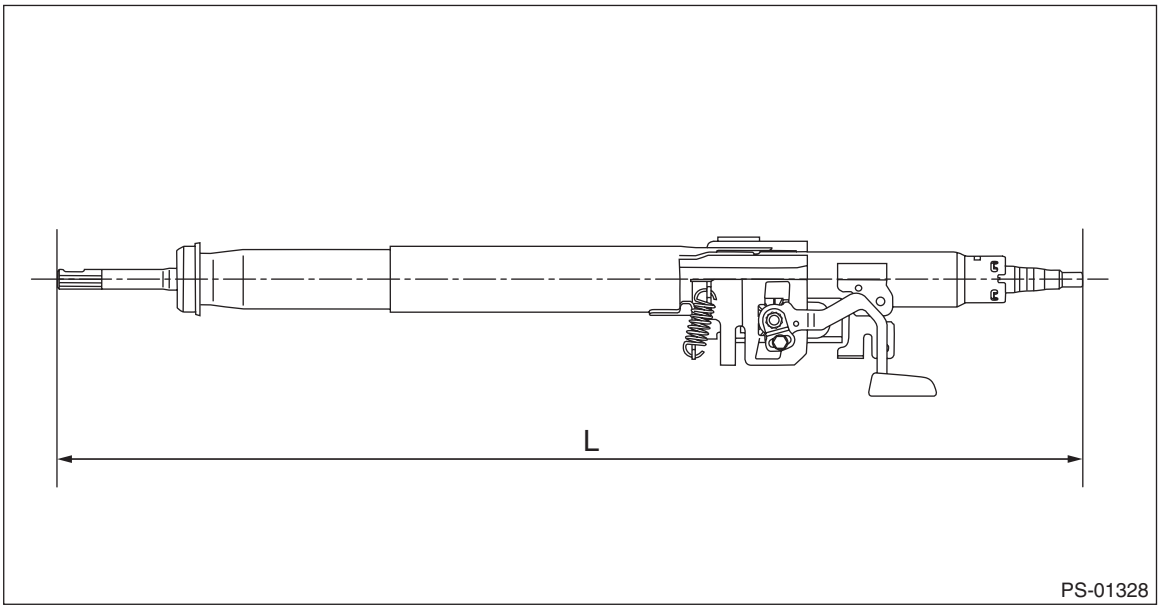

- Check the steering wheel deflection in axial and vertical directions.

Specification:
Axial deflection A (deflection of steering wheel)
Less than 6 mm (0.24 in)
Vertical deflection L (runout of steering wheel)
Less than 17 mm (0.68 in)

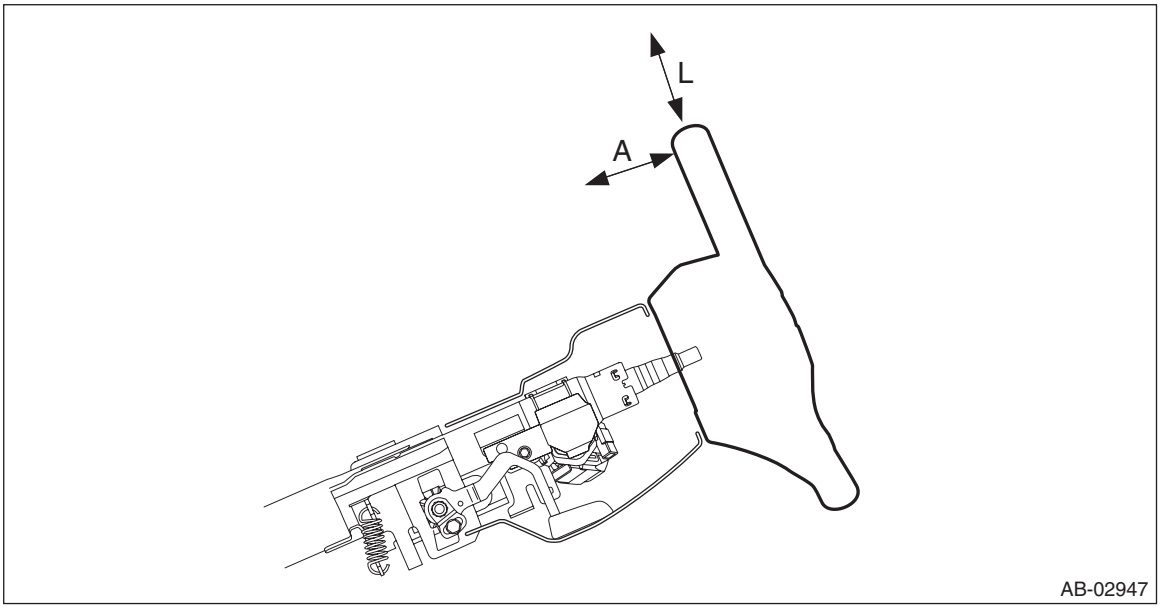

11.PASSENGER'S SEAT

Check for the following, and replace the damaged parts with new parts.
- Body or bracket of the seat belt inner - front is scratched, cracked or deformed.
- Frame assembly - front backrest is cracked or deformed.
- Headrest assembly for deformation or play
- If the cover - front cushion and the cover COMPL - front backrest is damaged or frayed, replace the cover with a new part.

CAUTION:
If any of the following applies, replace the pad assembly - front seat cushion & frame assembly - front cushion as a unit. Do not disassemble.
- **The frame assembly - front cushion or the pad assembly - front seat cushion is cracked or deformed.**
- **Scratches, cracks, or deformation found on the occupant detection system sensor mat or occupant detection control module, or attachment brackets of the control module.**
- **Harness and/or connector is cracked, deformed or open. Harness wire is exposed.**

12.INSPECTION OF OTHER PARTS

Check for the following parts, and replace the damaged parts with new parts.
1) Steering wheel and column assembly - steering
Check the column assembly - steering for mounting conditions and deflection of front and rear, upward and downward directions, and deflection of front and rear direction with tilt lever released. (After a collision, absorbing part of the column assembly - steering may have been operated.)
2) Check the direct type connector of driver's airbag module, knee airbag module, curtain airbag module, and pretensioner for damage, and also check each harness for pinching and connector damage. Replace the main harness as an assembly if damage is found.
3) Check the seat cushion, backrest, slide rail and headrest for installation condition and looseness.
4) If any break or fray is found in the cover COMPL - front backrest of the driver's seat or passenger's seat, the side airbag system may not operate normally. In this case, replace the cover COMPL - front backrest with a new part.
5) For the passenger's seat, replace the frame assembly - front cushion with a new part if the frame assembly - front cushion is deformed or cracked.
6) If there are tears or loosening in the seat cover - front cushion on the passenger's side, it may interfere with the proper operation of the occupant detection system. Replace the cover - front cushion with a new part.
7) When the passenger seat cushion cover has been removed or replaced, make sure that the occupant detection system operates normally.
8) Use the Subaru Select Monitor to check whether the passenger's seat belt buckle switch is operating normally.

4. Driver's Airbag Module

A: REMOVAL

CAUTION:
Refer to "CAUTION" of "General Description" before handling the airbag module. <Ref. to AB-11, CAUTION, General Description.>

1) Position the front wheels straight ahead. (After moving a vehicle 5 m (16 ft) or more with front wheels positioned straight ahead, make sure that the vehicle moves straight ahead.)
2) Turn the ignition switch to OFF.
3) Disconnect the ground cable from battery and wait for at least 60 seconds before starting work. <Ref. to NT-5, BATTERY, NOTE, Note.>

NOTE:
For the 12 volt engine restart battery of HEV model, disconnect the ground terminal from 12V engine restart battery sensor.

4) Remove the driver's airbag module.
   (1) Using a hexagon wrench etc. wrapped by protective tape, insert the snap pins and release the locks (3 locations).

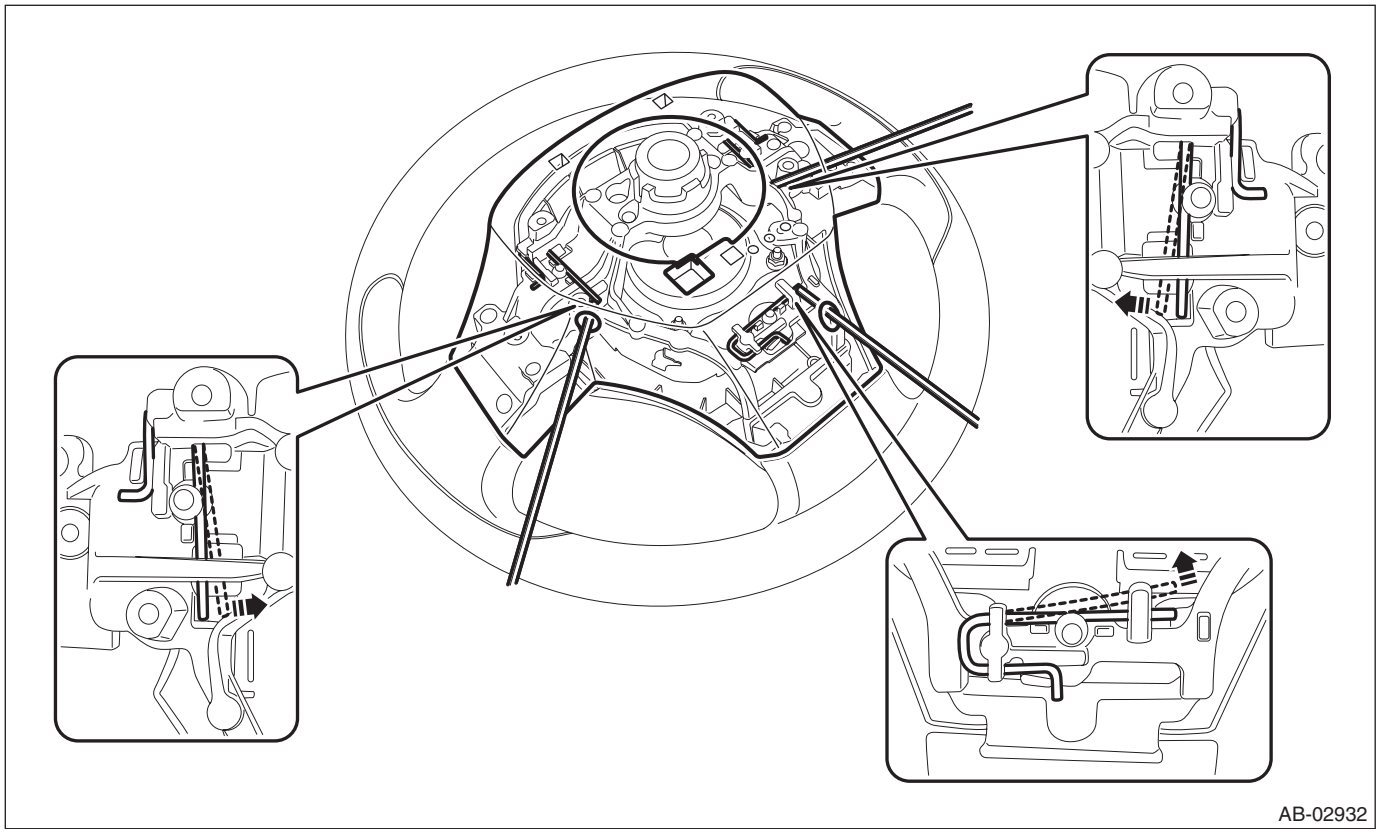

(2) Disconnect the horn harness and airbag connector, and remove the driver's airbag module. <Ref. to AB-23, DRIVER'S AIRBAG MODULE, CURTAIN AIRBAG MODULE & PRETENSIONER, PROCEDURE, Airbag Connector.>

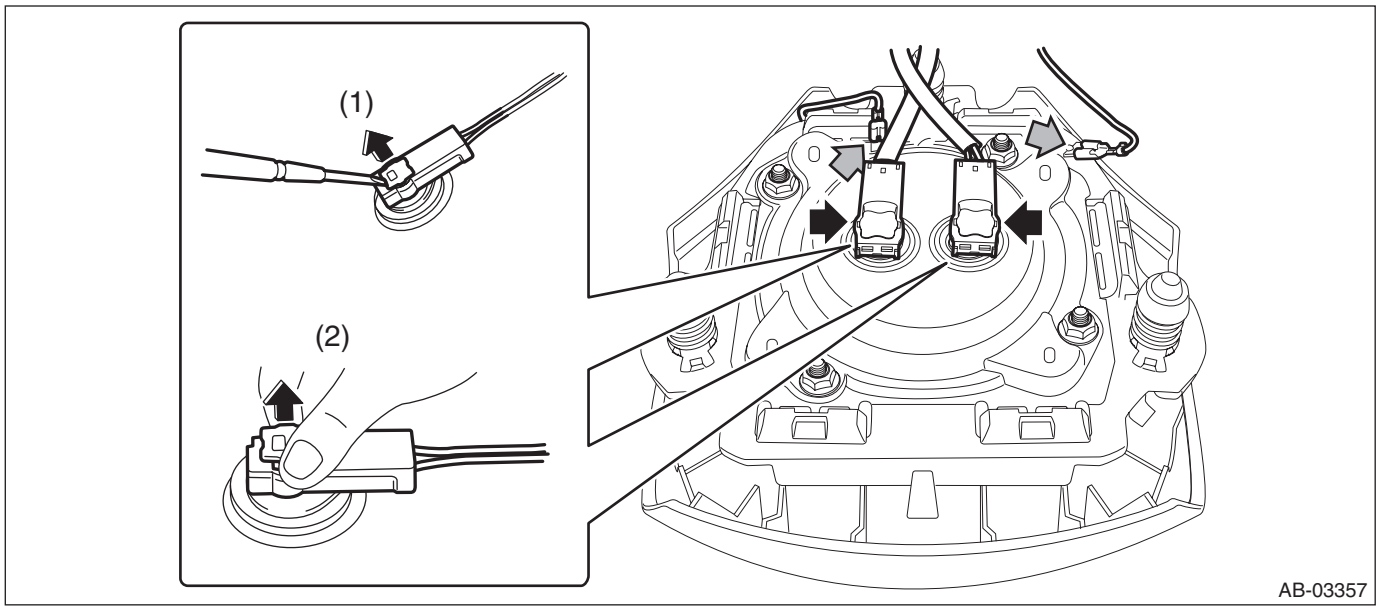

B: INSTALLATION

CAUTION:
• Refer to "CAUTION" of "General Description" before handling the airbag module. <Ref. to AB-11, CAUTION, General Description.>
• Do not allow harness and connectors to interfere or get tangled up with other parts.

1) Before installation, inspect the following items and replace any faulty part with a new one.
- Airbag module is cracked or deformed.
- Harness and/or connector is cracked, deformed or open.
- Harness wire is exposed.
- The steering wheel is in the way, making it difficult to install the airbag module.
- The clearance between the driver's airbag module and steering wheel is not constant.

2) Install each part in the reverse order of removal.

CAUTION:
Make sure that the snap pin is set inside the guide.

5. Knee Airbag Module

A: REMOVAL

1) Turn the ignition switch to OFF.
2) Disconnect the ground cable from battery and wait for at least 60 seconds before starting work. <Ref. to NT-5, BATTERY, NOTE, Note.>

NOTE:
For the 12 volt engine restart battery of HEV model, disconnect the ground terminal from 12V engine restart battery sensor.
3) Remove the cover assembly - instrument panel LWR driver.

CAUTION:
When removing the cover assembly - instrument panel LWR driver, be sure to pull it toward you. If attempting to remove by turning it upward, the claws may be damaged.

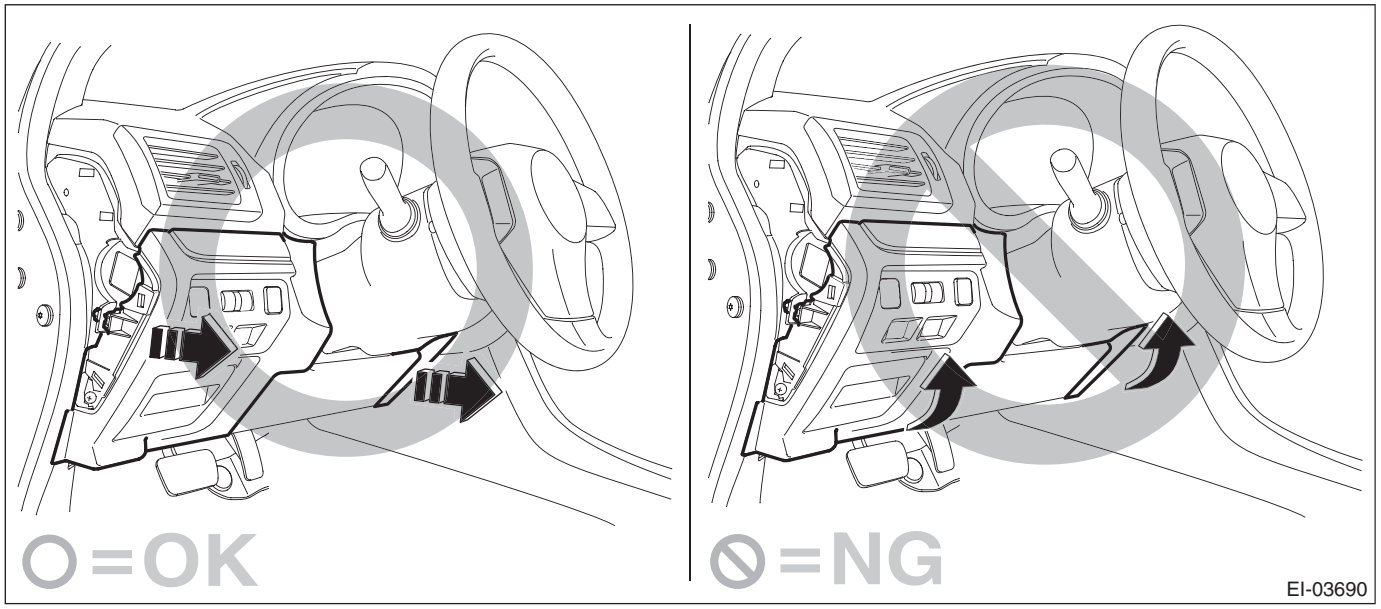

(1) Remove the clips, and remove the cover - instrument panel side LH.

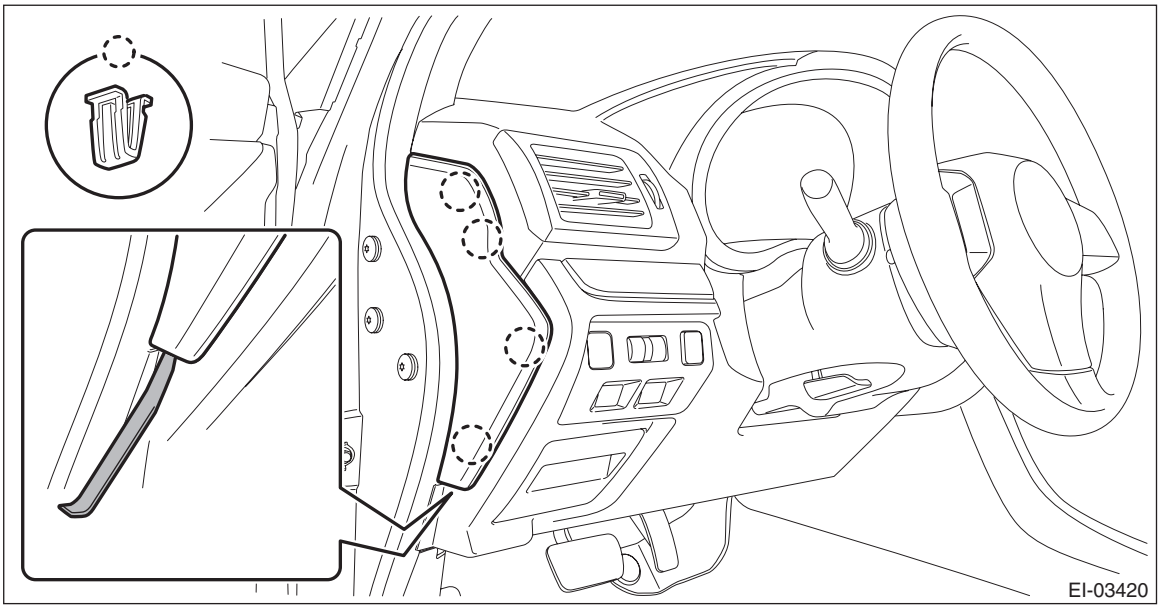

NOTE:
Using a plastic remover, open the cover - instrument panel side LH.

(2) Remove the screws and release the clips and claws.
(3) Disconnect the harness connectors, and remove the cover assembly - instrument panel LWR driver INN and the cover assembly - instrument panel LWR driver OUT.

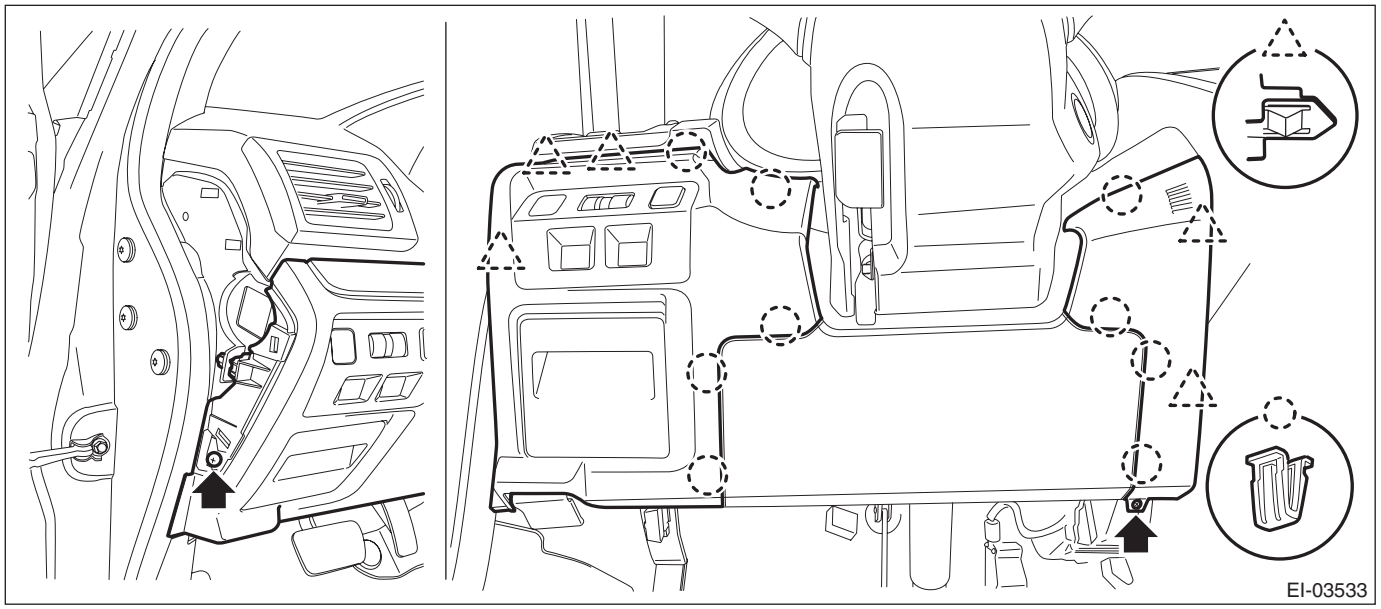

4) Remove the nuts to remove the knee airbag module and disconnect the harness connector. <Ref. to AB-31, KNEE AIRBAG MODULE, PROCEDURE, Airbag Connector.>

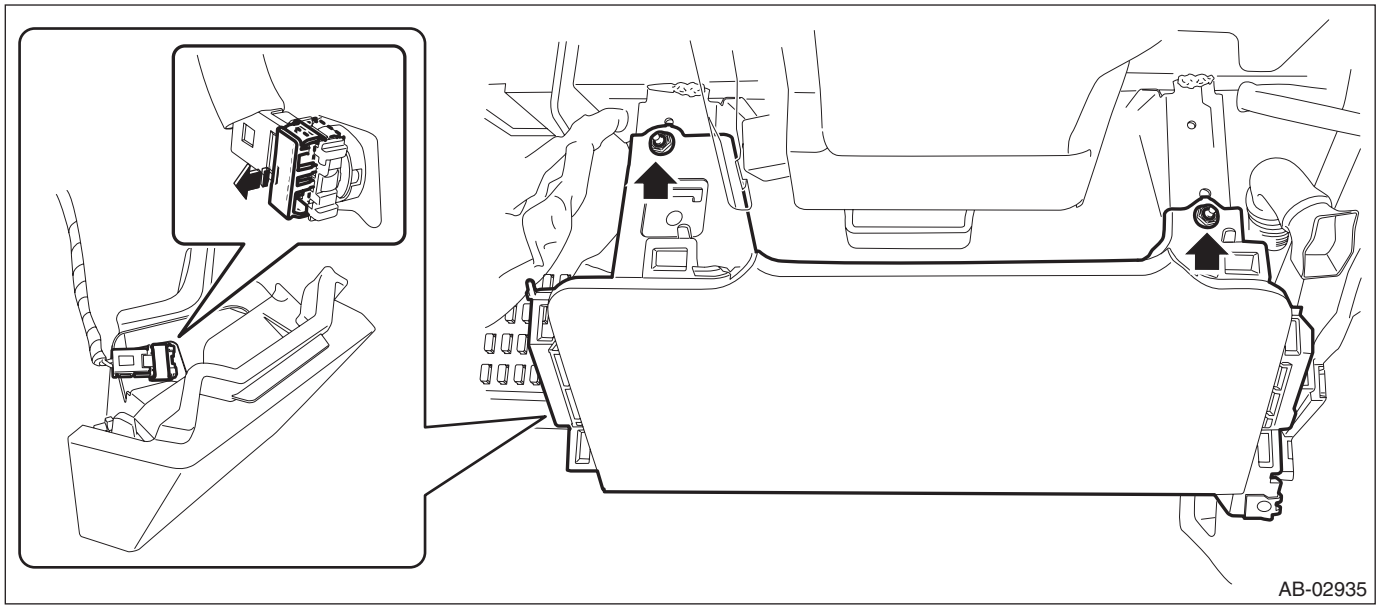

B: INSTALLATION

CAUTION:
• Refer to "CAUTION" of "General Description" before handling the airbag module. <Ref. to AB-11, CAUTION, General Description.>
• Do not allow harness and connectors to interfere or get tangled up with other parts.
1) Before installation, inspect the following items and replace any faulty part with a new one.
• Airbag module is cracked or deformed.
• Knee airbag module bracket is cracked or deformed.
• Harness and/or connector is cracked, deformed or open.
• Harness wire is exposed.
• Depending on the condition of the beam COMPL - steering, installation of the knee airbag module is difficult.
2) Install each part in the reverse order of removal.

Tightening torque:
Knee airbag module: 7.5 N·m (0.76 kgf-m, 5.5 ft-lb)

6. Passenger's Airbag Module

A: REMOVAL

CAUTION:
Refer to "CAUTION" of "General Description" before handling the airbag module. <Ref. to AB-11, CAUTION, General Description.>

1) Turn the ignition switch to OFF.
2) Disconnect the ground cable from battery and wait for at least 60 seconds before starting work. <Ref. to NT-5, BATTERY, NOTE, Note.>

NOTE:
• For the 12 volt engine restart battery of HEV model, disconnect the ground terminal from 12V engine restart battery sensor.
• On CVT models, shift the select lever into "D" before disconnecting the battery ground cable.

3) Remove the console box assembly.
(1) Release the claws, and then remove the boot - hand brake.

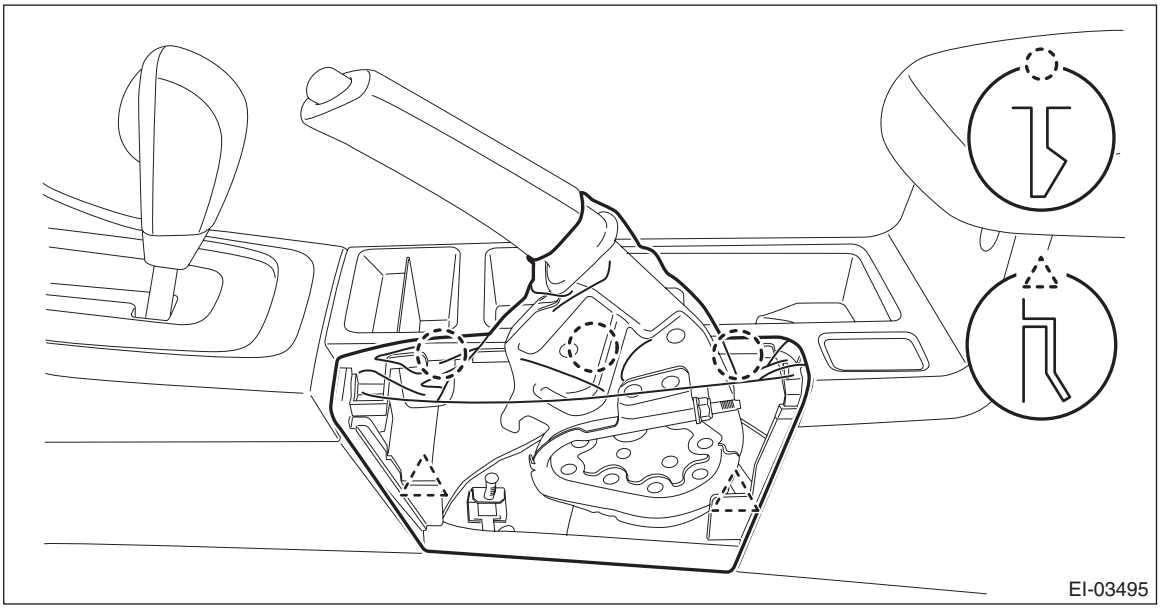

(2) Move the seat forward, and remove the bolts after detaching the left and right caps.
(3) Remove the screws, disconnect the harness connector and remove the console box assembly.

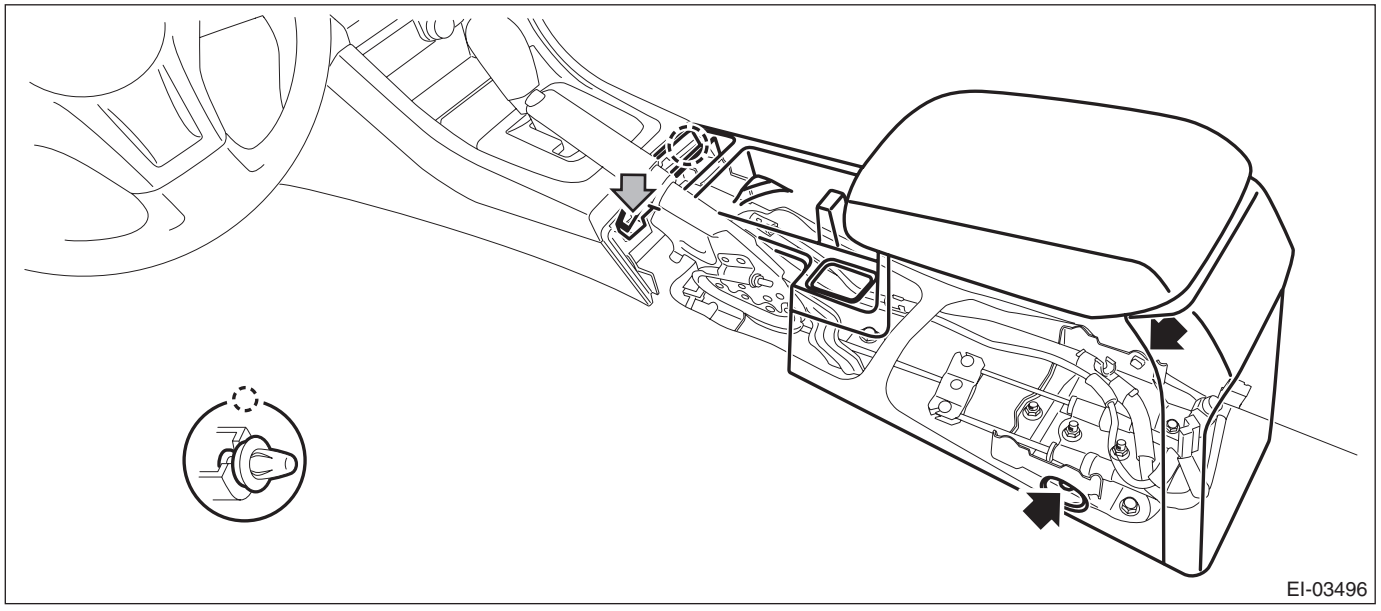

4) Remove the cover - shift lever.
   (1) Remove the shift knob. (MT model)
   (2) Release the clips and claws, then pull up the cover - shift lever.

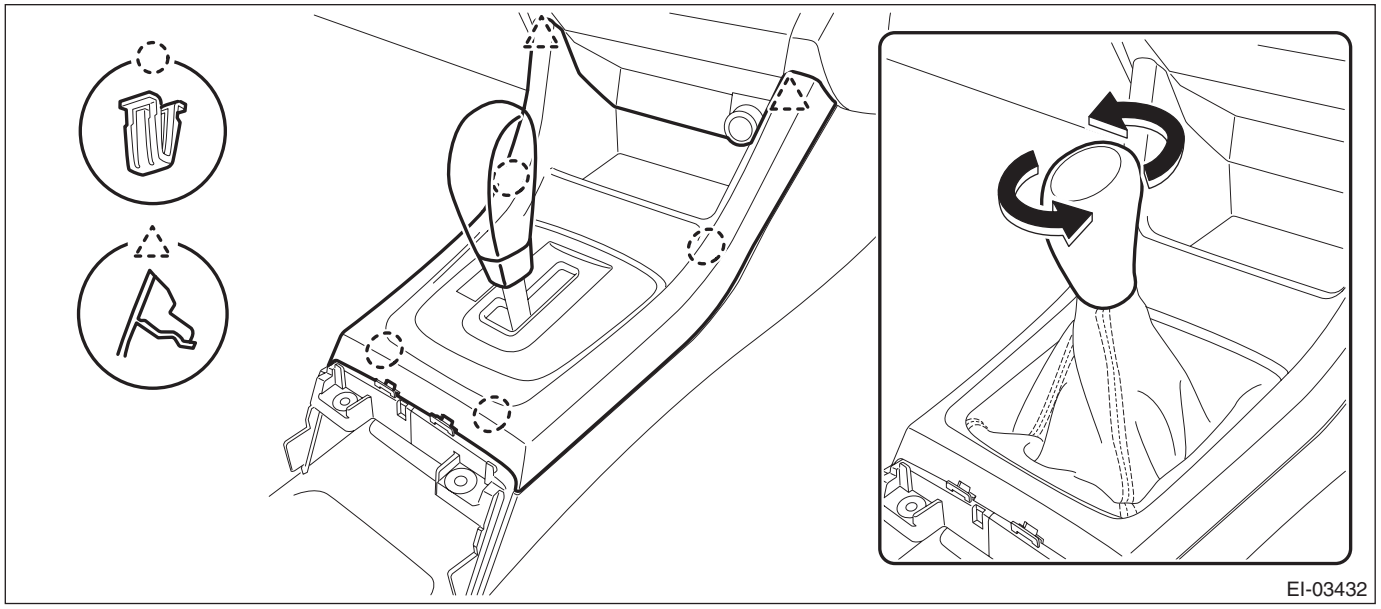
EI-03432

5) Remove the left and right panel center LWR.
   (1) Remove the screws and clips.
   (2) Release the claws, and then pull the panel center LWR to remove.

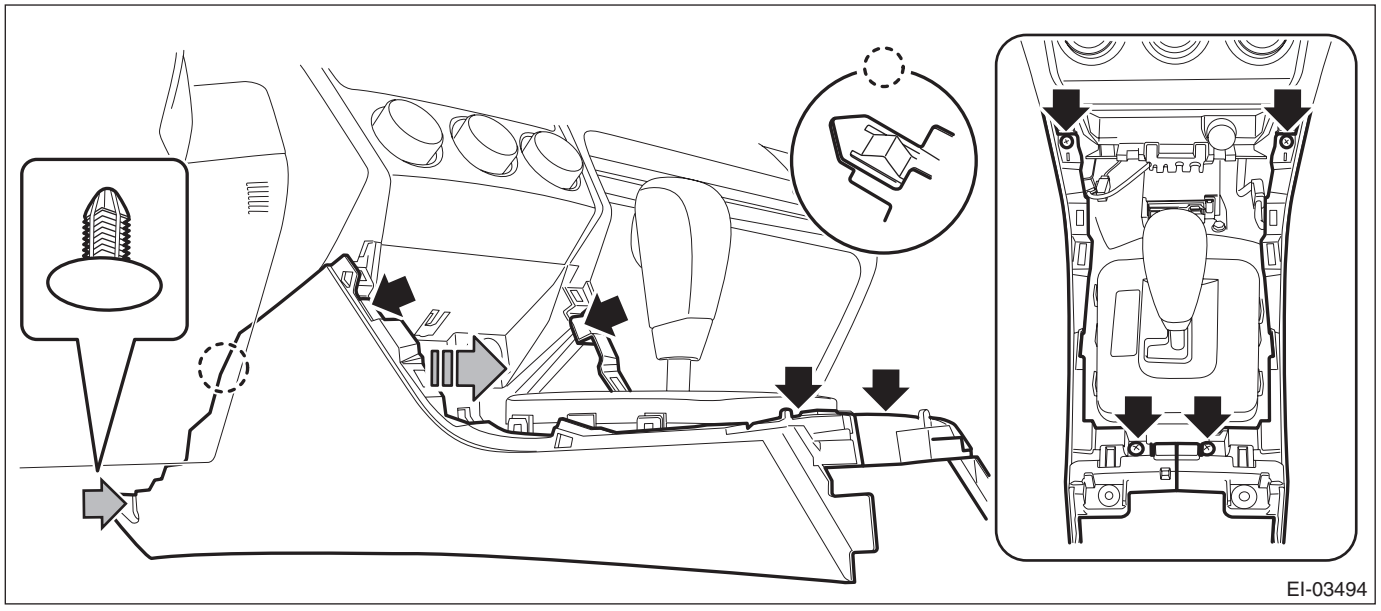
EI-03494

6) Remove the cover assembly - instrument panel LWR driver.

CAUTION:
When removing the cover assembly - instrument panel LWR driver, be sure to pull it toward you. If attempting to remove by turning it upward, the claws may be damaged.

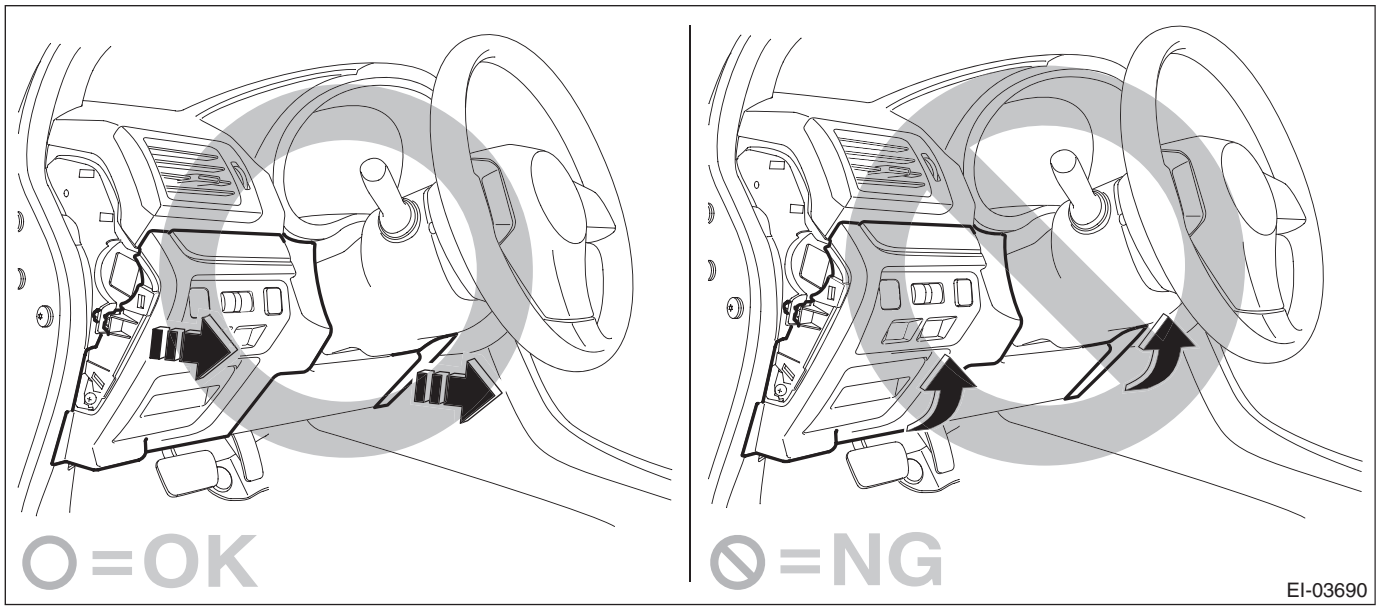

(1) Remove the clips, and remove the cover - instrument panel side LH.

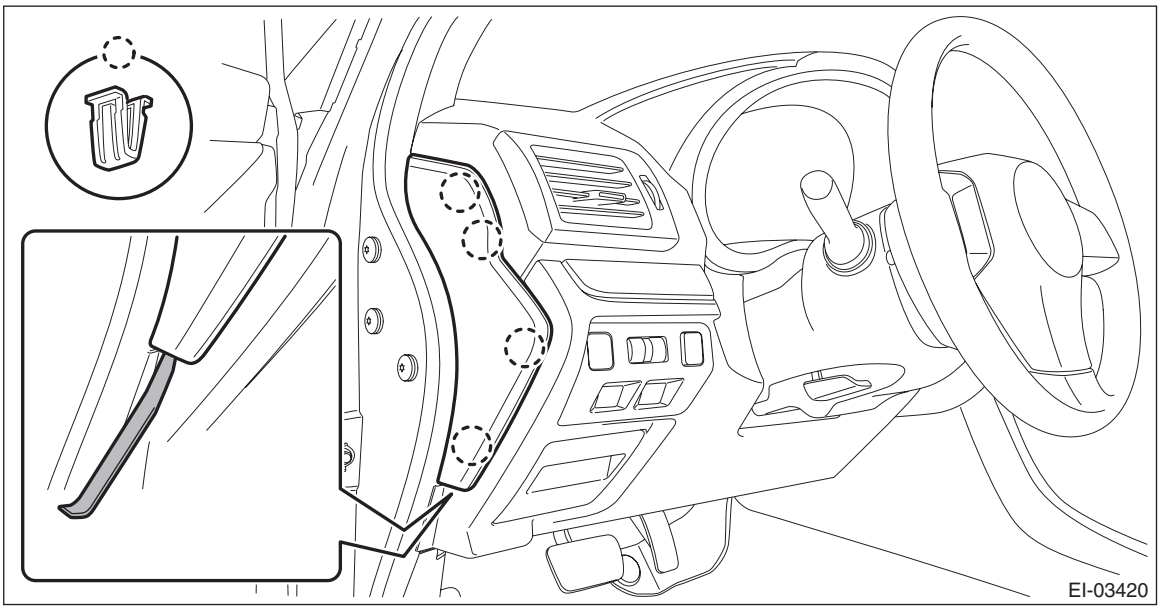

NOTE:
Using a plastic remover, open the cover - instrument panel side LH.

(2) Remove the screws and release the clips and claws.
(3) Disconnect the harness connectors, and remove the cover assembly - instrument panel LWR driver INN and OUT.

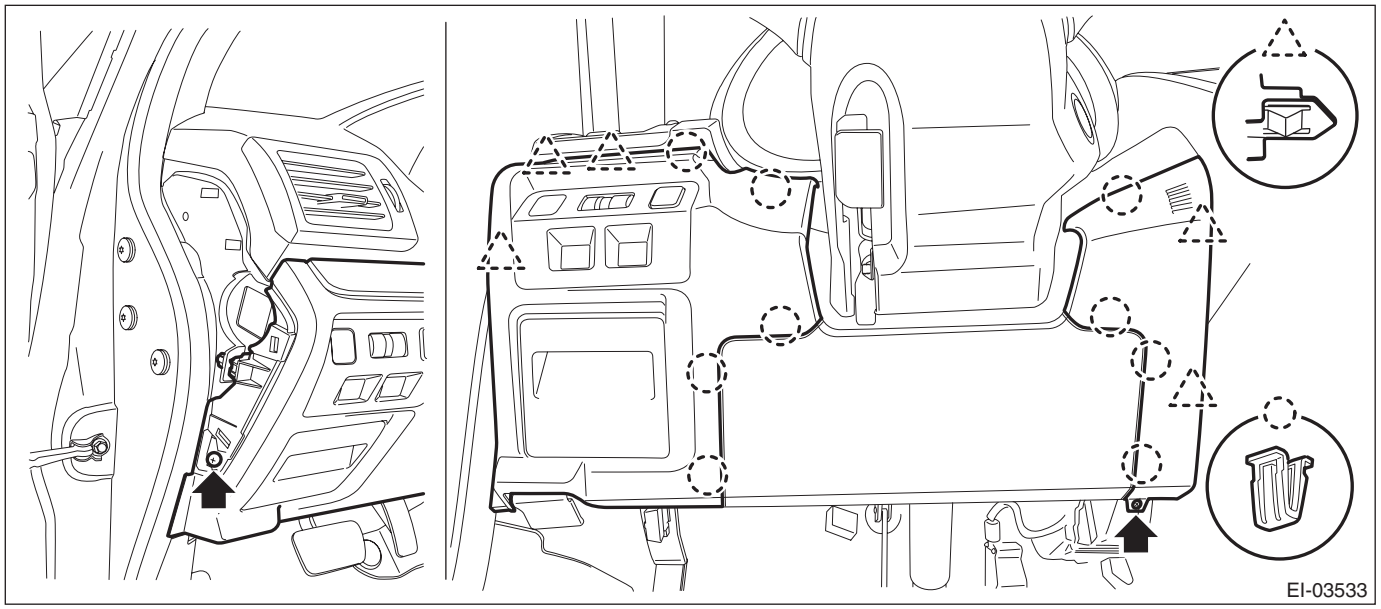

7) Remove the cover switch - starter. (Model without keyless access)
(1) Release the claws and remove the cover switch - starter.
(2) Disconnect the connector and aspirator hose.

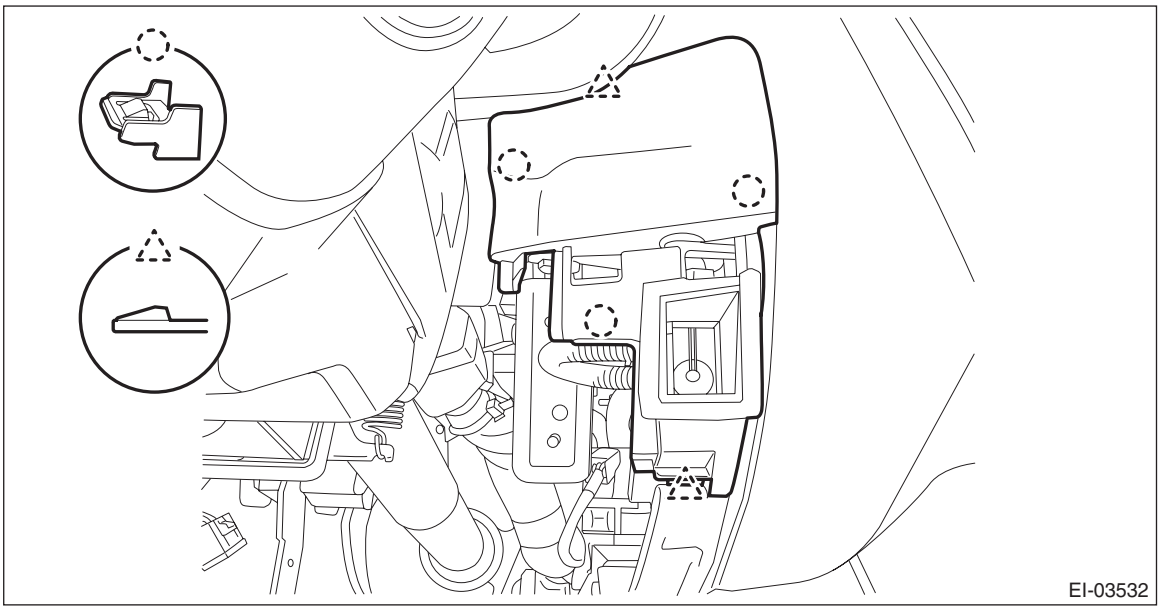

8) Remove the panel - switch. (Model with keyless access)
(1) Release the claw of the switch - push button start, and disconnect the connector.
(2) Release the claws, and then remove the panel - switch.
(3) Disconnect the connector and aspirator hose.

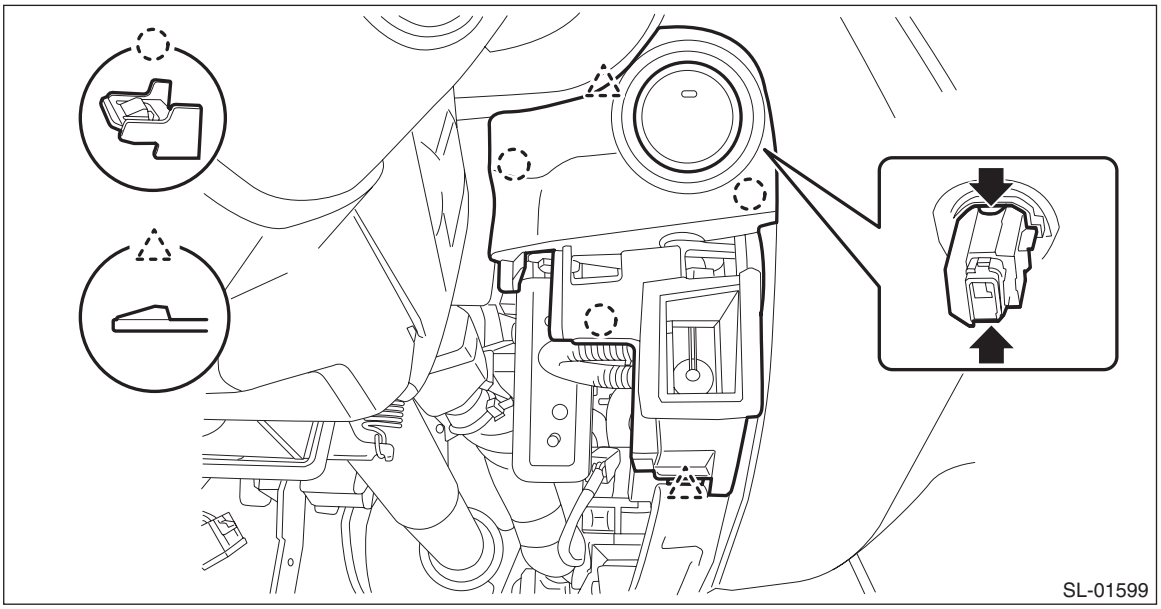

9) Remove the nuts to remove the knee airbag module and disconnect the harness connector. <Ref. to AB-31, KNEE AIRBAG MODULE, PROCEDURE, Airbag Connector.>

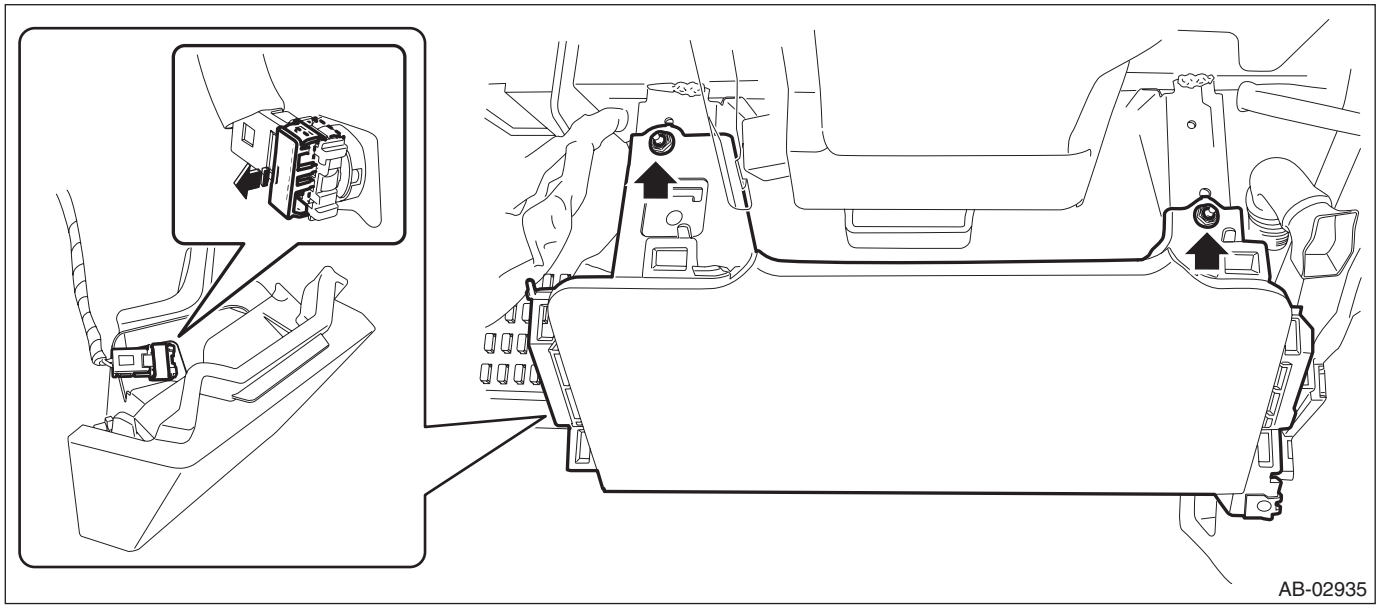

10) Release the clips and claws, then detach the left and right grille speaker side.

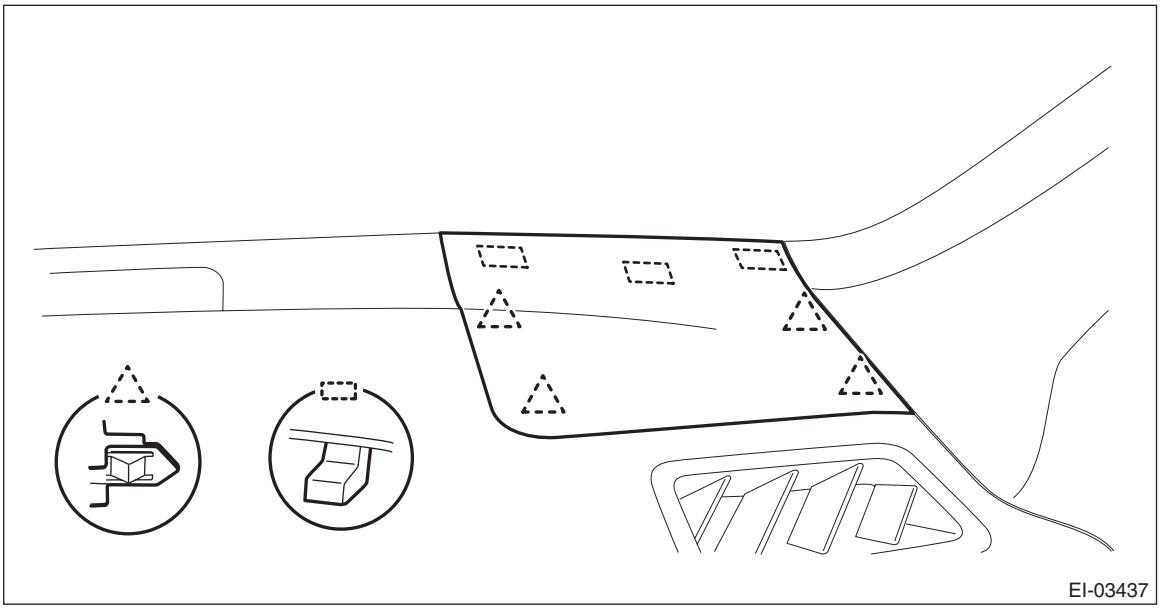

NOTE:
Remove the grille speaker side by using a plastic remover.

11) Remove the trim panel - front pillar UPR on the left and right sides.
(1) Pull the upper part of the trim panel - front pillar UPR towards the center of the vehicle.
(2) Insert long-nose pliers into the top part of the trim, grip the tether clip with the pliers and twist 90° in that position.

CAUTION:
Be careful not to damage the pillar trim surface and curtain airbag module when inserting the pliers.
(3) Holding the tether clip twisted as in the previous step, remove the trim panel - front pillar UPR from the tether clip.
(4) Remove the clips, and remove the trim panel - front pillar UPR.

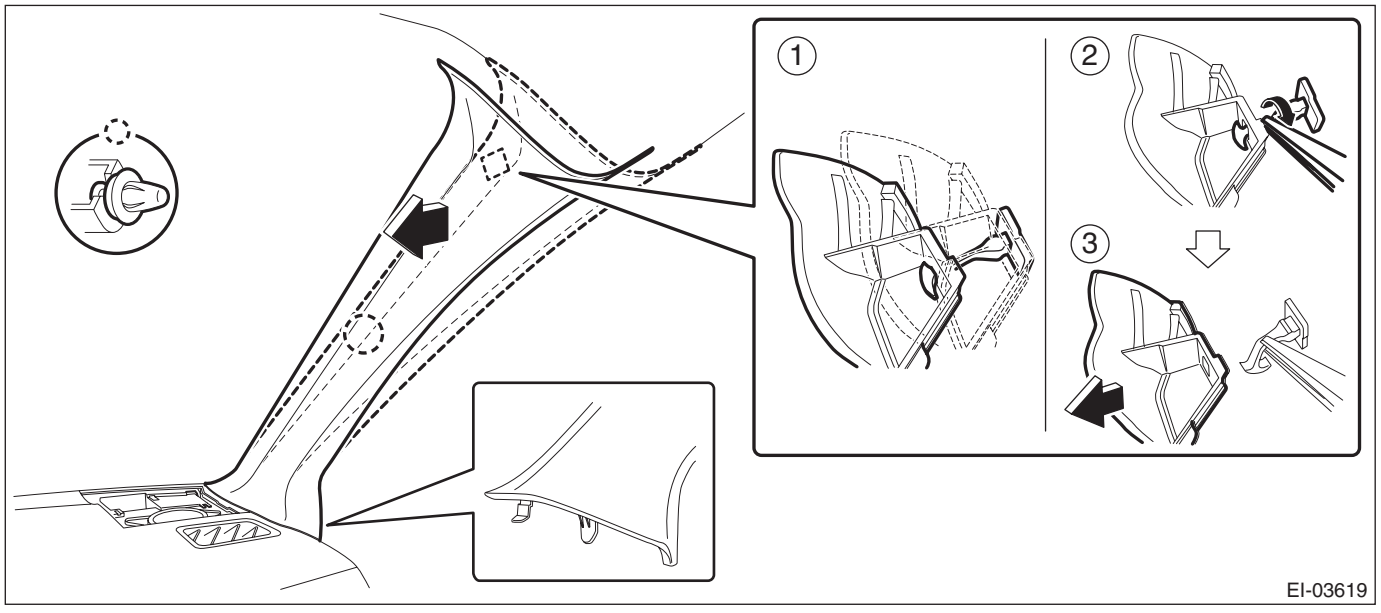

12) Remove the pocket assembly.
(1) Attach the protective tape (a) to the panel center LWR.
(2) Remove the damper COMPL - pocket.
(3) Release the stoppers and remove the pocket assembly by pulling it toward you.

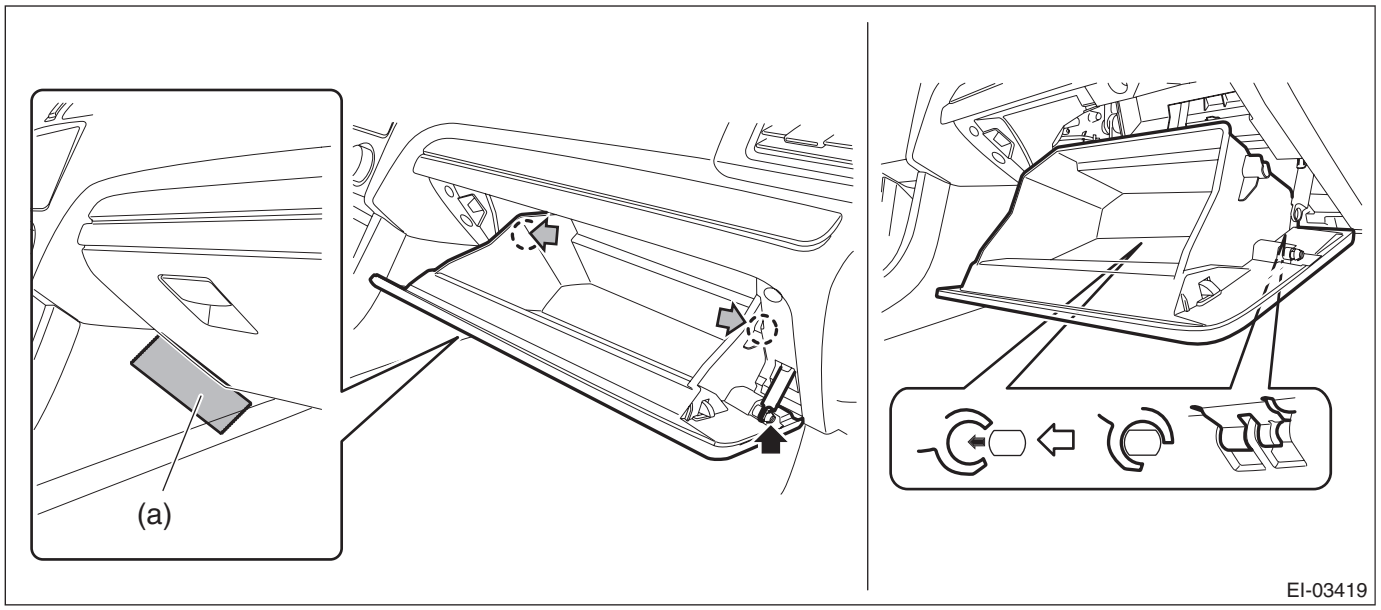

13) Remove the back panel - pocket.
(1) Release the clips, and remove the under cover assembly - passenger.

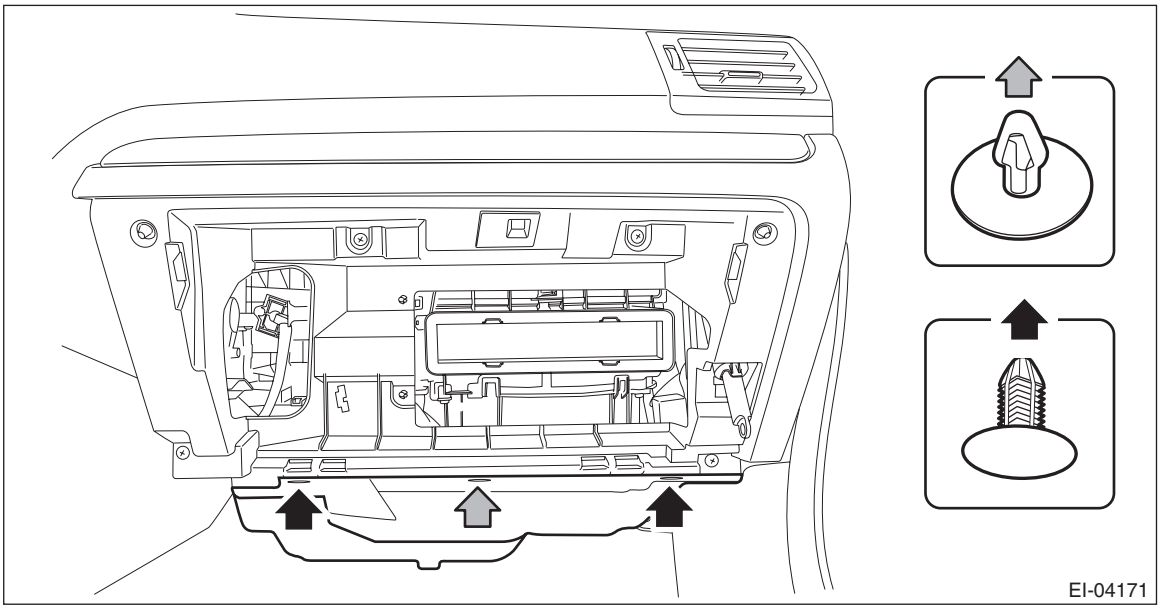

(2) Remove the clips, and remove the cover - instrument panel side RH.

NOTE:
Remove the cover - instrument panel side RH by using a plastic remover.

(3) Release the clips, and remove the ornament - panel assembly passenger.

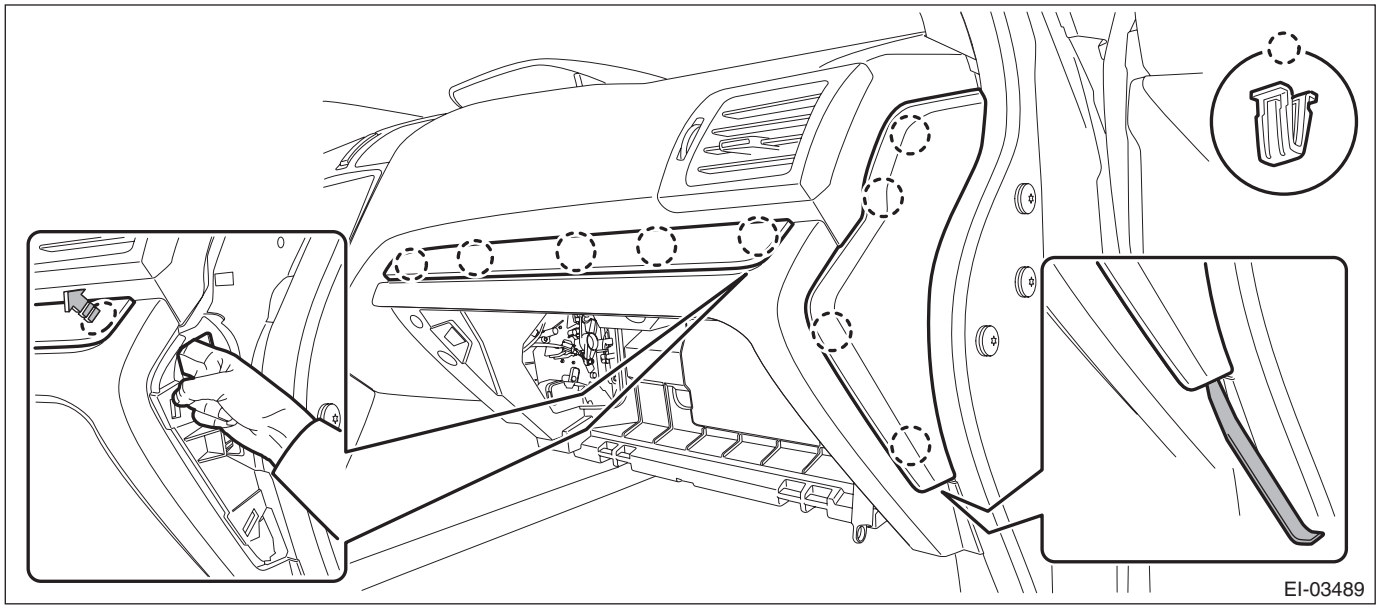

NOTE:
To facilitate the removal, push the clip of the ornament - panel assembly passenger from the backside.

(4) Release the claws and remove the screws, then remove the back panel - pocket.

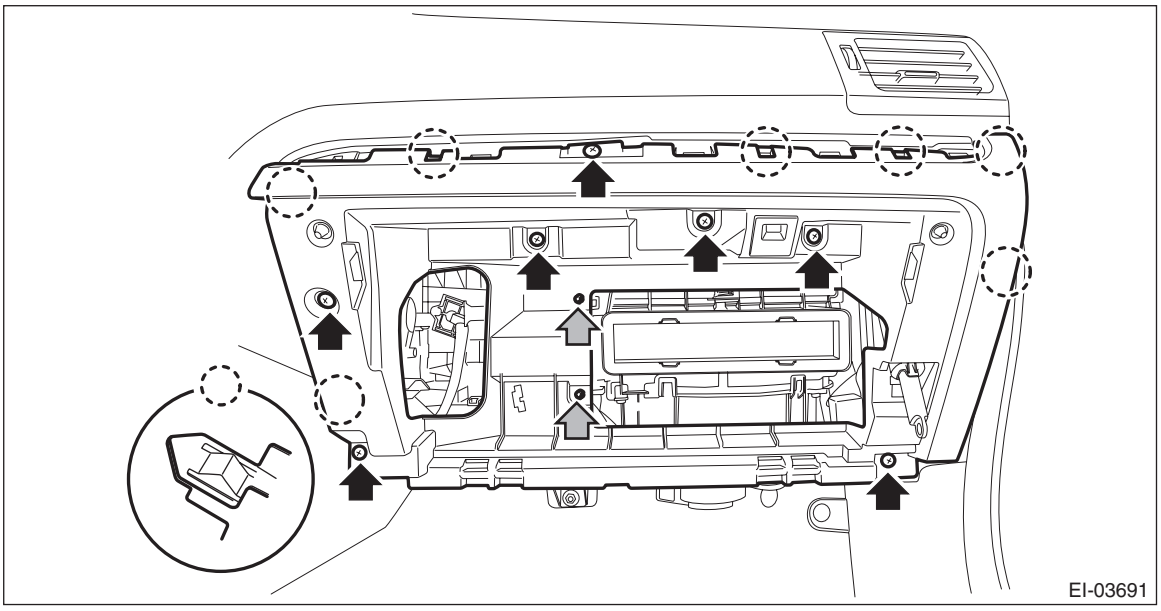

(5) Disconnect the glove box light LED connector.

14) On manual A/C models, disconnect the control cables from both sides of the heater & cooling unit.

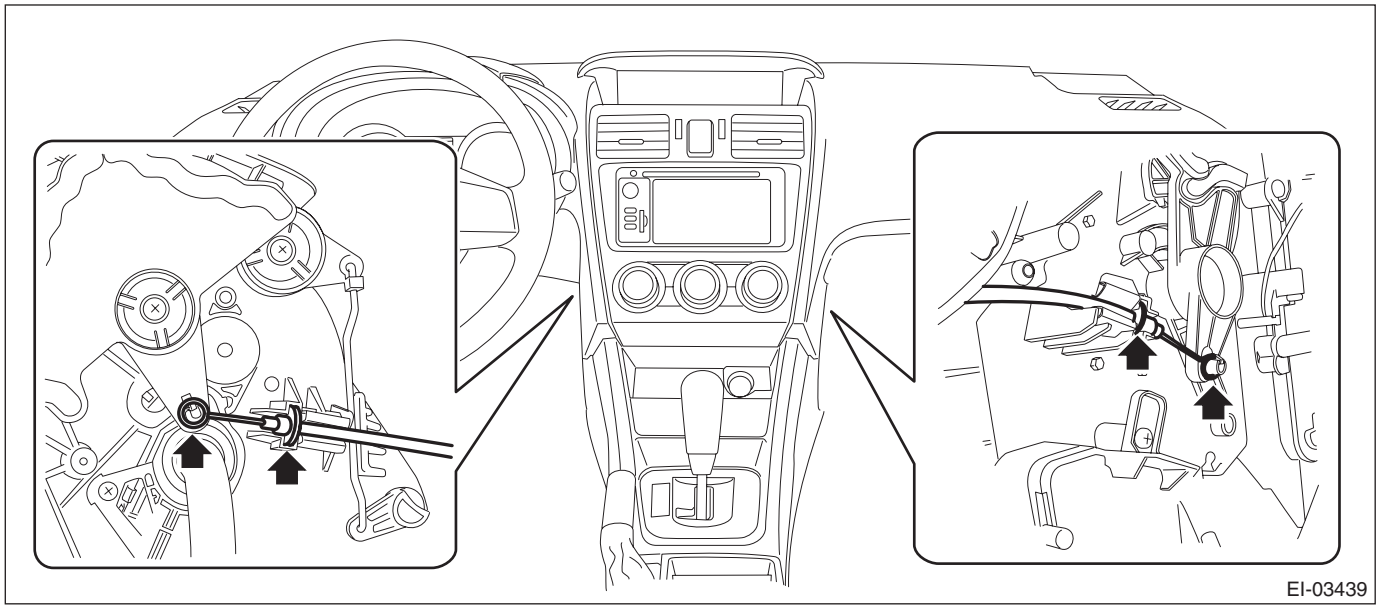

15) Remove the panel center assembly.

CAUTION:
- **Do not put your finger on the fin of the air vent grille. Doing so may damage the fin.**
- **Pull the panel center assembly slowly. Pulling with excessive force may damage the connector.**

(1) Insert a plastic remover to the three areas shown by the arrows, and slightly lift up the panel center assembly.
(2) With the panel center assembly lifted up slightly, release the claw by using a clip remover wrapped with protective tape.
(3) Release the rest of the claws, and pull out the panel center assembly.
(4) Disconnect the connectors, and remove the panel center assembly.

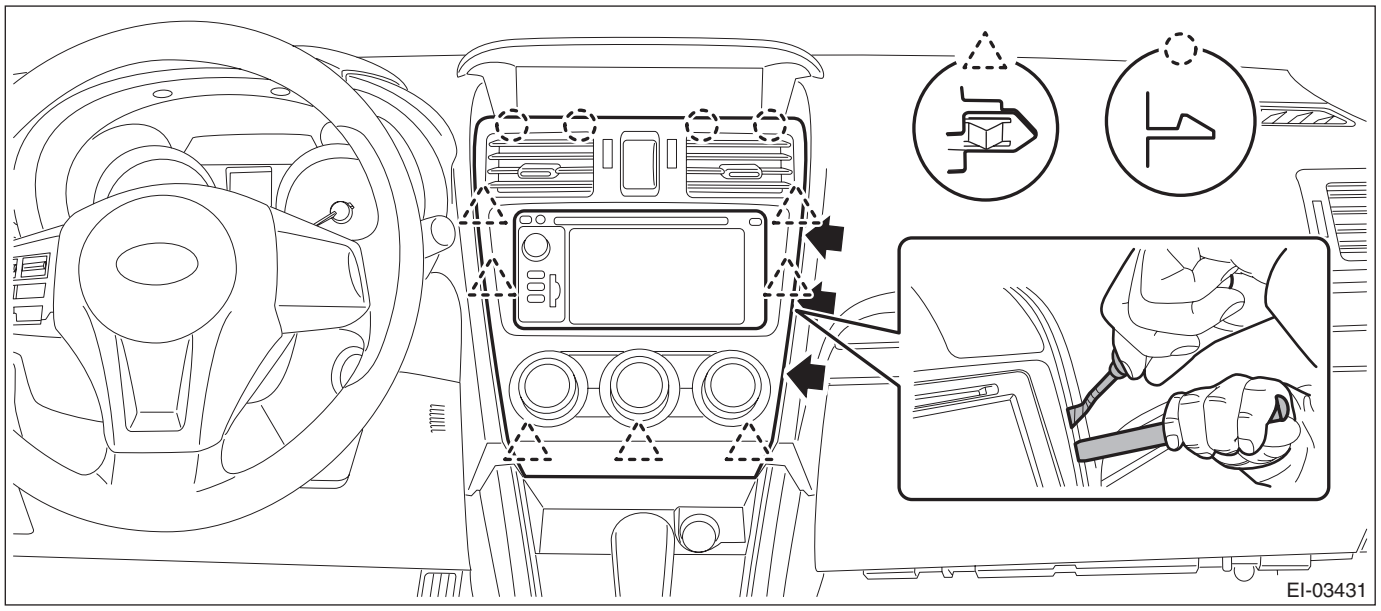

16) Remove the audio assembly or navigation assembly.
(1) Remove the screws, and partially pull out the audio assembly or navigation assembly.
(2) Disconnect the connectors, and remove the audio assembly or navigation assembly.

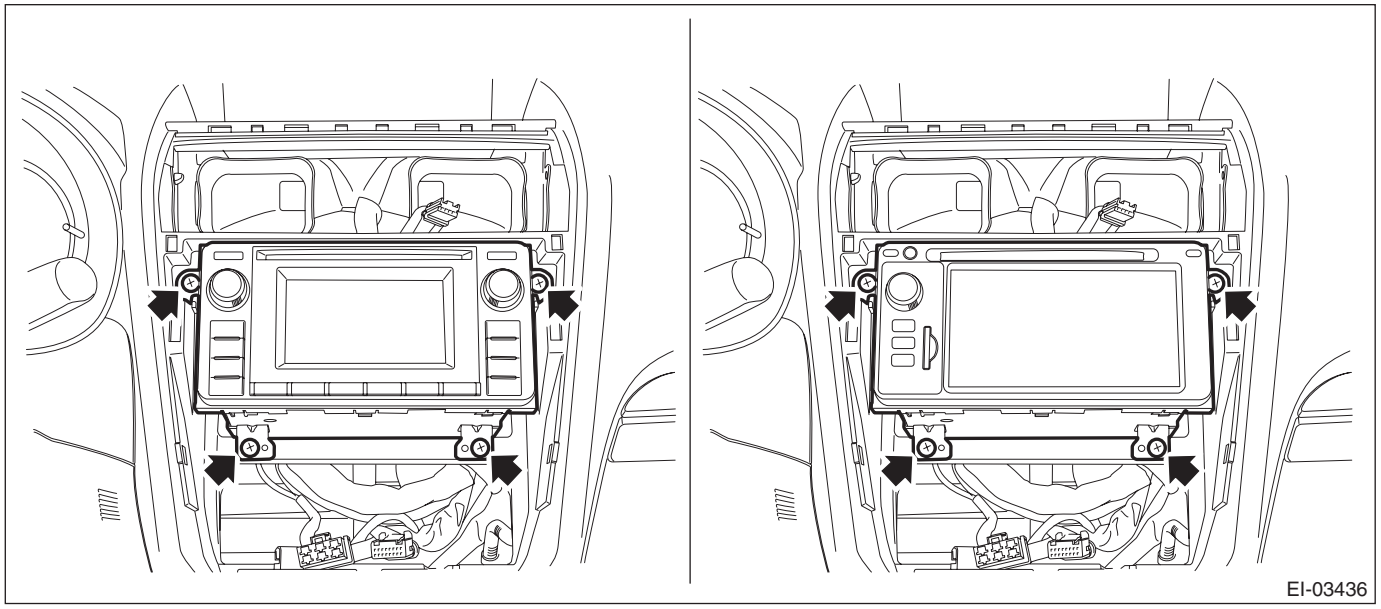

17) Remove the multi-function display assembly.
(1) Disconnect the claws and then remove the cover center UPR.

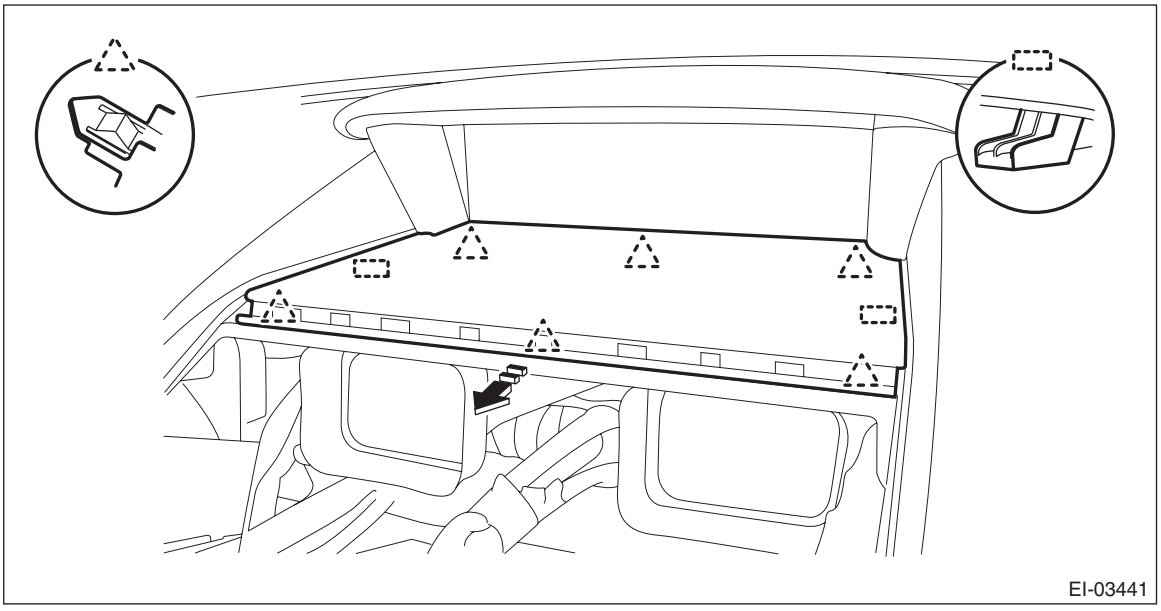

NOTE:
Lightly push up the back of the cover center UPR, hook the finger to the end portion and pull it toward you to remove it.

(2) Release the screws and claws, and then remove the panel - display UPR and the panel - display LWR.

NOTE:
Remove the panel - display UPR & panel - display LWR and the multi-function display assembly as a unit.

(3) Disconnect the connector and remove the multi-function display assembly.

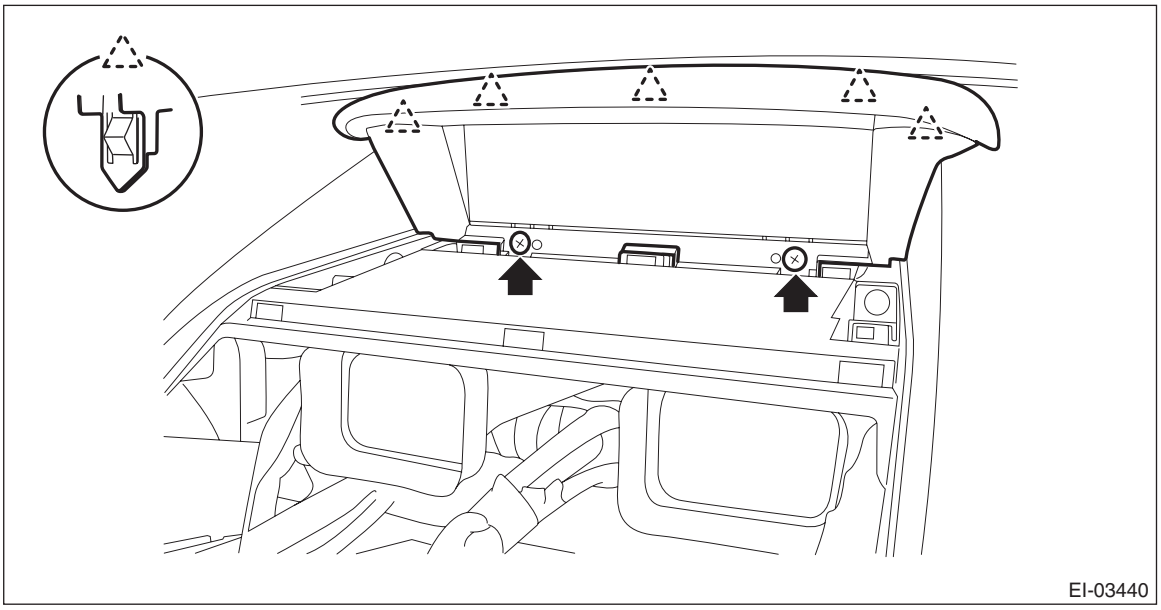

18) Remove the combination meter assembly.

CAUTION:
- **Be careful not to damage the meter or instrument panel.**
- **Pay particular attention to avoid damaging the meter glass.**

(1) Release the lock, tilt the steering column to the lowest end and fully extend the column by the telescopic system.

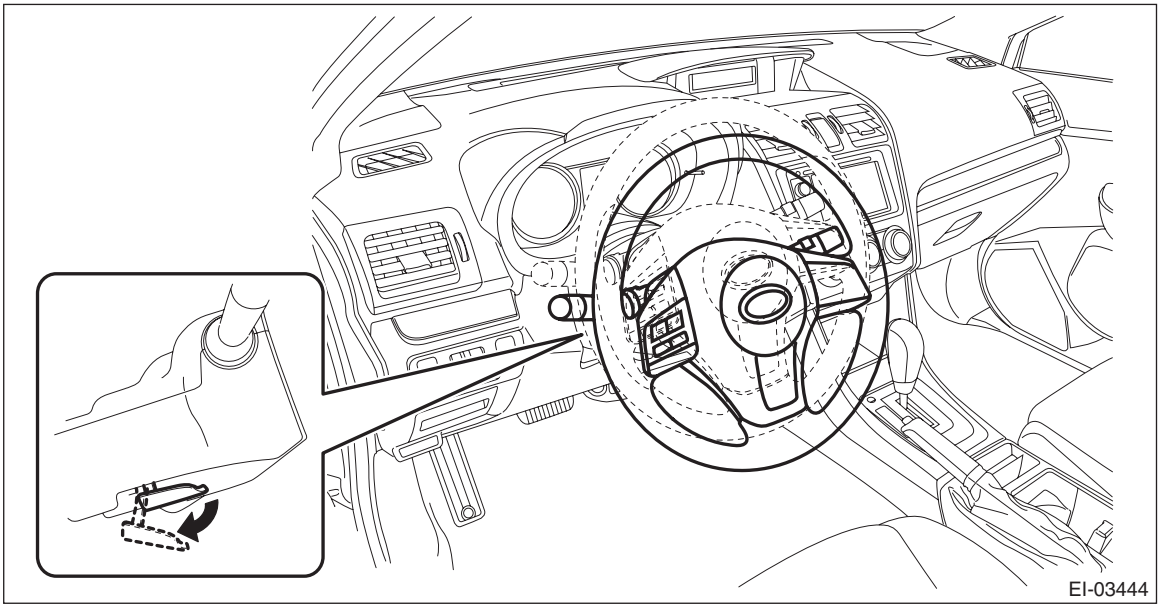

(2) Release the screws and clips, then detach the meter visor assembly.

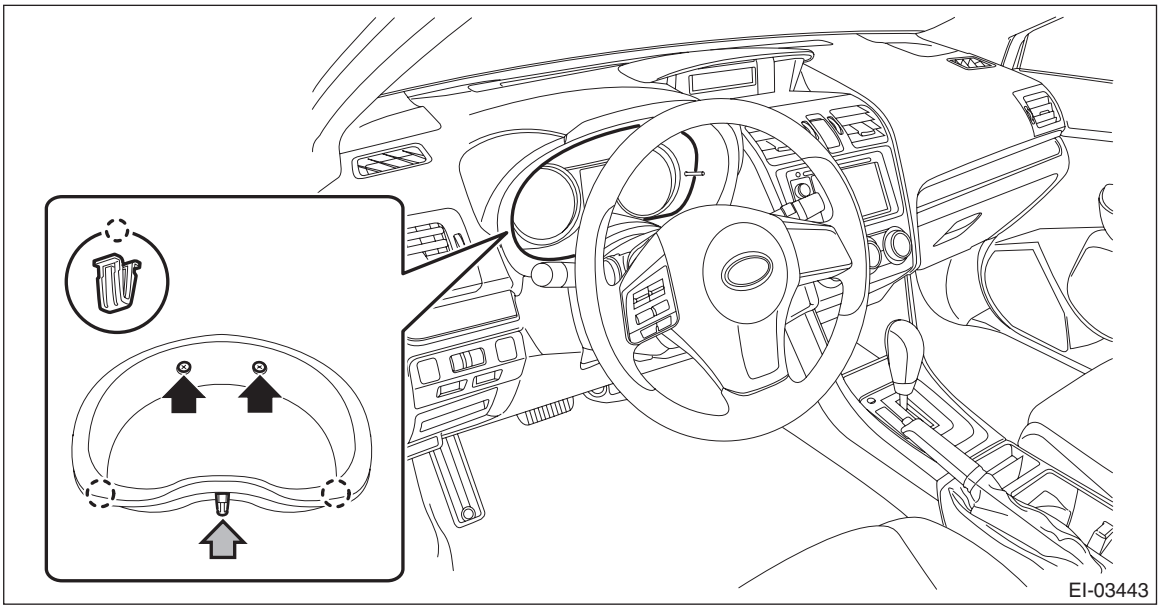

(3) Remove the screws, disconnect the connector and remove the combination meter assembly.

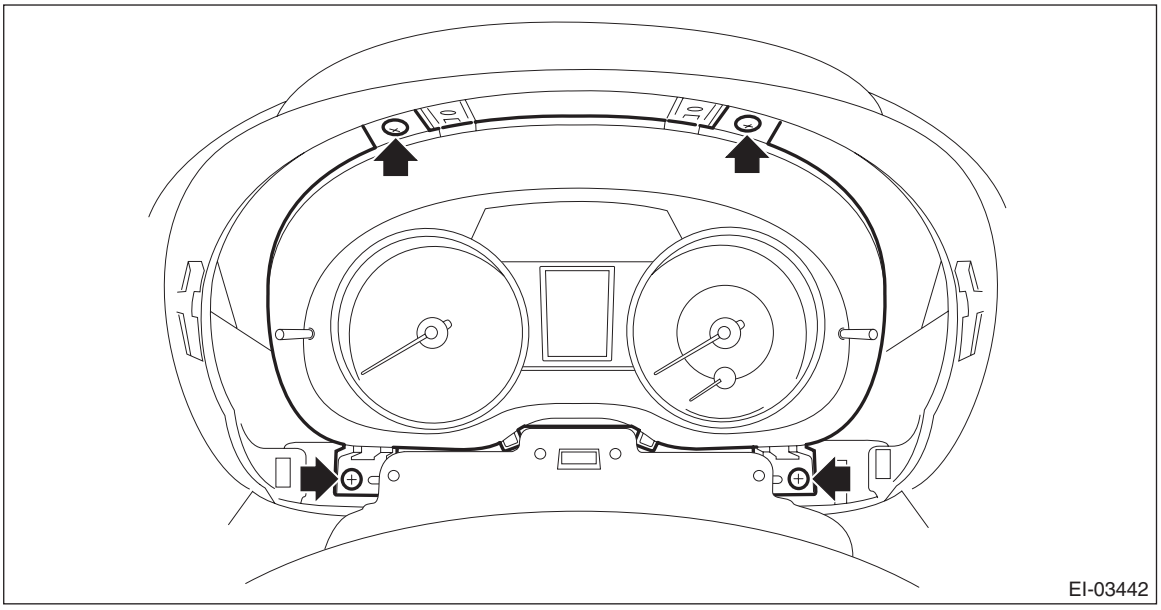

19) Disconnect the passenger's airbag module connector. <Ref. to AB-22, PASSENGER'S AIRBAG MODULE, PROCEDURE, Airbag Connector.>

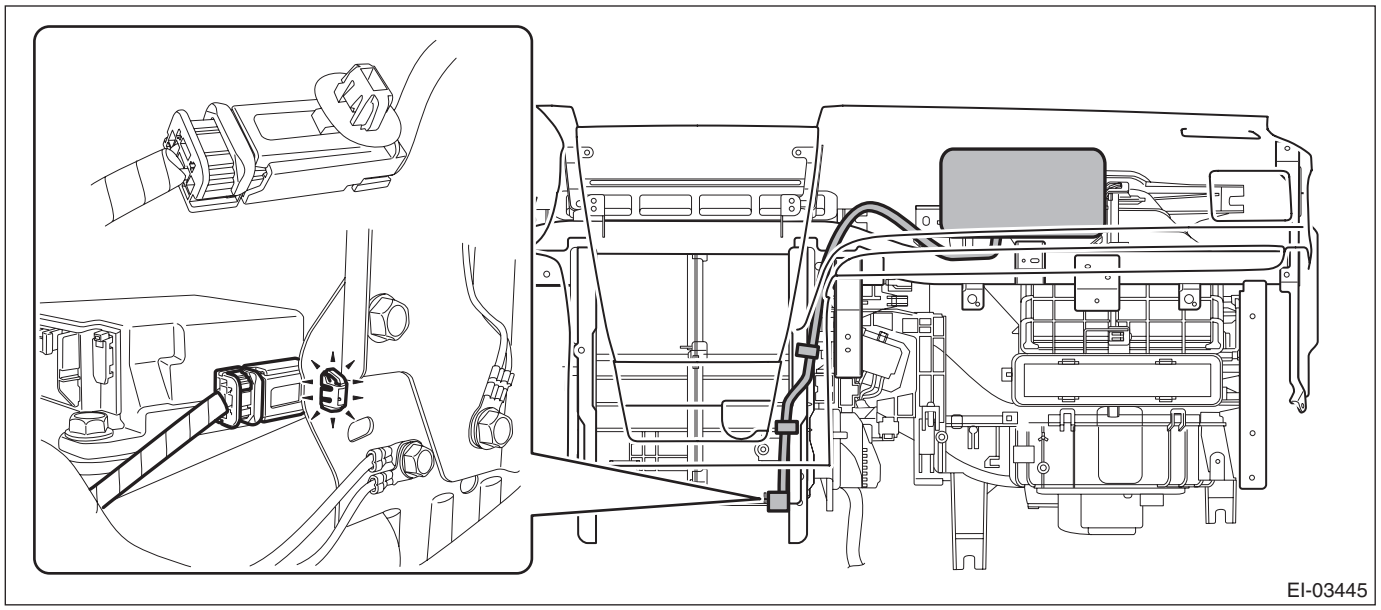
EI-03445

20) Remove the column assembly - steering. <Ref. to PS-18, REMOVAL, Steering Column.>
21) Release the claws, and then remove the cover side sill - front INN on LH and RH sides.

CAUTION:
Do not pull with excessive force. Doing so may damage the claws of the cover side sill - front INN.

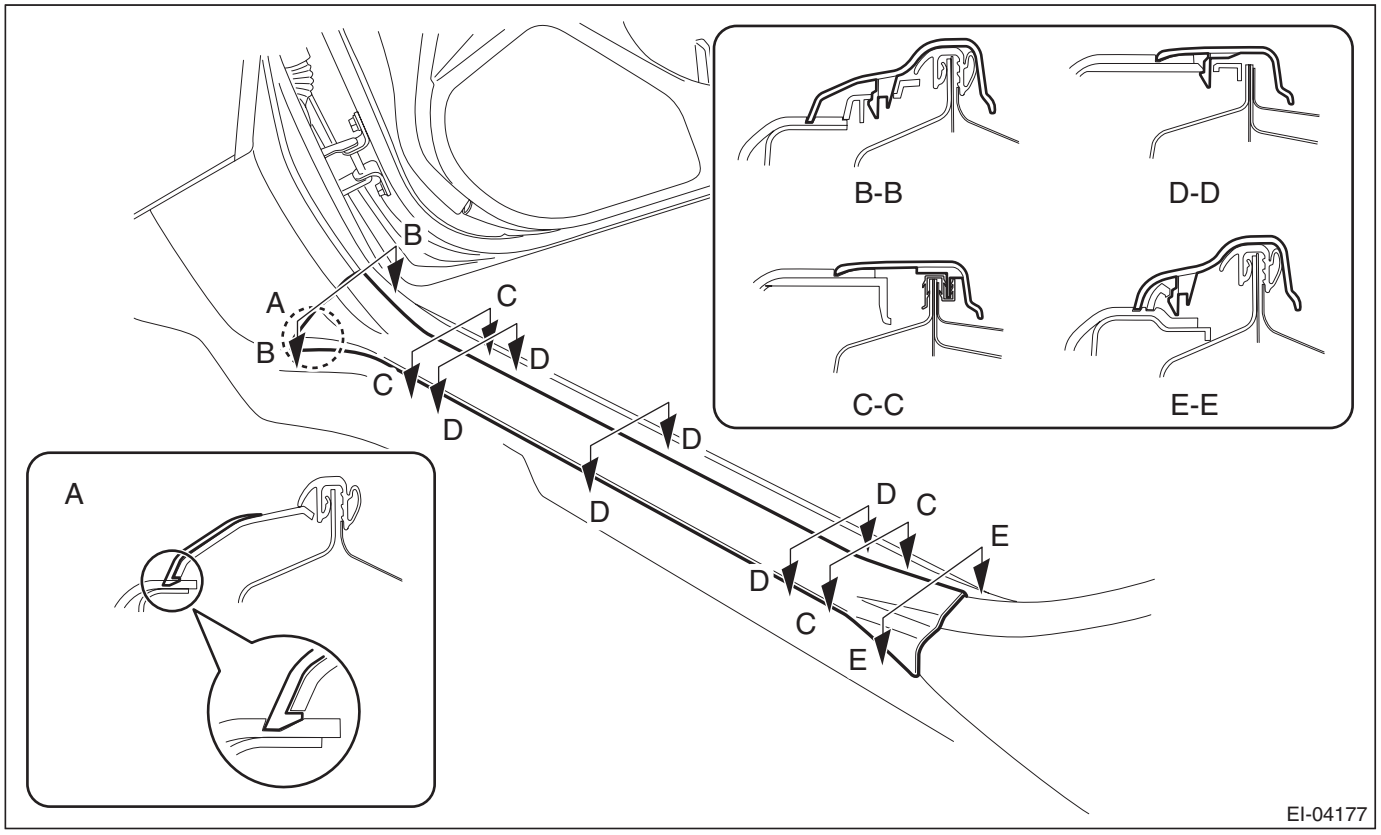

EI-04177

22) Remove the clip, and remove the cover side sill - front on LH and RH sides.

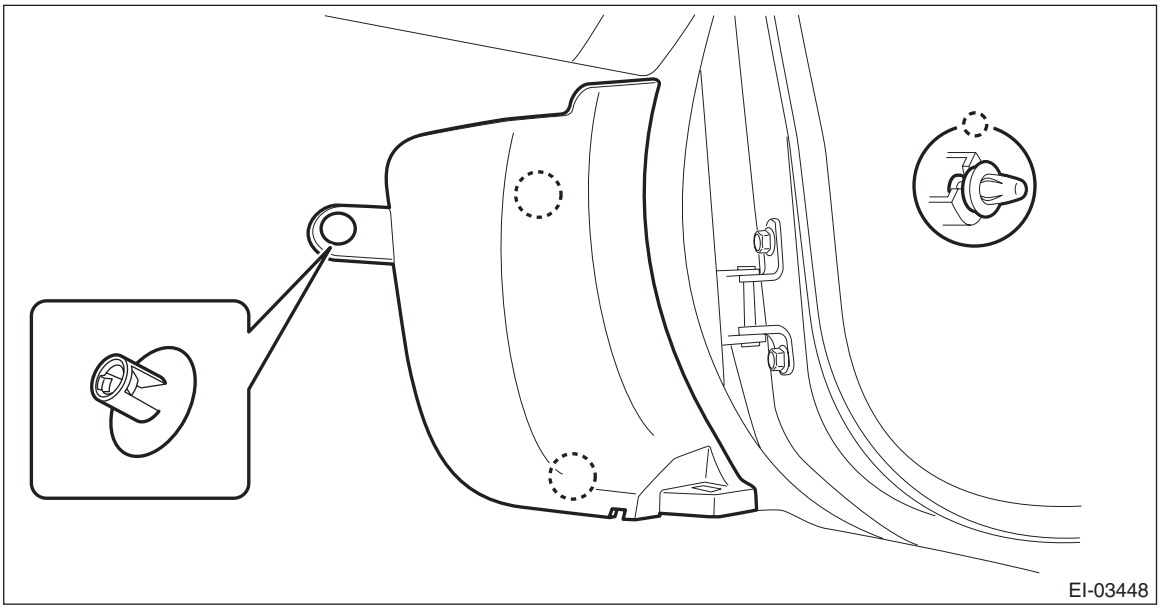

23) Remove the instrument panel assembly and the beam COMPL - steering as a unit.

CAUTION:
The instrument panel assembly and the beam COMPL - steering are heavy. Always work in a team of two persons when removing them from the vehicle, so as not to damage the vehicle interior.

(1) Remove the fuse box and relay box.
(2) Disconnect all harness clamps and connectors of the instrument panel harness.
(3) Remove the TORX® bolt. (a), (b)

Preparation tool:
TORX® T40

(4) Remove the bolts at the floor center. (c), (d)
(5) Remove the bolt. (e), (f)

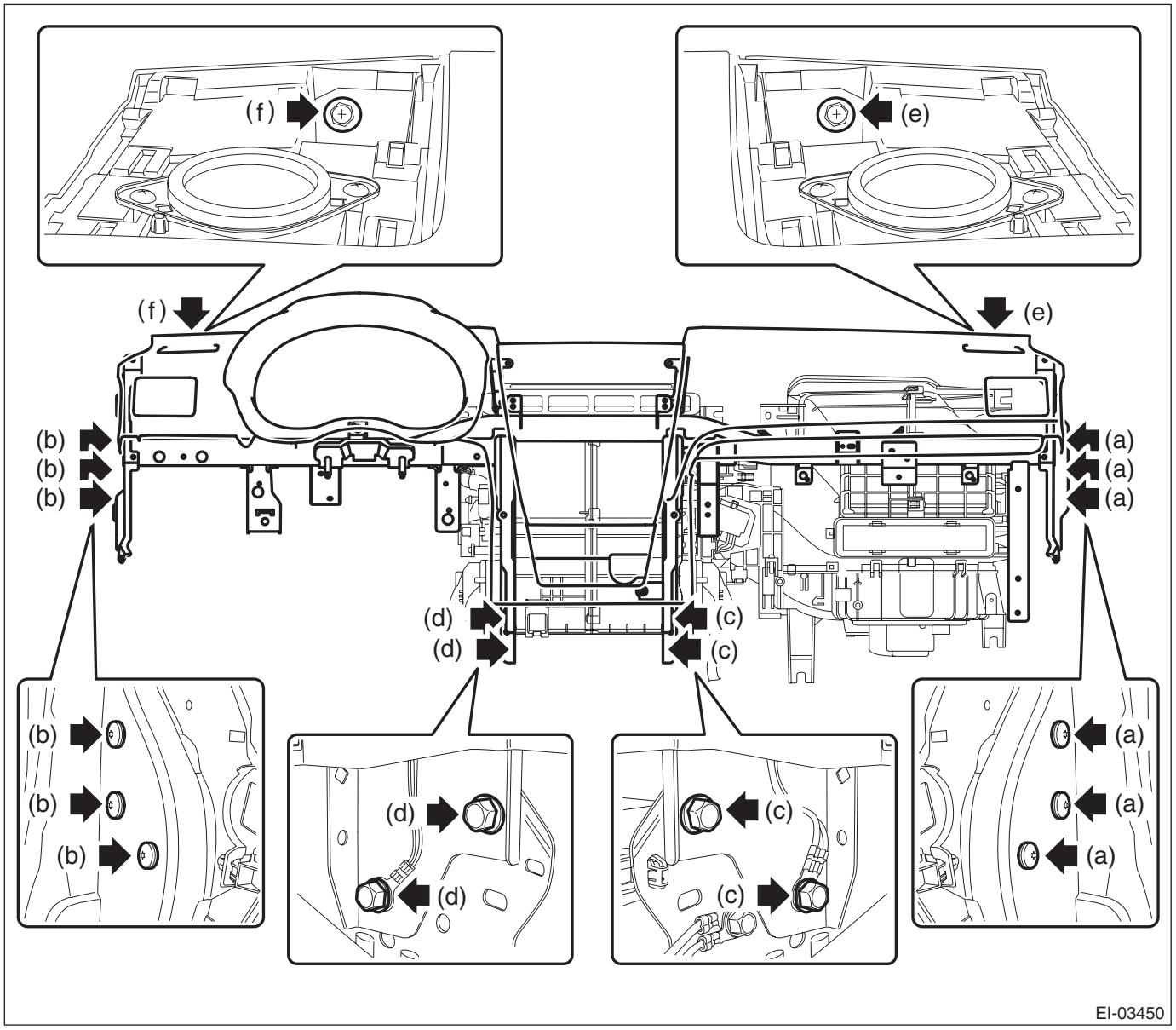

(6) Loosen the adjuster portion (a) of the adjuster - clip space. (only passenger's side of beam COMPL - steering)

Preparation tool:
Hexagon wrench: 8 mm (0.31 in)

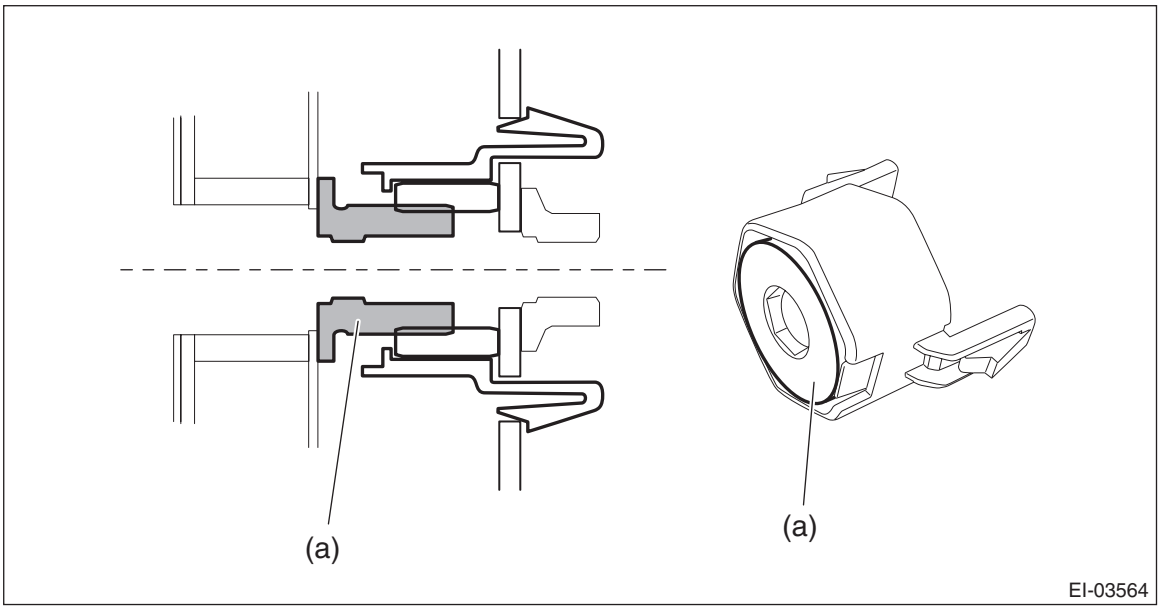

(7) Slightly lift the instrument panel assembly together with the beam COMPL - steering to detach the left and right pins. Then pull it toward you to remove the assembly.

CAUTION:
• Check that all harness clamps and connectors are detached.
• The instrument panel assembly and the beam COMPL - steering are heavy. Always work in a team of two persons when removing them from the vehicle, so as not to damage the vehicle interior.

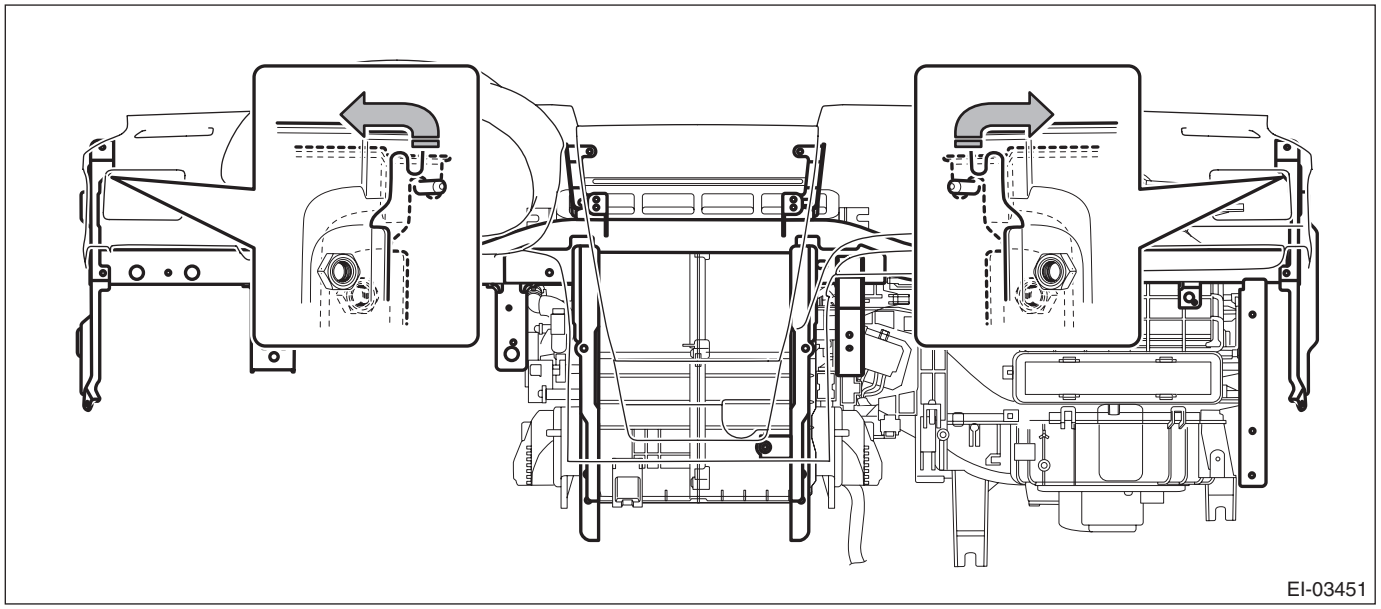

24) Separate the panel COMPL - instrument and the beam COMPL - steering.
(1) Remove the clamps and bolts of the passenger's airbag module harness.

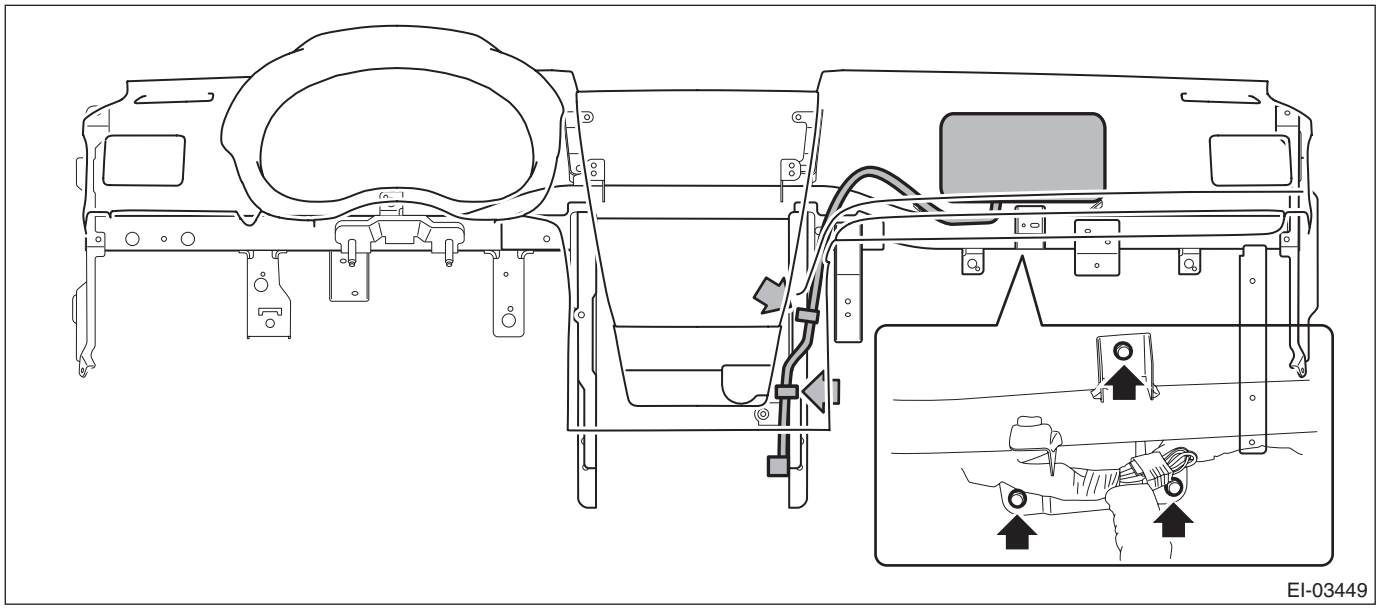

(2) Remove the left and right speakers and the sensor - sunload.

NOTE:
Detach the harness clamp together.

(3) Disconnect the front accessory socket connector.

(4) Remove the nut (a) and screws (b), (c), (d), (e), (f), (g) and (h).
(5) While being careful with the harness, separate the panel COMPL - instrument and the beam COMPL - steering.

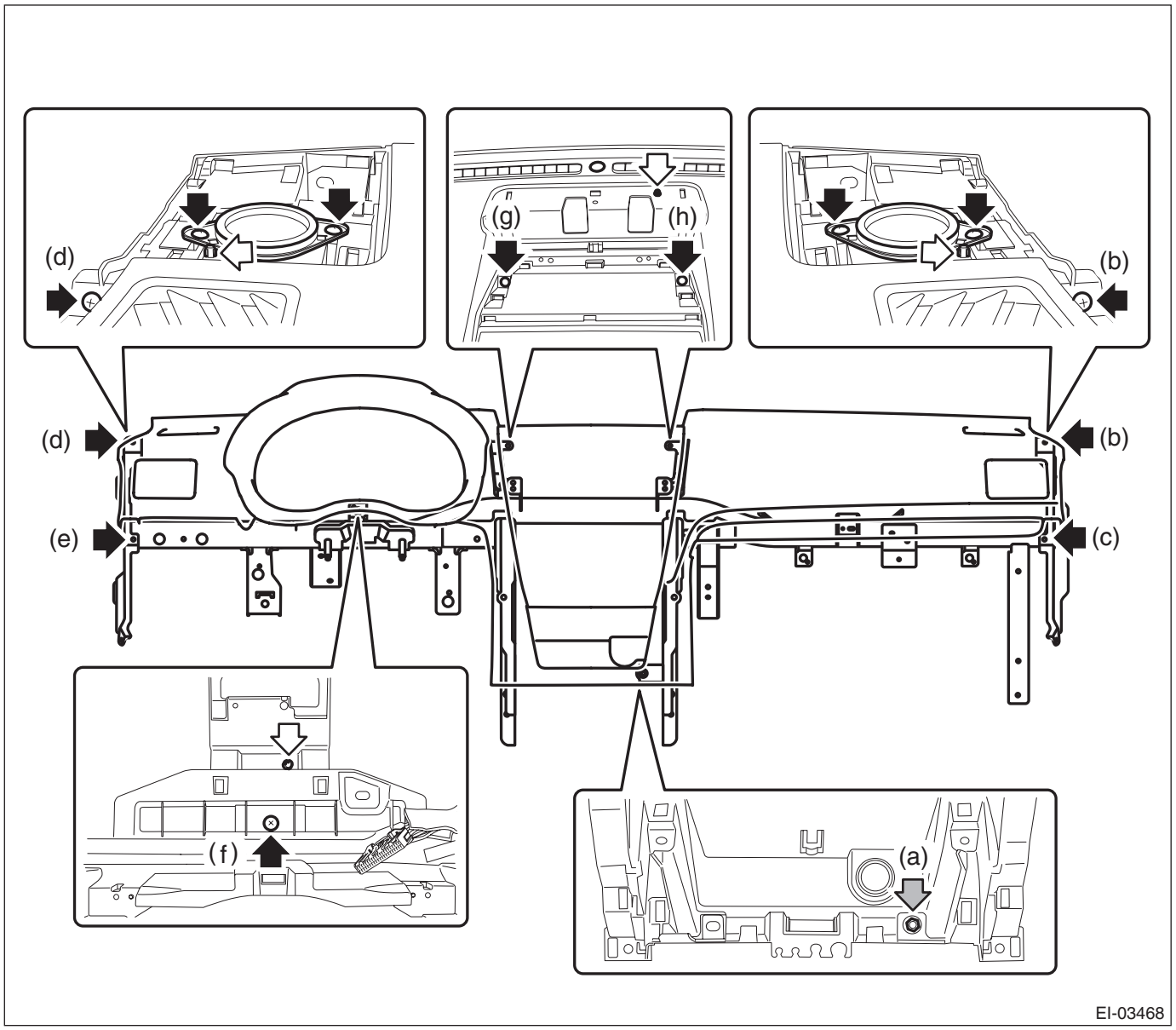

25) Remove the screws and remove the front (A) and side vent duct LH/RH (B).

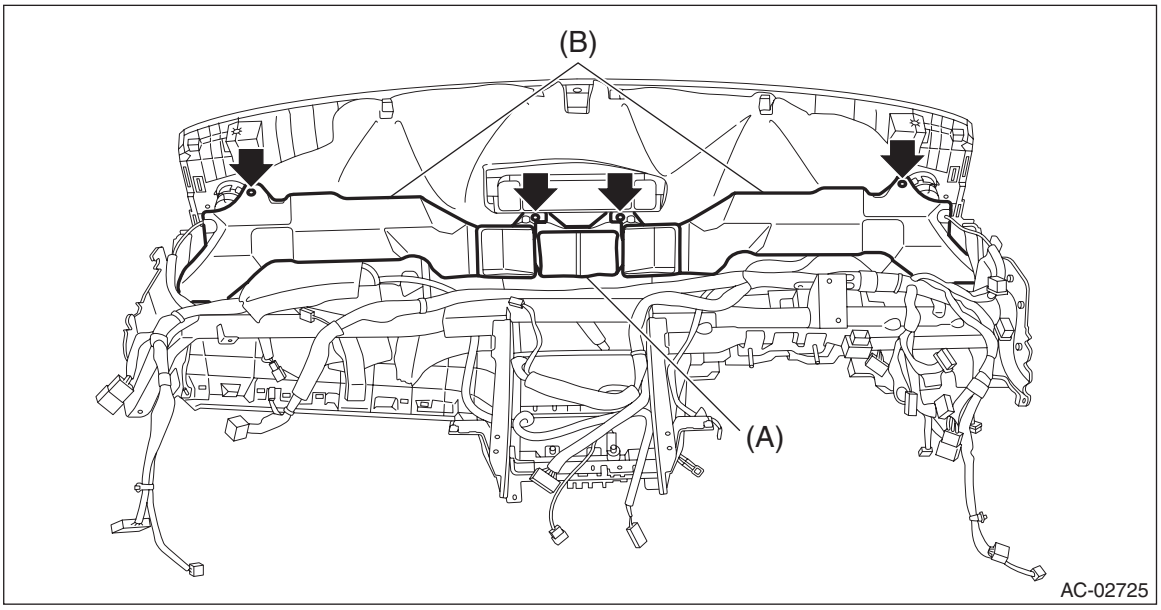

26) Remove the claws, and remove the passenger's airbag module.

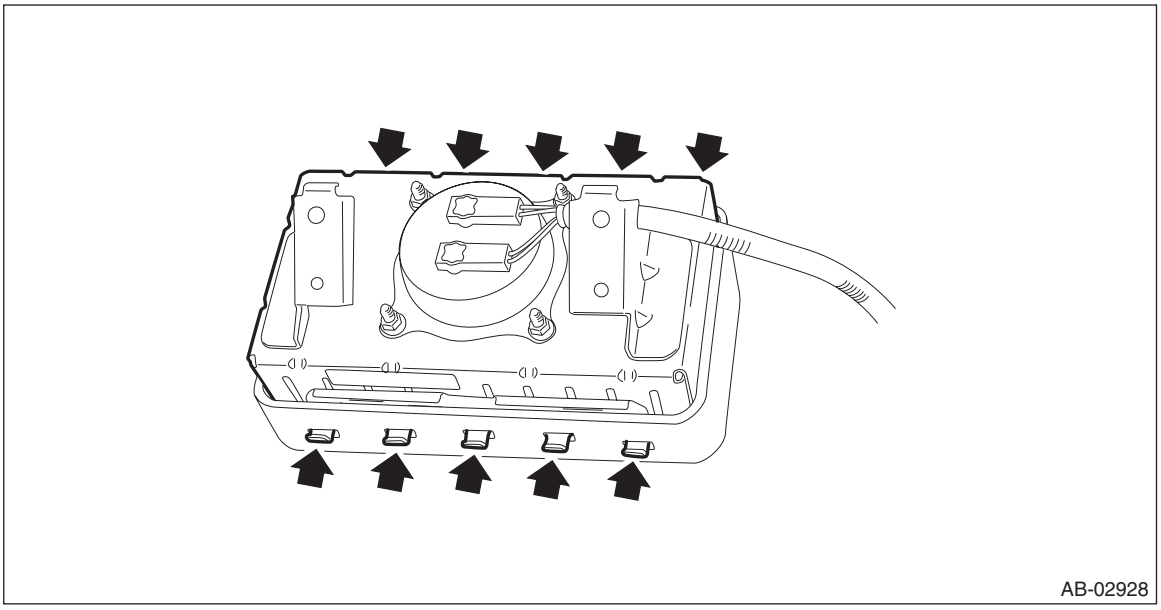

27) For handling of the removed airbag module, refer to "CAUTION". <Ref. to AB-11, CAUTION, General Description.>

B: INSTALLATION

CAUTION:
• Refer to "CAUTION" of "General Description" before handling the airbag module. <Ref. to AB-11, CAUTION, General Description.>
• Do not allow harness and connectors to interfere or get tangled up with other parts.
• When reusing the tether clip on the upper part of the trim panel - front pillar UPR, check that there is no damage to the tether clip. If the tether clip is damaged, its holding force is reduced and the trim panel - front pillar UPR may come off. Be sure to replace it with a new tether clip.

1) Before installation, inspect the following items and replace any faulty part with a new one.
- Passenger's airbag lid (instrument panel surface) is cracked or deformed.
- Airbag module is cracked or deformed.
- Harness and/or connector is cracked, deformed or open.
- Harness wire is exposed.
- Mounting bracket is cracked or deformed.

2) Install each part in the reverse order of removal.

NOTE:
Refer to the installation procedure of the "Instrument Panel Assembly". <Ref. to EI-99, INSTALLATION, Instrument Panel Assembly.>

7. Side Airbag Module

A: REMOVAL

CAUTION:
Refer to "CAUTION" of "General Description" before handling the airbag module. <Ref. to AB-11, CAUTION, General Description.>

NOTE:
Remove the passenger's side by referring to driver's side.
1) Remove the headrest assembly.
2) Disconnect the ground cable from battery and wait for at least 60 seconds before starting work. <Ref. to NT-5, BATTERY, NOTE, Note.>

NOTE:
For the 12 volt engine restart battery of HEV model, disconnect the ground terminal from 12V engine restart battery sensor.
3) Remove the front seats.

CAUTION:
Be careful not to damage the body when taking out the seat from the vehicle.
(1) Tilt the backrest assembly forward and move the front seat to the front most position.
(2) Remove the cover - bolt rear (A) and remove the bolts.

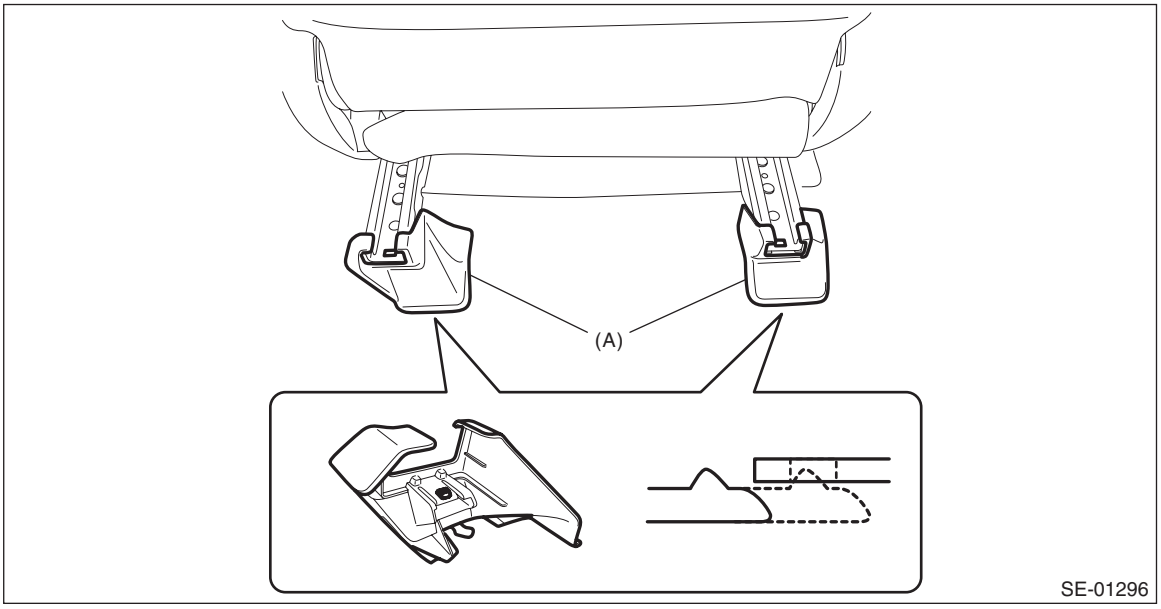

(3) Move the front seat to the rearmost position, and remove the bolts.
(4) Disconnect the connector under the front seat.
- Seat belt warning light connector (driver's seat)
- Occupant detection system harness connector (passenger's seat) <Ref. to OD(diag)-9, OCCUPANT DETECTION SYSTEM (BETWEEN AIRBAG REAR HARNESS AND SEAT HARNESS), PROCEDURE, Airbag Connector.>
- Side airbag module connector <Ref. to AB-29, SIDE AIRBAG MODULE, PROCEDURE, Airbag Connector.>
- Seat heater connector (model with seat heater)
- Buckle switch RH connector (passenger's seat) <Ref. to AB-30, BUCKLE SWITCH RH, PROCEDURE, Airbag Connector.>

(5) Take out the front seat assembly from the vehicle.

4) Remove the knob - lifter.
   (1) Using a flat tip screwdriver, remove the cap - lifter lever (a).
   (2) Remove the screws and remove the knob - lifter.

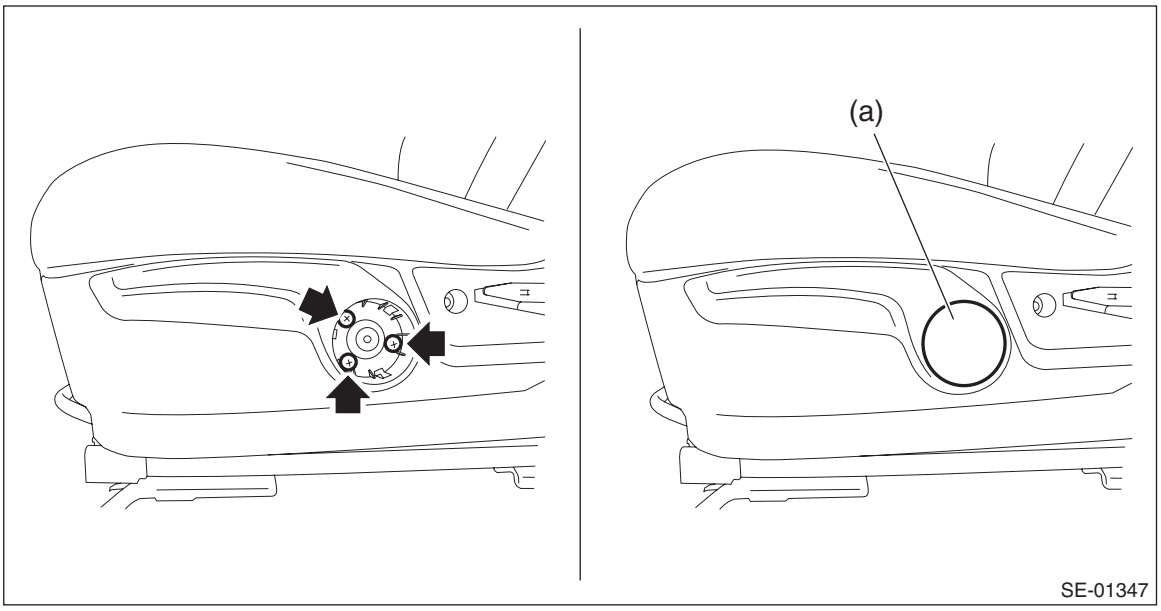

5) Remove the lever - reclining.
   (1) Pull up the lever - reclining and release the claws on the back.
   (2) Pull out the lever - reclining.

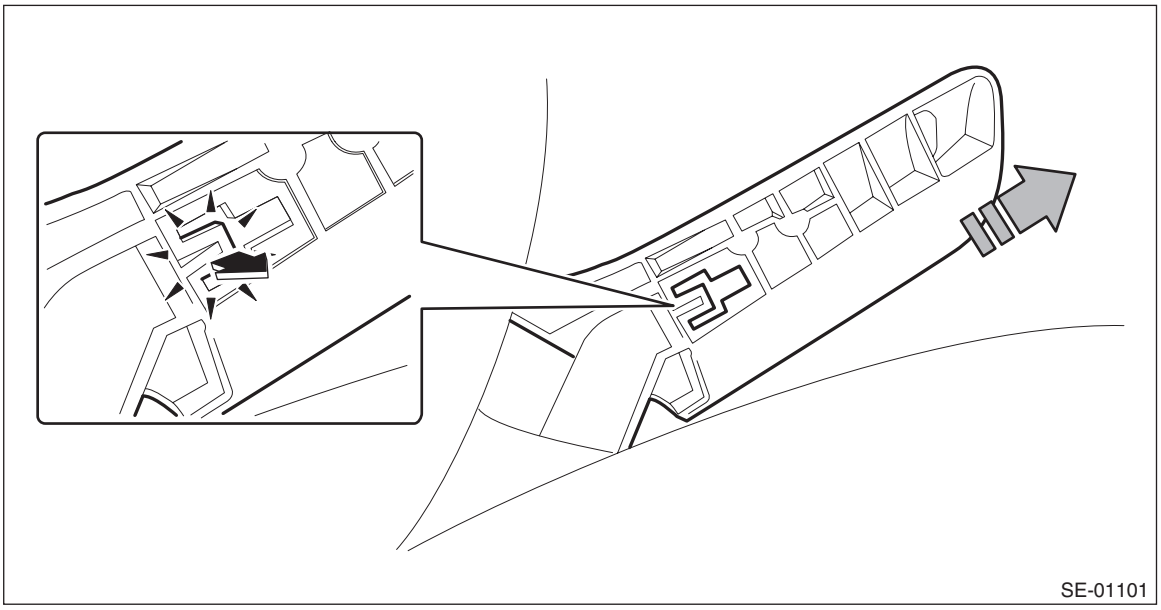

6) Remove the cover - hinge front seat outer.
(1) Remove the screws.
(2) Release the claw in the upper section of the cover - hinge front seat outer.
(3) Release the claw in the rear section of the cover - hinge front seat outer.
(4) Release the claw in the front section of the cover - hinge front seat outer, then remove the cover - hinge front seat outer.

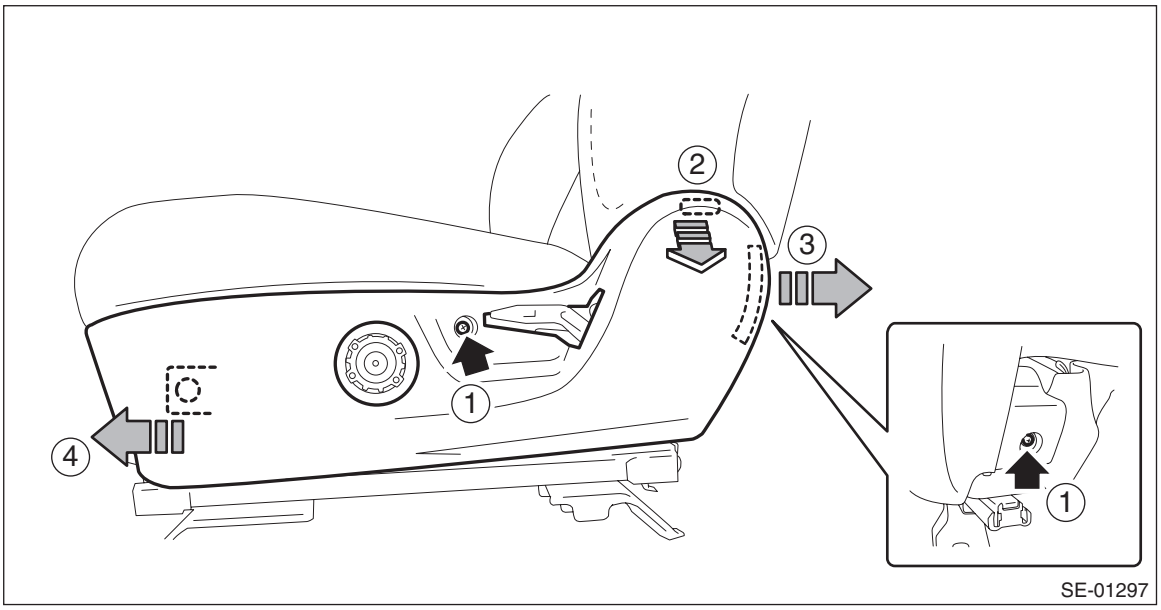

7) Remove the seat belt inner - front.
(1) Remove the nut, and remove the seat belt inner - front.
(2) Remove the clip for the seat belt inner - front located under the seat cushion assembly.

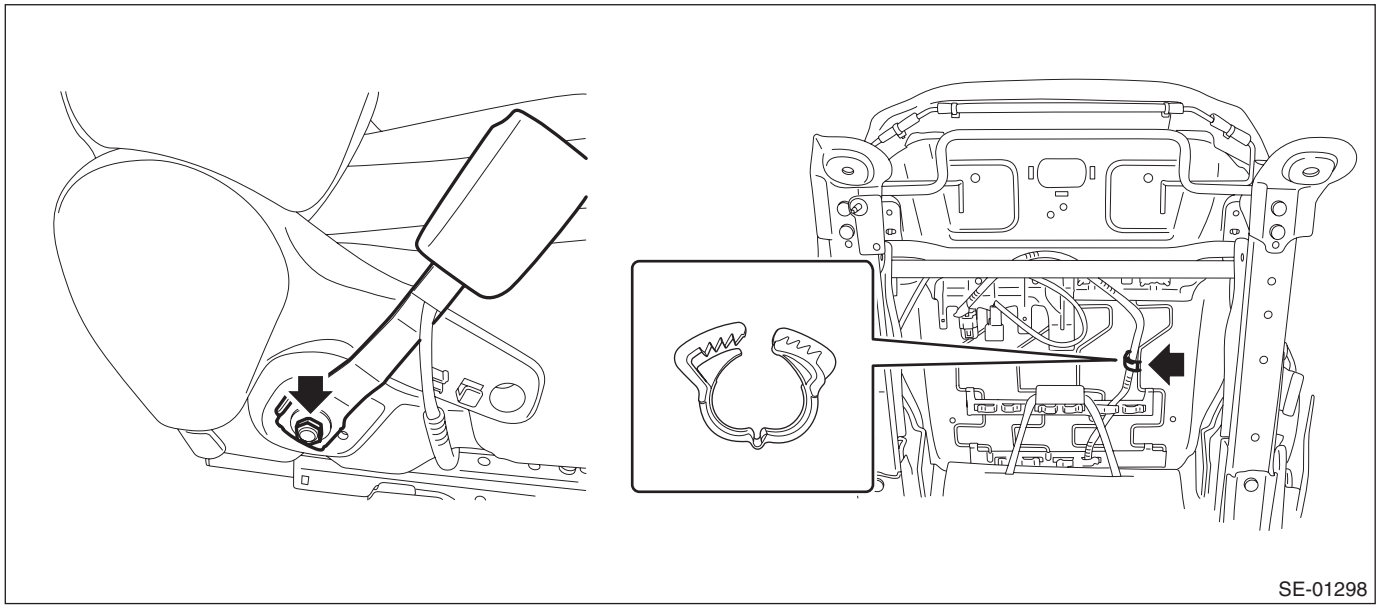

8) Remove the cover - hinge front seat inner.
(1) Remove the screws.
(2) Release the claw in the upper section of the cover - hinge front seat inner.
(3) Release the claw in the rear section of the cover - hinge front seat inner, then remove the cover - hinge front seat inner.

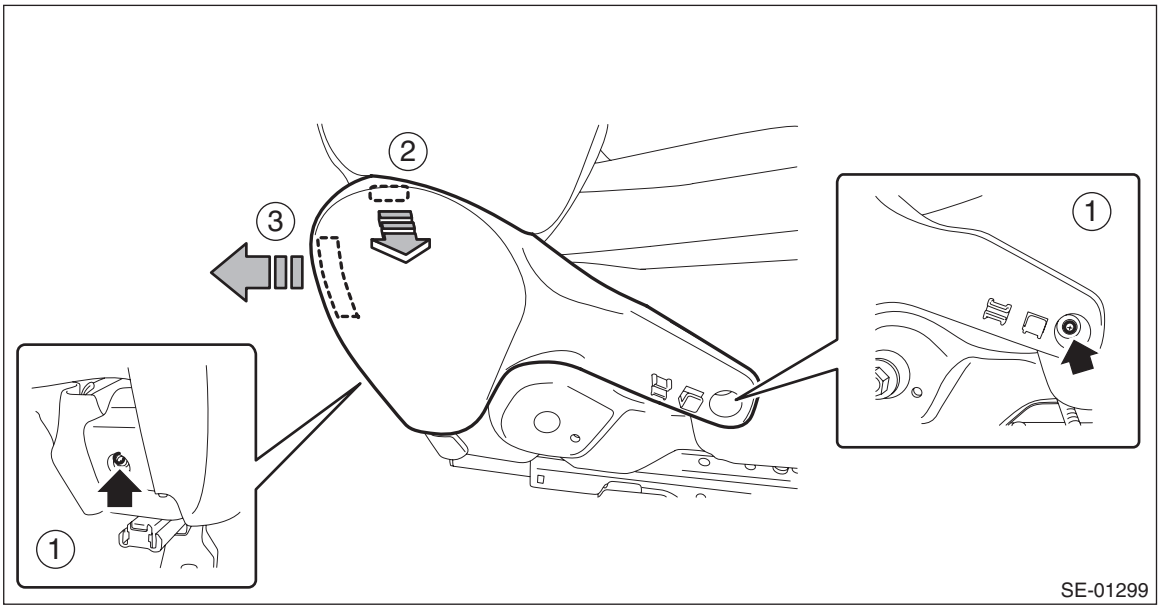

9) Separate the backrest assembly and the seat cushion assembly.
(1) Remove the clip for the side airbag harness located under the seat cushion assembly.
(2) Remove the bolts from reclining hinge of both sides.
(3) While taking care not to damage the airbag harness, separate the backrest assembly and the seat cushion assembly.

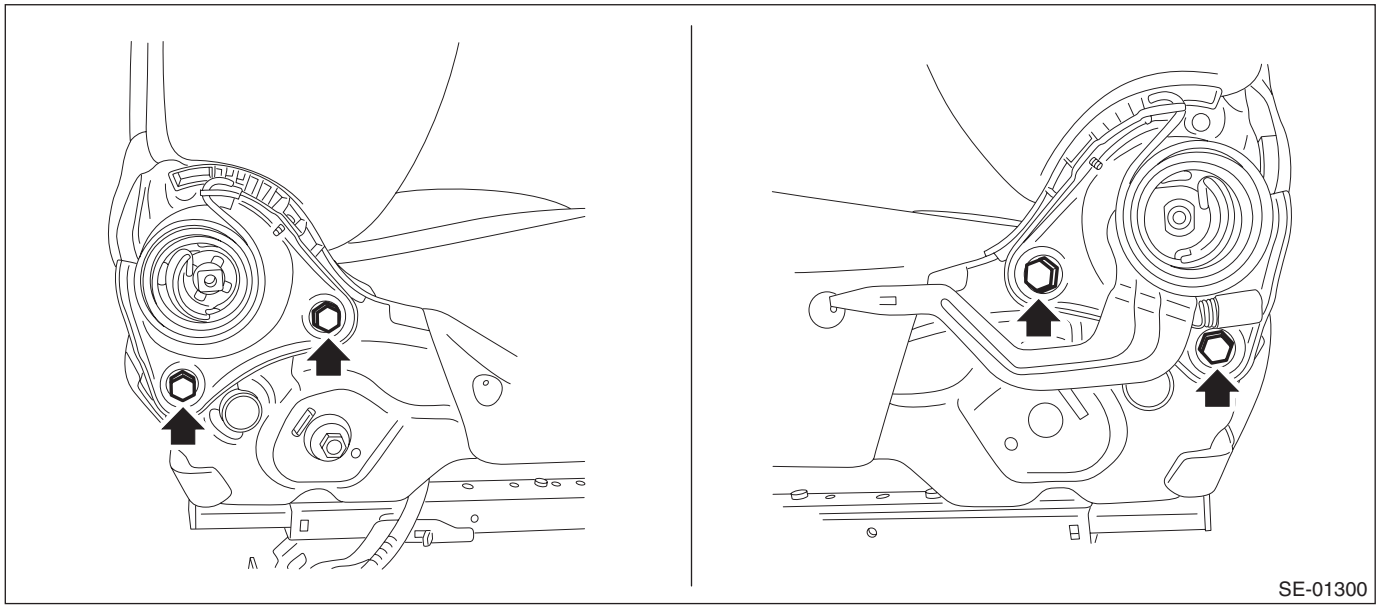

10) Remove the pad assembly - front seat backrest and the cover COMPL - front backrest.
(1) Remove the plastic fastener at the back side (bottom) of backrest assembly.
(2) Open the fastener at the rear side of backrest assembly.

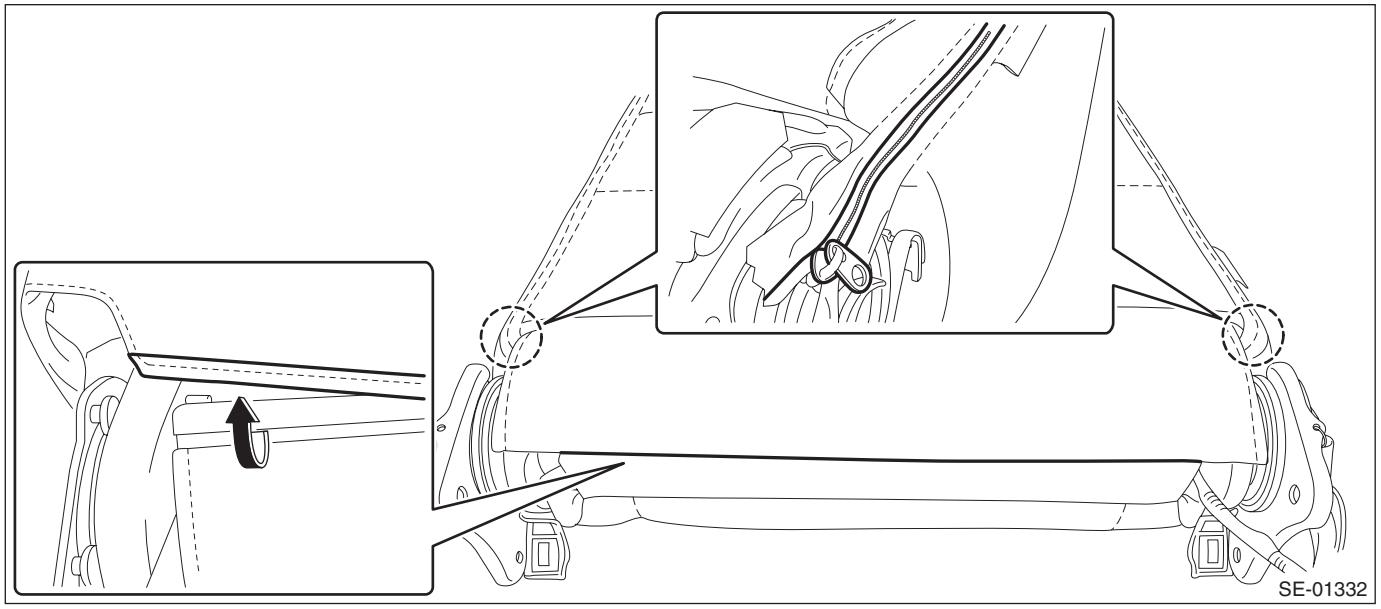

(3) Remove the hog ring.

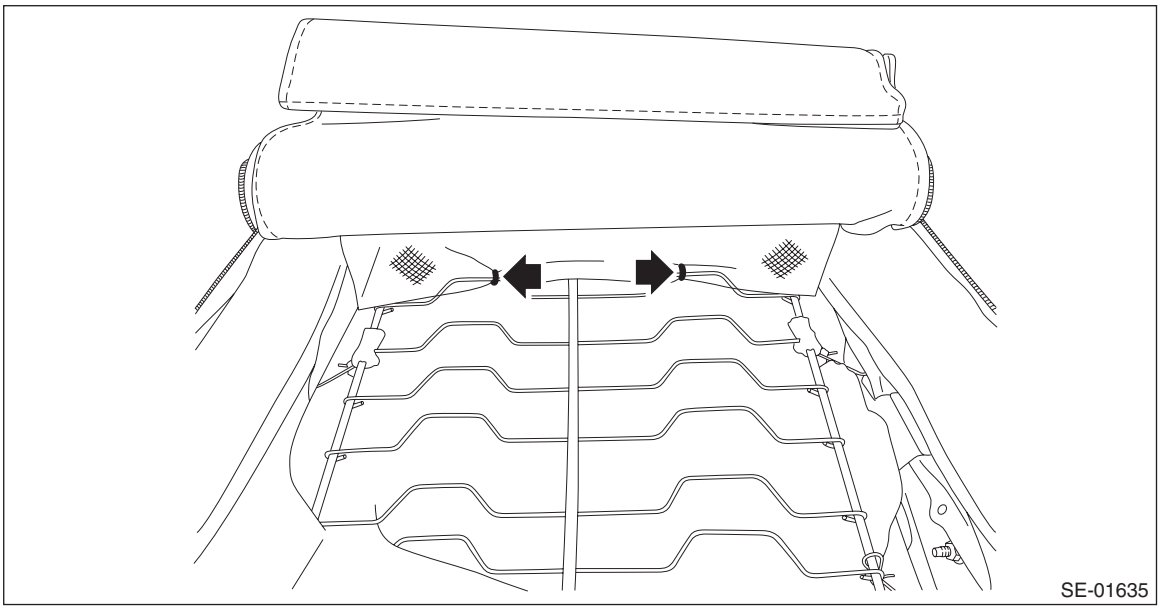

(4) Remove the pad assembly - front seat backrest and the cover COMPL - front backrest from the backrest assembly.

11) Remove the side airbag module.

CAUTION:
Do not open the protective cover of the side airbag module. If any damage is present in the protective cover or the cloth of side airbag module comes out from the protective cover slit, replace the side airbag module with a new part.

(1) Remove the hexagon cap nut and nuts.
(2) While taking care not to damage the airbag protective cover, remove the side airbag module.

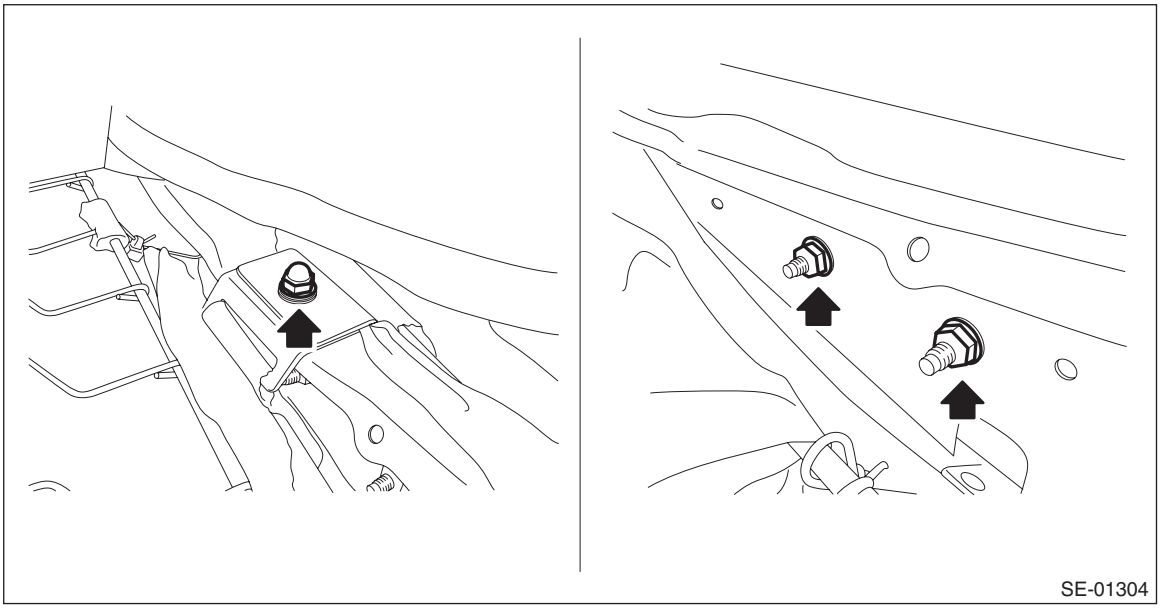

B: INSTALLATION

CAUTION:
• Refer to "CAUTION" of "General Description" before handling the airbag module. <Ref. to AB-11, CAUTION, General Description.>
• Make sure that the side airbag module is installed as shown in the figure.

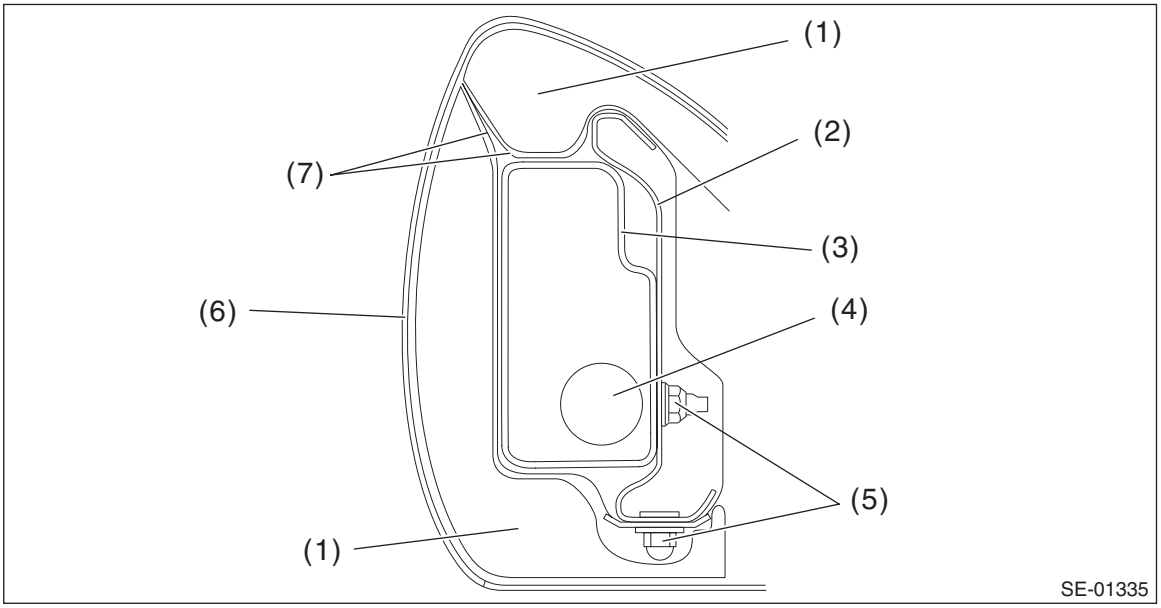

(1) Pad ASSY - front seat backrest
(2) Frame ASSY - front backrest
(3) Side airbag module protective cover
(4) Side airbag module inflator
(5) Nut
(6) Cover COMPL - front backrest
(7) Side airbag guide cloth

- **Be careful not to stain or damage the cover COMPL - front backrest during assembly.**
- **Do not reuse hog rings.**
- **Secure the hog ring using hog ring pliers.**
- **Install the hog rings to the specified points securely and make sure that there is no wrinkle or twisting on the cover COMPL - front backrest.**

1) Before installation, inspect the following items and replace any faulty part with a new one.
- Make sure that there is no foreign matter on side airbag module.
- Front seat, airbag module and mounting bracket are damaged or deformed.
- Harness and/or connector is cracked, deformed or open.
- Harness wire is exposed.

2) Install the side airbag module to the frame assembly - front backrest.

Tightening torque:
Side airbag module: 6 N·m (0.61 kgf-m, 4.4 ft-lb)

3) Install the side airbag harness to the frame assembly - front backrest.
4) Install the cover COMPL - front backrest.
5) Secure the backrest hinge.

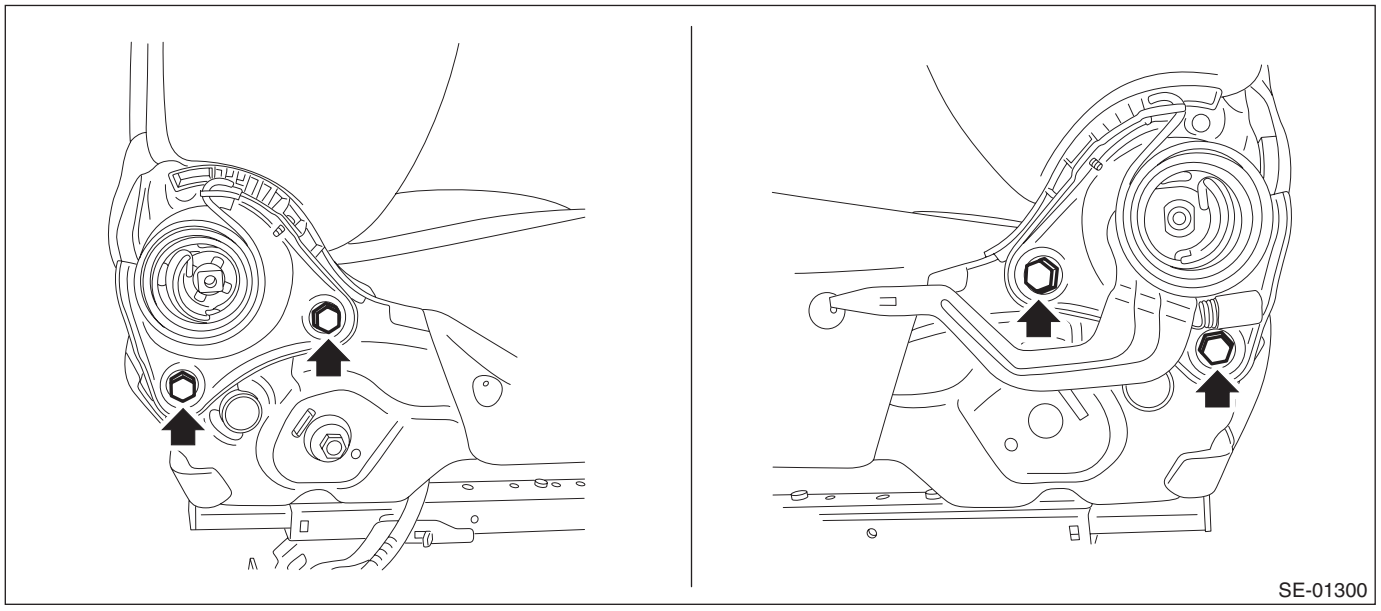

Tightening torque:
Refer to "COMPONENT" of "General Description". <Ref. to SE-2, FRONT SEAT, COMPONENT, General Description.>

6) Install the side airbag harness to the back of the seat cushion assembly using a cable clip.

CAUTION:
After restoring the seat, operate the reclining and sliding mechanisms to check that the side airbag harness is not caught.

7) Install the front seat assembly to the body.

CAUTION:
• The front seat mounting bolts differ between the front mounting points and the rear mounting points. When installing the front seat, make sure that you are using correct bolts at correct positions.
• Tighten the slide rail assembly installing bolts in the order as shown in the figure, in several steps by gradually increasing the torque until they reach the specified torque.

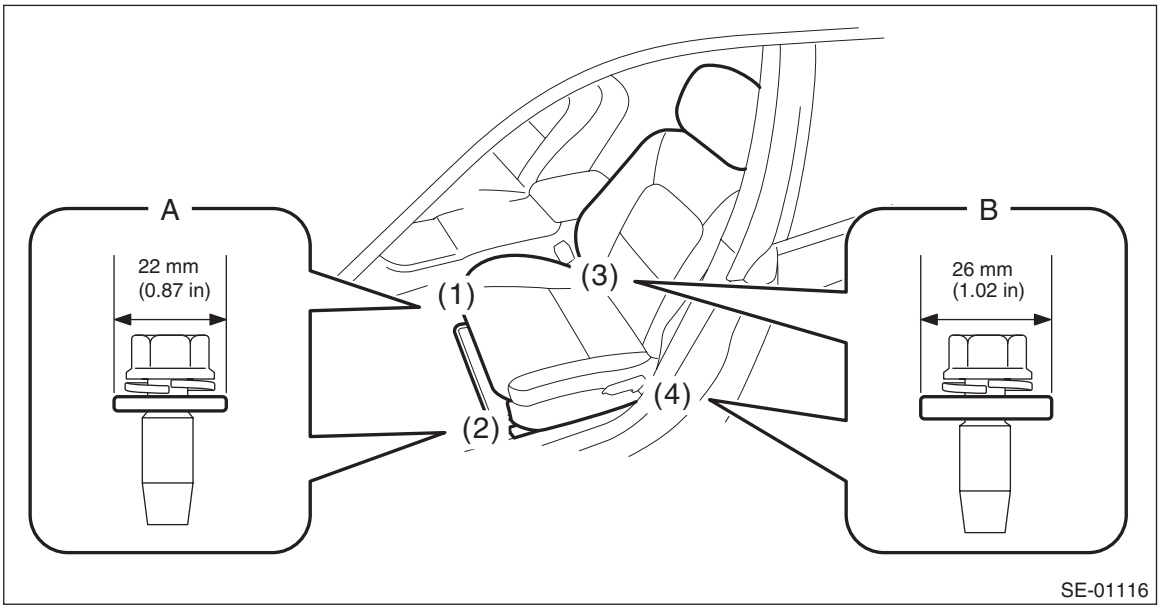

- **Front (bolt A): Washer diameter 22 mm (0.87 in)**
- **Rear (bolt B): Washer diameter 26 mm (1.02 in)**

Tightening torque:
Front seat assembly: 53 N·m (5.40 kgf-m, 39.1 ft-lb)

8. Curtain Airbag Module

A: REMOVAL

1. 4 DOOR MODEL

CAUTION:
Refer to “CAUTION” of “General Description” before handling the airbag module. <Ref. to AB-11, CAUTION, General Description.>
1) Turn the ignition switch to OFF.
2) Disconnect the ground cable from battery and wait for at least 60 seconds before starting work.
3) Remove the trim panel - roof assembly. <Ref. to EI-129, 4 DOOR MODEL, REMOVAL, Roof Trim.>
4) Remove the curtain airbag module.

CAUTION:
- **Be careful not to damage the curtain airbag module during removal.**
- **Never open the curtain airbag module before activation. Never reuse the deployed curtain airbag module.**
- **Remove the modules in order starting from the vehicle front.**
  (1) Remove all the bolts and clips, and remove the curtain airbag module.

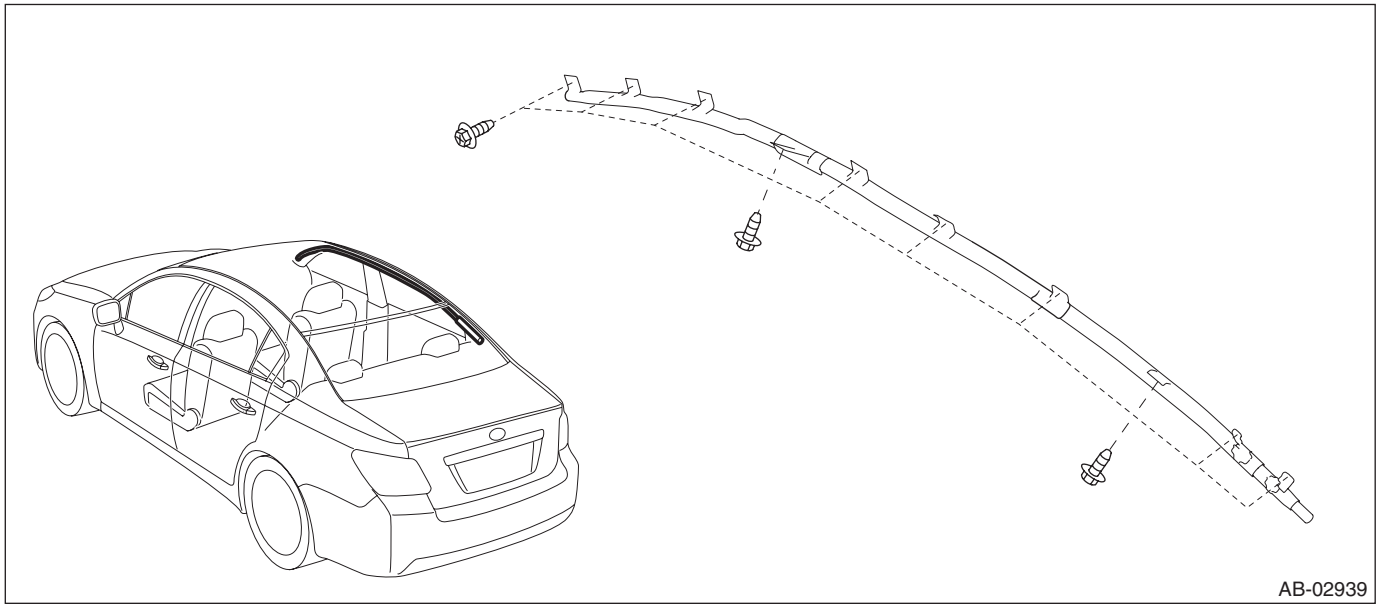

(2) Disconnect the curtain airbag module connector. <Ref. to AB-23, DRIVER'S AIRBAG MODULE, CURTAIN AIRBAG MODULE & PRETENSIONER, PROCEDURE, Airbag Connector.>

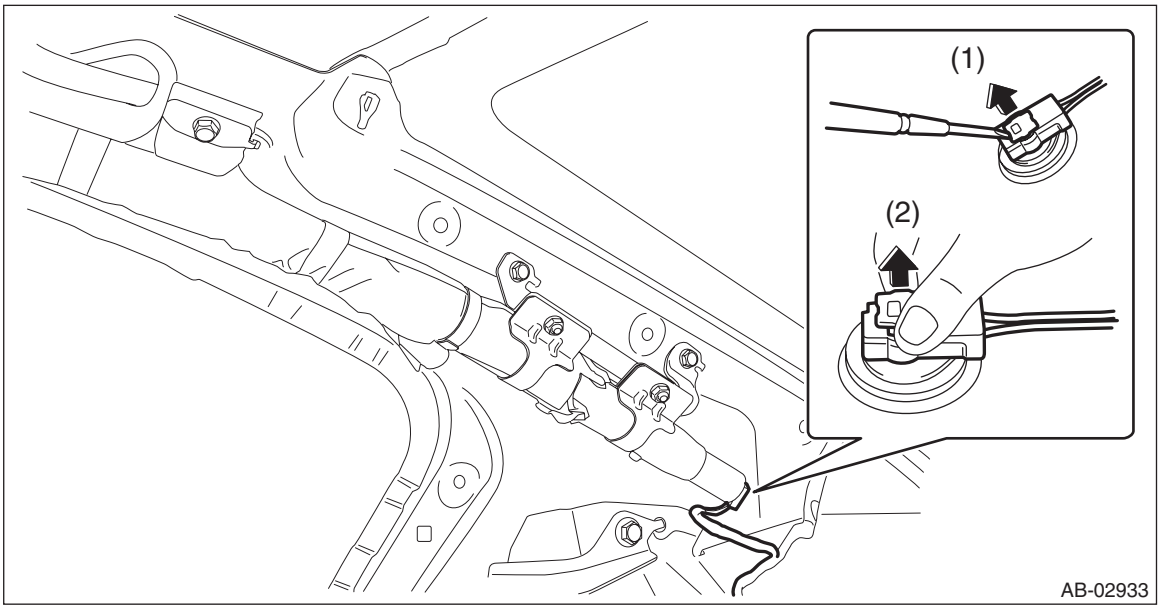

2. 5 DOOR MODEL/XV MODEL

CAUTION:
Refer to "CAUTION" of "General Description" before handling the airbag module. <Ref. to AB-11, CAUTION, General Description.>
1) Turn the ignition switch to OFF.
2) Disconnect the ground cable from battery and wait for at least 60 seconds before starting work. <Ref. to NT-5, BATTERY, NOTE, Note.>

NOTE:
For the 12 volt engine restart battery of HEV model, disconnect the ground terminal from 12V engine restart battery sensor.
3) Remove the trim panel - roof assembly. <Ref. to EI-138, 5 DOOR MODEL/XV MODEL, REMOVAL, Roof Trim.>

4) Remove the curtain airbag module.

CAUTION:
- **Be careful not to damage the curtain airbag module during removal.**
- **Never open the curtain airbag module before activation. Never reuse the deployed curtain airbag module.**
- **Remove the modules in order starting from the vehicle front.**

(1) Remove all the bolts and clips, and remove the curtain airbag module.

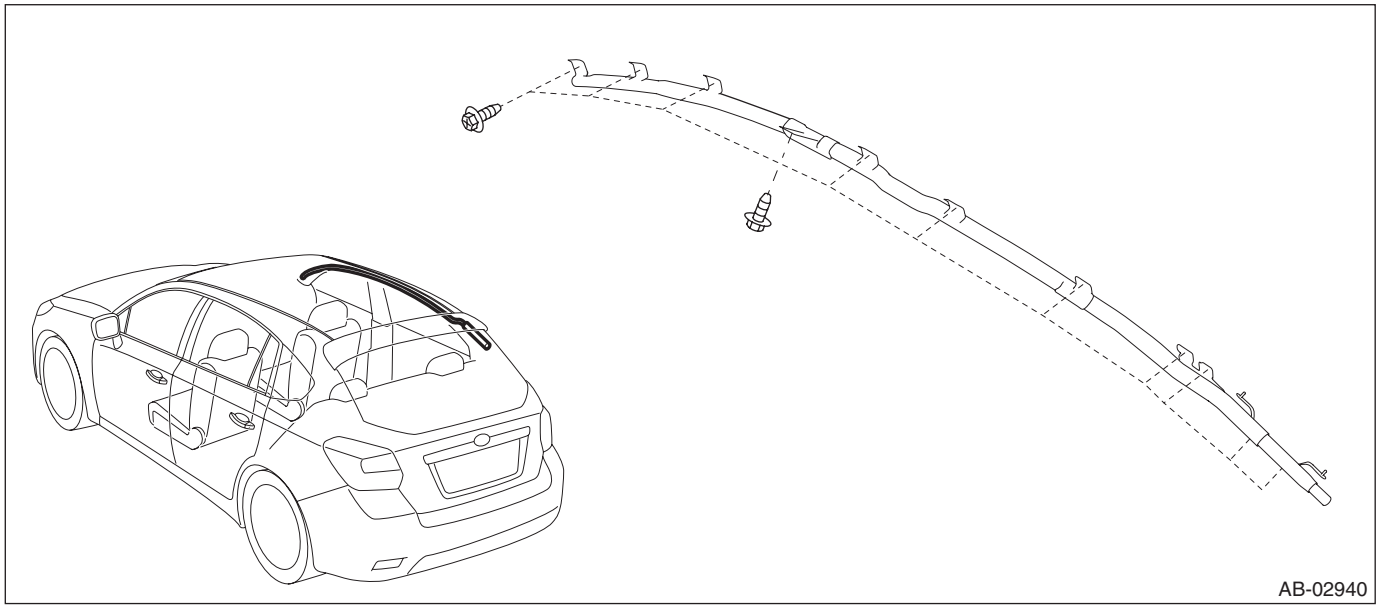

(2) Disconnect the curtain airbag module connector. <Ref. to AB-23, DRIVER'S AIRBAG MODULE, CURTAIN AIRBAG MODULE & PRETENSIONER, PROCEDURE, Airbag Connector.>

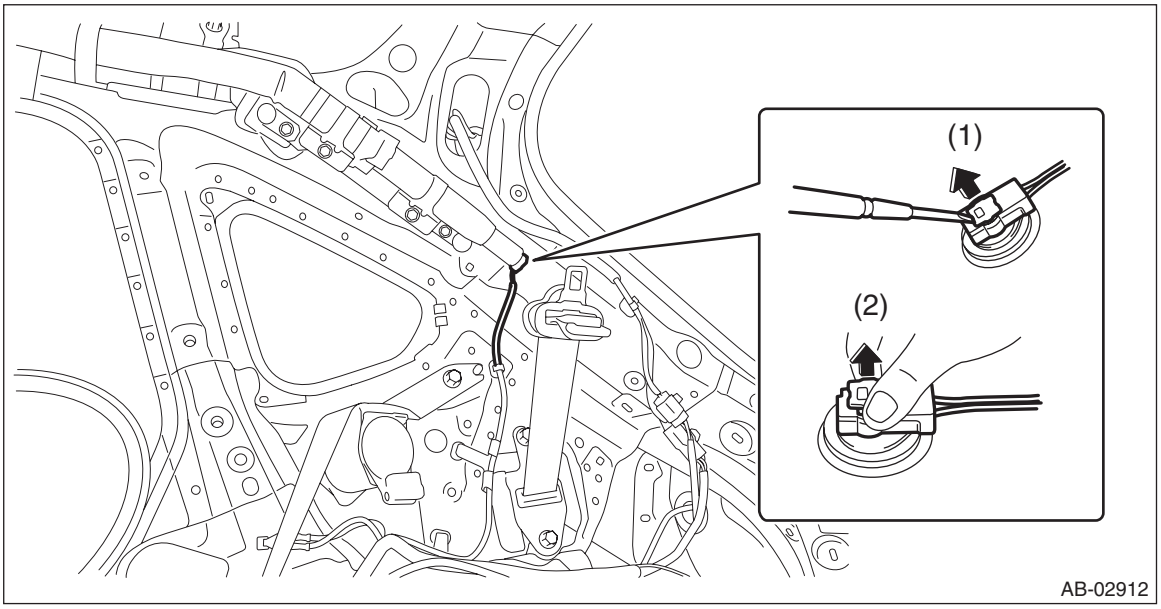

B: INSTALLATION

CAUTION:
• Refer to "CAUTION" of "General Description" before handling the airbag module. <Ref. to AB-11, CAUTION, General Description.>
• When installing the curtain airbag module, install a specified part at specified place.
• Be careful not to damage the curtain airbag module during installation.
• Never open the curtain airbag module before activation. Never reuse the deployed curtain airbag module.
• Make sure that there are no foreign matter on airbag module.
1) Before installation, inspect the following items and replace any faulty part with a new one.
- Airbag cover is scratched or torn.
- Harness and/or connector is cracked, deformed or open.
- Harness wire is exposed.
- Mounting bracket and securing clip are cracked or deformed.

2) Install each part in the reverse order of removal.

CAUTION:
• Do not reuse the tether clips on the upper part of the front pillar trim. Always replace with a new part.
Once the tether clip is removed from the pillar trim, the retention power deteriorates and the front pillar trim may come off.
• Do not reuse the upper clips of the trim panel - center pillar UPR. Once the clip is removed, its holding force is reduced. Be sure to replace it with a new clip.
• Before installing the front pillar trim, check the condition of (white) protective unwoven cloth of curtain airbag. If it is damaged (airbag module cloth is exposed), replace the curtain airbag module assembly with a new part.

Tightening torque:
Curtain airbag module: 7.5 N·m (0.76 kgf-m, 5.5 ft-lb)

9. Airbag Control Module

A: REMOVAL

CAUTION:
• Do not disassemble the airbag control module.
• If the airbag control module is deformed or if there is any trace of water on the module, replace the airbag control module with a new one.
• Do not drop the airbag control module.
• After removal, keep the airbag control module on a dry, clean surface away from moisture, heat and dust.

1) Turn the ignition switch to OFF.
2) Disconnect the ground cable from battery and wait for at least 60 seconds before starting work. <Ref. to NT-5, BATTERY, NOTE, Note.>

NOTE:
• For the 12 volt engine restart battery of HEV model, disconnect the ground terminal from 12V engine re-start battery sensor.
• On CVT models, shift the select lever into “D” before disconnecting the battery ground cable.

3) Remove the console box assembly.
(1) Release the claws, and then remove the boot - hand brake.

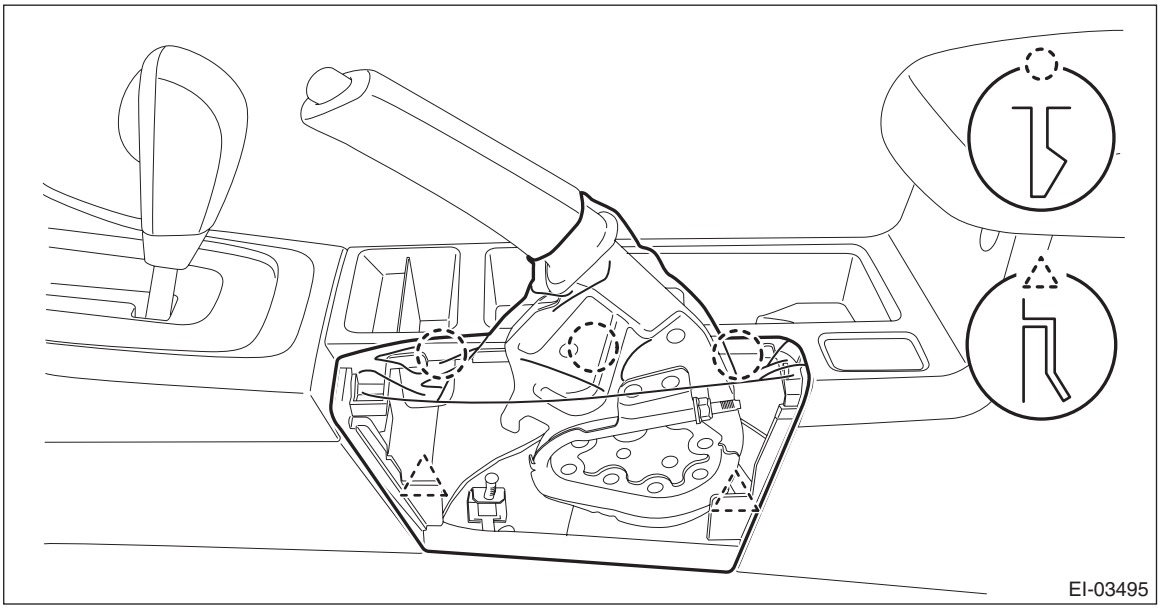

(2) Move the seat forward, and remove the bolts after detaching the left and right caps.

(3) Remove the screws, disconnect the harness connector and remove the console box assembly.

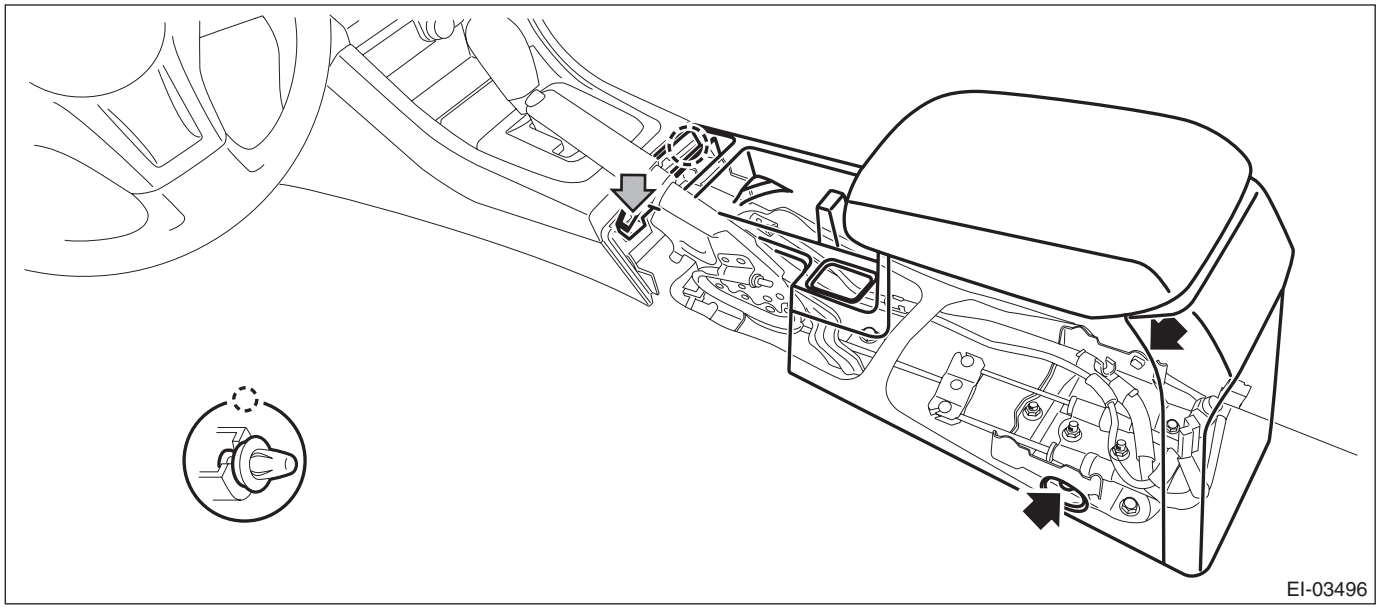

4) Remove the cover - shift lever.
(1) Remove the shift knob. (MT model)
(2) Release the clips and claws, then pull up the cover - shift lever.

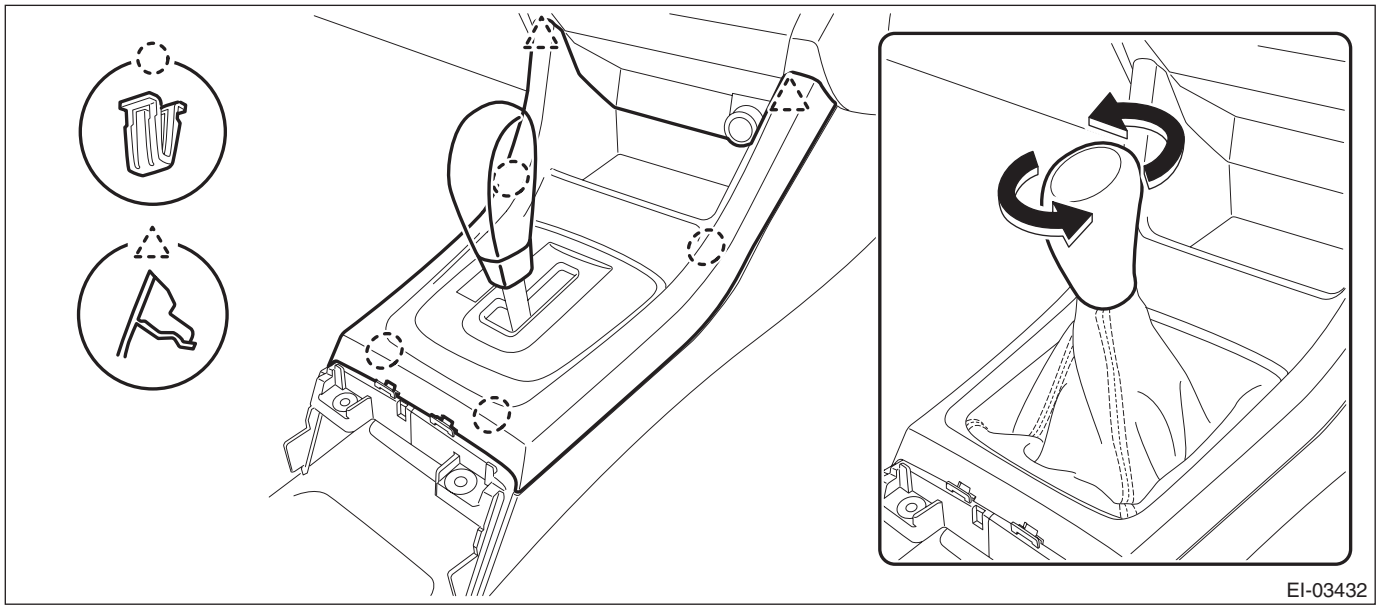

5) On manual A/C models, disconnect the control cables from both sides of the heater & cooling unit.

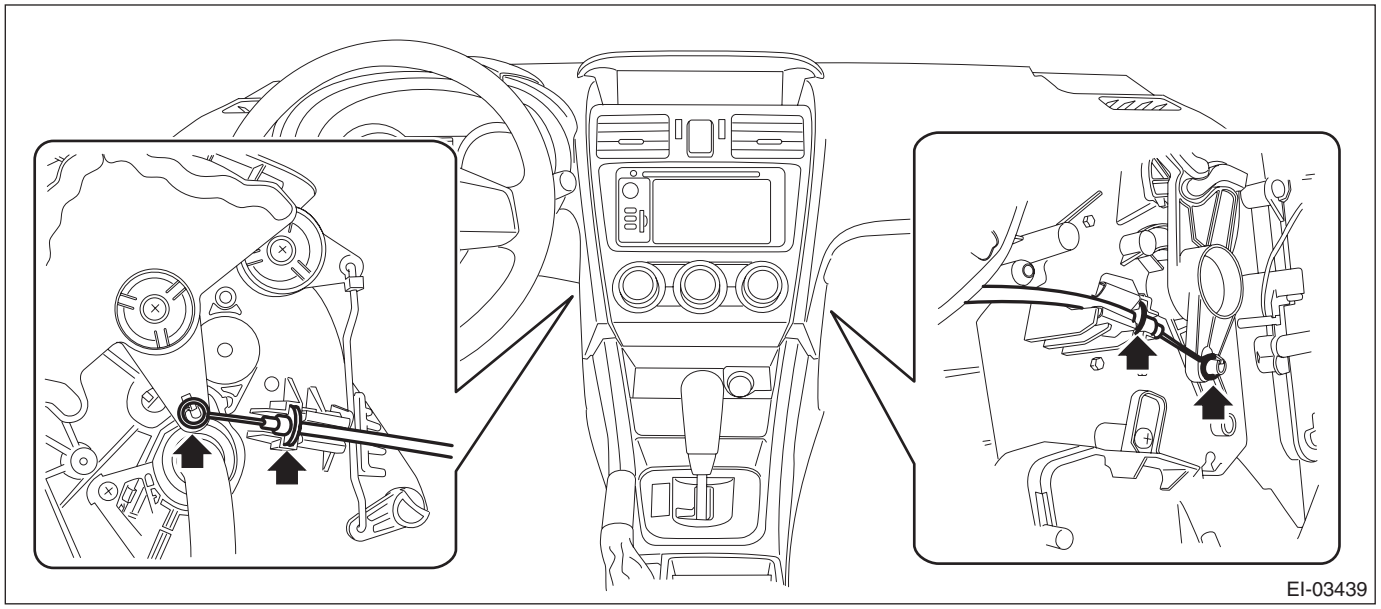

6) Remove the panel center assembly.

CAUTION:
- **Do not put your finger on the fin of the air vent grille. Doing so may damage the fin.**
- **Pull the panel center assembly slowly. Pulling with excessive force may damage the connector.**

(1) Insert a plastic remover to the three areas shown by the arrows, and slightly lift up the panel center assembly.
(2) With the panel center assembly lifted up slightly, release the claw by using a clip remover wrapped with protective tape.
(3) Release the rest of the claws, and pull out the panel center assembly.
(4) Disconnect the connectors, and remove the panel center assembly.

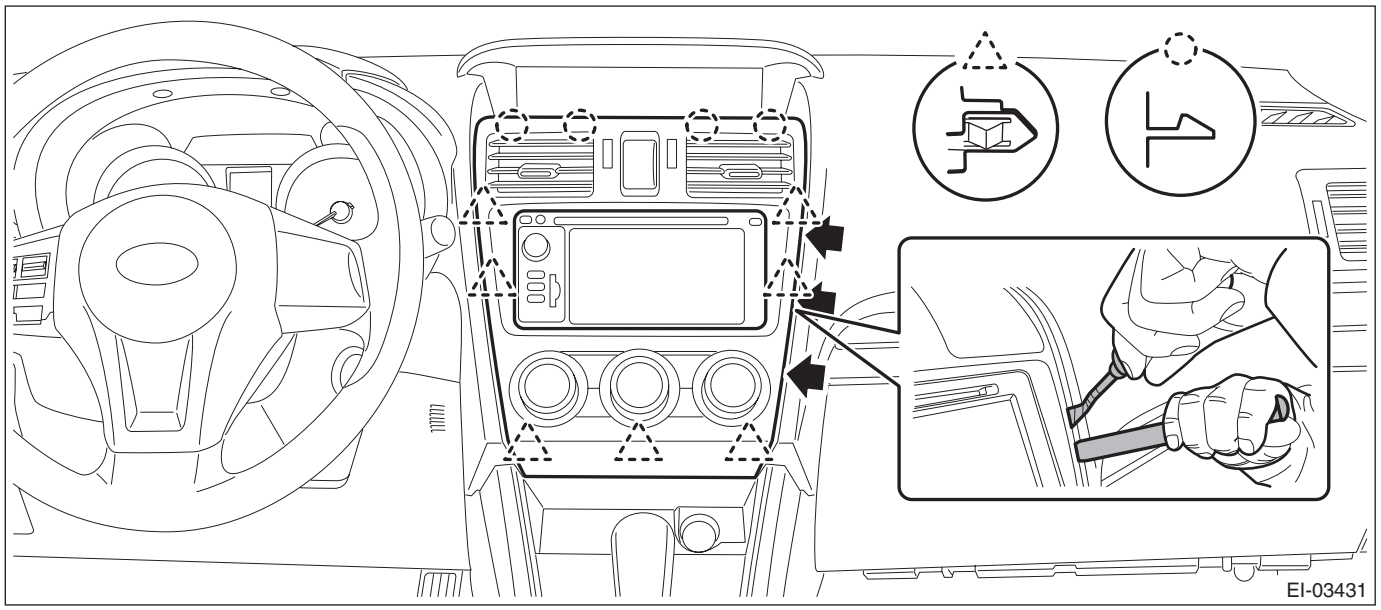

7) Remove the airbag control module.
(1) Disconnect the connector from airbag control module. <Ref. to AB-21, AIRBAG CONTROL MODULE, PROCEDURE, Airbag Connector.>
(2) Remove the bolt and nuts and remove the airbag control module.

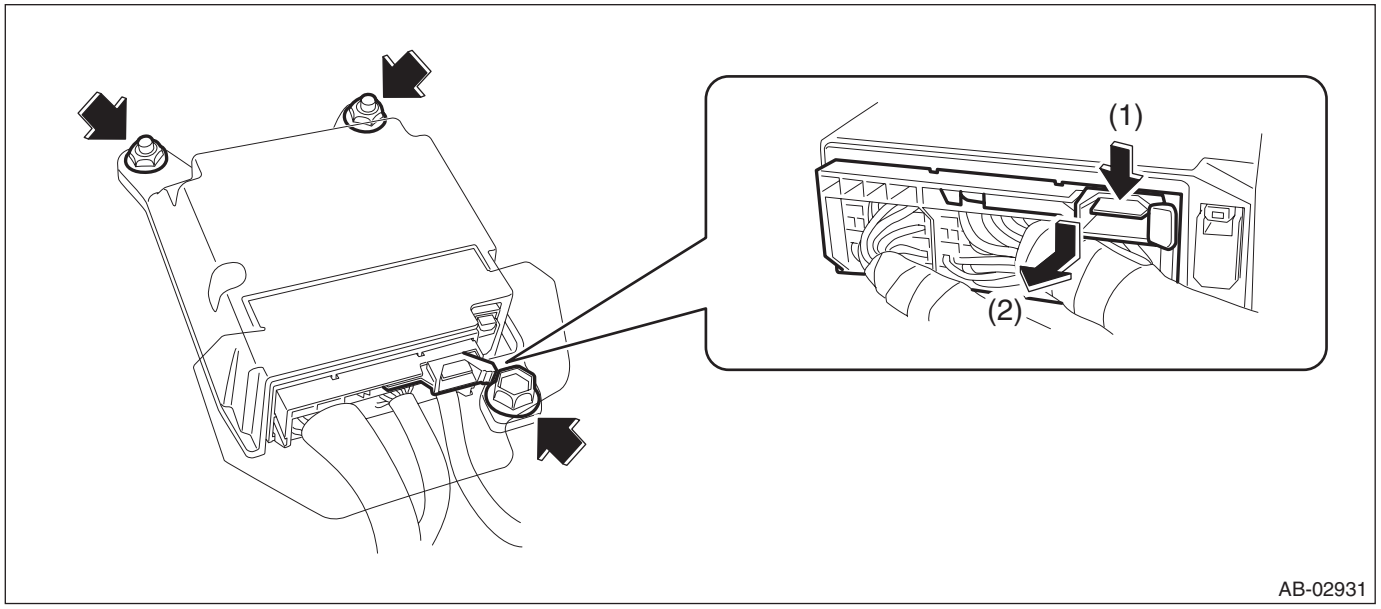

B: INSTALLATION

CAUTION:
Do not reuse the bolt and nut.
Always use new bolts and nuts for them.

1) Before installation, inspect the following items and replace any faulty part with a new one.
- Control module is deformed.
- Control module connector is damaged.
- Control module mounting bracket is damaged.

2) Install each part in the reverse order of removal.

Tightening torque:
Airbag control module: 25 N·m (2.55 kgf-m, 18.4 ft-lb)
Console box assembly: 6.5 N·m (0.66 kgf-m, 4.8 ft-lb)

10.Front Sub Sensor

A: REMOVAL

1) Disconnect the ground cable from battery and wait for at least 60 seconds before starting work. <Ref. to NT-5, BATTERY, NOTE, Note.>

NOTE:
For the 12 volt engine restart battery of HEV model, disconnect the ground terminal from 12V engine restart battery sensor.

2) Remove the bumper face - front.
   (1) Remove the screws and clips, and turn over the mud guard - front, and then disconnect the connectors of the fog light assembly - front on the LH and RH sides. (Model with fog light)

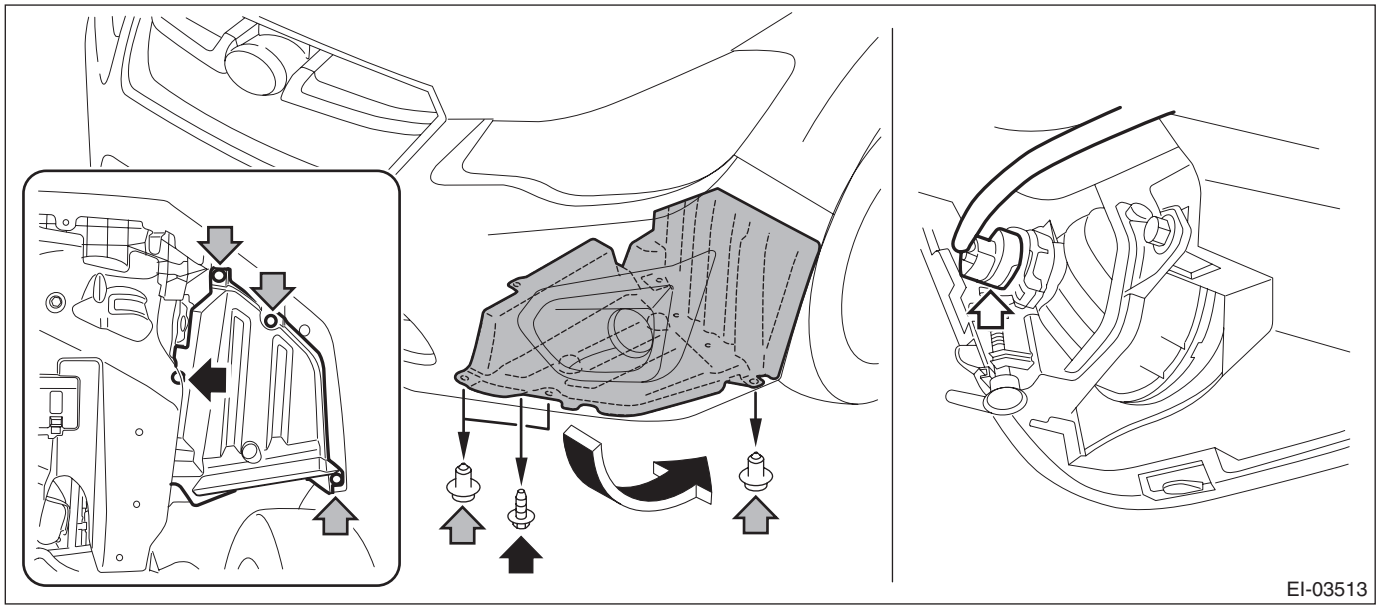

(2) Remove the clips at the upper side of the bumper face - front.
(3) Remove the clips from the fender.
(4) Remove the clips at the lower side of the bumper face - front.

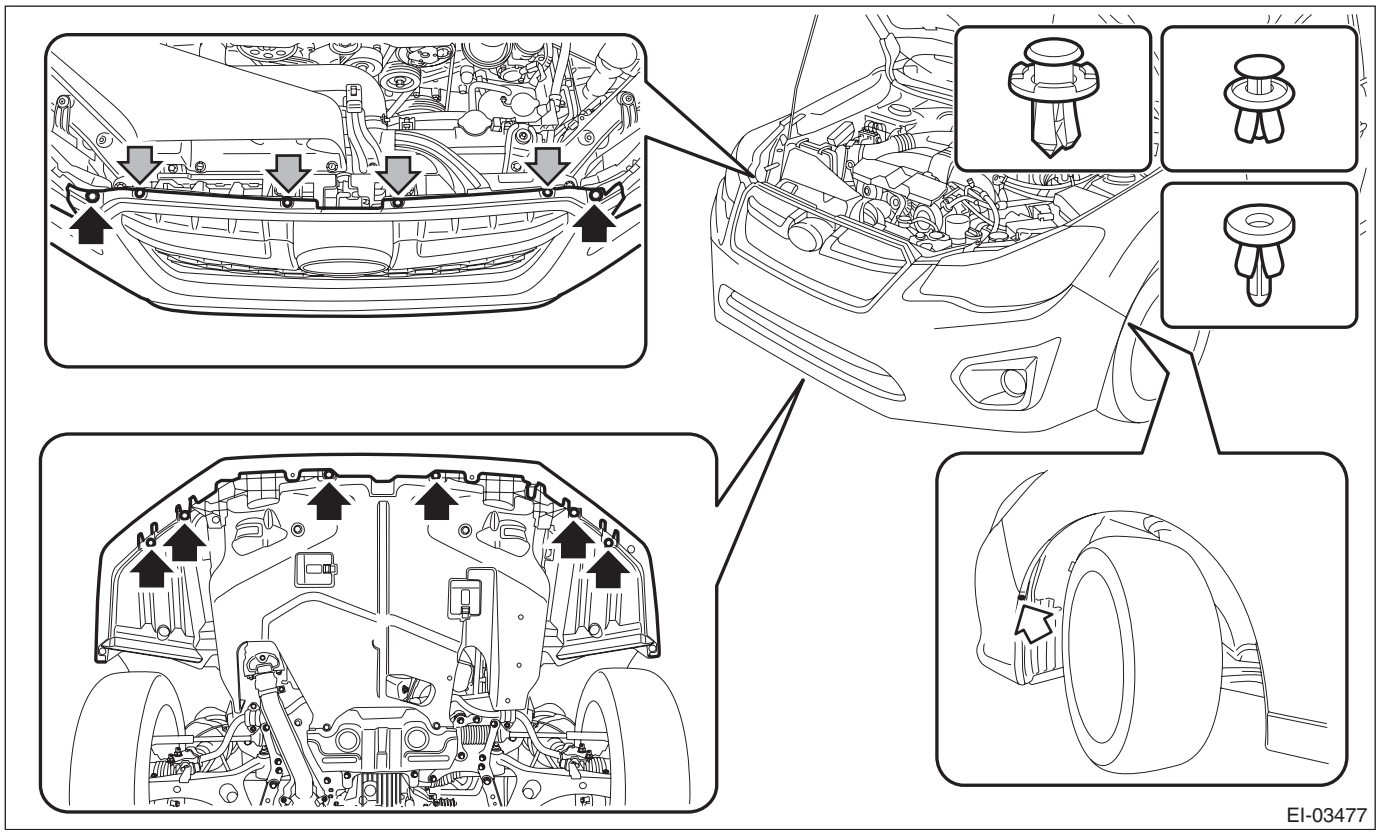

(5) Apply protective tape (A) to the light assembly - head.
(6) Detach the flange section on the bumper face side from the bracket - front bumper side.

CAUTION:
Do not pull forcibly. It may damage the flange section on the bumper face - front side when it comes off from the claws of the bracket - front bumper.

NOTE:
Remove the bumper face - front according to the following procedures.

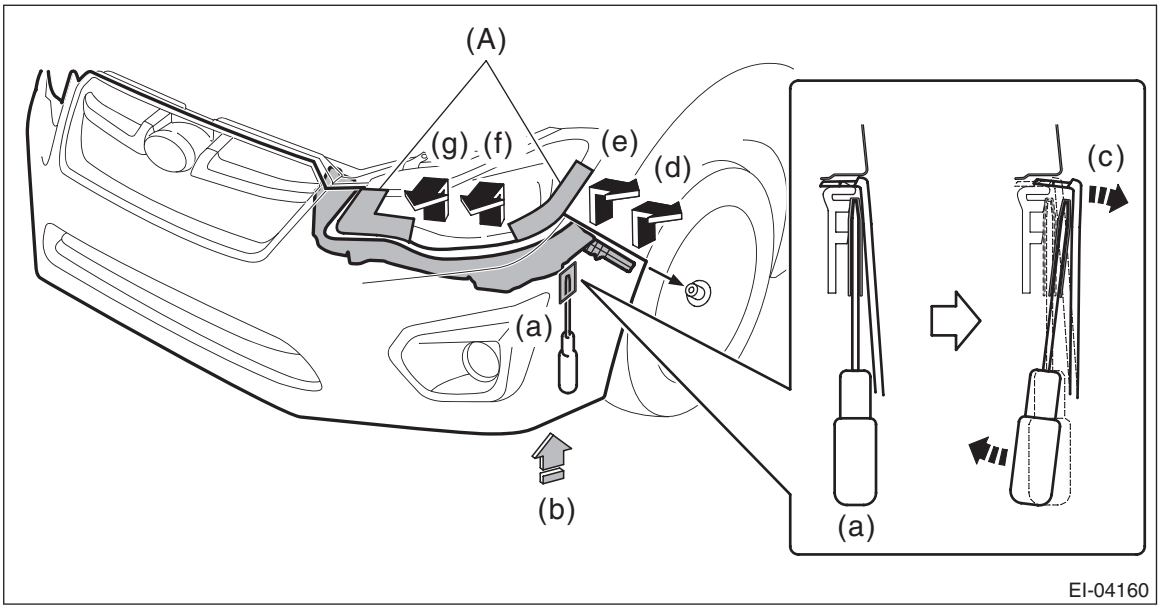

1. Remove the clips, turn over the mud guard, and insert a flat tip screwdriver with protection for damage prevention into the clearance between bumper and bracket. (a)
2. Push out the bumper with the flat tip screwdriver while pushing up the bumper from below. (b), (c)
3. Release the engagement of clips in the order of (d) to (g) while pushing up the bumper from below.
4. Perform the same procedures to remove the opposite side.

3) Remove the bolts, and remove the bumper beam COMPL - front.

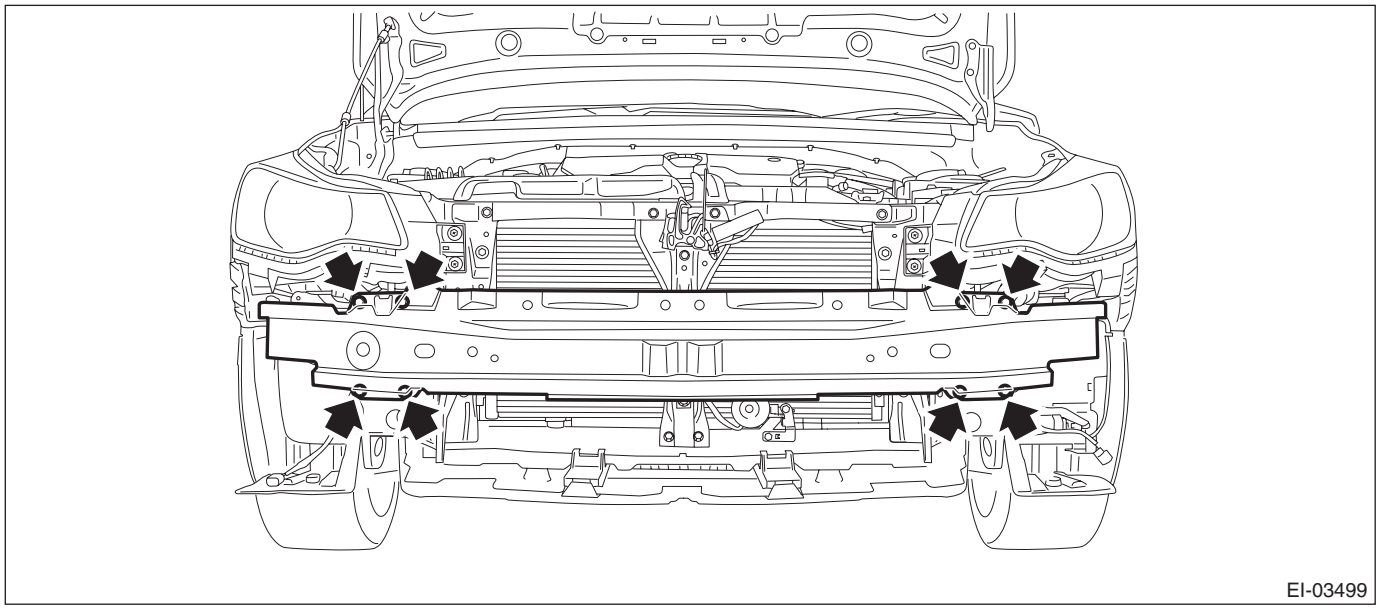
EI-03499

4) Remove the bolt, and then detach the front sub sensor. <Ref. to AB-24, FRONT SUB SENSOR, PROCEDURE, Airbag Connector.>

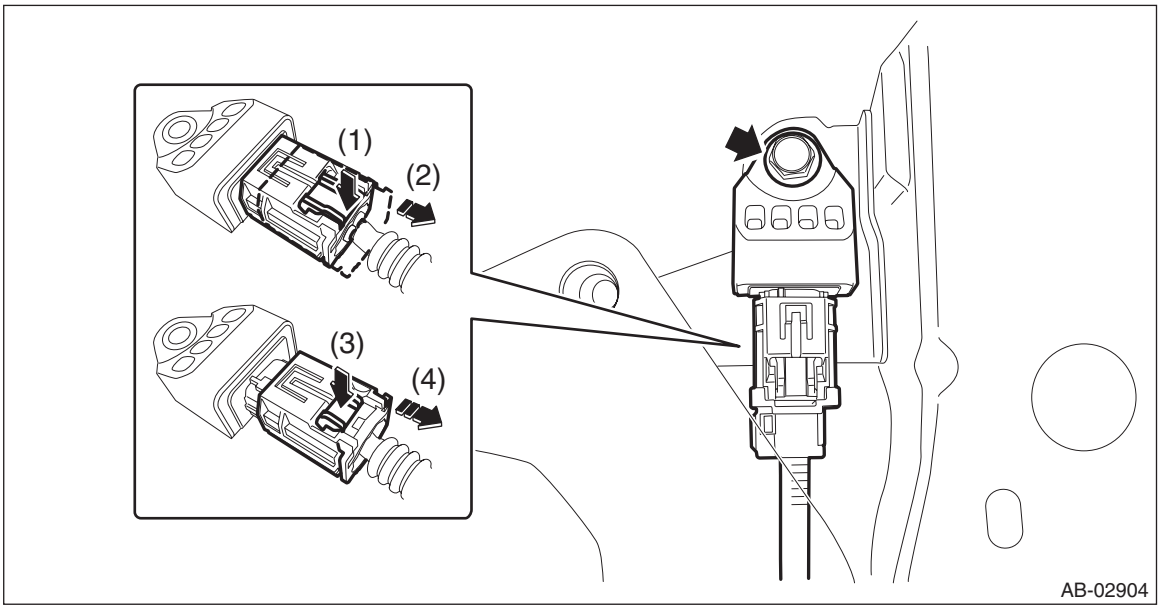

AB-02904

B: INSTALLATION

CAUTION:
- **If the airbag has been activated, replace the front sub sensor with a new part.**
- **Do not reuse the bolt and nut.**

Always replace with the specified new bolts and nuts.
- **When installing the sensor, insert the set pin on the backside of the sensor into the hole on the body side securely.**

1) Before installation, inspect the following items and replace any faulty part with a new part.
- Front sub sensor damage
- Connector damage

2) Install each part in the reverse order of removal.

CAUTION:
- **Install the bumper face - front so that the front end of the under cover (b) comes inside the bumper face - front (a).**

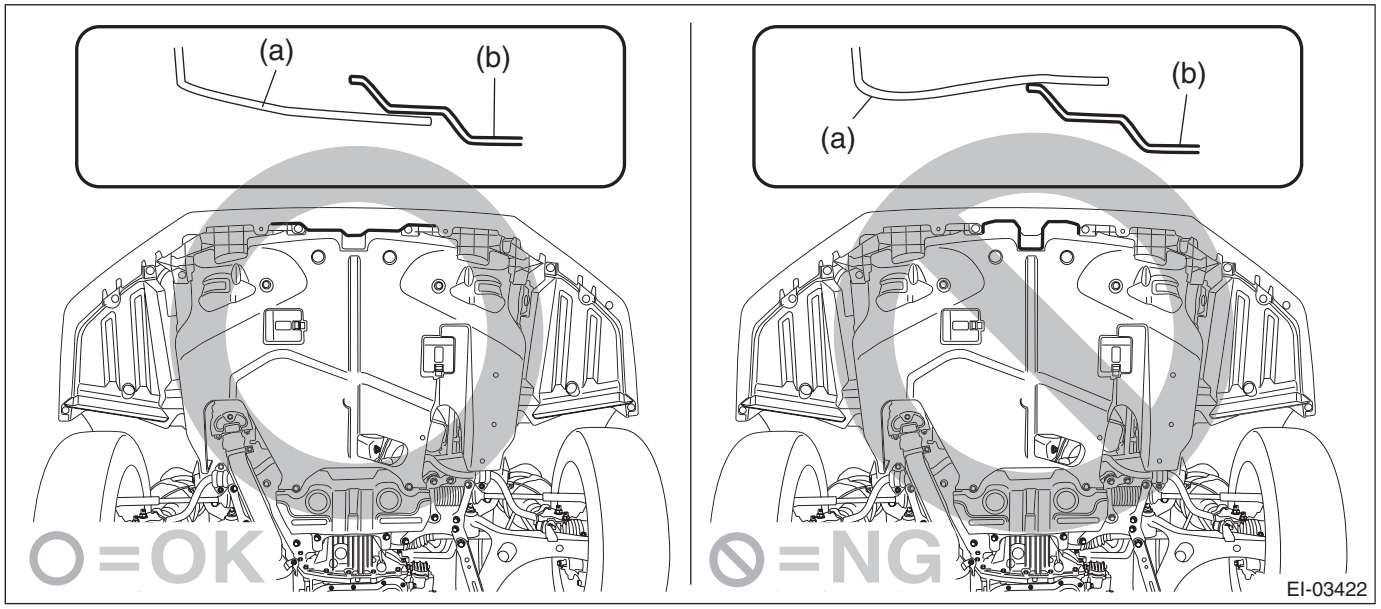

- **Before installing the bumper face, match the claws on the bracket - front bumper with the engaging position of flange section on the bumper face side. If the engaging position is not correct, the flange section may be broken or the clearance between fender panel and bumper face may not be uniform.**

Tightening torque:
Front sub sensor: 13 N·m (1.33 kgf-m, 9.6 ft-lb)
Bumper beam COMPL - front: 32 N·m (3.36 kgf-m, 24.3 ft-lb)

11.Front Door Impact Sensor

A: REMOVAL

1) Operate the power window switch to close the front door glass.
2) Turn the ignition switch to OFF.
3) Disconnect the ground cable from battery and wait for at least 60 seconds before starting work. <Ref. to NT-5, BATTERY, NOTE, Note.>

NOTE:
For the 12 volt engine restart battery of HEV model, disconnect the ground terminal from 12V engine restart battery sensor.

4) Remove the trim panel - front door.
   (1) Attach the protective tape (a).
   (2) Open the cover and remove the screw.
   (3) Remove the clips, and remove the trim panel - front door from the door panel.

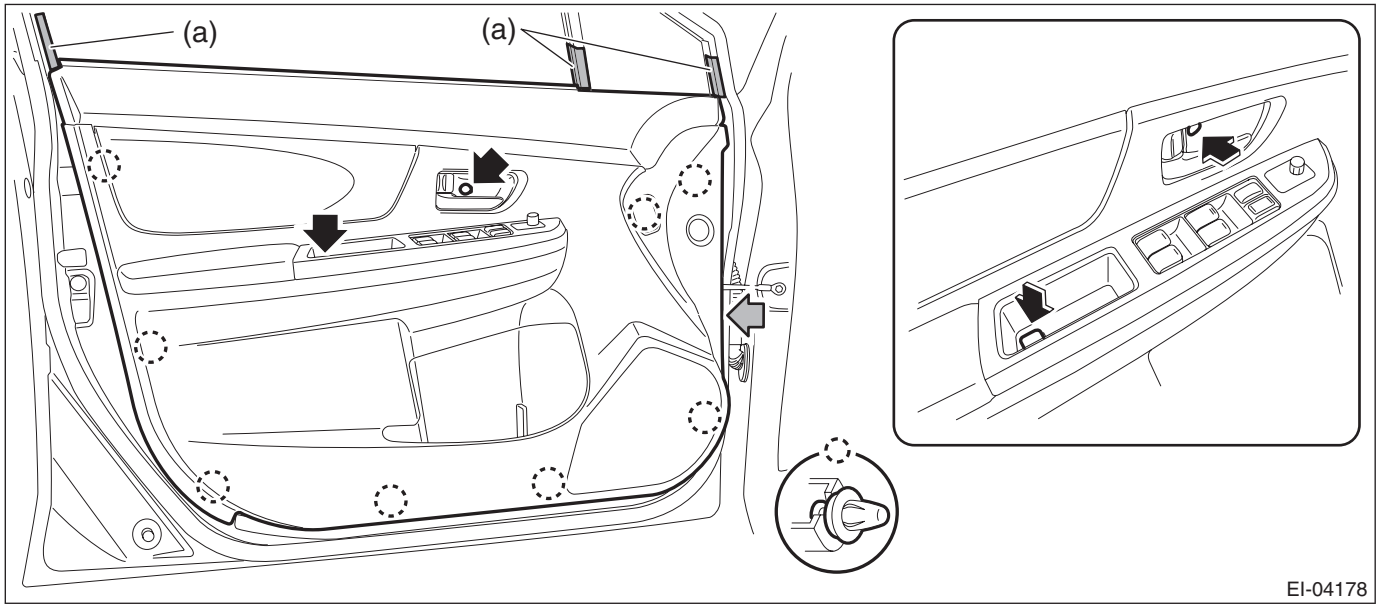

NOTE:
It is easier to remove the door trim if the removal is performed from the gray arrow section.

   (4) Detach the door lock cable (a) and door open cable (b) from the remote assembly - door.

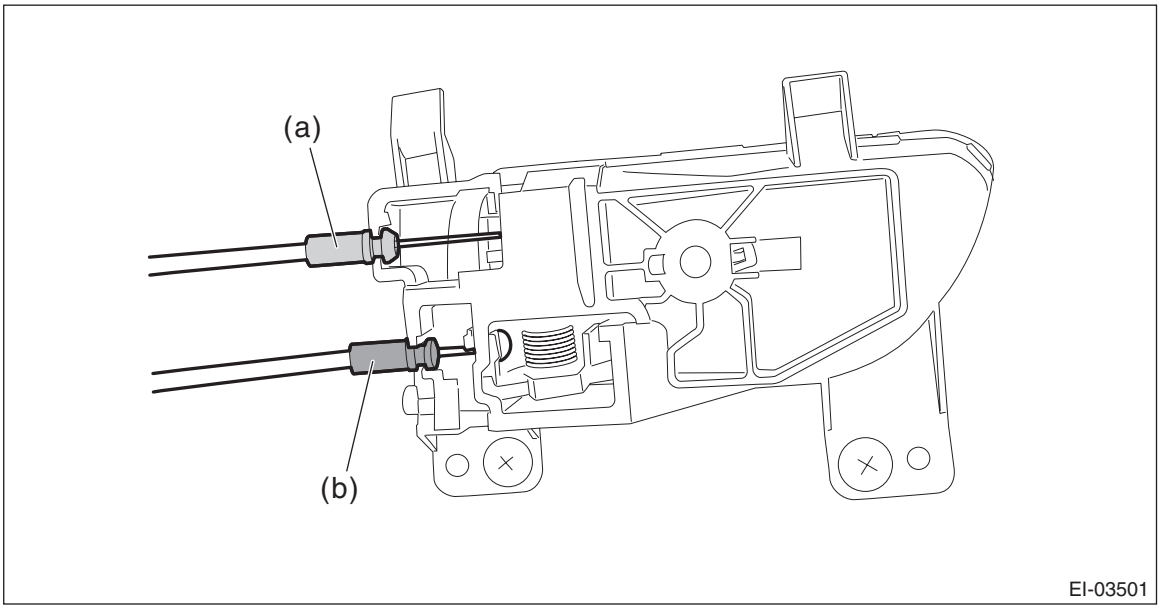

(5) Disconnect the harness connector and remove the trim panel - front door.

5) Remove the sealing cover.

CAUTION:
- **Carefully remove the butyl tape. Excessive force will easily break the cover.**
- **If the sealing cover gets broken, replace it with a new part.**

(1) Remove the screw to remove the bracket - door trim.

(2) Carefully remove the butyl tape to remove the sealing cover - front door.

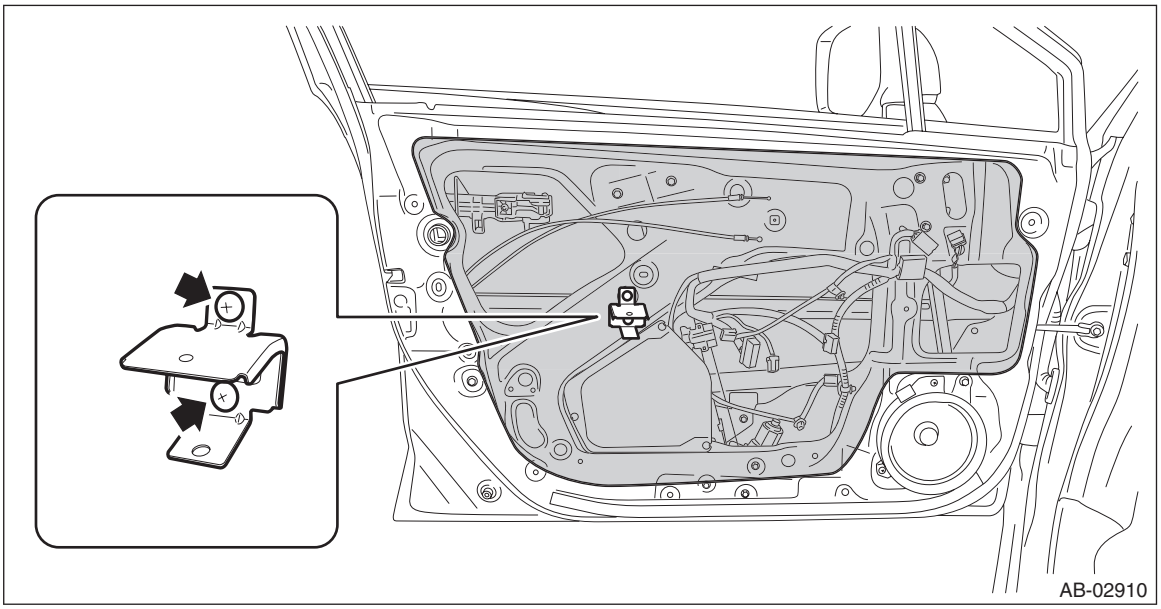

6) Remove the front door impact sensor.

(1) Remove the front door inner pad (a).

CAUTION:
If the clip is damaged, replace it with a new part because the panel assembly - front door may be deformed.

(2) Remove the nuts and then remove the front door impact sensor.

(3) Disconnect the airbag connector and remove the front door impact sensor. <Ref. to AB-26, FRONT DOOR IMPACT SENSOR AND SATELLITE SAFING SENSOR, PROCEDURE, Airbag Connector.>

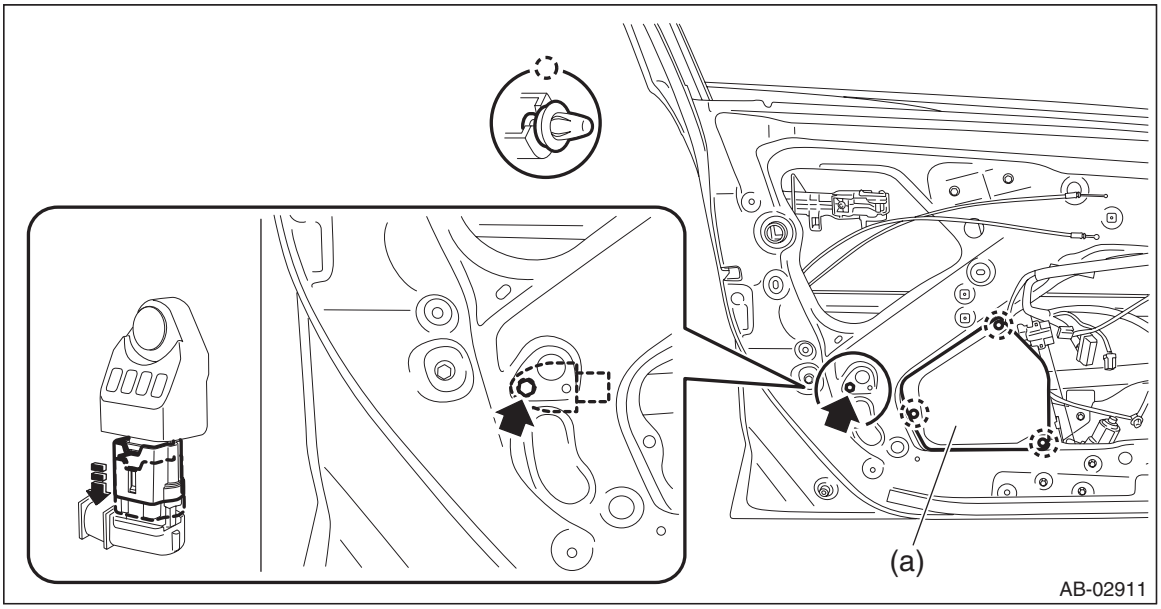

B: INSTALLATION

CAUTION:
Do not reuse the bolt and nut.
Always replace with the specified new bolts and nuts.

1) Before installation, inspect the following items and replace any faulty part with a new part.
- The front door impact sensor or connector is damaged.
- Inner panel area of the panel assembly - front door is deformed.
- Side airbag module has been activated.

Tightening torque:
Front door impact sensor: 7.5 N·m (0.76 kgf-m, 5.5 ft-lb)

2) Install each part in the reverse order of removal.

12.Side Airbag Sensor

A: REMOVAL

CAUTION:
• Airbag system satellite safing sensor is located in the lower of the rear seat cushion center. Before removing the rear seat, refer to "CAUTION" of "General Description" in "AIRBAG SYSTEM" section. <Ref. to AB-11, CAUTION, General Description.>
• The airbag system is fitted with a backup power supply. After disconnecting the battery ground cable, the airbag may operate if you do not wait for 60 seconds before starting the service of airbag system.

1) Move the seat all the way forward, from which the side airbag sensor is to be removed.

NOTE:
This is to remove the seat belt retractor assembly.

2) Turn the ignition switch to OFF.

3) Disconnect the ground cable from battery and wait for at least 60 seconds before starting work. <Ref. to NT-5, BATTERY, NOTE, Note.>

NOTE:
For the 12 volt engine restart battery of HEV model, disconnect the ground terminal from 12V engine restart battery sensor.

4) Release the claws, and then remove the cover side sill - front INN. (On the side where the side airbag sensor is removed)

CAUTION:
Do not pull with excessive force. Doing so may damage the claws of the cover side sill - front INN.

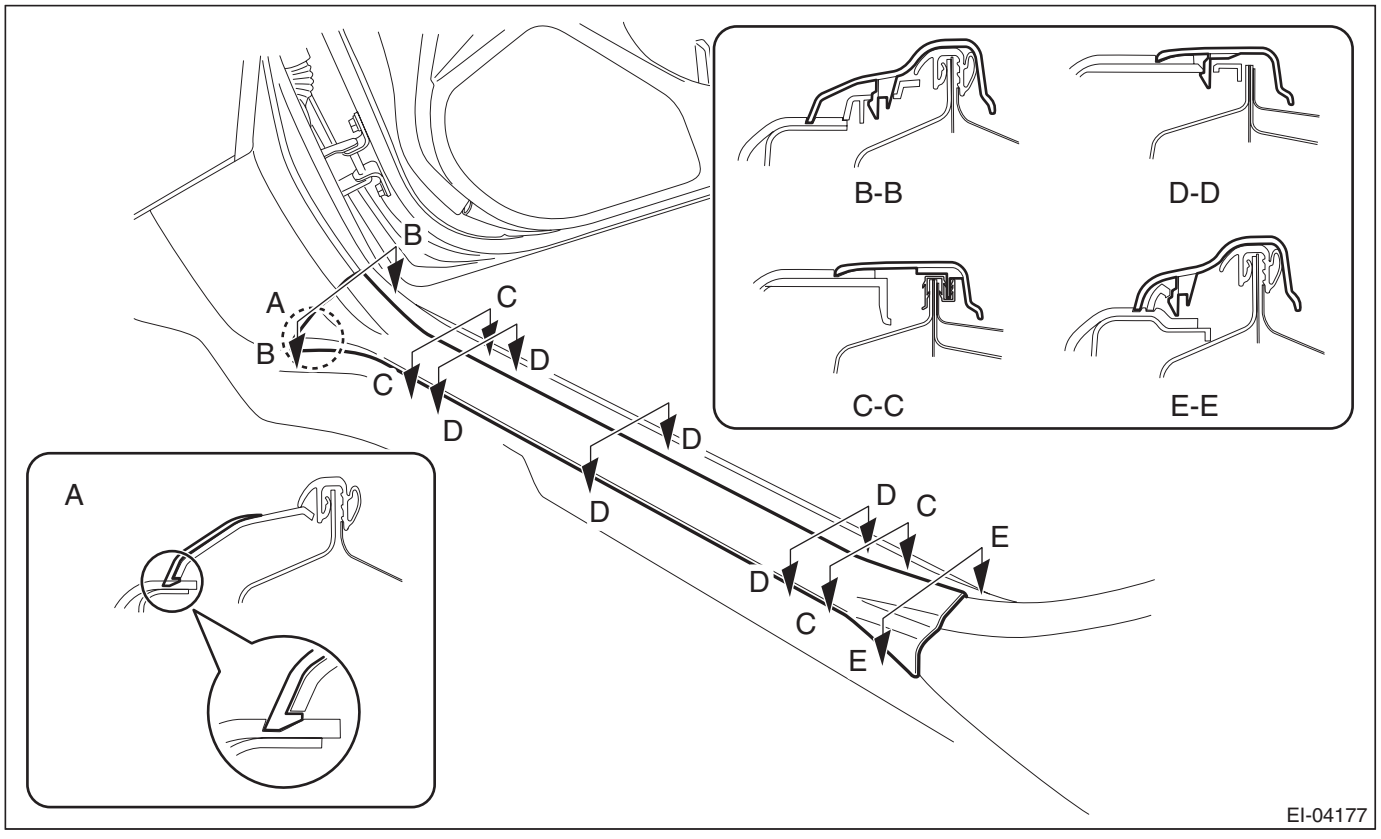

5) Remove the rear seat cushion assembly.
(1) Push the corners of the rear seat cushion from above.
(2) While pushing the corners of the rear seat cushion from above, pull the knob of the hook - seat cushion rear towards yourself.
(3) While pulling the knob towards yourself, disconnect the hooks by lifting up the rear seat cushion.

NOTE:
Pull the left side of the knob to disconnect the LH side hook, and pull the right side of the knob to disconnect the RH side hook.

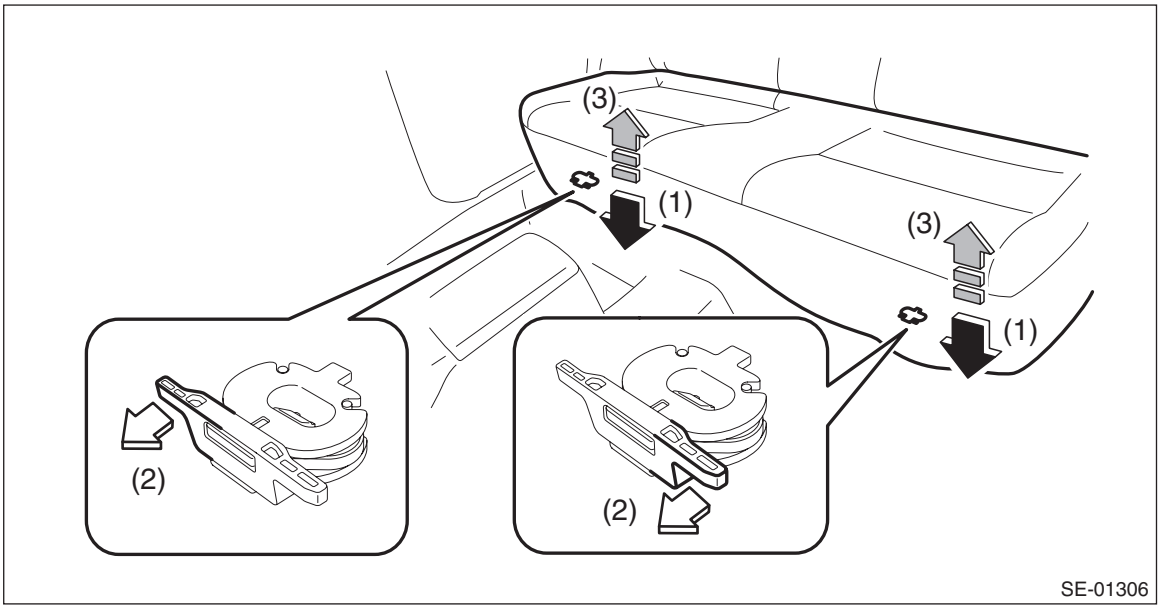

(4) Remove the hook (A) by pushing it back while lifting the front side of the rear seat cushion, and remove the rear seat cushion.

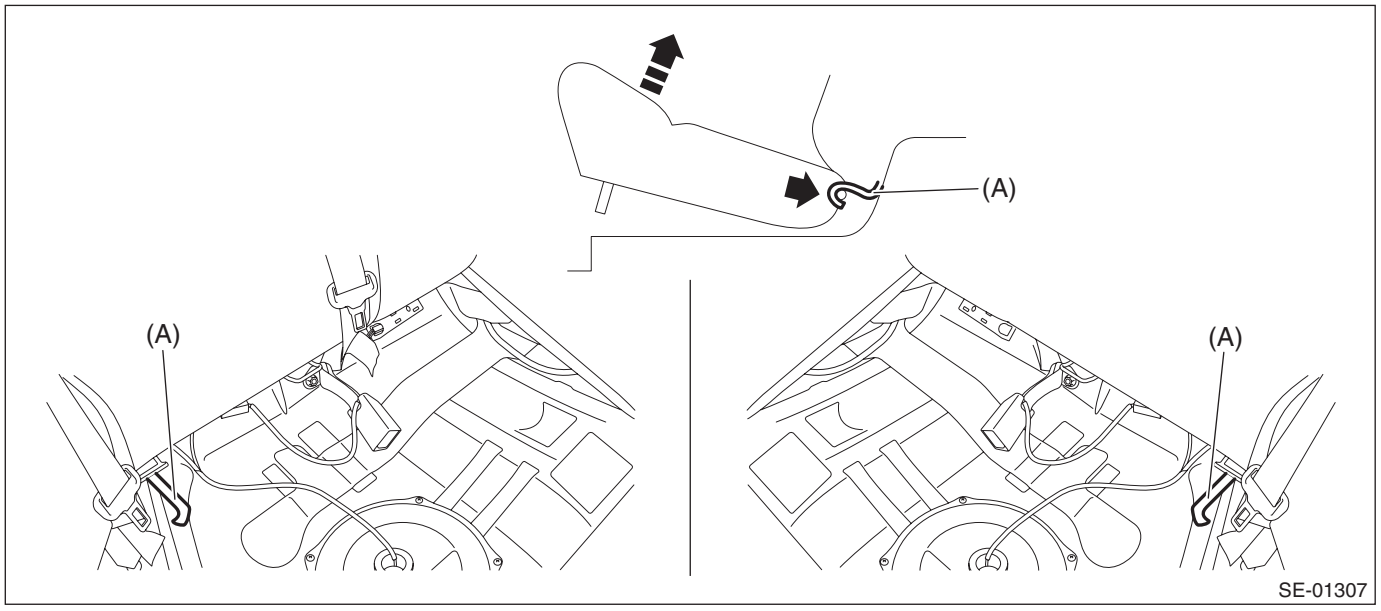

6) Release the clips and claws, and then remove the cover side sill - rear INN. (On the side where the side airbag sensor is removed)

CAUTION:
Do not pull with excessive force. Doing so may damage the claws of the cover side sill - rear INN.

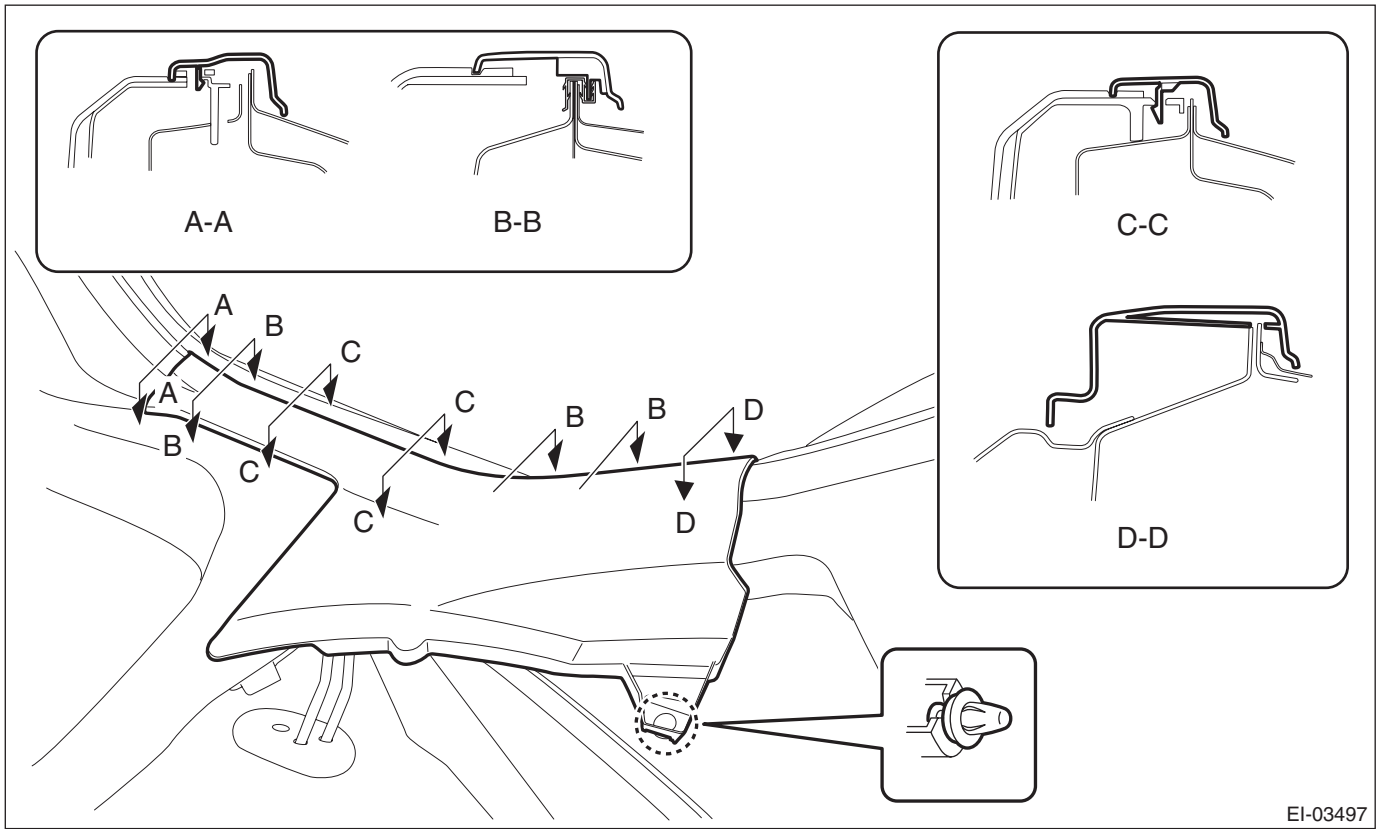

7) Remove the trim panel - center pillar LWR. (On the side where the side airbag sensor is removed)
(1) Release the clip by pulling the trim panel - center pillar LWR toward you.
(2) Expand the claws of the trim panel - center pillar LWR outward, and remove it from the trim panel - center pillar UPR.

CAUTION:
Do not expand the trim panel - center pillar LWR excessively. Doing so may damage the trim.

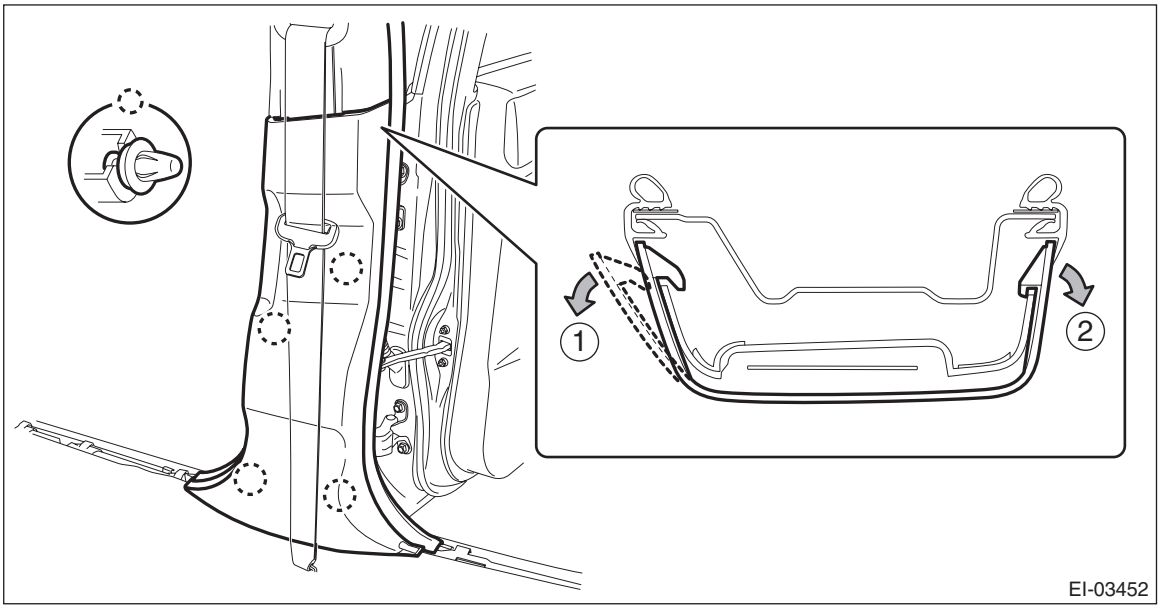

NOTE:
First release the claw located to the front of the vehicle.
8) Remove the seat belt retractor. (On the side where the side airbag sensor is removed)
(1) Turn over the floor mat to disconnect the belt tension sensor connector. <Ref. to AB-23, DRIVER'S AIRBAG MODULE, CURTAIN AIRBAG MODULE & PRETENSIONER, PROCEDURE, Airbag Connector.>

NOTE:
For XV model, disconnect the connector of the passenger's lap seat belt pretensioner.
(2) Remove the bolt to remove the seat belt retractor.

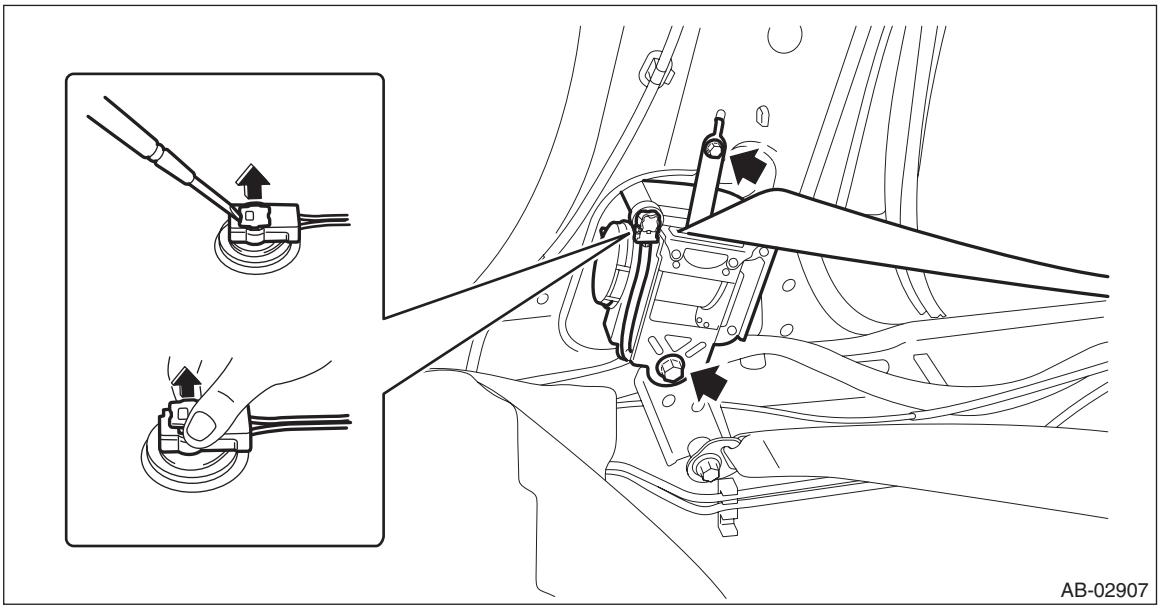

9) Remove the nuts and then remove the side airbag sensor. <Ref. to AB-28, SIDE AIRBAG SENSOR AND CURTAIN AIRBAG SENSOR, PROCEDURE, Airbag Connector.>

CAUTION:
- **Do not separate the side airbag sensor and bracket. It causes the airbag system malfunction.**
- **If the sensor is removed from the bracket, be sure to replace with a new part.**

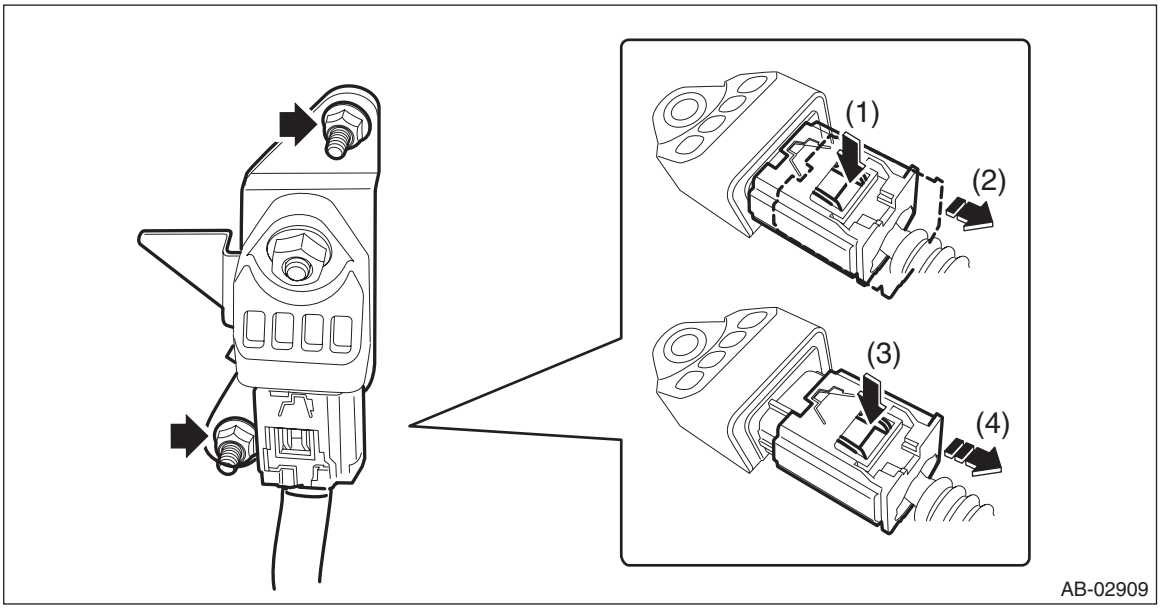

B: INSTALLATION

CAUTION:
Do not reuse the bolt and nut.
Always replace with the specified new bolts and nuts.

1) Before installation, inspect the following items and replace any faulty part with a new part.
- The side airbag sensor, sensor bracket, or connector are damaged.
- Side airbag module has been activated.

Tightening torque:
Side airbag sensor: 7.5 N·m (0.76 kgf-m, 5.5 ft-lb)

2) Install each part in the reverse order of removal.

NOTE:
Assemble the trim panel - center pillar LWR to the trim panel - center pillar UPR securely.

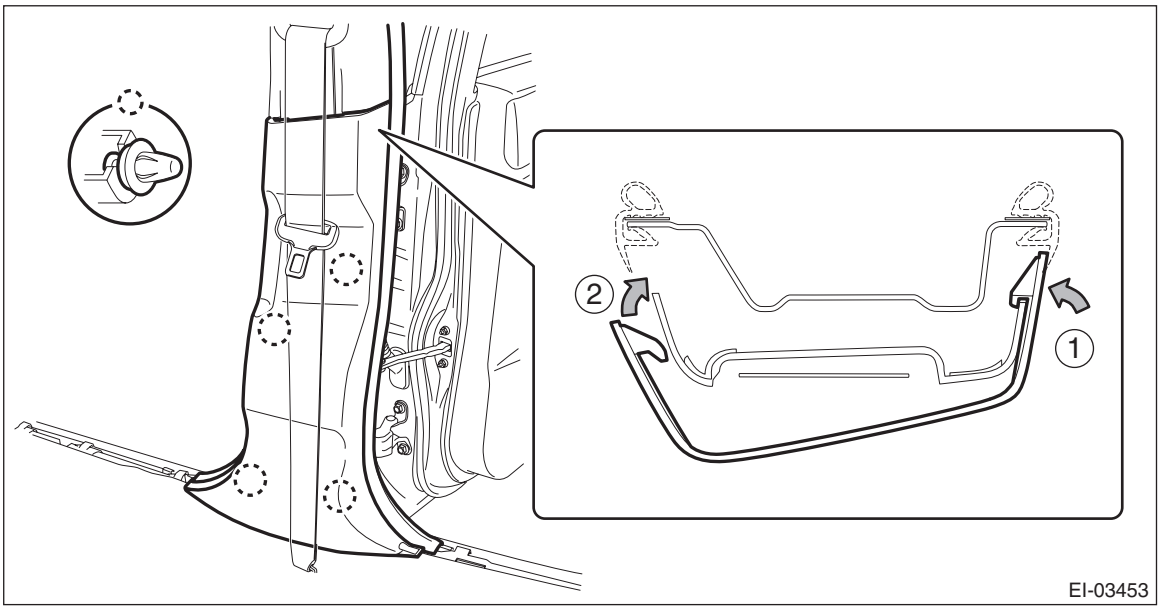

Tightening torque:
Front seat belt: <Ref. to SB-2, FRONT SEAT BELT, COMPONENT, General Description.>

13.Curtain Airbag Sensor

A: REMOVAL

1. 4 DOOR MODEL

1) Disconnect the ground cable from battery and wait for at least 60 seconds before starting work.

CAUTION:
• Airbag system satellite safing sensor is located in the lower of the rear seat cushion center. Before removing the rear seat, refer to "CAUTION" of "General Description" in "AIRBAG SYSTEM" section. <Ref. to AB-11, CAUTION, General Description.>
• The airbag system is fitted with a backup power supply. After disconnecting the battery ground cable, the airbag may operate if you do not wait for 60 seconds before starting the service of airbag system.

2) Remove the rear seat cushion assembly.
(1) Push the corners of the rear seat cushion from above.
(2) While pushing the corners of the rear seat cushion from above, pull the knob of the hook - seat cushion rear towards yourself.
(3) While pulling the knob towards yourself, disconnect the hooks by lifting up the rear seat cushion.

NOTE:
Pull the left side of the knob to disconnect the LH side hook, and pull the right side of the knob to disconnect the RH side hook.

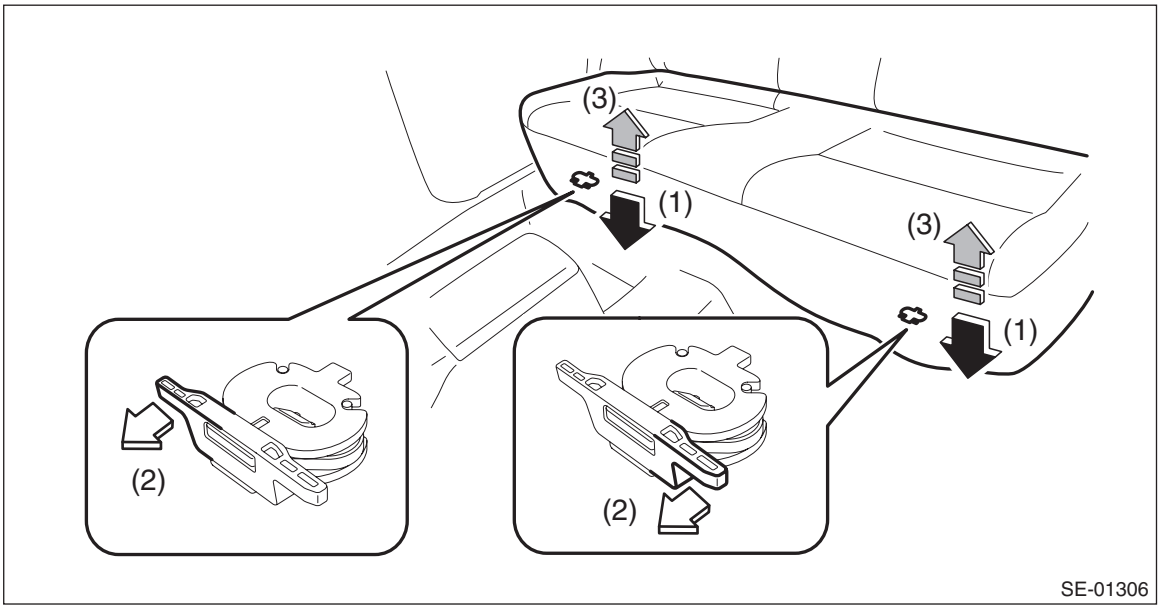

(4) Remove the hook (A) by pushing it back while lifting the front side of the rear seat cushion, and remove the rear seat cushion.

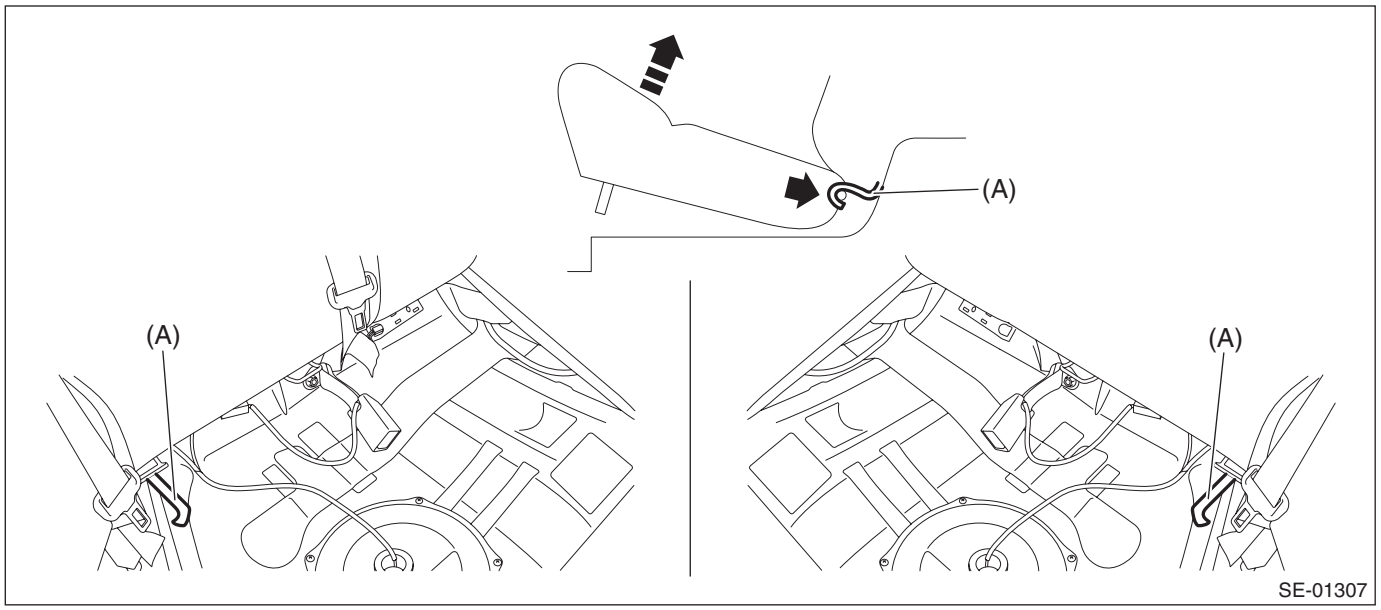

3) Release the clips and claws, and then remove the cover side sill - rear INN.

CAUTION:
Do not pull with excessive force. Doing so may damage the claws of the cover side sill - rear INN.

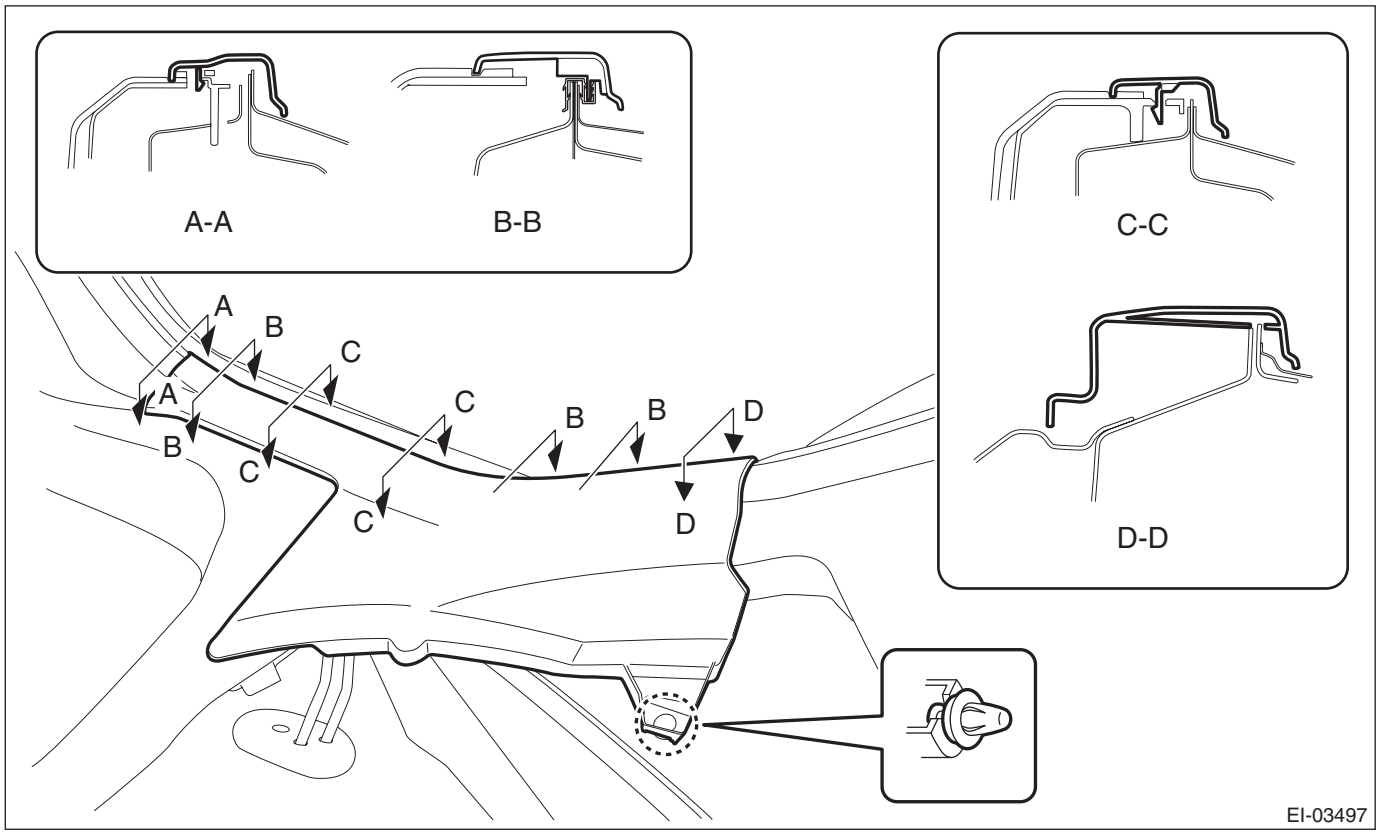

4) Remove the trim panel - rear pillar LWR. (On the side where the curtain airbag sensor is removed)
(1) Remove the clips, and turn over the trim panel - trunk side.

(2) Remove the clips, and remove the trim panel - rear pillar LWR.

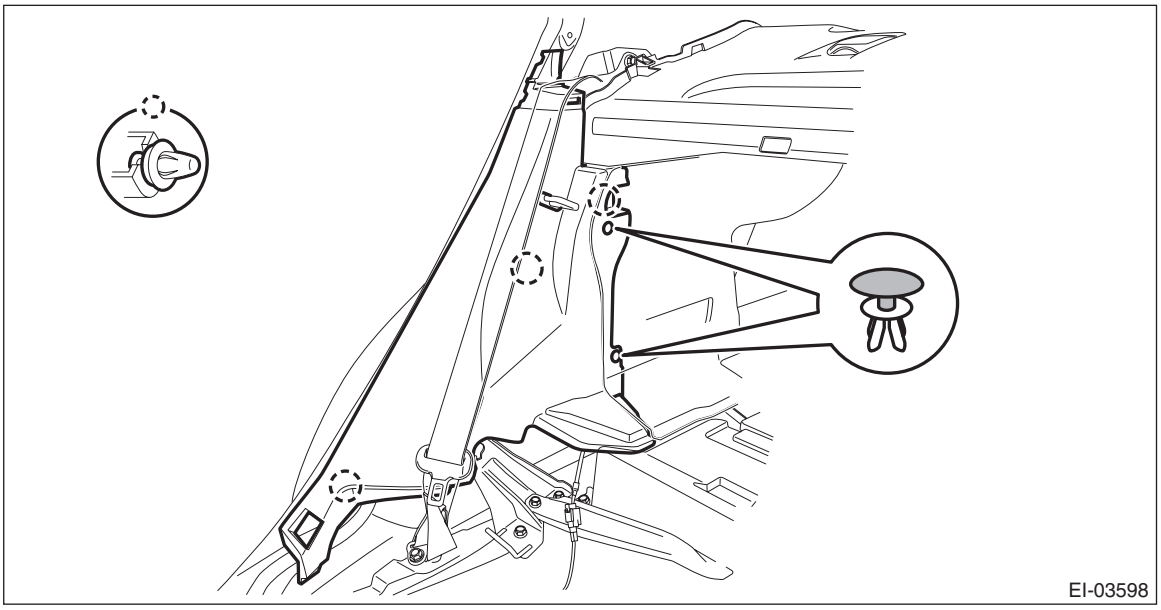

5) Remove the nuts and then remove the curtain airbag sensor. <Ref. to AB-28, SIDE AIRBAG SENSOR AND CURTAIN AIRBAG SENSOR, PROCEDURE, Airbag Connector.>

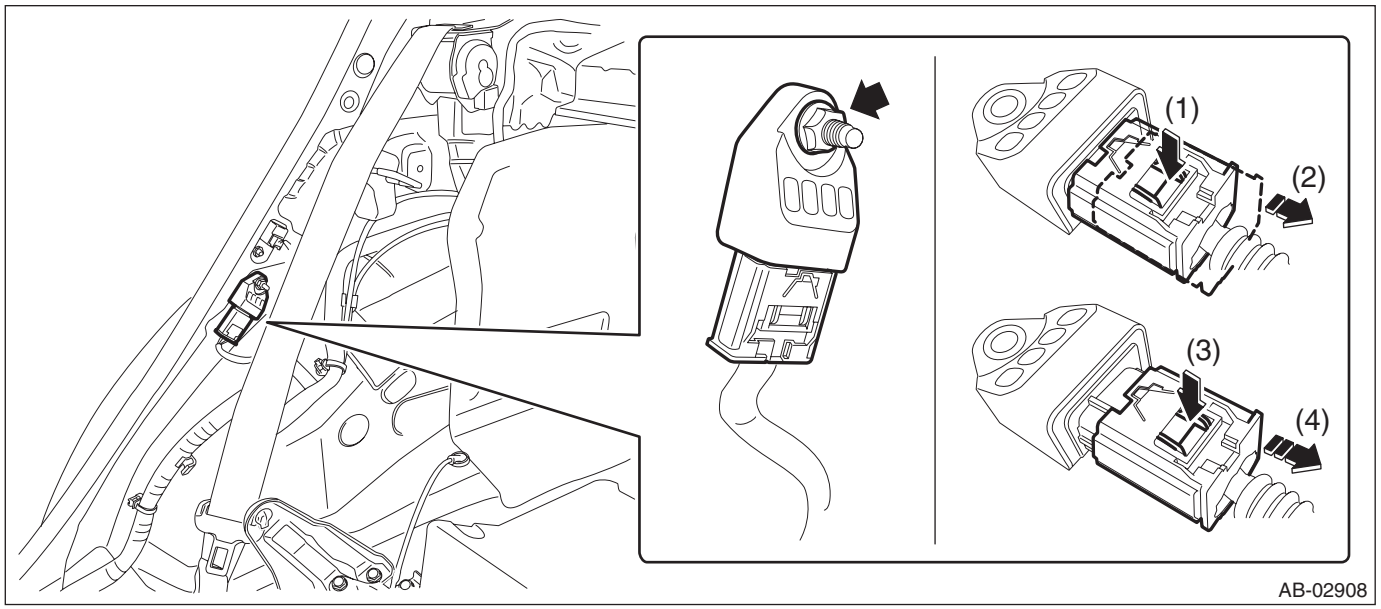

2. 5 DOOR MODEL/XV MODEL

1) Disconnect the ground cable from battery and wait for at least 60 seconds before starting work. <Ref. to NT-5, BATTERY, NOTE, Note.>

NOTE:
For the 12 volt engine restart battery of HEV model, disconnect the ground terminal from 12V engine restart battery sensor.

CAUTION:
• Airbag system satellite safing sensor is located in the lower of the rear seat cushion center. Before removing the rear seat, refer to "CAUTION" of "General Description" in "AIRBAG SYSTEM" section. <Ref. to AB-11, CAUTION, General Description.>
• The airbag system is fitted with a backup power supply. After disconnecting the battery ground cable, the airbag may operate if you do not wait for 60 seconds before starting the service of airbag system.

2) Remove the screws and clips, and remove the trim panel - rear quarter pillar UPR. (On the side where the curtain airbag sensor is removed)

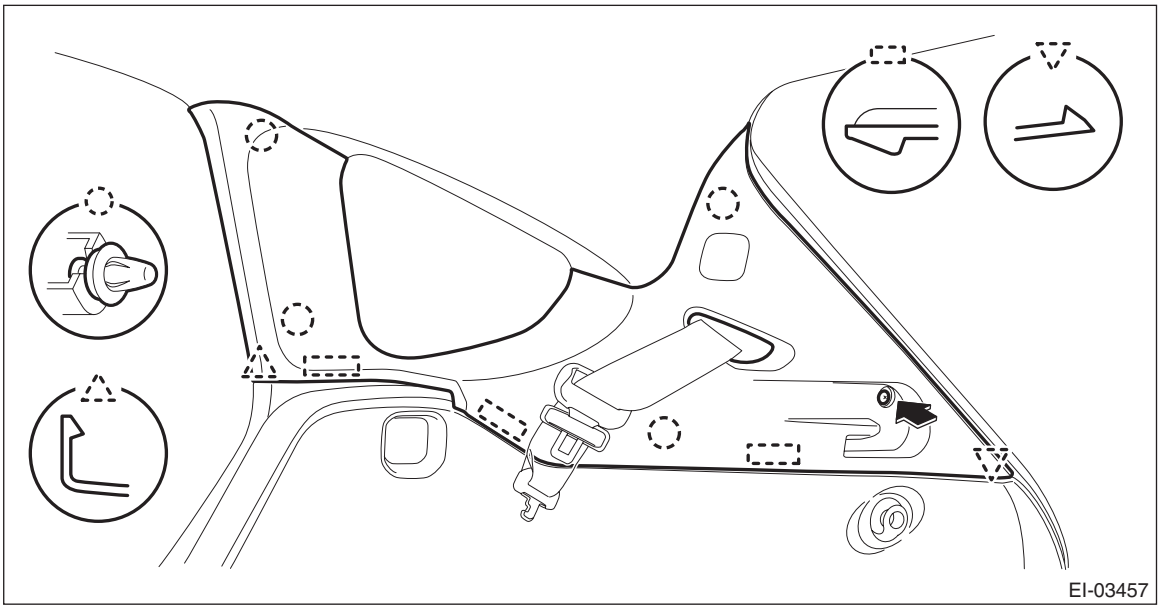

3) Remove the rear seat cushion assembly.
(1) Push the corners of the rear seat cushion from above.
(2) While pushing the corners of the rear seat cushion from above, pull the knob of the hook - seat cushion rear towards yourself.
(3) While pulling the knob towards yourself, disconnect the hooks by lifting up the rear seat cushion.

NOTE:
Pull the left side of the knob to disconnect the LH side hook, and pull the right side of the knob to disconnect the RH side hook.

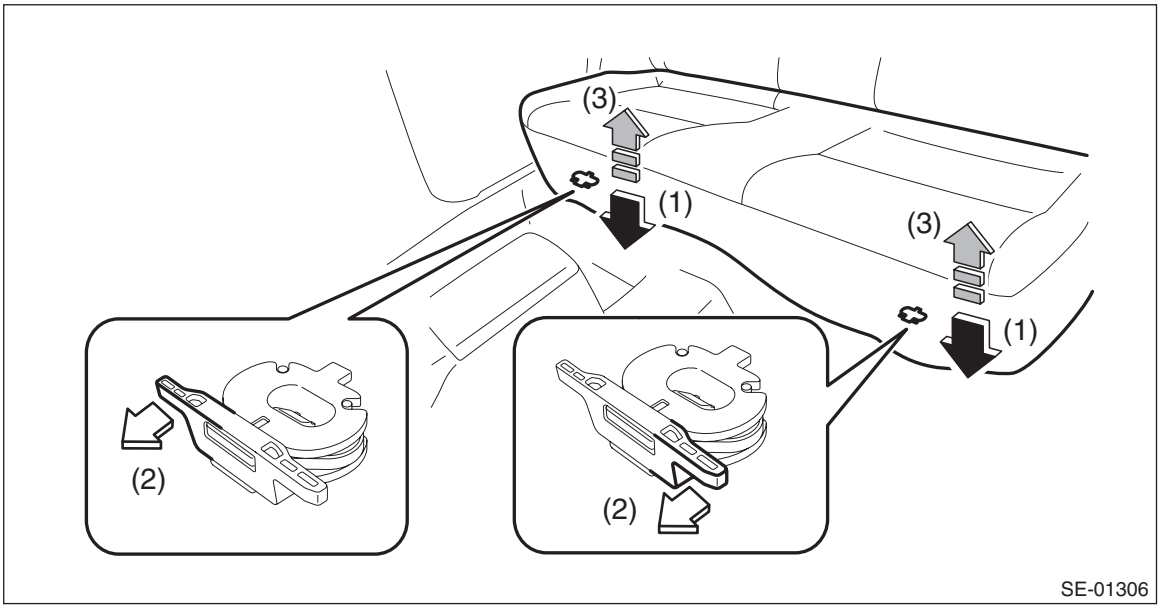

(4) Remove the hook (A) by pushing it back while lifting the front side of the rear seat cushion, and remove the rear seat cushion.

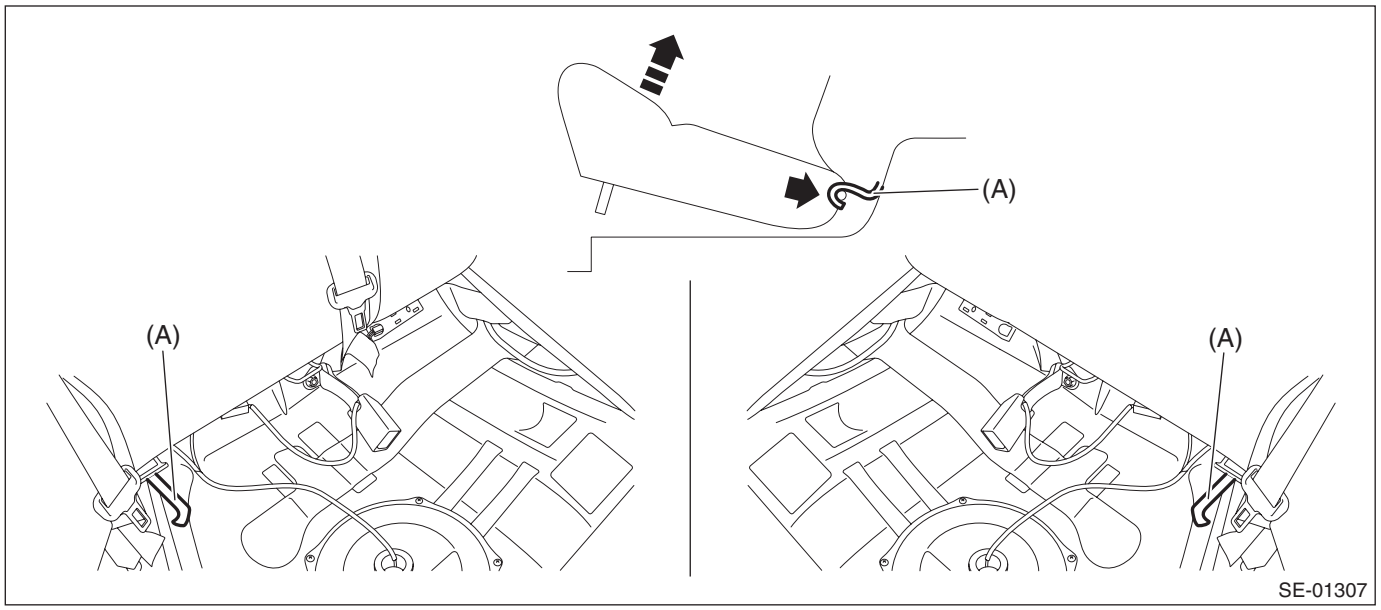

4) Release the clips and claws, and remove the side sill covers - rear INN on the left and right sides. (On the side where the curtain airbag sensor is removed)

CAUTION:
Do not pull with excessive force. Doing so may damage the claws of the side sill cover - rear INN.

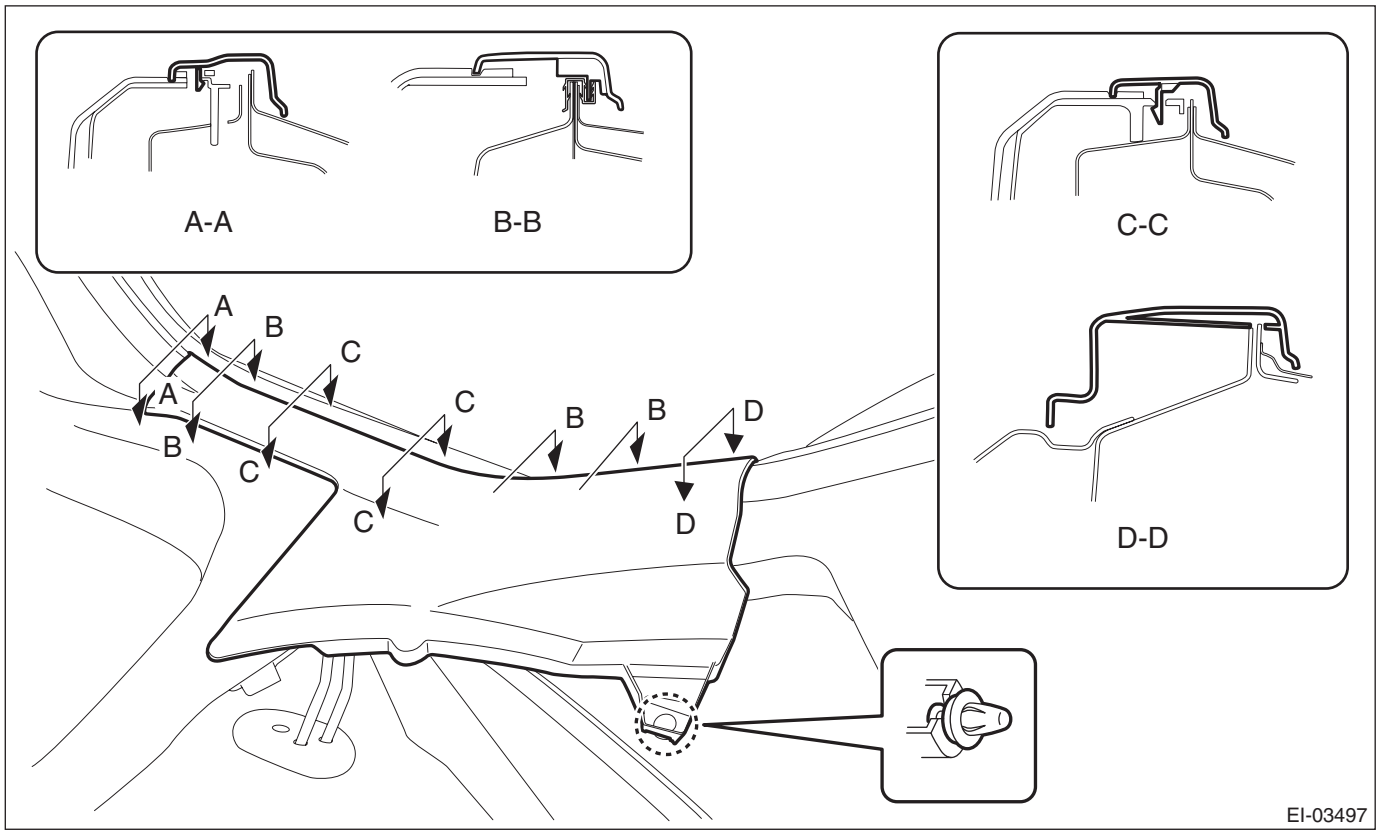

5) Remove the mat - rear floor CTR and the spacer - rear floor side.

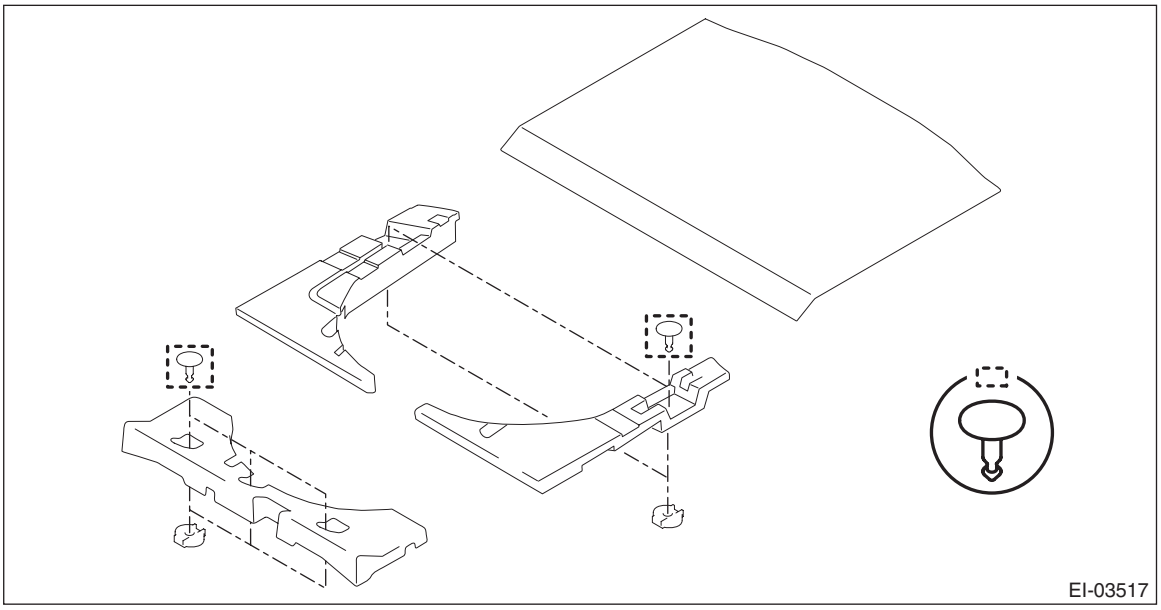

6) Remove the sub-trunk box and side spacers. (HEV model)

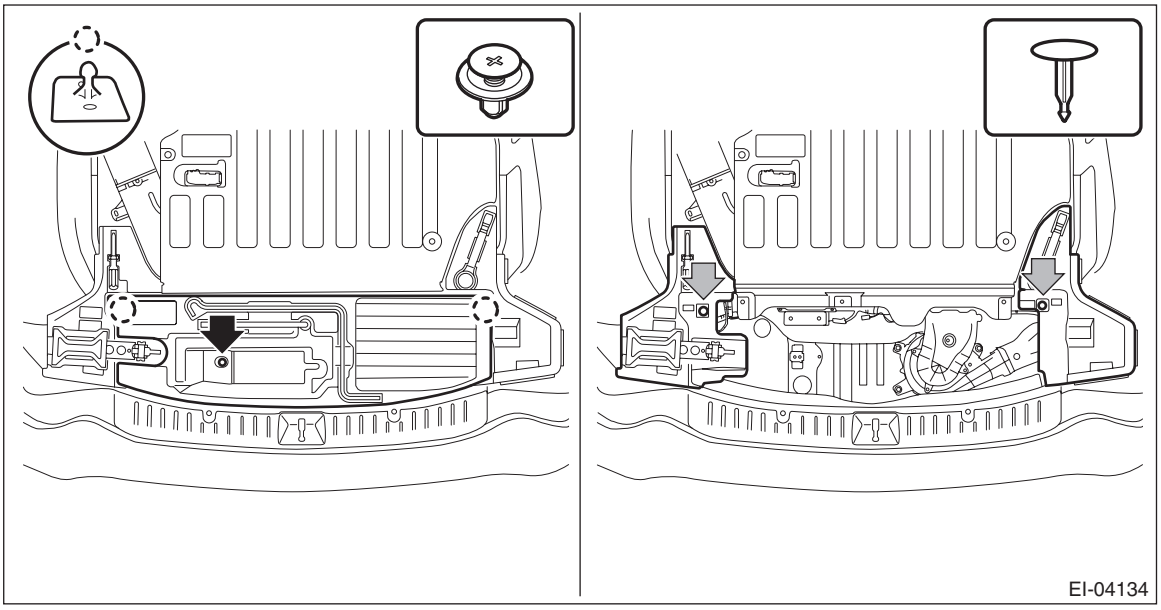

(1) Release the clips and side spacers, then detach the sub-trunk box.
(2) Remove the clips and detach the side spacers.

7) Remove the clips, and remove the trim panel - rear skirt.

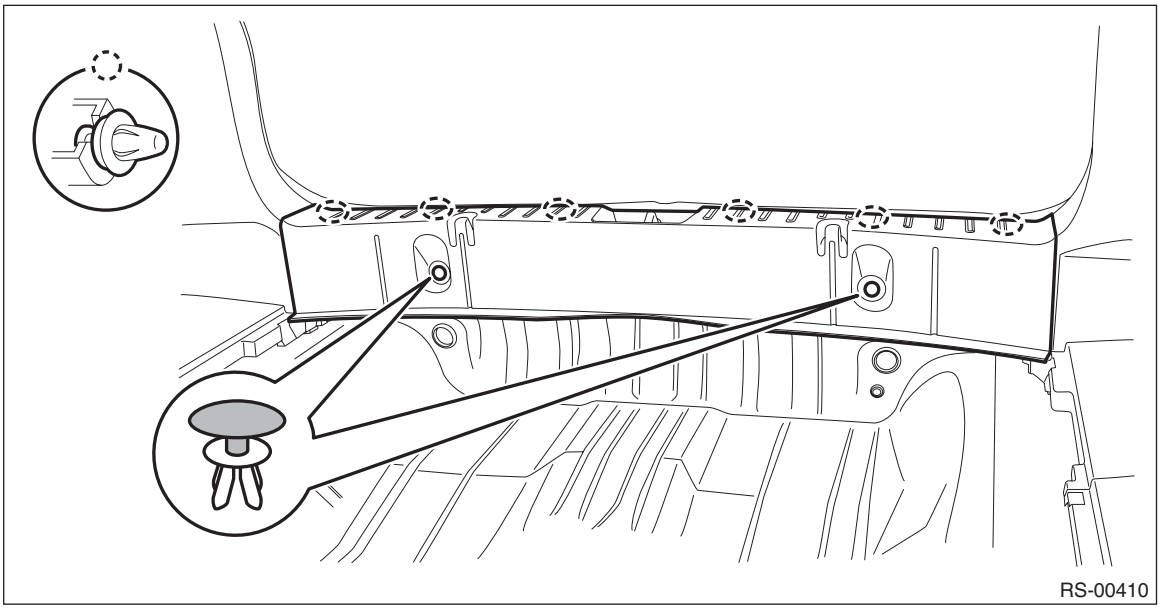

8) Remove the trim panel - rear apron. (On the side where the curtain airbag sensor is removed)
   (1) Remove the caps, and remove the bolts.
   (2) Remove the screws.
   (3) Disengage the clips, and remove the trim panel - rear apron.

NOTE:
For LH side, disconnect the connector of the luggage room light.

- Gasoline engine model

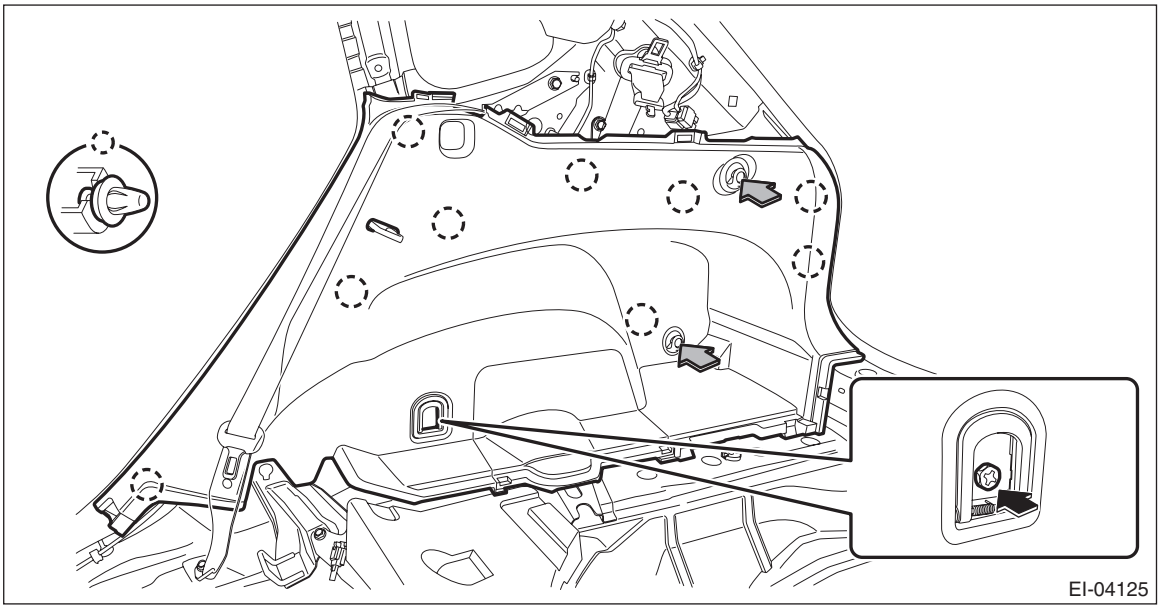

- HEV model

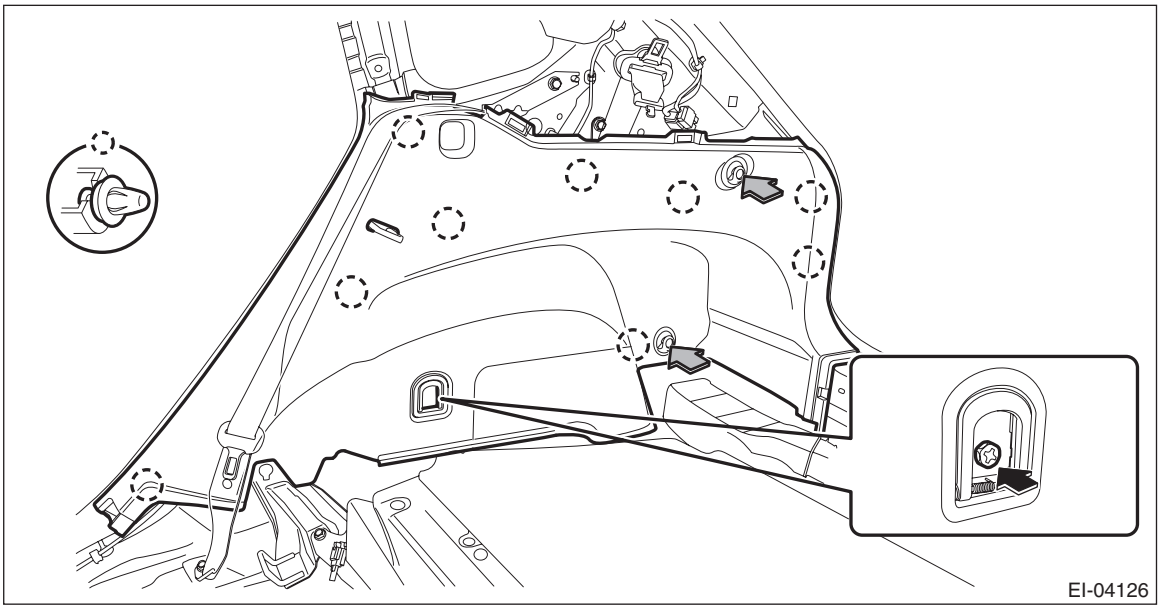

9) Remove the nuts and then remove the curtain airbag sensor. <Ref. to AB-28, SIDE AIRBAG SENSOR AND CURTAIN AIRBAG SENSOR, PROCEDURE, Airbag Connector.>

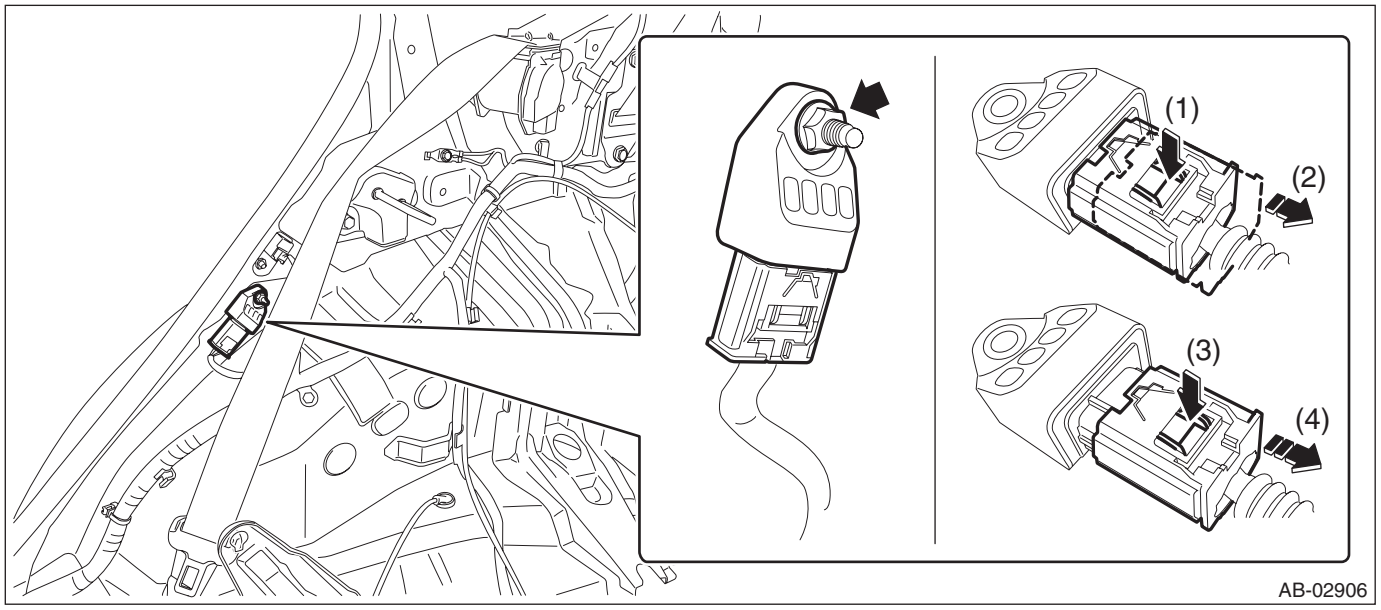

B: INSTALLATION

CAUTION:
• Do not reuse the bolt and nut.
Always replace with the specified new bolts and nuts.
• When installing the sensor, insert the set pin on the backside of the sensor into the hole on the body side securely.

1) Before installation, inspect the following items and replace any faulty part with a new one.
- Curtain airbag sensor or connector is damaged.
- Curtain airbag module has been activated.

2) Install each part in the reverse order of removal.

Tightening torque:
Curtain airbag sensor: 7.5 N·m (0.76 kgf-m, 5.5 ft-lb)
Rear seat backrest assembly: <Ref. to SE-5, REAR SEAT, COMPONENT, General Description.>

14.Satellite Safing Sensor

A: REMOVAL

1) Turn the ignition switch to OFF.
2) Disconnect the ground cable from battery and wait for at least 60 seconds before starting work. <Ref. to NT-5, BATTERY, NOTE, Note.>

NOTE:
For the 12 volt engine restart battery of HEV model, disconnect the ground terminal from 12V engine restart battery sensor.

CAUTION:
The airbag system is fitted with a backup power supply. After disconnecting the battery ground cable, the airbag may operate if you do not wait for 60 seconds before starting the service of airbag system.

3) Remove the rear seat cushion assembly.
   (1) Push the corners of the rear seat cushion from above.
   (2) While pushing the corners of the rear seat cushion from above, pull the knob of the hook - seat cushion rear towards yourself.
   (3) While pulling the knob towards yourself, disconnect the hooks by lifting up the rear seat cushion.

NOTE:
Pull the left side of the knob to disconnect the LH side hook, and pull the right side of the knob to disconnect the RH side hook.

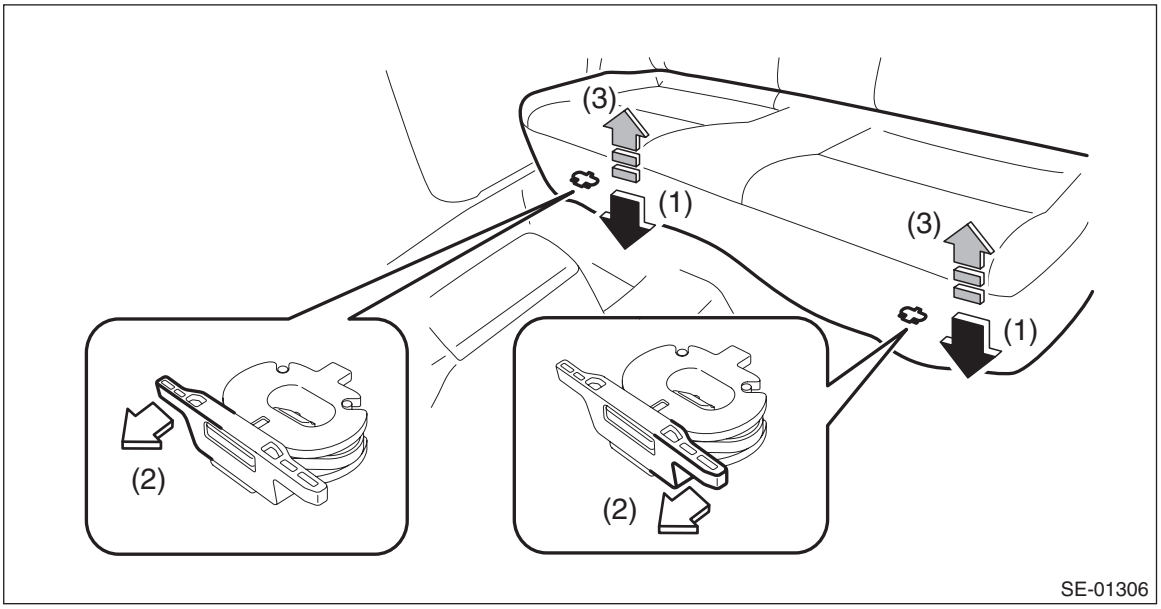

(4) Remove the hook (A) by pushing it back while lifting the front side of the rear seat cushion, and remove the rear seat cushion.

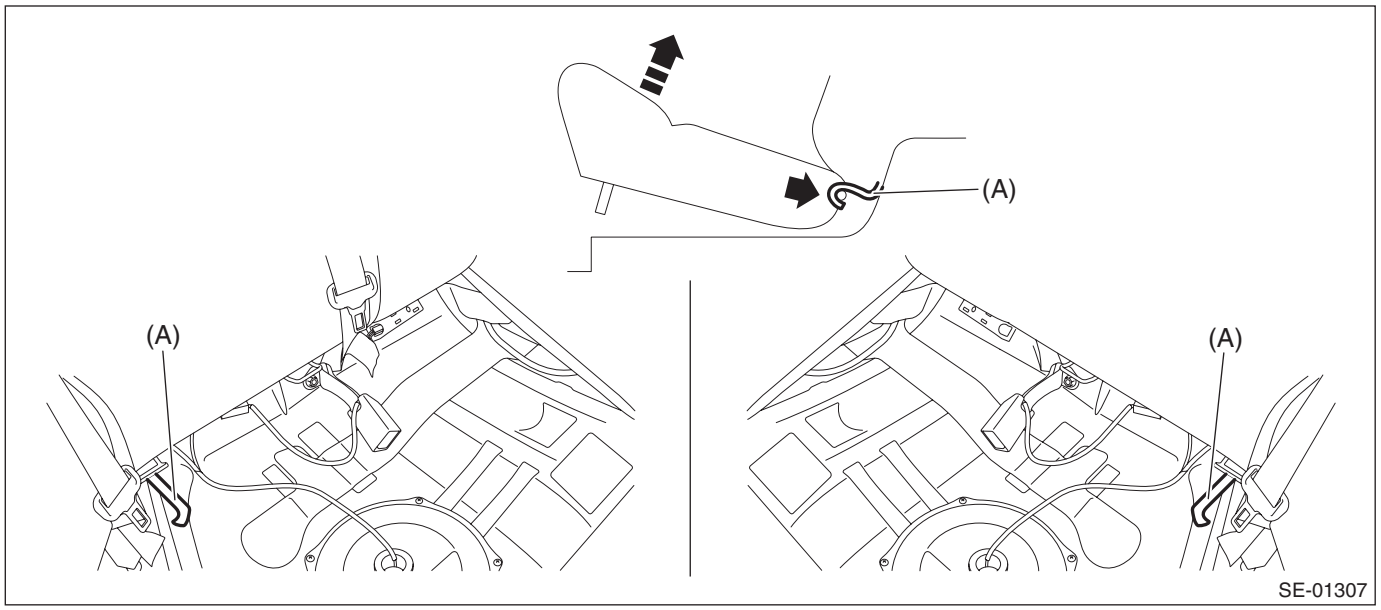

4) Remove the satellite safing sensor.
(1) Remove the clip, and remove the cover - satellite safing.
(2) Remove the bolts and then remove the satellite safing sensor. <Ref. to AB-26, FRONT DOOR IMPACT SENSOR AND SATELLITE SAFING SENSOR, PROCEDURE, Airbag Connector.>

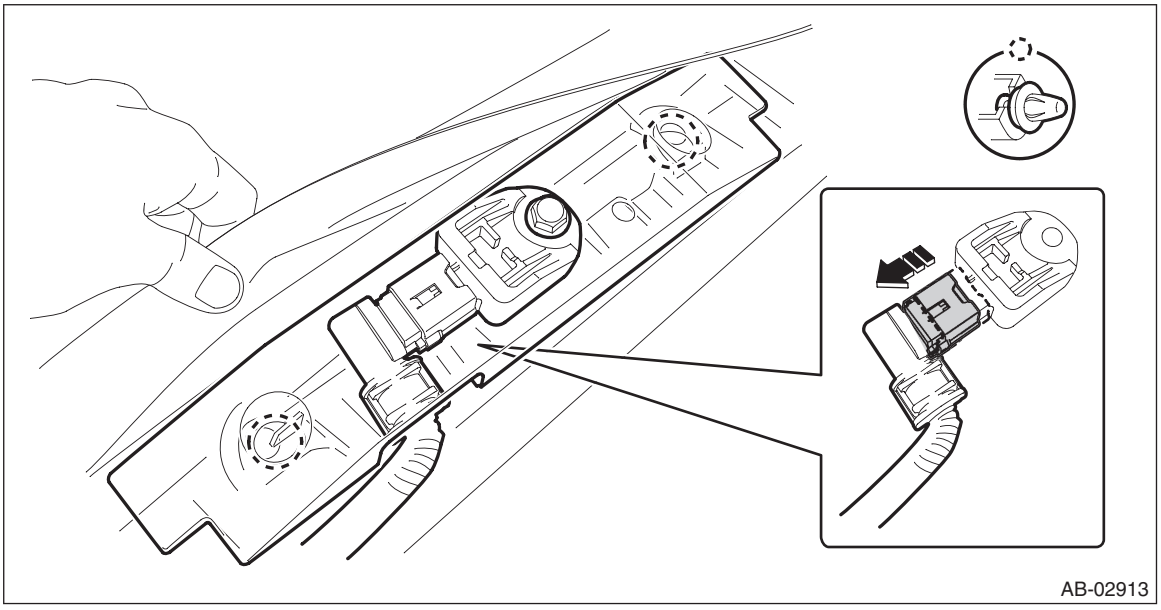

B: INSTALLATION

CAUTION:
- **Do not reuse the bolt and nut.**

Always replace with the specified new bolts and nuts.
- **When installing the cover - satellite safing, push the cover securely until it contacts the floor panel.**
- **If the cover - satellite safing is too loose at its mounting portion to remove easily, replace with a new cover - satellite safing.**
- **After installing the cover - satellite safing, make sure that the sensor harness does not get caught.**

Install each part in the reverse order of removal.

Tightening torque:
7.5 N·m (0.76 kgf-m, 5.5 ft-lb)

C: INSPECTION

Check for the following, and replace the damaged parts with new parts.
- The satellite safing sensor connector is damaged.
- The cover - satellite safing is damaged
- Side airbag or curtain airbag has been activated.

15.Roll Connector

A: REMOVAL

1) Position the front wheels straight ahead. (After moving a vehicle 5 m (16 ft) or more with front wheels positioned straight ahead, make sure that the vehicle moves straight ahead.)
2) Turn the ignition switch to OFF.
3) Disconnect the ground cable from battery and wait for at least 60 seconds before starting work. <Ref. to NT-5, BATTERY, NOTE, Note.>

NOTE:
For the 12 volt engine restart battery of HEV model, disconnect the ground terminal from 12V engine restart battery sensor.

4) Remove the driver's airbag module.
   (1) Using a hexagon wrench etc. wrapped by protective tape, insert the snap pins and release the locks (3 locations).

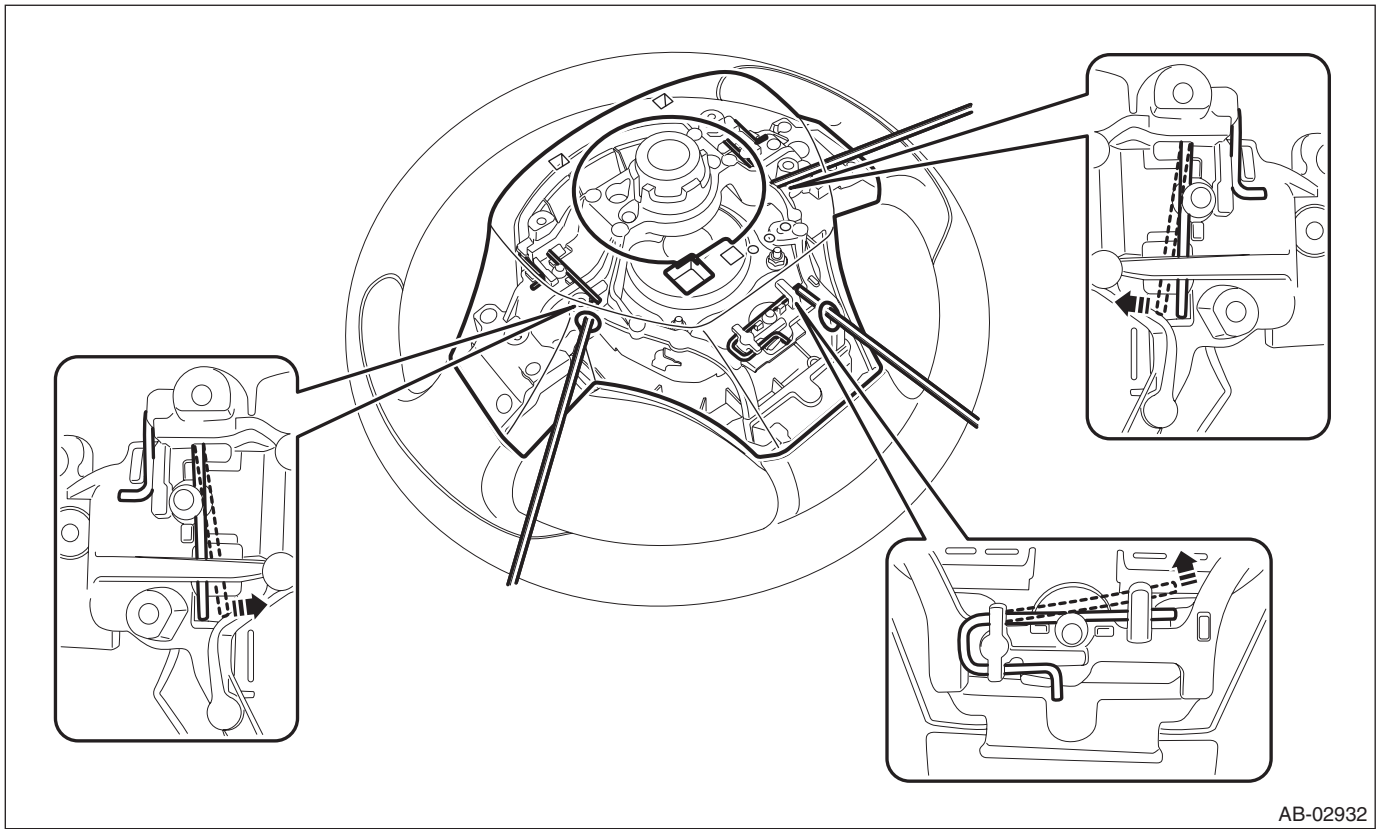

(2) Disconnect the horn harness and airbag connector, and remove the driver's airbag module. <Ref. to AB-23, DRIVER'S AIRBAG MODULE, CURTAIN AIRBAG MODULE & PRETENSIONER, PROCEDURE, Airbag Connector.>

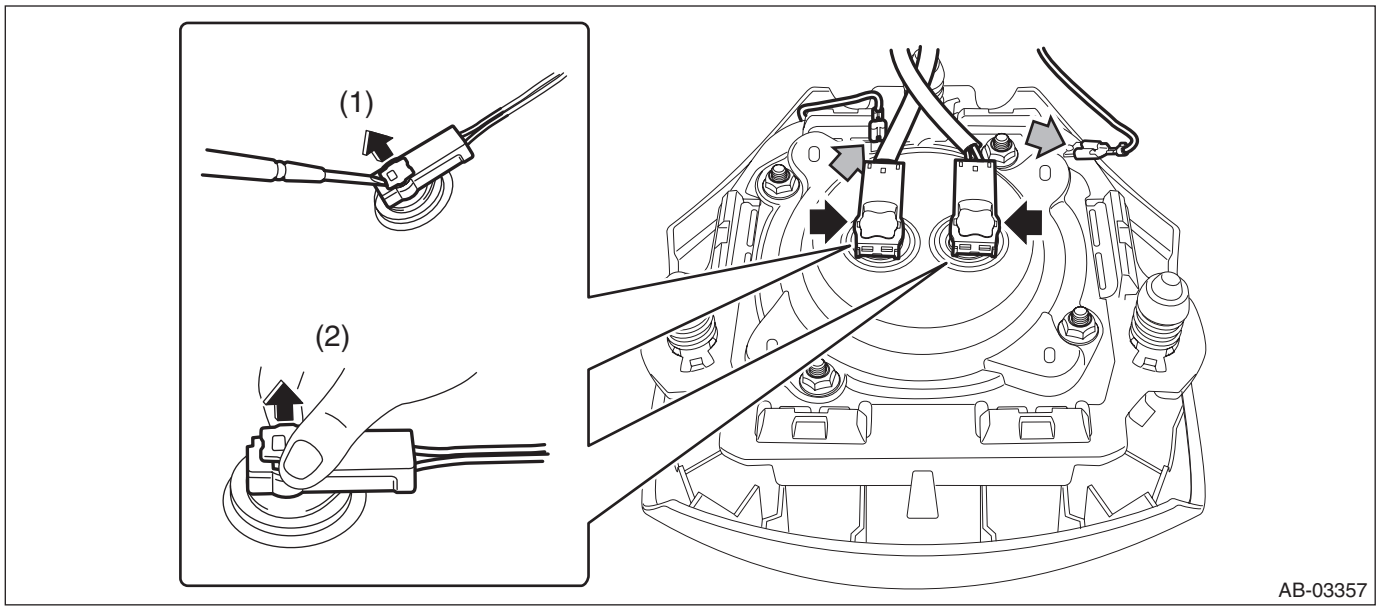

5) Remove the steering wheel.

CAUTION:
- **Always use the steering wheel puller for removal to avoid deforming the steering wheel.**
- **If the steering wheel has been removed, make sure that the roll connector is not turned from the original position.**

(1) Disconnect the connector and remove the nut.
(2) Put alignment marks and remove the steering wheel.

Preparation tool:
Steering wheel puller

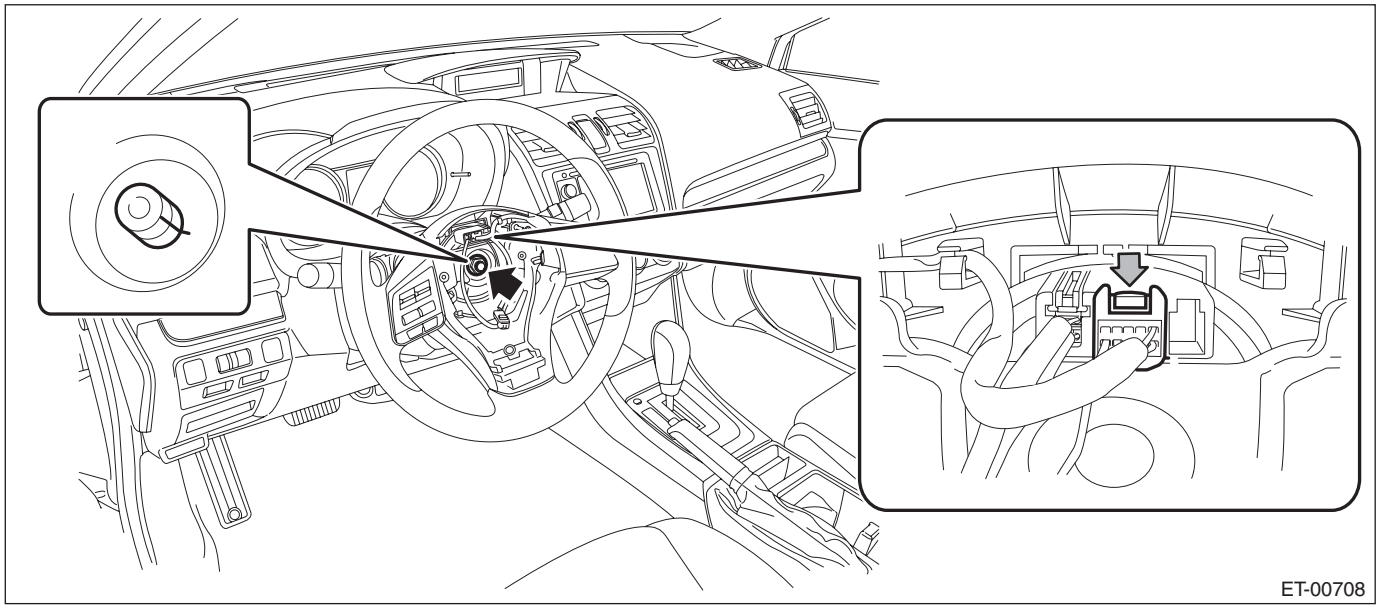

6) Remove the cover assembly - column.
(1) Release the screws and claws.
(2) Remove the cap - key cylinder (a). (Model with keyless access)
(3) Release the claw, and remove the cover assembly - column UPR and the cover assembly - column LWR.

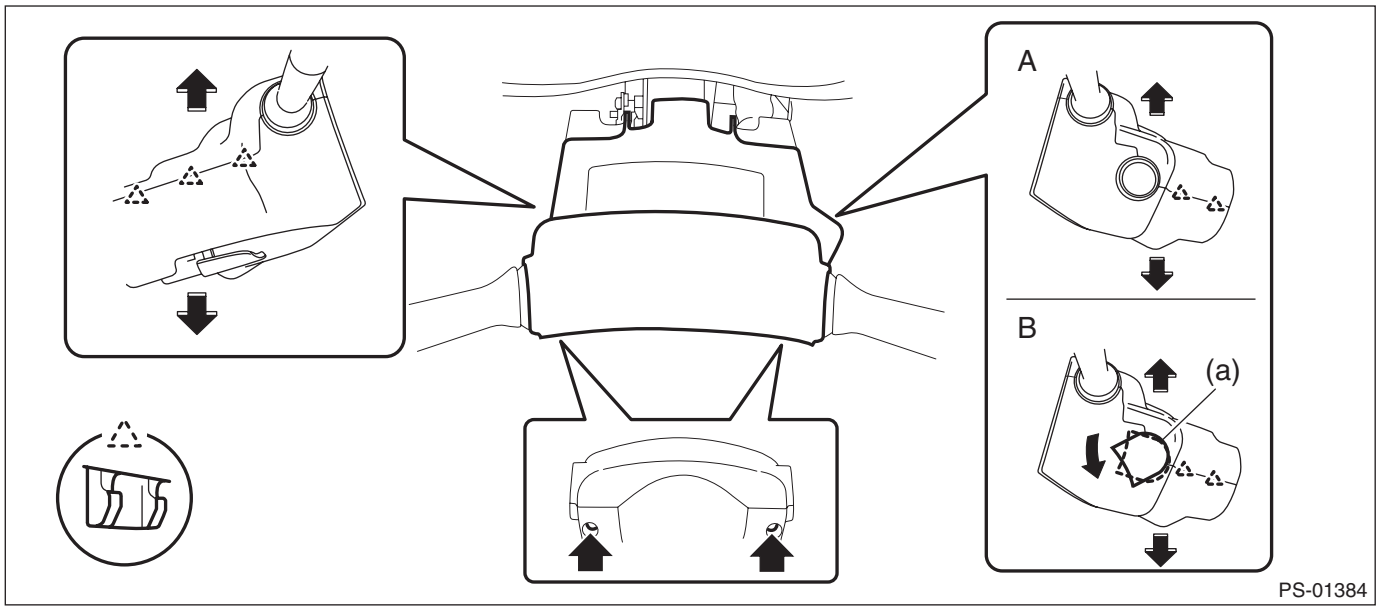

A Models without keyless access B Models with keyless access

7) Remove the roll connector.

CAUTION:
Make sure that the roll connector is not turned from the original position.
(1) Disconnect the connector under the roll connector.
(2) Release the claws and remove the roll connector.

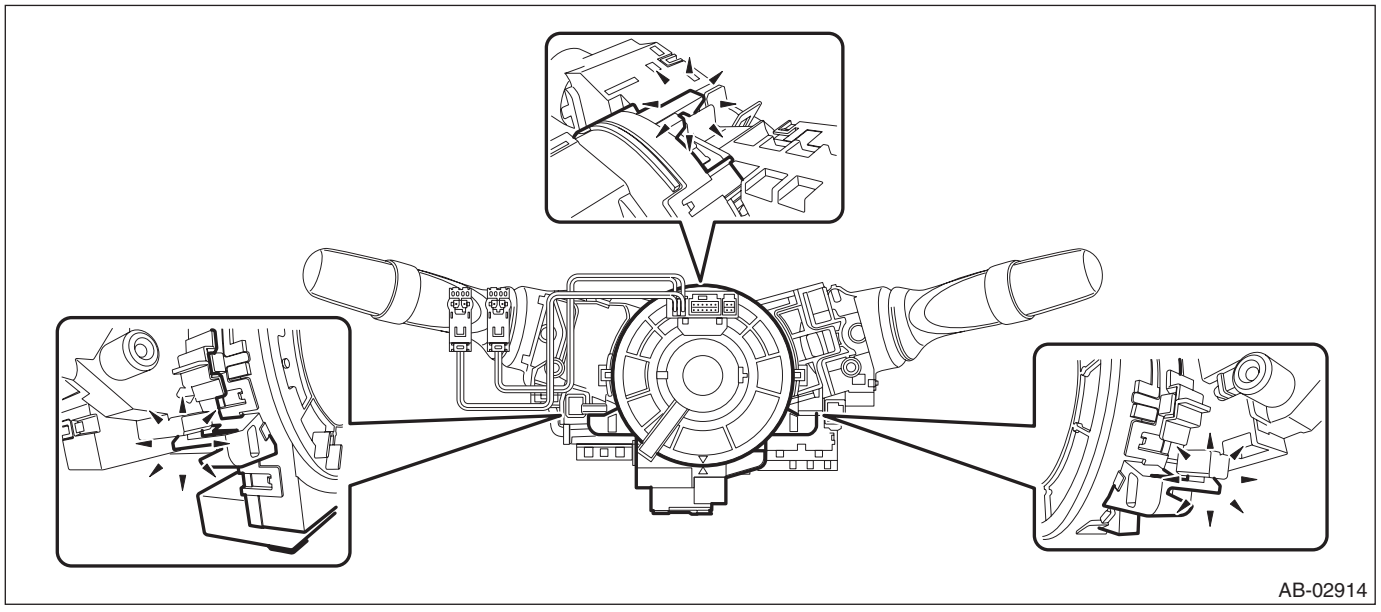

(3) Release the claws and separate the roll connector (a) and steering angle sensor (b).

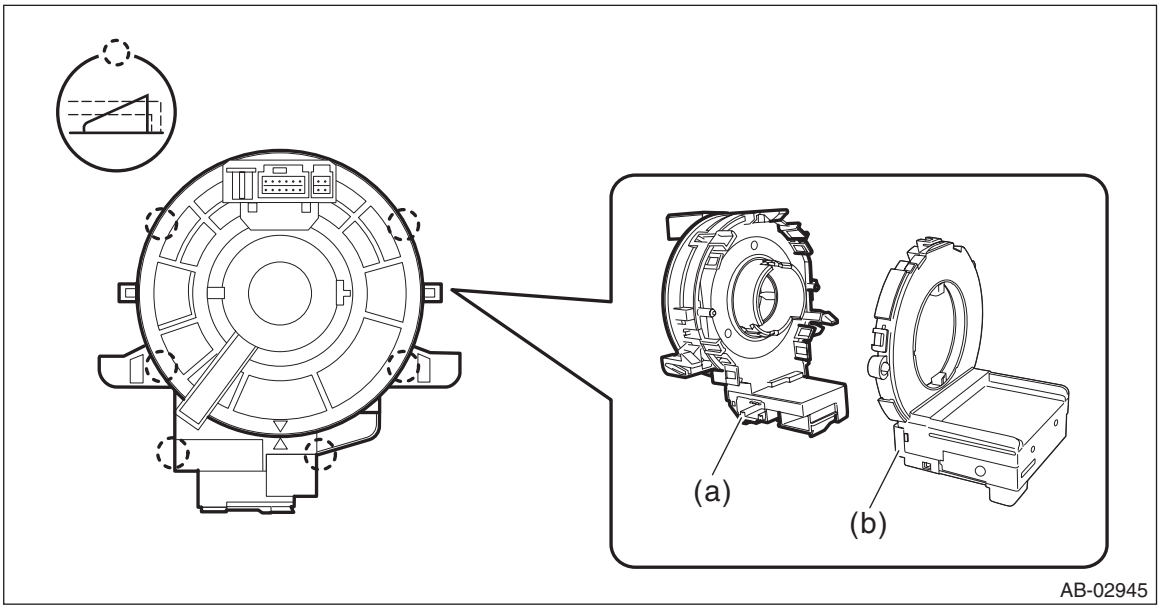

B: INSTALLATION

CAUTION:
If the steering wheel and steering angle sensor are removed, perform "VDC sensor midpoint setting mode" of the VDC. <Ref. to VDC-21, VDC SENSOR MIDPOINT SETTING MODE, ADJUSTMENT, VDC Control Module and Hydraulic Control Unit (VDCCM&H/U).>

1) Before attaching a new roll connector, apply a thin coat of grease contained in the connector onto the areas shown by the arrows.

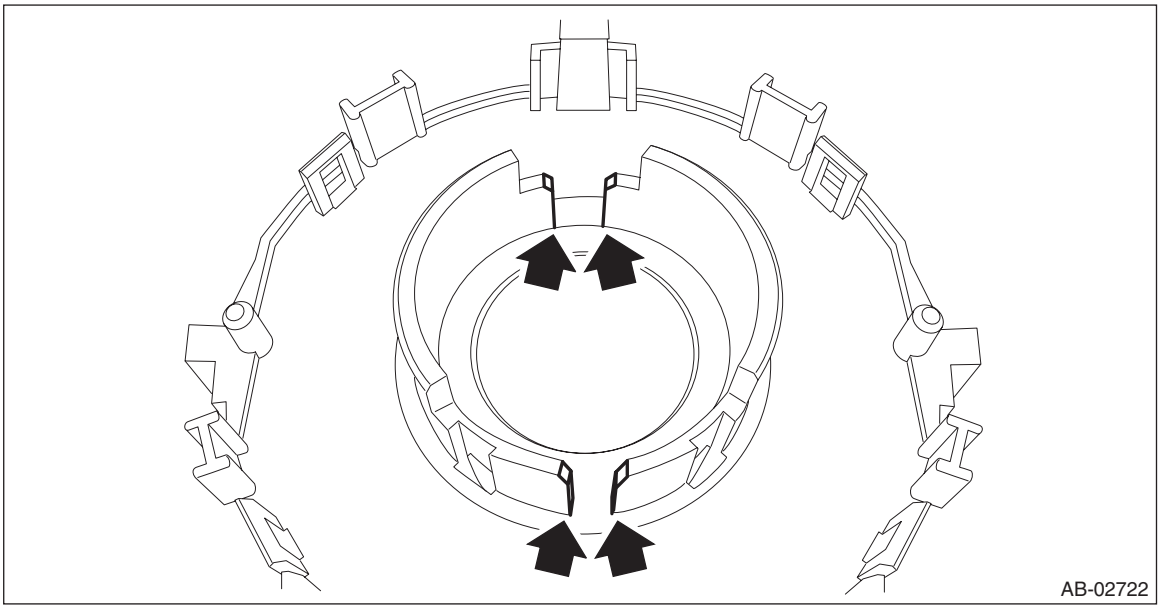

2) Install each part in the reverse order of removal.
3) Before installing steering wheel, be sure to adjust the direction of roll connector with steering. <Ref. to AB-110, ADJUSTMENT, Roll Connector.>

Tightening torque:
Steering wheel: 39 N·m (3.98 kgf-m, 28.8 ft-lb)

Clearance:
Cover assembly - column to Steering wheel: 4 — 6 mm (0.16 — 0.24 in)

C: INSPECTION

1. VISUAL INSPECTION

Check for the following, and replace the damaged parts with new parts.
- Combination switch is cracked or deformed.
- Roll connector is cracked or deformed.

2. UNIT INSPECTION OF ROLL CONNECTOR

CAUTION:
• Do not rotate the roll connector to more than the specified number of turns. Otherwise, the roll connector internal wire may be broken.
• When determining the end stop, rotate the connector slowly without applying excessive force. Applying excessive force at the end stop may break the internal wire.

1) Adjust the roll connector. <Ref. to AB-110, ADJUSTMENT, Roll Connector.>
2) Set the roll connector to the central position.
3) Connect the test harness to the connector E and connector F.

PREPARATION TOOL:
Test harness N (98299SA000)
Test harness Q (98299SA040)
- Connector E - Test harness N (1N)
- Connector F - Test harness Q (1Q)

4) With the following conditions, check the resistance between the test harness connector terminals.
- Perform the check with the roll connector centered (front wheels direct straightforward).
- Rotate the roll connector counterclockwise from the center (front wheels direct straightforward) to an end stop. Then, perform the check while rotating it clockwise to approximately 4.5 turns.

PREPARATION TOOL:
Circuit tester

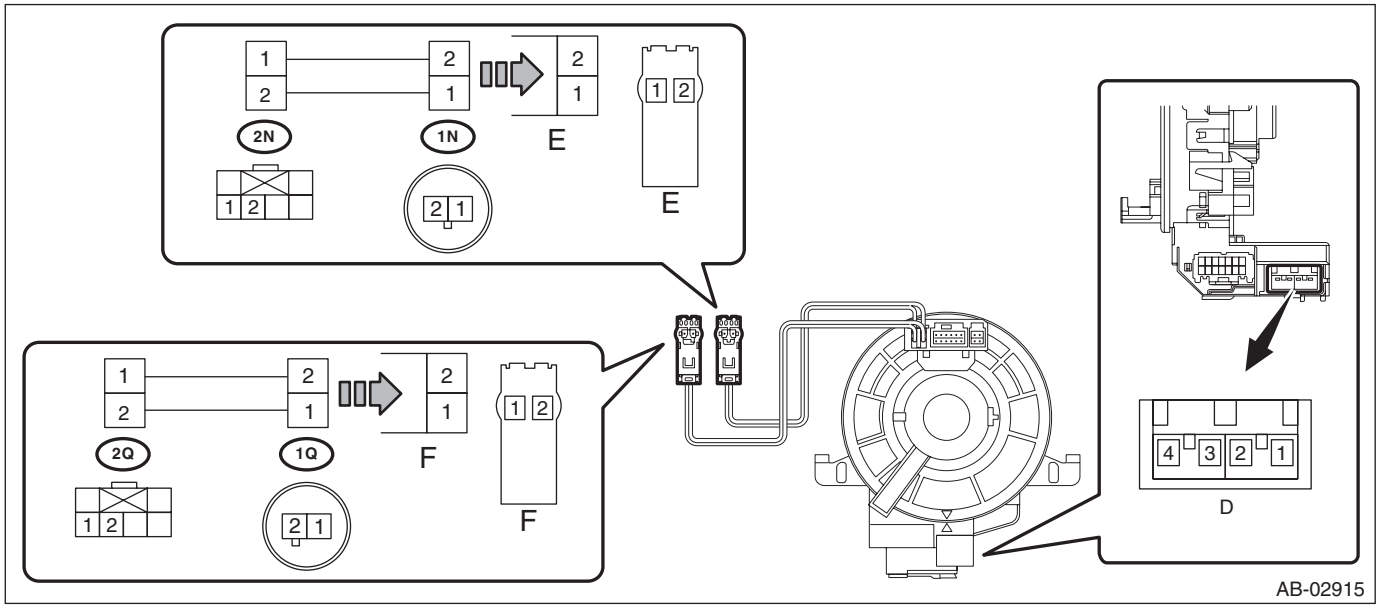

Terminal No.	Inspection conditions	Standard
(2N) No. 1 — (2N) No. 2	Always	Less than 1 Ω
(2Q) No. 1 — (2Q) No. 2	Always	Less than 1 Ω

NOTE:
The connector D is designed to short the terminals D1/D2 and D3/D4 when disconnected.

5) Replace the roll connector with a new part if the inspection result is not within the standard.

D: ADJUSTMENT

CAUTION:
• Do not rotate the roll connector to more than the specified number of turns. Otherwise, the roll connector internal wire may be broken.
• When determining the end stop, rotate the connector slowly without applying excessive force. Applying excessive force at the end stop may break the internal wire.
1) Check that front wheels are positioned in straight ahead direction.
2) Rotate the roll connector counterclockwise until it stops.
3) Rotate the roll connector clockwise approx. 2.5 turns until "▲" marks are aligned.

NOTE:
When the roll connector comes to the center position, the orange roller (b) can be seen from the sight glass (a).

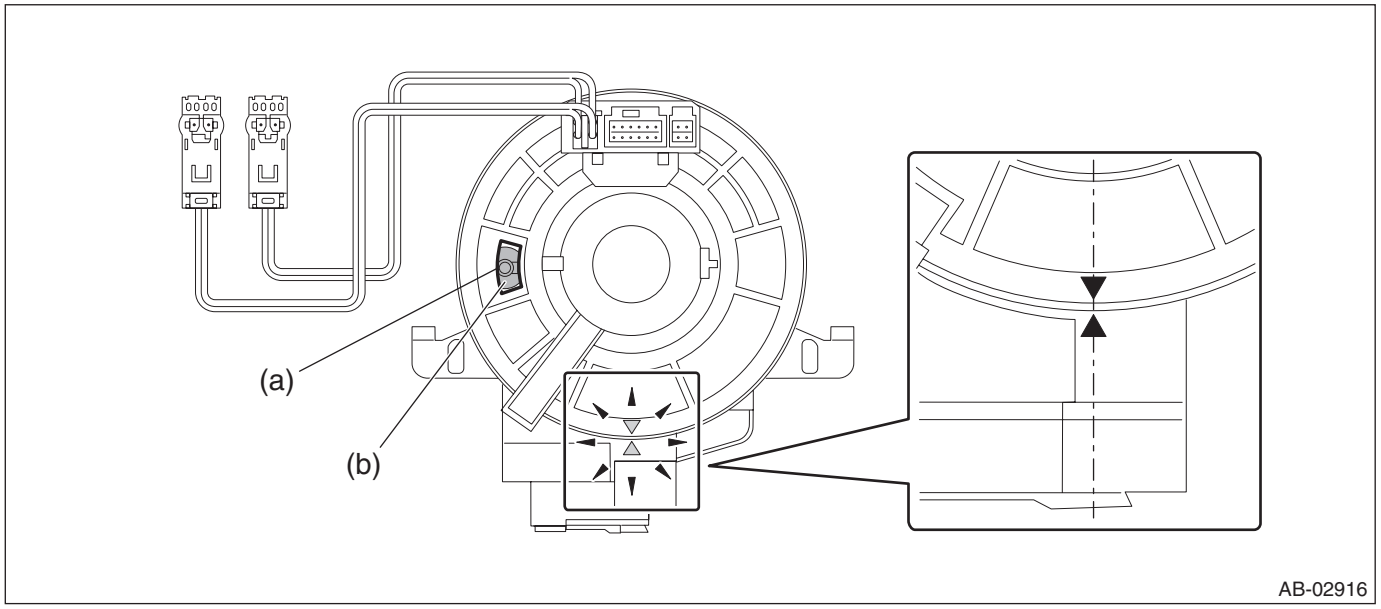

AIRBAG SYSTEM (DIAGNOSTICS)

AB(diag)

		Page
1.	Basic Diagnostic Procedure	2
2.	Check List for Interview	3
3.	General Description	4
4.	Electrical Component Location	17
5.	Airbag Connector	19
6.	Airbag Control Module I/O Signal	20
7.	Subaru Select Monitor	23
8.	Read Diagnostic Trouble Code (DTC)	26
9.	Inspection Mode	27
10.	Clear Memory Mode	28
11.	Display of Status Information	29
12.	Event Record Data	30
13.	Airbag Warning Light Illumination Pattern	31
14.	Airbag Warning Light Failure	32
15.	List of Diagnostic Trouble Code (DTC)	33
16.	Diagnostic Chart with Trouble Code	46

1. Basic Diagnostic Procedure

A: PROCEDURE

Step		Check	Yes	No
1	**CHECK WARNING LIGHT.** Check whether the airbag warning light in the combination meter is lit.	Does the airbag warning light illuminate?	Go to step **2**.	Perform the diagnosis according to phenomenon of the problem.
2	**READ DTC.** 1) Turn the ignition switch to OFF. 2) Connect the Subaru Select Monitor to data link connector. 3) Turn the ignition switch to ON and run the Subaru Select Monitor. 4) Read the DTC. (Current malfunction) <Ref. to AB(diag)-26, OPERATION, Read Diagnostic Trouble Code (DTC).> NOTE: If the communication function of the Subaru Select Monitor cannot be executed properly, check the communication circuit. <Ref. to AB(diag)-23, COMMUNICATION FOR INITIALIZING IMPOSSIBLE, INSPECTION, Subaru Select Monitor.> 5) Record all DTCs, time stamp and freeze frame data. NOTE: For time stamp, refer to “LAN SYSTEM”. <Ref. to LAN(w/o HEV)(diag)-6, TIME STAMP, CAUTION, General Description.> <Ref. to LAN(HEV)(diag)-6, TIME STAMP, CAUTION, General Description.>	Is DTC displayed?	Go to step **3**.	Go to “Airbag Warning Light Failure” <Ref. to AB(diag)-32, Airbag Warning Light Failure.>.
3	**PERFORM DIAGNOSIS.** 1) Determine the possible cause from “List of Diagnostic Trouble Code (DTC)” <Ref. to AB(diag)-33, List of Diagnostic Trouble Code (DTC).>. 2) Inspect the DTC using “List of Diagnostic Trouble Code (DTC)”. 3) Repair the trouble cause. 4) Perform the Clear Memory Mode. <Ref. to AB(diag)-28, Clear Memory Mode.> 5) Perform the Inspection Mode. <Ref. to AB(diag)-27, Inspection Mode.> 6) Read any other DTCs displayed.	Is DTC displayed?	Perform the procedure 1) to 5) in step 3.	Finish the diagnosis.

2. Check List for Interview

A: CHECK

Customer's Name		Inspector's Name	
Date Vehicle Brought in	/ /	Registration No.	
Odometer Reading	km miles	V.I.N.	
Date Problem Occurred	/ /	Registration Year	/ /
Weather	❑ Fine ❑ Cloudy ❑ Rainy ❑ Snowy ❑ Others:		
Temperature	°C (°F)		
Road Condition	❑ Flat road ❑ Uphill ❑ Downhill ❑ Gravel road ❑ Others:		
Vehicle Operation	❑ Starting ❑ Idling ❑ Driving ❑ Constant speed ❑ Accelerating ❑ Decelerating ❑ Turning ❑ Others:		
Details of Problem			
Airbag Warning Light Operation	❑ Normal (After turning the ignition switch to ON, lit for approximately 6 seconds and goes off.) ❑ Remains ON ❑ Remains OFF		
DTC output	❑ OK code ❑ DTC: (Code:)		

3. General Description

A: CAUTION

Refer to “CAUTION” in “General Description” in Airbag System. <Ref. to AB-11, CAUTION, General Description.>

B: INSPECTION

Measure the battery voltage and check electrolyte.

NOTE:
For HEV model, check the 12 volt auxiliary battery. <Ref. to SC(H4DO(HEV))-38, Battery.>

Standard voltage: 12 V

Specific gravity: 1.260 or more

C: PREPARATION TOOL

CAUTION:
To measure the voltage and resistance of airbag system component, be sure to use the specified test harness.

1. SPECIAL TOOL

- Subaru Select Monitor

ILLUSTRATION	TOOL NUMBER	DESCRIPTION	REMARKS
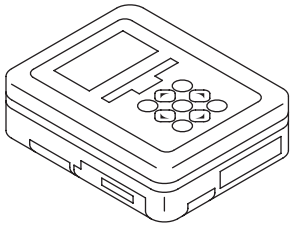 ST1B022XU0	1B022XU0	SUBARU SELECT MONITOR III KIT	Used for troubleshooting the electrical system.

- TEST HARNESS H

ILLUSTRATION	TOOL NUMBER	DESCRIPTION	REMARKS
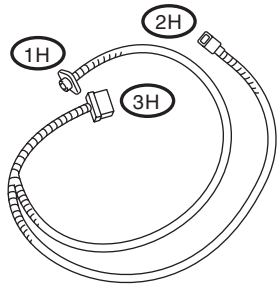 ST98299FA030	98299FA030	TEST HARNESS H	Used when measuring voltage and resistance of front sub sensor and front door impact sensor.

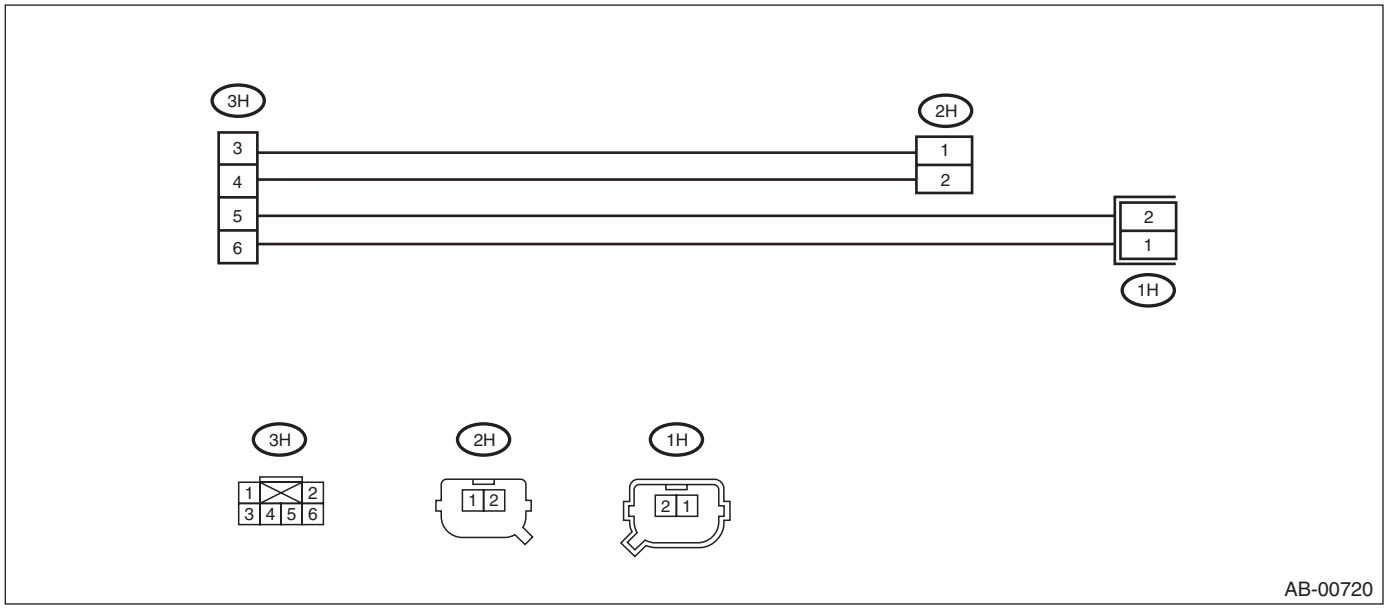

- TEST HARNESS N

ILLUSTRATION	TOOL NUMBER	DESCRIPTION	REMARKS
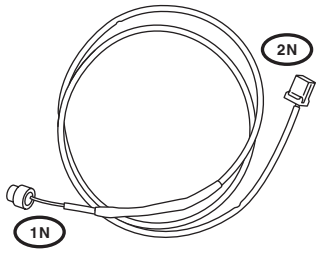 ST98299SA000	98299SA000	TEST HARNESS N	Used when measuring voltage and resistance of driver's airbag module, seat belt pretensioner and curtain airbag module.

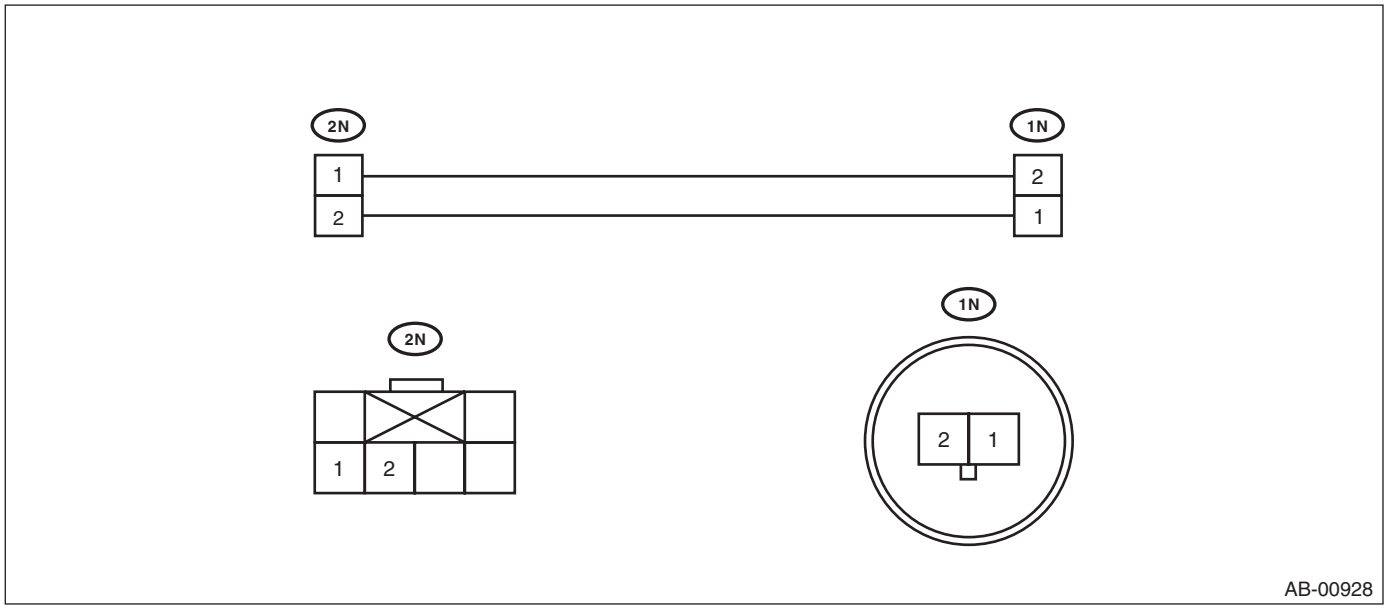

AB-00928

- TEST HARNESS Q

ILLUSTRATION	TOOL NUMBER	DESCRIPTION	REMARKS
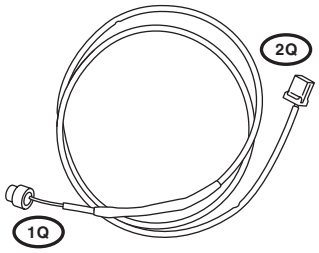 ST98299SA040	98299SA040	TEST HARNESS Q	Used when measuring voltage and resistance of driver's airbag module.

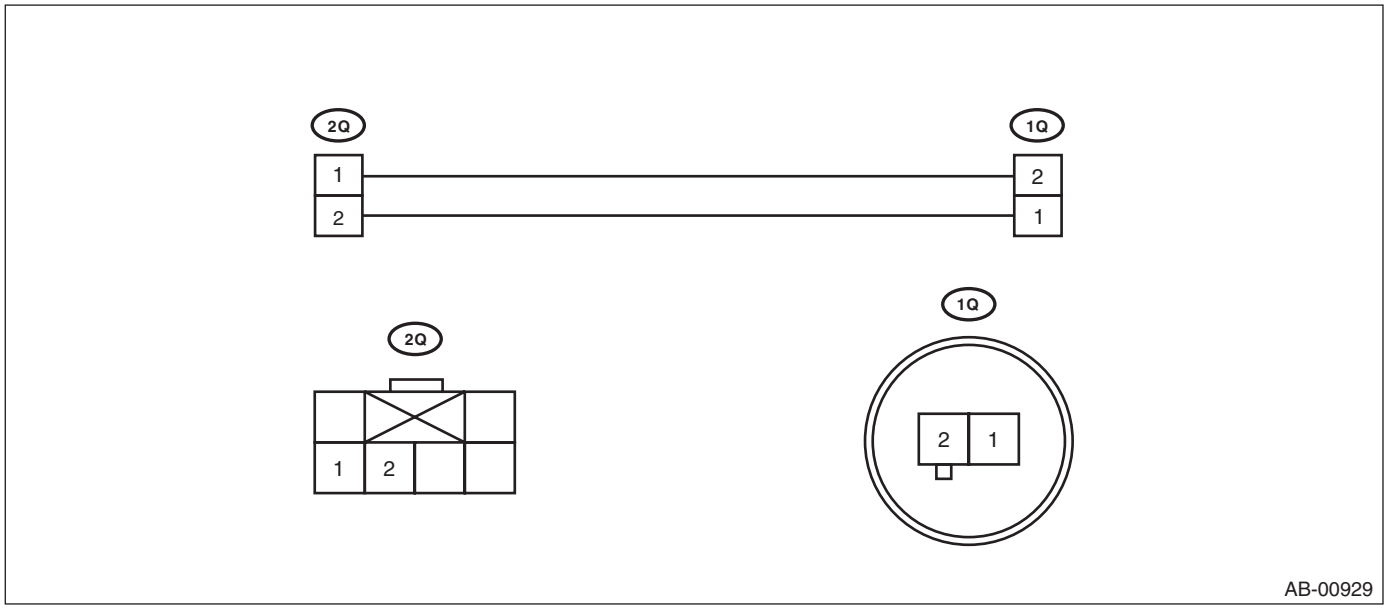

AB-00929

- TEST HARNESS AG

ILLUSTRATION	TOOL NUMBER	DESCRIPTION	REMARKS
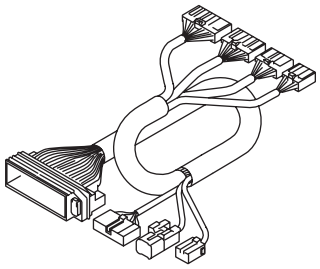 ST98299AG070	98299AG070	TEST HARNESS AG	Used when measuring voltage and resistance of airbag control module.

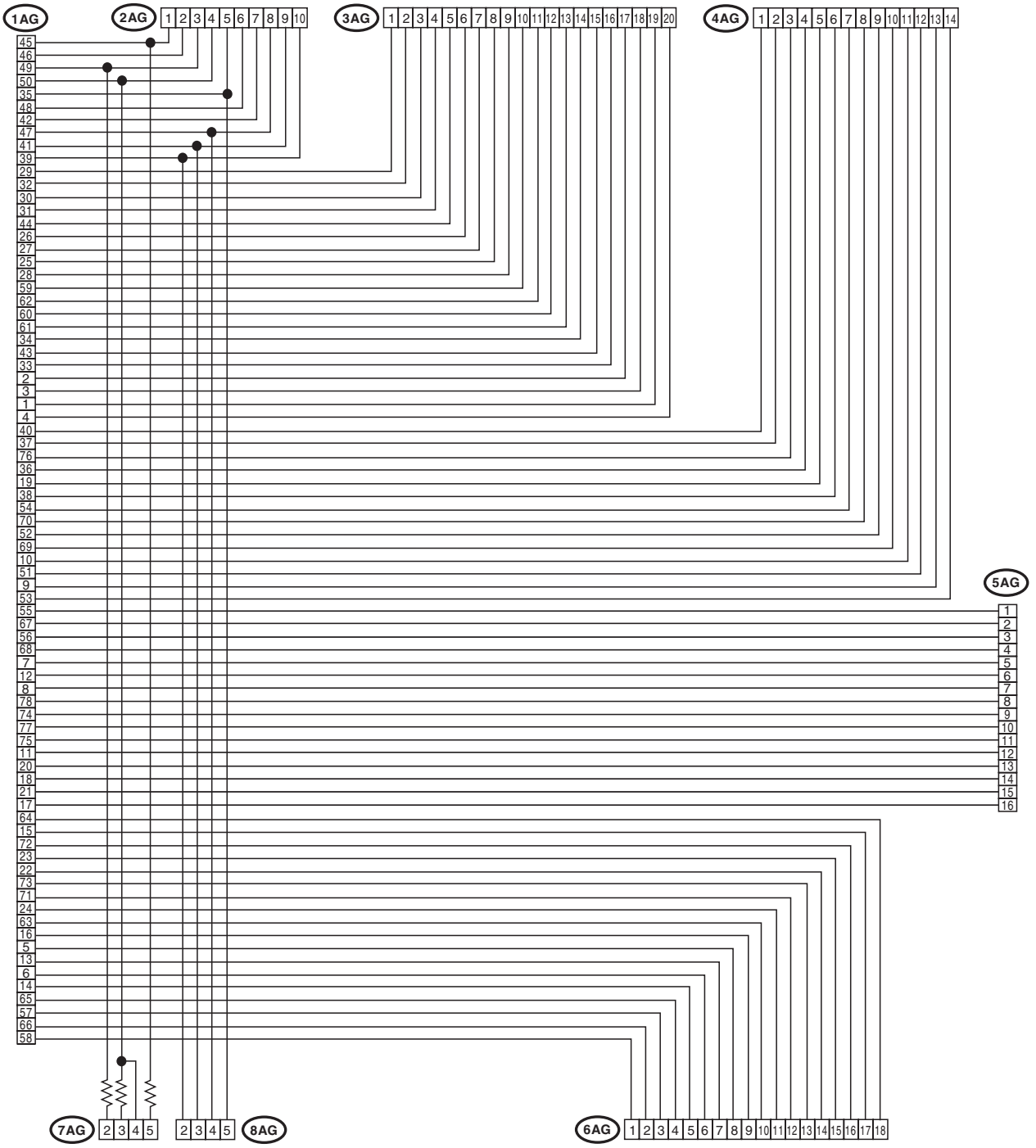
1AG
45 46 49 50 35 48 42 47 41 39 29 32 30 31 44 26 27 25 28 59 62 60 61 34 43 33 2 3 1 4 40 37 76 36 19 38 54 70 52 69 10 51 9 53 55 67 56 68 7 12 8 78 74 77 75 11 20 18 21 17 64 15 72 23 22 73 71 24 63 16 5 13 6 14 65 57 66 58
2AG
1 2 3 4 5 6 7 8 9 10
3AG
1 2 3 4 5 6 7 8 9 10 11 12 13 14 15 16 17 18 19 20
4AG
1 2 3 4 5 6 7 8 9 10 11 12 13 14
5AG
1 2 3 4 5 6 7 8 9 10 11 12 13 14 15 16
7AG
2 3 4 5
8AG
2 3 4 5
6AG
1 2 3 4 5 6 7 8 9 10 11 12 13 14 15 16 17 18

AB-01902

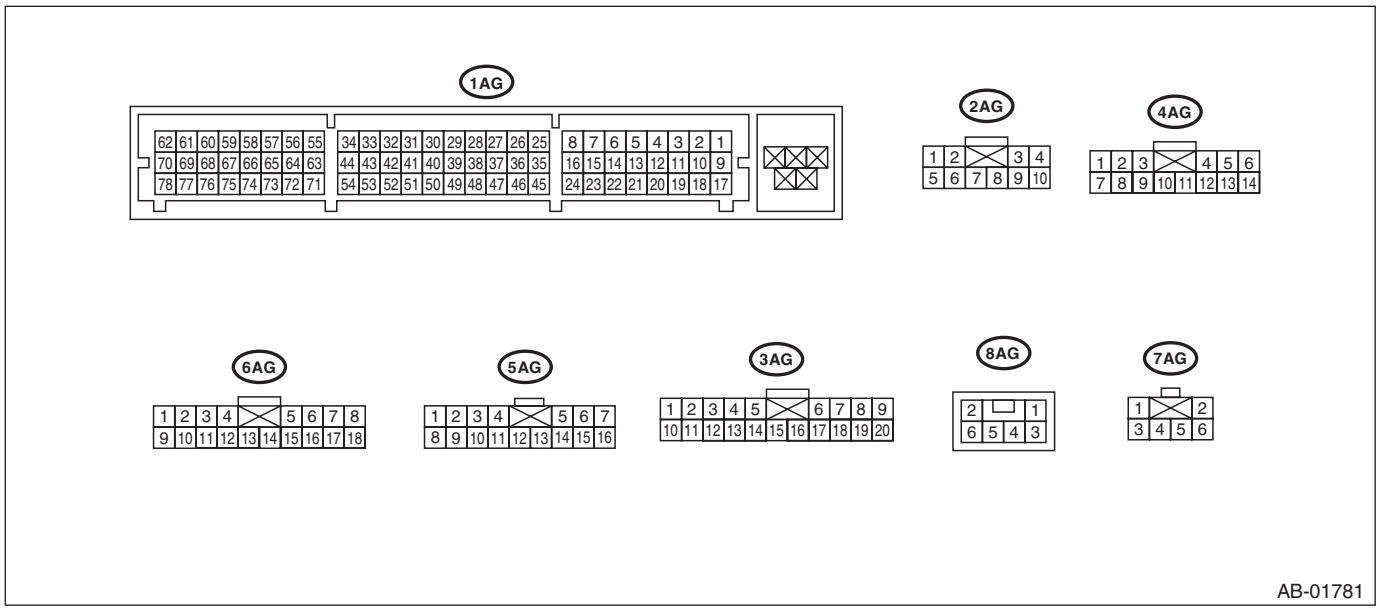
1AG
62 61 60 59 58 57 56 55
70 69 68 67 66 65 64 63
78 77 76 75 74 73 72 71
34 33 32 31 30 29 28 27 26 25
44 43 42 41 40 39 38 37 36 35
54 53 52 51 50 49 48 47 46 45
8 7 6 5 4 3 2 1
16 15 14 13 12 11 10 9
24 23 22 21 20 19 18 17
2AG
1 2 3 4
5 6 7 8 9 10
4AG
1 2 3 4 5 6
7 8 9 10 11 12 13 14
6AG
1 2 3 4 5 6 7 8
9 10 11 12 13 14 15 16 17 18
5AG
1 2 3 4 5 6 7
8 9 10 11 12 13 14 15 16
3AG
1 2 3 4 5 6 7 8 9
10 11 12 13 14 15 16 17 18 19 20
8AG
2 1
6 5 4 3
7AG
1 2
3 4 5 6
AB-01781

- TEST HARNESS AH

ILLUSTRATION	TOOL NUMBER	DESCRIPTION	REMARKS
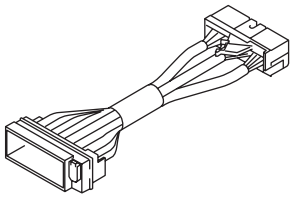 ST98299AG080	98299AG080	TEST HARNESS AH	Used together with test harness AG when measuring voltage and resistance of the airbag control module.

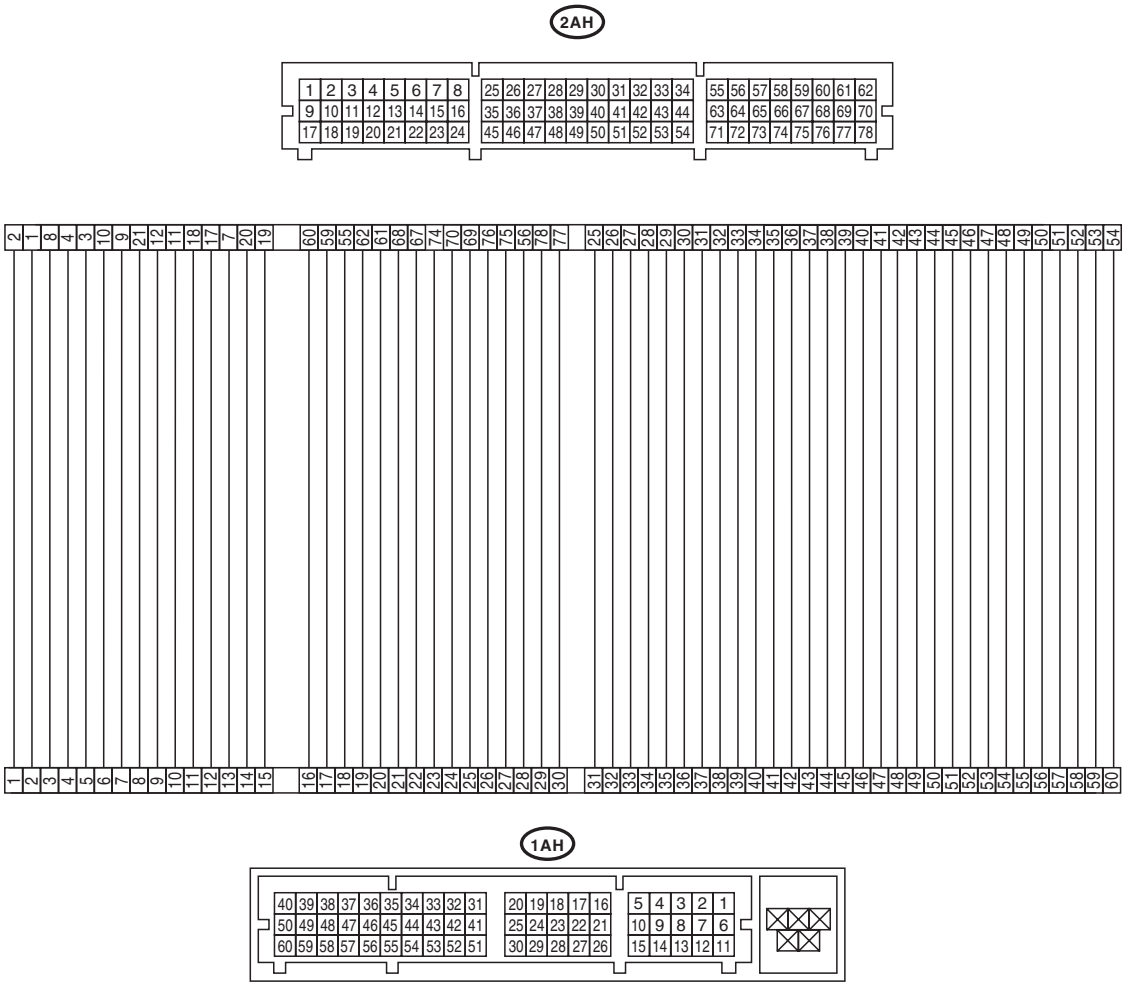

- TEST HARNESS V

ILLUSTRATION	TOOL NUMBER	DESCRIPTION	REMARKS
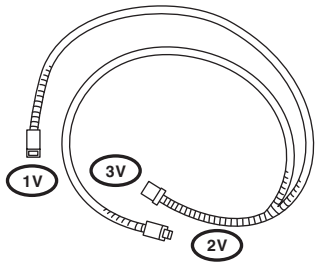 ST98299AG010	98299AG010	TEST HARNESS V	Used when measuring voltage and resistance of side airbag sensor and curtain airbag sensor.

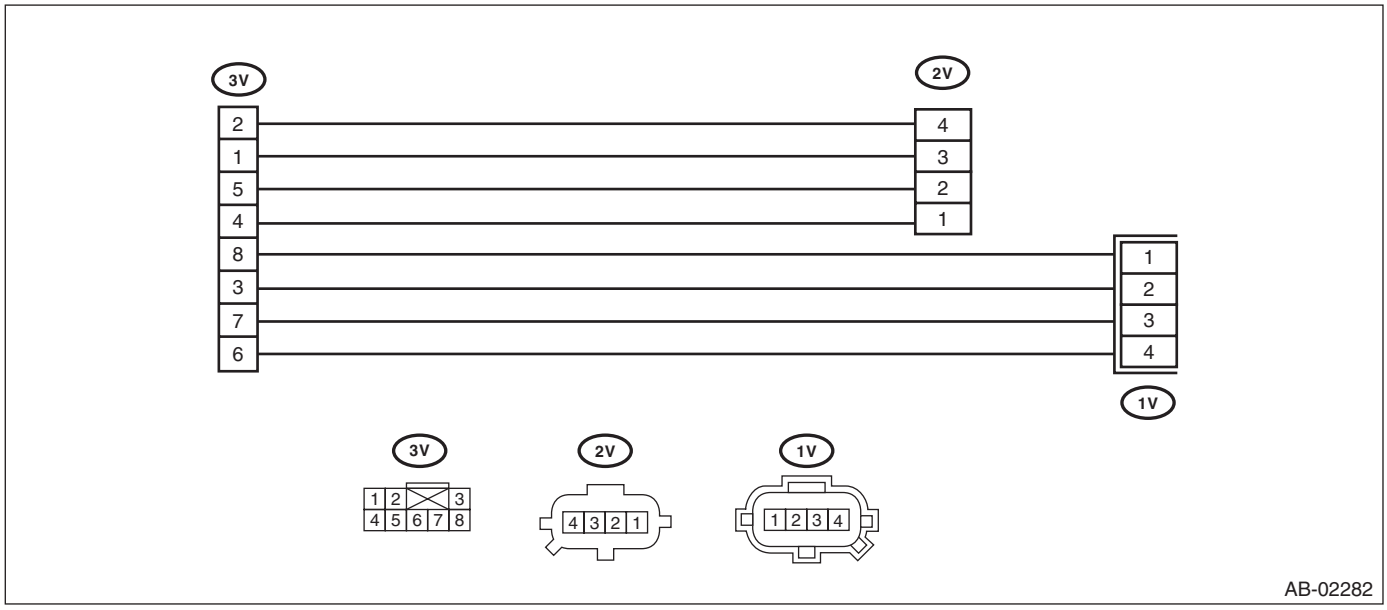

- AIRBAG RESISTOR

ILLUSTRATION	TOOL NUMBER	DESCRIPTION	REMARKS
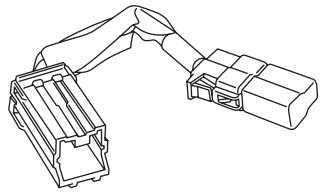 ST98299PA040	98299PA040	AIRBAG RESISTOR	Used in replacement of airbag module for which resistance value is same as airbag module. Two ST are required for diagnosis of two-stage inflator type airbag module.

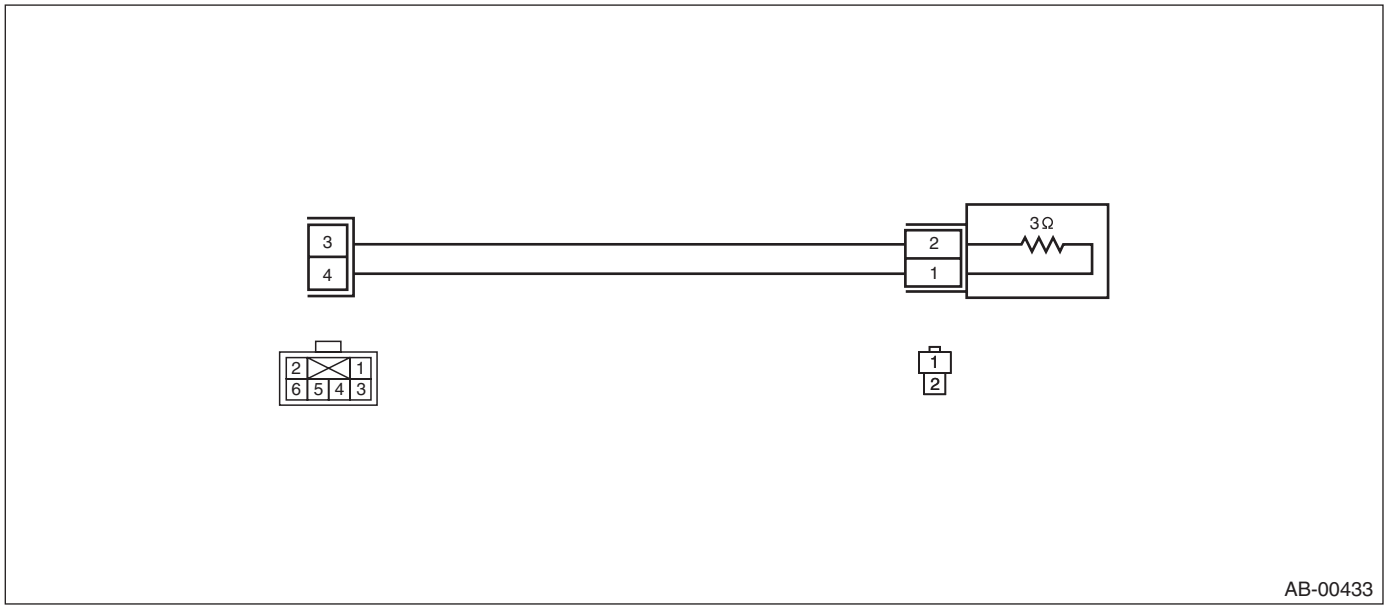

- TEST HARNESS AJ

ILLUSTRATION	TOOL NUMBER	DESCRIPTION	REMARKS
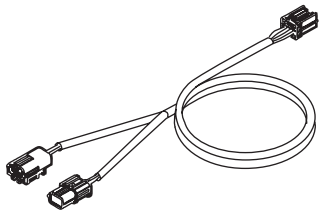 ST98299FG000	98299FG000	TEST HARNESS AJ	Used when measuring power supply and resistance of side airbag harness.

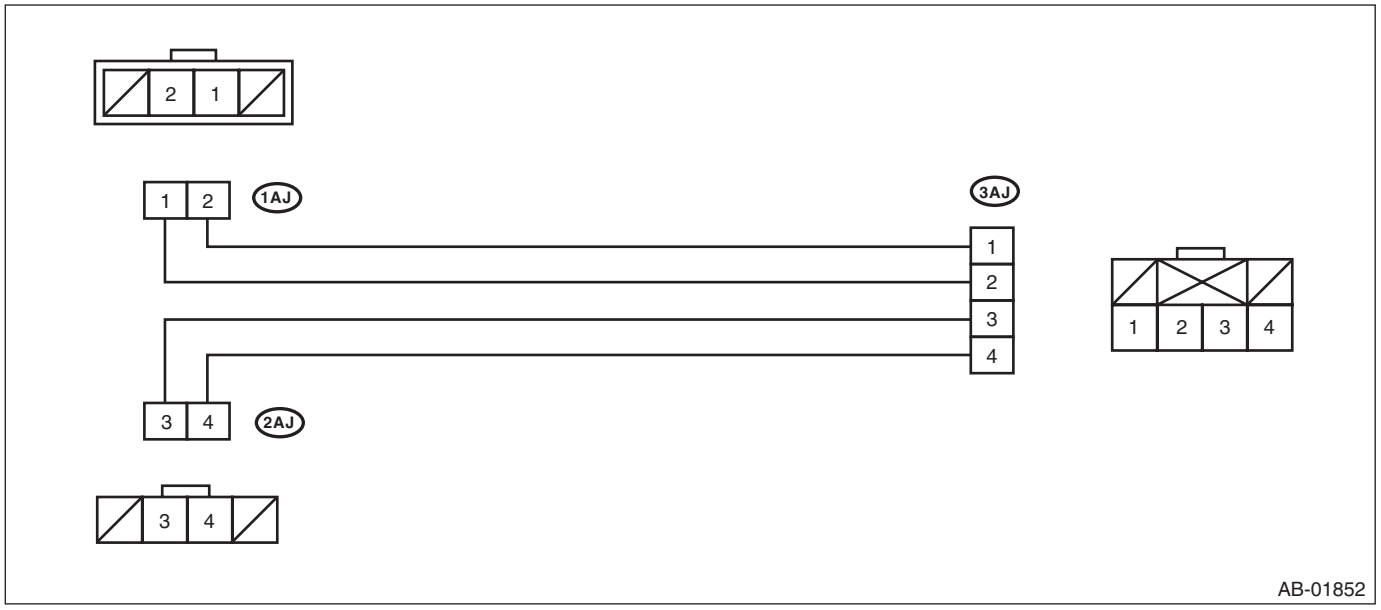

• TEST HARNESS AI

ILLUSTRATION	TOOL NUMBER	DESCRIPTION	REMARKS
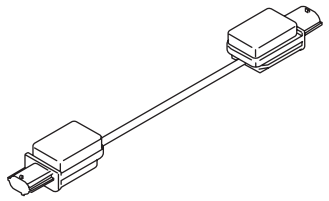 ST98299AG090	98299AG090	TEST HARNESS AI	• Used for diagnoses of side airbag sensor and curtain airbag sensor. • Used together with test harness V.

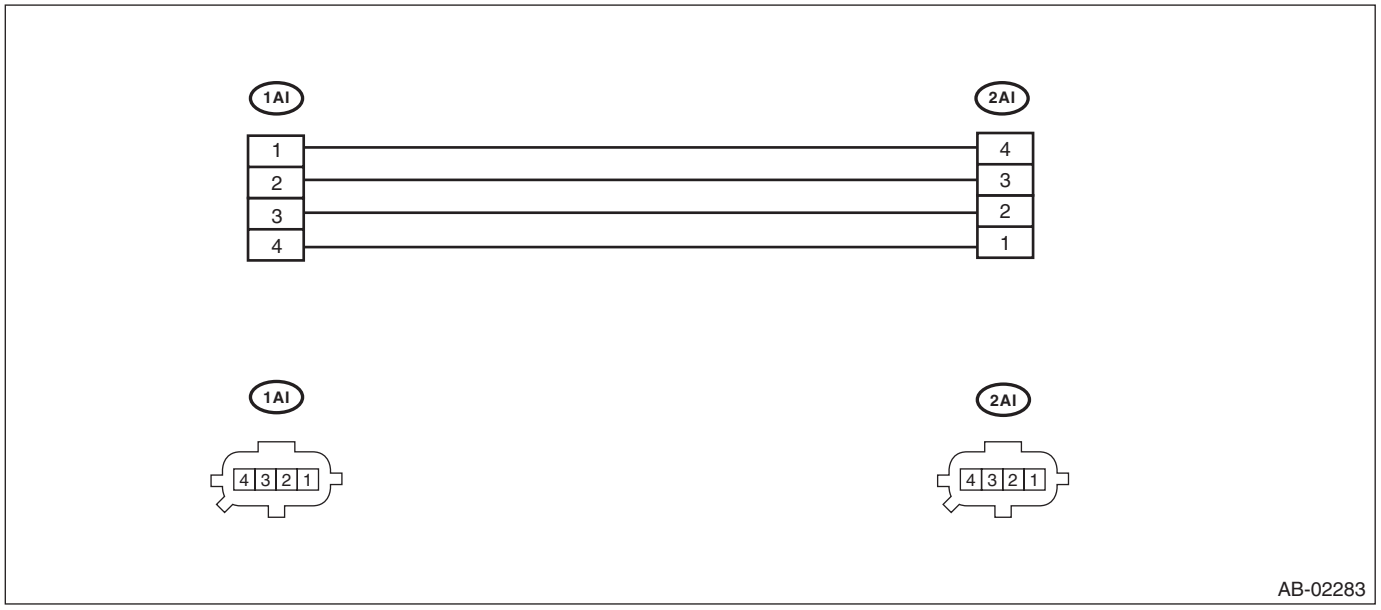

2. GENERAL TOOL

TOOL NAME	REMARKS
Circuit tester	Used for measuring resistance, voltage and current.
Oscilloscope	Used for measuring the sensor.
Probe	Used when measuring voltage and resistance of passenger's airbag module.

3. HOW TO USE PROBE

Insert the probe into the harness hole, and contact it with the terminal.

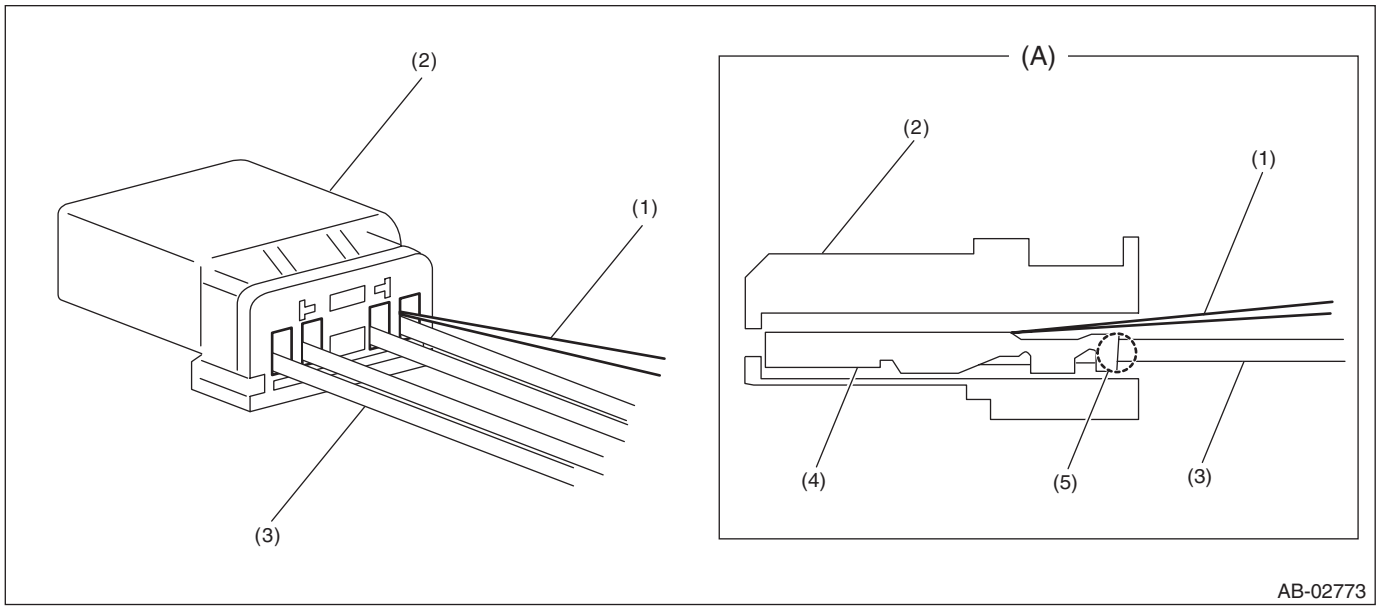

(A) Cross section

(1) Probe
(2) Connector (housing)
(3) Harness
(4) Terminal
(5) Connection

CAUTION:
- **Do not insert the probe forcibly.**
- **Be careful not to contact it to the connection (5) between the terminal and harness. (Harness will come off easily from connector if doing so.)**

4. Electrical Component Location

A: LOCATION

- XV model

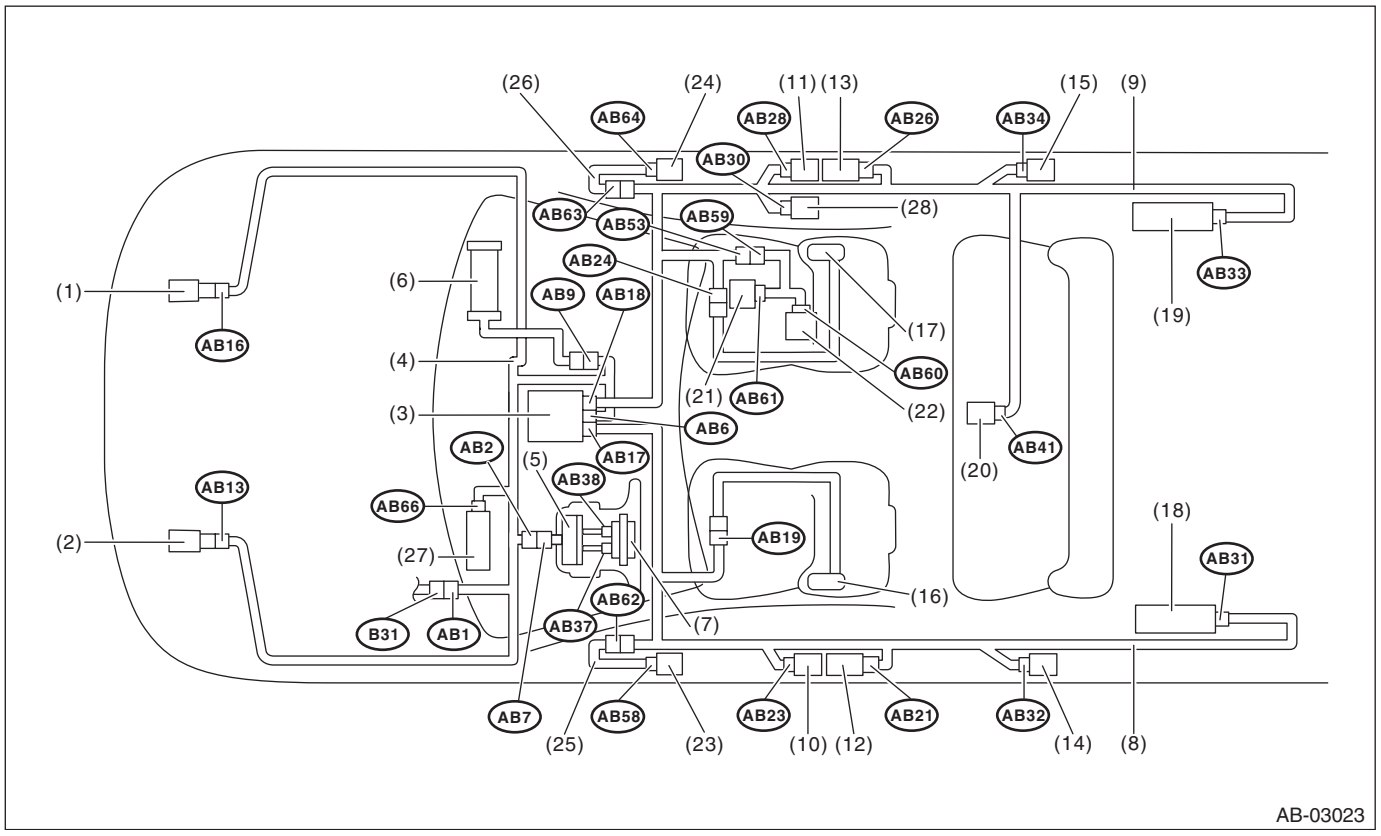

- Except for XV model

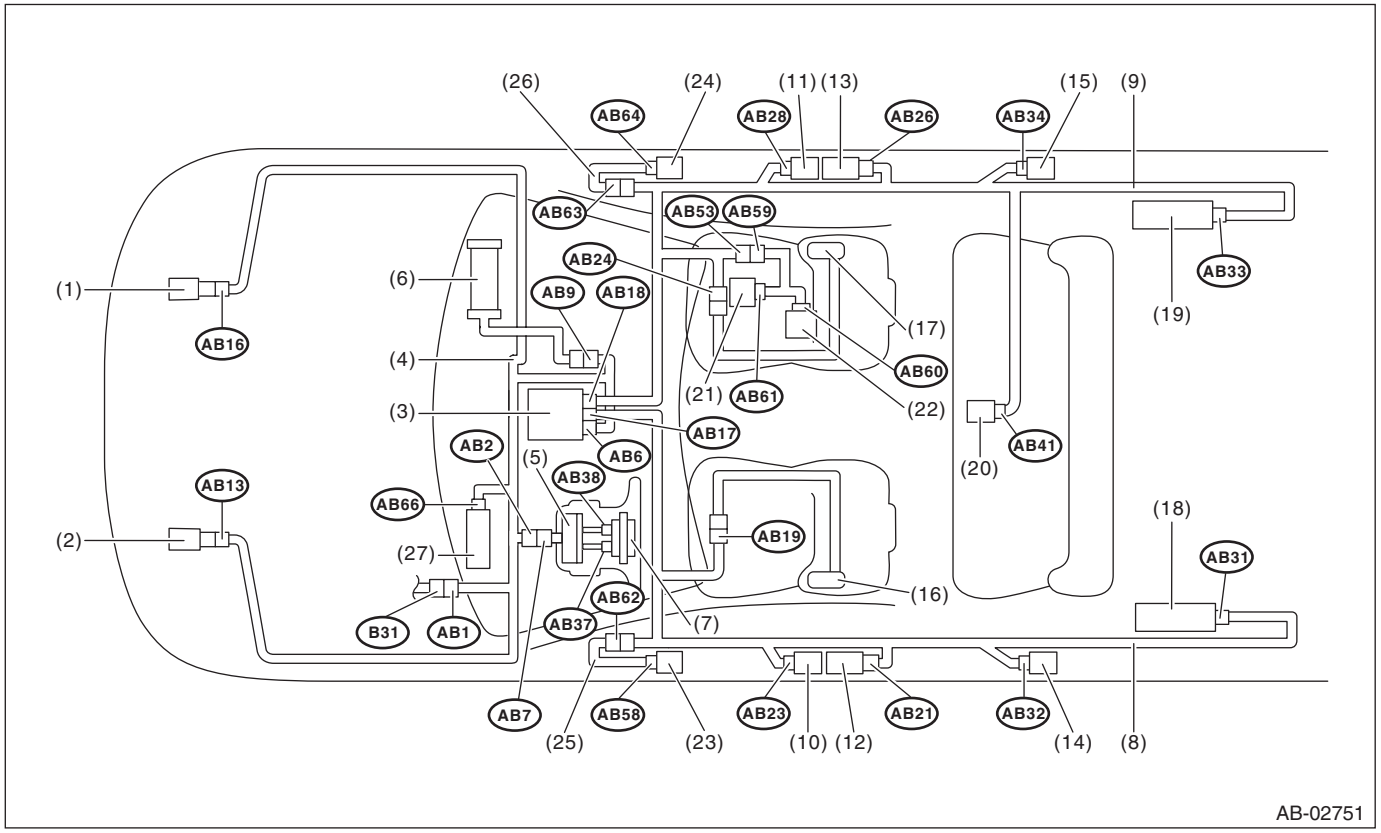

(1) Front sub sensor (RH)
(2) Front sub sensor (LH)
(3) Airbag control module
(4) Airbag main harness
(5) Roll connector
(6) Passenger's airbag inflator
(7) Driver's airbag inflator
(8) Airbag rear harness (LH)
(9) Airbag rear harness (RH)
(10) Side airbag sensor (LH)
(11) Side airbag sensor (RH)
(12) Seat belt pretensioner (LH)
(13) Seat belt pretensioner (RH)
(14) Curtain airbag sensor (LH)
(15) Curtain airbag sensor (RH)
(16) Side airbag inflator (LH)
(17) Side airbag inflator (RH)
(18) Curtain airbag inflator (LH)
(19) Curtain airbag inflator (RH)
(20) Satellite safing sensor
(21) Occupant detection control module
(22) Buckle switch (RH)
(23) Front door impact sensor (LH)
(24) Front door impact sensor (RH)
(25) Door harness (LH)
(26) Door harness (RH)
(27) Knee airbag inflator
(28) Lap seat belt pretensioner (RH)

Connector No.	(AB1)	(AB2)	(AB6)	(AB7)	(AB9)	(AB13)	(AB16)	(AB17)	(AB18)	(AB19)	(AB21)	(AB23)
Pin	10	4	30	4	4	2	2	15 or 24	15 or 24	4	2	4
Color	Gray	Yellow	Yellow	Yellow	Yellow	Yellow	Yellow	Yellow	Yellow	Yellow	Black	Yellow
Male/Female	Female	Female	Female	Male	Female	Female	Female	Female	Female	Female	Female	Female

Connector No.	(AB24)	(AB26)	(AB28)	(AB30)	(AB31)	(AB32)	(AB33)	(AB34)	(AB37)	(AB38)	(AB41)	(AB53)
Pin	4	2	4	2	2	4	2	4	2	2	2	3
Color	Yellow	Black	Yellow	Yellow	Black	Yellow	Black	Yellow	Orange	Black	Yellow	Brown
Male/Female	Female	Female	Female	Female	Female	Female	Female	Female	Female	Female	Female	Female

Connector No.	(AB58)	(AB59)	(AB60)	(AB61)	(AB62)	(AB63)	(AB64)	(AB66)				
Pin	2	3	2	10	2	2	2	2				
Color	Yellow	Brown	Yellow	Black	Yellow	Yellow	Yellow	Black				
Male/Female	Female	Male	Male	Female	Female	Female	Female	Female				

5. Airbag Connector

A: PROCEDURE

For operation procedures, refer to “Airbag Connector” of Airbag System. <Ref. to AB-20, Airbag Connector.>

6. Airbag Control Module I/O Signal

A: ELECTRICAL SPECIFICATION

- XV model

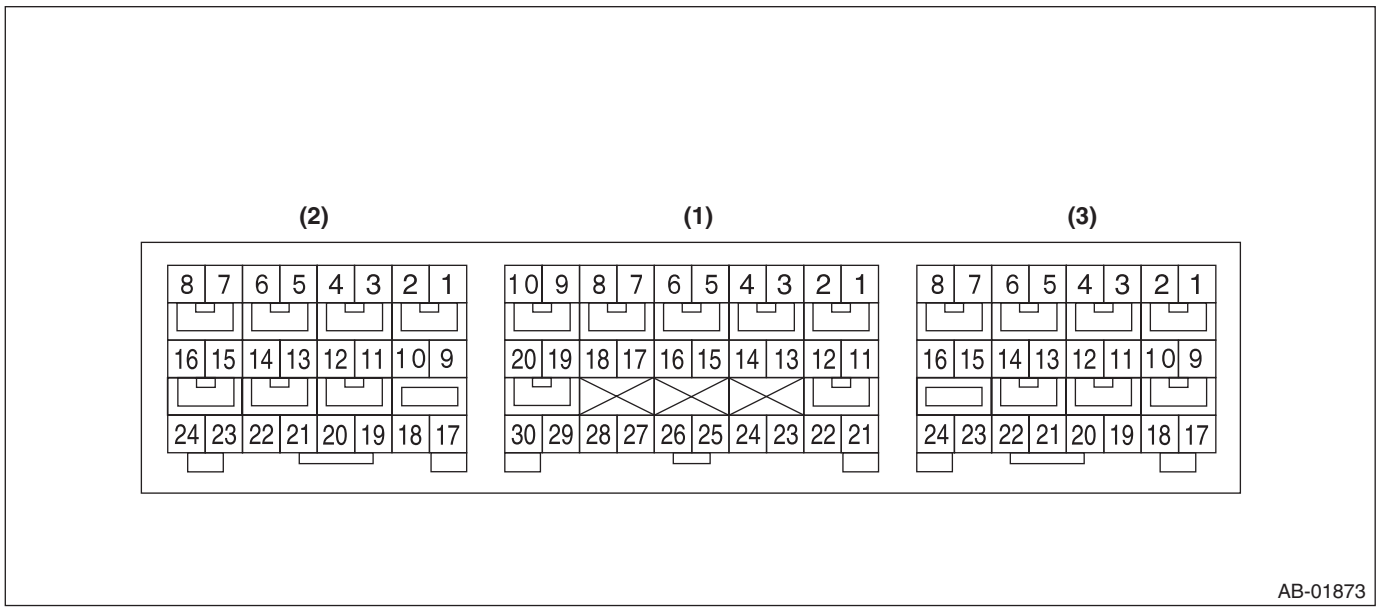

- Terminal numbers in airbag control module connector are shown in the figure.
- The airbag warning light illuminates when the connector is removed from the airbag control module.

Item		Control module terminal No.
Ignition power supply	Dedicated fuse	(1) — 21
Passenger's airbag module level one	+	(1) — 4
	–	(1) — 3
Passenger's airbag module level two	+	(1) — 1
	–	(1) — 2
Driver's airbag module level one	+	(1) — 5
	–	(1) — 6
Driver's airbag module level two	+	(1) — 8
	–	(1) — 7
Driver's knee airbag module	+	(1) — 9
	–	(1) — 10
CAN-H		(1) — 13
CAN-L		(1) — 22
Front sub sensor LH	+	(1) — 30
	–	(1) — 28
Front sub sensor RH	+	(1) — 29
	–	(1) — 27
Ground line (GND)		(1) — 25
		(1) — 26
Passenger's airbag ON indicator		(1) — 23
Passenger's airbag OFF indicator		(1) — 17
Passenger's seat belt warning		(1) — 15
Side airbag sensor LH	+	(2) — 24
Curtain airbag sensor LH Front door impact sensor LH	–	(2) — 23
Seat belt pretensioner LH	+	(2) — 5
	–	(2) — 6

Item		Control module terminal No.
Side airbag module LH	+	(2) — 1
	–	(2) — 2
Curtain airbag module LH	+	(2) — 4
	–	(2) — 3
Occupant detection control module	+	(3) — 16
	–	(3) — 24
Side airbag sensor RH Curtain airbag sensor RH Front door impact sensor RH	+	(3) — 17
	–	(3) — 18
Side airbag module RH	+	(3) — 8
	–	(3) — 7
Curtain airbag module RH	+	(3) — 5
	–	(3) — 6
Seat belt pretensioner RH	+	(3) — 4
	–	(3) — 3
Lap seat belt pretensioner RH	+	(3) — 1
	–	(3) — 2
Satellite safing sensor	+	(3) — 21
	–	(3) — 22

- Except for XV model

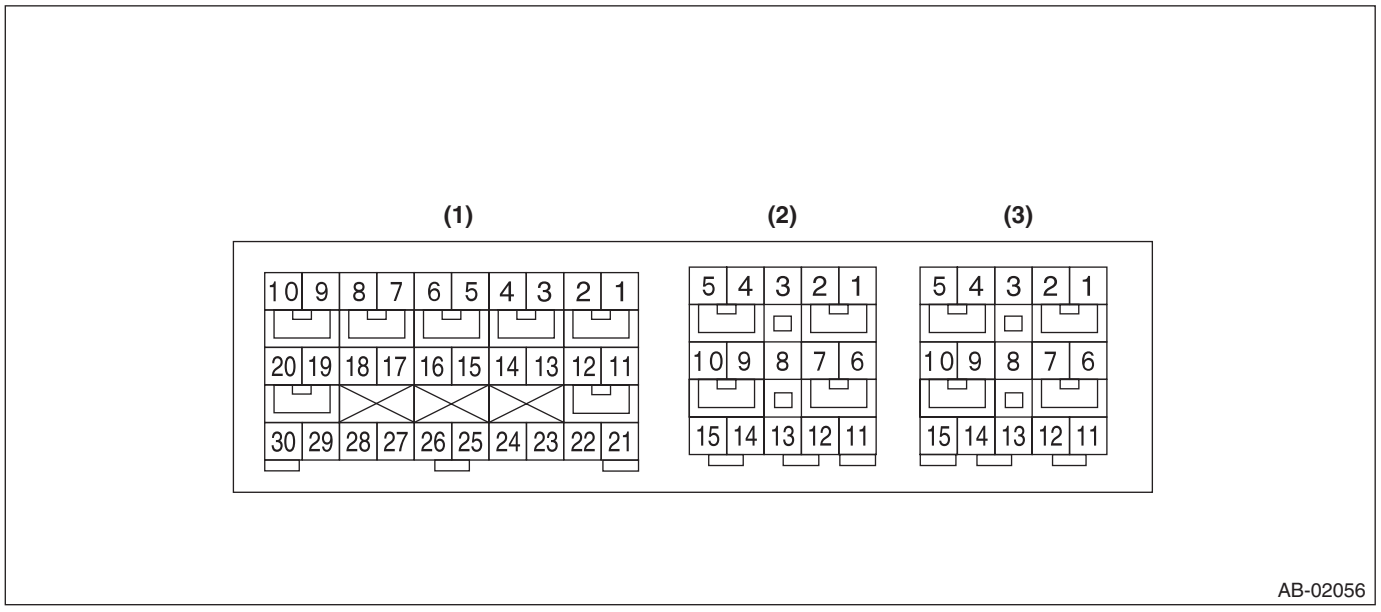

- Terminal numbers in airbag control module connector are shown in the figure.
- The airbag warning light illuminates when the connector is removed from the airbag control module.

Item		Control module terminal No.
Ignition power supply	Dedicated fuse	(1) — 21
Passenger's airbag module level one	+	(1) — 4
	–	(1) — 3
Passenger's airbag module level two	+	(1) — 1
	–	(1) — 2
Driver's airbag module level one	+	(1) — 5
	–	(1) — 6
Driver's airbag module level two	+	(1) — 8
	–	(1) — 7

Item		Control module terminal No.
Driver's knee airbag module	+	(1) — 9
	–	(1) — 10
CAN-H		(1) — 13
CAN-L		(1) — 22
Front sub sensor LH	+	(1) — 30
	–	(1) — 28
Front sub sensor RH	+	(1) — 29
	–	(1) — 27
Ground line (GND)		(1) — 25
		(1) — 26
Passenger's airbag OFF indicator		(1) — 17
Passenger's airbag ON indicator		(1) — 23
Passenger's seat belt warning		(1) — 15
Side airbag sensor LH Curtain airbag sensor LH Front door impact sensor LH	+	(2) — 8
	–	(2) — 15
Side airbag module LH	+	(2) — 9
	–	(2) — 10
Curtain airbag module LH	+	(2) — 7
	–	(2) — 6
Seat belt pretensioner LH	+	(2) — 2
	–	(2) — 1
Satellite safing sensor	+	(3) — 15
	–	(3) — 14
Seat belt pretensioner RH	+	(3) — 4
	–	(3) — 5
Side airbag sensor RH Curtain airbag sensor RH Front door impact sensor RH	+	(3) — 8
	–	(3) — 11
Side airbag module RH	+	(3) — 7
	–	(3) — 6
Curtain airbag module RH	+	(3) — 9
	–	(3) — 10
Occupant detection control module	+	(3) — 12
	–	(3) — 13

B: WIRING DIAGRAM

Refer to "Airbag System" in WI section. <Ref. to WI(w/o HEV)-30, WIRING DIAGRAM, Airbag System.> <Ref. to WI(HEV)-50, WIRING DIAGRAM, Airbag System.>

7. Subaru Select Monitor

A: OPERATION

For operation procedures, refer to the “PC application help for Subaru Select Monitor”.

B: INSPECTION

1. COMMUNICATION FOR INITIALIZING IMPOSSIBLE

DTC DETECTING CONDITION:
Defective harness connector
TROUBLE SYMPTOM:
Communication is impossible between the airbag control module and the Subaru Select Monitor.

CAUTION:
Before performing diagnosis, refer to “CAUTION” in “General Description”. <Ref. to AB(diag)-4, CAUTION, General Description.>
WIRING DIAGRAM:
Airbag system <Ref. to WI(w/o HEV)-30, WIRING DIAGRAM, Airbag System.> <Ref. to WI(HEV)-50, WIRING DIAGRAM, Airbag System.>

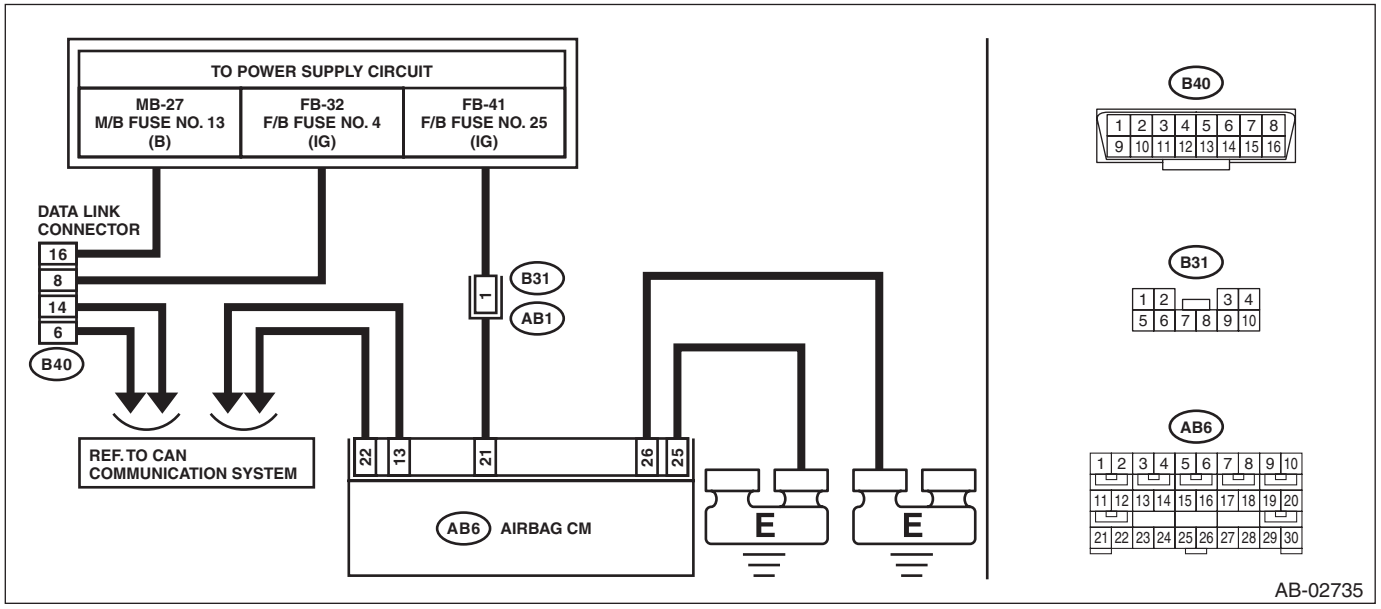

Step		Check	Yes	No
1	**CHECK IGNITION SWITCH.**	Is the ignition switch ON?	Go to step **2**.	Turn the ignition switch to ON, and select the airbag mode using the Subaru Select Monitor.
2	**CHECK BATTERY.** 1) Turn the ignition switch to OFF. 2) Measure the battery voltage. NOTE: For HEV model, check the 12 volt auxiliary battery. <Ref. to SC(H4DO(HEV))-38, Battery.>	Is the voltage 11 V or more?	Go to step **3**.	Charge or replace the battery.
3	**CHECK BATTERY TERMINAL.** Check battery terminal. NOTE: For HEV model, check the 12 volt auxiliary battery. <Ref. to SC(H4DO(HEV))-38, Battery.>	Is there poor contact at battery terminal?	Repair or tighten the battery terminal.	Go to step **4**.

	Step	Check	Yes	No
4	**CHECK SUBARU SELECT MONITOR COMMUNICATION.** 1) Turn the ignition switch to ON. 2) Using the Subaru Select Monitor, check whether communication to other systems can be executed normally.	Is the system name displayed on Subaru Select Monitor?	Go to step **9**.	Go to step **5**.
5	**CHECK SUBARU SELECT MONITOR.**	Is Subaru Select Monitor powered on?	Go to step **7**.	Go to step **6**.
6	**CHECK FUSE.** Remove a fuse in the data link connector and visually check the fuse.	Is the fuse OK?	Repair the harness between the battery and the data link connector.	Replace the fuse. If the fuse is blown out again, check the power supply circuit.
7	**CHECK AIRBAG CONTROL MODULE CONNECTOR.** 1) Turn the ignition switch to OFF, disconnect the battery ground cable, and wait for 60 seconds or more. NOTE: For HEV model, disconnect the negative terminal from 12 volt auxiliary battery, and disconnect the ground terminal from 12V engine restart battery sensor for 12 volt engine restart battery. <Ref. to NT-5, BATTERY, NOTE, Note.> 2) Confirm that the connectors of airbag control module (AB6, AB17, AB18) are securely connected.	Is the connector of the airbag control module securely connected?	Go to step **8**.	Connect the connector of the airbag control module.
8	**CHECK SUBARU SELECT MONITOR COMMUNICATION.** 1) Disconnect the airbag control module connector. 2) Connect the battery ground terminal. NOTE: For HEV model, connect the negative terminal for 12 volt auxiliary battery, and connect the ground terminal to 12V engine restart battery sensor for 12 volt engine restart battery. <Ref. to NT-5, BATTERY, NOTE, Note.> 3) Turn the ignition switch to ON. 4) Check whether communication to other systems can be executed normally.	Is the system name displayed on Subaru Select Monitor?	Replace the airbag control module. <Ref. to AB-78, Airbag Control Module.>	Go to step **9**.
9	**CHECK FUSE.** Remove fuse No. 25 from the fuse & relay box, and perform visual inspection.	Is the fuse OK?	Go to step **10**.	Replace the fuse. If the fuse is blown out again, check the power supply circuit.

	Step	Check	Yes	No
10	**CHECK AIRBAG CONTROL MODULE CONNECTOR.** 1) Turn the ignition switch to OFF, disconnect the battery ground cable, and wait for 60 seconds or more. NOTE: For HEV model, disconnect the negative terminal from 12 volt auxiliary battery, and disconnect the ground terminal from 12V engine restart battery sensor for 12 volt engine restart battery. <Ref. to NT-5, BATTERY, NOTE, Note.> 2) Confirm that the connectors of airbag control module (AB6, AB17, AB18) are securely connected.	Is the connector of the airbag control module securely connected?	Go to step **11**.	Connect the connector of the airbag control module.
11	**CHECK CAN COMMUNICATION.** Inspect LAN system. <Ref. to LAN(w/o HEV)(diag)-2, PROCEDURE, Basic Diagnostic Procedure.> <Ref. to LAN(HEV)(diag)-2, PROCEDURE, Basic Diagnostic Procedure.>	Is there any fault?	Repair it according to the diagnosis for LAN system.	Go to step **12**.
12	**CHECK POWER SUPPLY CIRCUIT.** 1) Disconnect the connectors (AB6, AB17, AB18) from airbag control module. 2) Connect the connector (1AG) in the test harness AG to the connectors (AB6, AB17, AB18). NOTE: Except for XV models, connect test harness AH between the connectors (AB6, AB17, AB18) and (1AG). 3) Turn the ignition switch to ON. 4) Measure the voltage between connector (2AG) in the test harness AG and chassis ground. ***Connector & terminal*** ***(2AG) No. 1 (+) — Chassis ground (–):***	Is the voltage 10 V or more?	Go to step **13**.	Repair the harness between the airbag control module and the battery. Or replace the airbag main harness along with the bulkhead harness.
13	**CHECK BETWEEN AIRBAG CONTROL MODULE AND CHASSIS GROUND.** 1) Turn the ignition switch to OFF. 2) Measure the resistance between connector (2AG) in the test harness AG and chassis ground. ***Connector & terminal*** ***(2AG) No. 4 — Chassis ground:*** ***(2AG) No. 3 — Chassis ground:***	Is the resistance less than 10 Ω?	Go to step **14**.	Repair the harness between the airbag control module and the chassis ground. Or replace the airbag main harness along with the bulkhead harness.
14	**CHECK POOR CONTACT OF CONNECTOR.**	Is there poor contact of the control module power supply, ground circuit and data link connector?	Repair the connector. (Replace the harness without repairing the airbag system connector.)	Replace the airbag control module. <Ref. to AB-78, REMOVAL, Airbag Control Module.>

8. Read Diagnostic Trouble Code (DTC)

A: OPERATION

For operation procedures, refer to the “PC application help for Subaru Select Monitor”.

NOTE:
For details concerning DTCs, refer to List of Diagnostic Trouble Code (DTC). <Ref. to AB(diag)-33, List of Diagnostic Trouble Code (DTC).>

9. Inspection Mode

A: PROCEDURE

Recreate the circumstance by referring to the conditions described in the checklist.

10.Clear Memory Mode

A: OPERATION

For operation procedures, refer to the “PC application help for Subaru Select Monitor”.

NOTE:
Clear the DTC stored in the airbag control module after repairing the airbag system.

11.Display of Status Information

A: OPERATION

Check the operating condition of each sensor in the event of malfunction in the seat belt buckle switch, or when the seat belt buckle switch has been replaced.
1) On «Main Menu» display, select {Each System Check}.
2) On «System Selection Menu» display, select {Airbag System}.
3) On «Airbag System» display, select {Current Data Display & Save}.
The following table is for support data.

Item	Display	Note
Trip Count	—	—
Count	—	—
Time Count	—	—
Belt Buckle Switch RH	Unbelted/Belted	“Belted” when passenger’s seat belt is fastened “Unbelted” when passenger’s seat belt is not fastened
Passenger Occupant Status	Occupied/Empty or CRS	“Occupied” when the occupant is present “Empty or CRS” when the seat is unoccupied or when child restraint seat is installed
Passenger Airbag Status	ON/OFF	“ON” when the passenger occupant status is “Occupied” “OFF” when the status is “Empty or CRS”

NOTE:
For detailed operation procedures, refer to “PC application help for Subaru Select Monitor”.

12.Event Record Data

A: OPERATION

1) On «Main Menu» display, select {Each System Check}.
2) On «System Selection Menu» display, select {Airbag System}.
3) On «Airbag System» display, select {Event Record Data}. After it is selected, {IMPORTANT NOTICE} screen is displayed.
4) Once you have read the contents of the «IMPORTANT NOTICE», click the Yes checkbox.
5) If doing so will not violate any laws, click the {Yes} button to retrieve the EDR data.

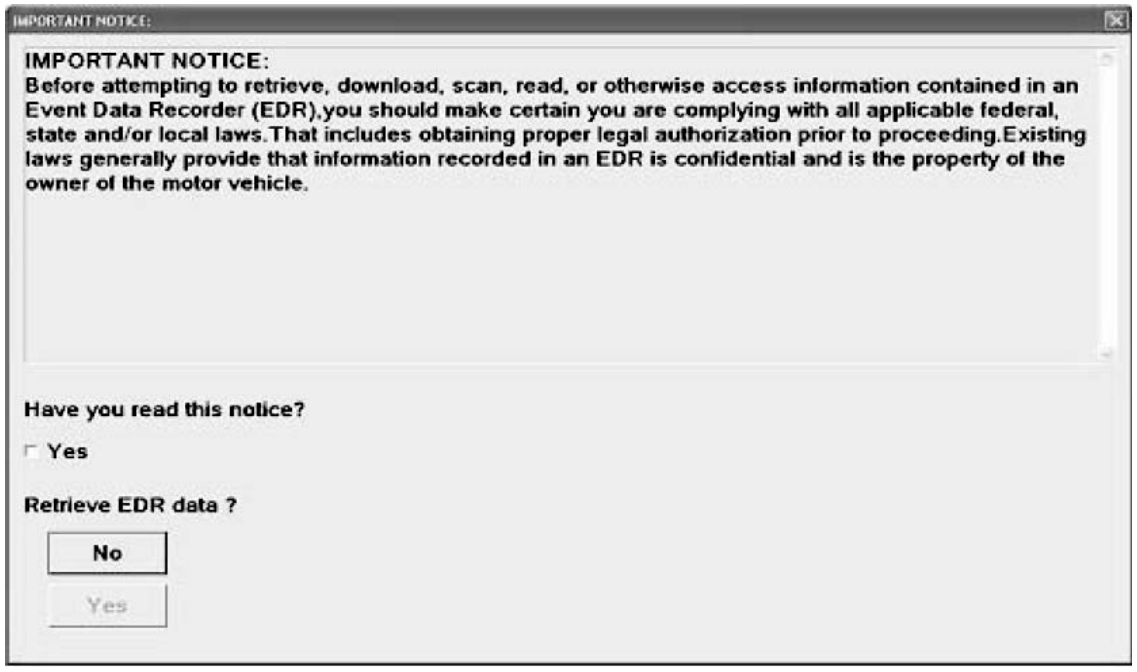

6) Select the items to be checked from each event record data.
7) Select the record data to be checked from each record data.
8) The selected record data is displayed. If there is no data recorded, «No Event Record Data Recorded» is displayed.
9) Select [Exit] to return to each event record data screen.

13.Airbag Warning Light Illumination Pattern

A: INSPECTION

Turn the ignition switch to ON, and confirm that the airbag warning light remains on for approx. 6 seconds then turns off afterwards.

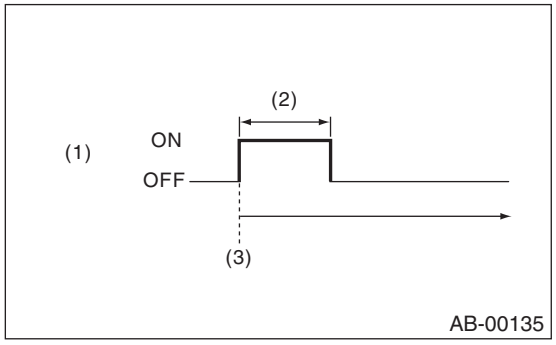

(1) Airbag warning light
(2) Approx. 6 seconds
(3) Ignition switch ON

14.Airbag Warning Light Failure

A: AIRBAG WARNING LIGHT REMAINS ON

DETECTING CONDITION:

- Airbag warning light is faulty.
- Airbag control module to combination meter circuit is shorted or open.
- Grounding circuit is faulty.
- Airbag control module is faulty.
- Connector connection is improper.
- Connections of (AB6, AB17, AB18) to airbag control module are improper.

CAUTION:
Before performing diagnosis, refer to "CAUTION" in "General Description". <Ref. to AB(diag)-4, CAUTION, General Description.>

	Step	Check	Yes	No
1	**CHECK CAN COMMUNICATION.** Inspect LAN system. <Ref. to LAN(w/o HEV)(diag)-2, PROCEDURE, Basic Diagnostic Procedure.> <Ref. to LAN(HEV)(diag)-2, PROCEDURE, Basic Diagnostic Procedure.>	Is there any fault?	Repair it according to diagnosis of LAN system.	Go to step **2**.
2	**CHECK DTC.** 1) Turn the ignition switch to OFF, disconnect the battery ground cable, and wait for 60 seconds or more. NOTE: For HEV model, disconnect the negative terminal from 12 volt auxiliary battery, and disconnect the ground terminal from 12V engine restart battery sensor for 12 volt engine restart battery. <Ref. to NT-5, BATTERY, NOTE, Note.> 2) Check the connection status of airbag CM connector.	Is there poor contact of connector?	Reconnect the connector. Or repair the connector.	Go to step **3**.
3	**CHECK FOR POOR CONTACT.** Check the combination meter. <Ref. to IDI(diag)-2, PROCEDURE, Basic Diagnostic Procedure.>	Is there any fault?	Repair it according to INSTRUMENTATION/DRIVER INFO (DIAGNOSTICS).	Replace the airbag CM. <Ref. to AB-78, REMOVAL, Airbag Control Module.>

B: AIRBAG WARNING LIGHT REMAINS OFF

NOTE:
For the diagnostic procedure, refer to "AIRBAG WARNING LIGHT REMAINS ON". <Ref. to AB(diag)-32, AIRBAG WARNING LIGHT REMAINS ON, Airbag Warning Light Failure.>

15.List of Diagnostic Trouble Code (DTC)

A: LIST

DTC	Item	Content of diagnosis	Reference
U0073	Control Module Communication Bus Off	CAN communication error occurred.	<Ref. to AB(diag)-46, DTC U0073 CONTROL MODULE COMMUNICATION BUS OFF, Diagnostic Chart with Trouble Code.>
B1000	Airbag ECU Malfunction	Airbag control module is faulty.	<Ref. to AB(diag)-46, DTC B1000 AIRBAG ECU MALFUNCTION, Diagnostic Chart with Trouble Code.>
B1003	Airbag ECU Malfunction	Airbag control module is faulty.	<Ref. to AB(diag)-46, DTC B1003 AIRBAG ECU MALFUNCTION, Diagnostic Chart with Trouble Code.>
B1105	Airbag ECU Malfunction	Airbag control module is faulty.	<Ref. to AB(diag)-46, DTC B1105 AIRBAG ECU MALFUNCTION, Diagnostic Chart with Trouble Code.>
B1106	Airbag ECU Malfunction	Airbag control module is faulty.	<Ref. to AB(diag)-46, DTC B1106 AIRBAG ECU MALFUNCTION, Diagnostic Chart with Trouble Code.>
B1115	Airbag ECU Malfunction	Airbag control module is faulty.	<Ref. to AB(diag)-46, DTC B1115 AIRBAG ECU MALFUNCTION, Diagnostic Chart with Trouble Code.>
B1116	Airbag ECU Malfunction	Airbag control module is faulty.	<Ref. to AB(diag)-46, DTC B1116 AIRBAG ECU MALFUNCTION, Diagnostic Chart with Trouble Code.>
B1120	Airbag ECU Malfunction	Airbag control module is faulty.	<Ref. to AB(diag)-46, DTC B1120 AIRBAG ECU MALFUNCTION, Diagnostic Chart with Trouble Code.>
B1121	Airbag ECU Malfunction	Airbag control module is faulty.	<Ref. to AB(diag)-47, DTC B1121 AIRBAG ECU MALFUNCTION, Diagnostic Chart with Trouble Code.>
B1125	Airbag ECU Malfunction	Airbag control module is faulty.	<Ref. to AB(diag)-47, DTC B1125 AIRBAG ECU MALFUNCTION, Diagnostic Chart with Trouble Code.>

DTC	Item	Content of diagnosis	Reference
B1126	Airbag ECU Malfunction	Airbag control module is faulty.	<Ref. to AB(diag)-47, DTC B1126 AIRBAG ECU MALFUNCTION, Diagnostic Chart with Trouble Code.>
B1135	Airbag ECU Malfunction	Airbag control module is faulty.	<Ref. to AB(diag)-47, DTC B1135 AIRBAG ECU MALFUNCTION, Diagnostic Chart with Trouble Code.>
B1136	Airbag ECU Malfunction	Airbag control module is faulty.	<Ref. to AB(diag)-47, DTC B1136 AIRBAG ECU MALFUNCTION, Diagnostic Chart with Trouble Code.>
B1145	Airbag ECU Malfunction	Airbag control module is faulty.	<Ref. to AB(diag)-47, DTC B1145 AIRBAG ECU MALFUNCTION, Diagnostic Chart with Trouble Code.>
B1146	Airbag ECU Malfunction	Airbag control module is faulty.	<Ref. to AB(diag)-47, DTC B1146 AIRBAG ECU MALFUNCTION, Diagnostic Chart with Trouble Code.>
B1170	Airbag ECU Malfunction	Airbag control module is faulty.	<Ref. to AB(diag)-47, DTC B1170 AIRBAG ECU MALFUNCTION, Diagnostic Chart with Trouble Code.>
B1185	Airbag ECU Malfunction	Airbag control module is faulty.	<Ref. to AB(diag)-47, DTC B1185 AIRBAG ECU MALFUNCTION, Diagnostic Chart with Trouble Code.>
B1195	Airbag ECU Malfunction	Airbag control module is faulty.	<Ref. to AB(diag)-47, DTC B1195 AIRBAG ECU MALFUNCTION, Diagnostic Chart with Trouble Code.>
B1196	Airbag ECU Malfunction	Airbag control module is faulty.	<Ref. to AB(diag)-47, DTC B1196 AIRBAG ECU MALFUNCTION, Diagnostic Chart with Trouble Code.>
B1199	Airbag ECU Malfunction	Airbag control module is faulty.	<Ref. to AB(diag)-48, DTC B1199 AIRBAG ECU MALFUNCTION, Diagnostic Chart with Trouble Code.>
B11E0	Rollover Ignition	Curtain airbag module (LH/RH) and seat belt pretensioner (LH/RH) are deployed.	<Ref. to AB(diag)-48, DTC B11E0 ROLLOVER IGNITION, Diagnostic Chart with Trouble Code.>

DTC	Item	Content of diagnosis	Reference
B11F2	Front Impact Ignition	Front airbag module and seat belt pretensioner (LH/RH) are inflated.	<Ref. to AB(diag)-48, DTC B11F2 FRONT IMPACT IGNITION, Diagnostic Chart with Trouble Code.>
B11F3	Front Impact Ignition	Front airbag module and seat belt pretensioner (LH/RH) are inflated.	<Ref. to AB(diag)-48, DTC B11F3 FRONT IMPACT IGNITION, Diagnostic Chart with Trouble Code.>
B11F4	Front Impact Ignition	Front airbag module and seat belt pretensioner (LH/RH) are inflated.	<Ref. to AB(diag)-48, DTC B11F4 FRONT IMPACT IGNITION, Diagnostic Chart with Trouble Code.>
B11F5	Front Impact Ignition	Front airbag module and seat belt pretensioner (LH/RH) are inflated.	<Ref. to AB(diag)-48, DTC B11F5 FRONT IMPACT IGNITION, Diagnostic Chart with Trouble Code.>
B11F7	Side Impact Ignition	• Side airbag module and curtain airbag module are deployed. • Curtain airbag module is deployed.	<Ref. to AB(diag)-48, DTC B11F7 SIDE IMPACT IGNITION, Diagnostic Chart with Trouble Code.>
B11F8	Side Impact Ignition	• Side airbag module and curtain airbag module are deployed. • Curtain airbag module is deployed.	<Ref. to AB(diag)-49, DTC B11F8 SIDE IMPACT IGNITION, Diagnostic Chart with Trouble Code.>
B11F9	Side Impact Ignition	• Side airbag module and curtain airbag module are deployed. • Curtain airbag module is deployed.	<Ref. to AB(diag)-49, DTC B11F9 SIDE IMPACT IGNITION, Diagnostic Chart with Trouble Code.>
B11FA	Side Impact Ignition	• Side airbag module and curtain airbag module are deployed. • Curtain airbag module is deployed.	<Ref. to AB(diag)-49, DTC B11FA SIDE IMPACT IGNITION, Diagnostic Chart with Trouble Code.>
B11FB	Side Impact Ignition	• Side airbag module and curtain airbag module are deployed. • Curtain airbag module is deployed.	<Ref. to AB(diag)-49, DTC B11FB SIDE IMPACT IGNITION, Diagnostic Chart with Trouble Code.>
B11FC	Side Impact Ignition	• Side airbag module and curtain airbag module are deployed. • Curtain airbag module is deployed.	<Ref. to AB(diag)-49, DTC B11FC SIDE IMPACT IGNITION, Diagnostic Chart with Trouble Code.>
B1610	Front Sub Sensor RH Failure	Front sub sensor (RH) is faulty	<Ref. to AB(diag)-49, DTC B1610 FRONT SUB SENSOR RH FAILURE, Diagnostic Chart with Trouble Code.>

DTC	Item	Content of diagnosis	Reference
B1612	Front Sub Sensor RH Lost Communication	• Open or short circuit in harness (RH) between airbag control module and front sub sensor. • Front sub sensor (RH) is faulty. • Airbag control module is faulty.	<Ref. to AB(diag)-49, DTC B1612 FRONT SUB SENSOR RH LOST COMMUNICATION, Diagnostic Chart with Trouble Code.>
B1613	Front Sub Sensor RH Initialization Error		<Ref. to AB(diag)-50, DTC B1613 FRONT SUB SENSOR RH INITIALIZATION ERROR, Diagnostic Chart with Trouble Code.>
B1615	Front Sub Sensor LH Failure	Front sub sensor (LH) is faulty.	<Ref. to AB(diag)-52, DTC B1615 FRONT SUB SENSOR LH FAILURE, Diagnostic Chart with Trouble Code.>
B1617	Front Sub Sensor LH Lost Communication	• Open or short circuit in harness (LH) between airbag control module and front sub sensor. • Front sub sensor (LH) is faulty. • Airbag control module is faulty.	<Ref. to AB(diag)-52, DTC B1617 FRONT SUB SENSOR LH LOST COMMUNICATION, Diagnostic Chart with Trouble Code.>
B1618	Front Sub Sensor LH Initialization Error		<Ref. to AB(diag)-53, DTC B1618 FRONT SUB SENSOR LH INITIALIZATION ERROR, Diagnostic Chart with Trouble Code.>
B16F2	Front Sub Sensor RH Recognition Error	• Front sensor (RH) is misinstalled. • Airbag control module is faulty.	<Ref. to AB(diag)-56, DTC B16F2 FRONT SUB SENSOR RH RECOGNITION ERROR, Diagnostic Chart with Trouble Code.>
B16F3	Front Sub Sensor LH Recognition Error	• Front sensor (LH) is misinstalled. • Airbag control module is faulty.	<Ref. to AB(diag)-56, DTC B16F3 FRONT SUB SENSOR LH RECOGNITION ERROR, Diagnostic Chart with Trouble Code.>
B1620	Side Airbag Sensor RH Failure	Side airbag sensor (RH) is faulty.	<Ref. to AB(diag)-56, DTC B1620 SIDE AIRBAG SENSOR RH FAILURE, Diagnostic Chart with Trouble Code.>
B1622	Side Airbag Sensor RH Lost Communication	• Open or short circuit in harness (RH) between airbag control module and side airbag sensor. • Side airbag sensor (RH) is faulty. • Airbag control module is faulty.	<Ref. to AB(diag)-56, DTC B1622 SIDE AIRBAG SENSOR RH LOST COMMUNICATION, Diagnostic Chart with Trouble Code.>
B1623	Side Airbag Sensor RH Initialization Error		<Ref. to AB(diag)-57, DTC B1623 SIDE AIRBAG SENSOR RH INITIALIZATION ERROR, Diagnostic Chart with Trouble Code.>

DTC	Item	Content of diagnosis	Reference
B1625	Side Airbag Sensor LH Failure	Side airbag sensor (LH) is faulty.	<Ref. to AB(diag)-59, DTC B1625 SIDE AIRBAG SENSOR LH FAILURE, Diagnostic Chart with Trouble Code.>
B1627	Side Airbag Sensor LH Lost Communication	• Open or short circuit in harness (LH) between airbag control module and side airbag sensor. • Side airbag sensor (LH) is faulty. • Airbag control module is faulty.	<Ref. to AB(diag)-59, DTC B1627 SIDE AIRBAG SENSOR LH LOST COMMUNICATION, Diagnostic Chart with Trouble Code.>
B1628	Side Airbag Sensor LH Initialization Error		<Ref. to AB(diag)-60, DTC B1628 SIDE AIRBAG SENSOR LH INITIALIZATION ERROR, Diagnostic Chart with Trouble Code.>
B1630	Curtain Airbag Sensor RH Failure	Curtain airbag sensor (RH) is faulty.	<Ref. to AB(diag)-62, DTC B1630 CURTAIN AIRBAG SENSOR RH FAILURE, Diagnostic Chart with Trouble Code.>
B1632	Curtain Airbag Sensor RH Lost Communication	• Open or short circuit in harness (RH) between airbag control module and curtain airbag sensor. • Side airbag sensor (RH) is faulty. • Curtain airbag sensor (RH) is faulty. • Airbag control module is faulty.	<Ref. to AB(diag)-62, DTC B1632 CURTAIN AIRBAG SENSOR RH LOST COMMUNICATION, Diagnostic Chart with Trouble Code.>
B1633	Curtain Airbag Sensor RH Initialization Error		<Ref. to AB(diag)-63, DTC B1633 CURTAIN AIRBAG SENSOR RH INITIALIZATION ERROR, Diagnostic Chart with Trouble Code.>
B1635	Curtain Airbag Sensor LH Failure	Curtain airbag sensor (LH) is faulty.	<Ref. to AB(diag)-65, DTC B1635 CURTAIN AIRBAG SENSOR LH FAILURE, Diagnostic Chart with Trouble Code.>
B1637	Curtain Airbag Sensor LH Lost Communication	• Open or short circuit in harness (LH) between airbag control module and curtain airbag sensor. • Side airbag sensor (LH) is faulty. • Curtain airbag sensor (LH) is faulty. • Airbag control module is faulty.	<Ref. to AB(diag)-65, DTC B1637 CURTAIN AIRBAG SENSOR LH LOST COMMUNICATION, Diagnostic Chart with Trouble Code.>
B1638	Curtain Airbag Sensor LH Initialization Error		<Ref. to AB(diag)-66, DTC B1638 CURTAIN AIRBAG SENSOR LH INITIALIZATION ERROR, Diagnostic Chart with Trouble Code.>

DTC	Item	Content of diagnosis	Reference
B16F4	Side Airbag Sensor RH Recognition Error	• Side airbag sensor (RH) is misinstalled. • Airbag control module is faulty.	<Ref. to AB(diag)-69, DTC B16F4 SIDE AIRBAG SENSOR RH RECOGNITION ERROR, Diagnostic Chart with Trouble Code.>
B16F5	Side Airbag Sensor LH Recognition Error	• Side airbag sensor (LH) is misinstalled. • Airbag control module is faulty.	<Ref. to AB(diag)-69, DTC B16F5 SIDE AIRBAG SENSOR LH RECOGNITION ERROR, Diagnostic Chart with Trouble Code.>
B16F6	Curtain Airbag Sensor RH Recognition Error	• Curtain airbag sensor (RH) is misinstalled. • Airbag control module is faulty.	<Ref. to AB(diag)-70, DTC B16F6 CURTAIN AIRBAG SENSOR RH RECOGNITION ERROR, Diagnostic Chart with Trouble Code.>
B16F7	Curtain Airbag Sensor LH Recognition Error	• Curtain airbag sensor (LH) is misinstalled. • Airbag control module is faulty.	<Ref. to AB(diag)-70, DTC B16F7 CURTAIN AIRBAG SENSOR LH RECOGNITION ERROR, Diagnostic Chart with Trouble Code.>
B1642	Side Satellite Sensor Bus RH Lost Communication	• Open or short circuit in harness (RH) between airbag control module and front door impact sensor. • Side airbag sensor (RH) is faulty. • Curtain airbag sensor (RH) is faulty. • Front door impact sensor (RH) is faulty. • Airbag control module is faulty.	<Ref. to AB(diag)-71, DTC B1642 SIDE SATELLITE SENSOR BUS RH LOST COMMUNICATION, Diagnostic Chart with Trouble Code.>
B1647	Side Satellite Sensor Bus LH Lost Communication	• Open or short circuit in harness (LH) between airbag control module and front door impact sensor. • Side airbag sensor (LH) is faulty. • Curtain airbag sensor (LH) is faulty. • Front door impact sensor (LH) is faulty. • Airbag control module is faulty.	<Ref. to AB(diag)-76, DTC B1647 SIDE SATELLITE SENSOR BUS LH LOST COMMUNICATION, Diagnostic Chart with Trouble Code.>
B1650	Occupant Classification System Malfunction	• Occupant detection sensor is faulty. • Occupant detection control module is faulty. • Occupant detection harness is faulty. • Rear airbag harness (RH) is faulty. • Fuse No. 25 is blown.	<Ref. to AB(diag)-80, DTC B1650 OCCUPANT CLASSIFICATION SYSTEM MALFUNCTION, Diagnostic Chart with Trouble Code.>
B1655	Front Buckle Switch RH Failure	• Buckle switch (RH) circuit is open, shorted or shorted to ground. • Occupant detection system is faulty. • Occupant detection harness is faulty.	<Ref. to AB(diag)-80, DTC B1655 FRONT BUCKLE SWITCH RH FAILURE, Diagnostic Chart with Trouble Code.>
B1660	Passenger's Airbag On Indicator Failure	• Passenger's airbag indicator is faulty. • Airbag control module is faulty. • Airbag main harness circuit is open, shorted or shorted to ground. • Body harness circuit is open.	<Ref. to AB(diag)-81, DTC B1660 PASSENGER'S AIRBAG ON INDICATOR FAILURE, Diagnostic Chart with Trouble Code.>

DTC	Item	Content of diagnosis	Reference
B1675	Satellite Safing Sensor Failure	Satellite safing sensor is faulty.	<Ref. to AB(diag)-84, DTC B1675 SATELLITE SAFING SENSOR FAILURE, Diagnostic Chart with Trouble Code.>
B1676	Lost Communication With Satellite Safing Sensor	• Open or short circuit in harness between airbag control module and satellite safing sensor. • Satellite safing sensor is faulty. • Airbag control module is faulty.	<Ref. to AB(diag)-84, DTC B1676 LOST COMMUNICATION WITH SATELLITE SAFING SENSOR, Diagnostic Chart with Trouble Code.>
B1677	Satellite Safing Sensor Initialization Incomplete		<Ref. to AB(diag)-85, DTC B1677 SATELLITE SAFING SENSOR INITIALIZATION INCOMPLETE, Diagnostic Chart with Trouble Code.>
B16F8	Satellite Safing Sensor Recognition Error	• Satellite safing sensor is misinstalled. • Airbag control module is faulty.	<Ref. to AB(diag)-88, DTC B16F8 SATELLITE SAFING SENSOR RECOGNITION ERROR, Diagnostic Chart with Trouble Code.>
B16F9	Door Sensor RH Recognition Error	• Front door impact sensor (RH) is misinstalled. • Airbag control module is faulty.	<Ref. to AB(diag)-88, DTC B16F9 DOOR SENSOR RH RECOGNITION ERROR, Diagnostic Chart with Trouble Code.>
B1690	Door Sensor RH Failure	Front door impact sensor (RH) is faulty.	<Ref. to AB(diag)-88, DTC B1690 DOOR SENSOR RH FAILURE, Diagnostic Chart with Trouble Code.>
B1692	Lost Communication With Door Sensor RH	• Open or short circuit in harness between curtain airbag sensor and front door impact sensor. • Front door impact sensor (RH) is faulty. • Curtain airbag sensor (RH) is faulty. • Airbag control module is faulty.	<Ref. to AB(diag)-88, DTC B1692 LOST COMMUNICATION WITH DOOR SENSOR RH, Diagnostic Chart with Trouble Code.>
B1693	Door Sensor RH Initialization Incomplete		<Ref. to AB(diag)-89, DTC B1693 DOOR SENSOR RH INITIALIZATION INCOMPLETE, Diagnostic Chart with Trouble Code.>
B16FA	Lost Communication With Door Sensor LH	• Front door impact sensor (LH) is misinstalled. • Airbag control module is faulty.	<Ref. to AB(diag)-92, DTC B16FA LOST COMMUNICATION WITH DOOR SENSOR LH, Diagnostic Chart with Trouble Code.>

DTC	Item	Content of diagnosis	Reference
B1695	Door Sensor LH Failure	Front door impact sensor (LH) is faulty.	<Ref. to AB(diag)-92, DTC B1695 DOOR SENSOR LH FAILURE, Diagnostic Chart with Trouble Code.>
B1697	Lost Communication With Door Sensor LH	• Open or short circuit in harness between curtain airbag sensor and front door impact sensor. • Front door impact sensor (LH) is faulty. • Curtain airbag sensor (LH) is faulty. • Airbag control module is faulty.	<Ref. to AB(diag)-92, DTC B1697 LOST COMMUNICATION WITH DOOR SENSOR LH, Diagnostic Chart with Trouble Code.>
B1698	Door Sensor LH Initialization Incomplete		<Ref. to AB(diag)-93, DTC B1698 DOOR SENSOR LH INITIALIZATION INCOMPLETE, Diagnostic Chart with Trouble Code.>
B161A	Lost Communication With Front Satellite Sensor Bus	• Open or short circuit in harness between airbag control module and front sub sensor. • Front sub sensor is faulty. • Airbag control module is faulty.	<Ref. to AB(diag)-96, DTC B161A LOST COMMUNICATION WITH FRONT SATELLITE SENSOR BUS, Diagnostic Chart with Trouble Code.>
B16F1	Passenger's Seat Belt Warning Failure	• Airbag control module is faulty. • Meter is faulty. • Harness circuits between meter and airbag control module are open, shorted or shorted to ground.	<Ref. to AB(diag)-99, DTC B16F1 PASSENGER'S SEAT BELT WARNING FAILURE, Diagnostic Chart with Trouble Code.>
B16F0	Passenger's Airbag Off Indicator Failure	• Passenger's airbag indicator is faulty. • Airbag control module is faulty. • Airbag main harness circuit is open or shorted. • Body harness circuit is open.	<Ref. to AB(diag)-101, DTC B16F0 PASSENGER'S AIRBAG OFF INDICATOR FAILURE, Diagnostic Chart with Trouble Code.>
B1760	Sensor Mat Abnormal	• Occupant detection sensor is open, shorted between terminals, shorted to power supply or shorted to ground. • Seat heater is open. • Occupant detection control module is faulty.	<Ref. to AB(diag)-101, DTC B1760 SENSOR MAT ABNORMAL, Diagnostic Chart with Trouble Code.>
B1761	Sensor Mat Liquid Coating Abnormal	• Detected that the occupant detection sensor is spattered with fluid. • Occupant detection sensor is faulty. • Occupant detection control module is faulty.	<Ref. to AB(diag)-101, DTC B1761 SENSOR MAT LIQUID COATING ABNORMAL, Diagnostic Chart with Trouble Code.>
B1771	Buckle Switch Abnormal	• Passenger's buckle switch circuit is open, shorted or shorted to ground. • Occupant detection system is faulty. • Occupant detection harness is faulty.	<Ref. to AB(diag)-101, DTC B1771 BUCKLE SWITCH ABNORMAL, Diagnostic Chart with Trouble Code.>
B1795	ECU Internal Circuit Fault	Occupant detection control module is faulty.	<Ref. to AB(diag)-101, DTC B1795 ECU INTERNAL CIRCUIT FAULT, Diagnostic Chart with Trouble Code.>

DTC	Item	Content of diagnosis	Reference
B1800	Short in Driver's Airbag	• Airbag main harness circuit is shorted. • Airbag module harness (driver's side) circuit is shorted. • Roll connector circuit is shorted. • Driver's airbag module is faulty. • Airbag control module is faulty.	<Ref. to AB(diag)-102, DTC B1800 SHORT IN DRIVER'S AIRBAG, Diagnostic Chart with Trouble Code.>
B1801	Open in Driver's Airbag	• Airbag main harness circuit is open. • Airbag module harness circuit (driver's side) is open. • Roll connector circuit is open. • Driver's airbag module is faulty. • Airbag control module is faulty.	<Ref. to AB(diag)-105, DTC B1801 OPEN IN DRIVER'S AIRBAG, Diagnostic Chart with Trouble Code.>
B1802	Short in Driver's Airbag (To Ground)	• Airbag main harness circuit is shorted to ground. • Airbag module harness (driver's side) circuit is shorted to ground. • Roll connector circuit is shorted to ground. • Driver's airbag module is faulty. • Airbag control module is faulty.	<Ref. to AB(diag)-108, DTC B1802 SHORT IN DRIVER'S AIRBAG (TO GROUND), Diagnostic Chart with Trouble Code.>
B1803	Short in Driver's Airbag (To +B)	• Airbag main harness circuit is shorted to power supply. • Airbag module harness circuit (driver's side) is shorted to power supply. • Roll connector circuit is shorted to power supply. • Airbag module is faulty. • Airbag control module is faulty.	<Ref. to AB(diag)-111, DTC B1803 SHORT IN DRIVER'S AIRBAG (TO +B), Diagnostic Chart with Trouble Code.>
B1805	Short in Passenger's Airbag	• Airbag main harness circuit is shorted. • Airbag module harness circuit (passenger's side) is shorted. • Passenger's airbag module is faulty. • Airbag control module is faulty.	<Ref. to AB(diag)-114, DTC B1805 SHORT IN PASSENGER'S AIR-BAG, Diagnostic Chart with Trouble Code.>
B1806	Open in Passenger's Airbag	• Airbag main harness circuit is open. • Airbag module harness circuit (passenger's side) is open. • Passenger's airbag module is faulty. • Airbag control module is faulty.	<Ref. to AB(diag)-117, DTC B1806 OPEN IN PASSENGER'S AIR-BAG, Diagnostic Chart with Trouble Code.>
B1807	Short in Passenger's Airbag (To Ground)	• Airbag main harness circuit is shorted to ground. • Airbag module harness (passenger's side) circuit is shorted to ground. • Passenger's airbag module is faulty. • Airbag control module is faulty.	<Ref. to AB(diag)-120, DTC B1807 SHORT IN PASSENGER'S AIR-BAG (TO GROUND), Diagnostic Chart with Trouble Code.>
B1808	Short in Passenger's Airbag (To +B)	• Airbag main harness circuit is shorted to power supply. • Airbag module harness (passenger's side) circuit is shorted to power supply. • Passenger's airbag module is faulty. • Airbag control module is faulty.	<Ref. to AB(diag)-123, DTC B1808 SHORT IN PASSENGER'S AIR-BAG (TO +B), Diagnostic Chart with Trouble Code.>
B1810	Short in Driver's Airbag Dual Stage - 2nd Step	• Airbag main harness circuit is shorted. • Airbag module harness (driver's side) circuit is shorted. • Roll connector circuit is shorted. • Driver's airbag module is faulty. • Airbag control module is faulty.	<Ref. to AB(diag)-126, DTC B1810 SHORT IN DRIVER'S AIRBAG DUAL STAGE - 2ND STEP, Diagnostic Chart with Trouble Code.>
B1811	Open in Driver's Airbag Dual Stage - 2nd Step	• Airbag main harness circuit is open. • Airbag module harness circuit (driver's side) is open. • Roll connector circuit is open. • Driver's airbag module is faulty. • Airbag control module is faulty.	<Ref. to AB(diag)-129, DTC B1811 OPEN IN DRIVER'S AIRBAG DUAL STAGE - 2ND STEP, Diagnostic Chart with Trouble Code.>

DTC	Item	Content of diagnosis	Reference
B1812	Short in Driver's Airbag Dual Stage - 2nd Step (To Ground)	• Airbag main harness circuit is shorted to ground. • Airbag module harness (driver's side) circuit is shorted to ground. • Roll connector circuit is shorted to ground. • Driver's airbag module is faulty. • Airbag control module is faulty.	<Ref. to AB(diag)-132, DTC B1812 SHORT IN DRIVER'S AIRBAG DUAL STAGE - 2ND STEP (TO GROUND), Diagnostic Chart with Trouble Code.>
B1813	Short in Driver's Airbag Dual Stage - 2nd Step Circuit (To +B)	• Airbag main harness circuit is shorted to power supply. • Airbag module harness circuit (driver's side) is shorted to power supply. • Roll connector circuit is shorted to power supply. • Airbag module is faulty. • Airbag control module is faulty.	<Ref. to AB(diag)-135, DTC B1813 SHORT IN DRIVER'S AIRBAG DUAL STAGE - 2ND STEP CIRCUIT (TO +B), Diagnostic Chart with Trouble Code.>
B1815	Open in Passenger's Airbag Dual Stage - 2nd Step	• Airbag main harness circuit is shorted. • Airbag module harness circuit (passenger's side) is shorted. • Passenger's airbag module is faulty. • Airbag control module is faulty.	<Ref. to AB(diag)-138, DTC B1815 OPEN IN PASSENGER'S AIR-BAG DUAL STAGE - 2ND STEP, Diagnostic Chart with Trouble Code.>
B1816	Open in Passenger's Airbag Dual Stage - 2nd Step	• Airbag main harness circuit is open. • Airbag module harness circuit (passenger's side) is open. • Passenger's airbag module is faulty. • Airbag control module is faulty.	<Ref. to AB(diag)-141, DTC B1816 OPEN IN PASSENGER'S AIR-BAG DUAL STAGE - 2ND STEP, Diagnostic Chart with Trouble Code.>
B1817	Short in Passenger's Airbag Dual Stage - 2nd Step (To Ground)	• Airbag main harness circuit is shorted to ground. • Airbag module harness (passenger's side) circuit is shorted to ground. • Passenger's airbag module is faulty. • Airbag control module is faulty.	<Ref. to AB(diag)-144, DTC B1817 SHORT IN PASSENGER'S AIR-BAG DUAL STAGE - 2ND STEP (TO GROUND), Diagnostic Chart with Trouble Code.>
B1818	Short in Passenger's Airbag Dual Stage - 2nd Step Circuit (To +B)	• Airbag main harness circuit is shorted to power supply. • Airbag module harness (passenger's side) circuit is shorted to power supply. • Passenger's airbag module is faulty. • Airbag control module is faulty.	<Ref. to AB(diag)-147, DTC B1818 SHORT IN PASSENGER'S AIR-BAG DUAL STAGE - 2ND STEP CIRCUIT (TO +B), Diagnostic Chart with Trouble Code.>
B1820	Short in Side Airbag RH	• Side airbag harness (RH) circuit is shorted. • Side airbag module (RH) is faulty. • Airbag control module is faulty.	<Ref. to AB(diag)-150, DTC B1820 SHORT IN SIDE AIRBAG RH, Diagnostic Chart with Trouble Code.>
B1821	Open in Side Airbag RH	• Side airbag harness (RH) circuit is open. • Side airbag module (RH) is faulty. • Airbag control module is faulty.	<Ref. to AB(diag)-152, DTC B1821 OPEN IN SIDE AIRBAG RH, Diagnostic Chart with Trouble Code.>

DTC	Item	Content of diagnosis	Reference
B1822	Short in Side Airbag RH (To Ground)	• Side airbag harness (RH) circuit is shorted to ground. • Side airbag module (RH) is faulty. • Airbag control module is faulty.	<Ref. to AB(diag)-154, DTC B1822 SHORT IN SIDE AIRBAG RH (TO GROUND), Diagnostic Chart with Trouble Code.>
B1823	Short in Side Airbag RH (To +B)	• Side airbag harness (RH) circuit is shorted to power supply. • Side airbag module (RH) is faulty. • Airbag control module is faulty.	<Ref. to AB(diag)-156, DTC B1823 SHORT IN SIDE AIRBAG RH (TO +B), Diagnostic Chart with Trouble Code.>
B1825	Short in Side Airbag LH	• Side airbag harness (LH) circuit is shorted. • Side airbag module (LH) is faulty. • Airbag control module is faulty.	<Ref. to AB(diag)-158, DTC B1825 SHORT IN SIDE AIRBAG LH, Diagnostic Chart with Trouble Code.>
B1826	Open in Side Airbag LH	• Side airbag harness (LH) circuit is open. • Side airbag module (LH) is faulty. • Airbag control module is faulty.	<Ref. to AB(diag)-160, DTC B1826 OPEN IN SIDE AIRBAG LH, Diagnostic Chart with Trouble Code.>
B1827	Short in Side Airbag LH (To Ground)	• Side airbag harness (LH) circuit is shorted to ground. • Side airbag module (LH) is faulty. • Airbag control module is faulty.	<Ref. to AB(diag)-162, DTC B1827 SHORT IN SIDE AIRBAG LH (TO GROUND), Diagnostic Chart with Trouble Code.>
B1828	Short in Side Airbag LH (To +B)	• Side airbag harness (LH) circuit is shorted to power supply. • Side airbag module (LH) is faulty. • Airbag control module is faulty.	<Ref. to AB(diag)-164, DTC B1828 SHORT IN SIDE AIRBAG LH (TO +B), Diagnostic Chart with Trouble Code.>
B1830	Short in Curtain Airbag RH Squib Circuit	• Curtain airbag harness (RH) circuit is shorted. • Curtain airbag module (RH) is faulty. • Airbag control module is faulty.	<Ref. to AB(diag)-166, DTC B1830 SHORT IN CURTAIN AIRBAG RH SQUIB CIRCUIT, Diagnostic Chart with Trouble Code.>
B1831	Open in Curtain Airbag RH Squib Circuit	• Curtain airbag harness (RH) circuit is open. • Curtain airbag module (RH) is faulty. • Airbag control module is faulty.	<Ref. to AB(diag)-168, DTC B1831 OPEN IN CURTAIN AIRBAG RH SQUIB CIRCUIT, Diagnostic Chart with Trouble Code.>
B1832	Short in Curtain Airbag RH Squib Circuit (To Ground)	• Curtain airbag harness (RH) circuit is shorted to ground. • Curtain airbag module (RH) is faulty. • Airbag control module is faulty.	<Ref. to AB(diag)-170, DTC B1832 SHORT IN CURTAIN AIRBAG RH SQUIB CIRCUIT (TO GROUND), Diagnostic Chart with Trouble Code.>
B1833	Short in Curtain Shield Airbag RH Squib Circuit (To +B)	• Curtain airbag harness (RH) is shorted to power supply. • Curtain airbag module (RH) is faulty. • Airbag control module is faulty.	<Ref. to AB(diag)-172, DTC B1833 SHORT IN CURTAIN SHIELD AIRBAG RH SQUIB CIRCUIT (TO +B), Diagnostic Chart with Trouble Code.>

DTC	Item	Content of diagnosis	Reference
B1835	Short in Curtain Airbag LH Squib Circuit	• Curtain airbag harness (LH) circuit is shorted. • Curtain airbag module (LH) is faulty. • Airbag control module is faulty.	<Ref. to AB(diag)-174, DTC B1835 SHORT IN CURTAIN AIRBAG LH SQUIB CIRCUIT, Diagnostic Chart with Trouble Code.>
B1836	Open in Curtain Airbag LH Squib Circuit	• Curtain airbag harness (LH) circuit is open. • Curtain airbag module (LH) is faulty. • Airbag control module is faulty.	<Ref. to AB(diag)-176, DTC B1836 OPEN IN CURTAIN AIRBAG LH SQUIB CIRCUIT, Diagnostic Chart with Trouble Code.>
B1837	Short in Curtain Airbag LH Squib Circuit (To Ground)	• Curtain airbag harness (LH) circuit is shorted to ground. • Curtain airbag module (LH) is faulty. • Airbag control module is faulty.	<Ref. to AB(diag)-178, DTC B1837 SHORT IN CURTAIN AIRBAG LH SQUIB CIRCUIT (TO GROUND), Diagnostic Chart with Trouble Code.>
B1838	Short in Curtain Shield Airbag LH Squib Circuit (To +B)	• Curtain airbag harness (LH) is shorted to power supply. • Curtain airbag module (LH) is faulty. • Airbag control module is faulty.	<Ref. to AB(diag)-180, DTC B1838 SHORT IN CURTAIN SHIELD AIRBAG LH SQUIB CIRCUIT (TO +B), Diagnostic Chart with Trouble Code.>
B1860	Short in Driver's Knee Airbag	• Airbag main harness circuit is shorted. • Knee airbag module harness circuit is shorted. • Knee airbag module is faulty. • Airbag control module is faulty.	<Ref. to AB(diag)-182, DTC B1860 SHORT IN DRIVER'S KNEE AIRBAG, Diagnostic Chart with Trouble Code.>
B1861	Open in Driver's Knee Airbag	• Airbag main harness circuit is open. • Knee airbag module harness circuit is open. • Knee airbag module is faulty. • Airbag control module is faulty.	<Ref. to AB(diag)-184, DTC B1861 OPEN IN DRIVER'S KNEE AIRBAG, Diagnostic Chart with Trouble Code.>
B1862	Short in Driver's Knee Airbag (To Ground)	• Airbag main harness circuit is shorted to ground. • Knee airbag module harness circuit is shorted to ground. • Knee airbag module is faulty. • Airbag control module is faulty.	<Ref. to AB(diag)-186, DTC B1862 SHORT IN DRIVER'S KNEE AIRBAG (TO GROUND), Diagnostic Chart with Trouble Code.>
B1863	Short in Driver's Knee Airbag (To +B)	• Airbag main harness circuit is shorted to power supply. • Knee airbag module harness circuit is shorted to power supply. • Knee airbag module is faulty. • Airbag control module is faulty.	<Ref. to AB(diag)-188, DTC B1863 SHORT IN DRIVER'S KNEE AIRBAG (TO +B), Diagnostic Chart with Trouble Code.>
B1900	Short in Front P/T RH	• Seat belt pretensioner (RH) circuit is shorted. • Pretensioner (RH) is faulty. • Pretensioner harness (RH) is shorted. • Airbag control module is faulty.	<Ref. to AB(diag)-190, DTC B1900 SHORT IN FRONT P/T RH, Diagnostic Chart with Trouble Code.>
B1901	Open in Front P/T RH	• Seat belt pretensioner (RH) circuit is open. • Pretensioner (RH) is faulty. • Pretensioner harness (RH) is shorted. • Airbag control module is faulty.	<Ref. to AB(diag)-192, DTC B1901 OPEN IN FRONT P/T RH, Diagnostic Chart with Trouble Code.>

DTC	Item	Content of diagnosis	Reference
B1902	Short in Front P/T RH (To Ground)	• Seat belt pretensioner (RH) circuit is shorted to ground. • Pretensioner (RH) is faulty. • Pretensioner harness (RH) is shorted. • Airbag control module is faulty.	<Ref. to AB(diag)-194, DTC B1902 SHORT IN FRONT P/T RH (TO GROUND), Diagnostic Chart with Trouble Code.>
B1903	Short in Front P/T RH (To +B)	• Seat belt pretensioner (RH) circuit is shorted to power supply. • Pretensioner (RH) is faulty. • Pretensioner harness (RH) is shorted. • Airbag control module is faulty.	<Ref. to AB(diag)-196, DTC B1903 SHORT IN FRONT P/T RH (TO +B), Diagnostic Chart with Trouble Code.>
B1905	Short in Front P/T LH	• Seat belt pretensioner (LH) circuit is shorted. • Pretensioner (LH) is faulty. • Pretensioner harness (LH) is shorted. • Airbag control module is faulty.	<Ref. to AB(diag)-198, DTC B1905 SHORT IN FRONT P/T LH, Diagnostic Chart with Trouble Code.>
B1906	Open in Front P/T LH	• Seat belt pretensioner (LH) circuit is open. • Pretensioner (LH) is faulty. • Pretensioner harness (LH) is shorted. • Airbag control module is faulty.	<Ref. to AB(diag)-200, DTC B1906 OPEN IN FRONT P/T LH, Diagnostic Chart with Trouble Code.>
B1907	Short in Front P/T LH (To Ground)	• Seat belt pretensioner (LH) circuit is shorted to ground. • Pretensioner (LH) is faulty. • Pretensioner harness (LH) is shorted. • Airbag control module is faulty.	<Ref. to AB(diag)-202, DTC B1907 SHORT IN FRONT P/T LH (TO GROUND), Diagnostic Chart with Trouble Code.>
B1908	Short in Front P/T LH (To +B)	• Seat belt pretensioner (LH) circuit is shorted to power supply. • Pretensioner (LH) is faulty. • Pretensioner harness (LH) is shorted. • Airbag control module is faulty.	<Ref. to AB(diag)-204, DTC B1908 SHORT IN FRONT P/T LH (TO +B), Diagnostic Chart with Trouble Code.>
B19F0	Short in Front P/T 2 RH	• Lap seat belt pretensioner (RH) circuit is shorted. • Lap seat belt pretensioner (RH) is faulty. • Lap seat belt pretensioner harness (RH) is shorted. • Airbag control module is faulty.	<Ref. to AB(diag)-206, DTC B19F0 SHORT IN FRONT P/T 2 RH, Diagnostic Chart with Trouble Code.>
B19F1	Open in Front P/T 2 RH	• Lap seat belt pretensioner (RH) circuit is open. • Lap seat belt pretensioner (RH) is faulty. • Lap seat belt pretensioner harness (RH) is open. • Airbag control module is faulty.	<Ref. to AB(diag)-208, DTC B19F1 OPEN IN FRONT P/T 2 RH, Diagnostic Chart with Trouble Code.>
B19F2	Short in Front P/T 2 RH (To Ground)	• Lap seat belt pretensioner (RH) circuit is shorted to ground. • Lap seat belt pretensioner (RH) is faulty. • Lap seat belt pretensioner harness (RH) is shorted to ground. • Airbag control module is faulty.	<Ref. to AB(diag)-210, DTC B19F2 SHORT IN FRONT P/T 2 RH (TO GROUND), Diagnostic Chart with Trouble Code.>
B19F3	Short in Front P/T 2 RH (To +B)	• Lap seat belt pretensioner (RH) circuit is shorted to power supply. • Lap seat belt pretensioner (RH) is faulty. • Lap seat belt pretensioner harness (RH) is shorted to power supply. • Airbag control module is faulty.	<Ref. to AB(diag)-212, DTC B19F3 SHORT IN FRONT P/T 2 RH (TO +B), Diagnostic Chart with Trouble Code.>

16.Diagnostic Chart with Trouble Code

A: DTC U0073 CONTROL MODULE COMMUNICATION BUS OFF

This is detected when a CAN line malfunction occurs.

NOTE:
Perform the diagnosis for LAN system. <Ref. to LAN(w/o HEV)(diag)-2, PROCEDURE, Basic Diagnostic Procedure.> <Ref. to LAN(HEV)(diag)-2, PROCEDURE, Basic Diagnostic Procedure.>

B: DTC B1000 AIRBAG ECU MALFUNCTION

DTC DETECTING CONDITION:
Airbag control module is faulty.

CAUTION:
Before performing diagnosis, refer to "CAUTION" in "General Description". <Ref. to AB(diag)-4, CAUTION, General Description.>

	Step	Check	Yes	No
1	**CHECK DTC.** Read the DTC. (Current malfunction) <Ref. to AB(diag)-26, Read Diagnostic Trouble Code (DTC).>	Is any of B1000, B1003, B1105, B1106, B1115, B1116, B1120, B1121, B1125, B1126, B1135, B1136, B1145, B1146, B1170, B1185, B1195, B1196 or B1199 displayed?	Replace the airbag control module. <Ref. to AB-78, Airbag Control Module.>	Perform the Clear Memory Mode. <Ref. to AB(diag)-28, Clear Memory Mode.>

C: DTC B1003 AIRBAG ECU MALFUNCTION

NOTE:
Refer to DTC B1103 for details on DTC B1000. <Ref. to AB(diag)-46, DTC B1000 AIRBAG ECU MALFUNCTION, Diagnostic Chart with Trouble Code.>

D: DTC B1105 AIRBAG ECU MALFUNCTION

NOTE:
Refer to DTC B1105 for details on DTC B1000. <Ref. to AB(diag)-46, DTC B1000 AIRBAG ECU MALFUNCTION, Diagnostic Chart with Trouble Code.>

E: DTC B1106 AIRBAG ECU MALFUNCTION

NOTE:
Refer to DTC B1106 for details on DTC B1000. <Ref. to AB(diag)-46, DTC B1000 AIRBAG ECU MALFUNCTION, Diagnostic Chart with Trouble Code.>

F: DTC B1115 AIRBAG ECU MALFUNCTION

NOTE:
Refer to DTC B1115 for details on DTC B1000. <Ref. to AB(diag)-46, DTC B1000 AIRBAG ECU MALFUNCTION, Diagnostic Chart with Trouble Code.>

G: DTC B1116 AIRBAG ECU MALFUNCTION

NOTE:
Refer to DTC B1116 for details on DTC B1000. <Ref. to AB(diag)-46, DTC B1000 AIRBAG ECU MALFUNCTION, Diagnostic Chart with Trouble Code.>

H: DTC B1120 AIRBAG ECU MALFUNCTION

NOTE:
Refer to DTC B1120 for details on DTC B1000. <Ref. to AB(diag)-46, DTC B1000 AIRBAG ECU MALFUNCTION, Diagnostic Chart with Trouble Code.>

I: DTC B1121 AIRBAG ECU MALFUNCTION

NOTE:
Refer to DTC B1121 for details on DTC B1000. <Ref. to AB(diag)-46, DTC B1000 AIRBAG ECU MALFUNCTION, Diagnostic Chart with Trouble Code.>

J: DTC B1125 AIRBAG ECU MALFUNCTION

NOTE:
Refer to DTC B1125 for details on DTC B1000. <Ref. to AB(diag)-46, DTC B1000 AIRBAG ECU MALFUNCTION, Diagnostic Chart with Trouble Code.>

K: DTC B1126 AIRBAG ECU MALFUNCTION

NOTE:
Refer to DTC B1126 for details on DTC B1000. <Ref. to AB(diag)-46, DTC B1000 AIRBAG ECU MALFUNCTION, Diagnostic Chart with Trouble Code.>

L: DTC B1135 AIRBAG ECU MALFUNCTION

NOTE:
Refer to DTC B1135 for details on DTC B1000. <Ref. to AB(diag)-46, DTC B1000 AIRBAG ECU MALFUNCTION, Diagnostic Chart with Trouble Code.>

M: DTC B1136 AIRBAG ECU MALFUNCTION

NOTE:
Refer to DTC B1136 for details on DTC B1000. <Ref. to AB(diag)-46, DTC B1000 AIRBAG ECU MALFUNCTION, Diagnostic Chart with Trouble Code.>

N: DTC B1145 AIRBAG ECU MALFUNCTION

NOTE:
Refer to DTC B1145 for details on DTC B1000. <Ref. to AB(diag)-46, DTC B1000 AIRBAG ECU MALFUNCTION, Diagnostic Chart with Trouble Code.>

O: DTC B1146 AIRBAG ECU MALFUNCTION

NOTE:
Refer to DTC B1146 for details on DTC B1000. <Ref. to AB(diag)-46, DTC B1000 AIRBAG ECU MALFUNCTION, Diagnostic Chart with Trouble Code.>

P: DTC B1170 AIRBAG ECU MALFUNCTION

NOTE:
Refer to DTC B1170 for details on DTC B1000. <Ref. to AB(diag)-46, DTC B1000 AIRBAG ECU MALFUNCTION, Diagnostic Chart with Trouble Code.>

Q: DTC B1185 AIRBAG ECU MALFUNCTION

NOTE:
Refer to DTC B1185 for details on DTC B1000. <Ref. to AB(diag)-46, DTC B1000 AIRBAG ECU MALFUNCTION, Diagnostic Chart with Trouble Code.>

R: DTC B1195 AIRBAG ECU MALFUNCTION

NOTE:
Refer to DTC B1195 for details on DTC B1000. <Ref. to AB(diag)-46, DTC B1000 AIRBAG ECU MALFUNCTION, Diagnostic Chart with Trouble Code.>

S: DTC B1196 AIRBAG ECU MALFUNCTION

NOTE:
Refer to DTC B1196 for details on DTC B1000. <Ref. to AB(diag)-46, DTC B1000 AIRBAG ECU MALFUNCTION, Diagnostic Chart with Trouble Code.>

T: DTC B1199 AIRBAG ECU MALFUNCTION

NOTE:
Refer to DTC B1199 for details on DTC B1000. <Ref. to AB(diag)-46, DTC B1000 AIRBAG ECU MALFUNCTION, Diagnostic Chart with Trouble Code.>

U: DTC B11E0 ROLLOVER IGNITION

This DTC is indicated when the curtain airbag module and the seat belt pretensioner are deployed.
Once this DTC is displayed, the memory cannot be cleared. Replace the following parts.
- Airbag control module <Ref. to AB-78, Airbag Control Module.>
- Curtain airbag module <Ref. to AB-74, Curtain Airbag Module.>
- Front outer seat belt with pretensioner <Ref. to SB-16, Front Seat Belt.>

V: DTC B11F2 FRONT IMPACT IGNITION

DTC DETECTING CONDITION:
This DTC is indicated when the front airbag module and the pretensioner are deployed.
Once this DTC is displayed, the memory cannot be cleared. Therefore replace the following parts.
- Airbag control module <Ref. to AB-78, Airbag Control Module.>
- Driver's airbag module <Ref. to AB-41, Driver's Airbag Module.>
- Passenger's airbag module <Ref. to AB-46, Passenger's Airbag Module.>
- Front sub sensor of both sides <Ref. to AB-82, Front Sub Sensor.>
- Front outer seat belt with pretensioner of both sides <Ref. to SB-16, Front Seat Belt.>
- Steering roll connector <Ref. to AB-105, Roll Connector.>
- Occupant detection system (passenger's seat cushion & frame assembly) <Ref. to SE-7, Front Seat.>
- Curtain airbag module on both sides (when activated) <Ref. to AB-74, Curtain Airbag Module.>

W: DTC B11F3 FRONT IMPACT IGNITION

NOTE:
For details on DTC B11F3, refer to DTC B11F2. <Ref. to AB(diag)-48, DTC B11F2 FRONT IMPACT IGNITION, Diagnostic Chart with Trouble Code.>

X: DTC B11F4 FRONT IMPACT IGNITION

NOTE:
For details on DTC B11F4, refer to DTC B11F2. <Ref. to AB(diag)-48, DTC B11F2 FRONT IMPACT IGNITION, Diagnostic Chart with Trouble Code.>

Y: DTC B11F5 FRONT IMPACT IGNITION

NOTE:
For details on DTC B11F5, refer to DTC B11F2. <Ref. to AB(diag)-48, DTC B11F2 FRONT IMPACT IGNITION, Diagnostic Chart with Trouble Code.>

Z: DTC B11F7 SIDE IMPACT IGNITION

This DTC is displayed when the side airbag module and curtain airbag module are deployed.
Once this DTC is displayed, the memory cannot be cleared. Replace the following parts.
- Airbag control module <Ref. to AB-78, Airbag Control Module.>
- Side airbag module (operating side) <Ref. to AB-66, Side Airbag Module.>
- Side airbag sensor (operating side) <Ref. to AB-89, Side Airbag Sensor.>
- Curtain airbag module (operating side) <Ref. to AB-74, Curtain Airbag Module.>
- Curtain airbag sensor (operating side) <Ref. to AB-94, Curtain Airbag Sensor.>
- Satellite safing sensor <Ref. to AB-102, Satellite Safing Sensor.>
- Front door impact sensor (operating side) <Ref. to AB-86, Front Door Impact Sensor.>
- Front outer seat belt with pretensioner on the collision side (when activated) <Ref. to SB-16, Front Seat Belt.>

AA:DTC B11F8 SIDE IMPACT IGNITION

NOTE:
For details on DTC B11F8. refer to DTC B11F7. <Ref. to AB(diag)-48, DTC B11F7 SIDE IMPACT IGNITION, Diagnostic Chart with Trouble Code.>

AB:DTC B11F9 SIDE IMPACT IGNITION

NOTE:
For details on DTC B11F9, refer to DTC B11F7. <Ref. to AB(diag)-48, DTC B11F7 SIDE IMPACT IGNITION, Diagnostic Chart with Trouble Code.>

AC:DTC B11FA SIDE IMPACT IGNITION

NOTE:
For details on DTC B11FA, refer to DTC B11F7. <Ref. to AB(diag)-48, DTC B11F7 SIDE IMPACT IGNITION, Diagnostic Chart with Trouble Code.>

AD:DTC B11FB SIDE IMPACT IGNITION

NOTE:
For details on DTC B11FB, refer to DTC B11F7. <Ref. to AB(diag)-48, DTC B11F7 SIDE IMPACT IGNITION, Diagnostic Chart with Trouble Code.>

AE:DTC B11FC SIDE IMPACT IGNITION

NOTE:
For details on DTC B11FC, refer to DTC B11F7. <Ref. to AB(diag)-48, DTC B11F7 SIDE IMPACT IGNITION, Diagnostic Chart with Trouble Code.>

AF:DTC B1610 FRONT SUB SENSOR RH FAILURE

DTC DETECTING CONDITION:
Front sub sensor (RH) is faulty.
If DTC B1610 is displayed, the circuit within the front sub sensor (RH) is faulty.
Replace the front sub sensor (RH). <Ref. to AB-82, Front Sub Sensor.>

AG:DTC B1612 FRONT SUB SENSOR RH LOST COMMUNICATION

NOTE:
For details on DTC B1612, refer to DTC B1613. <Ref. to AB(diag)-50, DTC B1613 FRONT SUB SENSOR RH INITIALIZATION ERROR, Diagnostic Chart with Trouble Code.>

AH:DTC B1613 FRONT SUB SENSOR RH INITIALIZATION ERROR

DTC DETECTING CONDITION:

- Open or short circuit in harness of front sensor bus (RH)
- Front sub sensor (RH) is faulty.
- Airbag control module is faulty.

CAUTION:

Before performing diagnosis, refer to "CAUTION" in "General Description". <Ref. to AB(diag)-4, CAUTION, General Description.>

WIRING DIAGRAM:

Airbag system <Ref. to WI(w/o HEV)-30, WIRING DIAGRAM, Airbag System.> <Ref. to WI(HEV)-50, WIRING DIAGRAM, Airbag System.>

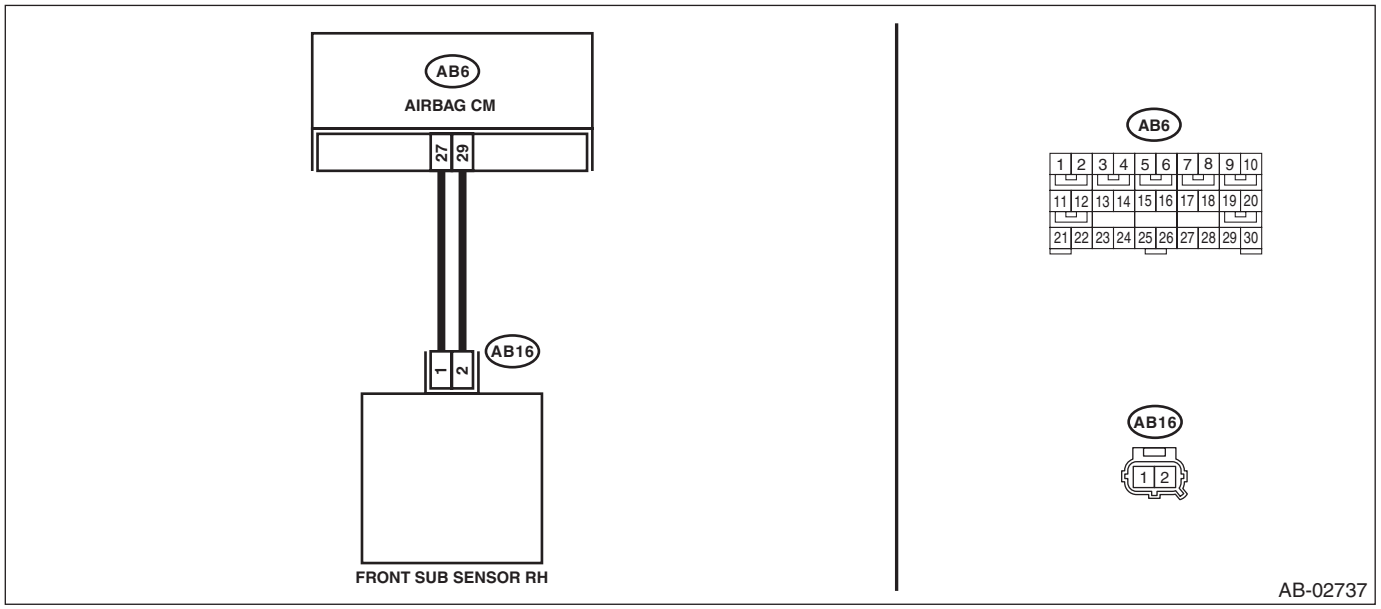

Step		Check	Yes	No
1	**CHECK POOR CONTACT OF CONNECTORS.** Check for poor contact of the connectors (AB6, AB16) between the airbag control module and the front sub sensor (RH).	Is there poor contact?	Replace the airbag main harness along with body harness.	Go to step **2**.

	Step	Check	Yes	No
2	**CHECK AIRBAG MAIN HARNESS (FRONT SENSOR BUS RH).** 1) Turn the ignition switch to OFF, disconnect the battery ground cable, and wait for 60 seconds or more. NOTE: For HEV model, disconnect the negative terminal from 12 volt auxiliary battery, and disconnect the ground terminal from 12V engine restart battery sensor for 12 volt engine restart battery. <Ref. to NT-5, BATTERY, NOTE, Note.> 2) Remove the instrument panel lower cover and column cover, and disconnect the connectors (AB7) and (AB2). 3) Remove the console front panel and disconnect the connector (AB9). 4) Disconnect the connectors (AB6, AB17, AB18) from airbag control module. 5) Connect the connector (1AG) in the test harness AG to the connectors (AB6, AB17, AB18). NOTE: Except for XV models, connect test harness AH between the connectors (AB6, AB17, AB18) and (1AG). 6) Disconnect the connector (AB16) from the front sub sensor (RH), and then connect the connector (1H) in the test harness H to connector (AB16). 7) Measure the resistance between connector (4AG) in the test harness AG and connector (3H) in the test harness H. ***Connector & terminal*** ***(4AG) No. 14 — (3H) No. 5:*** ***(4AG) No. 12 — (3H) No. 6:***	Is the resistance less than 10 Ω?	Go to step **3**.	Replace the airbag main harness along with body harness.
3	**CHECK AIRBAG MAIN HARNESS (FRONT SENSOR BUS RH).** Measure the resistance between connector (4AG) in the test harness AG and chassis ground, and the resistance between connector (4AG) terminals in the test harness AG. ***Connector & terminal*** ***(4AG) No. 12 — Chassis ground:*** ***(4AG) No. 14 — Chassis ground:*** ***(4AG) No. 12 — (4AG) No. 14:***	Is the resistance 1 MΩ or more?	Go to step **4**.	Replace the airbag main harness along with body harness.
4	**CHECK AIRBAG CONTROL MODULE.** 1) Connect all connectors. 2) Clear the memory. 3) Perform the Inspection Mode. 4) Read the DTC. (Current malfunction)	Is the same DTC displayed?	Replace the front sub sensor (RH). <Ref. to AB-82, REMOVAL, Front Sub Sensor.> Replace the airbag control module if not operating normally even after replacing the sensor. <Ref. to AB-78, REMOVAL, Airbag Control Module.>	Go to step **5**.

Step		Check	Yes	No
5	CHECK FOR ANY OTHER DTC ON DISPLAY.	Is any other DTC displayed?	Check DTC using “List of Diagnostic Trouble Code”. <Ref. to AB(diag)-33, List of Diagnostic Trouble Code (DTC).>	Finish the diagnosis.

AI: DTC B1615 FRONT SUB SENSOR LH FAILURE

DTC DETECTING CONDITION:

Front sub sensor (LH) is faulty.

If DTC B1615 is displayed, the circuit within the front sub sensor (LH) is faulty.

Replace the front sub sensor (LH). <Ref. to AB-82, Front Sub Sensor.>

AJ:DTC B1617 FRONT SUB SENSOR LH LOST COMMUNICATION

NOTE:

For details on DTC B1617, refer to DTC B1618. <Ref. to AB(diag)-53, DTC B1618 FRONT SUB SENSOR LH INITIALIZATION ERROR, Diagnostic Chart with Trouble Code.>

AK:DTC B1618 FRONT SUB SENSOR LH INITIALIZATION ERROR

DTC DETECTING CONDITION:

- Open or short circuit in harness of front sensor bus (LH)
- Front sub sensor (LH) is faulty.
- Airbag control module is faulty.

CAUTION:

Before performing diagnosis, refer to "CAUTION" in "General Description". <Ref. to AB(diag)-4, CAUTION, General Description.>

WIRING DIAGRAM:

Airbag system <Ref. to WI(w/o HEV)-30, WIRING DIAGRAM, Airbag System.> <Ref. to WI(HEV)-50, WIRING DIAGRAM, Airbag System.>

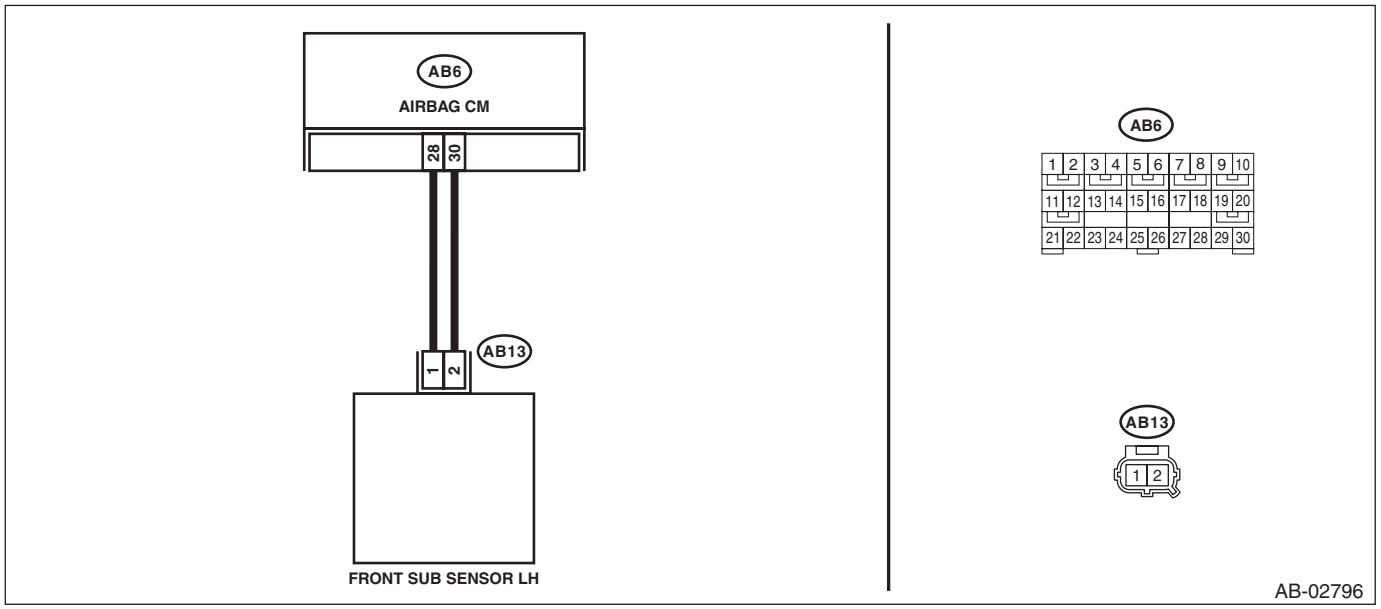

Step		Check	Yes	No
1	**CHECK POOR CONTACT OF CONNECTORS.** Check for poor contact of the connectors (AB6, AB13) between the airbag control module and the front sub sensor (LH).	Is there poor contact?	Replace the airbag main harness along with body harness.	Go to step **2**.

	Step	Check	Yes	No
2	**CHECK AIRBAG MAIN HARNESS (FRONT SENSOR BUS LH).** 1) Turn the ignition switch to OFF, disconnect the battery ground cable, and wait for 60 seconds or more. NOTE: For HEV model, disconnect the negative terminal from 12 volt auxiliary battery, and disconnect the ground terminal from 12V engine restart battery sensor for 12 volt engine restart battery. <Ref. to NT-5, BATTERY, NOTE, Note.> 2) Remove the instrument panel lower cover and column cover, and disconnect the connectors (AB7) and (AB2). 3) Remove the console front panel and disconnect the connector (AB9). 4) Disconnect the connectors (AB6, AB17, AB18) from airbag control module. 5) Connect the connector (1AG) in the test harness AG to the connectors (AB6, AB17, AB18). NOTE: Except for XV models, connect test harness AH between the connectors (AB6, AB17, AB18) and (1AG). 6) Disconnect the connector (AB13) from the front sub sensor (LH), and then connect the connector (1H) in the test harness H to connector (AB13). 7) Measure the resistance between connector (4AG) in the test harness AG and connector (3H) in the test harness H. ***Connector & terminal*** ***(4AG) No. 7 — (3H) No. 5:*** ***(4AG) No. 9 — (3H) No. 6:***	Is the resistance less than 10 Ω?	Go to step **3**.	Replace the airbag main harness along with body harness.
3	**CHECK AIRBAG MAIN HARNESS (FRONT SENSOR BUS LH).** Measure the resistance between connector (4AG) in the test harness AG and chassis ground, and the resistance between connector (4AG) terminals in the test harness AG. ***Connector & terminal*** ***(4AG) No. 7 — Chassis ground:*** ***(4AG) No. 9 — Chassis ground:*** ***(4AG) No. 7 — (4AG) No. 9:***	Is the resistance 1 MΩ or more?	Go to step **4**.	Replace the airbag main harness along with body harness.
4	**CHECK AIRBAG CONTROL MODULE.** 1) Connect all connectors. 2) Clear the memory. 3) Perform the Inspection Mode. 4) Read the DTC. (Current malfunction)	Is the same DTC displayed?	Replace the front sub sensor (LH). <Ref. to AB-82, REMOVAL, Front Sub Sensor.> Replace the airbag control module if not operating normally even after replacing the sensor. <Ref. to AB-78, REMOVAL, Airbag Control Module.>	Go to step **5**.

Step		Check	Yes	No
5	CHECK FOR ANY OTHER DTC ON DISPLAY.	Is any other DTC displayed?	Check DTC using “List of Diagnostic Trouble Code”. <Ref. to AB(diag)-33, List of Diagnostic Trouble Code (DTC).>	Finish the diagnosis.

AL:DTC B16F2 FRONT SUB SENSOR RH RECOGNITION ERROR

DTC DETECTING CONDITION:
Front sub sensor (RH) is misinstalled.

CAUTION:
Before performing diagnosis, refer to "CAUTION" in "General Description". <Ref. to AB(diag)-4, CAUTION, General Description.>

	Step	Check	Yes	No
1	**REPLACE FRONT SUB SENSOR.** 1) Turn the ignition switch to OFF, disconnect the battery ground cable, and wait for 60 seconds or more. NOTE: For HEV model, disconnect the negative terminal from 12 volt auxiliary battery, and disconnect the ground terminal from 12V engine restart battery sensor for 12 volt engine restart battery. <Ref. to NT-5, BATTERY, NOTE, Note.> 2) Replace the front sub sensor (RH) with a genuine sensor. <Ref. to AB-82, REMOVAL, Front Sub Sensor.>	Does the warning light go off?	Finish the diagnosis.	Replace the airbag control module. <Ref. to AB-78, REMOVAL, Airbag Control Module.>

AM:DTC B16F3 FRONT SUB SENSOR LH RECOGNITION ERROR

DTC DETECTING CONDITION:
Front sub sensor (LH) is misinstalled.

CAUTION:
Before performing diagnosis, refer to "CAUTION" in "General Description". <Ref. to AB(diag)-4, CAUTION, General Description.>

	Step	Check	Yes	No
1	**REPLACE FRONT SUB SENSOR.** 1) Turn the ignition switch to OFF, disconnect the battery ground cable, and wait for 60 seconds or more. NOTE: For HEV model, disconnect the negative terminal from 12 volt auxiliary battery, and disconnect the ground terminal from 12V engine restart battery sensor for 12 volt engine restart battery. <Ref. to NT-5, BATTERY, NOTE, Note.> 2) Replace the front sub sensor (LH) with a genuine sensor. <Ref. to AB-82, REMOVAL, Front Sub Sensor.>	Does the warning light go off?	Finish the diagnosis.	Replace the airbag control module. <Ref. to AB-78, REMOVAL, Airbag Control Module.>

AN:DTC B1620 SIDE AIRBAG SENSOR RH FAILURE

DTC DETECTING CONDITION:
Side airbag sensor (RH) is faulty.
When DTC B1620 is displayed, the circuit within the side airbag sensor (RH) is faulty.
Replace the side airbag sensor (RH). <Ref. to AB-89, Side Airbag Sensor.>

AO:DTC B1622 SIDE AIRBAG SENSOR RH LOST COMMUNICATION

NOTE:
For details on DTC B1622, refer to DTC B1623. <Ref. to AB(diag)-57, DTC B1623 SIDE AIRBAG SENSOR RH INITIALIZATION ERROR, Diagnostic Chart with Trouble Code.>

AP:DTC B1623 SIDE AIRBAG SENSOR RH INITIALIZATION ERROR

DTC DETECTING CONDITION:

- Open or short circuit in harness of side sensor bus (RH)
- Side airbag sensor (RH) and curtain airbag sensor (RH) are faulty.
- Airbag control module is faulty.

CAUTION:

Before performing diagnosis, refer to "CAUTION" in "General Description". <Ref. to AB(diag)-4, CAUTION, General Description.>

WIRING DIAGRAM:

Airbag system <Ref. to WI(w/o HEV)-30, WIRING DIAGRAM, Airbag System.> <Ref. to WI(HEV)-50, WIRING DIAGRAM, Airbag System.>

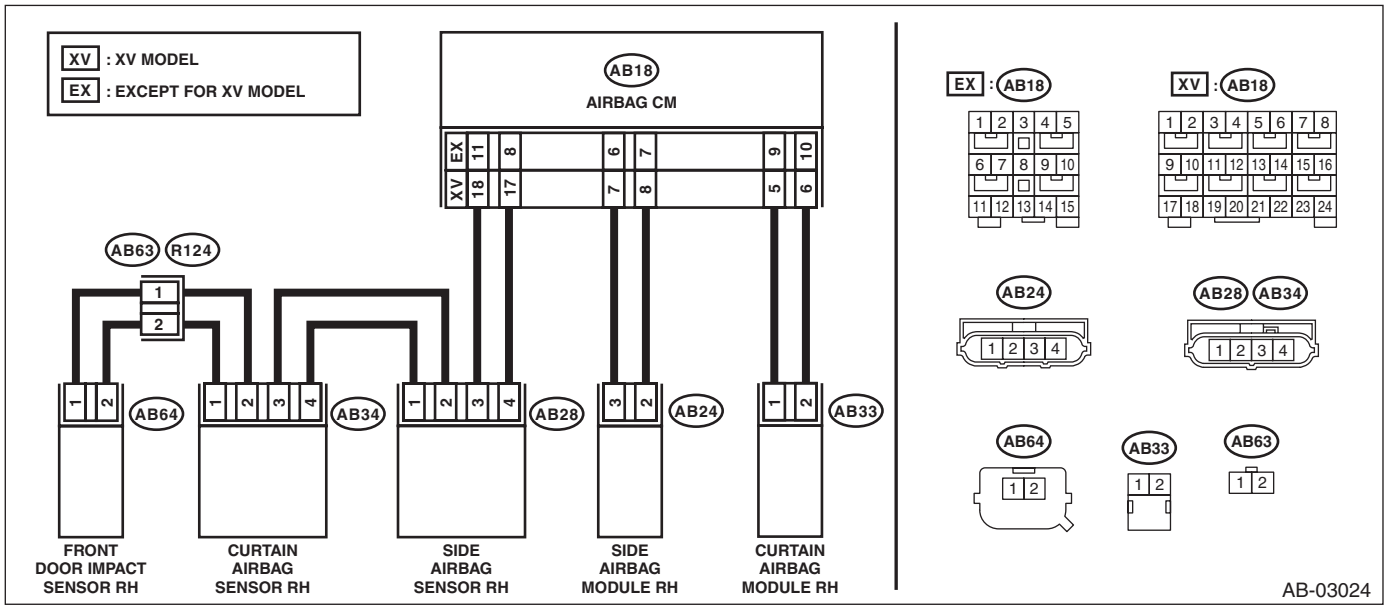

Step		Check	Yes	No
1	**CHECK POOR CONTACT OF CONNECTORS.** Check for poor contact of the connectors between the airbag control module and the side airbag sensor (RH).	Is there poor contact?	Replace the airbag rear harness along with body harness.	Go to step **2**.

	Step	Check	Yes	No
2	**CHECK AIRBAG REAR HARNESS (BETWEEN AIRBAG CONTROL MODULE AND SIDE AIRBAG SENSOR RH).** 1) Turn the ignition switch to OFF, disconnect the battery ground cable, and wait for 60 seconds or more. NOTE: For HEV model, disconnect the negative terminal from 12 volt auxiliary battery, and disconnect the ground terminal from 12V engine restart battery sensor for 12 volt engine restart battery. <Ref. to NT-5, BATTERY, NOTE, Note.> 2) Disconnect the connector (AB26) from seat belt pretensioner (RH). 3) Disconnect the connector (AB33) from curtain airbag module (RH). 4) Disconnect connector (AB24) of the side airbag module (RH). 5) Disconnect the connectors (AB6, AB17, AB18) from airbag control module. 6) Connect the connector (1AG) in the test harness AG to the connectors (AB6, AB17, AB18). NOTE: Except for XV models, connect test harness AH between the connectors (AB6, AB17, AB18) and (1AG). 7) Disconnect the connector (AB28) from side airbag sensor (RH), and connect the connector (2V) in test harness V to connector (AB28). 8) Measure the resistance between connector (5AG) in the test harness AG and connector (3V) in the test harness V. ***Connector & terminal*** ***XV model*** ***(5AG) No. 14 — (3V) No. 1:*** ***(5AG) No. 16 — (3V) No. 2:*** ***Except for XV model*** ***(5AG) No. 14 — (3V) No. 1:*** ***(5AG) No. 15 — (3V) No. 2:***	Is the resistance less than 10 Ω?	Go to step **3**.	Replace the airbag rear harness along with body harness.
3	**CHECK AIRBAG REAR HARNESS (BETWEEN AIRBAG CONTROL MODULE AND SIDE AIRBAG SENSOR RH).** Measure the resistance between test harness AG connectors (5AG) and chassis ground, and the resistance between connectors (5AG) of the test harness AG. ***Connector & terminal*** ***(3V) No. 1 — Chassis ground:*** ***(3V) No. 2 — Chassis ground:*** ***(3V) No. 1 — (3V) No. 2:***	Is the resistance 1 MΩ or more?	Go to step **4**.	Replace the airbag rear harness along with body harness.
4	**CHECK AIRBAG CONTROL MODULE.** 1) Connect all connectors. 2) Clear the memory. 3) Perform the Inspection Mode. 4) Read the DTC. (Current malfunction)	Is the same DTC displayed?	Go to step **5**.	Go to step **6**.

	Step	Check	Yes	No
5	**REPLACE SIDE AIRBAG SENSOR (RH) AND CHECK AIRBAG CONTROL MODULE AFTER REPLACEMENT.** 1) Turn the ignition switch to OFF, disconnect the battery ground cable, and wait for 60 seconds or more. NOTE: For HEV model, disconnect the negative terminal from 12 volt auxiliary battery, and disconnect the ground terminal from 12V engine restart battery sensor for 12 volt engine restart battery. <Ref. to NT-5, BATTERY, NOTE, Note.> 2) Replace the side airbag sensor (RH). <Ref. to AB-89, REMOVAL, Side Airbag Sensor.> 3) Connect all connectors. 4) Clear the memory. 5) Perform the Inspection Mode. 6) Read the DTC. (Current malfunction)	Is the system normal?	Go to step **6**.	Replace the curtain airbag sensor (RH). <Ref. to AB-94, REMOVAL, Curtain Airbag Sensor.> Replace the airbag control module if not operating normally even after replacing the sensor. <Ref. to AB-78, REMOVAL, Airbag Control Module.>
6	**CHECK FOR ANY OTHER DTC ON DISPLAY.**	Is any other DTC displayed?	Check DTC using "List of Diagnostic Trouble Code (DTC)". <Ref. to AB(diag)-33, List of Diagnostic Trouble Code (DTC).>	Finish the diagnosis.

AQ:DTC B1625 SIDE AIRBAG SENSOR LH FAILURE

DTC DETECTING CONDITION:

Side airbag sensor (LH) is faulty.

When DTC B1625 is displayed, the circuit within the side airbag sensor (LH) is faulty.

Replace the side airbag sensor (LH). <Ref. to AB-89, Side Airbag Sensor.>

AR:DTC B1627 SIDE AIRBAG SENSOR LH LOST COMMUNICATION

NOTE:

For details on DTC B1627, refer to DTC B1628. <Ref. to AB(diag)-60, DTC B1628 SIDE AIRBAG SENSOR LH INITIALIZATION ERROR, Diagnostic Chart with Trouble Code.>

AS:DTC B1628 SIDE AIRBAG SENSOR LH INITIALIZATION ERROR

DTC DETECTING CONDITION:

- Open or short circuit in harness of side sensor bus (LH)
- Side airbag sensor (LH) and curtain airbag sensor (LH) are faulty.
- Airbag control module is faulty.

CAUTION:

Before performing diagnosis, refer to "CAUTION" in "General Description". <Ref. to AB(diag)-4, CAUTION, General Description.>

WIRING DIAGRAM:

Airbag system <Ref. to WI(w/o HEV)-30, WIRING DIAGRAM, Airbag System.> <Ref. to WI(HEV)-50, WIRING DIAGRAM, Airbag System.>

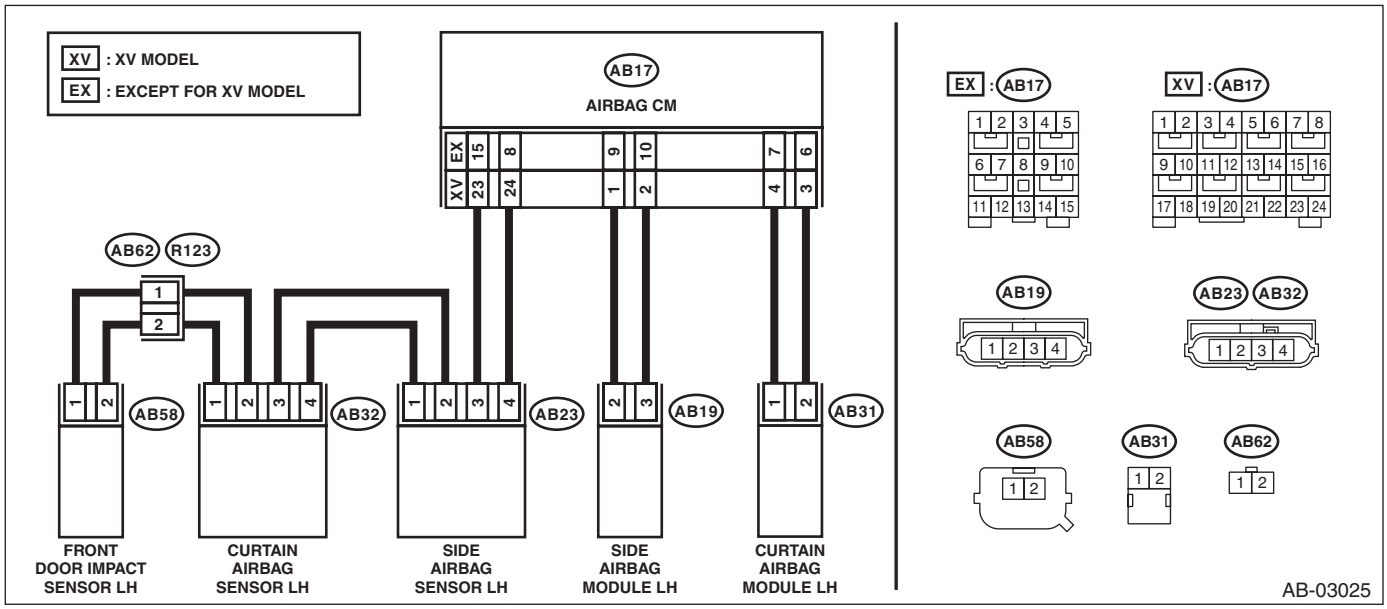

Step		Check	Yes	No
1	**CHECK POOR CONTACT OF CONNECTORS.** Check for poor contact of the connectors between the airbag control module and the side airbag sensor (RH).	Is there poor contact?	Replace the airbag rear harness along with body harness.	Go to step **2**.

	Step	Check	Yes	No
2	**CHECK AIRBAG REAR HARNESS (BETWEEN AIRBAG CONTROL MODULE AND SIDE AIRBAG SENSOR LH).** 1) Turn the ignition switch to OFF, disconnect the battery ground cable, and wait for 60 seconds or more. NOTE: For HEV model, disconnect the negative terminal from 12 volt auxiliary battery, and disconnect the ground terminal from 12V engine restart battery sensor for 12 volt engine restart battery. <Ref. to NT-5, BATTERY, NOTE, Note.> 2) Disconnect the connector (AB21) from seat belt pretensioner (LH). 3) Disconnect the connector (AB31) from curtain airbag module (LH). 4) Disconnect connector (AB19) of the side airbag module (LH). 5) Disconnect the connectors (AB17, AB6, AB18) from airbag control module. 6) Connect the connector (1AG) in the test harness AG to the connectors (AB6, AB17, AB18). NOTE: Except for XV models, connect test harness AH between the connectors (AB6, AB17, AB18) and (1AG). 7) Disconnect the connector (AB23) from side airbag sensor (LH), and connect the connector (2V) in test harness V to connector (AB23). 8) Measure the resistance between connector (5AG) in the test harness AG and connector (3V) in the test harness V. ***Connector & terminal*** ***XV model*** ***(5AG) No. 8 — (3V) No. 2:*** ***(5AG) No. 10 — (3V) No. 1:*** ***Except for XV model*** ***(5AG) No. 9 — (3V) No. 2:*** ***(5AG) No. 10 — (3V) No. 1:***	Is the resistance less than 10 Ω?	Go to step **3**.	Replace the airbag rear harness along with body harness.
3	**CHECK AIRBAG REAR HARNESS (BETWEEN AIRBAG CONTROL MODULE AND SIDE AIRBAG SENSOR LH).** Measure the resistance between test harness AG connectors (5AG) and chassis ground, and the resistance between connectors (5AG) of the test harness AG. ***Connector & terminal*** ***(3V) No. 1 — Chassis ground:*** ***(3V) No. 2 — Chassis ground:*** ***(3V) No. 1 — (3V) No. 2:***	Is the resistance 1 MΩ or more?	Go to step **4**.	Replace the airbag rear harness along with body harness.
4	**CHECK AIRBAG CONTROL MODULE.** 1) Connect all connectors. 2) Clear the memory. 3) Perform the Inspection Mode. 4) Read the DTC. (Current malfunction)	Is the same DTC displayed?	Go to step **5**.	Go to step **6**.

	Step	Check	Yes	No
5	**REPLACE SIDE AIRBAG SENSOR (LH) AND CHECK AIRBAG CONTROL MODULE AFTER REPLACEMENT.** 1) Turn the ignition switch to OFF, disconnect the battery ground cable, and wait for 60 seconds or more. NOTE: For HEV model, disconnect the negative terminal from 12 volt auxiliary battery, and disconnect the ground terminal from 12V engine restart battery sensor for 12 volt engine restart battery. <Ref. to NT-5, BATTERY, NOTE, Note.> 2) Replace the side airbag sensor (LH). <Ref. to AB-89, REMOVAL, Side Airbag Sensor.> 3) Connect all connectors. 4) Clear the memory. 5) Perform the Inspection Mode. 6) Read the DTC. (Current malfunction)	Is the system normal?	Go to step **6**.	Replace the curtain airbag sensor (LH). <Ref. to AB-94, REMOVAL, Curtain Airbag Sensor.> Replace the airbag control module if not operating normally even after replacing the sensor. <Ref. to AB-78, REMOVAL, Airbag Control Module.>
6	**CHECK FOR ANY OTHER DTC ON DISPLAY.**	Is any other DTC displayed?	Check DTC using "List of Diagnostic Trouble Code (DTC)". <Ref. to AB(diag)-33, List of Diagnostic Trouble Code (DTC).>	Finish the diagnosis.

AT:DTC B1630 CURTAIN AIRBAG SENSOR RH FAILURE

DTC DETECTING CONDITION:

Curtain airbag sensor (RH) is faulty.

If DTC B1630 is displayed, the circuit within the curtain airbag sensor (RH) is faulty.

Replace the curtain airbag sensor (RH). <Ref. to AB-94, Curtain Airbag Sensor.>

AU:DTC B1632 CURTAIN AIRBAG SENSOR RH LOST COMMUNICATION

NOTE:

For details on DTC B1632, refer to DTC B1633. <Ref. to AB(diag)-63, DTC B1633 CURTAIN AIRBAG SENSOR RH INITIALIZATION ERROR, Diagnostic Chart with Trouble Code.>

AV:DTC B1633 CURTAIN AIRBAG SENSOR RH INITIALIZATION ERROR

DTC DETECTING CONDITION:

- Open or short circuit in harness of side sensor bus (RH)
- Side airbag sensor (RH) and curtain airbag sensor (RH) are faulty.
- Airbag control module is faulty.

CAUTION:

Before performing diagnosis, refer to "CAUTION" in "General Description". <Ref. to AB(diag)-4, CAUTION, General Description.>

WIRING DIAGRAM:

Airbag system <Ref. to WI(w/o HEV)-30, WIRING DIAGRAM, Airbag System.> <Ref. to WI(HEV)-50, WIRING DIAGRAM, Airbag System.>

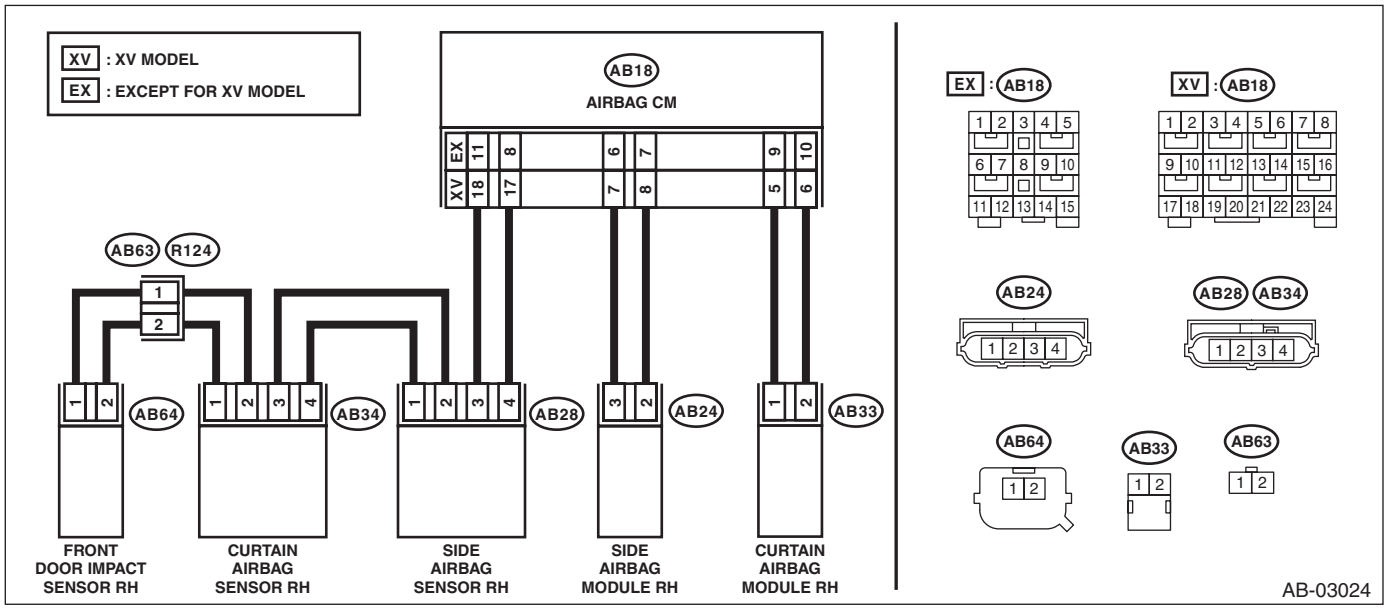

	Step	Check	Yes	No
1	**CHECK DTC.** Read the DTC. (Current malfunction)	Is DTC B1622 or B1623 displayed?	Perform the diagnosis according to DTC.	Go to step **2**.
2	**CHECK POOR CONTACT OF CONNECTORS.** Check for poor contact of the connectors between the airbag control module and the door sensor (RH).	Is there poor contact?	Replace the airbag rear harness and the door harness.	Go to step **3**.

	Step	Check	Yes	No
3	**CHECK AIRBAG REAR HARNESS (BETWEEN SIDE AIRBAG SENSOR (RH) AND CURTAIN AIRBAG SENSOR (RH)).** 1) Turn the ignition switch to OFF, disconnect the battery ground cable, and wait for 60 seconds or more. NOTE: For HEV model, disconnect the negative terminal from 12 volt auxiliary battery, and disconnect the ground terminal from 12V engine restart battery sensor for 12 volt engine restart battery. <Ref. to NT-5, BATTERY, NOTE, Note.> 2) Disconnect the connector (AB26) from seat belt pretensioner (RH). 3) Disconnect the connector (AB33) from curtain airbag module (RH). 4) Disconnect connector (AB24) of the side airbag module (RH). 5) Disconnect connector (AB28) from side airbag sensor (RH). 6) Connect the connector (AB28) of side airbag sensor (RH) and the connector (1AI) in the test harness AI. 7) Connect the connector (2AI) in the test harness AI and the connector (1V) in the test harness V. 8) Disconnect the connector (AB34) from curtain airbag sensor (RH), and connect the connector (2V) in test harness V to connector (AB34). 9) Measure the resistance between connector (3V) terminals in the test harness V. ***Connector & terminal*** ***(3V) No. 2 — (3V) No. 6:*** ***(3V) No. 1 — (3V) No. 7:***	Is the resistance less than 10 Ω?	Go to step **4**.	Replace the airbag rear harness along with body harness.
4	**CHECK AIRBAG REAR HARNESS (BETWEEN SIDE AIRBAG SENSOR AND CURTAIN AIRBAG SENSOR RH).** Measure the resistance between connector (3V) in test harness V and chassis ground, and the resistance between connector (3V) in test harness V. ***Connector & terminal*** ***(3V) No. 2 — Chassis ground:*** ***(3V) No. 1 — Chassis ground:*** ***(3V) No. 2 — (3V) No. 1:***	Is the resistance 1 MΩ or more?	Go to step **5**.	Replace the airbag rear harness along with body harness.
5	**CHECK AIRBAG CONTROL MODULE.** 1) Connect all connectors. 2) Clear the memory. 3) Perform the Inspection Mode. 4) Read the DTC. (Current malfunction)	Is the same DTC displayed?	Go to step **6**.	Go to step **7**.

Step		Check	Yes	No
6	**REPLACE CURTAIN AIRBAG SENSOR (RH) AND CHECK AIRBAG CONTROL MODULE AFTER REPLACEMENT.** 1) Turn the ignition switch to OFF, disconnect the battery ground cable, and wait for 60 seconds or more. NOTE: For HEV model, disconnect the negative terminal from 12 volt auxiliary battery, and disconnect the ground terminal from 12V engine restart battery sensor for 12 volt engine restart battery. <Ref. to NT-5, BATTERY, NOTE, Note.> 2) Replace the curtain airbag sensor (RH). <Ref. to AB-94, REMOVAL, Curtain Airbag Sensor.> 3) Connect all connectors. 4) Clear the memory. 5) Perform the Inspection Mode. 6) Read the DTC. (Current malfunction)	Is the same DTC displayed?	Go to step **7**.	Go to step **8**.
7	**REPLACE SIDE AIRBAG SENSOR (RH) AND CHECK AIRBAG CONTROL MODULE AFTER REPLACEMENT.** 1) Turn the ignition switch to OFF, disconnect the battery ground cable, and wait for 60 seconds or more. NOTE: For HEV model, disconnect the negative terminal from 12 volt auxiliary battery, and disconnect the ground terminal from 12V engine restart battery sensor for 12 volt engine restart battery. <Ref. to NT-5, BATTERY, NOTE, Note.> 2) Replace the side airbag sensor (RH). <Ref. to AB-89, REMOVAL, Side Airbag Sensor.> 3) Connect all connectors. 4) Clear the memory. 5) Perform the Inspection Mode. 6) Read the DTC. (Current malfunction)	Is the same DTC displayed?	Replace the airbag control module. <Ref. to AB-78, REMOVAL, Airbag Control Module.>	Go to step **8**.
8	**CHECK FOR ANY OTHER DTC ON DISPLAY.**	Is any other DTC displayed?	Check DTC using “List of Diagnostic Trouble Code (DTC)”. <Ref. to AB(diag)-33, List of Diagnostic Trouble Code (DTC).>	Finish the diagnosis.

AW:DTC B1635 CURTAIN AIRBAG SENSOR LH FAILURE

DTC DETECTING CONDITION:

Curtain airbag sensor (LH) is faulty.

If DTC B1635 is displayed, the circuit within the curtain airbag sensor (LH) is faulty.

Replace the curtain airbag sensor (LH). <Ref. to AB-94, Curtain Airbag Sensor.>

AX:DTC B1637 CURTAIN AIRBAG SENSOR LH LOST COMMUNICATION

NOTE:

Refer to DTC B1637 for details on DTC B1638. <Ref. to AB(diag)-66, DTC B1638 CURTAIN AIRBAG SENSOR LH INITIALIZATION ERROR, Diagnostic Chart with Trouble Code.>

AY:DTC B1638 CURTAIN AIRBAG SENSOR LH INITIALIZATION ERROR

DTC DETECTING CONDITION:

- Open or short circuit in harness of side sensor bus (LH)
- Side airbag sensor (LH) and curtain airbag sensor (LH) are faulty.
- Airbag control module is faulty.

CAUTION:

Before performing diagnosis, refer to "CAUTION" in "General Description". <Ref. to AB(diag)-4, CAUTION, General Description.>

WIRING DIAGRAM:

Airbag system <Ref. to WI(w/o HEV)-30, WIRING DIAGRAM, Airbag System.> <Ref. to WI(HEV)-50, WIRING DIAGRAM, Airbag System.>

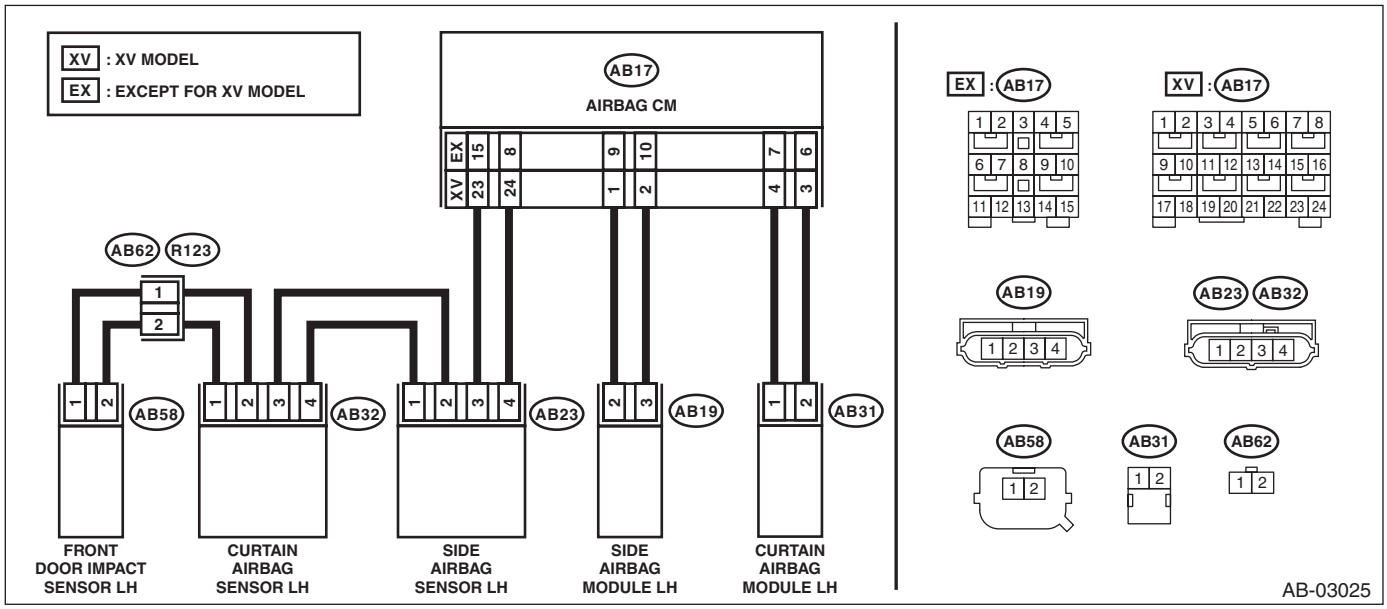

Step		Check	Yes	No
1	**CHECK DTC.** Read the DTC. (Current malfunction)	Is DTC B1627 or B1628 displayed?	Perform the diagnosis according to DTC.	Go to step **2**.
2	**CHECK POOR CONTACT OF CONNECTORS.** Check for poor contact of the connectors between the airbag control module and the door sensor (LH).	Is there poor contact?	Replace the airbag rear harness and the door harness.	Go to step **3**.

	Step	Check	Yes	No
3	**CHECK AIRBAG REAR HARNESS (BETWEEN SIDE AIRBAG SENSOR LH AND CURTAIN AIRBAG SENSOR LH).** 1) Turn the ignition switch to OFF, disconnect the battery ground cable, and wait for 60 seconds or more. NOTE: For HEV model, disconnect the negative terminal from 12 volt auxiliary battery, and disconnect the ground terminal from 12V engine restart battery sensor for 12 volt engine restart battery. <Ref. to NT-5, BATTERY, NOTE, Note.> 2) Disconnect the connector (AB21) from seat belt pretensioner (LH). 3) Disconnect the connector (AB31) from curtain airbag module (LH). 4) Disconnect connector (AB19) of the side airbag module (LH). 5) Disconnect the connector (AB23) in the side airbag sensor (LH). 6) Connect the connector (AB23) of side airbag sensor (LH) and the connector (1AI) in the test harness AI. 7) Connect the connector (2AI) in the test harness AI and the connector (1V) in the test harness V. 8) Disconnect the connector (AB32) from curtain airbag sensor (LH), and connect to the connector (2V) in test harness V. 9) Measure the resistance between connector (3V) terminals in the test harness V. ***Connector & terminal*** ***(3V) No. 2 — (3V) No. 6:*** ***(3V) No. 1 — (3V) No. 7:***	Is the resistance less than 10 Ω?	Go to step **4**.	Replace the airbag rear harness along with body harness.
4	**CHECK AIRBAG REAR HARNESS (BETWEEN SIDE AIRBAG SENSOR AND CURTAIN AIRBAG SENSOR LH).** Measure the resistance between connector (3V) in test harness V and chassis ground, and the resistance between connector (3V) in test harness V. ***Connector & terminal*** ***(3V) No. 1 — Chassis ground:*** ***(3V) No. 2 — Chassis ground:*** ***(3V) No. 1 — (3V) No. 2:***	Is the resistance 1 MΩ or more?	Go to step **5**.	Replace the airbag rear harness along with body harness.
5	**CHECK AIRBAG CONTROL MODULE.** 1) Connect all connectors. 2) Clear the memory. 3) Perform the Inspection Mode. 4) Read the DTC. (Current malfunction)	Is the same DTC displayed?	Go to step **6**.	Go to step **8**.

	Step	Check	Yes	No
6	**REPLACE CURTAIN AIRBAG SENSOR (LH) AND CHECK AIRBAG CONTROL MODULE AFTER REPLACEMENT.** 1) Turn the ignition switch to OFF, disconnect the battery ground cable, and wait for 60 seconds or more. NOTE: For HEV model, disconnect the negative terminal from 12 volt auxiliary battery, and disconnect the ground terminal from 12V engine restart battery sensor for 12 volt engine restart battery. <Ref. to NT-5, BATTERY, NOTE, Note.> 2) Replace the curtain airbag sensor (LH). <Ref. to AB-94, REMOVAL, Curtain Airbag Sensor.> 3) Connect all connectors. 4) Clear the memory. 5) Perform the Inspection Mode. 6) Read the DTC. (Current malfunction)	Is the same DTC displayed?	Go to step **7**.	Go to step **8**.
7	**REPLACE SIDE AIRBAG SENSOR (LH) AND CHECK AIRBAG CONTROL MODULE AFTER REPLACEMENT.** 1) Turn the ignition switch to OFF, disconnect the battery ground cable, and wait for 60 seconds or more. NOTE: For HEV model, disconnect the negative terminal from 12 volt auxiliary battery, and disconnect the ground terminal from 12V engine restart battery sensor for 12 volt engine restart battery. <Ref. to NT-5, BATTERY, NOTE, Note.> 2) Replace the side airbag sensor (LH). <Ref. to AB-89, REMOVAL, Side Airbag Sensor.> 3) Connect all connectors. 4) Clear the memory. 5) Perform the Inspection Mode. 6) Read the DTC. (Current malfunction)	Is the same DTC displayed?	Replace the airbag control module. <Ref. to AB-78, REMOVAL, Airbag Control Module.>	Go to step **8**.
8	**CHECK FOR ANY OTHER DTC ON DISPLAY.**	Is any other DTC displayed?	Check DTC using “List of Diagnostic Trouble Code (DTC)”. <Ref. to AB(diag)-33, List of Diagnostic Trouble Code (DTC).>	Finish the diagnosis.

AZ:DTC B16F4 SIDE AIRBAG SENSOR RH RECOGNITION ERROR

DTC DETECTING CONDITION:

- Side airbag sensor RH is misinstalled.
- Airbag CM is faulty.

CAUTION:
Before performing diagnosis, refer to "CAUTION" in "General Description". <Ref. to AB(diag)-4, CAUTION, General Description.>

	Step	Check	Yes	No
1	**REPLACE SIDE AIRBAG SENSOR (RH).** 1) Turn the ignition switch to OFF, disconnect the battery ground cable, and wait for 60 seconds or more. NOTE: For HEV model, disconnect the negative terminal from 12 volt auxiliary battery, and disconnect the ground terminal from 12V engine restart battery sensor for 12 volt engine restart battery. <Ref. to NT-5, BATTERY, NOTE, Note.> 2) Replace the side A/B sensor (RH) with a genuine sensor. <Ref. to AB-89, REMOVAL, Side Airbag Sensor.>	Does the warning light go off?	Finish the diagnosis.	Replace the airbag control module. <Ref. to AB-78, REMOVAL, Airbag Control Module.>

BA:DTC B16F5 SIDE AIRBAG SENSOR LH RECOGNITION ERROR

DTC DETECTING CONDITION:

- Side airbag sensor LH is misinstalled.
- Airbag CM is faulty.

CAUTION:
Before performing diagnosis, refer to "CAUTION" in "General Description". <Ref. to AB(diag)-4, CAUTION, General Description.>

	Step	Check	Yes	No
1	**REPLACE SIDE AIRBAG SENSOR (LH).** 1) Turn the ignition switch to OFF, disconnect the battery ground cable, and wait for 60 seconds or more. NOTE: For HEV model, disconnect the negative terminal from 12 volt auxiliary battery, and disconnect the ground terminal from 12V engine restart battery sensor for 12 volt engine restart battery. <Ref. to NT-5, BATTERY, NOTE, Note.> 2) Replace the side A/B sensor (LH) with a genuine sensor. <Ref. to AB-89, REMOVAL, Side Airbag Sensor.>	Does the warning light go off?	Finish the diagnosis.	Replace the airbag control module. <Ref. to AB-78, REMOVAL, Airbag Control Module.>

BB:DTC B16F6 CURTAIN AIRBAG SENSOR RH RECOGNITION ERROR

DTC DETECTING CONDITION:

- Curtain airbag sensor RH is misinstalled.
- Airbag CM is faulty.

CAUTION:
Before performing diagnosis, refer to "CAUTION" in "General Description". <Ref. to AB(diag)-4, CAUTION, General Description.>

	Step	Check	Yes	No
1	**REPLACE CURTAIN AIRBAG SENSOR (RH).** 1) Turn the ignition switch to OFF, disconnect the battery ground cable, and wait for 60 seconds or more. NOTE: For HEV model, disconnect the negative terminal from 12 volt auxiliary battery, and disconnect the ground terminal from 12V engine restart battery sensor for 12 volt engine restart battery. <Ref. to NT-5, BATTERY, NOTE, Note.> 2) Replace the curtain A/B sensor (RH) with a genuine sensor. <Ref. to AB-94, REMOVAL, Curtain Airbag Sensor.>	Does the warning light go off?	Finish the diagnosis.	Replace the airbag control module. <Ref. to AB-78, REMOVAL, Airbag Control Module.>

BC:DTC B16F7 CURTAIN AIRBAG SENSOR LH RECOGNITION ERROR

DTC DETECTING CONDITION:

- Curtain airbag sensor LH is misinstalled.
- Airbag CM is faulty.

CAUTION:
Before performing diagnosis, refer to "CAUTION" in "General Description". <Ref. to AB(diag)-4, CAUTION, General Description.>

	Step	Check	Yes	No
1	**REPLACE CURTAIN AIRBAG SENSOR (LH).** 1) Turn the ignition switch to OFF, disconnect the battery ground cable, and wait for 60 seconds or more. NOTE: For HEV model, disconnect the negative terminal from 12 volt auxiliary battery, and disconnect the ground terminal from 12V engine restart battery sensor for 12 volt engine restart battery. <Ref. to NT-5, BATTERY, NOTE, Note.> 2) Replace the curtain A/B sensor (LH) with a genuine sensor. <Ref. to AB-94, REMOVAL, Curtain Airbag Sensor.>	Does the warning light go off?	Finish the diagnosis.	Replace the airbag control module. <Ref. to AB-78, REMOVAL, Airbag Control Module.>

BD:DTC B1642 SIDE SATELLITE SENSOR BUS RH LOST COMMUNICATION

DTC DETECTING CONDITION:

- Open or short circuit in harness of side sensor bus (RH)
- Side airbag sensor (RH) is faulty.
- Curtain airbag sensor (RH) is faulty.
- Front door impact sensor (RH) is faulty.
- Airbag control module is faulty.

CAUTION:

Before performing diagnosis, refer to "CAUTION" in "General Description". <Ref. to AB(diag)-4, CAUTION, General Description.>

WIRING DIAGRAM:

Airbag system <Ref. to WI(w/o HEV)-30, WIRING DIAGRAM, Airbag System.> <Ref. to WI(HEV)-50, WIRING DIAGRAM, Airbag System.>

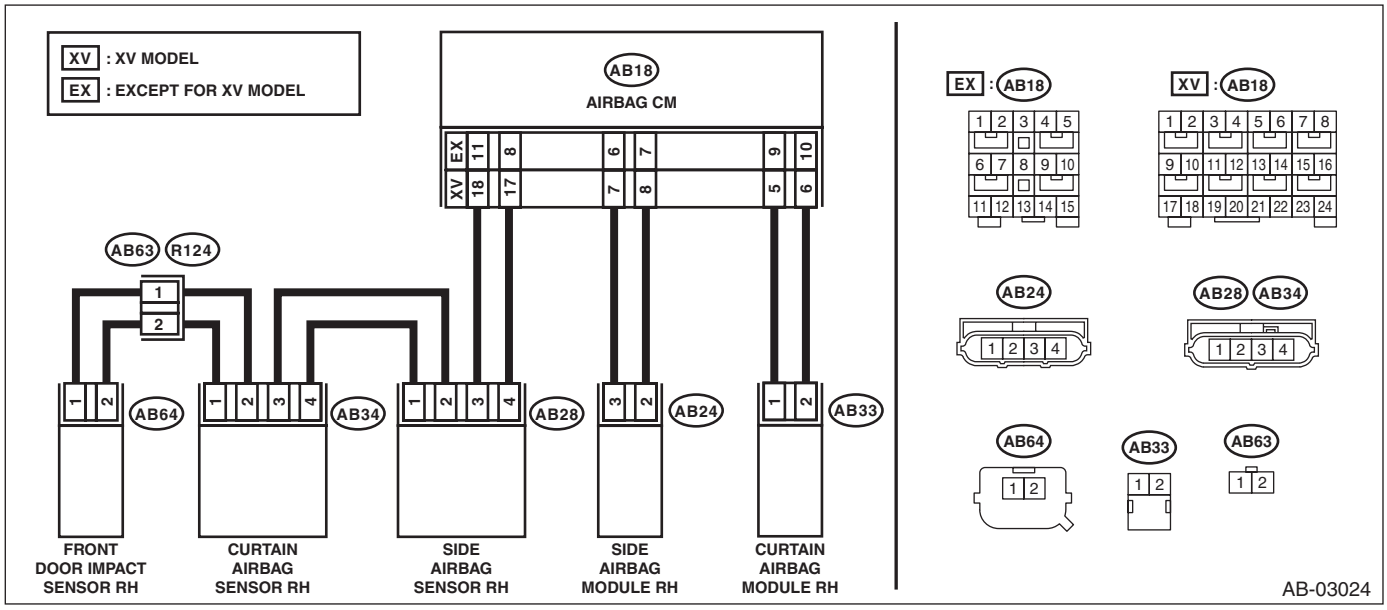

Step		Check	Yes	No
1	**CHECK DTC.** Read the DTC. (Current malfunction)	Is DTC B1622 or B1623 displayed?	Perform the diagnosis according to DTC.	Go to step **2**.
2	**CHECK DTC.** Read the DTC. (Current malfunction)	Is DTC B1632 or B1633 displayed?	Perform the diagnosis according to DTC.	Go to step **3**.
3	**CHECK DTC.** Read the DTC. (Current malfunction)	Is DTC B1692 or B1693 displayed?	Perform the diagnosis according to DTC.	Go to step **4**.
4	**CHECK POOR CONTACT OF CONNECTORS.** Check for poor contact of the connectors between the airbag control module and the front door impact sensor (RH).	Is there poor contact?	Replace the airbag rear harness and the door harness.	Go to step **5**.

	Step	Check	Yes	No
5	**CHECK AIRBAG REAR HARNESS (BETWEEN AIRBAG CONTROL MODULE AND SIDE AIRBAG SENSOR RH).** 1) Turn the ignition switch to OFF, disconnect the battery ground cable, and wait for 60 seconds or more. NOTE: For HEV model, disconnect the negative terminal from 12 volt auxiliary battery, and disconnect the ground terminal from 12V engine restart battery sensor for 12 volt engine restart battery. <Ref. to NT-5, BATTERY, NOTE, Note.> 2) Disconnect the connector (AB26) from seat belt pretensioner (RH). 3) Disconnect the connector (AB33) from curtain airbag module (RH). 4) Disconnect connector (AB24) of the side airbag module (RH). 5) Disconnect the connectors (AB6, AB17, AB18) from airbag control module. 6) Connect the connector (1AG) in the test harness AG to the connectors (AB6, AB17, AB18). NOTE: Except for XV models, connect test harness AH between the connectors (AB6, AB17, AB18) and (1AG). 7) Disconnect connector (AB28) from side airbag sensor (RH). 8) Connect the connector (2V) in the test harness V to the connector (AB28). 9) Measure the resistance between connector (5AG) in the test harness AG and connector (3V) in the test harness V. ***Connector & terminal*** ***XV model*** ***(5AG) No. 14 — (3V) No. 1:*** ***(5AG) No. 16 — (3V) No. 2:*** ***Except for XV model*** ***(5AG) No. 14 — (3V) No. 1:*** ***(5AG) No. 15 — (3V) No. 2:***	Is the resistance less than 10 Ω?	Go to step **6**.	Replace the airbag rear harness along with body harness.
6	**CHECK AIRBAG REAR HARNESS (BETWEEN AIRBAG CONTROL MODULE AND SIDE AIRBAG SENSOR RH).** Measure the resistance between connector (3V) in test harness V and chassis ground, and the resistance between connector (3V) terminals. ***Connector & terminal*** ***(3V) No. 1 — Chassis ground:*** ***(3V) No. 2 — Chassis ground:*** ***(3V) No. 1 — (3V) No. 2:***	Is the resistance 1 MΩ or more?	Go to step **7**.	Replace the airbag rear harness along with body harness.

	Step	Check	Yes	No
7	**CHECK AIRBAG REAR HARNESS (BETWEEN SIDE AIRBAG SENSOR AND CURTAIN AIRBAG SENSOR RH).** 1) Disconnect the connector (2V) in the test harness V from the connector (AB28) of side airbag sensor (RH). 2) Connect the connector (AB28) of side airbag sensor (RH) and the connector (1AI) in the test harness AI. 3) Connect the connector (2AI) in the test harness AI and the connector (1V) in the test harness V. 4) Disconnect the connector (AB34) from curtain airbag sensor (RH), and connect the connector (2V) in test harness V to connector (AB34). 5) Measure the resistance between connector (3V) terminals in the test harness V. ***Connector & terminal*** ***(3V) No. 2 — (3V) No. 6:*** ***(3V) No. 1 — (3V) No. 7:***	Is the resistance less than 10 Ω?	Go to step **8**.	Replace the airbag rear harness along with body harness.
8	**CHECK AIRBAG REAR HARNESS (BETWEEN SIDE AIRBAG SENSOR AND CURTAIN AIRBAG SENSOR RH).** Measure the resistance between connector (3V) in test harness V and chassis ground, and the resistance between connector (3V) terminals in test harness V. ***Connector & terminal*** ***(3V) No. 2 — Chassis ground:*** ***(3V) No. 1 — Chassis ground:*** ***(3V) No. 1 — (3V) No. 2:***	Is the resistance 1 MΩ or more?	Go to step **9**.	Replace the airbag rear harness along with body harness.
9	**CHECK AIRBAG REAR HARNESS AND DOOR HARNESS (BETWEEN CURTAIN AIRBAG SENSOR RH AND DOOR SENSOR RH).** 1) Disconnect the connector (AB64) from the front door impact sensor (RH), and connect the connector (1H) in the test harness H to connector (AB64). 2) Measure the resistance between connector (3V) in the test harness V and connector (3H) in the test harness H. ***Connector & terminal*** ***(3V) No. 4 — (3H) No. 5:*** ***(3V) No. 5 — (3H) No. 6:***	Is the resistance less than 10 Ω?	Go to step **10**.	Check the door harness, and if any fault is found, replace the harness. If there is no fault, replace the airbag rear harness together with body harness.
10	**CHECK AIRBAG REAR HARNESS AND DOOR HARNESS (BETWEEN CURTAIN AIRBAG SENSOR RH AND FRONT DOOR IMPACT SENSOR RH).** Measure the resistance between connector (3V) in test harness V and chassis ground, and the resistance between connector (3V) terminals in test harness V. ***Connector & terminal*** ***(3V) No. 4 — Chassis ground:*** ***(3V) No. 5 — Chassis ground:*** ***(3V) No. 4 — (3V) No. 5:***	Is the resistance 1 MΩ or more?	Go to step **11**.	Check the door harness, and if any fault is found, replace the harness. If there is no fault, replace the airbag rear harness together with body harness.

	Step	Check	Yes	No
11	**CHECK AIRBAG CONTROL MODULE.** 1) Connect all connectors. 2) Clear the memory. 3) Perform the Inspection Mode. 4) Read the DTC. (Current malfunction)	Is the same DTC displayed?	Go to step **12**.	Go to step **15**.
12	**REPLACE SIDE AIRBAG SENSOR (RH) AND CHECK AIRBAG CONTROL MODULE AFTER REPLACEMENT.** 1) Turn the ignition switch to OFF, disconnect the battery ground cable, and wait for 60 seconds or more. NOTE: For HEV model, disconnect the negative terminal from 12 volt auxiliary battery, and disconnect the ground terminal from 12V engine restart battery sensor for 12 volt engine restart battery. <Ref. to NT-5, BATTERY, NOTE, Note.> 2) Replace the side airbag sensor (RH). <Ref. to AB-89, REMOVAL, Side Airbag Sensor.> 3) Connect all connectors. 4) Clear the memory. 5) Perform the Inspection Mode. 6) Read the DTC. (Current malfunction)	Is the same DTC displayed?	Go to step **13**.	Go to step **15**.
13	**REPLACE CURTAIN AIRBAG SENSOR (RH) AND CHECK AIRBAG CONTROL MODULE AFTER REPLACEMENT.** 1) Turn the ignition switch to OFF, disconnect the battery ground cable, and wait for 60 seconds or more. NOTE: For HEV model, disconnect the negative terminal from 12 volt auxiliary battery, and disconnect the ground terminal from 12V engine restart battery sensor for 12 volt engine restart battery. <Ref. to NT-5, BATTERY, NOTE, Note.> 2) Replace the curtain airbag sensor (RH). <Ref. to AB-94, REMOVAL, Curtain Airbag Sensor.> 3) Connect all connectors. 4) Clear the memory. 5) Perform the Inspection Mode. 6) Read the DTC. (Current malfunction)	Is the same DTC displayed?	Go to step **14**.	Go to step **15**.

	Step	Check	Yes	No
14	**REPLACE FRONT DOOR IMPACT SENSOR (RH) AND CHECK AIRBAG CONTROL MODULE AFTER REPLACEMENT.** 1) Turn the ignition switch to OFF, disconnect the battery ground cable, and wait for 60 seconds or more. NOTE: For HEV model, disconnect the negative terminal from 12 volt auxiliary battery, and disconnect the ground terminal from 12V engine restart battery sensor for 12 volt engine restart battery. <Ref. to NT-5, BATTERY, NOTE, Note.> 2) Replace the front door impact sensor (RH). <Ref. to AB-86, REMOVAL, Front Door Impact Sensor.> 3) Connect all connectors. 4) Clear the memory. 5) Perform the Inspection Mode. 6) Read the DTC. (Current malfunction)	Is the same DTC displayed?	Replace the airbag control module. <Ref. to AB-78, REMOVAL, Airbag Control Module.>	Go to step **15**.
15	**CHECK FOR ANY OTHER DTC ON DISPLAY.** Read the DTC. (Current malfunction)	Is any other DTC displayed?	Perform the diagnosis according to DTC.	Finish the diagnosis.

BE:DTC B1647 SIDE SATELLITE SENSOR BUS LH LOST COMMUNICATION

DTC DETECTING CONDITION:

- Open or short circuit in harness of side sensor bus (LH)
- Side airbag sensor (LH) is faulty.
- Curtain airbag sensor (LH) is faulty.
- Front door impact sensor (LH) is faulty.
- Airbag control module is faulty.

CAUTION:

Before performing diagnosis, refer to "CAUTION" in "General Description". <Ref. to AB(diag)-4, CAUTION, General Description.>

WIRING DIAGRAM:

Airbag system <Ref. to WI(w/o HEV)-30, WIRING DIAGRAM, Airbag System.> <Ref. to WI(HEV)-50, WIRING DIAGRAM, Airbag System.>

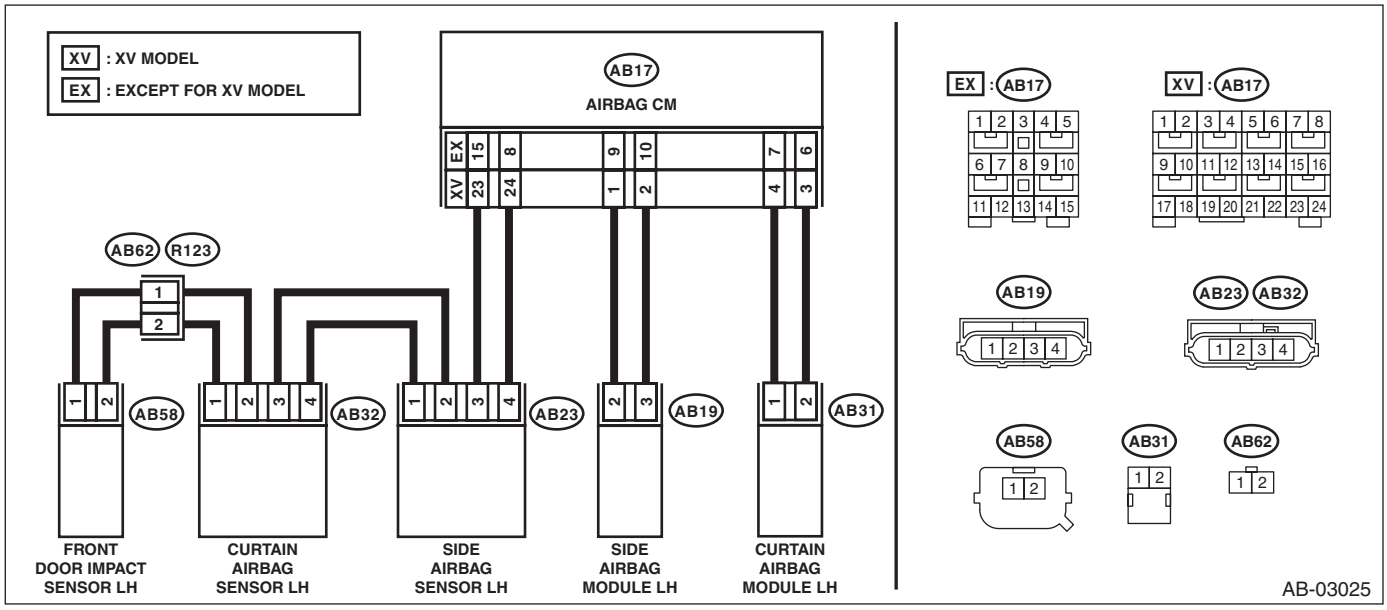

Step		Check	Yes	No
1	**CHECK DTC.** Read the DTC. (Current malfunction)	Is DTC B1627 or B1628 displayed?	Perform the diagnosis according to DTC.	Go to step **2**.
2	**CHECK DTC.** Read the DTC. (Current malfunction)	Is DTC B1637 or B1638 displayed?	Perform the diagnosis according to DTC.	Go to step **3**.
3	**CHECK DTC.** Read the DTC. (Current malfunction)	Is DTC B1697 or B1698 displayed?	Perform the diagnosis according to DTC.	Go to step **4**.
4	**CHECK POOR CONTACT OF CONNECTORS.** Check for poor contact of the connectors between the airbag control module and the front door impact sensor (LH).	Is there poor contact?	Replace the airbag rear harness and the door harness.	Go to step **5**.

	Step	Check	Yes	No
5	**CHECK AIRBAG REAR HARNESS (BETWEEN AIRBAG CONTROL MODULE AND SIDE AIRBAG SENSOR LH).** 1) Turn the ignition switch to OFF, disconnect the battery ground cable, and wait for 60 seconds or more. NOTE: For HEV model, disconnect the negative terminal from 12 volt auxiliary battery, and disconnect the ground terminal from 12V engine restart battery sensor for 12 volt engine restart battery. <Ref. to NT-5, BATTERY, NOTE, Note.> 2) Disconnect the connector (AB21) from seat belt pretensioner (LH). 3) Disconnect the connector (AB31) from curtain airbag module (LH). 4) Disconnect connector (AB19) of the side airbag module (LH). 5) Disconnect the connectors (AB6, AB17, AB18) from airbag control module. 6) Connect the connector (1AG) in the test harness AG to the connectors (AB6, AB17, AB18). NOTE: Except for XV models, connect test harness AH between the connectors (AB6, AB17, AB18) and (1AG). 7) Disconnect the connector (AB23) from the side airbag sensor (LH). 8) Connect the connector (2V) in the test harness V to the connector (AB23). 9) Measure the resistance between connector (5AG) in the test harness AG and connector (3V) in the test harness V. ***Connector & terminal*** ***XV model*** ***(5AG) No. 10 — (3V) No. 1:*** ***(5AG) No. 8 — (3V) No. 2:*** ***Except for XV model*** ***(5AG) No. 10 — (3V) No. 1:*** ***(5AG) No. 9 — (3V) No. 2:***	Is the resistance less than 10 Ω?	Go to step **6**.	Replace the airbag rear harness along with body harness.
6	**CHECK AIRBAG REAR HARNESS (BETWEEN AIRBAG CONTROL MODULE AND SIDE AIRBAG SENSOR LH).** Measure the resistance between connector (3V) in test harness V and chassis ground, and the resistance between connector (3V) terminals. ***Connector & terminal*** ***(3V) No. 1 — Chassis ground:*** ***(3V) No. 2 — Chassis ground:*** ***(3V) No. 1 — (3V) No. 2:***	Is the resistance 1 MΩ or more?	Go to step **7**.	Replace the airbag rear harness along with body harness.

	Step	Check	Yes	No
7	**CHECK AIRBAG REAR HARNESS (BETWEEN SIDE AIRBAG SENSOR AND CURTAIN AIRBAG SENSOR LH).** 1) Disconnect the connector (2V) in the test harness V from the connector (AB23) of side airbag sensor (LH). 2) Connect the connector (AB23) of side airbag sensor (LH) and the connector (1AI) in the test harness AI. 3) Connect the connector (2AI) in the test harness AI and the connector (1V) in the test harness V. 4) Disconnect the connector (AB32) from curtain airbag sensor (LH), and connect the connector (2V) in test harness V to connector (AB32). 5) Measure the resistance between connector (3V) terminals in the test harness V. ***Connector & terminal*** ***(3V) No. 2 — (3V) No. 6:*** ***(3V) No. 1 — (3V) No. 7:***	Is the resistance less than 10 Ω?	Go to step **8**.	Replace the airbag rear harness along with body harness.
8	**CHECK AIRBAG REAR HARNESS (BETWEEN SIDE AIRBAG SENSOR AND CURTAIN AIRBAG SENSOR LH).** Measure the resistance between connector (3V) in test harness V and chassis ground, and the resistance between connector (3V) terminals in test harness V. ***Connector & terminal*** ***(3V) No. 2 — Chassis ground:*** ***(3V) No. 1 — Chassis ground:*** ***(3V) No. 1 — (3V) No. 2:***	Is the resistance 1 MΩ or more?	Go to step **9**.	Replace the airbag rear harness along with body harness.
9	**CHECK AIRBAG REAR HARNESS AND DOOR HARNESS (BETWEEN CURTAIN AIRBAG SENSOR LH AND DOOR SENSOR LH).** 1) Disconnect the connector (AB58) from the front door impact sensor (LH), and connect the connector (1H) in the test harness H to connector (AB58). 2) Measure the resistance between connector (3V) in the test harness V and connector (3H) in the test harness H. ***Connector & terminal*** ***(3V) No. 4 — (3H) No. 5:*** ***(3V) No. 5 — (3H) No. 6:***	Is the resistance less than 10 Ω?	Go to step **10**.	Check the door harness, and if any fault is found, replace the harness. If there is no fault, replace the airbag rear harness together with body harness.
10	**CHECK AIRBAG REAR HARNESS AND DOOR HARNESS (BETWEEN CURTAIN AIRBAG SENSOR LH AND DOOR SENSOR LH).** Measure the resistance between connector (3V) in test harness V and chassis ground, and the resistance between connector (3V) terminals in test harness V. ***Connector & terminal*** ***(3V) No. 4 — Chassis ground:*** ***(3V) No. 5 — Chassis ground:*** ***(3V) No. 4 — (3V) No. 5:***	Is the resistance 1 MΩ or more?	Go to step **11**.	Check the door harness, and if any fault is found, replace the harness. If there is no fault, replace the airbag rear harness together with body harness.

	Step	Check	Yes	No
11	**CHECK AIRBAG CONTROL MODULE.** 1) Connect all connectors. 2) Clear the memory. 3) Perform the Inspection Mode. 4) Read the DTC. (Current malfunction)	Is the same DTC displayed?	Go to step **12**.	Go to step **15**.
12	**REPLACE SIDE AIRBAG SENSOR (LH) AND CHECK AIRBAG CONTROL MODULE AFTER REPLACEMENT.** 1) Turn the ignition switch to OFF, disconnect the battery ground cable, and wait for 60 seconds or more. NOTE: For HEV model, disconnect the negative terminal from 12 volt auxiliary battery, and disconnect the ground terminal from 12V engine restart battery sensor for 12 volt engine restart battery. <Ref. to NT-5, BATTERY, NOTE, Note.> 2) Replace the side airbag sensor (LH). <Ref. to AB-89, REMOVAL, Side Airbag Sensor.> 3) Connect all connectors. 4) Clear the memory. 5) Perform the Inspection Mode. 6) Read the DTC. (Current malfunction)	Is the same DTC displayed?	Go to step **13**.	Go to step **15**.
13	**REPLACE CURTAIN AIRBAG SENSOR (LH) AND CHECK AIRBAG CONTROL MODULE AFTER REPLACEMENT.** 1) Turn the ignition switch to OFF, disconnect the battery ground cable, and wait for 60 seconds or more. NOTE: For HEV model, disconnect the negative terminal from 12 volt auxiliary battery, and disconnect the ground terminal from 12V engine restart battery sensor for 12 volt engine restart battery. <Ref. to NT-5, BATTERY, NOTE, Note.> 2) Replace the curtain airbag sensor (LH). <Ref. to AB-94, REMOVAL, Curtain Airbag Sensor.> 3) Connect all connectors. 4) Clear the memory. 5) Perform the Inspection Mode. 6) Read the DTC. (Current malfunction)	Is the same DTC displayed?	Go to step **14**.	Go to step **15**.

	Step	Check	Yes	No
14	**REPLACE FRONT DOOR IMPACT SENSOR (LH) AND CHECK AIRBAG CONTROL MODULE AFTER REPLACEMENT.** 1) Turn the ignition switch to OFF, disconnect the battery ground cable, and wait for 60 seconds or more. NOTE: For HEV model, disconnect the negative terminal from 12 volt auxiliary battery, and disconnect the ground terminal from 12V engine restart battery sensor for 12 volt engine restart battery. <Ref. to NT-5, BATTERY, NOTE, Note.> 2) Replace the front door impact sensor (LH). <Ref. to AB-86, REMOVAL, Front Door Impact Sensor.> 3) Connect all connectors. 4) Clear the memory. 5) Perform the Inspection Mode. 6) Read the DTC. (Current malfunction)	Is the same DTC displayed?	Replace the airbag control module. <Ref. to AB-78, REMOVAL, Airbag Control Module.>	Go to step **15**.
15	**CHECK FOR ANY OTHER DTC ON DISPLAY.**	Is any other DTC displayed?	Perform the diagnosis according to DTC.	Finish the diagnosis.

BF:DTC B1650 OCCUPANT CLASSIFICATION SYSTEM MALFUNCTION

NOTE:
Refer to “Occupant Detection System” for details on DTC B1650. <Ref. to OD(diag)-19, DTC B1650 OCCUPANT CLASSIFICATION SYSTEM MALFUNCTION, Diagnostic Procedure with Diagnostic Trouble Code (DTC).>

BG:DTC B1655 FRONT BUCKLE SWITCH RH FAILURE

NOTE:
Refer to “Occupant Detection System” for details on DTC B1655. <Ref. to OD(diag)-22, DTC B1655 FRONT BUCKLE SWITCH RH FAILURE, Diagnostic Procedure with Diagnostic Trouble Code (DTC).>

BH:DTC B1660 PASSENGER'S AIRBAG ON INDICATOR FAILURE

DTC DETECTING CONDITION:

- Passenger's airbag indicator is faulty.
- Airbag control module is faulty.
- Airbag main harness circuit is open or shorted.
- Body harness circuit is open.

CAUTION:

Before performing diagnosis, refer to "CAUTION" in "General Description". <Ref. to AB(diag)-4, CAUTION, General Description.>

WIRING DIAGRAM:

Airbag system <Ref. to WI(w/o HEV)-30, WIRING DIAGRAM, Airbag System.> <Ref. to WI(HEV)-50, WIRING DIAGRAM, Airbag System.>

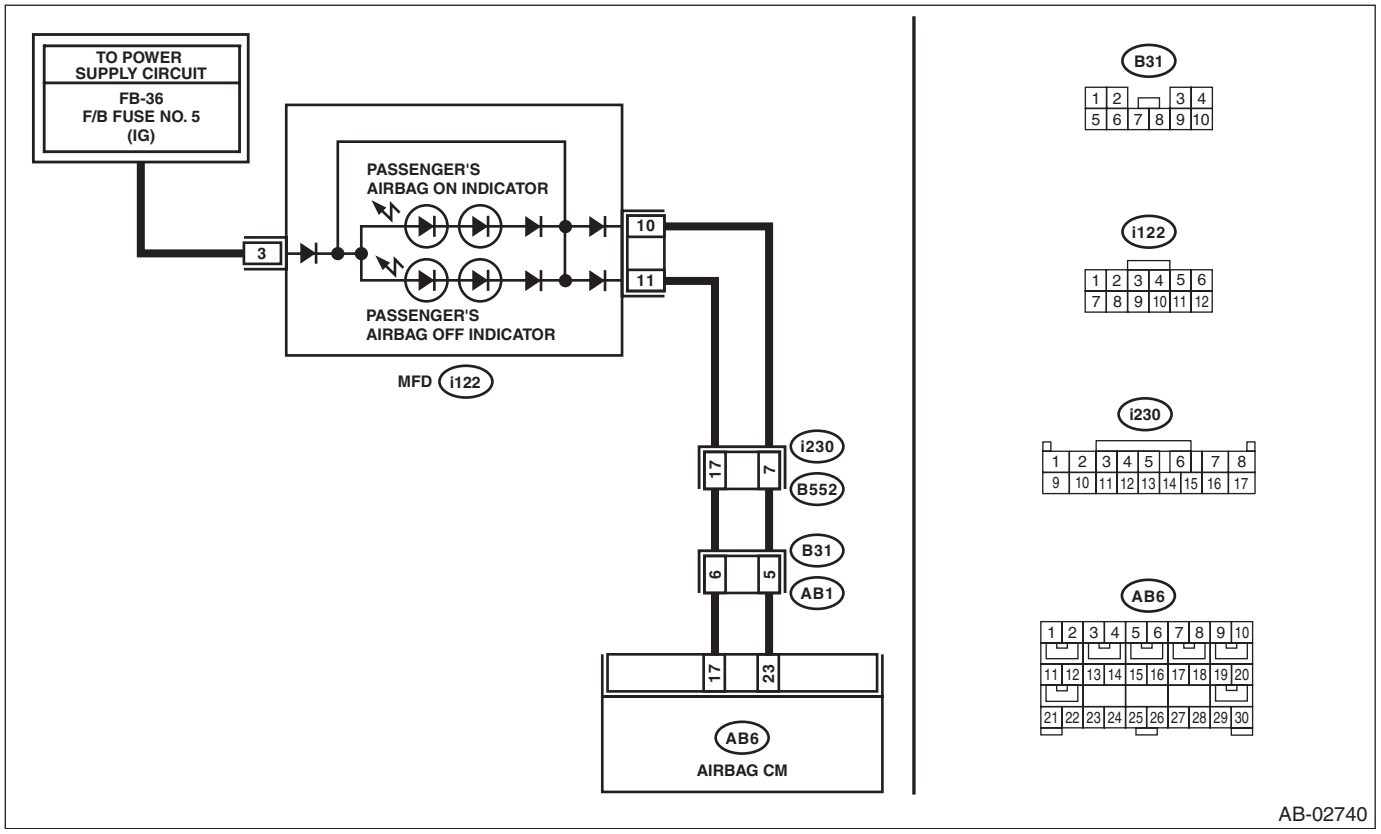

Step		Check	Yes	No
1	**CHECK FOR POOR CONTACT.** 1) Turn the ignition switch to OFF, disconnect the battery ground cable, and wait for 60 seconds or more. NOTE: For HEV model, disconnect the negative terminal from 12 volt auxiliary battery, and disconnect the ground terminal from 12V engine restart battery sensor for 12 volt engine restart battery. <Ref. to NT-5, BATTERY, NOTE, Note.> 2) Check that the connector between the airbag control module and MFD is securely connected.	Is there poor contact of any connector?	Repair the bulkhead harness. Or replace the airbag main harness along with body harness.	Go to step **2**.

	Step	Check	Yes	No
2	**CHECK AIRBAG MAIN HARNESS.** 1) Disconnect the connectors (AB6, AB17, AB18) from airbag control module. 2) Connect the battery ground terminal and turn the ignition switch to ON. NOTE: Neither of ON/OFF illuminates when it is normal.	Does the passenger's airbag indicator illuminate?	Go to step **3**.	Go to step **4**.
3	**CHECK AIRBAG MAIN HARNESS.** 1) Turn the ignition switch to OFF, disconnect the battery ground cable, and wait for 60 seconds or more. NOTE: For HEV model, disconnect the negative terminal from 12 volt auxiliary battery, and disconnect the ground terminal from 12V engine restart battery sensor for 12 volt engine restart battery. <Ref. to NT-5, BATTERY, NOTE, Note.> 2) Remove the MFD and disconnect the connector (i122). 3) Connect the connector (1AG) in the test harness AG to the connectors (AB6, AB17, AB18). NOTE: Except for XV models, connect test harness AH between the connectors (AB6, AB17, AB18) and (1AG). 4) Measure the resistance between connector (2AG) in the test harness AG and chassis ground. ***Connector & terminal*** ***(2AG) No. 9 — (2AG) No. 8:*** ***(2AG) No. 9 — Chassis ground:*** ***(2AG) No. 8 — Chassis ground:***	Is the resistance 1 MΩ or more?	Replace the MFD. <Ref. to IDI-23, REMOVAL, Multi-function Display (MFD).>	Repair the bulkhead harness. Or replace the airbag main harness along with body harness.
4	**CHECK AIRBAG MAIN HARNESS.** 1) Turn the ignition switch to OFF, disconnect the battery ground cable, and wait for 60 seconds or more. NOTE: For HEV model, disconnect the negative terminal from 12 volt auxiliary battery, and disconnect the ground terminal from 12V engine restart battery sensor for 12 volt engine restart battery. <Ref. to NT-5, BATTERY, NOTE, Note.> 2) Disconnect the connectors (AB6, AB17, AB18) from the airbag control module, and connect the connector (1AH) in the test harness AH. 3) Connect the connector (2AH) in the test harness AH and the connector (1AG) in the test harness AG. 4) Connect the connectors (7AG) and (8AG) in the test harness AG. 5) Connect the battery ground terminal and turn the ignition switch to ON.	Does the passenger's airbag indicator illuminate?	Replace the airbag control module. <Ref. to AB-78, Airbag Control Module.>	Go to step **5**.

	Step	Check	Yes	No
5	**CHECK AIRBAG MAIN HARNESS.** 1) Turn the ignition switch to OFF, disconnect the battery ground cable, and wait for 60 seconds or more. NOTE: For HEV model, disconnect the negative terminal from 12 volt auxiliary battery, and disconnect the ground terminal from 12V engine restart battery sensor for 12 volt engine restart battery. <Ref. to NT-5, BATTERY, NOTE, Note.> 2) Remove the MFD and disconnect the connector (i122). 3) Measure the resistance between connector (2AG) in the test harness AG and connector (i122). ***Connector & terminal*** ***(2AG) No. 9 — (i122) No. 11:*** ***(2AG) No. 8 — (i122) No. 10:***	Is the resistance less than 10 Ω?	Go to step **6**.	Repair the bulkhead harness. Or replace the airbag main harness along with body harness.
6	**CHECK BODY HARNESS.** 1) Turn the ignition switch to ON. 2) Measure the voltage between connector (i122) and chassis ground. ***Connector & terminal*** ***(i122) No. 3 (+) — Chassis ground (–):***	Is the voltage 10 V or more?	Replace the MFD. <Ref. to IDI-23, REMOVAL, Multi-function Display (MFD).>	Check the power supply circuit of MFD.

BI: DTC B1675 SATELLITE SAFING SENSOR FAILURE

DTC DETECTING CONDITION:

- Satellite safing sensor is faulty.
- Airbag control module is faulty.

CAUTION:
Before performing diagnosis, refer to "CAUTION" in "General Description". <Ref. to AB(diag)-4, CAUTION, General Description.>

	Step	Check	Yes	No
1	**REPLACE SATELLITE SAFING SENSOR.** 1) Turn the ignition switch to OFF, disconnect the battery ground cable, and wait for 60 seconds or more. NOTE: For HEV model, disconnect the negative terminal from 12 volt auxiliary battery, and disconnect the ground terminal from 12V engine restart battery sensor for 12 volt engine restart battery. <Ref. to NT-5, BATTERY, NOTE, Note.> 2) Replace the satellite safing sensor with a genuine sensor. <Ref. to AB-102, REMOVAL, Satellite Safing Sensor.>	Does the warning light go off?	Finish the diagnosis.	Replace the airbag control module. <Ref. to AB-78, REMOVAL, Airbag Control Module.>

BJ:DTC B1676 LOST COMMUNICATION WITH SATELLITE SAFING SENSOR

NOTE:
For details on DTC B1676, refer to DTC B1677. <Ref. to AB(diag)-85, DTC B1677 SATELLITE SAFING SENSOR INITIALIZATION INCOMPLETE, Diagnostic Chart with Trouble Code.>

BK:DTC B1677 SATELLITE SAFING SENSOR INITIALIZATION INCOMPLETE

DTC DETECTING CONDITION:

- Open or short circuit in harness of satellite safing sensor
- Satellite safing sensor is faulty.
- Airbag control module is faulty.

CAUTION:

Before performing diagnosis, refer to "CAUTION" in "General Description". <Ref. to AB(diag)-4, CAUTION, General Description.>

WIRING DIAGRAM:

Airbag system <Ref. to WI(w/o HEV)-30, WIRING DIAGRAM, Airbag System.> <Ref. to WI(HEV)-50, WIRING DIAGRAM, Airbag System.>

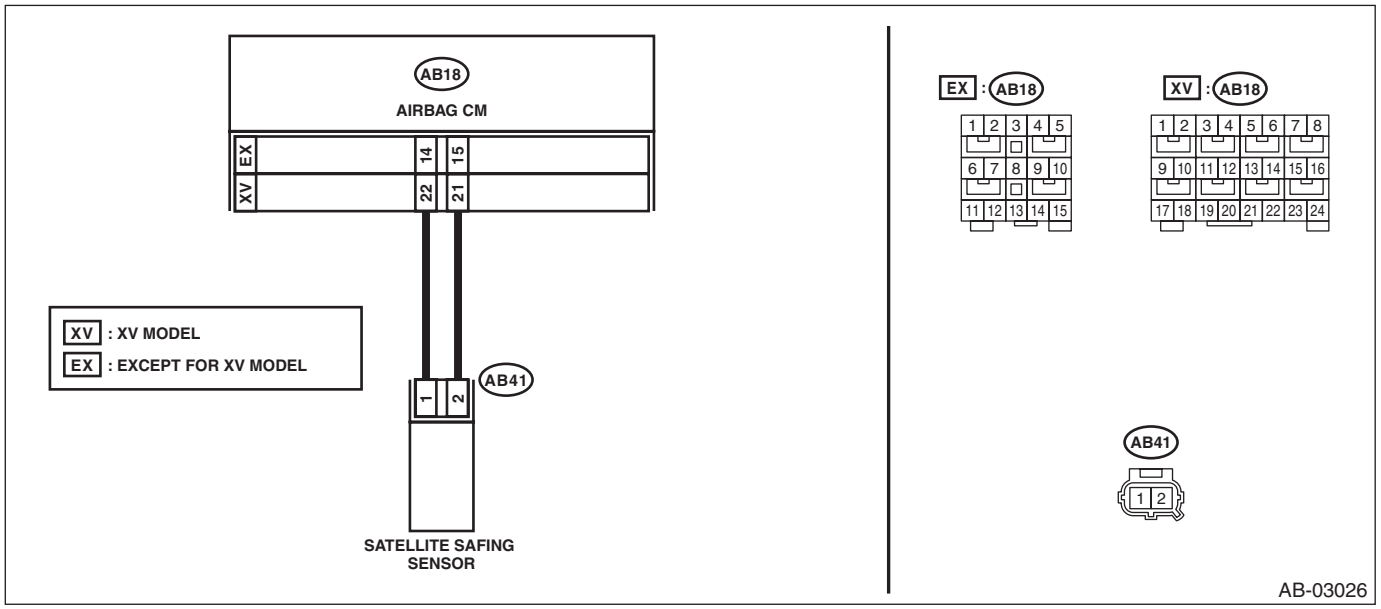

Step		Check	Yes	No
1	**CHECK POOR CONTACT OF CONNECTORS.** Check for poor contact of the connectors (AB18, AB41) between the airbag control module and the satellite safing sensor.	Is there poor contact?	Replace the airbag rear harness along with body harness.	Go to step **2**.

Step		Check	Yes	No
2	**CHECK AIRBAG REAR HARNESS (BETWEEN AIRBAG CONTROL MODULE AND SATELLITE SAFING SENSOR).** 1) Turn the ignition switch to OFF, disconnect the battery ground cable, and wait for 60 seconds or more. NOTE: For HEV model, disconnect the negative terminal from 12 volt auxiliary battery, and disconnect the ground terminal from 12V engine restart battery sensor for 12 volt engine restart battery. <Ref. to NT-5, BATTERY, NOTE, Note.> 2) Disconnect the connectors (AB21, AB26) from seat belt pretensioner. 3) Disconnect the connectors (AB31, AB33) from curtain airbag module. 4) Disconnect connectors (AB19) and (AB24) from the side airbag module. 5) Disconnect the connectors (AB17, AB6, AB18) from airbag control module. 6) Connect the connector (1AG) in the test harness AG to the connectors (AB6, AB17, AB18). NOTE: Except for XV models, connect test harness AH between the connectors (AB6, AB17, AB18) and (1AG). 7) Connect the connector (2AH) in the test harness AH and the connector (1AG) in the test harness AG. 8) Disconnect the connector (AB41) from the satellite safing sensor and connect to the test harness H connector (1H). 9) Measure the resistance between connector in the test harness AG and connector in the test harness H. ***Connector & terminal*** ***XV model*** ***(5AG) No. 15 — (3H) No. 5:*** ***(6AG) No. 14 — (3H) No. 6:*** ***Except for XV model*** ***(4AG) No. 5 — (3H) No. 5:*** ***(5AG) No. 13 — (3H) No. 6:***	Is the resistance less than 10 Ω?	Go to step **3**.	Replace the airbag rear harness along with body harness.
3	**CHECK AIRBAG REAR HARNESS (BETWEEN AIRBAG CONTROL MODULE AND SATELLITE SAFING SENSOR).** Measure the resistance between connector in the test harness AG and chassis ground, and the resistance between connector terminals in the test harness AG. ***Connector & terminal*** ***XV model*** ***(5AG) No. 15 — Chassis ground:*** ***(6AG) No. 14 — Chassis ground:*** ***(5AG) No. 15 — (6AG) No. 14:*** ***Except for XV model*** ***(4AG) No. 5 — Chassis ground:*** ***(5AG) No. 13 — Chassis ground:*** ***(4AG) No. 5 — (5AG) No. 13:***	Is the resistance 1 MΩ or more?	Go to step **4**.	Replace the airbag rear harness along with body harness.

	Step	Check	Yes	No
4	**CHECK AIRBAG CONTROL MODULE.** 1) Connect all connectors. 2) Clear the memory. 3) Perform the Inspection Mode. 4) Read the DTC. (Current malfunction)	Is the same DTC displayed?	Replace the satellite safing sensor. <Ref. to AB-102, REMOVAL, Satellite Safing Sensor.> Replace the airbag control module if not operating normally even after replacing the sensor. <Ref. to AB-78, REMOVAL, Airbag Control Module.>	Go to step **5**.
5	**CHECK FOR ANY OTHER DTC ON DISPLAY.**	Is any other DTC displayed?	Check DTC using "List of Diagnostic Trouble Code (DTC)". <Ref. to AB(diag)-33, List of Diagnostic Trouble Code (DTC).>	Finish the diagnosis.

BL:DTC B16F8 SATELLITE SAFING SENSOR RECOGNITION ERROR

DTC DETECTING CONDITION:

- Satellite safing sensor is misinstalled.
- Airbag control module is faulty.

	Step	Check	Yes	No
1	**REPLACE SATELLITE SAFING SENSOR.** 1) Turn the ignition switch to OFF, disconnect the battery ground cable, and wait for 60 seconds or more. NOTE: For HEV model, disconnect the negative terminal from 12 volt auxiliary battery, and disconnect the ground terminal from 12V engine restart battery sensor for 12 volt engine restart battery. <Ref. to NT-5, BATTERY, NOTE, Note.> 2) Replace the satellite safing sensor with a genuine sensor. <Ref. to AB-102, REMOVAL, Satellite Safing Sensor.>	Does the warning light go off?	Finish the diagnosis.	Replace the airbag control module. <Ref. to AB-78, REMOVAL, Airbag Control Module.>

BM:DTC B16F9 DOOR SENSOR RH RECOGNITION ERROR

DTC DETECTING CONDITION:

- Front door impact sensor (RH) is misinstalled.
- Airbag control module is faulty.

CAUTION:
Before performing diagnosis, refer to "CAUTION" in "General Description". <Ref. to AB(diag)-4, CAUTION, General Description.>

	Step	Check	Yes	No
1	**REPLACE FRONT DOOR IMPACT SENSOR (RH).** 1) Turn the ignition switch to OFF, disconnect the battery ground cable, and wait for 60 seconds or more. NOTE: For HEV model, disconnect the negative terminal from 12 volt auxiliary battery, and disconnect the ground terminal from 12V engine restart battery sensor for 12 volt engine restart battery. <Ref. to NT-5, BATTERY, NOTE, Note.> 2) Replace the front door impact sensor (RH) with a genuine sensor. <Ref. to AB-86, REMOVAL, Front Door Impact Sensor.>	Does the warning light go off?	Finish the diagnosis.	Replace the airbag control module. <Ref. to AB-78, REMOVAL, Airbag Control Module.>

BN:DTC B1690 DOOR SENSOR RH FAILURE

DTC DETECTING CONDITION:

Front door impact sensor (RH) is faulty.
If DTC B1690 is displayed, the circuit within the front door impact sensor (RH) is faulty.
Replace the front door impact sensor (RH). <Ref. to AB-86, REMOVAL, Front Door Impact Sensor.>

BO:DTC B1692 LOST COMMUNICATION WITH DOOR SENSOR RH

NOTE:
For details on DTC B1692, refer to DTC B1693. <Ref. to AB(diag)-89, DTC B1693 DOOR SENSOR RH INITIALIZATION INCOMPLETE, Diagnostic Chart with Trouble Code.>

BP:DTC B1693 DOOR SENSOR RH INITIALIZATION INCOMPLETE

DTC DETECTING CONDITION:

- Open or short circuit in harness of side sensor bus (RH)
- Front door impact sensor (RH) is faulty.
- Curtain airbag sensor (RH) is faulty.
- Airbag control module is faulty.

CAUTION:

Before performing diagnosis, refer to "CAUTION" in "General Description". <Ref. to AB(diag)-4, CAUTION, General Description.>

WIRING DIAGRAM:

Airbag system <Ref. to WI(w/o HEV)-30, WIRING DIAGRAM, Airbag System.> <Ref. to WI(HEV)-50, WIRING DIAGRAM, Airbag System.>

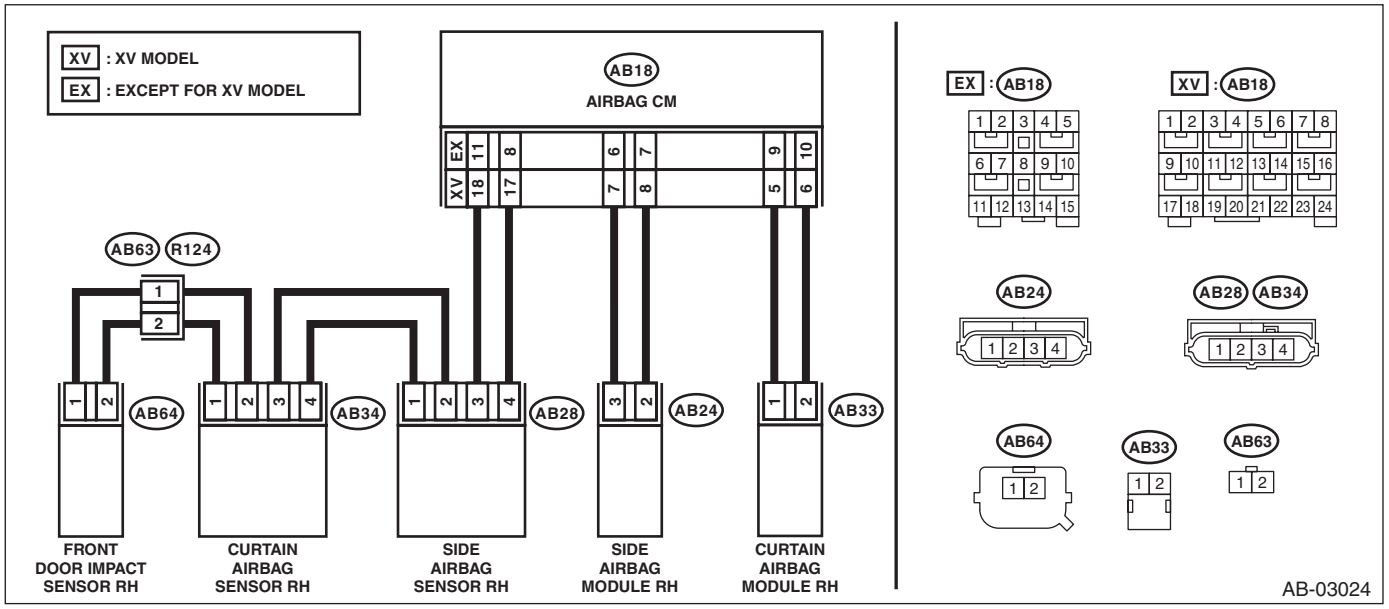

Step		Check	Yes	No
1	**CHECK DTC.** Read the DTC. (Current malfunction)	Is DTC B1622 or B1623 displayed?	Perform the diagnosis according to DTC.	Go to step **2**.
2	**CHECK DTC.** Read the DTC. (Current malfunction)	Is DTC B1632 or B1633 displayed?	Perform the diagnosis according to DTC.	Go to step **3**.
3	**CHECK POOR CONTACT OF CONNECTORS.** Check for poor contact of the connectors between the airbag control module and the front door impact sensor (RH).	Is there poor contact?	Replace the airbag rear harness and the door harness.	Go to step **4**.

	Step	Check	Yes	No
4	**CHECK AIRBAG REAR HARNESS AND DOOR HARNESS (BETWEEN CURTAIN AIRBAG SENSOR RH AND DOOR SENSOR RH).** 1) Turn the ignition switch to OFF, disconnect the battery ground cable, and wait for 60 seconds or more. NOTE: For HEV model, disconnect the negative terminal from 12 volt auxiliary battery, and disconnect the ground terminal from 12V engine restart battery sensor for 12 volt engine restart battery. <Ref. to NT-5, BATTERY, NOTE, Note.> 2) Disconnect the connector (AB26) from seat belt pretensioner (RH). 3) Disconnect the connector (AB33) from curtain airbag module (RH). 4) Disconnect connector (AB24) from side airbag module (RH). 5) Disconnect the connector (AB34) from curtain airbag sensor (RH), and connect the connector (2V) in test harness V to connector (AB34). 6) Disconnect the connector (AB64) from the front door impact sensor (RH), and connect the connector (1H) in the test harness H to connector (AB64). 7) Measure the resistance between connector (3V) in the test harness V and connector (3H) in the test harness H. ***Connector & terminal*** ***(3V) No. 4 — (3H) No. 5:*** ***(3V) No. 5 — (3H) No. 6:***	Is the resistance less than 10 Ω?	Go to step **5**.	Check the door harness, and if any fault is found, replace the harness. If there is no fault, replace the airbag rear harness together with body harness.
5	**CHECK AIRBAG REAR HARNESS AND DOOR HARNESS (BETWEEN CURTAIN AIRBAG SENSOR RH AND DOOR SENSOR RH).** Measure the resistance between connector (3V) in test harness V and chassis ground, and the resistance between connector (3V) terminals in test harness V. ***Connector & terminal*** ***(3V) No. 4 — Chassis ground:*** ***(3V) No. 5 — Chassis ground:*** ***(3V) No. 4 — (3V) No. 5:***	Is the resistance 1 MΩ or more?	Go to step **6**.	Check the door harness, and if any fault is found, replace the harness. If there is no fault, replace the airbag rear harness together with body harness.
6	**CHECK AIRBAG CONTROL MODULE.** 1) Connect all connectors. 2) Clear the memory. 3) Perform the Inspection Mode. 4) Read the DTC. (Current malfunction)	Is the same DTC displayed?	Go to step **7**.	Go to step **9**.

	Step	Check	Yes	No
7	**REPLACE FRONT DOOR IMPACT SENSOR (RH) AND CHECK AIRBAG CONTROL MODULE AFTER REPLACEMENT.** 1) Turn the ignition switch to OFF, disconnect the battery ground cable, and wait for 60 seconds or more. NOTE: For HEV model, disconnect the negative terminal from 12 volt auxiliary battery, and disconnect the ground terminal from 12V engine restart battery sensor for 12 volt engine restart battery. <Ref. to NT-5, BATTERY, NOTE, Note.> 2) Replace the front door impact sensor (RH). <Ref. to AB-86, REMOVAL, Front Door Impact Sensor.> 3) Connect all connectors. 4) Clear the memory. 5) Perform the Inspection Mode. 6) Read the DTC. (Current malfunction)	Is the same DTC displayed?	Go to step **8**.	Go to step **9**.
8	**REPLACE CURTAIN AIRBAG SENSOR (RH) AND CHECK AIRBAG CONTROL MODULE AFTER REPLACEMENT.** 1) Turn the ignition switch to OFF, disconnect the battery ground cable, and wait for 60 seconds or more. NOTE: For HEV model, disconnect the negative terminal from 12 volt auxiliary battery, and disconnect the ground terminal from 12V engine restart battery sensor for 12 volt engine restart battery. <Ref. to NT-5, BATTERY, NOTE, Note.> 2) Replace the curtain airbag sensor (RH). <Ref. to AB-94, REMOVAL, Curtain Airbag Sensor.> 3) Connect all connectors. 4) Clear the memory. 5) Perform the Inspection Mode. 6) Read the DTC. (Current malfunction)	Is the same DTC displayed?	Replace the airbag control module. <Ref. to AB-78, REMOVAL, Airbag Control Module.>	Go to step **9**.
9	**CHECK FOR ANY OTHER DTC ON DISPLAY.**	Is any other DTC displayed?	Check DTC using “List of Diagnostic Trouble Code”. <Ref. to AB(diag)-33, LIST, List of Diagnostic Trouble Code (DTC).>	Finish the diagnosis.

BQ:DTC B16FA LOST COMMUNICATION WITH DOOR SENSOR LH

DTC DETECTING CONDITION:

- Front door impact sensor (LH) is misinstalled.
- Airbag control module is faulty.

CAUTION:
Before performing diagnosis, refer to "CAUTION" in "General Description". <Ref. to AB(diag)-4, CAUTION, General Description.>

	Step	Check	Yes	No
1	**REPLACE FRONT DOOR IMPACT SENSOR (LH).** 1) Turn the ignition switch to OFF, disconnect the battery ground cable, and wait for 60 seconds or more. NOTE: For HEV model, disconnect the negative terminal from 12 volt auxiliary battery, and disconnect the ground terminal from 12V engine restart battery sensor for 12 volt engine restart battery. <Ref. to NT-5, BATTERY, NOTE, Note.> 2) Replace the front door impact sensor (LH) with a genuine sensor. <Ref. to AB-86, REMOVAL, Front Door Impact Sensor.>	Does the warning light go off?	Finish the diagnosis.	Replace the airbag control module. <Ref. to AB-78, REMOVAL, Airbag Control Module.>

BR:DTC B1695 DOOR SENSOR LH FAILURE

DTC DETECTING CONDITION:

Front door impact sensor (LH) is faulty.
If DTC AB is displayed, the circuit within the front door impact sensor (LH) is faulty.
Replace the front door impact sensor (LH). <Ref. to AB-86, REMOVAL, Front Door Impact Sensor.>

BS:DTC B1697 LOST COMMUNICATION WITH DOOR SENSOR LH

NOTE:
Refer to DTC B1697 for details on DTC B1698. <Ref. to AB(diag)-93, DTC B1698 DOOR SENSOR LH INITIALIZATION INCOMPLETE, Diagnostic Chart with Trouble Code.>

BT:DTC B1698 DOOR SENSOR LH INITIALIZATION INCOMPLETE

DTC DETECTING CONDITION:

- Open or short circuit in harness of side sensor bus (LH)
- Front door impact sensor (LH) is faulty.
- Curtain airbag sensor (LH) is faulty.
- Airbag control module is faulty.

CAUTION:

Before performing diagnosis, refer to "CAUTION" in "General Description". <Ref. to AB(diag)-4, CAUTION, General Description.>

WIRING DIAGRAM:

Airbag system <Ref. to WI(w/o HEV)-30, WIRING DIAGRAM, Airbag System.> <Ref. to WI(HEV)-50, WIRING DIAGRAM, Airbag System.>

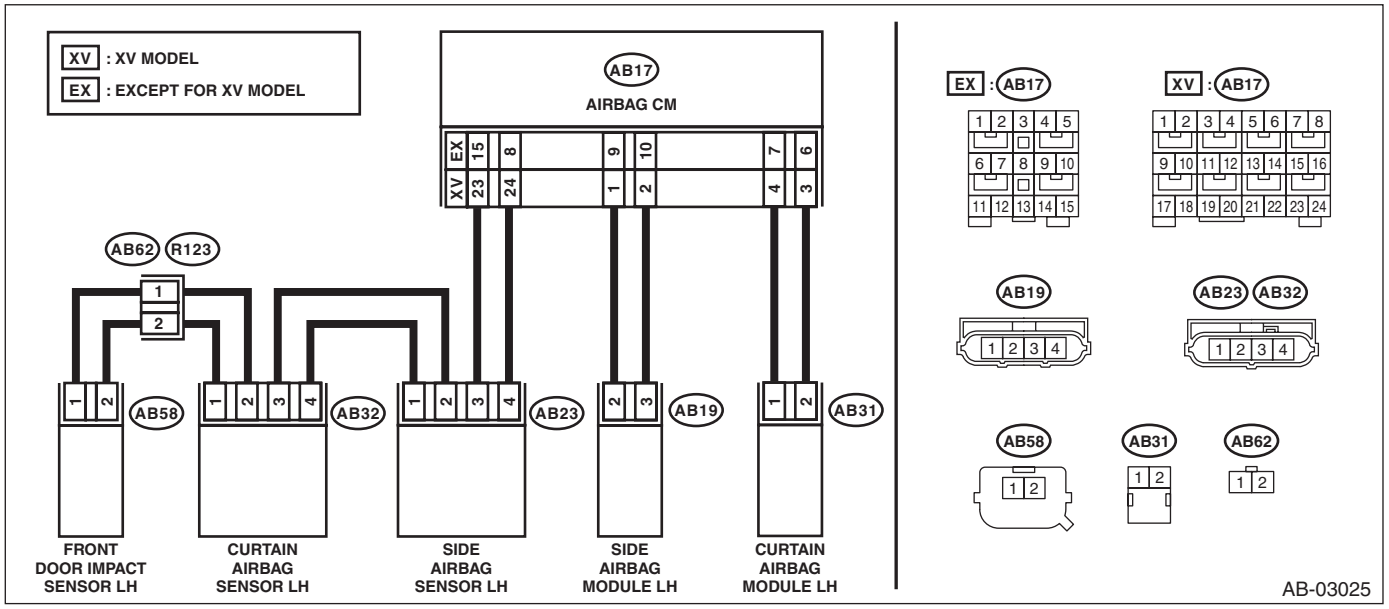

Step		Check	Yes	No
1	**CHECK DTC.** Read the DTC. (Current malfunction)	Is DTC B1627 or B1628 displayed?	Perform the diagnosis according to DTC.	Go to step **2**.
2	**CHECK DTC.** Read the DTC. (Current malfunction)	Is DTC B1637 or B1638 displayed?	Perform the diagnosis according to DTC.	Go to step **3**.
3	**CHECK POOR CONTACT OF CONNECTORS.** Check for poor contact of the connectors between the airbag control module and the front door impact sensor (LH).	Is there poor contact?	Replace the airbag rear harness and the door harness.	Go to step **4**.

Step		Check	Yes	No
4	**CHECK AIRBAG REAR HARNESS AND DOOR HARNESS (BETWEEN CURTAIN AIRBAG SENSOR LH AND FRONT DOOR IMPACT SENSOR LH).** 1) Turn the ignition switch to OFF, disconnect the battery ground cable, and wait for 60 seconds or more. NOTE: For HEV model, disconnect the negative terminal from 12 volt auxiliary battery, and disconnect the ground terminal from 12V engine restart battery sensor for 12 volt engine restart battery. <Ref. to NT-5, BATTERY, NOTE, Note.> 2) Disconnect the connector (AB21) from seat belt pretensioner (LH). 3) Disconnect the connector (AB31) from curtain airbag module (LH). 4) Disconnect connector (AB19) from side airbag module (LH). 5) Disconnect the connector (AB32) from curtain airbag sensor (LH), and connect the connector (2V) in test harness V to connector (AB32). 6) Disconnect the connector (AB58) from the front door impact sensor (LH), and connect the connector (1H) in the test harness H to connector (AB58). 7) Measure the resistance between connector (3V) in the test harness V and connector (3H) in the test harness H. ***Connector & terminal*** ***(3V) No. 4 — (3H) No. 5:*** ***(3V) No. 5 — (3H) No. 6:***	Is the resistance less than 10 Ω?	Go to step **5**.	Check the door harness, and if any fault is found, replace the harness. If there is no fault, replace the airbag rear harness together with body harness.
5	**CHECK AIRBAG REAR HARNESS AND DOOR HARNESS (BETWEEN CURTAIN AIRBAG SENSOR LH AND FRONT DOOR IMPACT SENSOR LH).** Measure the resistance between connector (3V) in test harness V and chassis ground, and the resistance between connector (3V) terminals in test harness V. ***Connector & terminal*** ***(3V) No. 4 — Chassis ground:*** ***(3V) No. 5 — Chassis ground:*** ***(3V) No. 4 — (3V) No. 5:***	Is the resistance 1 MΩ or more?	Go to step **6**.	Check the door harness, and if any fault is found, replace the harness. If there is no fault, replace the airbag rear harness together with body harness.
6	**CHECK AIRBAG CONTROL MODULE.** 1) Connect all connectors. 2) Clear the memory. 3) Perform the Inspection Mode. 4) Read the DTC. (Current malfunction)	Is the same DTC displayed?	Go to step **7**.	Go to step **9**.

	Step	Check	Yes	No
7	**REPLACE FRONT DOOR IMPACT SENSOR (LH) AND CHECK AIRBAG CONTROL MODULE AFTER REPLACEMENT.** 1) Turn the ignition switch to OFF, disconnect the battery ground cable, and wait for 60 seconds or more. NOTE: For HEV model, disconnect the negative terminal from 12 volt auxiliary battery, and disconnect the ground terminal from 12V engine restart battery sensor for 12 volt engine restart battery. <Ref. to NT-5, BATTERY, NOTE, Note.> 2) Replace the front door impact sensor (LH). <Ref. to AB-86, REMOVAL, Front Door Impact Sensor.> 3) Connect all connectors. 4) Clear the memory. 5) Perform the Inspection Mode. 6) Read the DTC. (Current malfunction)	Is the same DTC displayed?	Go to step **8**.	Go to step **9**.
8	**REPLACE CURTAIN AIRBAG SENSOR (LH) AND CHECK AIRBAG CONTROL MODULE AFTER REPLACEMENT.** 1) Turn the ignition switch to OFF, disconnect the battery ground cable, and wait for 60 seconds or more. NOTE: For HEV model, disconnect the negative terminal from 12 volt auxiliary battery, and disconnect the ground terminal from 12V engine restart battery sensor for 12 volt engine restart battery. <Ref. to NT-5, BATTERY, NOTE, Note.> 2) Replace the curtain airbag sensor (LH). <Ref. to AB-94, REMOVAL, Curtain Airbag Sensor.> 3) Connect all connectors. 4) Clear the memory. 5) Perform the Inspection Mode. 6) Read the DTC. (Current malfunction)	Is the same DTC displayed?	Replace the airbag control module. <Ref. to AB-78, REMOVAL, Airbag Control Module.>	Go to step **9**.
9	**CHECK FOR ANY OTHER DTC ON DISPLAY.** Read the DTC. (Current malfunction)	Is any other DTC displayed?	Check DTC using "List of Diagnostic Trouble Code". <Ref. to AB(diag)-33, LIST, List of Diagnostic Trouble Code (DTC).>	Finish the diagnosis.

BU:DTC B161A LOST COMMUNICATION WITH FRONT SATELLITE SENSOR BUS

DTC DETECTING CONDITION:

- Harness between airbag control module and front sub sensor is open or shorted.
- Front sub sensor is faulty.
- Airbag control module is faulty.

CAUTION:

Before performing diagnosis, refer to "CAUTION" in "General Description". <Ref. to AB(diag)-4, CAUTION, General Description.>

WIRING DIAGRAM:

Airbag system <Ref. to WI(w/o HEV)-30, WIRING DIAGRAM, Airbag System.> <Ref. to WI(HEV)-50, WIRING DIAGRAM, Airbag System.>

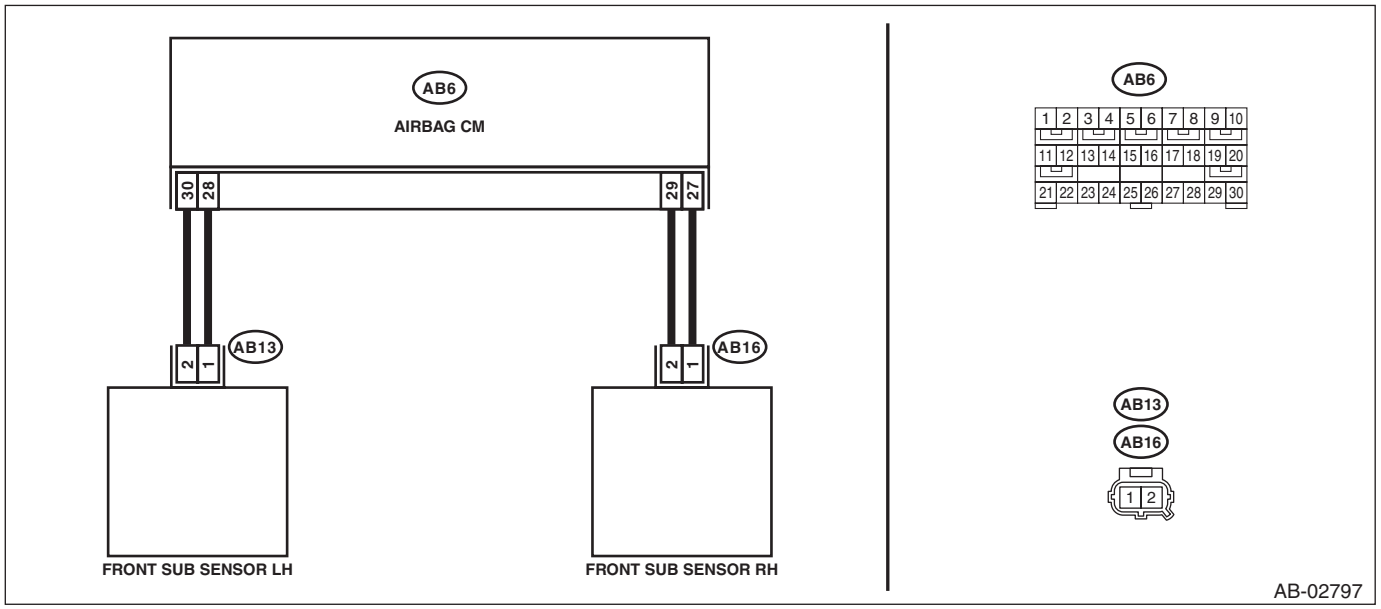

	Step	Check	Yes	No
1	**CHECK POOR CONTACT OF CONNECTORS.** Check for poor contact of the connectors between the airbag control module and the front sub sensor.	Is there poor contact?	Replace the airbag main harness along with body harness.	Go to step **2**.

	Step	Check	Yes	No
2	**CHECK AIRBAG MAIN HARNESS (FRONT SENSOR BUS LH).** 1) Turn the ignition switch to OFF, disconnect the battery ground cable, and wait for 60 seconds or more. NOTE: For HEV model, disconnect the negative terminal from 12 volt auxiliary battery, and disconnect the ground terminal from 12V engine restart battery sensor for 12 volt engine restart battery. <Ref. to NT-5, BATTERY, NOTE, Note.> 2) Remove the instrument panel lower cover and column cover, and disconnect the connectors (AB7) and (AB2). 3) Remove the console front panel and disconnect the connector (AB9). 4) Disconnect the connectors (AB6, AB17, AB18) from airbag control module. 5) Connect the connector (1AG) in the test harness AG to the connectors (AB6, AB17, AB18). NOTE: Except for XV models, connect test harness AH between the connectors (AB6, AB17, AB18) and (1AG). 6) Disconnect the connector (AB13) from the front sub sensor (LH), and then connect the connector (1H) in the test harness H to connector (AB13). 7) Measure the resistance between connector (4AG) in the test harness AG and connector (3H) in the test harness H. ***Connector & terminal*** ***(4AG) No. 7 — (3H) No. 5:*** ***(4AG) No. 9 — (3H) No. 6:***	Is the resistance less than 10 Ω?	Go to step **3**.	Replace the airbag main harness along with body harness.
3	**CHECK AIRBAG MAIN HARNESS (FRONT SENSOR BUS LH).** Measure the resistance between connector (4AG) in the test harness AG and chassis ground, and the resistance between connector (4AG) terminals in the test harness AG. ***Connector & terminal*** ***(4AG) No. 7 — Chassis ground:*** ***(4AG) No. 9 — Chassis ground:*** ***(4AG) No. 7 — (4AG) No. 9:***	Is the resistance 1 MΩ or more?	Go to step **4**.	Replace the airbag rear harness along with body harness.
4	**CHECK AIRBAG MAIN HARNESS (FRONT SENSOR BUS RH).** 1) Disconnect the connector (AB16) from the front sub sensor (RH), and then connect the connector (1H) in the test harness H to connector (AB16). 2) Measure the resistance between connector (4AG) in the test harness AG and connector (3H) in the test harness H. ***Connector & terminal*** ***(4AG) No. 14 — (3H) No. 5:*** ***(4AG) No. 12 — (3H) No. 6:***	Is the resistance less than 10 Ω?	Go to step **5**.	Replace the airbag main harness along with body harness.

	Step	Check	Yes	No
5	**CHECK AIRBAG MAIN HARNESS (FRONT SENSOR BUS RH).** Measure the resistance between connector (4AG) in the test harness AG and chassis ground, and the resistance between connector (4AG) terminals in the test harness AG. ***Connector & terminal*** ***(4AG) No. 12 — Chassis ground:*** ***(4AG) No. 14 — Chassis ground:*** ***(4AG) No. 12 — (4AG) No. 14:***	Is the resistance 1 MΩ or more?	Go to step **6**.	Replace the airbag rear harness along with body harness.
6	**CHECK AIRBAG CONTROL MODULE.** 1) Connect all connectors. 2) Clear the memory. 3) Perform the Inspection Mode. 4) Read the DTC. (Current malfunction)	Is the same DTC displayed?	Replace the front sub sensor (LH) and front sub sensor (RH). <Ref. to AB-82, REMOVAL, Front Sub Sensor.> Replace the airbag control module if not operating normally even after replacing the sensor. <Ref. to AB-78, REMOVAL, Airbag Control Module.>	Go to step **7**.
7	**CHECK FOR ANY OTHER DTC ON DISPLAY.**	Is any other DTC displayed?	Check DTC using “List of Diagnostic Trouble Code”. <Ref. to AB(diag)-33, List of Diagnostic Trouble Code (DTC).>	Finish the diagnosis.

BV:DTC B16F1 PASSENGER'S SEAT BELT WARNING FAILURE

DTC DETECTING CONDITION:

- Airbag control module is faulty.
- Meter is faulty.
- Harness circuits between meter and airbag control module are open, shorted or shorted to ground.

CAUTION:

Before performing diagnosis, refer to "CAUTION" in "General Description". <Ref. to AB(diag)-4, CAUTION, General Description.>

WIRING DIAGRAM:

Airbag system <Ref. to WI(w/o HEV)-30, WIRING DIAGRAM, Airbag System.> <Ref. to WI(HEV)-50, WIRING DIAGRAM, Airbag System.>

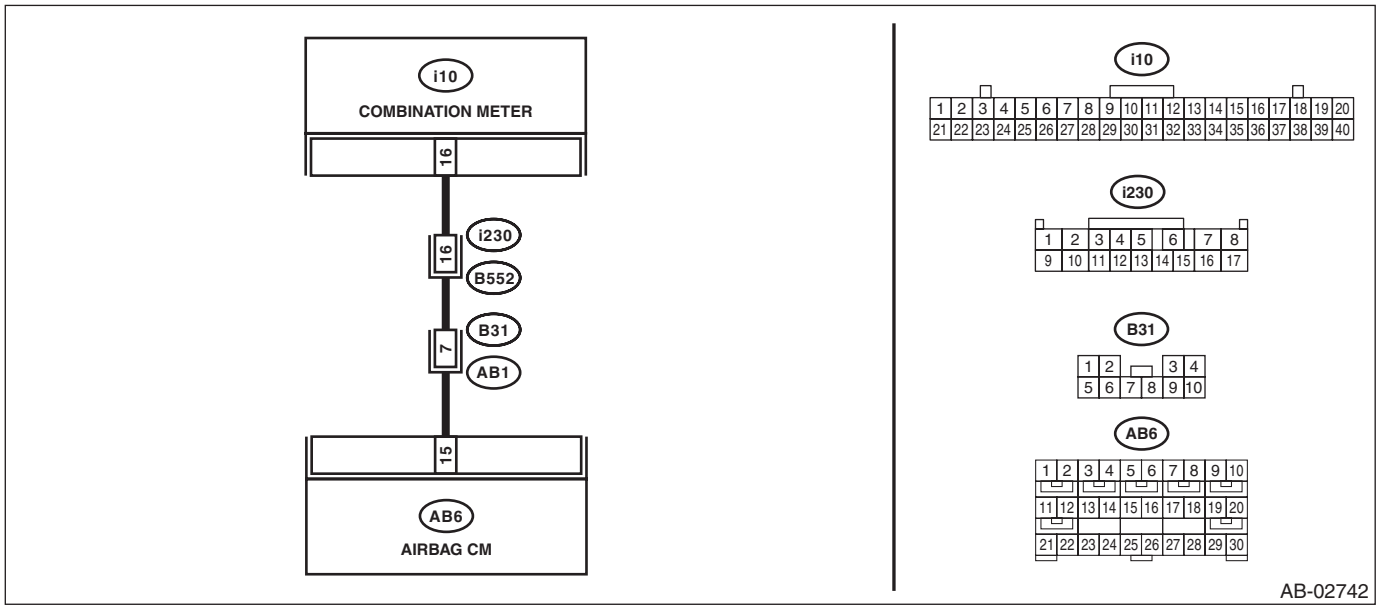

Step		Check	Yes	No
1	**CHECK AIRBAG HARNESS.** 1) Turn the ignition switch to OFF, disconnect the battery ground cable, and wait for 60 seconds or more. NOTE: For HEV model, disconnect the negative terminal from 12 volt auxiliary battery, and disconnect the ground terminal from 12V engine restart battery sensor for 12 volt engine restart battery. <Ref. to NT-5, BATTERY, NOTE, Note.> 2) Disconnect the connectors (AB6, AB17, AB18) from airbag control module. 3) Connect the battery ground terminal and turn the ignition switch to ON.	Does the passenger's seat belt warning light blink for 6 seconds and go off?	Go to step **3**.	Go to step **2**.

	Step	Check	Yes	No
2	**CHECK AIRBAG HARNESS.** 1) Turn the ignition switch to OFF. 2) Connect the connector (1AG) in the test harness AG to the connectors (AB6, AB17, AB18). NOTE: Except for XV models, connect test harness AH between the connectors (AB6, AB17, AB18) and (1AG). 3) Measure the resistance between connector (2AG) in the test harness AG and chassis ground. ***Connector & terminal*** ***(2AG) No. 10 — Chassis ground:***	Is the resistance 1 MΩ or more?	Replace the meter. <Ref. to IDI-16, REMOVAL, Combination Meter.>	Repair the bulkhead harness and instrument panel harness. Or replace the airbag main harness along with body harness.
3	**CHECK AIRBAG HARNESS.** 1) Turn the ignition switch to OFF. 2) Connect the connector (1AG) in the test harness AG to the connectors (AB6, AB17, AB18). NOTE: Except for XV models, connect test harness AH between the connectors (AB6, AB17, AB18) and (1AG). 3) Connect the connectors (7AG) and (8AG) in the test harness AG. 4) Turn the ignition switch to ON.	Does the passenger's seat belt warning light blink for 6 seconds, then repeatedly light and go off?	Replace the airbag control module. <Ref. to AB-78, Airbag Control Module.>	Go to step **4**.
4	**CHECK AIRBAG HARNESS.** 1) Turn the ignition switch to OFF. 2) Disconnect the connectors (7AG) and (8AG) in the test harness AG in the condition of step 3. 3) Disconnect the connector (i10) from meter. 4) Measure the resistance between connector (2AG) in the test harness AG and connector (i84). ***Connector & terminal*** ***(2AG) No. 10 — (i10) No. 16:***	Is the resistance less than 10 Ω?	Replace the meter. <Ref. to IDI-16, REMOVAL, Combination Meter.>	Repair the bulkhead harness and instrument panel harness. Or replace the airbag main harness along with body harness.

BW:DTC B16F0 PASSENGER'S AIRBAG OFF INDICATOR FAILURE

NOTE:
For details on DTC B16F0, refer to DTC B1660. <Ref. to AB(diag)-81, DTC B1660 PASSENGER'S AIRBAG ON INDICATOR FAILURE, Diagnostic Chart with Trouble Code.>

BX:DTC B1760 SENSOR MAT ABNORMAL

NOTE:
Refer to "Occupant Detection System" for details on DTC B1760. <Ref. to OD(diag)-24, DTC B1760 SENSOR MAT ABNORMAL, Diagnostic Procedure with Diagnostic Trouble Code (DTC).>

BY:DTC B1761 SENSOR MAT LIQUID COATING ABNORMAL

NOTE:
Refer to "Occupant Detection System" for details on DTC B1761. <Ref. to OD(diag)-24, DTC B1761 SENSOR MAT LIQUID COATING ABNORMAL, Diagnostic Procedure with Diagnostic Trouble Code (DTC).>

BZ:DTC B1771 BUCKLE SWITCH ABNORMAL

NOTE:
Refer to "Occupant Detection System" for details on DTC B1771. <Ref. to OD(diag)-24, DTC B1771 BUCKLE SWITCH ABNORMAL, Diagnostic Procedure with Diagnostic Trouble Code (DTC).>

CA:DTC B1795 ECU INTERNAL CIRCUIT FAULT

NOTE:
Refer to "Occupant Detection System" for details on DTC B1795. <Ref. to OD(diag)-24, DTC B1795 ECU INTERNAL CIRCUIT FAULT, Diagnostic Procedure with Diagnostic Trouble Code (DTC).>

CB:DTC B1800 SHORT IN DRIVER'S AIRBAG

DTC DETECTING CONDITION:

- Airbag main harness circuit is shorted.
- Airbag module harness (driver's side) circuit is shorted.
- Roll connector circuit is shorted.
- Driver's airbag module is faulty.
- Airbag control module is faulty.

CAUTION:

Before performing diagnosis, refer to "CAUTION" in "General Description". <Ref. to AB(diag)-4, CAUTION, General Description.>

NOTE:

Prior to starting work, prepare two AIRBAG RESISTORs (98299PA040).

WIRING DIAGRAM:

Airbag system <Ref. to WI(w/o HEV)-30, WIRING DIAGRAM, Airbag System.> <Ref. to WI(HEV)-50, WIRING DIAGRAM, Airbag System.>

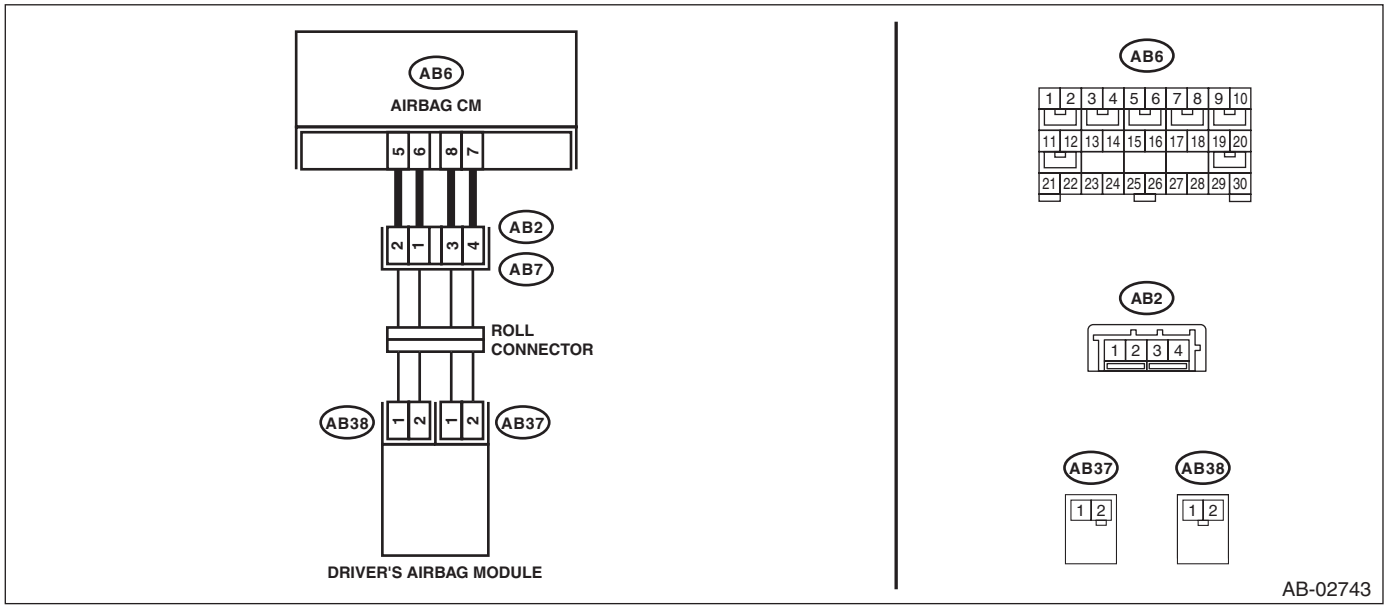

Step		Check	Yes	No
1	**CHECK POOR CONTACT OF CONNECTORS.** Check for poor contact of the connectors between the airbag control module and the driver's airbag module.	Is there poor contact?	Replace the airbag harness.	Go to step **2**.

	Step	Check	Yes	No
2	**CHECK DRIVER'S AIRBAG MODULE.** 1) Turn the ignition switch to OFF, disconnect the battery ground cable, and wait for 60 seconds or more. NOTE: For HEV model, disconnect the negative terminal from 12 volt auxiliary battery, and disconnect the ground terminal from 12V engine restart battery sensor for 12 volt engine restart battery. <Ref. to NT-5, BATTERY, NOTE, Note.> 2) Remove the driver's airbag module. 3) Connect the connector (1N) in the test harness N to the connector (AB38). 4) Connect the airbag resistor to the connector (2N) of test harness N. 5) Connect the connector (1Q) in the test harness Q to connector (AB37). 6) Connect the airbag resistor to the connector (2Q) in the test harness Q. 7) Connect the battery ground terminal and turn the ignition switch to ON.	Does the airbag warning light illuminate for six seconds and go off?	Replace the driver's airbag module. <Ref. to AB-41, Driver's Airbag Module.>	Go to step **3**.
3	**CHECK ROLL CONNECTOR AND AIRBAG MAIN HARNESS (DRIVER'S AIRBAG HARNESS).** 1) Turn the ignition switch to OFF, disconnect the battery ground cable, and wait for 60 seconds or more. NOTE: For HEV model, disconnect the negative terminal from 12 volt auxiliary battery, and disconnect the ground terminal from 12V engine restart battery sensor for 12 volt engine restart battery. <Ref. to NT-5, BATTERY, NOTE, Note.> 2) Remove the console front panel and disconnect the connector (AB9). 3) Disconnect the driver's knee airbag module connector (AB66). 4) Disconnect the airbag resistor from the connector (2N) in test harness N and from the connector (2Q) in test harness Q. 5) Disconnect the connectors (AB6, AB17, AB18) from the airbag control module, and connect the connector (1AG) in the test harness AG. NOTE: Except for XV models, connect test harness AH between the connectors (AB6, AB17, AB18) and (1AG). 6) Measure the resistance between connector (2Q) terminals in test harness Q. ***Connector & terminal*** ***(2Q) No. 1 — (2Q) No. 2:***	Is the resistance 1 MΩ or more?	Go to step **5**.	Go to step **4**.

	Step	Check	Yes	No
4	**CHECK AIRBAG MAIN HARNESS (DRIVER'S AIRBAG HARNESS).** 1) Remove the instrument panel lower cover and column cover, and disconnect the connector (AB7) from (AB2). 2) Measure the resistance between connector (3AG) terminals in test harness AG. ***Connector & terminal*** ***(3AG) No. 1 — (3AG) No. 3:***	Is the resistance 1 MΩ or more?	Replace the roll connector. <Ref. to AB-105, Roll Connector.>	Replace the airbag main harness along with body harness.
5	**CHECK AIRBAG CONTROL MODULE.** 1) Connect all connectors. 2) Clear the memory. 3) Perform the Inspection Mode. 4) Read the DTC. (Current malfunction)	Is the same DTC displayed?	Replace the airbag control module. <Ref. to AB-78, Airbag Control Module.>	Go to step **6**.
6	**CHECK FOR ANY OTHER DTC ON DISPLAY.**	Is any other DTC displayed?	Check DTC using "List of Diagnostic Trouble Code (DTC)". <Ref. to AB(diag)-33, List of Diagnostic Trouble Code (DTC).>	Finish the diagnosis.

CC:DTC B1801 OPEN IN DRIVER'S AIRBAG

DTC DETECTING CONDITION:

- Airbag main harness circuit is open.
- Airbag module harness (driver's side) circuit is open.
- Roll connector is open.
- Driver's airbag module is faulty.
- Airbag control module is faulty.

CAUTION:

Before performing diagnosis, refer to "CAUTION" in "General Description". <Ref. to AB(diag)-4, CAUTION, General Description.>

NOTE:

Prior to starting work, prepare two AIRBAG RESISTORs (98299PA040).

WIRING DIAGRAM:

Airbag system <Ref. to WI(w/o HEV)-30, WIRING DIAGRAM, Airbag System.> <Ref. to WI(HEV)-50, WIRING DIAGRAM, Airbag System.>

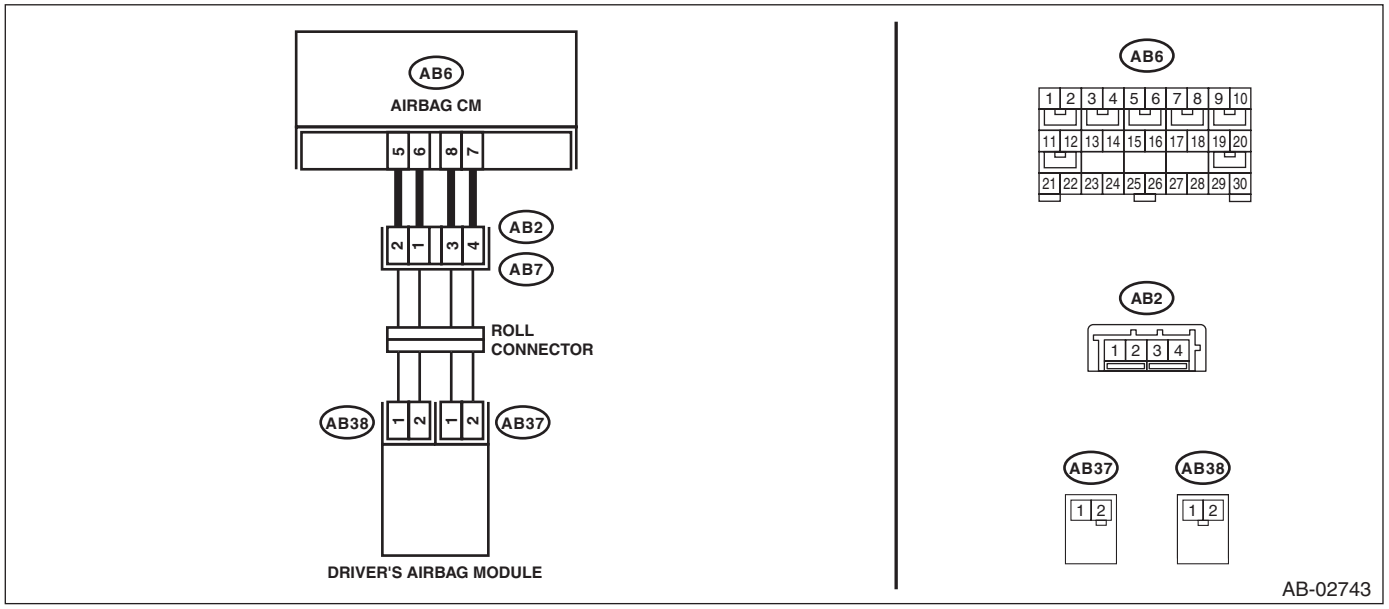

Step		Check	Yes	No
1	**CHECK POOR CONTACT OF CONNECTORS.** Check for poor contact of the connectors between the airbag control module and the driver's airbag module.	Is there poor contact?	Replace the airbag harness.	Go to step **2**.

	Step	Check	Yes	No
2	**CHECK DRIVER'S AIRBAG MODULE.** 1) Turn the ignition switch to OFF, disconnect the battery ground cable, and wait for 60 seconds or more. NOTE: For HEV model, disconnect the negative terminal from 12 volt auxiliary battery, and disconnect the ground terminal from 12V engine restart battery sensor for 12 volt engine restart battery. <Ref. to NT-5, BATTERY, NOTE, Note.> 2) Remove the driver's airbag module. 3) Connect the connector (1N) in the test harness N to the connector (AB38). 4) Connect the airbag resistor to the connector (2N) of test harness N. 5) Connect the connector (1Q) in the test harness Q to connector (AB37). 6) Connect the airbag resistor to the connector (2Q) in the test harness Q. 7) Connect the battery ground terminal and turn the ignition switch to ON.	Does the airbag warning light illuminate for six seconds and go off?	Replace the driver's airbag module. <Ref. to AB-41, Driver's Airbag Module.>	Go to step **3**.
3	**CHECK ROLL CONNECTOR AND AIRBAG MAIN HARNESS (DRIVER'S AIRBAG HARNESS).** 1) Turn the ignition switch to OFF, disconnect the battery ground cable, and wait for 60 seconds or more. NOTE: For HEV model, disconnect the negative terminal from 12 volt auxiliary battery, and disconnect the ground terminal from 12V engine restart battery sensor for 12 volt engine restart battery. <Ref. to NT-5, BATTERY, NOTE, Note.> 2) Remove the console front panel and disconnect the connector (AB9). 3) Disconnect the driver's knee airbag module connector (AB66). 4) Disconnect the airbag resistor from the connector (2N) in test harness N. 5) Disconnect the airbag resistor from the connector (2Q) of test harness Q. 6) Disconnect the connectors (AB6, AB17, AB18) from airbag control module. 7) Measure the resistance between connector (2Q) terminals in test harness Q. ***Connector & terminal*** ***(2Q) No. 1 — (2Q) No. 2:***	Is the resistance less than 10 Ω?	Go to step **5**.	Go to step **4**.
4	**CHECK ROLL CONNECTOR.** 1) Remove the instrument panel lower cover and column cover, and disconnect the connector (AB7) from (AB2). 2) Measure the resistance between connector (2Q) terminals in test harness Q. ***Connector & terminal*** ***(2Q) No. 1 — (2Q) No. 2:***	Is the resistance less than 10 Ω?	Replace the airbag main harness along with body harness.	Replace the roll connector. <Ref. to AB-105, Roll Connector.>

	Step	Check	Yes	No
5	**CHECK AIRBAG CONTROL MODULE.** 1) Connect all connectors. 2) Clear the memory. 3) Perform the Inspection Mode. 4) Read the DTC. (Current malfunction)	Is the same DTC displayed?	Replace the airbag control module. <Ref. to AB-78, Airbag Control Module.>	Go to step **6**.
6	**CHECK FOR ANY OTHER DTC ON DISPLAY.**	Is any other DTC displayed?	Check DTC using "List of Diagnostic Trouble Code (DTC)". <Ref. to AB(diag)-33, List of Diagnostic Trouble Code (DTC).>	Finish the diagnosis.

CD:DTC B1802 SHORT IN DRIVER'S AIRBAG (TO GROUND)

DTC DETECTING CONDITION:

- Airbag main harness circuit is shorted to ground.
- Airbag module harness (driver's side) circuit is shorted to ground.
- Roll connector circuit is shorted to ground.
- Driver's airbag module is faulty.
- Airbag control module is faulty.

CAUTION:

Before performing diagnosis, refer to "CAUTION" in "General Description". <Ref. to AB(diag)-4, CAUTION, General Description.>

NOTE:

Prior to starting work, prepare two AIRBAG RESISTORs (98299PA040).

WIRING DIAGRAM:

Airbag system <Ref. to WI(w/o HEV)-30, WIRING DIAGRAM, Airbag System.> <Ref. to WI(HEV)-50, WIRING DIAGRAM, Airbag System.>

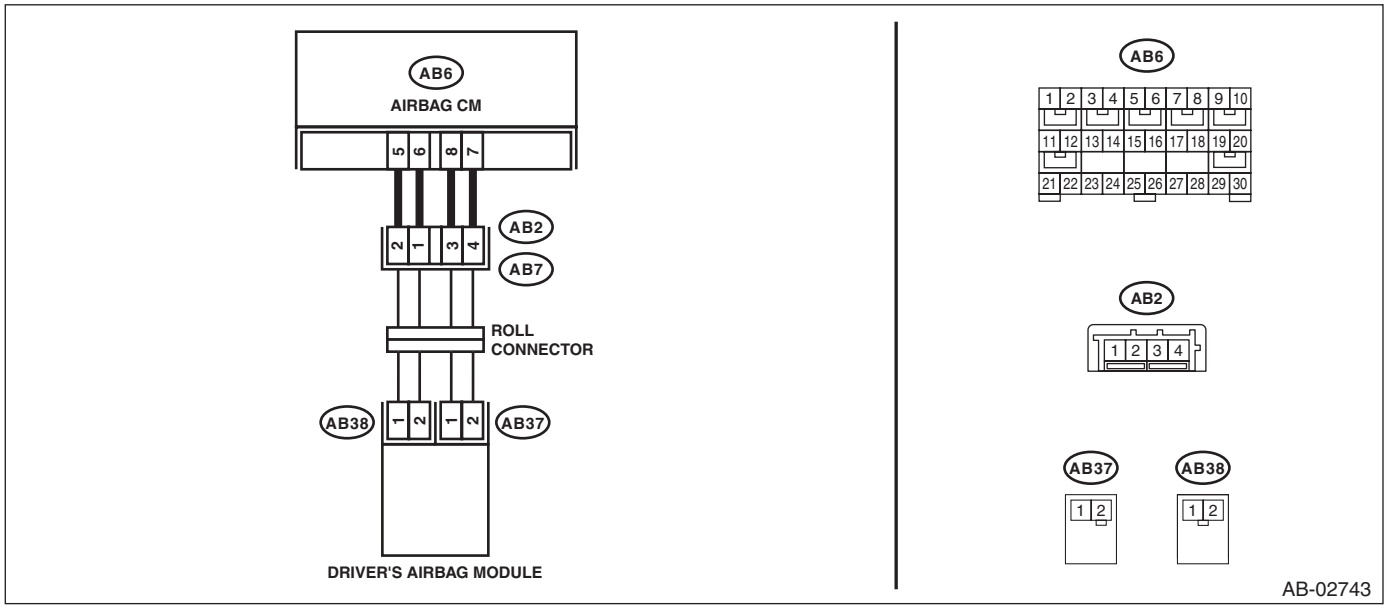

Step		Check	Yes	No
1	**CHECK POOR CONTACT OF CONNECTORS.** Check for poor contact of the connectors between the airbag control module and the driver's airbag module.	Is there poor contact?	Replace the airbag harness.	Go to step **2**.

	Step	Check	Yes	No
2	**CHECK DRIVER'S AIRBAG MODULE.** 1) Turn the ignition switch to OFF, disconnect the battery ground cable, and wait for 60 seconds or more. NOTE: For HEV model, disconnect the negative terminal from 12 volt auxiliary battery, and disconnect the ground terminal from 12V engine restart battery sensor for 12 volt engine restart battery. <Ref. to NT-5, BATTERY, NOTE, Note.> 2) Remove the driver's airbag module. 3) Connect the connector (1N) in the test harness N to the connector (AB38). 4) Connect the airbag resistor to the connector (2N) of test harness N. 5) Connect the connector (1Q) in the test harness Q to connector (AB37). 6) Connect the airbag resistor to the connector (2Q) in the test harness Q. 7) Connect the battery ground terminal and turn the ignition switch to ON.	Does the airbag warning light illuminate for six seconds and go off?	Replace the driver's airbag module. <Ref. to AB-41, Driver's Airbag Module.>	Go to step **3**.
3	**CHECK ROLL CONNECTOR.** 1) Turn the ignition switch to OFF, disconnect the battery ground cable, and wait for 60 seconds or more. NOTE: For HEV model, disconnect the negative terminal from 12 volt auxiliary battery, and disconnect the ground terminal from 12V engine restart battery sensor for 12 volt engine restart battery. <Ref. to NT-5, BATTERY, NOTE, Note.> 2) Remove the instrument panel lower cover and column cover, and disconnect the connector (AB7) from (AB2). 3) Disconnect the driver's knee airbag module connector (AB66). 4) Disconnect the airbag resistor from the connector (2N) in test harness N and from the connector (2Q) in test harness Q. 5) Measure the resistance between connector (2Q) in the test harness Q and chassis ground. ***Connector & terminal*** ***(2Q) No. 1 — Chassis ground:*** ***(2Q) No. 2 — Chassis ground:***	Is the resistance 1 MΩ or more?	Go to step **4**.	Replace the roll connector. <Ref. to AB-105, Roll Connector.>

	Step	Check	Yes	No
4	**CHECK AIRBAG MAIN HARNESS (DRIVER'S AIRBAG HARNESS).** 1) Disconnect the test harness N from connector (AB38). 2) Disconnect the test harness Q from connector (AB37). 3) Remove the console front panel and disconnect the connector (AB9). 4) Disconnect the connectors (AB6, AB17, AB18) from the airbag control module, and connect the connector (1AG) in the test harness AG. NOTE: Except for XV models, connect test harness AH between the connectors (AB6, AB17, AB18) and (1AG). 5) Measure the resistance between connector (3AG) in the test harness AG and chassis ground. ***Connector & terminal*** ***(3AG) No. 1 — Chassis ground:*** ***(3AG) No. 3 — Chassis ground:***	Is the resistance 1 MΩ or more?	Go to step **5**.	Replace the airbag main harness along with body harness.
5	**CHECK AIRBAG CONTROL MODULE.** 1) Connect all connectors. 2) Clear the memory. 3) Perform the Inspection Mode. 4) Read the DTC. (Current malfunction)	Is the same DTC displayed?	Replace the airbag control module. <Ref. to AB-78, Airbag Control Module.>	Go to step **6**.
6	**CHECK FOR ANY OTHER DTC ON DISPLAY.**	Is any other DTC displayed?	Check DTC using "List of Diagnostic Trouble Code (DTC)". <Ref. to AB(diag)-33, List of Diagnostic Trouble Code (DTC).>	Finish the diagnosis.

CE:DTC B1803 SHORT IN DRIVER'S AIRBAG (TO +B)

DTC DETECTING CONDITION:

- Airbag main harness circuit is shorted to power supply.
- Airbag module harness (driver's side) circuit is shorted to power supply.
- Roll connector circuit is shorted to power supply.
- Driver's airbag module is faulty.
- Airbag control module is faulty.

CAUTION:

Before performing diagnosis, refer to "CAUTION" in "General Description". <Ref. to AB(diag)-4, CAUTION, General Description.>

NOTE:

Prior to starting work, prepare two AIRBAG RESISTORs (98299PA040).

WIRING DIAGRAM:

Airbag system <Ref. to WI(w/o HEV)-30, WIRING DIAGRAM, Airbag System.> <Ref. to WI(HEV)-50, WIRING DIAGRAM, Airbag System.>

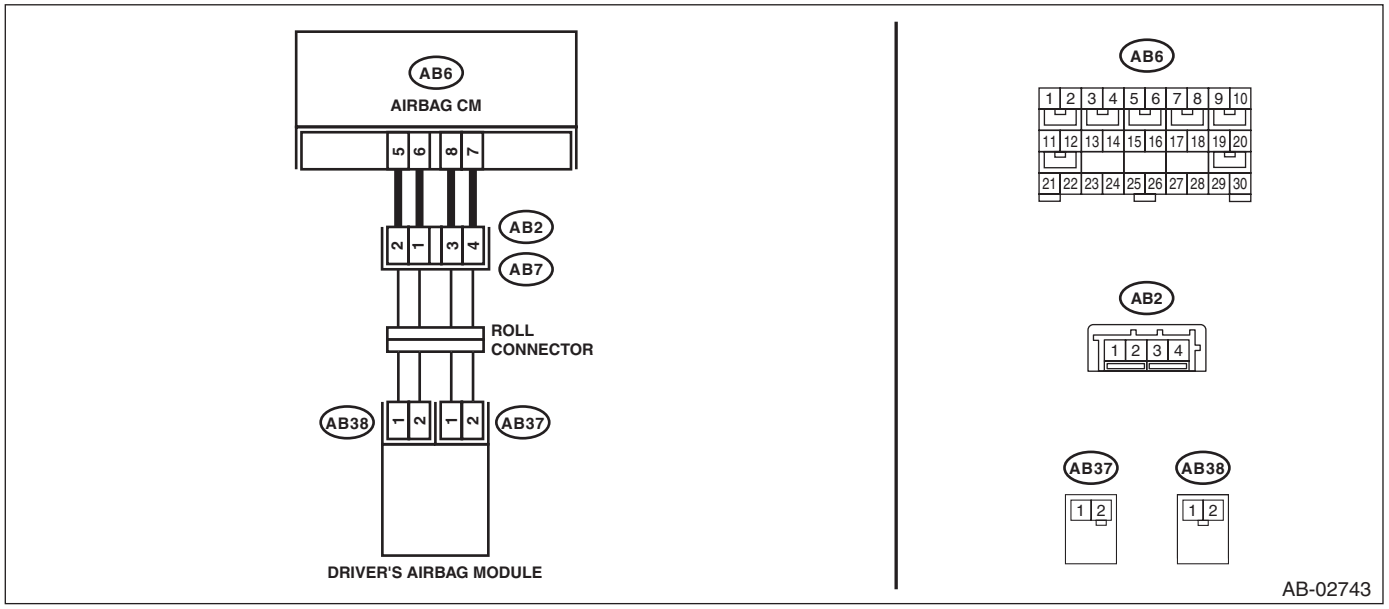

Step		Check	Yes	No
1	**CHECK POOR CONTACT OF CONNECTORS.** Check for poor contact of the connectors between the airbag control module and the driver's airbag module.	Is there poor contact?	Replace the airbag harness.	Go to step **2**.

	Step	Check	Yes	No
2	**CHECK DRIVER'S AIRBAG MODULE.** 1) Turn the ignition switch to OFF, disconnect the battery ground cable, and wait for 60 seconds or more. NOTE: For HEV model, disconnect the negative terminal from 12 volt auxiliary battery, and disconnect the ground terminal from 12V engine restart battery sensor for 12 volt engine restart battery. <Ref. to NT-5, BATTERY, NOTE, Note.> 2) Remove the driver's airbag module. 3) Connect the connector (1N) in the test harness N to the connector (AB38). 4) Connect the airbag resistor to the connector (2N) of test harness N. 5) Connect the connector (1Q) in the test harness Q to connector (AB37). 6) Connect the airbag resistor to the connector (2Q) in the test harness Q. 7) Connect the battery ground terminal and turn the ignition switch to ON.	Does the airbag warning light illuminate for six seconds and go off?	Replace the driver's airbag module. <Ref. to AB-41, Driver's Airbag Module.>	Go to step **3**.
3	**CHECK ROLL CONNECTOR.** 1) Turn the ignition switch to OFF, disconnect the battery ground cable, and wait for 60 seconds or more. NOTE: For HEV model, disconnect the negative terminal from 12 volt auxiliary battery, and disconnect the ground terminal from 12V engine restart battery sensor for 12 volt engine restart battery. <Ref. to NT-5, BATTERY, NOTE, Note.> 2) Remove the instrument panel lower cover and column cover, and disconnect the connector (AB7) from (AB2). 3) Disconnect the driver's knee airbag module connector (AB66). 4) Disconnect the airbag resistor from the connector (2N) in test harness N and from the connector (2Q) in test harness Q. 5) Measure the voltage between connector (2Q) in the test harness Q and chassis ground. ***Connector & terminal*** ***(2Q) No. 1 (+) — Chassis ground (–):*** ***(2Q) No. 2 (+) — Chassis ground (–):***	Is the voltage less than 1 V?	Go to step **4**.	Replace the roll connector. <Ref. to AB-105, Roll Connector.>

	Step	Check	Yes	No
4	**CHECK AIRBAG MAIN HARNESS (DRIVER'S AIRBAG HARNESS).** 1) Disconnect the test harness N from connector (AB38). 2) Disconnect the test harness Q from connector (AB37). 3) Remove the console front panel and disconnect the connector (AB9). 4) Disconnect the connectors (AB6, AB17, AB18) from the airbag control module, and connect the connector (1AG) in the test harness AG. NOTE: Except for XV models, connect test harness AH between the connectors (AB6, AB17, AB18) and (1AG). 5) Connect the battery ground terminal and turn the ignition switch to ON. 6) Measure the voltage between connector (3AG) in the test harness AG and chassis ground. ***Connector & terminal*** ***(3AG) No. 1 (+) — Chassis ground (–):*** ***(3AG) No. 3 (+) — Chassis ground (–):***	Is the voltage less than 1 V?	Go to step **5**.	Replace the airbag main harness along with body harness.
5	**CHECK AIRBAG CONTROL MODULE.** 1) Connect all connectors. 2) Clear the memory. 3) Perform the Inspection Mode. 4) Read the DTC. (Current malfunction)	Is the same DTC displayed?	Replace the airbag control module. <Ref. to AB-78, Airbag Control Module.>	Go to step **6**.
6	**CHECK FOR ANY OTHER DTC ON DISPLAY.**	Is any other DTC displayed?	Check DTC using "List of Diagnostic Trouble Code (DTC)". <Ref. to AB(diag)-33, List of Diagnostic Trouble Code (DTC).>	Finish the diagnosis.

CF:DTC B1805 SHORT IN PASSENGER'S AIRBAG

DTC DETECTING CONDITION:

- Airbag main harness circuit is shorted.
- Airbag module harness circuit (passenger's side) is shorted.
- Passenger's airbag module is faulty.
- Airbag control module is faulty.

CAUTION:

Before performing diagnosis, refer to "CAUTION" in "General Description". <Ref. to AB(diag)-4, CAUTION, General Description.>

WIRING DIAGRAM:

Airbag system <Ref. to WI(w/o HEV)-30, WIRING DIAGRAM, Airbag System.> <Ref. to WI(HEV)-50, WIRING DIAGRAM, Airbag System.>

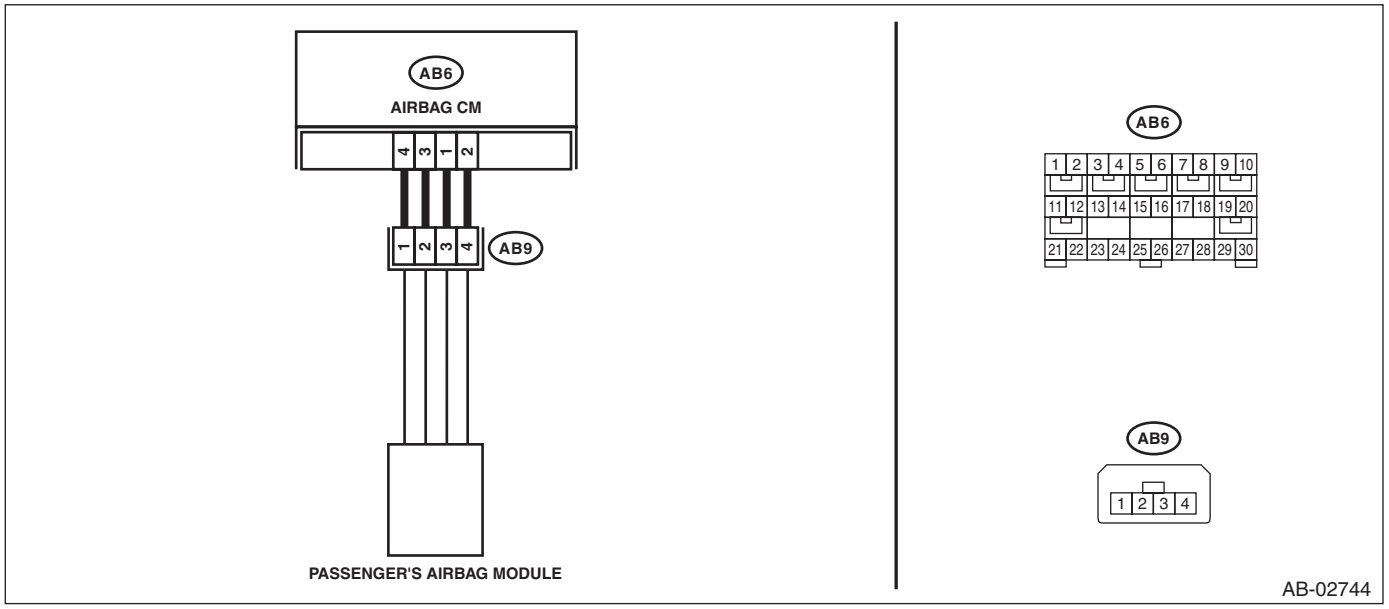

Step		Check	Yes	No
1	**CHECK POOR CONTACT OF CONNECTORS.** Check for poor contact of the connectors between the airbag control module and the passenger's airbag module.	Is there poor contact?	Replace the airbag harness.	Go to step **2**.

	Step	Check	Yes	No
2	**CHECK AIRBAG MAIN HARNESS (PASSENGER'S AIRBAG HARNESS).** 1) Turn the ignition switch to OFF, disconnect the battery ground cable, and wait for 60 seconds or more. NOTE: For HEV model, disconnect the negative terminal from 12 volt auxiliary battery, and disconnect the ground terminal from 12V engine restart battery sensor for 12 volt engine restart battery. <Ref. to NT-5, BATTERY, NOTE, Note.> 2) Disconnect the connectors (AB7) and (AB2). 3) Disconnect the connector (AB66) from the driver's knee airbag module. 4) Disconnect the connectors (AB6, AB17, AB18) from the airbag control module, connect the connector (1AG) in the test harness AG, and release the short mechanism of the connectors (AB6, AB17, AB18). NOTE: Except for XV models, connect the connectors (AB6, AB17, AB18) and the connector (1AH) in the test harness AH. 5) Disconnect the passenger's airbag module connector (AB9). 6) Using a probe, measure the resistance between the terminals of connector (AB9). <Ref. to AB(diag)-16, HOW TO USE PROBE, PREPARATION TOOL, General Description.> **CAUTION:** **When measuring the resistance, make sure that the probe is inserted from the back side (harness side) of the connector. Also, do not insert the probe forcibly.** ***Connector & terminal (AB9) No. 1 — (AB9) No. 2:***	Is the resistance 1 MΩ or more?	Go to step **3**.	Replace the airbag main harness along with body harness.
3	**CHECK AIRBAG CONTROL MODULE.** 1) Disconnect the test harness AG or test harness AH from the connectors (AB6, AB17, AB18). 2) Connect the connectors (AB6, AB17, AB18) and the airbag control module. 3) Connect the connectors (AB7) and (AB2). 4) Connect the connector (AB66) to the driver's knee airbag module. 5) Connect the battery ground terminal and turn the ignition switch to ON. 6) Perform the Inspection Mode. 7) Read the DTC. (Current malfunction)	Is DTC B1805 displayed?	Replace the airbag control module. <Ref. to AB-78, REMOVAL, Airbag Control Module.>	Go to step **4**.

	Step	Check	Yes	No
4	**CHECK PASSENGER'S AIRBAG MODULE.** 1) Turn the ignition switch to OFF, disconnect the battery ground cable, and wait for 60 seconds or more. NOTE: For HEV model, disconnect the negative terminal from 12 volt auxiliary battery, and disconnect the ground terminal from 12V engine restart battery sensor for 12 volt engine restart battery. <Ref. to NT-5, BATTERY, NOTE, Note.> 2) Connect the passenger's airbag module connector (AB9). 3) Connect the battery ground terminal and turn the ignition switch to ON. 4) Perform the Inspection Mode. 5) Read the DTC. (Current malfunction)	Is DTC B1805 displayed?	Replace the passenger's airbag module. <Ref. to AB-46, REMOVAL, Passenger's Airbag Module.>	Go to step **5**.
5	**CHECK FOR ANY OTHER DTC ON DISPLAY.**	Is any other DTC displayed?	Check DTC using "List of Diagnostic Trouble Code (DTC)". <Ref. to AB(diag)-33, List of Diagnostic Trouble Code (DTC).>	Finish the diagnosis.

CG:DTC B1806 OPEN IN PASSENGER'S AIRBAG

DTC DETECTING CONDITION:

- Airbag main harness circuit is open.
- Airbag module harness (passenger's side) circuit is open.
- Passenger's airbag module is faulty.
- Airbag control module is faulty.

CAUTION:

Before performing diagnosis, refer to "CAUTION" in "General Description". <Ref. to AB(diag)-4, CAUTION, General Description.>

WIRING DIAGRAM:

Airbag system <Ref. to WI(w/o HEV)-30, WIRING DIAGRAM, Airbag System.> <Ref. to WI(HEV)-50, WIRING DIAGRAM, Airbag System.>

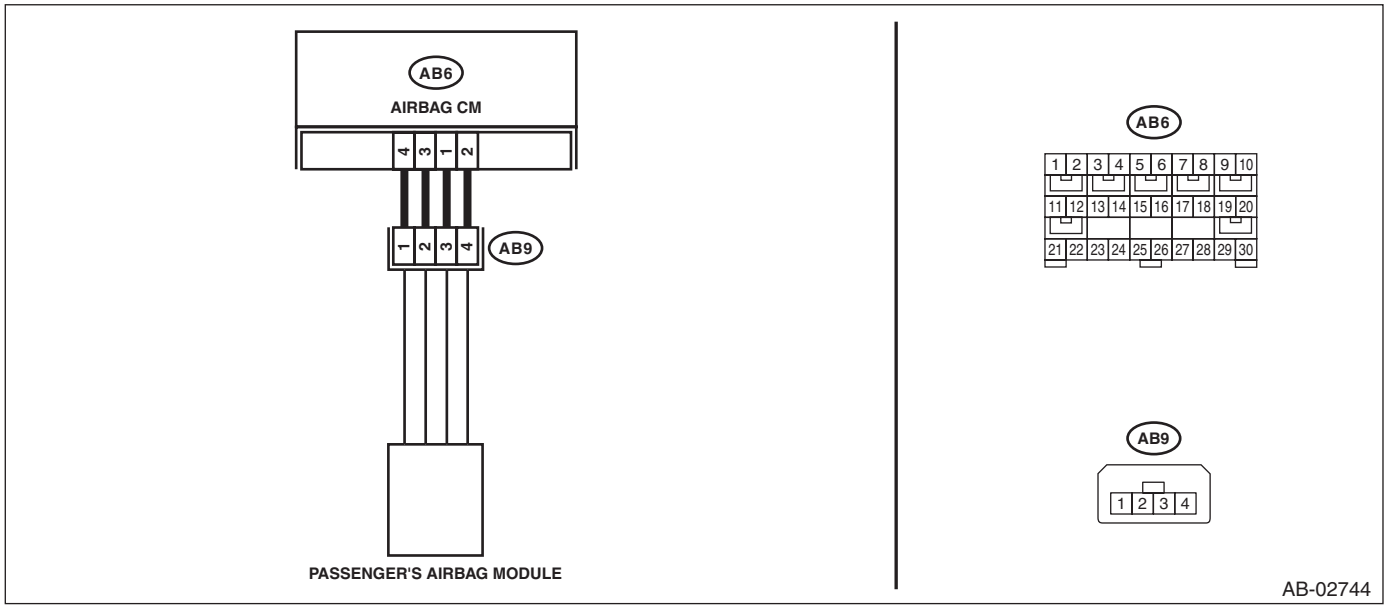

	Step	Check	Yes	No
1	**CHECK POOR CONTACT OF CONNECTORS.** Check for poor contact of the connectors between the airbag control module and the passenger's airbag module.	Is there poor contact?	Replace the airbag harness.	Go to step **2**.

	Step	Check	Yes	No
2	**CHECK AIRBAG MAIN HARNESS (PASSENGER'S AIRBAG HARNESS).** 1) Turn the ignition switch to OFF, disconnect the battery ground cable, and wait for 60 seconds or more. NOTE: For HEV model, disconnect the negative terminal from 12 volt auxiliary battery, and disconnect the ground terminal from 12V engine restart battery sensor for 12 volt engine restart battery. <Ref. to NT-5, BATTERY, NOTE, Note.> 2) Disconnect the connectors (AB7) and (AB2). 3) Disconnect the connector (AB66) from the driver's knee airbag module. 4) Disconnect the connectors (AB6, AB17, AB18) from airbag control module. 5) Disconnect the passenger's airbag module connector (AB9). 6) Using a probe, measure the resistance between the terminals of connector (AB9). <Ref. to AB(diag)-16, HOW TO USE PROBE, PREPARATION TOOL, General Description.> **CAUTION:** **When measuring the resistance, make sure that the probe is inserted from the back side (harness side) of the connector. Also, do not insert the probe forcibly.** ***Connector & terminal*** ***(AB9) No. 1 — (AB9) No. 2:***	Is the resistance less than 10 Ω?	Go to step **3**.	Replace the airbag main harness along with body harness.
3	**CHECK AIRBAG CONTROL MODULE.** 1) Connect the connectors (AB6, AB17, AB18) and the airbag control module. 2) Connect the connectors (AB7) and (AB2). 3) Connect the connector (AB66) to the driver's knee airbag module. 4) Using a probe, short the terminals No. 1 and No. 2 of connector (AB9). <Ref. to AB(diag)-16, HOW TO USE PROBE, PREPARATION TOOL, General Description.> **CAUTION:** **When shorting the terminals, make sure that the probe is inserted from the back side (harness side) of the connector. Also, do not insert the probe forcibly.** ***Connector & terminal*** ***(AB9) No. 1 — (AB9) No. 2:*** 5) Connect the battery ground terminal and turn the ignition switch to ON. 6) Perform the Inspection Mode. 7) Read the DTC. (Current malfunction)	Is DTC B1806 displayed?	Replace the airbag control module. <Ref. to AB-78, REMOVAL, Airbag Control Module.>	Go to step **4**.

	Step	Check	Yes	No
4	**CHECK PASSENGER'S AIRBAG MODULE.** 1) Turn the ignition switch to OFF, disconnect the battery ground cable, and wait for 60 seconds or more. NOTE: For HEV model, disconnect the negative terminal from 12 volt auxiliary battery, and disconnect the ground terminal from 12V engine restart battery sensor for 12 volt engine restart battery. <Ref. to NT-5, BATTERY, NOTE, Note.> 2) Connect the passenger's airbag module connector (AB9). 3) Connect the battery negative terminal, and clear the memory. 4) Perform the Inspection Mode. 5) Read the DTC. (Current malfunction)	Is DTC B1806 displayed?	Replace the passenger's airbag module. <Ref. to AB-46, REMOVAL, Passenger's Airbag Module.>	Go to step **5**.
5	**CHECK FOR ANY OTHER DTC ON DISPLAY.**	Is any other DTC displayed?	Check DTC using "List of Diagnostic Trouble Code (DTC)". <Ref. to AB(diag)-33, List of Diagnostic Trouble Code (DTC).>	Finish the diagnosis.

CH:DTC B1807 SHORT IN PASSENGER'S AIRBAG (TO GROUND)

DTC DETECTING CONDITION:

- Airbag main harness circuit is shorted to ground.
- Airbag module harness (passenger's side) circuit is shorted to ground.
- Passenger's airbag module is faulty.
- Airbag control module is faulty.

CAUTION:

Before performing diagnosis, refer to "CAUTION" in "General Description". <Ref. to AB(diag)-4, CAUTION, General Description.>

WIRING DIAGRAM:

Airbag system <Ref. to WI(w/o HEV)-30, WIRING DIAGRAM, Airbag System.> <Ref. to WI(HEV)-50, WIRING DIAGRAM, Airbag System.>

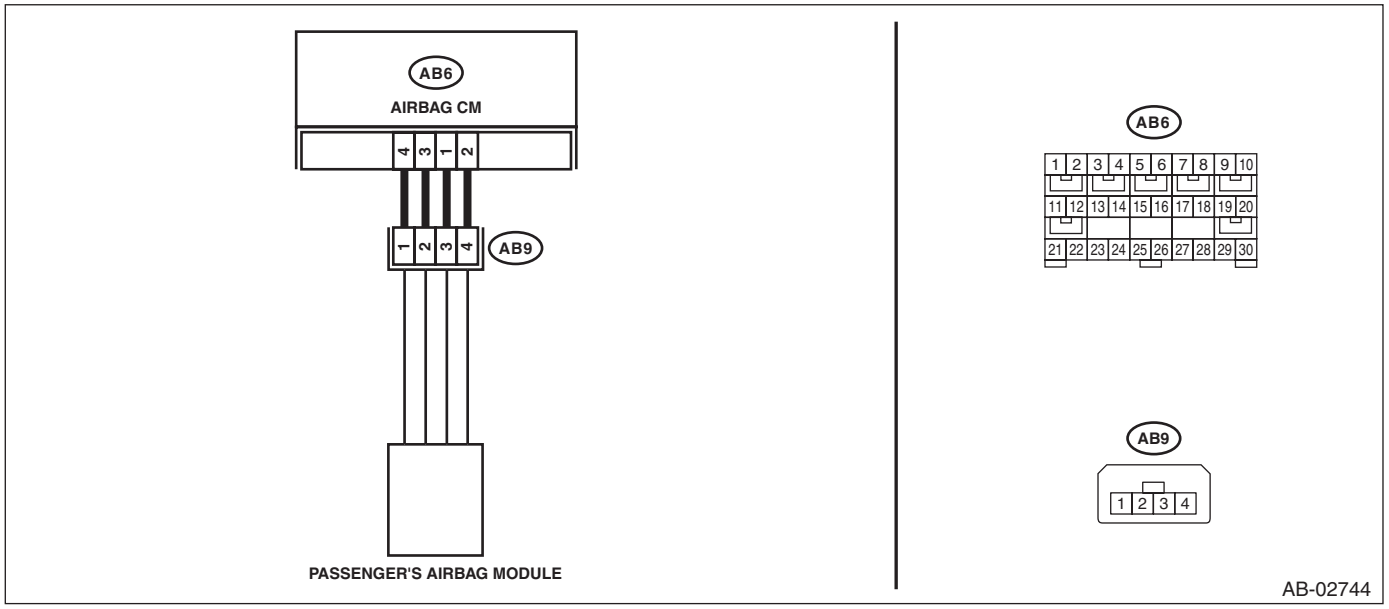

	Step	Check	Yes	No
1	**CHECK POOR CONTACT OF CONNECTORS.** Check for poor contact of the connectors between the airbag control module and the passenger's airbag module.	Is there poor contact?	Replace the airbag harness.	Go to step **2**.

	Step	Check	Yes	No
2	**CHECK AIRBAG MAIN HARNESS (PASSENGER'S AIRBAG HARNESS).** 1) Turn the ignition switch to OFF, disconnect the battery ground cable, and wait for 60 seconds or more. NOTE: For HEV model, disconnect the negative terminal from 12 volt auxiliary battery, and disconnect the ground terminal from 12V engine restart battery sensor for 12 volt engine restart battery. <Ref. to NT-5, BATTERY, NOTE, Note.> 2) Disconnect the connectors (AB7) and (AB2). 3) Disconnect the connector (AB66) from the driver's knee airbag module. 4) Disconnect the connectors (AB6, AB17, AB18) from airbag control module. 5) Disconnect the passenger's airbag module connector (AB9). 6) Using a probe, measure the resistance between the connector (AB9) and chassis ground. <Ref. to AB(diag)-16, HOW TO USE PROBE, PREPARATION TOOL, General Description.> **CAUTION:** **When measuring the resistance, make sure that the probe is inserted from the back side (harness side) of the connector. Also, do not insert the probe forcibly.** ***Connector & terminal*** ***(AB9) No. 1 — Chassis ground:*** ***(AB9) No. 2 — Chassis ground:***	Is the resistance 1 MΩ or more?	Go to step **3**.	Replace the airbag main harness along with body harness.
3	**CHECK AIRBAG CONTROL MODULE.** 1) Connect the connectors (AB6, AB17, AB18) and the airbag control module. 2) Using a probe, short the terminals No. 1 and No. 2 of connector (AB9). <Ref. to AB(diag)-16, HOW TO USE PROBE, PREPARATION TOOL, General Description.> **CAUTION:** **When shorting the terminals, make sure that the probe is inserted from the back side (harness side) of the connector. Also, do not insert the probe forcibly.** ***Connector & terminal*** ***(AB9) No. 1 — (AB9) No. 2:*** 3) Connect the battery ground terminal and turn the ignition switch to ON. 4) Perform the Inspection Mode. 5) Read the DTC. (Current malfunction)	Is DTC B1807 displayed?	Replace the airbag control module. <Ref. to AB-78, REMOVAL, Airbag Control Module.>	Go to step **4**.

	Step	Check	Yes	No
4	**CHECK PASSENGER'S AIRBAG MODULE.** 1) Turn the ignition switch to OFF, disconnect the battery ground cable, and wait for 60 seconds or more. NOTE: For HEV model, disconnect the negative terminal from 12 volt auxiliary battery, and disconnect the ground terminal from 12V engine restart battery sensor for 12 volt engine restart battery. <Ref. to NT-5, BATTERY, NOTE, Note.> 2) Release the short circuit of connector (AB9). 3) Connect the passenger's airbag module connector (AB9). 4) Connect the connectors (AB7) and (AB2). 5) Connect the connector (AB66) to the driver's knee airbag module. 6) Connect the battery ground terminal and turn the ignition switch to ON. 7) Perform the Inspection Mode. 8) Read the DTC. (Current malfunction)	Is DTC B1807 displayed?	Replace the passenger's airbag module. <Ref. to AB-46, REMOVAL, Passenger's Airbag Module.>	Go to step **5**.
5	**CHECK FOR ANY OTHER DTC ON DISPLAY.**	Is any other DTC displayed?	Check DTC using "List of Diagnostic Trouble Code (DTC)". <Ref. to AB(diag)-33, List of Diagnostic Trouble Code (DTC).>	Finish the diagnosis.

CI: DTC B1808 SHORT IN PASSENGER'S AIRBAG (TO +B)

DTC DETECTING CONDITION:

- Airbag main harness circuit is shorted to power supply.
- Airbag module harness (passenger's side) circuit is shorted to power supply.
- Passenger's airbag module is faulty.
- Airbag control module is faulty.

CAUTION:

Before performing diagnosis, refer to "CAUTION" in "General Description". <Ref. to AB(diag)-4, CAUTION, General Description.>

WIRING DIAGRAM:

Airbag system <Ref. to WI(w/o HEV)-30, WIRING DIAGRAM, Airbag System.> <Ref. to WI(HEV)-50, WIRING DIAGRAM, Airbag System.>

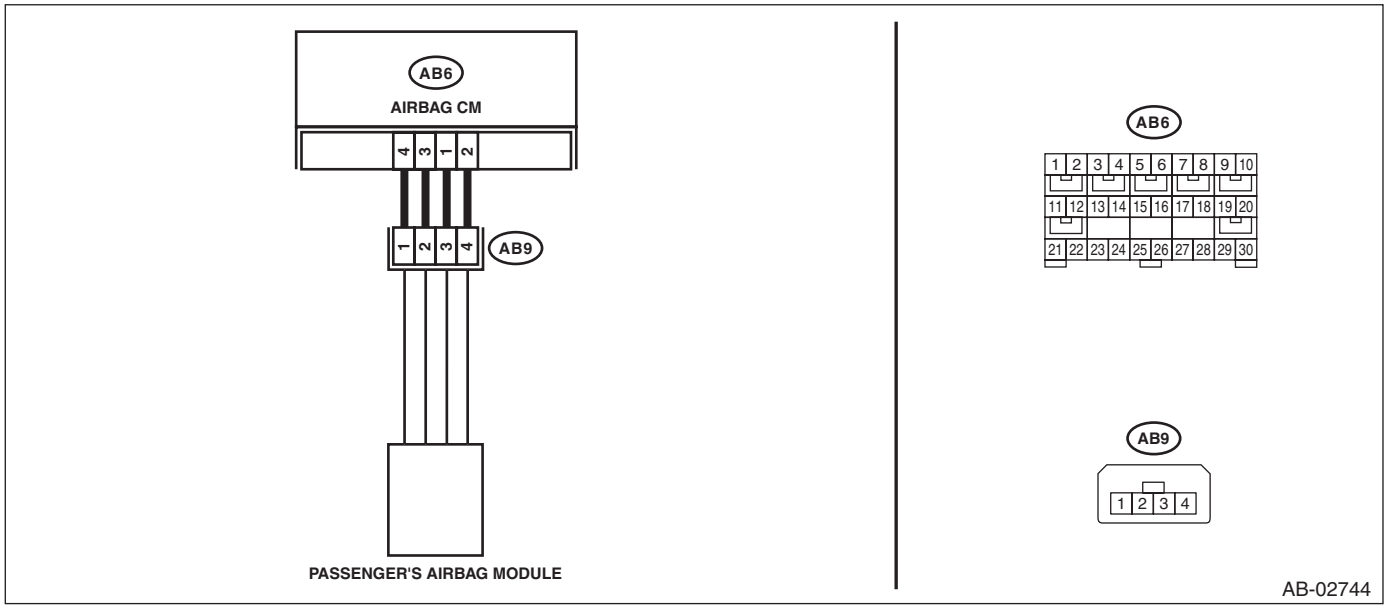

	Step	Check	Yes	No
1	**CHECK POOR CONTACT OF CONNECTORS.** Check for poor contact of the connectors between the airbag control module and the passenger's airbag module.	Is there poor contact?	Replace the airbag harness.	Go to step **2**.

	Step	Check	Yes	No
2	**CHECK AIRBAG MAIN HARNESS (PASSENGER'S AIRBAG HARNESS).** 1) Turn the ignition switch to OFF, disconnect the battery ground cable, and wait for 60 seconds or more. NOTE: For HEV model, disconnect the negative terminal from 12 volt auxiliary battery, and disconnect the ground terminal from 12V engine restart battery sensor for 12 volt engine restart battery. <Ref. to NT-5, BATTERY, NOTE, Note.> 2) Disconnect the connectors (AB7) and (AB2). 3) Disconnect the connector (AB66) from the driver's knee airbag module. 4) Disconnect the connectors (AB6, AB17, AB18) from airbag control module. 5) Disconnect the passenger's airbag module connector (AB9). 6) Using a probe, measure the voltage between the connector (AB9) and chassis ground. <Ref. to AB(diag)-16, HOW TO USE PROBE, PREPARATION TOOL, General Description.> **CAUTION:** **When measuring the voltage, make sure that the probe is inserted from the back side (harness side) of the connector. Also, do not insert the probe forcibly.** ***Connector & terminal*** ***(AB9) No. 1 (+) — Chassis ground (–):*** ***(AB9) No. 2 (+) — Chassis ground (–):***	Is the voltage less than 1 V?	Go to step **3**.	Replace the airbag main harness along with body harness.

	Step	Check	Yes	No
3	**CHECK AIRBAG CONTROL MODULE.** 1) Turn the ignition switch to OFF, disconnect the battery ground cable, and wait for 60 seconds or more. NOTE: For HEV model, disconnect the negative terminal from 12 volt auxiliary battery, and disconnect the ground terminal from 12V engine restart battery sensor for 12 volt engine restart battery. <Ref. to NT-5, BATTERY, NOTE, Note.> 2) Connect the connectors (AB6, AB17, AB18) and the airbag control module. 3) Using a probe, short the terminals No. 1 and No. 2 of connector (AB9). <Ref. to AB(diag)-16, HOW TO USE PROBE, PREPARATION TOOL, General Description.> **CAUTION:** **When shorting the terminals, make sure that the probe is inserted from the back side (harness side) of the connector. Also, do not insert the probe forcibly.** ***Connector & terminal*** ***(AB9) No. 1 — (AB9) No. 2:*** 4) Connect the battery ground terminal and turn the ignition switch to ON. 5) Perform the Inspection Mode. 6) Read the DTC. (Current malfunction)	Is DTC B1808 displayed?	Replace the airbag control module. <Ref. to AB-78, REMOVAL, Airbag Control Module.>	Go to step **4**.
4	**CHECK PASSENGER'S AIRBAG MODULE.** 1) Turn the ignition switch to OFF, disconnect the battery ground cable, and wait for 60 seconds or more. NOTE: For HEV model, disconnect the negative terminal from 12 volt auxiliary battery, and disconnect the ground terminal from 12V engine restart battery sensor for 12 volt engine restart battery. <Ref. to NT-5, BATTERY, NOTE, Note.> 2) Release the short circuit of connector (AB9). 3) Connect the passenger's airbag module connector (AB9). 4) Connect the connectors (AB7) and (AB2). 5) Connect the connector (AB66) to the driver's knee airbag module. 6) Connect the battery ground terminal and turn the ignition switch to ON. 7) Perform the Inspection Mode. 8) Read the DTC. (Current malfunction)	Is DTC B1808 displayed?	Replace the passenger's airbag module. <Ref. to AB-46, REMOVAL, Passenger's Airbag Module.>	Go to step **5**.
5	**CHECK FOR ANY OTHER DTC ON DISPLAY.**	Is any other DTC displayed?	Check DTC using "List of Diagnostic Trouble Code (DTC)". <Ref. to AB(diag)-33, List of Diagnostic Trouble Code (DTC).>	Finish the diagnosis.

CJ:DTC B1810 SHORT IN DRIVER'S AIRBAG DUAL STAGE - 2ND STEP

DTC DETECTING CONDITION:

- Airbag main harness circuit is shorted.
- Airbag module harness (driver's side) circuit is shorted.
- Roll connector circuit is shorted.
- Driver's airbag module is faulty.
- Airbag control module is faulty.

CAUTION:

Before performing diagnosis, refer to "CAUTION" in "General Description". <Ref. to AB(diag)-4, CAUTION, General Description.>

NOTE:

Prior to starting work, prepare two AIRBAG RESISTORs (98299PA040).

WIRING DIAGRAM:

Airbag system <Ref. to WI(w/o HEV)-30, WIRING DIAGRAM, Airbag System.> <Ref. to WI(HEV)-50, WIRING DIAGRAM, Airbag System.>

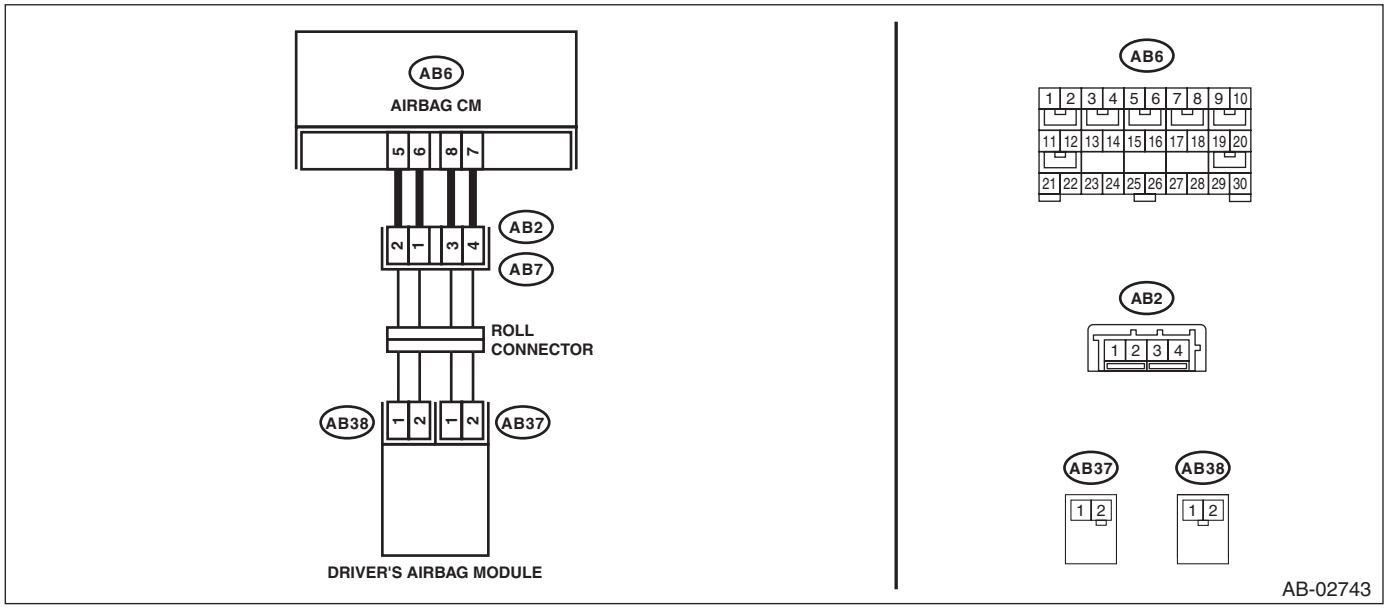

Step		Check	Yes	No
1	**CHECK POOR CONTACT OF CONNECTORS.** Check for poor contact of the connectors between the airbag control module and the driver's airbag module.	Is there poor contact?	Replace the airbag harness.	Go to step **2**.

	Step	Check	Yes	No
2	**CHECK DRIVER'S AIRBAG MODULE.** 1) Turn the ignition switch to OFF, disconnect the battery ground cable, and wait for 60 seconds or more. NOTE: For HEV model, disconnect the negative terminal from 12 volt auxiliary battery, and disconnect the ground terminal from 12V engine restart battery sensor for 12 volt engine restart battery. <Ref. to NT-5, BATTERY, NOTE, Note.> 2) Remove the driver's airbag module. 3) Connect the connector (1N) in the test harness N to the connector (AB38). 4) Connect the airbag resistor to the connector (2N) of test harness N. 5) Connect the connector (1Q) in the test harness Q to connector (AB37). 6) Connect the airbag resistor to the connector (2Q) in the test harness Q. 7) Connect the battery ground terminal and turn the ignition switch to ON.	Does the airbag warning light illuminate for six seconds and go off?	Replace the driver's airbag module. <Ref. to AB-41, Driver's Airbag Module.>	Go to step **3**.
3	**CHECK ROLL CONNECTOR AND AIRBAG MAIN HARNESS (DRIVER'S AIRBAG HARNESS).** 1) Turn the ignition switch to OFF, disconnect the battery ground cable, and wait for 60 seconds or more. NOTE: For HEV model, disconnect the negative terminal from 12 volt auxiliary battery, and disconnect the ground terminal from 12V engine restart battery sensor for 12 volt engine restart battery. <Ref. to NT-5, BATTERY, NOTE, Note.> 2) Remove the console front panel and disconnect the connector (AB9). 3) Disconnect the connector (AB66) from the driver's knee airbag module. 4) Disconnect the airbag resistor from the connector (2N) in test harness N and from the connector (2Q) in test harness Q. 5) Disconnect the connectors (AB6, AB17, AB18) from the airbag control module, and connect the connector (1AG) in the test harness AG. NOTE: Except for XV models, connect test harness AH between the connectors (AB6, AB17, AB18) and (1AG). 6) Measure the resistance between connector (2N) terminals in test harness N. ***Connector & terminal*** ***(2N) No. 1 — (2N) No. 2:***	Is the resistance 1 MΩ or more?	Go to step **5**.	Go to step **4**.

	Step	Check	Yes	No
4	**CHECK AIRBAG MAIN HARNESS (DRIVER'S AIRBAG HARNESS).** 1) Remove the instrument panel lower cover and column cover, and disconnect the connector (AB7) from (AB2). 2) Disconnect the test harness Q from connector (AB37). 3) Measure the resistance between connector (3AG) terminals in test harness AG. ***Connector & terminal*** ***(3AG) No. 2 — (3AG) No. 4:***	Is the resistance 1 MΩ or more?	Replace the roll connector. <Ref. to AB-105, Roll Connector.>	Replace the airbag main harness along with body harness.
5	**CHECK AIRBAG CONTROL MODULE.** 1) Connect all connectors. 2) Clear the memory. 3) Perform the Inspection Mode. 4) Read the DTC. (Current malfunction)	Is the same DTC displayed?	Replace the airbag control module. <Ref. to AB-78, Airbag Control Module.>	Go to step **6**.
6	**CHECK FOR ANY OTHER DTC ON DISPLAY.**	Is any other DTC displayed?	Check DTC using "List of Diagnostic Trouble Code (DTC)". <Ref. to AB(diag)-33, List of Diagnostic Trouble Code (DTC).>	Finish the diagnosis.

CK:DTC B1811 OPEN IN DRIVER'S AIRBAG DUAL STAGE - 2ND STEP

DTC DETECTING CONDITION:

- Airbag main harness circuit is open.
- Airbag module harness (driver's side) circuit is open.
- Roll connector circuit is open.
- Driver's airbag module is faulty.
- Airbag control module is faulty.

CAUTION:

Before performing diagnosis, refer to "CAUTION" in "General Description". <Ref. to AB(diag)-4, CAUTION, General Description.>

NOTE:

Prior to starting work, prepare two AIRBAG RESISTORs (98299PA040).

WIRING DIAGRAM:

Airbag system <Ref. to WI(w/o HEV)-30, WIRING DIAGRAM, Airbag System.> <Ref. to WI(HEV)-50, WIRING DIAGRAM, Airbag System.>

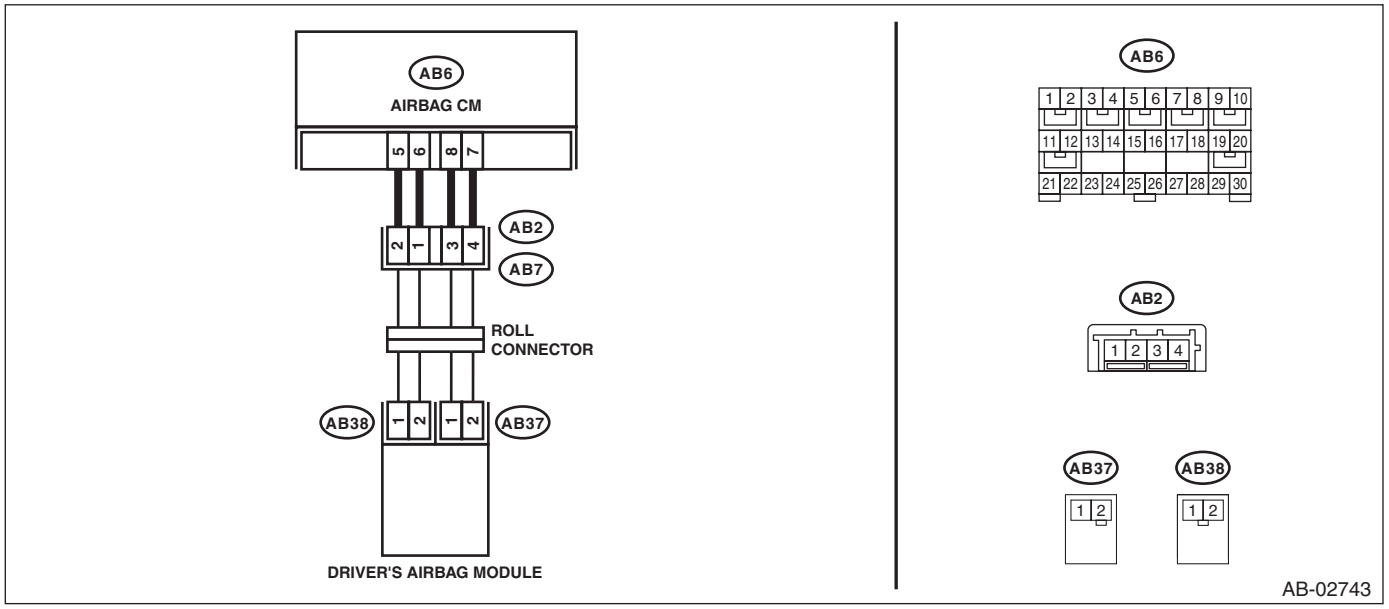

Step		Check	Yes	No
1	**CHECK POOR CONTACT OF CONNECTORS.** Check for poor contact of the connectors between the airbag control module and the driver's airbag module.	Is there poor contact?	Replace the airbag harness.	Go to step **2**.

	Step	Check	Yes	No
2	**CHECK DRIVER'S AIRBAG MODULE.** 1) Turn the ignition switch to OFF, disconnect the battery ground cable, and wait for 60 seconds or more. NOTE: For HEV model, disconnect the negative terminal from 12 volt auxiliary battery, and disconnect the ground terminal from 12V engine restart battery sensor for 12 volt engine restart battery. <Ref. to NT-5, BATTERY, NOTE, Note.> 2) Remove the driver's airbag module. 3) Connect the connector (1N) in the test harness N to the connector (AB38). 4) Connect the airbag resistor to the connector (2N) of test harness N. 5) Connect the connector (1Q) in the test harness Q to connector (AB37). 6) Connect the airbag resistor to the connector (2Q) in the test harness Q. 7) Connect the battery ground terminal and turn the ignition switch to ON.	Does the airbag warning light illuminate for six seconds and go off?	Replace the driver's airbag module. <Ref. to AB-41, Driver's Airbag Module.>	Go to step **3**.
3	**CHECK ROLL CONNECTOR AND AIRBAG MAIN HARNESS (DRIVER'S AIRBAG HARNESS).** 1) Turn the ignition switch to OFF, disconnect the battery ground cable, and wait for 60 seconds or more. NOTE: For HEV model, disconnect the negative terminal from 12 volt auxiliary battery, and disconnect the ground terminal from 12V engine restart battery sensor for 12 volt engine restart battery. <Ref. to NT-5, BATTERY, NOTE, Note.> 2) Remove the console front panel and disconnect the connector (AB9). 3) Disconnect the connector (AB66) from the driver's knee airbag module. 4) Disconnect the airbag resistor from the connector (2N) in test harness N. 5) Disconnect the airbag resistor from the connector (2Q) of test harness Q. 6) Disconnect the connectors (AB6, AB17, AB18) from airbag control module. 7) Measure the resistance between connector (2N) terminals in test harness N. ***Connector & terminal*** ***(2N) No. 1 — (2N) No. 2:***	Is the resistance less than 10 Ω?	Go to step **5**.	Go to step **4**.
4	**CHECK ROLL CONNECTOR.** 1) Remove the instrument panel lower cover and column cover, and disconnect the connector (AB7) from (AB2). 2) Measure the resistance between connector (2N) terminals in test harness N. ***Connector & terminal*** ***(2N) No. 1 — (2N) No. 2:***	Is the resistance less than 10 Ω?	Replace the airbag main harness along with body harness.	Replace the roll connector. <Ref. to AB-105, Roll Connector.>

	Step	Check	Yes	No
5	**CHECK AIRBAG CONTROL MODULE.** 1) Connect all connectors. 2) Clear the memory. 3) Perform the Inspection Mode. 4) Read the DTC. (Current malfunction)	Is the same DTC displayed?	Replace the airbag control module. <Ref. to AB-78, Airbag Control Module.>	Go to step **6**.
6	**CHECK FOR ANY OTHER DTC ON DISPLAY.**	Is any other DTC displayed?	Check DTC using "List of Diagnostic Trouble Code (DTC)". <Ref. to AB(diag)-33, List of Diagnostic Trouble Code (DTC).>	Finish the diagnosis.

CL:DTC B1812 SHORT IN DRIVER'S AIRBAG DUAL STAGE - 2ND STEP (TO GROUND)

DTC DETECTING CONDITION:

- Airbag main harness circuit is shorted to ground.
- Airbag module harness (driver's side) circuit is shorted to ground.
- Roll connector circuit is shorted to ground.
- Driver's airbag module is faulty.
- Airbag control module is faulty.

CAUTION:
Before performing diagnosis, refer to "CAUTION" in "General Description". <Ref. to AB(diag)-4, CAUTION, General Description.>

NOTE:
Prior to starting work, prepare two AIRBAG RESISTORs (98299PA040).

WIRING DIAGRAM:
Airbag system <Ref. to WI(w/o HEV)-30, WIRING DIAGRAM, Airbag System.> <Ref. to WI(HEV)-50, WIRING DIAGRAM, Airbag System.>

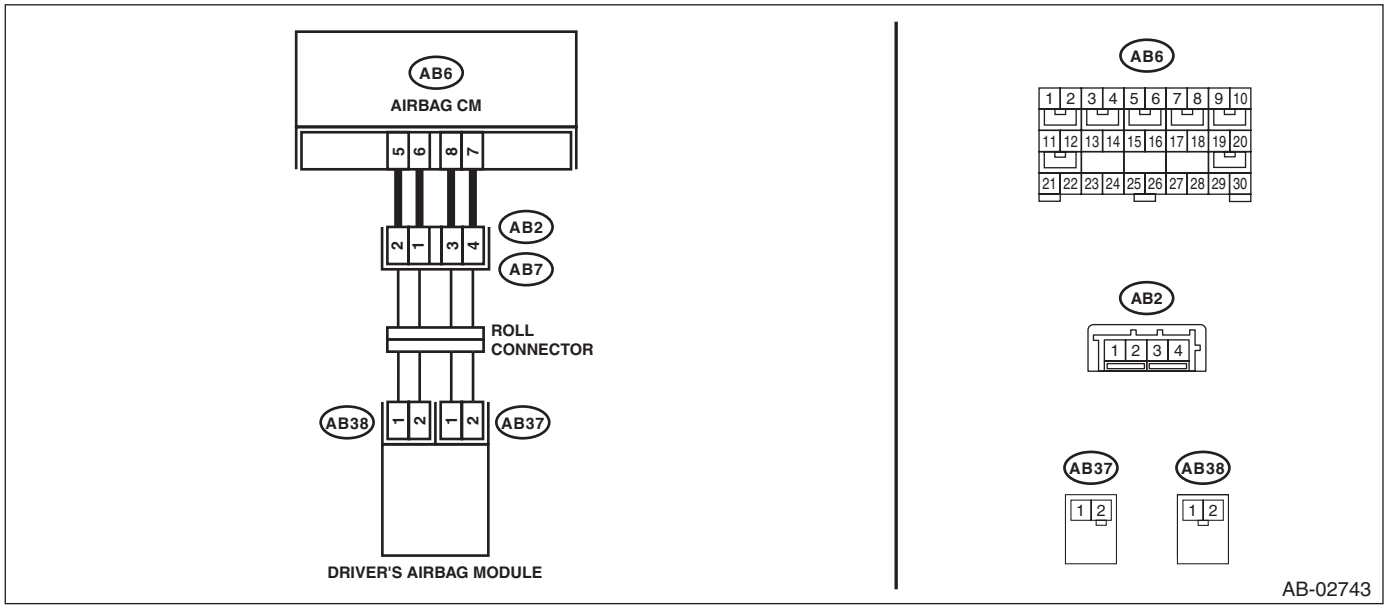

Step		Check	Yes	No
1	**CHECK POOR CONTACT OF CONNECTORS.** Check for poor contact of the connectors between the airbag control module and the driver's airbag module.	Is there poor contact?	Replace the airbag harness.	Go to step **2**.

	Step	Check	Yes	No
2	**CHECK DRIVER'S AIRBAG MODULE.** 1) Turn the ignition switch to OFF, disconnect the battery ground cable, and wait for 60 seconds or more. NOTE: For HEV model, disconnect the negative terminal from 12 volt auxiliary battery, and disconnect the ground terminal from 12V engine restart battery sensor for 12 volt engine restart battery. <Ref. to NT-5, BATTERY, NOTE, Note.> 2) Remove the driver's airbag module. 3) Connect the connector (1N) in the test harness N to the connector (AB38). 4) Connect the airbag resistor to the connector (2N) of test harness N. 5) Connect the connector (1Q) in the test harness Q to connector (AB37). 6) Connect the airbag resistor to the connector (2Q) in the test harness Q. 7) Connect the battery ground terminal and turn the ignition switch to ON.	Does the airbag warning light illuminate for six seconds and go off?	Replace the driver's airbag module. <Ref. to AB-41, Driver's Airbag Module.>	Go to step **3**.
3	**CHECK ROLL CONNECTOR.** 1) Turn the ignition switch to OFF, disconnect the battery ground cable, and wait for 60 seconds or more. NOTE: For HEV model, disconnect the negative terminal from 12 volt auxiliary battery, and disconnect the ground terminal from 12V engine restart battery sensor for 12 volt engine restart battery. <Ref. to NT-5, BATTERY, NOTE, Note.> 2) Remove the instrument panel lower cover and column cover, and disconnect the connector (AB7) from (AB2). 3) Disconnect the connector (AB66) from the driver's knee airbag module. 4) Disconnect the airbag resistor from the connector (2N) in test harness N and from the connector (2Q) in test harness Q. 5) Measure the resistance between connector (2N) in the test harness N and chassis ground. ***Connector & terminal*** ***(2N) No. 1 — Chassis ground:*** ***(2N) No. 2 — Chassis ground:***	Is the resistance 1 MΩ or more?	Go to step **4**.	Replace the roll connector. <Ref. to AB-105, Roll Connector.>

	Step	Check	Yes	No
4	**CHECK AIRBAG MAIN HARNESS (DRIVER'S AIRBAG HARNESS).** 1) Disconnect the test harness N from connector (AB38). 2) Disconnect the test harness Q from connector (AB37). 3) Remove the console front panel and disconnect the connector (AB9). 4) Disconnect the connectors (AB6, AB17, AB18) from the airbag control module, and connect the connector (1AG) in the test harness AG. NOTE: Except for XV models, connect test harness AH between the connectors (AB6, AB17, AB18) and (1AG). 5) Measure the resistance between connector (3AG) in the test harness AG and chassis ground. ***Connector & terminal*** ***(3AG) No. 2 — Chassis ground:*** ***(3AG) No. 4 — Chassis ground:***	Is the resistance 1 MΩ or more?	Go to step **5**.	Replace the airbag main harness along with body harness.
5	**CHECK AIRBAG CONTROL MODULE.** 1) Connect all connectors. 2) Clear the memory. 3) Perform the Inspection Mode. 4) Read the DTC. (Current malfunction)	Is the same DTC displayed?	Replace the airbag control module. <Ref. to AB-78, Airbag Control Module.>	Go to step **6**.
6	**CHECK FOR ANY OTHER DTC ON DISPLAY.**	Is any other DTC displayed?	Check DTC using "List of Diagnostic Trouble Code (DTC)". <Ref. to AB(diag)-33, List of Diagnostic Trouble Code (DTC).>	Finish the diagnosis.

CM:DTC B1813 SHORT IN DRIVER'S AIRBAG DUAL STAGE - 2ND STEP CIRCUIT (TO +B)

DTC DETECTING CONDITION:

- Airbag main harness circuit is shorted to power supply.
- Airbag module harness (driver's side) circuit is shorted to power supply.
- Roll connector is shorted to power supply.
- Driver's airbag module is faulty.
- Airbag control module is faulty.

CAUTION:
Before performing diagnosis, refer to "CAUTION" in "General Description". <Ref. to AB(diag)-4, CAUTION, General Description.>

NOTE:
Prior to starting work, prepare two AIRBAG RESISTORs (98299PA040).

WIRING DIAGRAM:
Airbag system <Ref. to WI(w/o HEV)-30, WIRING DIAGRAM, Airbag System.> <Ref. to WI(HEV)-50, WIRING DIAGRAM, Airbag System.>

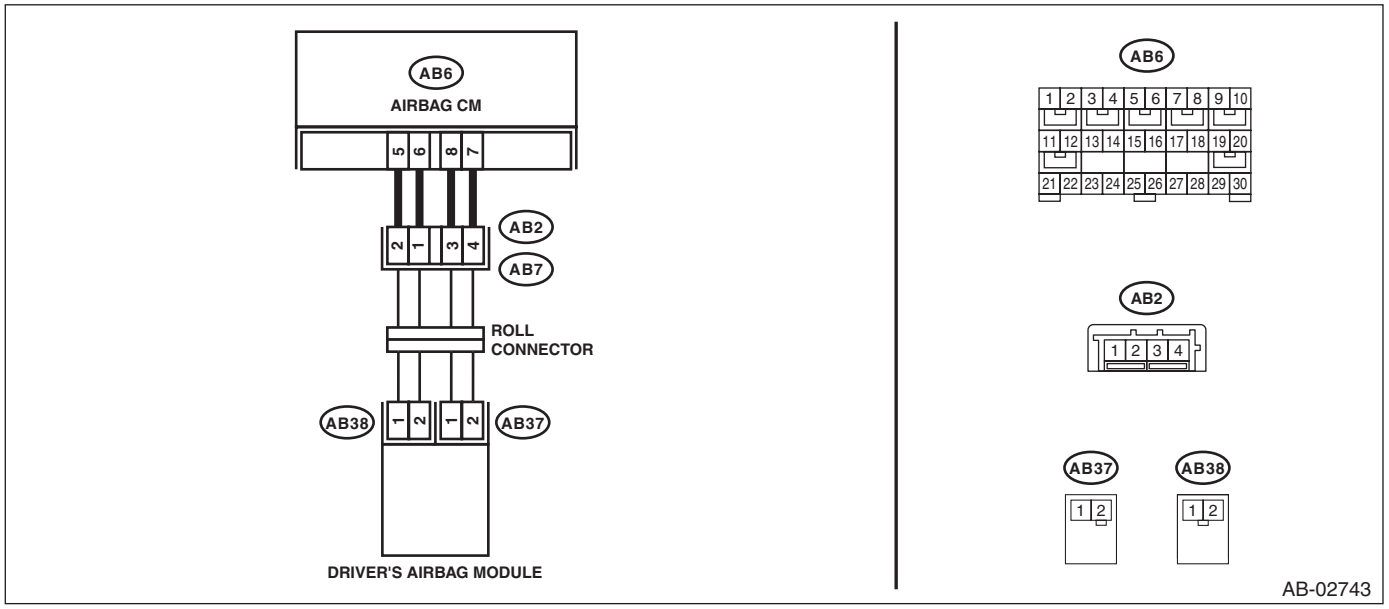

Step		Check	Yes	No
1	**CHECK POOR CONTACT OF CONNECTORS.** Check for poor contact of the connectors between the airbag control module and the driver's airbag module.	Is there poor contact?	Replace the airbag harness.	Go to step **2**.

	Step	Check	Yes	No
2	**CHECK DRIVER'S AIRBAG MODULE.** 1) Turn the ignition switch to OFF, disconnect the battery ground cable, and wait for 60 seconds or more. NOTE: For HEV model, disconnect the negative terminal from 12 volt auxiliary battery, and disconnect the ground terminal from 12V engine restart battery sensor for 12 volt engine restart battery. <Ref. to NT-5, BATTERY, NOTE, Note.> 2) Remove the driver's airbag module. 3) Connect the connector (1N) in the test harness N to the connector (AB38). 4) Connect the airbag resistor to the connector (2N) of test harness N. 5) Connect the connector (1Q) in the test harness Q to connector (AB37). 6) Connect the airbag resistor to the connector (2Q) in the test harness Q. 7) Connect the battery ground terminal and turn the ignition switch to ON.	Does the airbag warning light illuminate for six seconds and go off?	Replace the driver's airbag module. <Ref. to AB-41, Driver's Airbag Module.>	Go to step **3**.
3	**CHECK ROLL CONNECTOR.** 1) Turn the ignition switch to OFF, disconnect the battery ground cable, and wait for 60 seconds or more. NOTE: For HEV model, disconnect the negative terminal from 12 volt auxiliary battery, and disconnect the ground terminal from 12V engine restart battery sensor for 12 volt engine restart battery. <Ref. to NT-5, BATTERY, NOTE, Note.> 2) Remove the instrument panel lower cover and column cover, and disconnect the connector (AB7) from (AB2). 3) Disconnect the connector (AB66) from the driver's knee airbag module. 4) Disconnect the airbag resistor from the connector (2N) in test harness N and from the connector (2Q) in test harness Q. 5) Measure the voltage between connector (2N) in the test harness N and chassis ground. ***Connector & terminal*** ***(2N) No. 1 (+) — Chassis ground (–):*** ***(2N) No. 2 (+) — Chassis ground (–):***	Is the voltage less than 1 V?	Go to step **4**.	Replace the roll connector. <Ref. to AB-105, Roll Connector.>

	Step	Check	Yes	No
4	**CHECK AIRBAG MAIN HARNESS (DRIVER'S AIRBAG HARNESS).** 1) Disconnect the test harness N from connector (AB38). 2) Disconnect the test harness Q from connector (AB37). 3) Remove the console front panel and disconnect the connector (AB9). 4) Disconnect the connectors (AB6, AB17, AB18) from the airbag control module, and connect the connector (1AG) in the test harness AG. NOTE: Except for XV models, connect test harness AH between the connectors (AB6, AB17, AB18) and (1AG). 5) Measure the voltage between connector (3AG) in the test harness AG and chassis ground. ***Connector & terminal*** ***(3AG) No. 2 (+) — Chassis ground (–):*** ***(3AG) No. 4 (+) — Chassis ground (–):***	Is the voltage less than 1 V?	Go to step **5**.	Replace the airbag main harness along with body harness.
5	**CHECK AIRBAG CONTROL MODULE.** 1) Connect all connectors. 2) Clear the memory. 3) Perform the Inspection Mode. 4) Read the DTC. (Current malfunction)	Is the same DTC displayed?	Replace the airbag control module. <Ref. to AB-78, Airbag Control Module.>	Go to step **6**.
6	**CHECK FOR ANY OTHER DTC ON DISPLAY.**	Is any other DTC displayed?	Check DTC using "List of Diagnostic Trouble Code (DTC)". <Ref. to AB(diag)-33, List of Diagnostic Trouble Code (DTC).>	Finish the diagnosis.

CN:DTC B1815 OPEN IN PASSENGER'S AIRBAG DUAL STAGE - 2ND STEP

DTC DETECTING CONDITION:

- Airbag main harness circuit is shorted.
- Airbag module harness circuit (passenger's side) is shorted.
- Passenger's airbag module is faulty.
- Airbag control module is faulty.

CAUTION:

Before performing diagnosis, refer to "CAUTION" in "General Description". <Ref. to AB(diag)-4, CAUTION, General Description.>

WIRING DIAGRAM:

Airbag system <Ref. to WI(w/o HEV)-30, WIRING DIAGRAM, Airbag System.> <Ref. to WI(HEV)-50, WIRING DIAGRAM, Airbag System.>

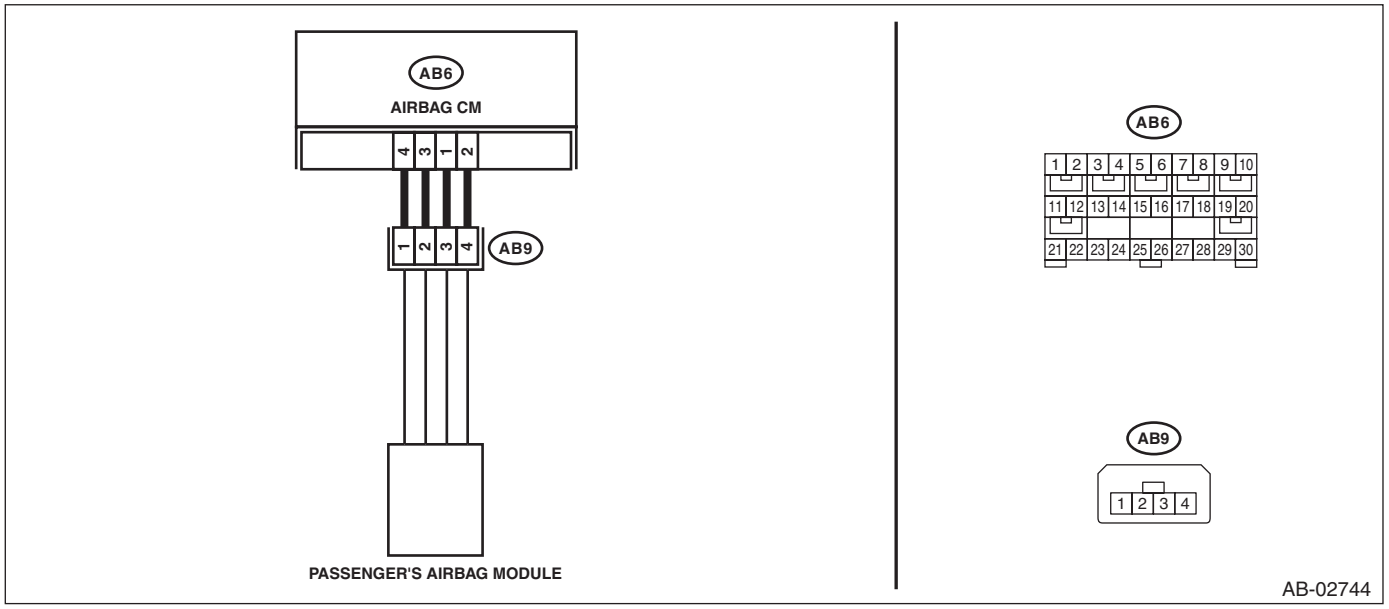

	Step	Check	Yes	No
1	**CHECK POOR CONTACT OF CONNECTORS.** Check for poor contact of the connectors between the airbag control module and the passenger's airbag module.	Is there poor contact?	Replace the airbag harness.	Go to step **2**.

	Step	Check	Yes	No
2	**CHECK AIRBAG MAIN HARNESS (PASSENGER'S AIRBAG HARNESS).** 1) Turn the ignition switch to OFF, disconnect the battery ground cable, and wait for 60 seconds or more. NOTE: For HEV model, disconnect the negative terminal from 12 volt auxiliary battery, and disconnect the ground terminal from 12V engine restart battery sensor for 12 volt engine restart battery. <Ref. to NT-5, BATTERY, NOTE, Note.> 2) Disconnect the connectors (AB7) and (AB2). 3) Disconnect the connector (AB66) from the driver's knee airbag module. 4) Disconnect the connectors (AB6, AB17, AB18) from the airbag control module, connect the connector (1AG) in the test harness AG, and release the short mechanism of the connectors (AB6, AB17, AB18). NOTE: Except for XV models, connect the connectors (AB6, AB17, AB18) and the connector (1AH) in the test harness AH. 5) Disconnect the passenger's airbag module connector (AB9). 6) Using a probe, measure the resistance between the terminals of connector (AB9). <Ref. to AB(diag)-16, HOW TO USE PROBE, PREPARATION TOOL, General Description.> **CAUTION:** **When measuring the resistance, make sure that the probe is inserted from the back side (harness side) of the connector. Also, do not insert the probe forcibly.** ***Connector & terminal*** ***(AB9) No. 3 — (AB9) No. 4:***	Is the resistance 1 MΩ or more?	Go to step **3**.	Replace the airbag main harness along with body harness.
3	**CHECK AIRBAG CONTROL MODULE.** 1) Disconnect the test harness AG and test harness AH from the connectors (AB6, AB17, AB18). 2) Connect the connectors (AB6, AB17, AB18) and the airbag control module. 3) Connect the connectors (AB7) and (AB2). 4) Connect the connector (AB66) to the driver's knee airbag module. 5) Connect the battery ground terminal and turn the ignition switch to ON. 6) Perform the Inspection Mode. 7) Read the DTC. (Current malfunction)	Is DTC B1815 displayed?	Replace the airbag control module. <Ref. to AB-78, REMOVAL, Airbag Control Module.>	Go to step **4**.

	Step	Check	Yes	No
4	**CHECK PASSENGER'S AIRBAG MODULE.** 1) Turn the ignition switch to OFF, disconnect the battery ground cable, and wait for 60 seconds or more. NOTE: For HEV model, disconnect the negative terminal from 12 volt auxiliary battery, and disconnect the ground terminal from 12V engine restart battery sensor for 12 volt engine restart battery. <Ref. to NT-5, BATTERY, NOTE, Note.> 2) Connect the passenger's airbag module connector (AB9). 3) Connect the battery ground terminal and turn the ignition switch to ON. 4) Perform the Inspection Mode. 5) Read the DTC. (Current malfunction)	Is DTC B1815 displayed?	Replace the passenger's airbag module. <Ref. to AB-46, REMOVAL, Passenger's Airbag Module.>	Go to step **5**.
5	**CHECK FOR ANY OTHER DTC ON DISPLAY.**	Is any other DTC displayed?	Check DTC using "List of Diagnostic Trouble Code (DTC)". <Ref. to AB(diag)-33, List of Diagnostic Trouble Code (DTC).>	Finish the diagnosis.

CO:DTC B1816 OPEN IN PASSENGER'S AIRBAG DUAL STAGE - 2ND STEP

DTC DETECTING CONDITION:

- Airbag main harness circuit is open.
- Airbag module harness (passenger's side) circuit is open.
- Passenger's airbag module is faulty.
- Airbag control module is faulty.

CAUTION:

Before performing diagnosis, refer to "CAUTION" in "General Description". <Ref. to AB(diag)-4, CAUTION, General Description.>

WIRING DIAGRAM:

Airbag system <Ref. to WI(w/o HEV)-30, WIRING DIAGRAM, Airbag System.> <Ref. to WI(HEV)-50, WIRING DIAGRAM, Airbag System.>

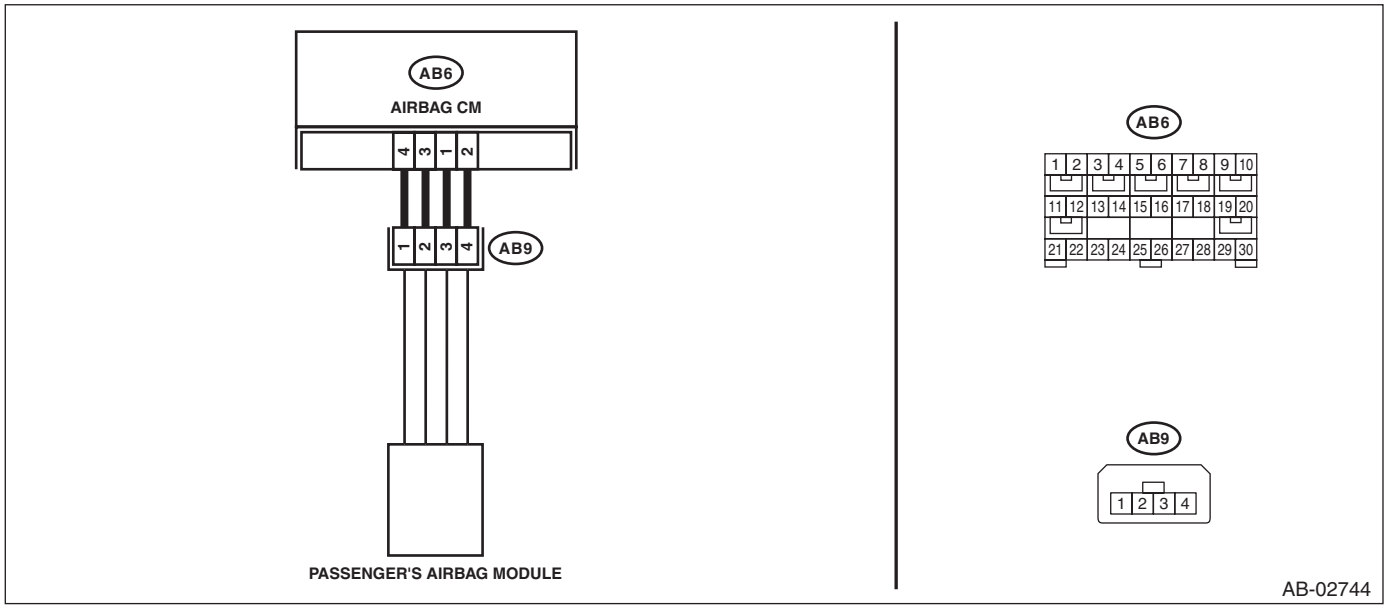

	Step	Check	Yes	No
1	**CHECK POOR CONTACT OF CONNECTORS.** Check for poor contact of the connectors between the airbag control module and the passenger's airbag module.	Is there poor contact?	Replace the airbag harness.	Go to step **2**.

	Step	Check	Yes	No
2	**CHECK AIRBAG MAIN HARNESS (PASSENGER'S AIRBAG HARNESS).** 1) Turn the ignition switch to OFF, disconnect the battery ground cable, and wait for 60 seconds or more. NOTE: For HEV model, disconnect the negative terminal from 12 volt auxiliary battery, and disconnect the ground terminal from 12V engine restart battery sensor for 12 volt engine restart battery. <Ref. to NT-5, BATTERY, NOTE, Note.> 2) Disconnect the connectors (AB7) and (AB2). 3) Disconnect the connector (AB66) from the driver's knee airbag module. 4) Disconnect the connectors (AB6, AB17, AB18) from airbag control module. 5) Disconnect the passenger's airbag module connector (AB9). 6) Using a probe, measure the resistance between the terminals of connector (AB9). <Ref. to AB(diag)-16, HOW TO USE PROBE, PREPARATION TOOL, General Description.> **CAUTION:** **When measuring the resistance, make sure that the probe is inserted from the back side (harness side) of the connector. Also, do not insert the probe forcibly.** ***Connector & terminal*** ***(AB9) No. 3 — (AB9) No. 4:***	Is the resistance less than 10 Ω?	Go to step **3**.	Replace the airbag main harness along with body harness.
3	**CHECK AIRBAG CONTROL MODULE.** 1) Connect the connectors (AB6, AB17, AB18) and the airbag control module. 2) Connect the connectors (AB7) and (AB2). 3) Connect the connector (AB66) to the driver's knee airbag module. 4) Using a probe, short the terminals No. 3 and No. 4 of connector (AB9). <Ref. to AB(diag)-16, HOW TO USE PROBE, PREPARATION TOOL, General Description.> **CAUTION:** **When shorting the terminals, make sure that the probe is inserted from the back side (harness side) of the connector. Also, do not insert the probe forcibly.** ***Connector & terminal*** ***(AB9) No. 3 — (AB9) No. 4:*** 5) Connect the battery ground terminal and turn the ignition switch to ON. 6) Perform the Inspection Mode. 7) Read the DTC. (Current malfunction)	Is DTC B1816 displayed?	Replace the airbag control module. <Ref. to AB-78, REMOVAL, Airbag Control Module.>	Go to step **4**.

	Step	Check	Yes	No
4	**CHECK PASSENGER'S AIRBAG MODULE.** 1) Turn the ignition switch to OFF, disconnect the battery ground cable, and wait for 60 seconds or more. NOTE: For HEV model, disconnect the negative terminal from 12 volt auxiliary battery, and disconnect the ground terminal from 12V engine restart battery sensor for 12 volt engine restart battery. <Ref. to NT-5, BATTERY, NOTE, Note.> 2) Connect the passenger's airbag module connector (AB9). 3) Connect the battery ground terminal and turn the ignition switch to ON. 4) Perform the Inspection Mode. 5) Read the DTC. (Current malfunction)	Is DTC B1816 displayed?	Replace the passenger's airbag module. <Ref. to AB-46, REMOVAL, Passenger's Airbag Module.>	Go to step **5**.
5	**CHECK FOR ANY OTHER DTC ON DISPLAY.**	Is any other DTC displayed?	Check DTC using "List of Diagnostic Trouble Code (DTC)". <Ref. to AB(diag)-33, List of Diagnostic Trouble Code (DTC).>	Finish the diagnosis.

CP:DTC B1817 SHORT IN PASSENGER'S AIRBAG DUAL STAGE - 2ND STEP (TO GROUND)

DTC DETECTING CONDITION:

- Airbag main harness circuit is shorted to ground.
- Airbag module harness (passenger's side) circuit is shorted to ground.
- Passenger's airbag module is faulty.
- Airbag control module is faulty.

CAUTION:

Before performing diagnosis, refer to "CAUTION" in "General Description". <Ref. to AB(diag)-4, CAUTION, General Description.>

WIRING DIAGRAM:

Airbag system <Ref. to WI(w/o HEV)-30, WIRING DIAGRAM, Airbag System.> <Ref. to WI(HEV)-50, WIRING DIAGRAM, Airbag System.>

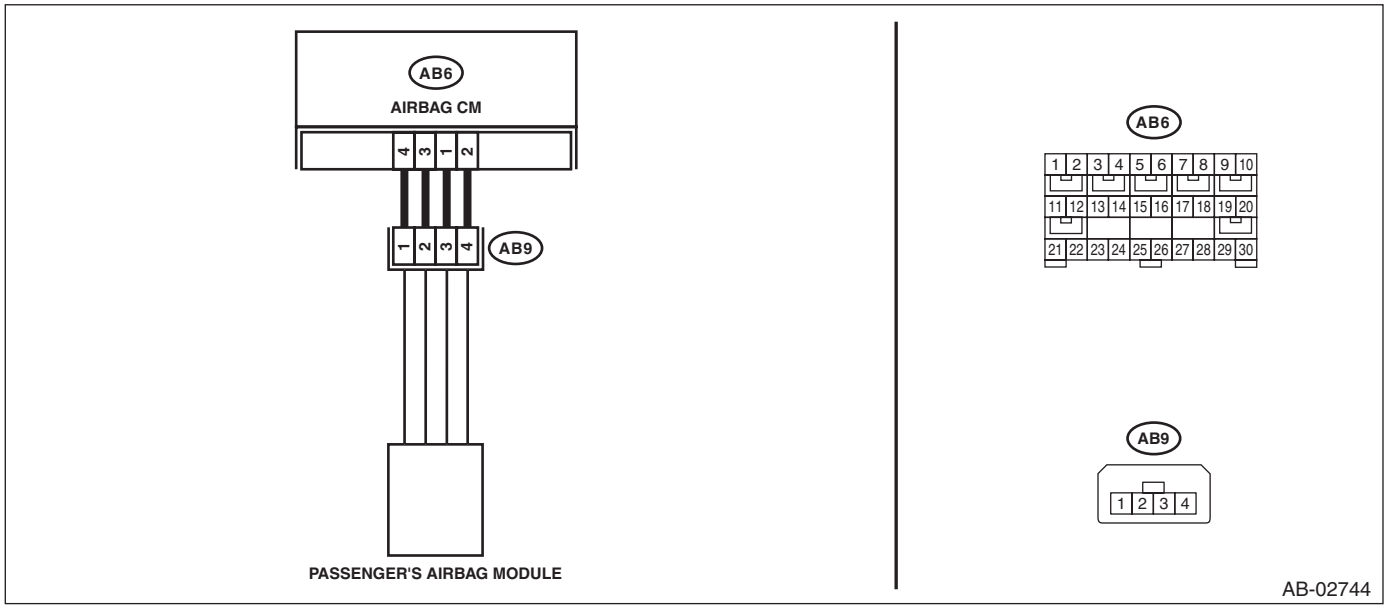

Step		Check	Yes	No
1	**CHECK POOR CONTACT OF CONNECTORS.** Check for poor contact of the connectors between the airbag control module and the passenger's airbag module.	Is there poor contact?	Replace the airbag harness.	Go to step **2**.

	Step	Check	Yes	No
2	**CHECK AIRBAG MAIN HARNESS (PASSENGER'S AIRBAG HARNESS).** 1) Turn the ignition switch to OFF, disconnect the battery ground cable, and wait for 60 seconds or more. NOTE: For HEV model, disconnect the negative terminal from 12 volt auxiliary battery, and disconnect the ground terminal from 12V engine restart battery sensor for 12 volt engine restart battery. <Ref. to NT-5, BATTERY, NOTE, Note.> 2) Disconnect the connectors (AB7) and (AB2). 3) Disconnect the connector (AB66) from the driver's knee airbag module. 4) Disconnect the connectors (AB6, AB17, AB18) from airbag control module. 5) Disconnect the passenger's airbag module connector (AB9). 6) Using a probe, measure the resistance between the connector (AB9) and chassis ground. <Ref. to AB(diag)-16, HOW TO USE PROBE, PREPARATION TOOL, General Description.> **CAUTION:** **When measuring the resistance, make sure that the probe is inserted from the back side (harness side) of the connector. Also, do not insert the probe forcibly.** ***Connector & terminal*** ***(AB9) No. 3 — Chassis ground:*** ***(AB9) No. 4 — Chassis ground:***	Is the resistance 1 MΩ or more?	Go to step **3**.	Replace the airbag main harness along with body harness.
3	**CHECK AIRBAG CONTROL MODULE.** 1) Connect the connectors (AB6, AB17, AB18) and the airbag control module. 2) Using a probe, short the terminals No. 3 and No. 4 of connector (AB9). <Ref. to AB(diag)-16, HOW TO USE PROBE, PREPARATION TOOL, General Description.> **CAUTION:** **When shorting the terminals, make sure that the probe is inserted from the back side (harness side) of the connector. Also, do not insert the probe forcibly.** ***Connector & terminal*** ***(AB9) No. 3 — (AB9) No. 4:*** 3) Connect the battery ground terminal and turn the ignition switch to ON. 4) Perform the Inspection Mode. 5) Read the DTC. (Current malfunction)	Is DTC B1817 displayed?	Replace the airbag control module. <Ref. to AB-78, REMOVAL, Airbag Control Module.>	Go to step **4**.

	Step	Check	Yes	No
4	**CHECK PASSENGER'S AIRBAG MODULE.** 1) Turn the ignition switch to OFF, disconnect the battery ground cable, and wait for 60 seconds or more. NOTE: For HEV model, disconnect the negative terminal from 12 volt auxiliary battery, and disconnect the ground terminal from 12V engine restart battery sensor for 12 volt engine restart battery. <Ref. to NT-5, BATTERY, NOTE, Note.> 2) Release the short circuit of connector (AB9). 3) Connect the passenger's airbag module connector (AB9). 4) Connect the connectors (AB7) and (AB2). 5) Connect the connector (AB66) to the driver's knee airbag module. 6) Connect the battery ground terminal and turn the ignition switch to ON. 7) Perform the Inspection Mode. 8) Read the DTC. (Current malfunction)	Is DTC B1817 displayed?	Replace the passenger's airbag module. <Ref. to AB-46, REMOVAL, Passenger's Airbag Module.>	Go to step **5**.
5	**CHECK FOR ANY OTHER DTC ON DISPLAY.**	Is any other DTC displayed?	Check DTC using "List of Diagnostic Trouble Code (DTC)". <Ref. to AB(diag)-33, List of Diagnostic Trouble Code (DTC).>	Finish the diagnosis.

CQ:DTC B1818 SHORT IN PASSENGER'S AIRBAG DUAL STAGE - 2ND STEP CIRCUIT (TO +B)

DTC DETECTING CONDITION:

- Airbag main harness circuit is shorted to power supply.
- Airbag module harness (passenger's side) circuit is shorted to power supply.
- Passenger's airbag module is faulty.
- Airbag control module is faulty.

CAUTION:

Before performing diagnosis, refer to "CAUTION" in "General Description". <Ref. to AB(diag)-4, CAUTION, General Description.>

WIRING DIAGRAM:

Airbag system <Ref. to WI(w/o HEV)-30, WIRING DIAGRAM, Airbag System.> <Ref. to WI(HEV)-50, WIRING DIAGRAM, Airbag System.>

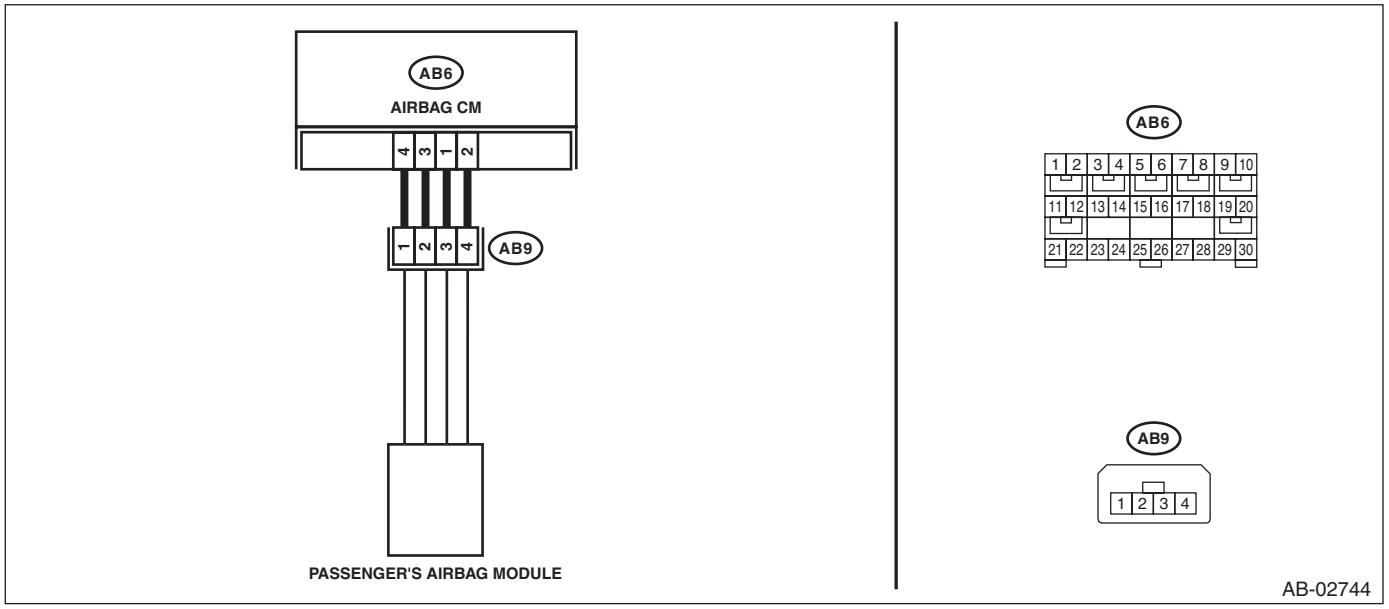

Step		Check	Yes	No
1	**CHECK POOR CONTACT OF CONNECTORS.** Check for poor contact of the connectors between the airbag control module and the passenger's airbag module.	Is there poor contact?	Replace the airbag harness.	Go to step **2**.

	Step	Check	Yes	No
2	**CHECK AIRBAG MAIN HARNESS (PASSENGER'S AIRBAG HARNESS).** 1) Turn the ignition switch to OFF, disconnect the battery ground cable, and wait for 60 seconds or more. NOTE: For HEV model, disconnect the negative terminal from 12 volt auxiliary battery, and disconnect the ground terminal from 12V engine restart battery sensor for 12 volt engine restart battery. <Ref. to NT-5, BATTERY, NOTE, Note.> 2) Disconnect the connectors (AB7) and (AB2). 3) Disconnect the connector (AB66) from the driver's knee airbag module. 4) Disconnect the connectors (AB6, AB17, AB18) from airbag control module. 5) Disconnect the passenger's airbag module connector (AB9). 6) Using a probe, measure the voltage between the connector (AB9) and chassis ground. <Ref. to AB(diag)-16, HOW TO USE PROBE, PREPARATION TOOL, General Description.> **CAUTION:** **When measuring the voltage, make sure that the probe is inserted from the back side (harness side) of the connector. Also, do not insert the probe forcibly.** ***Connector & terminal*** ***(AB9) No. 3 (+) — Chassis ground (–):*** ***(AB9) No. 4 (+) — Chassis ground (–):***	Is the voltage less than 1 V?	Go to step **3**.	Replace the airbag main harness along with body harness.

	Step	Check	Yes	No
3	**CHECK AIRBAG CONTROL MODULE.** 1) Turn the ignition switch to OFF, disconnect the battery ground cable, and wait for 60 seconds or more. NOTE: For HEV model, disconnect the negative terminal from 12 volt auxiliary battery, and disconnect the ground terminal from 12V engine restart battery sensor for 12 volt engine restart battery. <Ref. to NT-5, BATTERY, NOTE, Note.> 2) Connect the connectors (AB6, AB17, AB18) and the airbag control module. 3) Using a probe, short the terminals No. 3 and No. 4 of connector (AB9). <Ref. to AB(diag)-16, HOW TO USE PROBE, PREPARATION TOOL, General Description.> **CAUTION:** **When shorting the terminals, make sure that the probe is inserted from the back side (harness side) of the connector. Also, do not insert the probe forcibly.** ***Connector & terminal*** ***(AB9) No. 3 — (AB9) No. 4:*** 4) Connect the battery ground terminal and turn the ignition switch to ON. 5) Perform the Inspection Mode. 6) Read the DTC. (Current malfunction)	Is DTC B1818 displayed?	Replace the airbag control module. <Ref. to AB-78, REMOVAL, Airbag Control Module.>	Go to step **4**.
4	**CHECK PASSENGER'S AIRBAG MODULE.** 1) Turn the ignition switch to OFF, disconnect the battery ground cable, and wait for 60 seconds or more. NOTE: For HEV model, disconnect the negative terminal from 12 volt auxiliary battery, and disconnect the ground terminal from 12V engine restart battery sensor for 12 volt engine restart battery. <Ref. to NT-5, BATTERY, NOTE, Note.> 2) Release the short circuit of connector (AB9). 3) Connect the passenger's airbag module connector (AB9). 4) Connect the connectors (AB7) and (AB2). 5) Connect the connector (AB66) to the driver's knee airbag module. 6) Connect the battery ground terminal and turn the ignition switch to ON. 7) Perform the Inspection Mode. 8) Read the DTC. (Current malfunction)	Is DTC B1818 displayed?	Replace the passenger's airbag module. <Ref. to AB-46, REMOVAL, Passenger's Airbag Module.>	Go to step **5**.
5	**CHECK FOR ANY OTHER DTC ON DISPLAY.**	Is any other DTC displayed?	Check DTC using "List of Diagnostic Trouble Code (DTC)". <Ref. to AB(diag)-33, List of Diagnostic Trouble Code (DTC).>	Finish the diagnosis.

CR:DTC B1820 SHORT IN SIDE AIRBAG RH

DTC DETECTING CONDITION:

- Side airbag harness (RH) circuit is shorted.
- Side airbag module (RH) is faulty.
- Airbag control module is faulty.

CAUTION:

Before performing diagnosis, refer to "CAUTION" in "General Description". <Ref. to AB(diag)-4, CAUTION, General Description.>

WIRING DIAGRAM:

Airbag system <Ref. to WI(w/o HEV)-30, WIRING DIAGRAM, Airbag System.> <Ref. to WI(HEV)-50, WIRING DIAGRAM, Airbag System.>

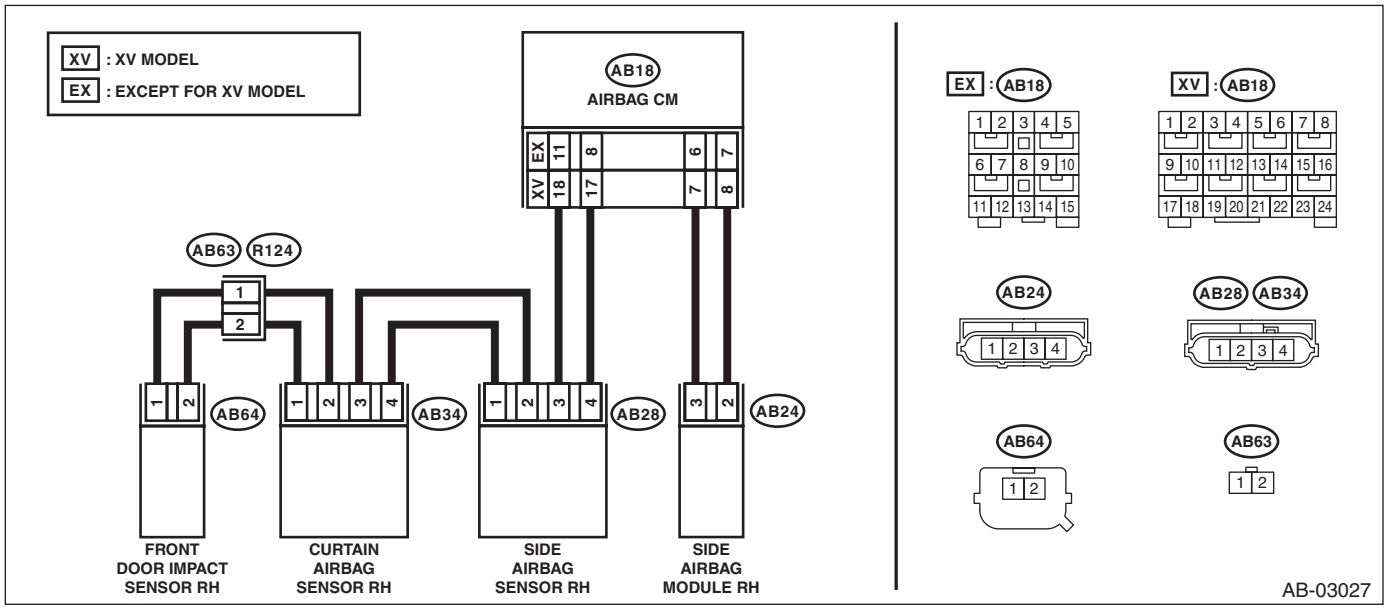

	Step	Check	Yes	No
1	**CHECK POOR CONTACT OF CONNECTORS.** Check for poor contact of the connectors between the airbag control module, side airbag module RH and the side airbag sensor RH.	Is there poor contact?	Replace the airbag rear harness along with body harness.	Go to step **2**.
2	**CHECK SIDE AIRBAG MODULE.** 1) Turn the ignition switch to OFF, disconnect the battery ground cable, and wait for 60 seconds or more. NOTE: For HEV model, disconnect the negative terminal from 12 volt auxiliary battery, and disconnect the ground terminal from 12V engine restart battery sensor for 12 volt engine restart battery. <Ref. to NT-5, BATTERY, NOTE, Note.> 2) Disconnect the connector (AB24) from the side airbag module (RH), and connect the connector (1AJ) in the test harness AJ to connector (AB24). 3) Connect the airbag resistor to the test harness AJ connector (3AJ). 4) Connect the battery ground terminal and turn the ignition switch to ON.	Does the airbag warning light illuminate for 6 seconds and go off?	Replace the side airbag module (RH). <Ref. to AB-66, REMOVAL, Side Airbag Module.>	Go to step **3**.

	Step	Check	Yes	No
3	**CHECK AIRBAG REAR HARNESS (SIDE AIRBAG MODULE HARNESS RH).** 1) Turn the ignition switch to OFF, disconnect the battery ground cable, and wait for 60 seconds or more. NOTE: For HEV model, disconnect the negative terminal from 12 volt auxiliary battery, and disconnect the ground terminal from 12V engine restart battery sensor for 12 volt engine restart battery. <Ref. to NT-5, BATTERY, NOTE, Note.> 2) Disconnect the connector (AB26) from seat belt pretensioner (RH). 3) Disconnect the connector (AB33) from curtain airbag module (RH). 4) Disconnect the airbag resistor from test harness AJ. 5) Disconnect the connectors (AB6, AB17, AB18) from airbag control module. 6) Connect the connector (1AG) in the test harness AG to the connectors (AB6, AB17, AB18). NOTE: Except for XV models, connect test harness AH between the connectors (AB6, AB17, AB18) and (1AG). 7) Measure the resistance between connector (3AJ) in the test harness AJ and chassis ground. ***Connector & terminal*** ***(3AJ) No. 1 — (3AJ) No. 2:***	Is the resistance 1 MΩ or more?	Go to step **4**.	Replace the airbag rear harness along with body harness.
4	**CHECK AIRBAG CONTROL MODULE.** 1) Connect all connectors. 2) Clear the memory. 3) Perform the Inspection Mode. 4) Read the DTC. (Current malfunction)	Is the same DTC displayed?	Replace the airbag control module. <Ref. to AB-78, Airbag Control Module.>	Go to step **5**.
5	**CHECK FOR ANY OTHER DTC ON DISPLAY.**	Is any other DTC displayed?	Check DTC using "List of Diagnostic Trouble Code (DTC)". <Ref. to AB(diag)-33, List of Diagnostic Trouble Code (DTC).>	Finish the diagnosis.

CS:DTC B1821 OPEN IN SIDE AIRBAG RH

DTC DETECTING CONDITION:

- Side airbag harness (RH) circuit is open.
- Side airbag module (RH) is faulty.
- Airbag control module is faulty.

CAUTION:

Before performing diagnosis, refer to "CAUTION" in "General Description". <Ref. to AB(diag)-4, CAUTION, General Description.>

WIRING DIAGRAM:

Airbag system <Ref. to WI(w/o HEV)-30, WIRING DIAGRAM, Airbag System.> <Ref. to WI(HEV)-50, WIRING DIAGRAM, Airbag System.>

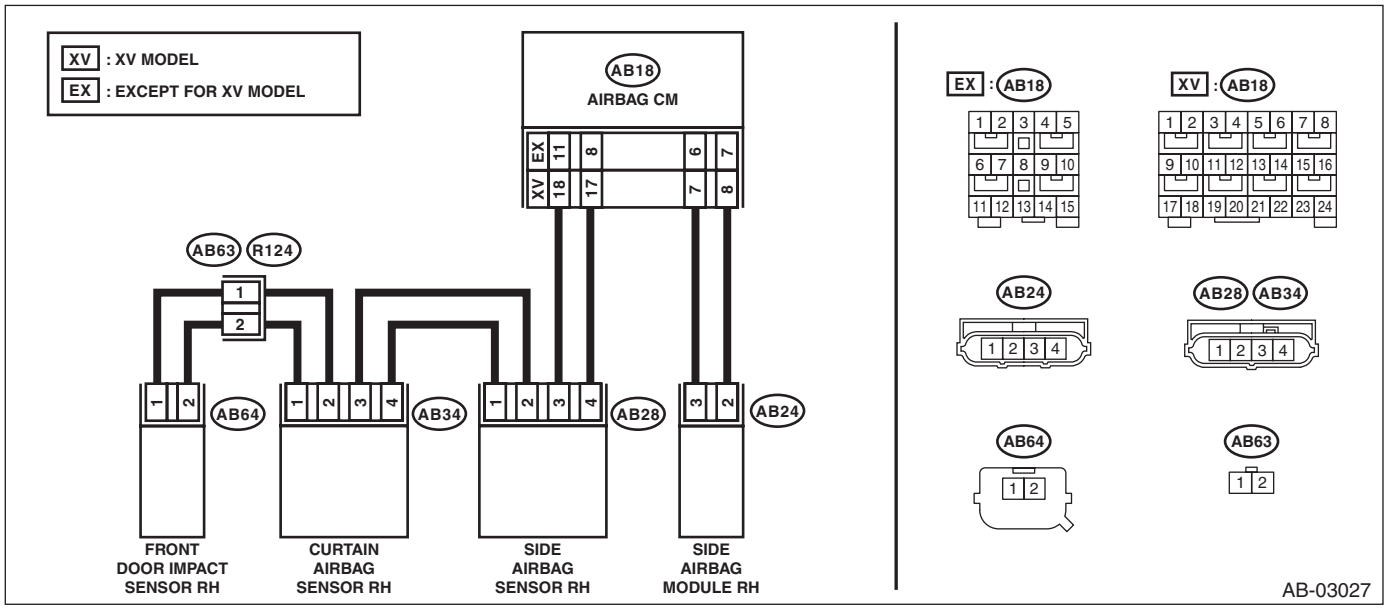

	Step	Check	Yes	No
1	**CHECK POOR CONTACT OF CONNECTORS.** Check for poor contact of the connectors between the airbag control module, side airbag module RH and the side airbag sensor RH.	Is there poor contact?	Replace the airbag rear harness along with body harness.	Go to step **2**.
2	**CHECK SIDE AIRBAG MODULE.** 1) Turn the ignition switch to OFF, disconnect the battery ground cable, and wait for 60 seconds or more. NOTE: For HEV model, disconnect the negative terminal from 12 volt auxiliary battery, and disconnect the ground terminal from 12V engine restart battery sensor for 12 volt engine restart battery. <Ref. to NT-5, BATTERY, NOTE, Note.> 2) Disconnect the connector (AB24) from the side airbag module (RH), and connect the connector (1AJ) in the test harness AJ to connector (AB24). 3) Connect the airbag resistor to the test harness AJ connector (3AJ). 4) Connect the battery ground terminal and turn the ignition switch to ON.	Does the airbag warning light illuminate for 6 seconds and go off?	Replace the side airbag module (RH). <Ref. to AB-66, REMOVAL, Side Airbag Module.>	Go to step **3**.

	Step	Check	Yes	No
3	**CHECK AIRBAG REAR HARNESS (SIDE AIRBAG MODULE HARNESS RH).** 1) Turn the ignition switch to OFF, disconnect the battery ground cable, and wait for 60 seconds or more. NOTE: For HEV model, disconnect the negative terminal from 12 volt auxiliary battery, and disconnect the ground terminal from 12V engine restart battery sensor for 12 volt engine restart battery. <Ref. to NT-5, BATTERY, NOTE, Note.> 2) Disconnect the connector (AB26) from seat belt pretensioner (RH). 3) Disconnect the connector (AB33) from curtain airbag module (RH). 4) Disconnect the airbag resistor from test harness AJ. 5) Disconnect the connectors (AB6, AB17, AB18) from airbag control module. 6) Connect the connector (1AG) in the test harness AG to the connectors (AB6, AB17, AB18). NOTE: Except for XV models, connect test harness AH between the connectors (AB6, AB17, AB18) and (1AG). 7) Measure the resistance between connector in the test harness AG and connector in the test harness AJ. ***Connector & terminal*** ***XV model*** ***(5AG) No. 5 — (3AJ) No. 1:*** ***(5AG) No. 7 — (3AJ) No. 2:*** ***Except for XV model*** ***(4AG) No. 11 — (3AJ) No. 1:*** ***(4AG) No. 13 — (3AJ) No. 2:***	Is the resistance less than 10 Ω?	Go to step **4**.	Replace the airbag rear harness along with body harness.
4	**CHECK AIRBAG CONTROL MODULE.** 1) Connect all connectors. 2) Clear the memory. 3) Perform the Inspection Mode. 4) Read the DTC. (Current malfunction)	Is the same DTC displayed?	Replace the airbag control module. <Ref. to AB-78, Airbag Control Module.>	Go to step **5**.
5	**CHECK FOR ANY OTHER DTC ON DISPLAY.**	Is any other DTC displayed?	Check DTC using "List of Diagnostic Trouble Code (DTC)". <Ref. to AB(diag)-33, List of Diagnostic Trouble Code (DTC).>	Finish the diagnosis.

CT:DTC B1822 SHORT IN SIDE AIRBAG RH (TO GROUND)

DTC DETECTING CONDITION:

- Side airbag harness (RH) circuit is shorted to ground.
- Side airbag module (RH) is faulty.
- Airbag control module is faulty.

CAUTION:

Before performing diagnosis, refer to "CAUTION" in "General Description". <Ref. to AB(diag)-4, CAUTION, General Description.>

WIRING DIAGRAM:

Airbag system <Ref. to WI(w/o HEV)-30, WIRING DIAGRAM, Airbag System.> <Ref. to WI(HEV)-50, WIRING DIAGRAM, Airbag System.>

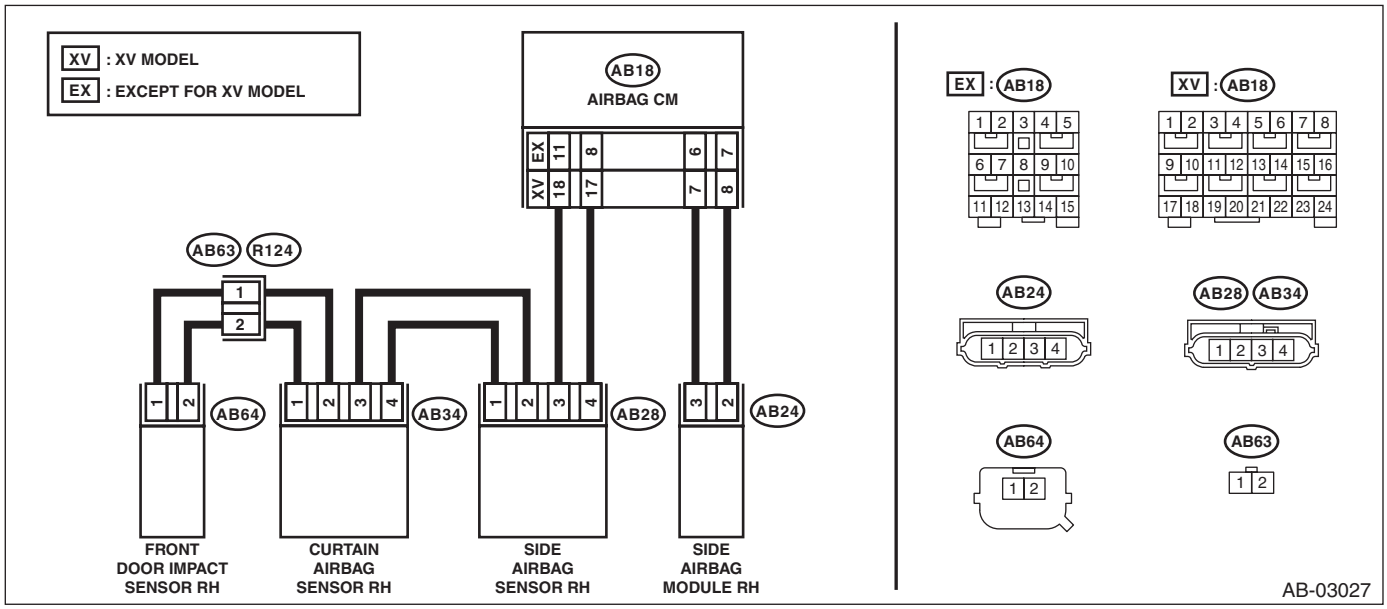

Step		Check	Yes	No
1	**CHECK POOR CONTACT OF CONNECTORS.** Check for poor contact of the connectors between the airbag control module, side airbag module RH and the side airbag sensor RH.	Is there poor contact?	Replace the airbag rear harness along with body harness.	Go to step **2**.
2	**CHECK SIDE AIRBAG MODULE.** 1) Turn the ignition switch to OFF, disconnect the battery ground cable, and wait for 60 seconds or more. NOTE: For HEV model, disconnect the negative terminal from 12 volt auxiliary battery, and disconnect the ground terminal from 12V engine restart battery sensor for 12 volt engine restart battery. <Ref. to NT-5, BATTERY, NOTE, Note.> 2) Disconnect the connector (AB24), and connect the connector (1AJ) in test harness AJ to connector (AB24). 3) Connect the airbag resistor to the test harness AJ connector (3AJ). 4) Connect the battery ground terminal and turn the ignition switch to ON.	Does the airbag warning light illuminate for six seconds and go off?	Replace the side airbag module (RH). <Ref. to AB-66, REMOVAL, Side Airbag Module.>	Go to step **3**.

	Step	Check	Yes	No
3	**CHECK AIRBAG REAR HARNESS (SIDE AIRBAG MODULE HARNESS RH).** 1) Turn the ignition switch to OFF, disconnect the battery ground cable, and wait for 60 seconds or more. NOTE: For HEV model, disconnect the negative terminal from 12 volt auxiliary battery, and disconnect the ground terminal from 12V engine restart battery sensor for 12 volt engine restart battery. <Ref. to NT-5, BATTERY, NOTE, Note.> 2) Disconnect the connector (AB26) from seat belt pretensioner (RH). 3) Disconnect the connector (AB33) from curtain airbag module (RH). 4) Disconnect the airbag resistor from test harness AJ. 5) Disconnect the connectors (AB6, AB17, AB18) from airbag control module. 6) Connect the connector (1AG) in the test harness AG to the connectors (AB6, AB17, AB18). NOTE: Except for XV models, connect test harness AH between the connectors (AB6, AB17, AB18) and (1AG). 7) Measure the resistance between connector (3AJ) in the test harness AJ and chassis ground. ***Connector & terminal*** ***(3AJ) No. 1 — Chassis ground:*** ***(3AJ) No. 2 — Chassis ground:***	Is the resistance 1 MΩ or more?	Go to step **4**.	Replace the airbag rear harness along with body harness.
4	**CHECK AIRBAG CONTROL MODULE.** 1) Connect all connectors. 2) Clear the memory. 3) Perform the Inspection Mode. 4) Read the DTC. (Current malfunction)	Is the same DTC displayed?	Replace the airbag control module. <Ref. to AB-78, Airbag Control Module.>	Go to step **5**.
5	**CHECK FOR ANY OTHER DTC ON DISPLAY.**	Is any other DTC displayed?	Check DTC using "List of Diagnostic Trouble Code (DTC)". <Ref. to AB(diag)-33, List of Diagnostic Trouble Code (DTC).>	Finish the diagnosis.

CU:DTC B1823 SHORT IN SIDE AIRBAG RH (TO +B)

DTC DETECTING CONDITION:

- Side airbag harness (RH) is shorted to power supply.
- Side airbag module (RH) is faulty.
- Airbag control module is faulty.

CAUTION:

Before performing diagnosis, refer to "CAUTION" in "General Description". <Ref. to AB(diag)-4, CAUTION, General Description.>

WIRING DIAGRAM:

Airbag system <Ref. to WI(w/o HEV)-30, WIRING DIAGRAM, Airbag System.> <Ref. to WI(HEV)-50, WIRING DIAGRAM, Airbag System.>

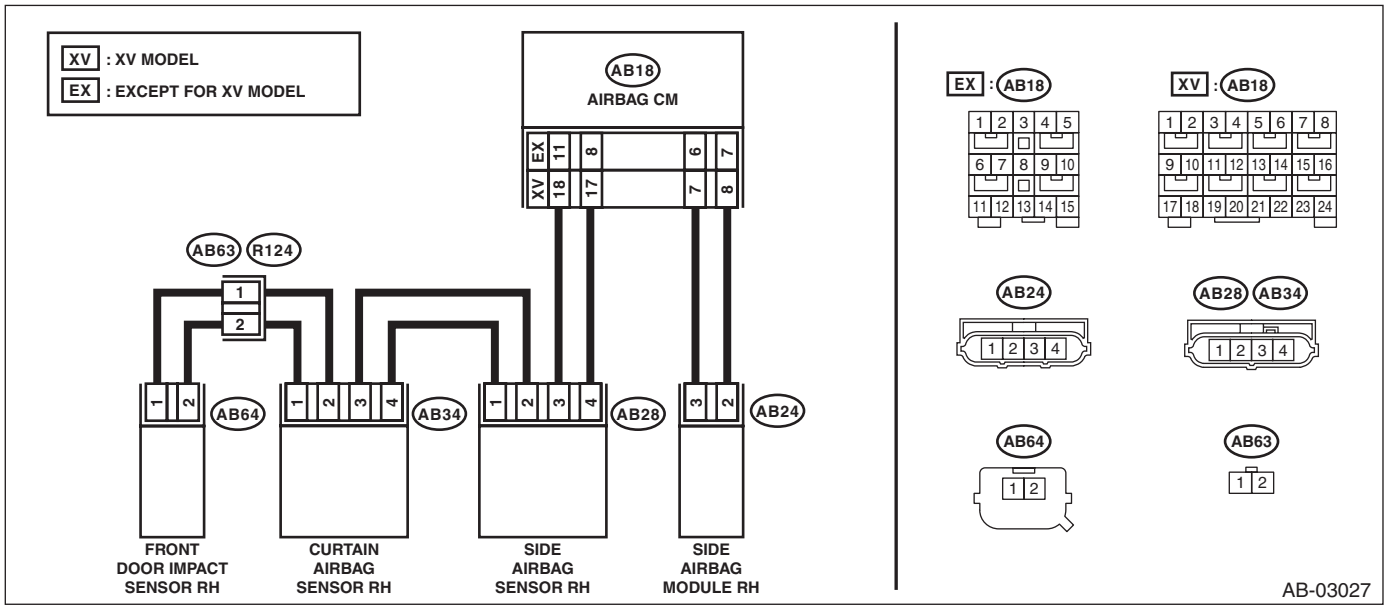

Step		Check	Yes	No
1	**CHECK POOR CONTACT OF CONNECTORS.** Check for poor contact of the connectors between the airbag control module, side airbag module RH and the side airbag sensor RH.	Is there poor contact?	Replace the airbag rear harness along with body harness.	Go to step **2**.
2	**CHECK SIDE AIRBAG MODULE.** 1) Turn the ignition switch to OFF, disconnect the battery ground cable, and wait for 60 seconds or more. NOTE: For HEV model, disconnect the negative terminal from 12 volt auxiliary battery, and disconnect the ground terminal from 12V engine restart battery sensor for 12 volt engine restart battery. <Ref. to NT-5, BATTERY, NOTE, Note.> 2) Disconnect the connector (AB24), and connect the connector (1AJ) in test harness AJ to connector (AB24). 3) Connect the airbag resistor to the test harness AJ connector (3AJ). 4) Connect the battery ground terminal and turn the ignition switch to ON.	Does the airbag warning light illuminate for six seconds and go off?	Replace the side airbag module (RH). <Ref. to AB-66, REMOVAL, Side Airbag Module.>	Go to step **3**.

	Step	Check	Yes	No
3	**CHECK AIRBAG REAR HARNESS (SIDE AIRBAG MODULE HARNESS RH).** 1) Turn the ignition switch to OFF, disconnect the battery ground cable, and wait for 60 seconds or more. NOTE: For HEV model, disconnect the negative terminal from 12 volt auxiliary battery, and disconnect the ground terminal from 12V engine restart battery sensor for 12 volt engine restart battery. <Ref. to NT-5, BATTERY, NOTE, Note.> 2) Disconnect the connector (AB26) from seat belt pretensioner (RH). 3) Disconnect the connector (AB33) from curtain airbag module (RH). 4) Disconnect the airbag resistor from test harness. 5) Disconnect the connectors (AB6, AB17, AB18) from airbag control module. 6) Connect the connector (1AG) in the test harness AG to the connectors (AB6, AB17, AB18). NOTE: Except for XV models, connect test harness AH between the connectors (AB6, AB17, AB18) and (1AG). 7) Connect the battery ground terminal and turn the ignition switch to ON. 8) Measure the voltage between connector (3AJ) in the test harness AJ and chassis ground. ***Connector & terminal*** ***(3AJ) No. 1 (+) — Chassis ground (–):*** ***(3AJ) No. 2 (+) — Chassis ground (–):***	Is the voltage less than 1 V?	Go to step **4**.	Replace the airbag rear harness along with body harness.
4	**CHECK AIRBAG CONTROL MODULE.** 1) Connect all connectors. 2) Clear the memory. 3) Perform the Inspection Mode. 4) Read the DTC. (Current malfunction)	Is the same DTC displayed?	Replace the airbag control module. <Ref. to AB-78, Airbag Control Module.>	Go to step **5**.
5	**CHECK FOR ANY OTHER DTC ON DISPLAY.**	Is any other DTC displayed?	Check DTC using "List of Diagnostic Trouble Code (DTC)". <Ref. to AB(diag)-33, List of Diagnostic Trouble Code (DTC).>	Finish the diagnosis.

CV:DTC B1825 SHORT IN SIDE AIRBAG LH

DTC DETECTING CONDITION:

- Side airbag harness (LH) circuit is shorted.
- Side airbag module (LH) is faulty.
- Airbag control module is faulty.

CAUTION:

Before performing diagnosis, refer to "CAUTION" in "General Description". <Ref. to AB(diag)-4, CAUTION, General Description.>

WIRING DIAGRAM:

Airbag system <Ref. to WI(w/o HEV)-30, WIRING DIAGRAM, Airbag System.> <Ref. to WI(HEV)-50, WIRING DIAGRAM, Airbag System.>

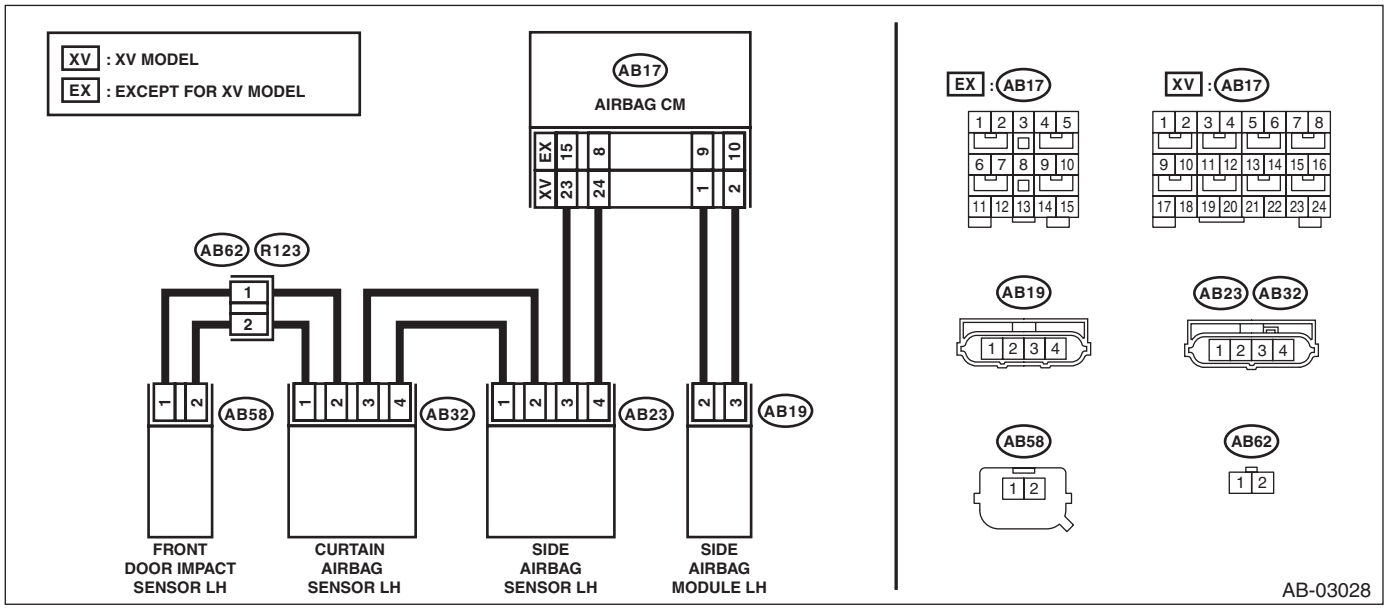

	Step	Check	Yes	No
1	**CHECK POOR CONTACT OF CONNECTORS.** Check for poor contact of the connectors between the airbag control module, side airbag module LH and the side airbag sensor LH.	Is there poor contact?	Replace the airbag rear harness along with body harness.	Go to step **2**.
2	**CHECK SIDE AIRBAG MODULE.** 1) Turn the ignition switch to OFF, disconnect the battery ground cable, and wait for 60 seconds or more. NOTE: For HEV model, disconnect the negative terminal from 12 volt auxiliary battery, and disconnect the ground terminal from 12V engine restart battery sensor for 12 volt engine restart battery. <Ref. to NT-5, BATTERY, NOTE, Note.> 2) Disconnect the connector (AB19) from the side airbag module (LH), and connect the connector (1AJ) in test harness AJ to the connector (AB19). 3) Connect the airbag resistor to the test harness AJ connector (3AJ). 4) Connect the battery ground terminal and turn the ignition switch to ON.	Does the airbag warning light illuminate for 6 seconds and go off?	Replace the side airbag module (LH). <Ref. to AB-66, REMOVAL, Side Airbag Module.>	Go to step **3**.

	Step	Check	Yes	No
3	**CHECK AIRBAG REAR HARNESS (SIDE AIRBAG MODULE HARNESS LH).** 1) Turn the ignition switch to OFF, disconnect the battery ground cable, and wait for 60 seconds or more. NOTE: For HEV model, disconnect the negative terminal from 12 volt auxiliary battery, and disconnect the ground terminal from 12V engine restart battery sensor for 12 volt engine restart battery. <Ref. to NT-5, BATTERY, NOTE, Note.> 2) Disconnect the connector (AB21) from seat belt pretensioner (LH). 3) Disconnect the connector (AB31) from curtain airbag module (LH). 4) Disconnect the airbag resistor from test harness AJ. 5) Disconnect the connectors (AB6, AB17, AB18) from airbag control module. 6) Connect the connector (1AG) in the test harness AG to the connectors (AB6, AB17, AB18). NOTE: Except for XV models, connect test harness AH between the connectors (AB6, AB17, AB18) and (1AG). 7) Measure the resistance between connector (3AJ) terminals in test harness AJ. ***Connector & terminal (3AJ) No. 1 — (3AJ) No. 2:***	Is the resistance 1 MΩ or more?	Go to step **4**.	Replace the airbag rear harness along with body harness.
4	**CHECK AIRBAG CONTROL MODULE.** 1) Connect all connectors. 2) Clear the memory. 3) Perform the Inspection Mode. 4) Read the DTC. (Current malfunction)	Is the same DTC displayed?	Replace the airbag control module. <Ref. to AB-78, Airbag Control Module.>	Go to step **5**.
5	**CHECK FOR ANY OTHER DTC ON DISPLAY.**	Is any other DTC displayed?	Check DTC using "List of Diagnostic Trouble Code (DTC)". <Ref. to AB(diag)-33, List of Diagnostic Trouble Code (DTC).>	Finish the diagnosis.

CW:DTC B1826 OPEN IN SIDE AIRBAG LH

DTC DETECTING CONDITION:

- Side airbag harness (LH) circuit is open.
- Side airbag module (LH) is faulty.
- Airbag control module is faulty.

CAUTION:

Before performing diagnosis, refer to "CAUTION" in "General Description". <Ref. to AB(diag)-4, CAUTION, General Description.>

WIRING DIAGRAM:

Airbag system <Ref. to WI(w/o HEV)-30, WIRING DIAGRAM, Airbag System.> <Ref. to WI(HEV)-50, WIRING DIAGRAM, Airbag System.>

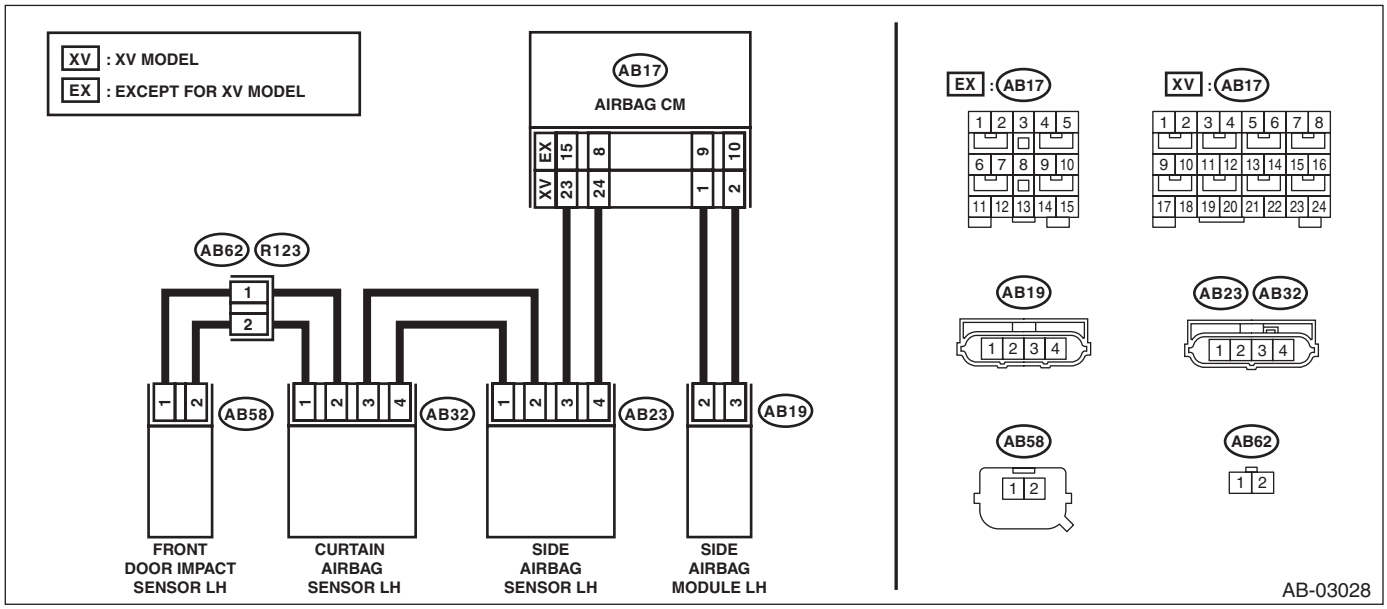

	Step	Check	Yes	No
1	**CHECK POOR CONTACT OF CONNECTORS.** Check for poor contact of the connectors between the airbag control module, side airbag module LH and the side airbag sensor LH.	Is there poor contact?	Replace the airbag rear harness along with body harness.	Go to step **2**.
2	**CHECK SIDE AIRBAG MODULE.** 1) Turn the ignition switch to OFF, disconnect the battery ground cable, and wait for 60 seconds or more. NOTE: For HEV model, disconnect the negative terminal from 12 volt auxiliary battery, and disconnect the ground terminal from 12V engine restart battery sensor for 12 volt engine restart battery. <Ref. to NT-5, BATTERY, NOTE, Note.> 2) Disconnect the connector (AB19) from the side airbag module (LH), and connect the connector (1AJ) in test harness AJ to the connector (AB19). 3) Connect the airbag resistor to the test harness AJ connector (3AJ). 4) Connect the battery ground terminal and turn the ignition switch to ON.	Does the airbag warning light illuminate for 6 seconds and go off?	Replace the side airbag module (LH). <Ref. to AB-66, REMOVAL, Side Airbag Module.>	Go to step **3**.

	Step	Check	Yes	No
3	**CHECK AIRBAG REAR HARNESS (SIDE AIRBAG MODULE HARNESS LH).** 1) Turn the ignition switch to OFF, disconnect the battery ground cable, and wait for 60 seconds or more. NOTE: For HEV model, disconnect the negative terminal from 12 volt auxiliary battery, and disconnect the ground terminal from 12V engine restart battery sensor for 12 volt engine restart battery. <Ref. to NT-5, BATTERY, NOTE, Note.> 2) Disconnect the connector (AB21) from seat belt pretensioner (LH). 3) Disconnect the connector (AB31) from curtain airbag module (LH). 4) Disconnect the airbag resistor from test harness AJ. 5) Disconnect the connectors (AB6, AB17, AB18) from airbag control module. 6) Connect the connector (1AG) in the test harness AG to the connectors (AB6, AB17, AB18). NOTE: Except for XV models, connect test harness AH between the connectors (AB6, AB17, AB18) and (1AG). 7) Measure the resistance between connector (4AG) or (5AG) in the test harness AG and connector (3AJ) in the test harness AJ. ***Connector & terminal*** ***XV model*** ***(5AG) No. 1 — (3AJ) No. 2:*** ***(5AG) No. 3 — (3AJ) No. 1:*** ***Except for XV model*** ***(4AG) No. 8 — (3AJ) No. 2:*** ***(4AG) No. 10 — (3AJ) No. 1:***	Is the resistance less than 10 Ω?	Go to step **4**.	Replace the airbag rear harness along with body harness.
4	**CHECK AIRBAG CONTROL MODULE.** 1) Connect all connectors. 2) Clear the memory. 3) Perform the Inspection Mode. 4) Read the DTC. (Current malfunction)	Is the same DTC displayed?	Replace the airbag control module. <Ref. to AB-78, Airbag Control Module.>	Go to step **5**.
5	**CHECK FOR ANY OTHER DTC ON DISPLAY.**	Is any other DTC displayed?	Check DTC using "List of Diagnostic Trouble Code (DTC)". <Ref. to AB(diag)-33, List of Diagnostic Trouble Code (DTC).>	Finish the diagnosis.

CX:DTC B1827 SHORT IN SIDE AIRBAG LH (TO GROUND)

DTC DETECTING CONDITION:

- Side airbag harness (LH) circuit is shorted to ground.
- Side airbag module (LH) is faulty.
- Airbag control module is faulty.

CAUTION:

Before performing diagnosis, refer to "CAUTION" in "General Description". <Ref. to AB(diag)-4, CAUTION, General Description.>

WIRING DIAGRAM:

Airbag system <Ref. to WI(w/o HEV)-30, WIRING DIAGRAM, Airbag System.> <Ref. to WI(HEV)-50, WIRING DIAGRAM, Airbag System.>

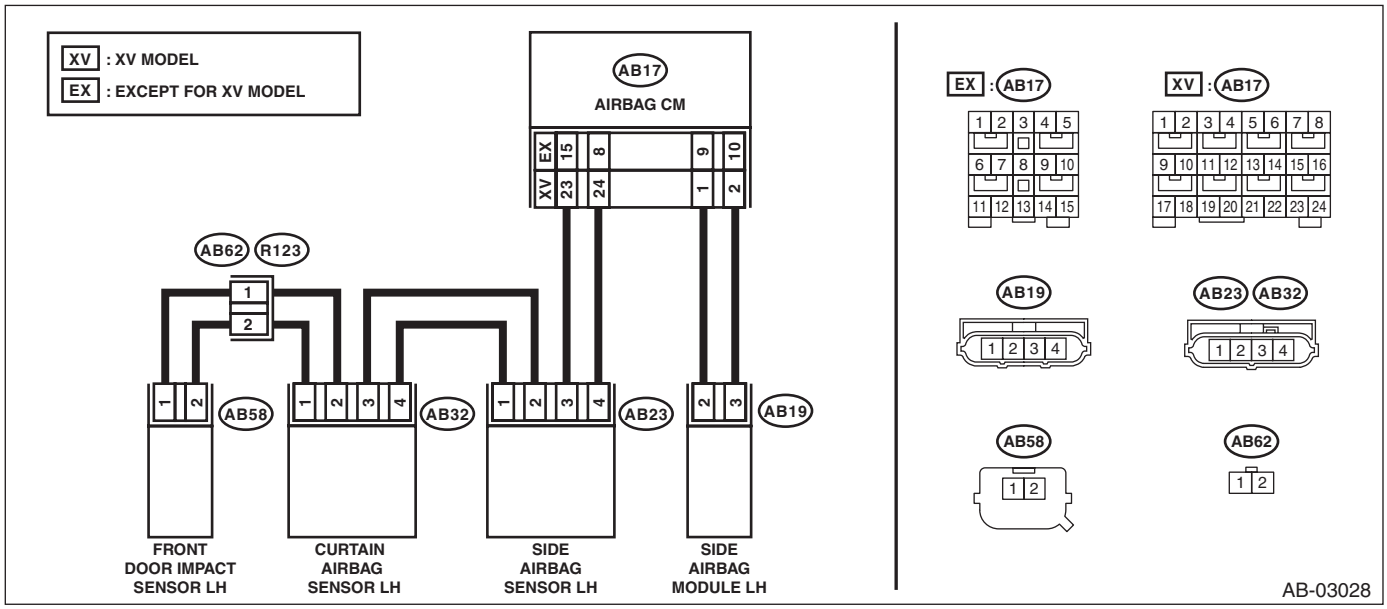

	Step	Check	Yes	No
1	**CHECK POOR CONTACT OF CONNECTORS.** Check for poor contact of the connectors between the airbag control module, side airbag module LH and the side airbag sensor LH.	Is there poor contact?	Replace the airbag rear harness along with body harness.	Go to step **2**.
2	**CHECK SIDE AIRBAG MODULE.** 1) Turn the ignition switch to OFF, disconnect the battery ground cable, and wait for 60 seconds or more. NOTE: For HEV model, disconnect the negative terminal from 12 volt auxiliary battery, and disconnect the ground terminal from 12V engine restart battery sensor for 12 volt engine restart battery. <Ref. to NT-5, BATTERY, NOTE, Note.> 2) Disconnect the connector (AB19), and connect the connector (1AJ) in test harness AJ to connector (AB19). 3) Connect the airbag resistor to the test harness AJ connector (3AJ). 4) Connect the battery ground terminal and turn the ignition switch to ON.	Does the airbag warning light illuminate for six seconds and go off?	Replace the side airbag module (LH). <Ref. to AB-66, REMOVAL, Side Airbag Module.>	Go to step **3**.

	Step	Check	Yes	No
3	**CHECK AIRBAG REAR HARNESS (SIDE AIRBAG MODULE HARNESS LH).** 1) Turn the ignition switch to OFF, disconnect the battery ground cable, and wait for 60 seconds or more. NOTE: For HEV model, disconnect the negative terminal from 12 volt auxiliary battery, and disconnect the ground terminal from 12V engine restart battery sensor for 12 volt engine restart battery. <Ref. to NT-5, BATTERY, NOTE, Note.> 2) Disconnect the connector (AB21) from seat belt pretensioner (LH). 3) Disconnect the connector (AB31) from curtain airbag module (LH). 4) Disconnect the airbag resistor from test harness. 5) Disconnect the connectors (AB6, AB17, AB18) from airbag control module. 6) Connect the connector (1AG) in the test harness AG to the connectors (AB6, AB17, AB18). NOTE: Except for XV models, connect test harness AH between the connectors (AB6, AB17, AB18) and (1AG). 7) Measure the resistance between connector (3AJ) in the test harness AJ and chassis ground. ***Connector & terminal*** ***(3AJ) No. 1 — Chassis ground:*** ***(3AJ) No. 2 — Chassis ground:***	Is the resistance 1 MΩ or more?	Go to step **4**.	Replace the airbag rear harness along with body harness.
4	**CHECK AIRBAG CONTROL MODULE.** 1) Connect all connectors. 2) Clear the memory. 3) Perform the Inspection Mode. 4) Read the DTC. (Current malfunction)	Is the same DTC displayed?	Replace the airbag control module. <Ref. to AB-78, Airbag Control Module.>	Go to step **5**.
5	**CHECK FOR ANY OTHER DTC ON DISPLAY.**	Is any other DTC displayed?	Check DTC using "List of Diagnostic Trouble Code (DTC)". <Ref. to AB(diag)-33, List of Diagnostic Trouble Code (DTC).>	Finish the diagnosis.

CY:DTC B1828 SHORT IN SIDE AIRBAG LH (TO +B)

DTC DETECTING CONDITION:

- Side airbag harness (LH) is shorted to power supply.
- Side airbag module (LH) is faulty.
- Airbag control module is faulty.

CAUTION:

Before performing diagnosis, refer to "CAUTION" in "General Description". <Ref. to AB(diag)-4, CAUTION, General Description.>

WIRING DIAGRAM:

Airbag system <Ref. to WI(w/o HEV)-30, WIRING DIAGRAM, Airbag System.> <Ref. to WI(HEV)-50, WIRING DIAGRAM, Airbag System.>

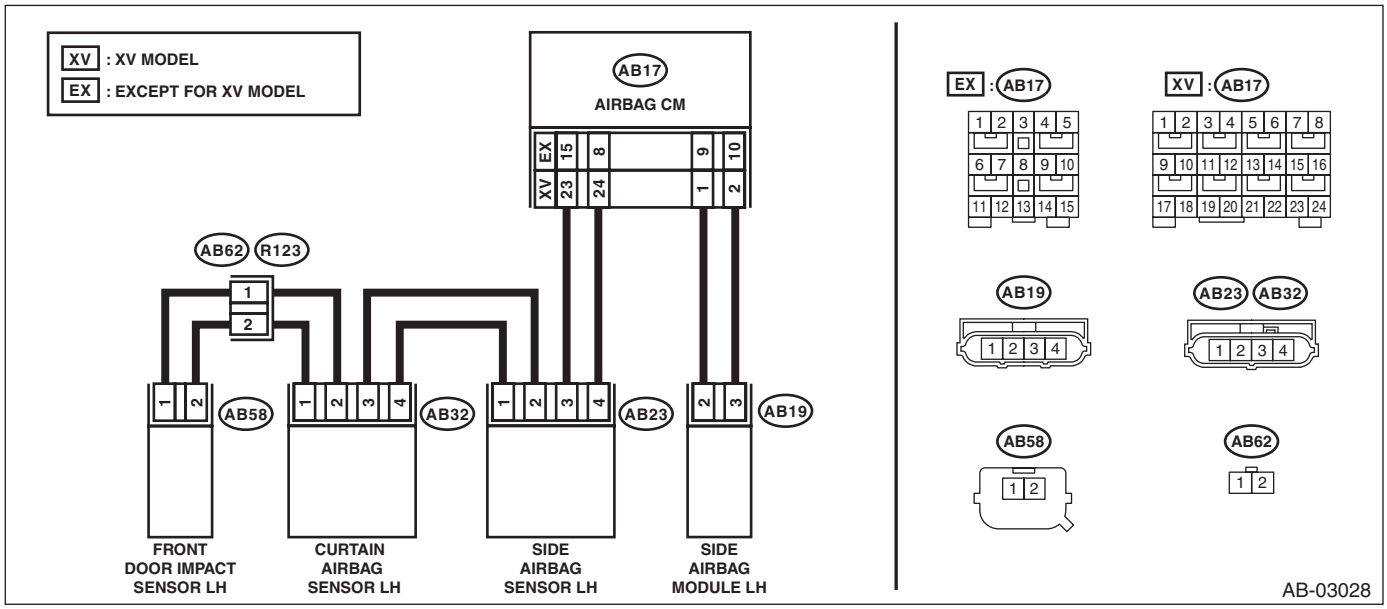

	Step	Check	Yes	No
1	**CHECK POOR CONTACT OF CONNECTORS.** Check for poor contact of the connectors between the airbag control module, side airbag module LH and the side airbag sensor LH.	Is there poor contact?	Replace the airbag rear harness along with body harness.	Go to step **2**.
2	**CHECK SIDE AIRBAG MODULE.** 1) Turn the ignition switch to OFF, disconnect the battery ground cable, and wait for 60 seconds or more. NOTE: For HEV model, disconnect the negative terminal from 12 volt auxiliary battery, and disconnect the ground terminal from 12V engine restart battery sensor for 12 volt engine restart battery. <Ref. to NT-5, BATTERY, NOTE, Note.> 2) Disconnect the connector (AB19), and connect the connector (1AJ) in test harness AJ to connector (AB19). 3) Connect the airbag resistor to the test harness AJ connector (3AJ). 4) Connect the battery ground terminal and turn the ignition switch to ON.	Does the airbag warning light illuminate for six seconds and go off?	Replace the side airbag module (LH). <Ref. to AB-66, REMOVAL, Side Airbag Module.>	Go to step **3**.

	Step	Check	Yes	No
3	**CHECK AIRBAG REAR HARNESS (SIDE AIRBAG MODULE HARNESS LH).** 1) Turn the ignition switch to OFF, disconnect the battery ground cable, and wait for 60 seconds or more. NOTE: For HEV model, disconnect the negative terminal from 12 volt auxiliary battery, and disconnect the ground terminal from 12V engine restart battery sensor for 12 volt engine restart battery. <Ref. to NT-5, BATTERY, NOTE, Note.> 2) Disconnect the connector (AB21) from seat belt pretensioner (LH). 3) Disconnect the connector (AB31) from curtain airbag module (LH). 4) Disconnect the airbag resistor from test harness. 5) Disconnect the connectors (AB6, AB17, AB18) from airbag control module. 6) Connect the connector (1AG) in the test harness AG to the connectors (AB6, AB17, AB18). NOTE: Except for XV models, connect test harness AH between the connectors (AB6, AB17, AB18) and (1AG). 7) Connect the battery ground terminal and turn the ignition switch to ON. 8) Measure the voltage between connector (3AJ) in the test harness AJ and chassis ground. ***Connector & terminal*** ***(3AJ) No. 1 (+) — Chassis ground (–):*** ***(3AJ) No. 2 (+) — Chassis ground (–):***	Is the voltage less than 1 V?	Go to step **4**.	Replace the airbag rear harness along with body harness.
4	**CHECK AIRBAG CONTROL MODULE.** 1) Connect all connectors. 2) Clear the memory. 3) Perform the Inspection Mode. 4) Read the DTC. (Current malfunction)	Is the same DTC displayed?	Replace the airbag control module. <Ref. to AB-78, Airbag Control Module.>	Go to step **5**.
5	**CHECK FOR ANY OTHER DTC ON DISPLAY.**	Is any other DTC displayed?	Check DTC using "List of Diagnostic Trouble Code (DTC)". <Ref. to AB(diag)-33, List of Diagnostic Trouble Code (DTC).>	Finish the diagnosis.

CZ:DTC B1830 SHORT IN CURTAIN AIRBAG RH SQUIB CIRCUIT

DTC DETECTING CONDITION:

- Curtain airbag harness (RH) circuit is shorted.
- Curtain airbag module (RH) is faulty.
- Airbag control module is faulty.

CAUTION:

Before performing diagnosis, refer to "CAUTION" in "General Description". <Ref. to AB(diag)-4, CAUTION, General Description.>

WIRING DIAGRAM:

Airbag system <Ref. to WI(w/o HEV)-30, WIRING DIAGRAM, Airbag System.> <Ref. to WI(HEV)-50, WIRING DIAGRAM, Airbag System.>

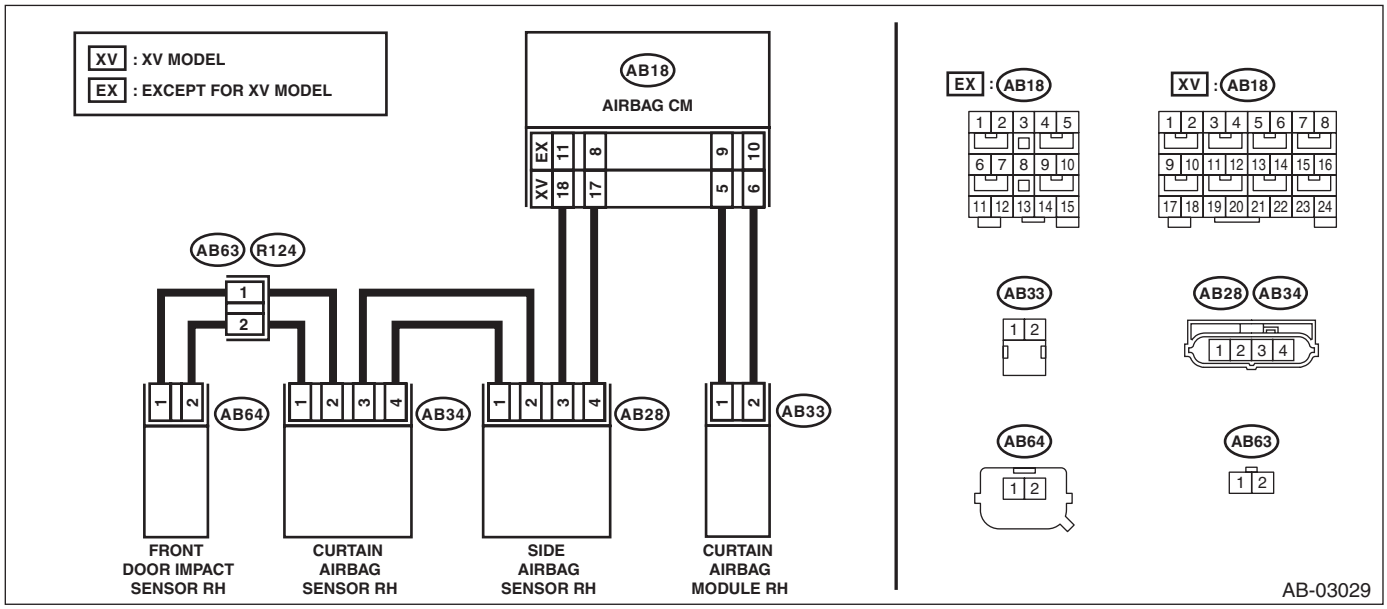

	Step	Check	Yes	No
1	**CHECK POOR CONTACT OF CONNECTORS.** Check for poor contact of the connectors between the airbag control module, curtain airbag module RH and the curtain airbag sensor RH.	Is there poor contact?	Replace the airbag rear harness along with body harness.	Go to step **2**.
2	**CHECK CURTAIN AIRBAG MODULE.** 1) Turn the ignition switch to OFF, disconnect the battery ground cable, and wait for 60 seconds or more. NOTE: For HEV model, disconnect the negative terminal from 12 volt auxiliary battery, and disconnect the ground terminal from 12V engine restart battery sensor for 12 volt engine restart battery. <Ref. to NT-5, BATTERY, NOTE, Note.> 2) Disconnect the connector (AB33) from curtain airbag module (RH). 3) Connect the connector (1N) in the test harness N to the connector (AB33). 4) Connect the airbag resistor to the connector (2N) of test harness N. 5) Connect the battery ground terminal and turn the ignition switch to ON.	Does the airbag warning light illuminate for 6 seconds and go off?	Replace the curtain airbag module (RH). <Ref. to AB-74, Curtain Airbag Module.>	Go to step **3**.

	Step	Check	Yes	No
3	**CHECK AIRBAG REAR HARNESS (CURTAIN AIRBAG MODULE HARNESS RH).** 1) Turn the ignition switch to OFF, disconnect the battery ground cable, and wait for 60 seconds or more. NOTE: For HEV model, disconnect the negative terminal from 12 volt auxiliary battery, and disconnect the ground terminal from 12V engine restart battery sensor for 12 volt engine restart battery. <Ref. to NT-5, BATTERY, NOTE, Note.> 2) Disconnect the connector (AB26) from seat belt pretensioner (RH). 3) Disconnect connector (AB24) from side airbag module (RH). 4) Disconnect the airbag resistor from test harness N. 5) Disconnect the connectors (AB6, AB17, AB18) from airbag control module. 6) Connect the connector (1AG) in the test harness AG to the connectors (AB6, AB17, AB18). NOTE: Except for XV models, connect test harness AH between the connectors (AB6, AB17, AB18) and (1AG). 7) Measure the resistance between connector (2N) terminals in test harness N. ***Connector & terminal (2N) No. 1 — (2N) No. 2:***	Is the resistance 1 MΩ or more?	Go to step **4**.	Replace the airbag rear harness along with body harness.
4	**CHECK AIRBAG CONTROL MODULE.** 1) Connect all connectors. 2) Clear the memory. 3) Perform the Inspection Mode. 4) Read the DTC. (Current malfunction)	Is the same DTC displayed?	Replace the airbag control module. <Ref. to AB-78, Airbag Control Module.>	Go to step **5**.
5	**CHECK FOR ANY OTHER DTC ON DISPLAY.**	Is any other DTC displayed?	Check DTC using "List of Diagnostic Trouble Code (DTC)". <Ref. to AB(diag)-33, List of Diagnostic Trouble Code (DTC).>	Finish the diagnosis.

DA:DTC B1831 OPEN IN CURTAIN AIRBAG RH SQUIB CIRCUIT

DTC DETECTING CONDITION:

- Curtain airbag harness (RH) circuit is open.
- Curtain airbag module (RH) is faulty.
- Airbag control module is faulty.

CAUTION:

Before performing diagnosis, refer to "CAUTION" in "General Description". <Ref. to AB(diag)-4, CAUTION, General Description.>

WIRING DIAGRAM:

Airbag system <Ref. to WI(w/o HEV)-30, WIRING DIAGRAM, Airbag System.> <Ref. to WI(HEV)-50, WIRING DIAGRAM, Airbag System.>

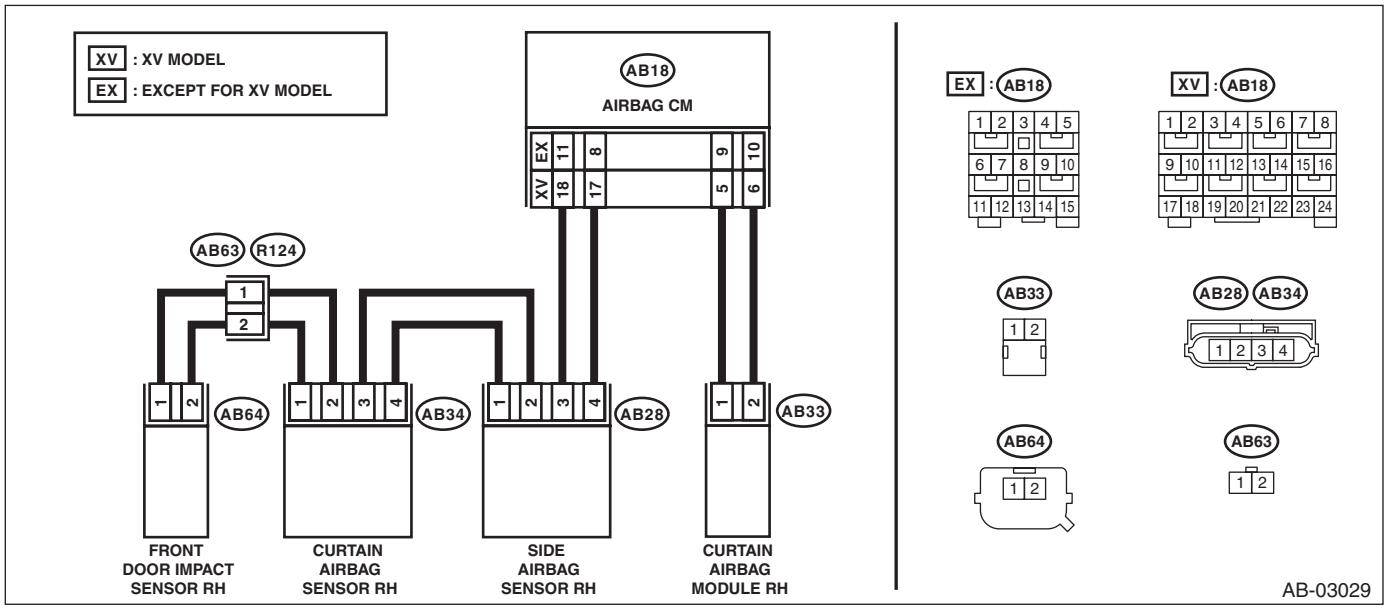

	Step	Check	Yes	No
1	**CHECK POOR CONTACT OF CONNECTORS.** Check for poor contact of the connectors between the airbag control module, curtain airbag module RH and the curtain airbag sensor RH.	Is there poor contact?	Replace the airbag rear harness along with body harness.	Go to step **2**.
2	**CHECK CURTAIN AIRBAG MODULE.** 1) Turn the ignition switch to OFF, disconnect the battery ground cable, and wait for 60 seconds or more. NOTE: For HEV model, disconnect the negative terminal from 12 volt auxiliary battery, and disconnect the ground terminal from 12V engine restart battery sensor for 12 volt engine restart battery. <Ref. to NT-5, BATTERY, NOTE, Note.> 2) Disconnect the connector (AB33) from curtain airbag module (RH). 3) Connect the connector (1N) in the test harness N to the connector (AB33). 4) Connect the airbag resistor to the connector (2N) of test harness N. 5) Connect the battery ground terminal and turn the ignition switch to ON.	Does the airbag warning light illuminate for 6 seconds and go off?	Replace the curtain airbag module (RH). <Ref. to AB-74, Curtain Airbag Module.>	Go to step **3**.

	Step	Check	Yes	No
3	**CHECK AIRBAG REAR HARNESS (CURTAIN AIRBAG MODULE HARNESS RH).** 1) Turn the ignition switch to OFF, disconnect the battery ground cable, and wait for 60 seconds or more. NOTE: For HEV model, disconnect the negative terminal from 12 volt auxiliary battery, and disconnect the ground terminal from 12V engine restart battery sensor for 12 volt engine restart battery. <Ref. to NT-5, BATTERY, NOTE, Note.> 2) Disconnect the connector (AB26) from seat belt pretensioner (RH). 3) Disconnect connector (AB24) from side airbag module (RH). 4) Disconnect the airbag resistor from test harness N. 5) Disconnect the connectors (AB6, AB17, AB18) from airbag control module. 6) Connect the connector (1AG) in the test harness AG to the connectors (AB6, AB17, AB18). NOTE: Except for XV models, connect test harness AH between the connectors (AB6, AB17, AB18) and (1AG). 7) Measure the resistance between connector (5AG) or (6AG) in the test harness AG and connector (2N) in the test harness N. ***Connector & terminal*** ***XV model*** ***(6AG) No. 8 — (2N) No. 1:*** ***(6AG) No. 6 — (2N) No. 2:*** ***Except for XV model*** ***(5AG) No. 6 — (2N) No. 2:*** ***(5AG) No. 12 — (2N) No. 1:***	Is the resistance less than 10 Ω?	Go to step **4**.	Replace the airbag rear harness along with body harness.
4	**CHECK AIRBAG CONTROL MODULE.** 1) Connect all connectors. 2) Clear the memory. 3) Perform the Inspection Mode. 4) Read the DTC. (Current malfunction)	Is the same DTC displayed?	Replace the airbag control module. <Ref. to AB-78, Airbag Control Module.>	Go to step **5**.
5	**CHECK FOR ANY OTHER DTC ON DISPLAY.**	Is any other DTC displayed?	Check DTC using "List of Diagnostic Trouble Code (DTC)". <Ref. to AB(diag)-33, List of Diagnostic Trouble Code (DTC).>	Finish the diagnosis.

DB:DTC B1832 SHORT IN CURTAIN AIRBAG RH SQUIB CIRCUIT (TO GROUND)

DTC DETECTING CONDITION:

- Curtain airbag harness (RH) circuit is shorted to ground.
- Curtain airbag module (RH) is faulty.
- Airbag control module is faulty.

CAUTION:

Before performing diagnosis, refer to "CAUTION" in "General Description". <Ref. to AB(diag)-4, CAUTION, General Description.>

WIRING DIAGRAM:

Airbag system <Ref. to WI(w/o HEV)-30, WIRING DIAGRAM, Airbag System.> <Ref. to WI(HEV)-50, WIRING DIAGRAM, Airbag System.>

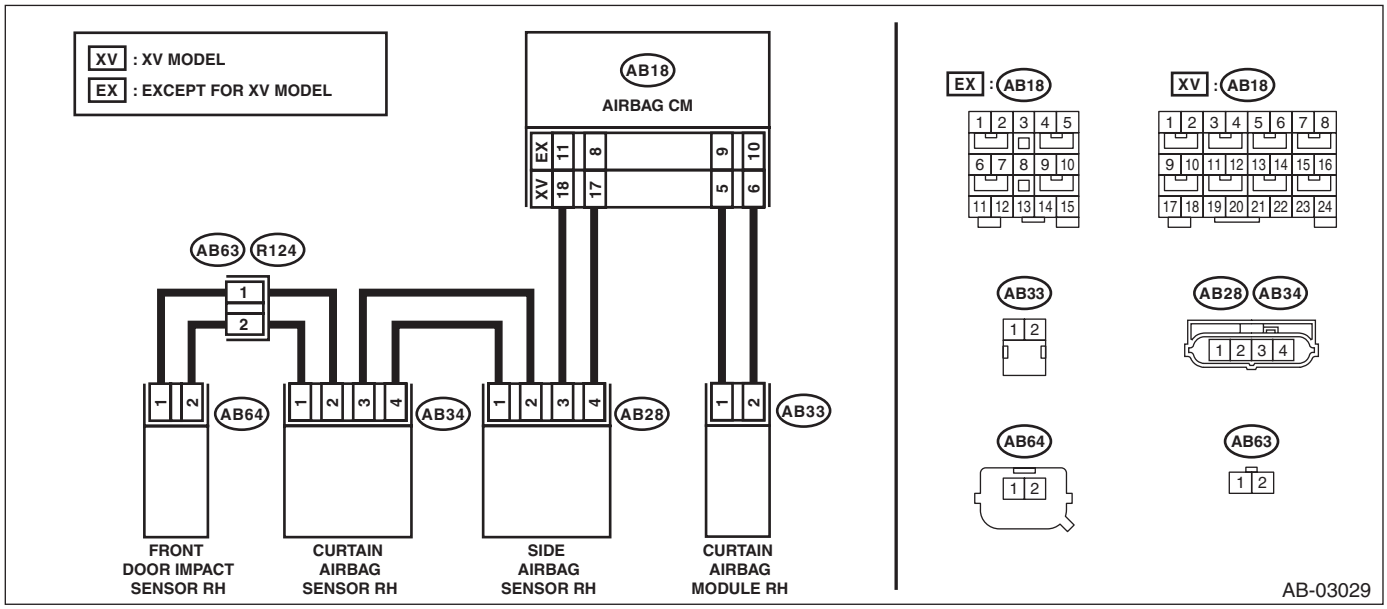

	Step	Check	Yes	No
1	**CHECK POOR CONTACT OF CONNECTORS.** Check for poor contact of the connectors between the airbag control module, curtain airbag module RH and the curtain airbag sensor RH.	Is there poor contact?	Replace the airbag rear harness along with body harness.	Go to step **2**.
2	**CHECK CURTAIN AIRBAG MODULE.** 1) Turn the ignition switch to OFF, disconnect the battery ground cable, and wait for 60 seconds or more. NOTE: For HEV model, disconnect the negative terminal from 12 volt auxiliary battery, and disconnect the ground terminal from 12V engine restart battery sensor for 12 volt engine restart battery. <Ref. to NT-5, BATTERY, NOTE, Note.> 2) Disconnect the connector (AB33), and connect the connector (1N) in test harness N to connector (AB33). 3) Connect the airbag resistor to the connector (2N) of test harness N. 4) Connect the battery ground terminal and turn the ignition switch to ON.	Does the airbag warning light illuminate for six seconds and go off?	Replace the curtain airbag module (RH). <Ref. to AB-74, Curtain Airbag Module.>	Go to step **3**.

	Step	Check	Yes	No
3	**CHECK AIRBAG REAR HARNESS (CURTAIN AIRBAG MODULE HARNESS RH).** 1) Turn the ignition switch to OFF, disconnect the battery ground cable, and wait for 60 seconds or more. NOTE: For HEV model, disconnect the negative terminal from 12 volt auxiliary battery, and disconnect the ground terminal from 12V engine restart battery sensor for 12 volt engine restart battery. <Ref. to NT-5, BATTERY, NOTE, Note.> 2) Disconnect the connector (AB26) from seat belt pretensioner (RH). 3) Disconnect connector (AB24) from side airbag module (RH). 4) Disconnect the airbag resistor from test harness N. 5) Disconnect the connectors (AB6, AB17, AB18) from airbag control module. 6) Connect the connector (1AG) in the test harness AG to the connectors (AB6, AB17, AB18). NOTE: For XV models, connect test harness AH between the connectors (AB6, AB17, AB18) and (1AG). 7) Measure the resistance between connector (2N) in the test harness N and chassis ground. ***Connector & terminal*** ***(2N) No. 1 — Chassis ground:*** ***(2N) No. 2 — Chassis ground:***	Is the resistance 1 MΩ or more?	Go to step **4**.	Replace the airbag rear harness along with body harness.
4	**CHECK AIRBAG CONTROL MODULE.** 1) Connect all connectors. 2) Clear the memory. 3) Perform the Inspection Mode. 4) Read the DTC. (Current malfunction)	Is the same DTC displayed?	Replace the airbag control module. <Ref. to AB-78, Airbag Control Module.>	Go to step **5**.
5	**CHECK FOR ANY OTHER DTC ON DISPLAY.**	Is any other DTC displayed?	Check DTC using "List of Diagnostic Trouble Code (DTC)". <Ref. to AB(diag)-33, List of Diagnostic Trouble Code (DTC).>	Finish the diagnosis.

DC:DTC B1833 SHORT IN CURTAIN SHIELD AIRBAG RH SQUIB CIRCUIT (TO +B)

DTC DETECTING CONDITION:

- Curtain airbag harness (RH) is shorted to power supply.
- Curtain airbag module (RH) is faulty.
- Airbag control module is faulty.

CAUTION:

Before performing diagnosis, refer to "CAUTION" in "General Description". <Ref. to AB(diag)-4, CAUTION, General Description.>

WIRING DIAGRAM:

Airbag system <Ref. to WI(w/o HEV)-30, WIRING DIAGRAM, Airbag System.> <Ref. to WI(HEV)-50, WIRING DIAGRAM, Airbag System.>

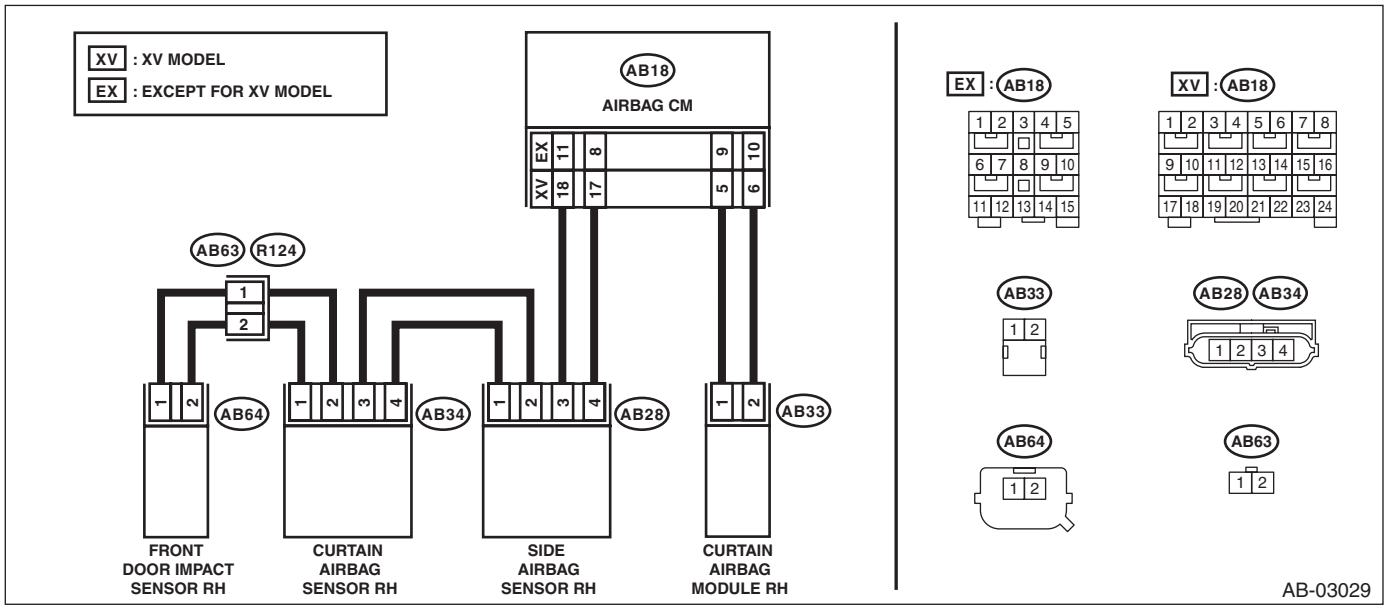

	Step	Check	Yes	No
1	**CHECK POOR CONTACT OF CONNECTORS.** Check for poor contact of the connectors between the airbag control module, curtain airbag module RH and the curtain airbag sensor RH.	Is there poor contact?	Replace the airbag rear harness along with body harness.	Go to step **2**.
2	**CHECK CURTAIN AIRBAG MODULE.** 1) Turn the ignition switch to OFF, disconnect the battery ground cable, and wait for 60 seconds or more. NOTE: For HEV model, disconnect the negative terminal from 12 volt auxiliary battery, and disconnect the ground terminal from 12V engine restart battery sensor for 12 volt engine restart battery. <Ref. to NT-5, BATTERY, NOTE, Note.> 2) Disconnect the connector (AB33), and connect the connector (1N) in test harness N to connector (AB33). 3) Connect the airbag resistor to the connector (2N) of test harness N. 4) Connect the battery ground terminal and turn the ignition switch to ON.	Does the airbag warning light illuminate for six seconds and go off?	Replace the curtain airbag module (RH). <Ref. to AB-74, Curtain Airbag Module.>	Go to step **3**.

	Step	Check	Yes	No
3	**CHECK AIRBAG REAR HARNESS (CURTAIN AIRBAG MODULE HARNESS RH).** 1) Turn the ignition switch to OFF, disconnect the battery ground cable, and wait for 60 seconds or more. NOTE: For HEV model, disconnect the negative terminal from 12 volt auxiliary battery, and disconnect the ground terminal from 12V engine restart battery sensor for 12 volt engine restart battery. <Ref. to NT-5, BATTERY, NOTE, Note.> 2) Disconnect the connector (AB26) from seat belt pretensioner (RH). 3) Disconnect connector (AB24) from side airbag module (RH). 4) Disconnect the airbag resistor from test harness N. 5) Disconnect the connectors (AB6, AB17, AB18) from airbag control module. 6) Connect the connector (1AG) in the test harness AG to the connectors (AB6, AB17, AB18). NOTE: Except for XV models, connect test harness AH between the connectors (AB6, AB17, AB18) and (1AG). 7) Connect the battery ground terminal and turn the ignition switch to ON. 8) Measure the voltage between connector (2N) in the test harness N and chassis ground. ***Connector & terminal*** ***(2N) No. 1 (+) — Chassis ground (–):*** ***(2N) No. 2 (+) — Chassis ground (–):***	Is the voltage less than 1 V?	Go to step **4**.	Replace the airbag rear harness along with body harness.
4	**CHECK AIRBAG CONTROL MODULE.** 1) Connect all connectors. 2) Clear the memory. 3) Perform the Inspection Mode. 4) Read the DTC. (Current malfunction)	Is the same DTC displayed?	Replace the airbag control module. <Ref. to AB-78, Airbag Control Module.>	Go to step **5**.
5	**CHECK FOR ANY OTHER DTC ON DISPLAY.**	Is any other DTC displayed?	Check DTC using "List of Diagnostic Trouble Code (DTC)". <Ref. to AB(diag)-33, List of Diagnostic Trouble Code (DTC).>	Finish the diagnosis.

DD:DTC B1835 SHORT IN CURTAIN AIRBAG LH SQUIB CIRCUIT

DTC DETECTING CONDITION:

- Curtain airbag harness (LH) circuit is shorted.
- Curtain airbag module (LH) is faulty.
- Airbag control module is faulty.

CAUTION:

Before performing diagnosis, refer to "CAUTION" in "General Description". <Ref. to AB(diag)-4, CAUTION, General Description.>

WIRING DIAGRAM:

Airbag system <Ref. to WI(w/o HEV)-30, WIRING DIAGRAM, Airbag System.> <Ref. to WI(HEV)-50, WIRING DIAGRAM, Airbag System.>

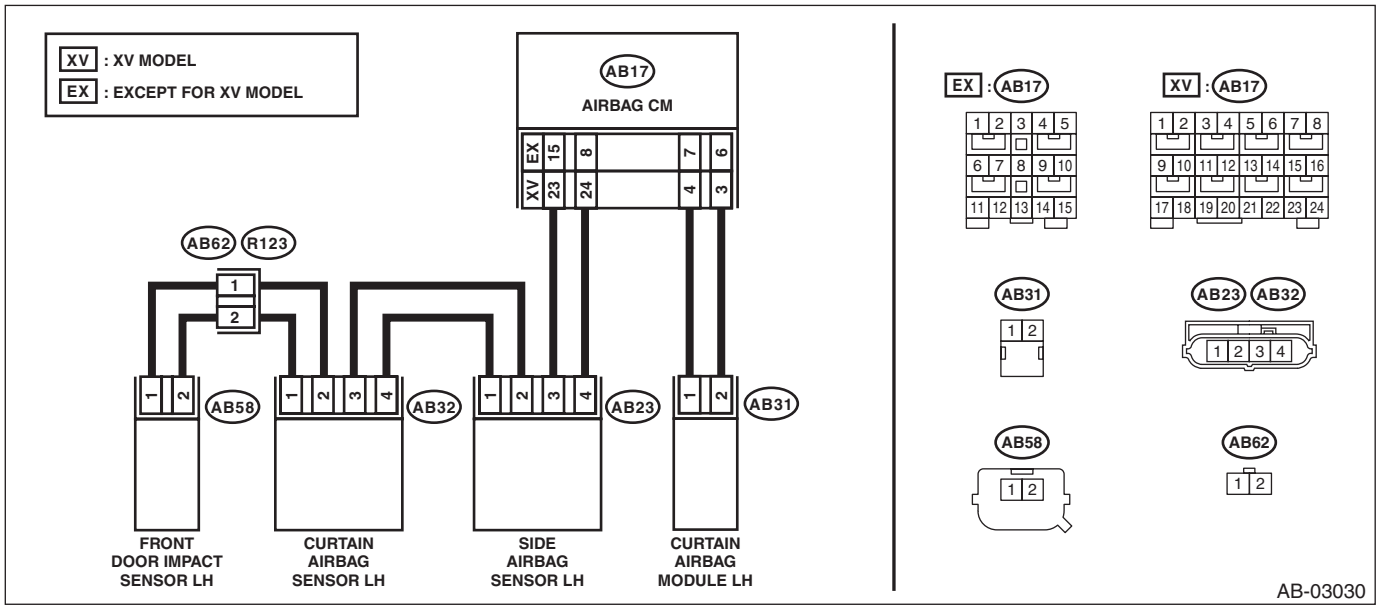

Step		Check	Yes	No
1	**CHECK POOR CONTACT OF CONNECTORS.** Check for poor contact of the connectors between the airbag control module, curtain airbag module LH and the curtain airbag sensor LH.	Is there poor contact?	Replace the airbag rear harness along with body harness.	Go to step **2**.
2	**CHECK CURTAIN AIRBAG MODULE.** 1) Turn the ignition switch to OFF, disconnect the battery ground cable, and wait for 60 seconds or more. NOTE: For HEV model, disconnect the negative terminal from 12 volt auxiliary battery, and disconnect the ground terminal from 12V engine restart battery sensor for 12 volt engine restart battery. <Ref. to NT-5, BATTERY, NOTE, Note.> 2) Disconnect the connector (AB31) from curtain airbag module (LH). 3) Connect the connector (1N) in the test harness N to the connector (AB31). 4) Connect the airbag resistor to the connector (2N) of test harness N. 5) Connect the battery ground terminal and turn the ignition switch to ON.	Does the airbag warning light illuminate for 6 seconds and go off?	Replace the curtain airbag module (LH). <Ref. to AB-74, Curtain Airbag Module.>	Go to step **3**.

	Step	Check	Yes	No
3	**CHECK AIRBAG REAR HARNESS (CURTAIN AIRBAG MODULE HARNESS LH).** 1) Turn the ignition switch to OFF, disconnect the battery ground cable, and wait for 60 seconds or more. NOTE: For HEV model, disconnect the negative terminal from 12 volt auxiliary battery, and disconnect the ground terminal from 12V engine restart battery sensor for 12 volt engine restart battery. <Ref. to NT-5, BATTERY, NOTE, Note.> 2) Disconnect the connector (AB21) from seat belt pretensioner (LH). 3) Disconnect connector (AB19) from side airbag module (LH). 4) Disconnect the airbag resistor from test harness N. 5) Disconnect the connectors (AB6, AB17, AB18) from airbag control module. 6) Connect the connector (1AG) in the test harness AG to the connectors (AB6, AB17, AB18). NOTE: Except for XV models, connect test harness AH between the connectors (AB6, AB17, AB18) and (1AG). 7) Measure the resistance between connector (2N) terminals in test harness N. ***Connector & terminal (2N) No. 1 — (2N) No. 2:***	Is the resistance 1 MΩ or more?	Go to step **4**.	Replace the airbag rear harness along with body harness.
4	**CHECK AIRBAG CONTROL MODULE.** 1) Connect all connectors. 2) Clear the memory. 3) Perform the Inspection Mode. 4) Read the DTC. (Current malfunction)	Is the same DTC displayed?	Replace the airbag control module. <Ref. to AB-78, Airbag Control Module.>	Go to step **5**.
5	**CHECK FOR ANY OTHER DTC ON DISPLAY.**	Is any other DTC displayed?	Check DTC using "List of Diagnostic Trouble Code (DTC)". <Ref. to AB(diag)-33, List of Diagnostic Trouble Code (DTC).>	Finish the diagnosis.

DE:DTC B1836 OPEN IN CURTAIN AIRBAG LH SQUIB CIRCUIT

DTC DETECTING CONDITION:

- Curtain airbag harness (LH) circuit is open.
- Curtain airbag module (LH) is faulty.
- Airbag control module is faulty.

CAUTION:

Before performing diagnosis, refer to "CAUTION" in "General Description". <Ref. to AB(diag)-4, CAUTION, General Description.>

WIRING DIAGRAM:

Airbag system <Ref. to WI(w/o HEV)-30, WIRING DIAGRAM, Airbag System.> <Ref. to WI(HEV)-50, WIRING DIAGRAM, Airbag System.>

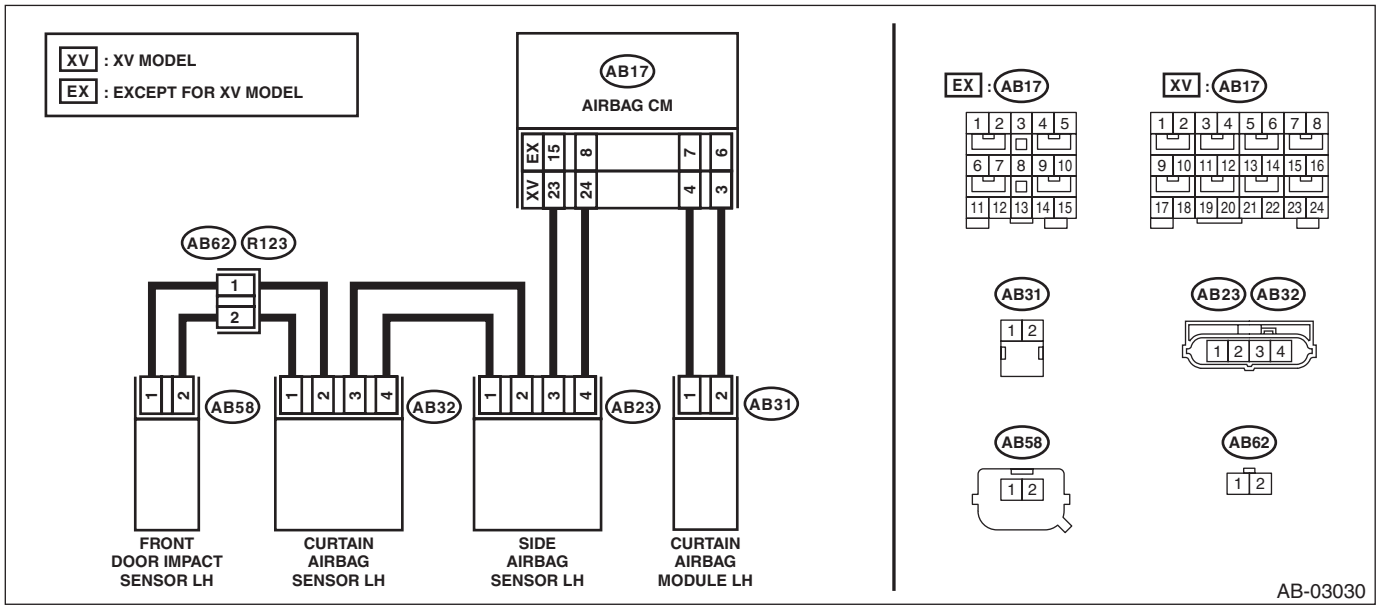

Step		Check	Yes	No
1	**CHECK POOR CONTACT OF CONNECTORS.** Check for poor contact of the connectors between the airbag control module, curtain airbag module LH and the curtain airbag sensor LH.	Is there poor contact?	Replace the airbag rear harness along with body harness.	Go to step **2**.
2	**CHECK CURTAIN AIRBAG MODULE.** 1) Turn the ignition switch to OFF, disconnect the battery ground cable, and wait for 60 seconds or more. NOTE: For HEV model, disconnect the negative terminal from 12 volt auxiliary battery, and disconnect the ground terminal from 12V engine restart battery sensor for 12 volt engine restart battery. <Ref. to NT-5, BATTERY, NOTE, Note.> 2) Disconnect the connector (AB31) from curtain airbag module (LH). 3) Connect the connector (1N) in the test harness N to the connector (AB31). 4) Connect the airbag resistor to the connector (2N) of test harness N. 5) Connect the battery ground terminal and turn the ignition switch to ON.	Does the airbag warning light illuminate for 6 seconds and go off?	Replace the curtain airbag module (LH). <Ref. to AB-74, Curtain Airbag Module.>	Go to step **3**.

	Step	Check	Yes	No
3	**CHECK AIRBAG REAR HARNESS (CURTAIN AIRBAG MODULE HARNESS LH).** 1) Turn the ignition switch to OFF, disconnect the battery ground cable, and wait for 60 seconds or more. NOTE: For HEV model, disconnect the negative terminal from 12 volt auxiliary battery, and disconnect the ground terminal from 12V engine restart battery sensor for 12 volt engine restart battery. <Ref. to NT-5, BATTERY, NOTE, Note.> 2) Disconnect the connector (AB21) from seat belt pretensioner (LH). 3) Disconnect connector (AB19) from side airbag module (LH). 4) Disconnect the airbag resistor from test harness N. 5) Disconnect the connectors (AB6, AB17, AB18) from airbag control module. 6) Connect the connector (1AG) in the test harness AG to the connectors (AB6, AB17, AB18). NOTE: Except for XV models, connect test harness AH between the connectors (AB6, AB17, AB18) and (1AG). 7) Measure the resistance between connector (5AG) or (6AG) in the test harness AG and connector (2N) in the test harness N. ***Connector & terminal*** ***XV model*** ***(6AG) No. 1 — (2N) No. 2:*** ***(6AG) No. 3 — (2N) No. 1:*** ***Except for XV model*** ***(5AG) No. 2 — (2N) No. 2:*** ***(5AG) No. 4 — (2N) No. 1:***	Is the resistance less than 10 Ω?	Go to step **4**.	Replace the airbag rear harness along with body harness.
4	**CHECK AIRBAG CONTROL MODULE.** 1) Connect all connectors. 2) Clear the memory. 3) Perform the Inspection Mode. 4) Read the DTC. (Current malfunction)	Is the same DTC displayed?	Replace the airbag control module. <Ref. to AB-78, Airbag Control Module.>	Go to step **5**.
5	**CHECK FOR ANY OTHER DTC ON DISPLAY.**	Is any other DTC displayed?	Check DTC using "List of Diagnostic Trouble Code (DTC)". <Ref. to AB(diag)-33, List of Diagnostic Trouble Code (DTC).>	Finish the diagnosis.

DF:DTC B1837 SHORT IN CURTAIN AIRBAG LH SQUIB CIRCUIT (TO GROUND)

DTC DETECTING CONDITION:

- Curtain airbag harness (LH) circuit is shorted to ground.
- Curtain airbag module (LH) is faulty.
- Airbag control module is faulty.

CAUTION:

Before performing diagnosis, refer to "CAUTION" in "General Description". <Ref. to AB(diag)-4, CAUTION, General Description.>

WIRING DIAGRAM:

Airbag system <Ref. to WI(w/o HEV)-30, WIRING DIAGRAM, Airbag System.> <Ref. to WI(HEV)-50, WIRING DIAGRAM, Airbag System.>

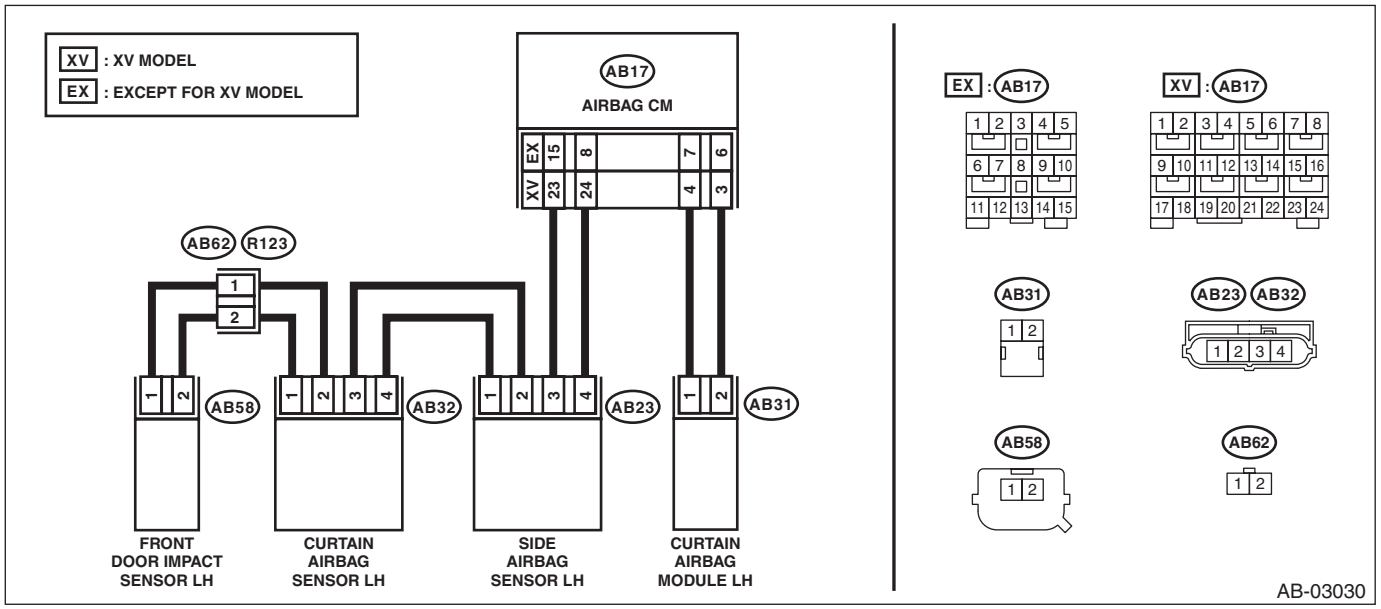

Step		Check	Yes	No
1	**CHECK POOR CONTACT OF CONNECTORS.** Check for poor contact of the connectors between the airbag control module, curtain airbag module LH and the curtain airbag sensor LH.	Is there poor contact?	Replace the airbag rear harness along with body harness.	Go to step **2**.
2	**CHECK CURTAIN AIRBAG MODULE.** 1) Turn the ignition switch to OFF, disconnect the battery ground cable, and wait for 60 seconds or more. NOTE: For HEV model, disconnect the negative terminal from 12 volt auxiliary battery, and disconnect the ground terminal from 12V engine restart battery sensor for 12 volt engine restart battery. <Ref. to NT-5, BATTERY, NOTE, Note.> 2) Disconnect the connector (AB31), and connect the connector (1N) in test harness N to connector (AB31). 3) Connect the airbag resistor to the connector (2N) of test harness N. 4) Connect the battery ground terminal and turn the ignition switch to ON.	Does the airbag warning light illuminate for six seconds and go off?	Replace the curtain airbag module (LH). <Ref. to AB-74, Curtain Airbag Module.>	Go to step **3**.

	Step	Check	Yes	No
3	**CHECK AIRBAG REAR HARNESS (CURTAIN AIRBAG MODULE HARNESS LH).** 1) Turn the ignition switch to OFF, disconnect the battery ground cable, and wait for 60 seconds or more. NOTE: For HEV model, disconnect the negative terminal from 12 volt auxiliary battery, and disconnect the ground terminal from 12V engine restart battery sensor for 12 volt engine restart battery. <Ref. to NT-5, BATTERY, NOTE, Note.> 2) Disconnect the connector (AB21) from seat belt pretensioner (LH). 3) Disconnect connector (AB19) from side airbag module (LH). 4) Disconnect the airbag resistor from test harness N. 5) Disconnect the connectors (AB6, AB17, AB18) from airbag control module. 6) Connect the connector (1AG) in the test harness AG to the connectors (AB6, AB17, AB18). NOTE: Except for XV models, connect test harness AH between the connectors (AB6, AB17, AB18) and (1AG). 7) Measure the resistance between connector (2N) in the test harness N and chassis ground. ***Connector & terminal*** ***(2N) No. 1 — Chassis ground:*** ***(2N) No. 2 — Chassis ground:***	Is the resistance 1 MΩ or more?	Go to step **4**.	Replace the airbag rear harness along with body harness.
4	**CHECK AIRBAG CONTROL MODULE.** 1) Connect all connectors. 2) Clear the memory. 3) Perform the Inspection Mode. 4) Read the DTC. (Current malfunction)	Is the same DTC displayed?	Replace the airbag control module. <Ref. to AB-78, Airbag Control Module.>	Go to step **5**.
5	**CHECK FOR ANY OTHER DTC ON DISPLAY.**	Is any other DTC displayed?	Check DTC using "List of Diagnostic Trouble Code (DTC)". <Ref. to AB(diag)-33, List of Diagnostic Trouble Code (DTC).>	Finish the diagnosis.

DG:DTC B1838 SHORT IN CURTAIN SHIELD AIRBAG LH SQUIB CIRCUIT (TO +B)

DTC DETECTING CONDITION:

- Curtain airbag harness (LH) is shorted to power supply.
- Curtain airbag module (LH) is faulty.
- Airbag control module is faulty.

CAUTION:

Before performing diagnosis, refer to "CAUTION" in "General Description". <Ref. to AB(diag)-4, CAUTION, General Description.>

WIRING DIAGRAM:

Airbag system <Ref. to WI(w/o HEV)-30, WIRING DIAGRAM, Airbag System.> <Ref. to WI(HEV)-50, WIRING DIAGRAM, Airbag System.>

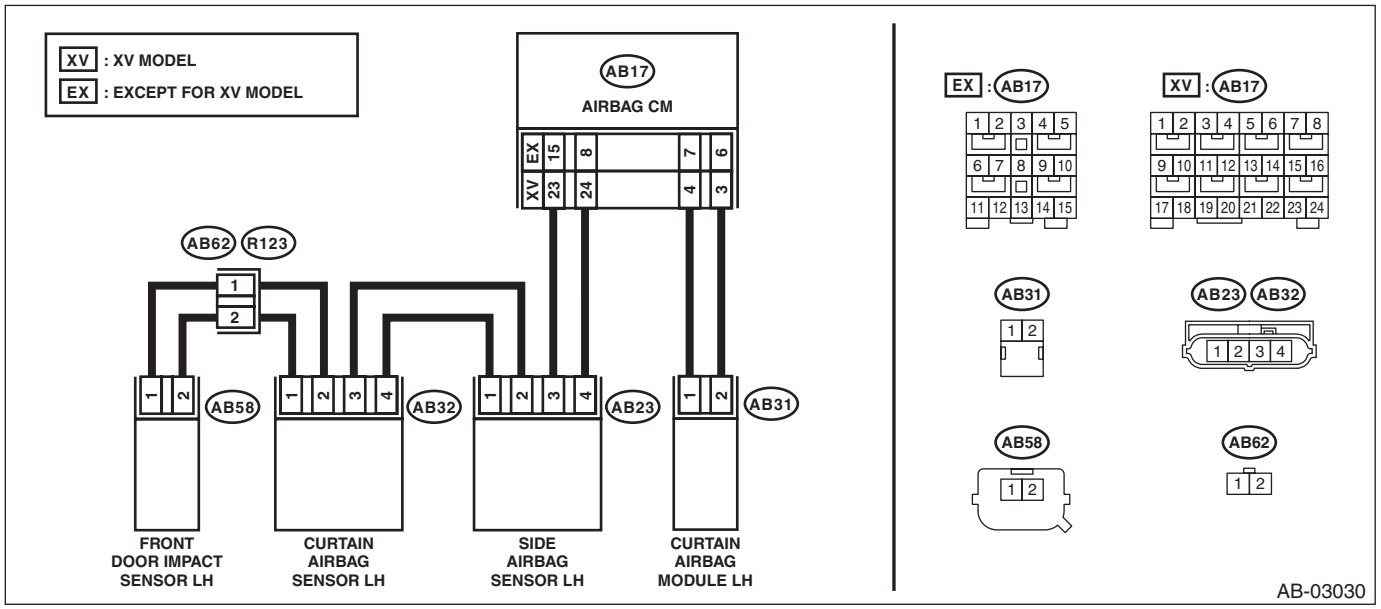

Step		Check	Yes	No
1	**CHECK POOR CONTACT OF CONNECTORS.** Check for poor contact of the connectors between the airbag control module, curtain airbag module LH and the curtain airbag sensor LH.	Is there poor contact?	Replace the airbag rear harness along with body harness.	Go to step **2**.
2	**CHECK CURTAIN AIRBAG MODULE.** 1) Turn the ignition switch to OFF, disconnect the battery ground cable, and wait for 60 seconds or more. NOTE: For HEV model, disconnect the negative terminal from 12 volt auxiliary battery, and disconnect the ground terminal from 12V engine restart battery sensor for 12 volt engine restart battery. <Ref. to NT-5, BATTERY, NOTE, Note.> 2) Disconnect the connector (AB31), and connect the connector (1N) in test harness N to connector (AB31). 3) Connect the airbag resistor to the connector (2N) of test harness N. 4) Connect the battery ground terminal and turn the ignition switch to ON.	Does the airbag warning light illuminate for six seconds and go off?	Replace the curtain airbag module (LH). <Ref. to AB-74, Curtain Airbag Module.>	Go to step **3**.

	Step	Check	Yes	No
3	**CHECK AIRBAG REAR HARNESS (CURTAIN AIRBAG MODULE HARNESS LH).** 1) Turn the ignition switch to OFF, disconnect the battery ground cable, and wait for 60 seconds or more. NOTE: For HEV model, disconnect the negative terminal from 12 volt auxiliary battery, and disconnect the ground terminal from 12V engine restart battery sensor for 12 volt engine restart battery. <Ref. to NT-5, BATTERY, NOTE, Note.> 2) Disconnect the connector (AB21) from seat belt pretensioner (LH). 3) Disconnect connector (AB19) from side airbag module (LH). 4) Disconnect the airbag resistor from test harness N. 5) Disconnect the connectors (AB6, AB17, AB18) from airbag control module. 6) Connect the connector (1AG) in the test harness AG to the connectors (AB6, AB17, AB18). NOTE: Except for XV models, connect test harness AH between the connectors (AB6, AB17, AB18) and (1AG). 7) Connect the battery ground terminal and turn the ignition switch to ON. 8) Measure the voltage between connector (2N) in the test harness N and chassis ground. ***Connector & terminal*** ***(2N) No. 1 (+) — Chassis ground (–):*** ***(2N) No. 2 (+) — Chassis ground (–):***	Is the voltage less than 1 V?	Go to step **4**.	Replace the airbag rear harness along with body harness.
4	**CHECK AIRBAG CONTROL MODULE.** 1) Connect all connectors. 2) Clear the memory. 3) Perform the Inspection Mode. 4) Read the DTC. (Current malfunction)	Is the same DTC displayed?	Replace the airbag control module. <Ref. to AB-78, Airbag Control Module.>	Go to step **5**.
5	**CHECK FOR ANY OTHER DTC ON DISPLAY.**	Is any other DTC displayed?	Check DTC using "List of Diagnostic Trouble Code (DTC)". <Ref. to AB(diag)-33, List of Diagnostic Trouble Code (DTC).>	Finish the diagnosis.

DH:DTC B1860 SHORT IN DRIVER'S KNEE AIRBAG

DTC DETECTING CONDITION:

- Airbag main harness circuit is shorted.
- Knee airbag module harness circuit is shorted.
- Knee airbag module is faulty.
- Airbag control module is faulty.

CAUTION:

Before performing diagnosis, refer to "CAUTION" in "General Description". <Ref. to AB(diag)-4, CAUTION, General Description.>

WIRING DIAGRAM:

Airbag system <Ref. to WI(w/o HEV)-30, WIRING DIAGRAM, Airbag System.> <Ref. to WI(HEV)-50, WIRING DIAGRAM, Airbag System.>

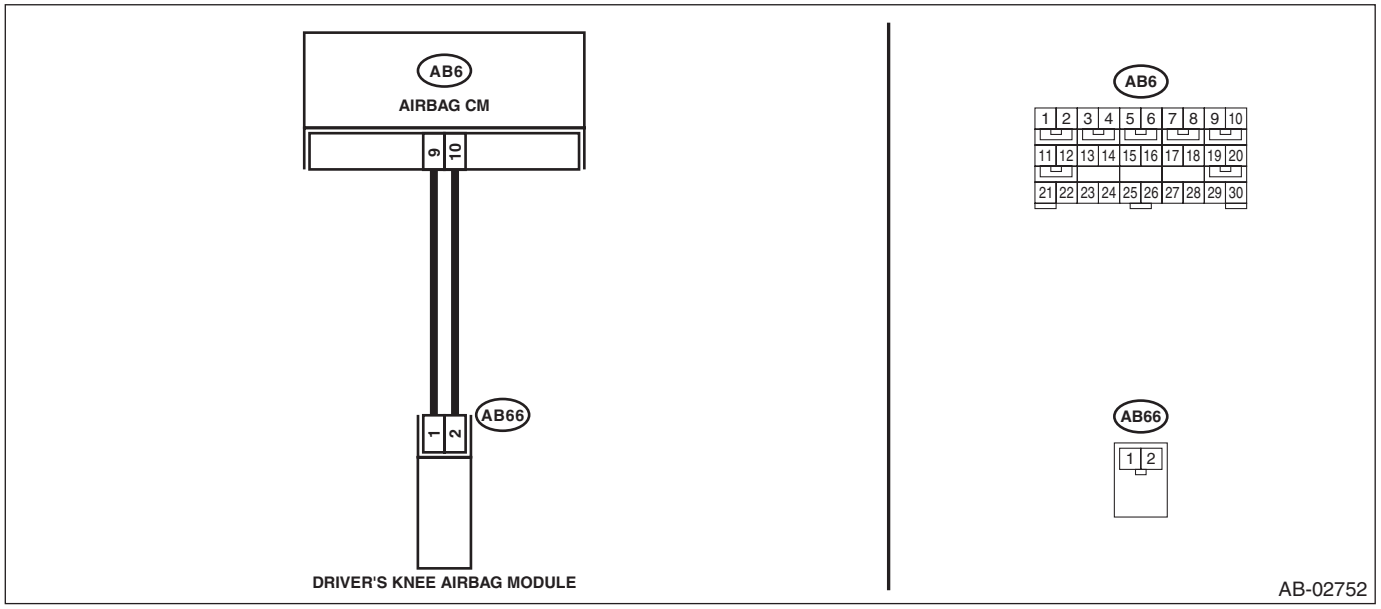

	Step	Check	Yes	No
1	**CHECK POOR CONTACT OF CONNECTORS.** Check for poor contact of the connectors between the airbag control module and the knee airbag module.	Is there poor contact?	Replace the airbag harness.	Go to step **2**.
2	**CHECK KNEE AIRBAG MODULE.** 1) Turn the ignition switch to OFF, disconnect the battery ground cable, and wait for 60 seconds or more. NOTE: For HEV model, disconnect the negative terminal from 12 volt auxiliary battery, and disconnect the ground terminal from 12V engine restart battery sensor for 12 volt engine restart battery. <Ref. to NT-5, BATTERY, NOTE, Note.> 2) Disconnect the connector (AB66) from knee airbag module. 3) Connect the connector (1N) in the test harness N to the connector (AB66). 4) Connect the airbag resistor to the connector (2N) of test harness N. 5) Connect the battery ground terminal and turn the ignition switch to ON.	Does the airbag warning light illuminate for six seconds and go off?	Replace the knee airbag module. <Ref. to AB-43, REMOVAL, Knee Airbag Module.>	Go to step **3**.

	Step	Check	Yes	No
3	**CHECK AIRBAG MAIN HARNESS (KNEE AIRBAG HARNESS).** 1) Turn the ignition switch to OFF, disconnect the battery ground cable, and wait for 60 seconds or more. NOTE: For HEV model, disconnect the negative terminal from 12 volt auxiliary battery, and disconnect the ground terminal from 12V engine restart battery sensor for 12 volt engine restart battery. <Ref. to NT-5, BATTERY, NOTE, Note.> 2) Disconnect the airbag resistor from test harness N. 3) Remove the instrument panel lower cover and column cover, and disconnect the connector (AB7) from (AB2). 4) Remove the console front panel and disconnect the connector (AB9). 5) Disconnect the connectors (AB6, AB17, AB18) from the airbag control module, and connect the connector (1AG) in the test harness AG to connectors (AB6, AB17, AB18). NOTE: Except for XV models, connect test harness AH between the connectors (AB6, AB17, AB18) and (1AG). 6) Measure the resistance between connector (3AG) terminals in test harness AG. ***Connector & terminal*** ***(3AG) No. 14 — (3AG) No. 16:***	Is the resistance 1 MΩ or more?	Go to step **4**.	Replace the airbag main harness along with body harness.
4	**CHECK AIRBAG CONTROL MODULE.** 1) Connect all connectors. 2) Clear the memory. 3) Perform the Inspection Mode. 4) Read the DTC. (Current malfunction)	Is the same DTC displayed?	Replace the airbag control module. <Ref. to AB-78, Airbag Control Module.>	Go to step **5**.
5	**CHECK FOR ANY OTHER DTC ON DISPLAY.**	Is any other DTC displayed?	Check DTC using "List of Diagnostic Trouble Code (DTC)". <Ref. to AB(diag)-33, List of Diagnostic Trouble Code (DTC).>	Finish the diagnosis.

DI: DTC B1861 OPEN IN DRIVER'S KNEE AIRBAG

DTC DETECTING CONDITION:

- Airbag main harness circuit is open.
- Knee airbag module harness circuit is open.
- Knee airbag module is faulty.
- Airbag control module is faulty.

CAUTION:

Before performing diagnosis, refer to "CAUTION" in "General Description". <Ref. to AB(diag)-4, CAUTION, General Description.>

WIRING DIAGRAM:

Airbag system <Ref. to WI(w/o HEV)-30, WIRING DIAGRAM, Airbag System.> <Ref. to WI(HEV)-50, WIRING DIAGRAM, Airbag System.>

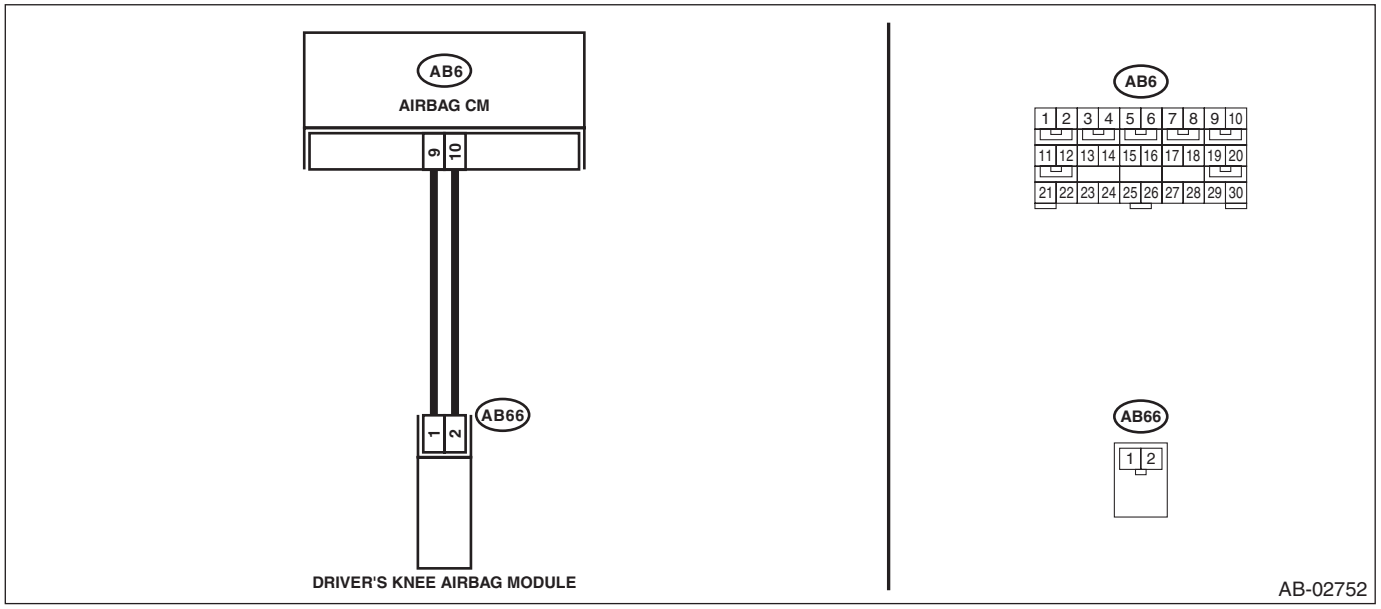

	Step	Check	Yes	No
1	**CHECK POOR CONTACT OF CONNECTORS.** Check for poor contact of the connectors between the airbag control module and the knee airbag module.	Is there poor contact?	Replace the airbag harness.	Go to step **2**.
2	**CHECK KNEE AIRBAG MODULE.** 1) Turn the ignition switch to OFF, disconnect the battery ground cable, and wait for 60 seconds or more. NOTE: For HEV model, disconnect the negative terminal from 12 volt auxiliary battery, and disconnect the ground terminal from 12V engine restart battery sensor for 12 volt engine restart battery. <Ref. to NT-5, BATTERY, NOTE, Note.> 2) Disconnect the connector (AB66) from knee airbag module. 3) Connect the connector (1N) in the test harness N to the connector (AB66). 4) Connect the airbag resistor to the connector (2N) of test harness N. 5) Connect the battery ground terminal and turn the ignition switch to ON.	Does the airbag warning light illuminate for six seconds and go off?	Replace the knee airbag module. <Ref. to AB-43, REMOVAL, Knee Airbag Module.>	Go to step **3**.

	Step	Check	Yes	No
3	**CHECK AIRBAG MAIN HARNESS (KNEE AIRBAG HARNESS).** 1) Turn the ignition switch to OFF, disconnect the battery ground cable, and wait for 60 seconds or more. NOTE: For HEV model, disconnect the negative terminal from 12 volt auxiliary battery, and disconnect the ground terminal from 12V engine restart battery sensor for 12 volt engine restart battery. <Ref. to NT-5, BATTERY, NOTE, Note.> 2) Disconnect the airbag resistor from test harness N. 3) Remove the instrument panel lower cover and column cover, and disconnect the connector (AB7) from (AB2). 4) Remove the console front panel and disconnect the connector (AB9). 5) Disconnect the connectors (AB6, AB17, AB18) from the airbag control module, and connect the connector (1AG) in the test harness AG to connectors (AB6, AB17, AB18). NOTE: Except for XV models, connect test harness AH between the connectors (AB6, AB17, AB18) and (1AG). 6) Measure the resistance between connector (3AG) in the test harness AG and connector (2N) in the test harness N. ***Connector & terminal*** ***(3AG) No. 14 — (2N) No. 2:*** ***(3AG) No. 16 — (2N) No. 1:***	Is the resistance less than 10 Ω?	Go to step **4**.	Replace the airbag main harness along with body harness.
4	**CHECK AIRBAG CONTROL MODULE.** 1) Connect all connectors. 2) Clear the memory. 3) Perform the Inspection Mode. 4) Read the DTC. (Current malfunction)	Is the same DTC displayed?	Replace the airbag control module. <Ref. to AB-78, Airbag Control Module.>	Go to step **5**.
5	**CHECK FOR ANY OTHER DTC ON DISPLAY.**	Is any other DTC displayed?	Check DTC using "List of Diagnostic Trouble Code (DTC)". <Ref. to AB(diag)-33, List of Diagnostic Trouble Code (DTC).>	Finish the diagnosis.

DJ:DTC B1862 SHORT IN DRIVER'S KNEE AIRBAG (TO GROUND)

DTC DETECTING CONDITION:

- Airbag main harness circuit is shorted to ground.
- Knee airbag module harness circuit is shorted to ground.
- Knee airbag module is faulty.
- Airbag control module is faulty.

CAUTION:

Before performing diagnosis, refer to "CAUTION" in "General Description". <Ref. to AB(diag)-4, CAUTION, General Description.>

WIRING DIAGRAM:

Airbag system <Ref. to WI(w/o HEV)-30, WIRING DIAGRAM, Airbag System.> <Ref. to WI(HEV)-50, WIRING DIAGRAM, Airbag System.>

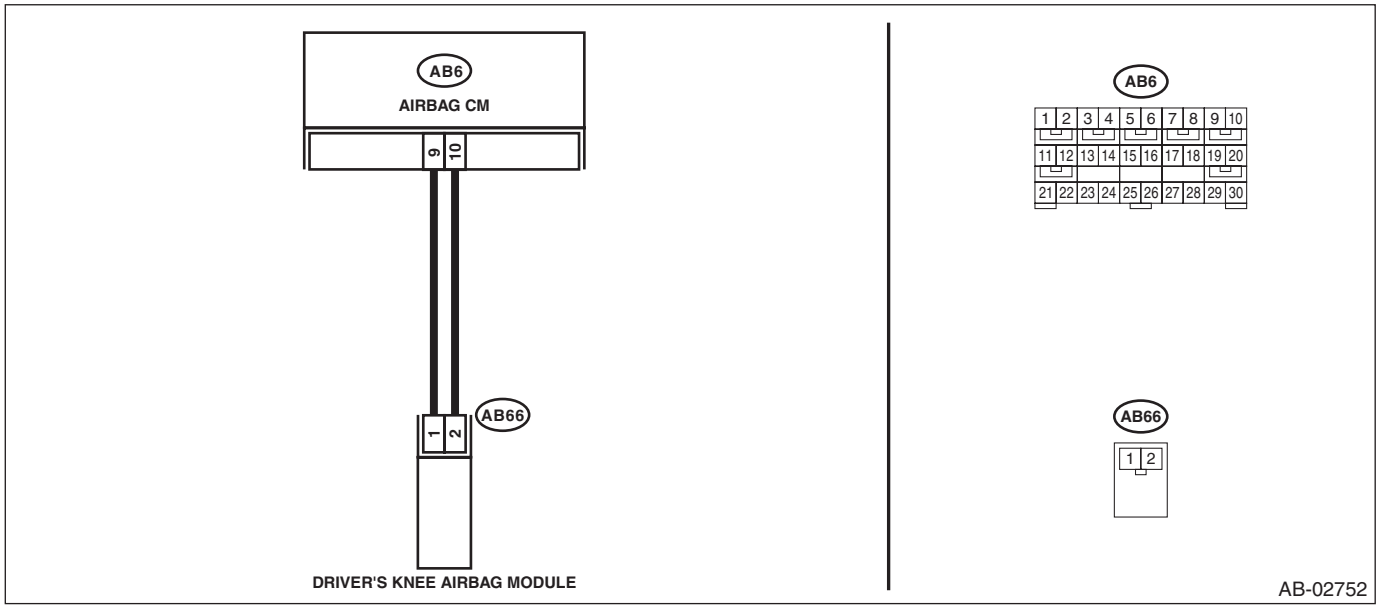

	Step	Check	Yes	No
1	**CHECK POOR CONTACT OF CONNECTORS.** Check for poor contact of the connectors between the airbag control module and the knee airbag module.	Is there poor contact?	Replace the airbag harness.	Go to step **2**.
2	**CHECK KNEE AIRBAG MODULE.** 1) Turn the ignition switch to OFF, disconnect the battery ground cable, and wait for 60 seconds or more. NOTE: For HEV model, disconnect the negative terminal from 12 volt auxiliary battery, and disconnect the ground terminal from 12V engine restart battery sensor for 12 volt engine restart battery. <Ref. to NT-5, BATTERY, NOTE, Note.> 2) Disconnect the connector (AB66) from knee airbag module. 3) Connect the connector (1N) in the test harness N to the connector (AB66). 4) Connect the airbag resistor to the connector (2N) of test harness N. 5) Connect the battery ground terminal and turn the ignition switch to ON.	Does the airbag warning light illuminate for six seconds and go off?	Replace the knee airbag module. <Ref. to AB-43, REMOVAL, Knee Airbag Module.>	Go to step **3**.

	Step	Check	Yes	No
3	**CHECK AIRBAG MAIN HARNESS (KNEE AIRBAG HARNESS).** 1) Turn the ignition switch to OFF, disconnect the battery ground cable, and wait for 60 seconds or more. NOTE: For HEV model, disconnect the negative terminal from 12 volt auxiliary battery, and disconnect the ground terminal from 12V engine restart battery sensor for 12 volt engine restart battery. <Ref. to NT-5, BATTERY, NOTE, Note.> 2) Disconnect the airbag resistor from test harness N. 3) Remove the instrument panel lower cover and column cover, and disconnect the connector (AB7) from (AB2). 4) Remove the console front panel and disconnect the connector (AB9). 5) Disconnect the connectors (AB6, AB17, AB18) from the airbag control module, and connect the connector (1AG) in the test harness AG to connectors (AB6, AB17, AB18). NOTE: Except for XV models, connect test harness AH between the connectors (AB6, AB17, AB18) and (1AG). 6) Measure the resistance between connector (3AG) in the test harness AG and chassis ground. ***Connector & terminal*** ***(3AG) No. 14 — Chassis ground:*** ***(3AG) No. 16 — Chassis ground:***	Is the resistance 1 MΩ or more?	Go to step **4**.	Replace the airbag main harness along with body harness.
4	**CHECK AIRBAG CONTROL MODULE.** 1) Connect all connectors. 2) Clear the memory. 3) Perform the Inspection Mode. 4) Read the DTC. (Current malfunction)	Is the same DTC displayed?	Replace the airbag control module. <Ref. to AB-78, Airbag Control Module.>	Go to step **5**.
5	**CHECK FOR ANY OTHER DTC ON DISPLAY.**	Is any other DTC displayed?	Check DTC using "List of Diagnostic Trouble Code (DTC)". <Ref. to AB(diag)-33, List of Diagnostic Trouble Code (DTC).>	Finish the diagnosis.

DK:DTC B1863 SHORT IN DRIVER'S KNEE AIRBAG (TO +B)

DTC DETECTING CONDITION:

- Airbag main harness circuit is shorted to power supply.
- Knee airbag module harness circuit is shorted to power supply.
- Knee airbag module is faulty.
- Airbag control module is faulty.

CAUTION:

Before performing diagnosis, refer to "CAUTION" in "General Description". <Ref. to AB(diag)-4, CAUTION, General Description.>

WIRING DIAGRAM:

Airbag system <Ref. to WI(w/o HEV)-30, WIRING DIAGRAM, Airbag System.> <Ref. to WI(HEV)-50, WIRING DIAGRAM, Airbag System.>

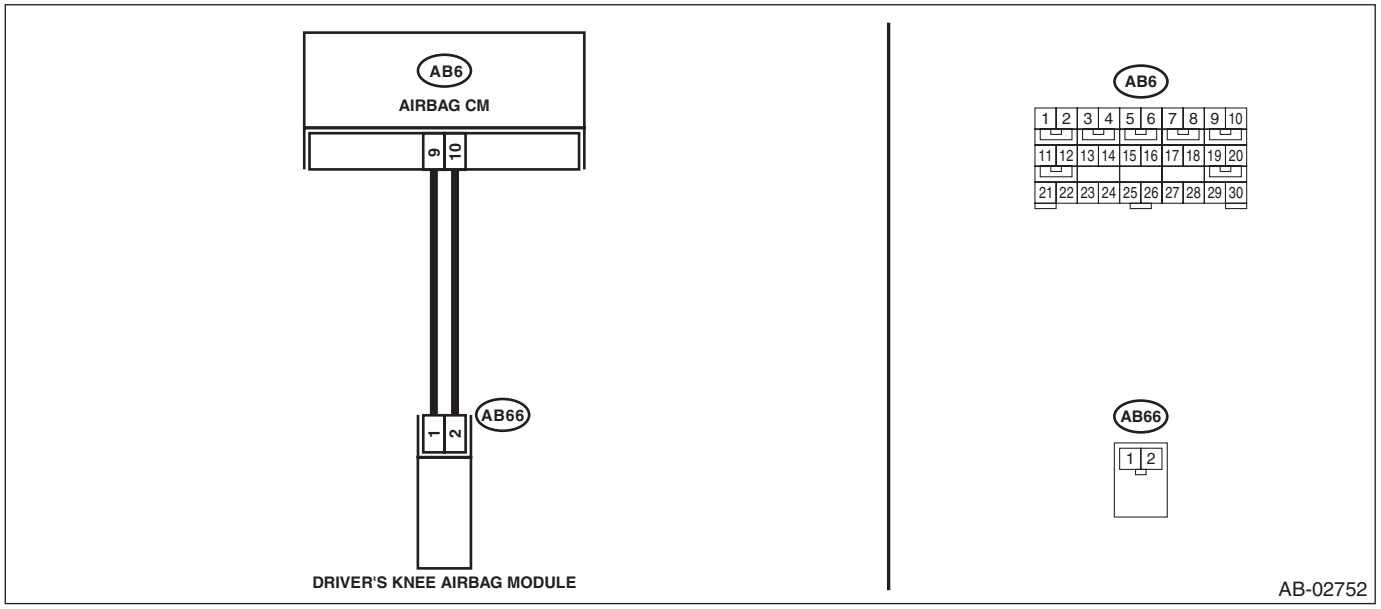

	Step	Check	Yes	No
1	**CHECK POOR CONTACT OF CONNECTORS.** Check for poor contact of the connectors between the airbag control module and the knee airbag module.	Is there poor contact?	Replace the airbag harness.	Go to step **2**.
2	**CHECK KNEE AIRBAG MODULE.** 1) Turn the ignition switch to OFF, disconnect the battery ground cable, and wait for 60 seconds or more. NOTE: For HEV model, disconnect the negative terminal from 12 volt auxiliary battery, and disconnect the ground terminal from 12V engine restart battery sensor for 12 volt engine restart battery. <Ref. to NT-5, BATTERY, NOTE, Note.> 2) Disconnect the connector (AB66) from knee airbag module. 3) Connect the connector (1N) in the test harness N to the connector (AB66). 4) Connect the airbag resistor to the connector (2N) of test harness N. 5) Connect the battery ground terminal and turn the ignition switch to ON.	Does the airbag warning light illuminate for six seconds and go off?	Replace the knee airbag module. <Ref. to AB-43, REMOVAL, Knee Airbag Module.>	Go to step **3**.

	Step	Check	Yes	No
3	**CHECK AIRBAG MAIN HARNESS (KNEE AIRBAG HARNESS).** 1) Turn the ignition switch to OFF, disconnect the battery ground cable, and wait for 60 seconds or more. NOTE: For HEV model, disconnect the negative terminal from 12 volt auxiliary battery, and disconnect the ground terminal from 12V engine restart battery sensor for 12 volt engine restart battery. <Ref. to NT-5, BATTERY, NOTE, Note.> 2) Disconnect the airbag resistor from test harness N. 3) Remove the instrument panel lower cover and column cover, and disconnect the connector (AB7) from (AB2). 4) Remove the console front panel and disconnect the connector (AB9). 5) Disconnect the connectors (AB6, AB17, AB18) from the airbag control module, and connect the connector (1AG) in the test harness AG. NOTE: Except for XV models, connect test harness AH between the connectors (AB6, AB17, AB18) and (1AG). 6) Connect the battery ground terminal and turn the ignition switch to ON. 7) Measure the voltage between connector (3AG) in the test harness AG and chassis ground. ***Connector & terminal*** ***(3AG) No. 14 (+) — Chassis ground (–):*** ***(3AG) No. 16 (+) — Chassis ground (–):***	Is the voltage less than 1 V?	Go to step **4**.	Replace the airbag main harness along with body harness.
4	**CHECK AIRBAG CONTROL MODULE.** 1) Connect all connectors. 2) Clear the memory. 3) Perform the Inspection Mode. 4) Read the DTC. (Current malfunction)	Is the same DTC displayed?	Replace the airbag control module. <Ref. to AB-78, Airbag Control Module.>	Go to step **5**.
5	**CHECK FOR ANY OTHER DTC ON DISPLAY.**	Is any other DTC displayed?	Check DTC using "List of Diagnostic Trouble Code (DTC)". <Ref. to AB(diag)-33, List of Diagnostic Trouble Code (DTC).>	Finish the diagnosis.

DL:DTC B1900 SHORT IN FRONT P/T RH

DTC DETECTING CONDITION:

- Seat belt pretensioner (RH) circuit is shorted.
- Pretensioner (RH) is faulty.
- Pretensioner harness (RH) is faulty.
- Airbag control module is faulty.

CAUTION:

Before performing diagnosis, refer to "CAUTION" in "General Description". <Ref. to AB(diag)-4, CAUTION, General Description.>

WIRING DIAGRAM:

Airbag system <Ref. to WI(w/o HEV)-30, WIRING DIAGRAM, Airbag System.> <Ref. to WI(HEV)-50, WIRING DIAGRAM, Airbag System.>

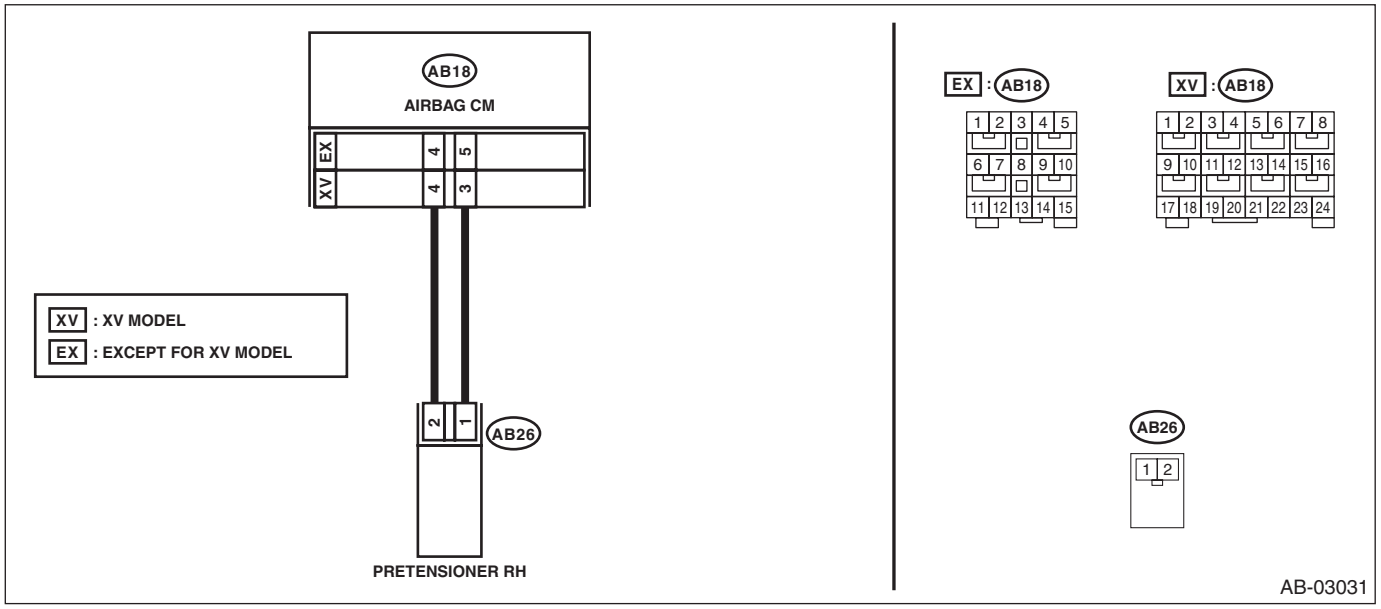

Step		Check	Yes	No
1	**CHECK POOR CONTACT OF CONNECTORS.** Check for poor contact of the connectors between the airbag control module and the seat belt pretensioner RH.	Is there poor contact?	Replace the airbag rear harness along with body harness.	Go to step **2**.
2	**CHECK SEAT BELT PRETENSIONER.** 1) Turn the ignition switch to OFF, disconnect the battery ground cable, and wait for 60 seconds or more. NOTE: For HEV model, disconnect the negative terminal from 12 volt auxiliary battery, and disconnect the ground terminal from 12V engine restart battery sensor for 12 volt engine restart battery. <Ref. to NT-5, BATTERY, NOTE, Note.> 2) Disconnect the connector (AB26) from seat belt pretensioner (RH). 3) Connect the connector (1N) in the test harness N to the connector (AB26). 4) Connect the airbag resistor to the connector (2N) of test harness N. 5) Connect the battery ground terminal and turn the ignition switch to ON.	Does the airbag warning light illuminate for 6 seconds and go off?	Replace the seat belt pretensioner (RH). <Ref. to SB-16, Front Seat Belt.>	Go to step **3**.

	Step	Check	Yes	No
3	**CHECK AIRBAG REAR HARNESS (PRETENSIONER HARNESS RH).** 1) Turn the ignition switch to OFF, disconnect the battery ground cable, and wait for 60 seconds or more. NOTE: For HEV model, disconnect the negative terminal from 12 volt auxiliary battery, and disconnect the ground terminal from 12V engine restart battery sensor for 12 volt engine restart battery. <Ref. to NT-5, BATTERY, NOTE, Note.> 2) Disconnect the airbag resistor from test harness N. 3) Disconnect connector (AB24) from side airbag module (RH). 4) Disconnect the connector (AB33) from curtain airbag module (RH). 5) Disconnect the connectors (AB6, AB17, AB18) from airbag control module. 6) Connect the connector (1AG) in the test harness AG to the connectors (AB6, AB17, AB18). NOTE: Except for XV models, connect test harness AH between the connectors (AB6, AB17, AB18) and (1AG). 7) Measure the resistance between connector (3AG) terminals in test harness AG. ***Connector & terminal (3AG) No. 18 — (3AG) No. 20:***	Is the resistance 1 MΩ or more?	Go to step **4**.	Replace the airbag rear harness along with body harness.
4	**CHECK AIRBAG CONTROL MODULE.** 1) Connect all connectors. 2) Clear the memory. 3) Perform the Inspection Mode. 4) Read the DTC. (Current malfunction)	Is the same DTC displayed?	Replace the airbag control module. <Ref. to AB-78, Airbag Control Module.>	Go to step **5**.
5	**CHECK FOR ANY OTHER DTC ON DISPLAY.**	Is any other DTC displayed?	Check DTC using "List of Diagnostic Trouble Code (DTC)". <Ref. to AB(diag)-33, List of Diagnostic Trouble Code (DTC).>	Finish the diagnosis.

DM:DTC B1901 OPEN IN FRONT P/T RH

DTC DETECTING CONDITION:

- Seat belt pretensioner (RH) circuit is open.
- Pretensioner (RH) is faulty.
- Pretensioner harness (RH) is faulty.
- Airbag control module is faulty.

CAUTION:

Before performing diagnosis, refer to "CAUTION" in "General Description". <Ref. to AB(diag)-4, CAUTION, General Description.>

WIRING DIAGRAM:

Airbag system <Ref. to WI(w/o HEV)-30, WIRING DIAGRAM, Airbag System.> <Ref. to WI(HEV)-50, WIRING DIAGRAM, Airbag System.>

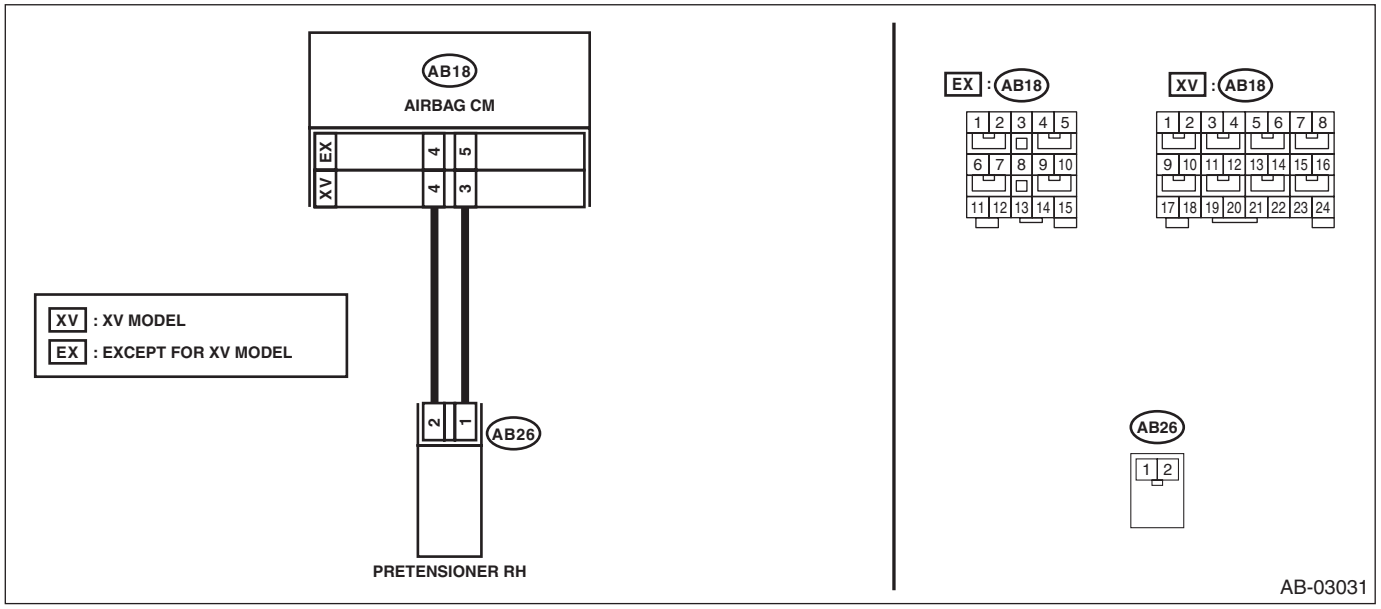

Step		Check	Yes	No
1	**CHECK POOR CONTACT OF CONNECTORS.** Check for poor contact of the connectors between the airbag control module and the seat belt pretensioner RH.	Is there poor contact?	Replace the airbag rear harness along with body harness.	Go to step **2**.
2	**CHECK SEAT BELT PRETENSIONER.** 1) Turn the ignition switch to OFF, disconnect the battery ground cable, and wait for 60 seconds or more. NOTE: For HEV model, disconnect the negative terminal from 12 volt auxiliary battery, and disconnect the ground terminal from 12V engine restart battery sensor for 12 volt engine restart battery. <Ref. to NT-5, BATTERY, NOTE, Note.> 2) Disconnect the connector (AB26) from seat belt pretensioner (RH). 3) Connect the connector (1N) in the test harness N to the connector (AB26). 4) Connect the airbag resistor to the connector (2N) of test harness N. 5) Connect the battery ground terminal and turn the ignition switch to ON.	Does the airbag warning light illuminate for 6 seconds and go off?	Replace the seat belt pretensioner (RH). <Ref. to SB-16, Front Seat Belt.>	Go to step **3**.

	Step	Check	Yes	No
3	**CHECK AIRBAG REAR HARNESS (PRE-TENSIONER HARNESS RH).** 1) Turn the ignition switch to OFF, disconnect the battery ground cable, and wait for 60 seconds or more. NOTE: For HEV model, disconnect the negative terminal from 12 volt auxiliary battery, and disconnect the ground terminal from 12V engine restart battery sensor for 12 volt engine restart battery. <Ref. to NT-5, BATTERY, NOTE, Note.> 2) Disconnect the airbag resistor from the connector (2N) of test harness N. 3) Disconnect connector (AB24) from side airbag module (RH). 4) Disconnect the connector (AB33) from curtain airbag module (RH). 5) Disconnect the connectors (AB6, AB17, AB18) from airbag control module. 6) Connect the connector (1AG) in the test harness AG to the connectors (AB6, AB17, AB18). NOTE: Except for XV models, connect test harness AH between the connectors (AB6, AB17, AB18) and (1AG). 7) Measure the resistance between connector (3AG) in the test harness AG and connector (2N) in the test harness N. ***Connector & terminal*** ***(3AG) No. 18 — (2N) No. 2:*** ***(3AG) No. 20 — (2N) No. 1:***	Is the resistance less than 10 Ω?	Go to step **4**.	Replace the airbag rear harness along with body harness.
4	**CHECK AIRBAG CONTROL MODULE.** 1) Connect all connectors. 2) Clear the memory. 3) Perform the Inspection Mode. 4) Read the DTC. (Current malfunction)	Is the same DTC displayed?	Replace the airbag control module. <Ref. to AB-78, Airbag Control Module.>	Go to step **5**.
5	**CHECK FOR ANY OTHER DTC ON DISPLAY.**	Is any other DTC displayed?	Check DTC using "List of Diagnostic Trouble Code (DTC)". <Ref. to AB(diag)-33, List of Diagnostic Trouble Code (DTC).>	Finish the diagnosis.

DN:DTC B1902 SHORT IN FRONT P/T RH (TO GROUND)

DTC DETECTING CONDITION:

- Seat belt pretensioner (RH) circuit is shorted to ground.
- Pretensioner (RH) is faulty.
- Pretensioner harness (RH) is faulty.
- Airbag control module is faulty.

CAUTION:

Before performing diagnosis, refer to "CAUTION" in "General Description". <Ref. to AB(diag)-4, CAUTION, General Description.>

WIRING DIAGRAM:

Airbag system <Ref. to WI(w/o HEV)-30, WIRING DIAGRAM, Airbag System.> <Ref. to WI(HEV)-50, WIRING DIAGRAM, Airbag System.>

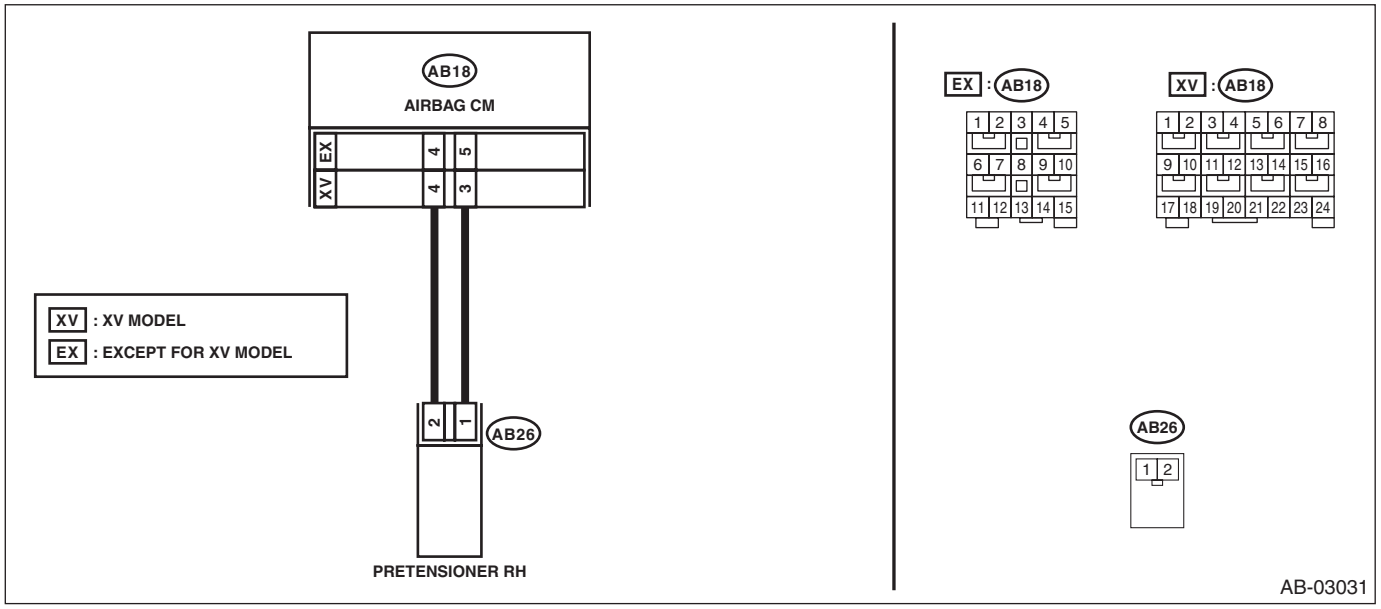

Step		Check	Yes	No
1	**CHECK POOR CONTACT OF CONNECTORS.** Check for poor contact of the connectors between the airbag control module and the seat belt pretensioner RH.	Is there poor contact?	Replace the airbag rear harness along with body harness.	Go to step **2**.
2	**CHECK SEAT BELT PRETENSIONER.** 1) Turn the ignition switch to OFF, disconnect the battery ground cable, and wait for 60 seconds or more. NOTE: For HEV model, disconnect the negative terminal from 12 volt auxiliary battery, and disconnect the ground terminal from 12V engine restart battery sensor for 12 volt engine restart battery. <Ref. to NT-5, BATTERY, NOTE, Note.> 2) Disconnect the connector (AB26) from seat belt pretensioner (RH). 3) Connect the connector (1N) in the test harness N to the connector (AB26). 4) Connect the airbag resistor to the connector (2N) of test harness N. 5) Connect the battery ground terminal and turn the ignition switch to ON.	Does the airbag warning light illuminate for six seconds and go off?	Replace the seat belt pretensioner (RH). <Ref. to SB-16, Front Seat Belt.>	Go to step **3**.

	Step	Check	Yes	No
3	**CHECK AIRBAG REAR HARNESS (PRE-TENSIONER HARNESS RH).** 1) Turn the ignition switch to OFF, disconnect the battery ground cable, and wait for 60 seconds or more. NOTE: For HEV model, disconnect the negative terminal from 12 volt auxiliary battery, and disconnect the ground terminal from 12V engine restart battery sensor for 12 volt engine restart battery. <Ref. to NT-5, BATTERY, NOTE, Note.> 2) Disconnect the airbag resistor from the connector (2N) of test harness N. 3) Disconnect connector (AB24) from side airbag module (RH). 4) Disconnect the connector (AB33) from curtain airbag module (RH). 5) Disconnect the connectors (AB6, AB17, AB18) from airbag control module. 6) Connect the connector (1AG) in the test harness AG to the connectors (AB6, AB17, AB18). NOTE: Except for XV models, connect test harness AH between the connectors (AB6, AB17, AB18) and (1AG). 7) Measure the resistance between connector (3AG) in the test harness AG and chassis ground. ***Connector & terminal*** ***(3AG) No. 18 — Chassis ground:*** ***(3AG) No. 20 — Chassis ground:***	Is the resistance 1 MΩ or more?	Go to step **4**.	Replace the airbag rear harness along with body harness.
4	**CHECK AIRBAG CONTROL MODULE.** 1) Connect all connectors. 2) Clear the memory. 3) Perform the Inspection Mode. 4) Read the DTC. (Current malfunction)	Is the same DTC displayed?	Replace the airbag control module. <Ref. to AB-78, Airbag Control Module.>	Go to step **5**.
5	**CHECK FOR ANY OTHER DTC ON DISPLAY.**	Is any other DTC displayed?	Check DTC using "List of Diagnostic Trouble Code (DTC)". <Ref. to AB(diag)-33, List of Diagnostic Trouble Code (DTC).>	Finish the diagnosis.

DO:DTC B1903 SHORT IN FRONT P/T RH (TO +B)

DTC DETECTING CONDITION:

- Seat belt pretensioner (RH) circuit is shorted to power supply.
- Pretensioner (RH) is faulty.
- Pretensioner harness (RH) is faulty.
- Airbag control module is faulty.

CAUTION:

Before performing diagnosis, refer to "CAUTION" in "General Description". <Ref. to AB(diag)-4, CAUTION, General Description.>

WIRING DIAGRAM:

Airbag system <Ref. to WI(w/o HEV)-30, WIRING DIAGRAM, Airbag System.> <Ref. to WI(HEV)-50, WIRING DIAGRAM, Airbag System.>

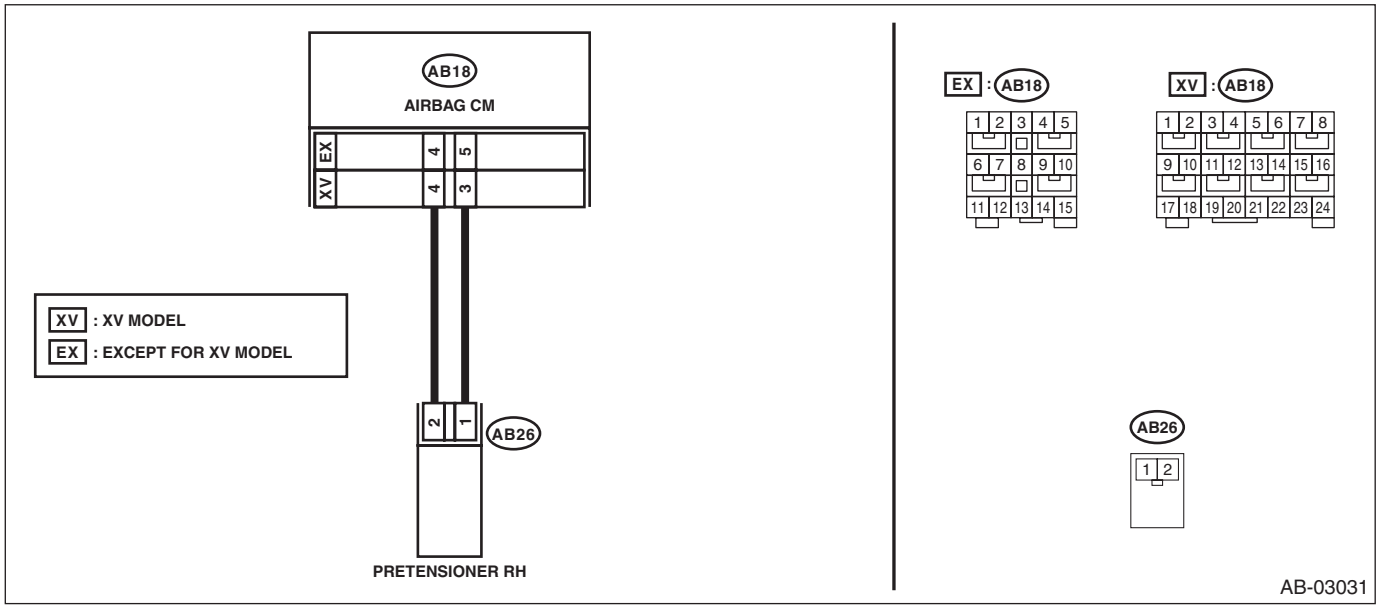

Step		Check	Yes	No
1	**CHECK POOR CONTACT OF CONNECTORS.** Check for poor contact of the connectors between the airbag control module and the seat belt pretensioner RH.	Is there poor contact?	Replace the airbag rear harness along with body harness.	Go to step **2**.
2	**CHECK SEAT BELT PRETENSIONER.** 1) Turn the ignition switch to OFF, disconnect the battery ground cable, and wait for 60 seconds or more. NOTE: For HEV model, disconnect the negative terminal from 12 volt auxiliary battery, and disconnect the ground terminal from 12V engine restart battery sensor for 12 volt engine restart battery. <Ref. to NT-5, BATTERY, NOTE, Note.> 2) Disconnect the connector (AB26) from seat belt pretensioner (RH). 3) Connect the connector (1N) in the test harness N to the connector (AB26). 4) Connect the airbag resistor to the connector (2N) of test harness N. 5) Connect the battery ground terminal and turn the ignition switch to ON.	Does the airbag warning light illuminate for six seconds and go off?	Replace the seat belt pretensioner (RH). <Ref. to SB-16, Front Seat Belt.>	Go to step **3**.

	Step	Check	Yes	No
3	**CHECK AIRBAG REAR HARNESS (PRETENSIONER HARNESS RH).** 1) Turn the ignition switch to OFF, disconnect the battery ground cable, and wait for 60 seconds or more. NOTE: For HEV model, disconnect the negative terminal from 12 volt auxiliary battery, and disconnect the ground terminal from 12V engine restart battery sensor for 12 volt engine restart battery. <Ref. to NT-5, BATTERY, NOTE, Note.> 2) Disconnect the airbag resistor from the connector (2N) of test harness N. 3) Disconnect connector (AB24) from side airbag module (RH). 4) Disconnect the connector (AB33) from curtain airbag module (RH). 5) Disconnect the connectors (AB6, AB17, AB18) from airbag control module. 6) Connect the connector (1AG) in the test harness AG to the connectors (AB6, AB17, AB18). NOTE: Except for XV models, connect test harness AH between the connectors (AB6, AB17, AB18) and (1AG). 7) Connect the battery ground terminal and turn the ignition switch to ON. 8) Measure the voltage between connector (3AG) in the test harness AG and chassis ground. ***Connector & terminal*** ***(3AG) No. 20 (+) — Chassis ground (–):*** ***(3AG) No. 18 (+) — Chassis ground (–):***	Is the voltage less than 1 V?	Go to step **4**.	Replace the airbag rear harness along with body harness.
4	**CHECK AIRBAG CONTROL MODULE.** 1) Connect all connectors. 2) Clear the memory. 3) Perform the Inspection Mode. 4) Read the DTC. (Current malfunction)	Is the same DTC displayed?	Replace the airbag control module. <Ref. to AB-78, Airbag Control Module.>	Go to step **5**.
5	**CHECK FOR ANY OTHER DTC ON DISPLAY.**	Is any other DTC displayed?	Check DTC using "List of Diagnostic Trouble Code (DTC)". <Ref. to AB(diag)-33, List of Diagnostic Trouble Code (DTC).>	Finish the diagnosis.

DP:DTC B1905 SHORT IN FRONT P/T LH

DTC DETECTING CONDITION:

- Seat belt pretensioner (LH) circuit is shorted.
- Pretensioner (LH) is faulty.
- Pretensioner harness (LH) is faulty.
- Airbag control module is faulty.

CAUTION:

Before performing diagnosis, refer to "CAUTION" in "General Description". <Ref. to AB(diag)-4, CAUTION, General Description.>

WIRING DIAGRAM:

Airbag system <Ref. to WI(w/o HEV)-30, WIRING DIAGRAM, Airbag System.> <Ref. to WI(HEV)-50, WIRING DIAGRAM, Airbag System.>

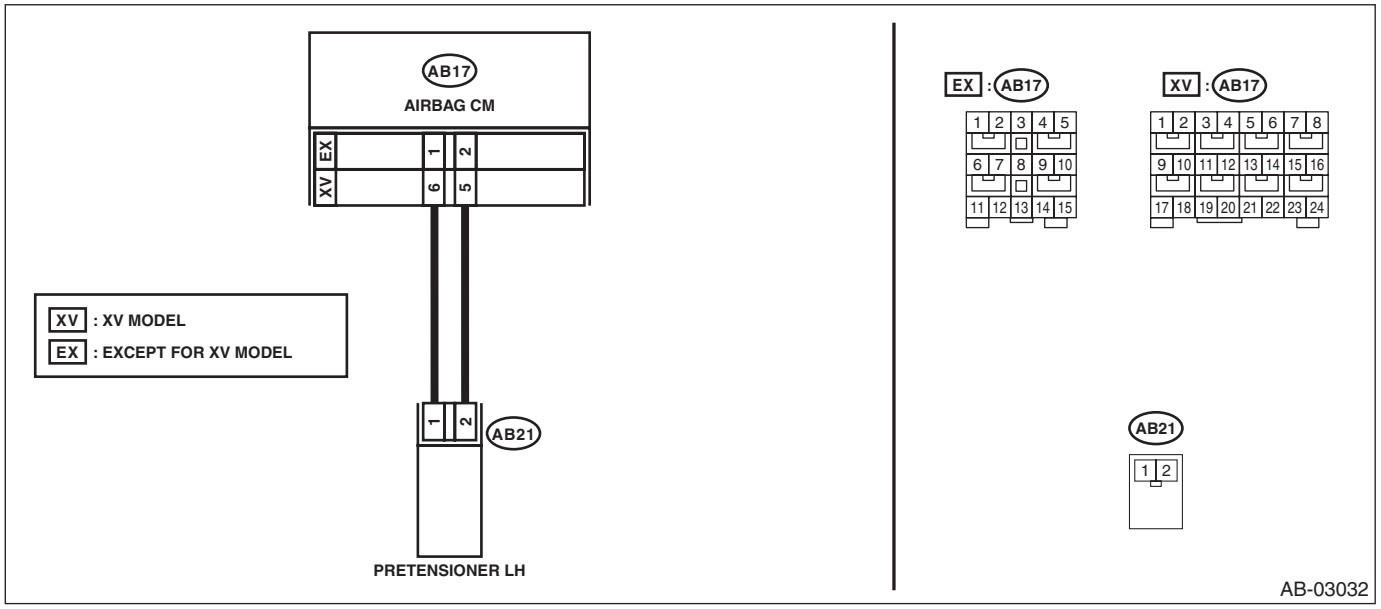

Step		Check	Yes	No
1	**CHECK POOR CONTACT OF CONNECTORS.** Check for poor contact of the connectors between the airbag control module and the seat belt pretensioner LH.	Is there poor contact?	Replace the airbag rear harness along with body harness.	Go to step **2**.
2	**CHECK SEAT BELT PRETENSIONER.** 1) Turn the ignition switch to OFF, disconnect the battery ground cable, and wait for 60 seconds or more. NOTE: For HEV model, disconnect the negative terminal from 12 volt auxiliary battery, and disconnect the ground terminal from 12V engine restart battery sensor for 12 volt engine restart battery. <Ref. to NT-5, BATTERY, NOTE, Note.> 2) Disconnect the connector (AB21) from seat belt pretensioner (LH). 3) Connect the connector (1N) in the test harness N to the connector (AB21). 4) Connect the airbag resistor to the connector (2N) of test harness N. 5) Connect the battery ground terminal and turn the ignition switch to ON.	Does the airbag warning light illuminate for 6 seconds and go off?	Replace the seat belt pretensioner (LH). <Ref. to SB-16, Front Seat Belt.>	Go to step **3**.

	Step	Check	Yes	No
3	**CHECK AIRBAG REAR HARNESS (PRETENSIONER HARNESS LH).** 1) Turn the ignition switch to OFF, disconnect the battery ground cable, and wait for 60 seconds or more. NOTE: For HEV model, disconnect the negative terminal from 12 volt auxiliary battery, and disconnect the ground terminal from 12V engine restart battery sensor for 12 volt engine restart battery. <Ref. to NT-5, BATTERY, NOTE, Note.> 2) Disconnect the airbag resistor from the connector (2N) of test harness N. 3) Disconnect connector (AB19) from side airbag module (LH). 4) Disconnect the connector (AB31) from curtain airbag module (LH). 5) Disconnect the connectors (AB6, AB17, AB18) from airbag control module. 6) Connect the connector (1AG) in the test harness AG to the connectors (AB6, AB17, AB18). NOTE: Except for XV models, connect test harness AH between the connectors (AB6, AB17, AB18) and (1AG). 7) Measure the resistance between connector (3AG) terminals in test harness AG. ***Connector & terminal (3AG) No. 10 — (3AG) No. 12:***	Is the resistance 1 MΩ or more?	Go to step **4**.	Replace the airbag rear harness along with body harness.
4	**CHECK AIRBAG CONTROL MODULE.** 1) Connect all connectors. 2) Clear the memory. 3) Perform the Inspection Mode. 4) Read the DTC. (Current malfunction)	Is the same DTC displayed?	Replace the airbag control module. <Ref. to AB-78, Airbag Control Module.>	Go to step **5**.
5	**CHECK FOR ANY OTHER DTC ON DISPLAY.**	Is any other DTC displayed?	Check DTC using "List of Diagnostic Trouble Code (DTC)". <Ref. to AB(diag)-33, List of Diagnostic Trouble Code (DTC).>	Finish the diagnosis.

DQ:DTC B1906 OPEN IN FRONT P/T LH

DTC DETECTING CONDITION:

- Seat belt pretensioner (LH) circuit is open.
- Pretensioner (LH) is faulty.
- Pretensioner harness (LH) is faulty.
- Airbag control module is faulty.

CAUTION:

Before performing diagnosis, refer to "CAUTION" in "General Description". <Ref. to AB(diag)-4, CAUTION, General Description.>

WIRING DIAGRAM:

Airbag system <Ref. to WI(w/o HEV)-30, WIRING DIAGRAM, Airbag System.> <Ref. to WI(HEV)-50, WIRING DIAGRAM, Airbag System.>

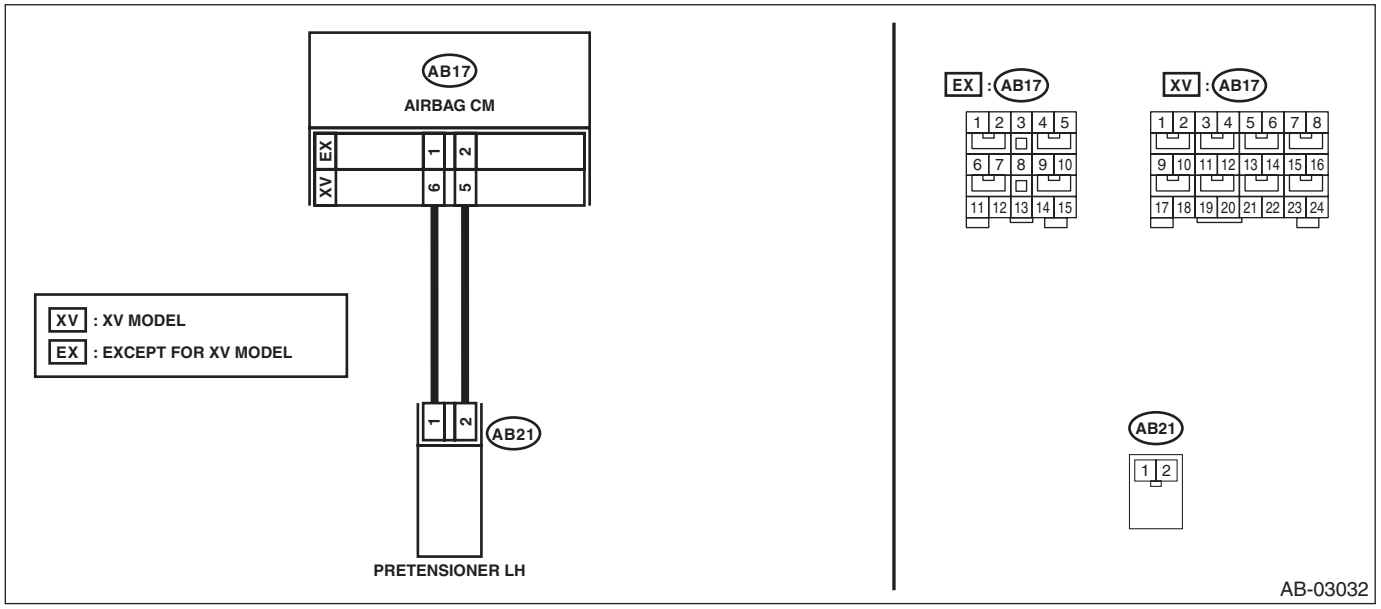

Step		Check	Yes	No
1	**CHECK POOR CONTACT OF CONNECTORS.** Check for poor contact of the connectors between the airbag control module and the seat belt pretensioner LH.	Is there poor contact?	Replace the airbag rear harness along with body harness.	Go to step **2**.
2	**CHECK SEAT BELT PRETENSIONER.** 1) Turn the ignition switch to OFF, disconnect the battery ground cable, and wait for 60 seconds or more. NOTE: For HEV model, disconnect the negative terminal from 12 volt auxiliary battery, and disconnect the ground terminal from 12V engine restart battery sensor for 12 volt engine restart battery. <Ref. to NT-5, BATTERY, NOTE, Note.> 2) Disconnect the connector (AB21) from seat belt pretensioner (LH). 3) Connect the connector (1N) in the test harness N to the connector (AB21). 4) Connect the airbag resistor to the connector (2N) of test harness N. 5) Connect the battery ground terminal and turn the ignition switch to ON.	Does the airbag warning light illuminate for 6 seconds and go off?	Replace the seat belt pretensioner (LH). <Ref. to SB-16, Front Seat Belt.>	Go to step **3**.

	Step	Check	Yes	No
3	**CHECK AIRBAG REAR HARNESS (PRETENSIONER HARNESS LH).** 1) Turn the ignition switch to OFF, disconnect the battery ground cable, and wait for 60 seconds or more. NOTE: For HEV model, disconnect the negative terminal from 12 volt auxiliary battery, and disconnect the ground terminal from 12V engine restart battery sensor for 12 volt engine restart battery. <Ref. to NT-5, BATTERY, NOTE, Note.> 2) Disconnect the airbag resistor from the connector (2N) of test harness N. 3) Disconnect connector (AB19) from side airbag module (LH). 4) Disconnect the connector (AB31) from curtain airbag module (LH). 5) Disconnect the connectors (AB6, AB17, AB18) from airbag control module. 6) Connect the connector (1AG) in the test harness AG to the connectors (AB6, AB17, AB18). NOTE: Except for XV models, connect test harness AH between the connectors (AB6, AB17, AB18) and (1AG). 7) Measure the resistance between connector (3AG) in the test harness AG and connector (2N) in the test harness N. ***Connector & terminal*** ***(3AG) No. 10 — (2N) No. 1:*** ***(3AG) No. 12 — (2N) No. 2:***	Is the resistance less than 10 Ω?	Go to step **4**.	Replace the airbag rear harness along with body harness.
4	**CHECK AIRBAG CONTROL MODULE.** 1) Connect all connectors. 2) Clear the memory. 3) Perform the Inspection Mode. 4) Read the DTC. (Current malfunction)	Is the same DTC displayed?	Replace the airbag control module. <Ref. to AB-78, Airbag Control Module.>	Go to step **5**.
5	**CHECK FOR ANY OTHER DTC ON DISPLAY.**	Is any other DTC displayed?	Check DTC using "List of Diagnostic Trouble Code (DTC)". <Ref. to AB(diag)-33, List of Diagnostic Trouble Code (DTC).>	Finish the diagnosis.

DR:DTC B1907 SHORT IN FRONT P/T LH (TO GROUND)

DTC DETECTING CONDITION:

- Seat belt pretensioner (LH) circuit is shorted to ground.
- Pretensioner (LH) is faulty.
- Pretensioner harness (LH) is faulty.
- Airbag control module is faulty.

CAUTION:

Before performing diagnosis, refer to "CAUTION" in "General Description". <Ref. to AB(diag)-4, CAUTION, General Description.>

WIRING DIAGRAM:

Airbag system <Ref. to WI(w/o HEV)-30, WIRING DIAGRAM, Airbag System.> <Ref. to WI(HEV)-50, WIRING DIAGRAM, Airbag System.>

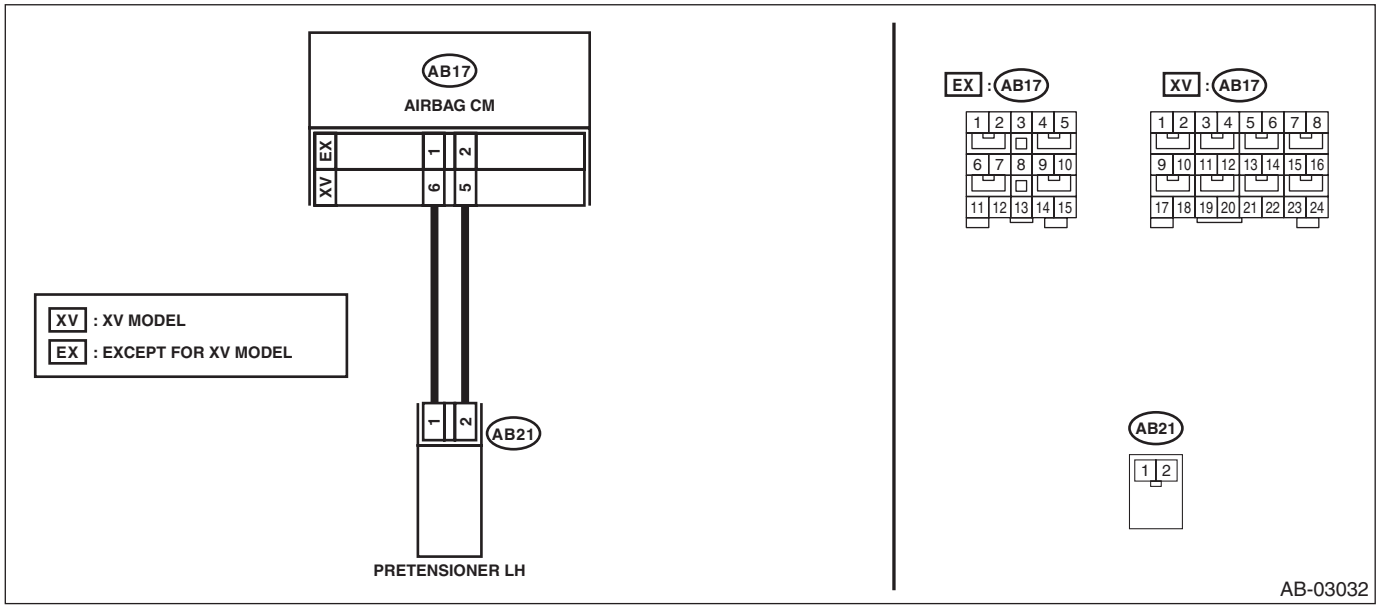

Step		Check	Yes	No
1	**CHECK POOR CONTACT OF CONNECTORS.** Check for poor contact of the connectors between the airbag control module and the seat belt pretensioner LH.	Is there poor contact?	Replace the airbag rear harness along with body harness.	Go to step **2**.
2	**CHECK SEAT BELT PRETENSIONER.** 1) Turn the ignition switch to OFF, disconnect the battery ground cable, and wait for 60 seconds or more. NOTE: For HEV model, disconnect the negative terminal from 12 volt auxiliary battery, and disconnect the ground terminal from 12V engine restart battery sensor for 12 volt engine restart battery. <Ref. to NT-5, BATTERY, NOTE, Note.> 2) Disconnect the connector (AB21) from seat belt pretensioner (LH). 3) Connect the connector (1N) in the test harness N to the connector (AB21). 4) Connect the airbag resistor to the connector (2N) of test harness N. 5) Connect the battery ground terminal and turn the ignition switch to ON.	Does the airbag warning light illuminate for six seconds and go off?	Replace the seat belt pretensioner (LH). <Ref. to SB-16, Front Seat Belt.>	Go to step **3**.

	Step	Check	Yes	No
3	**CHECK AIRBAG REAR HARNESS (PRETENSIONER HARNESS LH).** 1) Turn the ignition switch to OFF, disconnect the battery ground cable, and wait for 60 seconds or more. NOTE: For HEV model, disconnect the negative terminal from 12 volt auxiliary battery, and disconnect the ground terminal from 12V engine restart battery sensor for 12 volt engine restart battery. <Ref. to NT-5, BATTERY, NOTE, Note.> 2) Disconnect the airbag resistor from the connector (2N) of test harness N. 3) Disconnect connector (AB19) from side airbag module (LH). 4) Disconnect the connector (AB31) from curtain airbag module (LH). 5) Disconnect the connectors (AB6, AB17, AB18) from airbag control module. 6) Connect the connector (1AG) in the test harness AG to the connectors (AB6, AB17, AB18). NOTE: Except for XV models, connect test harness AH between the connectors (AB6, AB17, AB18) and (1AG). 7) Measure the resistance between connector (3AG) in the test harness AG and chassis ground. ***Connector & terminal*** ***(3AG) No. 10 — Chassis ground:*** ***(3AG) No. 12 — Chassis ground:***	Is the resistance 1 MΩ or more?	Go to step **4**.	Replace the airbag rear harness along with body harness.
4	**CHECK AIRBAG CONTROL MODULE.** 1) Connect all connectors. 2) Clear the memory. 3) Perform the Inspection Mode. 4) Read the DTC. (Current malfunction)	Is the same DTC displayed?	Replace the airbag control module. <Ref. to AB-78, Airbag Control Module.>	Go to step **5**.
5	**CHECK FOR ANY OTHER DTC ON DISPLAY.**	Is any other DTC displayed?	Check DTC using "List of Diagnostic Trouble Code (DTC)". <Ref. to AB(diag)-33, List of Diagnostic Trouble Code (DTC).>	Finish the diagnosis.

DS:DTC B1908 SHORT IN FRONT P/T LH (TO +B)

DTC DETECTING CONDITION:

- Seat belt pretensioner (LH) circuit is shorted to power supply.
- Pretensioner (LH) is faulty.
- Pretensioner harness (LH) is faulty.
- Airbag control module is faulty.

CAUTION:

Before performing diagnosis, refer to "CAUTION" in "General Description". <Ref. to AB(diag)-4, CAUTION, General Description.>

WIRING DIAGRAM:

Airbag system <Ref. to WI(w/o HEV)-30, WIRING DIAGRAM, Airbag System.> <Ref. to WI(HEV)-50, WIRING DIAGRAM, Airbag System.>

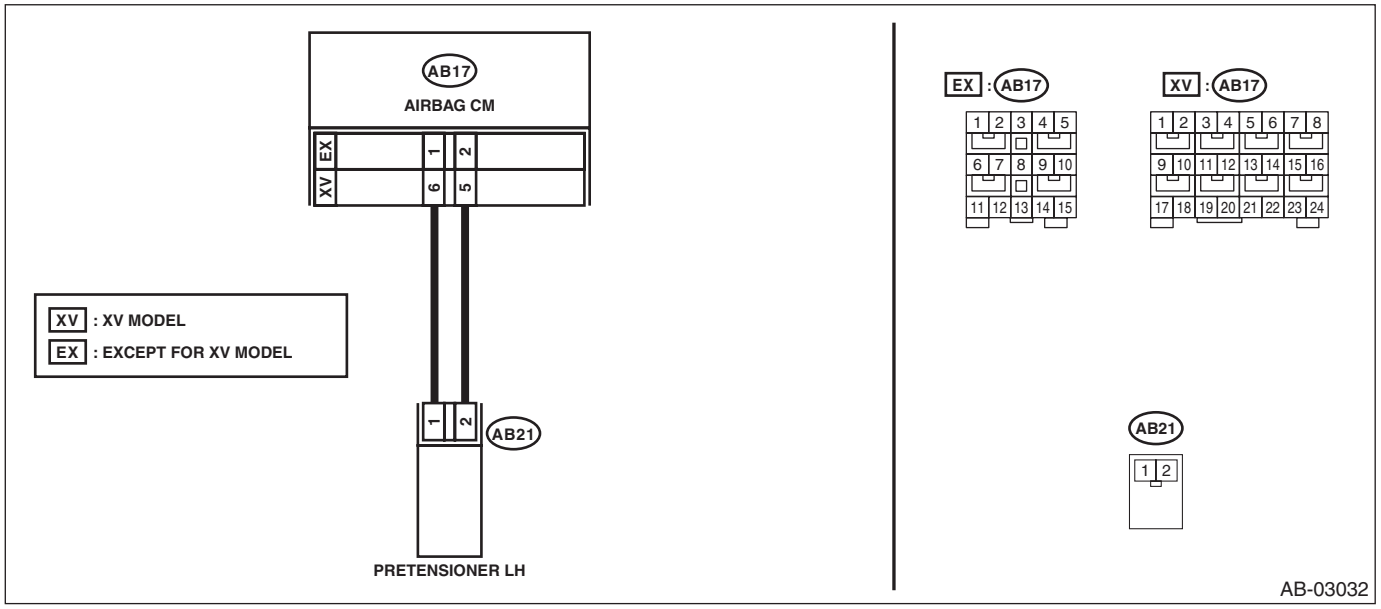

Step		Check	Yes	No
1	**CHECK POOR CONTACT OF CONNECTORS.** Check for poor contact of the connectors between the airbag control module and the seat belt pretensioner LH.	Is there poor contact?	Replace the airbag rear harness along with body harness.	Go to step **2**.
2	**CHECK SEAT BELT PRETENSIONER.** 1) Turn the ignition switch to OFF, disconnect the battery ground cable, and wait for 60 seconds or more. NOTE: For HEV model, disconnect the negative terminal from 12 volt auxiliary battery, and disconnect the ground terminal from 12V engine restart battery sensor for 12 volt engine restart battery. <Ref. to NT-5, BATTERY, NOTE, Note.> 2) Disconnect the connector (AB21) from seat belt pretensioner (LH). 3) Connect the connector (1N) in the test harness N to the connector (AB21). 4) Connect the airbag resistor to the connector (2N) of test harness N. 5) Connect the battery ground terminal and turn the ignition switch to ON.	Does the airbag warning light illuminate for six seconds and go off?	Replace the seat belt pretensioner (LH). <Ref. to SB-16, Front Seat Belt.>	Go to step **3**.

	Step	Check	Yes	No
3	**CHECK AIRBAG REAR HARNESS (PRETENSIONER HARNESS LH).** 1) Turn the ignition switch to OFF, disconnect the battery ground cable, and wait for 60 seconds or more. NOTE: For HEV model, disconnect the negative terminal from 12 volt auxiliary battery, and disconnect the ground terminal from 12V engine restart battery sensor for 12 volt engine restart battery. <Ref. to NT-5, BATTERY, NOTE, Note.> 2) Disconnect the airbag resistor from the connector (2N) of test harness N. 3) Disconnect connector (AB19) from side airbag module (LH). 4) Disconnect the connector (AB31) from curtain airbag module (LH). 5) Disconnect the connectors (AB6, AB17, AB18) from airbag control module. 6) Connect the connector (1AG) in the test harness AG to the connectors (AB6, AB17, AB18). NOTE: Except for XV models, connect test harness AH between the connectors (AB6, AB17, AB18) and (1AG). 7) Connect the battery ground terminal and turn the ignition switch to ON. 8) Measure the voltage between connector (3AG) in the test harness AG and chassis ground. ***Connector & terminal*** ***(3AG) No. 10 (+) — Chassis ground (–):*** ***(3AG) No. 12 (+) — Chassis ground (–):***	Is the voltage less than 1 V?	Go to step **4**.	Replace the airbag rear harness along with body harness.
4	**CHECK AIRBAG CONTROL MODULE.** 1) Connect all connectors. 2) Clear the memory. 3) Perform the Inspection Mode. 4) Read the DTC. (Current malfunction)	Is the same DTC displayed?	Replace the airbag control module. <Ref. to AB-78, Airbag Control Module.>	Go to step **5**.
5	**CHECK FOR ANY OTHER DTC ON DISPLAY.**	Is any other DTC displayed?	Check DTC using "List of Diagnostic Trouble Code (DTC)". <Ref. to AB(diag)-33, List of Diagnostic Trouble Code (DTC).>	Finish the diagnosis.

DT:DTC B19F0 SHORT IN FRONT P/T 2 RH

DTC DETECTING CONDITION:

- Lap seat belt pretensioner (RH) circuit is shorted.
- Lap seat belt pretensioner (RH) is faulty.
- Lap seat belt pretensioner harness (RH) is shorted.
- Airbag control module is faulty.

CAUTION:

Before performing diagnosis, refer to "CAUTION" in "General Description". <Ref. to AB(diag)-4, CAUTION, General Description.>

WIRING DIAGRAM:

Airbag system <Ref. to WI(w/o HEV)-30, WIRING DIAGRAM, Airbag System.> <Ref. to WI(HEV)-50, WIRING DIAGRAM, Airbag System.>

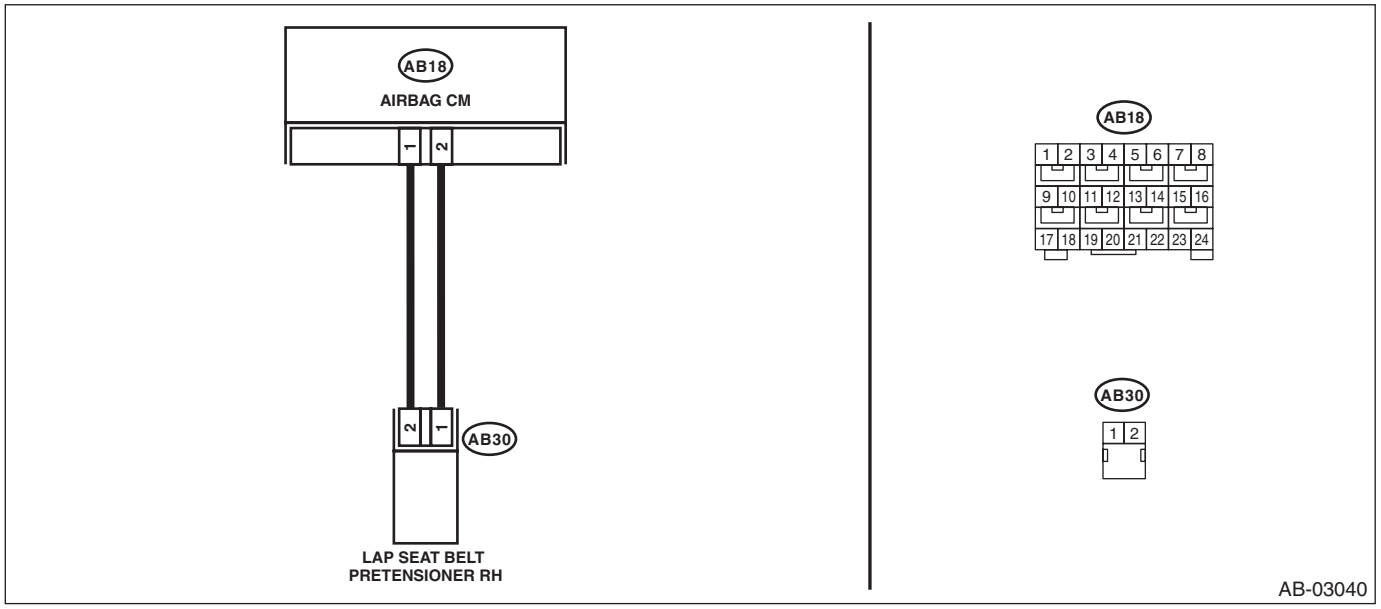

	Step	Check	Yes	No
1	**CHECK POOR CONTACT OF CONNECTORS.** Check for poor contact of the connectors between the airbag control module and the lap seat belt pretensioner (RH).	Is there poor contact?	Replace the airbag rear harness along with body harness.	Go to step **2**.
2	**CHECK LAP SEAT BELT PRETENSIONER.** 1) Turn the ignition switch to OFF, disconnect the battery ground cable, and wait for 60 seconds or more. NOTE: For HEV model, disconnect the negative terminal from 12 volt auxiliary battery, and disconnect the ground terminal from 12V engine restart battery sensor for 12 volt engine restart battery. <Ref. to NT-5, BATTERY, NOTE, Note.> 2) Disconnect the connector (AB30) from lap seat belt pretensioner (RH). 3) Connect the connector (1N) in the test harness N to the connector (AB30). 4) Connect the airbag resistor to the connector (2N) of test harness N. 5) Connect the battery ground terminal and turn the ignition switch to ON.	Does the airbag warning light illuminate for 6 seconds and go off?	Replace the lap seat belt pretensioner (RH). <Ref. to SB-20, SEAT BELT INNER - FRONT, REMOVAL, Front Seat Belt.>	Go to step **3**.

	Step	Check	Yes	No
3	**CHECK AIRBAG REAR HARNESS (LAP SEAT BELT PRETENSIONER HARNESS RH).** 1) Turn the ignition switch to OFF, disconnect the battery ground cable, and wait for 60 seconds or more. NOTE: For HEV model, disconnect the negative terminal from 12 volt auxiliary battery, and disconnect the ground terminal from 12V engine restart battery sensor for 12 volt engine restart battery. <Ref. to NT-5, BATTERY, NOTE, Note.> 2) Disconnect the airbag resistor from test harness N. 3) Disconnect the connector (AB33) from curtain airbag module (RH). 4) Disconnect connector (AB24) from side airbag module (RH). 5) Disconnect the connector (AB26) from seat belt pretensioner. 6) Disconnect the connectors (AB6, AB17, AB18) from airbag control module. 7) Connect the connector (1AG) in the test harness AG to the connectors (AB6, AB17, AB18). 8) Measure the resistance between connector (3AG) terminals in test harness AG. ***Connector & terminal*** ***(3AG) No. 17 — (3AG) No. 19:***	Is the resistance less than 10 Ω?	Go to step **4**.	Replace the airbag rear harness along with body harness.
4	**CHECK AIRBAG CONTROL MODULE.** 1) Connect all connectors. 2) Clear the memory. 3) Perform the Inspection Mode. 4) Read the DTC. (Current malfunction)	Is the same DTC displayed?	Replace the airbag control module. <Ref. to AB-78, Airbag Control Module.>	Go to step **5**.
5	**CHECK FOR ANY OTHER DTC ON DISPLAY.**	Is any other DTC displayed?	Check DTC using "List of Diagnostic Trouble Code (DTC)". <Ref. to AB(diag)-33, List of Diagnostic Trouble Code (DTC).>	Finish the diagnosis.

DU:DTC B19F1 OPEN IN FRONT P/T 2 RH

DTC DETECTING CONDITION:

- Lap seat belt pretensioner (RH) circuit is open.
- Lap seat belt pretensioner (RH) is faulty.
- Lap seat belt pretensioner harness (RH) is open.
- Airbag control module is faulty.

CAUTION:

Before performing diagnosis, refer to "CAUTION" in "General Description". <Ref. to AB(diag)-4, CAUTION, General Description.>

WIRING DIAGRAM:

Airbag system <Ref. to WI(w/o HEV)-30, WIRING DIAGRAM, Airbag System.> <Ref. to WI(HEV)-50, WIRING DIAGRAM, Airbag System.>

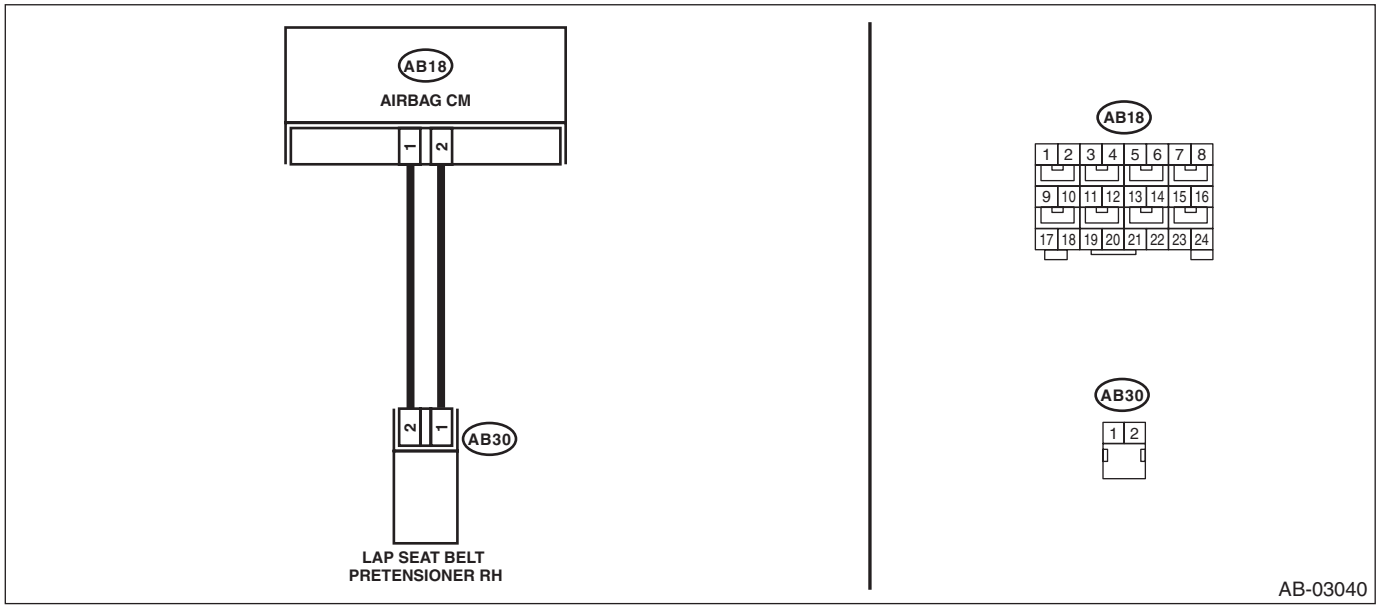

	Step	Check	Yes	No
1	**CHECK POOR CONTACT OF CONNECTORS.** Check for poor contact of the connectors between the airbag control module and the lap seat belt pretensioner (RH).	Is there poor contact?	Replace the airbag rear harness along with body harness.	Go to step **2**.
2	**CHECK LAP SEAT BELT PRETENSIONER.** 1) Turn the ignition switch to OFF, disconnect the battery ground cable, and wait for 60 seconds or more. NOTE: For HEV model, disconnect the negative terminal from 12 volt auxiliary battery, and disconnect the ground terminal from 12V engine restart battery sensor for 12 volt engine restart battery. <Ref. to NT-5, BATTERY, NOTE, Note.> 2) Disconnect the connector (AB30) from lap seat belt pretensioner (RH). 3) Connect the connector (1N) in the test harness N to the connector (AB30). 4) Connect the airbag resistor to the connector (2N) of test harness N. 5) Connect the battery ground terminal and turn the ignition switch to ON.	Does the airbag warning light illuminate for 6 seconds and go off?	Replace the lap seat belt pretensioner (RH). <Ref. to SB-20, SEAT BELT INNER - FRONT, REMOVAL, Front Seat Belt.>	Go to step **3**.

	Step	Check	Yes	No
3	**CHECK AIRBAG REAR HARNESS (SIDE AIRBAG HARNESS RH).** 1) Turn the ignition switch to OFF, disconnect the battery ground cable, and wait for 60 seconds or more. NOTE: For HEV model, disconnect the negative terminal from 12 volt auxiliary battery, and disconnect the ground terminal from 12V engine restart battery sensor for 12 volt engine restart battery. <Ref. to NT-5, BATTERY, NOTE, Note.> 2) Disconnect the airbag resistor from test harness N. 3) Disconnect the connector (AB33) from curtain airbag module (RH). 4) Disconnect connector (AB24) from side airbag module (RH). 5) Disconnect the connector (AB26) from seat belt pretensioner. 6) Disconnect the connectors (AB6, AB17, AB18) from airbag control module. 7) Connect the connector (1AG) in the test harness AG to the connectors (AB6, AB17, AB18). 8) Measure the resistance between connector (3AG) in the test harness AG and connector (2N) in the test harness N. ***Connector & terminal*** ***(3AG) No. 17 — (2N) No. 2:*** ***(3AG) No. 19 — (2N) No. 1:***	Is the resistance less than 10 Ω?	Go to step **4**.	Replace the airbag rear harness along with body harness.
4	**CHECK AIRBAG CONTROL MODULE.** 1) Connect all connectors. 2) Clear the memory. 3) Perform the Inspection Mode. 4) Read the DTC. (Current malfunction)	Is the same DTC displayed?	Replace the airbag control module. <Ref. to AB-78, Airbag Control Module.>	Go to step **5**.
5	**CHECK FOR ANY OTHER DTC ON DISPLAY.**	Is any other DTC displayed?	Check DTC using "List of Diagnostic Trouble Code (DTC)". <Ref. to AB(diag)-33, List of Diagnostic Trouble Code (DTC).>	Finish the diagnosis.

DV:DTC B19F2 SHORT IN FRONT P/T 2 RH (TO GROUND)

DTC DETECTING CONDITION:

- Lap seat belt pretensioner (RH) circuit is shorted to ground.
- Lap seat belt pretensioner (RH) is faulty.
- Lap seat belt pretensioner harness (RH) is shorted to ground.
- Airbag control module is faulty.

CAUTION:

Before performing diagnosis, refer to "CAUTION" in "General Description". <Ref. to AB(diag)-4, CAUTION, General Description.>

WIRING DIAGRAM:

Airbag system <Ref. to WI(w/o HEV)-30, WIRING DIAGRAM, Airbag System.> <Ref. to WI(HEV)-50, WIRING DIAGRAM, Airbag System.>

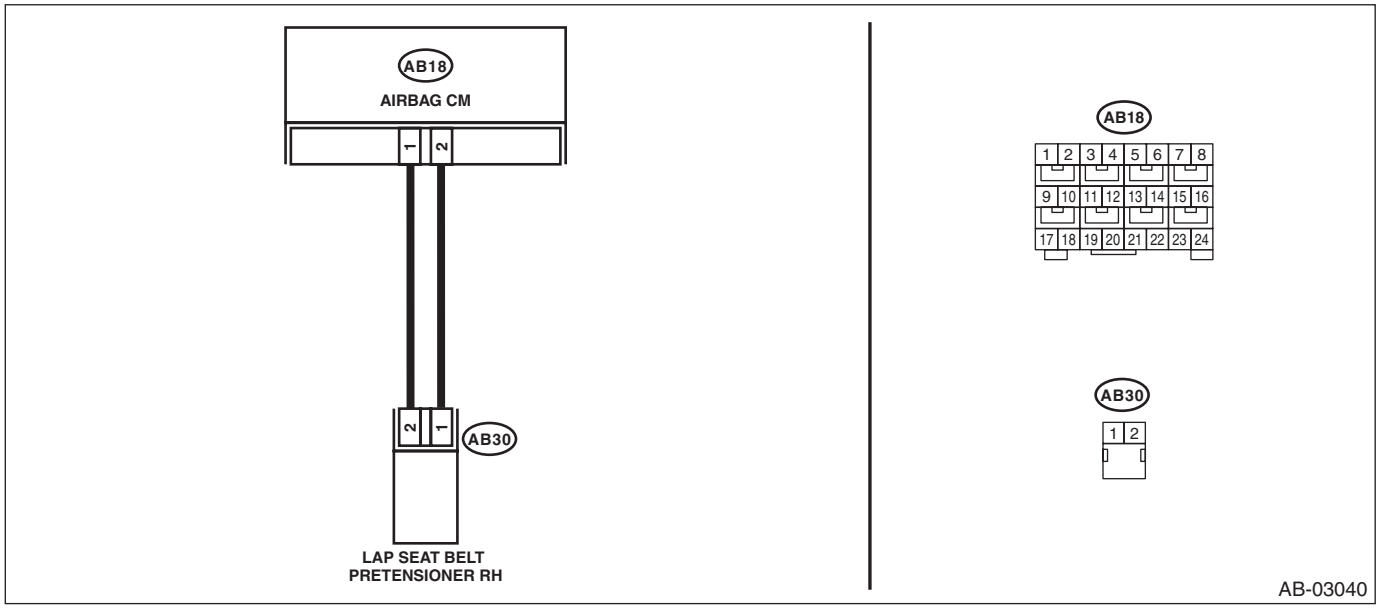

	Step	Check	Yes	No
1	**CHECK POOR CONTACT OF CONNECTORS.** Check for poor contact of the connectors between the airbag control module and the lap seat belt pretensioner (RH).	Is there poor contact?	Replace the airbag rear harness along with body harness.	Go to step **2**.
2	**CHECK LAP SEAT BELT PRETENSIONER.** 1) Turn the ignition switch to OFF, disconnect the battery ground cable, and wait for 60 seconds or more. NOTE: For HEV model, disconnect the negative terminal from 12 volt auxiliary battery, and disconnect the ground terminal from 12V engine restart battery sensor for 12 volt engine restart battery. <Ref. to NT-5, BATTERY, NOTE, Note.> 2) Disconnect the connector (AB30) from lap seat belt pretensioner (RH). 3) Connect the connector (1N) in the test harness N to the connector (AB30). 4) Connect the airbag resistor to the connector (2N) of test harness N. 5) Connect the battery ground terminal and turn the ignition switch to ON.	Does the airbag warning light illuminate for 6 seconds and go off?	Replace the lap seat belt pretensioner (RH). <Ref. to SB-20, SEAT BELT INNER - FRONT, REMOVAL, Front Seat Belt.>	Go to step **3**.

	Step	Check	Yes	No
3	**CHECK AIRBAG REAR HARNESS (LAP SEAT BELT PRETENSIONER HARNESS RH).** 1) Turn the ignition switch to OFF, disconnect the battery ground cable, and wait for 60 seconds or more. NOTE: For HEV model, disconnect the negative terminal from 12 volt auxiliary battery, and disconnect the ground terminal from 12V engine restart battery sensor for 12 volt engine restart battery. <Ref. to NT-5, BATTERY, NOTE, Note.> 2) Disconnect the airbag resistor from test harness N. 3) Disconnect the connector (AB33) from curtain airbag module (RH). 4) Disconnect connector (AB24) from side airbag module (RH). 5) Disconnect the connector (AB26) from seat belt pretensioner. 6) Disconnect the connectors (AB6, AB17, AB18) from airbag control module. 7) Connect the connector (1AG) in the test harness AG to the connectors (AB6, AB17, AB18). 8) Measure the resistance between connector (3AG) in the test harness AG and chassis ground. ***Connector & terminal*** ***(3AG) No. 17 — Chassis ground:*** ***(3AG) No. 19 — Chassis ground:***	Is the resistance 1 MΩ or more?	Go to step **4**.	Replace the airbag rear harness along with body harness.
4	**CHECK AIRBAG CONTROL MODULE.** 1) Connect all connectors. 2) Clear the memory. 3) Perform the Inspection Mode. 4) Read the DTC. (Current malfunction)	Is the same DTC displayed?	Replace the airbag control module. <Ref. to AB-78, Airbag Control Module.>	Go to step **5**.
5	**CHECK FOR ANY OTHER DTC ON DISPLAY.**	Is any other DTC displayed?	Check DTC using "List of Diagnostic Trouble Code (DTC)". <Ref. to AB(diag)-33, List of Diagnostic Trouble Code (DTC).>	Finish the diagnosis.

DW:DTC B19F3 SHORT IN FRONT P/T 2 RH (TO +B)

DTC DETECTING CONDITION:

- Lap seat belt pretensioner (RH) circuit is shorted to power supply.
- Lap seat belt pretensioner (RH) is faulty.
- Lap seat belt pretensioner harness (RH) is shorted to power supply.
- Airbag control module is faulty.

CAUTION:

Before performing diagnosis, refer to "CAUTION" in "General Description". <Ref. to AB(diag)-4, CAUTION, General Description.>

WIRING DIAGRAM:

Airbag system <Ref. to WI(w/o HEV)-30, WIRING DIAGRAM, Airbag System.> <Ref. to WI(HEV)-50, WIRING DIAGRAM, Airbag System.>

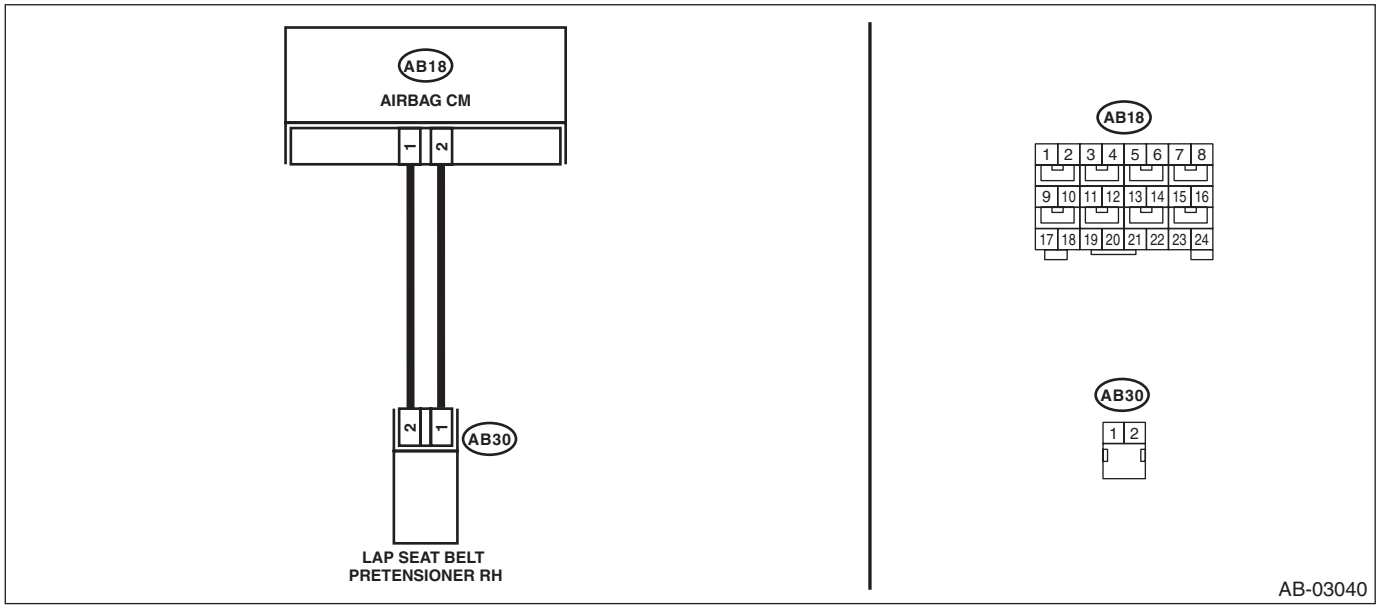

	Step	Check	Yes	No
1	**CHECK POOR CONTACT OF CONNECTORS.** Check for poor contact of the connectors between the airbag control module and the lap seat belt pretensioner (RH).	Is there poor contact?	Replace the airbag rear harness along with body harness.	Go to step **2**.
2	**CHECK LAP SEAT BELT PRETENSIONER.** 1) Turn the ignition switch to OFF, disconnect the battery ground cable, and wait for 60 seconds or more. NOTE: For HEV model, disconnect the negative terminal from 12 volt auxiliary battery, and disconnect the ground terminal from 12V engine restart battery sensor for 12 volt engine restart battery. <Ref. to NT-5, BATTERY, NOTE, Note.> 2) Disconnect the connector (AB30) from lap seat belt pretensioner (RH). 3) Connect the connector (1N) in the test harness N to the connector (AB30). 4) Connect the airbag resistor to the connector (2N) of test harness N. 5) Connect the battery ground terminal and turn the ignition switch to ON.	Does the airbag warning light illuminate for 6 seconds and go off?	Replace the lap seat belt pretensioner (RH). <Ref. to SB-20, SEAT BELT INNER - FRONT, REMOVAL, Front Seat Belt.>	Go to step **3**.

	Step	Check	Yes	No
3	**CHECK AIRBAG REAR HARNESS (LAP SEAT BELT PRETENSIONER HARNESS RH).** 1) Turn the ignition switch to OFF, disconnect the battery ground cable, and wait for 60 seconds or more. NOTE: For HEV model, disconnect the negative terminal from 12 volt auxiliary battery, and disconnect the ground terminal from 12V engine restart battery sensor for 12 volt engine restart battery. <Ref. to NT-5, BATTERY, NOTE, Note.> 2) Disconnect the airbag resistor from test harness N. 3) Disconnect the connector (AB33) from curtain airbag module (RH). 4) Disconnect connector (AB24) from side airbag module (RH). 5) Disconnect the connector (AB26) from seat belt pretensioner. 6) Disconnect the connectors (AB6, AB17, AB18) from airbag control module. 7) Connect the connector (1AG) in the test harness AG to the connectors (AB6, AB17, AB18). 8) Connect the battery ground terminal and turn the ignition switch to ON. 9) Measure the voltage between connector (3AG) in the test harness AG and chassis ground. ***Connector & terminal*** ***(3AG) No. 17 (+) — Chassis ground (–):*** ***(3AG) No. 19 (+) — Chassis ground (–):***	Is the voltage less than 1 V?	Go to step **4**.	Replace the airbag rear harness along with body harness.
4	**CHECK AIRBAG CONTROL MODULE.** 1) Connect all connectors. 2) Clear the memory. 3) Perform the Inspection Mode. 4) Read the DTC. (Current malfunction)	Is the same DTC displayed?	Replace the airbag control module. <Ref. to AB-78, Airbag Control Module.>	Go to step **5**.
5	**CHECK FOR ANY OTHER DTC ON DISPLAY.**	Is any other DTC displayed?	Check DTC using "List of Diagnostic Trouble Code (DTC)". <Ref. to AB(diag)-33, List of Diagnostic Trouble Code (DTC).>	Finish the diagnosis.

OCCUPANT DETECTION SYSTEM (DIAGNOSTICS)

OD(diag)

		Page
1.	Basic Diagnostic Procedure	2
2.	Check List for Interview	3
3.	General Description	4
4.	Electrical Component Location	8
5.	Airbag Connector	9
6.	Control Module I/O Signal	10
7.	Subaru Select Monitor	11
8.	Read Diagnostic Trouble Code (DTC)	12
9.	Inspection Mode	13
10.	Clear Memory Mode	14
11.	Display of Status Information	15
12.	Airbag Warning Light Illumination Pattern	16
13.	Passenger's Airbag ON/OFF Indicator Light Illumination Pattern	17
14.	List of Diagnostic Trouble Code (DTC)	18
15.	Diagnostic Procedure with Diagnostic Trouble Code (DTC)	19

1. Basic Diagnostic Procedure

A: PROCEDURE

Step		Check	Yes	No
1	**CHECK WARNING LIGHT.** Check whether the airbag warning light in the combination meter is lit.	Does the airbag warning light illuminate?	Go to step **2**.	Perform the diagnosis according to phenomenon of the problem.
2	**READ DTC.** 1) Turn the ignition switch to OFF. 2) Connect the Subaru Select Monitor to data link connector. 3) Turn the ignition switch to ON and run the Subaru Select Monitor. 4) Read the DTC. <Ref. to OD(diag)-12, OPERATION, Read Diagnostic Trouble Code (DTC).> NOTE: If the communication function of the Subaru Select Monitor cannot be executed properly, check the communication circuit. <Ref. to OD(diag)-11, INSPECTION, Subaru Select Monitor.>	Is DTC displayed?	Go to step **3**.	Go to "Airbag Warning Light Failure" <Ref. to AB(diag)-32, Airbag Warning Light Failure.>.
3	**PERFORM DIAGNOSIS.** 1) Determine the possible cause from "List of Diagnostic Trouble Code (DTC)" <Ref. to OD(diag)-18, List of Diagnostic Trouble Code (DTC).>. 2) Inspect the DTC using "List of Diagnostic Trouble Code (DTC)". 3) Repair the trouble cause. 4) Perform the Clear Memory Mode. <Ref. to OD(diag)-14, Clear Memory Mode.> 5) Perform the Inspection Mode. <Ref. to OD(diag)-13, Inspection Mode.> 6) Read any other DTCs displayed.	Is DTC displayed?	Perform the procedure 1) to 5) in step 3.	Finish the diagnosis.

2. Check List for Interview

A: CHECK

Customer's name		Inspector's name	
Date vehicle brought in	/ /	Registration No.	
Odometer reading	km miles	V.I.N.	
Date problem occurred	/ /	Registration year	/ /
Weather	❑ Fine ❑ Cloudy ❑ Rainy ❑ Snowy ❑ Others :		
Temperature	°C (°F)		
Road condition	❑ Flat road ❑ Uphill ❑ Downhill ❑ Gravel road ❑ Others :		
Vehicle operation	❑ Starting ❑ Idling ❑ Driving ❑ Constant speed ❑ Accelerating ❑ Decelerating ❑ Turning ❑ Others :		
Details of problem			
Airbag warning light operation	❑ Normal (After turning the ignition switch to ON, illuminates for 6 seconds then goes off.) ❑ Remains ON ❑ Remains OFF		
Passenger's airbag ON/OFF indicator does not operate.	❑ Normal (After turning the ignition switch to ON, illuminates for 6 seconds then goes off for 2 seconds; Lights ON (adult) or OFF (children/unoccupied).) ❑ Both remain ON ❑ Both remain OFF		
DTC output	❑ OK code ❑ DTC: (Code:)		

3. General Description

A: CAUTION

1) The occupant detection system (passenger seat only) control module and the occupant detection sensor are fixed to the seat cushion frame. Never remove the occupant detection control module or the occupant detection sensor from the seat cushion frame.
2) Do not replace the seat cushion pad by itself. Always replace the seat cushion pad and frame assembly as a set. The seat cushion pad and cushion frame are adjusted as a set at the time of manufacture. If cushion pads and cushion frames are combined from those of other vehicles or other sets, the occupant detection system may not operate properly.
3) If the seat cushion cover is removed, make sure to replace the hang wire on the seat cushion side with a new wire.
4) Never connect the battery in reverse polarity. Occupant detection system may be destroyed instantly.
5) Do not disconnect the battery cables while the engine is running. A large counter electromotive force will be generated in the generator, and this voltage may damage electronic parts such as occupant detection control module.
6) Before disconnecting the connectors of each sensor and control module, be sure to turn the ignition switch to OFF and wait for 60 seconds or more. Occupant detection control module may be damaged.
7) Every occupant detection system-related part is a precision part. Do not drop them.

CAUTION:
• Do not use electrical test equipment on wiring harness and connector circuits of the airbag system.
• Be careful not to damage the airbag system wiring harness when servicing the occupant detection system.
• Refer to CAUTION in Airbag System when repairing the occupant detection system. <Ref. to AB-11, CAUTION, General Description.>

B: INSPECTION

Measure the battery voltage and check electrolyte.

NOTE:
For HEV model, check the 12 volt auxiliary battery. <Ref. to SC(H4DO(HEV))-38, Battery.>

Standard voltage:
12 V

Specific gravity:
1.260 or more

Fluid level:
Between the upper level and lower level

C: PREPARATION TOOL

CAUTION:
To measure the voltage and resistance of airbag system and occupant detection system components, be sure to use the specified test harness.

1. SPECIAL TOOL

ILLUSTRATION	TOOL NUMBER	DESCRIPTION	REMARKS
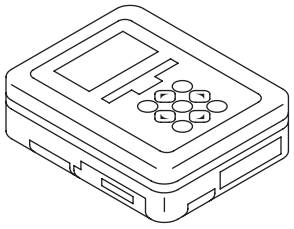 ST1B022XU0	1B022XU0	SUBARU SELECT MONITOR III KIT	Used for troubleshooting the electrical system.

- TEST HARNESS Y

ILLUSTRATION	TOOL NUMBER	DESCRIPTION	REMARKS
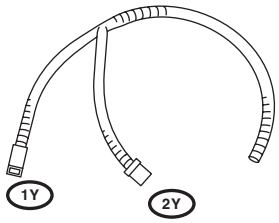 ST98299AG040	98299AG040	TEST HARNESS Y	Used for troubleshooting seat belt buckle switch.

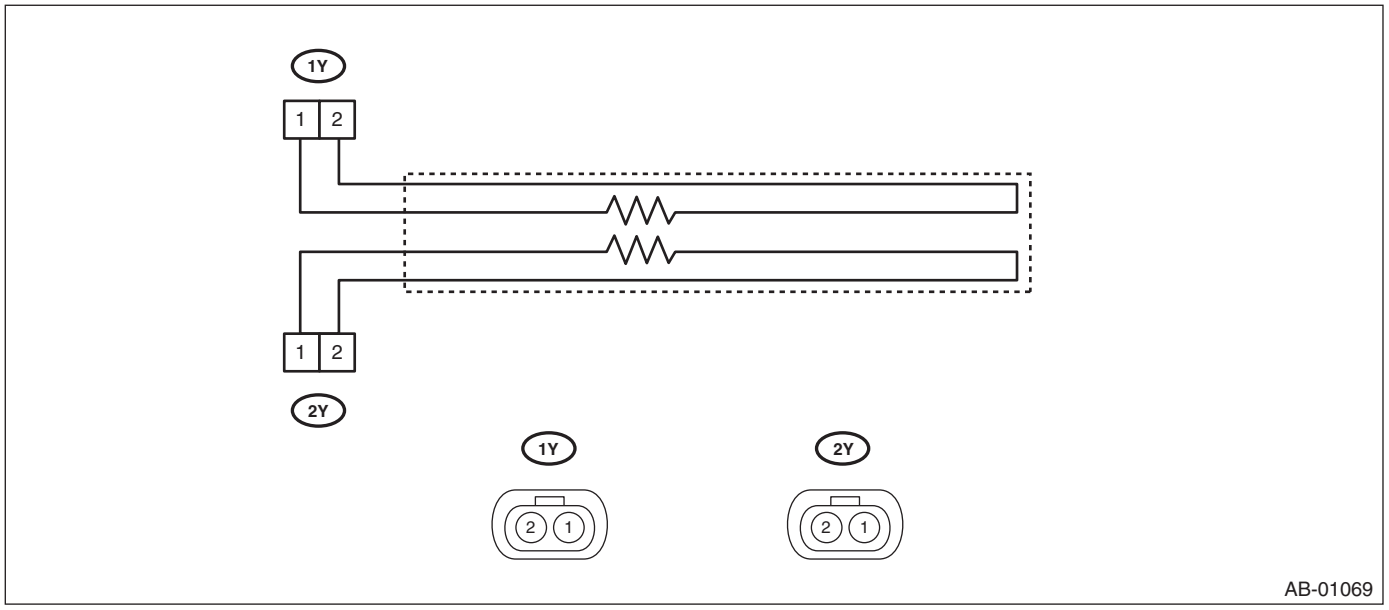

AB-01069

- TEST HARNESS AE

ILLUSTRATION	TOOL NUMBER	DESCRIPTION	REMARKS
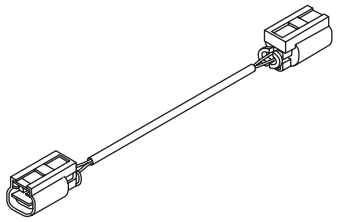 ST98299XA030	98299XA030	TEST HARNESS AE	TEST HARNESS Y adapter harness Used for troubleshooting seat belt buckle switch.

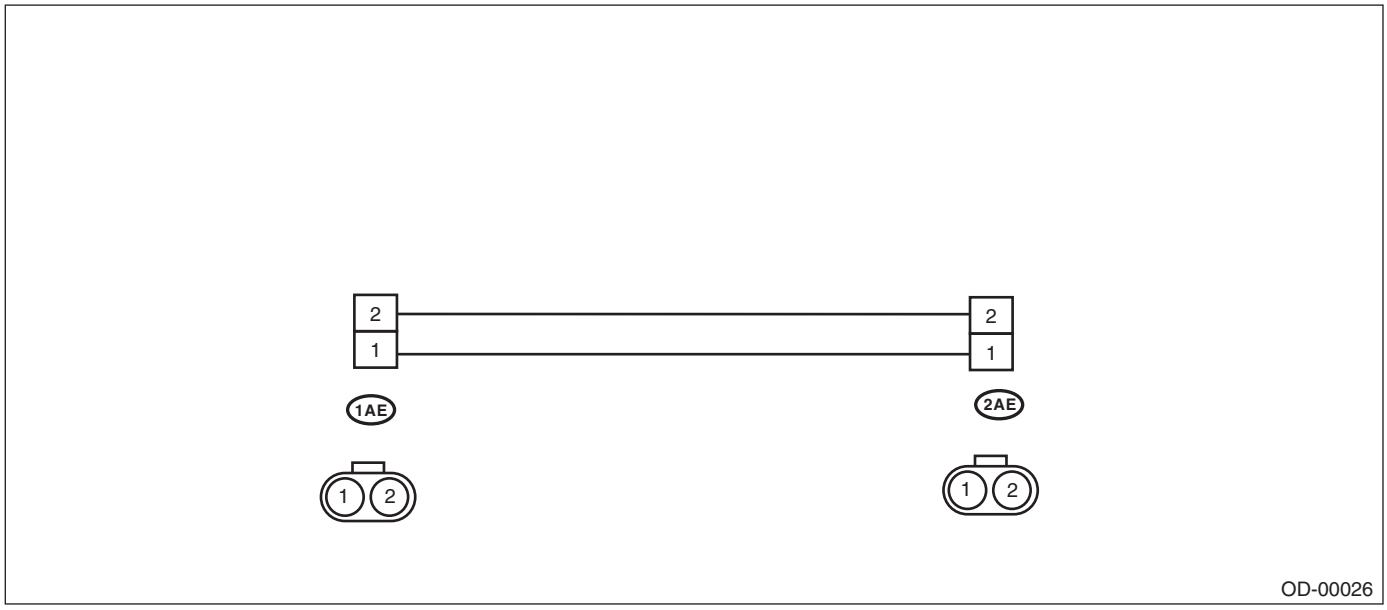

- TEST HARNESS AP

ILLUSTRATION	TOOL NUMBER	DESCRIPTION	REMARKS
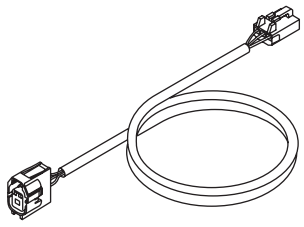 ST98299FJ030	98299FJ030	TEST HARNESS AP	Used when measuring voltage and resistance of occupant detection system.

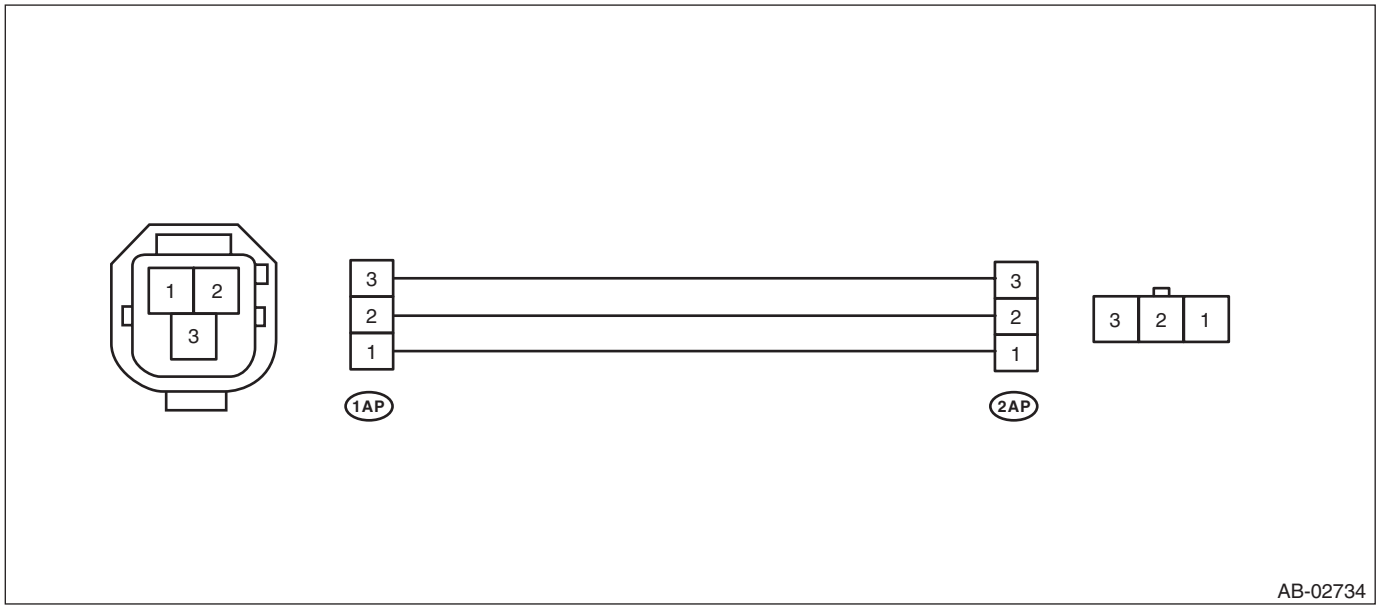

AB-02734

2. GENERAL TOOL

TOOL NAME	REMARKS
Circuit tester	Used for measuring resistance, voltage and current.

4. Electrical Component Location

A: LOCATION

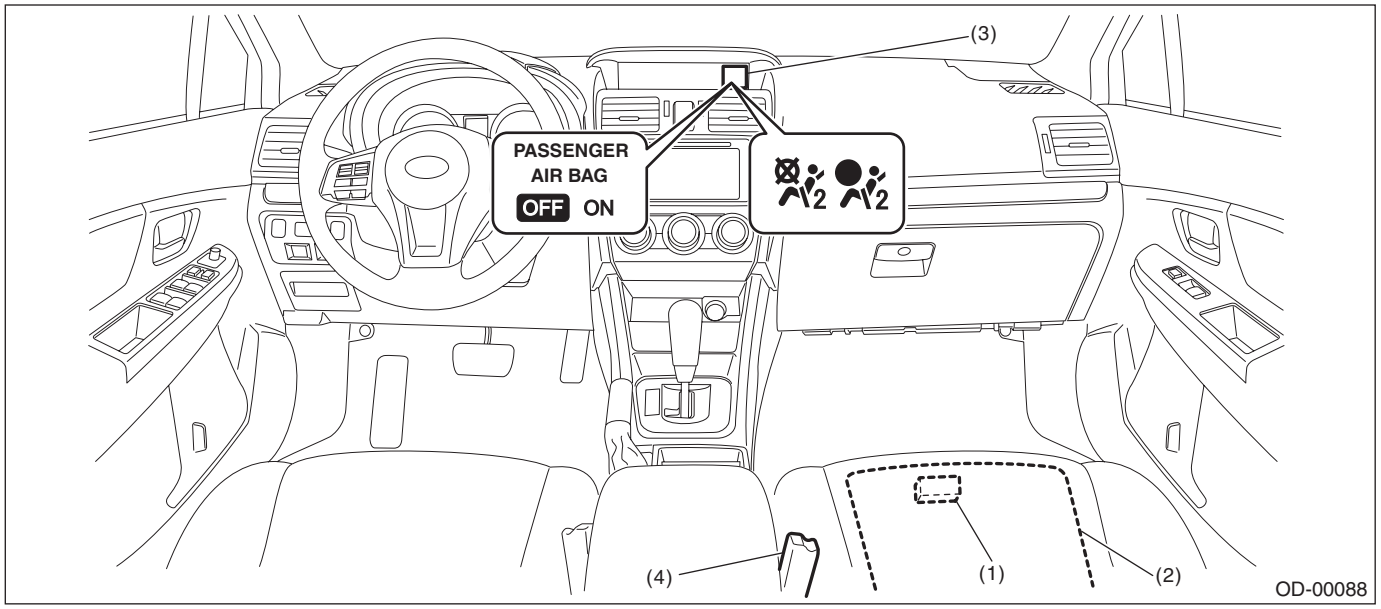

(1) Occupant detection control module
(2) Occupant detection sensor
(3) Airbag ON/OFF indicator light
(4) Buckle switch (passenger's seat)

5. Airbag Connector

A: PROCEDURE

1. OCCUPANT DETECTION SYSTEM (BETWEEN AIRBAG REAR HARNESS AND SEAT HARNESS)

1) How to disconnect:
Press the lock arm (A) and disconnect the connector.

CAUTION:
When pulling the slide lock or disconnecting connector, be sure to hold the connector, not the harness.

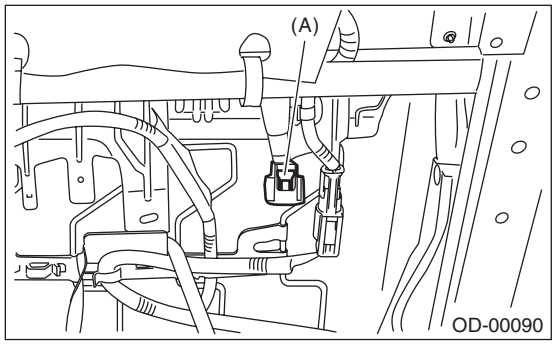

2) How to connect:
Holding the connector, push it in securely until a clicking sound is heard.

CAUTION:
Be sure to insert the connector in until it is locked. Then pull it gently to make sure that it is locked.

2. AIRBAG CONTROL MODULE

Refer to the airbag system section. <Ref. to AB-21, AIRBAG CONTROL MODULE, PROCEDURE, Airbag Connector.>

3. BUCKLE SWITCH RH

Refer to the airbag system section. <Ref. to AB-30, BUCKLE SWITCH RH, PROCEDURE, Airbag Connector.>

6. Control Module I/O Signal

A: ELECTRICAL SPECIFICATION

CAUTION:
Never remove the occupant detection control module, occupant detection sensor or seat frame because they are integrated into one unit.

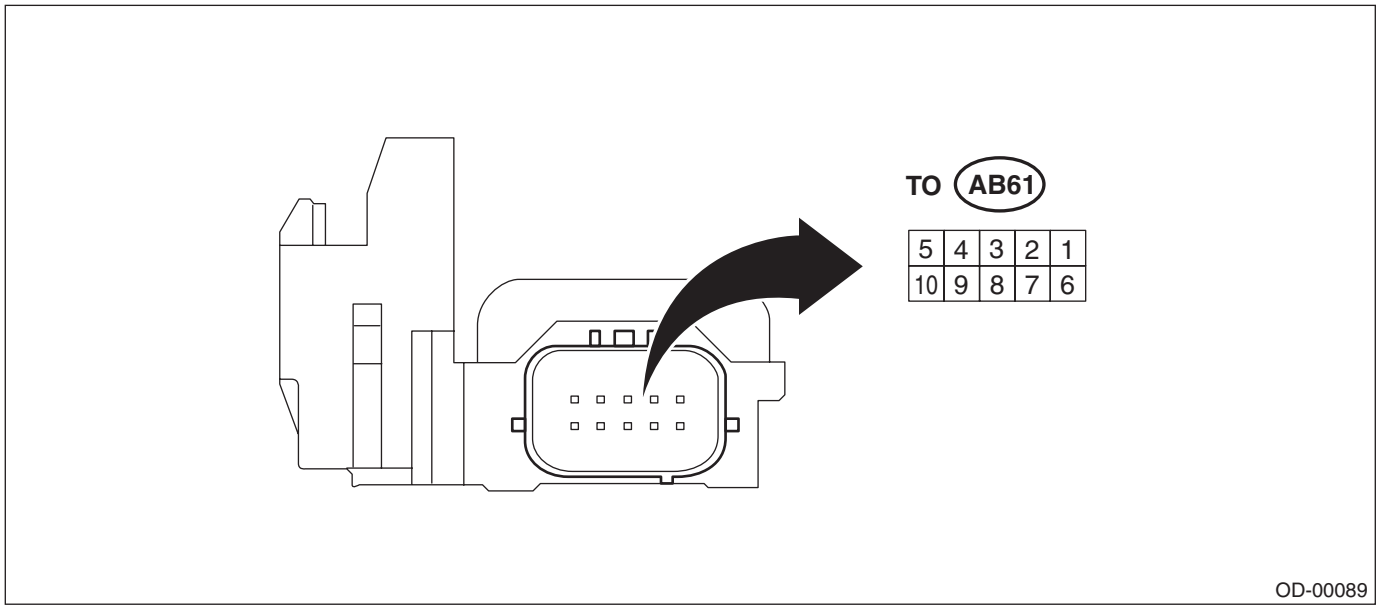

Terminal No.	Terminal name	Input/Output value	Note
1	Airbag CM communication (FSR+)	—	Communication line
2	Not used	—	—
3	Not used	—	—
4	Buckle switch– (BER–)	0 V	Switch ground
5	Not used	—	—
6	IG power supply (IG)	8 — 16 V	When ignition SW is ON
7	Not used	—	—
8	Buckle switch+	0 — IG voltage	Ignition voltage when the switch is ON
9	Airbag CM communication (FSR–)	0V	GND
10	Not used	—	—

B: WIRING DIAGRAM

Refer to “Occupant Detection System” in the wiring diagram. <Ref. to WI(w/o HEV)-113, WIRING DIAGRAM, Occupant Detection System.> <Ref. to WI(HEV)-173, WIRING DIAGRAM, Occupant Detection System.>

7. Subaru Select Monitor

A: OPERATION

For operation procedures, refer to the “PC application help for Subaru Select Monitor”.

B: INSPECTION

1. COMMUNICATION FOR INITIALIZING THE AIRBAG SYSTEM IS IMPOSSIBLE

DETECTING CONDITION:
Defective harness connector
TROUBLE SYMPTOM:
Communication is impossible between the airbag control module and the Subaru Select Monitor.

NOTE:
Refer to “Communication for Initializing Impossible” in AIRBAG SYSTEM (DIAGNOSTICS). <Ref. to AB(diag)-23, COMMUNICATION FOR INITIALIZING IMPOSSIBLE, INSPECTION, Subaru Select Monitor.>

2. COMMUNICATION FOR INITIALIZING ONLY THE OCCUPANT DETECTION SYSTEM IS IMPOSSIBLE

NOTE:
The occupant detection system communicates with the Subaru Select Monitor via the airbag control module.
DETECTING CONDITION:
Defective harness connector between airbag control module and occupant detection control module
TROUBLE SYMPTOM:
Communication is impossible between the airbag control module and the occupant detection control module.
Perform the diagnosis from step 2 in “DTC B1650 OCCUPANT CLASSIFICATION SYSTEM MALFUNCTION”. <Ref. to OD(diag)-19, DTC B1650 OCCUPANT CLASSIFICATION SYSTEM MALFUNCTION, Diagnostic Procedure with Diagnostic Trouble Code (DTC).>

8. Read Diagnostic Trouble Code (DTC)

A: OPERATION

Read out DTCs stored in the airbag control module and the occupant detection control module. For operation procedures, refer to the “PC application help for Subaru Select Monitor”.

NOTE:
For details concerning DTCs, refer to the List of Diagnostic Trouble Code (Airbag system, Occupant detection system). <Ref. to AB(diag)-33, List of Diagnostic Trouble Code (DTC).> <Ref. to OD(diag)-18, List of Diagnostic Trouble Code (DTC).>

9. Inspection Mode

A: PROCEDURE

Recreate the circumstance by referring to the conditions described in the checklist.

10.Clear Memory Mode

A: OPERATION

For operation procedures, refer to the “PC application help for Subaru Select Monitor”.

NOTE:
After repairing the occupant detection system, clear the DTCs stored in the airbag control module and the occupant detection control module.

11.Display of Status Information

A: OPERATION

Check the operating condition of each sensor in the event of malfunction in the seat belt buckle switch, or when the seat belt buckle switch has been replaced.
1) On «Main Menu» display, select {Each System Check}.
2) On «System Selection Menu» display, select {Airbag System}.
3) On «Airbag System» display, select {Current Data Display & Save}.
The following table is for support data.

Item	Display	Note
Trip Count	—	—
Count	—	—
Time Count	—	—
Belt Buckle Switch RH	Unbelted/Belted	“Belted” when passenger’s seat belt is fastened “Unbelted” when passenger’s seat belt is not fastened
Passenger Occupant Status	Occupied/Empty or CRS	“Occupied” when the occupant is present “Empty or CRS” when the seat is unoccupied or when child restraint seat is installed
Passenger Airbag Status	ON/OFF	“ON” when the passenger occupant status is “Occupied” “OFF” when the status is “Empty or CRS”

NOTE:
For detailed operation procedures, refer to “PC application help for Subaru Select Monitor”.

12.Airbag Warning Light Illumination Pattern

A: INSPECTION

Turn the ignition switch to ON, and confirm that the airbag warning light remains on for approx. 6 seconds then turns off afterwards.

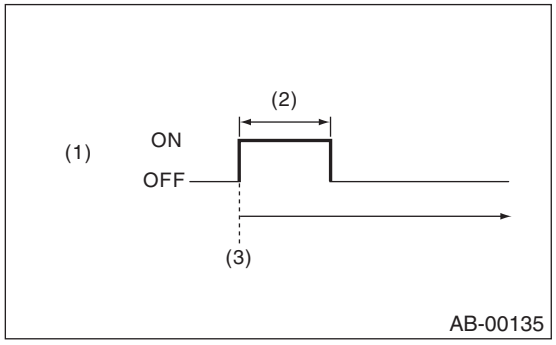

(1) Airbag warning light
(2) Approx. 6 seconds
(3) Ignition switch ON

13.Passenger's Airbag ON/OFF Indicator Light Illumination Pattern

A: INSPECTION

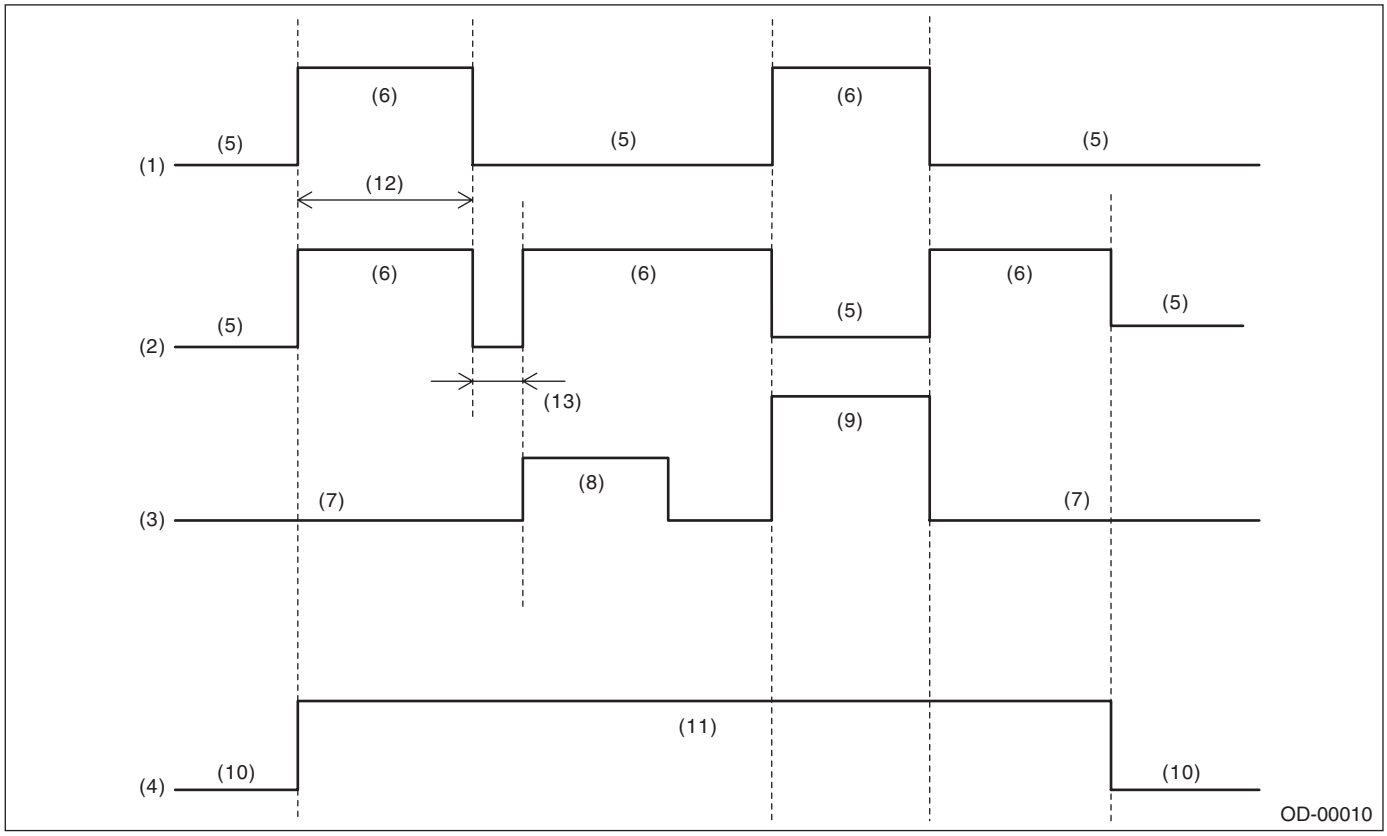

(1)	Passenger's airbag ON indicator light	(6)	Light ON	(10)	OFF
(2)	Passenger's airbag OFF indicator light	(7)	Empty	(11)	ON
(3)	Occupant seating	(8)	Child	(12)	Approx. 6 sec.
(4)	Ignition switch	(9)	Adult	(13)	Approx. 2 sec.
(5)	Light OFF				

14.List of Diagnostic Trouble Code (DTC)

A: LIST

DTC	Item	Content of diagnosis	Reference
B1650	Occupant Classification System Malfunction	• Occupant detection sensor is faulty. • Occupant detection control module is faulty. • Occupant detection harness is faulty. • Fuse No. 25 is blown.	<Ref. to OD(diag)-19, DTC B1650 OCCUPANT CLASSIFICATION SYSTEM MALFUNCTION, Diagnostic Procedure with Diagnostic Trouble Code (DTC).>
B1655	Front Buckle Switch RH Failure	• Passenger's buckle switch circuit is open, shorted or shorted to ground. • Occupant detection system is faulty. • Occupant detection harness is faulty.	<Ref. to OD(diag)-22, DTC B1655 FRONT BUCKLE SWITCH RH FAILURE, Diagnostic Procedure with Diagnostic Trouble Code (DTC).>
B1760	Sensor mat abnormal	• Occupant detection sensor is faulty. • Occupant detection sensor is open, shorted between terminals, shorted to power supply or shorted to ground. • Seat heater is open. • Occupant detection control module is faulty.	<Ref. to OD(diag)-24, DTC B1760 SENSOR MAT ABNORMAL, Diagnostic Procedure with Diagnostic Trouble Code (DTC).>
B1761	Sensor mat liquid coating abnormal	• Detected that the occupant detection sensor is spattered with fluid. • Occupant detection sensor is faulty. • Occupant detection control module is faulty.	<Ref. to OD(diag)-24, DTC B1761 SENSOR MAT LIQUID COATING ABNORMAL, Diagnostic Procedure with Diagnostic Trouble Code (DTC).>
B1771	Buckle switch abnormal	• Passenger's buckle switch is faulty. • Passenger's buckle switch circuit is open, shorted or shorted to ground. • Occupant detection system is faulty. • Occupant detection harness is faulty.	<Ref. to OD(diag)-24, DTC B1771 BUCKLE SWITCH ABNORMAL, Diagnostic Procedure with Diagnostic Trouble Code (DTC).>
B1795	ECU internal circuit fault	Occupant detection control module is faulty.	<Ref. to OD(diag)-24, DTC B1795 ECU INTERNAL CIRCUIT FAULT, Diagnostic Procedure with Diagnostic Trouble Code (DTC).>

15.Diagnostic Procedure with Diagnostic Trouble Code (DTC)

A: DTC B1650 OCCUPANT CLASSIFICATION SYSTEM MALFUNCTION

DTC DETECTING CONDITION:

- Occupant detection sensor is faulty.
- Occupant detection control module is faulty.
- Occupant detection harness is faulty.
- Rear airbag harness is faulty.

CAUTION:

Before performing diagnosis, refer to "CAUTION" in "General Description". <Ref. to AB(diag)-4, CAUTION, General Description.>

WIRING DIAGRAM:

Occupant detection system <Ref. to WI(w/o HEV)-113, WIRING DIAGRAM, Occupant Detection System.> <Ref. to WI(HEV)-173, WIRING DIAGRAM, Occupant Detection System.>

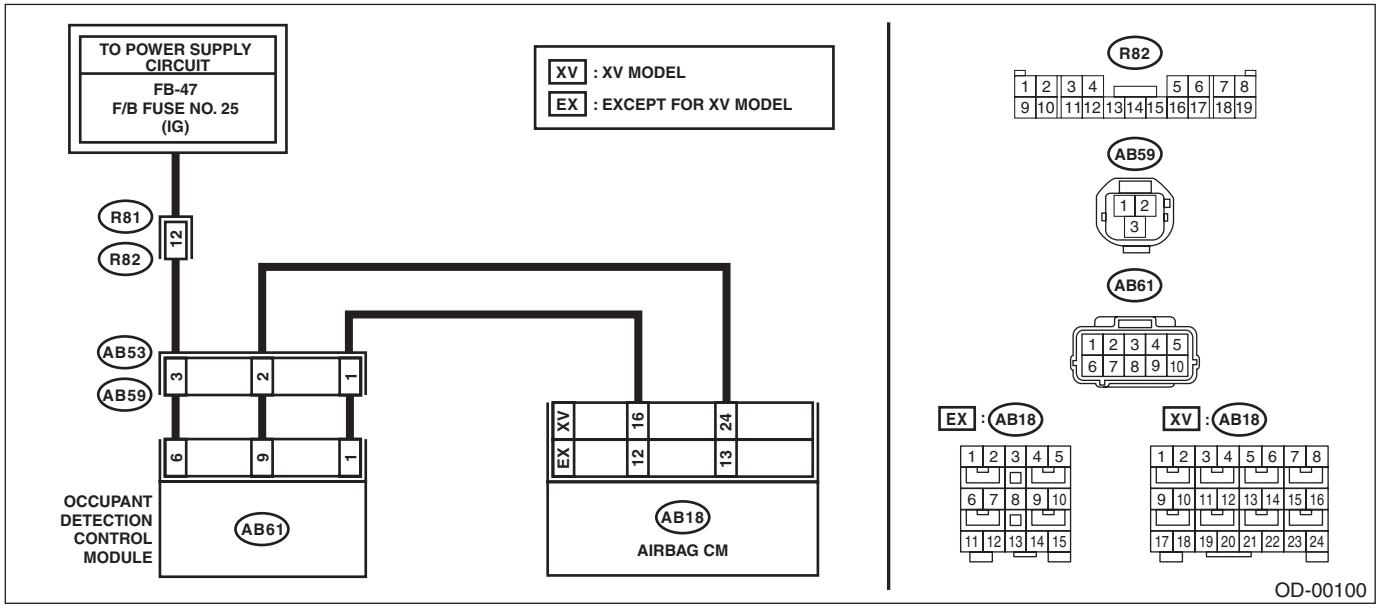

Step		Check	Yes	No
1	**CHECK DTC.** Read the DTC of the occupant detection system.	Is any of DTC B1760, B1761, B1771 and B1795 detected?	Perform the diagnosis according to DTC.	Go to step **2**.
2	**CHECK POOR CONTACT OF CONNECTORS.** Check for poor contact of the connectors between the occupant detection control module and airbag control module.	Is there poor contact?	Reconnect the connector. If defective is not improved, replace the airbag rear harness along with the body harness or the occupant detection harness (seat harness).	Go to step **3**.

	Step	Check	Yes	No
3	**CHECK AIRBAG REAR HARNESS.** 1) Turn the ignition switch to OFF, disconnect the battery ground cable, and wait for 60 seconds or more. NOTE: For HEV model, disconnect the negative terminal from 12 volt auxiliary battery, and disconnect the ground terminal from 12V engine restart battery sensor for 12 volt engine restart battery. <Ref. to NT-5, BATTERY, NOTE, Note.> 2) Disconnect the connectors (AB59) and (AB53) under the passenger's seat. 3) Disconnect the connectors (AB6, AB17, AB18) from the airbag control module, and connect the connector (1AG) in the test harness AG to connectors (AB6, AB17, AB18). NOTE: Except for XV models, connect test harness AH between the connectors (AB6, AB17, AB18) and (1AG). 4) Connect the connector (1AP) in the test harness AP to the connector (AB53). 5) Measure the resistance between connector (5AG) in the test harness AG and connector (2AP) in the test harness AP. ***Connector & terminal*** ***XV model*** ***(6AG) No. 9 — (2AP) No. 2:*** ***(6AG) No. 11 — (2AP) No. 1:*** ***Except for XV model*** ***(5AG) No. 5 — (2AP) No. 1:*** ***(5AG) No. 16 — (2AP) No. 2:***	Is the resistance less than 10 Ω?	Go to step **4**.	Replace the airbag rear harness along with body harness.
4	**CHECK AIRBAG REAR HARNESS.** Measure the resistance between connector (5AG) in the test harness AG and chassis ground. ***Connector & terminal*** ***XV model*** ***(6AG) No. 9 — Chassis ground:*** ***(6AG) No. 11 — Chassis ground:*** ***(6AG) No. 9 — (6AG) No. 11:*** ***Except for XV model*** ***(5AG) No. 5 — Chassis ground:*** ***(5AG) No. 16 — Chassis ground:*** ***(5AG) No. 5 — (5AG) No. 16:***	Is the resistance 1 MΩ or more?	Go to step **5**.	Replace the airbag rear harness along with body harness.

Step		Check	Yes	No
5	**CHECK OCCUPANT DETECTION HARNESS.** 1) Turn the ignition switch to ON. 2) Measure the voltage between connector (2AB) in the test harness AB and chassis ground. ***Connector & terminal*** ***(2AP) No. 3 (+) — Chassis ground (–):***	Is the voltage 10 V or more?	Replace the occupant detection harness (seat harness). If defective is not improved, replace the occupant detection system (seat cushion & frame assembly), and then the airbag control module in this order. <Ref. to SE-16, PASSENGER'S SEAT, DISASSEMBLY, Front Seat.>	Check the battery voltage and fuse. If there is no fault, replace the airbag rear harness together with body harness.

B: DTC B1655 FRONT BUCKLE SWITCH RH FAILURE

DTC DETECTING CONDITION:

- Passenger's buckle switch circuit is open, shorted or shorted to ground.
- Seat harness circuit is open, shorted or shorted to ground.
- Occupant detection control module is faulty.

WIRING DIAGRAM:

Occupant detection system <Ref. to WI(w/o HEV)-113, WIRING DIAGRAM, Occupant Detection System.> <Ref. to WI(HEV)-173, WIRING DIAGRAM, Occupant Detection System.>

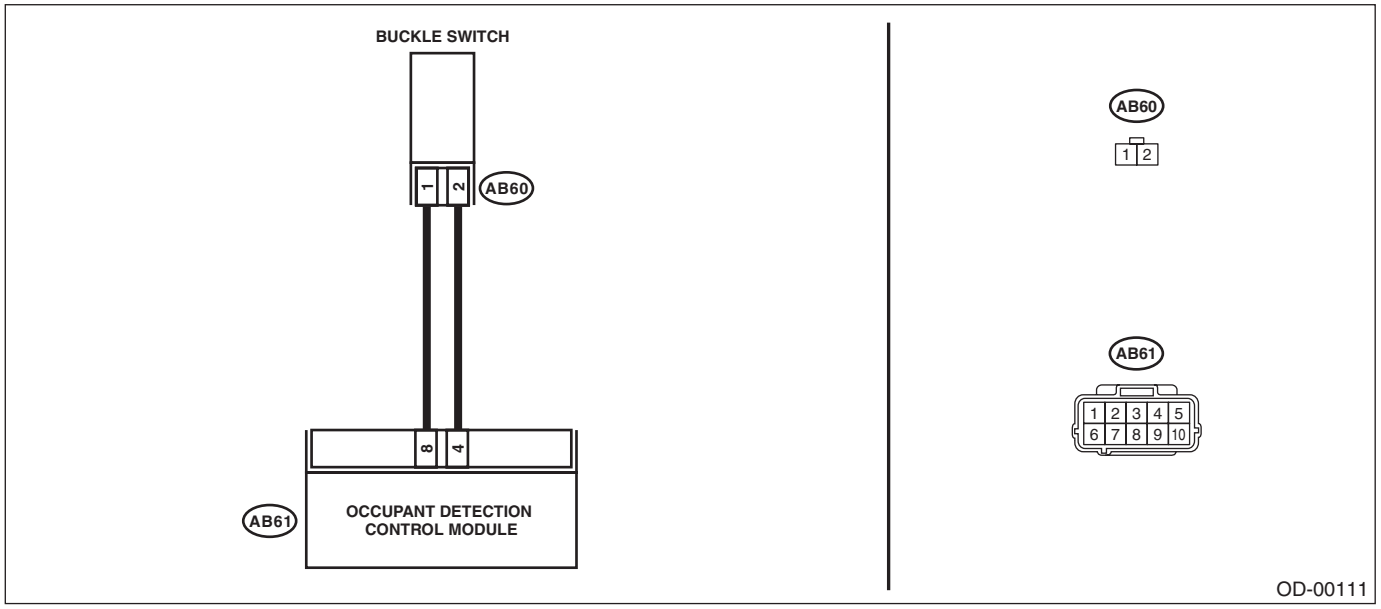

	Step	Check	Yes	No
1	**CHECK DTC.** Read the DTC of the occupant detection system.	Is any of DTC B1760, B1761, B1771 and B1795 detected?	Perform the diagnosis according to DTC.	Go to step **2**.
2	**CHECK POOR CONTACT OF CONNECTORS.** Check for poor contact of the connectors between the occupant detection control module and buckle switch.	Is there poor contact?	Reconnect the connector. If the fault is not fixed, replace the airbag harness.	Go to step **3**.

	Step	Check	Yes	No
3	**CHECK BUCKLE SWITCH.** 1) Turn the ignition switch to OFF, disconnect the battery ground terminal, and wait for 60 seconds. NOTE: For HEV model, disconnect the negative terminal from 12 volt auxiliary battery, and disconnect the ground terminal from 12V engine restart battery sensor for 12 volt engine restart battery. <Ref. to NT-5, BATTERY, NOTE, Note.> 2) Disconnect the buckle switch connector (AB60). 3) Connect the test harness AE and test harness connector Y to buckle switch connector (AB60). 4) Connect the battery ground terminal and turn the ignition switch to ON. NOTE: For HEV model, connect the negative terminal for 12 volt auxiliary battery, and connect the ground terminal to 12V engine restart battery sensor for 12 volt engine restart battery. <Ref. to NT-5, BATTERY, NOTE, Note.>	Does the airbag warning light illuminate for 6 seconds and go off?	Replace the buckle switch. <Ref. to SB-16, SEAT BELT OUTER - FRONT, REMOVAL, Front Seat Belt.>	Check the seat harness, and if any fault is found, replace the seat harness. If the fault is not fixed, replace the occupant detection system. <Ref. to SE-16, PASSENGER'S SEAT, DISASSEMBLY, Front Seat.>

C: DTC B1760 SENSOR MAT ABNORMAL

DTC DETECTING CONDITION:

- Occupant detection sensor circuit is open, shorted between terminals, shorted to power supply or shorted to ground.
- Seat heater circuit is open.
- Occupant detection control module is faulty.

	Step	Check	Yes	No
1	**CHECK POOR CONTACT OF CONNECTORS.** Check for poor contact of connectors between the occupant detection control module and the occupant detection sensor.	Is there poor contact of connector?	Reconnect the connector. If the fault is not fixed, replace the occupant detection harness or replace the occupant detection system (passenger's & frame assembly).	Replace the occupant detection system (passenger's & frame assembly). <Ref. to SE-16, PASSENGER'S SEAT, DISASSEMBLY, Front Seat.>

D: DTC B1761 SENSOR MAT LIQUID COATING ABNORMAL

DTC DETECTING CONDITION:

- Occupant detection sensor is spattered with fluid.
- Occupant detection sensor is faulty.
- Occupant detection control module is faulty.

	Step	Check	Yes	No
1	**DRY THE SEAT.** 1) Open the vehicle windows in a well-ventilated place indoors and dry the seat for 24 hours. 2) Read the DTC of the occupant detection system.	Is DTC B1761 detected?	Replace the occupant detection system (passenger's & frame assembly). <Ref. to SE-16, PASSENGER'S SEAT, DISASSEMBLY, Front Seat.>	Clear the memory.

E: DTC B1771 BUCKLE SWITCH ABNORMAL

DTC DETECTING CONDITION:

- Passenger's seat buckle switch is faulty.
- Passenger's buckle switch circuit is open, shorted or shorted to ground.
- Occupant detection system is faulty.
- Occupant detection harness is faulty.

Perform the diagnosis from Step 2 in "DTC B1655 FRONT BUCKLE SWITCH RH FAILURE". <Ref. to OD(diag)-22, DTC B1655 FRONT BUCKLE SWITCH RH FAILURE, Diagnostic Procedure with Diagnostic Trouble Code (DTC).>

F: DTC B1795 ECU INTERNAL CIRCUIT FAULT

DTC DETECTING CONDITION:

Occupant detection control module is faulty.

When "DTC B1795 ECU INTERNAL CIRCUIT FAULT" is displayed, the occupant detection control module is faulty. Replace the occupant detection system (passenger's & frame assembly). <Ref. to SE-16, PASSENGER'S SEAT, DISASSEMBLY, Front Seat.>

SEAT BELT SYSTEM

SB

Page

1. General Description 2
2. Pretensioner Connector 11
3. Inspection Locations after a Collision 12
4. Seat Belt Warning System 13
5. Front Seat Belt 16
6. Rear Seat Belt 30

1. General Description

A: COMPONENT

1. FRONT SEAT BELT

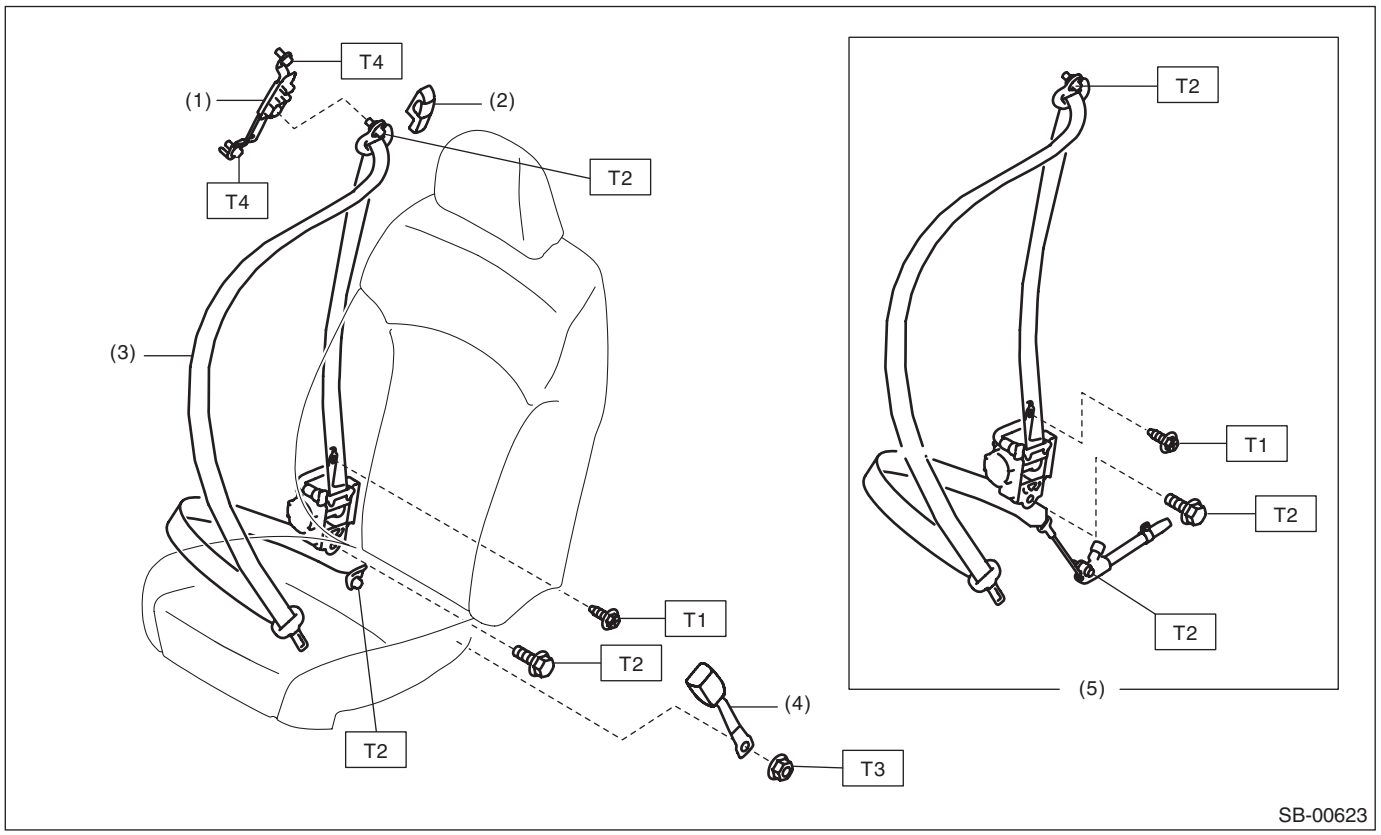

(1) Adjuster assembly - seat belt
(2) Cover through
(3) Seat belt outer - front
(4) Seat belt inner - front
(5) Seat belt outer - front (Only on passenger's side for XV models with lap seat belt pretensioner)

Tightening torque: N·m (kgf-m, ft-lb)
T1: 7.5 (0.76, 5.5)
T2: 30 (3.06, 22.1)
T3: 38 (3.87, 28.0)
T4: 53 (5.40, 39.1)

2. REAR SEAT BELT (4 DOOR MODEL)

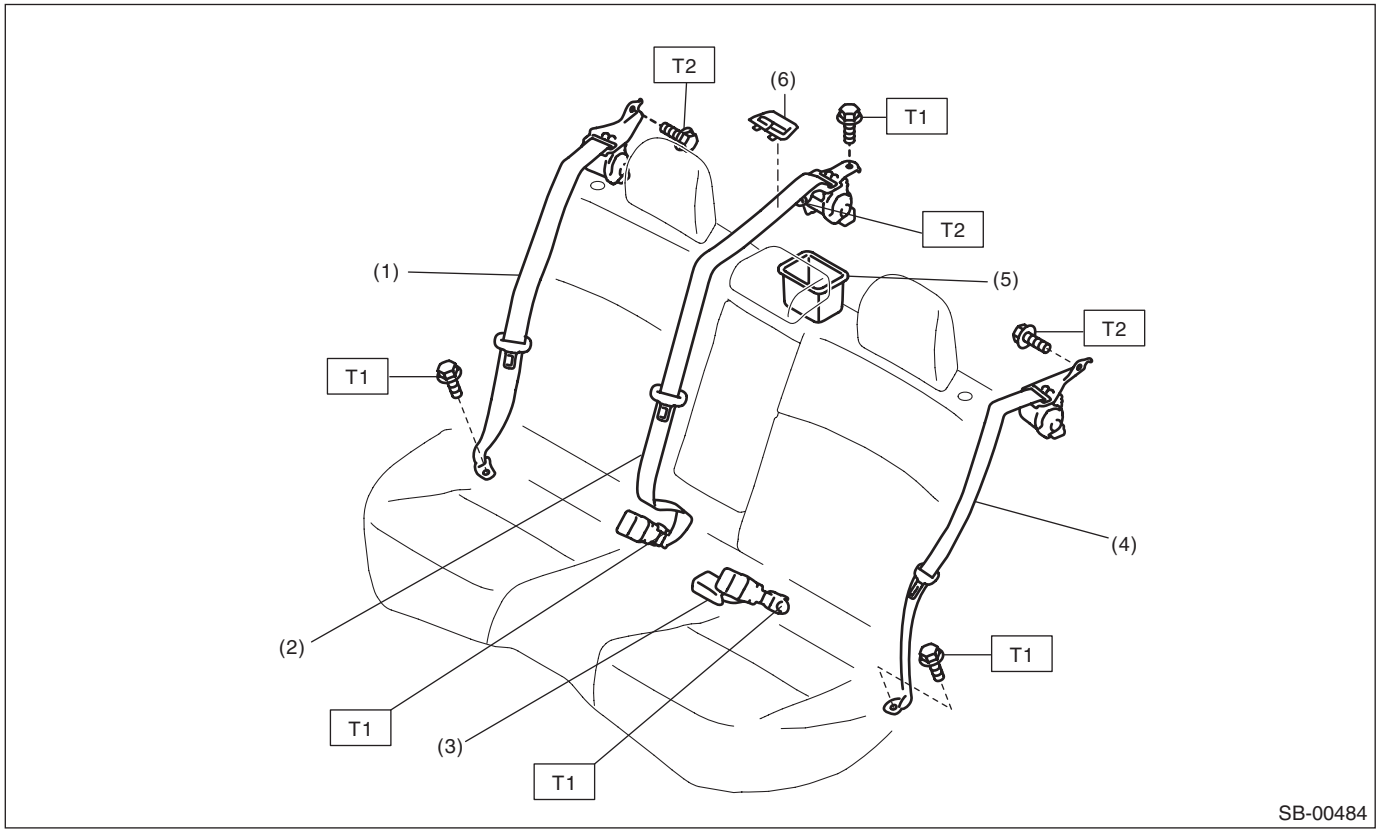

(1)	Seat belt outer - rear RH	(4)	Seat belt outer - rear LH
(2)	Seat belt - rear shoulder CTR	(5)	Cover - ELR
(3)	Seat belt - CTR LH	(6)	Cover - belt rear

Tightening torque: N·m (kgf-m, ft-lb)
T1: 30 (3.06, 22.1)
T2: 53 (5.40, 39.1)

3. REAR SEAT BELT (5 DOOR MODEL/XV MODEL)

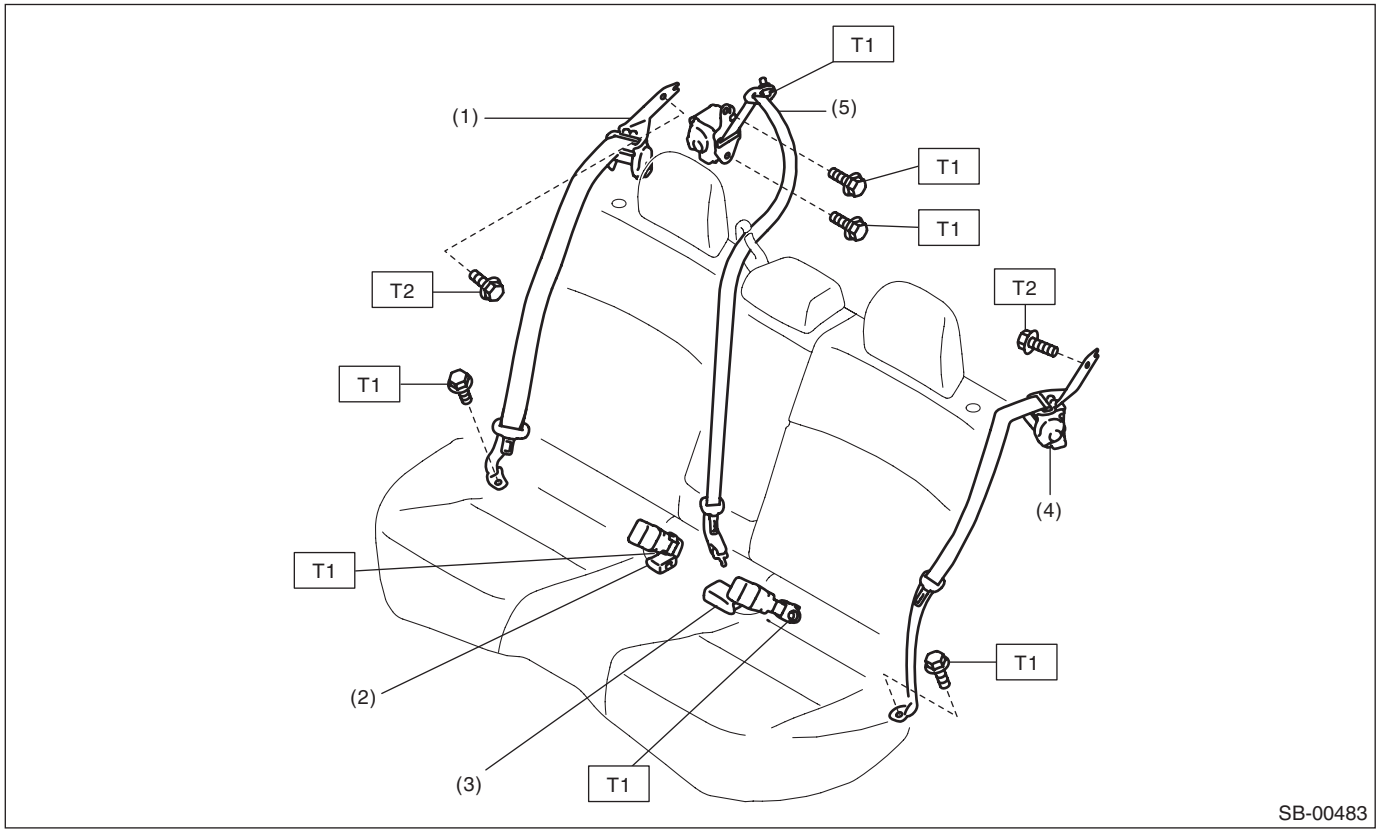

(1) Seat belt outer - rear RH
(2) Seat belt - CTR RH
(3) Seat belt - CTR LH
(4) Seat belt outer - rear LH
(5) Seat belt - rear shoulder CTR

Tightening torque: N·m (kgf-m, ft-lb)
T1: 30 (3.06, 22.1)
T2: 53 (5.40, 39.1)

B: CAUTION

• Before starting the work, turn the ignition switch to OFF, disconnect the battery ground cable and wait for 60 seconds or more.
• For the 12 volt engine restart battery of HEV model, disconnect the ground terminal from 12V engine restart battery sensor.
• The pretensioner system is fitted with a backup power supply. After disconnecting the battery ground cable, the pretensioner may operate if you do not wait for 60 seconds or more before starting pretensioner system servicing.
• Do not drop or apply any impact to the pretensioner.
• If oil, grease or water gets on the pretensioner, wipe it off immediately with a dry cloth.
• Do not expose the pretensioner to high temperature or flame.
• Do not allow current to flow through or voltage to reach the pretensioner. Do not use a circuit tester to check resistance of the pretensioner.
• Do not disassemble or attempt to repair the pretensioner. If it is dented, cracked or deformed, replace it with a new genuine part.
• Do not use the airbag or pretensioner parts from other vehicles. Always use a new genuine part for replacement.
• When handling a seat belt with deployed pretensioner, wear gloves and goggles. Wash your hands afterwards.
• Do not reuse a seat belt with deployed pretensioner.
• Before disposal, make sure to perform an operation process to the pretensioners.
• If material from the pretensioner enters the eyes or contacts skin during operation process, wash it away with clean water, and then consult a doctor.

C: PREPARATION TOOL

1. SPECIAL TOOL

• Subaru Select Monitor

ILLUSTRATION	TOOL NUMBER	DESCRIPTION	REMARKS
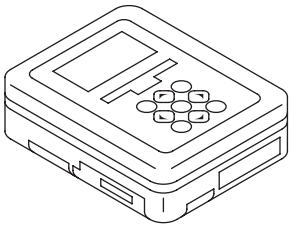 ST1B022XU0	1B022XU0	SUBARU SELECT MONITOR III KIT	Used for setting of each function and trouble-shooting for electrical system.

- TEST HARNESS AP

ILLUSTRATION	TOOL NUMBER	DESCRIPTION	REMARKS
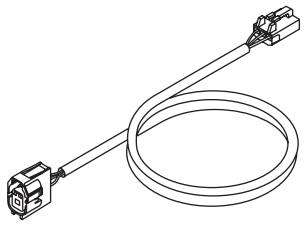 ST98299FJ030	98299FJ030	TEST HARNESS AP	Used when measuring voltage and resistance of occupant detection system.

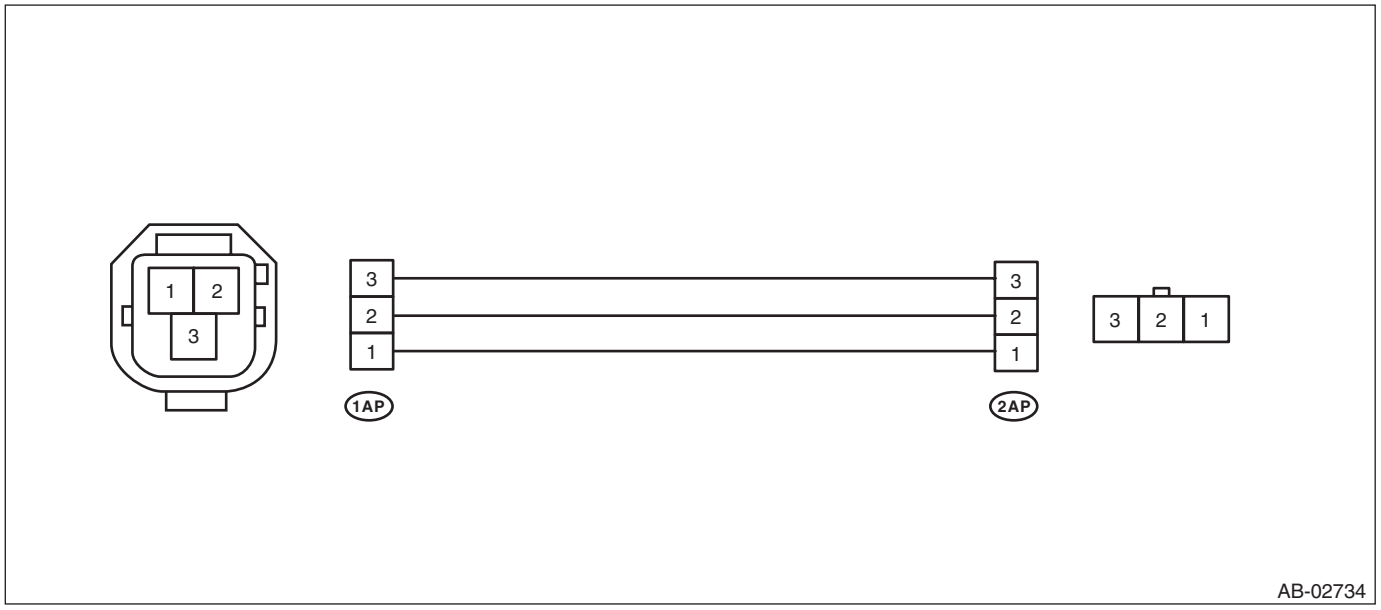

- TEST HARNESS AG

ILLUSTRATION	TOOL NUMBER	DESCRIPTION	REMARKS
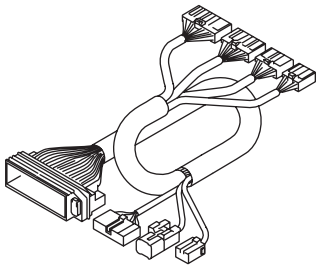 ST98299AG070	98299AG070	TEST HARNESS AG	Used when measuring voltage and resistance of airbag control module.

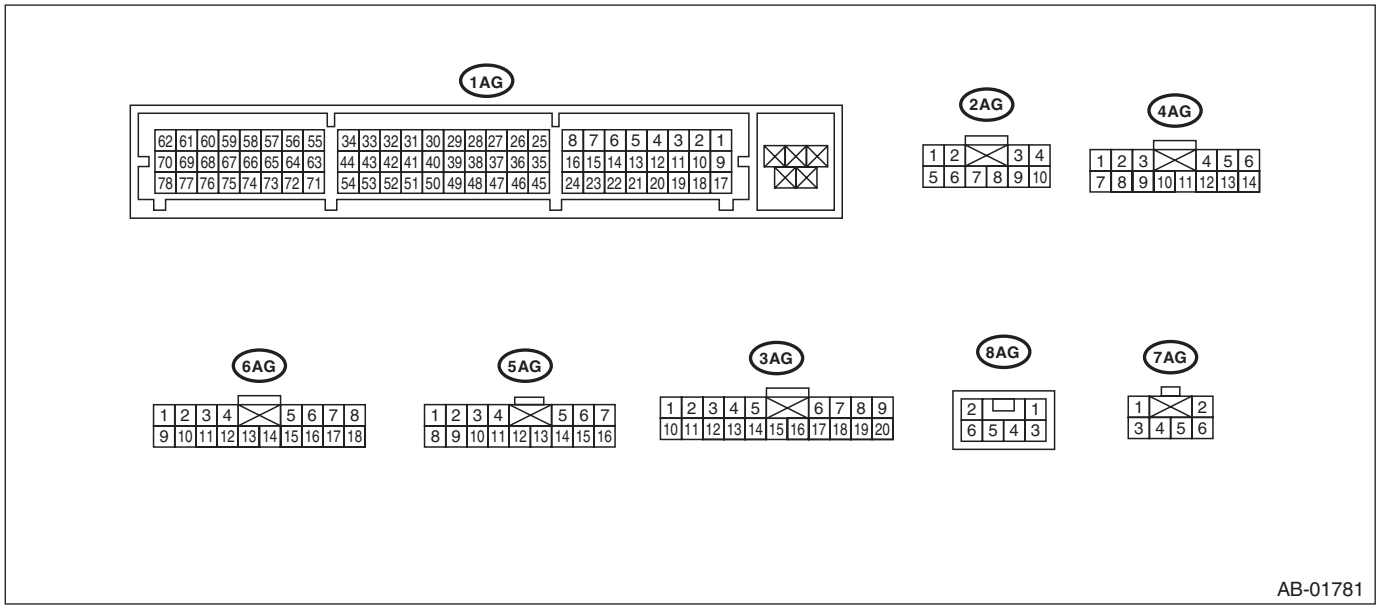

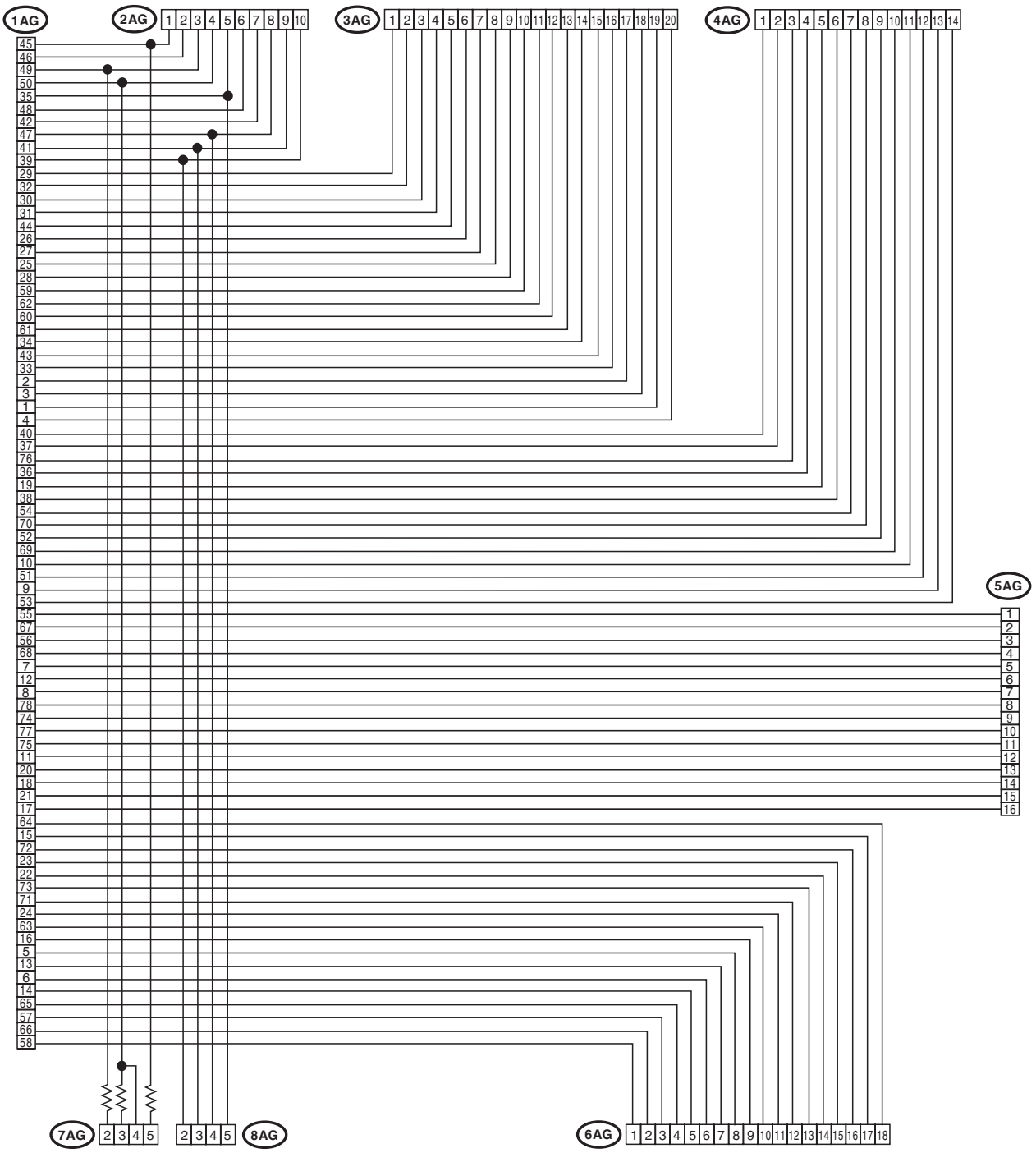

AB-01902

- TEST HARNESS Y

ILLUSTRATION	TOOL NUMBER	DESCRIPTION	REMARKS
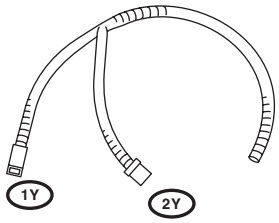 ST98299AG040	98299AG040	TEST HARNESS Y	Used for troubleshooting seat belt buckle switch.

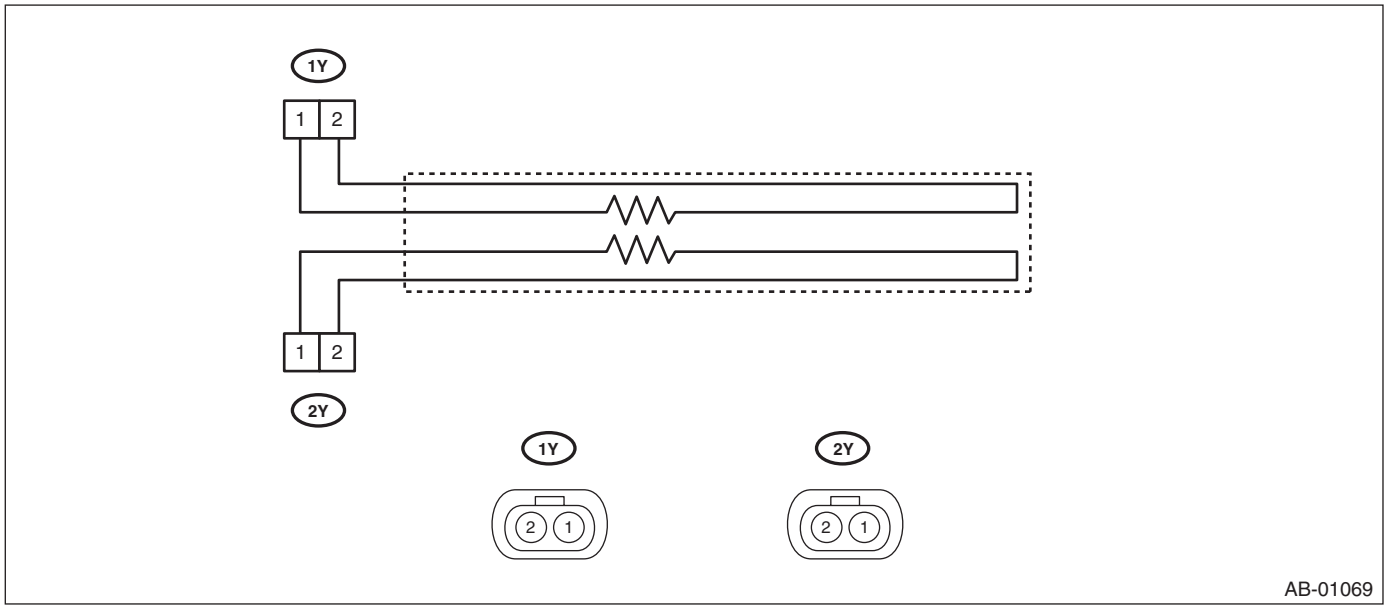

AB-01069

- AIRBAG RESISTOR

ILLUSTRATION	TOOL NUMBER	DESCRIPTION	REMARKS
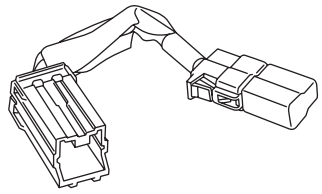 ST98299PA040	98299PA040	AIRBAG RESISTOR	Used in replacement of airbag module for which resistance value is same as airbag module.

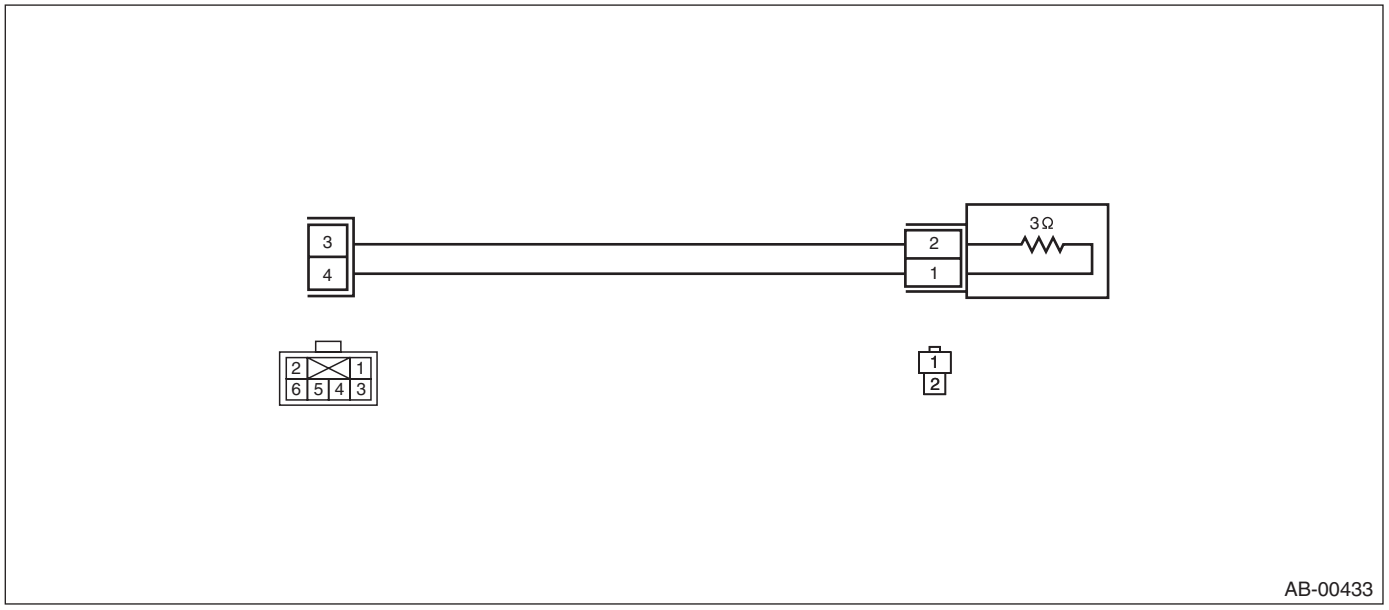

2. GENERAL TOOL

TOOL NAME	REMARKS
Circuit tester	Used for measuring resistance and voltage.

2. Pretensioner Connector

A: PROCEDURE

For connectors of seat belt pretensioner, lap seat belt pretensioner and buckle switch RH, refer to “Airbag Connector” of “AIRBAG SYSTEM” section or “OCCUPANT DETECTION SYSTEM” section.

- Airbag system: <Ref. to AB-20, PROCEDURE, Airbag Connector.>
- Occupant detection system: <Ref. to OD(diag)-9, PROCEDURE, Airbag Connector.>

3. Inspection Locations after a Collision

A: INSPECTION

Refer to “Inspection Locations after a Collision” of “AIRBAG SYSTEM” section. <Ref. to AB-33, Inspection Locations after a Collision.>

4. Seat Belt Warning System

A: WIRING DIAGRAM

Refer to “Seat Belt Warning System” in the wiring diagram.
- Gasoline engine model <Ref. to WI(w/o HEV)-136, WIRING DIAGRAM, Seat Belt Warning System.>
- HEV model <Ref. to WI(HEV)-199, WIRING DIAGRAM, Seat Belt Warning System.>

B: INSPECTION

CAUTION:
• Before diagnosing the seat belt warning system and airbag system, always turn the ignition switch to OFF, disconnect the battery ground cable, and then wait for 60 seconds or more.
• When inspecting the airbag main harness, disconnect the connectors of the driver’s airbag module, passenger’s airbag module and knee airbag module for safety reasons.
• When inspecting the airbag rear harness, disconnect the side airbag module connector, curtain airbag module connector and seat belt pretensioner connector for safety reasons.

	Step	Check	Yes	No
1	**CHECK FUNCTION.** 1) Sit on the driver’s seat and passenger’s seat and disconnect the seat belts of the both. 2) Turn the ignition switch to ON (engine OFF). 3) Check the illumination of the driver’s seat belt warning light in the combination meter, and the passenger’s seat belt warning light in the MFD, and the sounding of the buzzer.	Do the driver’s warning light and passenger’s warning light blink and the buzzer sound while blinking?	Go to step **2**.	Go to step **12**.
2	**CHECK FUNCTION.** 1) Wait until the buzzer sound stops in step 1. (for approximately six seconds after starting sounding) 2) Connect and disconnect the seat belts of the driver’s and passenger’s. 3) Check the illumination of the driver’s seat belt warning light in the combination meter and the passenger’s seat belt warning light in the MFD.	Do the seat belts warning light illuminate ←→ go off according to the operation?	Go to step **3**.	Go to step **8**.
3	**CHECK FUNCTION.** 1) Wait until the buzzer sound stops in step 2. (for approximately six seconds after starting sounding) 2) Start the engine, and set the vehicle speed at 20 km/h (12 MPH) or more. 3) Check the seat belt warning lights of the driver’s and the passenger’s, and if the warning buzzer sounds.	Do the driver’s warning light and passenger’s warning light blink and the buzzer sound while blinking?	Go to step **4**.	Go to step **14**.
4	**CHECK HARNESS.** 1) Disconnect the negative terminal from the battery, and wait for 60 seconds or more. NOTE: For the 12 volt engine restart battery of HEV model, disconnect the ground terminal from 12V engine restart battery sensor. 2) Disconnect the connectors of the combination meter and the seat belt buckle switch LH. 3) Check for short circuit to battery, open circuit and short circuit to ground between the combination meter and the seat belt buckle switch LH. ***Connector & terminal*** ***(i10) No. 15 — (R107) No. 2:***	Is the harness normal?	Go to step **5**.	Repair or replace the harness.

	Step	Check	Yes	No
5	**CHECK HARNESS.** Measure the resistance between the seat belt buckle switch LH and chassis ground. ***Connector & terminal*** ***(R107) No. 1 — Chassis ground:***	Is the resistance less than 10 Ω?	Go to step **6**.	Repair or replace the harness.
6	**CHECK SEAT BELT BUCKLE SWITCH LH.** Measure the resistance between the connector terminals of the driver's seat belt switch when the driver's seat belt is fastened and detached. ***Connector & terminal*** ***(R107) No. 2 — (R107) No. 1:***	Is the resistance when the belt is fastened 1 MΩ or more, and less than 10 Ω when the belt is detached?	Go to step **7**.	Replace the seat belt inner - front LH. <Ref. to SB-16, SEAT BELT OUTER - FRONT, REMOVAL, Front Seat Belt.>
7	**CHECK COMBINATION METER.** Perform the self-diagnosis of combination meter. <Ref. to IDI-7, SELF-DIAGNOSIS DISPLAY MODE, OPERATION, Combination Meter System.>	At the start of combination meter self diagnosis, did the buzzer sound and the seat belt warning light illuminate?	Replace the combination meter. There may be a reception failure of the combination meter.	Replace the combination meter. <Ref. to IDI-16, REMOVAL, Combination Meter.>
8	**CHECK CURRENT DATA.** 1) Sit in the passenger's seat. 2) Select "Current Data Display" and display the data of "Passenger seat seat-belt wearing state". 3) Fasten and detach the passenger's side seat belt buckle, and read the data of the seat belt switch. <Ref. to IDI(diag)-16, LIST, Read Current Data.>	Does the seat belt switch display turn ON ←→ OFF according to the operation of the seat belt buckle?	Go to step **12**.	Go to step **9**.
9	**CHECK AIRBAG SYSTEM AND OCCUPANT DETECTION SYSTEM.** Perform the check in accordance with the diagnostic procedure DTC B1650 of the airbag system. <Ref. to OD(diag)-19, DTC B1650 OCCUPANT CLASSIFICATION SYSTEM MALFUNCTION, Diagnostic Procedure with Diagnostic Trouble Code (DTC).>	Is the inspection result normal?	Go to step **10**.	Repair or replace with new parts according to DTC B1650.
10	**CHECK BUCKLE SWITCH RH.** Perform the check in accordance with the diagnostic procedure DTC B1655 of the occupant detection system. <Ref. to OD(diag)-22, DTC B1655 FRONT BUCKLE SWITCH RH FAILURE, Diagnostic Procedure with Diagnostic Trouble Code (DTC).>	Is the inspection result normal?	Go to step **11**.	Repair or replace with new parts according to DTC B1655.
11	**CHECK AIRBAG CONTROL MODULE AND COMBINATION METER.** Check the airbag control module, occupant detection sensor and seat belt buckle switch RH. Perform the check in accordance with the diagnostic procedure DTC B16F1 of the airbag system. <Ref. to AB(diag)-99, DTC B16F1 PASSENGER'S SEAT BELT WARNING FAILURE, Diagnostic Chart with Trouble Code.>	Is the inspection result normal?	Replace the combination meter. <Ref. to IDI-16, REMOVAL, Combination Meter.>	Repair or replace with new parts according to DTC B16F1.
12	**CHECK MFD POWER SUPPLY VOLTAGE.** 1) Disconnect the MFD connector. 2) Turn the ignition switch to ON. 3) Measure the voltage between the ignition power supply and the MFD. ***Connector & terminal*** ***(i122) No. 3 (+) — Chassis ground (–):***	Is the voltage 10 V or more?	Go to step **13**.	Check the harness for open or short between the fuse and MFD.

	Step	Check	Yes	No
13	**CHECK MFD GROUND CIRCUIT.** 1) Turn the ignition switch to OFF. 2) Measure the resistance between MFD and chassis ground. ***Connector & terminal*** ***(i122) No. 2 — Chassis ground:***	Is the resistance less than 10 Ω?	Go to step **14**.	Repair or replace the harness.
14	**CHECK HARNESS BETWEEN MFD AND COMBINATION METER.** 1) Disconnect the harness of the MFD and the combination meter. 2) Measure the resistance between MFD and combination meter. ***Connector & terminal*** ***(i122) No. 9 — (i10) No. 28:***	Is the resistance less than 10 Ω?	Go to step **15**.	Repair or replace the harness.
15	**CHECK COMMUNICATION STATUS BETWEEN MFD AND COMBINATION METER.** 1) Remove the MFD, and install a properly operating MFD (new MFD). 2) Connect the connector and then turn the ignition switch to ON. ***Connector & terminal*** ***(i122) No. 9 — (i10) No. 28:***	Is the MFD properly displayed?	Replace the MFD.	Replace the combination meter case assembly.

5. Front Seat Belt

A: REMOVAL

1. SEAT BELT OUTER - FRONT

CAUTION:
• The airbag system is fitted with a backup power supply. After disconnecting the battery ground cable, the airbag may operate if you do not wait for 60 seconds before starting the service of airbag system.
• Do not drop or subject the pretensioner to any impact.
• Since the pretensioner and bracket are integrated as a unit, do not disassemble them.
1) Before working, turn the ignition switch to OFF, disconnect the battery ground cable, and wait for 60 seconds or more. <Ref. to NT-5, BATTERY, NOTE, Note.>

NOTE:
For the 12 volt engine restart battery of HEV model, disconnect the ground terminal from 12V engine restart battery sensor.
2) Tilt the front seat backrest assembly forward, and move the front seat all the way forward.
3) Release the claws, and then remove the cover side sill - front INN. (On the side where seat belt assembly is removed)

CAUTION:
Do not pull with excessive force. Doing so may damage the claws of the cover side sill - front INN.

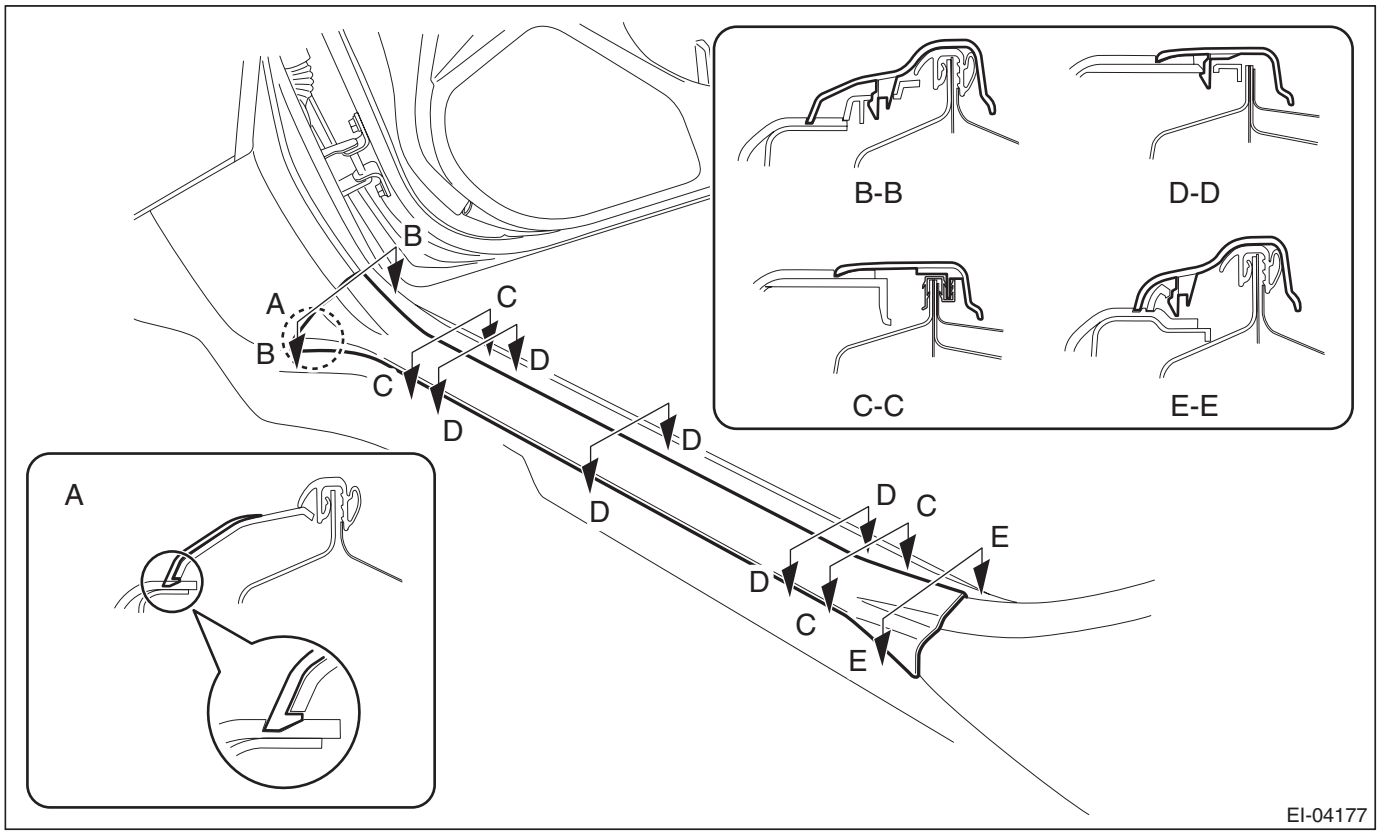

4) Remove the rear seat cushion assembly.
(1) Push the corners of the seat cushion from above.
(2) While pushing the corners of the seat cushion from above, pull the knob of the hook - seat cushion rear towards yourself.
(3) While pulling the knob towards yourself, disconnect the hooks by lifting up the rear seat cushion.

NOTE:
Pull the left side of the knob to disconnect the LH side hook, and pull the right side of the knob to disconnect the RH side hook.

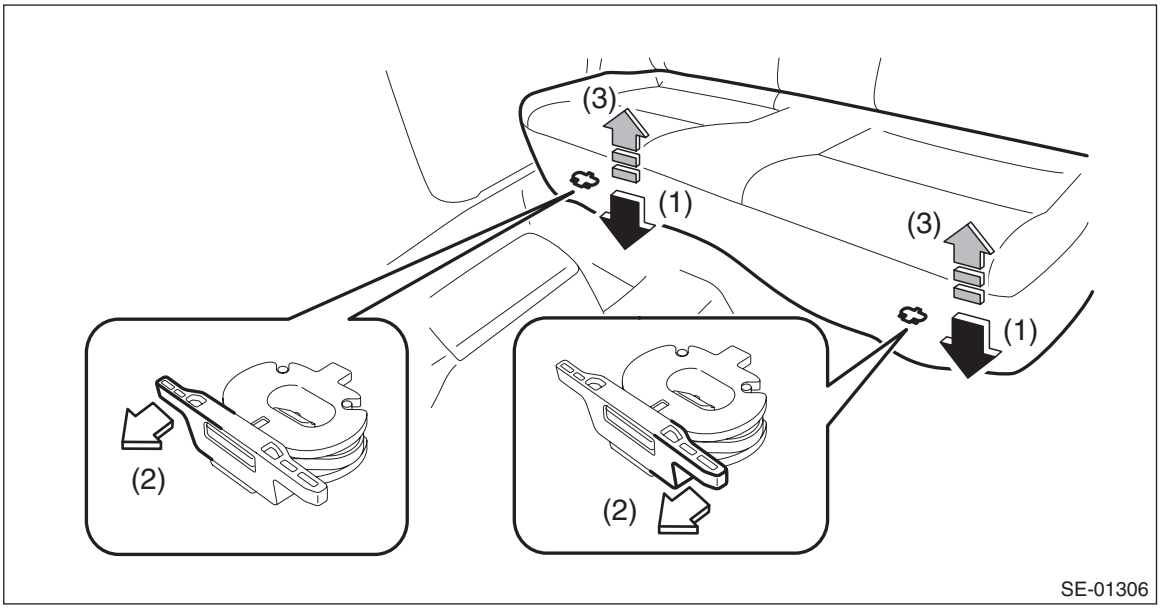

(4) Remove the hook (A) by pushing it back while lifting the front side of the rear seat cushion, and remove the rear seat cushion.

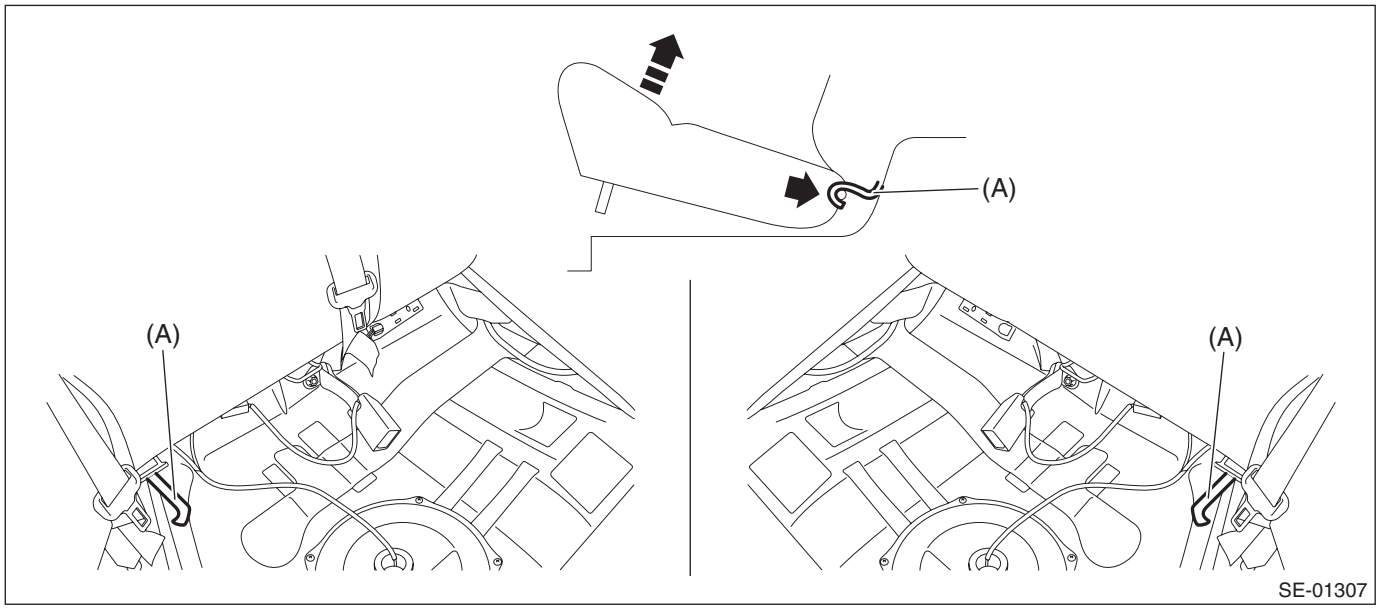

5) Release the clips and claws, and then remove the cover side sill - rear INN. (On the side where seat belt assembly is removed)

CAUTION:
Do not pull with excessive force. Doing so may damage the claws of the cover side sill - rear INN.

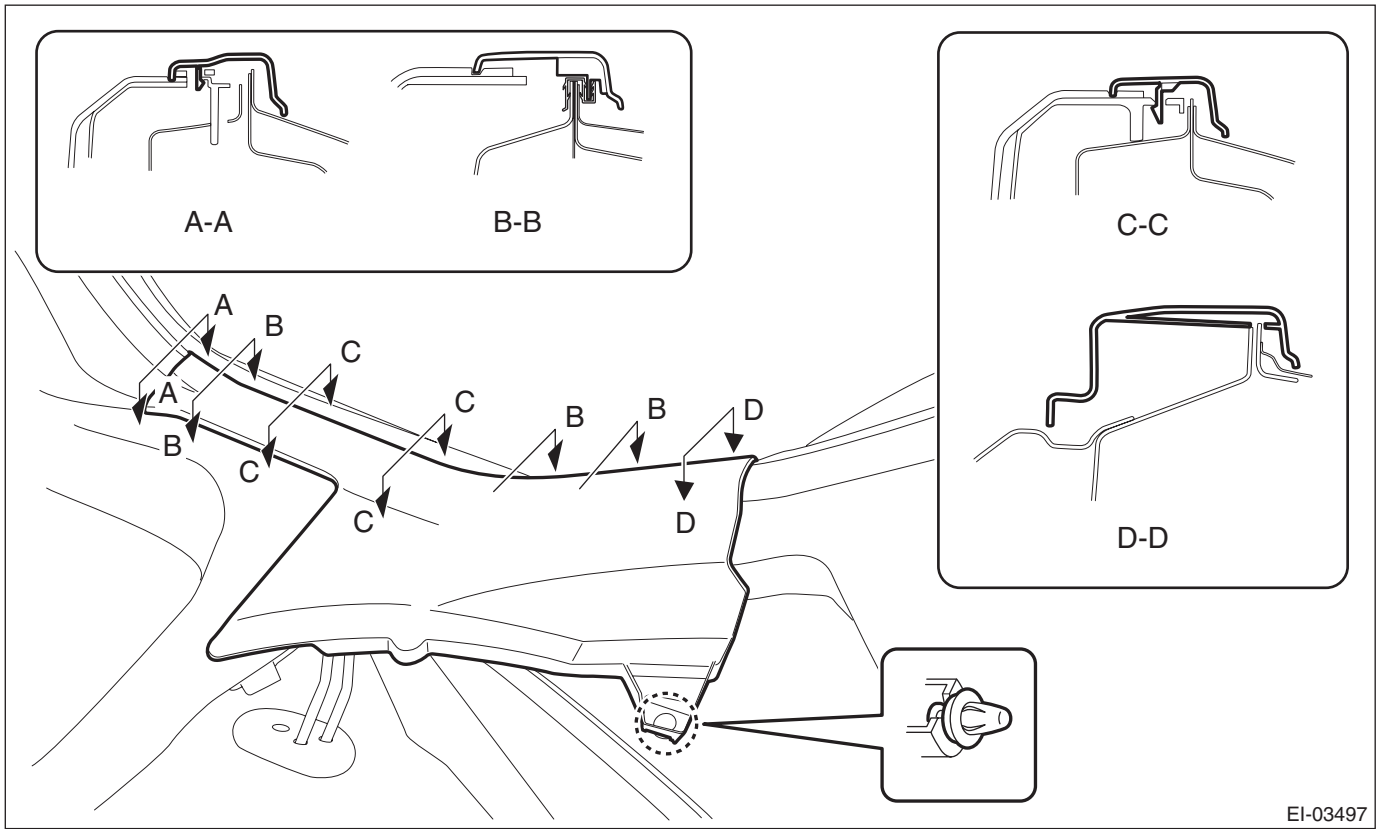

6) Remove the trim panel - center pillar LWR. (On the side where seat belt assembly is removed)
(1) Release the clip by pulling the trim panel - center pillar LWR toward you.
(2) Expand the claws of the trim panel - center pillar LWR outward, and remove it from the trim panel - center pillar UPR.

CAUTION:
Do not expand the trim panel - center pillar LWR excessively. Doing so may damage the trim.

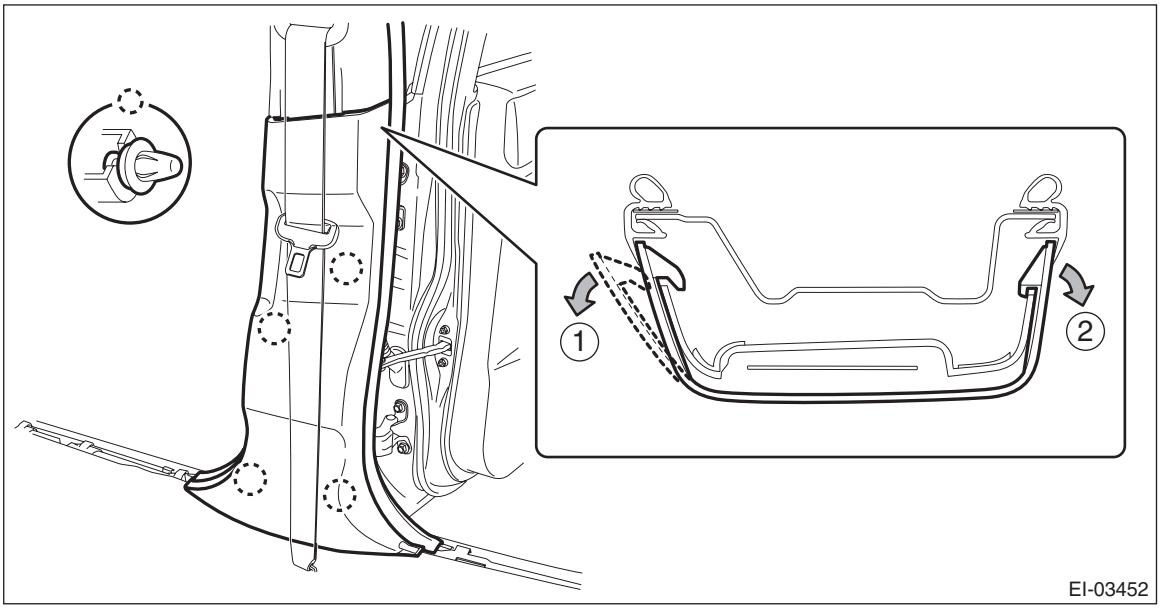

NOTE:
First release the claw located to the front of the vehicle.
7) Remove the trim panel - center pillar UPR. (On the side where seat belt assembly is removed)
(1) Remove the cover through (a), and remove the seat belt anchor bolt.
(2) Remove the bolt on the lower side of the trim panel - center pillar UPR.
(3) Remove the clip by pulling the upper part of the trim toward you, and while lowering the entire trim, remove the trim panel - center pillar UPR.

CAUTION:
Do not reuse the upper clips of the trim panel - center pillar UPR. Once the clip is removed, its holding force is reduced. Be sure to replace it with a new clip.

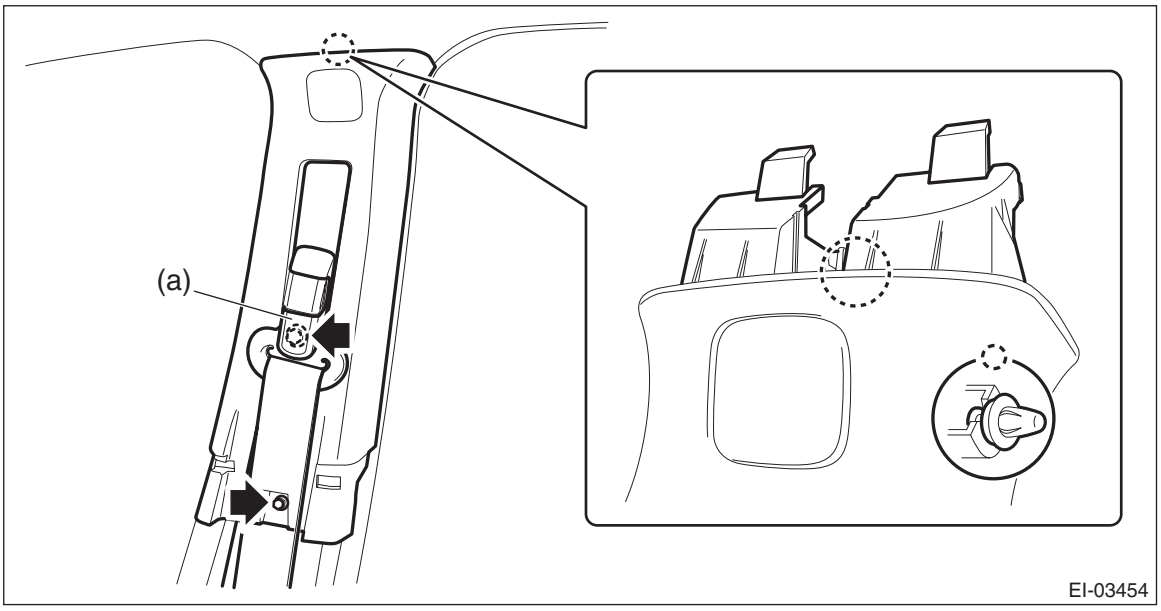

8) Remove the seat belt outer - front.
(1) Turn over the floor mat to disconnect the belt tension sensor connector. <Ref. to AB-23, DRIVER'S AIRBAG MODULE, CURTAIN AIRBAG MODULE & PRETENSIONER, PROCEDURE, Airbag Connector.>

NOTE:
For XV model, disconnect the connector of the passenger's lap seat belt pretensioner.
(2) Remove the bolt to remove the seat belt retractor.
(3) Remove the lower anchor bolt, and remove the seat belt outer - front.

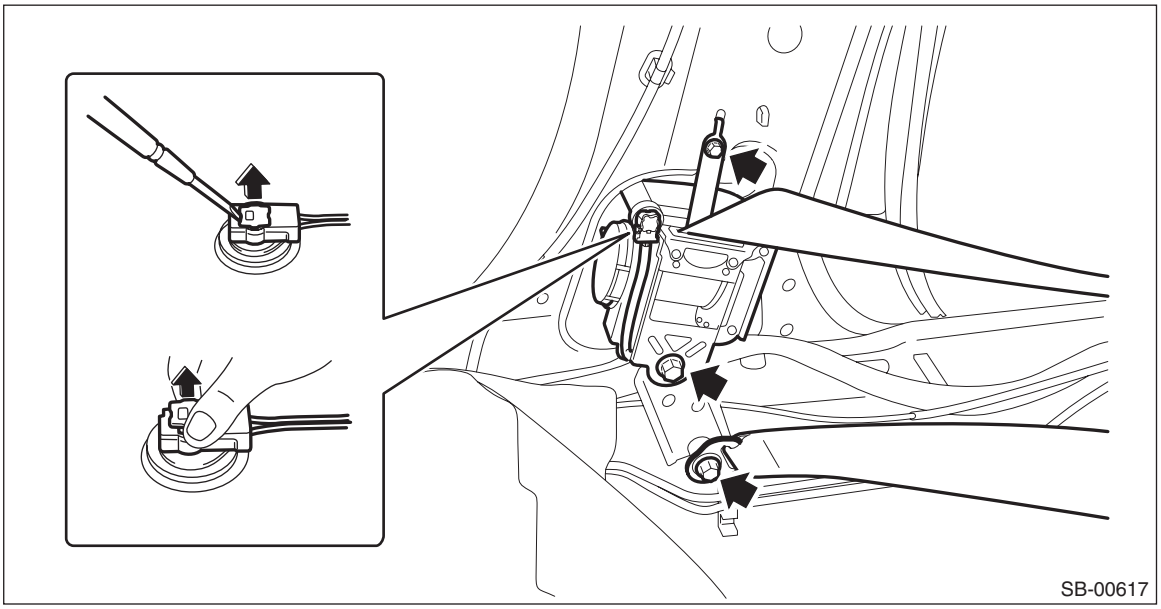

2. SEAT BELT INNER - FRONT

CAUTION:
The airbag system is fitted with a backup power supply. After disconnecting the battery ground cable, the airbag may operate if you do not wait for 60 seconds before starting the service of airbag system.

1) Turn the ignition switch to OFF.
2) Disconnect the ground cable from battery and wait for at least 60 seconds before starting work. <Ref. to NT-5, BATTERY, NOTE, Note.>

NOTE:
For the 12 volt engine restart battery of HEV model, disconnect the ground terminal from 12V engine restart battery sensor.

3) Remove the front seats.
   (1) Tilt the backrest assembly forward and move the front seat to the front most position.
   (2) Remove the cover - bolt rear (A) and remove the bolts.

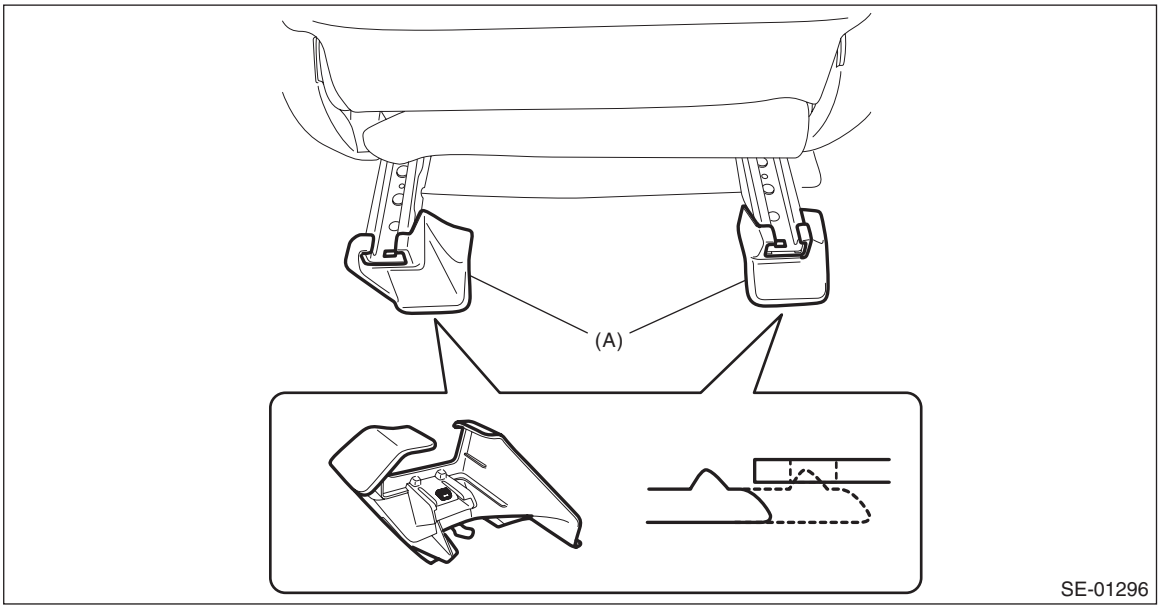

   (3) Move the front seat to the rearmost position, and remove the bolts.
   (4) Disconnect the connector under the front seat.
   • Seat belt warning light connector (driver's seat)
   • Occupant detection system harness connector (passenger's seat) <Ref. to OD(diag)-9, OCCUPANT DETECTION SYSTEM (BETWEEN AIRBAG REAR HARNESS AND SEAT HARNESS), PROCEDURE, Airbag Connector.>
   • Side airbag connector <Ref. to AB-29, SIDE AIRBAG MODULE, PROCEDURE, Airbag Connector.>
   • Seat heater connector (model with seat heater)
   • Buckle switch RH connector (passenger's seat) <Ref. to AB-30, BUCKLE SWITCH RH, PROCEDURE, Airbag Connector.>

4) Remove the seat belt inner - front.
(1) Remove the nut, and remove the seat belt inner - front.
(2) Remove the clip for the inner seat belt harness located under the seat cushion.

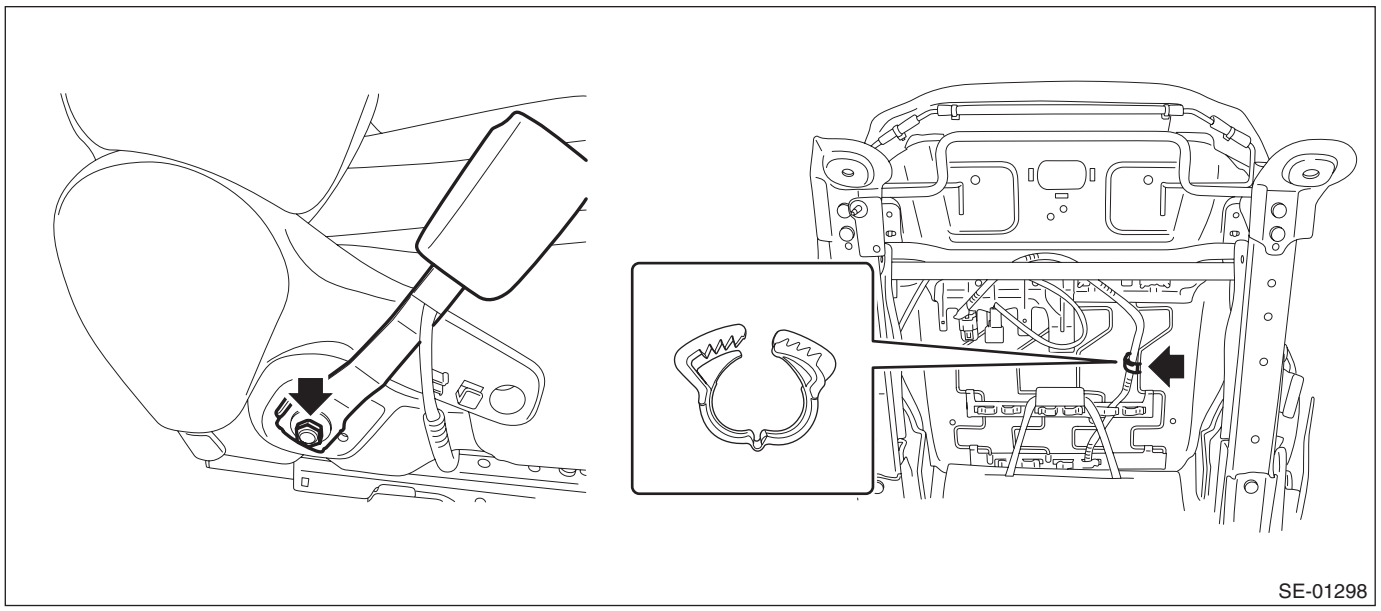

3. ADJUSTER ASSEMBLY - SEAT BELT

CAUTION:
• The airbag system is fitted with a backup power supply. After disconnecting the battery ground cable, the airbag may operate if you do not wait for 60 seconds before starting the service of airbag system.
• Airbag system satellite safing sensor is located in the lower of the rear seat cushion center. Before removing the rear seat, refer to "CAUTION" of "General Description" in "AIRBAG SYSTEM" section. <Ref. to AB-11, CAUTION, General Description.>
• Do not drop or subject the pretensioner to any impact.
• Since the pretensioner and bracket are integrated as a unit, do not disassemble them.
1) Before working, turn the ignition switch to OFF, disconnect the battery ground cable, and wait for 60 seconds or more. <Ref. to NT-5, BATTERY, NOTE, Note.>

NOTE:
For the 12 volt engine restart battery of HEV model, disconnect the ground terminal from 12V engine restart battery sensor.
2) Tilt the backrest assembly forward and move the front seat to the front most position.

3) Release the claws, and then remove the cover side sill - front INN.

CAUTION:
Do not pull with excessive force. Doing so may damage the claws of the cover side sill - front INN.

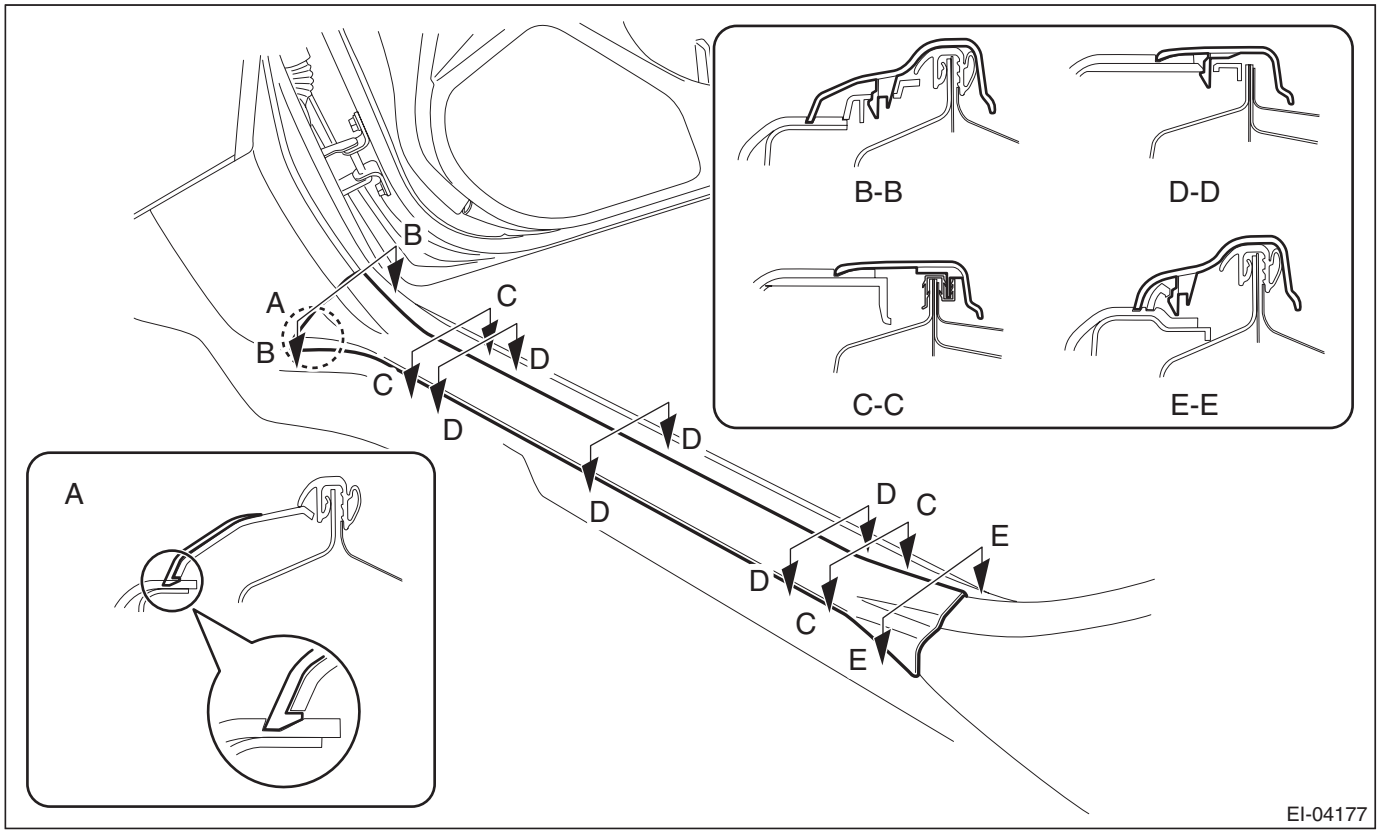

4) Remove the rear seat cushion assembly.
(1) Push the corners of the rear seat cushion from above.
(2) While pushing the corners of the rear seat cushion from above, pull the knob of the hook - seat cushion rear towards yourself.
(3) While pulling the knob towards yourself, disconnect the hooks by lifting up the rear seat cushion.

NOTE:
Pull the left side of the knob to disconnect the LH side hook, and pull the right side of the knob to disconnect the RH side hook.

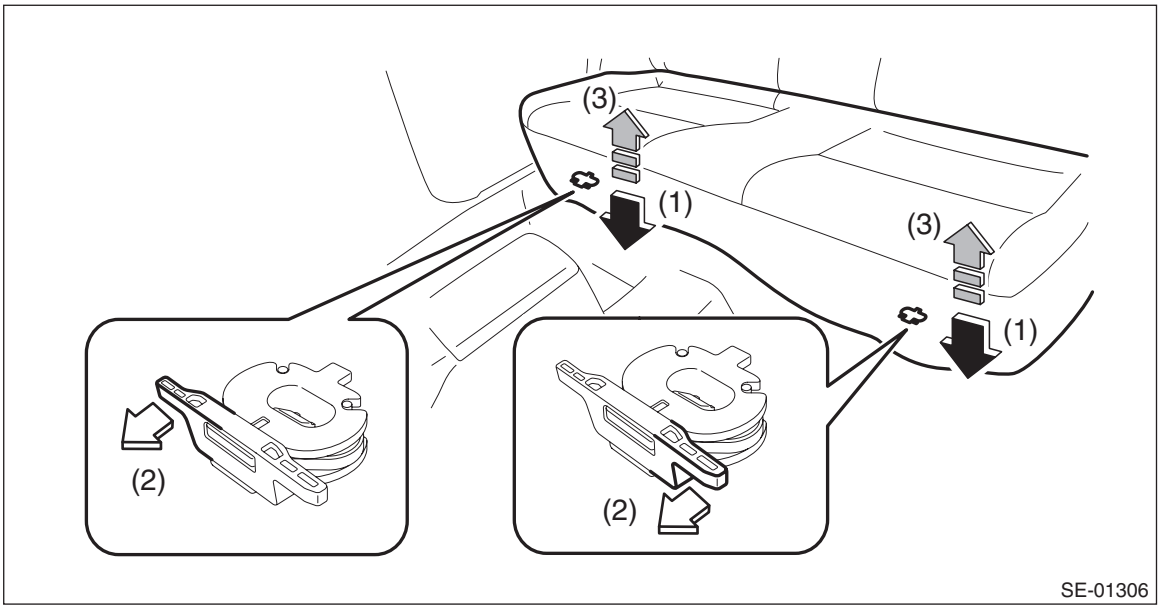

(4) Remove the hook (A) by pushing it back while lifting the front side of the rear seat cushion, and remove the rear seat cushion.

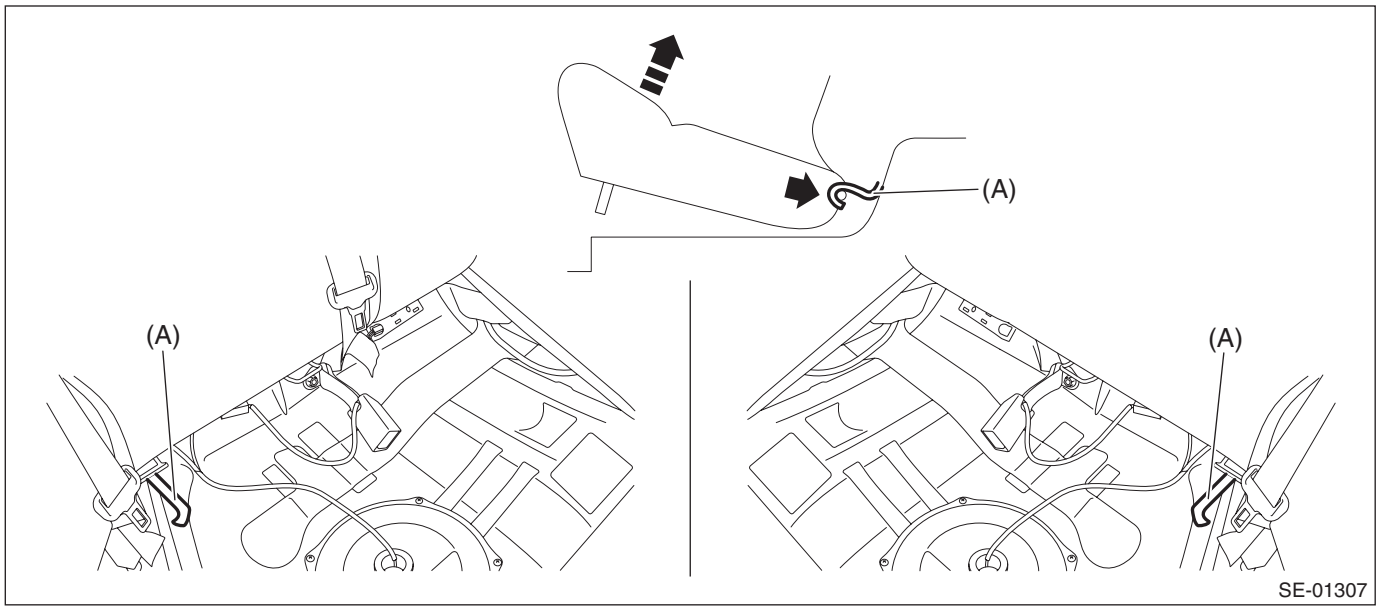

5) Release the clips and claws, and then remove the cover side sill - rear INN.

CAUTION:
Do not pull with excessive force. Doing so may damage the claws of the cover side sill - rear INN.

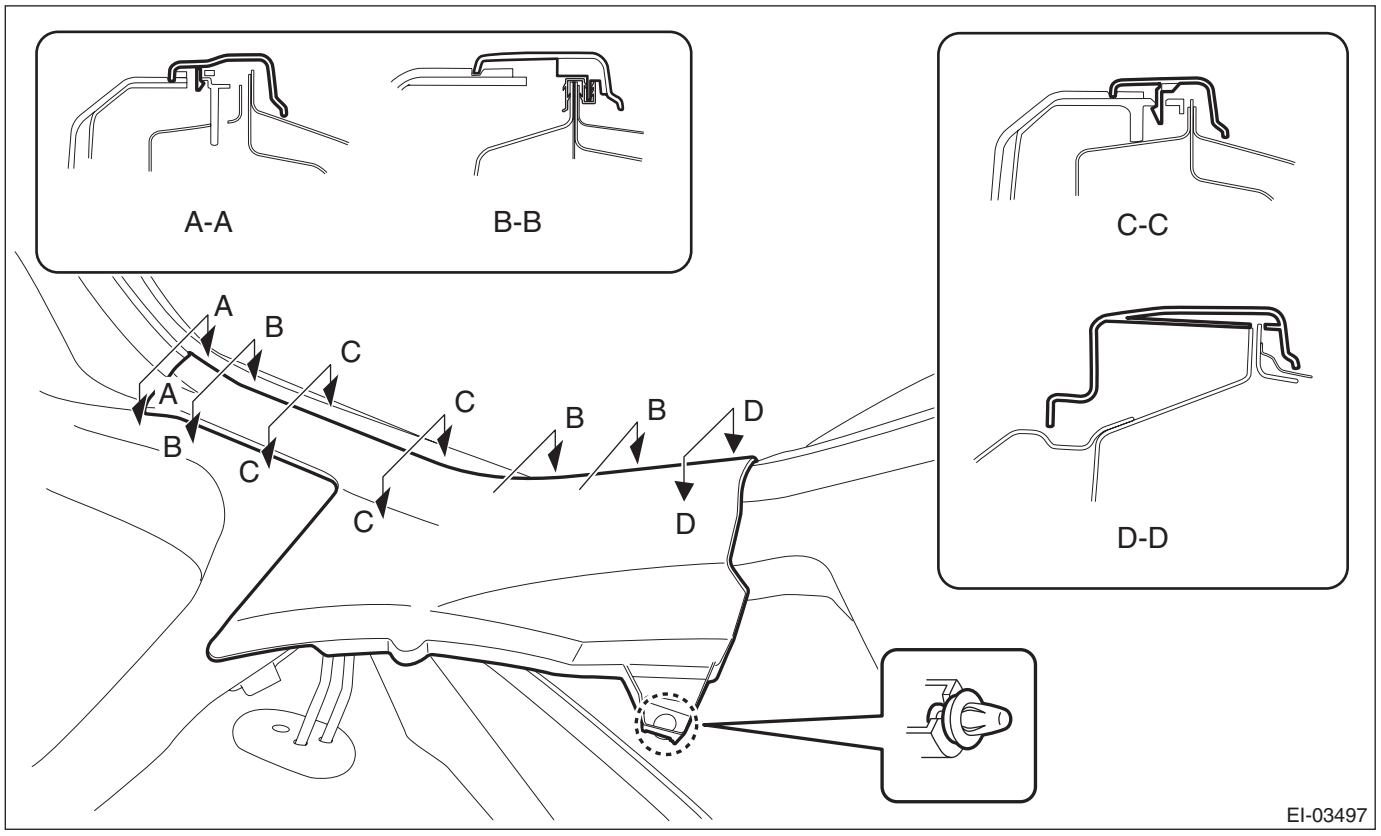

6) Remove the trim panel - center pillar LWR.
(1) Release the clip by pulling the trim panel - center pillar LWR toward you.
(2) Expand the claws of the trim panel - center pillar LWR outward, and remove it from the trim panel - center pillar UPR.

CAUTION:
Do not expand the trim panel - center pillar LWR excessively. Doing so may damage the trim.

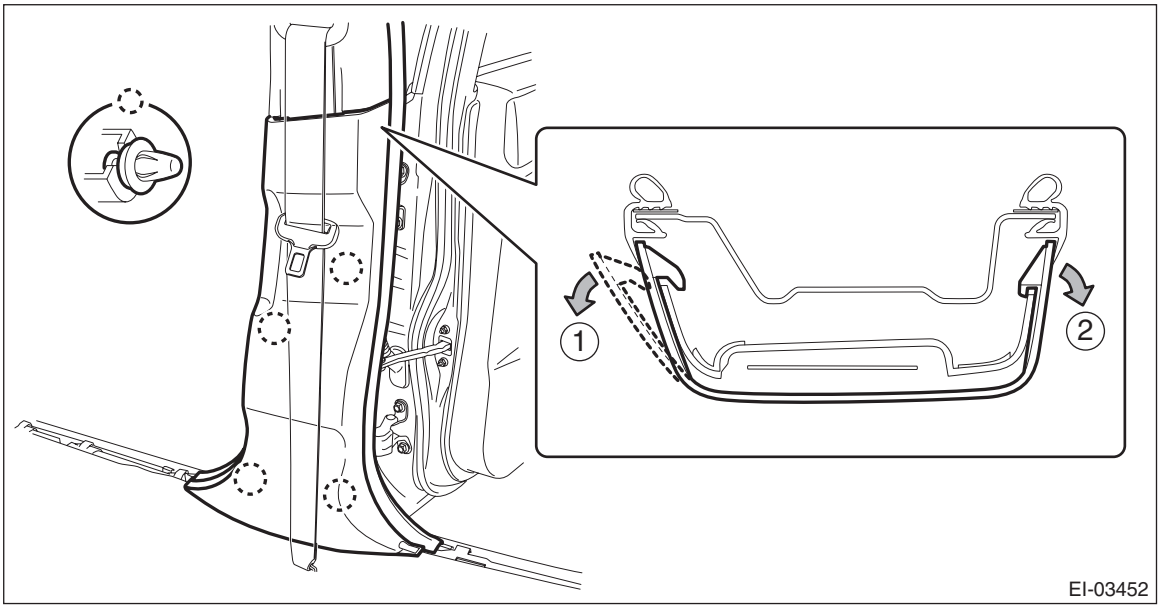

NOTE:
First release the claw located to the front of the vehicle.
7) Remove the trim panel - center pillar UPR.
(1) Remove the cover through (a), and remove the seat belt anchor bolt.
(2) Remove the bolt on the lower side of the trim panel - center pillar UPR.
(3) Remove the clip by pulling the upper part of the trim toward you, and while lowering the entire trim, remove the trim panel - center pillar UPR.

CAUTION:
Do not reuse the upper clips of the trim panel - center pillar UPR. Once the clip is removed, its holding force is reduced. Be sure to replace it with a new clip.

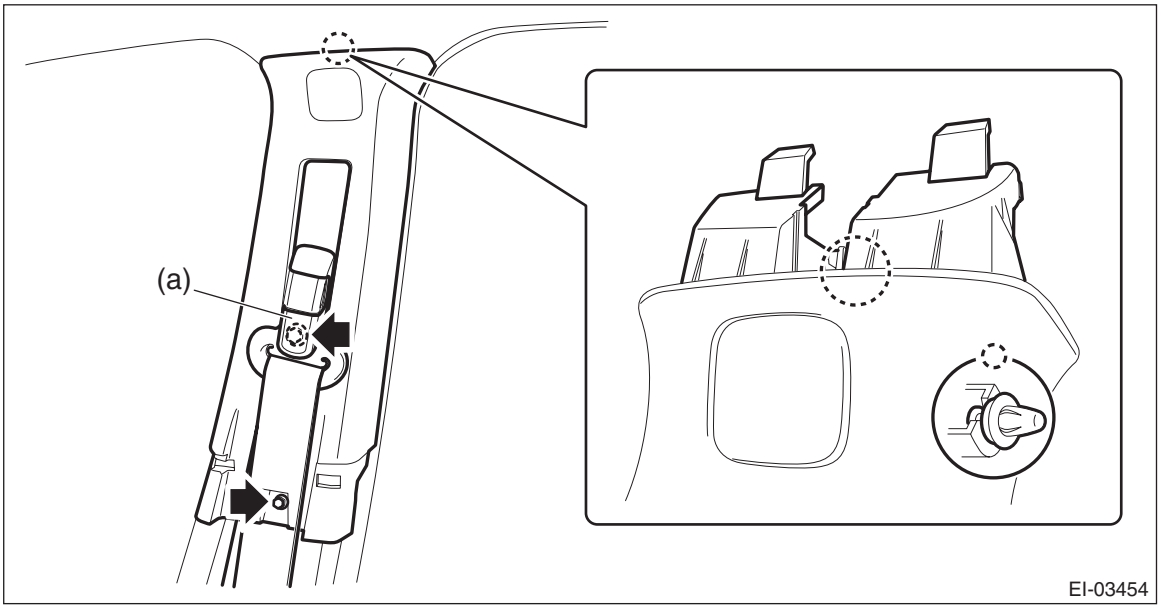

8) Remove the bolts, and then remove the adjuster assembly - seat belt.

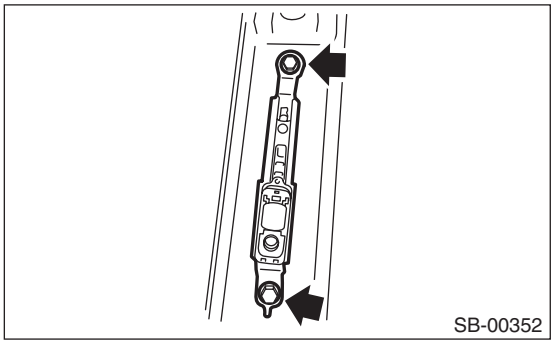

B: INSTALLATION

1. SEAT BELT OUTER - FRONT

CAUTION:
• The parts of the driver and passenger sides are not the same. Before installation, make sure that the correct part is used.
• During installation, make sure that the seat belts are not twisted.
• After installation, make sure that the seat belt can be pulled out and retracted smoothly.
• Make sure that the seat belt harness is not caught anywhere. Wrong harness rooting may cause the harness short from pinch.
• Do not reuse the upper clips of the trim panel - center pillar UPR. Once the clip is removed, its holding force is reduced. Be sure to replace it with a new clip.

1) Before installation, perform a unit inspection of retractor. <Ref. to SB-27, INSPECTION, Front Seat Belt.>
2) Install the seat belt outer - front.

Tightening torque:
Front seat belt: <Ref. to SB-2, FRONT SEAT BELT, COMPONENT, General Description.>

3) Install the remaining parts in the reverse order of removal.

NOTE:
Assemble the trim panel - center pillar LWR to the trim panel - center pillar UPR securely.

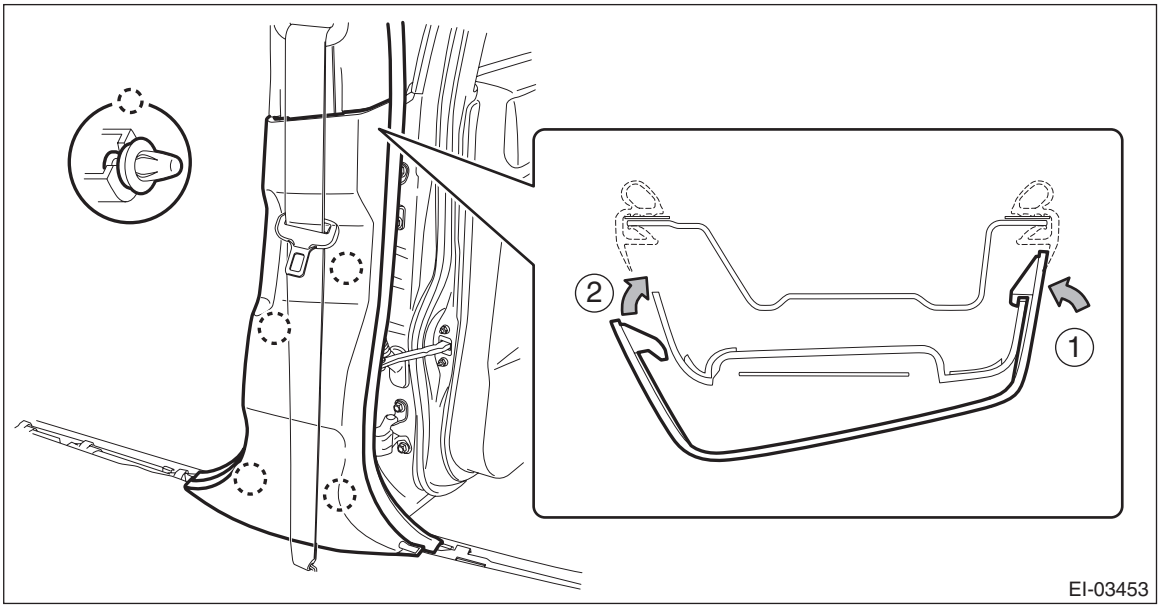

4) After installation, check the following points.
- The seat belt is not twisted.
- The seat belt can be pulled out and retracted smoothly.
- The adjuster assembly - seat belt can be moved smoothly.
- Check that the airbag warning light lights up for approximately 6 seconds and then turns off when connecting the battery ground cable and turning the ignition switch to ON.

2. SEAT BELT INNER - FRONT

CAUTION:
- **Before installation, make sure that the correct part is used.**
- **During installation, make sure that the seat belts are not twisted.**
- **Check that there is no pinching of the seat belt harness. Wrong harness rooting may cause the harness short from pinch.**

1) Install the seat belt inner - front.

Tightening torque:
Front seat belt: <Ref. to SB-2, FRONT SEAT BELT, COMPONENT, General Description.>

2) Locate the seat belt harness and retain it with a harness clip.

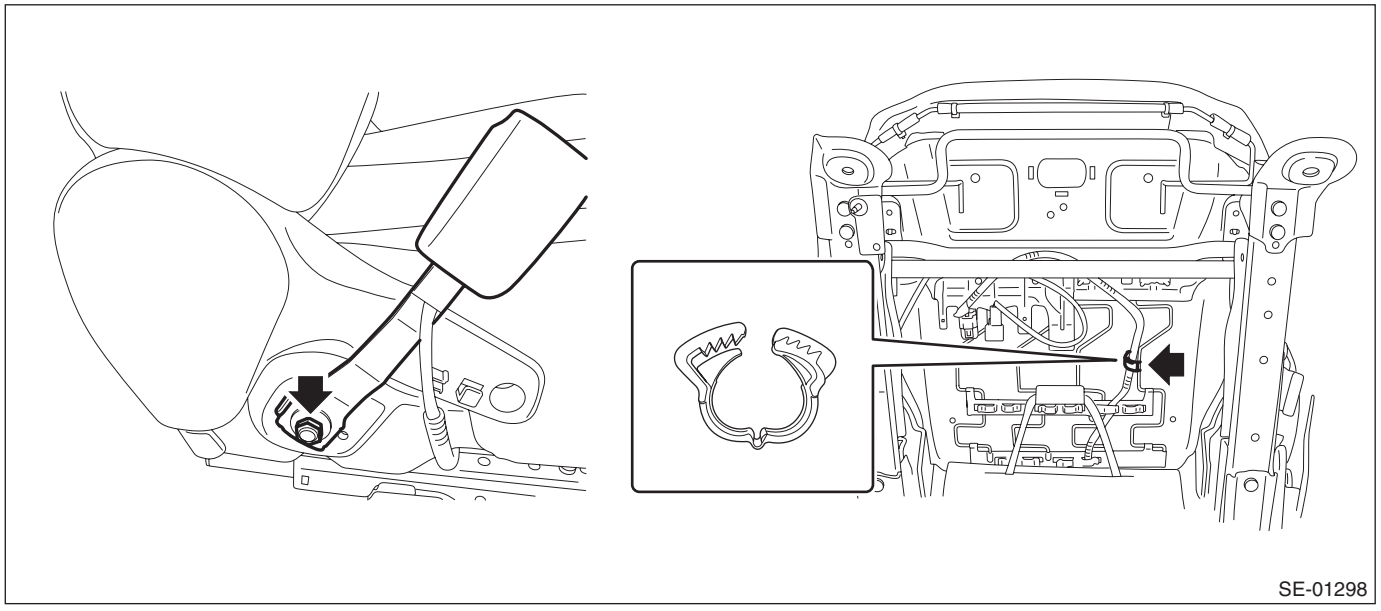

3) Install the seat assembly to the body.

CAUTION:
• The seat mounting bolts differ between the front mounting points and the rear mounting points. Make sure that you are using correct bolts at correct positions.
• Tighten the slide rail installing bolts in the order as shown in the figure, in several steps by gradually increasing the torque until they reach the specified torque.

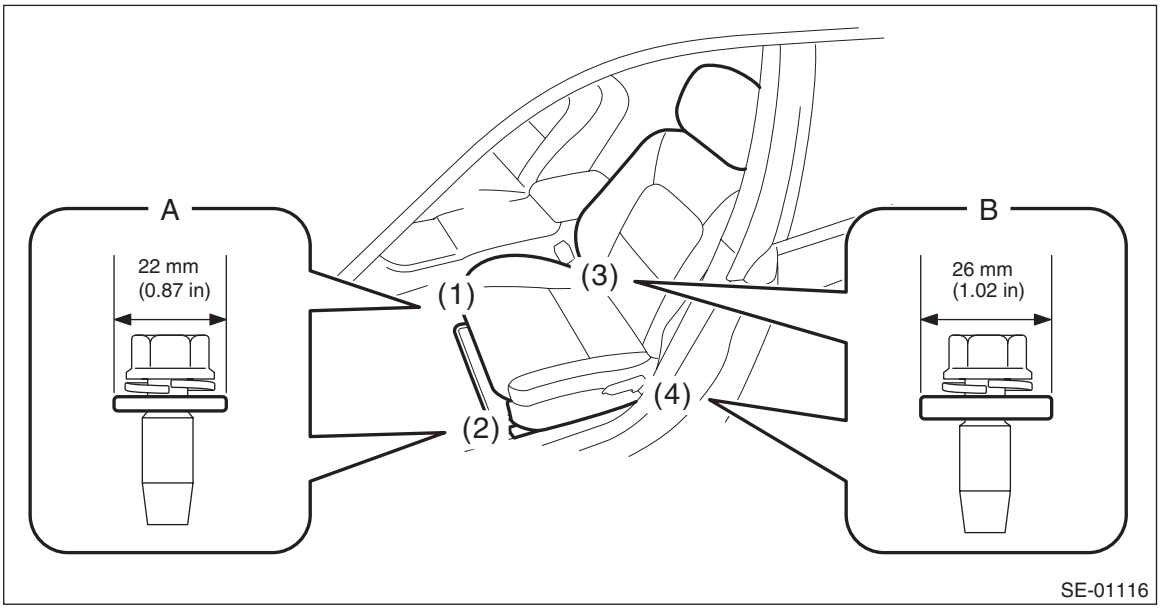

- **Front (bolt A): Washer diameter 22 mm (0.87 in)**
- **Rear (bolt B): Washer diameter 26 mm (1.02 in)**

Tightening torque:
Front seat assembly: 53 N·m (5.40 kgf-m, 39.1 ft-lb)

4) Check that no harness is caught by sliding the seat back and forth.

3. ADJUSTABLE ANCHOR ASSY

Referring to the installation procedure for seat belt outer - front, install the parts in the reverse order of removal.

Tightening torque:
Front seat belt: <Ref. to SB-2, FRONT SEAT BELT, COMPONENT, General Description.>

C: INSPECTION

1. VISUAL INSPECTION

Check for the following, and replace with new parts if necessary.
- Pretensioner is cracked or deformed.
- Adjuster assembly - seat belt is cracked or deformed.
- Seat belt is slackened, bent or worn.
- Seat belt is abnormally wound or extended.
- Seat belt inner - front is deformed or damaged.
- Seat belt buckle cannot be engaged properly.

2. ELR LOCK MECHANISM INSPECTION

1) Hold the retractor upright (as installed in the vehicle) and check the ELR lock mechanism.
2) Tilt the retractor from the upright posture and check the following points.

- It does not lock if the inclination angle is 15° or less.

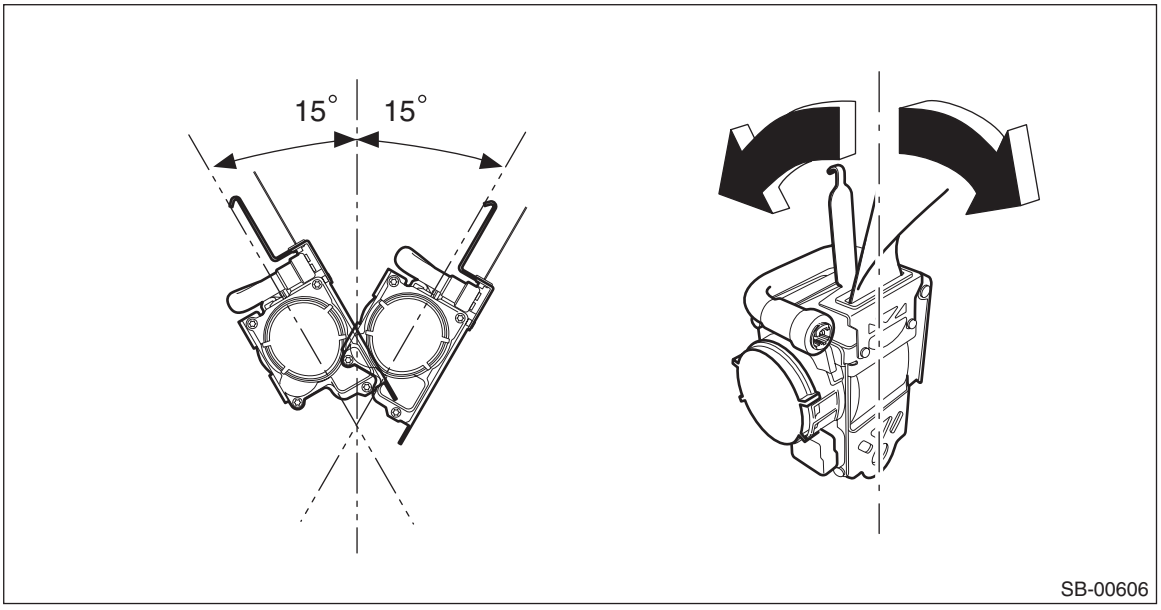

- It remains locked if the inclination angle is 27° or more.

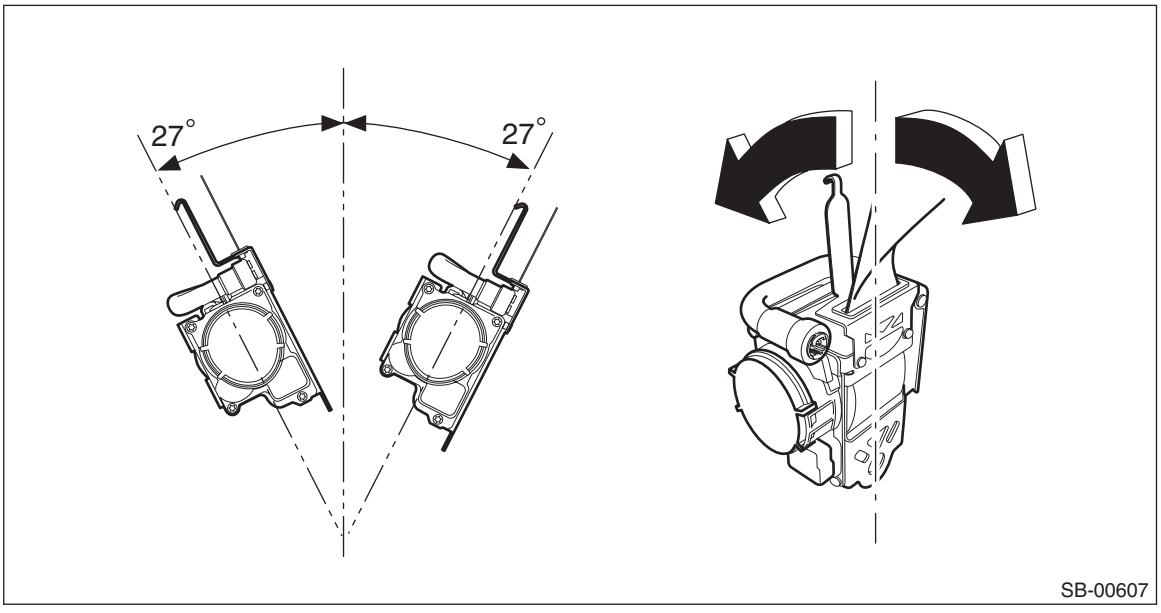

3) If the ELR lock mechanism does not operate properly, replace the seat belt outer - front with a new part.

3. SEAT BELT SWITCH INSPECTION

Preparation tool:
Circuit tester

- Driver's seat

Check the resistance between the terminals when the seat belt inner - front is in each of the following operation conditions.

Terminal No.	Inspection conditions	Standard	Circuit
2 — 1	Tongue plate inserted	1 MΩ or more	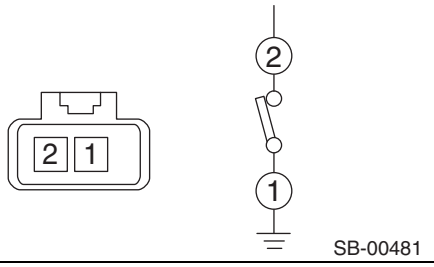 SB-00481
2 — 1	Tongue plate detached	1 Ω or less	

Replace the seat belt inner - front if the inspection result is not within the standard.

- Passenger's seat

Check the current between the terminals when the seat belt inner - front is in each of the following operation conditions.

Terminal No.	Inspection conditions	Standard	Circuit
1 — 2	Tongue plate inserted	12 — 18 mA	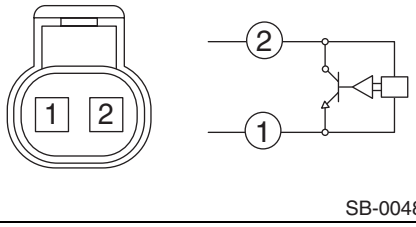 SB-00482
1 — 2	Tongue plate detached	4 — 7 mA	

Replace the seat belt inner - front if the inspection result is not within the standard.

6. Rear Seat Belt

A: REMOVAL

1. SEAT BELT OUTER - REAR RH AND LH (4 DOOR MODEL)

CAUTION:
• Airbag system satellite safing sensor is located in the lower of the rear seat cushion center. Before removing the rear seat, refer to "CAUTION" of "General Description" in "AIRBAG SYSTEM" section. <Ref. to AB-11, CAUTION, General Description.>
• The airbag system is fitted with a backup power supply. After disconnecting the battery ground cable, the airbag may operate if you do not wait for 60 seconds before starting the service of airbag system.

1) Disconnect the ground cable from battery and wait for at least 60 seconds before starting work.
2) Remove the rear seat cushion assembly.
   (1) Push the corners of the rear seat cushion from above.
   (2) While pushing the corners of the rear seat cushion from above, pull the knob of the hook - seat cushion rear towards yourself.
   (3) While pulling the knob towards yourself, disconnect the hooks by lifting up the rear seat cushion.

NOTE:
Pull the left side of the knob to disconnect the LH side hook, and pull the right side of the knob to disconnect the RH side hook.

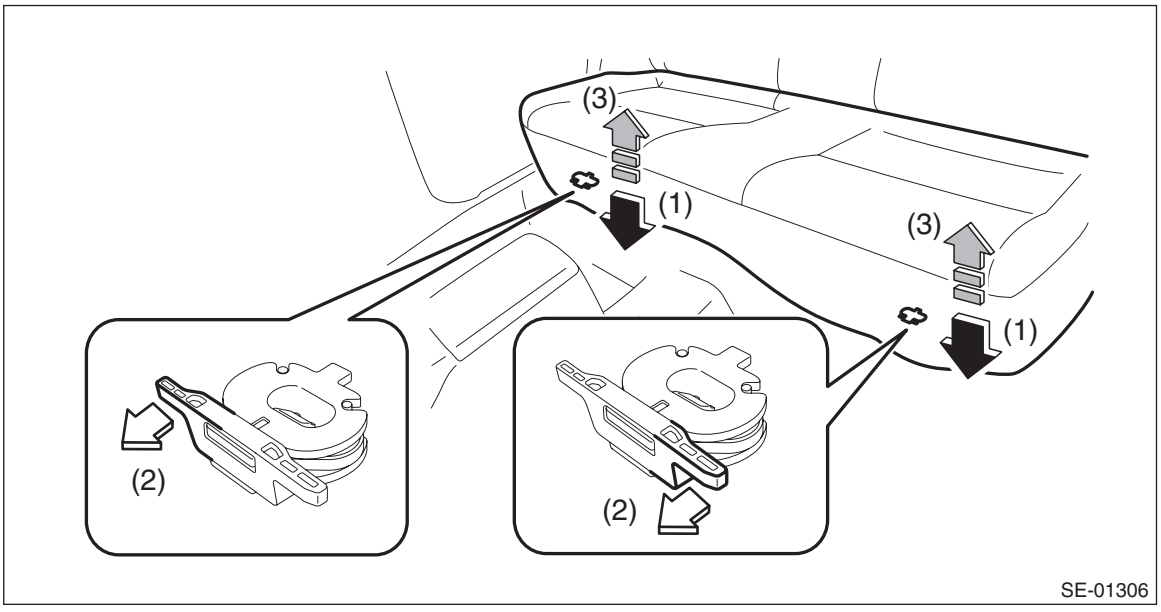

(4) Remove the hook (A) by pushing it back while lifting the front side of the rear seat cushion, and remove the rear seat cushion.

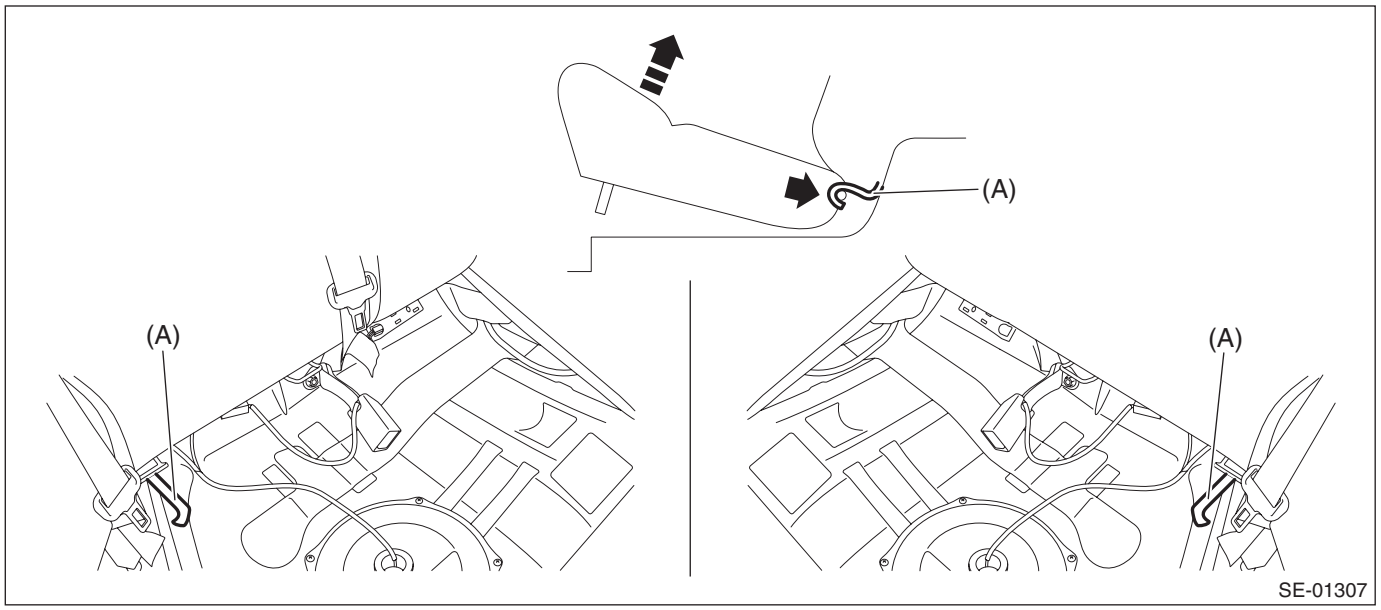

3) Release the clips and claws, and then remove the cover side sill - rear INN. (On the side where seat belt assembly is removed)

CAUTION:
Do not pull with excessive force. Doing so may damage the claws of the cover side sill - rear INN.

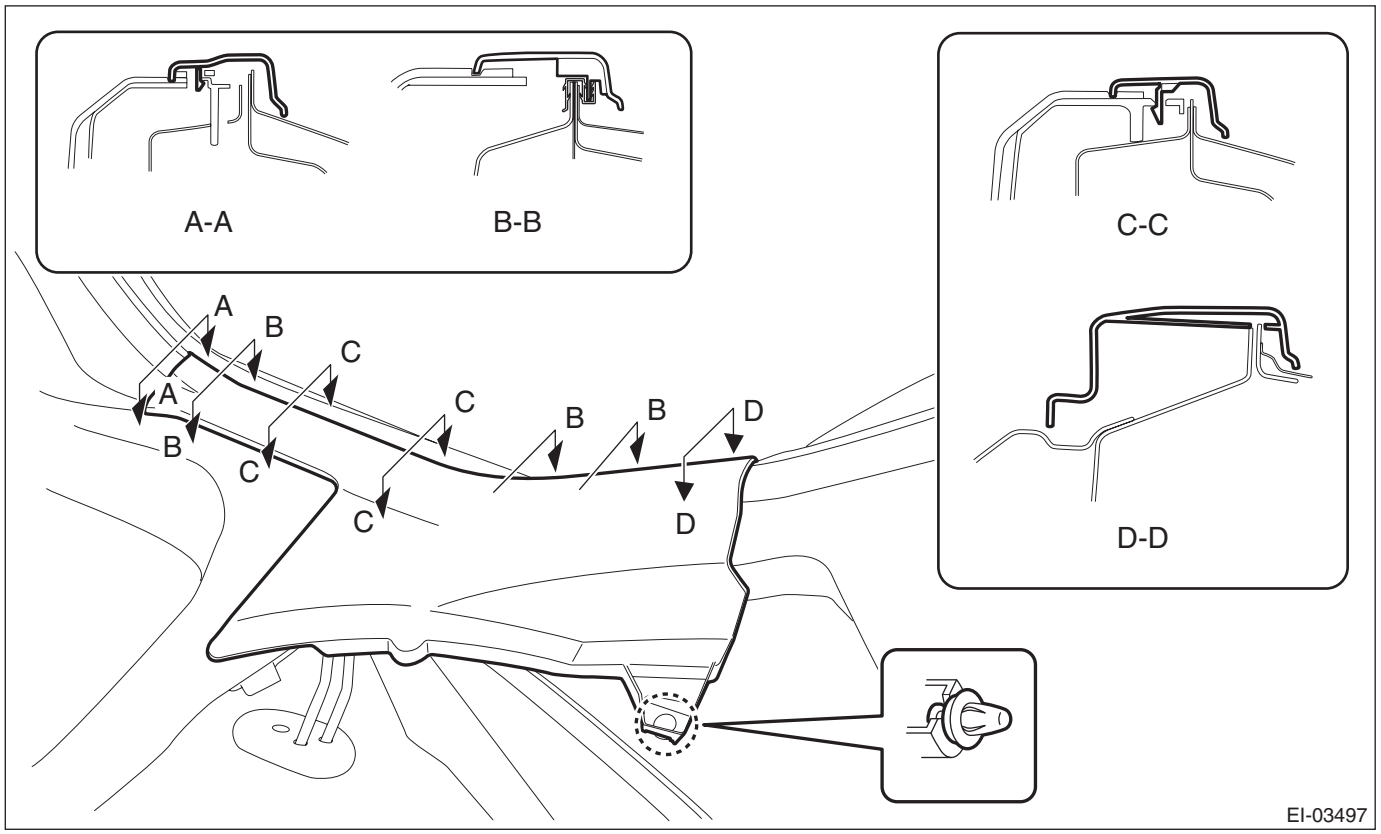

4) Remove the clips, and remove the trim panel - rear pillar UPR. (On the side where seat belt assembly is removed)

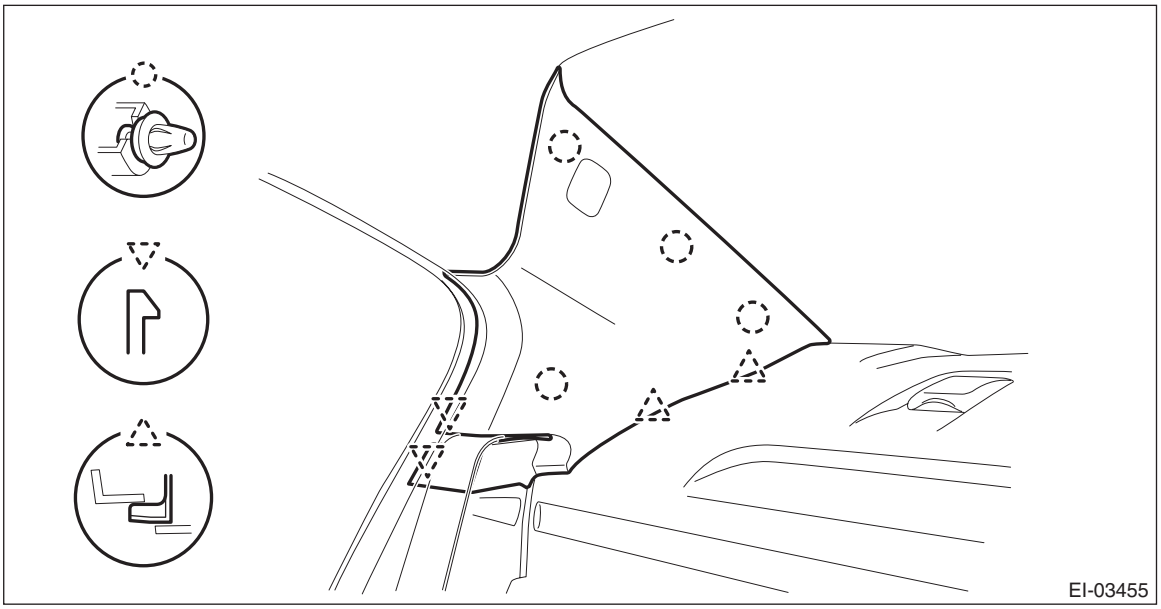

5) Remove the trim panel - rear pillar LWR. (On the side where seat belt assembly is removed)
   (1) Remove the clips, and turn over the trim panel - trunk side.
   (2) Remove the clips, and remove the trim panel - rear pillar LWR.

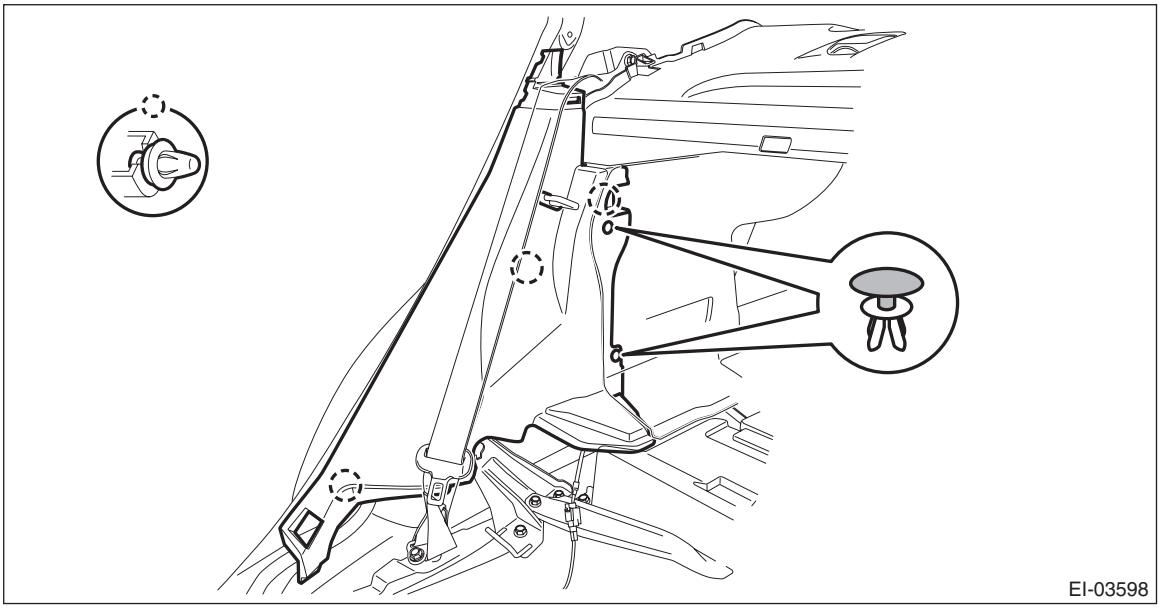

6) Remove the bolts, and remove the seat belt outer - rear.

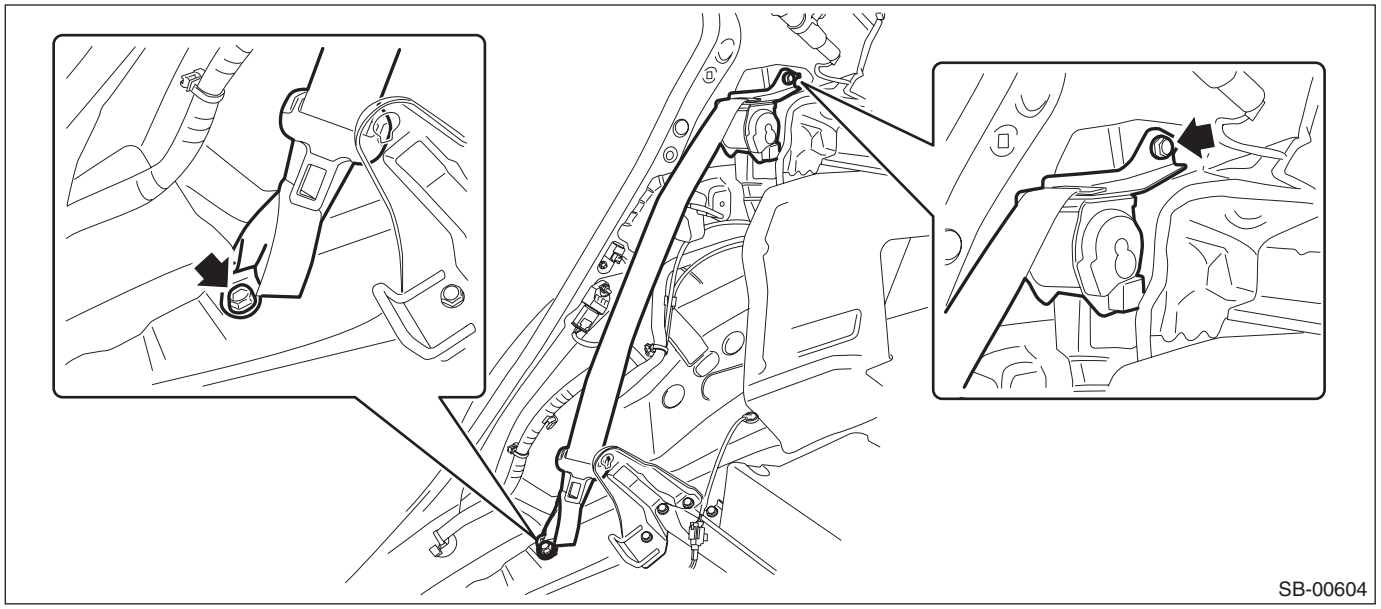

2. SEAT BELT OUTER - REAR RH AND LH (5 DOOR MODEL/XV MODEL)

CAUTION:

- **Airbag system satellite safing sensor is located in the lower of the rear seat cushion center. Before removing the rear seat, refer to "CAUTION" of "General Description" in "AIRBAG SYSTEM" section. <Ref. to AB-11, CAUTION, General Description.>**
- **The airbag system is fitted with a backup power supply. After disconnecting the battery ground cable, the airbag may operate if you do not wait for 60 seconds before starting the service of airbag system.**

1) Disconnect the ground cable from battery. <Ref. to NT-5, BATTERY, NOTE, Note.>

NOTE:
For the 12 volt engine restart battery of HEV model, disconnect the ground terminal from 12V engine restart battery sensor.

2) Remove the rear seat cushion assembly.
(1) Push the corners of the rear seat cushion from above.
(2) While pushing the corners of the rear seat cushion from above, pull the knob of the hook - seat cushion rear towards yourself.
(3) While pulling the knob towards yourself, disconnect the hooks by lifting up the rear seat cushion.

NOTE:
Pull the left side of the knob to disconnect the LH side hook, and pull the right side of the knob to disconnect the RH side hook.

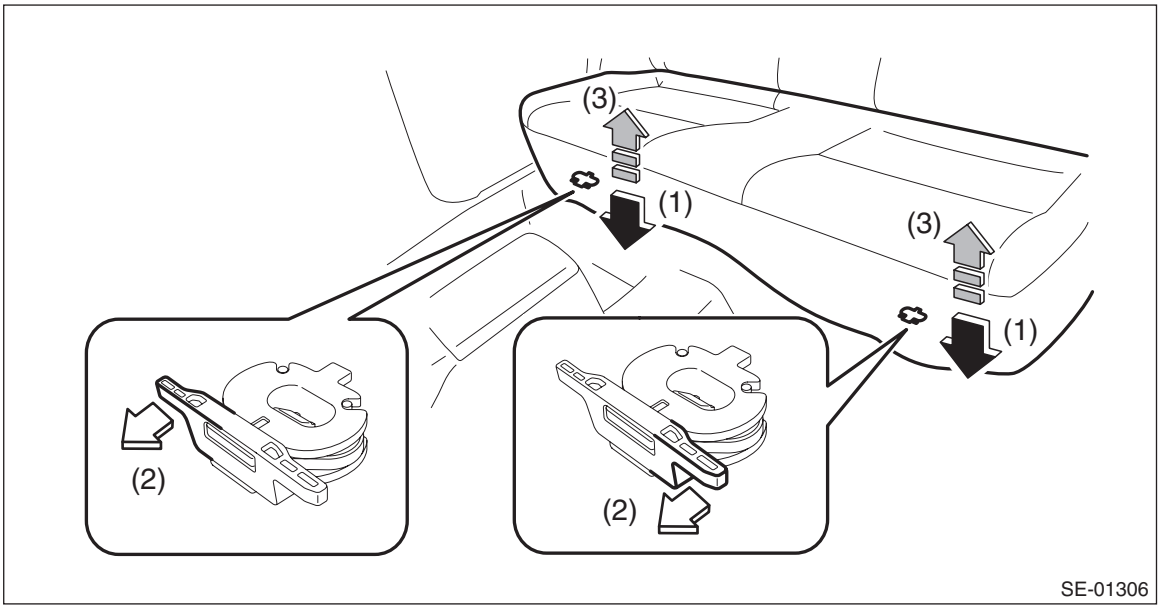

(4) Remove the hook (A) by pushing it back while lifting the front side of the rear seat cushion, and remove the rear seat cushion.

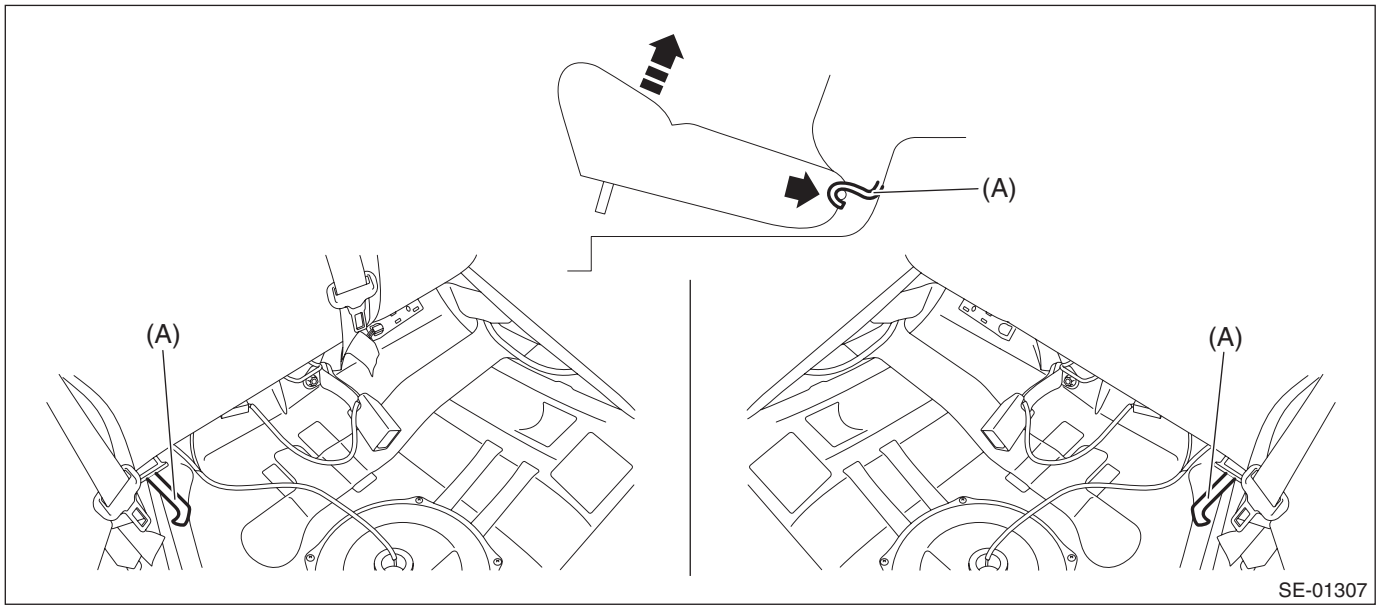

3) Remove the screws and clips, and remove the trim panel - rear quarter pillar UPR. (On the side where seat belt assembly is removed)

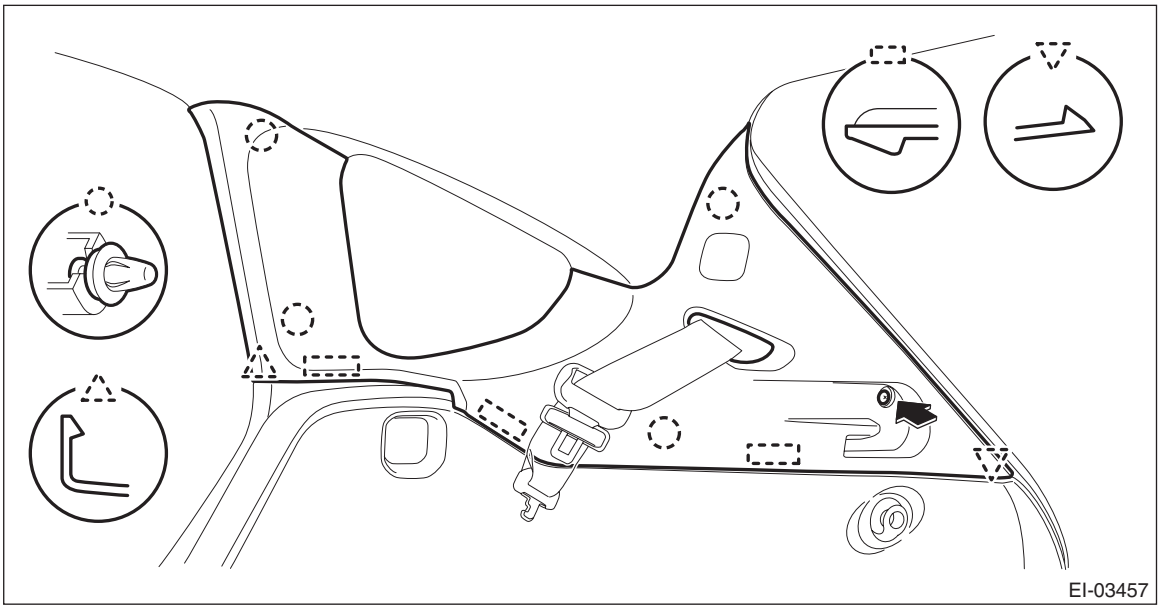

4) Remove the bolts, and remove the seat belt outer - rear.

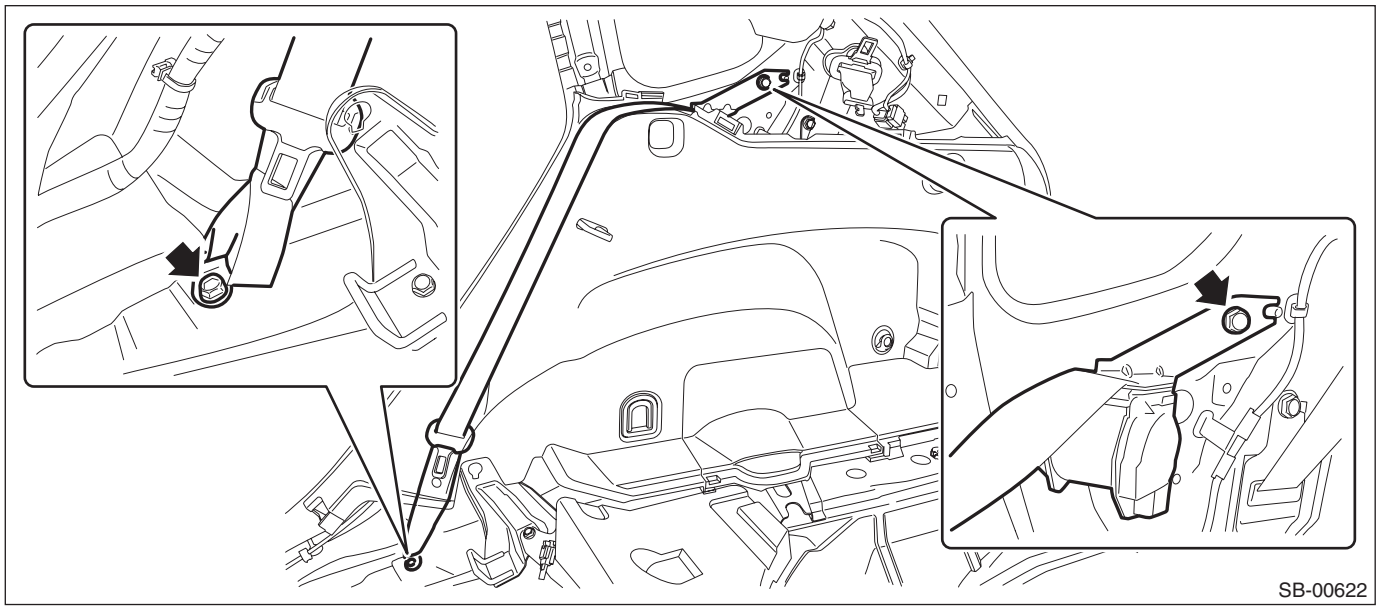

3. SEAT BELT - REAR SHOULDER CTR (4 DOOR MODEL)

CAUTION:

• Airbag system satellite safing sensor is located in the lower of the rear seat cushion center. Before removing the rear seat, refer to "CAUTION" of "General Description" in "AIRBAG SYSTEM" section. <Ref. to AB-11, CAUTION, General Description.>

• The airbag system is fitted with a backup power supply. After disconnecting the battery ground cable, the airbag may operate if you do not wait for 60 seconds before starting the service of airbag system.

1) Disconnect the ground cable from battery and wait for at least 60 seconds before starting work.

2) Remove the rear seat cushion assembly.
(1) Push the corners of the rear seat cushion from above.
(2) While pushing the corners of the rear seat cushion from above, pull the knob of the hook - seat cushion rear towards yourself.
(3) While pulling the knob towards yourself, disconnect the hooks by lifting up the rear seat cushion.

NOTE:
Pull the left side of the knob to disconnect the LH side hook, and pull the right side of the knob to disconnect the RH side hook.

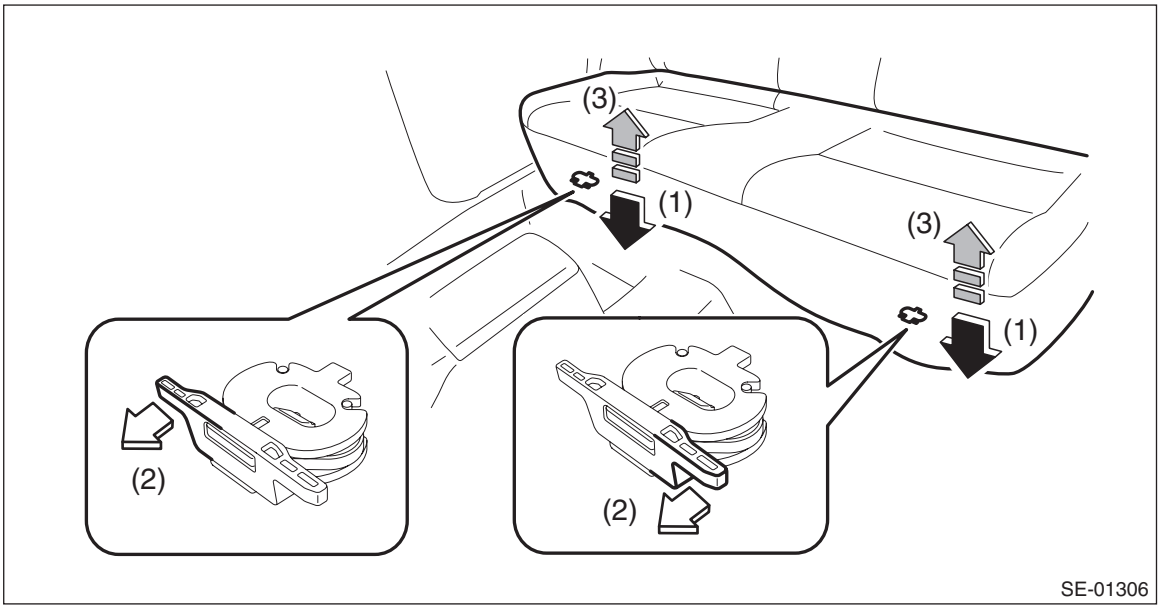

(4) Remove the hook (A) by pushing it back while lifting the front side of the rear seat cushion, and remove the rear seat cushion.

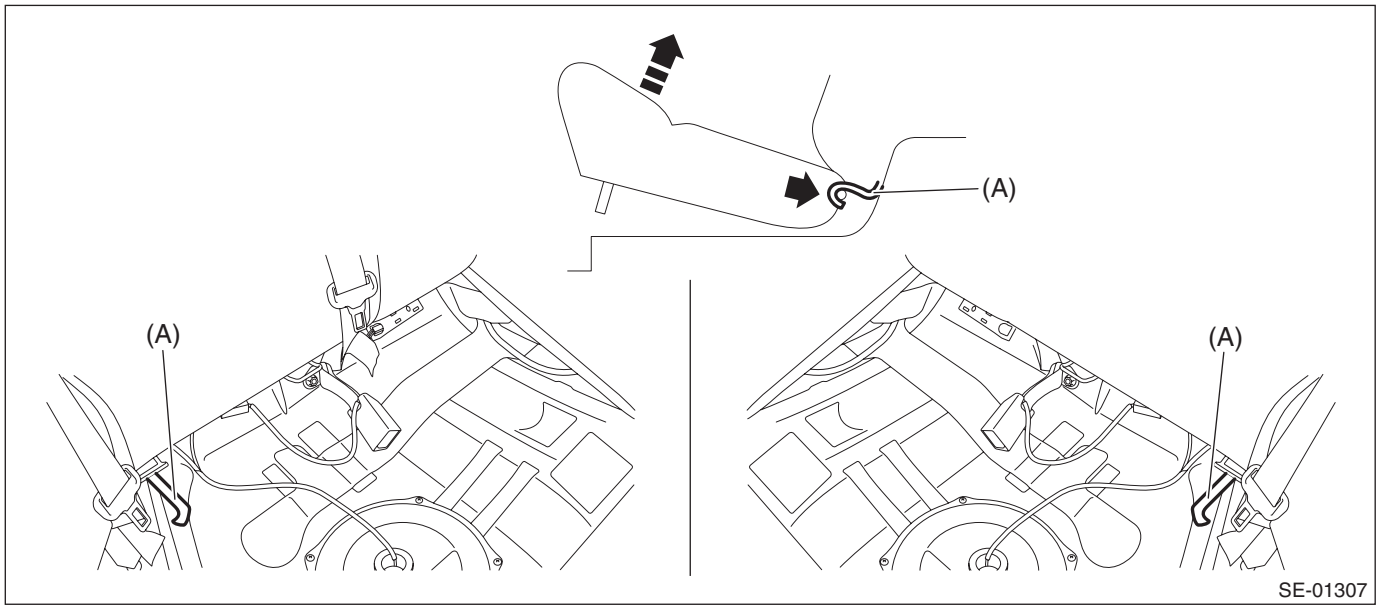

3) Release the clips and claws, and remove the side sill covers - rear INN on the left and right sides.

CAUTION:
Do not pull with excessive force. Doing so may damage the claws of the side sill cover - rear INN.

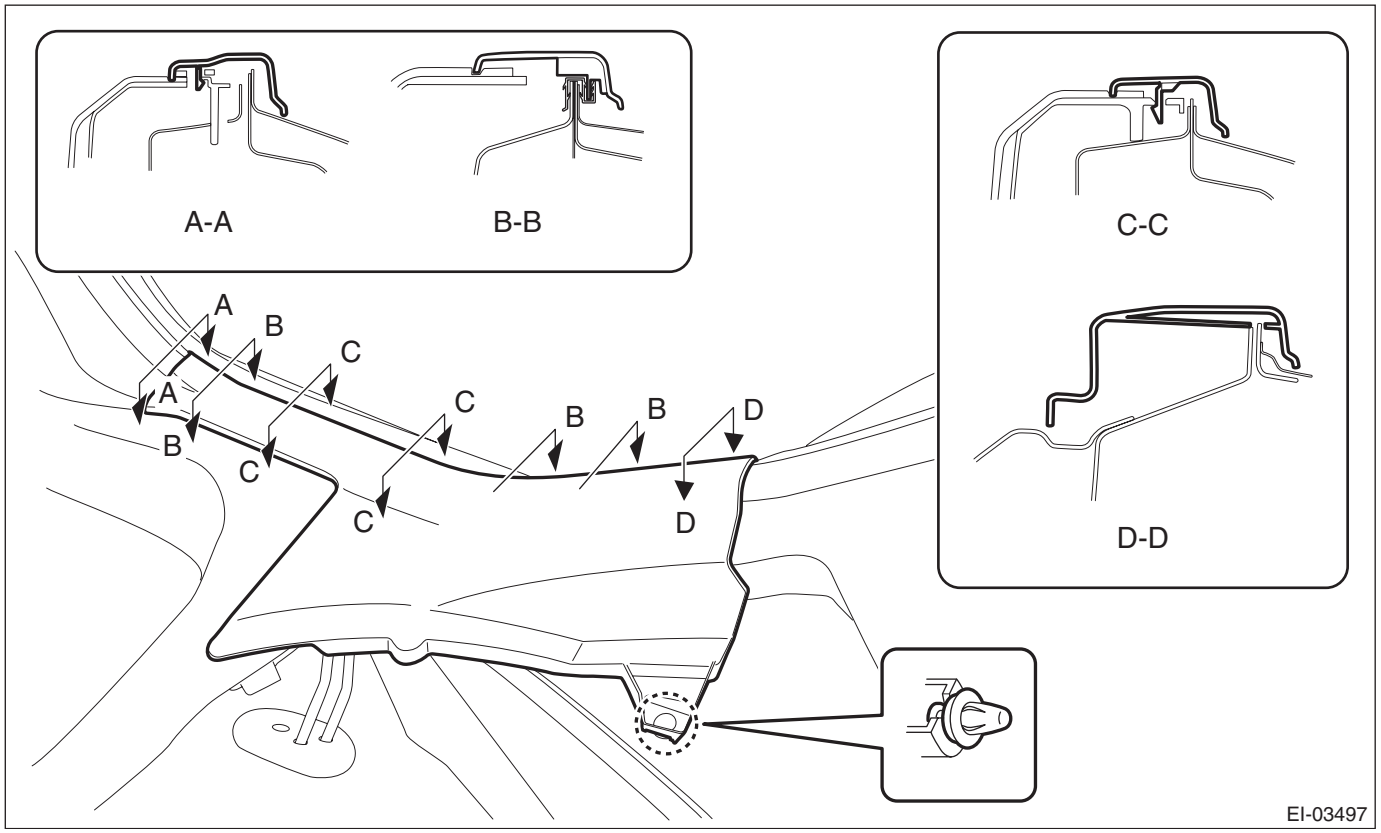

4) Remove the clips, and remove the trim panel - rear pillar UPR on the left and right sides.

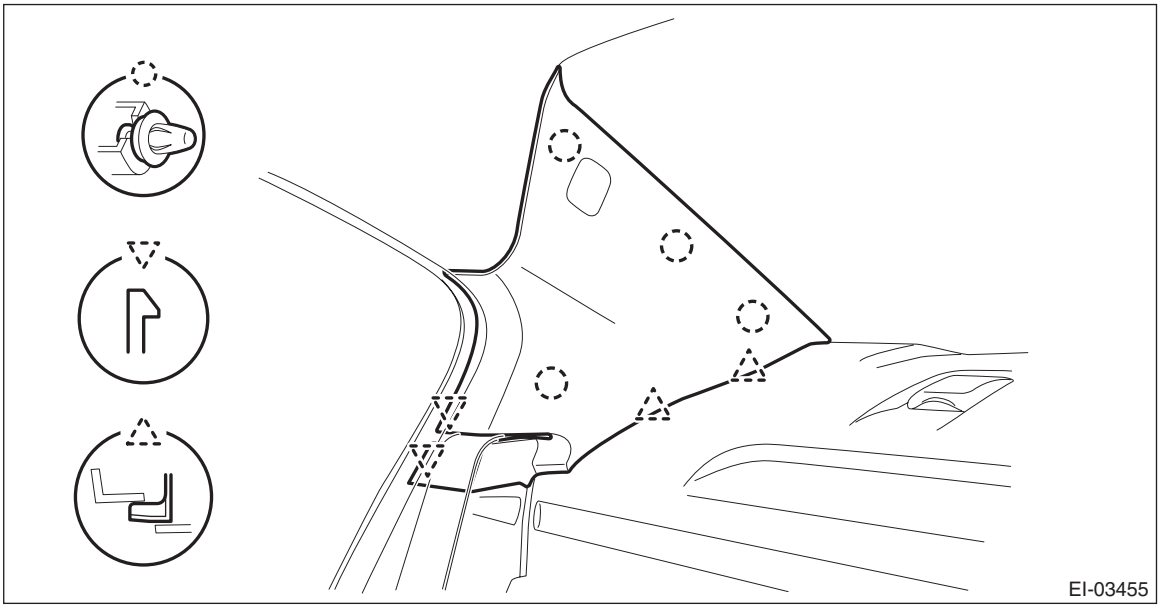

5) Remove the trim panel - rear pillar LWR on the left and right sides.
   (1) Remove the clips, and turn over the trim panel - trunk side.
   (2) Remove the clips, and remove the trim panel - rear pillar LWR.

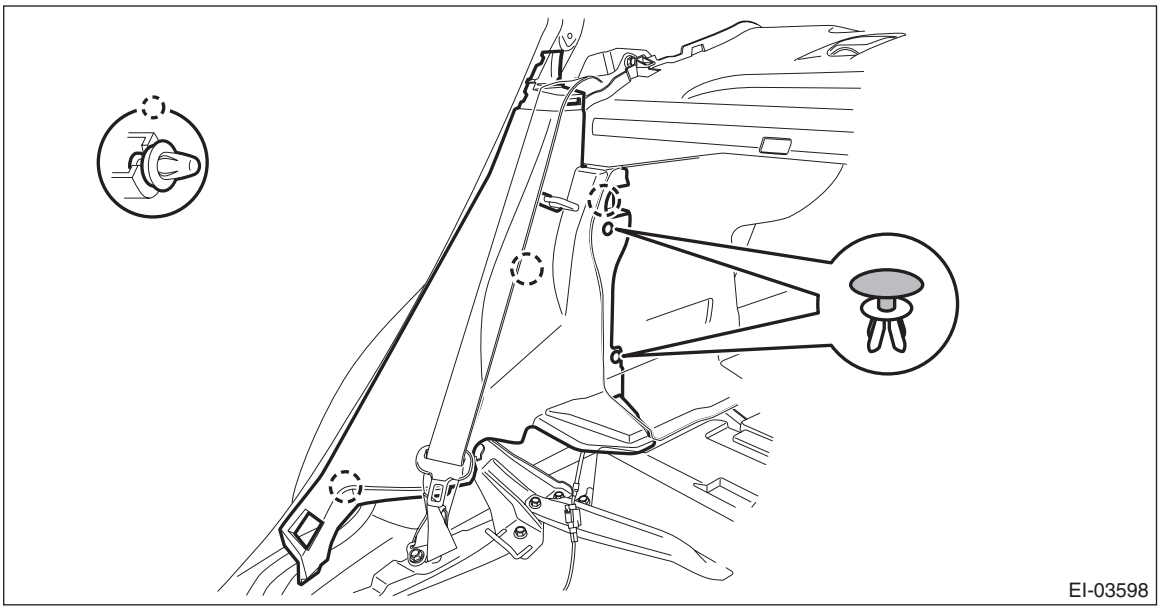

6) Remove the bolts, and remove the lower anchor of the seat belt - rear shoulder CTR.

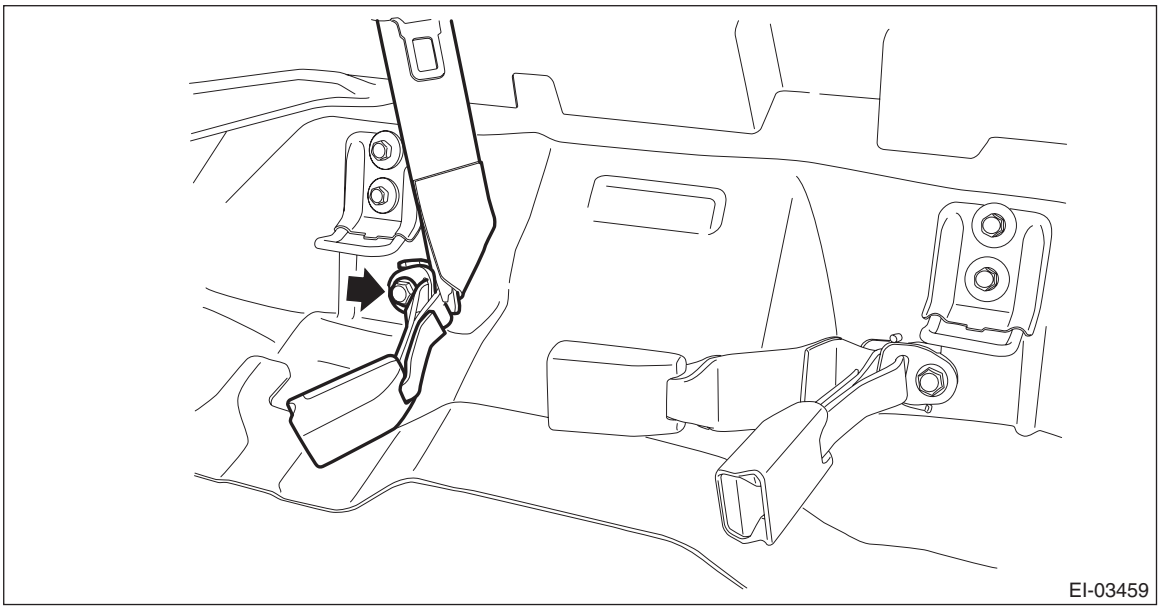

7) Remove the trim panel - rear shelf assembly.
   (1) Release the clips to float the trim panel assembly - rear shelf.
   (2) Release the belt guide, and guide the anchor of the seat belt - rear shoulder CTR to behind the trim panel - rear shelf assembly.
   (3) Disconnect the connector of high-mounted stop light.

(4) Remove the trim panel assembly - rear shelf.

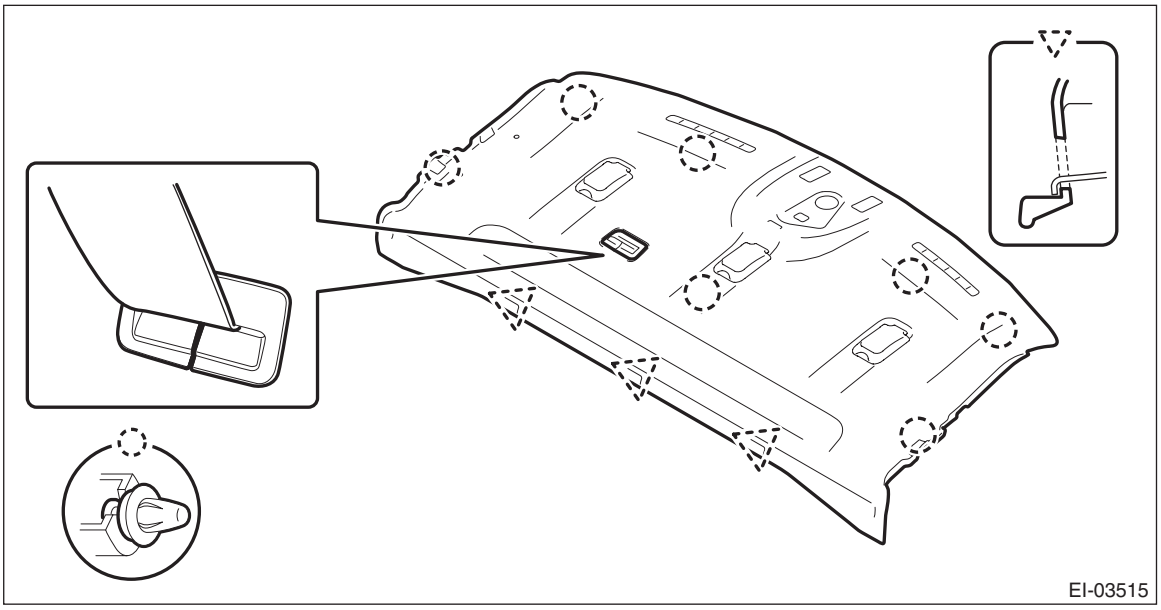

8) Remove the bolts, and remove the seat belt - rear shoulder CTR.

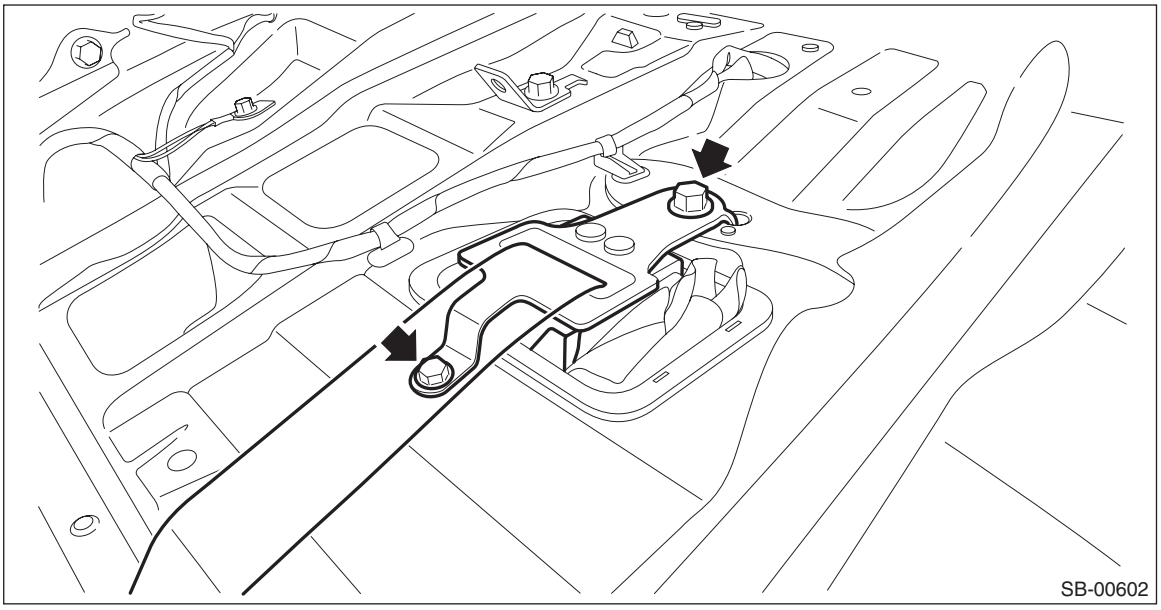

4. SEAT BELT - REAR SHOULDER CTR (5 DOOR MODEL/XV MODEL)

CAUTION:

- **Airbag system satellite safing sensor is located in the lower of the rear seat cushion center. Before removing the rear seat, refer to "CAUTION" of "General Description" in "AIRBAG SYSTEM" section. <Ref. to AB-11, CAUTION, General Description.>**
- **The airbag system is fitted with a backup power supply. After disconnecting the battery ground cable, the airbag may operate if you do not wait for 60 seconds before starting the service of airbag system.**

1) Disconnect the ground cable from battery and wait for at least 60 seconds before starting work. <Ref. to NT-5, BATTERY, NOTE, Note.>

NOTE:
For the 12 volt engine restart battery of HEV model, disconnect the ground terminal from 12V engine restart battery sensor.

2) Remove the screws and clips, and remove the trim panel - rear quarter pillar UPR RH.

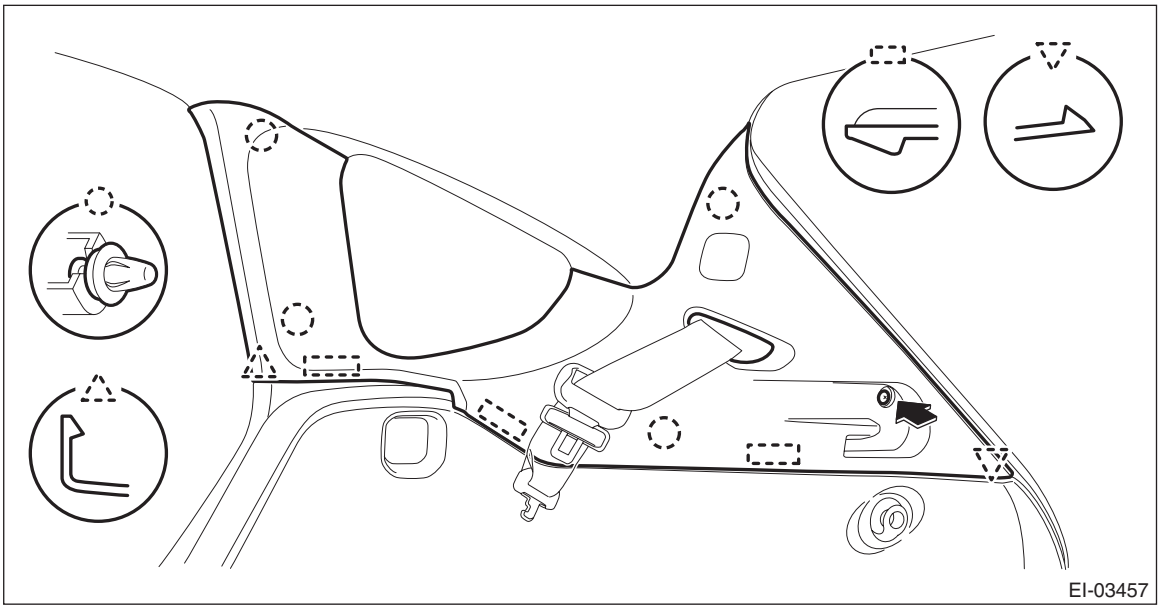

3) Remove the rear seat cushion assembly.
(1) Push the corners of the rear seat cushion from above.
(2) While pushing the corners of the rear seat cushion from above, pull the knob of the hook - seat cushion rear towards yourself.
(3) While pulling the knob towards yourself, disconnect the hooks by lifting up the rear seat cushion.

NOTE:
Pull the left side of the knob to disconnect the LH side hook, and pull the right side of the knob to disconnect the RH side hook.

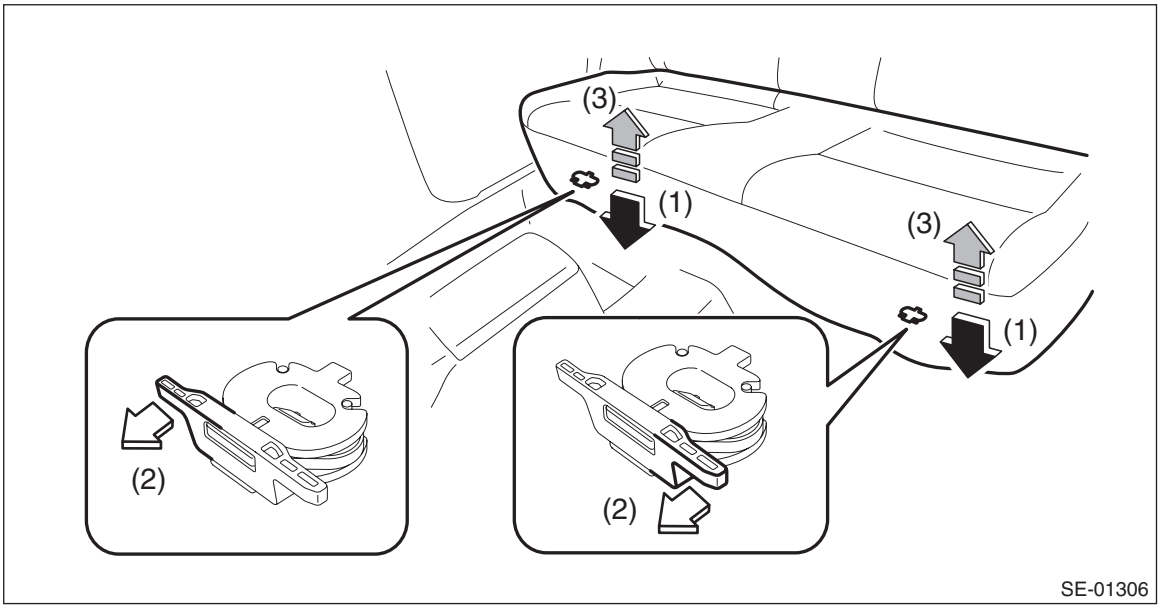

(4) Remove the hook (A) by pushing it back while lifting the front side of the rear seat cushion, and remove the rear seat cushion.

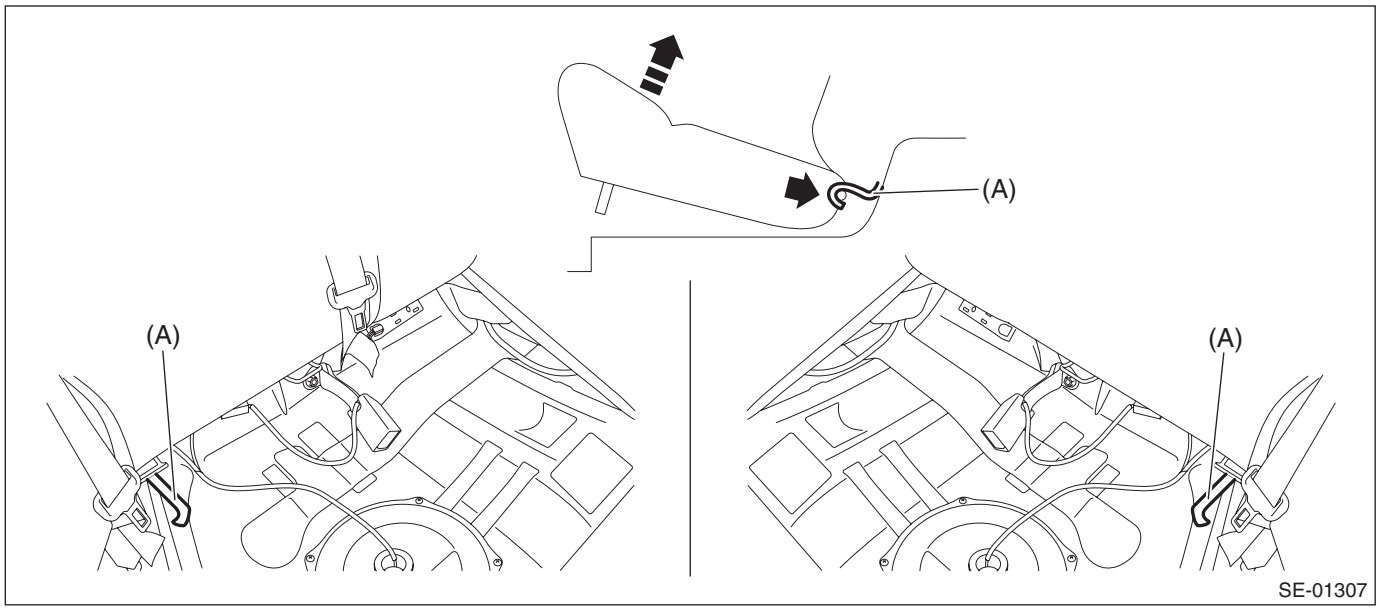

4) Release the clips and claws, and then remove the cover side sill - rear INN RH.

CAUTION:
Do not pull with excessive force. Doing so may damage the claws of the cover side sill - rear INN.

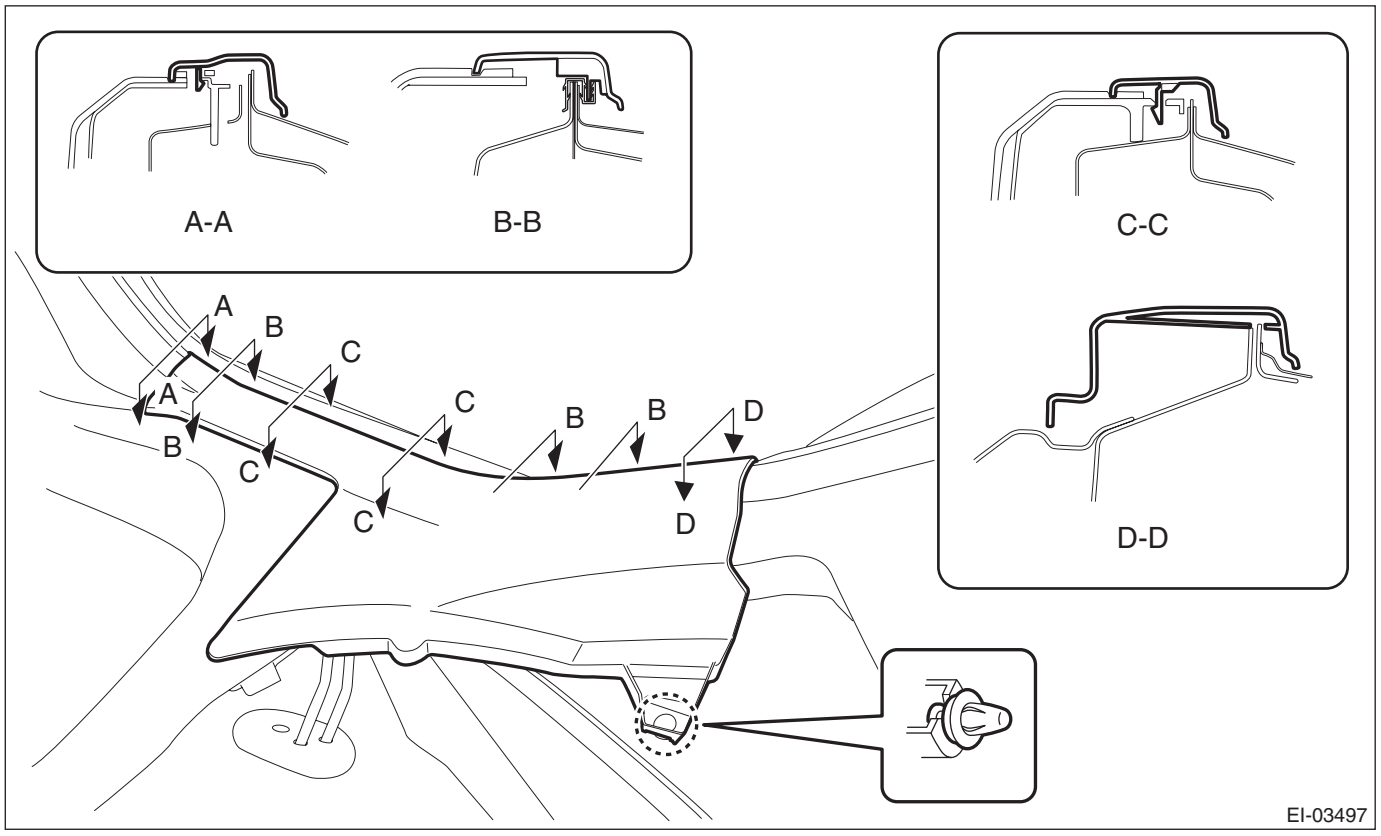

5) Remove the clips, and remove the trim panel - rear skirt.

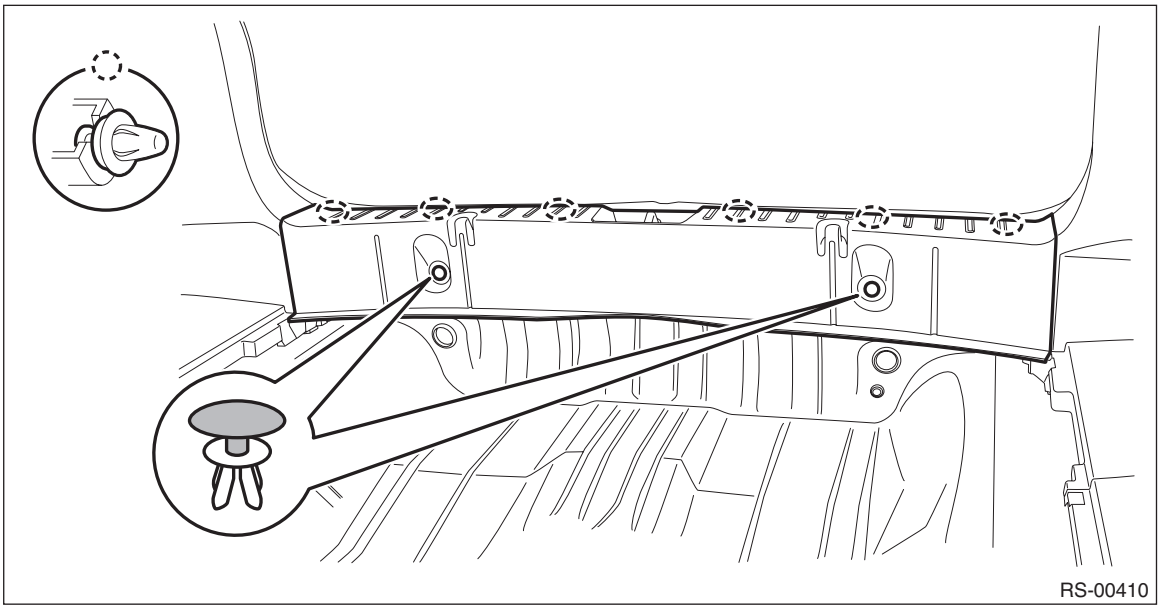

6) Remove the trim panel - rear apron RH.
   (1) Remove the caps, and then remove the screws.
   (2) Remove the clips, and remove the trim panel - rear apron RH.

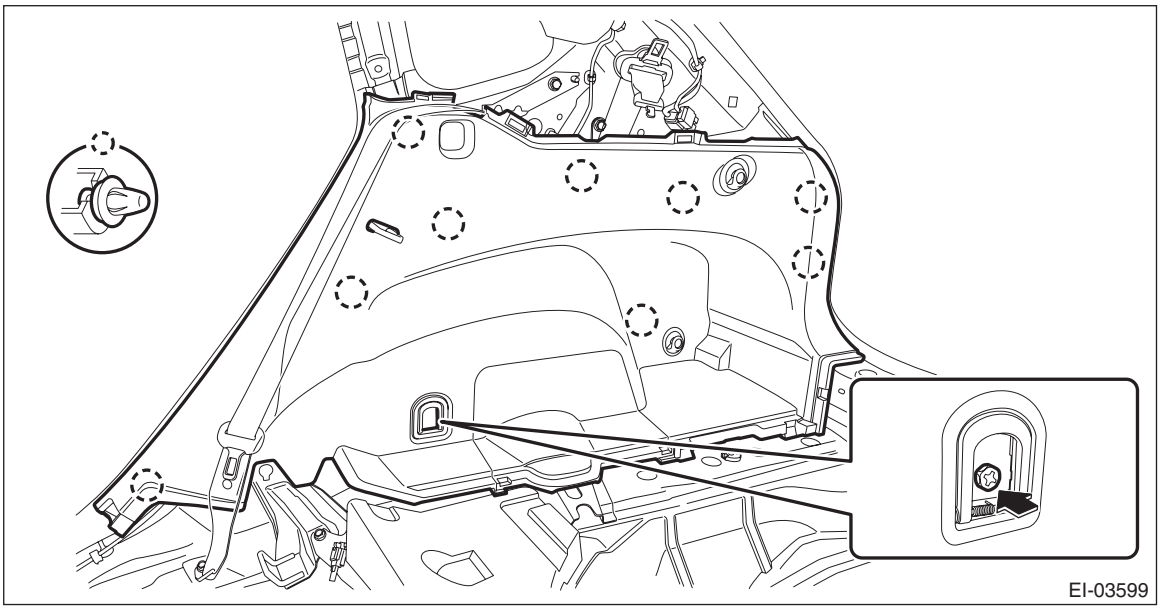

7) Remove the bolts, and remove the seat belt - rear shoulder CTR.

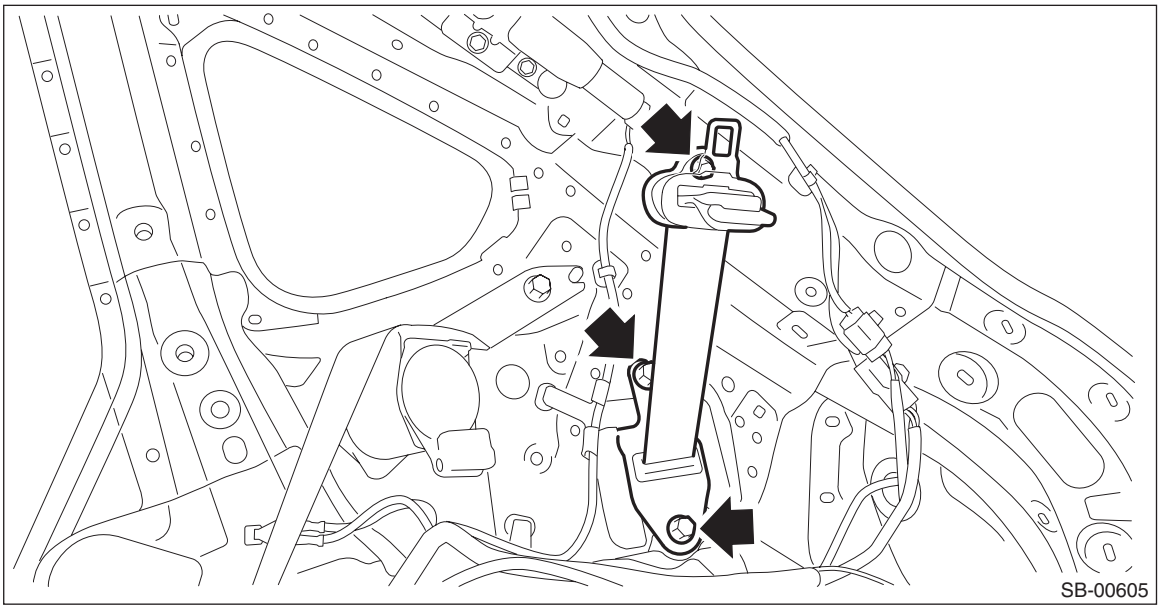

5. SEAT BELT - CTR RH AND LH

CAUTION:

• Airbag system satellite safing sensor is located in the lower of the rear seat cushion center. Before removing the rear seat, refer to "CAUTION" of "General Description" in "AIRBAG SYSTEM" section. <Ref. to AB-11, CAUTION, General Description.>

• The airbag system is fitted with a backup power supply. After disconnecting the battery ground cable, the airbag may operate if you do not wait for 60 seconds before starting the service of airbag system.

1) Disconnect the ground cable from battery and wait for at least 60 seconds before starting work. <Ref. to NT-5, BATTERY, NOTE, Note.>

NOTE:
For the 12 volt engine restart battery of HEV model, disconnect the ground terminal from 12V engine restart battery sensor.

2) Remove the rear seat cushion assembly.
(1) Push the corners of the rear seat cushion from above.
(2) While pushing the corners of the rear seat cushion from above, pull the knob of the hook - seat cushion rear towards yourself.
(3) While pulling the knob towards yourself, disconnect the hooks by lifting up the rear seat cushion.

NOTE:
Pull the left side of the knob to disconnect the LH side hook, and pull the right side of the knob to disconnect the RH side hook.

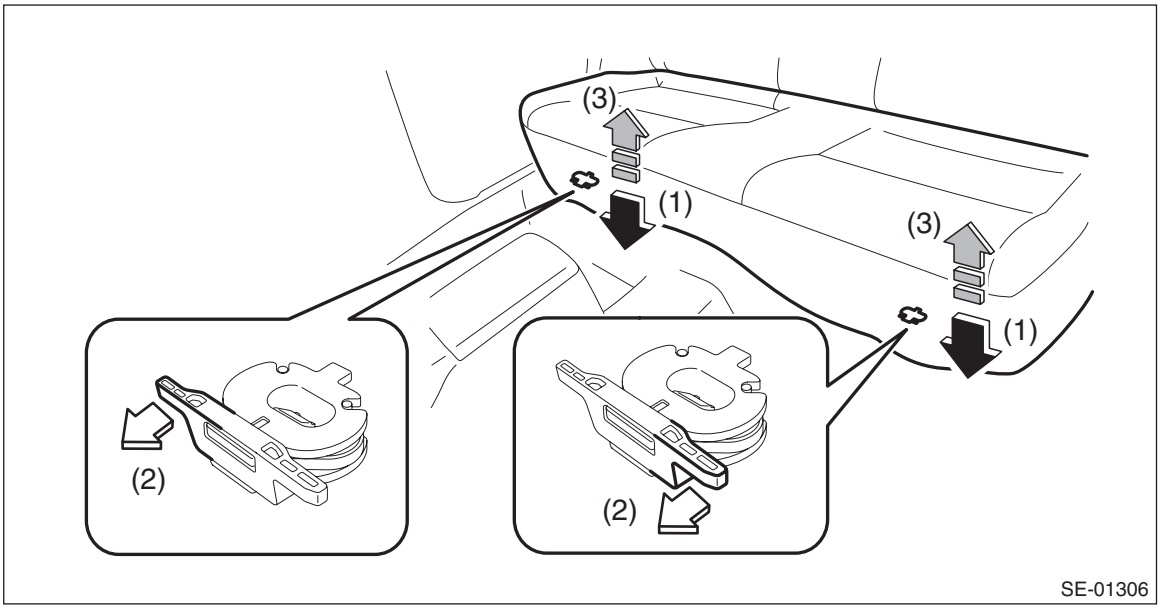

(4) Remove the hook (A) by pushing it back while lifting the front side of the rear seat cushion, and remove the rear seat cushion.

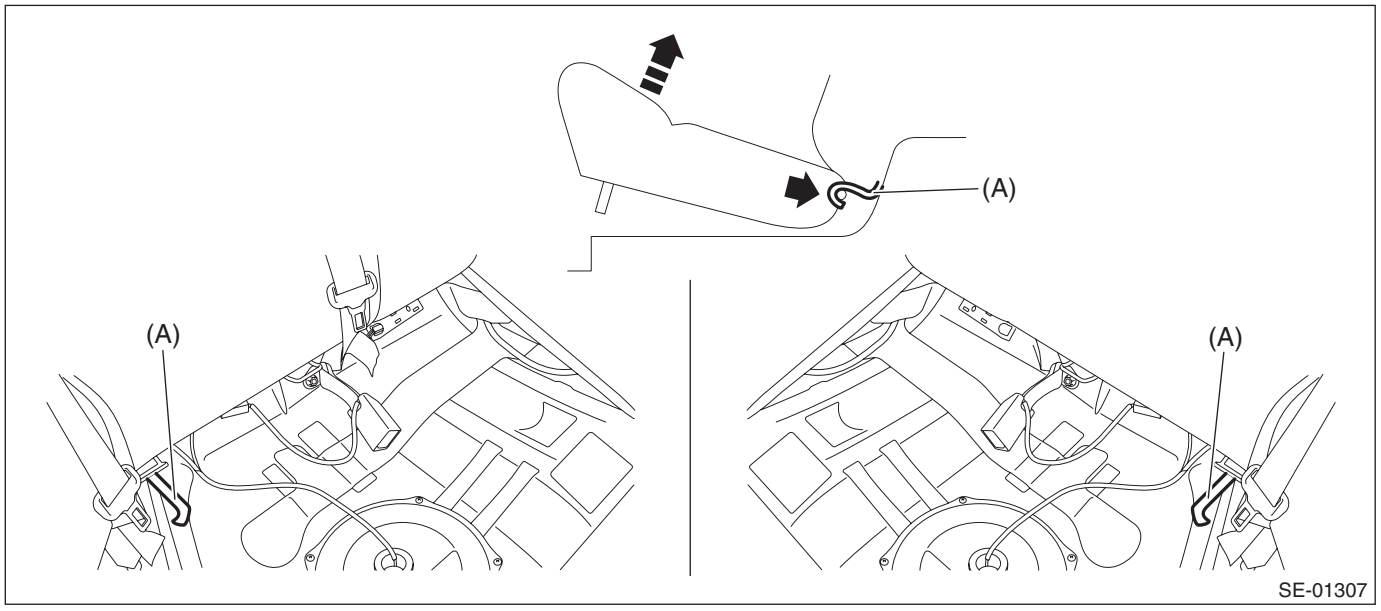

3) Remove the bolts, and remove the seat belt - CTR RH and LH.
- 4 door model: Seat belt - CTR LH

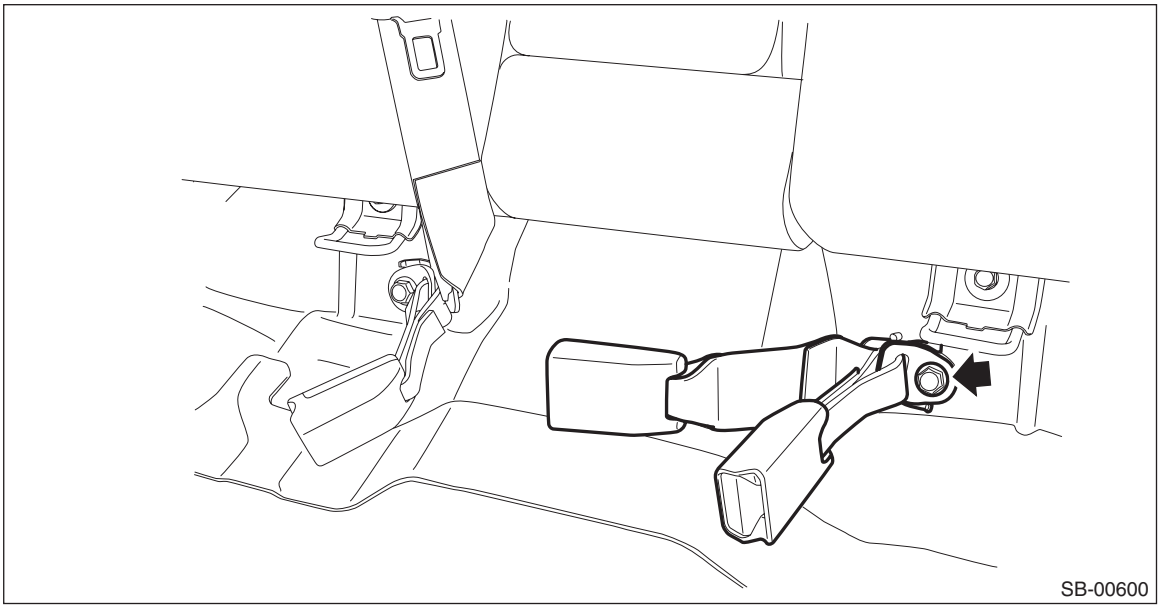

- 5 door model/XV model: Seat belt - CTR RH and LH

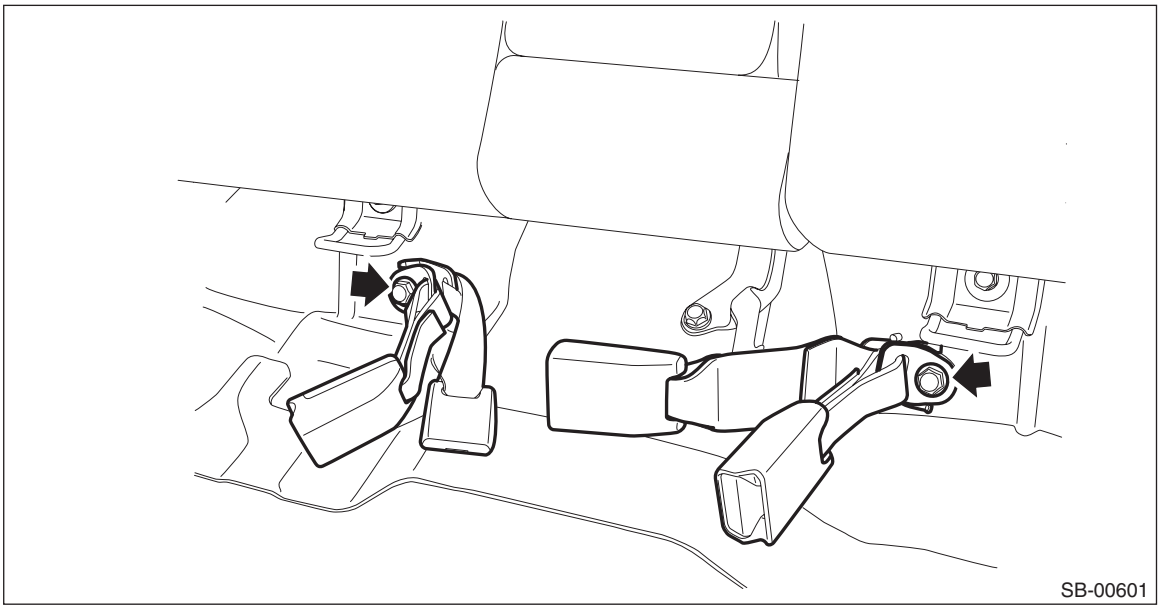

B: INSTALLATION

1. SEAT BELT OUTER - REAR RH AND LH (4 DOOR MODEL)

1) Before installation, perform a unit inspection of retractor. <Ref. to SB-47, INSPECTION, Rear Seat Belt.>
2) Install the seat belt outer - rear.

CAUTION:
- **During installation, make sure that the seat belts are not twisted.**
- **After installation, make sure that the seat belts are smoothly extended and wound.**

Tightening torque:
Rear seat belt (4 door model): <Ref. to SB-3, REAR SEAT BELT (4 DOOR MODEL), COMPONENT, General Description.>

3) Install the remaining parts in the reverse order of removal.
4) After installation, check the following points.
- The seat belt is not twisted.
- The seat belt can be pulled out and retracted smoothly.

2. SEAT BELT OUTER - REAR RH AND LH (5 DOOR MODEL/XV MODEL)

1) Before installation, perform a unit inspection of retractor. <Ref. to SB-47, INSPECTION, Rear Seat Belt.>
2) Install the seat belt outer - rear.

CAUTION:
- **During installation, make sure that the seat belts are not twisted.**
- **After installation, make sure that the seat belts are smoothly extended and wound.**

Tightening torque:
Rear seat belt (5 door model/XV model): <Ref. to SB-4, REAR SEAT BELT (5 DOOR MODEL/XV MODEL), COMPONENT, General Description.>

3) Install the trim panel - rear quarter trim UPR.
4) Install the remaining parts in the reverse order of removal.
5) After installation, check the following points.
- The seat belt is not twisted.
- The seat belt can be pulled out and retracted smoothly.

3. SEAT BELT - REAR SHOULDER CTR (4 DOOR MODEL)

1) Install the retractor of seat belt - rear shoulder CTR.

Tightening torque:
Rear seat belt (4 door model): <Ref. to SB-3, REAR SEAT BELT (4 DOOR MODEL), COMPONENT, General Description.>

2) Install the trim panel assembly - rear shelf.
3) Install the lower anchor of seat belt - rear shoulder CTR.

CAUTION:
- **During installation, make sure that the seat belts are not twisted.**
- **After installation, make sure that the seat belts are smoothly extended and wound.**

Tightening torque:
Rear seat belt (4 door model): <Ref. to SB-3, REAR SEAT BELT (4 DOOR MODEL), COMPONENT, General Description.>

4) Install the remaining parts in the reverse order of removal.
5) After installation, check the following points.
- The seat belt is not twisted.
- The seat belt can be pulled out and retracted smoothly.

4. SEAT BELT - REAR SHOULDER CTR (5 DOOR MODEL/XV MODEL)

1) Install the seat belt - rear shoulder CTR.

Tightening torque:
Rear seat belt (5 door model/XV model): <Ref. to SB-4, REAR SEAT BELT (5 DOOR MODEL/XV MODEL), COMPONENT, General Description.>

2) Install the remaining parts in the reverse order of removal.
3) After installation, check the following points.
- The seat belt is not twisted.
- The seat belt can be pulled out and retracted smoothly.

5. SEAT BELT - CTR RH AND LH

1) Install the seat belt - CTR RH/LH.

Tightening torque:
Rear seat belt (4 door model): <Ref. to SB-3, REAR SEAT BELT (4 DOOR MODEL), COMPONENT, General Description.>
Rear seat belt (5 door model/XV model): <Ref. to SB-4, REAR SEAT BELT (5 DOOR MODEL/XV MODEL), COMPONENT, General Description.>

2) Install the rear seat cushion.
3) Install the remaining parts in the reverse order of removal.
4) After installation, check the following points.
- The seat belt is not twisted.
- Check that the airbag warning light lights up for approximately 6 seconds and then turns off when connecting the battery ground cable and turning the ignition switch to ON.

C: INSPECTION

1. VISUAL INSPECTION

Check for the following, and replace with new parts if necessary.
- Seat belt is slackened, bent or worn.
- Seat belt is abnormally wound or extended.
- Seat belt inner - rear is deformed or damaged.
- Seat belt buckle cannot be engaged properly.

2. ELR LOCK MECHANISM INSPECTION

1) Hold the retractor upright (as installed in the vehicle) and check the ELR lock mechanism.
2) Tilt the retractor from the upright posture and check the following points.

- It does not lock if the inclination angle is 15° or less.

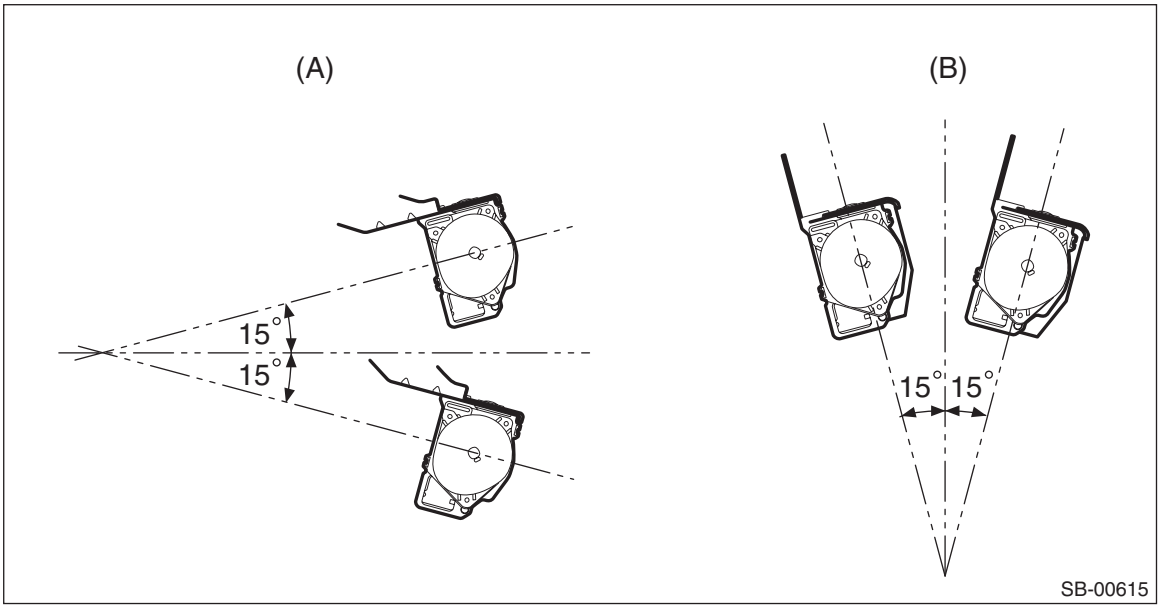

(A) Except for seat belt - rear shoulder CTR (5 door model/XV model)
(B) Seat belt - rear shoulder CTR (5 door model/XV model)

- It remains locked if the inclination angle is 27° or more.

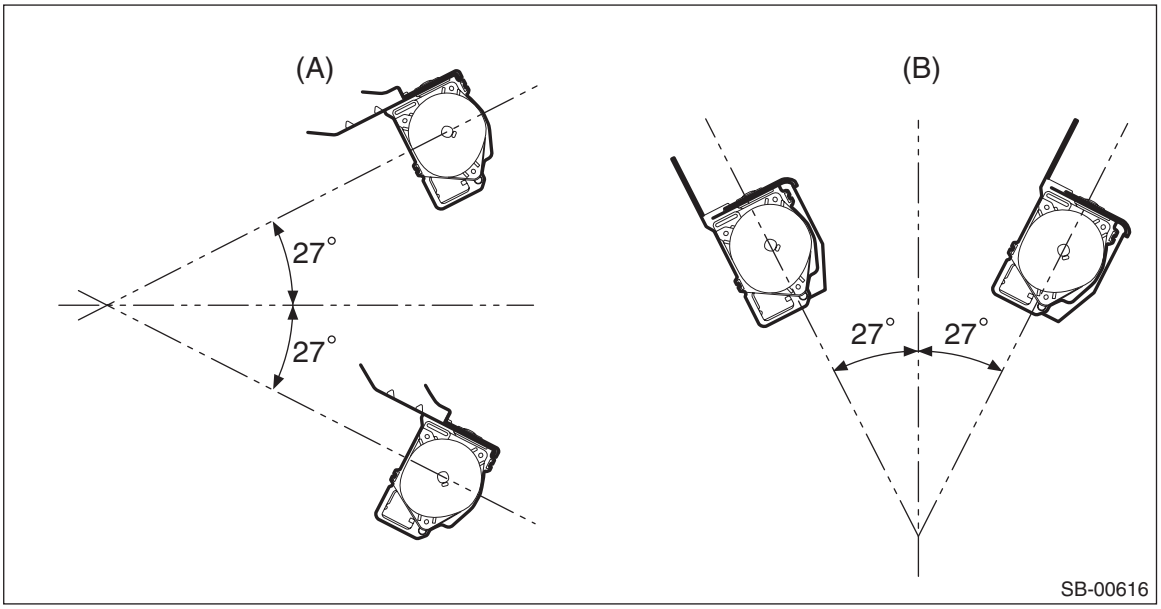

(A) Except for seat belt - rear shoulder CTR (5 door model/XV model)
(B) Seat belt - rear shoulder CTR (5 door model/XV model)

3) If the ELR lock mechanism does not operate properly, replace the seat belt outer - rear with a new part.

LIGHTING SYSTEM

LI

		Page
1.	General Description	2
2.	Relay and Fuse	5
3.	Headlight System	7
4.	Day Time Running Light System	9
5.	Clearance Light and Illumination Light System	10
6.	Front Fog Light System	11
7.	Turn Signal Light and Hazard Light System	12
8.	Back-up Light System	13
9.	Stop Light System	14
10.	Interior Light System	15
11.	Auto Headlight Beam Leveler System	16
12.	Combination Switch (Light)	19
13.	Light Control Sensor	26
14.	Headlight Assembly	28
15.	Headlight Bulb	38
16.	Hazard Switch	48
17.	Turn Signal Light & Hazard Light Module	50
18.	Front Turn Signal Light Bulb	52
19.	Clearance/Parking Light Bulb	53
20.	Front Side Marker Light Bulb	54
21.	Front Fog Light Assembly	55
22.	Front Fog Light Bulb	58
23.	Side Turn Signal Light Assembly	60
24.	Rear Combination Light Assembly	61
25.	Tail/Stop Light Bulb	64
26.	Rear Turn Signal Light Bulb	67
27.	Rear Side Marker Light Bulb	70
28.	Back-up Light Bulb	72
29.	License Plate Light	75
30.	High-mounted Stop Light	77
31.	Spot Map Light	81
32.	Room Light	83
33.	Luggage Room Light	85
34.	Trunk Room Light	87
35.	Glove Box Light	88
36.	Ignition Switch Illumination	90
37.	Auto Headlight Beam Leveler Control Module	92
38.	Rear Height Sensor	94
39.	Day Time Running Resistor	96
40.	Reflex Reflector	98
41.	Door Switch	99

1. General Description

A: SPECIFICATION

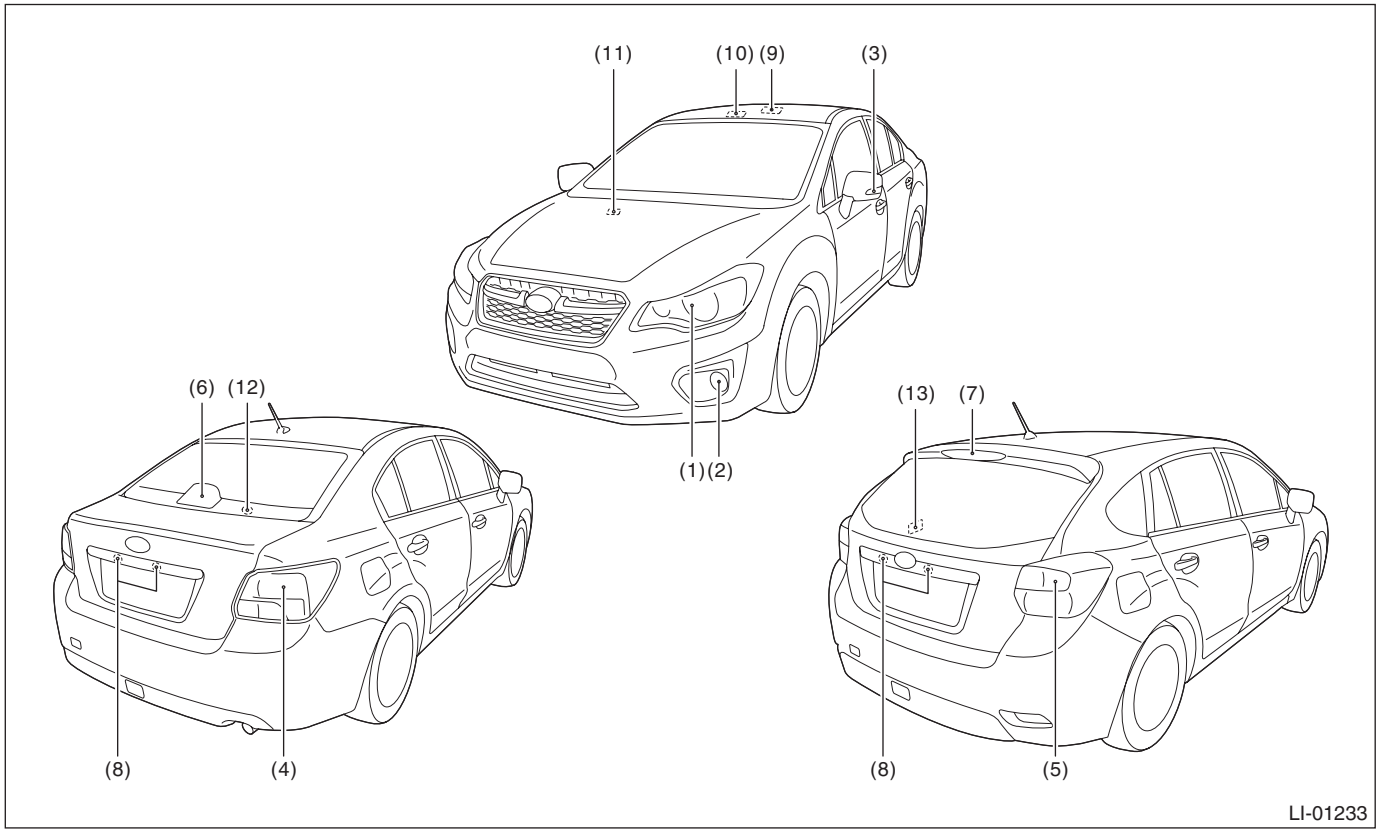

(1)	Headlight	Low beam (halogen type)	12 V — 55 W
		Low beam (HID type)	12 V — 35 W
		High beam	12 V — 60 W
		Front turn signal light	12 V — 21 W
		Parking light	12 V — 5 W
		Side marker light	12 V — 5 W
(2)	Front fog light		12 V — 24 W
(3)	Side turn signal light		12 V — 1.1 W (LED)
(4)	Rear combination light (4 door model)	Tail & side marker/stop light	12 V — 5 / 21 W
		Turn signal light	12 V — 21 W
		Back-up light	12 V — 16 W
(5)	Rear combination light (5 door model/XV model)	Tail/stop light	12 V — 5 / 21 W
		Back-up light	12 V — 16 W
		Turn signal light	12 V — 21 W
		Side marker light	12 V — 5 W
	Rear combination light (HEV model)	Tail light	12 V — 5 W
		Stop light	12 V — 2.0 W (LED)
		Back-up light	12 V — 16 W
		Turn signal light	12 V — 21 W
		Side marker light	12 V — 5 W
(6)	High-mounted stop light (4 door model)		12 V — 21 W
(7)	High-mounted stop light (5 door model/XV model)		12 V — 2.1 W (LED)
(8)	License plate light		12 V — 5 W
(9)	Room light		12 V — 8 W
(10)	Spot map light		12 V — 8 W
(11)	Glove box light		12 V — 1.4 W
(12)	Trunk room light (4 door model)		12 V — 5 W
(13)	Luggage room light (5 door model/XV model)		12 V — 5 W

B: CAUTION

• Before disassembling or reassembling parts, always disconnect the battery ground cable from battery. When replacing the audio, control module and other parts provided with memory functions, record the memory contents before disconnecting the battery ground cable. Otherwise, the memory is cleared.
• Reassemble the parts in the reverse order of disassembly procedure unless otherwise indicated.
• Connect the connectors securely during reassembly.
• After reassembly, make sure that the each component operates normally.
• Yellow connectors and harnesses with yellow tapes around them are the connectors and harnesses for the airbag system. Using a tester above such circuits may cause malfunction of airbag system. Follow the cautions for “AIRBAG SYSTEM” in this case. <Ref. to AB-11, CAUTION, General Description.>
• Be careful not to damage the airbag system wiring harness when servicing electrical parts and switches.
• If the steering wheel and steering angle sensor (steering roll connector) are removed, perform “VDC sensor midpoint setting mode” of the VDC. <Ref. to VDC-21, VDC SENSOR MIDPOINT SETTING MODE, ADJUSTMENT, VDC Control Module and Hydraulic Control Unit (VDCCM&H/U).>

C: PREPARATION TOOL

1. SPECIAL TOOL

ILLUSTRATION	TOOL NUMBER	DESCRIPTION	REMARKS
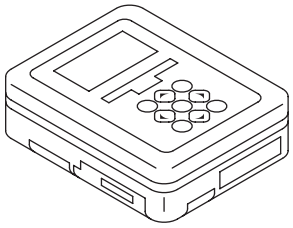 ST1B022XU0	1B022XU0	SUBARU SELECT MONITOR III KIT	Used for setting of each function and trouble-shooting for electrical system. NOTE: For detailed operation procedures of SUBARU SELECT MONITOR III KIT, refer to “PC application help for Subaru Select Monitor”.

2. GENERAL TOOL

TOOL NAME	REMARKS
Circuit tester	Used for measuring resistance and voltage.
Steering wheel puller	Used for removing the steering wheel.

2. Relay and Fuse

A: LOCATION

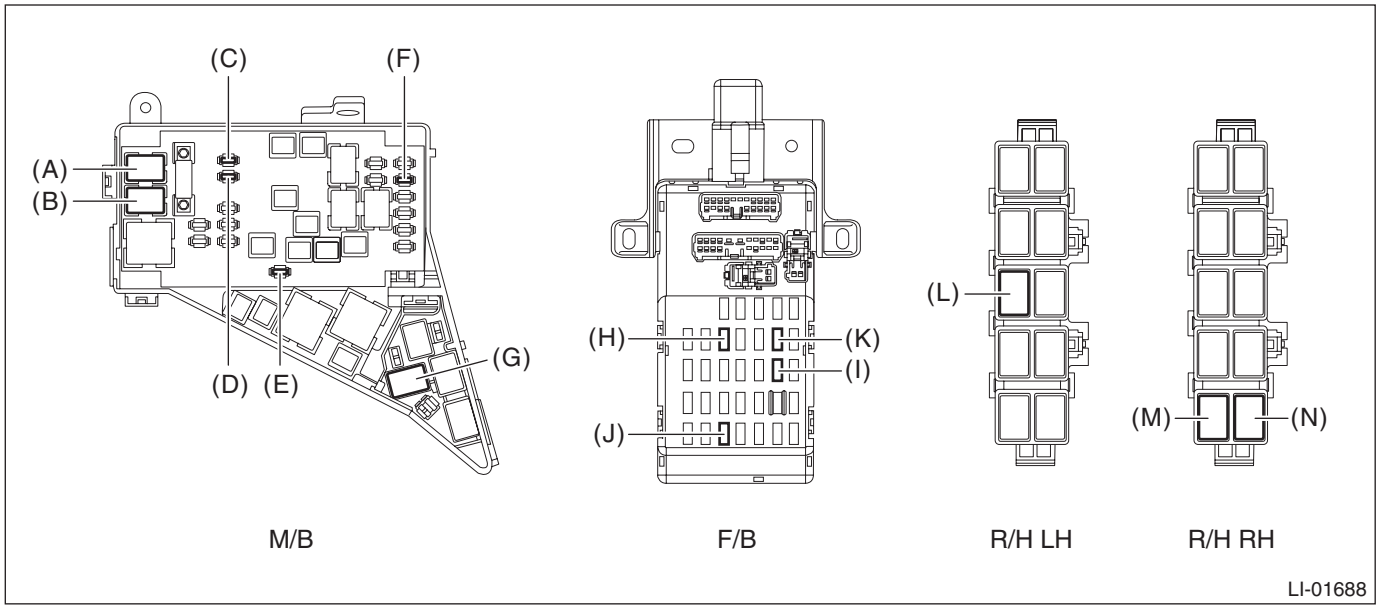

Main fuse box	Headlight relay (HI)	(A)
	Headlight relay (LO)	(B)
	Fuse 15A (daytime running light relay)	(C)
	Fuse 30 A (front fog light relay, combination light LH/RH)	(D)
	Fuse 20A (spot map light, room light, ignition switch illumination (immobilizer antenna))	(E)
	Fuse 15A (tail and illumination relay, daytime running light relay) (gasoline engine model)	(F)
	Fuse 15A (tail relay, daytime running light relay) (HEV model)	
	Daytime running light relay	(G)
Relay & fuse box	Fuse 15A (stop light and brake switch)	(H)
	Fuse 10A (inhibitor switch, back-up light switch, auto headlight beam leveler CM) (gasoline engine model)	(I)
	Fuse 10A (R range relay, auto headlight beam leveler CM) (HEV model)	
	Fuse 15A (front fog light relay)	(J)
	Fuse 7.5A (turn signal & hazard unit)	(K)
Relay holder LH	Tail & illumination relay (gasoline engine model)	(L)
	Tail relay (HEV model)	
Relay holder RH	R range relay (HEV model)	(M)
	Front fog light relay	(N)

NOTE:
For other related fuses, refer to the wiring diagram.
- Gasoline engine model: <Ref. to WI(w/o HEV)-15, Power Supply Circuit.>
- HEV model: <Ref. to WI(HEV)-20, Power Supply Circuit.>

B: INSPECTION

1. CHECK FUSE

1) Remove the fuse and inspect visually.
2) If the fuse is blown out, replace the fuse.

NOTE:
If the fuse is blown again, check the system wiring harness.

2. CHECK RELAY

1) Check the resistance between relay terminals.

Terminal No.	Inspection conditions	Standard	Circuit
1 — 2	Always	1 MΩ or more	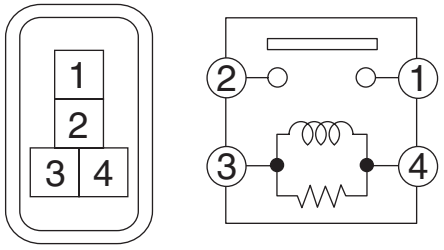 LI-01273
1 — 2	Apply battery voltage between terminals 4 and 3.	Less than 1 Ω	

Terminal No.	Inspection conditions	Standard	Circuit
1 — 2	Always	1 MΩ or more	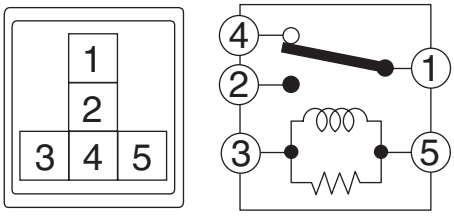 LI-01274
1 — 4	Always	Less than 1 Ω	
1 — 2	Apply battery voltage between terminals 3 and 5.	Less than 1 Ω	

2) Replace the relay if the inspection result is not within the standard value.

3. Headlight System

A: WIRING DIAGRAM

Refer to “Headlight System” in the wiring diagram.

- Gasoline engine model: <Ref. to WI(w/o HEV)-95, WIRING DIAGRAM, Headlight System.>
- HEV model: <Ref. to WI(HEV)-135, WIRING DIAGRAM, Headlight System.>

B: INSPECTION

1. AUTO HEADLIGHT SYSTEM CHECK

	Step	Check	Yes	No
1	**CHECK HEADLIGHT ILLUMINATION.** Set the lighting switch to the switch 1 (TAIL) and switch 2 (HEAD).	Do the tail and headlight illuminate?	Go to step **2**.	Check the combination switch (light) and headlight bulb.
2	**CHECK CURRENT DATA.** Using the Subaru Select Monitor, display the data of «Lighting AUTO input». NOTE: For detailed procedures, refer to “PC application help for Subaru Select Monitor”.	Does the display switch between OFF ←→ ON when the lighting switch is moved to AUTO position?	Go to step **3**.	Go to step **8**.
3	**CHECK CURRENT DATA.** 1) Using the Subaru Select Monitor, display the data of «Illumination Sensor Output». 2) Measure the voltage when the area around the light control sensor, which was dark, becomes bright. ***Illumination sensor output*** ***Dark condition: Approx. 0.6 V or less*** ***Bright condition: Approx. 3.0 V or more***	Is the voltage output according to the brightness?	Check and replace the body integrated unit. • Inspection: <Ref. to BC(diag)-2, Basic Diagnostic Procedure.> • Replacement: <Ref. to SL-82, Body Integrated Unit.>	Go to step **4**.
4	**CHECK HARNESS.** 1) Disconnect the connectors from body integrated unit and light control sensor. 2) Check the harness between body integrated unit and light control sensor. ***Connector & terminal*** ***(B280) No. 19 — (i226) No. 2:*** ***(B280) No. 29 — (i226) No. 1:*** ***(B281) No. 1 — (i226) No. 3:***	Is harness normal?	Go to step **5**.	Repair or replace the harness.
5	**CHECK HARNESS.** 1) Connect the connector of body integrated unit. 2) Turn the ignition switch to ON. 3) Measure the voltage between light control sensor connector and chassis ground. ***Connector & terminal*** ***(i226) No. 3 (+) — Chassis ground (–):***	Is the voltage 4.5 — 5.5 V?	Go to step **6**.	Replace the body integrated unit. <Ref. to SL-82, Body Integrated Unit.>
6	**CHECK BODY INTEGRATED UNIT.** Measure the resistance between the body integrated unit and chassis ground. ***Connector & terminal*** ***(B280) No. 29 — Chassis ground:***	Is the resistance less than 10 Ω?	Go to step **7**.	Replace the body integrated unit. <Ref. to SL-82, Body Integrated Unit.>
7	**CHECK LIGHT CONTROL SENSOR.** 1) Connect the light control sensor connector. 2) Check the light control sensor. <Ref. to LI-27, INSPECTION, Light Control Sensor.>	Is the light control sensor normal?	Go to step **8**.	Replace the light control sensor.

Step		Check	Yes	No
8	**CHECK COMBINATION SWITCH (LIGHT).** Check the combination switch (light). <Ref. to LI-23, INSPECTION, Combination Switch (Light).>	Is the combination switch (light) normal?	Go to step **9**.	Replace the combination switch (light).
9	**CHECK HARNESS.** 1) Disconnect the connectors of body integrated unit and combination switch (light). 2) Check the harness between body integrated unit and combination switch (light). ***Connector & terminal*** ***(B71) No. 19 — (B281) No. 16:***	Is harness normal?	Check and replace the body integrated unit. • Inspection: <Ref. to BC(diag)-2, Basic Diagnostic Procedure.> • Replacement: <Ref. to SL-82, Body Integrated Unit.>	Repair or replace the harness.

2. CHECK LIGHTING SWITCH

Refer to the “INSPECTION” of the “Combination Switch (Light)”. <Ref. to LI-23, INSPECTION, Combination Switch (Light).>

3. CHECK DIMMER & PASSING SWITCH

Refer to the “INSPECTION” of the “Combination Switch (Light)”. <Ref. to LI-23, INSPECTION, Combination Switch (Light).>

C: NOTE

For operation procedures of each component of the headlight system, refer to the respective section.
- Headlight Assembly: <Ref. to LI-28, Headlight Assembly.>
- Headlight bulb: <Ref. to LI-38, Headlight Bulb.>
- Combination switch (light): <Ref. to LI-19, Combination Switch (Light).>
- Light control sensor: <Ref. to LI-26, Light Control Sensor.>

4. Day Time Running Light System

A: WIRING DIAGRAM

Refer to “Headlight System” in the wiring diagram.
- Gasoline engine model: <Ref. to WI(w/o HEV)-95, WIRING DIAGRAM, Headlight System.>
- HEV model: <Ref. to WI(HEV)-135, WIRING DIAGRAM, Headlight System.>

B: INSPECTION

1. DAYTIME RUNNING LIGHT SYSTEM CHECK

	Step	Check	Yes	No
1	**CHECK BODY INTEGRATED UNIT.** Read the DTC using Subaru Select Monitor. NOTE: For detailed procedures, refer to “PC application help for Subaru Select Monitor”.	Is DTC displayed?	Perform the diagnosis according to DTC.	Go to step **2**.
2	**CHECK CURRENT DATA.** Display the following items using Subaru Select Monitor. • «Parking Brake Switch Input» • «Shift position» • «Lighting II Switch Input»	Is the input signal normal?	Go to step **3**.	Check the defective part.
3	**CHECK RELAY.** Check the daytime running light relay. <Ref. to LI-6, CHECK RELAY, INSPECTION, Relay and Fuse.>	Is the relay OK?	Go to step **4**.	Replace the relay.
4	**CHECK HARNESS.** Check each harness.	Is harness normal?	Replace the body integrated unit. <Ref. to SL-82, REMOVAL, Body Integrated Unit.>	Repair or replace the harness.

C: NOTE

For operation procedures of each component of the daytime running light system, refer to the respective section.
- Headlight Assembly: <Ref. to LI-28, Headlight Assembly.>
- Headlight bulb: <Ref. to LI-38, Headlight Bulb.>
- Combination switch (light): <Ref. to LI-19, Combination Switch (Light).>
- Daytime running resistor: <Ref. to LI-96, Day Time Running Resistor.>

5. Clearance Light and Illumination Light System

A: WIRING DIAGRAM

Refer to “Clearance Light and Illumination Light System” in the wiring diagram.

- Gasoline engine model: <Ref. to WI(w/o HEV)-49, WIRING DIAGRAM, Clearance Light and Illumination Light System.>
- HEV model: <Ref. to WI(HEV)-69, WIRING DIAGRAM, Clearance Light and Illumination Light System.>

B: INSPECTION

1. CHECK LIGHTING SWITCH

Refer to the “INSPECTION” of the “Combination Switch (Light)”. <Ref. to LI-23, INSPECTION, Combination Switch (Light).>

C: NOTE

For operation procedures of each component of the clearance light & illumination light system, refer to the respective sections.

- Combination switch (light): <Ref. to LI-19, Combination Switch (Light).>
- Parking light bulb: <Ref. to LI-53, Clearance/Parking Light Bulb.>
- Front side marker light bulb: <Ref. to LI-54, Front Side Marker Light Bulb.>
- Rear combination light assembly: <Ref. to LI-61, Rear Combination Light Assembly.>
- Tail light/stop light bulb: <Ref. to LI-64, Tail/Stop Light Bulb.>
- Rear side marker light bulb: <Ref. to LI-70, Rear Side Marker Light Bulb.>
- License plate light: <Ref. to LI-75, License Plate Light.>
- Ignition switch illumination: <Ref. to LI-90, Ignition Switch Illumination.>

6. Front Fog Light System

A: WIRING DIAGRAM

Refer to “Front Fog Light System” in the wiring diagram.
- Gasoline engine model: <Ref. to WI(w/o HEV)-89, WIRING DIAGRAM, Front Fog Light System.>
- HEV model: <Ref. to WI(HEV)-129, WIRING DIAGRAM, Front Fog Light System.>

B: INSPECTION

1. CHECK FRONT FOG LIGHT SWITCH

Refer to the “INSPECTION” of the “Combination Switch (Light)”. <Ref. to LI-23, INSPECTION, Combination Switch (Light).>

C: NOTE

For operation procedures of each component of the front fog light system, refer to the respective section.
- Combination switch (light): <Ref. to LI-19, Combination Switch (Light).>
- Front fog light assembly: <Ref. to LI-55, Front Fog Light Assembly.>
- Front fog light bulb: <Ref. to LI-58, Front Fog Light Bulb.>

7. Turn Signal Light and Hazard Light System

A: WIRING DIAGRAM

Refer to “Turn Signal Light and Hazard Light System” in the wiring diagram.

- Gasoline engine model: <Ref. to WI(w/o HEV)-149, WIRING DIAGRAM, Turn Signal Light and Hazard Light System.>
- HEV model: <Ref. to WI(HEV)-211, WIRING DIAGRAM, Turn Signal Light and Hazard Light System.>

B: INSPECTION

1. CHECK TURN SIGNAL SWITCH

Refer to the “INSPECTION” of the “Combination Switch (Light)”. <Ref. to LI-23, INSPECTION, Combination Switch (Light).>

2. CHECK HAZARD SWITCH

Refer to the “INSPECTION” of the “Hazard Switch”. <Ref. to LI-49, INSPECTION, Hazard Switch.>

3. CHECK TURN SIGNAL AND HAZARD MODULE

Refer to “INSPECTION” of the “Turn Signal Light and Hazard Light System”. <Ref. to LI-50, INSPECTION, Turn Signal Light & Hazard Light Module.>

C: NOTE

For operation procedures of each component of the turn signal and hazard light system, refer to the respective sections.

- Combination switch (light): <Ref. to LI-19, Combination Switch (Light).>
- Front turn signal light bulb: <Ref. to LI-52, Front Turn Signal Light Bulb.>
- Side turn signal light assembly: <Ref. to LI-60, Side Turn Signal Light Assembly.>
- Rear combination light assembly: <Ref. to LI-61, Rear Combination Light Assembly.>
- Rear turn signal light bulb: <Ref. to LI-67, Rear Turn Signal Light Bulb.>
- Hazard switch: <Ref. to LI-48, Hazard Switch.>
- Turn signal and hazard module: <Ref. to LI-50, Turn Signal Light & Hazard Light Module.>

8. Back-up Light System

A: WIRING DIAGRAM

Refer to “Back-up Light System” in the wiring diagram. <Ref. to WI(w/o HEV)-45, WIRING DIAGRAM, Back-up Light System.>

- Gasoline engine model: <Ref. to WI(w/o HEV)-45, WIRING DIAGRAM, Back-up Light System.>
- HEV model: <Ref. to WI(HEV)-63, WIRING DIAGRAM, Back-up Light System.>

B: INSPECTION

1. CHECK BACK-UP LIGHT SWITCH (MT MODEL)

Refer to “INSPECTION” of the “Switches and Harness” in “MANUAL TRANSMISSION AND DIFFERENTIAL” section. <Ref. to 5MT-36, BACK-UP LIGHT SWITCH, INSPECTION, Switches and Harness.>

2. CHECK INHIBITOR SWITCH (CVT MODEL)

Refer to “INSPECTION” of the “Inhibitor Switch” in “CONTINUOUSLY VARIABLE TRANSMISSION” section.

- Gasoline engine model: <Ref. to CVT(TR580)-92, INSPECTION, Inhibitor Switch.>
- HEV model: <Ref. to CVT(TH58A)-96, INSPECTION, Inhibitor Switch.>

C: NOTE

For operation procedures of each component of the back-up light system, refer to the respective section.

- Rear combination light assembly: <Ref. to LI-61, Rear Combination Light Assembly.>
- Back-up light bulb: <Ref. to LI-72, Back-up Light Bulb.>

9. Stop Light System

A: WIRING DIAGRAM

Refer to “Stop Light System” in the wiring diagram.

- Gasoline engine model

4 door model: <Ref. to WI(w/o HEV)-145, 4 DOOR MODEL, WIRING DIAGRAM, Stop Light System.>
5 door model/XV model: <Ref. to WI(w/o HEV)-146, 5 DOOR MODEL/XV MODEL, WIRING DIAGRAM, Stop Light System.>

- HEV model: <Ref. to WI(HEV)-208, WIRING DIAGRAM, Stop Light System.>

B: INSPECTION

1. CHECK STOP LIGHT SWITCH

Refer to “INSPECTION” of the “Stop Light Switch” in “BRAKE” section. <Ref. to BR-74, INSPECTION, Stop Light Switch.>

C: NOTE

For operation procedures of each component of the stop light system, refer to the respective section.

- Rear combination light assembly: <Ref. to LI-61, Rear Combination Light Assembly.>
- Tail light/stop light bulb: <Ref. to LI-64, Tail/Stop Light Bulb.>
- High-mounted stop light: <Ref. to LI-77, High-mounted Stop Light.>

10.Interior Light System

A: WIRING DIAGRAM

Refer to “Interior Light System” in the wiring diagram.
- Gasoline engine model: <Ref. to WI(w/o HEV)-101, WIRING DIAGRAM, Interior Light System.>
- HEV model: <Ref. to WI(HEV)-154, WIRING DIAGRAM, Interior Light System.>

B: INSPECTION

1. CHECK DOOR SWITCH

Refer to the “INSPECTION” of the “Door Switch”. <Ref. to LI-99, INSPECTION, Door Switch.>

2. CHECK REAR GATE LATCH SWITCH

Refer to “INSPECTION” of the “Rear Gate Latch and Actuator Assembly” in “SECURITY AND LOCKS” section. <Ref. to SL-52, ACTUATOR, INSPECTION, Rear Gate Latch and Actuator Assembly.>

3. CHECK TRUNK LID LATCH SWITCH

Refer to “INSPECTION” of the “Trunk Lid Latch and Actuator Assembly” in “SECURITY AND LOCKS” section. <Ref. to SL-54, ACTUATOR, INSPECTION, Trunk Lid Latch and Actuator Assembly.>

C: NOTE

For operation procedures of each component of the interior light system, refer to the respective section.
- Spot map light: <Ref. to LI-81, Spot Map Light.>
- Room light: <Ref. to LI-83, Room Light.>
- Luggage room light: <Ref. to LI-85, Luggage Room Light.>
- Trunk room light: <Ref. to LI-87, Trunk Room Light.>
- Glove box light: <Ref. to LI-88, Glove Box Light.>
- Door switch: <Ref. to LI-99, Door Switch.>

11.Auto Headlight Beam Leveler System

A: WIRING DIAGRAM

Refer to “Headlight Beam Leveler System” in the wiring diagram.

- Gasoline engine model: <Ref. to WI(w/o HEV)-93, WIRING DIAGRAM, Headlight Beam Leveler System.>
- HEV model: <Ref. to WI(HEV)-133, WIRING DIAGRAM, Headlight Beam Leveler System.>

B: SPECIFICATION

1. TERMINAL ARRANGEMENT OF AUTO HEADLIGHT BEAM LEVELER CM

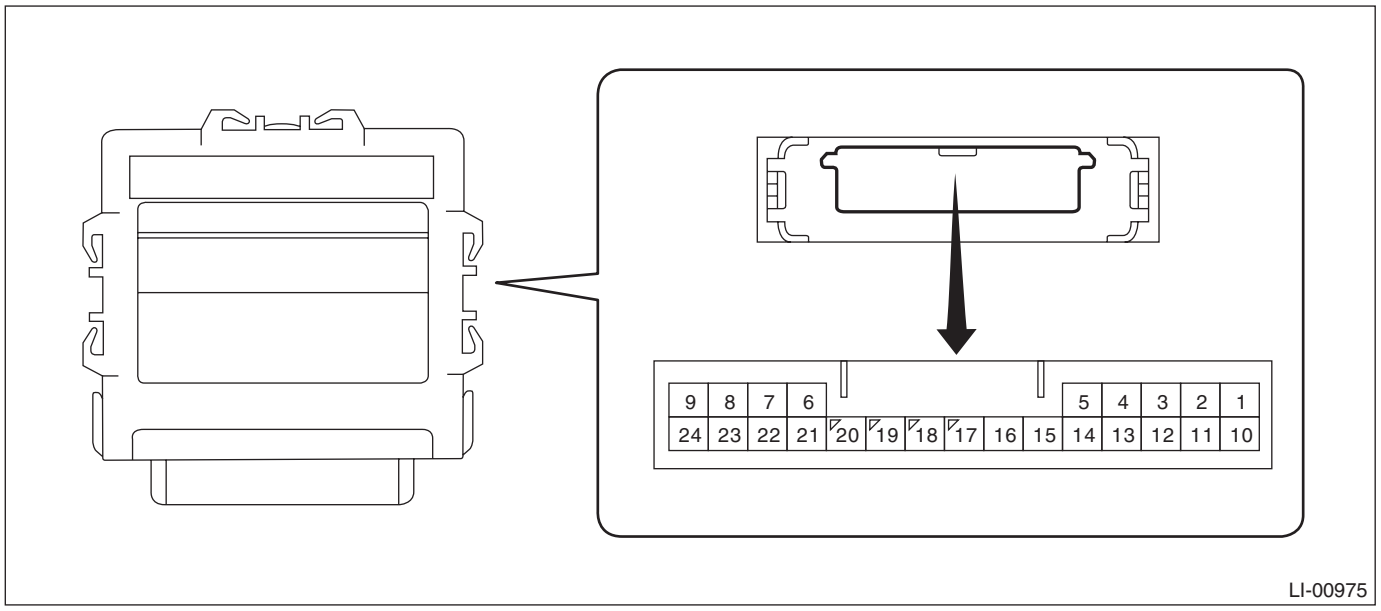

(1)	IG power supply	(9)	Not used	(17)	Actuator control signal output
(2)	GND	(10)	Actuator power supply	(18)	Not used
(3)	Rear sensor GND	(11)	Actuator GND	(19)	Rear sensor input
(4)	Not used	(12)	Rear sensor power supply	(20)	Not used
(5)	Not used	(13)	Not used	(21)	Not used
(6)	Indicator output	(14)	Not used	(22)	Not used
(7)	Not used	(15)	Not used	(23)	CAN-HI
(8)	Not used	(16)	Not used	(24)	CAN-LO

2. TERMINAL LAYOUT OF VEHICLE HEIGHT SENSOR

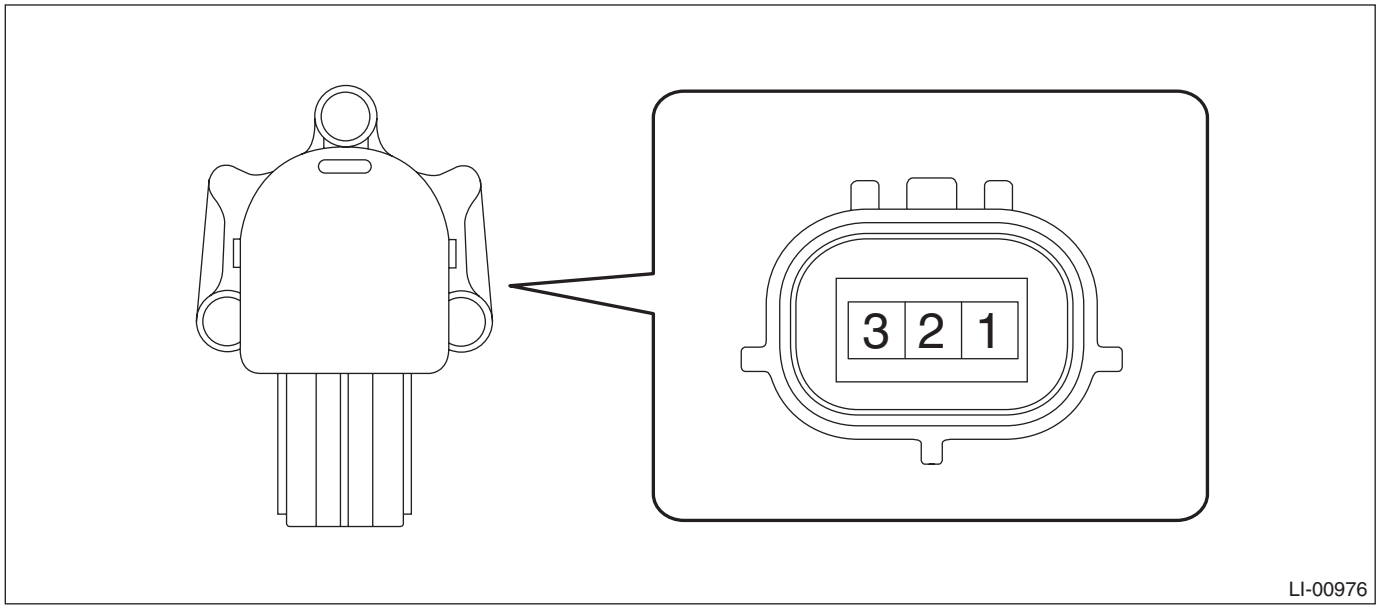

(1) GND (2) Output (3) Power supply

C: INSPECTION

Refer to “Basic Diagnostic Procedure” of “AUTO HEADLIGHT BEAM LEVELER SYSTEM (DIAGNOSTICS)” section. <Ref. to AL(diag)-2, Basic Diagnostic Procedure.>

D: PROCEDURE

When parts related to the auto headlight beam leveler system are removed or replaced, perform the following procedures to initialize or reinitialize.

NOTE:
Before performing initialization or reinitialization, check the following:
- Vehicle is parked on a level surface.
- The inflation pressure of tires is correct.
- Unload any cargo from the vehicle.
- Vehicle's fuel tank is fully filled.
- Refer to the following chart to determine whether to initialize or reinitialize.

Initialization	When the auto headlight beam leveler CM was replaced with a new module.
Reinitialization	• When the auto headlight beam leveler CM was replaced with a part from another vehicle. • When suspension parts have been removed or replaced. (Crossmember, front arm, sub frame, lateral link, housing, strut etc.) • When the vehicle height sensor has been replaced or removed.

CAUTION:
If the indicator does not flash three times or the headlight beam does not operate, it can be assumed that there is an open circuit or faulty wiring in the harness of the auto headlight beam leveler CM, vehicle height sensors or headlight assembly. Perform inspection and repair according to the inspection results, then perform initialization/reinitialization again.
- **Initialization: <Ref. to LI-18, INITIALIZATION, PROCEDURE, Auto Headlight Beam Leveler System.>**
- **Reinitialization: <Ref. to LI-18, REINITIALIZATION, PROCEDURE, Auto Headlight Beam Leveler System.>**

1. INITIALIZATION

1) Check that the indicator in the meter is flashing twice repeatedly.
2) Bounce the vehicle several times to normalize the suspension.
3) Make certain that someone is seated in the driver's seat.
4) Turn the ignition switch to ON, and within 1.5 — 20 seconds, turn the headlight switch OFF → ON for three successive times.
5) Make sure that the indicator in the meter flashes three times and then turns OFF, indicating that initialization has been successfully completed. (At this time, the headlight beam drops once, and then returns to the original position.)
6) Perform beam adjustment for the headlight. <Ref. to LI-36, ADJUSTMENT, Headlight Assembly.>

2. REINITIALIZATION

1) Bounce the vehicle several times to normalize the suspension.
2) Make certain that someone is seated in the driver's seat.
3) Turn the ignition switch to ON, and, within 1.5 — 10 seconds, turn the headlight switch OFF → ON five or more successive times.
4) Check that the headlight beam drops once, then returns to normal.
5) After confirming 4), turn the ignition switch to OFF within 30 seconds.
6) Turn the ignition switch to ON again, and, within 1.5 — 10 seconds, turn the headlight switch OFF → ON five or more successive times.
7) Make sure that the indicator in the meter flashes three times and then turns OFF, indicating that reinitialization has been successfully completed. (At this time, the headlight beam drops once, and then returns to the original position.)
8) Perform beam adjustment for the headlight. <Ref. to LI-36, ADJUSTMENT, Headlight Assembly.>

E: NOTE

For operation procedures of each component of the auto headlight beam leveler system, refer to the respective section.
- Auto headlight beam leveler CM: <Ref. to LI-92, Auto Headlight Beam Leveler Control Module.>
- Vehicle height sensor: <Ref. to LI-94, Rear Height Sensor.>

12.Combination Switch (Light)

A: REMOVAL

1) Position the front wheels straight ahead. (After moving a vehicle 5 m (16 ft) or more with front wheels positioned straight ahead, make sure that the vehicle moves straight ahead.)
2) Turn the ignition switch to OFF.
3) Disconnect the ground cable from battery and wait for at least 60 seconds before starting work. <Ref. to NT-5, BATTERY, NOTE, Note.>

NOTE:
For the 12 volt engine restart battery of HEV model, disconnect the ground terminal from 12V engine restart battery sensor.
4) Remove the driver's airbag module.

CAUTION:
Before handling the airbag module, refer to "CAUTION" of "General Description" in "AIRBAG SYSTEM". <Ref. to AB-11, CAUTION, General Description.>

(1) Using a hexagon wrench etc. wrapped by protective tape, insert the snap pins and release the locks (3 locations).

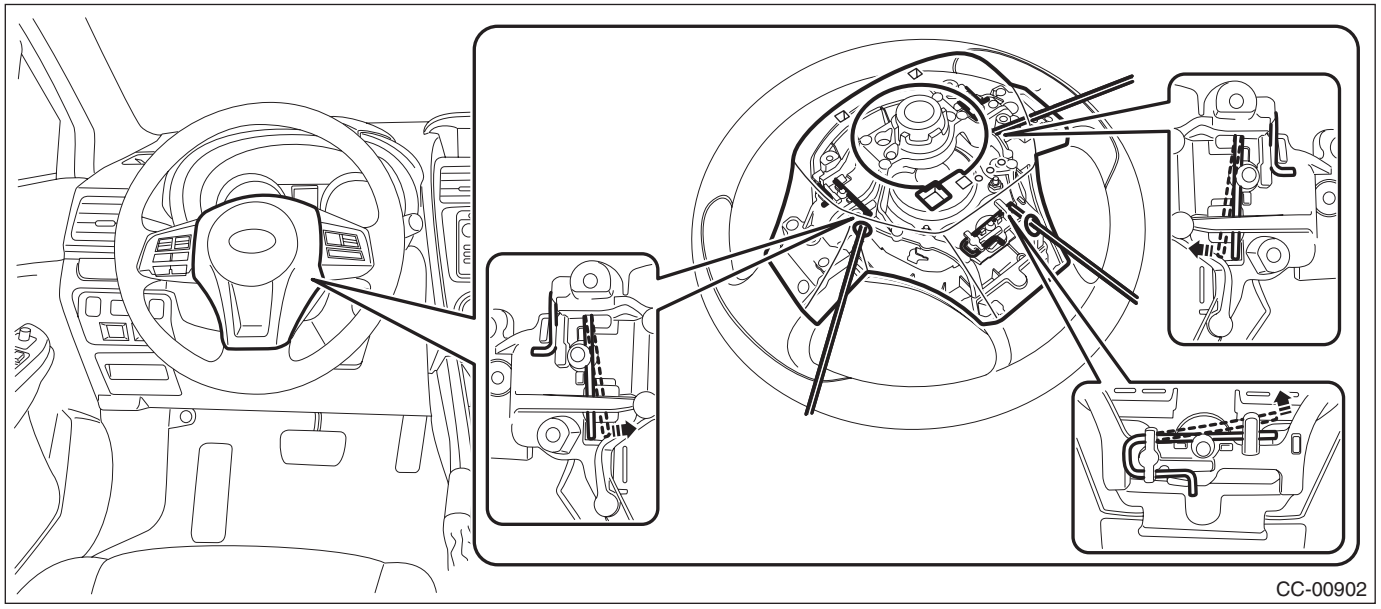

(2) Disconnect the horn harness and airbag connector, and remove the driver's airbag module. <Ref. to AB-23, DRIVER'S AIRBAG MODULE, CURTAIN AIRBAG MODULE & PRETENSIONER, PROCEDURE, Airbag Connector.>

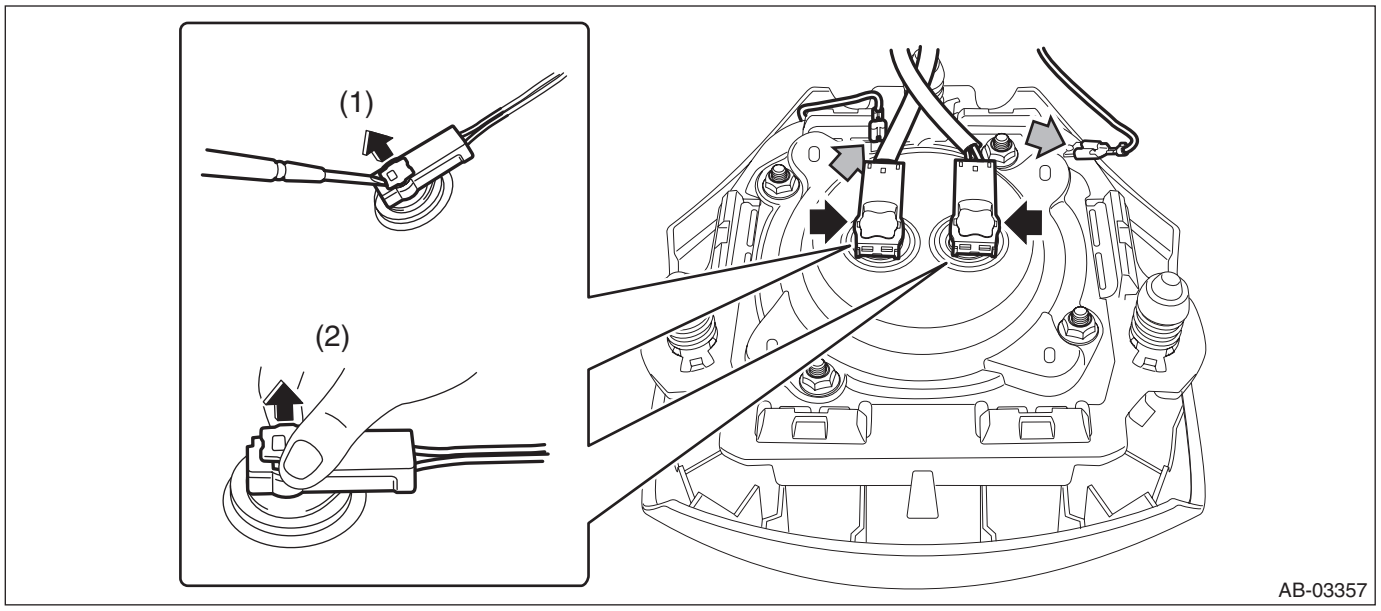

5) Remove the steering wheel.

CAUTION:
• Always use the steering wheel puller for removal to avoid deforming the steering wheel.
• If the steering wheel has been removed, make sure that the steering roll connector is not turned from the original position.

(1) Disconnect the connector and remove the nut.
(2) Put alignment marks and remove the steering wheel using a steering wheel puller.

Preparation tool:
Steering wheel puller

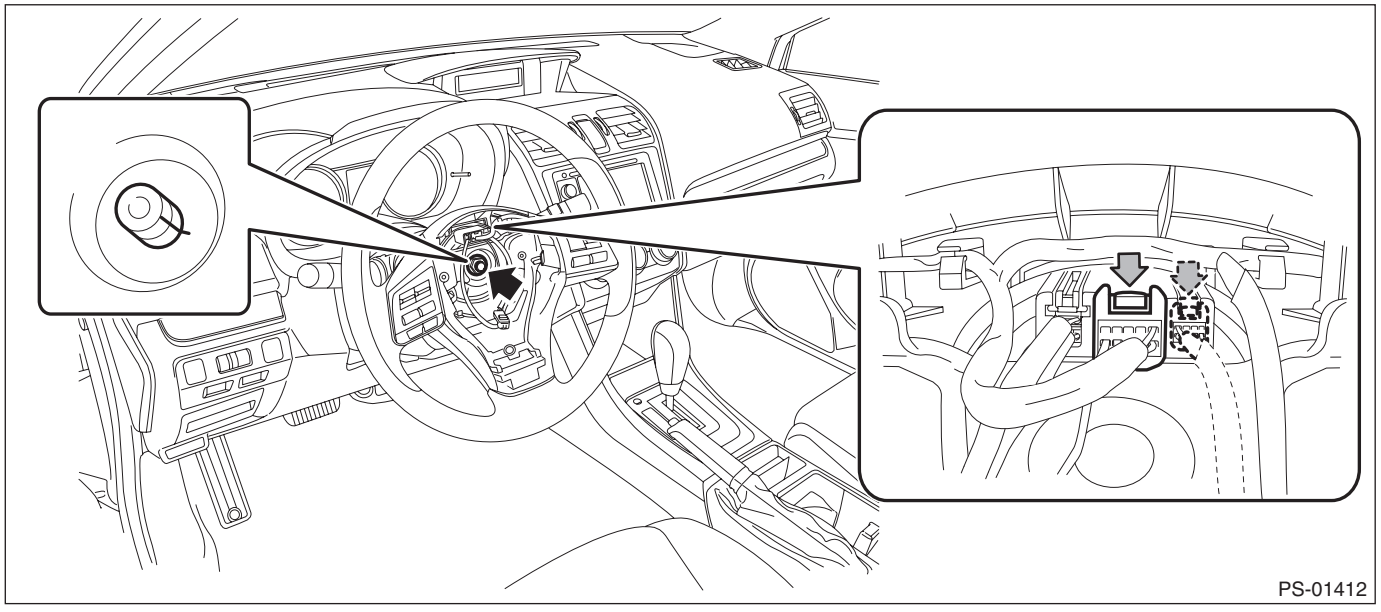

6) Remove the cover assembly - column.
(1) Release the screws and claws.
(2) Remove the cap - key cylinder (a). (Model with keyless access)
(3) Release the claw, and remove the cover assembly - column UPR and the cover assembly - column LWR.

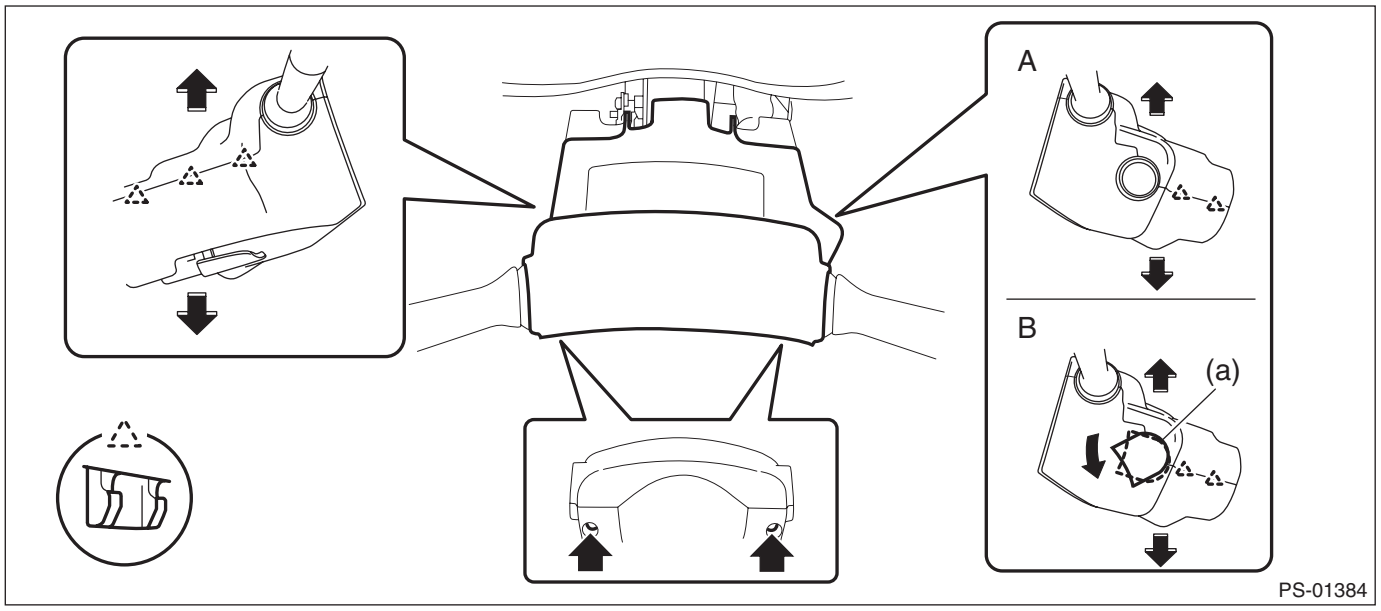

A Models without keyless access B Models with keyless access

7) Remove the steering roll connector.

CAUTION:
Make sure that the steering roll connector is not turned from the original position.
(1) Disconnect the connector under the steering roll connector.
(2) Release the claws and remove the steering roll connector.

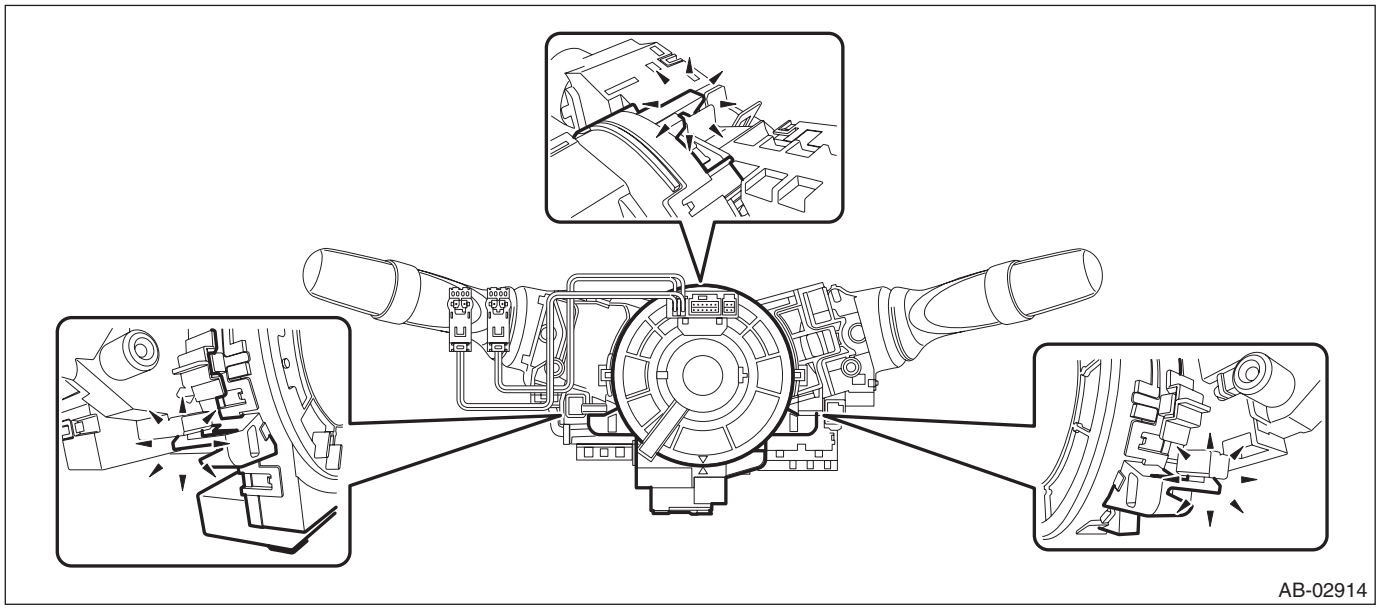

8) Remove the switch assembly - combination wiper select.
(1) Disconnect the connector.
(2) Release the claws, and pull out the switch assembly - combination wiper select.

CAUTION:
Do not press the claws with excessive force. They may be damaged.

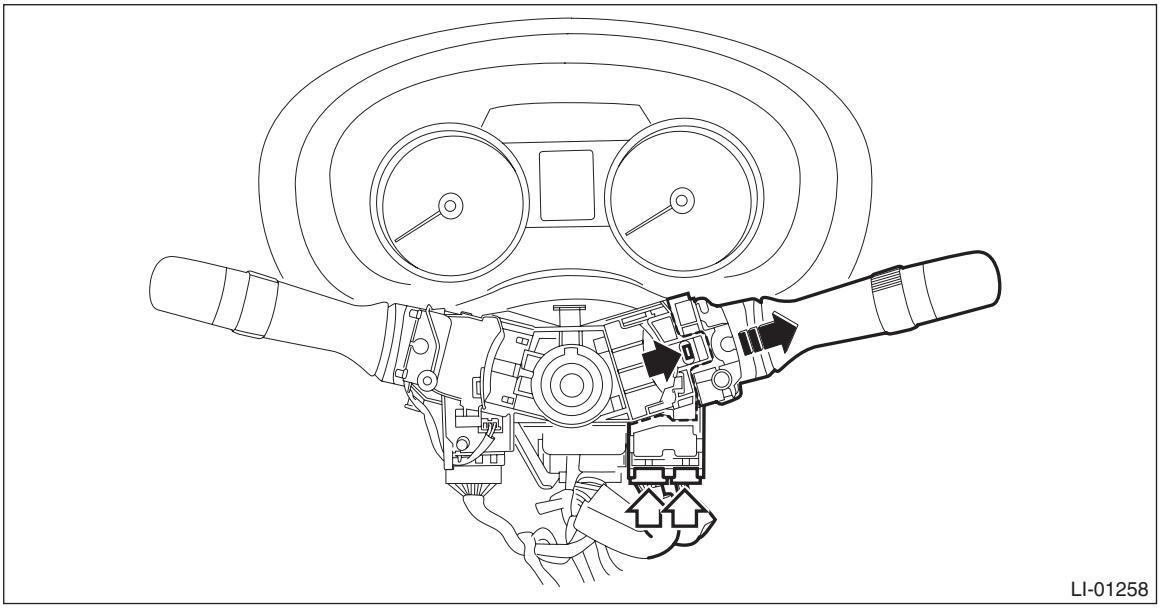

9) Remove the switch assembly - combination turn dimmer.
(1) Disconnect the connector, and loosen the clamp to release the claws.
(2) Pull out the switch assembly - combination turn dimmer from the column assembly - steering.

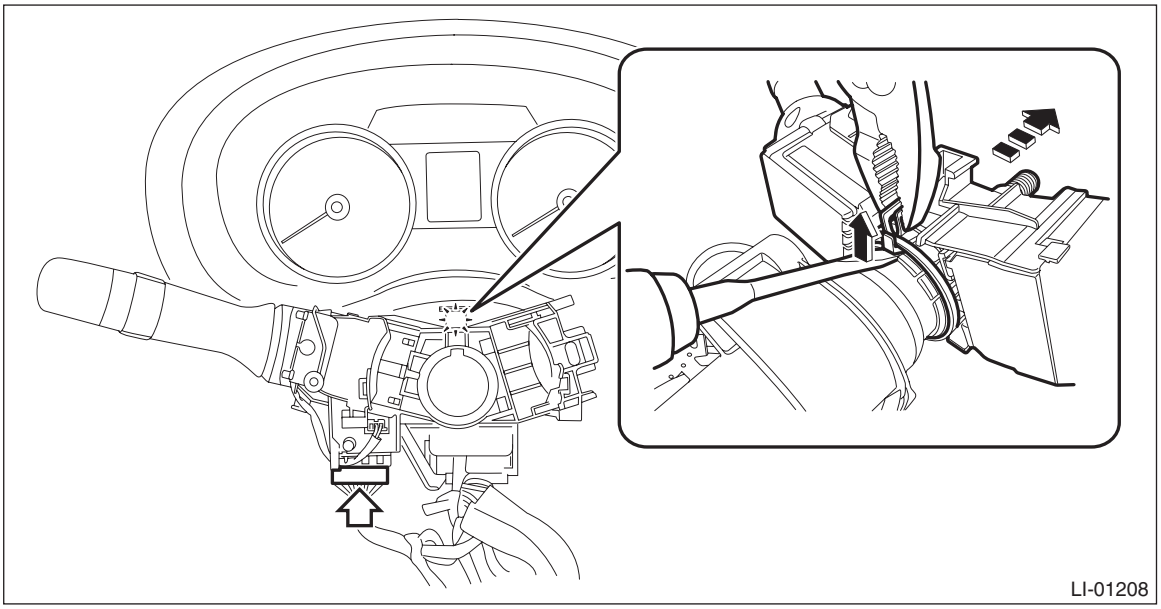

B: INSTALLATION

CAUTION:
• Before handling the airbag module, refer to "CAUTION" of "General Description" in "AIRBAG SYSTEM". <Ref. to AB-11, CAUTION, General Description.>
• Do not allow harness and connectors to interfere or get tangled up with other parts.
• If the steering wheel and steering angle sensor (steering roll connector) are removed, perform "VDC sensor midpoint setting mode" of the VDC. <Ref. to VDC-21, VDC SENSOR MIDPOINT SETTING MODE, ADJUSTMENT, VDC Control Module and Hydraulic Control Unit (VDCCM&H/U).>
1) Before installing steering wheel, be sure to adjust the direction of steering roll connector with steering wheel. <Ref. to AB-110, ADJUSTMENT, Roll Connector.>
2) Install each part in the reverse order of removal.

NOTE:
Align the alignment marks on the steering wheel and the column assembly - steering.

Tightening torque:
Steering wheel: 39 N·m (3.98 kgf-m, 28.8 ft-lb)

Clearance:
Between cover assembly - column and steering wheel: 4 — 6 mm (0.16 — 0.24 in)

C: INSPECTION

UNIT INSPECTION

Preparation tool:
Circuit tester
1) Check the resistance between switch terminals.
• Lighting switch

Terminal No.	Inspection conditions	Standard	Connection diagram
18, 19, 20 — 12	Switch OFF	1 MΩ or more	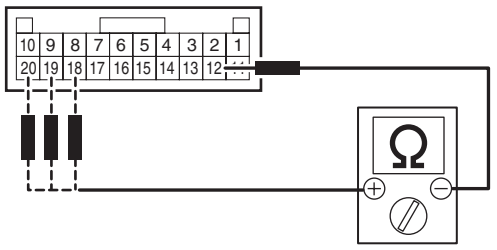 LI-01685
18 — 12	Switch 1 (TAIL)	Less than 1 Ω	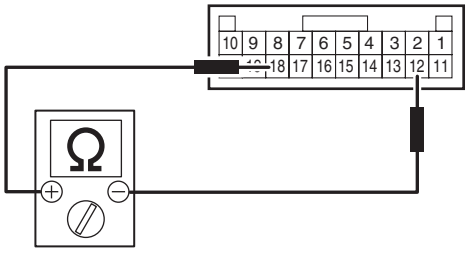 LI-01244

Terminal No.	Inspection conditions	Standard	Connection diagram
20, 18 — 12	Switch 2 (HEAD)	Less than 1 Ω	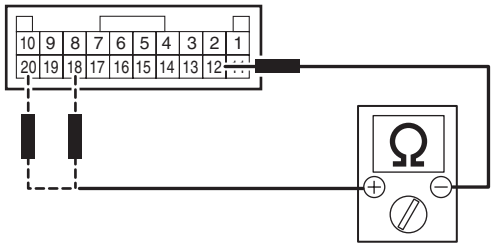 LI-01245
19 — 12	Switch AUTO	Less than 1 Ω	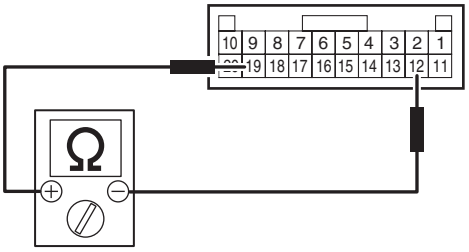 LI-01246

- Dimmer & passing switch

Terminal No.	Inspection conditions	Standard	Connection diagram
11, 17 — 12	Switch PASS	Less than 1 Ω	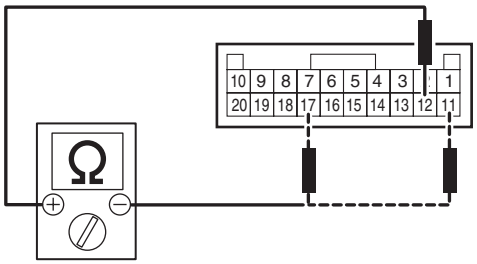 LI-01247
11 — 12	Switch UP	Less than 1 Ω	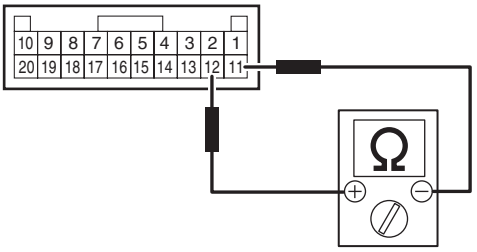 LI-01248

- Turn signal switch

Terminal No.	Inspection conditions	Standard	Connection diagram
13 — 12	Switch TURN (RH)	Less than 1 Ω	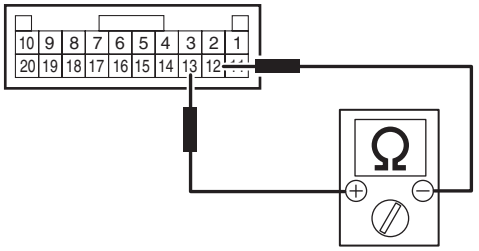 LI-01249
15 — 12	Switch TURN (LH)	Less than 1 Ω	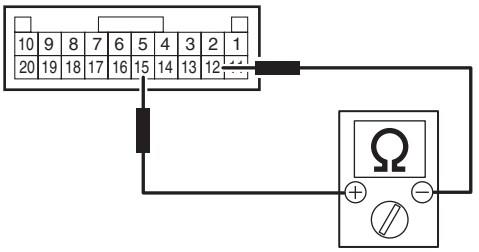 LI-01250

- Front fog light switch

Terminal No.	Inspection conditions	Standard	Connection diagram
4 — 3	Switch OFF	1 MΩ or more	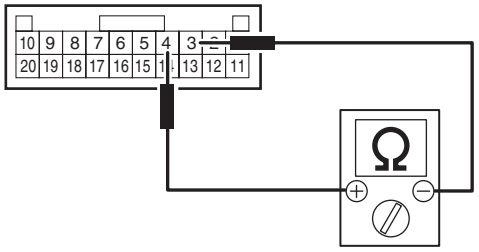 LI-01251
	Switch ON	Less than 1 Ω	

2) Replace the switch assembly - combination turn dimmer if the inspection result is not within the standard value.

13.Light Control Sensor

A: REMOVAL

1) Disconnect the ground cable from battery. <Ref. to NT-5, BATTERY, NOTE, Note.>

NOTE:
For the 12 volt engine restart battery of HEV model, disconnect the ground terminal from 12V engine restart battery sensor.

2) Remove the sensor - automatic light.

CAUTION:
Be careful not to damage the sensors and interior trims when removing.

(1) Release the connector and claws, and remove the panel COMPL - instrument UPR.

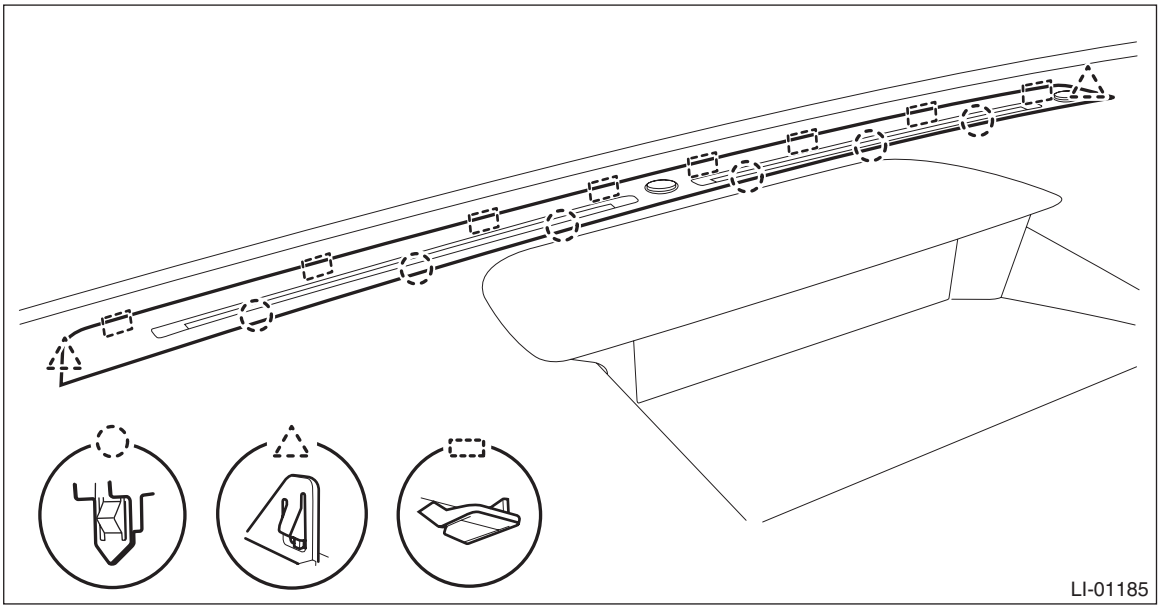

(2) Release the claws, and remove the sensor - automatic light from the panel COMPL - instrument UPR.

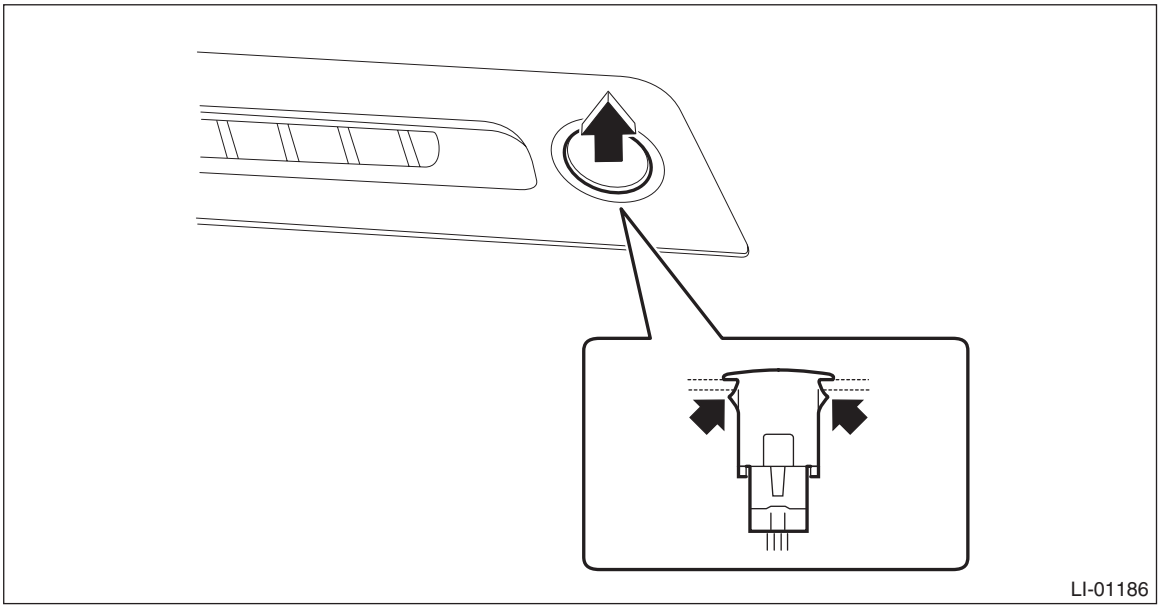

B: INSTALLATION

Install each part in the reverse order of removal.

C: INSPECTION

UNIT INSPECTION

Preparation tool:
Circuit tester

1) Turn the ignition switch to ON.
2) Set the lighting switch to AUTO position.
3) Check the voltage between the sensor terminals.

Terminal No.	Inspection conditions	Standard	Connection diagram
2 (+) — 1 (–)	Measure the voltage when the area around the sensor - automatic light, which was dark, becomes bright.	Dark condition: Approx. 0.6 V or less Bright condition: Approx. 3.0 V or more	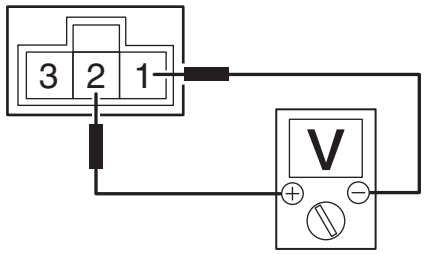 LI-01280

4) Replace the sensor - automatic light if the inspection result is not within the standard value.

14.Headlight Assembly

A: REMOVAL

1. WHEN REMOVING RH SIDE

WARNING:
Because the headlight system uses high voltage, be careful not to perform work with wet hands. There is a possibility of electrical shock.

CAUTION:
The HID type uses very high voltages for the lighting circuit. Make sure that the power supply is turned OFF before working.

1) Disconnect the ground cable from battery. <Ref. to NT-5, BATTERY, NOTE, Note.>

NOTE:
For the 12 volt engine restart battery of HEV model, disconnect the ground terminal from 12V engine restart battery sensor.

2) Remove the clips and remove the air intake duct. (Gasoline engine model)

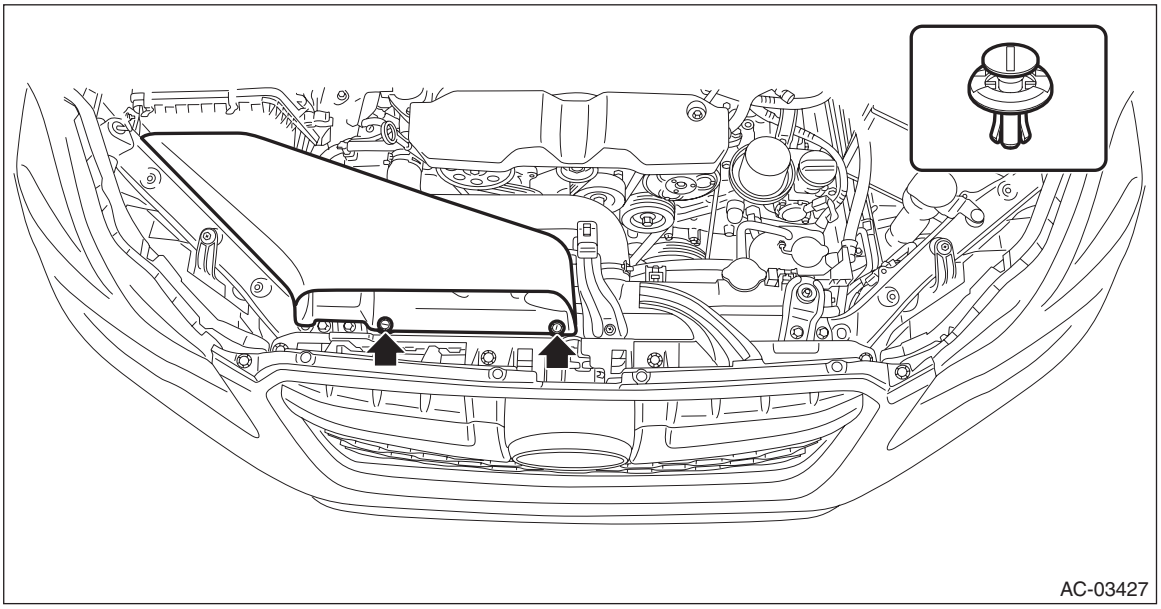

3) Remove the clip, and remove the bracket - grille.

CAUTION:
To prevent damage to the bracket - grille, make sure to remove all clips.

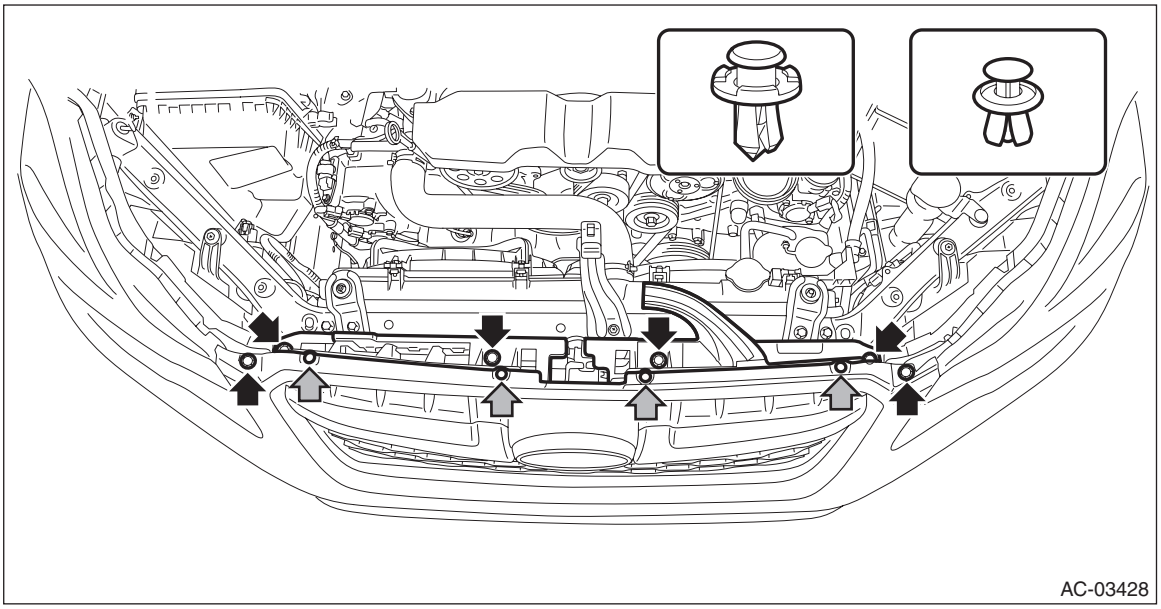

4) Detach the flange section on the right side of the bumper face - front.
(1) Apply protective tape (A) to the light assembly - head.
(2) According to the following procedures, detach the flange section on the bumper face side from the bracket - front bumper side.

CAUTION:
Do not pull forcibly. It may damage the flange section on the bumper face - front side when it comes off from the claws of the bracket - front bumper.

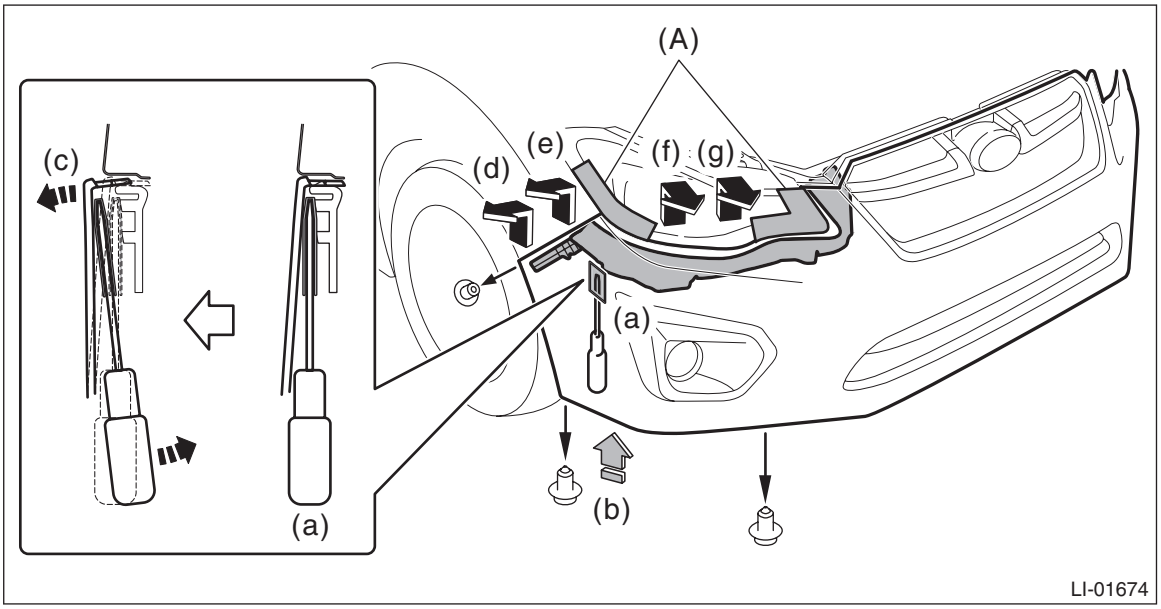

1. Remove the clips, turn over the mud guard, and insert a flat tip screwdriver with protection for damage prevention into the clearance between bumper and bracket. (a)
2. Push out the bumper with the flat tip screwdriver while pushing up the bumper from below. (b), (c)
3. Release the engagement of clips in the order of (d) to (g) while pushing up the bumper from below.

5) Remove the light assembly - head.

CAUTION:
Be careful not to damage the light assembly - head, fender COMPL - front, and bumper face - front.

(1) Disconnect connectors.
(2) Remove the bolts and clips, and remove the light assembly - head.

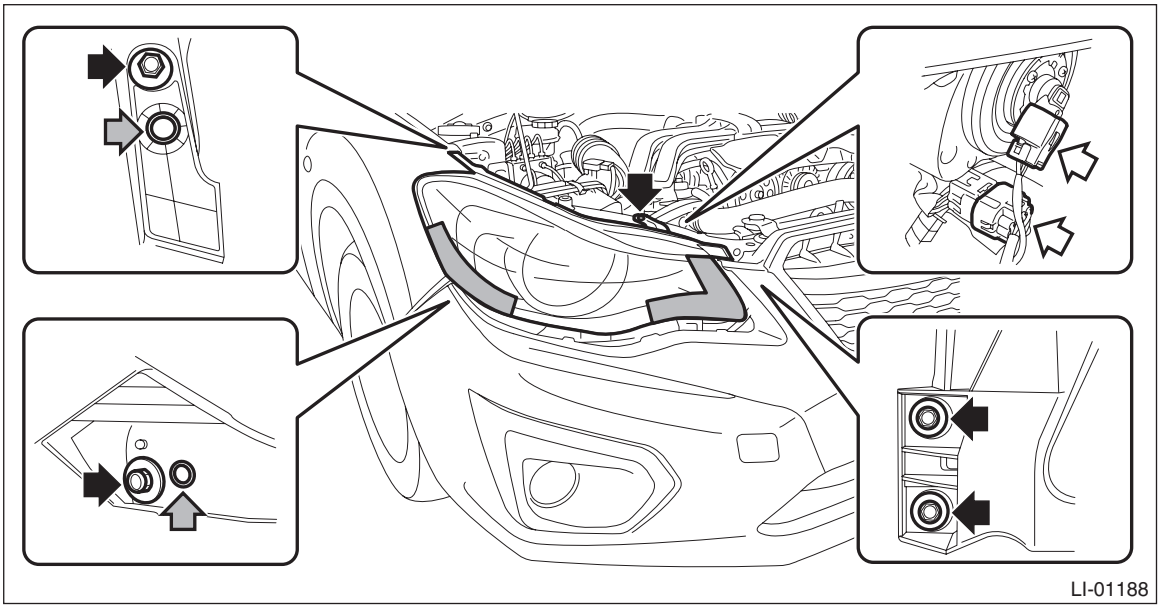

2. WHEN REMOVING LH SIDE

WARNING:
Because the headlight system uses high voltage, be careful not to perform work with wet hands. There is a possibility of electrical shock.

CAUTION:
The HID type uses very high voltages for the lighting circuit. Make sure that the power supply is turned OFF before working.
1) Disconnect the ground cable from battery. <Ref. to NT-5, BATTERY, NOTE, Note.>

NOTE:
For the 12 volt engine restart battery of HEV model, disconnect the ground terminal from 12V engine restart battery sensor.
2) Remove the clip, and remove the bracket - grille.

CAUTION:
To prevent damage to the bracket - grille, make sure to remove all clips.

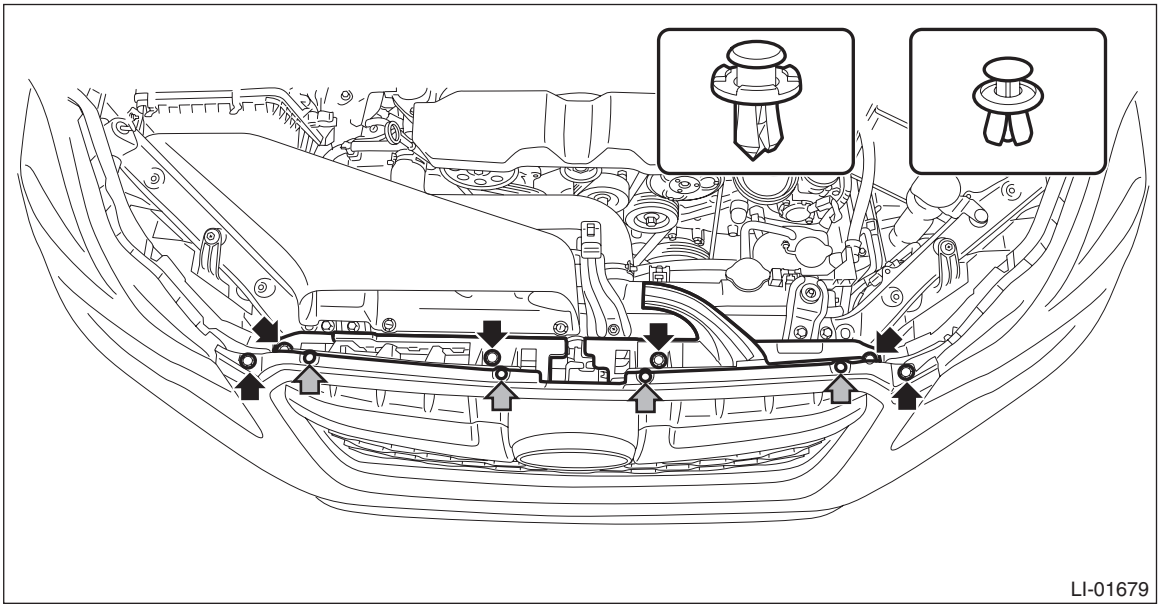

3) Detach the flange section on the bumper face - front left side.
(1) Apply protective tape (A) to the light assembly - head.
(2) According to the following procedures, detach the flange section on the bumper face side from the bracket - front bumper side.

CAUTION:
Do not pull forcibly. It may damage the flange section on the bumper face - front side when it comes off from the claws of the bracket - front bumper.

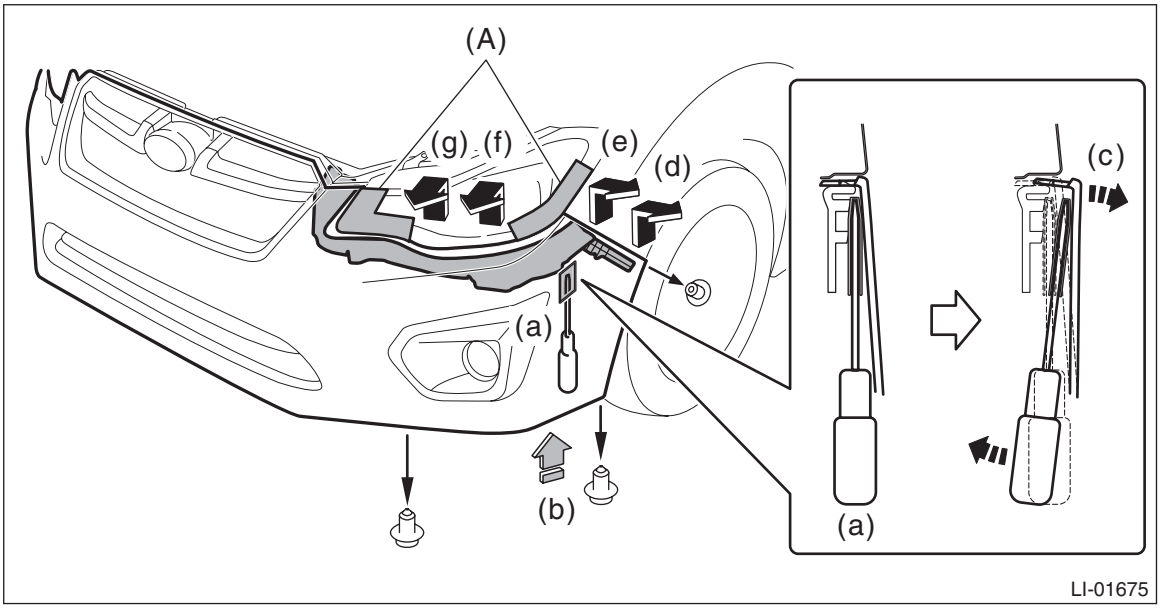

1. Remove the clips, turn over the mud guard, and insert a flat tip screwdriver with protection for damage prevention into the clearance between bumper and bracket. (a)
2. Push out the bumper with the flat tip screwdriver while pushing up the bumper from below. (b), (c)
3. Release the engagement of clips in the order of (d) to (g) while pushing up the bumper from below.

4) Remove the light assembly - head.

CAUTION:
Be careful not to damage the light assembly - head, fender COMPL - front, and bumper face - front.
(1) Disconnect connectors.
(2) Remove the bolts and clips, and remove the light assembly - head.

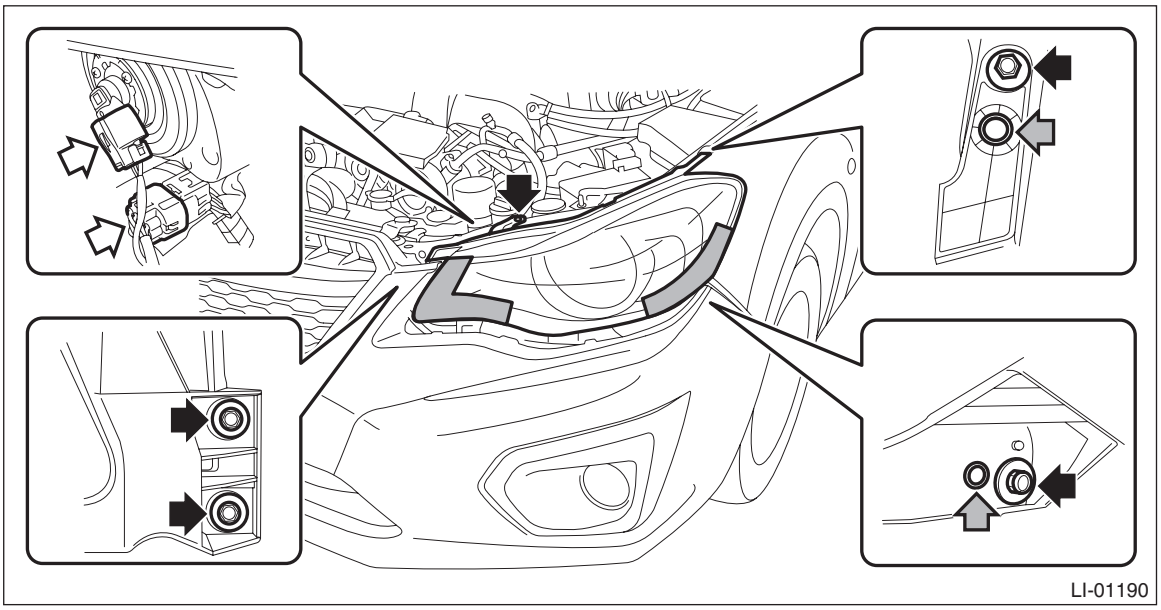

3. WHEN REMOVING BOTH SIDE

WARNING:
Because the headlight system uses high voltage, be careful not to perform work with wet hands. There is a possibility of electrical shock.

CAUTION:
The HID type uses very high voltages for the lighting circuit. Make sure that the power supply is turned OFF before working.

1) Disconnect the ground cable from battery. <Ref. to NT-5, BATTERY, NOTE, Note.>

NOTE:
For the 12 volt engine restart battery of HEV model, disconnect the ground terminal from 12V engine restart battery sensor.

2) Remove the clips and remove the air intake duct. (Gasoline engine model)

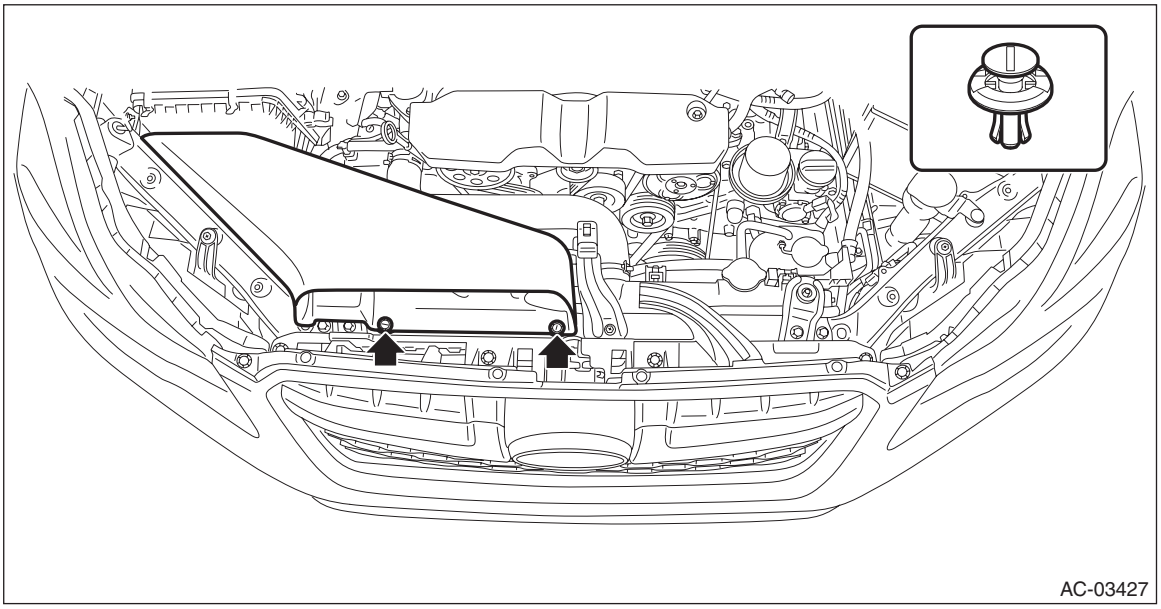

3) Remove the bumper face - front. <Ref. to EI-37, REMOVAL, Front Bumper.>
4) Remove the light assembly - head.
   (1) Disconnect connectors.
   (2) Remove the bolts and clips, and remove the light assembly - head.

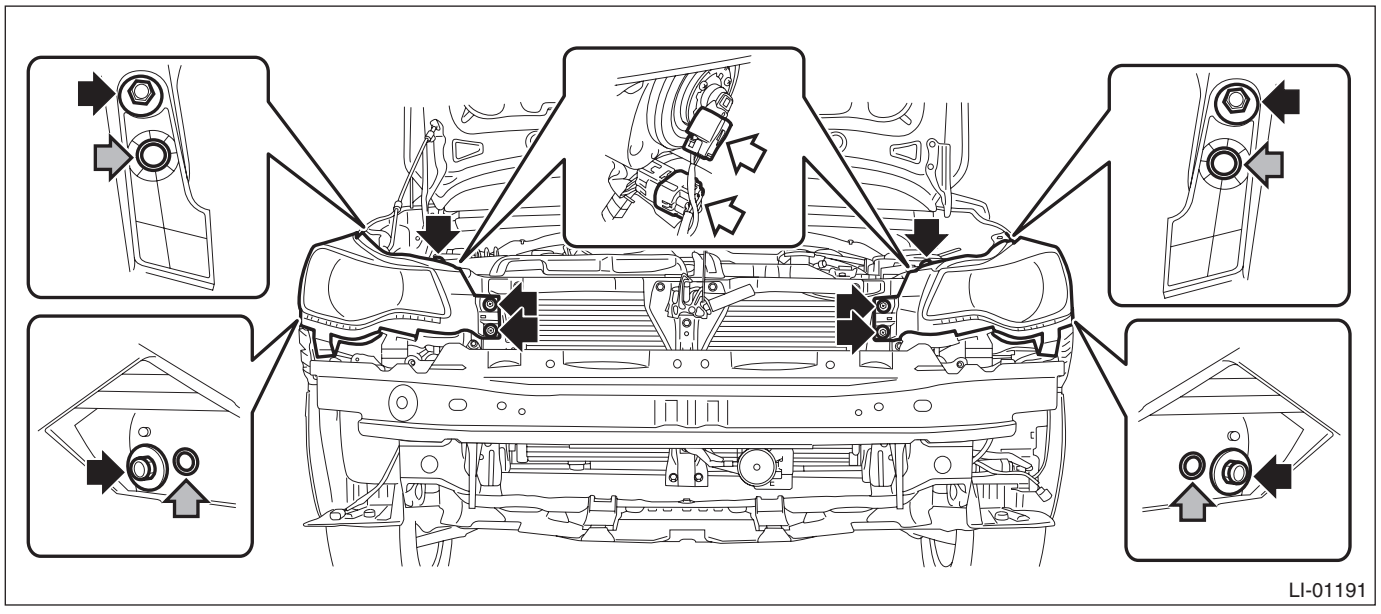

B: INSTALLATION

1) Install each part in the reverse order of removal.
2) Secure the flange section of the bumper face - front to the bracket - front bumper side.

CAUTION:
Install the bumper face - front so that the front end of the under cover (b) comes inside the bumper face - front (a).

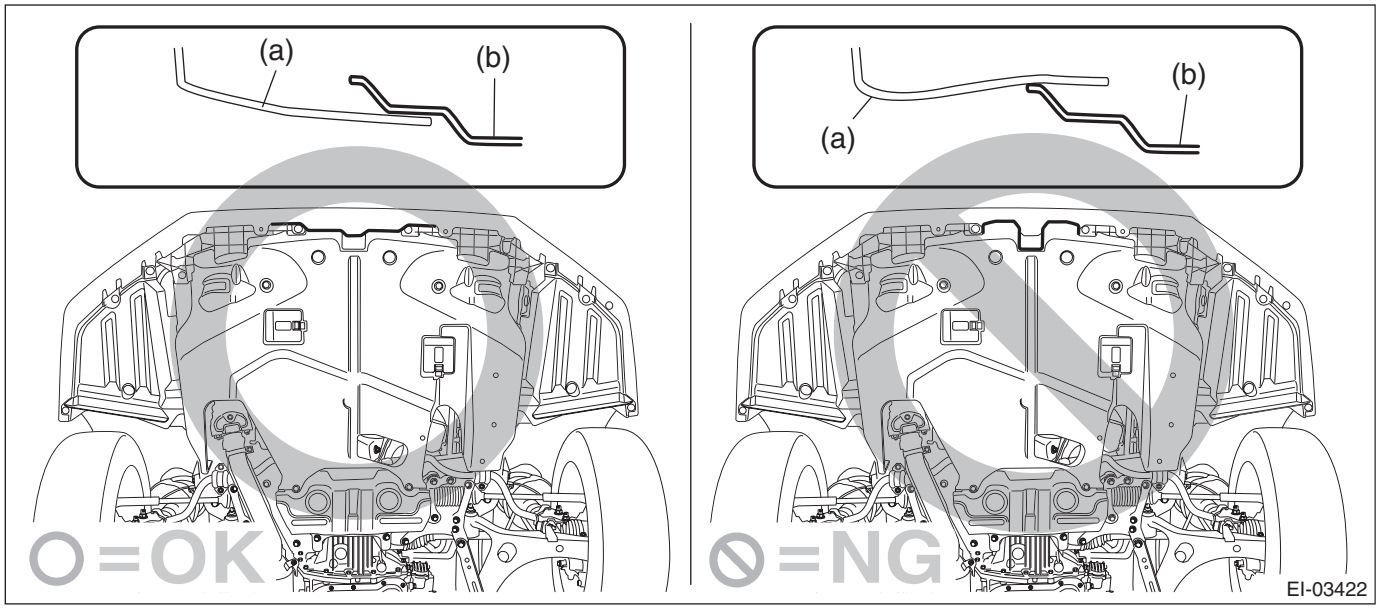

Tightening torque:
Light assembly - head: 7.5 N·m (0.76 kgf-m, 5.5 ft-lb)
3) Adjust the headlight beam and fog light beam.
• Adjust the headlight beam. <Ref. to LI-36, HEADLIGHT BEAM ADJUSTMENT, ADJUSTMENT, Headlight Assembly.>
• Adjust the fog light beam. (Model with fog light) <Ref. to LI-56, FOG LIGHT AIMING, ADJUSTMENT, Front Fog Light Assembly.>

C: DISASSEMBLY

1. HID HEADLIGHT BALLAST

WARNING:
Because the headlight system uses high voltage, be careful not to perform work with wet hands. There is a possibility of electrical shock.

CAUTION:
• The HID type uses very high voltages for the lighting circuit. Make sure that the power supply is turned OFF before working.
• Do not leave the light assembly - head without the ballast - headlight for a long time. Dust, moisture, etc. entering the light assembly - head may affect its performance.
1) Disconnect the ground cable from battery.
2) Remove the light assembly - head.
• RH side: <Ref. to LI-28, WHEN REMOVING RH SIDE, REMOVAL, Headlight Assembly.>
• LH side: <Ref. to LI-30, WHEN REMOVING LH SIDE, REMOVAL, Headlight Assembly.>
• Both sides: <Ref. to LI-32, WHEN REMOVING BOTH SIDE, REMOVAL, Headlight Assembly.>

3) Remove the cover - headlight.

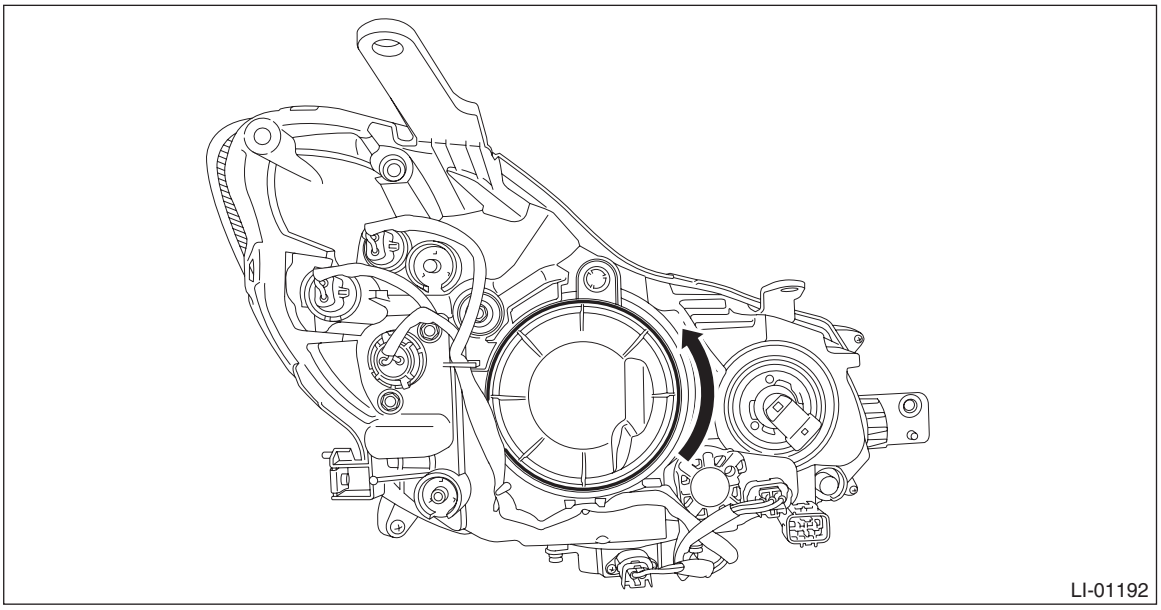

4) Disconnect the bulb socket.

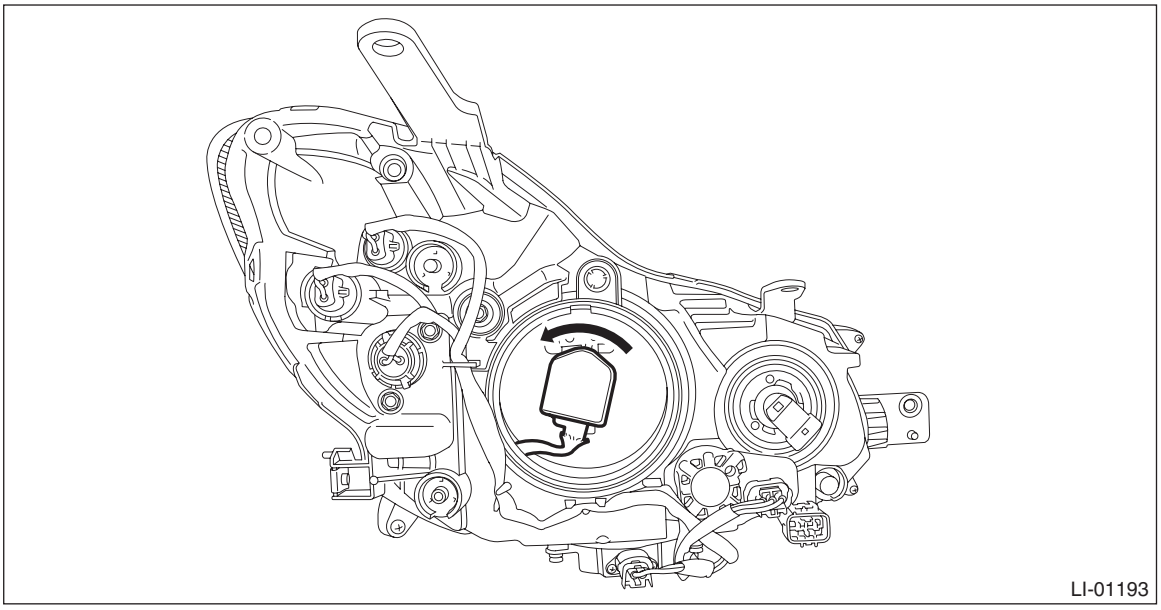

5) Remove the ballast - headlight.
(1) Disconnect the connector.
(2) Remove the screws and remove the ballast - headlight.

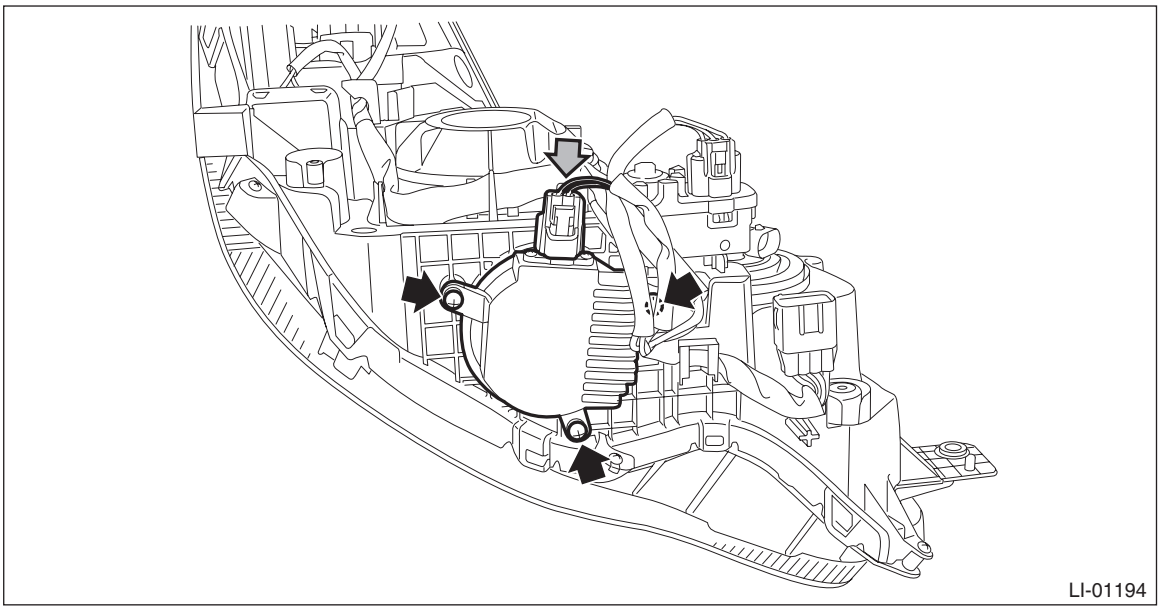
LI-01194

(3) Guiding the bulb socket through the gap between housing and reflector, pull out the ballast - headlight.

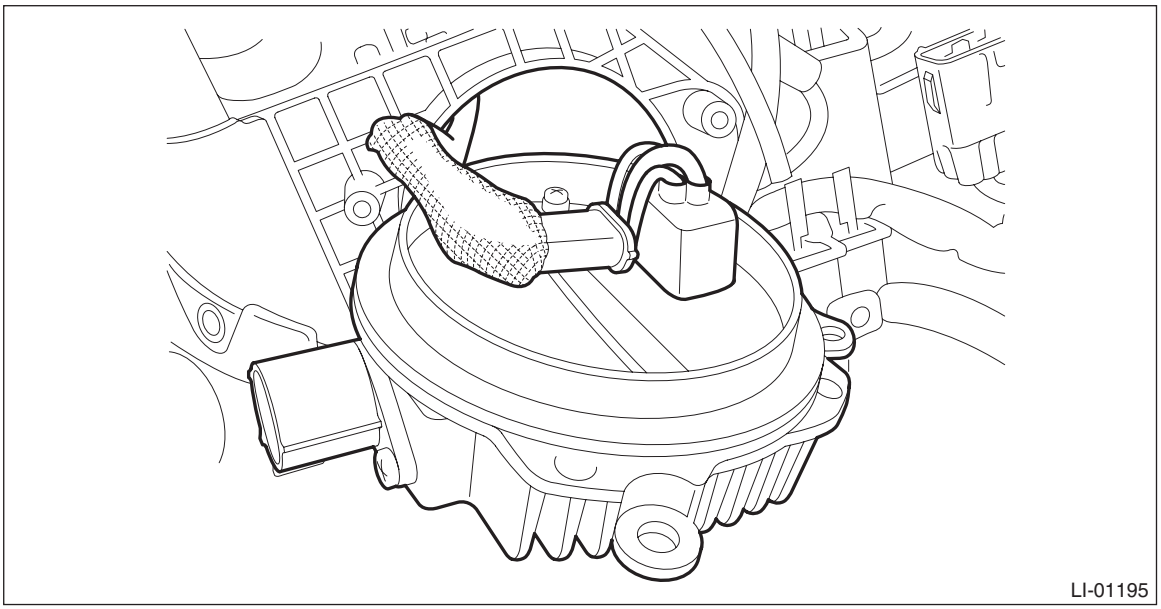
LI-01195

D: ASSEMBLY

1. HID HEADLIGHT BALLAST

CAUTION:
- **When installing the ballast - headlight, be sure to install the gasket.**
- **After installing the ballast to the vehicle, be sure to perform beam adjustment.**

Assemble each part in the reverse order of disassembly.

Tightening torque:
Light assembly - head: 7.5 N·m (0.76 kgf-m, 5.5 ft-lb)

E: ADJUSTMENT

1. HEADLIGHT BEAM ADJUSTMENT

CAUTION:
• Turn off the light before adjusting the beam level of the light assembly - head. If it is necessary to inspect the beam level, do not keep the light on for two minutes or more.
• When blocking the light that come from outside, use a closure plate or the like.
Do not apply tape to the lens or cover it with a cloth. It may raise the temperature in the light and cause deformation/bubble formations of the plastic lens.
1) Before checking the beam level of the light assembly - head, be sure of the following:
• The area around the light assembly - head has not sustained any scratches, damage or other type of deformation.
• Vehicle is parked on a level surface.
• The inflation pressure of tires is correct.
• Vehicle's fuel tank is fully filled.
2) Bounce the vehicle several times to normalize the suspension.
3) Make certain that someone is seated in the driver's seat.
4) Measure the distance between the low beam bulb centers and the height of the bulb center.

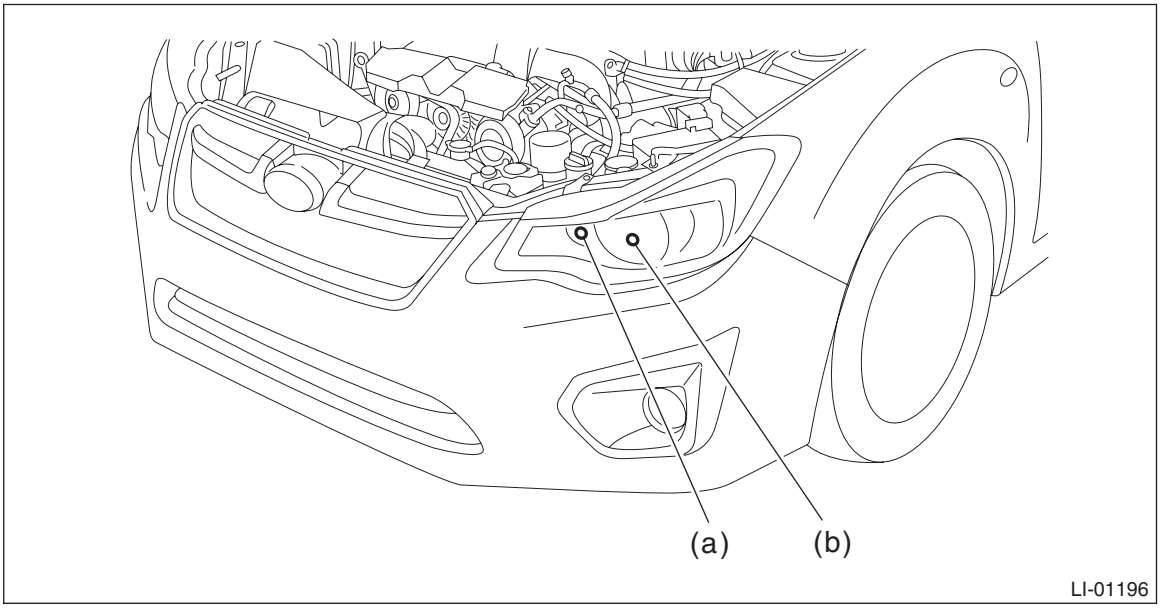

(a) High beam (b) Low beam

5) Adjust the beam level of the light assembly - head.

(1) Place the vehicle with the front end facing to the measurement panel, then illuminate the low beam.

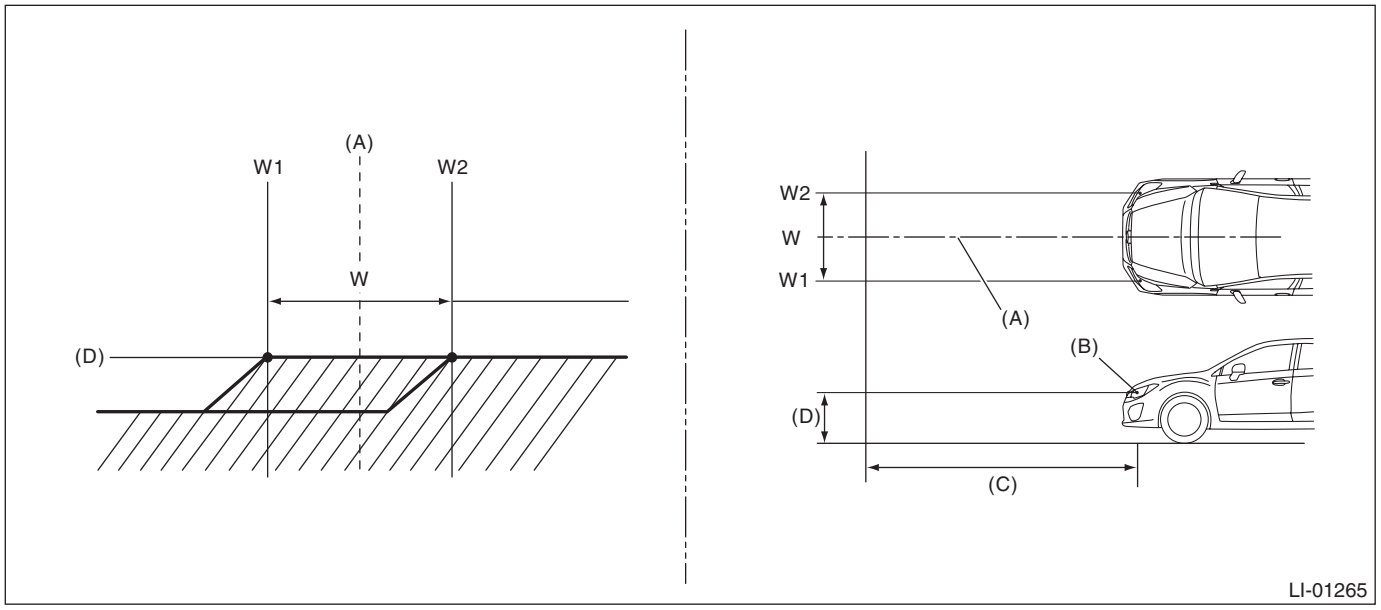

(A) Vehicle center
(B) Bulb center marking
(C) 3 m (10 ft)
(D) Height of headlight center

W mm (in)
1,281 (50.44)

(2) Adjust the low beam by turning the aiming screw.

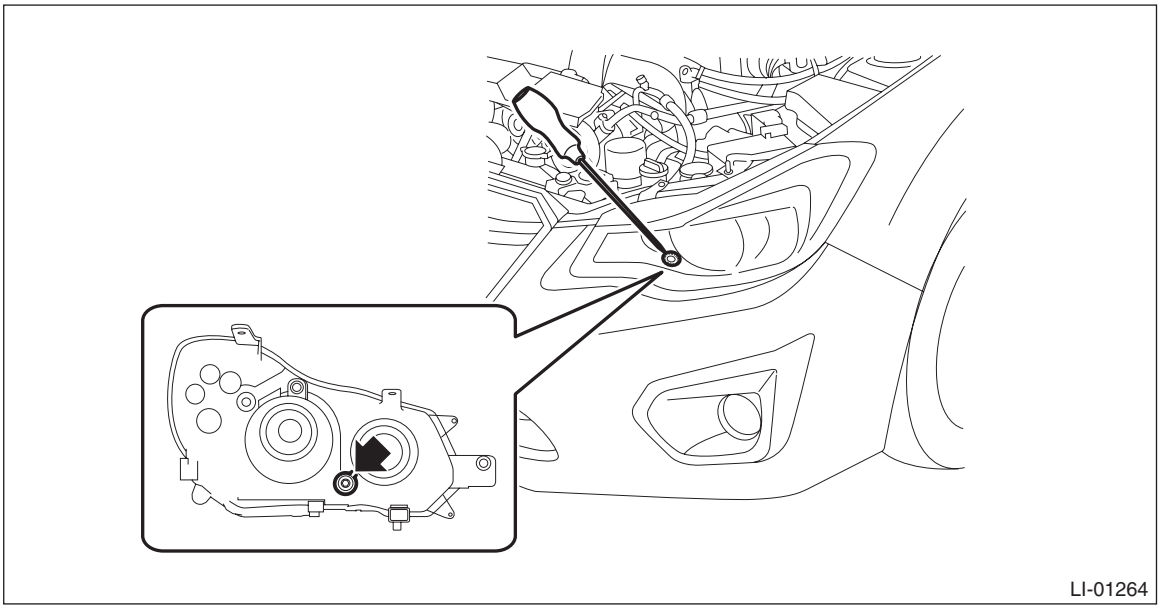

15.Headlight Bulb

A: REMOVAL

1. HIGH BEAM

WARNING:
Because the headlight system uses high voltage, be careful not to perform work with wet hands. There is a possibility of electrical shock.

CAUTION:
• Because the halogen bulb operates at a high temperature, dirt and oil on the bulb surface reduces the bulb's service life. Hold the flange portion when replacing the bulb. Never touch the glass portion.
• Do not leave the light assembly - head without the bulb for a long time. Dust, moisture, etc. entering the light may affect its performance.
1) Disconnect the ground cable from battery. <Ref. to NT-5, BATTERY, NOTE, Note.>

NOTE:
For the 12 volt engine restart battery of HEV model, disconnect the ground terminal from 12V engine restart battery sensor.
2) Remove the clips and remove the air intake duct. (When removing the high beam bulb RH of gasoline engine model)

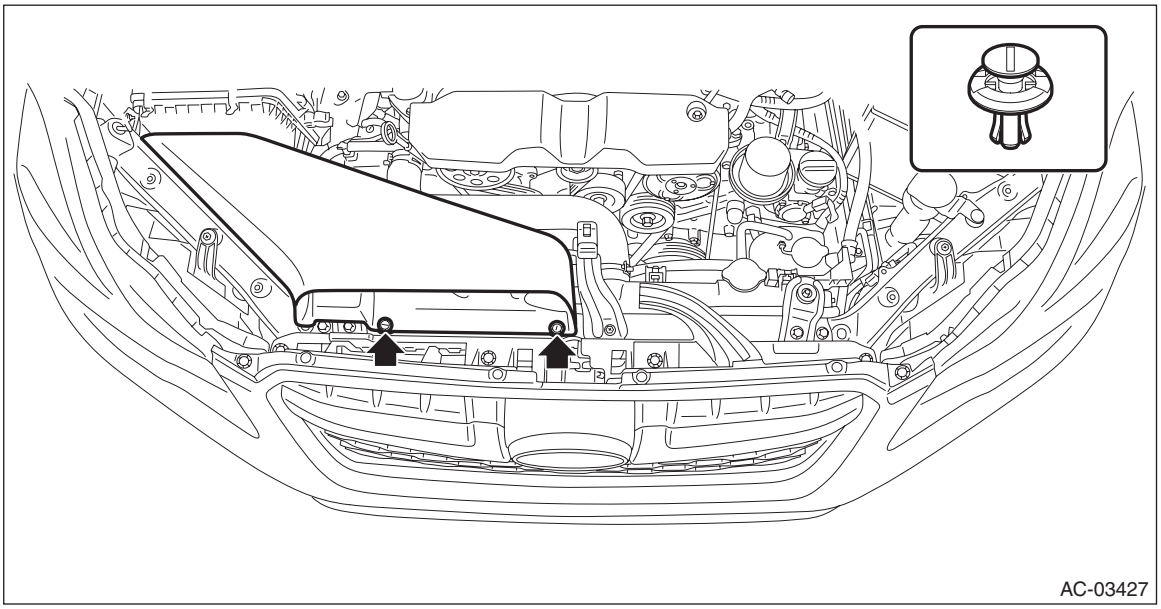
AC-03427

3) Disconnect the connector and remove the high beam bulb.

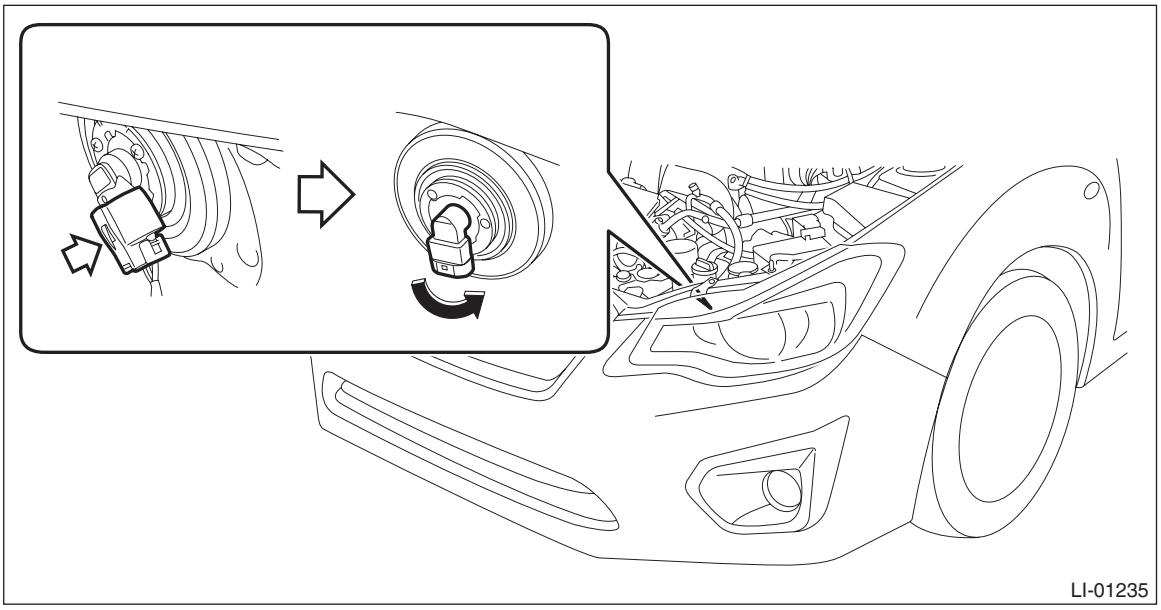

2. HALOGEN TYPE LOW BEAM

WARNING:
Because the headlight system uses high voltage, be careful not to perform work with wet hands. There is a possibility of electrical shock.

CAUTION:
• Because the halogen bulb operates at a high temperature, dirt and oil on the bulb surface reduces the bulb's service life. Hold the flange portion when replacing the bulb. Never touch the glass portion.
• Do not leave the light assembly - head without the bulb for a long time. Dust, moisture, etc. entering the light may affect its performance.

1) Disconnect the ground cable from battery. <Ref. to NT-5, BATTERY, NOTE, Note.>

NOTE:
For the 12 volt engine restart battery of HEV model, disconnect the ground terminal from 12V engine restart battery sensor.

2) Remove the clips and remove the air intake duct. (When removing the low beam bulb RH of gasoline engine model)

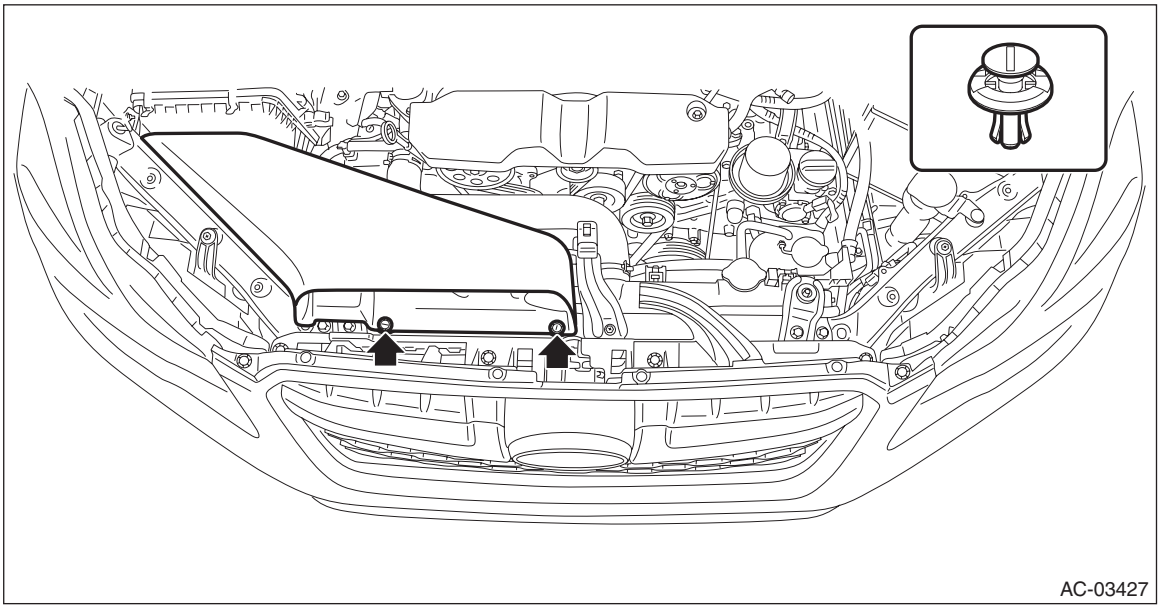

3) Turn the filler neck of the tank - washer front clockwise. (When removing the low beam bulb LH)

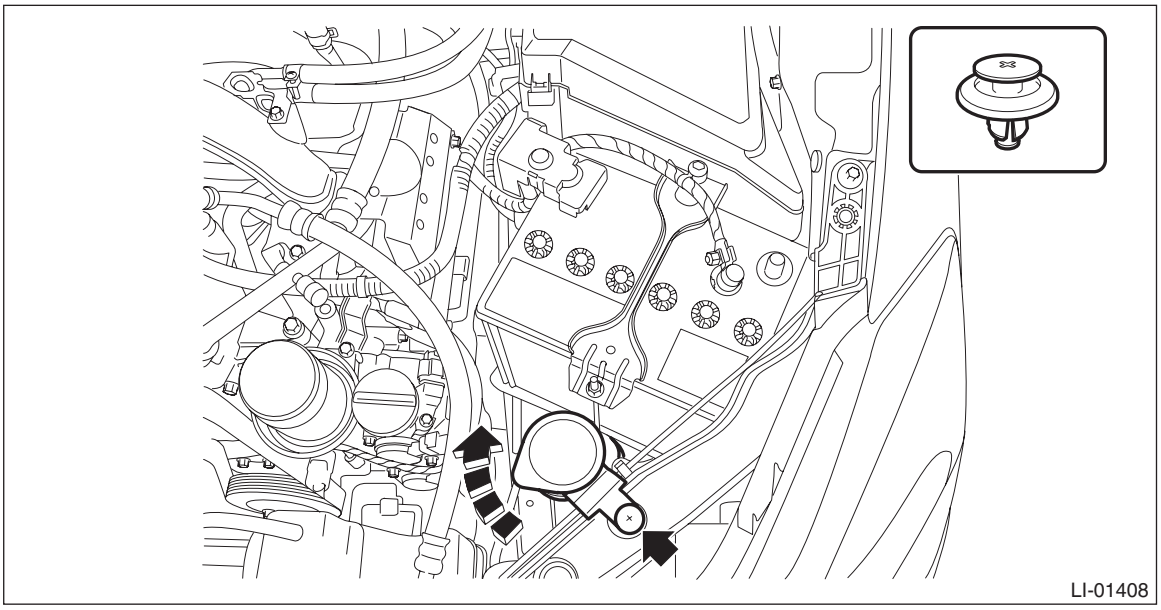

4) Disconnect the connector and remove the low beam bulb.

CAUTION:
Make sure to check if any bulb O-ring is remained on the housing side as this may sometimes happen.

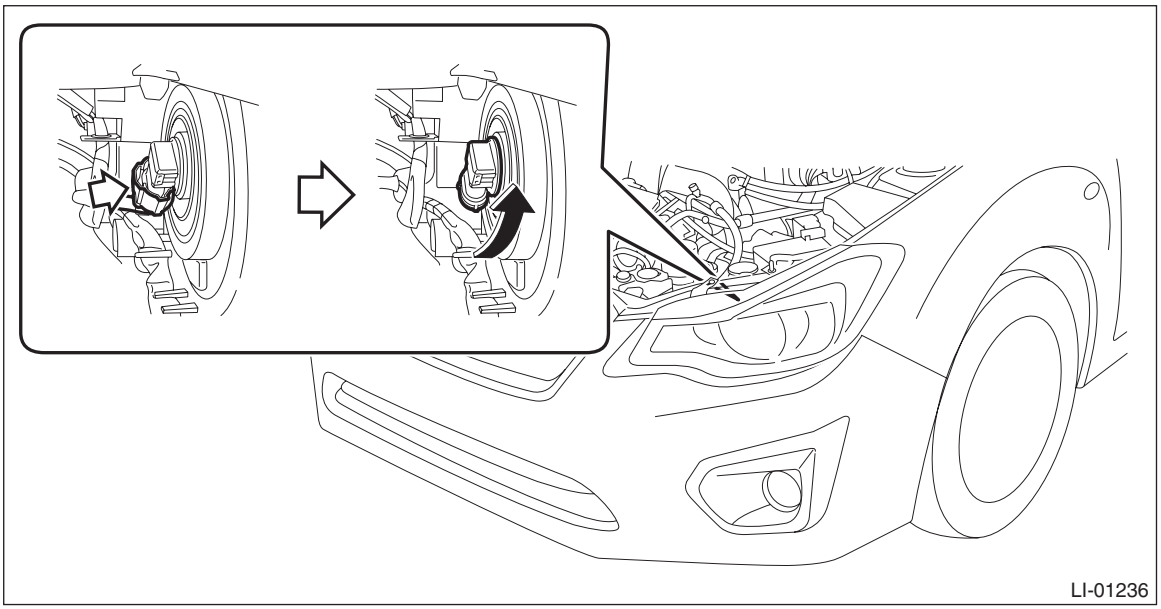

3. HID TYPE LOW BEAM

When removing RH side

WARNING:
Because the headlight system uses high voltage, be careful not to perform work with wet hands. There is a possibility of electrical shock.

CAUTION:
- **Because the lighting circuit uses high voltage, be sure to confirm that the power supply is turned off before operation.**
- **When replacing bulb, hold the flange area. Be careful not to touch the glass area.**
- **Do not leave the light assembly - head without the bulb and cover - headlight for a long time. Dust, moisture, etc. entering the light may affect its performance.**

1) Disconnect the ground cable from battery. <Ref. to NT-5, BATTERY, NOTE, Note.>

NOTE:
For the 12 volt engine restart battery of HEV model, disconnect the ground terminal from 12V engine restart battery sensor.

2) Remove the clips and remove the air intake duct. (Gasoline engine model)

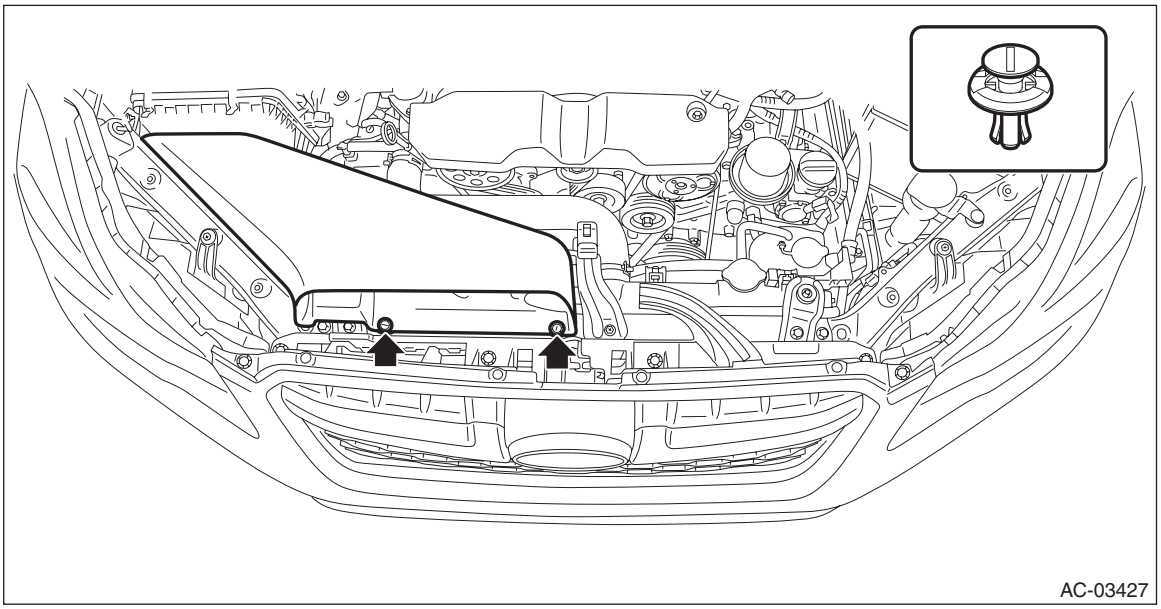

3) Remove the clip, and remove the bracket - grille.

CAUTION:
To prevent damage to the bracket - grille, make sure to remove all clips.

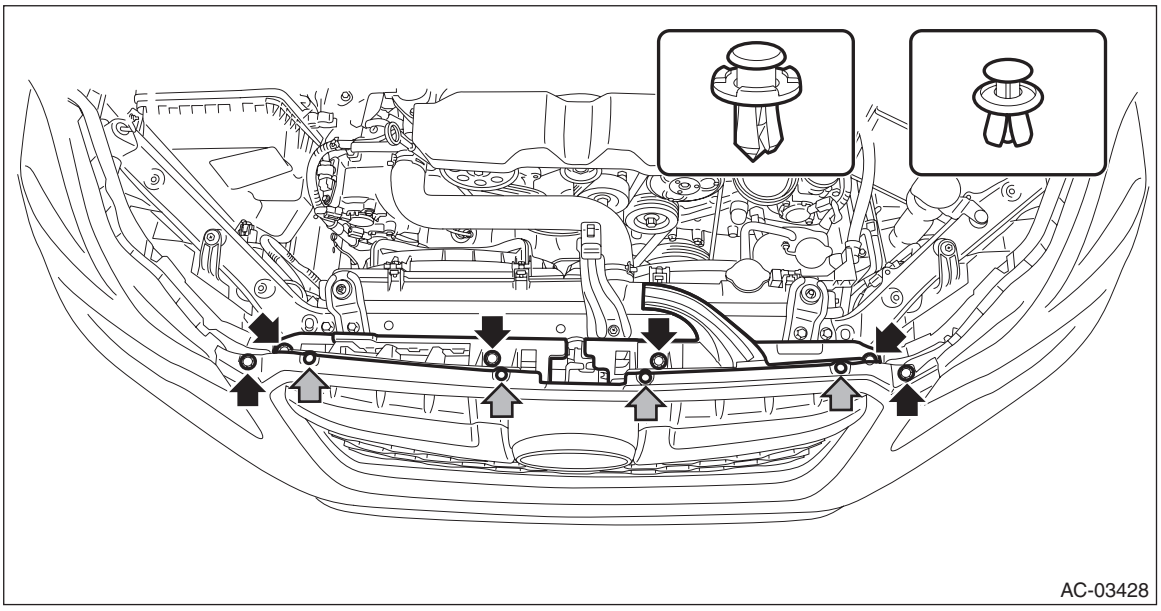

4) Detach the flange section on the right side of the bumper face - front.
(1) Apply protective tape (A) to the light assembly - head.
(2) According to the following procedures, detach the flange section on the bumper face side from the bracket - front bumper side.

CAUTION:
Do not pull forcibly. It may damage the flange section on the bumper face - front side when it comes off from the claws of the bracket - front bumper.

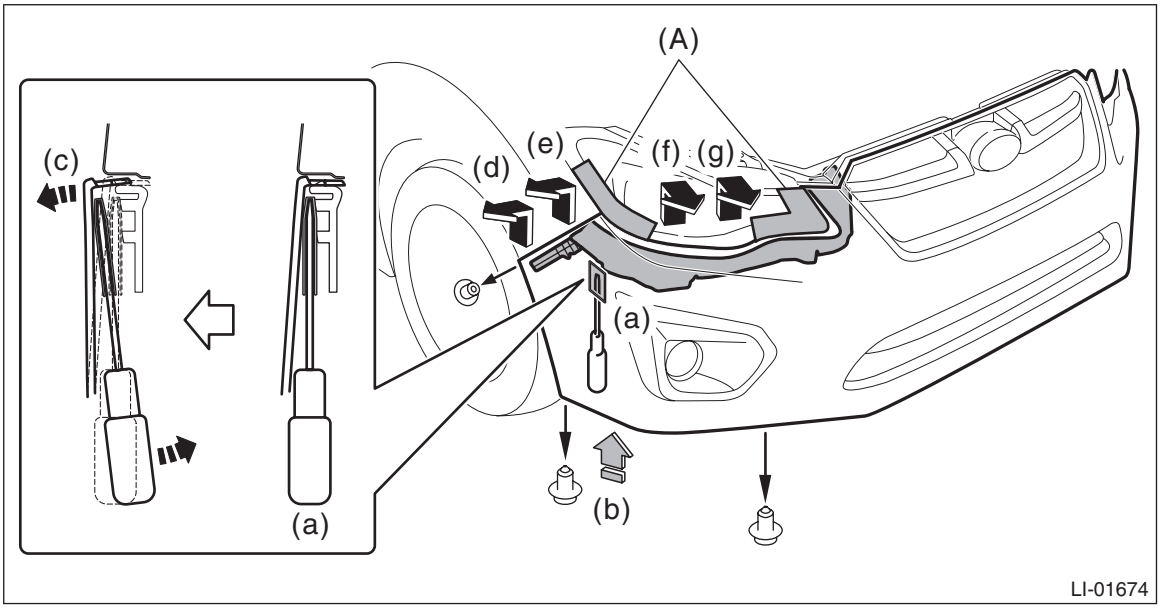

1. Remove the clips, turn over the mud guard, and insert a flat tip screwdriver with protection for damage prevention into the clearance between bumper and bracket. (a)
2. Push out the bumper with the flat tip screwdriver while pushing up the bumper from below. (b), (c)
3. Release the engagement of clips in the order of (d) to (g) while pushing up the bumper from below.

5) Remove the light assembly - head.

CAUTION:
Be careful not to damage the light assembly - head, fender COMPL - front, and bumper face - front.
(1) Disconnect connectors.
(2) Remove the bolts and clips, and remove the light assembly - head.

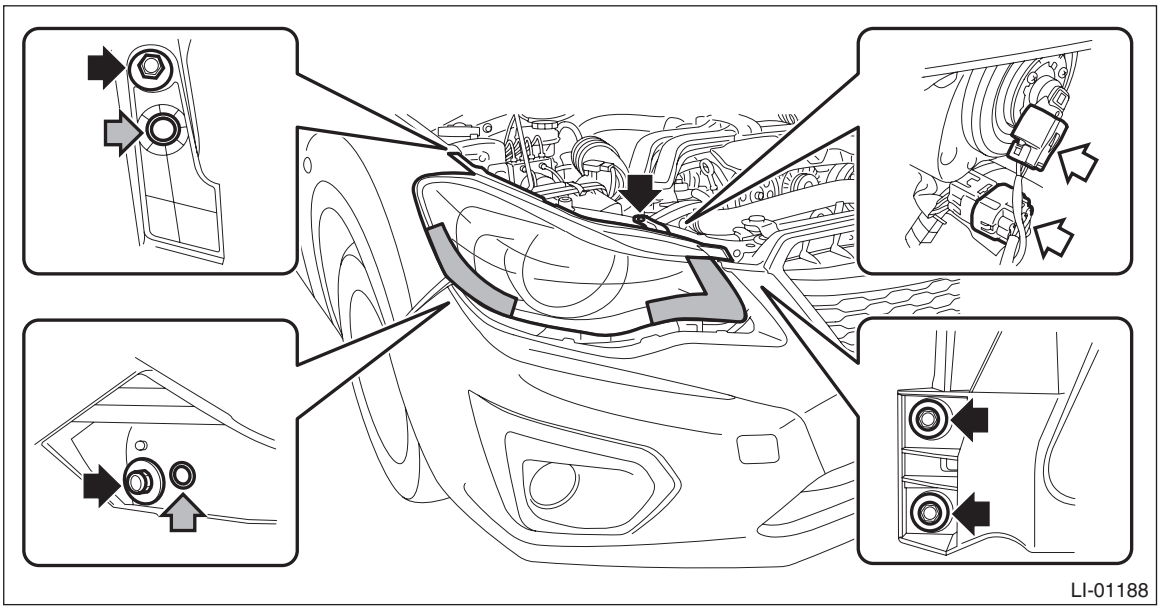

6) Remove the low beam bulb.
(1) Remove the cover - headlight.

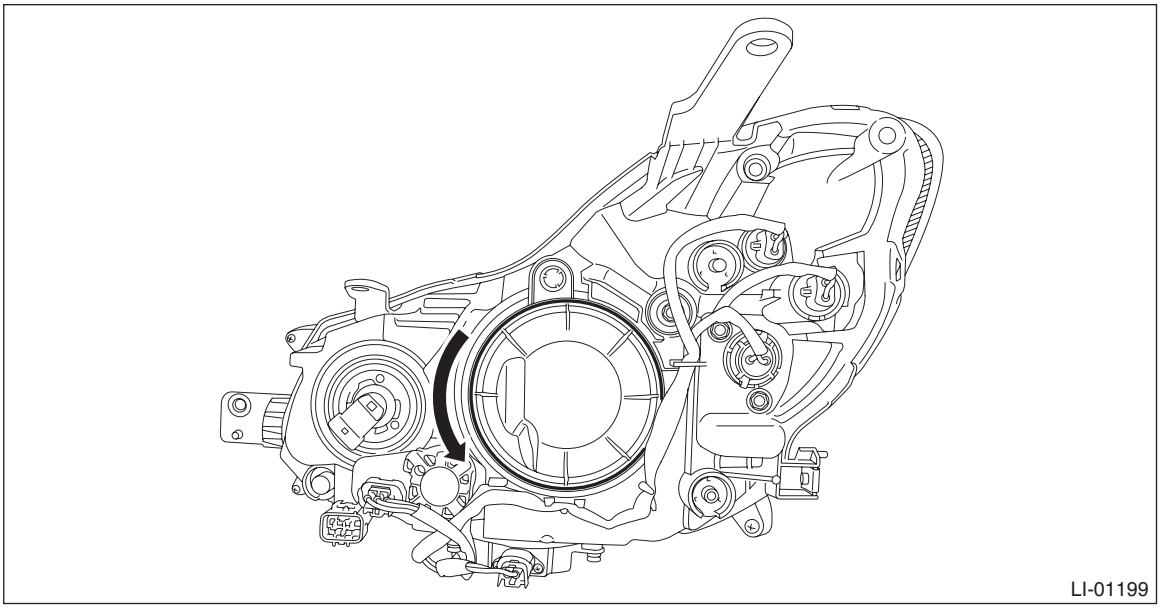

(2) Remove the valve socket.

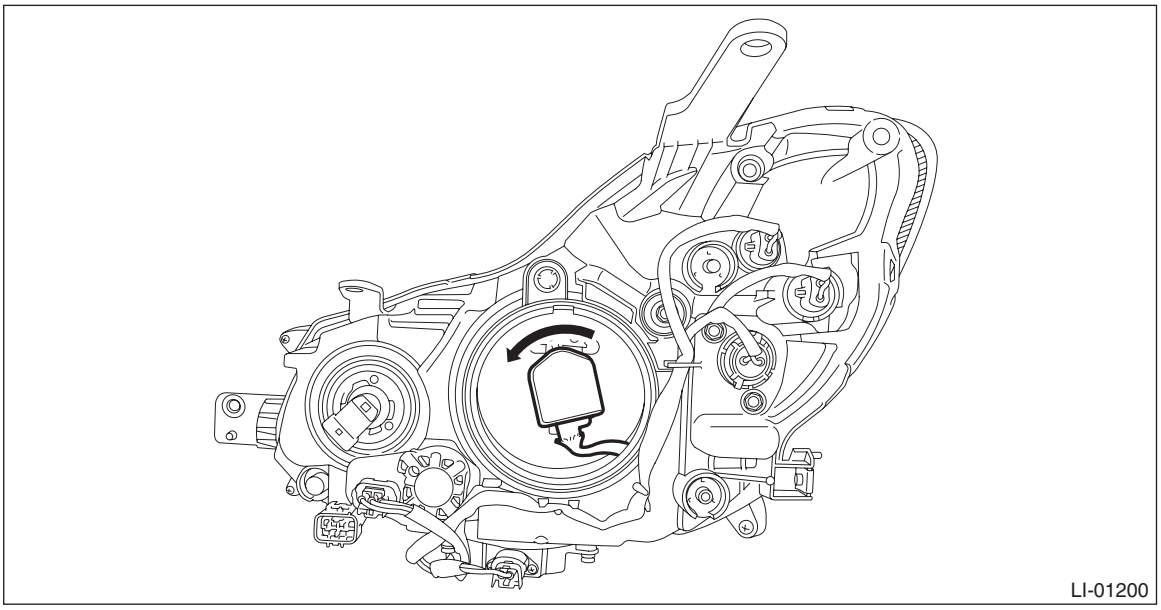

(3) Unlock the bulb spring, and remove the low beam bulb.

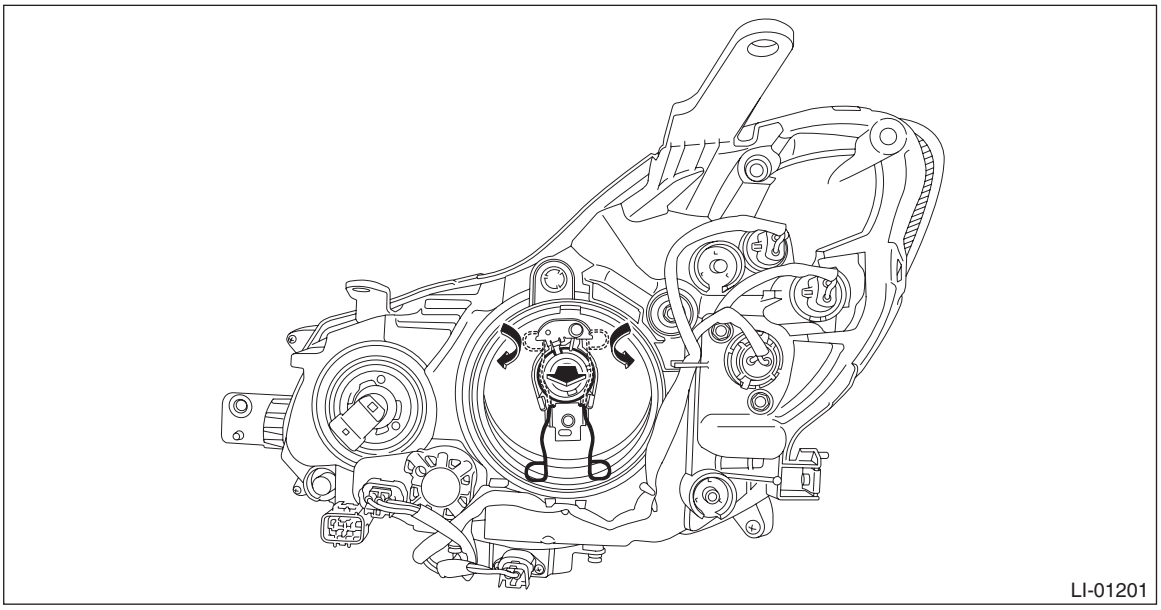

When removing LH side

WARNING:
Because the headlight system uses high voltage, be careful not to perform work with wet hands. There is a possibility of electrical shock.

CAUTION:
• Because the lighting circuit uses high voltage, be sure to confirm that the power supply is turned off before operation.
• When replacing bulb, hold the flange area. Be careful not to touch the glass area.
• Do not leave the light assembly - head without the bulb and cover - headlight for a long time. Dust, moisture, etc. entering the light may affect its performance.

1) Remove the battery.
- Gasoline engine model: <Ref. to SC(H4DO(w/o HEV))-55, REMOVAL, Battery.>
- HEV model: <Ref. to SC(H4DO(HEV))-38, REMOVAL, Battery.>

2) Remove the low beam bulb.
(1) Remove the cover - headlight.

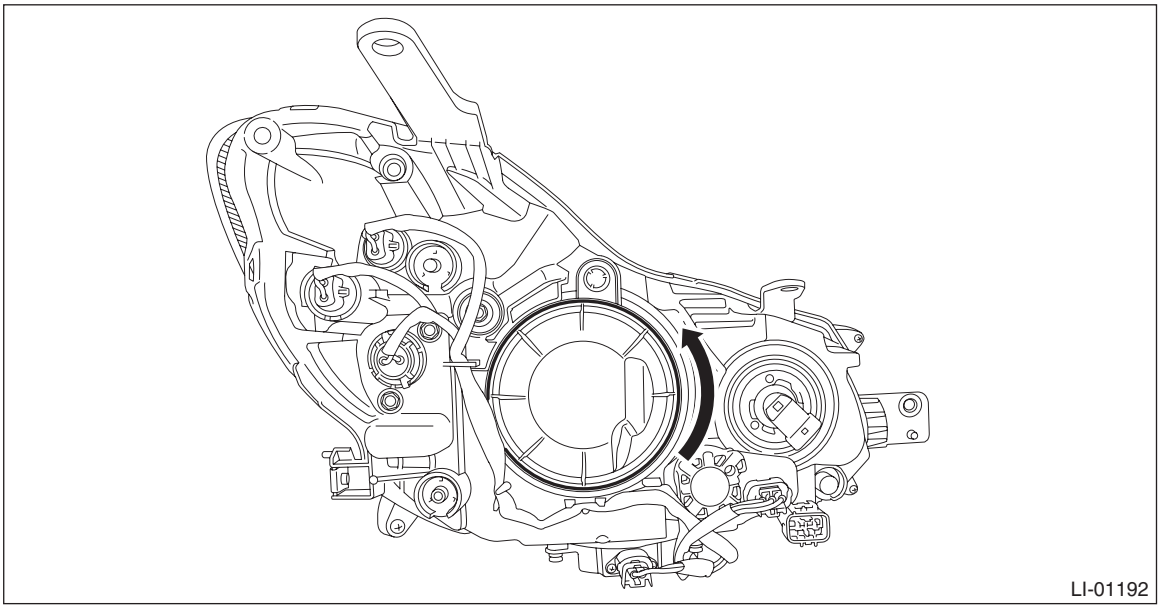

(2) Remove the valve socket.

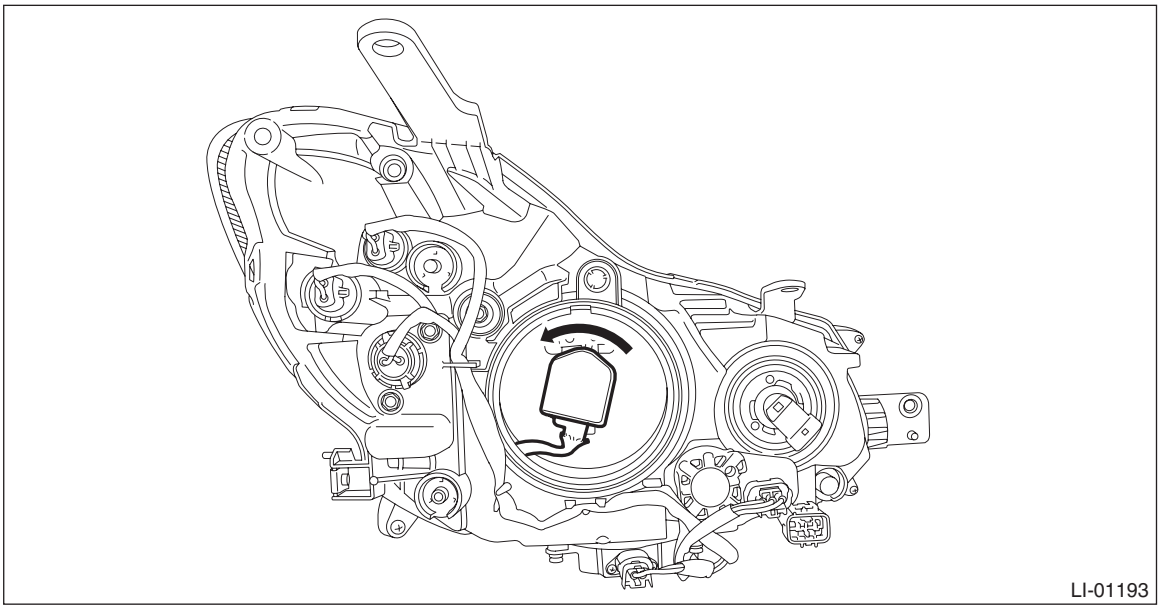

(3) Unlock the bulb spring, and remove the low beam bulb.

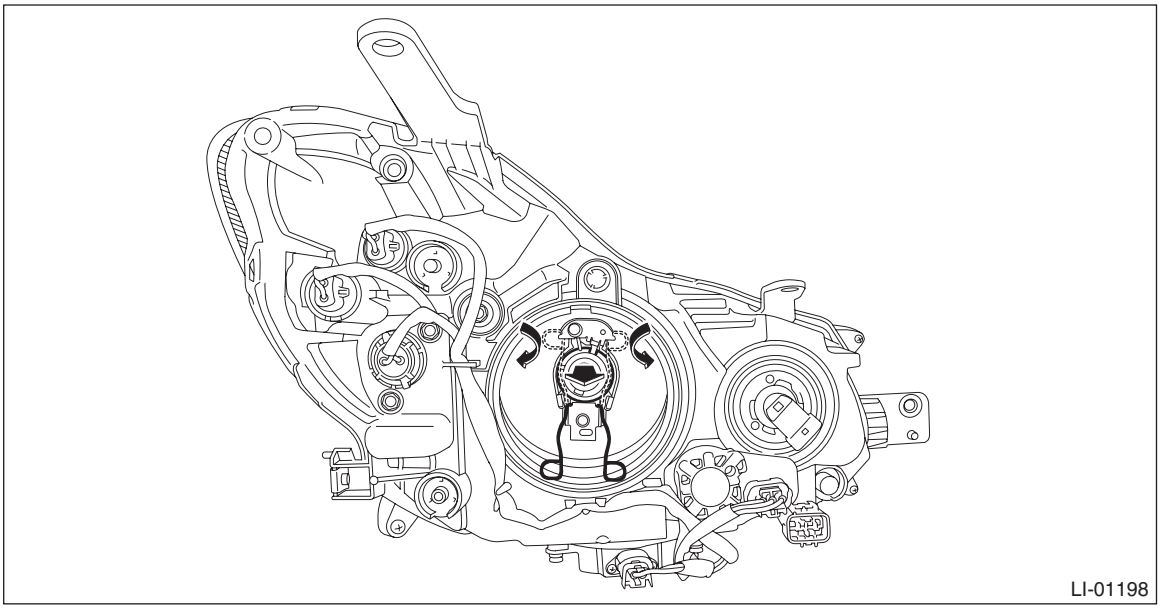

B: INSTALLATION

1) Install each part in the reverse order of removal.
2) When performing the work of HID type low beam RH, secure the flange section of the bumper face - front to the bracket - front bumper side.

CAUTION:
Install the bumper face - front so that the front end of the under cover (b) comes inside the bumper face - front (a).

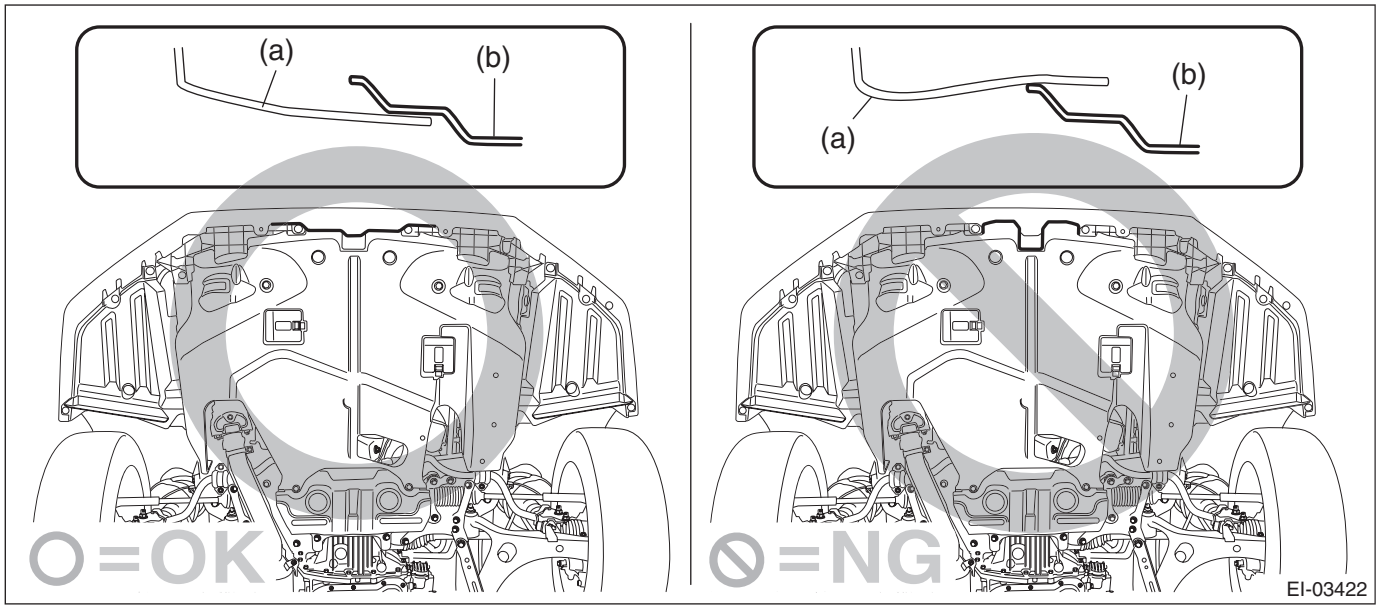

Tightening torque:
Light assembly - head: 7.5 N·m (0.76 kgf-m, 5.5 ft-lb)

3) When performing the work of HID type low beam RH, adjust the fog light beam. (Model with fog light) <Ref. to LI-56, FOG LIGHT AIMING, ADJUSTMENT, Front Fog Light Assembly.>

C: INSPECTION

1. HALOGEN TYPE

WARNING:
Because the headlight system uses high voltage, be careful not to perform work with wet hands. There is a possibility of electrical shock.

CAUTION:
• Because the halogen bulb operates at a high temperature, dirt and oil on the bulb surface reduces the bulb's service life. Hold the flange portion when replacing the bulb. Never touch the glass portion.
• Do not leave the light assembly - head without the bulb and cover - headlight for a long time. Dust, moisture, etc. entering the headlight may affect its performance.

1) Visually check the bulb for blow out.
2) Check the bulb specification. <Ref. to LI-2, SPECIFICATION, General Description.>
3) Replace the bulb if it is found defective.

2. HID TYPE

WARNING:
Because the headlight system uses high voltage, be careful not to perform work with wet hands. There is a possibility of electrical shock.

CAUTION:
• Do not leave the light assembly - head without the bulb and cover - headlight for a long time. Dust, moisture, etc. entering the headlight may affect its performance.
• When lit (lighting switch is ON), do not touch the harness, light internals, or metal parts of the light.
• When performing a lighting test, make sure that the headlight is mounted on the vehicle, and the power supply is connected to the connector on the vehicle's side.

1) Check the bulb specification. <Ref. to LI-2, SPECIFICATION, General Description.>
2) Install the factory HID bulb to check whether it lights properly.
3) If it does not light properly, replace with a new bulb.
4) Inspect the HID ballast.

Inspect the ballast in the following manner, and determine whether or not to reuse.

(1) Perform cold starts (light the headlight after turning off for 10 minutes or more), and hot starts (light the headlight for 15 minutes or more, then turn off for 1 minute and relight) several times, to make sure that the headlight lights properly.
(2) Monitor the lighting condition right after a cold start up to a stable state (approx. 5 min.), to see if there are any unstable conditions such as flickering.
(3) Install bulbs with the same number of operating hours on both headlights, and light for approximately 30 minutes. Check for whether there is a difference in brightness on the right and left sides.

5) Replace the ballast if it is found defective.

16.Hazard Switch

A: REMOVAL

1) Disconnect the ground cable from battery. <Ref. to NT-5, BATTERY, NOTE, Note.>

NOTE:
For the 12 volt engine restart battery of HEV model, disconnect the ground terminal from 12V engine restart battery sensor.
2) On manual A/C models, disconnect the control cables from both sides of the heater and cooling unit assembly.

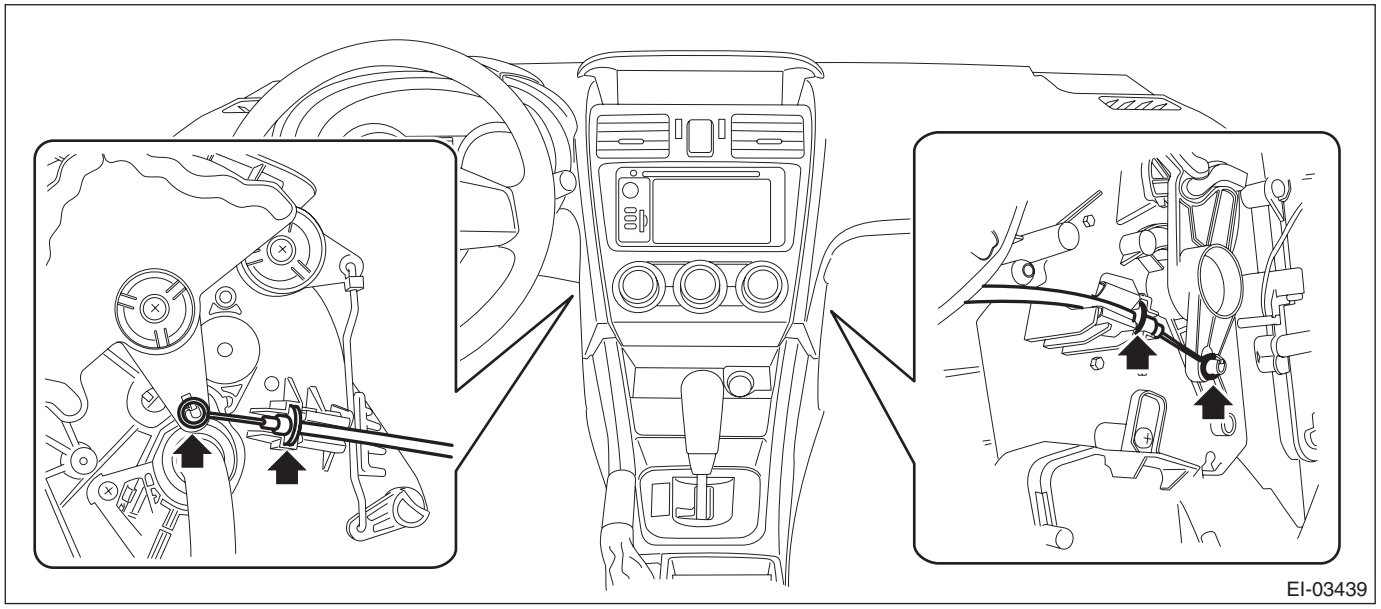

3) Remove the panel center assembly.

CAUTION:
Do not put your finger on the fin of the air vent grille. Doing so may damage the fin.

(1) Insert a plastic remover to the three areas shown by the arrows, and slightly lift up the panel center assembly.
(2) With the panel center assembly lifted up slightly, release the claw by using a clip remover wrapped with protective tape.
(3) Release the rest of the claws, and remove the panel center assembly.

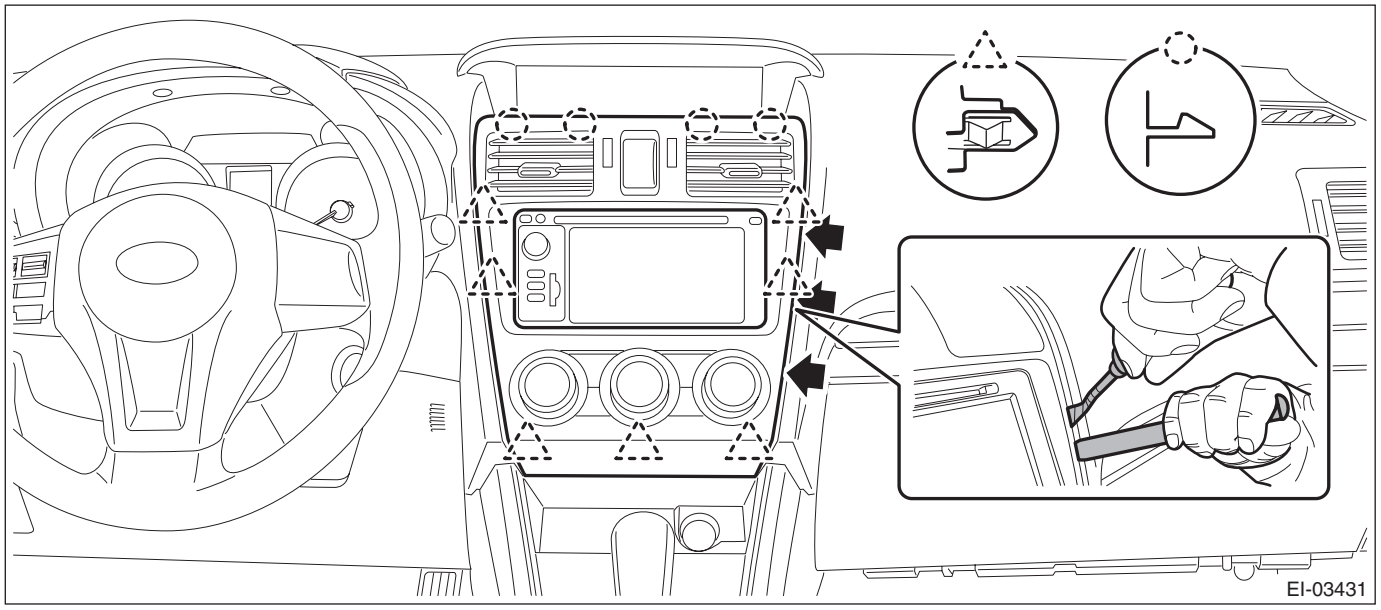

4) Release the claws, and remove the switch - hazard from the panel center assembly.

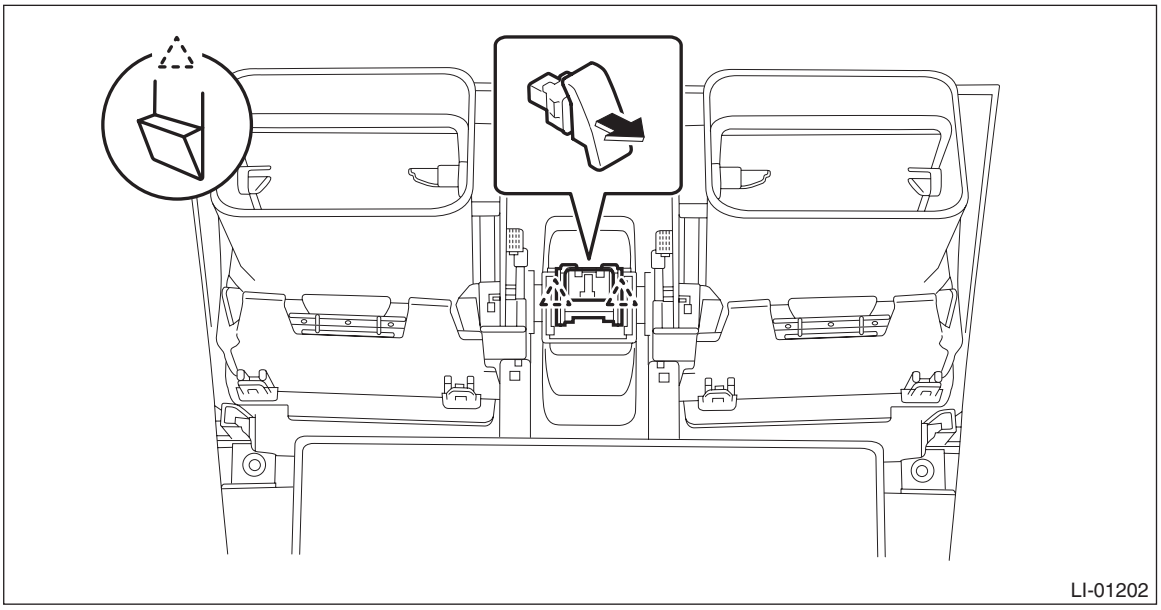

B: INSTALLATION

CAUTION:
After installing the panel center assembly, check that the air vent grille of the panel center assembly is inserted correctly into the air vent duct.
Install each part in the reverse order of removal.

C: INSPECTION

Unit inspection

Preparation tool:
Circuit tester

1) Check the resistance between switch terminals.

Terminal No.	Inspection conditions	Standard	Connection diagram
2 — 3	Switch OFF	1 MΩ or more	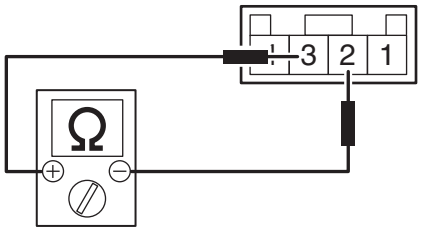
	Switch ON	Less than 1 Ω	

2) Replace the switch - hazard if the inspection result is not within the standard value.

17.Turn Signal Light & Hazard Light Module

A: REMOVAL

1) Remove the knee airbag module. <Ref. to AB-43, REMOVAL, Knee Airbag Module.>
2) Remove the turn signal and hazard module.
   (1) Disconnect the connector.
   (2) Release the claws and remove the turn signal & hazard module from the beam COMPL - steering.

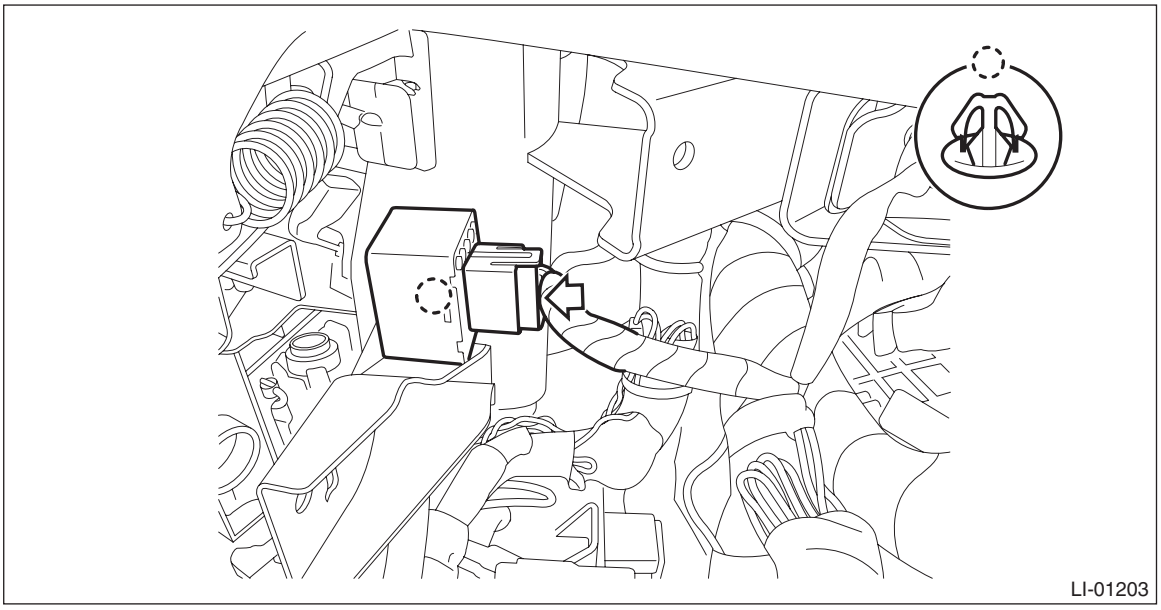

B: INSTALLATION

Install each part in the reverse order of removal.

C: INSPECTION

On the vehicle inspection

Preparation tool:
Circuit tester

1) Disconnect the turn signal and hazard module connector.
2) Measure the voltage between the turn signal & hazard module connector and the chassis ground.

Terminal No.	Inspection conditions	Standard	Connection diagram
4 (+) — Chassis ground (–)	Always	10 — 14 V	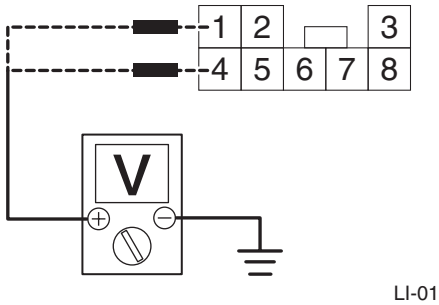
1 (+) — Chassis ground (–)	IG OFF → ON	Less than 1 V → 10 — 14 V	

Repair or replace the harness if the inspection result is not within the standard value.

3) Measure the resistance between the turn signal & hazard module connector and the chassis ground.

Terminal No.	Inspection conditions	Standard	Connection diagram
7 — Chassis ground	Always	Less than 1 Ω	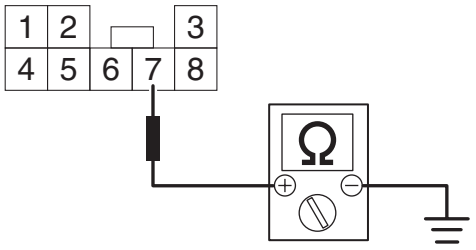 LI-01282

Repair or replace the harness if the inspection result is not within the standard value.
4) Connect the turn signal and hazard module connector.
5) Measure the voltage between the turn signal & hazard module and the chassis ground.

Terminal No.	Input/ Output	Inspection conditions	Standard
6 (+) — Chassis ground (–)	Input	Turn signal switch (Right) OFF → ON	9 V or more → less than 1 V
5 (+) — Chassis ground (–)	Input	Turn signal switch (Left) OFF → ON	9 V or more → less than 1 V
8 (+) — Chassis ground (–)	Input	Hazard switch OFF → ON	9 V or more → less than 1 V
2 (+) — Chassis ground (–)	Output	Turn signal switch (Right) OFF → ON	Repeat less than 1 V → less than 1 V ←→ more than 9 V at 60 to 120 times per minute.
3 (+) — Chassis ground (–)	Output	Turn signal switch (Left) OFF → ON	Repeat less than 1 V → less than 1 V ←→ more than 9 V at 60 to 120 times per minute.
2 (+) — Chassis ground (–)	Output	Hazard switch OFF → ON	Repeat less than 1 V → less than 1 V ←→ more than 9 V at 60 to 120 times per minute.
3 (+) — Chassis ground (–)	Output	Hazard switch OFF → ON	Repeat less than 1 V → less than 1 V ←→ more than 9 V at 60 to 120 times per minute.

Replace the turn signal and hazard module if the inspection result is not within the standard value.

18.Front Turn Signal Light Bulb

A: REMOVAL

1) Disconnect the ground cable from battery. <Ref. to NT-5, BATTERY, NOTE, Note.>

NOTE:
For the 12 volt engine restart battery of HEV model, disconnect the ground terminal from 12V engine restart battery sensor.
2) Turn the steering wheel in the opposite direction from the parts to be removed. Then remove the screws and clips, and turn over the mud guard - front.

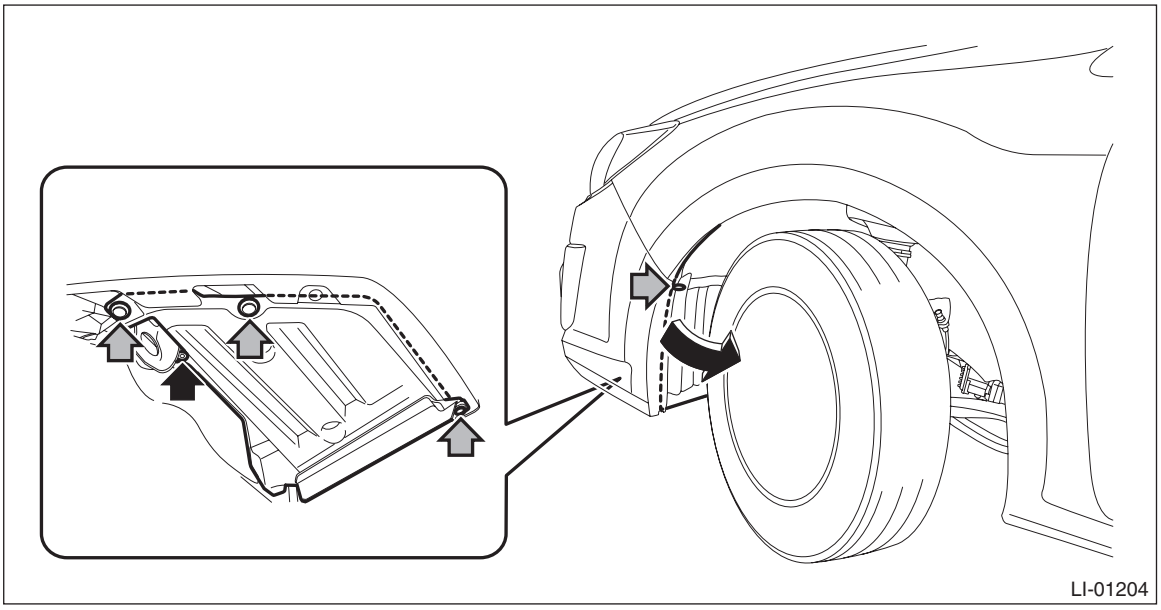

3) Remove the bulb socket and front turn signal light bulb.

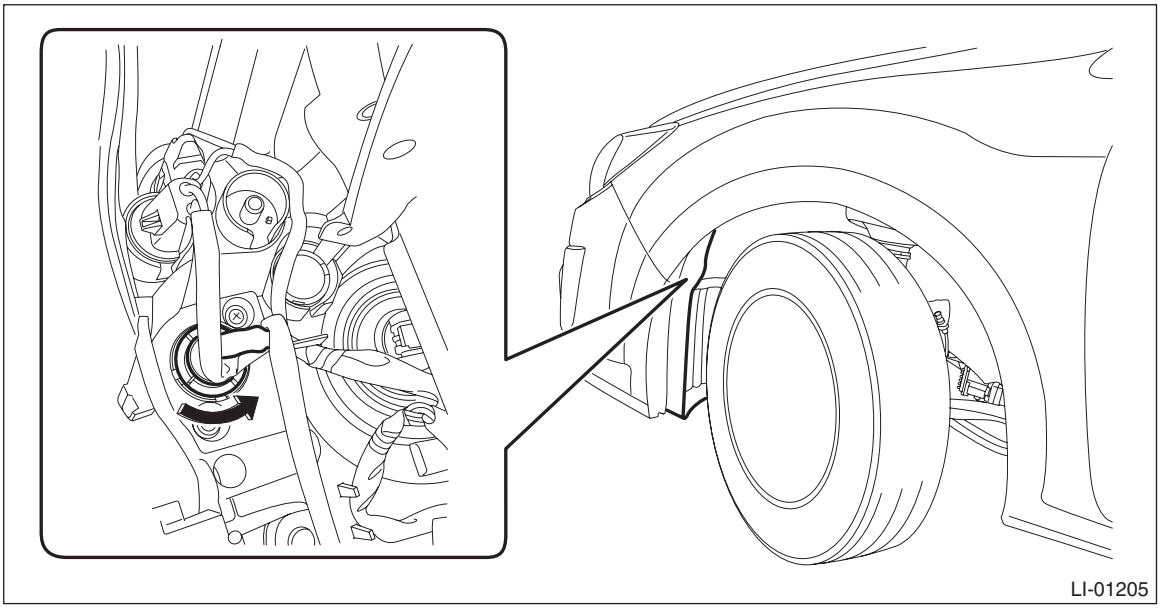

B: INSTALLATION

Install each part in the reverse order of removal.

C: INSPECTION

1) Visually check the bulb for blow out.
2) Check the bulb specification. <Ref. to LI-2, SPECIFICATION, General Description.>
3) Replace the bulb if it is found defective.

19.Clearance/Parking Light Bulb

A: REMOVAL

1) Disconnect the ground cable from battery. <Ref. to NT-5, BATTERY, NOTE, Note.>

NOTE:
For the 12 volt engine restart battery of HEV model, disconnect the ground terminal from 12V engine restart battery sensor.
2) Turn the steering wheel in the opposite direction from the parts to be removed. Then remove the screws and clips, and turn over the mud guard - front.

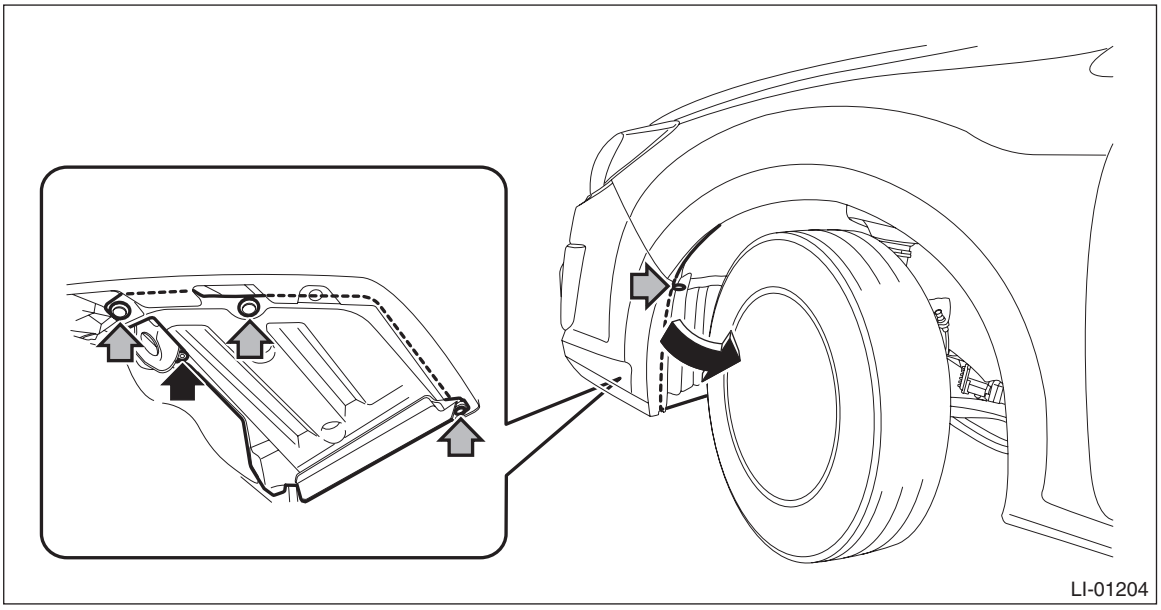

3) Remove the bulb socket and parking light bulb.

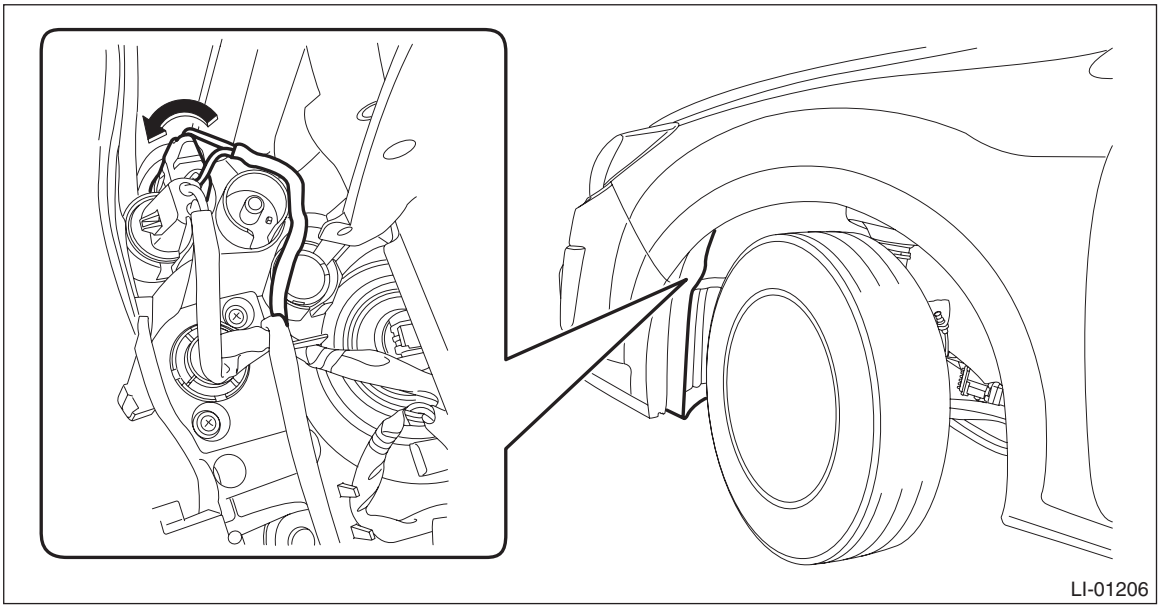

B: INSTALLATION

Install each part in the reverse order of removal.

C: INSPECTION

1) Visually check the bulb for blow out.
2) Check the bulb specification. <Ref. to LI-2, SPECIFICATION, General Description.>
3) Replace the bulb if it is found defective.

20.Front Side Marker Light Bulb

A: REMOVAL

1) Disconnect the ground cable from battery. <Ref. to NT-5, BATTERY, NOTE, Note.>

NOTE:
For the 12 volt engine restart battery of HEV model, disconnect the ground terminal from 12V engine restart battery sensor.
2) Turn the steering wheel in the opposite direction from the parts to be removed. Then remove the screws and clips, and turn over the mud guard - front.

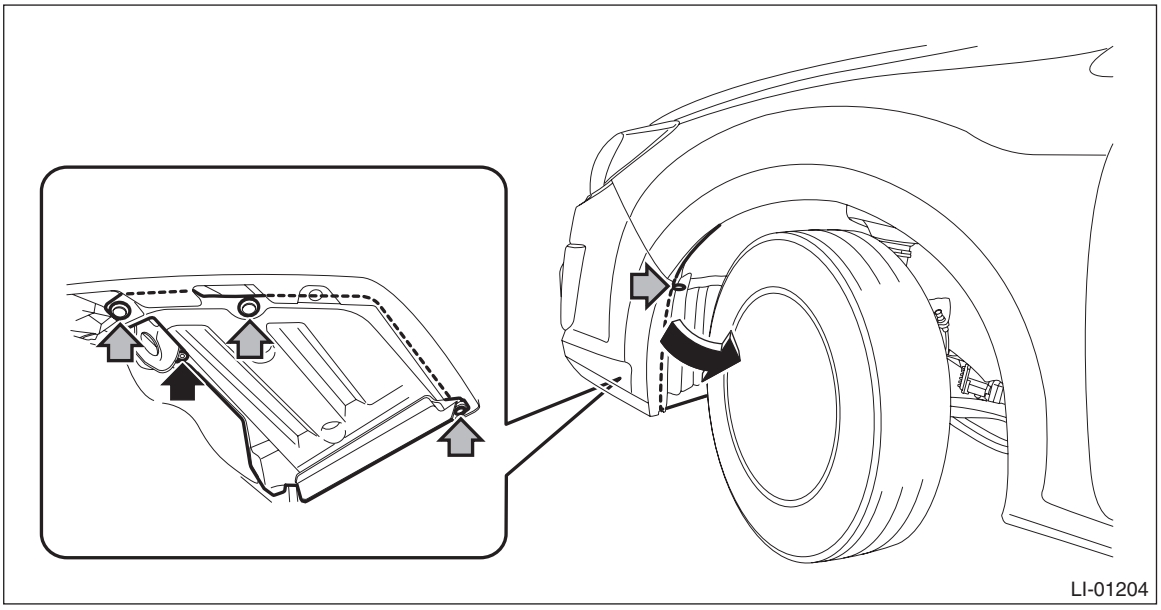
LI-01204

3) Remove the bulb socket and front side marker light bulb.

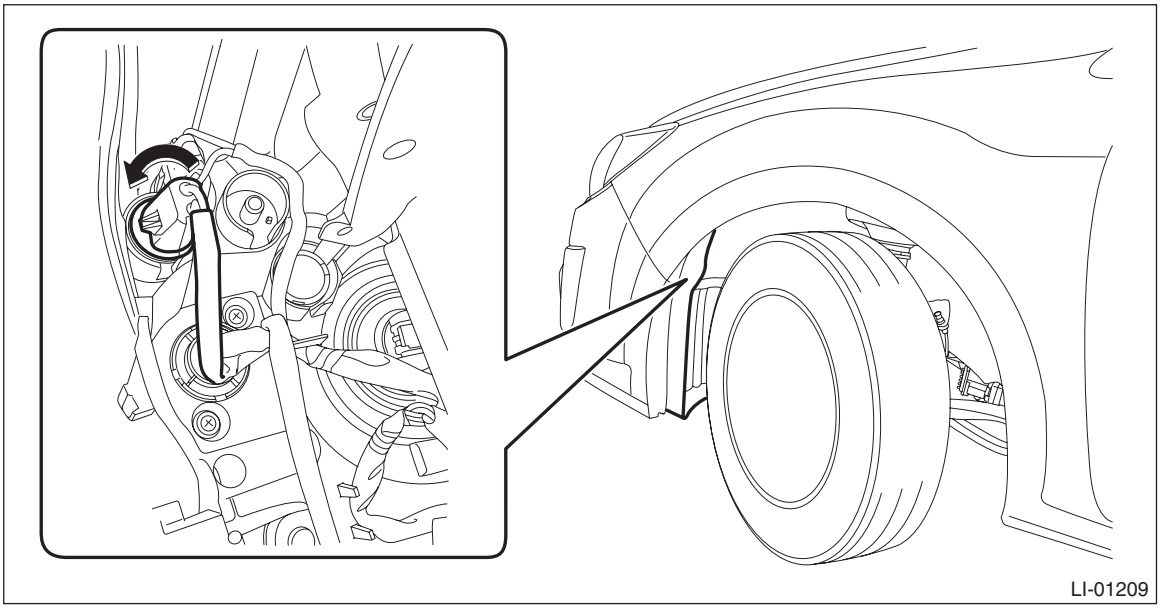
LI-01209

B: INSTALLATION

Install each part in the reverse order of removal.

C: INSPECTION

1) Visually check the bulb for blow out.
2) Check the bulb specification. <Ref. to LI-2, SPECIFICATION, General Description.>
3) Replace the bulb if it is found defective.

21.Front Fog Light Assembly

A: REMOVAL

1) Disconnect the ground cable from battery. <Ref. to NT-5, BATTERY, NOTE, Note.>

NOTE:
For the 12 volt engine restart battery of HEV model, disconnect the ground terminal from 12V engine restart battery sensor.

2) Lift up the vehicle.
3) Remove the screw and clips, and turn over the front side of the mud guard - front.

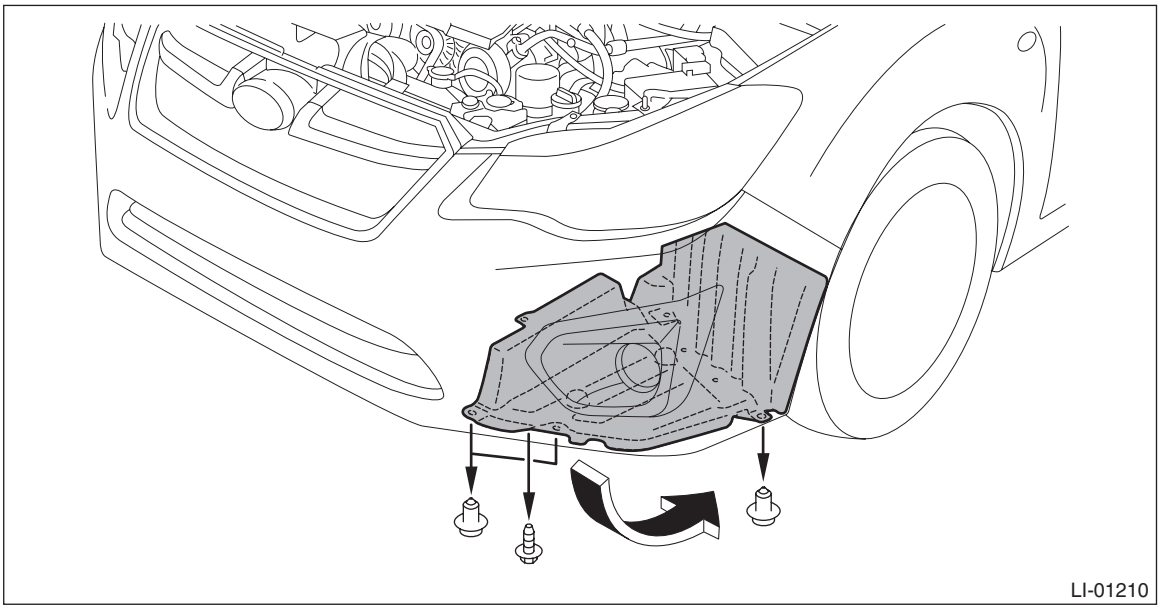

4) From the bottom of the bumper face - front, remove the fog light assembly - front.
   (1) Disconnect the connector.
   (2) Remove the bolts, then remove the fog light assembly - front.

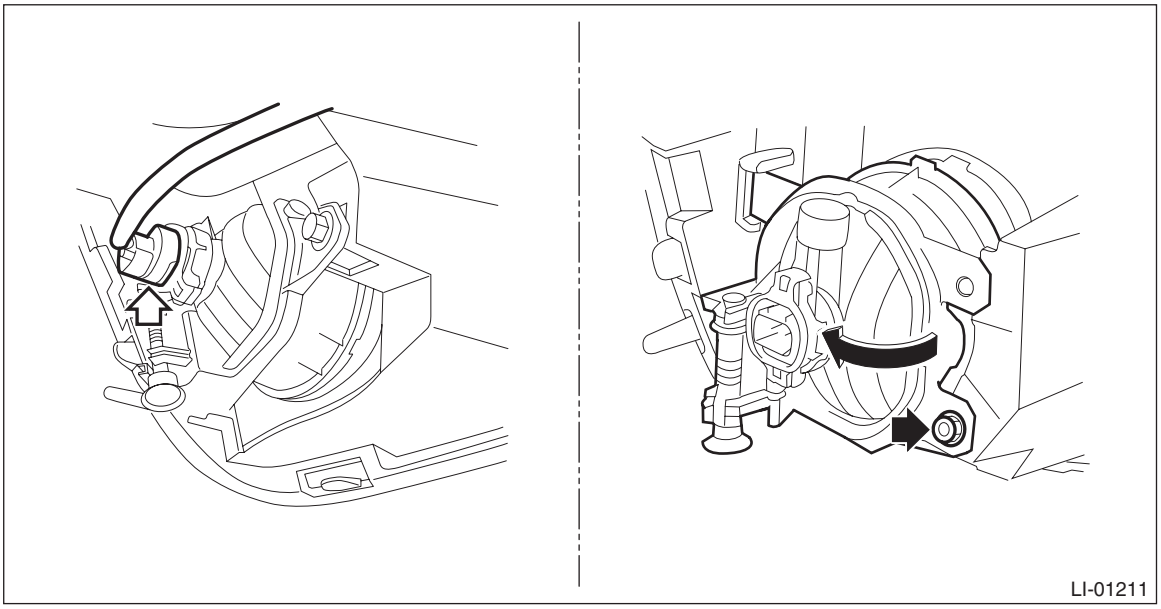

B: INSTALLATION

1) Install each part in the reverse order of removal.

Tightening torque:
Fog light assembly - front: 7.5 N·m (0.76 kgf-m, 5.5 ft-lb)
2) Adjust the fog light beam. <Ref. to LI-56, FOG LIGHT AIMING, ADJUSTMENT, Front Fog Light Assembly.>

C: ADJUSTMENT

1. FOG LIGHT AIMING

1) Before checking the fog light assembly - front beam level, be sure of the following:
• The area around the fog light assembly - front has not sustained any scratches, damage or other type of deformation.
• Vehicle is parked on a level surface.
• The inflation pressure of tires is correct.
• Vehicle's fuel tank is fully filled.
2) Bounce the vehicle several times to normalize the suspension.
3) Make certain that someone is seated in the driver's seat.
4) Place the vehicle with the front end facing to the measurement panel.

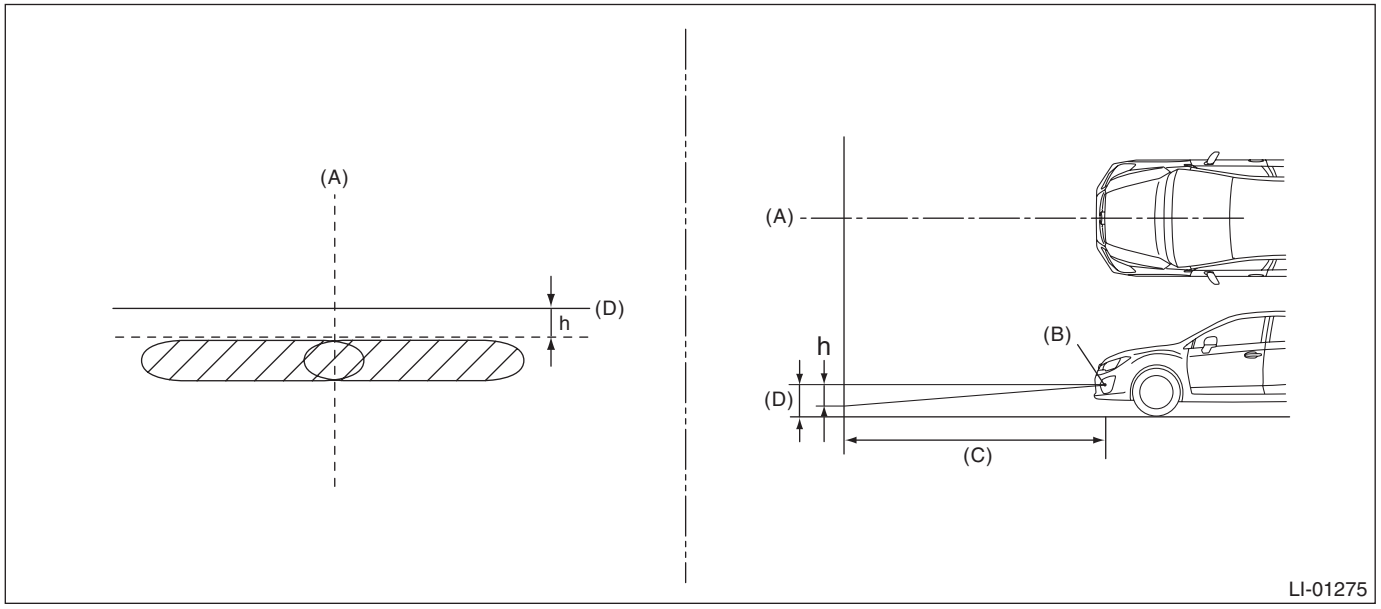

(A) Vehicle center
(B) Bulb center marking
(C) 3 m (10 ft)
(D) Height of fog light center

h mm (in) at 3 m (10 ft)
40 (1.58)

5) Adjust the fog light assembly - front beam.
(1) Remove the screw and clips, and turn over the front side of the mud guard - front.

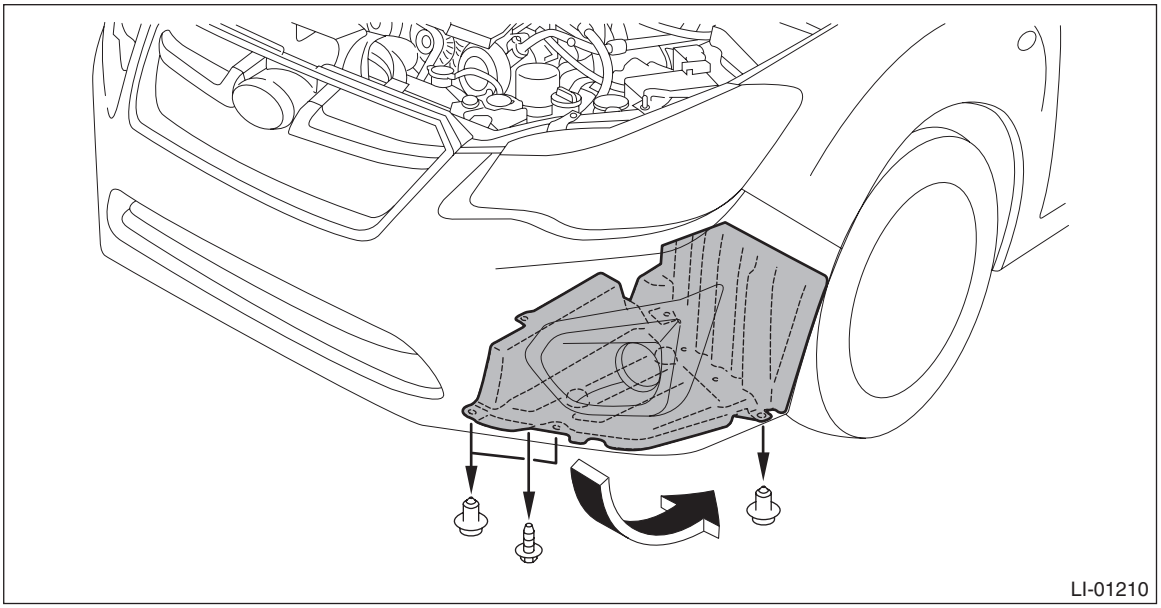

(2) Adjust the beam direction by turning the aiming screw from the bottom of the bumper face - front.

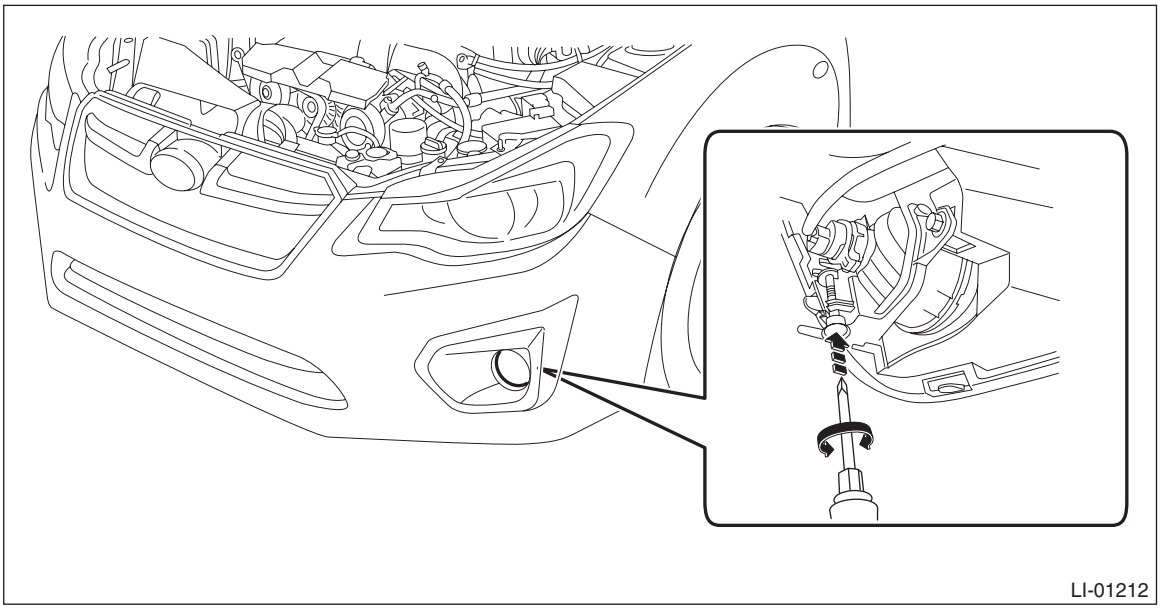

22.Front Fog Light Bulb

A: REMOVAL

1) Disconnect the ground cable from battery. <Ref. to NT-5, BATTERY, NOTE, Note.>

NOTE:
For the 12 volt engine restart battery of HEV model, disconnect the ground terminal from 12V engine restart battery sensor.

2) Remove the screw and clips, and turn over the front side of the mud guard - front.

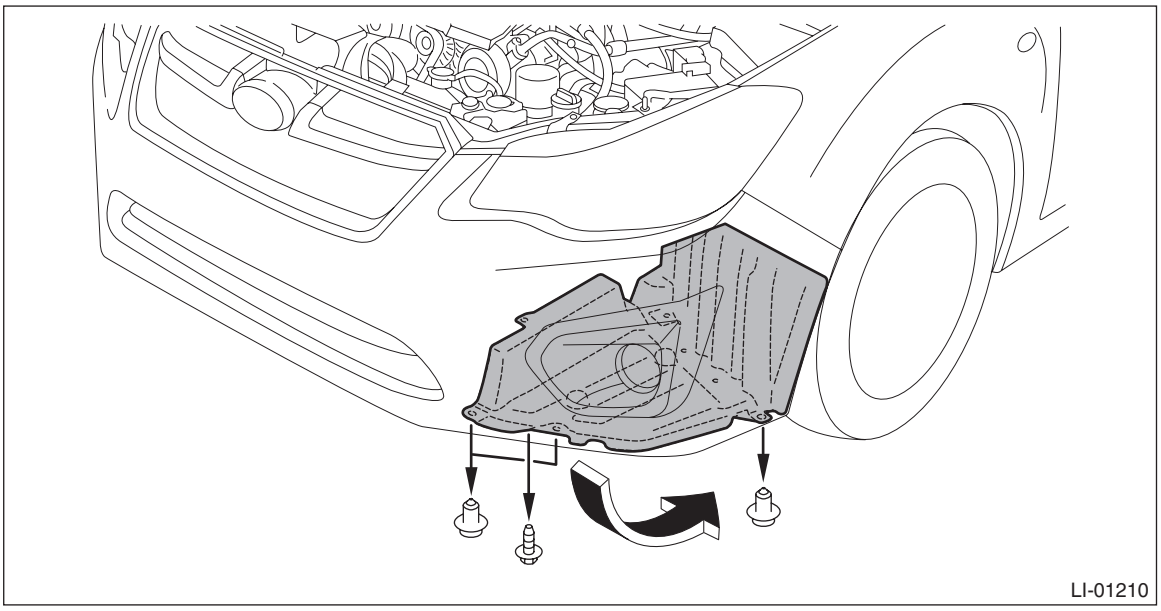

3) From the bottom of the bumper face - front, remove the front fog light bulb.
   (1) Disconnect the connector.
   (2) Remove the bulb.

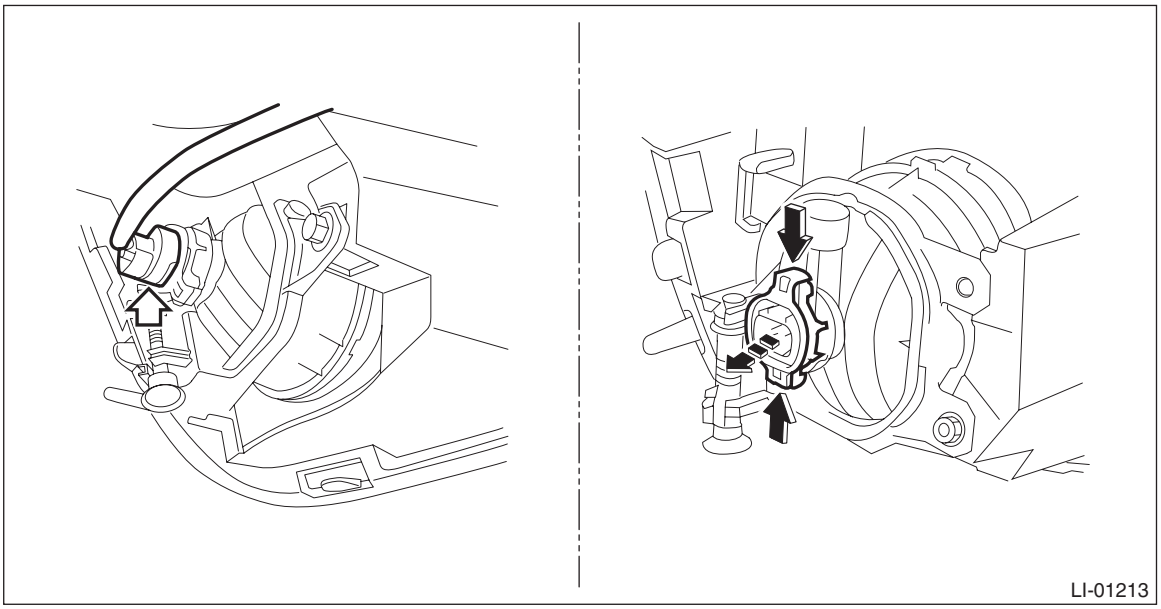

B: INSTALLATION

CAUTION:
After connecting the connector, make sure that the bulb is locked securely.
Install each part in the reverse order of removal.

C: INSPECTION

1) Visually check the bulb for blow out.
2) Check the bulb specification. <Ref. to LI-2, SPECIFICATION, General Description.>
3) Replace the bulb if it is found defective.

23.Side Turn Signal Light Assembly

A: REMOVAL

1) Disconnect the ground cable from battery. <Ref. to NT-5, BATTERY, NOTE, Note.>

NOTE:
For the 12 volt engine restart battery of HEV model, disconnect the ground terminal from 12V engine restart battery sensor.

2) Remove the mirror - repair, cover - cap outer mirror lower and the cover - cap outer mirror. <Ref. to GW-25, DISASSEMBLY, Outer Mirror Assembly.>

3) Remove the light assembly - side turn mirror.
   (1) Remove the screws and pull out the light assembly - side turn mirror to the front of the vehicle.
   (2) Disconnect the connector and remove the light assembly - side turn mirror.

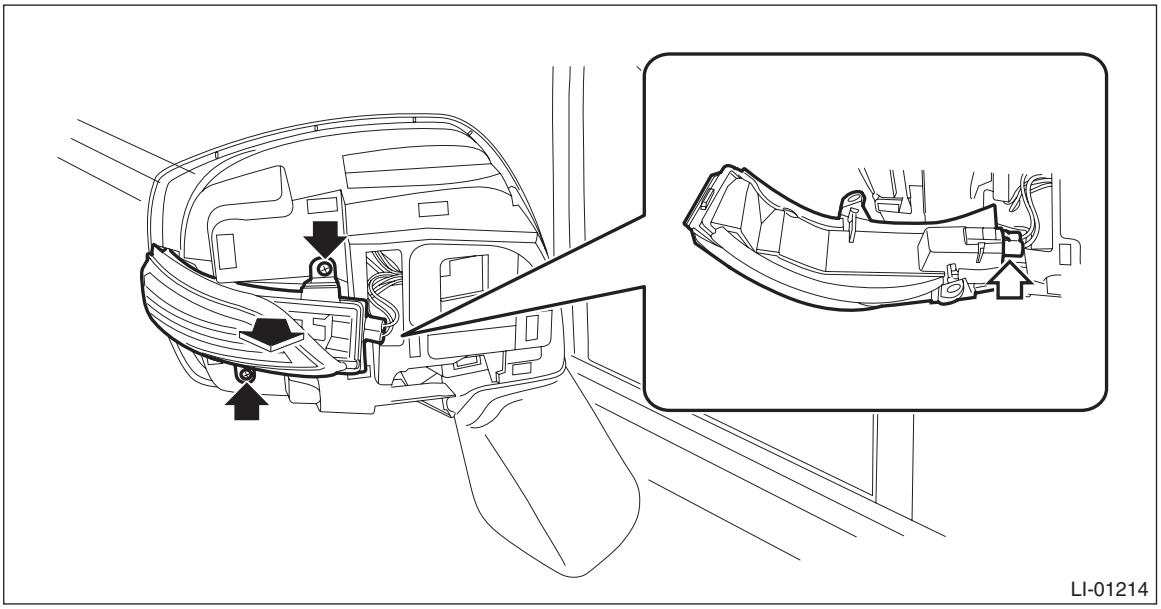

B: INSTALLATION

Install each part in the reverse order of removal.

C: INSPECTION

1) Install the light to check if it blinks normally.
2) If it fails to blink normally, replace the light assembly - side turn mirror with a new part.

NOTE:
Since LED (Light Emitting Diode) is used for the light, replace the light assembly - side turn mirror if the LED burns out.

24.Rear Combination Light Assembly

A: REMOVAL

1. 4 DOOR MODEL

1) Disconnect the ground cable from battery.
2) Remove the mat - trunk.
3) Remove the trim panel - trunk rear.
   (1) Remove the clip.
   (2) Release the claws, and remove the trim panel - trunk rear.

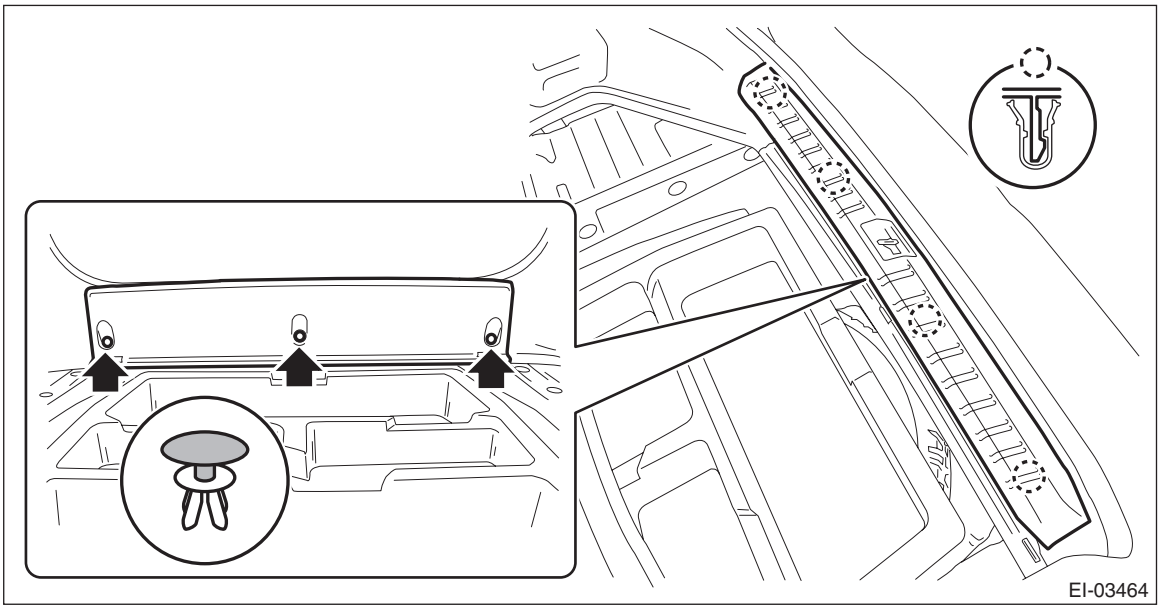

4) Remove the clips, and turn over the trim panel - trunk side.

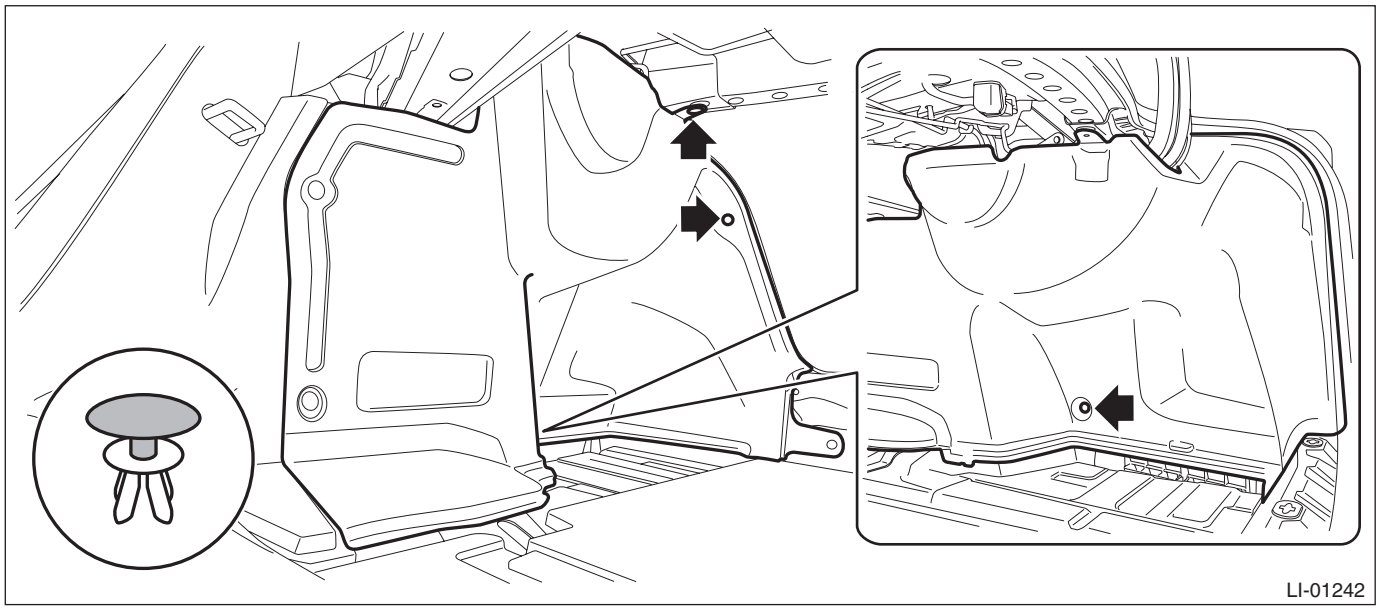

5) Remove the light assembly - rear combination.
(1) Remove the harness clip and connector.
(2) Release the nuts and clips, then remove the light assembly - rear combination.

CAUTION:
Be careful not to damage the clips.

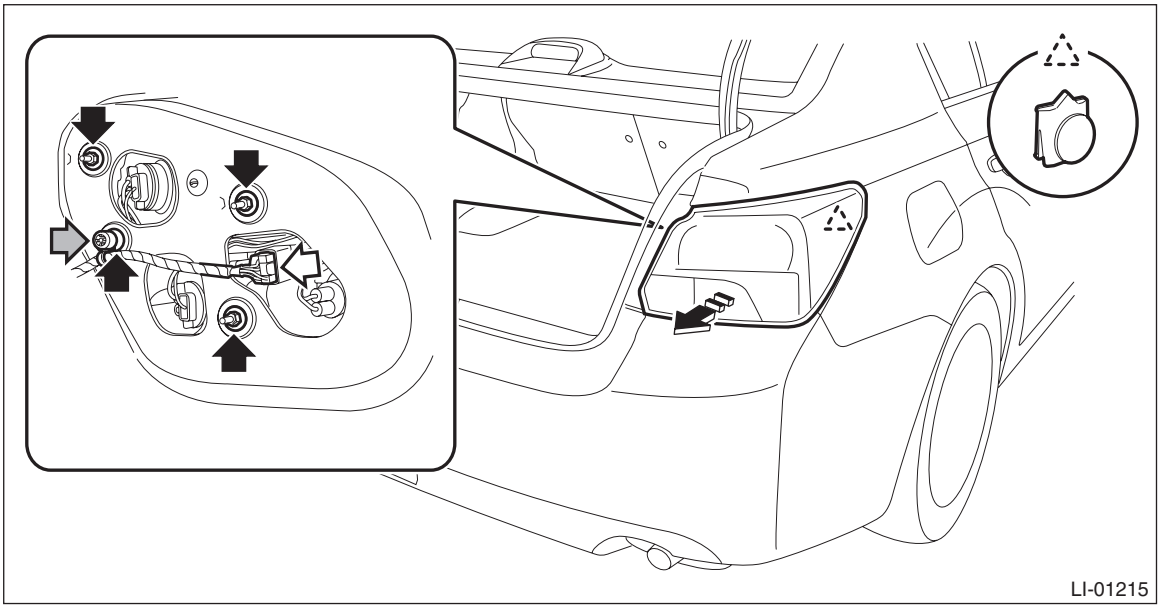

2. 5 DOOR MODEL/XV MODEL

1) Disconnect the ground cable from battery. <Ref. to NT-5, BATTERY, NOTE, Note.>

NOTE:
For the 12 volt engine restart battery of HEV model, disconnect the ground terminal from 12V engine restart battery sensor.
2) Remove the light assembly - rear combination.

CAUTION:
Be careful not to damage the clips.
(1) Release the bolts and clips, then pull out the light assembly - rear combination to the vehicle rear.
(2) Disconnect the connector and remove the light assembly - rear combination.

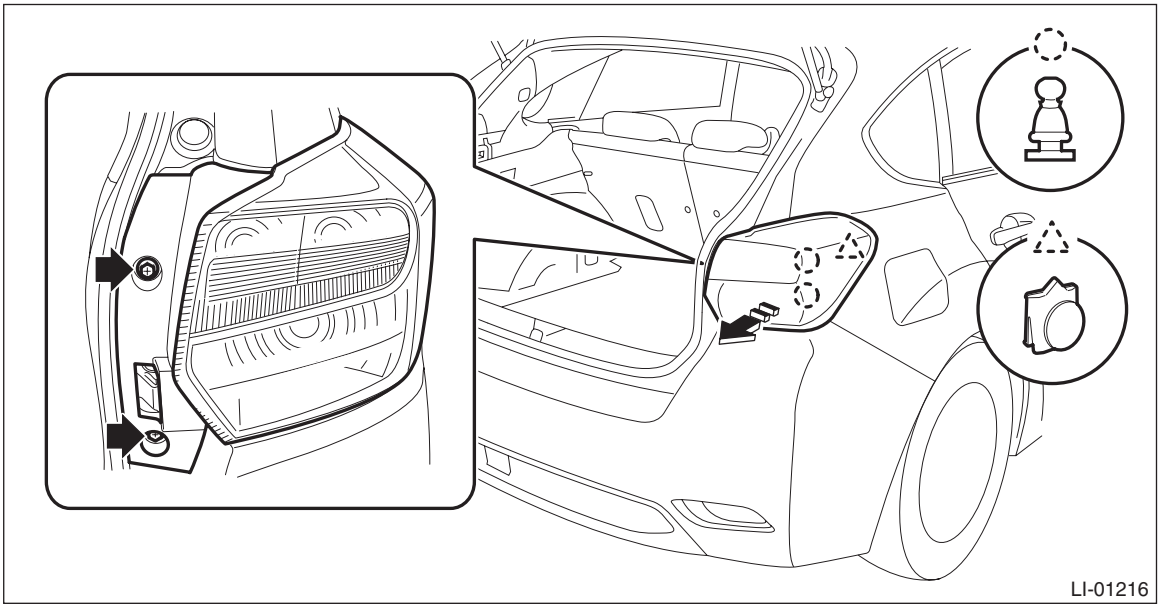

B: INSTALLATION

CAUTION:
For 4 door model, replace the gasket - rear combination (b) of the light assembly - rear combination (a) with a new part. If the gasket - rear combination is reused, water may come inside of the vehicle.

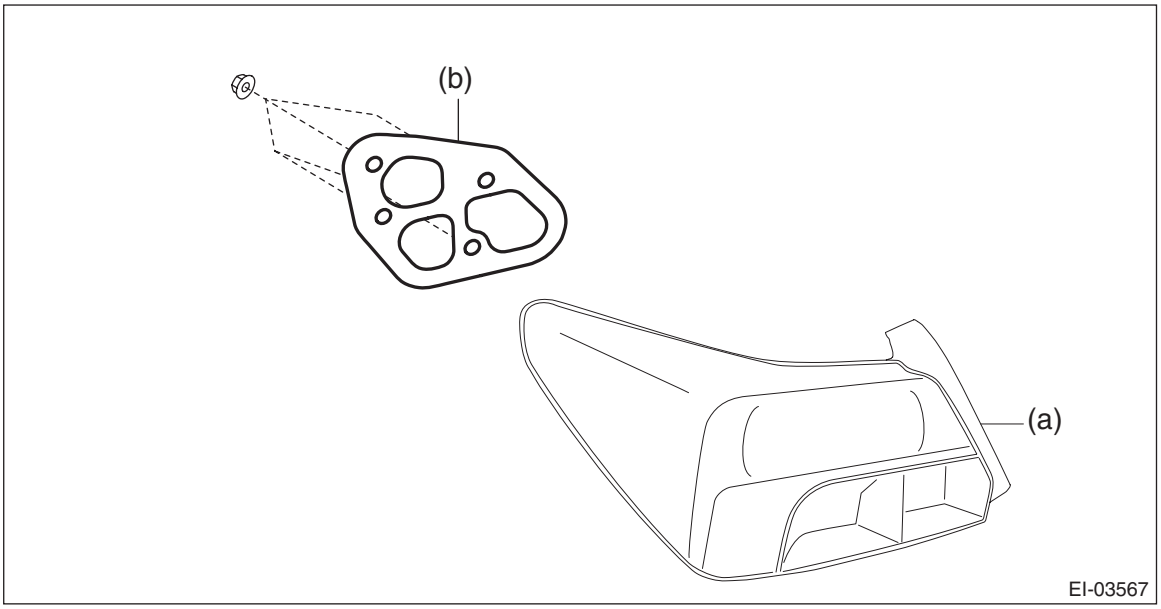

Install each part in the reverse order of removal.

Tightening torque:
Light assembly - rear combination: 7.5 N·m (0.76 kgf-m, 5.5 ft-lb)

C: INSPECTION

1) Visually check the bulb for blow out.
2) Check the bulb specification. <Ref. to LI-2, SPECIFICATION, General Description.>
3) Replace the bulb if it is found defective.

25.Tail/Stop Light Bulb

A: REMOVAL

1. 4 DOOR MODEL

1) Disconnect the ground cable from battery.
2) Remove the mat - trunk.
3) Remove the trim panel - trunk rear.
   (1) Remove the clip.
   (2) Release the claws, and remove the trim panel - trunk rear.

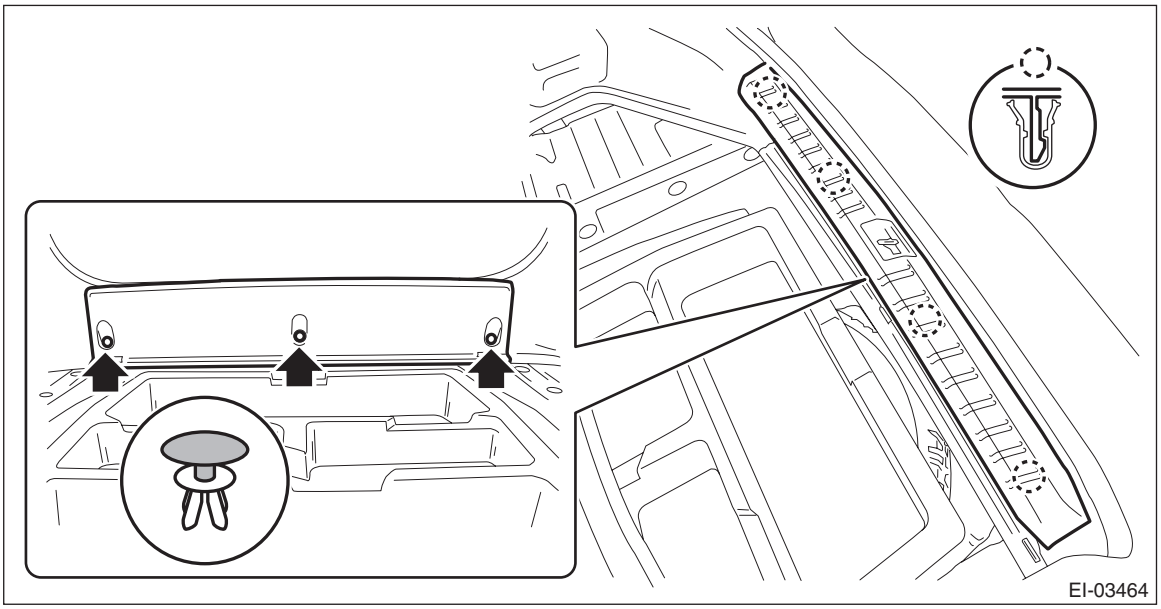

4) Remove the clips, and turn over the trim panel - trunk side.

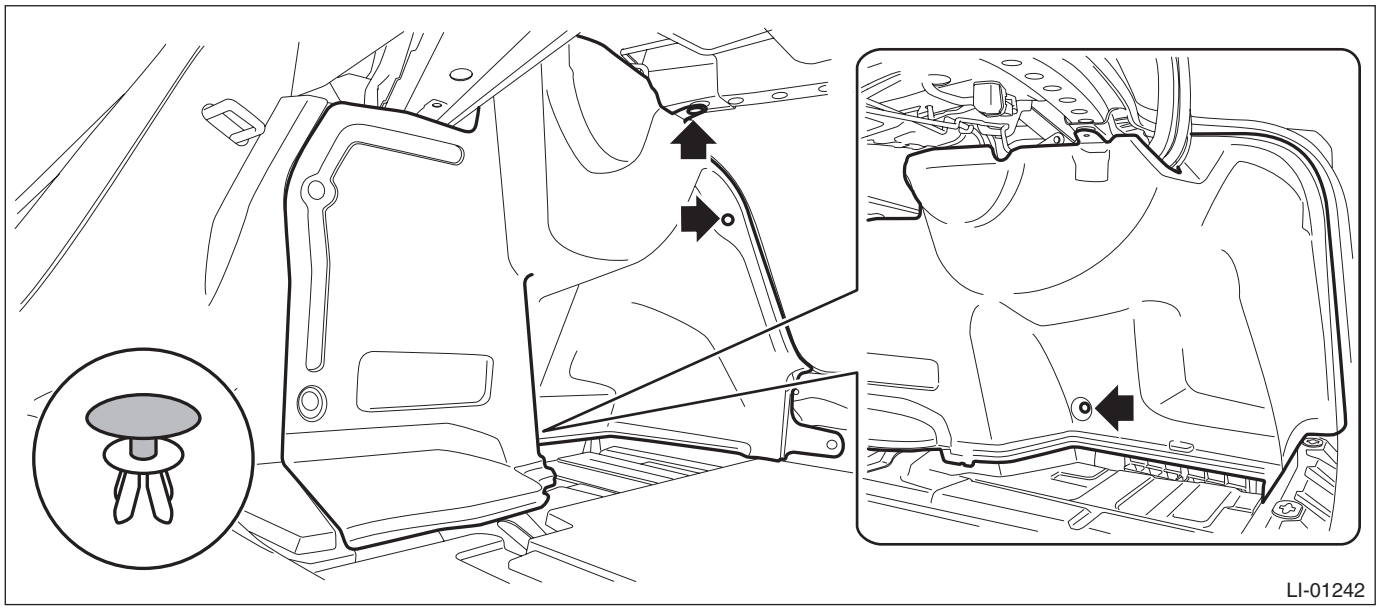

5) Remove the bulb socket and tail light/stop light bulb.

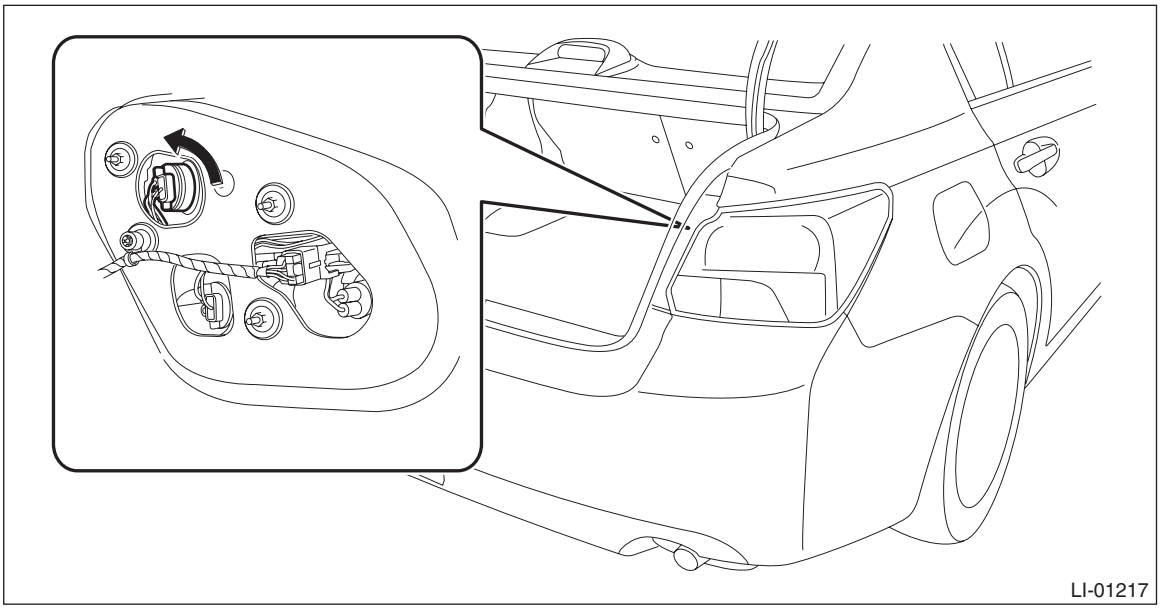

2. 5 DOOR MODEL/XV MODEL

1) Disconnect the ground cable from battery. <Ref. to NT-5, BATTERY, NOTE, Note.>

NOTE:
For the 12 volt engine restart battery of HEV model, disconnect the ground terminal from 12V engine restart battery sensor.

2) Remove the light assembly - rear combination.

CAUTION:
Be careful not to damage the clips.

(1) Release the bolts and clips, then pull out the light assembly - rear combination to the vehicle rear.
(2) Disconnect the connector and remove the light assembly - rear combination.

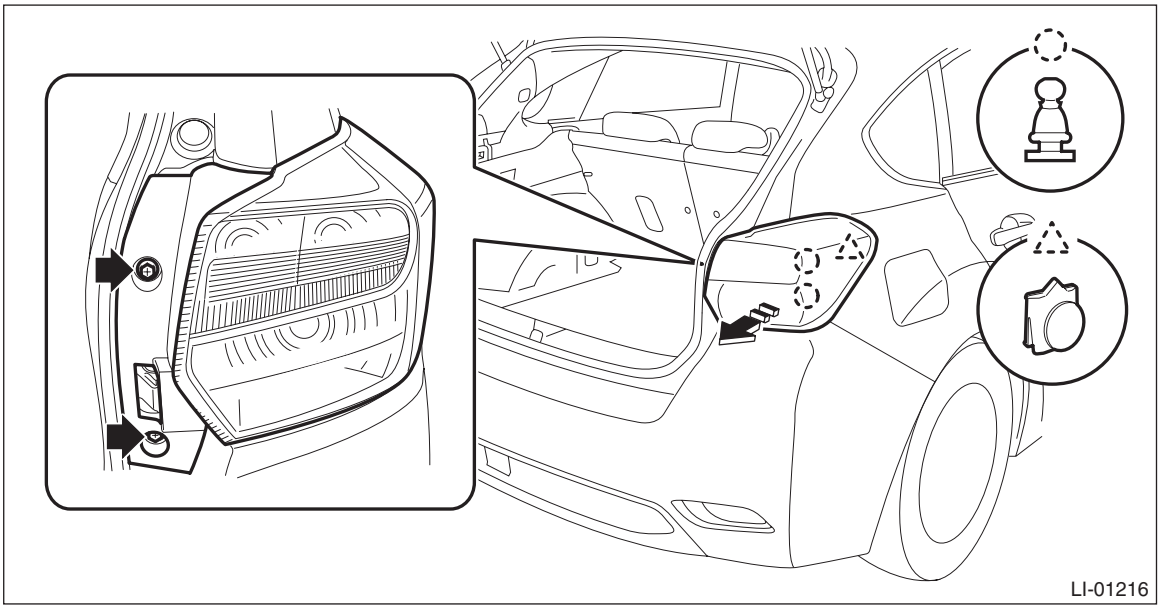

3) Remove the bulb socket and tail light/stop light bulb.

NOTE:
Only tail light bulb for HEV model

- Gasoline engine model

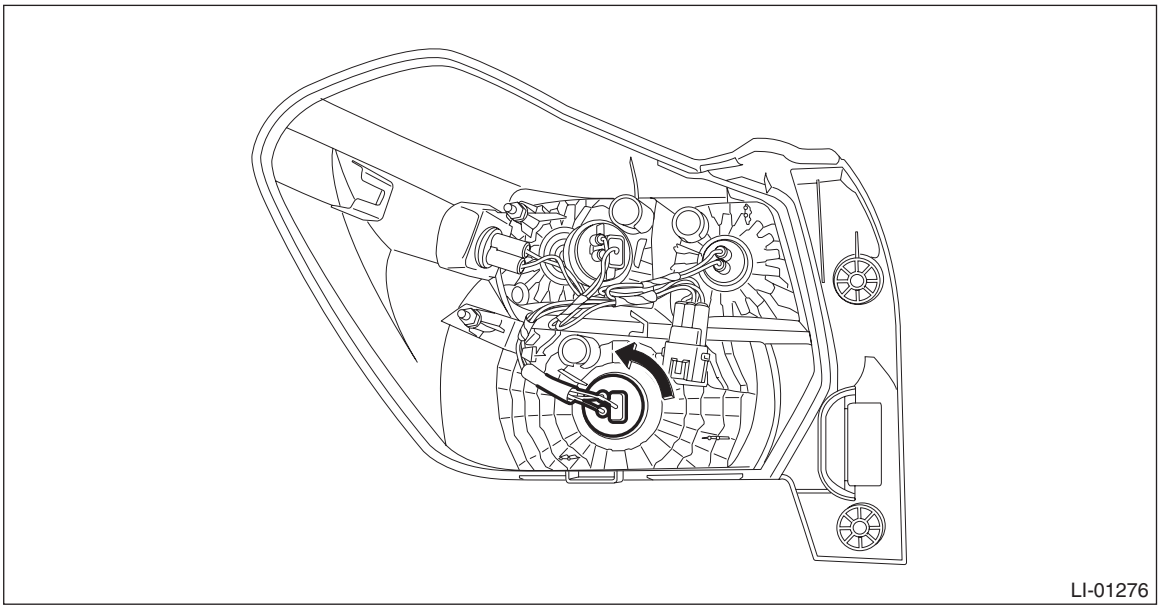

- HEV model

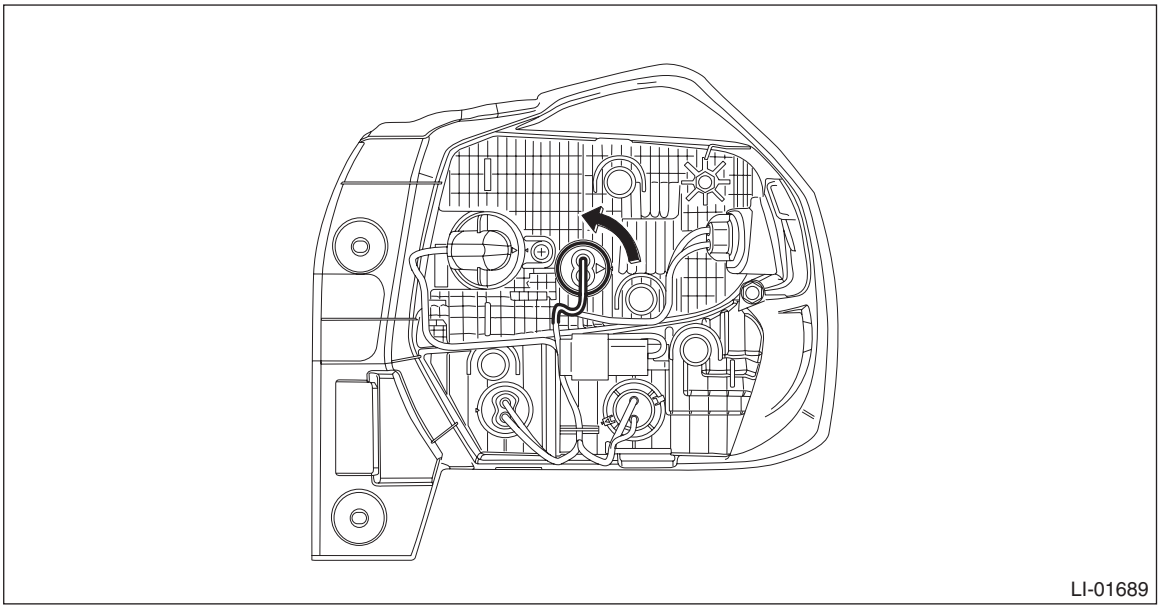

B: INSTALLATION

Install each part in the reverse order of removal.

Tightening torque:
Light assembly - rear combination (5 door model/XV model): 7.5 N·m (0.76 kgf-m, 5.5 ft-lb)

C: INSPECTION

1) Visually check the bulb for blow out.
2) Check the bulb specification. <Ref. to LI-2, SPECIFICATION, General Description.>
3) Replace the bulb if it is found defective.

26.Rear Turn Signal Light Bulb

A: REMOVAL

1. 4 DOOR MODEL

1) Disconnect the ground cable from battery.
2) Remove the mat - trunk.
3) Remove the trim panel - trunk rear.
   (1) Remove the clip.
   (2) Release the claws, and remove the trim panel - trunk rear.

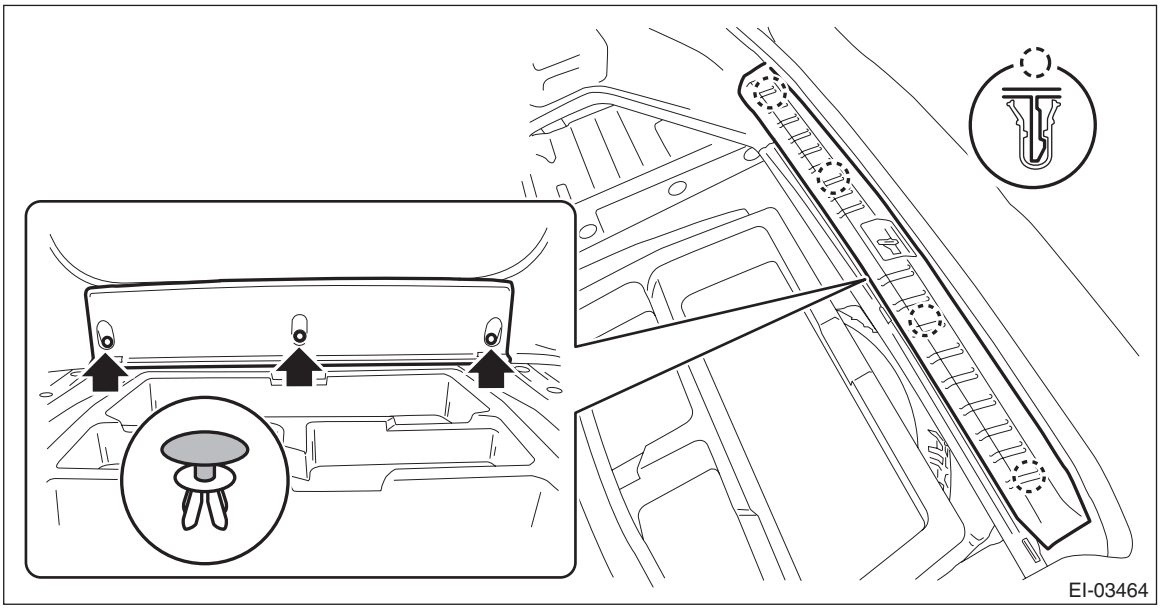

4) Remove the clips, and turn over the trim panel - trunk side.

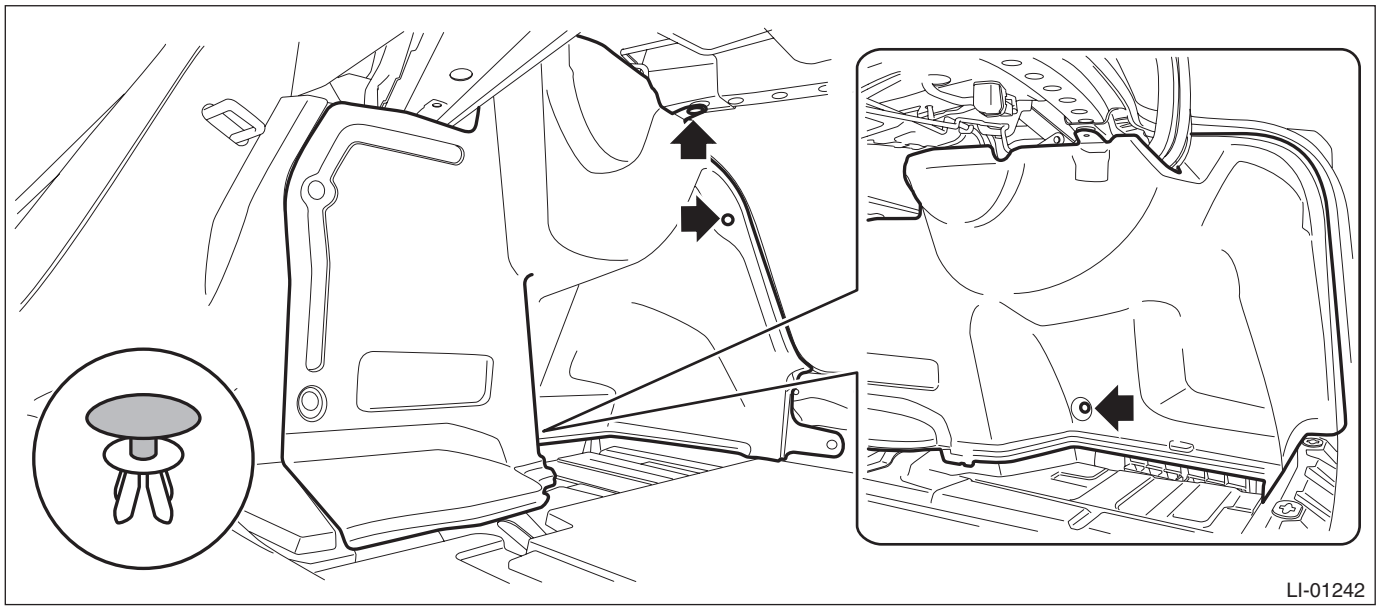

5) Remove the bulb socket and rear turn signal light bulb.

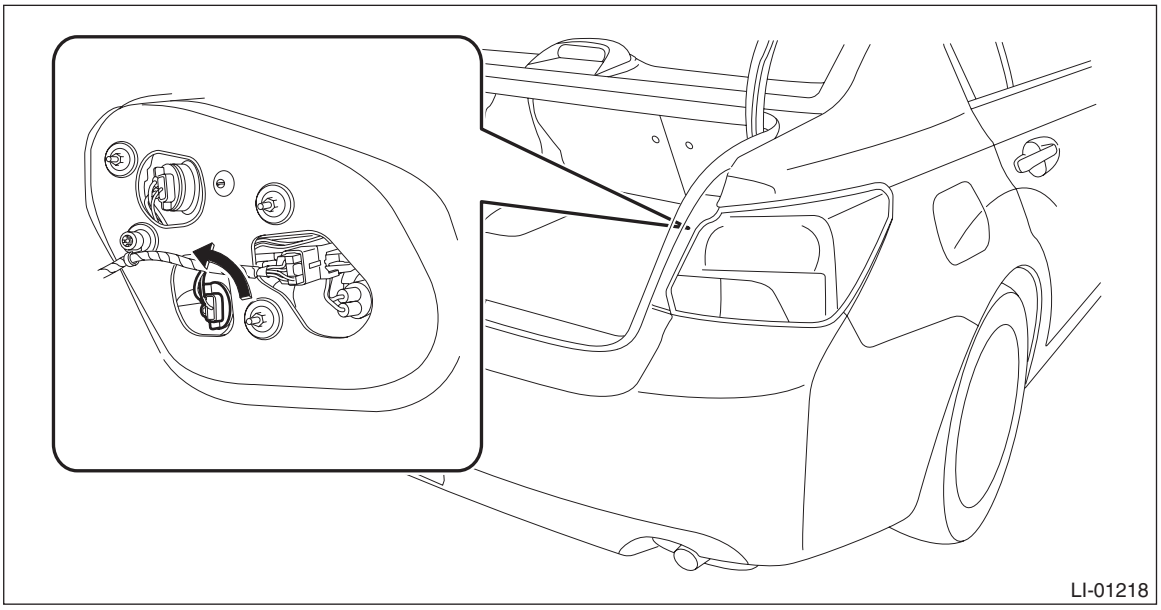

2. 5 DOOR MODEL/XV MODEL

1) Disconnect the ground cable from battery. <Ref. to NT-5, BATTERY, NOTE, Note.>

NOTE:
For the 12 volt engine restart battery of HEV model, disconnect the ground terminal from 12V engine restart battery sensor.

2) Remove the light assembly - rear combination.

CAUTION:
Be careful not to damage the clips.

(1) Release the bolts and clips, then pull out the light assembly - rear combination to the vehicle rear.
(2) Disconnect the connector and remove the light assembly - rear combination.

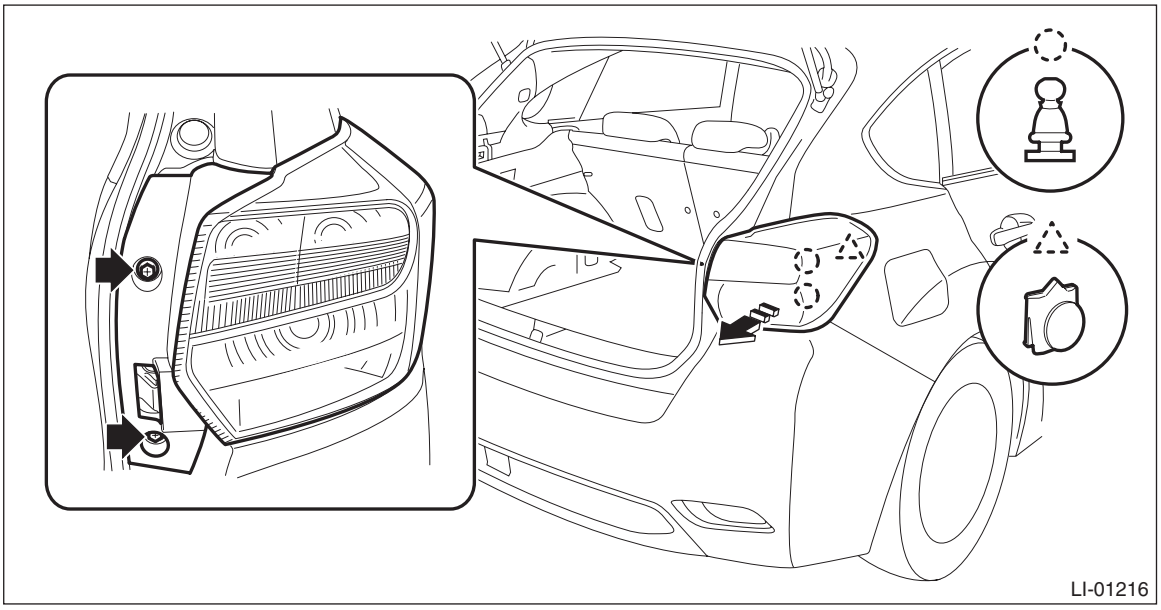

3) Remove the bulb socket and rear turn signal light bulb.
- Gasoline engine model

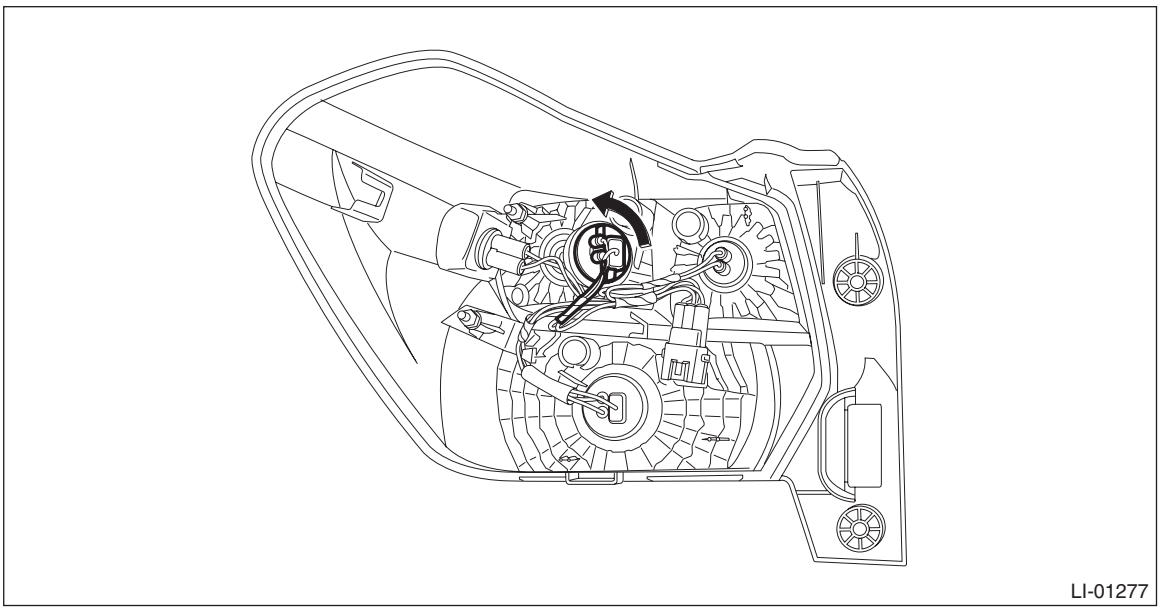

- HEV model

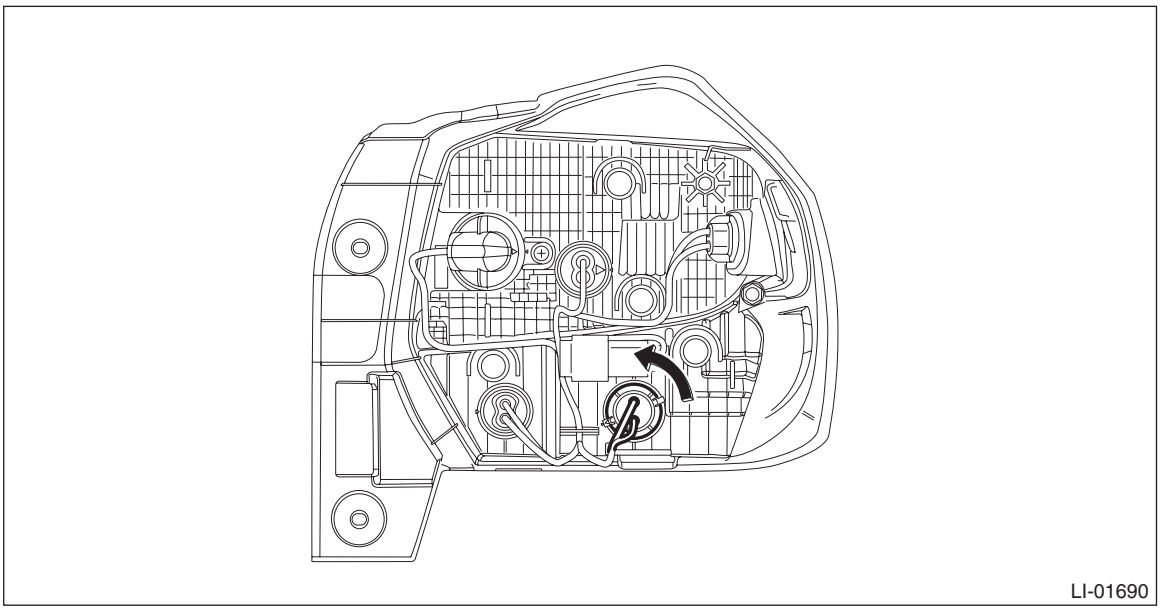

B: INSTALLATION

Install each part in the reverse order of removal.

Tightening torque:
Light assembly - rear combination (5 door model/XV model): 7.5 N·m (0.76 kgf-m, 5.5 ft-lb)

C: INSPECTION

1) Visually check the bulb for blow out.
2) Check the bulb specification. <Ref. to LI-2, SPECIFICATION, General Description.>
3) Replace the bulb if it is found defective.

27.Rear Side Marker Light Bulb

A: REMOVAL

1. 4 DOOR MODEL

It is integrated with the tail light bulb. For details concerning operation procedures, refer to “REMOVAL” of “Tail/Stop Light Bulb”. <Ref. to LI-64, REMOVAL, Tail/Stop Light Bulb.>

2. 5 DOOR MODEL/XV MODEL

1) Disconnect the ground cable from battery. <Ref. to NT-5, BATTERY, NOTE, Note.>

NOTE:
For the 12 volt engine restart battery of HEV model, disconnect the ground terminal from 12V engine restart battery sensor.

2) Remove the light assembly - rear combination.

CAUTION:
Be careful not to damage the clips.

(1) Release the bolts and clips, then pull out the light assembly - rear combination to the vehicle rear.
(2) Disconnect the connector and remove the light assembly - rear combination.

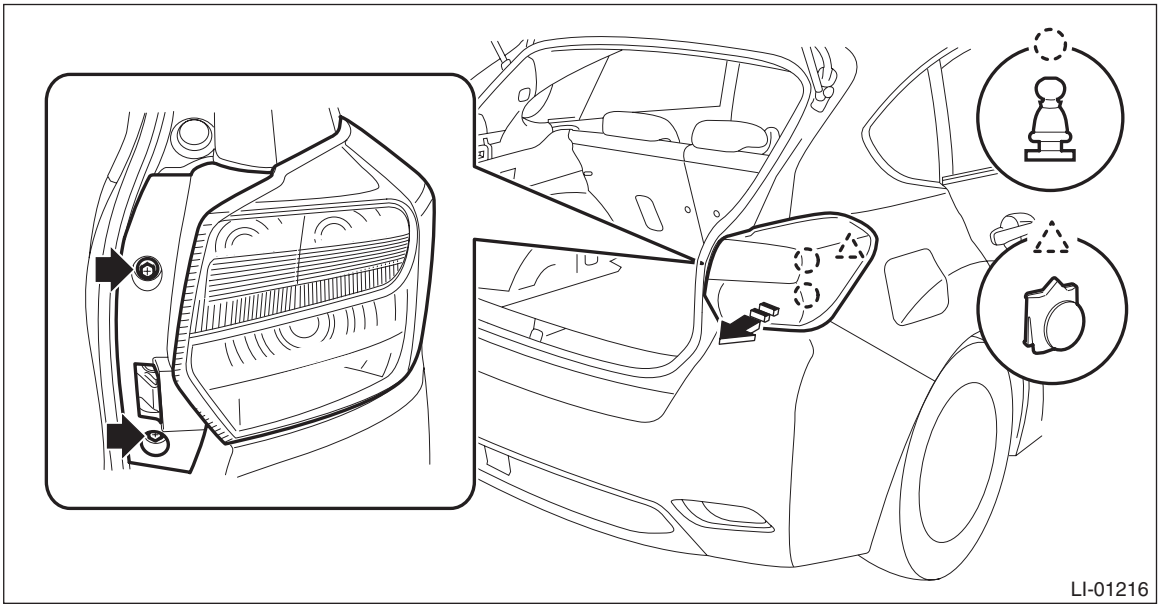

3) Remove the bulb socket and rear side marker light bulb.
- Gasoline engine model

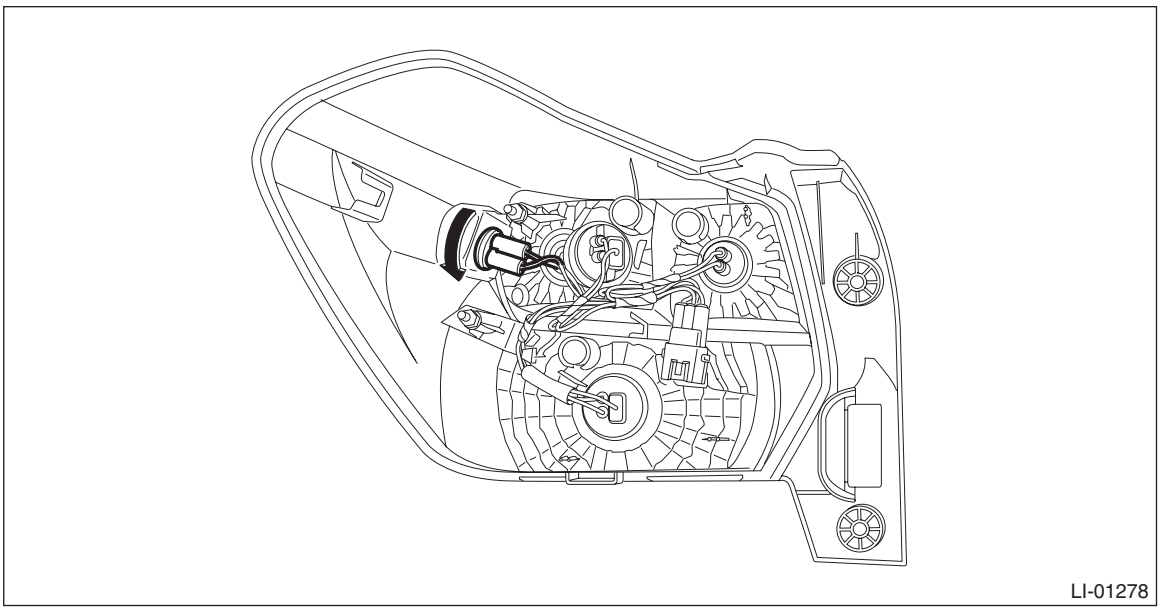

- HEV model

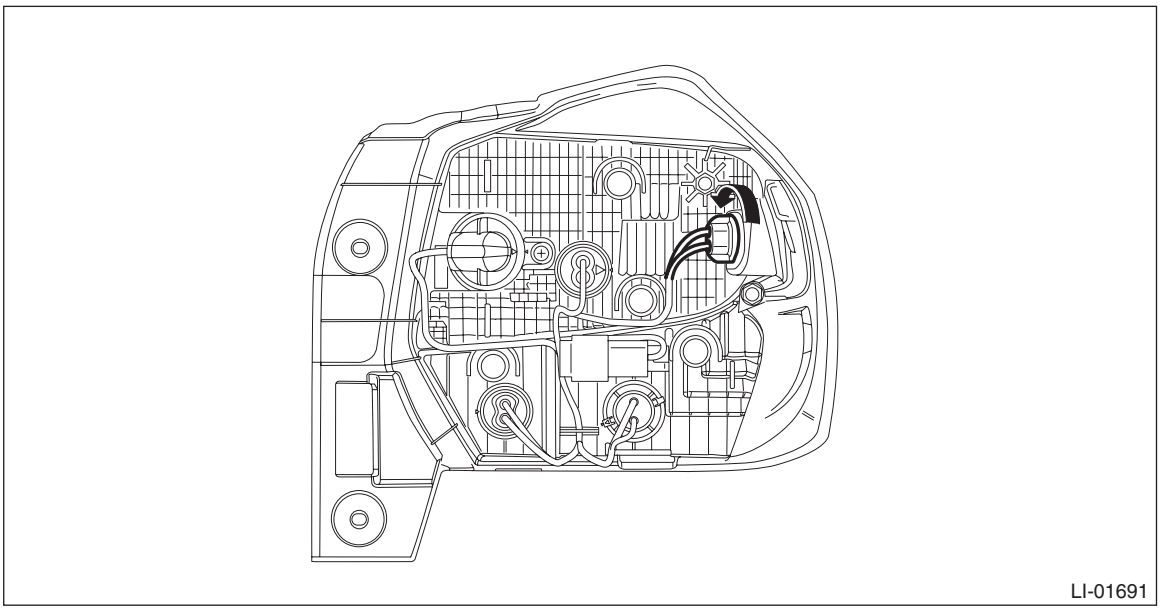

B: INSTALLATION

Install each part in the reverse order of removal.

Tightening torque:
Light assembly - rear combination (5 door model/XV model): 7.5 N·m (0.76 kgf-m, 5.5 ft-lb)

C: INSPECTION

1) Visually check the bulb for blow out.
2) Check the bulb specification. <Ref. to LI-2, SPECIFICATION, General Description.>
3) Replace the bulb if it is found defective.

28.Back-up Light Bulb

A: REMOVAL

1. 4 DOOR MODEL

1) Disconnect the ground cable from battery.
2) Remove the mat - trunk.
3) Remove the trim panel - trunk rear.
   (1) Remove the clip.
   (2) Release the claws, and remove the trim panel - trunk rear.

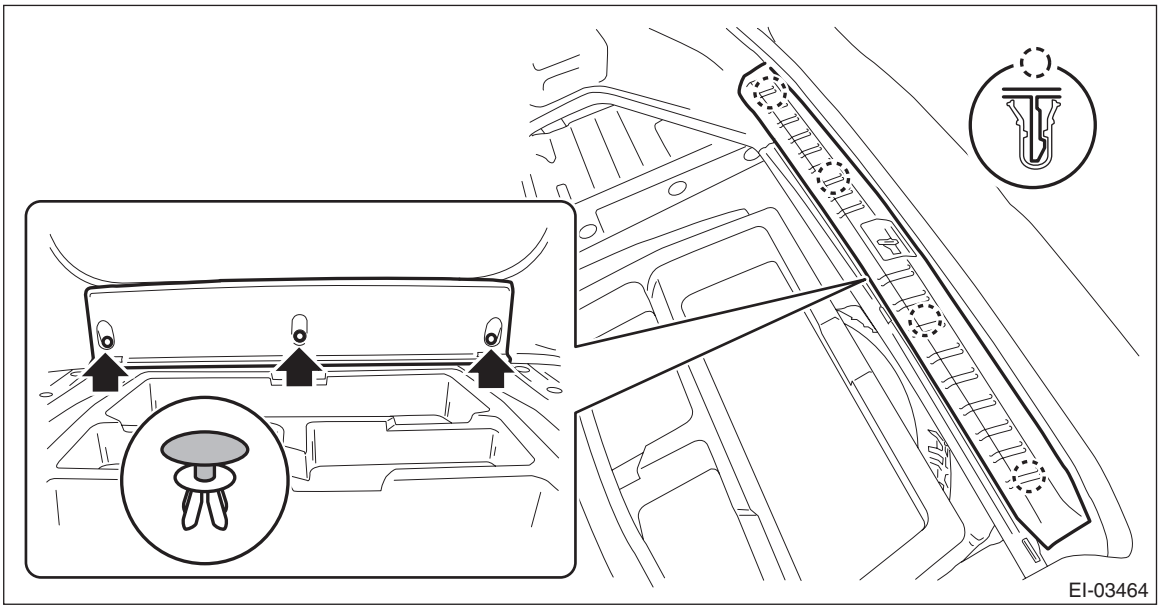

4) Remove the clips, and turn over the trim panel - trunk side.

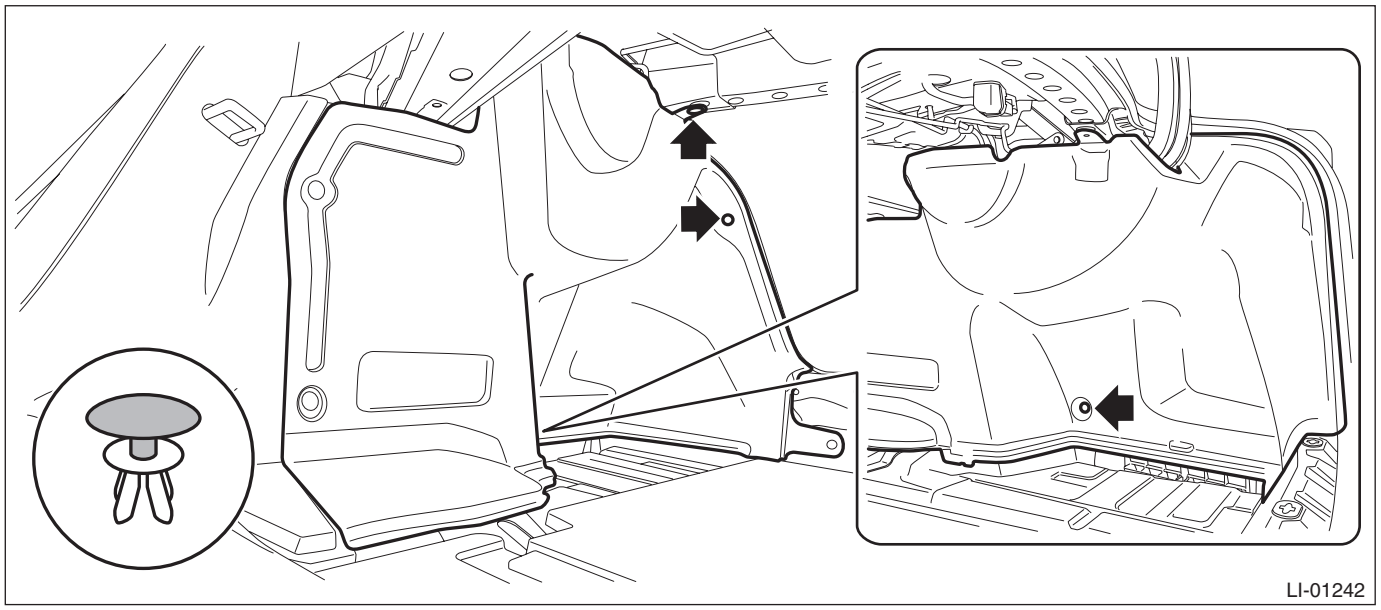

5) Remove the bulb socket and back-up light bulb.

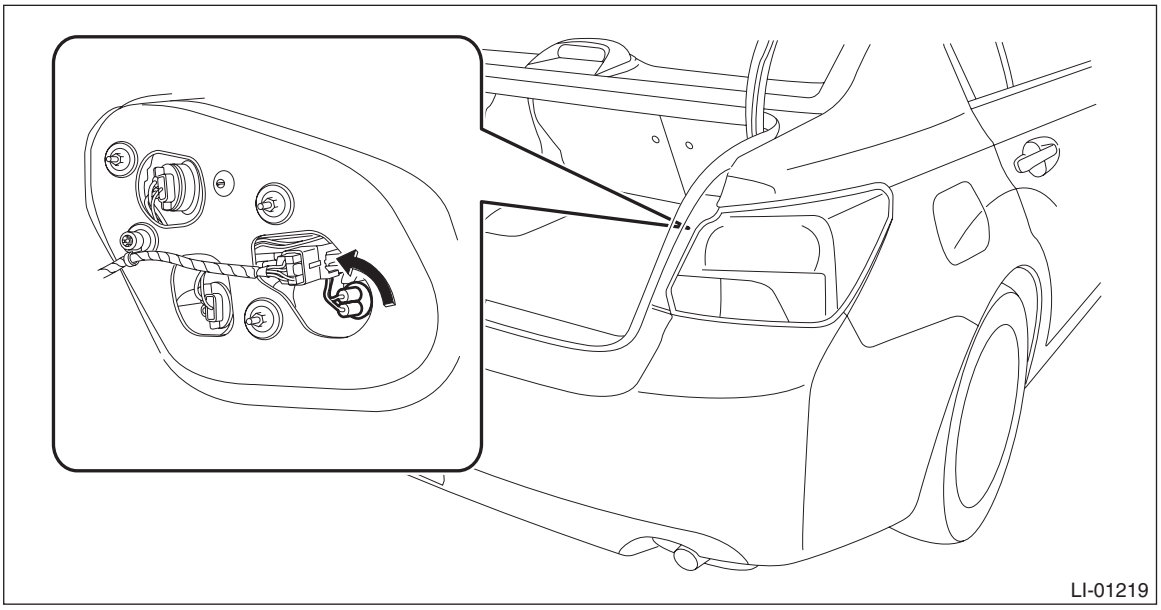

2. 5 DOOR MODEL/XV MODEL

1) Disconnect the ground cable from battery. <Ref. to NT-5, BATTERY, NOTE, Note.>

NOTE:
For the 12 volt engine restart battery of HEV model, disconnect the ground terminal from 12V engine restart battery sensor.

2) Remove the light assembly - rear combination.

CAUTION:
Be careful not to damage the clips.

(1) Release the bolts and clips, then pull out the light assembly - rear combination to the vehicle rear.
(2) Disconnect the connector and remove the light assembly - rear combination.

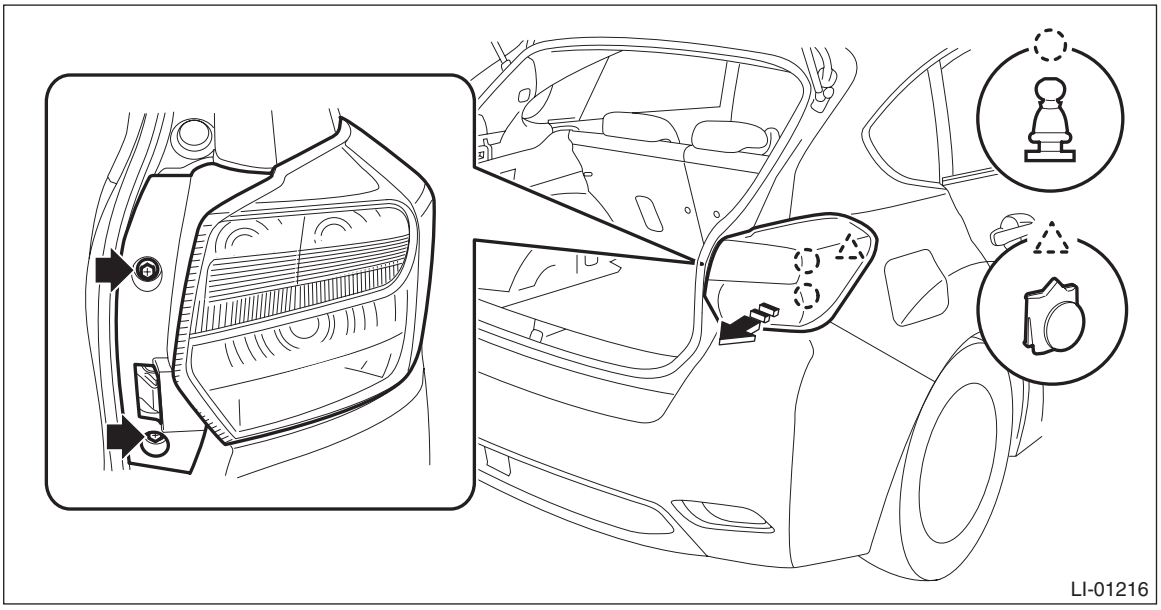

3) Remove the bulb socket and rear turn signal light bulb.
- Gasoline engine model

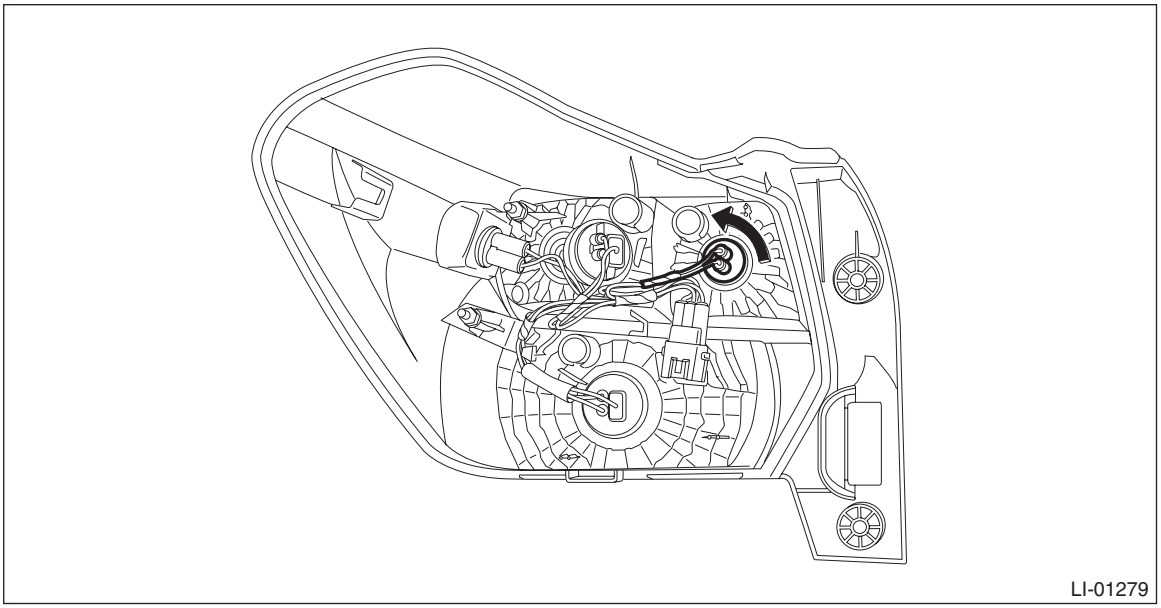
LI-01279

- HEV model

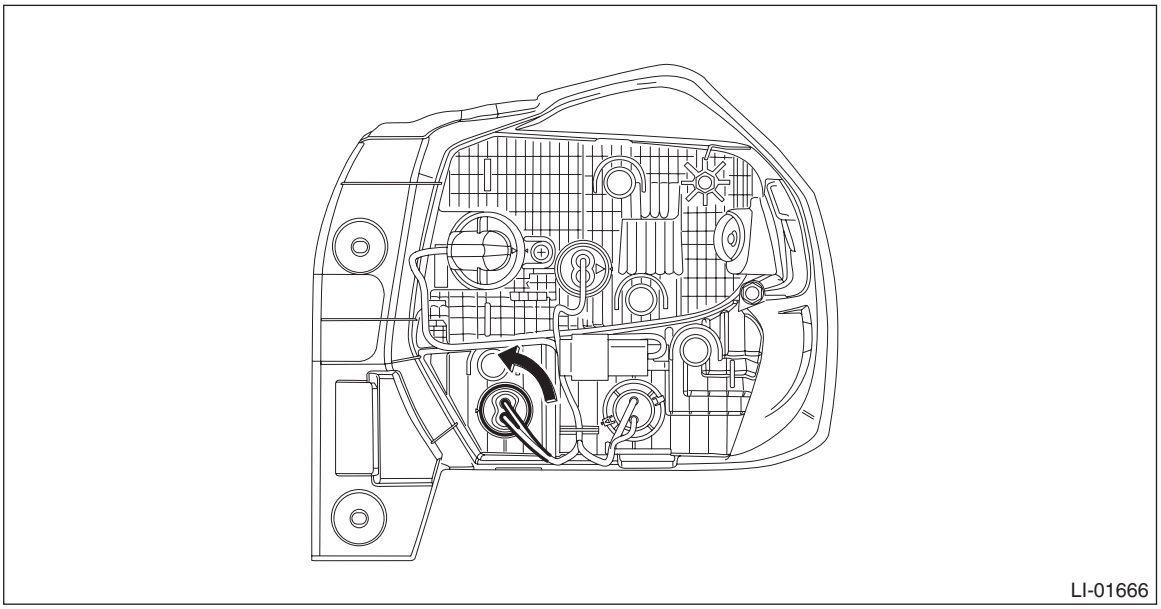
LI-01666

B: INSTALLATION

Install each part in the reverse order of removal.

Tightening torque:
Light assembly - rear combination (5 door model/XV model): 7.5 N·m (0.76 kgf-m, 5.5 ft-lb)

C: INSPECTION

1) Visually check the bulb for blow out.
2) Check the bulb specification. <Ref. to LI-2, SPECIFICATION, General Description.>
3) Replace the bulb if it is found defective.

29.License Plate Light

A: REMOVAL

1) Disconnect the ground cable from battery. <Ref. to NT-5, BATTERY, NOTE, Note.>

NOTE:
For the 12 volt engine restart battery of HEV model, disconnect the ground terminal from 12V engine restart battery sensor.

2) Remove the garnish - trunk. (4 door model) <Ref. to EI-161, REMOVAL, Trunk Lid Garnish.>
3) Remove the license plate light.
   (1) Release the claws and pull out the license plate light.
   (2) Disconnect the connector and remove the bulb socket and bulb from the license plate light.

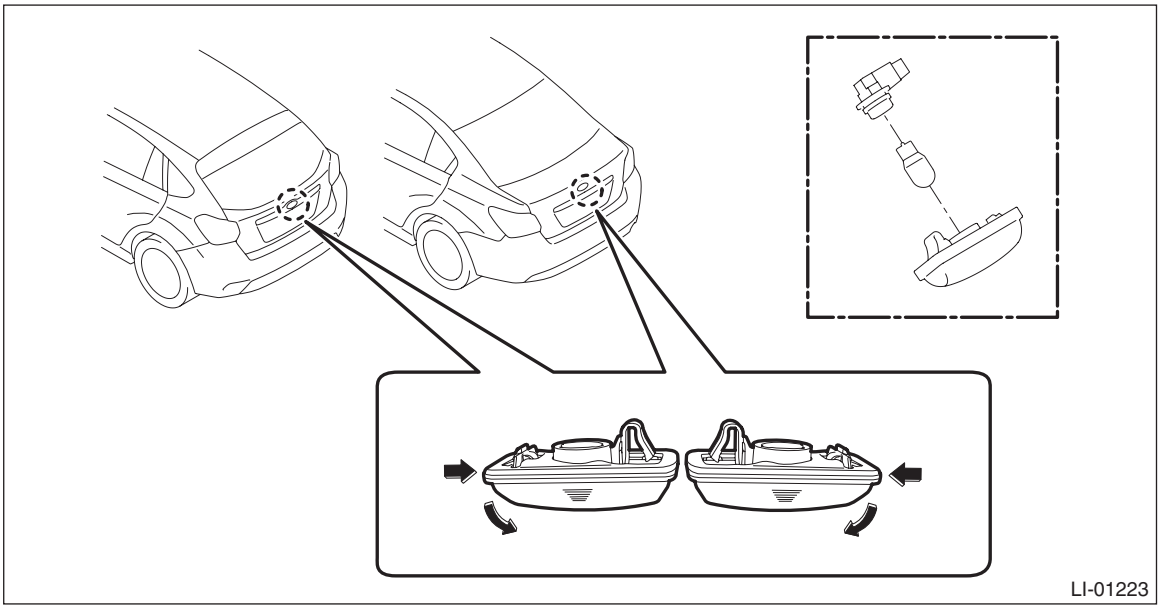

NOTE:
For 4 door model, when removing the bulb only, remove the trim panel - trunk lid halfway, then remove the bulb socket and the bulb.

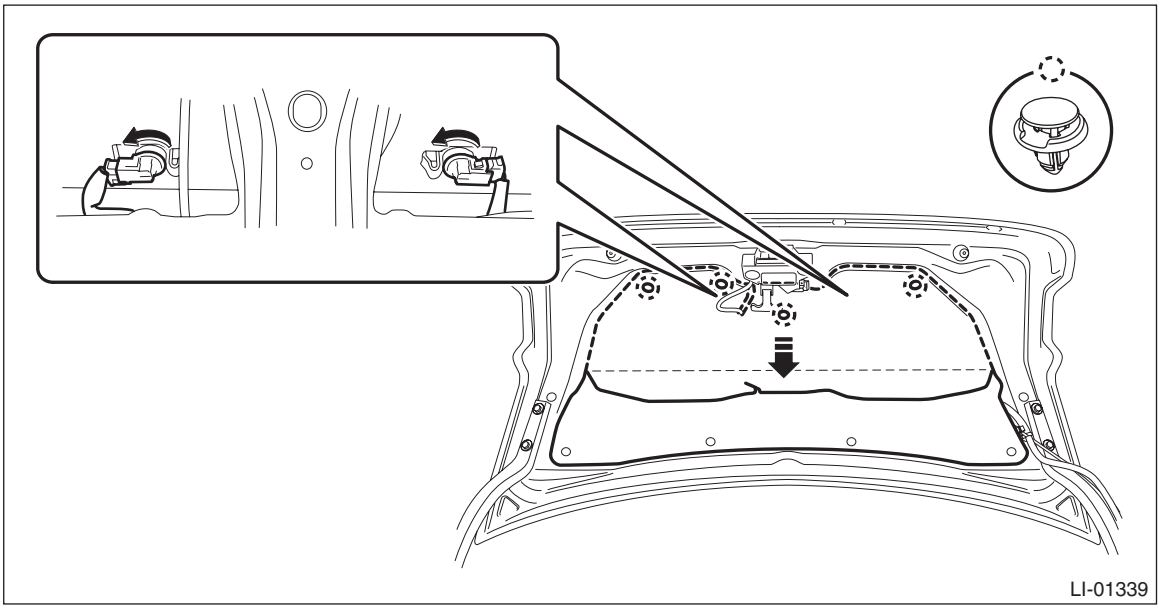

B: INSTALLATION

Install each part in the reverse order of removal.

C: INSPECTION

1) Visually check the bulb for blow out.
2) Check the bulb specification. <Ref. to LI-2, SPECIFICATION, General Description.>
3) Replace the bulb if it is found defective.

30.High-mounted Stop Light

A: REMOVAL

1. 4 DOOR MODEL

1) Disconnect the ground cable from battery.
2) Remove the light assembly - high-mounted.
   (1) Disconnect the connector.

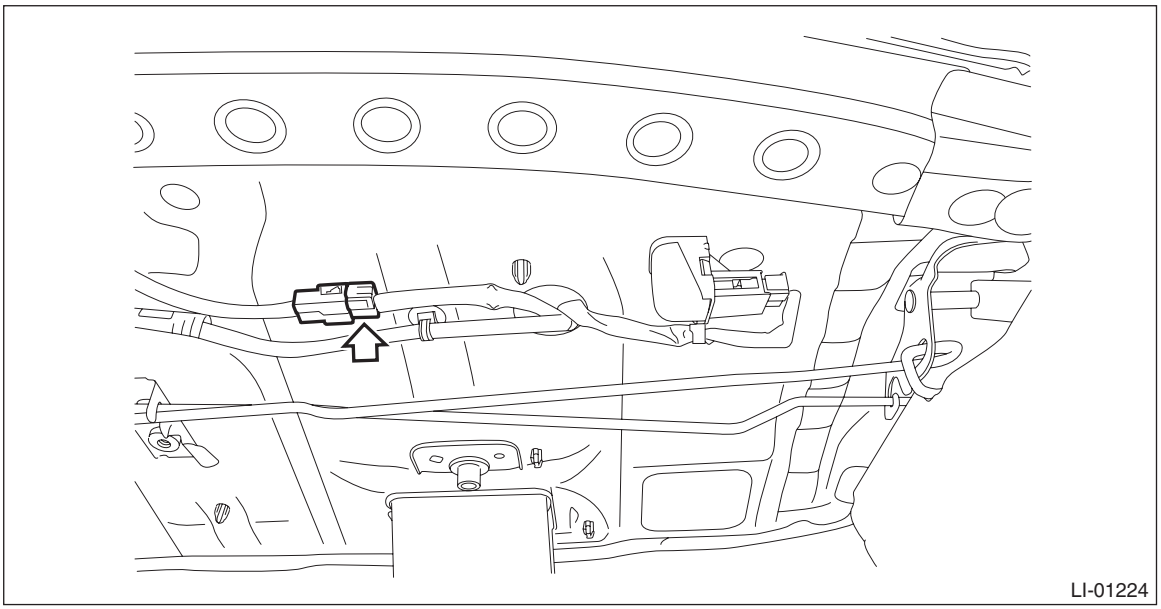

   (2) Release the claws, and remove the light assembly - high-mounted.

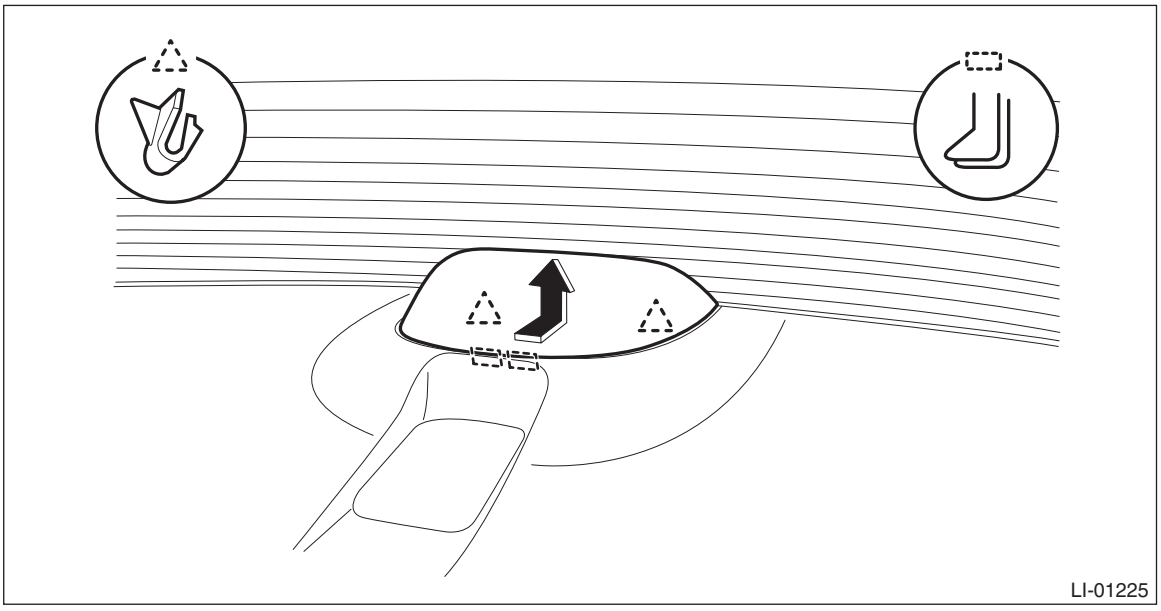

   (3) Release the claws and remove the reflector assembly from the light - case.

(4) Remove the lens and remove the bulb.

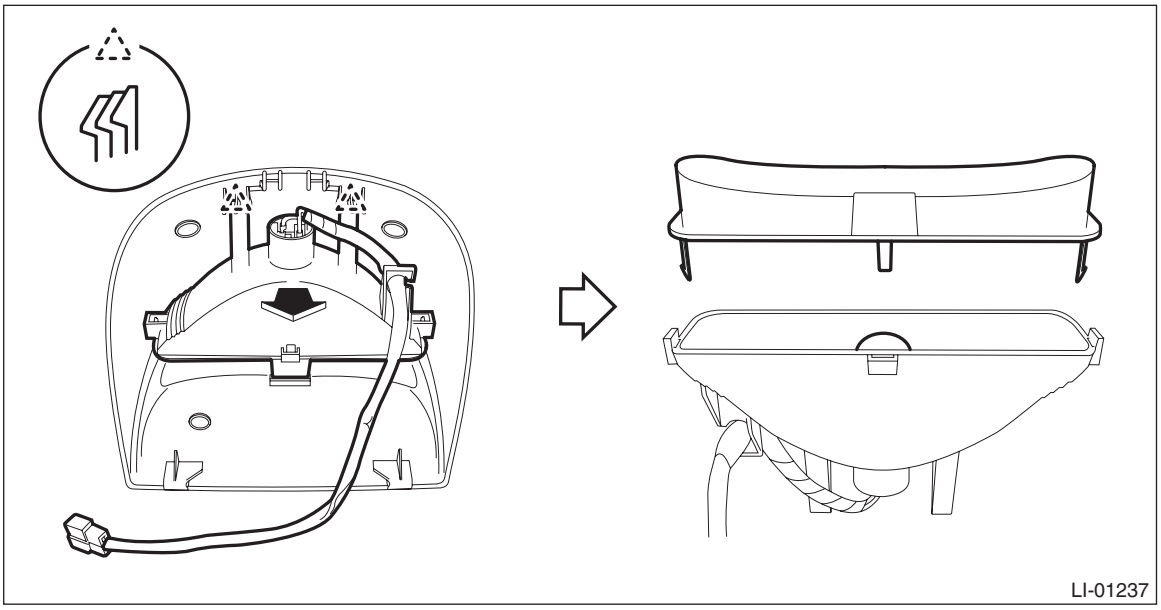

2. 5 DOOR MODEL/XV MODEL

1) Disconnect the ground cable from battery. <Ref. to NT-5, BATTERY, NOTE, Note.>

NOTE:
For the 12 volt engine restart battery of HEV model, disconnect the ground terminal from 12V engine restart battery sensor.

2) Remove the trim panel - rear gate UPR.
   (1) Remove the claws on the trim edge.
   (2) Release the claws in the center of trim, and remove the trim panel - rear gate UPR.

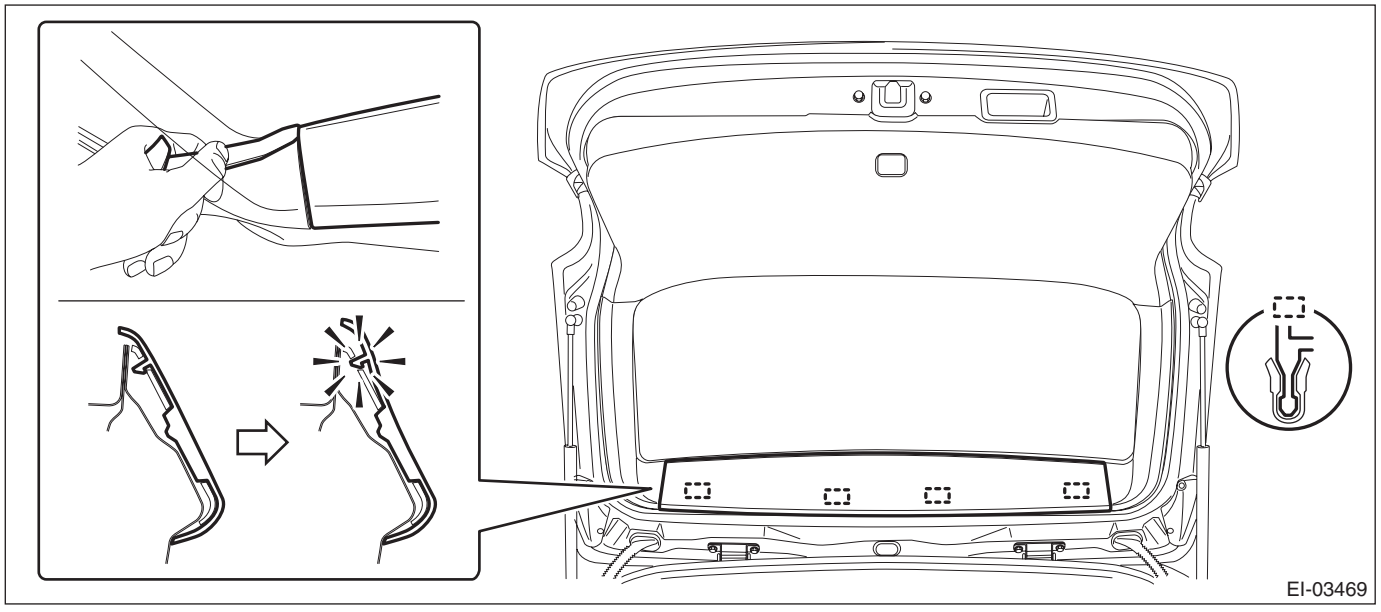

3) Remove the light assembly - high-mounted.
(1) Remove the nut.

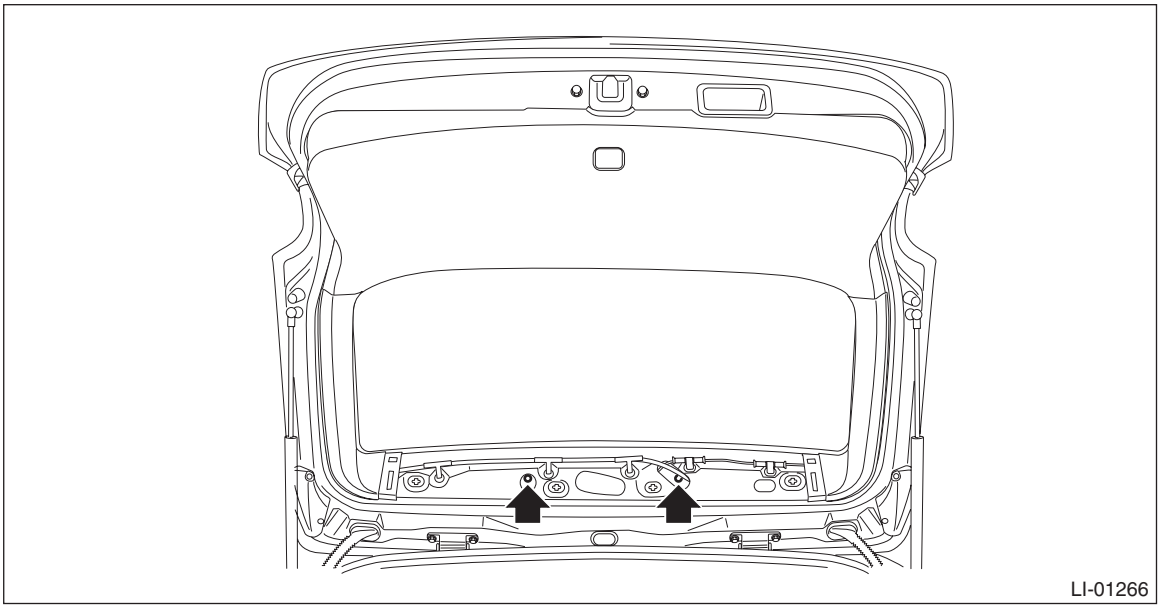
LI-01266

(2) From the inside of the rear gate, push the claws on both side of the light assembly - high-mounted to take it out toward vehicle rear.
(3) Disconnect the connector and remove the light assembly - high-mounted.

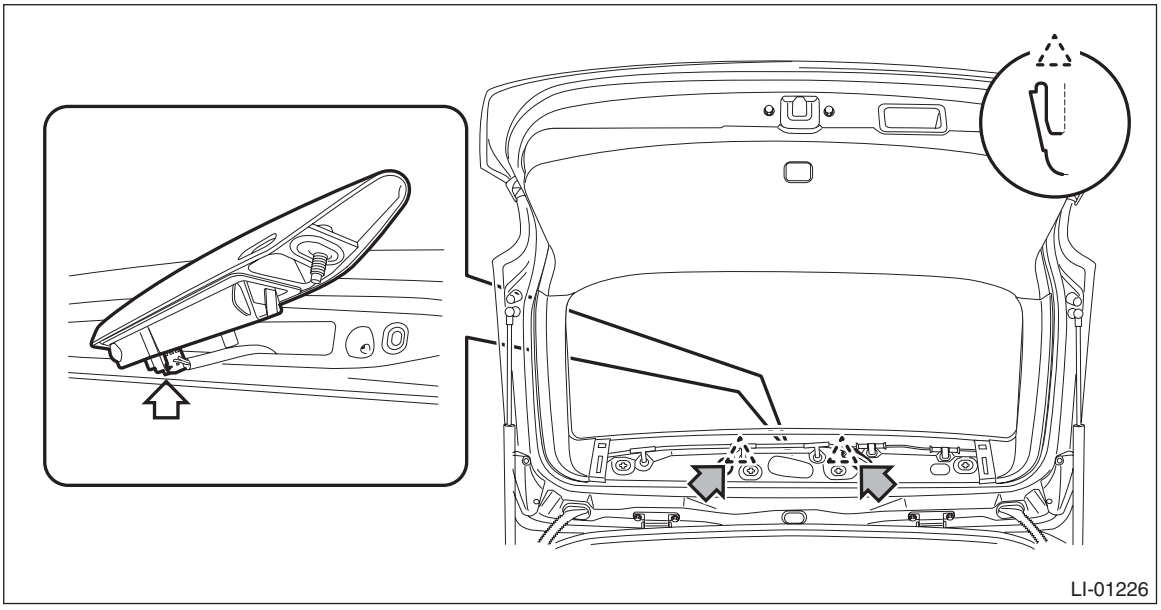
LI-01226

B: INSTALLATION

Install each part in the reverse order of removal.

Tightening torque:
Light assembly - high-mounted (5 door model/XV model): 4.5 N·m (0.46 kgf-m, 3.3 ft-lb)

C: INSPECTION

1. 4 DOOR MODEL

1) Visually check the bulb for blow out.
2) Check the bulb specification. <Ref. to LI-2, SPECIFICATION, General Description.>
3) Replace the bulb if it is found defective.

2. 5 DOOR MODEL/XV MODEL

1) Install the light to test if it illuminates normally.
2) If it fails to illuminate normally, replace the light assembly - high-mounted with a new part.

NOTE:
Since LED (Light Emitting Diode) is used for the light, replace the light assembly - high-mounted if the LED burns out.

31.Spot Map Light

A: REMOVAL

1) Disconnect the ground cable from battery. <Ref. to NT-5, BATTERY, NOTE, Note.>

NOTE:
For the 12 volt engine restart battery of HEV model, disconnect the ground terminal from 12V engine restart battery sensor.

2) Remove the light assembly - map.

CAUTION:
When using a flat tip screwdriver, apply protective tape or cloth and be careful not to cause damage.

(1) Release the claws and remove the lens.
(2) Remove the screws and pull out the light assembly - map.

- Model without sunroof

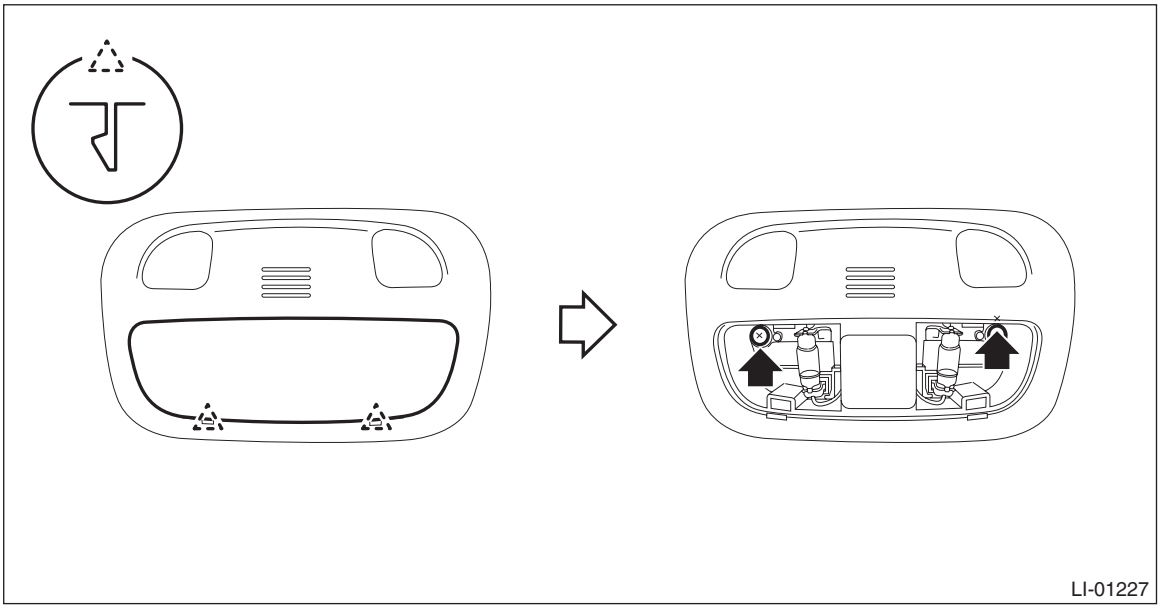

- Model with sunroof

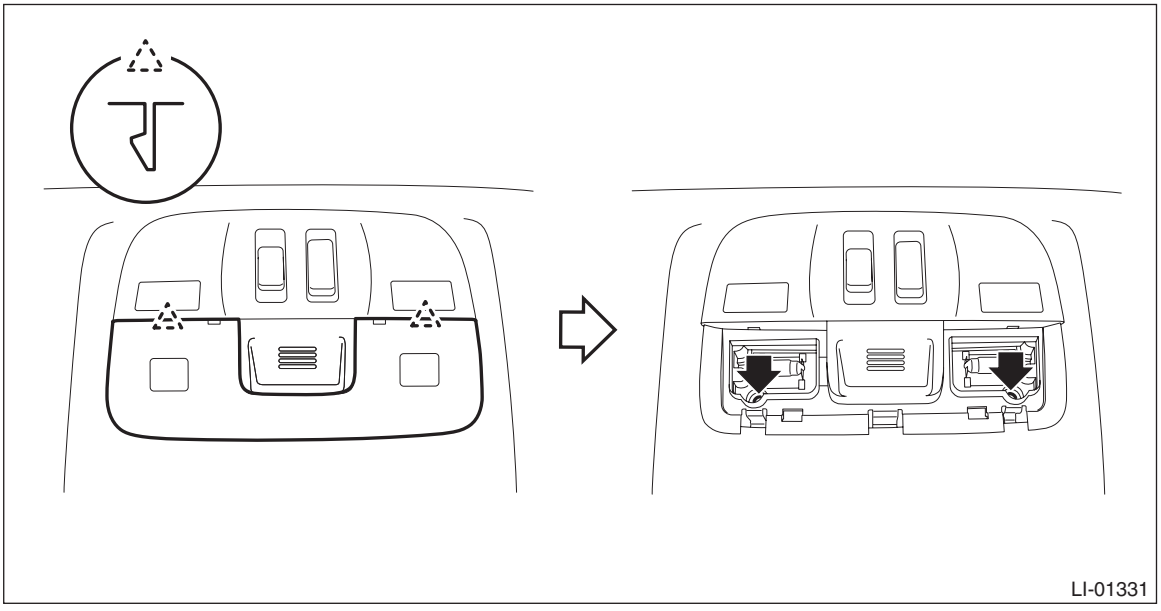

(3) Disconnect the connector and remove the light assembly - map and the bulb.

B: INSTALLATION

Install each part in the reverse order of removal.

C: INSPECTION

1. SPOT MAP LIGHT BULB

1) Visually check the bulb for blow out.
2) Check the bulb specification. <Ref. to LI-2, SPECIFICATION, General Description.>
3) Replace the bulb if it is found defective.

2. SPOT MAP LIGHT SWITCH

Unit inspection

Preparation tool:
Circuit tester

1) Check the resistance between switch terminals.

- Model without sunroof

Terminal No.	Inspection conditions	Standard	Connection diagram
1 — 2	Switch OFF	1 MΩ or more	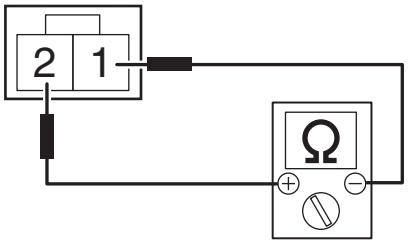 LI-01253
	Switch ON	Approx. 18 Ω	

- Model with sunroof

Terminal No.	Inspection conditions	Standard	Connection diagram
1 — 2	Switch OFF	1 MΩ or more	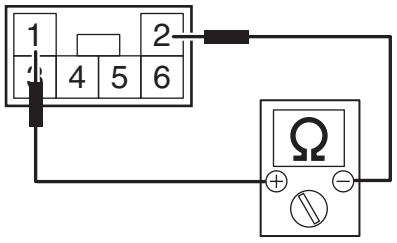 LI-01332
	Switch ON	Approx. 18 Ω	

2) Replace the light assembly - map if the inspection result is not within the standard value.

32.Room Light

A: REMOVAL

1) Disconnect the ground cable from battery. <Ref. to NT-5, BATTERY, NOTE, Note.>

NOTE:
For the 12 volt engine restart battery of HEV model, disconnect the ground terminal from 12V engine restart battery sensor.

2) Remove the light assembly - room.

CAUTION:
When using a flat tip screwdriver, apply protective tape or cloth and be careful not to cause damage.

(1) Release the claws and remove the lens.
(2) Remove the screws and pull out the light assembly - room.

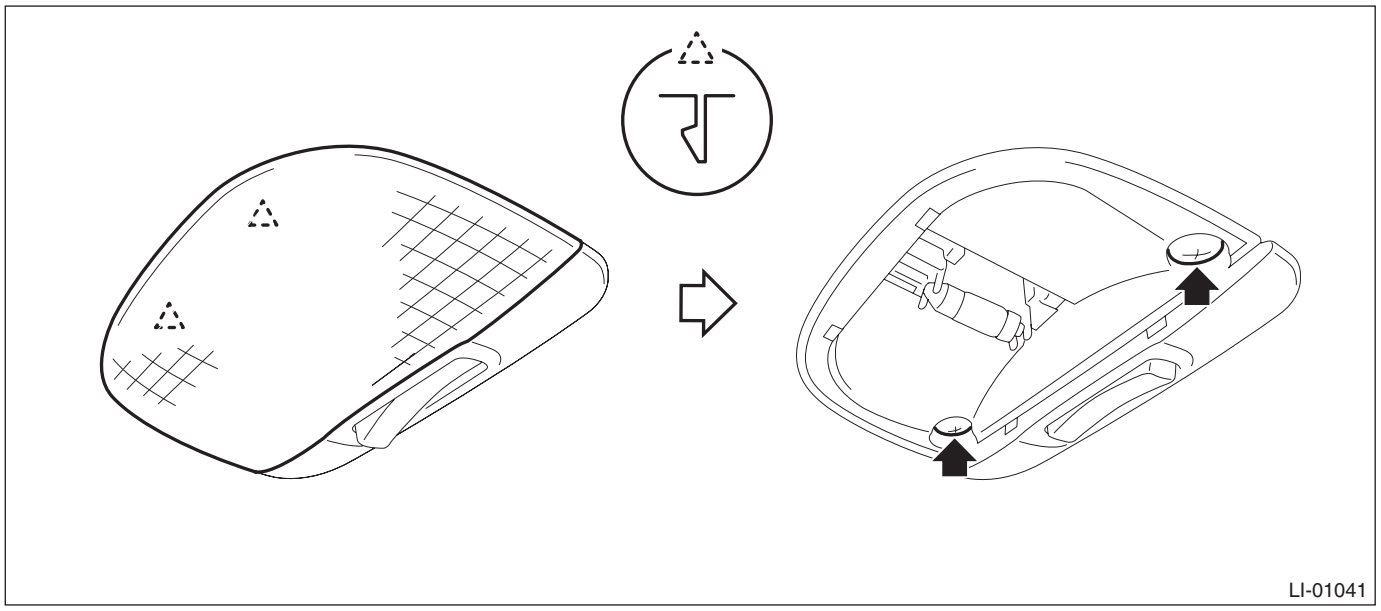

(3) Disconnect the connector and remove the light assembly - room and the bulb.

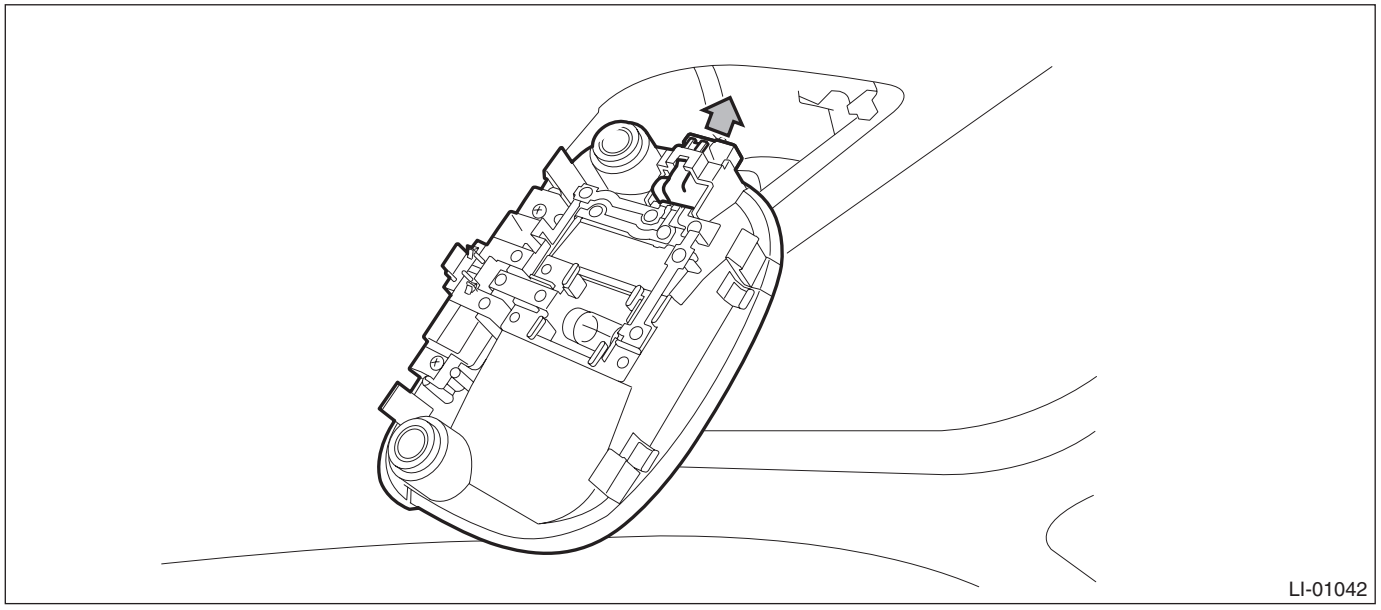

B: INSTALLATION

Install each part in the reverse order of removal.

C: INSPECTION

1. ROOM LIGHT BULB

1) Visually check the bulb for blow out.
2) Check the bulb specification. <Ref. to LI-2, SPECIFICATION, General Description.>
3) Replace the bulb if it is found defective.

2. ROOM LIGHT SWITCH

UNIT INSPECTION

Preparation tool:
Circuit tester

1) Check the resistance between switch terminals.

Terminal No.	Inspection conditions	Standard	Connection diagram
1 — 3	Switch OFF	1 MΩ or more	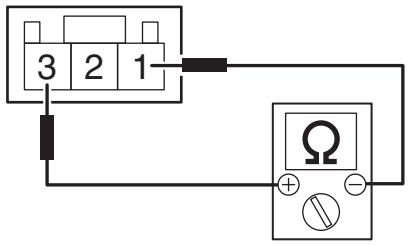 LI-01254
	Switch ON	Less than 1 Ω	
2 — 3	Switch door	Less than 1 Ω	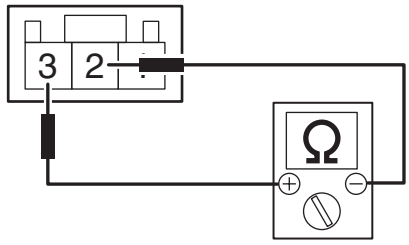 LI-01255

2) Apply battery voltage to check the lighting condition of the light.

Terminal No.	Inspection conditions	Specification	Connection diagram
3 (+) — 1, 2 (–)	Switch OFF	Light OFF	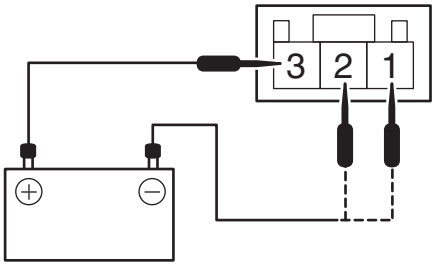 LI-01256
	Switch ON	Light ON	
	Switch door	Light ON	

3) Replace the light assembly - room if the inspection result is not within the standard value.

33.Luggage Room Light

A: REMOVAL

1) Disconnect the ground cable from battery. <Ref. to NT-5, BATTERY, NOTE, Note.>

NOTE:
For the 12 volt engine restart battery of HEV model, disconnect the ground terminal from 12V engine restart battery sensor.

2) Remove the light assembly - luggage room.

CAUTION:
When using a flat tip screwdriver, apply protective tape or cloth and be careful not to cause damage.

(1) Release the claws and remove the main body of the light assembly - luggage room.
(2) Disconnect the connector and remove the light assembly - luggage room and the bulb.

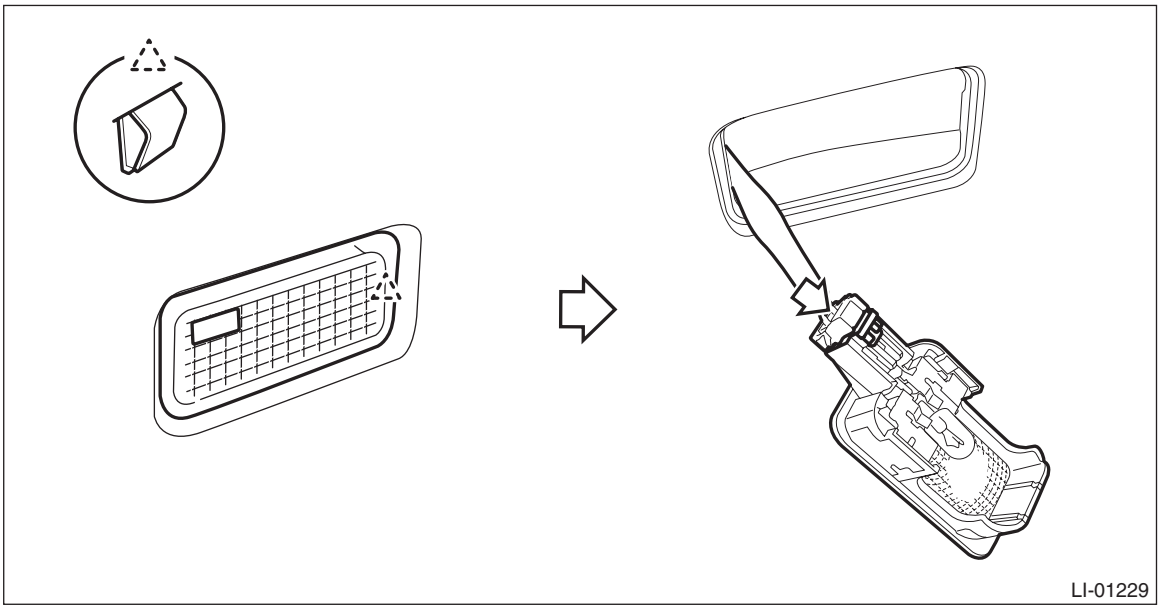

B: INSTALLATION

Install each part in the reverse order of removal.

C: INSPECTION

1. LUGGAGE ROOM LIGHT BULB

1) Visually check the bulb for blow out.
2) Check the bulb specification. <Ref. to LI-2, SPECIFICATION, General Description.>
3) Replace the bulb if it is found defective.

2. LUGGAGE ROOM LIGHT SWITCH

Unit inspection

Preparation tool:
Circuit tester

1) Check the resistance between switch terminals.

Terminal No.	Inspection conditions	Specification	Connection diagram
1 — 2	Switch OFF	1 MΩ or more	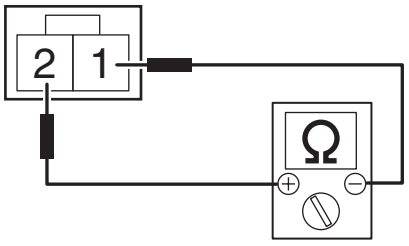 LI-01253
	Switch ON	Less than 1 Ω	

2) Replace the light assembly - luggage room if the inspection result is not within the standard value.

34.Trunk Room Light

A: REMOVAL

1) Disconnect the ground cable from battery. <Ref. to NT-5, BATTERY, NOTE, Note.>

NOTE:
For the 12 volt engine restart battery of HEV model, disconnect the ground terminal from 12V engine restart battery sensor.

2) Remove the light assembly - trunk room.
   (1) Disconnect the connector.
   (2) Turn the light assembly - trunk room counterclockwise to 60° and remove the light.

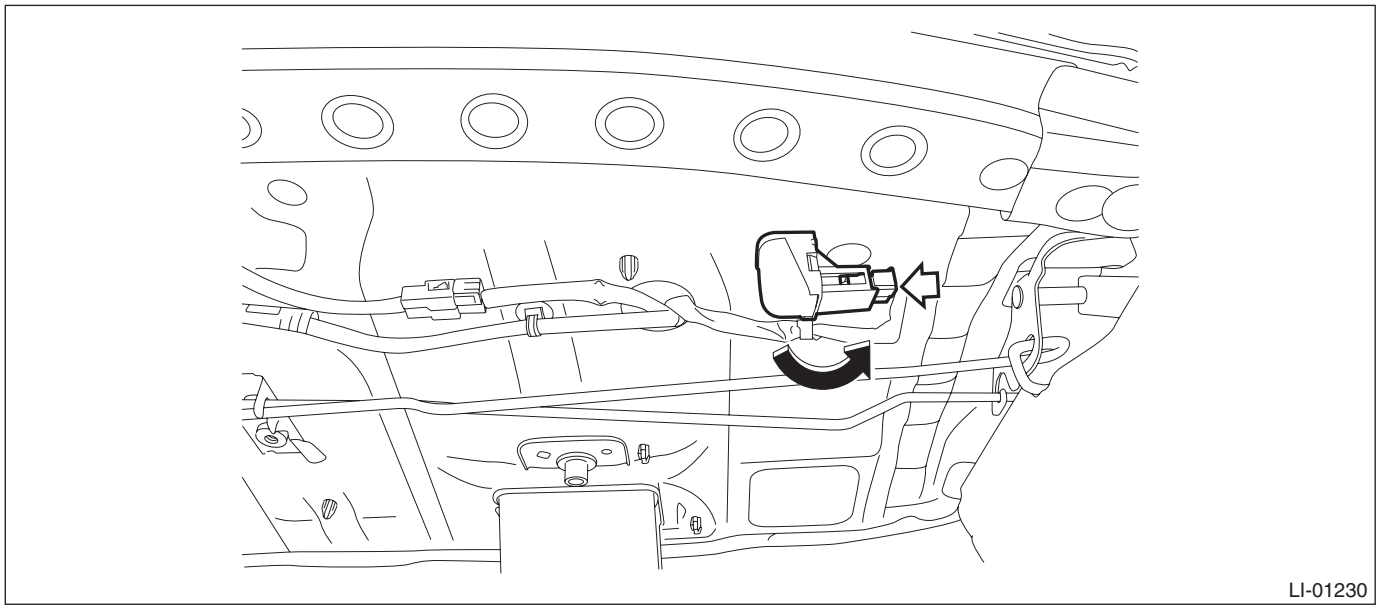
LI-01230

3) Release the claws, and detach the lens and bulb.

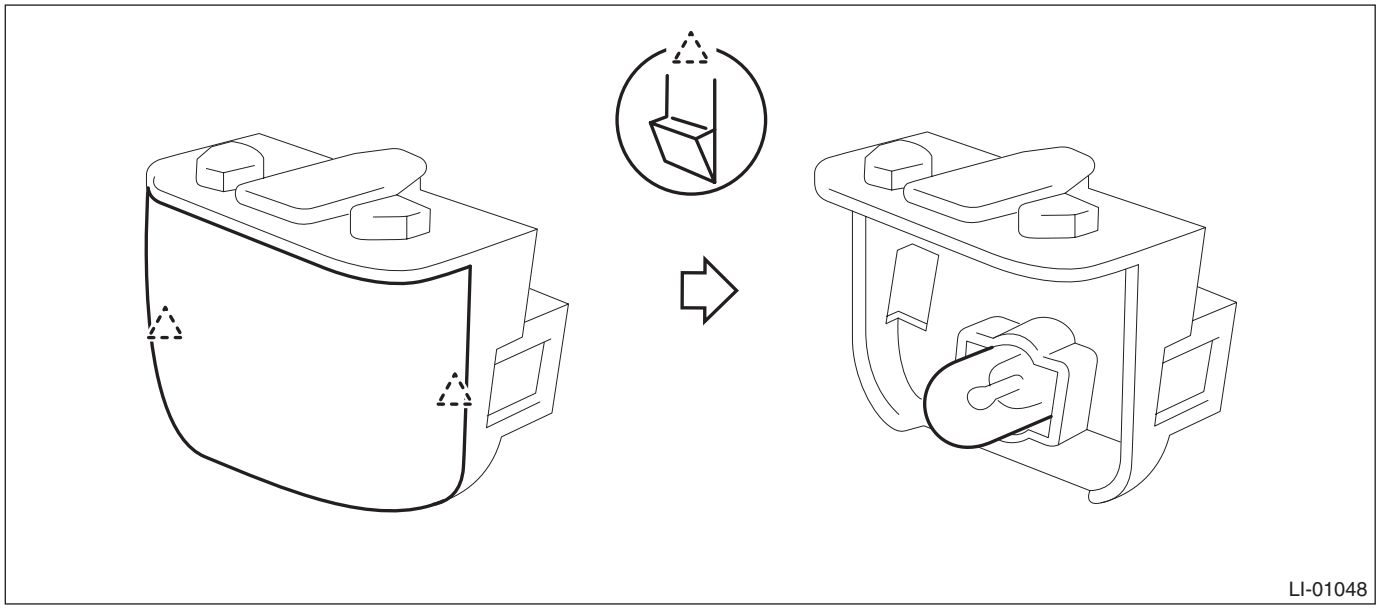
LI-01048

B: INSTALLATION

Install each part in the reverse order of removal.

C: INSPECTION

1) Visually check the bulb for blow out.
2) Check the bulb specification. <Ref. to LI-2, SPECIFICATION, General Description.>
3) Replace the bulb if it is found defective.

35.Glove Box Light

A: REMOVAL

1) Disconnect the ground cable from battery. <Ref. to NT-5, BATTERY, NOTE, Note.>

NOTE:
For the 12 volt engine restart battery of HEV model, disconnect the ground terminal from 12V engine restart battery sensor.

2) Remove the pocket assembly.
   (1) Attach the protective tape (a) to the panel center LWR.
   (2) Remove the damper COMPL - pocket.
   (3) Release the stoppers and remove the pocket assembly by pulling it toward you.

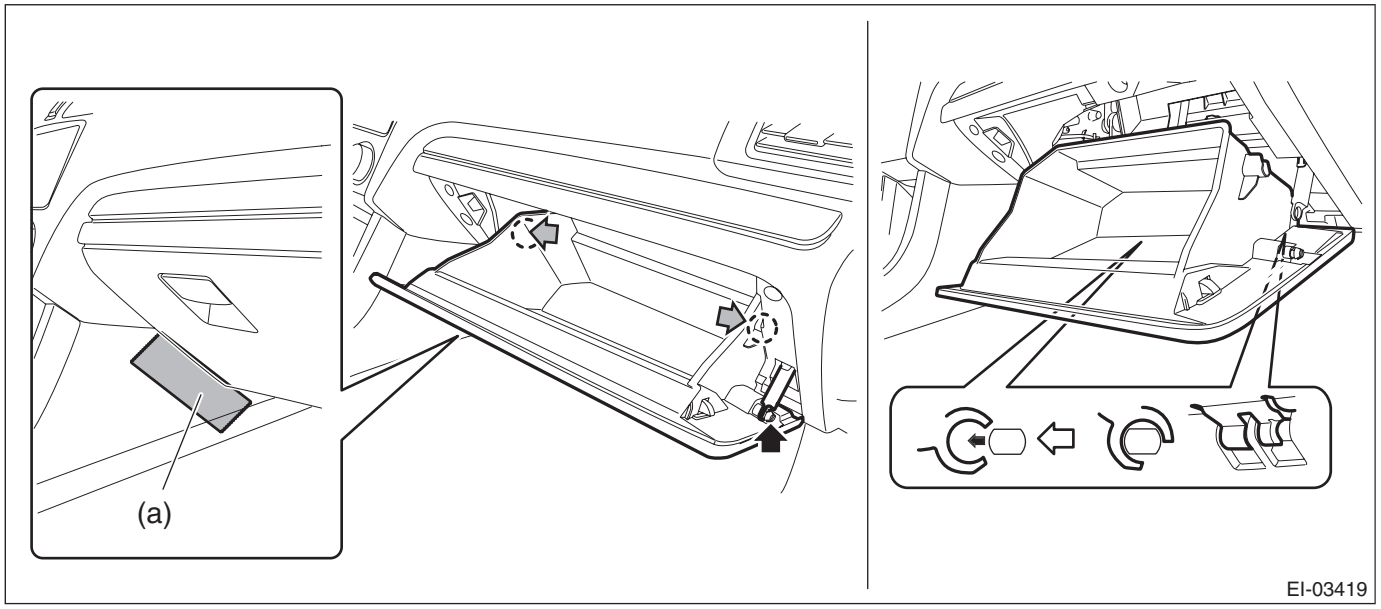

3) Remove the light - pocket.
   (1) Release the claws and remove the light - pocket cover from the back panel - pocket.
   (2) Disconnect the connector and remove the light - pocket from the cover.

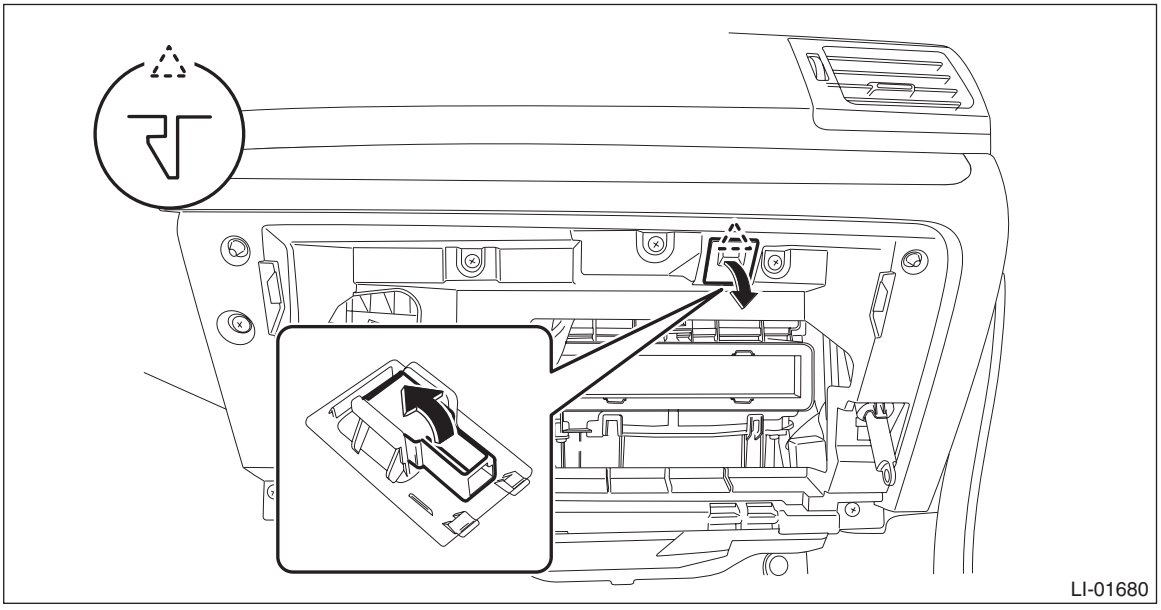

B: INSTALLATION

Install each part in the reverse order of removal.

C: INSPECTION

1) Install the light to test if it illuminates normally.
2) If it fails to illuminate normally, replace the light - pocket with a new part.

NOTE:
Since LED (Light Emitting Diode) is used for the light, replace the light - pocket if the LED burns out.

36.Ignition Switch Illumination

A: REMOVAL

NOTE:
The ignition switch illumination is integrated into the immobilizer antenna assembly.
1) Disconnect the ground cable from battery. <Ref. to NT-5, BATTERY, NOTE, Note.>

NOTE:
For the 12 volt engine restart battery of HEV model, disconnect the ground terminal from 12V engine restart battery sensor.
2) Remove the cover assembly - column.
(1) Remove the screws by turning the steering wheel to right and left.

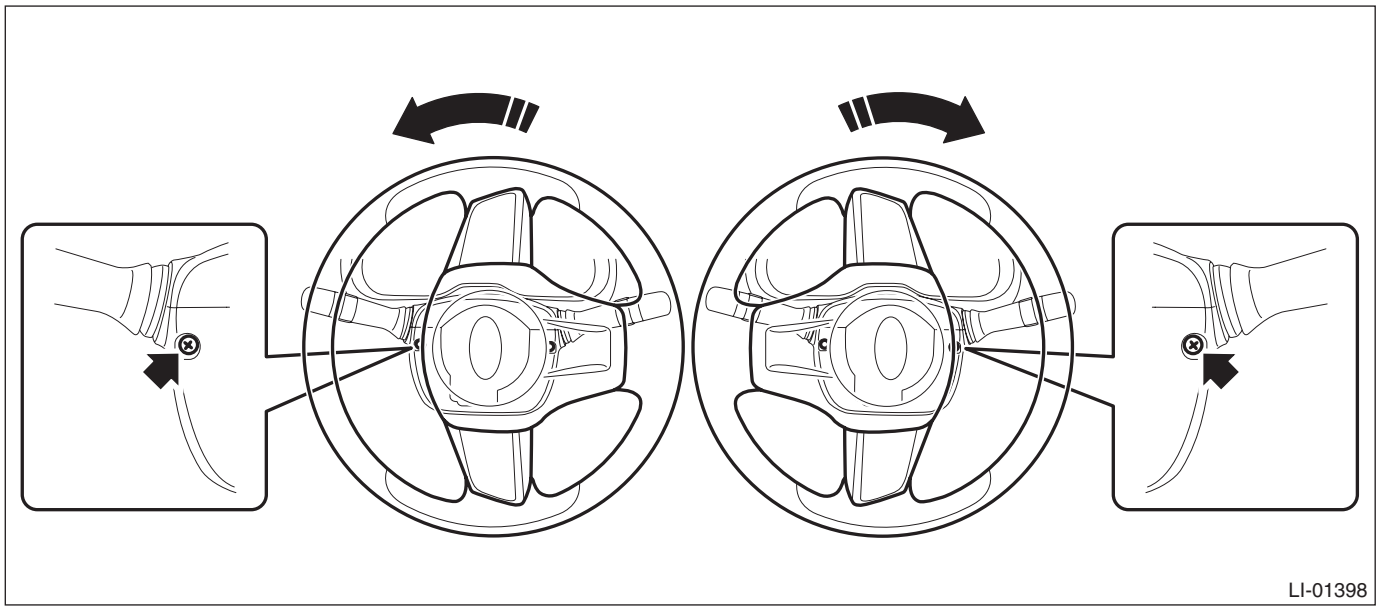

(2) Release the claw, and remove the cover assembly - column UPR and the cover assembly - column LWR.

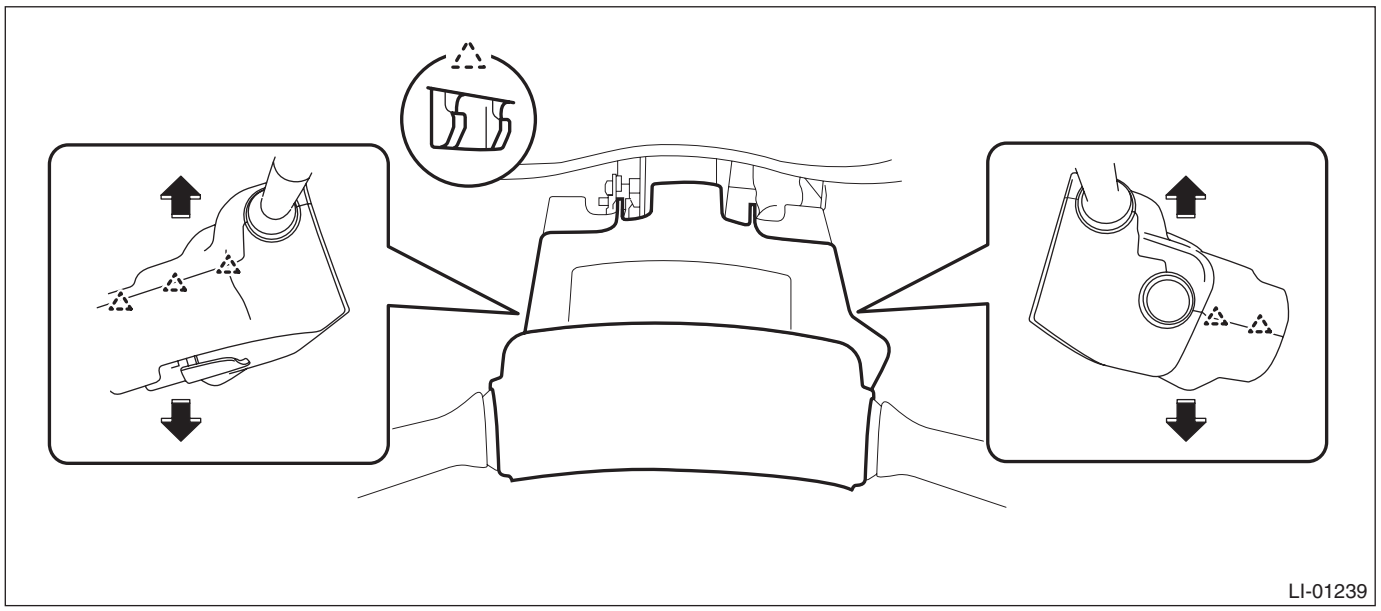

3) Remove the ignition switch illumination.
   (1) Disconnect the connector.
   (2) Release the claw using a flat tip screwdriver or similar tool wrapped with a protection tape, and remove the ignition switch illumination.

CAUTION:
Do not apply excessive force to remove the ignition switch illumination lock. Otherwise they may be broken because those parts are the products made of a plastic.

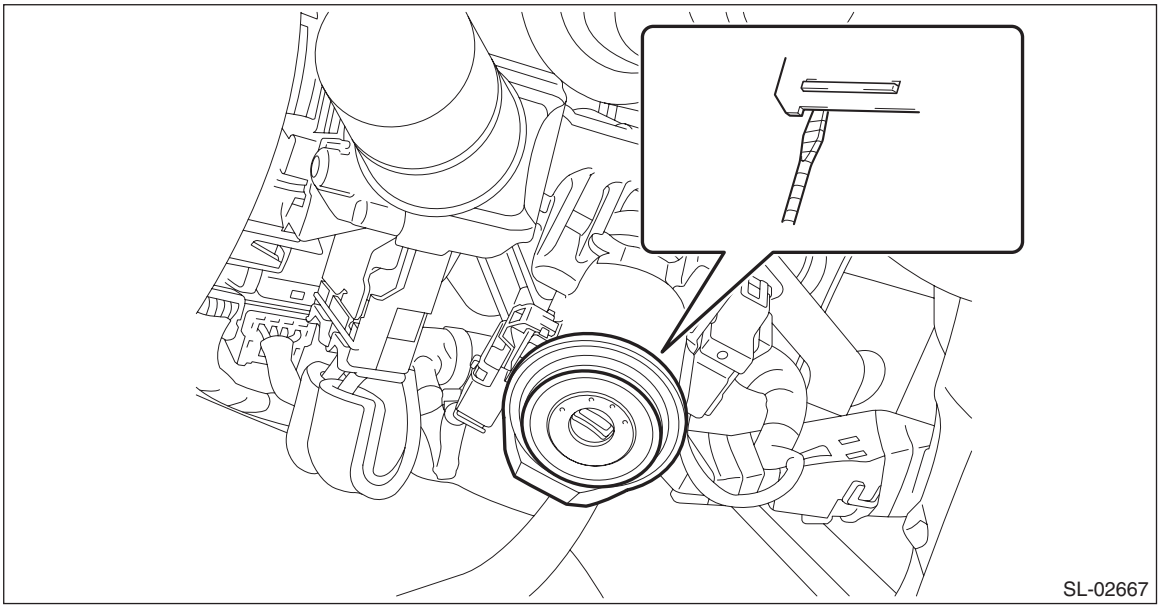

B: INSTALLATION

Install each part in the reverse order of removal.

C: INSPECTION

On the vehicle inspection

Preparation tool:
Circuit tester

Step		Check	Yes	No
1	**CHECK THE IGNITION SWITCH ILLUMINATION.** Make sure the ignition switch illumination illuminates when driver's side door is open.	Does the ignition switch illumination illuminate?	Ignition switch illumination is normal.	Go to step **2**.
2	**CHECK THE IGNITION SWITCH ILLUMINATION.** Make sure the ignition switch illumination blinks when the ignition switch is turned to ON.	Does the ignition switch illumination blink?	Check the function setting of body integrated unit. <Ref. to BC(diag)-2, Basic Diagnostic Procedure.>	Check the ignition switch illumination circuit. <Ref. to SL-26, CHECK IGNITION SWITCH ILLUMINATION, INSPECTION, Keyless Entry System.>

37.Auto Headlight Beam Leveler Control Module

A: REMOVAL

1) Remove the knee airbag module. <Ref. to AB-43, REMOVAL, Knee Airbag Module.>
2) Release the lock and remove the fuse holder.

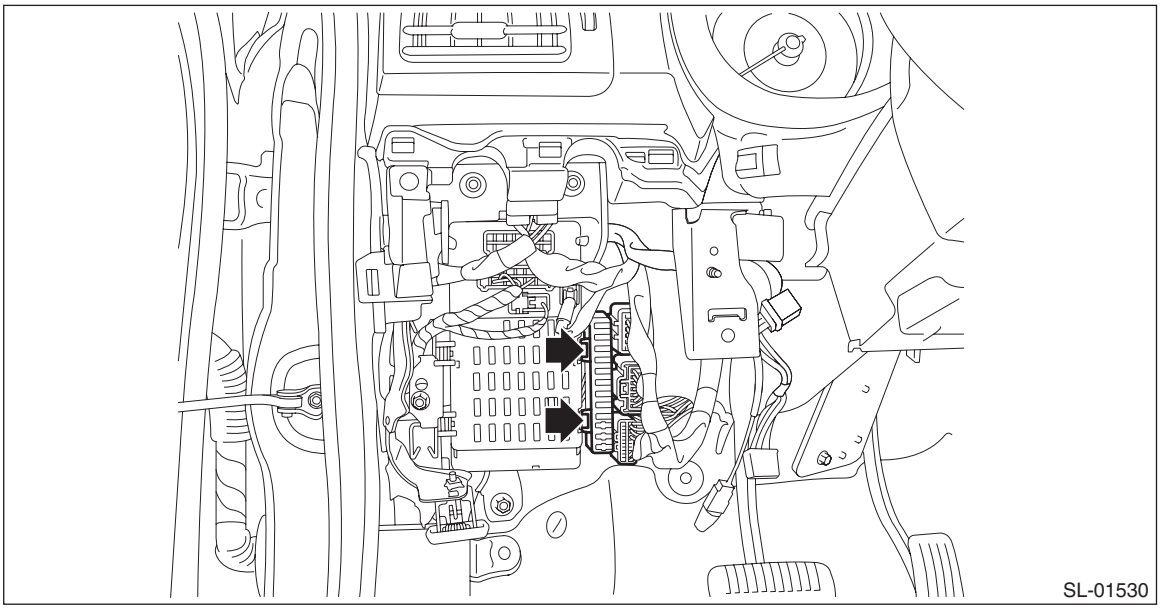

3) Remove the relay & fuse box.
   (1) Disconnect the connector.
   (2) Remove the bolts and nuts, and remove the relay & fuse box.

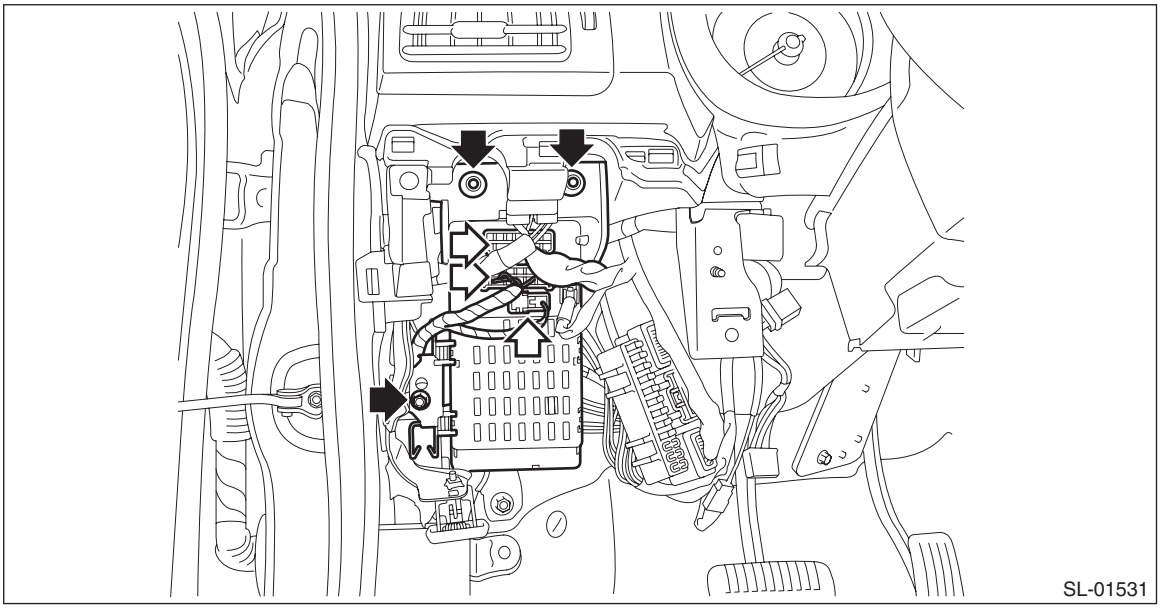

4) Disconnect the connector of body integrated unit.

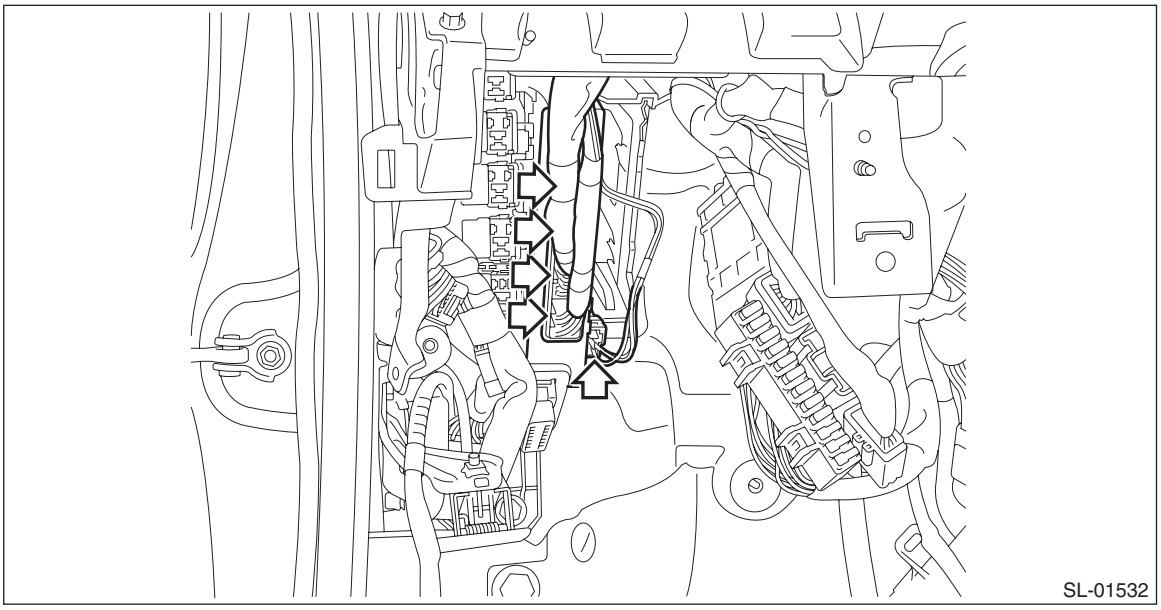

5) Remove the auto headlight beam leveler CM.
   (1) Disconnect the connector.
   (2) Release the claws and pull out the auto headlight beam leveler CM.

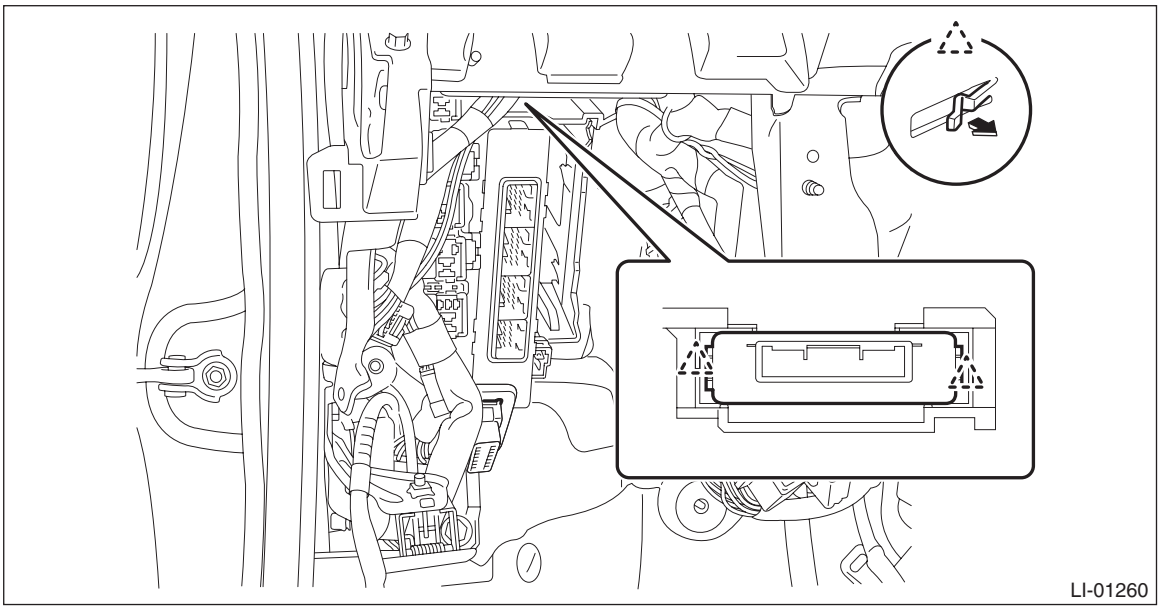

B: INSTALLATION

Install each part in the reverse order of removal.

Tightening torque:
Relay & fuse box: 7.5 N·m (0.76 kgf-m, 5.5 ft-lb)

NOTE:
When the auto headlight beam leveler CM is removed, perform initialization or reinitialization. <Ref. to LI-18, PROCEDURE, Auto Headlight Beam Leveler System.>

38.Rear Height Sensor

A: REMOVAL

CAUTION:
Always remove the sensor assembly - headlight beam leveler before removing any parts related to the suspension.

1) Disconnect the ground cable from battery. <Ref. to NT-5, BATTERY, NOTE, Note.>

NOTE:
For the 12 volt engine restart battery of HEV model, disconnect the ground terminal from 12V engine restart battery sensor.

2) Lift up the vehicle, and remove the left rear wheel.
3) Remove the sensor assembly - headlight beam leveler.

CAUTION:
Do not disassemble the sensor and lever.

(1) Disconnect the connector.
(2) Remove the nuts, and remove the sensor assembly - headlight beam leveler.

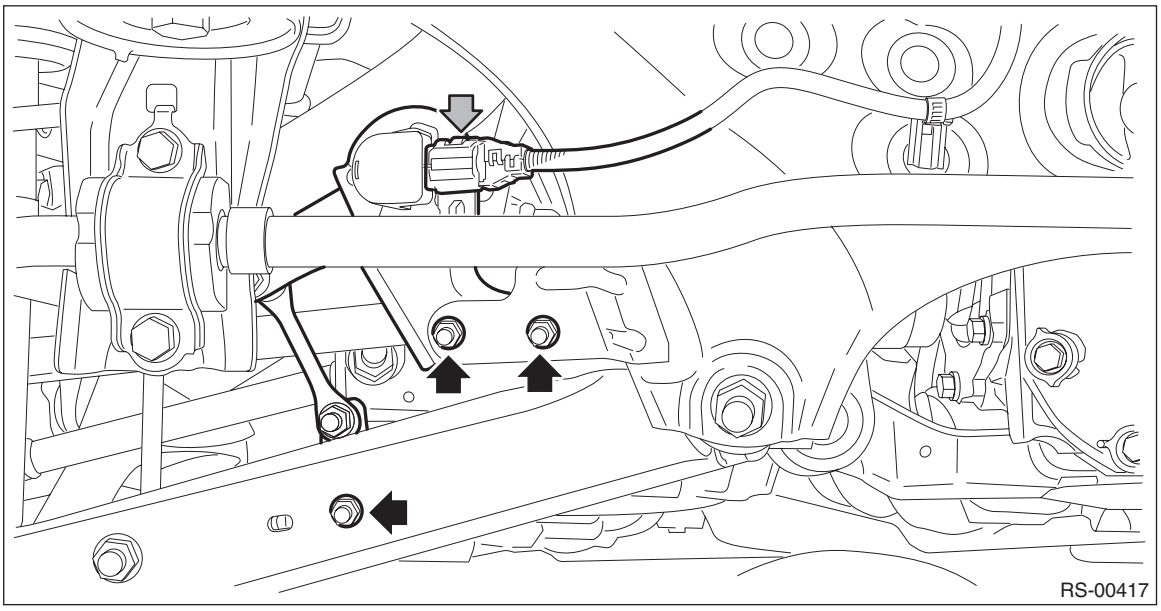

B: INSTALLATION

1) Install each part in the reverse order of removal.

Tightening torque:
Sensor assembly - headlight beam leveler: 7.5 N·m (0.76 kgf-m, 5.5 ft-lb)
Rear wheel: Except for C4 model
120 N·m (12.24 kgf-m, 88.5 ft-lb)
Rear wheel: C4 model
100 N·m (10.20 kgf-m, 73.8 ft-lb)

2) Perform reinitialization of the sensor assembly - headlight beam leveler. <Ref. to LI-18, REINITIALIZATION, PROCEDURE, Auto Headlight Beam Leveler System.>

NOTE:
When replacing the sensor assembly - headlight beam leveler with a new part, perform the initialization. <Ref. to LI-18, INITIALIZATION, PROCEDURE, Auto Headlight Beam Leveler System.>

C: INSPECTION

UNIT INSPECTION

Preparation tool:
Circuit tester

1) Connect three dry cell batteries (1.5 V) in series.
2) Connect the (+) side of the battery to terminal No. 3 of the sensor, and the (–) side of the battery to terminal No. 1, and apply a voltage of 4.5 V between terminals No. 3 — No. 1.
3) With voltage applied, check the voltage between terminals when the sensor link is moved slowly up and down.

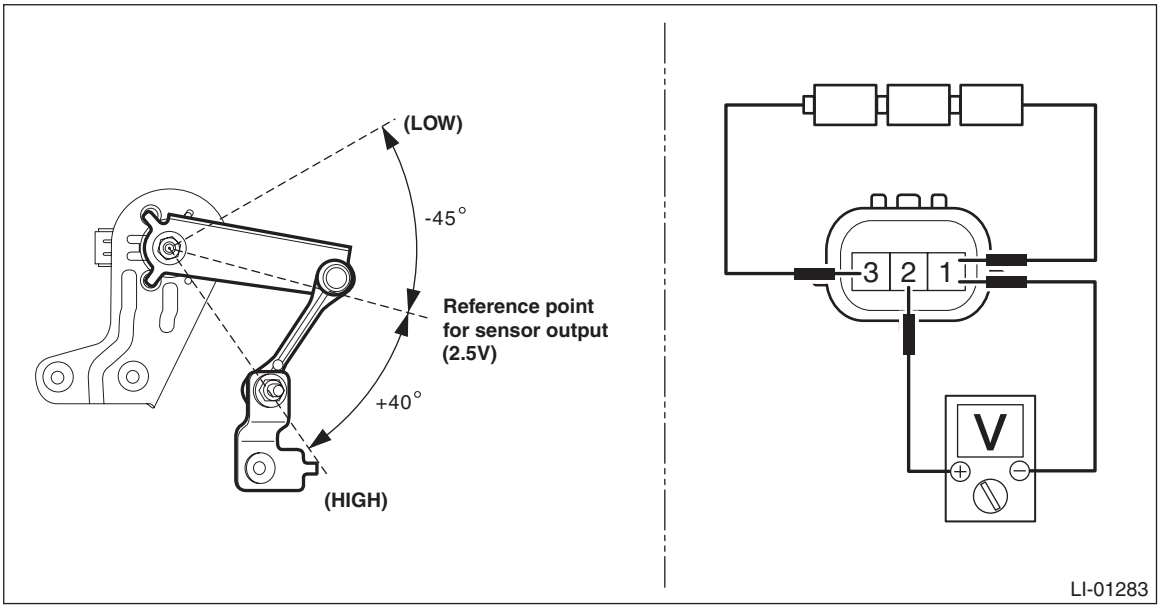

Terminal No.	Inspection conditions	Standard
2 (+) — 1 (–)	Move the link within the operation range.	0.5 — 4.1 V

4) Replace the sensor assembly - headlight beam leveler if the inspection result is not within the standard value.

39.Day Time Running Resistor

A: REMOVAL

1) Disconnect the ground cable from battery. <Ref. to NT-5, BATTERY, NOTE, Note.>

NOTE:
For the 12 volt engine restart battery of HEV model, disconnect the ground terminal from 12V engine restart battery sensor.
2) Lift up the vehicle.
3) Remove the screw and clips, and turn over the front side of the mud guard - front.

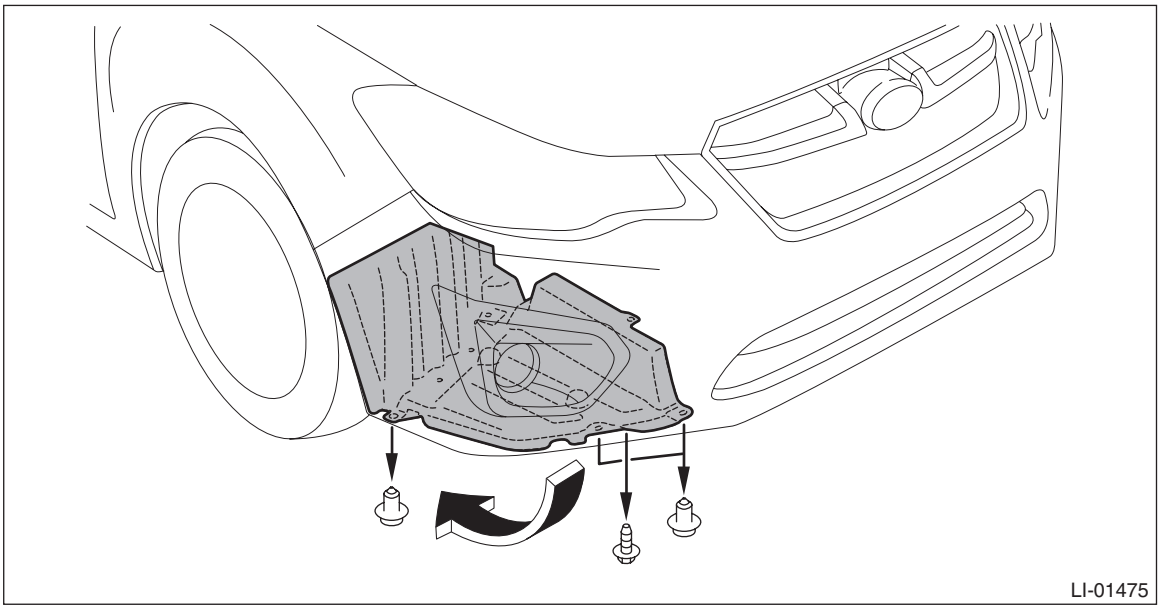

4) Remove the resistor assembly - daytime running light.

CAUTION:
The resistor may become hot. Be careful not to burn yourself when removing it.
(1) Disconnect the connector.
(2) Remove the bolts, then remove the resistor assembly - daytime running light.

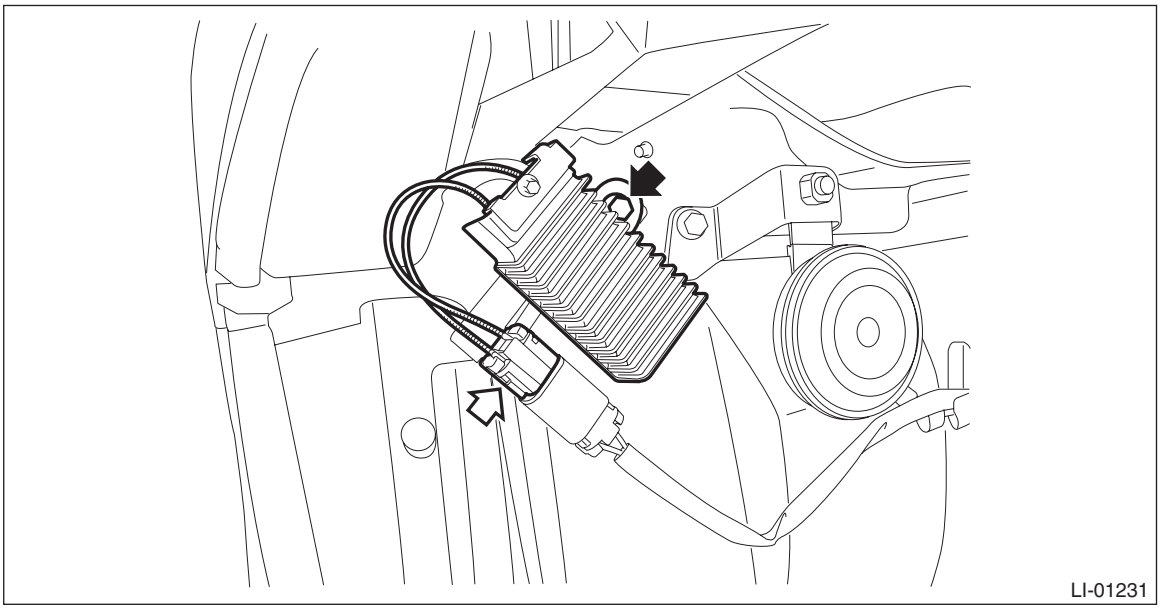

B: INSTALLATION

Install each part in the reverse order of removal.

Tightening torque:
Resistor assembly - daytime running light: 7.5 N·m (0.76 kgf-m, 5.5 ft-lb)

40.Reflex Reflector

A: REMOVAL

From behind the bumper face - rear, release the claws and remove the reflex reflector assembly.

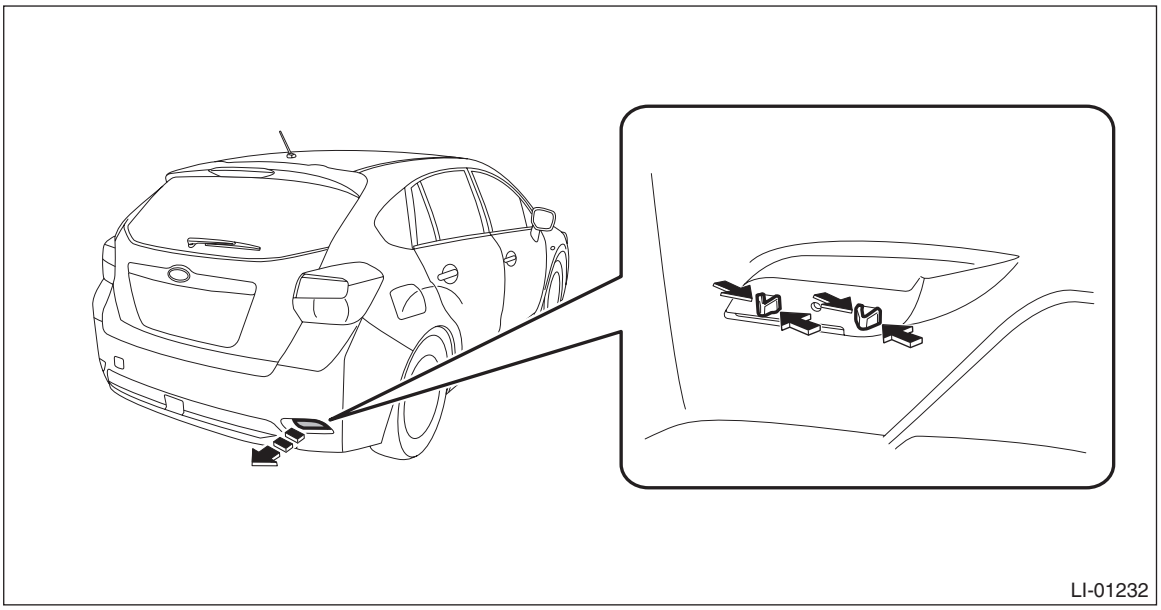

B: INSTALLATION

Install each part in the reverse order of removal.

41.Door Switch

A: REMOVAL

1) Disconnect the ground cable from battery. <Ref. to NT-5, BATTERY, NOTE, Note.>

NOTE:
For the 12 volt engine restart battery of HEV model, disconnect the ground terminal from 12V engine restart battery sensor.

2) Remove the switch assembly - door.
   (1) Remove the screws, and pull out the switch assembly - door toward you.
   (2) Disconnect the connector and remove the switch assembly - door.

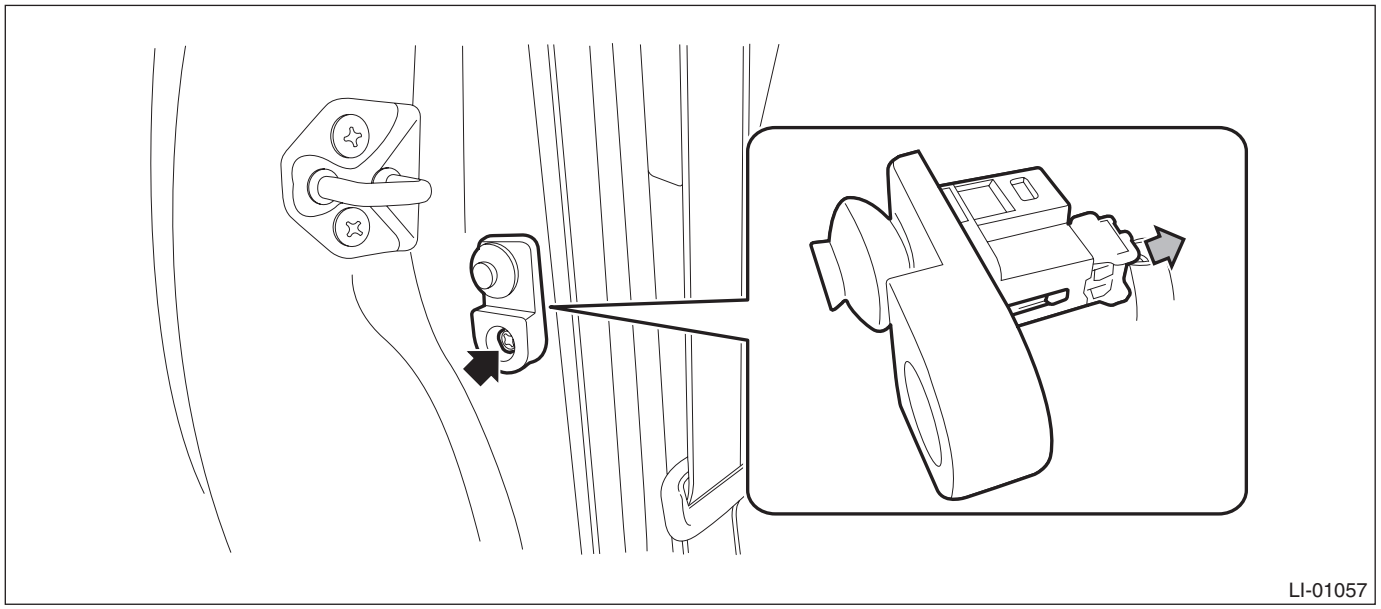

B: INSTALLATION

Install each part in the reverse order of removal.

C: INSPECTION

Unit inspection

Preparation tool:
Circuit tester

1) Check the resistance between switch terminals.

Terminal No.	Inspection conditions	Standard	Connection diagram
1 — 3	When door is opened	Less than 1 Ω	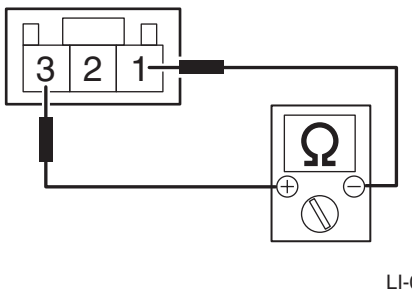
	When door is closed	1 MΩ or more	

2) Replace the switch assembly - door if the inspection result is not within the standard value.

AUTO HEADLIGHT BEAM LEVELER SYSTEM (DIAGNOSTICS)

AL(diag)

		Page
1.	Basic Diagnostic Procedure	2
2.	Check List for Interview	3
3.	General Description	4
4.	Electrical Component Location	5
5.	Control Module I/O Signal	6
6.	Subaru Select Monitor	7
7.	Read Diagnostic Trouble Code (DTC)	10
8.	Clear Memory Mode	11
9.	Read Current Data	12
10.	List of Diagnostic Trouble Code (DTC)	13
11.	Diagnostic Procedure with Diagnostic Trouble Code (DTC)	14
12.	Diagnostics with Phenomenon	17

1. Basic Diagnostic Procedure

A: PROCEDURE

	Step	Check	Yes	No
1	**PERFORM CUSTOMER INTERVIEW.** Using the Check List for Interview, ask the customer the condition of how the trouble occurred. <Ref. to AL(diag)-3, CHECK, Check List for Interview.>	Did you interview the customer?	Go to step **2**.	Interview the customer. <Ref. to AL(diag)-3, CHECK, Check List for Interview.>
2	**CHECK LAN SYSTEM.** Inspect LAN system. <Ref. to LAN(w/o HEV)(diag)-2, PROCEDURE, Basic Diagnostic Procedure.> <Ref. to LAN(HEV)(diag)-2, PROCEDURE, Basic Diagnostic Procedure.>	Is there any fault?	Perform the inspection according to the diagnosis for LAN system.	Go to step **3**.
3	**CHECK AUTO HEADLIGHT BEAM LEVELER SYSTEM.** Using the Subaru Select Monitor, read DTC of the auto headlight beam leveler system inspection. <Ref. to AL(diag)-10, OPERATION, Read Diagnostic Trouble Code (DTC).> NOTE: If the communication function of the Subaru Select Monitor cannot be executed properly, check the communication circuit. <Ref. to AL(diag)-8, COMMUNICATION FOR INITIALIZING IMPOSSIBLE, INSPECTION, Subaru Select Monitor.>	Is DTC displayed?	Record DTC and time stamp, and perform the diagnosis according to DTC. <Ref. to AL(diag)-13, LIST, List of Diagnostic Trouble Code (DTC).> For time stamp, refer to “LAN SYSTEM”. <Ref. to LAN(w/o HEV)(diag)-6, TIME STAMP, CAUTION, General Description.> <Ref. to LAN(HEV)(diag)-6, TIME STAMP, CAUTION, General Description.>	Go to step **4**.
4	**CHECK DIAGNOSTICS WITH PHENOMENON.** Check “Diagnostics with Phenomenon”. <Ref. to AL(diag)-17, Diagnostics with Phenomenon.>	Does the symptom apply?	Perform diagnosis according to the procedures in the diagnostics with phenomenon.	Go to step **5**.
5	**CHECK TROUBLE PHENOMENON.** 1) Perform the basic inspection and function check. <Ref. to AL(diag)-4, INSPECTION, General Description.> 2) Check the auto headlight beam leveler CM. <Ref. to AL(diag)-6, Control Module I/O Signal.> 3) Perform check of current data. <Ref. to AL(diag)-12, Read Current Data.> 4) Perform a unit check.	Was the trouble cause found?	Repair or replace the cause of trouble.	System is normal.

2. Check List for Interview

A: CHECK

- Inspect the following items regarding the vehicle's state.
- Print out this page for interviewing customers.

<table>
<tr><td colspan="4">Auto Headlight Beam Leveler System Check List for Interview
Date the Vehicle is Received Year Month Day</td></tr>
<tr><td colspan="2" rowspan="2">Customer's name</td><td>Registration No.</td><td>Initial year of registration
Year Month Date</td></tr>
<tr><td>Vehicle model</td><td>Frame number</td></tr>
<tr><td>Interviewer</td><td>Inspector</td><td>Engine type</td><td>Odometer reading</td></tr>
<tr><td colspan="4">Customer specified content
•
•
•</td></tr>
<tr><td>Date and time when the trouble occurred</td><td></td><td>Frequency of trouble occurrence</td><td>Always occurs
Sometimes occurs (times per day, times per month)</td></tr>
<tr><td rowspan="2">Condition of trouble occurrence
(How the trouble occurs)</td><td rowspan="2"></td><td>Weather</td><td>Fine • Cloudy • Rainy • Snowy • Others
( )</td></tr>
<tr><td>Temperature</td><td>°C (°F) — °C (°F)</td></tr>
<tr><td>Road conditions</td><td></td><td>Occurrence location</td><td></td></tr>
<tr><td>Accessory installation condition</td><td colspan="3"></td></tr>
<tr><td>Confirmation of trouble condition</td><td colspan="3"></td></tr>
<tr><td>❑ Diagnostic code</td><td colspan="3"></td></tr>
</table>

3. General Description

A: CAUTION

1. AIRBAG SYSTEM

CAUTION:
• Do not use the electrical test equipment on the airbag system wiring harnesses and connector circuits.
• Be careful not to damage the airbag system wiring harness.

B: INSPECTION

1. BASIC INSPECTION

Before performing the diagnosis, check the following items which may cause problems relating the wiper or light.
1) Check the battery.

NOTE:
For HEV model, check the 12 volt auxiliary battery. <Ref. to SC(H4DO(HEV))-38, Battery.>
2) Check the relay and fuse condition. <Ref. to LI-5, Relay and Fuse.>
3) Check the connecting condition of harness and harness connector.

2. FUNCTION CHECK

With the ignition switch ON and the lighting switch set at 2 (HEAD), change the vehicle posture while the vehicle is stopped. Check that the beam moves, when the vehicle condition is kept for three seconds or more.

C: PREPARATION TOOL

1. SPECIAL TOOL

ILLUSTRATION	TOOL NUMBER	DESCRIPTION	REMARKS
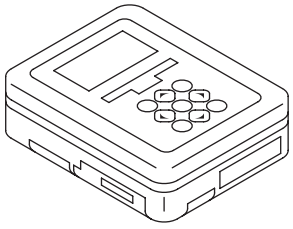 ST1B022XU0	1B022XU0	SUBARU SELECT MONITOR III KIT	Used for troubleshooting the electrical system.

2. GENERAL TOOL

TOOL NAME	REMARKS
Circuit tester	Used for measuring resistance, voltage and current.

4. Electrical Component Location

A: LOCATION

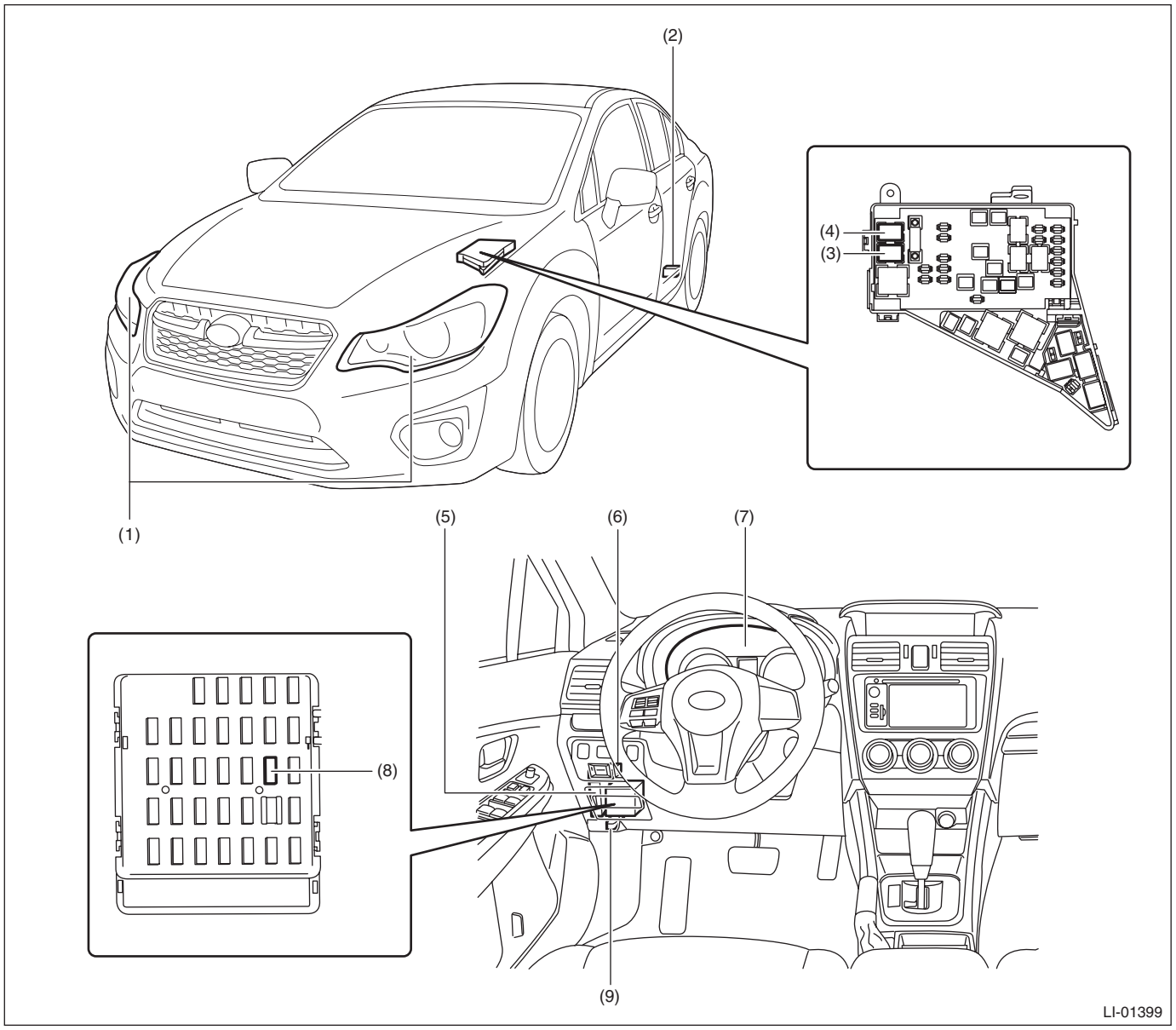

(1)	Headlight ASSY – Headlight beam leveler actuator	(4)	Headlight relay (Hi)	(7)	Combination meter
(2)	Rear vehicle height sensor	(5)	Body integrated unit	(8)	Fuse 10 A (auto headlight beam leveler CM)
(3)	Headlight relay (Lo)	(6)	Auto headlight beam leveler CM	(9)	Data link connector

5. Control Module I/O Signal

A: ELECTRICAL SPECIFICATION

1. AUTO HEADLIGHT BEAM LEVELER CM

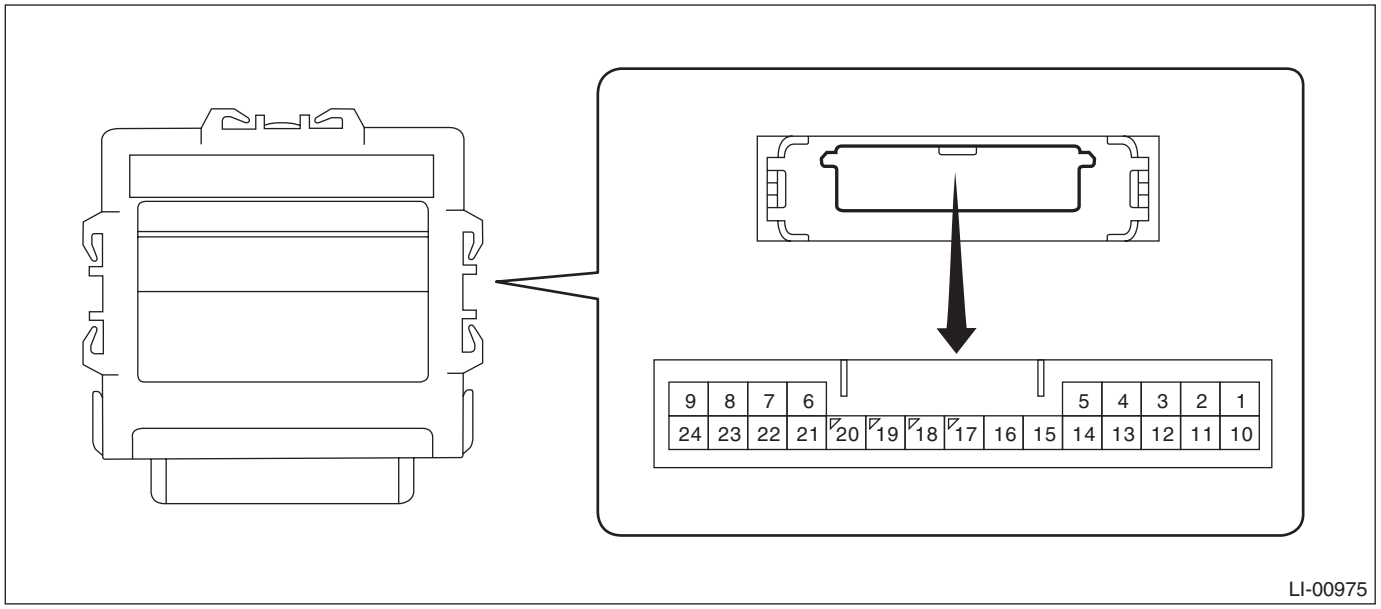

Description	Terminal No.	Measuring condition	Standard
IG power supply	1 ←→ Chassis ground	Ignition switch ON	8 — 16 V
GND	2 ←→ Chassis ground	Always	Less than 1 Ω
Rear height sensor GND	3 ←→ Chassis ground	Always	Less than 1 Ω
Indicator output	6 ←→ Chassis ground	After turning the ignition switch to ON, for 3 seconds (warning light on) → after 3 seconds (warning light off)	Less than 1.35 V → 8 — 16 V
Leveling actuator power supply	10 ←→ Chassis ground	Ignition switch ON	10 — 16 V
Leveling actuator GND	11 ←→ Chassis ground	Always	Less than 1 Ω
Rear height sensor power supply	12 ←→ 3	Ignition switch ON	4.75 — 5.25 V
Leveling actuator signal	17 ←→ Chassis ground	Headlight off → on	Less than 1 V → 1.0 — 14.4 V (for 17 seconds)
		Headlight on, no vehicle height change → change and hold vehicle height for 3 seconds or more	
Rear sensor signal	19 ←→ Chassis ground	IG ON (with no passenger, no load and vehicle stopped)	Approx. 2.5 V (changes according to vehicle condition)
CAN-H	23	Cannot be measured (CAN communication line)	—
CAN-L	24	Cannot be measured (CAN communication line)	—

B: WIRING DIAGRAM

Refer to “Headlight Beam Leveler System” in the wiring diagram. <Ref. to WI(w/o HEV)-93, WIRING DIAGRAM, Headlight Beam Leveler System.> <Ref. to WI(HEV)-133, WIRING DIAGRAM, Headlight Beam Leveler System.>

6. Subaru Select Monitor

A: OPERATION

- For operation procedures, refer to the “PC application help for Subaru Select Monitor”.
- If the auto headlight beam leveler CM can not communicate with Subaru Select Monitor, perform “COMMUNICATION FOR INITIALIZING IMPOSSIBLE”. <Ref. to AL(diag)-8, INSPECTION, Subaru Select Monitor.>

B: INSPECTION

1. COMMUNICATION FOR INITIALIZING IMPOSSIBLE

Communication error with auto headlight beam leveler CM

DETECTING CONDITION:

- Defective harness connector
- Power supply circuit malfunction
- Defective auto headlight beam leveler CM
- Defective CAN communication circuit
- Defective Subaru Select Monitor

TROUBLE SYMPTOM:

Communication is impossible between auto headlight beam leveler CM and Subaru Select Monitor.

CAUTION:

Initialization is required after replacing the auto headlight beam leveler CM.

WIRING DIAGRAM:

Headlight beam leveler system <Ref. to WI(w/o HEV)-93, WIRING DIAGRAM, Headlight Beam Leveler System.> <Ref. to WI(HEV)-133, WIRING DIAGRAM, Headlight Beam Leveler System.>

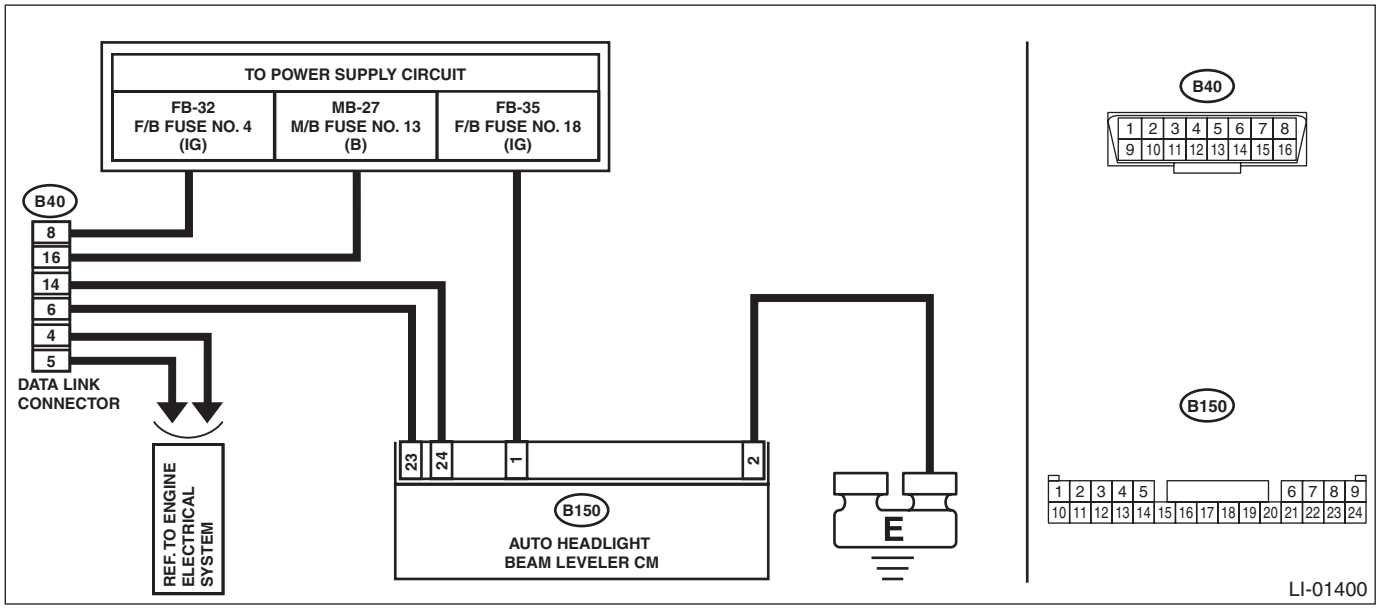

Step		Check	Yes	No
1	**CHECK OTHER COMMUNICATION.** Communicate with the system other than the auto headlight beam leveler CM using the Subaru Select Monitor.	Is the communication to other control module possible?	Go to step **2**.	Perform the "Communication for Initializing Impossible" of LAN system. <Ref. to LAN(w/o HEV)(diag)-11, COMMUNICATION FOR INITIALIZING IMPOSSIBLE, Subaru Select Monitor.> <Ref. to LAN(HEV)(diag)-11, COMMUNICATION FOR INITIALIZING IMPOSSIBLE, Subaru Select Monitor.>

	Step	Check	Yes	No
2	**CHECK LAN SYSTEM.** Inspect LAN system. <Ref. to LAN(w/o HEV)(diag)-2, PROCEDURE, Basic Diagnostic Procedure.> <Ref. to LAN(HEV)(diag)-2, PROCEDURE, Basic Diagnostic Procedure.>	Is there any fault?	Perform the inspection according to the diagnosis for LAN system.	Go to step **3**.
3	**CHECK FOR POOR CONTACT.** 1) Turn the ignition switch to OFF. 2) Disconnect the auto headlight beam leveler CM connector. 3) Connect the disconnected connectors. 4) Communicate with the auto headlight beam leveler CM using the Subaru Select Monitor.	Is communication possible?	It is possible that temporary poor communication occurs.	Replace the auto headlight beam leveler CM. <Ref. to LI-92, Auto Headlight Beam Leveler Control Module.>

7. Read Diagnostic Trouble Code (DTC)

A: OPERATION

- For operation procedures, refer to the “PC application help for Subaru Select Monitor”.
- For details concerning DTC, refer to the List of Diagnostic Trouble Codes (DTC). <Ref. to AL(diag)-13, LIST, List of Diagnostic Trouble Code (DTC).>

8. Clear Memory Mode

A: OPERATION

For operation procedures, refer to the “PC application help for Subaru Select Monitor”.

9. Read Current Data

A: OPERATION

For detailed operation procedures, refer to “PC application help for Subaru Select Monitor”.

B: LIST

Item Name	Remarks	Standard	Note
Trip Count	Information of timestamp, trip counter	—	—
Count	Information of timestamp, original counter identification information	—	—
Time Count	Information of timestamp, time counter	—	—
F Sensor Signal	Output voltage value from front vehicle height sensor Display range: 0.00 — 5.00 V	5 V	Fixed at 5 V because front vehicle height sensor is not equipped.
R Sensor Signal	Output voltage value from rear vehicle height sensor Display range: 0.00 — 5.00 V	Approx. 2.5 V	Changes according to vehicle condition.
Actuator Signal	Power supply voltage value to headlight beam leveler actuator Display range: 0% — 100%	Not in operation: 0% In operation: 10 — 90% (17 seconds)	Changes according to vehicle condition.
ECU ACC	IG voltage condition of auto headlight beam leveler CM Display range: 0.00 — 25.76 V	8 — 16 V	—
Indicator Signal	Meter indicator condition Display range: Light off/ Light up/Flashing	Light off: Normal Light up: Abnormal Flashing: Not initialized	—
Vehicle speed signal	Vehicle speed condition Display range: 0.00 — 3686.34 km/h	Shows vehicle speed	—
H/L Lo Signal	Headlight lighting condition Display range: Light off/ Light up	Light off: Light switch is OFF Light up: Light sensor in operation when light switch is in HEAD or AUTO position	—

NOTE:
For detailed operation procedures, refer to “PC application help for Subaru Select Monitor”.

10.List of Diagnostic Trouble Code (DTC)

A: LIST

DTC	Item	Content of diagnosis	Reference
U0073	Control Module Communication Bus Off	Detected when CAN line abnormality is detected.	<Ref. to AL(diag)-14, DTC U0073 CONTROL MODULE COMMUNICATION BUS OFF, Diagnostic Procedure with Diagnostic Trouble Code (DTC).>
U0122	Lost Communication With Vehicle Dynamics Control Module	Detected when CAN data from VDC (vehicle speed signal) does not arrive.	<Ref. to AL(diag)-14, DTC U0122 LOST COMMUNICATION WITH VEHICLE DYNAMICS CONTROL MODULE, Diagnostic Procedure with Diagnostic Trouble Code (DTC).>
U0140	Lost Communication With Body Control Module	Detected when CAN data from body integrated unit (headlight ON signal) does not arrive.	<Ref. to AL(diag)-14, DTC U0140 LOST COMMUNICATION WITH BODY CONTROL MODULE, Diagnostic Procedure with Diagnostic Trouble Code (DTC).>
B2900	AHLCU Error	Detected when an error occurred in auto headlight beam leveler CM.	<Ref. to AL(diag)-14, DTC B2900 AHLCU ERROR, Diagnostic Procedure with Diagnostic Trouble Code (DTC).>
B2902	Rear Height Sensor Error	Detected when an error occurred in rear vehicle height sensor.	<Ref. to AL(diag)-15, DTC B2902 REAR HEIGHT SENSOR ERROR, Diagnostic Procedure with Diagnostic Trouble Code (DTC).>
B2903	VDC Data Error	Detected when data from VDC (vehicle speed signal) is abnormal.	<Ref. to AL(diag)-16, DTC B2903 VDC DATA ERROR, Diagnostic Procedure with Diagnostic Trouble Code (DTC).>

11.Diagnostic Procedure with Diagnostic Trouble Code (DTC)

A: DTC U0073 CONTROL MODULE COMMUNICATION BUS OFF

Detected when CAN line abnormality is detected.

NOTE:
Perform the diagnosis for LAN system. <Ref. to LAN(w/o HEV)(diag)-2, PROCEDURE, Basic Diagnostic Procedure.> <Ref. to LAN(HEV)(diag)-2, PROCEDURE, Basic Diagnostic Procedure.>

B: DTC U0122 LOST COMMUNICATION WITH VEHICLE DYNAMICS CONTROL MODULE

Detected when CAN data (vehicle speed signal) is not received from VDC.

NOTE:
Perform the diagnosis for LAN system. <Ref. to LAN(w/o HEV)(diag)-2, PROCEDURE, Basic Diagnostic Procedure.> <Ref. to LAN(HEV)(diag)-2, PROCEDURE, Basic Diagnostic Procedure.>

C: DTC U0140 LOST COMMUNICATION WITH BODY CONTROL MODULE

Detected when CAN data (headlights ON signal) is not received from the body integrated unit.

NOTE:
Perform the diagnosis for LAN system. <Ref. to LAN(w/o HEV)(diag)-2, PROCEDURE, Basic Diagnostic Procedure.> <Ref. to LAN(HEV)(diag)-2, PROCEDURE, Basic Diagnostic Procedure.>

D: DTC B2900 AHLCU ERROR

DTC DETECTING CONDITION:
Detected when internal malfunction occurs in the auto headlight beam leveler CM.
TROUBLE SYMPTOM:
The auto headlight beam leveler does not operate.

CAUTION:
Initialization is required after replacing the auto headlight beam leveler CM.

	Step	Check	Yes	No
1	**CHECK DTC.** 1) Turn the ignition switch to OFF. 2) Using the Subaru Select Monitor, clear the auto headlight beam leveler system memory. 3) Turn the ignition switch to OFF → ON. 4) Use the Subaru Select Monitor and read DTCs.	Is DTC B2900 displayed? (Current malfunction)	Replace the auto headlight beam leveler CM. <Ref. to LI-92, Auto Headlight Beam Leveler Control Module.>	System is normal. It is possible that temporary poor contact occurs.

E: DTC B2902 REAR HEIGHT SENSOR ERROR

DTC DETECTING CONDITION:
Detected when error occurs in the rear height sensor.
TROUBLE SYMPTOM:
The auto headlight beam leveler does not operate.

CAUTION:
Initialization is required after replacing the auto headlight beam leveler CM.
WIRING DIAGRAM:
Headlight beam leveler system <Ref. to WI(w/o HEV)-93, WIRING DIAGRAM, Headlight Beam Leveler System.> <Ref. to WI(HEV)-133, WIRING DIAGRAM, Headlight Beam Leveler System.>

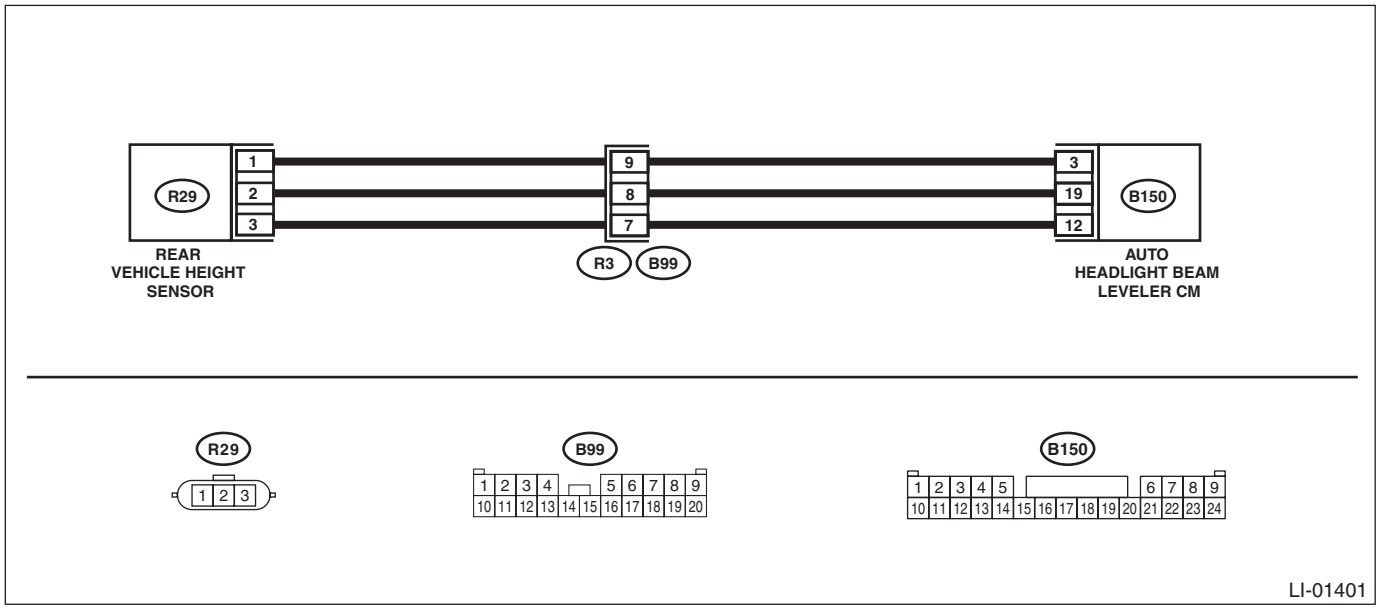

Step		Check	Yes	No
1	**CHECK DTC.** 1) Turn the ignition switch to OFF. 2) Using the Subaru Select Monitor, clear the auto headlight beam leveler system memory. 3) Turn the ignition switch to OFF → ON. 4) Use the Subaru Select Monitor and read DTCs.	Is DTC B2902 displayed? (current malfunction)	Go to step **2**.	System is normal. It is possible that temporary poor contact occurs.
2	**CHECK CURRENT DATA.** Display {R Sensor Signal} using Subaru Select Monitor.	Does the data indicate the standard value?	Replace the auto headlight beam leveler CM. <Ref. to LI-92, Auto Headlight Beam Leveler Control Module.>	Go to step **3**.
3	**CHECK CURRENT DATA.** 1) Display {R Sensor Signal} using Subaru Select Monitor. 2) Change the vehicle posture.	Does the data change?	Go to step **6**.	Go to step **4**.

	Step	Check	Yes	No
4	**CHECK OUTPUT VOLTAGE BETWEEN AUTO HEADLIGHT BEAM LEVELER CM AND VEHICLE HEIGHT SENSOR.** 1) Disconnect the vehicle height sensor connector. 2) Turn the ignition switch to ON. 3) Measure the voltage between the vehicle height sensor connector and chassis ground. ***Connector & terminal*** ***(R29) No. 3 (+) — Chassis ground (–):***	Is the voltage 5±0.25 V?	Go to step **5**.	Replace the auto headlight beam leveler CM. <Ref. to LI-92, Auto Headlight Beam Leveler Control Module.>
5	**CHECK REAR HEIGHT SENSOR.** 1) Remove the rear vehicle height sensor. 2) Perform the inspection of rear height sensor unit. <Ref. to LI-95, INSPECTION, Rear Height Sensor.>	Is the rear height sensor normal?	Go to step **6**.	Replace the rear height sensor. <Ref. to LI-94, Rear Height Sensor.>
6	**CHECK HARNESS.** 1) Disconnect the auto headlight beam leveler CM connector. 2) Using a tester, measure the resistance between the auto headlight beam leveler CM connector and rear height sensor connector. ***Connector & terminal*** ***(B150) No. 3 — (R29) No. 1:*** ***(B150) No. 19 — (R29) No. 2:*** ***(B150) No. 12 — (R29) No. 3:***	Is there continuity?	Go to step **7**.	Repair or replace the open circuit of harness.
7	**CHECK HARNESS.** Using a tester, measure the resistance between the auto headlight beam leveler CM connector and chassis ground. ***Connector & terminal*** ***(B150) No. 3 — Chassis ground:*** ***(B150) No. 19 — Chassis ground:*** ***(B150) No. 12 — Chassis ground:***	Is the resistance 10 kΩ or more?	Replace the auto headlight beam leveler CM. <Ref. to LI-92, Auto Headlight Beam Leveler Control Module.>	Repair or replace the short circuit of the harness.

F: DTC B2903 VDC DATA ERROR

DTC DETECTING CONDITION:

Detected when data (vehicle speed signal) from VDC CM is abnormal.

TROUBLE SYMPTOM:

The auto headlight beam leveler does not operate.

NOTE:

Perform the diagnosis for VDC. <Ref. to VDC(diag)-2, PROCEDURE, Basic Diagnostic Procedure.>

12.Diagnostics with Phenomenon

A: INSPECTION

1. BEAM LEVEL CONTROL DOES NOT FUNCTION

CAUTION:
- **Before performing diagnosis, check the fuse in this circuit.**
- **Initialization is required after replacing the auto headlight beam leveler CM.**

WIRING DIAGRAM:
Headlight beam leveler system <Ref. to WI(w/o HEV)-93, WIRING DIAGRAM, Headlight Beam Leveler System.> <Ref. to WI(HEV)-133, WIRING DIAGRAM, Headlight Beam Leveler System.>

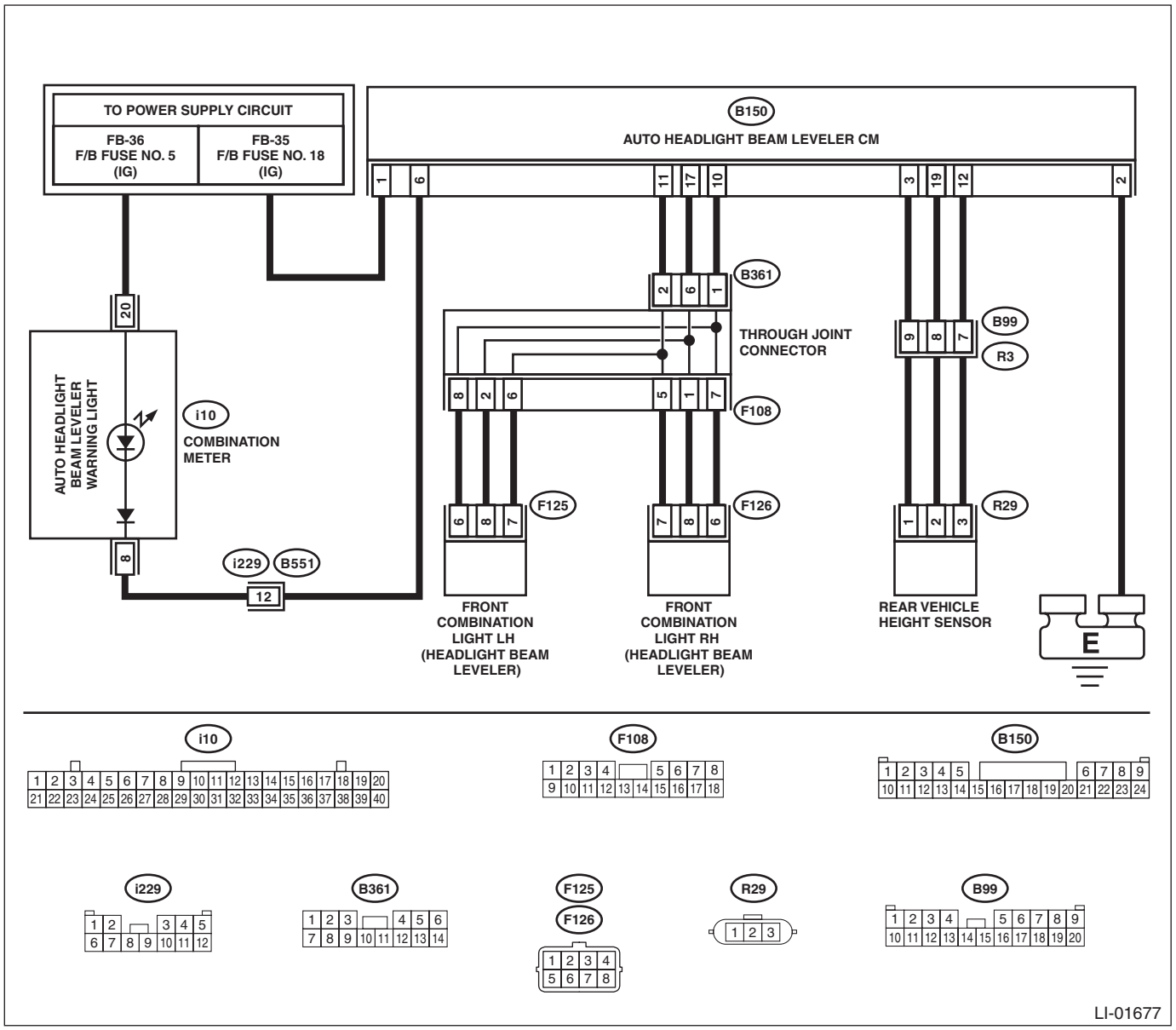

Step		Check	Yes	No
1	**CHECK CURRENT DATA.** Display {ECU ACC} using Subaru Select Monitor.	Does the current data indicate the standard value?	Go to step **3**.	Go to step **2**.

	Step	Check	Yes	No
2	**CHECK HARNESS BETWEEN POWER SUPPLY — AUTO HEADLIGHT BEAM LEVELER CM.** 1) Disconnect the auto headlight beam leveler CM connector. 2) Turn the ignition switch to ON. 3) Measure the voltage between the auto headlight beam leveler CM connector and chassis ground. ***Connector & terminal*** ***(B150) No. 1 (+) — Chassis ground (–):***	Is the voltage 8 — 16 V?	Replace the auto headlight beam leveler CM. <Ref. to LI-92, Auto Headlight Beam Leveler Control Module.>	Repair or replace the harness.
3	**CHECK INDICATOR OUTPUT.** Turn the ignition switch to ON.	Does the warning indicator turn on for three seconds?	Go to step **5**.	Go to step **4**.
4	**CHECK CURRENT DATA.** 1) Display {Indicator Signal} using Subaru Select Monitor. 2) Turn the ignition switch to ON.	Is it set as ON for 3 seconds?	Go to step **6**.	Replace the auto headlight beam leveler CM. <Ref. to LI-92, Auto Headlight Beam Leveler Control Module.>
5	**CHECK INDICATOR OUTPUT.** Leave the ignition switch to ON for 10 seconds.	Does the warning indicator light go off?	Go to step **9**.	Go to step **13**.
6	**CHECK HARNESS BETWEEN BATTERY — INDICATOR BULB — AUTO HEADLIGHT BEAM LEVELER CM.** 1) Disconnect the auto headlight beam leveler CM connector. 2) Turn the ignition switch to ON. 3) Measure the voltage between the auto headlight beam leveler CM (indicator bulb) connector and chassis ground. ***Connector & terminal*** ***(B150) No. 6 (+) — Chassis ground (–):***	Is the voltage 12 V?	Replace the auto headlight beam leveler CM. <Ref. to LI-92, Auto Headlight Beam Leveler Control Module.>	Go to step **7**.
7	**CHECK INDICATOR BULB.** 1) Disconnect the combination meter connector. 2) Measure the continuity between combination meter terminals. ***Connector & terminal*** ***(i10) No. 20 — (i10) No. 8:***	Is there continuity?	Go to step **8**.	Replace the meter case assembly. <Ref. to IDI-16, Combination Meter.>
8	**CHECK HARNESS BETWEEN AUTO HEADLIGHT BEAM LEVELER CM AND INDICATOR BULB.** 1) Turn the ignition switch to OFF. 2) Measure the continuity between the auto headlight beam leveler CM and the combination meter. ***Connector & terminal*** ***(B150) No. 6 — (i10) No. 8:***	Is there continuity?	Replace the auto headlight beam leveler CM. <Ref. to LI-92, Auto Headlight Beam Leveler Control Module.>	Repair the open circuit and poor contact of the connector in the harness between the auto headlight beam leveler CM and indicator.

	Step	Check	Yes	No
9	**CHECK HEADLIGHT ASSEMBLY (ACTUATOR) DRIVE.** 1) Connect the auto headlight beam leveler CM connector. 2) Turn the ignition switch to ON, and within 10 seconds, repeat the OFF → 2 (HEAD) operation of headlight switch 5 times. 3) Check that the headlight beam drops once, then returns to normal. 4) Then, after waiting for 30 seconds or more with the ignition ON, turn the ignition switch to OFF.	Does the headlight beam drop down once, and then return?	Replace the auto headlight beam leveler CM. <Ref. to LI-92, Auto Headlight Beam Leveler Control Module.>	Go to step **10**.
10	**CHECK HEADLIGHT ASSEMBLY (ACTUATOR) OUTPUT.** 1) Display {Actuator Signal} using Subaru Select Monitor. 2) Turn the ignition switch to ON, and within 10 seconds, repeat the OFF → 2 (HEAD) operation of headlight switch 5 times. 3) Check that the headlight beam drops once, then returns to normal. 4) Then, after waiting for 30 seconds or more with the ignition ON, turn the ignition switch to OFF.	Does the current data indicate the standard value? (Does the value change at 10 — 90%?)	Go to step **11**.	Replace the auto headlight beam leveler CM. <Ref. to LI-92, Auto Headlight Beam Leveler Control Module.>
11	**CHECK OUTPUT VOLTAGE BETWEEN HEADLIGHT ASSEMBLY (ACTUATOR).** 1) Disconnect the auto headlight beam leveler CM connector. 2) Turn the ignition switch to ON. 3) Measure the voltage between the auto headlight beam leveler CM connector and chassis ground. ***Connector & terminal*** ***(B150) No. 10 (+) — Chassis ground (–):***	Is the voltage 12 V?	Replace the headlight assembly. <Ref. to LI-28, Headlight Assembly.>	Go to step **12**.
12	**CHECK HARNESS BETWEEN AUTO HEADLIGHT BEAM LEVELER CM AND HEADLIGHT ASSEMBLY (ACTUATOR).** 1) Disconnect the connector of headlight assembly. 2) Measure the continuity between the auto headlight beam leveler CM connector and headlight assembly (actuator) connector. ***Connector & terminal*** ***• Headlight beam leveler RH*** ***(B150) No. 10 — (F126) No. 6:*** ***(B150) No. 17 — (F126) No. 8:*** ***(B150) No. 11 — (F126) No. 7:*** ***• Headlight beam leveler LH*** ***(B150) No. 10 — (F125) No. 6:*** ***(B150) No. 17 — (F125) No. 8:*** ***(B150) No. 11 — (F125) No. 7:***	Is there continuity?	Replace the auto headlight beam leveler CM. <Ref. to LI-92, Auto Headlight Beam Leveler Control Module.>	Repair the open circuit or poor contact of the connector in the harness between headlight assembly and auto headlight beam leveler CM.
13	**CHECK DTC.** Display DTC using the Subaru Select Monitor.	Is DTC displayed?	Perform the diagnosis according to DTC. <Ref. to AL(diag)-13, LIST, List of Diagnostic Trouble Code (DTC).>	Replace the auto headlight beam leveler CM. <Ref. to LI-92, Auto Headlight Beam Leveler Control Module.>

WIPER AND WASHER SYSTEMS

WW

		Page
1.	General Description	2
2.	Relay and Fuse	6
3.	Wiper and Washer System	8
4.	Combination Switch (Wiper)	9
5.	Wiper Blade	16
6.	Washer Tank and Motor	20
7.	Front Wiper Arm	26
8.	Front Wiper Motor and Link	28
9.	Front Washer Nozzle	33
10.	Rear Wiper Arm	38
11.	Rear Wiper Motor	40
12.	Rear Washer	44

1. General Description

A: SPECIFICATION

Front wiper motor	Input	12 V — 72 W or less
Rear wiper motor	Input	12 V — 42 W or less
Front washer motor	Pump type	Centrifugal
	Input	12 V — 60 W or less
Rear washer motor	Pump type	Centrifugal
	Input	12 V — 36 W or less

B: COMPONENT

1. FRONT WIPER

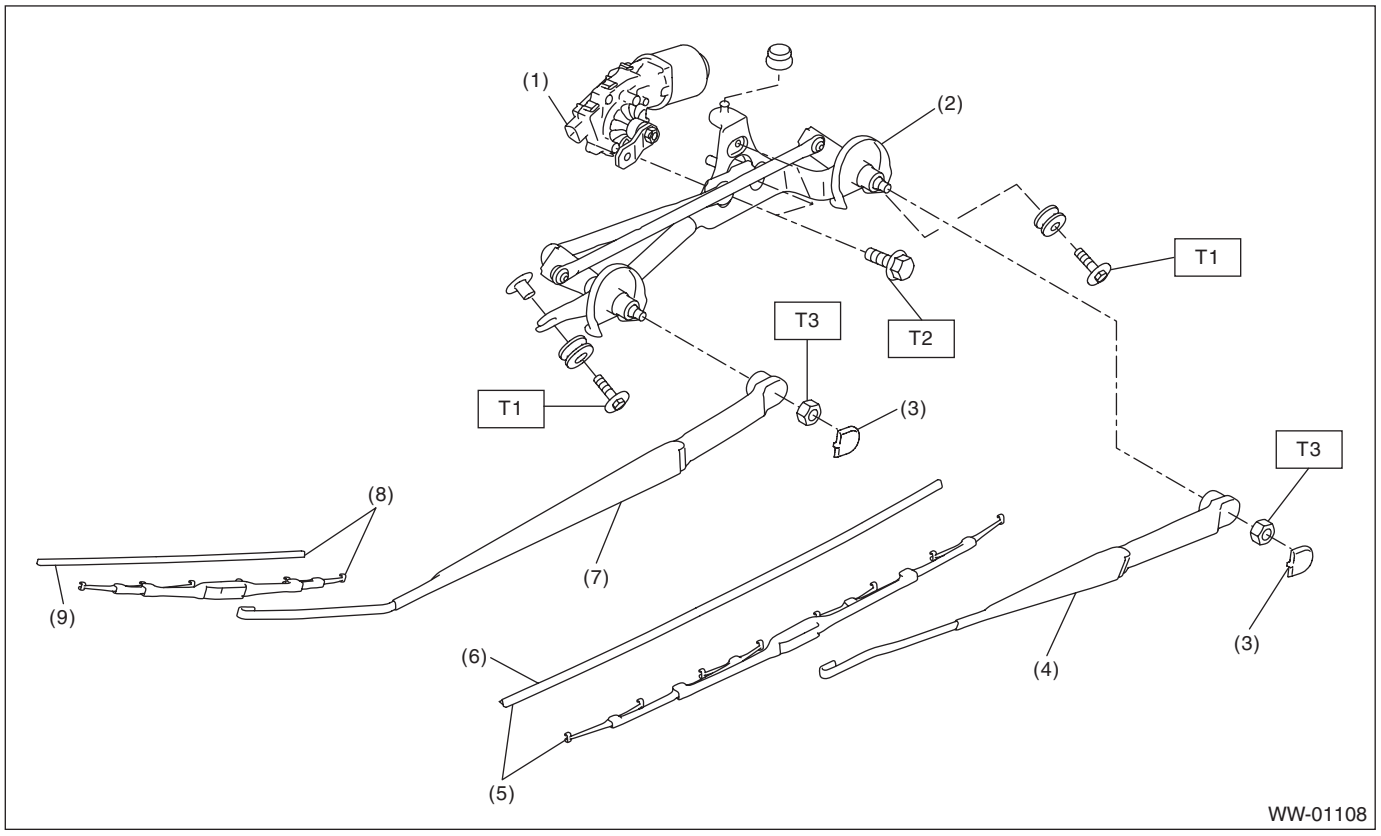

(1) Motor ASSY - windshield wiper
(2) Link ASSY - windshield wiper
(3) Cover - windshield wiper arm
(4) Arm ASSY - windshield wiper driver
(5) Blade ASSY - windshield wiper driver
(6) Rubber ASSY - windshield wiper driver
(7) Arm ASSY - windshield wiper assistor
(8) Blade ASSY - windshield wiper assistor
(9) Rubber ASSY - windshield wiper assistor

Tightening torque: N·m (kgf-m, ft-lb)

T1: 6 (0.61, 4.4)
T2: 5.5 (0.56, 4.1)
T3: 26 (2.65, 19.2)

2. REAR WIPER

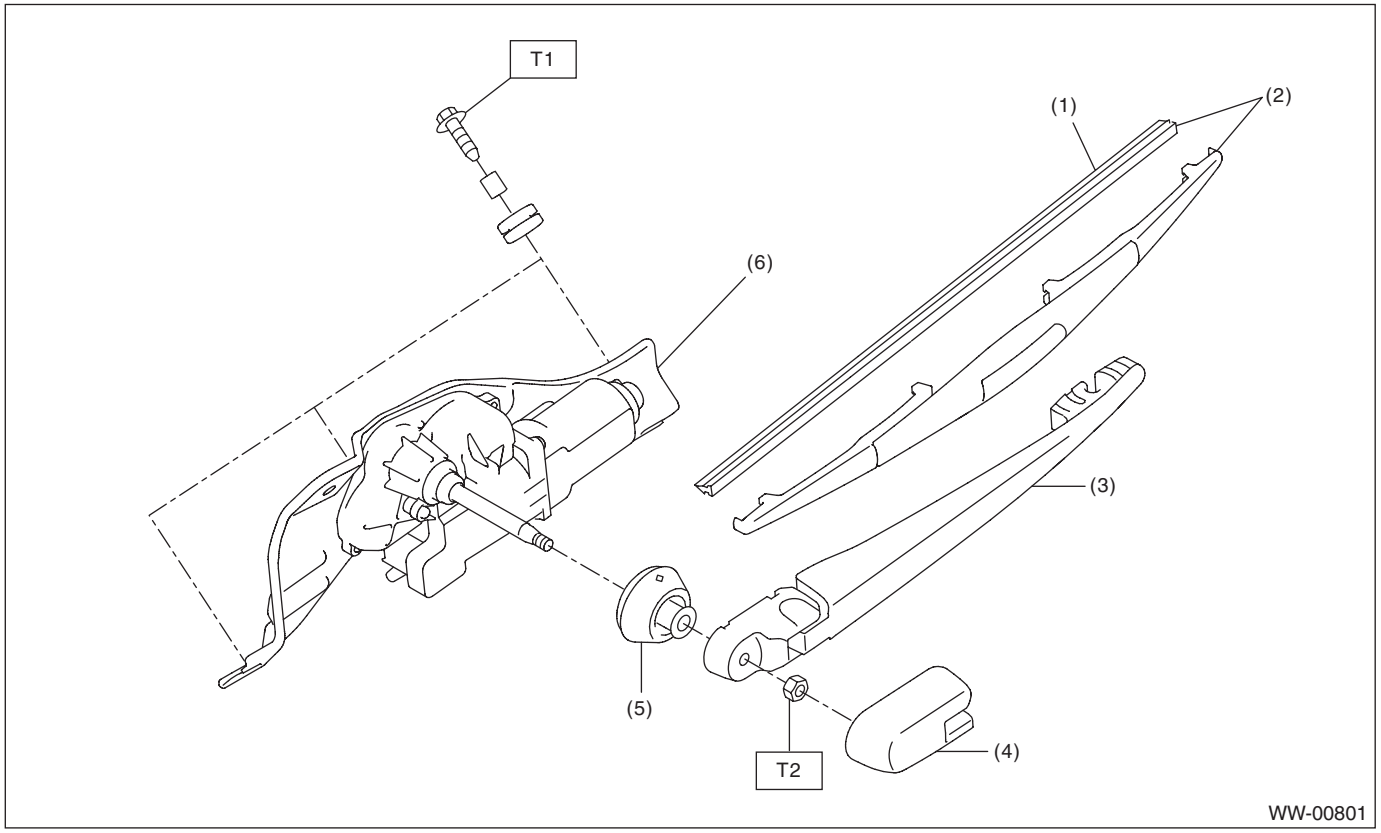

(1)	Rubber ASSY - rear wiper	(4)	Cover - rear wiper arm	***Tightening torque: N·m (kgf-m, ft-lb)***
(2)	Blade ASSY - rear wiper	(5)	Cap - pivot wiper	***T1: 6 (0.61, 4.4)***
(3)	Arm ASSY - rear wiper	(6)	Motor ASSY - rear wiper	***T2: 8 (0.82, 5.9)***

3. WASHER TANK

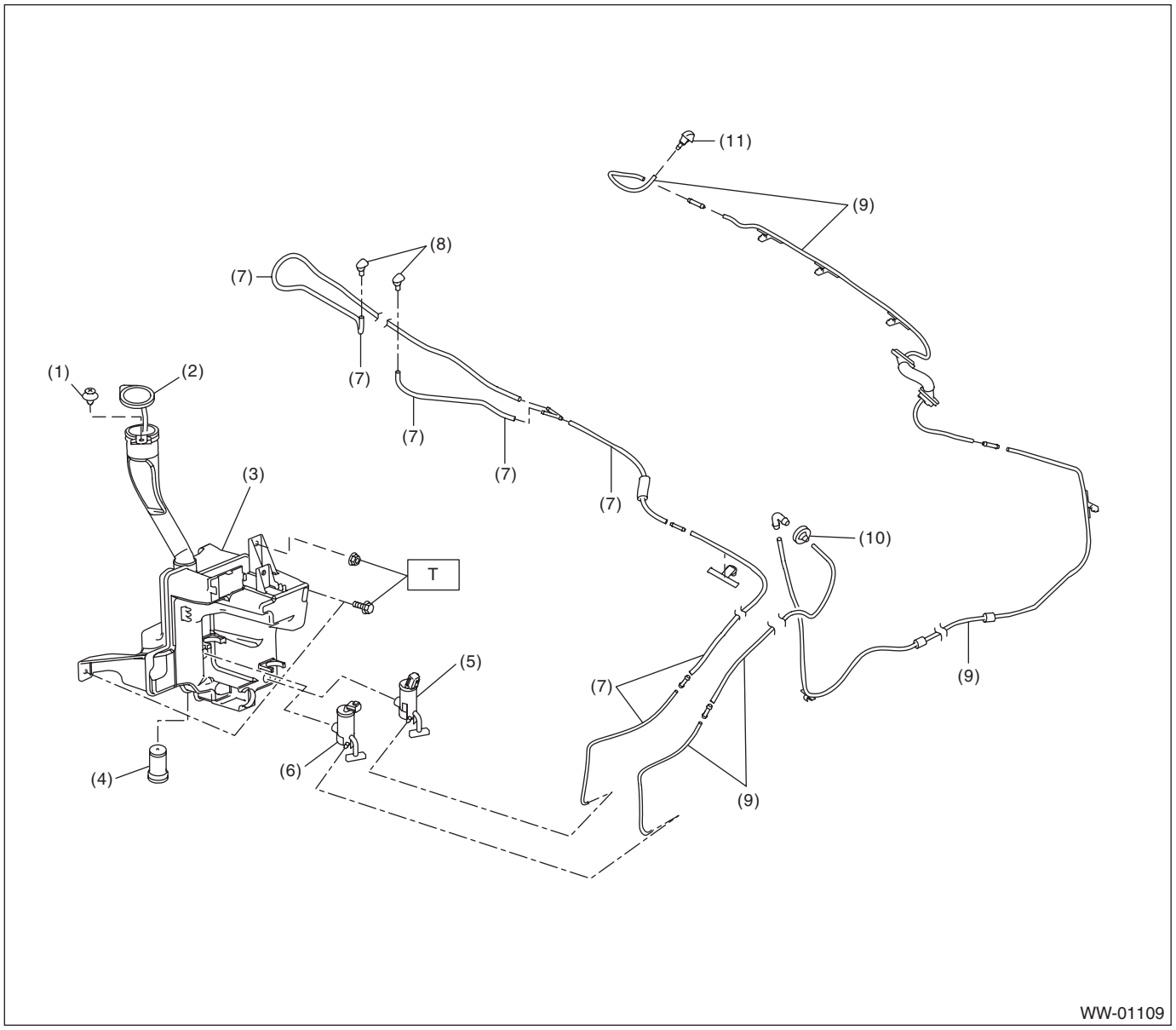

(1) Clip
(2) Holder - windshield washer tank
(3) Tank - washer
(4) Sensor - washer tank
(5) Motor pump ASSY - washer front
(6) Motor pump ASSY - washer rear (5 door model/XV model only)
(7) Hose - windshield washer
(8) Nozzle - windshield washer
(9) Hose ASSY - rear washer (5 door model/XV model)
(10) Grommet - washer hose
(11) Nozzle - rear washer (5 door model/XV model only)

Tightening torque: N·m (kgf-m, ft-lb)
T: 6 (0.61, 4.4)

C: CAUTION

- Connect the connectors and hoses securely during reassembly.
- After reassembly, make sure that the each component or each function operates normally.
- Be careful with the airbag system wiring harness which passes near electrical parts and switches.
- Yellow connectors and harnesses with yellow tapes around them are the connectors and harnesses for the airbag system. Using a tester above such circuits may cause malfunction of airbag system. Follow the cautions of “AIRBAG SYSTEM” in this case. <Ref. to AB-11, CAUTION, General Description.>
- When connecting the pipe hoses, be careful not to cause bend or blockage.
- If even a small amount of silicon oil or grease enters the tank - washer and the washer fluid passages, an oil film will be formed on the glass and will cause the wiper to chatter and judder. Make sure that no oil comes into contact with the system.

D: PREPARATION TOOL

1. SPECIAL TOOL

ILLUSTRATION	TOOL NUMBER	DESCRIPTION	REMARKS
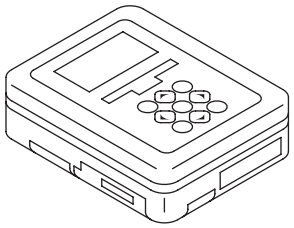 ST1B022XU0	1B022XU0	SUBARU SELECT MONITOR III KIT	Used for setting of each function and trouble-shooting for electrical system.

2. GENERAL TOOL

TOOL NAME	REMARKS
Circuit tester	Used for checking voltage and continuity.

2. Relay and Fuse

A: LOCATION

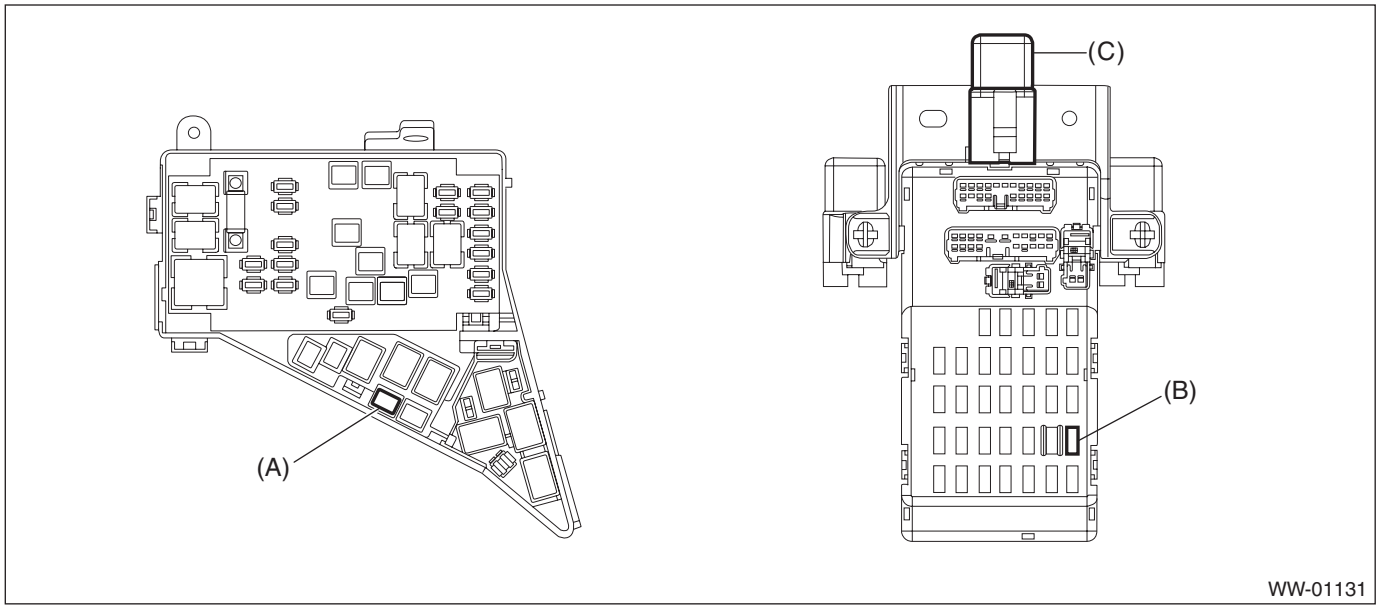

Main fuse box	Fuse 30 A (wiper)	(A)
Relay & fuse box	Fuse 7.5 A (wiper)	(B)
Relay holder	Wiper relay	(C)

NOTE:
For other related fuses, refer to the wiring diagram. <Ref. to WI(w/o HEV)-15, Power Supply Circuit.>

B: INSPECTION

1. CHECK FUSE

1) Remove the fuse and inspect visually.
2) If the fuse is blown out, replace the fuse.

2. CHECK RELAY

1) Check the resistance between relay terminals.

Terminal No.	Inspection conditions	Standard	Circuit
1 — 2	Always	1 MΩ or more	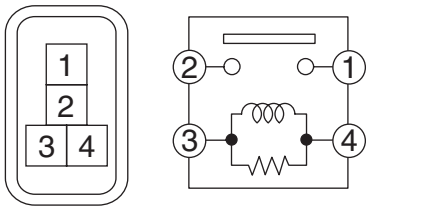 SR-00180
1 — 2	Apply battery voltage between terminals 4 and 3.	Less than 1 Ω	

Terminal No.	Inspection conditions	Standard	Circuit
1 — 2	Always	1 MΩ or more	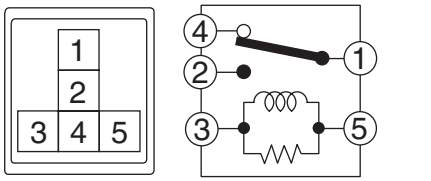 SL-01085
1 — 4	Always	Less than 1 Ω	
1 — 2	Apply battery voltage between terminals 3 and 5.	Less than 1 Ω	

2) Replace the relay if the inspection result is not within the standard.

3. Wiper and Washer System

A: WIRING DIAGRAM

1. WIPER AND WASHER (FRONT)

Refer to “Front Wiper and Washer System” in the wiring diagram. <Ref. to WI(w/o HEV)-90, WIRING DIAGRAM, Front Wiper and Washer System.>

2. WIPER AND WASHER (REAR)

Refer to “Rear Wiper and Washer System” in the wiring diagram. <Ref. to WI(w/o HEV)-130, WIRING DIAGRAM, Rear Wiper and Washer System.>

B: INSPECTION

Symptoms	Repair order
Wiper and washers do not operate.	1. Wiper fuse (F/B No. 14, 15) 2. Combination switch 3. Motor assembly - wiper 4. Wiring harness
Wipers do not operate in LO or HI.	1. Combination switch 2. Motor assembly - wiper 3. Wiring harness
Wipers do not operate in INT.	1. Combination switch 2. Motor assembly - wiper 3. Wiring harness
Washer motor does not operate.	1. Combination switch 2. Motor pump assembly - washer 3. Wiring harness
Wipers do not operate when washer switch is ON.	1. Motor assembly - wiper 2. Wiring harness
Washer fluid spray does not operate properly.	1. Motor pump assembly - washer 2. Hose assembly - washer 3. Nozzle - washer

C: NOTE

For operation procedures of each component of the wiper and washer system, refer to the respective sections.

- Combination switch (Wiper): <Ref. to WW-9, Combination Switch (Wiper).>
- Wiper blade: <Ref. to WW-16, Wiper Blade.>
- Front wiper arm: <Ref. to WW-26, Front Wiper Arm.>
- Front wiper motor and link: <Ref. to WW-28, Front Wiper Motor and Link.>
- Rear wiper arm: <Ref. to WW-38, Rear Wiper Arm.>
- Rear wiper motor: <Ref. to WW-40, Rear Wiper Motor.>
- Washer tank and motor: <Ref. to WW-20, Washer Tank and Motor.>
- Front washer nozzle: <Ref. to WW-33, Front Washer Nozzle.>
- Rear washer nozzle: <Ref. to WW-44, Rear Washer.>

4. Combination Switch (Wiper)

A: REMOVAL

1) Disconnect the ground cable from battery. <Ref. to NT-5, BATTERY, NOTE, Note.>

NOTE:
For the 12 volt engine restart battery of HEV model, disconnect the ground terminal from 12V engine restart battery sensor.

2) Remove the cover assembly - column.
   (1) Release the screws and claws.
   (2) Remove the cap - key cylinder (a). (Model with keyless access)
   (3) Remove the cover assembly - column UPR and the cover assembly - column LWR.

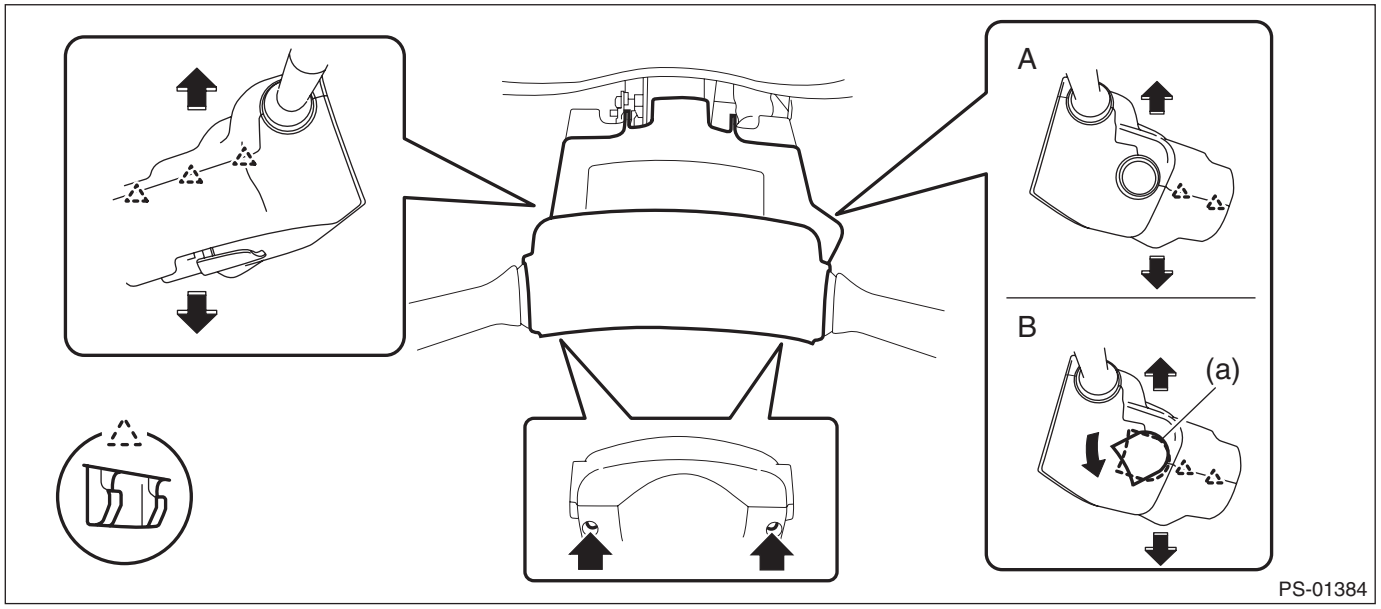

A Models without keyless access B Models with keyless access

3) Remove the switch assembly - combination wiper select.
   (1) Disconnect the connector.
   (2) Release the claws, and pull out the switch assembly - combination wiper select.

CAUTION:
Do not press the claws with excessive force. They may be damaged.

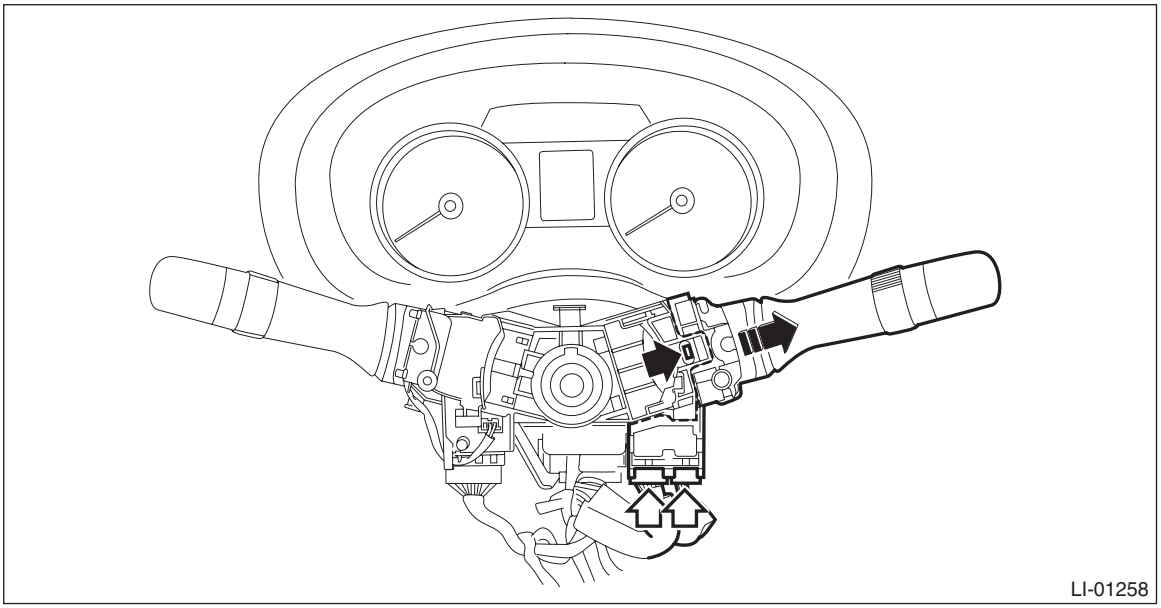

B: INSTALLATION

Install each part in the reverse order of removal.

C: INSPECTION

1. INSPECTION OF SWITCH UNIT

1) Operate the switches to check the continuity between terminals.

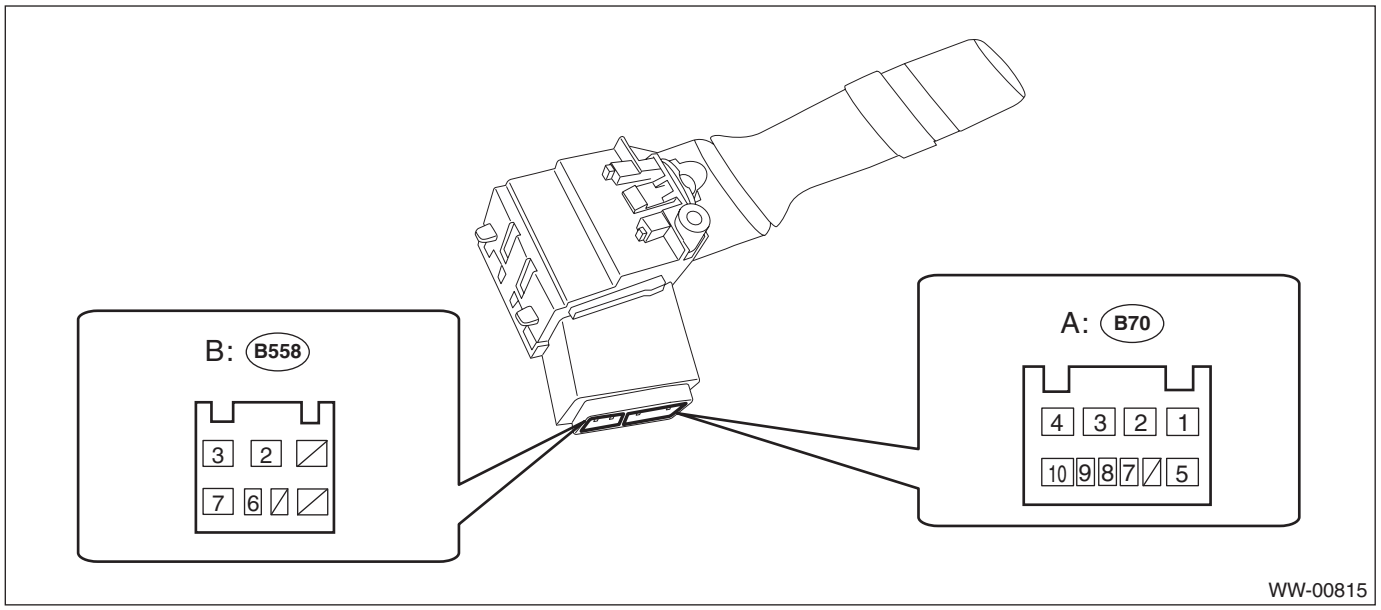

	Switch position	Terminal No.	Standard
Front	OFF	A1 and A3	Less than 1 Ω
	INT	A1 and A3	Less than 1 Ω
	LO	A2 and A3	Less than 1 Ω
	HI	A2 and A4	Less than 1 Ω
	Washer ON	B2 and B3	Less than 1 Ω
Rear	OFF	A5 and B2 B6 and B2 B7 and B2	1 MΩ or more
	LO	B6 and B2	Less than 1 Ω
	HI	B7 and B2	Less than 1 Ω
	Washer ON	A5 and B2	Less than 1 Ω

2) Replace the switch if the inspection result is not within the standard.

2. FRONT WIPER

1) Check with Subaru Select Monitor
   (1) Check the input signal when the switch assembly - combination wiper select is turned to LO or HI, using the current data display.
   (2) Does the input signal change corresponding to the switch operation?
   - **Yes** → Finish the diagnosis.
   - **No** → Check the harness.

2) CHECK THE INTERMITTENT OPERATION (INSPECTION OF THE WIPER SWITCH ALONE).

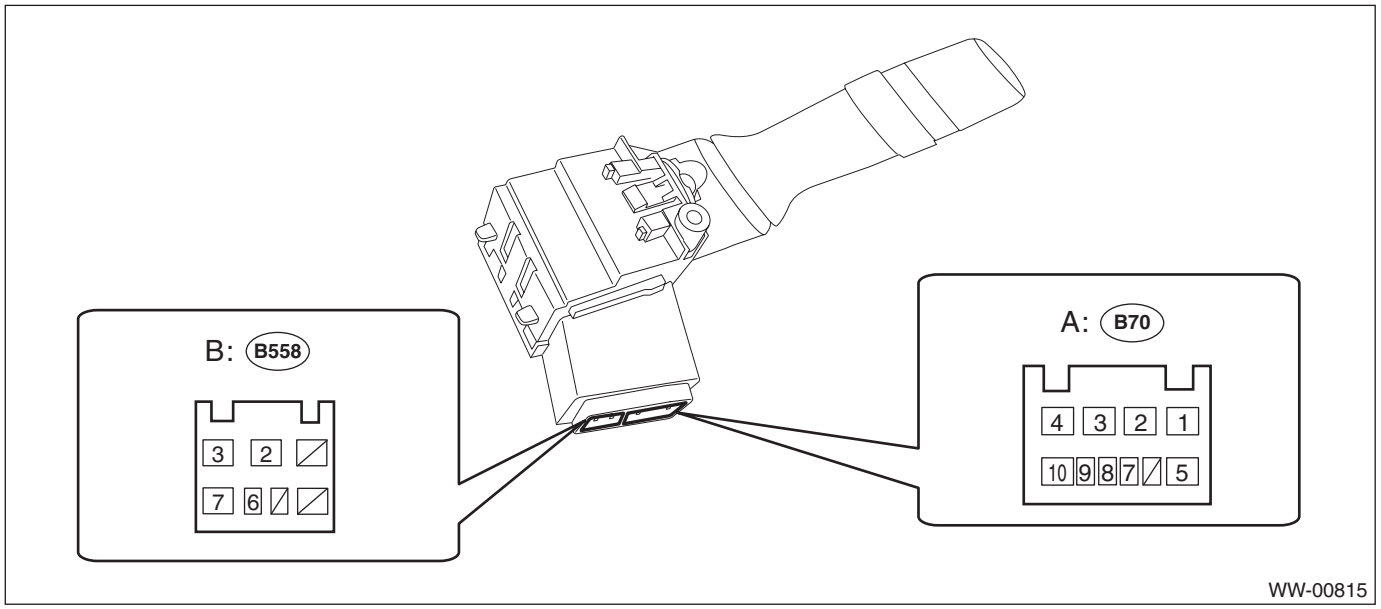

   (1) Set the voltmeter between terminals No. A2 (+) and No. B2 (–).
   (2) Connect the battery to connector. (Terminal No. A2 (+), terminal No. B2 & A3 (–))
   (3) Turn the switch assembly - combination wiper select to INT.
   (4) Connect the battery (+) to the terminal No. A2 for 5 seconds.
   (5) Connect the battery (–) to the terminal No. B2, and check the voltage between terminals No. A2 and No. A3 during intermittent operation.
   (6) Perform step (1) to (5) above when intermittent control switch is in MIN or MAX, and replace the switch if the operation is not as specified.

Intermittent stationary time
MIN: Approx. 2 seconds
MAX: Approx. 16 seconds

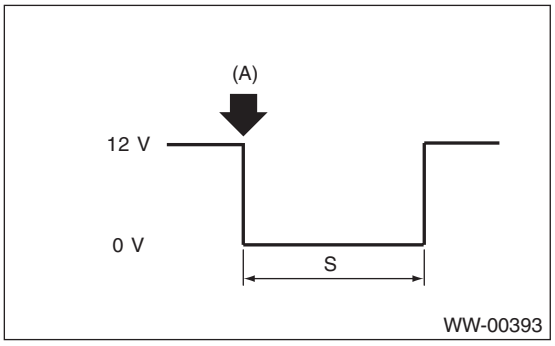

(A): Connect the battery (–) to the terminal No. B2.
S: Intermittent downtime (sec.)

3. REAR WIPER

1) Check input of body integrated unit
Check the input signal when the rear wiper switch is operated using Subaru Select Monitor.
(1) Turn the ignition switch to ON.
(2) Operate the rear wiper switch to each position of ON, INT and Washer ON.
(3) Does the input signal change corresponding to the switch operation?
- **Yes** → Go to step 4.
- **No** → Go to step 2.

2) Check harness
(1) Turn the ignition switch to OFF, disconnect the ground cable from battery. <Ref. to NT-5, BATTERY, NOTE, Note.>

NOTE:
For the 12 volt engine restart battery of HEV model, disconnect the ground terminal from 12V engine restart battery sensor.
(2) Disconnect the connector of body integrated unit and wiper switch.
(3) Measure the resistance between body integrated unit and wiper switch.

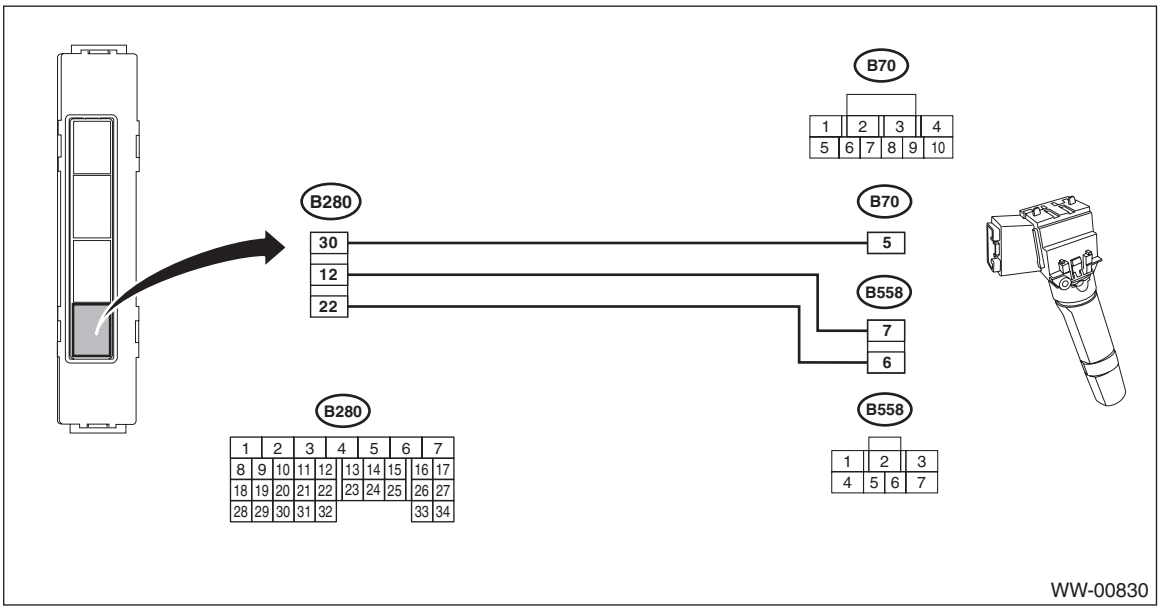

Connector & terminal
(B280) No. 30 — (B70) No. 5:
(B280) No. 22 — (B558) No. 6:
(B280) No. 12 — (B558) No. 7:
(4) Is the resistance less than 10 Ω?
- **Yes** → Go to step 3.
- **No** → Repair the harness between the body integrated unit and wiper switch.

3) Check input voltage of body integrated unit
(1) Connect the ground cable to battery.
(2) Turn the ignition switch to ON and check the input voltage of body integrated unit.

Connector & terminal
(i84) No. 6 (+) — Chassis ground (–):
(B281) No. 3 (+) — Chassis ground (–):
(3) Is the voltage 10 V or more?
- **Yes** → Go to step 4.
- **No** → Check the harness and fuse.

4) Check output of body integrated unit
Check the output signal when the rear wiper switch is operated using Subaru Select Monitor.
(1) Turn the ignition switch to ON.
(2) Operate the rear wiper switch to ON and Washer ON.
(3) When the operation in step (2) is performed, check the output signal of body integrated unit to rear wiper motor.
(4) When the rear wiper switch is set to ON, is ON output continuous? Also, when the washer is set to ON, is ON output?
- **Yes** → Go to step 5.
- **No** → Replace the body integrated unit. <Ref. to SL-82, Body Integrated Unit.>

5) Check output of body integrated unit
Check the output signal when the rear wiper switch is operated using Subaru Select Monitor.
(1) Turn the ignition switch to ON.
(2) Set the rear wiper switch to INT.
(3) When the operation in step (2) is performed, check the output signal of body integrated unit.
(4) When the rear wiper switch is set to INT, is ON/OFF output repeated? (INT OFF time (when vehicle parked): 12 seconds)
- **Yes** → Go to step 8.
- **No** → Go to step 6.

6) Check harness between body integrated unit and rear wiper motor
(1) Turn the ignition switch to OFF, disconnect the ground cable from battery. <Ref. to NT-5, BATTERY, NOTE, Note.>

NOTE:
For the 12 volt engine restart battery of HEV model, disconnect the ground terminal from 12V engine restart battery sensor.
(2) Disconnect the connector of body integrated unit and wiper switch.
(3) Measure the resistance between the harness connector terminals of the body integrated unit and rear wiper motor.

Connector & terminal
(B280) No. 6 — (B97) No. 11:
(4) Is the resistance less than 10 Ω?
- **Yes** → Go to step 7.
- **No** → Repair the open circuit of the harness between body integrated unit and rear wiper motor.

7) Check stop position circuit of the rear wiper motor
(1) Disconnect the harness connector of the motor assembly - rear wiper.
(2) Check the continuity of the circuit of rear wiper motor stop position.

Connector & terminal
(D43) No. 1 (+) — (D43) No. 4 (–):
(3) Is there continuity between terminals?
- **Yes** → Go to step 8.
- **No** → Replace the motor assembly - rear wiper.

8) Check power supply circuit of the rear wiper motor
(1) Disconnect the harness connector of the motor assembly - rear wiper.
(2) Turn the ignition switch to ON.
(3) Measure the voltage between the rear wiper motor harness connector terminal and chassis ground.

Connector & terminal
(D43) No. 3 (+) — Chassis ground (–):
(4) Is the voltage 10 V or more?
- **Yes** → Go to step 9.
- **No** → Check the fuse (No. 27 in main fuse box).

9) Check ground circuit of rear wiper motor
(1) Turn the ignition switch to OFF.
(2) Measure the resistance between the rear wiper motor harness connector terminal and chassis ground.

Connector & terminal
(D43) No. 4 — Chassis ground:
(3) Is the resistance less than 10 Ω?
- **Yes** → Go to step 10.
- **No** → Repair the open circuit of the rear wiper motor ground circuit.

10) Check harness between body integrated unit and rear wiper motor
(1) Turn the ignition switch to OFF.
(2) Disconnect the harness connector of body integrated unit.
(3) Disconnect the harness connector of the motor assembly - rear wiper.
(4) Measure the resistance between the harness connector terminals of the body integrated unit and rear wiper motor.

Connector & terminal
(B280) No. 7 — (D43) No. 2:
(5) Is the resistance less than 10 Ω?
- **Yes** → Go to step 11.
- **No** → Repair the open circuit of the harness between body integrated unit and rear wiper motor.

11) Check output of body integrated unit
(1) Connect the harness connector of body integrated unit.
(2) Disconnect the connector of the motor assembly - rear wiper.
(3) Turn the ignition switch to ON.
(4) Measure the voltage between rear wiper motor connector and chassis ground.

Connector & terminal
(D43) No. 2 (+) — Chassis ground (–):
(5) Is the voltage less than 1.5 V when the rear wiper switch is OFF, and is the voltage 10 V or more when the rear wiper switch is ON?
- **Yes** → Go to step 12.
- **No** → Replace the body integrated unit. <Ref. to SL-82, Body Integrated Unit.>

12) Check operation of rear wiper motor
(1) Remove the motor assembly - rear wiper.
(2) Check the rear wiper motor. <Ref. to WW-43, INSPECTION, Rear Wiper Motor.>
(3) Does the rear wiper motor rotate normally?
- **Yes** → Finished.
- **No** → Replace the motor assembly - rear wiper.

NOTE:
Rear wiper intermittent time

Select lever position	Vehicle speed (km/h (MPH))	Intermittent stopping time (sec.)
		5 door model/XV model
Rev.	—	Continuous operation
Except for reverse mode	80 — (50 —)	3
	50 — 80 (31 — 50)	6
	20 — 50 (12 — 31)	9
	0 — 20 (0 — 12)	12

5. Wiper Blade

A: REMOVAL

1. FRONT

While pushing the locking clip (A) up, pull out the blade assembly - windshield wiper in the direction of the arrow, and remove it from the arm assembly - windshield wiper.

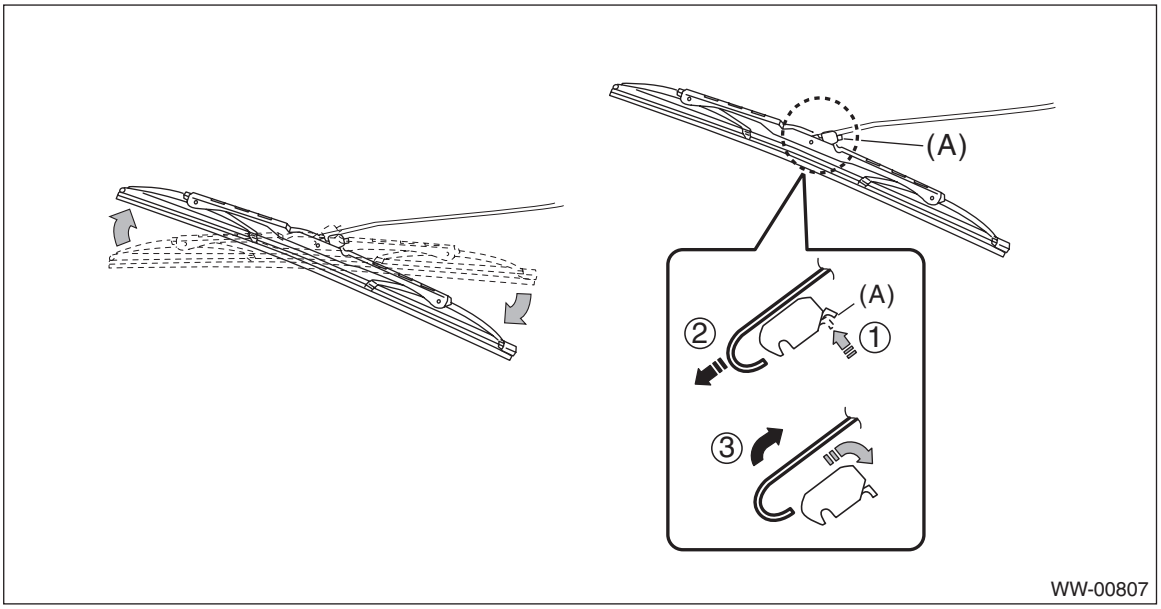

2. REAR

Turn the blade assembly - rear wiper in the direction of arrow (A) and remove it from the arm assembly - rear wiper.

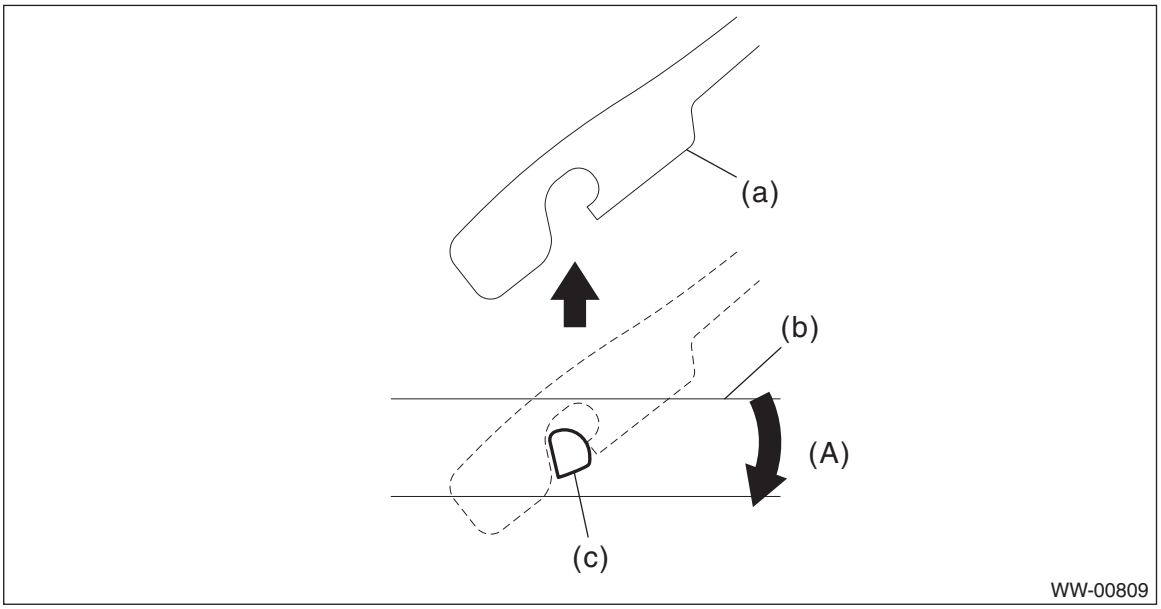

(A) Turn the wiper blade.

(a) Arm ASSY - rear wiper (b) Blade ASSY - rear wiper (c) Wiper blade attachment section

B: INSTALLATION

1) Install each part in the reverse order of removal.
2) Confirm that the clip is locked securely.

C: DISASSEMBLY

1. FRONT

Pull side (A) of the wiper rubber stopper, and remove the rubber assembly - windshield wiper from the blade assembly - windshield wiper.

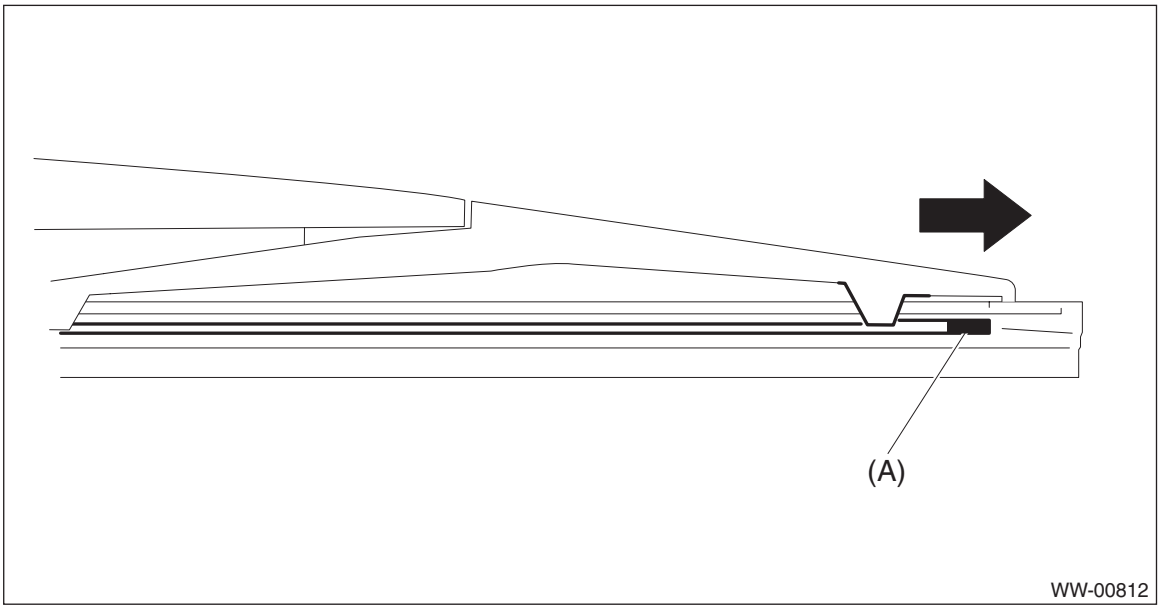

2. REAR

Slightly pull the top of the rubber assembly - rear wiper from the stopper (A), and pull out completely.

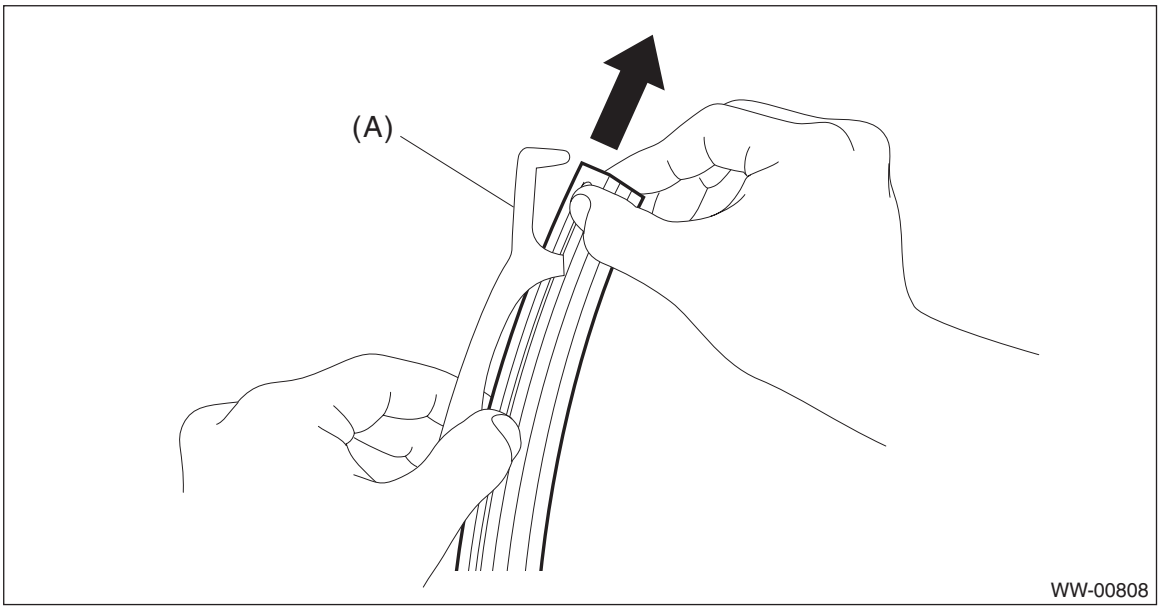

D: ASSEMBLY

1. FRONT

1) Insert the rubber assembly - windshield wiper onto the blade - windshield wiper so that the stopper is in the position shown in the figure.

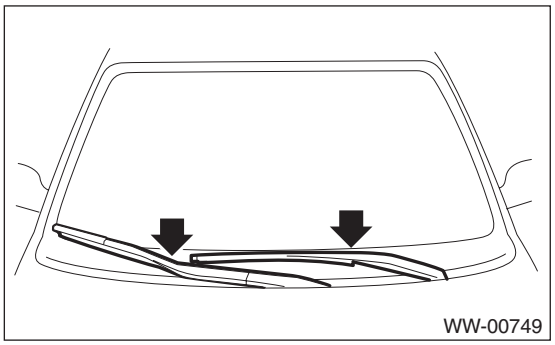

2) Make sure the rubber assembly - windshield wiper is securely fastened to the pull stopper (A).

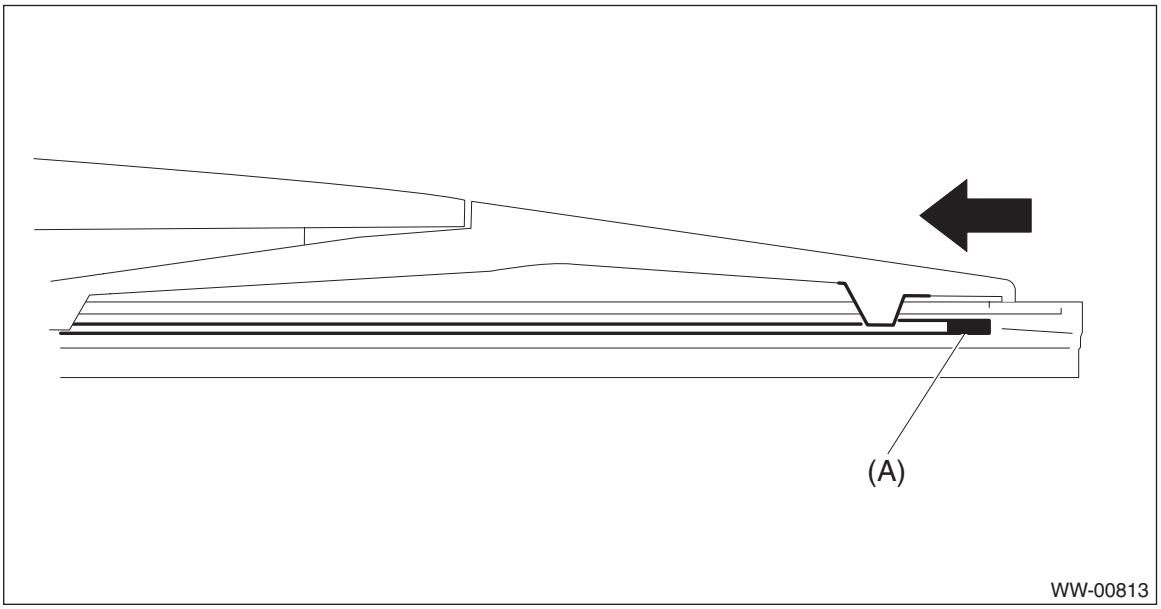

2. REAR

1) Insert the rubber assembly - rear wiper into claw (B).

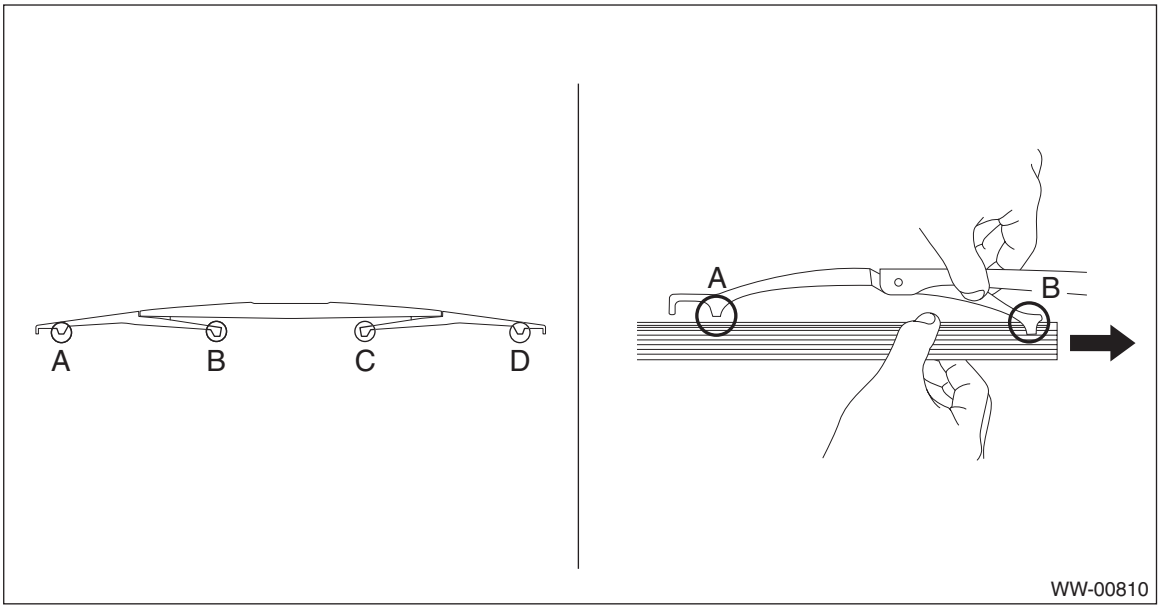

2) Insert the rubber assembly - rear wiper until its top end protrudes approx. 20 mm (0.79 in) from stopper (D).
3) Insert the rubber assembly - rear wiper into claw (A).

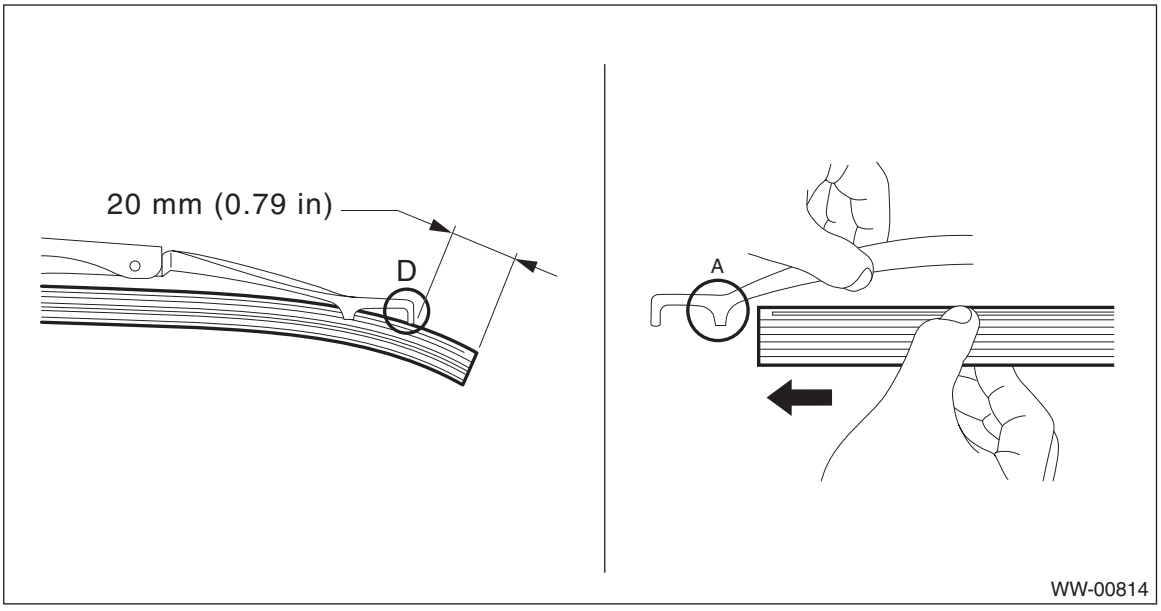

E: INSPECTION

1) When the wiper does not operate properly, inspect the following item.
- Make sure the movable part of the blade assembly - rear wiper moves smoothly.
- Check that the rubber assembly - rear wiper rubber is not deformed or damaged.

2) Replace with a new part if damage is found.

6. Washer Tank and Motor

A: REMOVAL

1. WASHER TANK

1) Open the hood COMPL - front.
2) Disconnect the ground cable from battery. <Ref. to NT-5, BATTERY, NOTE, Note.>

NOTE:
For the 12 volt engine restart battery of HEV model, disconnect the ground terminal from 12V engine restart battery sensor.

3) Remove the bumper face - front.
   (1) Remove the clips and screws, and turn over the mud guard - front, and then disconnect the connectors of the fog light assembly - front on the LH and RH sides. (Model with fog light)

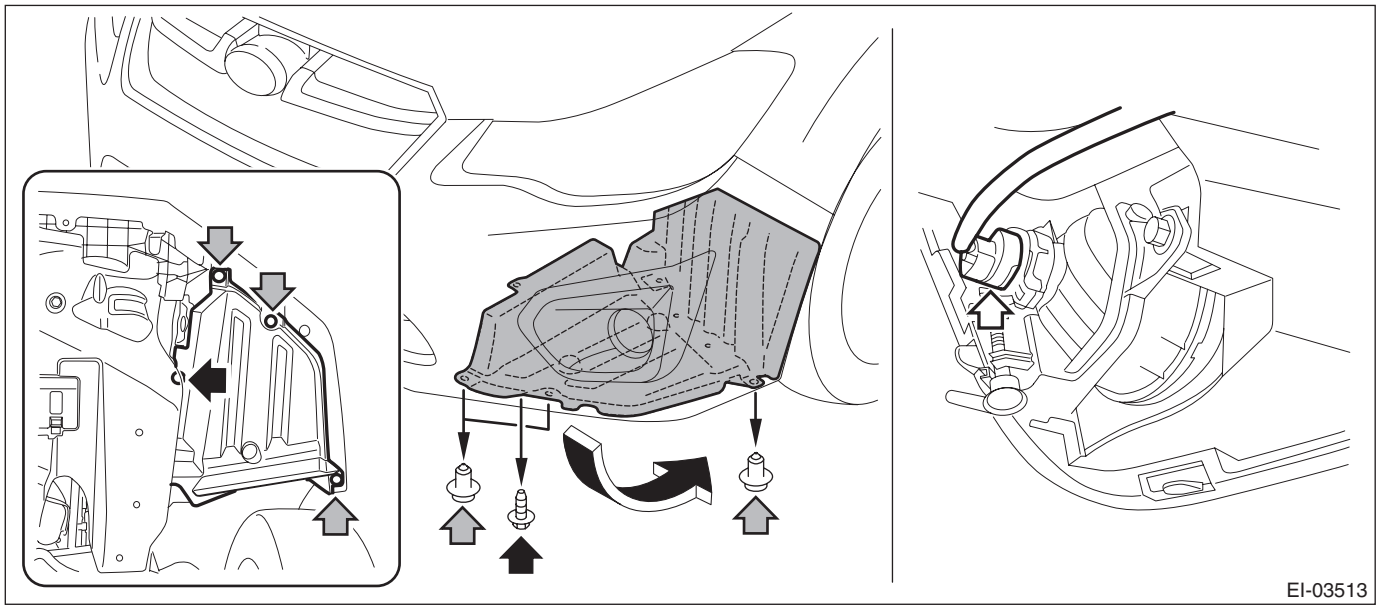

(2) Remove the clips at the upper side of the bumper.
(3) Remove the clips from the fender.
(4) Remove the clips at the lower side of bumper.

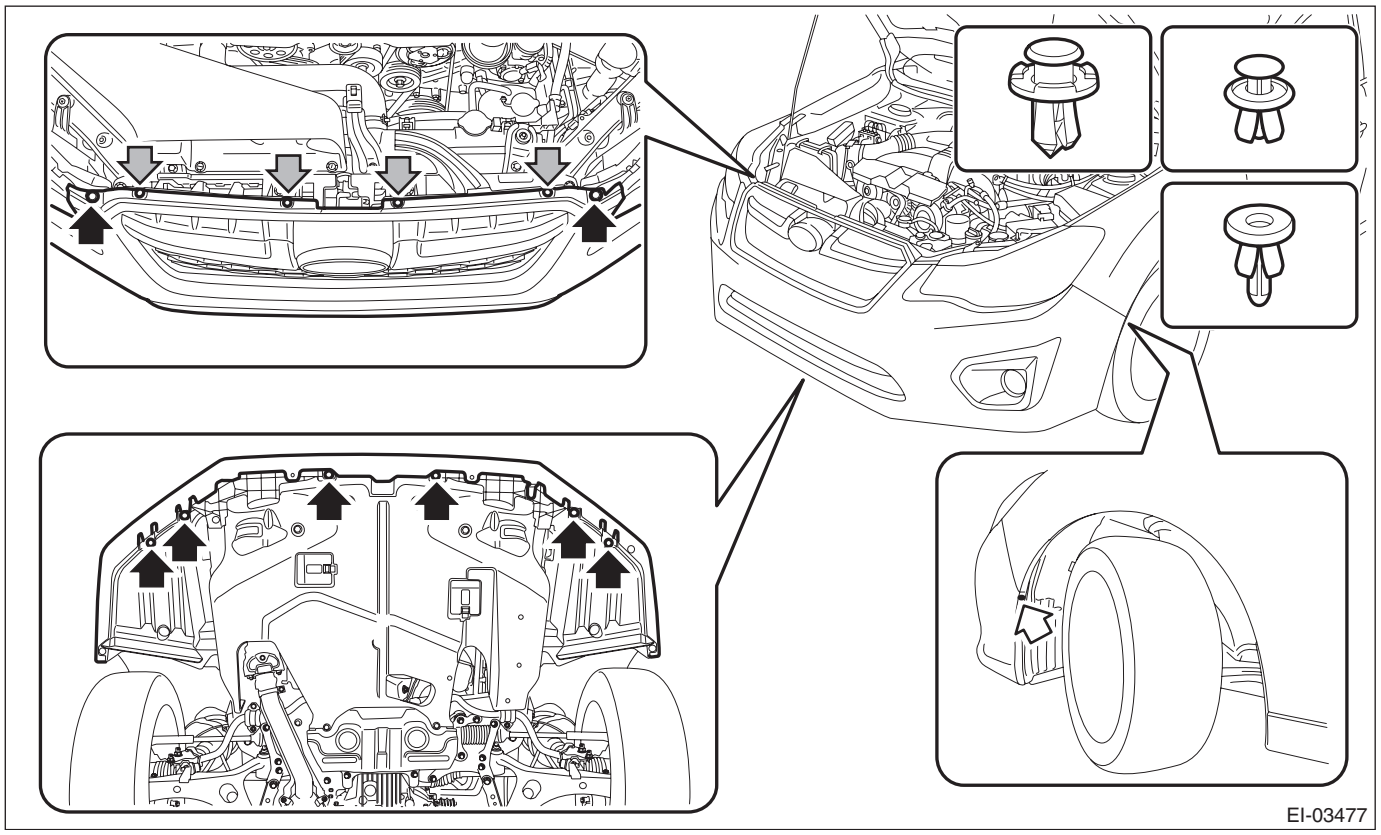

(5) Apply protective tape (A) to the light assembly - head.
(6) Detach the flange section on the bumper face side from the bracket - front bumper side.

CAUTION:
Do not pull forcibly. It may damage the flange section on the bumper face - front side when it comes off from the claws of the bracket - front bumper.

NOTE:
Remove the bumper face - front according to the following procedures.

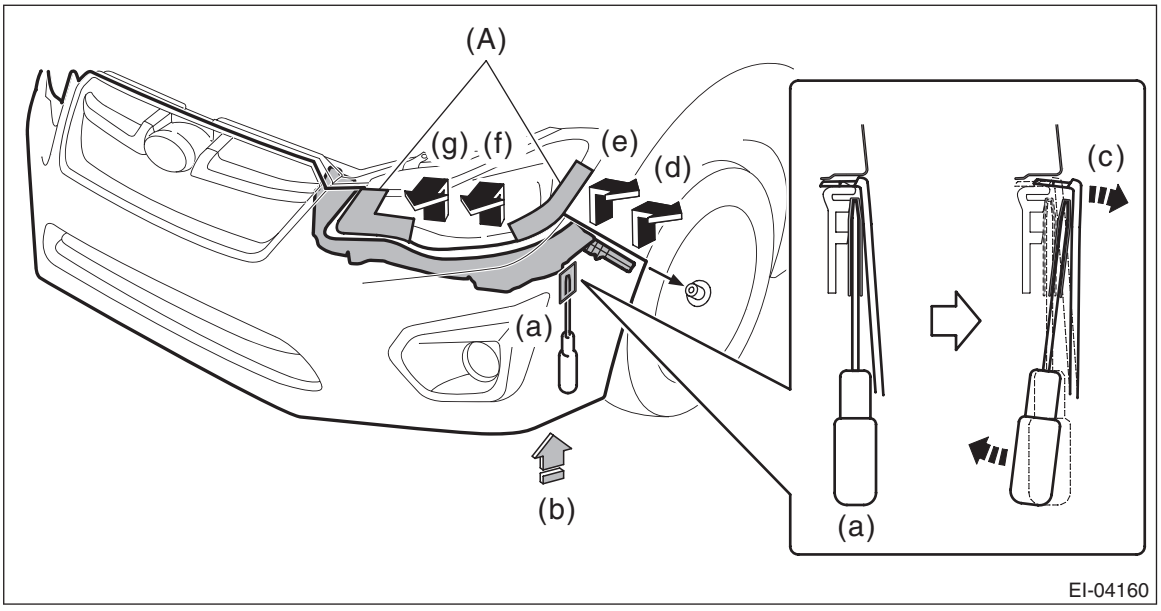

1. Remove the clips, turn over the mud guard, and insert a flat tip screwdriver with protection for damage prevention into the clearance between bumper and bracket. (a)
2. Push out the bumper with the flat tip screwdriver while pushing up the bumper from below. (b), (c)
3. Release the engagement of clips in the order of (d) to (g) while pushing up the bumper from below.
4. Perform the same procedures to remove the opposite side.

4) Remove the tank - washer assembly.

(1) Remove the clip of the holder - windshield washer tank.

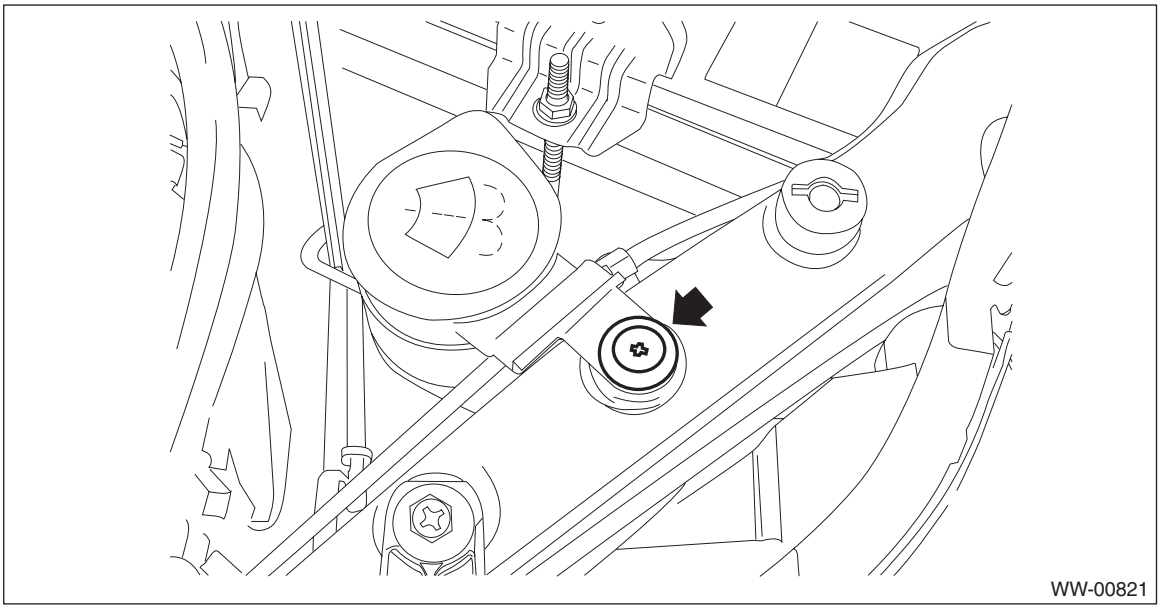

(2) Disconnect the connector from the motor pump assembly - washer and the sensor - washer tank, and then remove the harness clip.

(3) Prepare a container before disconnecting the hose - washer, and drain all washer fluid in the tank - washer.

(4) Remove the bolt and nuts and remove the tank - washer assembly.

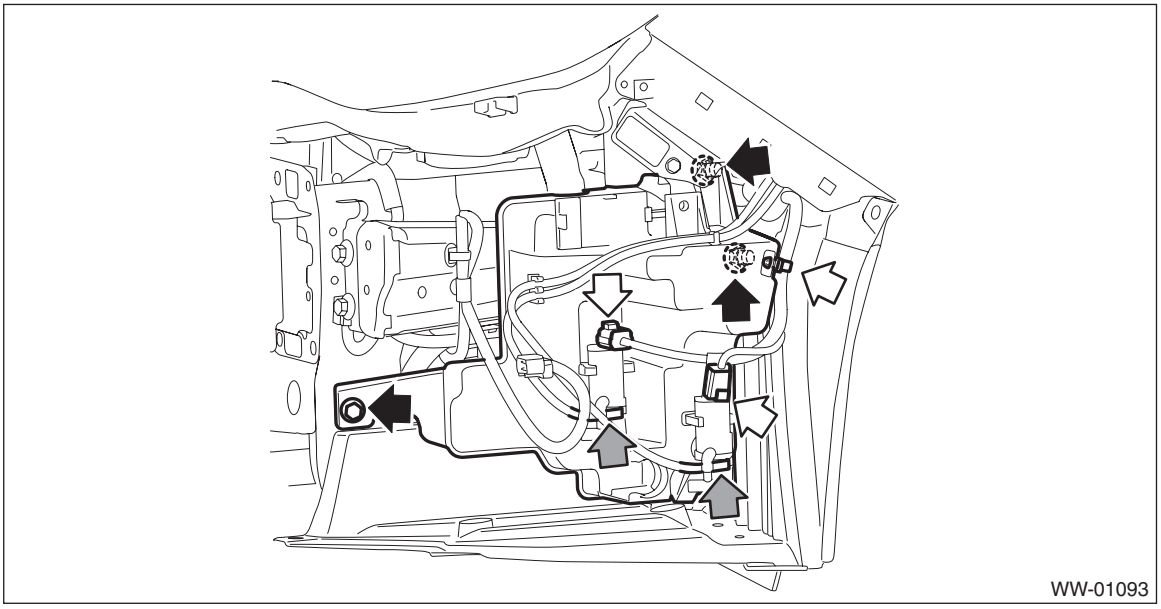

2. WASHER MOTOR

1) Open the hood COMPL - front.
2) Disconnect the ground cable from battery. <Ref. to NT-5, BATTERY, NOTE, Note.>

NOTE:
For the 12 volt engine restart battery of HEV model, disconnect the ground terminal from 12V engine restart battery sensor.

3) Remove the clips and screws, turn over the mud guard - front LH, and disconnect the connector of the fog light assembly - front. (Model with fog light)

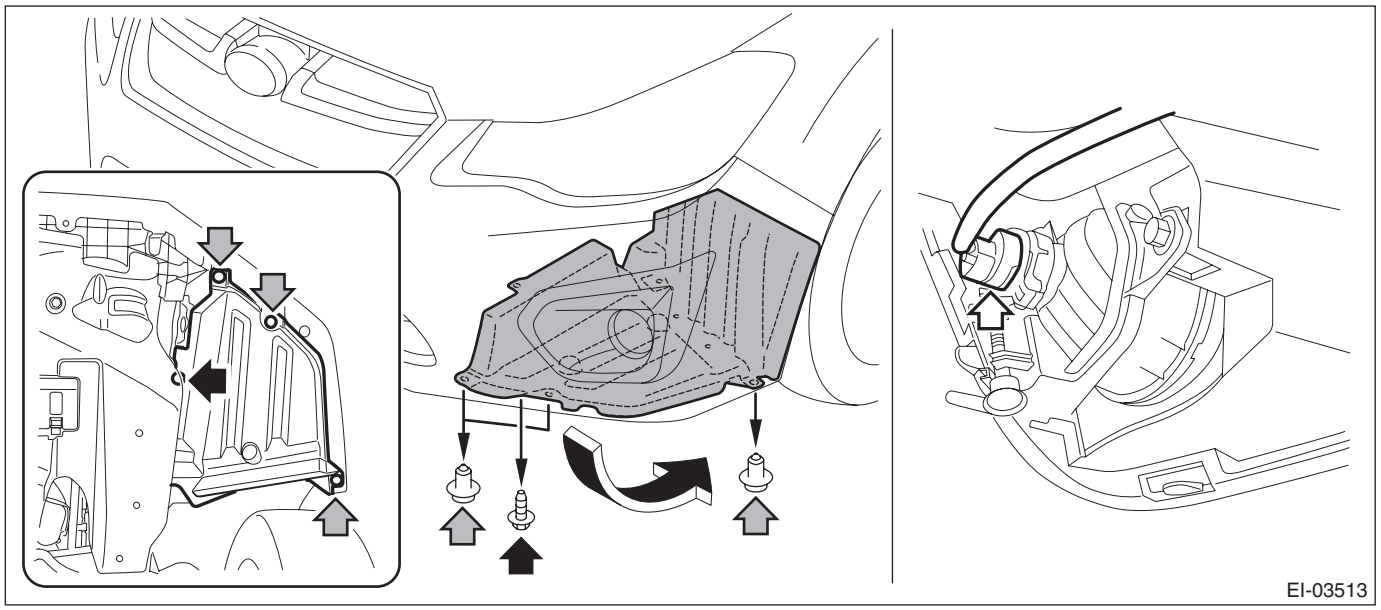

4) Disconnect the connector from the motor pump assembly - washer and remove the harness clip.
5) Prepare a container before disconnecting the hose - washer, and drain all washer fluid in the tank - washer.
6) Remove the motor pump assembly - washer from the tank - washer.

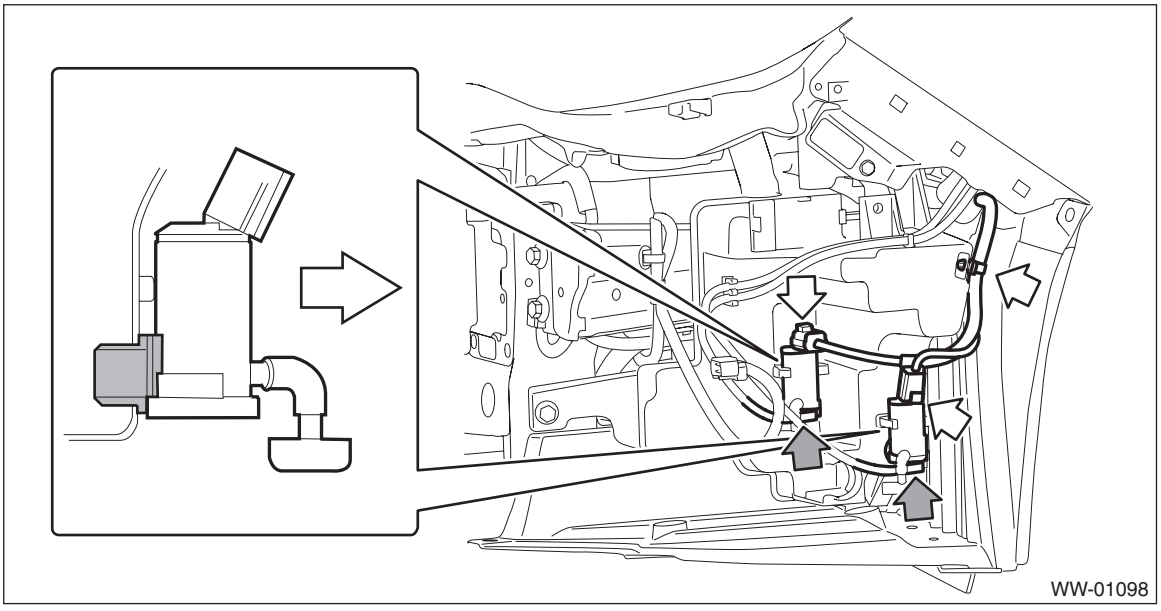

B: INSTALLATION

1) Install each part in the reverse order of removal.

CAUTION:

• Install the bumper face - front so that the front end of the under cover (b) comes inside the bumper face - front (a).

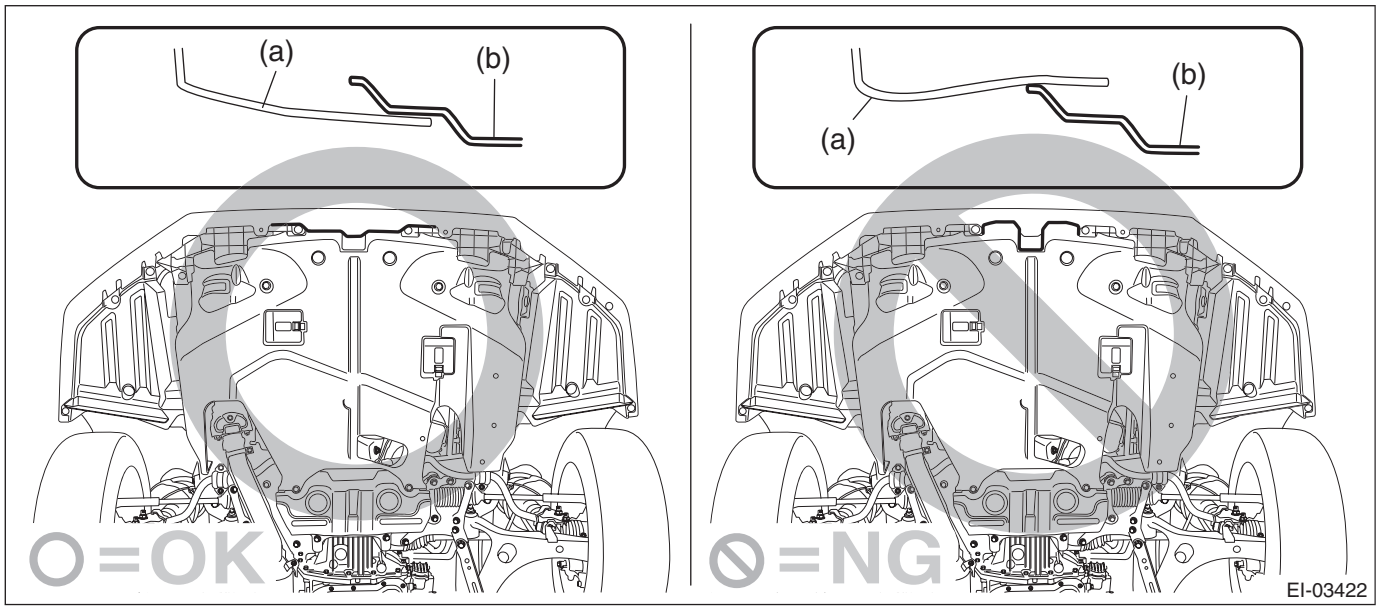

• Before installing the bumper face, match the claws on the bracket - front bumper with the engaging position of flange section on the bumper face side. If the engaging position is not correct, the flange section may be broken or the clearance between fender panel and bumper face may not be uniform.

Tightening torque:
6.0 N·m (0.61 kgf-m, 4.4 ft-lb)

2) Add new washer fluid.

3) Adjust the fog light beam. (Model with fog light) <Ref. to LI-56, FOG LIGHT AIMING, ADJUSTMENT, Front Fog Light Assembly.>

C: INSPECTION

1. WASHER PUMP

Apply battery voltage to the connector terminal of the motor pump assembly - washer, and make sure that the motor operates.

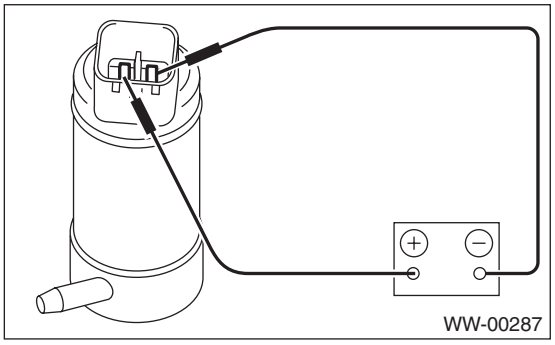

2. WASHER FLUID LEVEL SENSOR

1) Check the connection status of washer fluid level sensor connector.
2) Does the low washer fluid warning light illuminate after draining the washer fluid? And does the low washer fluid warning light go off after refilling the washer fluid?
- **Yes → Normal operation.**
- **No → Perform step 3.**

3) Using a tester, measure the voltage of the washer fluid level sensor connector.
   (1) Is the voltage approx. 8.5 V or more?
   - **Yes → Perform step 4.**
   - **No → Check harness, meter and integrated unit, and replace if necessary.**

4) Does the meter indicator illuminate if you short the washer fluid level sensor connector?
- **Yes → Perform step 5.**
- **No → Check meter and integrated unit, and replace if necessary.**

5) Using a tester, measure the resistance of the washer fluid level sensor.
   (1) Turn over the mud guard.
   (2) Measure the resistance of the washer fluid level sensor.

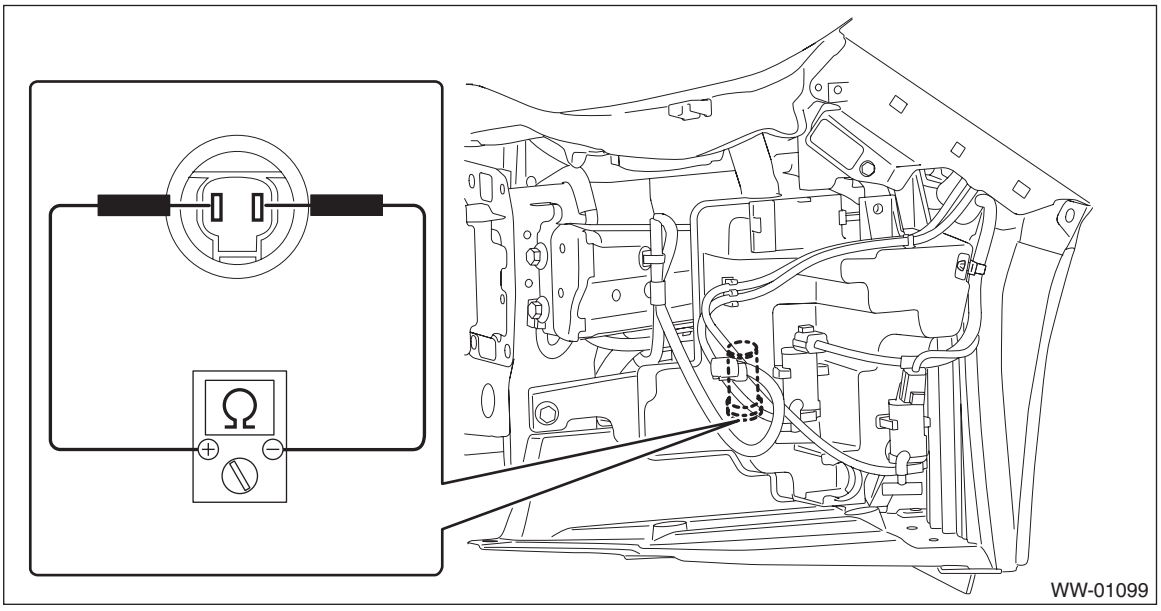

Amount of washer fluid in the tank	Standard
No remaining quantity (ON)	Less than 10 Ω
There is remaining quantity (OFF)	1 MΩ or more

   (3) Is the resistance within the standard?
   - **Yes → Normal operation.**
   - **No → Replace the washer fluid level sensor along with the washer tank.**

7. Front Wiper Arm

A: REMOVAL

1) Open the hood COMPL - front.
2) Remove the arm assembly - windshield wiper.
   (1) Remove the cover - windshield wiper arm.
   (2) Remove the nuts, and remove the arm assembly - windshield wiper.

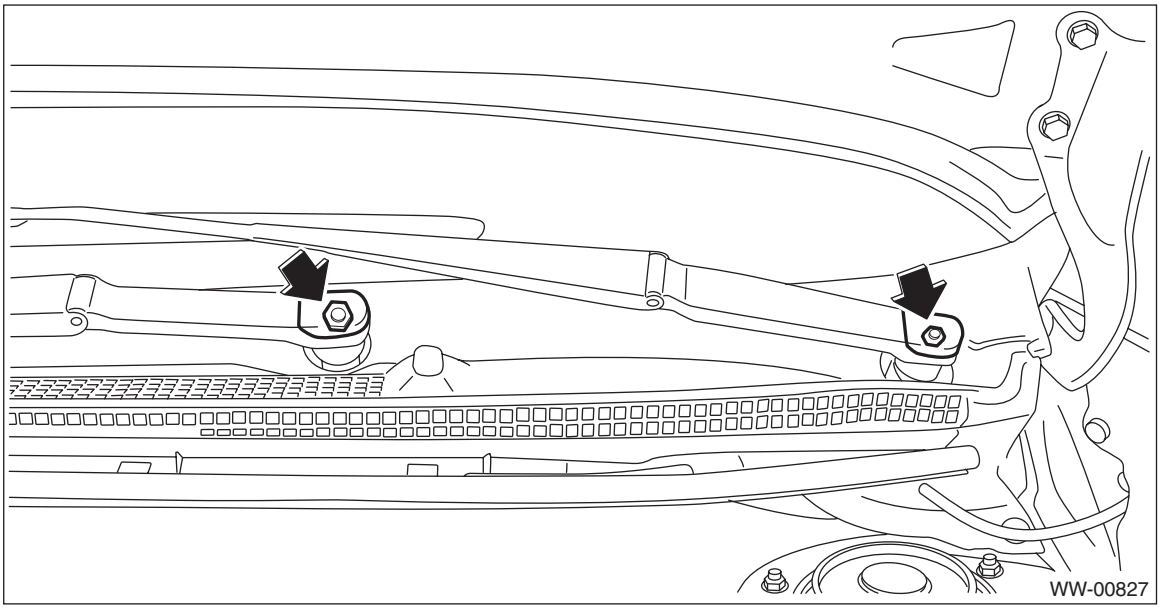

B: INSTALLATION

1) Install the arm assembly - windshield wiper.
   (1) Assemble the arm assembly - windshield wiper so that the blade assembly - windshield wiper is aligned to the ceramic print point mark of the windshield glass.

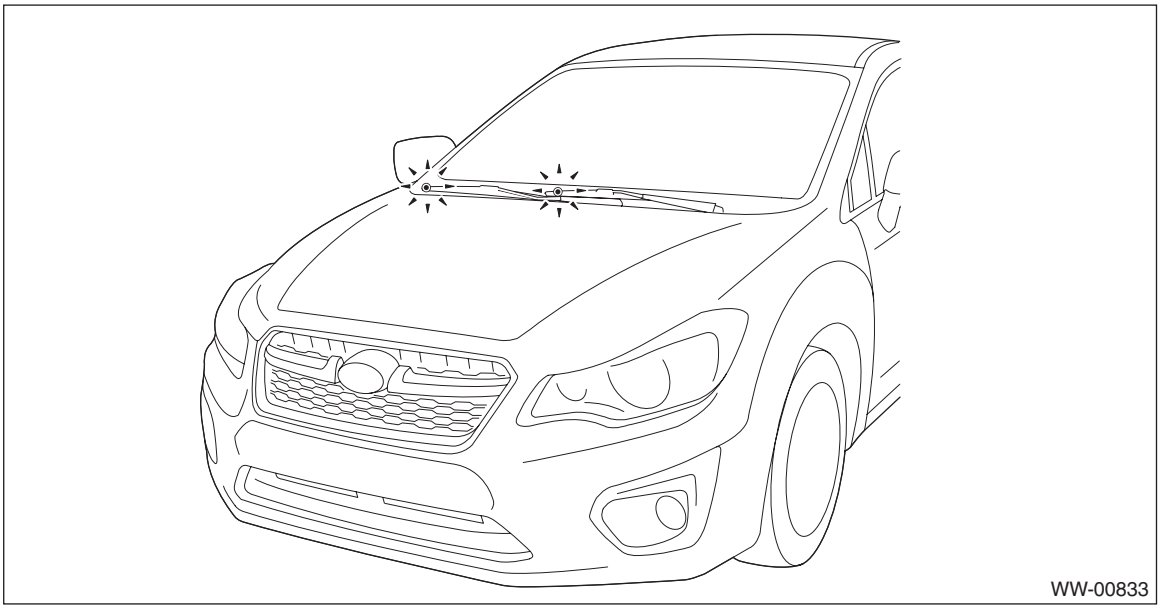

(2) Tighten the arm assembly - windshield wiper to specified torque and install the cap.

Tightening torque:
26 N·m (2.65 kgf-m, 19.2 ft-lb)

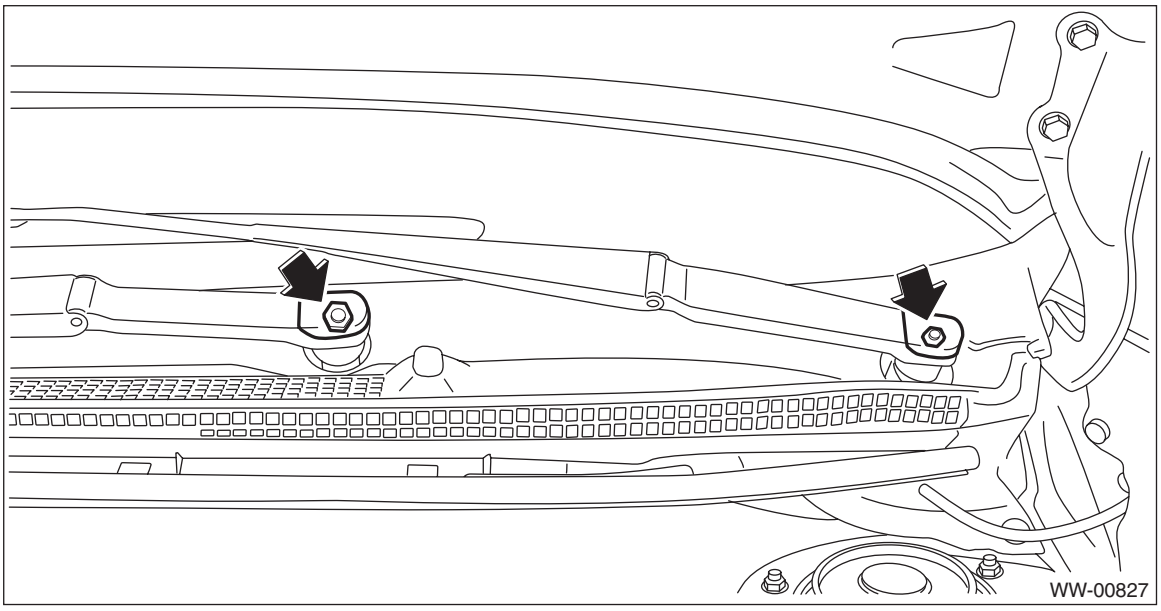

2) Check the position of windshield wiper. <Ref. to WW-27, ADJUSTMENT, Front Wiper Arm.>

C: ADJUSTMENT

1) Operate the windshield wiper once.
2) Check that the wiper blade is aligned with the point mark.

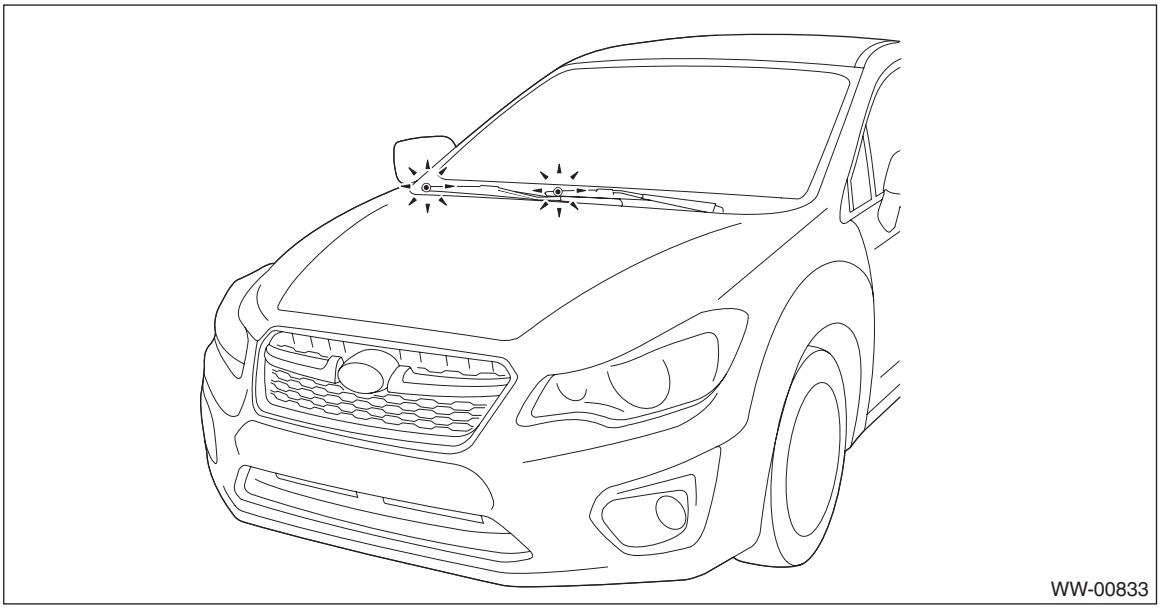

3) If the wiper blade is not aligned with the point mark, perform the removal and installation of the windshield wiper. <Ref. to WW-26, REMOVAL, Front Wiper Arm.>

8. Front Wiper Motor and Link

A: REMOVAL

1) Disconnect the ground cable from battery. <Ref. to NT-5, BATTERY, NOTE, Note.>

NOTE:
For the 12 volt engine restart battery of HEV model, disconnect the ground terminal from 12V engine restart battery sensor.

2) Remove the arm assembly - windshield wiper.
   (1) Remove the cover - windshield wiper arm.
   (2) Remove the nuts, and remove the arm assembly - windshield wiper.

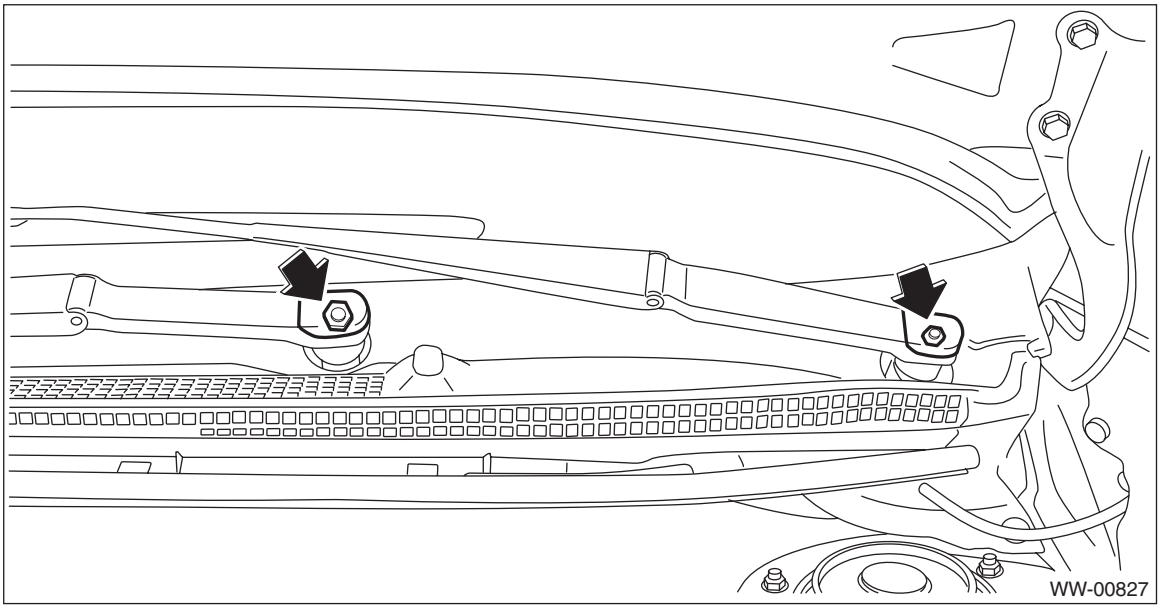

3) Remove the cowl panel - side.
   (1) Remove the clips.
   (2) Release the claws, and then remove the cowl panel - side.

CAUTION:
Pulling with excessive force may damage the cowl panel - side. If it is difficult to remove, use a plastic remover or equivalent tool.

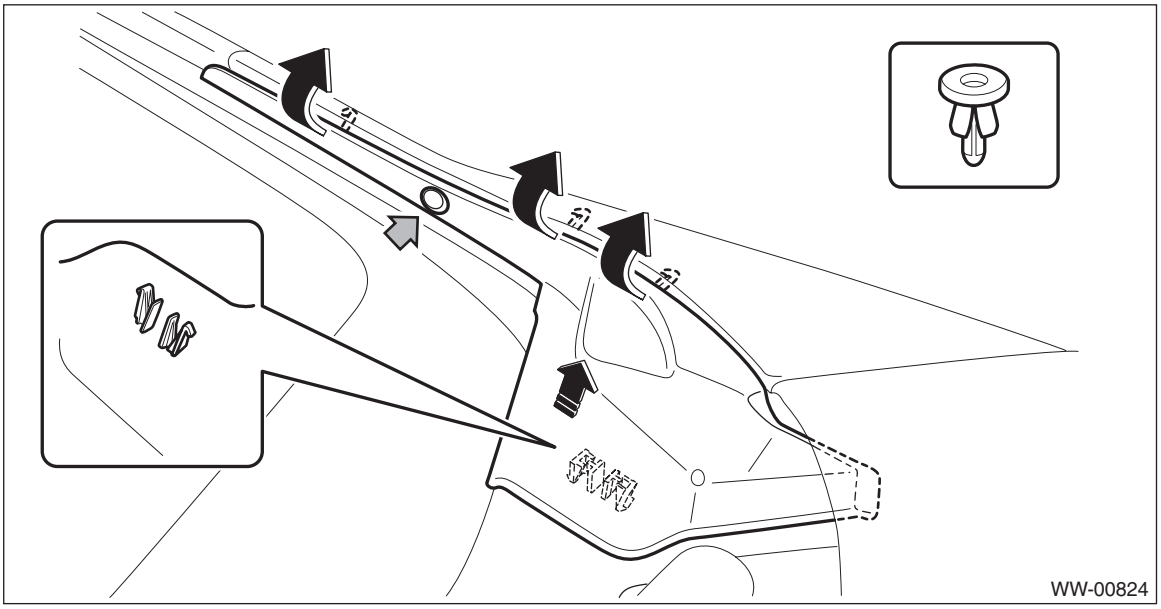

4) Remove the cowl panel assembly.

CAUTION:
Before removing the cowl panel, use an air blower and nylon brush to sweep gravel from the lower area of the front side of the glass.

(1) Disconnect the hose - windshield washer.
(2) Remove clips (A).
(3) Check the direction of the clip (B), and push the claws from both sides to remove it.

CAUTION:
When removing the clip (B), push the claw of the clip from both sides.
Be careful because the clips (B) can be damaged if you pull unnecessarily hard on them.

(4) Remove the cowl panel assembly by pulling it out towards the front of the vehicle.

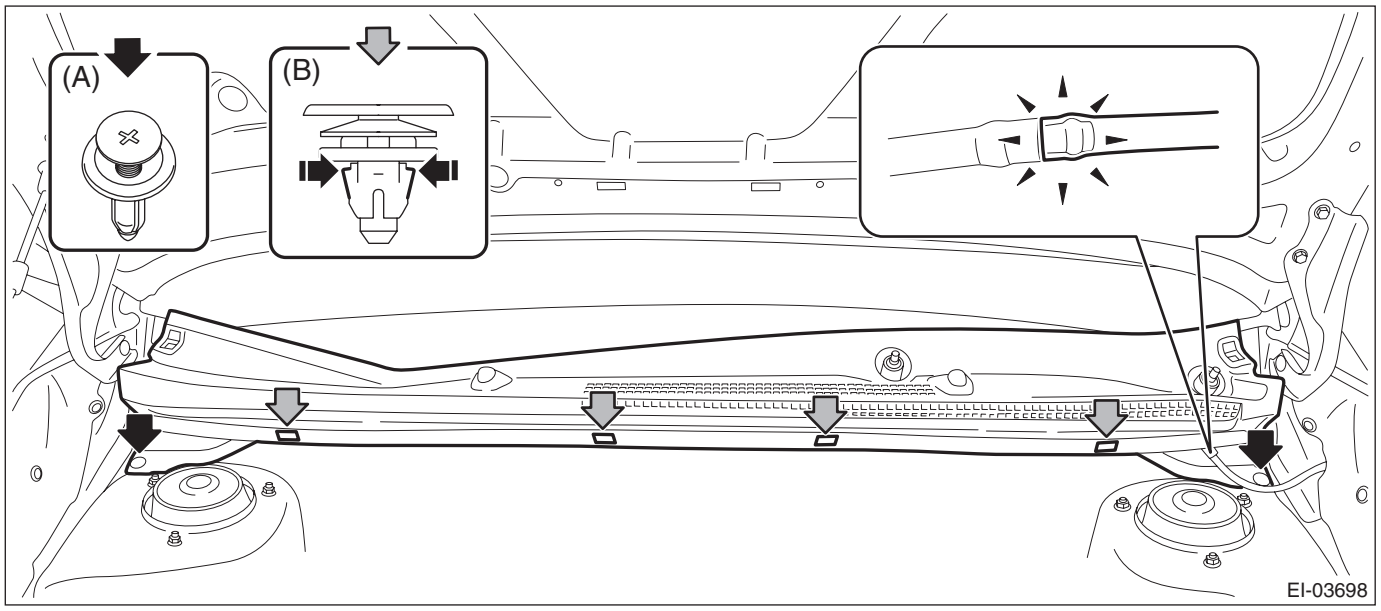

5) Remove the link assembly - windshield wiper.

(1) Disconnect the connector of the motor assembly - windshield wiper.
(2) Remove the bolts and harness clips, and remove the link assembly - windshield wiper.

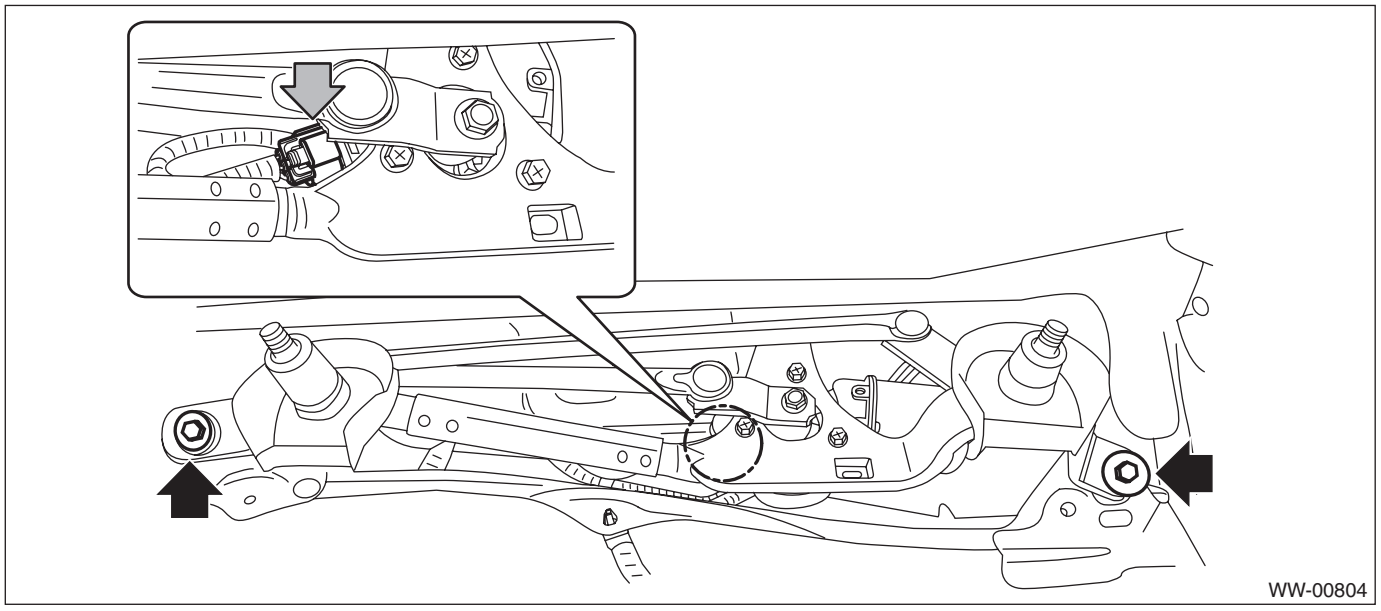

6) Remove the motor assembly - windshield wiper.
(1) Using a flat tip screwdriver wrapped with protective tape, disconnect the link assembly - windshield wiper from the link plate.
(2) Remove the bolts, and remove the motor assembly - windshield wiper.

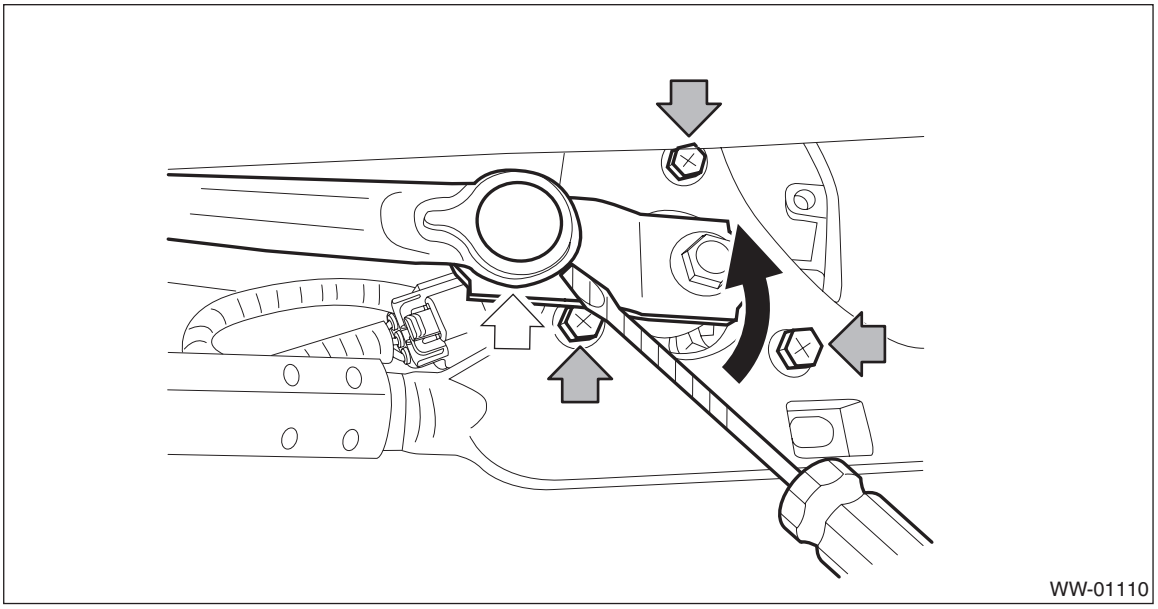

B: INSTALLATION

CAUTION:
Before installing the windshield glass and cowl panel, make sure there are no gravel in the installing area.

1) Connect the battery ground terminal.
2) To confirm that the motor assembly - windshield wiper is at the auto stop position, connect the harness to the motor and turn the wiper switch to ON/OFF once.

CAUTION:
During motor operation, do not touch the movable part.

3) Disconnect the ground cable from battery. <Ref. to NT-5, BATTERY, NOTE, Note.>

NOTE:
For the 12 volt engine restart battery of HEV model, disconnect the ground terminal from 12V engine restart battery sensor.

4) Install the motor assembly - windshield wiper.

CAUTION:
Set the component where the rod (B) and link plate (A) is aligned in a straight line.

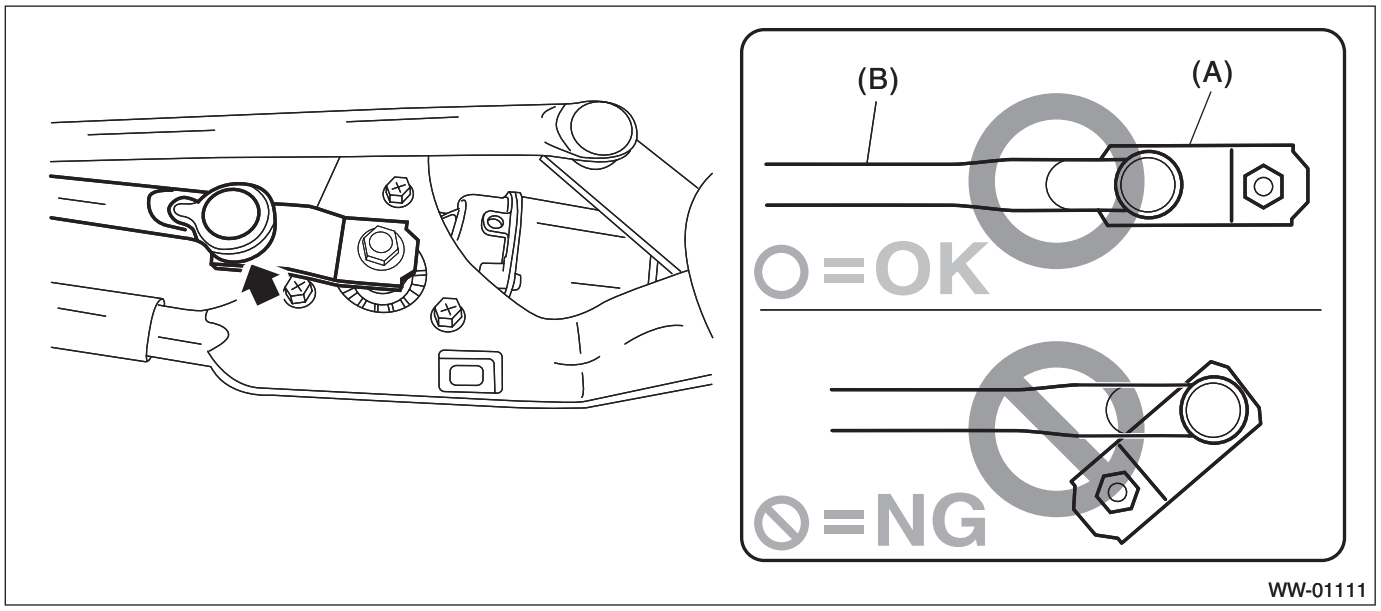

5) Install the link assembly - windshield wiper and cowl panel in the reverse order of removal.

Tightening torque:
Refer to "COMPONENT" of "General Description". <Ref. to WW-2, FRONT WIPER, COMPONENT, General Description.>

C: INSPECTION

1) When the battery is connected to the terminal of connectors, confirm that the motor operates at low speed.
2) When the battery is connected to the terminal of connectors, confirm that the motor operates at high speed.
3) Connect the battery to terminals of the connector, and remove the terminal connection with motor rotating at low speed, and stop the motor assembly - windshield wiper in mid-operation.
4) Connect the battery and check that the motor stops at the automatic stop position after the motor operates at low speed again.

CAUTION:
Fix the motor to prevent the motor from being shorted by moving during operation.

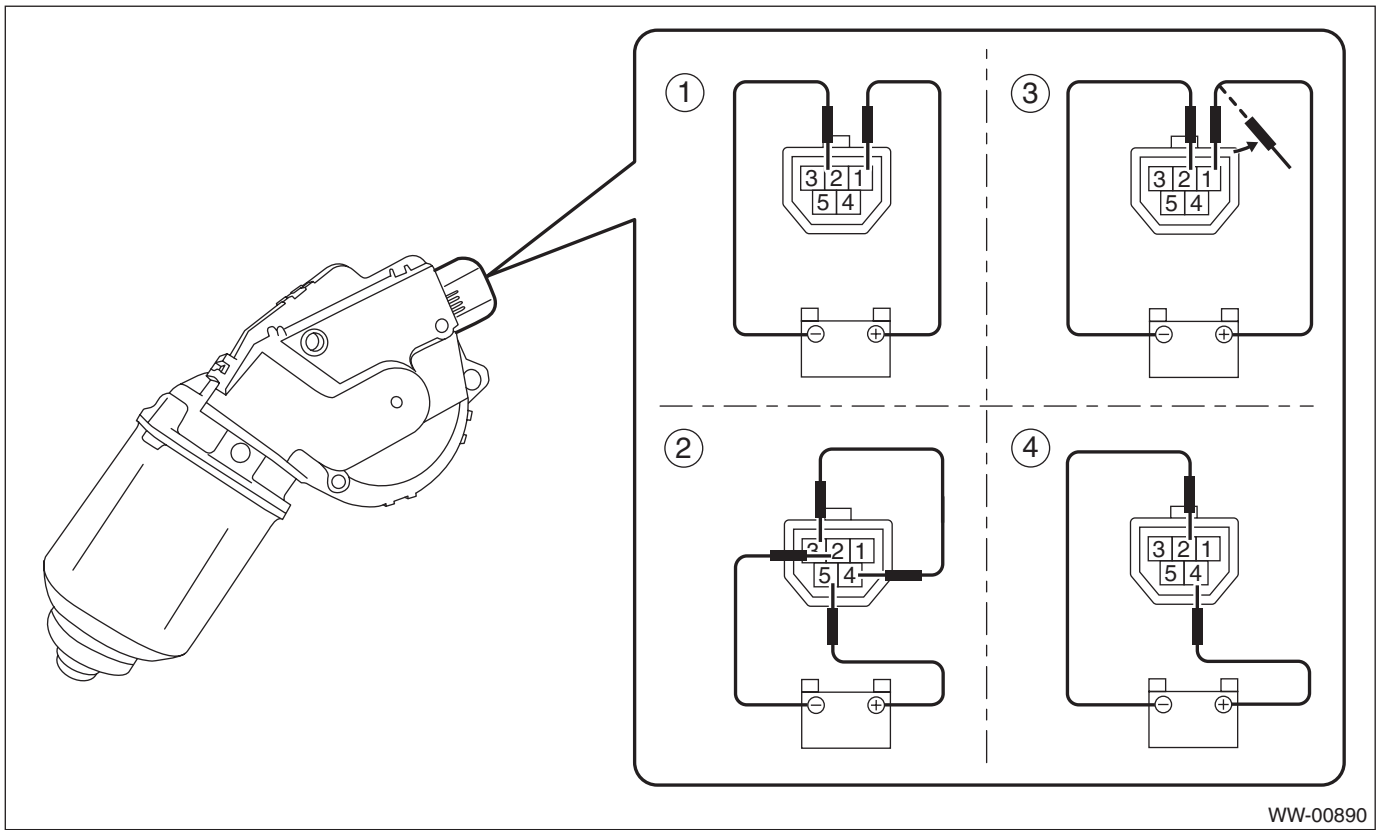

9. Front Washer Nozzle

A: REMOVAL

1) Open the hood COMPL - front.
2) Disconnect the ground cable from battery. <Ref. to NT-5, BATTERY, NOTE, Note.>

NOTE:
For the 12 volt engine restart battery of HEV model, disconnect the ground terminal from 12V engine restart battery sensor.

3) Remove the arm assembly - windshield wiper.
   (1) Remove the cover - windshield wiper arm.
   (2) Remove the nuts, and remove the arm assembly - windshield wiper.

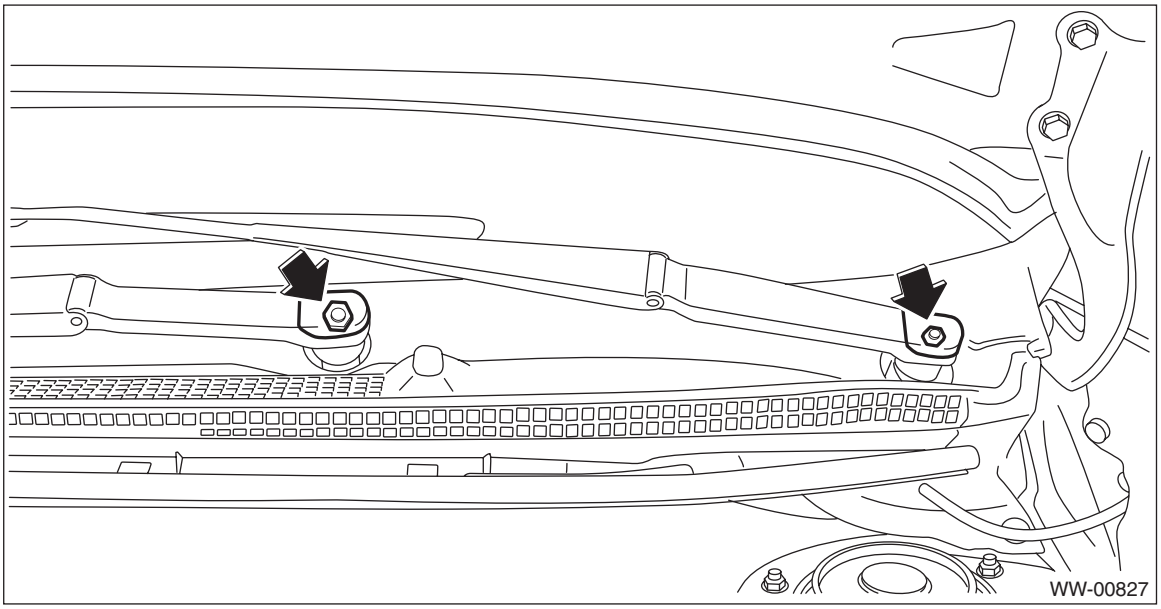

4) Remove the cowl panel - side.
   (1) Remove the clips.
   (2) Release the claws, and then remove the cowl panel - side.

CAUTION:
Pulling with excessive force may damage the cowl panel - side. If it is difficult to remove, use a plastic remover or equivalent tool.

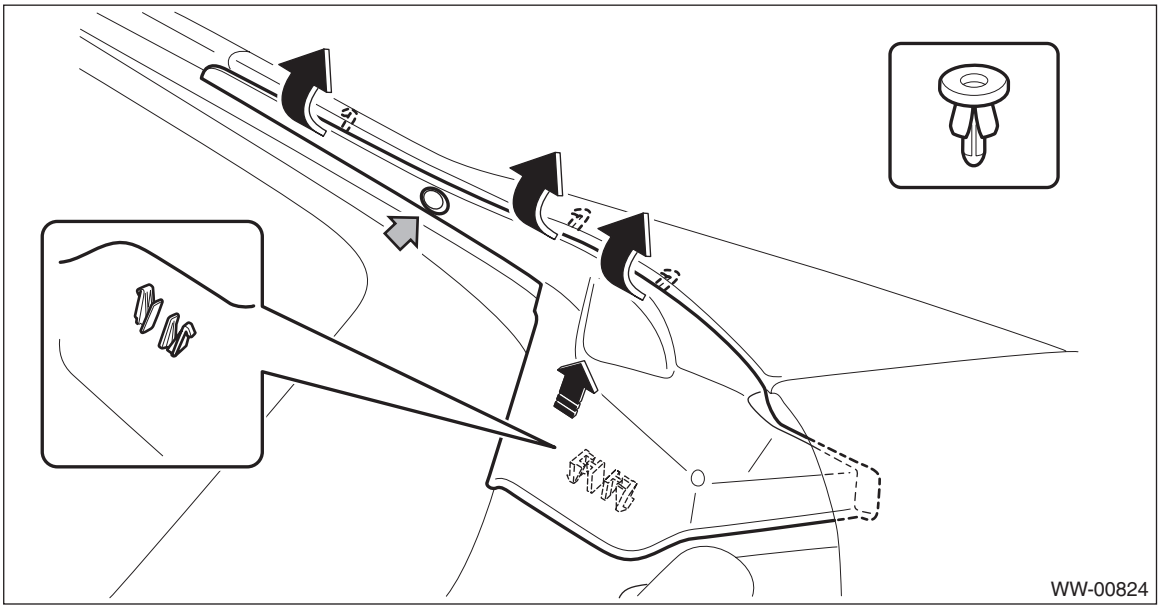

5) Remove the cowl panel assembly.

CAUTION:
Before removing the cowl panel, use an air blower and nylon brush to sweep gravel from the lower area of the front side of the glass.

(1) Disconnect the hose - windshield washer.
(2) Remove clips (A).
(3) Check the direction of the clip (B), and push the claws from both sides to remove it.

CAUTION:
When removing the clip (B), push the claw of the clip from both sides.
Be careful because the clips (B) can be damaged if you pull unnecessarily hard on them.

(4) Remove the cowl panel assembly by pulling it out towards the front of the vehicle.

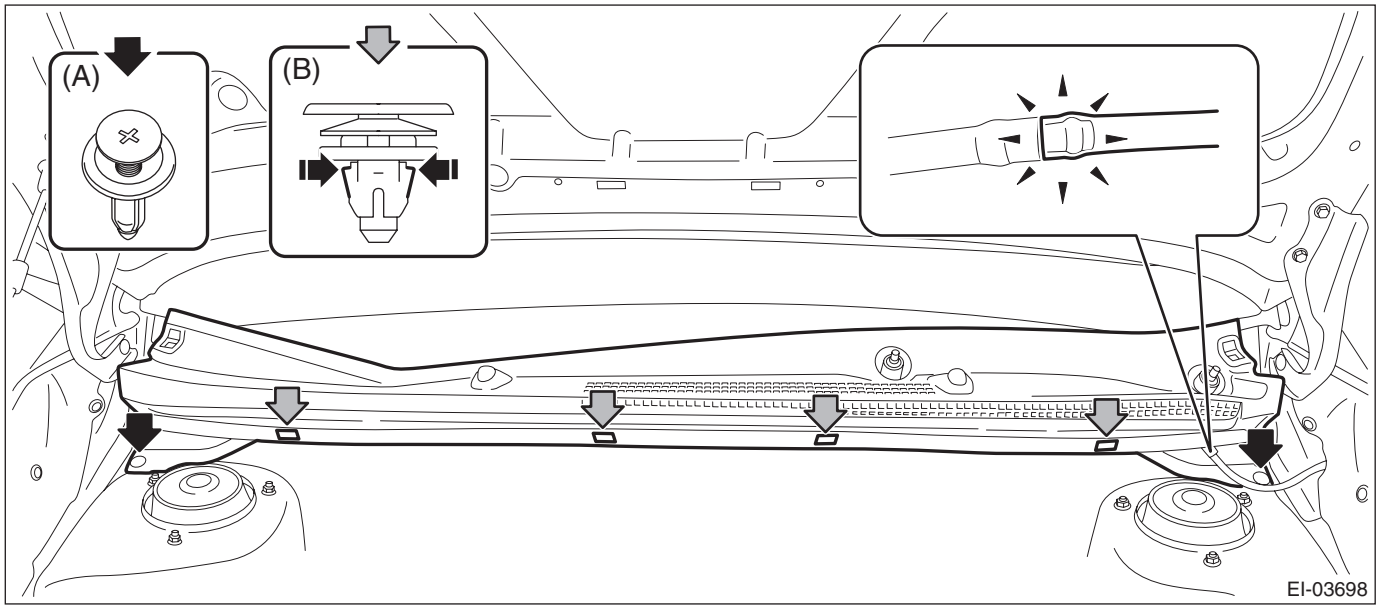

6) Disconnect the hose - windshield washer.

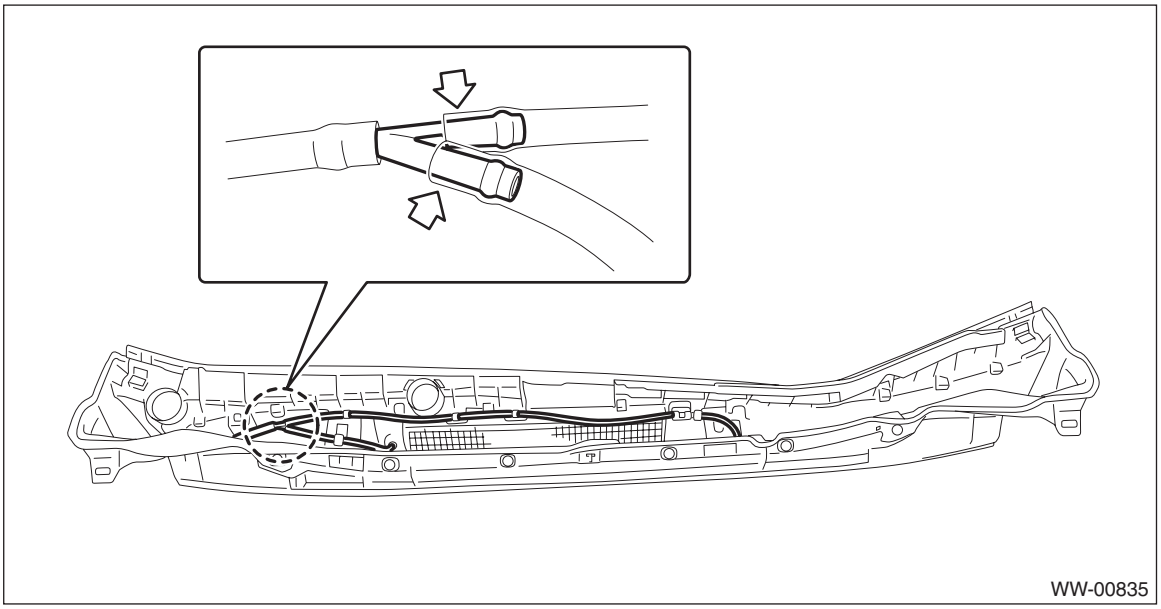

7) Remove the nozzle - windshield washer.
(1) Push the claw using a flat tip screwdriver, etc.
(2) When the nozzle - windshield washer lifts up, pull out the nozzle - windshield washer using a clip remover, etc.
(3) Disconnect the hose - windshield washer, and remove the nozzle - windshield washer.

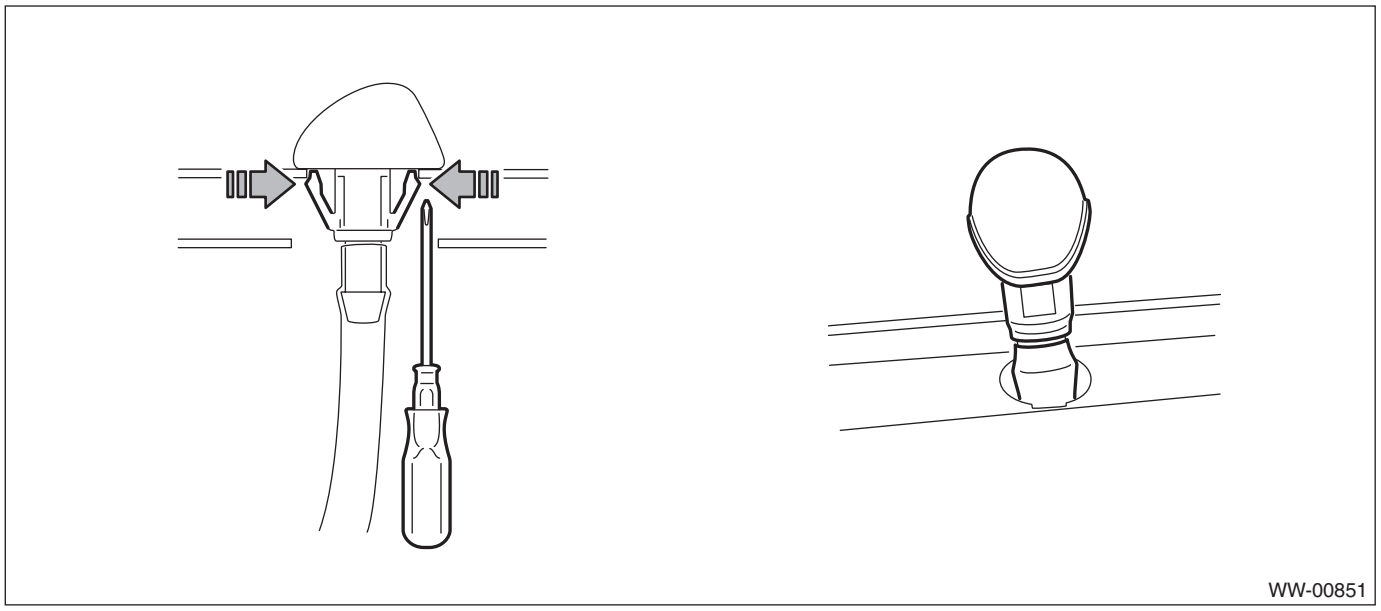

B: INSTALLATION

CAUTION:
Before installing the windshield glass and cowl panel, make sure there are no gravel in the installing area.

1) Install each part in the reverse order of removal.

Tightening torque:
Refer to "COMPONENT" of "General Description". <Ref. to WW-2, FRONT WIPER, COMPONENT, General Description.>

2) Adjust the position of the nozzle - windshield washer. <Ref. to WW-36, ADJUSTMENT, Front Washer Nozzle.>

C: INSPECTION

- Make sure the nozzle - windshield washer and the hose - windshield washer are not clogged.
- Make sure the hose - windshield washer is not bent.

D: ADJUSTMENT

1) Turn the wiper switch to OFF position.
2) While the vehicle is at a standstill, insert a precision screwdriver (A) wrapped with protection tape or equivalent into the clearance on the upper/lower side or the right/left side of the nozzle - windshield washer to perform necessary adjustment.

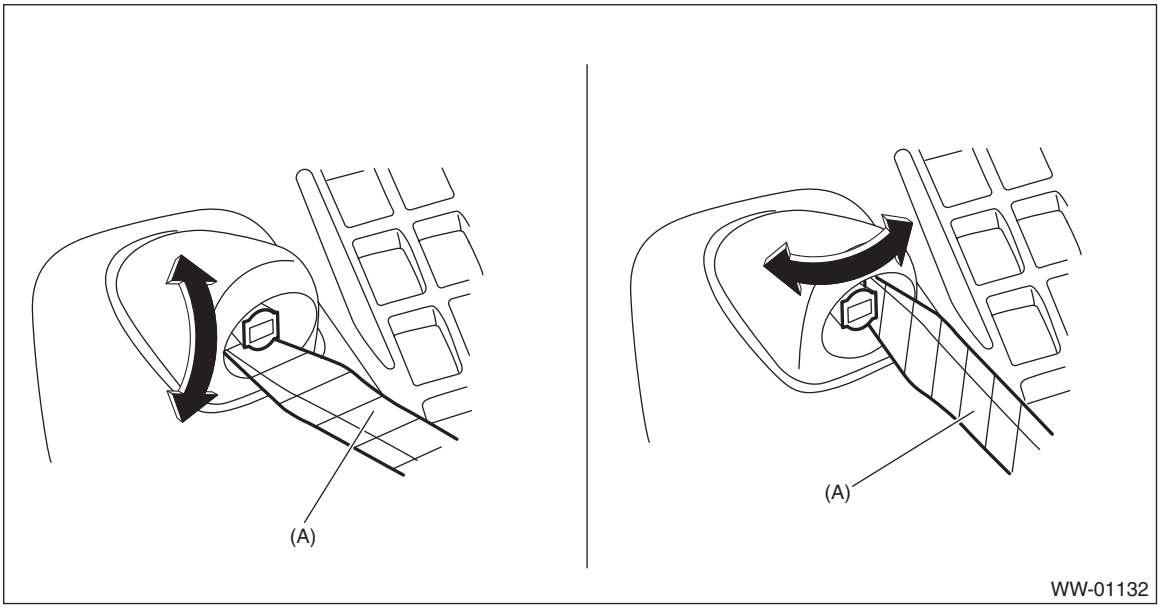

CAUTION:
The nozzle - windshield washer is made of resin. If precision screwdriver (A) or equivalent is inserted into discharge port for adjustment, the discharge port can be deformed, and washer fluid cannot be sprayed.

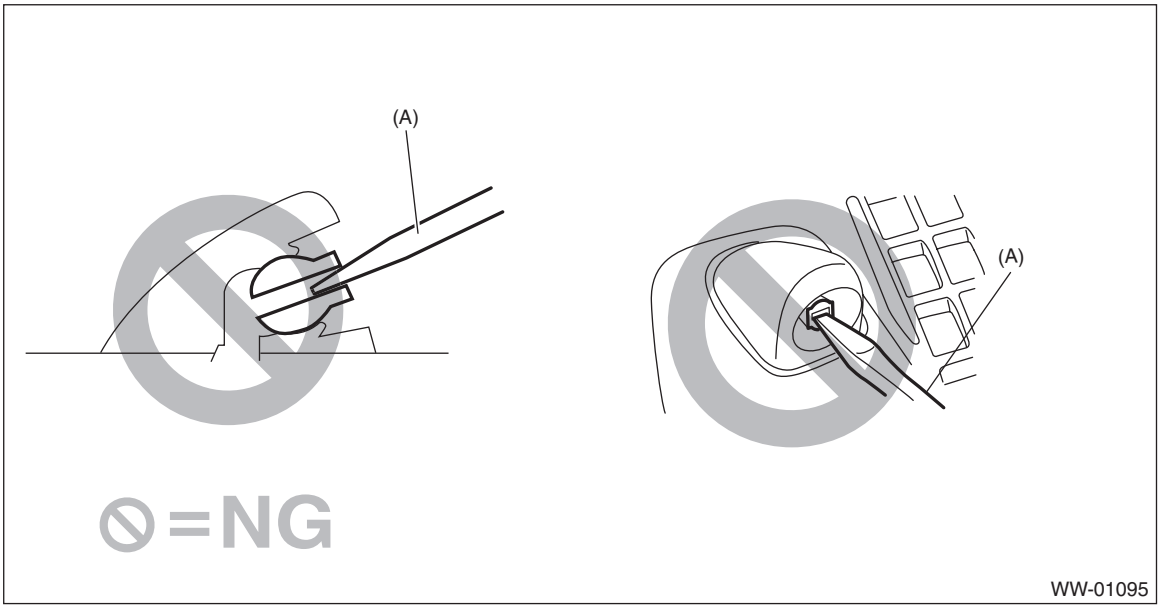

3) Adjust the washer injection position as shown in the figure.

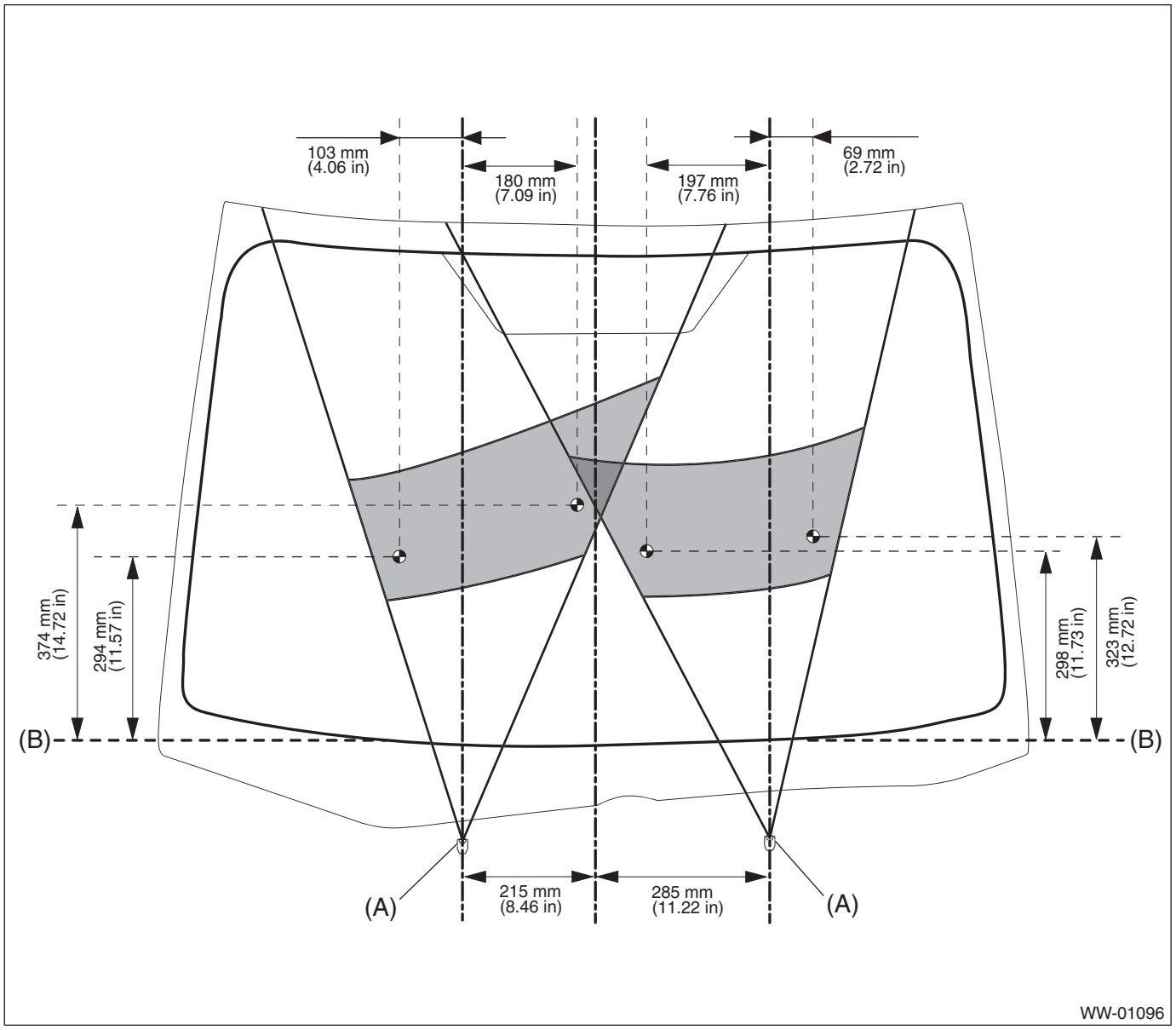

(A) Nozzle - windshield washer (B) Ceramic line

10.Rear Wiper Arm

A: REMOVAL

1) Pull up the cover - rear wiper arm.
2) Remove the nut, and remove the arm assembly - rear wiper.

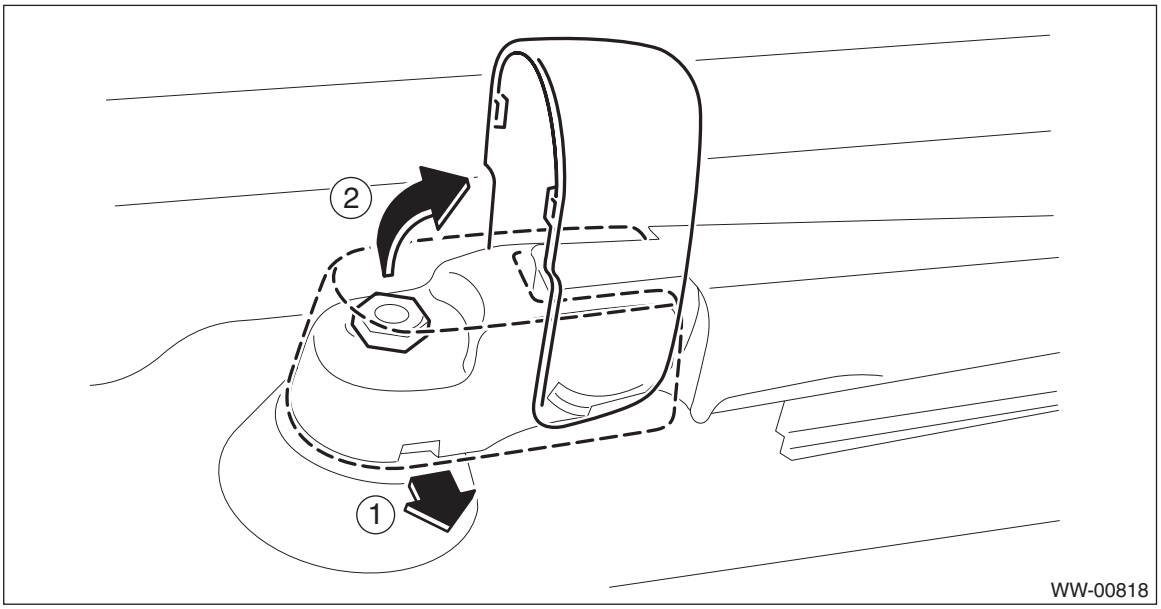

B: INSTALLATION

1) Install in the reverse order of removal.
2) Operate the rear wiper once.
3) Align the blade assembly - rear wiper with the marking on the glass, and then tighten the nut to the specified torque.

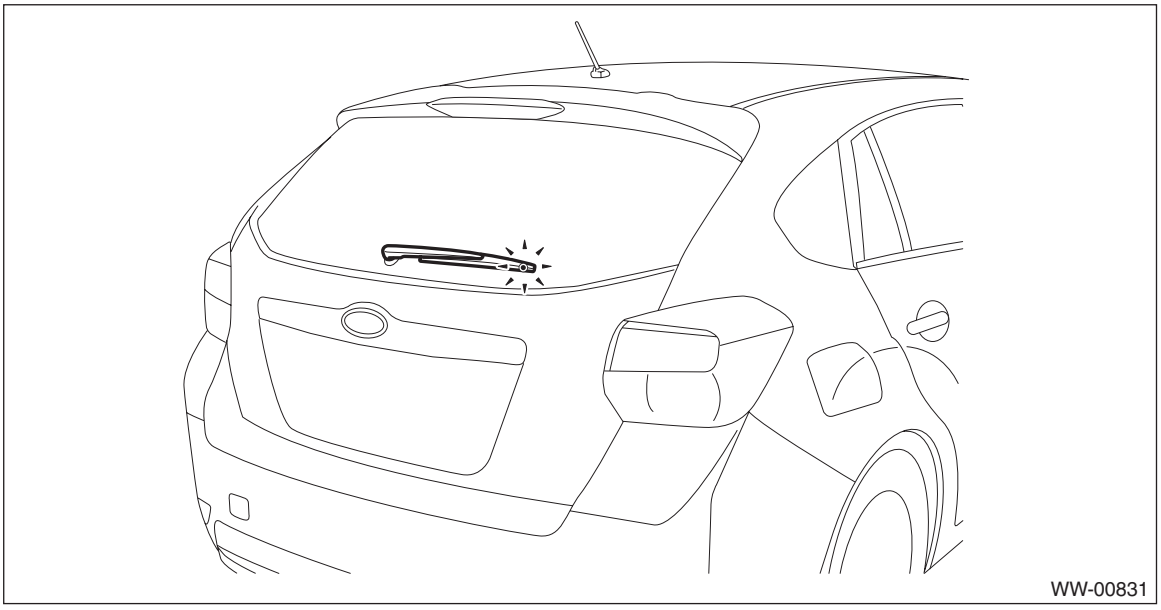

Tightening torque:
8 N·m (0.82 kgf-m, 5.9 ft-lb)

4) Operate the wiper to check whether the wiper blade aligns with the point mark. If not, perform installation over again.

C: ADJUSTMENT

1) Operate the rear wiper once.
2) Align the blade assembly - rear wiper with the marking on the glass.

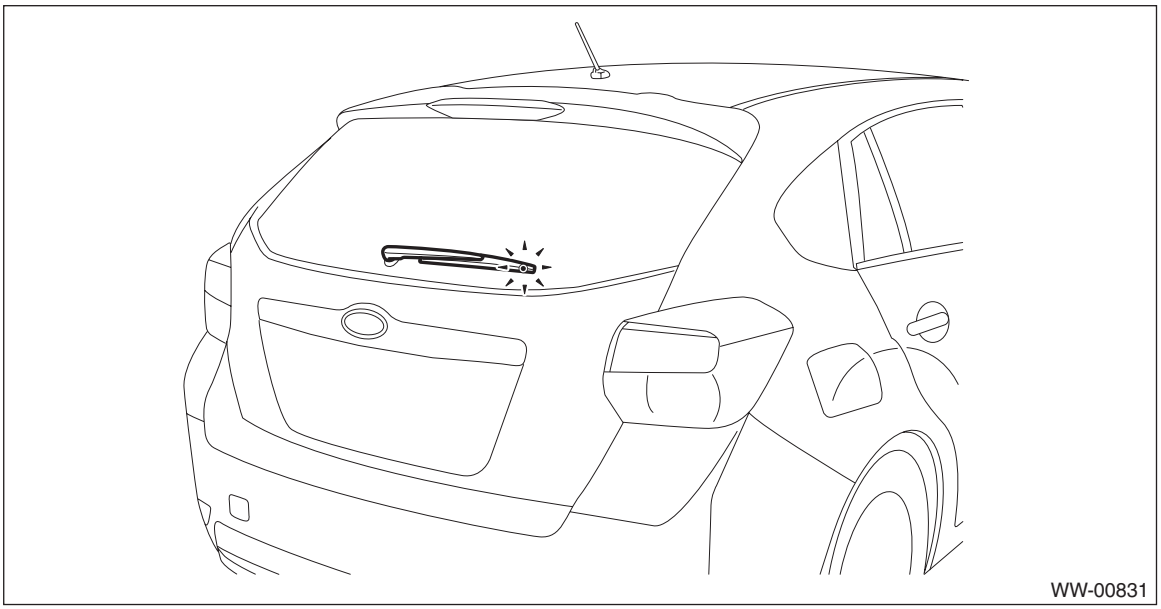

3) If the wiper blade is not aligned with the point mark, perform the removal of the rear wiper arm to align with the marking. <Ref. to WW-38, REMOVAL, Rear Wiper Arm.>

11.Rear Wiper Motor

A: REMOVAL

1) Disconnect the ground cable from battery. <Ref. to NT-5, BATTERY, NOTE, Note.>

NOTE:
For the 12 volt engine restart battery of HEV model, disconnect the ground terminal from 12V engine restart battery sensor.

2) Remove the trim panel - rear gate UPR.
   (1) Remove the claws on the trim edge.
   (2) Release the claws in the center of trim, and remove the trim panel - rear gate UPR.

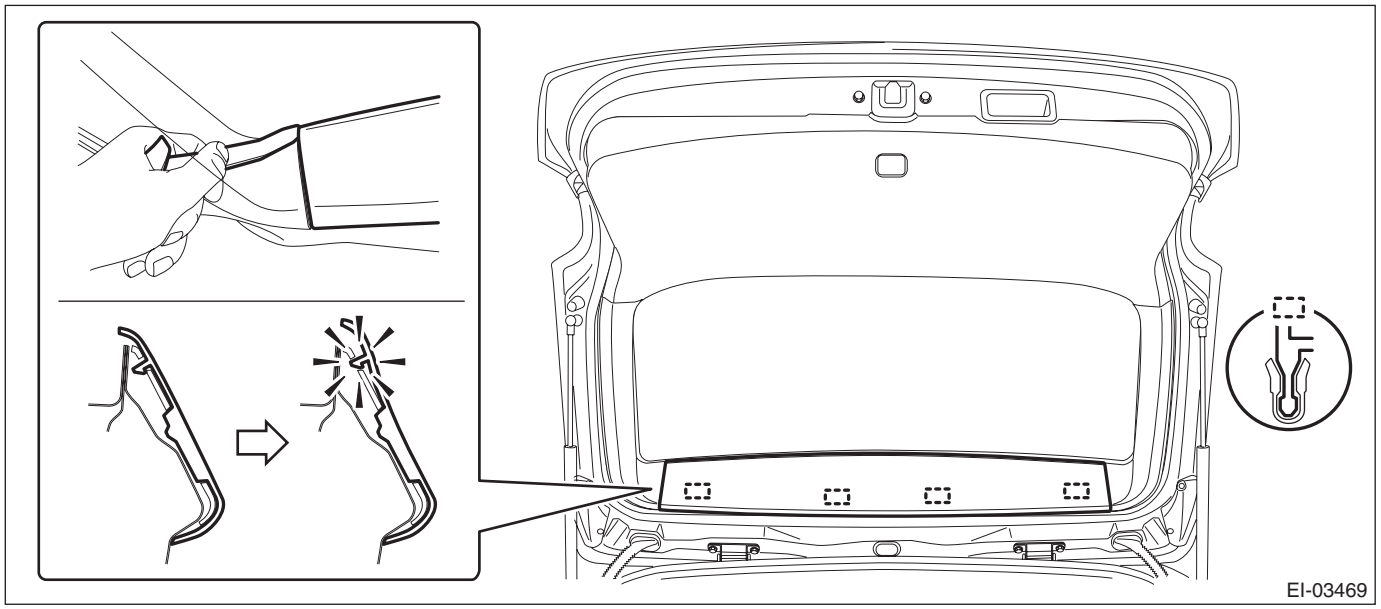

3) Remove the trim panel - rear gate pillar side.
   (1) Release the claws.
   (2) Remove the claws on the bottom of trim, and remove the trim panel - rear gate pillar side.

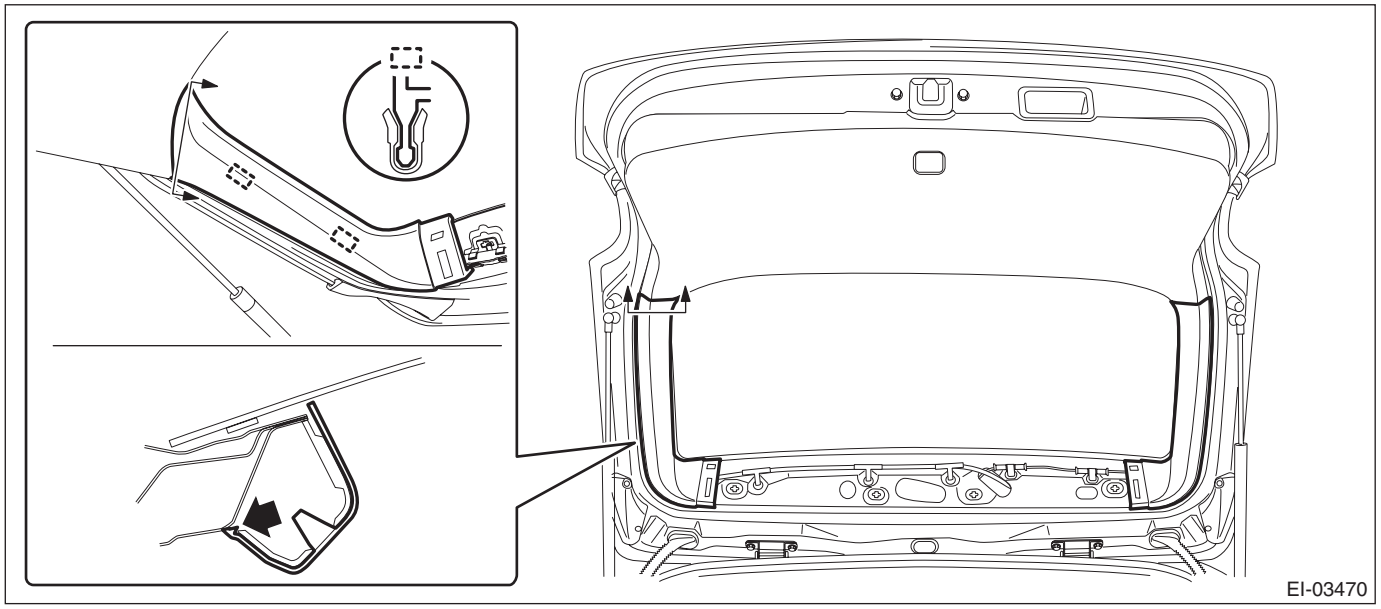

4) Remove the trim panel - rear gate LWR.
   (1) Remove the clips on both ends.
   (2) Release the clips, and remove the trim panel - rear gate LWR.

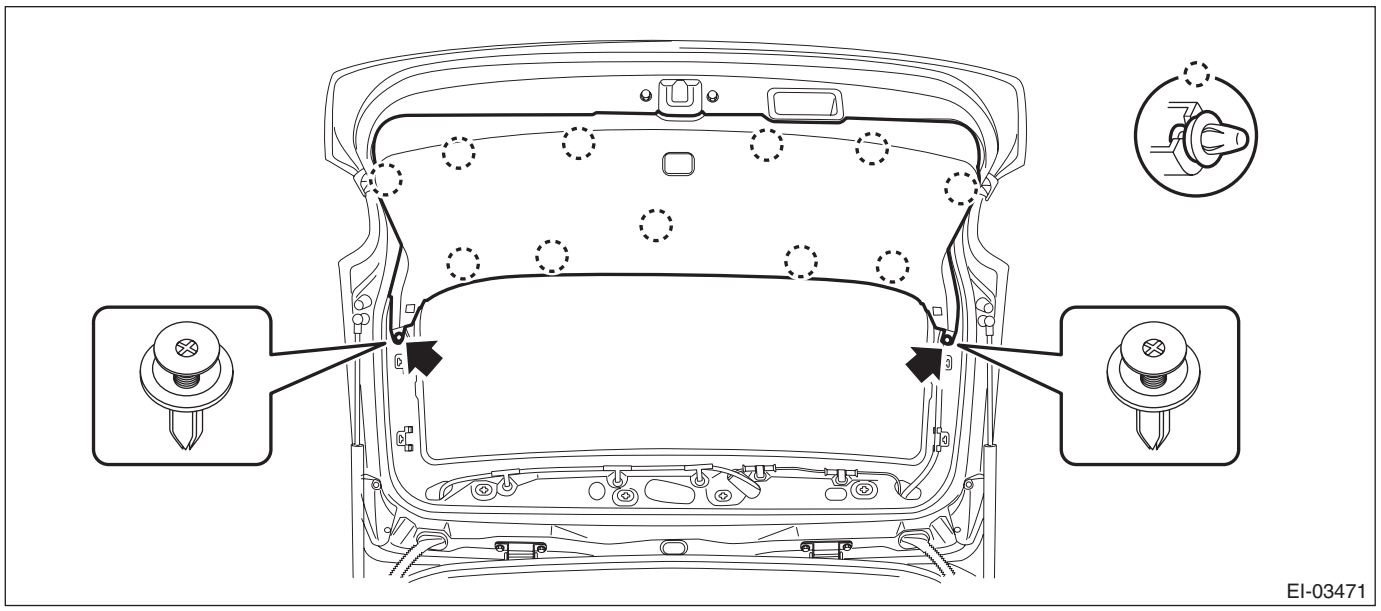

5) Remove the arm assembly - rear wiper.
   (1) Remove the cover - rear wiper arm.
   (2) Remove the nut, and remove the arm assembly - rear wiper.

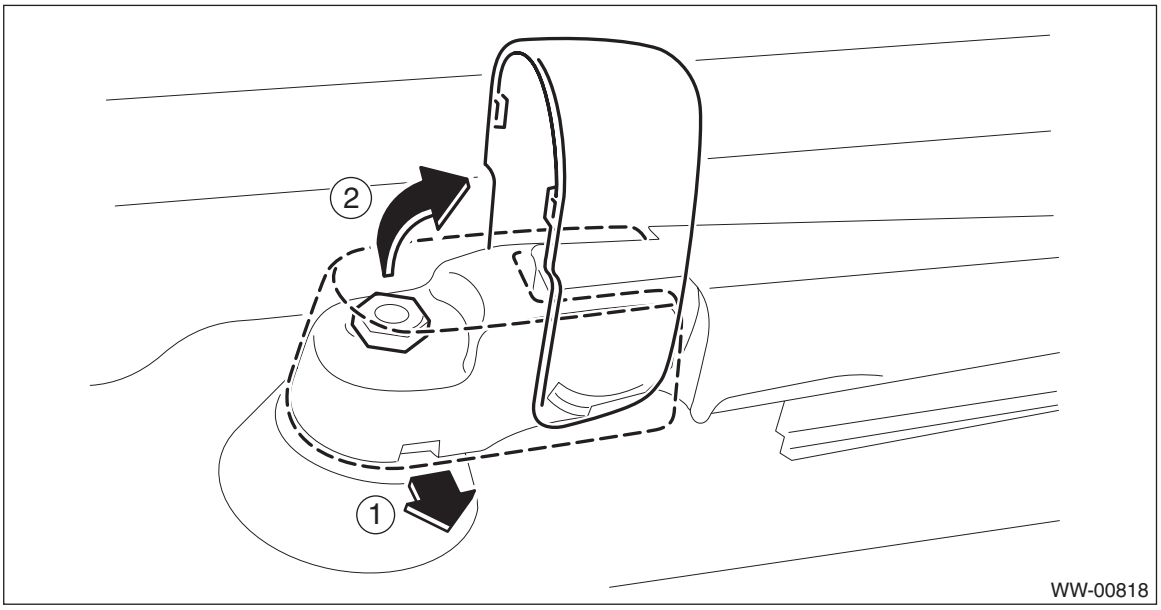

6) Remove the motor assembly - rear wiper.
   (1) Disconnect the harness connector of the motor assembly - rear wiper.
   (2) Remove the bolts, and remove the motor assembly - rear wiper.

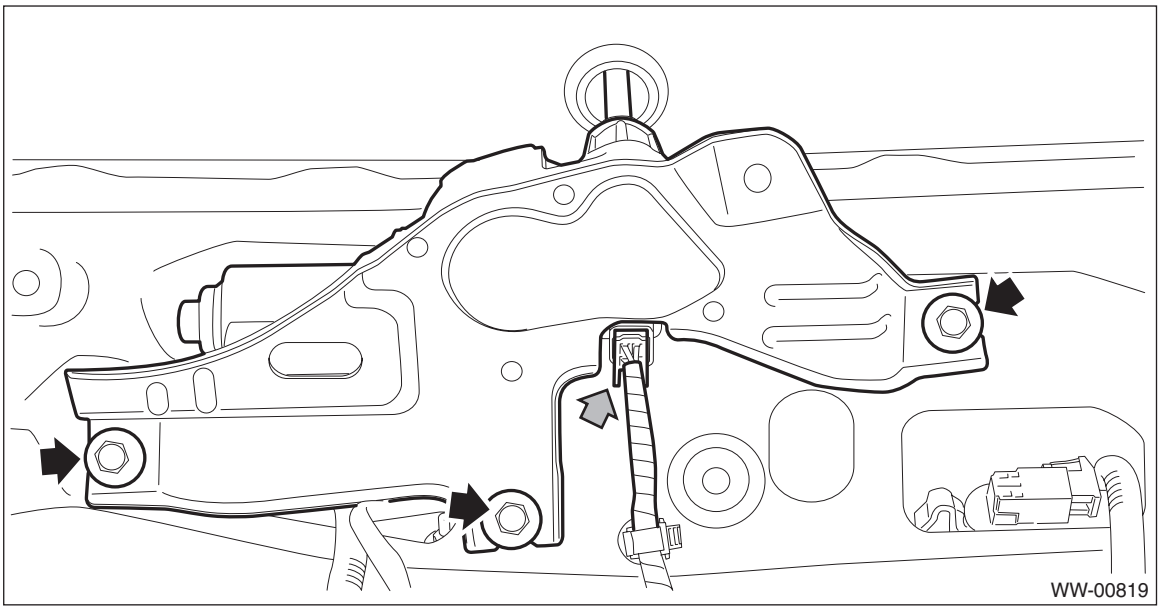

B: INSTALLATION

1) Install each part in the reverse order of removal.
2) Check that the mark on the cap - pivot wiper faces up, as shown in the figure.

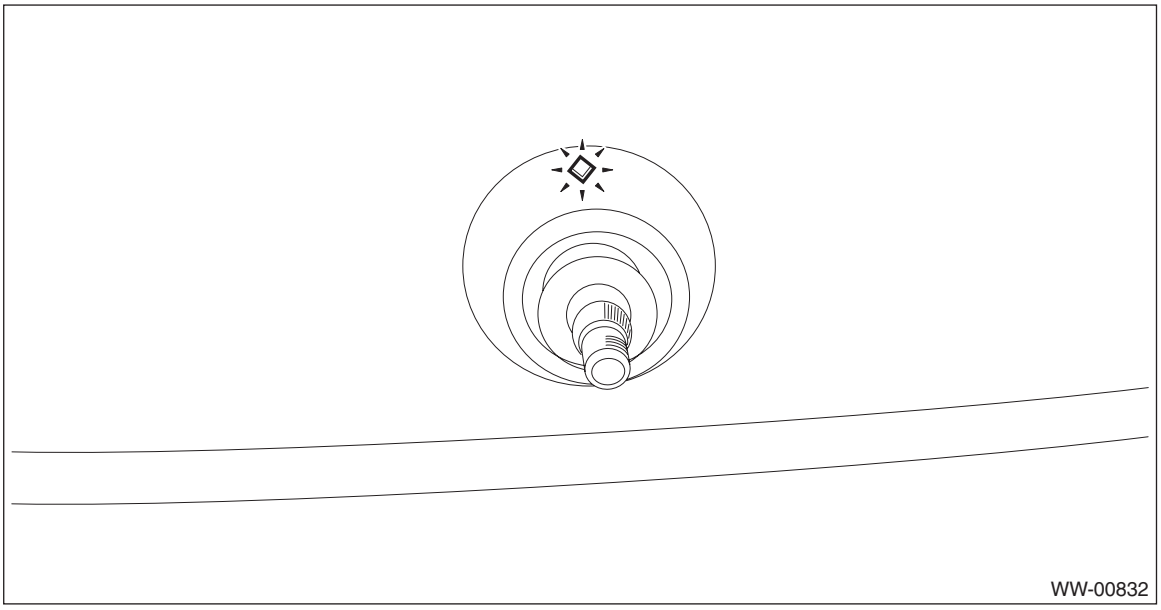

Tightening torque:
Refer to "COMPONENT" of "General Description". <Ref. to WW-3, REAR WIPER, COMPONENT, General Description.>

C: INSPECTION

1) Connect the battery to the rear wiper motor connector, and check that the motor assembly - rear wiper operates.
2) Connect the battery to terminals of the connector, and remove the terminal connection with motor rotating, and stop the motor assembly - rear wiper in mid-operation.
3) Connect the battery and check that the motor stops at the automatic stop position after the motor operates at low speed again.

CAUTION:
Fix the motor to prevent the motor from being shorted by moving during operation.

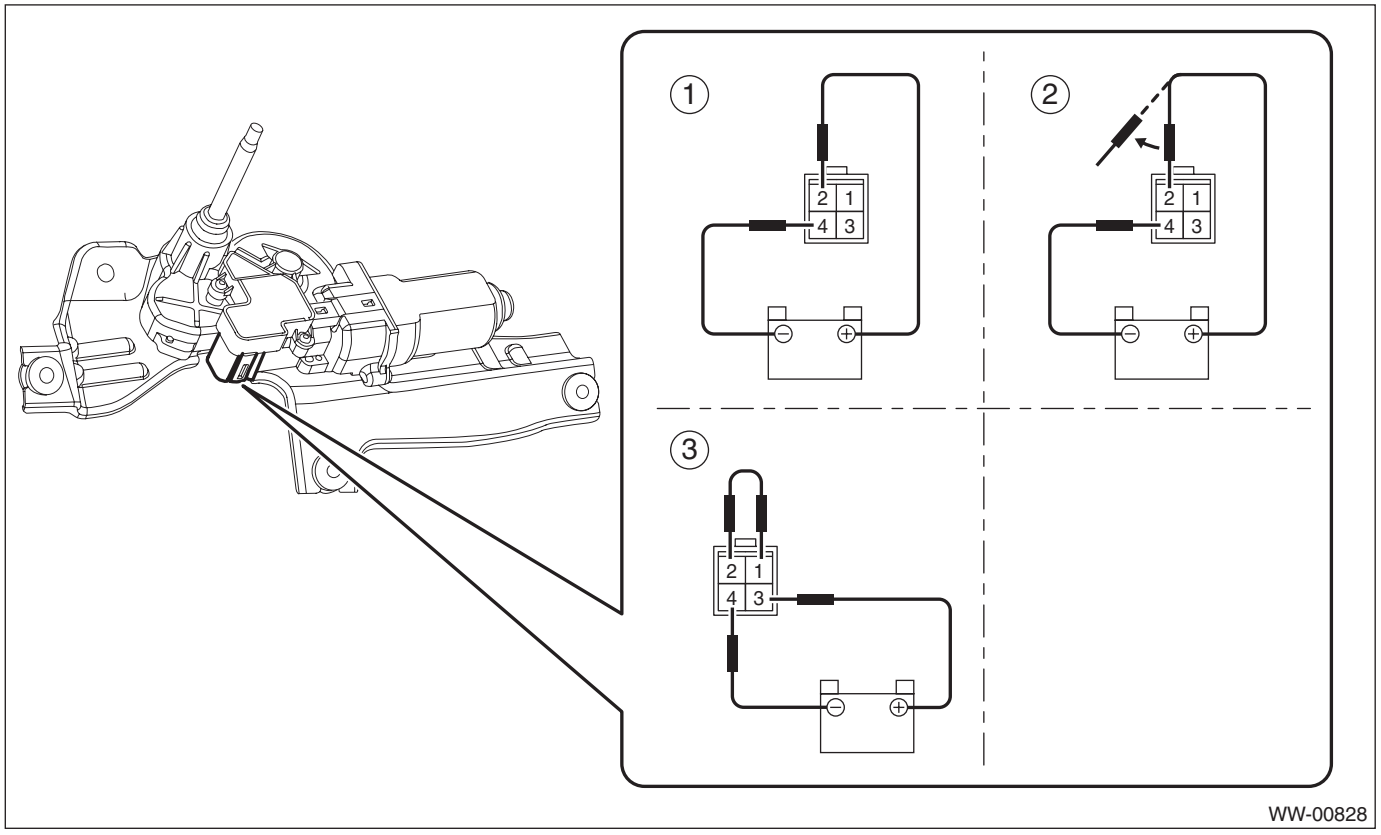

12.Rear Washer

A: REMOVAL

1) Disconnect the ground cable from battery. <Ref. to NT-5, BATTERY, NOTE, Note.>

NOTE:
For the 12 volt engine restart battery of HEV model, disconnect the ground terminal from 12V engine restart battery sensor.

2) Remove the trim panel - rear gate UPR.
   (1) Remove the claws on the trim edge.
   (2) Release the claws in the center of trim, and remove the trim panel - rear gate UPR.

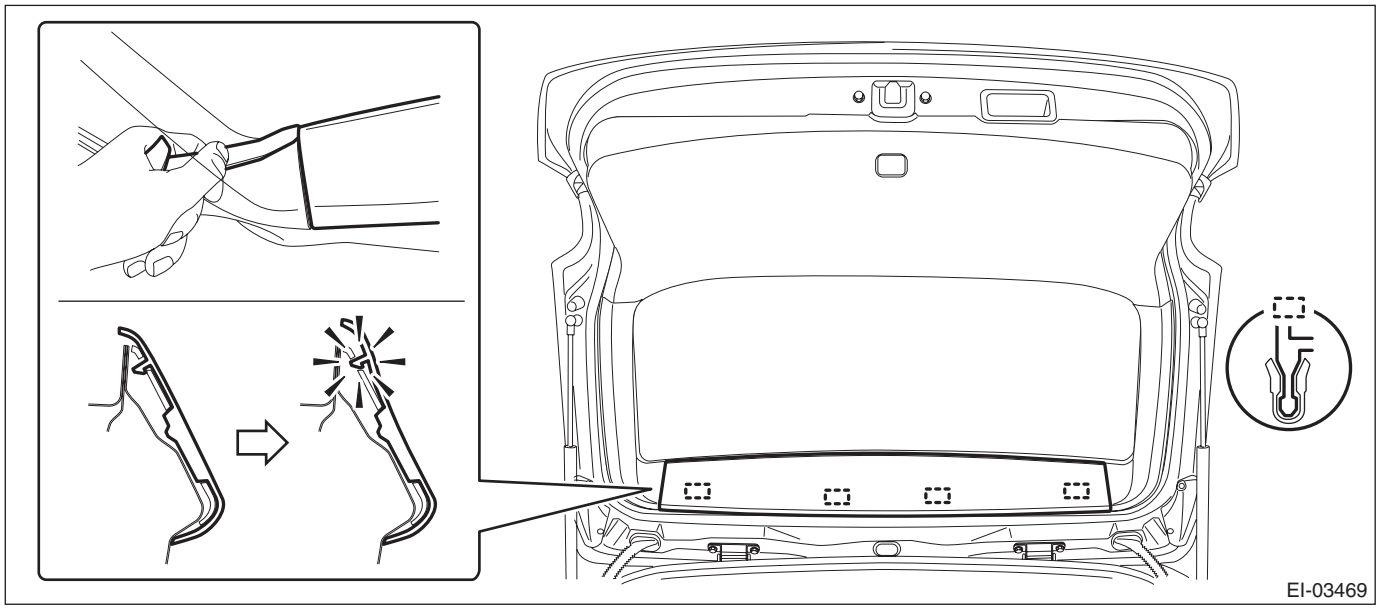

3) Remove the light assembly - high-mounted.
   (1) Remove the nut.
   (2) Disconnect the connector and remove the light assembly - high-mounted.

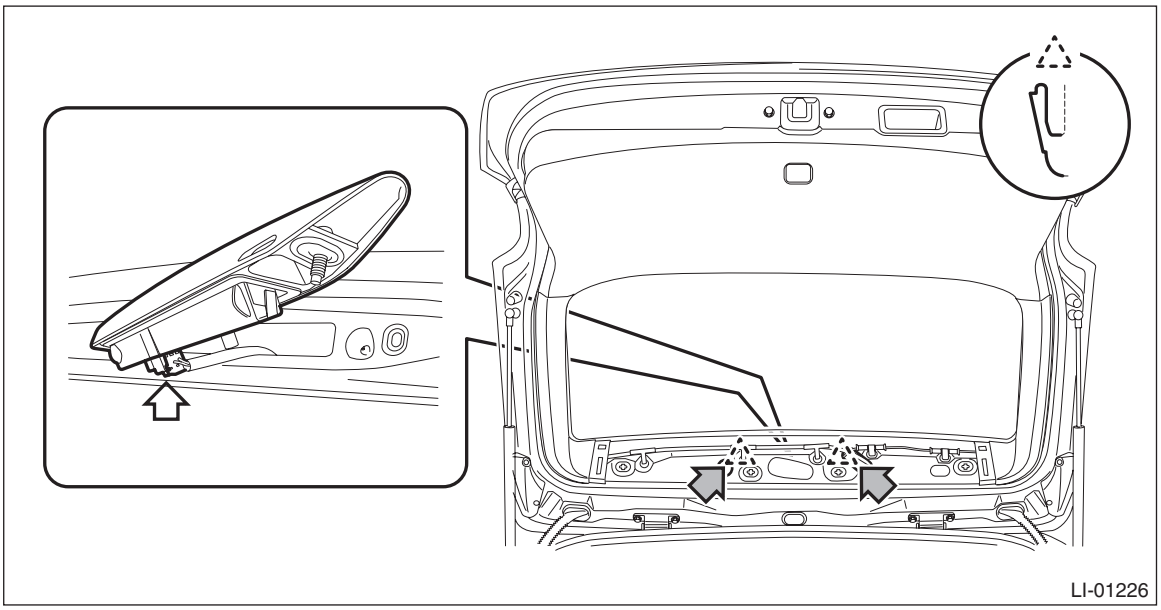

4) Remove the nozzle - rear washer.

CAUTION:
Before removing, apply protective tape to the body panel and used tools not to damage the panel - rear gate.

(1) Push the claw using a flat tip screwdriver, etc.
(2) When the nozzle - rear washer lifts up, pull out the nozzle - rear washer using a clip remover, etc.
(3) Disconnect the hose - rear washer, and remove the nozzle - rear washer.

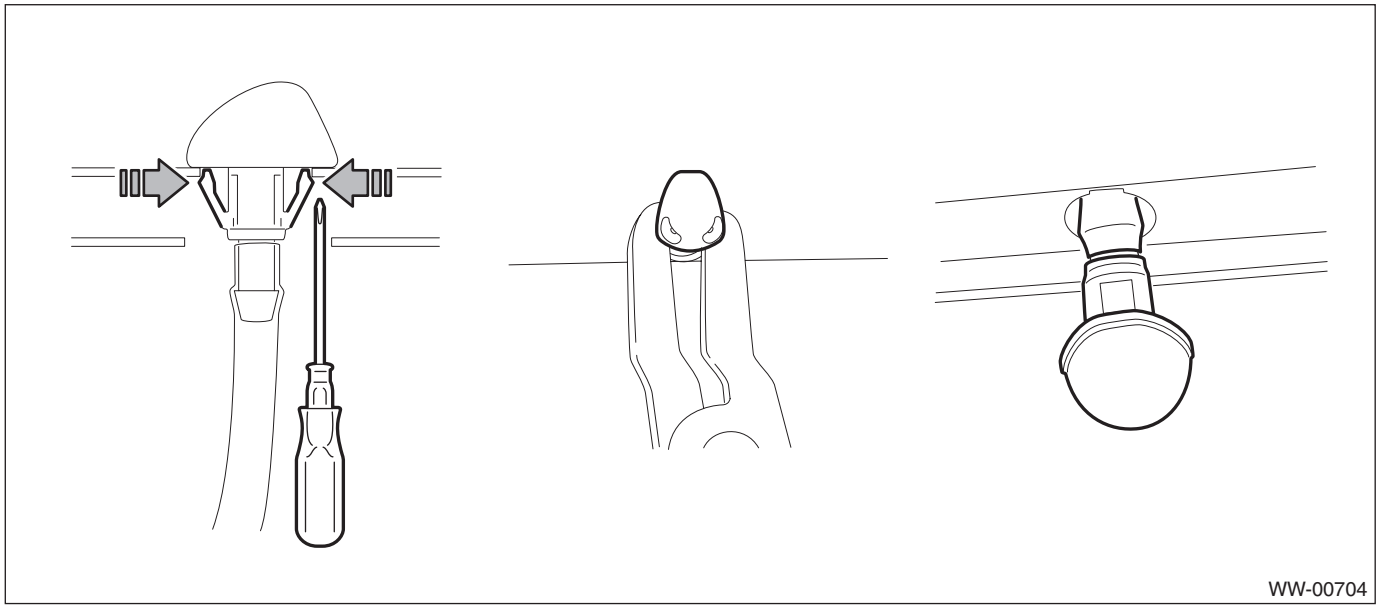

B: INSTALLATION

1) Install each part in the reverse order of removal.

Tightening torque:
Light assembly - high-mounted: 4.5 N·m (0.46 kgf-m, 3.3 ft-lb)

2) Check the nozzle - rear washer position. <Ref. to WW-46, VISUAL INSPECTION, INSPECTION, Rear Washer.>

C: INSPECTION

1. VISUAL INSPECTION

Check for the following items, and if any malfunction is found, replace the corresponding part.
- Make sure the nozzle - rear washer and the hose - rear washer are not clogged.
- Make sure the hose - rear washer is not bent.

2. INSPECTING THE SPRAY POSITION

1) Turn the wiper switch to OFF position.
2) While the vehicle is stopped, check that the washer spray position is as shown in the figure.
3) After inspection, if the spray position is significantly out of the specified range, replace the nozzle - rear washer with a new part.

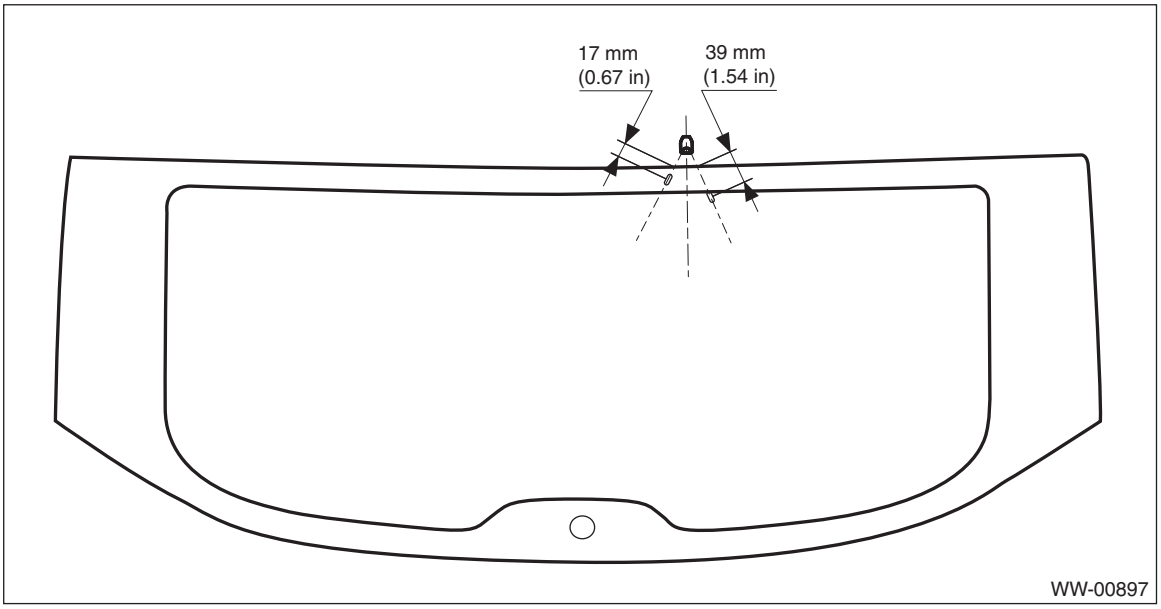

ENTERTAINMENT

ET

		Page
1.	General Description	2
2.	Relay and Fuse	3
3.	Audio System	4
4.	Navigation System	7
5.	Audio	10
6.	Front Speaker	12
7.	Rear Speaker	15
8.	Antenna	17
9.	Steering Satellite Switch	29
10.	Microphone	36
11.	Navigation Body	37
12.	GPS Antenna	39
13.	Rearview Camera System	43
14.	Front Accessory Power Supply Socket	54
15.	Rear Accessory Power Supply Socket	55
16.	AUX Input Terminal	56

1. General Description

A: CAUTION

• Before disassembling or reassembling parts, always disconnect the battery ground cable from battery. When replacing the audio, control module and other parts provided with memory functions, record the memory contents before disconnecting the battery ground cable. Otherwise, the memory is cleared.
• Reassemble the parts in the reverse order of disassembly procedure unless otherwise indicated.
• Adjust parts to the given specifications.
• Connect the connectors securely during reassembly.
• After reassembly, make sure that the each component operates smoothly.
• Yellow connectors and harnesses with yellow tapes around them are the connectors and harnesses for the airbag system. Using a tester above such circuits may cause malfunction of airbag system. Follow the cautions of “AIRBAG SYSTEM” in this case. <Ref. to AB-11, CAUTION, General Description.>
• Be careful not to damage the airbag system wiring harness when servicing electrical parts and switches.
• If the steering wheel and steering angle sensor (steering roll connector) are removed, perform “VDC sensor midpoint setting mode” of the VDC. <Ref. to VDC-21, VDC SENSOR MIDPOINT SETTING MODE, ADJUSTMENT, VDC Control Module and Hydraulic Control Unit (VDCCM&H/U).>

B: PREPARATION TOOL

1. GENERAL TOOL

TOOL NAME	REMARKS
Circuit tester	Used for measuring resistance and voltage.
Steering wheel puller	Used for removing the steering wheel.

2. Relay and Fuse

A: LOCATION

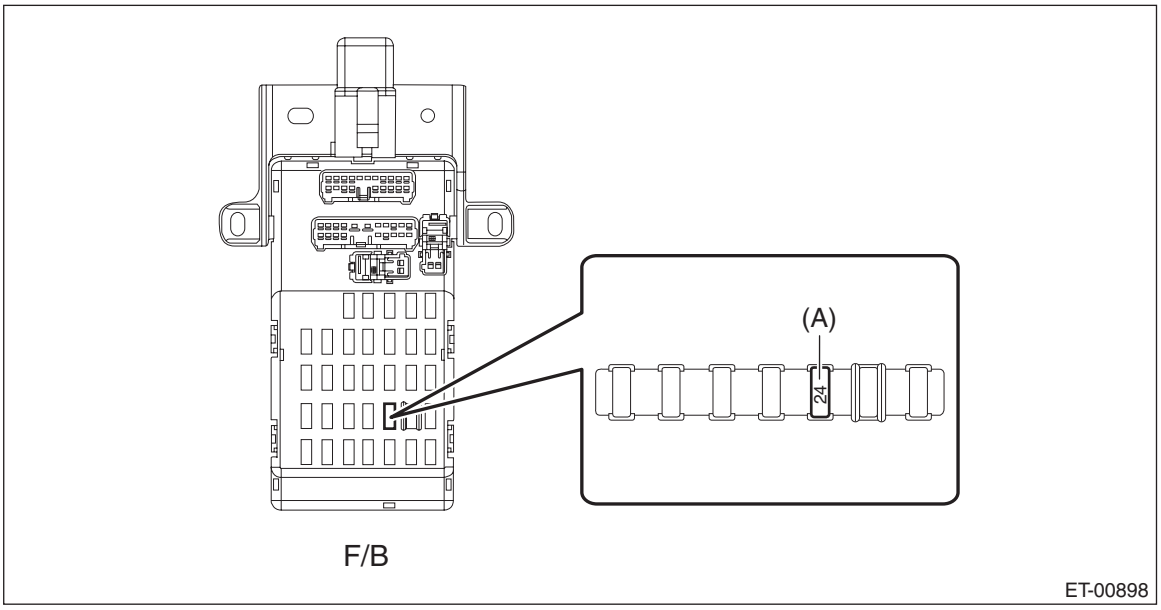

Relay & fuse box	Fuse 10A (audio, navigation unit)	(A)

NOTE:
For other related fuses, refer to the wiring diagram.
- Gasoline engine model: <Ref. to WI(w/o HEV)-15, Power Supply Circuit.>
- HEV model: <Ref. to WI(HEV)-20, Power Supply Circuit.>

B: INSPECTION

1. CHECK FUSE

1) Remove the fuse and inspect visually.
2) If the fuse is blown out, replace the fuse.

NOTE:
If the fuse is blown again, check the system wiring harness.

3. Audio System

A: WIRING DIAGRAM

1. AUDIO

Refer to “Audio System” in the wiring diagram.

- Gasoline engine model: <Ref. to WI(w/o HEV)-42, WIRING DIAGRAM, Audio System.>
- HEV model: <Ref. to WI(HEV)-60, WIRING DIAGRAM, Audio System.>

B: INSPECTION

Symptoms	Repair order
No power coming in. (No display and no sound from speakers)	1. Check the fuse and power supply for audio. 2. Check the audio ground. 3. Remove the audio and repair them.
A specific speaker does not operate.	1. Check the speaker. 2. Check the output circuit between audio and speaker.
Audio generates noise with engine running.	1. Check the audio ground. 2. Check the generator. 3. Check the ignition coil. 4. Remove the audio and repair them.
Volume is low in AM and FM modes or interference noise occurs.	1. Check the antenna. 2. Check the rear window defogger. 3. Check the audio ground. 4. Remove the audio and repair them.
Rear window defogger generates noise when it operate.	1. Check the rear window defogger.

1. CHECK EACH CONNECTION (DISPLAY AUDIO)

1) Turn the ignition switch to ON, and then while pressing the buttons (a) and (b), press and hold the button (c) for 3 seconds or more.

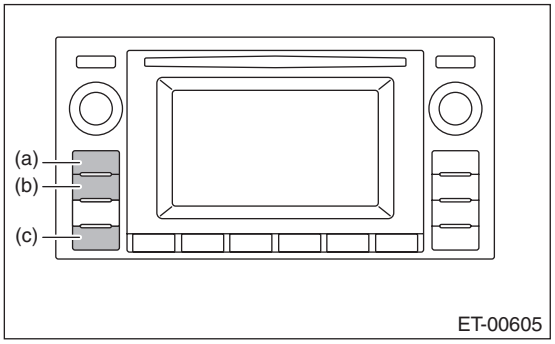

2) The display will switch to the Line Diag screen.

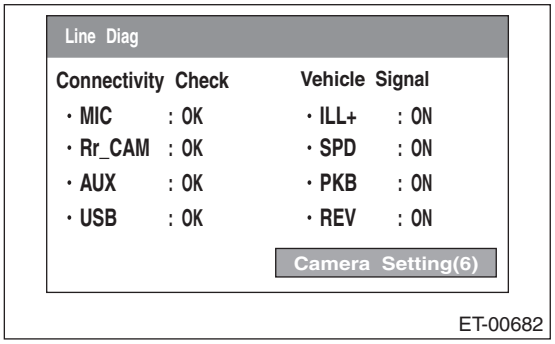

• CHECK MICROPHONE

Check that “OK” is displayed in MIC.
OK: Normal.
NG: Abnormal. Check the signal line connection. If there are no problems, the unit could be faulty.

• CHECK REARVIEW CAMERA

Check that “OK” is displayed in Rr_CAM.
OK: Normal.
NG: Abnormal. Check the signal line connection. If there are no problems, the unit could be faulty.

• CHECK AUX

Check that “OK” is displayed in AUX.
OK: Normal.
NG: Abnormal. Check the signal line connection. If there are no problems, the unit could be faulty.

• CHECK USB

Check that “OK” is displayed in USB when USB memory is connected.

NOTE:
When USB memory is connected, it takes approximately 2 seconds for audio unit to recognize the USB memory.
OK: Normal.
NG: Abnormal. Check the signal line connection. If there are no problems, the unit could be faulty.

2. CHECK EACH VEHICLE SIGNAL (DISPLAY AUDIO)

1) Turn the ignition switch to ON, and then while pressing the buttons (a) and (b), press and hold the button (c) for 3 seconds or more.

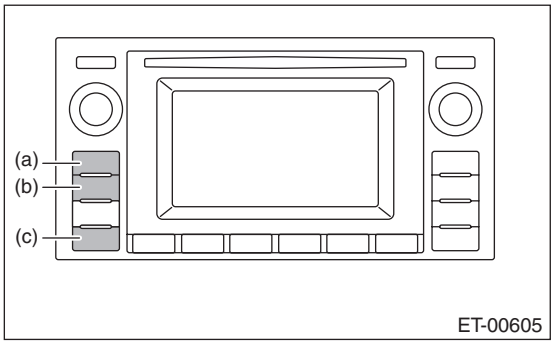

2) The display will switch to the Line Diag screen.

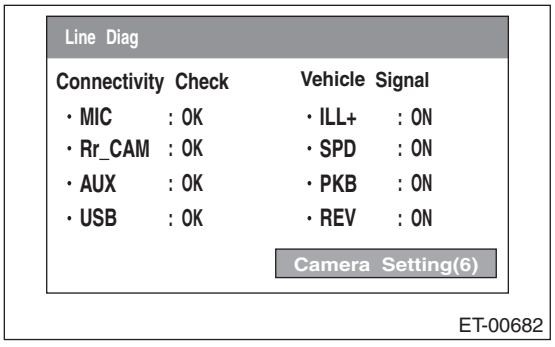

• CHECK ILLUMINATION

NOTE:
Before starting inspections, turn the ignition switch to ON.
1) Set the lighting switch to the parking light position.
Make sure that the bright switch is not turned ON at this time.
2) Make sure that “ON” lights in ILL+ and then the screen becomes dim.
ON: Normal.
OFF: Abnormal. Check the signal line connector. If there are no problems, the unit could be faulty.

• CHECK SPEED SENSOR

NOTE:
- Before starting inspections, check the safety around the vehicle.
- Lift up the vehicle as necessary.
- When the diagnostic trouble code is input in the VDCCM, perform the Clear Memory operation.

1) Move the vehicle 2 to 3 meters (6.6 to 9.8 ft).
2) Check that “ON” is displayed in SPD.
ON: Normal.
OFF: Abnormal. Check the signal line connection. If there are no problems, the unit could be faulty.

• CHECK PARKING BRAKE SIGNAL

1) Pull parking brake lever.
2) Check that “ON” is displayed in PKB.
ON: Normal.
OFF: Abnormal. Check the signal line connector. If there are no problems, the unit could be faulty.

• CHECK BACK SENSOR

NOTE:
Before starting inspections, check the safety around the rear end of the vehicle and then turn the ignition switch to ON.
1) Pull the parking brake and depress the brake, then put the gear in reverse.
2) Make sure that “ON” is displayed in REV.
ON: Normal.
OFF: Abnormal. Check the signal line connection. If there are no problems, the unit could be faulty.

C: NOTE

For procedure of each component in the audio system, refer to the respective sections.
- Audio unit: <Ref. to ET-10, Audio.>
- Front speaker

Tweeter (instrument panel): <Ref. to ET-12, TWEETER, REMOVAL, Front Speaker.>
Door speaker: <Ref. to ET-13, DOOR SPEAKER, REMOVAL, Front Speaker.>
- Rear speaker: <Ref. to ET-15, Rear Speaker.>
- Antenna: <Ref. to ET-17, Antenna.>
- Steering satellite switch: <Ref. to ET-29, Steering Satellite Switch.>
- AUX input terminal: <Ref. to ET-56, AUX Input Terminal.>
- Rearview camera: <Ref. to ET-43, Rearview Camera System.>

4. Navigation System

A: WIRING DIAGRAM

Refer to “Navigation System” in the wiring diagram.
- Gasoline engine model: <Ref. to WI(w/o HEV)-110, WIRING DIAGRAM, Navigation System.>
- HEV model: <Ref. to WI(HEV)-170, WIRING DIAGRAM, Navigation System.>

B: INSPECTION

NOTE:
If no problems are found in “CHECK NAVIGATION OPERATION”, “CHECK EACH CONNECTION” and “CHECK EACH VEHICLE SIGNAL” as described below, check the navigation system circuit.
- Gasoline engine model: <Ref. to WI(w/o HEV)-110, WIRING DIAGRAM, Navigation System.>
- HEV model: <Ref. to WI(HEV)-170, WIRING DIAGRAM, Navigation System.>

1. CHECK NAVIGATION OPERATION

Start the engine and check that the opening screen is displayed.
Standard: Opening screen is displayed.
OK: Normal.
NG: If the screen is not displayed, check the following items.
- The map disk (SD CARD) is set in the navigation system unit.
- Check the connection of the power supply connector at the backside of the navigation unit. If wire connection is correct or has got repaired, check again that the opening screen is displayed.

If it is not displayed at this time, it indicates the navigation unit trouble.

2. CHECK EACH CONNECTION

1) With the main power OFF, press and hold the button (c) for 3 seconds or more while pressing the buttons (a) and (b).

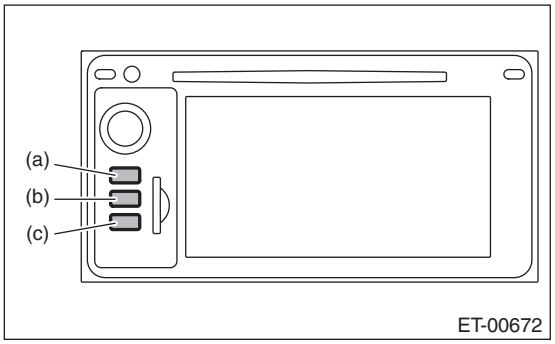

NOTE:
Diagnostic mode can be cancelled by pressing the button (a) for 3 seconds or more, or turning the ignition switch from ACC OFF to ON position.
2) Line Diag screen is displayed.

3) Check the connection status by monitoring each item in “Connectivity Check” displayed on the left of the screen.

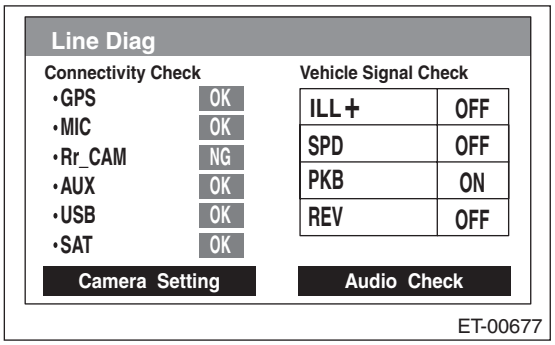

OK: Each connection device is connected correctly.
NG: No connection or faulty connection has been detected.
4) Check the connection status of the connector. If there are no problems, the connection device or unit body could be faulty.

3. CHECK EACH VEHICLE SIGNAL

1) With the main power OFF, press and hold the button (c) for 3 seconds or more while pressing the buttons (a) and (b) simultaneously.

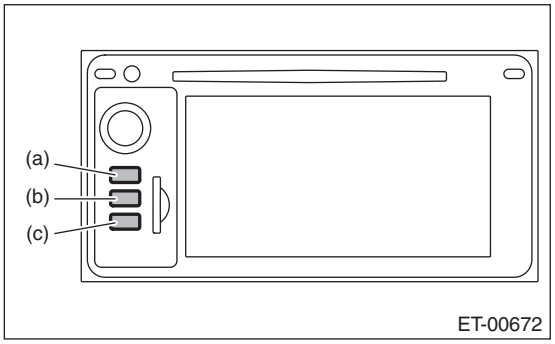

NOTE:
Pressing the button (a) for 3 seconds or more, or turning the ignition switch from ACC OFF to ON position can exit the diagnostic mode.
2) Line Diag screen is displayed.
3) Check the connection status for each item listed in “Vehicle Signal Check” displayed on the right of the screen.

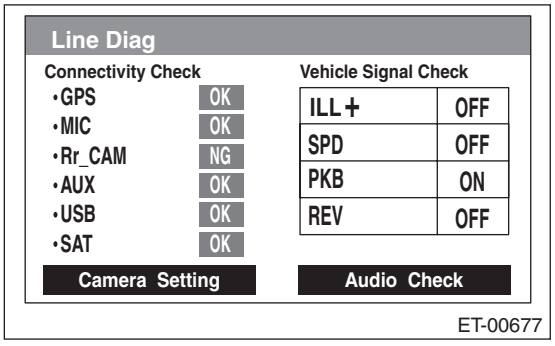

• **Check illumination**

NOTE:
Before starting inspections, turn the ignition switch to ON.
1) Set the lighting switch to the parking light position.
Make sure that the bright switch is not turned ON at this time.
2) Make sure that “ON” lights in ILL+ and then the screen becomes dim.
ON: Normal
OFF: Abnormal Check the signal line connector. If there are no problems, the unit could be faulty.

• **Check speed sensor**

NOTE:
- Before starting inspections, check the safety around the vehicle.
- Lift up the vehicle as necessary.
- When the diagnostic trouble code is input in the VDC CM, perform the Clear Memory operation.

1) Drive the vehicle at 9 km/h (6 MPH) or more.
2) Check that “ON” is displayed in SPD.
ON: Normal
OFF: Vehicle speed is less than 7 km/h (4 MPH), or malfunction is detected in the signal line. Check the signal line connector. If there are no problems, the unit could be faulty.

• **Check parking brake signal**

1) Pull parking brake lever.
2) Check that “ON” is displayed in PKB.
ON: Normal
OFF: Abnormal Check the signal line connector. If there are no problems, the unit could be faulty.

• **Check back sensor**

NOTE:
Before starting inspections, check the safety around the rear end of the vehicle and then turn the ignition switch to ON.
1) Pull the parking brake and depress the brake, then put the gear in reverse.
2) Make sure that “ON” is displayed in REV.
ON: Normal
OFF: Abnormal Check the signal line connector. If there are no problems, the unit could be faulty.

C: NOTE

For procedure of each component in the navigation system, refer to the respective section.
- Navigation unit: <Ref. to ET-37, Navigation Body.>
- GPS antenna: <Ref. to ET-39, GPS Antenna.>
- Rearview camera: <Ref. to ET-43, Rearview Camera System.>

5. Audio

A: REMOVAL

1) Disconnect the ground cable from battery. <Ref. to NT-5, BATTERY, NOTE, Note.>

NOTE:
For the 12 volt engine restart battery of HEV model, disconnect the ground terminal from 12V engine restart battery sensor.
2) On manual A/C models, disconnect the control cables from both sides of the heater and cooling unit assembly.

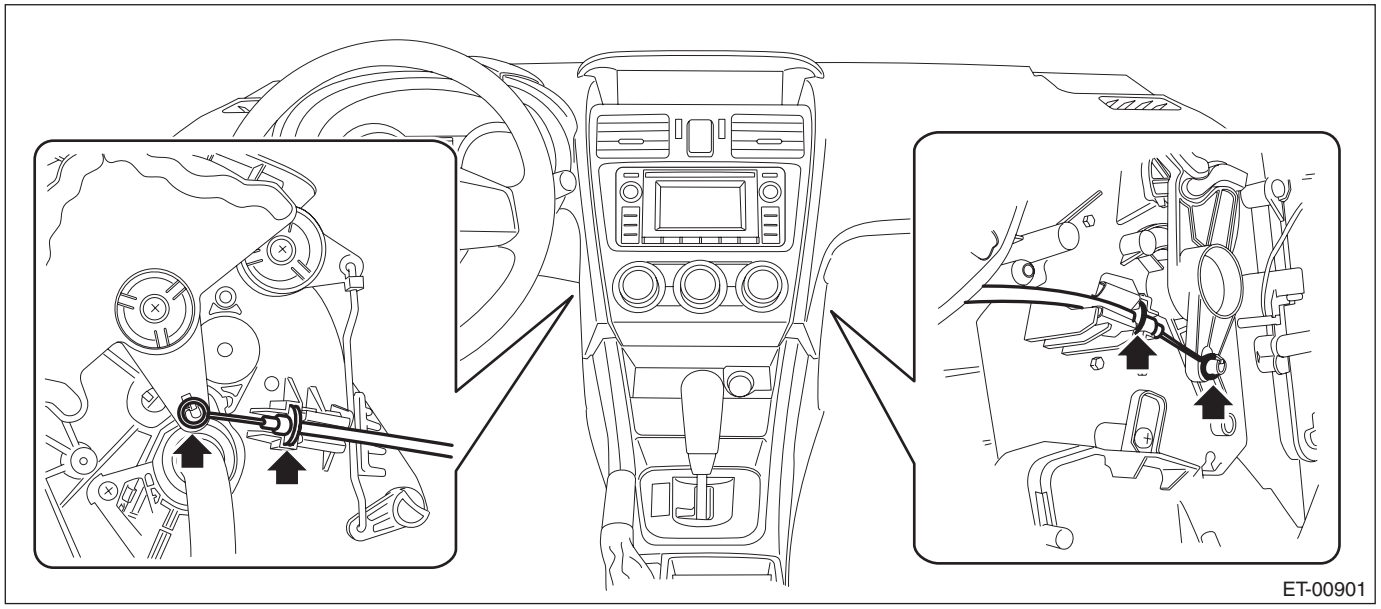

NOTE:
Remove the glove box pocket assembly on the passenger's side.
3) Remove the panel center assembly.

CAUTION:
- **Do not put your finger on the fin of the air vent grille. Doing so may damage the fin.**
- **Pull the panel center assembly slowly. Pulling with excessive force may damage the connector.**

(1) Insert a plastic remover to the three areas shown by the arrows, and slightly lift up the panel center assembly.
(2) With the panel center assembly lifted up slightly, release the claw by using a clip remover wrapped with protective tape.
(3) Release the rest of the claws, and pull out the panel center assembly.

(4) Disconnect the connectors, and remove the panel center assembly.

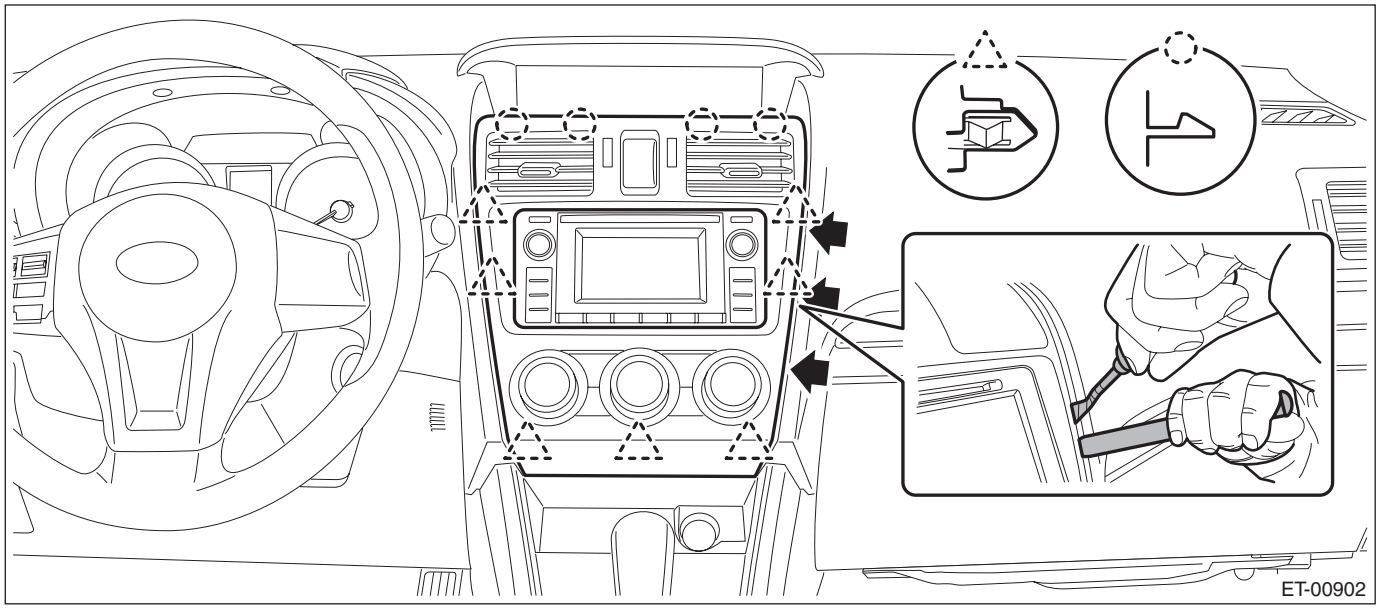

4) Remove the audio assembly.
(1) Remove the left and right screws, and partially pull out the audio assembly.
(2) Disconnect the connectors, and remove the audio assembly.

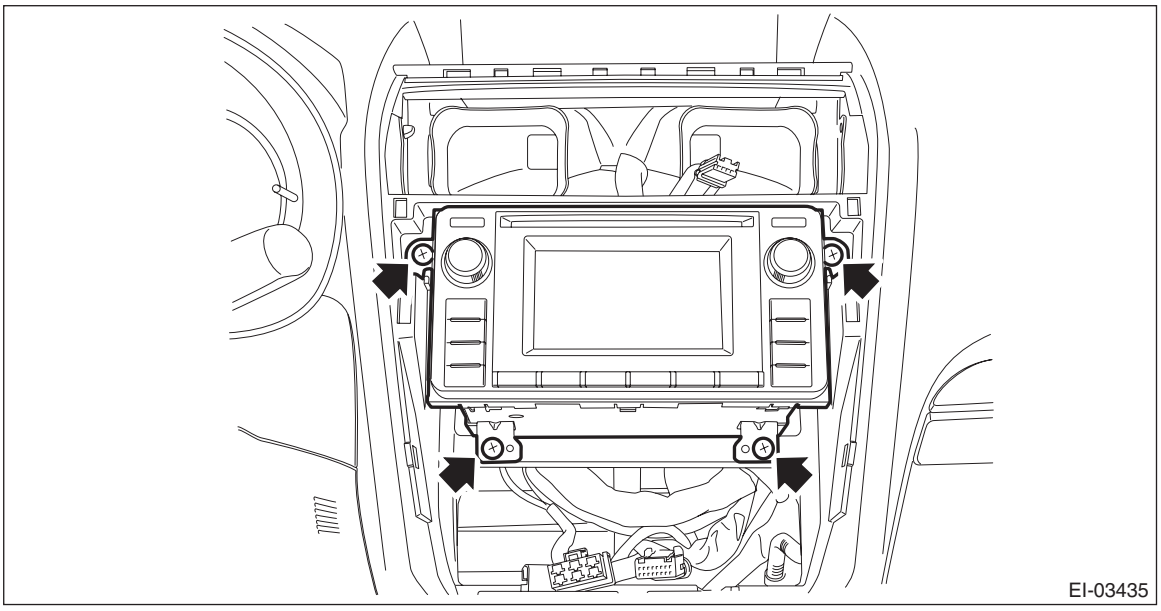

B: INSTALLATION

CAUTION:
After installing the panel center assembly, check that the air vent grille of the panel center assembly is inserted correctly into the air vent duct.
Install each part in the reverse order of removal.

6. Front Speaker

A: REMOVAL

1. TWEETER

1) Disconnect the ground cable from battery. <Ref. to NT-5, BATTERY, NOTE, Note.>

NOTE:
For the 12 volt engine restart battery of HEV model, disconnect the ground terminal from 12V engine restart battery sensor.

2) Remove the speaker assembly - tweeter.
   (1) Release the clips and claws, then detach the grille speaker side.

NOTE:
Remove the grille speaker side by using a plastic remover.
   (2) Remove the screws.

Preparation tool:
Stubby screwdriver
   (3) Disconnect the connector and remove the speaker assembly - tweeter.

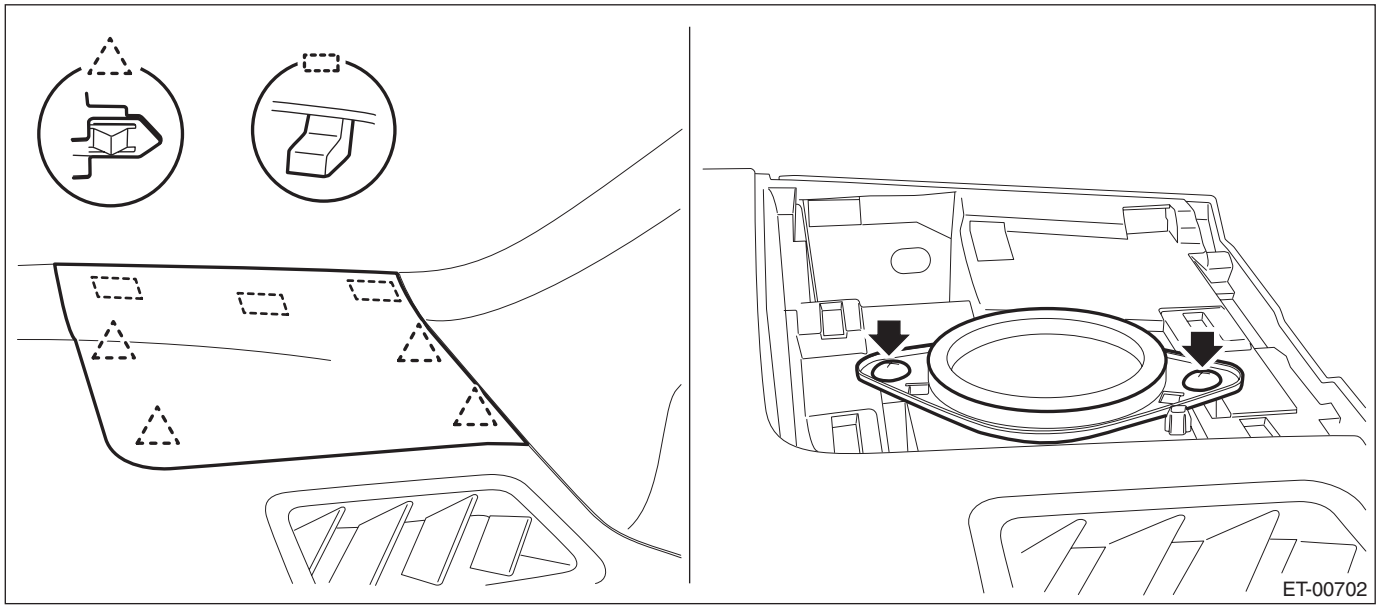

2. DOOR SPEAKER

1) Disconnect the ground cable from battery. <Ref. to NT-5, BATTERY, NOTE, Note.>

NOTE:
For the 12 volt engine restart battery of HEV model, disconnect the ground terminal from 12V engine restart battery sensor.

2) Remove the trim panel - front door.
   (1) Attach the protective tape (a).
   (2) Open the cover and remove the screw.
   (3) Remove the clips, and remove the trim panel - front door from the panel assembly - front door.

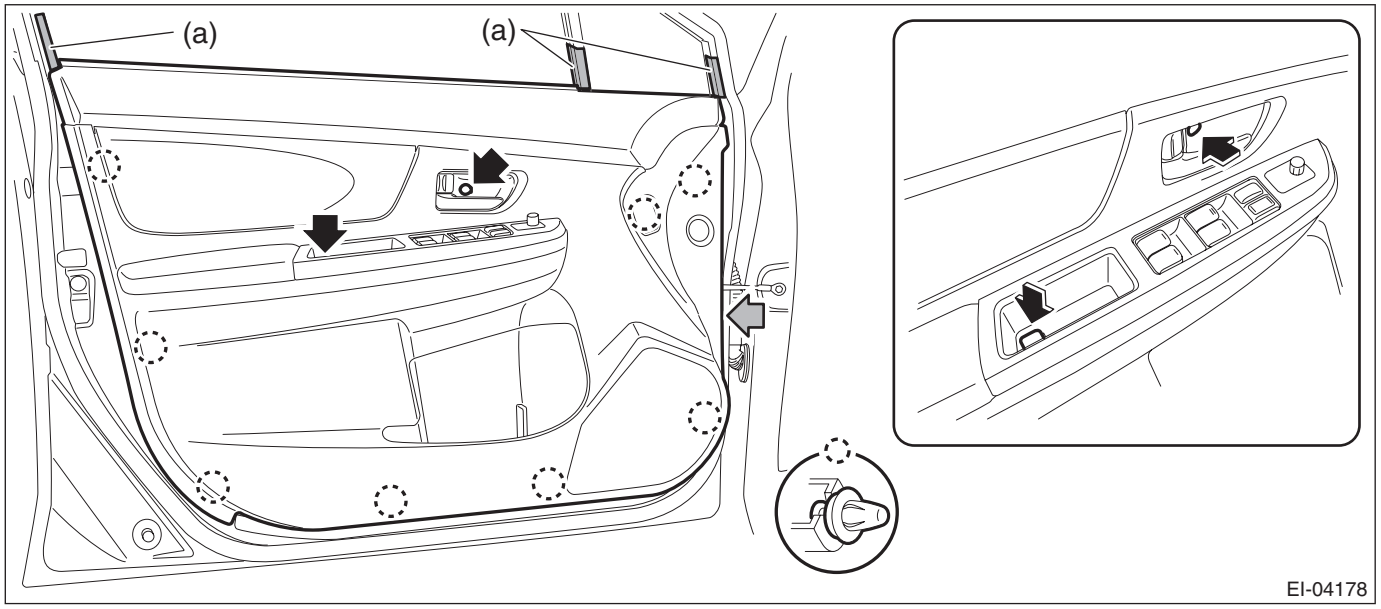

NOTE:
It is easier to remove the door trim if the removal is performed from the gray arrow section.

   (4) Detach the door lock cable (a) and door open cable (b) from the remote assembly - door.

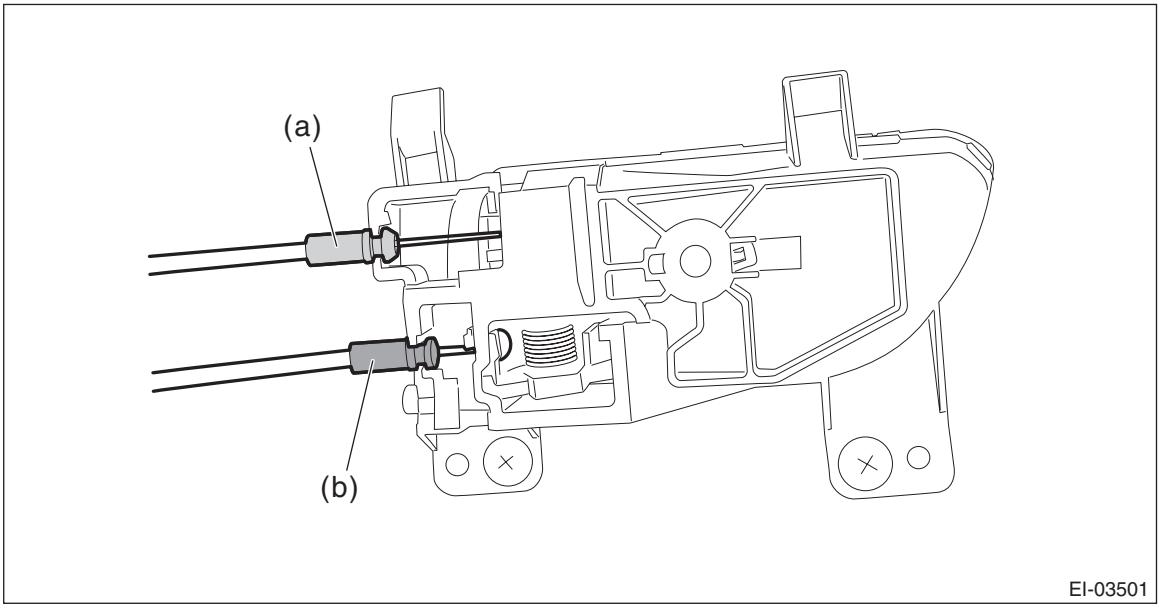

   (5) Disconnect the harness connector and remove the trim panel - front door.

3) Remove the front door speaker assembly.
   (1) Remove the screws.
   (2) Disconnect the connector, and remove the front door speaker assembly.

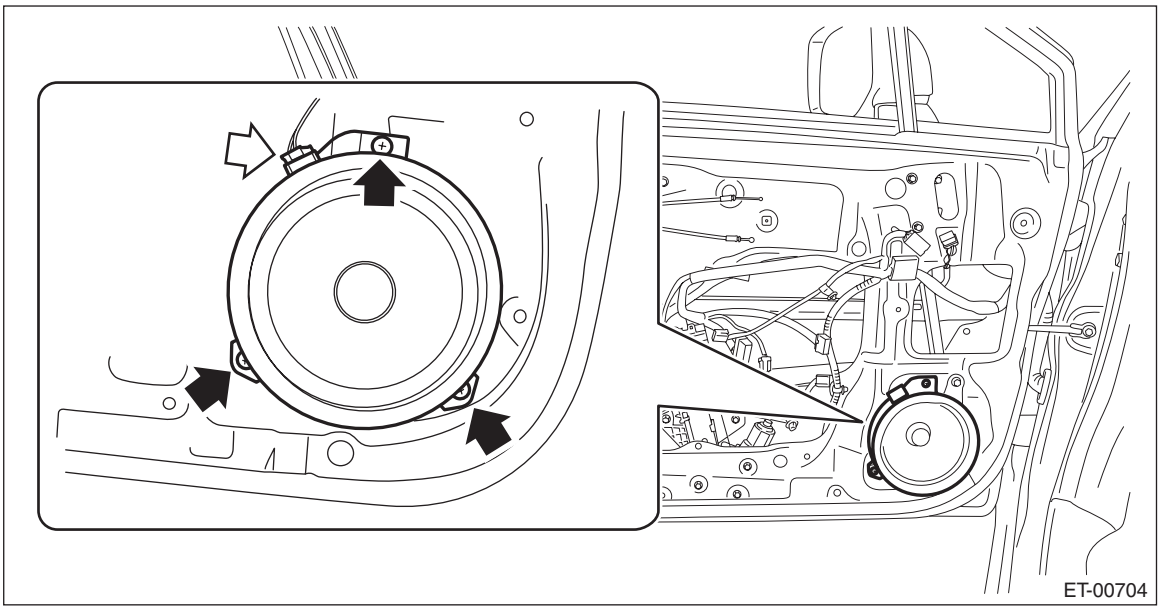

B: INSTALLATION

Install each part in the reverse order of removal.

NOTE:
Attach the door lock cable (a - end ball: small) to the upper side, and attach the door open cable (b - end ball: large) to the lower side.

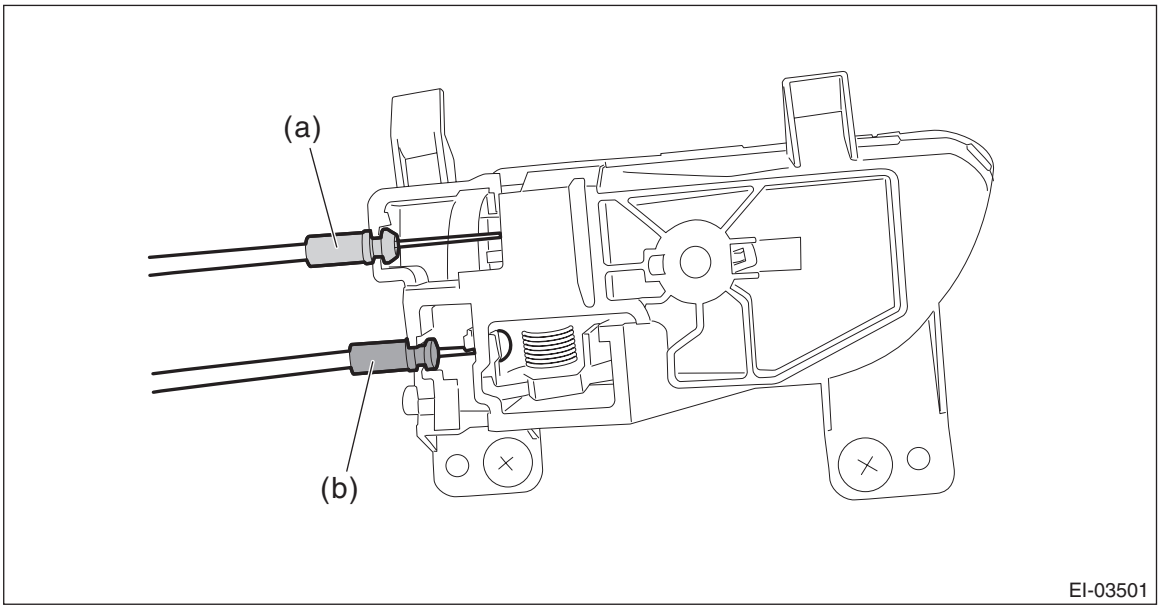

7. Rear Speaker

A: REMOVAL

1) Disconnect the ground cable from battery. <Ref. to NT-5, BATTERY, NOTE, Note.>

NOTE:
For the 12 volt engine restart battery of HEV model, disconnect the ground terminal from 12V engine restart battery sensor.

2) Remove the trim panel - rear door.
   (1) Attach the protective tape (a).
   (2) Open the cover and remove the screw.
   (3) Remove the clips, and remove the trim panel - rear door from the panel assembly - rear door.

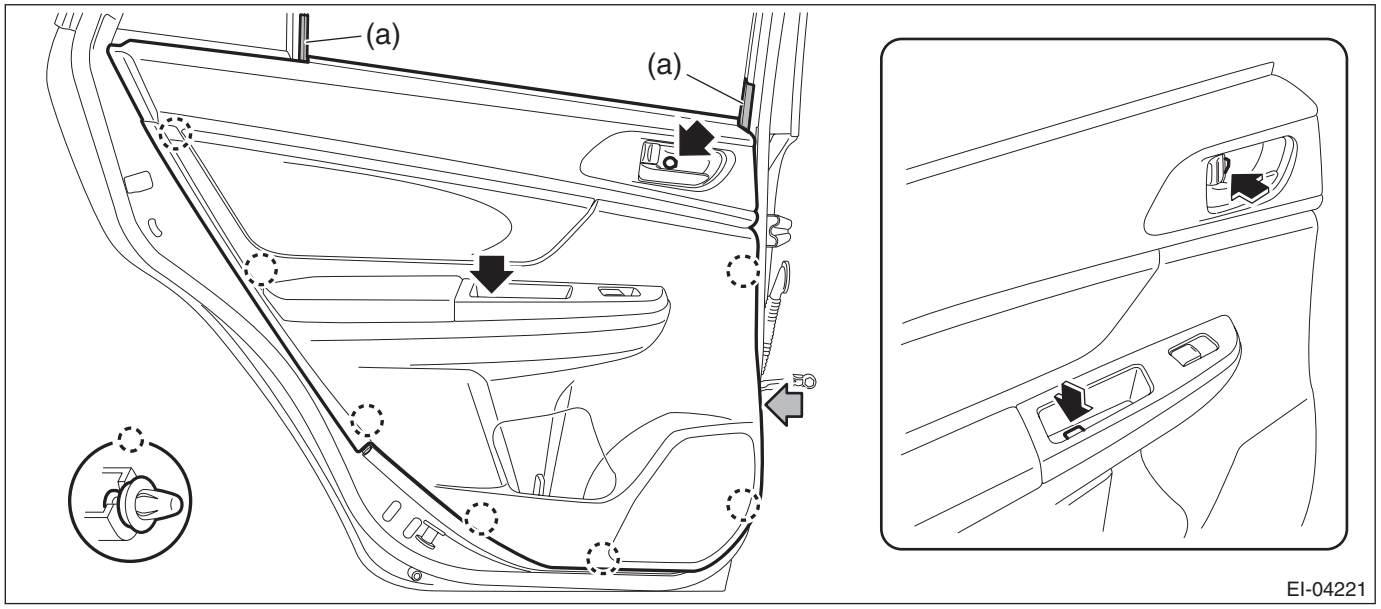

NOTE:
It is easier to remove the door trim if the removal is performed from the gray arrow section.

   (4) Detach the door lock cable (a) and door open cable (b) from the remote assembly - door.

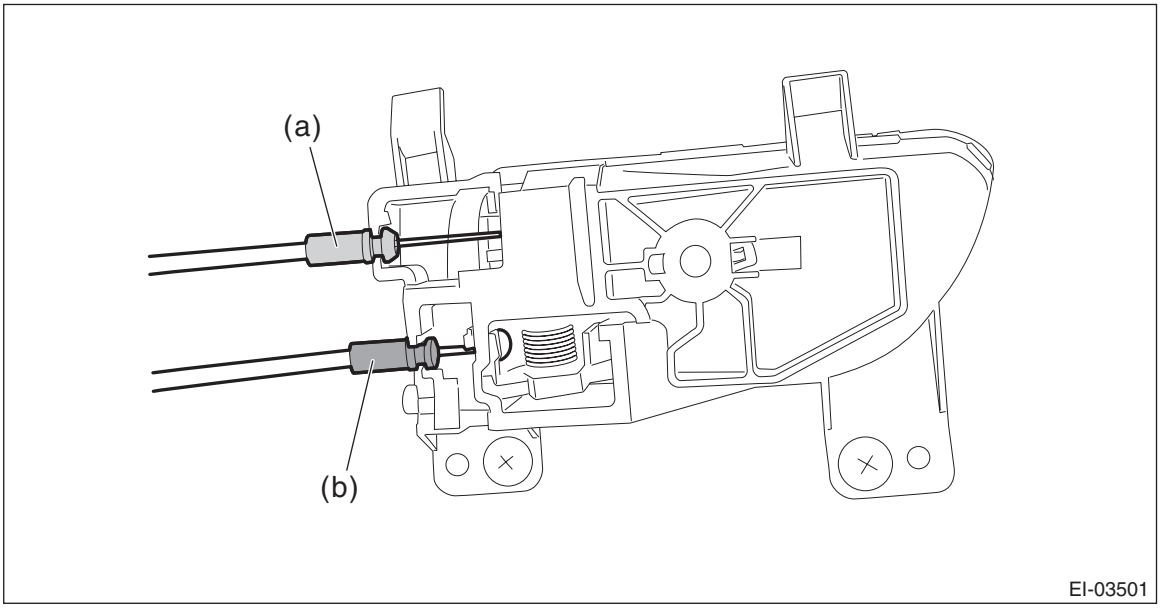

   (5) Disconnect the harness connector and remove the trim panel - rear door.

3) Remove the rear speaker assembly.
   (1) Remove the screws.
   (2) Disconnect the connector behind the speaker and remove the rear speaker assembly.

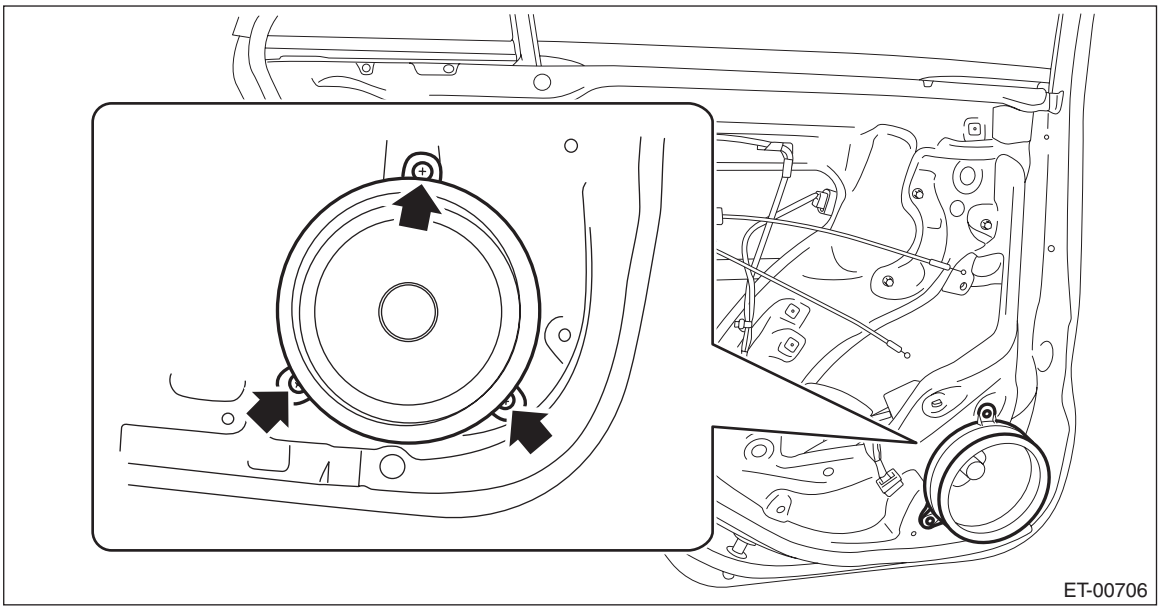

B: INSTALLATION

Install each part in the reverse order of removal.

NOTE:
Attach the door lock cable (a - end ball: small) to the upper side, and attach the door open cable (b - end ball: large) to the lower side.

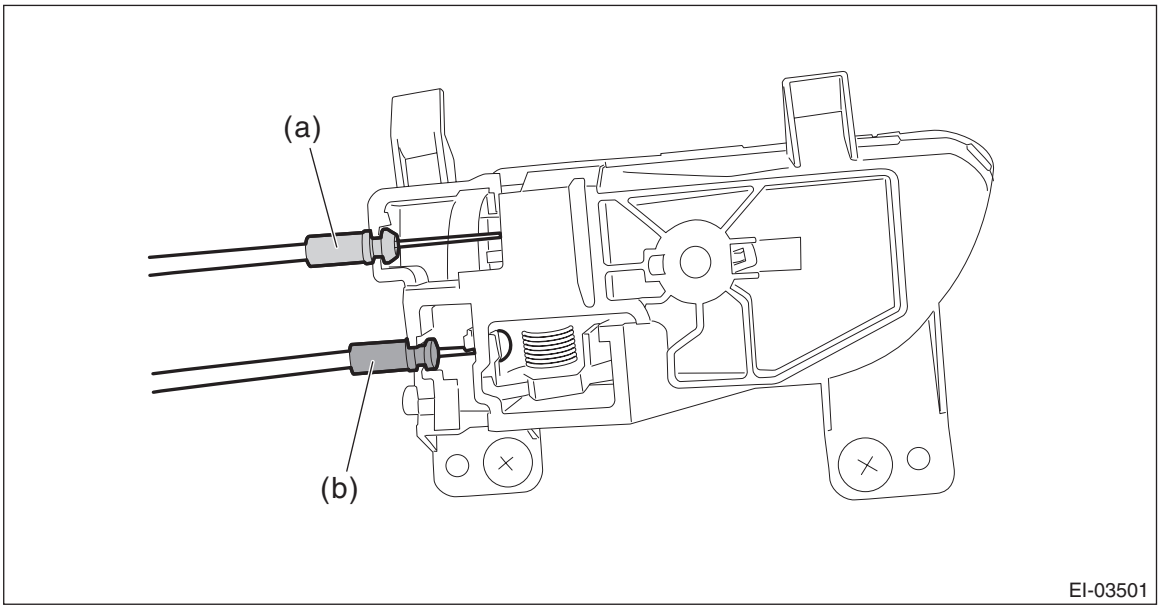

8. Antenna

A: REMOVAL

1. ANTENNA

1) Disconnect the ground cable from battery and wait for at least 60 seconds before starting work. <Ref. to NT-5, BATTERY, NOTE, Note.>

NOTE:
For the 12 volt engine restart battery of HEV model, disconnect the ground terminal from 12V engine restart battery sensor.

2) Remove the trim panel - front pillar UPR on the left and right sides.
   (1) Pull the upper part of the trim panel - front pillar UPR towards the center of the vehicle.
   (2) Insert long-nose pliers into the top part of the trim, grip the tether clip with the pliers and twist 90° in that position.

CAUTION:
Be careful not to damage the pillar trim surface and curtain airbag module when inserting the pliers.
   (3) Holding the tether clip twisted as in the previous step, remove the trim panel - front pillar UPR from the tether clip.
   (4) Remove the clips, and remove the trim panel - front pillar UPR.

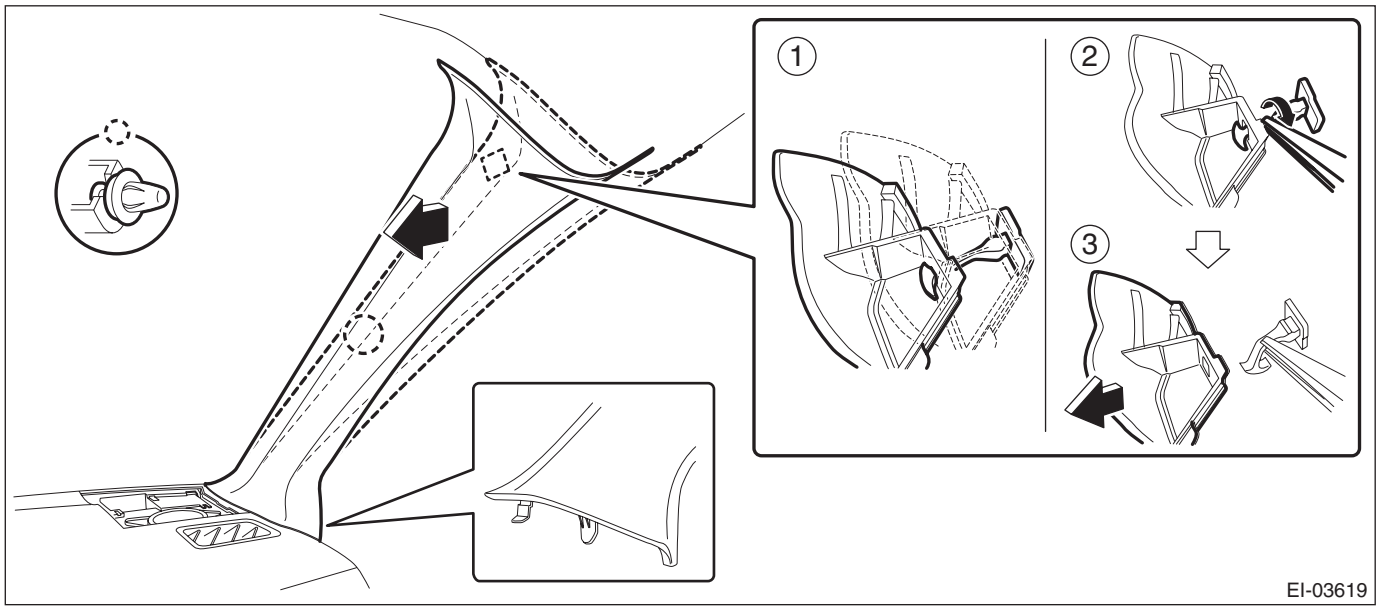

3) Release the claws, and then remove the cover side sill - front INN on LH and RH sides.

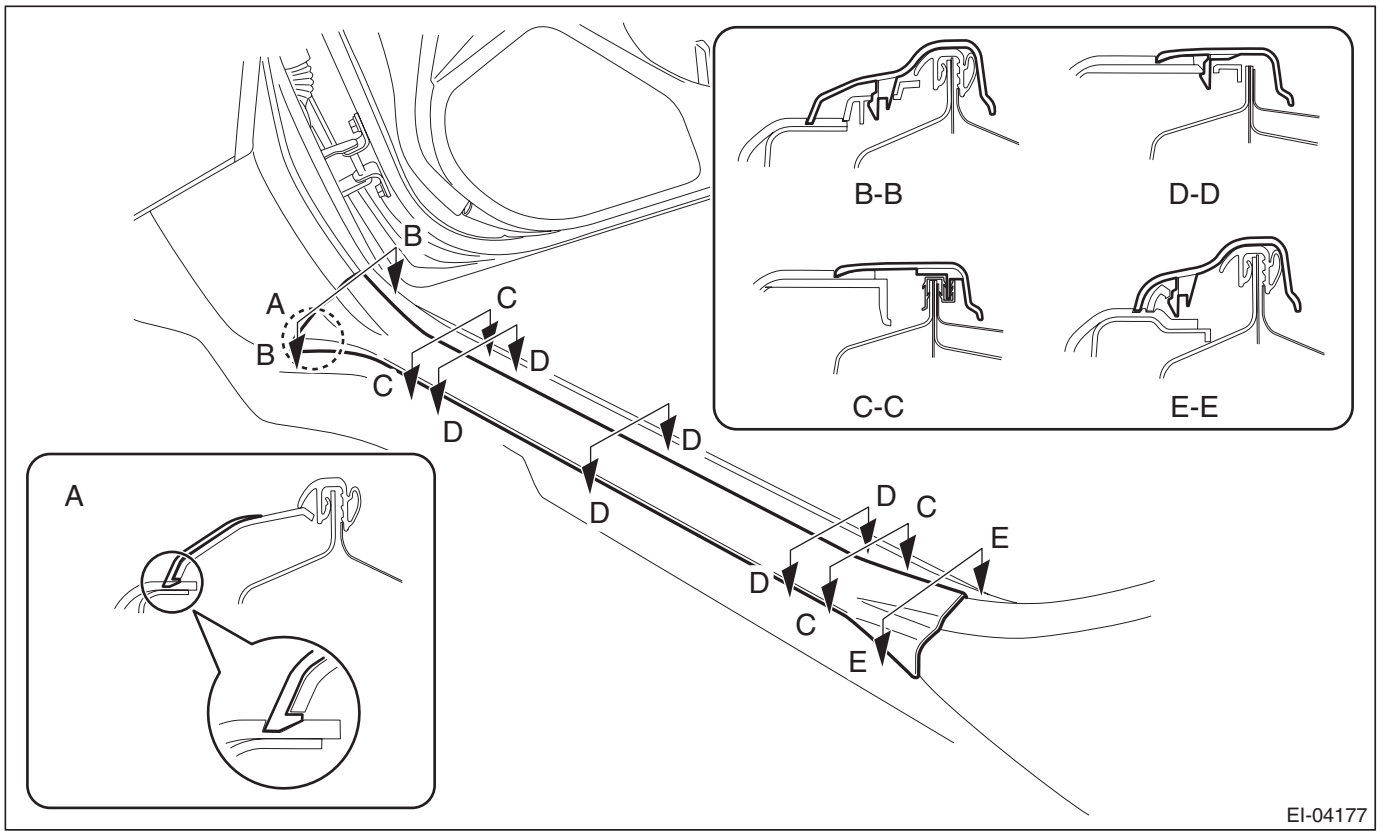

4) Remove the rear seat cushion assembly.

CAUTION:
Airbag system satellite safing sensor is located in the lower of the rear seat cushion center. Before removing the rear seat, refer to "CAUTION" of "General Description" in "AIRBAG SYSTEM" section. <Ref. to AB-11, CAUTION, General Description.>

(1) Push the corners of the rear seat cushion from above.
(2) While pushing the corners of the rear seat cushion from above, pull the knob of the hook - seat cushion rear towards yourself.

(3) While pulling the knob towards yourself, disconnect the hooks by lifting up the rear seat cushion.

NOTE:
Pull the left side of the knob to disconnect the LH side hook, and pull the right side of the knob to disconnect the RH side hook.

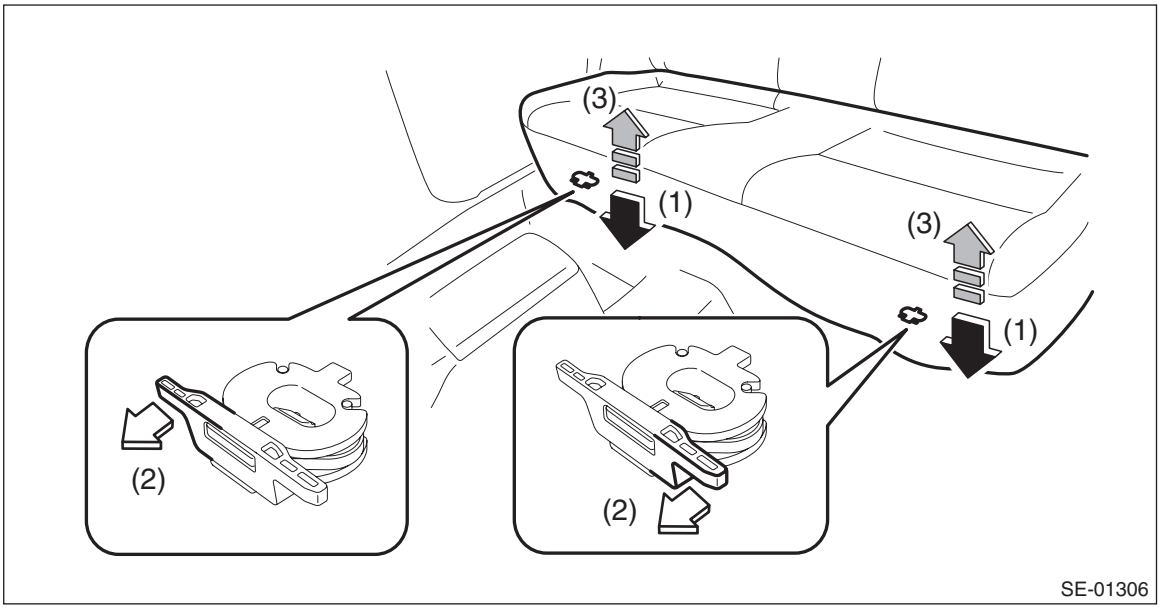

(4) Remove the hook (A) by pushing it back while lifting the front side of the rear seat cushion, and remove the rear seat cushion.

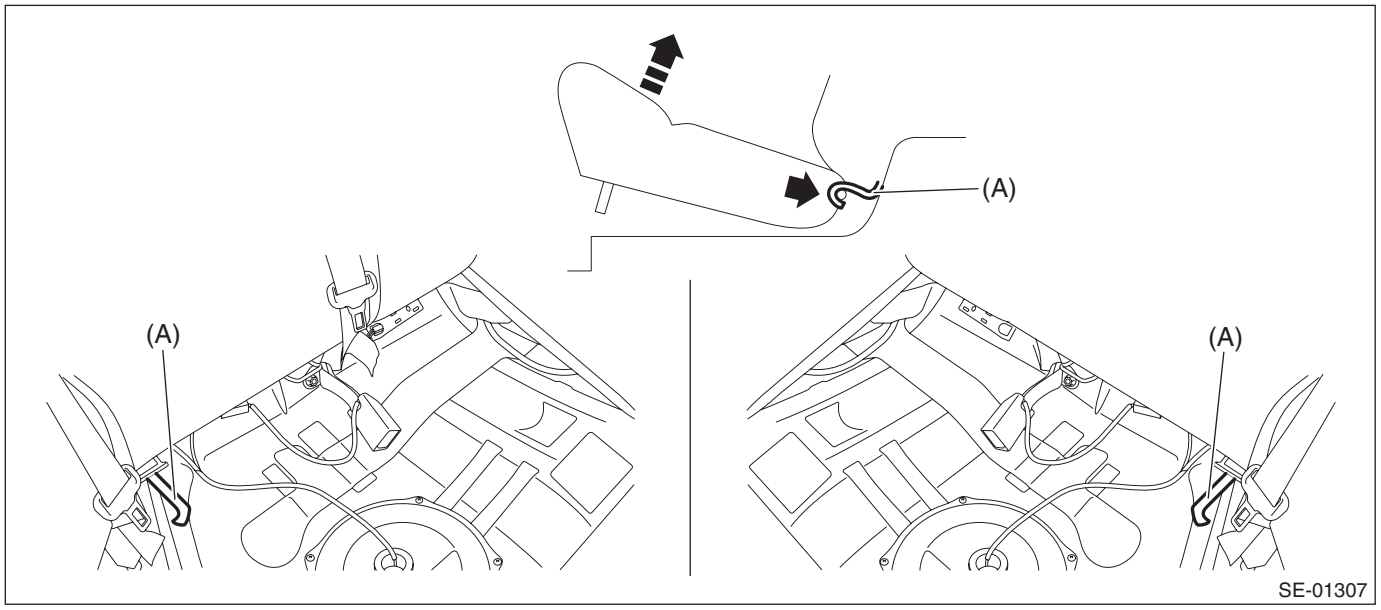

5) Release the clips and claws, and remove the cover side sill - rear INN on LH and RH sides.

CAUTION:
Do not pull with excessive force. Doing so may damage the claws of the cover side sill - rear INN.

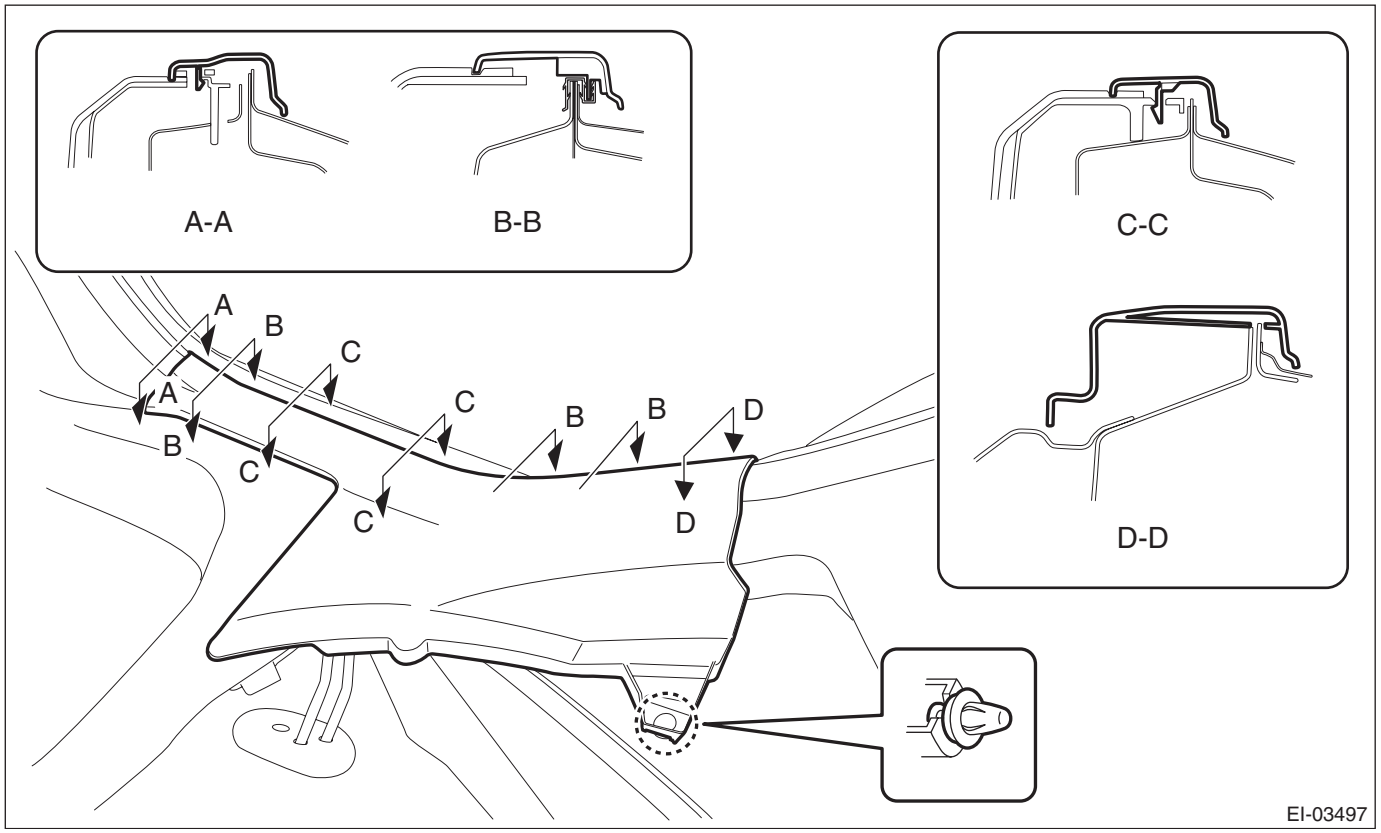

6) Remove the trim panel - center pillar LWR on the left and right sides.
(1) Release the clip by pulling the trim panel - center pillar LWR toward you.
(2) Expand the claws of the trim panel - center pillar LWR outward, and remove it from the trim panel - center pillar UPR.

CAUTION:
Do not expand the trim panel - center pillar LWR excessively. Doing so may damage the trim.

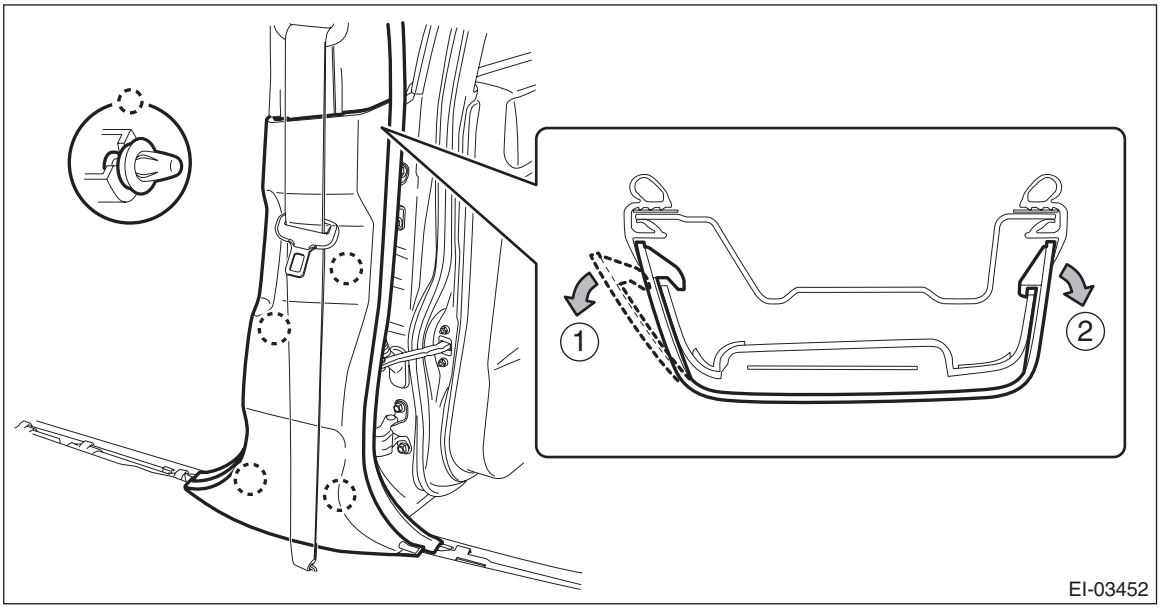

NOTE:
First release the claw located to the front of the vehicle.
7) Remove the trim panel - center pillar UPR on the left and right sides.
(1) Remove the cover through (a), and remove the seat belt anchor bolt.
(2) Remove the bolt on the lower side of the trim panel - center pillar UPR.
(3) Remove the clip by pulling the upper part of the trim toward you, and while lowering the entire trim, remove the trim panel - center pillar UPR.

CAUTION:
Do not reuse the upper clips of the trim panel - center pillar UPR. Once the clip is removed, its holding force is reduced. Be sure to replace it with a new clip.

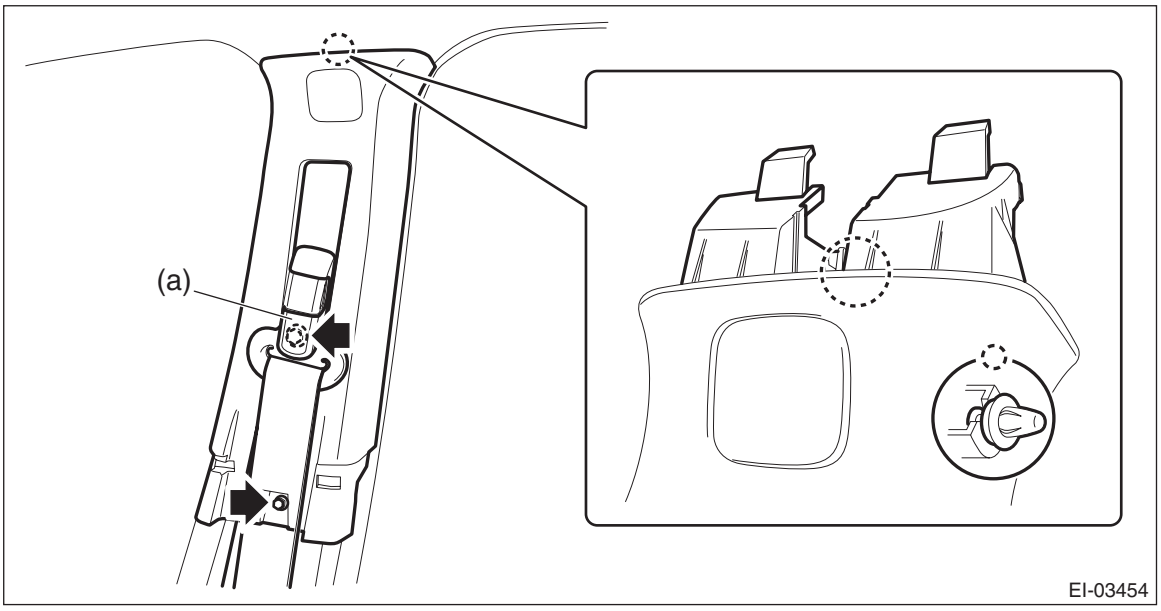

8) Remove the clips, and remove the trim panel - rear pillar UPR on the left and right sides. (4 door model)

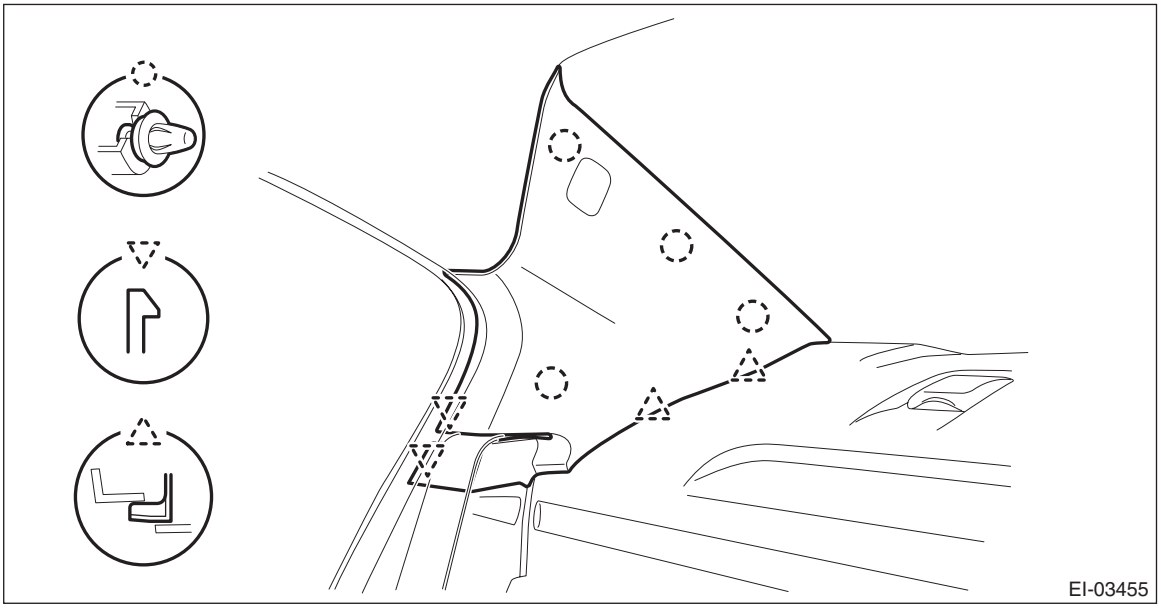

9) Remove the screws and clips, and remove the trim panel - rear quarter pillar UPR on the left and right sides. (5 door model/XV model)

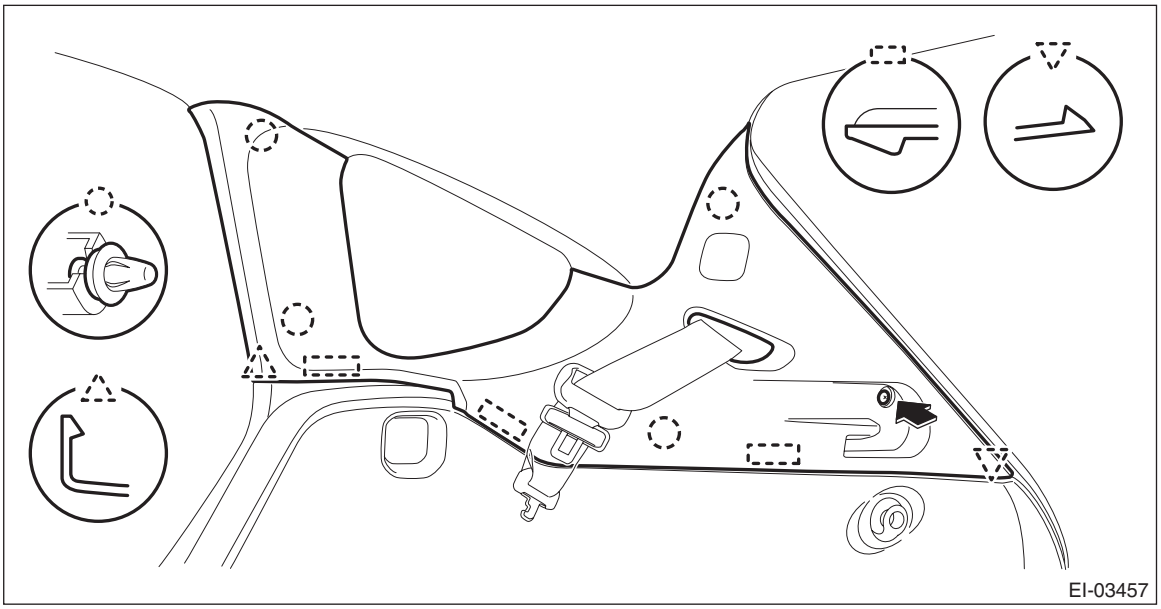

10) Remove the light assembly - map.
(1) Remove the lens and detach the screws.
(2) Disconnect the connector and remove the light assembly - map.

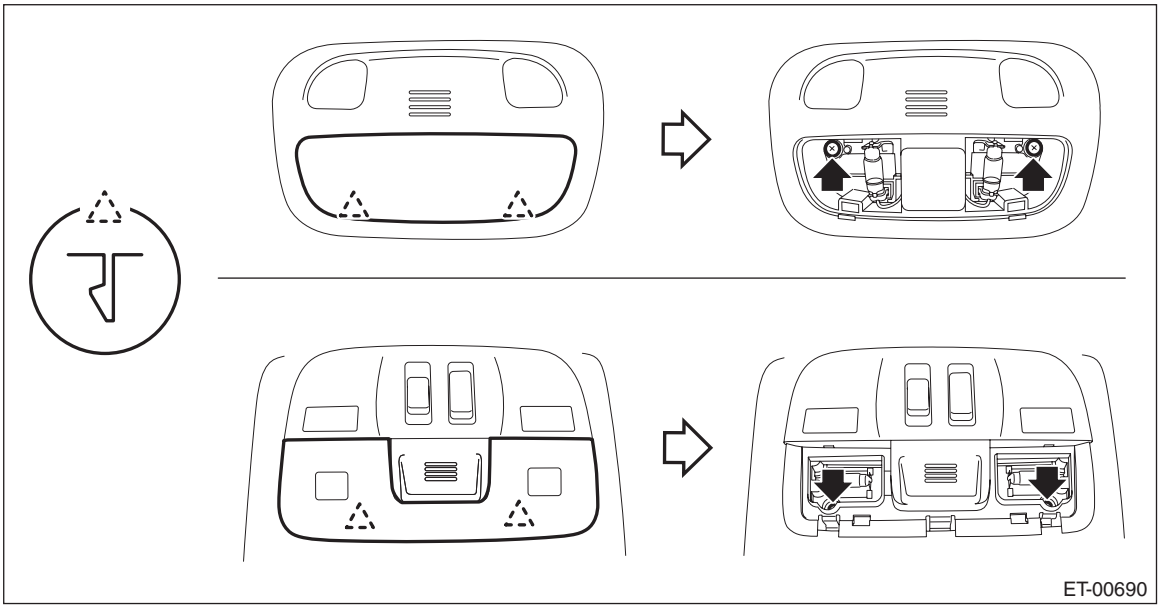

11) Remove the left and right sun visor assembly.
(1) Remove the screws and remove the sun visor assembly.
(2) Press both sides of the hook - sun visor using a flat tip screwdriver.
(3) Remove the hook - sun visor by pulling it toward you.

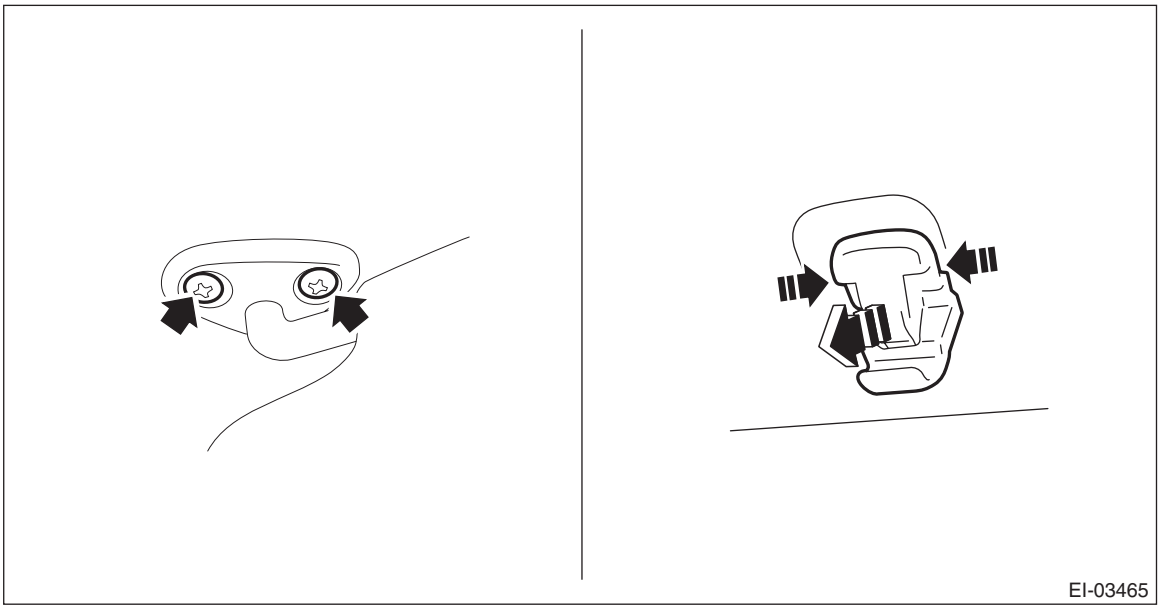

12) Remove the light assembly - room.
(1) Remove the lens and detach the screws.
(2) Disconnect the connector and remove the light assembly - room.

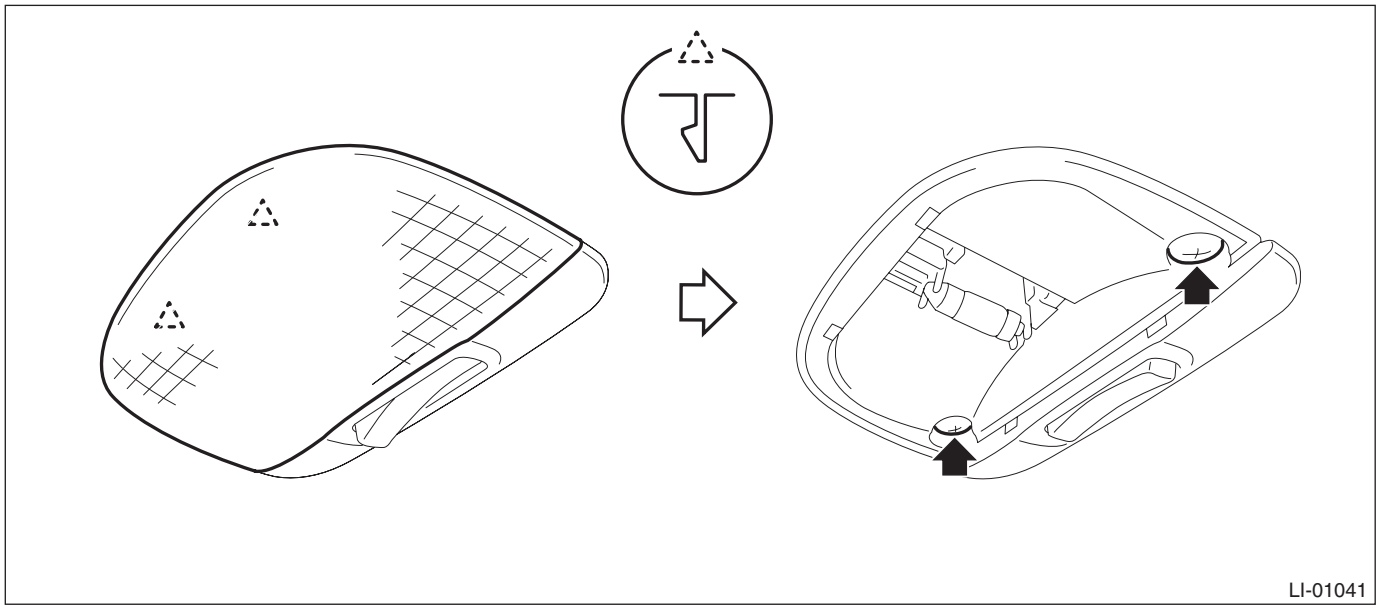

13) Remove all assist rails.
(1) Remove the cap (a) by pulling the both sides of the cap (a) using a flat tip screwdriver wrapped with a protection tape.
(2) Pull the assist grip toward you (to the vehicle center) and remove the metal clip from the bracket.

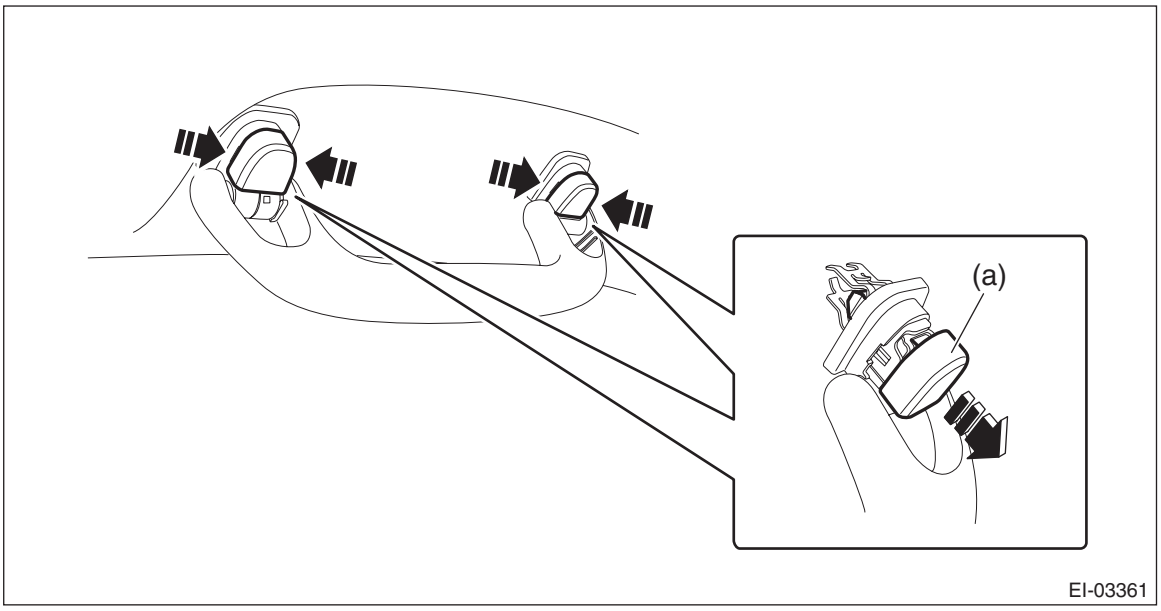

14) Remove the garnish - roof. (Model with sunroof)

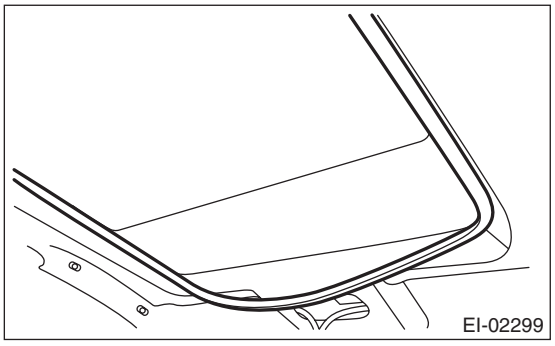

15) Remove the trim panel - roof assembly.
(1) Remove the clips and the Velcro tape behind the room light.
(2) Remove the weather strip - body side flange from the front/rear and left/right doors, and lower the trim panel - roof assembly.

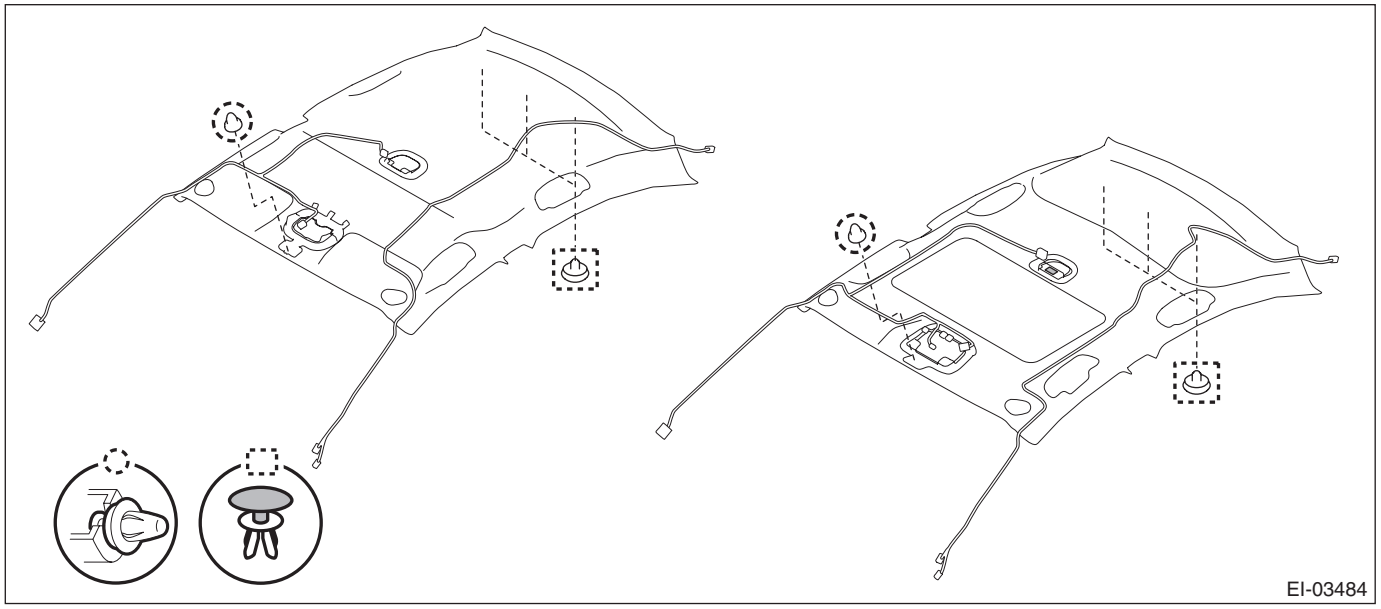

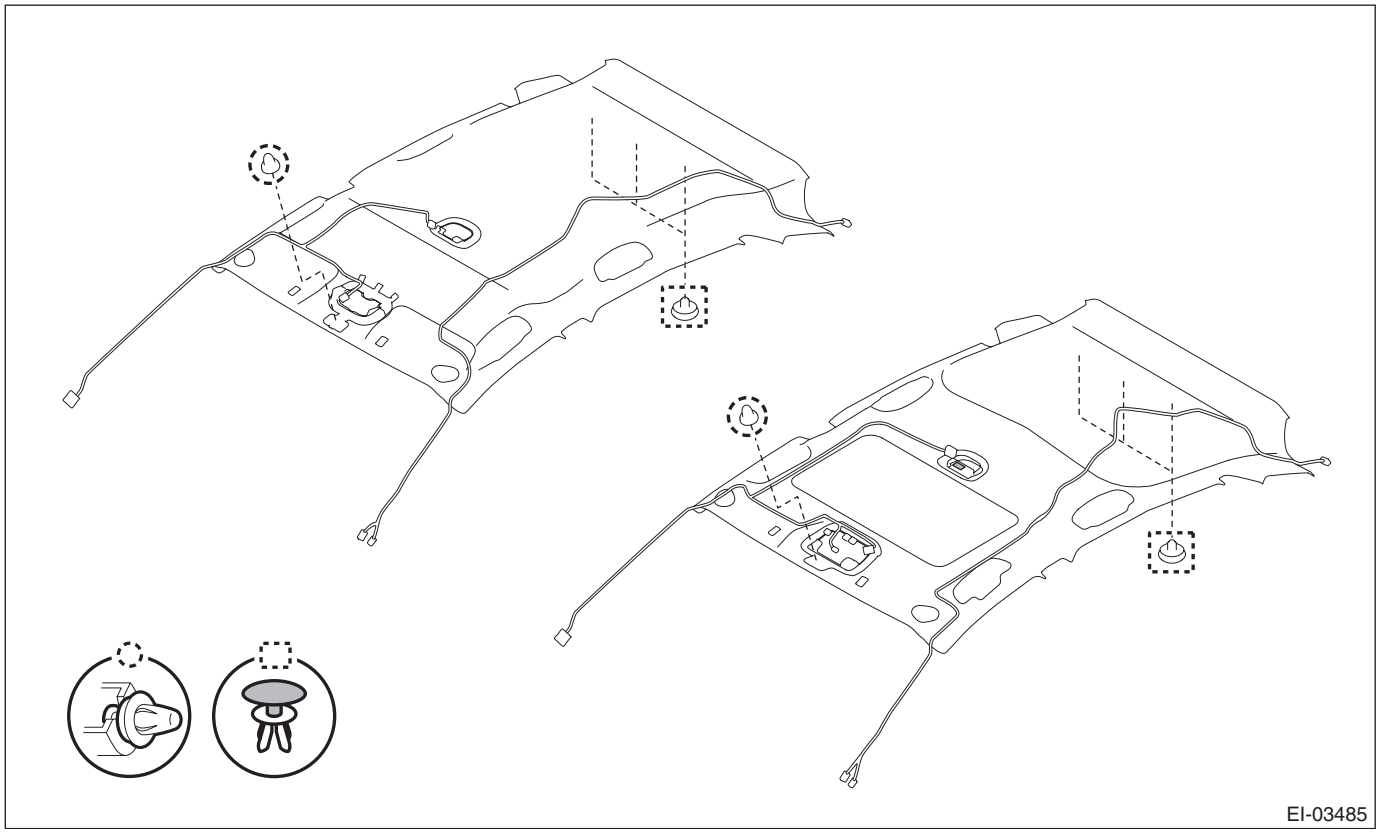

16) Disconnect the harness connector and terminal, and remove the mounting nut (A).

17) Pull out the antenna from the roof top.

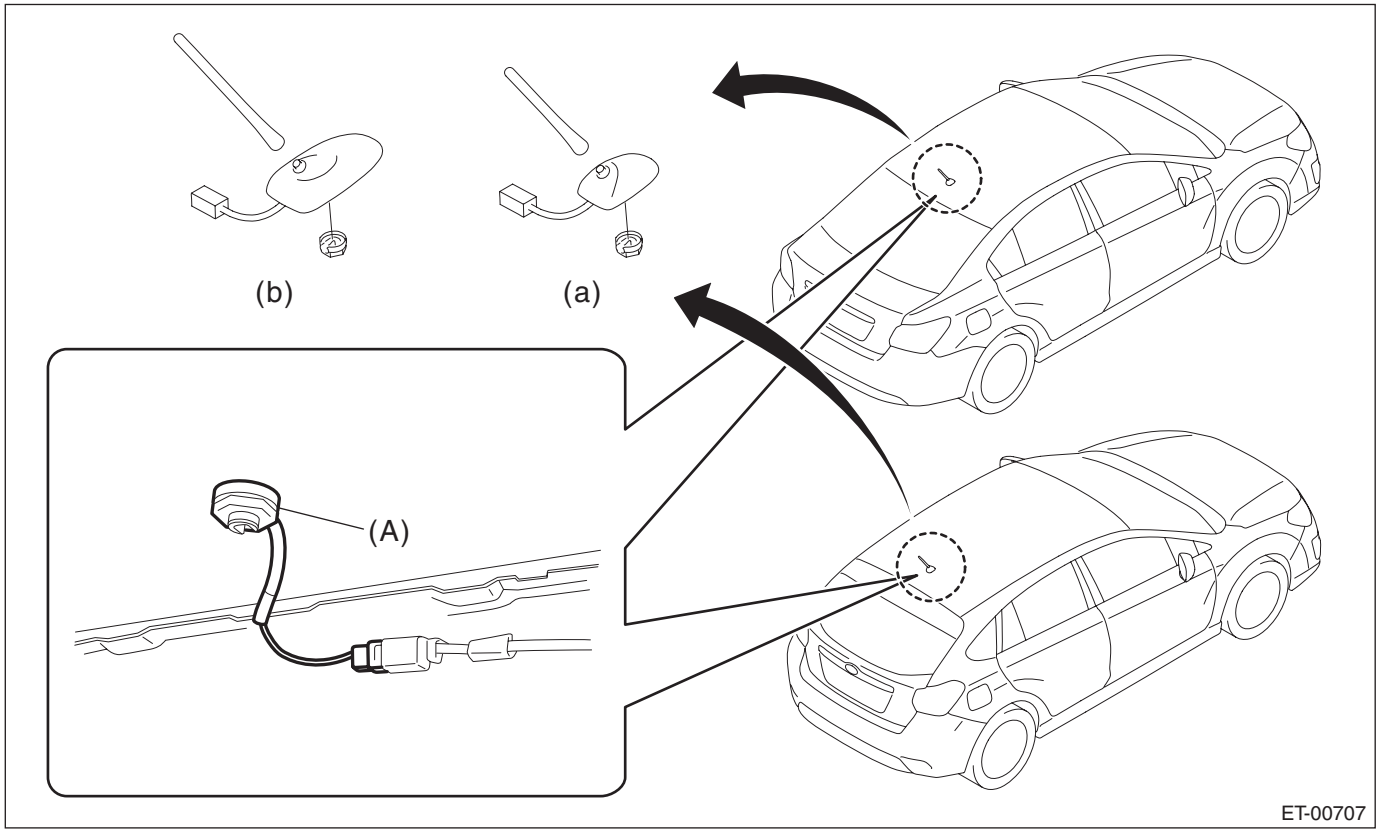

(a) Radio antenna (b) XM radio antenna

2. ANTENNA FEEDER CORD

1) Disconnect the ground cable from battery and wait for at least 60 seconds before starting work. <Ref. to NT-5, BATTERY, NOTE, Note.>

NOTE:
For the 12 volt engine restart battery of HEV model, disconnect the ground terminal from 12V engine restart battery sensor.

2) Lower the trim panel - roof assembly in the same manner as the removal procedure of antenna. <Ref. to ET-17, ANTENNA, REMOVAL, Antenna.>
(1) Disconnect the connector of the cord assembly - antenna feeder.
(2) Remove the clips and the Velcro tape behind the room light.
(3) Detach the connector of the cord assembly - antenna feeder from the trim panel - roof assembly.

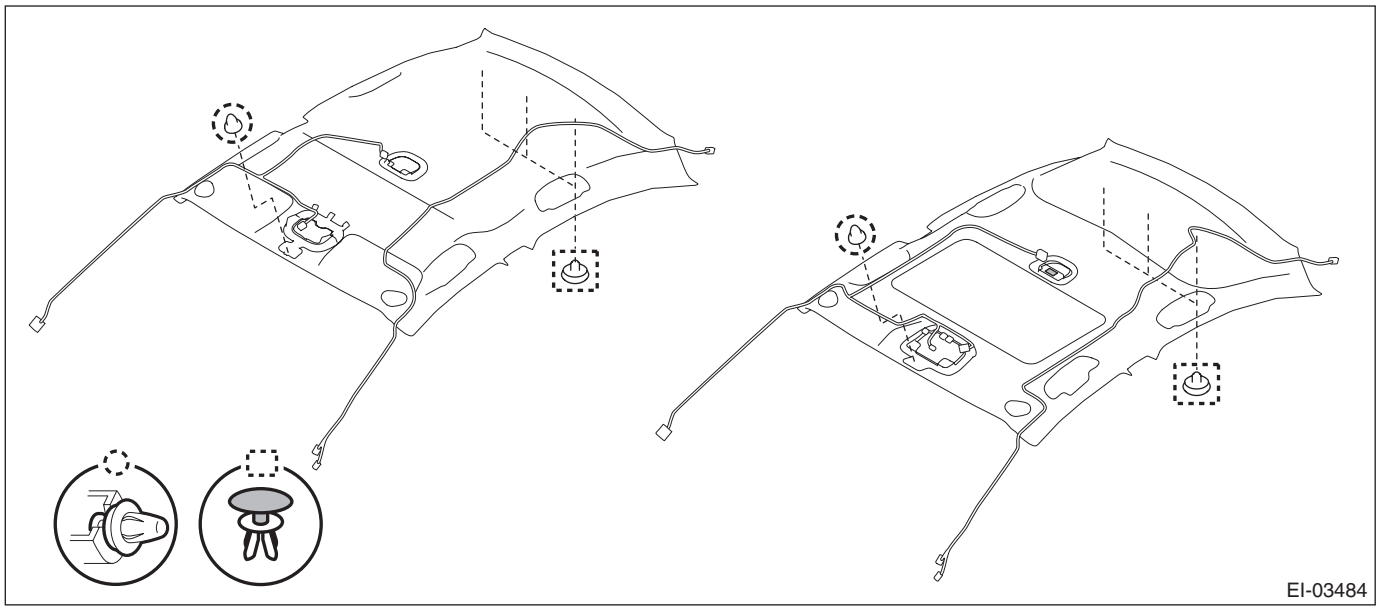
EI-03484

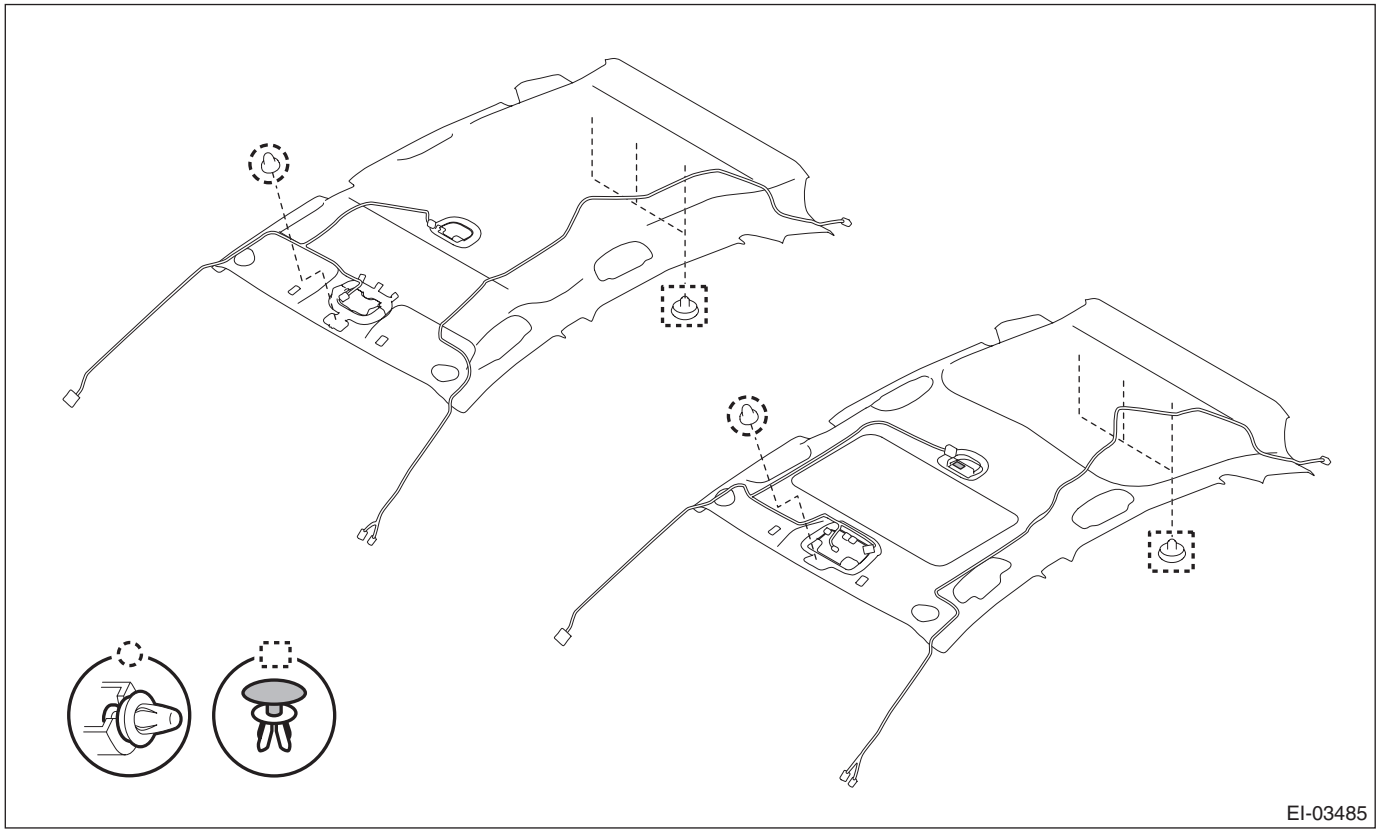
EI-03485

B: INSTALLATION

Install each part in the reverse order of removal.

CAUTION:
• When reusing the tether clip on the upper part of the trim panel - front pillar UPR, check that there is no damage to the tether clip. If the clip is damaged, its holding force is reduced and the trim panel - front pillar UPR may come off. Be sure to replace it with a new clip.
• Do not reuse the tether clip removed from the upper part of the trim panel - front pillar UPR. Always replace with a new part.
• Do not reuse the upper clips of the trim panel - center pillar UPR. Once the clip is removed, its holding force is reduced. Be sure to replace it with a new clip.
• Before installing the trim panel - front pillar UPR, check the condition of protective non-woven fabric (white) of the curtain airbag. If it is damaged (airbag module cloth is exposed), replace the curtain airbag module assembly with a new part.

NOTE:
• For application of feeder cord, refer to installation procedure of the trim panel - roof assembly. <Ref. to EI-152, INSTALLATION, Roof Trim.>
• Check the installation status of the tether clips and install the trim panel - front pillar UPR.

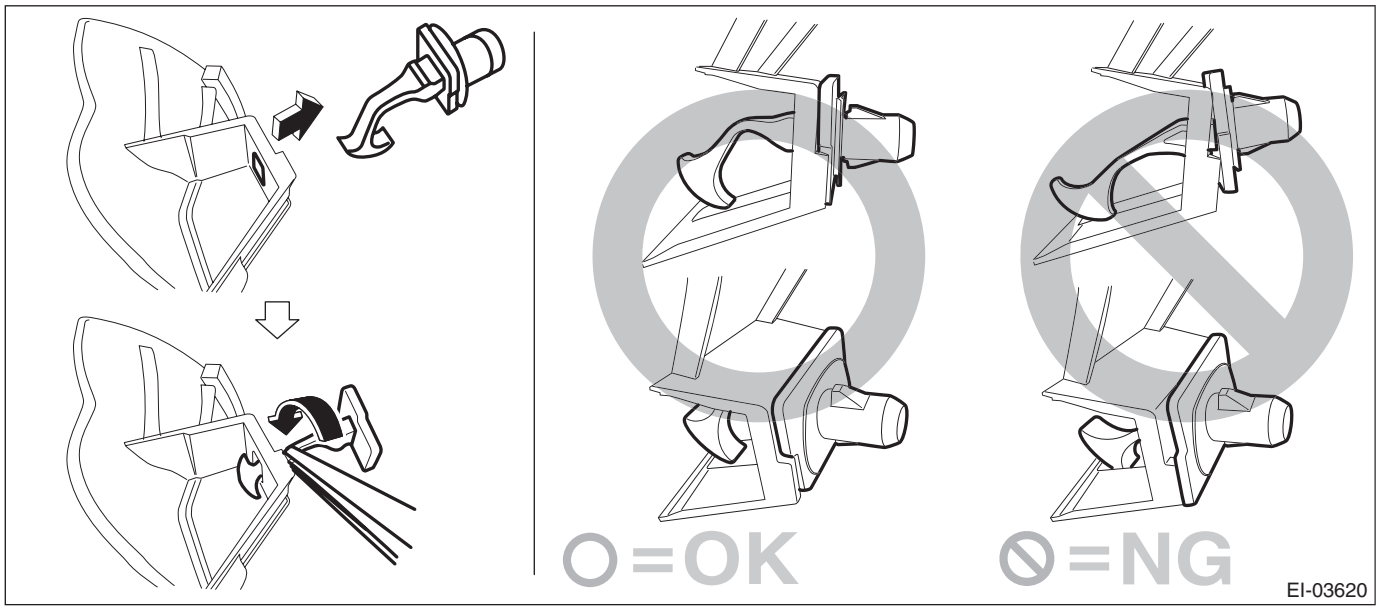

Tightening torque:
Radio antenna: 4.5 N·m (0.46 kgf-m, 3.3 ft-lb)

9. Steering Satellite Switch

A: REMOVAL

1) Position the front wheels straight ahead. (After moving a vehicle 5 m (16 ft) or more with front wheels positioned straight ahead, make sure that the vehicle moves straight ahead.)
2) Turn the ignition switch to OFF.
3) Disconnect the ground cable from battery and wait for at least 60 seconds before starting work. <Ref. to NT-5, BATTERY, NOTE, Note.>

NOTE:
For the 12 volt engine restart battery of HEV model, disconnect the ground terminal from 12V engine restart battery sensor.
4) Remove the driver's airbag module.

CAUTION:
Before handling the airbag module, refer to "CAUTION" of "General Description" in "AIRBAG SYSTEM". <Ref. to AB-11, CAUTION, General Description.>

(1) Using a hexagon wrench etc. wrapped by protective tape, insert the snap pins and release the locks (3 locations).

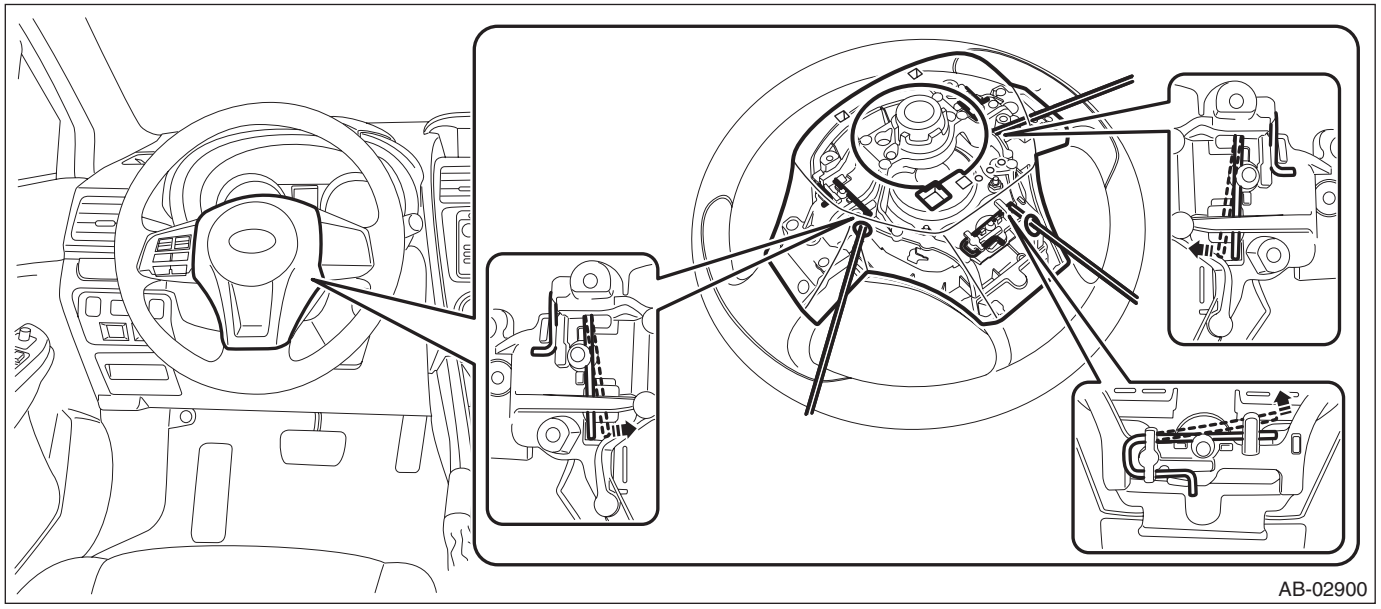

(2) Disconnect the horn harness and airbag connector, and remove the driver's airbag module. <Ref. to AB-20, PROCEDURE, Airbag Connector.>

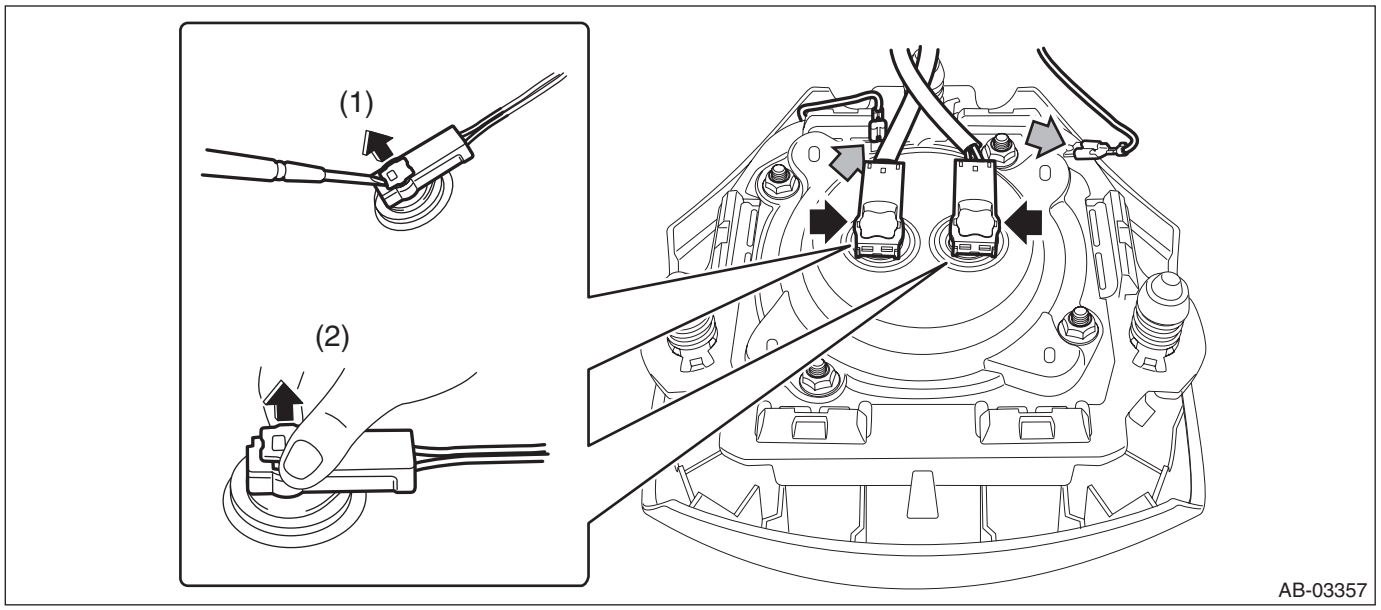

5) Remove the steering wheel.

CAUTION:
• Always use the steering wheel puller for removal to avoid deforming the steering wheel.
• If the steering wheel has been removed, make sure that the roll connector is not turned from the original position.

(1) Disconnect the connector and remove the nut.
(2) Put alignment marks and remove the steering wheel.

Preparation tool:
Steering wheel puller

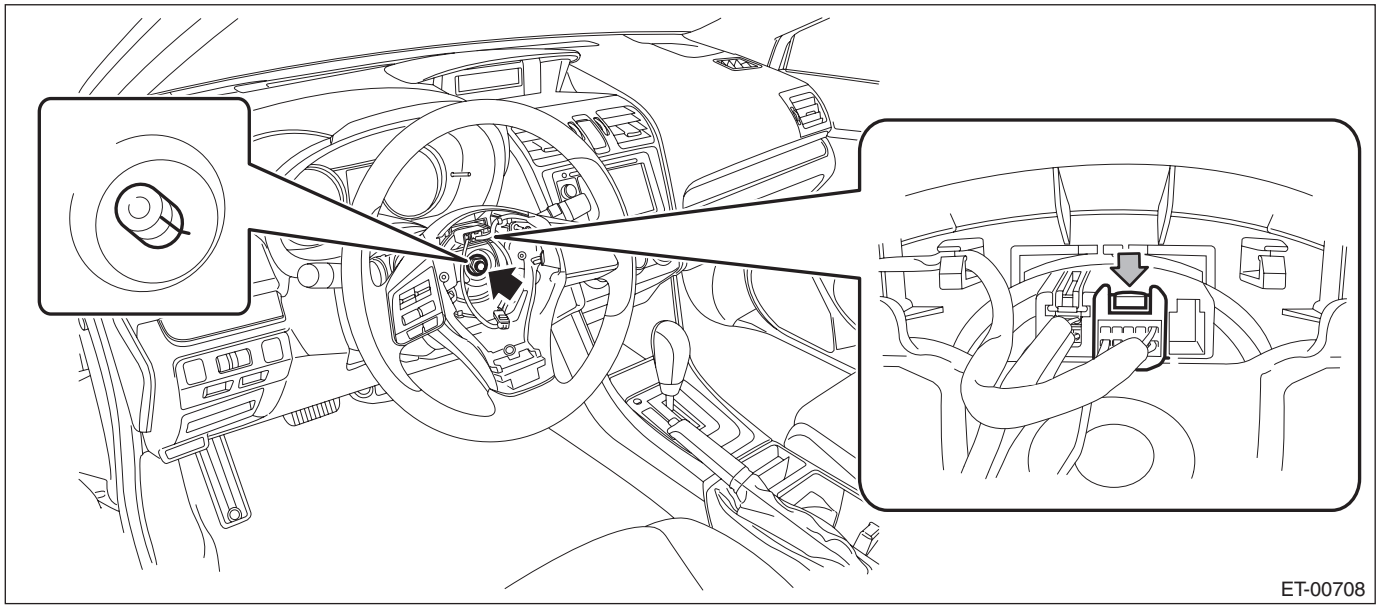

6) Remove the satellite switch assembly.
(1) Remove the screw, disconnect the connector and remove the paddle shift switch. (Model with paddle shift)

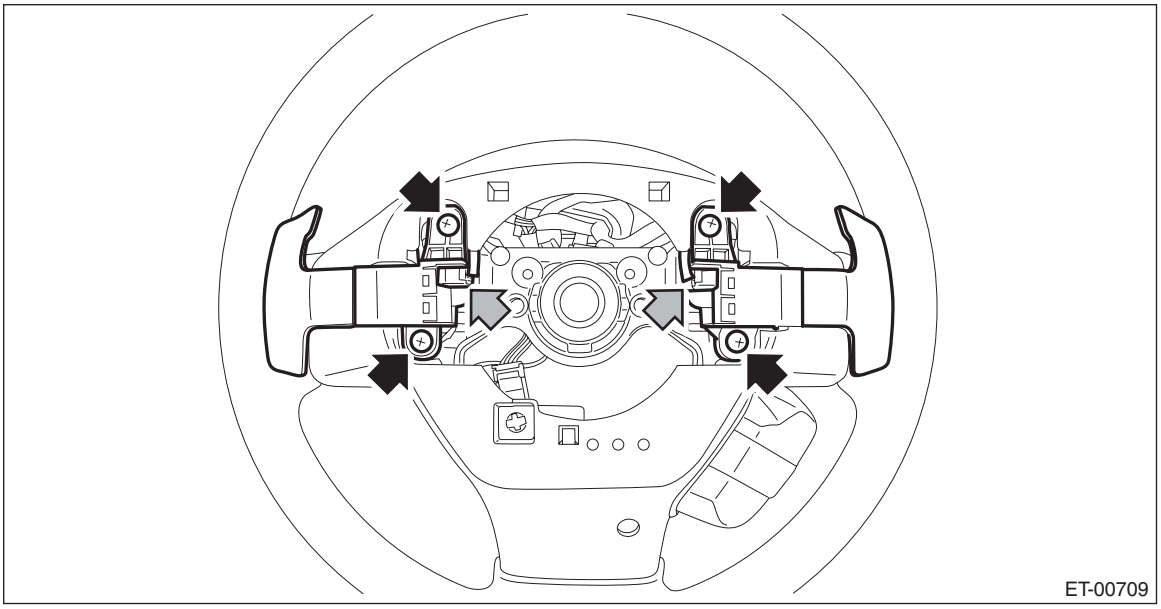

(2) Release the claws and clips, detach the cover - steering wheel LWR.

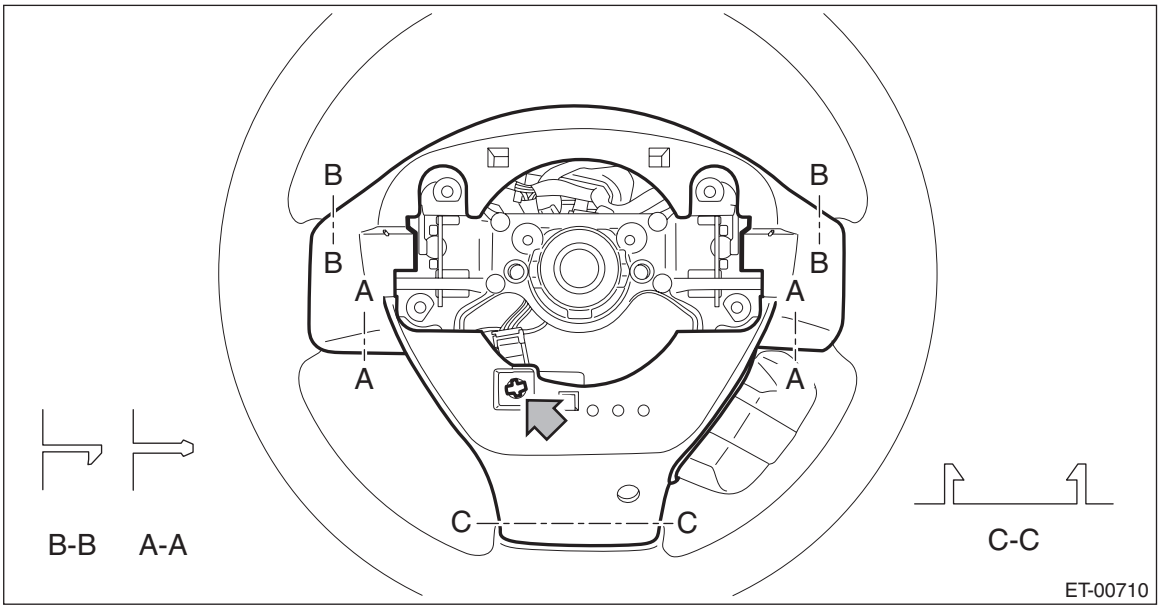

NOTE:
For model with steering switch, remove the connector and screw.

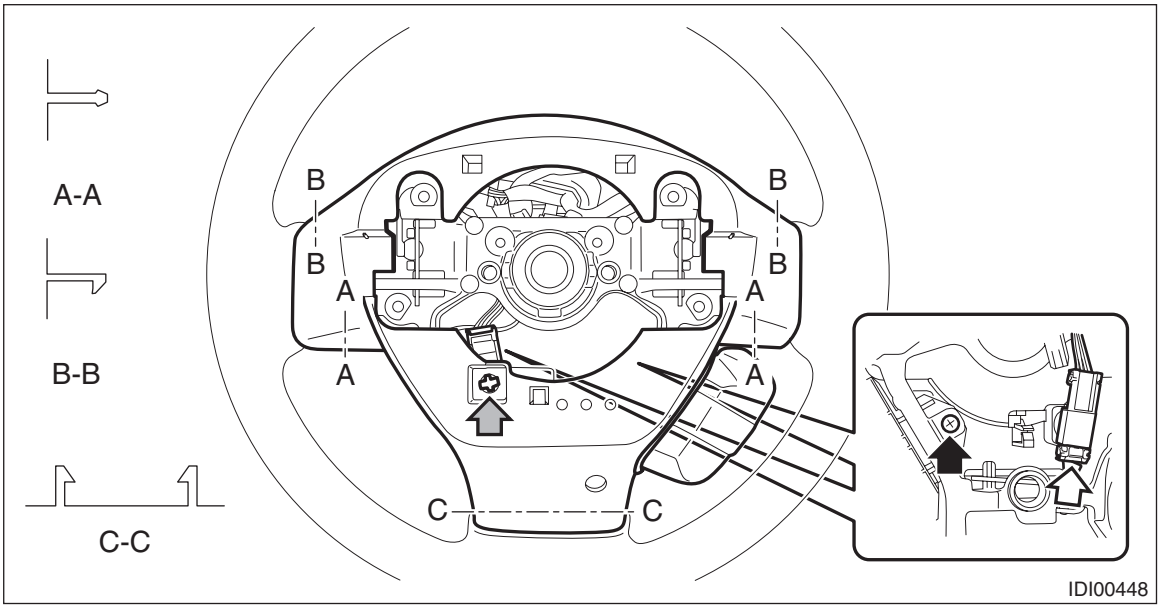

(3) Remove the screws and then remove the satellite switch assembly.

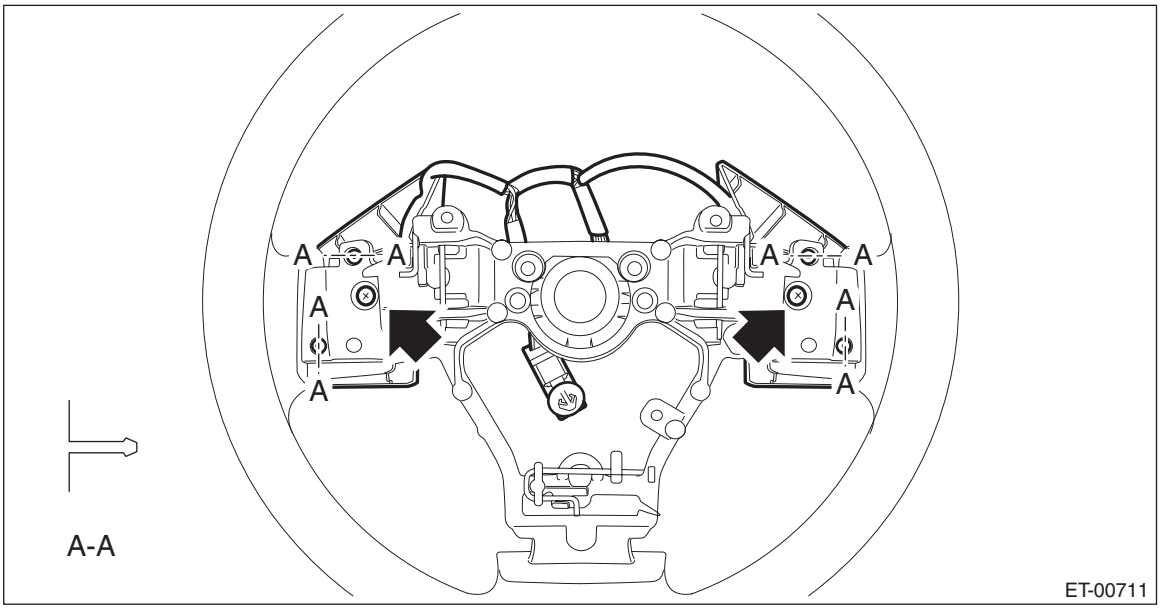

B: INSTALLATION

CAUTION:
• Before handling the airbag module, refer to "CAUTION" of "General Description" in "AIRBAG SYSTEM". <Ref. to AB-11, CAUTION, General Description.>
• Do not allow harness and connectors to interfere or get tangled up with other parts.
• If the steering wheel and steering angle sensor (steering roll connector) are removed, perform "VDC sensor midpoint setting mode" of the VDC. <Ref. to VDC-21, VDC SENSOR MIDPOINT SETTING MODE, ADJUSTMENT, VDC Control Module and Hydraulic Control Unit (VDCCM&H/U).>
1) Before installing steering wheel, be sure to adjust the direction of steering roll connector with steering wheel. <Ref. to AB-110, ADJUSTMENT, Roll Connector.>
2) Install each part in the reverse order of removal.

NOTE:
Align the alignment marks on the steering wheel and the column assembly - steering.

Tightening torque:
Steering wheel: 39 N·m (4.0 kgf-m, 28.8 ft-lb)

Clearance:
Between cover assembly - column and steering wheel: 4 — 6 mm (0.16 — 0.24 in)

C: INSPECTION

1. GASOLINE ENGINE MODEL

1) Measure the resistance between connector terminals of the satellite switch.
• Audio operation

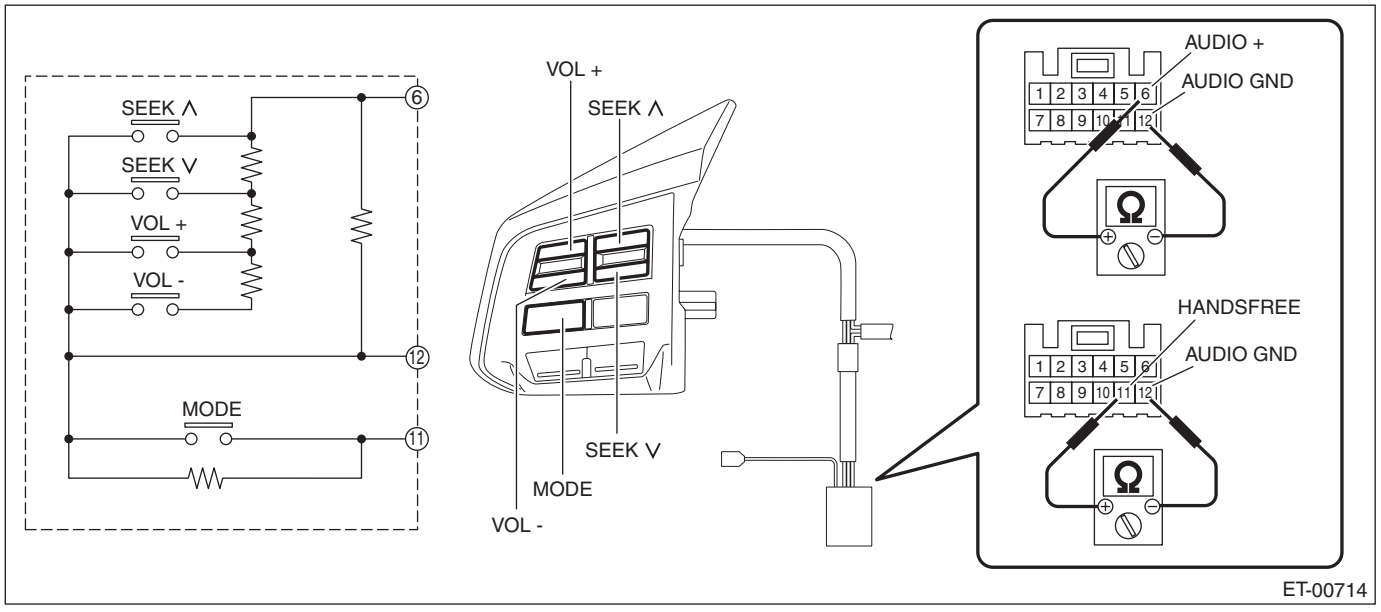

Switch	Switch operation	Terminal No.	Standard
VOL + VOL – SEEK ∧ SEEK ∨	All OFF	6 and 12	Approx. 100 kΩ
MODE	OFF	11 and 12	Approx. 100 kΩ
VOL +	ON	6 and 12	Approx. 1010 Ω
VOL –	ON	6 and 12	Approx. 3210 Ω
Preset CH UP/SEEK ∧	ON	6 and 12	Approx. less than 1 Ω
Preset CH DOWN/SEEK ∨	ON	6 and 12	Approx. 330 Ω
MODE	ON	11 and 12	Approx. less than 1 Ω

- Handsfree operation

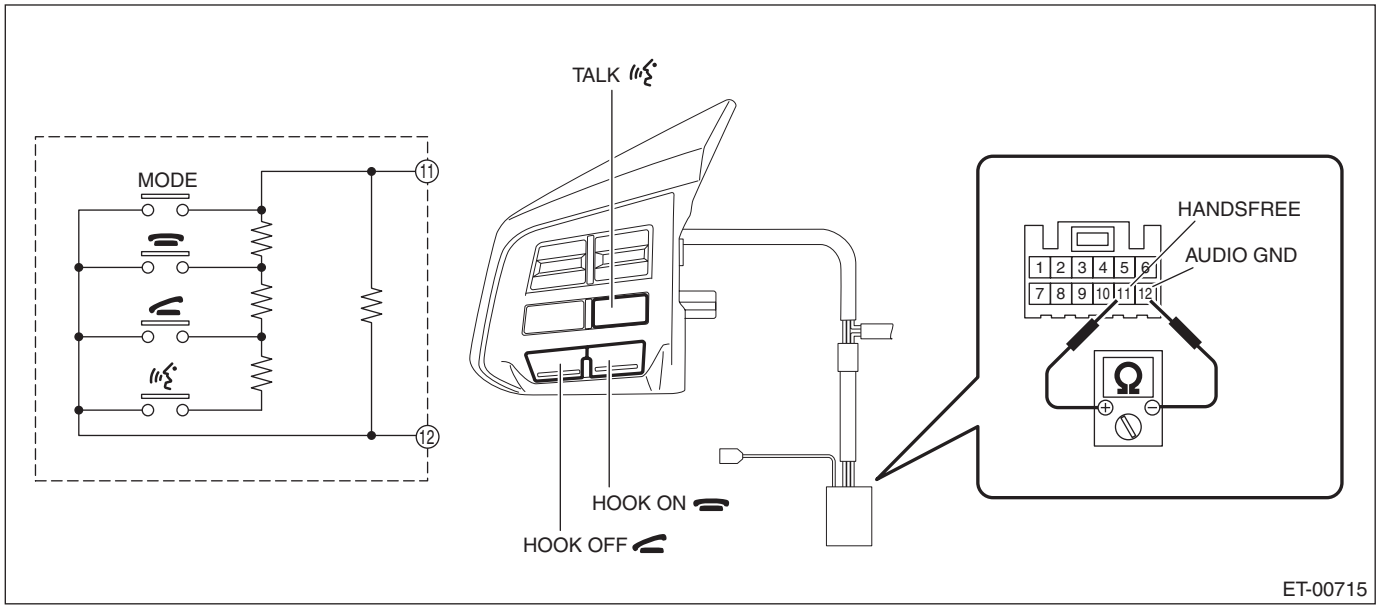

Switch	Switch operation	Terminal No.	Standard
HOOK ON HOOK OFF TALK	All OFF	11 and 12	Approx. 100 kΩ
HOOK ON	ON	11 and 12	Approx. 330 Ω
HOOK OFF	ON	11 and 12	Approx. 1010 Ω
TALK	ON	11 and 12	Approx. 3210 Ω

2) If the result of the measurement is not at the standard, replace the satellite switch assembly.

2. HEV MODEL

1) Measure the resistance between satellite switch connector terminals.

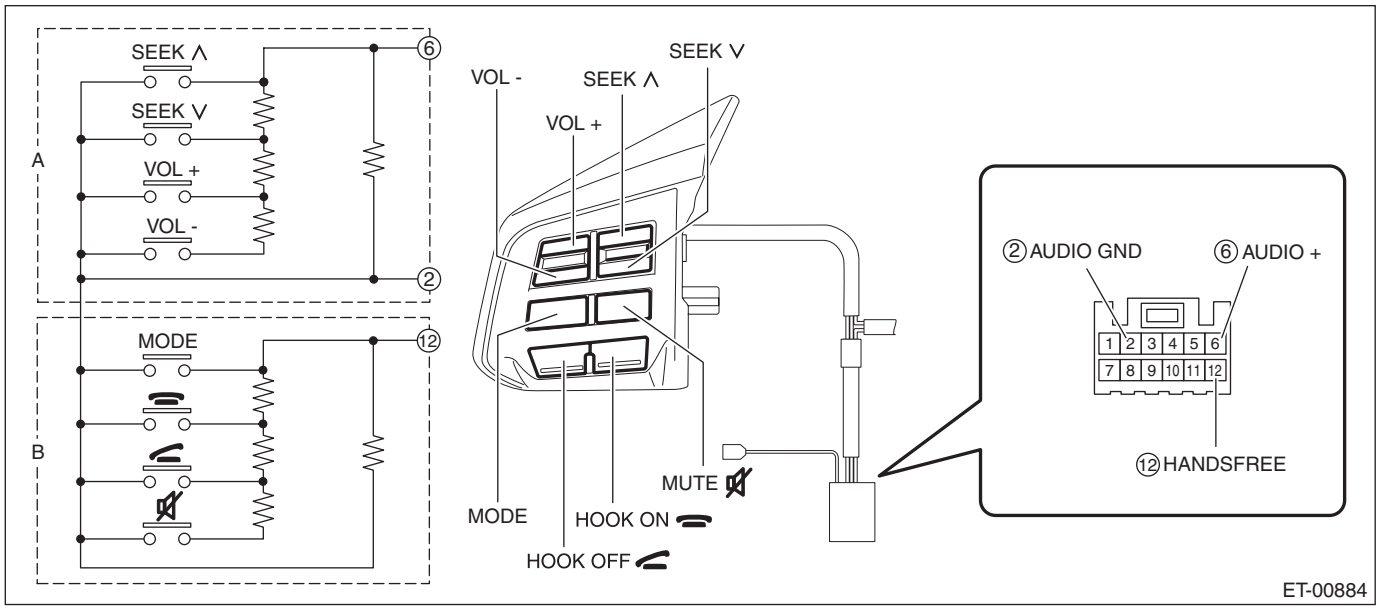

Terminal No.	Inspection conditions		Standard
6 — 2	SEEK ∧ SEEK ∨ VOL + VOL –	A circuit is all OFF.	Approx. 100 kΩ
6 — 2	Preset CH UP/SEEK ∧	ON	Less than 1 Ω
6 — 2	Preset CH DOWN/SEEK ∨	ON	Approx. 330 Ω
6 — 2	VOL +	ON	Approx. 1000 Ω
6 — 2	VOL –	ON	Approx. 3110 Ω
12 — 2	MODE HOOK ON HOOK OFF MUTE	B circuit is all OFF.	Approx. 100 kΩ
12 — 2	MODE	ON	Less than 1 Ω
12 — 2	HOOK ON	ON	Approx. 330 Ω
12 — 2	HOOK OFF	ON	Approx. 1000 Ω
12 — 2	MUTE	ON	Approx. 3110 Ω

2) If the result of the measurement is not at the standard, replace the satellite switch assembly.

10.Microphone

A: NOTE

The microphone is a single unit with the spot map light.
For operation procedures, refer to “LIGHTING SYSTEM” section. <Ref. to LI-81, Spot Map Light.>

11.Navigation Body

A: REMOVAL

1) Disconnect the ground cable from battery. <Ref. to NT-5, BATTERY, NOTE, Note.>

NOTE:
For the 12 volt engine restart battery of HEV model, disconnect the ground terminal from 12V engine restart battery sensor.
2) On manual A/C models, disconnect the control cables from both sides of the heater and cooling unit assembly.

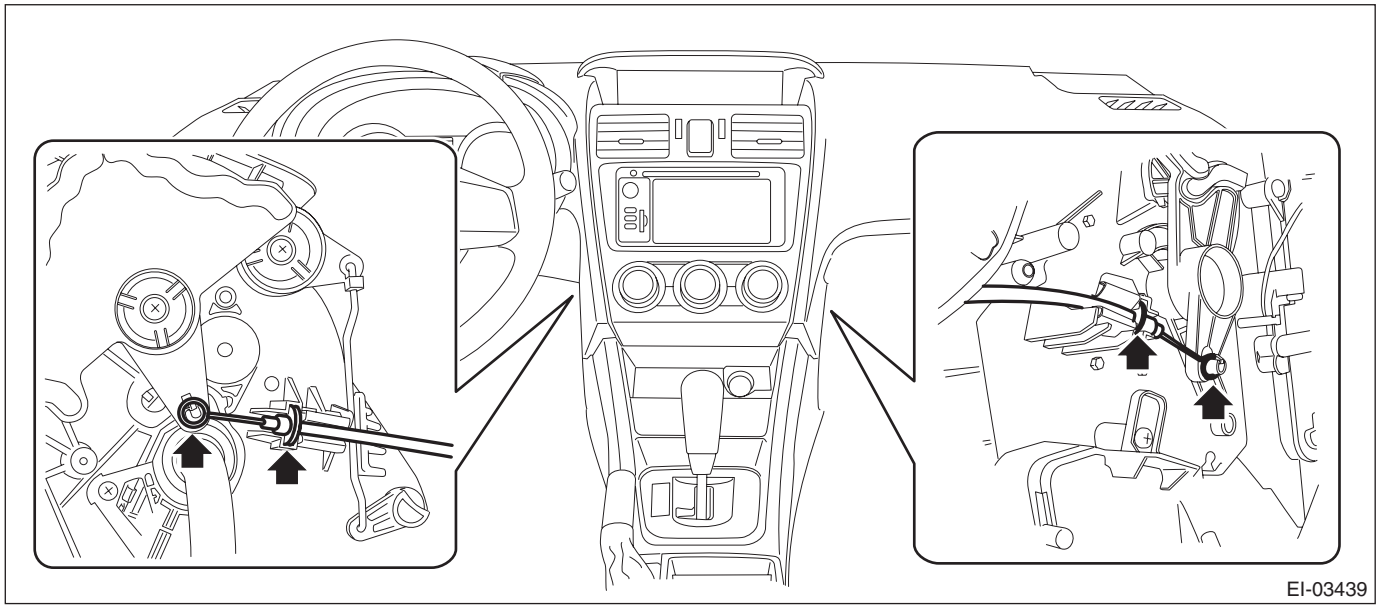

NOTE:
Remove the glove box pocket assembly on the passenger's side.
3) Remove the panel center assembly.

CAUTION:
- **Do not put your finger on the fin of the air vent grille. Doing so may damage the fin.**
- **Pull the panel center assembly slowly. Pulling with excessive force may damage the connector.**

(1) Insert a plastic remover to the three areas shown by the arrows, and slightly lift up the panel center assembly.
(2) With the panel center assembly lifted up slightly, release the claw by using a clip remover wrapped with protective tape.
(3) Release the rest of the claws, and pull out the panel center assembly.

(4) Disconnect the connectors, and remove the panel center assembly.

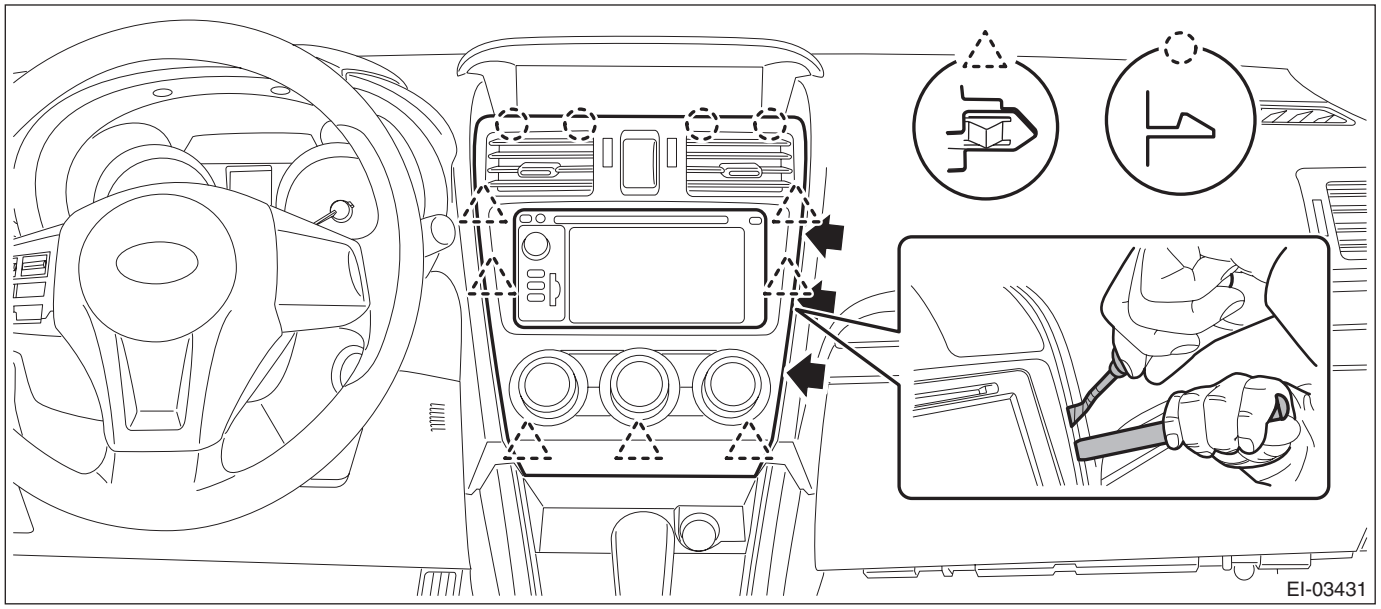

4) Remove the navigation assembly.
(1) Remove the left and right screws, and partially pull out the navigation assembly.
(2) Disconnect the connector and remove the navigation assembly.

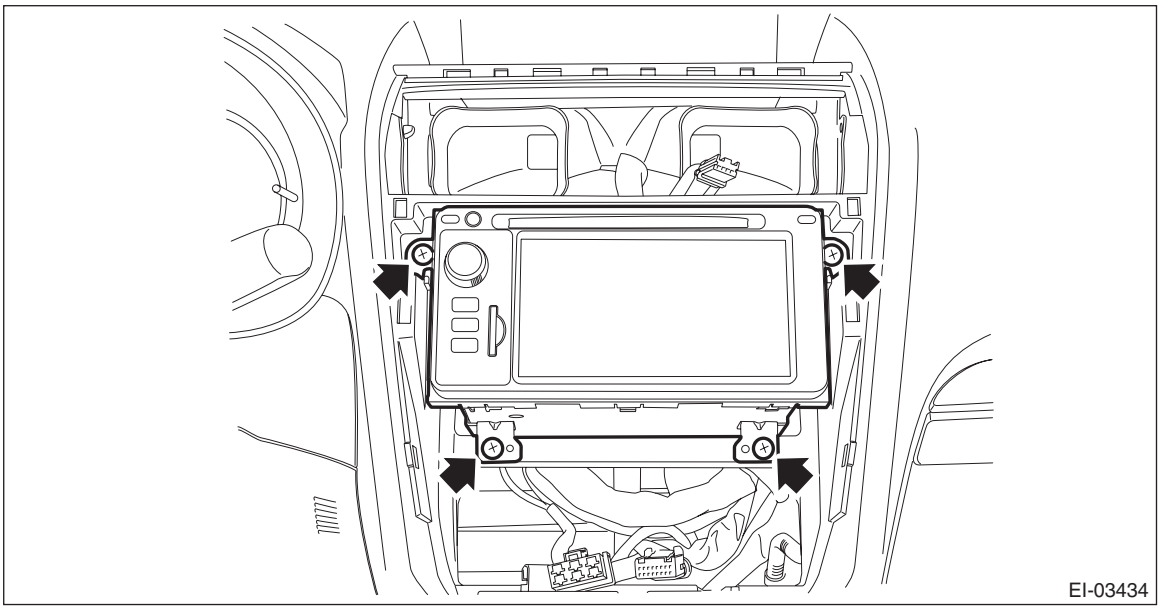

B: INSTALLATION

CAUTION:
After installing the panel center assembly, check that the air vent grille of the panel center assembly is inserted correctly into the air vent duct.
Install each part in the reverse order of removal.

12.GPS Antenna

A: REMOVAL

1) Disconnect the ground cable from battery. <Ref. to NT-5, BATTERY, NOTE, Note.>

NOTE:
For the 12 volt engine restart battery of HEV model, disconnect the ground terminal from 12V engine restart battery sensor.

2) Remove the combination meter assembly.

CAUTION:
- **Be careful not to damage the meter or instrument panel.**
- **Pay particular attention to avoid damaging the meter glass.**

(1) Release the lock, tilt the steering column to the lowest end and fully extend the column by the telescopic system.

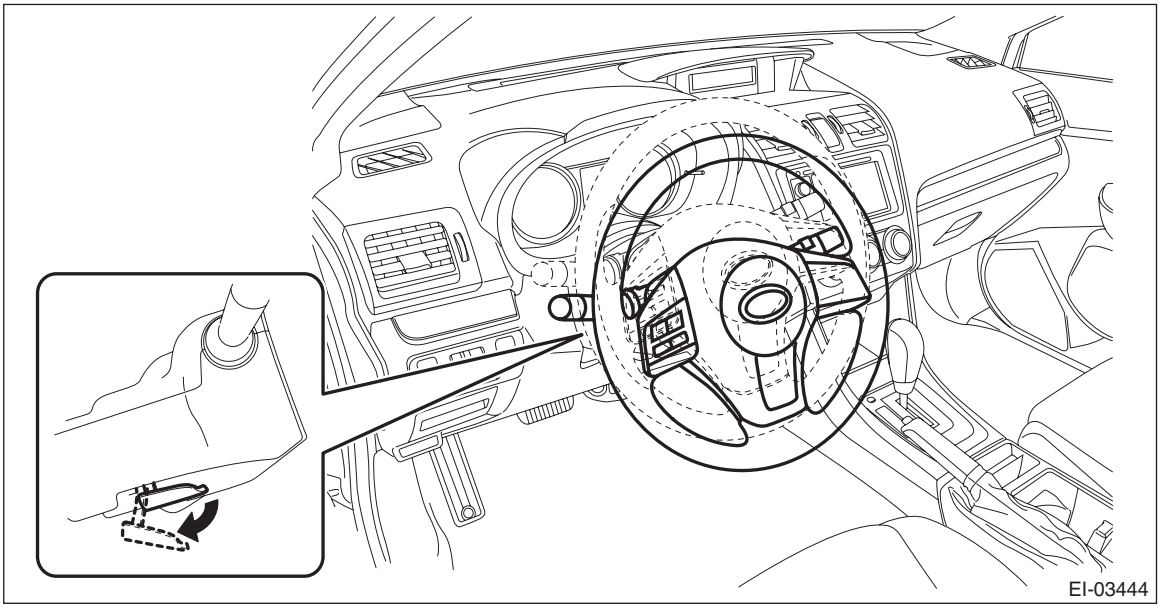

(2) Release the screws and clips, then detach the meter visor assembly.

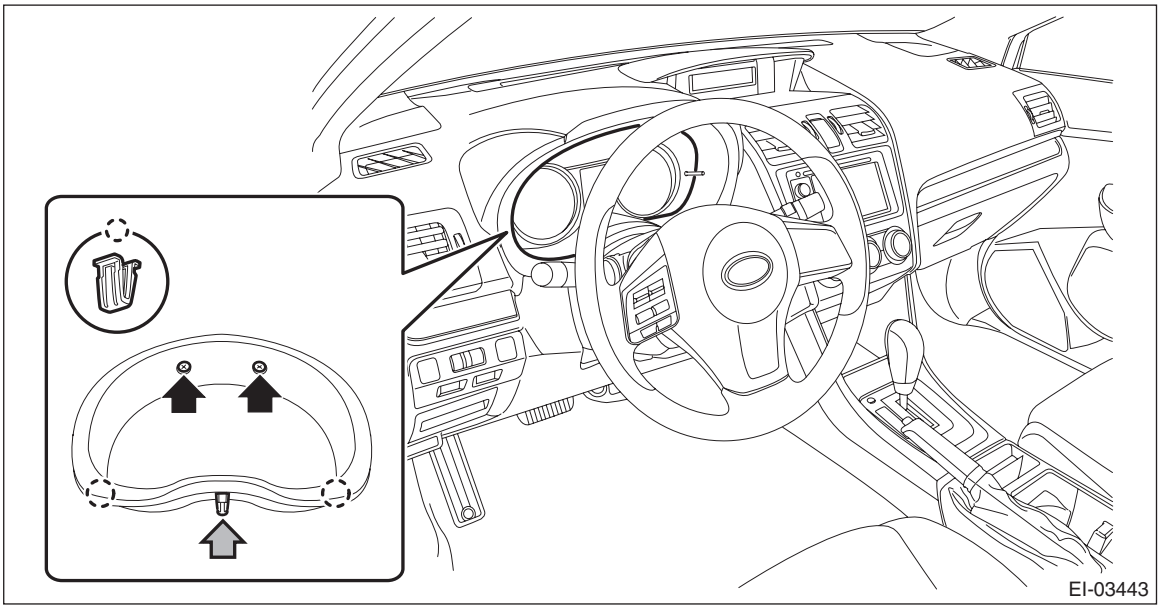

(3) Remove the screws, disconnect the connector and remove the combination meter assembly.

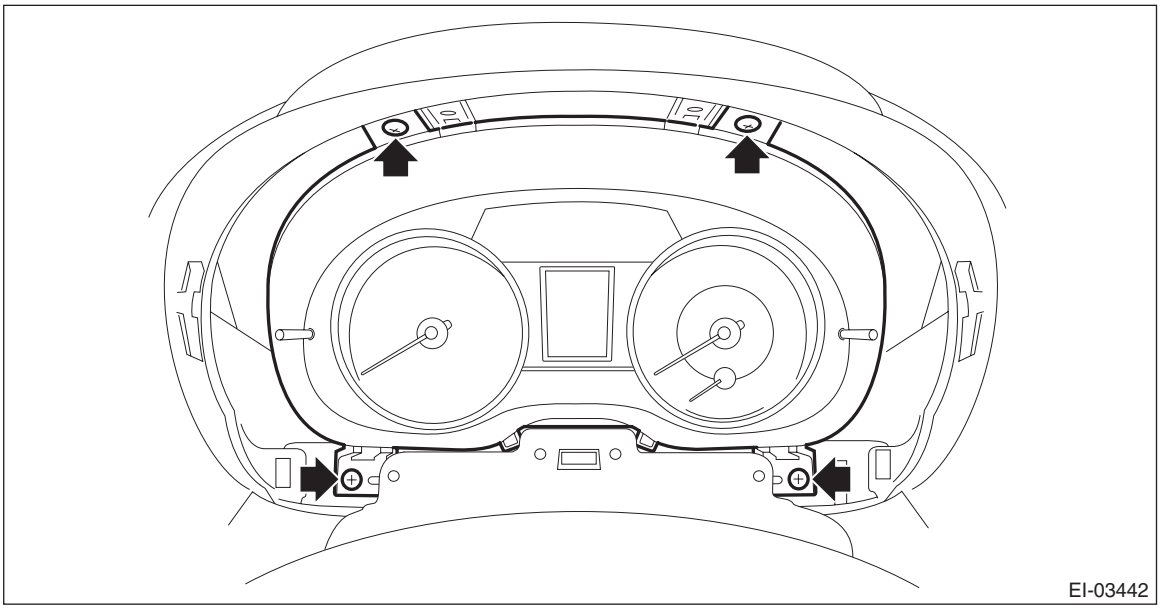

3) On manual A/C models, disconnect the control cables from both sides of the heater and cooling unit assembly.

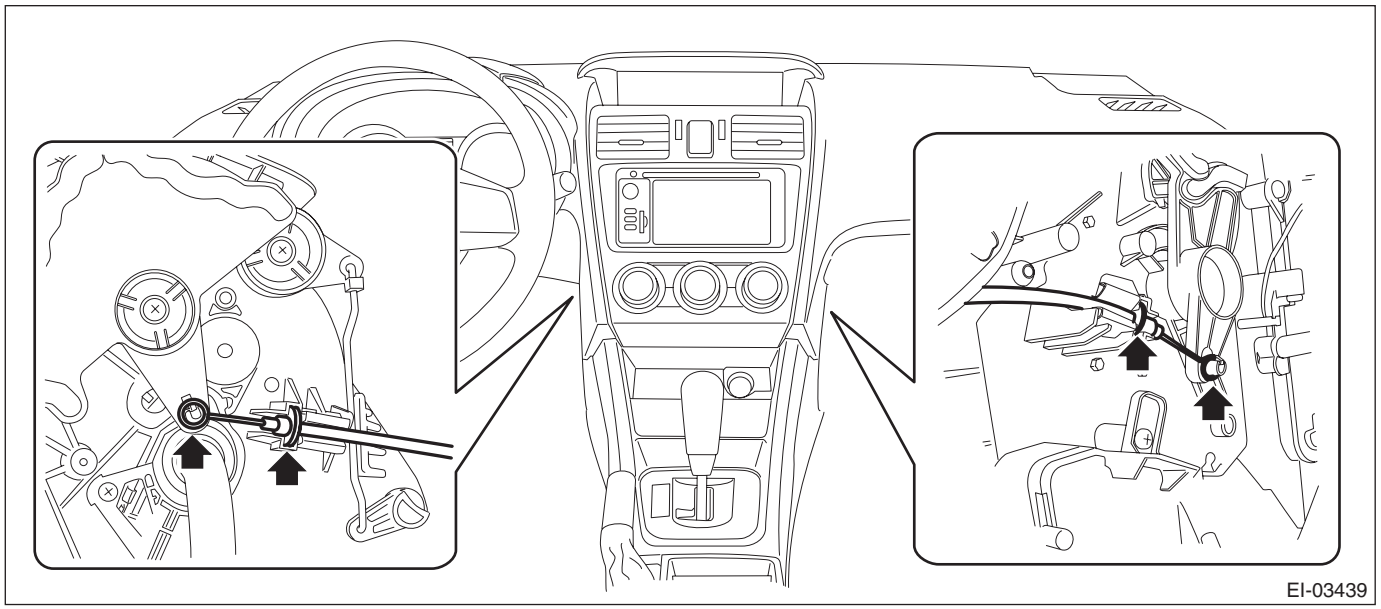

NOTE:
Remove the glove box pocket assembly on the passenger's side.

4) Remove the panel center assembly.

CAUTION:
- **Do not put your finger on the fin of the air vent grille. Doing so may damage the fin.**
- **Pull the panel center assembly slowly. Pulling with excessive force may damage the connector.**

(1) Insert a plastic remover to the three areas shown by the arrows, and slightly lift up the panel center assembly.
(2) With the panel center assembly lifted up slightly, release the claw by using a clip remover wrapped with protective tape.
(3) Release the rest of the claws, and pull out the panel center assembly.
(4) Disconnect the connectors, and remove the panel center assembly.

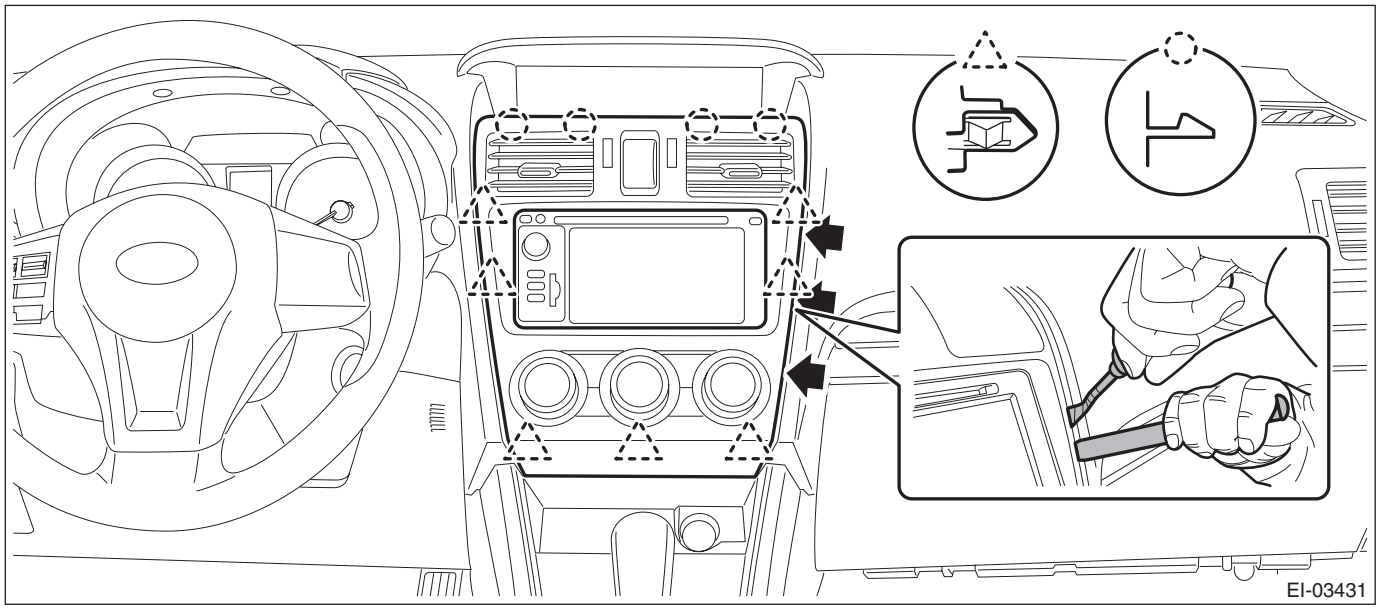
EI-03431

5) Remove the navigation assembly.
(1) Remove the left and right screws, and partially pull out the navigation assembly.
(2) Disconnect the connector and remove the navigation assembly.

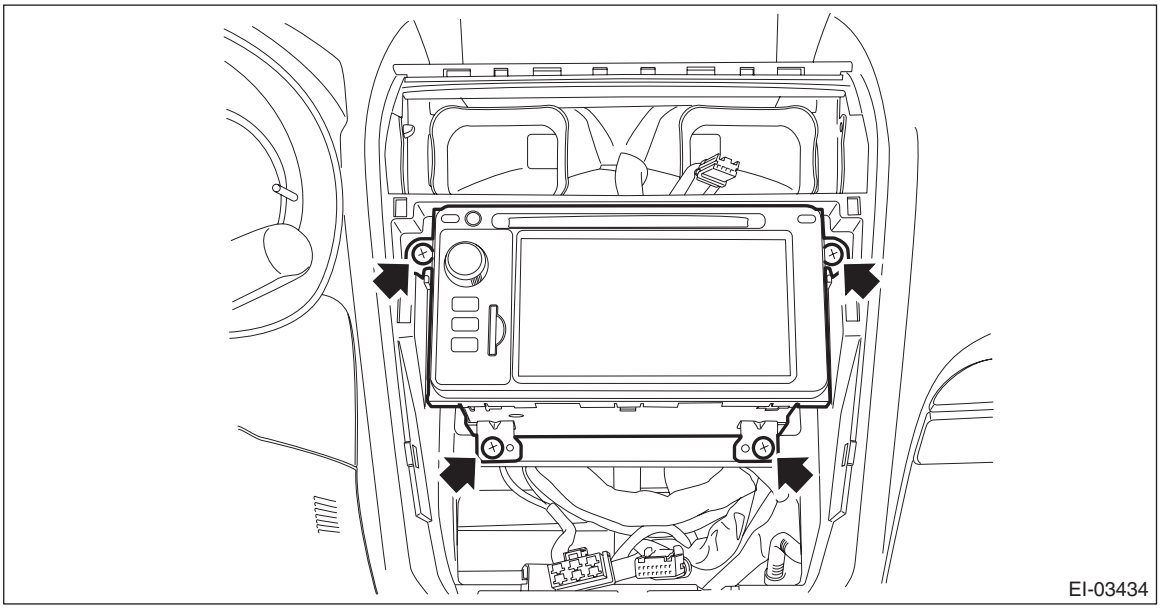
EI-03434

6) Remove the GPS antenna assembly.
(1) Tie a string to the GPS antenna assembly harness connector on the navigation unit side.

NOTE:
A string makes operation easier during installation.

(2) Remove the screw and harness clamp, and pull out the GPS antenna assembly harness from the combination meter side.

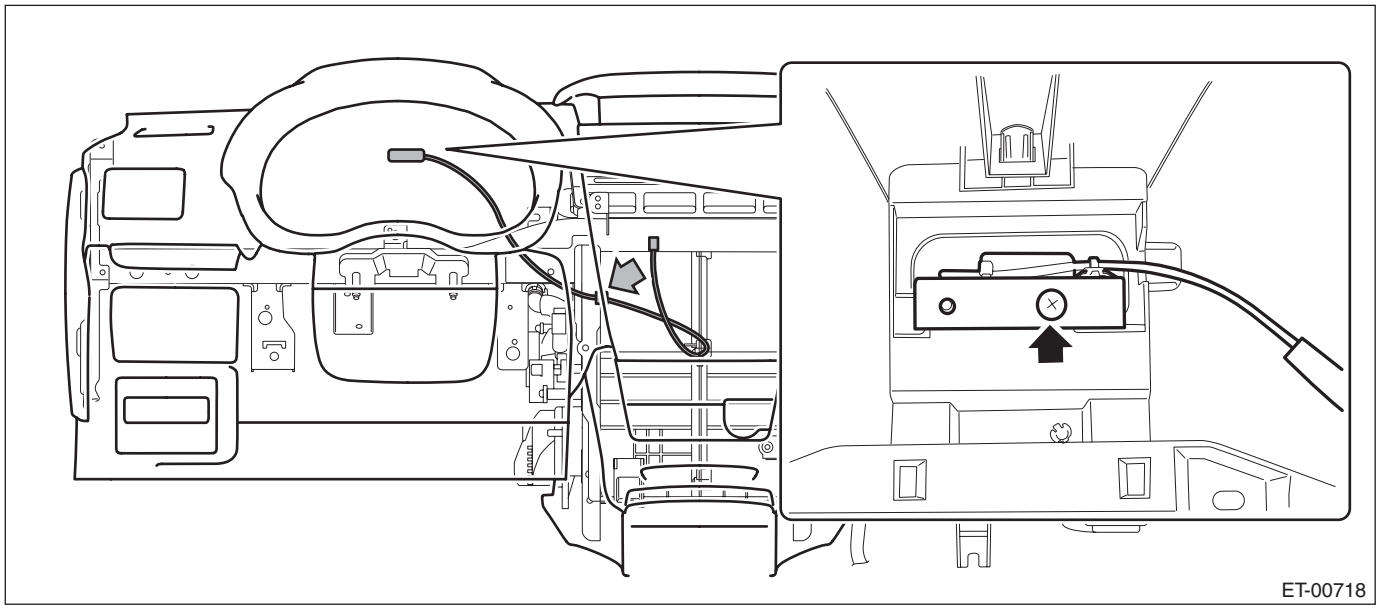

(3) When the GPS antenna assembly is pulled out, remove the string attached to the connector in step (1).

B: INSTALLATION

CAUTION:
After installing the panel center assembly, check that the air vent grille of the panel center assembly is inserted correctly into the air vent duct.
Install each part in the reverse order of removal.

13.Rearview Camera System

A: WIRING DIAGRAM

Refer to “Rearview Camera System” in the wiring diagram. <Ref. to WI(w/o HEV)-123, WIRING DIAGRAM, Rearview Camera System.>

- Gasoline engine model

Sedan model (without navigation system): <Ref. to WI(w/o HEV)-123, SEDAN MODEL (WITHOUT NAVIGATION SYSTEM), WIRING DIAGRAM, Rearview Camera System.>
Sedan model (with navigation system): <Ref. to WI(w/o HEV)-124, SEDAN MODEL (WITH NAVIGATION SYSTEM), WIRING DIAGRAM, Rearview Camera System.>
Wagon model (without navigation system): <Ref. to WI(w/o HEV)-126, WAGON MODEL (WITHOUT NAVIGATION SYSTEM), WIRING DIAGRAM, Rearview Camera System.>
Wagon model (with navigation system): <Ref. to WI(w/o HEV)-127, WAGON MODEL (WITH NAVIGATION SYSTEM), WIRING DIAGRAM, Rearview Camera System.>

- HEV model: <Ref. to WI(HEV)-187, WIRING DIAGRAM, Rearview Camera System.>

B: REMOVAL

1. 4 DOOR MODEL

1) Disconnect the ground cable from battery.
2) Remove the clips, and remove the trim panel - trunk lid.

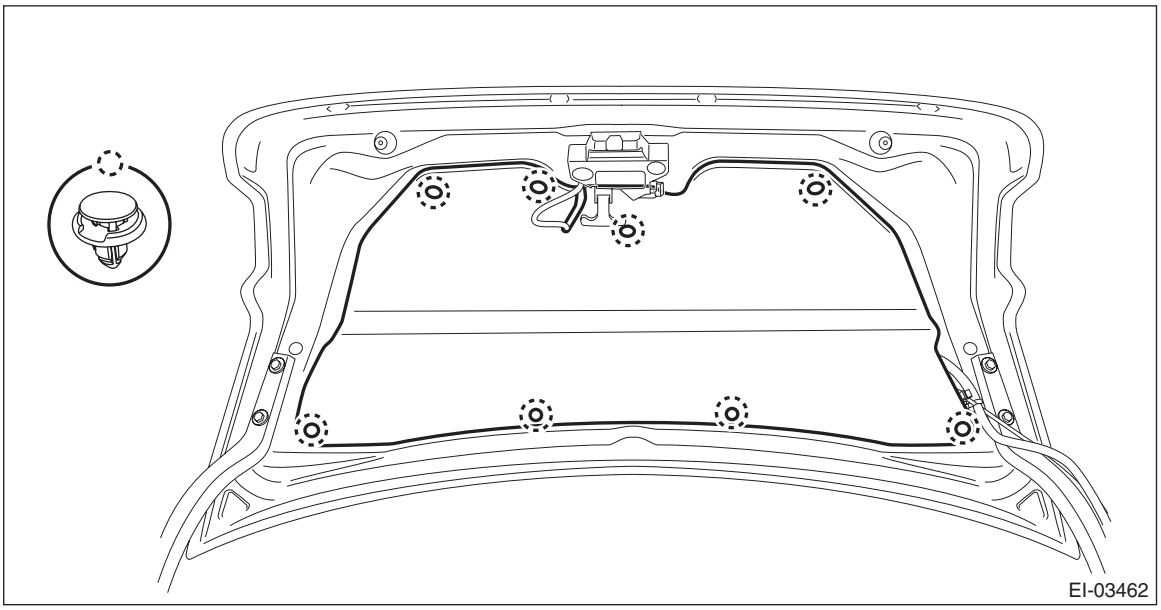

3) Remove the garnish - trunk.
   (1) Remove the nut.
   (2) Remove the clips, and remove the garnish - trunk.

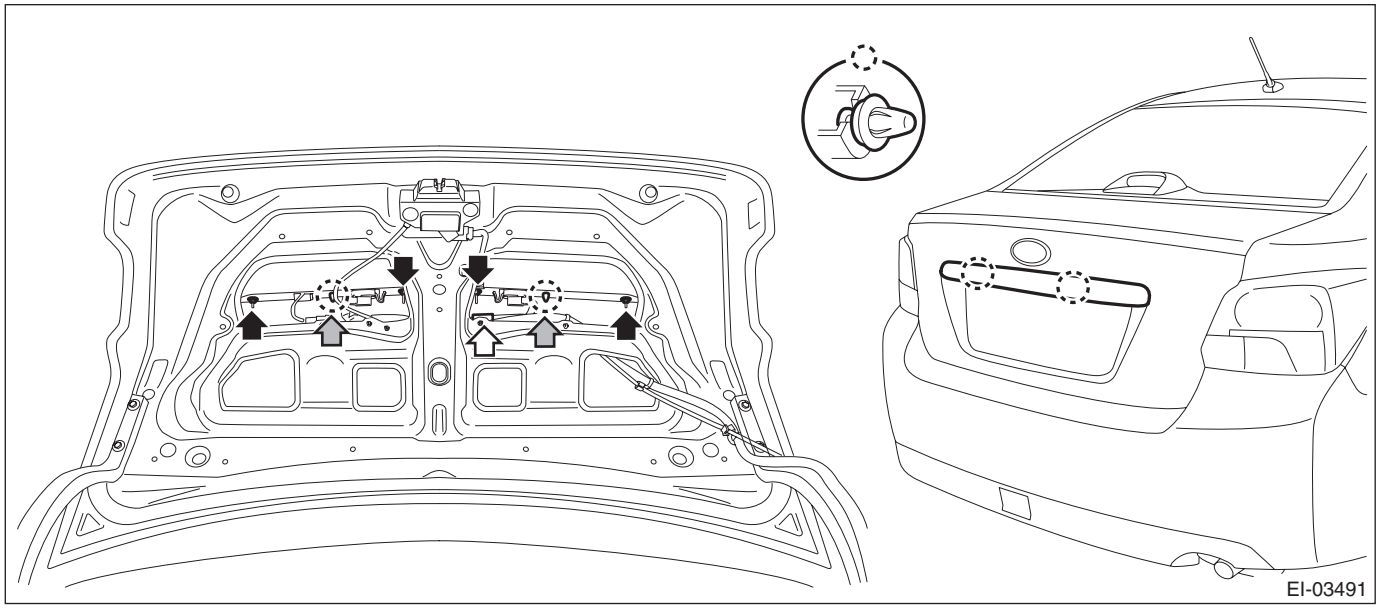

4) Remove the rearview camera assembly.

CAUTION:
Do not drop or apply any impact to the rearview camera because it is a precision equipment.
   (1) Disconnect the rearview camera connector.
   (2) Disconnect the claws and then remove the rearview camera assembly.

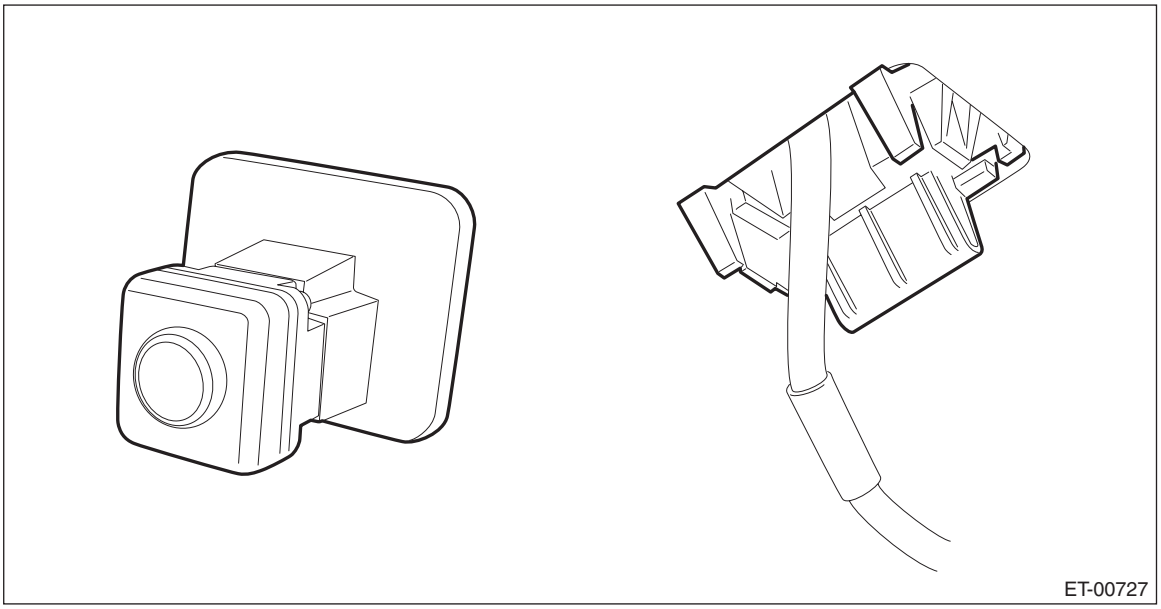

2. 5 DOOR MODEL/XV MODEL

1) Disconnect the ground cable from battery.
2) Remove the trim panel - rear gate UPR.
   (1) Remove the claws on the trim edge.
   (2) Release the claws in the center of trim, and remove the trim panel - rear gate UPR.

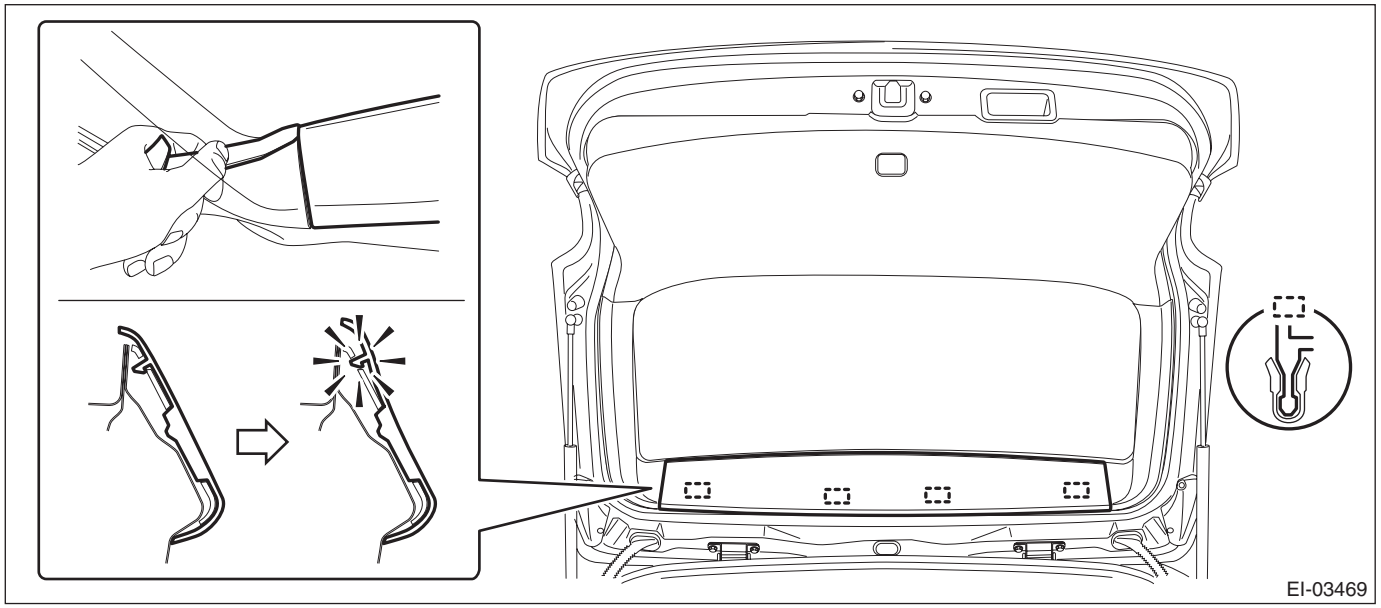

3) Remove the trim panel - rear gate pillar side.
   (1) Release the claws.
   (2) Remove the claws on the bottom of trim, and remove the trim panel - rear gate pillar side.

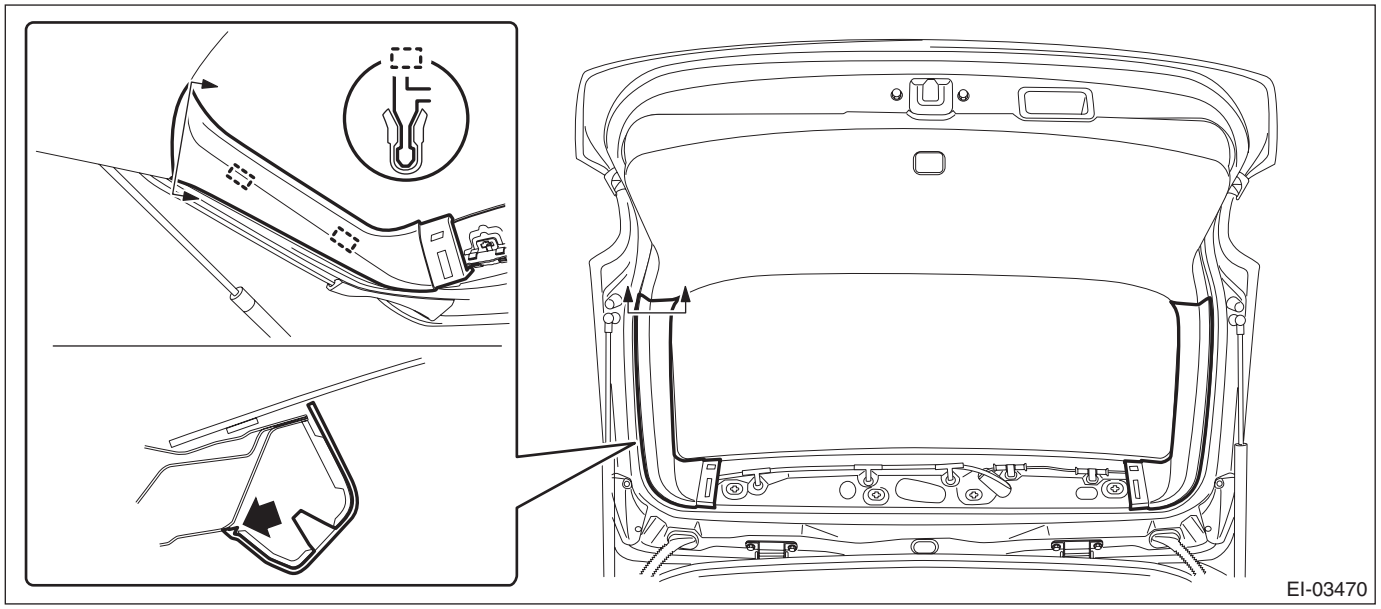

4) Remove the trim panel - rear gate LWR.
   (1) Remove the clips on both ends.
   (2) Release the clips, and remove the trim panel - rear gate LWR.

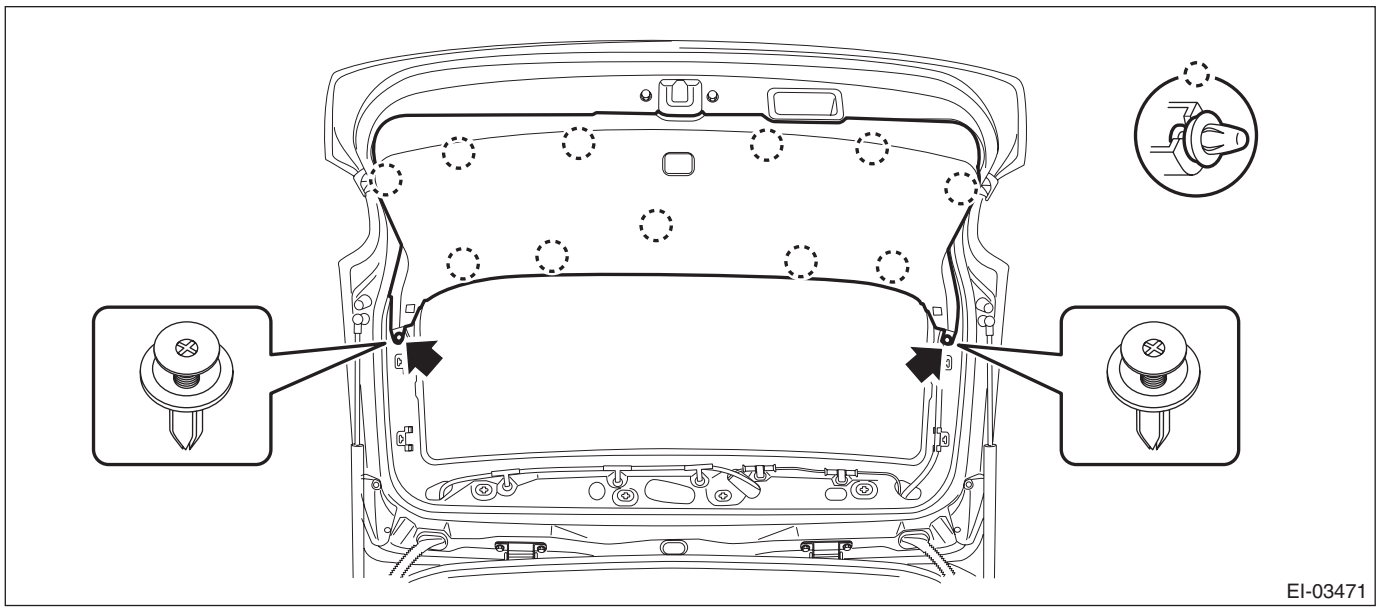
EI-03471

5) Remove the arm assembly - rear wiper.
   (1) Remove the cover - rear wiper arm.
   (2) Remove the nut, and remove the arm assembly - rear wiper.

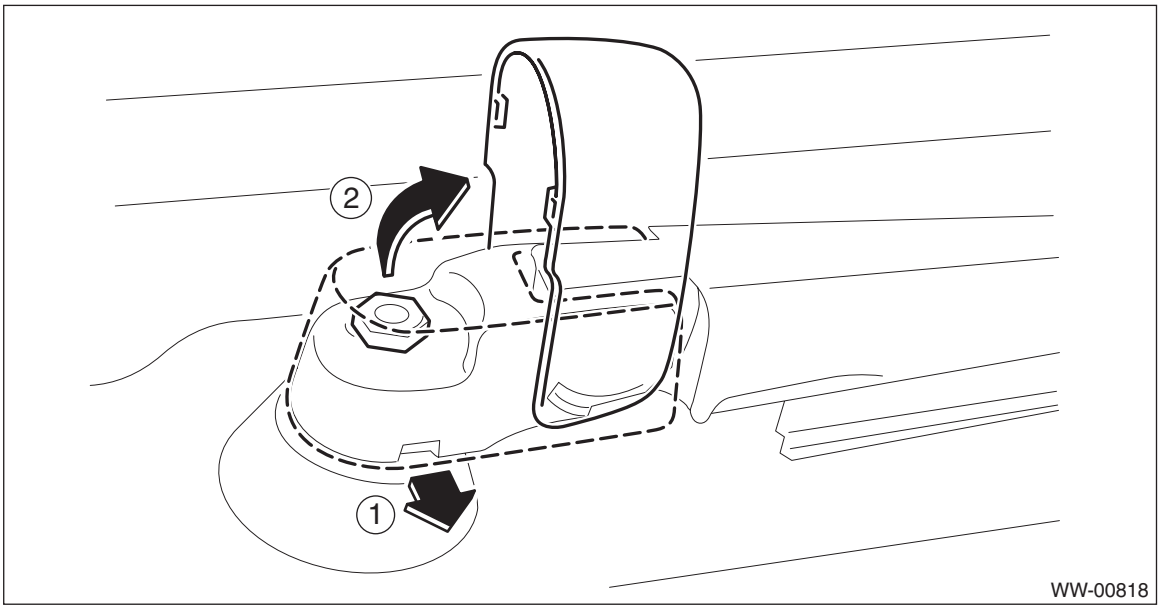

WW-00818

6) Remove the motor assembly - rear wiper.
   (1) Disconnect the harness connector of the motor assembly - rear wiper.
   (2) Remove the bolts, and remove the motor assembly - rear wiper.

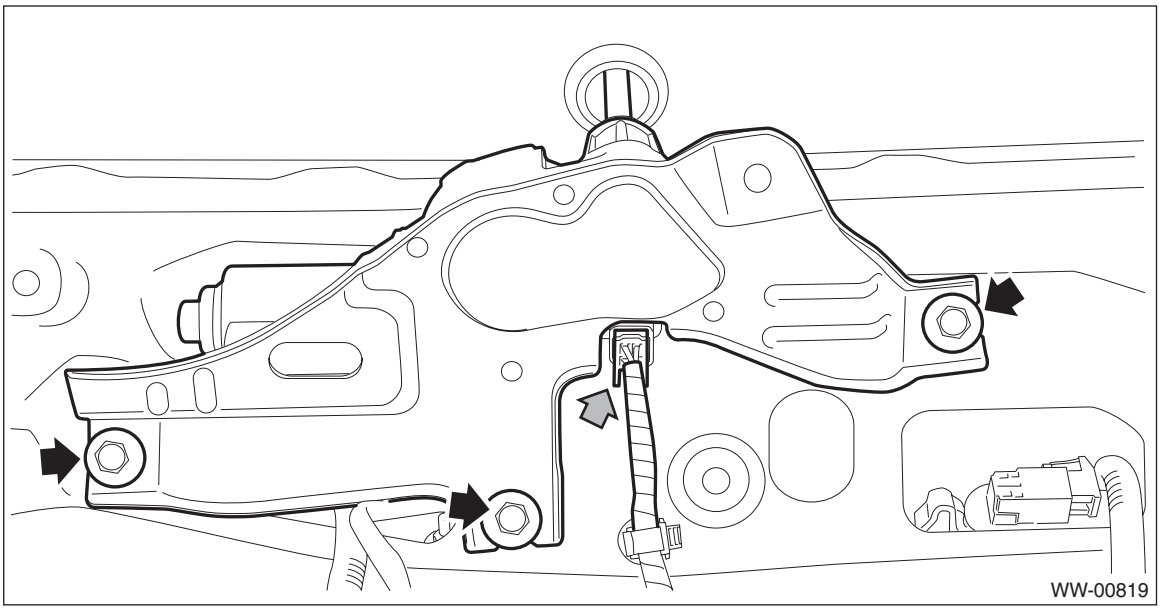

7) Remove the garnish assembly - rear gate.
   (1) Disconnect the harness connector of license plate light assembly.
   (2) Remove the nuts.
   (3) Remove the clips and remove the garnish assembly - rear gate.

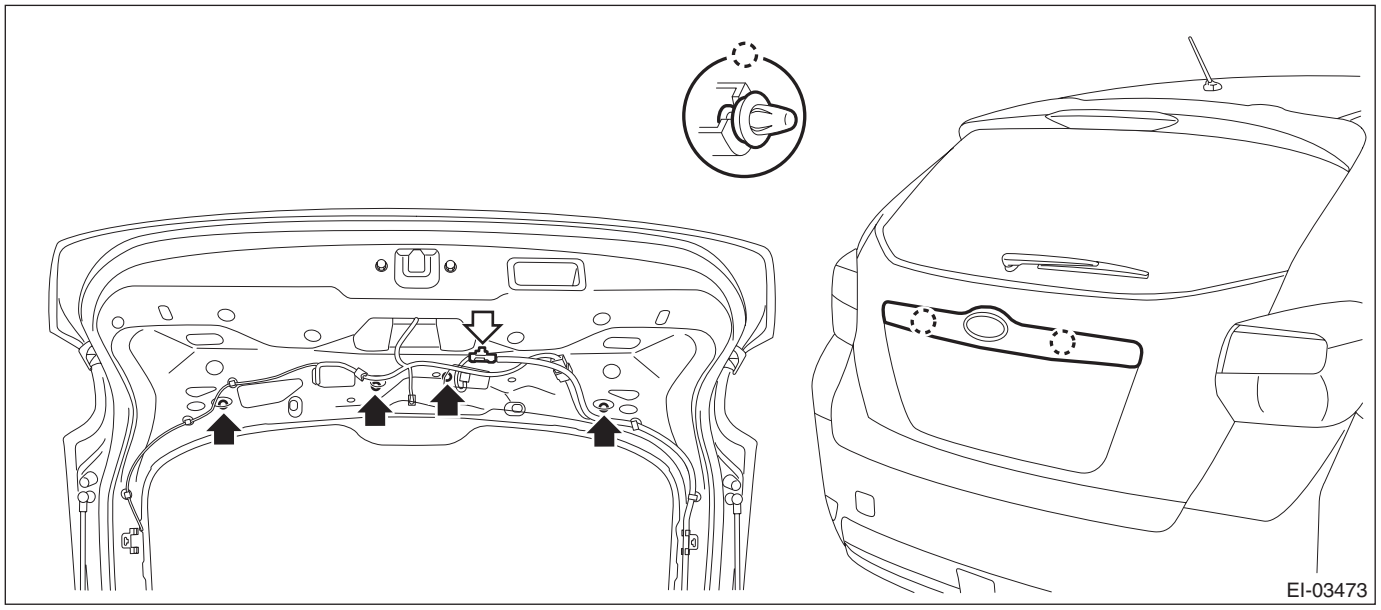

8) Remove the rearview camera assembly.

CAUTION:
Do not drop or apply any impact to the rearview camera because it is a precision equipment.

(1) Disconnect the rearview camera connector.
(2) Disconnect the claws and then remove the rearview camera assembly.

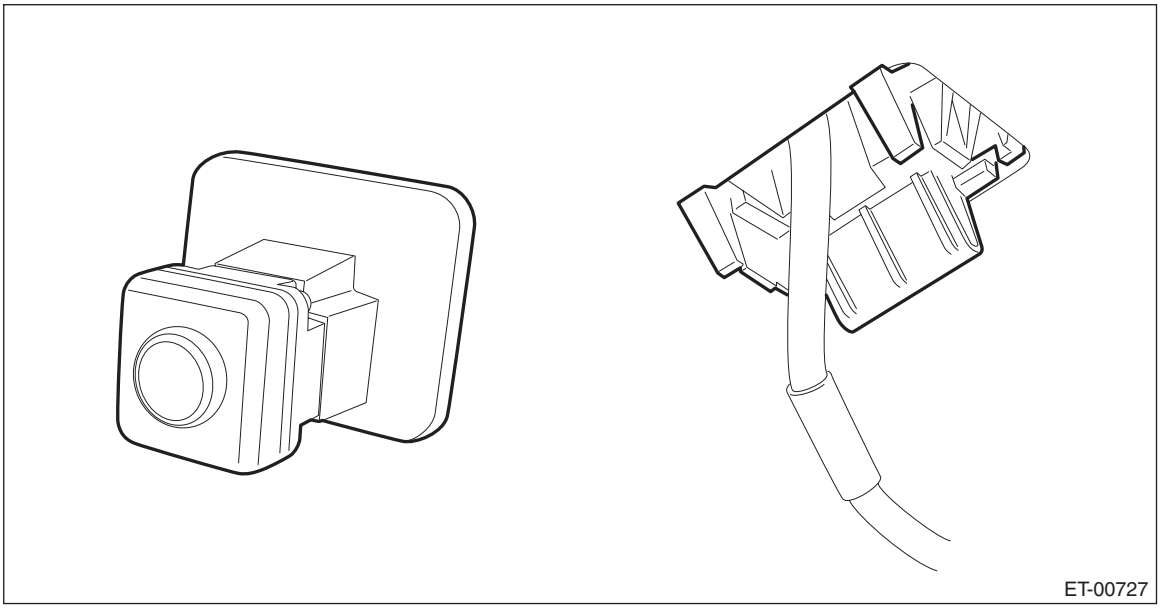

C: INSTALLATION

CAUTION:
Be sure to confirm the marker position, whenever the rearview camera is removed/installed/replaced.
Install each part in the reverse order of removal.

Tightening torque:
4 door model
Rearview camera (bracket): 7.5 N·m (0.76 kgf-m, 5.5 ft-lb)
Garnish - trunk: 4.5 N·m (0.46 kgf-m, 3.3 ft-lb)
5 door model/XV model
Rearview camera (bracket (nut)): 4.5 N·m (0.46 kgf-m, 3.3 ft-lb)
Rearview camera (ground (bolt)): 13 N·m (1.33 kgf-m, 9.6 ft-lb)
Garnish assembly - rear gate: 4.5 N·m (0.46 kgf-m, 3.3 ft-lb)
Arm assembly - rear wiper: 8 N·m (0.82 kgf-m, 5.9 ft-lb)

D: INSPECTION

1) Park the vehicle at the level place where there are enough area at the rear of the vehicle.
2) Attach the tape as the target point for standard at the floor rearward of the vehicle as shown in the figure below.

NOTE:
Standard tape width is about 30 — 50 mm (1.18 — 1.97 in) and brilliant color shall be used.

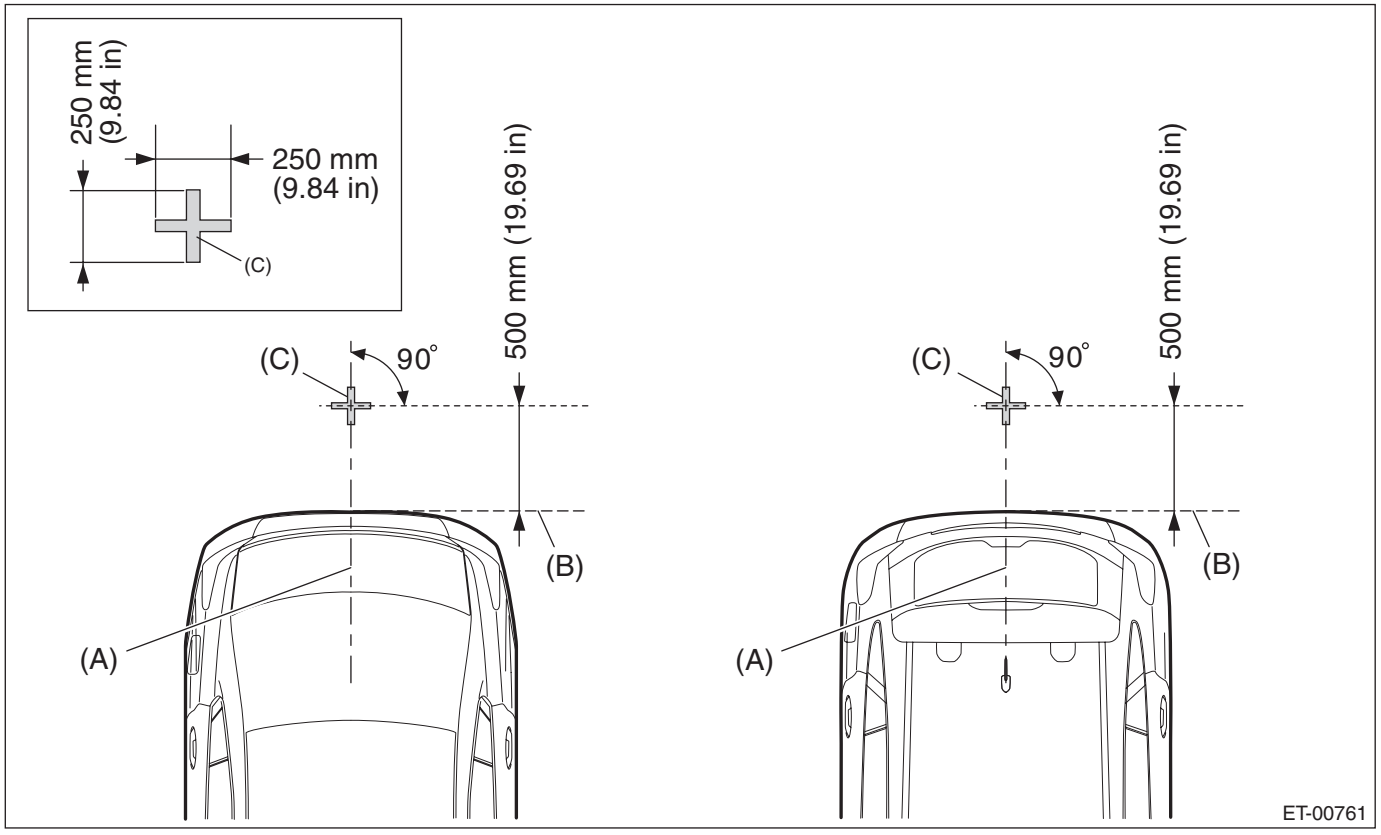

(A) Vehicle body center line (B) Rear edge of bumper (C) Target point

3) Confirm the following before checking the corresponding items.
- If the display is blank.

Rearview camera image is not displayed. (Navigation and multi-function display screen is displayed normally.)

1. Check the condition of back sensor connection.
   - Navigation system: <Ref. to ET-8, CHECK EACH VEHICLE SIGNAL, INSPECTION, Navigation System.>
   - Display audio system: <Ref. to ET-5, CHECK EACH VEHICLE SIGNAL (DISPLAY AUDIO), INSPECTION, Audio System.>
   - Multi-function display (MFD) system: <Ref. to IDI-12, DIAGNOSTIC MODE (HIGH GRADE TYPE ONLY), OPERATION, Multi-function Display (MFD) System.>
2. Check the condition of rearview camera connection.
   - Navigation system: <Ref. to ET-7, CHECK EACH CONNECTION, INSPECTION, Navigation System.>
   - Display audio system: <Ref. to ET-4, CHECK EACH CONNECTION (DISPLAY AUDIO), INSPECTION, Audio System.>
   - Multi-function display (MFD) system: <Ref. to IDI-12, DIAGNOSTIC MODE (HIGH GRADE TYPE ONLY), OPERATION, Multi-function Display (MFD) System.>

- If the marker is not displayed.
- If the marker position is not aligned.

1. Adjust the marker position according to the MARKER ADJUSTMENT MODE. <Ref. to ET-50, MARKER ADJUSTMENT MODE, ADJUSTMENT, Rearview Camera System.>

E: ADJUSTMENT

1. MARKER ADJUSTMENT MODE

- **Navigation system**

CAUTION:
When replacing the navigation unit, be sure to replace with specified navigation unit. The marker adjustment can not be performed correctly if replacing with unspecified navigation unit.

1) Prepare the target point. <Ref. to ET-49, INSPECTION, Rearview Camera System.>
2) With the main power OFF, press and hold the button (c) for 3 seconds or more while pressing the buttons (a) and (b) simultaneously.

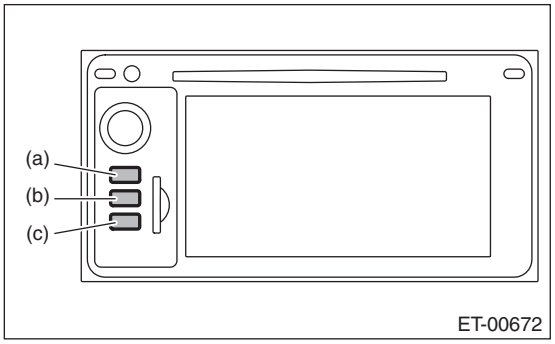

NOTE:
Pressing the button (a) for 3 seconds or more, or turning the ignition switch from ACC OFF to ON position can exit the diagnostic mode.
3) Line Diag screen is displayed.

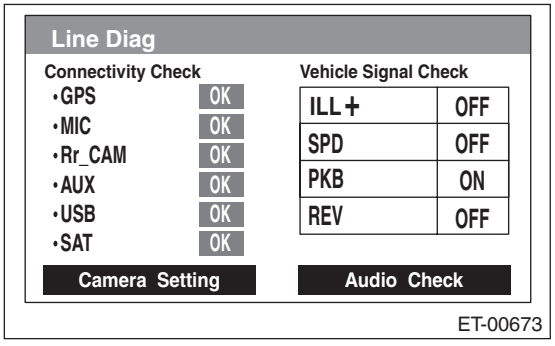

4) Touch {Camera Setting} key to display «Camera Setting» screen.
5) Touch {G-4D} key.

CAUTION:
Do not use {G-5D} key or {G-XUV} key.

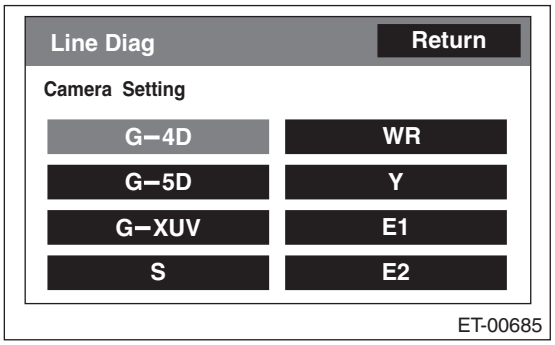

6) Shift the shift lever or the select lever to the following position to display the image of the rearview camera:
- MT model: Shift lever shifted to “Reverse” position.
- CVT model: Select lever shifted to “R” position.

7) Touch the adjustment keys (d), (e), (f) and (g) on the display screen to adjust the marker line.

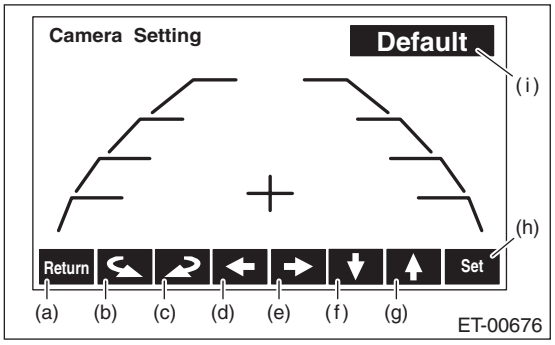

(a) Returns to vehicle selection screen.
(b) Rotates the cross line on the center of the screen counterclockwise by 0.25°.
(c) Rotates the cross line on the center of the screen clockwise by 0.25°.
(d) Moves the guide line and cross line to the left.
(e) Moves the guide line and cross line to the right.
(f) Moves the guide line and cross line downward.
(g) Moves the guide line and cross line upward.
(h) Saves settings for vehicle selection and guide line.
(i) Resets the adjustment value to the default condition.

(1) Confirm that the target point position in the display screen is identified.
(2) Adjust by touching the adjustment keys so that the cross line and target point join together.

8) Turn the ignition switch to OFF and wait for 60 seconds or more before turning the ignition switch to ON again.

CAUTION:
If the ignition switch is turned to OFF, be sure to wait for 60 seconds or more before turning the ignition switch to ON again.
If turning the ignition switch to ON again or disconnecting the ground cable from battery within 60 seconds after turning the ignition switch to OFF, the navigation unit data updating can not be performed correctly.

9) Shift the shift lever or the select lever to the following position to display the image of the rearview camera:
- MT model: Shift lever shifted to “Reverse” position.
- CVT model: Select lever shifted to “R” position.

10) Confirm that the marker line position is correctly adjusted before turning the ignition switch to OFF, then finish the procedures.

- **Display audio**

CAUTION:
When replacing the audio unit, be sure to replace with specified audio unit. The marker adjustment can not be performed correctly if replacing with unspecified audio unit.

1) With the main power OFF, turn the TUNE/TRACK/CH dial (b) by 30 clicks while pressing the preset 6 key (a).

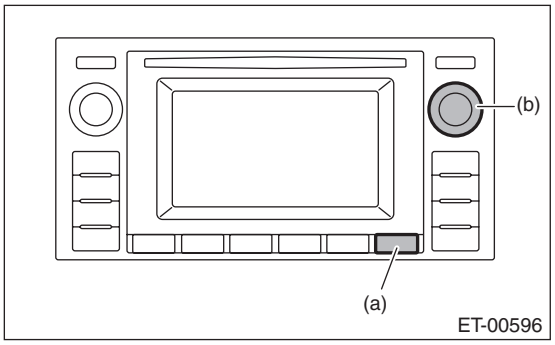

2) When the version information screen is displayed, press the MENU/ENTER key (c).

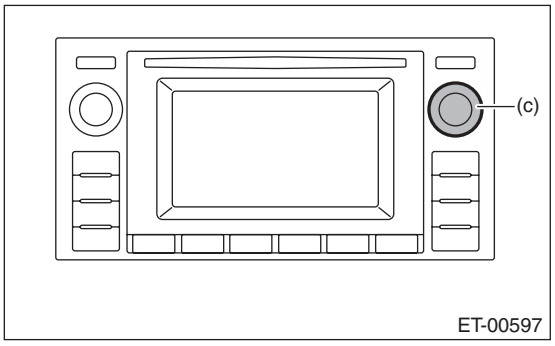

3) When the uploader screen is displayed, press the MENU/ENTER key (c).

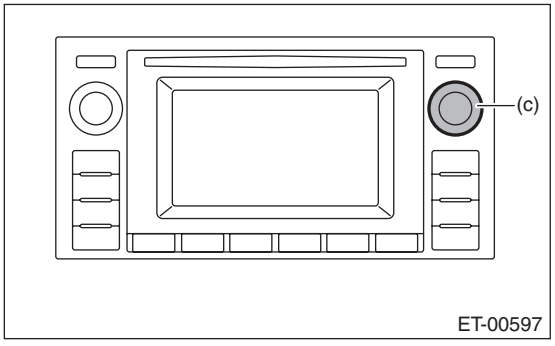

4) When the rearview camera marker adjust screen is displayed, press and hold the MENU/ENTER key (c).

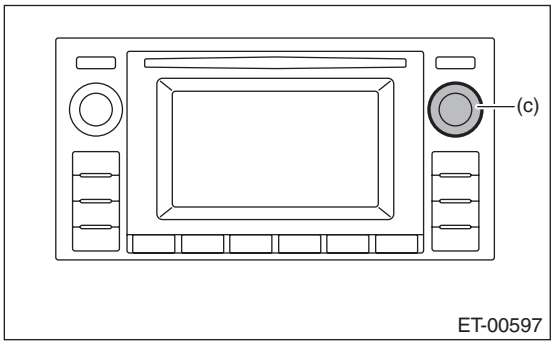

NOTE:
When the ENTER key (c) is tapped, the version information screen is displayed again.

5) With the image of the rearview camera displayed, adjust the rearview camera marker.

CAUTION:
Operate the keys shown in the table only.

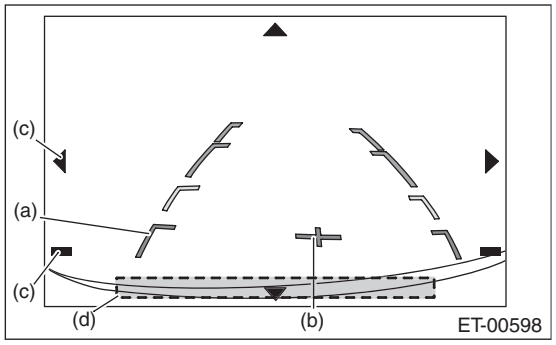

(a) Line marker line
(b) Center marker
(c) Bumper marker
(d) Warning message display position

Key operation	Contents
TUNE/TRACK/CH dial CCW	Line marker moves upward.
TUNE/TRACK/CH dial CW	Line marker moves downward.
» key	Line marker moves to the right.
« key	Line marker moves to the left.
MENU/ENTER key	Modified line marker position is determined, and then rearview camera marker screen is displayed.

6) Turn the ignition switch to OFF and wait for 60 seconds or more before finishing the procedures.

CAUTION:
Do not turn the ignition switch to ON or disconnect the ground cable from battery within 60 seconds after turning the ignition switch to OFF. The audio unit data updating can not be performed correctly.

- **Multi-function display (MFD) system**

For marker adjustment of the multi-function display (MFD) system, refer to “INSTRUMENTATION/DRIVER INFO”. <Ref. to IDI-12, DIAGNOSTIC MODE (HIGH GRADE TYPE ONLY), OPERATION, Multi-function Display (MFD) System.>

14.Front Accessory Power Supply Socket

A: WIRING DIAGRAM

Refer to “Front Accessory Power Supply Socket System” in the wiring diagram.

- Gasoline engine model: <Ref. to WI(w/o HEV)-88, WIRING DIAGRAM, Front Accessory Power Supply Socket System.>
- HEV model: <Ref. to WI(HEV)-128, WIRING DIAGRAM, Front Accessory Power Supply Socket System.>

B: REMOVAL

1) Disconnect the ground cable from battery. <Ref. to NT-5, BATTERY, NOTE, Note.>

NOTE:
For the 12 volt engine restart battery of HEV model, disconnect the ground terminal from 12V engine restart battery sensor.

2) Remove the front accessory power supply socket.
   (1) While releasing the claw inside the accessory power supply socket, pull it toward you to remove the accessory power supply socket.
   (2) Disconnect the connector, and remove the accessory power supply socket and holder.

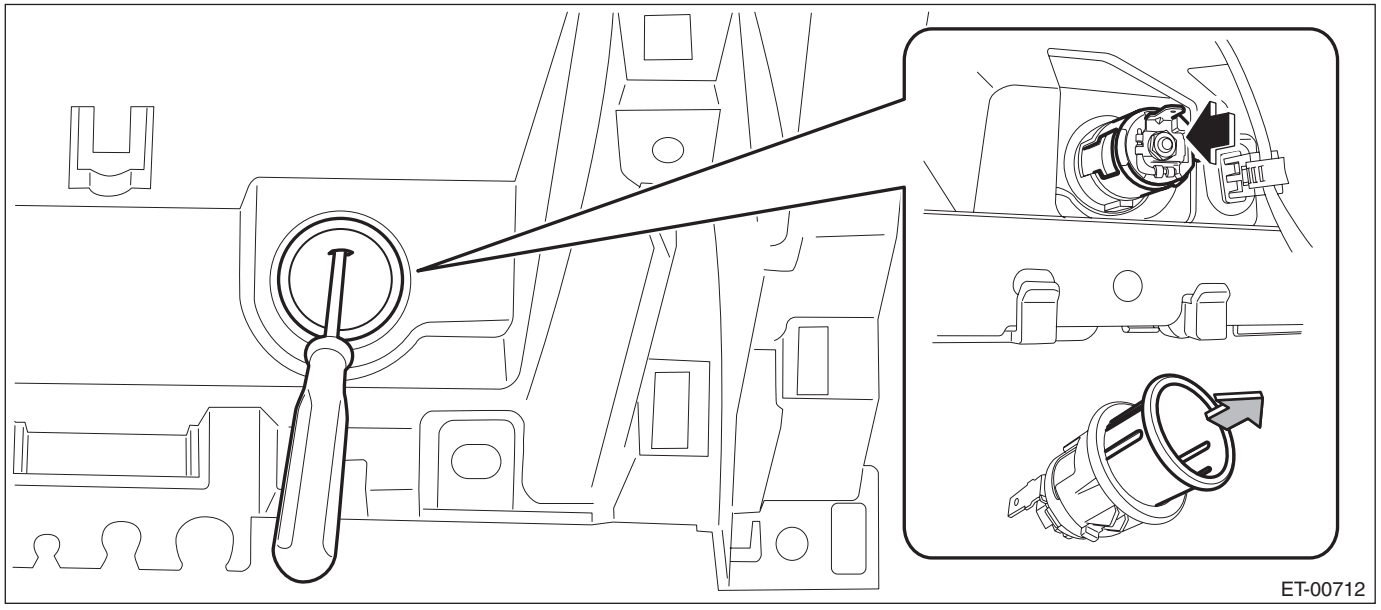

NOTE:
If it is hard to remove, remove the panel center assembly and then release the claws from behind.

C: INSTALLATION

Install each part in the reverse order of removal.

NOTE:
Align the grooves of the holder with the claws of accessory power supply socket.

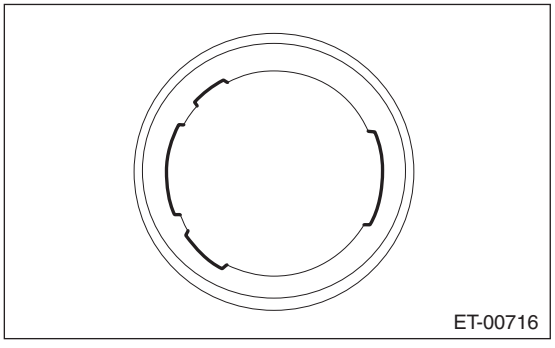

15.Rear Accessory Power Supply Socket

A: WIRING DIAGRAM

Refer to “Rear Accessory Power Supply Socket System” in the wiring diagram.

- Gasoline engine model: <Ref. to WI(w/o HEV)-121, WIRING DIAGRAM, Rear Accessory Power Supply Socket System.>
- HEV model: <Ref. to WI(HEV)-185, WIRING DIAGRAM, Rear Accessory Power Supply Socket System.>

B: REMOVAL

1) Disconnect the ground cable from battery. <Ref. to NT-5, BATTERY, NOTE, Note.>

NOTE:
For the 12 volt engine restart battery of HEV model, disconnect the ground terminal from 12V engine restart battery sensor.

2) Open the console box, and remove the rear accessory power supply socket.
   (1) While releasing the claw inside the accessory power supply socket, pull it toward you to remove the accessory power supply socket.
   (2) Disconnect the connector, and remove the accessory power supply socket and holder.

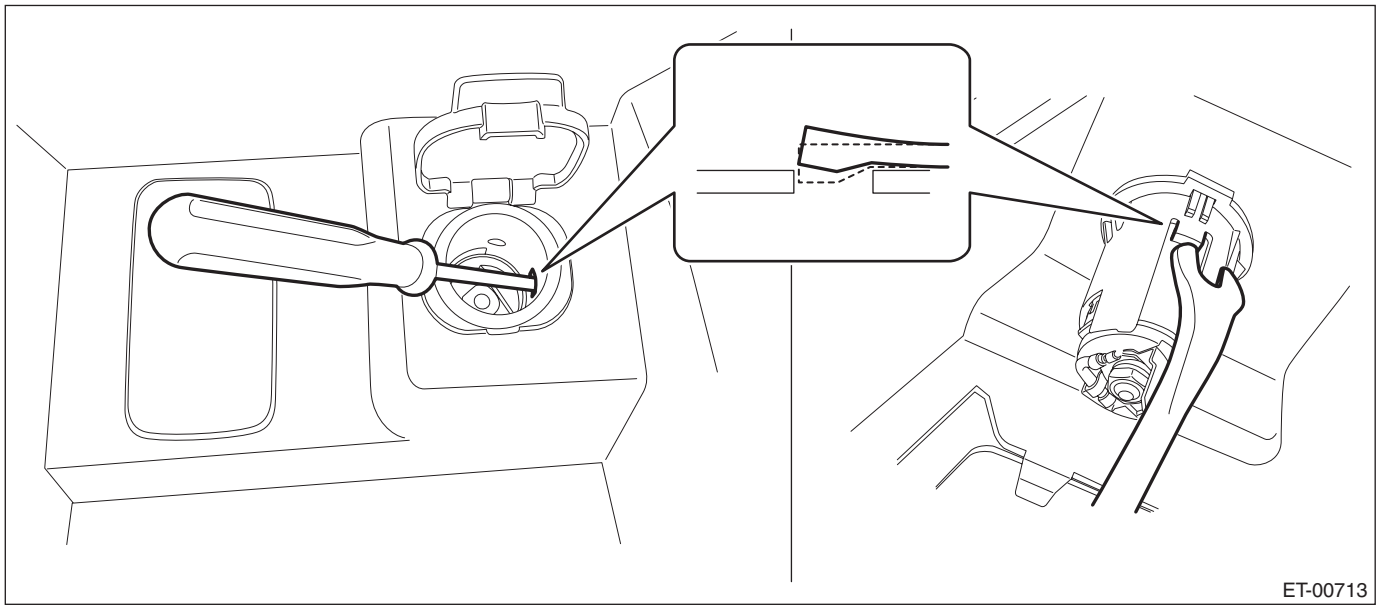

NOTE:
If it is hard to remove, remove the console box assembly and then release the claws from behind.

C: INSTALLATION

Install each part in the reverse order of removal.

NOTE:
Align the grooves of the holder with the claws of accessory power supply socket.

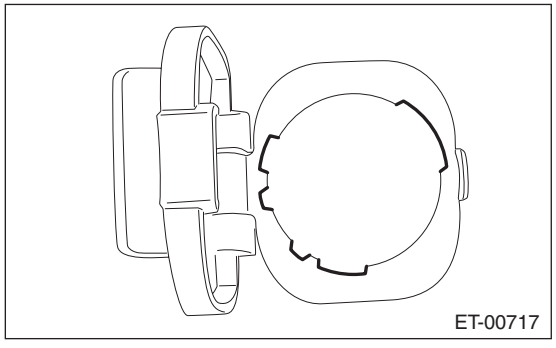

16.AUX Input Terminal

A: REMOVAL

1) Disconnect the ground cable from battery. <Ref. to NT-5, BATTERY, NOTE, Note.>

NOTE:
- On CVT models, shift the select lever into “D” before disconnecting the battery ground cable.
- For the 12 volt engine restart battery of HEV model, disconnect the ground terminal from 12V engine restart battery sensor.

2) Remove the console box assembly. <Ref. to EI-77, REMOVAL, Console Box.>
3) Remove the AUX input terminal.
   (1) Remove the claws at four locations.
   (2) Remove the AUX input terminal assembly by pushing it into the console box.

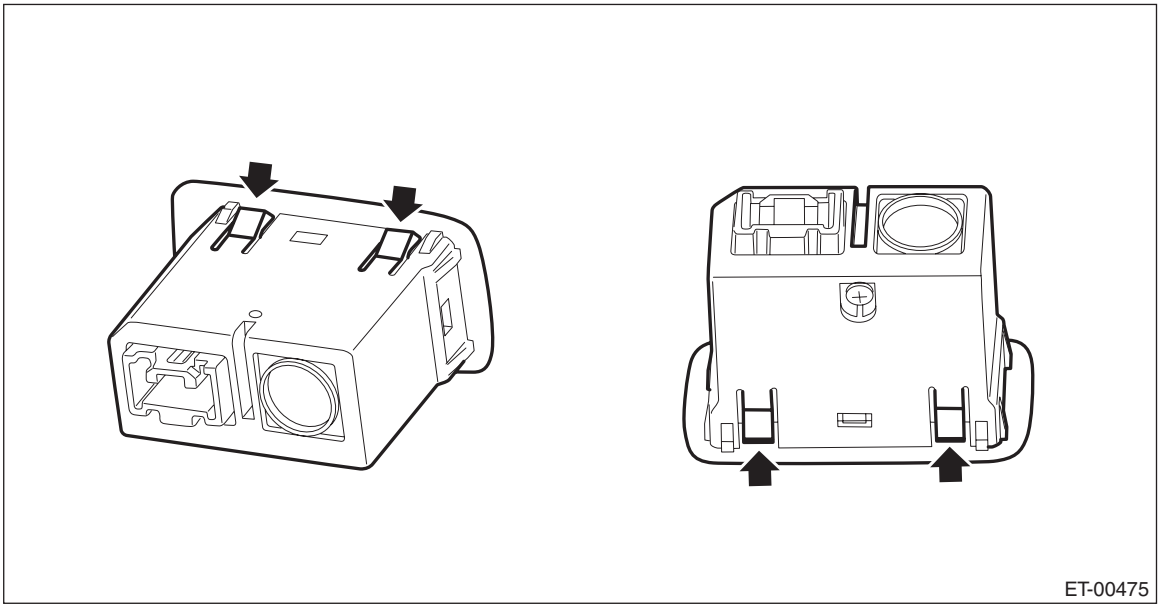

4) Remove the cover - shift lever.
   (1) Remove the shift knob. (MT model)
   (2) Release the clips and claws, then pull up the cover - shift lever.

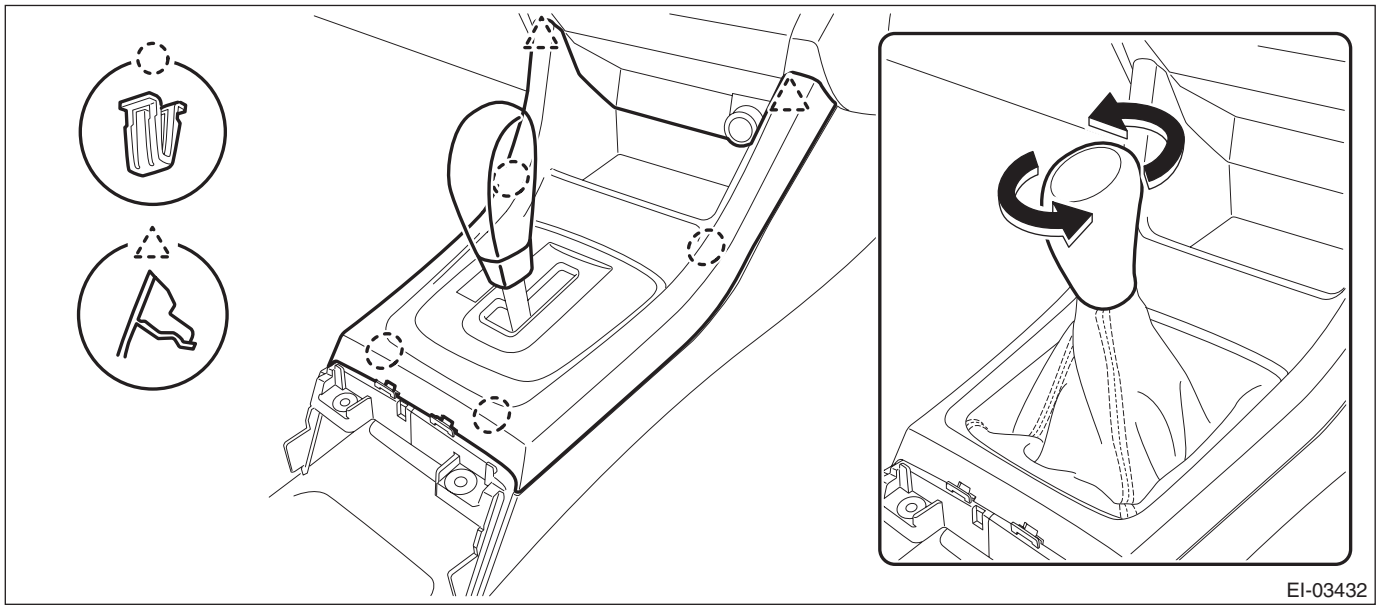

5) Remove the panel center LWR RH.
(1) Remove the screws and clips.
(2) Release the claws, and pull the panel center LWR RH to remove.

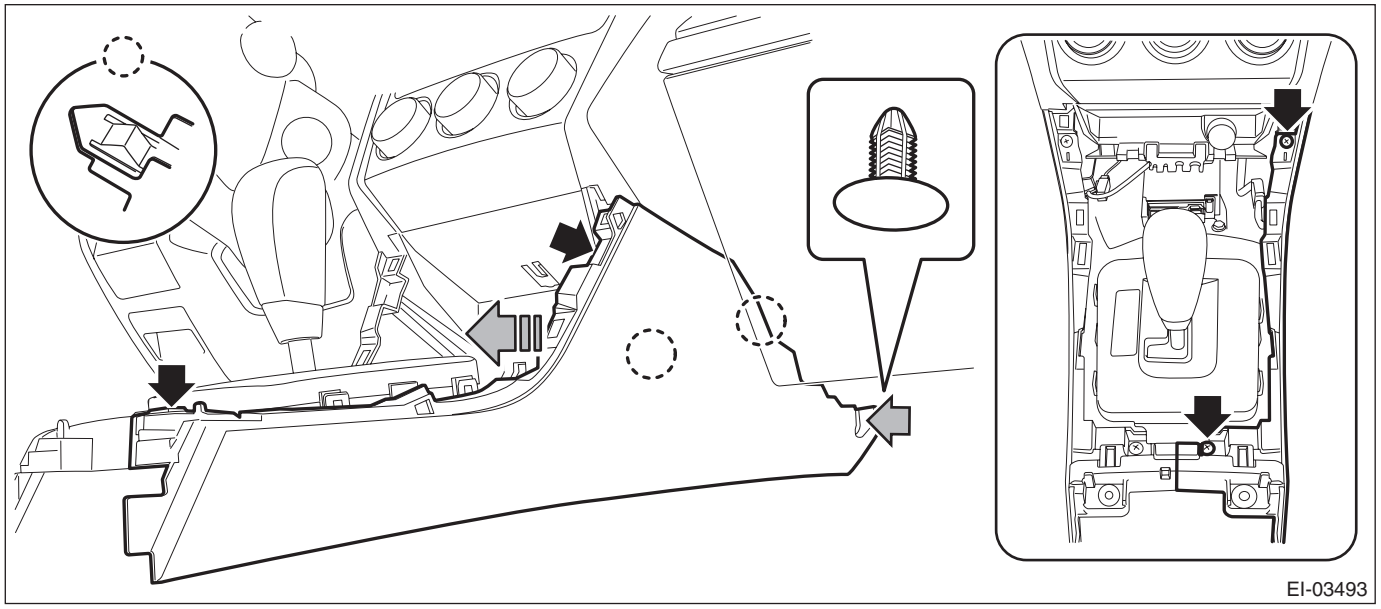
EI-03493

6) On manual A/C models, disconnect the control cables from both sides of the heater and cooling unit assembly.

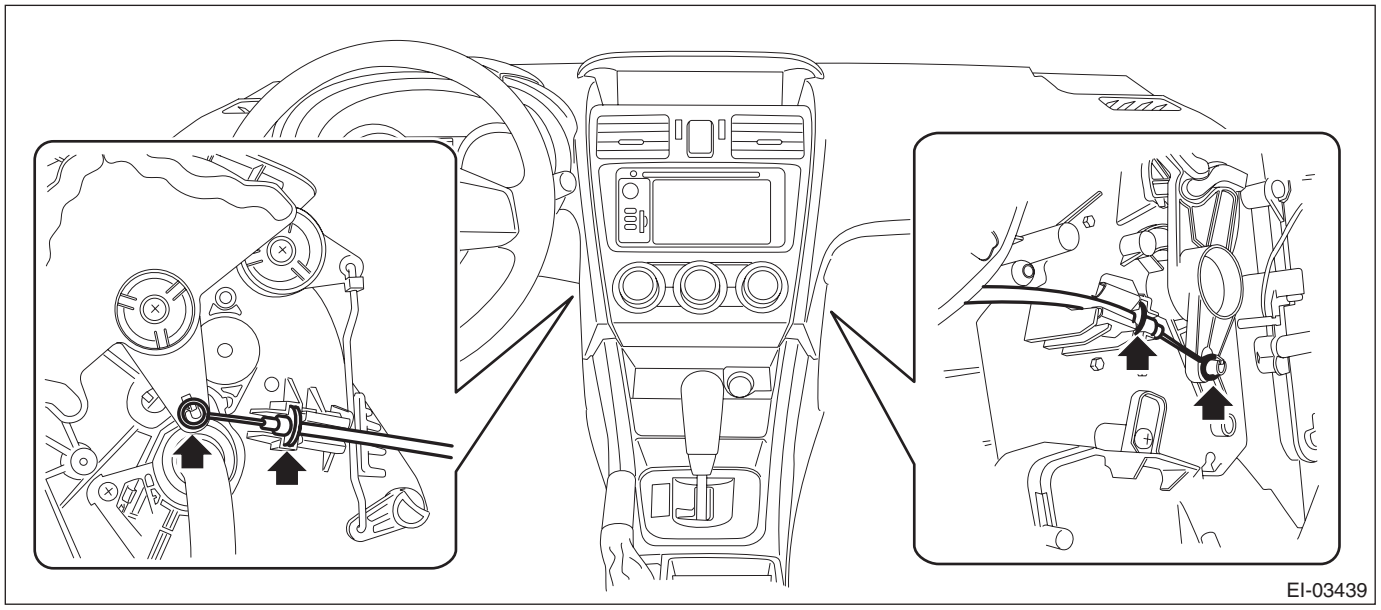
EI-03439

NOTE:
Remove the glove box pocket assembly on the passenger's side.

7) Remove the panel center assembly.

CAUTION:
- **Do not put your finger on the fin of the air vent grille. Doing so may damage the fin.**
- **Pull the panel center assembly slowly. Pulling with excessive force may damage the connector.**

(1) Insert a plastic remover to the three areas shown by the arrows, and slightly lift up the panel center assembly.
(2) With the panel center assembly lifted up slightly, release the claw by using a clip remover wrapped with protective tape.
(3) Release the rest of the claws, and pull out the panel center assembly.
(4) Disconnect the connectors, and remove the panel center assembly.

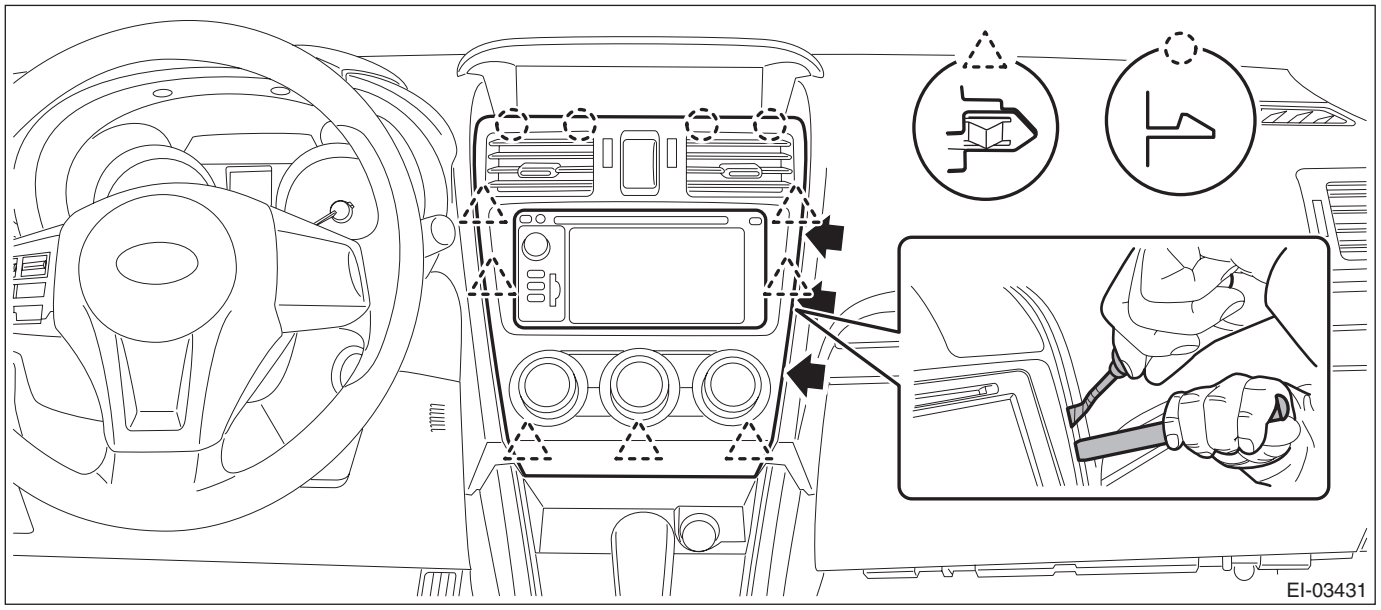
EI-03431

8) Remove the audio assembly or navigation assembly.
(1) Remove the screws, and partially pull out the audio assembly or navigation assembly.
(2) Disconnect the connectors, and remove the audio assembly or navigation assembly.

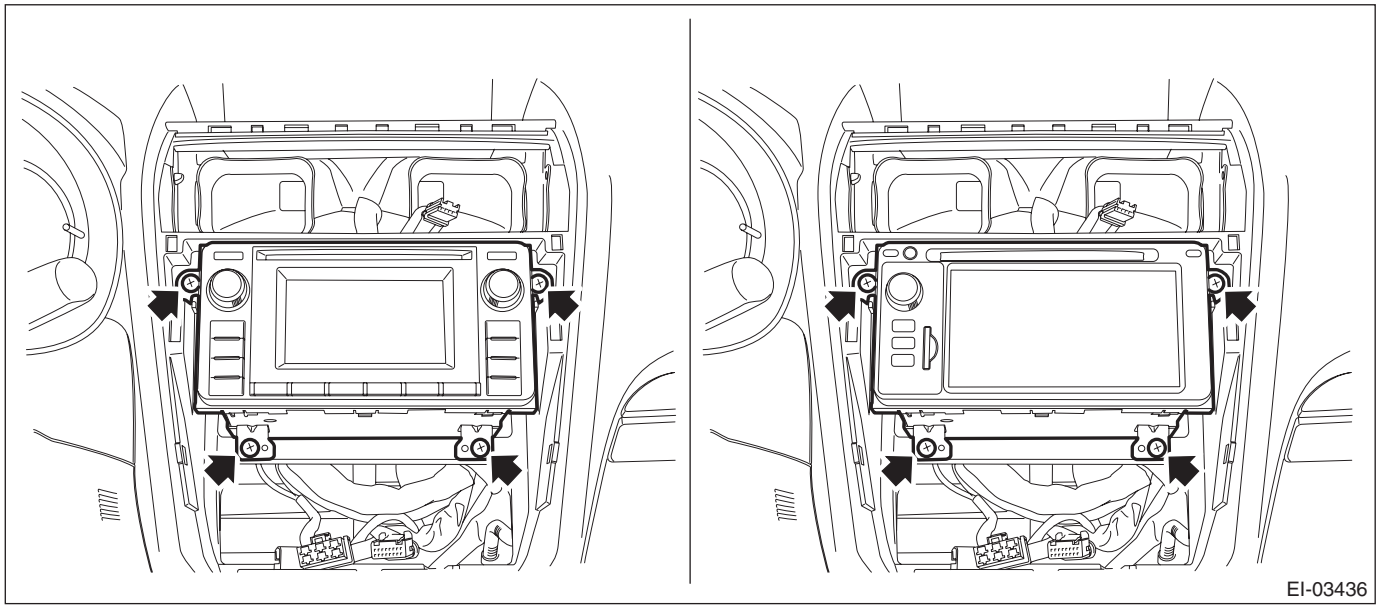
EI-03436

9) Remove the harness clamp and remove the AUX terminal harness.

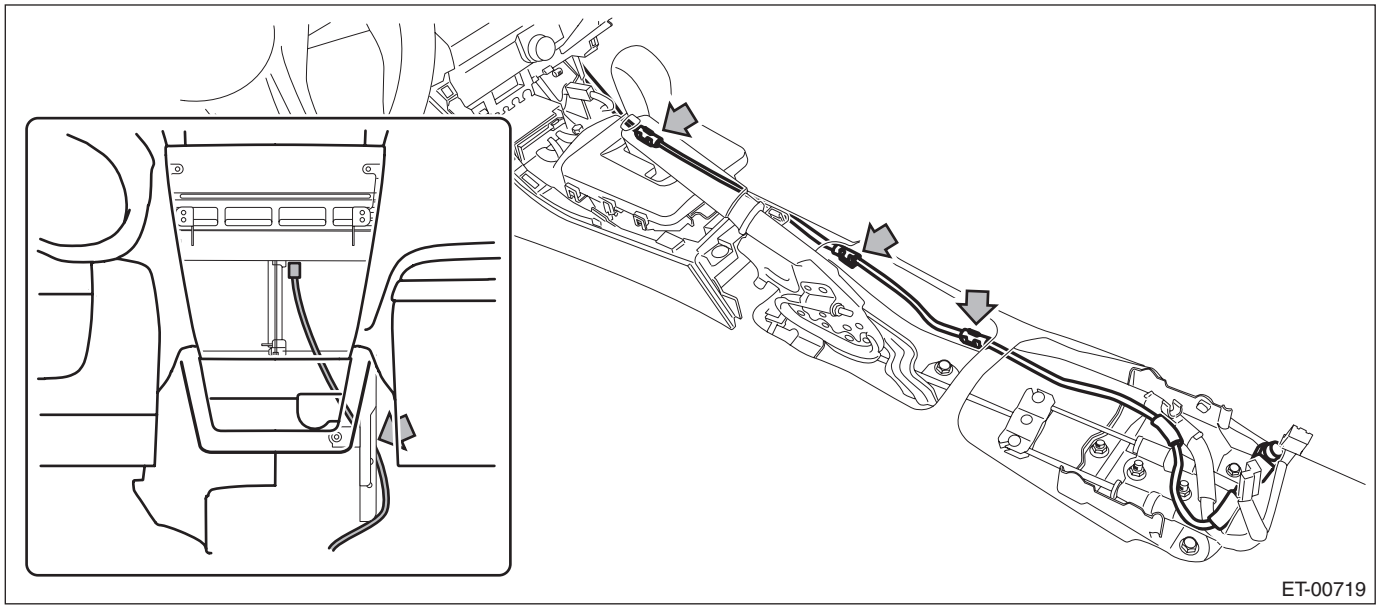

B: INSTALLATION

CAUTION:
After installing the panel center assembly, check that the air vent grille of the panel center assembly is inserted correctly into the air vent duct.
Install each part in the reverse order of removal.

Tightening torque:
Console box assembly: 6.5 N·m (0.66 kgf-m, 4.8 ft-lb)

COMMUNICATION SYSTEM

COM

Page

1. General Description 2
2. Relay and Fuse 3
3. Horn System 4
4. Horn 5
5. Horn Switch 8

1. General Description

A: COMPONENT

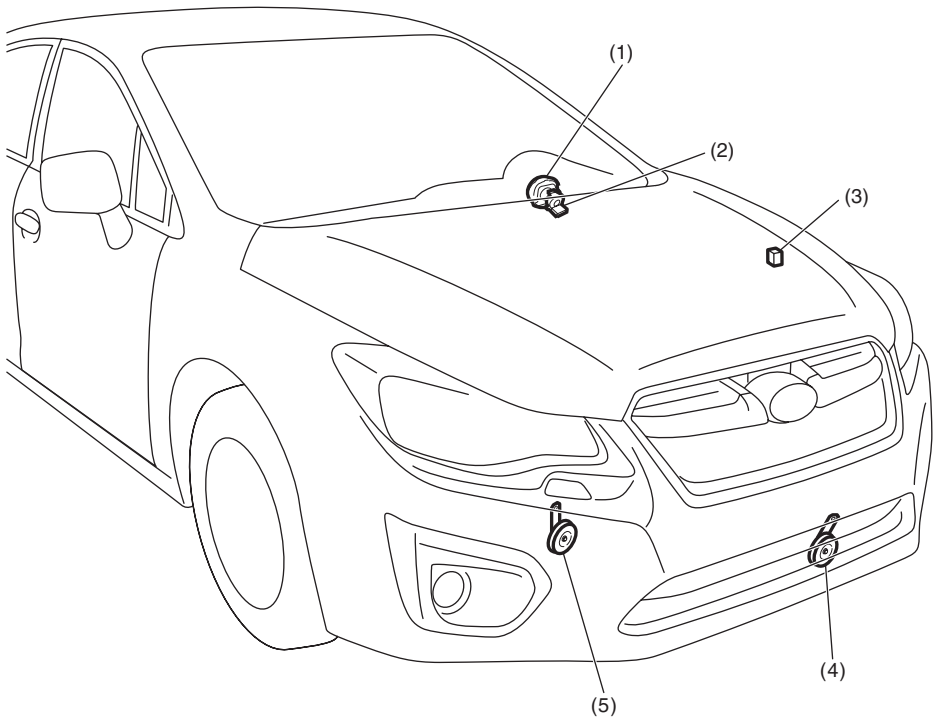

(1) Horn switch (driver's airbag module ASSY)
(2) Roll connector
(3) Horn relay
(4) Horn ASSY - Lo
(5) Horn ASSY - Hi

B: CAUTION

• Before disassembling or reassembling parts, always disconnect the battery ground cable from battery. When replacing the audio, control module and other parts provided with memory functions, record the memory contents before disconnecting the battery ground cable. Otherwise, the memory is cleared.
• Reassemble the parts in the reverse order of disassembly procedure unless otherwise indicated.
• Connect the connectors securely during reassembly.
• After reassembly, make sure that the each component operates normally.
• Yellow connectors and harnesses with yellow tapes around them are the connectors and harnesses for the airbag system. Using a tester above such circuits may cause malfunction of airbag system. Follow the cautions of "AIRBAG SYSTEM" in this case. <Ref. to AB-11, CAUTION, General Description.>
• Be careful not to damage the airbag system wiring harness when servicing electrical parts and switches.

C: PREPARATION TOOL

1. GENERAL TOOL

TOOL NAME	REMARKS
Circuit tester	Used for measuring resistance and voltage.

2. Relay and Fuse

A: LOCATION

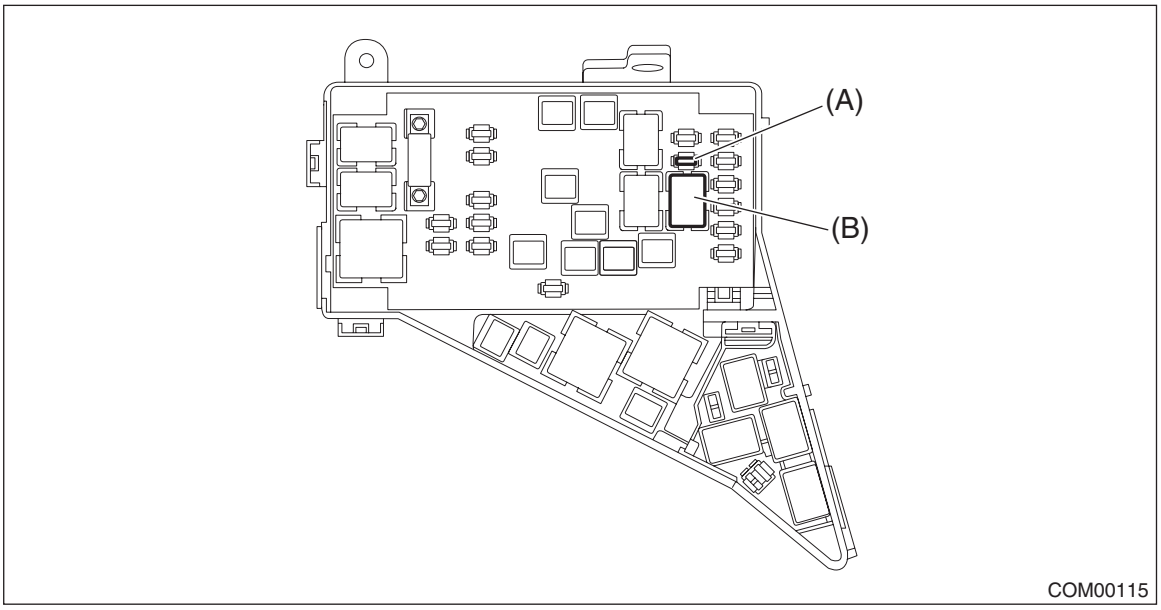

Main fuse box	Fuse 15 A (horn ASSY - Hi, Lo)	(A)
	Horn relay	(B)

NOTE:
For other related fuses, refer to the wiring diagram.
- Gasoline engine model <Ref. to WI(w/o HEV)-15, Power Supply Circuit.>
- HEV model <Ref. to WI(HEV)-20, Power Supply Circuit.>

B: INSPECTION

1. CHECK FUSE

1) Remove the fuse and check visually.
2) If the fuse is blown out, replace the fuse.

2. CHECK RELAY

1) Check the resistance between relay terminals.

Terminal No.	Inspection conditions	Specification	Circuit
1 — 2	Always	1 MΩ or more	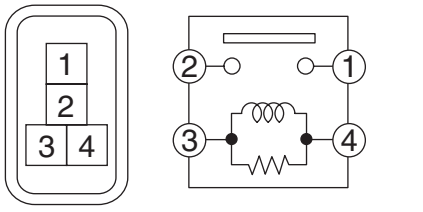
1 — 2	Apply battery voltage between 4 — 3 terminals.	Less than 1 Ω	

2) Replace the relay if the inspection result is not within the standard value.

3. Horn System

A: WIRING DIAGRAM

Refer to “Horn System” in the wiring diagram.

- Gasoline engine model <Ref. to WI(w/o HEV)-99, WIRING DIAGRAM, Horn System.>
- HEV model <Ref. to WI(HEV)-149, WIRING DIAGRAM, Horn System.>

B: INSPECTION

Symptoms	Inspection steps
Horn does not sound	1. Check the fuse.
	2. Check the horn relay.
	3. Check the role connector.
	4. Check the horn switch.
	5. Check the horn assembly.
	6. Check the harness.

C: NOTE

For operation procedures of each component of the horn system, refer to the respective section.

- Horn ASSY: <Ref. to COM-5, Horn.>
- Horn switch: <Ref. to COM-8, Horn Switch.>

4. Horn

A: REMOVAL

CAUTION:
Do not remove the bumper face - front when removing the horn, in order to prevent damaging the claws of the bracket - front bumper corner and the bracket - front bumper side.

1) Disconnect the ground cable from battery.
2) Remove the clip, and remove the bracket - grille.

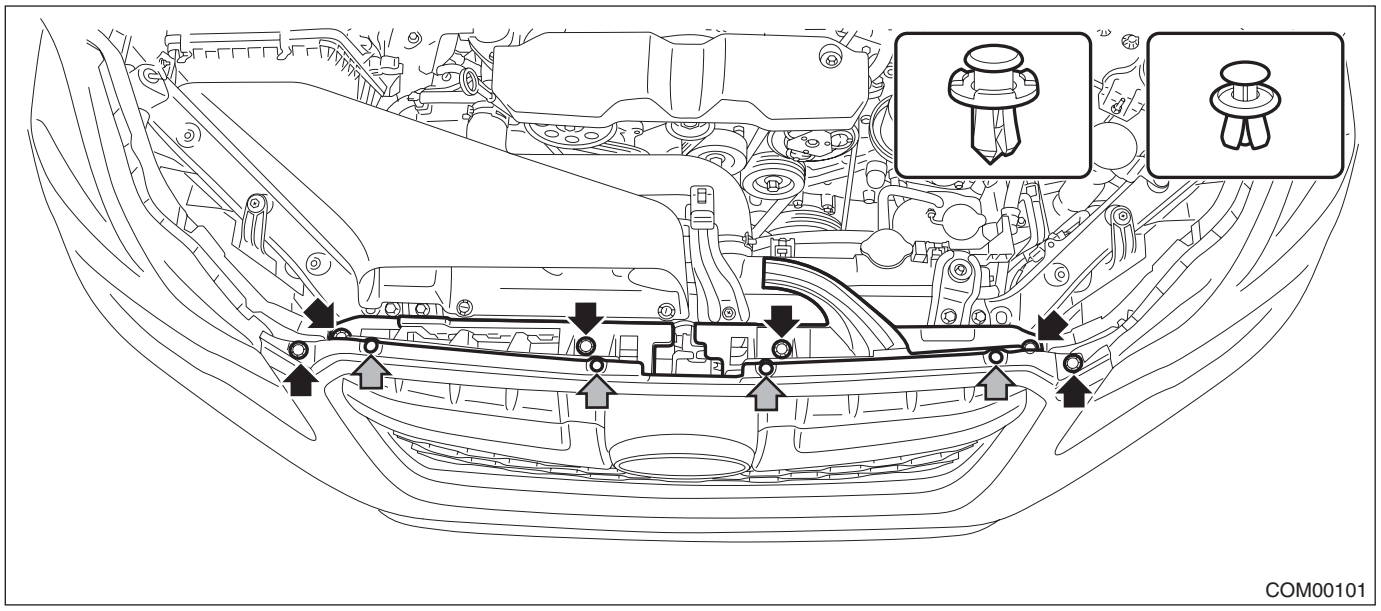

3) Remove the horn assembly - Lo.
   (1) Disconnect the connector.
   (2) Remove the horn bracket mounting bolt, and remove the horn assembly - Lo.

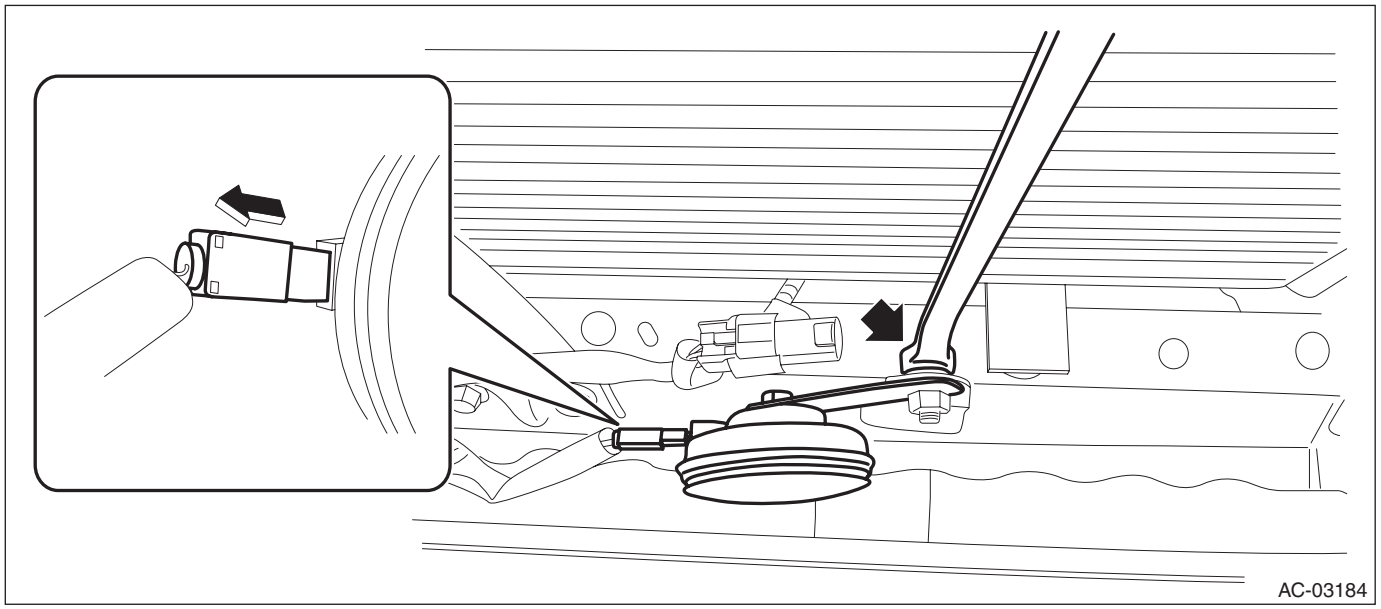

4) Remove the horn assembly - Hi.
(1) Remove the clips, and turn over the front side of the mud guard - front.

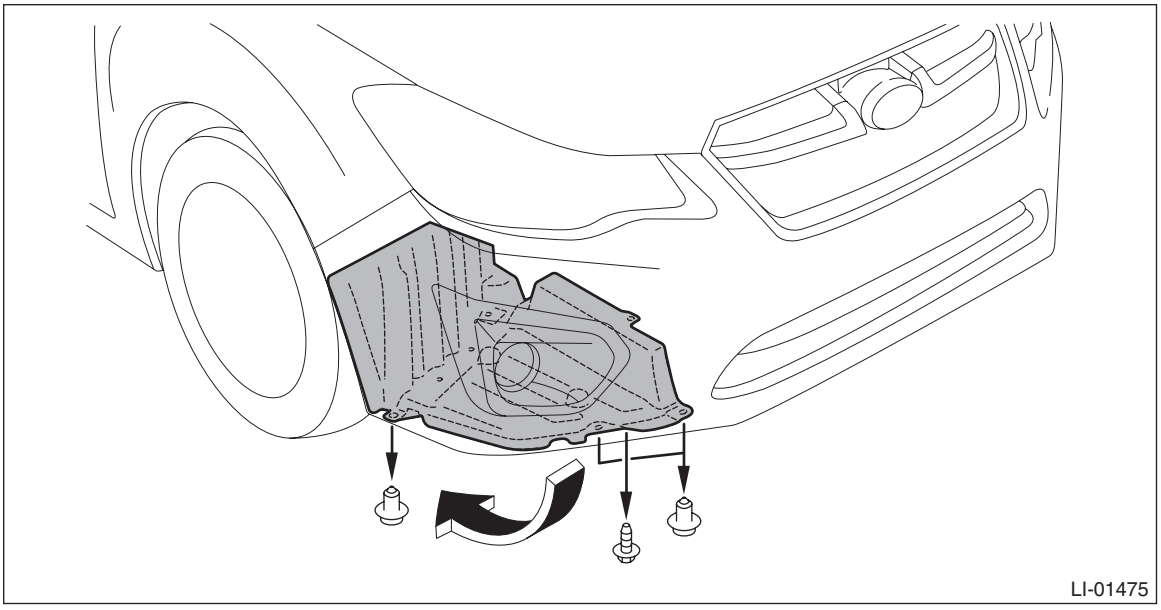

(2) Disconnect the horn connector.
(3) Remove the horn bracket mounting bolt, and remove the horn assembly - Hi.

CAUTION:
The resistor may become hot. Be careful not to burn yourself.

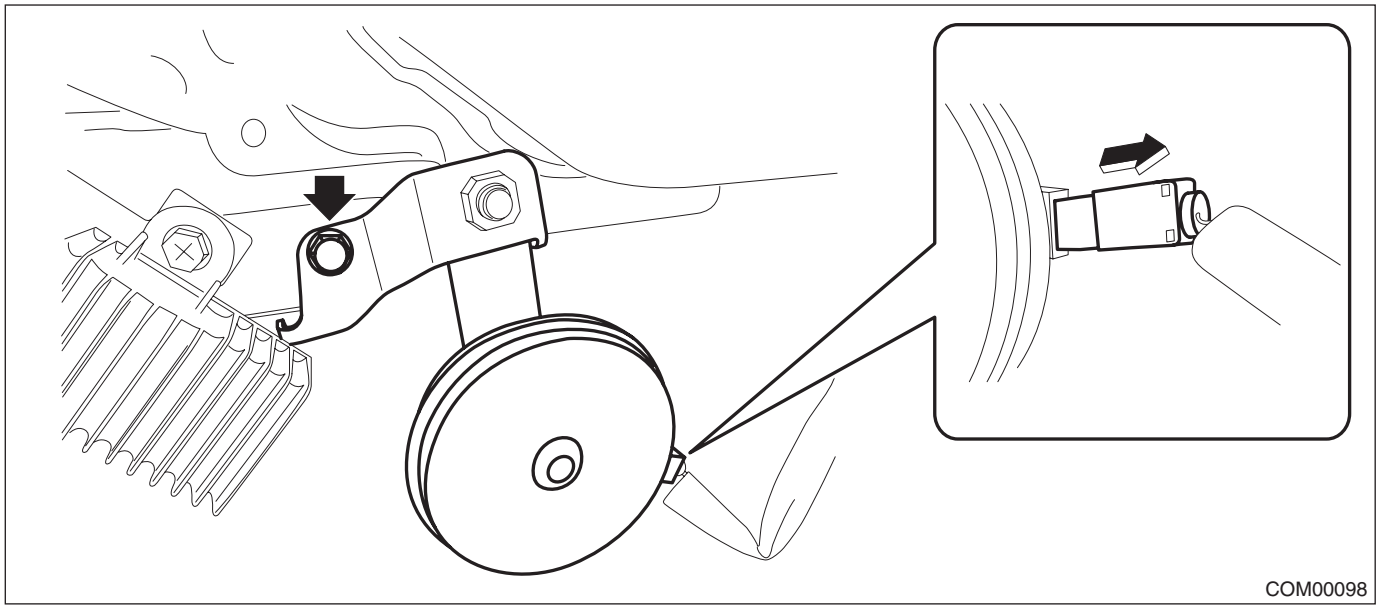

B: INSTALLATION

Install each part in the reverse order of removal.

Tightening torque:
Horn assembly - Hi: 13 N·m (1.33 kgf-m, 9.6 ft-lb)
Horn assembly - Lo: 18 N·m (1.84 kgf-m, 13.3 ft-lb)

C: INSPECTION

1. CHECK HORN ASSEMBLY

1) Remove the horn assembly (Hi & Lo). <Ref. to COM-5, REMOVAL, Horn.>
2) Check the horn sounds when applying the battery voltage to the horn assembly.

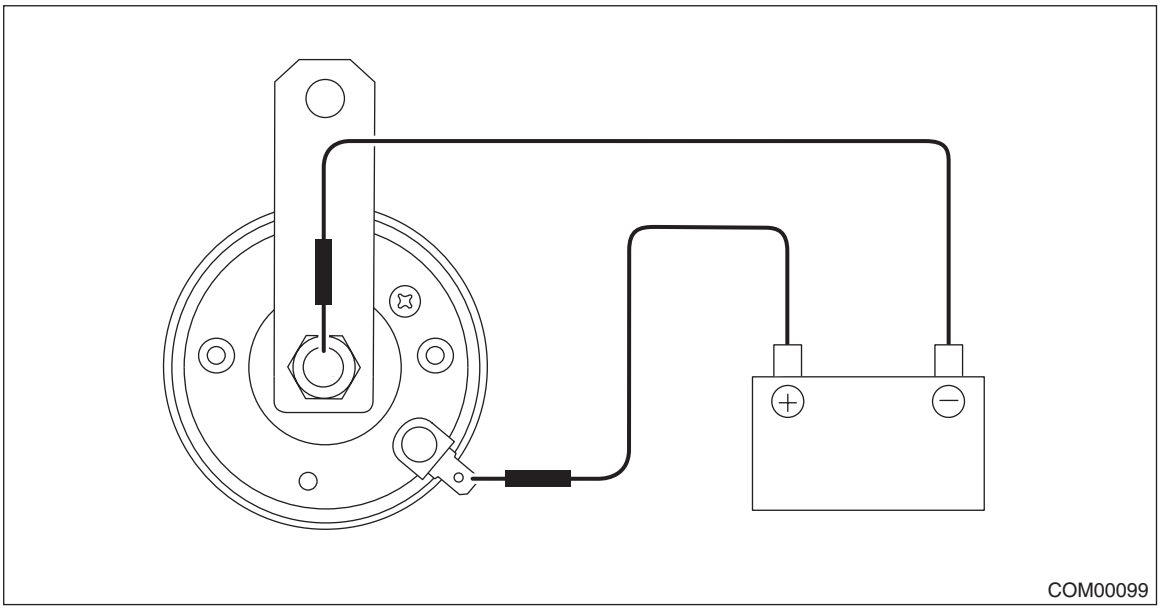

Terminal No.	Inspection conditions	Specification
Horn terminal (+) — Horn case (–)	Connect battery to the terminals	Sounds

3) If it does not operate normally, replace the horn assembly.

5. Horn Switch

A: REMOVAL

NOTE:
Horn switch is a unit with the driver's airbag module.
1) Position the front wheels straight ahead. (After moving a vehicle 5 m (16 ft) or more with front wheels positioned straight ahead, make sure that the vehicle moves straight ahead.)
2) Turn the ignition switch to OFF.
3) Disconnect the ground cable from battery and wait for at least 60 seconds before starting work. <Ref. to NT-5, BATTERY, NOTE, Note.>

NOTE:
For the 12 volt engine restart battery of HEV model, disconnect the ground terminal from 12V engine restart battery sensor.
4) Remove the driver's airbag module.

CAUTION:
Before handling the airbag module, refer to "CAUTION" of "General Description" in "AIRBAG SYSTEM". <Ref. to AB-11, CAUTION, General Description.>

(1) Using a hexagon wrench etc. wrapped by protective tape, insert the snap pins and release the locks (3 locations).

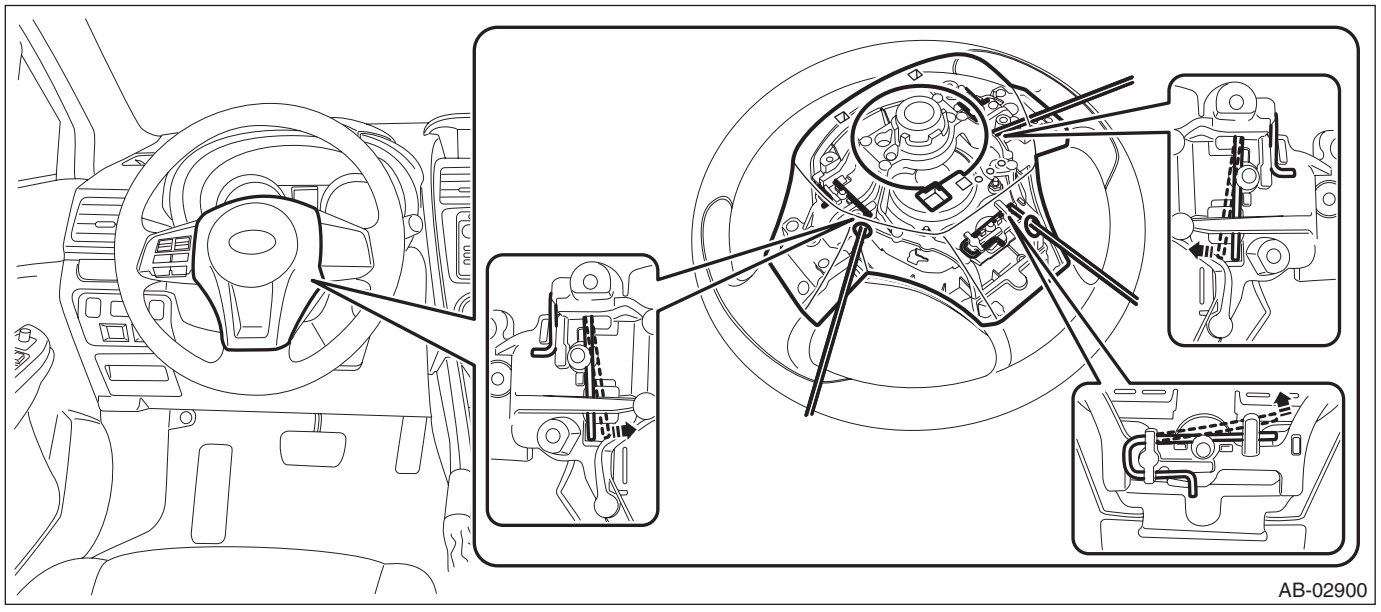

(2) Disconnect the horn harness and airbag connector, and remove the driver's airbag module. <Ref. to AB-23, DRIVER'S AIRBAG MODULE, CURTAIN AIRBAG MODULE & PRETENSIONER, PROCEDURE, Airbag Connector.>

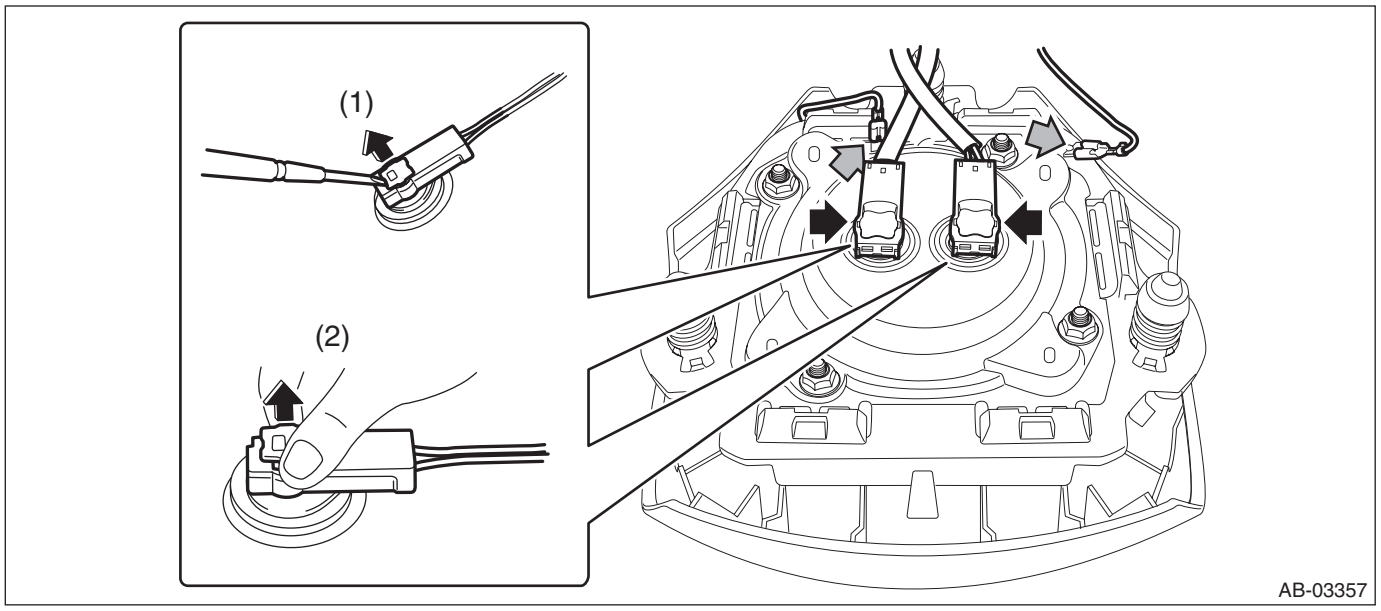

B: INSTALLATION

CAUTION:
• Before handling the airbag module, refer to "CAUTION" of "General Description" in "AIRBAG SYSTEM". <Ref. to AB-11, CAUTION, General Description.>
• Do not allow harness and connectors to interfere or get tangled up with other parts.
1) Install the driver's airbag module. <Ref. to AB-42, INSTALLATION, Driver's Airbag Module.>
2) Install each part in the reverse order of removal.

C: INSPECTION

1. CHECK HORN SWITCH

1) Remove the horn switch. <Ref. to COM-8, REMOVAL, Horn Switch.>
2) Check that the connection of the horn switch harness connector is correct.
3) Disconnect the horn switch harness connector and check the resistance between the harness connectors.

Preparation tool:
Circuit tester

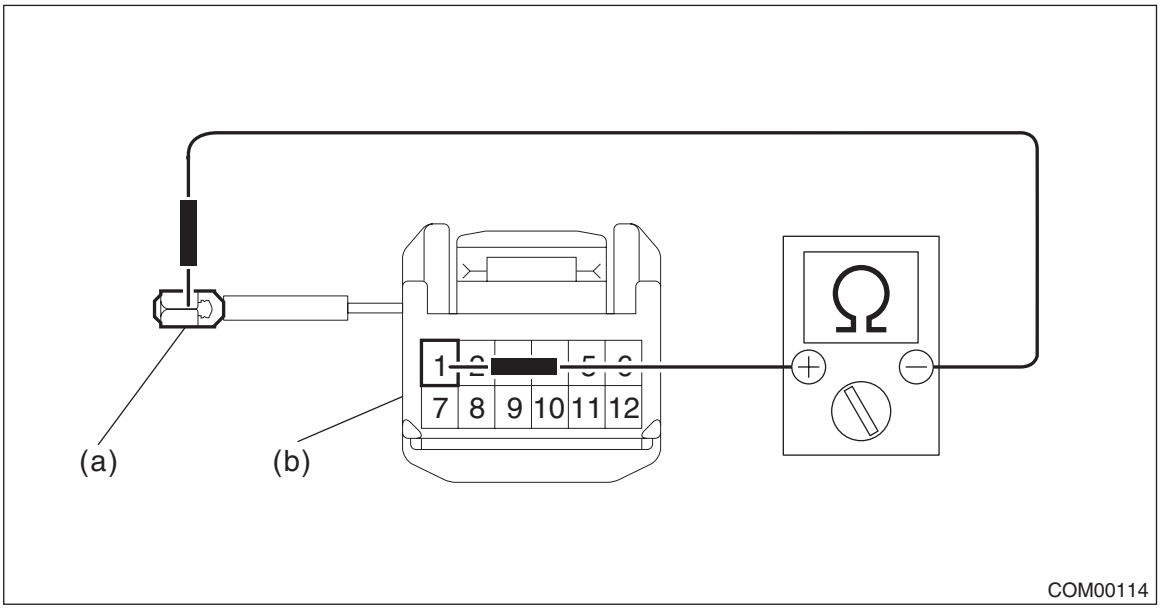

(a) Ground terminal (b) Horn switch terminal

Terminal No.	Standard
Horn switch terminal — ground terminal	Less than 1 Ω

4) Replace the driver's airbag module if the inspection result is not within the standard value.

2. CHECK ROLL CONNECTOR

1) Remove the roll connector. <Ref. to AB-105, REMOVAL, Roll Connector.>
2) Check the resistance between roll connector terminals.

Preparation tool:
Circuit tester

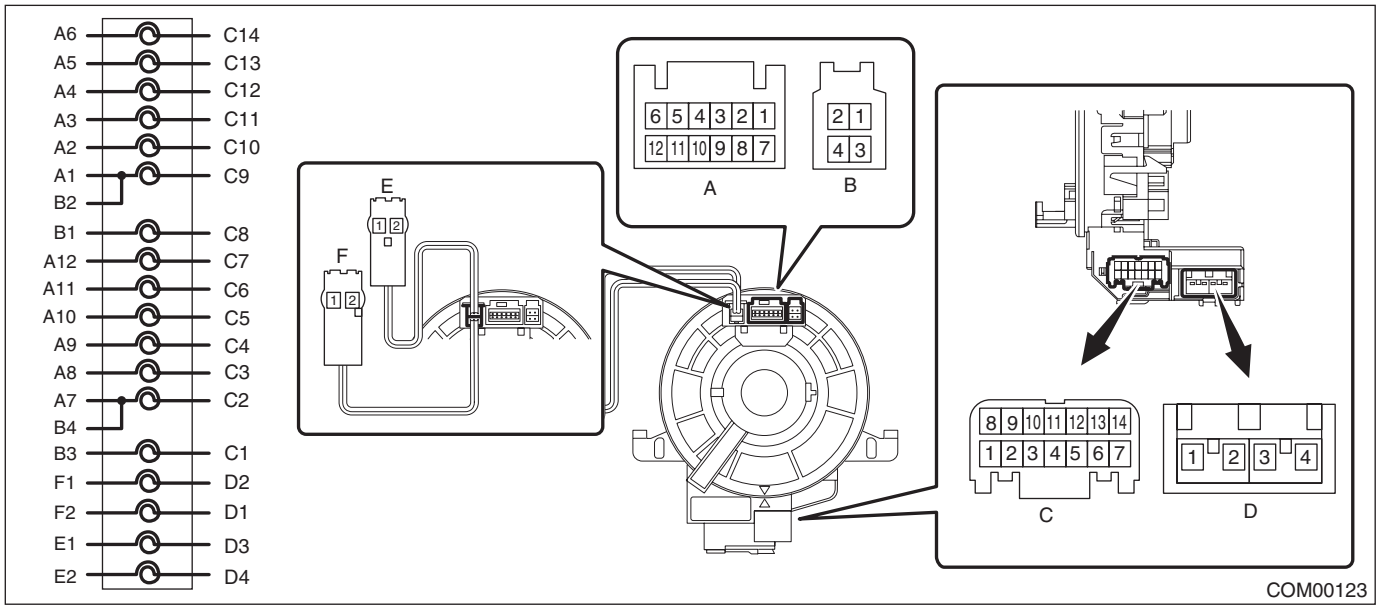

Terminal No.	Inspection conditions	Standard
A1 — C9	Always	Less than 1 Ω

3) Replace the roll connector if the inspection result is not within the standard value.

GLASS/WINDOWS/MIRRORS

GW

		Page
1.	General Description	2
2.	Relay and Fuse	8
3.	Power Window System	10
4.	Power Window Control Switch	12
5.	Front Door Glass	18
6.	Front Regulator and Motor Assembly	21
7.	Remote Control Mirror System	23
8.	Outer Mirror Assembly	24
9.	Remote Control Mirror Switch	29
10.	Rearview Mirror	31
11.	Rear Door Glass	32
12.	Rear Regulator and Motor Assembly	34
13.	Windshield Glass	36
14.	Rear Window Glass	44
15.	Rear Gate Glass	47
16.	Rear Window Defogger System	50
17.	Rear Quarter Glass	53
18.	Wiper Deicer System	56

1. General Description

A: COMPONENT

1. FRONT DOOR GLASS

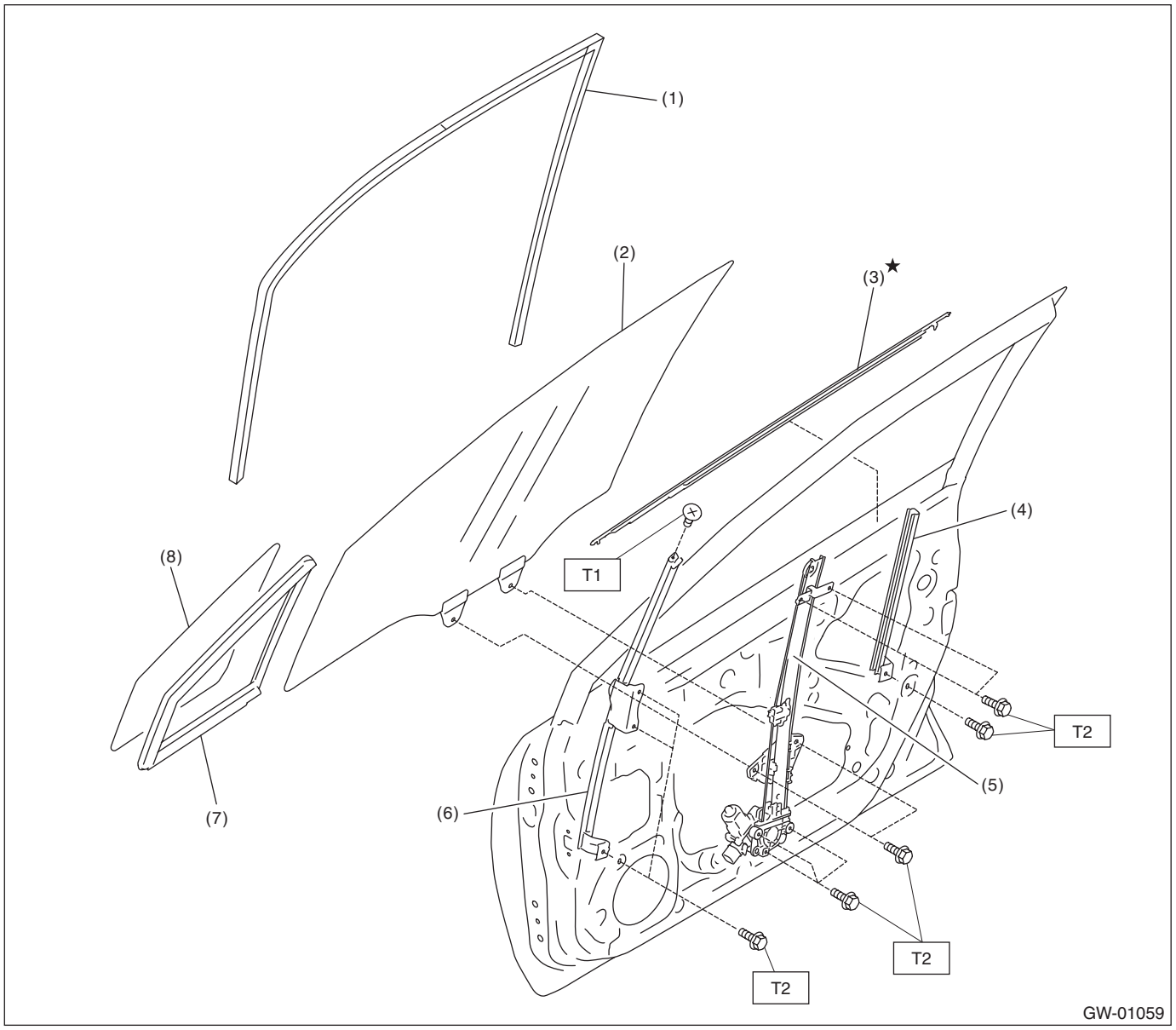

(1)	Running channel - front door	(5)	Regulator & motor ASSY - front	***Tightening torque: N·m (kgf-m, ft-lb)***
(2)	Glass ASSY - front door	(6)	Sash COMPL - partition	***T1: 2.2 (0.22, 1.6)***
(3)	Weather strip outer - front door	(7)	Weather strip - front door partition	***T2: 7.5 (0.76, 5.5)***
(4)	Sash COMPL - lower	(8)	Glass - front door partition	

2. REAR DOOR GLASS

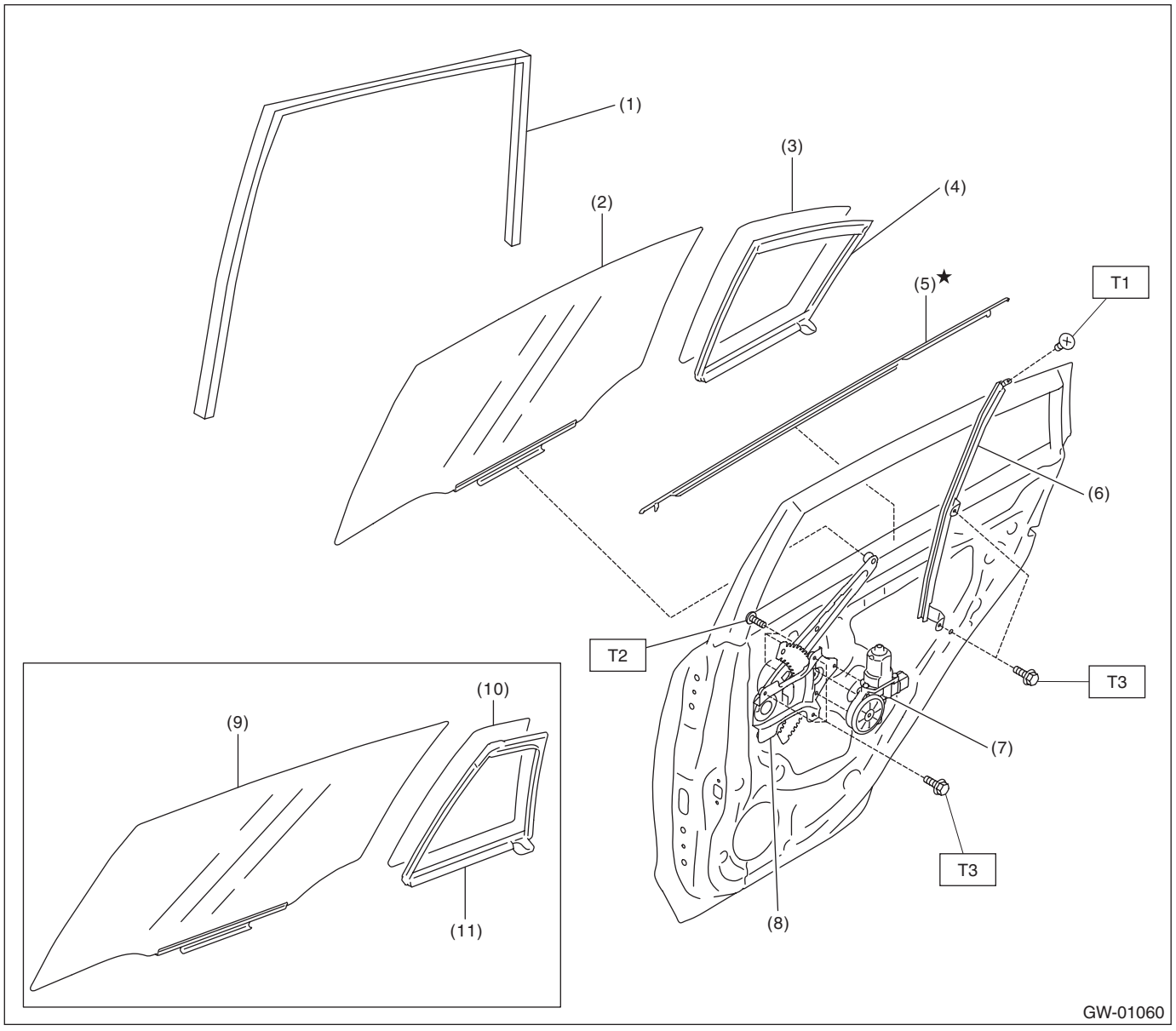

(1)	Running channel - rear door	(7)	Motor - rear
(2)	Glass ASSY - rear door (4 door model)	(8)	Regulator - rear
(3)	Glass - rear door partition (4 door model)	(9)	Glass ASSY - rear door (5 door model/XV model)
(4)	Weather strip - rear door partition (4 door model)	(10)	Glass - rear door partition (5 door model/XV model)
(5)	Weather strip outer - rear door	(11)	Weather strip - rear door partition (5 door model/XV model)
(6)	Sash COMPL - rear partition		

Tightening torque: N·m (kgf-m, ft-lb)

T1: 2.2 (0.22, 1.6)

T2: 5.9 (0.6, 4.4)

T3: 7.5 (0.76, 5.5)

3. MIRROR

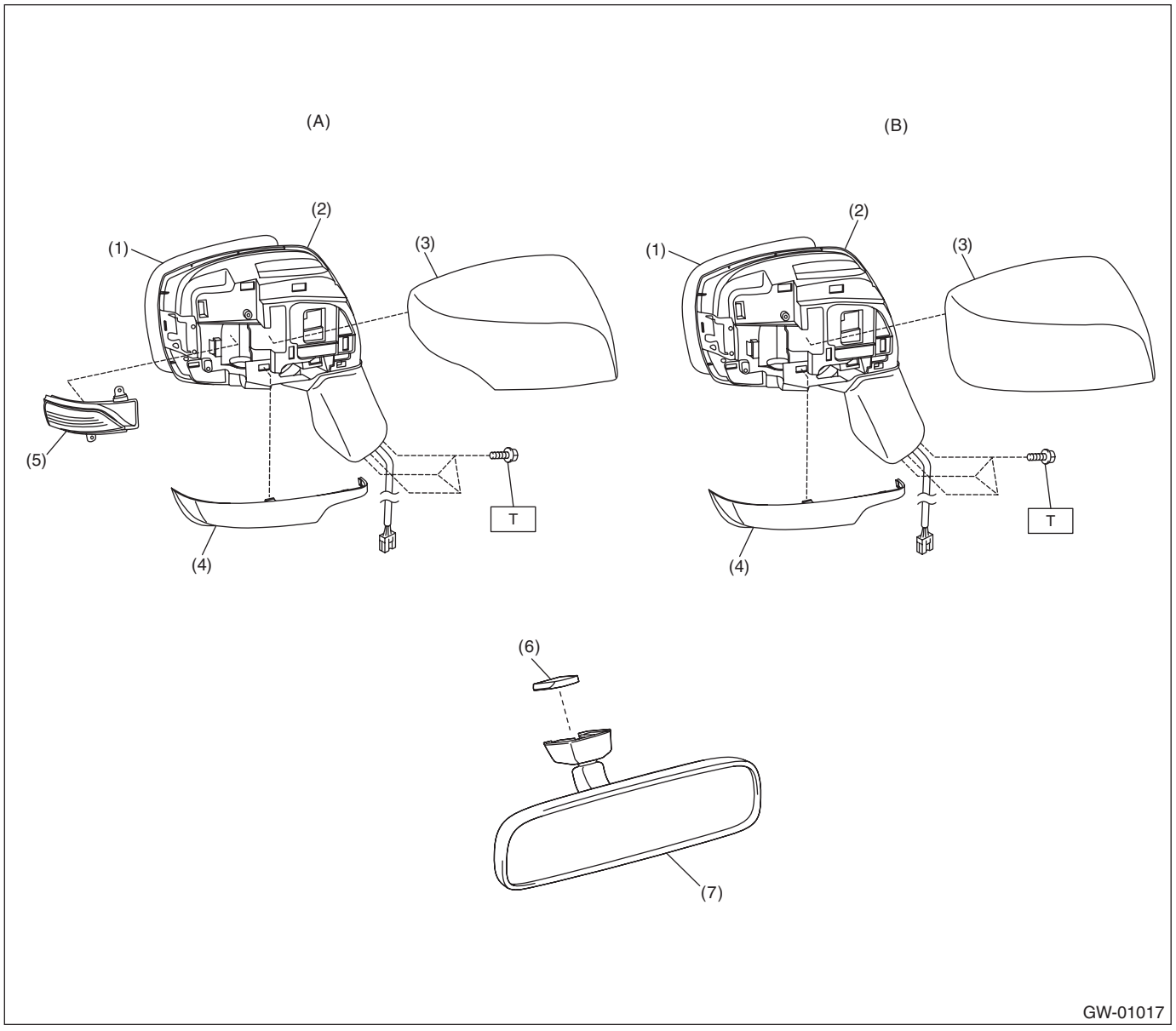

(A) Model with side turn
(B) Model without side turn

(1) Mirror - repair
(2) Mirror unit - door
(3) Cover - cap outer mirror
(4) Cover - cap outer mirror lower
(5) Light ASSY - side turn mirror
(6) Base - inner mirror
(7) Mirror ASSY - inner rearview

Tightening torque: N·m (kgf-m, ft-lb)
T: 7.5 (0.76, 5.5)

4. FIXED GLASS (4 DOOR MODEL)

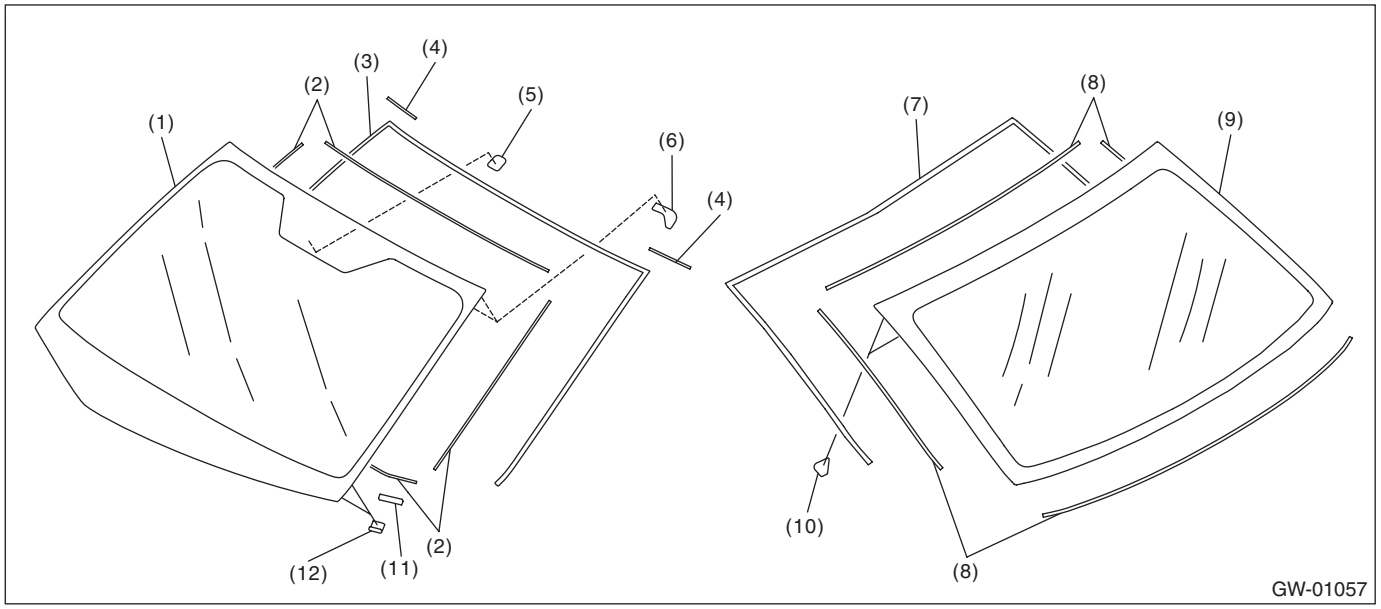

(1) Glass - front window
(2) Dam rubber - front
(3) Molding - front window
(4) Seal - upper
(5) Base - inner mirror
(6) Locating pin - front window
(7) Molding - rear window
(8) Dam rubber - rear
(9) Glass - rear window
(10) Locating pin - rear window
(11) Seal - lower VIN
(12) Seal - lower

5. FIXED GLASS (5 DOOR MODEL/XV MODEL)

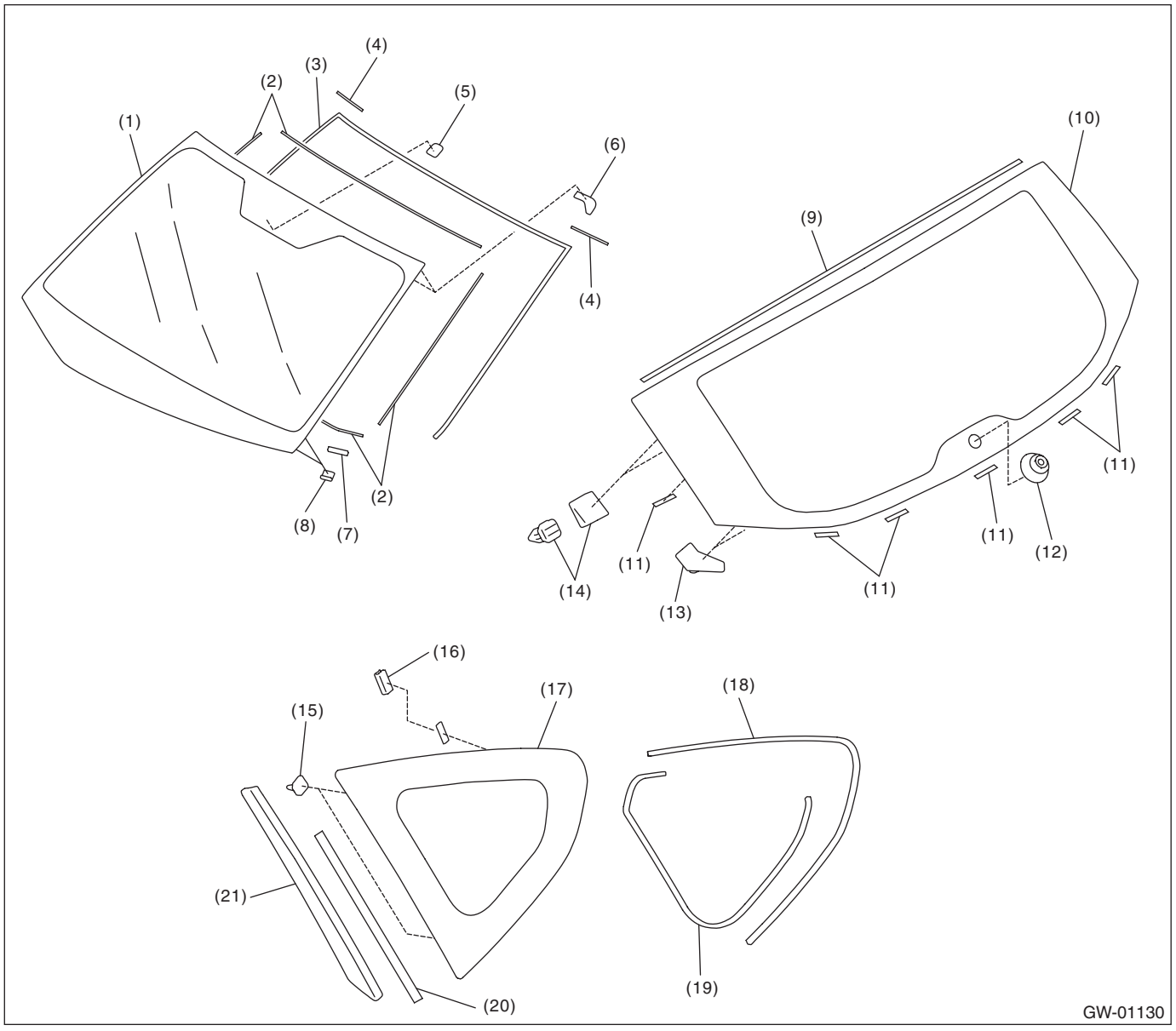

(1) Glass - front window
(2) Dam rubber - front
(3) Molding - front window
(4) Seal - upper
(5) Base - inner mirror
(6) Locating pin - front window
(7) Seal - lower VIN
(8) Seal - lower
(9) Dam rubber - rear gate
(10) Glass - rear gate
(11) Spacer - rear gate
(12) Cap - pivot
(13) Locating pin - rear gate
(14) Holder - rear gate
(15) Locating pin - rear quarter
(16) Fastener - rear quarter
(17) Glass - rear quarter
(18) Dam rubber - rear quarter
(19) Seal - rear quarter
(20) Protective plate
(21) Molding - rear quarter

B: CAUTION

• Before disassembling or reassembling parts, always disconnect the battery ground cable from battery. When replacing the audio, control module and other parts provided with memory functions, record the memory contents before disconnecting the battery ground cable. Otherwise, the memory is cleared.
• Avoid impact and damage to the glass.
• Reassemble the parts in the reverse order of disassembly procedure unless otherwise indicated.
• Connect the connectors securely during reassembly.
• After reassembly, make sure that the each component operates normally.

C: PREPARATION TOOL

1. SPECIAL TOOL

ILLUSTRATION	TOOL NUMBER	DESCRIPTION	REMARKS
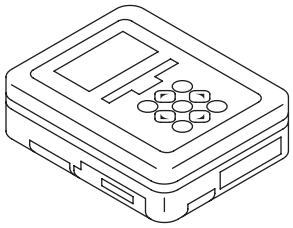 ST1B022XU0	1B022XU0	SUBARU SELECT MONITOR III KIT	Used for setting of each function and trouble-shooting for electrical system.

2. GENERAL TOOL

TOOL NAME	REMARKS
Circuit tester	Used for measuring resistance and voltage.
Piano wire	Used for removing the window glass.
Cutter knife	Used for removing the window glass.
Windshield glass knife	Used for removing the window glass.

2. Relay and Fuse

A: LOCATION

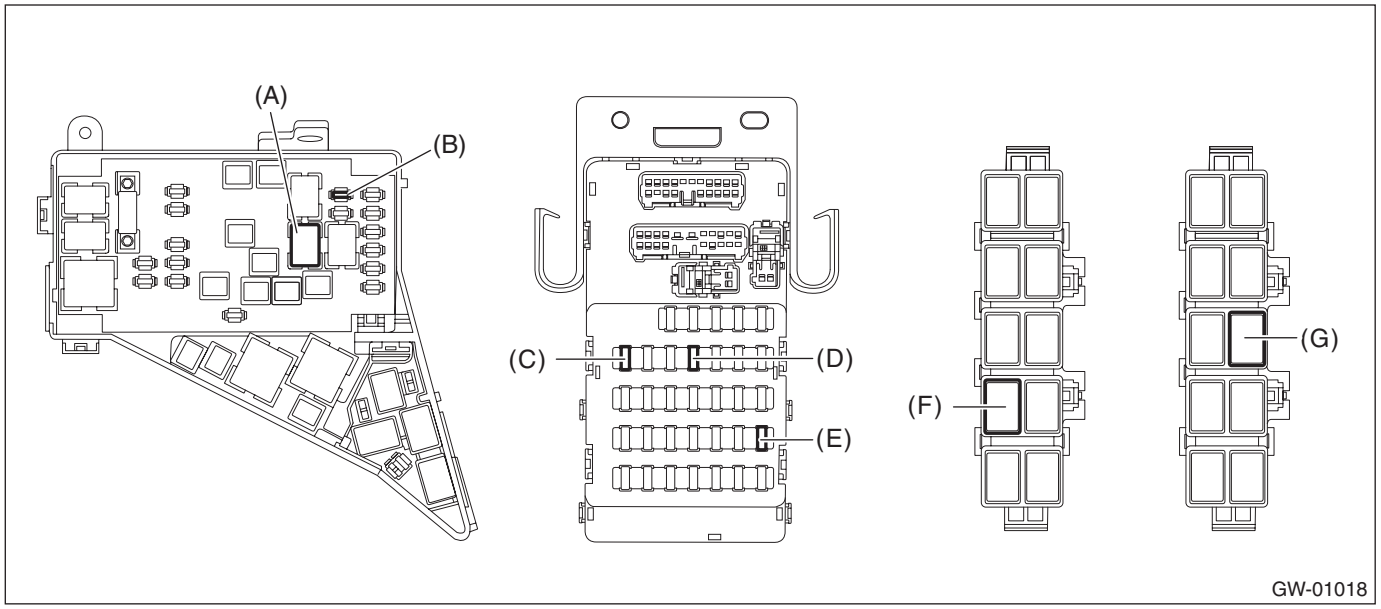

Main fuse box	Rear defogger relay	(A)
	Fuse 25 A (rear defogger)	(B)
Relay & fuse box	Fuse 7.5 A (remote control mirror)	(C)
	Fuse 15 A (wiper deicer)	(D)
	Fuse 7.5 A (power window)	(E)
Relay holder	Power window relay	(F)
	Wiper deicer relay	(G)

NOTE:
For other related fuses, refer to the wiring diagram.
- Gasoline engine model: <Ref. to WI(w/o HEV)-15, Power Supply Circuit.>
- HEV model: <Ref. to WI(HEV)-20, Power Supply Circuit.>

B: INSPECTION

1. CHECK FUSE

1) Remove the fuse and check visually.
2) If the fuse is blown out, replace the fuse.

2. CHECK RELAY

1) Check the resistance between relay terminals.

Terminal No.	Inspection conditions	Specification	Circuit
1 — 2	Always	1 MΩ or more	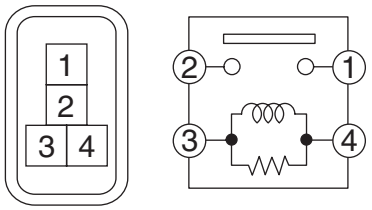 SR-00180
1 — 2	Apply battery voltage between 4 — 3 terminals.	Less than 1 Ω	

Terminal No.	Inspection conditions	Specification	Circuit
1 — 2	Always	1 MΩ or more	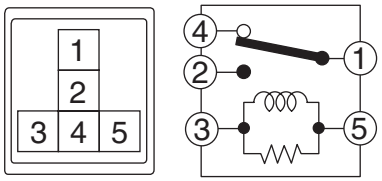 SL-01085
1 — 4	Always	Less than 1 Ω	
1 — 2	Apply battery voltage between 3 — 5 terminals.	Less than 1 Ω	

2) Replace the relay if the inspection result is not within the standard value.

3. Power Window System

A: WIRING DIAGRAM

Refer to “Power Window System” in the wiring diagram.
- Gasoline engine model: <Ref. to WI(w/o HEV)-15, Power Supply Circuit.>
- HEV model: <Ref. to WI(HEV)-20, Power Supply Circuit.>

B: INSPECTION

Symptoms	Inspection order
All power windows do not operate.	1. Check the fuse. 2. Check the power window relay. 3. Check the wiring harness.
Particular window does not operate.	1. Check the fuse. 2. Check the switch - power window main. 3. Check the switch - power window sub. 4. Check the power window motor. 5. Check the wiring harness.
“Window Lock” does not operate.	Check the switch - power window main.
Driver’s side window moves slightly (approx. 20 mm (0.79 in)).	1. Check the motor - front. 2. Check the switch - power window main. 3. Check the wiring harness.
Driver’s side window moves slightly (approx. 50 mm (1.97 in)). (This status is not a failure.)	Perform reset operation A. <Ref. to GW-10, RESET OPERATION A, OPERATION, Power Window System.>
Driver’s side window does not close completely. (Using AUTO UP allows the window to fully close first and then move in reverse resulting in slightly opening.)	Perform reset operation B. <Ref. to GW-10, RESET OPERATION B, OPERATION, Power Window System.>

C: OPERATION

1. RESET OPERATION A

1) Sit in the driver’s seat and close the door.
2) Turn the ignition switch to ON.
3) Operate the switch - power window main to open the glass assembly - front door halfway.
4) Operate the switch - power window main in “UP” direction to fully close the glass assembly - front door on the driver’s side.
5) While the glass assembly - front door is fully closed, hold down the switch - power window main in “UP” direction for one second.
6) Operate the switch - power window main in “AUTO DOWN” direction to check whether the window fully opens properly.

NOTE:
If the window does not fully open properly, repeat steps 1) to 6).

2. RESET OPERATION B

1) Sit in the driver’s seat and close the door.
2) Turn the ignition switch to ON.
3) On the glass assembly - front door of the driver’s side, operate the “AUTO UP” function (fully pull up the switch) using the switch - power window main, and perform auto-reverse operations 10 times in a row (after the window fully closes, it slightly opens).
4) Check that the “AUTO UP” function no longer operates.
5) Perform reset operation A.
6) Check that the window operates properly by operating the “AUTO UP” and “AUTO DOWN” switch.

NOTE:
If the window does not fully open/close properly, repeat steps 1) to 6).

D: NOTE

For operation procedures of each component of the power window system, refer to the respective sections.
- Power window control switch: <Ref. to GW-12, Power Window Control Switch.>
- Front door glass: <Ref. to GW-18, Front Door Glass.>
- Front regulator and motor assembly: <Ref. to GW-21, Front Regulator and Motor Assembly.>
- Rear door glass: <Ref. to GW-32, Rear Door Glass.>
- Rear regulator and motor assembly: <Ref. to GW-34, Rear Regulator and Motor Assembly.>

4. Power Window Control Switch

A: REMOVAL

1. MAIN SWITCH

1) Remove the trim panel - front door. <Ref. to EI-67, FRONT DOOR, REMOVAL, Door Trim.>
2) Remove the panel - power window main switch.

CAUTION:
Be careful not to damage the trim panel - front door with the panel - power window main switch.

(1) Insert a sheet of protective paper (a) between panel - power window main switch and trim panel - front door.
(2) Remove the screws and disconnect the connector.

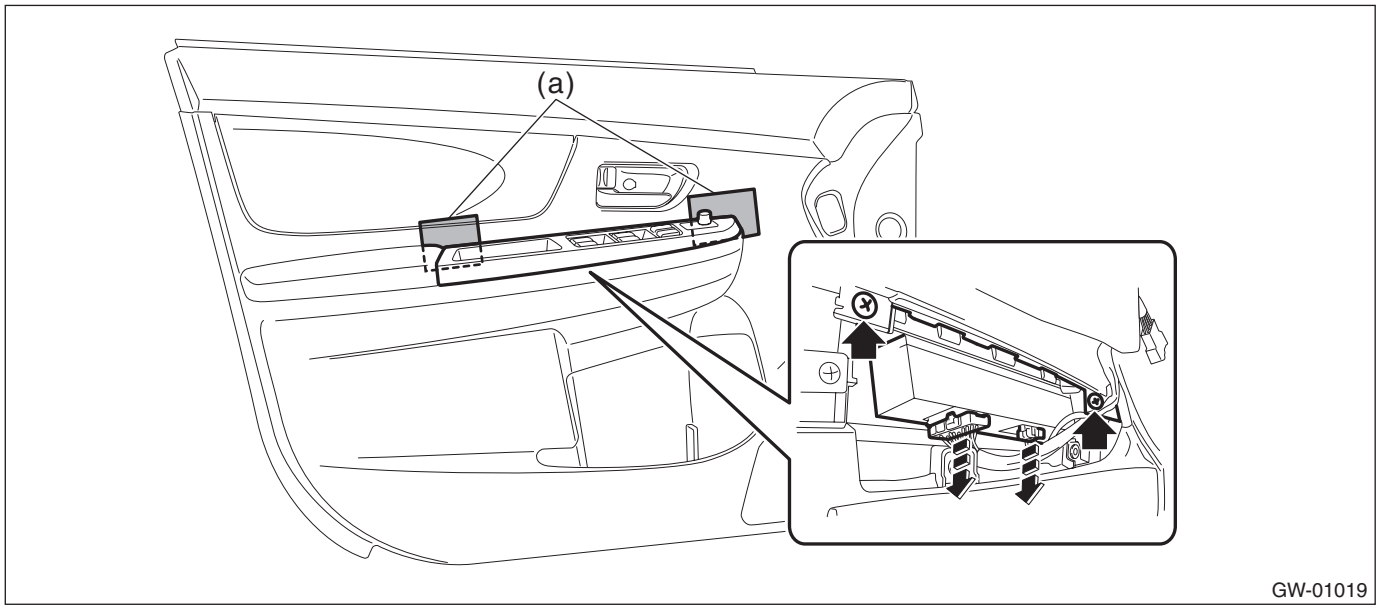

(3) Release the claws, and then remove the panel - power window main switch.

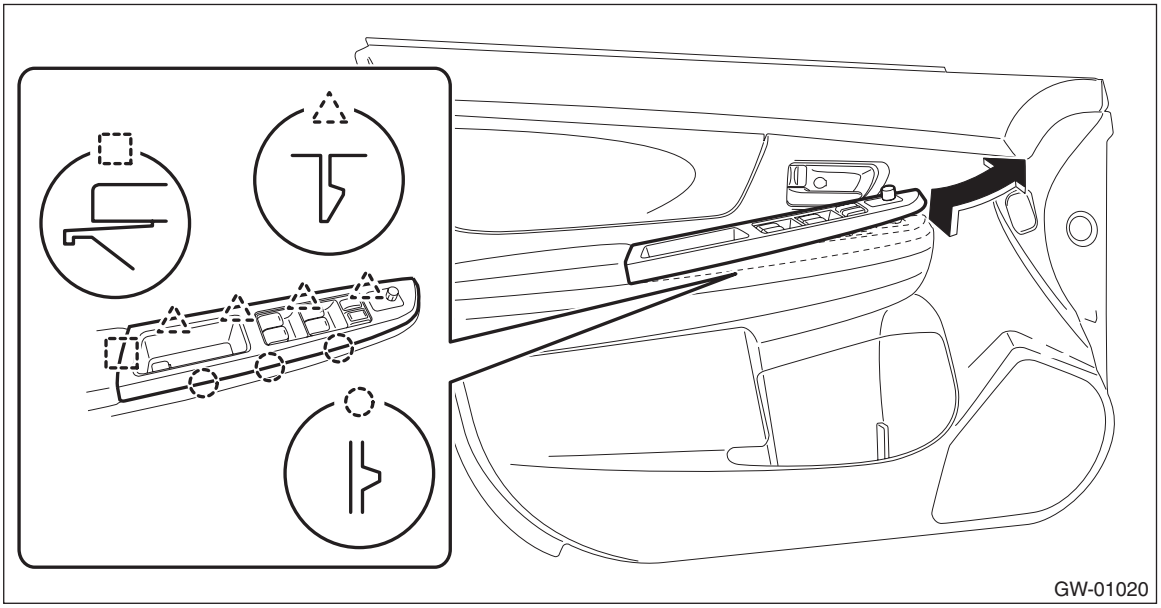

(4) Release the claws, and then remove the switch - power window main.

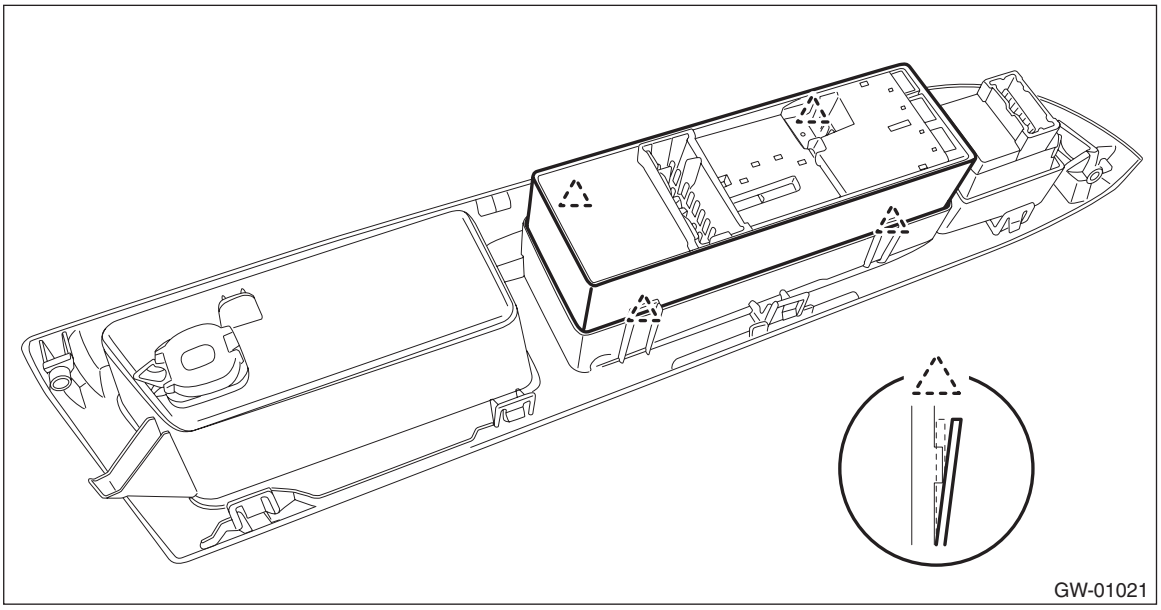

2. SUB-SWITCH

Switch - power window sub front

For removal of the switch - power window sub front on the passenger's seat, refer to the removal procedure of the switch - power window main. <Ref. to GW-12, MAIN SWITCH, REMOVAL, Power Window Control Switch.>

Switch - power window sub rear

1) Remove the trim panel - rear door. <Ref. to EI-68, REAR DOOR, REMOVAL, Door Trim.>
2) Remove the panel - power window sub switch rear.

CAUTION:
Be careful not to damage the trim panel - rear door with the panel - power window sub switch rear.

(1) Insert a sheet of protective paper (a) between panel - power window sub switch rear and trim panel - rear door.
(2) Remove the screws and disconnect the connector.

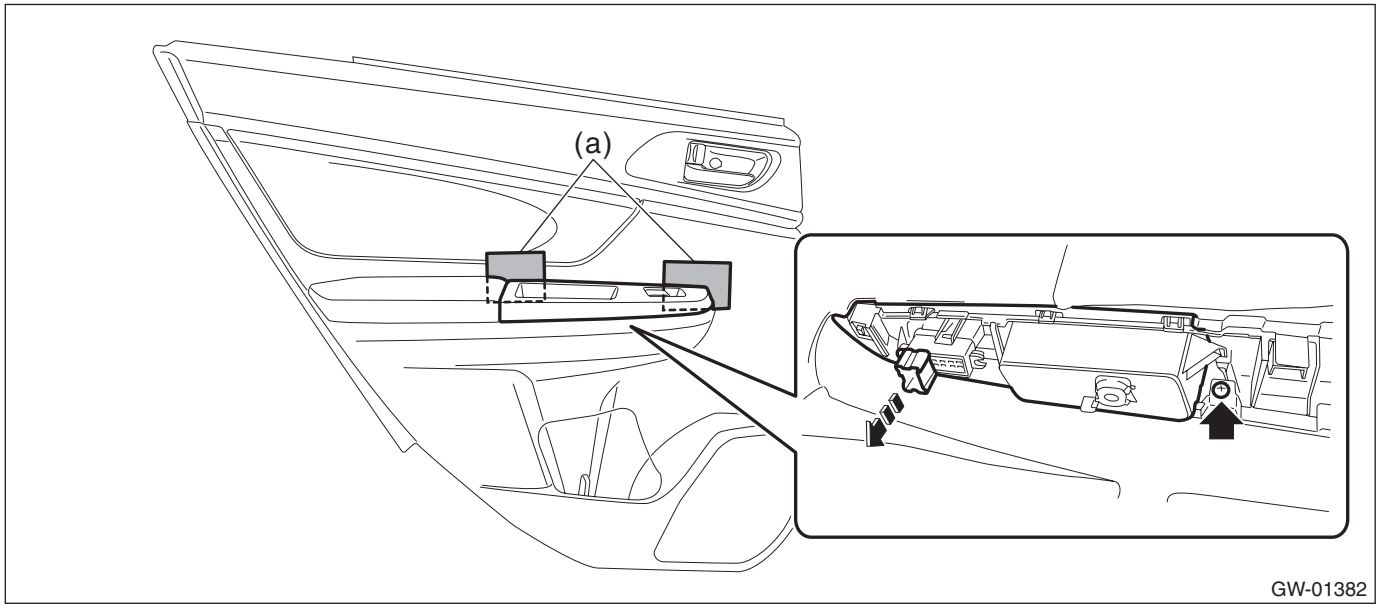

(3) Release the claws, and then remove the panel - power window sub switch rear.

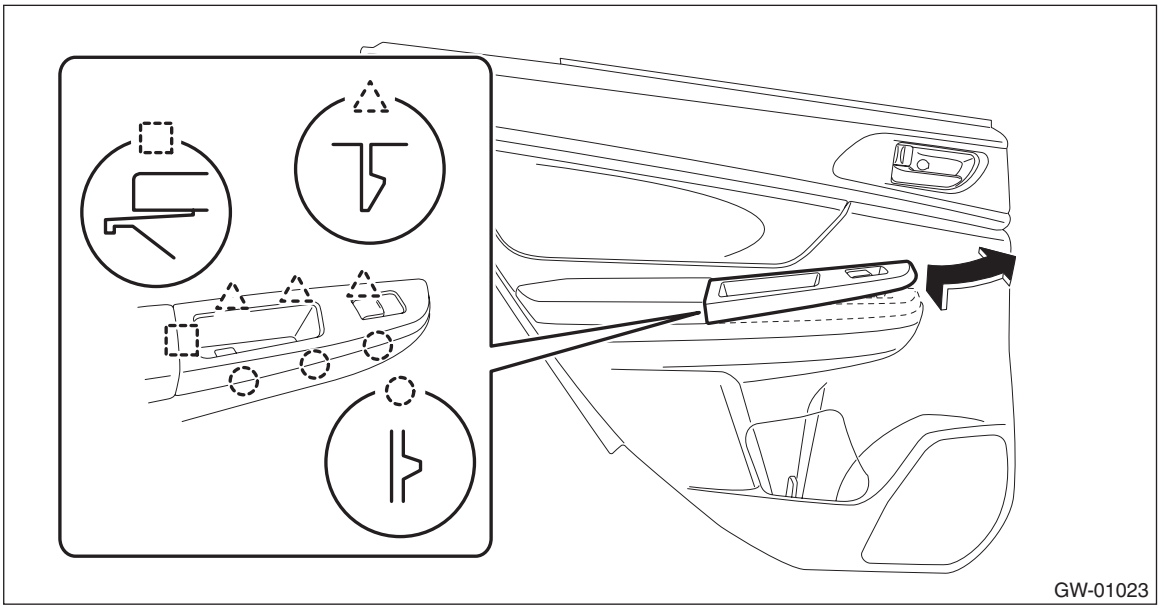

3) Release the claws, and then remove the switch - power window sub rear.

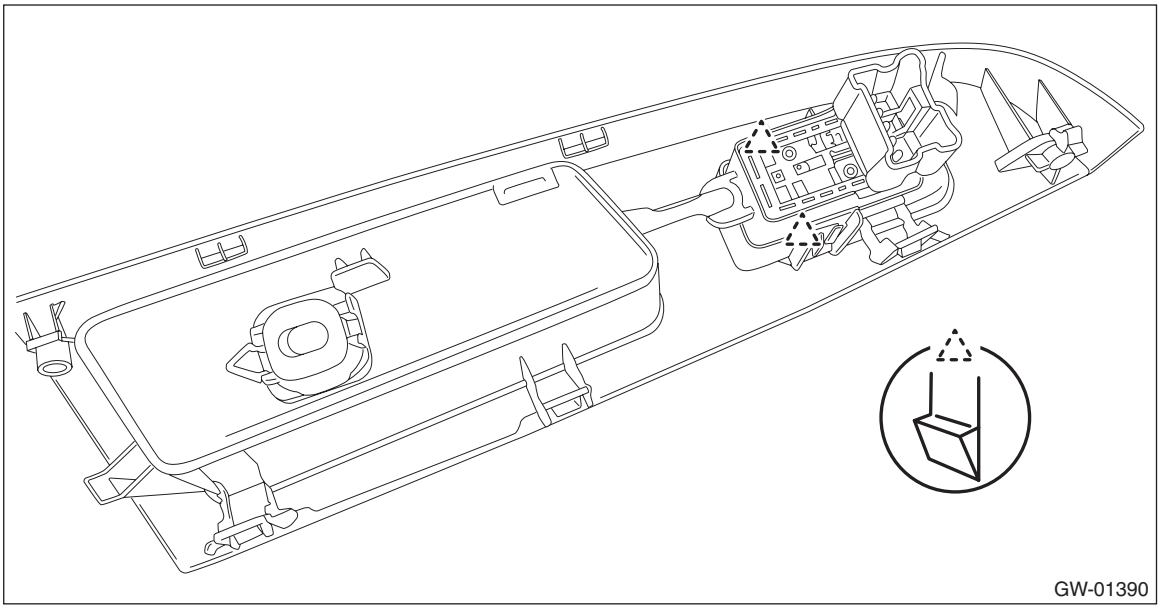

B: INSTALLATION

CAUTION:
- **After installing the switch - power window main, always perform the initial setting.**

Failure to do so may cause the improper activation of auto-reverse operation for pinching hazard prevention.
- **Use protective paper to avoid damage to the trim panel.**

1) Install each part in the reverse order of removal.
2) Perform initial setting operation (reset operation A). <Ref. to GW-10, RESET OPERATION A, OPERATION, Power Window System.>

C: INSPECTION

1. MAIN SWITCH

• Driver's seat

CAUTION:
Since the switch - power window main is controlled by CPU, do not check continuity for switch alone with the circuit tester. Performing continuity check with circuit tester can damage the switch - power window main circuit.
Check output from the switch - power window main to the driver's side motor using the oscilloscope function in the Subaru Select Monitor.
1) Remove the switch - power window main.
2) Connect the battery and the Subaru Select Monitor to the switch - power window main terminal.

CAUTION:
Never mix up the terminals when connecting the harness connector of the switch - power window main and the battery. If the connection is wrong, the switch - power window main may be damaged.

NOTE:
• When the battery is connected to the switch - power window main terminal, the letters "AUTO" on the driver's side knob illuminates.
• For detailed procedures, refer to "Subaru Select Monitor Operation Manual".

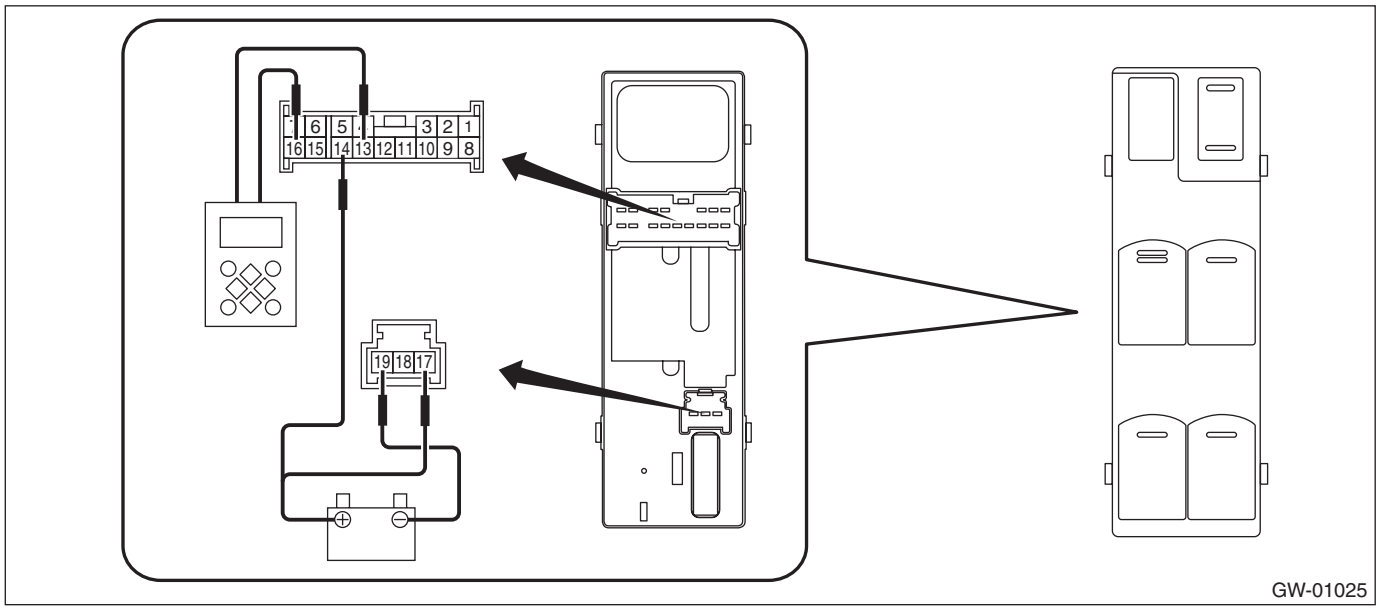

3) Operate the switch - power window main and check the output.

NOTE:
Since output time during window UP operation is extremely short, it cannot be checked without using a measuring instrument such as oscilloscope. Output is constantly produced while the switch is operated for window DOWN operation.

Inspection conditions	Output time	Standard
AUTO UP	Approx. 130 ms	Battery voltage
UP		
OFF	—	0 V
DOWN	During switch operation	Battery voltage
AUTO DOWN	Approx. 300 ms	

4) If the inspection result is not within the standard, replace the switch - power window main.

• Except for driver's seat

1) Check the resistance between terminals of the switch - power window main.

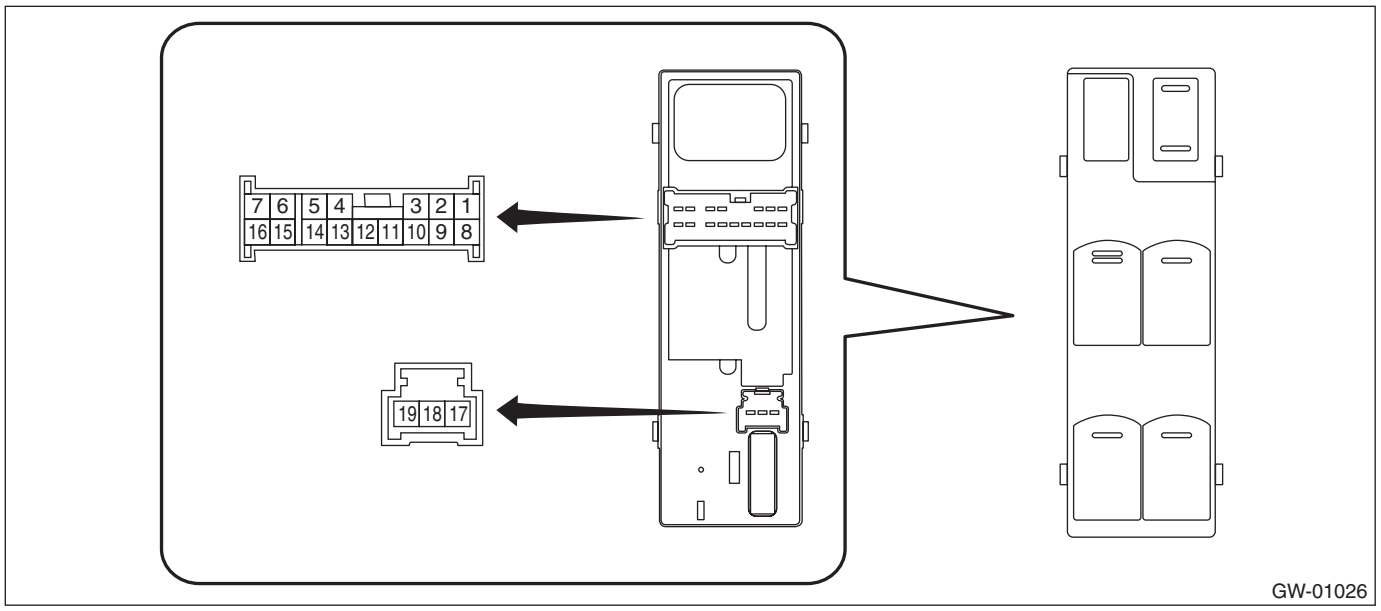

	Terminal No.	Inspection conditions	Standard
Passenger's seat	14 — 8 19 — 12	UP	Less than 1 Ω
	14 — 12 14 — 8	OFF	1 MΩ or more
	19 — 8 19 — 12 8 — 12		Less than 1 Ω
	14 — 12 19 — 8	DOWN	Less than 1 Ω
Rear LH	14 — 7 19 — 5	UP	Less than 1 Ω
	14 — 7 14 — 5	OFF	1 MΩ or more
	19 — 7 19 — 5 7 — 5		Less than 1 Ω
	14 — 5 19 — 7	DOWN	Less than 1 Ω
Rear RH	14 — 1 19 — 3	UP	Less than 1 Ω
	14 — 1 14 — 3	OFF	1 MΩ or more
	19 — 3 19 — 1 3 — 1		Less than 1 Ω
	14 — 3 19 — 1	DOWN	Less than 1 Ω

2) If the inspection result is not within the standard, replace the switch - power window main.

2. SUB-SWITCH

1) Remove the switch - power window sub.
2) Check the resistance between terminals of the switch - power window sub.

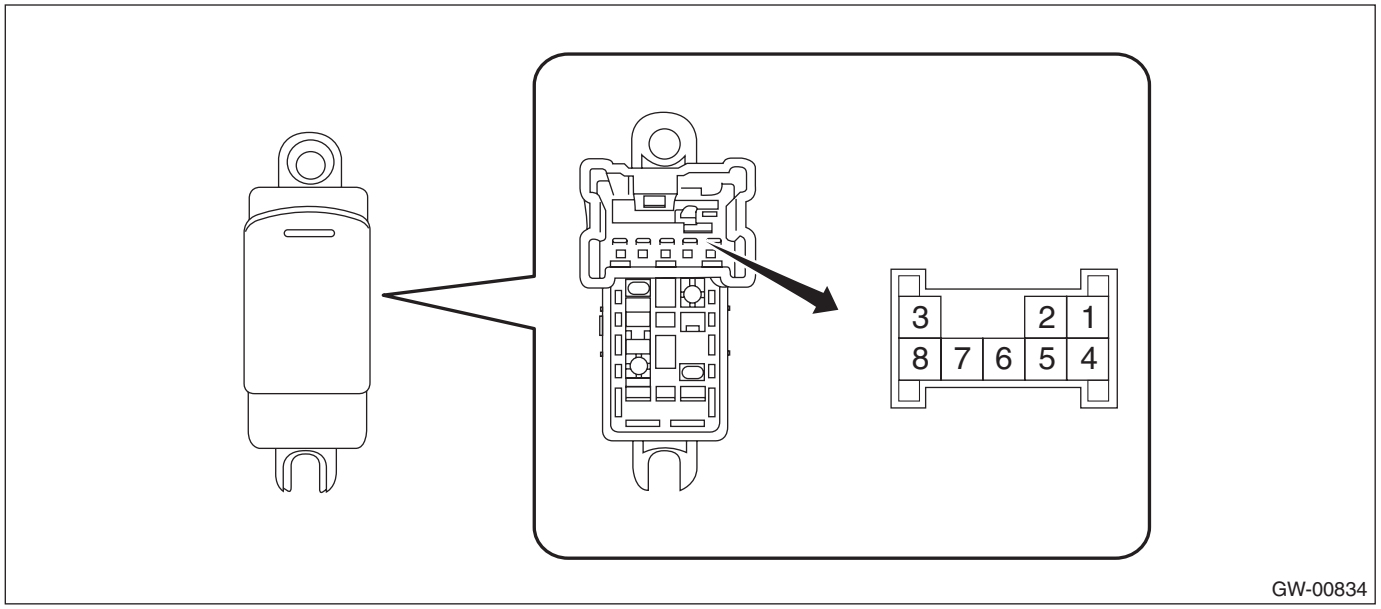

	Terminal No.	Inspection conditions	Standard
Passenger seat, rear	4 — 5 6 — 7	UP	Less than 1 Ω
	7 — 4 8 — 4	OFF	1 MΩ or more
	5 — 8 6 — 7		Less than 1 Ω
	4 — 6 5 — 8	DOWN	Less than 1 Ω

3) If the inspection result is not within the standard, replace the switch - power window sub.

5. Front Door Glass

A: REMOVAL

1) Remove the trim panel - front door. <Ref. to EI-67, FRONT DOOR, REMOVAL, Door Trim.>
2) Remove the sealing cover - front door.

CAUTION:
- **Carefully remove the butyl tape. Excessive force will easily break the sealing cover - front door.**
- **If the sealing cover - front door gets broken, replace it with a new part.**
  (1) Remove the screw to remove the bracket - door trim front.
  (2) Carefully remove the butyl tape to remove the sealing cover - front door.

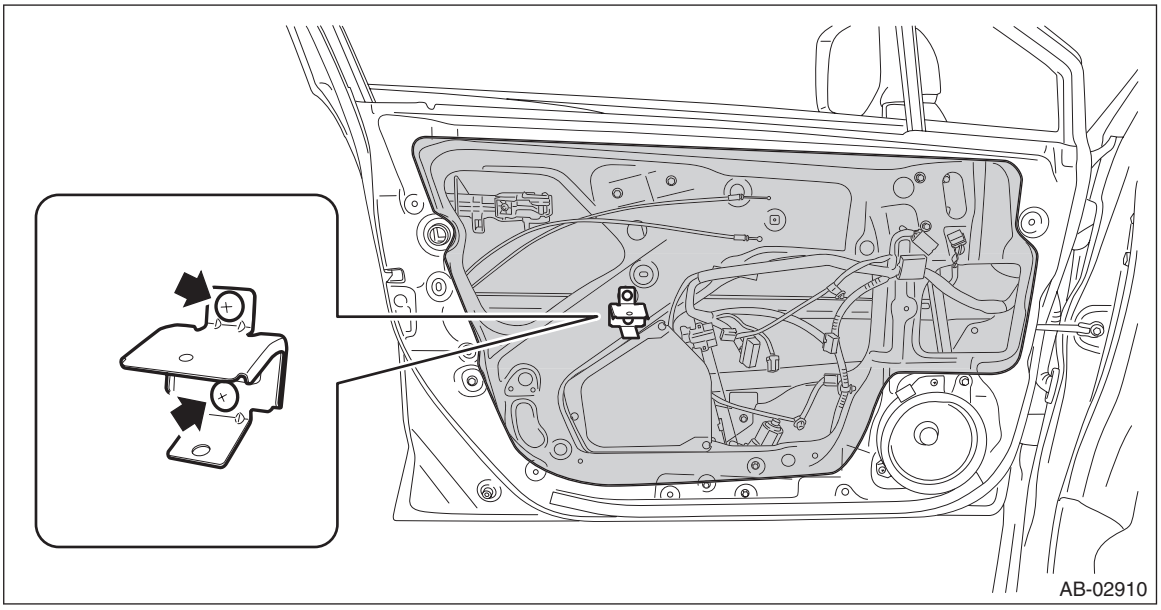

3) Remove the front door inner pad.

CAUTION:
If the clip is damaged, replace it with a new part because the panel assembly - front door may be deformed.
4) Attach the battery ground cable and the switch - power window, and turn the ignition to ON. <Ref. to NT-5, BATTERY, NOTE, Note.>

5) Remove the glass assembly - front door.
(1) Operate the switch - power window to move the glass assembly - front door to the position where the mounting bolts can be seen.
(2) Remove the running channel - front door.
(3) Remove the mounting bolts from the glass assembly - front door.

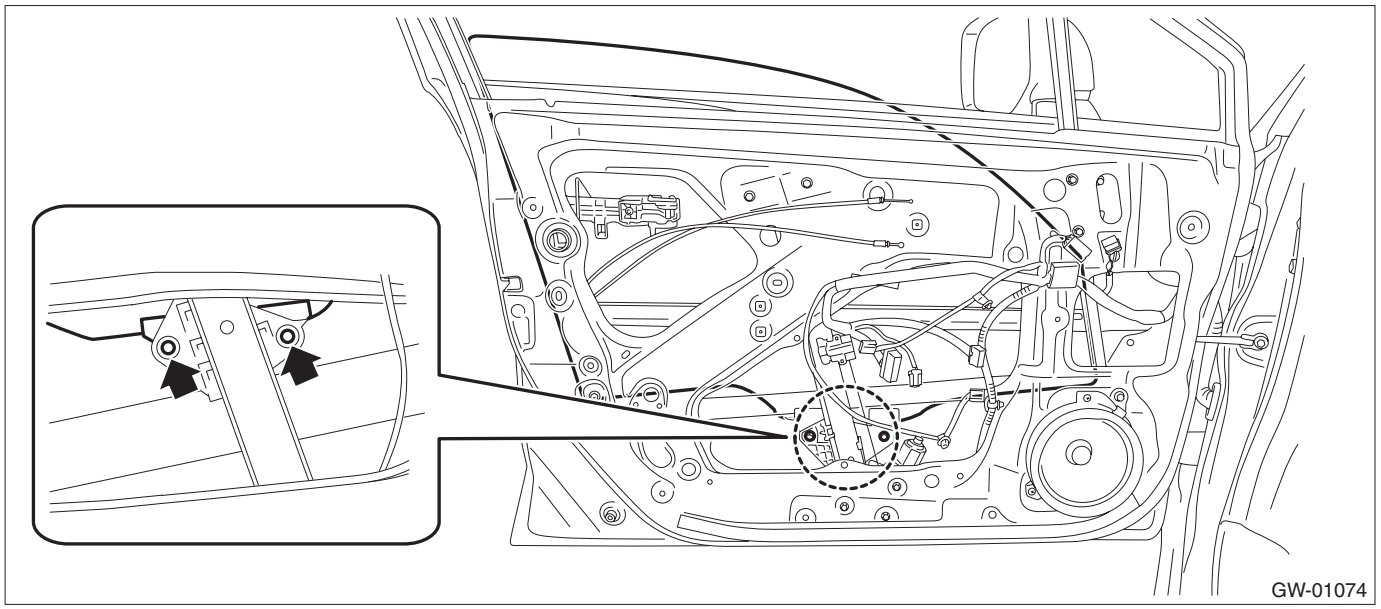

(4) While tilting the glass, remove the glass assembly - front door.

CAUTION:
Avoid impact and damage to the glass assembly - front door.

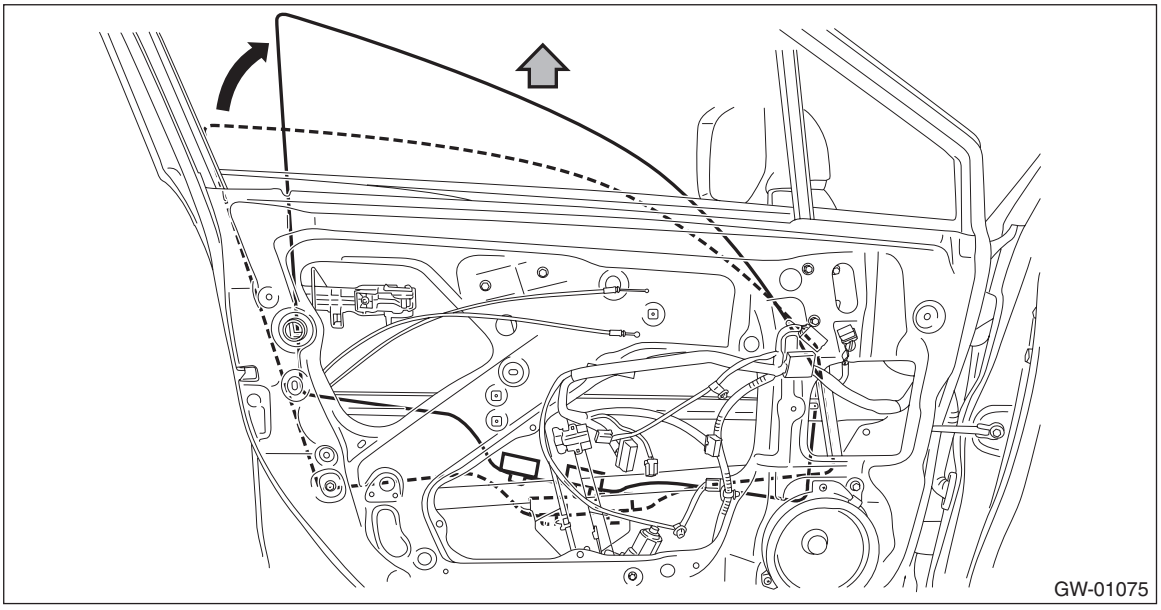

6) Remove the glass - front door partition.
(1) Remove the bolts and screws, and then remove the sash COMPL - partition.

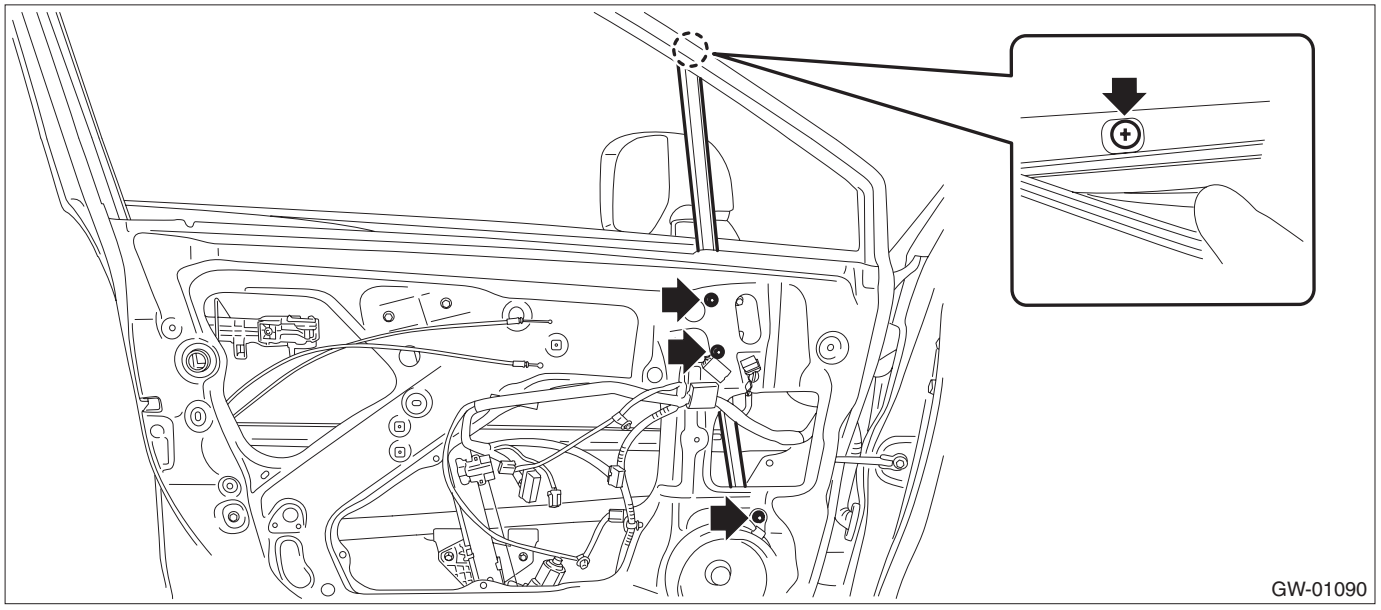

(2) Remove the glass - front door partition.

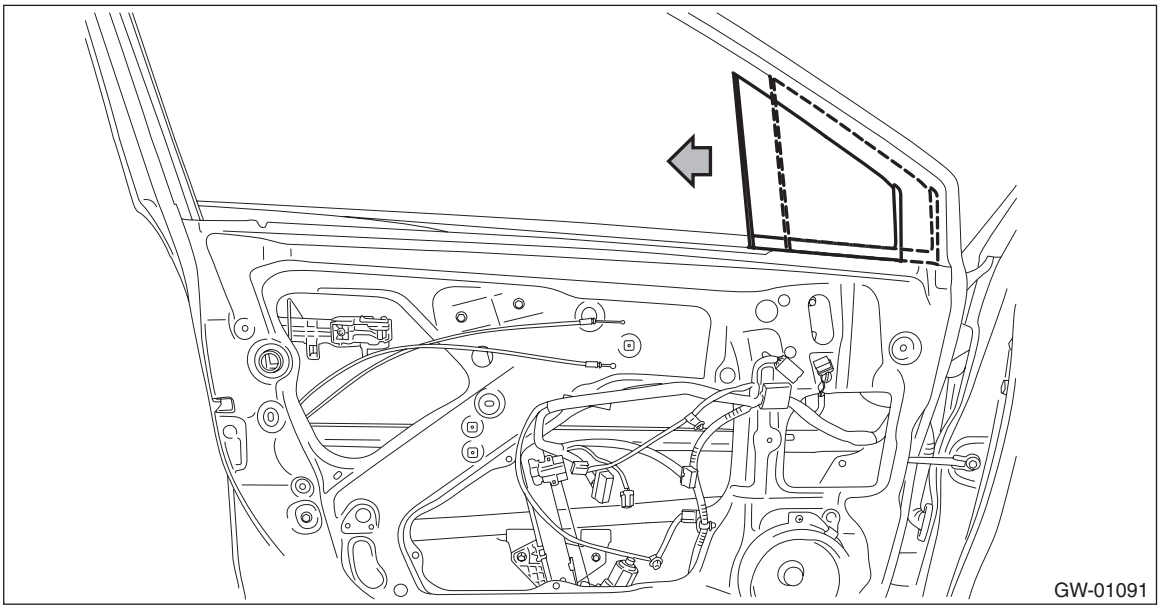

B: INSTALLATION

CAUTION:
• Check that the running channel - front door is securely fixed to the panel assembly - front door and to the sash COMPL - partition.
• Before installing the glass assembly - front door, check the lip of the running channel - front door for being everted or tuck-in.
Install each part in the reverse order of removal.

Tightening torque:
Refer to "COMPONENT" of "General Description". <Ref. to GW-2, FRONT DOOR GLASS, COMPONENT, General Description.>

6. Front Regulator and Motor Assembly

A: REMOVAL

1) Remove the glass assembly - front door. <Ref. to GW-18, REMOVAL, Front Door Glass.>
2) Remove the regulator and motor assembly - front.
   (1) Disconnect the motor - front connector.
   (2) Remove the bolts, and then remove the regulator and motor assembly - front.

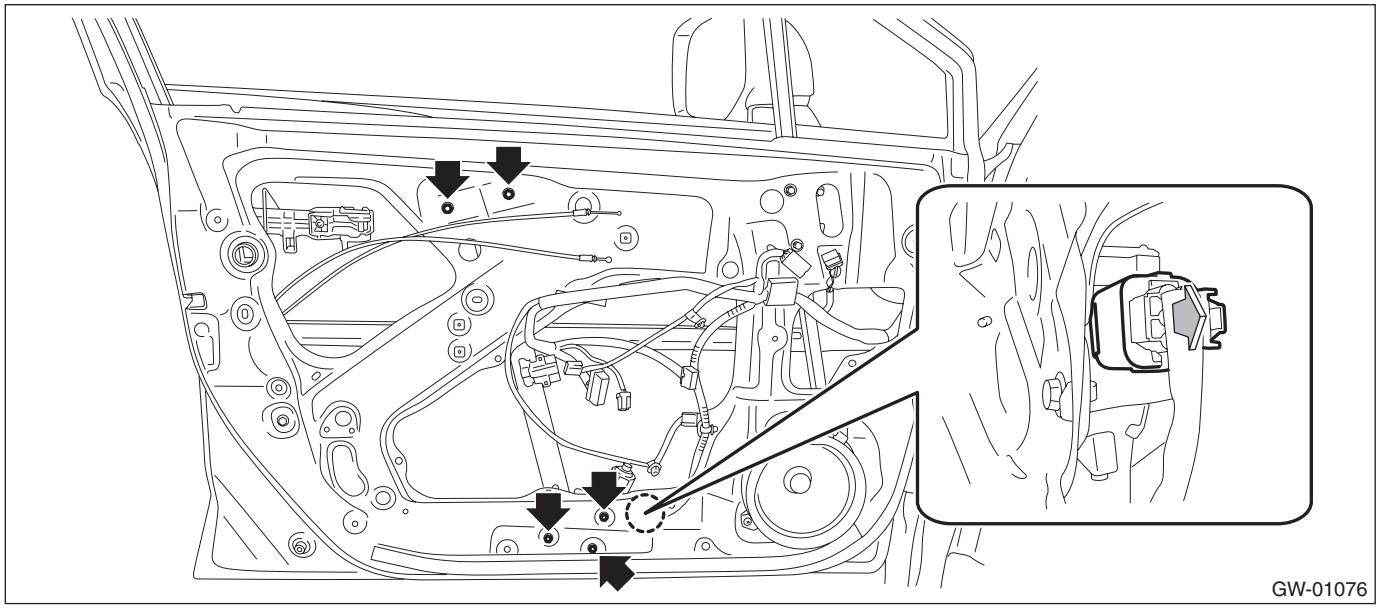

B: INSTALLATION

Install each part in the reverse order of removal.

Tightening torque:
Refer to "COMPONENT" of "General Description". <Ref. to GW-2, FRONT DOOR GLASS, COMPONENT, General Description.>

C: INSPECTION

1) Disconnect the connector of the motor - front.
2) Check the motor operation when battery voltage is applied between terminals of the motor - front connector.

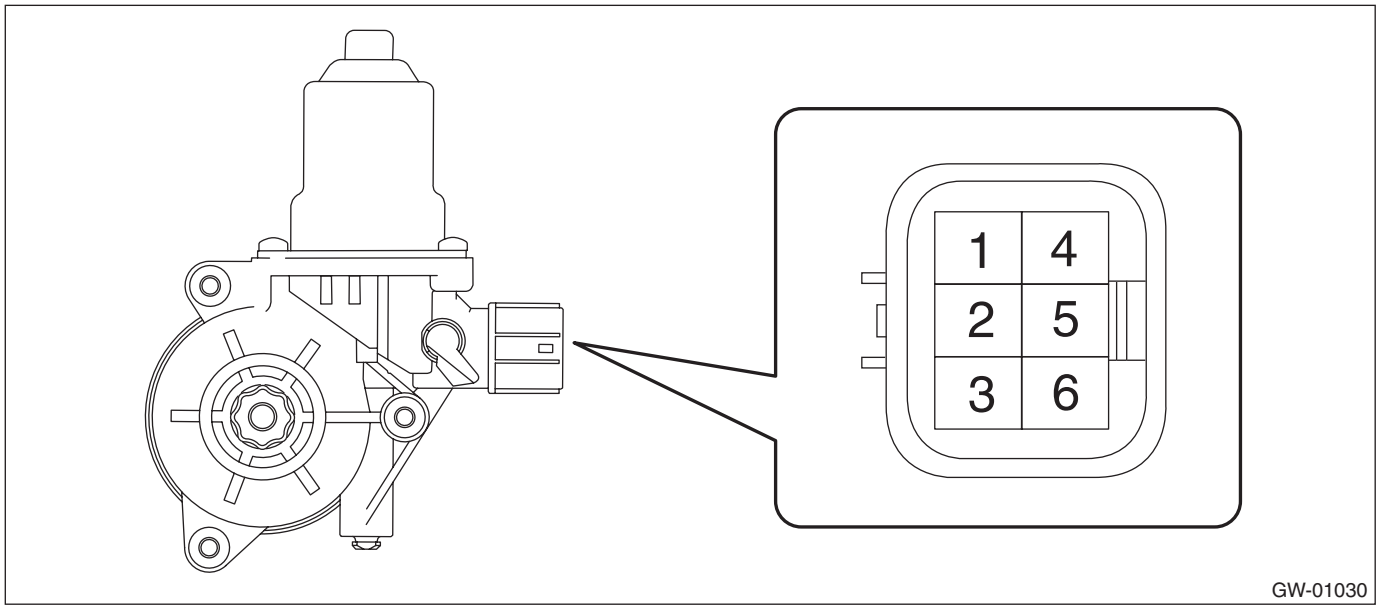

- LH side

Terminal No.	Inspection conditions	Standard
4 (+) — 1 (–)	Apply battery voltage between terminals.	Increase
1 (+) — 4 (–)	Apply battery voltage between terminals.	Decrease

- RH side

Terminal No.	Inspection conditions	Standard
3 (+) — 6 (–)	Apply battery voltage between terminals.	Increase
6 (+) — 3 (–)	Apply battery voltage between terminals.	Decrease

3) If it does not operate properly as a result of inspection, replace the regulator and motor assembly - front.

7. Remote Control Mirror System

A: WIRING DIAGRAM

Refer to “Remote Control Mirror System” in the wiring diagram.
- Gasoline engine model: <Ref. to WI(w/o HEV)-15, Power Supply Circuit.>
- HEV model: <Ref. to WI(HEV)-20, Power Supply Circuit.>

B: INSPECTION

1. SYMPTOM CHART

Symptoms	Inspection order
All function does not operate.	1. Check the fuse. 2. Check the remote control mirror switch. 3. Check the wiring harness.
One side of the mirror motor does not operate.	1. Check the remote control mirror switch. 2. Check the mirror motor. 3. Check the wiring harness.
Mirror heater does not operate.	1. Check the rear defogger switch. 2. Check the rear defogger relay. 3. Check the mirror heater. 4. Check the wiring harness. 5. Check body integrated unit.

NOTE:
The mirror heater operates with the rear window defogger at the same time. Refer to “INSPECTION” of “Rear Window Defogger System” for details. <Ref. to GW-50, INSPECTION, Rear Window Defogger System.>

C: NOTE

For procedure of each component in the remote control mirror system, refer to the respective section.
- Outer mirror assembly: <Ref. to GW-24, Outer Mirror Assembly.>
- Remote control mirror switch: <Ref. to GW-29, Remote Control Mirror Switch.>

8. Outer Mirror Assembly

A: REMOVAL

Refer to “DISASSEMBLY” for removal procedures of scalp cap and mirror face. <Ref. to GW-25, DISASSEMBLY, Outer Mirror Assembly.>

1) Remove the trim panel - front door. <Ref. to EI-67, FRONT DOOR, REMOVAL, Door Trim.>
2) Remove the outer mirror assembly.
   (1) Remove the connector clip that is installed on the panel assembly - front door, and disconnect the connector.
   (2) Turn over the sealing cover - front door.
   (3) Remove the bolts to remove outer mirror assembly.

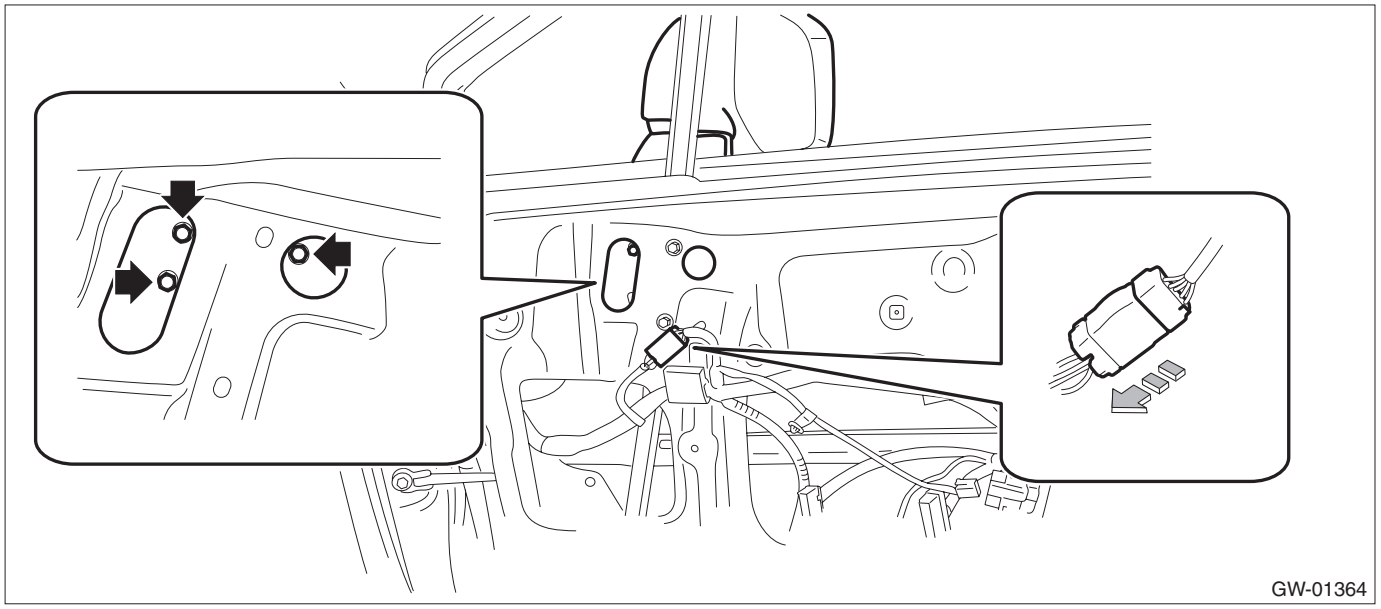

B: INSTALLATION

Install each part in the reverse order of removal.

Tightening torque:
Outer mirror assembly: 7.5 N·m (0.76 kgf-m, 5.5 ft-lb)

C: DISASSEMBLY

CAUTION:
- **When removing the mirror - repair, be careful not to damage the back surface of mirror - repair with a flat tip screwdriver.**
- **When installing the mirror - repair, insert the connector and clip securely.**

1) Operate the remote control mirror switch to face the mirror - repair upward.
2) Disconnect the ground cable from battery and wait for at least 60 seconds before starting work. <Ref. to NT-5, BATTERY, NOTE, Note.>

NOTE:
For the 12 volt engine restart battery of HEV model, disconnect the ground terminal from 12V engine restart battery sensor.

3) Remove the mirror - repair.
   (1) Using a flat tip screwdriver, release the clip, and slide the mirror - repair downward to remove.

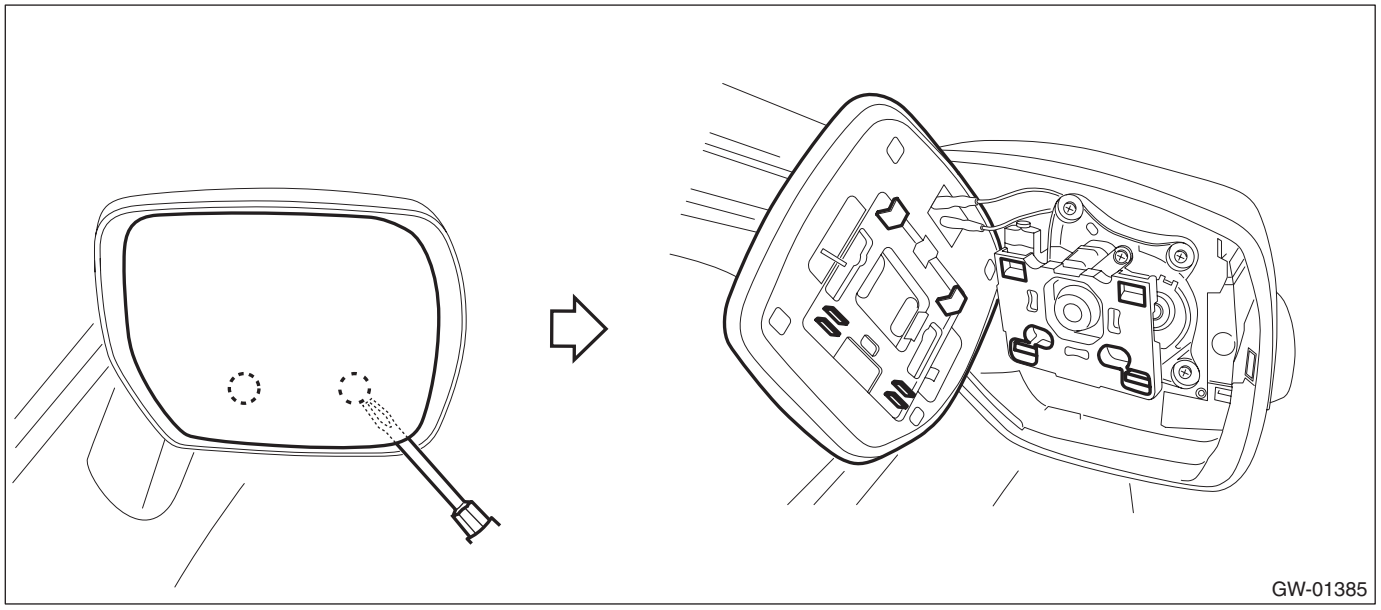
GW-01385

   (2) Disconnect the mirror heater connector. (Model with mirror heater)

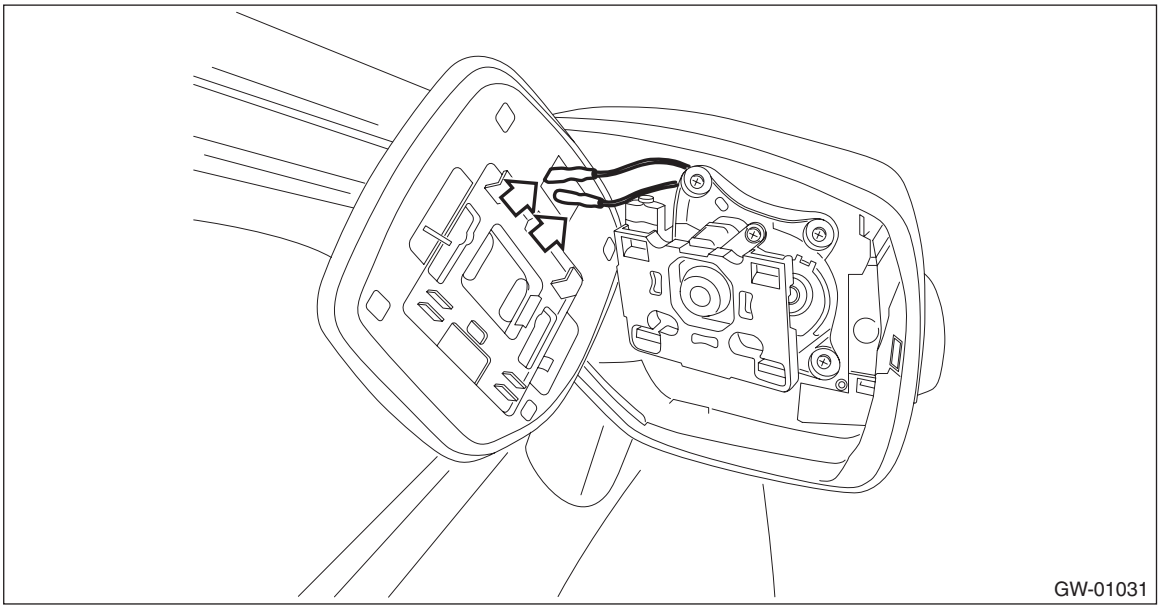
GW-01031

4) Release the claws, and then remove the cover - cap outer mirror lower.

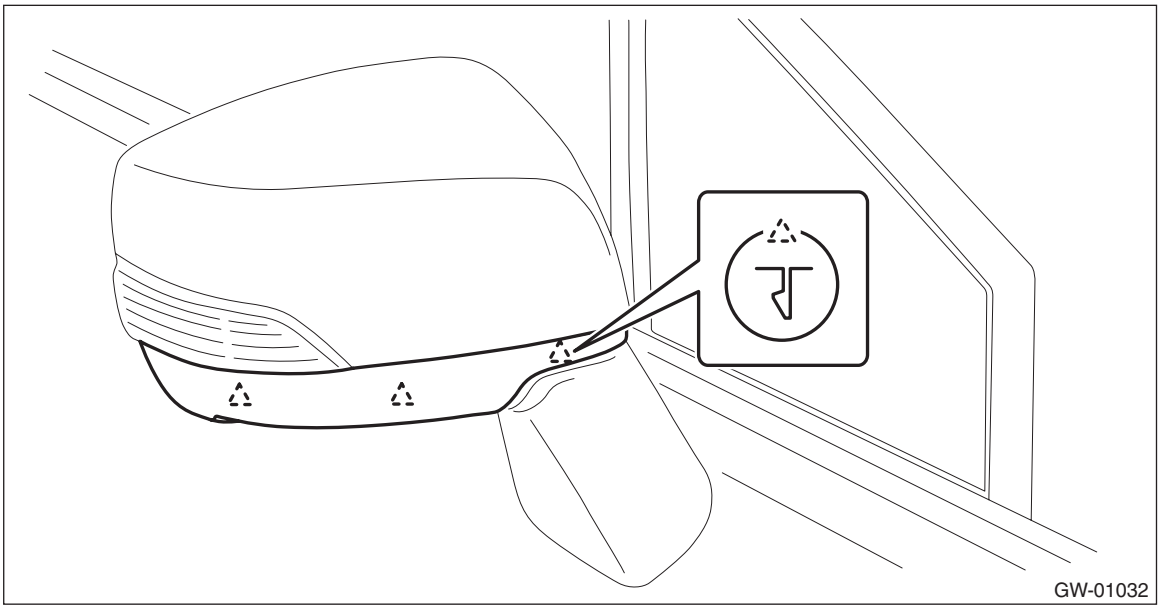

5) Release the claws, and then remove the cover - cap outer mirror.

CAUTION:
Be careful not to apply excessive force when removing the cover - cap outer mirror, as the lower hooks may become damaged.

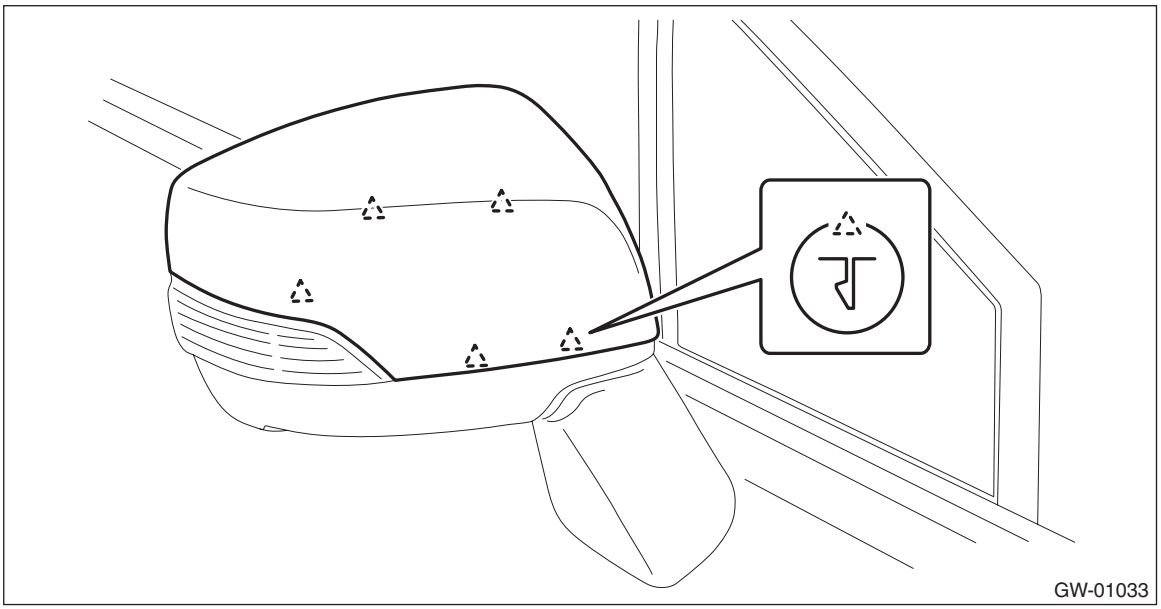

D: ASSEMBLY

1) Engage the claws into the hole and install the cover - cap outer mirror.

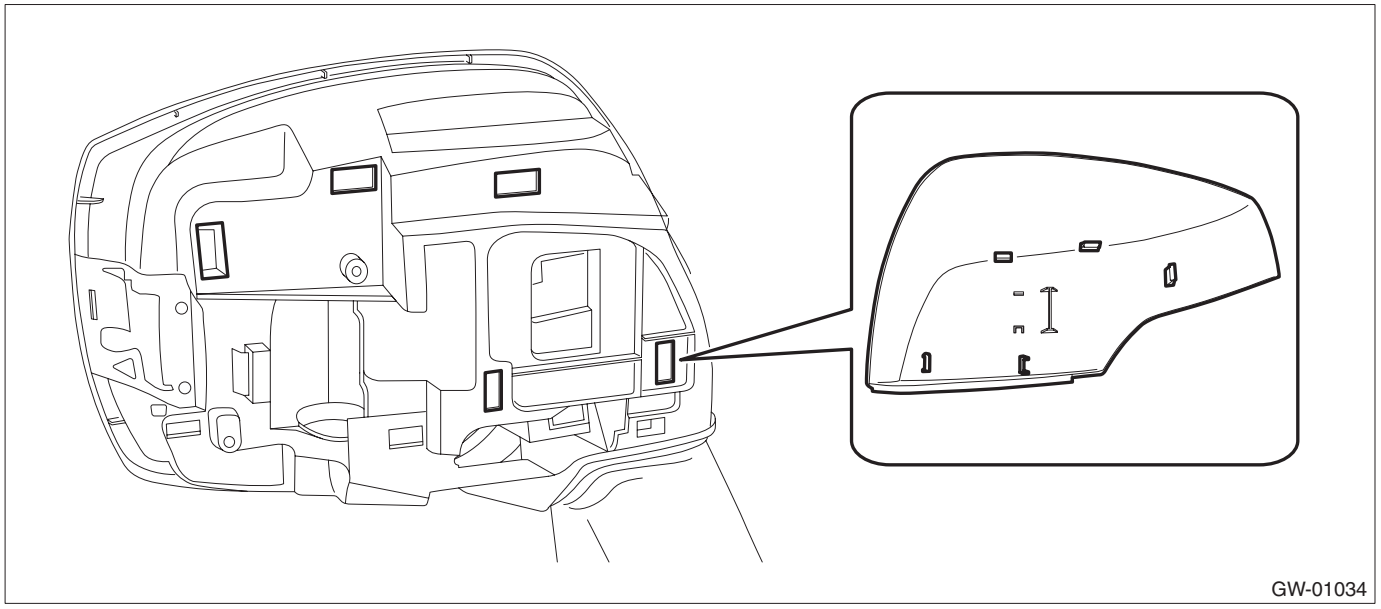

2) Engage the claws into the hole and install the cover - cap outer mirror lower.

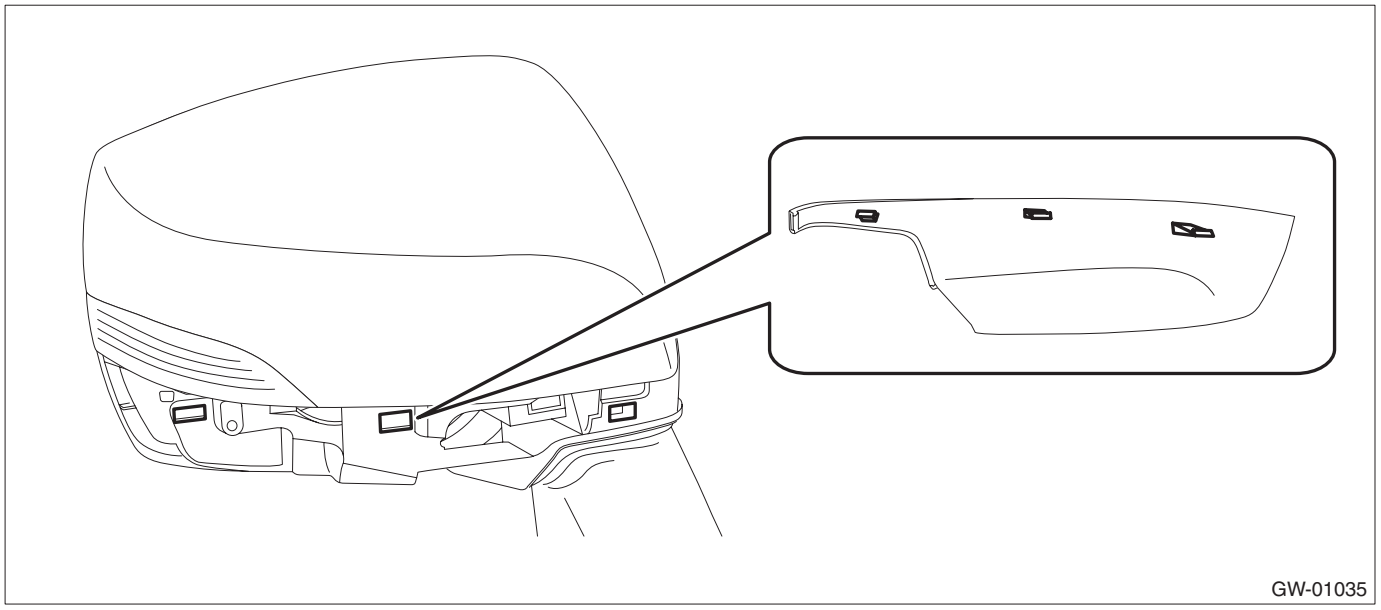

3) Check that all the claws are securely engaged.
4) Install the mirror - repair in the reverse order of removal.

CAUTION:
Be sure to insert the connector and clips securely.

E: INSPECTION

1) Disconnect the outer mirror connector.
2) Apply battery voltage between the outer mirror connector terminals and check the mirror operation.

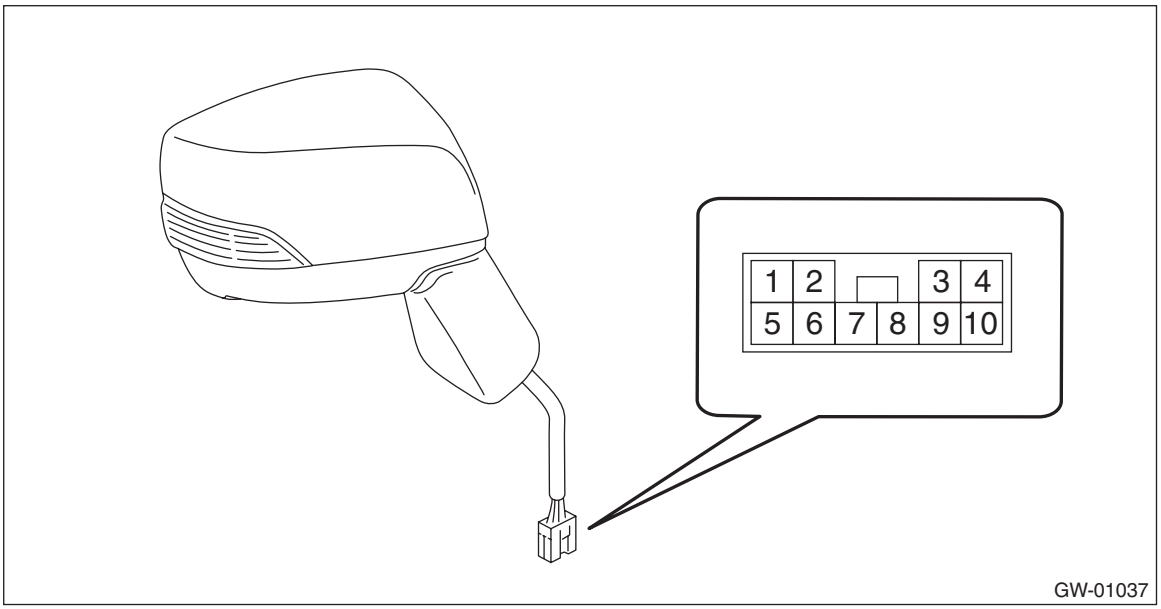

Terminal No.	Inspection conditions	Switch position
—	—	OFF
3 (+) — 8 (–)	Apply battery voltage between terminals.	UP
8 (+) — 3 (–)	Apply battery voltage between terminals.	DOWN
7 (+) — 3 (–)	Apply battery voltage between terminals.	LEFT
3 (+) — 7 (–)	Apply battery voltage between terminals.	RIGHT

3) If it does not operate normally, replace the outer mirror assembly.

9. Remote Control Mirror Switch

A: REMOVAL

1) Remove the panel - power window main switch. <Ref. to GW-12, MAIN SWITCH, REMOVAL, Power Window Control Switch.>
2) Release the claws, and then remove the switch - door mirror.

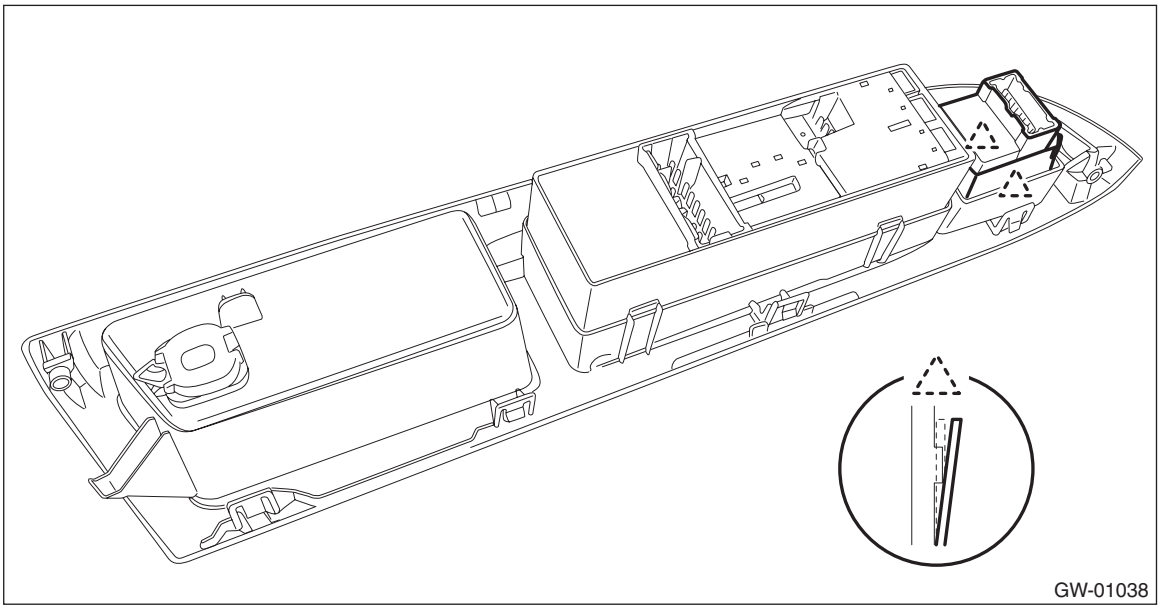

B: INSTALLATION

Install each part in the reverse order of removal.

C: INSPECTION

1) Disconnect the connector of the switch - door mirror.
2) Check the resistance between switch - door mirror terminals.

Preparation tool:
Circuit tester

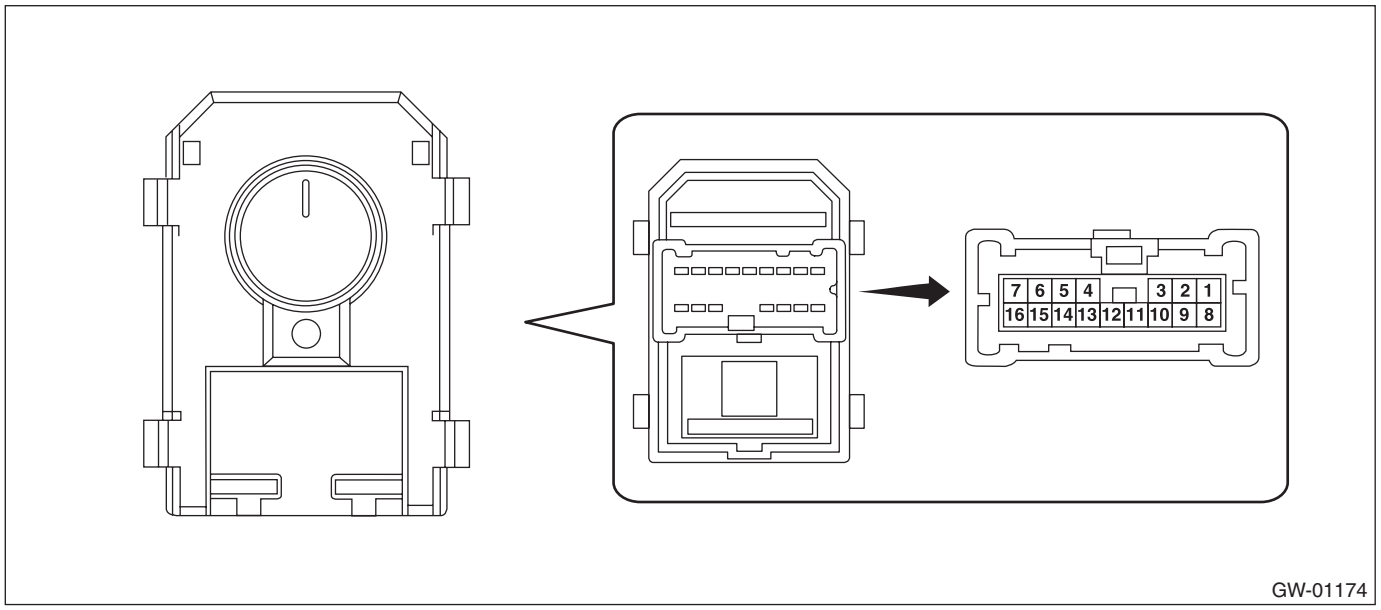

- Changeover switch RH

Terminal No.	Inspection conditions	Standard
—	OFF	1 MΩ or more
1 — 12 9 — 7	UP	Less than 1 Ω
1 — 9 12 — 7	DOWN	Less than 1 Ω
1 — 11 12 — 7	LEFT	Less than 1 Ω
1 — 12 11 — 7	RIGHT	Less than 1 Ω

- Changeover switch LH

Terminal No.	Inspection conditions	Standard
—	OFF	1 MΩ or more
1 — 14 8 — 7	UP	Less than 1 Ω
1 — 8 14 — 7	DOWN	Less than 1 Ω
1 — 10 14 — 7	LEFT	Less than 1 Ω
1 — 14 10 — 7	RIGHT	Less than 1 Ω

3) If the inspection result is not within the standard, replace the switch - door mirror.

10.Rearview Mirror

A: REMOVAL

CAUTION:
Be careful not to damage the mirror surface and the glass - front window.

1) Release the claws, and then remove the cover.

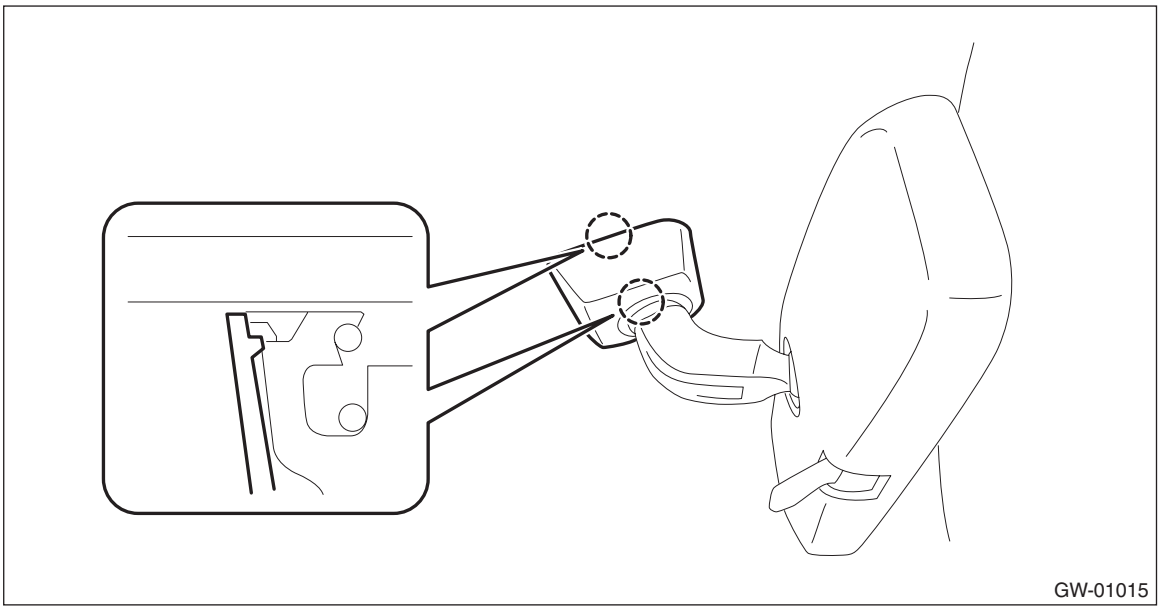

2) Release the lock lever, and slide the mirror assembly - inner rearview to remove.

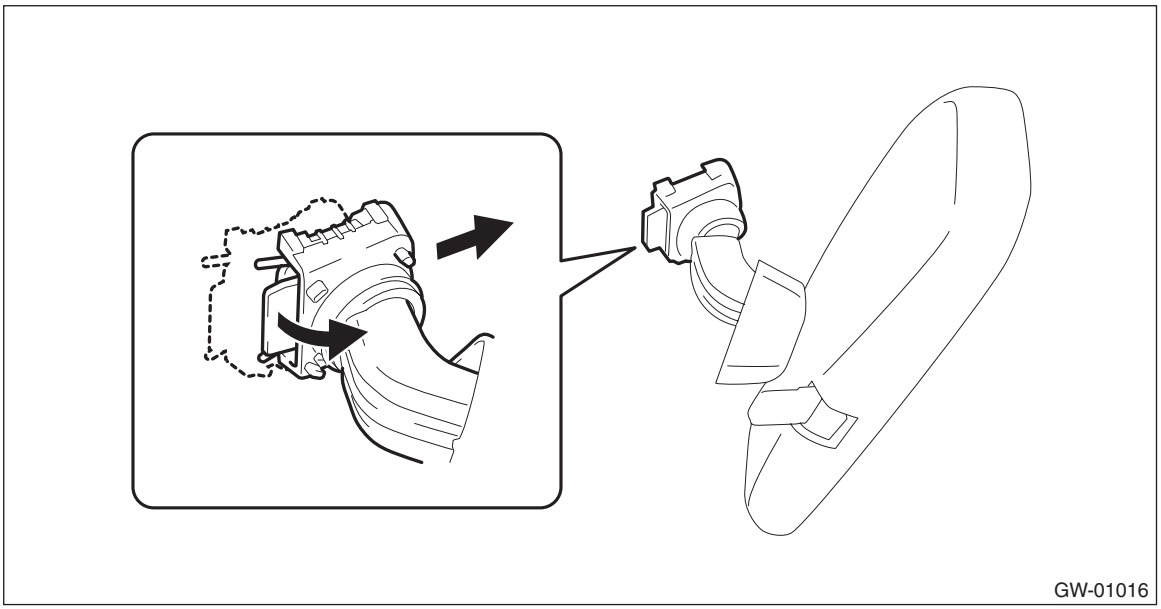

3) When the mirror mount is damaged, use something like piano wire or a spatula to remove.

B: INSTALLATION

Install each part in the reverse order of removal.

C: INSPECTION

Check the mirror and mirror mount for damage.

11.Rear Door Glass

A: REMOVAL

1) Remove the trim panel - rear door. <Ref. to EI-68, REAR DOOR, REMOVAL, Door Trim.>
2) Remove the sealing cover - rear door.

CAUTION:
- **Carefully remove the butyl tape. Excessive force will easily break the sealing cover - rear door.**
- **If the sealing cover - rear door gets broken, replace it with a new part.**

(1) Remove the screw to remove the bracket - door trim rear.
(2) Carefully remove the butyl tape to remove the sealing cover - rear door.

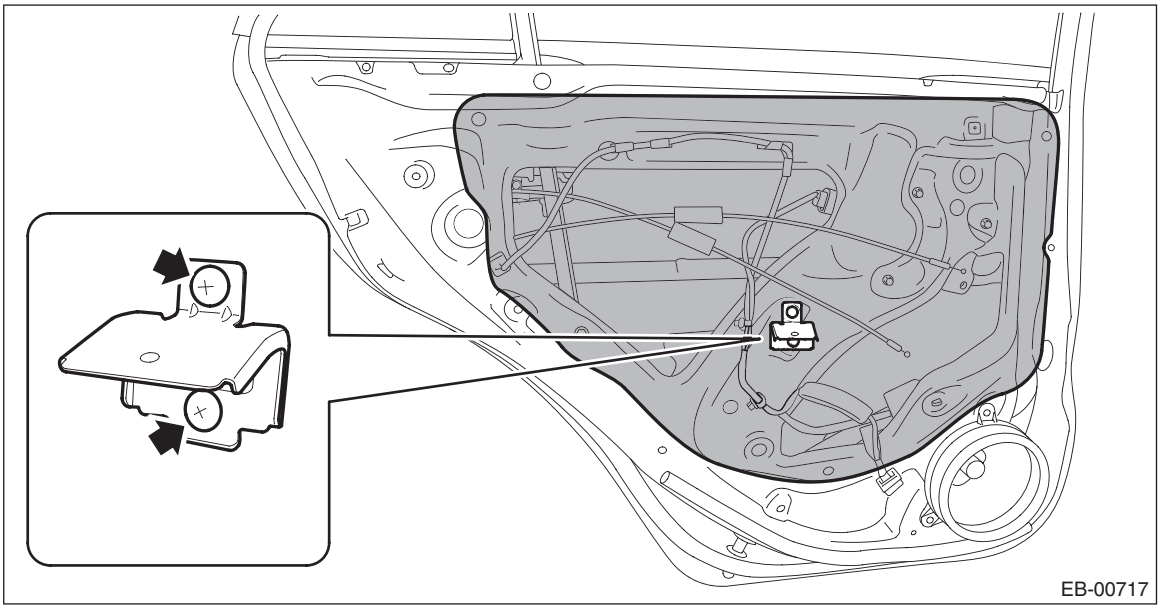
EB-00717

3) Attach the battery ground cable and the switch - power window, and turn the ignition to ON.
4) Remove the glass assembly - rear door.
(1) Operate the switch - power window sub rear to move the glass assembly - rear door to the lowest position.
(2) Remove the running channel - rear door.
(3) Remove the screws and bolts, and then remove the sash COMPL - rear partition.

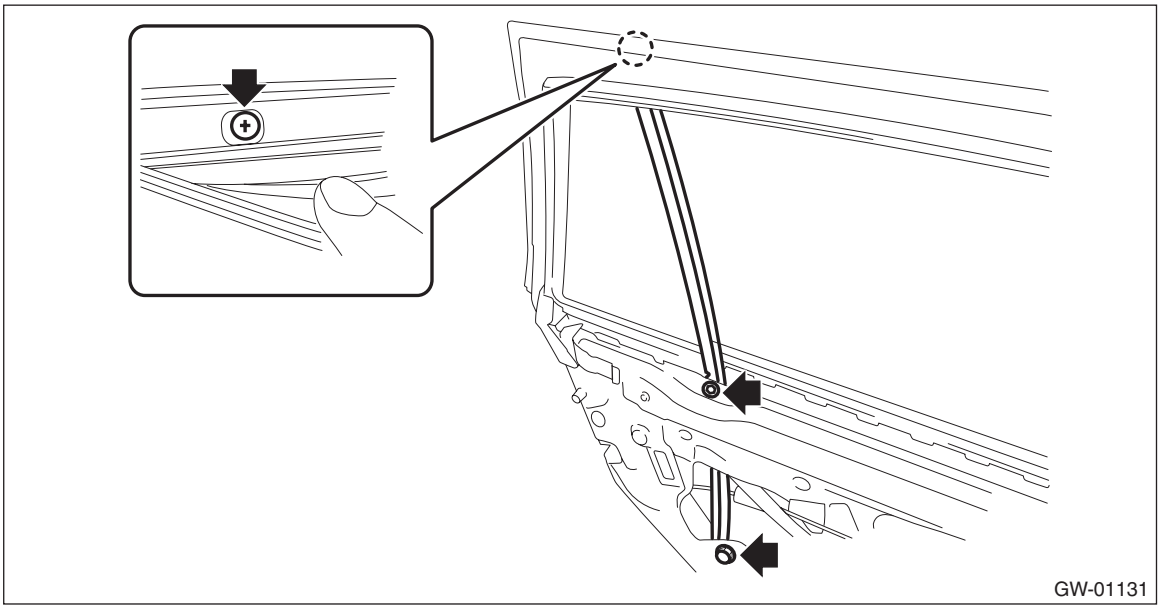
GW-01131

(4) Remove the glass - rear door partition.

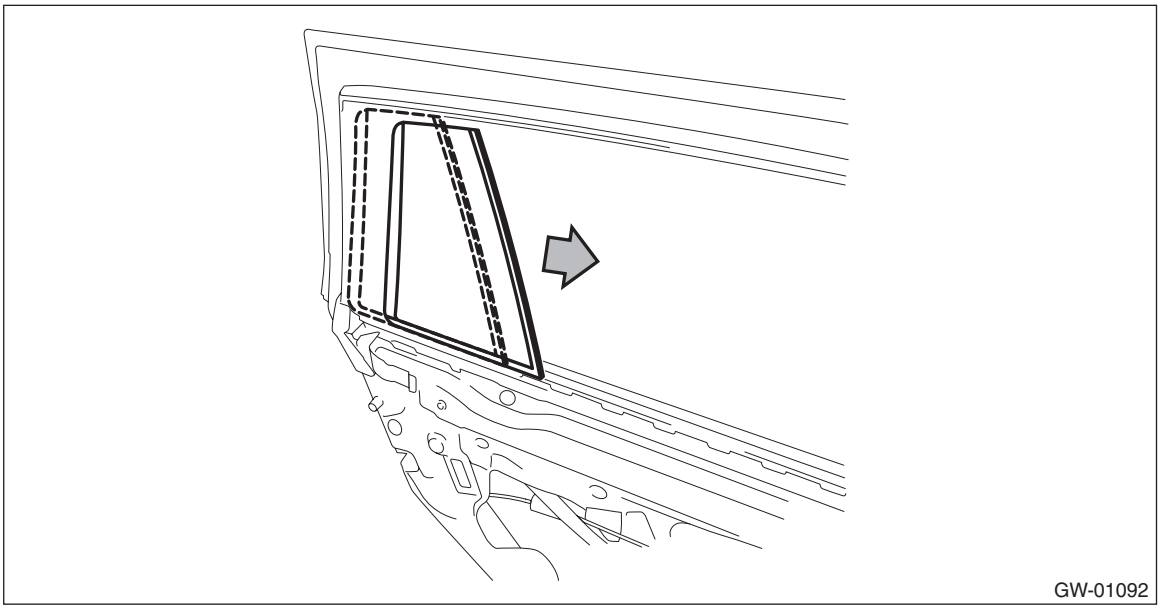

(5) While tilting the glass assembly - rear door, remove the guide from the roller of the regulator and motor assembly - rear, then remove the glass assembly - rear door.

CAUTION:
Avoid impact and damage to the glass assembly - rear door.

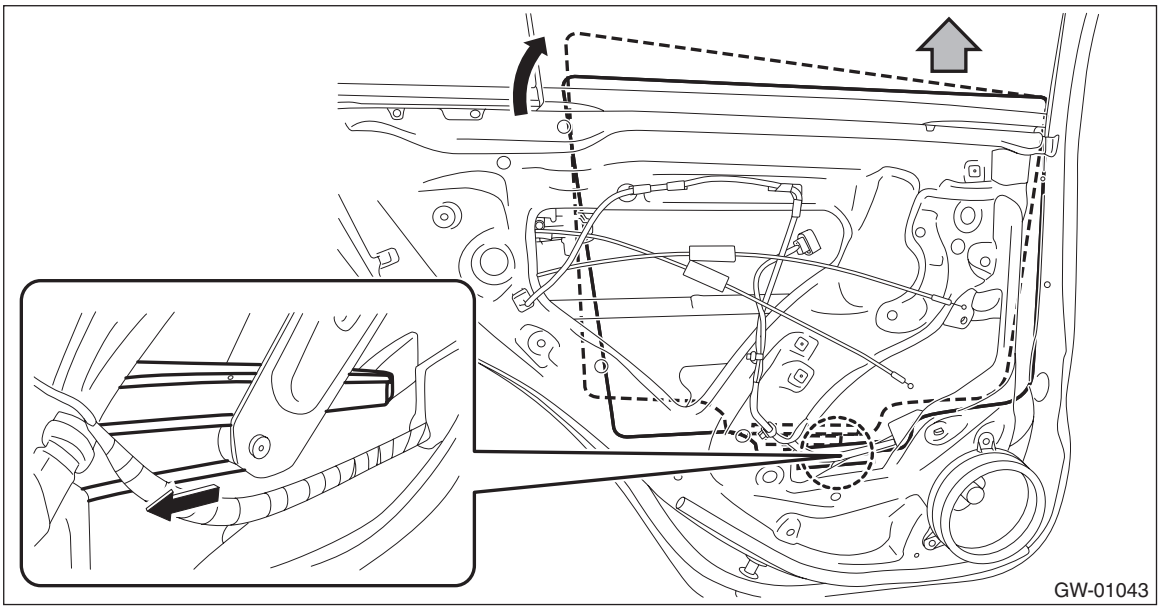

B: INSTALLATION

CAUTION:
• Check that the running channel - rear door is securely fixed to the panel assembly - rear door and to the sash COMPL - rear partition.
• Before installing the glass assembly - rear door, check the lip of the running channel - rear door for being everted or tuck-in.
Install each part in the reverse order of removal.

Tightening torque:
Refer to "COMPONENT" of "General Description". <Ref. to GW-3, REAR DOOR GLASS, COMPONENT, General Description.>

12.Rear Regulator and Motor Assembly

A: REMOVAL

1) Remove the glass assembly - rear door. <Ref. to GW-32, REMOVAL, Rear Door Glass.>
2) Remove the rear regulator and motor assembly.
   (1) Disconnect the motor - rear connector.

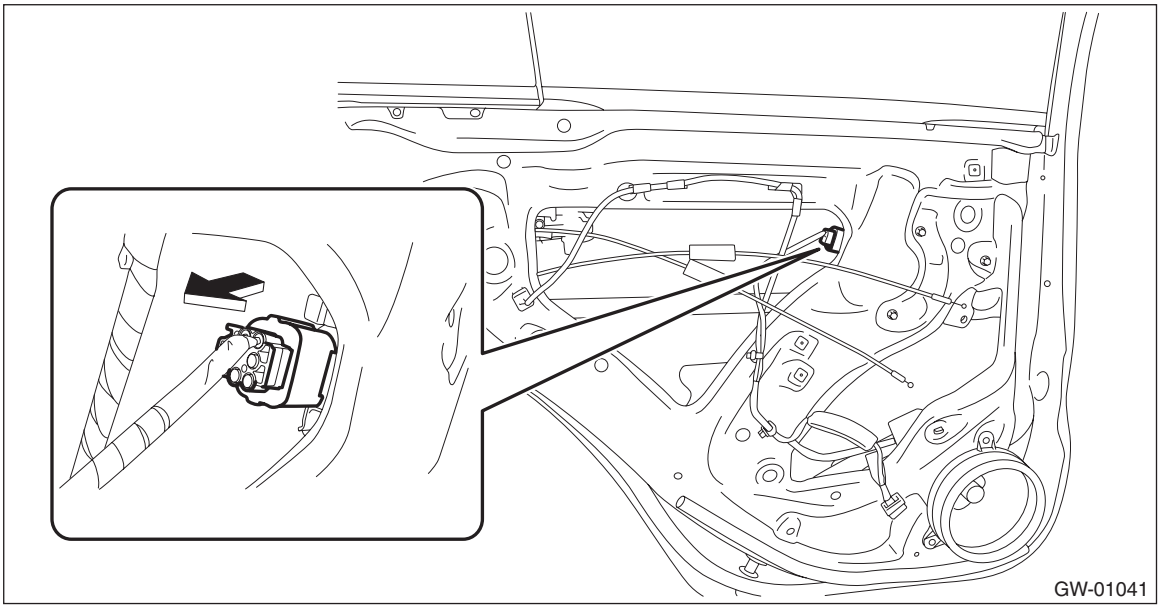

   (2) Remove the bolts, and then remove the rear regulator and motor assembly.

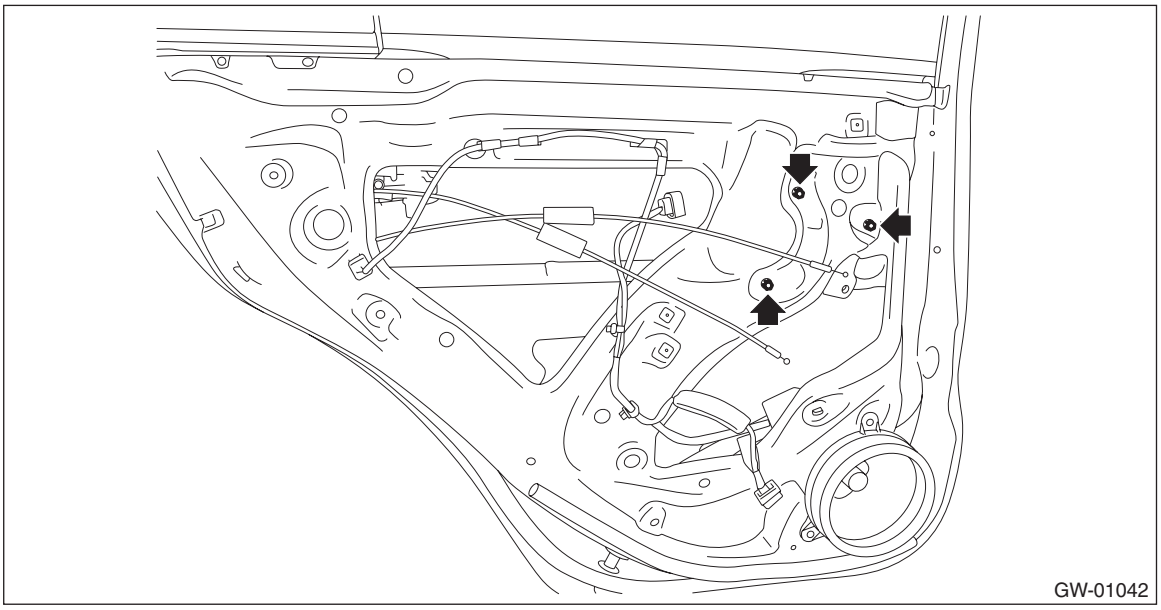

B: INSTALLATION

Install each part in the reverse order of removal.

Tightening torque:
Refer to "COMPONENT" of "General Description". <Ref. to GW-3, REAR DOOR GLASS, COMPONENT, General Description.>

C: INSPECTION

1) Disconnect the connector of the motor - rear.
2) Check the motor operation when battery voltage is applied between terminals of the motor - rear connector.

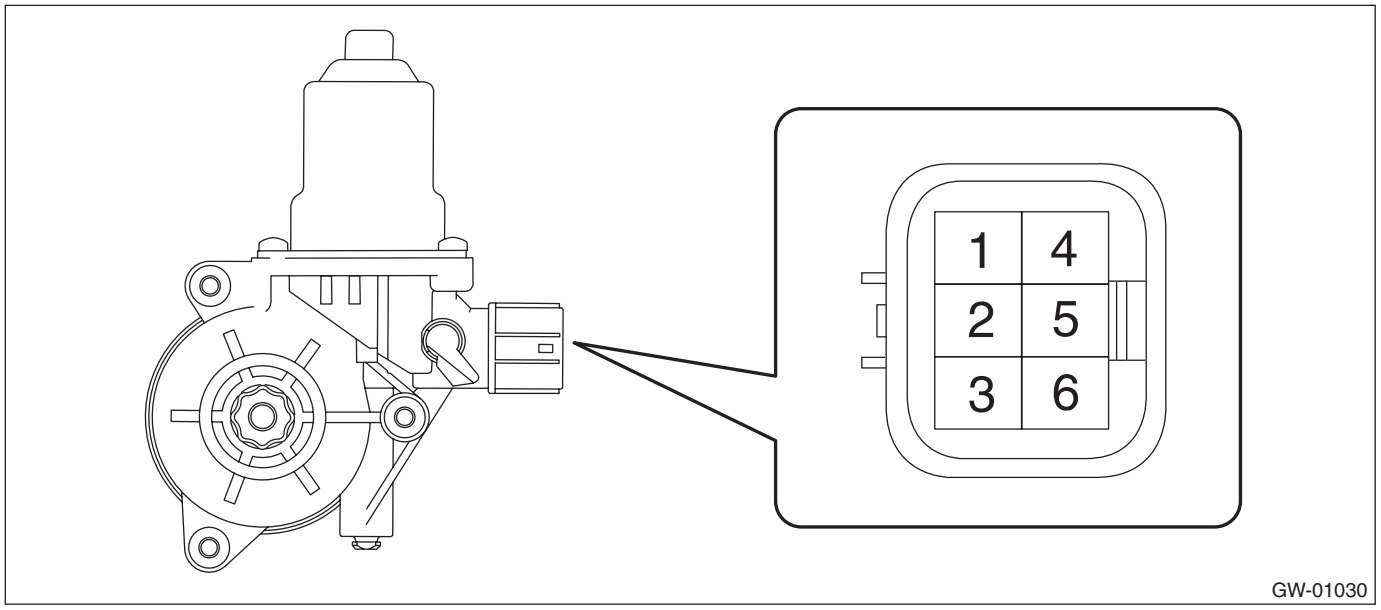

- LH side

Terminal No.	Inspection conditions	Standard
4 (+) — 1(–)	Apply battery voltage between terminals.	Increase
1 (+) — 4(–)	Apply battery voltage between terminals.	Decrease

- RH side

Terminal No.	Inspection conditions	Standard
3 (+) — 6(–)	Apply battery voltage between terminals.	Increase
6 (+) — 3(–)	Apply battery voltage between terminals.	Decrease

3) If it does not operate properly as a result of inspection, replace the regulator and motor assembly - rear.

13.Windshield Glass

A: REMOVAL

1. USING WINDSHIELD GLASS KNIFE

1) Disconnect the ground cable from battery. (Models with wiper deicer) <Ref. to NT-5, BATTERY, NOTE, Note.>

NOTE:
For the 12 volt engine restart battery of HEV model, disconnect the ground terminal from 12V engine restart battery sensor.

2) Remove the trim panel - front pillar UPR. <Ref. to EI-107, REMOVAL, Upper Inner Trim.>
3) Remove the cowl panel assembly. <Ref. to EI-58, REMOVAL, Cowl Panel.>
4) Disconnect the wiper deicer connector. (Models with wiper deicer)
5) Remove the molding - front window from the glass - front window, and attach protective tape on the body side of the circumference of the glass - front window.

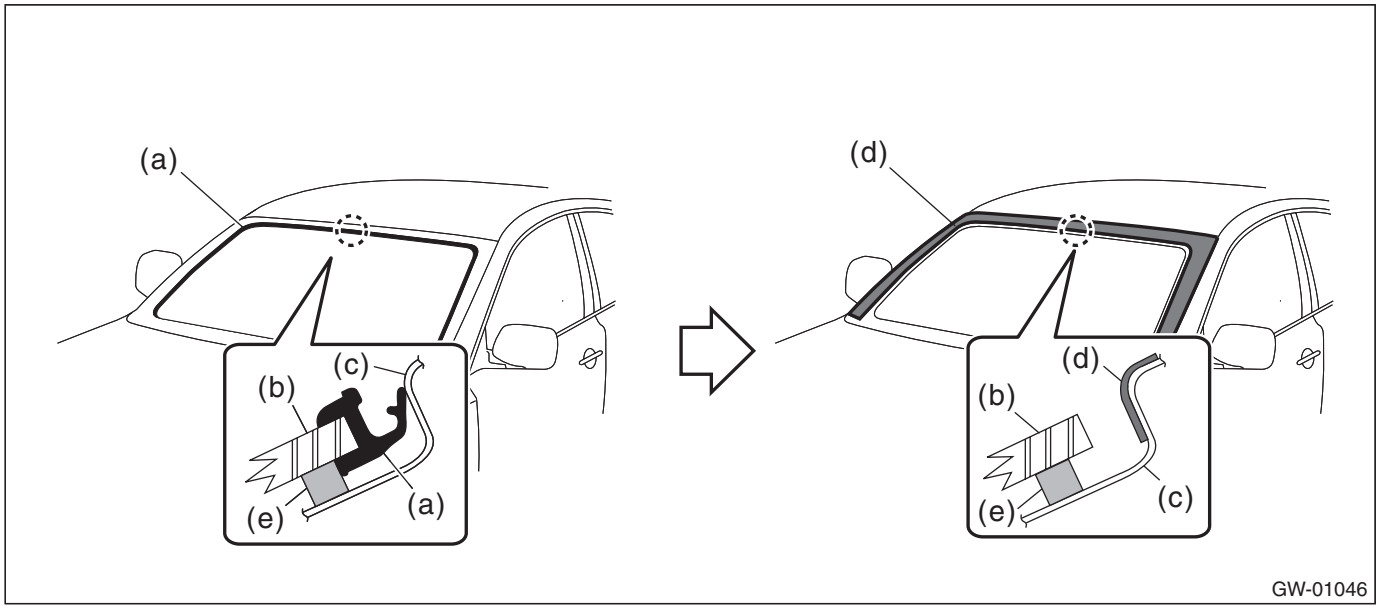

(a) Molding - front window
(b) Glass - front window
(c) Body panel
(d) Protective tape
(e) Adhesive

6) Remove the glass - front window.
(1) Apply sufficient amount of soapy water to the adhesive part and insert the windshield glass knife.
(2) While holding the edges of the knife and the glass - front window at a right angle, move the windshield glass knife parallel to the edge of the glass - front window, and cut the adhesive along the surface and the edge of the glass - front window.

CAUTION:
• Cutting of adhesive part should be started from an area with wider gap between the glass - front window and the body.
• Never twist the windshield glass knife.

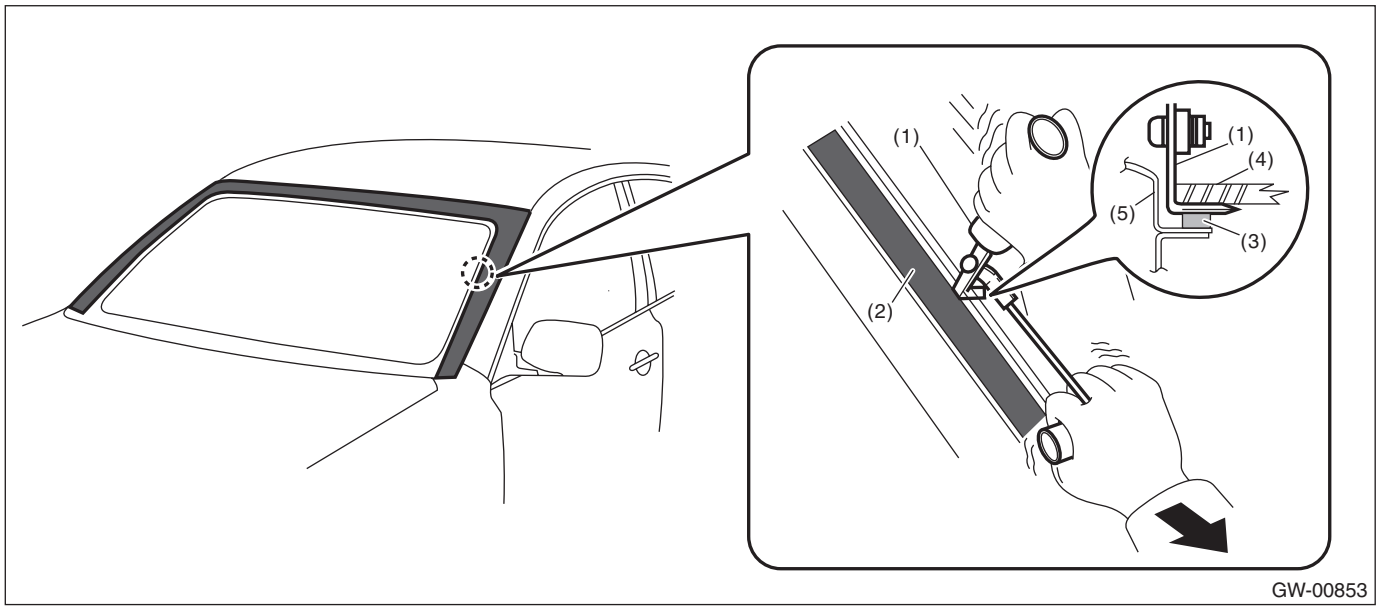

(1) Windshield glass knife
(2) Protective tape
(3) Adhesive
(4) Glass - front window
(5) Body panel

(3) Disconnect the locating pin - front window, and remove the glass - front window.

NOTE:
The locating pin - front window are bonded to the corners of the glass - front window. Use piano wire to disconnect the pins.

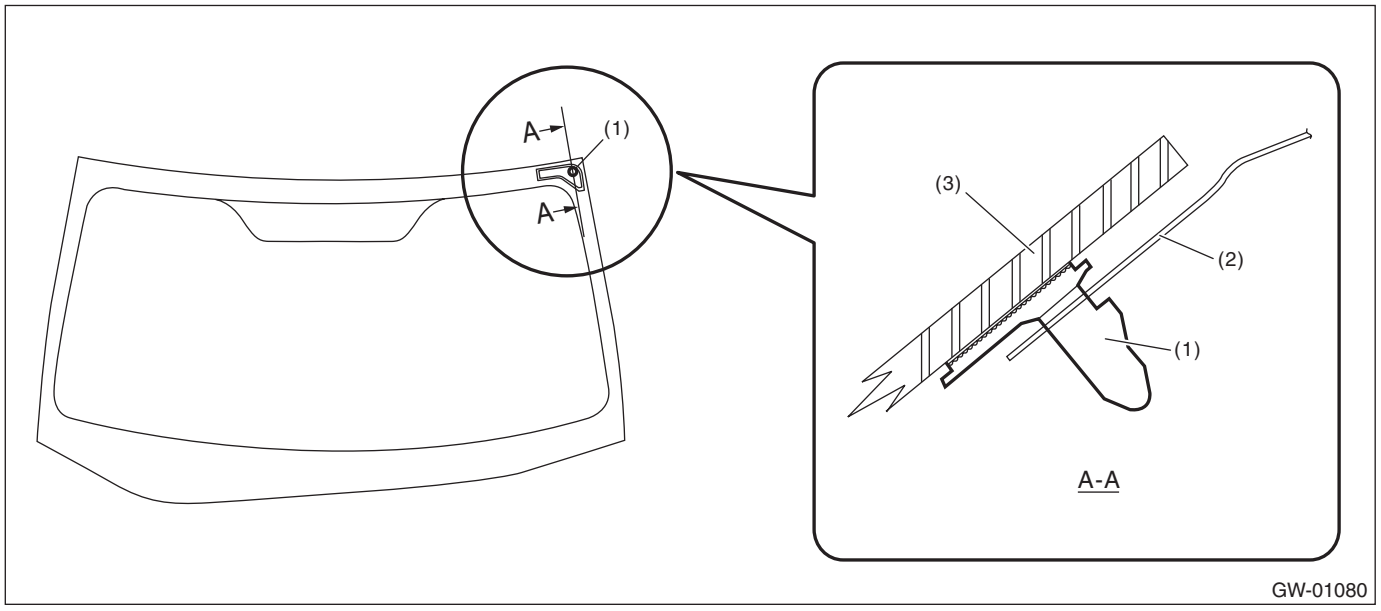

(1) Locating pin - front window
(2) Body panel
(3) Glass - front window

2. USING PIANO WIRE

CAUTION:
- **Do not tightly pull the piano wire against the glass - front window edge.**
- **Apply protective tape, etc, and be careful that the inner and outer components of the vehicle are not damaged.**
- **Do not cross piano wires. Otherwise they may be cut.**

1) Disconnect the ground cable from battery. (Models with wiper deicer) <Ref. to NT-5, BATTERY, NOTE, Note.>

NOTE:
For the 12 volt engine restart battery of HEV model, disconnect the ground terminal from 12V engine restart battery sensor.

2) Remove the trim panel - front pillar UPR. <Ref. to EI-107, REMOVAL, Upper Inner Trim.>
3) Remove the cowl panel assembly. <Ref. to EI-58, REMOVAL, Cowl Panel.>
4) Disconnect the wiper deicer connector. (Models with wiper deicer)
5) Remove the molding - front window from the glass - front window, and attach protective tape on the body side of the circumference of the glass - front window.

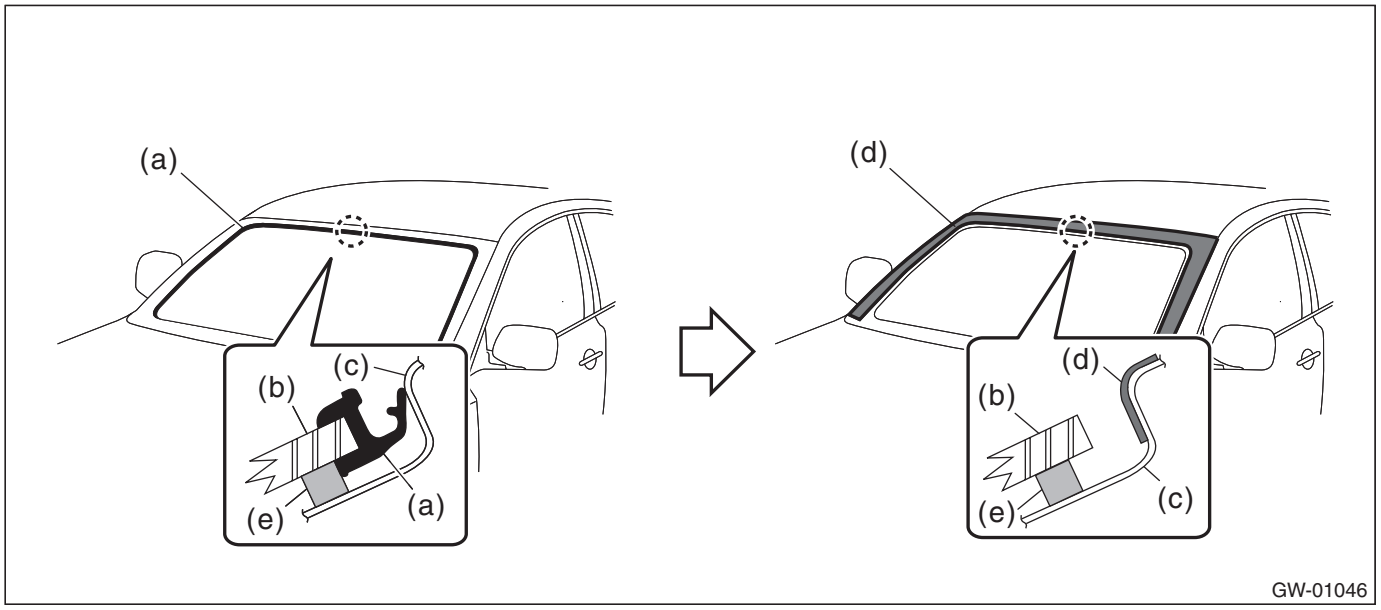

(a) Molding - front window
(b) Glass - front window
(c) Body panel
(d) Protective tape
(e) Adhesive

6) Remove the glass - front window.
(1) Using a drill, make a hole in the adhesive part.
(2) Pass the piano wire through the hole, and pull the wire ends alternately to cut off the adhesive part and the locating pin - front window.

CAUTION:
Attach a piece of wood to both piano wire ends.

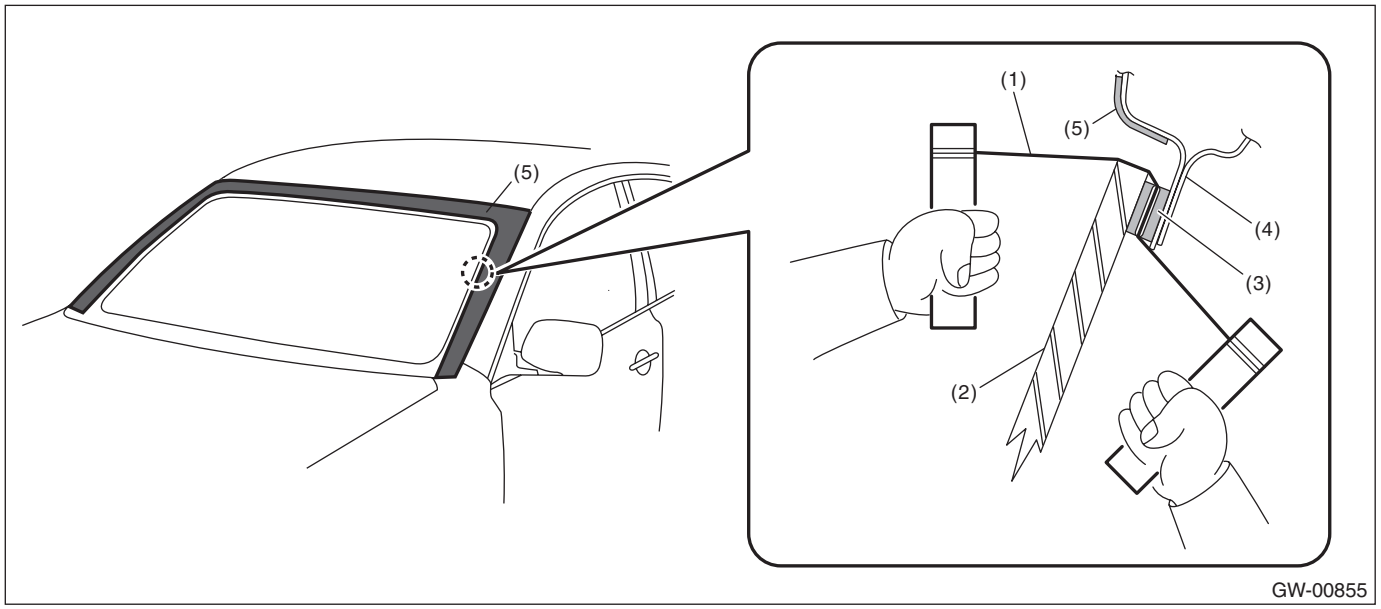

(1) Piano wire
(2) Glass - front window
(3) Adhesive
(4) Body panel
(5) Protective tape

B: INSTALLATION

1) Fabricate the cartridge nozzle tip as shown and set the sealant gun with the adhesive.

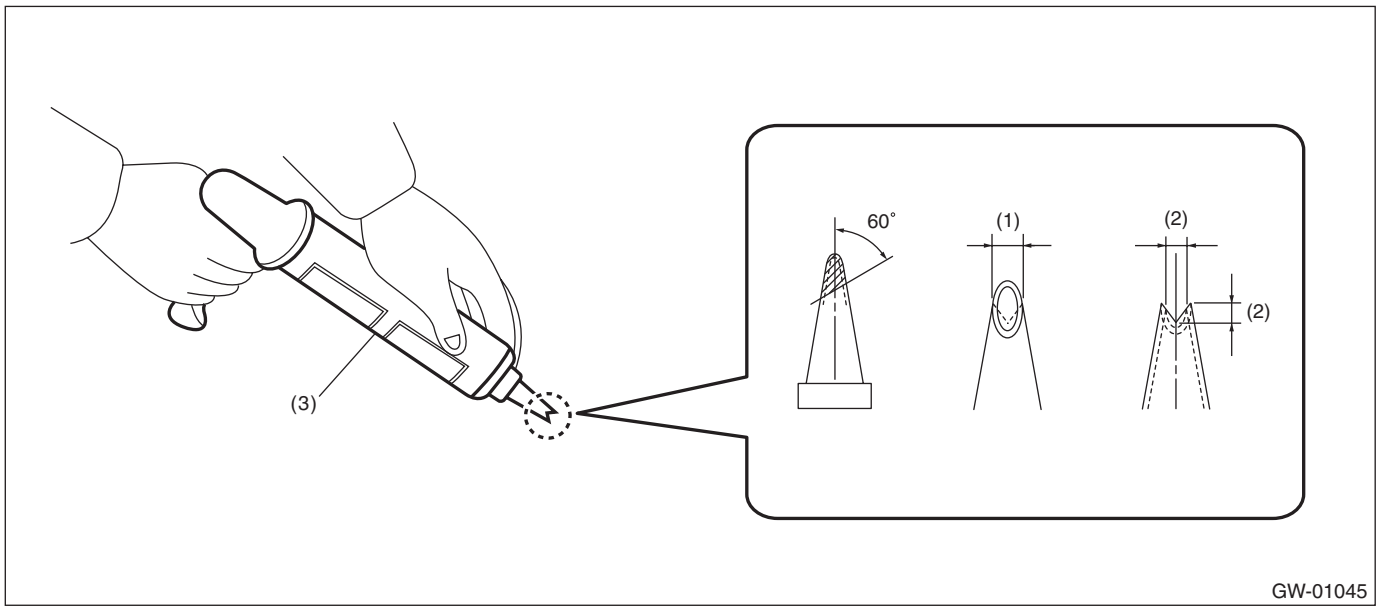

(1) 10 mm (0.39 in)
(2) 8 mm (0.31 in)
(3) Sealant gun

2) Remove the adhesive layer on the body using cutter knife to obtain smooth face of 2 mm (0.08 in) thick.

CAUTION:
- **Be careful not to damage the body and paint surface.**
- **Be sure to keep some of old adhesive.**

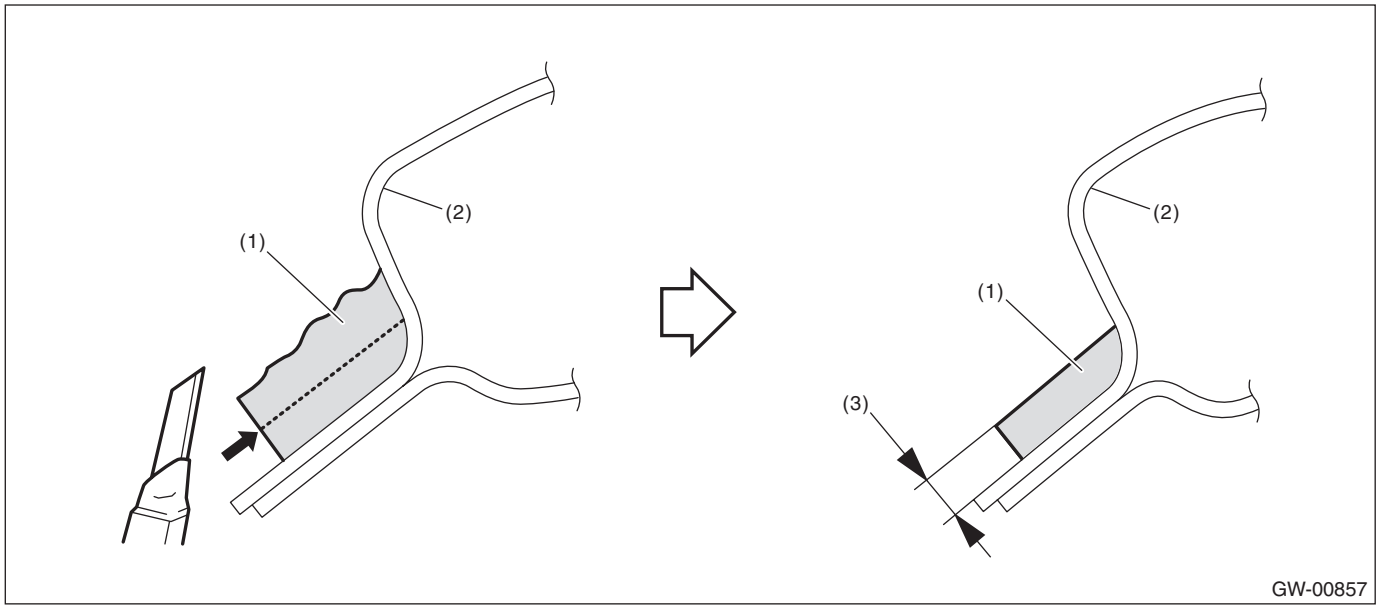

(1) Adhesive (2) Body panel (3) 2 mm (0.08 in)

3) Clean the glass - front window and the body with alcohol or appropriate cleaning solvent to completely eliminate cutting powder, dust and dirt.
4) Attach the dam rubber - front to the glass - front window.

NOTE:
Adhere the dam rubber along with the dam rubber set mark.

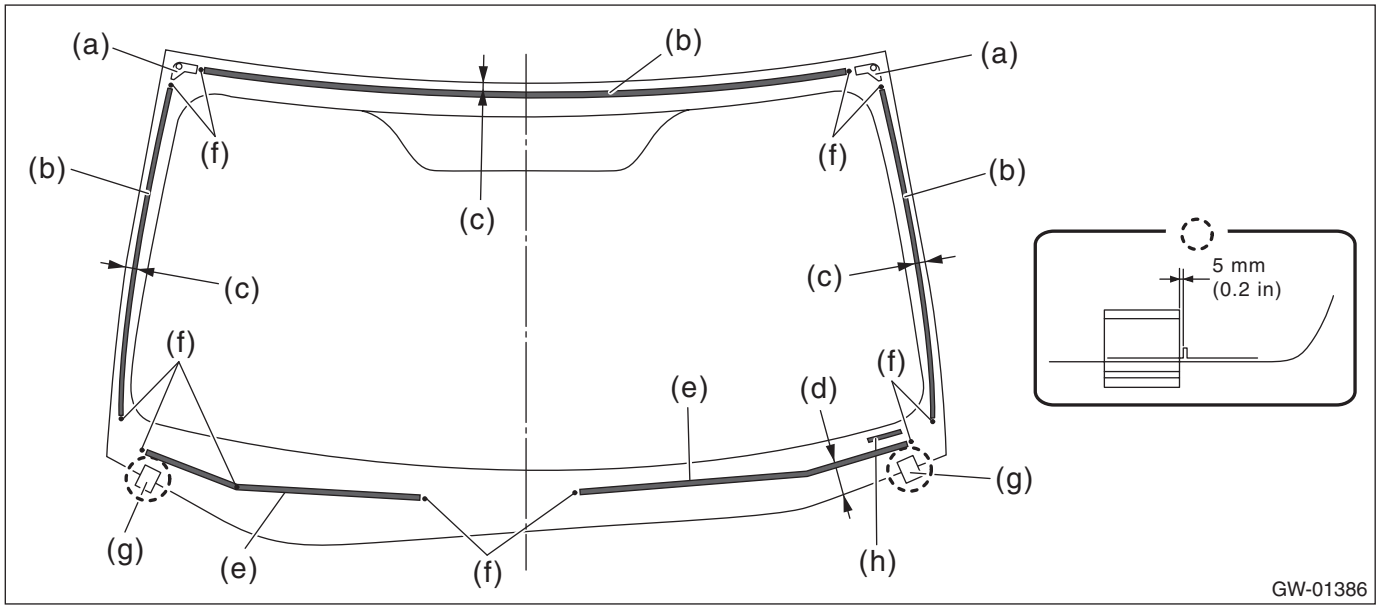

(a) Locating pin - front window (d) 14.1 mm (0.56 in) (g) Seal - lower
(b) Dam rubber - front upper (e) Dam rubber - front lower (h) Seal - lower VIN
(c) 16 mm (0.63 in) (f) Dam rubber set mark

5) Attach the molding - front window to the glass - front window.

CAUTION:
Be careful to attach the molding - front window so that the molding has no loose or undulating part.

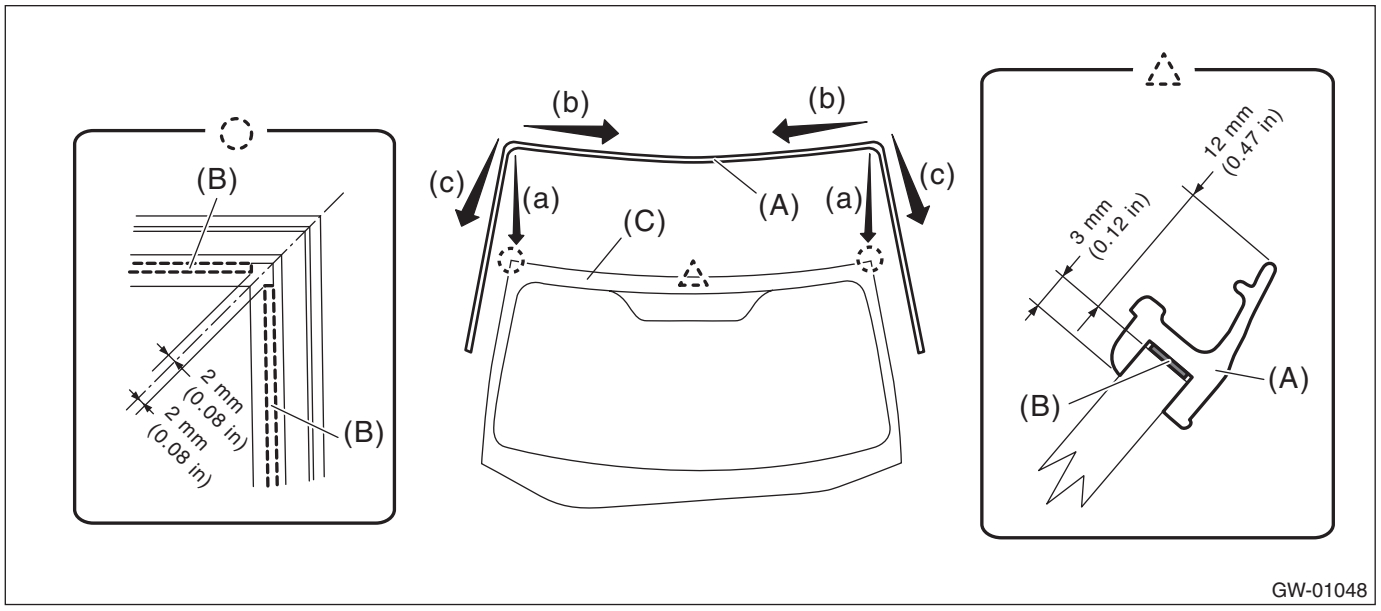

(1) Align the molding - front window (A) to the upper ends (a) of the glass - front window (C).
(2) Install the molding - front window from both corners of the upper edge toward the center (b).
(3) Install the molding - front window from both corners of the upper edge toward the lower side (c).
(4) Firmly apply the double sided tape (B) of the molding - front window evenly to the surface of the glass - front window.

6) Attach the seal - upper to the molding - front window.

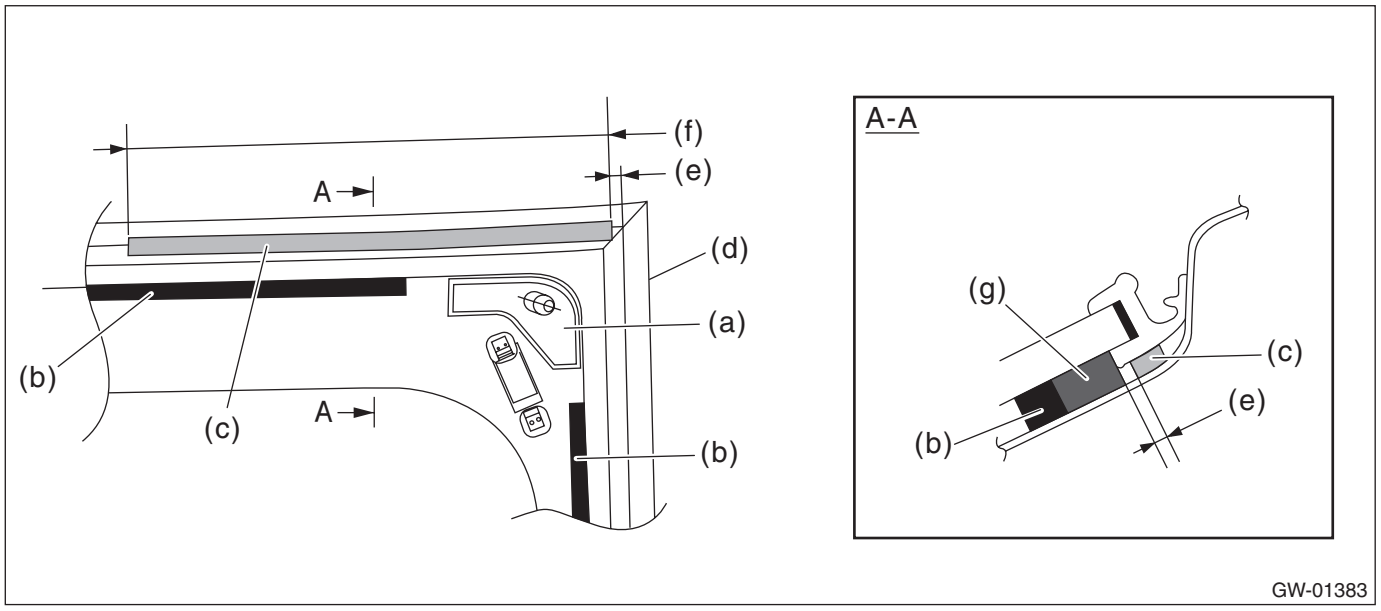

(a) Locating pin - front window
(b) Dam rubber - front upper
(c) Seal - upper
(d) Molding - front window
(e) 3 mm (0.12 in)
(f) 165 mm (6.50 in)
(g) Adhesive

7) Install the glass - front window.
(1) Apply the primer to the adhesive surface of glass - front window side and body side using sponge.

Glass primer:
Dow Automotive's
ESSEX U-401, U-402 or equivalent

Painted surface primer:
Dow Automotive's
ESSEX U-413 or equivalent

NOTE:
• Primer once attached to the painted surface of the body and internal trim is hard to wipe off. Mask the circumference of such area.
• Let primer dry for about ten minutes before installing the glass - front window.
• Do not touch the surface coated with primer.
(2) Apply adhesive to the end back surface of the glass - front window.

Adhesive:
Dow Automotive's
ESSEX U-400HV or equivalent

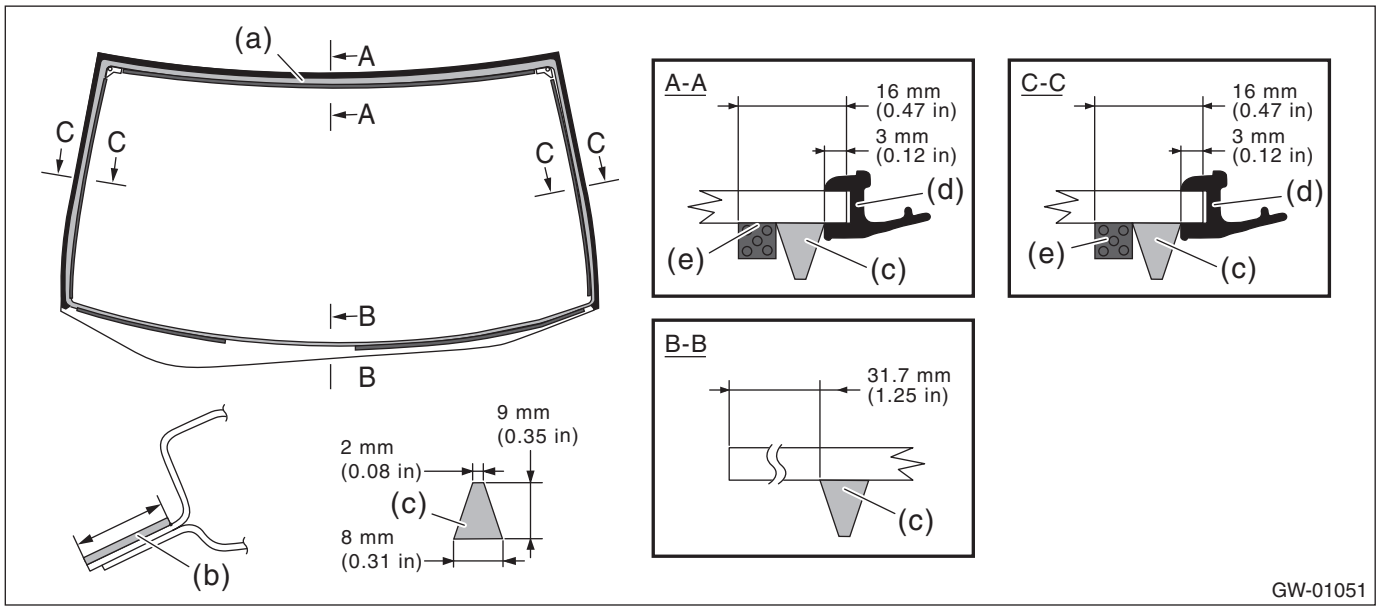

(a) Application of primer (glass side)
(b) Application of primer (body side)
(c) Adhesive
(d) Molding - front window
(e) Dam rubber - front

(3) Fit the locating pins - front window to the vehicle body using suction rubber cups to install the windshield glass.

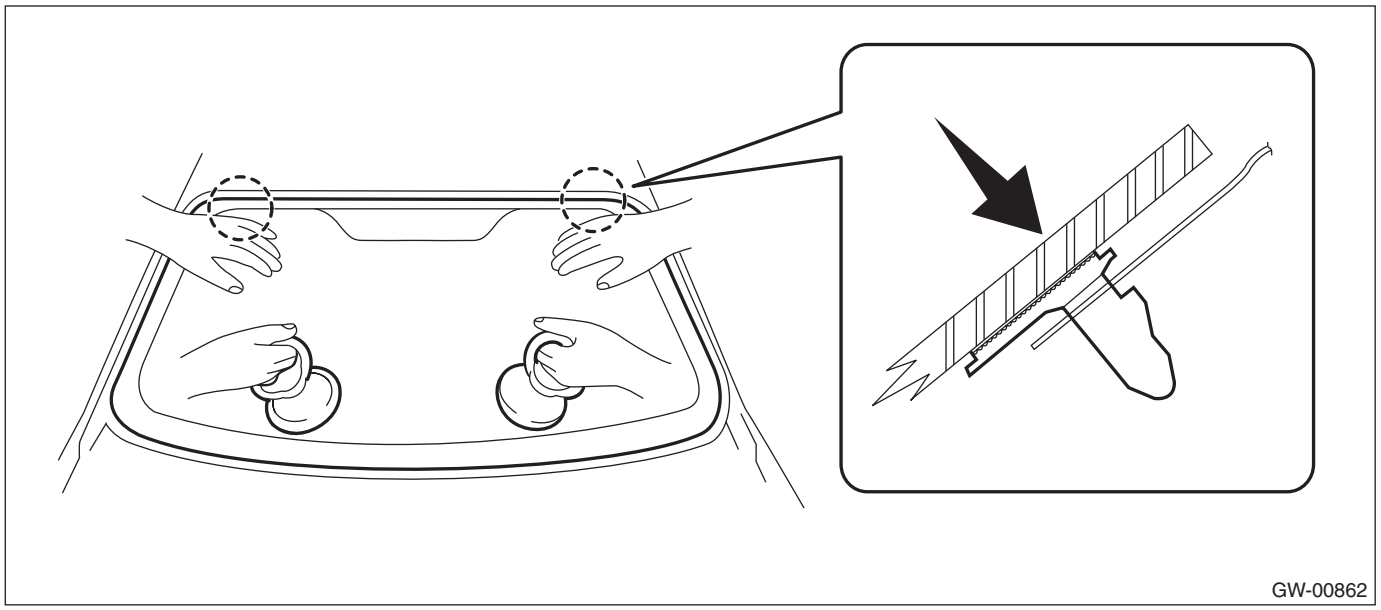

(4) Lightly press the entire perimeter of the glass - front window for tight fit.
(5) Make flush the adhesive surface jutted out using spatula.

8) After completion of all work, allow the vehicle to stand for about 24 hours.

NOTE:
• When opening/closing the door after the glass - front window was bonded, always lower the glass assembly - door first, and then open/close it carefully.
• Move the vehicle slowly.
• For minimum drying time and vehicle standing time before driving after bonding, follow instructions or instruction manual from the adhesive manufacturer.

9) Connect the wiper deicer connector. (Models with wiper deicer)
10) Install the cowl panel assembly. <Ref. to EI-59, INSTALLATION, Cowl Panel.>
11) Install the trim panel - front pillar UPR. <Ref. to EI-111, INSTALLATION, Upper Inner Trim.>
12) Connect the battery ground terminal. (Models with wiper deicer) <Ref. to NT-5, BATTERY, NOTE, Note.>
13) After curing of adhesive, pour the water on external surface of vehicle to check that there are no water leaks.

NOTE:
When a vehicle is returned to the user, tell him or her that the vehicle should not be subjected to heavy impact for at least three days.

14.Rear Window Glass

A: REMOVAL

1) Disconnect the ground cable from battery. <Ref. to NT-5, BATTERY, NOTE, Note.>

NOTE:
For the 12 volt engine restart battery of HEV model, disconnect the ground terminal from 12V engine restart battery sensor.
2) Disconnect the rear defogger connector.
3) Remove the glass - rear window in the same procedure as for the glass - front window. <Ref. to GW-36, REMOVAL, Windshield Glass.>

B: INSTALLATION

1) Fabricate the cartridge nozzle tip as shown and set the sealant gun with the adhesive.

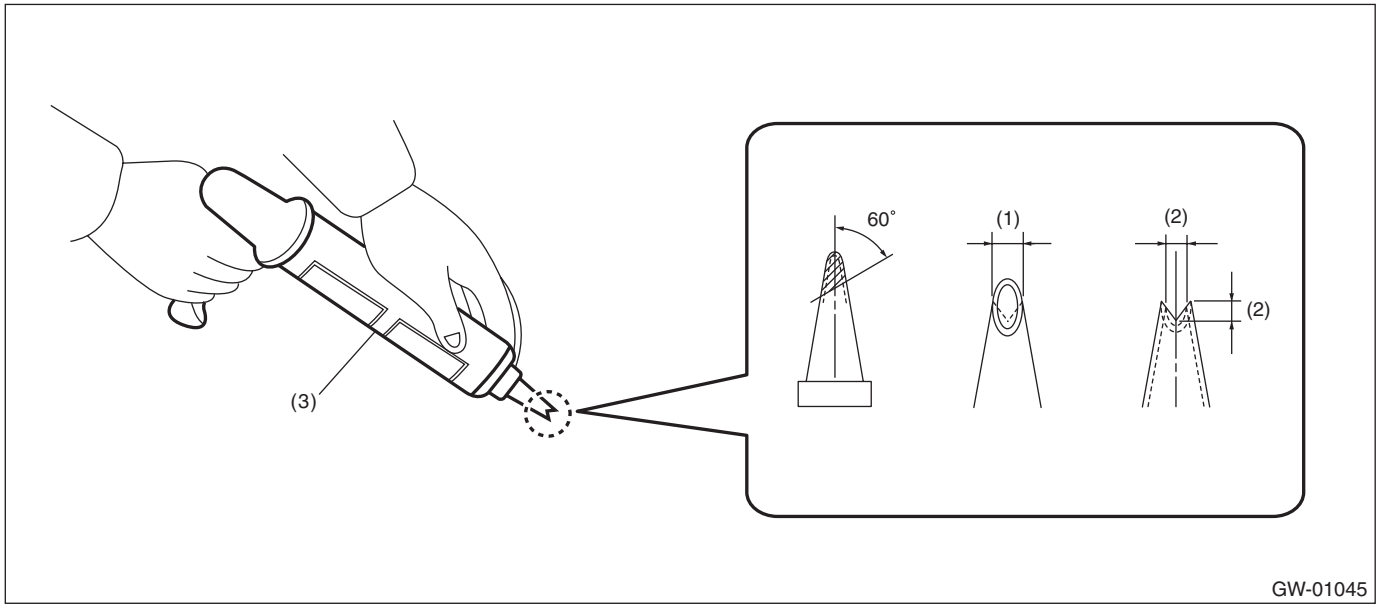

(1) 10 mm (0.39 in) (2) 8 mm (0.31 in) (3) Sealant gun

2) Smoothen and clean the adhesive surfaces of the glass - rear window and body using the same procedures as for the glass - front window. <Ref. to GW-39, INSTALLATION, Windshield Glass.>

3) Attach the dam rubber - rear to the glass - rear window.

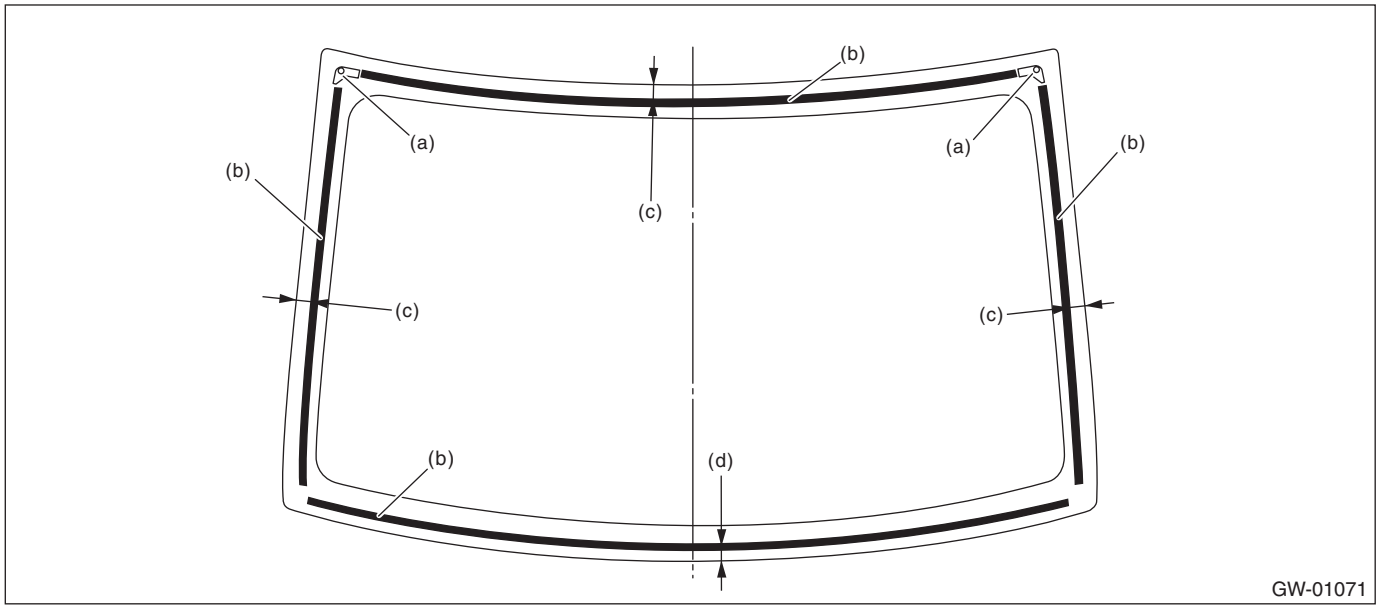

(a) Locating pin - rear window
(b) Dam rubber - rear
(c) 21.9 mm (0.86 in)
(d) 10.7 mm (0.42 in)

4) Attach the molding - rear window to the glass - rear window.

CAUTION:
Be careful to attach the molding - rear window so that the molding has no loose or undulating part.

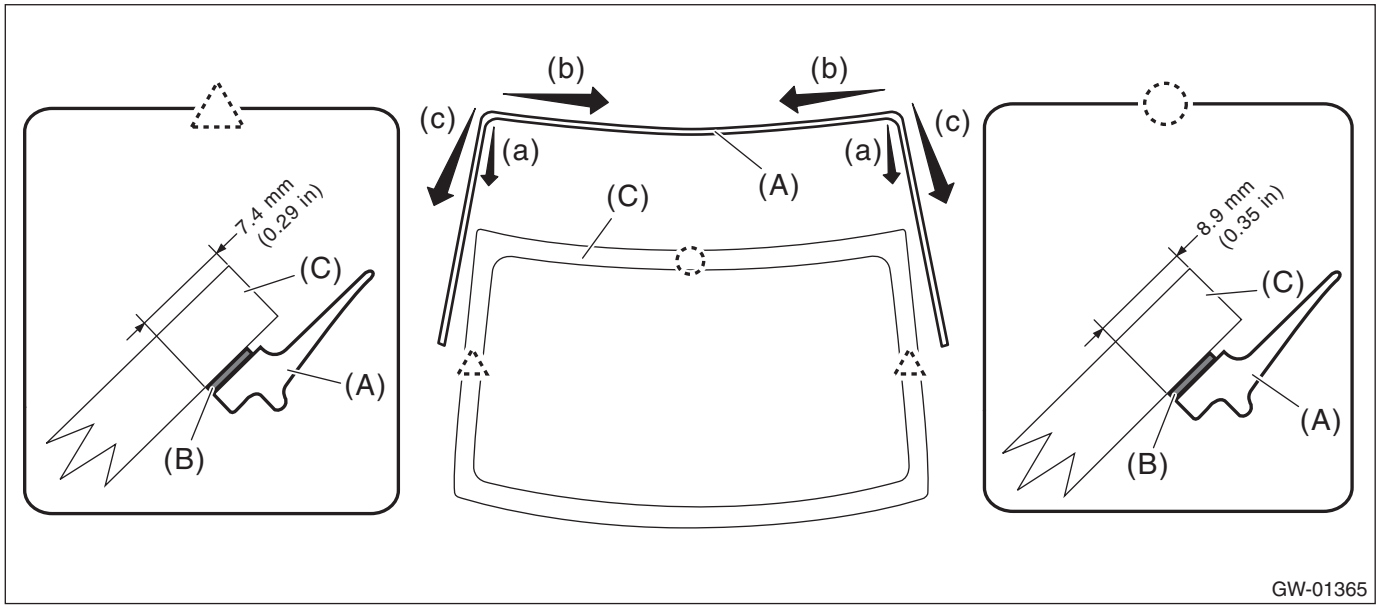

(1) Align the molding - rear window (A) to the upper ends (a) of the glass - rear window (C).
(2) Install the molding - rear window from both corners of the upper edge toward the center (b).
(3) Install the molding - rear window from both corners of the upper edge toward the lower side (c).
(4) Firmly apply the double sided tape (B) of the molding - rear window evenly to the surface of the glass - rear window.

5) Install the glass - rear window in the same procedure as for the glass - front window. <Ref. to GW-39, INSTALLATION, Windshield Glass.>
(1) Apply the primer to the adhesive surface of glass - rear window side and body side using sponge.
(2) Apply adhesive to the end back surface of the glass - rear window.

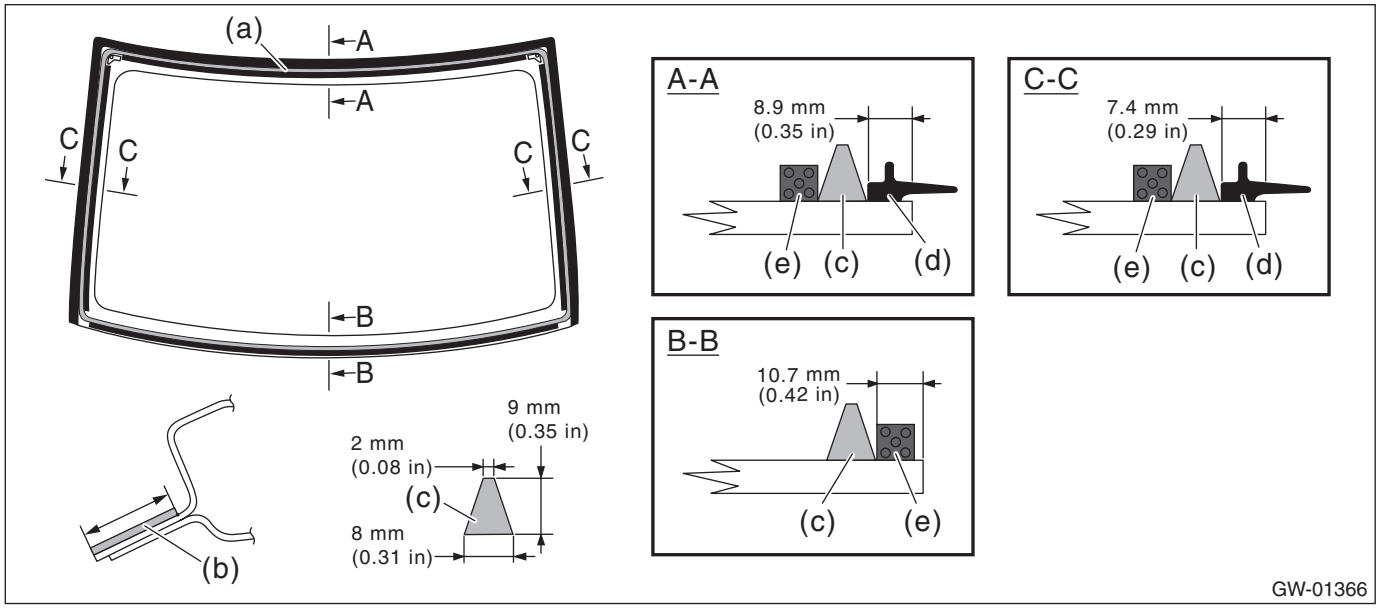

(a) Application of primer (glass side)
(b) Application of primer (body side)
(c) Adhesive
(d) Molding - rear window
(e) Dam rubber - rear

(3) Insert the locating pins - rear window into the rear panel holes, and install the glass - rear window.
(4) Lightly press the entire perimeter of the glass - rear window for tight fit.
(5) Make flush the adhesive surface jutted out using spatula.
6) After completion of all work, allow the vehicle to stand for about 24 hours.

NOTE:
• When opening/closing the door after the glass - rear window was bonded, always lower the glass assembly - door first, and then open/close it carefully.
• Move the vehicle slowly.
• For minimum drying time and vehicle standing time before driving after bonding, follow instructions or instruction manual from the adhesive manufacturer.
7) Connect the rear defogger connector.
8) After curing of adhesive, pour the water on external surface of vehicle to check that there are no water leaks.

NOTE:
When a vehicle is returned to the user, tell him or her that the vehicle should not be subjected to heavy impact for at least three days.

15.Rear Gate Glass

A: REMOVAL

1) Disconnect the ground cable from battery. <Ref. to NT-5, BATTERY, NOTE, Note.>

NOTE:
For the 12 volt engine restart battery of HEV model, disconnect the ground terminal from 12V engine restart battery sensor.
2) Remove the trim panel - rear gate and the motor assembly - rear wiper. <Ref. to WW-40, REMOVAL, Rear Wiper Motor.>
3) Disconnect the rear defogger connector.
4) Remove the glass - rear gate in the same procedure as for the glass - front window. <Ref. to GW-36, REMOVAL, Windshield Glass.>

B: INSTALLATION

NOTE:
Use the markings on the glass to apply adhesive and primer, and to install the dam rubber - rear gate and the spacer - rear gate.

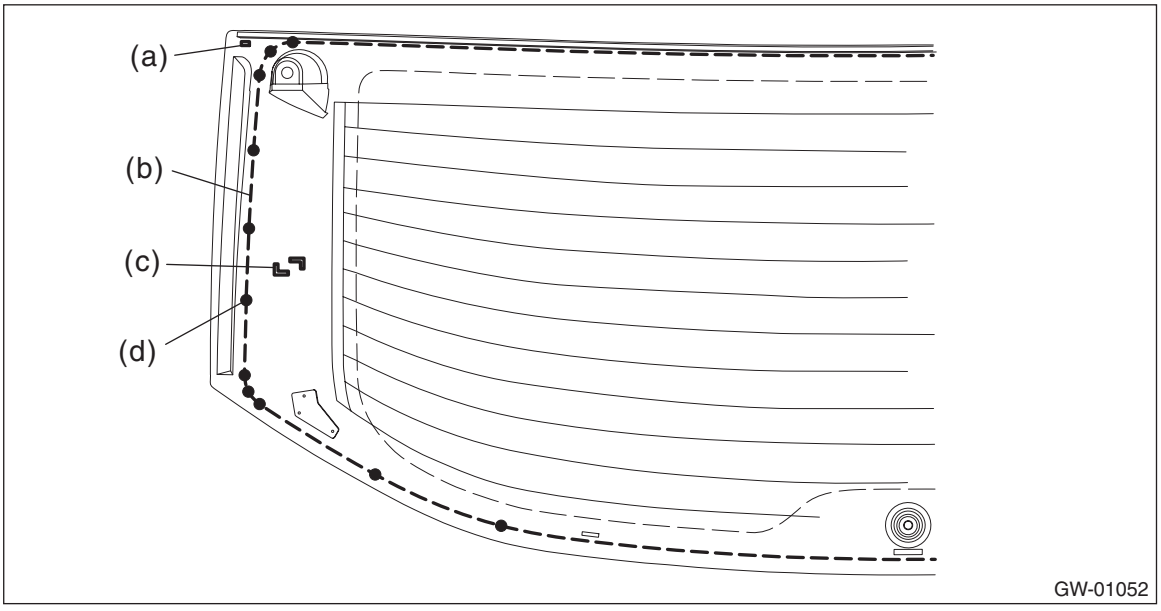

(a) Marking for dam rubber - rear gate application (Ag print)
(b) Center line for adhesive
(c) Marking for spacer - rear gate application (Ag print)
(d) Marking for primer application

1) Fabricate the cartridge nozzle tip as shown and set the sealant gun with the adhesive.

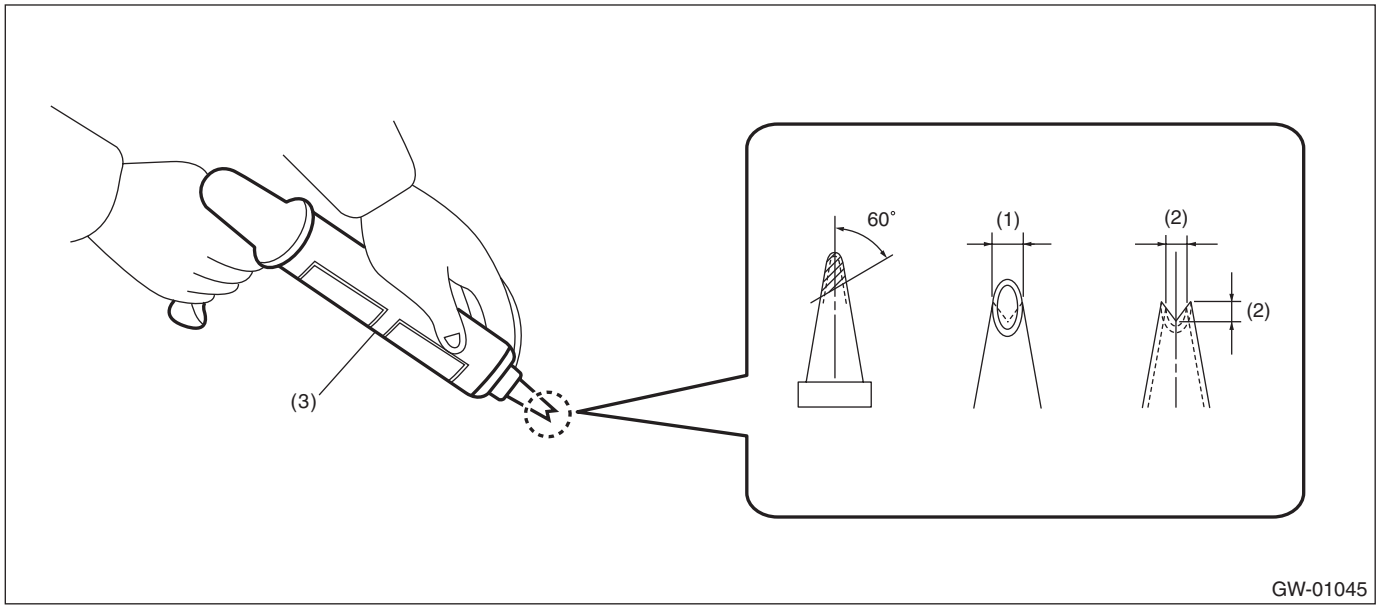

(1) 10 mm (0.39 in) (2) 8 mm (0.31 in) (3) Sealant gun

2) Smoothen and clean the adhesive surfaces of the glass - rear gate and body using the same procedures as for the glass - front window. <Ref. to GW-39, INSTALLATION, Windshield Glass.>
3) Attach the dam rubber - rear gate to the glass - rear gate.

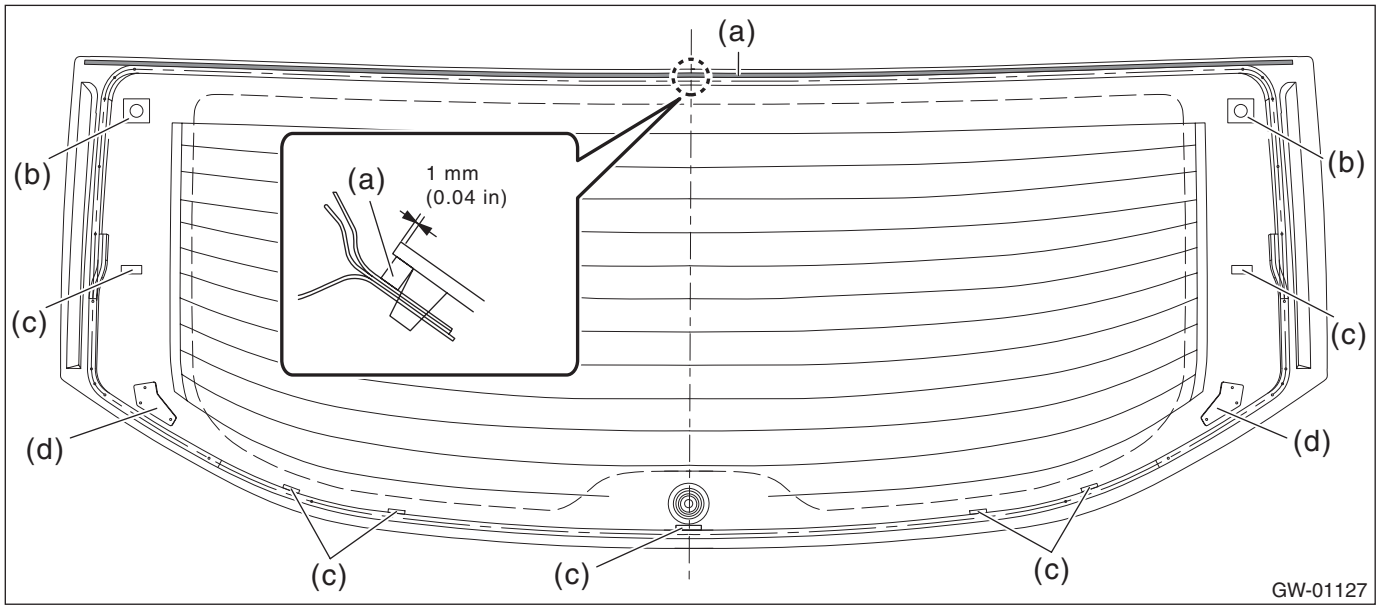

(a) Dam rubber - rear gate (c) Spacer - rear gate (d) Locating pin - rear gate
(b) Holder - rear gate

4) Install the glass - rear gate.
(1) Apply the primer to the adhesive surface of glass - rear gate side and body side using sponge.
(2) Apply adhesive to the glass - rear gate end back surface.

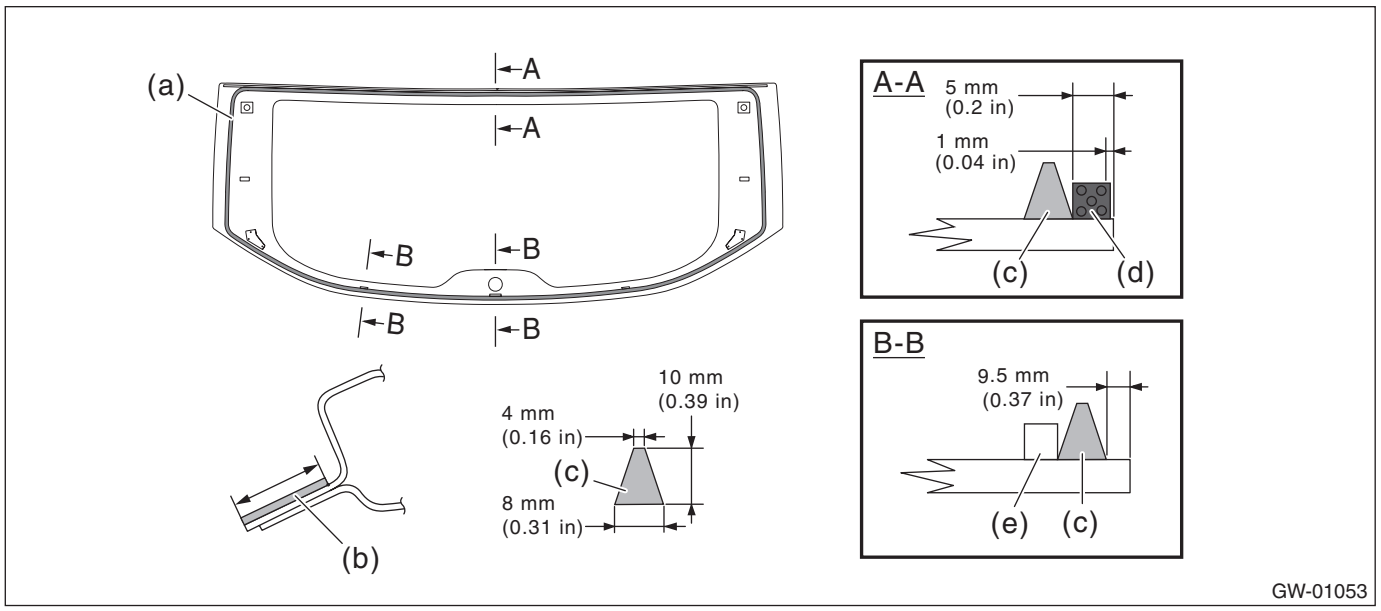

(a) Application of primer (glass side)
(b) Application of primer (body side)
(c) Adhesive
(d) Dam rubber - rear gate
(e) Spacer - rear gate

(3) Attach the clip to the holder - rear gate of the glass - rear gate.
(4) Insert the locating pins - rear gate into the rear gate panel holes, and install the glass - rear gate.
(5) Lightly press the entire perimeter of the glass - rear gate for tight fit.
(6) Make flush the adhesive surface jutted out using spatula.

5) After completion of all work, allow the vehicle to stand for about 24 hours.

NOTE:
• When opening/closing the door after the glass - rear gate was bonded, always lower the glass assembly - door first, and then open/close it carefully.
• Move the vehicle slowly.
• For minimum drying time and vehicle standing time before driving after bonding, follow instructions or instruction manual from the adhesive manufacturer.

6) Connect the rear defogger connector.
7) Install the motor assembly - rear wiper and the arm assembly - rear wiper.

Tightening torque:
Motor assembly - rear wiper and arm assembly - rear wiper: <Ref. to WW-3, REAR WIPER, COMPONENT, General Description.>

8) Install the trim panel - rear gate. <Ref. to EI-158, INSTALLATION, Rear Gate Trim.>
9) After curing of adhesive, pour the water on external surface of vehicle to check that there are no water leaks.

NOTE:
When a vehicle is returned to the user, tell him or her that the vehicle should not be subjected to heavy impact for at least three days.

16.Rear Window Defogger System

A: WIRING DIAGRAM

Refer to “Rear Defogger System” in the wiring diagram.
- Gasoline engine model: <Ref. to WI(w/o HEV)-122, WIRING DIAGRAM, Rear Defogger System.>
- HEV model: <Ref. to WI(HEV)-186, WIRING DIAGRAM, Rear Defogger System.>

B: INSPECTION

1. CHECK SYSTEM

Symptoms	Inspection order
Rear window defogger does not operate.	1. Check the fuse. 2. Check the rear defogger relay. 3. Check the rear window defogger switch. 4. Check the heat wire. 5. Check the wiring harness. 6. Check body integrated unit.

NOTE:
Rear window defogger system can be customized using the Subaru Select Monitor, when the customize setting {Auto A/C ECU Setting} of the body integrated unit is set to {support}.

System name	Initial setting	Customize setting
Rear defogger operation mode	OFF after 15 min.	Repeat 15 min. operation and 2 min. stop.

2. CHECK WITH SUBARU SELECT MONITOR

CAUTION:
Check whether the Rr Defogger op. mode setting is in initial setting or customize setting before performing inspection.

1) Check the input signal when the rear window defogger switch is operated using Subaru Select Monitor.
   (1) Prepare the Subaru Select Monitor. <Ref. to GW-7, PREPARATION TOOL, General Description.>
   (2) Turn the ignition switch to ON (engine OFF) and run the “PC application for Subaru Select Monitor”.
   (3) On «System Selection Menu» display, select {Integ. unit mode}.
   (4) Select {Auto A/C ECU Setting} from Current Data Display & Save.
   (5) Check the vehicle equipment and the settings of body integrated unit.
   - Model with manual A/C: Without auto A/C ECM setting
   - Model with auto A/C: With auto A/C ECM setting

   If correct, go to (6).
   If not correct, go to (8).
   (6) Select the {Rr Defogger output} on {Current Data Display & Save}.
   (7) Check the displayed data (ON/OFF) by operating the rear window defogger switch.
   (8) On the system selection menu display, select the body integrated unit mode. Select customize from work support, then select {Auto A/C ECU Setting}. Match the auto A/C ECM setting to the actual vehicle equipment.
2) Check the operation with rear window defogger switch ON.
- When customize setting is set as “Continuous”, it is normal if the 15-minute operation and 2-minute stop repeats.
- When customize setting is “Normal”, it is normal if the operation lasts for 15 minutes and then turns OFF.

3) When the operation in 2) above fails, replace the body integrated unit.

3. HEAT WIRE INSPECTION

CAUTION:
Use a dry soft cloth to wipe off dirt on the glass along the heat wires with care not to damage the heat wires.

1) Prepare the following checking items.
- Liquid crystal thermograph sheet (Approximate Size: 300 × 300 mm (11.8 × 11.8 in) and thermal temperature: 35 — 40°C (95 — 104°F))
- Aluminum foil

2) Turn the ignition switch to ON.
3) Turn the defogger switch to ON.
4) Push the liquid crystal thermograph sheet from the outside of the glass - rear window.

NOTE:
Use the liquid crystal thermograph sheet every range it is separated with the separate line.

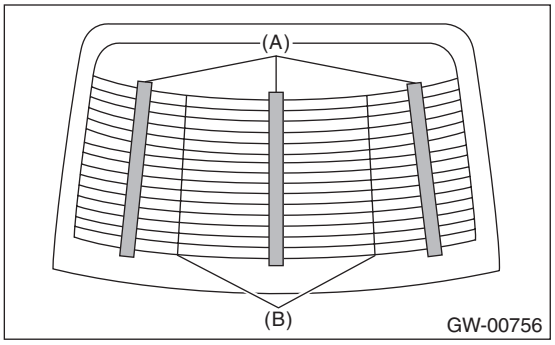

(A) Liquid crystal thermograph sheet
(B) Separate line

5) Determine the faulty heat wire by checking the color of the liquid crystal thermograph sheet.

Liquid crystal thermograph sheet	Criteria
Change occurred (red → blue)	Normal
No change (black)	Open

NOTE:
- Check from the inside of the glass - rear window if the liquid crystal thermograph sheet does not change.
- The time for the color change may differ depends on the surface temperature of the glass.

6) Wrap a piece of aluminum foil around the tip of tester probe and press it against the heat wire with your finger.

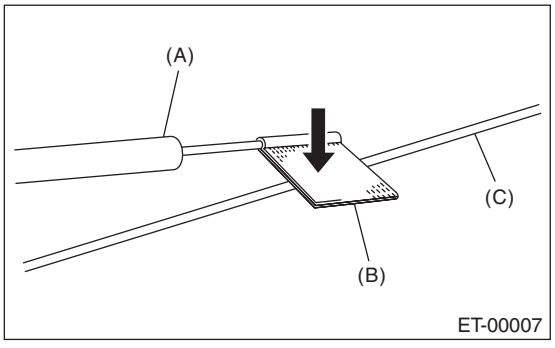

(A) Tester probe
(B) Aluminum foil
(C) Heat wire

7) To both ends of the section that has been found to include an open in the step 5), apply the tester positive (+) probe and the negative (–) probe.

8) Move the tester probe on the negative (–) side slowly along the heat wire. If voltage changes from zero while moving the tester probe, heat wire is open at the voltage change point.

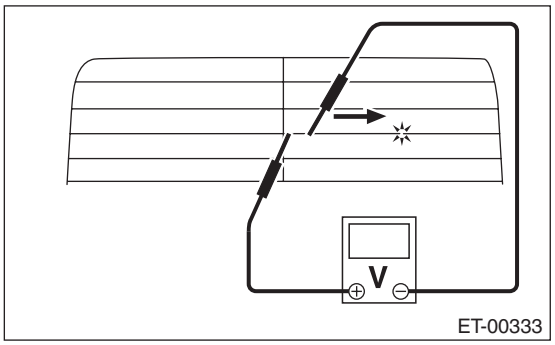

9) Repair the heat wire that determines the place of the open circuit. <Ref. to GW-52, REPAIR, Rear Window Defogger System.>

C: REPAIR

1) Clean the broken portion with alcohol or appropriate cleaning solvent.
2) Mask both side of wire with masking tape.
3) Apply the conductive silver composition to the broken portion.

Conductive silver composition:
By Permatex
QUICK GRID

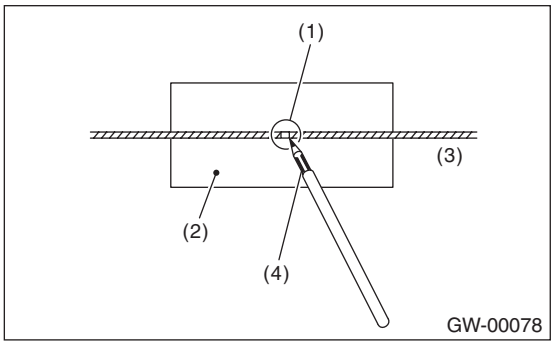

(1) Broken portion
(2) Masking tape
(3) Broken wire
(4) Conductive silver composition

4) Dry using a dryer after applying the composition.
5) After repair, check the wire.

17.Rear Quarter Glass

A: REMOVAL

1) Disconnect the ground cable from battery. <Ref. to NT-5, BATTERY, NOTE, Note.>

NOTE:
For the 12 volt engine restart battery of HEV model, disconnect the ground terminal from 12V engine restart battery sensor.
2) Remove the trim panel - rear pillar UPR. <Ref. to EI-115, 5 DOOR MODEL/XV MODEL, REMOVAL, Rear Quarter Trim.>
3) Remove the glass - rear quarter in the same procedure as for the glass - front window. <Ref. to GW-36, REMOVAL, Windshield Glass.>

B: INSTALLATION

1) Fabricate the cartridge nozzle tip as shown and set the sealant gun with the adhesive.

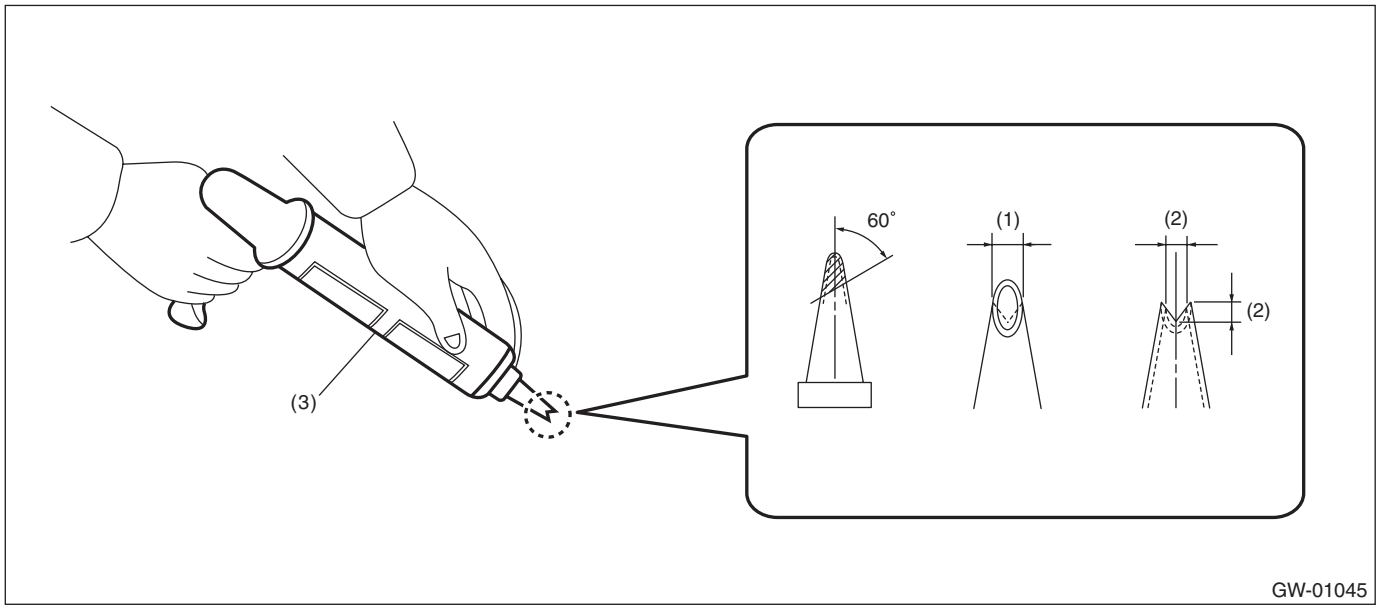

(1) 10 mm (0.39 in) (2) 8 mm (0.31 in) (3) Sealant gun

2) Smoothen and clean the adhesive surfaces of the glass - rear quarter and body using the same procedures as for the glass - front window. <Ref. to GW-39, INSTALLATION, Windshield Glass.>

3) Install the dam rubber - rear and the seal - rear quarter to the glass - rear quarter.

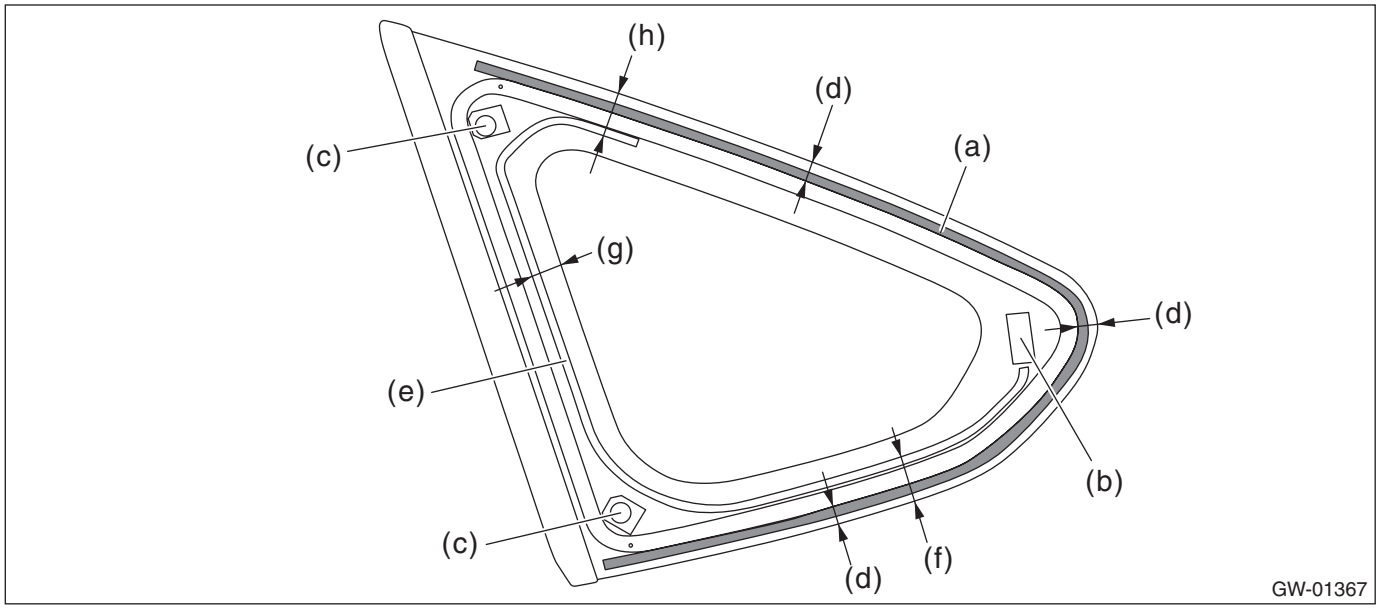

(a)	Dam rubber - rear quarter	(d)	9 mm (0.35 in)	(g)	15.2 mm (0.60 in)
(b)	Fastener - rear quarter	(e)	Seal - rear quarter	(h)	22.4 mm (0.88 in)
(c)	Locating pin - rear quarter	(f)	23.1 mm (0.91 in)		

4) Install the glass - rear quarter in the same procedure as for the glass - front window. <Ref. to GW-39, INSTALLATION, Windshield Glass.>

(1) Apply the primer to the adhesive surface of glass - rear quarter side and body side using sponge.
(2) Apply adhesive to the glass - rear quarter end back surface.

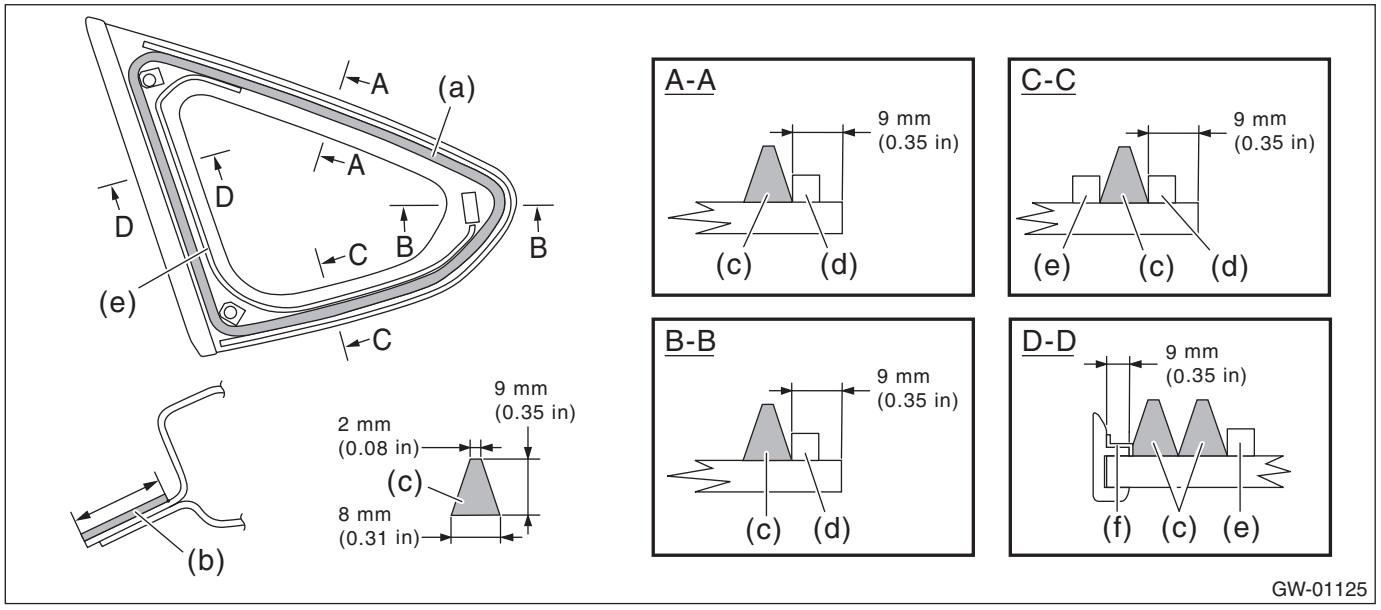

(a)	Application of primer (glass side)	(c)	Adhesive	(e)	Seal - rear quarter
(b)	Application of primer (body side)	(d)	Dam rubber - rear quarter	(f)	Protective plate

(3) Mount the fastener - rear quarter on the vehicle body.
(4) Insert the locating pins - rear quarter into the side panel holes, and install the glass - rear quarter.
(5) Lightly press the entire perimeter of the glass - rear quarter for tight fit.
(6) Make flush the adhesive surface jutted out using spatula.

5) After completion of all work, allow the vehicle to stand for about 24 hours.

NOTE:
- When opening/closing the door after the glass - rear quarter was bonded, always lower the glass assembly - door first, and then open/close it carefully.
- Move the vehicle slowly.
- For minimum drying time and vehicle standing time before driving after bonding, follow instructions or instruction manual from the adhesive manufacturer.

6) Install the trim panel - rear pillar UPR. <Ref. to EI-119, INSTALLATION, Rear Quarter Trim.>

7) After curing of adhesive, pour the water on external surface of vehicle to check that there are no water leaks.

NOTE:
When a vehicle is returned to the user, tell him or her that the vehicle should not be subjected to heavy impact for at least three days.

18.Wiper Deicer System

A: WIRING DIAGRAM

Refer to “Wiper Deicer System” in the wiring diagram.
- Gasoline engine model: <Ref. to WI(w/o HEV)-122, WIRING DIAGRAM, Rear Defogger System.>
- HEV model: <Ref. to WI(HEV)-186, WIRING DIAGRAM, Rear Defogger System.>

B: INSPECTION

1. CHECK SYSTEM

NOTE:
- The wiper deicer does not operate when the ambient temperature becomes 5°C (41°F) or more.
- The wiper deicer operates with the rear window defogger at the same time.
- It is possible to perform a forced operation if you keep holding the rear window defogger switch for 3 seconds or more.

Symptoms	Inspection order
Wiper deicer does not operate.	1. Check the fuse. 2. Check the wiper deicer relay. 3. Check the wiper deicer switch. 4. Check the heat wire. 5. Check the wiring harness. 6. Check body integrated unit.

NOTE:
- Wiper deicer system can be customized using the Subaru Select Monitor, when the customize setting {Auto A/C ECU Setting} of the body integrated unit is set to {support}.
- Set the system using the Rr Defogger op. mode, and setting will be the same as rear defogger system setting.

System name	Initial setting	Customize setting
Rear defogger operation mode	OFF after 15 min.	Continuous operation*

*: When one of the following conditions occurs, continuous operation is suspended and turned off after 15 minutes.
- Ambient temperature at 5°C (41°F) or more continues for 10 seconds.
- Malfunction occurs on ambient sensor.
- Vehicle speed of 15 km/h (9 MPH) or less continues 15 minutes (OFF when conditions are met)
- Malfunction occurs in CAN communication.
- Battery voltage remains at 10 V or less for 30 seconds.
- SI-DRIVE [I] mode driving continues for 10 seconds.

2. CHECK WITH SUBARU SELECT MONITOR

CAUTION:
Before performing the inspection, check the following settings.
- **Wiper deicer setting → "support". If "no support", set to "support" using customize setting.**
- **Rr Defogger op. mode setting → Initial setting or customize setting.**

1) Check the input signal when the rear window defogger switch is operated using Subaru Select Monitor.
   (1) Prepare the Subaru Select Monitor. <Ref. to GW-7, PREPARATION TOOL, General Description.>
   (2) Turn the ignition switch to ON (engine OFF) and run the "PC application for Subaru Select Monitor".
   (3) On «System Selection Menu» display, select {Integ. unit mode}.
   (4) Select {Auto A/C ECU Setting} from Current Data Display & Save.
   (5) Check the vehicle equipment and the settings of body integrated unit.
   - Model with manual A/C: Without auto A/C ECM setting
   - Model with auto A/C: With auto A/C ECM setting

   If correct, go to (6).
   If not correct, go to (8).
   (6) Select the {wiper deicer output} on {Current Data Display & Save}.
   (7) Check the displayed data (ON/OFF) by operating the rear window defogger switch.
   (8) On the system selection menu display, select the body integrated unit mode. Select customize from work support, then select {Auto A/C ECU Setting}. Match the auto A/C ECM setting to the actual vehicle equipment.
2) Check the operation with rear window defogger switch ON.
- When customize setting is set as "Continuous", it is normal if the 15-minute operation and 2-minute stop repeats.
- When customize setting is "Normal", it is normal if the operation lasts for 15 minutes and then turns OFF.

3) When the operation in 2) above fails, replace the body integrated unit.

3. HEAT WIRE INSPECTION

Refer to "HEAT WIRE INSPECTION" of "Rear Window Defogger System". <Ref. to GW-51, HEAT WIRE INSPECTION, INSPECTION, Rear Window Defogger System.>

NOTE:
Heat wire inspection needs removing/installing procedure of instrument panel assembly.

C: REPAIR

Refer to "REPAIR" of "Rear Window Defogger System". <Ref. to GW-52, REPAIR, Rear Window Defogger System.>

NOTE:
Heat wire repair needs removing/installing procedure of instrument panel assembly.

BODY STRUCTURE

BS

Page
1. General Description 2

1. General Description

A: SPECIFICATION

Refer to “Body Repair Manual” for general description of body structure, reference points and reference dimensions.

INSTRUMENTATION/DRIVER INFO

IDI

		Page
1.	General Description	2
2.	Relay and Fuse	6
3.	Combination Meter System	7
4.	Multi-function Display (MFD) System	11
5.	Combination Meter	16
6.	Speedometer	19
7.	Tachometer	20
8.	Fuel Gauge	21
9.	ECO Gauge	22
10.	Multi-function Display (MFD)	23
11.	Steering Switch	27

1. General Description

A: SPECIFICATION

1. COMBINATION METER ASSEMBLY

NOTE:
Specifications of the combination meter vary depending on the market and the grade.
- Gasoline engine model

Meter, display	Operation method, display method	Drive control	When checking the indicator needle operation/needle reading operation
Speedometer	Stepping motor type	Combination meter	—
Tachometer			
ECO gauge			
ABS warning light	LED	Combination meter	On/Off
STEERING warning light			
AT oil temperature warning light			
Driver's seat belt warning light			
Door warning light			
Tire pressure warning light			
AWD warning light			
Hill start assist warning light			
VDC warning light / VDC indicator light			
VDC OFF indicator light			
High beam indicator light			
Front fog light indicator light			
Lighting indicator light			
Fuel level warning light			
Malfunction indicator light			
Airbag warning light			
Engine oil level warning light			
Washer fluid level warning light			
Meter illumination back light			Light ON
LCD back light			Light ON
Engine coolant temperature warning light (red)			On (red)/Off
Engine coolant temperature indicator light (blue)			Off/On (blue)
Oil pressure warning light		Oil pressure switch	Turns on or off according to module control
Charge warning light		Generator	
Turn signal indicator light		Turn signal and hazard unit	
Security/immobilizer indicator light		Body integrated unit	
Auto leveler warning light		Auto headlight beam leveler CM	
Parking brake/brake fluid level warning light		Combination meter/ brake fluid level switch	On/Turns on or off according to module control
Odo indicator	LCD	Combination meter	—
Trip indicator			
Select lever / shift position indicator			
FUEL meter			
Cruise control system indicator • Constant speed cruise • SET			

- HEV model

Meter, display	Operation method, display method	Drive control	When checking the indicator needle operation/ needle reading operation
Speedometer	Stepping motor type	Combination meter	—
Tachometer			
ECO gauge			
ABS warning light	LED	Combination meter	On/Off
STEERING warning light			
AT oil temperature warning light			
Driver's seat belt warning light			
Door warning light			
Access key warning light			
Tire pressure warning light			
AWD warning light			
Hill start assist warning light			
VDC warning light / VDC indicator light			
VDC OFF indicator light			
High beam indicator light			
Front fog light indicator light			
Lighting indicator light			
Fuel level warning light			
Malfunction indicator light			
Airbag warning light			
Engine oil level warning light			
Washer fluid level warning light			
Oil pressure warning light			
Vacuum pump warning light			
Hybrid fail lamp			
EV mode lamp			
Hybrid READY indicator light			
Charge warning light			
Meter illumination back light			Light ON
LCD back light			Light ON
Engine coolant temperature warning light (red)			On (red)/Off
Engine coolant temperature indicator light (blue)			Off/On (blue)
Turn signal indicator light		Turn signal and hazard unit	Turns on or off according to module control
Security/immobilizer indicator light		Body integrated unit	
Auto leveler warning light		Auto headlight beam leveler CM	
Pedestrian alert warning light		Pedestrian alert control unit	On/Turns on or off according to module control
Parking brake/brake fluid level warning light		Combination meter/brake fluid level switch	
Odo indicator	LCD	Combination meter	—
Trip indicator			
Select lever / shift position indicator			
FUEL meter			
Cruise control system indicator • Constant speed cruise • SET			

2. MULTI-FUNCTION DISPLAY

NOTE:
Specifications of the multi-function display vary depending on the market and the grade.

- Standard type

Display	Display method
Average/instantaneous fuel economy, cruising distance, ambient temperature, current time, continuous driving time, average vehicle speed	LCD
Passenger's seat airbag indicator light	LED
Passenger's airbag ON indicator light	
Passenger's airbag OFF indicator light	
Passenger's seat belt warning light	

- High grade type

Display	Display method
Fuel economy screen, economy gauge (instantaneous) screen, economy gauge (history) screen, Auto Start Stop screen, FUEL SAVE screen, preventive safety screen, triple meter screen, clock screen, setting screen, self-check screen, information screen, energy flow screen	TFT
Air conditioner display	LCD
Passenger's seat airbag indicator light	LED
Passenger's airbag ON indicator light	
Passenger's airbag OFF indicator light	
Passenger's seat belt warning light	

B: LOCATION

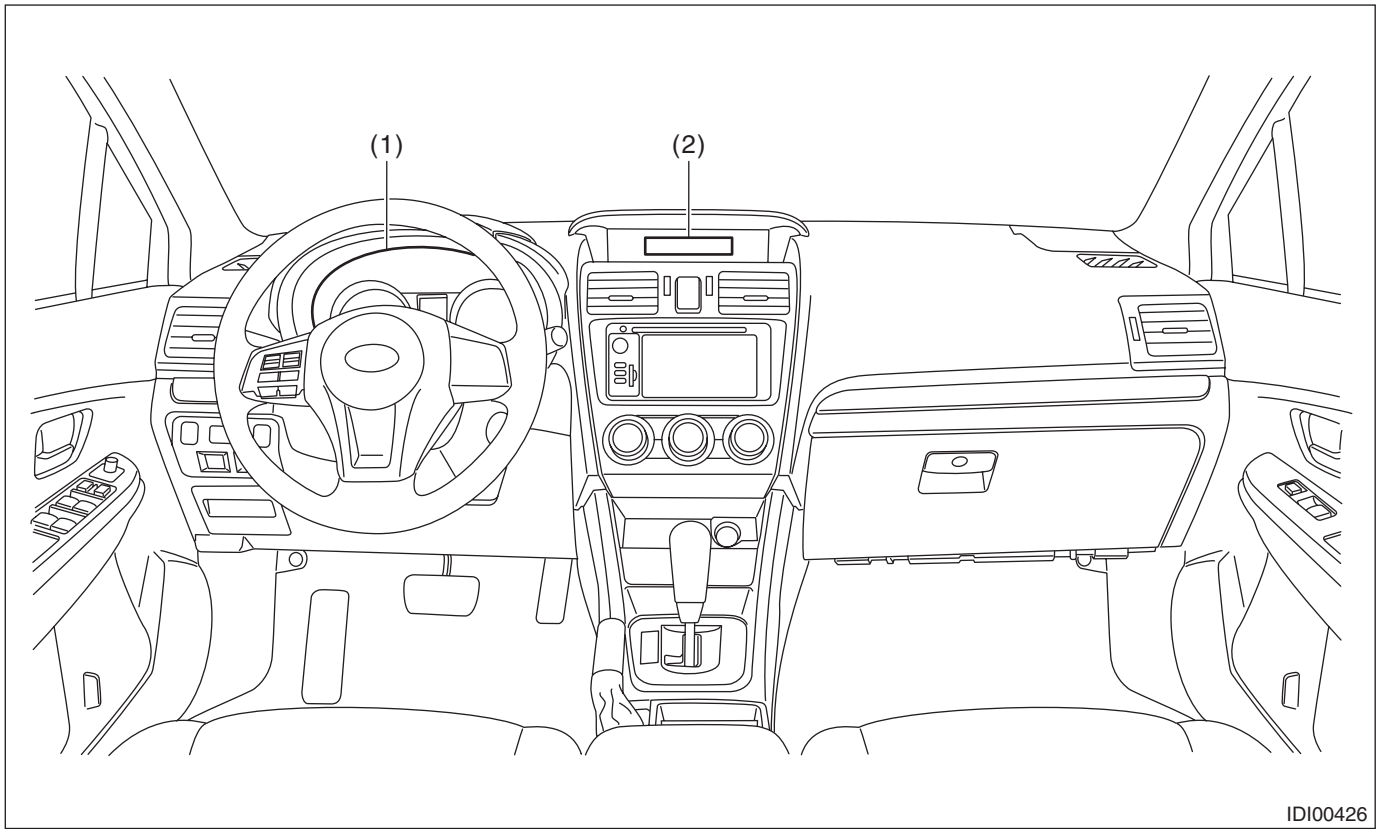

(1) Combination meter ASSY (2) Multi-function display (MFD)

C: CAUTION

• Before disassembling or reassembling parts, always disconnect the battery ground cable from battery. When replacing the audio, control module and other parts provided with memory functions, record the memory contents before disconnecting the battery ground cable. Otherwise, the memory is cleared.
• Reassemble the parts in the reverse order of disassembly procedure unless otherwise indicated.
• Use gloves to avoid damage and getting fingerprints on the glass surface and meter surfaces.
• Do not apply an excessive force on the printed circuit.
• Do not drop or otherwise apply impact.
• Connect the connectors securely during reassembly.
• After reassembly, make sure that each component operates normally.
• When the combination meter assembly has been replaced, be sure to perform the following operations.
  – For models without the keyless access with push button start except for C0 and C5, be sure to perform the registration of immobilizer. For the relevant procedures, refer to the “REGISTRATION MANUAL FOR IMMOBILIZER”.
  – Be sure to reset the ODO fuel economy value of the multi-function display (MFD). <Ref. to IDI-13, ODO FUEL ECONOMY VALUE RESET (HIGH GRADE TYPE ONLY), OPERATION, Multi-function Display (MFD) System.>
• Yellow connectors and harnesses with yellow tapes around them are the connectors and harnesses for the airbag system. Using a tester above such circuits may cause malfunction of airbag system. Follow the cautions of “AIRBAG SYSTEM” in this case. <Ref. to AB-11, CAUTION, General Description.>
• Be careful not to damage the airbag system wiring harness when servicing electrical parts and switches.
• If the steering wheel and steering angle sensor (steering roll connector) are removed, perform “VDC sensor midpoint setting mode” of the VDC. <Ref. to VDC-21, VDC SENSOR MIDPOINT SETTING MODE, ADJUSTMENT, VDC Control Module and Hydraulic Control Unit (VDCCM&H/U).>

D: PREPARATION TOOL

1. SPECIAL TOOL

ILLUSTRATION	TOOL NUMBER	DESCRIPTION	REMARKS
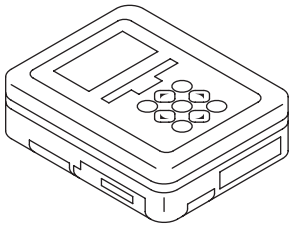 ST1B022XU0	1B022XU0	SUBARU SELECT MONITOR III KIT	Used for setting of each function and trouble-shooting for electrical system. NOTE: For detailed operation procedures of SUBARU SELECT MONITOR III KIT, refer to “PC application help for Subaru Select Monitor”.

2. GENERAL TOOL

TOOL NAME	REMARKS
Circuit tester	Used for measuring resistance and voltage.
Steering wheel puller	Used for removing the steering wheel.

2. Relay and Fuse

A: LOCATION

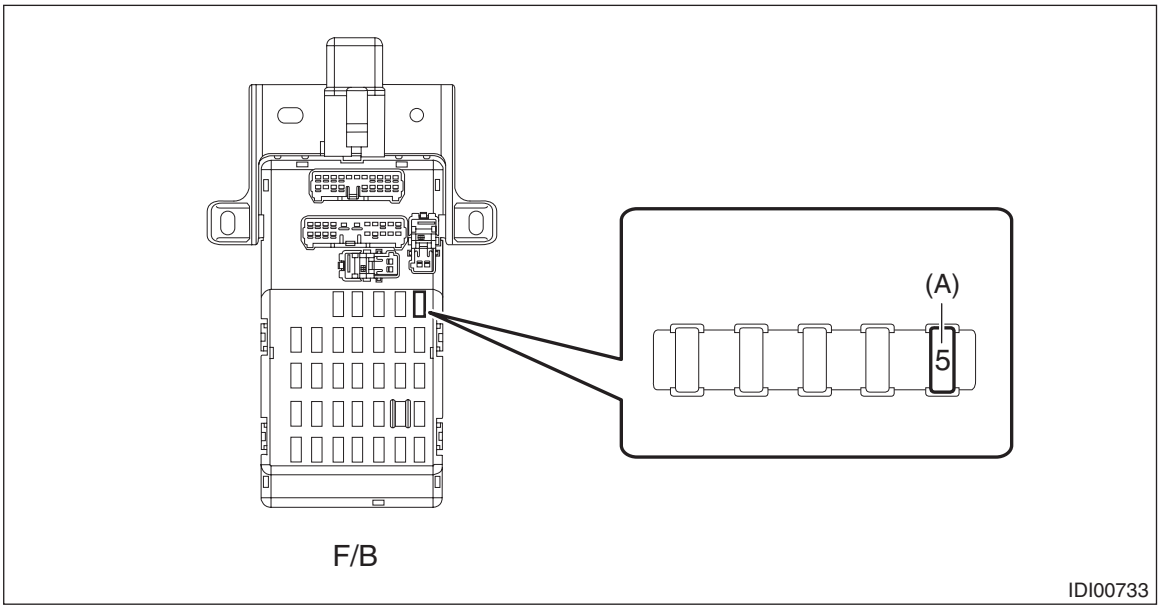

Relay & fuse box	Fuse 10 A (combination meter, MFD)	(A)

NOTE:
For other related fuses, refer to the wiring diagram.
- Gasoline engine model: <Ref. to WI(w/o HEV)-15, Power Supply Circuit.>
- HEV model: <Ref. to WI(HEV)-20, Power Supply Circuit.>

B: INSPECTION

1. CHECK FUSE

1) Remove the fuse and inspect visually.
2) If the fuse is blown out, replace the fuse.

NOTE:
If the fuse is blown again, check the system wiring harness.

3. Combination Meter System

A: WIRING DIAGRAM

Refer to “Combination Meter System” in the wiring diagram.
- Gasoline engine model: <Ref. to WI(w/o HEV)-54, WIRING DIAGRAM, Combination Meter System.>
- HEV model: <Ref. to WI(HEV)-74, WIRING DIAGRAM, Combination Meter System.>

B: ELECTRICAL SPECIFICATION

1. COMBINATION METER ASSEMBLY

Refer to “Control Module I/O Signal” of “INSTRUMENTATION/DRIVER INFO (DIAGNOSTICS)” section. <Ref. to IDI(diag)-7, ELECTRICAL SPECIFICATION, Control Module I/O Signal.>

C: OPERATION

1. SELF-DIAGNOSIS DISPLAY MODE

The self-diagnosis (checking of each meter, warning light, indicator light, illumination, LCD) of combination meter can be performed in the following procedure.

CAUTION:
Perform the steps described in 1) through 4) within 10 seconds.

1) Unfasten → fasten the driver’s seat belt within 3 seconds after the ignition switch is turned to ON.
2) With the driver’s seat belt fastened, press the trip meter knob three times.
3) Unfasten the driver’s seat belt, and then press the trip meter knob three times.
4) Fasten the driver’s seat belt again, and then press the trip meter knob three times.

NOTE:
- When the self-diagnosis function operates, the warning light, indicator light, and LCD display checks are performed. After this, the buzzer will sound for 0.5 seconds every time the trip meter knob is pressed, and operation checks are performed in the order of meter indicator needle operation, meter indicator needle indication, and LCD. Turn the ignition switch to OFF to cancel the self-diagnosis function.
- When the engine starts during diagnosis, the self-diagnosis function is not cancelled, however, once the vehicle starts driving, the self-diagnosis function is deactivated automatically.

5) Go to “Check meter indicator operation”.
Check meter operation, warning light, indicator light, illumination and LCD.

NOTE:
- After “_S_1” is displayed on the LCD, the meter indicator operation check mode is initiated.
- Each of the meter indicator operation display and LCD display switches every 6 seconds.

Meter indicator	LCD display, illumination	Warning light/ indicator light
MIN indication ↓ MAX indication	ILL1 (Min. brightness) ↓*4 ILL6 (Max. brightness)	*1, *2, *3
MAX indication ↓ MIN indication	ILL6 (Max. brightness) ↓*4 ILL1 (Min. brightness)	

*1: Warning lights and indicator lights controlled by the meter drive circuit are illuminated. <Ref. to IDI-2, SPECIFICATION, General Description.>
*2: Warning lights and indicator lights controlled by other module are turned on/off according to the module control. <Ref. to IDI-2, SPECIFICATION, General Description.>
*3: Engine coolant temperature warning light illuminates in red.
*4: Display for one second for each level.

6) Press the trip meter knob once.

7) Go to “Meter Indicator Needle Indication Check”.
Check meter operation, warning light, indicator light, and LCD.

NOTE:
• Meter indicator switches every 1.5 seconds for each indication.
• ILL indication illuminates at the same brightness as when entering “Meter Indicator Needle Indication Check”.
• During operation, “_S_2” is displayed on the LCD trip display.

Speedometer (km/h)	Tachometer (rpm)	ECO gauge	Warning light/ indicator light
0	0	Lowest point	*1, *2, *3
0	0	–Max	
40	1000	0	
100	4000	+Max	
40	1000	0	
0	0	–Max	

*1: Warning lights and indicator lights controlled by the meter drive circuit go off. <Ref. to IDI-2, SPECIFICATION, General Description.>
*2: Warning lights and indicator lights controlled by other module are turned on/off according to the module control. <Ref. to IDI-2, SPECIFICATION, General Description.>
*3: Engine coolant temperature indicator light illuminates in blue.
8) Press the trip meter knob once.
9) Go to “Check LCD display”.
Check the LCD display.

NOTE:
• After “_S_3” is displayed on the LCD, the LCD display check mode is initiated.
• LCD display switches every 1 second.
• Warning lights and indicator lights controlled by the meter drive circuit go off. <Ref. to IDI-2, SPECIFICATION, General Description.>
• Warning lights and indicator lights controlled by other module are turned on/off according to the module control. <Ref. to IDI-2, SPECIFICATION, General Description.>
• The meter indication remains at the same level as “Meter Indicator Needle Indication Check”.
• ILL indication illuminates at ILL6 level (max. brightness).

- After No. 14 is displayed in the illumination order, display is repeated from No. 1 again.

ORDER	AT/SS	SHIFT UP	CRUISE/SET	MODE X/S/I/S#	TRIP/ODO	FUEL METER	LFW
1	▲▼	▲	SET	[S][I]S#	A/B 888.8 888888 km	E F	OFF
2			OFF	OFF	111.1 111111	E F	ON
3	▲		OFF	OFF	A 222.2 222222 km	E F	ON
4			OFF		333.3 333333	E F	OFF
5	▼	▲	OFF	OFF	B 444.4 444444 km	E F	OFF
6			OFF	OFF	555.5 555555	E F	OFF
7	▲			[S]	A 666.6 666666 km	E F	OFF
8			OFF	OFF	777.7 777777	E F	OFF
9	▼		SET	OFF	B 888.8 888888 km	E F	OFF
10			OFF	[I]	999.9 999999	E F	OFF
11	▲	▲	OFF	OFF	A 000.0 000000 km	E F	OFF
12			OFF	OFF	888.8 888888	E F	OFF
13	▼		SET	S#	B 888.8 888888 km	E F	ON
14			OFF	OFF	888.8 888888		OFF

IDI00712

D: INSPECTION

Refer to “Basic Diagnostic Procedure” of “INSTRUMENTATION/DRIVER INFO (DIAGNOSTICS)” section. <Ref. to IDI(diag)-2, Basic Diagnostic Procedure.>

E: NOTE

For procedure of each component in the combination meter system, refer to the respective section.

- Combination meter assembly: <Ref. to IDI-16, Combination Meter.>
- Speedometer: <Ref. to IDI-19, Speedometer.>
- Tachometer: <Ref. to IDI-20, Tachometer.>
- FUEL meter: <Ref. to IDI-21, Fuel Gauge.>
- ECO gauge: <Ref. to IDI-22, ECO Gauge.>

4. Multi-function Display (MFD) System

A: WIRING DIAGRAM

Refer to “Multi-function Display (MFD) System” in WI section.

- Gasoline engine model: <Ref. to WI(w/o HEV)-108, WIRING DIAGRAM, Multi-function Display (MFD) System.>
- HEV model: <Ref. to WI(HEV)-168, WIRING DIAGRAM, Multi-function Display (MFD) System.>

B: ELECTRICAL SPECIFICATION

1. MULTI FUNCTION DISPLAY

- Standard type

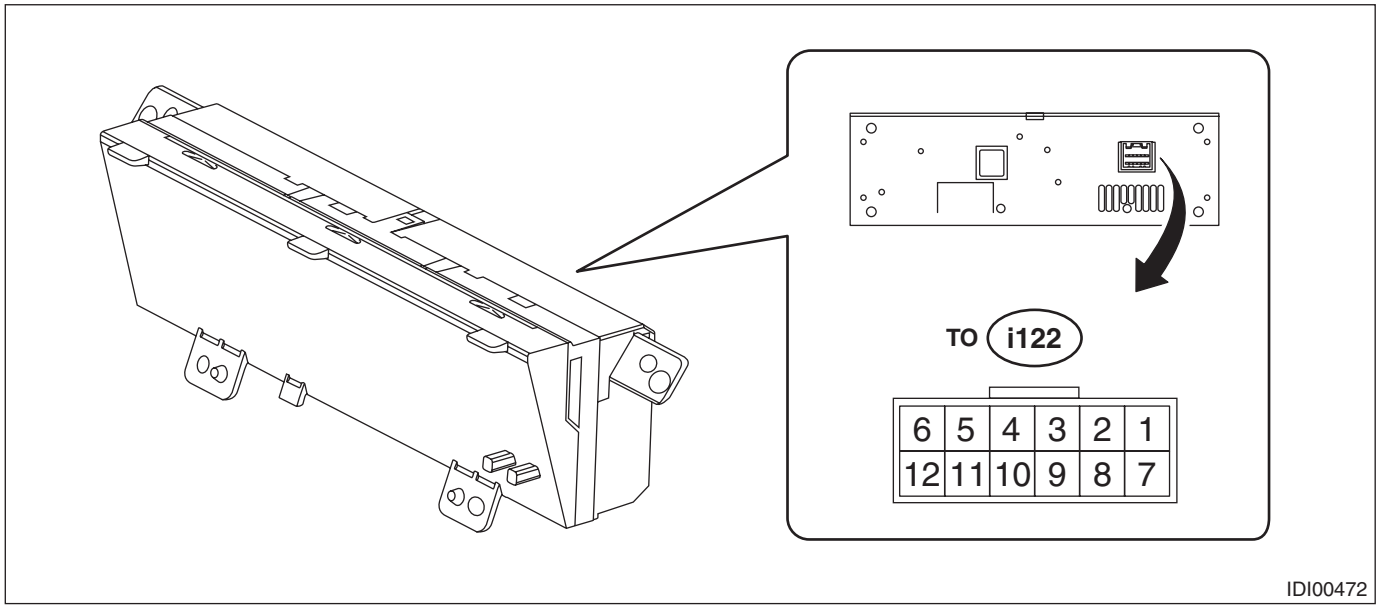

Terminal No.	Item	Measuring condition	Standard
1 (+B) ←→ Chassis ground	Voltage	Always	10 — 14 V
2 (GND) ←→ Chassis ground	Resistance	Always	Less than 1 Ω
3 (IG) ←→ Chassis ground	Voltage	IG OFF → ON	0 V → 10 — 14 V
9 (U-ART com.)	—	Cannot be measured	—
10 ←→ Chassis ground	Voltage	Passenger’s airbag ON indicator light OFF → ON	0 V → 1.5 V
11 ←→ Chassis ground	Voltage	Passenger’s airbag OFF indicator light OFF → ON	0 V → 1.5 V

- High grade type

Refer to “Control Module I/O Signal” of “INSTRUMENTATION/DRIVER INFO (DIAGNOSTICS)” section. <Ref. to IDI(diag)-7, ELECTRICAL SPECIFICATION, Control Module I/O Signal.>

C: OPERATION

1. DIAGNOSTIC MODE (HIGH GRADE TYPE ONLY)

The settings of the multi-function display can be changed by performing the following procedures to display the diagnostic mode.

CAUTION:
- **Perform the work with IG-ON while charging the battery.**
- **While performing the work, close the front hood and all doors, and do not operate any electrical parts.**
- **Display can not be switched to diagnostic mode if the illumination control dial is set to the position for the dimming cancel function (maximum brightness).**

1) Procedure

CAUTION:
Perform the steps described in (2) through (4) within 10 seconds.

(1) Within 3 seconds after turning the IG-ON, turn the lighting switch to Switch 1 (TAIL) or Switch 2 (HEAD).
(2) While keeping the lighting switch to Switch 1 (TAIL) or Switch 2 (HEAD) position, press the i/SET switch three times.
(3) Turn the lighting switch to OFF, and press the i/SET switch three times.
(4) Turn the lighting switch to Switch 1 (TAIL) or Switch 2 (HEAD) position again, press the i/SET switch three times.

NOTE:
- Except for the demonstration display setting of the diagnostic mode, the display will terminate with IG-OFF or by selecting “Back” from the menu screen.
- The demonstration display setting of the diagnostic mode will terminate by starting the engine or removing the battery. Even if it becomes IG-OFF then IG-ON again, the diagnostic mode will not terminate.
- To select other menus from the demonstration display setting, terminate the diagnostic mode by starting the engine or removing the battery, then access to the diagnostic mode again.

2) Display menu
Change the display and settings from each menu.

Menu	Item	Contents
Demonstration display setting	—	Shows demonstration display.
Vehicle status confirmation	• CAN communication	Displays the connection status of input signals.
	• U-ART communication	
	• Camera connection	
Rear camera settings	• Guide line adjustment	Adjust the guide line in the order of up/down, left/right and rotate, then select “Set” to determine.
	• Guide line display	Select “ON” or “OFF”, then select “Set” to determine.
	• Guide line reset	Select “Yes” or “No” to determine whether to restore to the default settings.
Customize	• Key operation sound	Select “ON” or “OFF”, then select “Set” to determine.
	• Correction of lifetime fuel economy value*	Adjust the fuel economy value within the range of -10 — +10 km/l, then determine the value with i/SET switch.
Back	—	Finish the diagnostic mode.

*: Correction of lifetime fuel economy value is used only when the multi-function display has been replaced. This function is provided as a compensation feature to bring the current lifetime fuel economy value to the one before the replacement of multi-function display.

2. ODO FUEL ECONOMY VALUE RESET (HIGH GRADE TYPE ONLY)

Follow the procedure below to initialize the ODO setting value.

1) Procedure
   (1) After IG-ON, pull the i/SET switch toward you for two seconds to display the setting screen.
   (2) Select “Factory delivery setting” from “Setting screen”.
   (3) Select “ODO setting reset” and determine with “Yes”.
   (4) The screen that indicates the completion of the setting is displayed for three seconds. This is the end of operation.

NOTE:
- The resetting operation is confirmed twice. Select confirmation according to the screen.
- The display will terminate with IG-OFF or by selecting “Back” from the menu screen.

D: INSPECTION

- Standard type

Refer to the following inspection steps. <Ref. to IDI-13, SYMPTOM CHART, INSPECTION, Multi-function Display (MFD) System.>

- High grade type

Refer to “Basic Diagnostic Procedure” of “INSTRUMENTATION/DRIVER INFO (DIAGNOSTICS)” section. <Ref. to IDI(diag)-2, Basic Diagnostic Procedure.>

1. SYMPTOM CHART

Symptoms	Repair order	Note
No display is shown.	1. Power supply 2. Ground circuit 3. Communication circuit harness 4. MFD	<Ref. to IDI-13, CHECK POWER SUPPLY AND GROUND CIRCUIT AND COMMUNICATION CIRCUIT, INSPECTION, Multi-function Display (MFD) System.>
Ambient air temperature/fuel economy displays do not appear.	1. Power supply 2. Ground circuit 3. MFD	<Ref. to IDI-14, CHECK CLOCK SYSTEM COMMUNICATION CIRCUIT, INSPECTION, Multi-function Display (MFD) System.>
Only ambient air temperature display is not displayed.	1. Power supply 2. Harness 3. Ambient sensor 4. Communication circuit 5. MFD	<Ref. to IDI-14, CHECK AMBIENT TEMPERATURE METER SYSTEM COMMUNICATION CIRCUIT, INSPECTION, Multi-function Display (MFD) System.>
Only fuel economy display is not displayed.	1. Setting 2. MFD	<Ref. to IDI-15, CHECK COMMUNICATION CIRCUIT OF FUEL ECONOMY SYSTEM, INSPECTION, Multi-function Display (MFD) System.>

2. CHECK POWER SUPPLY AND GROUND CIRCUIT AND COMMUNICATION CIRCUIT

	Step	Check	Yes	No
1	**CHECK POWER SUPPLY.** 1) Disconnect the MFD connector. 2) Measure the voltage between MFD connector and chassis ground. ***Connector & terminal*** ***(i122) No. 1 (+) — Chassis ground (–):***	Is the voltage 10 V or more?	Go to step **2**.	Check the harness for open or short between the fuse and MFD.
2	**CHECK GROUND CIRCUIT.** Measure the resistance between MFD connector and chassis ground. ***Connector & terminal*** ***(i122) No. 2 — Chassis ground:***	Is the resistance less than 10 Ω?	Go to step **3**.	Repair or replace the harness.

	Step	Check	Yes	No
3	**CHECK HARNESS BETWEEN MFD AND COMBINATION METER ASSEMBLY.** 1) Disconnect the connector of combination meter assembly. 2) Check harness between MFD and combination meter assembly. ***Connector & terminal*** ***(i122) No. 9 — (i10) No. 28:***	Is harness normal?	Go to step **4**.	Repair or replace the harness.
4	**CHECK MFD.** 1) Remove the MFD. 2) Attach the clock to another vehicle on which the clock display operates normally, and check its operation.	Is the MFD normal?	Replace the meter - main assembly.	Replace the MFD.

3. CHECK CLOCK SYSTEM COMMUNICATION CIRCUIT

	Step	Check	Yes	No
1	**CHECK POWER SUPPLY.** 1) Disconnect the MFD connector. 2) Turn the ignition switch to ON. 3) Measure the voltage between MFD connector and chassis ground. ***Connector & terminal*** ***(i122) No. 3 (+) — Chassis ground (–):***	Is the voltage 10 V or more?	Go to step **2**.	Repair or replace the harness.
2	**CHECK GROUND CIRCUIT.** Measure the resistance between MFD connector and chassis ground. ***Connector & terminal*** ***(i122) No. 2 — Chassis ground:***	Is the resistance less than 10 Ω?	Go to step **3**.	Repair or replace the harness.
3	**CHECK MFD.** 1) Remove the MFD. 2) Attach the clock to another vehicle on which the clock display operates normally, and check its operation.	Is the MFD normal?	Repair the poor contact of connector.	Replace the MFD.

4. CHECK AMBIENT TEMPERATURE METER SYSTEM COMMUNICATION CIRCUIT

	Step	Check	Yes	No
1	**CHECK AMBIENT SENSOR POWER SUPPLY.** 1) Disconnect the ambient sensor connector. 2) Turn the ignition switch to ON. 3) Measure the voltage between the ambient sensor connector and chassis ground. ***Connector & terminal*** ***(F78) No. 1 (+) — Chassis ground (–):***	Is the voltage 4 V or more?	Go to step **2**.	Check the harness for open or short between the fuse and MFD.
2	**CHECK HARNESS BETWEEN AMBIENT SENSOR AND COMBINATION METER ASSEMBLY.** 1) Disconnect the connector of combination meter assembly. 2) Check harness between ambient sensor and combination meter assembly. ***Connector & terminal*** ***(F78) No. 1 — (i10) No. 27:*** ***(F78) No. 2 — (i10) No. 36:***	Is harness normal?	Go to step **3**.	Repair or replace the harness.
3	**CHECK AMBIENT SENSOR.** Check the ambient sensor. <Ref. to AC-82, INSPECTION, Ambient Sensor.>	Is the ambient sensor operating properly?	Go to step **4**.	Replace the ambient sensor.

	Step	Check	Yes	No
4	**CHECK AMBIENT TEMPERATURE DISPLAY.** 1) Connect the combination meter assembly connector. 2) Install the 3 kΩ resistance between connector terminals of the ambient sensor. 3) Turn the ignition switch to ON. ***Connector & terminal (F78) No. 1 — No. 2:***	Does the ambient temperature display 25°C (77°F)?	Repair the poor contact between the ambient sensor and harness connector.	Go to step **5**.
5	**CHECK CURRENT DATA.** Using the Subaru Select Monitor, display the data of «Ambient Air Temperature». NOTE: For detailed procedures, refer to "PC application help for Subaru Select Monitor".	Is the ambient temperature of 25°C (77°F) output?	Go to step **6**.	Replace the meter - main assembly. <Ref. to IDI-16, Combination Meter.>
6	**CHECK MFD.** 1) Remove the MFD. 2) Attach the ambient temperature display to another vehicle on which the ambient temperature display operates normally to check its operation.	Does the ambient temperature display 25°C (77°F)?	Replace the MFD.	Replace the meter - main assembly. <Ref. to IDI-16, Combination Meter.>

5. CHECK COMMUNICATION CIRCUIT OF FUEL ECONOMY SYSTEM

	Step	Check	Yes	No
1	**CHECK FUEL ECONOMY DISPLAY OFF MODE.** Check that the mode display changes when the MFD changeover knob is operated. (Display changes in the following order: cruising distance → average fuel economy → instantaneous fuel economy → continuous driving time → average vehicle speed → blank display)	Is fuel economy displayed?	MFD is normal.	Go to step **2**.
2	**CHECK MFD.** 1) Remove the MFD. 2) Attach the fuel economy display to another vehicle on which the fuel economy display operates normally to check its operation.	Is the fuel economy display correct?	Replace the meter - main assembly. <Ref. to IDI-16, Combination Meter.>	Replace the MFD.

E: NOTE

For procedure of each component in the clock system, refer to the respective section.
- Multi-function display: <Ref. to IDI-23, Multi-function Display (MFD).>

5. Combination Meter

A: REMOVAL

1) Disconnect the ground cable from battery. <Ref. to NT-5, BATTERY, NOTE, Note.>

NOTE:
For the 12 volt engine restart battery of HEV model, disconnect the ground terminal from 12V engine restart battery sensor.

2) Release the lock, tilt the steering column to the lowest end and fully extend the column by the telescopic system.

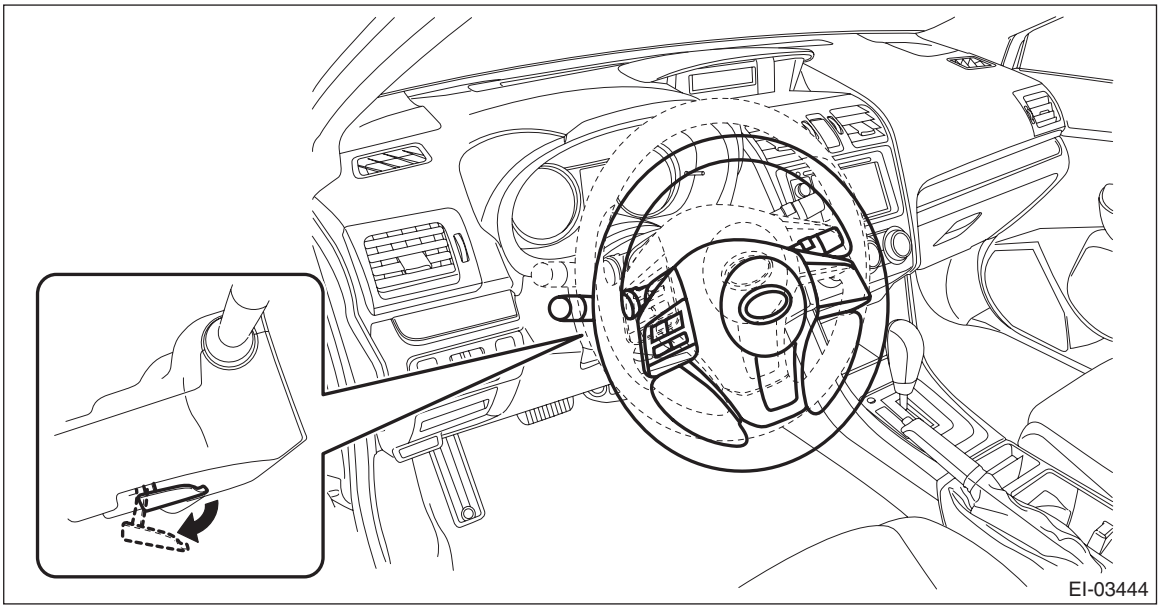

3) Release the screws, clips and claws, and remove the visor - combination meter.

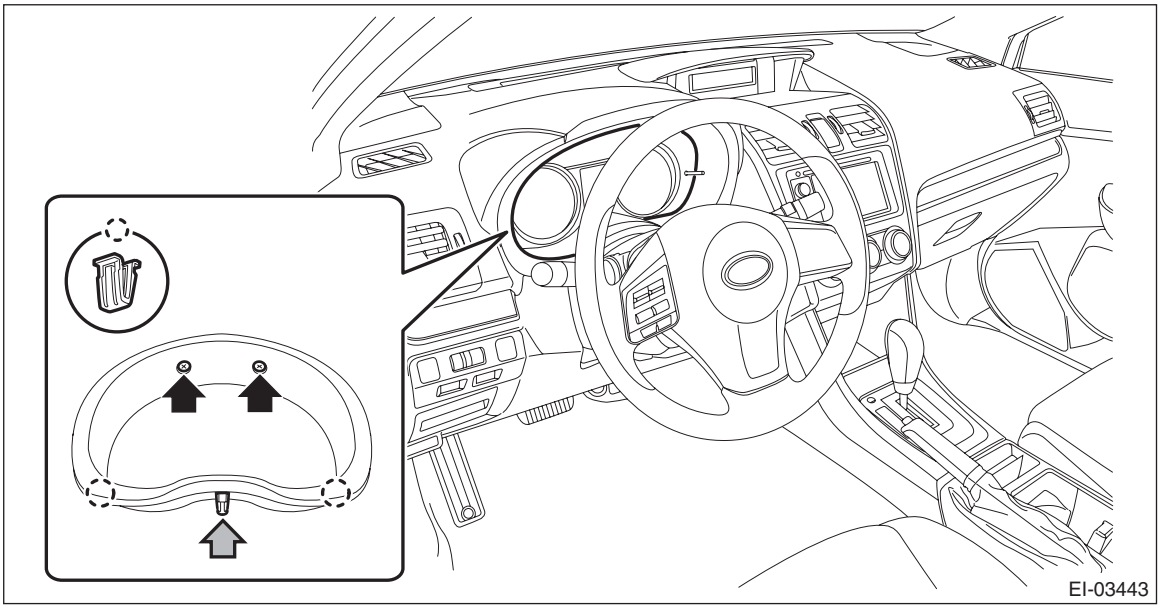

4) Remove the combination meter assembly.

CAUTION:
- **Be careful not to damage the meter or instrument panel.**
- **Pay particular attention to avoid damaging the meter glass.**

(1) Remove the screws.

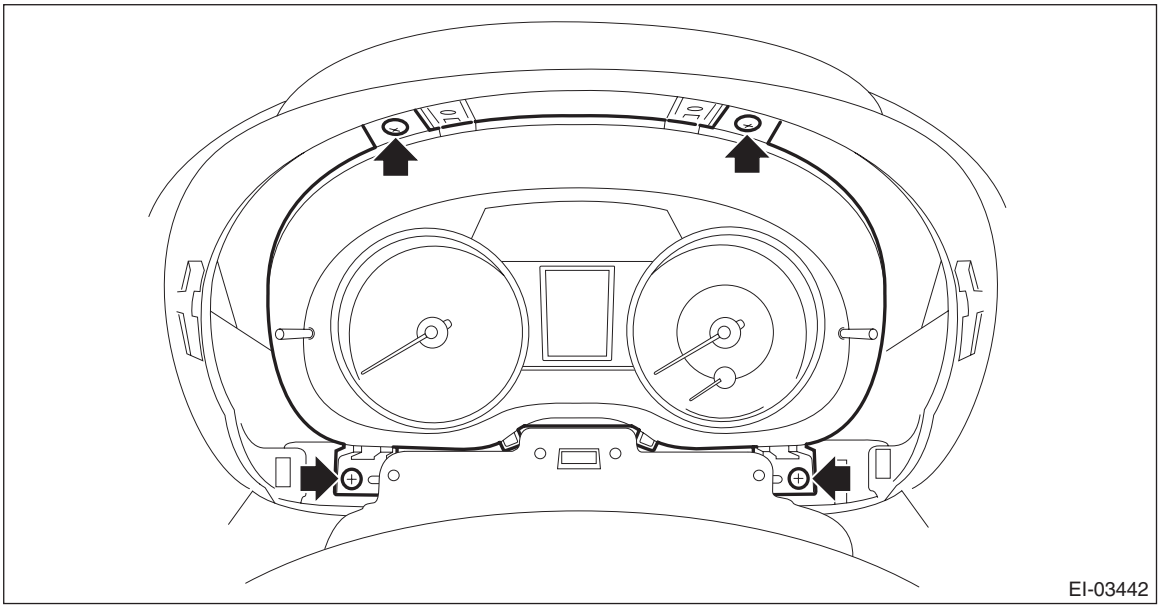

(2) Pull the combination meter assembly toward you and disconnect the connector.

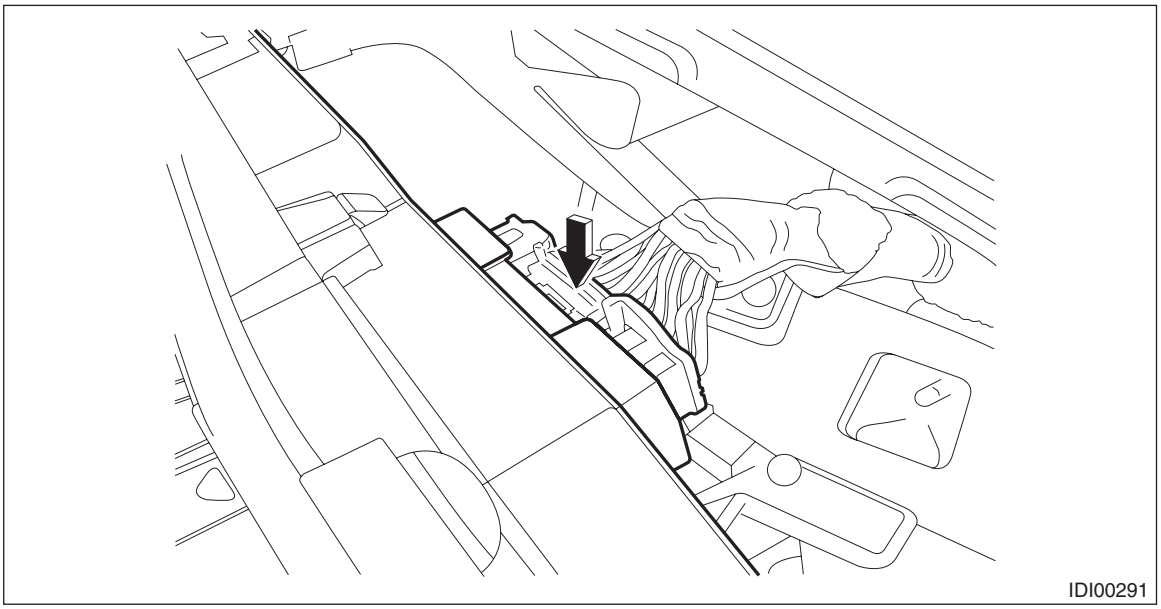

B: INSTALLATION

CAUTION:
- **Make sure the electrical connector is connected securely.**
- **Make sure that each meter operates normally.**
- **When the combination meter assembly has been replaced, be sure to perform the following operations.**
  - **For models without the keyless access with push button start except for C0 and C5, be sure to perform the registration of immobilizer. For the relevant procedures, refer to the "REGISTRATION MANUAL FOR IMMOBILIZER".**
  - **Be sure to reset the ODO fuel economy value of the multi-function display (MFD). <Ref. to IDI-13, ODO FUEL ECONOMY VALUE RESET (HIGH GRADE TYPE ONLY), OPERATION, Multi-function Display (MFD) System.>**

Install each part in the reverse order of removal.

C: DISASSEMBLY

1. DISASSEMBLY OF COMBINATION METER ASSEMBLY

CAUTION:
- **Use gloves to avoid damage and getting fingerprints on the glass surface and meter surfaces.**
- **Be careful not to apply excessive force to the trip knob.**
- **Be sure not to touch the meter indicator needle.**

Release the claw, and remove the glass - combination meter (A) and visor - combination meter (B) from the meter - main assembly (C).

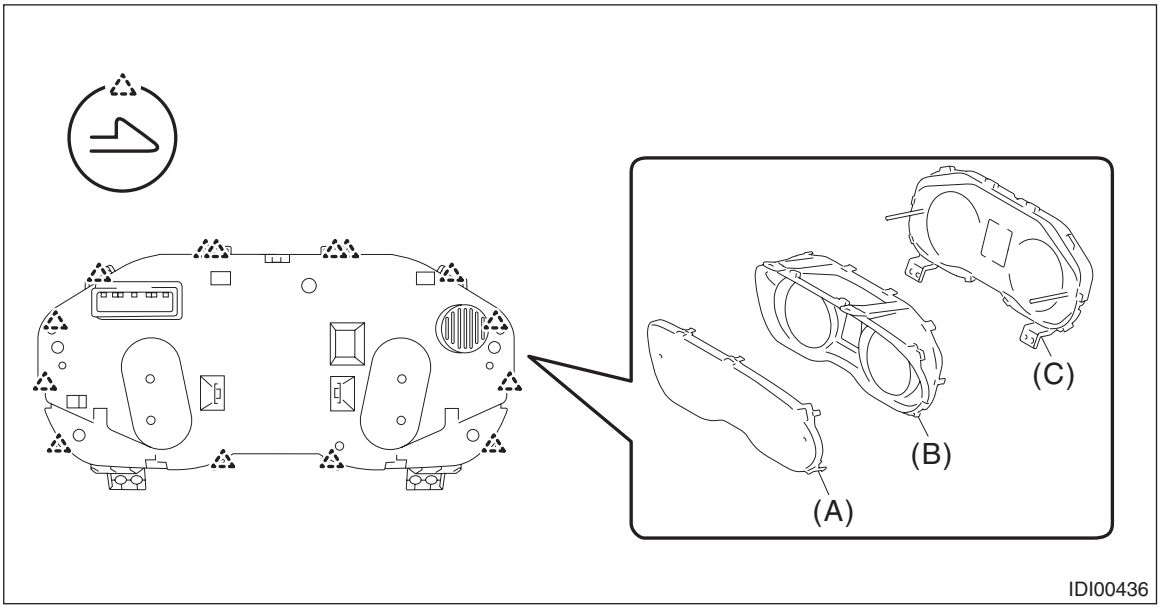

2. BULB REPLACEMENT

Because LEDs are used for all of warning lights and indicator lights of combination meters, replace the meter - main assembly if faulty.

D: ASSEMBLY

Assemble each part in the reverse order of disassembly.

6. Speedometer

A: SPECIFICATION

Since the meter - main assembly cannot be disassembled, do not remove or inspect the speedometer alone. (Do not remove the cover on the back surface.)

7. Tachometer

A: SPECIFICATION

Since the meter - main assembly cannot be disassembled, do not remove or inspect the tachometer alone. (Do not remove the cover on the back surface.)

8. Fuel Gauge

A: SPECIFICATION

Since the meter - main assembly cannot be disassembled, do not remove or inspect the fuel gauge alone. (Do not remove the cover on the back surface.)

9. ECO Gauge

A: SPECIFICATION

Since the meter - main assembly cannot be disassembled, do not remove or inspect the ECO gauge alone. (Do not remove the cover on the back surface.)

10.Multi-function Display (MFD)

A: REMOVAL

1) Disconnect the ground cable from battery. <Ref. to NT-5, BATTERY, NOTE, Note.>

NOTE:
For the 12 volt engine restart battery of HEV model, disconnect the ground terminal from 12V engine restart battery sensor.
2) On manual A/C models, disconnect the control cables from both sides of the heater and cooling unit assembly.

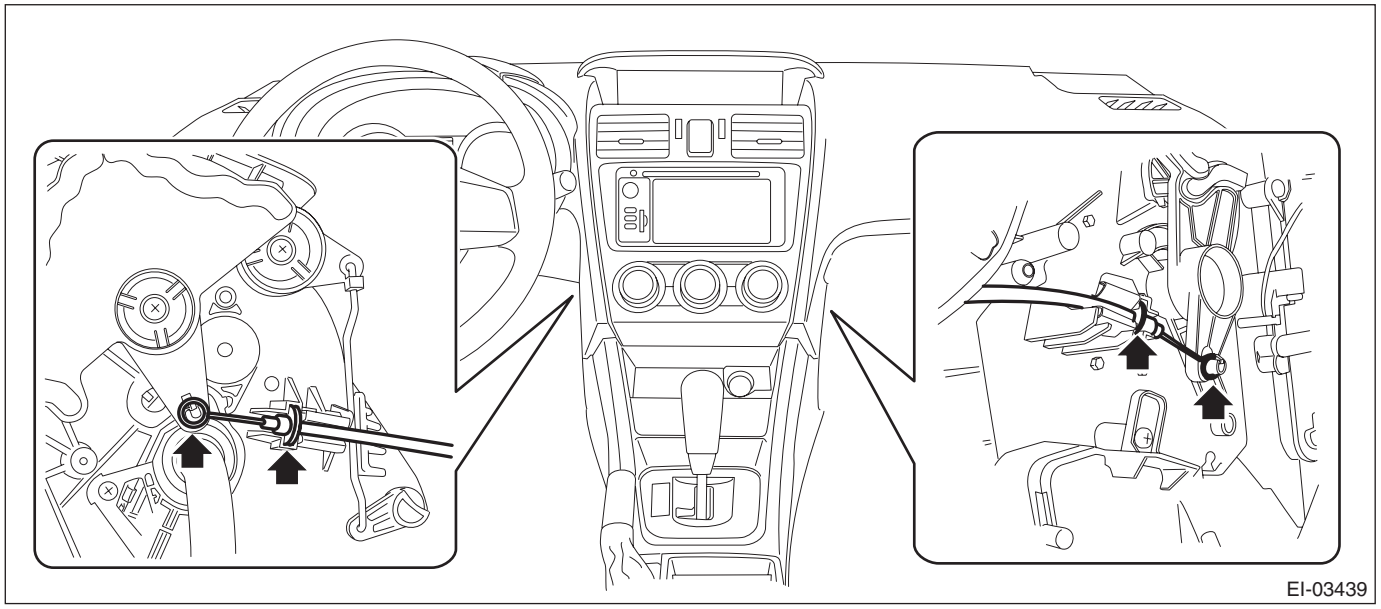

NOTE:
Remove the glove box pocket assembly on the passenger's side.
3) Remove the panel center assembly.

CAUTION:
- **Do not put your finger on the fin of the air vent grille. Doing so may damage the fin.**
- **Pull the panel center assembly slowly. Pulling with excessive force may damage the connector.**

(1) Insert a plastic remover to the three areas shown by the arrows, and slightly lift up the panel center assembly.
(2) With the panel center assembly lifted up slightly, release the claw by using a clip remover wrapped with protective tape.
(3) Release the rest of the claws, and pull out the panel center assembly.

(4) Disconnect the connectors, and remove the panel center assembly.

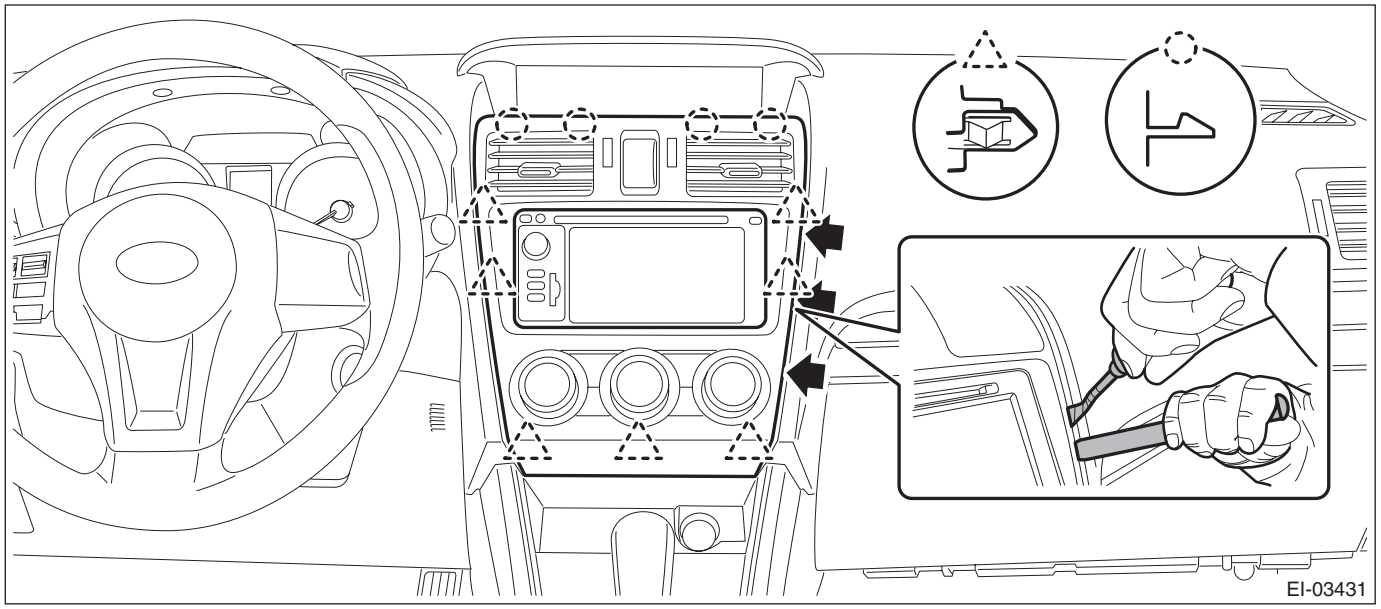

4) Release the claw and hook, and then remove the cover center UPR.

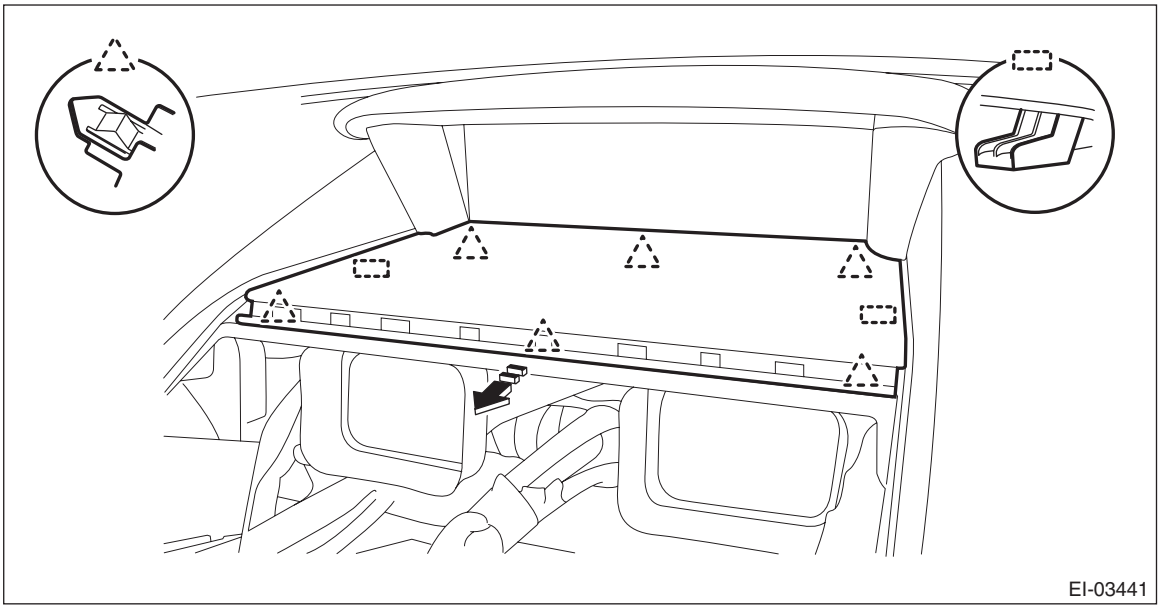

NOTE:
Lightly push up the back of the cover center UPR, hook the finger to the end portion and pull it toward you to remove it.

5) Remove the multi-function display.

CAUTION:
Be careful not to damage the multi-function display or instrument panel.

(1) Release the screws and claws.
(2) Pull the multi-function display assembly toward you, and disconnect the connector.

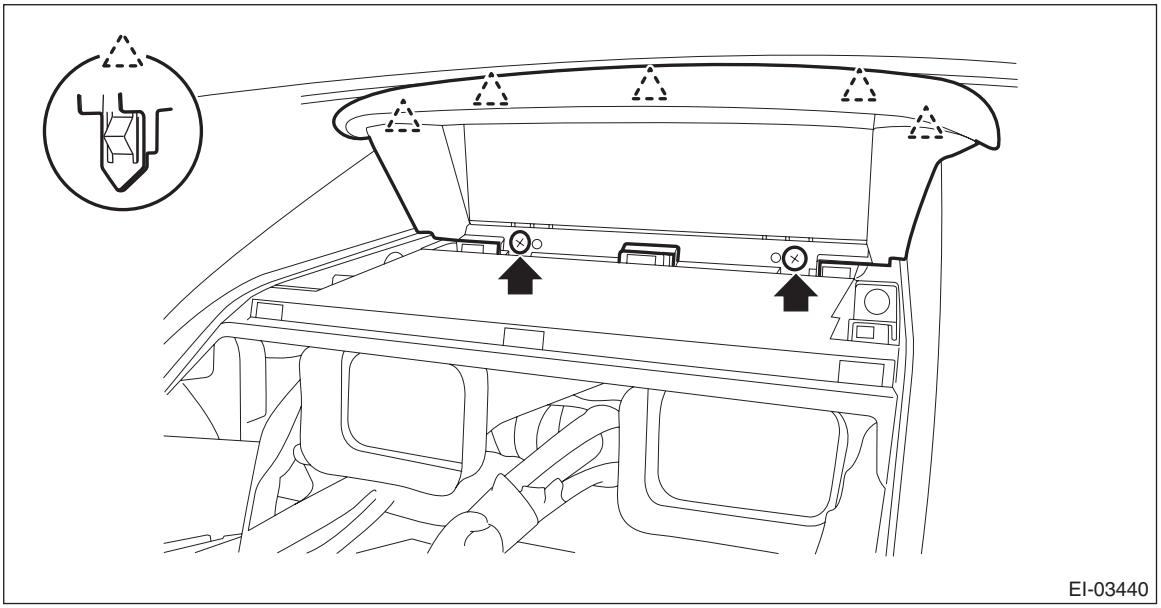

(3) Remove the screw, and remove the multi-function display from the panel - display.

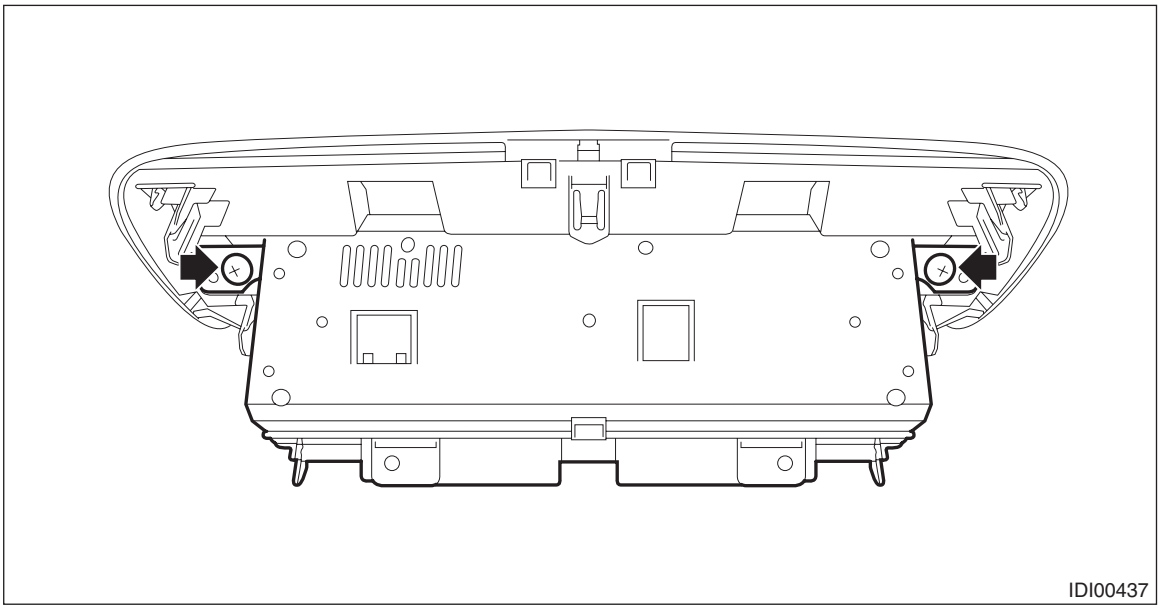

B: INSTALLATION

CAUTION:
- **Make sure the electrical connector is connected securely.**
- **Make sure that the multi-function display operates normally.**
- **After installing the panel center assembly, check that the air vent grille of the panel center assembly is inserted correctly into the air vent duct.**
- **When the multi-function display has been replaced, perform the following operations.**
  – Be sure to reset the ODO fuel economy value of the multi-function display (MFD). <Ref. to IDI-13, ODO FUEL ECONOMY VALUE RESET (HIGH GRADE TYPE ONLY), OPERATION, Multi-function Display (MFD) System.>
  – Be sure to correction the lifetime fuel economy value of the multi-function display (MFD). <Ref. to IDI-12, DIAGNOSTIC MODE (HIGH GRADE TYPE ONLY), OPERATION, Multi-function Display (MFD) System.>

Install each part in the reverse order of removal.

11.Steering Switch

A: REMOVAL

1) Position the front wheels straight ahead. (After moving a vehicle 5 m (16 ft) or more with front wheels positioned straight ahead, make sure that the vehicle moves straight ahead.)
2) Turn the ignition switch to OFF.
3) Disconnect the ground cable from battery and wait for at least 60 seconds before starting work. <Ref. to NT-5, BATTERY, NOTE, Note.>

NOTE:
For the 12 volt engine restart battery of HEV model, disconnect the ground terminal from 12V engine restart battery sensor.
4) Remove the driver's airbag module.

CAUTION:
Before handling the airbag module, refer to "CAUTION" of "General Description" in "AIRBAG SYSTEM". <Ref. to AB-11, CAUTION, General Description.>

(1) Using a hexagon wrench etc. wrapped by protective tape, insert the snap pins and release the locks (3 locations).

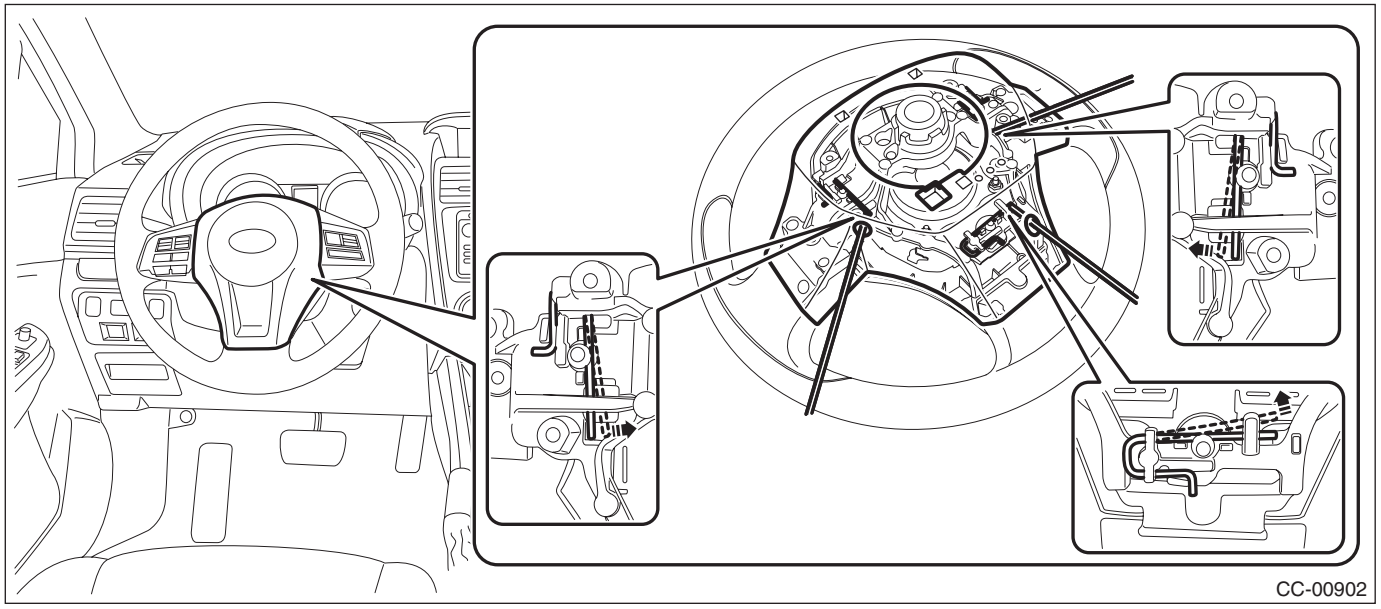

(2) Disconnect the horn harness and airbag connector, and remove the driver's airbag module. <Ref. to AB-20, PROCEDURE, Airbag Connector.>

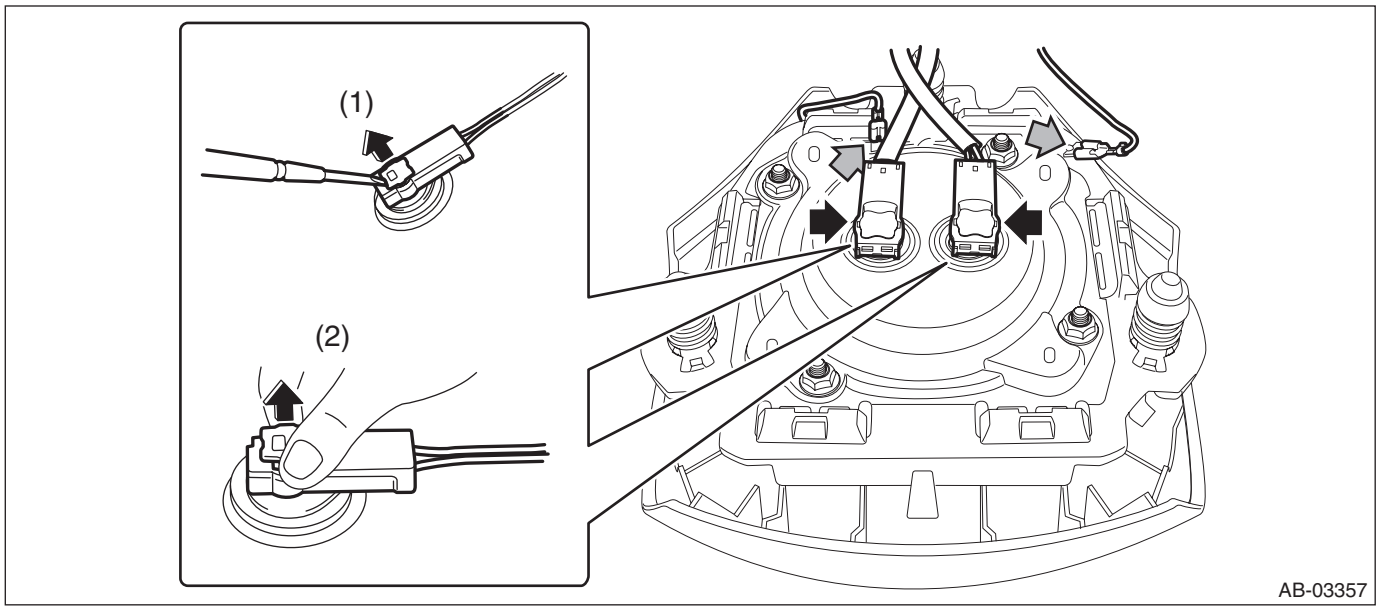

5) Remove the steering wheel.

CAUTION:
- **Always use the steering wheel puller for removal to avoid deforming the steering wheel.**
- **If the steering wheel has been removed, make sure that the roll connector is not turned from the original position.**

(1) Disconnect the connector and remove the nut.
(2) Put alignment marks and remove the steering wheel using a steering wheel puller.

Preparation tool:
Steering wheel puller

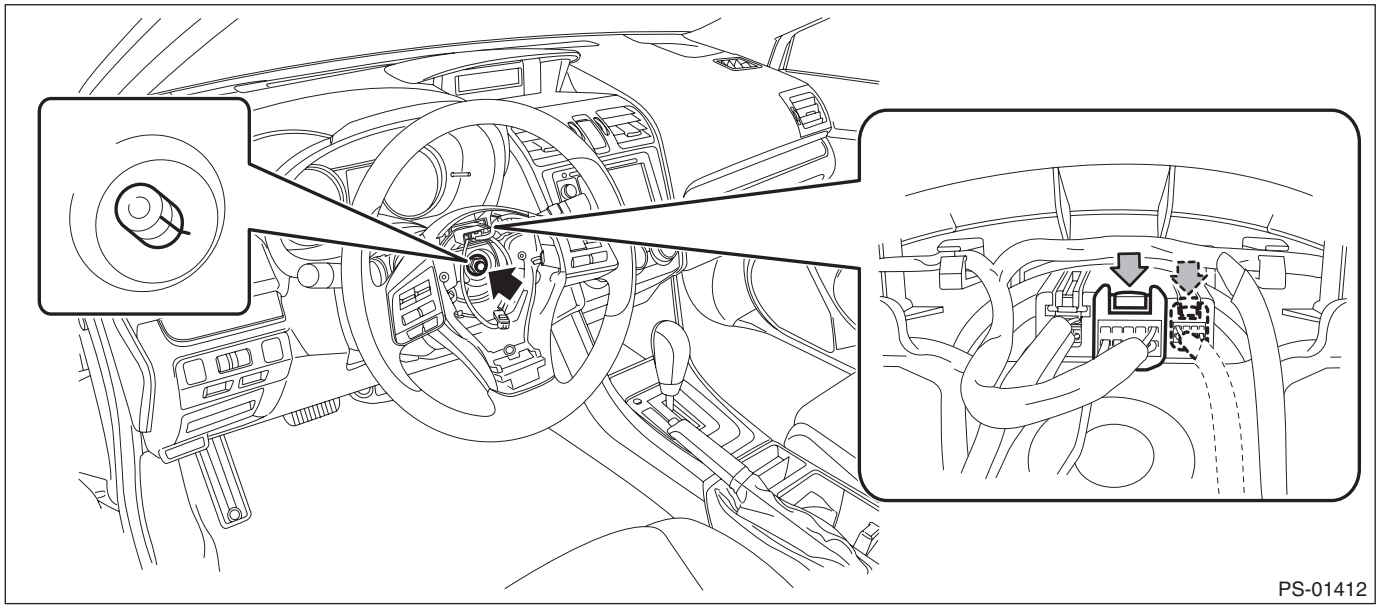

6) Remove the switch assembly - steering.
(1) Remove the screw, disconnect the connector and remove the paddle shift switch. (Model with paddle shift)

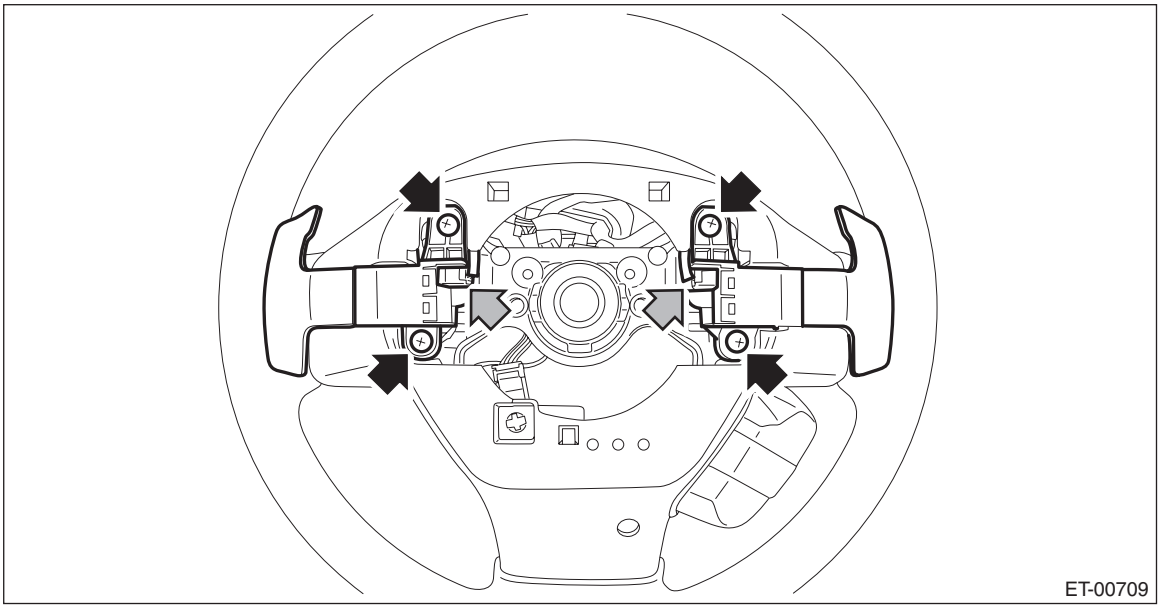

(2) Remove the connector and screw.
(3) Release the claws and clips, detach the cover - steering wheel LWR.

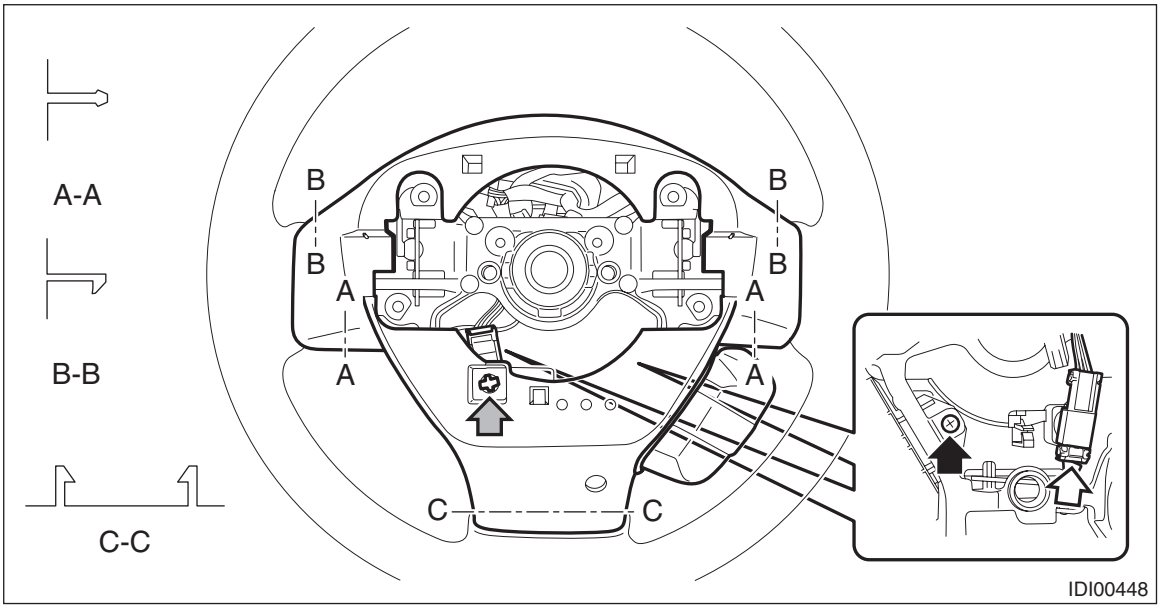

(4) Remove the switch assembly - steering from the cover - steering wheel LWR.

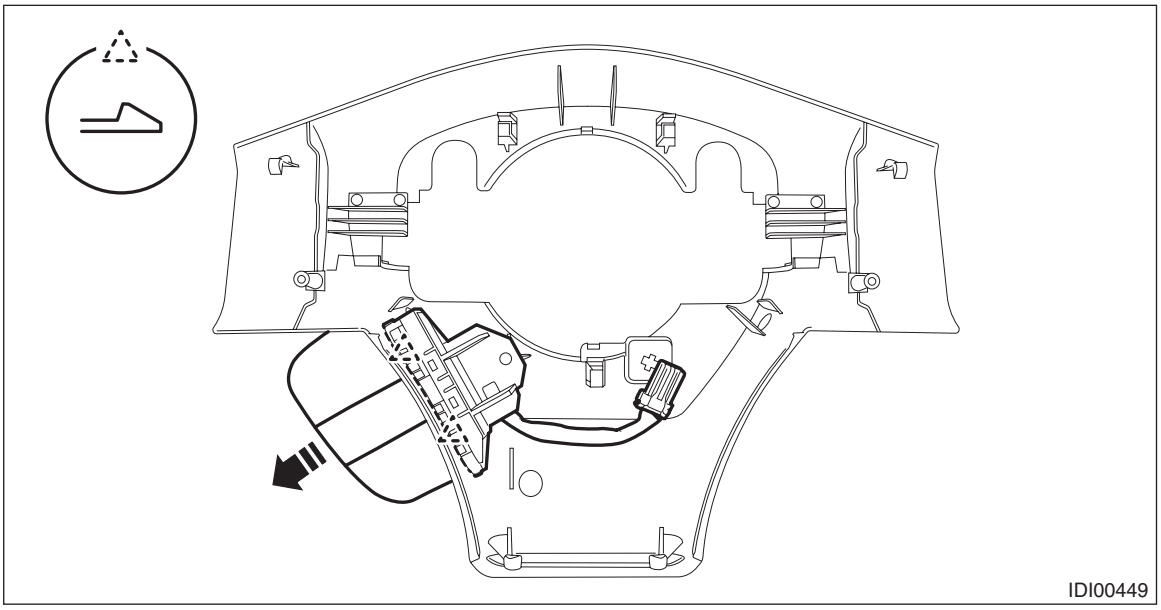

B: INSTALLATION

CAUTION:
• Before handling the airbag module, refer to "CAUTION" of "General Description" in "AIRBAG SYSTEM". <Ref. to AB-11, CAUTION, General Description.>
• Do not allow harness and connectors to interfere or get tangled up with other parts.
• If the steering wheel and steering angle sensor (steering roll connector) are removed, perform "VDC sensor midpoint setting mode" of the VDC. <Ref. to VDC-21, VDC SENSOR MIDPOINT SETTING MODE, ADJUSTMENT, VDC Control Module and Hydraulic Control Unit (VDCCM&H/U).>
1) Before installing steering wheel, be sure to adjust the direction of steering roll connector with steering wheel. <Ref. to AB-110, ADJUSTMENT, Roll Connector.>
2) Install each part in the reverse order of removal.

NOTE:
Align the alignment marks on the steering wheel and the column assembly - steering.

Tightening torque:
Steering wheel: 39 N·m (3.98 kgf-m, 28.8 ft-lb)

Clearance:
Between cover assembly - column and steering wheel: 4 — 6 mm (0.16 — 0.24 in)

C: INSPECTION

UNIT INSPECTION

PREPARATION TOOL:

Circuit tester

1) Check the resistance between switch terminals.

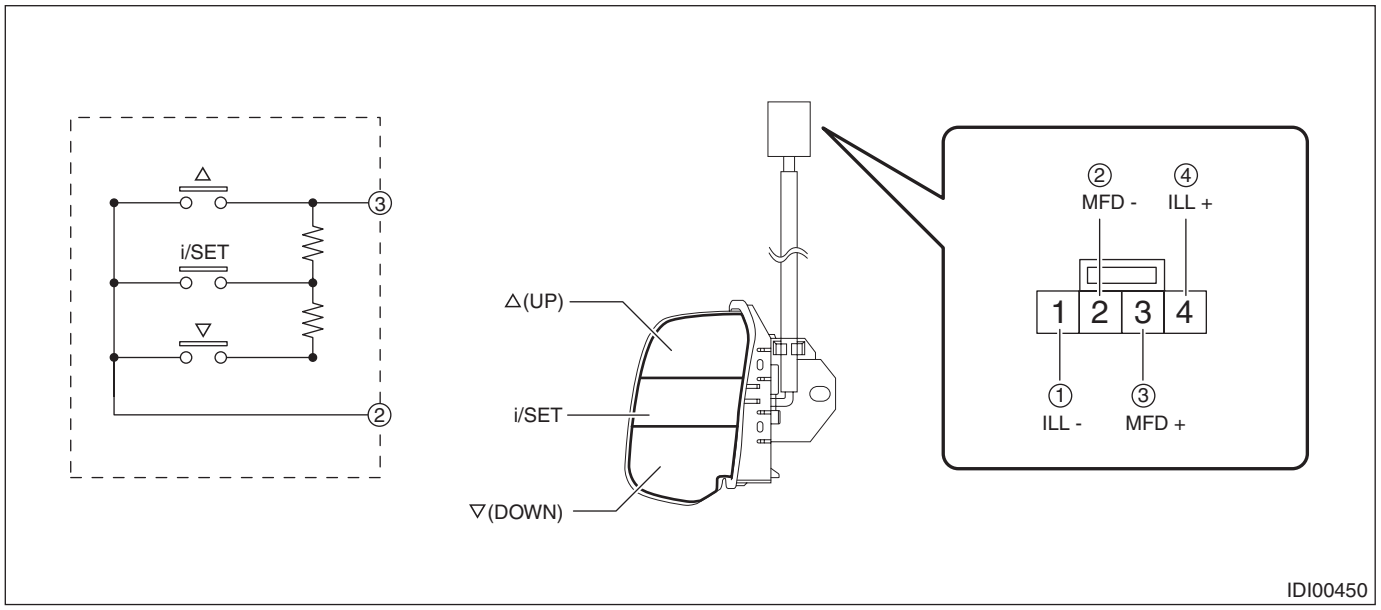

Terminal No.	Inspection conditions		Standard
3 — 2	△ (UP) i/SET ▽ (DOWN)	All OFF	Approx. 3670 Ω
3 — 2	△ (UP)	ON	Less than 1 Ω
3 — 2	i/SET	ON	Approx. 1000 Ω
3 — 2	▽ (DOWN)	ON	Approx. 2670 Ω

2) Replace the switch assembly - steering if the inspection result is not within the standard.

INSTRUMENTATION/DRIVER INFO (DIAGNOSTICS)

IDI(diag)

		Page
1.	Basic Diagnostic Procedure	2
2.	Check List for Interview	4
3.	General Description	5
4.	Electrical Component Location	6
5.	Control Module I/O Signal	7
6.	Subaru Select Monitor	9
7.	Read Diagnostic Trouble Code (DTC)	14
8.	Clear Memory Mode	15
9.	Read Current Data	16
10.	System Operation Check Mode	19
11.	User Customizing	22
12.	List of Diagnostic Trouble Code (DTC)	23
13.	Diagnostic Procedure with Diagnostic Trouble Code (DTC)	25
14.	Charge Warning Light	37

1. Basic Diagnostic Procedure

A: PROCEDURE

1. COMBINATION METER

Step		Check	Yes	No
1	**PERFORM CUSTOMER INTERVIEW.** Using the Check List for Interview, ask the customer the condition of how trouble occurs. <Ref. to IDI(diag)-4, CHECK, Check List for Interview.>	Did you interview the customer?	Go to step **2**.	Interview the customer. <Ref. to IDI(diag)-4, CHECK, Check List for Interview.>
2	**CHECK CAN COMMUNICATION.** Read the DTC of the CAN system using the Subaru Select Monitor. <Ref. to LAN(w/o HEV)(diag)-23, OPERATION, Read Diagnostic Trouble Code (DTC).> <Ref. to LAN(HEV)(diag)-29, OPERATION, Read Diagnostic Trouble Code (DTC).>	Is DTC displayed?	Perform the inspection according to the basic diagnostic procedure for LAN system. <Ref. to LAN(w/o HEV)(diag)-2, PROCEDURE, Basic Diagnostic Procedure.> <Ref. to LAN(HEV)(diag)-2, PROCEDURE, Basic Diagnostic Procedure.>	Go to step **3**.
3	**CHECK COMBINATION METER.** Using the Subaru Select Monitor, read DTC of combination meter. <Ref. to IDI(diag)-14, Read Diagnostic Trouble Code (DTC).>	Is DTC displayed?	Record DTC and time stamp, and perform the diagnosis according to DTC. <Ref. to IDI(diag)-23, LIST, List of Diagnostic Trouble Code (DTC).> For time stamp, refer to “LAN SYSTEM”. <Ref. to LAN(w/o HEV)(diag)-6, TIME STAMP, CAUTION, General Description.> <Ref. to LAN(HEV)(diag)-6, TIME STAMP, CAUTION, General Description.>	Go to step **4**.
4	**CHECK COMBINATION METER.** Check the operation of combination meter. <Ref. to IDI(diag)-19, System Operation Check Mode.>	Is it operating normally?	System is normal.	Replace the combination meter. <Ref. to IDI-16, Combination Meter.>

2. MFD

	Step	Check	Yes	No
1	**PERFORM CUSTOMER INTERVIEW.** Using the Check List for Interview, ask the customer the condition of how trouble occurs. <Ref. to IDI(diag)-4, CHECK, Check List for Interview.>	Did you interview the customer?	Go to step **2**.	Interview the customer. <Ref. to IDI(diag)-4, CHECK, Check List for Interview.>
2	**CHECK CAN COMMUNICATION.** Read the DTC of the CAN system using the Subaru Select Monitor. <Ref. to LAN(w/o HEV)(diag)-23, OPERATION, Read Diagnostic Trouble Code (DTC).> <Ref. to LAN(HEV)(diag)-29, OPERATION, Read Diagnostic Trouble Code (DTC).>	Is DTC displayed?	Perform the inspection according to the basic diagnostic procedure for LAN system. <Ref. to LAN(w/o HEV)(diag)-2, PROCEDURE, Basic Diagnostic Procedure.> <Ref. to LAN(HEV)(diag)-2, PROCEDURE, Basic Diagnostic Procedure.>	Go to step **3**.
3	**CHECK MFD.** Read the DTC relating the MFD using the Subaru Select Monitor. <Ref. to IDI(diag)-14, Read Diagnostic Trouble Code (DTC).>	Is DTC displayed?	Record DTC and time stamp, and perform the diagnosis according to DTC. <Ref. to IDI(diag)-23, LIST, List of Diagnostic Trouble Code (DTC).> For time stamp, refer to “LAN SYSTEM”. <Ref. to LAN(w/o HEV)(diag)-6, TIME STAMP, CAUTION, General Description.> <Ref. to LAN(HEV)(diag)-6, TIME STAMP, CAUTION, General Description.>	Go to step **4**.
4	**CHECK MFD.** Check the MFD display using the system operation check mode of combination meter. <Ref. to IDI(diag)-19, System Operation Check Mode.>	Is the display normal?	System is normal.	Replace the MFD. <Ref. to IDI-23, Multi-function Display (MFD).>

2. Check List for Interview

A: CHECK

- Inspect the following items regarding the vehicle's state.
- Print out this page for interviewing customers.

<table>
<tr><td colspan="4">Combination Meter / MFD Check List for Interview
Date the Vehicle is Received Year Month Day</td></tr>
<tr><td colspan="2" rowspan="2">Customer's name</td><td>Registration No.</td><td>Initial year of registration
Year Month Date</td></tr>
<tr><td>Vehicle model</td><td>Frame number</td></tr>
<tr><td>Interviewer</td><td>Inspector</td><td>Engine type</td><td>Odometer reading</td></tr>
<tr><td colspan="4">Customer specified content
•
•
•</td></tr>
<tr><td>Date and time when the trouble occurred</td><td></td><td>Frequency of trouble occurrence</td><td>Always occurs
Sometimes occurs (times per day, times per month)</td></tr>
<tr><td rowspan="2">Condition of trouble occurrence
(How the trouble occurs)</td><td rowspan="2"></td><td>Weather</td><td>Fine • Cloudy • Rainy • Snowy • Others ( )</td></tr>
<tr><td>Temperature</td><td>°C (°F) — °C (°F)</td></tr>
<tr><td>Road conditions</td><td></td><td>Occurrence location</td><td></td></tr>
<tr><td>Accessory installation condition</td><td colspan="3"></td></tr>
<tr><td colspan="4">Confirmation of trouble condition</td></tr>
<tr><td rowspan="3">❑ Combination meter</td><td colspan="3"></td></tr>
<tr><td colspan="3"></td></tr>
<tr><td colspan="3"></td></tr>
<tr><td rowspan="3">❑ MFD</td><td colspan="3"></td></tr>
<tr><td colspan="3"></td></tr>
<tr><td colspan="3"></td></tr>
<tr><td>❑ Diagnostic code</td><td colspan="3"></td></tr>
</table>

3. General Description

A: CAUTION

1. AIRBAG SYSTEM

CAUTION:
• Do not use the electrical test equipment on the airbag system wiring harnesses and connector circuits.
• Be careful not to damage the airbag system wiring harness.

B: INSPECTION

Before performing the diagnosis, check the following items which may cause problems relating the wiper or light.
1) Measure the battery voltage and check electrolyte.

NOTE:
For HEV model, check the 12 volt auxiliary battery. <Ref. to SC(H4DO(HEV))-38, Battery.>

Standard voltage: 12 V or more

Specific gravity: 1.260 or more
2) Check the fuse condition.
3) Check the connecting condition of harness and harness connector.

C: PREPARATION TOOL

1. SPECIAL TOOL

ILLUSTRATION	TOOL NUMBER	DESCRIPTION	REMARKS
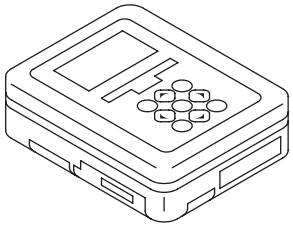 ST1B022XU0	1B022XU0	SUBARU SELECT MONITOR III KIT	Used for troubleshooting the electrical system.

2. GENERAL TOOL

TOOL NAME	REMARKS
Circuit tester	Used for measuring resistance, voltage and current.

4. Electrical Component Location

A: LOCATION

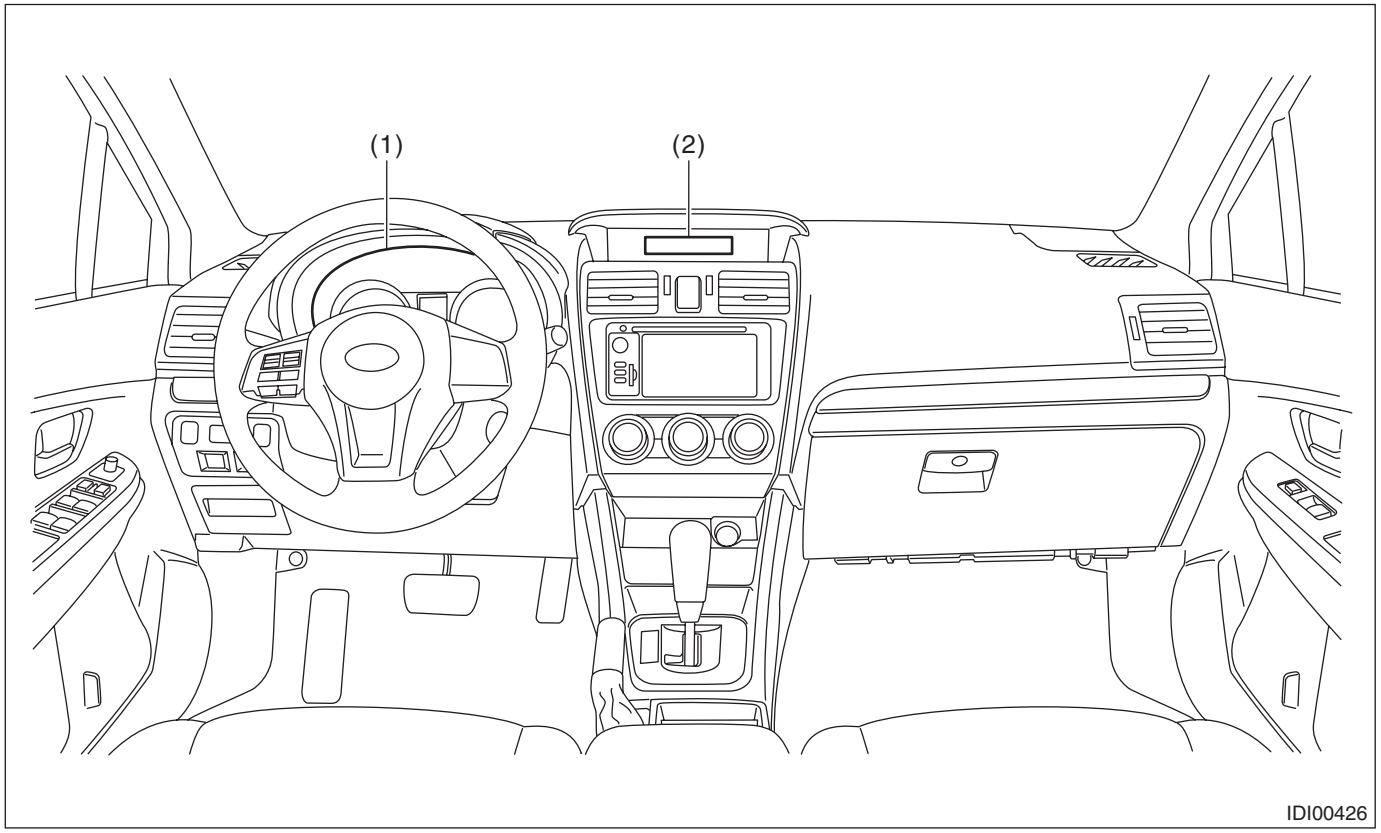

(1) Combination meter
(2) MFD

5. Control Module I/O Signal

A: ELECTRICAL SPECIFICATION

- Combination meter

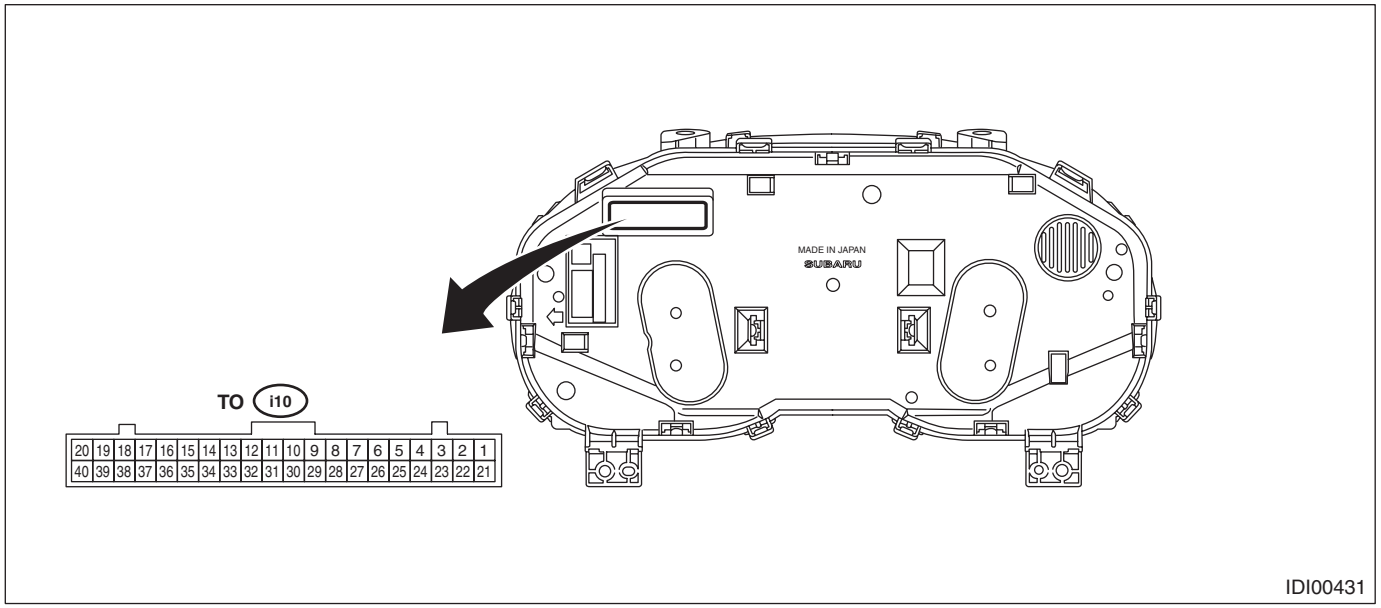

Terminal No.	Description	Terminal No.	Description
1	Immobilizer/security indicator	25	Fuel level sensor
2	Charge warning light	27	Ambient sensor
3	Oil pressure warning light	28	UART (MFD)
4	RH turn signal indicator	30	Pedestrian alert system
6	LH turn signal indicator	32	CAN communication line (–)
8	Auto headlight beam leveler warning light	33	CAN communication line (+)
15	Driver's seat belt switch	36	Ambient sensor GND
16	Passenger's seat belt switch	37	Fuel level sensor GND
20	Ignition power supply	38	GND
21	Washer fluid level sensor	39	Back-up ignition power supply
23	Brake fluid level switch	40	Battery power supply

Terminal No.	Item	Measuring condition	Standard
1 ←→ Chassis ground	Voltage	Security/immobilizer indicator light off → on	0 V → 10 — 14 V
2 ←→ Chassis ground	Voltage	Charge warning light off → on	0 V → 10 — 14 V
3 ←→ Chassis ground	Voltage	Oil pressure warning light off → on	0 V → 10 — 14 V
4 ←→ Chassis ground	Voltage	RH turn indicator off → on	0 V → 10 — 14 V
6 ←→ Chassis ground	Voltage	LH turn indicator off → on	0 V → 10 — 14 V
8 ←→ Chassis ground	Voltage	Auto headlight beam leveler warning light off → on	0 V → 10 — 14 V
15 ←→ Chassis ground	Resistance	Driver's seat belt switch ON	Less than 1 Ω
16 ←→ Chassis ground	Resistance	Passenger's seat belt switch ON	Less than 1 Ω
20 ←→ Chassis ground	Voltage	IG OFF → ON	0 V → 10 — 14 V
21 ←→ Chassis ground	—	Washer fluid level sensor	—
23 ←→ Chassis ground	—	Brake fluid level switch	—
25 ←→ 37	Resistance	Fuel level sensor	10 — 600 Ω
27 ←→ 36	Resistance	Ambient sensor	1 — 35 kΩ
28 (UART) ←→ Chassis ground	—	Cannot be measured	—
32 (CAN–) ←→ Chassis ground	—	Cannot be measured	—

Terminal No.	Item	Measuring condition	Standard
33 (CAN+) ←→ Chassis ground	—	Cannot be measured	—
34 ←→ Chassis ground	Resistance	Always	Less than 1 Ω
35 ←→ Chassis ground	Resistance	Always	Less than 1 Ω
36 ←→ Chassis ground	Resistance	Always	Less than 1 Ω
37 ←→ Chassis ground	Resistance	Always	Less than 1 Ω
38 ←→ Chassis ground	Resistance	Always	Less than 1 Ω
39 ←→ Chassis ground	Resistance	Always	Less than 1 Ω
40 ←→ Chassis ground	Voltage	Always	10 — 14 V

- MFD

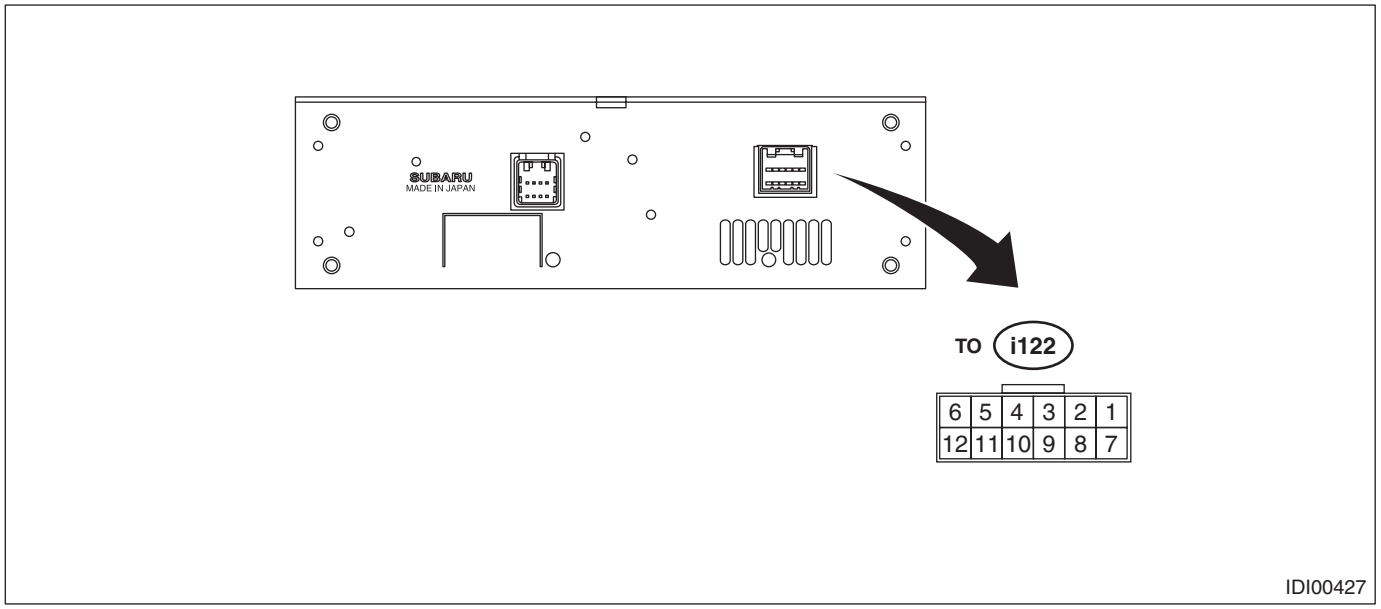

Terminal No.	Description	Terminal No.	Description
1	Battery power supply	7	—
2	GND	8	—
3	Ignition power supply	9	UART (Meter)
4	Steering switch communication line (–)	10	Passenger's airbag ON
5	CAN communication line (–)	11	Passenger's airbag OFF
6	CAN communication line (+)	12	Steering switch communication line (+)

Terminal No.	Item	Measuring condition	Standard
1(+B) ←→ Chassis ground	Voltage	Always	10 — 14 V
2 (GND) ←→ Chassis ground	Resistance	Always	Less than 1 Ω
3 (IGN) ←→ Chassis ground	Voltage	IG OFF → ON	0 V → 10 — 14 V
4 (STR-) ←→ Chassis ground	—	Cannot be measured (steering switch communication line)	—
5 (CAN-) ←→ Chassis ground	—	Cannot be measured (CAN communication line)	—
6 (CAN+) ←→ Chassis ground	—	Cannot be measured (CAN communication line)	—
9 (UART) ←→ Chassis ground	—	Cannot be measured (meter communication line)	—
10 ←→ Chassis ground	Voltage	Passenger's airbag ON indicator (when illuminating)	Less than 1 V
11 ←→ Chassis ground	Voltage	Passenger's airbag OFF indicator (when illuminating)	Less than 1 V
12 (STR+) ←→ Chassis ground	—	Cannot be measured (steering switch communication line)	—

6. Subaru Select Monitor

A: OPERATION

- For operation procedures, refer to the “PC application help for Subaru Select Monitor”.
- If the combination meter or MFD can not communicate with Subaru Select Monitor, perform the “Communication for Initializing Impossible”. <Ref. to IDI(diag)-10, INSPECTION, Subaru Select Monitor.>

If the DTCs related to the LAN system are not displayed, perform the inspection by connecting the Subaru Select Monitor to another vehicle which is operating properly and by establishing the communication.

B: INSPECTION

1. COMMUNICATION FOR INITIALIZING IMPOSSIBLE (COMBINATION METER)

DETECTING CONDITION:

- Defective harness connector
- Power supply circuit malfunction
- Defective combination meter
- Defective CAN communication circuit
- Defective Subaru Select Monitor

TROUBLE SYMPTOM:

Communication is impossible between combination meter and Subaru Select Monitor.

WIRING DIAGRAM:

- Combination meter system <Ref. to WI(w/o HEV)-54, WIRING DIAGRAM, Combination Meter System.> <Ref. to WI(HEV)-74, WIRING DIAGRAM, Combination Meter System.>
- CAN communication system <Ref. to WI(w/o HEV)-46, WIRING DIAGRAM, CAN Communication System.> <Ref. to WI(HEV)-64, WIRING DIAGRAM, CAN Communication System.>

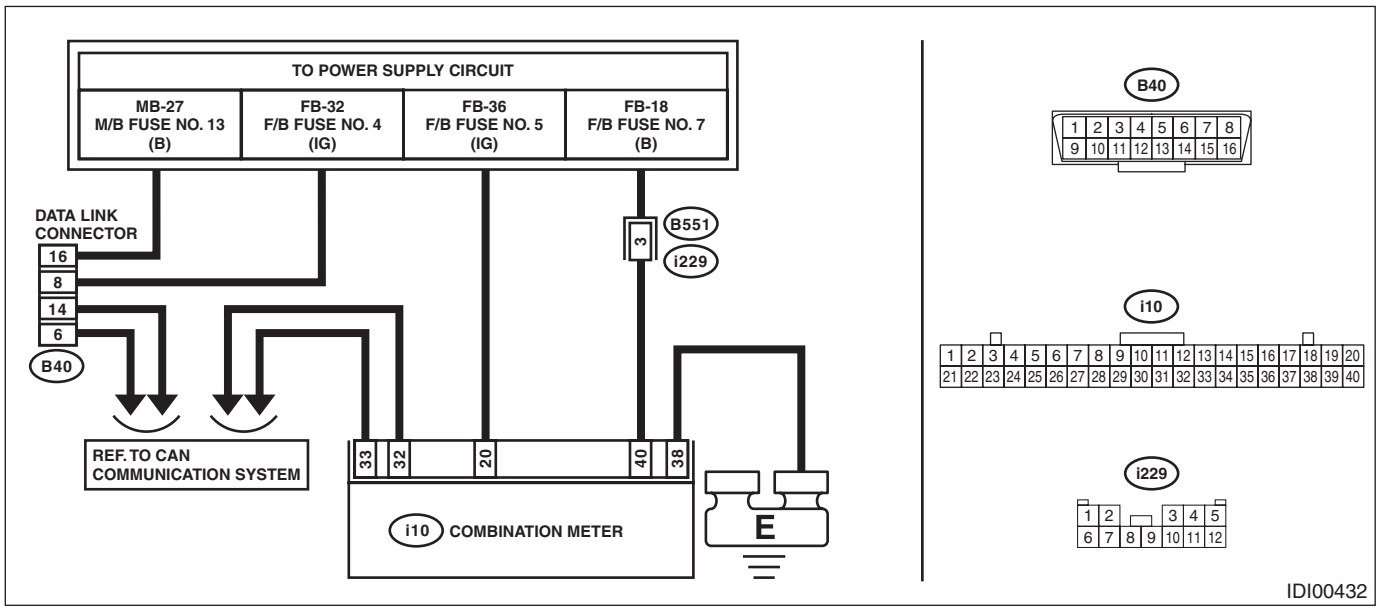

Step		Check	Yes	No
1	**CHECK OTHER COMMUNICATION.** Communicate with the system other than the combination meter using the Subaru Select Monitor.	Is the communication to other control module possible?	Go to step **2**.	Perform the “Communication for Initializing Impossible” of LAN system. <Ref. to LAN(w/o HEV)(diag)-11, COMMUNICATION FOR INITIALIZING IMPOSSIBLE, Subaru Select Monitor.> <Ref. to LAN(HEV)(diag)-11, COMMUNICATION FOR INITIALIZING IMPOSSIBLE, Subaru Select Monitor.>

Step		Check	Yes	No
2	**CHECK DTC.** Read the DTC of the LAN system using the Subaru Select Monitor. <Ref. to LAN(w/o HEV)(diag)-23, OPERATION, Read Diagnostic Trouble Code (DTC).> <Ref. to LAN(HEV)(diag)-29, OPERATION, Read Diagnostic Trouble Code (DTC).>	Is DTC detected?	Perform the diagnosis according to DTC.	Go to step **3**.
3	**CHECK COMBINATION METER.** 1) Turn the ignition switch to OFF. 2) Disconnect the connector of combination meter. 3) Connect the disconnected connectors. 4) Communicate with the combination meter using the Subaru Select Monitor.	Is communication possible?	It is possible that temporary poor communication occurs.	Replace the combination meter. <Ref. to IDI-16, Combination Meter.>

2. COMMUNICATION FOR INITIALIZING IMPOSSIBLE (MFD)

DETECTING CONDITION:

- Defective harness connector
- Power supply circuit malfunction
- Defective MFD
- Defective CAN communication circuit
- Defective Subaru Select Monitor

TROUBLE SYMPTOM:

Communication is impossible between MFD and Subaru Select Monitor.

WIRING DIAGRAM:

- Multi-function display (MFD) system <Ref. to WI(w/o HEV)-108, WIRING DIAGRAM, Multi-function Display (MFD) System.> <Ref. to WI(HEV)-168, WIRING DIAGRAM, Multi-function Display (MFD) System.>
- CAN communication system <Ref. to WI(w/o HEV)-46, WIRING DIAGRAM, CAN Communication System.> <Ref. to WI(HEV)-64, WIRING DIAGRAM, CAN Communication System.>

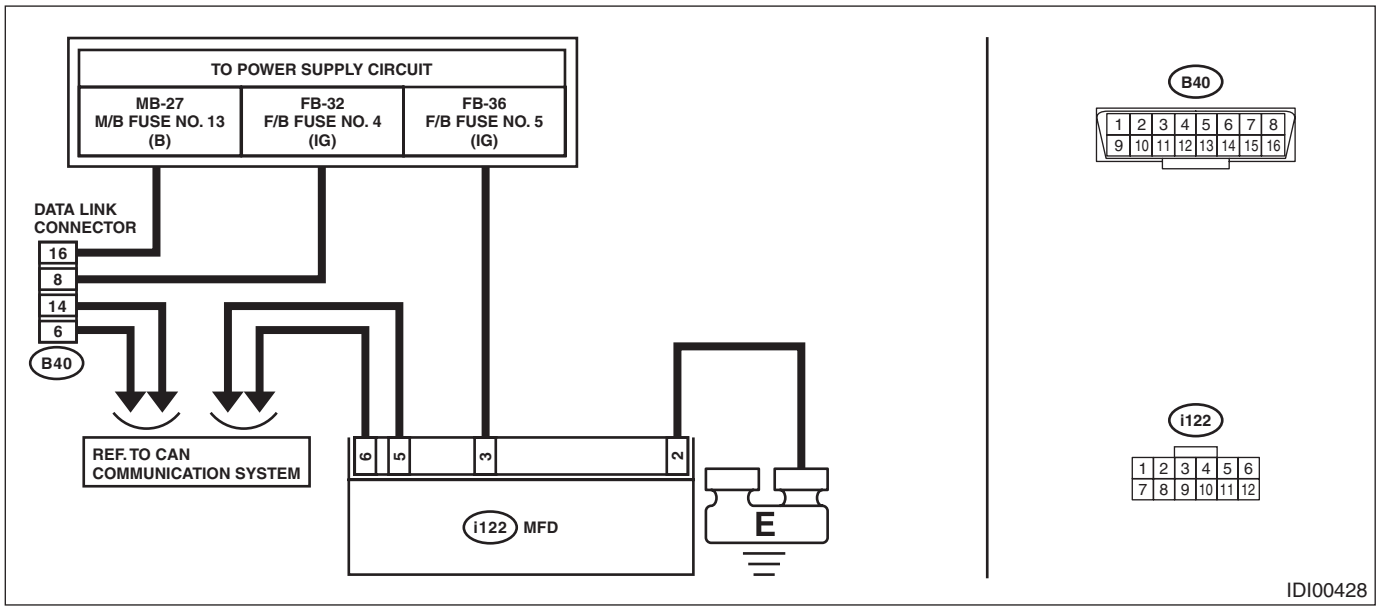

Step		Check	Yes	No
1	**CHECK OTHER COMMUNICATION.** Communicate with the system other than the MFD using the Subaru Select Monitor.	Is the communication to other control module possible?	Go to step **2**.	Perform the "Communication for Initializing Impossible" of LAN system. <Ref. to LAN(w/o HEV)(diag)-11, COMMUNICATION FOR INITIALIZING IMPOSSIBLE, Subaru Select Monitor.> <Ref. to LAN(HEV)(diag)-11, COMMUNICATION FOR INITIALIZING IMPOSSIBLE, Subaru Select Monitor.>

Step		Check	Yes	No
2	**CHECK DTC.** Read the DTC of the LAN system using the Subaru Select Monitor. <Ref. to LAN(w/o HEV)(diag)-23, OPERATION, Read Diagnostic Trouble Code (DTC).> <Ref. to LAN(HEV)(diag)-29, OPERATION, Read Diagnostic Trouble Code (DTC).>	Is DTC detected?	Perform the diagnosis according to DTC.	Go to step **3**.
3	**CHECK MFD.** 1) Turn the ignition switch to OFF. 2) Disconnect the MFD connector. 3) Connect the disconnected connectors. 4) Communicate with the MFD using the Subaru Select Monitor.	Is communication possible?	It is possible that temporary poor communication occurs.	Replace the MFD. <Ref. to IDI-23, Multi-function Display (MFD).>

7. Read Diagnostic Trouble Code (DTC)

A: OPERATION

- For operation procedures, refer to the “PC application help for Subaru Select Monitor”.
- For detailed concerning DTC, refer to the List of Diagnostic Trouble Codes (DTC). <Ref. to IDI(diag)-23, LIST, List of Diagnostic Trouble Code (DTC).>

8. Clear Memory Mode

A: OPERATION

For operation procedures, refer to the “PC application help for Subaru Select Monitor”.

9. Read Current Data

A: OPERATION

For detailed operation procedures, refer to “PC application help for Subaru Select Monitor”.

B: LIST

- Combination meter

Items to be displayed	Unit of measure	Remarks	Note
Power on trip number	times	Information of timestamp	—
Power on supply system	—	Information of timestamp	—
Past time after power on	ms	Information of timestamp	—
Fuel sensing value	Ω	Fuel sensor value display	—
External air temperature sensing value	°C (°F)	External temperature sensor value display	—
External air temperature indication value	°C (°F)	Calculated value of external temperature for indication	—
Vehicle speed data	km/h (MPH)	Vehicle speed value detected by meter	—
Engine revolution data	rpm	Engine speed value detected by meter	—
Drivers seat seat-belt wearing state	—	Displays ON/OFF	—
Passenger seat seat-belt wearing state	—	Displays ON/OFF	—
Rear seat right seat-belt wearing state	—	Displays ON/OFF	—
Rear seat center seat-belt wearing state	—	Displays ON/OFF	—
Rear seat left seat-belt wearing state	—	Displays ON/OFF	—

- MFD

Items to be displayed	Unit of measure	Remarks	Note
MFD hardware fail flag	Normal/MFD Fail	MFD abnormal status	—
MFD U-ART communication error flag	Normal/MFD U-ART Fail		—
MFD CAN communication error flag	Normal/MFD CAN Fail		—
MFD destination abnormal flag	Normal/MFD destination error		—
MFD failure information	No error High-speed CAN error counter abnormal High-speed CAN bus OFF detection High-speed CAN data abnormal High-speed CAN data not received UART data abnormal UART data not received IGN line wire break System microcomputer abnormal GERDA abnormal		—
Birthday1 setting M	—	Birthday setting value	—
Birthday1 setting D	—		—
Birthday2 setting M	—	Birthday setting value	—
Birthday2 setting D	—		—
Anniversary1 setting M	—	Anniversary setting value	—
Anniversary1 setting D	—		—
Anniversary2 setting M	—	Anniversary setting value	—
Anniversary2setting D	—		—
Driving record1 setting Yard	—	Driving record 1 setting value	—
Driving record1 setting Time	—		—
Driving record1setting fuel cons. Ave.	—		—
Driving record1 setting M	—		—
Driving record1 setting D	—		—
Driving record2 setting DIS	—	Driving record 2 setting value	—
Driving record2 setting Time	—		—
Driving record2setting fuel cons. Ave.	—		—
Driving record2 setting M	—		—
Driving record2 setting D	—		—
Clock/OFF setting	OFF External air temperature + analog clock External air temperature + digital clock	Clock display setting	—
Engine oil maintenance setting Y	—	Oil maintenance setting value	—
Engine oil maintenance setting M	—		—
Engine oil maintenance setting D	—		—
Engine oil maintenance setting meter	—		—
Oil filter maintenance setting Y	—	Oil filter maintenance setting value	—
Oil filter maintenance setting M	—		—
Oil filter maintenance setting D	—		—
Oil filter maintenance setting meter	—		—
Tire maintenance setting Y	—	Tire maintenance setting value	—
Tire maintenance setting M	—		—
Tire maintenance setting D	—		—
Tire maintenance setting meter	—		—
Engine oil maintenance setting Y	—	Periodic inspection setting value	—
Engine oil maintenance setting M	—		—
Engine oil maintenance setting D	—		—
Engine oil maintenance setting meter	—		—

Items to be displayed	Unit of measure	Remarks	Note
Sub-meter(left) setting NO1	Indication OFF AVG speed ODO fuel efficiency ECVT Fluid Temp. Accel. Opening Angle Section time Section distance Section fuel efficiency	Meter display setting	—
Sub-meter(left) setting NO2	Analog display Digital display	Meter display setting	—
Sub-meter(center) setting NO1	Indication OFF AVG speed ODO fuel efficiency ECVT Fluid Temp. Accel. Opening Angle Section time Section distance Section fuel efficiency	Meter display setting	—
Sub-meter(center) setting NO2	Analog display Digital display	Meter display setting	—
Sub-meter(right) setting NO1	Indication OFF AVG speed ODO fuel efficiency ECVT Fluid Temp. Accel. Opening Angle Section time Section distance Section fuel efficiency	Meter display setting	—
Sub-meter(right) setting NO2	Analog display Digital display	Meter display setting	—
MFD brightness setting NO1	-5 — +5	MFD setting	—
MFD brightness setting NO2	-5 — +5	MFD setting	—
MFD contrast setting NO1	-5 — +5	MFD setting	—
MFD contrast setting NO2	-5 — +5	MFD setting	—
ECO evaluation ON-OFF setting	OFF/ON	MFD setting	—
Info area setting	OFF AVG CONS FUEL CONS Range	MFD setting	—
Menu language setting	(Corresponding languages)	MFD setting	—
Buzzer volume setting	OFF Small Big	MFD setting	—
Fuel cons. Setting	00/OFF	MFD setting	—
Auto Start Stop interrupt display setting	OFF/ON	MFD setting	Not applicable
Welcome display ON-OFF setting	OFF/ON	MFD setting	—
Self check ON-OFF setting	OFF/ON	MFD setting	—

NOTE:
For detailed operation procedures, refer to “PC application help for Subaru Select Monitor”.

10.System Operation Check Mode

A: OPERATION

For detailed operation procedures, refer to “PC application help for Subaru Select Monitor”.

NOTE:
If not equipped (based on area or condition), process will not go on.

CAUTION:
After executing the system operation check mode, execute the Clear Memory Mode. <Ref. to IDI(diag)-15, OPERATION, Clear Memory Mode.>

B: LIST

- Combination meter

Check item	Item 1	Item 2	Note
Pointer operation check	Speed Meter Operation	Speedometer 0 km/h (MPH) indication	—
		Speedometer 40 km/h (MPH) indication	—
		Speedometer 80 km/h (MPH) indication	—
		Speedometer 120 km/h (MPH) indication	—
		Speedometer 160 km/h (MPH) indication	—
		Speedometer 200 km/h (MPH) indication	—
		Speedometer 240 km/h (MPH) indication	—
		Speedometer 280 km/h (MPH) indication	—
	TachoMeter Operation	Tachometer 0 rpm indication	—
		Tachometer 1000 rpm indication	—
		Tachometer 2000 rpm indication	—
		Tachometer 3000 rpm indication	—
		Tachometer 4000 rpm indication	—
		Tachometer 5000 rpm indication	—
		Tachometer 6000 rpm indication	—
		Tachometer 7000 rpm indication	—
	Economy gauge	Fuel efficiency gauge (ECO gauge) MIN scale command	—
		Fuel efficiency gauge (ECO gauge) 1/4 scale command	—
		Fuel efficiency gauge (ECO gauge) 1/2 scale command	—
		Fuel efficiency gauge (ECO gauge) 3/4 scale command	—
		Fuel efficiency gauge (ECO gauge) MAX scale command	—

Check item	Item 1	Item 2	Note
Segment of liquid crystal display check	LCD display all lighted		—
	AT shift (CVT only)	P range display	—
		R range display	—
		N range display	—
		L range display	—
		Up display	—
		Down display	—
		8 range display	—
		7 range display	—
		6 range display	—
		5 range display	—
		4 range display	—
		3 range display	—
		2 range display	—
		1 range display	—
	Odometer	Odometer numerical device display 0	—
		Odometer numerical device display 1	—
		Odometer numerical device display 2	—
		Odometer numerical device display 3	—
		Odometer numerical device display 4	—
		Odometer numerical device display 5	—
		Odometer numerical device display 6	—
		Odometer numerical device display 7	—
		Odometer numerical device display 8	—
		Odometer numerical device display 9	—
	Trip meter	Trip meter numerical device display 0	—
		Trip meter numerical device display 1	—
		Trip meter numerical device display 2	—
		Trip meter numerical device display 3	—
		Trip meter numerical device display 4	—
		Trip meter numerical device display 5	—
		Trip meter numerical device display 6	—
		Trip meter numerical device display 7	—
		Trip meter numerical device display 8	—
		Trip meter numerical device display 9	—
	Fuel gauge bar display	Fuel sender E-point command	—
		Meter E scale command	—
		Fuel warning lit position command (fuel warning ON)	—
		Meter 1/4 scale command	—
		Meter 1/2 scale command	—
		Meter 3/4 scale command	—
		Meter F-scale command	—
		Fuel sender F-point command	—
	Shift-up indicator		MT only
	CRUISE indicator		—
	SET indicator		—
	READY indicator		HEV model only

Check item	Item 1	Item 2	Note
Lamp check	All lamps lit		—
	Indicator drive	High-beam indicator	—
		Position light indicator	High grade meter only
		Front fog light indicator	—
		Water temperature (COOL) indicator	—
		VDC OFF indicator	—
		VDC operation/failure indicator	—
		Hill start assist OFF/failure indicator	—
		EV mode indicator	—
		HEV READY indicator	—
	Warning drive	Driver side seat belt warning	—
		Airbag warning	—
		TPMS warning	US only
		All seats door warning	—
		Water temperature (HOT) warning	—
		E/G remaining oil warning	—
		AT (CVT) oil temperature warning	CVT only
		ABS warning	—
		BRAKE warning	—
		AWD warning	CVT only
		Remaining washer fluid washer	—
		Remaining fuel warning	—
		EPS warning	—
		Check E/G warning	—
		HEV fail warning	—
		Charge warning	—
		Oil pressure warning	—
		Vacuum pump warning	—
MFD output check	P seat seat-belt warning		—
	Momentary fuel efficiency display value		—
	Mean fuel efficiency A display value		—
	Mean fuel efficiency B display value		—
	Remaining fuel cruising distance display value		—
	External air temperature indication value		—
	Mean vehicle speed display value		—
Buzzer output	Sounding output ON/OFF		—
Illumination check	Brightness check		—

11.User Customizing

A: OPERATION

For operation procedures, refer to the “PC application help for Subaru Select Monitor”.

B: LIST

- Combination meter

Items to be displayed	Initial setting value	Customize setting	Note
Air temperature correction	±0°C	-5°C — +5°C	Temperature compensation can only be performed by 1°C (1°C change = 1.8°F) interval.
Mean fuel efficiency correction	±0°%	+10% — -10%	—

12.List of Diagnostic Trouble Code (DTC)

A: LIST

DTC	Item	Content of diagnosis	Reference
U0073	Control Module Communication Bus Off	Detected when CAN line abnormality is detected.	<Ref. to IDI(diag)-25, DTC U0073 CONTROL MODULE COMMUNICATION BUS OFF, Diagnostic Procedure with Diagnostic Trouble Code (DTC).>
U0100	Lost Communication With ECM/PCM “A”	Detected when CAN data from the engine control module (ECM) does not arrive.	<Ref. to IDI(diag)-25, DTC U0100 LOST COMMUNICATION WITH ECM/PCM “A”, Diagnostic Procedure with Diagnostic Trouble Code (DTC).>
U0101	Lost Communication With TCM	Detected when CAN data from TCM does not arrive.	<Ref. to IDI(diag)-25, DTC U0101 LOST COMMUNICATION WITH TCM, Diagnostic Procedure with Diagnostic Trouble Code (DTC).>
U0122	Lost Communication With Vehicle Dynamics Control Module	Detected when CAN data from VDC does not arrive.	<Ref. to IDI(diag)-25, DTC U0122 LOST COMMUNICATION WITH VEHICLE DYNAMICS CONTROL MODULE, Diagnostic Procedure with Diagnostic Trouble Code (DTC).>
U0131	Lost Communication With Power Steering Control Module	Detected when CAN data from electric power steering CM does not arrive.	<Ref. to IDI(diag)-25, DTC U0131 LOST COMMUNICATION WITH POWER STEERING CONTROL MODULE, Diagnostic Procedure with Diagnostic Trouble Code (DTC).>
U0140	Lost Communication With Body Control Module	Detected when CAN data from body integrated unit does not arrive.	<Ref. to IDI(diag)-25, DTC U0140 LOST COMMUNICATION WITH BODY CONTROL MODULE, Diagnostic Procedure with Diagnostic Trouble Code (DTC).>
U0151	Lost Communication With Restraints Control Module	Detected when CAN data from airbag CM does not arrive.	<Ref. to IDI(diag)-25, DTC U0151 LOST COMMUNICATION WITH RESTRAINTS CONTROL MODULE, Diagnostic Procedure with Diagnostic Trouble Code (DTC).>
U0164	Lost Communication With HVAC Control Module	Detected when CAN data from A/C CM does not arrive.	<Ref. to IDI(diag)-25, DTC U0164 LOST COMMUNICATION WITH HVAC CONTROL MODULE, Diagnostic Procedure with Diagnostic Trouble Code (DTC).>
U0293	Lost Communication With Hybrid Powertrain Control Module	Detected when CAN data from HPCM does not arrive.	<Ref. to IDI(diag)-26, DTC U0293 LOST COMMUNICATION WITH HYBRID POWERTRAIN CONTROL MODULE, Diagnostic Procedure with Diagnostic Trouble Code (DTC).>
U0327	Software Incompatibility With Vehicle Security Control Module	Detected when CAN data from keyless access CM does not arrive.	<Ref. to IDI(diag)-26, DTC U0327 SOFTWARE INCOMPATIBILITY WITH VEHICLE SECURITY CONTROL MODULE, Diagnostic Procedure with Diagnostic Trouble Code (DTC).>
U1201	CAN-HS Counter Abnormal	Detected when CAN data is abnormal.	<Ref. to IDI(diag)-26, DTC U1201 CAN-HS COUNTER ABNORMAL, Diagnostic Procedure with Diagnostic Trouble Code (DTC).>
U1650	Invalid Data Received From Meter (UART)	UART data from the combination meter is abnormal.	<Ref. to IDI(diag)-27, DTC U1650 INVALID DATA RECEIVED FROM METER (UART), Diagnostic Procedure with Diagnostic Trouble Code (DTC).>
U1651	Lost Communication With Meter (UART)	UART data from the combination meter has not arrived.	<Ref. to IDI(diag)-28, DTC U1651 LOST COMMUNICATION WITH METER (UART), Diagnostic Procedure with Diagnostic Trouble Code (DTC).>
B2220	Break The Wire of IGN	Voltage malfunction caused by poor contact of IGN power supply circuits.	<Ref. to IDI(diag)-30, DTC B2220 BREAK THE WIRE OF IGN, Diagnostic Procedure with Diagnostic Trouble Code (DTC).>
B2222	System Microcomputer Fail	When microcomputer froze.	<Ref. to IDI(diag)-31, DTC B2222 SYSTEM MICROCOMPUTER FAIL, Diagnostic Procedure with Diagnostic Trouble Code (DTC).>

DTC	Item	Content of diagnosis	Reference
B2223	GERDA Fail	When transmitting and receiving of data cannot be done normally between system microcomputer and image microcomputer.	<Ref. to IDI(diag)-31, DTC B2223 GERDA FAIL, Diagnostic Procedure with Diagnostic Trouble Code (DTC).>
B1500	Fuel Sender Open/ Short-Circuit Detection	Fuel gauge circuit is open or shorted.	<Ref. to IDI(diag)-32, DTC B1500 FUEL SENDER OPEN/SHORT-CIRCUIT DETECTION, Diagnostic Procedure with Diagnostic Trouble Code (DTC).>
B1501	Power Supply System Error Detection	Combination meter power supply circuit is open or shorted.	<Ref. to IDI(diag)-34, DTC B1501 POWER SUPPLY SYSTEM ERROR DETECTION, Diagnostic Procedure with Diagnostic Trouble Code (DTC).>
B1507	External Air Temperature Open/Short-Circuit Detection	External air temperature sensor circuit is open or shorted.	<Ref. to IDI(diag)-35, DTC B1507 EXTERNAL AIR TEMPERATURE OPEN/SHORT-CIRCUIT DETECTION, Diagnostic Procedure with Diagnostic Trouble Code (DTC).>

13.Diagnostic Procedure with Diagnostic Trouble Code (DTC)

A: DTC U0073 CONTROL MODULE COMMUNICATION BUS OFF

Detected when CAN line abnormality is detected.

NOTE:
Perform the diagnosis for LAN system. <Ref. to LAN(w/o HEV)(diag)-2, PROCEDURE, Basic Diagnostic Procedure.> <Ref. to LAN(HEV)(diag)-2, PROCEDURE, Basic Diagnostic Procedure.>

B: DTC U0100 LOST COMMUNICATION WITH ECM/PCM “A”

Detected when CAN data from the engine control module (ECM) does not arrive.

NOTE:
Perform the diagnosis for LAN system. <Ref. to LAN(w/o HEV)(diag)-2, PROCEDURE, Basic Diagnostic Procedure.> <Ref. to LAN(HEV)(diag)-2, PROCEDURE, Basic Diagnostic Procedure.>

C: DTC U0101 LOST COMMUNICATION WITH TCM

Detected when CAN data from TCM does not arrive.

NOTE:
Perform the diagnosis for LAN system. <Ref. to LAN(w/o HEV)(diag)-2, PROCEDURE, Basic Diagnostic Procedure.> <Ref. to LAN(HEV)(diag)-2, PROCEDURE, Basic Diagnostic Procedure.>

D: DTC U0122 LOST COMMUNICATION WITH VEHICLE DYNAMICS CONTROL MODULE

Detected when CAN data from VDC does not arrive.

NOTE:
Perform the diagnosis for LAN system. <Ref. to LAN(w/o HEV)(diag)-2, PROCEDURE, Basic Diagnostic Procedure.> <Ref. to LAN(HEV)(diag)-2, PROCEDURE, Basic Diagnostic Procedure.>

E: DTC U0131 LOST COMMUNICATION WITH POWER STEERING CONTROL MODULE

Detected when CAN data is not received from electric power steering CM.

NOTE:
Perform the diagnosis for LAN system. <Ref. to LAN(w/o HEV)(diag)-2, PROCEDURE, Basic Diagnostic Procedure.> <Ref. to LAN(HEV)(diag)-2, PROCEDURE, Basic Diagnostic Procedure.>

F: DTC U0140 LOST COMMUNICATION WITH BODY CONTROL MODULE

Detected when CAN data is not received from body integrated unit.

NOTE:
Perform the diagnosis for LAN system. <Ref. to LAN(w/o HEV)(diag)-2, PROCEDURE, Basic Diagnostic Procedure.> <Ref. to LAN(HEV)(diag)-2, PROCEDURE, Basic Diagnostic Procedure.>

G: DTC U0151 LOST COMMUNICATION WITH RESTRAINTS CONTROL MODULE

Detected when CAN data is not received from airbag CM.

NOTE:
Perform the diagnosis for LAN system. <Ref. to LAN(w/o HEV)(diag)-2, PROCEDURE, Basic Diagnostic Procedure.> <Ref. to LAN(HEV)(diag)-2, PROCEDURE, Basic Diagnostic Procedure.>

H: DTC U0164 LOST COMMUNICATION WITH HVAC CONTROL MODULE

Detected when CAN data is not received from A/C CM.

NOTE:
Perform the diagnosis for LAN system. <Ref. to LAN(w/o HEV)(diag)-2, PROCEDURE, Basic Diagnostic Procedure.> <Ref. to LAN(HEV)(diag)-2, PROCEDURE, Basic Diagnostic Procedure.>

I: DTC U0293 LOST COMMUNICATION WITH HYBRID POWERTRAIN CONTROL MODULE

Detected when CAN data from HPCM does not arrive.

NOTE:
Perform the diagnosis for LAN system. <Ref. to LAN(HEV)(diag)-2, PROCEDURE, Basic Diagnostic Procedure.>

J: DTC U0327 SOFTWARE INCOMPATIBILITY WITH VEHICLE SECURITY CONTROL MODULE

Detected when CAN data is not received from keyless access CM.

NOTE:
Perform the diagnosis for LAN system. <Ref. to LAN(w/o HEV)(diag)-2, PROCEDURE, Basic Diagnostic Procedure.> <Ref. to LAN(HEV)(diag)-2, PROCEDURE, Basic Diagnostic Procedure.>

K: DTC U1201 CAN-HS COUNTER ABNORMAL

Detected when CAN data is abnormal.

NOTE:
Perform the diagnosis for LAN system. <Ref. to LAN(w/o HEV)(diag)-2, PROCEDURE, Basic Diagnostic Procedure.>

L: DTC U1650 INVALID DATA RECEIVED FROM METER (UART)

DTC DETECTING CONDITION:
There is an abnormality in UART data from combination meter.
TROUBLE SYMPTOM:
LCD is not displayed.

	Step	Check	Yes	No
1	**CHECK LAN SYSTEM.** Read the DTC of body integrated unit and LAN system using Subaru Select Monitor. <Ref. to LAN(w/o HEV)(diag)-23, OPERATION, Read Diagnostic Trouble Code (DTC).> <Ref. to LAN(HEV)(diag)-29, OPERATION, Read Diagnostic Trouble Code (DTC).> <Ref. to BC(diag)-9, OPERATION, Read Diagnostic Trouble Code (DTC).>	Is DTC displayed?	Perform the diagnosis according to DTC.	Go to step **2**.
2	**CHECK CONNECTOR.** 1) Disconnect the MFD connector and meter connector. 2) Connect the disconnected connectors. 3) Read the DTC of the MFD using the Subaru Select Monitor.	Is DTC U1650 a current malfunction?	Go to step **3**.	There was poor contact of connector.
3	**CHECK COMBINATION METER.** 1) Replace the combination meter. <Ref. to IDI-16, Combination Meter.> 2) Read the DTC of the MFD using the Subaru Select Monitor.	Is DTC U1650 a current malfunction?	Replace the MFD. <Ref. to IDI-23, Multi-function Display (MFD).>	There was something wrong with the meter.

M: DTC U1651 LOST COMMUNICATION WITH METER (UART)

DTC DETECTING CONDITION:
UART data from combination meter is not received.
TROUBLE SYMPTOM:
LCD is not displayed.
WIRING DIAGRAM:
Multi-function display (MFD) system <Ref. to WI(w/o HEV)-108, WIRING DIAGRAM, Multi-function Display (MFD) System.> <Ref. to WI(HEV)-168, WIRING DIAGRAM, Multi-function Display (MFD) System.>

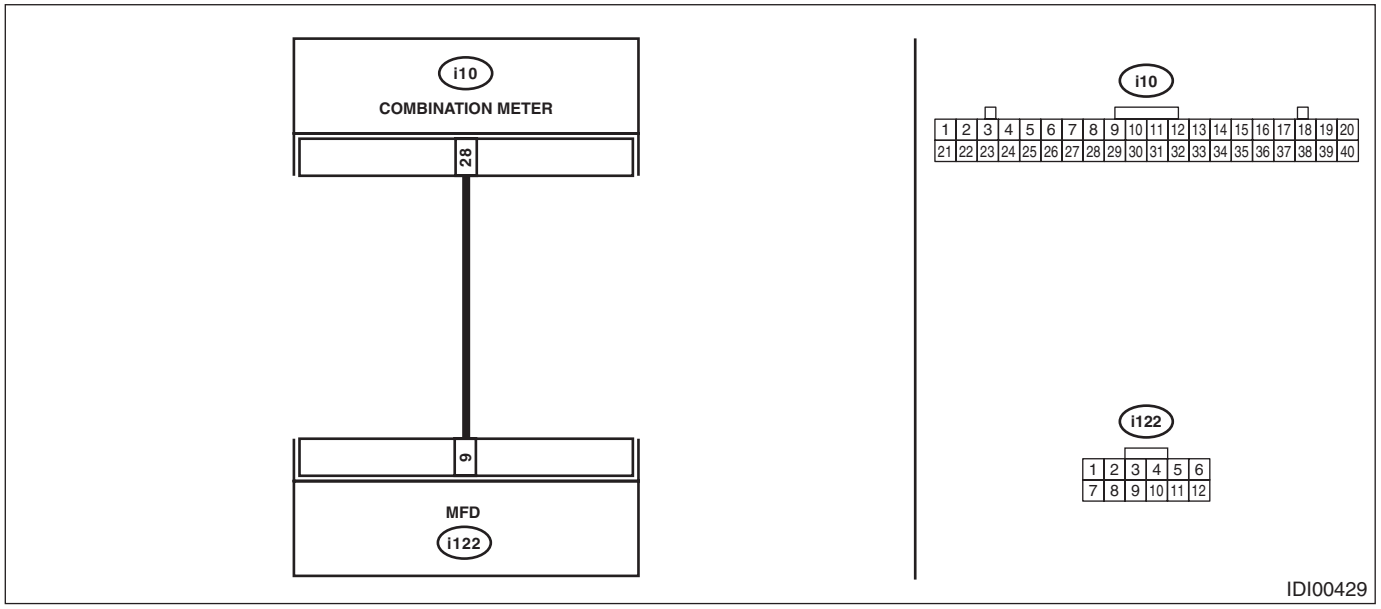

	Step	Check	Yes	No
1	**CHECK LAN SYSTEM.** Read the DTC of the LAN system using the Subaru Select Monitor. <Ref. to LAN(w/o HEV)(diag)-23, OPERATION, Read Diagnostic Trouble Code (DTC).> <Ref. to LAN(HEV)(diag)-29, OPERATION, Read Diagnostic Trouble Code (DTC).>	Is DTC displayed?	Perform the diagnosis according to DTC.	Go to step **2**.
2	**CHECK CONNECTOR.** 1) Disconnect the MFD connector and meter connector. 2) Connect the disconnected connectors. 3) Read the DTC of the MFD using the Subaru Select Monitor.	Is DTC U1651 a current malfunction?	Go to step **3**.	There was poor contact of connector.
3	**CHECK HARNESS.** 1) Disconnect the MFD connector and meter connector. 2) Using the tester, measure the resistance between terminals. ***Connector & terminal*** ***(i10) No. 28 — (i122) No. 9:***	Is the resistance 10 Ω or less?	Go to step **4**.	Repair the open circuit of harness or replace harness.
4	**CHECK HARNESS.** Using the tester, measure the resistance between terminals. ***Connector & terminal*** ***(i122) No. 9 — Chassis ground:***	Is the resistance 10 Ω or less?	Repair the short circuit of harness or replace harness.	Go to step **5**.

	Step	Check	Yes	No
5	**CHECK COMBINATION METER.** 1) Replace the combination meter. <Ref. to IDI-16, Combination Meter.> 2) Read the DTC of the MFD using the Subaru Select Monitor.	Is DTC U1651 a current malfunction?	Go to step **6**.	There was something wrong with the meter.
6	**CHECK COMBINATION METER.** 1) Replace the current combination meter with the original combination meter. 2) Replace the MFD. <Ref. to IDI-23, Multi-function Display (MFD).> 3) Read the DTC of the MFD using the Subaru Select Monitor.	Is DTC U1651 a current malfunction?	Replace the meter. <Ref. to IDI-16, Combination Meter.>	There was an abnormality in MFD.

N: DTC B2220 BREAK THE WIRE OF IGN

DTC DETECTING CONDITION:
There was voltage malfunction caused by poor contact of IGN power supply circuits.
TROUBLE SYMPTOM:
Airbag indicator does not illuminate.
WIRING DIAGRAM:
Multi-function display (MFD) system <Ref. to WI(w/o HEV)-108, WIRING DIAGRAM, Multi-function Display (MFD) System.> <Ref. to WI(HEV)-168, WIRING DIAGRAM, Multi-function Display (MFD) System.>

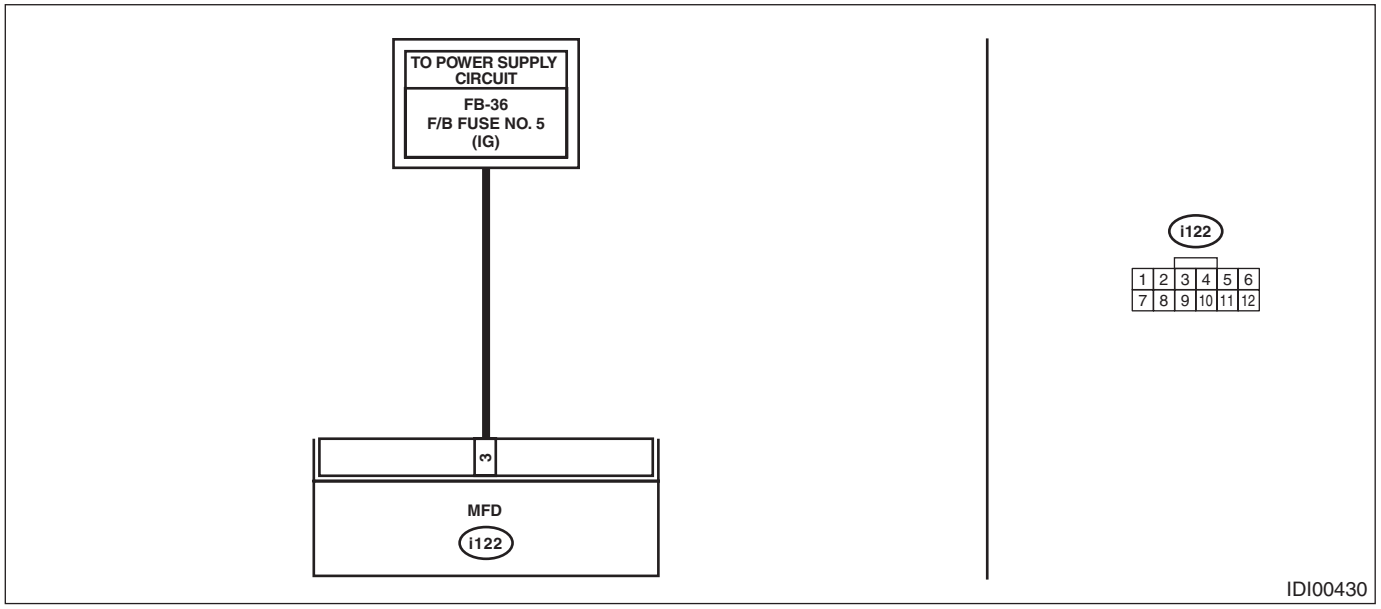

Step		Check	Yes	No
1	**CHECK DTC.** Read the DTC of the MFD using the Subaru Select Monitor.	Is DTC B2220 a current malfunction?	Go to step **2**.	Go to step **5**.
2	**CHECK DTC.** 1) Turn the ignition switch to OFF. 2) Disconnect the MFD connector and reconnect it. 3) Turn the ignition switch to ON. 4) Read the DTC relating the MFD using the Subaru Select Monitor.	Is DTC B2220 a current malfunction?	Go to step **3**.	Go to step **5**.
3	**CHECK FUSE.** 1) Turn the ignition switch to OFF. 2) Check the fuse.	Is the fuse OK?	Go to step **4**.	Replace the defective fuse.
4	**CHECK HARNESS.** 1) Disconnect the MFD connector. 2) Turn the ignition switch to ON. 3) Using the tester, measure the voltage between terminals. ***Connector & terminal*** ***(i122) No. 3 (+) — Chassis ground (–):***	Is the voltage 8.5 — 16.5 V?	Replace the MFD. <Ref. to IDI-23, Multi-function Display (MFD).>	Repair the harness between MFD and fuse.
5	**CHECK CONNECTOR.** 1) Turn the ignition switch to OFF. 2) Disconnect the MFD connector.	Is there poor contact of connector?	Repair or replace the poor contact of connector.	A temporary change of voltage occurred.

O: DTC B2222 SYSTEM MICROCOMPUTER FAIL

DTC DETECTING CONDITION:
When the microcomputer froze.
TROUBLE SYMPTOM:
MFD does not operate.

NOTE:
Reset the MFD. If it does not return to the normal operation, replace the MFD. <Ref. to IDI-23, Multi-function Display (MFD).>

P: DTC B2223 GERDA FAIL

DTC DETECTING CONDITION:
When the system microcomputer can not send/receive the data with the image microcomputer normally.
TROUBLE SYMPTOM:
There is no display on the TFT. Operation is normal.

NOTE:
Replace the MFD. <Ref. to IDI-23, Multi-function Display (MFD).>

Q: DTC B1500 FUEL SENDER OPEN/SHORT-CIRCUIT DETECTION

DTC DETECTING CONDITION:
The fuel gauge circuit is open or shorted.
TROUBLE SYMPTOM:
- Defective fuel gauge.
- Fuel level warning light blinks.

WIRING DIAGRAM:
- Gasoline engine model

Fuel gauge system <Ref. to WI(w/o HEV)-92, WIRING DIAGRAM, Fuel Gauge System.>

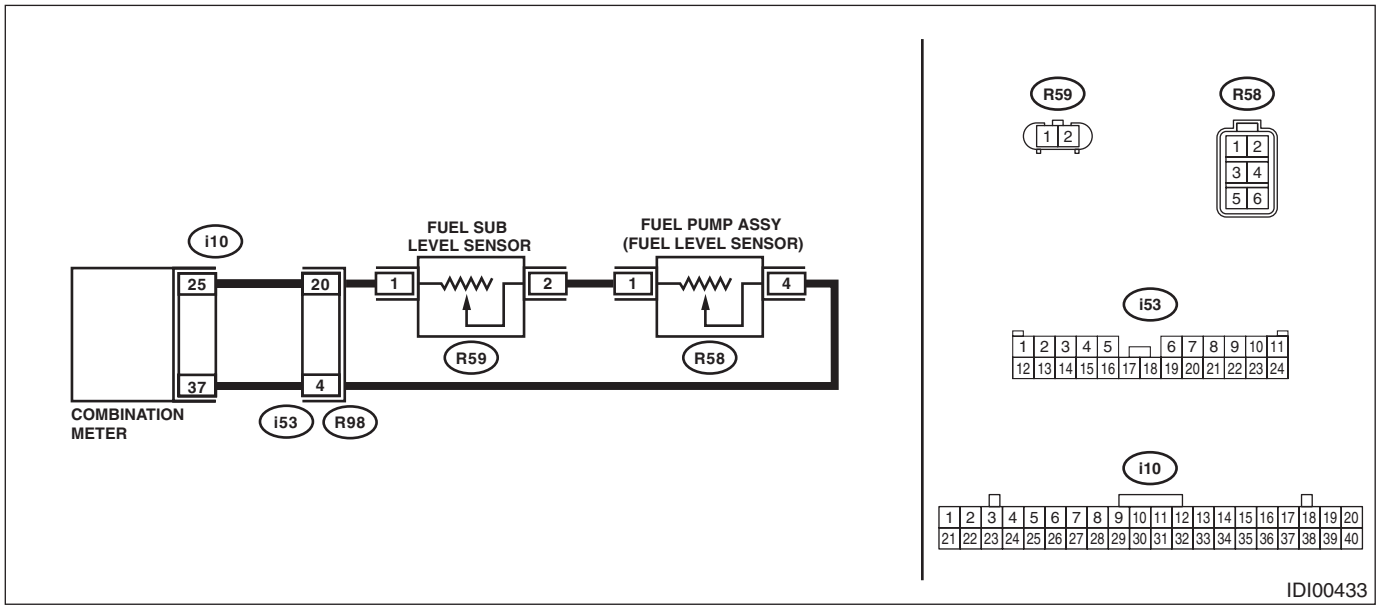

- HEV model

Fuel gauge system <Ref. to WI(HEV)-132, WIRING DIAGRAM, Fuel Gauge System.>

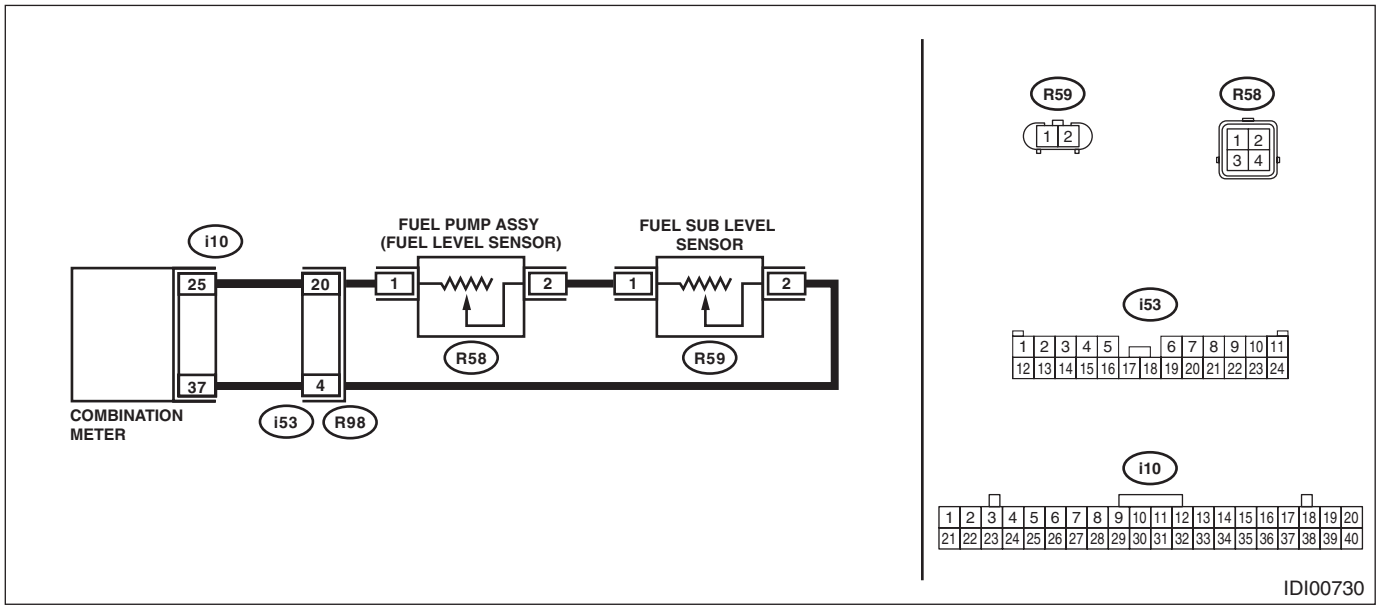

Step		Check	Yes	No
1	**CHECK DTC.** Read the DTC of the meter using the Subaru Select Monitor.	Is DTC B1500 a current malfunction?	Go to step **2**.	Go to step **7**.

	Step	Check	Yes	No
2	**CHECK COMBINATION METER.** 1) Check the operation of combination meter using Subaru Select Monitor. 2) From the {System Operation Check Mode}, select the «Fuel Meter Operation» and «Remaining fuel warning».	Is the operation of combination meter OK?	Go to step **3**.	Replace the combination meter. <Ref. to IDI-16, Combination Meter.>
3	**CHECK HARNESS.** 1) Turn the ignition switch to OFF. 2) Disconnect the meter connector and the fuel sub level sensor connector and the fuel level sensor connector. 3) Using the tester, measure the resistance between terminals. ***Connector & terminal*** ***Gasoline engine model*** ***(i10) No. 25 — (R59) No. 1:*** ***(i10) No. 37 — (R58) No. 4:*** ***HEV model*** ***(i10) No. 25 — (R58) No. 1:*** ***(i10) No. 37 — (R59) No. 2:***	Is the resistance 10 Ω or less?	Go to step **4**.	Repair the open circuit of harness or replace harness.
4	**CHECK HARNESS.** Using the tester, measure the resistance between terminals. ***Connector & terminal*** ***(i10) No. 25 — Chassis ground:*** ***(i10) No. 37 — Chassis ground:***	Is the resistance 10 Ω or less?	Repair the short circuit of harness or replace harness.	Go to step **5**.
5	**CHECK FUEL SUB LEVEL SENSOR.** Check the fuel sub level sensor as a single part. <Ref. to FU(H4DO(w/o HEV))-153, INSPECTION, Fuel Sub Level Sensor.>	Is the sensor normal?	Go to step **6**.	Replace the sensor.
6	**CHECK FUEL LEVEL SENSOR.** Check the fuel level sensor as a single part. <Ref. to FU(H4DO(w/o HEV))-147, INSPECTION, Fuel Level Sensor.>	Is the sensor normal?	Go to step **7**.	Replace the sensor.
7	**CHECK CONNECTOR.** 1) Turn the ignition switch to OFF. 2) Disconnect connectors.	Is there poor contact of connector?	Repair or replace the poor contact of connector.	Go to step **8**.
8	**CHECK CURRENT DATA.** Using the Subaru Select Monitor, display the «Fuel sensing value» from {Current Data Display & Save}.	Does the data display 10 — 570 Ω?	System is normal.	Replace the combination meter. <Ref. to IDI-16, Combination Meter.>

R: DTC B1501 POWER SUPPLY SYSTEM ERROR DETECTION

DTC DETECTING CONDITION:
Open or short in combination meter power supply circuit
TROUBLE SYMPTOM:
Defective operation of combination meter
WIRING DIAGRAM:
Combination meter system <Ref. to WI(w/o HEV)-54, WIRING DIAGRAM, Combination Meter System.> <Ref. to WI(HEV)-74, WIRING DIAGRAM, Combination Meter System.>

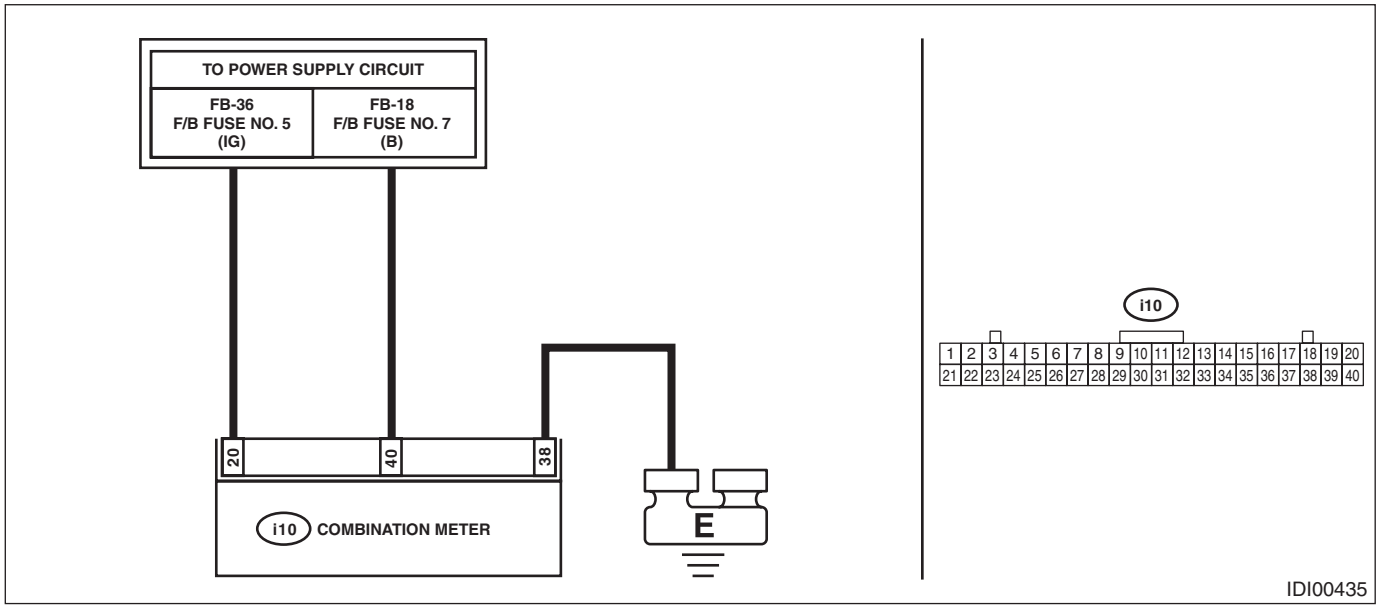

Step		Check	Yes	No
1	**CHECK POWER SUPPLY CIRCUIT.** Turn the ignition switch to ON, and confirm that the illumination of combination meter lights.	Does the illumination light?	Go to step **2**.	Go to step **3**.
2	**CHECK DTC.** Read the DTC of the meter using the Subaru Select Monitor.	Is DTC B1501 a current malfunction?	Go to step **3**.	Go to step **5**.
3	**CHECK FUSE.** 1) Turn the ignition switch to OFF. 2) Check the fuse.	Is the fuse OK?	Go to step **4**.	Replace the defective fuse.
4	**CHECK HARNESS.** 1) Turn the ignition switch to OFF. 2) Disconnect the meter connector. 3) Using the tester, measure the voltage between terminals. ***Connector & terminal*** ***(i10) No. 20 (+) — Chassis ground (–):*** ***(i10) No. 40 (+) — Chassis ground (–):***	Is the voltage 8.5 — 16.5 V?	Go to step **5**.	Repair the open circuit of harness or replace harness.
5	**CHECK CONNECTOR.** 1) Turn the ignition switch to OFF. 2) Disconnect connectors.	Is there poor contact of connector?	Repair or replace the poor contact of connector.	A temporary change of voltage occurred.

S: DTC B1507 EXTERNAL AIR TEMPERATURE OPEN/SHORT-CIRCUIT DETECTION

DTC DETECTING CONDITION:
Open or short circuit in ambient sensor
TROUBLE SYMPTOM:
- Defective ambient temperature display
- Defective air conditioner operation

WIRING DIAGRAM:
- Gasoline engine model

Air conditioning system <Ref. to WI(w/o HEV)-35, WIRING DIAGRAM, Air Conditioning System.>

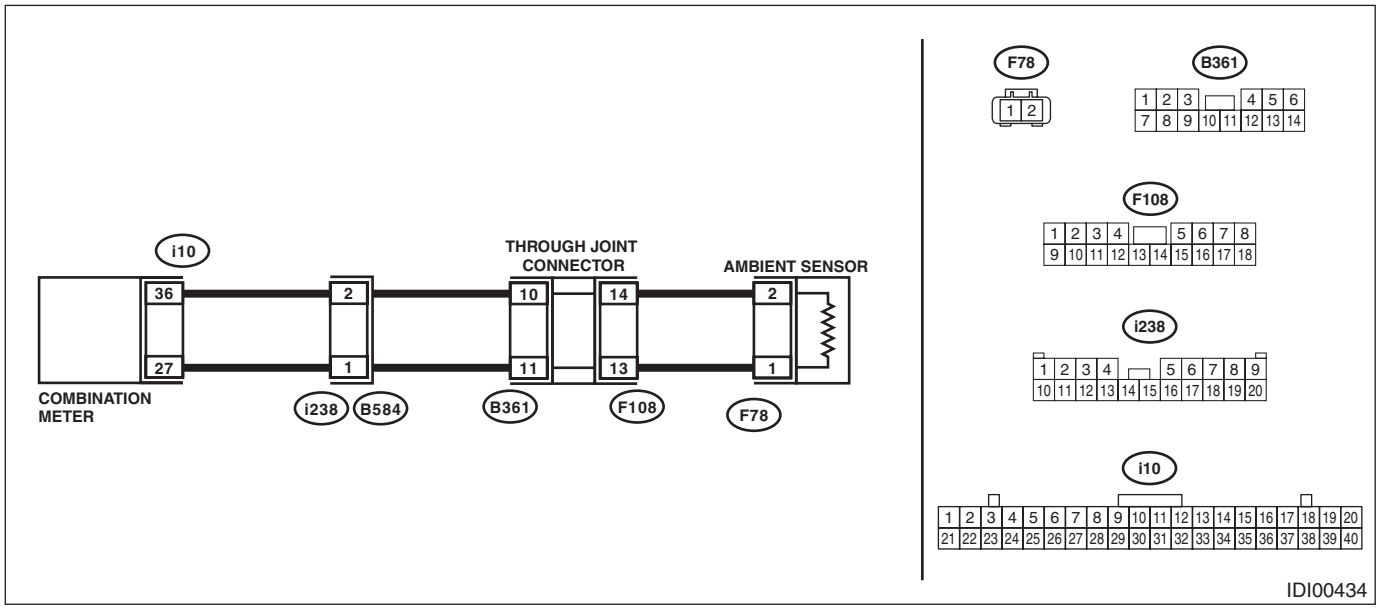

- HEV model

Air conditioning system <Ref. to WI(HEV)-55, WIRING DIAGRAM, Air Conditioning System.>

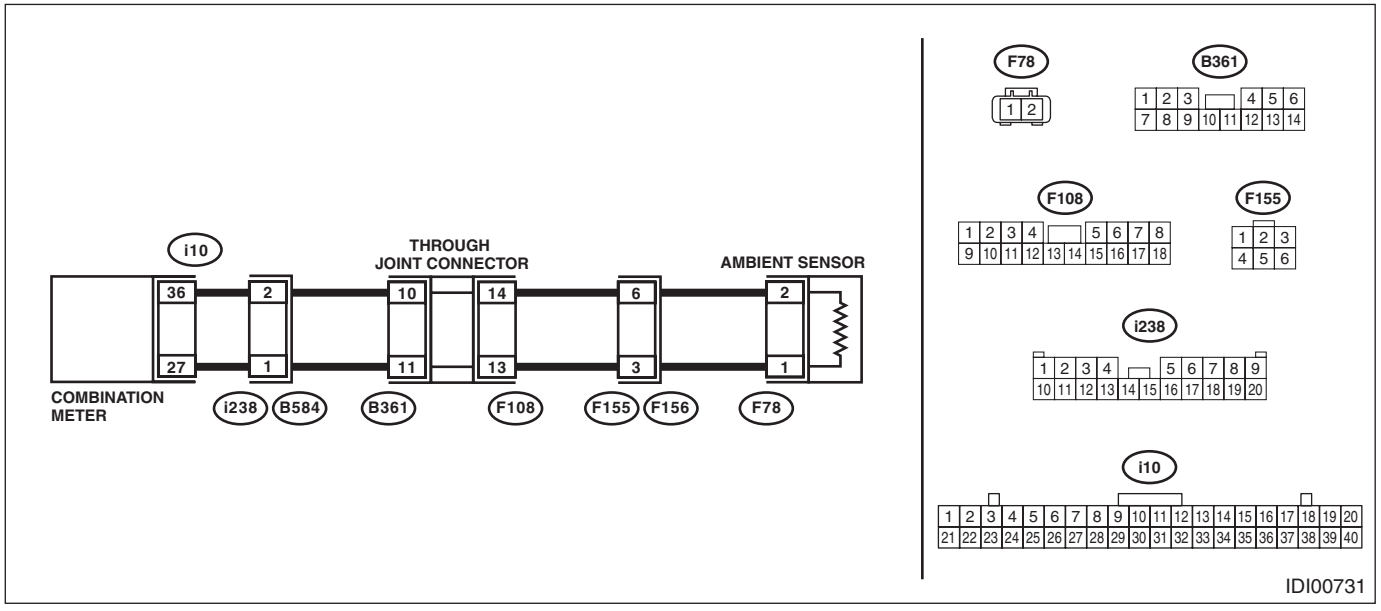

Step		Check	Yes	No
1	**CHECK DTC.** Read the DTC of the meter using the Subaru Select Monitor.	Is DTC B1507 a current malfunction?	Go to step **2**.	Go to step **6**.

	Step	Check	Yes	No
2	**CHECK CURRENT DATA.** Using the Subaru Select Monitor, display the «External air temperature sensing value» from {Current Data Display & Save}.	Is data displayed?	System is normal.	Go to step **3**.
3	**CHECK HARNESS.** 1) Turn the ignition switch to OFF. 2) Disconnect the meter connector and ambient sensor connector. 3) Using the tester, measure the resistance between terminals. ***Connector & terminal*** ***(i10) No. 36 — (F78) No. 2:*** ***(i10) No. 27 — (F78) No. 1:***	Is the resistance 10 Ω or less?	Go to step **4**.	Repair the open circuit of harness or replace harness.
4	**CHECK HARNESS.** Using the tester, measure the resistance between terminals. ***Connector & terminal*** ***(i10) No. 36 — Chassis ground:*** ***(i10) No. 27 — Chassis ground:***	Is the resistance 10 Ω or less?	Repair the short circuit of harness or replace harness.	Go to step **5**.
5	**CHECK AMBIENT SENSOR.** Perform the inspection of ambient sensor unit. <Ref. to AC-82, INSPECTION, Ambient Sensor.>	Is the sensor normal?	Go to step **6**.	Replace the sensor.
6	**CHECK CONNECTOR.** 1) Turn the ignition switch to OFF. 2) Disconnect connectors.	Is there poor contact of connector?	Repair or replace the poor contact of connector.	A temporary change of voltage occurred.

14.Charge Warning Light

A: INSPECTION

Illuminated when the ignition switch is turned ON, and goes off after the engine has been started.

NOTE:
For HEV model, when the charge warning light stays lit after the engine has been started, perform inspection for the charge warning light. <Ref. to SC(H4DO(HEV))-37, CHECK CHARGE WARNING LIGHT, INSPECTION, Integrated Starter Generator (ISG).>

SEATS

SE

Page

1. General Description 2
2. Front Seat 7
3. Rear Seat 23
4. Seat Heater System 35

1. General Description

A: COMPONENT

1. FRONT SEAT

- Manual seat LH

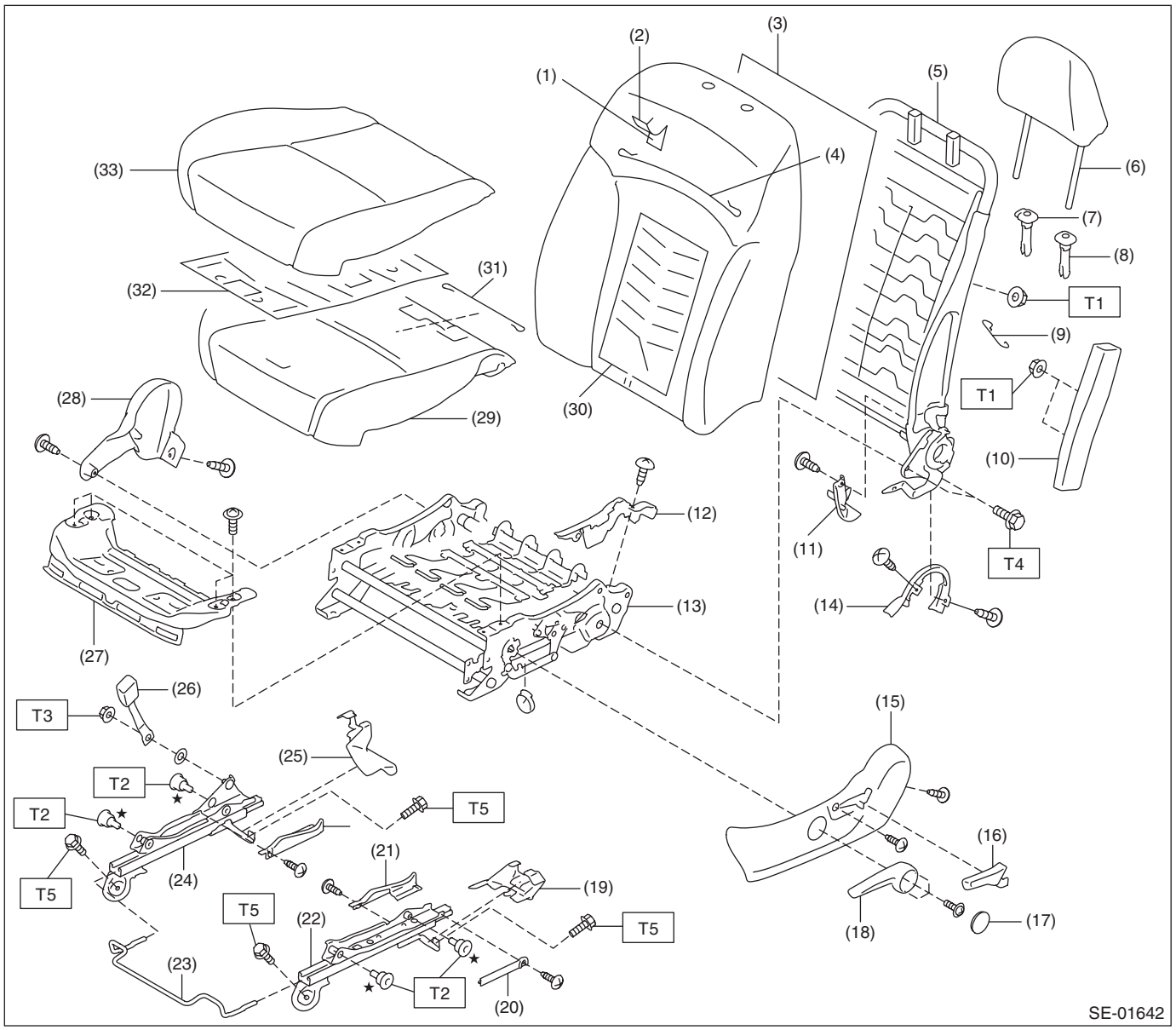

(1) Pad ASSY - front seat backrest
(2) Cover COMPL - front backrest
(3) Cover - silencer front seat backrest
(4) Wire set - front seat backrest
(5) Frame ASSY - front backrest
(6) Headrest ASSY - front
(7) Bushing - lock headrest
(8) Bushing - free headrest
(9) Hook - backrest front
(10) Side airbag module LH
(11) Cover - inner front
(12) Cover - frame front cushion
(13) Frame ASSY - front cushion
(14) Cover - hinge base front seat
(15) Cover - hinge front seat OUT
(16) Lever - reclining
(17) Cap - lifter lever
(18) Knob - lifter
(19) Cover - bolt rear OUT
(20) Cover - slide rail OUT
(21) Cover - slide rail OUT
(22) Slide rail ASSY - OUT
(23) Lever - towel bar
(24) Slide rail ASSY - INN
(25) Cover - bolt rear INN
(26) Seat belt inner - front
(27) Panel - front seat
(28) Cover - hinge front seat INN
(29) Pad ASSY - front seat cushion
(30) Heater unit - front seat backrest
(31) Wire set - front seat cushion
(32) Heater unit - front seat cushion
(33) Cover - front cushion

Tightening torque: N·m (kgf-m, ft-lb)

T1: 6 (0.61, 4.4)
T2: 15 (1.53, 11.1)
T3: 38 (3.87, 28.0)
T4: 52 (5.30, 38.4)
T5: 53 (5.40, 39.1)

- Manual seat RH

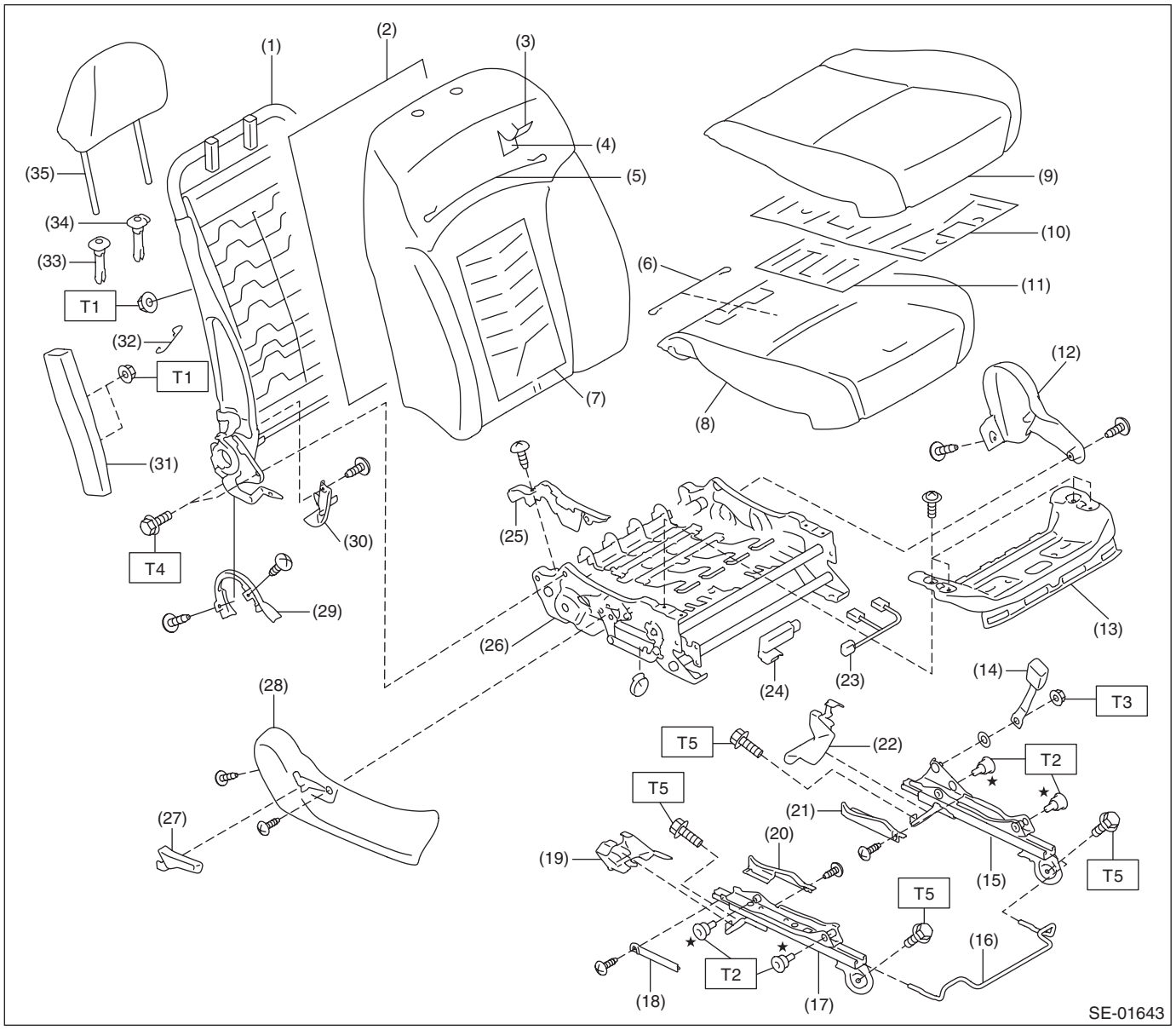

(1)	Frame ASSY - front backrest	(15)	Slide rail ASSY - INN	(29)	Cover - hinge base front seat
(2)	Cover - silencer front seat backrest	(16)	Lever - towel bar	(30)	Cover - inner front
(3)	Cover COMPL - front backrest	(17)	Slide rail ASSY - OUT	(31)	Side airbag module RH
(4)	Pad ASSY - front seat backrest	(18)	Cover - slide rail OUT	(32)	Hook - backrest front
(5)	Wire set - front seat backrest	(19)	Cover - bolt rear OUT	(33)	Bushing - lock headrest
(6)	Wire set - front seat cushion	(20)	Cover - slide rail OUT	(34)	Bushing - free headrest
(7)	Heater unit - front seat backrest	(21)	Cover - slide rail INN	(35)	Headrest ASSY - front
(8)	Pad ASSY - front seat cushion	(22)	Cover - bolt rear INN		
(9)	Cover - front cushion	(23)	Harness - occupant detection sensor	***Tightening torque: N·m (kgf-m, ft-lb)***	
(10)	Heater unit - front cushion	(24)	Control unit - occupant detection sensor	***T1:***	***6 (0.61, 4.4)***
(11)	Occupant detection sensor	(25)	Cover - frame front seat cushion	***T2:***	***15 (1.53, 11.1)***
(12)	Cover - hinge front seat INN	(26)	Frame ASSY - front seat cushion	***T3:***	***38 (3.87, 28.0)***
(13)	Panel - front seat	(27)	Lever - reclining	***T4:***	***52 (5.30, 38.4)***
(14)	Seat belt inner - front	(28)	Cover - hinge front seat OUT	***T5:***	***53 (5.40, 39.1)***

2. REAR SEAT

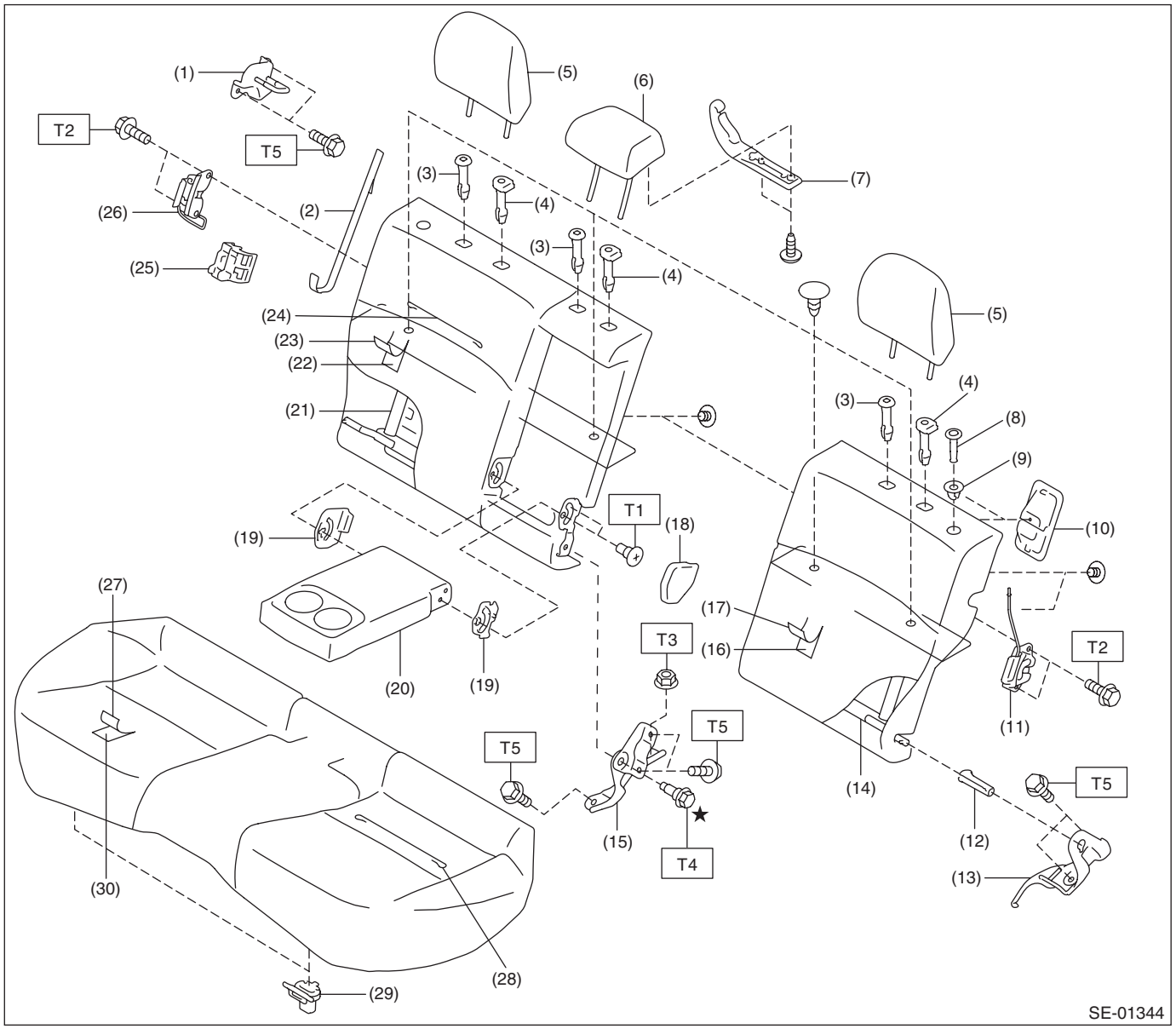

(1) Striker - backrest rear RH
(2) Knob - strap (4 door model)
(3) Bushing - headrest
(4) Bushing - lock ASSY
(5) Headrest ASSY - rear backrest
(6) Headrest ASSY - rear center
(7) Belt guide - rear seat (5 door model/XV model)
(8) Knob - backrest rear
(9) Knob - guide
(10) Tether anchor cover
(11) Lock ASSY - backrest rear LH
(12) Bushing - backrest hinge
(13) Hinge ASSY - rear backrest
(14) Frame ASSY - rear backrest LH
(15) Hinge ASSY - backrest center
(16) Pad ASSY - rear seat backrest LH
(17) Cover COMPL - rear backrest LH
(18) Cover - armrest
(19) Bushing - rear armrest
(20) Armrest ASSY - rear center
(21) Frame ASSY - rear backrest RH
(22) Pad ASSY - rear seat backrest RH
(23) Cover COMPL - rear backrest RH
(24) Wire set - rear backrest
(25) Knob - strap guide (4 door model)
(26) Lock ASSY - backrest rear RH
(27) Cover - rear cushion
(28) Wire set - rear cushion
(29) Hook - seat cushion rear
(30) Pad and frame ASSY - rear cushion

Tightening torque: N·m (kgf-m, ft-lb)	
T1:	*14.7 (1.5, 10.8)*
T2:	*22.5 (2.3, 16.6)*
T3:	*24.5 (2.5, 18.1)*
T4:	*28.9 (2.9, 21.3)*
T5:	*33 (3.4, 24.3)*

B: CAUTION

When removing the front seat from the vehicle, refer to “CAUTION” of “General Description” in “AIRBAG SYSTEM” section. <Ref. to AB-11, CAUTION, General Description.>

C: PREPARATION TOOL

1. GENERAL TOOL

TOOL NAME	REMARKS
Long nose plier	Used for removing the hog ring.
Hog ring pliers	Used for installing the hog ring.
Circuit tester	Used for measuring resistance and voltage.

2. Front Seat

A: REMOVAL

CAUTION:
The airbag system is fitted with a backup power supply. After disconnecting the battery ground cable, the airbag may operate if you do not wait for 60 seconds before starting the service of airbag system.

1) Remove the headrest assembly - front.
2) Disconnect the ground cable from battery and wait for at least 60 seconds before starting work. <Ref. to NT-5, BATTERY, NOTE, Note.>

NOTE:
For the 12 volt engine restart battery of HEV model, disconnect the ground terminal from 12V engine restart battery sensor.

3) Remove the slide rail assembly installing bolt.
   (1) Tilt the backrest assembly forward and move the front seat to the front most position.
   (2) Remove the cover - bolt rear (A) and remove the bolts.

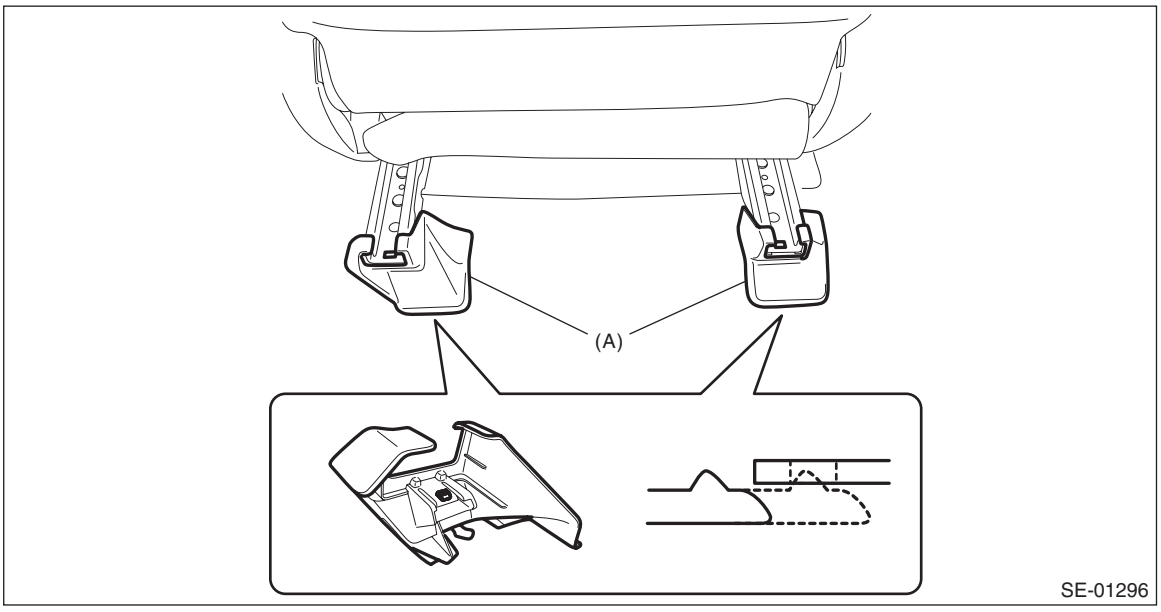

   (3) Move the front seat to the rearmost position, and remove the bolts.

4) Disconnect the connector under the front seat.
- Seat belt warning light connector (driver's seat)
- Occupant detection system harness connector (passenger's seat) <Ref. to OD(diag)-9, OCCUPANT DETECTION SYSTEM (BETWEEN AIRBAG REAR HARNESS AND SEAT HARNESS), PROCEDURE, Airbag Connector.>
- Side airbag connector <Ref. to AB-29, SIDE AIRBAG MODULE, PROCEDURE, Airbag Connector.>
- Seat heater connector (model with seat heater)
- Buckle switch RH connector (passenger's seat) <Ref. to AB-30, BUCKLE SWITCH RH, PROCEDURE, Airbag Connector.>

5) Take out the front seat from the vehicle.

CAUTION:
Be careful not to damage the body.

B: INSTALLATION

Install each part in the reverse order of removal.

CAUTION:
• The front seat mounting bolts differ between the front mounting points and the rear mounting points. When installing the front seat, make sure that you are using correct bolts at correct positions.
• Tighten the slide rail assembly installing bolts in the order as shown in the figure, in several steps by gradually increasing the torque until they reach the specified torque.

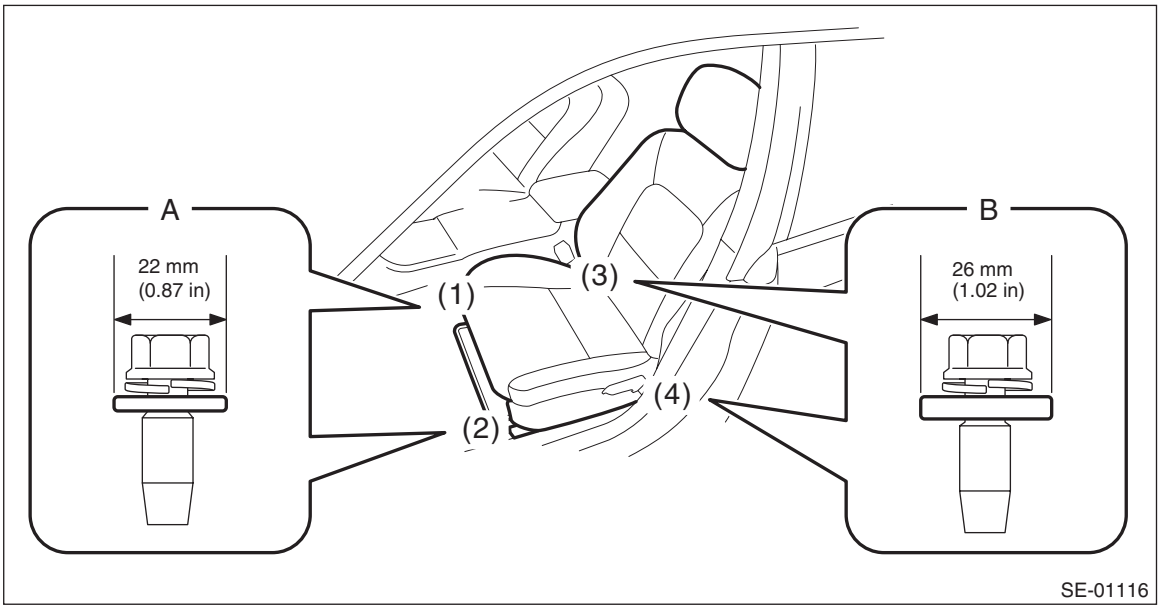

- **Front (bolt A): Washer diameter 22 mm (0.87 in)**
- **Rear (bolt B): Washer diameter 26 mm (1.02 in)**

Tightening torque:
Front seat assembly: 53 N·m (5.40 kgf-m, 39.1 ft-lb)

C: DISASSEMBLY

1. DRIVER'S SEAT

CAUTION:
Before assembling, make sure how the harnesses such as the side airbag harness and the seat belt inner - front harness are routed in order to avoid misarranging. Assembling with harnesses improperly routed may cause the harness to get caught and short out.

1) Remove the front seat from vehicle. <Ref. to SE-7, REMOVAL, Front Seat.>
2) Remove the knob - lifter.
   (1) Using a flat tip screwdriver, remove the cap - lifter lever (a).
   (2) Remove the screws and remove the knob - lifter.

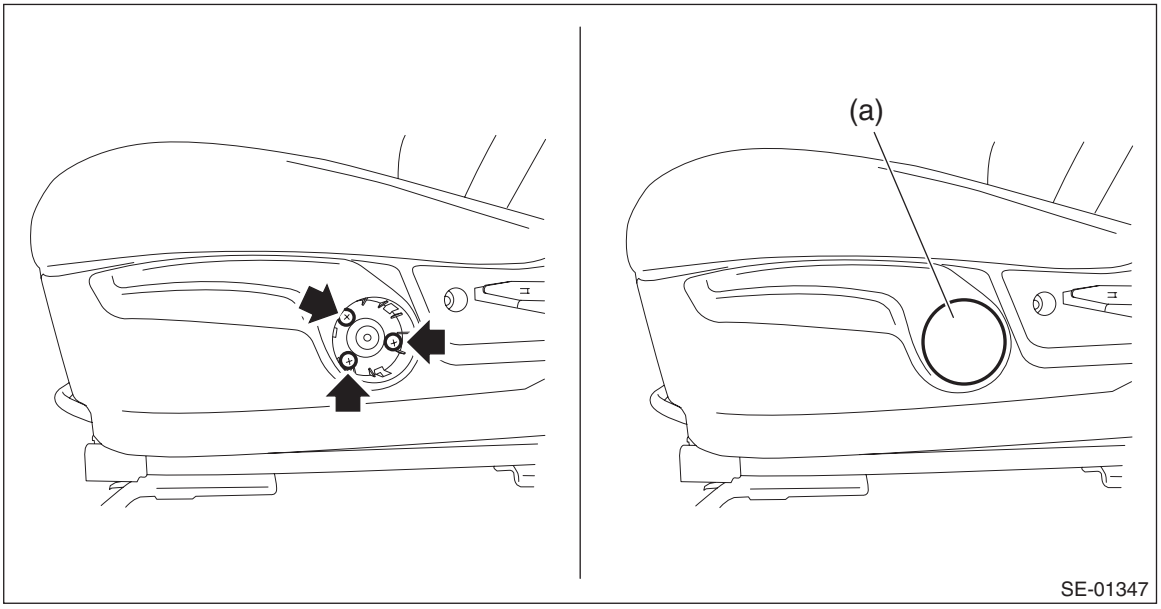

3) Remove the lever - reclining.
   (1) Pull up the lever - reclining and release the claws on the back.
   (2) Pull out the lever - reclining.

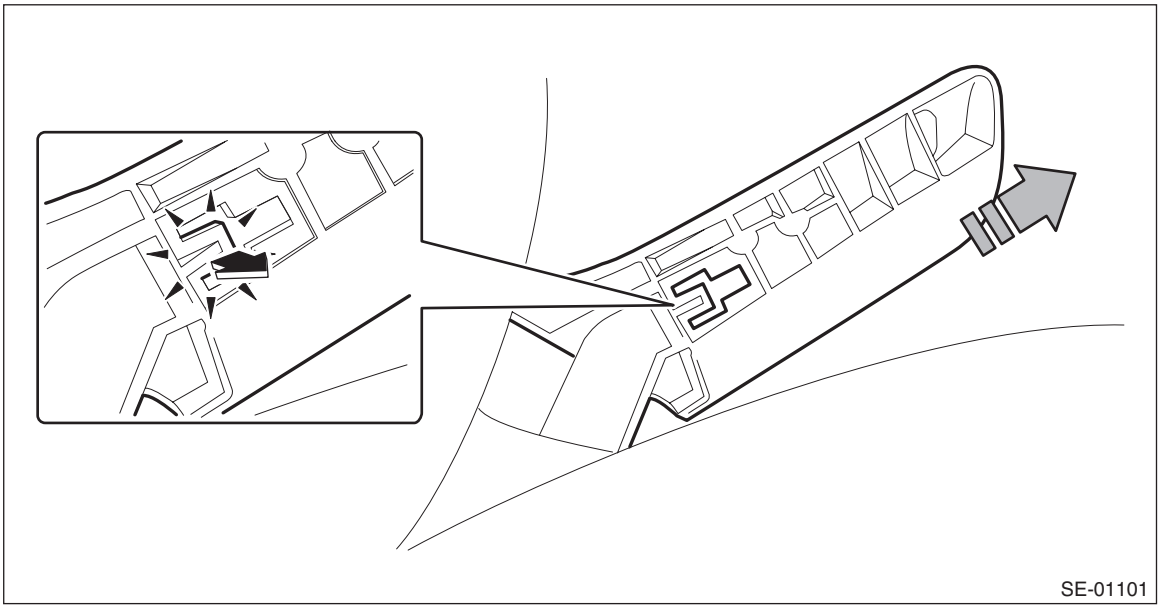

4) Remove the cover - hinge front seat OUT.
(1) Remove the screws.
(2) Release the claw in the upper section of the cover - hinge front seat OUT.
(3) Release the claw in the rear section of the cover - hinge front seat OUT.
(4) Release the claw in the front section of the cover - hinge front seat OUT, then remove the cover - hinge front seat OUT.

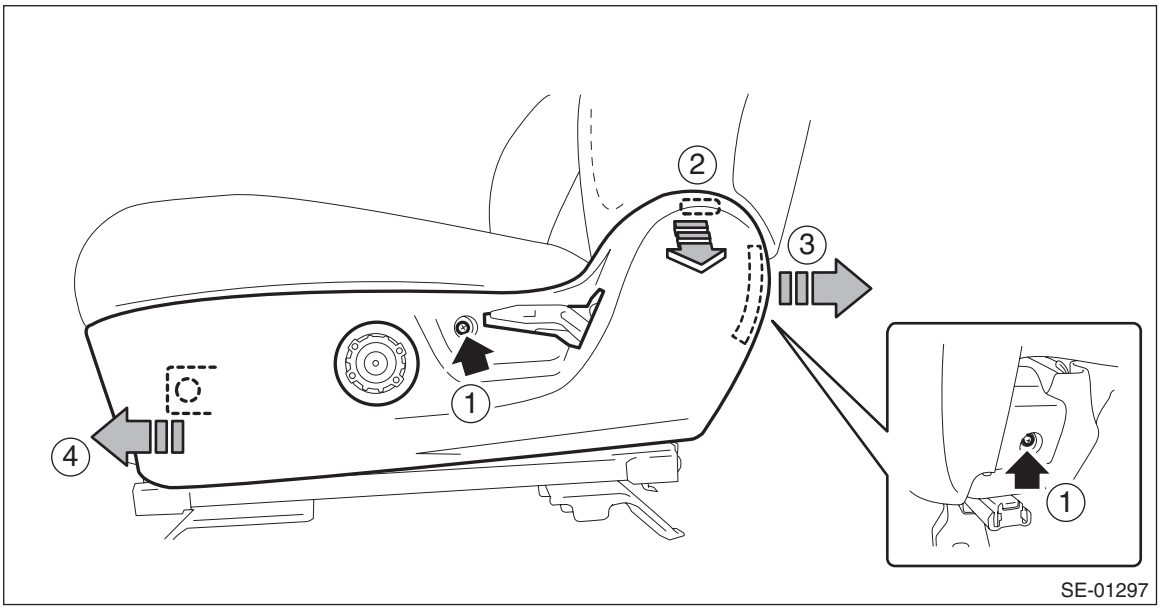

5) Remove the seat belt inner - front.
(1) Remove the nut, and remove the seat belt inner - front.
(2) Remove the clip for the seat belt inner - front located under the seat cushion assembly.

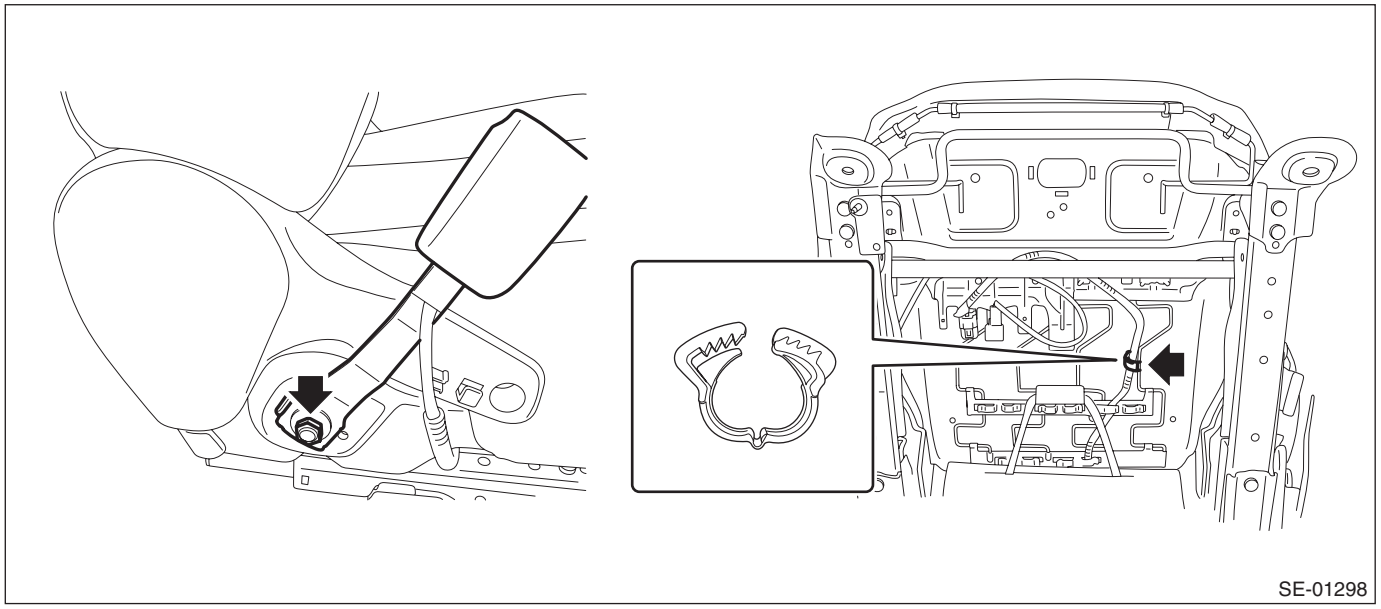

6) Remove the cover - hinge front seat INN.
(1) Remove the screws.
(2) Release the claw in the upper section of the cover - hinge front seat INN.
(3) Release the claw in the rear section of the cover - hinge front seat INN, then remove the cover - hinge front seat INN.

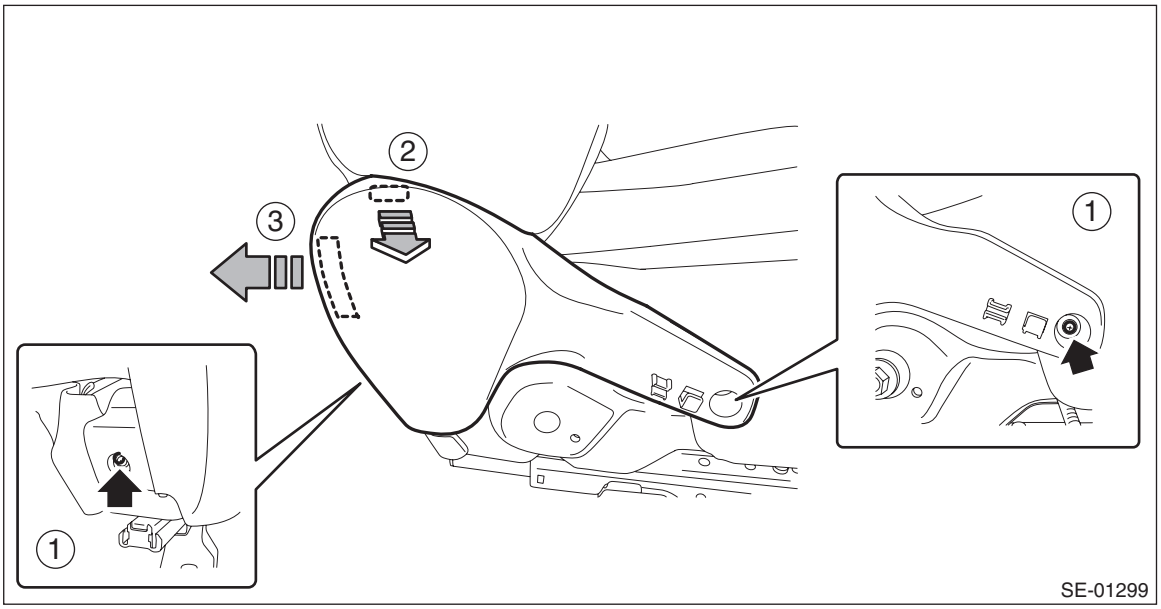

7) Separate the backrest assembly and the seat cushion assembly.
(1) Remove the clip for the side airbag harness located under the seat cushion assembly. (seat with side airbag)
(2) Remove the bolts from reclining hinge of both sides.
(3) While taking care not to damage the airbag harness, separate the backrest assembly and the seat cushion assembly.

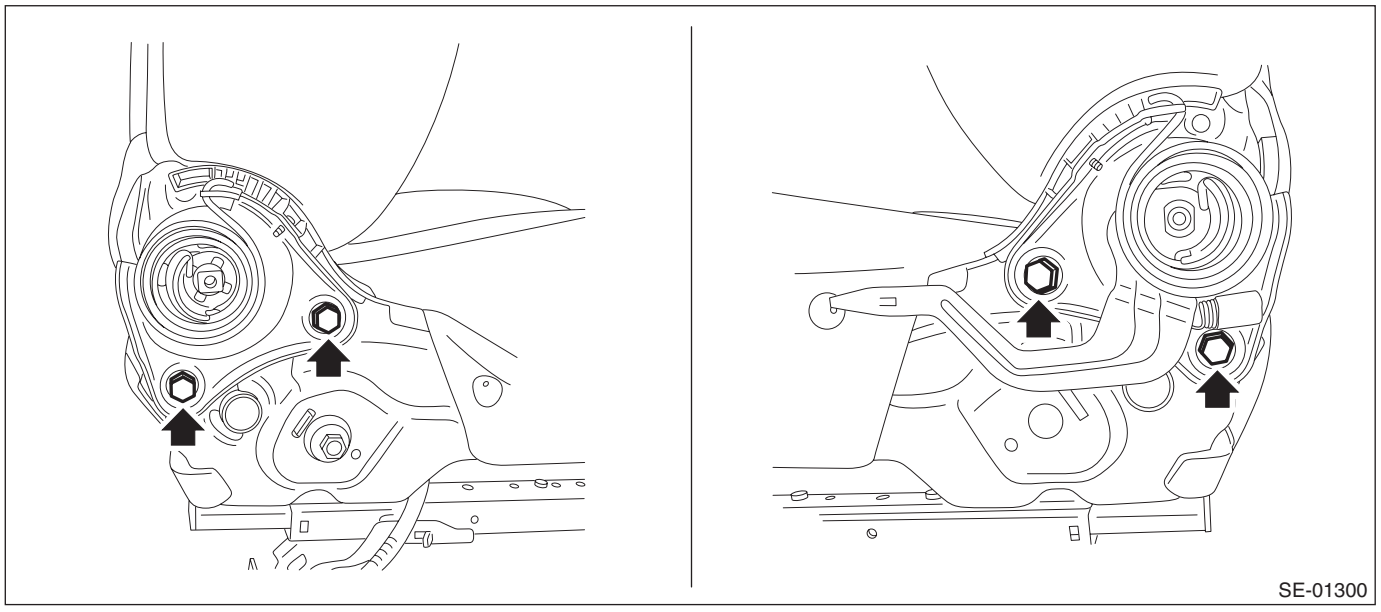

8) Remove the cover - slide rail OUT.
   (1) Remove the clip.
   (2) Remove the hook, and detach the cover - slide rail OUT.

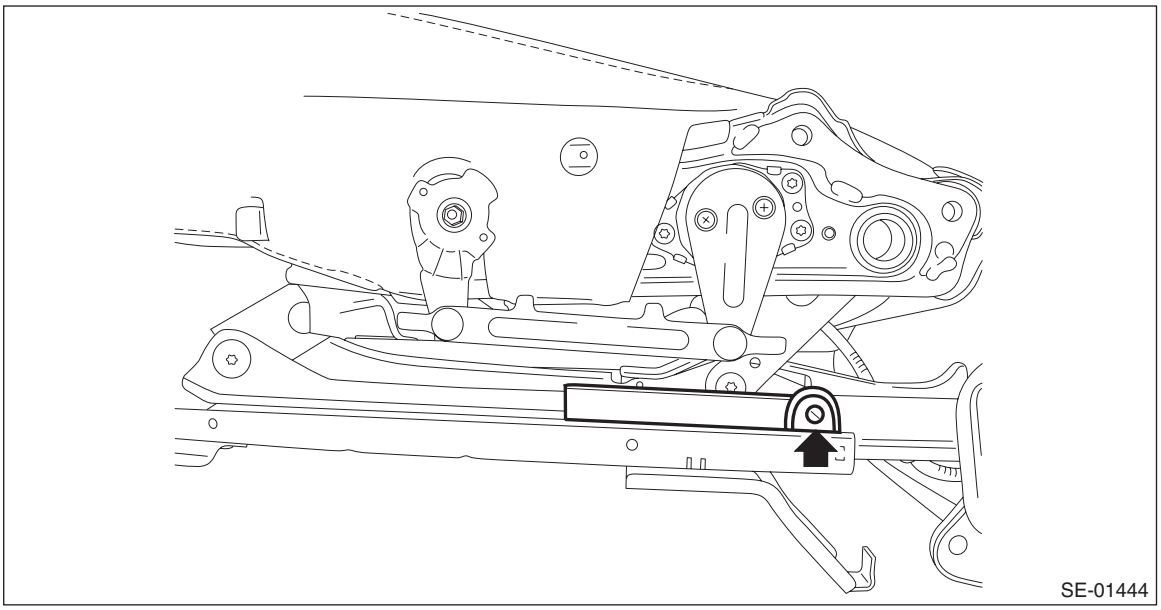

9) Remove the screws and detach the cover - slide rail INN.

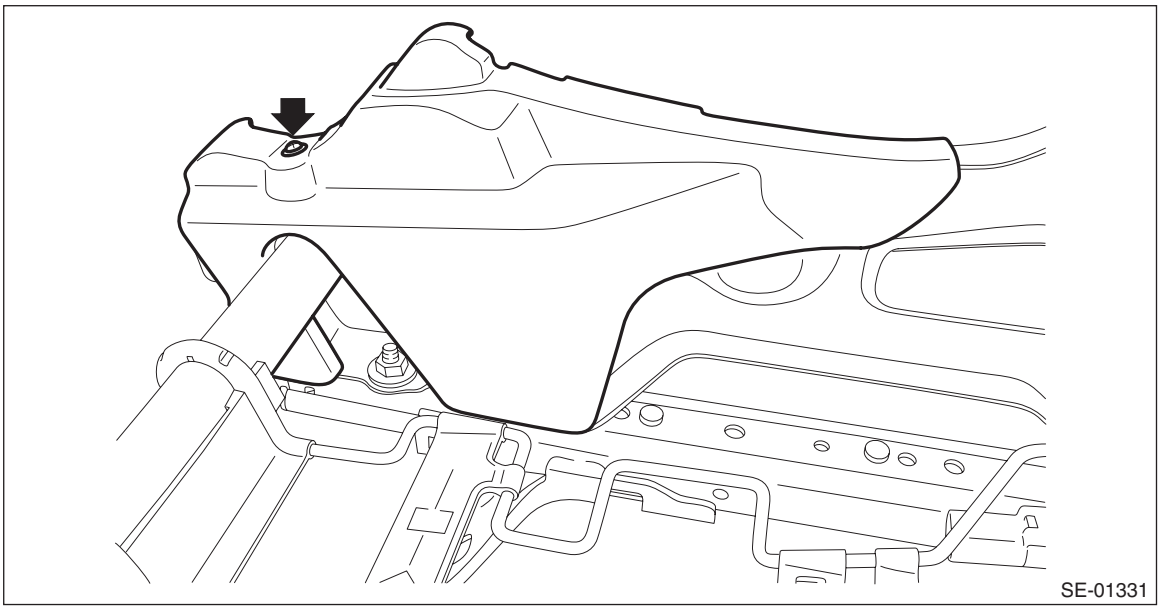

10) Remove the pad assembly - front seat cushion and the cover - front cushion.
(1) Remove the hooks and hog rings.
(2) Remove the pad assembly - front seat cushion and the cover - front cushion from the seat cushion assembly.

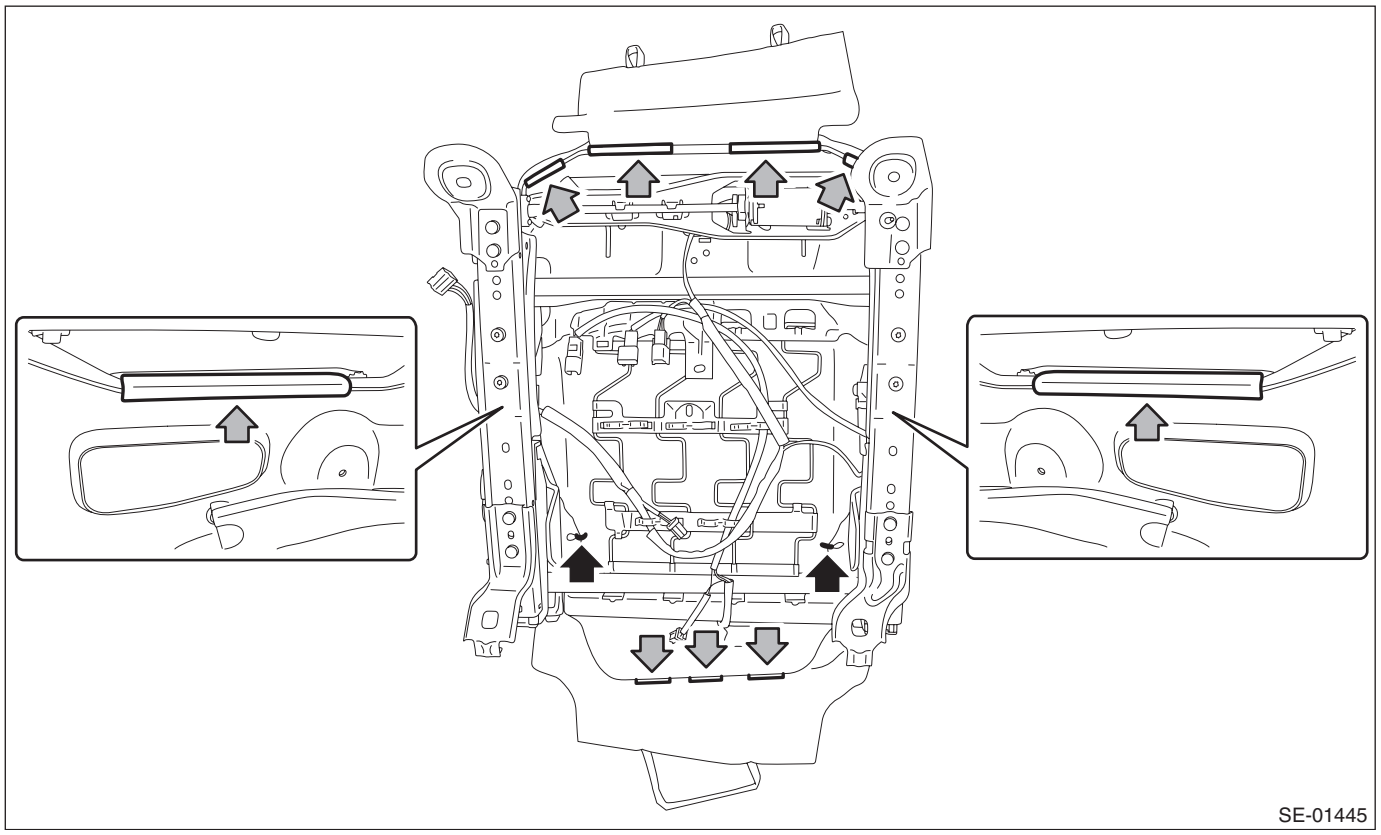

11) Remove the cover - front cushion.
(1) Remove the hog ring (A).

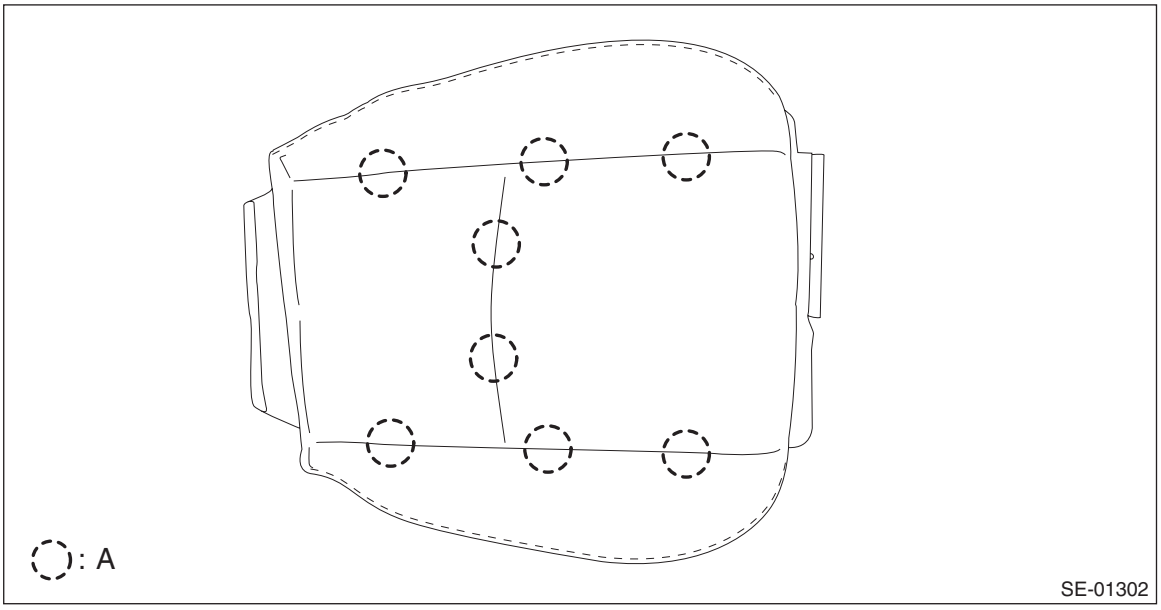

(2) Pull out the pad assembly - front seat cushion from the cover - front cushion.

12) Remove the pad assembly - front seat backrest and the cover COMPL - front backrest.
(1) Remove the plastic fastener at the back side (bottom) of backrest assembly.
(2) Open the fastener at the rear side of backrest assembly.

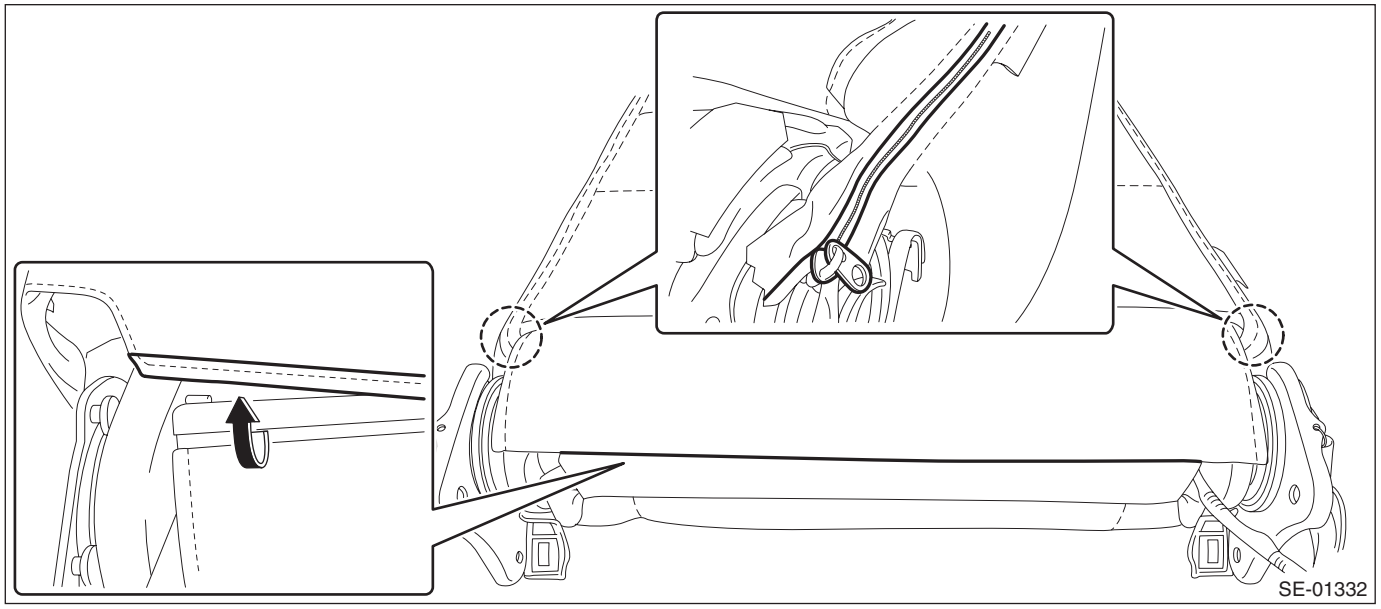

(3) Remove the hog ring.

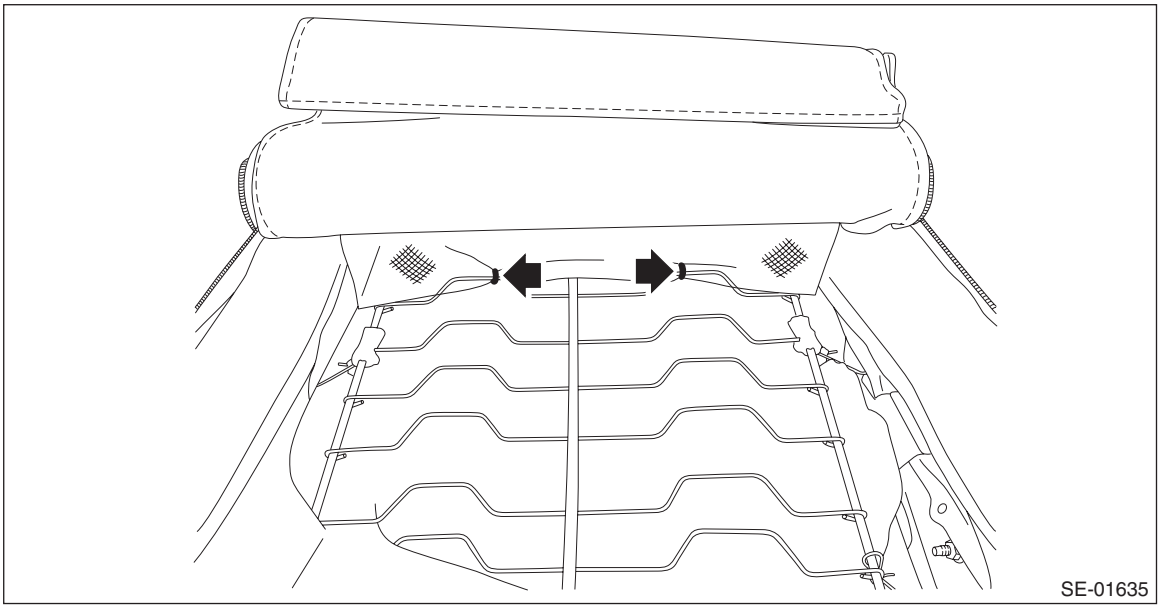

(4) Remove the pad assembly - front seat backrest and the cover COMPL - front backrest from the backrest assembly.

13) Remove the side airbag module.

CAUTION:
Do not open the protective cover of the side airbag. If any damage is present in the protective cover or the cloth of side airbag module comes out from the protective cover slit, replace the side airbag module with a new part.

(1) Remove the hexagon cap nut and nuts.
(2) While taking care not to damage the airbag protective cover, remove the side airbag module.

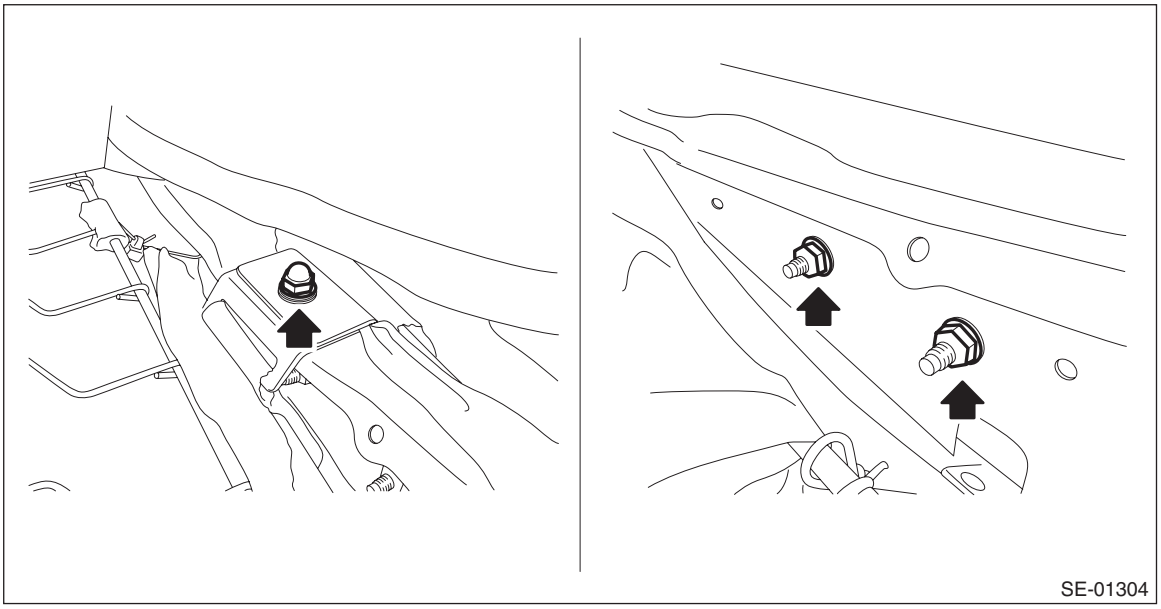
SE-01304

14) Remove the bushing - headrest.

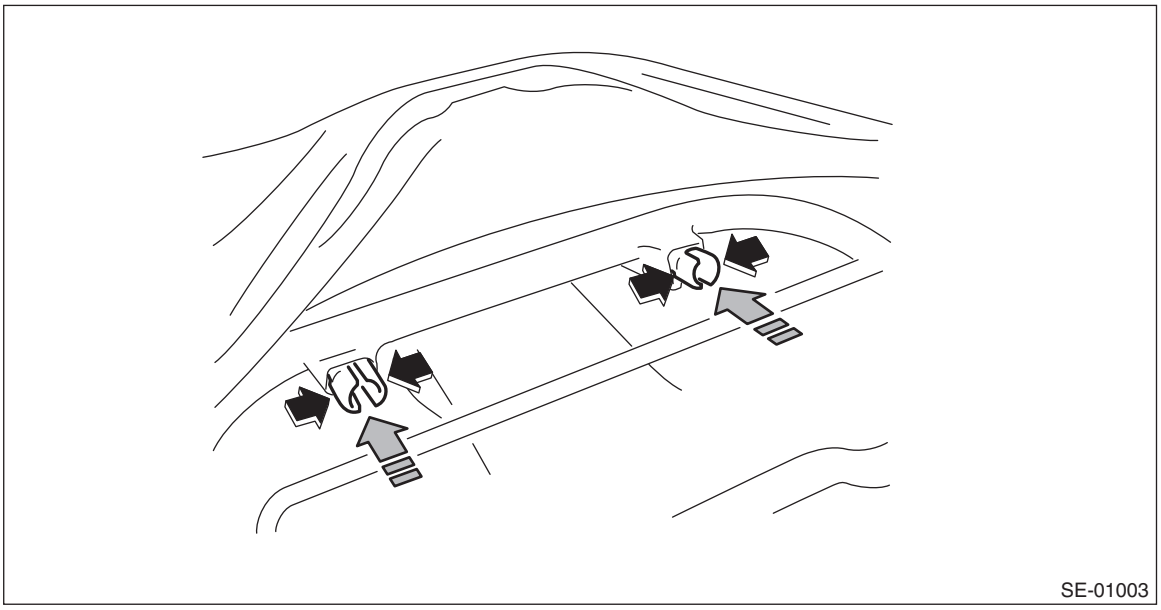
SE-01003

NOTE:
Catch the tip of the bushing - headrest with pliers and push it outward from the inside of seat to remove it.

15) Pull out the frame assembly - front backrest.
16) Remove the cover COMPL - front backrest.
(1) Remove the hog ring (A).

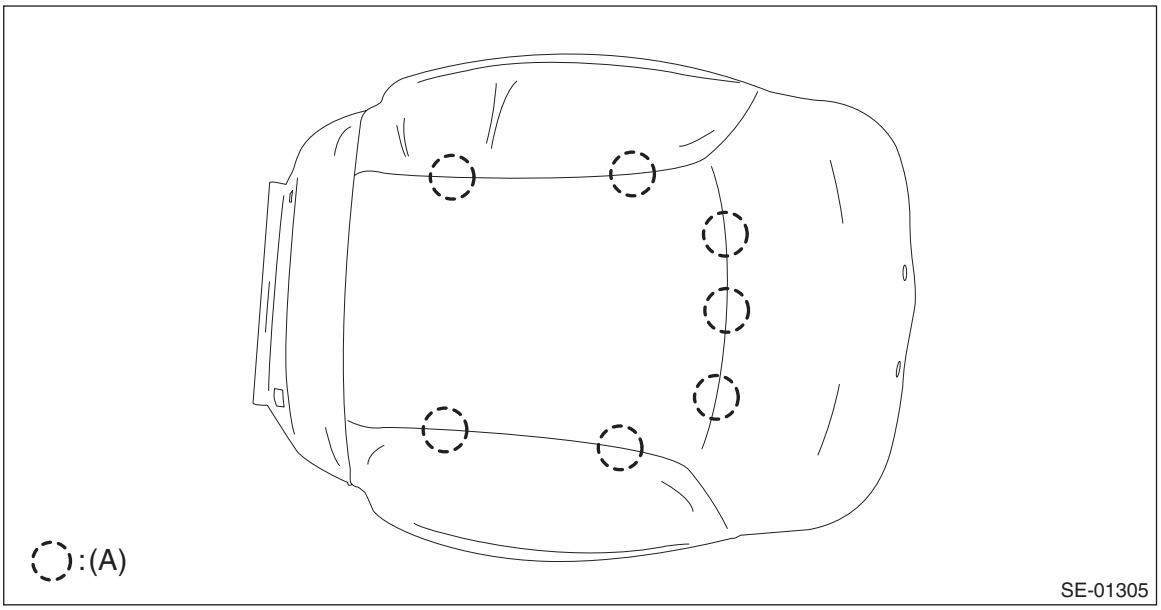

(2) Pull out the pad assembly - front seat backrest from the cover COMPL - front backrest.

2. PASSENGER'S SEAT

CAUTION:
• The occupant detection system (passenger's seat only) control module, the occupant detection sensor, the pad assembly - front seat cushion and the frame assembly - front cushion are considered as a single seat cushion pad & frame assembly. Never remove the occupant detection control module or the occupant detection sensor from the frame assembly - front cushion.
• If the cover - front cushion is removed, make sure to replace the hang wire on the cover - front cushion side with a new wire.
• Never remove the occupant detection sensor connector from the occupant detection control module.
• When replacing the seat cover, be careful not to damage the occupant detection sensor while installing the hog ring.
• When removing or replacing the seat cover, perform "Occupant Detection System Inspection" after installing the seat to check if the occupant detection system operates normally. <Ref. to PI-15, SEAT, PRE-DELIVERY INSPECTION (PDI) PROCEDURE, Pre-delivery Inspection.>
1) Remove the front seat (passenger's side) from vehicle. <Ref. to SE-7, REMOVAL, Front Seat.>
2) Refer to the disassembly procedures for the driver's seat. <Ref. to SE-9, DRIVER'S SEAT, DISASSEMBLY, Front Seat.>

D: ASSEMBLY

CAUTION:

• Do not confuse the harness routing of the side airbag harness and the seat belt inner - front harness, etc. Assembling with harnesses improperly routed may cause the harness to get caught and short out.

• If the flat mat hook of the frame assembly - front backrest is deformed or comes off due to the deformation, replace the hook with a new part.

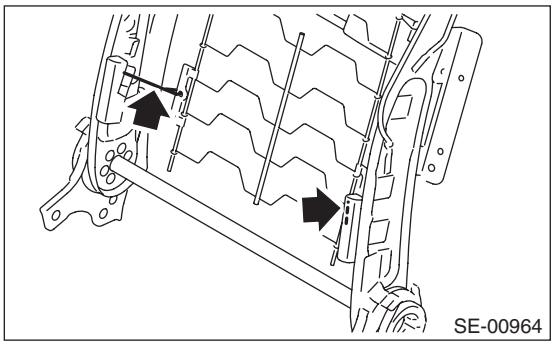

• Make sure that the side airbag module is installed as shown in the figure.

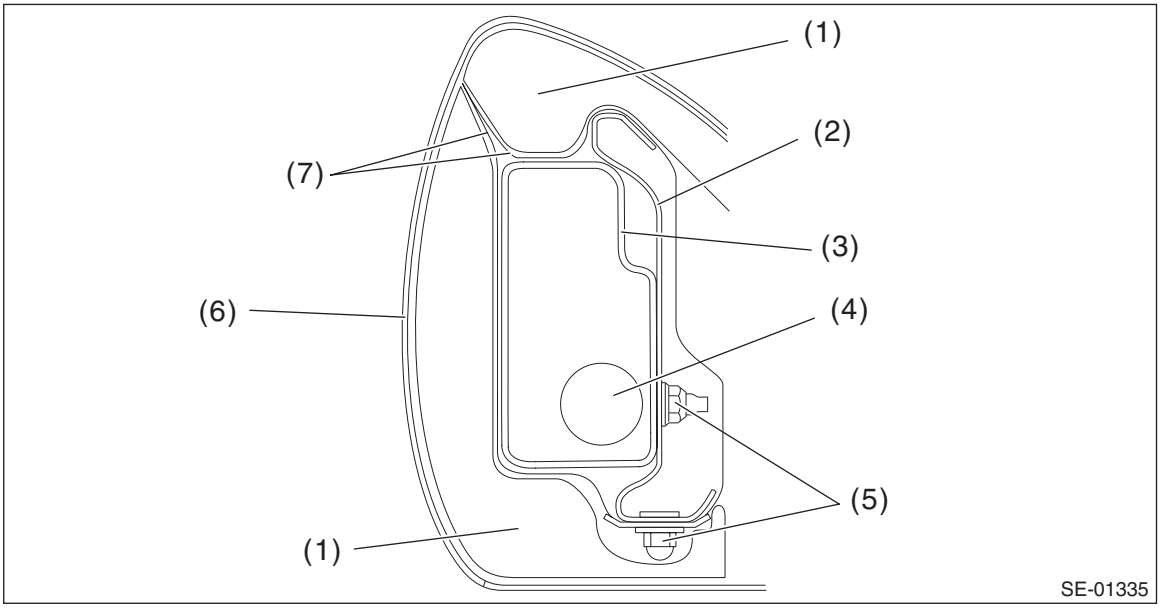

(1)	Pad ASSY - front seat backrest	(4)	Side airbag module inflator	(7)	Side airbag guide cloth
(2)	Frame ASSY - front backrest	(5)	Nut		
(3)	Side airbag module protective cover	(6)	Cover COMPL - front backrest		

Besides, if the cover COMPL - front backrest is not installed securely, the side airbag may not be activated properly, therefore keep strictly to the following procedures.

• Be careful not to stain or damage the cover COMPL - front backrest during assembly.

• Do not reuse hog rings.

• Secure the hog ring using hog ring pliers.

• Install the hog rings to the specified points securely and make sure that there is no wrinkle or twisting on the cover COMPL - front backrest.

1) Make sure that there is no foreign matter on side airbag module.
2) Assemble the seat cover.
   (1) Adjust so that the left and right clearances between wire and seat pad become equal, and mark the seat pad.

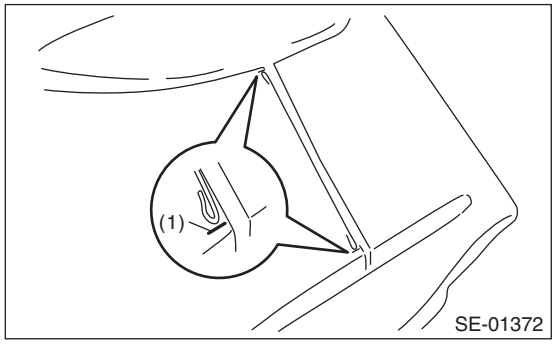

(1) Marking

   (2) Mark the center of the wire on the pad side to which the hog ring is attached.

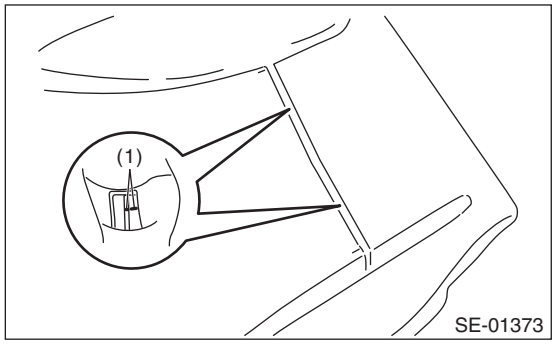

(1) Marking

   (3) Insert the wire into the seat cover, and align the wire with the position marked in step 1).

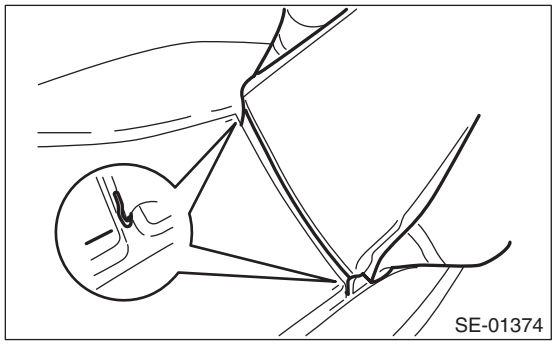

   (4) Mark the wire on the seat cover side according to the markings on the seat pad.

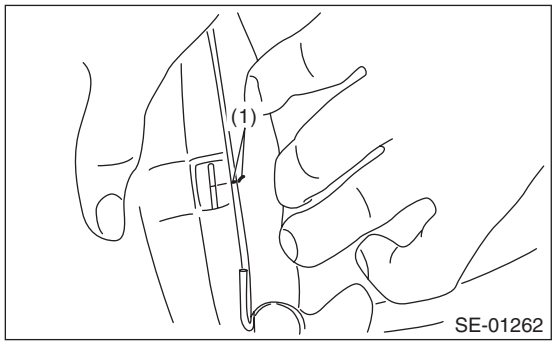

(1) Marking

(5) Perform steps 1) — 4) to all sections to which the hog rings are attached.
(6) Make sure that all hog rings (A) are attached securely.

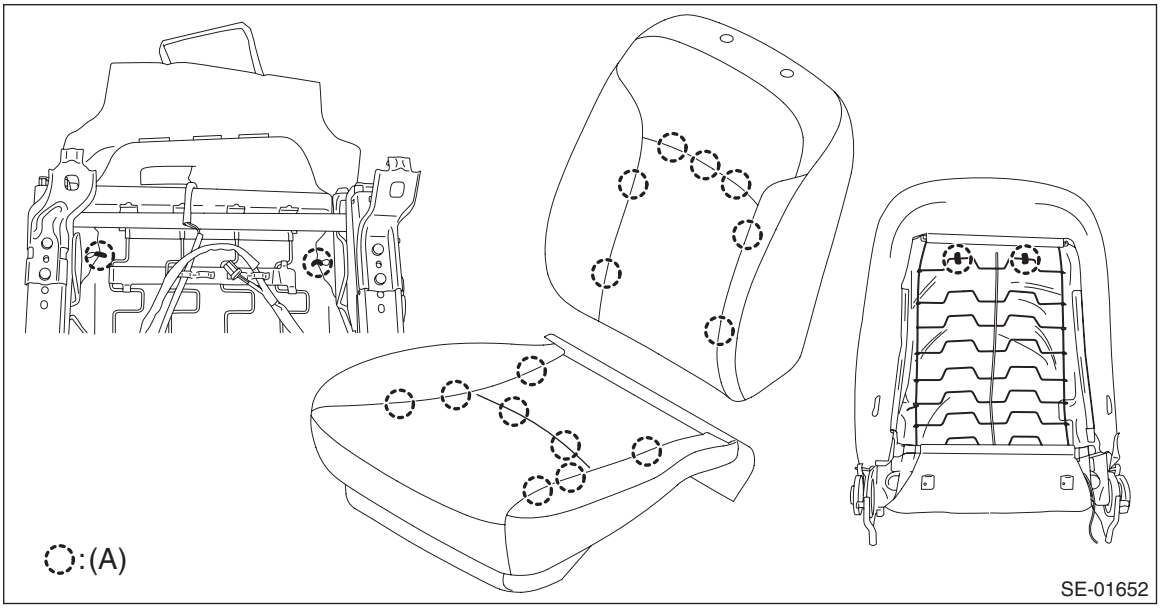

3) Assemble remaining parts in the reverse order of disassemble.

NOTE:
• When installing the seat belt inner - front, follow the procedures described in the seat belt section. <Ref. to SB-25, INSTALLATION, Front Seat Belt.>
• Install the backrest assembly and seat cushion assembly in the following procedure.
1. Temporarily tighten the four reclining hinge bolts.
2. Place the backrest in the most upright position.
3. Tighten the reclining hinge bolts in order from (1) to (4) two or three times, until they reach the specified torque.

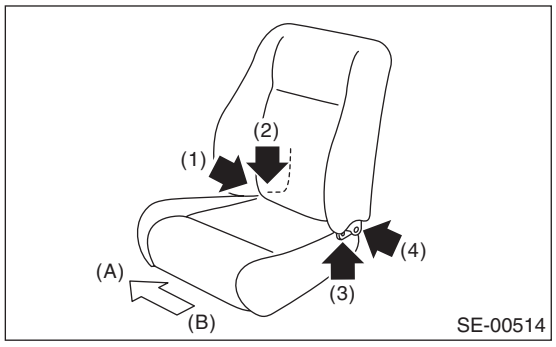

(A) Vehicle inside
(B) Vehicle outside

Tightening torque:
Refer to "COMPONENT" of "General Description". <Ref. to SE-2, FRONT SEAT, COMPONENT, General Description.>

4) If any wrinkles are found after the assembly of the seat cover, finish the seat cover with iron.
(1) Place the wet towel on wrinkles.



(2) Touch up with warm iron.

CAUTION:
Keep moving the iron, otherwise the seat cover surface can be damaged.

NOTE:
This method is available for genuine leather, synthetic leather, cloth, etc.

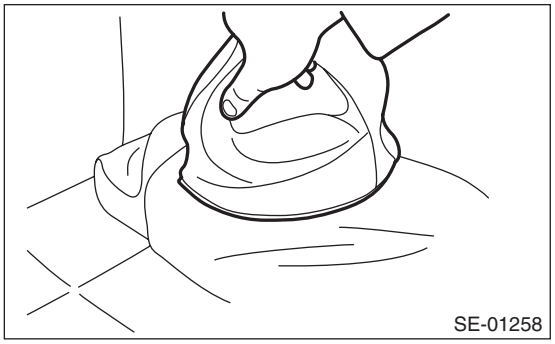

5) Install connectors located under the front seat.
- Manual seat

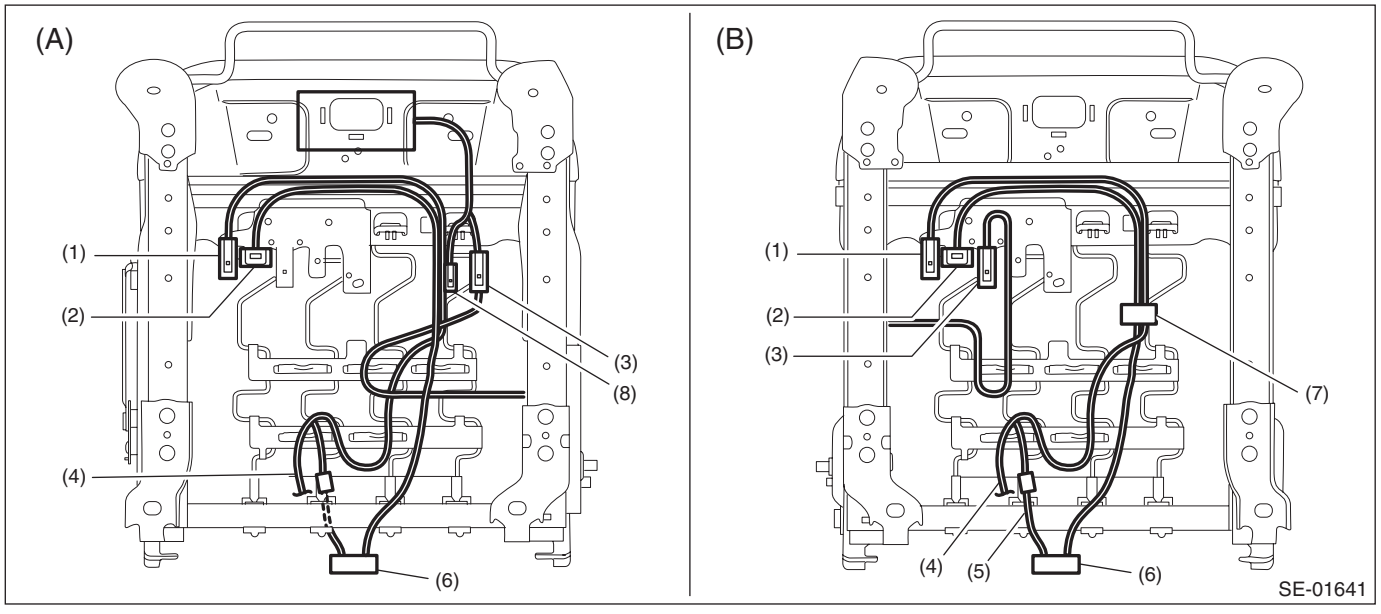

(A) 4 WAY
(B) 6 WAY

(1) Seat cushion heater connector
(2) Side airbag connector
(3) Seat belt switch connector
(4) Seat cushion - heater harness
(5) Backrest heater harness
(6) Velcro
(7) Band A
(8) Occupant detection control module

6) Install the seat assembly.

CAUTION:
• The seat mounting bolts differ between the front mounting points and the rear mounting points. Make sure that you are using correct bolts at correct positions.
• Tighten the slide rail installing bolts in the order as shown in the figure, in several steps by gradually increasing the torque until they reach the specified torque.

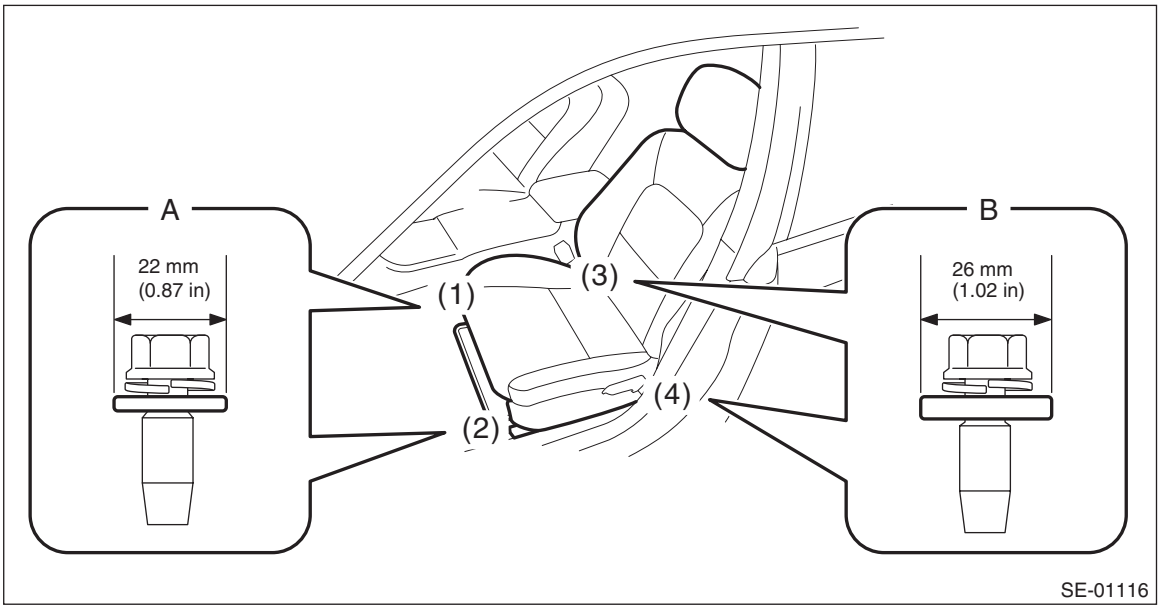

- **Front (bolt A): Washer diameter 22 mm (0.87 in)**
- **Rear (bolt B): Washer diameter 26 mm (1.02 in)**

Tightening torque: 53 N·m (5.40 kgf-m, 39.1 ft-lb)

E: INSPECTION

1. SEAT COVER

Check that there is no tear or fray on the cover COMPL - front backrest and the cover - front cushion.

NOTE:
For model with side airbag, if the door side of the cover COMPL - front backrest is torn or frayed, the side airbag may not be deployed properly. In this case, replace the cover COMPL - front backrest with a new part.

2. FLAT MAT HOOK

Check the flat mat hook by applying weight to the backrest assembly.

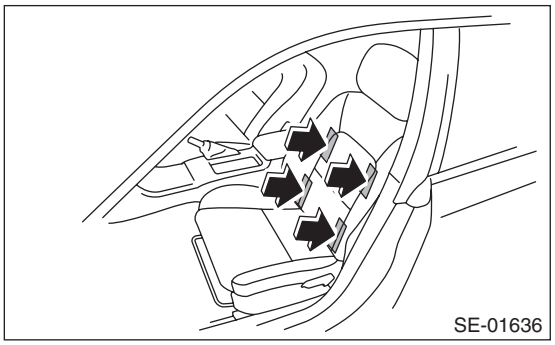

NOTE:
If the appropriate stiffness is not obtained by applying weight to the backrest assembly, the hook may be disengaged.
If it is due to the deformation of the hook, replace the hook with a new part.

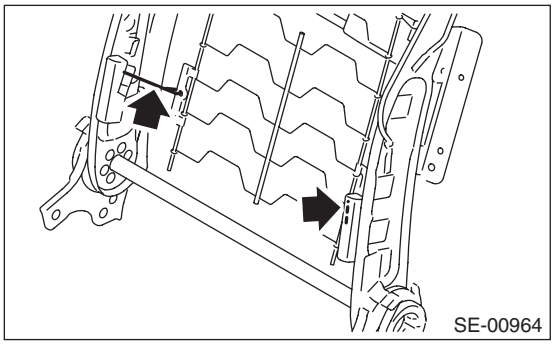

3. Rear Seat

A: REMOVAL

CAUTION:
• Airbag system satellite safing sensor is located in the lower of the rear seat cushion center. Before removing the rear seat, refer to "CAUTION" of "General Description" in "AIRBAG SYSTEM" section. <Ref. to AB-11, CAUTION, General Description.>
• The airbag system is fitted with a backup power supply. After disconnecting the battery ground cable, the airbag may operate if you do not wait for 60 seconds before starting the service of airbag system.

1) Disconnect the ground cable from battery and wait for at least 60 seconds before starting work. <Ref. to NT-5, BATTERY, NOTE, Note.>

NOTE:
For the 12 volt engine restart battery of HEV model, disconnect the ground terminal from 12V engine restart battery sensor.

2) Remove the rear seat cushion assembly.
   (1) Push the corners of the rear seat cushion from above.
   (2) While pushing the corners of the rear seat cushion from above, pull the knob of the hook - seat cushion rear towards yourself.
   (3) While pulling the knob towards yourself, disconnect the hooks by lifting up the rear seat cushion.

NOTE:
Pull the left side of the knob to disconnect the LH side hook, and pull the right side of the knob to disconnect the RH side hook.

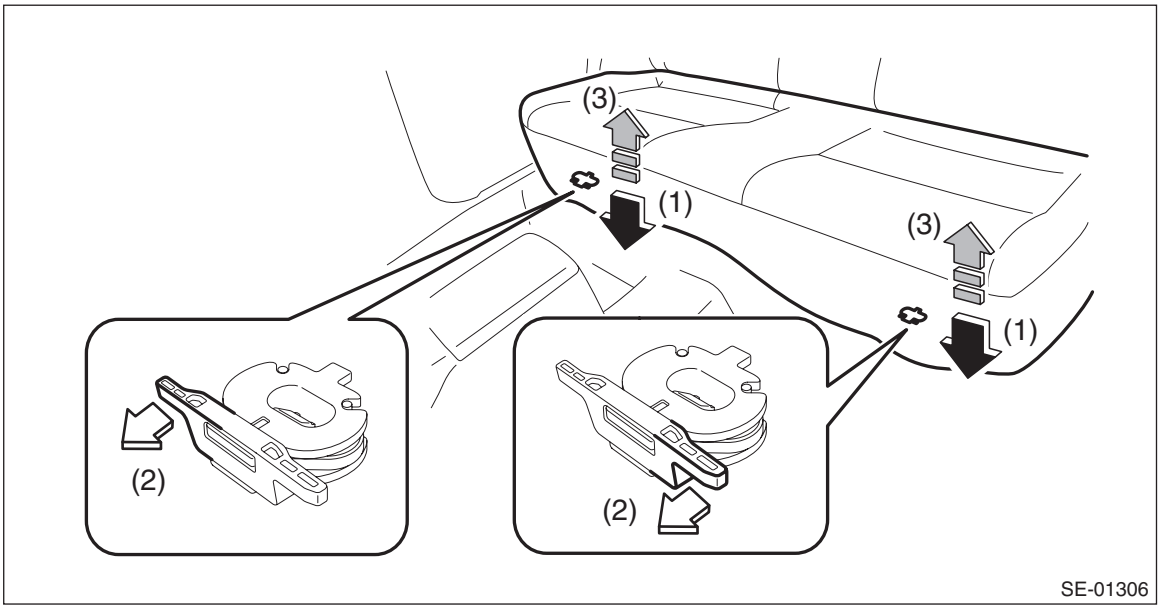

(4) Remove the hook (A) by pushing it back while lifting the front side of the rear seat cushion, and remove the rear seat cushion.

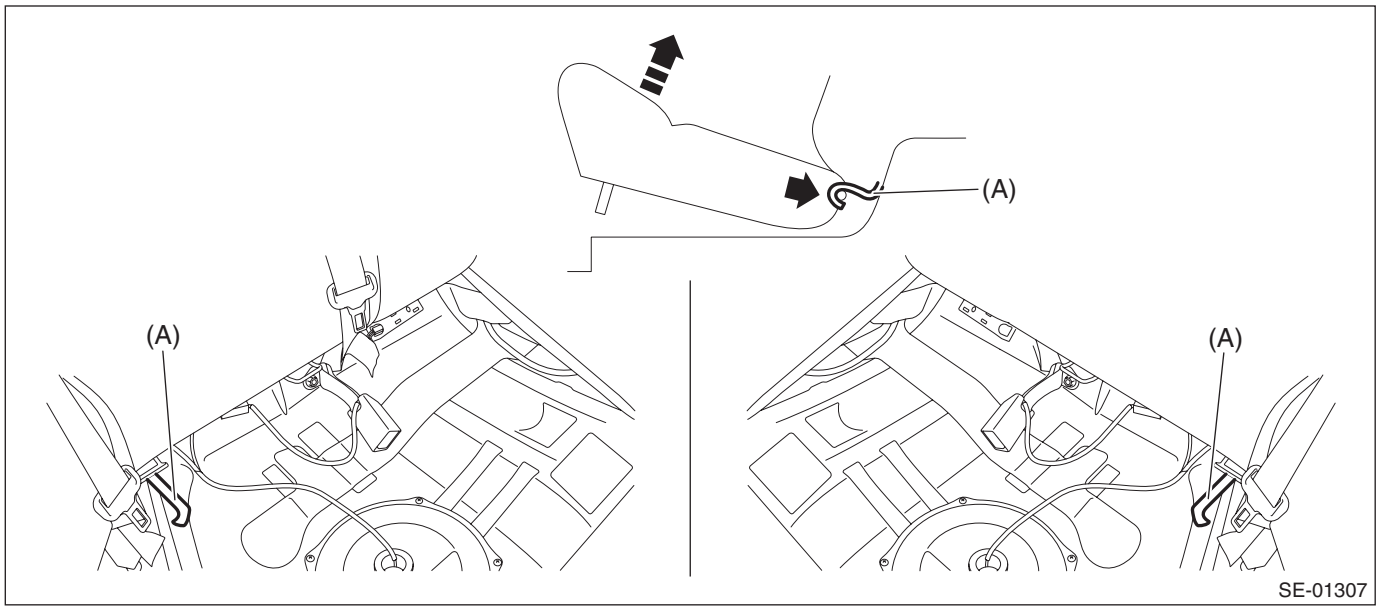

3) Remove the backrest assembly LH.
(1) Tilt the backrest assembly LH forward.
(2) Remove the clips located at the bottom of the cover COMPL - rear backrest LH and RH of the rear seat back.

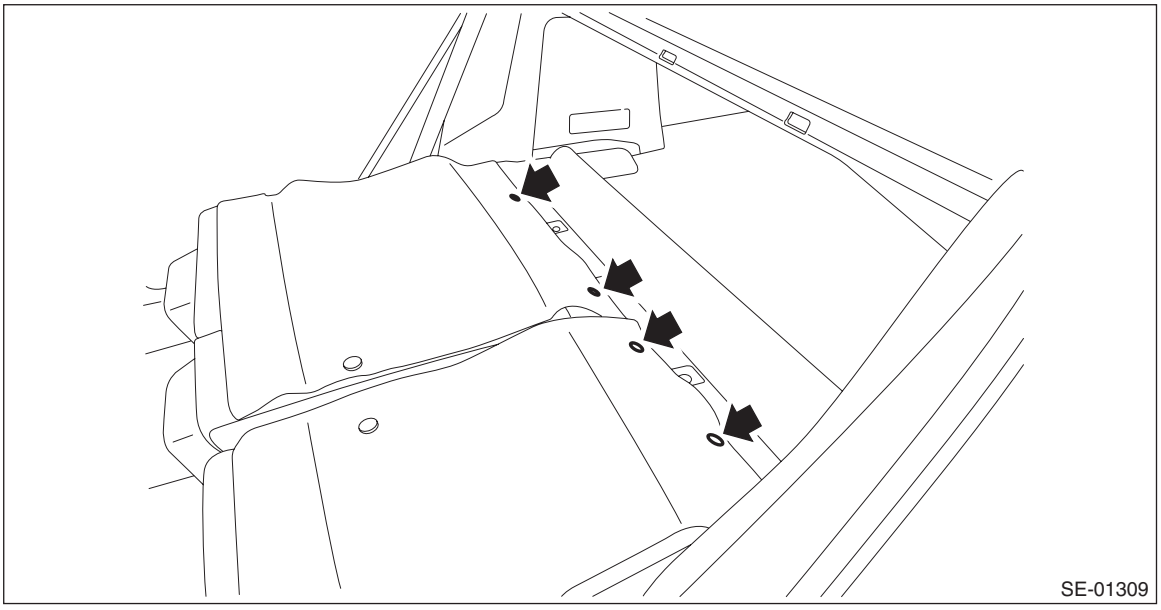

(3) Turn over the cover COMPL - rear backrest LH to remove the bolts.

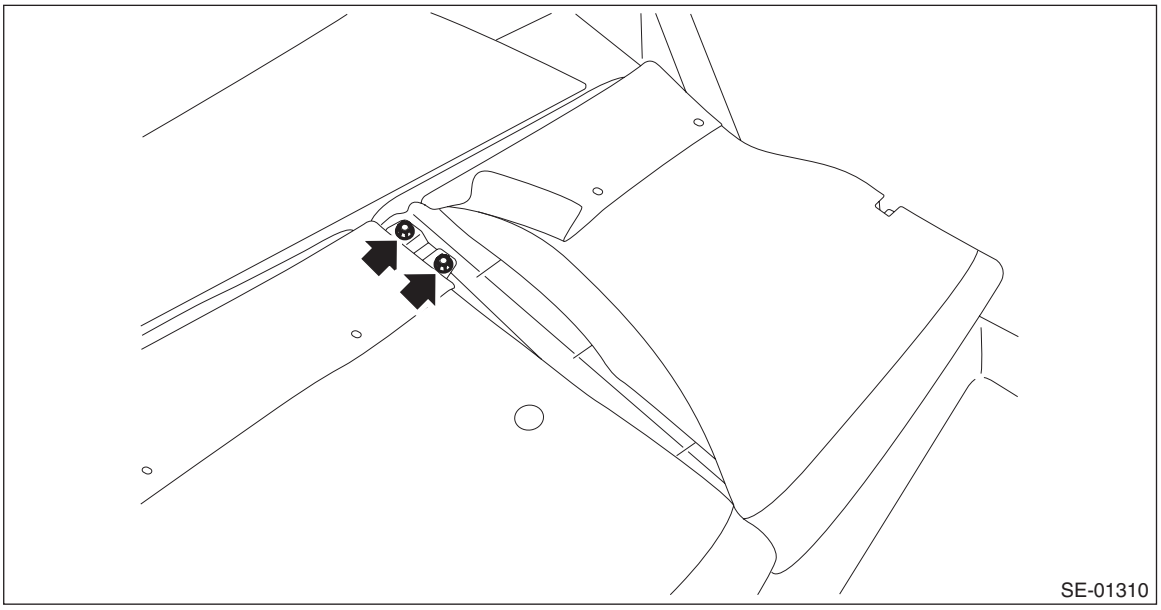

(4) Remove the backrest assembly LH from the hinge assembly.

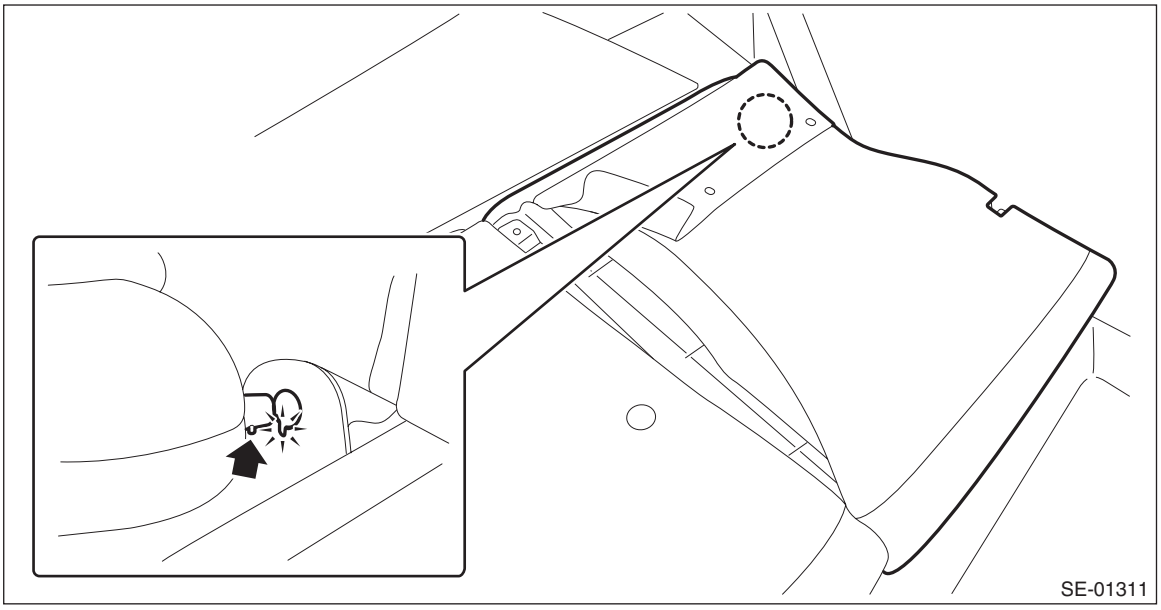

NOTE:
The backrest assembly cannot be removed unless pin positions on the hinge assembly side and backrest assembly side are aligned.

4) Remove the backrest assembly RH.
(1) Remove the bolts and nuts.

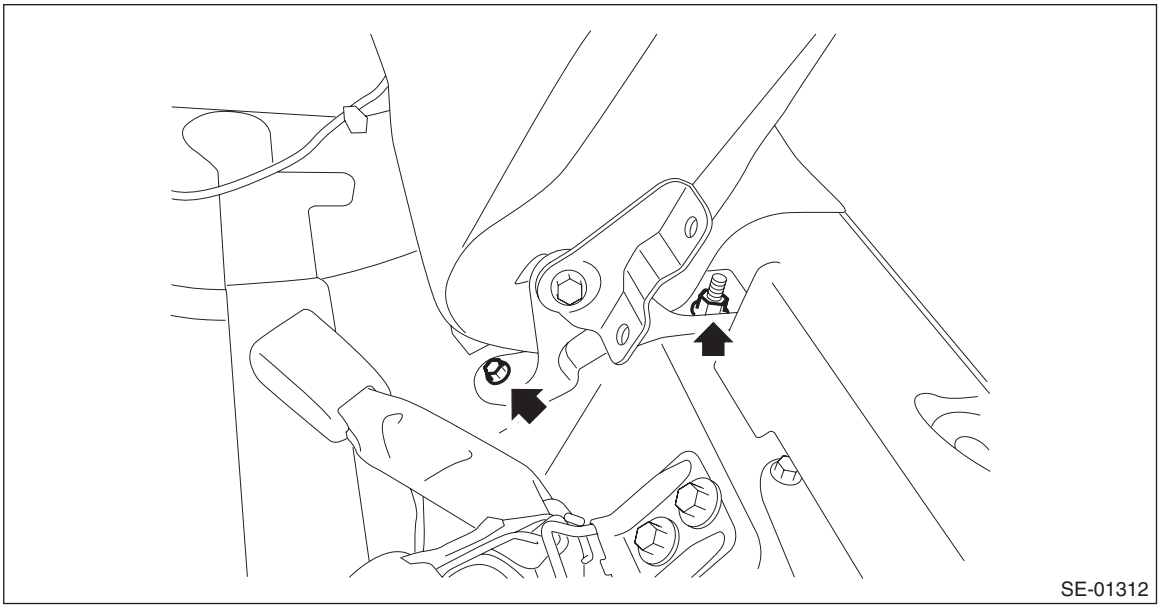

(2) Remove the backrest assembly RH from the hinge assembly.

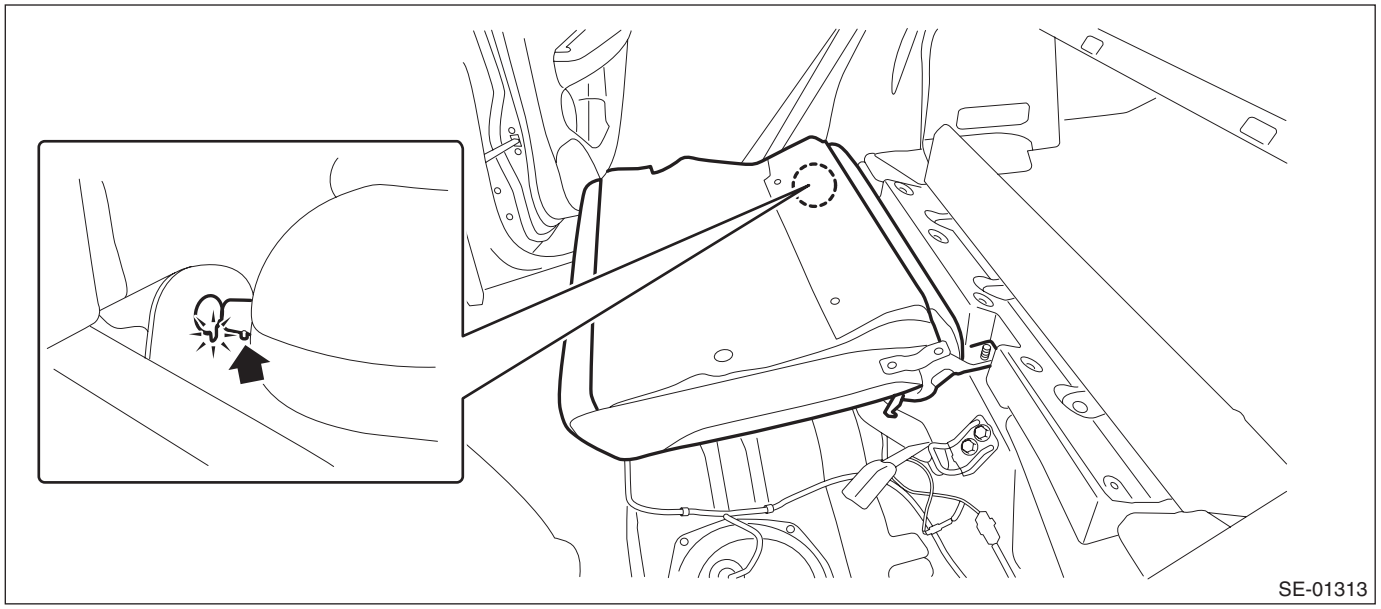

NOTE:
The backrest assembly cannot be removed unless pin positions on the hinge assembly side and backrest assembly side are aligned.

B: INSTALLATION

Install each part in the reverse order of removal.

NOTE:
- After installing the backrest assembly, make sure that each seat belt operates normally.
- Make sure that they are properly secured on each hook on the vehicle side.

Tightening torque:
Refer to "COMPONENT" of "General Description". <Ref. to SE-5, REAR SEAT, COMPONENT, General Description.>

C: DISASSEMBLY

1) Remove the rear seat. <Ref. to SE-23, REMOVAL, Rear Seat.>
2) Remove the headrest assembly - rear backrest.
3) Remove the armrest assembly - rear center. (model with armrest assembly - rear center)
   (1) Remove the cover - armrest by pulling it in the direction of the arrow (black).
   (2) Remove the screws and remove the armrest assembly - rear center.

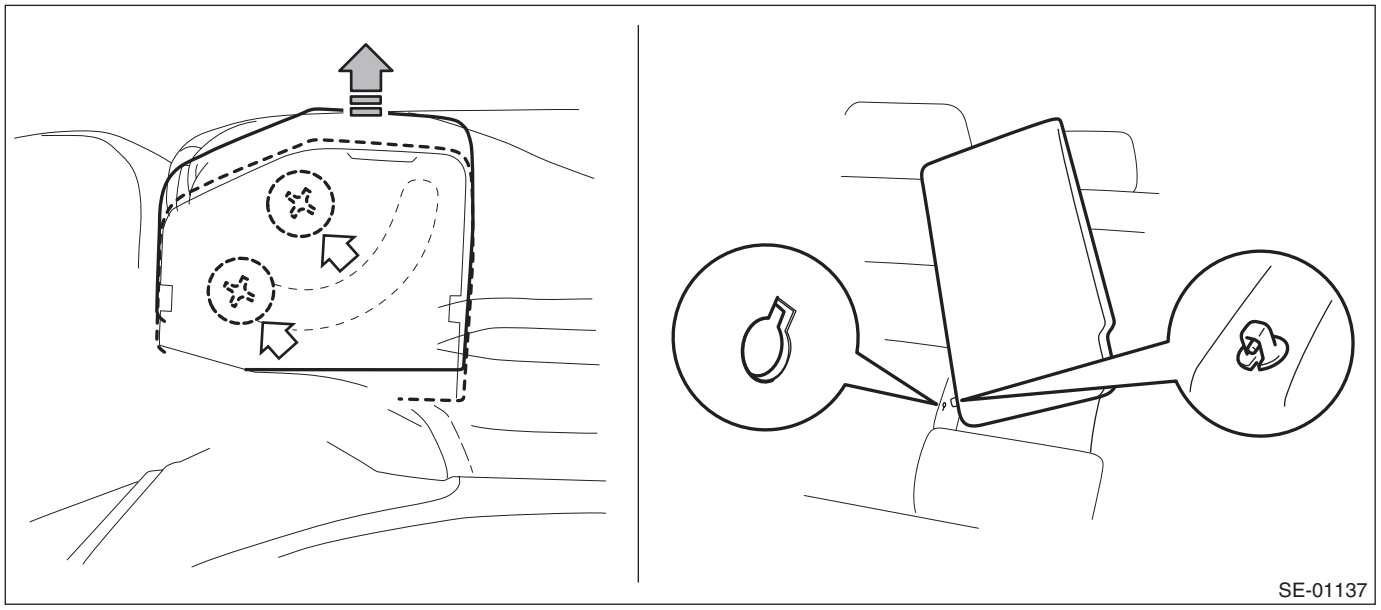

NOTE:
The armrest assembly - rear center cannot be detached unless pin positions on the RH side of the backrest assembly and on the center side of the armrest assembly - rear are aligned.
4) Remove the knob - backrest. (Screw-in type)

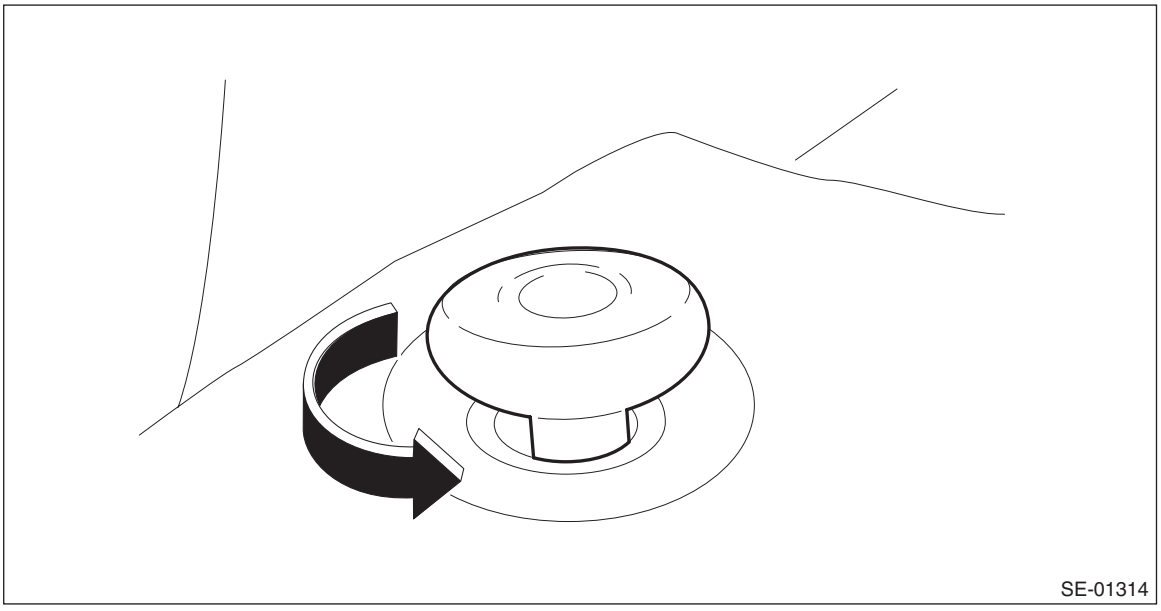

5) Remove the tether anchor cover.

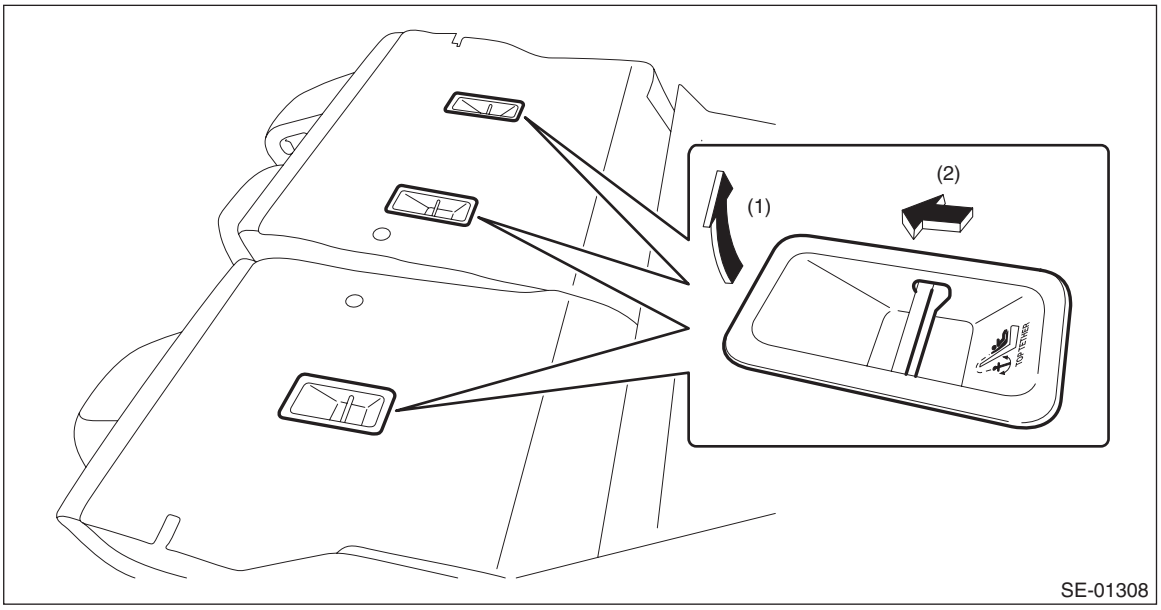

6) Remove the clips on the backside of the cover COMPL - rear backrest LH.

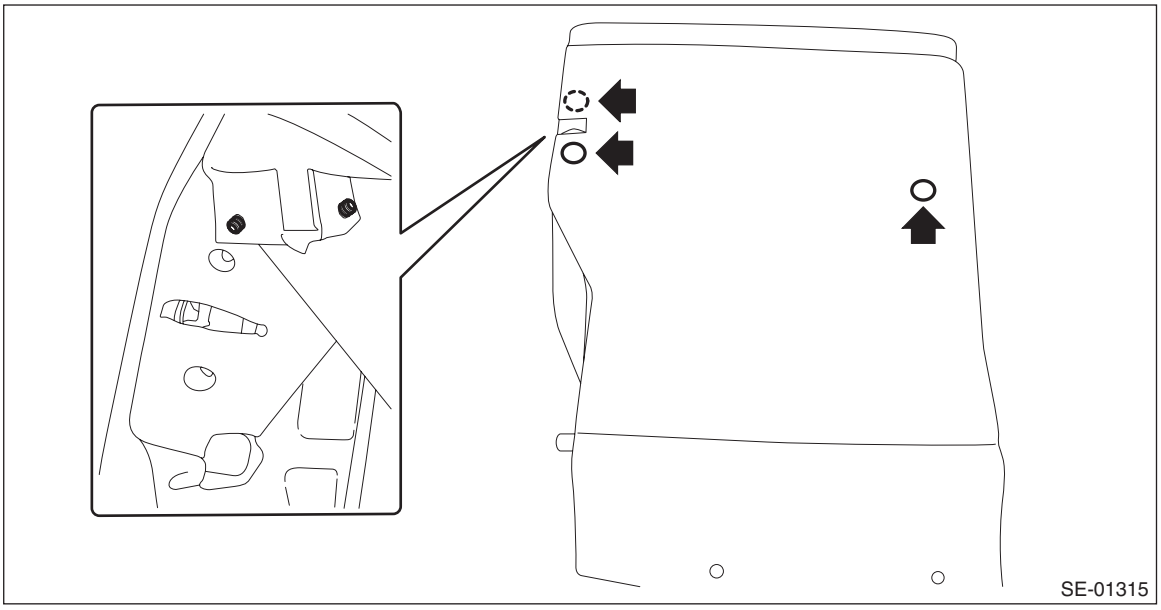

7) Detach the plastic fastener at the bottom of backrest assembly LH and turn over the cover COMPL - rear backrest LH.

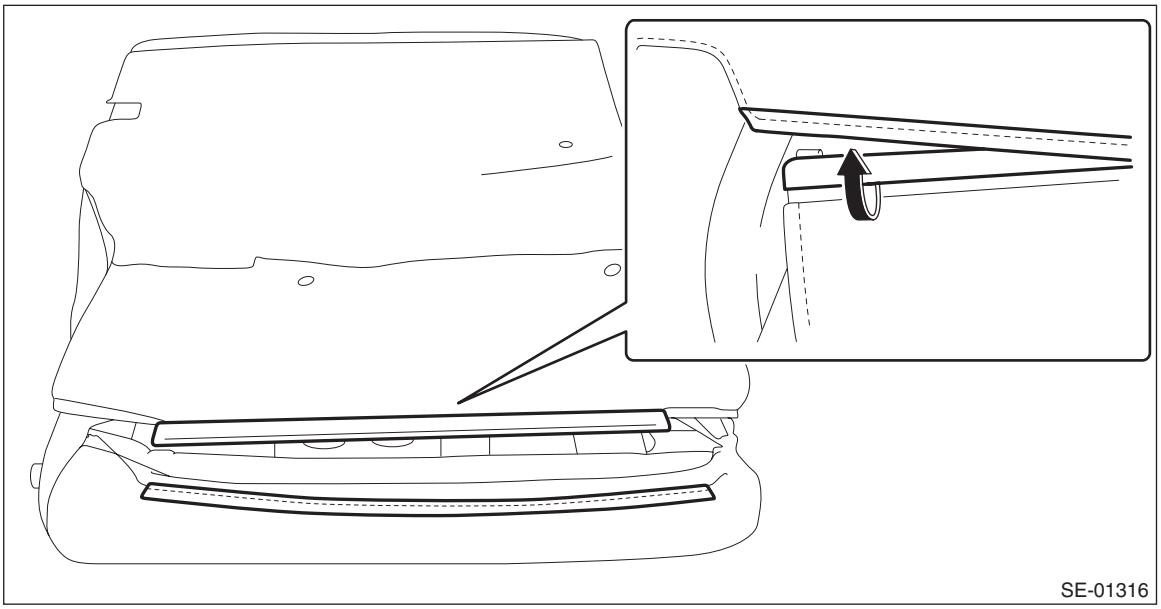

8) Remove the plastic hooks on the back side of the backrest assembly LH.

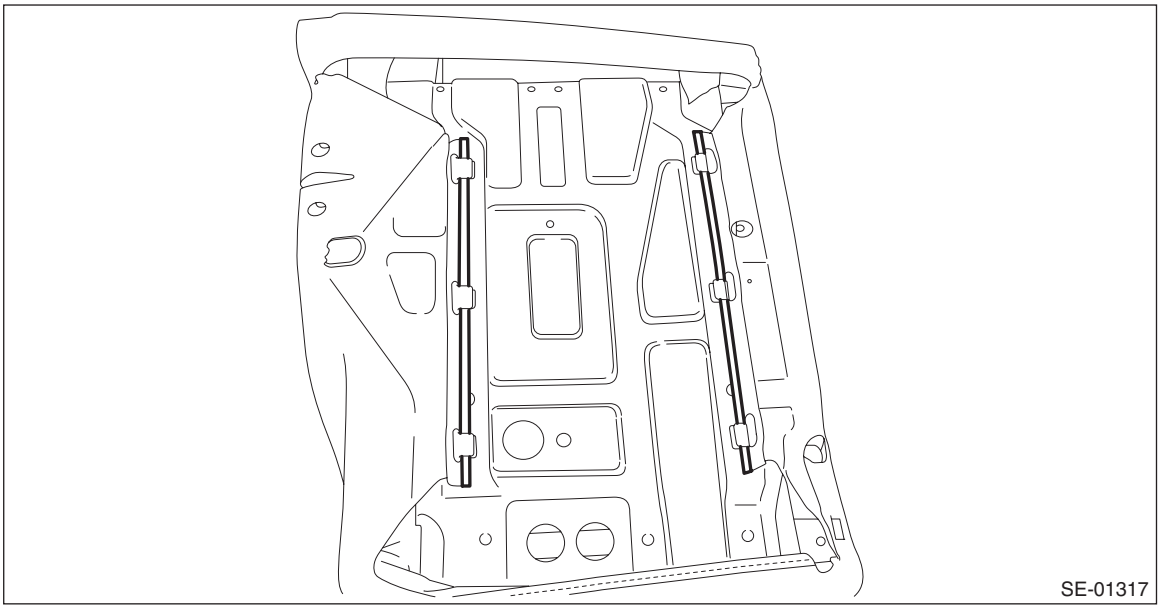

9) Remove the lock assembly - rear backrest rear LH.

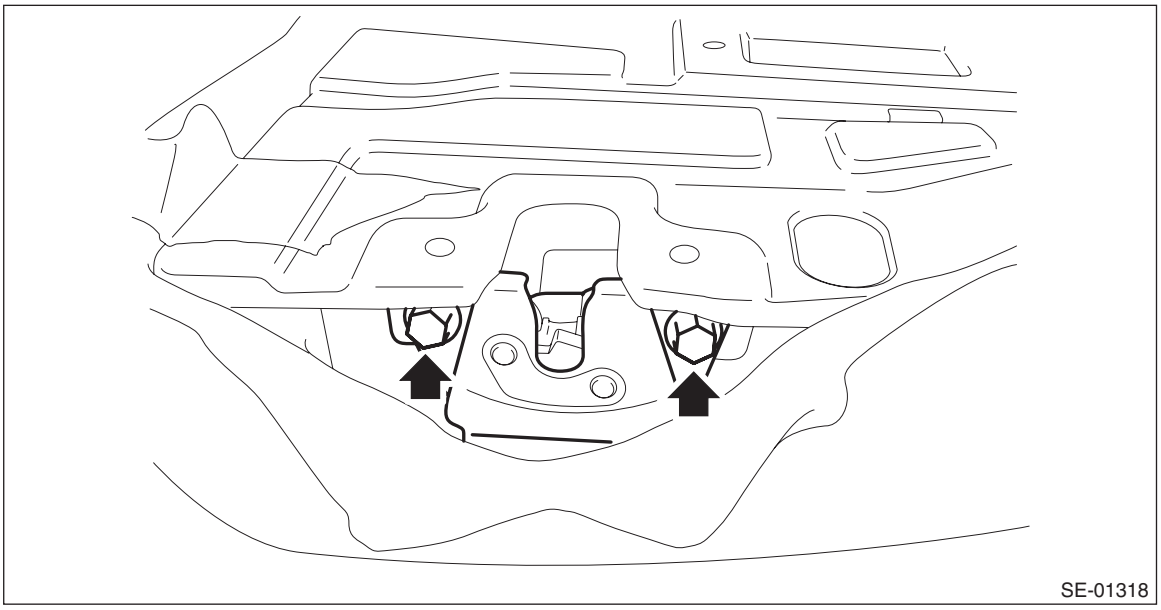

10) Detach the bushing - headrest and the bushing - lock assembly, and remove the frame assembly - rear backrest LH from the pad assembly - main LH.

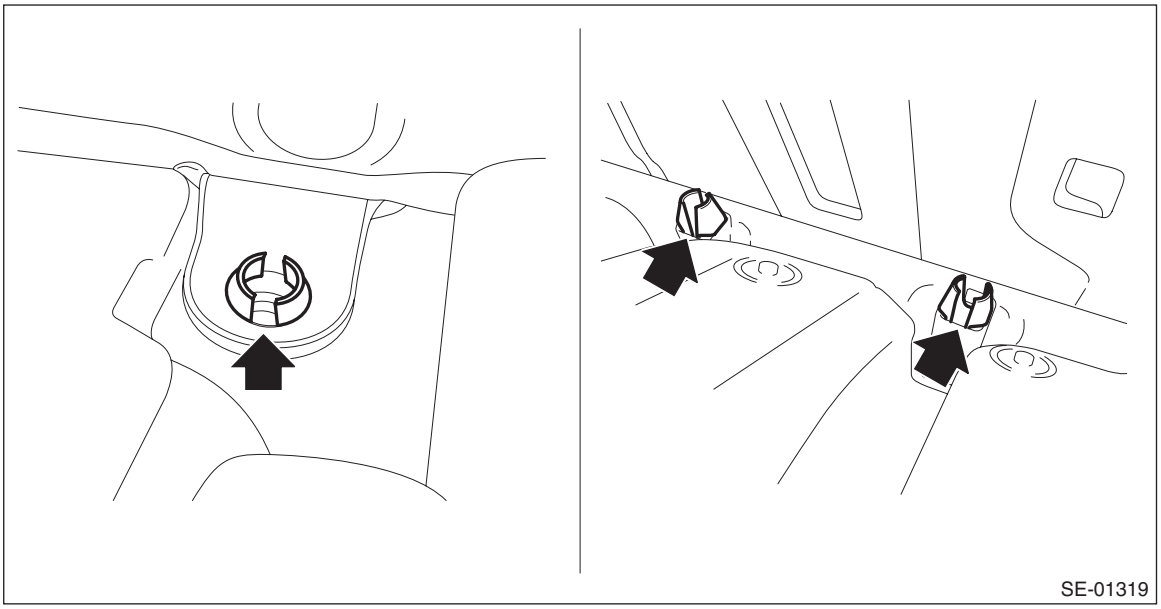

11) Remove the hog rings (A) and wire clip (B), then remove the cover COMPL - rear backrest LH.

- LH side

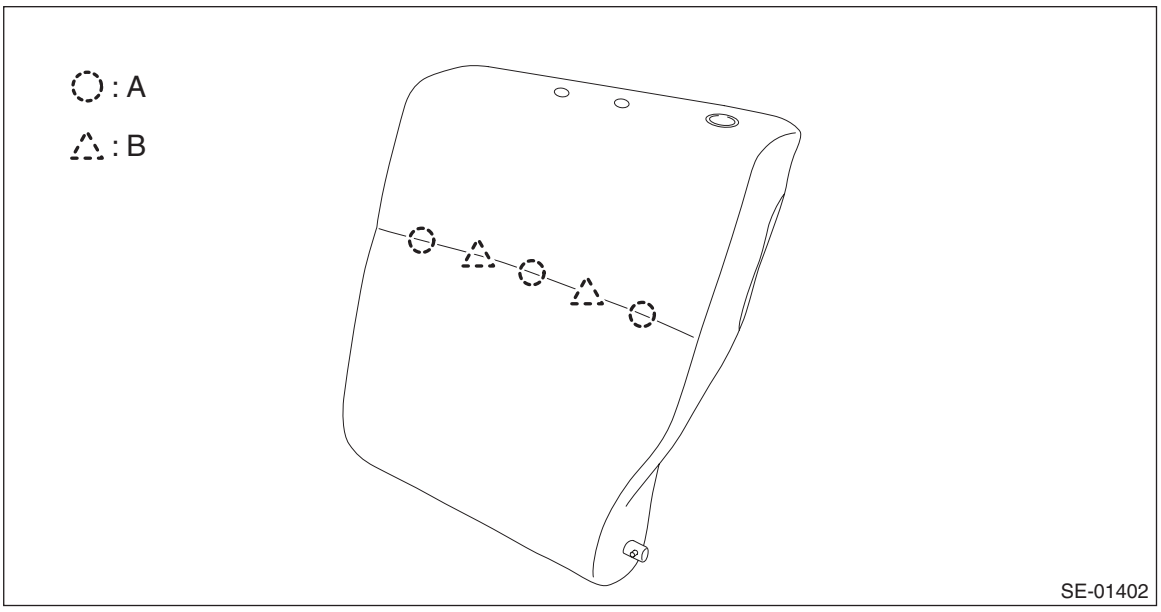

- RH side

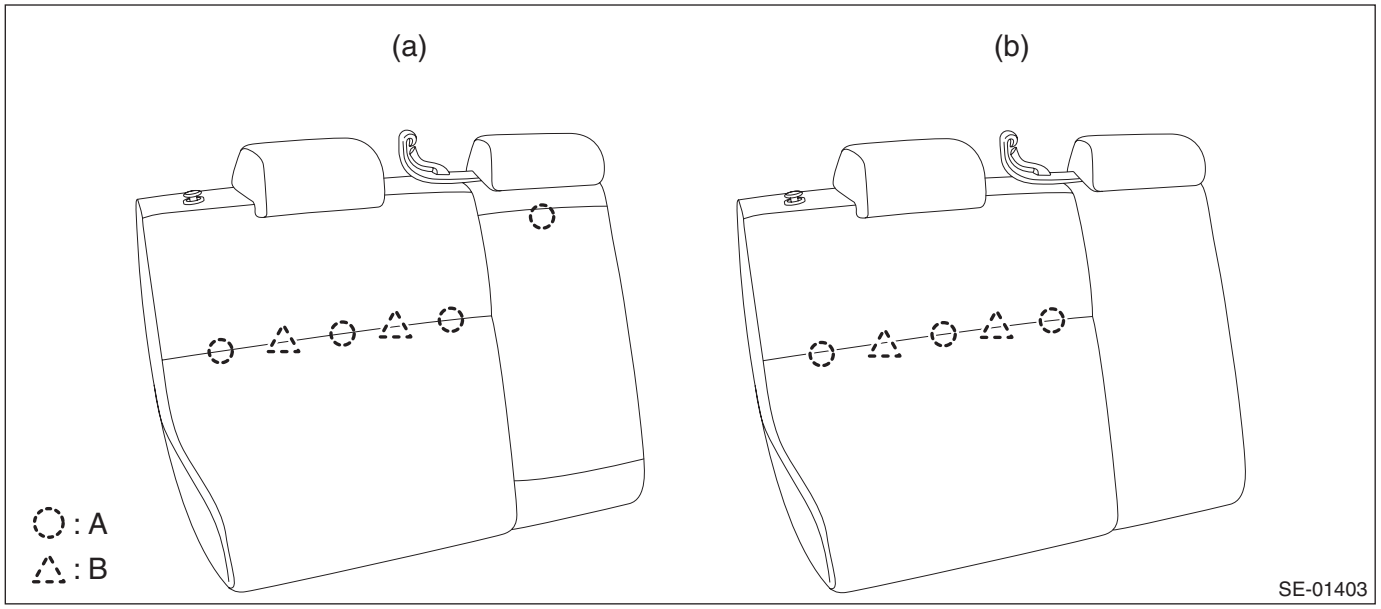

(a) Model with armrest assembly - rear center

(b) Model without armrest assembly - rear center

12) Referring to the above steps, disassemble the backrest assembly RH.

13) Detach the plastic fastener and hog ring, and then remove the headrest cover.

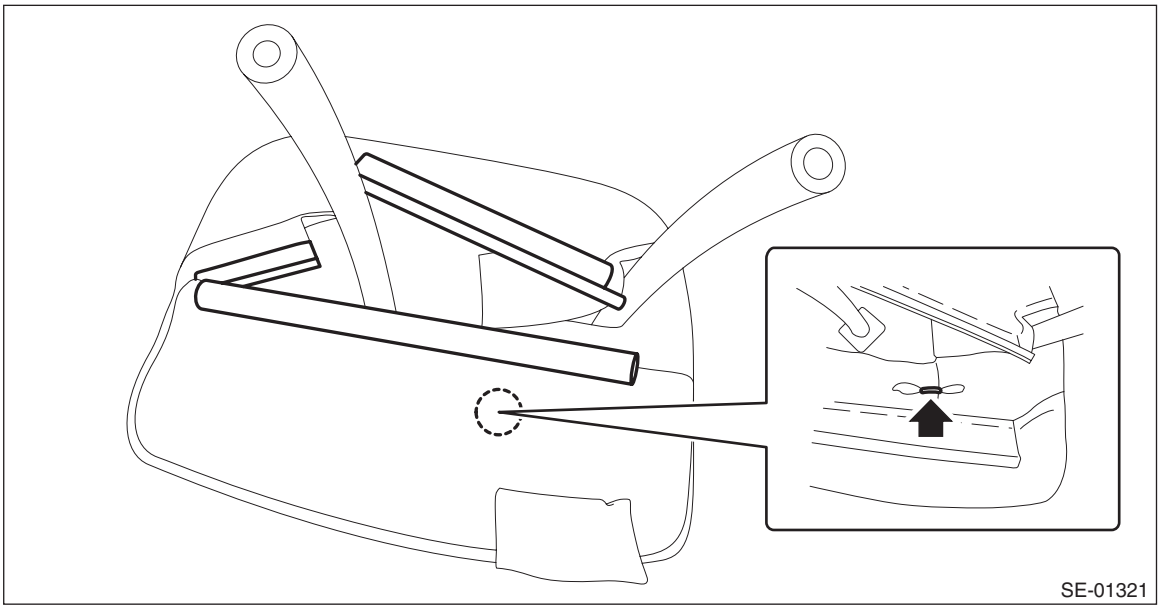

14) Remove the hog rings (A) on the back side of the rear seat cushion assembly.

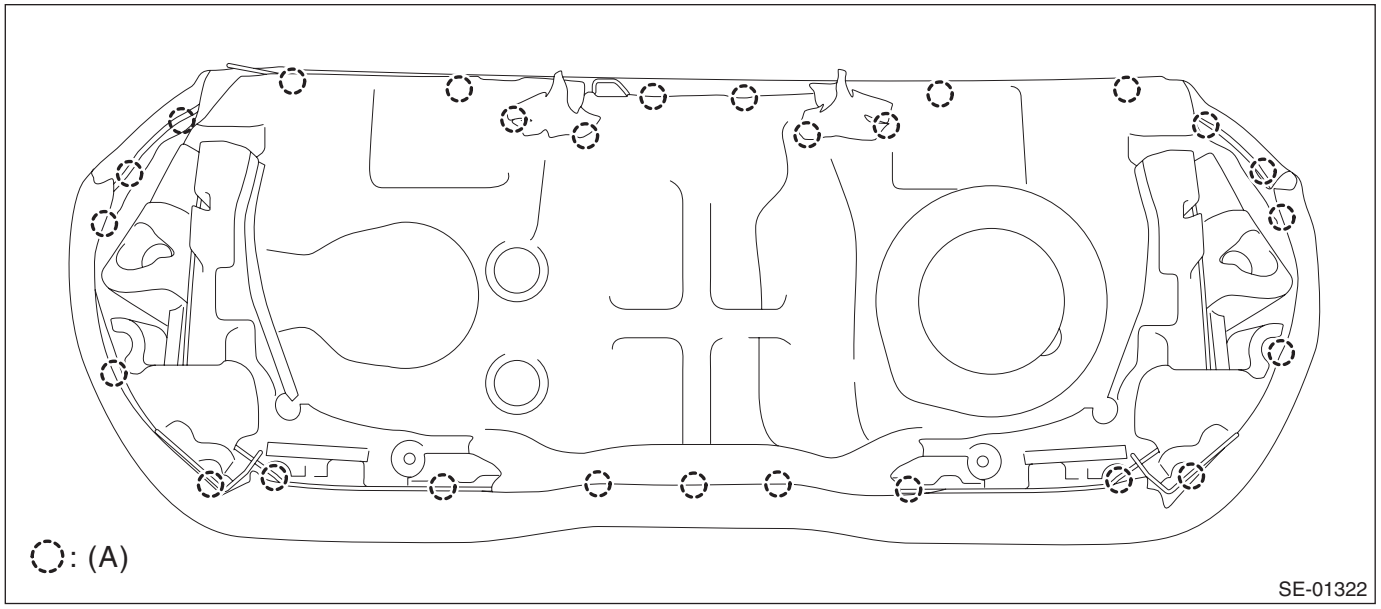

15) Remove the hog rings (A), then remove the cover - rear cushion.

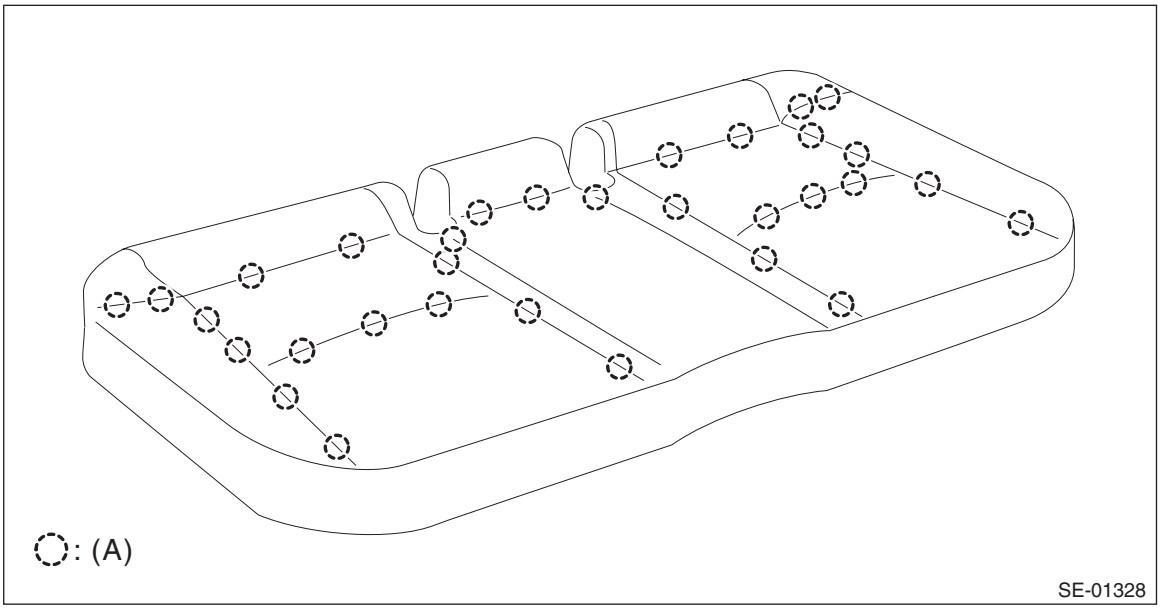

D: ASSEMBLY

CAUTION:
- **Do not reuse hog rings.**
- **Secure the hog ring using hog ring pliers.**
- **Install the hog rings to the specified points securely and make sure that there is no wrinkle or twisting on the cover COMPL - rear backrest.**

1) Assemble the cover COMPL - rear backrest and the cover - rear cushion in the same manner as for the front seat. <Ref. to SE-17, ASSEMBLY, Front Seat.>

2) Make sure that all hog rings (A) and wire clips (B) are attached securely.

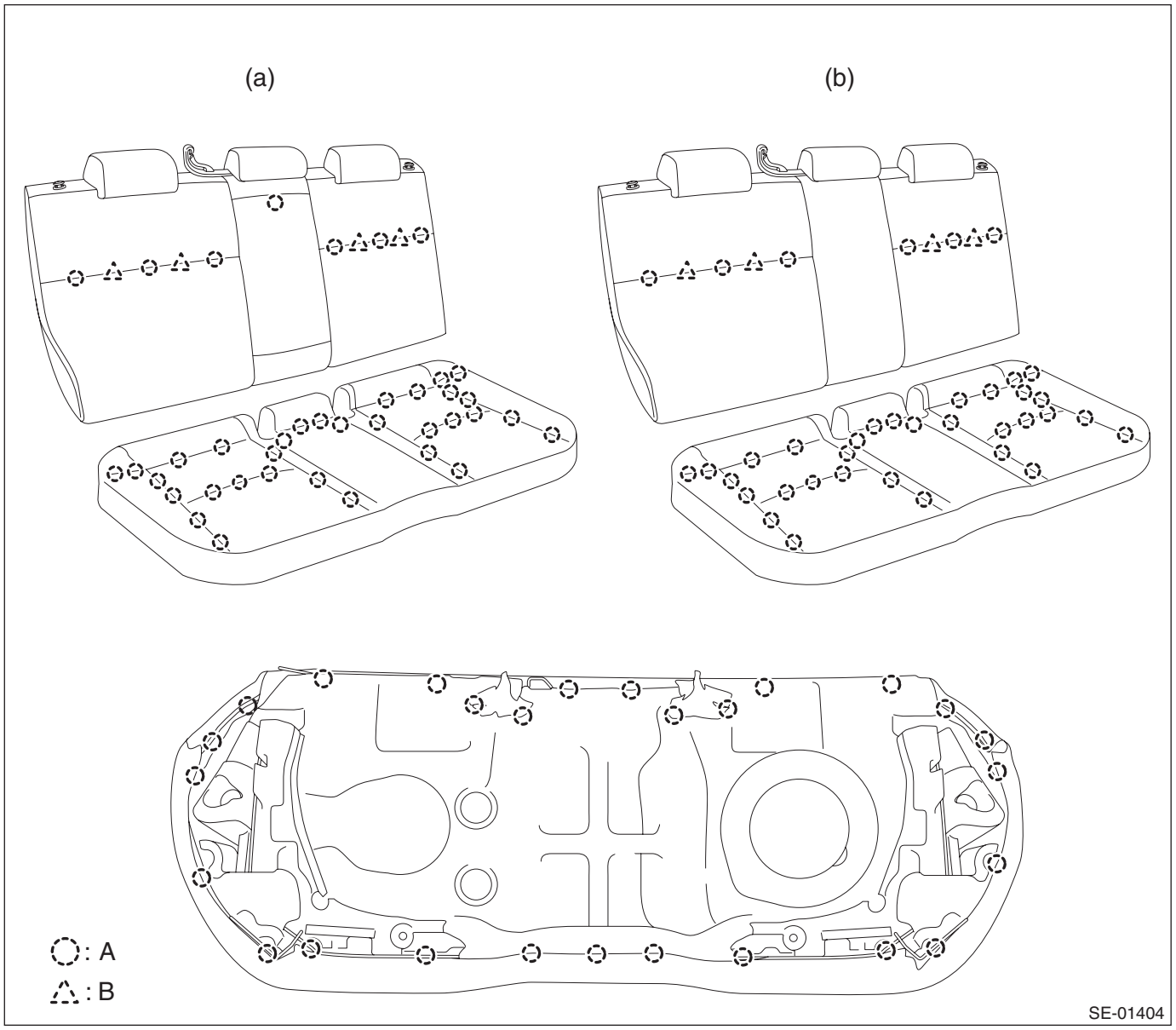

(a) Model with armrest assembly - rear center

(b) Model without armrest assembly - rear center

3) Assemble each part in the reverse order of disassembly.

NOTE:
- Do not contaminate or damage the cover COMPL - rear backrest and the cover - rear cushion.
- While installing the hog rings, prevent the cover COMPL - rear backrest and the cover - rear cushion from getting wrinkled.

Tightening torque:
Refer to "COMPONENT" of "General Description". <Ref. to SE-5, REAR SEAT, COMPONENT, General Description.>

4) Before installation, check the following items.
- No tear and fray on the cover COMPL - rear backrest and the cover - rear cushion.
- No fray or deformation on each wire cable.

5) Install each part in the reverse order of removal.

4. Seat Heater System

A: REMOVAL

1. SEAT HEATER UNIT

1) Remove the front seats. <Ref. to SE-7, REMOVAL, Front Seat.>
2) Remove the backrest cover of front seat and seat cushion cover. <Ref. to SE-9, DISASSEMBLY, Front Seat.>
3) Remove the seat heater unit.

2. SEAT HEATER SWITCH

1) Disconnect the ground cable from battery. <Ref. to NT-5, BATTERY, NOTE, Note.>

NOTE:
• For the 12 volt engine restart battery of HEV model, disconnect the ground terminal from 12V engine restart battery sensor.
• On CVT models, shift the select lever into “D” before disconnecting the battery ground cable.

2) Remove the console box assembly.
(1) Release the claws, and then remove the boot - hand brake.

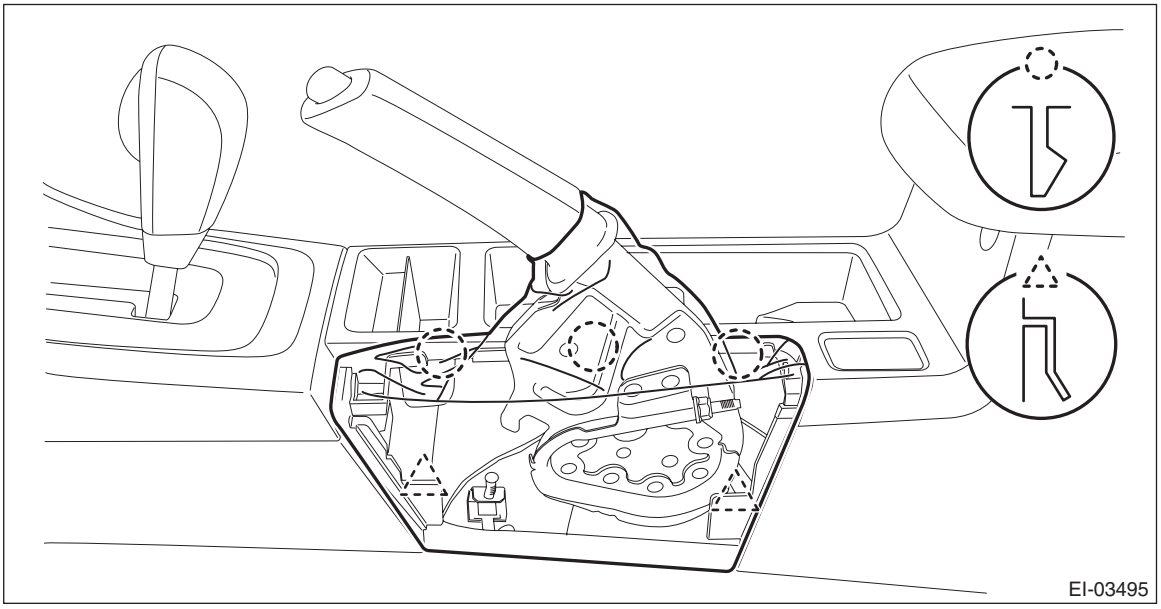

(2) Move the seat forward, and remove the bolts after detaching the left and right caps.

(3) Remove the screws, disconnect the harness connector and remove the console box assembly.

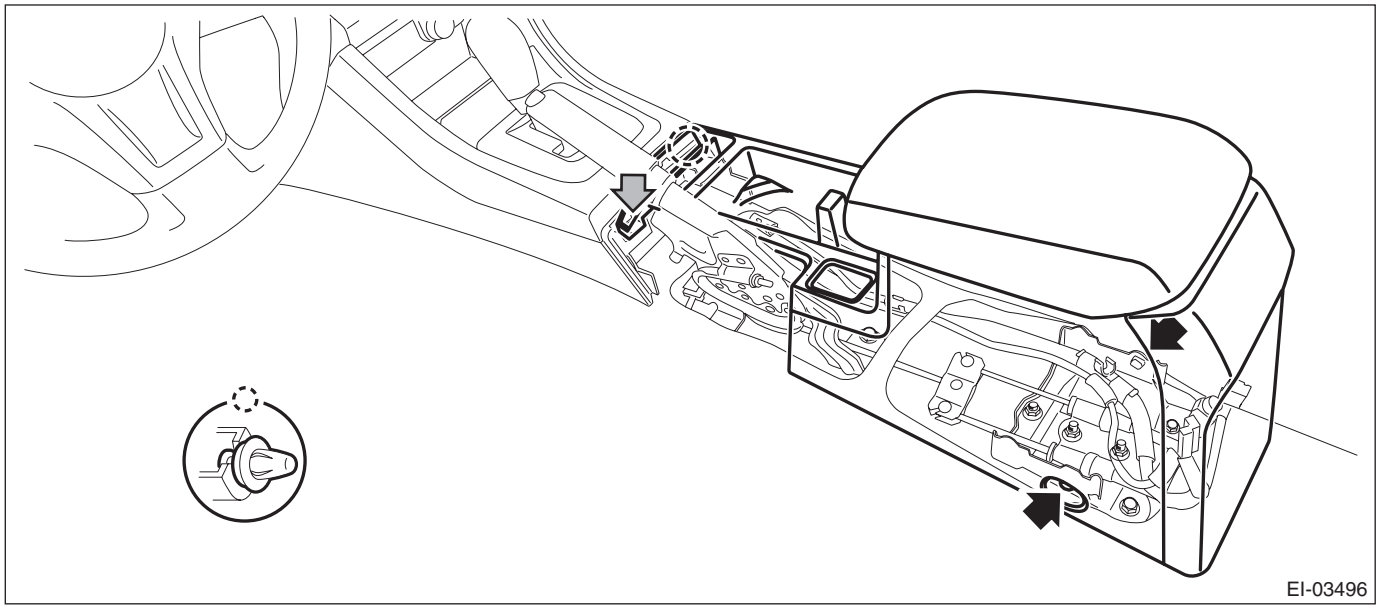

3) Remove the screws and remove the seat heater switch from the backside of the console box assembly.

3. SEAT HEATER RELAY AND FUSE

1) Disconnect the ground cable from battery. <Ref. to NT-5, BATTERY, NOTE, Note.>

NOTE:
For the 12 volt engine restart battery of HEV model, disconnect the ground terminal from 12V engine restart battery sensor.

2) Remove the cover assembly - instrument panel LWR driver.

(1) Remove the clips, and remove the cover - instrument panel side LH.

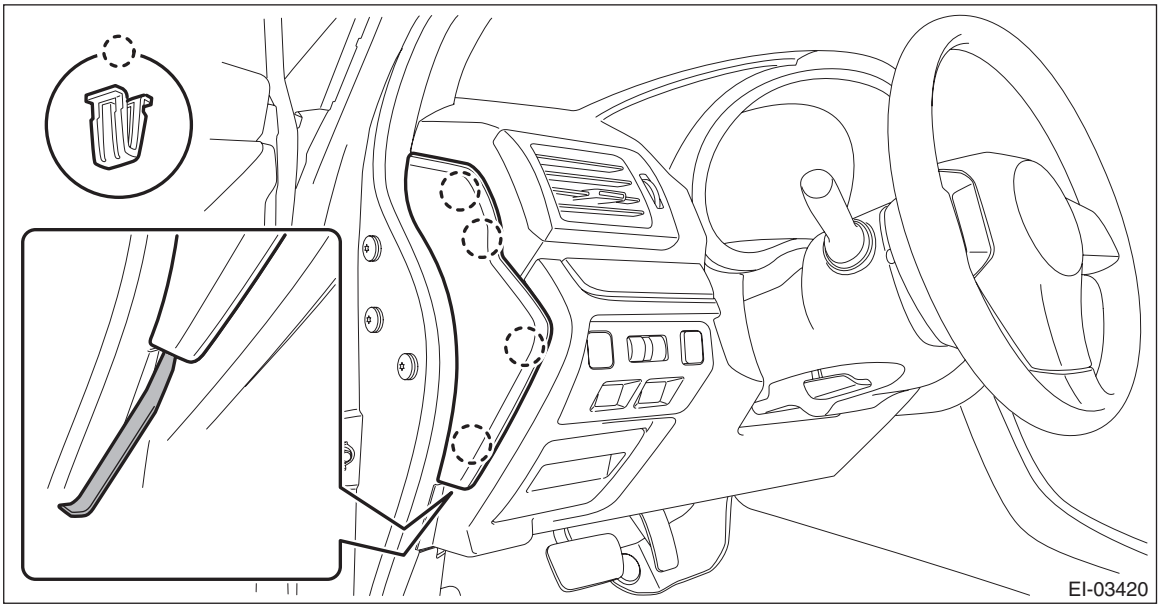

NOTE:
Using a plastic remover, open the cover - instrument panel side LH.

(2) Remove the screws and release the clips and claws.

(3) Disconnect the harness connectors, and remove the cover assembly - instrument panel LWR driver OUT.

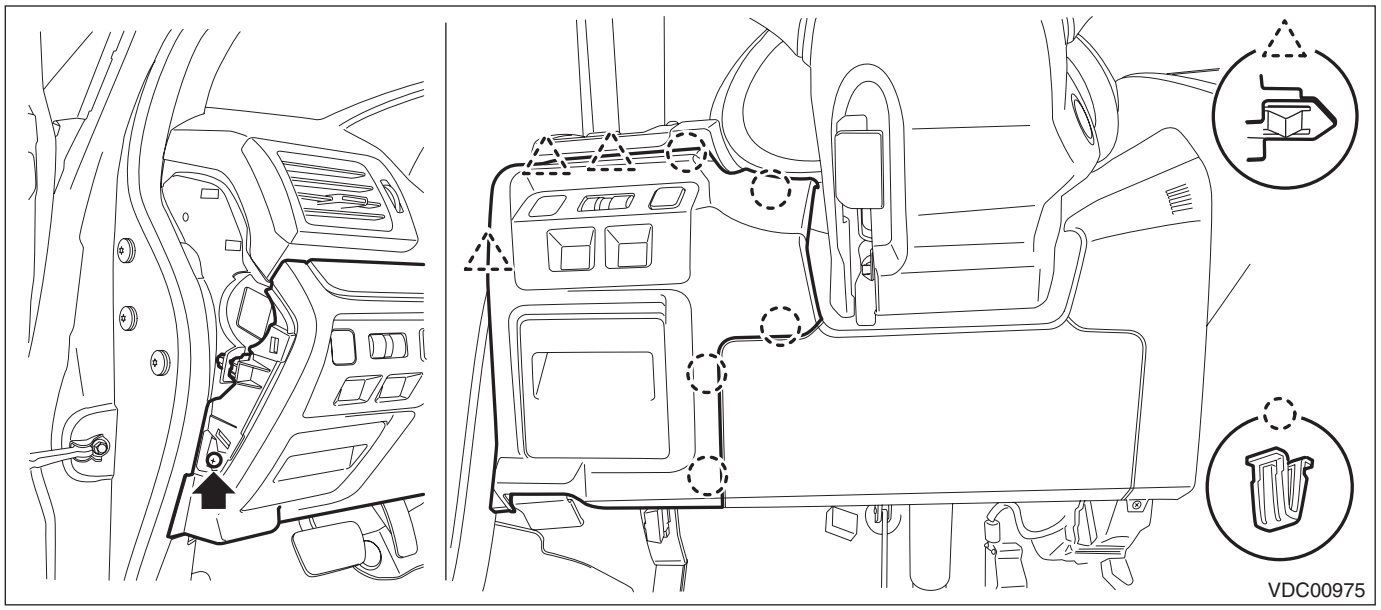

3) Remove the pocket assembly.
(1) Attach the protective tape (a) to the panel center LWR.
(2) Remove the damper COMPL - pocket.
(3) Release the stoppers and remove the pocket assembly by pulling it toward you.

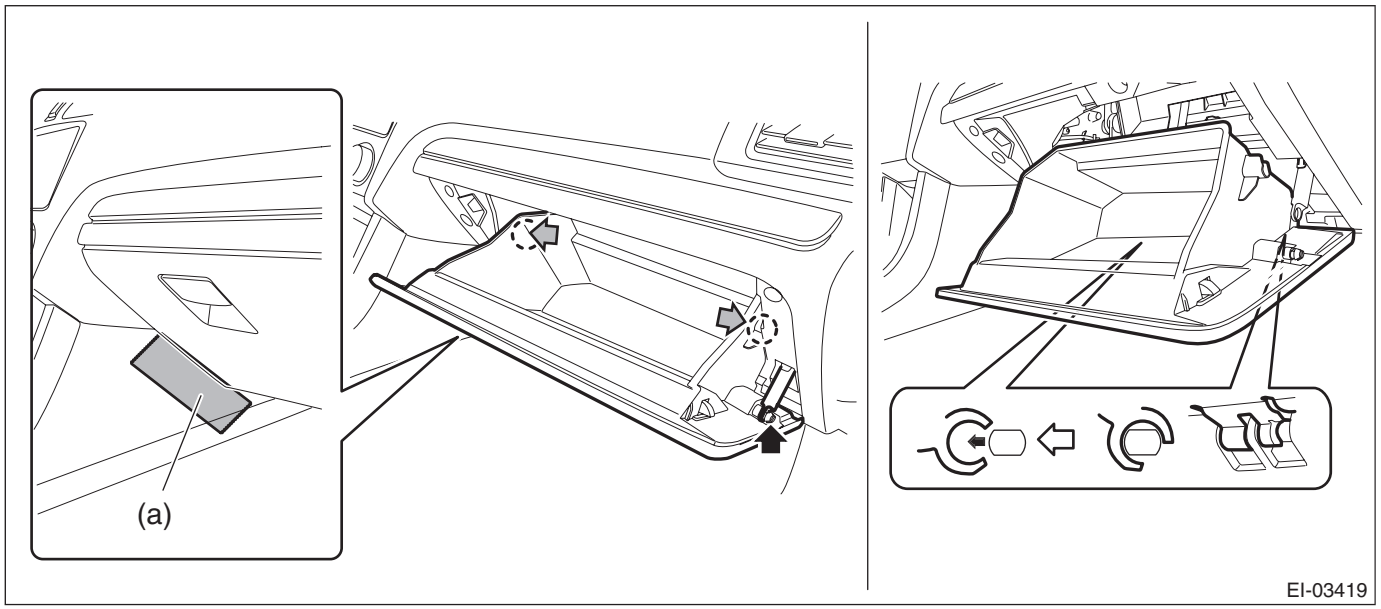

4) Remove the back panel - pocket.
(1) Release the clips, and remove the under cover assembly - passenger.

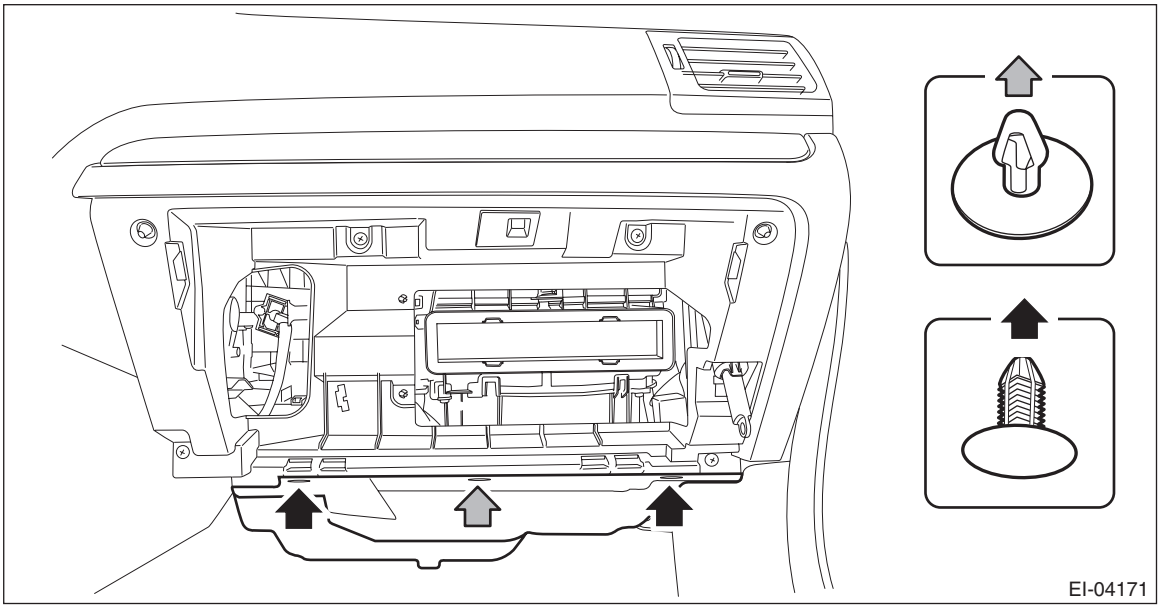

(2) Remove the clips, and remove the cover - instrument panel side RH.

NOTE:
Remove the cover - instrument panel side RH by using a plastic remover.

(3) Release the clips, and remove the ornament - panel assembly passenger.

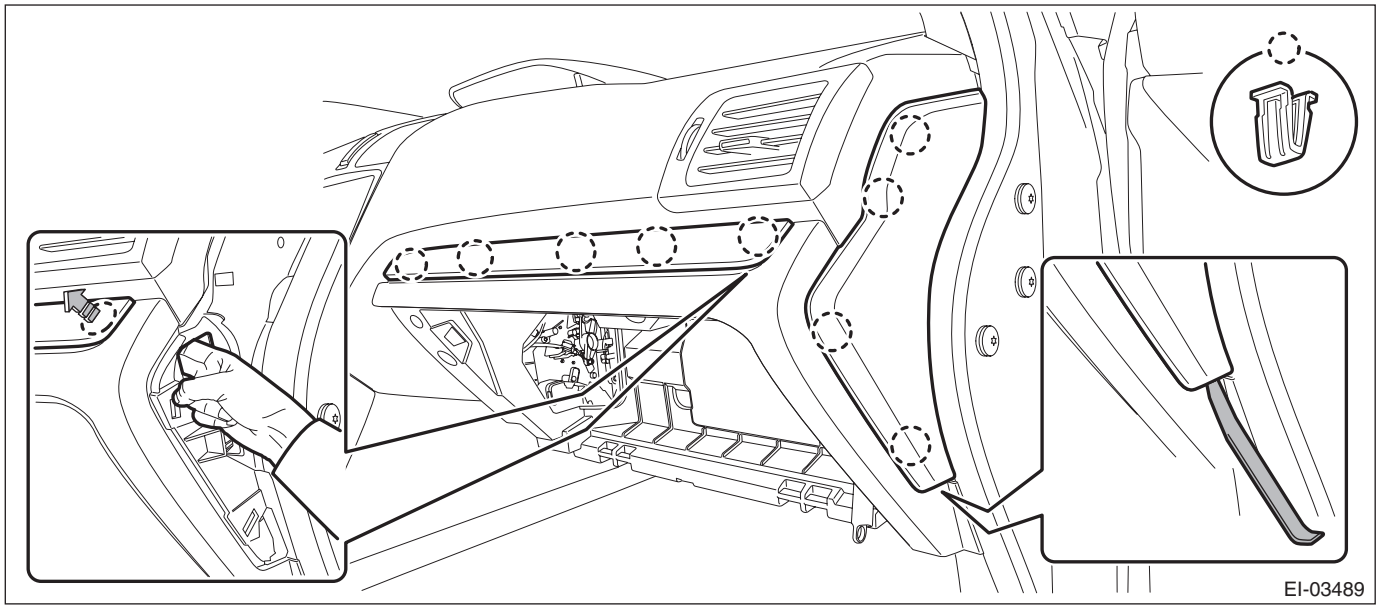

NOTE:
To facilitate the removal, push the clip of the ornament - panel assembly passenger from the backside.

(4) Release the claws and remove the screws, then remove the back panel - pocket.

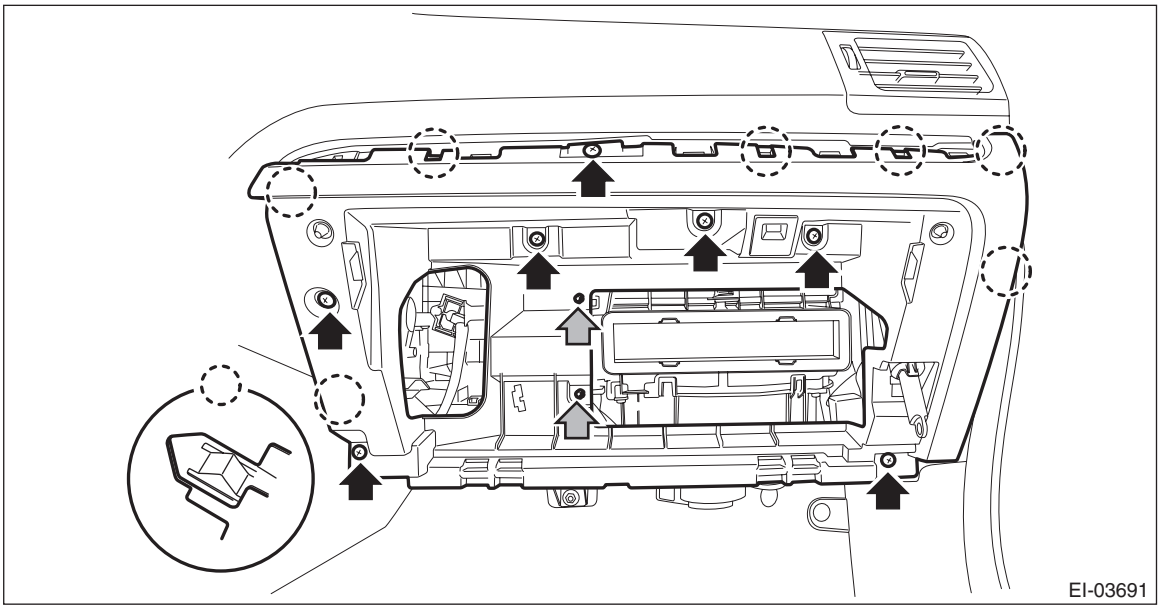

(5) Disconnect the glove box light LED connector.

5) Remove the seat heater relay and fuse.
(1) Remove the relay & fuse box bolts.
(2) Remove the seat heater relay from the relay holder.

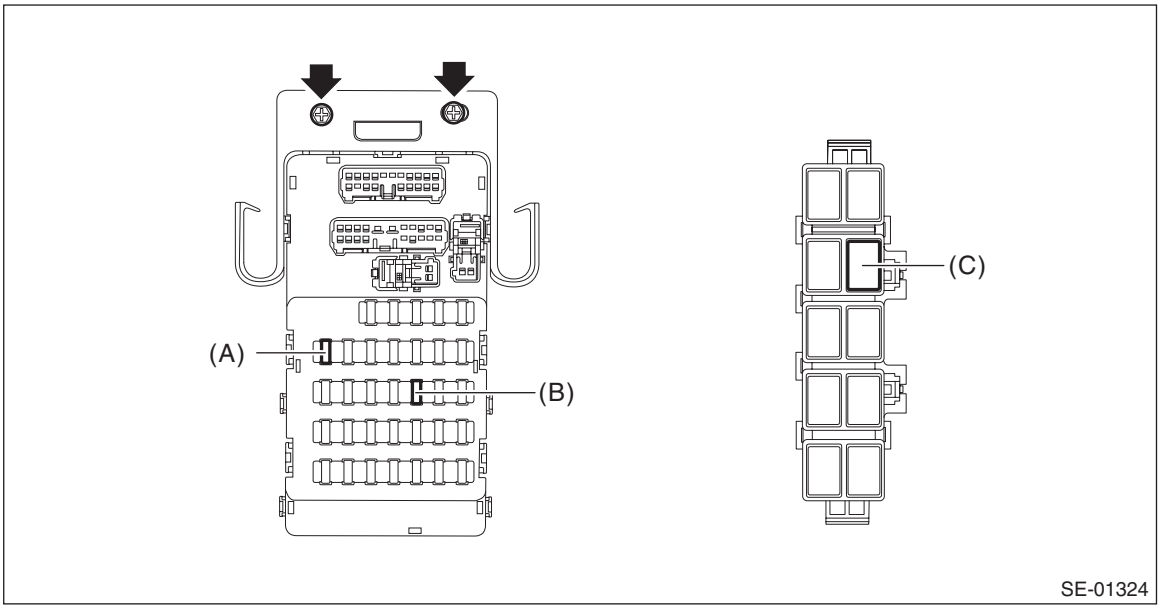

Relay & fuse box	Fuse 7.5 A (remote control mirror)	(A)
	Fuse 15 A (seat heater)	(B)
Relay holder	Seat heater relay	(C)

B: INSTALLATION

Install each part in the reverse order of removal.

C: INSPECTION

1. WIRING DIAGRAM

Refer to “Seat Heater System” in the wiring diagram.

- Gasoline engine model <Ref. to WI(w/o HEV)-137, WIRING DIAGRAM, Seat Heater System.>
- HEV model <Ref. to WI(HEV)-200, WIRING DIAGRAM, Seat Heater System.>

2. DIAGNOSTIC CHART

Symptoms	Repair order
Seat heater does not operate.	1. Check the fuse. <Ref. to SE-40, CHECK SEAT HEATER FUSE, INSPECTION, Seat Heater System.>
	2. Check the seat heater relay. <Ref. to SE-40, CHECK SEAT HEATER RELAY, INSPECTION, Seat Heater System.>
	3. Check the seat heater system power supply and ground circuit. <Ref. to SE-40, CHECK POWER SUPPLY AND GROUND CIRCUIT, INSPECTION, Seat Heater System.>
	4. Check the seat heater module. <Ref. to SE-41, SEAT HEATER UNIT, INSPECTION, Seat Heater System.>
	5. Check the seat heater switch circuit. <Ref. to SE-41, SEAT HEATER SWITCH, INSPECTION, Seat Heater System.>

3. CHECK SEAT HEATER FUSE

Remove the seat heater fuse and inspect visually.
Is the fuse blown out?
- **Yes** → Replace the fuse.
- **No** → Check the power supply and ground circuits.

4. CHECK SEAT HEATER RELAY

1) Remove the seat heater relay from the relay holder.
2) Measure the resistance between seat heater relay terminals.

Preparation tool: Circuit tester

Terminal No.	Inspection conditions	Standard	Circuit
36 — 37	Always	1 MΩ or more	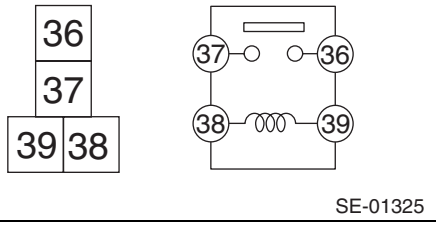
36 — 37	Apply battery voltage between terminals 38 — 39.	Less than 1 Ω	

3) Replace the seat heater relay if the inspection result is not within the standard.

5. CHECK POWER SUPPLY AND GROUND CIRCUIT

1) Check power supply circuit
   (1) Disconnect the harness connector of seat heater switch.
   (2) Turn the ignition switch to ON.
   (3) Measure the voltage between harness connector terminal and chassis ground.

Connector & terminal
(R43) No. 7 (+) — Chassis ground (–):
Is the voltage 12 V or more?
- **Yes** → Go to step 2.
- **No** → Check the harness between the seat heater switch and fuse.

2) Check ground circuit
Measure the resistance between harness connector terminal and chassis ground.

Connector & terminal
(R43) No. 2 — Chassis ground:
Is the resistance less than 10 Ω?
- **Yes** → Go to step 3.
- **No** → Repair the harness.

3) Check ground circuit
Measure the resistance between seat heater switch terminals.

Connector & terminal
(R43) No. 7 — (R43) No. 2:
Is the resistance less than 10 Ω?
- **Yes** → The power supply and ground circuits are normal.
- **No** → Replace the seat heater switch.

6. SEAT HEATER UNIT

1) Disconnect the seat heater unit connector, and check the continuity between terminals of connector.

Connector & terminal
HI
No. 1 — No. 3:
No. 3 — No. 4:
LOW
No. 1 — No. 4:

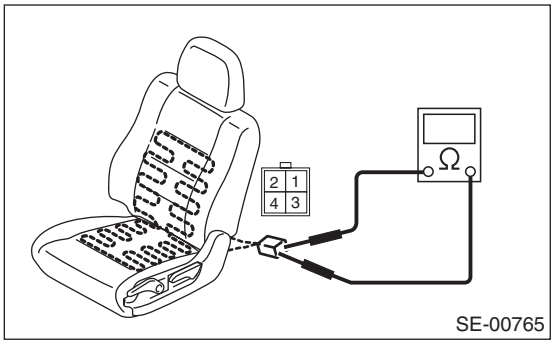

2) If no continuity exists, replace the seat heater module with a new part.

7. SEAT HEATER SWITCH

1) Inspect the continuity between the seat heater switch terminals.

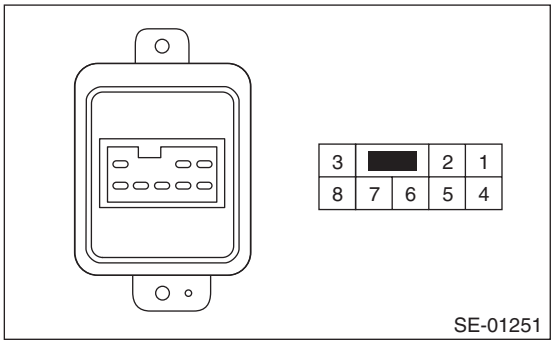

Connector & terminal
HI
No. 7 — No. 2:
No. 7 — No. 4:
No. 7 — No. 8:
LOW
No. 7 — No. 1:
No. 7 — No. 2:
No. 7 — No. 3:

2) If no continuity exists, replace the seat heater switch with a new part.

BODY 2 SECTION

This service manual has been prepared to provide SUBARU service personnel with the necessary information and data for the correct maintenance and repair of SUBARU vehicles.
This manual includes the procedures for maintenance, disassembling, reassembling, inspection and adjustment of components and diagnostics for guidance of experienced mechanics.
Please peruse and utilize this manual fully to ensure complete repair work for satisfying our customers by keeping their vehicle in optimum condition. When replacement of parts during repair work is needed, be sure to use SUBARU genuine parts.

All information, illustration and specifications contained in this manual are based on the latest product information available at the time of publication approval.

SECURITY AND LOCKS	SL
SUNROOF/T-TOP/CONVERTIBLE TOP (SUNROOF)	SR
EXTERIOR/INTERIOR TRIM	EI
EXTERIOR BODY PANELS	EB
CRUISE CONTROL SYSTEM	CC
CRUISE CONTROL SYSTEM (DIAGNOSTICS)	CC(w/o HEV)(diag)
CRUISE CONTROL SYSTEM (DIAGNOSTICS)	CC(HEV)(diag)
IMMOBILIZER (DIAGNOSTICS)	IM(diag)
LAN SYSTEM (DIAGNOSTICS)	LAN(w/o HEV)(diag)
LAN SYSTEM (DIAGNOSTICS)	LAN(HEV)(diag)
HYBRID ELECTRIC VEHICLE	HEV
HYBRID ELECTRIC VEHICLE (DIAGNOSTICS)	HEV(diag)
GENERAL DESCRIPTION (HEV)	GD(HEV)
PEDESTRIAN ALERT SYSTEM	PA
PEDESTRIAN ALERT SYSTEM (DIAGNOSTICS)	PA(diag)
KEYLESS ACCESS WITH PUSH BUTTON START SYSTEM (DIAGNOSTICS)	KPS(diag)
BODY CONTROL SYSTEM (DIAGNOSTICS)	BC(diag)

FUJI HEAVY INDUSTRIES LTD.

SECURITY AND LOCKS

SL

		Page
1.	General Description	2
2.	Relay and Fuse	10
3.	Door Lock Control System	12
4.	Keyless Entry System	17
5.	Keyless Access System	27
6.	Push Button Start System	28
7.	Security System	30
8.	Front Inner Remote	34
9.	Front Outer Handle	35
10.	Front Door Latch and Door Lock Actuator Assembly	39
11.	Rear Inner Remote	42
12.	Rear Outer Handle	43
13.	Rear Door Latch and Door Lock Actuator Assembly	47
14.	Rear Gate Opener Button	49
15.	Rear Gate Latch and Actuator Assembly	51
16.	Trunk Lid Latch and Actuator Assembly	53
17.	Front Hood Lock Assembly	55
18.	Remote Openers	58
19.	Ignition Key Lock	65
20.	Key Lock Cylinders	70
21.	Security Control Module	75
22.	Impact Sensor	76
23.	Keyless Entry Control Module	78
24.	Keyless Buzzer	80
25.	Body Integrated Unit	82
26.	Keyless Transmitter	85
27.	Access Key	88
28.	Immobilizer Control Module	90
29.	Immobilizer Antenna	91
30.	Keyless Access Indoor Antenna	94
31.	Keyless Access Outdoor Antenna	97
32.	Rear Lock Button	99
33.	Receiver	101
34.	Keyless Access CM	102
35.	ID Code Box	104
36.	Steering Lock CM	105
37.	Push Button Ignition Switch	106
38.	Starter Relay (Push Button Start)	109
39.	IG Relay1 (Push Button Start)	111
40.	IG Relay2 (Push Button Start)	113
41.	Accessory Relay (Push Button Start)	115
42.	Starter Cut Relay	116
43.	Access Buzzer	118
44.	Function Setting (Customize)	120
45.	Keyless Access With Push Button Start System	121

1. General Description

A: COMPONENT

1. DOOR LOCK ASSEMBLY

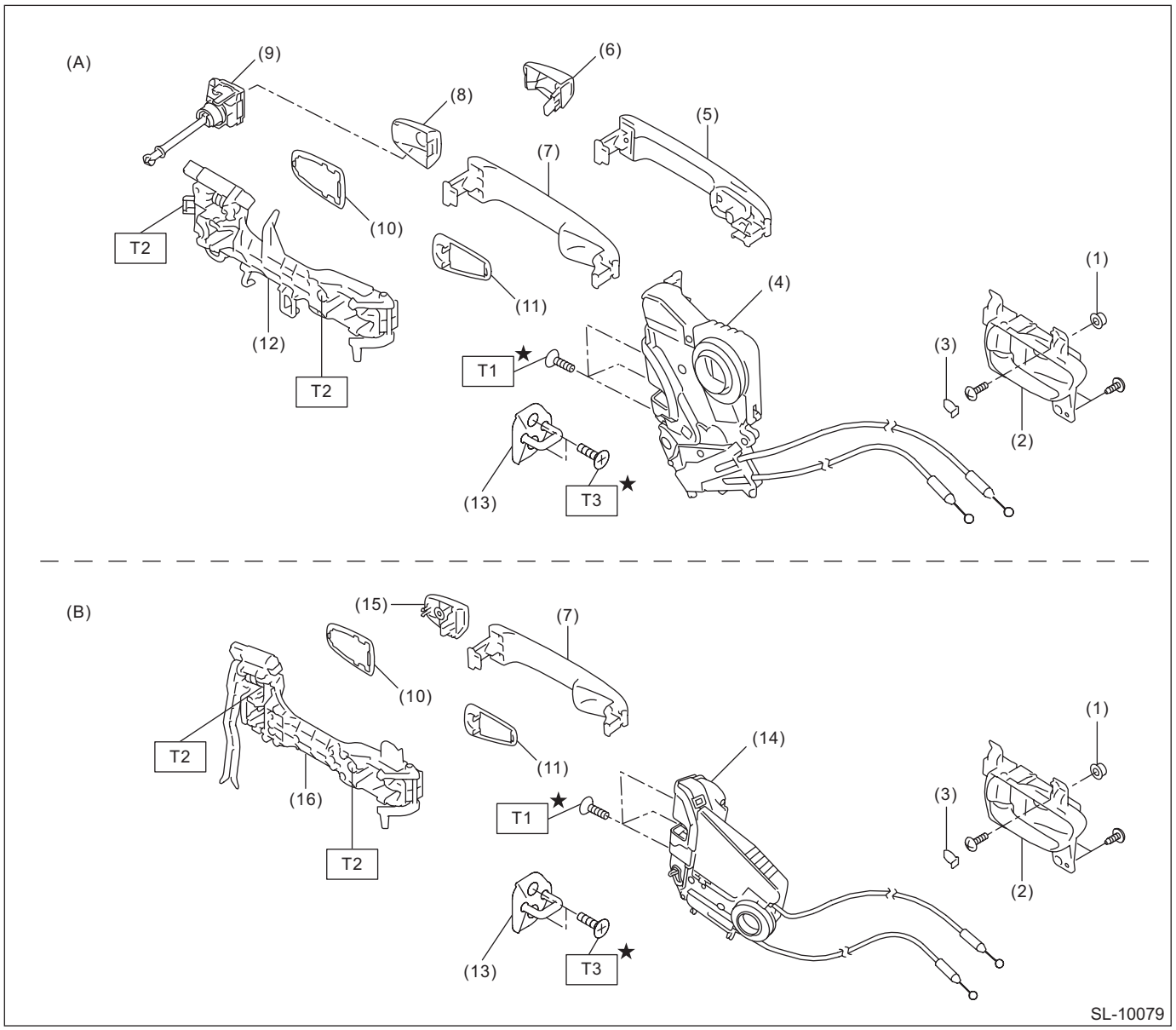

(A)	Front	(B)	Rear		
(1)	Grommet - screw	(8)	Cover - handle front outer (driver's seat)	(15)	Cover - handle rear outer
(2)	Remote ASSY - door	(9)	Key lock - door (driver's seat only)	(16)	Frame ASSY - rear door outer
(3)	Cap remote	(10)	Spacer - door handle outer B		
(4)	Latch & actuator ASSY - front	(11)	Spacer - door handle outer A	***Tightening torque: N·m (kgf-m, ft-lb)***	
(5)	Handle - door outer (model with keyless access)	(12)	Frame ASSY - front door outer	***T1: 6.5 (0.66, 4.8)***	
(6)	Cover - handle front outer (passenger's seat)	(13)	Striker - door	***T2: 7.5 (0.76, 5.5)***	
(7)	Handle - door outer (model without keyless access)	(14)	Latch & actuator ASSY - rear	***T3: 18 (1.84, 13.3)***	

2. REAR GATE LOCK AND TRUNK LID LOCK

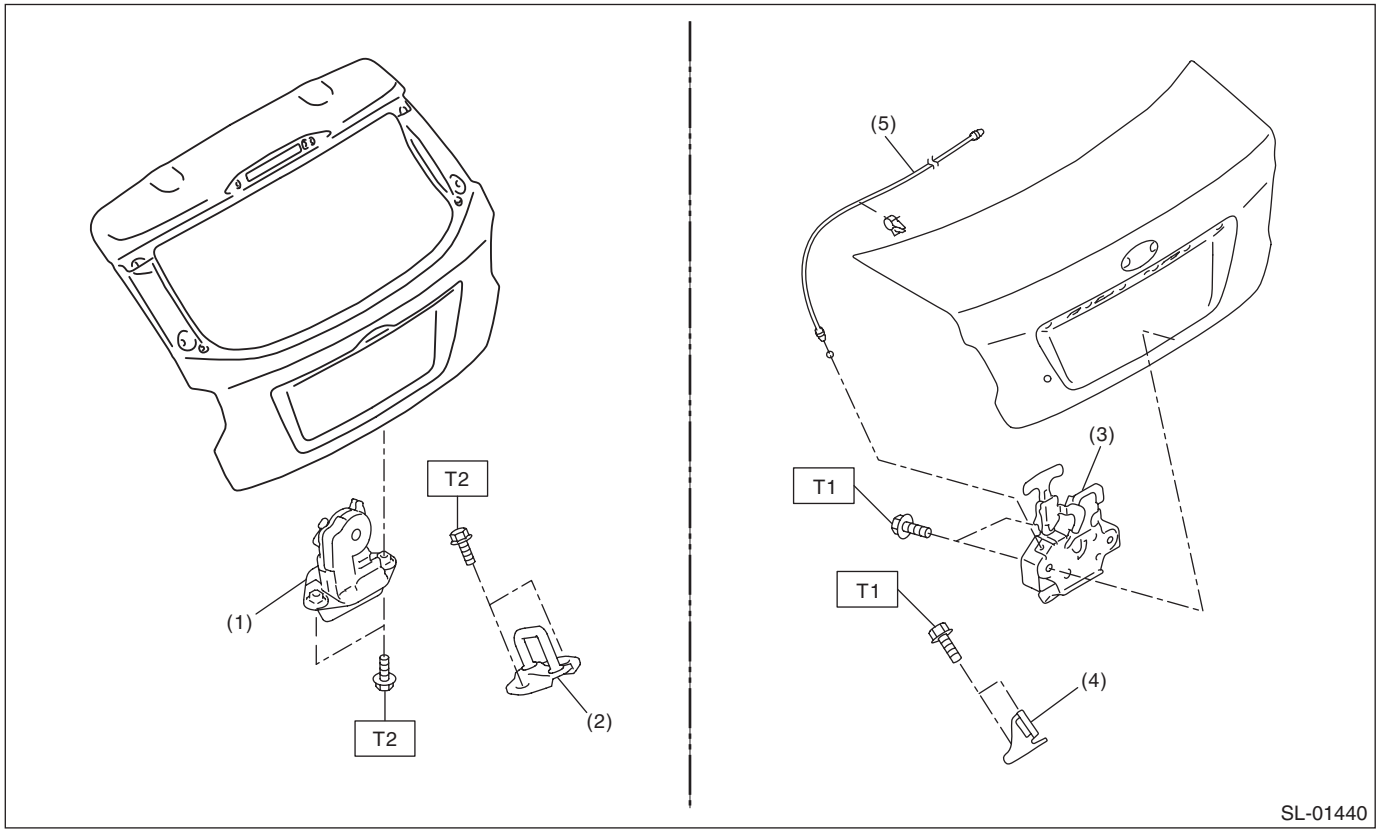

(1) Latch & actuator - rear gate
(2) Striker - rear gate
(3) Lock ASSY - trunk lid
(4) Striker - trunk lid
(5) Cable ASSY - trunk lid

Tightening torque: N·m (kgf-m, ft-lb)
T1: 7.5 (0.76, 5.5)
T2: 25 (2.55, 18.4)

3. FRONT HOOD LOCK

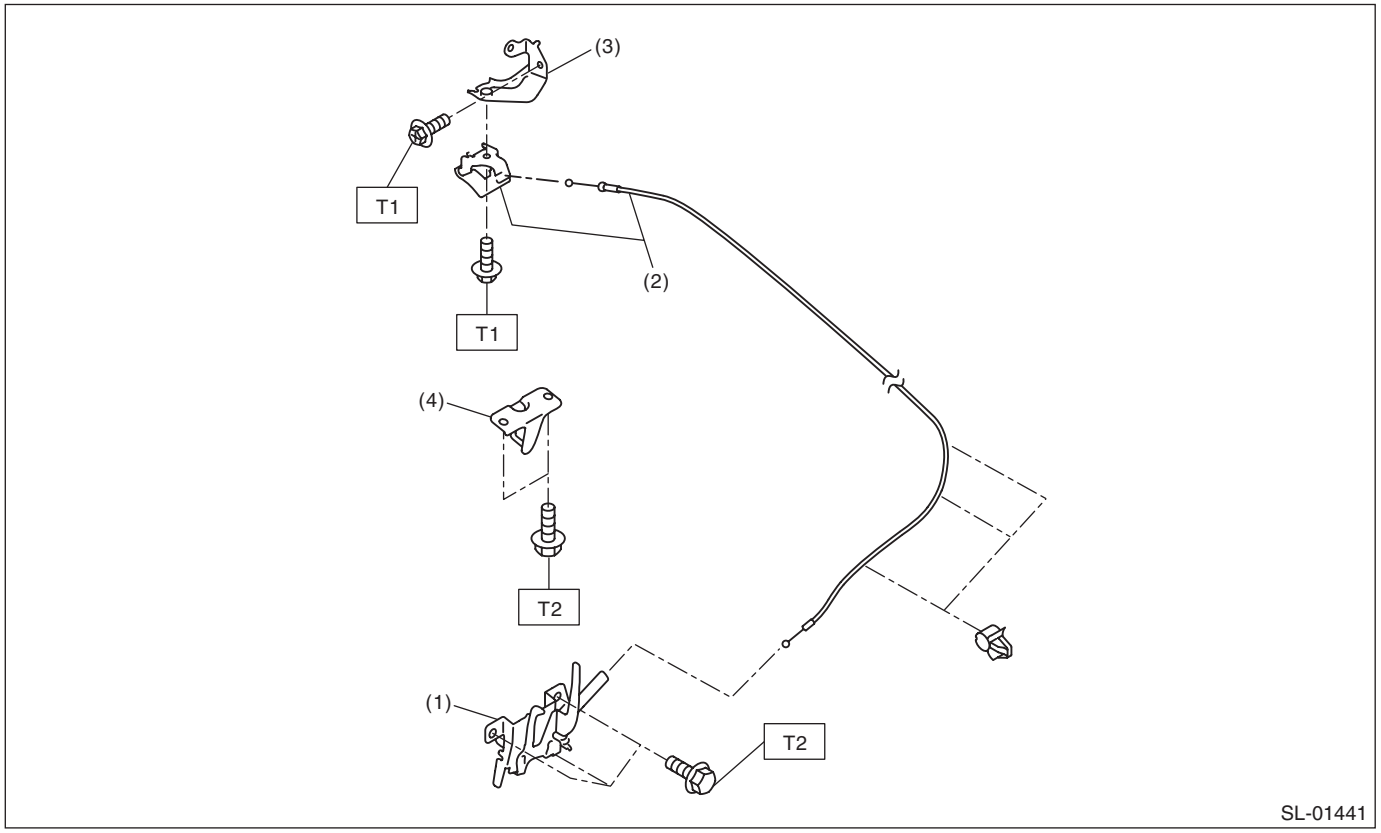

(1) Lock ASSY - front hood
(2) Cable - front hood
(3) Bracket - opener handle
(4) Striker - front hood

Tightening torque: N·m (kgf-m, ft-lb)
T1: 7.5 (0.76, 5.5)
T2: 33 (3.36, 24.3)

4. REMOTE OPENER

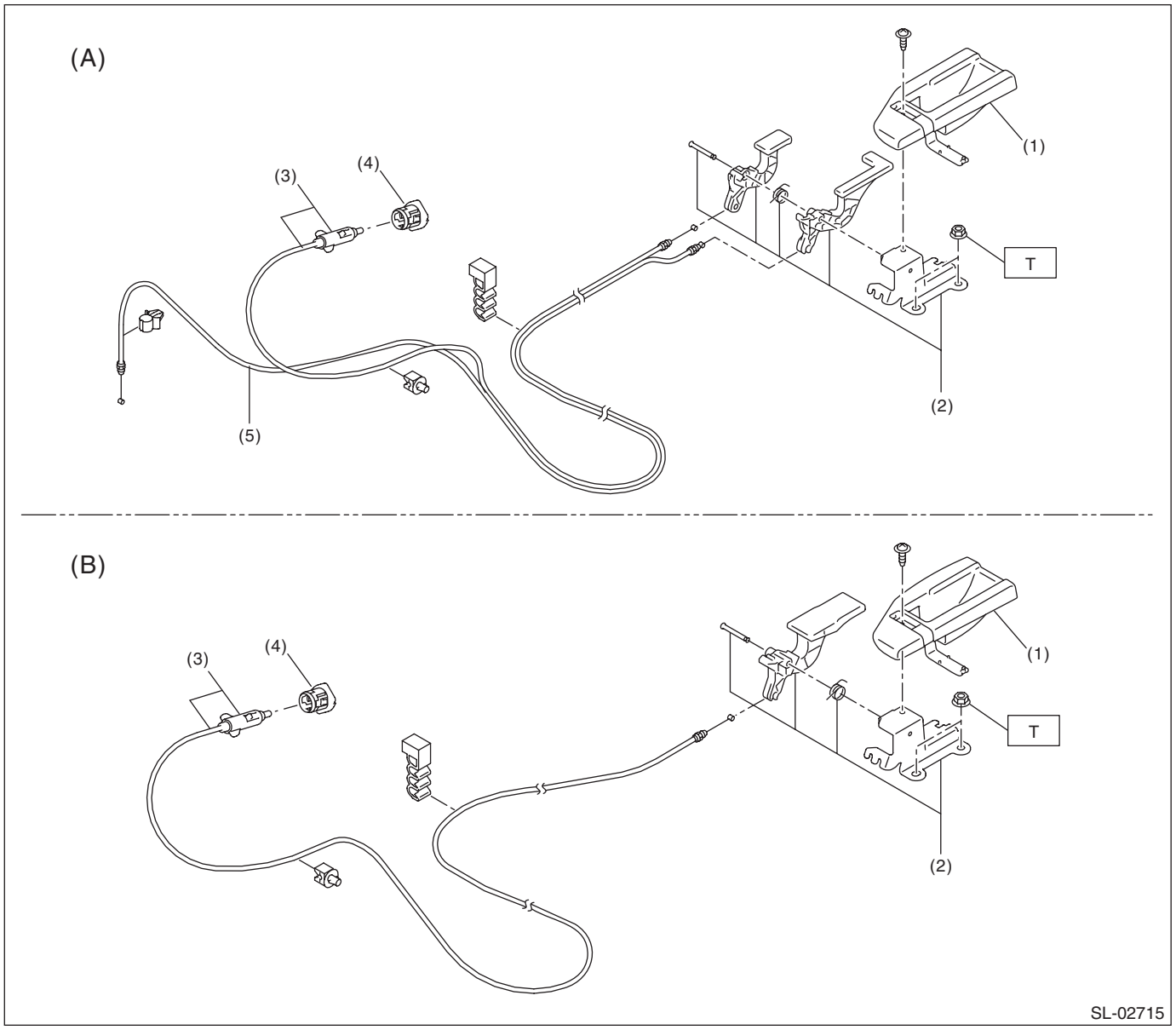

(A) 4 door model
(B) 5 door model/XV model

(1) Cover - handle
(2) Pull handle - opener
(3) Cable ASSY - fuel
(4) Holder
(5) Cable ASSY - trunk lid

Tightening torque: N·m (kgf-m, ft-lb)
T: 7.5 (0.76, 5.5)

5. KEYLESS ENTRY SYSTEM

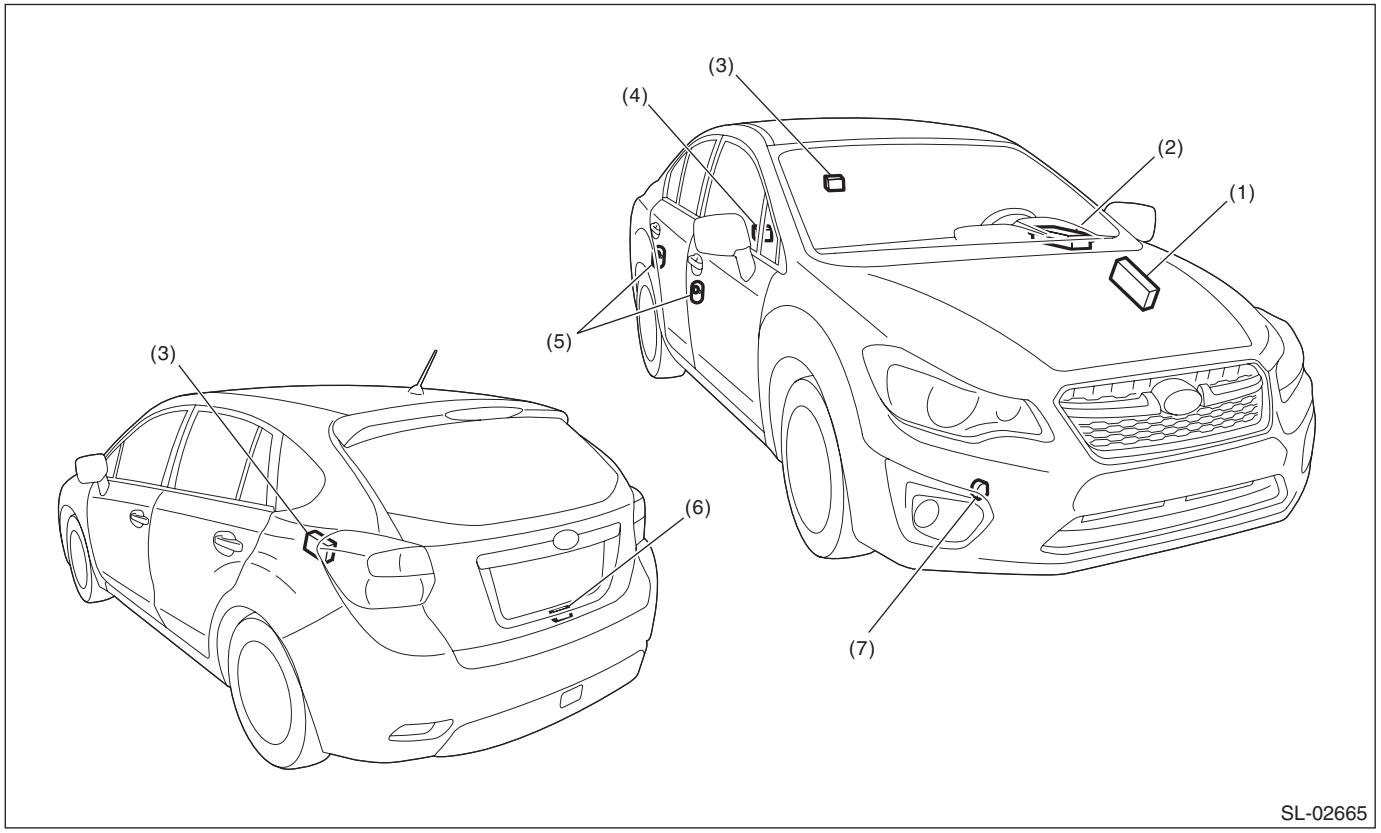

(1) Body integrated unit
(2) Power window main switch
(3) Keyless entry control module
(4) Trunk lid latch switch (4 door model)
(5) Door switch
(6) Rear gate latch switch (5 door model/XV model)
(7) Keyless buzzer

6. SECURITY SYSTEM

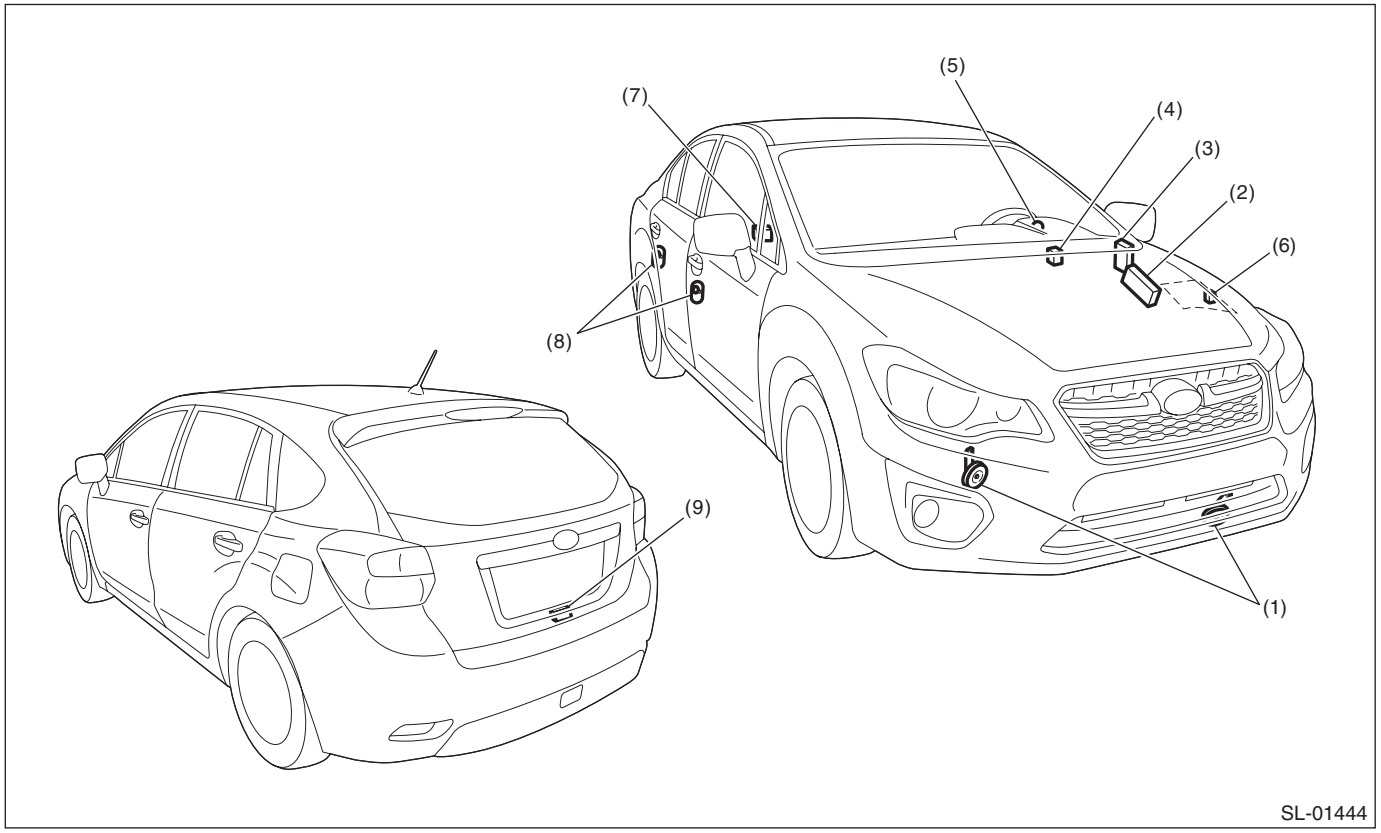

(1)	Horn	(4)	Turn signal and hazard module	(7)	Trunk lid latch switch (4 door model)
(2)	Body integrated unit	(5)	Security indicator light (in combination meter)	(8)	Door switch
(3)	Impact sensor (driver's seat instrument panel side) (dealer option)	(6)	Horn relay (in main fuse box)	(9)	Rear gate latch switch (5 door model/XV model)

7. KEYLESS ACCESS WITH PUSH BUTTON START SYSTEM

NOTE:
Except for model without keyless access.

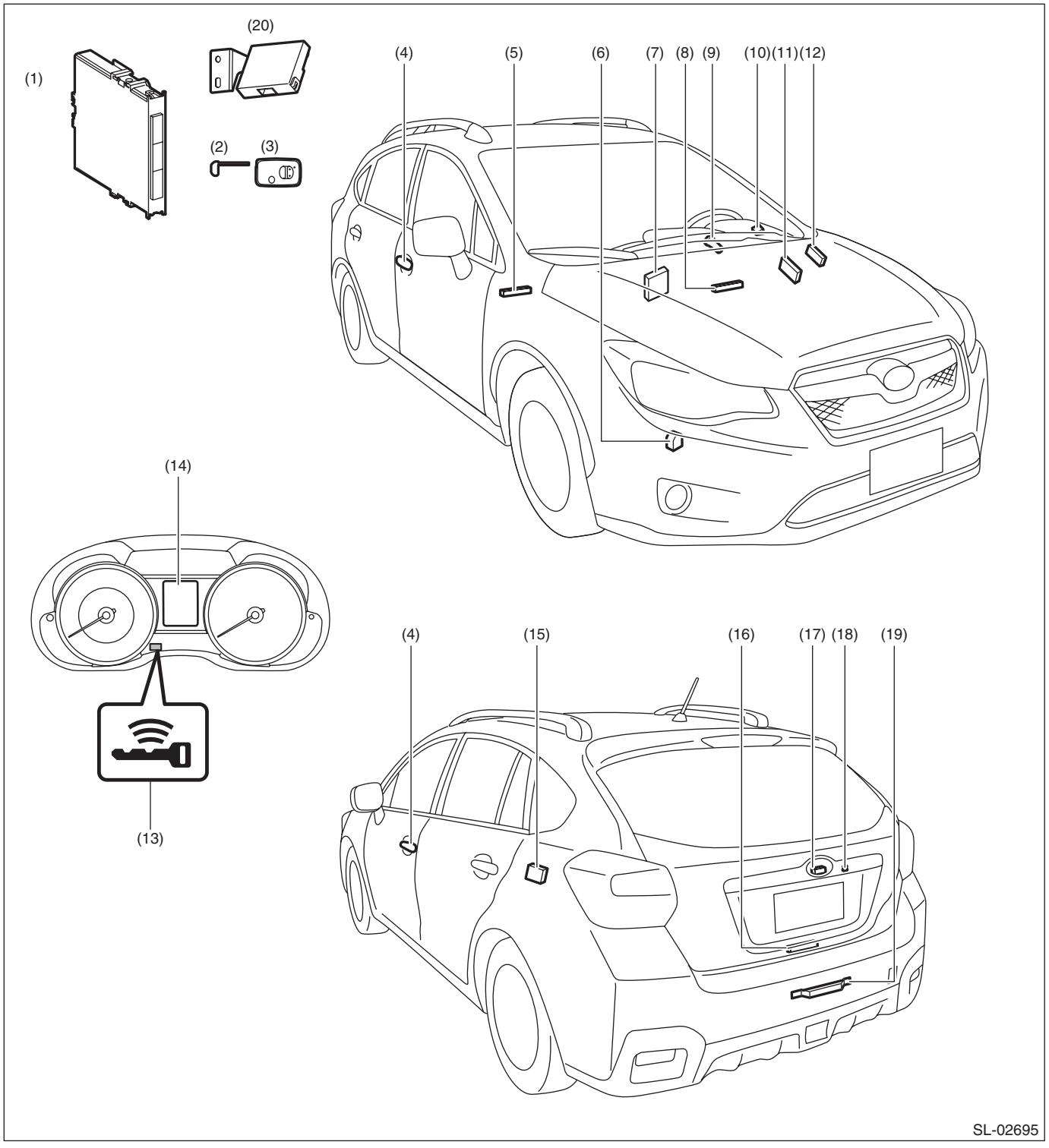

(1) Keyless access CM
(2) Mechanical key
(3) Access key
(4) Front outer handle (front exterior antenna)
– Touch sensor (lock)
– Touch sensor (unlock)
(5) Center interior antenna
(6) Access buzzer
(7) ECM
(8) Front interior antenna
(9) Push button ignition switch
(10) Steering lock CM
(11) TCM
(12) Body integrated unit
(13) Access key warning light
(14) Multi-information display
(15) Receiver
(16) Rear interior antenna
(17) Rear gate opener button
(18) Rear lock button
(19) Rear exterior antenna
(20) ID code box
(For C0 and C5 model only)

B: CAUTION

• Before disassembling or reassembling parts, always disconnect the battery ground cable from battery. When replacing the audio, control module and other parts provided with memory functions, record the memory contents before disconnecting the battery ground cable. Otherwise, the memory is cleared.
• Reassemble the parts in the reverse order of disassembly procedure unless otherwise indicated.
• Connect the connectors securely during reassembly.
• After reassembly, make sure that the each component operates normally.
• If any immobilizer related part has been replaced, make sure to register the immobilizer.
• Do not use any electrical test equipment on the airbag system wiring harnesses and connector circuits.
• Be careful not to damage the airbag system wiring harness when servicing the ignition key cylinder.
• If the steering wheel and steering angle sensor (steering roll connector) are removed, perform “VDC sensor midpoint setting mode” of the VDC. <Ref. to VDC-21, VDC SENSOR MIDPOINT SETTING MODE, ADJUSTMENT, VDC Control Module and Hydraulic Control Unit (VDCCM&H/U).>

C: PREPARATION TOOL

1. SPECIAL TOOL

ILLUSTRATION	TOOL NUMBER	DESCRIPTION	REMARKS
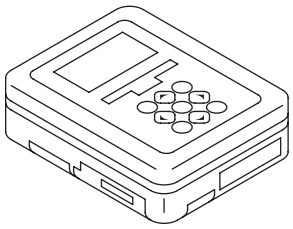 ST1B022XU0	1B022XU0	SUBARU SELECT MONITOR III KIT	Used for troubleshooting the electrical system. NOTE: For detailed operation procedures of SUBARU SELECT MONITOR III KIT, refer to “PC application help for Subaru Select Monitor”.

2. GENERAL TOOL

TOOL NAME	REMARKS
Circuit tester	Used for measuring resistance and voltage.
Drill	Used for replacing ignition key lock.
Reverse tap	Used for replacing ignition key lock.
TORX® T30	Used for removing and installing door outer handle cover and frame assembly.
Clip remover	Used for removing trim clip.

2. Relay and Fuse

A: LOCATION

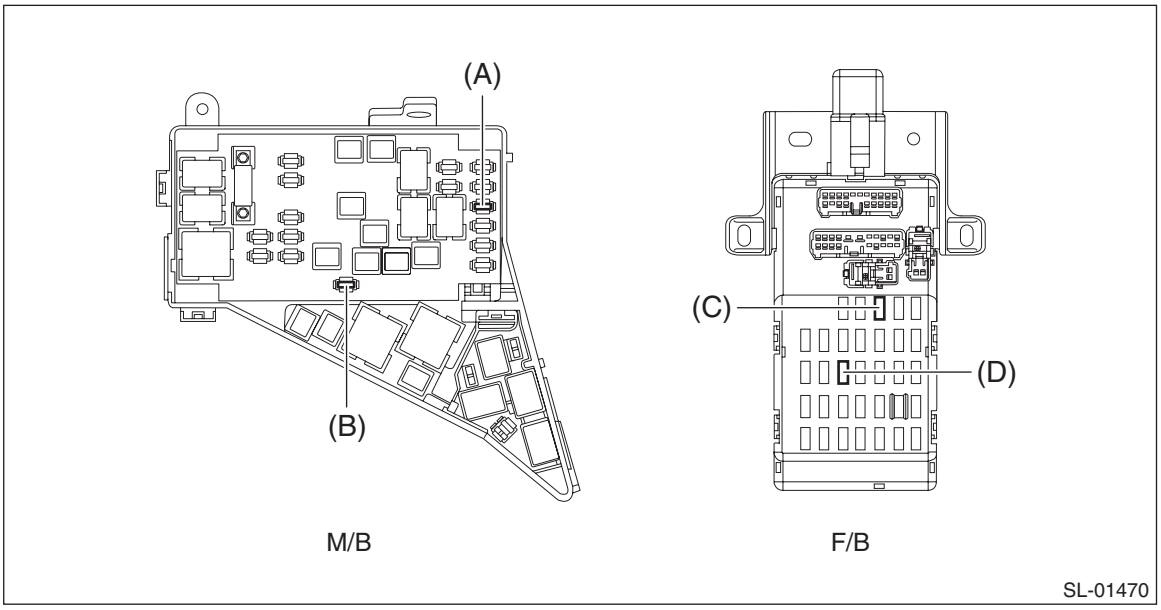

Main fuse box	Fuse 15 A (turn signal and hazard unit, body integrated unit)	(A)
	Fuse 20 A (body integrated unit, immobilizer antenna)	(B)
Relay & fuse box	Fuse 15 A (body integrated unit)	(C)
	Fuse 10 A (keyless entry CM, TPMS & keyless entry CM)	(D)

NOTE:
For other related fuses, refer to the wiring diagram.
- Gasoline engine model: <Ref. to WI(w/o HEV)-15, Power Supply Circuit.>
- HEV model: <Ref. to WI(HEV)-20, Power Supply Circuit.>

B: INSPECTION

1. CHECK FUSE

1) Remove the fuse and inspect visually.
2) If the fuse is blown out, replace the fuse.

NOTE:
If the fuse is blown again, check the system wiring harness.

2. CHECK RELAY

1) Check the resistance between relay terminals.

Terminal No.	Inspection conditions	Standard	Circuit
1 — 2	Always	1 MΩ or more	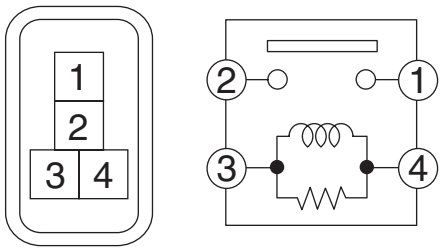 LI-01273
1 — 2	Apply battery voltage between terminals 4 and 3.	Less than 1 Ω	

Terminal No.	Inspection conditions	Standard	Circuit
1 — 4	Always	1 MΩ or more	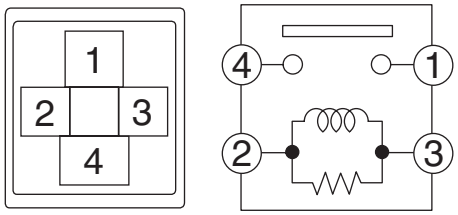 AC-02796
1 — 4	Apply battery voltage between terminals 2 and 3.	Less than 1 Ω	

Terminal No.	Inspection conditions	Standard	Circuit
1 — 2	Always	1 MΩ or more	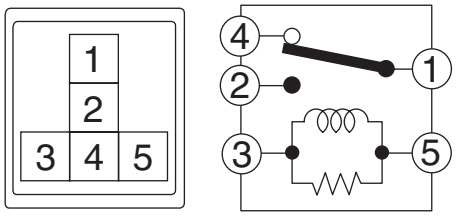 SL-01566
1 — 4	Always	Less than 1 Ω	
1 — 2	Apply battery voltage between terminals 3 and 5.	Less than 1 Ω	

2) Replace the relay if the inspection result is not within the standard value.

3. Door Lock Control System

A: WIRING DIAGRAM

Refer to “Keyless Entry System” in the wiring diagram.
- Gasoline engine model: <Ref. to WI(w/o HEV)-104, WIRING DIAGRAM, Keyless Entry System.>
- HEV model: <Ref. to WI(HEV)-164, WIRING DIAGRAM, Keyless Entry System.>

B: ELECTRICAL SPECIFICATION

1. BODY INTEGRATED UNIT

Refer to “Control Module I/O Signal” of “BODY CONTROL SYSTEM (DIAGNOSTICS)” section. <Ref. to BC(diag)-6, ELECTRICAL SPECIFICATION, Control Module I/O Signal.>

C: INSPECTION

1. SYMPTOM CHART

Symptoms	Repair order	Reference
The door lock control system does not operate.	1. Remove and visually inspect the following fuses. • No. 3 (in fuse & relay box) • No. 7 (in fuse & relay box) • No. 8 (in main fuse box)	If the fuse is blown out, replace the fuse with a new part. When there is no defective with the fuse, check the power supply and ground circuit. <Ref. to SL-13, CHECK POWER SUPPLY AND GROUND CIRCUIT, INSPECTION, Door Lock Control System.>
	2. Check the power supply and ground circuit for body integrated unit.	<Ref. to SL-13, CHECK POWER SUPPLY AND GROUND CIRCUIT, INSPECTION, Door Lock Control System.>
	3. Check the door lock switch and the circuit.	<Ref. to SL-13, CHECK DOOR LOCK SWITCH, INSPECTION, Door Lock Control System.>
	4. Check the rear gate opener button and the circuit.	<Ref. to SL-14, CHECK REAR GATE OPENER BUTTON CIRCUIT, INSPECTION, Door Lock Control System.>
	5. Check the door lock actuator and the circuit.	<Ref. to SL-15, CHECK DOOR LOCK ACTUATOR AND CIRCUIT, INSPECTION, Door Lock Control System.>
A specific door lock actuator does not operate.	Check the door lock actuator and circuit.	<Ref. to SL-15, CHECK DOOR LOCK ACTUATOR AND CIRCUIT, INSPECTION, Door Lock Control System.>

2. CHECK POWER SUPPLY AND GROUND CIRCUIT

	Step	Check	Yes	No
1	**CHECK POWER SUPPLY.** 1) Disconnect the connector of body integrated unit. 2) Measure the voltage between the body integrated unit connector and chassis ground. ***Connector & terminal*** ***(i84) No. 6 (+) — Chassis ground (–):*** ***(i171) No. 1 (+) — Chassis ground (–):*** ***(B281) No. 7 (+) — Chassis ground (–):***	Is the voltage 9 V or more?	Go to step **2**.	Check the harness for open or short circuit between body integrated unit and fuse.
2	**CHECK GROUND CIRCUIT.** Measure the resistance between the body integrated unit connector and chassis ground. ***Connector & terminal*** ***(i84) No. 1 — Chassis ground:*** ***(i171) No. 29 — Chassis ground:*** ***(B280) No. 1 — Chassis ground:*** ***(B281) No. 31 — Chassis ground:***	Is the resistance less than 10 Ω?	The power supply and ground circuit are OK.	Repair or replace the harness.

3. CHECK DOOR LOCK SWITCH

	Step	Check	Yes	No
1	**CHECK CURRENT DATA.** Using the Subaru Select Monitor, display the data of «Manual lock SW input». NOTE: For detailed procedures, refer to “PC application help for Subaru Select Monitor”.	Does the display switch between OFF ←→ ON when each door lock switch is moved to LOCK?	Go to step **2**.	Go to step **3**.
2	**CHECK DOOR LOCK SWITCH.** From the condition in step 1), operate each door lock switch (driver’s and passenger’s) in the UNLOCK direction.	Does the display switch between OFF ←→ ON?	The door lock switch is OK.	Go to step **4**.
3	**CHECK POWER WINDOW MAIN SWITCH (DOOR LOCK SWITCH).** 1) Disconnect the power window main switch (door lock switch) connector. 2) Measure the continuity between terminals when moving the power window main switch (door lock switch) in LOCK direction. ***Terminals*** ***Driver’s side*** ***No. A10 — No. B3:*** ***Passenger’s side*** ***No. 4 — No. 5:***	Did the indicator change from “No continuity” (1 MΩ or more) to “Continuity exists” (less than 10 Ω)?	Go to step **4**.	Replace the power window main switch or door lock switch.
4	**CHECK POWER WINDOW MAIN SWITCH (DOOR LOCK SWITCH).** Measure the continuity between terminals when moving the power window main switch (door lock switch) in UNLOCK direction. ***Terminals*** ***Driver’s side*** ***No. A2 — No. B3:*** ***Passenger’s side*** ***No. 2 — No. 5:***	Did the indicator change from “No continuity” (1 MΩ or more) to “Continuity exists” (less than 10 Ω)?	Go to step **5**.	Replace the power window main switch or door lock switch.

	Step	Check	Yes	No
5	**CHECK HARNESS.** Measure the resistance between the power window main switch (door lock switch) connector and chassis ground. ***Connector & terminal*** ***Driver's side*** ***(D102) No. 3 — Chassis ground:*** ***Passenger's side*** ***(D125) No. 5 — Chassis ground:***	Is the resistance less than 10 Ω?	Go to step **6**.	Repair or replace the harness.
6	**CHECK HARNESS.** Check the harness between body integrated unit and power window main switch (door lock switch). ***Connector & terminal*** ***Driver's side*** ***(D7) No. 10 — (i84) No. 9:*** ***(D7) No. 2 — (i84) No. 20:*** ***Passenger's side*** ***(D125) No. 4 — (i84) No. 9:*** ***(D125) No. 2 — (i84) No. 20:***	Is harness normal?	Replace the body integrated unit. <Ref. to SL-82, Body Integrated Unit.>	Repair or replace the harness.

4. CHECK REAR GATE OPENER BUTTON CIRCUIT

	Step	Check	Yes	No
1	**CHECK CURRENT DATA.** Using the Subaru Select Monitor, display the data of «R Gate Release SW input». NOTE: For detailed procedures, refer to "PC application help for Subaru Select Monitor".	Does the display change to OFF ←→ ON, when the rear gate opener button is operated?	Rear gate opener button is normal.	Go to step **2**.
2	**CHECK HARNESS.** 1) Disconnect the connectors of body integrated unit and rear gate opener button. 2) Check the harness between the body integrated unit and rear gate opener button. ***Connector & terminal*** ***(i84) No. 10 — (D47) No. 1:***	Is harness normal?	Go to step **3**.	Repair or replace the harness.
3	**CHECK HARNESS.** Measure the resistance between the rear gate opener button connector and chassis ground. ***Connector & terminal*** ***(D47) No. 2 — Chassis ground:***	Is the resistance less than 10 Ω?	Go to step **4**.	Repair or replace the harness.
4	**CHECK REAR GATE OPENER BUTTON.** Measure the resistance between terminals both when the rear gate opener button is pressed and when not pressed. ***Terminals*** ***No. 1 — No. 2:***	Is the resistance less than 10 Ω when the switch is pressed and 1 MΩ or more when not pressed?	Replace the body integrated unit. <Ref. to SL-82, Body Integrated Unit.>	Replace the rear gate opener button.

5. CHECK DOOR LOCK ACTUATOR AND CIRCUIT

	Step	Check	Yes	No
1	**CHECK HARNESS (DOOR LOCK).** 1) Disconnect the body integrated unit and each door lock actuator connector. 2) Check the harness between body integrated unit and each door lock actuator. ***Connector & terminal*** ***Front door LH*** ***(i171) No. 2 — (D72) No. 4:*** ***Front door RH (keyless entry model)*** ***(i171) No. 2 — (D18) No. 4:*** ***Rear door LH*** ***(i171) No. 2 — (D26) No. 4:*** ***Rear door RH*** ***(i171) No. 2 — (D32) No. 4:***	Is harness normal?	Go to step **2**.	Repair or replace the harness.
2	**CHECK HARNESS (DOOR UNLOCK).** Check the harness between body integrated unit and each door lock actuator. ***Connector & terminal*** ***Front door LH*** ***(i171) No. 4 — (D72) No. 1:*** ***Front door RH (keyless entry model)*** ***(i171) No. 3 — (D18) No. 1:*** ***Front door RH (keyless access model)*** ***(i171) No. 6 — (D18) No. 1:*** ***Rear door LH*** ***(i171) No. 3 — (D26) No. 1:*** ***Rear door RH*** ***(i171) No. 3 — (D32) No. 1:***	Is harness normal?	4 door model: Go to step **5**. 5 door model/XV model: Go to step **3**.	Repair or replace the harness.
3	**CHECK HARNESS (REAR GATE UNLOCK).** Check the harness between the body integrated unit and rear gate lock actuator. ***Connector & terminal*** ***(i171) No. 7 — (D46) No. 1:***	Is harness normal?	Go to step **4**.	Repair or replace the harness.
4	**CHECK HARNESS (REAR GATE UNLOCK).** Measure the resistance between the rear gate lock actuator connector and chassis ground. ***Connector & terminal*** ***(D46) No. 2 — Chassis ground:***	Is the resistance less than 10 Ω?	Go to step **7**.	Repair or replace the harness.
5	**CHECK HARNESS (TRUNK UNLOCK).** Check the harness between the body integrated unit and trunk lid lock actuator. ***Connector & terminal*** ***(i171) No. 7 — (R186) No. 1:***	Is harness normal?	Go to step **6**.	Repair or replace the harness.
6	**CHECK HARNESS (TRUNK UNLOCK).** Measure the resistance between the trunk lid lock actuator connector and chassis ground. ***Connector & terminal*** ***(R186) No. 2 — Chassis ground:***	Is the resistance less than 10 Ω?	Go to step **7**.	Repair or replace the harness.

Step		Check	Yes	No
7	**CHECK BODY INTEGRATED UNIT OUTPUT SIGNAL.** 1) Connect the body integrated unit connector. 2) Measure the voltage between terminals of the body integrated unit when operating the door lock switch to LOCK direction. ***Connector & terminal*** ***Except for front door LH*** ***(i171) No. 2 (+) — (i171) No. 3 (–):*** ***Front door LH*** ***(i171) No. 2 (+) — (i171) No. 4 (–):***	Does the voltage change from less than 1 V → 9 V or more? (During lock output)	Go to step **8**.	Replace the body integrated unit. <Ref. to SL-82, Body Integrated Unit.>
8	**CHECK BODY INTEGRATED UNIT OUTPUT SIGNAL.** Measure the voltage between terminals of the body integrated unit when operating the door lock switch to UNLOCK direction. ***Connector & terminal*** ***Except for front door LH*** ***(i171) No. 3 (+) — (i171) No. 2 (–):*** ***Front door LH*** ***(i171) No. 4 (+) — (i171) No. 2 (–):***	Does the voltage change from less than 1 V → 9 V or more? (During unlock output)	Go to step **9**.	Replace the body integrated unit. <Ref. to SL-82, Body Integrated Unit.>
9	**CHECK BODY INTEGRATED UNIT OUTPUT SIGNAL.** Measure the voltage between body integrated unit and chassis ground when operating the rear gate opener button. ***Connector & terminal*** ***(i171) No. 7 (+) — Chassis ground (–):***	Does the voltage change from less than 1 V → 9 V or more? (During unlock output)	Go to step **10**.	Replace the body integrated unit. <Ref. to SL-82, Body Integrated Unit.>
10	**CHECK DOOR LOCK ACTUATOR.** Check the door lock actuator. • Front door lock actuator: <Ref. to SL-41, INSPECTION, Front Door Latch and Door Lock Actuator Assembly.> • Rear door lock actuator: <Ref. to SL-48, INSPECTION, Rear Door Latch and Door Lock Actuator Assembly.>	Is the door lock actuator OK?	• 4 door model: Go to step **12**. • 5 door model/XV model: Go to step **11**.	Replace the door latch and door lock actuator assembly.
11	**CHECK REAR GATE LOCK ACTUATOR.** Check the rear gate lock actuator. <Ref. to SL-51, Rear Gate Latch and Actuator Assembly.>	Is the rear gate lock actuator normal?	Check the connection status of the harness and connector that may have a temporary poor contact.	Replace the rear gate latch and actuator assembly.
12	**CHECK TRUNK LID LOCK ACTUATOR.** Check the trunk lid lock actuator. <Ref. to SL-53, Trunk Lid Latch and Actuator Assembly.>	Is trunk lid lock actuator normal?	Check the connection status of the harness and connector that may have a temporary poor contact.	Replace the trunk lid latch & actuator assembly.

4. Keyless Entry System

A: WIRING DIAGRAM

Refer to “Keyless Entry System” in the wiring diagram. <Ref. to WI(w/o HEV)-104, WIRING DIAGRAM, Keyless Entry System.>

B: ELECTRICAL SPECIFICATION

1. KEYLESS ENTRY CONTROL MODULE

- Model without tire pressure monitoring system

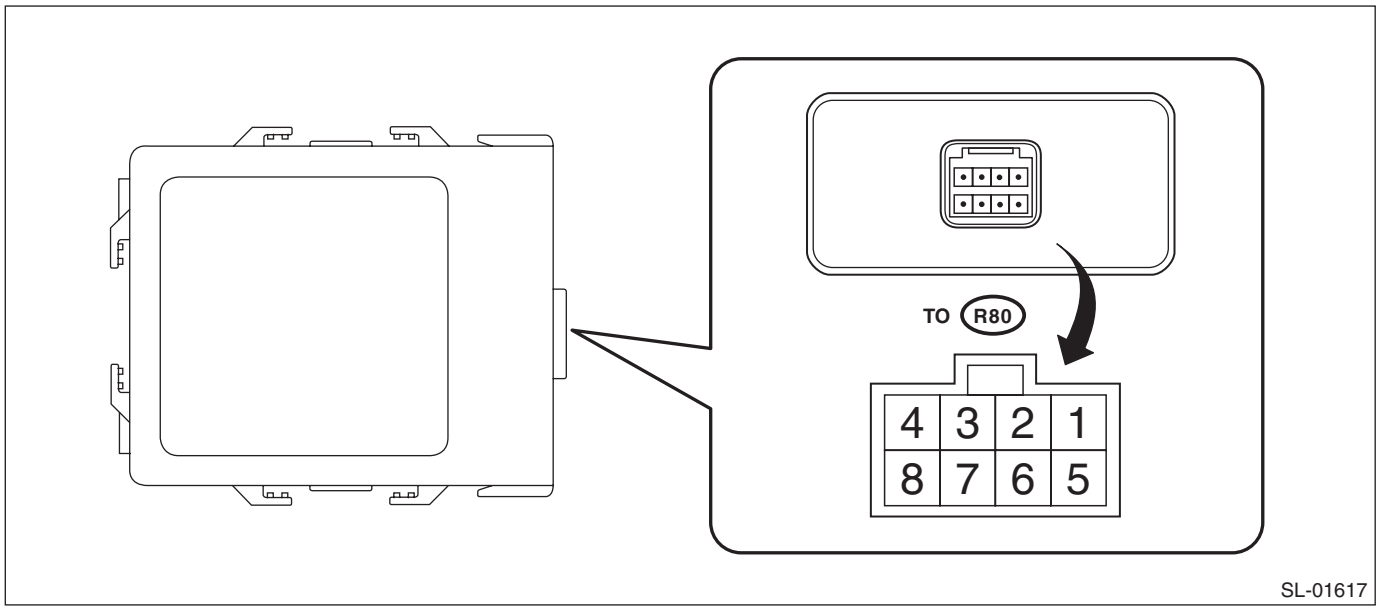

Terminal No.	Item	Measuring condition	Standard
3 (U-ART com.)	—	Cannot be measured	—
4 (+B) ←→ Chassis ground	Voltage	Always	10 — 14 V
7 (GND) ←→ Chassis ground	Resistance	Always	Less than 1 Ω

- Model with tire pressure monitoring system

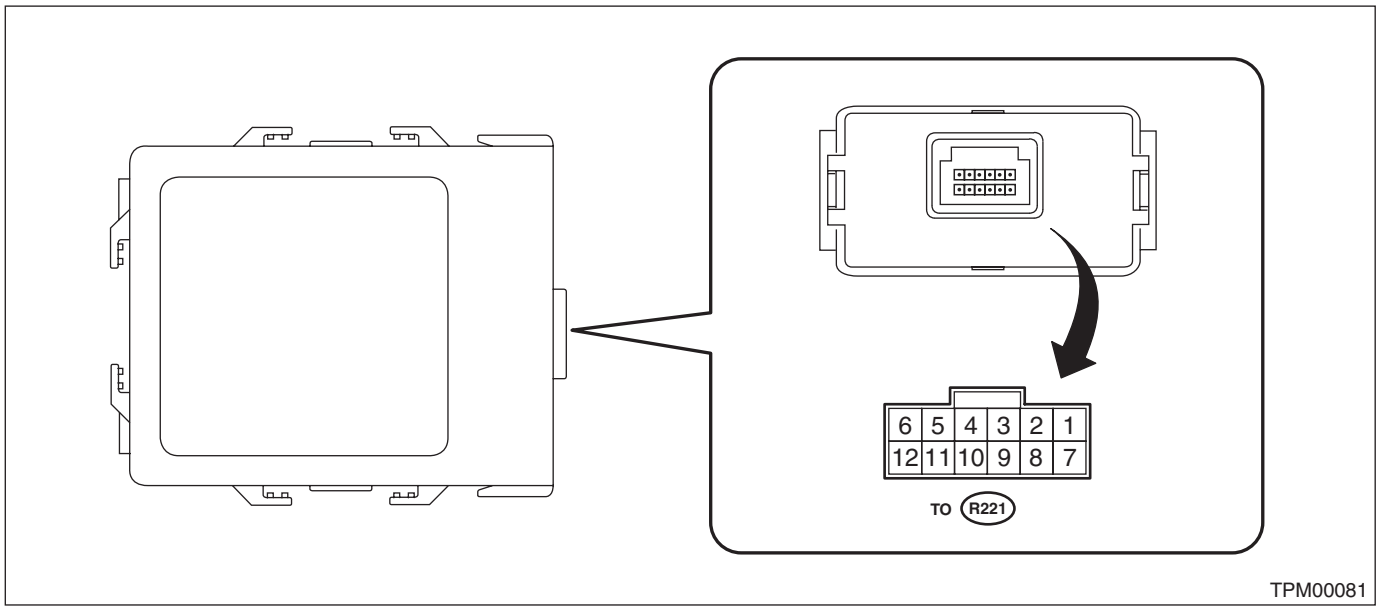

Terminal No.	Item	Measuring condition	Standard
4 (IG) ←→ Chassis ground	Resistance	IG OFF → ON	0 V → 10 — 14 V
5 (GND) ←→ Chassis ground	Resistance	Always	Less than 1 Ω
6 (+B) ←→ Chassis ground	Voltage	Always	10 — 14 V
11 (U-ART com.)	—	Cannot be measured	—

2. BODY INTEGRATED UNIT

Refer to “Control Module I/O Signal” of “BODY CONTROL SYSTEM (DIAGNOSTICS)” section. <Ref. to BC(diag)-6, ELECTRICAL SPECIFICATION, Control Module I/O Signal.>

C: INSPECTION

1. SYMPTOM CHART

Symptoms	Repair order	Reference
None of the functions of the keyless entry system operate.	1. Check the keyless transmitter battery.	<Ref. to SL-20, CHECK KEYLESS TRANSMITTER BATTERY AND FUNCTION, INSPECTION, Keyless Entry System.>
	2. Remove and visually inspect the following fuses. • No. 3 (in fuse & relay box) • No. 7 (in fuse & relay box) • No. 8 (in main fuse box)	If the fuse is blown out, replace the fuse with a new part. When there is no defective with the fuse, check the power supply and ground circuit. <Ref. to SL-13, CHECK POWER SUPPLY AND GROUND CIRCUIT, INSPECTION, Door Lock Control System.>
	3. Check the keyless entry control module.	<Ref. to SL-21, CHECK KEYLESS ENTRY CONTROL MODULE, INSPECTION, Keyless Entry System.>
	4. Check the power supply and ground circuit for body integrated unit.	<Ref. to SL-21, CHECK BODY INTEGRATED UNIT POWER SUPPLY AND GROUND CIRCUIT, INSPECTION, Keyless Entry System.>
	5. Check the key warning switch.	<Ref. to SL-23, CHECK KEY WARNING SWITCH, INSPECTION, Keyless Entry System.>
	6. Check the body integrated unit.	<Ref. to BC(diag)-2, Basic Diagnostic Procedure.>
The keyless transmitter cannot be registered.	1. Check the keyless transmitter battery.	<Ref. to SL-20, CHECK KEYLESS TRANSMITTER BATTERY AND FUNCTION, INSPECTION, Keyless Entry System.>
	2. Check the key warning switch.	<Ref. to SL-23, CHECK KEY WARNING SWITCH, INSPECTION, Keyless Entry System.>
	3. Check the keyless entry control module.	<Ref. to SL-21, CHECK KEYLESS ENTRY CONTROL MODULE, INSPECTION, Keyless Entry System.>
	4. Check the body integrated unit.	<Ref. to BC(diag)-2, Basic Diagnostic Procedure.>

Symptoms	Repair order	Reference
Door lock or unlock does not operate. NOTE: If the door lock control system does not operate when using the door lock switch, check the door lock control system. <Ref. to SL-12, INSPECTION, Door Lock Control System.>	1. Check the keyless transmitter battery.	<Ref. to SL-20, CHECK KEYLESS TRANSMITTER BATTERY AND FUNCTION, INSPECTION, Keyless Entry System.>
	2. Check the key warning switch.	<Ref. to SL-23, CHECK KEY WARNING SWITCH, INSPECTION, Keyless Entry System.>
	3. Check the door switch signal.	<Ref. to SL-22, CHECK DOOR SWITCH, INSPECTION, Keyless Entry System.>
	4. Check the keyless entry control module.	<Ref. to SL-21, CHECK KEYLESS ENTRY CONTROL MODULE, INSPECTION, Keyless Entry System.>
	5. Check the body integrated unit.	<Ref. to BC(diag)-2, Basic Diagnostic Procedure.>
The keyless buzzer and hazard light do not operate.	1. Check the keyless buzzer operation.	<Ref. to SL-25, CHECK KEYLESS BUZZER, INSPECTION, Keyless Entry System.>
	2. Check the hazard light operation.	<Ref. to SL-24, CHECK HAZARD LIGHT OPERATION, INSPECTION, Keyless Entry System.>
	3. Check the body integrated unit.	<Ref. to BC(diag)-2, Basic Diagnostic Procedure.>
Room light does not operate.	1. Check the room light operation.	<Ref. to SL-24, CHECK ROOM LIGHT OPERATION, INSPECTION, Keyless Entry System.>
	2. Check the body integrated unit.	<Ref. to BC(diag)-2, Basic Diagnostic Procedure.>
Ignition switch illumination does not operate.	1. Check the ignition switch illumination.	<Ref. to SL-26, CHECK IGNITION SWITCH ILLUMINATION, INSPECTION, Keyless Entry System.>
	2. Check the body integrated unit.	<Ref. to BC(diag)-2, Basic Diagnostic Procedure.>

2. CHECK KEYLESS TRANSMITTER BATTERY AND FUNCTION

CAUTION:
Be sure to reset keyless transmitter of other vehicles registered to the inspection target vehicle, and vehicles to which keyless transmitters were registered for inspection, to the condition before performing the inspection. (Re-register the keyless transmitters.)

	Step	Check	Yes	No
1	**CHECK KEYLESS TRANSMITTER BATTERY.** 1) Remove the battery from the keyless transmitter. <Ref. to SL-85, REMOVAL, Keyless Transmitter.> 2) Check the battery voltage. <Ref. to SL-86, INSPECTION, Keyless Transmitter.>	Is the voltage 2.5 V or more?	Go to step **2**.	Replace the keyless transmitter battery.
2	**CHECK KEYLESS TRANSMITTER.** Register the keyless transmitter which operates normally on other vehicles to the inspection target vehicle. <Ref. to SL-86, REGISTRATION OF KEYLESS TRANSMITTER WITH SUBARU SELECT MONITOR, REPLACEMENT, Keyless Transmitter.> 1) Close all the doors and rear gate (5 door model/XV model) or trunk lid (4 door model) of the inspection target vehicle. 2) Using the keyless transmitter, lock and unlock the doors and rear gate of vehicle. For the 4 door model, unlock the trunk lid.	Can lock, unlock of doors and unlock of the trunk lid be performed properly on the inspection target vehicle?	Go to step **3**.	Due to vehicle malfunction, continue the keyless entry system diagnosis.
3	**CHECK KEYLESS TRANSMITTER.** Register the keyless transmitter of the inspected vehicle to another vehicle whose keyless system operates normally. <Ref. to SL-86, REGISTRATION OF KEYLESS TRANSMITTER WITH SUBARU SELECT MONITOR, REPLACEMENT, Keyless Transmitter.>	Is the keyless transmitter registered correctly?	Go to step **4**.	Replace the keyless transmitter and perform registration.
4	**CHECK KEYLESS TRANSMITTER.** Check the registered keyless transmitter. 1) Close all the doors and rear gate (5 door model/XV model) or trunk lid (4 door model) of the vehicle on which the keyless system works normally. 2) Using the keyless transmitter, lock and unlock the doors and rear gate of vehicle. For the 4 door model, unlock the trunk lid.	Can lock, unlock of doors and unlock of the trunk lid be performed properly on the vehicle?	Keyless transmitter is OK.	Replace the keyless transmitter and perform registration.

3. CHECK KEYLESS ENTRY CONTROL MODULE

	Step	Check	Yes	No
1	**CHECK BODY INTEGRATED UNIT.** Read the DTC using Subaru Select Monitor. NOTE: For detailed procedures, refer to "PC application help for Subaru Select Monitor".	Is DTC B1500 "Keyless UART com. Malfunction" displayed?	Go to step **2**.	Keyless entry control module is normal.
2	**CHECK POWER SUPPLY.** 1) Disconnect the keyless entry control module connector. 2) Measure the voltage between keyless entry control module connector and chassis ground. ***Connector & terminal*** ***Model without tire pressure monitoring system*** ***(R80) No. 4 (+) — Chassis ground (–):*** ***Model with tire pressure monitoring system*** ***(R221) No. 6 (+) — Chassis ground (–):***	Is the voltage 10 V or more?	Go to step **3**.	Check the harness for open or short circuits between the keyless entry control module and the fuse.
3	**CHECK GROUND CIRCUIT.** Measure the resistance between keyless entry control module connector and chassis ground. ***Connector & terminal*** ***Model without tire pressure monitoring system*** ***(R80) No. 7 — Chassis ground:*** ***Model with tire pressure monitoring system*** ***(R221) No. 5 — Chassis ground:***	Is the resistance less than 10 Ω?	Go to step **4**.	Repair or replace the harness.
4	**CHECK KEYLESS ENTRY CONTROL MODULE CIRCUIT.** 1) Disconnect the body integrated unit connector. 2) Check the harness between keyless entry control module and body integrated unit. ***Connector & terminal*** ***Model without tire pressure monitoring system*** ***(i171) No. 11 — (R80) No. 3:*** ***Model with tire pressure monitoring system*** ***(i171) No. 11 — (R221) No. 11:***	Is harness normal?	Replace the keyless entry control module.	Repair or replace the harness.

4. CHECK BODY INTEGRATED UNIT POWER SUPPLY AND GROUND CIRCUIT

Refer to the "INSPECTION of POWER SUPPLY AND GROUND CIRCUIT" of "Door Lock Control System" for detailed procedures. <Ref. to SL-13, CHECK POWER SUPPLY AND GROUND CIRCUIT, INSPECTION, Door Lock Control System.>

5. CHECK DOOR SWITCH

	Step	Check	Yes	No
1	**CHECK CURRENT DATA.** Display the following items using Subaru Select Monitor. • «Driver's door SW input» • «P-door SW input» • «Rear right door SW input» • «Rear left door SW input» • «R Gate SW input» NOTE: For detailed procedures, refer to "PC application help for Subaru Select Monitor".	Does the display switch between OFF ←→ ON when each door, rear gate, or trunk lid is opened/closed?	The door switches, trunk lid latch switch or rear gate latch switch are normal.	Go to step **2**.
2	**CHECK HARNESS.** 1) Disconnect the connector of body integrated unit. 2) Disconnect the connector of the door switch, trunk lid latch switch or rear gate latch switch that the display does not change. 3) Check the harness between body integrated unit and defective switch. ***Connector & terminal*** ***Front door LH*** ***(i84) No. 14 — (R9) No. 1:*** ***Front door RH*** ***(i84) No. 13 — (R12) No. 1:*** ***Rear door LH*** ***(i84) No. 24 — (R22) No. 1:*** ***Rear door RH*** ***(i84) No. 25 — (R16) No. 1:*** ***Trunk lid*** ***(i84) No. 33 — (R186) No. 3:*** ***Rear gate*** ***(i84) No. 33 — (D46) No. 3:***	Is harness normal?	Go to step **3**.	Repair or replace the harness.
3	**CHECK HARNESS.** Measure the resistance between the faulty switch connector and chassis ground. ***Connector & terminal*** ***Front door LH*** ***(R9) No. 3 — Chassis ground:*** ***Front door RH*** ***(R12) No. 3 — Chassis ground:*** ***Rear door LH*** ***(R22) No. 3 — Chassis ground:*** ***Rear door RH*** ***(R16) No. 3 — Chassis ground:*** ***Trunk lid*** ***(R186) No. 2 — Chassis ground:*** ***Rear gate*** ***(D46) No. 4 — Chassis ground:***	Is the resistance less than 10 Ω?	Go to step **4**.	Repair or replace the harness.

	Step	Check	Yes	No
4	**CHECK DOOR SWITCH.** Measure the resistance between faulty switch terminals. ***Terminals*** ***Front LH door switch*** ***No. 1 — No. 3:*** ***Front RH door switch*** ***No. 1 — No. 3:*** ***Rear LH door switch*** ***No. 1 — No. 3:*** ***Rear RH door switch*** ***No. 1 — No. 3:*** ***Trunk lid latch switch*** ***No. 3 — No. 2:*** ***Rear gate latch switch*** ***No. 3 — No. 4:***	Is the resistance 1 MΩ or more when the door switch is pushed, or the trunk lid or rear gate is closed?	Replace the body integrated unit. <Ref. to SL-82, Body Integrated Unit.>	Replace the faulty parts. • Door switches • Trunk lid latch and actuator ASSY • Rear gate latch and actuator ASSY

6. CHECK KEY WARNING SWITCH

	Step	Check	Yes	No
1	**CHECK CURRENT DATA.** Using the Subaru Select Monitor, display the data of «key-lock warning SW». NOTE: For detailed procedures, refer to “PC application help for Subaru Select Monitor”.	Is the normal input signal displayed when the key is inserted in/removed from the ignition switch?	The key warning switch is OK.	Go to step **2**.
2	**CHECK FUSE.** Remove and visually check fuse No. 14 (in the main fuse box).	Is the fuse blown out?	Replace the fuse with a new part.	Go to step **3**.
3	**CHECK KEY WARNING SWITCH CIRCUIT.** 1) Disconnect the connector of body integrated unit. 2) Insert the key into ignition switch. (LOCK position) 3) Measure the voltage between the body integrated unit connector and chassis ground. ***Connector & terminal*** ***(B280) No. 4 (+) — Chassis ground (–):***	Is the voltage 9 V or more?	Go to step **4**.	Go to step **5**.
4	**CHECK KEY WARNING SWITCH CIRCUIT.** 1) Remove the key from ignition switch. 2) Measure the voltage between the body integrated unit connector and chassis ground. ***Connector & terminal*** ***(B280) No. 4 (+) — Chassis ground (–):***	Is the voltage less than 1.5 V?	The key warning switch is OK.	Go to step **5**.
5	**CHECK KEY WARNING SWITCH.** 1) Disconnect the connector of key warning switch. 2) Insert the key into ignition switch. (LOCK position) 3) Measure the resistance between key warning switch terminals. ***Terminals*** ***No. 1 — No. 2:***	Is the resistance less than 1 Ω?	Go to step **6**.	Replace the key warning switch.

	Step	Check	Yes	No
6	**CHECK KEY WARNING SWITCH.** 1) Remove the key from ignition switch. 2) Measure the resistance between key warning switch terminals. ***Terminals*** ***No. 1 — No. 2:***	Is the resistance 1 MΩ or more?	Check the following: • Harness for open circuits and shorts between the key warning switch and fuse. • Harness for open or short between the body integrated unit and key warning switch	Replace the key warning switch.

7. CHECK ROOM LIGHT OPERATION

	Step	Check	Yes	No
1	**CHECK ROOM LIGHT OPERATION.** Make sure the room light illuminates when the room light switch is ON, and goes off when the switch is OFF.	Does the room light illuminate or go off?	Go to step **2**.	Check the room light circuit. <Ref. to LI-84, INSPECTION, Room Light.>
2	**CHECK ROOM LIGHT OPERATION.** 1) Turn the room light switch to the "DOOR" position. 2) Open and close any door.	Does the room light illuminate ←→ go off (including off delay) when the door is opened and closed?	Go to step **3**.	Go to step **4**.
3	**CHECK KEYLESS ENTRY OPERATION.** Press the LOCK/UNLOCK button of the keyless transmitter.	Does it operate properly?	Room light is normal.	Check keyless entry system. <Ref. to SL-18, SYMPTOM CHART, INSPECTION, Keyless Entry System.>
4	**CHECK ROOM LIGHT.** Check the room light. <Ref. to LI-84, INSPECTION, Room Light.>	Is room light normal?	Go to step **5**.	Replace the bulb or room light assembly.
5	**CHECK HARNESS.** 1) Disconnect the connectors of body integrated unit and room light. 2) Check the harness between body integrated unit and room light. ***Connector & terminal*** ***(i84) No. 4 — (R52) No. 2:***	Is harness normal?	Go to step **6**.	Repair or replace the harness.
6	**CHECK HARNESS.** Measure the voltage between the room light connector and chassis ground. ***Connector & terminal*** ***(R52) No. 3 (+) — Chassis ground (–):***	Is the voltage 10 V or more?	Replace the body integrated unit. <Ref. to SL-82, Body Integrated Unit.>	Repair or replace the harness.

8. CHECK HAZARD LIGHT OPERATION

	Step	Check	Yes	No
1	**CHECK HAZARD LIGHT OPERATION.** Make sure the hazard light blinks when hazard switch is turned to ON.	Does the hazard light blink?	Go to step **2**.	Check the hazard light circuit.

	Step	Check	Yes	No
2	**CHECK BODY INTEGRATED UNIT SETTING.** Display the data of «Abnormal warning lamp flashing setting» using Subaru Select Monitor. NOTE: For detailed procedures, refer to "PC application help for Subaru Select Monitor".	Is the setting ON?	Go to step **3**.	Turn the setting to ON.
3	**CHECK CURRENT DATA.** Display the data of «Hazard Output» using Subaru Select Monitor.	Is output signal present when operating the transmitter LOCK/UNLOCK button?	Go to step **4**.	Go to step **5**.
4	**CHECK KEYLESS ENTRY OPERATION.** Press the LOCK/UNLOCK button of the keyless transmitter.	Does it operate properly?	Replace the body integrated unit. <Ref. to SL-82, Body Integrated Unit.>	Check keyless entry system. <Ref. to SL-18, SYMPTOM CHART, INSPECTION, Keyless Entry System.>
5	**CHECK HAZARD LIGHT CIRCUIT.** 1) Disconnect the connectors of the body integrated unit and turn signal & hazard unit. 2) Check the harness between body integrated unit and turn signal & hazard unit. ***Connector & terminal*** ***(i171) No. 18 — (B32) No. 8:***	Is harness normal?	Check body integrated unit. <Ref. to BC(diag)-2, Basic Diagnostic Procedure.>	Repair or replace the harness.

9. CHECK KEYLESS BUZZER

	Step	Check	Yes	No
1	**CHECK BODY INTEGRATED UNIT SETTING.** Display the data of «Answer-back buzzer setup» using Subaru Select Monitor. NOTE: For detailed procedures, refer to "PC application help for Subaru Select Monitor".	Is the setting ON?	Go to step **2**.	Turn the setting to ON.
2	**CHECK BODY INTEGRATED UNIT.** Select and perform the «Keyless Buzzer Output» using Subaru Select Monitor.	Does the keyless buzzer sound?	Check the keyless control module.	Go to step **3**.
3	**CHECK KEYLESS BUZZER CIRCUIT.** 1) Turn the ignition switch to OFF. 2) Disconnect the connectors of the body integrated unit and keyless buzzer. 3) Check the harness between body integrated unit and keyless buzzer. ***Connector & terminal*** ***(B280) No. 20 — (B164) No. 1:***	Is harness normal?	Go to step **4**.	Repair or replace the harness.
4	**CHECK HARNESS.** Measure the resistance between keyless buzzer connector and chassis ground. ***Connector & terminal*** ***(B164) No. 1 — Chassis ground:***	Is the resistance value 10 kΩ or more?	Go to step **5**.	Repair or replace the short circuit of the harness.
5	**CHECK KEYLESS BUZZER CIRCUIT.** Measure the resistance between the keyless buzzer connector and chassis ground. ***Connector & terminal*** ***(B164) No. 2 — Chassis ground:***	Is the resistance less than 10 Ω?	Go to step **6**.	Repair or replace the harness.

	Step	Check	Yes	No
6	**CHECK BODY INTEGRATED UNIT.** 1) Connect the connector of body integrated unit. 2) Select and perform the «Keyless Buzzer Output» using Subaru Select Monitor. 3) Measure the voltage between body integrated unit connector and chassis ground using an oscilloscope. ***Connector & terminal*** ***(B280) No. 20 (+) — Chassis ground (–):***	Is the frequency 2 kHz or the voltage 9 V or more?	Replace the keyless buzzer.	Replace the body integrated unit. <Ref. to SL-82, Body Integrated Unit.>

10.CHECK DOOR LOCK SWITCH

For operation procedures, refer to the “INSPECTION OF DOOR LOCK SWITCH” of the “Door Lock Control System”. <Ref. to SL-13, CHECK DOOR LOCK SWITCH, INSPECTION, Door Lock Control System.>

11.CHECK IGNITION SWITCH ILLUMINATION

	Step	Check	Yes	No
1	**CHECK IGNITION CIRCUIT.** Check the ignition circuit. <Ref. to SL-33, CHECK IGNITION SWITCH CIRCUIT, INSPECTION, Security System.>	Is the switch circuit normal?	Go to step **2**.	Repair or replace.
2	**CHECK DOOR SWITCH CIRCUIT.** Inspect door switch circuit. <Ref. to SL-22, CHECK DOOR SWITCH, INSPECTION, Keyless Entry System.>	Is the switch circuit normal?	Go to step **3**.	Repair or replace.
3	**CHECK FUSE.** Remove and visually check fuse No. 14 (in the main fuse box).	Is the fuse blown out?	Replace the fuse with a new part.	Go to step **4**.
4	**CHECK HARNESS.** 1) Disconnect the ignition switch illumination connector. NOTE: The ignition switch illumination is integrated into the immobilizer antenna. 2) Measure the voltage between ignition switch illumination connector and chassis ground. ***Connector & terminal*** ***(B415) No. 2 (+) — Chassis ground (–):***	Is the voltage 10 V or more?	Go to step **5**.	Check the harness for open or short circuits between the ignition switch illumination and fuse.
5	**CHECK IGNITION SWITCH ILLUMINATION CIRCUIT.** 1) Disconnect the connector of body integrated unit. 2) Check the harness between body integrated unit and ignition switch illumination. ***Connector & terminal*** ***(B280) No. 25 — (B415) No. 6:***	Is harness normal?	Go to step **6**.	Check the harness for open circuits and shorts between the body integrated unit and ignition switch illumination.
6	**CHECK IGNITION SWITCH ILLUMINATION BULB.** Apply battery voltage between terminals of the bulb. ***Terminals*** ***No. 2 (+) — No. 6 (–):***	Does the bulb illuminate?	Replace the body integrated unit. <Ref. to SL-82, Body Integrated Unit.>	Replace the immobilizer antenna. <Ref. to SL-91, REMOVAL, Immobilizer Antenna.>

5. Keyless Access System

A: WIRING DIAGRAM

For wiring diagrams related to the keyless access system, refer to the following items. (HEV model)

- Keyless access system: <Ref. to WI(HEV)-157, WIRING DIAGRAM, Keyless Access System.>
- Push button start system: <Ref. to WI(HEV)-180, WIRING DIAGRAM, Push Button Start System.>

B: ELECTRICAL SPECIFICATION

Refer to “Control Module I/O Signal” of “KEYLESS ACCESS WITH PUSH BUTTON START SYSTEM (DIAGNOSTICS)” section. <Ref. to KPS(diag)-12, ELECTRICAL SPECIFICATION, Control Module I/O Signal.>

C: INSPECTION

1. KEYLESS ACCESS WITH PUSH BUTTON START SYSTEM

Refer to “Basic Diagnostic Procedure” of “KEYLESS ACCESS WITH PUSH BUTTON START SYSTEM (DIAGNOSTICS)” section. <Ref. to KPS(diag)-2, Basic Diagnostic Procedure.>

6. Push Button Start System

A: WIRING DIAGRAM

For wiring diagrams related to the push button start system (ignition change), refer to the following items. (HEV model)

- Keyless access system: <Ref. to WI(HEV)-157, WIRING DIAGRAM, Keyless Access System.>
- Push button start system: <Ref. to WI(HEV)-180, WIRING DIAGRAM, Push Button Start System.>

B: ELECTRICAL SPECIFICATION

Refer to “Control Module I/O Signal” of “KEYLESS ACCESS WITH PUSH BUTTON START SYSTEM (DIAGNOSTICS)” section. <Ref. to KPS(diag)-12, ELECTRICAL SPECIFICATION, Control Module I/O Signal.>

C: INSPECTION

1. POWER SUPPLY SWITCH FUNCTION INSPECTION

1) Check push button ignition switch function

(1) Check the power supply change control through the operation of push button ignition switch, brake pedal, and shift position.

- CVT model

Shift lever position	Brake pedal operation	Push button ignition switch operation
P	Released	Repeat Ignition OFF → ACC ON → Ignition ON → Ignition OFF
P	Released	Engine running or hybrid system operating → Ignition OFF
P	Depressed	Ignition OFF → Engine or hybrid system started
P	Depressed	ACC ON → Engine or hybrid system started
P	Depressed	Ignition ON → Engine or hybrid system started
P	Depressed	Engine running or hybrid system operating → Ignition OFF
N	Released	Repeat Ignition OFF → ACC ON → Ignition ON → ACC ON
N	Released	Engine running or hybrid system operating → ACC ON
N	Depressed	Ignition OFF → Engine or hybrid system started
N	Depressed	ACC ON → Engine or hybrid system started
N	Depressed	Ignition ON → Engine or hybrid system started
N	Depressed	Engine running or hybrid system operating → ACC ON
Other than P or N	Released	Repeat Ignition OFF → ACC ON → Ignition ON → ACC ON
Other than P or N	Released	Engine running or hybrid system operating → ACC ON
Other than P or N	Depressed	Ignition OFF → Ignition ON
Other than P or N	Depressed	ACC ON → Ignition ON
Other than P or N	Depressed	Engine running or hybrid system operating → ACC ON

(2) Check the changeover functions other than push button ignition switch operation.
With ACC ON or Ignition ON, and with the shift lever in “P” position, leave the vehicle for 1 hour or more, and confirm that the vehicle status changed from ACC ON or Ignition ON to Ignition OFF.

(3) If the inspection result indicates an improper operation, check the push button start system. <Ref. to KPS(diag)-99, POWER SUPPLY SWITCHING SYSTEM, INSPECTION, General Diagnostic Table.>

2) Check power status display
(1) Check the power indicator display of the push button ignition switch.

NOTE:
*1: Key collation is normal, and the stop light switch (AT) is ON.
Indicator display

Push button ignition switch status	Indicator lighting status
Ignition OFF (except for condition *1)	Light OFF
ACC ON (except for condition *1)	Orange light
Ignition ON (except for condition *1)	Orange light
Engine or hybrid system in start standby mode (*1)	Green light
After engine or hybrid system started	Light OFF

(2) If the inspection result indicates an improper operation, check the push button start system. <Ref. to KPS(diag)-99, POWER SUPPLY SWITCHING SYSTEM, INSPECTION, General Diagnostic Table.>

NOTE:
The indicator blinks if any of the following malfunctions are detected.

Detected malfunction	Indicator lighting status
Steering lock stuck	Green blinking
Steering lock CM internal malfunction	Orange blinking
Keyless access CM internal malfunction	Orange blinking
Vehicle speed signal malfunction	Orange blinking

7. Security System

A: WIRING DIAGRAM

Refer to “Security System” in the wiring diagram.
- Gasoline engine model: <Ref. to WI(w/o HEV)-138, WIRING DIAGRAM, Security System.>
- HEV model: <Ref. to WI(HEV)-201, WIRING DIAGRAM, Security System.>

B: ELECTRICAL SPECIFICATION

Refer to “Control Module I/O Signal” of “BODY CONTROL SYSTEM (DIAGNOSTICS)” section. <Ref. to BC(diag)-6, ELECTRICAL SPECIFICATION, Control Module I/O Signal.>

C: INSPECTION

1. BASIC DIAGNOSTIC PROCEDURE

	Step	Check	Yes	No
1	**INITIAL CHECK.** Check the keyless entry system or keyless access system operation.	Does the keyless entry system or keyless access system operate normally?	Go to step **2**.	Check the keyless entry system or keyless access system. • Keyless entry system: <Ref. to SL-18, INSPECTION, Keyless Entry System.> • Keyless access system: <Ref. to KPS(diag)-5, KEYLESS ACCESS WITH PUSH BUTTON START SYSTEM, CAUTION, General Description.>
2	**CHECK SECURITY ON/OFF SETTING.** 1) Remove the key from ignition switch or turn the power OFF, and then close all doors. 2) Check the status of security indicator light. 3) Press the LOCK button of the keyless transmitter or access key. 4) Check the security indicator light blinking patterns.	Is the security indicator light blinking patterns as follows? • Before pressing the LOCK button: Blinks once within 3 seconds • After pressing the LOCK button: When monitoring lag is set to 0 second, flashes twice within 0.5 seconds in 2 second intervals / When monitoring lag is set to 30 seconds, flashes once within 0.4 seconds in 30 seconds.	Go to step **4**.	Go to step **3**.
3	**CHANGE SETTING OF SECURITY SYSTEM.** Change the setting of security system to ON using Subaru Select Monitor. <Ref. to SL-32, SECURITY SYSTEM ON/OFF SETTING, INSPECTION, Security System.>	Is setting change completed correctly?	Go to step **4**.	Replace the body integrated unit. <Ref. to SL-82, Body Integrated Unit.>
4	**CHECK SECURITY SYSTEM OPERATION.** 1) Remove the key from ignition switch or turn the power OFF, and then close all doors. 2) Press the LOCK button on the keyless transmitter or access key, then wait for 30 seconds. 3) Check the security indicator light blinking patterns.	Does the security indicator light blink twice within 0.5 seconds in 2 second intervals?	Go to step **5**.	Check the security indicator light. <Ref. to SL-33, CHECK SECURITY INDICATOR LIGHT CIRCUIT, INSPECTION, Security System.>

	Step	Check	Yes	No
5	**CHECK SECURITY ALARM OPERATION.** 1) Operate the driver's door lock switch to the UNLOCK side. 2) Open any door, trunk lid or rear gate.	Does the security alarm operate when opening any door, trunk lid, or rear gate?	Go to step **6**.	Check the following parts. <Ref. to SL-22, CHECK DOOR SWITCH, INSPECTION, Keyless Entry System.> • Door switches • Trunk lid latch switch • Rear gate latch switch
6	**CHECK SECURITY ALARM OPERATION.** Check the security alarm operation status.	During the operation, does the horn keep sounding and the hazard light blink?	Go to step **7**.	Check the following parts. <Ref. to SL-22, CHECK DOOR SWITCH, INSPECTION, Keyless Entry System.> • Horn: <Ref. to SL-33, CHECK HORN, INSPECTION, Security System.> • Hazard light: <Ref. to SL-33, CHECK HAZARD LIGHT OPERATION, INSPECTION, Security System.>
7	**CHECK SECURITY ALARM CANCEL OPERATION.** Press any button of the transmitter or access key while the security alarm is operating.	Do the horn sound and the blinking of the hazard light stop?	Go to step **8**.	Replace the body integrated unit. <Ref. to SL-82, Body Integrated Unit.>
8	**CHECK IMPACT SENSOR (DEALER OPTION).** Check the sensibility of impact sensor. <Ref. to SL-77, CHECK IMPACT SENSOR, ADJUSTMENT, Impact Sensor.>	Is the sensibility set properly?	Go to step **9**.	Adjust the sensitivity. <Ref. to SL-77, IMPACT SENSITIVITY ADJUSTMENT, ADJUSTMENT, Impact Sensor.>
9	**CHECK SECURITY SYSTEM CONDITION MEMORY.** 1) Remove the key from ignition switch or turn the power OFF, and then close all doors. 2) Open the front hood. 3) Press the LOCK button on the keyless transmitter or access key, then wait for 30 seconds. 4) Disconnect the ground cable from battery. <Ref. to NT-5, BATTERY, NOTE, Note.> NOTE: For the 12 volt engine restart battery of HEV model, disconnect the ground terminal from 12V engine restart battery sensor. 5) Connect the ground cable to battery. <Ref. to NT-5, BATTERY, NOTE, Note.> 6) Check the status of security indicator light.	Does the security indicator light blinks twice within 0.5 seconds at 2 second intervals?	Go to step **10**.	Replace the body integrated unit. <Ref. to SL-82, Body Integrated Unit.>

Step		Check	Yes	No
10	**CHECK SECURITY SYSTEM MANUAL ON/OFF SETTING.** 1) Press the UNLOCK button of the keyless transmitter or access key. 2) Change the setting of security system. <Ref. to SL-32, SECURITY SYSTEM ON/OFF SETTING, INSPECTION, Security System.>	Is setting change completed correctly?	Restore the security system settings to those before the diagnosis and finish the diagnosis.	Check the following parts. • Ignition switch circuit: <Ref. to SL-69, INSPECTION, Ignition Key Lock.> • Door lock switch circuit: <Ref. to SL-13, CHECK DOOR LOCK SWITCH, INSPECTION, Door Lock Control System.>

NOTE:
If the horn sounds when the security is turned on (monitor condition) using the keyless transmitter or access key, check the function setting of the body integrated unit. As a cause, it is possible that the impact sensor present (ON) / not present (OFF) setting is set to ON in the customization function though there is no impact sensor. <Ref. to BC(diag)-15, User Customizing.>

2. CHECK SECURITY SYSTEM CONDITION MEMORY

1) Pull out the key from the ignition switch, or turn the ignition to OFF.
2) Close all the doors, trunk lid or rear gate.
3) Open the front hood.
4) Press the LOCK button of the keyless transmitter or access key.

NOTE:
Wait until the security indicator light blinks twice within 0.5 seconds at 2 second intervals.
If the 30 second monitoring lag has been set, wait for 30 seconds.
5) Disconnect the ground cable from battery. <Ref. to NT-5, BATTERY, NOTE, Note.>

NOTE:
For the 12 volt engine restart battery of HEV model, disconnect the ground terminal from 12V engine restart battery sensor.
6) Connect the ground cable to battery. <Ref. to NT-5, BATTERY, NOTE, Note.>
7) Check that the security indicator light blinks twice within 0.5 seconds at 2 second intervals. When it does not blink, replace the body integrated unit.

3. SECURITY SYSTEM ON/OFF SETTING

NOTE:
It can be set by «Security Alarm Setup» in unit customizing using Subaru Select Monitor.
For detailed procedures, refer to “PC application help for Subaru Select Monitor”.
1) Close all doors, trunk lid or rear gate, and sit down on the driver seat. Press the UNLOCK button of the keyless transmitter or access key.
2) Turn the ignition to ON.
3) Press the central door unlock switch and open the driver’s door simultaneously. (Keep the central door unlock switch pressed down.)
4) When the condition in step 3) continues for 10 seconds, the system switches to a mode reverse to the current mode.

Setting	Horn activation	Meter display
ON → OFF	Twice	[AL_OF]
OFF → ON	Once	[AL_ON]

4. CHECK DOOR SWITCH

For operation procedure, refer to “CHECK DOOR SWITCH” of “Keyless Entry System”. <Ref. to SL-22, CHECK DOOR SWITCH, INSPECTION, Keyless Entry System.>

5. CHECK SECURITY INDICATOR LIGHT CIRCUIT

For operation procedures, refer to “CHECK SECURITY INDICATOR LIGHT CIRCUIT” of “IMMOBILIZER (DIAGNOSTICS)” section. <Ref. to IM(diag)-11, CHECK SECURITY INDICATOR LIGHT CIRCUIT, INSPECTION, Diagnostics Chart for Security Indicator Light.>

6. CHECK HORN

	Step	Check	Yes	No
1	**CHECK HORN OPERATION.** Check the horn sounds when the horn switch is pushed.	Does the horn sound?	Go to step **2**.	Check the horn circuit.
2	**CHECK BODY INTEGRATED UNIT.** Select and perform the «Horn Output» using Subaru Select Monitor. NOTE: For detailed procedures, refer to “PC application help for Subaru Select Monitor”.	Does the horn sound?	Horn circuit is OK.	Go to step **3**.
3	**CHECK HORN RELAY CIRCUIT.** 1) Turn the ignition switch to OFF or turn the power to OFF. 2) Disconnect the connector of body integrated unit. 3) Remove the horn relay. 4) Check the harness between body integrated unit and horn relay. ***Connector & terminal*** ***(B280) No. 24 — Horn relay No. 4:***	Is harness normal?	Check body integrated unit. <Ref. to BC(diag)-2, Basic Diagnostic Procedure.>	Repair or replace the harness.

7. CHECK HAZARD LIGHT OPERATION

For operation procedure, refer to “CHECK HAZARD LIGHT OPERATION” of “Keyless Entry System”. <Ref. to SL-24, CHECK HAZARD LIGHT OPERATION, INSPECTION, Keyless Entry System.>

8. CHECK IGNITION SWITCH CIRCUIT

	Step	Check	Yes	No
1	**CHECK CURRENT DATA.** Display the data of «BATT voltage» and «IG power supply voltage» using the Subaru Select Monitor. NOTE: For detailed procedures, refer to “PC application help for Subaru Select Monitor”.	Does the «IG power supply voltage» indicate 0 V when the ignition is OFF, and fall within a range of ±1 V from the «BATT voltage» when the ignition is ON?	The ignition switch input circuit is OK.	Go to step **2**.
2	**CHECK IGNITION SWITCH CIRCUIT.** 1) Turn the ignition switch to OFF or turn the power to OFF. 2) Disconnect the connector of body integrated unit. 3) Turn the ignition switch to ON. 4) Measure the voltage between the body integrated unit connector and chassis ground. ***Connector & terminal*** ***(B281) No. 3 (+) — Chassis ground (–):***	Is the voltage 10 V or more?	Check body integrated unit. <Ref. to BC(diag)-2, Basic Diagnostic Procedure.>	Check the harness for open or short circuit between body integrated unit and fuse.

8. Front Inner Remote

A: REMOVAL

1) Remove the trim panel - front door. <Ref. to EI-67, FRONT DOOR, REMOVAL, Door Trim.>
2) Remove the screw, and remove the remote assembly - door.

CAUTION:
The remote assembly - door is tightened with the plate. Be careful not to drop or damage the part.

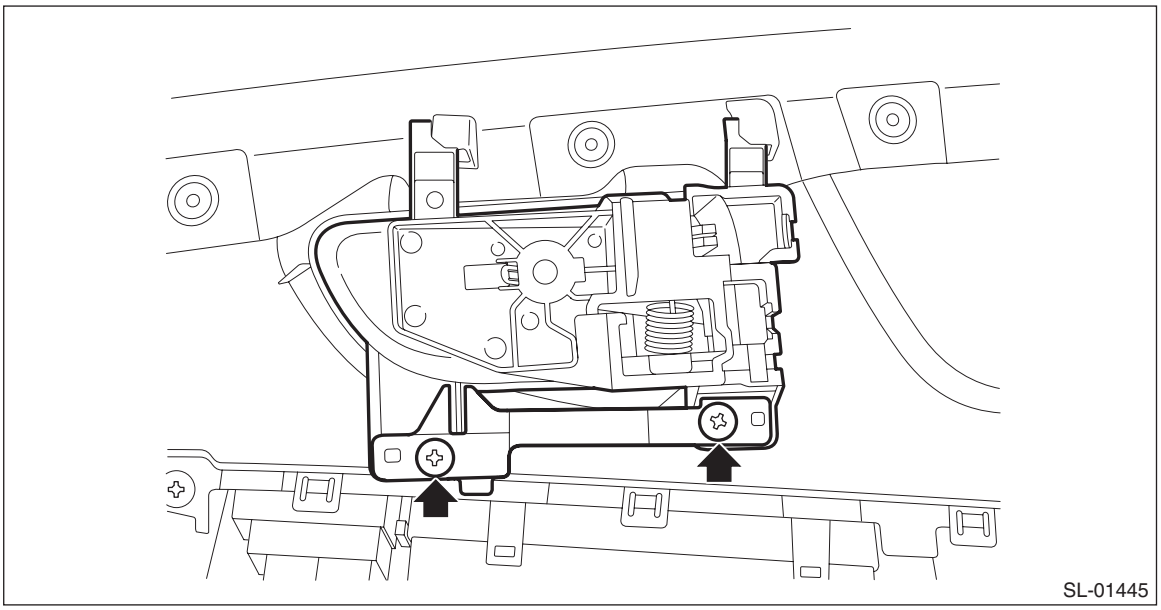

B: INSTALLATION

1) Before installation, check the following items.
- Cable is free from deformation such as fray.
- Grease is applied sufficiently to cable joints.

If grease is insufficient, add it as necessary before assembling the cable.
2) Install each part in the reverse order of removal.

CAUTION:
Securely install the plate.

C: INSPECTION

Check if the remote handle operates normally.
- If the lever is faulty, replace the remote handle.
- If the cable is deformed, replace the latch & actuator assembly - front.

9. Front Outer Handle

A: REMOVAL

1) Raise the glass assembly - front door to the top position.
2) Remove the trim panel - front door. <Ref. to EI-67, FRONT DOOR, REMOVAL, Door Trim.>
3) Remove the sealing cover - front door.

CAUTION:
- **Carefully remove the butyl tape. Excessive force will easily break the sealing cover - front door.**
- **If the sealing cover - front door gets broken, replace it with a new part.**
  (1) Remove the screw to remove the bracket - door trim front.
  (2) Disconnect connectors.
  (3) Carefully remove the butyl tape to remove the sealing cover - front door.

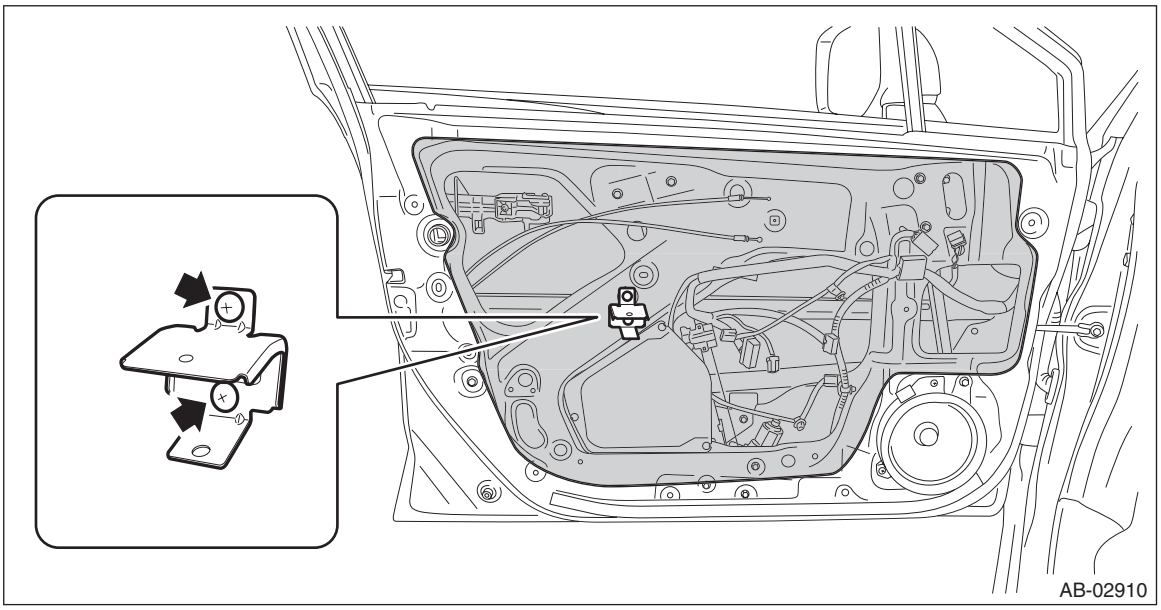

4) Remove the holder of the frame assembly - front door outer.

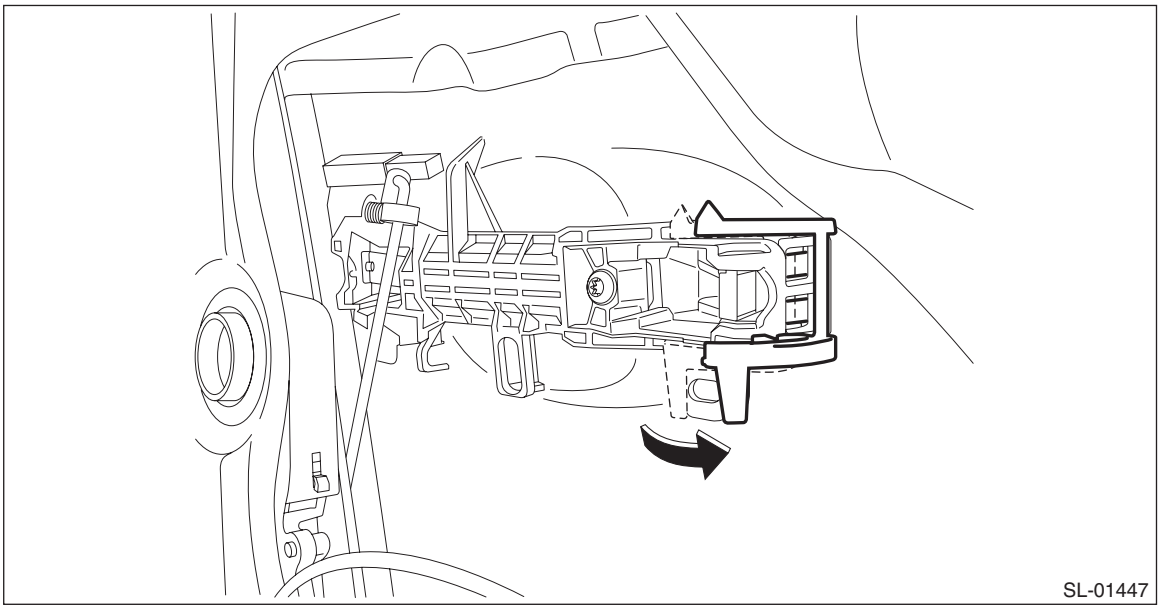

NOTE:
For model with keyless access, disconnect the harness clip and exterior antenna (touch sensor) connector.

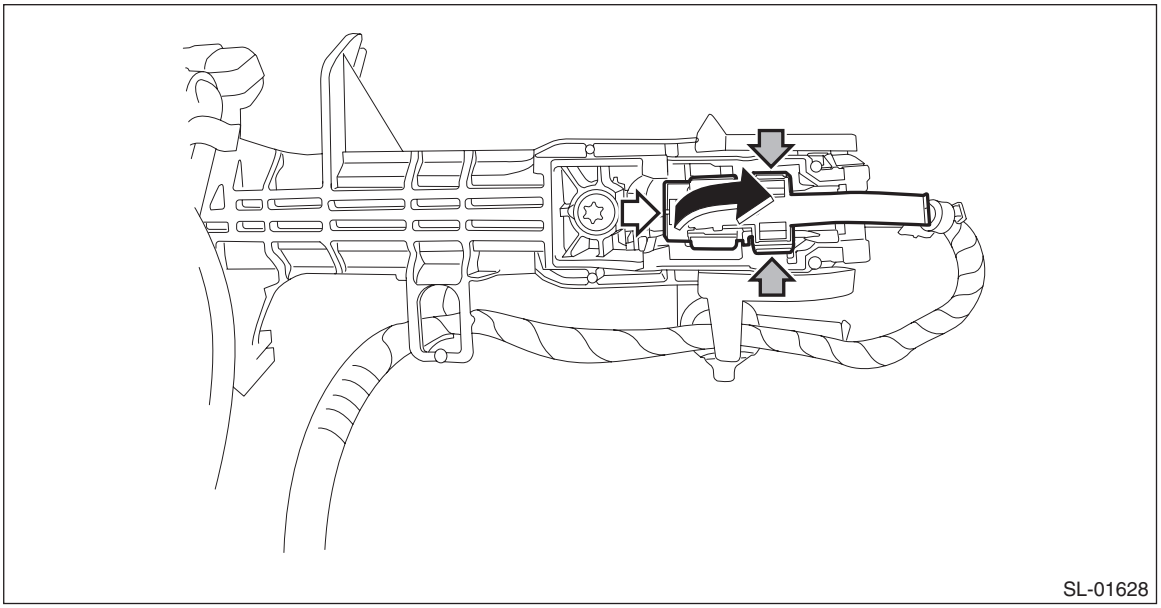
SL-01628

5) Remove the cover - handle front outer.

Preparation tool:
TORX® T30

(1) Remove the plug at the rear end of the panel assembly - front door.
(2) Loosen the TORX® bolt and remove the cover - handle front outer.

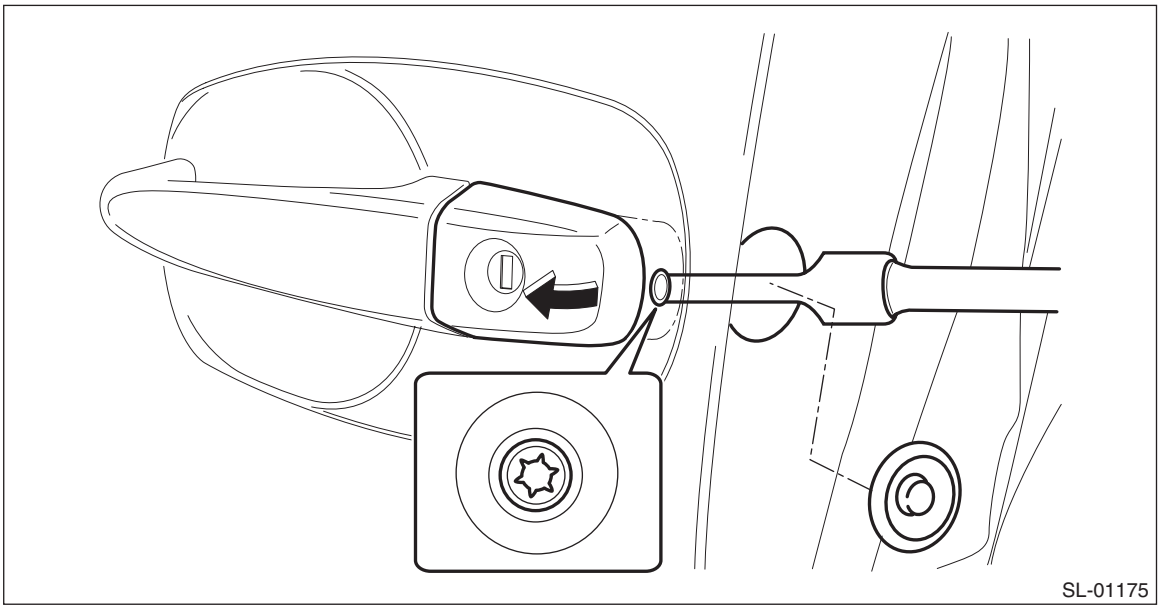
SL-01175

6) Remove the handle - door outer by moving it rearward.

CAUTION:
Do not apply excessive force to remove the handle - door outer from the panel assembly - front door. The panel assembly - front door may be deformed.

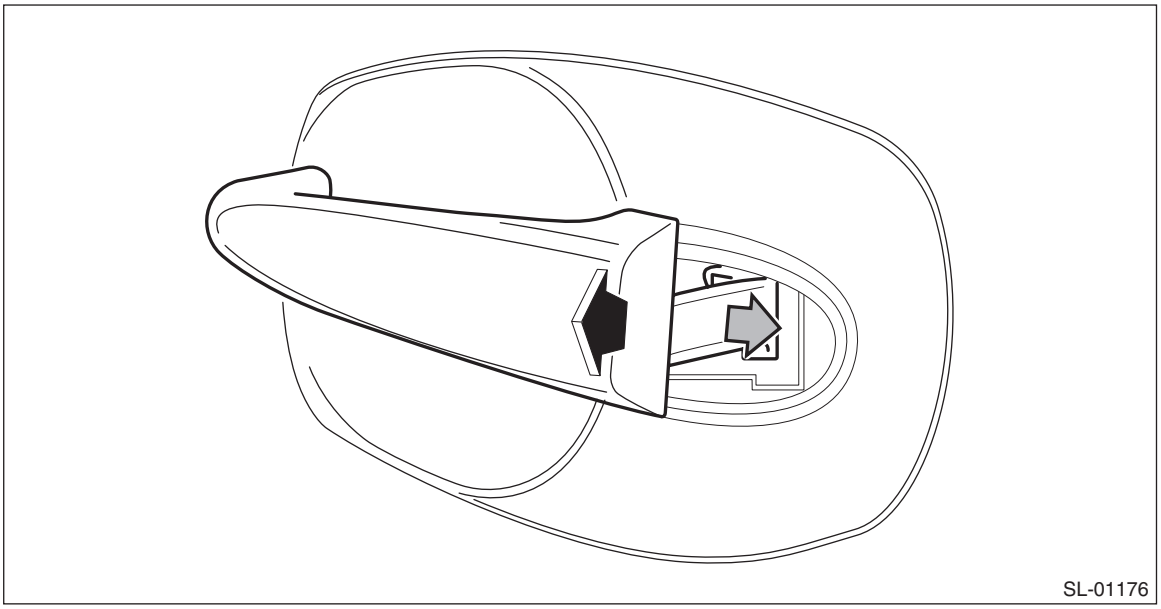

7) Remove the frame assembly - front door outer.

Preparation tool:
TORX® T30

(1) Remove the spacer - door handle outer.

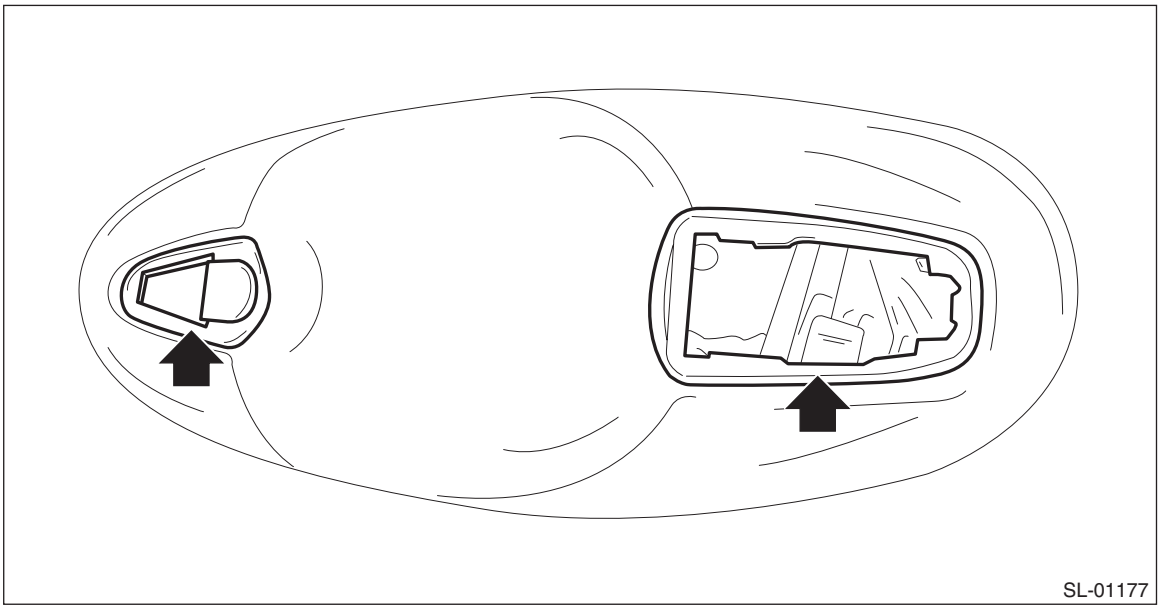

(2) Remove the rod from the rod clamp of the frame assembly - front door outer.

(3) Loosen the TORX® bolt and remove the frame assembly - front door outer from inside the panel assembly - front door.

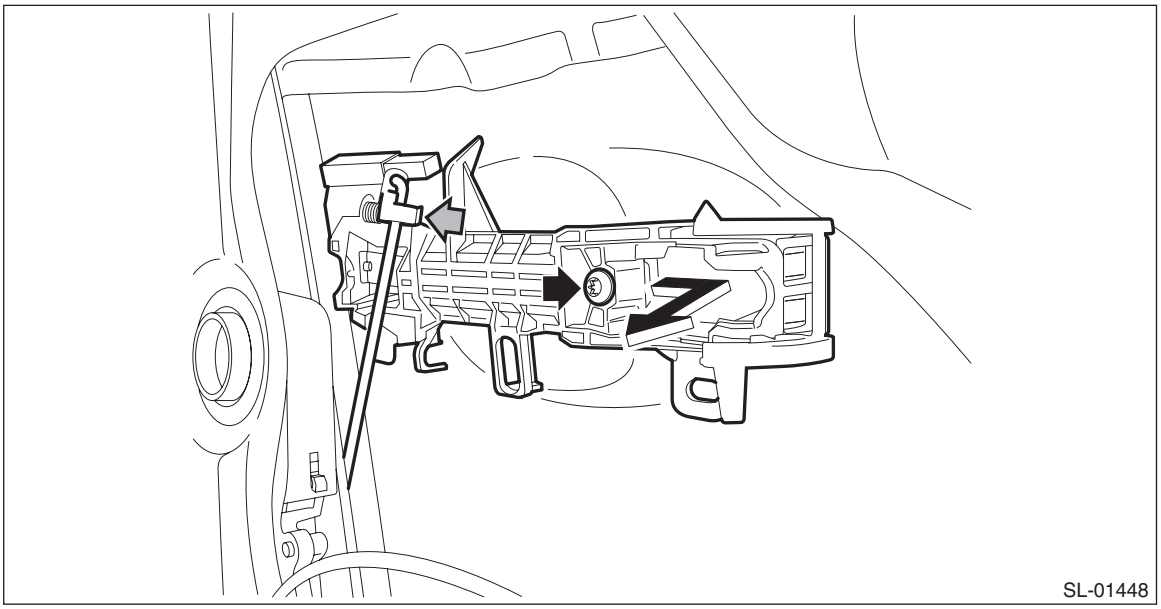

B: INSTALLATION

1) Before installation, check the following items.
- Rod is free from deformation.
- Grease is applied sufficiently to rod joints.

If grease is insufficient, add it as necessary before assembling the rod.
2) Install each part in the reverse order of removal.

CAUTION:
When installing the cover - handle front outer on driver's side, make sure that the key cylinder shaft is correctly inserted into the latch & actuator assembly - front.

Tightening torque:
Refer to "COMPONENT" of "General Description". <Ref. to SL-2, DOOR LOCK ASSEMBLY, COMPONENT, General Description.>

C: INSPECTION

Check if the outer handle operates normally.
- If the lever is faulty, replace the handle - door outer.
- If the rod is deformed, replace the latch & actuator assembly - front.

10.Front Door Latch and Door Lock Actuator Assembly

A: REMOVAL

1) Raise the glass assembly - front door to the top position.
2) Remove the trim panel - front door. <Ref. to EI-67, FRONT DOOR, REMOVAL, Door Trim.>
3) Remove the sealing cover - front door.

CAUTION:
- **Carefully remove the butyl tape. Excessive force will easily break the sealing cover - front door.**
- **If the sealing cover - front door gets broken, replace it with a new part.**
  (1) Remove the screw to remove the bracket - door trim front.
  (2) Disconnect connectors.
  (3) Carefully remove the butyl tape to remove the sealing cover - front door.

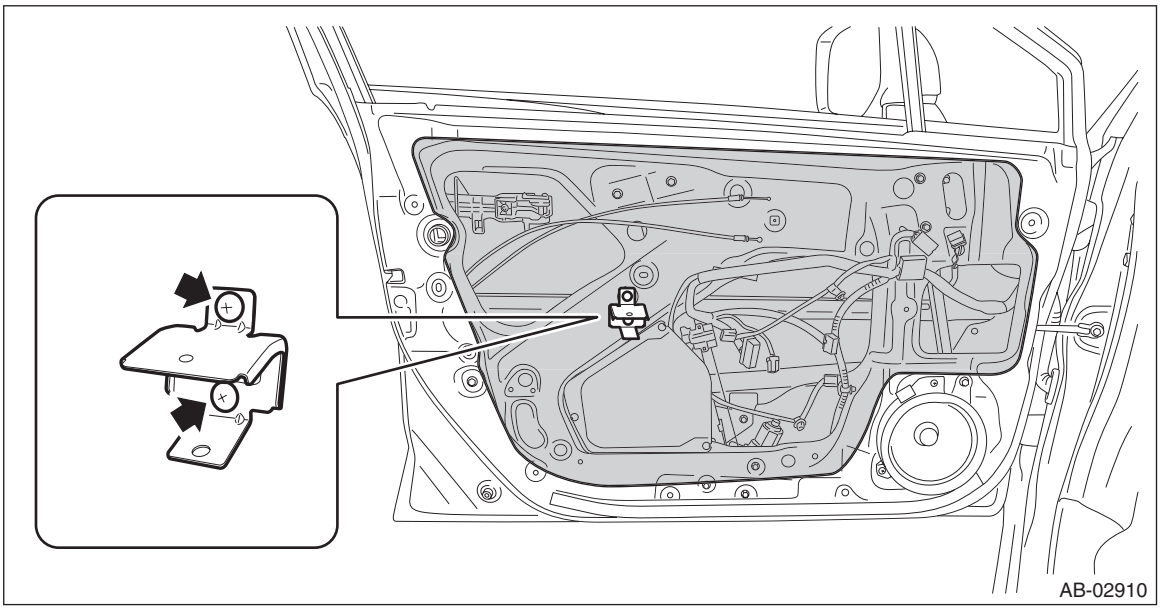

4) Remove the rod from the rod clamp of the frame assembly - front door outer.

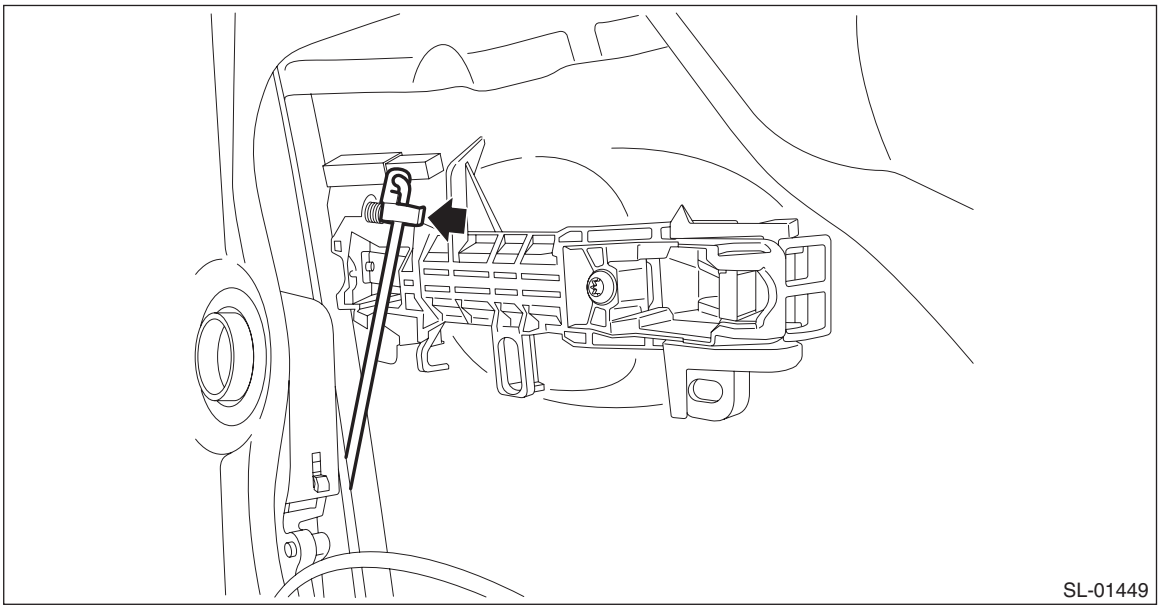

5) Remove the cover - handle front outer. <Ref. to SL-73, FRONT DOOR, REPLACEMENT, Key Lock Cylinders.>

6) Remove the sash COMPL - lower.
(1) Remove the lower side of the running channel - front door.
(2) Remove the bolts, and remove the sash COMPL - lower.

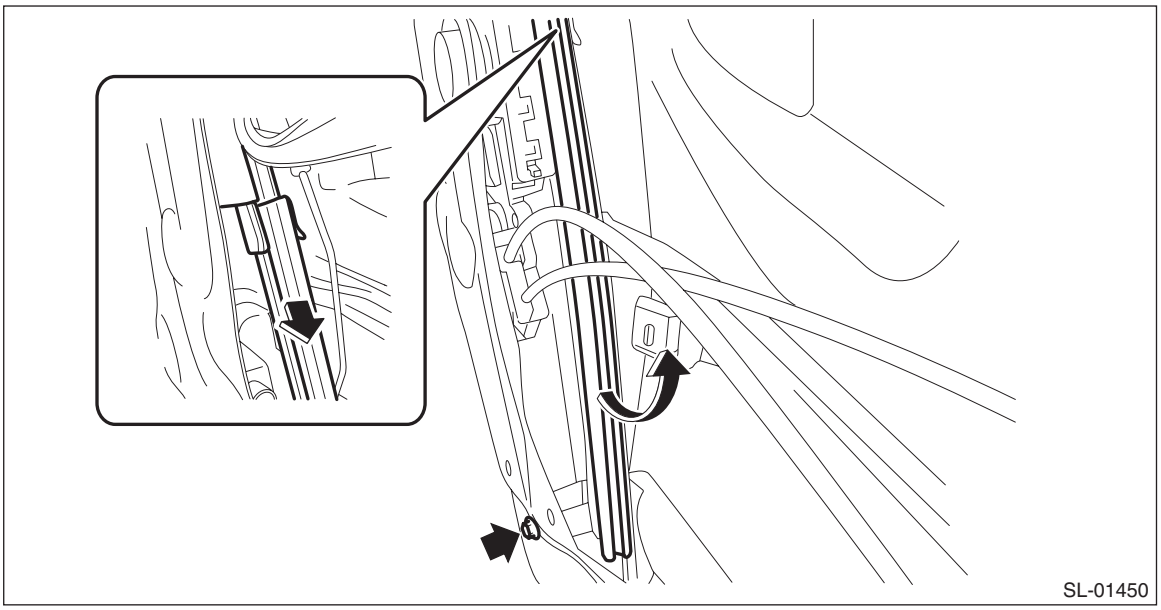

7) Remove the screws to remove the latch & actuator assembly - front.

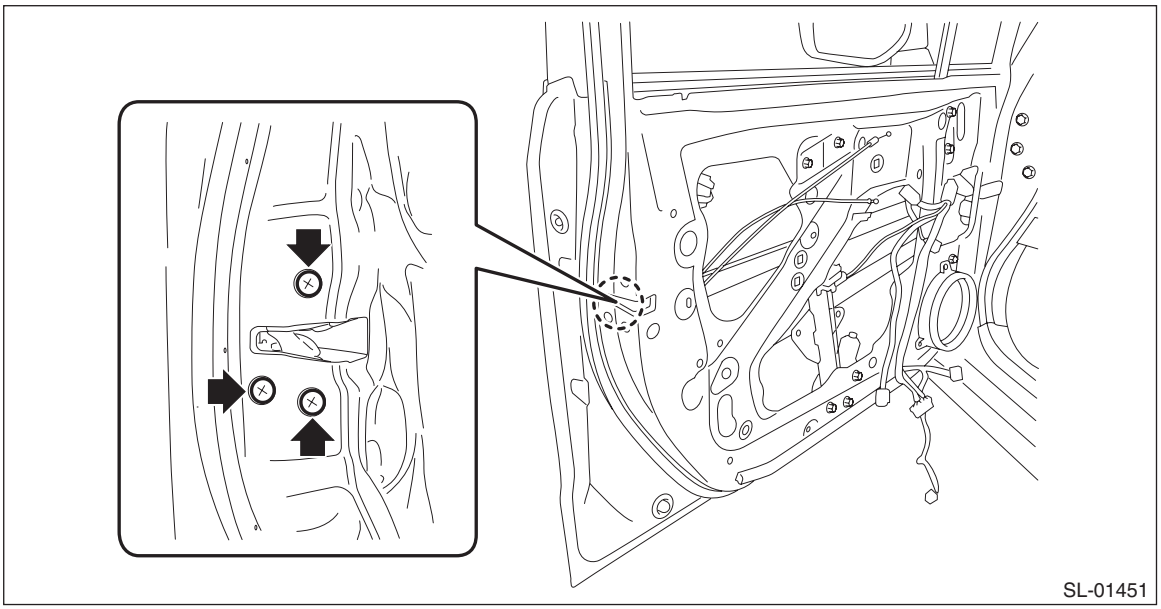

B: INSTALLATION

1) Before installation, check the following items.
- Cable and rod are free from deformation.
- Grease is applied sufficiently to rod joints.

If grease is insufficient, add it as necessary before assembling the rod.
2) Install each part in the reverse order of removal.

Tightening torque:
Door lock assembly: <Ref. to SL-2, DOOR LOCK ASSEMBLY, COMPONENT, General Description.>
Sash COMPL - lower: 7.5 N·m (0.76 kgf-m, 5.5 ft-lb)

C: INSPECTION

1. LATCH

Check if the latch operates normally.
If the cable or rod is faulty, replace the latch & actuator assembly - front.

2. LOCK ACTUATOR

UNIT INSPECTION

Preparation tool:
Circuit tester

1) Check door lock operation
Check the door lock operation when battery voltage is applied between the terminals of actuator.

Terminal No.	Inspection conditions	Specification	Connection diagram
4 (+) — 1 (–)	Apply battery voltage.	LOCK	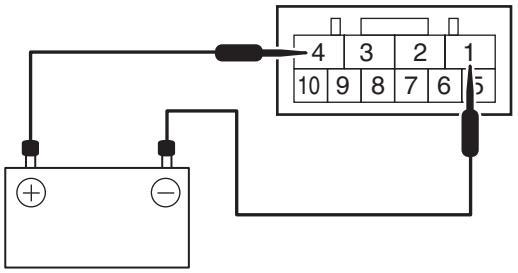 SL-01474
1 (+) — 4 (–)		UNLOCK	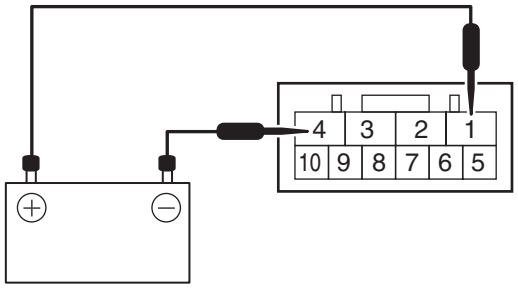 SL-01473

2) Check position switch
Check the resistance between actuator terminals.

Terminal No.	Inspection conditions	Standard	Connection diagram
8 — 7	LOCK	1 MΩ or more	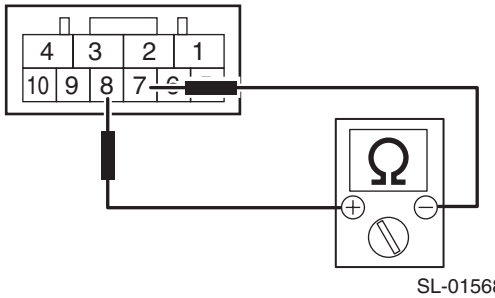 SL-01568
	UNLOCK	Less than 1 Ω	

3) Replace the latch & actuator assembly - front if it is found defective.

11.Rear Inner Remote

A: REMOVAL

1) Remove the trim panel - rear door. <Ref. to EI-68, REAR DOOR, REMOVAL, Door Trim.>
2) Remove the screw, and remove the remote assembly - door.

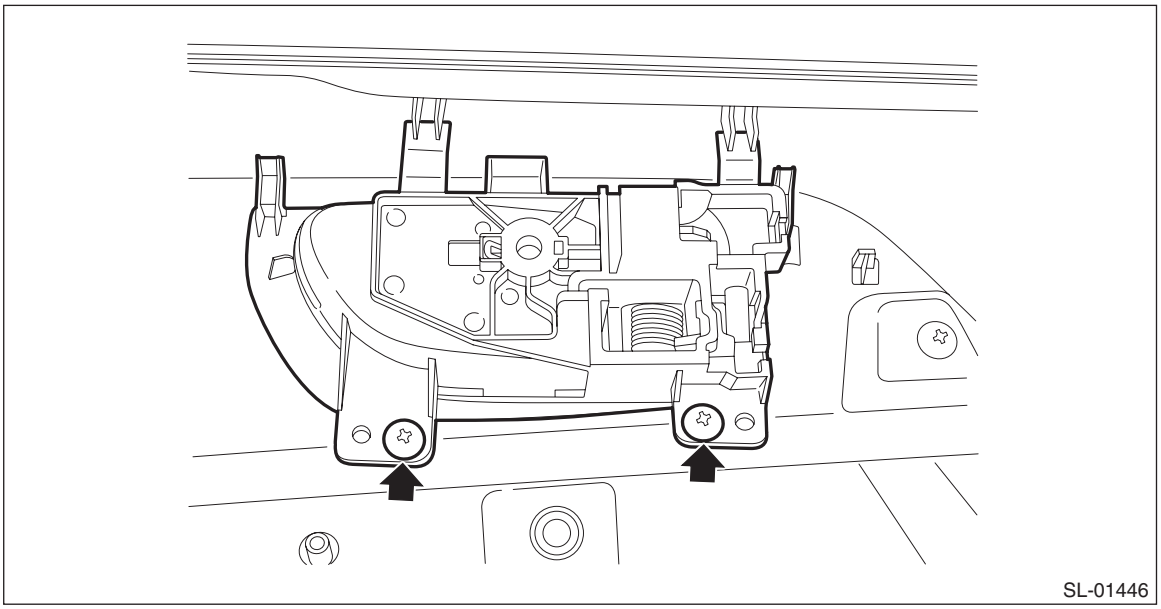

B: INSTALLATION

1) Before installation, check the following items.
- Cable is free from deformation such as fray.
- Grease is applied sufficiently to cable joints.

If grease is insufficient, add it as necessary before assembling the cable.
2) Install each part in the reverse order of removal.

C: INSPECTION

Check if the remote handle operates normally.
- If the lever is faulty, replace the remote handle.
- If the cable is deformed, replace the latch & actuator assembly - rear.

12.Rear Outer Handle

A: REMOVAL

1) Raise the glass assembly - rear door to the top position.
2) Remove the trim panel - rear door. <Ref. to EI-68, REAR DOOR, REMOVAL, Door Trim.>
3) Remove the sealing cover - rear door.

CAUTION:
- **Carefully remove the butyl tape. Excessive force will easily break the sealing cover - rear door.**
- **If the sealing cover - rear door gets broken, replace it with a new part.**

(1) Remove the screw to remove the bracket - door trim rear.
(2) Disconnect connectors.
(3) Carefully remove the butyl tape to remove the sealing cover - rear door.

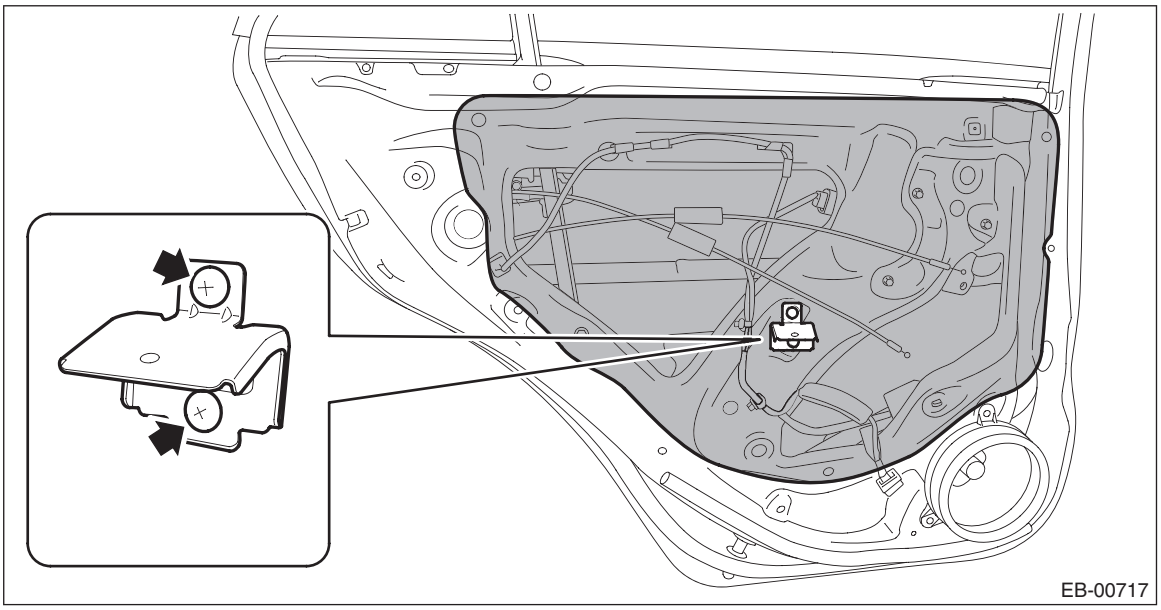

4) Remove the screws and move downward the latch & actuator assembly - rear.

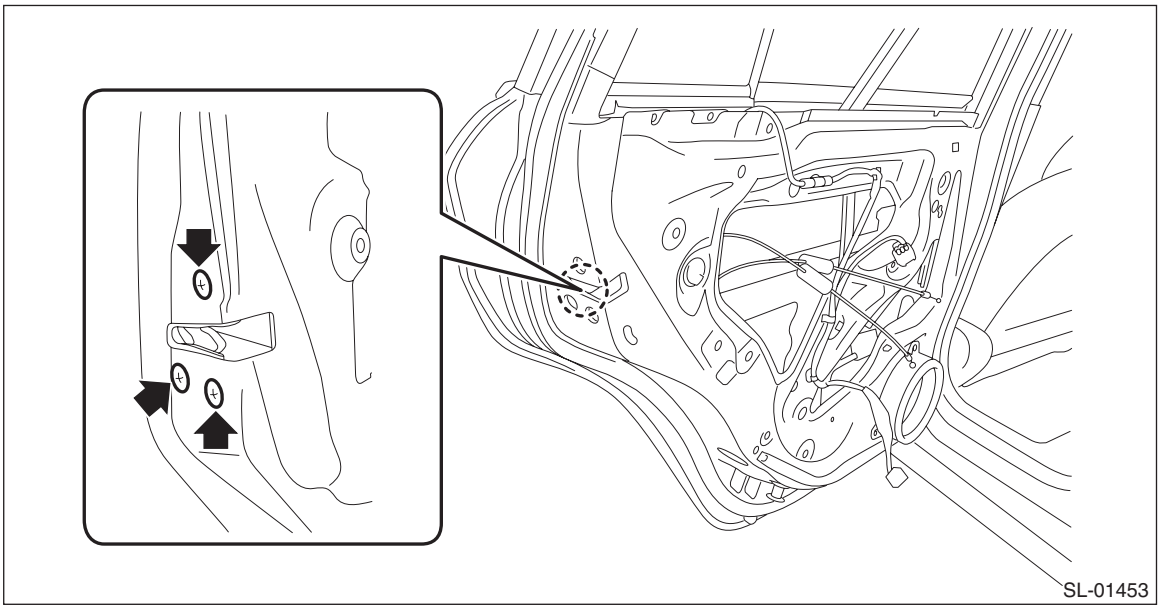

5) Remove the holder of the frame assembly - rear door outer.

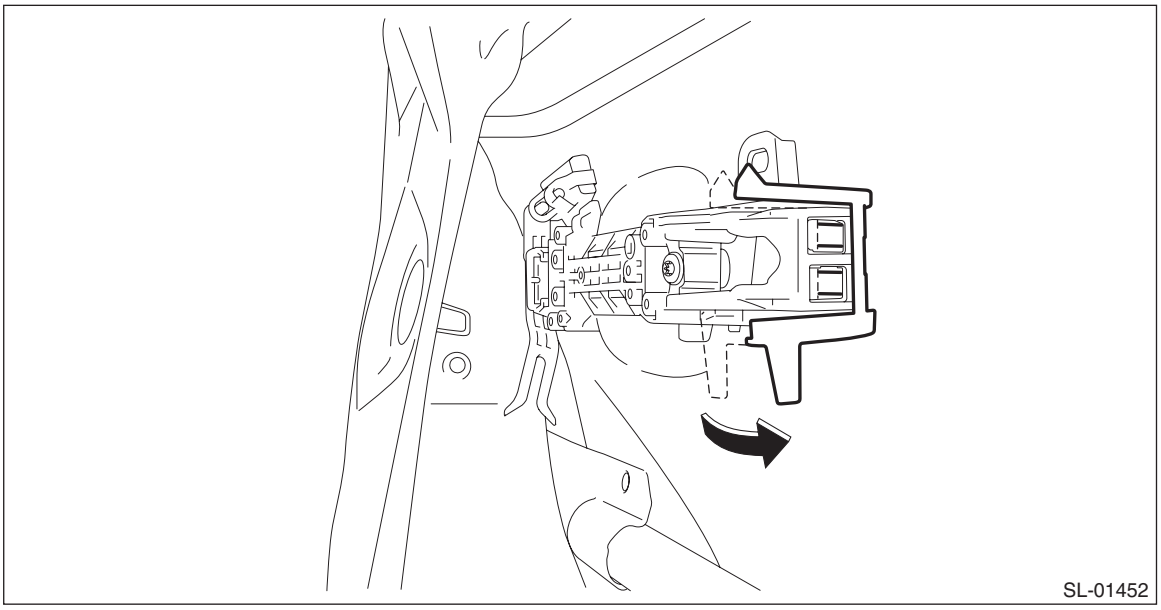

6) Remove the cover - handle rear outer.

PREPARATION TOOL:
TORX® T30

(1) Loosen the TORX® bolt.
(2) Release the claws, and then remove the cover - handle rear outer.

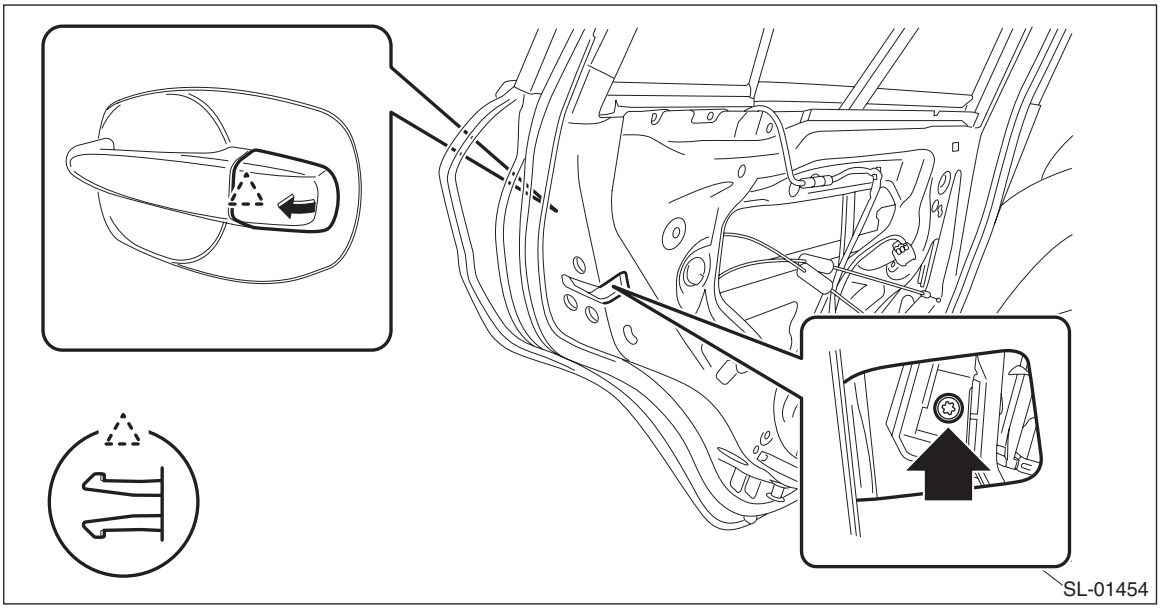

7) Remove the handle - door outer by moving it rearward.

CAUTION:
Do not apply excessive force to remove the handle - door outer from the panel assembly - rear door. The panel assembly - rear door may be deformed.

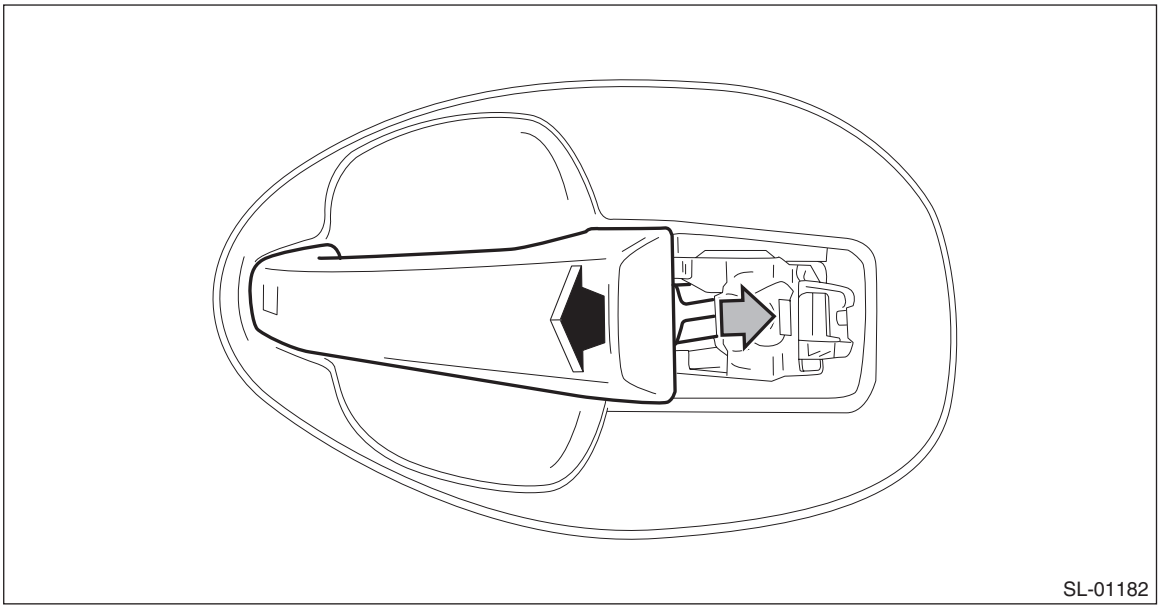

8) Remove the frame assembly - rear door outer.

PREPARATION TOOL:
TORX® T30

(1) Remove the spacer - door handle outer.

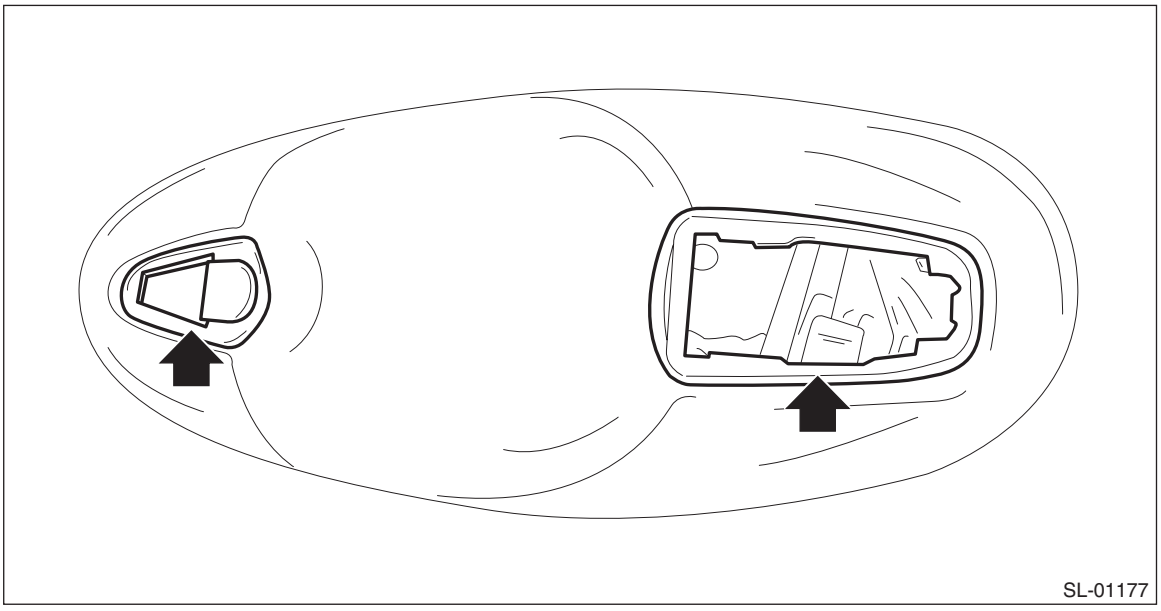

(2) Loosen the TORX® bolt and remove the frame assembly - rear door outer from inside the panel assembly - rear door.

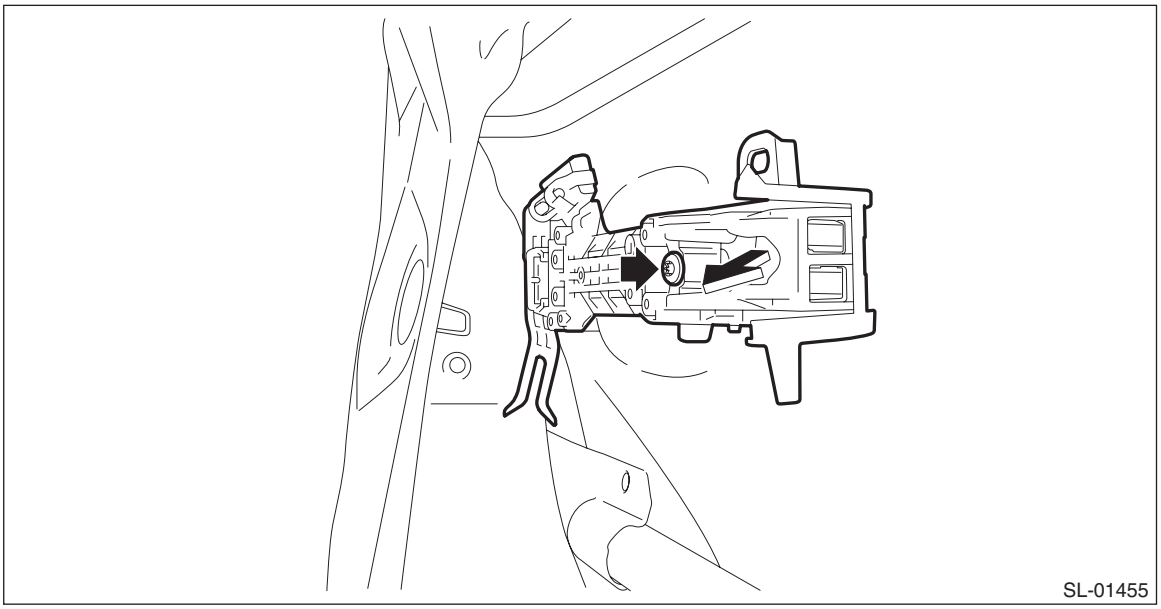

B: INSTALLATION

1) Before installation, check the following items.
- Lever is free from deformation.
- Grease is applied sufficiently to lever joints.

If grease is insufficient, add it as necessary before assembling.
2) Install each part in the reverse order of removal.

Tightening torque:
Refer to "COMPONENT" of "General Description". <Ref. to SL-2, DOOR LOCK ASSEMBLY, COMPONENT, General Description.>

C: INSPECTION

Check if the outer handle operates normally.
If the lever is faulty, replace the handle - door outer.

13.Rear Door Latch and Door Lock Actuator Assembly

A: REMOVAL

1) Disconnect the ground cable from battery. <Ref. to NT-5, BATTERY, NOTE, Note.>

NOTE:
For the 12 volt engine restart battery of HEV model, disconnect the ground terminal from 12V engine restart battery sensor.

2) Remove the trim panel - rear door. <Ref. to EI-68, REAR DOOR, REMOVAL, Door Trim.>
3) Remove the sealing cover - rear door.

CAUTION:
- **Carefully remove the butyl tape. Excessive force will easily break the sealing cover - rear door.**
- **If the sealing cover - rear door gets broken, replace it with a new part.**

(1) Remove the screw to remove the bracket - door trim rear.
(2) Disconnect connectors.
(3) Carefully remove the butyl tape to remove the sealing cover - rear door.

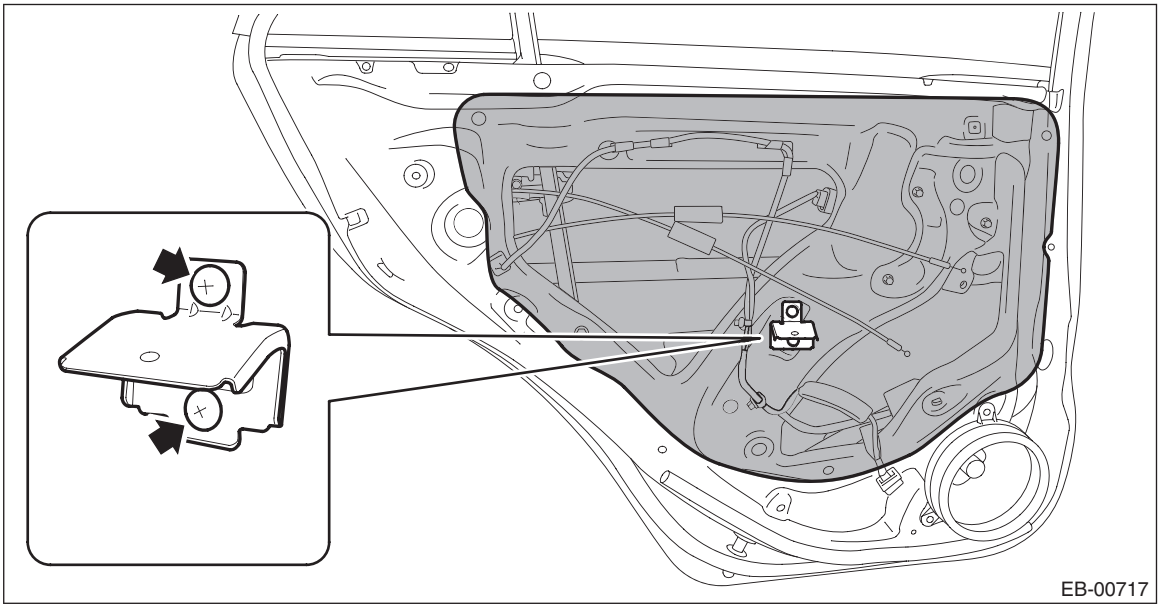

4) Remove the glass assembly - rear door. <Ref. to GW-32, REMOVAL, Rear Door Glass.>
5) Remove the screws to remove the latch & actuator assembly - rear.

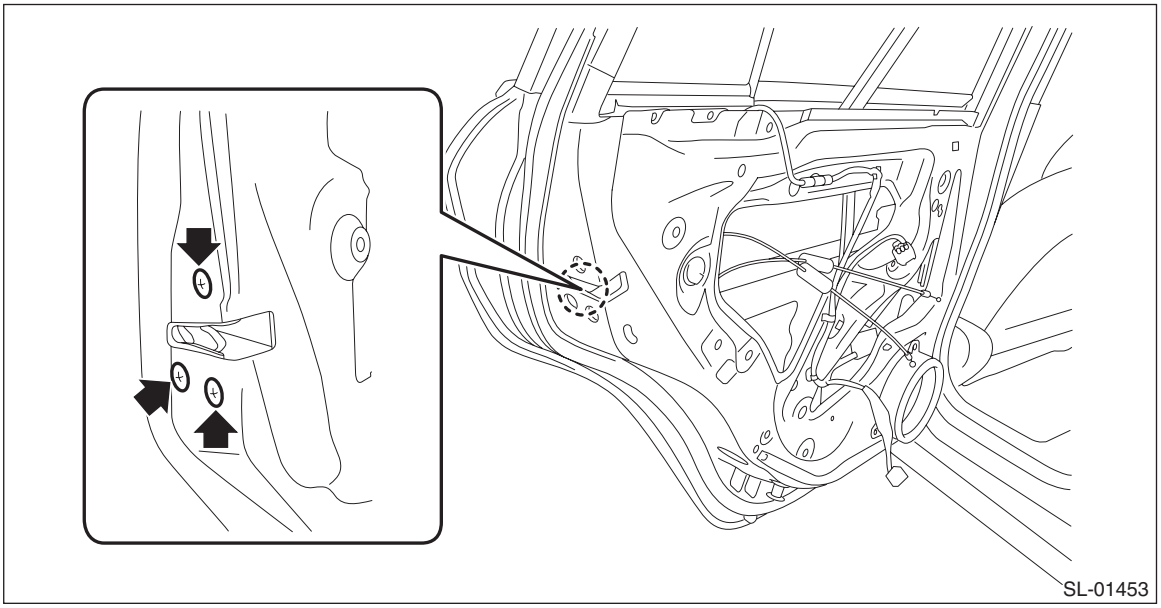

B: INSTALLATION

1) Before installation, check the following items.
- Cable is free from deformation.
- Grease is applied sufficiently to lever joints.

If grease is insufficient, add it as necessary before assembling.
2) Install each part in the reverse order of removal.

Tightening torque:
Refer to "COMPONENT" of "General Description". <Ref. to SL-2, DOOR LOCK ASSEMBLY, COMPONENT, General Description.>

NOTE:
Make sure the child safety lock works correctly after installation.

C: INSPECTION

1. LATCH

Check if the latch operates normally.
If the cable is faulty, replace the latch & actuator assembly - rear.

2. ACTUATOR

UNIT INSPECTION

1) Check door lock operation
Check the door lock operation when battery voltage is applied between the terminals of actuator.

Terminal No.	Inspection conditions	Specification	Connection diagram
4 (+) — 1 (–)	Apply battery voltage.	LOCK	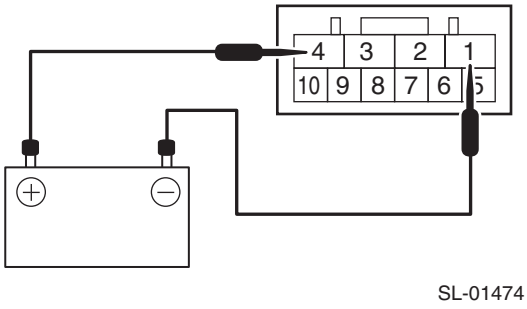 SL-01474
1 (+) — 4 (–)		UNLOCK	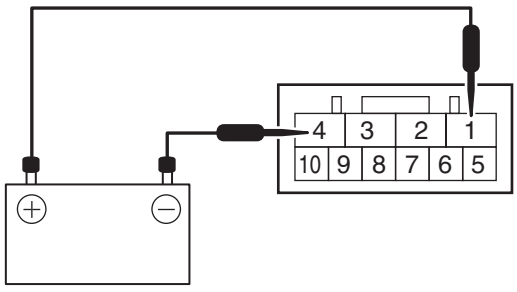 SL-01473

2) If it does not operate properly as a result of inspection, replace the latch & actuator assembly - rear.

14.Rear Gate Opener Button

A: REMOVAL

NOTE:
- The button - opener rear gate is integrated with the rear lock button. (Model with keyless access)
- Before disconnecting the battery ground cable, open the panel - rear gate.

1) Disconnect the ground cable from battery. <Ref. to NT-5, BATTERY, NOTE, Note.>

NOTE:
For the 12 volt engine restart battery of HEV model, disconnect the ground terminal from 12V engine restart battery sensor.

2) Remove the garnish assembly - rear gate. <Ref. to EI-162, REMOVAL, Rear Gate Garnish.>

3) Release the locks at both ends of the button - opener rear gate by pushing them with a flat tip screwdriver, and remove the button - opener rear gate.

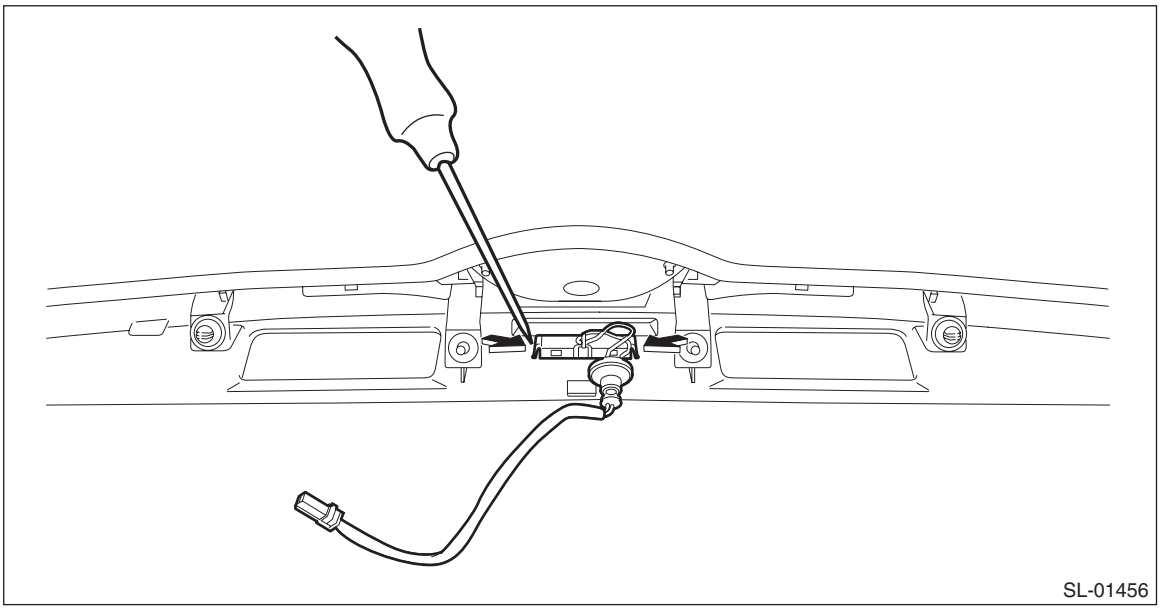
SL-01456

4) Remove the screws, and remove the rear lock button, and remove the integrated harness. (Model with keyless access)

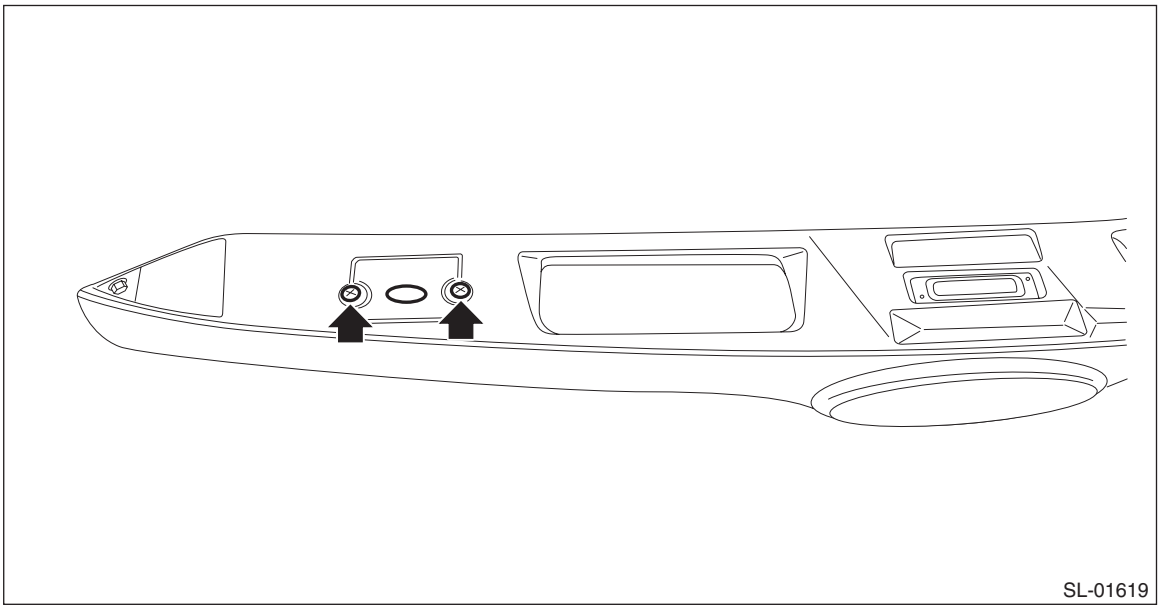
SL-01619

B: INSTALLATION

CAUTION:
Make sure that the harness grommet is securely installed.
If not properly installed, this may cause leaks.
Install each part in the reverse order of removal.

C: INSPECTION

UNIT INSPECTION

Preparation tool:
Circuit tester

1) Check the resistance between switch terminals.

Terminal No.	Inspection conditions	Standard	Connection diagram
1 — 2	OPEN	Less than 5 Ω	• Models without keyless access 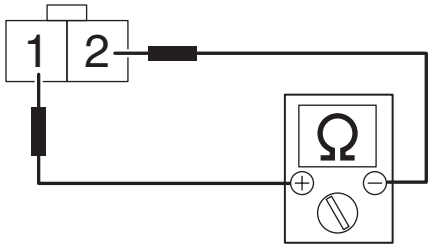 SL-01476
	CLOSE	1 MΩ or more	• Models with keyless access 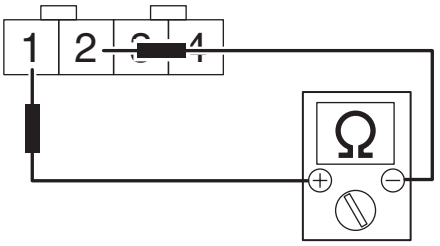 SL-01578

2) If the inspection result is not within the standard, replace the button - opener rear gate.

15.Rear Gate Latch and Actuator Assembly

A: REMOVAL

1) Disconnect the ground cable from battery. <Ref. to NT-5, BATTERY, NOTE, Note.>

NOTE:
For the 12 volt engine restart battery of HEV model, disconnect the ground terminal from 12V engine restart battery sensor.

2) Remove the trim panel - rear gate. <Ref. to EI-157, REMOVAL, Rear Gate Trim.>
3) Remove the latch and actuator - rear gate.
   (1) Disconnect the connector.
   (2) Remove the bolts, and remove the latch and actuator - rear gate.

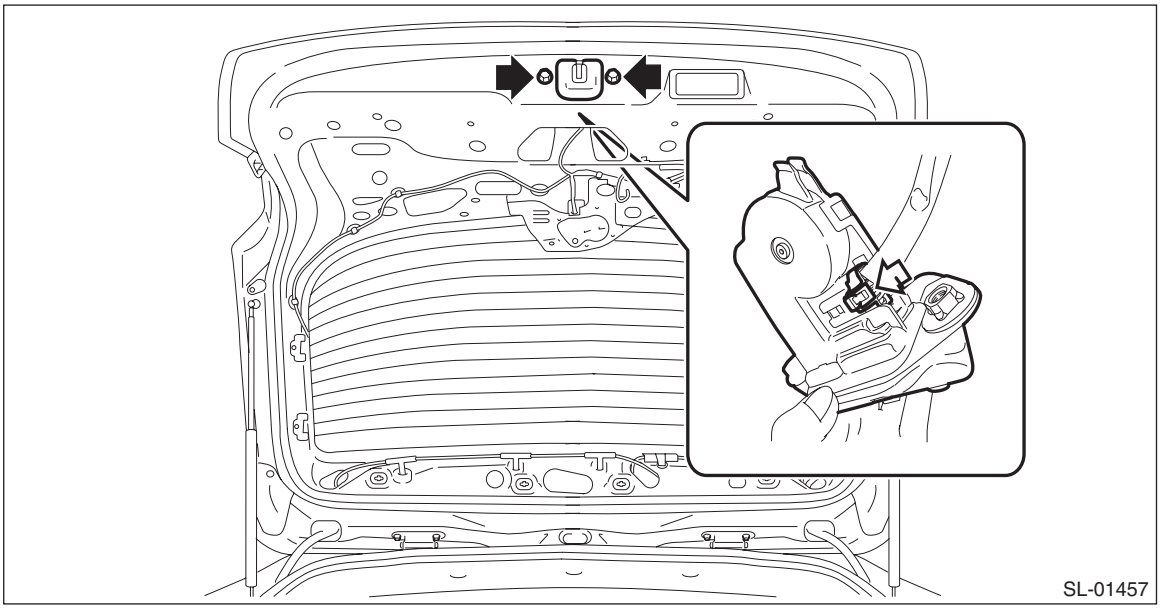

B: INSTALLATION

Install each part in the reverse order of removal.

Tightening torque:
Refer to "COMPONENT" of "General Description". <Ref. to SL-3, REAR GATE LOCK AND TRUNK LID LOCK, COMPONENT, General Description.>

C: INSPECTION

1. LATCH

Check if the latch operates normally.
If latch deformation, abnormal wear, or unsmooth lock operation is observed, replace the latch and actuator - rear gate.

2. ACTUATOR

UNIT INSPECTION

PREPARATION TOOL:
Circuit tester

1) Check door lock operation
Check the door lock operation when battery voltage is applied between the terminals of actuator.

Terminal No.	Inspection conditions	Specification	Connection diagram
1 (+) — 2 (–)	Connect battery to the terminals	OPEN	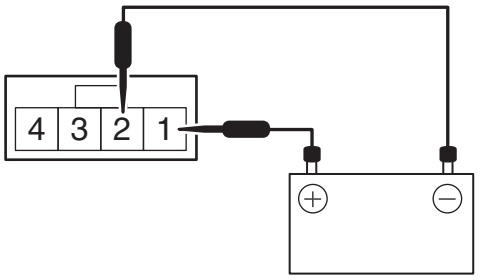 SL-01477

2) Check switch
Check the resistance between actuator terminals.

Terminal No.	Inspection conditions	Specification	Connection diagram
3 — 4	OPEN	Less than 1.5 Ω	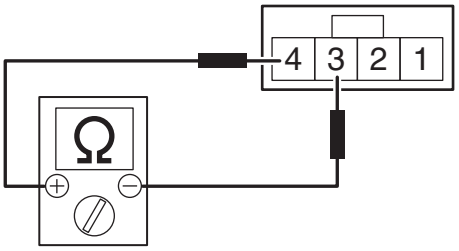 SL-01478
	CLOSE	1 MΩ or more	

3) If it does not operate properly as a result of inspection, replace the latch and actuator - rear gate.

16.Trunk Lid Latch and Actuator Assembly

A: REMOVAL

1) Disconnect the ground cable from battery. <Ref. to NT-5, BATTERY, NOTE, Note.>

NOTE:
For the 12 volt engine restart battery of HEV model, disconnect the ground terminal from 12V engine restart battery sensor.

2) Remove the lock assembly - trunk lid.
   (1) Disconnect the connector.
   (2) Release the claws, and open the lock cover.
   (3) Remove the bolts, and disconnect the release cable, and then remove the lock assembly - trunk lid.

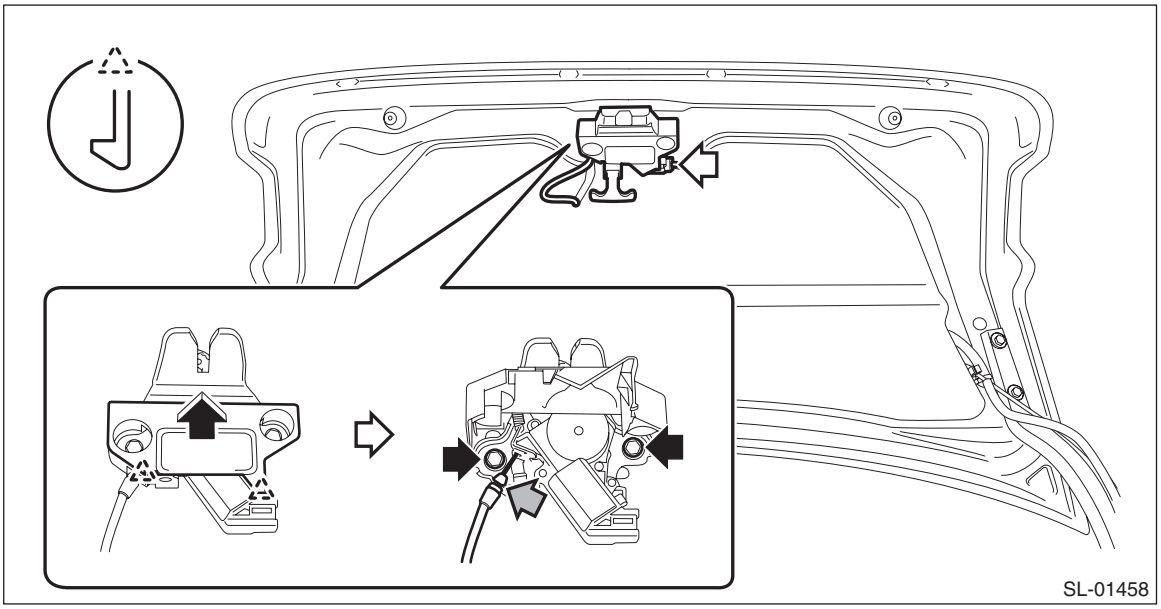

NOTE:
When disconnecting the release cable, refer to “TRUNK LID OPENER” of “Remote Openers”. <Ref. to SL-59, TRUNK LID OPENER, REMOVAL, Remote Openers.>

B: INSTALLATION

1) Before installation, check the following items.
- Is the cable deformed?
- Grease is applied sufficiently to cable joints.

If grease is insufficient, add it as necessary before assembling the cable.

2) Install each part in the reverse order of removal.

Tightening torque:
Refer to “COMPONENT” of “General Description”. <Ref. to SL-3, REAR GATE LOCK AND TRUNK LID LOCK, COMPONENT, General Description.>

C: INSPECTION

1. LATCH

Check if the latch operates normally.
If latch deformation, abnormal wear, or unsmooth lock operation is observed, replace the lock assembly - trunk lid.

2. ACTUATOR

UNIT INSPECTION

PREPARATION TOOL:
Circuit tester

1) Check door lock operation
Check the door lock operation when battery voltage is applied between the terminals of actuator.

Terminal No.	Inspection conditions	Specification	Connection diagram
1 (+) — 2 (–)	Connect battery to the terminals	LOCK → UNLOCK	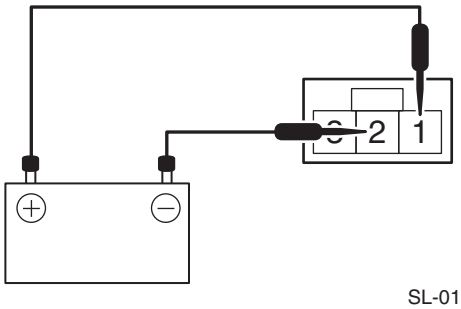 SL-01517

2) CHECK SWITCH.
Check the resistance between actuator terminals.

Terminal No.	Inspection conditions	Specification	Connection diagram
2 — 3	LOCK	1 MΩ or more	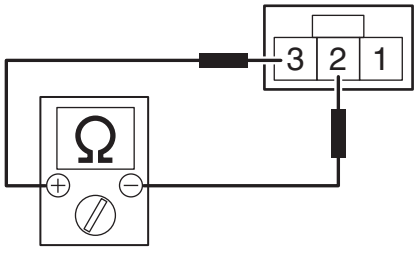 SL-01518
	UNLOCK	Less than 1 Ω	

3) If it does not operate normally, replace the lock assembly - trunk lid.

17.Front Hood Lock Assembly

A: REMOVAL

1) Open the front hood.
2) Remove the clip, and remove the bracket - grille.

NOTE:
To prevent damage to the bracket - grille, make sure to remove all clips.

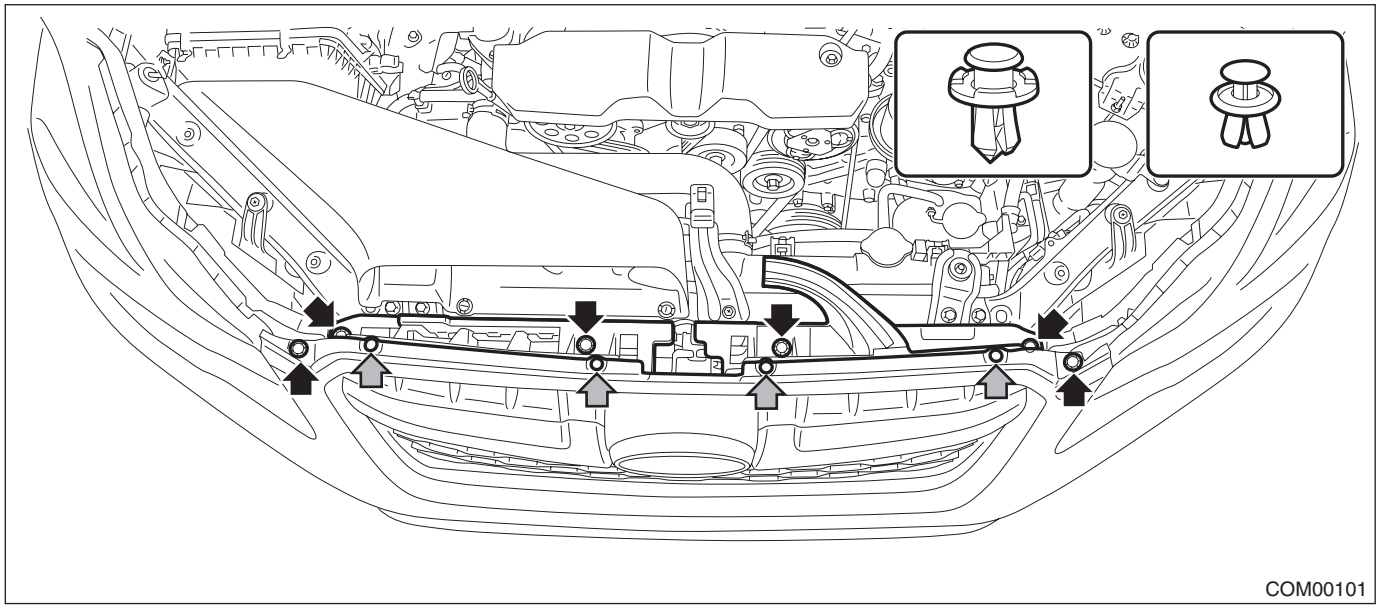

3) Remove the lock assembly - front hood.
   (1) Remove the bolt and clip.

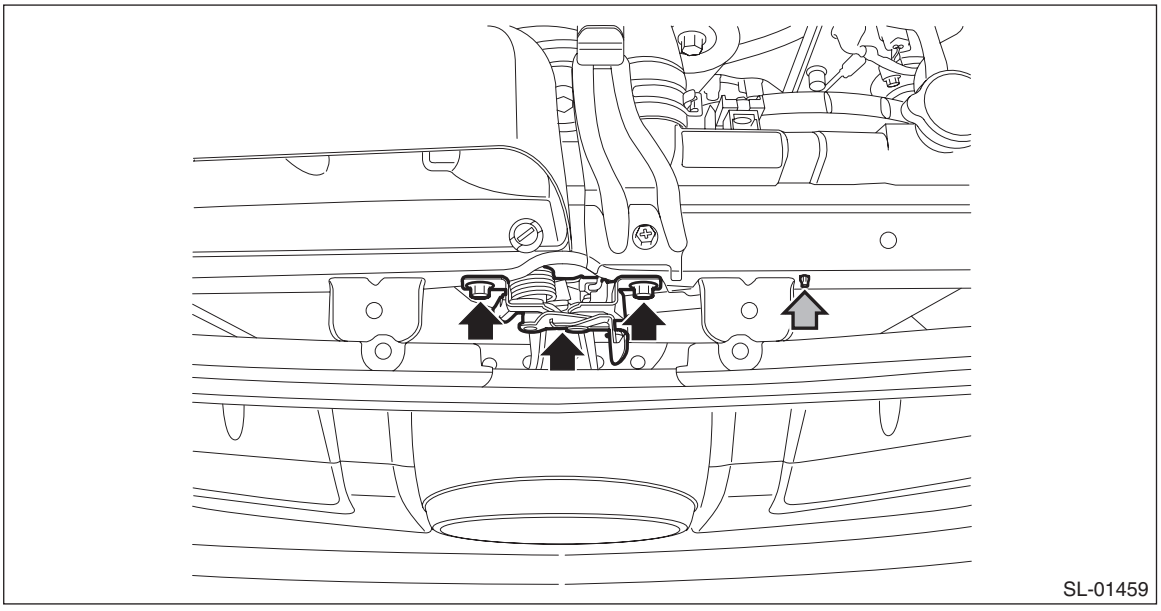

(2) Disconnect the release cable, and detach the lock assembly - front hood.

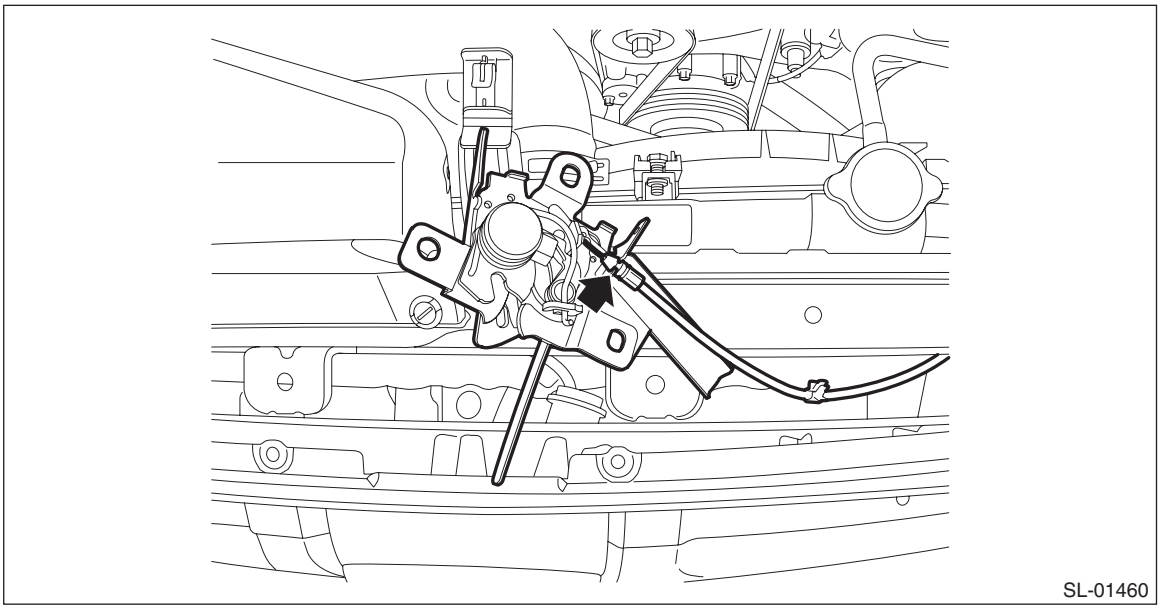

NOTE:
When disconnecting the release cable, refer to “FRONT HOOD OPENER” of “Remote Openers”. <Ref. to SL-58, FRONT HOOD OPENER, REMOVAL, Remote Openers.>

B: INSTALLATION

1) Before installation, check the following items.
- Is the cable deformed?
- Grease is applied sufficiently to cable joints.

If grease is insufficient, add it as necessary before assembling the cable.
2) Install each part in the reverse order of removal.

Tightening torque:
Refer to “COMPONENT” of “General Description”. <Ref. to SL-4, FRONT HOOD LOCK, COMPONENT, General Description.>

C: ADJUSTMENT

1) Loosen the bolt, and adjust the lock assembly - front hood while moving it up and down.

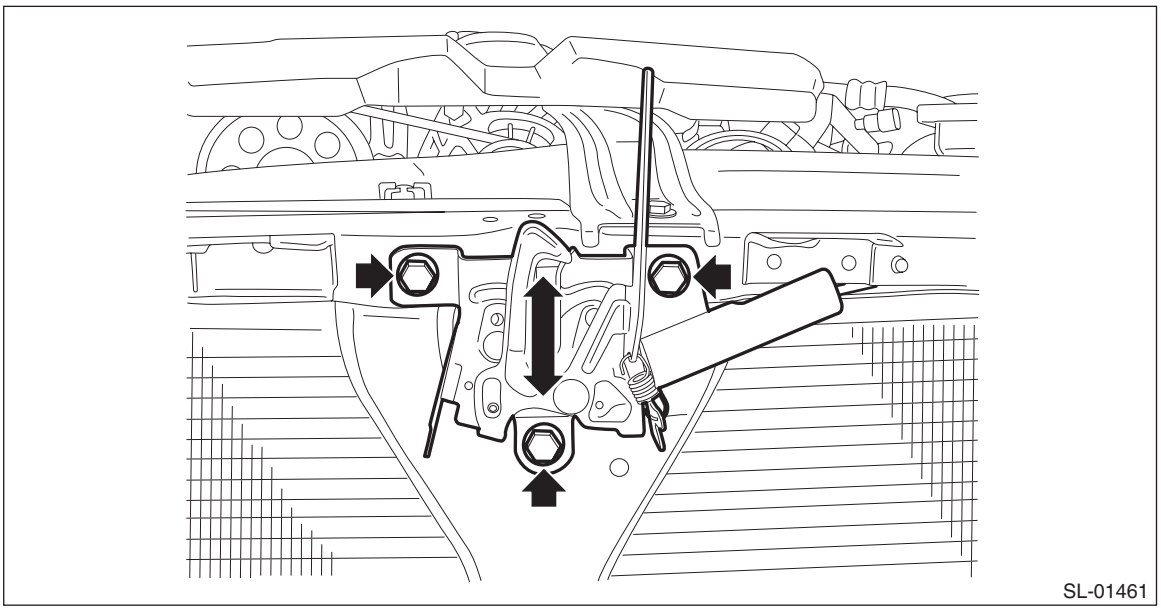

2) After adjustment, tighten the bolts securely.

Tightening torque:
Refer to "COMPONENT" of "General Description". <Ref. to SL-4, FRONT HOOD LOCK, COMPONENT, General Description.>

D: INSPECTION

Check if the lock assembly operates normally.
If lever deformation, abnormal wear, or unsmooth lock operation is observed, replace the lock assembly - front hood.

18.Remote Openers

A: REMOVAL

1. FRONT HOOD OPENER

1) Remove the opener handle.
   (1) Remove the cable.
   (2) Remove the bolt, and remove the opener handle.

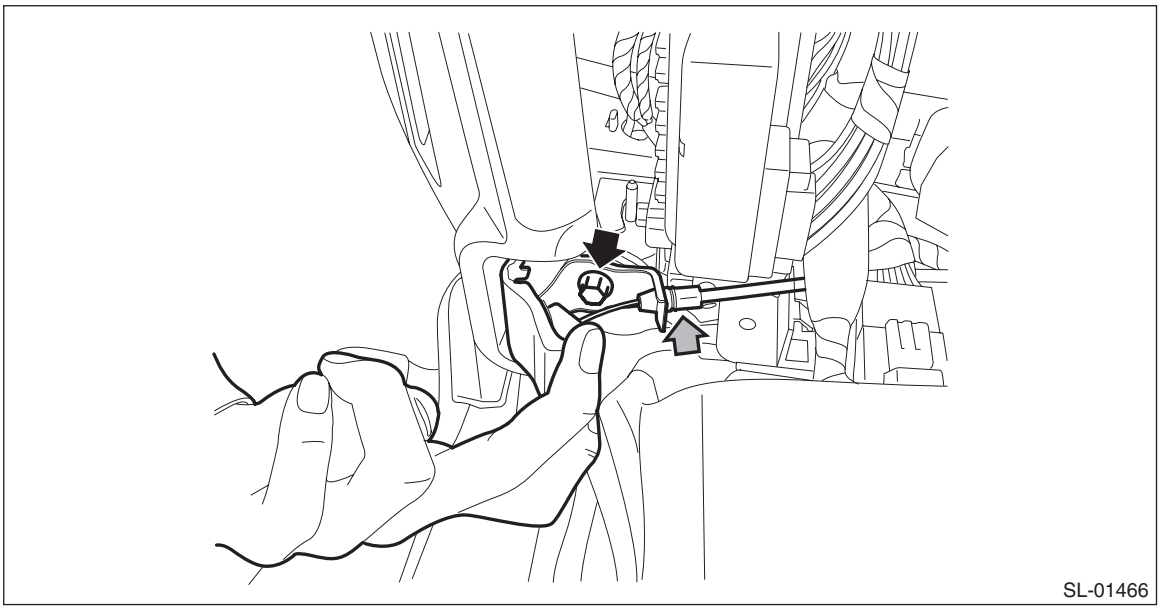

2) Remove the following parts and remove the cable clip and cable.
- Lock assembly - front hood: <Ref. to SL-55, REMOVAL, Front Hood Lock Assembly.>
- Cover assembly - instrument panel LWR driver: <Ref. to EI-71, REMOVAL, Instrument Panel Lower Cover.>

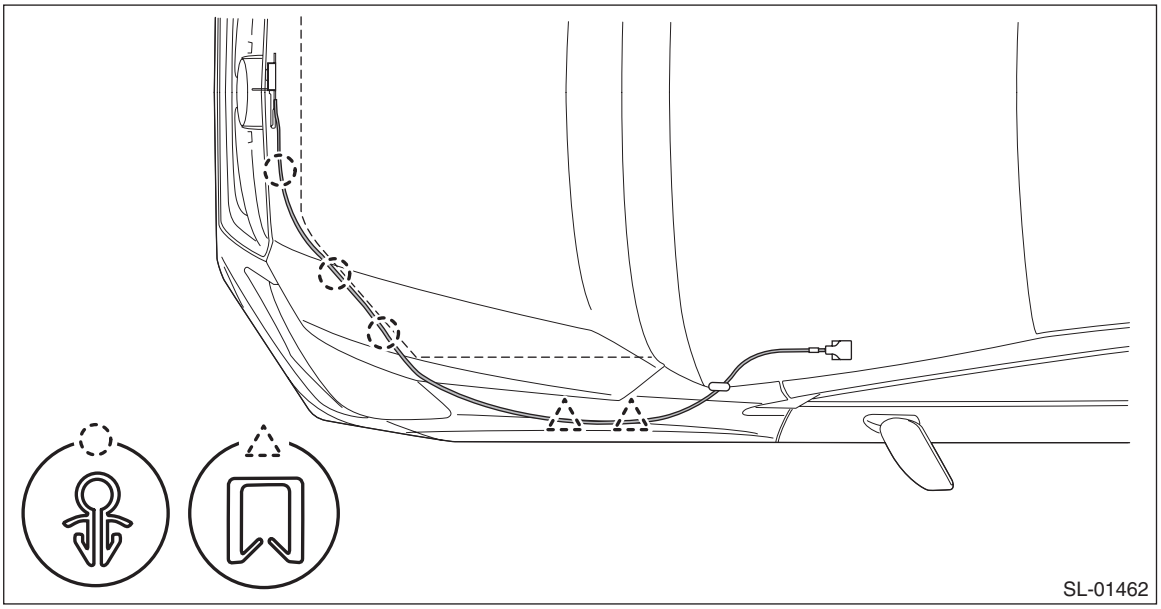

2. TRUNK LID OPENER

1) Remove the cover - handle.
   (1) Open the cover by using a flat tip screwdriver.
   (2) Remove the screws and detach the cover - handle.

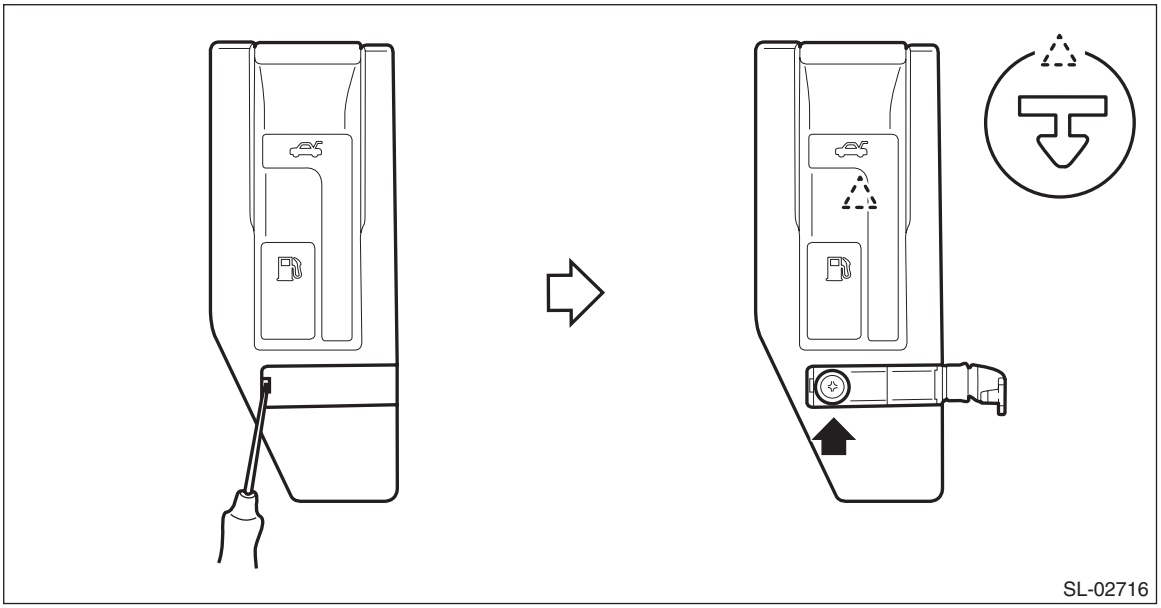

2) Remove the pull handle - opener.
   (1) Remove the nut.
   (2) Remove the cable from pull handle - opener.

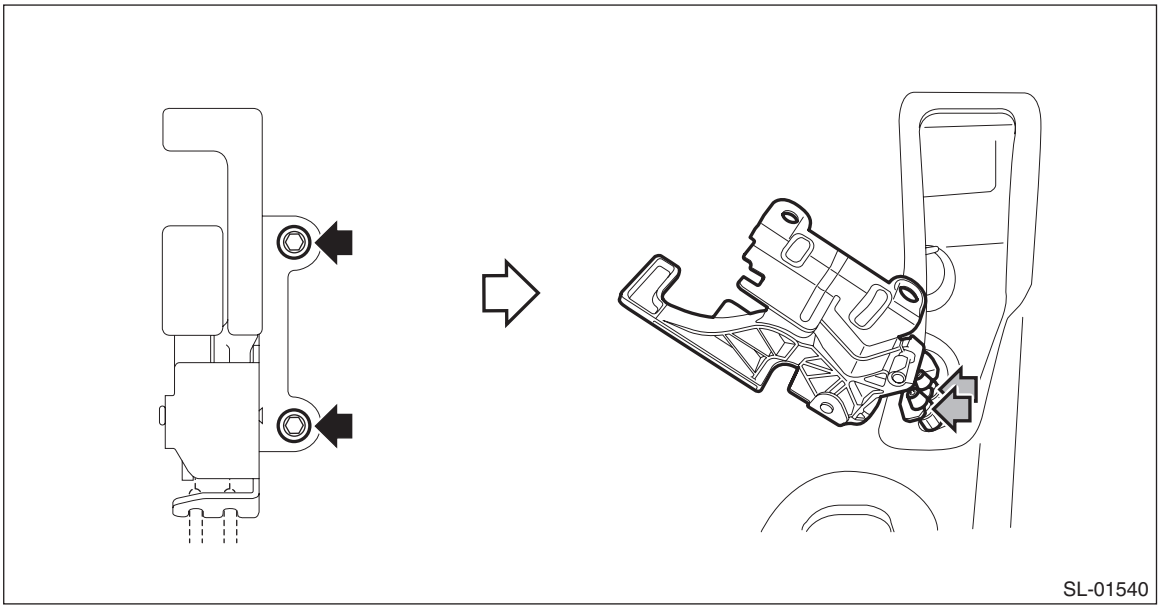

3) Remove the trim panel - trunk side RH. <Ref. to EI-125, TRUNK ROOM TRIM, REMOVAL, Trunk Room Trim.>
4) Remove the lower inner trim. <Ref. to EI-102, REMOVAL, Lower Inner Trim.>
5) Remove the trim panel - trunk lid. <Ref. to EI-125, TRUNK LID TRIM, REMOVAL, Trunk Room Trim.>

6) Disconnect the cable from the lock assembly - trunk lid.

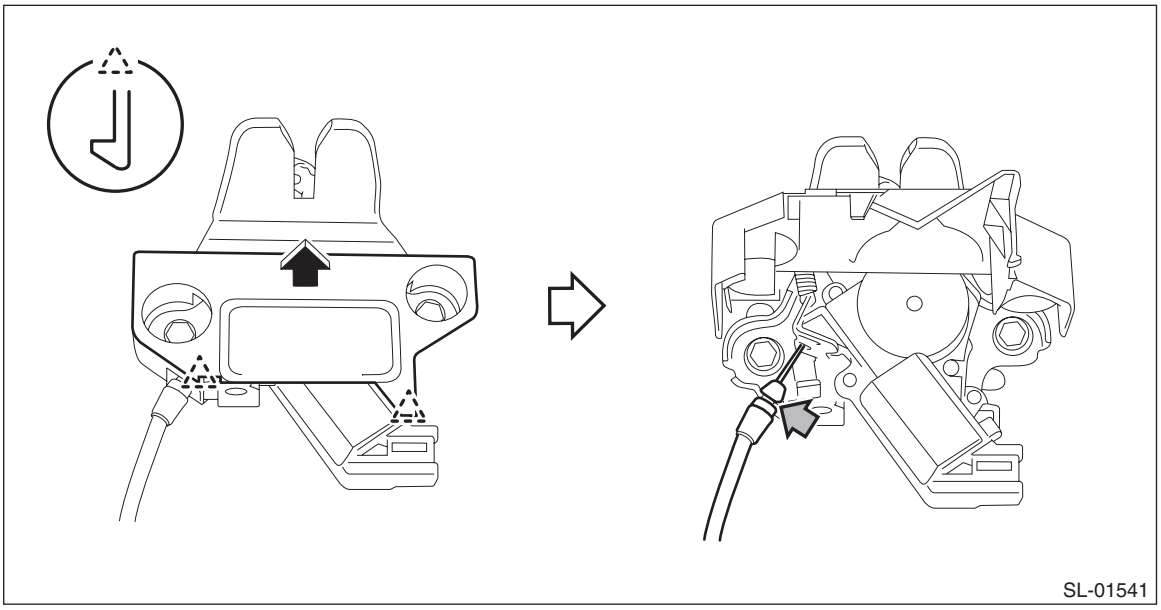

7) Remove the cable clip, and remove the cable.

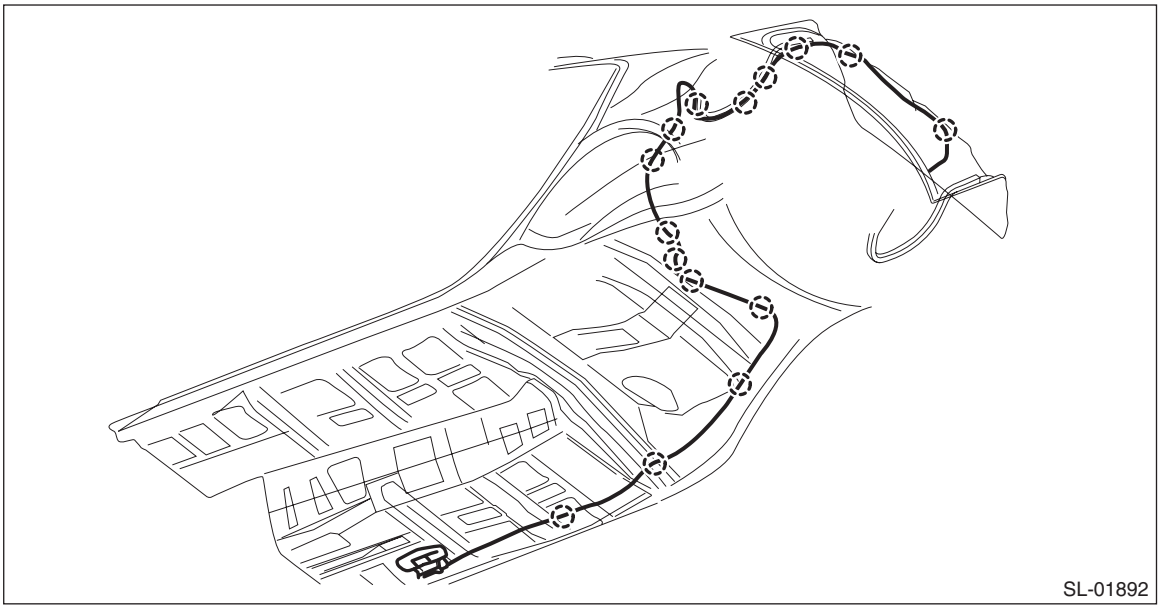

3. FUEL FLAP OPENER

1) Remove the cover - handle.
   (1) Open the cover by using a flat tip screwdriver.
   (2) Remove the screws and detach the cover - handle.
   • 4 door model

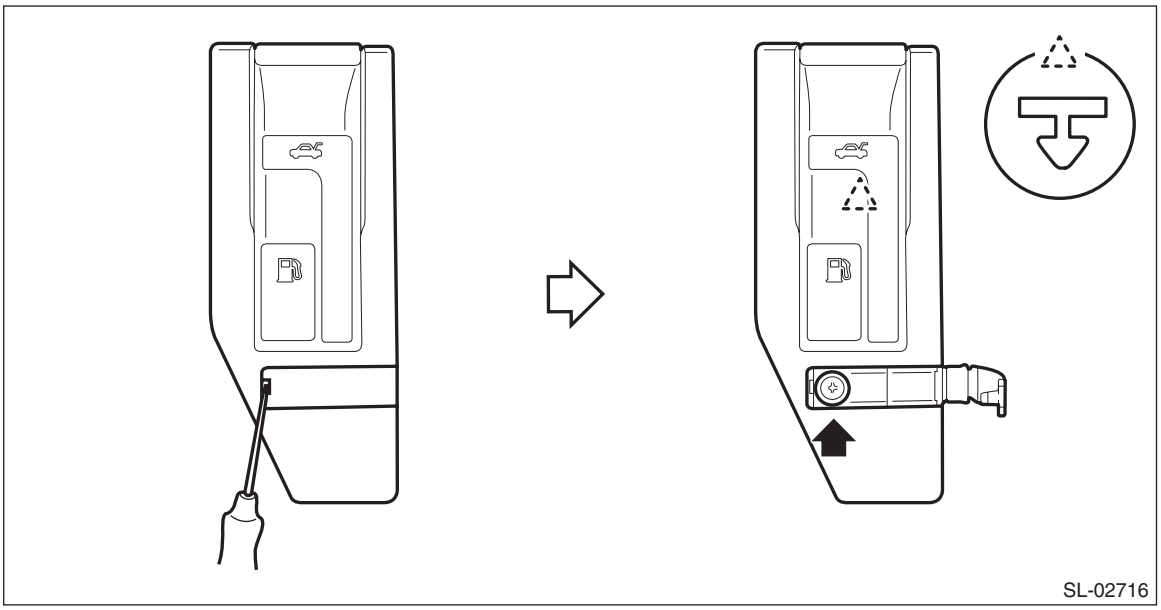

   • 5 door model/XV model

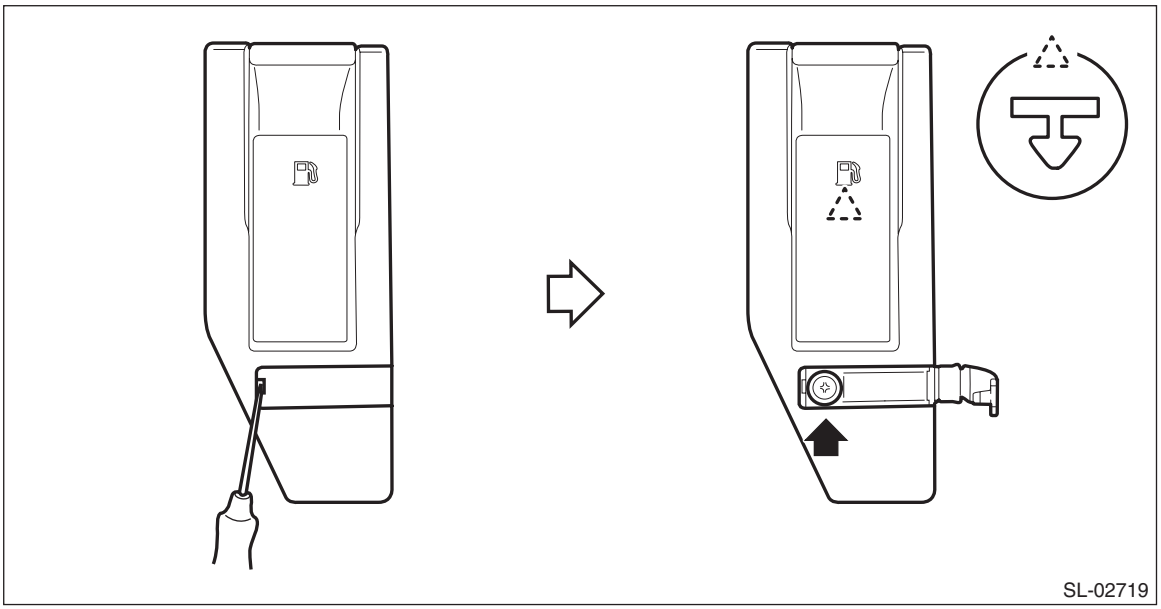

2) Remove the pull handle - opener.
(1) Remove the nut.
(2) Remove the cable from pull handle - opener.

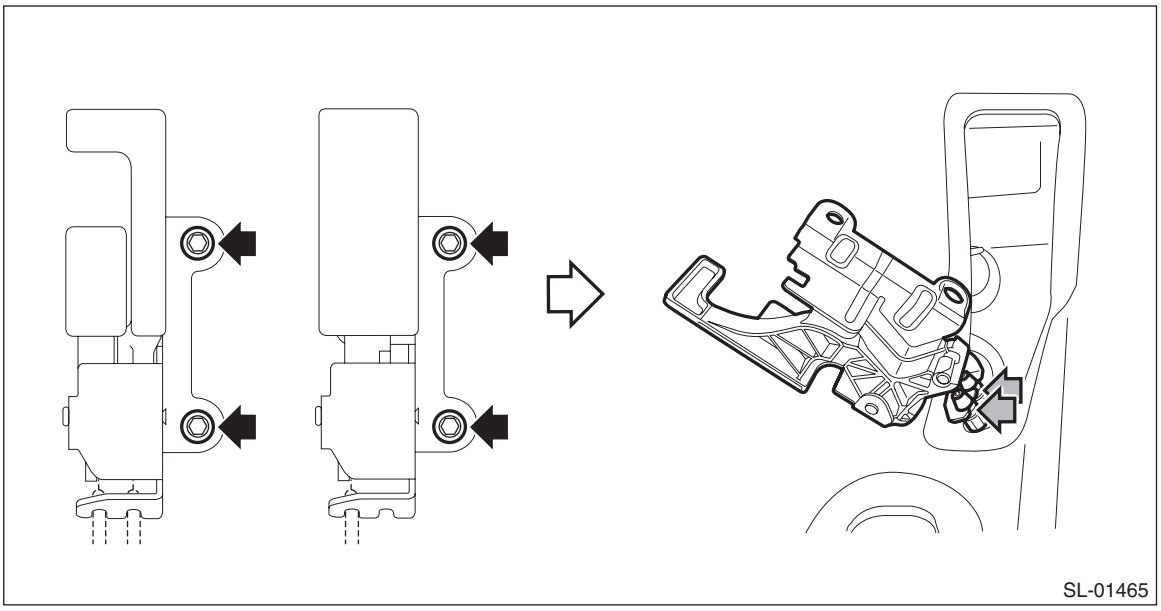

3) Remove the trim panel - trunk side RH. (4 door model) <Ref. to EI-125, TRUNK ROOM TRIM, REMOVAL, Trunk Room Trim.>
4) Remove the trim panel - rear apron RH. (5 door model/XV model) <Ref. to EI-115, 5 DOOR MODEL/XV MODEL, REMOVAL, Rear Quarter Trim.>
5) Remove the fuel lock inside the quarter panel.
(1) Press the claws of the fuel lock.
(2) While keeping the condition in step (1), pull the fuel lock to the rearward of the vehicle.

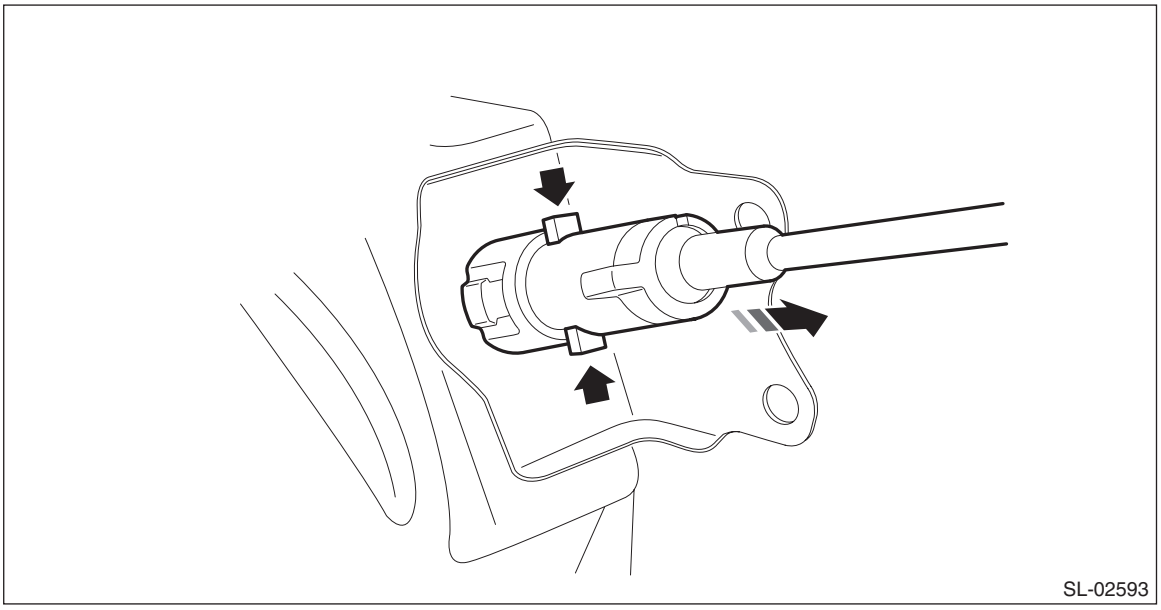

6) Remove the lower inner trim. <Ref. to EI-102, REMOVAL, Lower Inner Trim.>

7) Remove the cable clip, and remove the cable.
- 4 door model

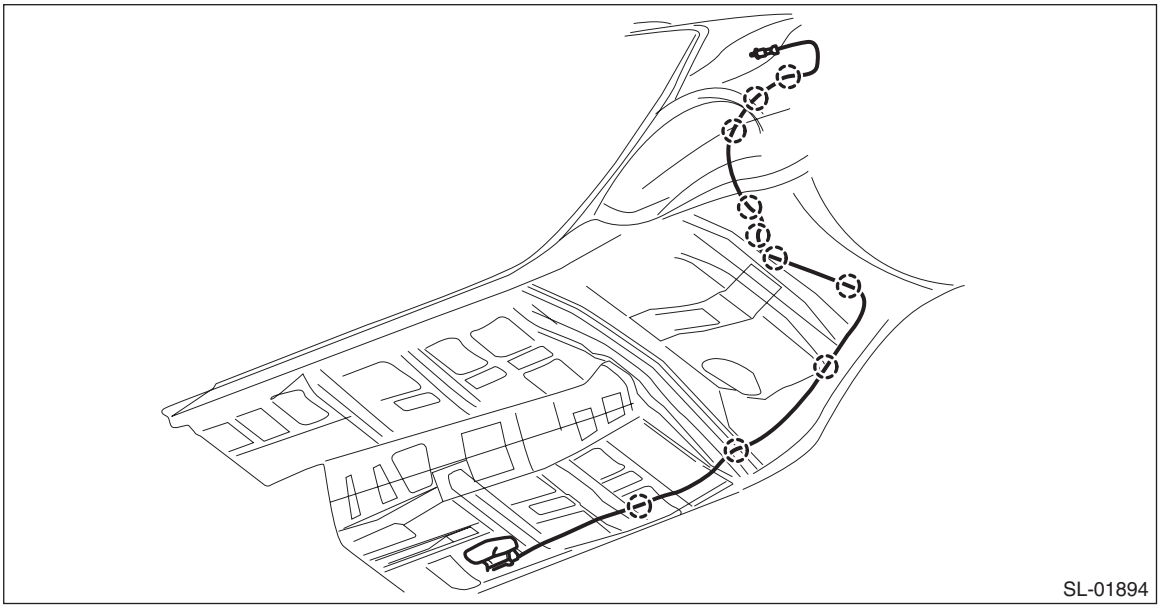
SL-01894

- 5 door model/XV model

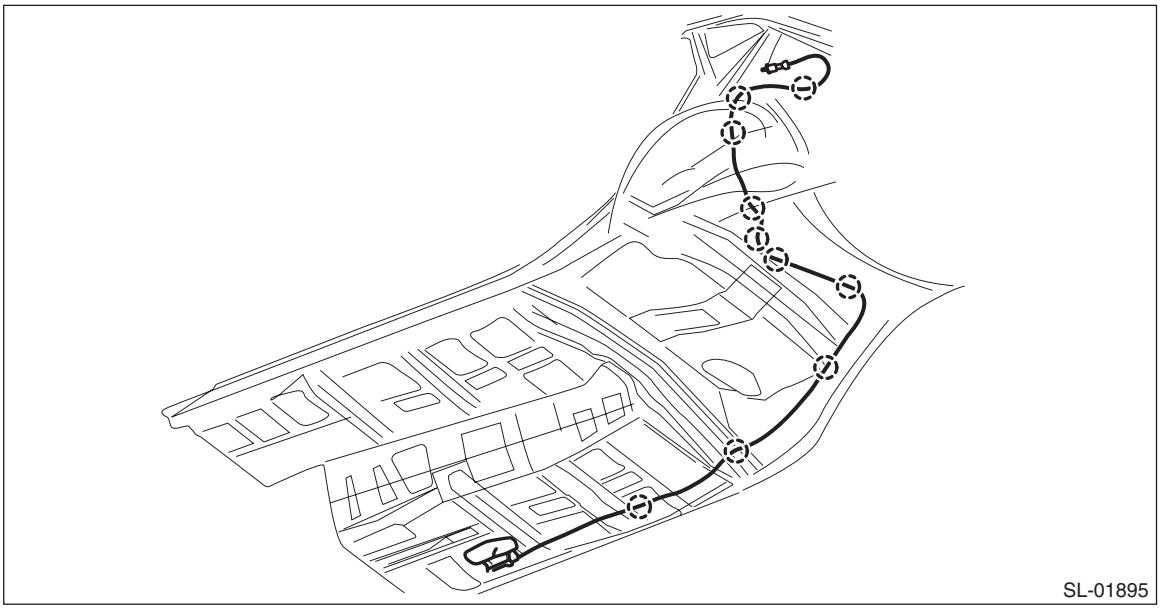
SL-01895

- HEV model

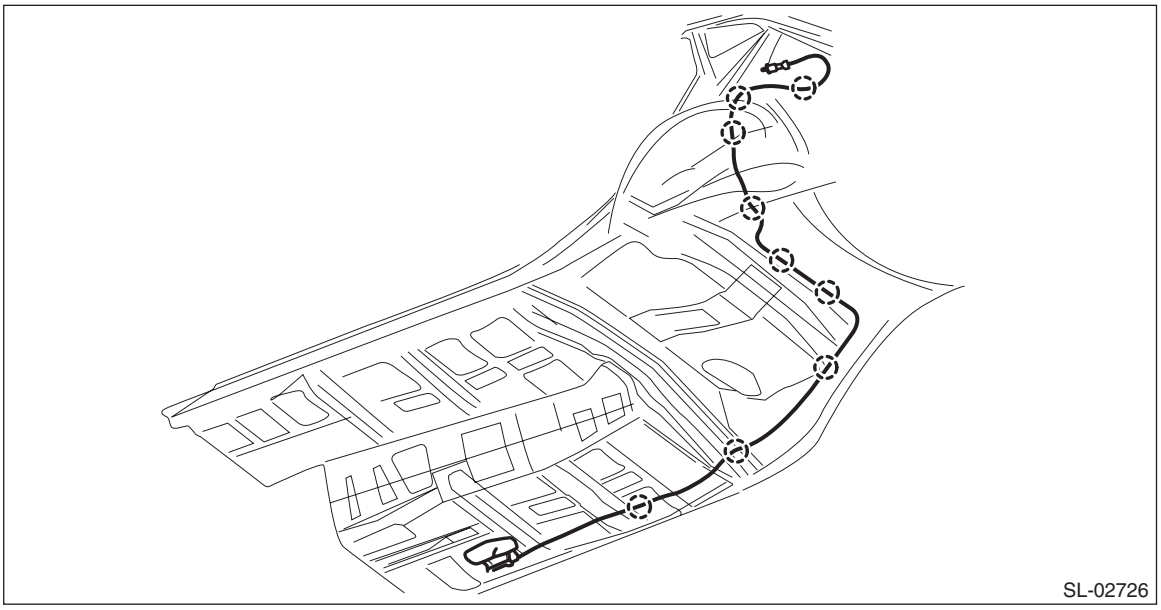

B: INSTALLATION

1) Before installation, check the following items.
- Cable is free from deformation such as fray.

2) Install each part in the reverse order of removal.

Tightening torque:
Front hood lock: <Ref. to SL-4, FRONT HOOD LOCK, COMPONENT, General Description.>
Remote opener: <Ref. to SL-5, REMOTE OPENER, COMPONENT, General Description.>

C: INSPECTION

Check if the front hood and fuel flap operate normally.

19.Ignition Key Lock

A: REPLACEMENT

CAUTION:
• Before handling the airbag module, refer to "CAUTION" of "General Description" in "AIRBAG SYSTEM". <Ref. to AB-11, CAUTION, General Description.>
• If the steering wheel and steering angle sensor (steering roll connector) are removed, perform "VDC sensor midpoint setting mode" of the VDC. <Ref. to VDC-21, VDC SENSOR MIDPOINT SETTING MODE, ADJUSTMENT, VDC Control Module and Hydraulic Control Unit (VDCCM&H/U).>

1) Disconnect the ground cable from battery. <Ref. to NT-5, BATTERY, NOTE, Note.>

NOTE:
For the 12 volt engine restart battery of HEV model, disconnect the ground terminal from 12V engine restart battery sensor.

2) Remove the column assembly - steering. <Ref. to PS-18, REMOVAL, Steering Column.>
3) Remove the ignition key lock.
   (1) Secure the column assembly - steering in a vise.
   (2) Use the reverse tap and drill to remove the set bolt and remove the ignition key lock.

CAUTION:
Do not apply any impact to the set bolt by a chisel or punch.

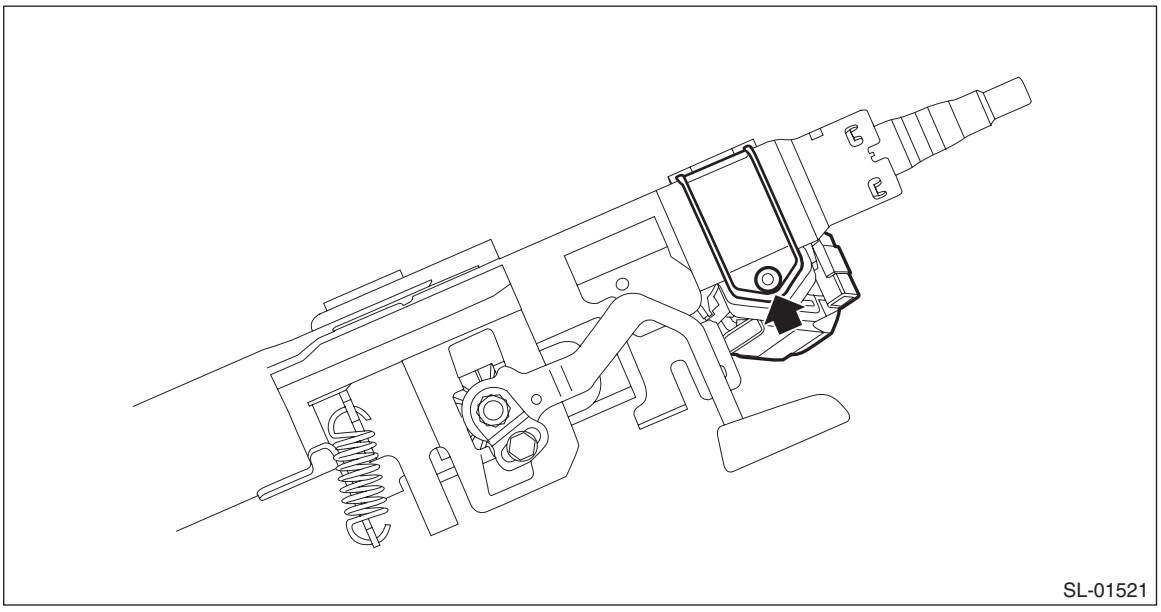
SL-01521

4) Install the ignition key lock.
   (1) Secure the ignition key lock to the column assembly - steering.
   (2) Use new set bolts. Tighten the bolt until the bolt head is broken (bolt head wrenched off).

B: DISASSEMBLY

1) Remove the immobilizer antenna assembly or the ignition switch illumination.
   (1) Disconnect the connector.
   (2) Release two claws using a flat tip screwdriver or similar tool wrapped with a protection tape, and remove the immobilizer antenna assembly or the ignition switch illumination.

CAUTION:
Do not apply excessive force to disengage the lock of immobilizer antenna assembly or ignition switch illumination. Otherwise they may be broken because those parts are the products made of a plastic.

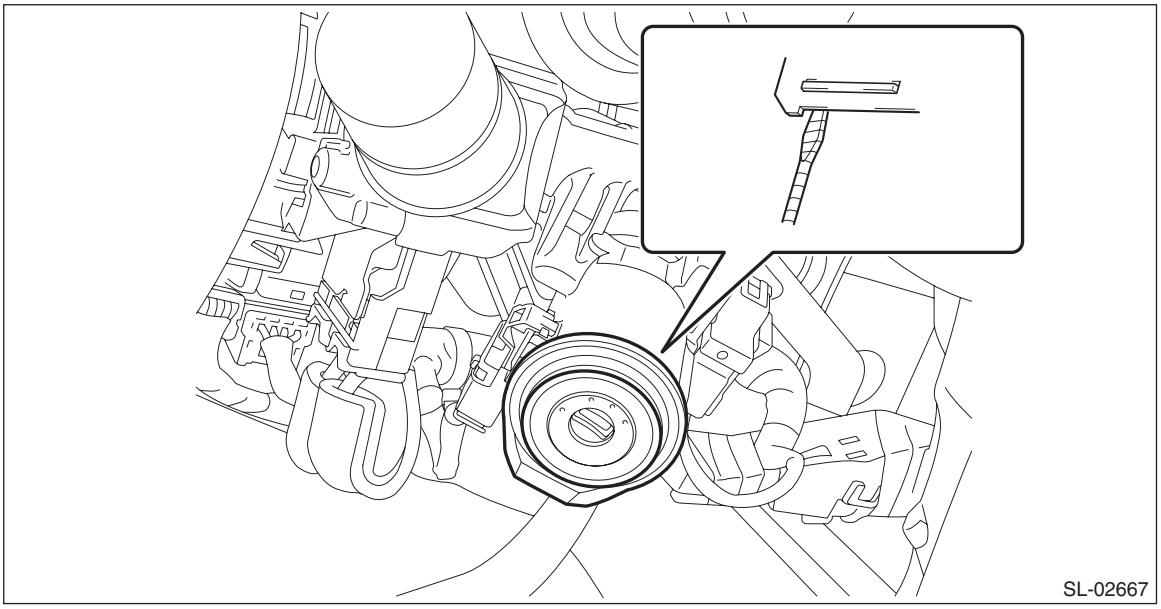
SL-02667

2) Release the claws, and pull the key warning switch downwards to remove.

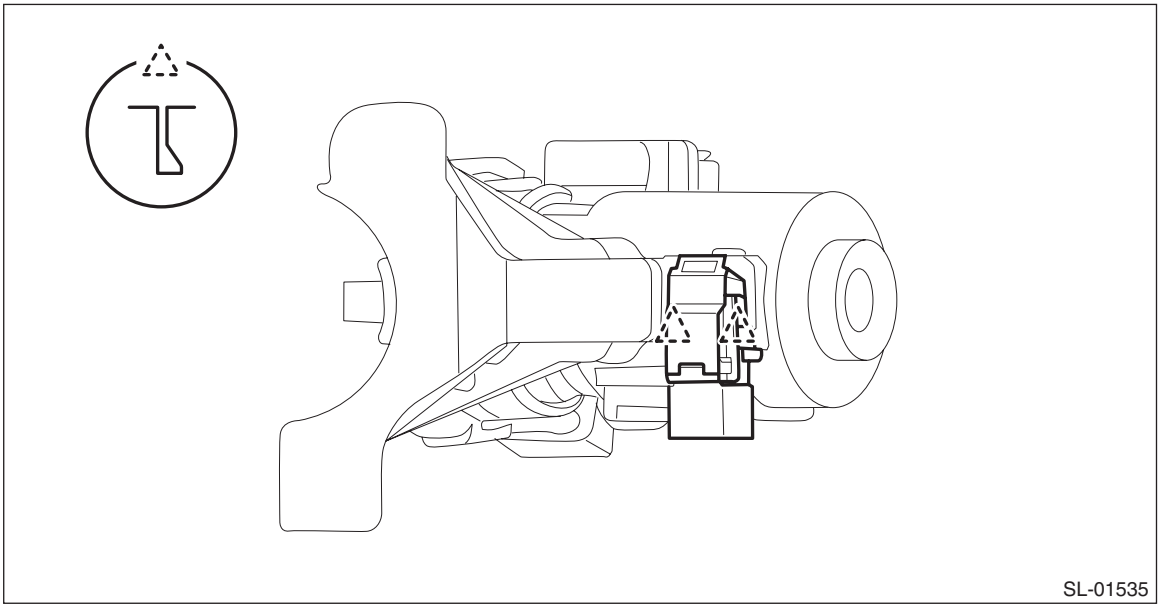
SL-01535

3) Remove the screws and remove the key lock solenoid.

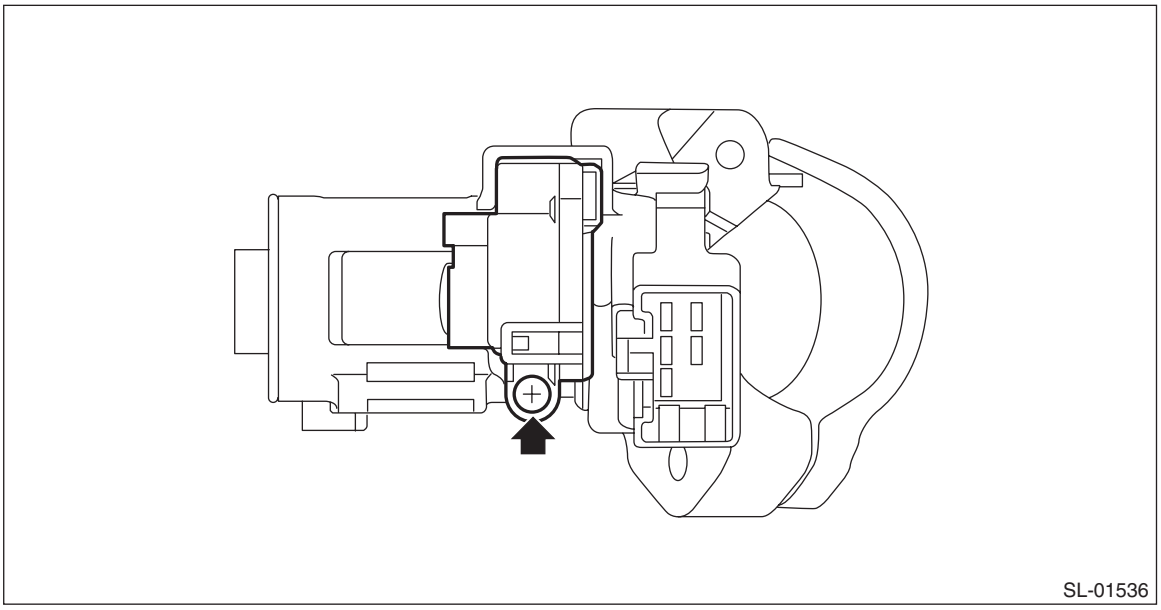

4) Replace the key cylinder.
(1) Insert the key into the key cylinder, and turn the key to the ACC position.
(2) Insert a flat tip screwdriver from the steering lock frame hole (A), and pull the key cylinder until the key cylinder claws touch the steering lock frame stopper (B).

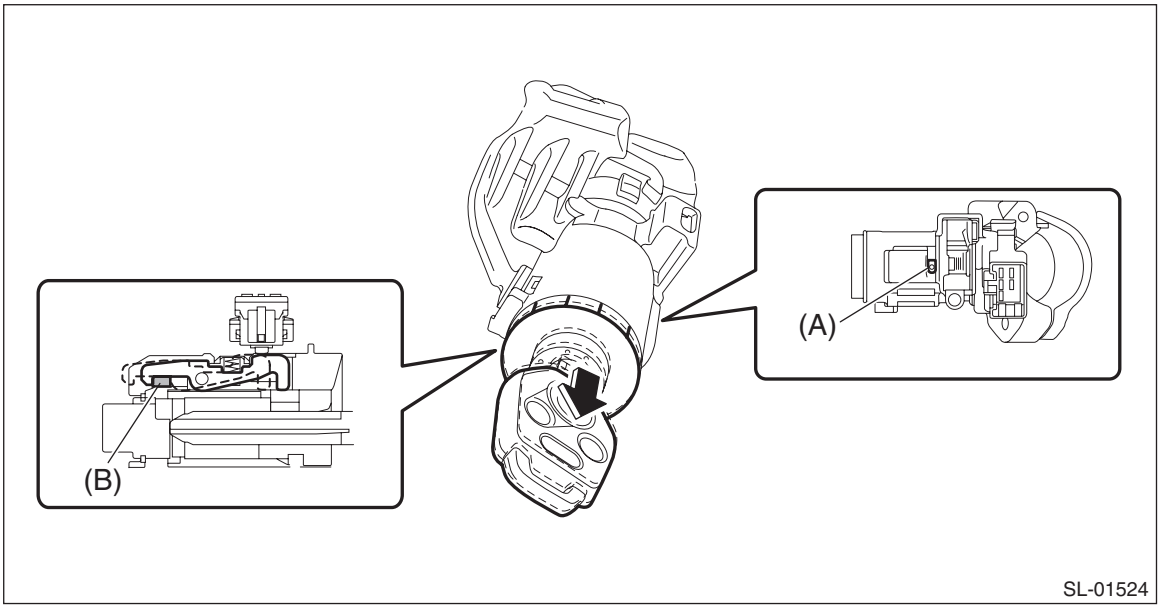

(3) Insert a flat tip screwdriver from the steering lock frame hole (A), and release the claws to pull out the key cylinder.

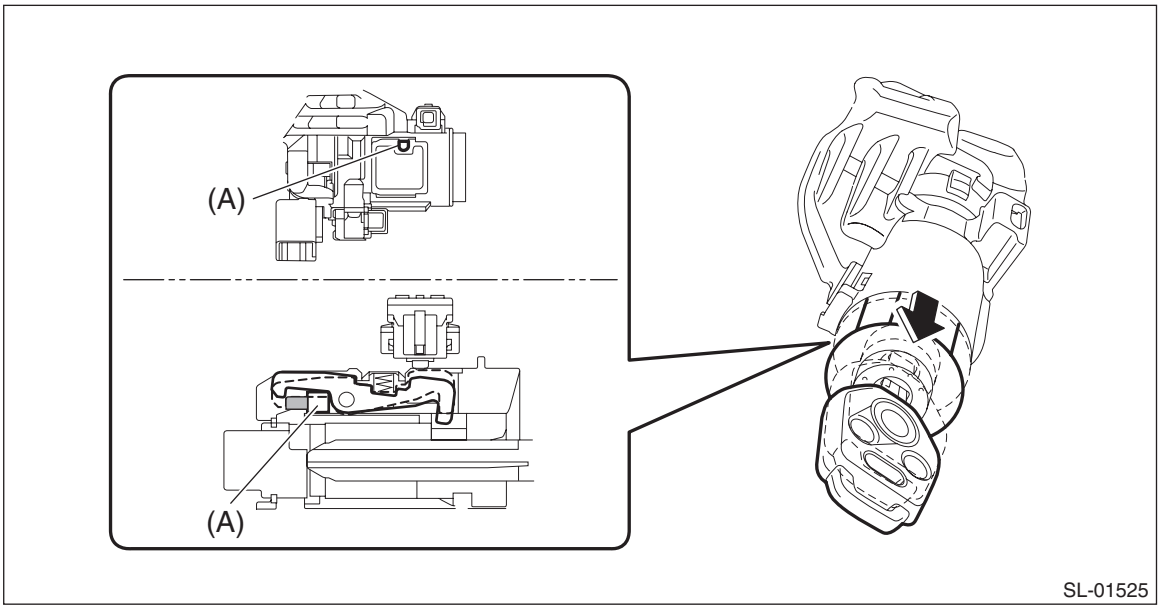

5) Release the claws and remove the ignition switch assembly.

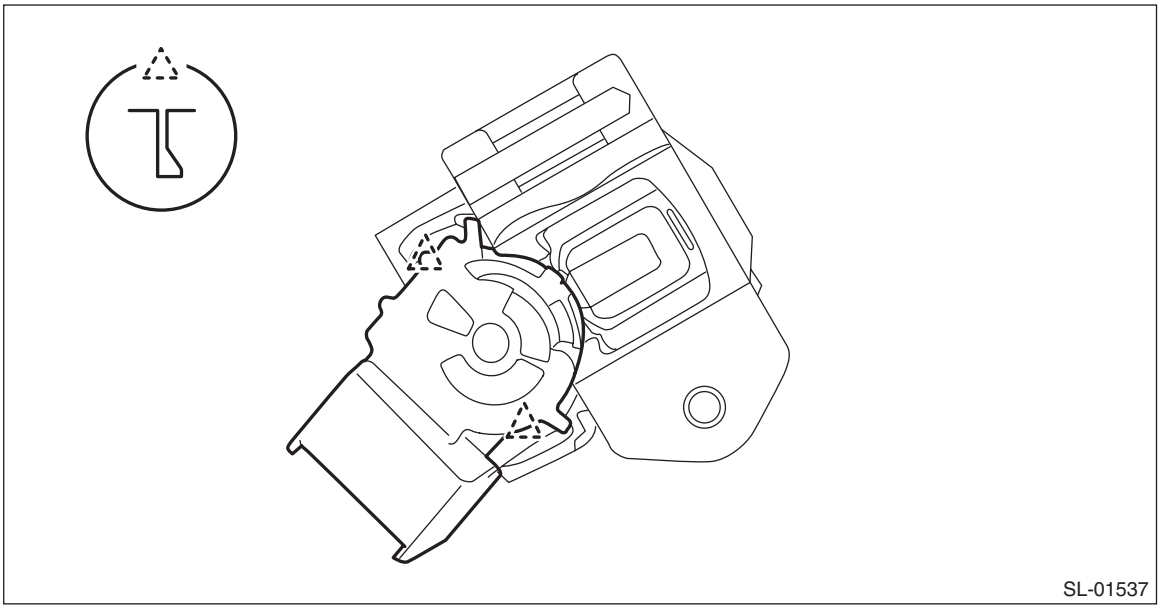

C: INSPECTION

UNIT INSPECTION

PREPARATION TOOL:
Circuit tester

1) Check the resistance between switch terminals.

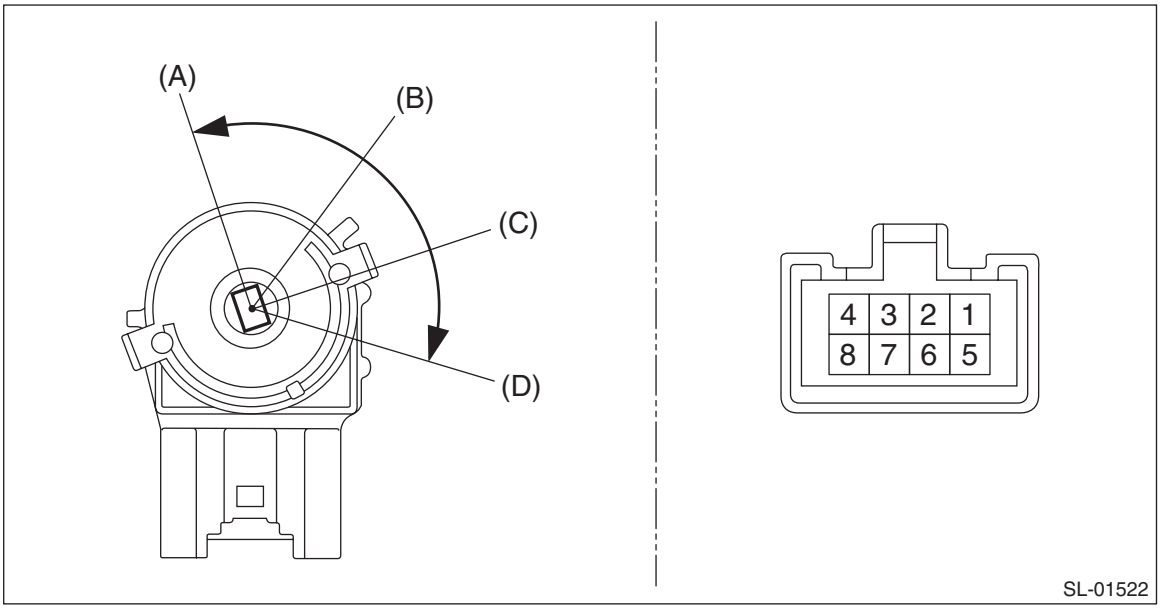

Terminal No.	Inspection conditions		Standard
Between all terminals	(A)	LOCK	1 MΩ or more
2 — 4	(B)	ACC	Less than 1 Ω
1 — 2 — 4 5 — 6	(C)	ON	Less than 1 Ω
1 — 3 — 4 5 — 6 — 7	(D)	ST	Less than 1 Ω

2) Replace the ignition switch assembly if the inspection result is not within the standard.

20.Key Lock Cylinders

A: REPLACEMENT

1. STEERING LOCK

1) Disconnect the ground cable from battery. <Ref. to NT-5, BATTERY, NOTE, Note.>

NOTE:
For the 12 volt engine restart battery of HEV model, disconnect the ground terminal from 12V engine restart battery sensor.

2) Remove the cover assembly - column.
   (1) Remove the screws by turning the steering wheel to right and left.

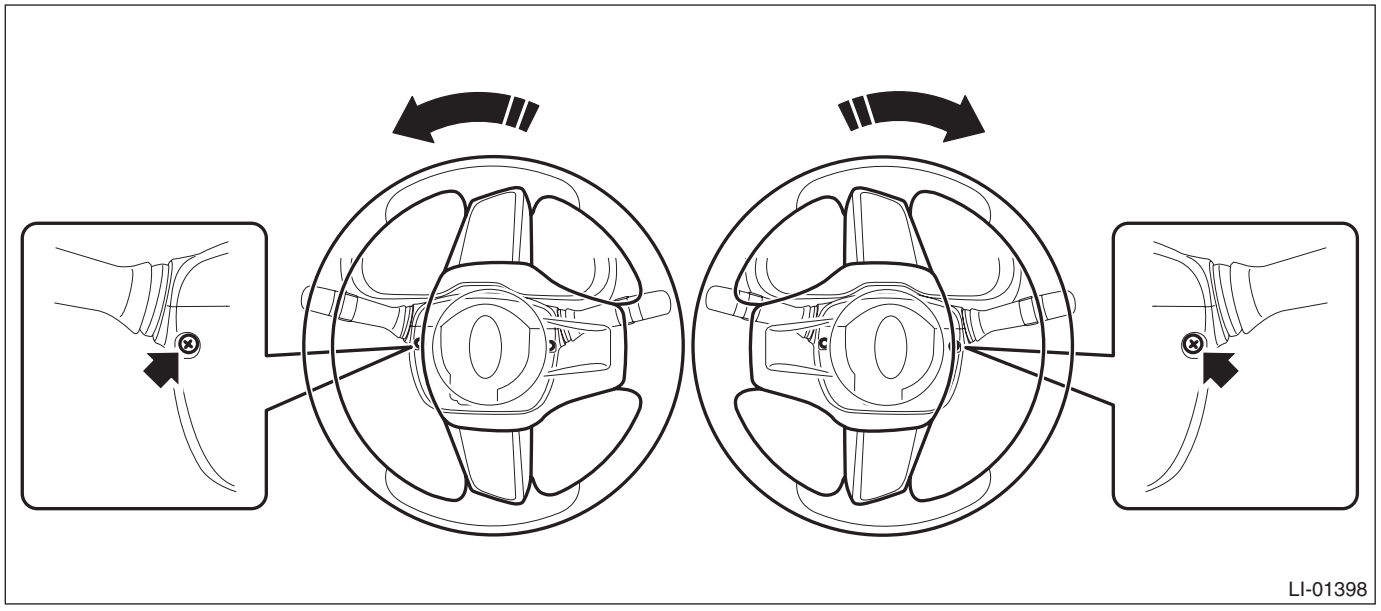
LI-01398

   (2) Release the claw, and remove the cover assembly - column UPR and the cover assembly - column LWR.

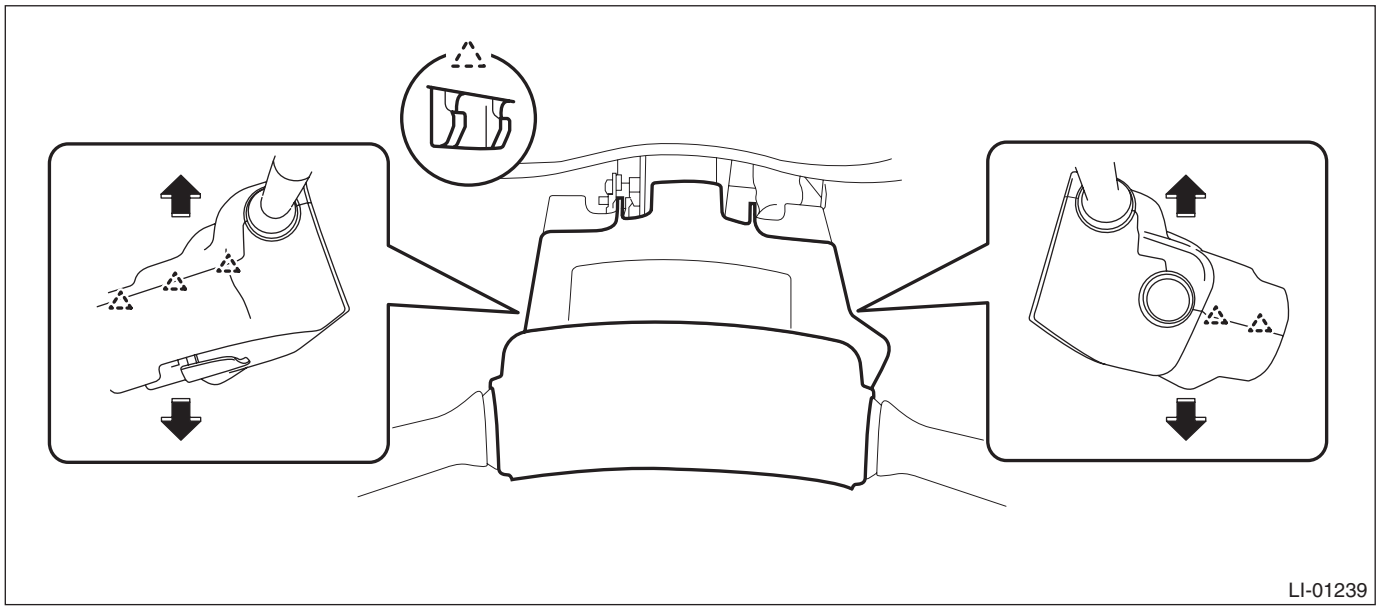
LI-01239

3) Remove the immobilizer antenna assembly or the ignition switch illumination.
(1) Disconnect the connector.
(2) Release two claws using a flat tip screwdriver or similar tool wrapped with a protection tape, and remove the immobilizer antenna assembly or the ignition switch illumination.

CAUTION:
Do not apply excessive force to disengage the lock of immobilizer antenna assembly or ignition switch illumination. Otherwise they may be broken because those parts are the products made of a plastic.

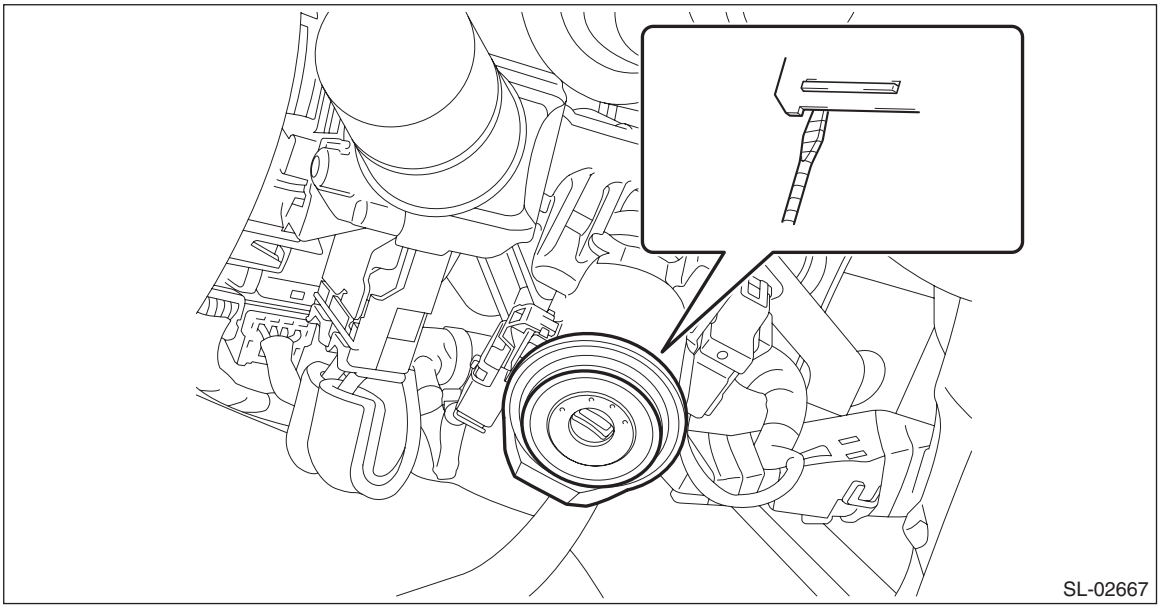
SL-02667

4) Remove the key lock solenoid.
(1) Disconnect the connector.
(2) Remove the screws and remove the key lock solenoid.

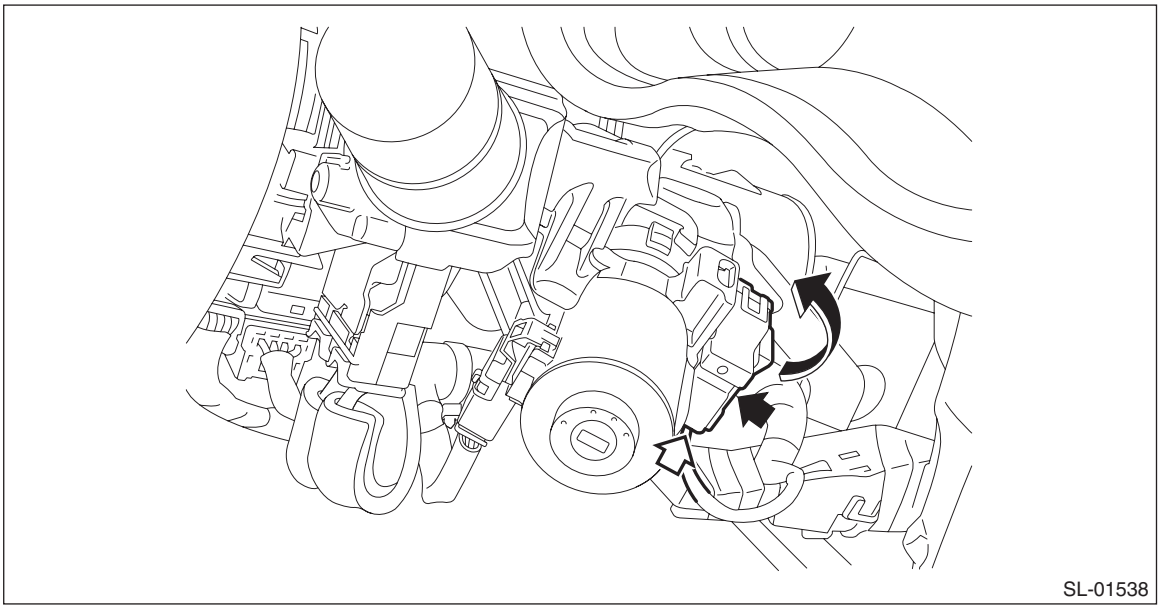
SL-01538

5) Replace the key cylinder.
(1) Insert the key into the key cylinder, and turn the key to the ACC position.
(2) Insert a flat tip screwdriver from the steering lock frame hole (A), and pull the key cylinder until the key cylinder claws touch the steering lock frame stopper (B).

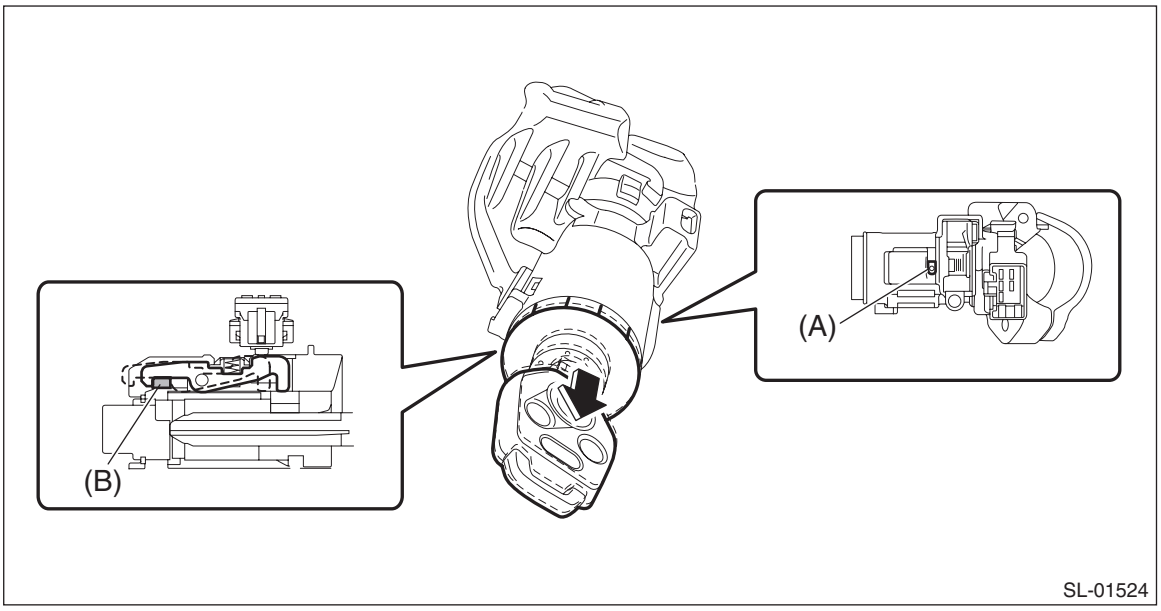

(3) Insert a flat tip screwdriver from the steering lock frame hole (A), and release the claws to pull out the key cylinder.

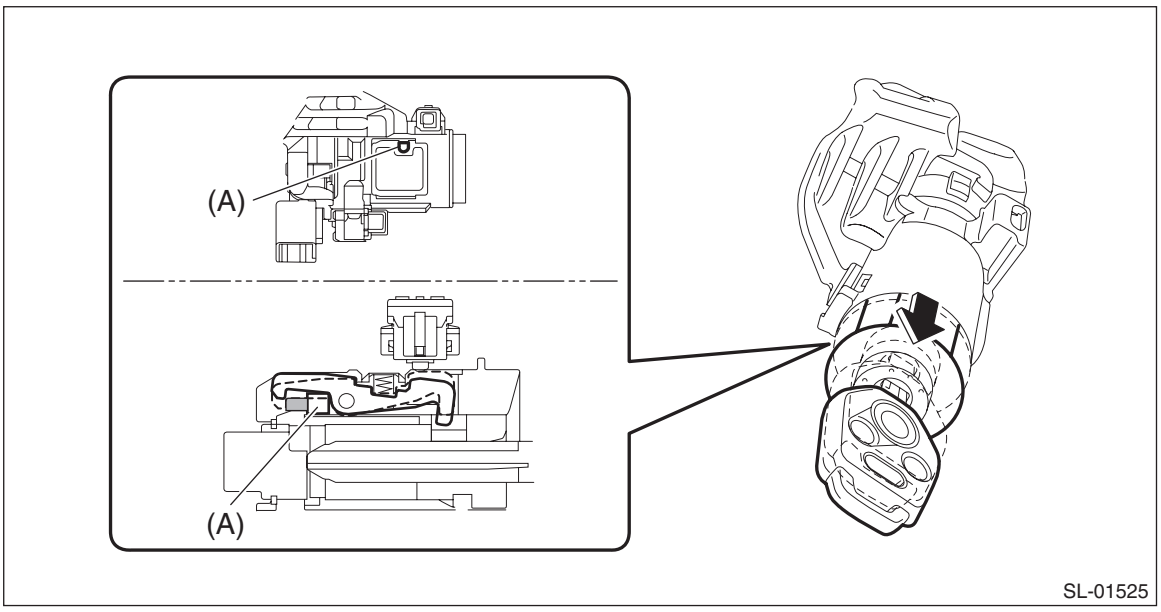

6) Install each part in the reverse order of removal.

2. FRONT DOOR

1) Raise the glass assembly - front door to the top position.
2) Remove the cover - handle front outer.

Preparation tool:
TORX® T30

(1) Remove the plug at the rear end of the panel assembly - front door.
(2) Loosen the TORX® bolt and remove the cover - handle front outer.

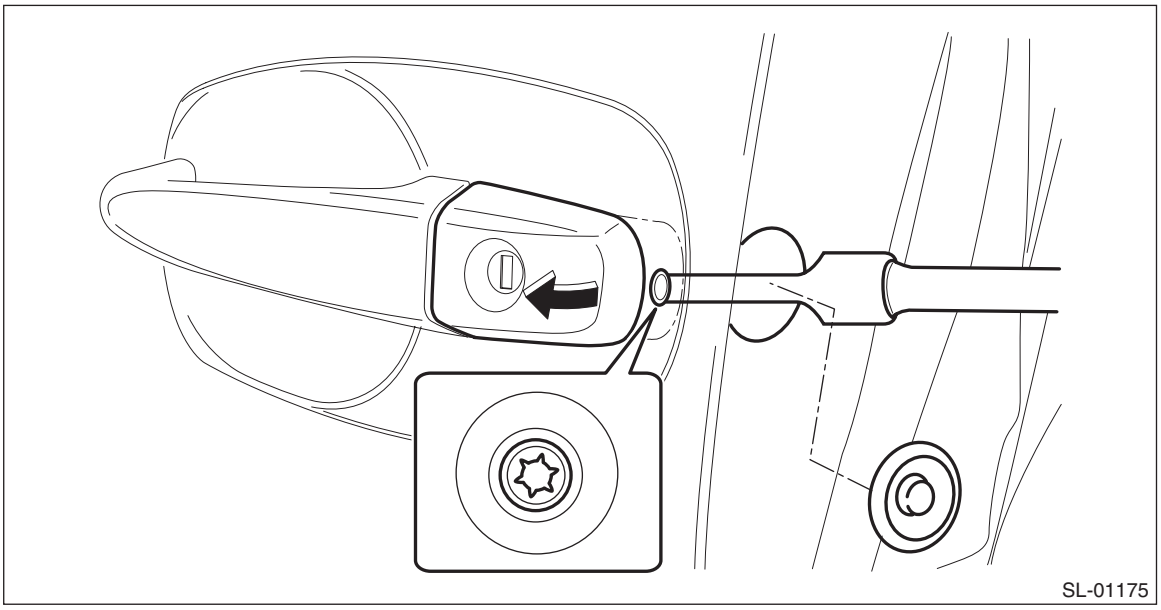

3) Remove the key cylinder (B) from the cover - handle front outer (A), and replace the key cylinder.

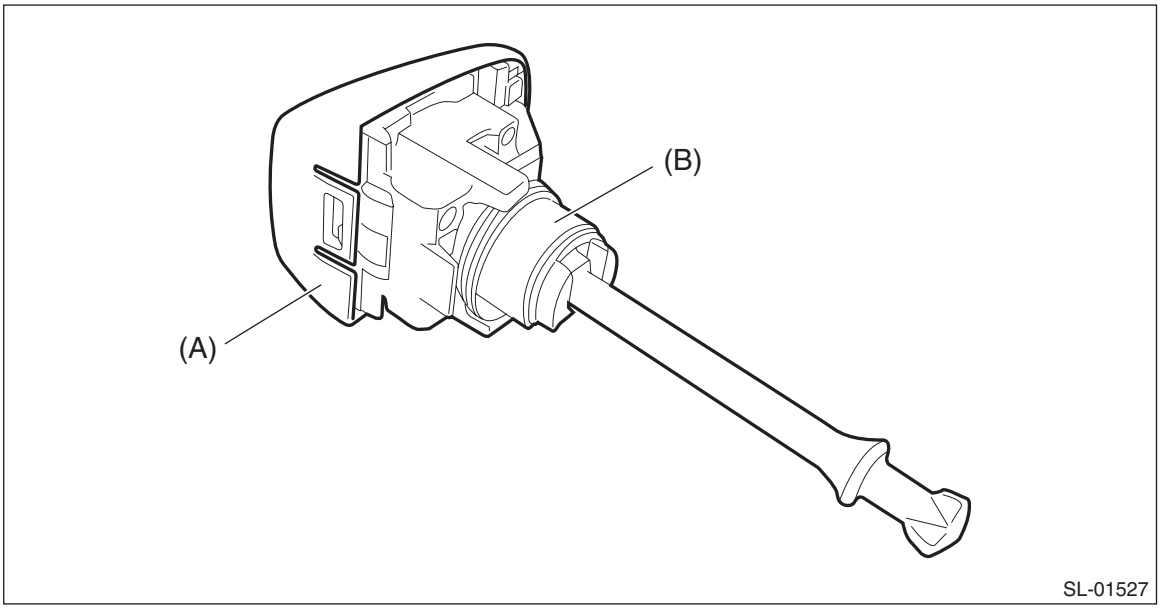

4) Install each part in the reverse order of removal.

CAUTION:
When installing the cover - handle front outer on driver's side, make sure that the key cylinder shaft is correctly inserted into the latch & actuator assembly - front.

Tightening torque:
Refer to "COMPONENT" of "General Description". <Ref. to SL-2, DOOR LOCK ASSEMBLY, COMPONENT, General Description.>

3. GLOVE BOX LID

1) Remove the pocket assembly.
   (1) Attach the protective tape (a) to the panel center LWR.
   (2) Remove the damper COMPL - pocket.
   (3) Release the stoppers and remove the pocket assembly by pulling it toward you.

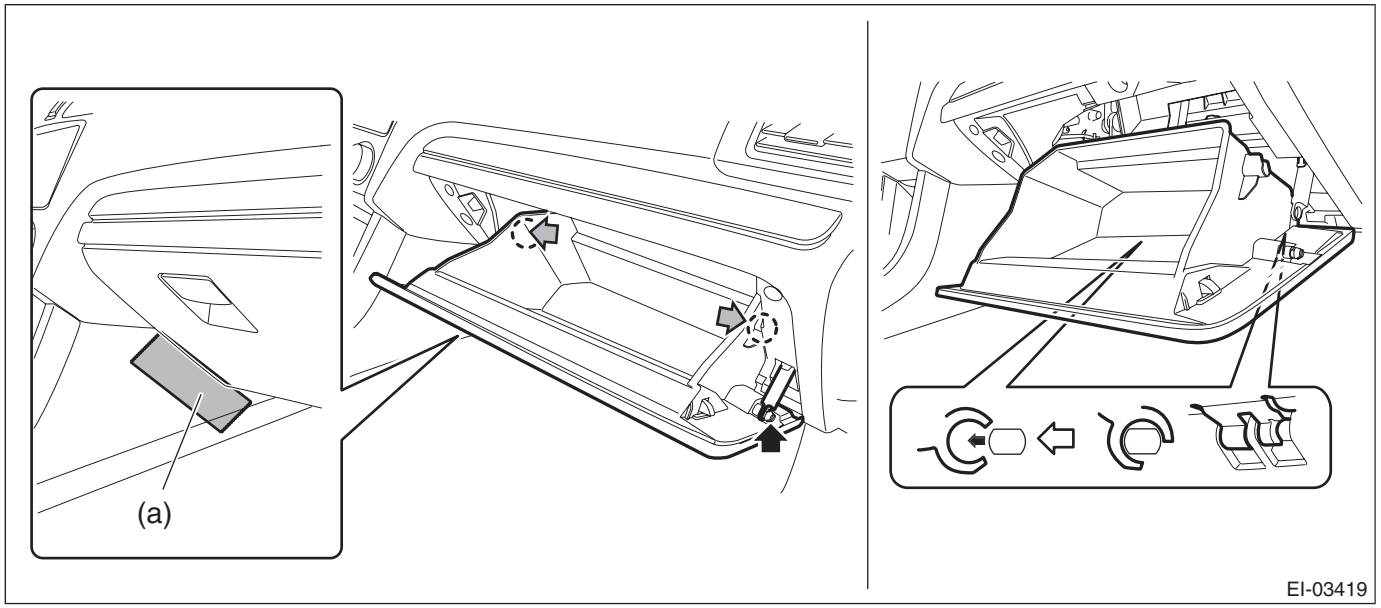

2) Replace the key cylinder.
   (1) Pull up the lock knob.
   (2) Push out the key cylinder from the pocket assembly while pressing in the metal plate.

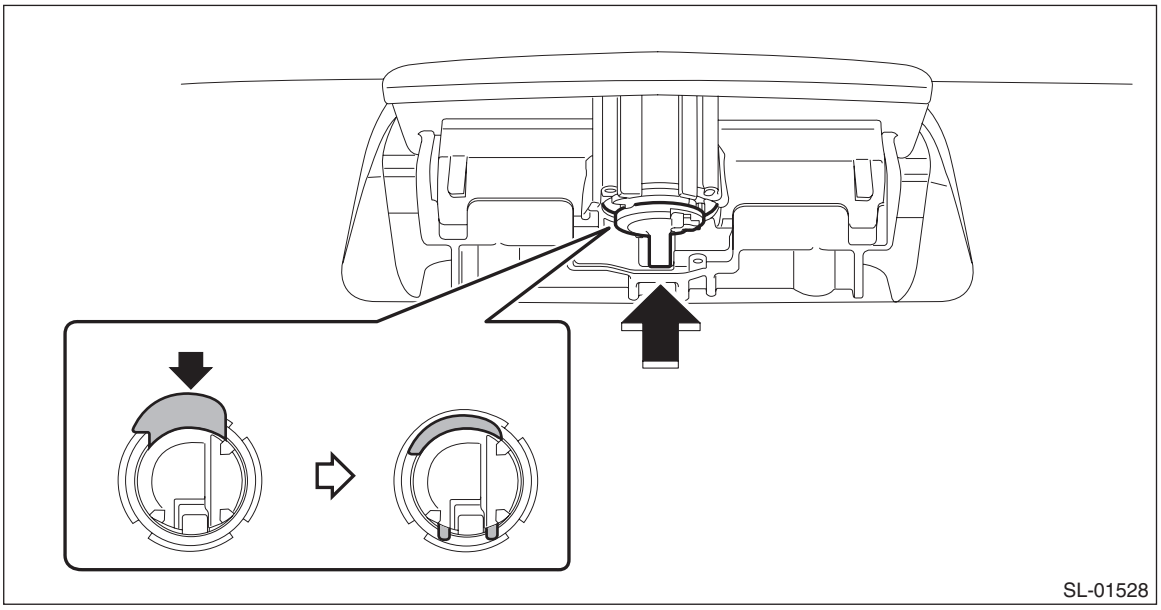

3) Install each part in the reverse order of removal.

21.Security Control Module

A: REMOVAL

1) Remove the heater and cooling unit assembly. <Ref. to AC-63, REMOVAL, Heater and Cooling Unit.>
2) Remove the security control module.
   (1) Disconnect the connector.
   (2) Remove the nuts, and remove the security control module.

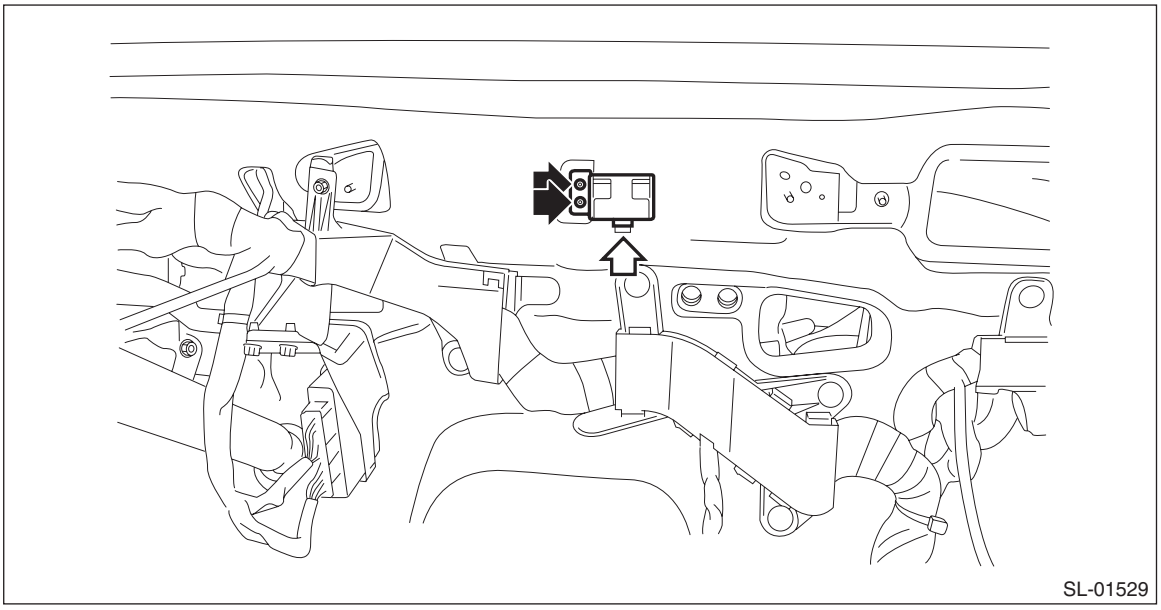

B: INSTALLATION

Install each part in the reverse order of removal.

Tightening torque:
Security control module: 7.5 N·m (0.76 kgf-m, 5.5 ft-lb)

22.Impact Sensor

A: REMOVAL

1) Pull out the key from the ignition switch, or turn the power to OFF.
2) Close all the doors, trunk lid and rear gate.
3) Press the UNLOCK button of the keyless transmitter or access key.
4) Disconnect the ground cable from battery. <Ref. to NT-5, BATTERY, NOTE, Note.>

NOTE:
For the 12 volt engine restart battery of HEV model, disconnect the ground terminal from 12V engine restart battery sensor.
5) Remove the impact sensor.
6) Change the setting of impact sensor using Subaru Select Monitor.

B: INSTALLATION

1) Pull out the key from the ignition switch, or turn the power to OFF.
2) Close all the doors, trunk lid and rear gate.
3) Press the UNLOCK button of the keyless transmitter or access key.
4) Disconnect the ground cable from battery. <Ref. to NT-5, BATTERY, NOTE, Note.>

NOTE:
For the 12 volt engine restart battery of HEV model, disconnect the ground terminal from 12V engine restart battery sensor.
5) Install the impact sensor.
6) Change the setting of impact sensor using Subaru Select Monitor.

C: OPERATION

1. IMPACT SENSOR SETTING USING SUBARU SELECT MONITOR

1) Prepare the Subaru Select Monitor kit.
2) Turn the ignition to ON (engine OFF) and run the “PC application for Subaru Select Monitor”.
3) On «System Selection Menu» display, select {Integ. unit mode}.
4) Select {Unit customizing} from {Work Support}.
5) Set the impact sensor setting.
- When installing: ON
- When removing: OFF

6) Set the impact sensor ON/OFF setting.
- When installing: ON
- When removing: OFF

7) Turn the ignition to OFF, and then remove the Subaru Select Monitor.

D: ADJUSTMENT

1. CHECK IMPACT SENSOR

1) Pull out the key from the ignition switch, or turn the power to OFF.
2) Close all the windows.
3) Close all the doors, trunk lid and rear gate. Leave open the front hood.
4) Press the LOCK button of the keyless transmitter or access key from outside of vehicle.
5) Check that the security indicator light blinks twice within 0.5 seconds in 2 second cycles after 30 seconds.
6) Hit all windows with the palm with force repeatedly, to check for whether the security alarm operates. Lift up the front hood approx. 12 cm (4.7 in) or more, and then drop it off to check the operation of security alarm.
7) If NG, adjust the impact sensitivity.

2. IMPACT SENSITIVITY ADJUSTMENT

1) Prepare the Subaru Select Monitor kit.
2) Turn the ignition to ON (engine OFF) and run the “PC application for Subaru Select Monitor”.
3) On the «System Selection Menu», select the {Impact Sensor}.
4) Make a {Sensitivity Adjustment Mode}.
- Sensitivity can be adjusted in 11 levels (0 to 10).
- Initial setting is 5.
- Smaller number means more sensitive.
- Larger number means less sensitive.

5) Turn the ignition to OFF, and then remove the Subaru Select Monitor.

NOTE:
- Set the sensor so that it is not triggered by normal vibrations (someone reclining on the door, hit by a ball, etc.).
- Set the sensor to operate the alarm when the windshield glass or door is hit hard repeatedly, etc, where it can be assumed that there is an attempt to damage the car by a burglar, etc.
- Even if there is no burglary attempt, if there is vibration (road construction, elevated parking lots, passage of trains or boarding of ferries), the alarm can be triggered. Because of this, ask the customer about their parking conditions, and set an appropriate sensitivity level after discussion.
- If the sensitivity setting was not performed properly, a buzzer will sound four times. In this case, check that there is no error in CAN communication.

23.Keyless Entry Control Module

A: REMOVAL

1. 4 DOOR MODEL

1) Disconnect the ground cable from battery.
2) Remove the trim panel assembly - rear shelf. <Ref. to EI-120, REMOVAL, Rear Shelf Trim.>
3) Remove the keyless entry control module.
   (1) Disconnect the connector.
   (2) Remove the bolt and then remove the keyless entry control module.

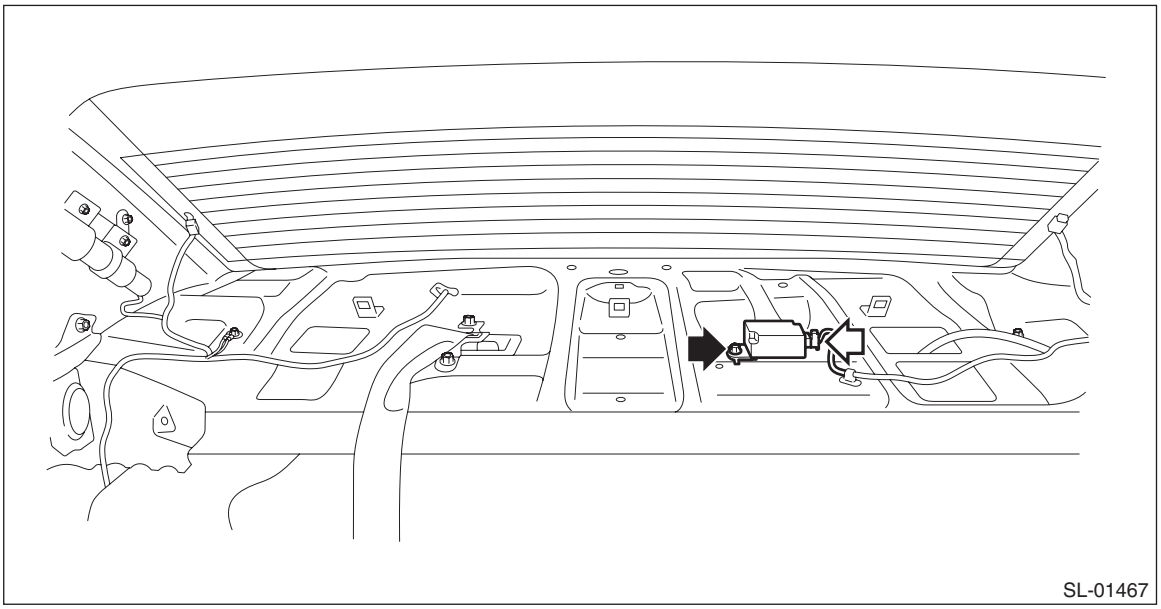

2. 5 DOOR MODEL/XV MODEL

1) Disconnect the ground cable from battery. <Ref. to NT-5, BATTERY, NOTE, Note.>

NOTE:
For the 12 volt engine restart battery of HEV model, disconnect the ground terminal from 12V engine restart battery sensor.

2) Remove the trim panel - rear apron LH. <Ref. to EI-112, REMOVAL, Rear Quarter Trim.>
3) Remove the keyless entry control module.
   (1) Disconnect the connector.
   (2) Remove the bolt and then remove the keyless entry control module.

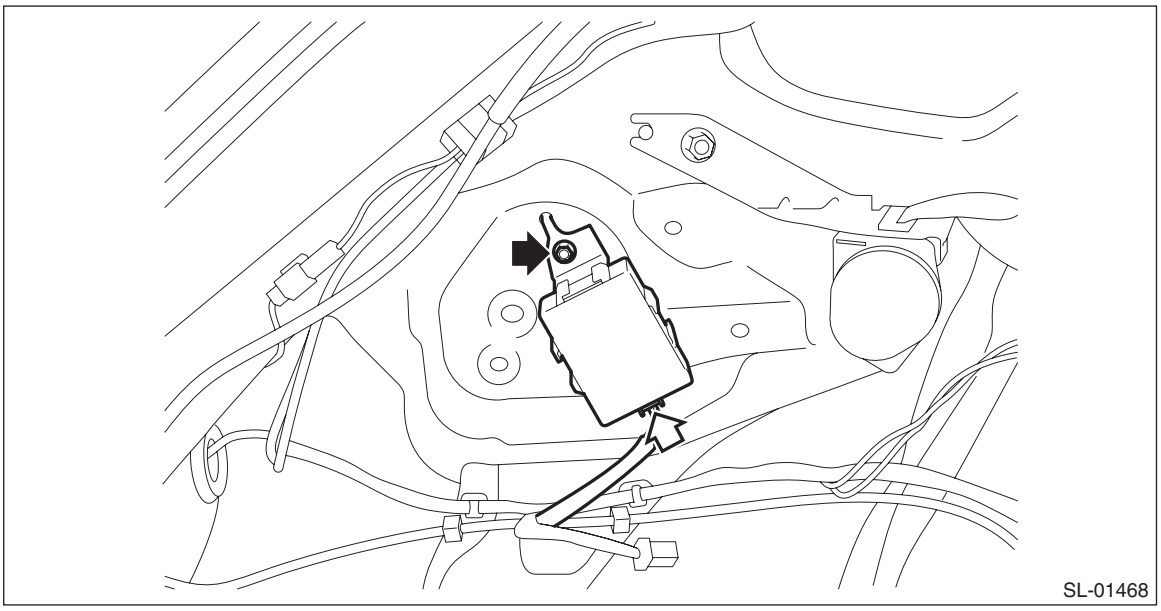

B: INSTALLATION

Install each part in the reverse order of removal.

Tightening torque:
Keyless entry control module: 13 N·m (1.33 kgf-m, 9.6 ft-lb)

24.Keyless Buzzer

A: REMOVAL

1) Disconnect the ground cable from battery. <Ref. to NT-5, BATTERY, NOTE, Note.>

NOTE:
For the 12 volt engine restart battery of HEV model, disconnect the ground terminal from 12V engine restart battery sensor.

2) Lift up the vehicle.
3) Remove the clips, and turn over the front side of the mud guard - front.

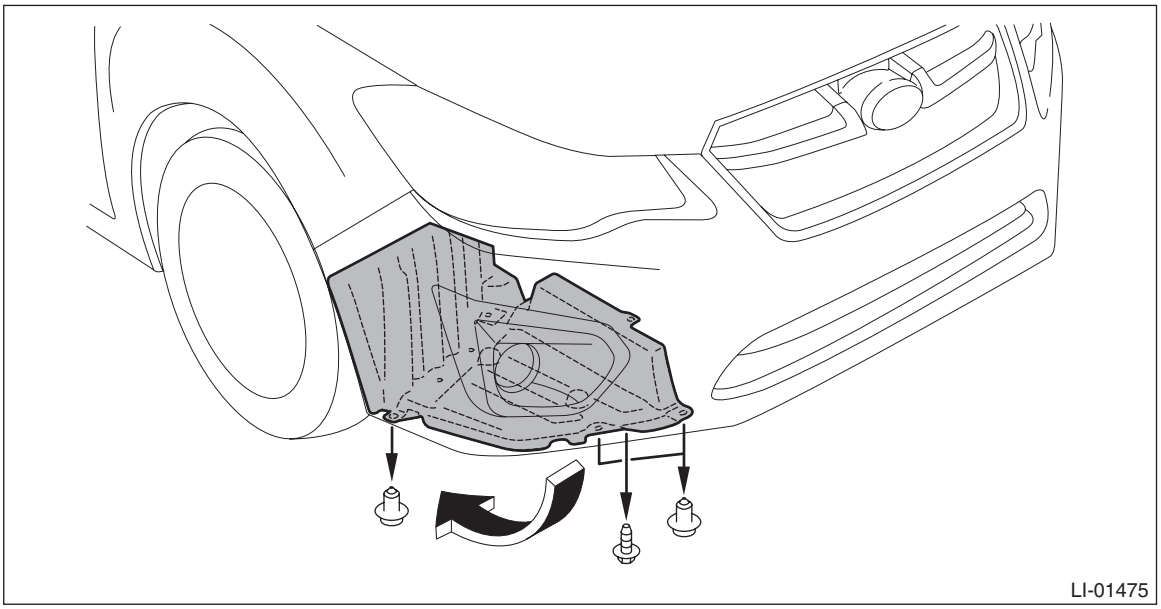

4) Remove the keyless buzzer.
   (1) Disconnect the connector.
   (2) Remove the clip and detach the keyless buzzer.
   • Gasoline engine model

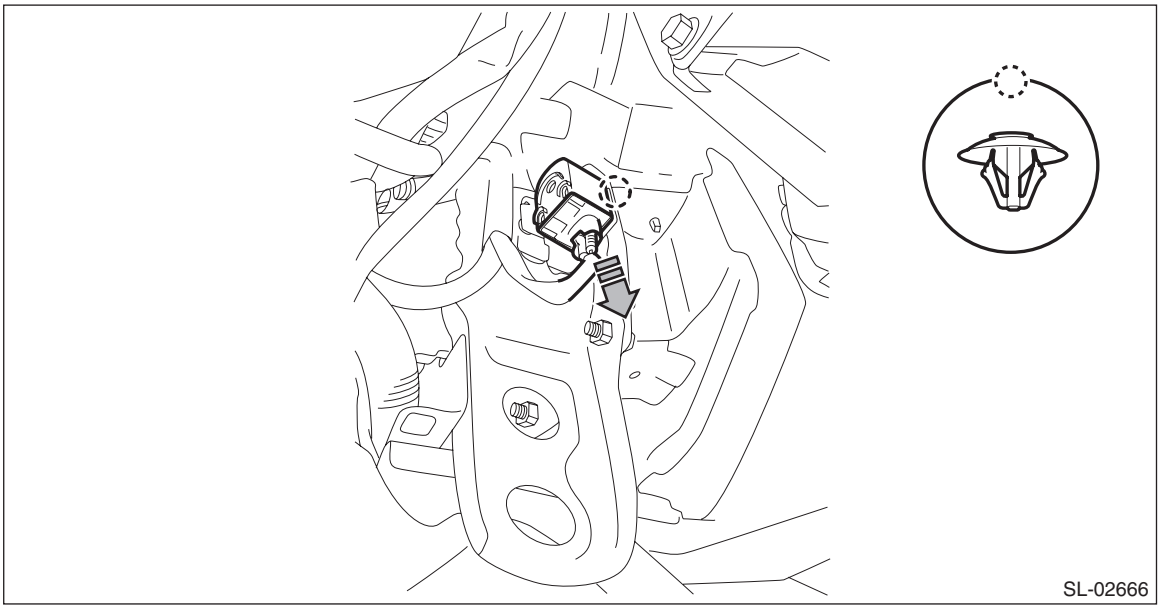

- HEV model

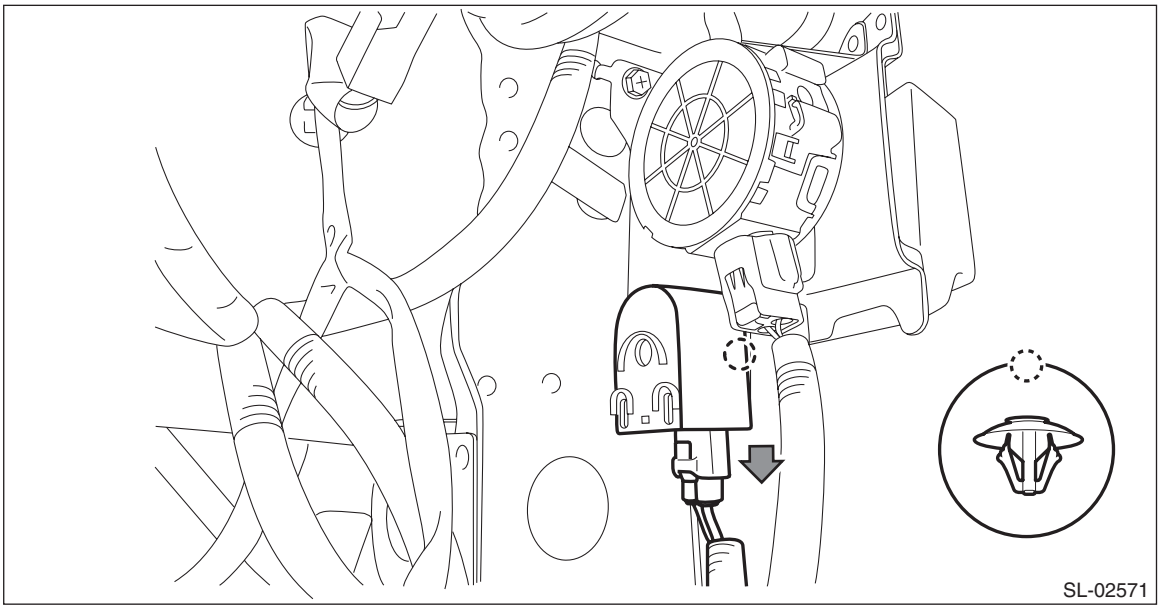

B: INSTALLATION

Install each part in the reverse order of removal.

C: INSPECTION

Using the Subaru Select Monitor, perform forced operation of the keyless buzzer. <Ref. to BC(diag)-15, OPERATION, User Customizing.>
If the buzzer does not sound, replace the keyless buzzer.

25.Body Integrated Unit

A: NOTE

1. WHEN REPLACING THE BODY INTEGRATED UNIT

1) Check and record the current setting. <Ref. to BC(diag)-17, CONFIRM CURRENT SETTING, OPERATION, Registration Body Integrated Unit.>
2) Prepare all immobilizer keys already registered. (Model without keyless access)

NOTE:
If some of the registered immobilizer keys are missing, the following parts must be replaced.
- Except for C0 and C5 models: Combination meter
- C0 and C5 models: Security control module

2. AFTER REPLACING THE BODY INTEGRATED UNIT

1) Register the immobilizer. (Model without keyless access)

NOTE:
For detailed operation procedure, refer to the “REGISTRATION MANUAL FOR IMMOBILIZER”.
2) Set the current settings as recorded.

B: REMOVAL

1) Remove the cover assembly - instrument panel LWR driver and the knee airbag module. <Ref. to AB-43, REMOVAL, Knee Airbag Module.>
2) Release the lock and remove the fuse holder.

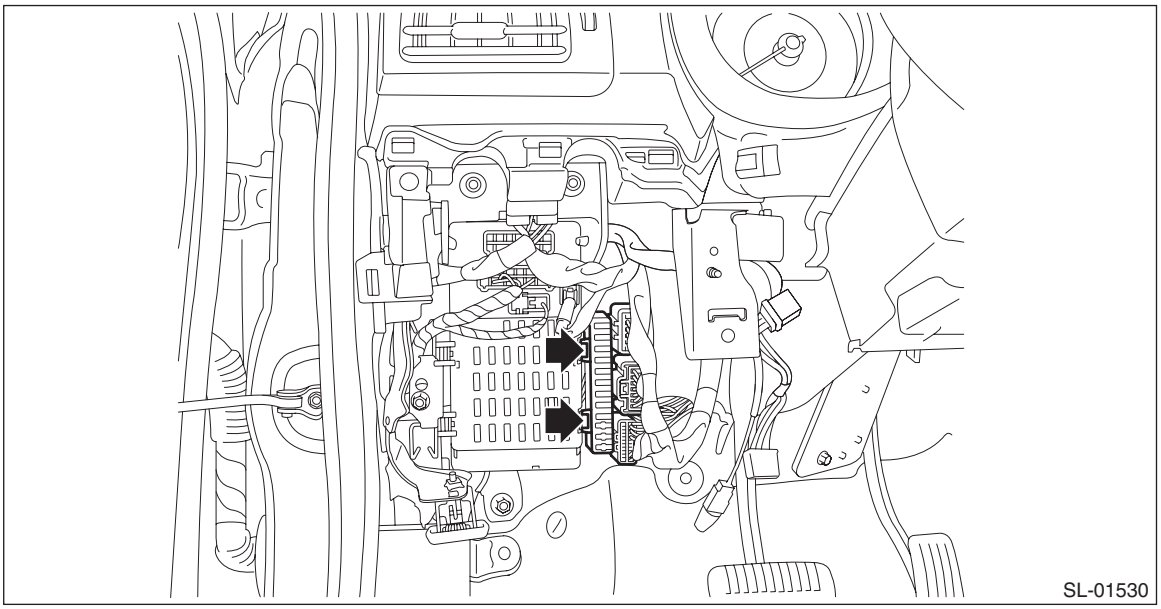

3) Remove the relay & fuse box.
(1) Disconnect the connector.
(2) Remove the bolts and nuts, and remove the relay & fuse box.

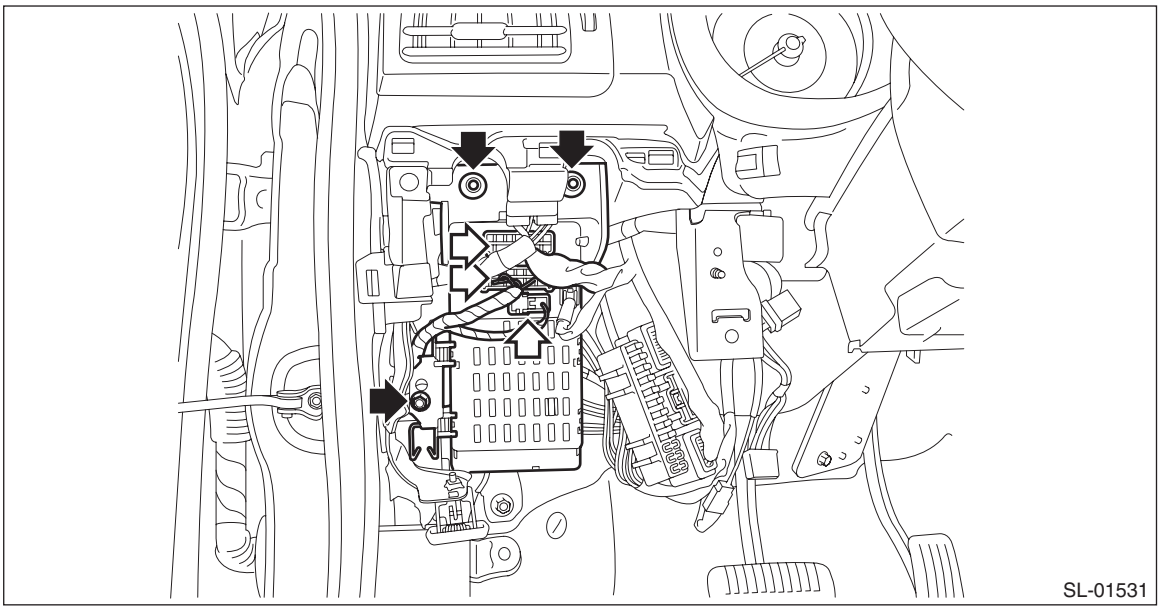
SL-01531

4) Remove the body integrated unit.

CAUTION:
Be careful to keep water and other foreign materials away from body integrated unit.
(1) Disconnect the connector.

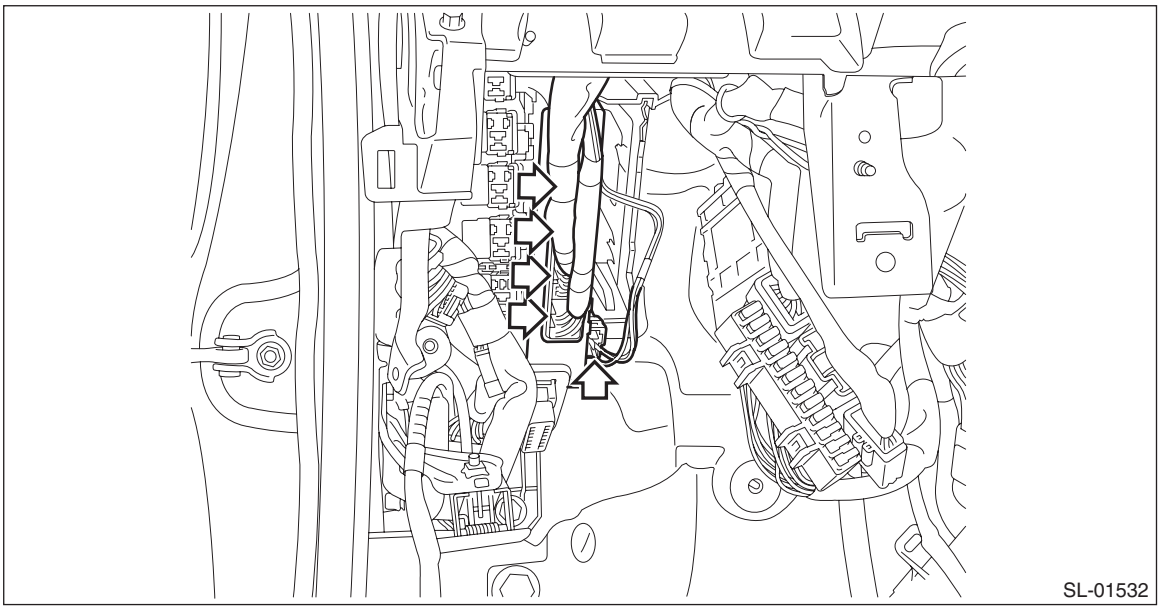
SL-01532

(2) Release the lock, and remove the data link connector bracket from the bracket.

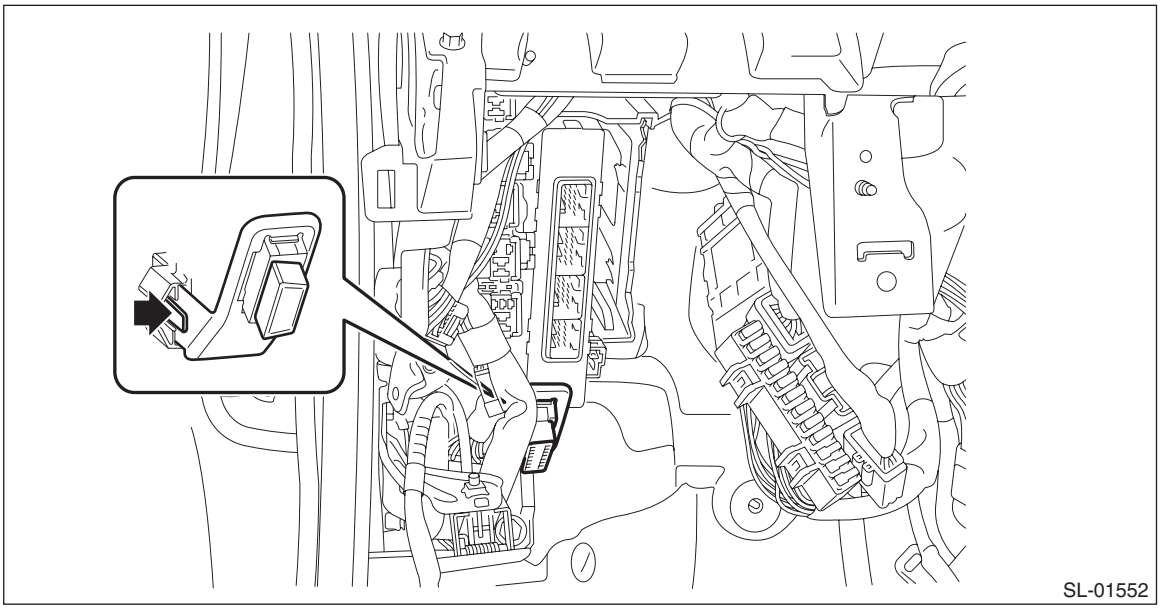

(3) Release the claws, and pull out the body integrated unit from the bracket.

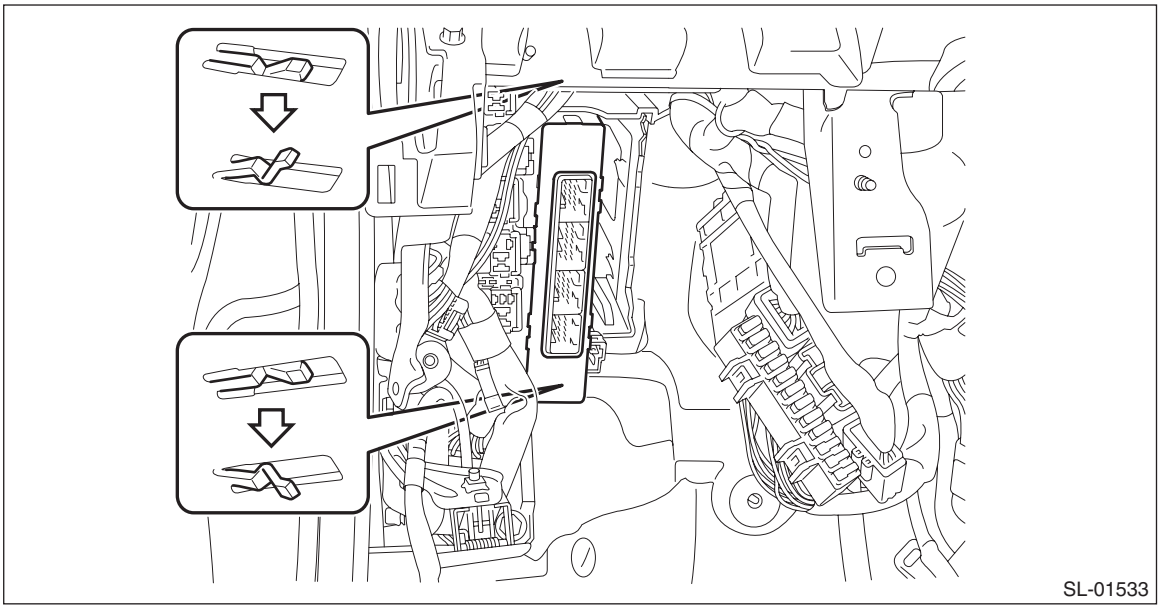

C: INSTALLATION

CAUTION:

- **Before handling the airbag module, refer to "CAUTION" of "General Description" in "AIRBAG SYSTEM". <Ref. to AB-11, CAUTION, General Description.>**
- **Do not allow harness and connectors to interfere or get tangled up with other parts.**

Install each part in the reverse order of removal.

Tightening torque:

Relay & fuse box: 7.5 N·m (0.76 kgf-m, 5.5 ft-lb)

NOTE:

Make sure that there are no differences from the contents of the current settings after installation. <Ref. to BC(diag)-11, LIST, Read Current Data.>

26.Keyless Transmitter

A: REMOVAL

1. KEYLESS TRANSMITTER BATTERY

CAUTION:
To prevent static electricity damage to the keyless transmitter printed circuit board, touch the steel area of building with hand to discharge static electricity carried on body or clothes before disassembling the keyless transmitter.

1) Remove the keyless transmitter cover, and take out the transmitter case (A).

NOTE:
Use a flat tip screwdriver with protective tape or cloth in order not to damage the components.

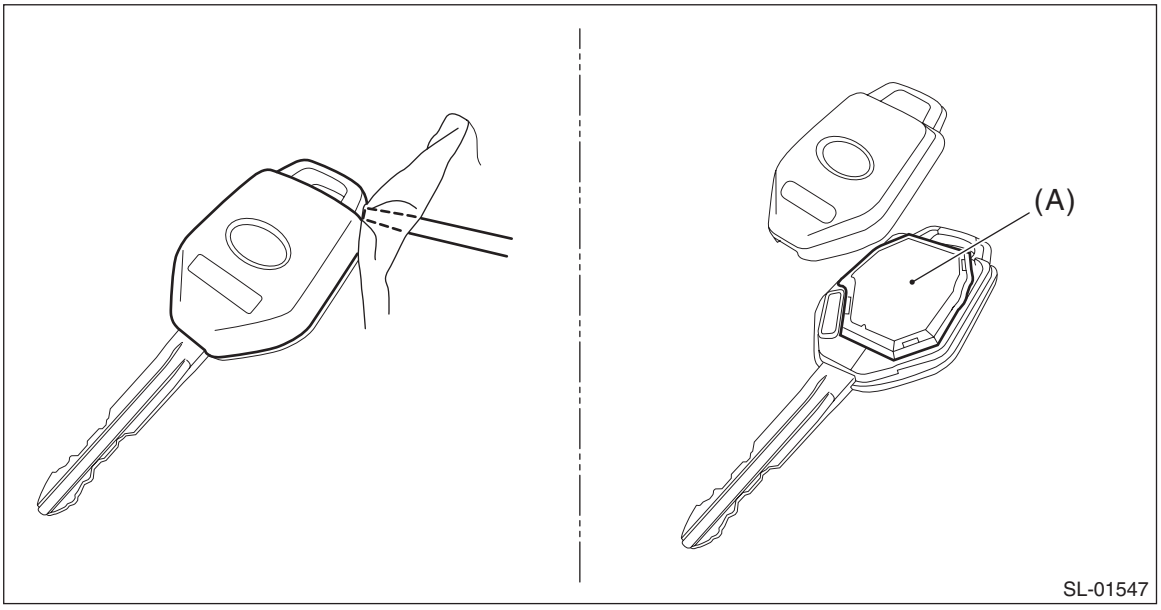

2) Release the claws to open the transmitter case, then remove the battery (A).

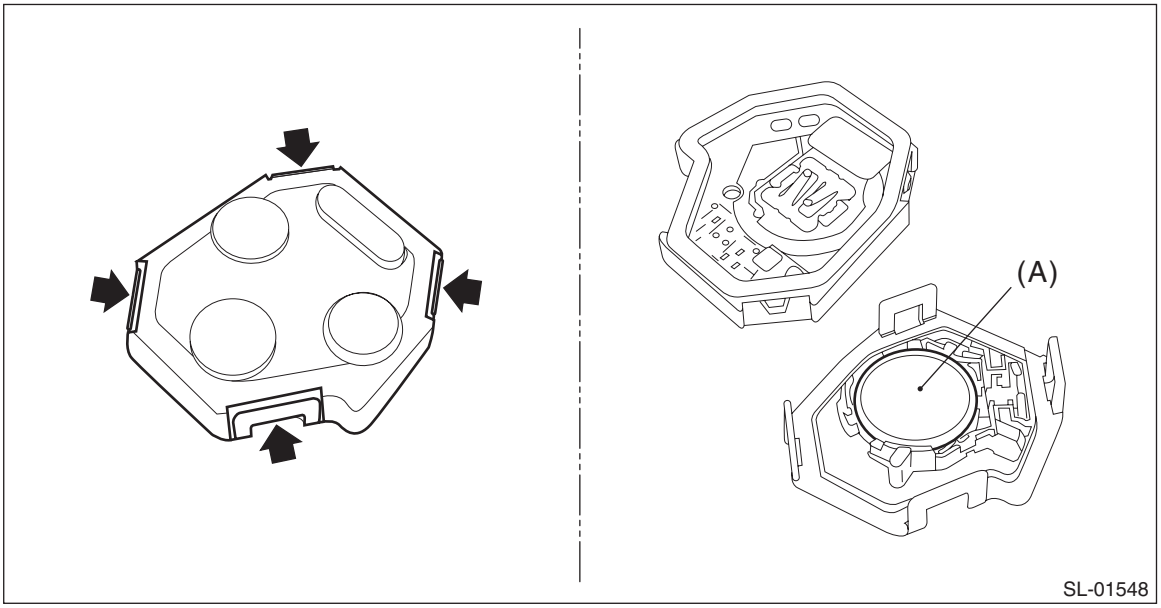

B: INSTALLATION

1. KEYLESS TRANSMITTER BATTERY

Install each part in the reverse order of removal.

C: INSPECTION

1. KEYLESS TRANSMITTER BATTERY

1) Check the keyless transmitter battery voltage.

PREPARATION TOOL:
Circuit tester

NOTE:
Complete the measurement within 5 seconds because the battery discharges during measurement.

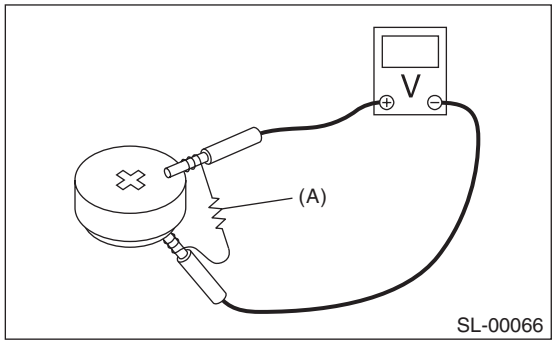

Battery terminal	Inspection Conditions	Standard
(+) — (–)	Connect resistor (A) 47 Ω	2.5 — 3.0 V

2) Replace the battery if the inspection result is not within the standard. (Use CR1620 or equivalent.)

D: REPLACEMENT

1. REGISTRATION OF KEYLESS TRANSMITTER WITH SUBARU SELECT MONITOR

NOTE:
- A maximum of four keyless transmitters can be registered for each individual vehicle.
- When replacing or adding the keyless transmitter, new registration of transmitter is necessary.

1) Prepare the Subaru Select Monitor kit. <Ref. to SL-9, SPECIAL TOOL, PREPARATION TOOL, General Description.>

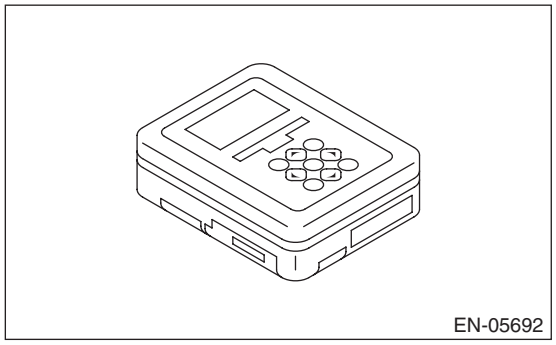

2) Prepare PC with Subaru Select Monitor installed.
3) Connect the USB cable to SDI (Subaru Diagnosis Interface) and USB port on the personal computer (dedicated port for the Subaru Select Monitor).

NOTE:
The dedicated port for the Subaru Select Monitor means the USB port which was used to install the Subaru Select Monitor.
4) Connect the diagnosis cable to SDI.

5) Connect SDI to data link connector located in the lower portion of the instrument panel (on the driver's side).

CAUTION:
Do not connect scan tools other than the Subaru Select Monitor.

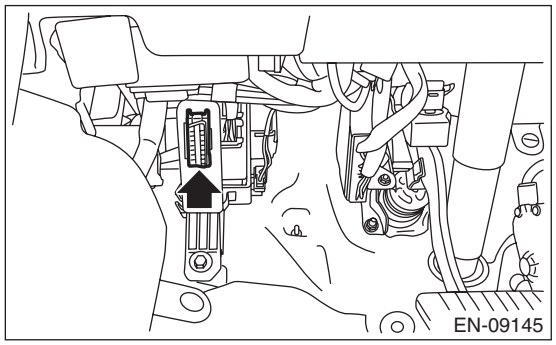

6) Start the PC.
7) Turn the ignition switch to OFF and run the "PC application for Subaru Select Monitor".
8) On the «Main Menu» of the Subaru Select Monitor, select {Each System Check} → {Integ. unit mode} → {Work Support} → {Keyless ID registration}.
9) According to the directions on the screen, press the button of the transmitter to be registered in the LOCK → UNLOCK order. «When registration completed, external buzzer sound once.» Repeat the registration as many times as desired.
10) Press the [Exit] button to finish the operations.

NOTE:
When attempting to register a key that has already been registered, the external buzzer sounds twice.

27.Access Key

A: REMOVAL

NOTE:
Refer to keyless transmitter for model without keyless access. <Ref. to SL-85, KEYLESS TRANSMITTER BATTERY, REMOVAL, Keyless Transmitter.>

1. ACCESS KEY BATTERY

CAUTION:
To prevent static electricity damage to the access key printed circuit board, touch the steel area of building with hand to discharge static electricity carried on body or clothes before disassembling the access key.

1) Push the lock button and remove the mechanical key from the access key.
2) Insert the mechanical key into the slit of the access key to open the case.

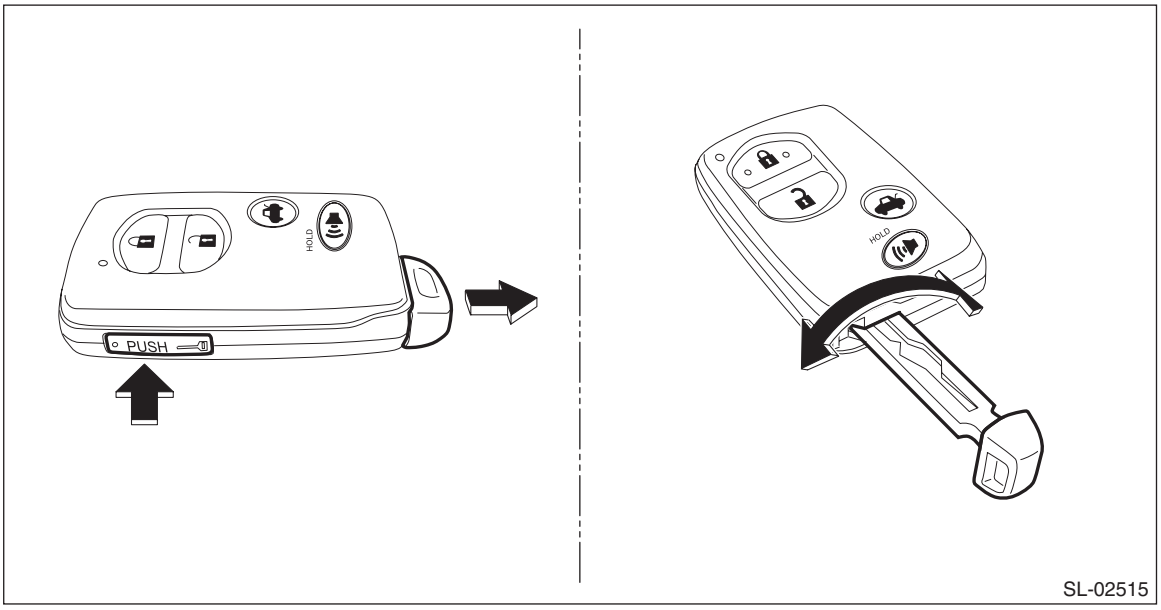

SL-02515

3) Insert a flat tip screwdriver to remove the battery (A) from the case.

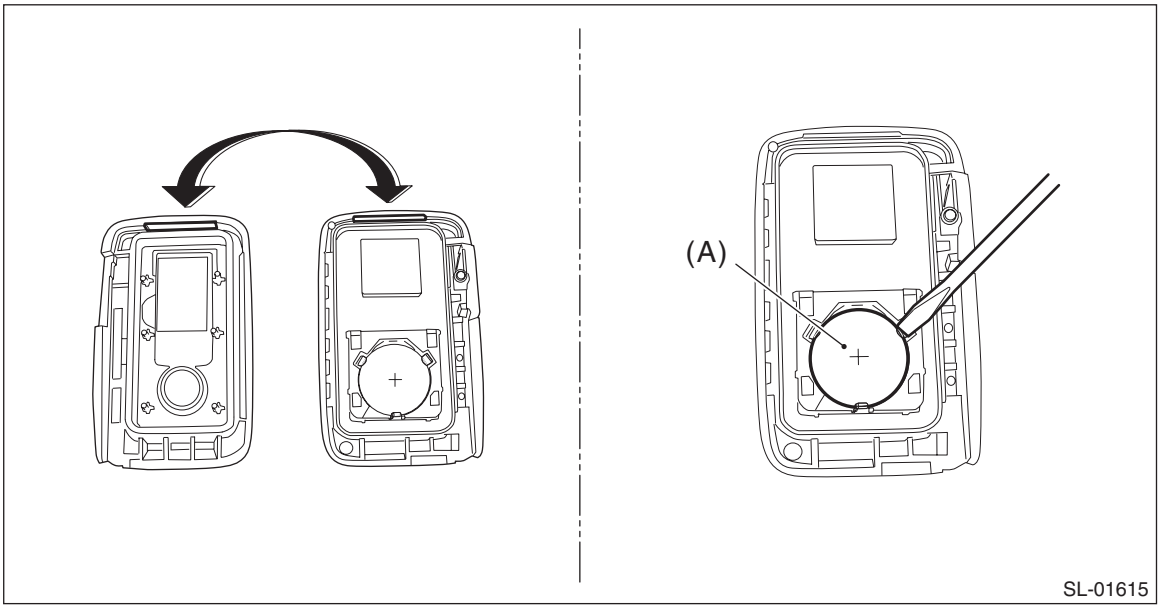

SL-01615

B: INSTALLATION

1. ACCESS KEY BATTERY

Install each part in the reverse order of removal.

C: INSPECTION

1. ACCESS KEY BATTERY

Check the access key battery voltage.

Preparation tool:
Circuit tester

NOTE:
Complete the measurement within 5 seconds because the battery discharges during measurement.

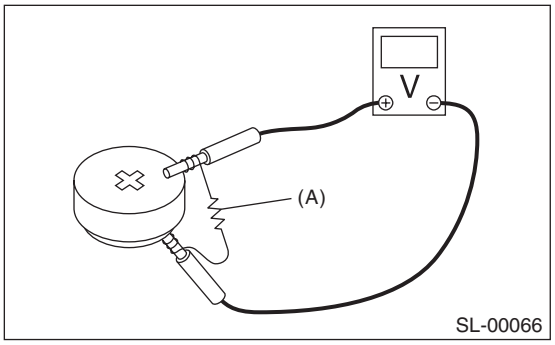

Battery terminal	Inspection conditions	Standard
(+) — (–)	Connect resistor (A) 47 Ω	2.5 — 3.0 V

Replace the battery if the inspection result is not within the standard value. (Use CR1632 V or equivalent.)

D: REPLACEMENT

1. ACCESS KEY REGISTRATION

NOTE:
- A maximum of seven access keys can be registered for each individual vehicle.
- When replacing or adding an access key, new registration of the access key is necessary.
- When the access key has been newly added, it is registered to the immobilizer system at the same time.

2. CLEARING ACCESS KEY REGISTRATION

Refer to the “REGISTRATION MANUAL FOR IMMOBILIZER” for clearing access key registration.

28.Immobilizer Control Module

A: NOTE

The control of immobilizer system is carried out in body integrated unit. For the detailed procedure, refer to the section of body integrated unit.

- Removal: <Ref. to SL-82, REMOVAL, Body Integrated Unit.>
- Installation: <Ref. to SL-84, INSTALLATION, Body Integrated Unit.>

29.Immobilizer Antenna

A: REMOVAL

1. MODELS WITHOUT KEYLESS ACCESS

1) Disconnect the ground cable from battery. <Ref. to NT-5, BATTERY, NOTE, Note.>

NOTE:
For the 12 volt engine restart battery of HEV model, disconnect the ground terminal from 12V engine restart battery sensor.

2) Remove the cover assembly - column.
   (1) Remove the screws by turning the steering wheel to right and left.

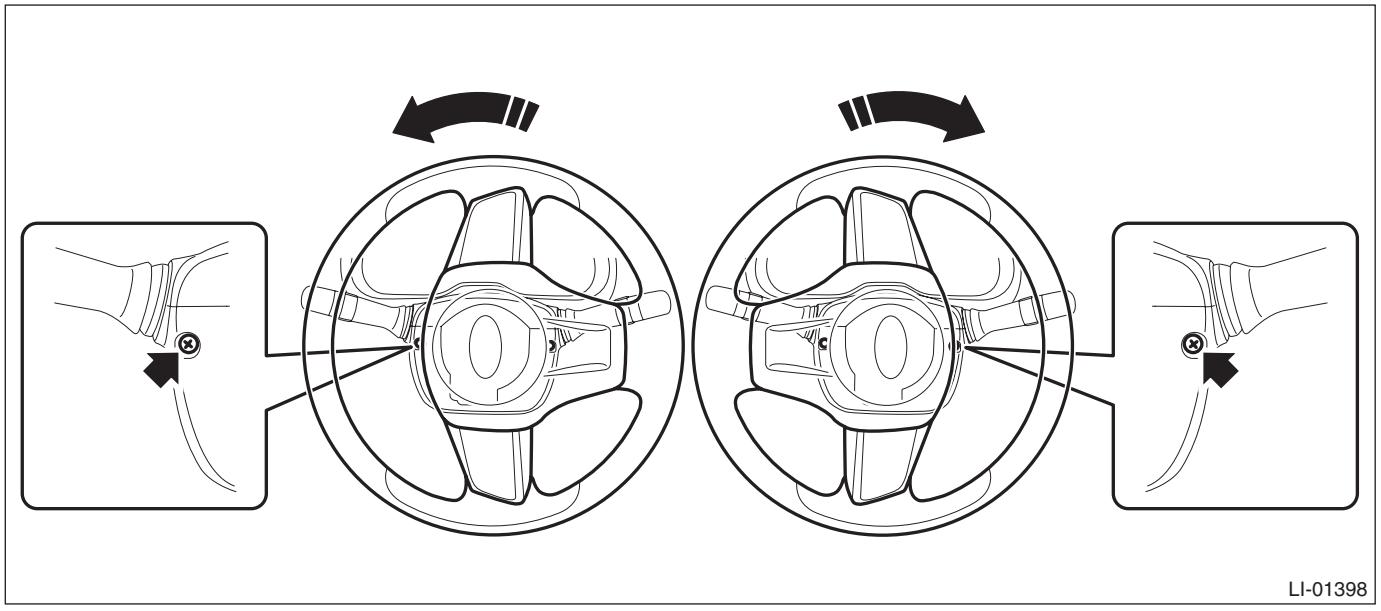

   (2) Release the claw, and remove the cover assembly - column UPR and the cover assembly - column LWR.

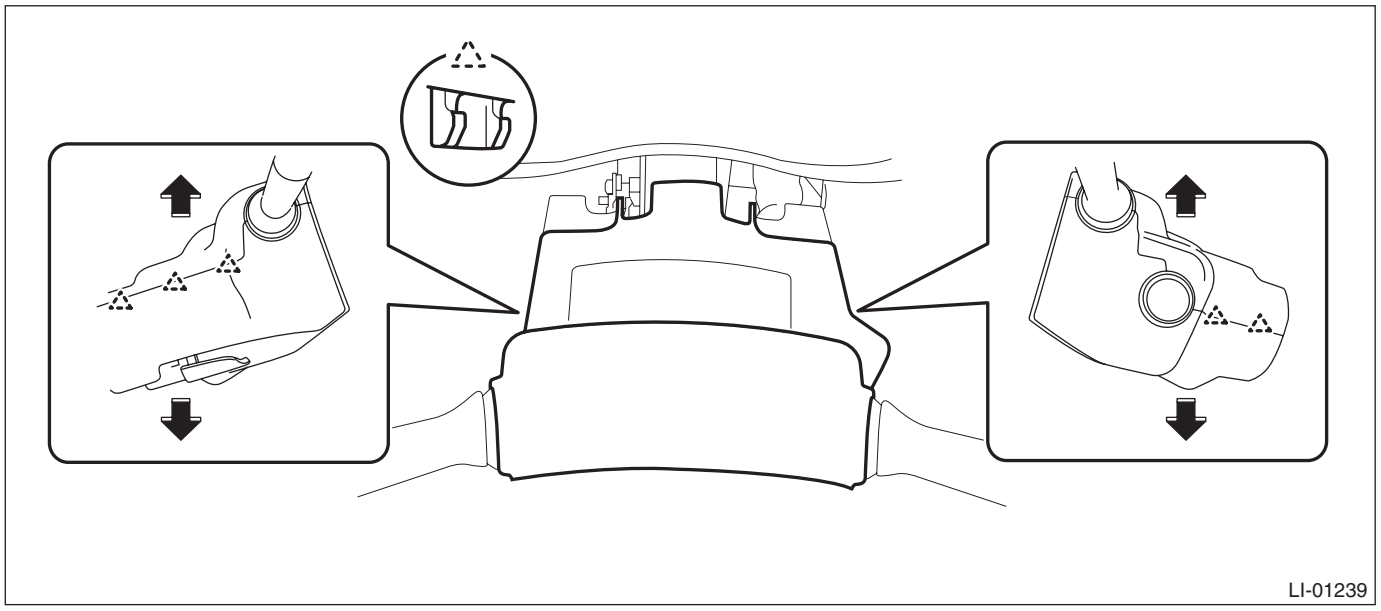

3) Remove the immobilizer antenna assembly.
(1) Disconnect the connector.
(2) Release two claws using a flat tip screwdriver or similar tool wrapped with a protection tape, and remove the immobilizer antenna assembly.

CAUTION:
Do not apply excessive force to disengage the lock of immobilizer antenna assembly. Otherwise they may be broken because those parts are the products made of a plastic.

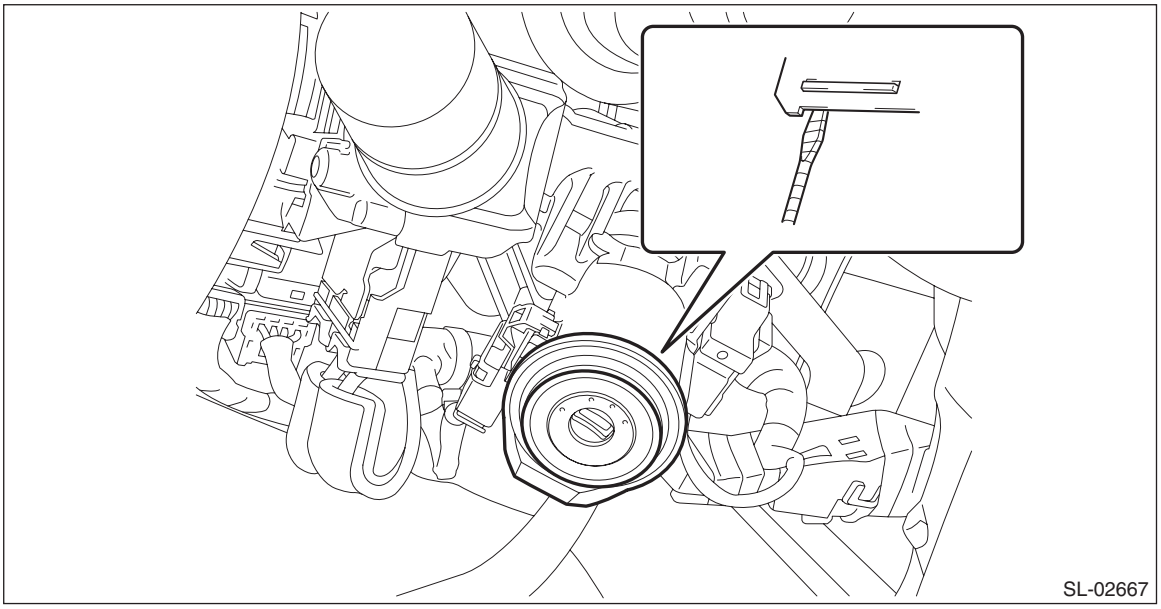
SL-02667

2. MODELS WITH KEYLESS ACCESS

NOTE:
Immobilizer antenna is integrated with the push button ignition switch.
1) Remove the cover assembly - instrument panel LWR driver. <Ref. to EI-71, REMOVAL, Instrument Panel Lower Cover.>
2) Remove the push button ignition switch.
(1) Disconnect the connector, and remove the aspirator hose.

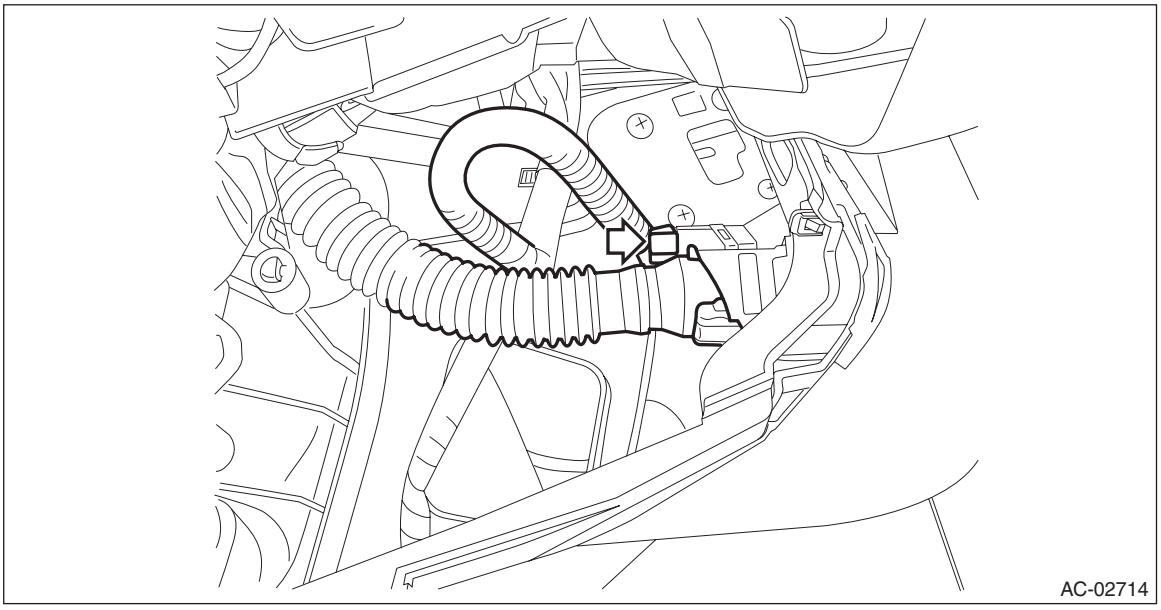
AC-02714

(2) Release the claws, and then remove the panel - switch.

(3) Release the claws, and then remove the push button ignition switch from the panel - switch.

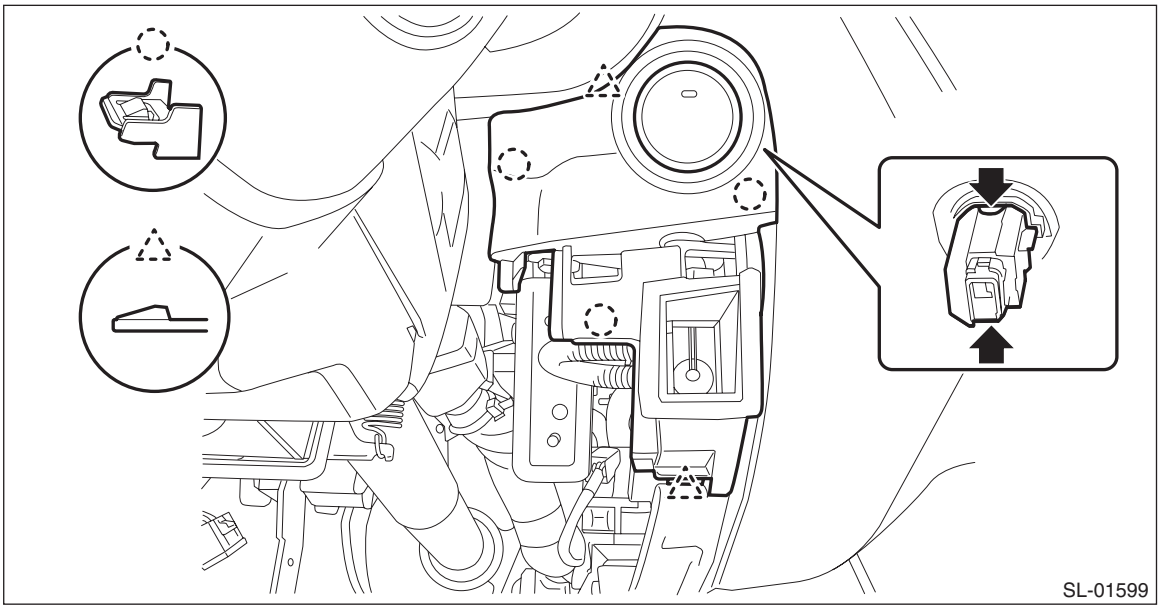

B: INSTALLATION

Install each part in the reverse order of removal.

30.Keyless Access Indoor Antenna

A: REMOVAL

1. FRONT ANTENNA

1) Remove the cover - shift lever. <Ref. to EI-77, REMOVAL, Console Box.>
2) Disconnect the connector and remove the front antenna assembly - interior.

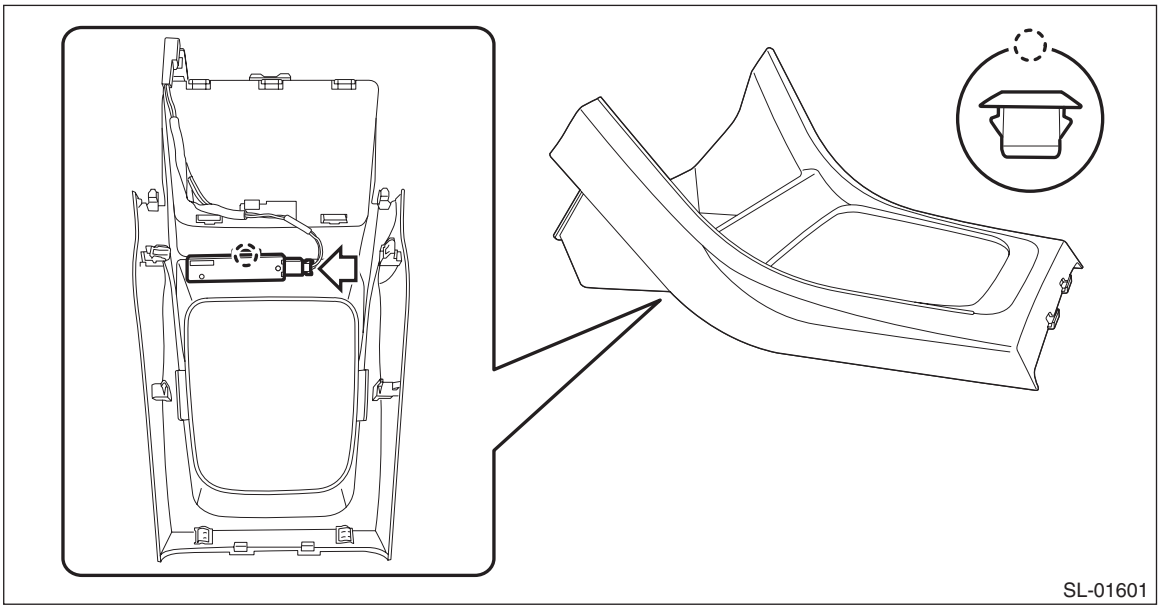

2. CENTER ANTENNA

1) Disconnect the ground cable from battery. <Ref. to NT-5, BATTERY, NOTE, Note.>

NOTE:
For the 12 volt engine restart battery of HEV model, disconnect the ground terminal from 12V engine restart battery sensor.
2) Remove the rear seat cushion assembly. <Ref. to SE-23, REMOVAL, Rear Seat.>

3) Remove the center antenna assembly - interior.

NOTE:
Do not remove the antenna assembly from the cover. If removed, the antenna assembly and cover mounting becomes loose, causing abnormal noises.

(1) Disconnect the connector.
(2) Remove the screw, and remove the center antenna assembly - interior.

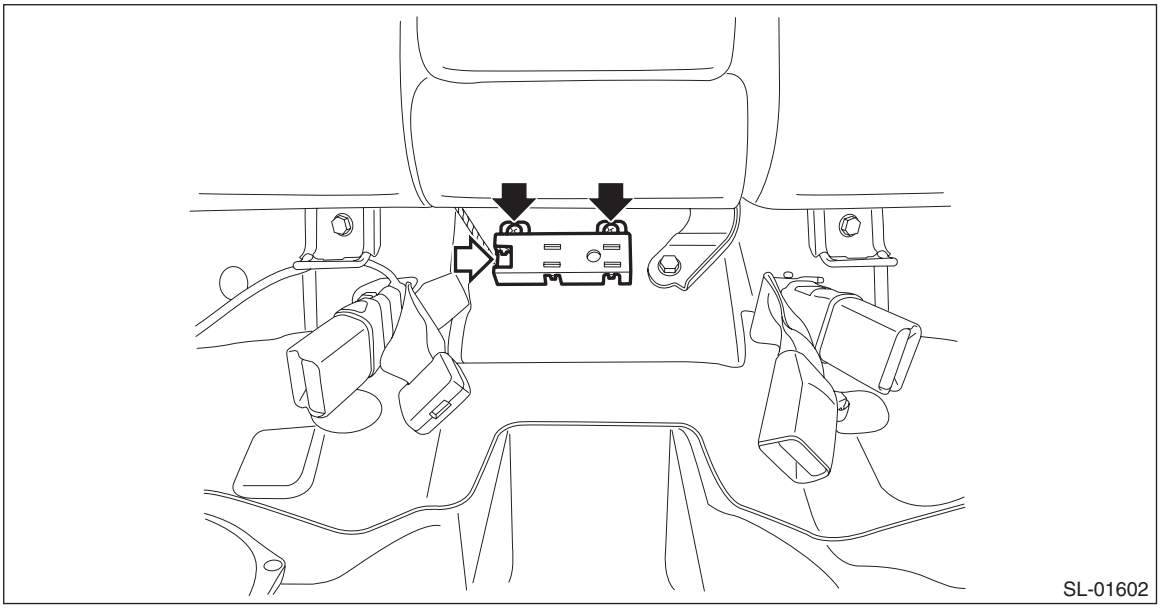

3. REAR ANTENNA

1) Disconnect the ground cable from battery. <Ref. to NT-5, BATTERY, NOTE, Note.>

NOTE:
For the 12 volt engine restart battery of HEV model, disconnect the ground terminal from 12V engine restart battery sensor.

2) Remove the mat - rear floor CTR.
3) Remove the clips, and remove the sub-trunk box.

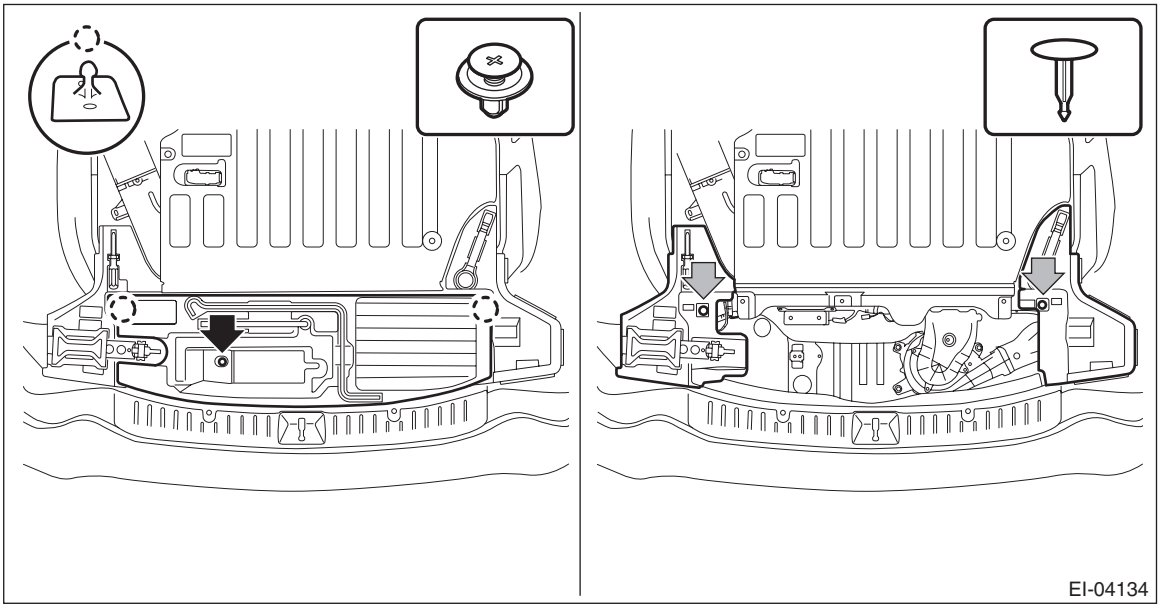

4) Remove the rear antenna assembly - interior.
(1) Disconnect the connector.
(2) Release the claw, and remove the rear antenna assembly - interior.

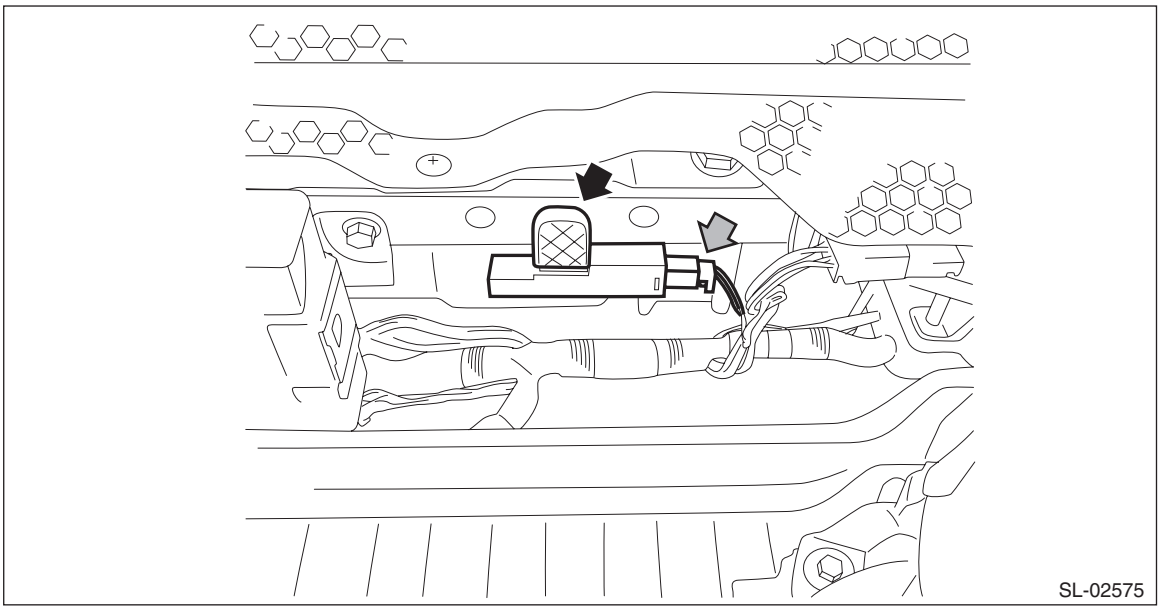

B: INSTALLATION

Install each part in the reverse order of removal.

C: INSPECTION

1) Check the setting by performing Keyless access system check using the Subaru Select Monitor. <Ref. to KPS(diag)-33, OPERATION, Keyless Access System Check.>
2) Disconnect the Subaru Select Monitor. Operate the touch sensor of the door outer handle to check if door lock operates.
3) If the system does not operate normally as the result of inspection, refer to “General Diagnostic Table” of the “KEYLESS ACCESS WITH PUSH BUTTON START SYSTEM (DIAGNOSTICS)” section. <Ref. to KPS(diag)-98, KEYLESS ACCESS SYSTEM, INSPECTION, General Diagnostic Table.>

31.Keyless Access Outdoor Antenna

A: REMOVAL

1. FRONT ANTENNA

CAUTION:
Do not remove the antenna from the front door outer handle.
If replacement is needed, replace the front outer handle assembly as a set.

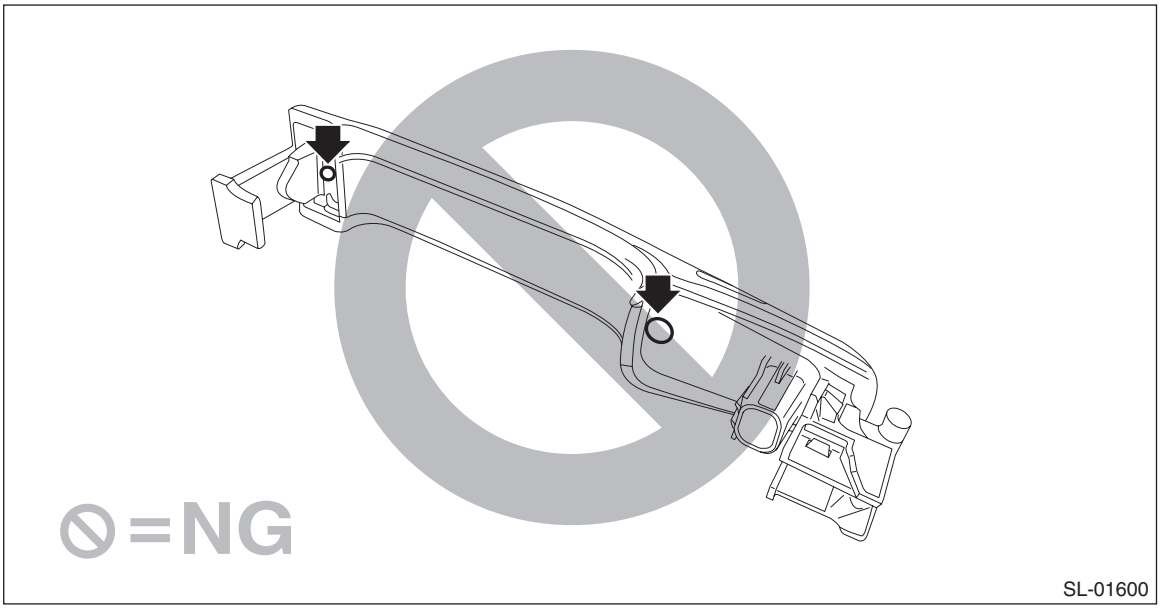

Remove the handle - door outer. <Ref. to SL-35, REMOVAL, Front Outer Handle.>

2. REAR ANTENNA

CAUTION:
• Do not remove the antenna except when the antenna needs to be replaced. Otherwise it may cause the antenna to be loose.
• When replacing the antenna, do not reuse the tapping screw. Be sure to replace it with a new tapping screw.

1) Remove the bumper face - rear. <Ref. to EI-52, 5 DOOR MODEL/XV MODEL, REMOVAL, Rear Bumper.>
2) Remove the rear antenna assembly - exterior.
   (1) Disconnect the connector.
   (2) Remove the screw, and remove the rear antenna assembly - exterior.

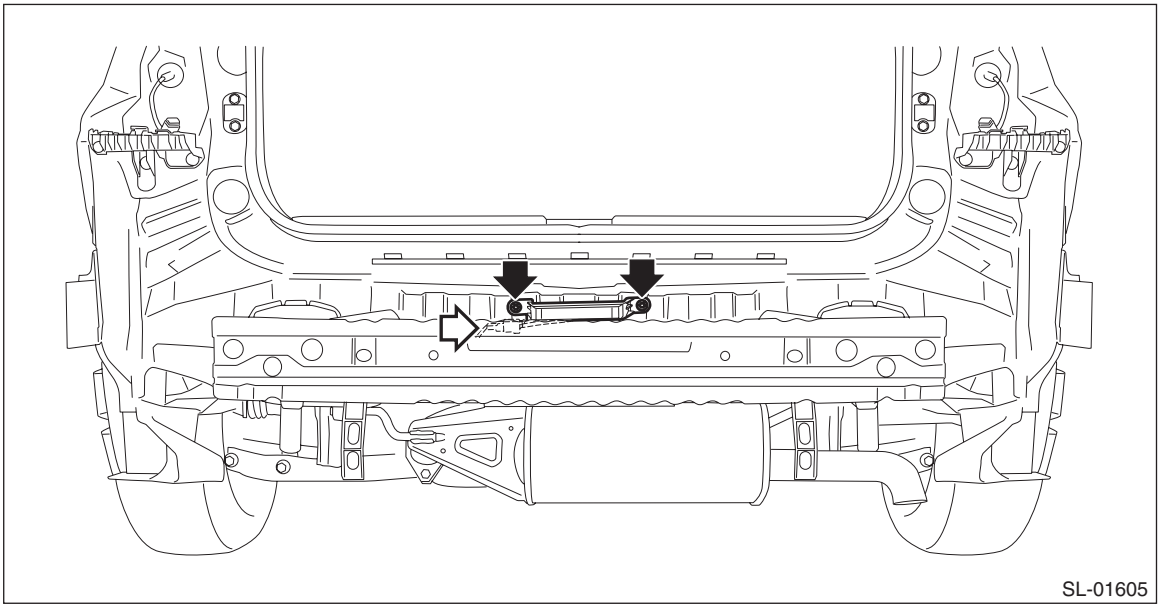

B: INSTALLATION

Install each part in the reverse order of removal.

Tightening torque:
Rear antenna assembly - exterior: 7.5 N·m (0.76 kgf-m, 5.5 ft-lb)

C: INSPECTION

1) Check the setting by performing Keyless access system check using the Subaru Select Monitor. <Ref. to KPS(diag)-33, OPERATION, Keyless Access System Check.>
2) Disconnect the Subaru Select Monitor. Operate the touch sensor of the door outer handle to check if door lock operates.
3) If the system does not operate normally as the result of inspection, refer to “General Diagnostic Table” of the “KEYLESS ACCESS WITH PUSH BUTTON START SYSTEM (DIAGNOSTICS)” section. <Ref. to KPS(diag)-98, KEYLESS ACCESS SYSTEM, INSPECTION, General Diagnostic Table.>

32.Rear Lock Button

A: REMOVAL

NOTE:
The rear lock button is integrated into the rear gate opener button.
1) Remove the garnish assembly - rear gate. <Ref. to EI-162, REMOVAL, Rear Gate Garnish.>
2) Remove the screws and remove the rear lock button.

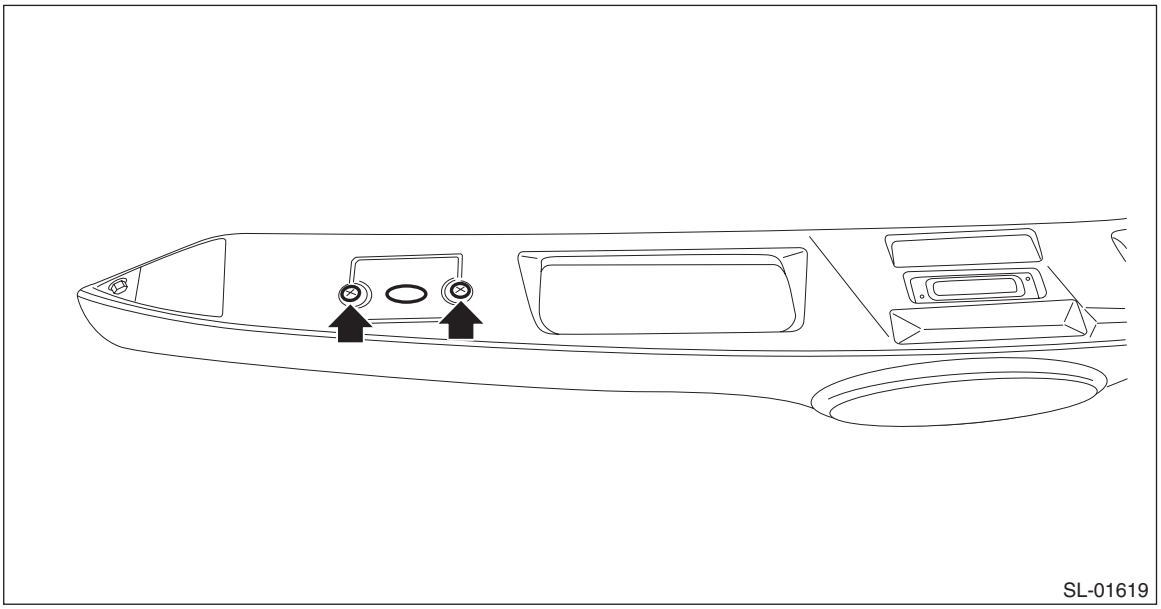
SL-01619

3) Release the locks at both ends of the button - opener rear gate by pushing them with a flat tip screwdriver, remove the button - opener rear gate and remove the integrated harness.

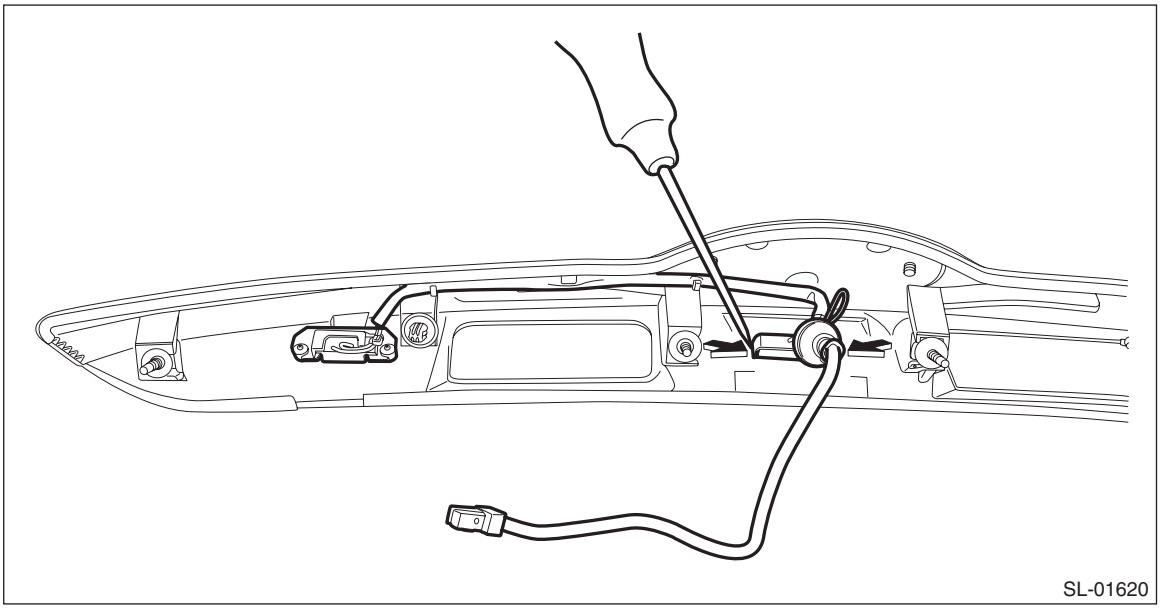
SL-01620

B: INSTALLATION

CAUTION:
Make sure that the harness grommet is securely installed.
If not properly installed, this may cause leaks.
Install each part in the reverse order of removal.

C: INSPECTION

1) Display the current data using the Subaru Select Monitor.
2) Check if the display changes when the rear lock button is operated.
3) If the display is not correct as the result of inspection, refer to “General Diagnostic Table” of the “KEYLESS ACCESS WITH PUSH BUTTON START SYSTEM (DIAGNOSTICS)” section. <Ref. to KPS(diag)-98, KEYLESS ACCESS SYSTEM, INSPECTION, General Diagnostic Table.>

33.Receiver

A: REMOVAL

NOTE:
Except for model with keyless entry

1. HEV MODEL

1) Remove the trim panel - rear apron LH. <Ref. to EI-112, REMOVAL, Rear Quarter Trim.>
2) Remove the receiver assembly.
   (1) Disconnect the connector.
   (2) Remove the bolt and remove the receiver assembly.

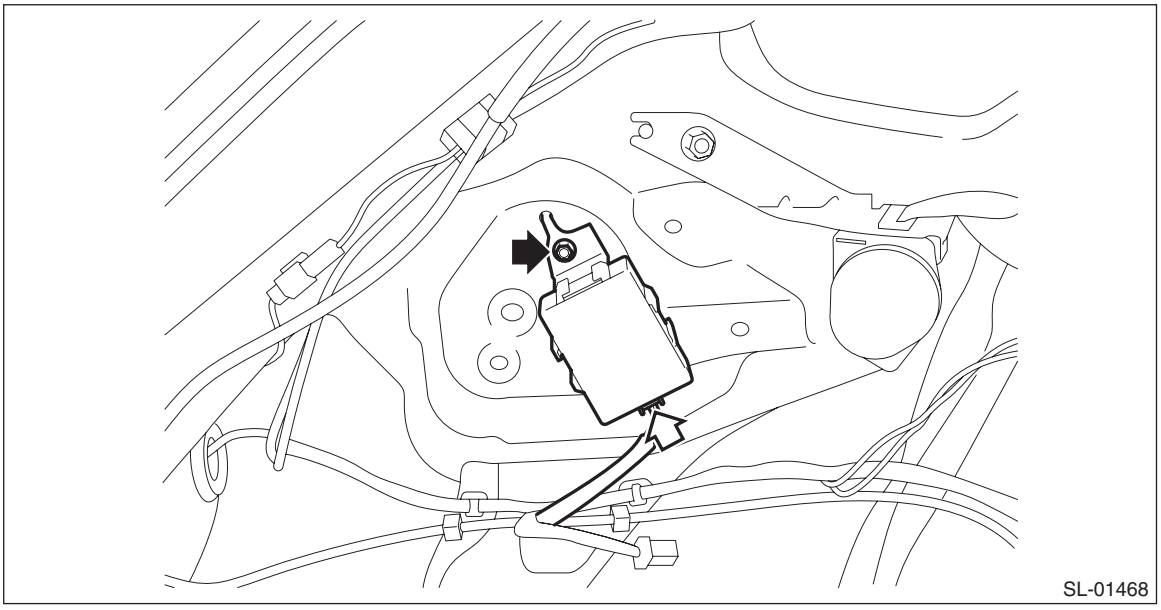

B: INSTALLATION

Install each part in the reverse order of removal.

Tightening torque:
Receiver assembly: 13 N·m (1.33 kgf-m, 9.6 ft-lb)

C: INSPECTION

1) Check if the door lock operates when the touch sensor of the door outer handle, rear lock button or trunk opener button is operated.
2) If the system does not operate normally as the result of inspection, refer to “General Diagnostic Table” of the “KEYLESS ACCESS WITH PUSH BUTTON START SYSTEM (DIAGNOSTICS)” section. <Ref. to KPS(diag)-98, KEYLESS ACCESS SYSTEM, INSPECTION, General Diagnostic Table.>

34.Keyless Access CM

A: REMOVAL

1) Remove the cover assembly - instrument panel LWR driver and the knee airbag module. <Ref. to AB-43, REMOVAL, Knee Airbag Module.>
2) Release the lock and remove the fuse holder.

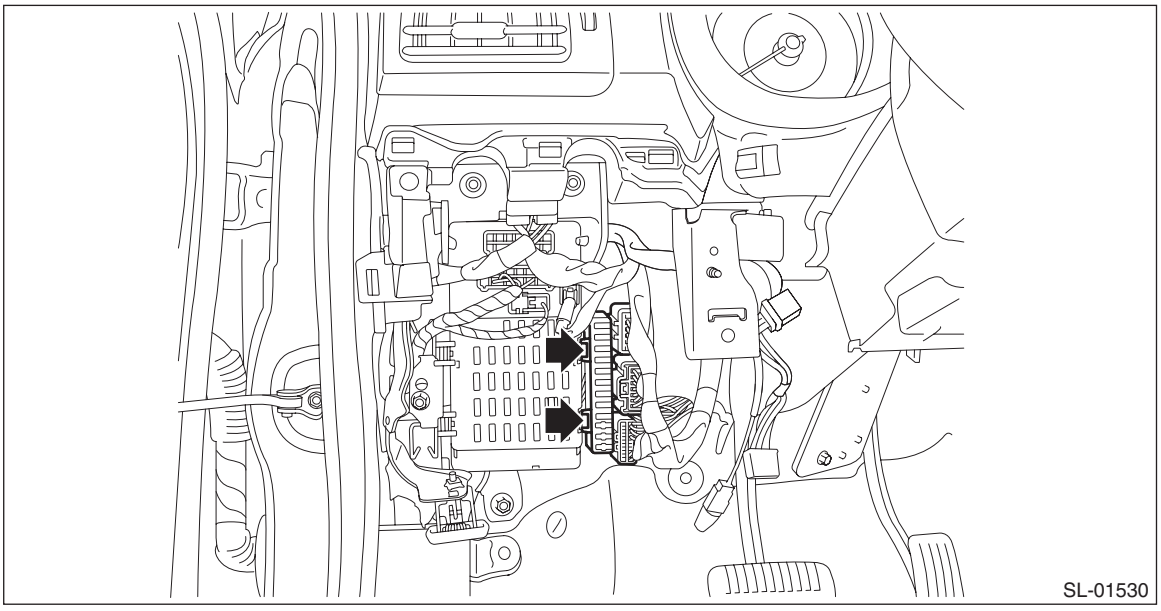

3) Remove the relay & fuse box.
   (1) Disconnect the connector.
   (2) Remove the bolts and nuts, and remove the relay & fuse box.

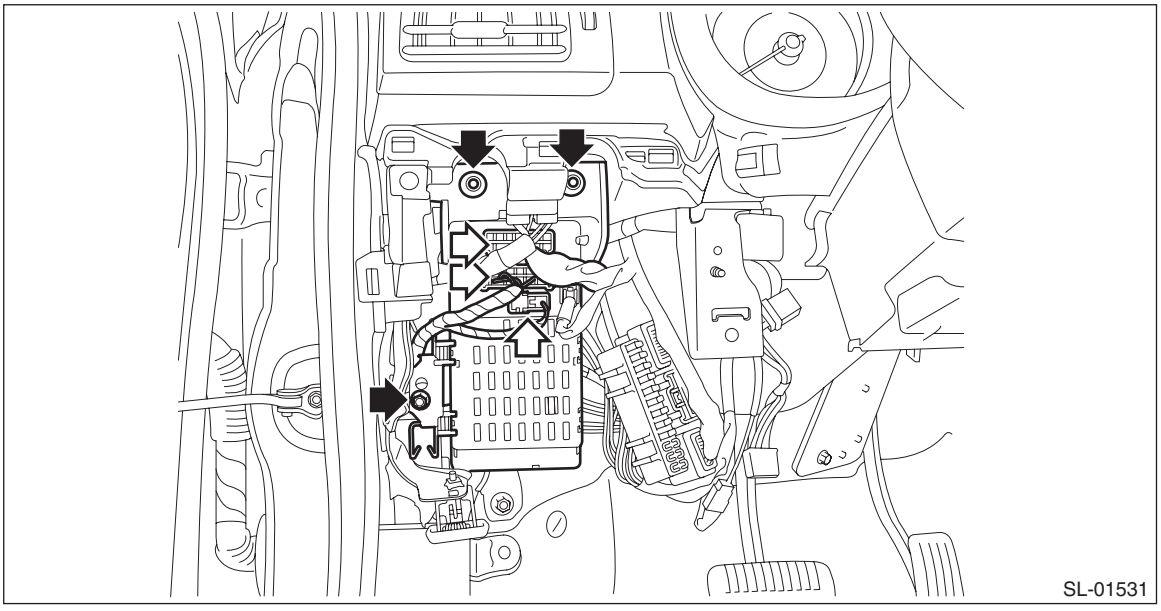

4) Remove the keyless access CM.

CAUTION:
Be careful to keep water and other foreign materials away from body integrated unit.

(1) Disconnect the connector.

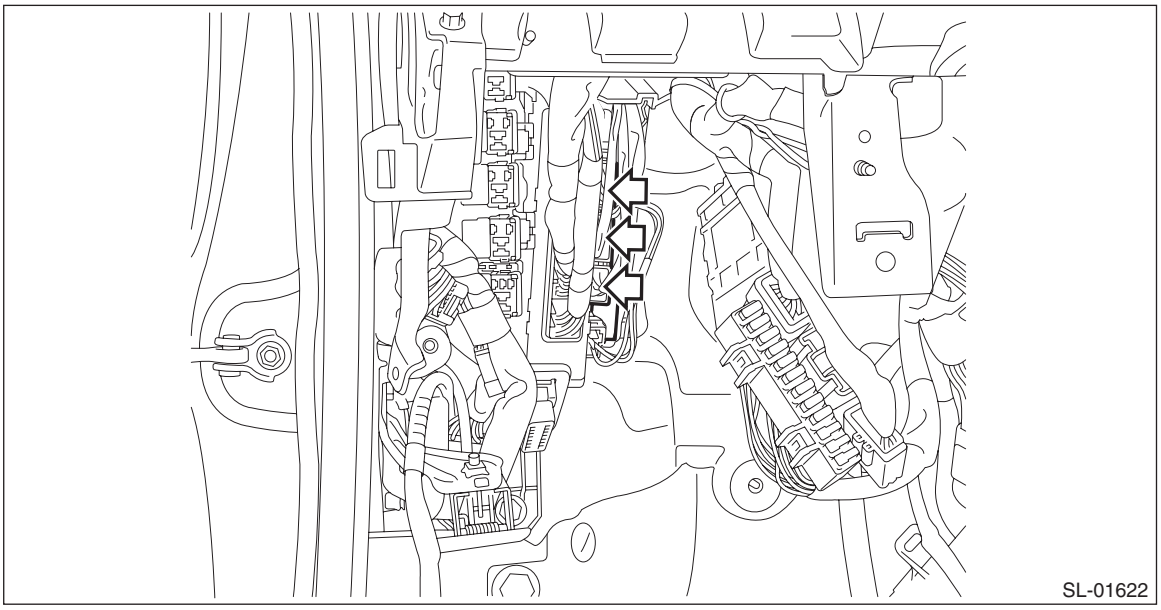
SL-01622

(2) Release the claws, and pull out the keyless access CM from the bracket.

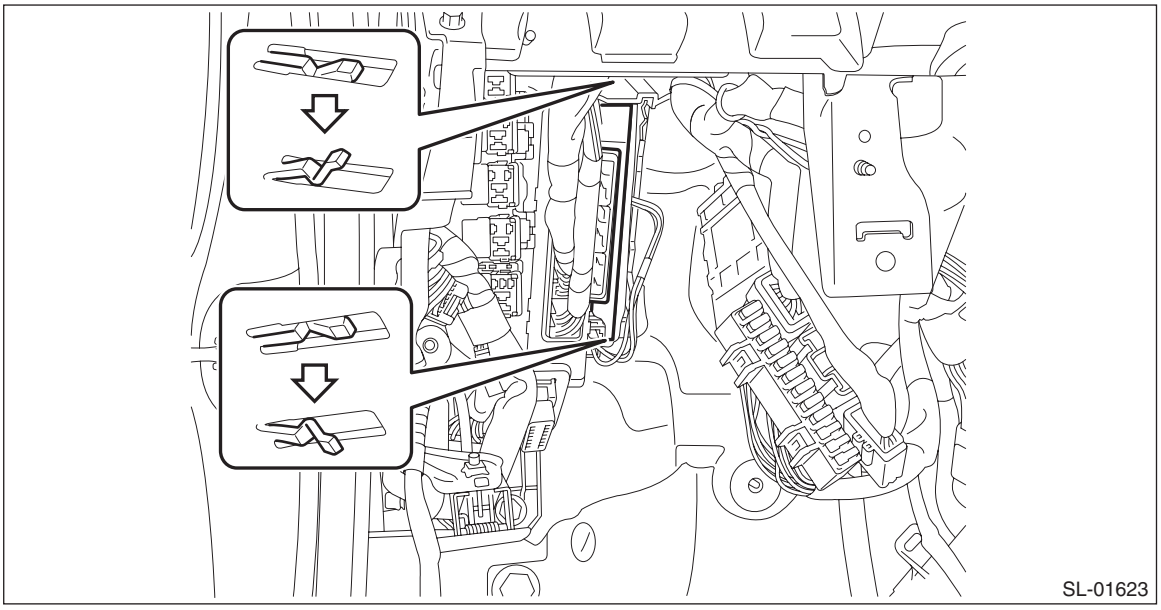
SL-01623

B: INSTALLATION

CAUTION:
Registration of the immobilizer is necessary when a immobilizer-related control module has been replaced. For detailed operation procedure, refer to the "REGISTRATION MANUAL FOR IMMOBILIZER".

Install each part in the reverse order of removal.

Tightening torque:
Relay & fuse box: 7.5 N·m (0.76 kgf-m, 5.5 ft-lb)

35.ID Code Box

A: REMOVAL

NOTE:
- Equipped on keyless access model for C0, C5.
- The installation location of ID code box is the same as that for the security control module.

1) Remove the heater and cooling unit assembly. <Ref. to AC-63, REMOVAL, Heater and Cooling Unit.>
2) Remove ID code box.
   (1) Disconnect the connector.
   (2) Remove the nut to remove ID code box.

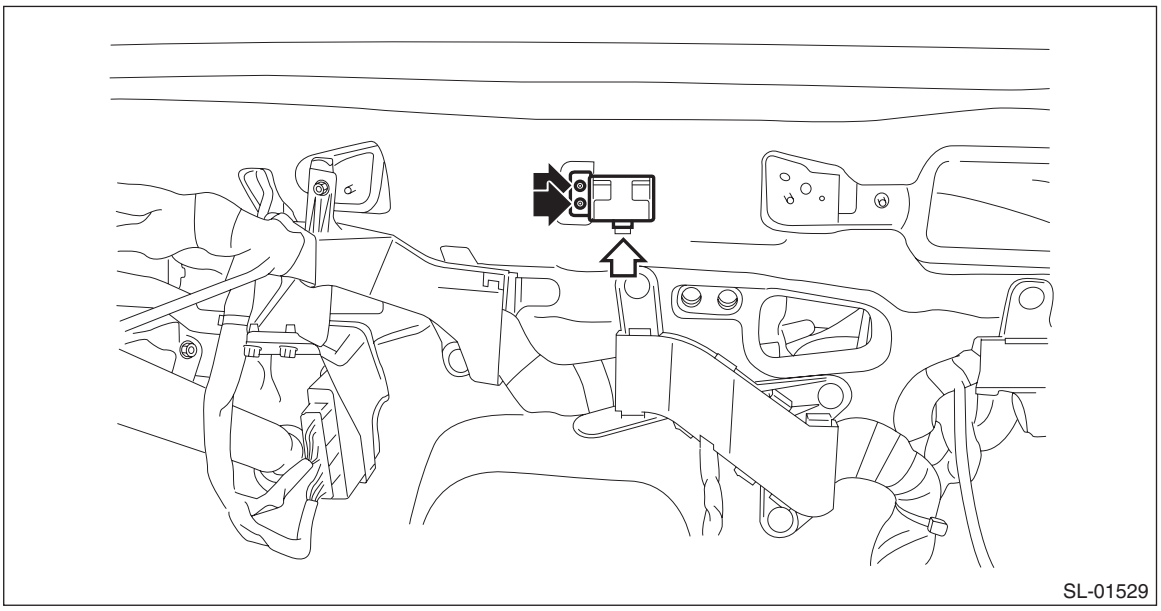

B: INSTALLATION

CAUTION:
Registration of the immobilizer is necessary when a immobilizer-related control module has been replaced. For detailed operation procedure, refer to the "REGISTRATION MANUAL FOR IMMOBILIZER".
Install each part in the reverse order of removal.

36.Steering Lock CM

A: REMOVAL

1) Disconnect the ground cable from battery. <Ref. to NT-5, BATTERY, NOTE, Note.>

NOTE:
For the 12 volt engine restart battery of HEV model, disconnect the ground terminal from 12V engine restart battery sensor.
2) Remove the column assembly - steering. <Ref. to PS-18, REMOVAL, Steering Column.>
3) Remove the steering lock CM.
   (1) Secure the column assembly - steering in a vise.
   (2) Use the reverse tap or drill to remove the set bolt and remove the steering lock CM.

CAUTION:
Do not apply any impact to the set bolt by a chisel or punch.

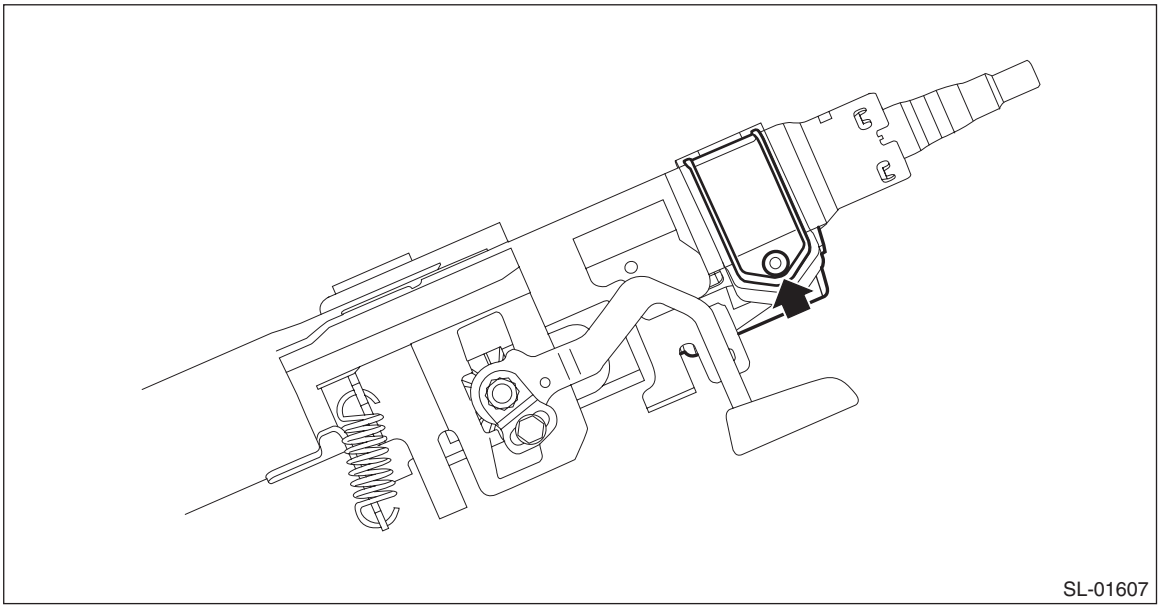

B: INSTALLATION

CAUTION:
Registration of the immobilizer is necessary when a immobilizer-related control module has been replaced. For the relevant procedures, refer to the "REGISTRATION MANUAL FOR IMMOBILIZER".
1) Secure the steering lock CM to the steering column.
2) Use new set bolts. Tighten the bolt until the bolt head is broken (bolt head wrenched off).

C: INSPECTION

1) Check if the steering lock is released when you start the engine using the push button ignition switch.
2) If the system does not operate normally as the result of inspection, refer to "General Diagnostic Table" of the "KEYLESS ACCESS WITH PUSH BUTTON START SYSTEM (DIAGNOSTICS)" section. <Ref. to KPS(diag)-99, STEERING LOCK SYSTEM, INSPECTION, General Diagnostic Table.>

37.Push Button Ignition Switch

A: REMOVAL

1) Remove the cover assembly - instrument panel LWR driver and the knee airbag module. <Ref. to AB-43, REMOVAL, Knee Airbag Module.>
2) Remove the push button ignition switch.
(1) Disconnect the connector, and remove the aspirator hose.

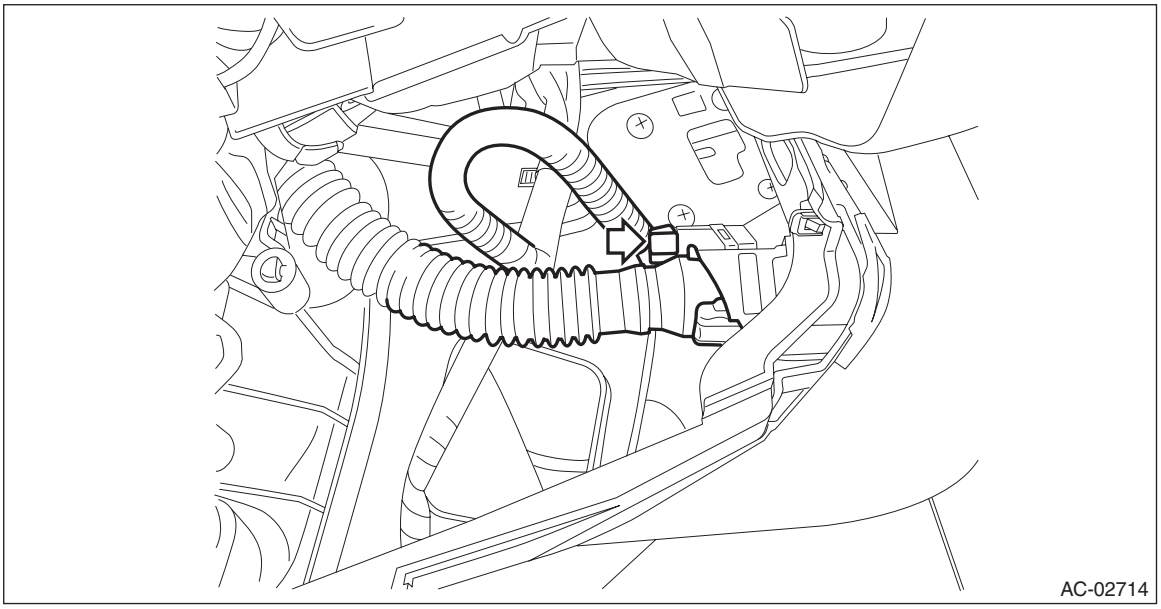

(2) Release the claws, and then remove the panel - switch.
(3) Release the claws, and then remove the push button ignition switch from the panel - switch.

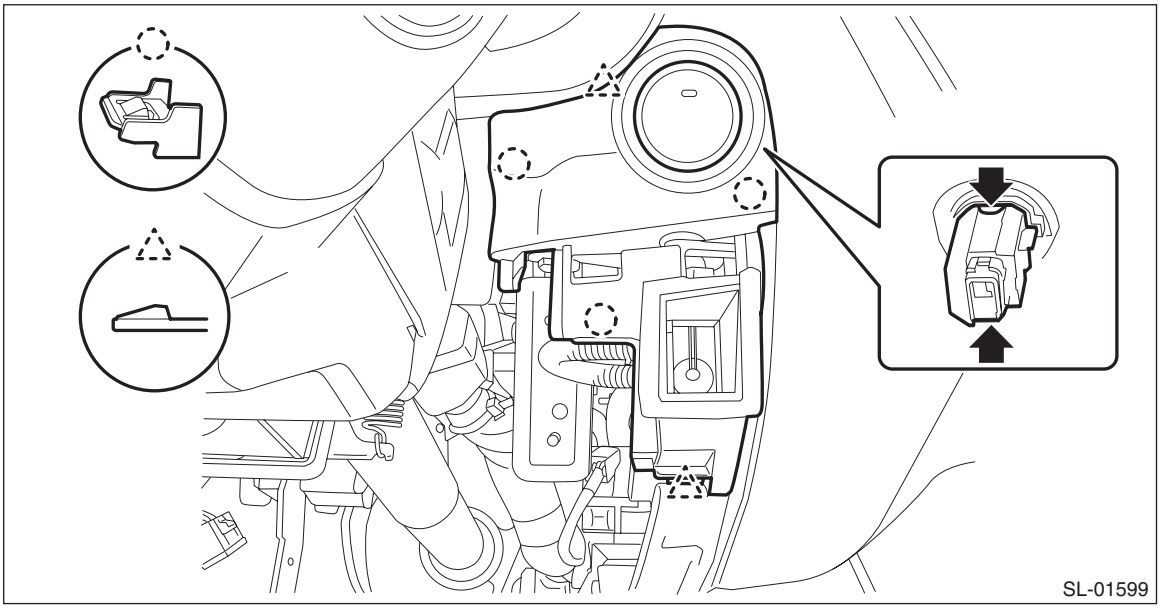

B: INSTALLATION

Install each part in the reverse order of removal.

C: INSPECTION

On the vehicle inspection

Preparation tool:
Circuit tester

1) Check the continuity between push button ignition switch terminals.

Terminal No.	Inspection conditions	Specification	Connection diagram
4 (COM) — 5 (GND)	Always	Continuity exists	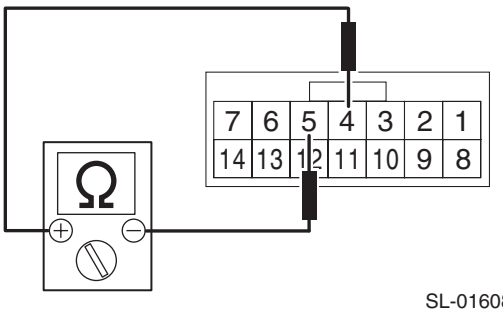
7 (SSW1) — 5 (GND)	Push button ignition switch released → pressed	Continuity exists	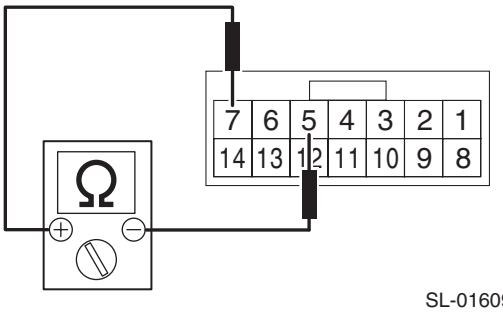
2 (SSW2) — 5 (GND)	Push button ignition switch released → pressed	Continuity exists	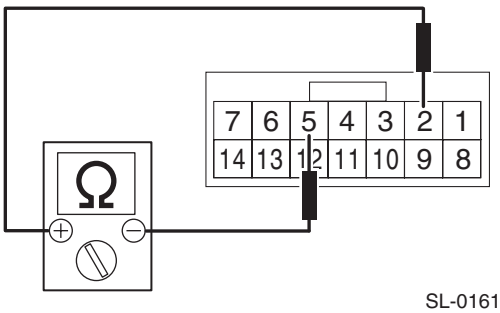

2) Check the push button ignition switch operation when battery voltage is applied between the terminals of the push button ignition switch.

Terminal No.	Inspection conditions	Specification	Connection diagram
11 (SWIL) — 5 (GND)	Connect battery to the terminals	Goes off → Red switch illumination light	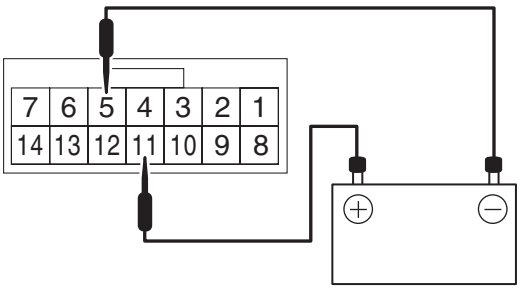 SL-01659
12 (INDS) — 5 (GND)		Turns off → Switch indicator lights in green	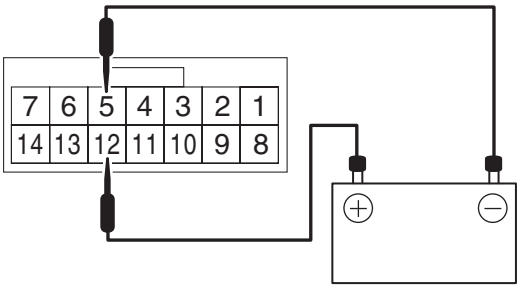 SL-01660
13 (INDW) — 5 (GND)		Turns off → Switch indicator lights in orange	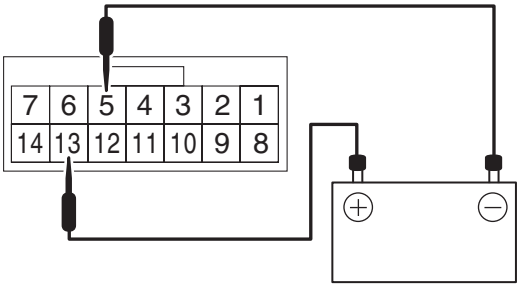 SL-01661

3) Replace the push button ignition switch if the inspection result is not within the standard value.

38.Starter Relay (Push Button Start)

A: REMOVAL

1) Remove the cover assembly - instrument panel LWR driver and the knee airbag module. <Ref. to AB-43, REMOVAL, Knee Airbag Module.>
2) Release the lock and remove the fuse holder.

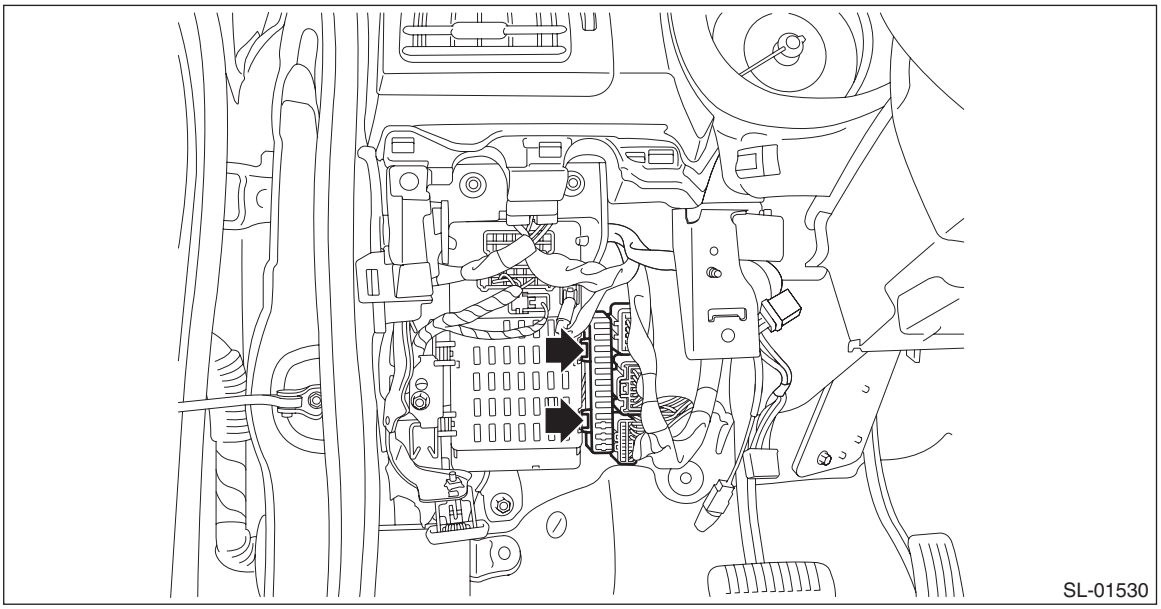

3) Remove the relay & fuse box.
   (1) Disconnect the connector.
   (2) Remove the bolts and nuts, and remove the relay & fuse box.

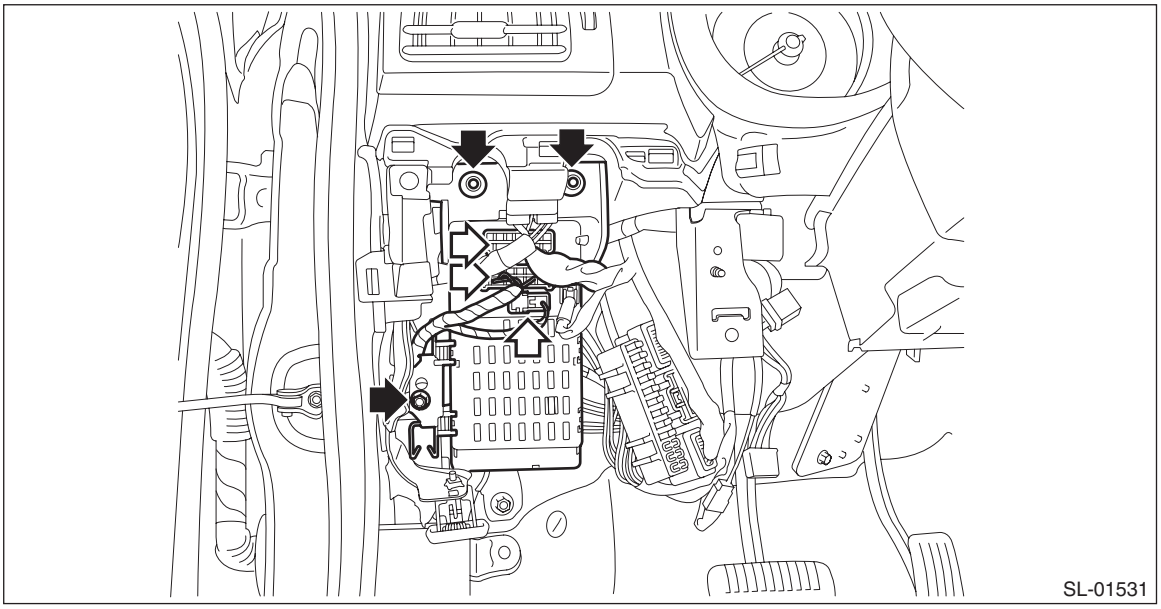

4) Remove the starter relay (push button start) (A) from the relay holder.

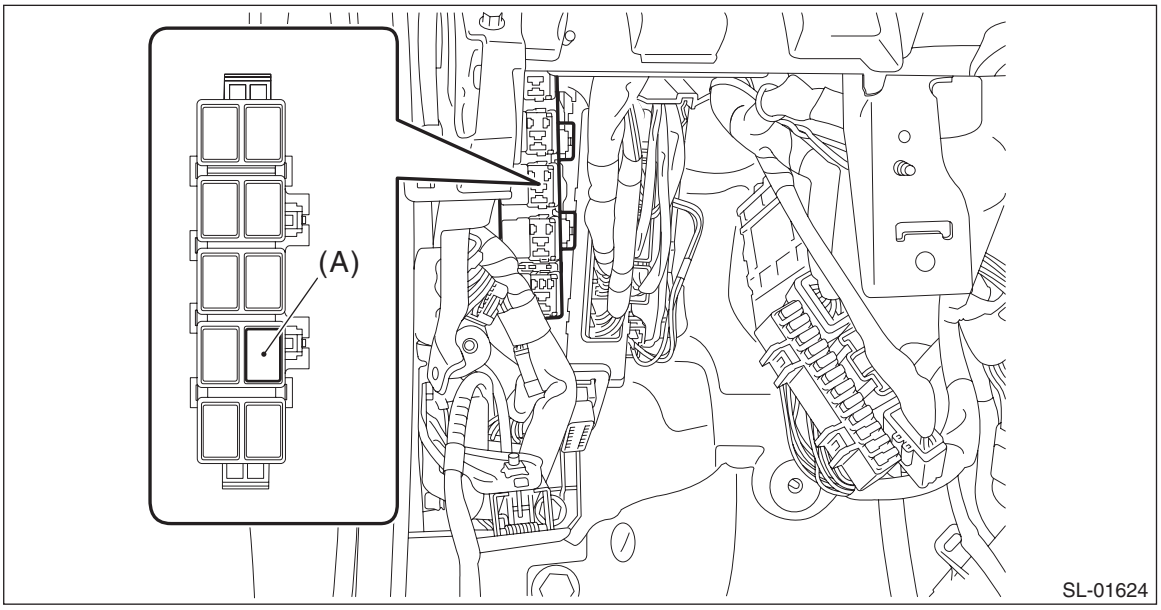

B: INSTALLATION

Install each part in the reverse order of removal.

Tightening torque:
Relay & fuse box: 7.5 N·m (0.76 kgf-m, 5.5 ft-lb)

C: INSPECTION

Refer to “CHECK RELAY” in “Relay and Fuse”. <Ref. to SL-11, CHECK RELAY, INSPECTION, Relay and Fuse.>

39.IG Relay1 (Push Button Start)

A: REMOVAL

1) Remove the cover assembly - instrument panel LWR driver and the knee airbag module. <Ref. to AB-43, REMOVAL, Knee Airbag Module.>
2) Release the lock and remove the fuse holder.

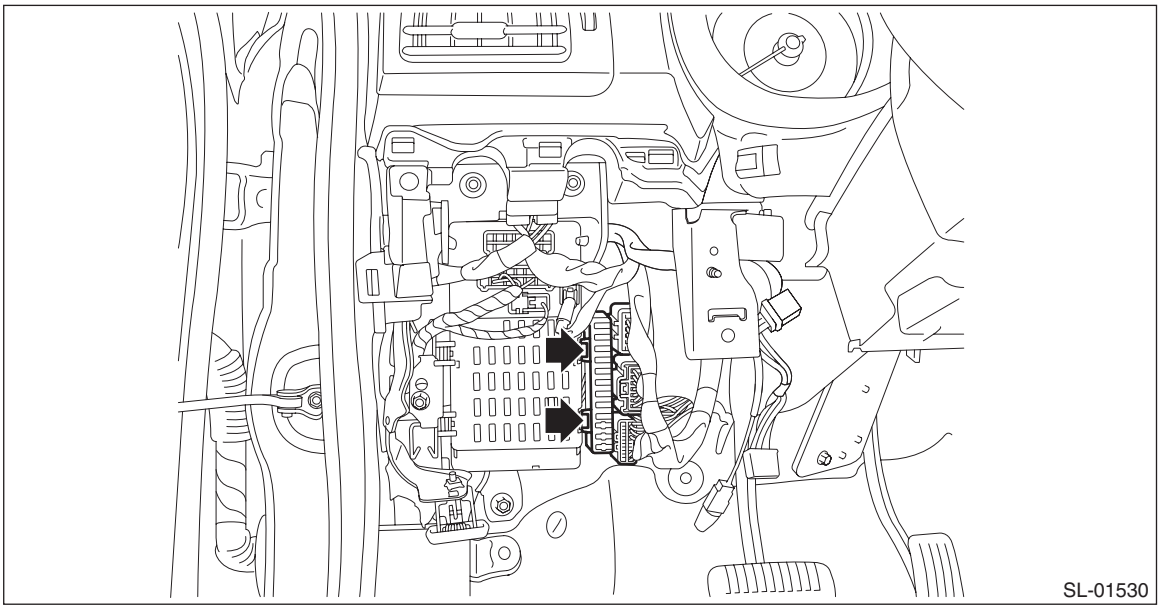

3) Remove the relay & fuse box.
   (1) Disconnect the connector.
   (2) Remove the bolts and nuts, and remove the relay & fuse box.

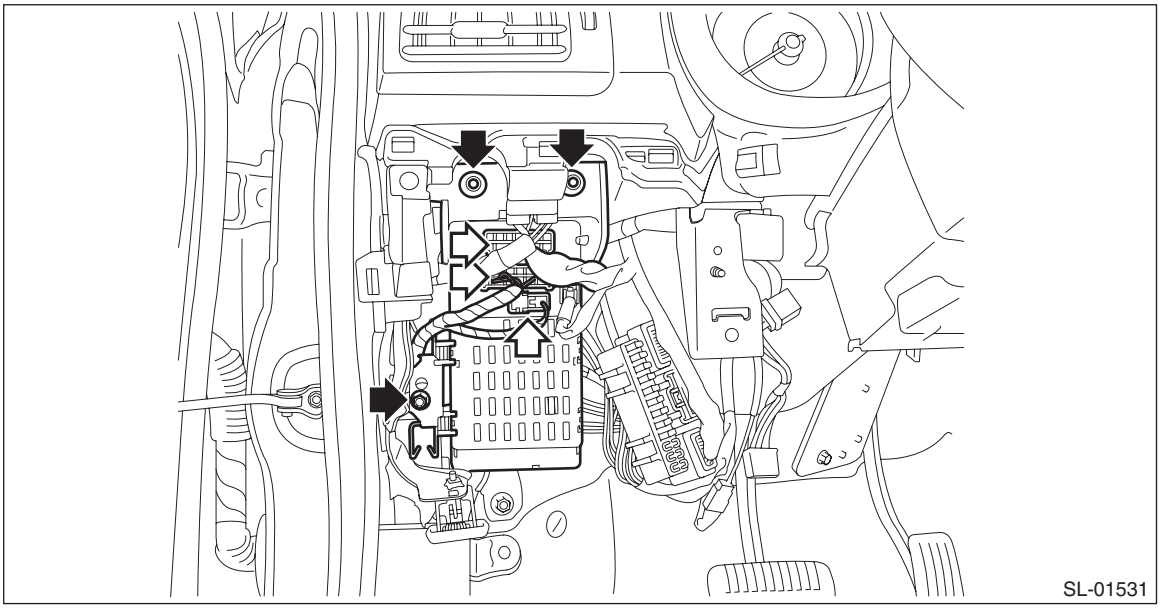

4) Remove IG relay 1 (push button start) (A) from the relay holder.

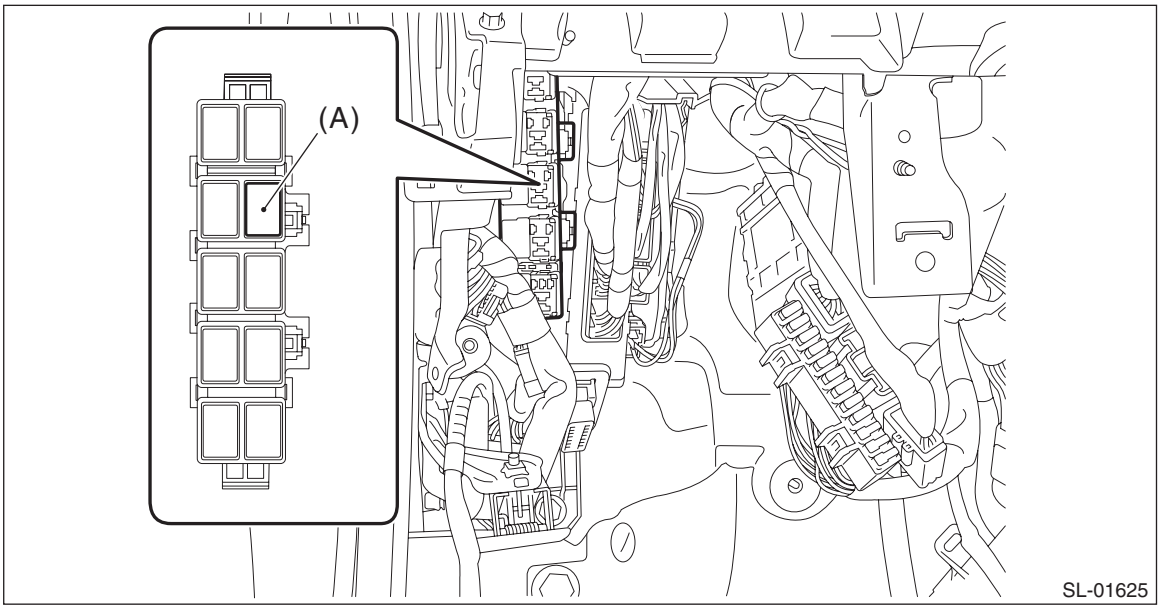

B: INSTALLATION

Install each part in the reverse order of removal.

Tightening torque:
Relay & fuse box: 7.5 N·m (0.76 kgf-m, 5.5 ft-lb)

C: INSPECTION

Refer to “CHECK RELAY” in “Relay and Fuse”. <Ref. to SL-11, CHECK RELAY, INSPECTION, Relay and Fuse.>

40.IG Relay2 (Push Button Start)

A: REMOVAL

1) Remove the cover assembly - instrument panel LWR driver and the knee airbag module. <Ref. to AB-43, REMOVAL, Knee Airbag Module.>
2) Release the lock and remove the fuse holder.

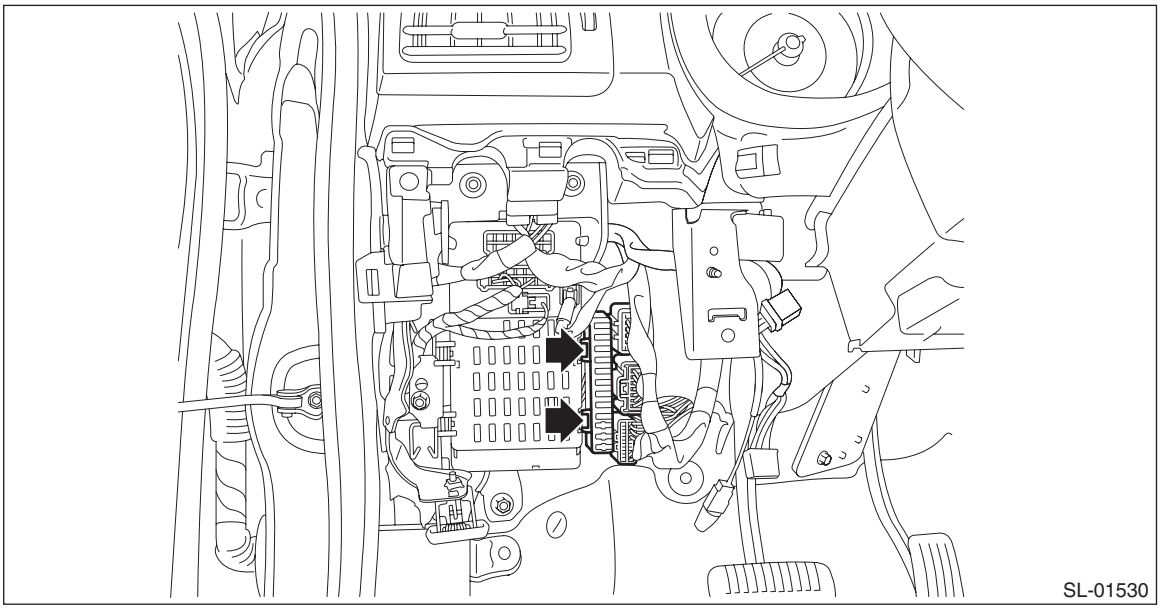

3) Remove the relay & fuse box.
   (1) Disconnect the connector.
   (2) Remove the bolts and nuts, and remove the relay & fuse box.

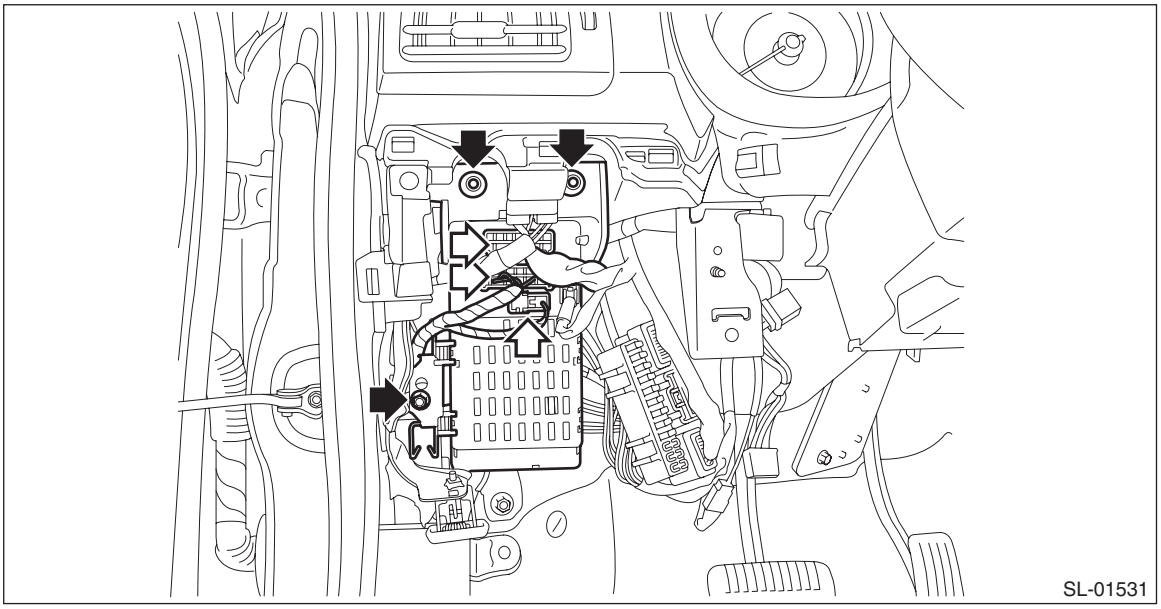

4) Remove IG relay 2 (push button start) (A) from the relay holder.

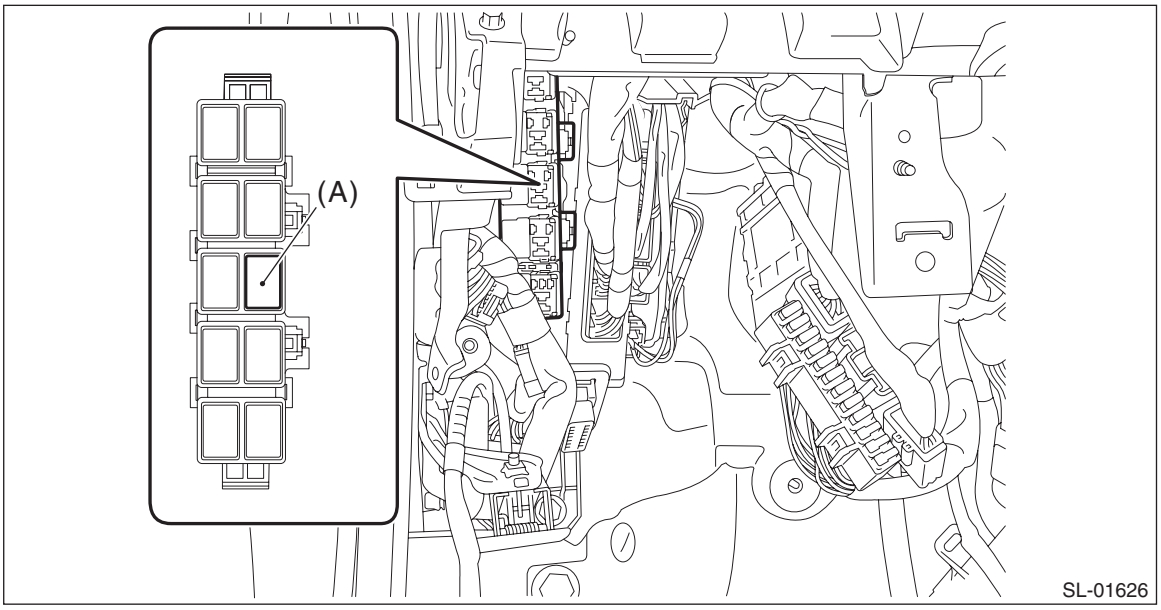

B: INSTALLATION

Tightening torque:
Relay & fuse box: 7.5 N·m (0.76 kgf-m, 5.5 ft-lb)

C: INSPECTION

Refer to “CHECK RELAY” in “Relay and Fuse”. <Ref. to SL-11, CHECK RELAY, INSPECTION, Relay and Fuse.>

41.Accessory Relay (Push Button Start)

A: REMOVAL

1) Remove the cover assembly - instrument panel LWR driver and the knee airbag module. <Ref. to AB-43, REMOVAL, Knee Airbag Module.>
2) Release the lock and remove the fuse holder.

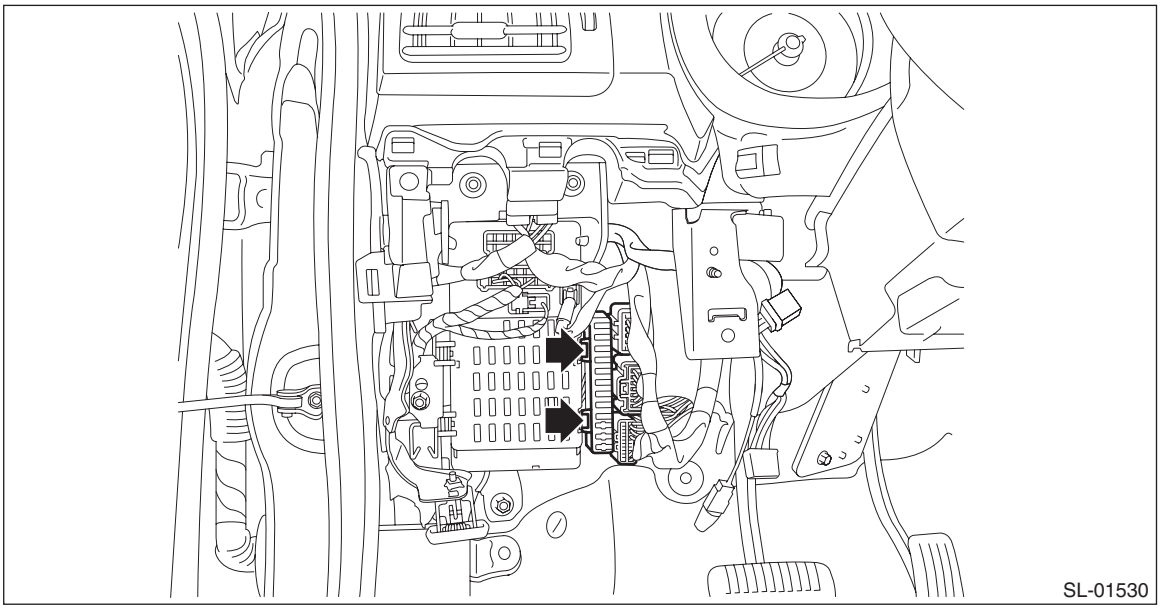

3) Remove the accessory relay (push button start) (A) from the relay and fuse box.

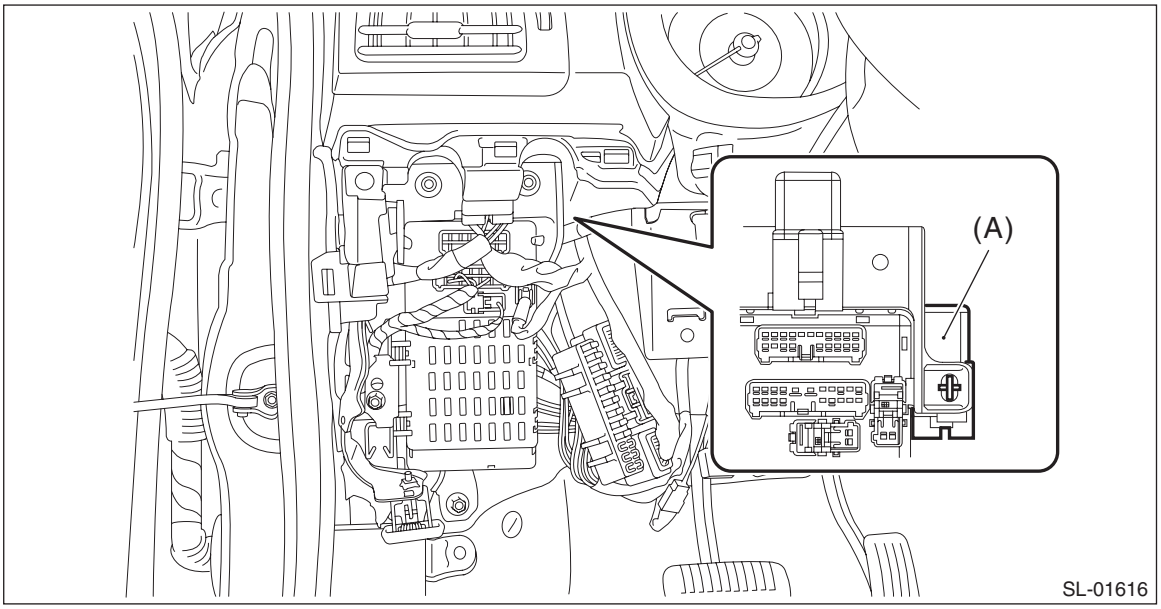

B: INSTALLATION

Install each part in the reverse order of removal.

C: INSPECTION

Refer to “CHECK RELAY” in “Relay and Fuse”. <Ref. to SL-11, CHECK RELAY, INSPECTION, Relay and Fuse.>

42.Starter Cut Relay

A: REMOVAL

1) Remove the cover assembly - instrument panel LWR driver and the knee airbag module. <Ref. to AB-43, REMOVAL, Knee Airbag Module.>
2) Release the lock and remove the fuse holder.

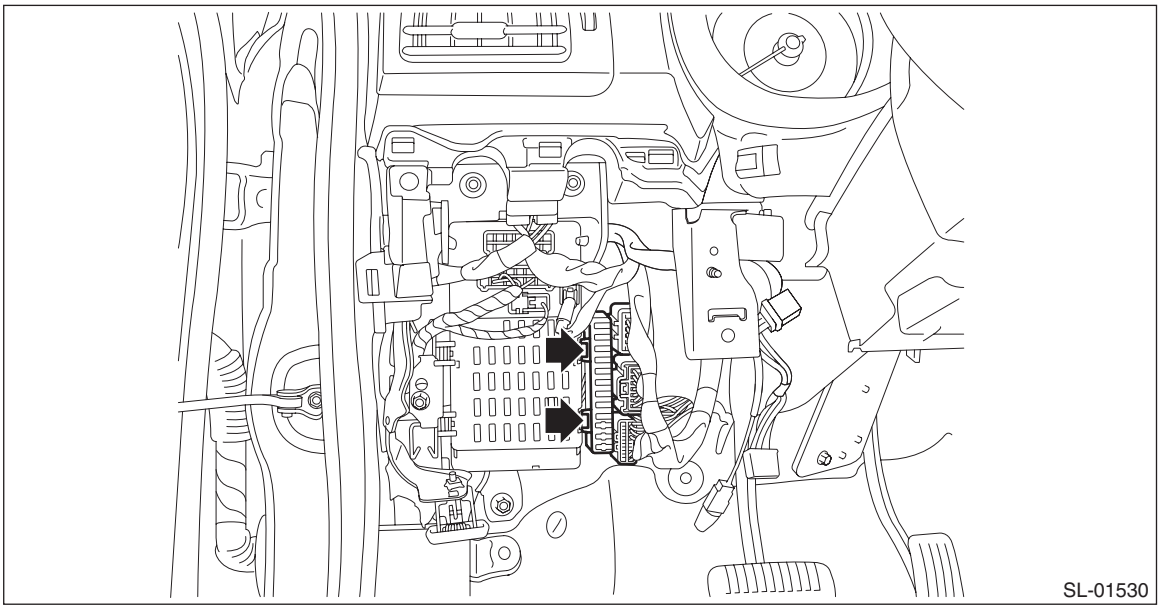

3) Remove the relay & fuse box.
   (1) Disconnect the connector.
   (2) Remove the bolts and nuts, and remove the relay & fuse box.

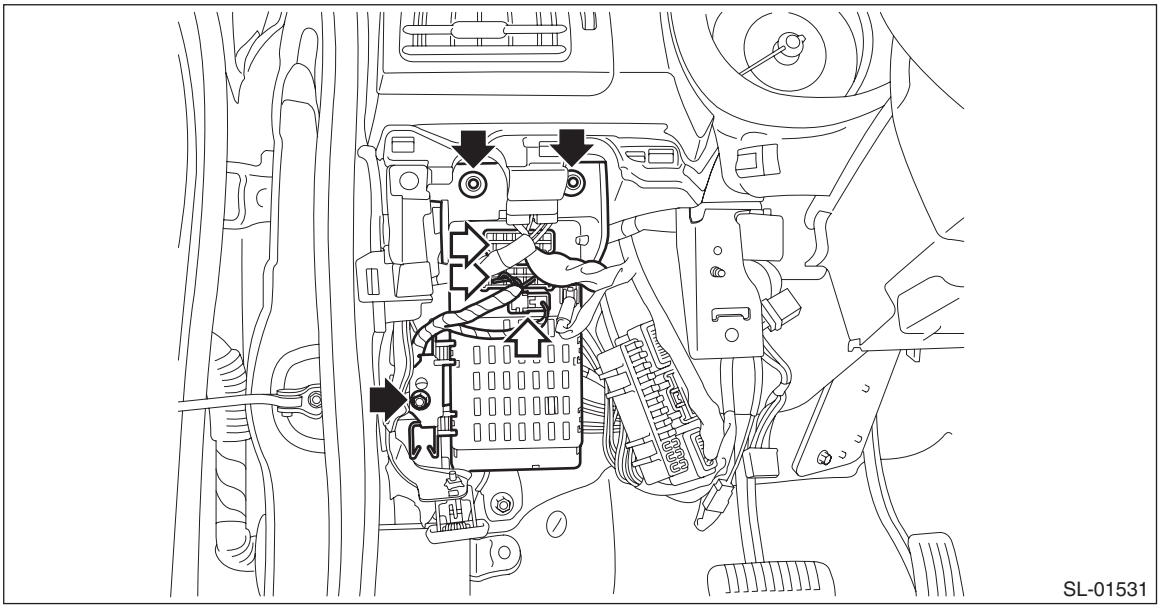

4) Remove the starter cut relay (A) from the relay holder.

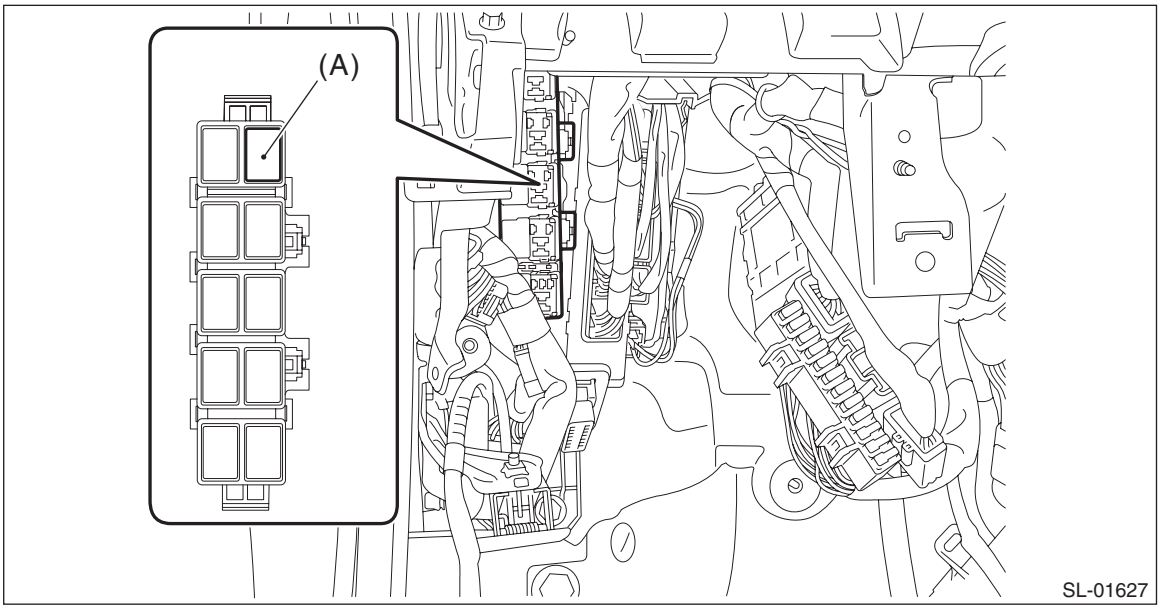

B: INSTALLATION

Install each part in the reverse order of removal.

Tightening torque:
Relay & fuse box: 7.5 N·m (0.76 kgf-m, 5.5 ft-lb)

C: INSPECTION

Refer to “CHECK RELAY” in “Relay and Fuse”. <Ref. to SL-11, CHECK RELAY, INSPECTION, Relay and Fuse.>

43.Access Buzzer

A: REMOVAL

1) Disconnect the ground cable from battery. <Ref. to NT-5, BATTERY, NOTE, Note.>

NOTE:
For the 12 volt engine restart battery of HEV model, disconnect the ground terminal from 12V engine restart battery sensor.

2) Lift up the vehicle.
3) Remove the clips, and turn over the front side of the mud guard - front.

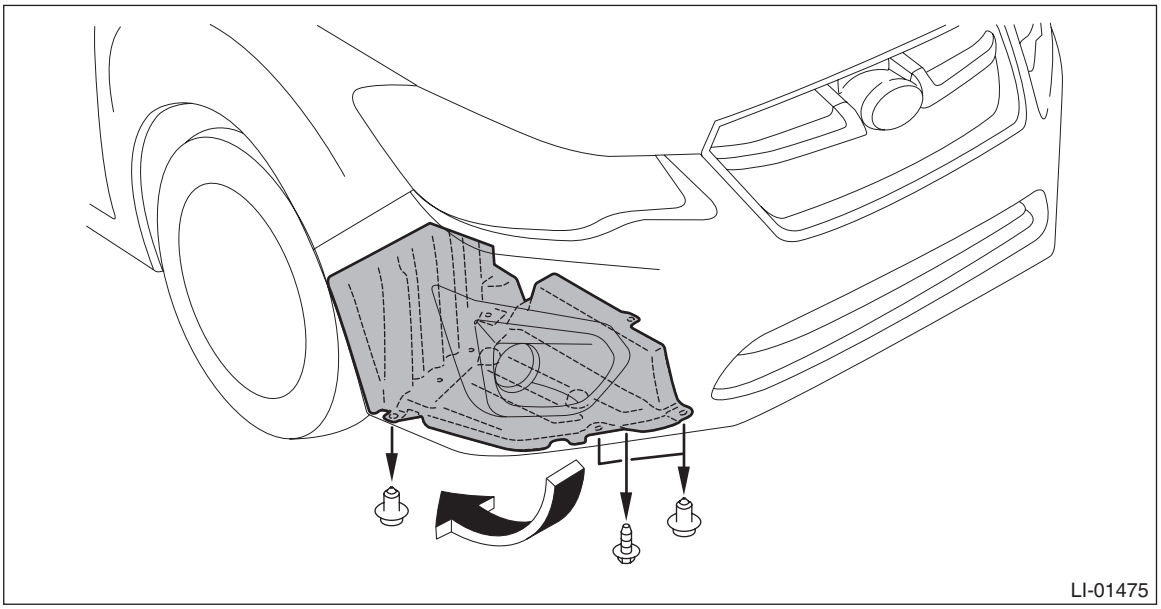

4) Remove the access buzzer.
   (1) Disconnect the connector.
   (2) Remove the clip and detach the keyless buzzer.

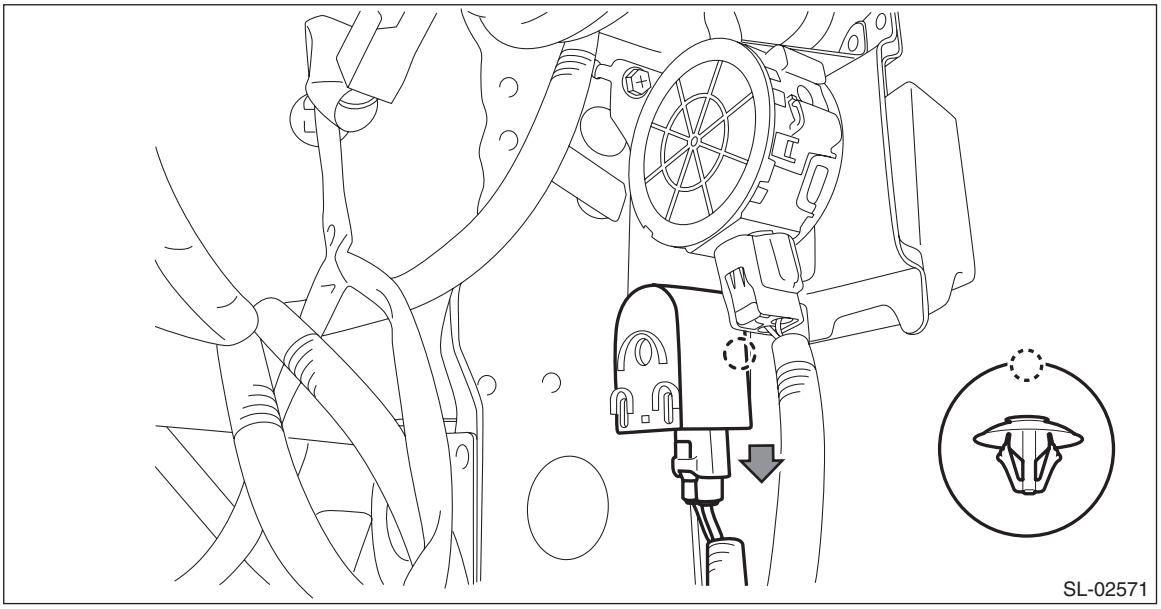

B: INSTALLATION

Install each part in the reverse order of removal.

C: INSPECTION

Using the Subaru Select Monitor, perform forced operation of the keyless buzzer. <Ref. to BC(diag)-15, OPERATION, User Customizing.>
If the buzzer does not sound, replace the keyless buzzer.

44.Function Setting (Customize)

A: OPERATION

Disabling/Activating the keyless access system

The following functions are disabled when the keyless access system functions are disabled:

- LOCK function performed by the operation of touch sensor on the door outer handle
- Rear gate LOCK function by rear lock button operation
- UNLOCK function by the door touch sensor
- Rear gate open function by rear gate opener button operation in the rear gate lock condition
- Trunk lid open function by trunk opener button operation in the trunk lid lock condition
- Lockout prevention feature
- Warning function
- Engine starting control using keyless access collation

B: PROCEDURE

1) Check that the vehicle status is as follows:
- Ignition switch OFF
- One window is completely open
- Keyless access system is activated (or disabled if re-activating)

2) Sit in the driver's seat with the door closed and press the door lock switch to UNLOCK once.
3) Open the driver's door within five seconds.
4) Within 5 seconds, with the driver's door opened, slowly press the door lock switch to UNLOCK twice.
5) Within 30 seconds, perform the closing → opening operation of the driver's door twice.
6) Within 30 seconds, with the driver's door opened, slowly press the door lock switch to UNLOCK twice.
7) Within 30 seconds, perform the closing → opening operation of the driver's door once.
8) Within five seconds, close the driver's door.

NOTE:
- Perform the same procedures to re-activate the keyless access system from the disabled condition.
- If the driver's door is opened or closed in step 4) and step 6), the cancel operation is disabled.

45.Keyless Access With Push Button Start System

A: DIAGNOSTIC PROCEDURE WITH PHENOMENON

Refer to “Diagnostics with Phenomenon” of “KEYLESS ACCESS WITH PUSH BUTTON START SYSTEM (DIAGNOSTICS)” section. <Ref. to KPS(diag)-100, Diagnostics with Phenomenon.>

SUNROOF/T-TOP/CONVERTIBLE TOP (SUNROOF)

SR

		Page
1.	General Description	2
2.	Relay and Fuse	4
3.	Sunroof Control System	5
4.	Glass Lid	7
5.	Sunroof Assembly	11
6.	Sunroof Motor	17
7.	Sunroof Switch	19
8.	Sunshade	22

1. General Description

A: COMPONENT

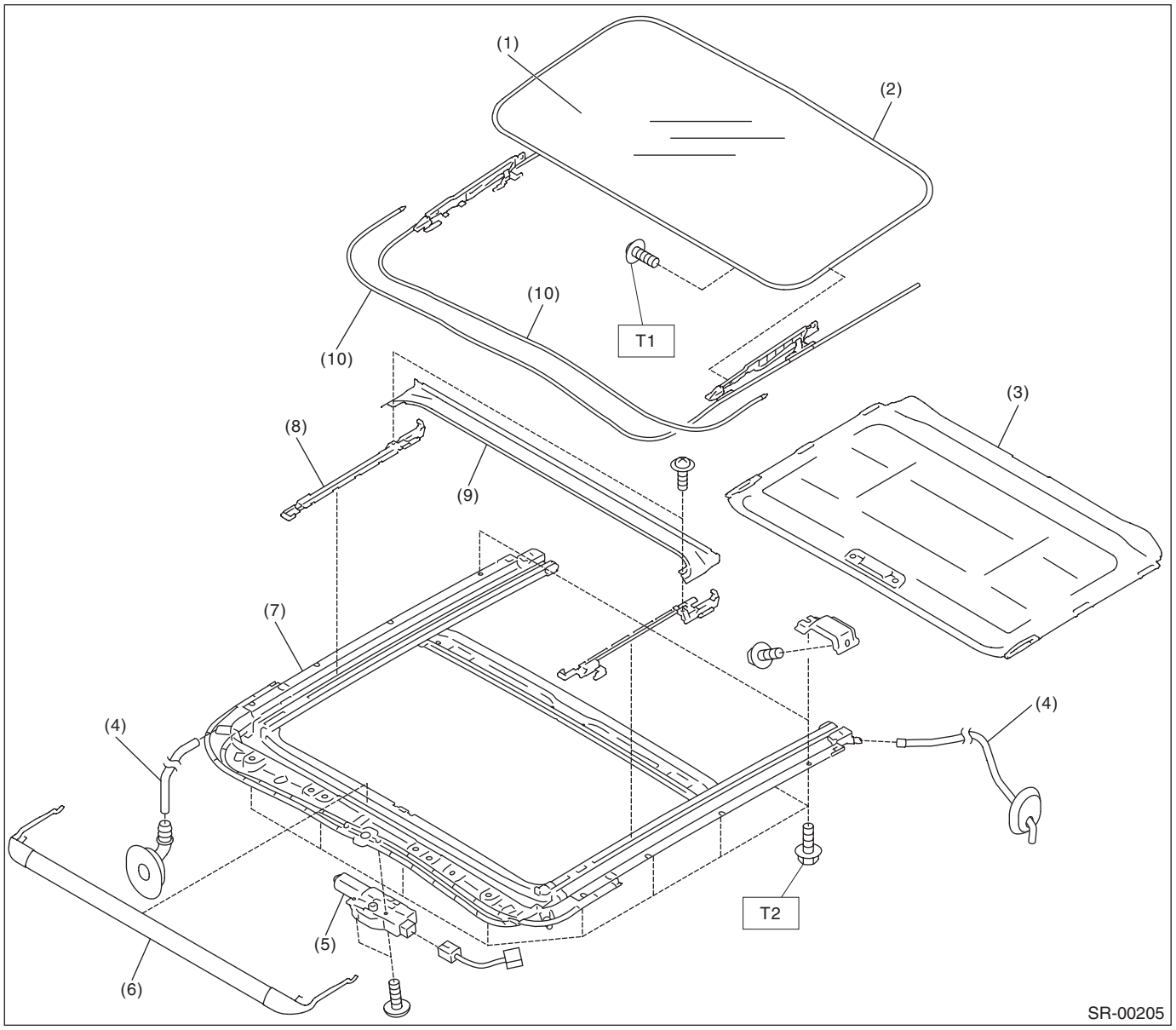

(1) Lid ASSY - sunroof
(2) Weather strip
(3) Sunshade ASSY
(4) Drain tube - sunroof
(5) Motor ASSY - sunroof
(6) Deflector ASSY - sunroof
(7) Rail ASSY - sunroof
(8) Link - drain sunroof
(9) Drain ASSY - sunroof
(10) Cable ASSY

Tightening torque: N·m (kgf-m, ft-lb)
T1: 4.5 (0.46, 3.3)
T2: 6.0 (0.61, 4.4)

B: CAUTION

• Before disassembling or reassembling parts, always disconnect the battery ground cable from battery. When replacing the audio, control module and other parts provided with memory functions, record the memory contents before disconnecting the battery ground cable. Otherwise, the memory is cleared.
• Reassemble the parts in the reverse order of disassembly unless otherwise indicated.
• Adjust parts to the given specifications.
• Connect the connectors securely during reassembly.
• After reassembly, make sure that the each component operates normally.

C: PREPARATION TOOL

1. GENERAL TOOL

TOOL NAME	REMARKS
Circuit tester	Used for measuring resistance and voltage.
Hexagon wrench	Used for forcibly driving the motor assembly - sunroof. Width across flat 4 mm (0.16 in)
TORX® T25	Used for removing and installing the lid assembly - sunroof.

2. Relay and Fuse

A: LOCATION

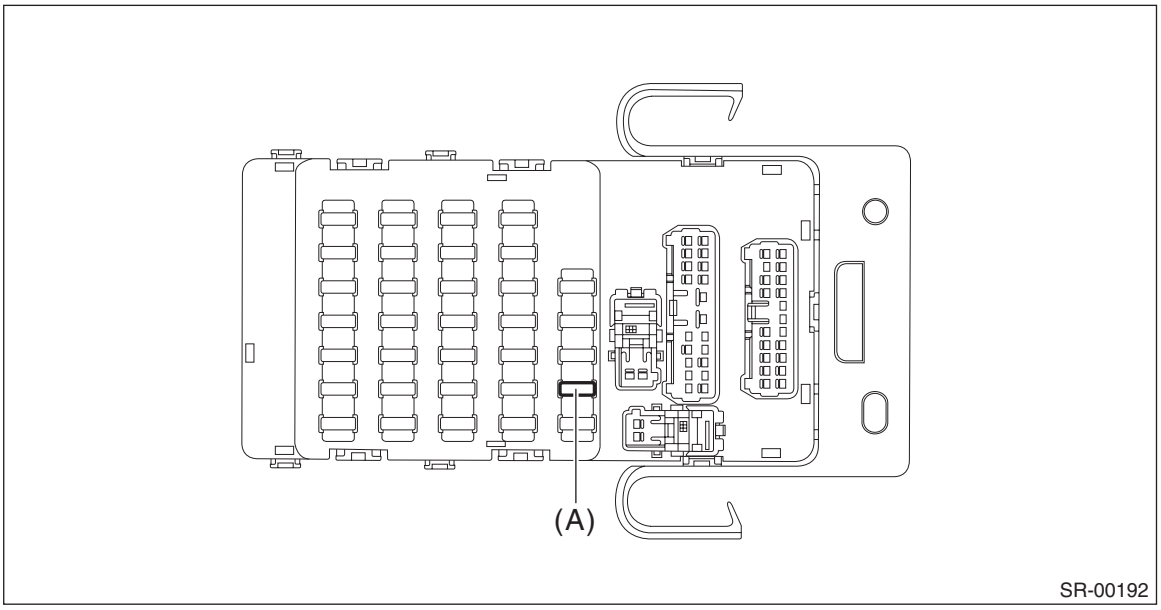

Relay & fuse box	Fuse 10A (IG 2)	(A)

NOTE:
For other related fuses, refer to the wiring diagram. <Ref. to WI(w/o HEV)-15, Power Supply Circuit.>

B: INSPECTION

1. CHECK FUSE

1) Remove the fuse and check visually.
2) If the fuse is blown out, replace the fuse.

3. Sunroof Control System

A: WIRING DIAGRAM

Refer to “Sunroof Control System” in the wiring diagram. <Ref. to WI(w/o HEV)-147, WIRING DIAGRAM, Sunroof Control System.>

B: INSPECTION

Symptoms	Inspection steps
Water leakage	1. Check the roof panel and the lid assembly - sunroof for improper or poor sealing. 2. Check the drain tube - sunroof for clogging. 3. Check the joints of the rail assembly - sunroof for improper sealing and for proper installation to the body.
Booming noise, wind noise and other noise	1. Check the lid assembly - sunroof and the roof panel for improper clearance. 2. Check the sunshade assembly and the trim panel - roof assembly for improper clearance.
Abnormal motor noise	1. Check installing part of motor for looseness. 2. Check gears and bearings for wear. 3. Check cable assembly for wear. 4. Check cable pipe for deformities.
Failure of sunroof (Motor operates properly.)	1. Check guide rail for foreign particles. 2. Check guide rail for improper installation. 3. Check parts for mutual interference. 4. Check cable slider for improper clinching. 5. Check cable assembly for improper installation.
Motor does not rotate or rotate improperly.	1. Check fuse for blown out. 2. Check switch for improper function. 3. Check motor assembly for incorrect terminal voltage. 4. Check the relay for improper operation. 5. Check harness for open or short and terminals for poor connections.
Incorrect reverse operation of the lid assembly - sunroof	Check guide rail for foreign particles.

- Incorrect reverse operation of the lid assembly - sunroof while driving on rough road

The lid assembly - sunroof has auto-reverse function. When the lid assembly - sunroof is pushed in the opening direction with a force of 110±10 N (11.2 kgf, 24.7 lbf±1.0 kgf, 2.2 lbf), the glass lid moves in reverse and then stops.
Therefore, if you operate (open or close) the lid assembly - sunroof while driving on rough road, the vibration may be judged as a force and the lid may incorrectly move in the reverse direction.
When the incorrect reverse operation is occurred repeatedly, perform inspection around the sunroof frame. If there are no problems, perform the initialization operation with following procedure.

C: OPERATION

1. INITIALIZE OPERATION

CAUTION:
During initialization, perform the position learning and the sliding learning. Sliding learning mode can not be initiated unless the position learning is performed.

NOTE:
When initialize operation is performed, it is necessary to press the switch repeatedly as it operates for only at the moment when the switch is pressed, even when the switch is held down.

- Position learning

1) Position the lid assembly - sunroof at the full open position, and press and hold the tilt up switch for ten seconds.
2) The motion of the glass lid shifts to inching operation until it reaches the full close position. After that, it returns to the full open position and then stops.
3) Release the tilt up switch to finish the position learning.

- Sliding learning

4) Within six seconds after the position learning is finished, press and hold the tilt up switch again.
5) The lid assembly - sunroof moves to the full close position, full open position, and the full close position successively, and stops at the full close position.
6) Release the tilt up switch and turn the IG to OFF to finish the initializing.

D: NOTE

For operation procedures of each component of the sunroof control system, refer to the respective section.

- Glass lid: <Ref. to SR-7, Glass Lid.>
- Sunroof assembly: <Ref. to SR-11, Sunroof Assembly.>
- Sunroof motor: <Ref. to SR-17, Sunroof Motor.>
- Sunroof switch: <Ref. to SR-19, Sunroof Switch.>
- Sunshade: <Ref. to SR-22, Sunshade.>

4. Glass Lid

A: REMOVAL

1. GLASS LID

1) Completely close the lid assembly - sunroof, and open the sunshade assembly.
2) Remove the TORX® bolt, and then remove the lid assembly - sunroof.

CAUTION:
Be careful not to damage the lid assembly - sunroof.

PREPARATION TOOL:
TORX® T25

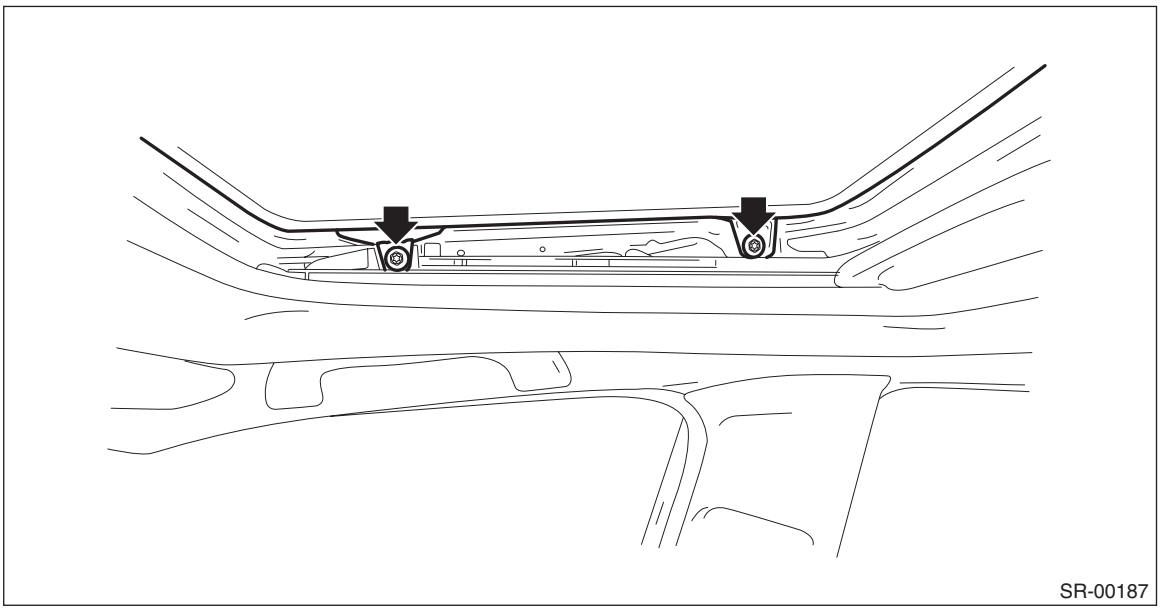
SR-00187

2. DEFLECTOR ASSEMBLY

1) Open the lid assembly - sunroof and the sunshade assembly.
2) Remove the deflector assembly - sunroof.
   (1) Remove the spring from the rail assembly - sunroof.

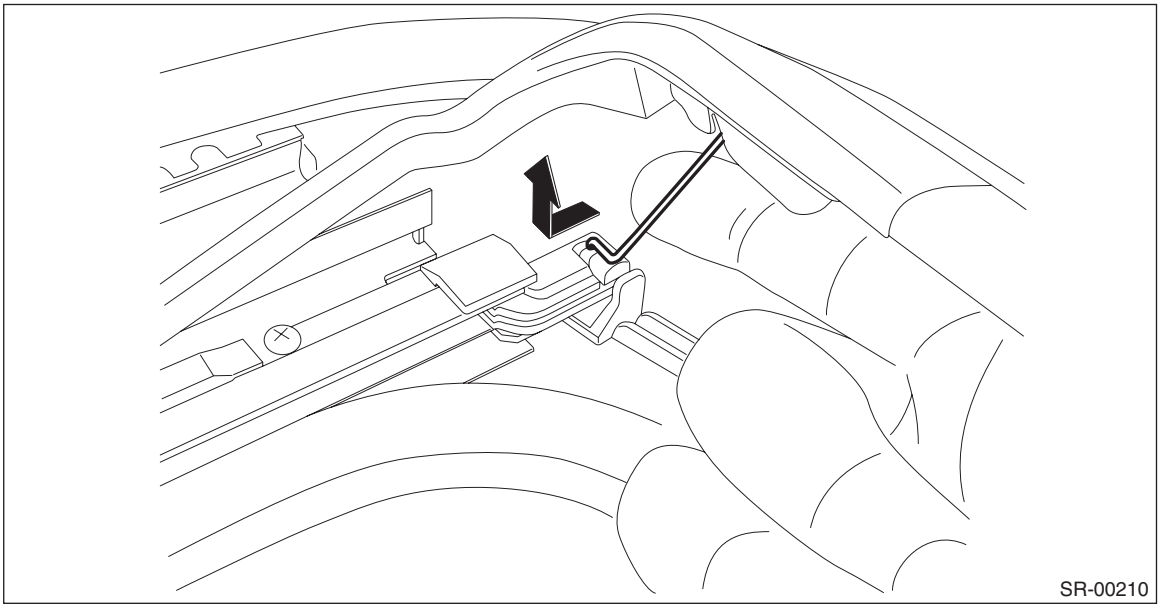
SR-00210

(2) While lifting up the deflector assembly - sunroof, remove the deflector assembly - sunroof from the hook on the rail assembly - sunroof.

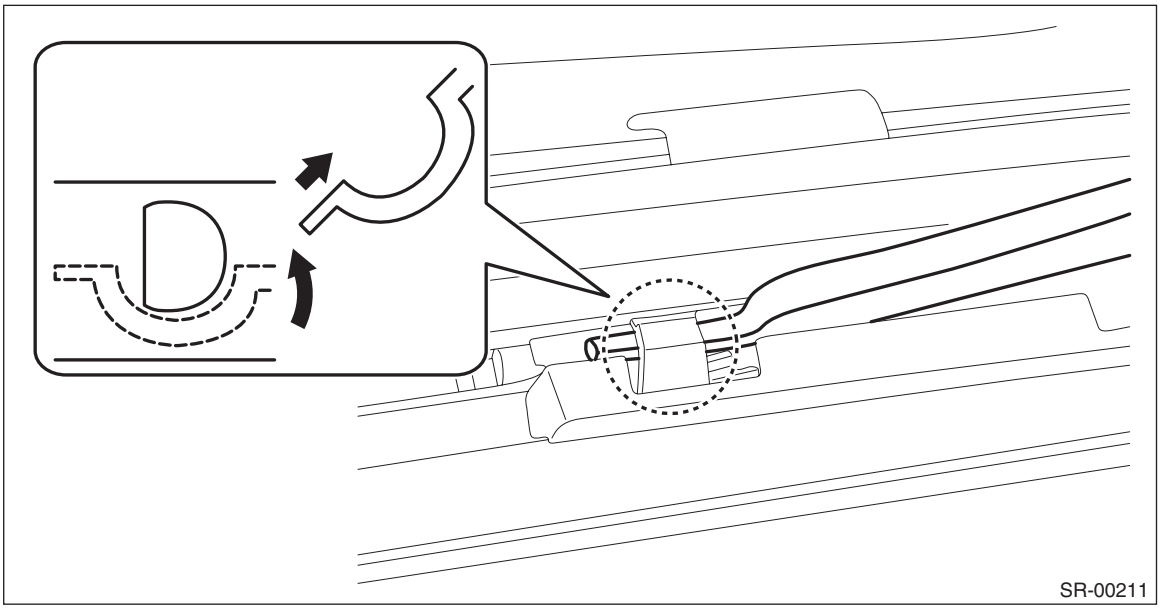

B: INSTALLATION

1. GLASS LID

Install each part in the reverse order of removal.

Tightening torque:
Refer to "COMPONENT" of "General Description". <Ref. to SR-2, COMPONENT, General Description.>

2. DEFLECTOR ASSEMBLY

1) Install each part in the reverse order of removal.
2) After installation, measure the height from the roof panel when deflector assembly - sunroof is activated.

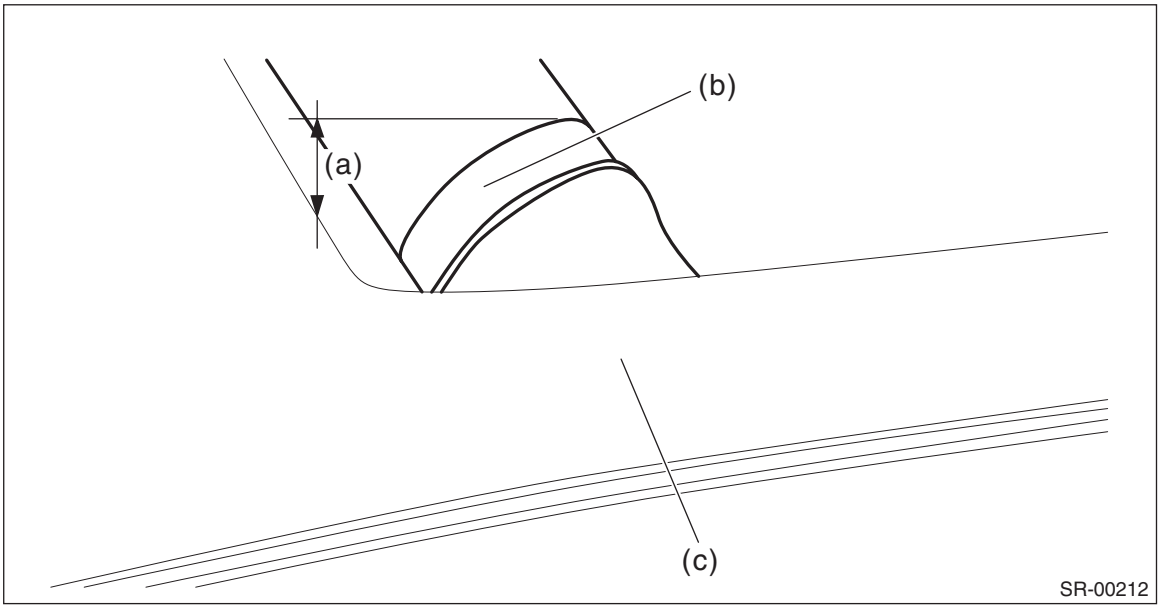

(a) 14 mm (0.55 in) (b) Deflector ASSY - sunroof (c) Roof panel

C: ADJUSTMENT

Adjust the height of the lid assembly - sunroof and the roof panel.

- Loosen the lid assembly - sunroof mounting bolts (A), and then adjust the height by moving the lid assembly - sunroof side.

Lid assembly - sunroof height difference L:
Lid assembly - sunroof to Roof panel: 0.7±1.0 mm (0.03±0.04 in)

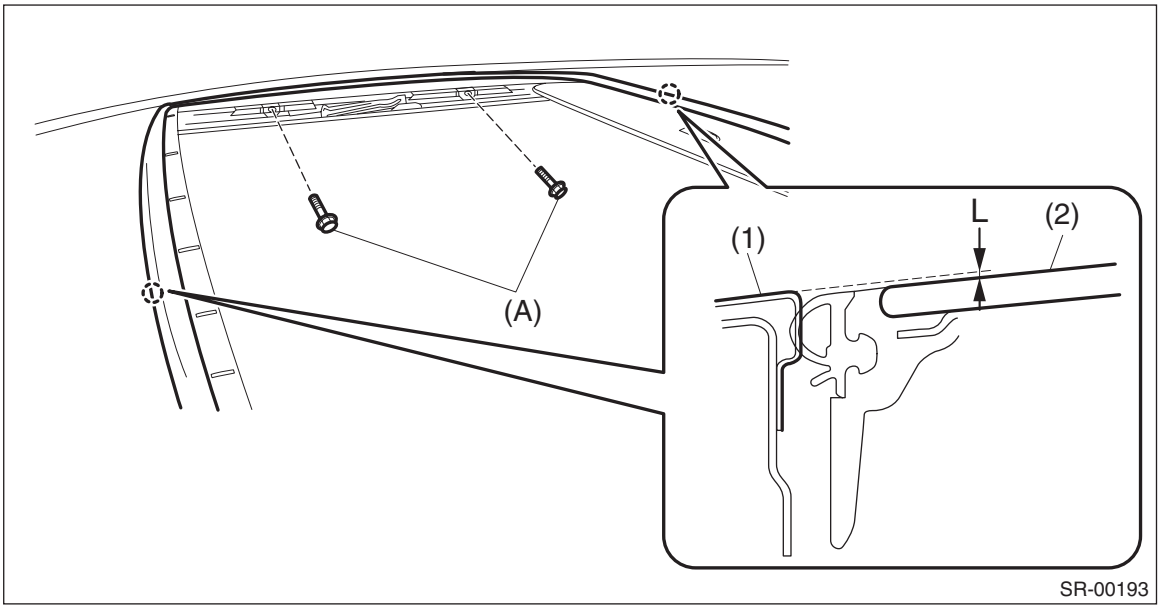

(1) Roof panel
(2) Lid ASSY - sunroof

D: FORCED DRIVE

If the lid assembly - sunroof does not operate or the motor assembly is not supplied with power, move the lid assembly - sunroof using the hexagon wrench.

PREPARATION TOOL:
Hexagon wrench: width across flat 4 mm (0.16 in)

CAUTION:
After a forced operation, make sure to perform an initialize operation. <Ref. to SR-6, INITIALIZE OPERATION, OPERATION, Sunroof Control System.>

1) Remove the light assembly - map. <Ref. to LI-81, REMOVAL, Spot Map Light.>
2) Insert the hexagon wrench securely until it touches the motor shaft end.
3) Turn the hexagon wrench, and move the lid assembly - sunroof.

- Turning right, the lid assembly - sunroof opens.
- Turning left, the lid assembly - sunroof closes.

CAUTION:
Be careful not to damage the adjacent parts with the rod end when moving the lid assembly - sunroof with the hexagon wrench.

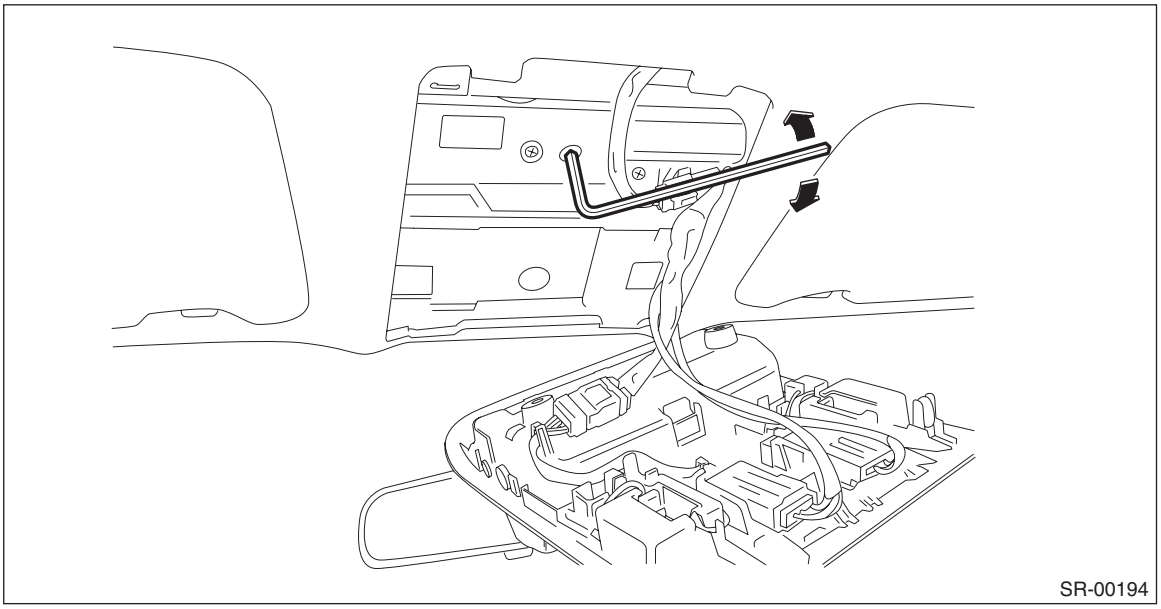
SR-00194

5. Sunroof Assembly

A: REMOVAL

CAUTION:
When removing the clip, use great care not to damage the trim panel - roof assembly.

1) Remove the lid assembly - sunroof.
   (1) Completely close the lid assembly - sunroof, and open the sunshade assembly.
   (2) Remove the TORX® bolt, and then remove the lid assembly - sunroof.

CAUTION:
Be careful not to damage the lid assembly - sunroof.

PREPARATION TOOL:
TORX® T25

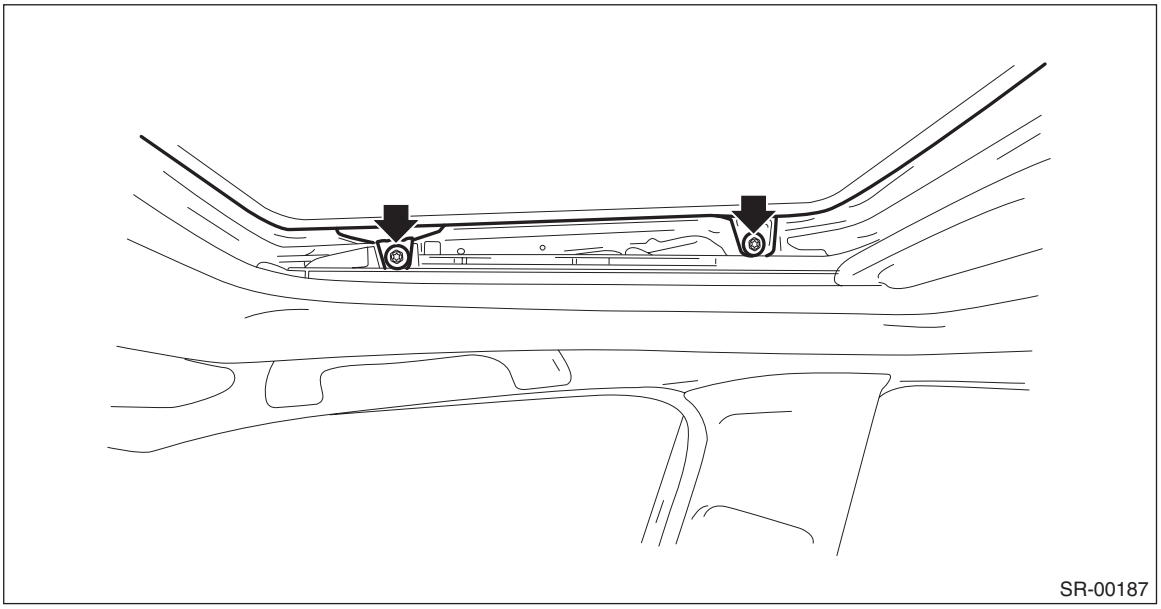

2) Remove the trim panel - roof assembly. <Ref. to EI-129, REMOVAL, Roof Trim.>
3) Disconnect the harness connector of the motor assembly.

4) Remove the rail assembly.
(1) Remove the drain tube - sunroof.

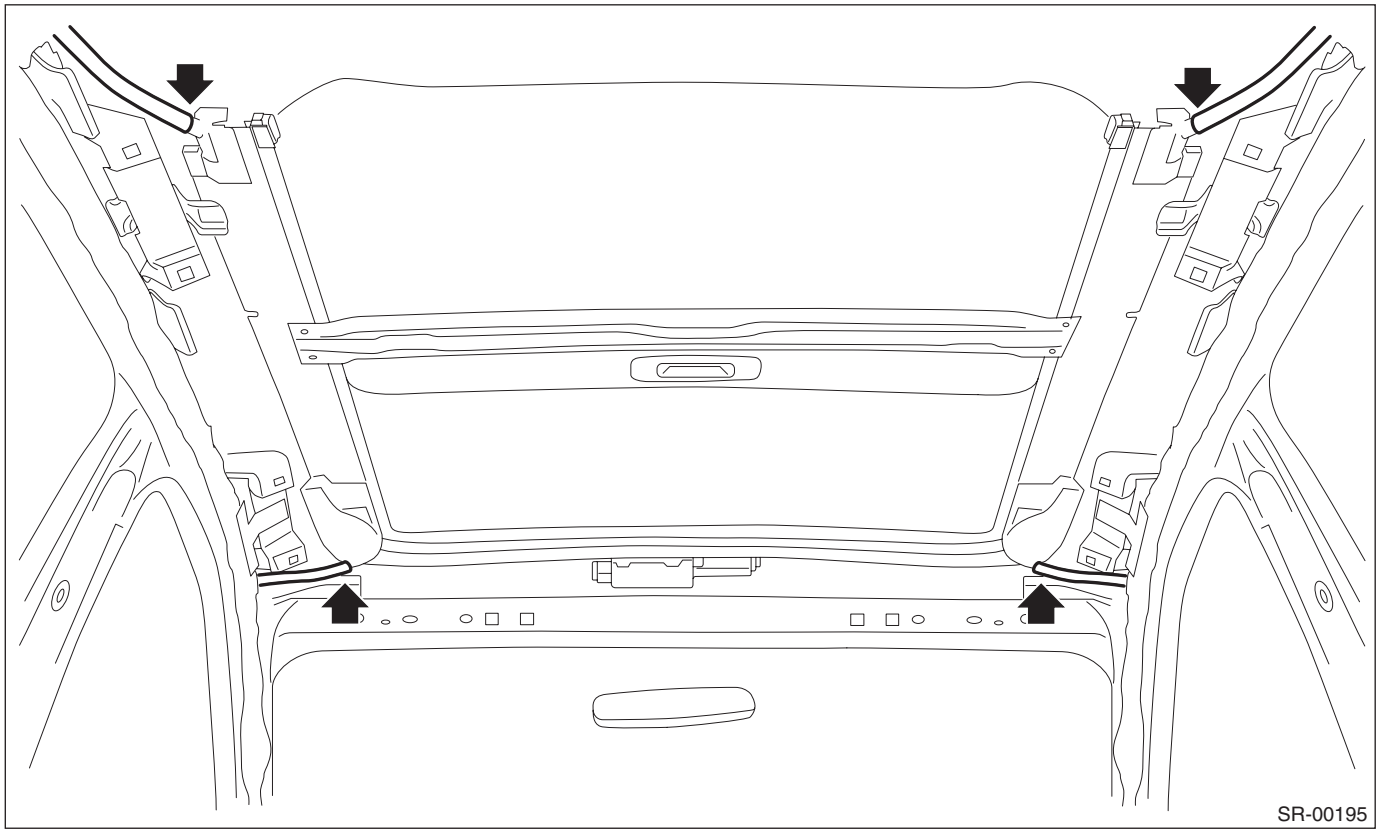

(2) Remove the bracket - assist rail.

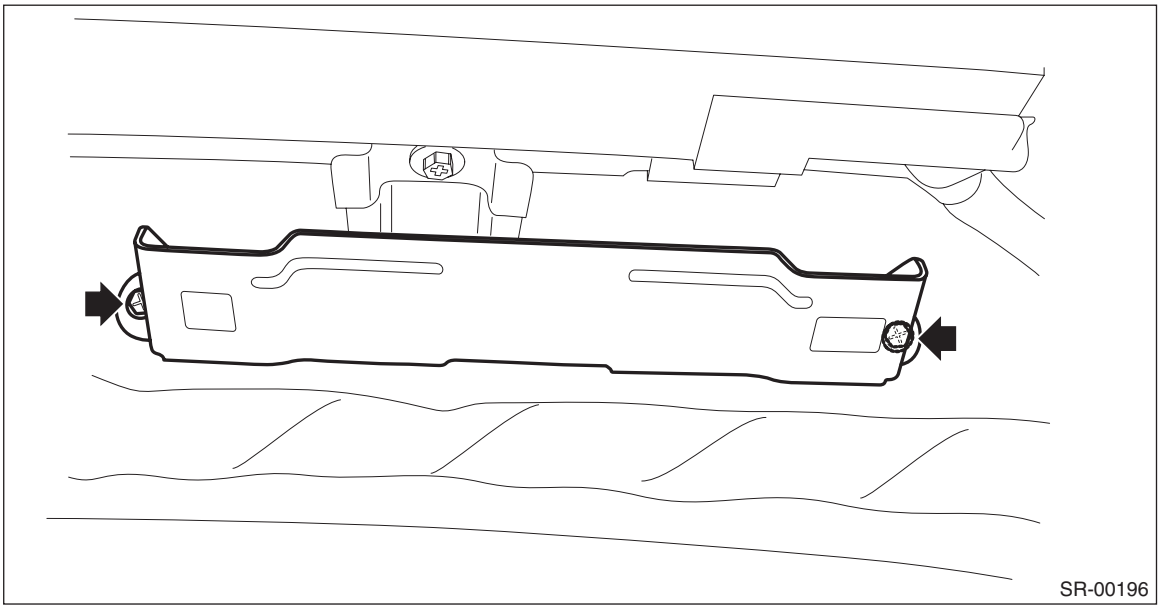

(3) Remove the bolts and then remove the sunroof bracket.

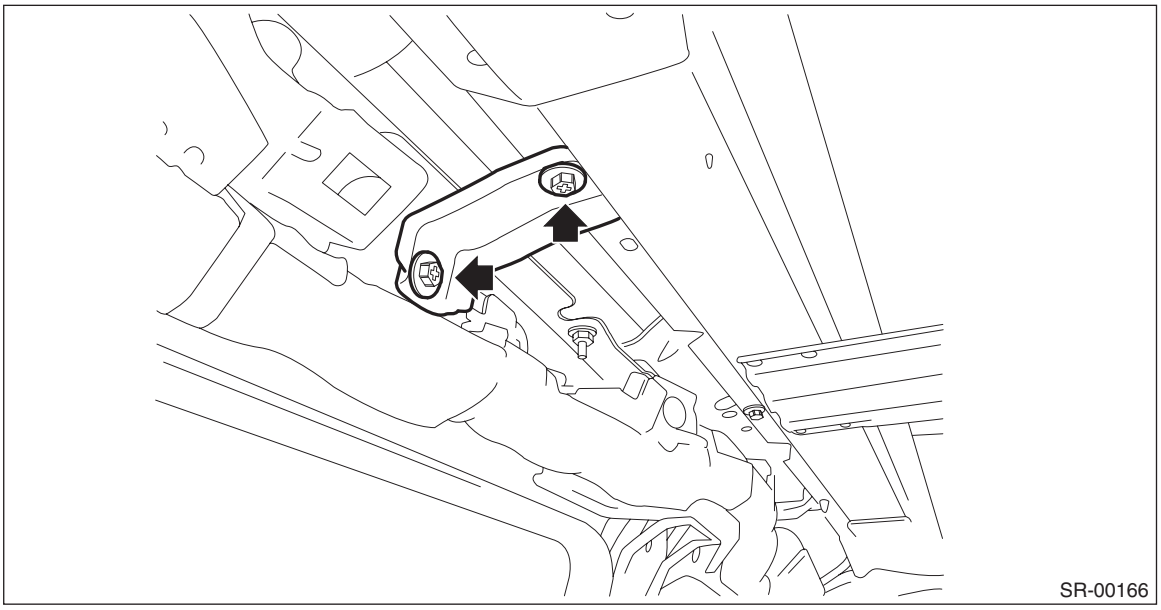

(4) Remove the bolts, then remove the rail assembly.

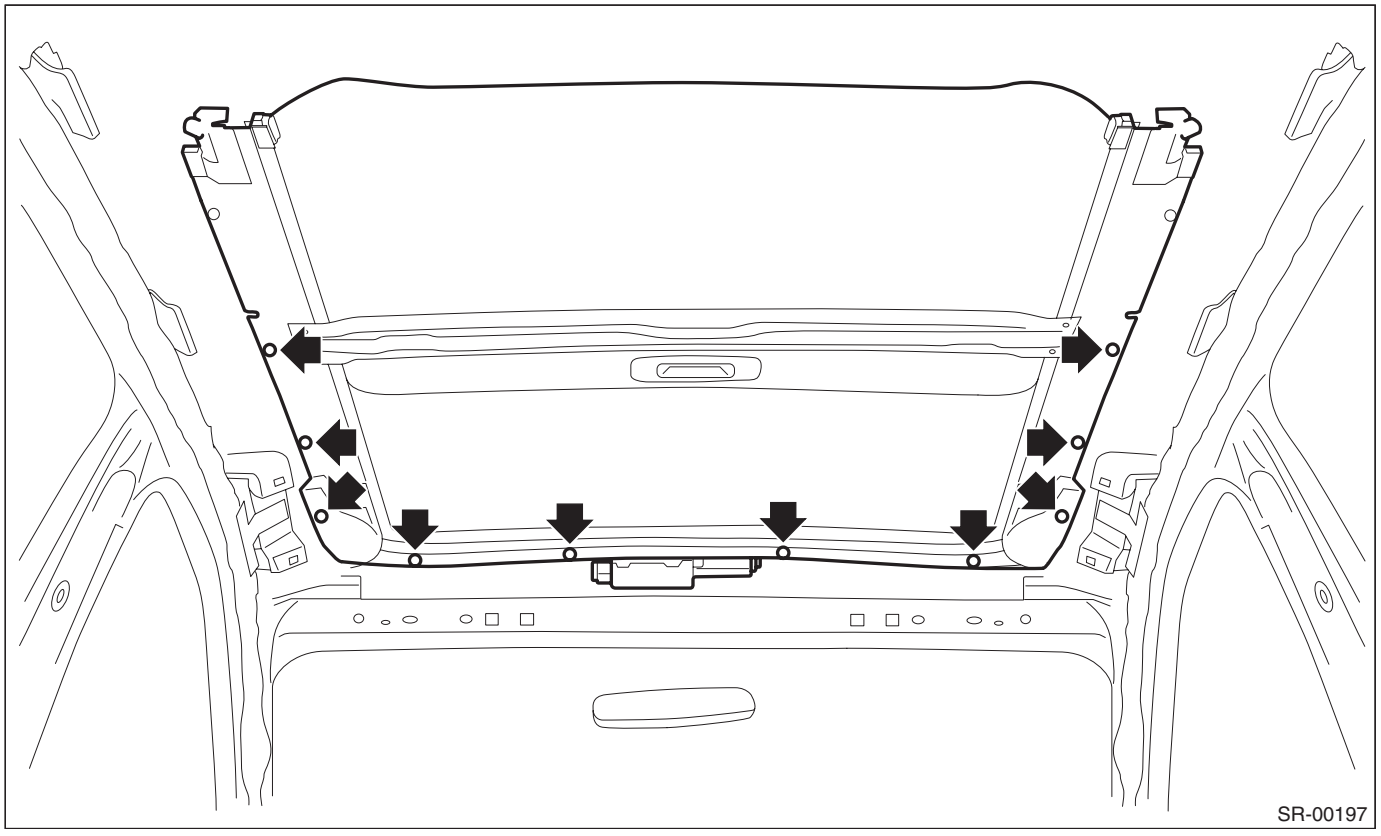

B: INSTALLATION

CAUTION:
Be careful not to snag the harness.
Install each part in the reverse order of removal.

Tightening torque:
Refer to "COMPONENT" of "General Description". <Ref. to SR-2, COMPONENT, General Description.>

NOTE:
- Be sure to connect the harness connector.
- When installing the drain tube - sunroof, insert it securely into drain pipe.

Length A:
15 mm (0.59 in) or more

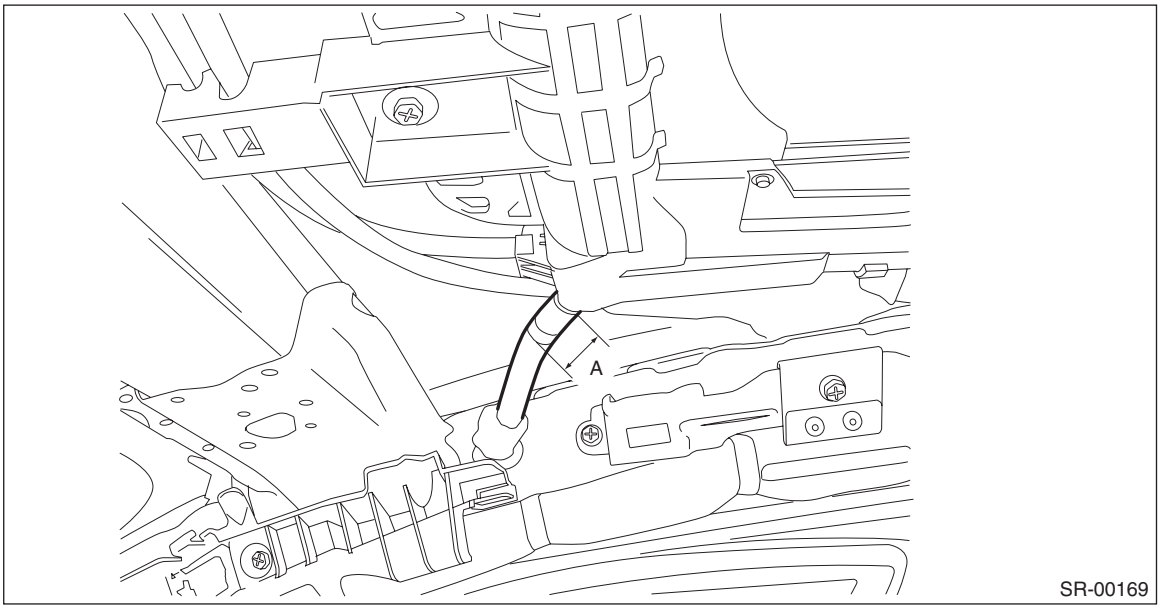

C: DISASSEMBLY

1) Remove the screw and remove the sunroof motor.

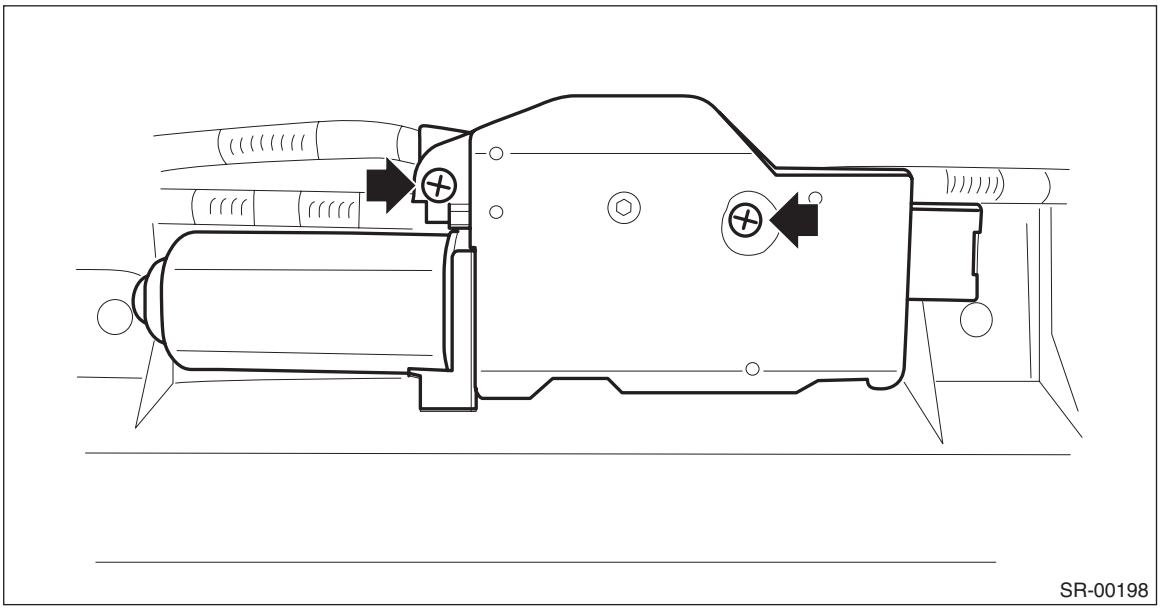

2) Remove the stopper rubber and pull out the sunshade assembly from the rail assembly - sunroof.

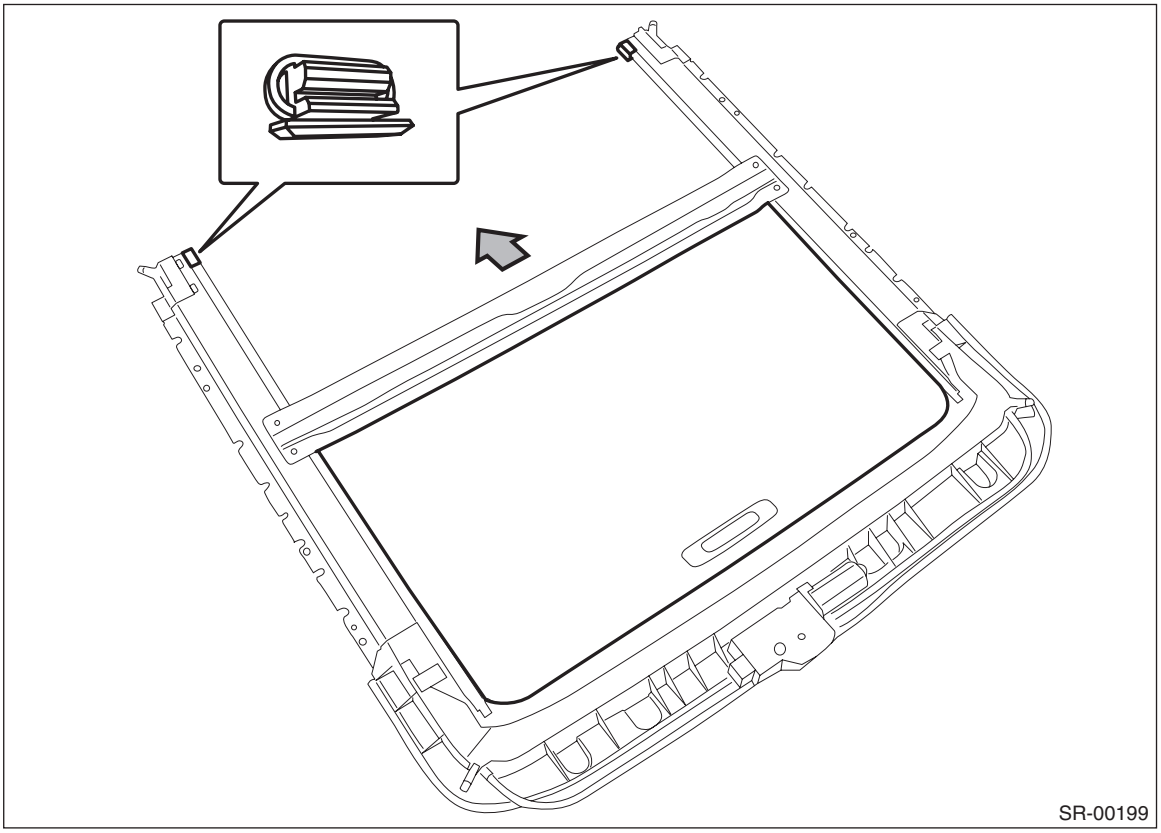

3) Disconnect the claws and then remove the drain holder.

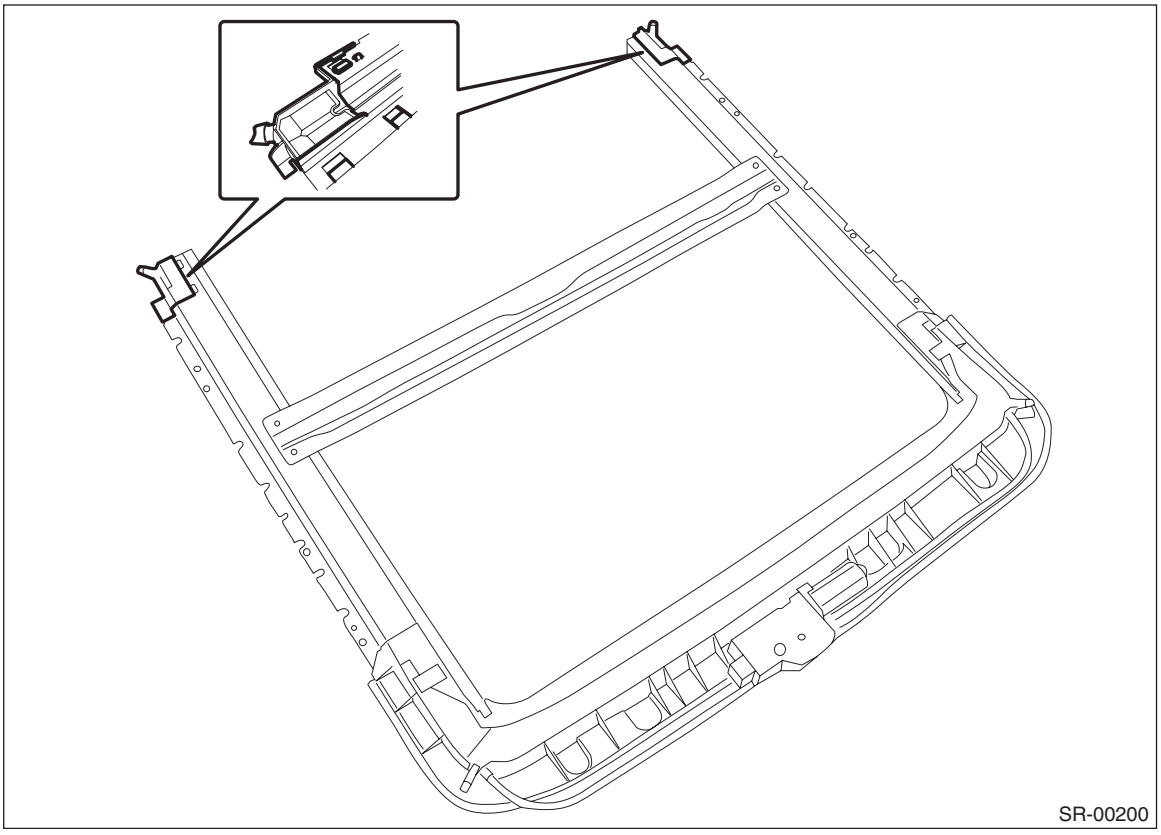

4) Remove the screw and pull out the cable assembly from the rail assembly - sunroof.

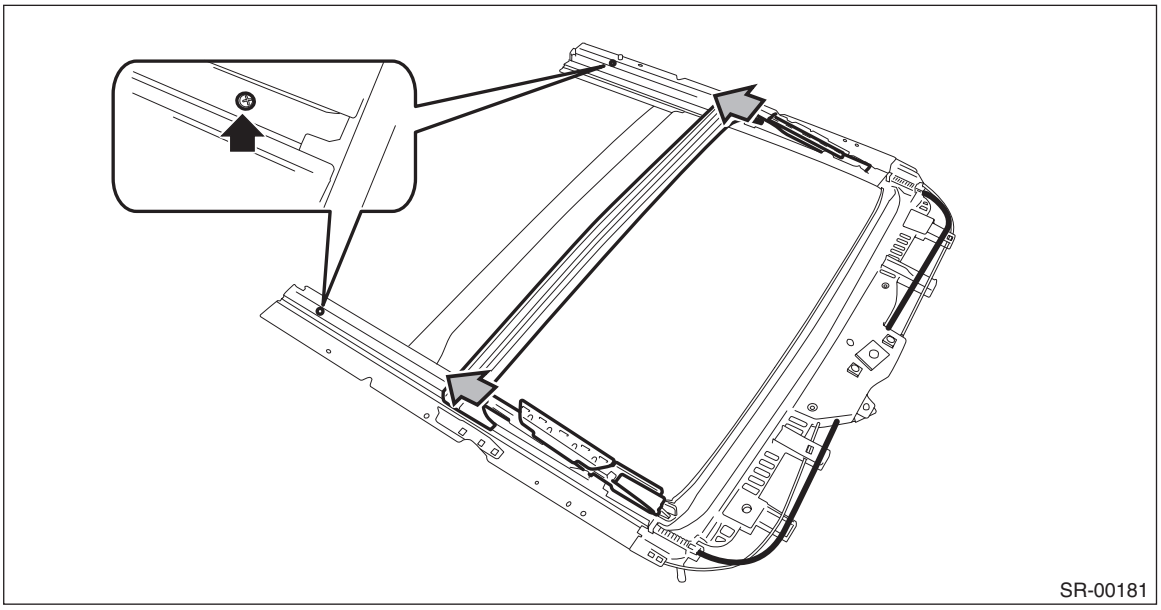

D: ASSEMBLY

Install each part in the reverse order of removal.

6. Sunroof Motor

A: REMOVAL

1) Completely close the lid assembly - sunroof.
2) Disconnect the ground cable from battery. <Ref. to NT-5, BATTERY, NOTE, Note.>

NOTE:
For the 12 volt engine restart battery of HEV model, disconnect the ground terminal from 12V engine restart battery sensor.

3) Remove the light assembly - map.
   (1) Remove the lens and detach the screws.

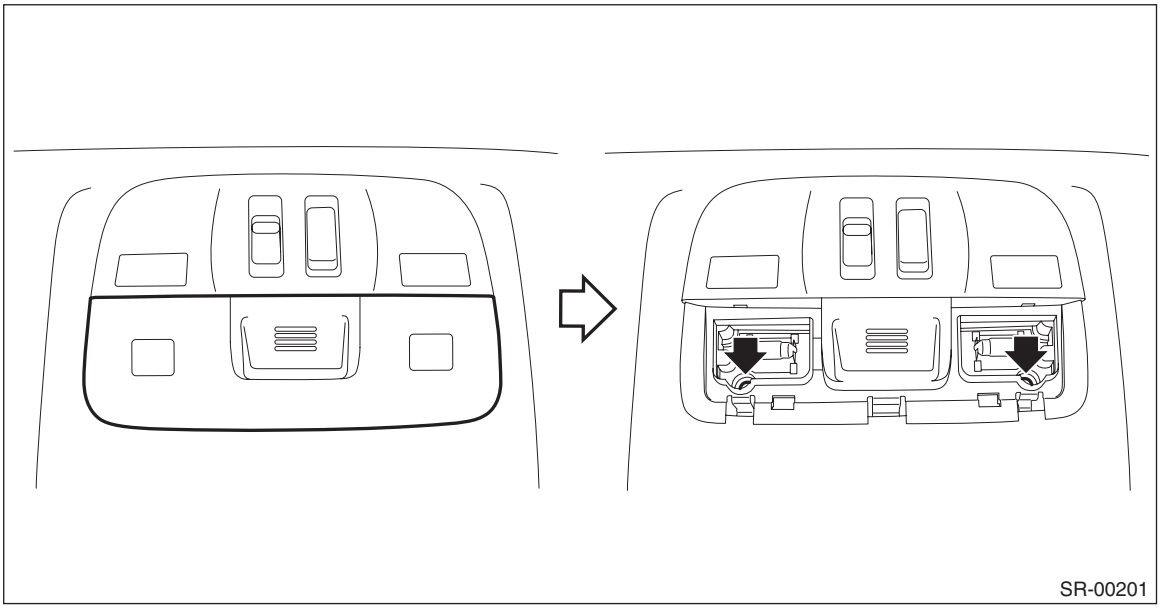
SR-00201

   (2) Release the clips and pull out the light assembly - map to disconnect the connectors.

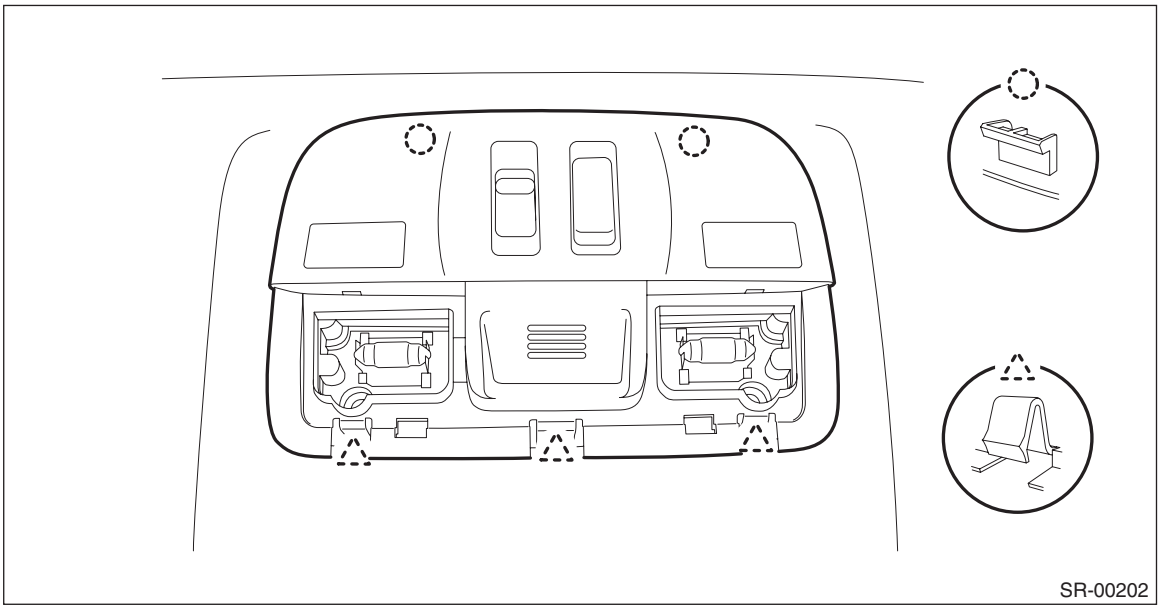
SR-00202

4) Remove the motor assembly - sunroof.
   (1) Disconnect the harness connector.
   (2) Remove the screws and remove the motor assembly - sunroof.

CAUTION:
When removing the motor assembly - sunroof, secure the cable assembly so that it does not move.

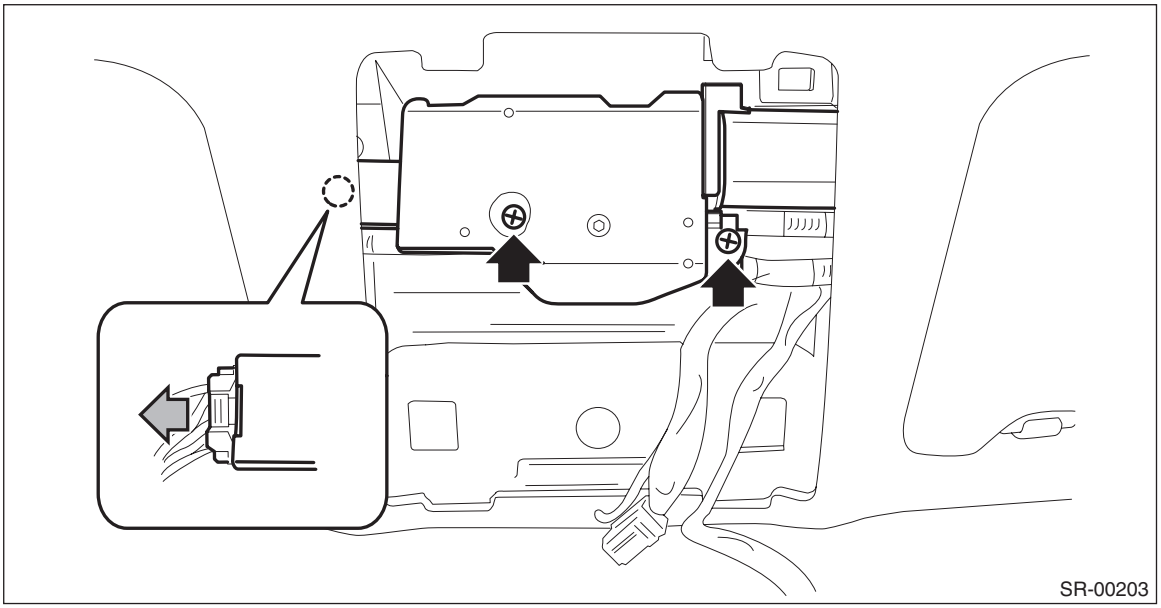

B: INSTALLATION

CAUTION:
When installing the motor assembly - sunroof, be careful not to move the cable assembly.
1) Install the motor assembly - sunroof.
2) Install the light assembly - map, and connect the ground cable to the battery.
3) Perform the initialize operation. <Ref. to SR-6, INITIALIZE OPERATION, OPERATION, Sunroof Control System.>
4) Check the operation of sunroof with following table below.

Operation	Switch position
(1) Lid assembly - sunroof closes completely.	Close
(2) Lid assembly - sunroof is tilted up to the top position.	Tilt up
(3) Lid assembly - sunroof closes completely.	Tilt down
(4) Lid assembly - sunroof opens 295 mm (11.61 in) away from completely closed position.	Open
(5) Lid assembly - sunroof opens completely.	Open
(6) Lid assembly - sunroof closes completely.	Close

C: INSPECTION

Check the auto-reverse mechanism.

CAUTION:
Do not place objects in the way to check the auto-reverse mechanism.
1) Open the lid assembly - sunroof.
2) Push the lid assembly - sunroof in the opening direction with a force of 110±10 N (11.2 kgf, 24.7 lbf±1.0 kgf, 2.2 lbf) during the auto-closing operation, and check whether the window auto-reverse mechanism functions.

NOTE:
If the auto function is cancelled, perform the initialize operation. <Ref. to SR-6, INITIALIZE OPERATION, OPERATION, Sunroof Control System.>

7. Sunroof Switch

A: REMOVAL

1) Disconnect the ground cable from battery. <Ref. to NT-5, BATTERY, NOTE, Note.>

NOTE:
For the 12 volt engine restart battery of HEV model, disconnect the ground terminal from 12V engine restart battery sensor.

2) Remove the light assembly - map.
   (1) Remove the lens and detach the screws.

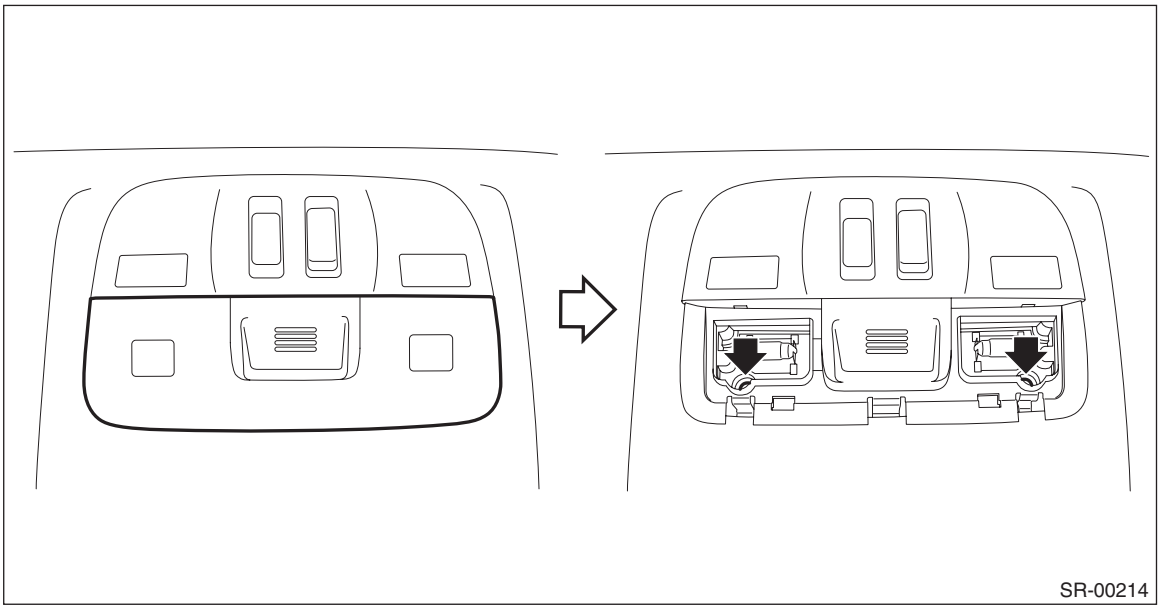

   (2) Release the clips and pull out the light assembly - map to disconnect the connectors.

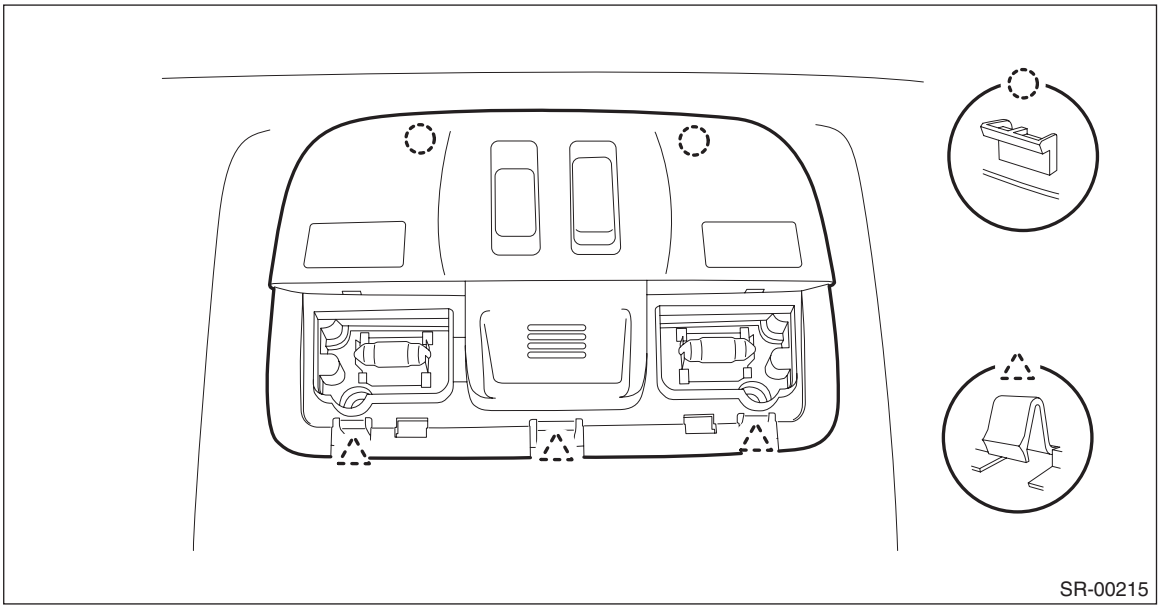

3) Release the claws and remove the sunroof switch from the light assembly - map.

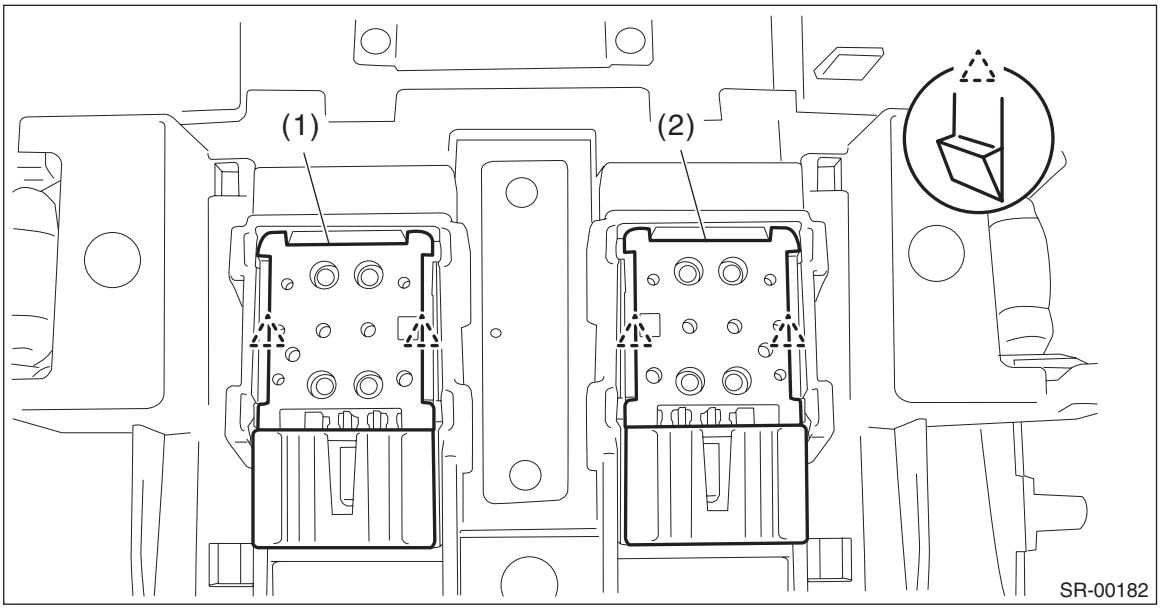

(1) Sunroof switch (tilt)
(2) Sunroof switch (slide)

B: INSTALLATION

Install each part in the reverse order of removal.

C: INSPECTION

1) Remove the light assembly - map.
2) Disconnect the harness connector of sunroof switch.
3) Check the resistance between sunroof switch terminals.

PREPARATION TOOL:
Circuit tester

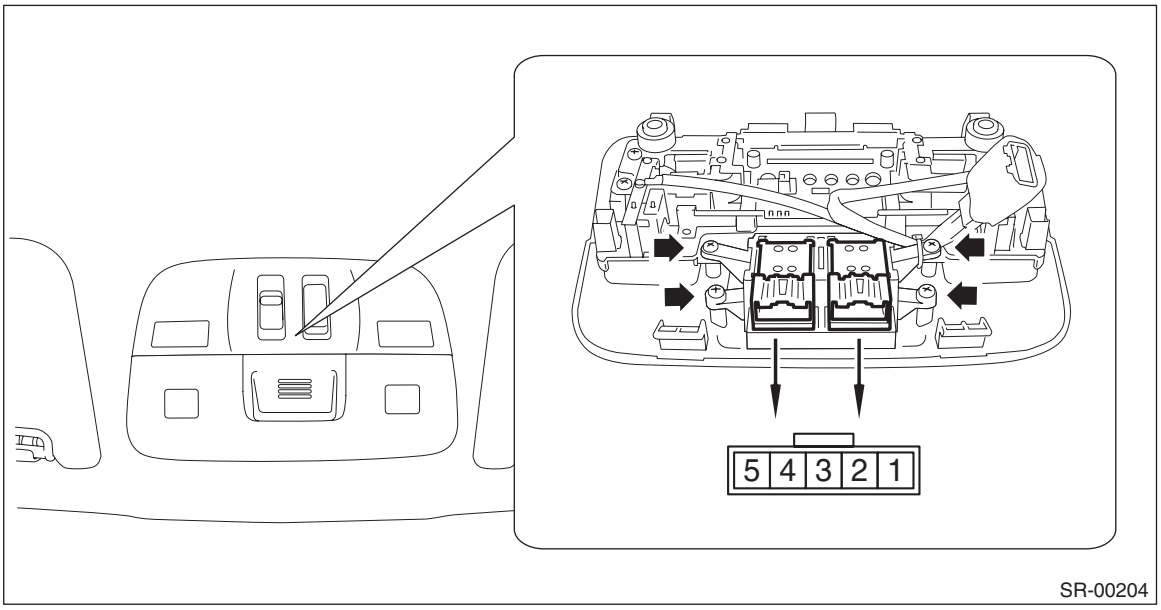

Terminal No.	Inspection conditions	Standard	Connector No.
1 — 3	Open	Less than 1 Ω	R128
4 — 3	Close	Less than 1 Ω	
1 — 3	Tilt up	Less than 1 Ω	R187
4 — 3	Tilt down	Less than 1 Ω	

4) Replace the sunroof switch if the inspection result is not within the standard.

8. Sunshade

A: REMOVAL

1) Remove the lid assembly - sunroof.
   (1) Completely close the lid assembly - sunroof, and open the sunshade assembly.
   (2) Remove the TORX® bolt, and then remove the lid assembly - sunroof.

CAUTION:
Be careful not to damage the lid assembly - sunroof.

PREPARATION TOOL:
TORX® T25

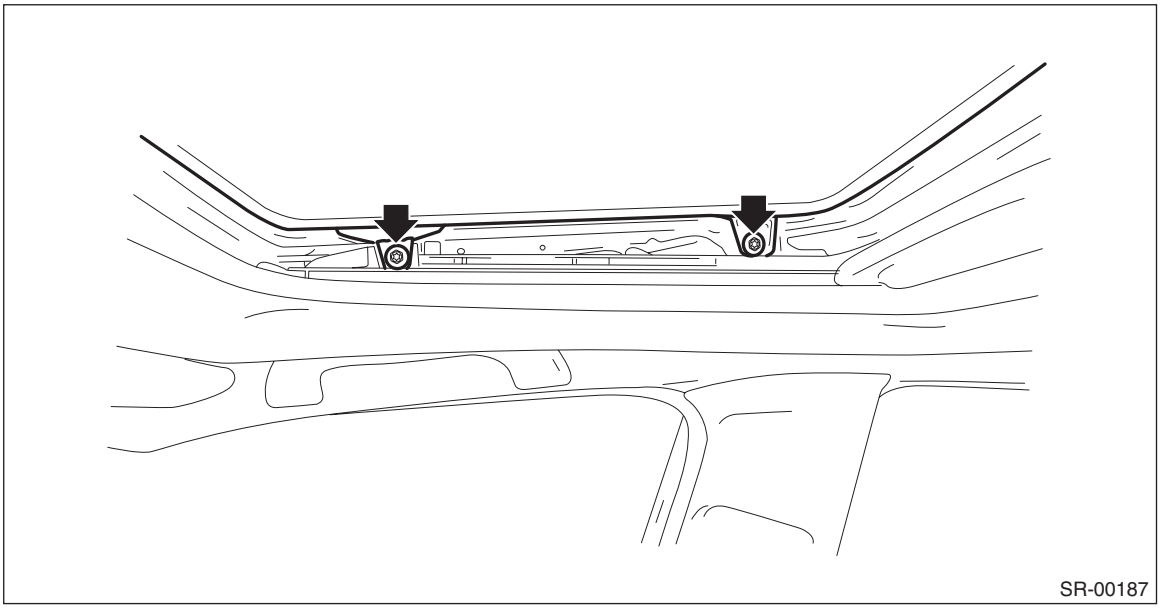

2) Remove the trim panel - roof assembly. <Ref. to EI-129, REMOVAL, Roof Trim.>

3) Remove the sunshade assembly.
   (1) Attach protective tape (a) on the handle of sunshade assembly.
   (2) Remove the left and right stoppers (b).
   (3) Remove the sunshade assembly while pulling the center of the brace downward.

CAUTION:
Be careful not to damage the sunshade assembly.

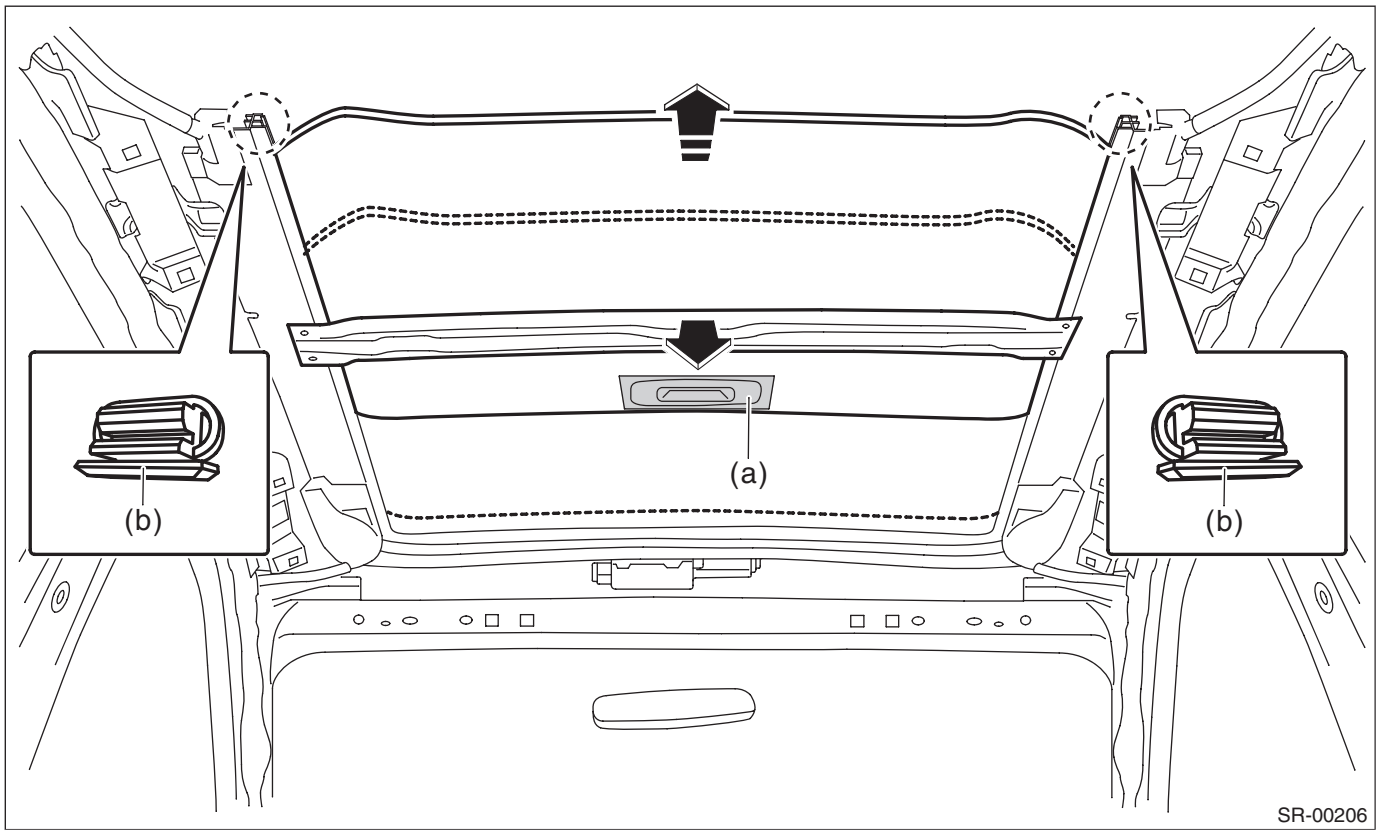

B: INSTALLATION

Install each part in the reverse order of removal.

Tightening torque:
Refer to "COMPONENT" of "General Description". <Ref. to SR-2, COMPONENT, General Description.>

C: INSPECTION

1. MOVING LOAD OF SUNSHADE ASSEMBLY

1) Attach a spring scale together with a cloth to the edge of sunshade assembly.
2) Pull the spring scale to check the moving load of the sunshade assembly.

Moving load of sunshade assembly:
14±6 N (1.43 kgf, 3.1 lbf±0.61 kgf, 1.3 lbf)

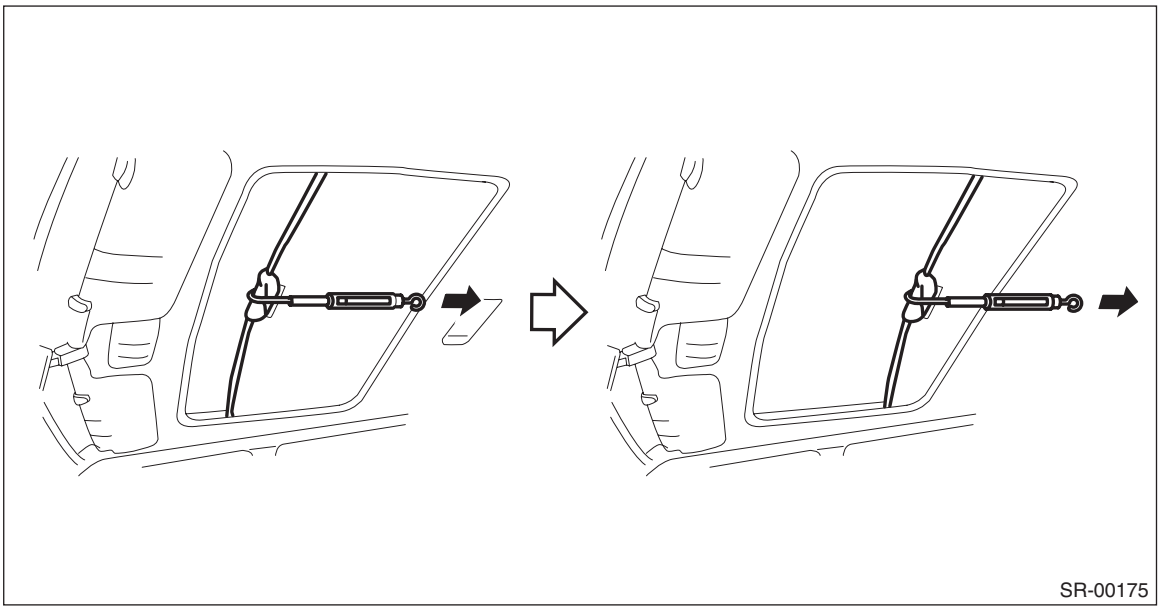

NOTE:
Moving load is larger at the beginning of pulling a spring scale, so take a spring scale reading while the sunshade assembly is sliding smoothly.
3) If the inspection result exceeds the standard, check the sunshade assembly or the rail assembly - sunroof for improper installation, and replace if necessary.

EXTERIOR/INTERIOR TRIM

EI

		Page
1.	General Description	2
2.	Front Under Cover	29
3.	Mud Guard	30
4.	Floor Under Protector	31
5.	Fuel Tank Protector	33
6.	Front Grille	34
7.	Front Bumper	37
8.	Rear Bumper	49
9.	Cowl Panel	58
10.	Side Garnish	61
11.	Roof Molding	63
12.	Roof Rail	66
13.	Door Trim	67
14.	Instrument Panel Lower Cover	71
15.	Glove Box	73
16.	Center Console	75
17.	Console Box	77
18.	Instrument Panel Assembly	80
19.	Lower Inner Trim	102
20.	Upper Inner Trim	107
21.	Rear Quarter Trim	112
22.	Rear Shelf Trim	120
23.	Trunk Room Trim	125
24.	Sun Visor	127
25.	Assist Grip	128
26.	Roof Trim	129
27.	Rear Gate Trim	157
28.	Floor Mat	159
29.	Trunk Lid Garnish	161
30.	Rear Gate Garnish	162
31.	Heat Shield Cover	165
32.	Ornament	166

1. General Description

A: COMPONENT

1. FRONT UNDER COVER

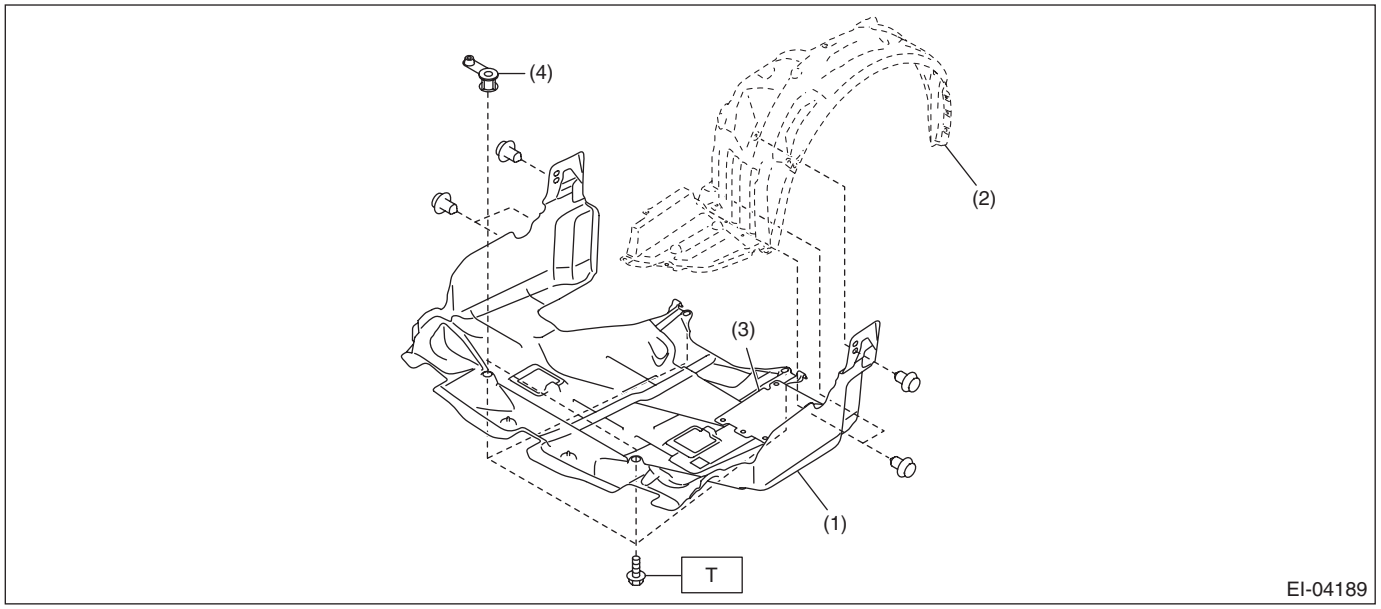

(1) Under cover - front
(2) Mud guard - front
(3) Plate cover - rear (XV model)
(4) Spacer - under cover (XV model)

Tightening torque: N·m (kgf-m, ft-lb)
T: 18 (1.84, 13.3)

2. MUD GUARD

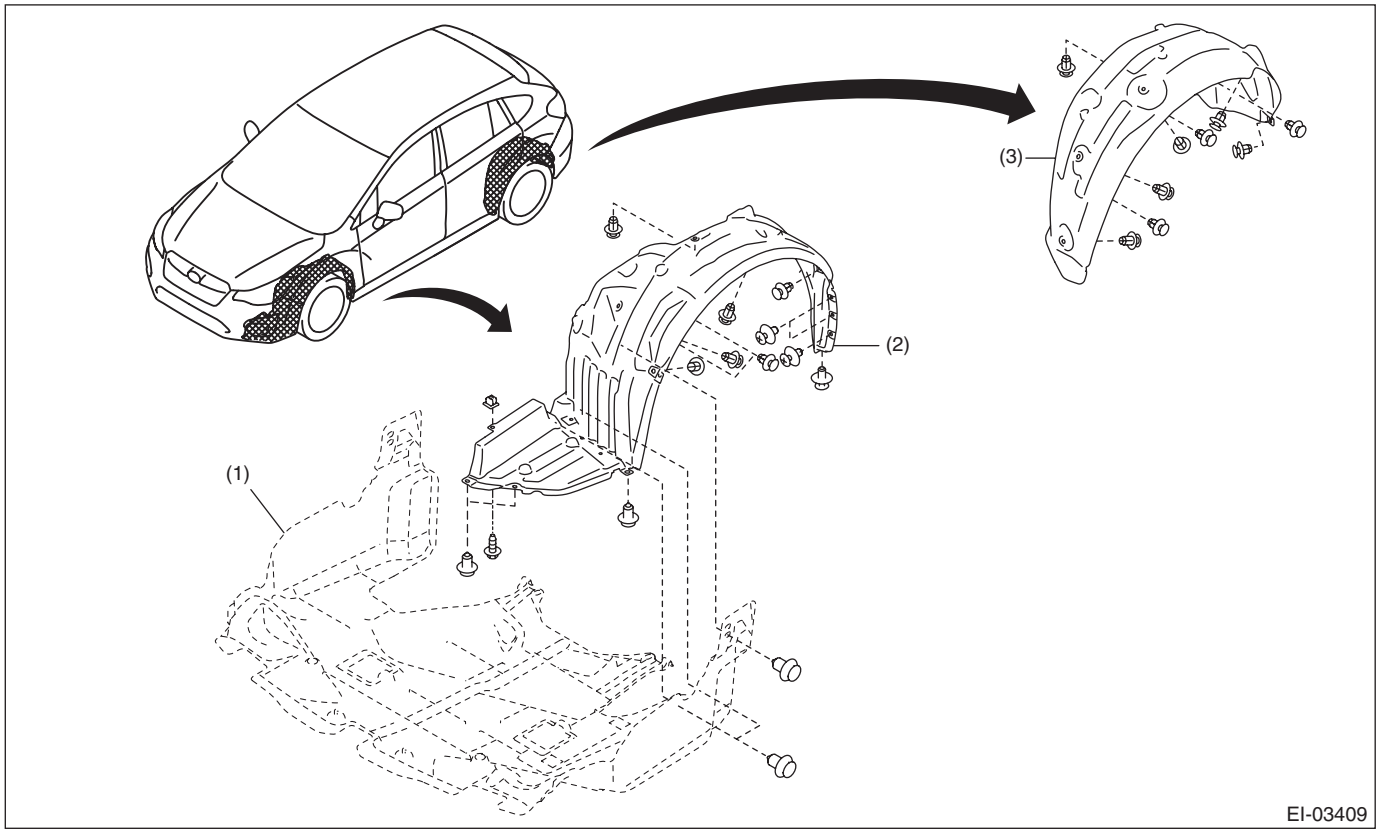

(1) Under cover - front
(2) Mud guard - front
(3) Mud guard - rear

3. FLOOR UNDER PROTECTOR

- Type A

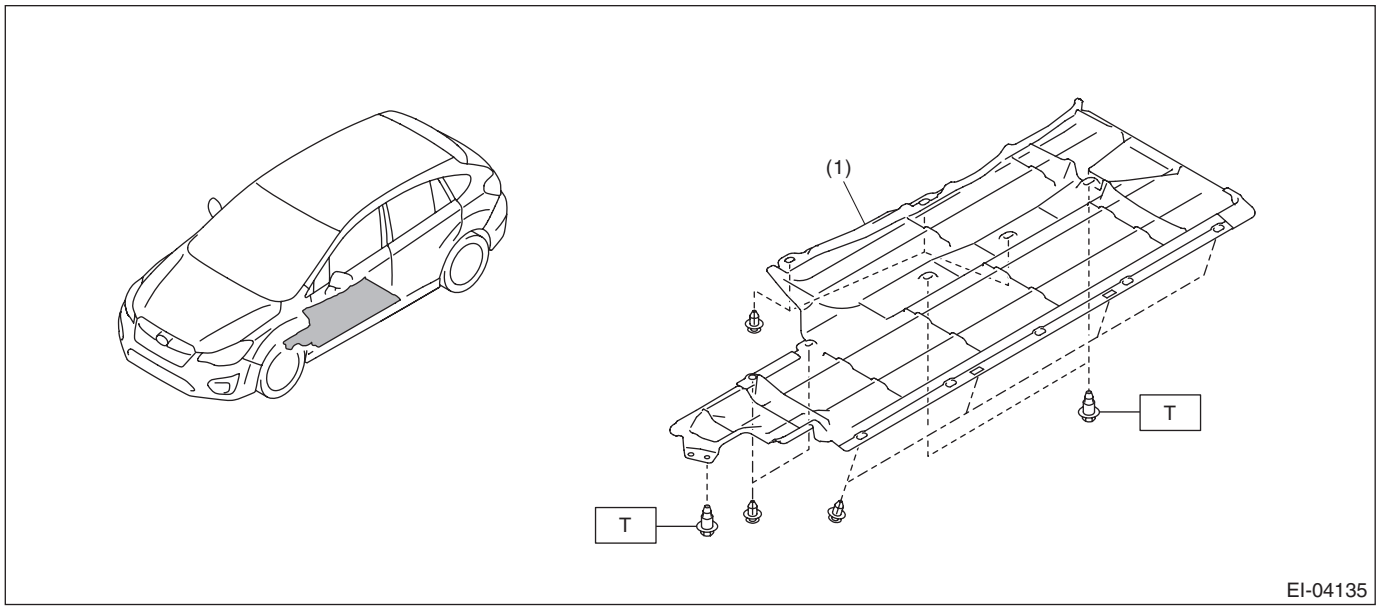

Tightening torque: N·m (kgf-m, ft-lb)
T: 7.5 (0.76, 5.5)

- Type B

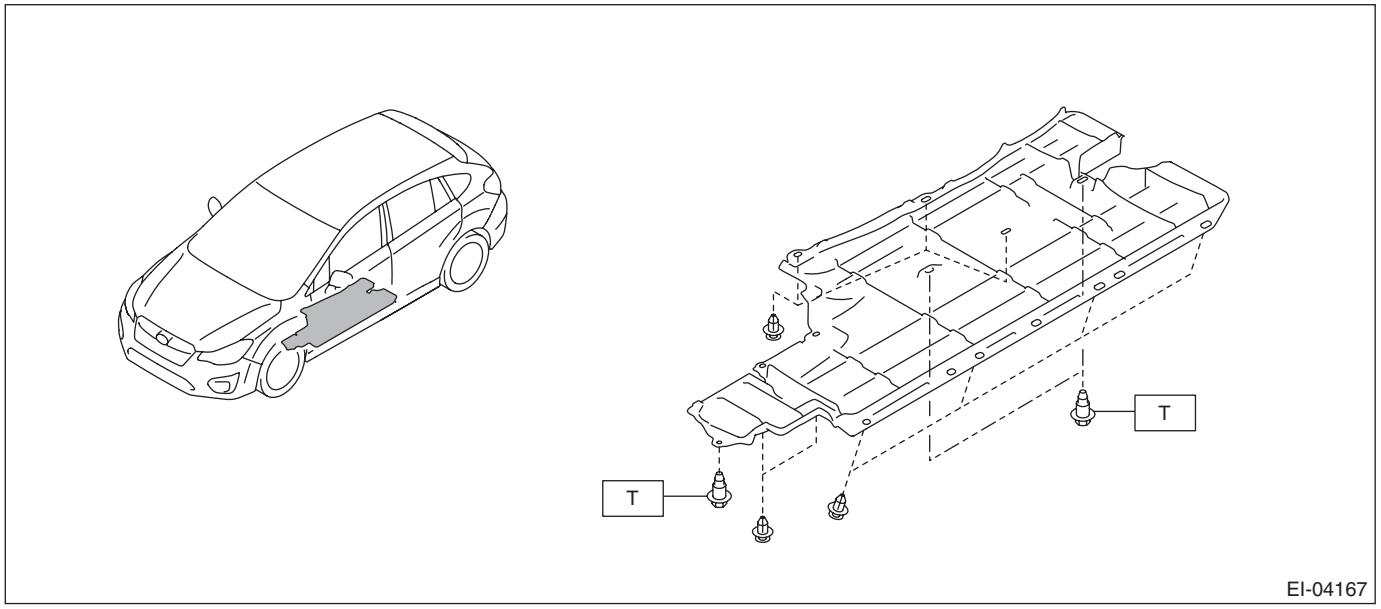

Tightening torque: N·m (kgf-m, ft-lb)
T: 7.5 (0.76, 5.5)

- Type C

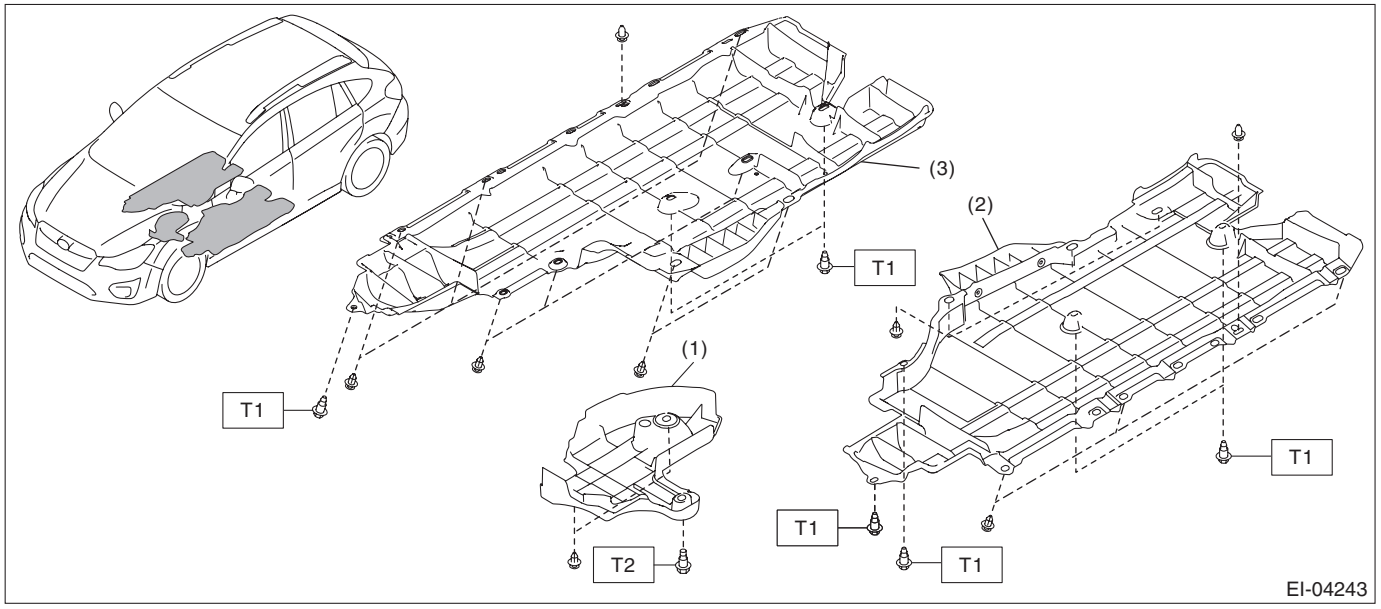

(1) Under cover front - cable
(2) Under cover - rear LH
(3) Under cover - rear RH

Tightening torque: N·m (kgf-m, ft-lb)
T1: 7.5 (0.76, 5.5)
T2: 18 (1.84, 13.3)

4. FUEL TANK PROTECTOR

For exploded view of the fuel tank protector, refer to “FUEL TANK” of “FUEL INJECTION” section. <Ref. to FU(H4DO(w/o HEV))-7, FUEL TANK, COMPONENT, General Description.>

5. PROTECTOR OIL COVER

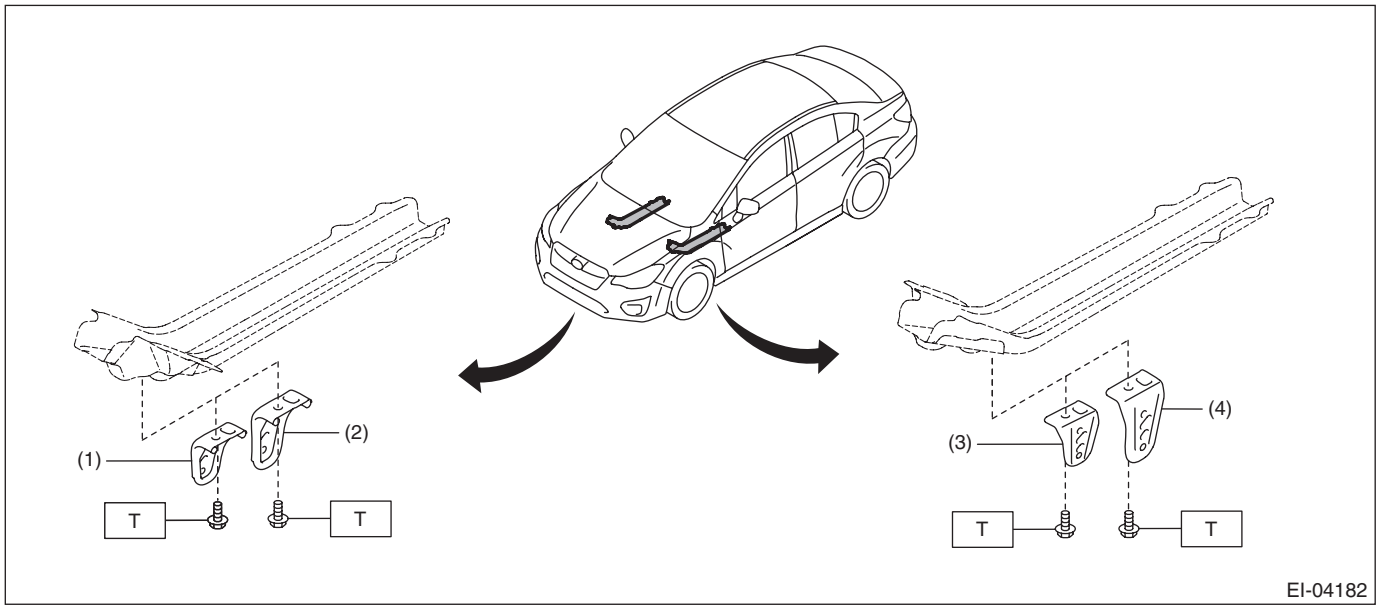

(1) Protector oil cover RH (except for XV model)
(2) Protector oil cover RH (XV model)
(3) Protector oil cover LH (except for XV model)
(4) Protector oil cover LH (XV model)

Tightening torque: N·m (kgf-m, ft-lb)
T: 100 (10.2, 73.3)

6. FRONT BUMPER

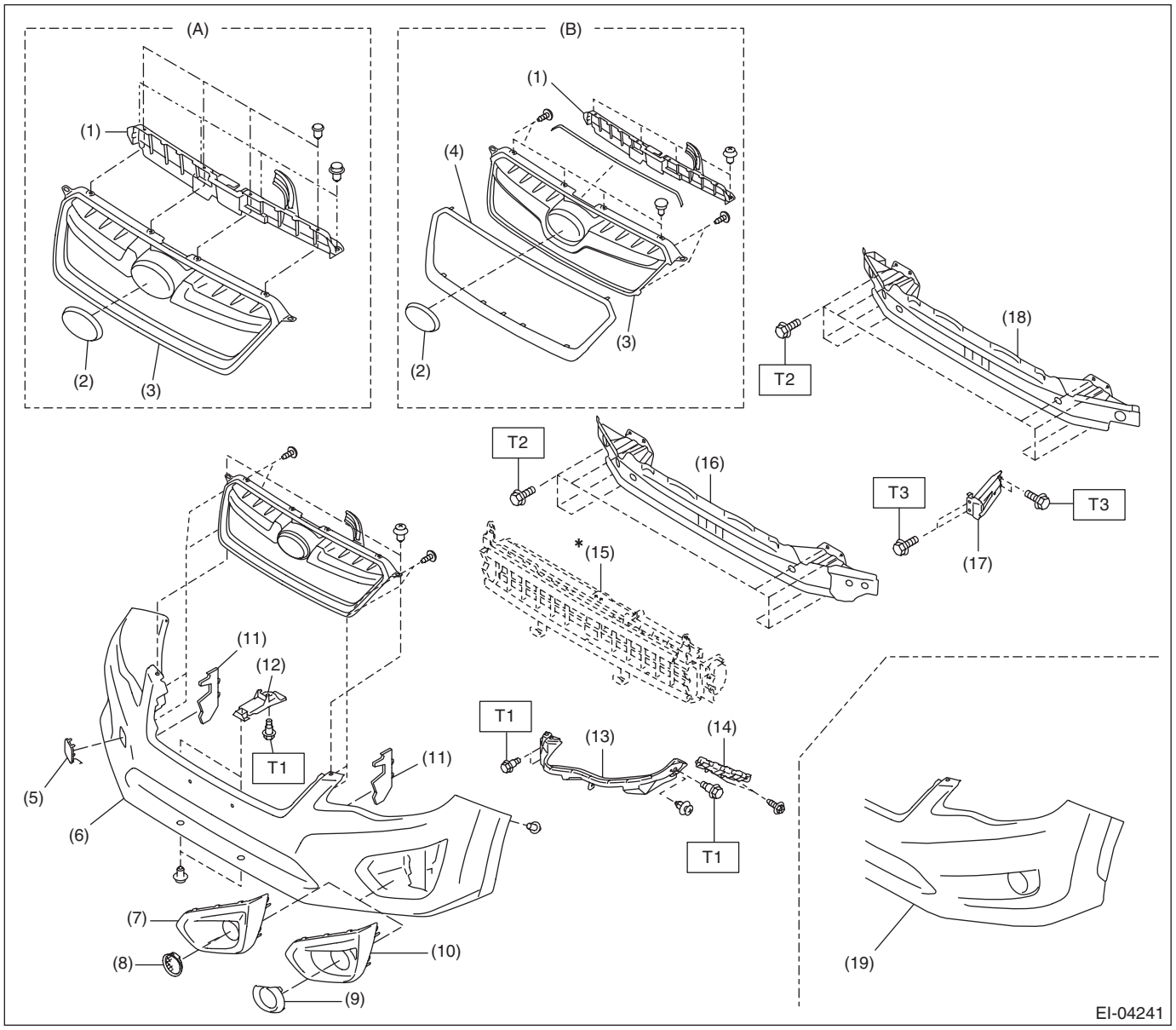

(A)	Except for XV model	(B)	XV model		
(1)	Bracket - grille	(9)	Fog ring	(17)	Gusset COMPL - front side
(2)	Ornament front	(10)	Cover - fog light B	(18)	Bumper beam COMPL - front (gasoline engine model)
(3)	Front grille ASSY	(11)	Radiator gasket	(19)	Bumper face - front (XV model)
(4)	Ring - front grille	(12)	Bracket - front center LWR		
(5)	Cover - front bumper A	(13)	Bracket - front bumper corner	***Tightening torque: N·m (kgf-m, ft-lb)***	
(6)	Bumper face - front (except for XV model)	(14)	Bracket - front bumper side	***T1:***	***7.5 (0.76, 5.5)***
(7)	Cover - fog light A	(15)	Active grille shutter (ACTGS)	***T2:***	***32 (3.26, 23.6)***
(8)	Cover - front bumper B	(16)	Bumper beam COMPL - front (HEV model)	***T3:***	***65 (6.63, 47.9)***

*: For exploded view of the active grille shutter (ACTGS), refer to “ACTIVE GRILLE SHUTTER” of “HYBRID ELECTRIC VEHICLE” section. <Ref. to HEV-9, HYBRID POWERTRAIN CONTROL MODULE, COMPONENT, General Description.>

7. REAR BUMPER

- 4 door model

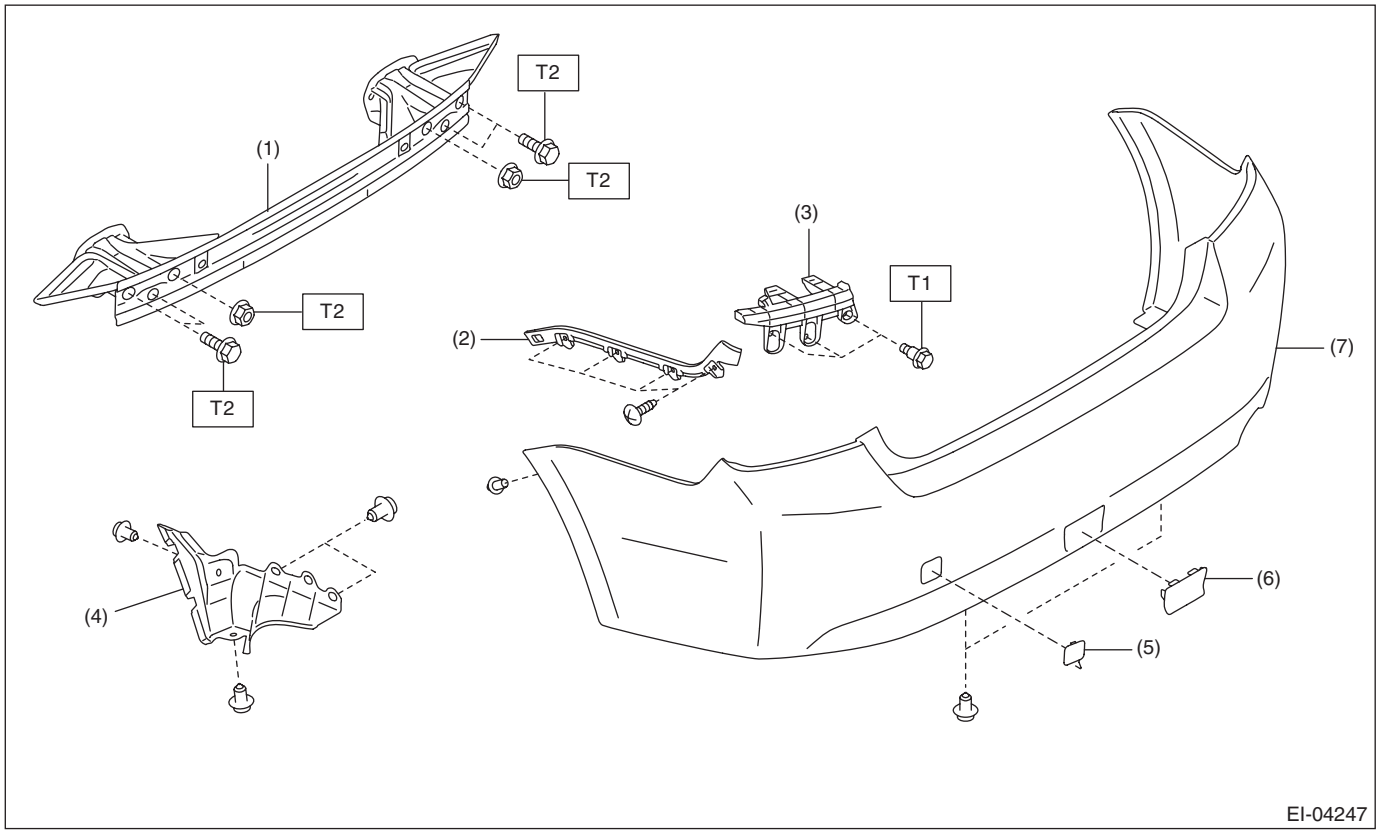

(1) Bumper beam COMPL - rear
(2) Bracket - rear bumper side
(3) Bracket - rear bumper corner
(4) Cover - rear bumper side
(5) Cover - rear bumper A
(6) Cover - rear bumper B
(7) Bumper face - rear

Tightening torque: N·m (kgf-m, ft-lb)
T1: 7.5 (0.76, 5.5)
T2: 70 (7.14, 51.6)

- 5 door model/XV model

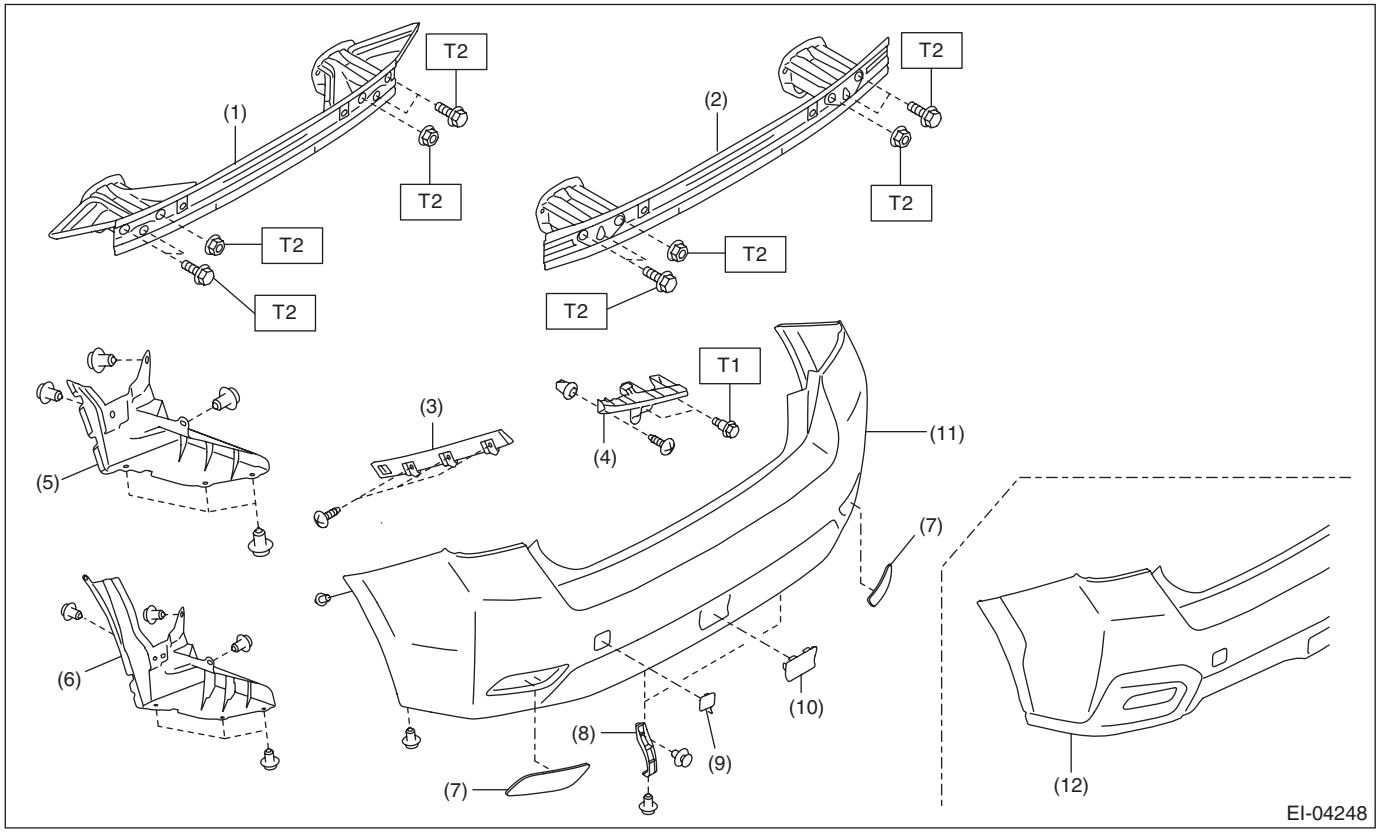

(1)	Bumper beam COMPL - rear (except for XV model)	(7)	Reflex reflector ASSY
(2)	Bumper beam COMPL - rear (XV model)	(8)	Bracket - rear bumper lower
(3)	Bracket - rear bumper side	(9)	Cover - rear bumper A
(4)	Bracket - rear bumper corner	(10)	Cover - rear bumper B
(5)	Cover - rear bumper side (except for XV model)	(11)	Bumper face - rear (except for XV model)
(6)	Cover - rear bumper side (XV model)	(12)	Bumper face - rear (XV model)

Tightening torque: N·m (kgf-m, ft-lb)

T1: 7.5 (0.76, 5.5)

T2: 70 (7.14, 51.6)

8. COWL PANEL

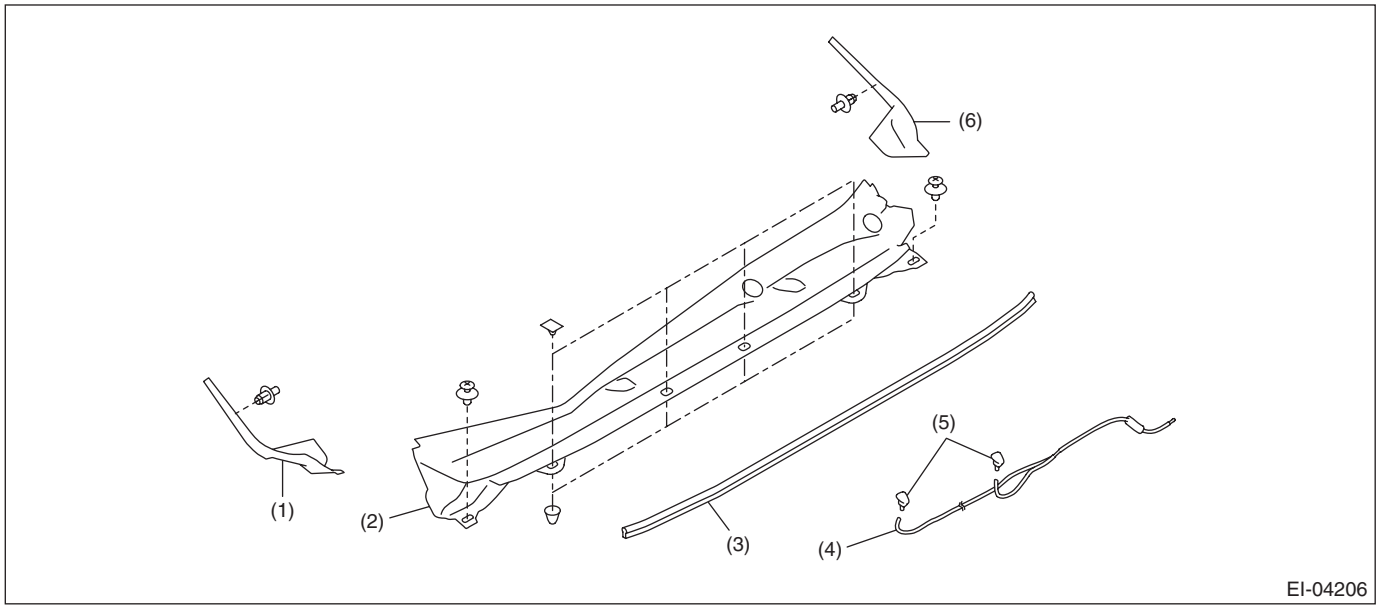

(1) Cowl panel - side RH
(2) Cowl panel ASSY
(3) Seal - front panel
(4) Hose - windshield washer
(5) Nozzle - windshield washer
(6) Cowl panel - side LH

9. SIDE GARNISH

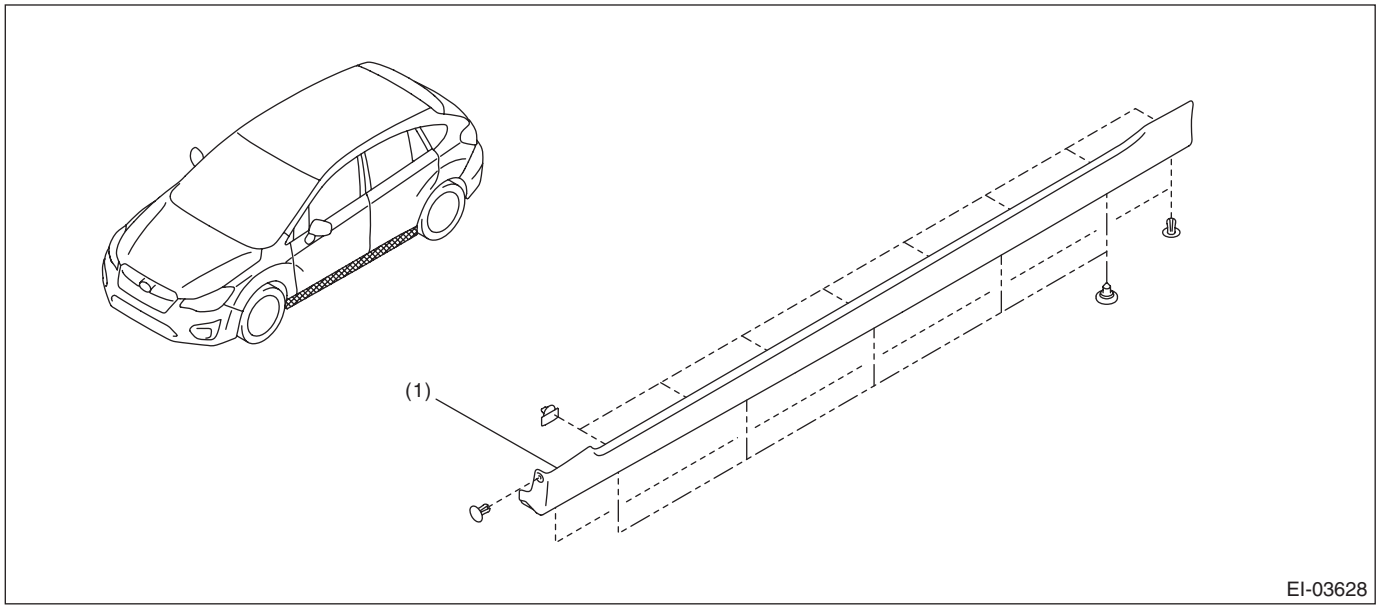

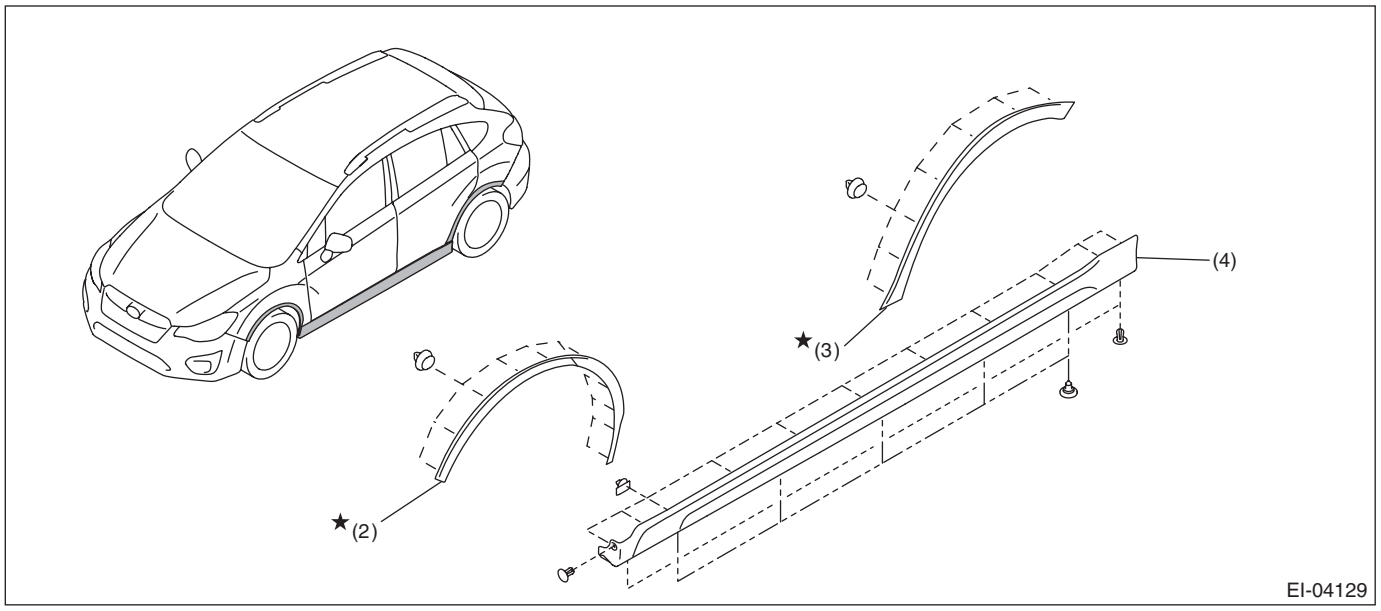

(1) Garnish ASSY - side sill (except for XV model)
(2) Garnish ASSY - fender (XV model)
(3) Garnish ASSY - rear quarter (XV model)
(4) Garnish ASSY - side sill (XV model)

10.ROOF MOLDING

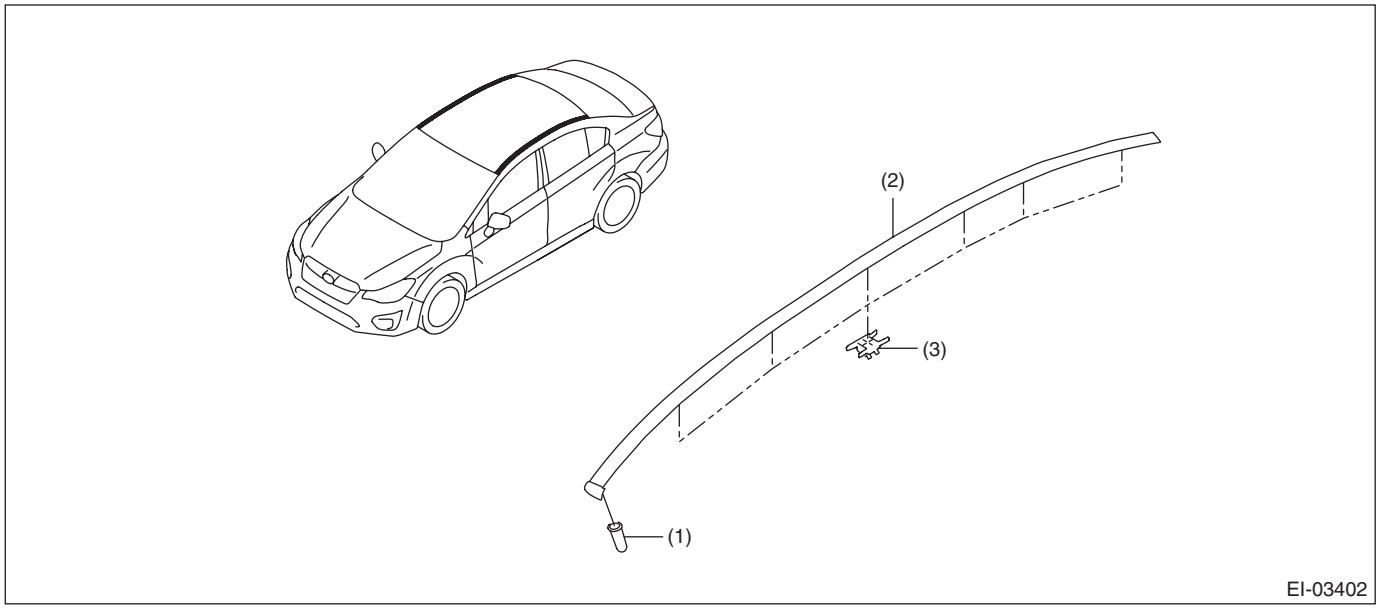

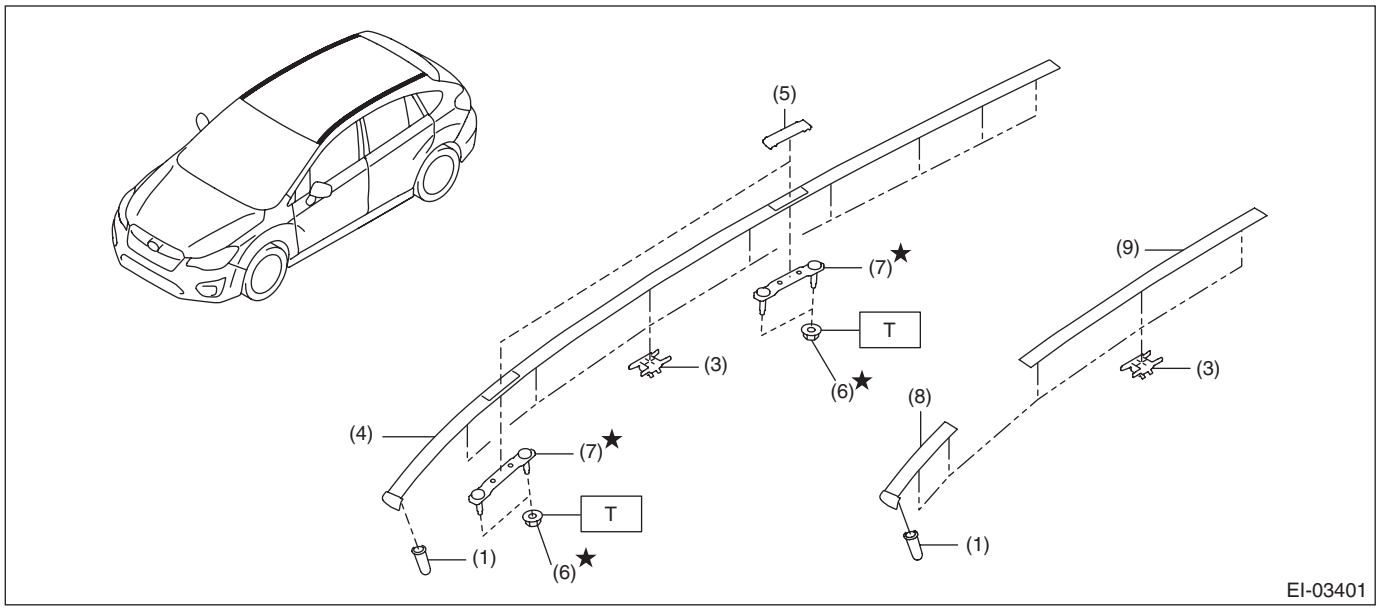

(1) Rivet
(2) Molding - roof (4 door model)
(3) Fastener
(4) Molding - roof (5 door model/XV model)
(5) Cap - molding
(6) Flange nut
(7) Bracket - molding roof
(8) Molding - roof front (model with roof rail)
(9) Molding - roof rear (model with roof rail)

Tightening torque: N·m (kgf-m, ft-lb)
T: 7.5 (0.76, 5.5)

11.ROOF RAIL

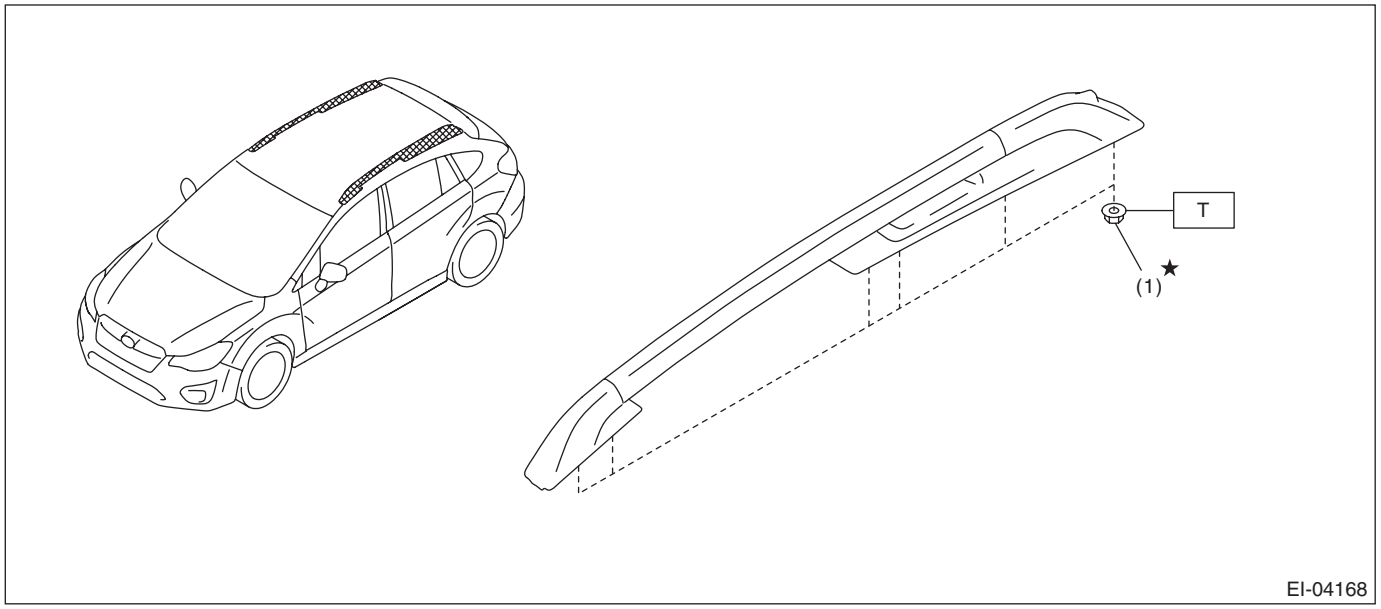

(1) Self-locking nut

Tightening torque: N·m (kgf-m, ft-lb)
T: 7.5 (0.76, 5.5)

12.DOOR TRIM

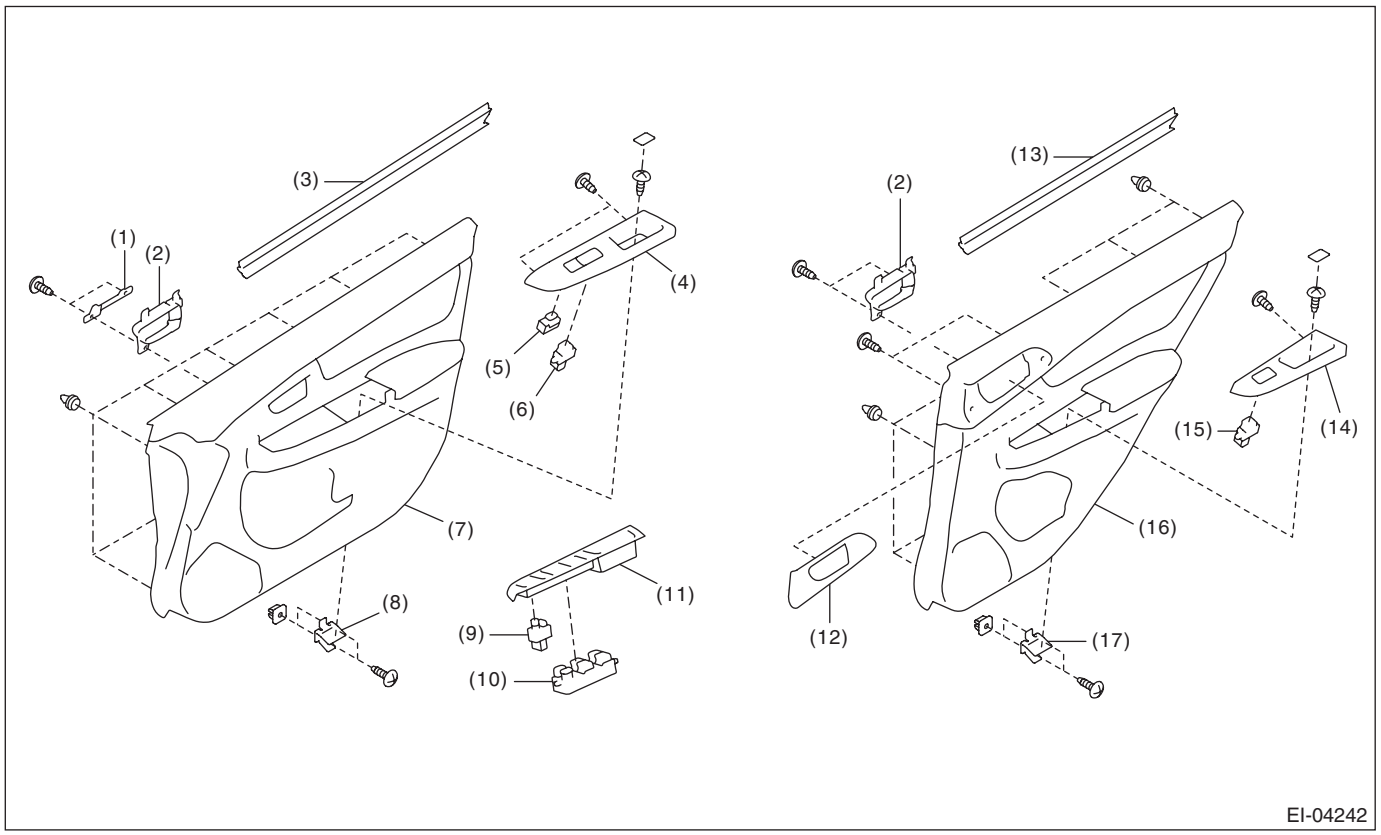

(1)	Plate	(7)	Trim panel - front door	(13)	Weather strip - door rear INN
(2)	Remote ASSY - door	(8)	Bracket - door trim front	(14)	Panel - power window sub-switch rear
(3)	Weather strip - door front INN	(9)	Switch - door mirror	(15)	Switch - power window sub rear
(4)	Panel - power window sub-switch front	(10)	Switch - power window main	(16)	Trim panel - rear door
(5)	Switch - door lock sub	(11)	Panel - power window main switch	(17)	Bracket - door trim rear
(6)	Switch - power window sub front	(12)	Cover - remote rear door		

13.CONSOLE BOX

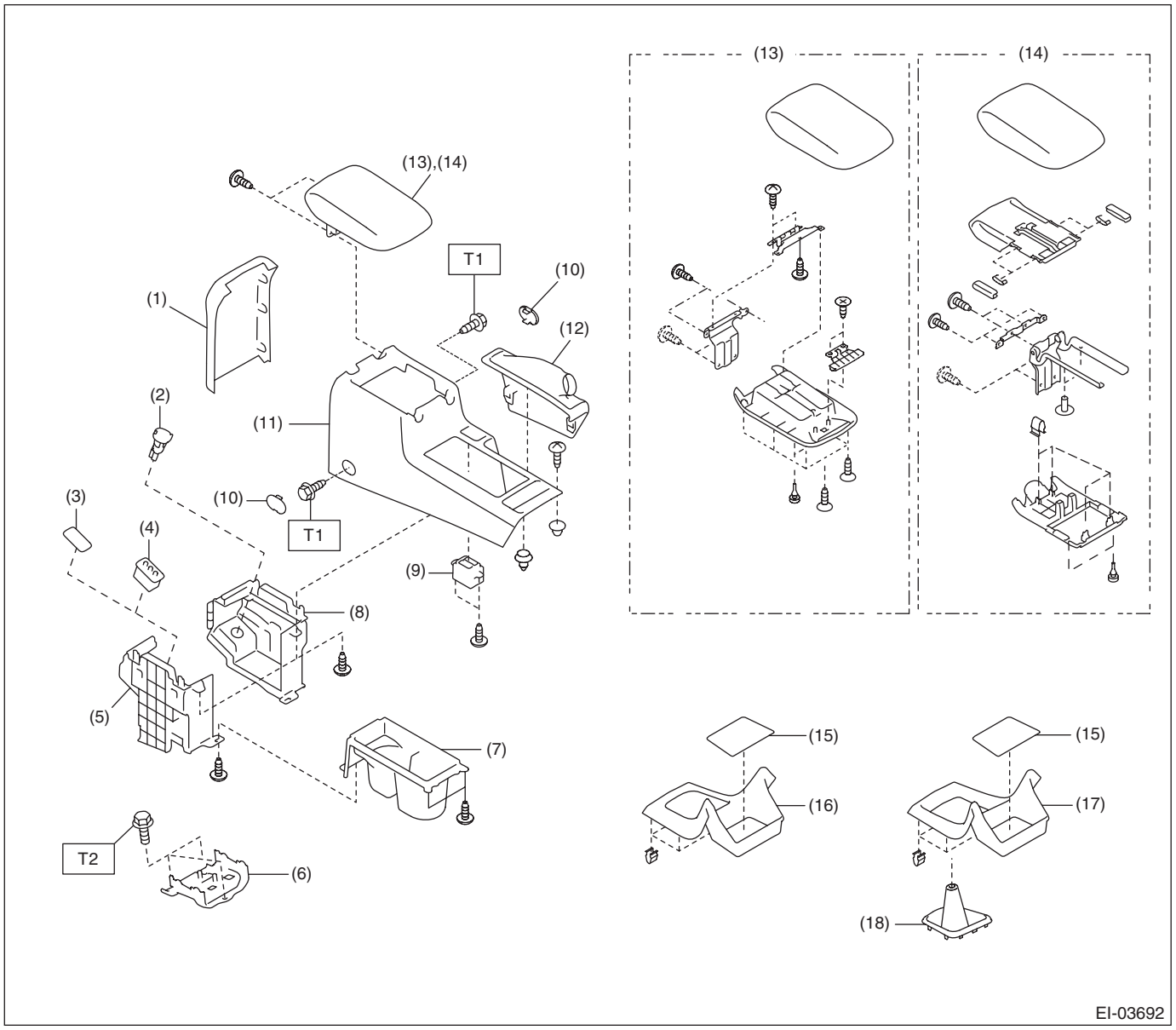

(1) Console box, rear
(2) Accessory socket
(3) Cap
(4) AUX unit
(5) Pocket console box RH
(6) Bracket - console box
(7) Cup holder
(8) Pocket console box LH
(9) Switch - seat heater
(10) Cap - console box
(11) Console box
(12) Boot - parking brake
(13) Lid ASSY - console box (fixed type)
(14) Lid ASSY - console box (sliding type)
(15) Mat
(16) Cover front (CVT model)
(17) Cover front (MT model)
(18) Boot - shift lever (MT model)

Tightening torque: N·m (kgf-m, ft-lb)
T1: 6.5 (0.66, 4.8)
T2: 18 (1.84, 13.3)

14.INSTRUMENT PANEL

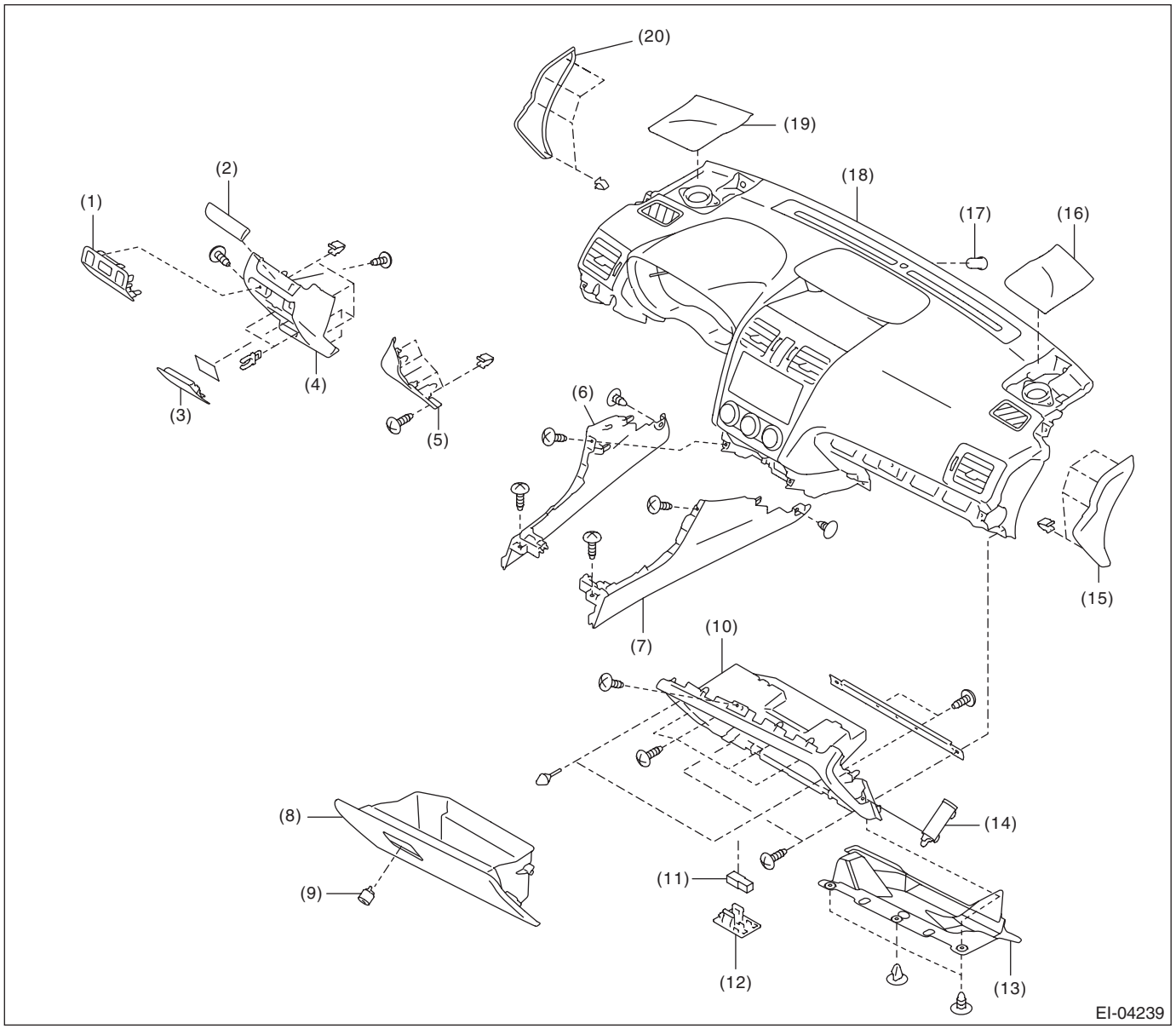

(1)	Panel - switch	(8)	Pocket ASSY	(15)	Cover - instrument panel side RH
(2)	Ornament - panel ASSY driver	(9)	Key cylinder - pocket	(16)	Grille speaker side RH
(3)	Lid ASSY - fuse box	(10)	Back panel - pocket	(17)	Cap - guide pin
(4)	Cover ASSY - instrument panel LWR driver OUT	(11)	Light - pocket	(18)	Panel COMPL - instrument
(5)	Cover ASSY - instrument panel LWR driver INN	(12)	Holder	(19)	Grille speaker side LH
(6)	Panel center LWR LH	(13)	Under cover ASSY - passenger	(20)	Cover - instrument panel side LH
(7)	Panel center LWR RH	(14)	Damper COMPL - pocket		

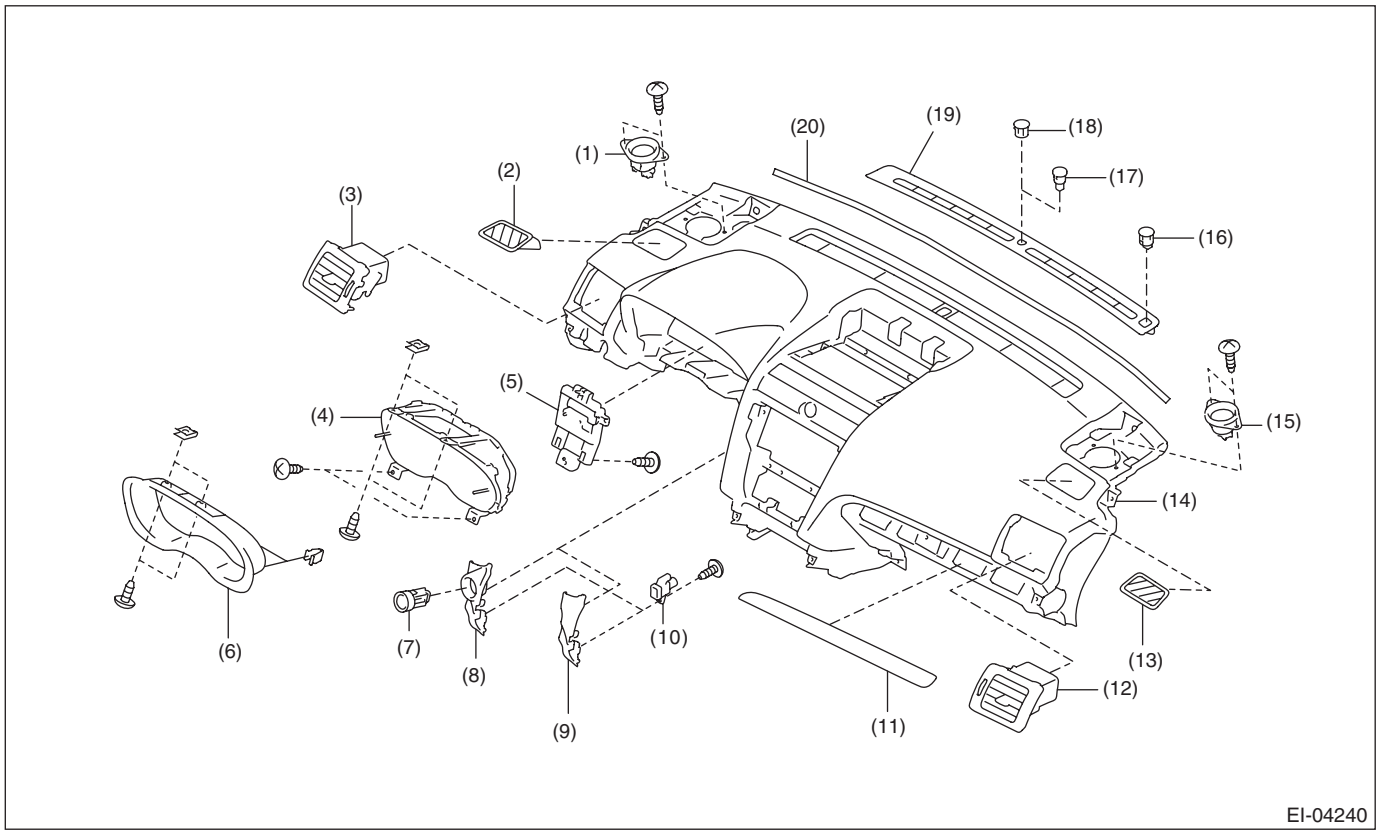

(1)	Speaker ASSY - tweeter LH	(8)	Panel - switch	(15)	Speaker ASSY - tweeter RH
(2)	Grille defroster - front LH	(9)	Cover - switch starter	(16)	Sensor - rain
(3)	Grille ASSY - ventilation LH	(10)	Case - sensor	(17)	Sensor - sunload
(4)	Combination meter ASSY	(11)	Ornament - panel ASSY passenger	(18)	Cap
(5)	Reinforcement - combination meter	(12)	Grille ASSY - ventilation RH	(19)	Grille front defroster
(6)	Visor - combination meter	(13)	Grille defroster - front RH	(20)	Cushion
(7)	Switch - push button start	(14)	Panel COMPL - instrument		

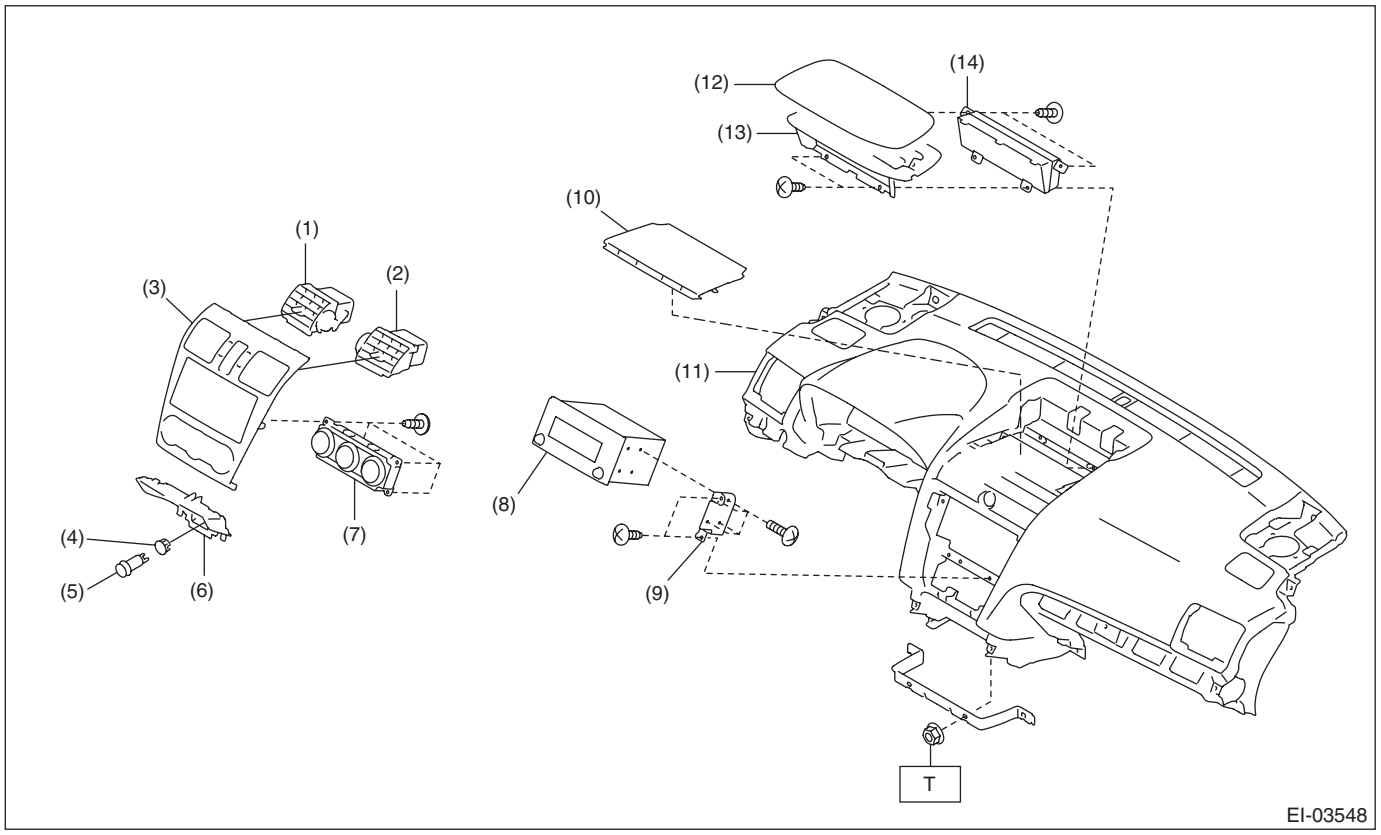

(1) Grille ASSY - CTR ventilation LH
(2) Grille ASSY - CTR ventilation RH
(3) Panel center ASSY
(4) Cap
(5) Socket ASSY
(6) Back panel - center pocket
(7) Heater control ASSY
(8) Audio ASSY
(9) Bracket - audio
(10) Cover center UPR
(11) Panel COMPL - instrument
(12) Panel - display UPR
(13) Panel - display LWR
(14) Multi-function display ASSY

Tightening torque: N·m (kgf-m, ft-lb)
T: 7 (0.71, 5.2)

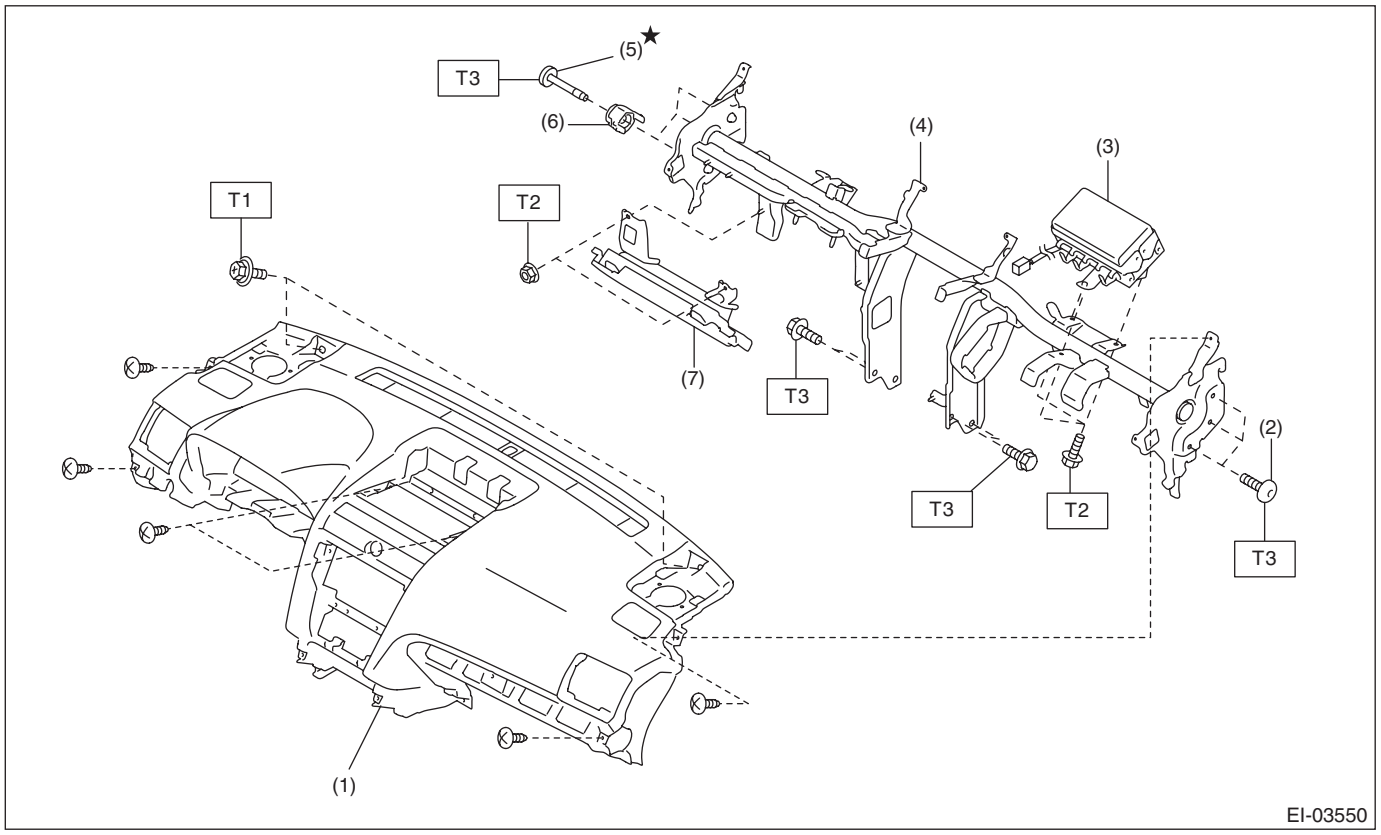

(1) Panel COMPL - instrument
(2) TORX® bolt (M8 × 37)
(3) Passenger's airbag module
(4) Beam COMPL - steering
(5) TORX® bolt (M8 × 57)
(6) Adjuster - clip space
(7) Knee airbag module

Tightening torque: N·m (kgf-m, ft-lb)
T1: 7 (0.71, 5.2)
T2: 7.5 (0.76, 5.5)
T3: 25 (2.55, 18.4)

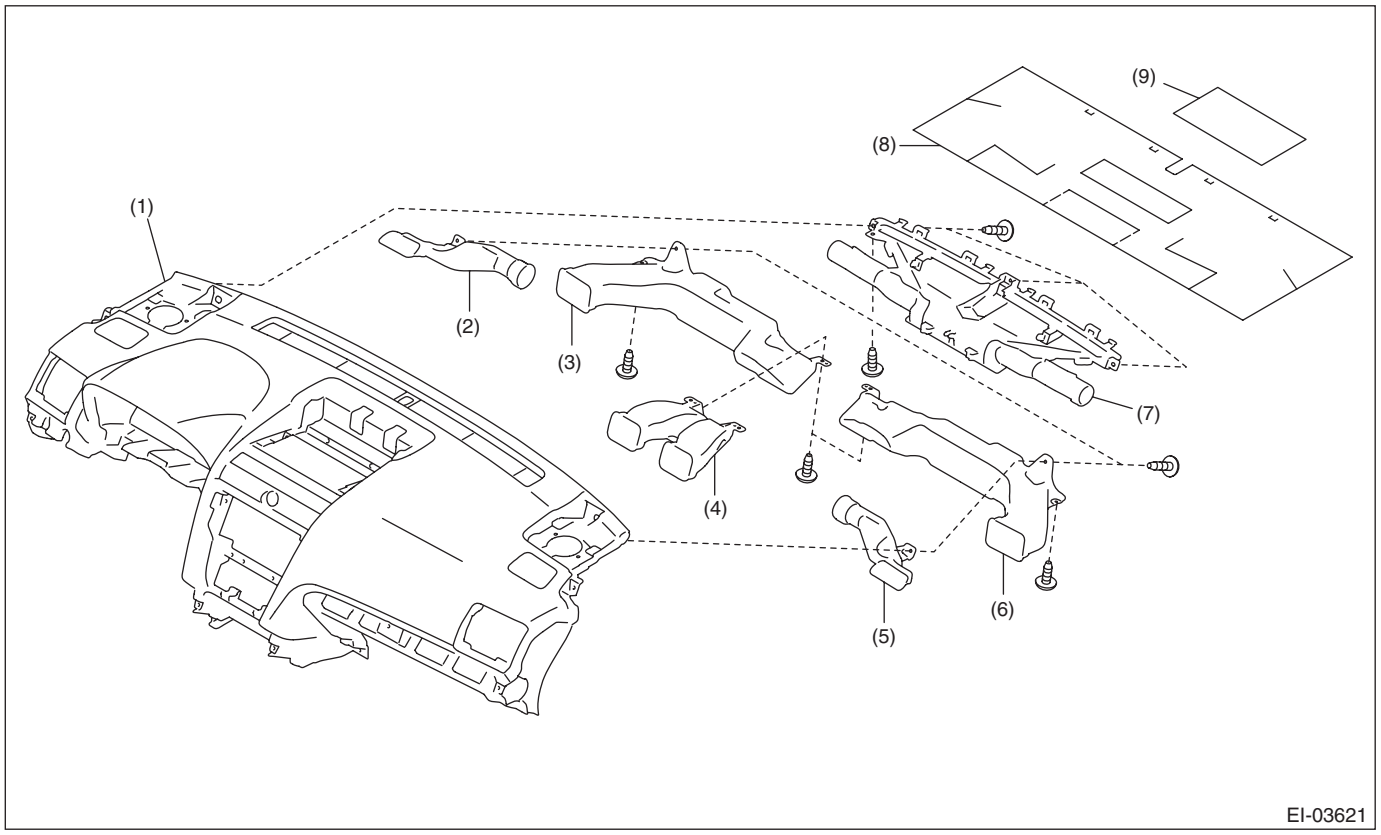

(1) Panel COMPL - instrument
(2) Duct - side defroster LH
(3) Duct - side ventilation LH
(4) Duct - center vent
(5) Duct - side defroster RH
(6) Duct - side ventilation RH
(7) Nozzle - front defroster
(8) Insulator - instrument
(9) Insulator - airbag

15.INNER TRIM

- 4 door model

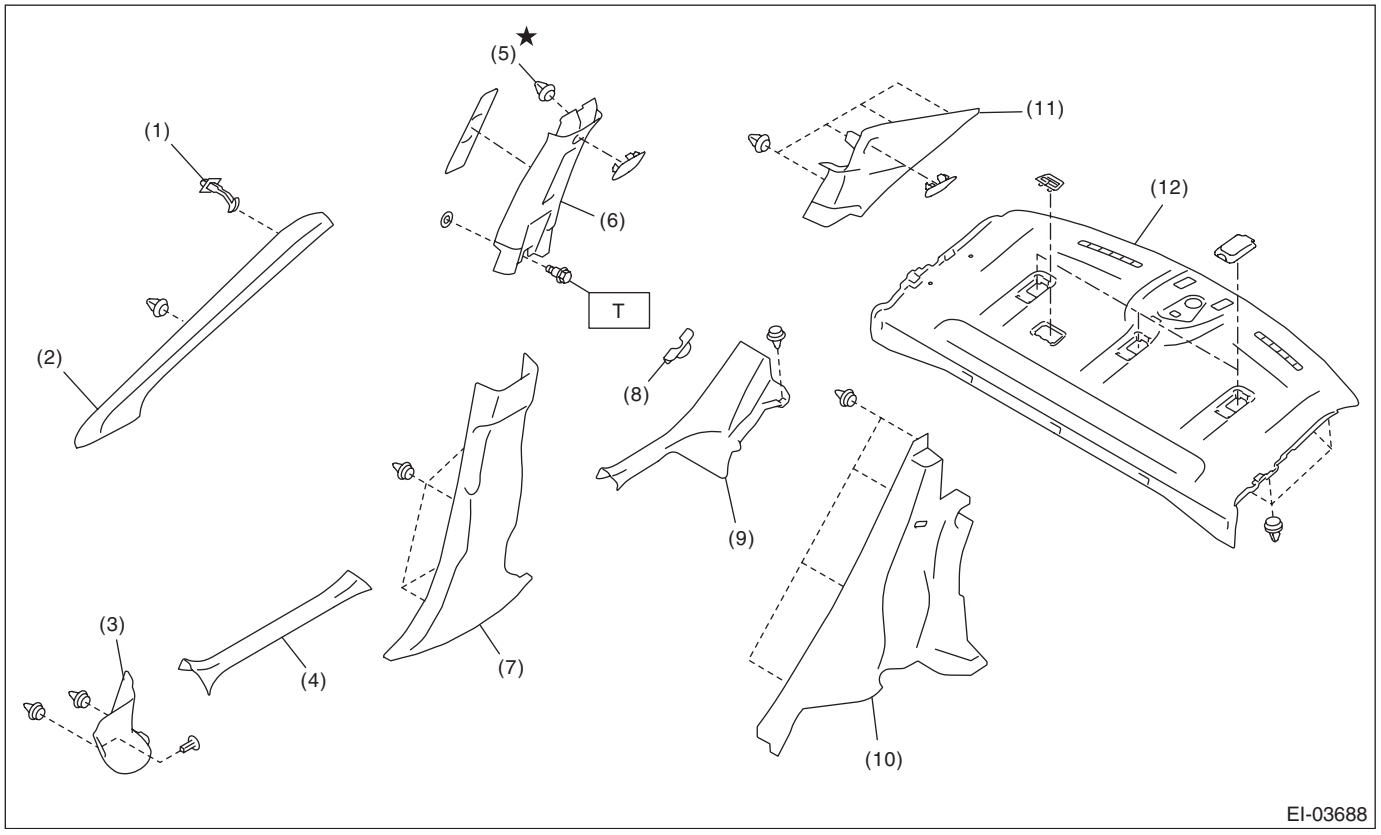

(1) Tether clip
(2) Trim panel - front pillar UPR
(3) Cover side sill - front
(4) Cover side sill - front INN
(5) Clip
(6) Trim panel - center pillar UPR
(7) Trim panel - center pillar LWR
(8) Cover - catcher
(9) Cover side sill - rear INN
(10) Trim panel - rear pillar LWR
(11) Trim panel - rear pillar UPR
(12) Trim panel ASSY - rear shelf

Tightening torque: N·m (kgf-m, ft-lb)
T: 7.5 (0.76, 5.5)

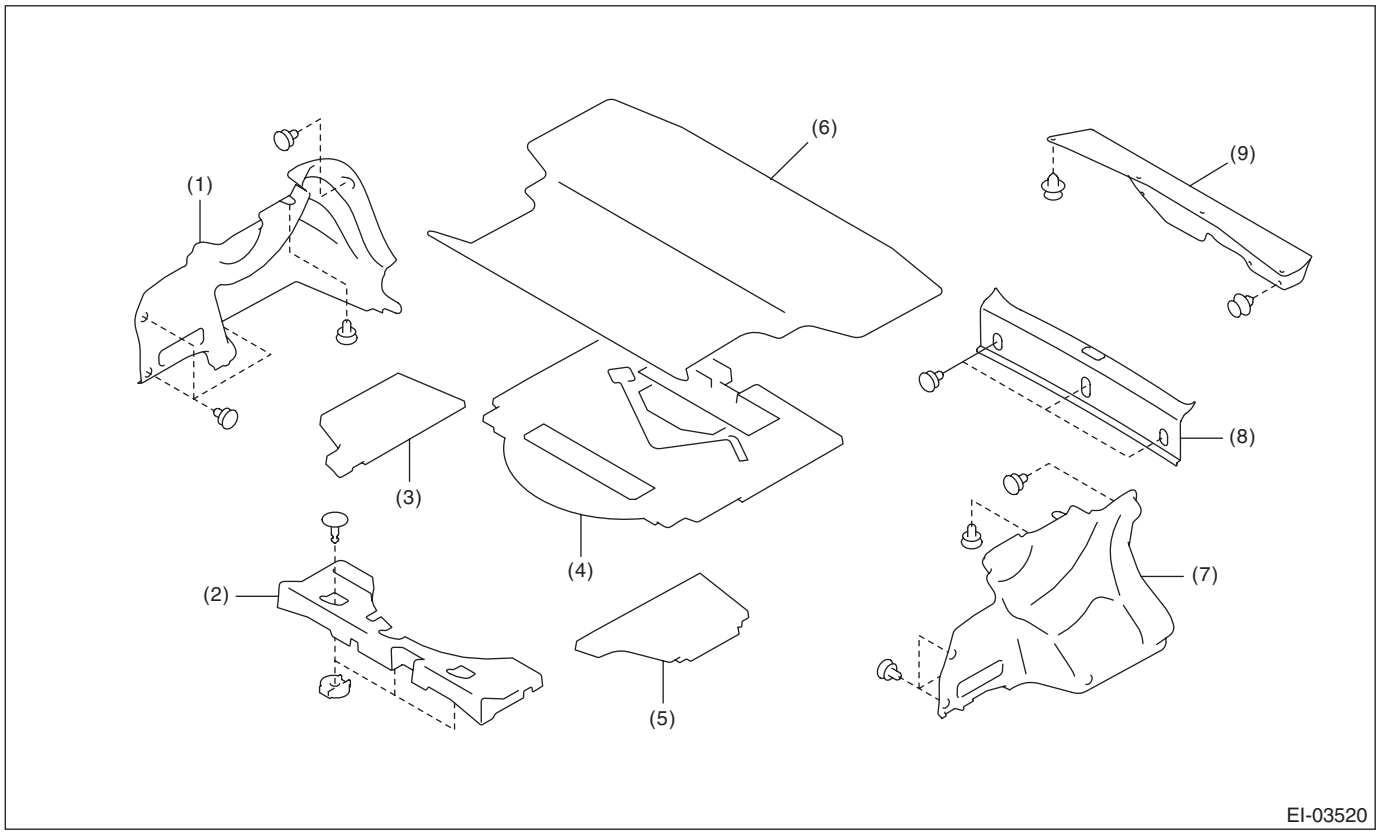

(1) Trim panel - trunk side RH
(2) Spacer - rear floor front
(3) Spacer - rear floor side RH
(4) Sub-trunk ASSY
(5) Spacer - rear floor side LH
(6) Mat - trunk
(7) Trim panel - trunk side LH
(8) Trim panel - trunk rear
(9) Trim panel - trunk lid

- 5 door model (gasoline engine model)

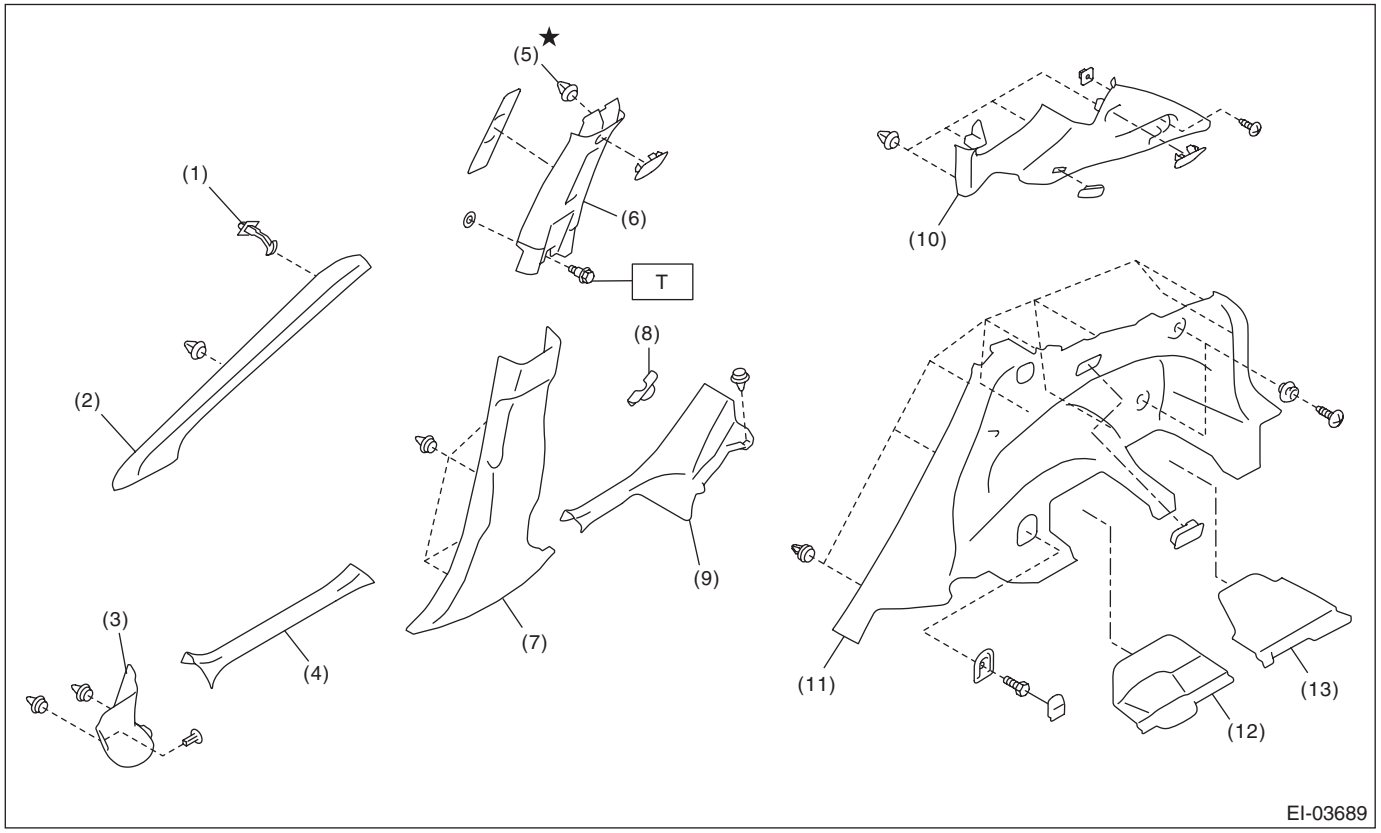

(1) Tether clip
(2) Trim panel - front pillar UPR
(3) Cover side sill - front
(4) Cover side sill - front INN
(5) Clip
(6) Trim panel - center pillar UPR
(7) Trim panel - center pillar LWR
(8) Cover - catcher
(9) Cover side sill - rear INN
(10) Trim panel - rear quarter UPR
(11) Trim panel - rear apron
(12) Cap - rear strut
(13) Lid upper rear

Tightening torque: N·m (kgf-m, ft-lb)
T: 7.5 (0.76, 5.5)

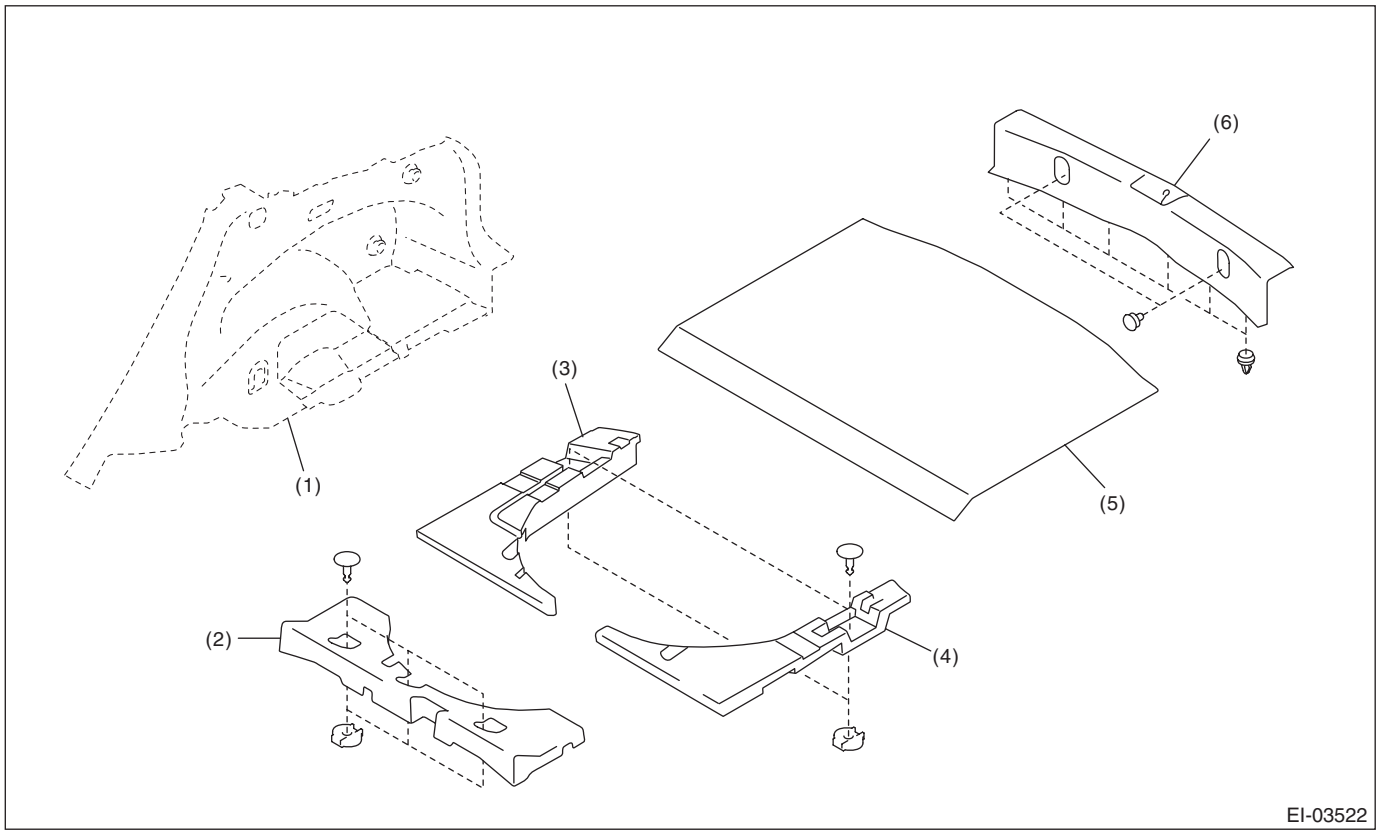

(1) Trim panel - rear apron
(2) Spacer - rear floor
(3) Spacer - rear floor side RH
(4) Spacer - rear floor side LH
(5) Mat - rear floor CTR
(6) Trim panel - rear skirt

- 5 door model (HEV model)

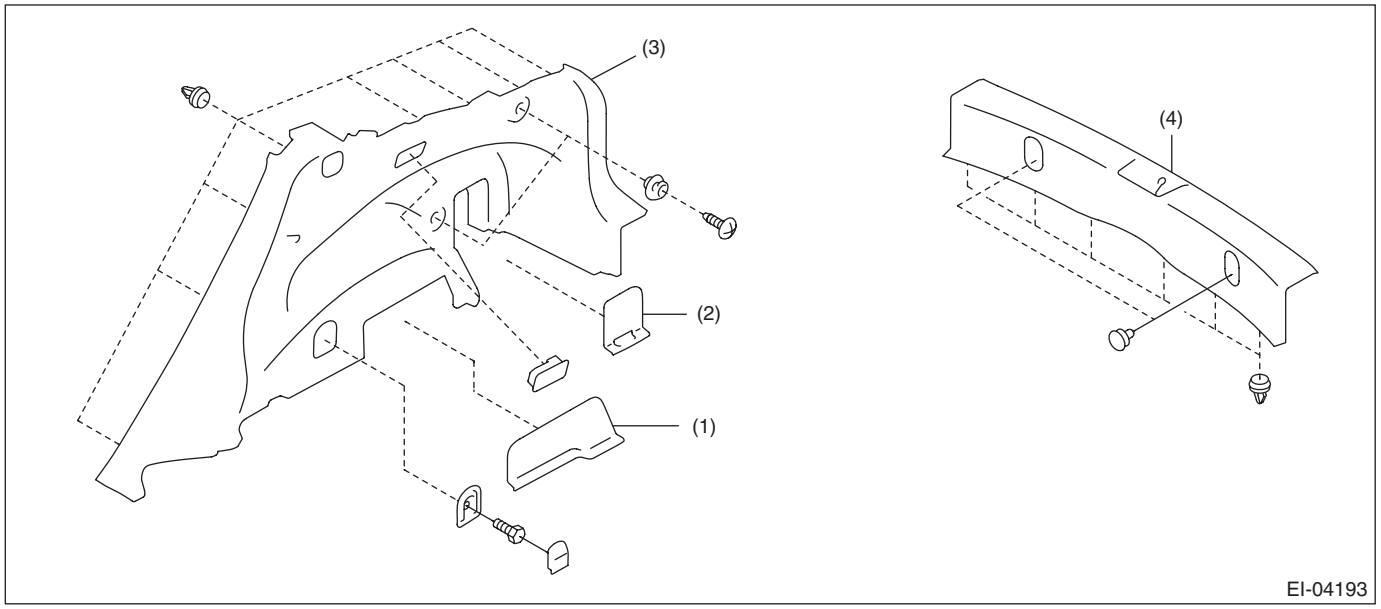

(1) Cap - rear strut
(2) Cover - jack (LH side only)
(3) Trim panel - rear apron
(4) Trim panel - rear skirt

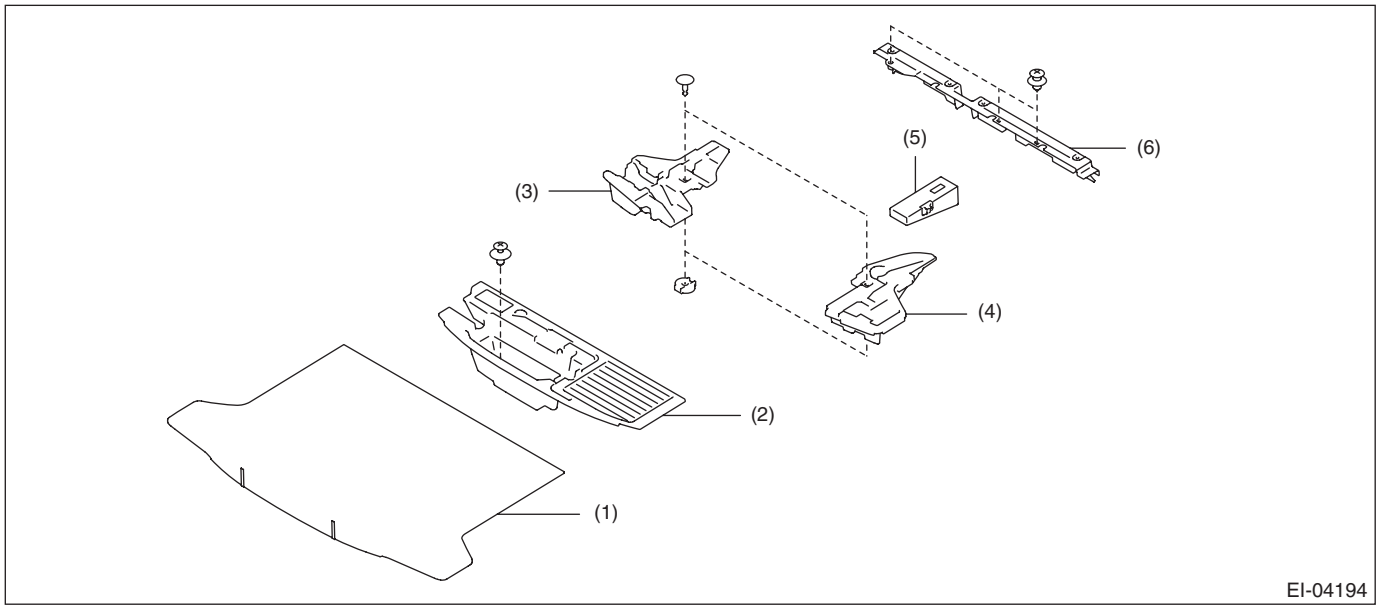

(1) Mat - rear floor CTR
(2) Sub-trunk box
(3) Side spacer LH
(4) Side spacer RH
(5) Inverter spacer
(6) Spacer - rear floor front

16.REAR GATE TRIM

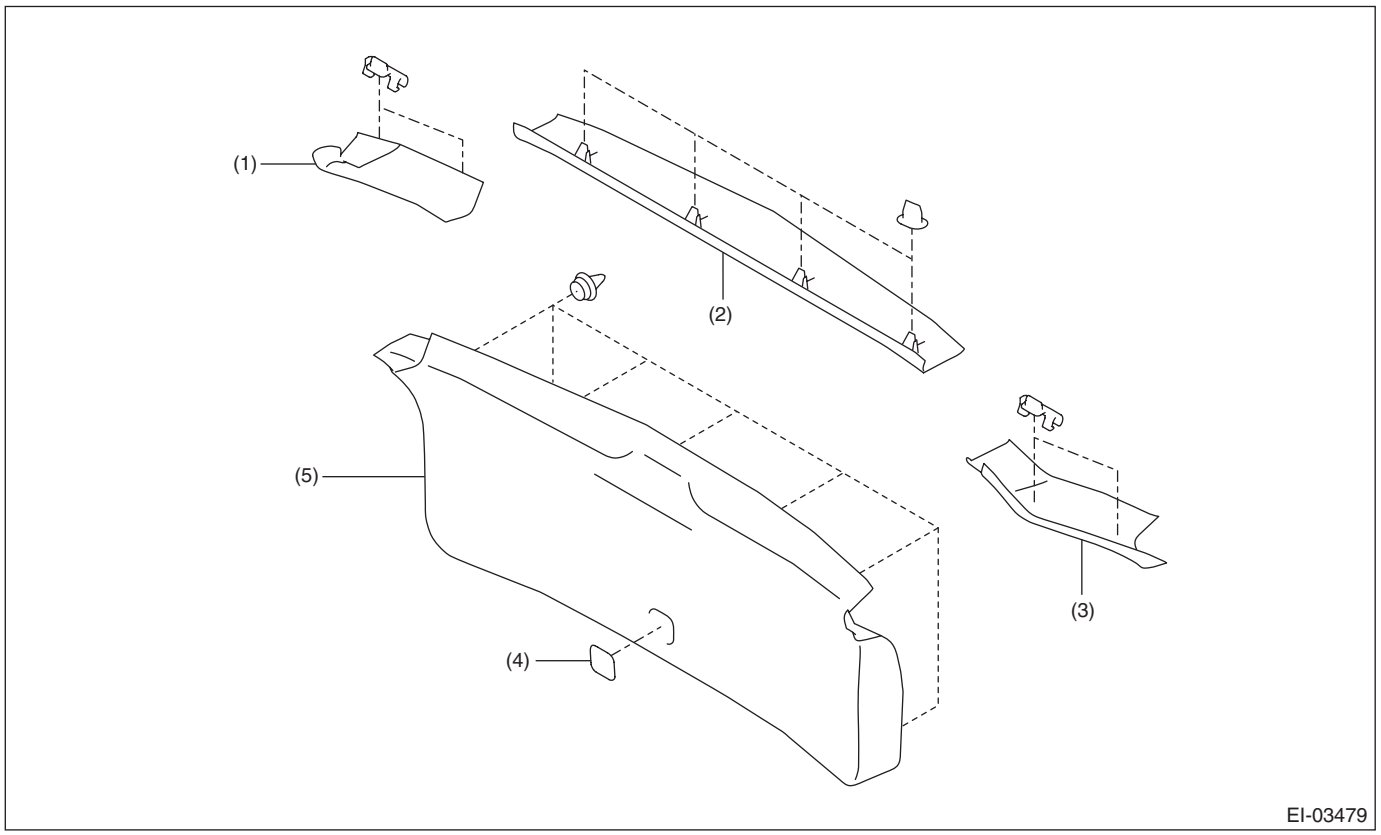

(1) Trim panel - rear gate pillar side RH
(2) Trim panel - rear gate UPR
(3) Trim panel - rear gate pillar side LH
(4) Cap
(5) Trim panel - rear gate LWR

17.ROOF TRIM

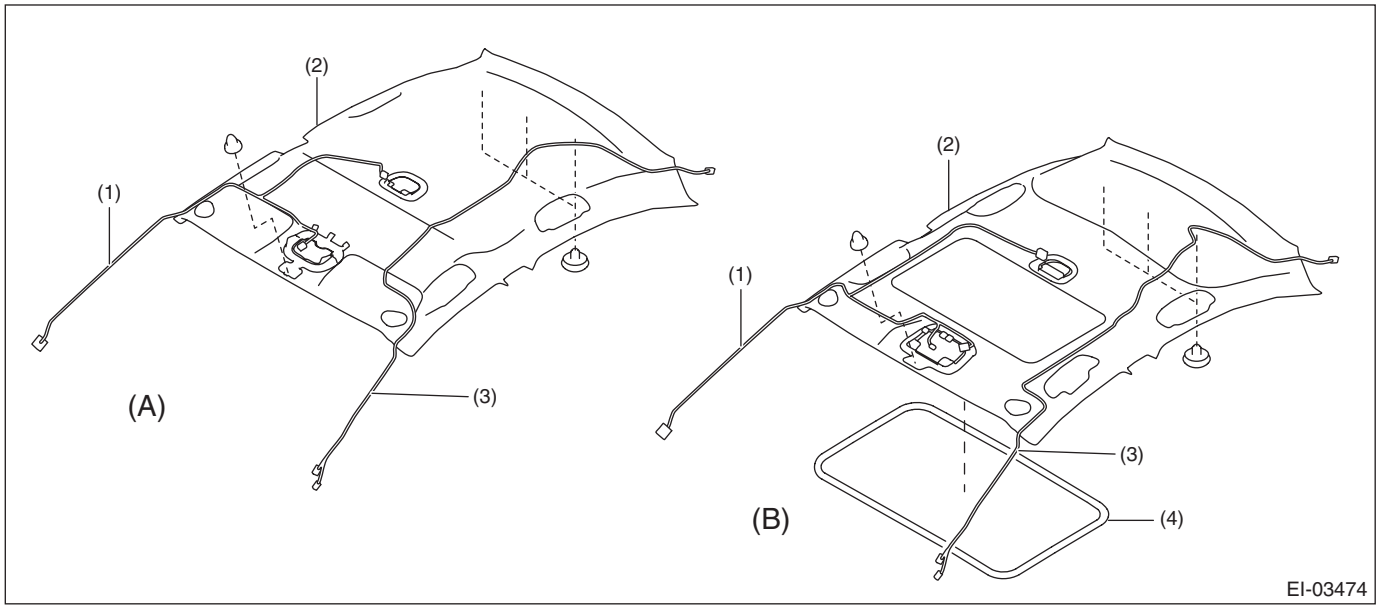

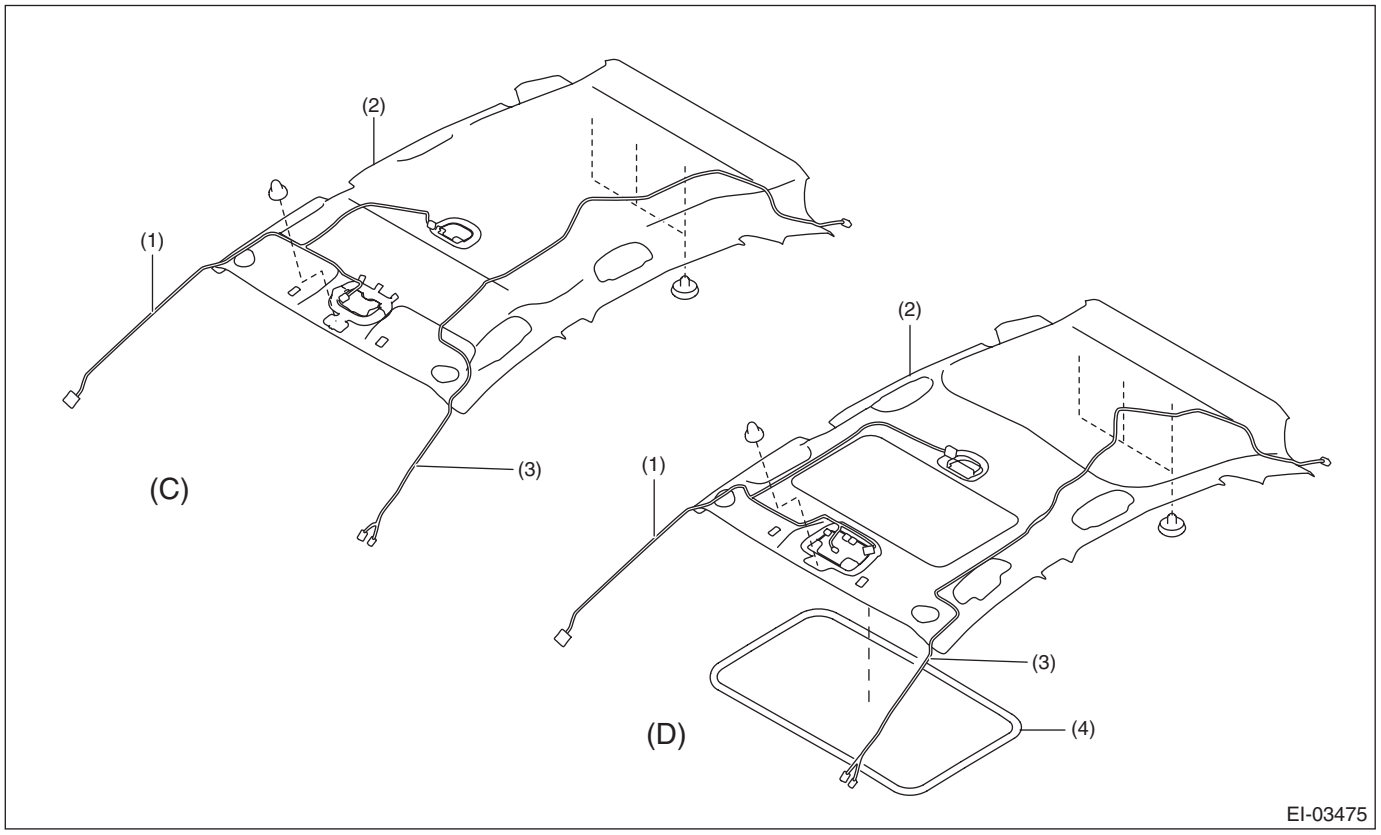

(A) Normal roof type (4 door model)
(B) Sunroof type (4 door model)
(C) Normal roof type (5 door model/ XV model)
(D) Sunroof type (5 door model/XV model)

(1) Cord - roof
(2) Trim panel - roof ASSY
(3) Cord ASSY - antenna feeder
(4) Garnish - roof

18.ROOM INNER PARTS

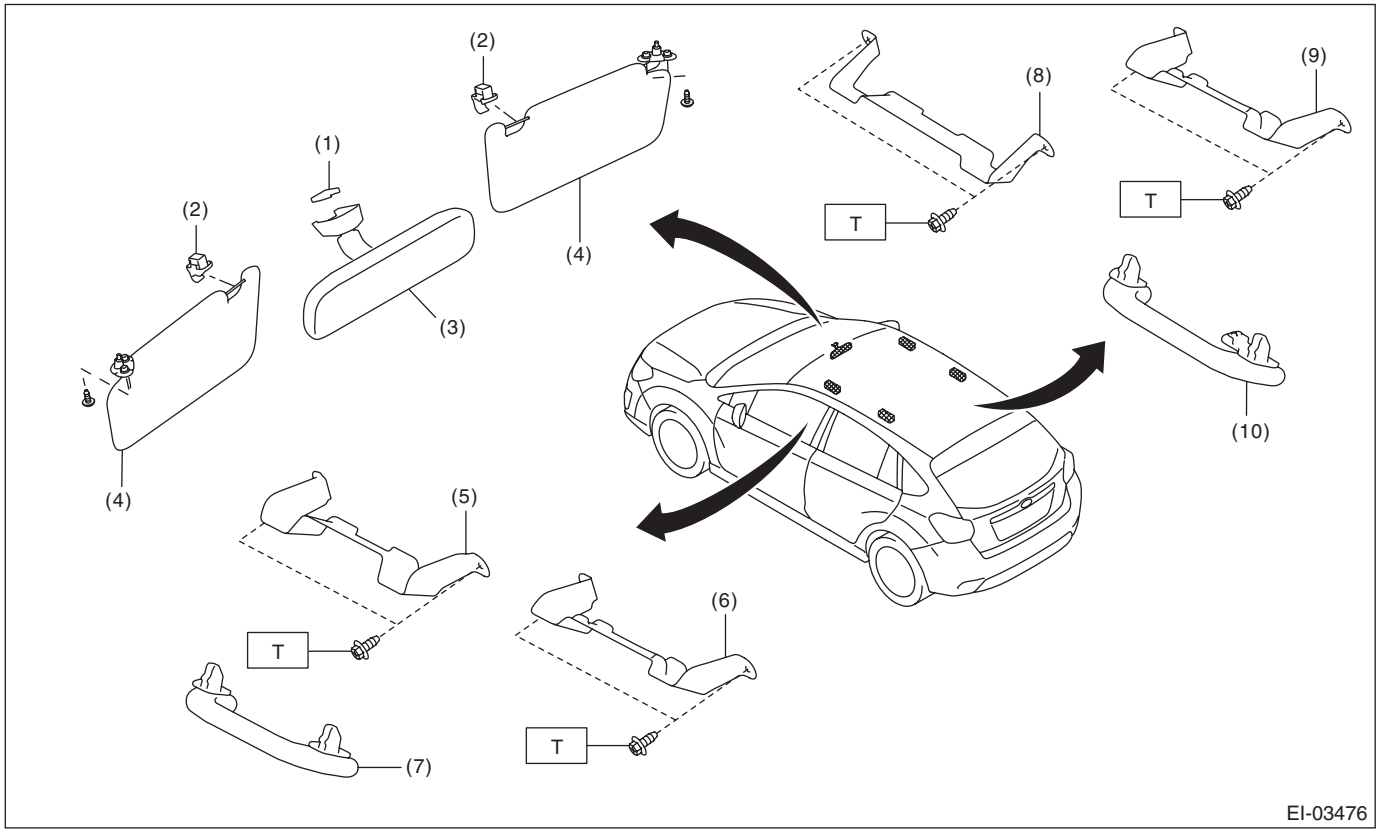

(1)	Base - inner mirror	(6)	Bracket - assist rail front (normal roof)
(2)	Hook - sun visor	(7)	Assist rail - front
(3)	Mirror ASSY rearview inner	(8)	Bracket - assist rail rear (model with sunroof)
(4)	Sun visor ASSY	(9)	Bracket - assist rail rear (normal roof)
(5)	Bracket - assist rail front (model with sunroof)	(10)	Assist rail - rear

Tightening torque: N·m (kgf-m, ft-lb)

T: 7.5 (0.76, 5.5)

19.TRUNK LID GARNISH

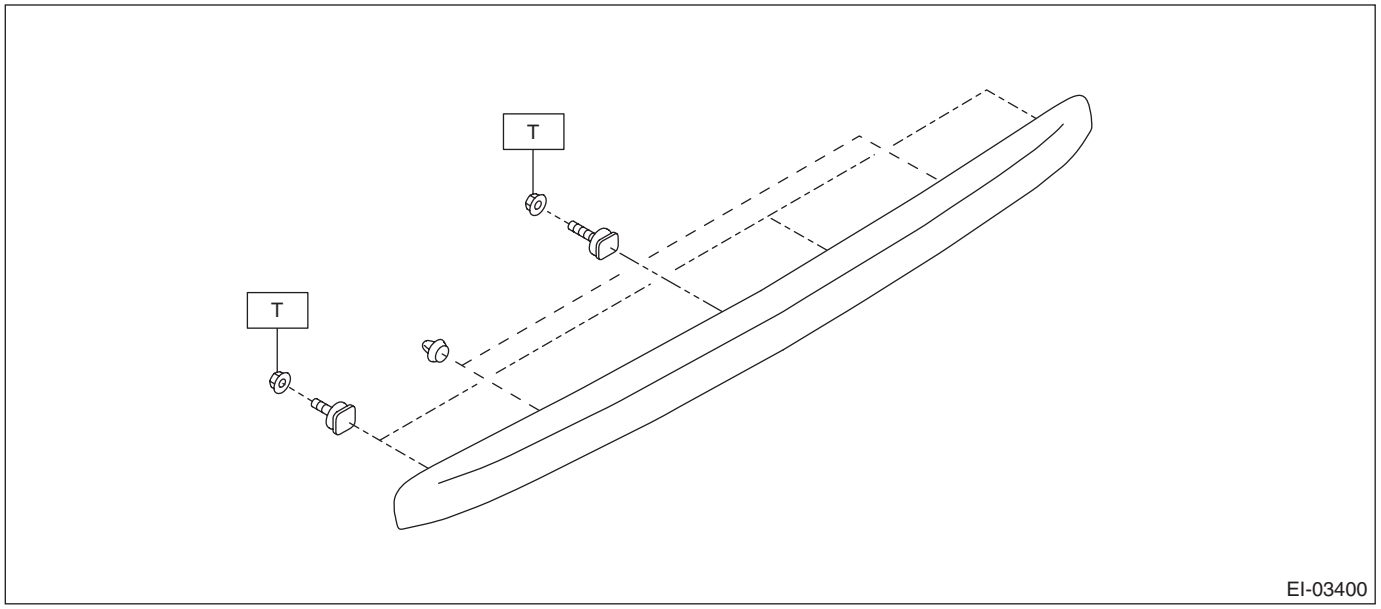

Tightening torque: N·m (kgf-m, ft-lb)
T: 4.5 (0.46, 3.3)

20.REAR GATE GARNISH

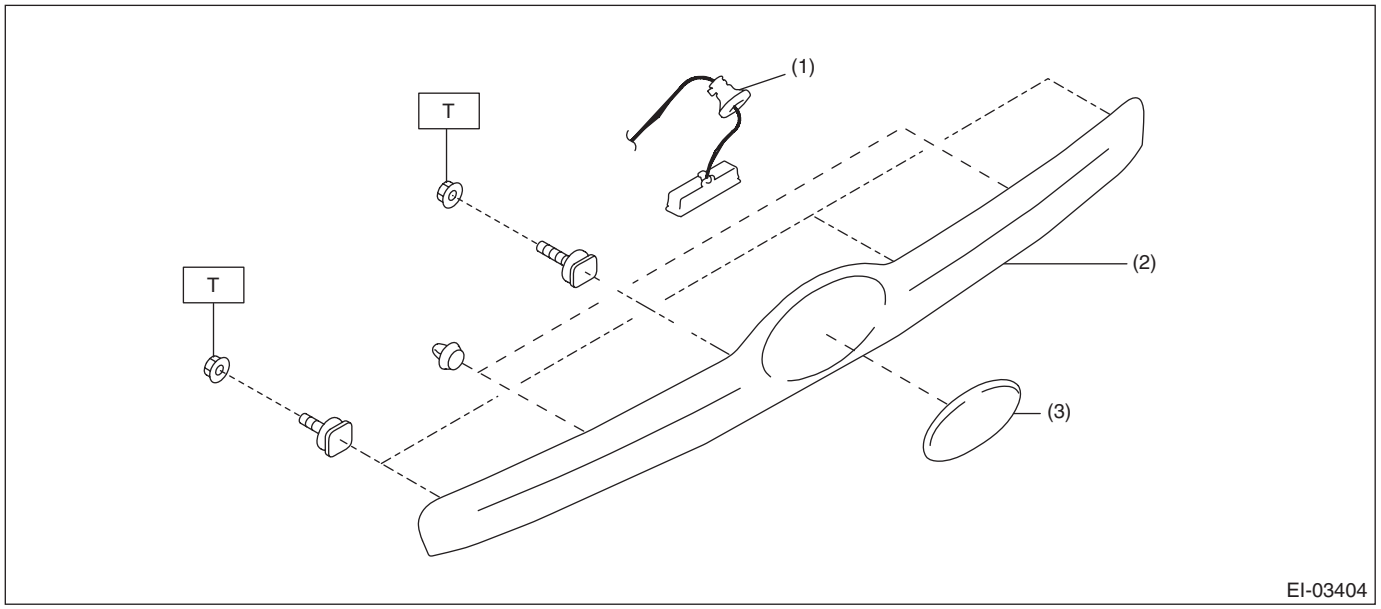

(1) Switch - opener rear gate
(2) Garnish assembly - rear gate
(3) Ornament rear

Tightening torque: N·m (kgf-m, ft-lb)
T: 4.5 (0.46, 3.3)

B: PREPARATION TOOL

TOOL NAME	REMARKS
Clip remover	Used for removing trim. • KTC AP201-10A • KTC AP201-N • KTC AP203-10A • KTC AP20L-10B or equivalent
Clip clamp pliers	Used for removal of various clips and clamps. • KTC CCP-190 or equivalent

2. Front Under Cover

A: REMOVAL

1) Lift up the vehicle.
2) Remove the bolts and clips, and remove the under cover - front.

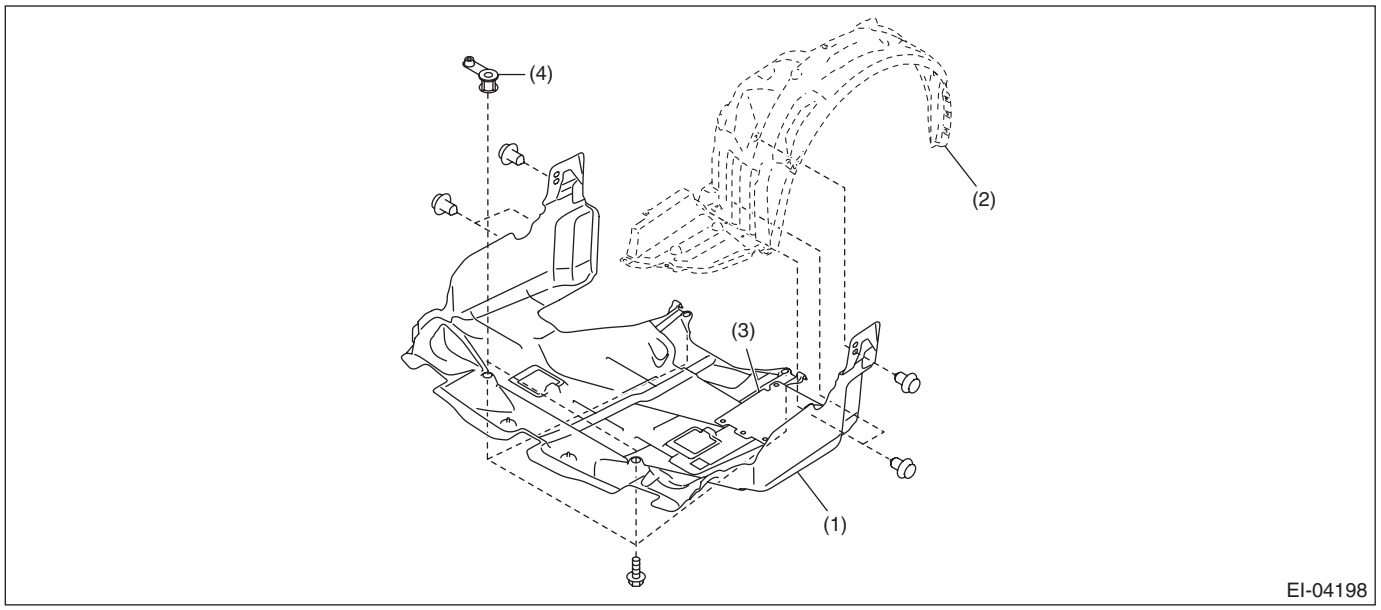

(1) Under cover - front
(2) Mud guard - front
(3) Plate cover - rear (XV model)
(4) Spacer - under cover (XV model)

B: INSTALLATION

CAUTION:
Install the under cover so that the under cover front end (b) comes inside of the bumper face - front (a).

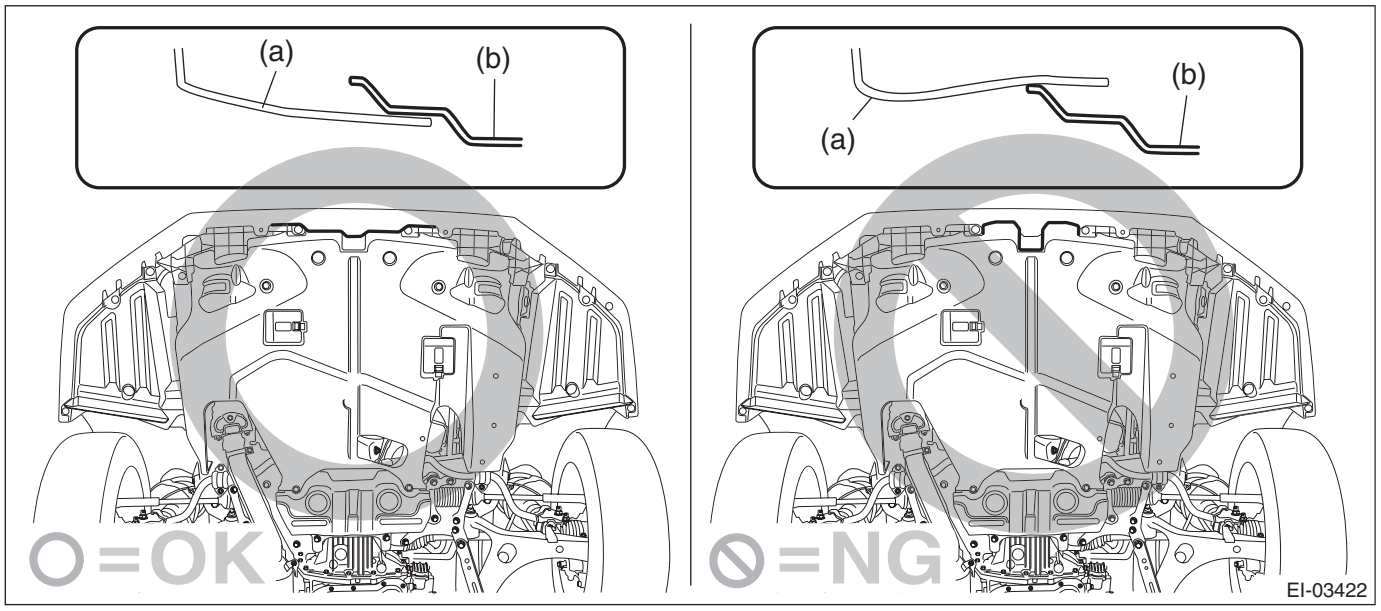

Install each part in the reverse order of removal.

Tightening torque:
18 N·m (1.84 kgf-m, 13.3 ft-lb)

3. Mud Guard

A: REMOVAL

1) Lift up the vehicle.
2) Remove the wheels.
3) Remove the screws and clips to remove the mud guard.

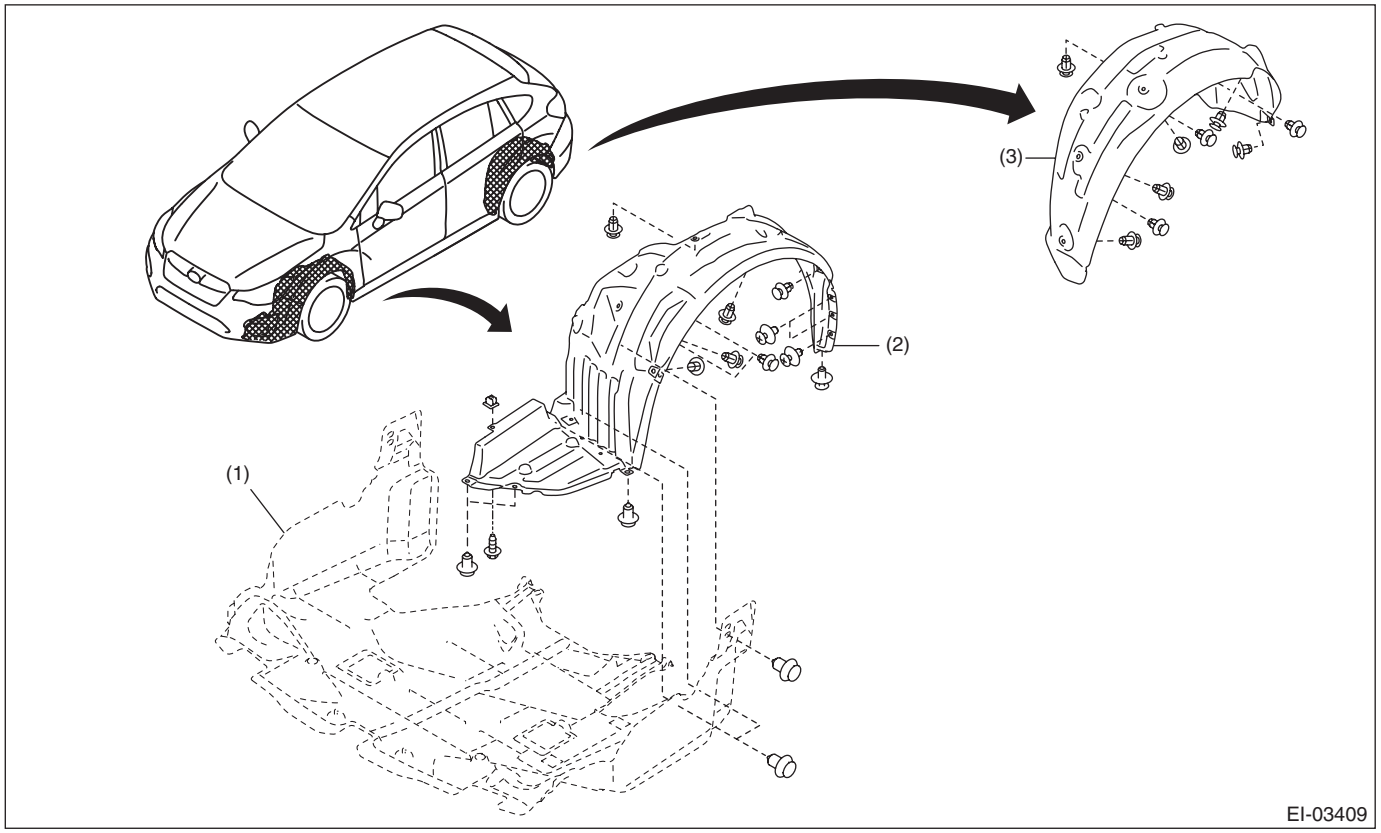

(1) Under cover - front
(2) Mud guard - front
(3) Mud guard - rear

B: INSTALLATION

Install each part in the reverse order of removal.

Tightening torque:
Except for C4 model: 120 N·m (12.24 kgf-m, 88.5 ft-lb)
C4 model: 100 N·m (10.20 kgf-m, 73.8 ft-lb)

4. Floor Under Protector

A: REMOVAL

1) Lift up the vehicle.

NOTE:
A plate type lift cannot be used.

2) Remove the bolts and clips, and remove the front under protector.

- Type A

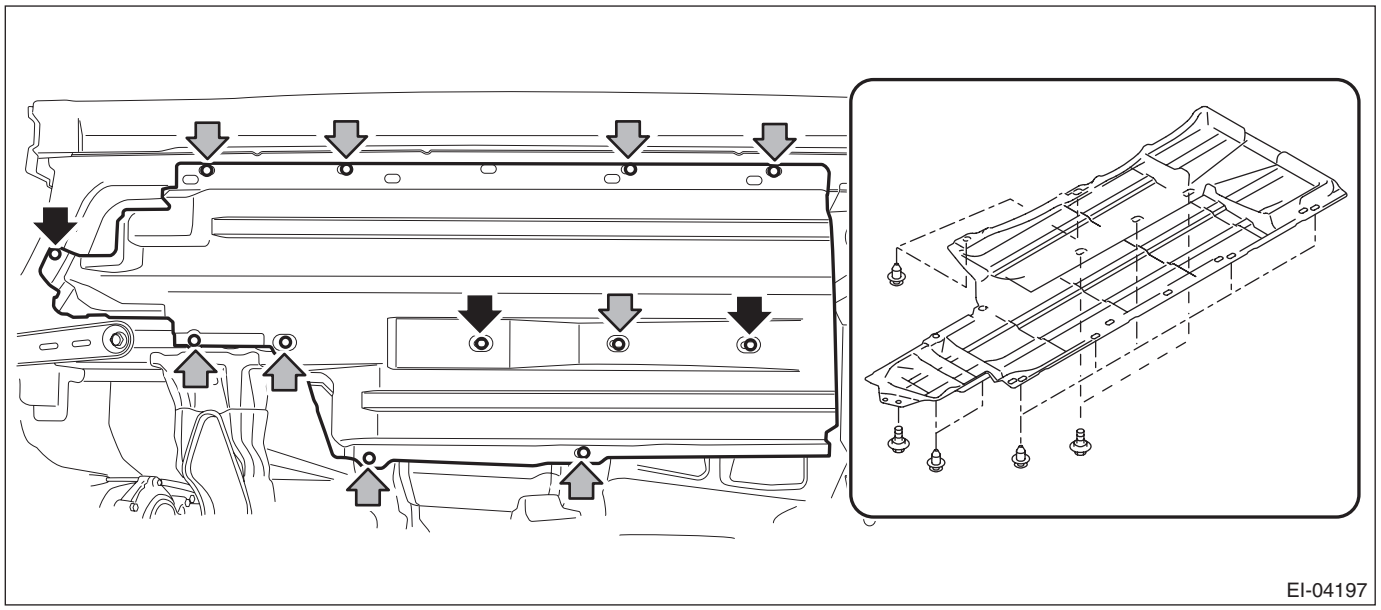

- Type B

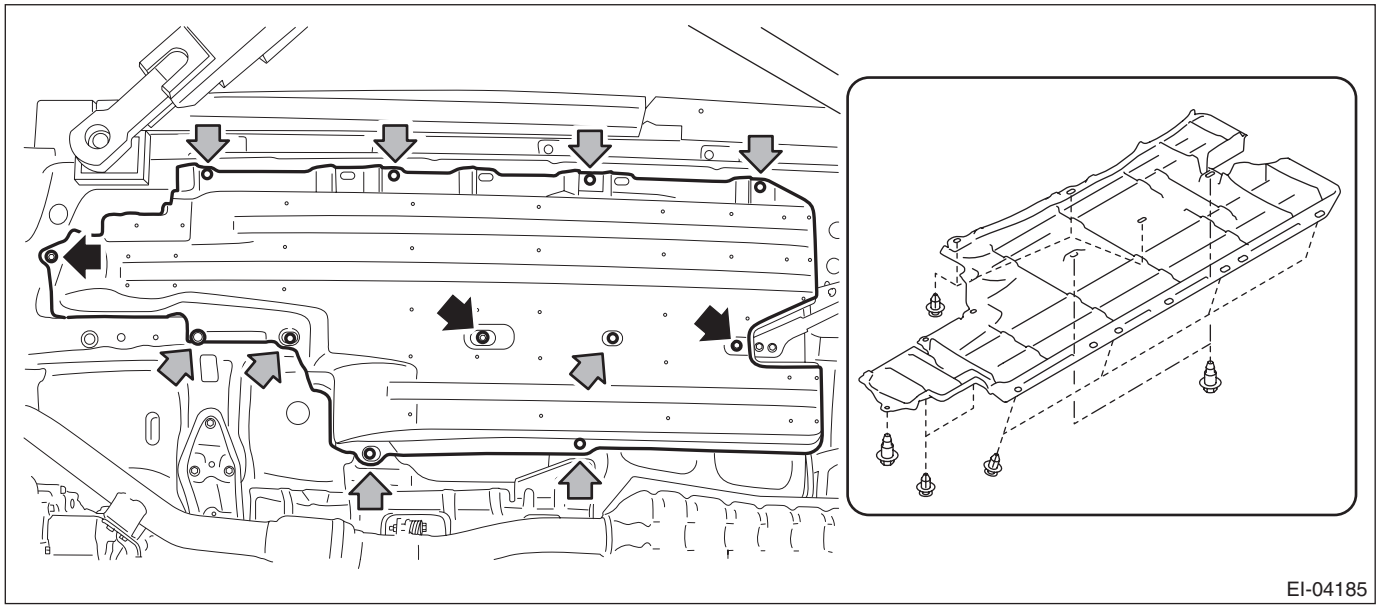

- Type C

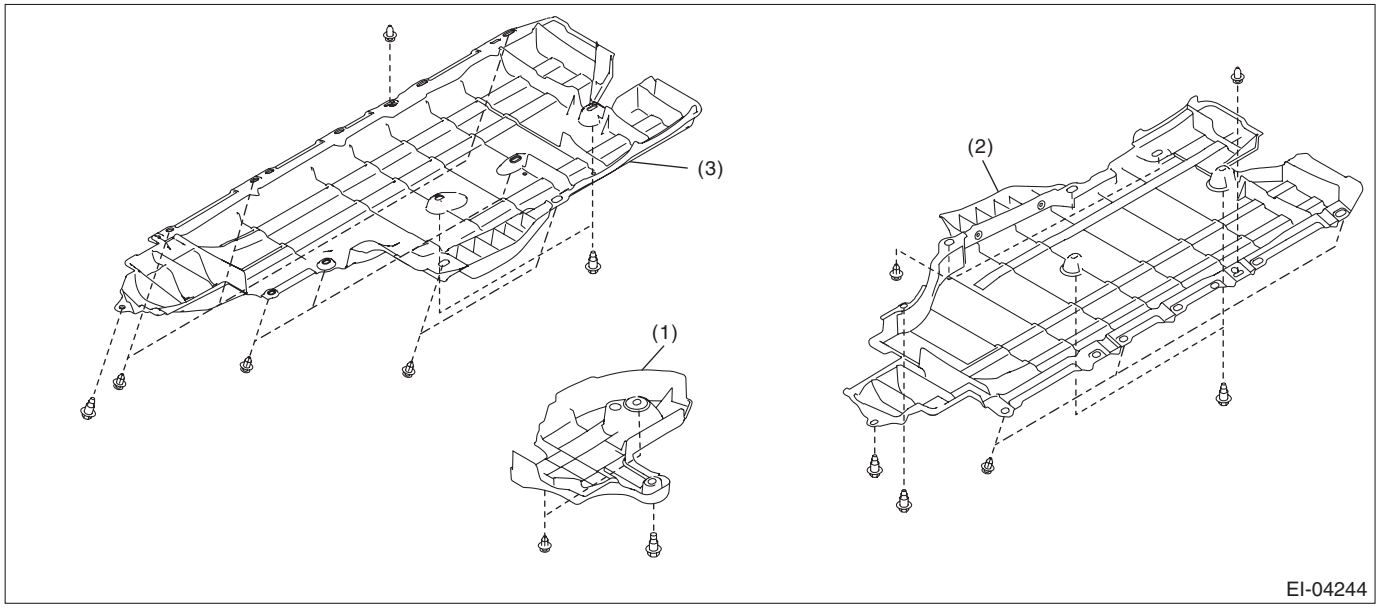

(1) Under cover front - cable
(2) Under cover - rear LH
(3) Under cover - rear RH

B: INSTALLATION

Install each part in the reverse order of removal.

Tightening torque:
7.5 N·m (0.76 kgf-m, 5.5 ft-lb)

5. Fuel Tank Protector

A: NOTE

• Refer to “FUEL INJECTION” section for removal and installation procedure of the fuel tank protector. (Gasoline engine model) <Ref. to FU(H4DO(w/o HEV))-121, Fuel Tank Protector.>
• Refer to “FUEL INJECTION” section for removal and installation procedure of the fuel tank protector. (HEV model) <Ref. to FU(H4DO(HEV))-104, Fuel Tank Protector.>

6. Front Grille

A: REMOVAL

1) Disconnect the ground cable from battery. <Ref. to NT-5, BATTERY, NOTE, Note.>

NOTE:
For the 12 volt engine restart battery of HEV model, disconnect the ground terminal from 12V engine restart battery sensor.

2) Remove the bumper face - front.
   (1) Remove the screws and clips, and turn over the mud guard - front, and then disconnect the connectors of the fog light assembly - front on the LH and RH sides. (Model with fog light)

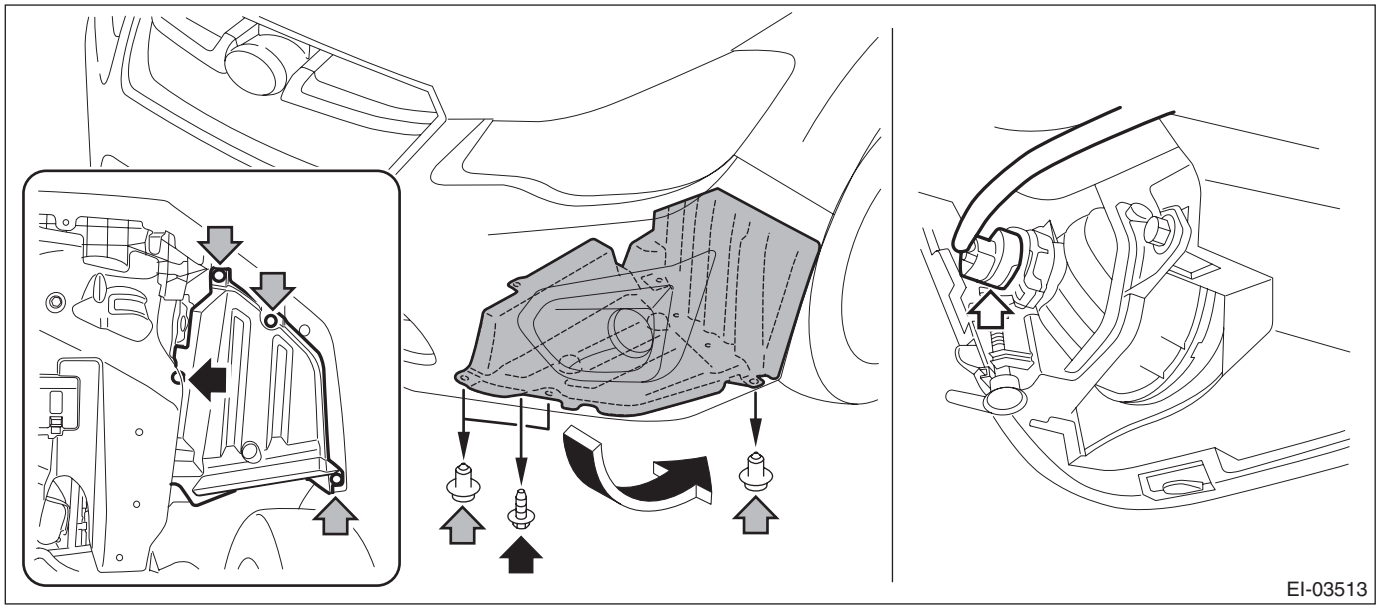

   (2) Remove the clips at the upper side of the bumper face - front.
   (3) Remove the clips from the fender.

(4) Remove the clips at the lower side of the bumper face - front.

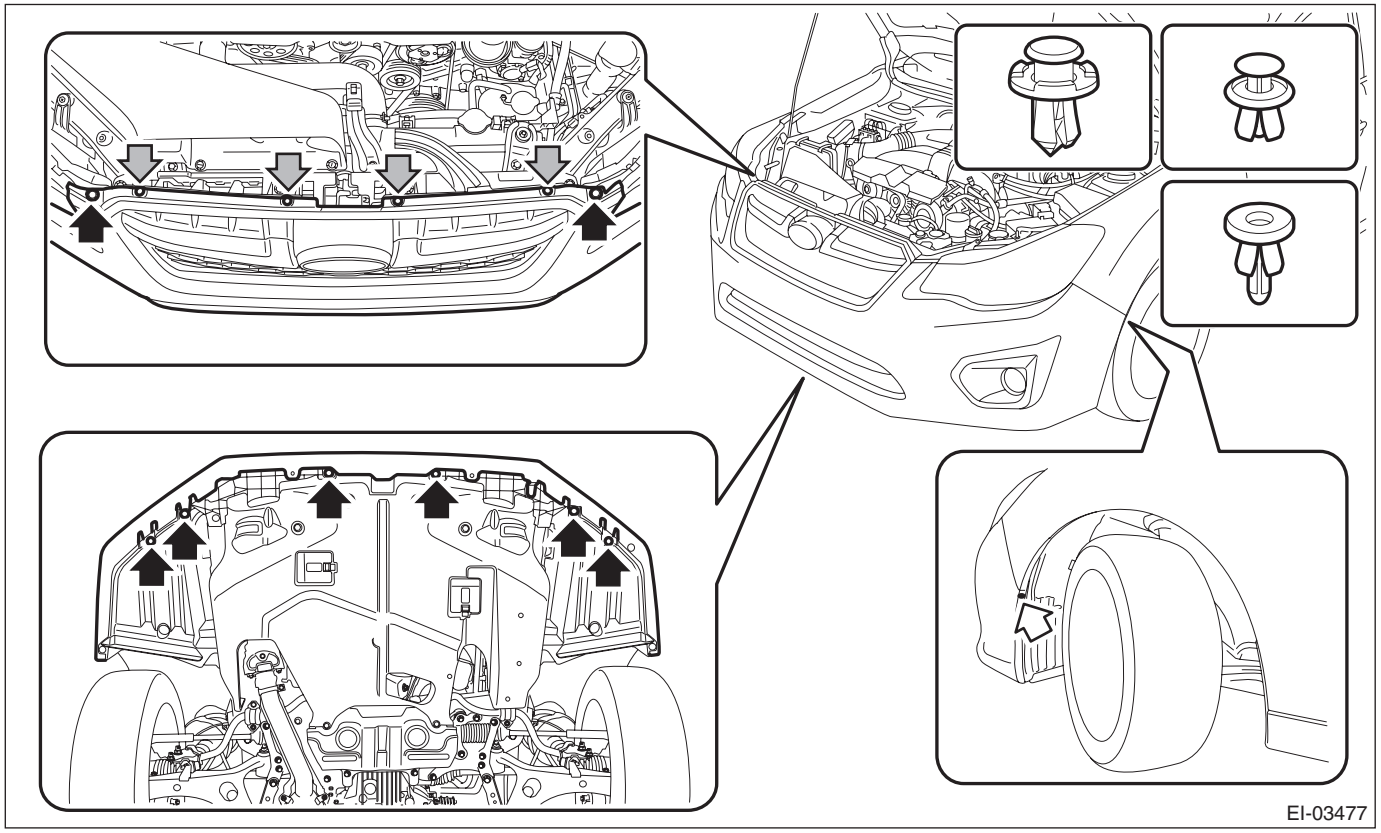

(5) Apply protective tape (A) to the light assembly - head.
(6) Detach the flange section on the bumper face side from the bracket - front bumper side.

CAUTION:
Do not pull forcibly. It may damage the flange section on the bumper face - front side when it comes off from the claws of the bracket - front bumper.

NOTE:
Remove the bumper face - front according to the following procedures.

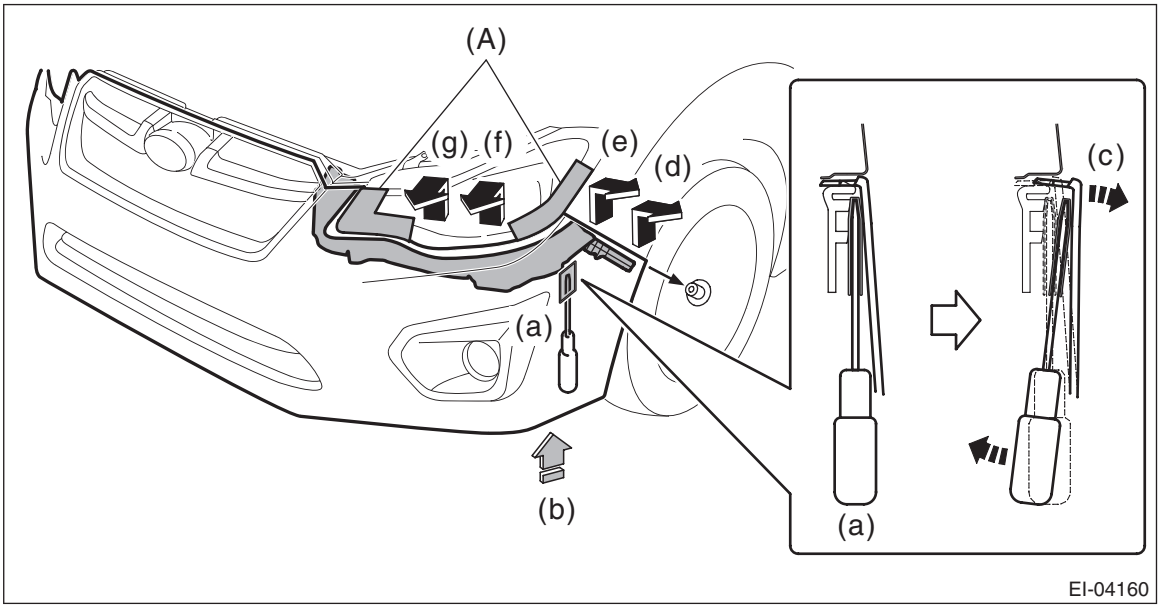

1. Remove the clips, turn over the mud guard, and insert a flat tip screwdriver with protection for damage prevention into the clearance between bumper and bracket. (a)

2. Push out the bumper with the flat tip screwdriver while pushing up the bumper from below. (b), (c)
3. Release the engagement of clips in the order of (d) to (g) while pushing up the bumper from below.
4. Perform the same procedures to remove the opposite side.

3) Remove the front grille assembly.
   (1) Remove the screws from the back side of the bumper face - front.
   (2) Release the claws, and remove the front grille assembly.

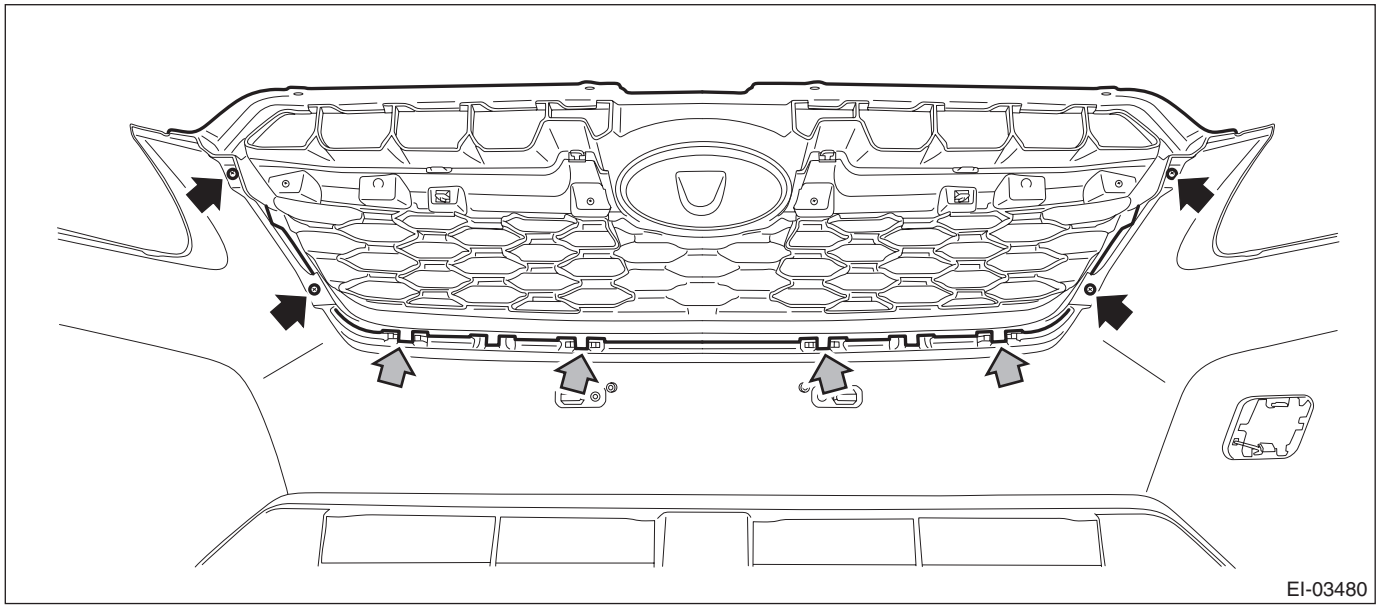

B: INSTALLATION

CAUTION:

• Install the bumper face - front so that the front end of the under cover (b) comes inside the bumper face - front (a).

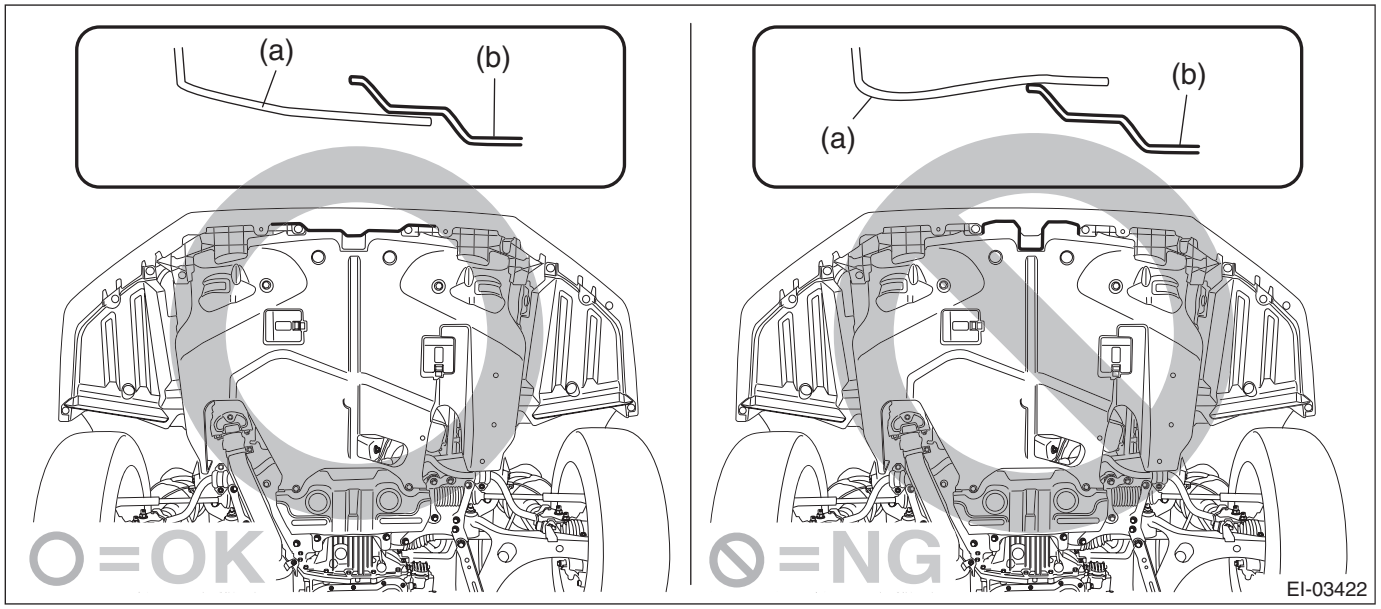

• Before installing the bumper face, match the claws on the bracket - front bumper with the engaging position of flange section on the bumper face side. If the engaging position is not correct, the flange section may be broken or the clearance between fender panel and bumper face may not be uniform.

1) Install each part in the reverse order of removal.
2) Adjust the fog light beam. (Model with fog light) <Ref. to LI-56, FOG LIGHT AIMING, ADJUSTMENT, Front Fog Light Assembly.>

7. Front Bumper

A: REMOVAL

1) Disconnect the ground cable from battery. <Ref. to NT-5, BATTERY, NOTE, Note.>

NOTE:
For the 12 volt engine restart battery of HEV model, disconnect the ground terminal from 12V engine restart battery sensor.

2) Remove the bumper face - front.
   (1) Remove the screws and clips, and turn over the mud guard - front, and then disconnect the connectors of the fog light assembly - front on the LH and RH sides. (Model with fog light)

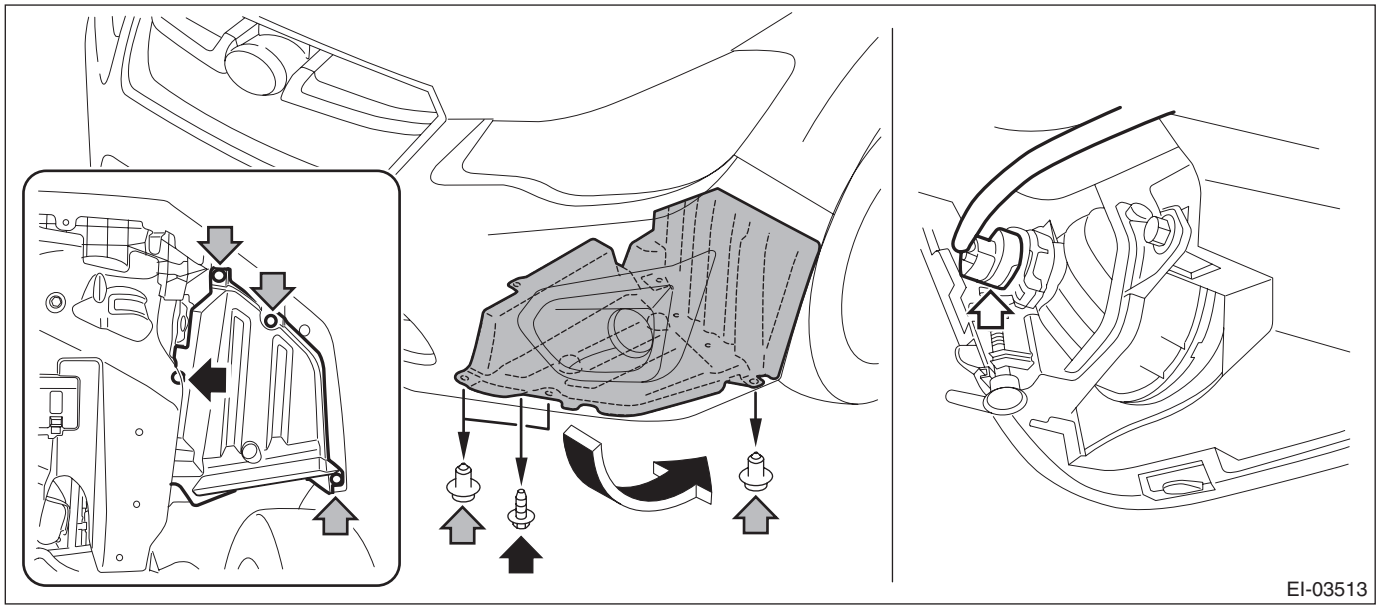

   (2) Remove the clips at the upper side of the bumper face - front.
   (3) Remove the clips from the fender.

(4) Remove the clips at the lower side of the bumper face - front.

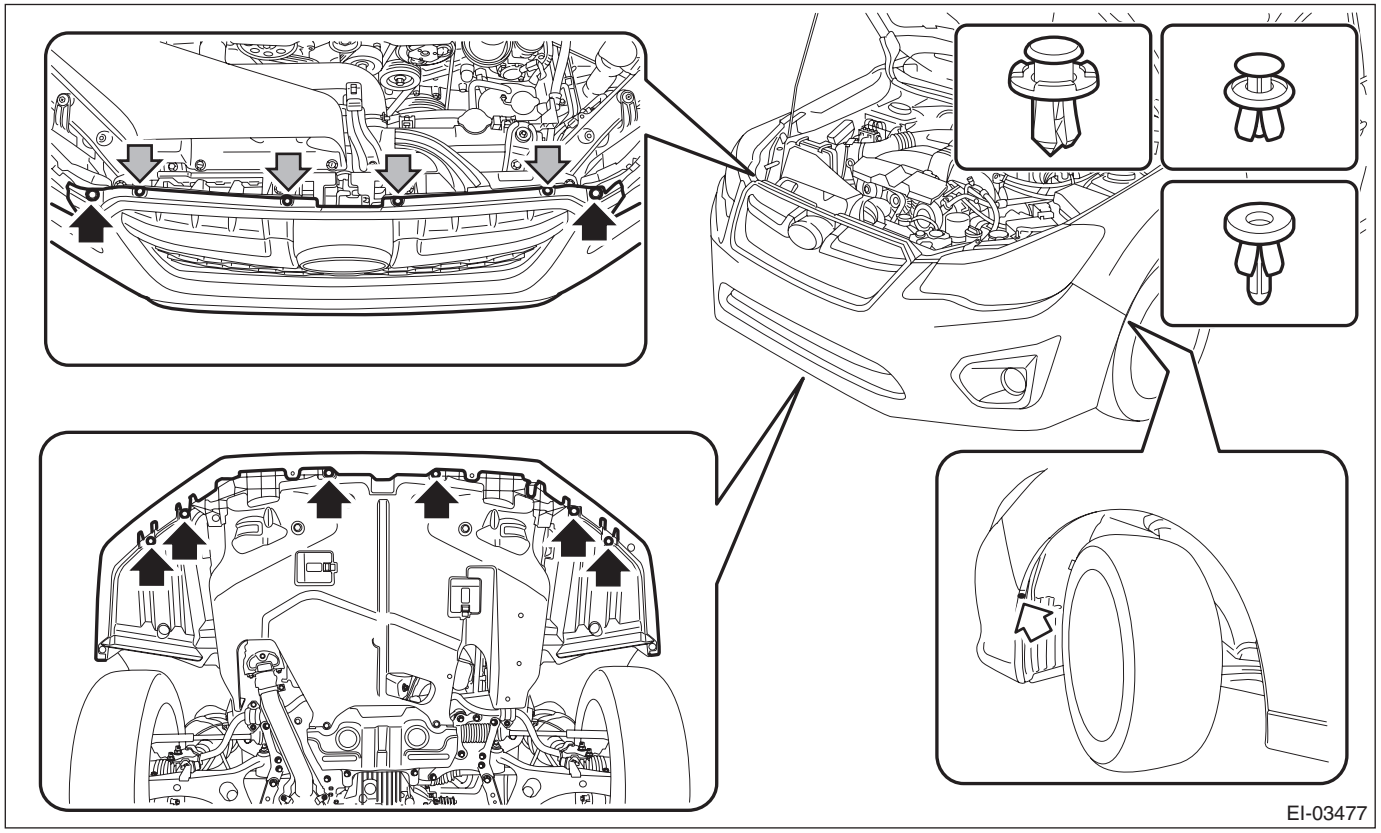

(5) Apply protective tape (A) to the light assembly - head.
(6) Detach the flange section on the bumper face side from the bracket - front bumper side.

CAUTION:
Do not pull forcibly. It may damage the flange section on the bumper face - front side when it comes off from the claws of the bracket - front bumper.

NOTE:
Remove the bumper face - front according to the following procedures.

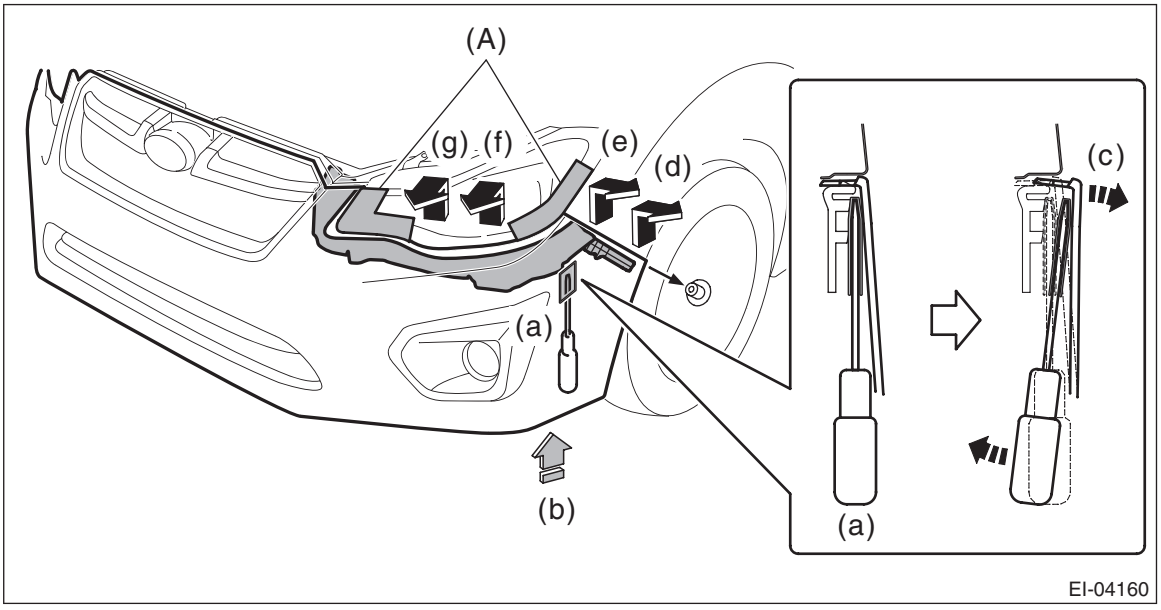

1. Remove the clips, turn over the mud guard, and insert a flat tip screwdriver with protection for damage prevention into the clearance between bumper and bracket. (a)
2. Push out the bumper with the flat tip screwdriver while pushing up the bumper from below. (b), (c)
3. Release the engagement of clips in the order of (d) to (g) while pushing up the bumper from below.
4. Perform the same procedures to remove the opposite side.

3) Remove the active grille shutter. (HEV model) <Ref. to HEV-76, REMOVAL, Active Grille Shutter.>
4) Remove the bolts, and remove the bumper beam COMPL - front.

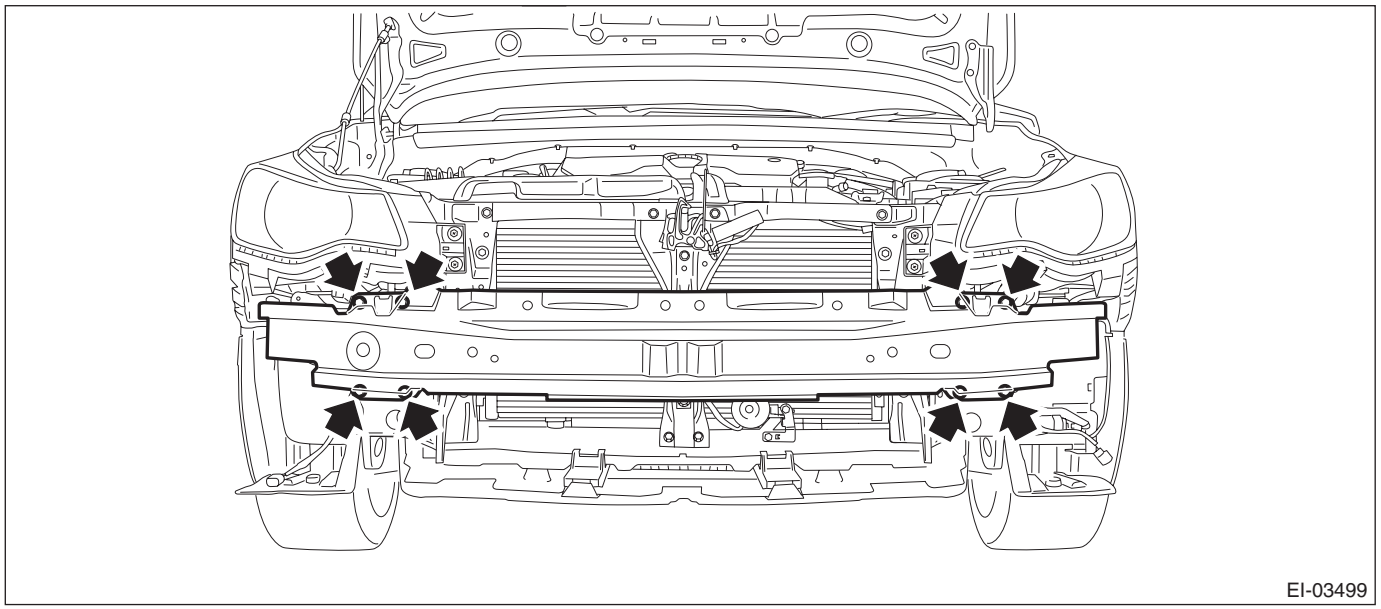
EI-03499

5) Remove the clip, and remove the bracket - grille.

CAUTION:
To prevent damage to the bracket - grille, make sure to remove all clips.

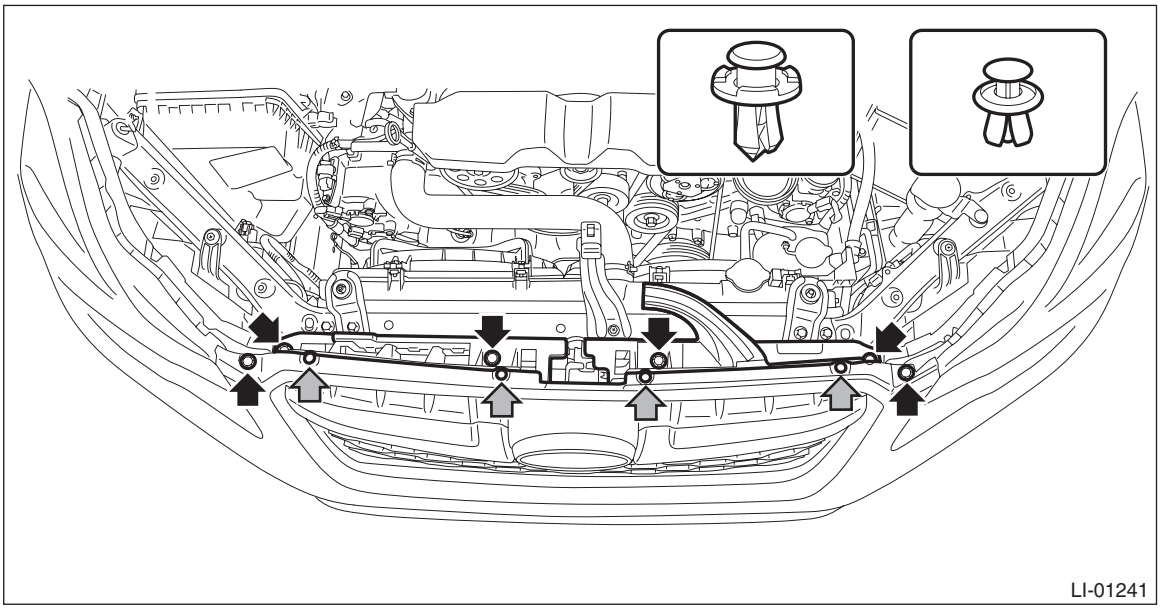
LI-01241

NOTE:
The bracket - grille can be removed without removing the bumper face - front.

6) Remove the bracket - front center LWR.
(1) Remove the bolts and clips, and turn over the under cover - front.

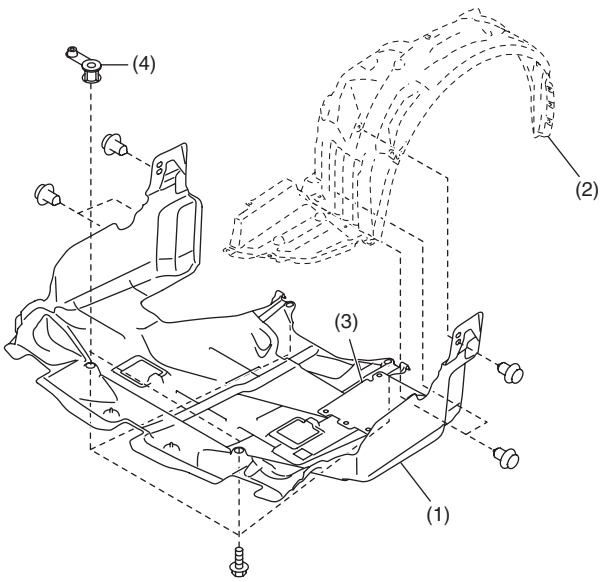

EI-04198

(1) Under cover - front
(2) Mud guard - front
(3) Plate cover - rear (XV model)
(4) Spacer - under cover (XV model)

(2) Remove the bolts, and remove the bracket - front center LWR.

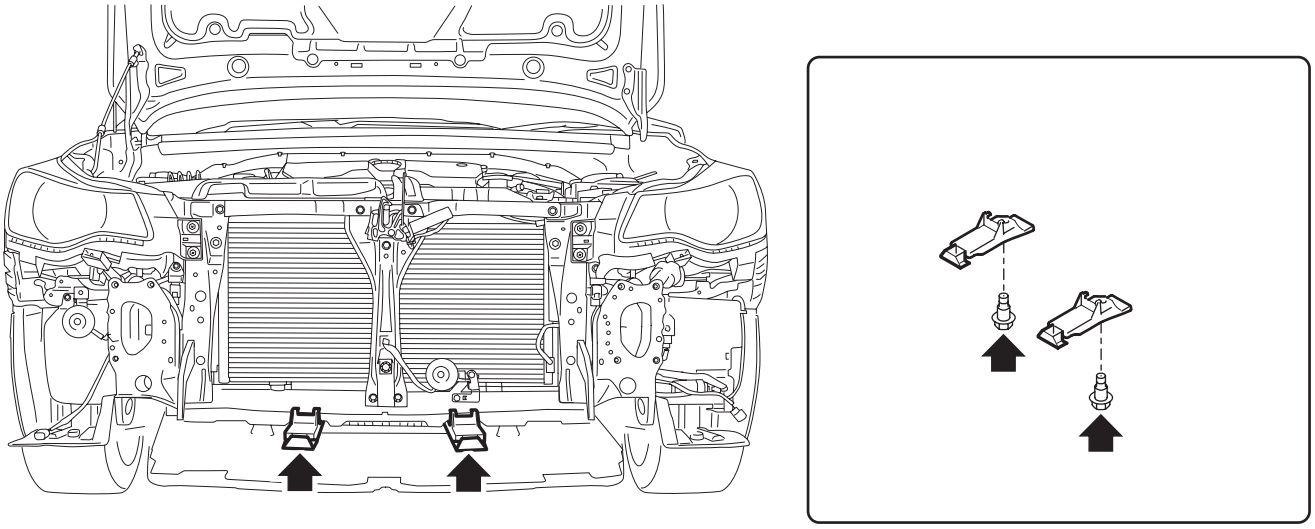

EI-03498

7) Remove the bolts and clips, and remove the bracket - front bumper corner.

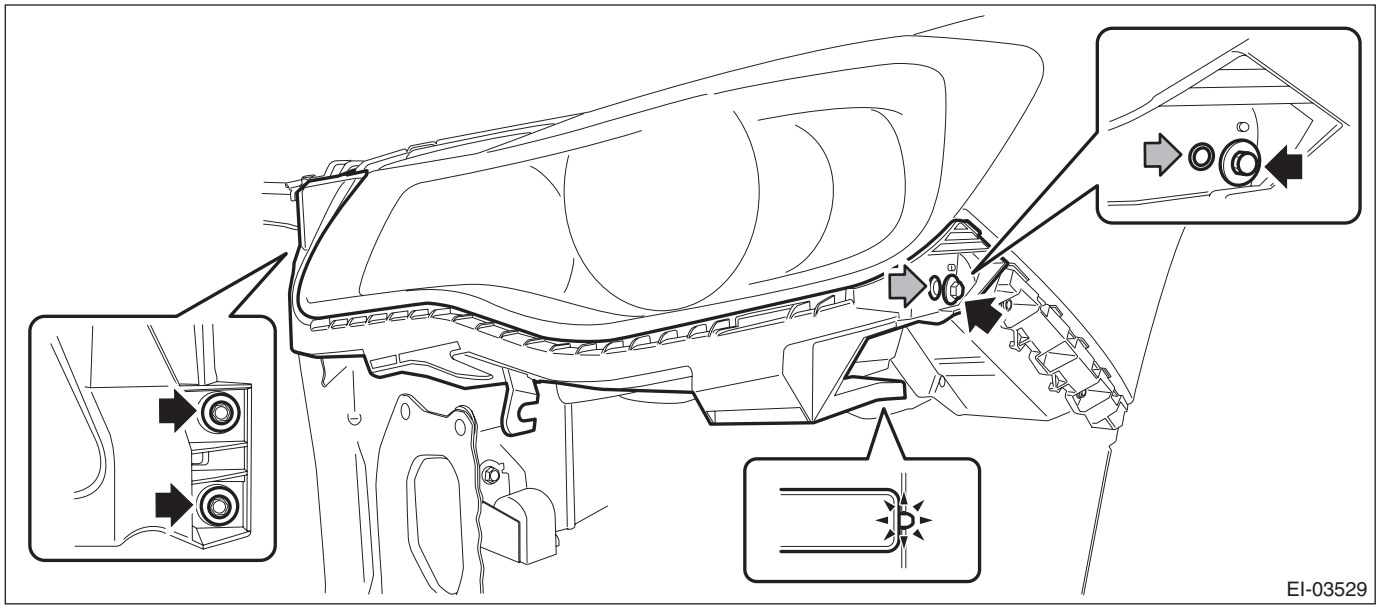

8) Remove the bracket - front bumper side.
(1) Remove the bolts and clips, and remove the light assembly - head and the bracket - front bumper corner.

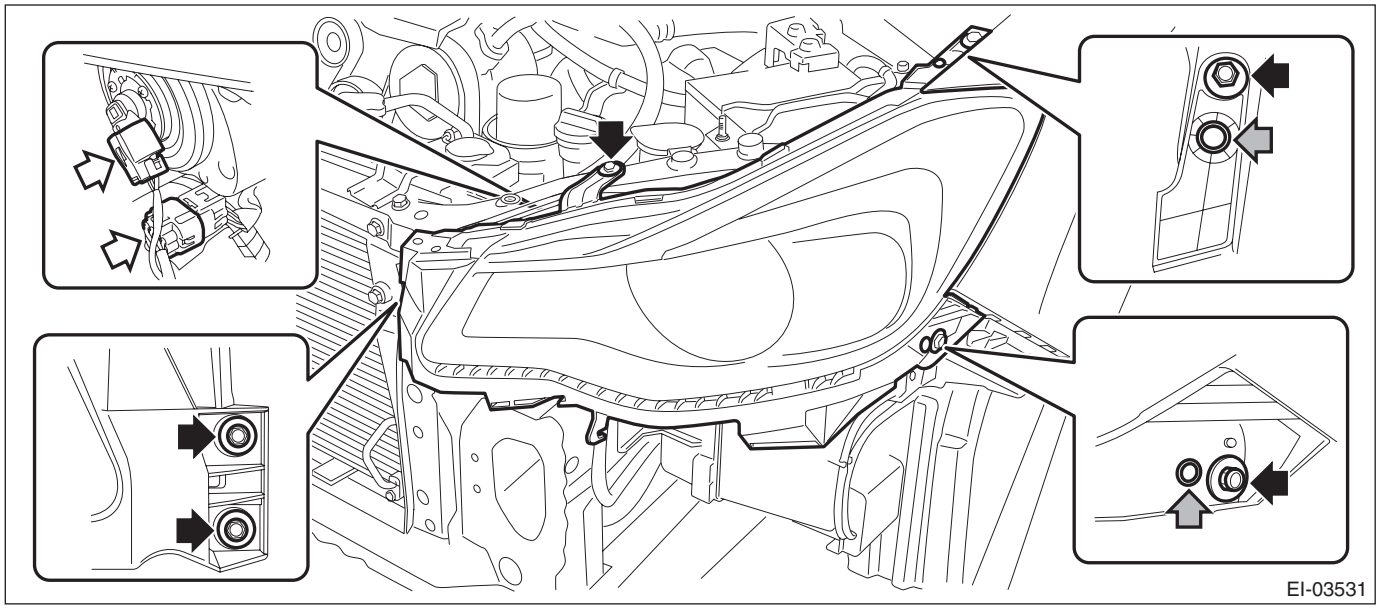

(2) Remove the screws.

(3) Remove the claws from behind the fender COMPL - front, and remove the bracket - front bumper side.

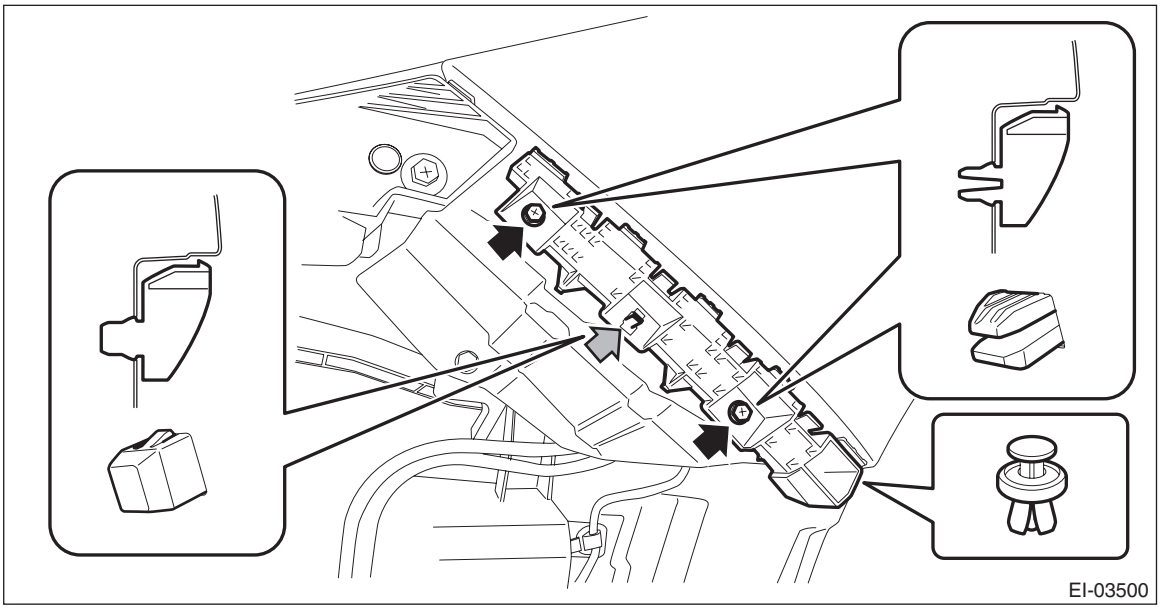

9) Remove the bolt and pin, and remove the fog light assembly - front.

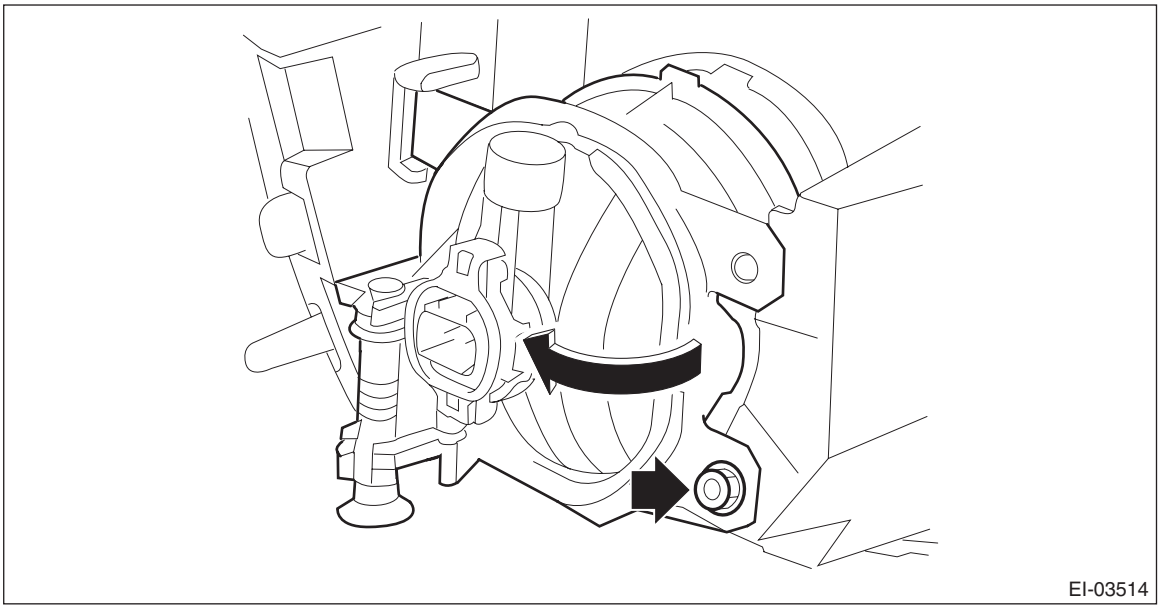

B: INSTALLATION

1) Install each part in the reverse order of removal.
2) Secure the flange section of the bumper face - front to the bracket - front bumper side.

CAUTION:
• Install the bumper face - front so that the front end of the under cover (b) comes inside the bumper face - front (a).

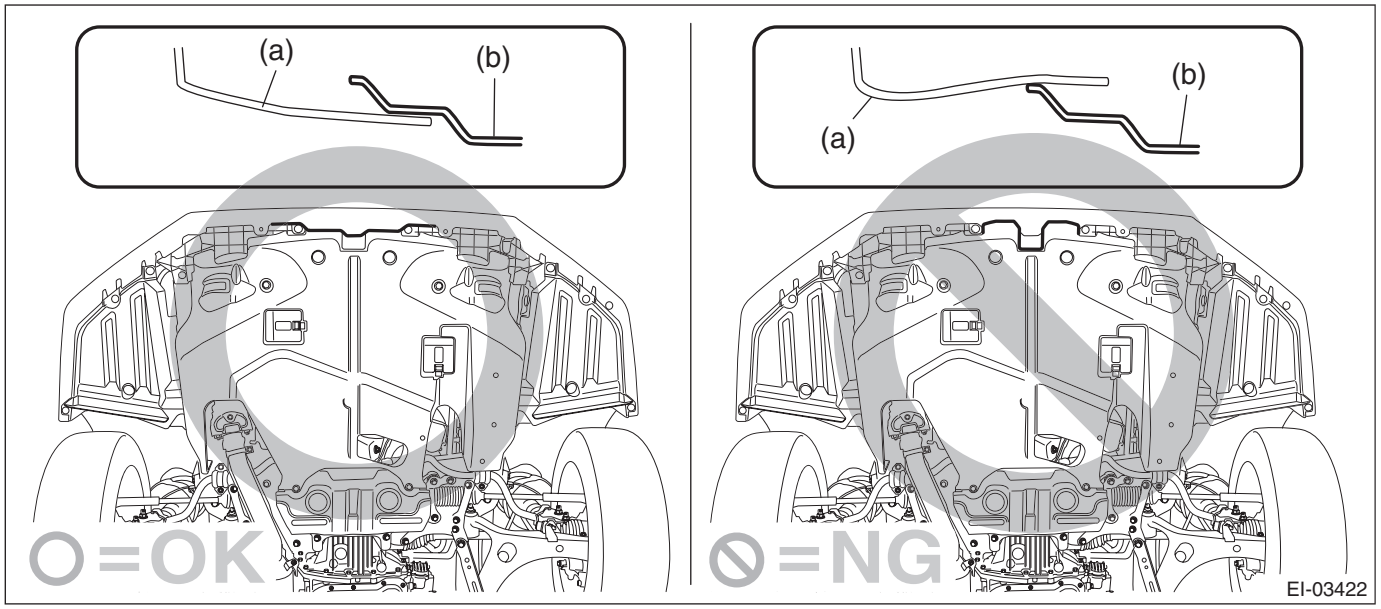

• Before installing the bumper face, match the claws on the bracket - front bumper with the engaging position of flange section on the bumper face side. If the engaging position is not correct, the flange section may be broken or the clearance between fender panel and bumper face may not be uniform.

Tightening torque:
Refer to "COMPONENT" of "General Description". <Ref. to EI-5, FRONT BUMPER, COMPONENT, General Description.>

3) Install each part in the reverse order of removal.
4) Adjust the headlight beam and fog light beam.
• Adjust the headlight beam. <Ref. to LI-36, HEADLIGHT BEAM ADJUSTMENT, ADJUSTMENT, Headlight Assembly.>
• Adjust the fog light beam. (Model with fog light) <Ref. to LI-56, FOG LIGHT AIMING, ADJUSTMENT, Front Fog Light Assembly.>

C: REPAIR

1. COATING METHOD FOR PP BUMPER

Process No.	Process name	Job contents	
1	Bumper installation	Place the bumper on a paint worktable as required. Use the paint worktable conforming to inner shape of bumper if possible.	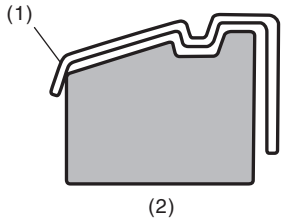 EI-00234 (1) Bumper (2) Set bumper section
2	Masking	Mask specified part (black base) with masking tape. Use masking tape for PP.	
3	Degreasing/cleaning	Clean all parts to be painted with appropriate detergent, general-purpose alcohol, etc. to remove dirt, oil, grease, etc.	
4	Primer paint	Apply primer to all parts to be painted, using spray gun. Use primer (clear).	
5	Drying	Dry at normal temperature. [10 — 15 min. at 20°C (68°F)] In half-dried condition, PP primer paint is dissolved by solvent, e.g. thinner, etc. Therefore, if dust or dirt must be removed, use general-purpose alcohol etc.	
6	Top coat paint (I)	Non-colored	Metallic paint
		Use section (block) paint for top coat. For paint/hardener mixture, observe the specifications recommended by the manufacturers. • Viscosity: 10 — 13 sec./20°C (68°F) • Film thickness: 35 — 45 μ • Spraying pressure: 245 — 343 kPa (2.5 — 3.5 kgf/cm^2, 36 — 50 psi)	Use section (block) paint for top coat. For paint/hardener mixture, observe the specifications recommended by the manufacturers. • Viscosity: 10 — 13 sec./20°C (68°F) • Film thickness: 15 — 20 μ • Spraying pressure: 245 — 343 kPa (2.5 — 3.5 kgf/cm^2, 36 — 50 psi)
7	Drying	Not required.	Dry at normal temperature [at least 10 min. at 20°C (68°F)]. In half-dried condition, avoid dust, dirt.
8	Top coat paint (II)	Not required.	Apply a clear coat to parts with top coat paint (I), three times at 5 — 7 minute intervals. For paint/hardener mixture, observe the specifications recommended by the manufacturers. • Viscosity: 14 — 16 sec./20°C (68°F) • Film thickness: 25 — 30 μ • Spraying pressure: 245 — 343 kPa (2.5 — 3.5 kgf/cm^2, 36 — 50 psi)
9	Drying	60°C (140°F), 60 min. or 80°C (176°F), 30 min. If the temperature is higher than 80°C (176°F), PP may be deformed. Keep maximum temperature at 80°C (176°F) or less.	
10	Inspection	Check paint.	
11	Removal of masking	Remove the masking tape applied in procedure 2.	

2. REPAIR INSTRUCTIONS FOR COLORED PP BUMPER

NOTE:
All PP bumpers are provided with a grained surface, and if the surface is damaged, it cannot normally be restored to its former condition. Damages limited to the shallow scratches that cause only a change in the luster of the base material or coating, can be almost fully restored. Before repairing a damaged area, explain this point to the customer and obtain an understanding about the matter.
Repair methods are outlined below, based on a classification of the extent of damage.
1) Minor damage causing only a change in the luster of the bumper due to a light touch
Almost restorable.

<table>
<tr><th>Process No.</th><th>Process name</th><th colspan="2">Job contents</th></tr>
<tr><td>1</td><td>Cleaning</td><td colspan="2">Clean the area to be repaired using water.</td></tr>
<tr><td>2</td><td>Sanding</td><td colspan="2">Grind the repairing area with #500 sand paper in a “feathering” motion.</td></tr>
<tr><td rowspan="3">3</td><td rowspan="3">Finish</td><td>Resin section</td><td>Coated section</td></tr>
<tr><td>Repeatedly apply wax to the affected area using soft cloth (such as flannel).
Recommended wax: Tire wax or equivalent</td><td rowspan="2">Perform either the same procedures as for the resin section or process No. 18 and subsequent in section 3), depending on the degree and nature of damage.</td></tr>
<tr><td>Polish the waxed area with clean cloth after 5 — 10 minutes.</td></tr>
</table>

2) Deep damage caused by scratching with fences etc.
A dent cannot be repaired but a whitened or swelled part can be removed.

<table>
<tr><th>Process No.</th><th>Process name</th><th colspan="2">Job contents</th></tr>
<tr><td>1</td><td>Cleaning</td><td colspan="2">Clean the damaged area with water.</td></tr>
<tr><td>2</td><td>Removal of damaged area</td><td colspan="2">Cut off protruding area, if any, due to collision, using a putty knife.</td></tr>
<tr><td>3</td><td>Sanding</td><td colspan="2">Grind the affected area with #100 — #500 sand paper.</td></tr>
<tr><td rowspan="2">4</td><td rowspan="2">Finish</td><td>Resin section</td><td>Coated section</td></tr>
<tr><td>Same as process No. 3 in section “1)”.</td><td>Perform process No. 12 and subsequent operations in section “3)”.</td></tr>
</table>

3) Deep damage such as a break or hole that requires filling
Much of the peripheral grained surface must be sacrificed for repair. The degree of restoration is not really worth the expense. (The surface, however, will become almost flush with adjacent areas.)

Process No.	Process name	Job contents	
1	Bumper removal	Remove the bumper as required.	
2	Removal of parts	Remove the parts built into bumper as required.	
3	Bumper placement	Place the bumper on a paint worktable as required. It is recommended to use the paint worktable conforming to internal shape of bumper.	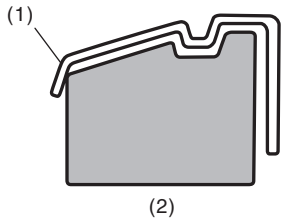 EI-00234 (1) Bumper (2) Set bumper section
4	Surface preparation	Remove dust, oil, etc. from areas to be repaired and surrounding areas, using a suitable solvent (appropriate detergent or alcohol, etc.).	
5	Cutting	If the damage is a crack or a hole, cut a guide slit of 20 to 30 mm (0.79 to 1.18 in) in length along the crack or hole up to the bumper base surface. Next, use a knife or grinder to carve a V-shaped groove in the area for repair.	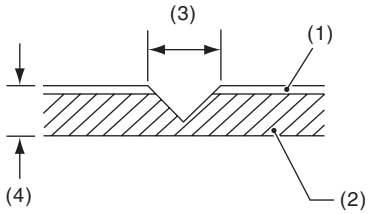 EI-00235 (1) Paint surface (2) PP base surface (3) 20 — 30 mm (0.79 — 1.18 in) (4) 3 mm (0.12 in)
6	Sanding (I)	Grind beveled surface with sand paper (#40 — #60) to smooth finish.	
7	Cleaning	Clean the sanded surface with the same solvent as used in process No. 4.	
8	Temporary welding	Grind the side just opposite the beveled area with sand paper (#40 — #60) and clean using a solvent. Temporarily spot-weld the side, using PP welding rod and heater gun.	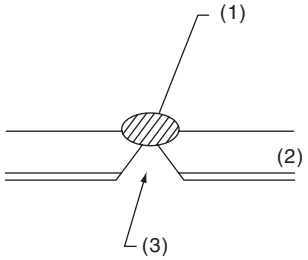 EI-00236 (1) Welded point (Use heater gun and PP welding rod) (2) PP base surface (3) Beveled section NOTE: • Do not melt welding rod until it flows out. This results in reduced strength. • Leave the welded spot unattended until it cools completely.

Process No.	Process name	Job contents
9	Welding	Using a heater gun and PP welding rod, weld the beveled spot while melting both the rod and damaged area.
		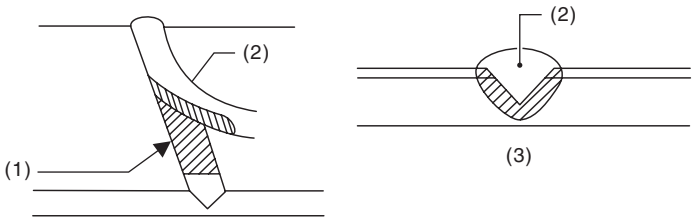 EI-00237 (1) Welding rod (2) Melt hatched area (3) Section NOTE: • Melt the sections indicated by hatched area. • Do not melt the welding rod until it flows out, in order to provide strength. • Always keep the heater gun 1 to 2 cm (0.4 to 0.8 in) away from the welding spot. • Leave the welded spot unattended until it cools completely.
10	Sanding (II)	Remove excess part of weld with a putty knife. If a drill or disc wheel is used instead of the knife, operate it at a rate less than 1,500 rpm and grind the excess part little by little. A higher rpm will cause the PP substrate to melt from the heat.
		 EI-00042
		Sand the welded spot smooth with #240 sand paper.
11	Masking	Mask the black substrate section using masking tape.
12	Cleaning/degreasing	Completely clean the entire coated area, using solvent similar to that used in process No. 4.
13	Primer coating	Apply a coat of primer for bumpers to the repaired surface and its surrounding areas. Mask these areas, if necessary. NOTE: Be sure to apply a coat of primer using a spray gun at a pressure of 245 — 343 kPa (2.5 — 3.5 kgf/cm^2, 36 — 50 psi).
14	Leave unattended	Leave the repaired area unattended at 20°C (68°F) for 10 to 15 minutes until primer is half-dry. NOTE: If dirt or dust comes in contact with the coated area, wipe it off with a cloth dampened with alcohol. (Do not use thinner since the coated area tends to melt.)
15	Surfacer coating	Apply a coat of surfacer for PP bumpers to the repaired area two or three times at an interval of 3 — 5 minutes. For surfacer/hardener mixture, viscosity and paint thickness, observe the specifications of the surfacers to be used.
16	Drying	Allow the coated surface to dry for 20 minutes at 20°C (68°F) [or 30 minutes at 60°C (140°F)].
17	Sanding (III)	Sand the coated surface and its surrounding areas using #400 sand paper and water.
18	Cleaning/degreasing	Same as process No. 12.

Process No.	Process name	Job contents	
		Non-colored	Metallic paint
19	Top coat (I)	Use a “block” coating method. For paint/hardener mixture, observe the specifications recommended by the manufacturers. • Viscosity: 11 — 13 sec./20°C (68°F) • Coating film thickness: 40 — 50 µ • Spraying pressure: 245 — 343 kPa (2.5 — 3.5 kgf/cm^2, 36 — 50 psi)	Use a “block” coating method. For paint/hardener mixture, observe the specifications recommended by the manufacturers. • Viscosity: 11 — 13 sec./20°C (68°F) • Coating film thickness: 20 — 30 µ • Spraying pressure: 245 — 343 kPa (2.5 — 3.5 kgf/cm^2, 36 — 50 psi)
20	Leave unattended	Not required.	Leave unattended at 20°C (68°F) for at least 10 minutes until the topcoated area is half-dry. NOTE: Be careful to keep dust or dirt from coming in contact with the affected area.
21	Top coat (II)	Not required.	Apply a clear coat three times at an interval of 3 to 5 minutes. For paint/hardener mixture, observe the specifications recommended by the manufacturers. • Viscosity: 10 — 13 sec./20°C (68°F) • Coating film thickness: 20 — 30 µ • Spraying pressure: 245 — 343 kPa (2.5 — 3.5 kgf/cm^2, 36 — 50 psi)
22	Drying	Allow the coated surface to dry for two hours at 20°C (68°F) or 30 minutes at 60°C (140°F). NOTE: Do not allow the temperature to exceed 80°C (176°F) since this will deform the PP substrate.	
23	Inspection	Carefully check the condition of the repaired area.	
24	Removal of masking	Remove the masking tape applied in process No. 11 and 13.	
25	Parts installation	Install parts on the bumper in reverse order of removal.	
26	Bumper installation	Install the bumper.	

8. Rear Bumper

A: REMOVAL

1. 4 DOOR MODEL

1) Disconnect the ground cable from battery.
2) Remove the trunk room mat.
3) Remove the trim panel - trunk rear.
   (1) Remove the clip.
   (2) Release the claws, and remove the trim panel - trunk rear.

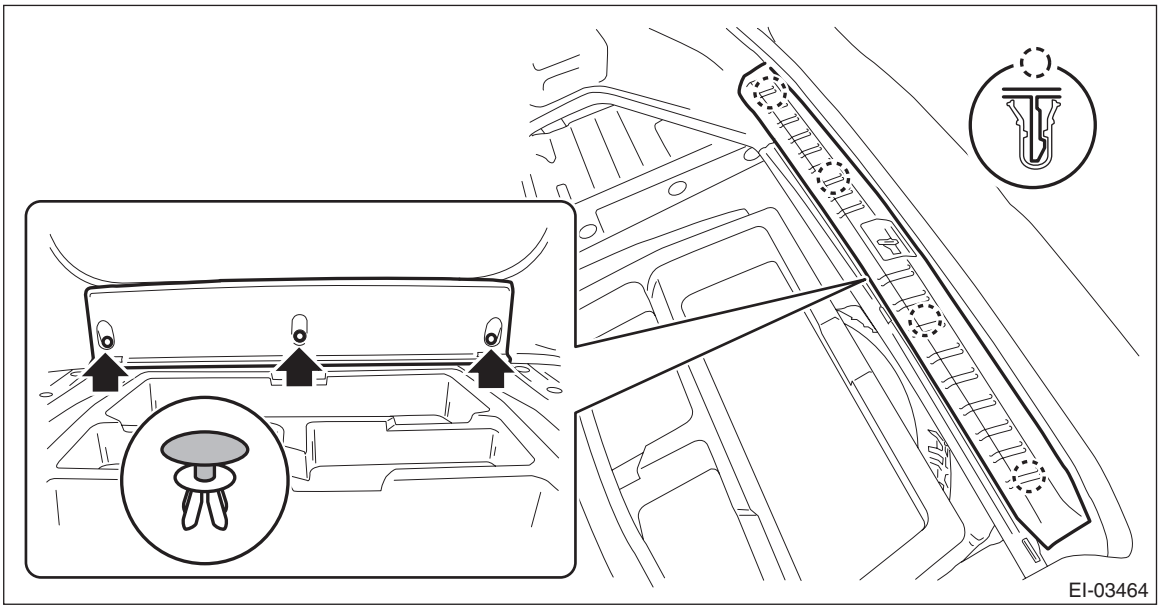

4) Remove the clips, and turn over the trim panel - trunk side.

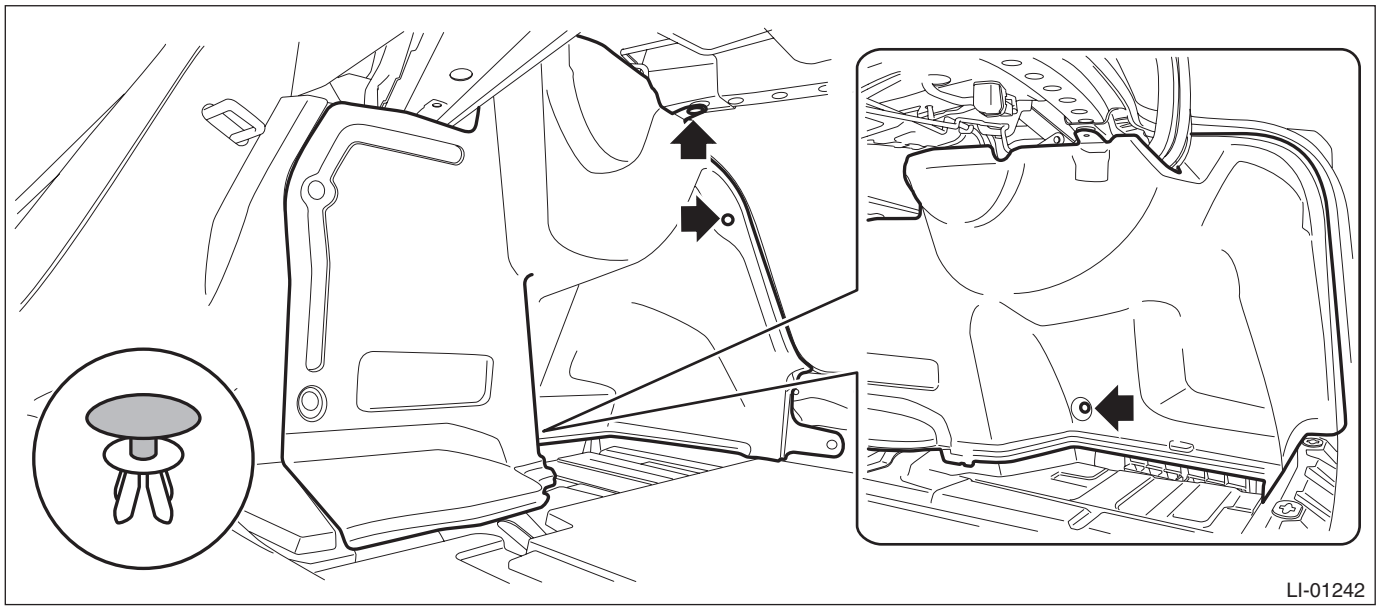

5) Remove the light assembly - rear combination.
   (1) Remove the harness clamp and connector.
   (2) Release the nuts and clips, then remove the light assembly - rear combination.

CAUTION:
Be careful not to damage the clips.

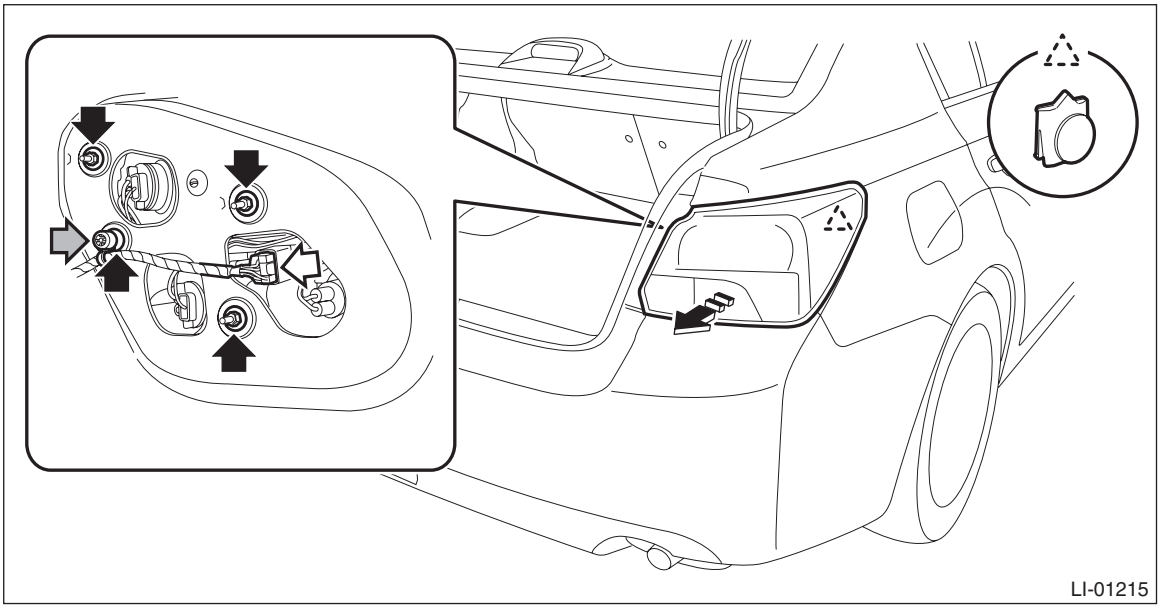

6) Remove the bumper face - rear.
   (1) Remove the clips inside the wheel housing.
   (2) Remove the clips at the lower side of the bumper face - rear.

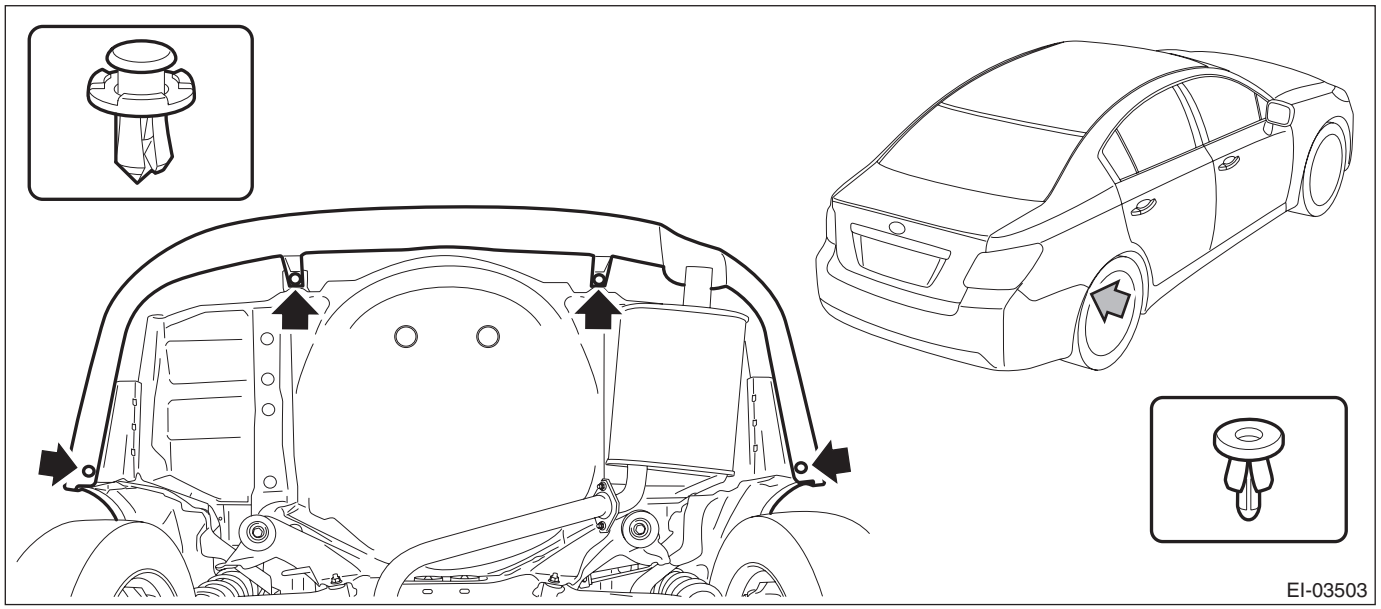

(3) Detach (b) and (c) while pulling up (a) of the bumper face - rear.
(4) Detach (e) while pulling up (d) of the bumper face - rear.
(5) Detach the opposite side in the same manner.
(6) Detach in order from (f) to (h) while pulling up the center part of the bumper face - rear.

CAUTION:
Pulling with excessive force may damage the bracket.

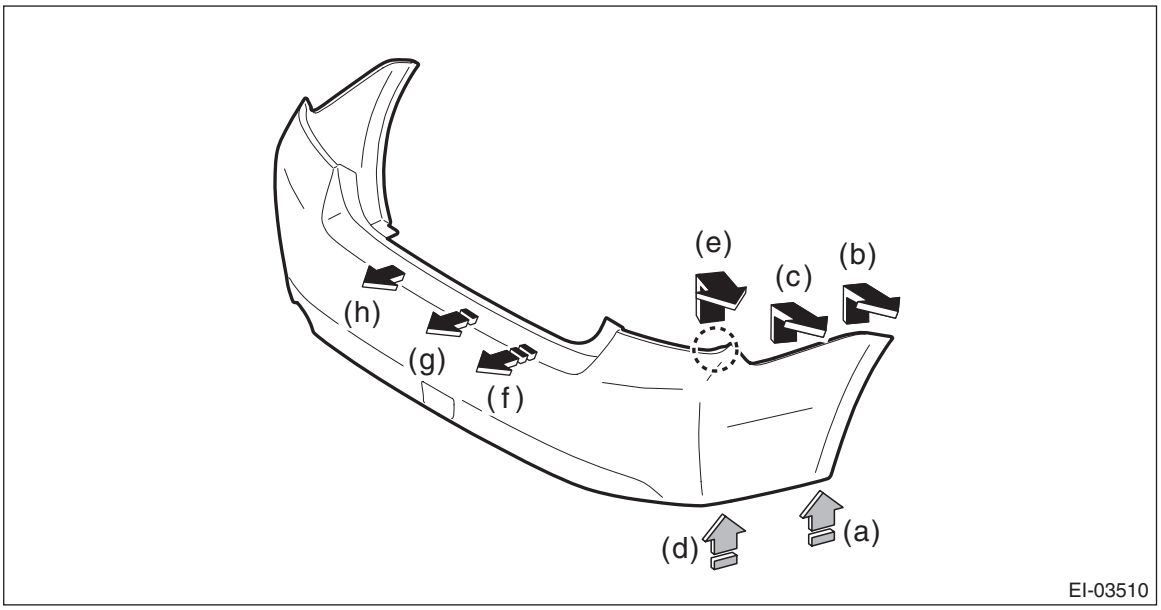

7) Remove the bolts and nuts, and remove the bumper beam COMPL - rear.

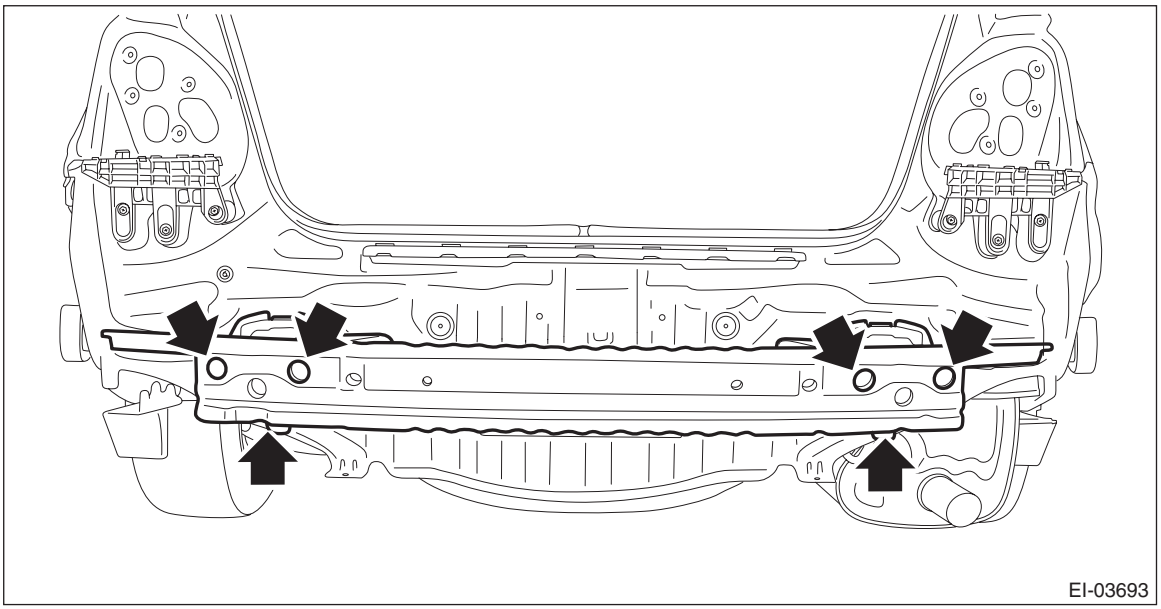

NOTE:
After all nuts are removed, raise the bumper beam COMPL - rear a little to remove it from vehicle body.

8) Remove bumper brackets.
(1) Remove the screws.
(2) Turn over the trim panel - trunk side, and detach the claw of the clip from the back side.

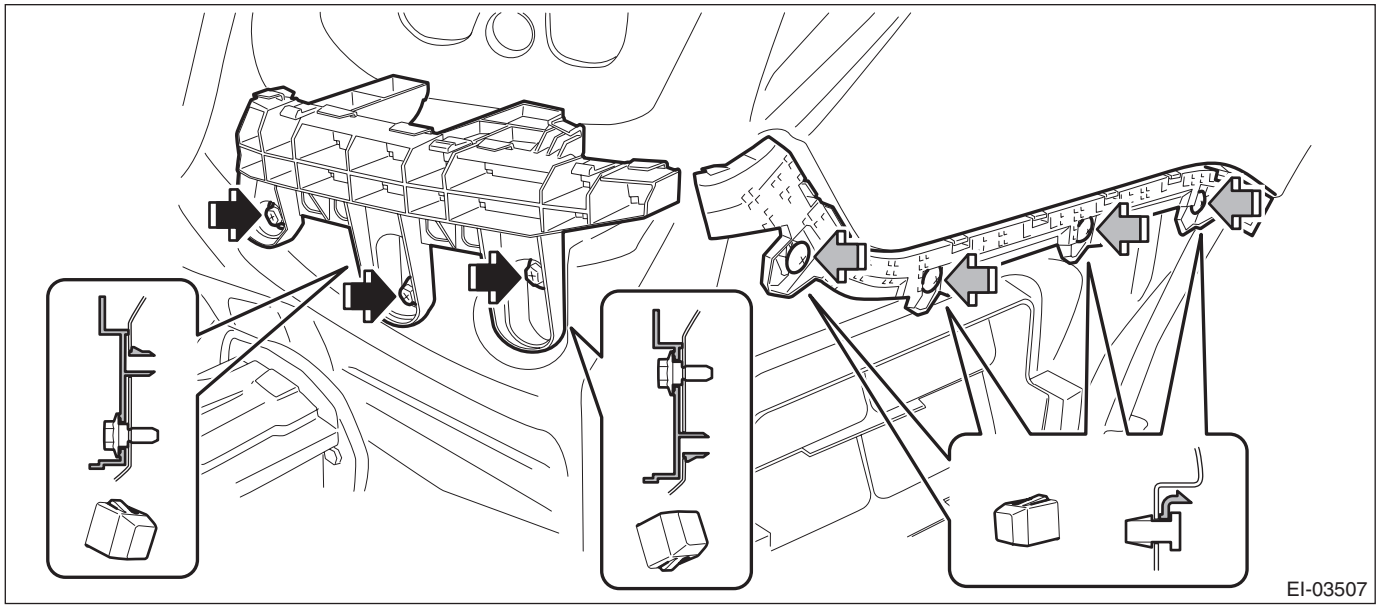

2. 5 DOOR MODEL/XV MODEL

1) Disconnect the ground cable from battery. <Ref. to NT-5, BATTERY, NOTE, Note.>

NOTE:
For the 12 volt engine restart battery of HEV model, disconnect the ground terminal from 12V engine restart battery sensor.

2) Remove the light assembly - rear combination.

CAUTION:
Be careful not to damage the clips.
(1) Release the bolts and clips, then pull out the light assembly - rear combination to the vehicle rear.
(2) Disconnect the connector and remove the light assembly - rear combination.

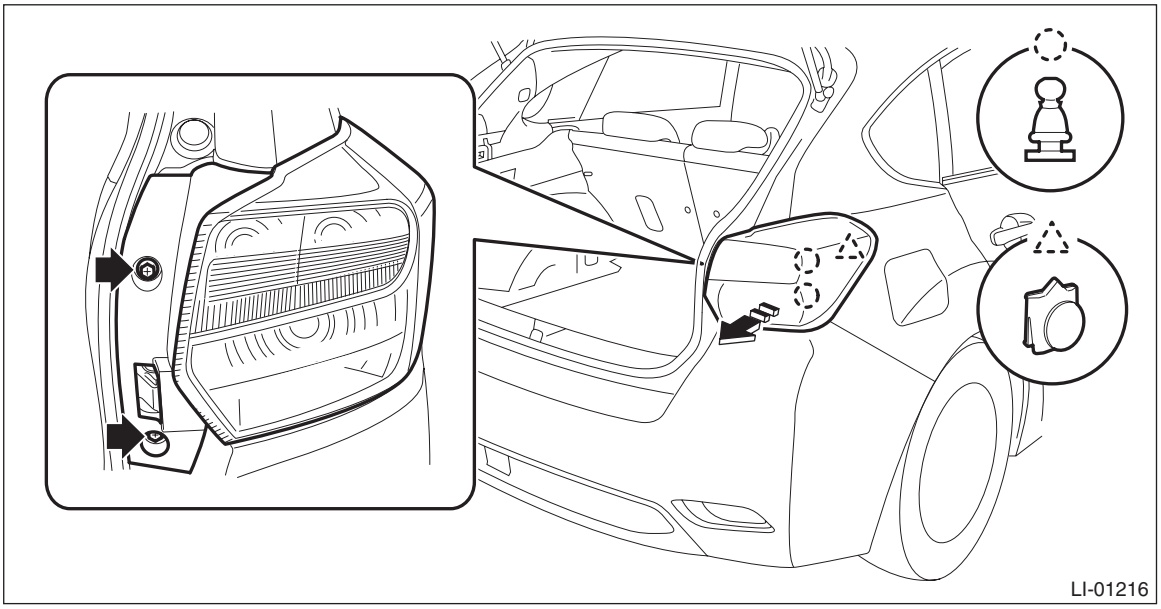

3) Remove the bumper face - rear.
(1) Remove the clips inside the wheel housing.
(2) Remove the clips at the lower side of the bumper face - rear.

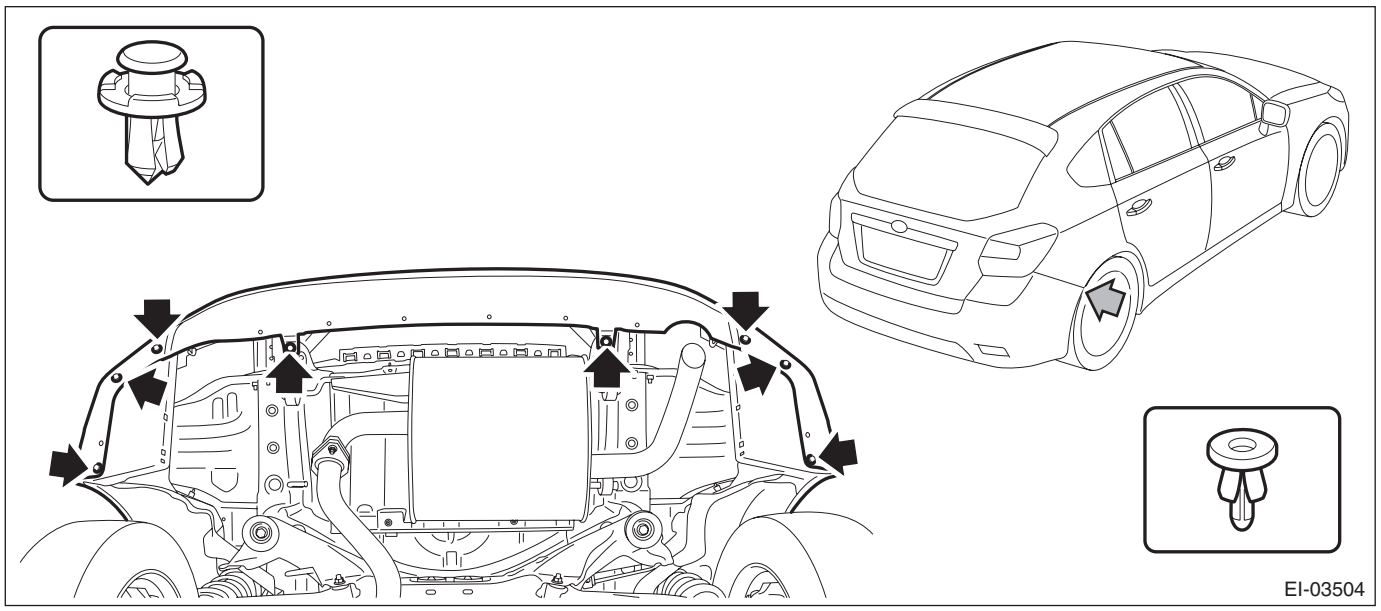

(3) Detach (b) and (c) while pulling up (a) of the bumper face - rear.
(4) Detach (e) while pulling up (d) of the bumper face - rear.
(5) Detach the opposite side in the same manner.
(6) Detach in order from (f) to (h) while pulling up the center part of the bumper face - rear.

CAUTION:
Do not pull forcibly. It may damage the flange section on the bumper face - rear side when it comes off from the claws of the bracket - rear bumper.

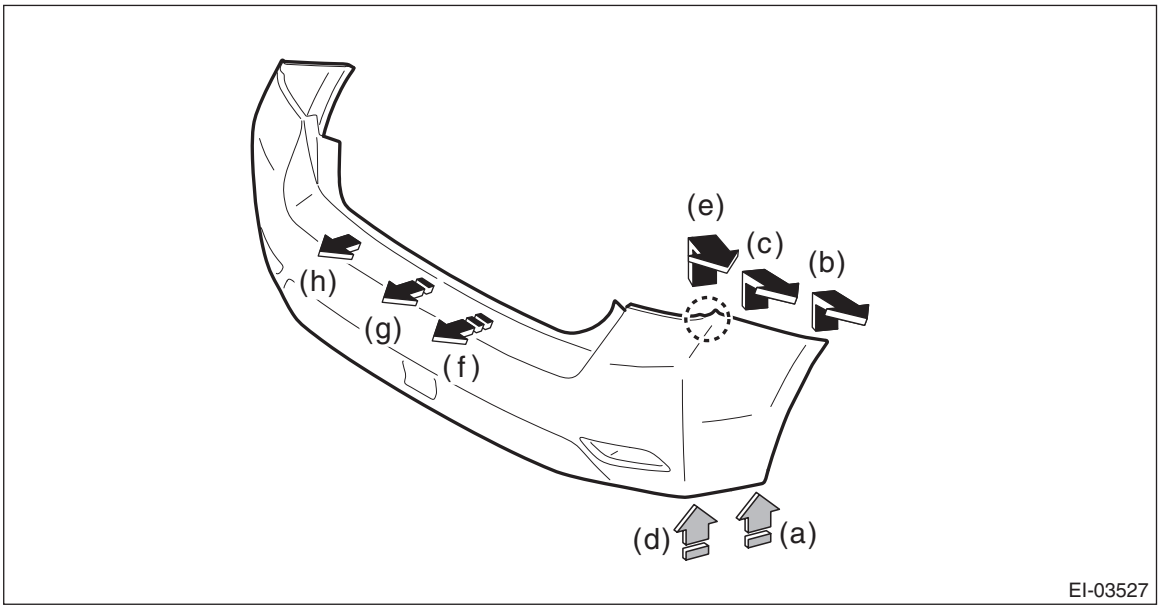

4) Remove the bolts and nuts, and remove the bumper beam COMPL - rear.

- Except for XV model

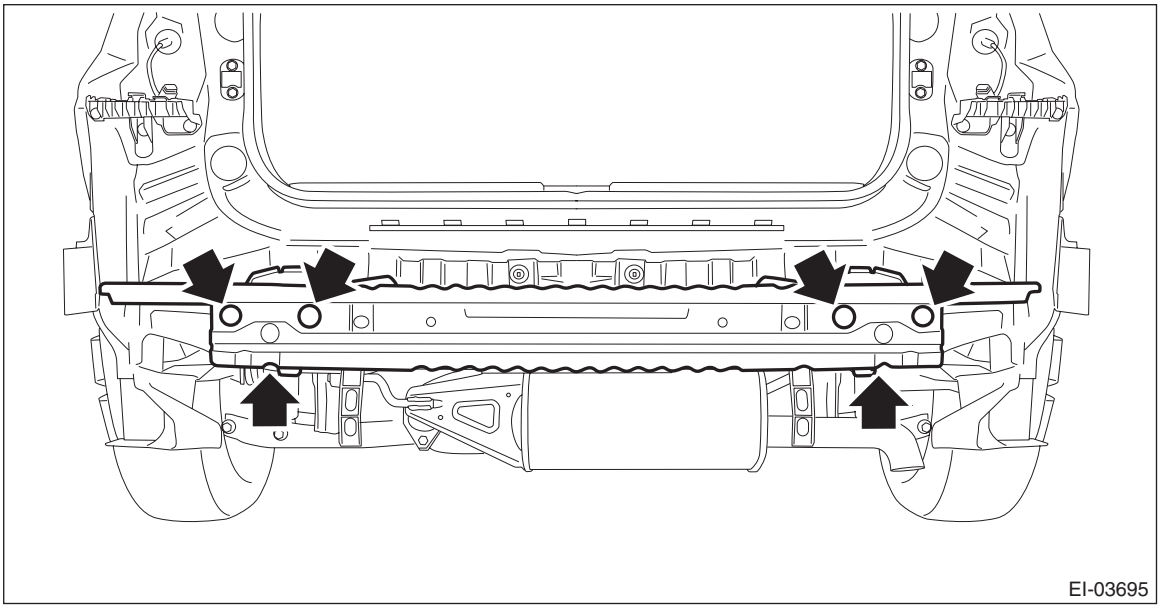

- XV model

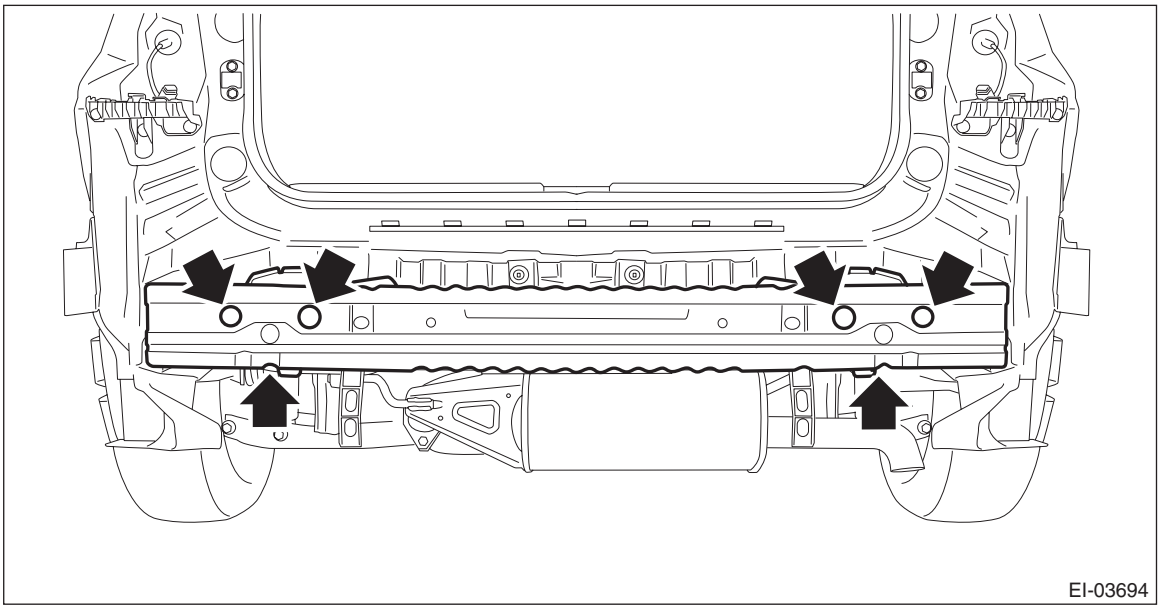

NOTE:
After all nuts are removed, raise the bumper beam COMPL - rear a little to remove it from vehicle body.

5) Remove bumper brackets.
(1) Remove the screws.
(2) Turn over the trim panel - trunk side, and detach the claw of the clip from the back side.

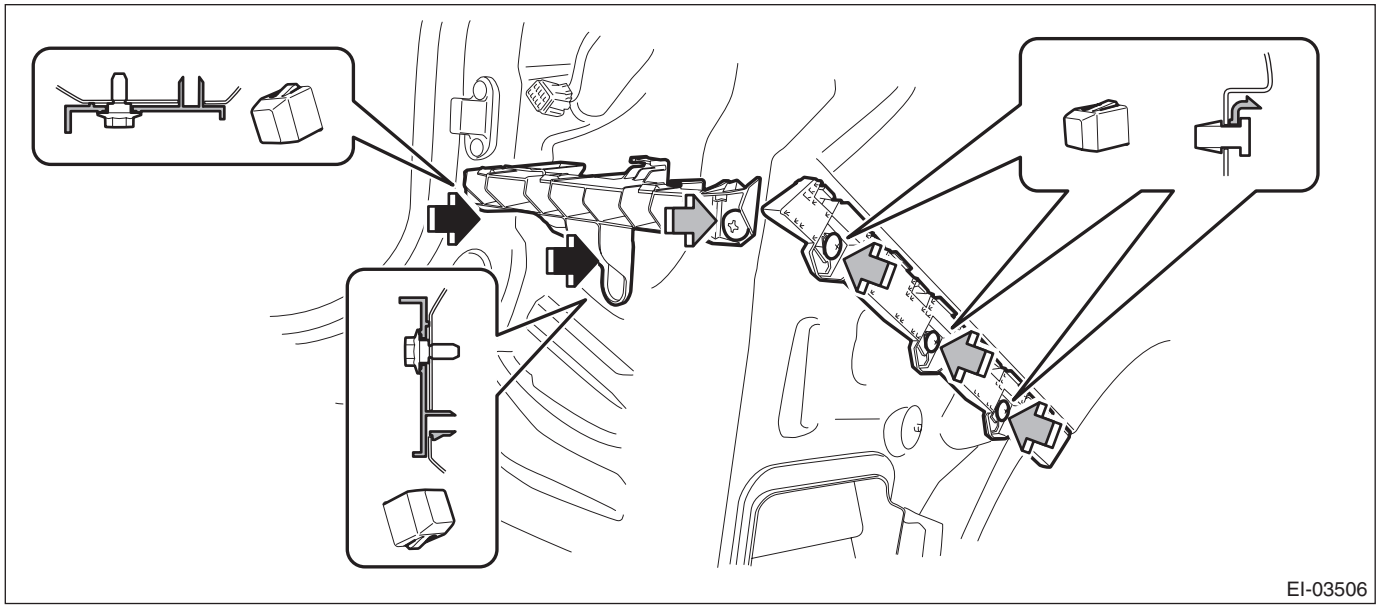
EI-03506

(3) Remove the clip, and remove the bracket - rear bumper lower.

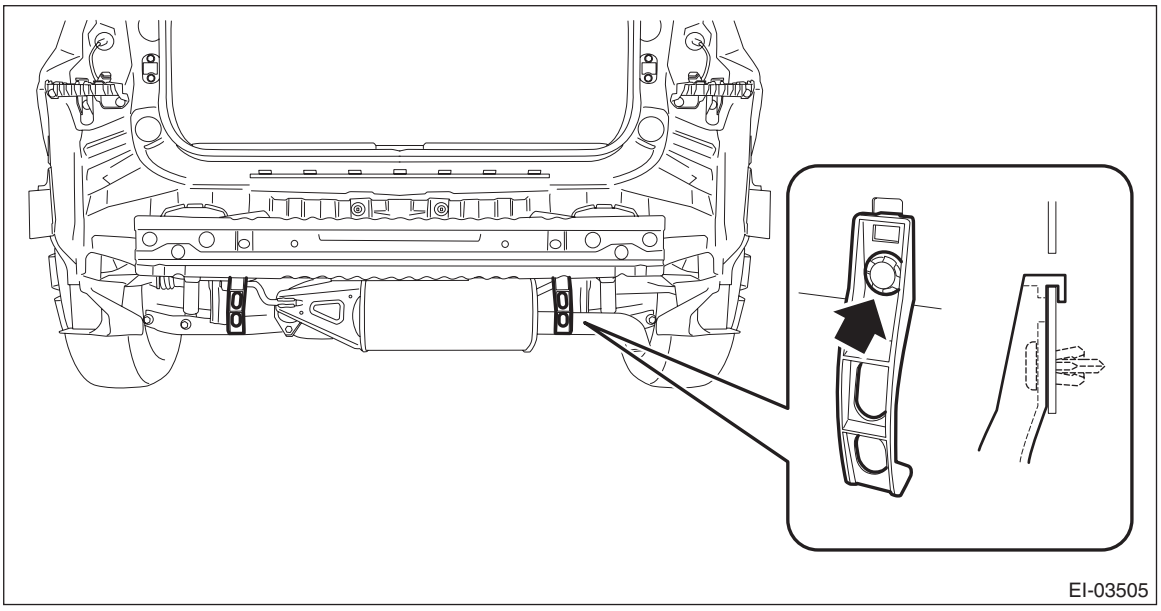
EI-03505

6) From behind the bumper, release the claws, and remove the reflex reflector assembly.

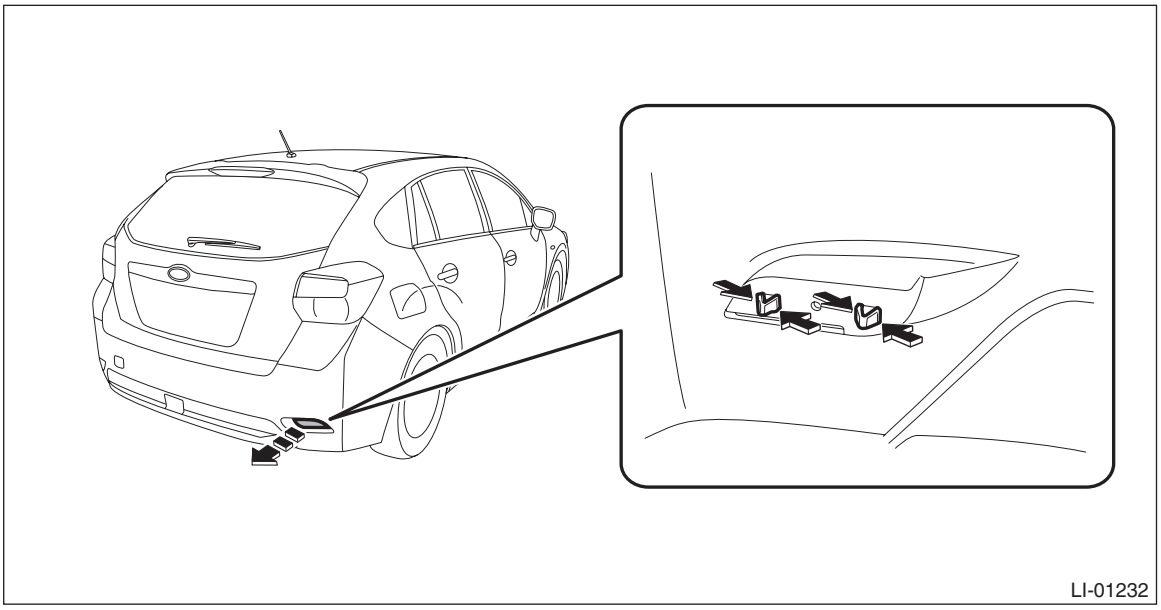

B: INSTALLATION

Install each part in the reverse order of removal.

CAUTION:

• For 4 door model, replace the seal gasket (b) of rear combination light assembly (a) with a new part. If the seal gasket is reused, water leaks may occur.

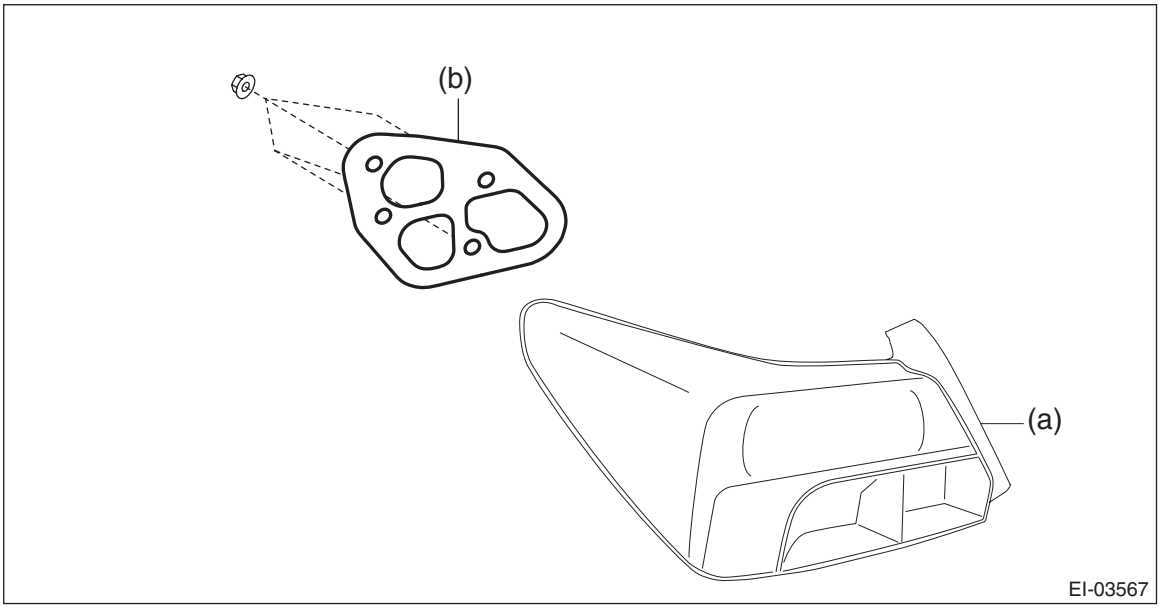

• Before installing the bumper face, match the claws on the bracket - rear bumper with the engaging position of flange section on the bumper face side. If the engaging position is not correct, the flange section may be broken or the clearance between fender panel and bumper face may not be uniform.

NOTE:
If the bumper face - rear comes off too easily, adjust the hook of the bracket side.

Tightening torque:

Rear bumper component: <Ref. to EI-6, REAR BUMPER, COMPONENT, General Description.>
Light assembly - rear combination: 7.5 N·m (0.76 kgf-m, 5.5 ft-lb)

C: REPAIR

Refer to the description concerning repair in “Front Bumper” section. <Ref. to EI-44, REPAIR, Front Bumper.>

9. Cowl Panel

A: REMOVAL

1) Open the front hood.
2) Remove the arm assembly - windshield wiper.
   (1) Remove the cover - windshield wiper arm.
   (2) Remove the nuts, and remove the arm assembly - windshield wiper.

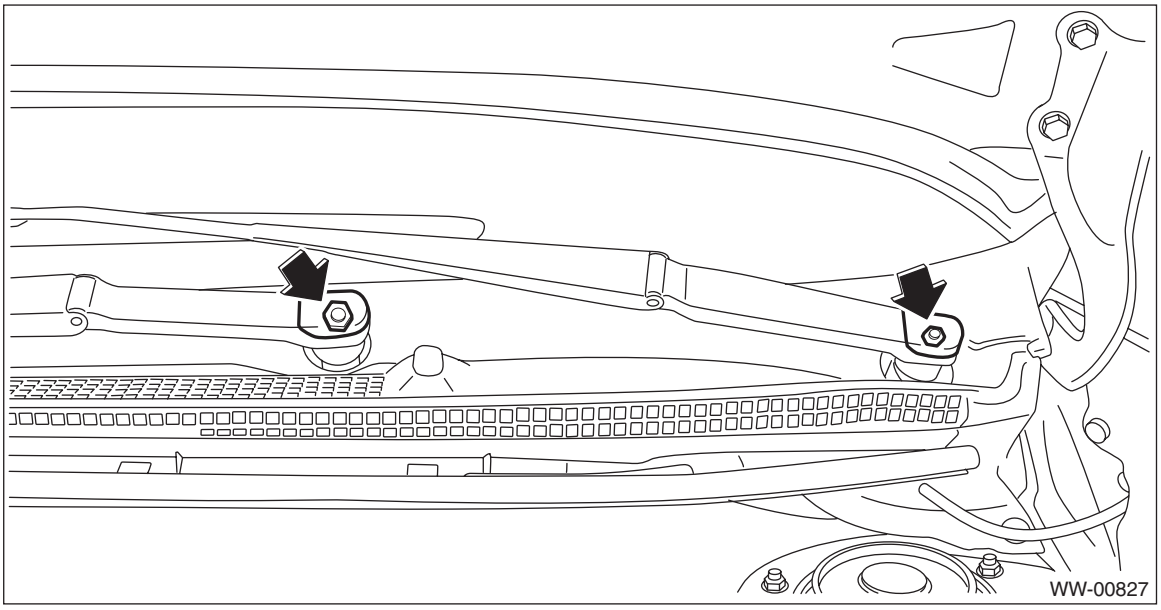

3) Remove the cowl panel - side.
   (1) Remove the clips.
   (2) Release the claws, and then remove the cowl panel - side.

CAUTION:
Pulling with excessive force may damage the cowl panel - side. If it is difficult to remove, use a plastic remover or equivalent tool.

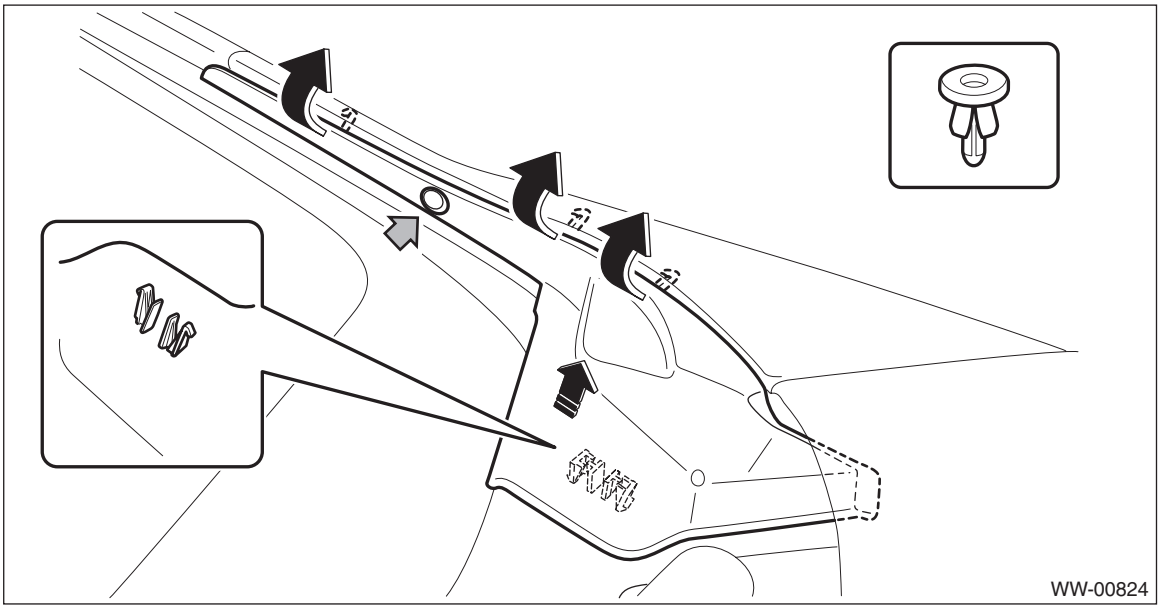

4) Remove the cowl panel assembly.

CAUTION:
Before removing the cowl panel, use an air blower and nylon brush to sweep gravel from the lower area of the front side of the glass.

(1) Disconnect the washer hose.
(2) Remove clips (A).
(3) Check the direction of the clip (B), and push the claws from both sides to remove it.

CAUTION:
When removing the clip (B), push the claws of the clip first.
Be careful not to apply excessive force when pulling the clip (B), as the clip may become damaged.

(4) Remove the cowl panel assembly by pulling it out towards the front of the vehicle.

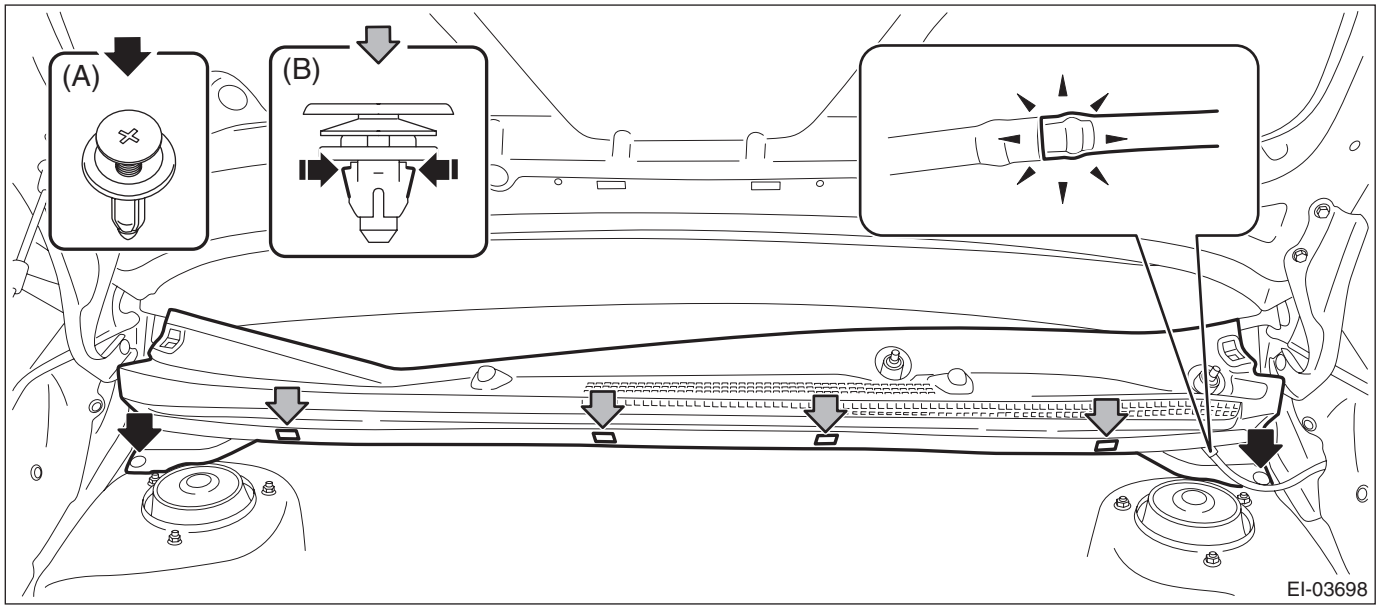

B: INSTALLATION

CAUTION:
Before installing the windshield glass and cowl panel, make sure there are no gravel in the installing area.

1) Install the cowl panel assembly.

CAUTION:
If the cowl panel assembly cannot be installed properly, do not hit or set it forcibly. The claws of the cowl panel or the windshield glass may be damaged.

(1) Hook the claw of the cowl panel on the lower end (1) of the windshield.

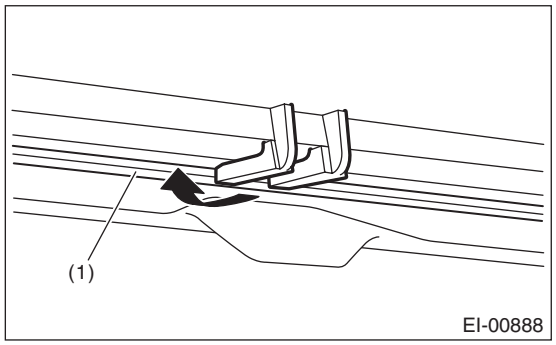

(2) Align the center claw of the cowl panel assembly to the cutout portion of the vehicle side, then install the cowl panel assembly.

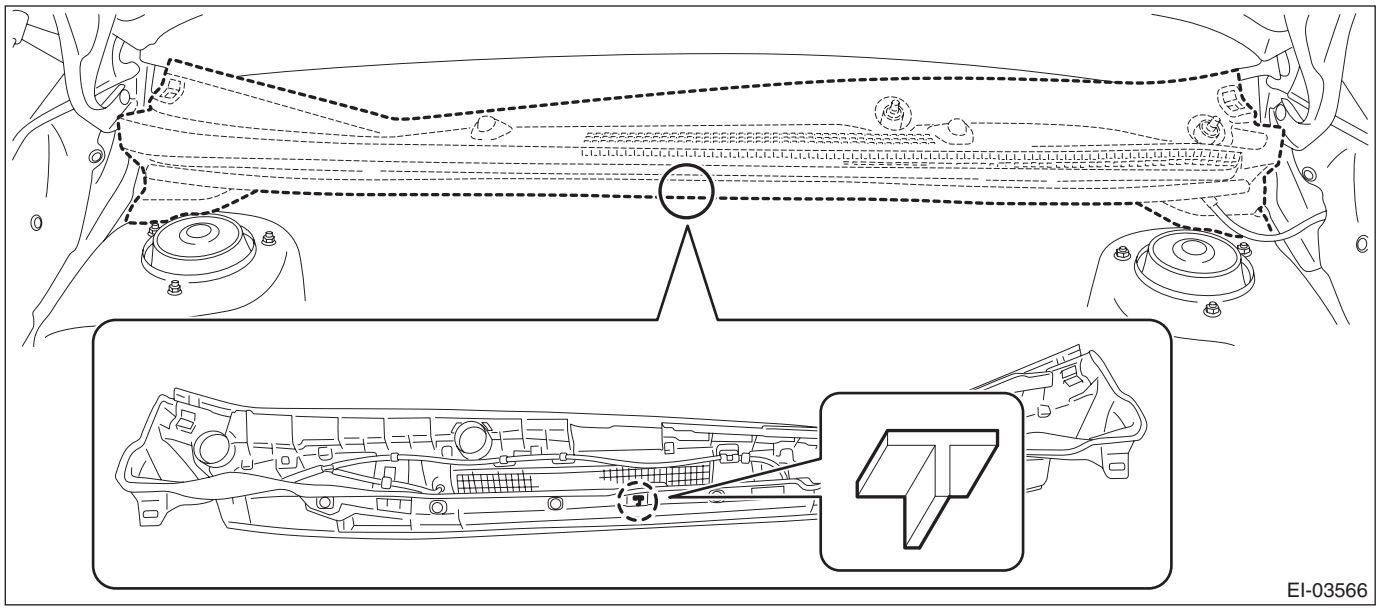

2) Install the arm assembly - windshield wiper.

(1) Assemble the arm assembly - windshield wiper so that the blade assembly - windshield wiper is aligned to the ceramic print point mark of the windshield glass.

(2) Tighten the arm assembly - windshield wiper to specified torque and install the cap.

Tightening torque:

26 N·m (2.65 kgf-m, 19.2 ft-lb)

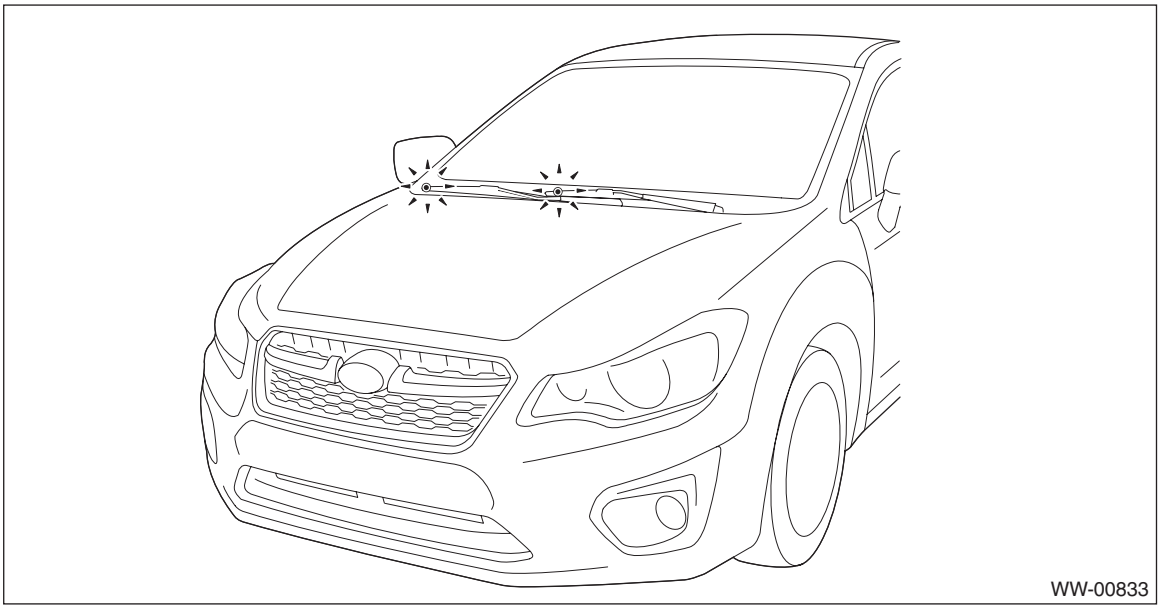

3) Install the remaining parts in the reverse order of removal.

Tightening torque:

Arm assembly - windshield wiper: <Ref. to WW-2, FRONT WIPER, COMPONENT, General Description.>

4) If the washer nozzles have been removed from the cowl panel assembly, adjust the washer spray positions. <Ref. to WW-36, ADJUSTMENT, Front Washer Nozzle.>

10.Side Garnish

A: REMOVAL

Remove the clips and detach the side garnish assembly.

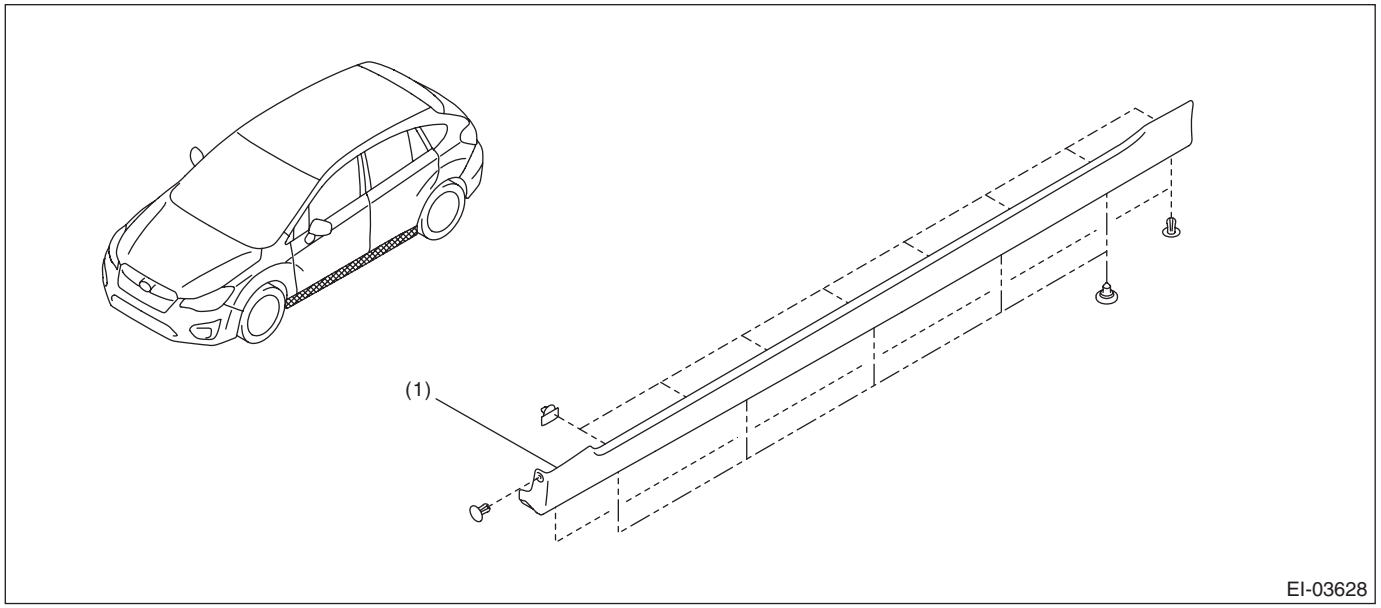

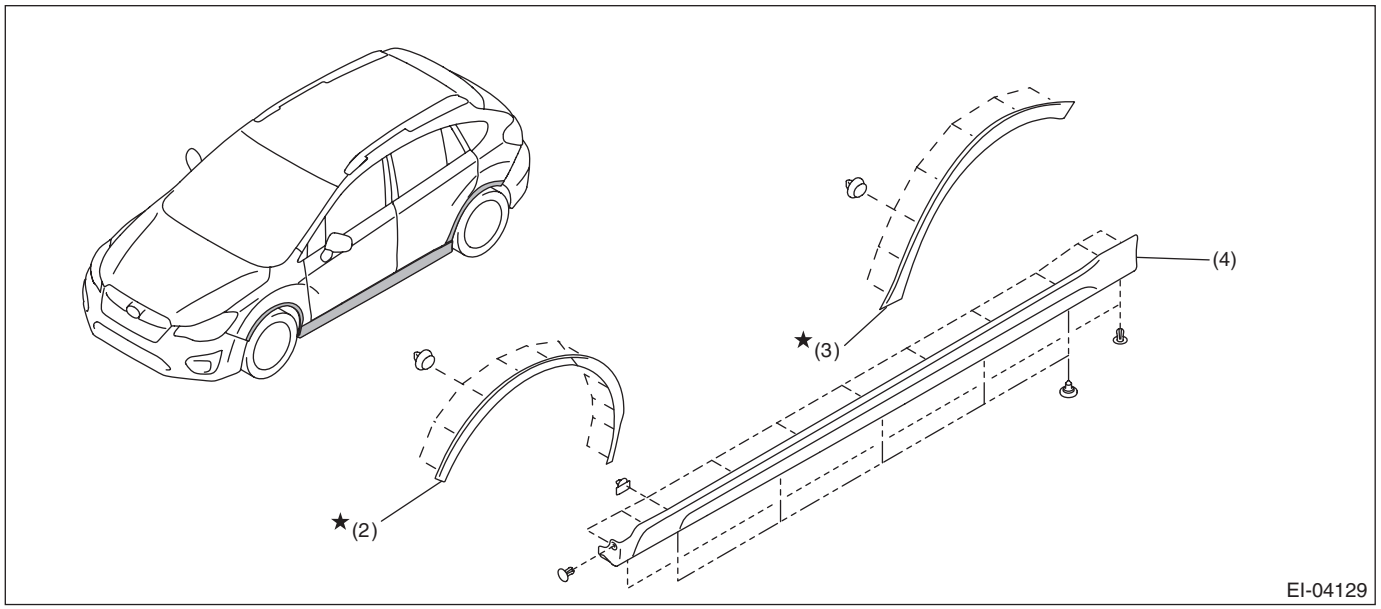

(1) Garnish ASSY - side sill (except for XV model)
(2) Garnish ASSY - fender (XV model)
(3) Garnish ASSY - rear quarter (XV model)
(4) Garnish ASSY - side sill (XV model)

B: INSTALLATION

CAUTION:
Do not reuse the garnish assembly. Deformation occurs on the garnish assembly when once removed, and this may cause improper adhesion.

1) Install each part in the reverse order of removal.
2) For XV model, install the garnish assembly - fender and the garnish assembly - rear quarter.
   (1) Remove the double-sided tape remaining on the vehicle body, then clean the adhesive surface.

CAUTION:
If even a slight amount of double-sided tape remains on the adhesive surface, it may lead to improper adhesion.

   (2) Heat the vehicle body and the garnish for 1 — 3 minutes using a heat light or a drier.

CAUTION:
Be careful not to burn yourself.

   (3) Apply primer to the installation surfaces of garnish, and wait till the primer dries.
   (4) Attach new double-sided tape on garnish.
   (5) Apply primer to the garnish installation surface on the vehicle body side, and wait till the primer dries.
   (6) Peel off the backing papers, engage the clips, and adhere the garnish assembly to the vehicle body.

CAUTION:
Press-fit the garnish assembly to adhere securely.

11.Roof Molding

A: REMOVAL

CAUTION:
Be careful not to damage the body.

1) Remove the roof rail assembly. (model with roof rail) <Ref. to EI-66, REMOVAL, Roof Rail.>
2) Turn over the front end of the molding - roof.
3) Slide the inner fastener in the direction of the arrow using a flat tip screwdriver, then remove the fastener from the stud on the vehicle side.

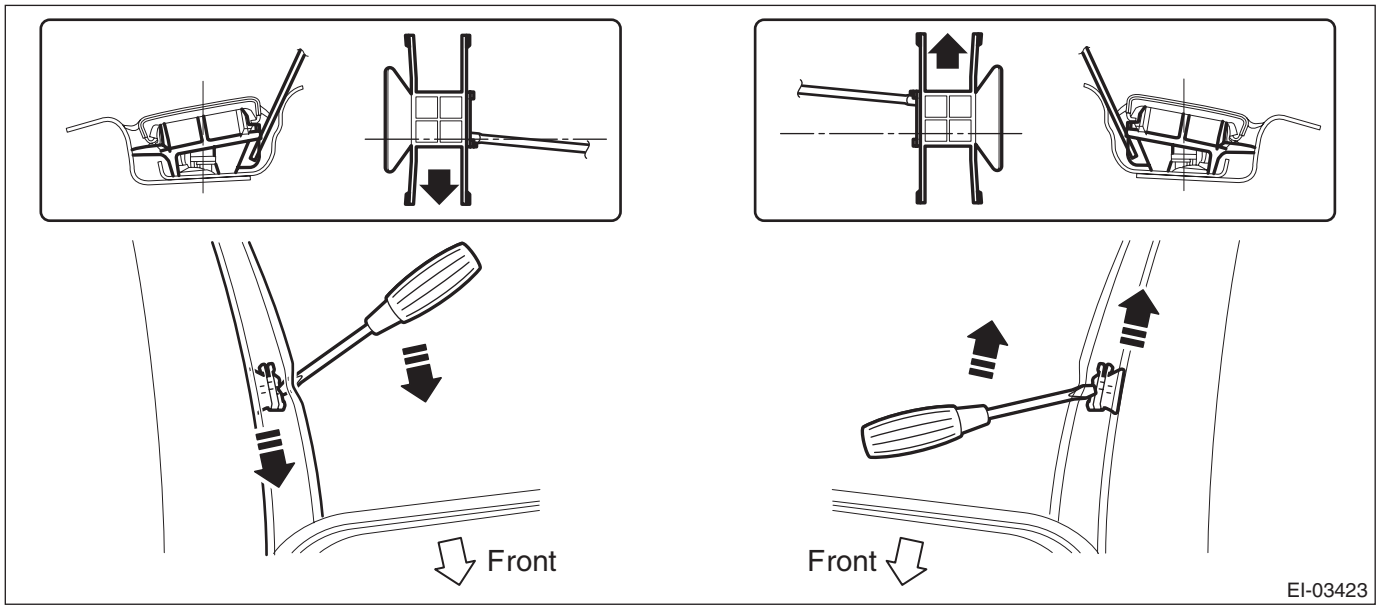

Right side: Slide towards the front of the vehicle.
Left side: Slide towards the rear of the vehicle.

- 4 door model: 6 locations per side

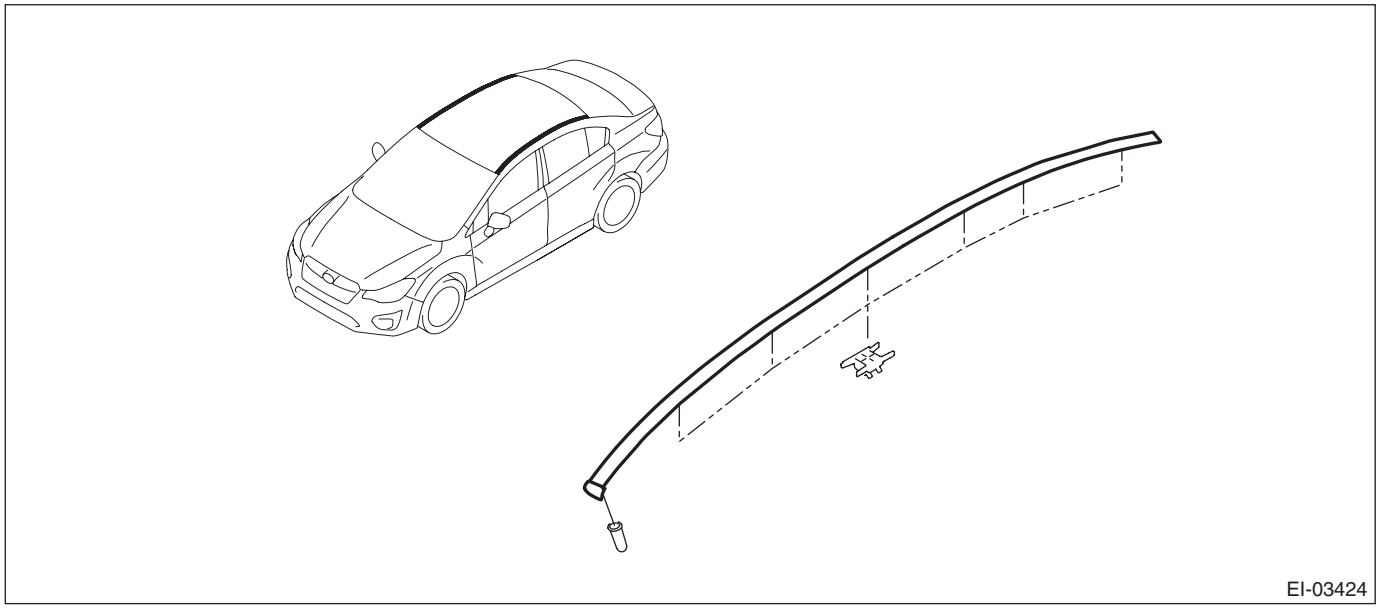

- 5 door model/XV model
  - Model without roof rail: 8 locations per side
  - Model with roof rail: 5 locations per side

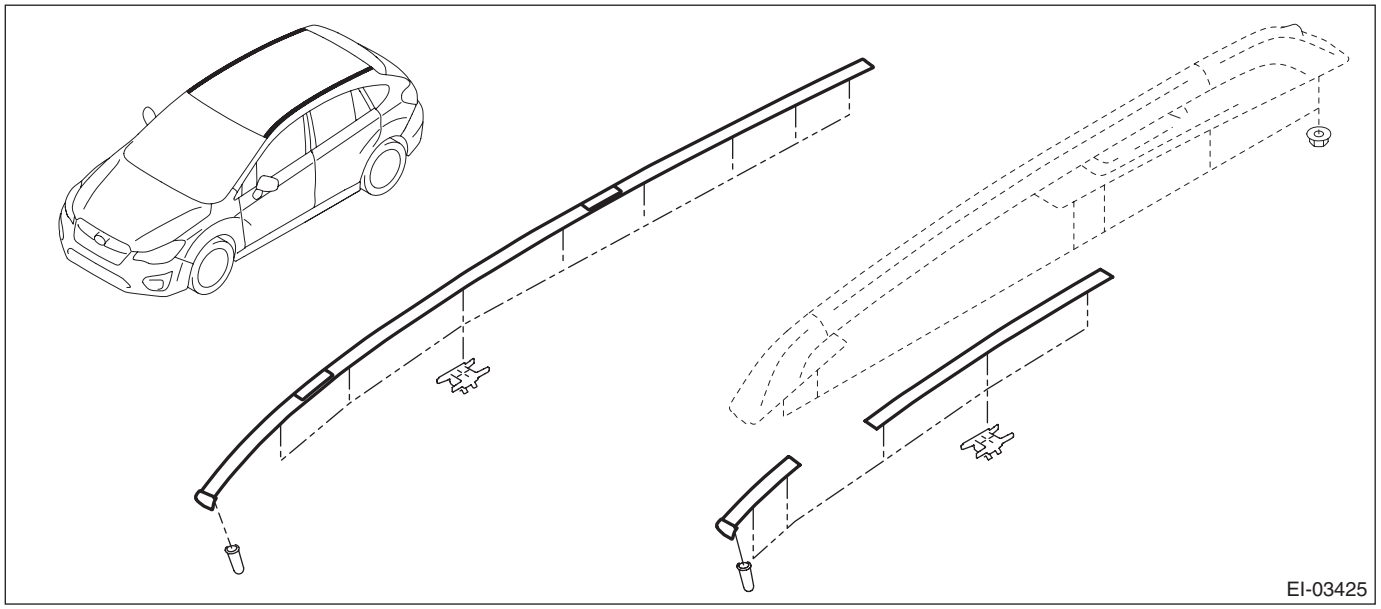

4) Pull up the molding - roof, and remove from the vehicle.

B: INSTALLATION

1) Remove the clips from the molding - roof, and attach to the studs on the vehicle.

CAUTION:
- **Always replace the clips that were damaged during removal of the molding - roof with new parts.**
- **While installing the molding - roof, be careful not to catch the glass molding with the tip of the front side and rear side.**

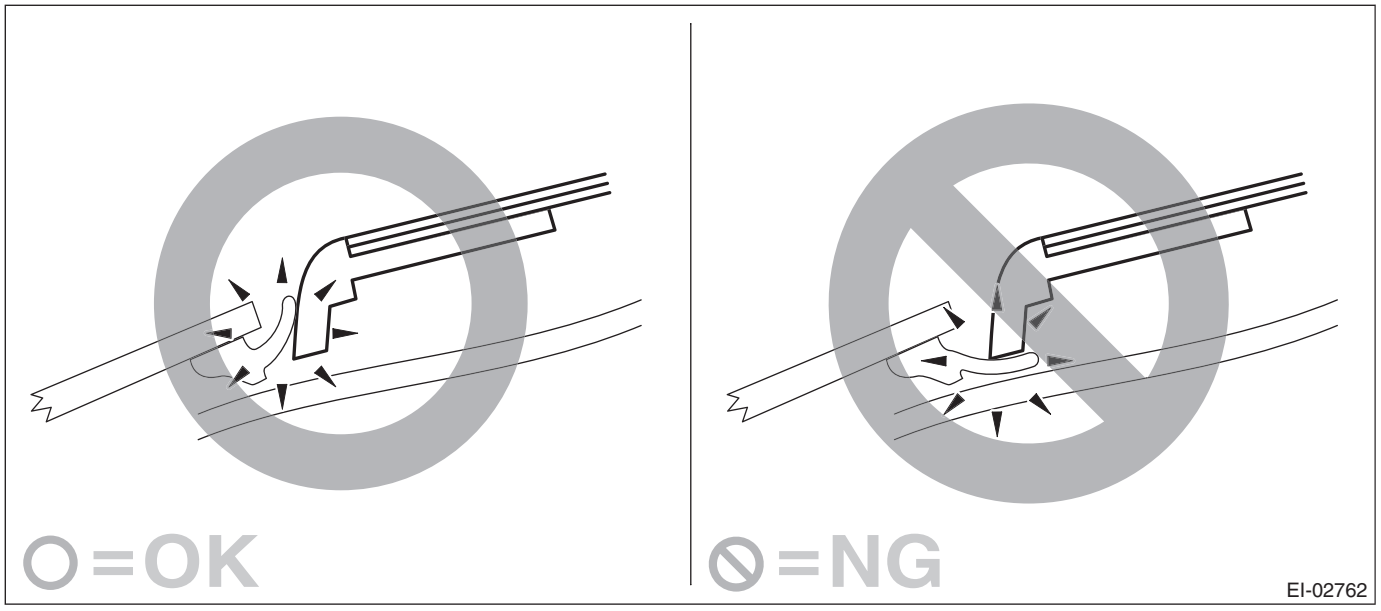

2) Push the front end of the molding - roof against the front window, and attach the forward positioning clip onto the rivet on the body.

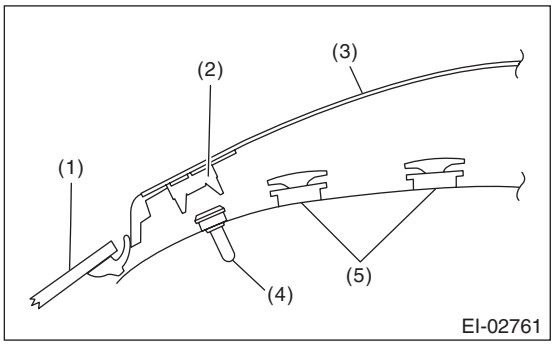

(1) Windshield
(2) Positioning clip
(3) Molding - roof
(4) Rivet
(5) Clip

3) While pushing down the molding - roof from above, connect the molding - roof and the clip.

12.Roof Rail

A: REMOVAL

1) Remove the trim panel - roof. <Ref. to EI-138, 5 DOOR MODEL/XV MODEL, REMOVAL, Roof Trim.>
2) Remove the curtain airbag module. <Ref. to AB-75, 5 DOOR MODEL/XV MODEL, REMOVAL, Curtain Airbag Module.>

CAUTION:
• Before handling the airbag module, refer to "CAUTION" of "General Description" in "AIRBAG SYSTEM". <Ref. to AB-11, CAUTION, General Description.>
• Be careful not to damage the curtain airbag module during removal.
3) Remove the six installing nuts.

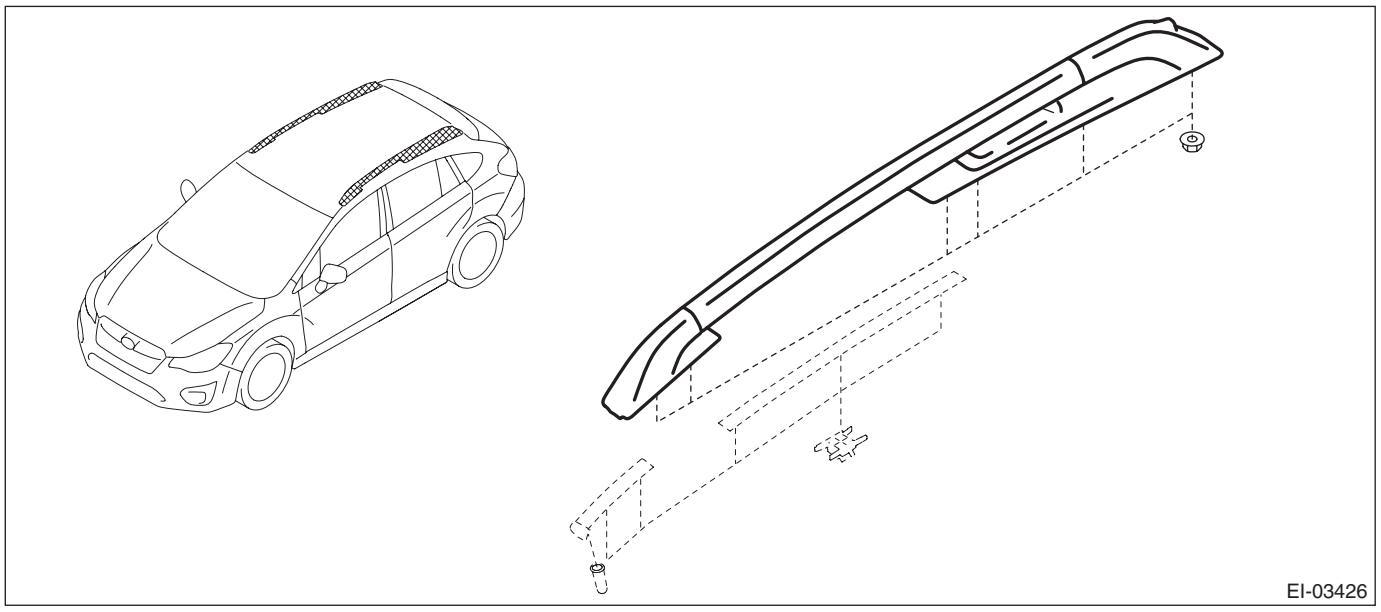

B: INSTALLATION

CAUTION:
When removing or installing the roof rail, be careful not to scratch the body panel with the stud bolt of roof rail.
Install each part in the reverse order of removal.

Tightening torque:
7.5 N·m (0.76 kgf-m, 5.5 ft-lb)

13.Door Trim

A: REMOVAL

1. FRONT DOOR

1) Disconnect the ground cable from battery. <Ref. to NT-5, BATTERY, NOTE, Note.>

NOTE:
For the 12 volt engine restart battery of HEV model, disconnect the ground terminal from 12V engine restart battery sensor.

2) Remove the trim panel - front door.
   (1) Attach the protective tape (a).
   (2) Open the cover and remove the screw.
   (3) Remove the clips, and remove the trim panel - front door from the panel assembly - front door.

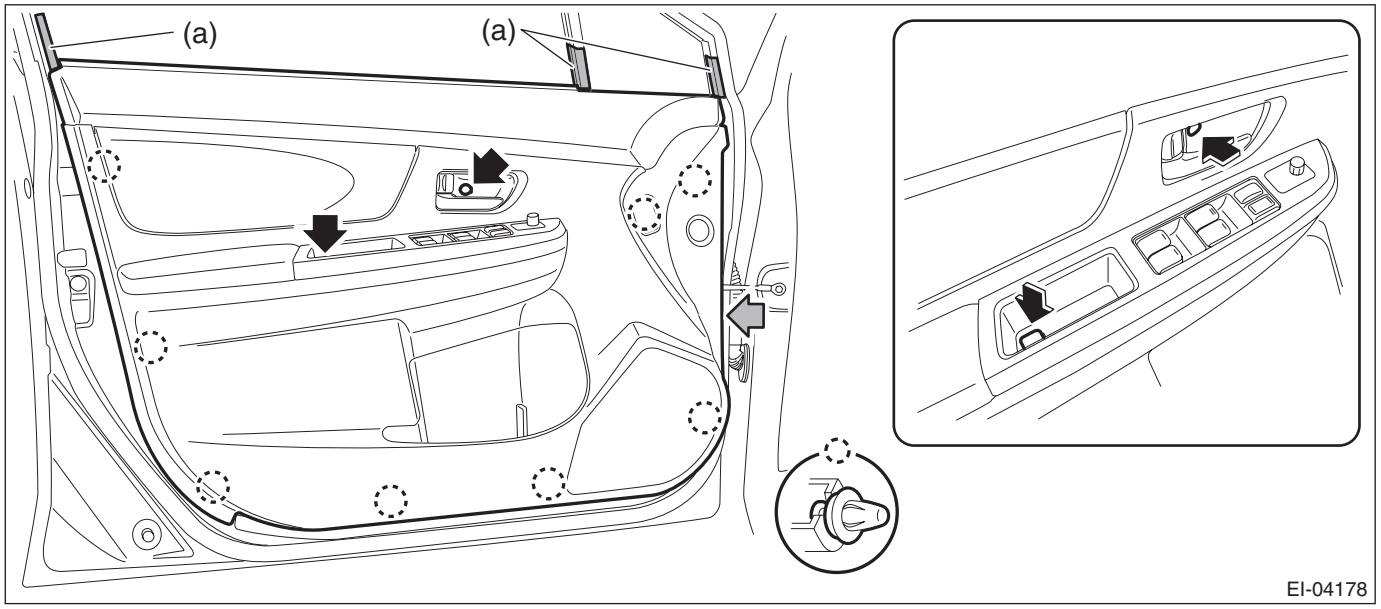

NOTE:
It is easier to remove the door trim if the removal is performed from the gray arrow section.

   (4) Detach the door lock cable (a) and door open cable (b) from the remote assembly - door.

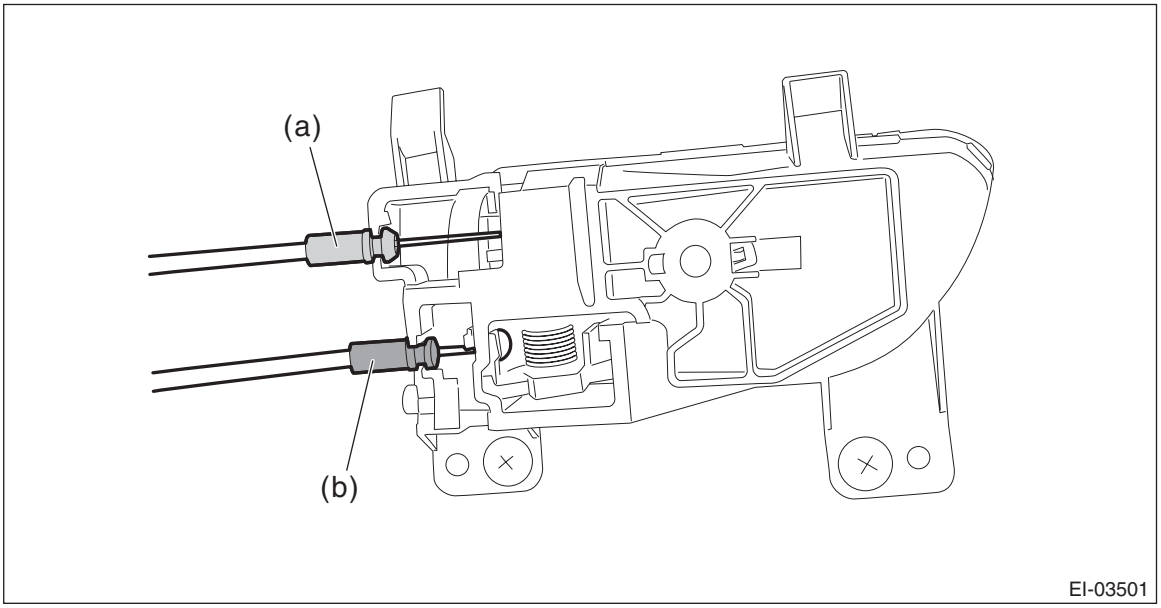

   (5) Disconnect the harness connector and remove the trim panel - front door.

3) Remove each part as required.
- Remote assembly - door: <Ref. to SL-34, REMOVAL, Front Inner Remote.>
- Switch - power window main: <Ref. to GW-12, MAIN SWITCH, REMOVAL, Power Window Control Switch.>
- Weather strip - door INN: <Ref. to EI-69, DISASSEMBLY, Door Trim.>

2. REAR DOOR

1) Disconnect the ground cable from battery. <Ref. to NT-5, BATTERY, NOTE, Note.>

NOTE:
For the 12 volt engine restart battery of HEV model, disconnect the ground terminal from 12V engine restart battery sensor.

2) Remove the trim panel - rear door.
   (1) Attach the protective tape (a).
   (2) Open the cover and remove the screw.
   (3) Remove the clips, and remove the trim panel - rear door from the panel assembly - rear door.

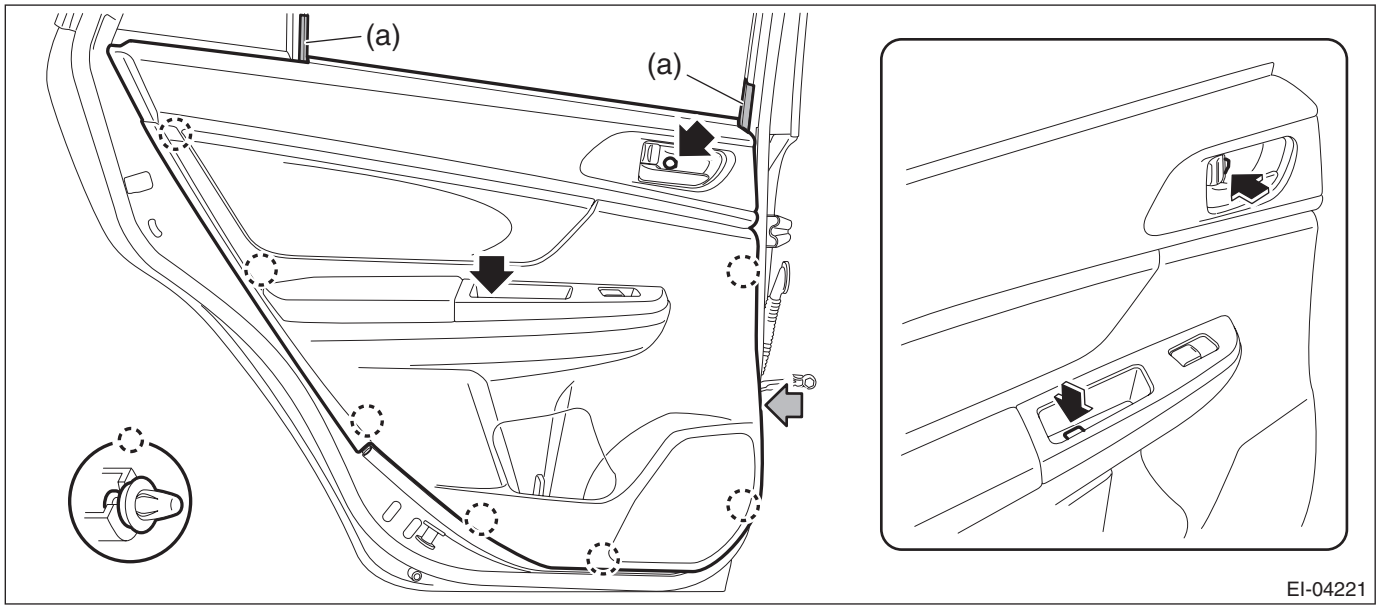

NOTE:
It is easier to remove the door trim if the removal is performed from the gray arrow section.

   (4) Detach the door lock cable (a) and door open cable (b) from the remote assembly - door.

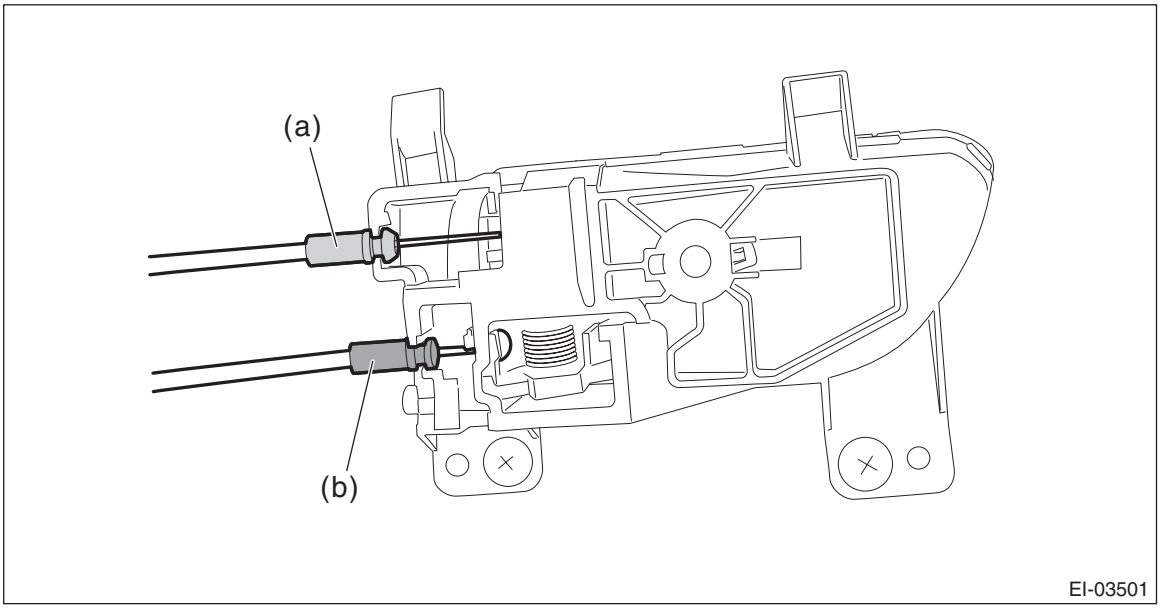

   (5) Disconnect the harness connector and remove the trim panel - rear door.

3) Remove each part as required.
- Remote assembly - door: <Ref. to SL-42, REMOVAL, Rear Inner Remote.>
- Switch - power window sub: <Ref. to GW-13, SUB-SWITCH, REMOVAL, Power Window Control Switch.>
- Weather strip - door INN: <Ref. to EI-69, DISASSEMBLY, Door Trim.>

B: INSTALLATION

Install each part in the reverse order of removal.

NOTE:
Attach the door lock cable (a - end ball: small) to the upper side, and attach the door open cable (b - end ball: large) to the lower side.

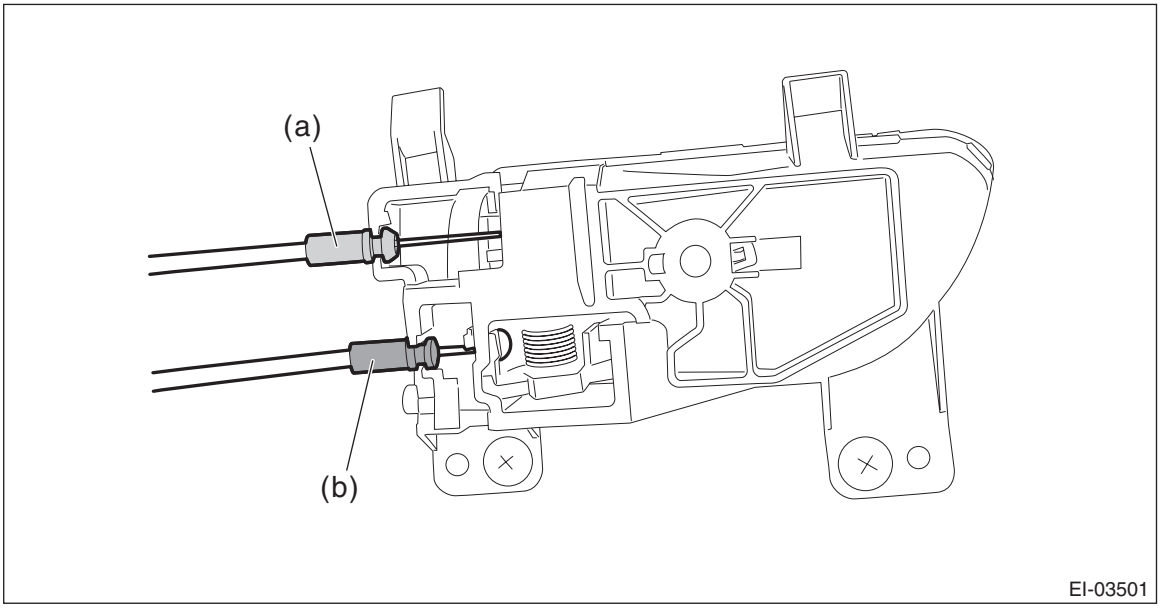

C: DISASSEMBLY

1) Remove the door trim.
2) Remove the rivets and claws, and remove the weather strip - door INN from the door trim.

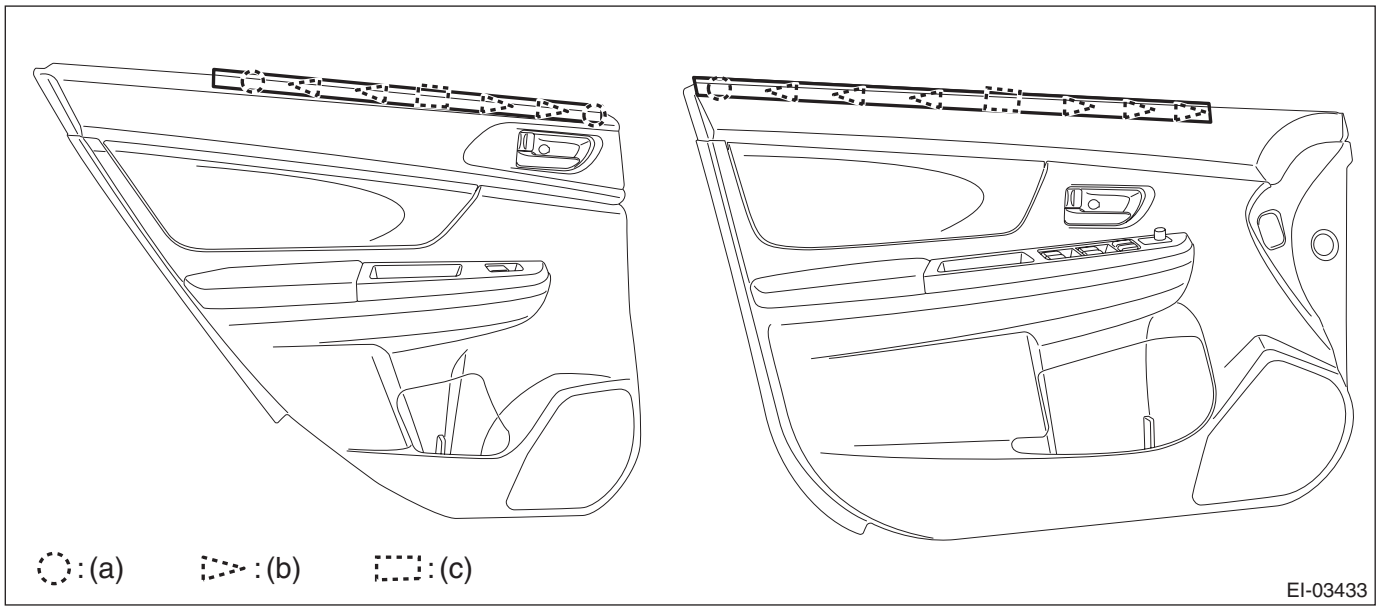

(a) Rivet (b) Claw (c) Claw

NOTE:
Remove the rivets by using the rivet cutter or nippers.

D: ASSEMBLY

1) Bend the claws while pushing the weather strip - door INN against the door trim.

CAUTION:
Be careful of the bending direction of the claws.

2) Install the rivet.

CAUTION:
The height of the crimped rivet must be 3 mm (0.12 in). Squash the rivets with the pliers if the crimping is not enough, because the rivet may interference with the door trim.

PREPARATION TOOL & REQUIRED MATERIALS:
Hand riveter (ϕ3.2 mm (0.13 in) compliant)
Rivet

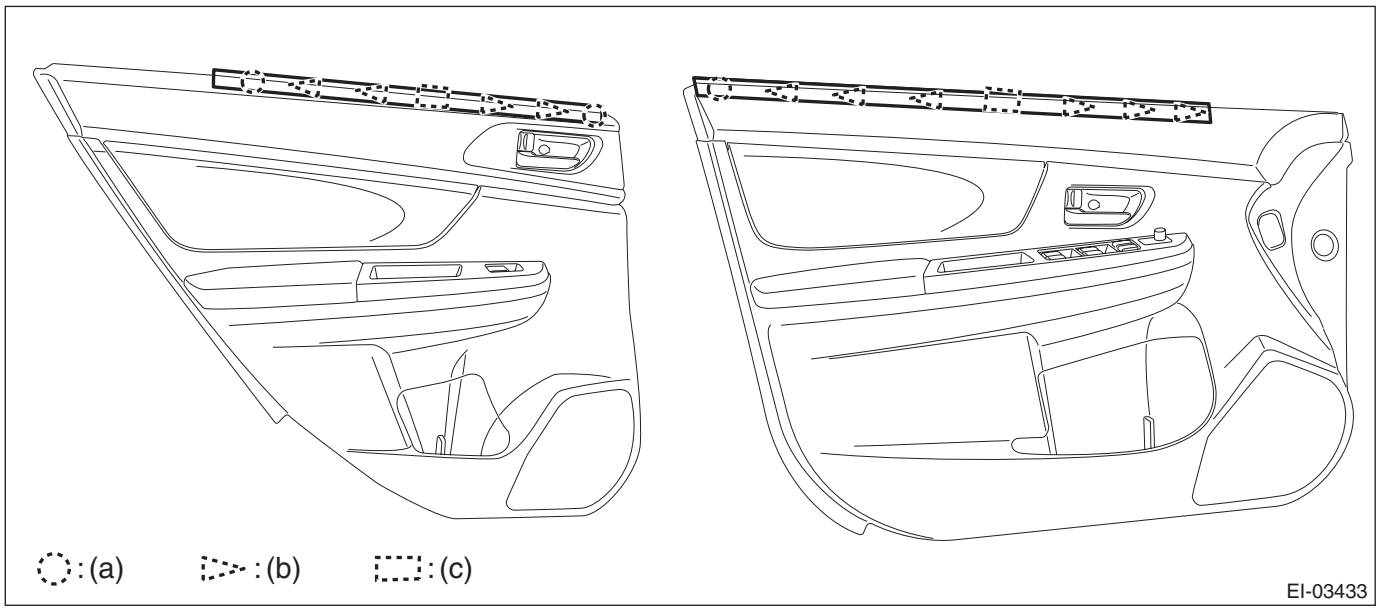

(a) Rivet
(b) Claw bending direction
(c) Claw bending direction: bend forward for LH side, backward for RH side.

3) After installing the weather strip - door INN, perform the following checks.
- Make sure there are no gaps between the weather strip - door INN and the door trim.
- Make sure there are no looseness when pulling the weather strip - door INN lightly.

14.Instrument Panel Lower Cover

A: REMOVAL

1) Disconnect the ground cable from battery and wait for at least 60 seconds before starting work. <Ref. to NT-5, BATTERY, NOTE, Note.>

NOTE:
For the 12 volt engine restart battery of HEV model, disconnect the ground terminal from 12V engine restart battery sensor.

2) Remove the clips, and remove the cover - instrument panel side LH.

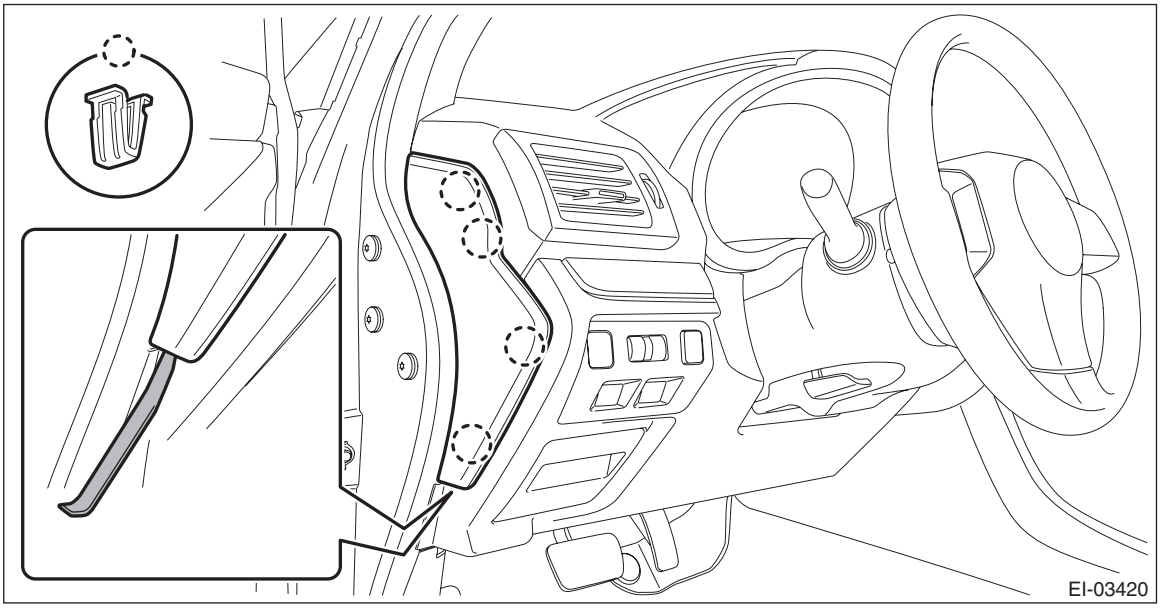

NOTE:
Using a plastic remover, open the cover - instrument panel side LH.

3) Remove the cover assembly - instrument panel LWR driver INN and OUT.

CAUTION:
When removing the cover assembly - instrument panel LWR driver, be sure to pull it toward you. If attempting to remove by turning it upward, the claws may be damaged.

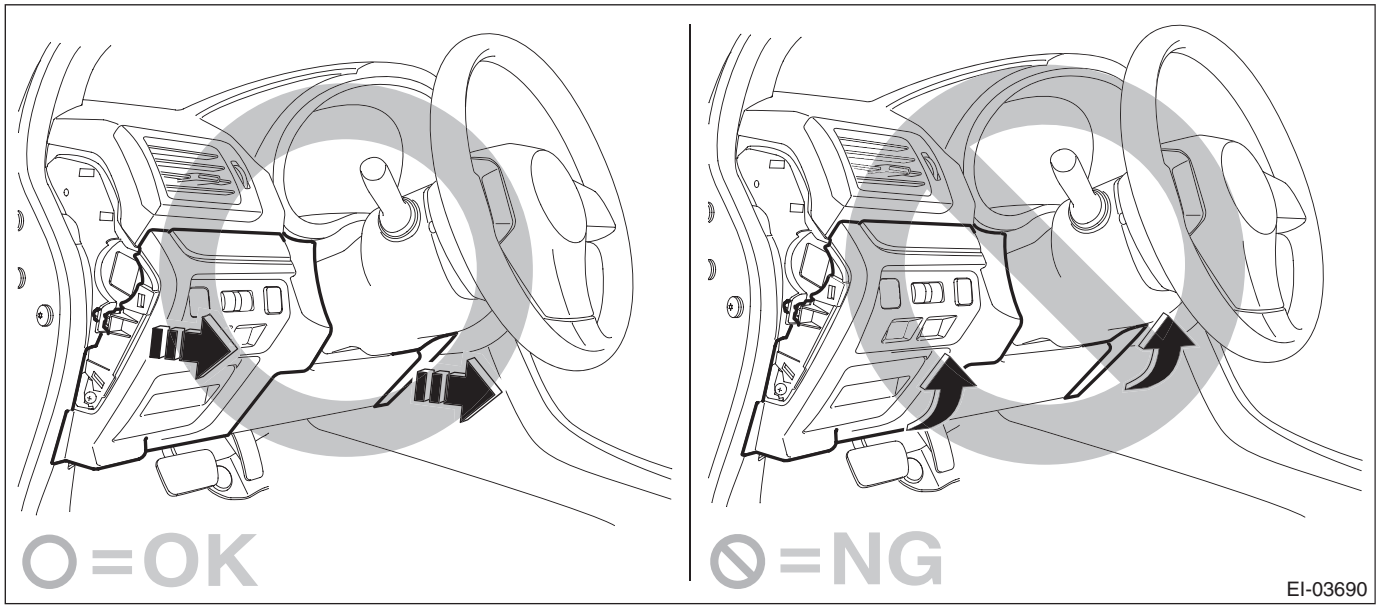

(1) Remove the screws and release the clips and claws.
(2) Disconnect the harness connectors, and remove the cover assembly - instrument panel LWR driver INN and OUT.

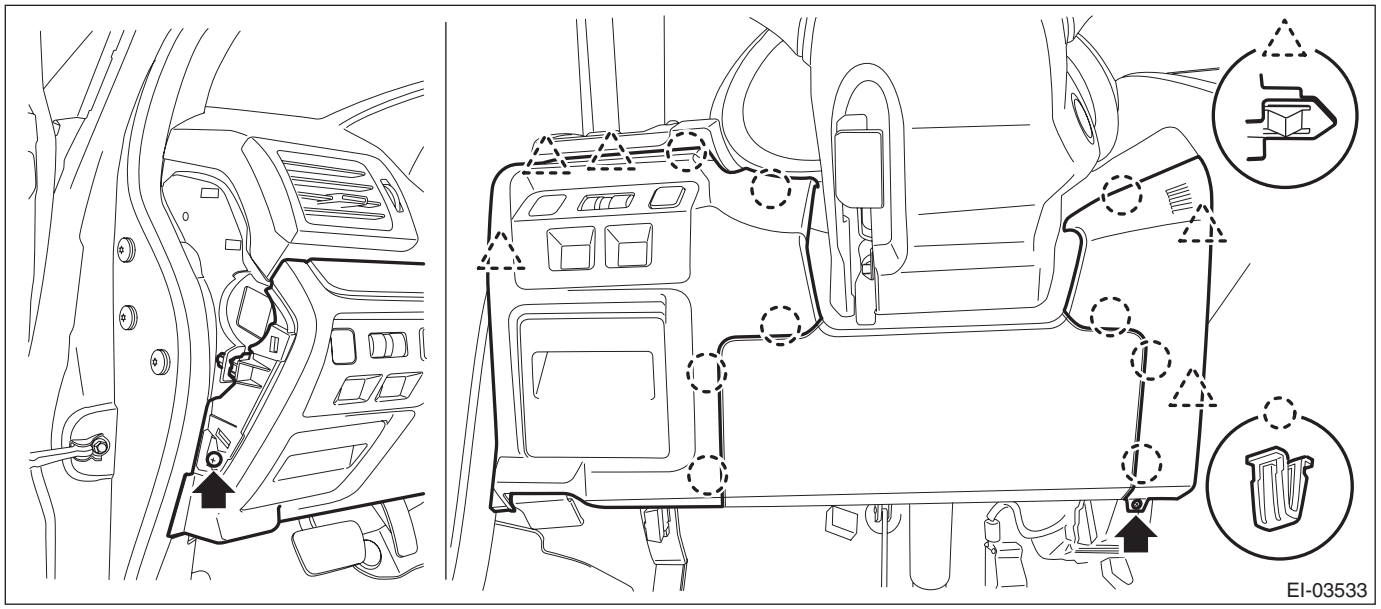

B: INSTALLATION

Install each part in the reverse order of removal.

15.Glove Box

A: REMOVAL

NOTE:
Refer to “Security and Locks” section for key cylinder replacement. <Ref. to SL-74, GLOVE BOX LID, REPLACEMENT, Key Lock Cylinders.>

1) Remove the pocket assembly.
   (1) Attach the protective tape (a) to the panel center LWR.
   (2) Remove the damper COMPL - pocket.
   (3) Release the stoppers and remove the pocket assembly by pulling it toward you.

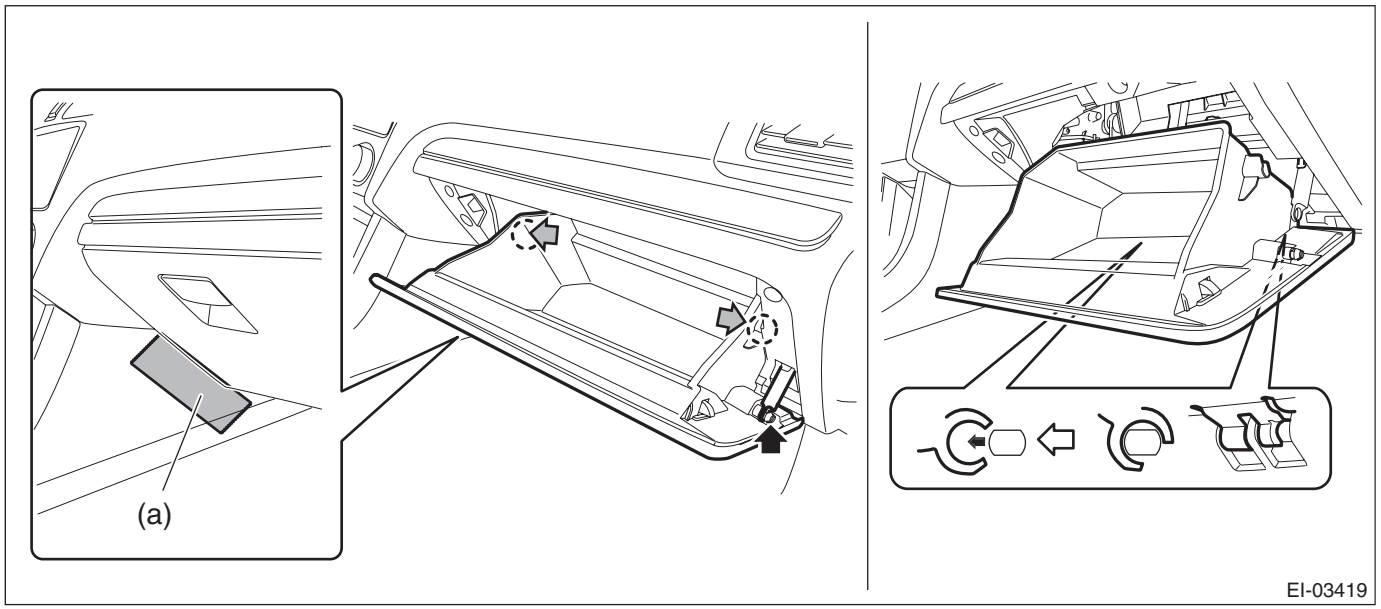

2) Remove the back panel - pocket.
   (1) Release the clips, and remove the under cover assembly - passenger.

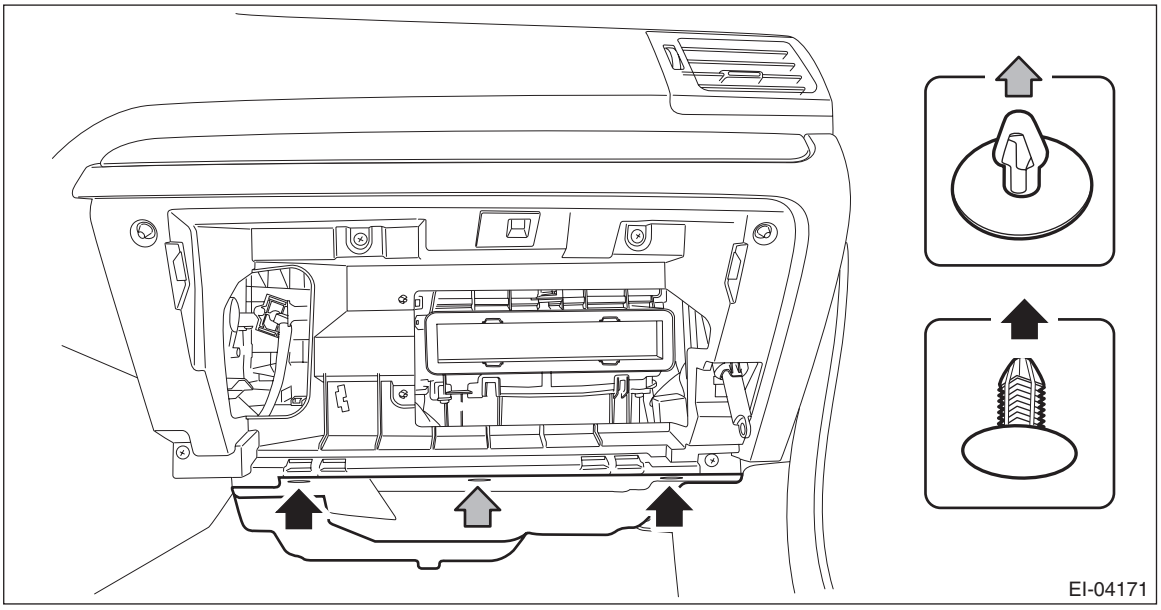

   (2) Remove the clips, and remove the cover - instrument panel side RH.

NOTE:
Remove the cover - instrument panel side RH by using a plastic remover.

(3) Release the clips, and remove the ornament - panel assembly passenger.

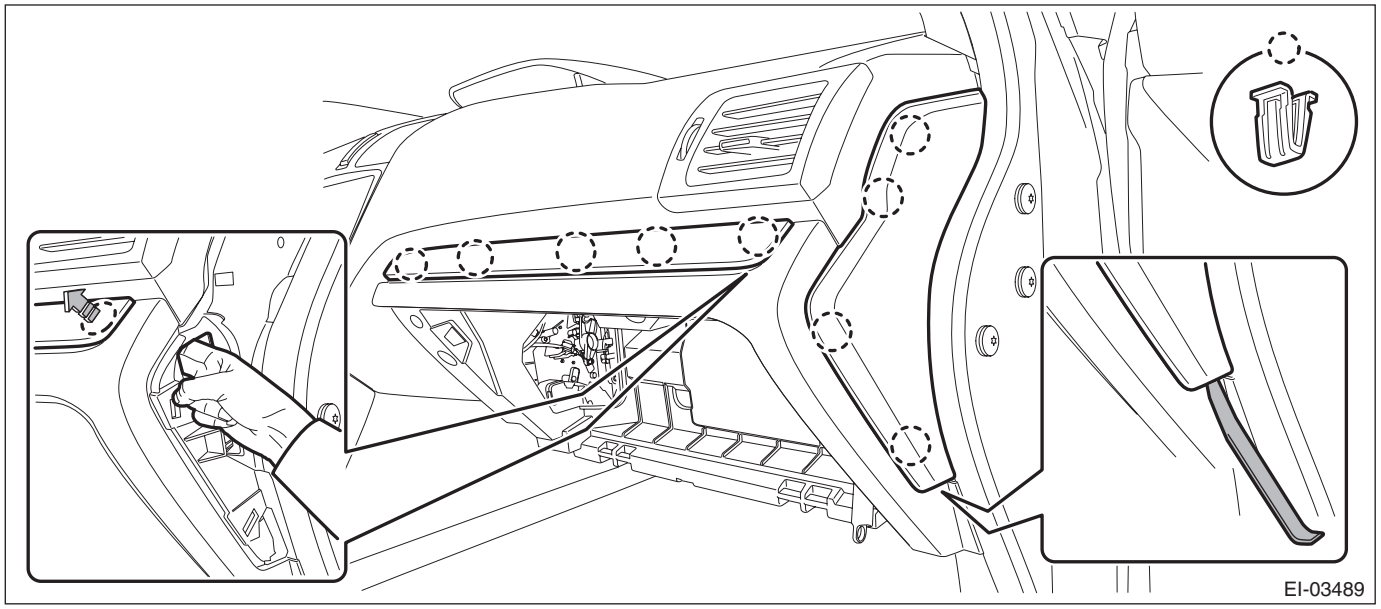

NOTE:
To facilitate the removal, push the clip of the ornament - panel assembly passenger from the backside.

(4) Remove the screws, claws and harness clamp, then remove the back panel - pocket.

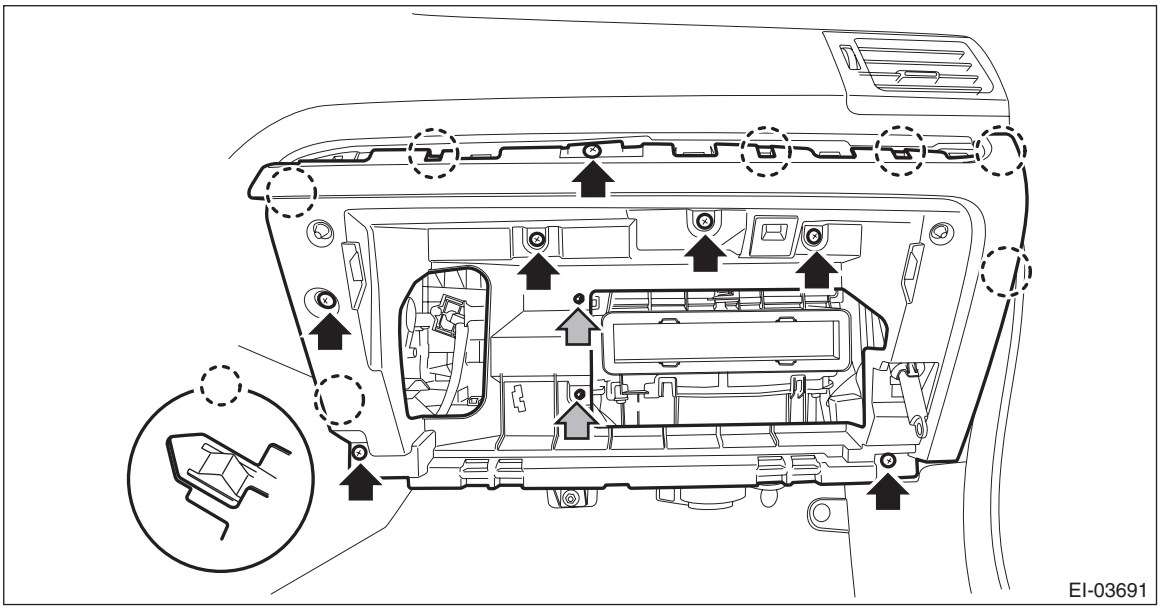

(5) Disconnect the glove box light LED connector.

B: INSTALLATION

Install each part in the reverse order of removal.

16.Center Console

A: REMOVAL

1) On manual A/C models, disconnect the control cables from both sides of the heater & cooling unit.
   (1) Disconnect the cable on the driver's side.

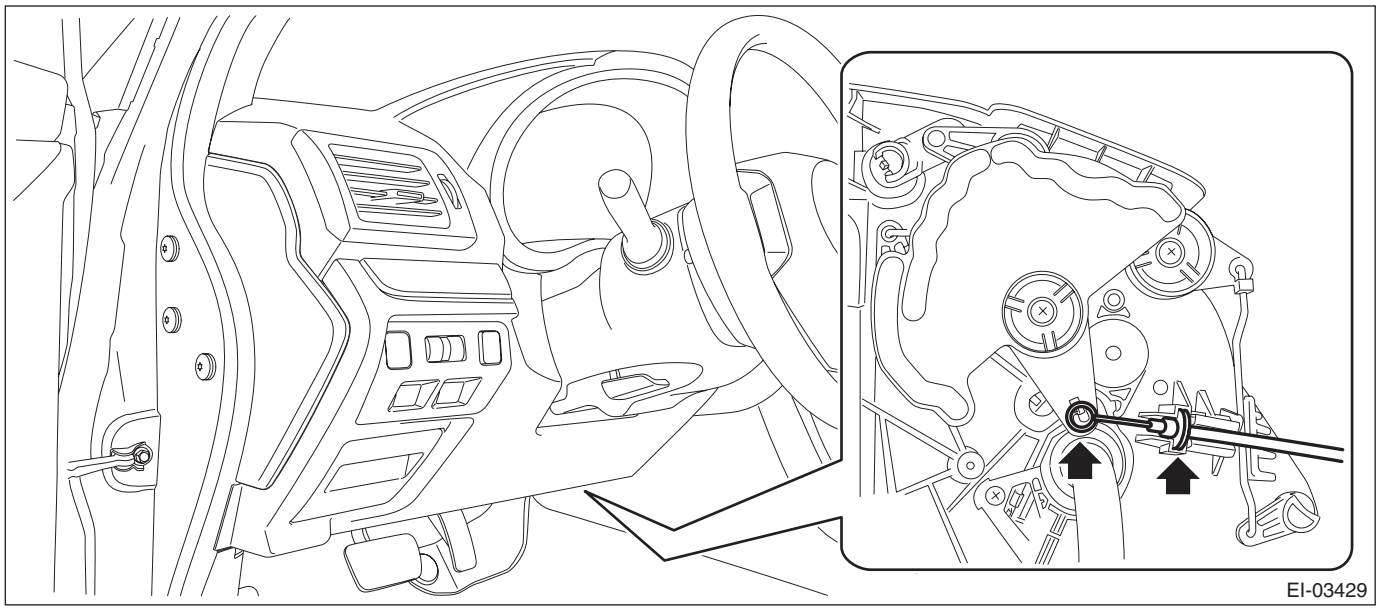

   (2) Attach the protective tape (a) to the panel center LWR.
   (3) Release the glove box dampers and stoppers, and remove the pocket assembly by pulling it toward you.

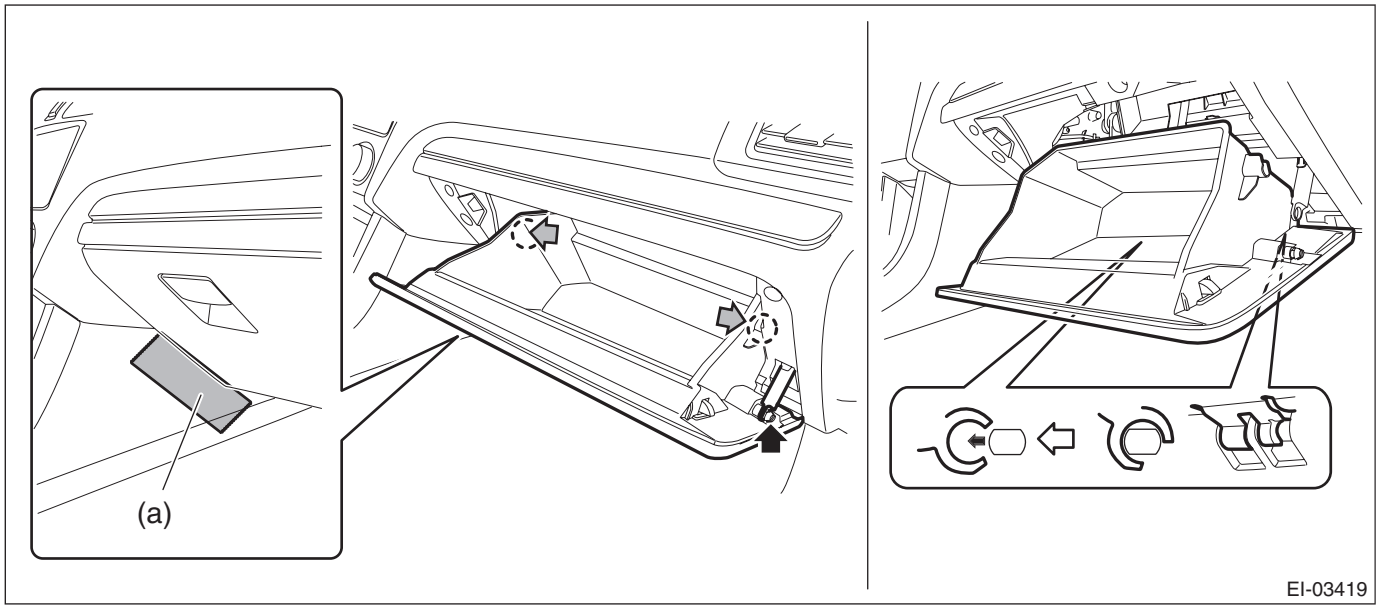

(4) Disconnect the cable on the passenger's side.

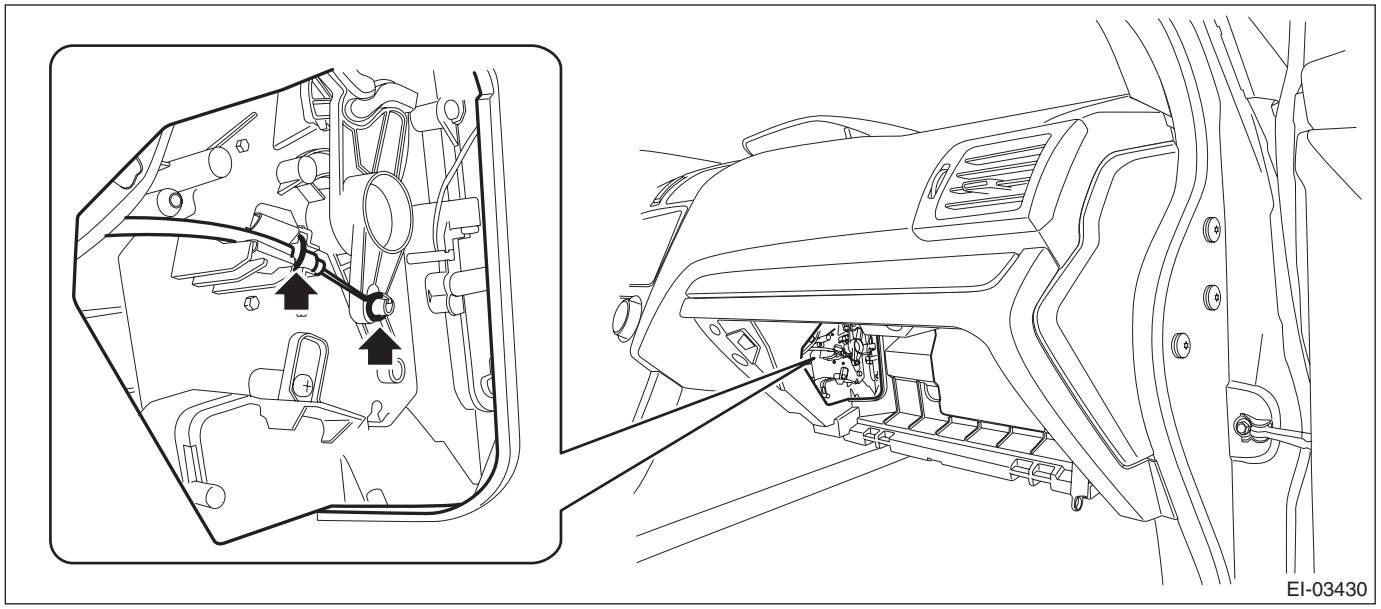

2) Remove the panel center assembly.

CAUTION:
- **Do not put your finger on the fin of the air vent grille. Doing so may damage the fin.**
- **Pull the panel center assembly slowly. Pulling with excessive force may damage the connector.**

(1) Insert a plastic remover to the three areas shown by the arrows, and lift up the panel center assembly slightly.
(2) With the panel center assembly lifted up slightly, release the claw by using a clip remover wrapped with protective tape.
(3) Release the rest of the claws, and pull out the panel center assembly.
(4) Disconnect the connectors, and remove the panel center assembly.

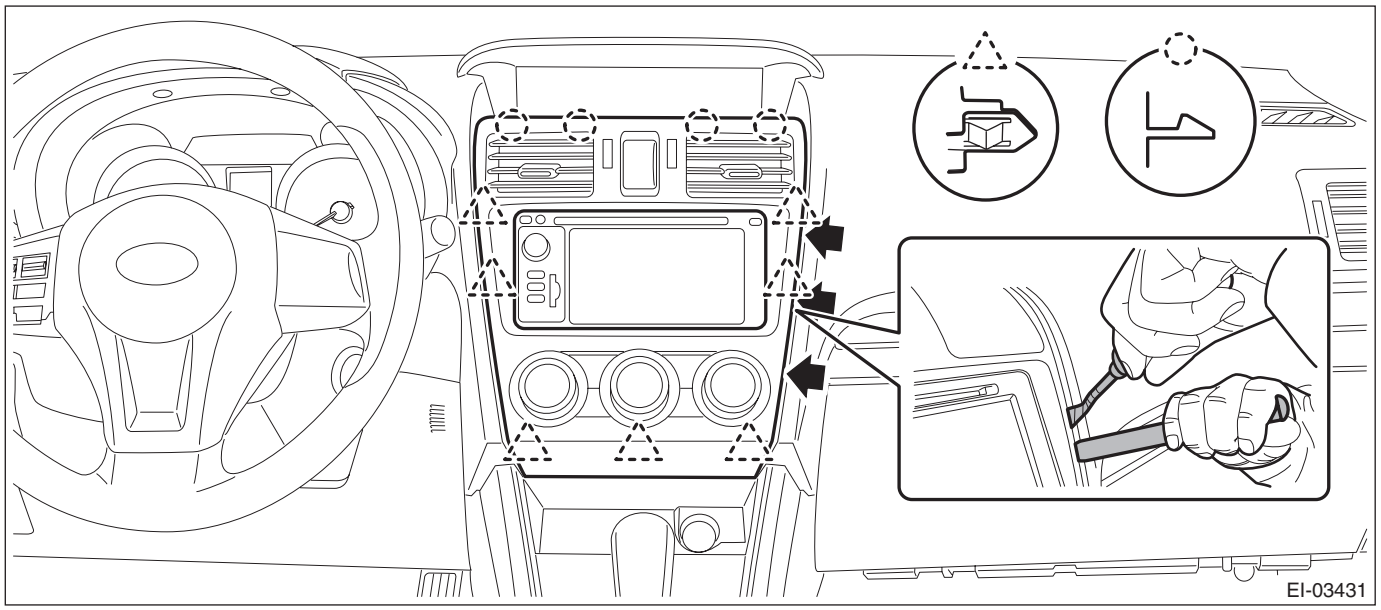

B: INSTALLATION

CAUTION:
After installing the panel center assembly, check that the air vent grille of the panel center assembly is inserted correctly into the air vent duct.
Install each part in the reverse order of removal.

17.Console Box

A: REMOVAL

1) Disconnect the ground cable from battery. <Ref. to NT-5, BATTERY, NOTE, Note.>

NOTE:
• For the 12 volt engine restart battery of HEV model, disconnect the ground terminal from 12V engine restart battery sensor.
• On CVT models, shift the select lever into “D” before disconnecting the battery ground cable.

2) Remove the console box assembly.
(1) Release the claws, and then remove the boot - hand brake.

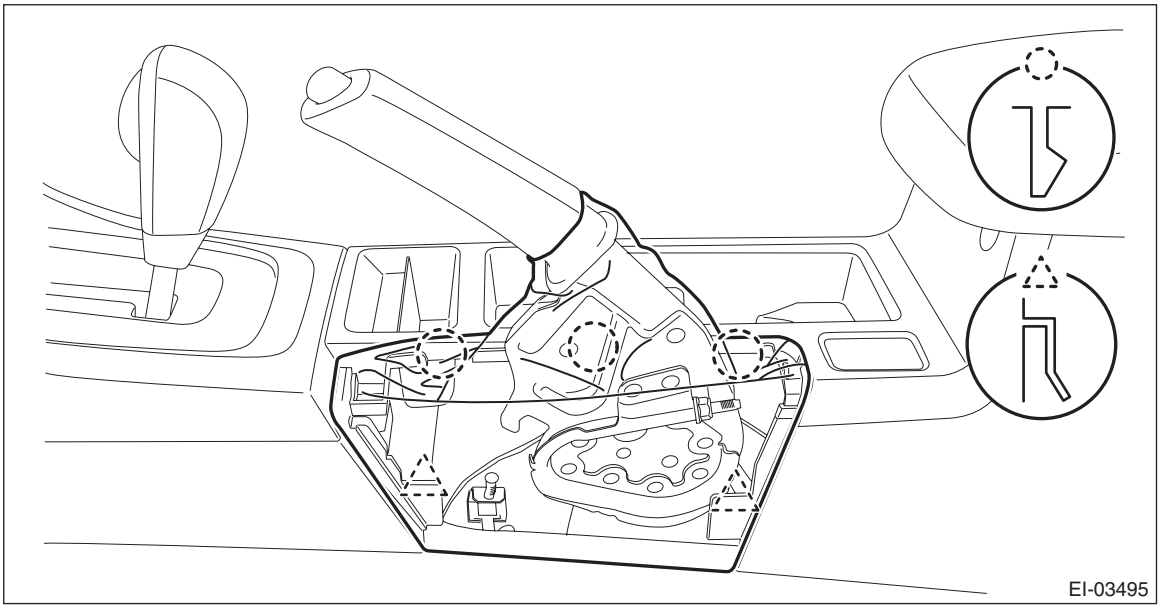

(2) Move the seat forward, and remove the bolts after detaching the left and right caps.
(3) Remove the screws and clips, disconnect the harness connector and remove the console box assembly.

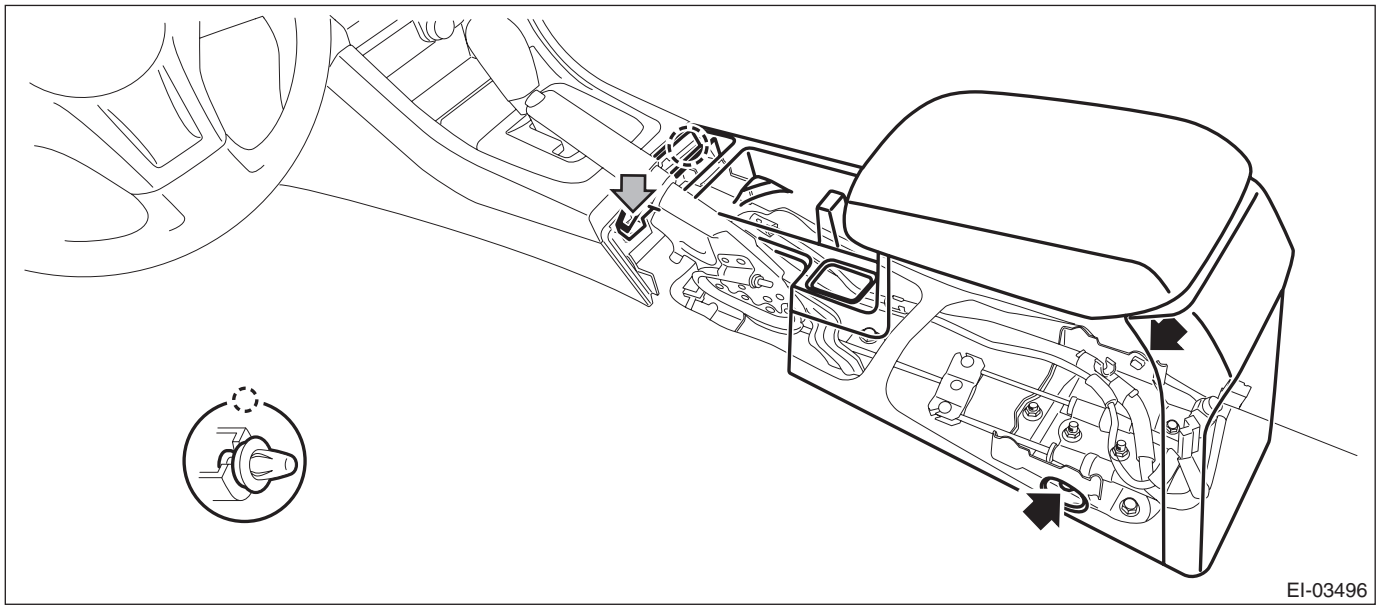

3) Remove the cover - shift lever.
   (1) Remove the shift knob. (MT model)
   (2) Release the clips and claws, then pull up the cover - shift lever.

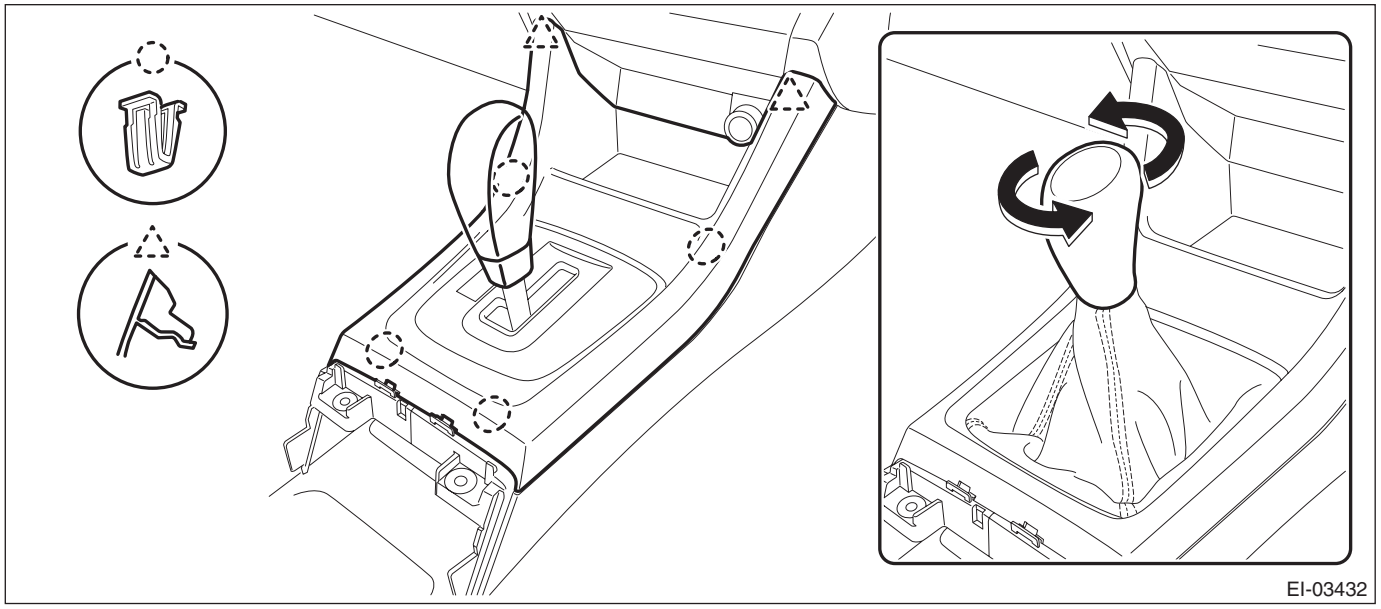

4) Remove the left and right panel center LWR.
   (1) Remove the screws and clips.

(2) Release the claws, and then pull the panel center LWR to remove.

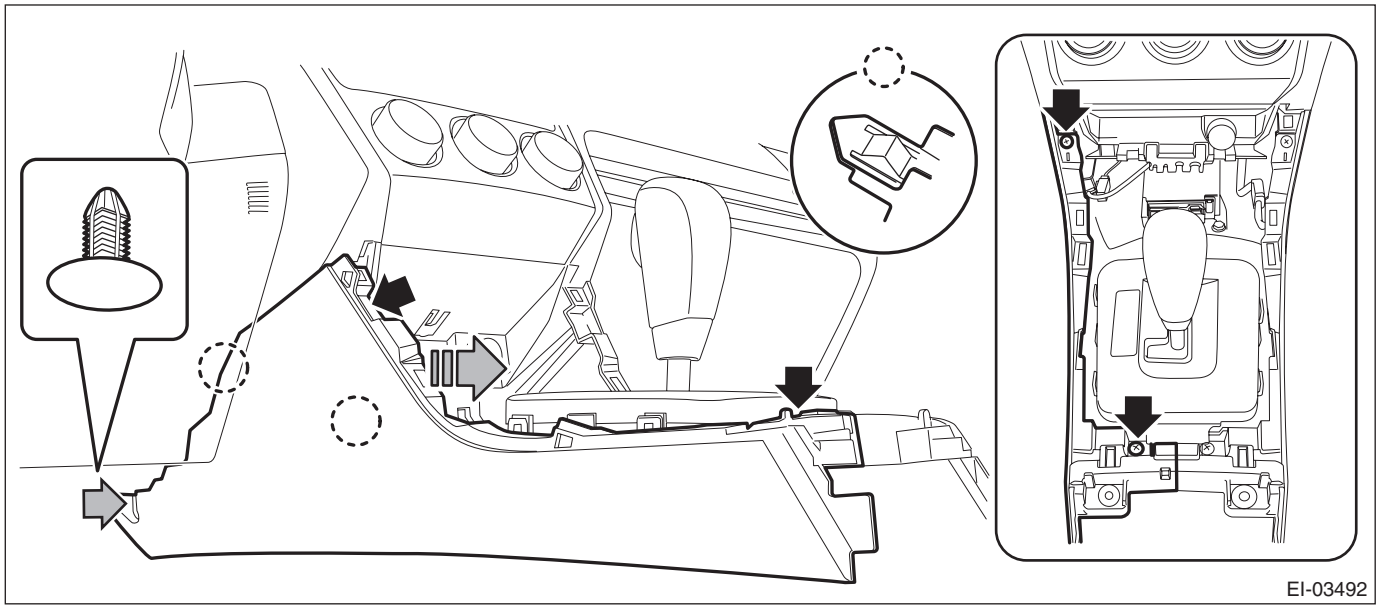

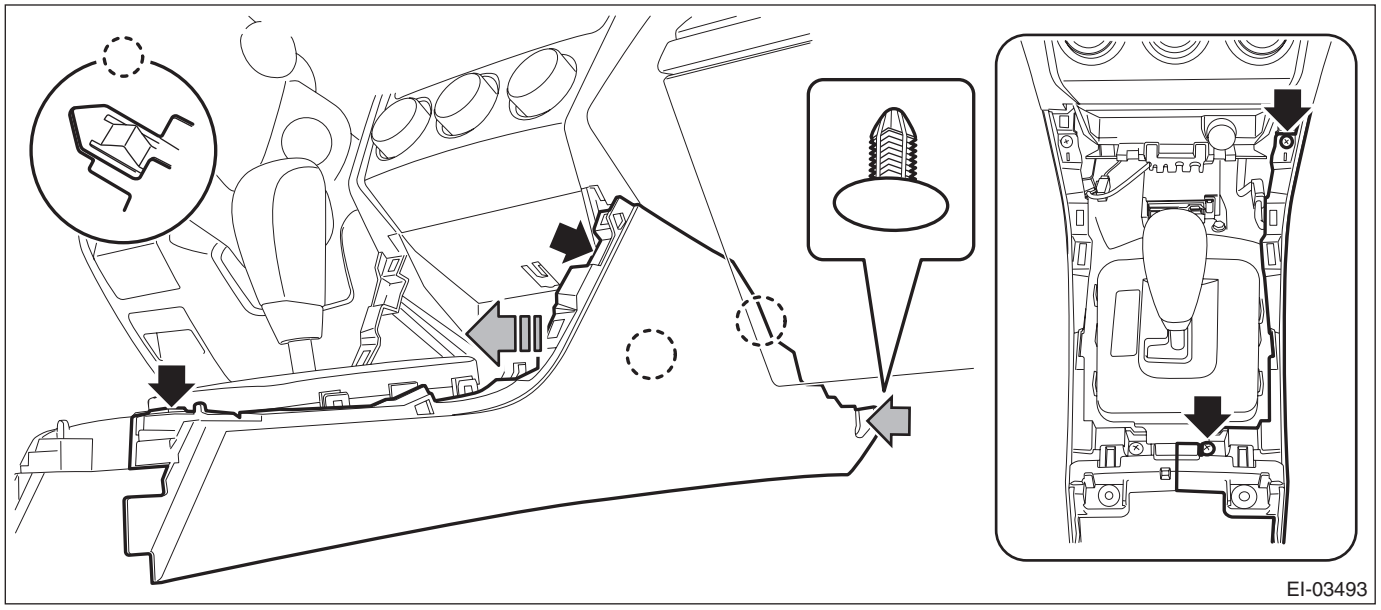

B: INSTALLATION

Install each part in the reverse order of removal.

Tightening torque:
6.5 N·m (0.66 kgf-m, 4.8 ft-lb)

18.Instrument Panel Assembly

A: REMOVAL

CAUTION:
Be careful not to damage the airbag system harness when servicing the instrument panel. Damage may cause the system to malfunction.

NOTE:
Remove the instrument panel assembly and the beam COMPL - steering as a unit.
1) Disconnect the ground cable from battery. <Ref. to NT-5, BATTERY, NOTE, Note.>

NOTE:
• For the 12 volt engine restart battery of HEV model, disconnect the ground terminal from 12V engine restart battery sensor.
• On CVT models, shift the select lever into “D” before disconnecting the battery ground cable.
2) Remove the console box assembly.
(1) Release the claws, and then remove the boot - hand brake.

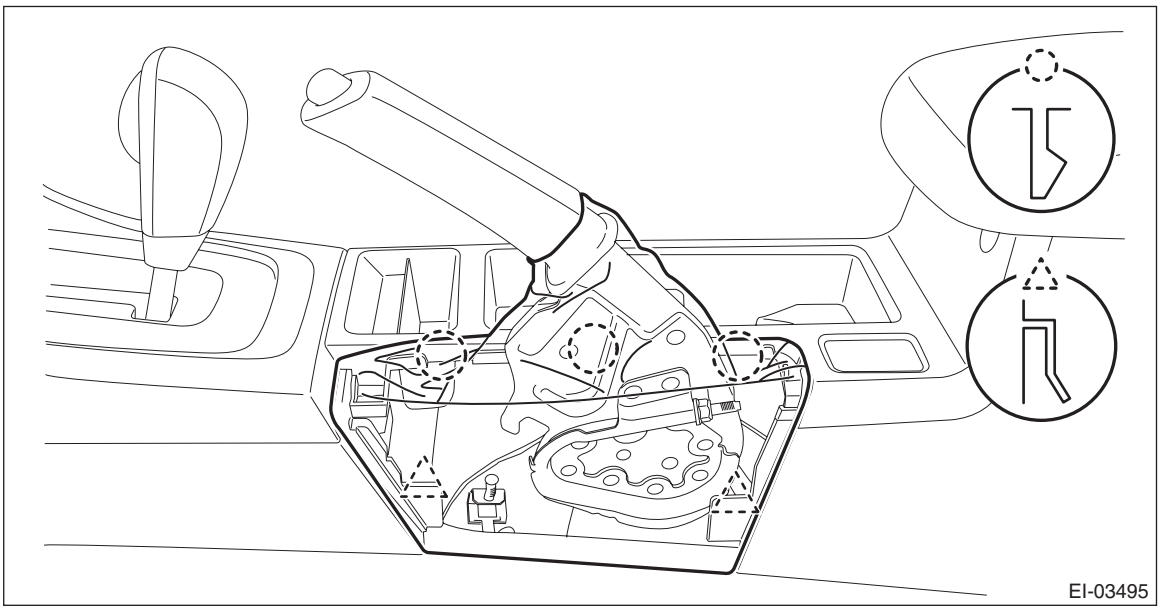

(2) Move the seat forward, and remove the bolts after detaching the left and right caps.
(3) Remove the screws, disconnect the harness connector and remove the console box assembly.

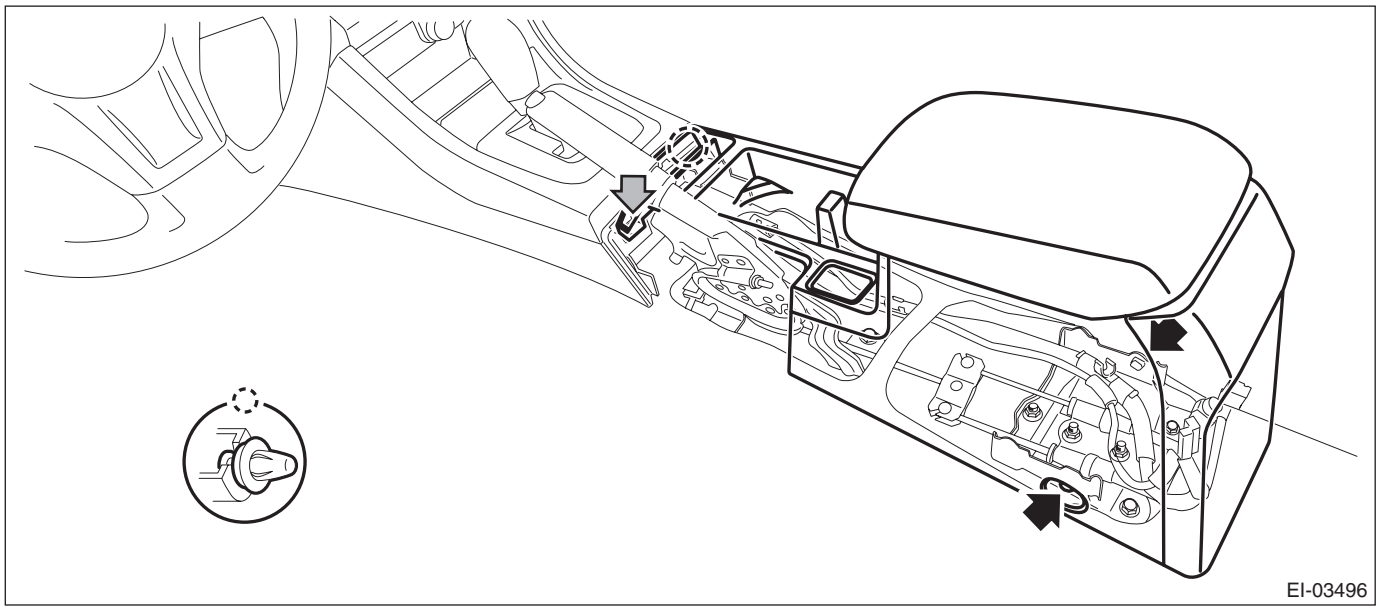

3) Remove the cover - shift lever.
   (1) Remove the shift knob. (MT model)
   (2) Release the clips and claws, then pull up the cover - shift lever.

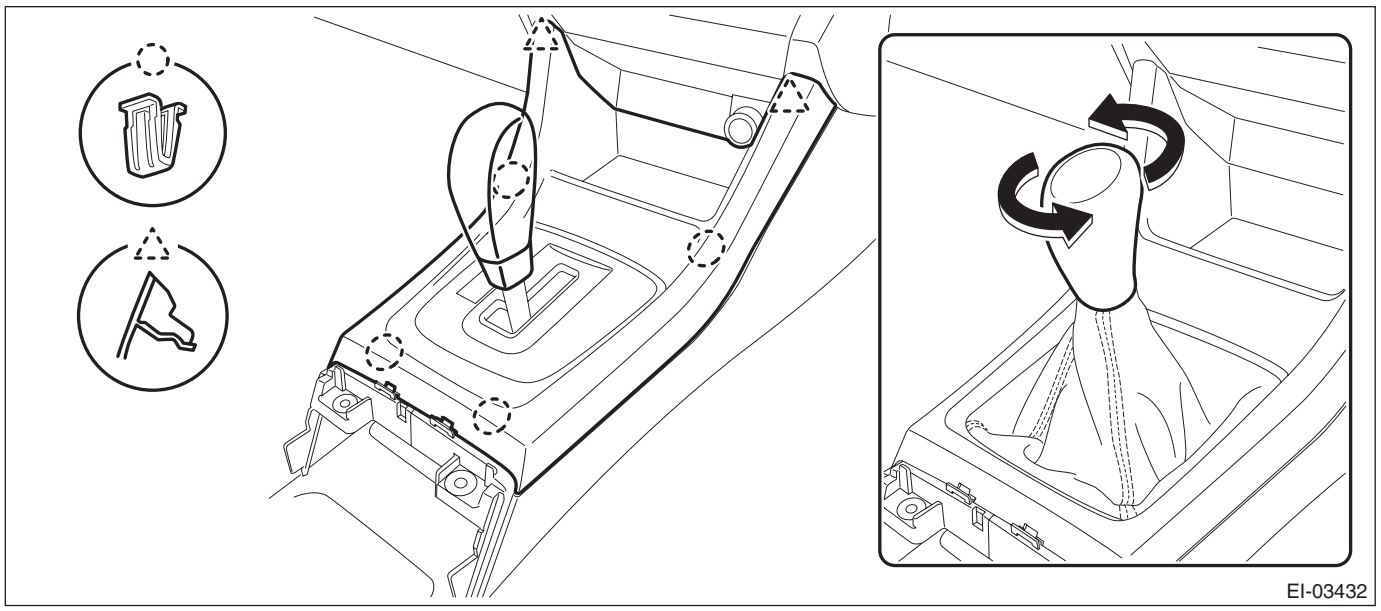

4) Remove the left and right panel center LWR.
   (1) Remove the screws and clips.
   (2) Release the claws, and then pull the panel center LWR to remove.

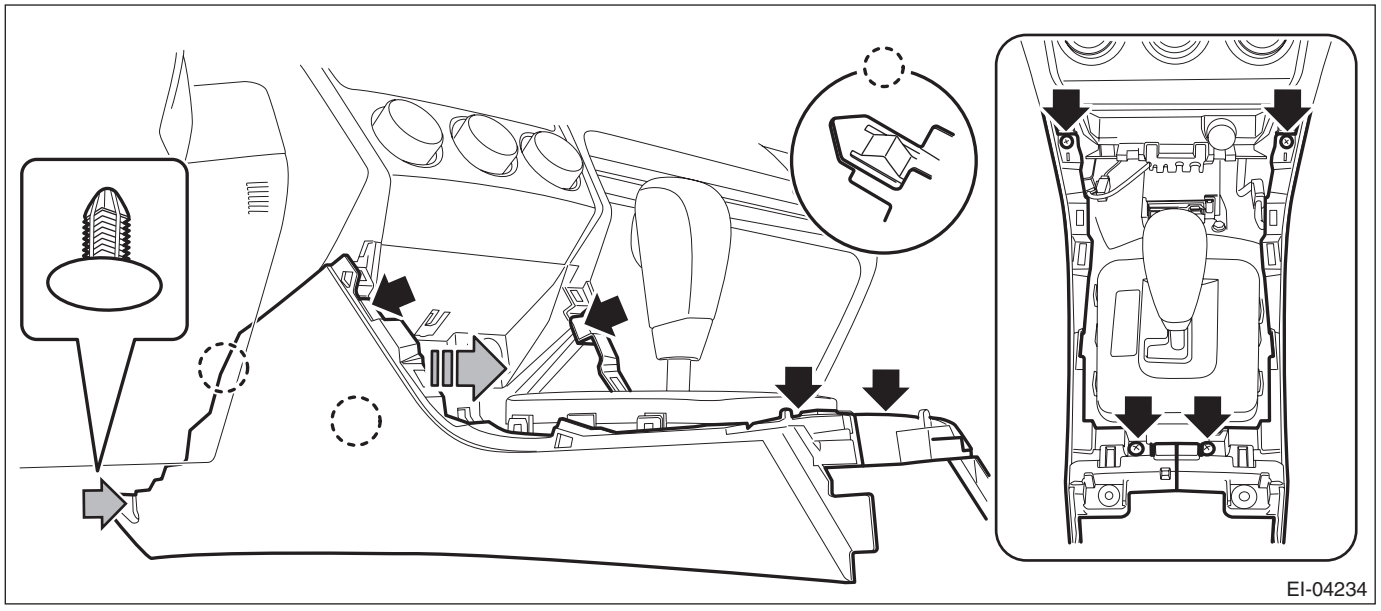

5) Remove the cover assembly - instrument panel LWR driver.

CAUTION:
When removing the cover assembly - instrument panel LWR driver, be sure to pull it toward you. If attempting to remove by turning it upward, the claws may be damaged.

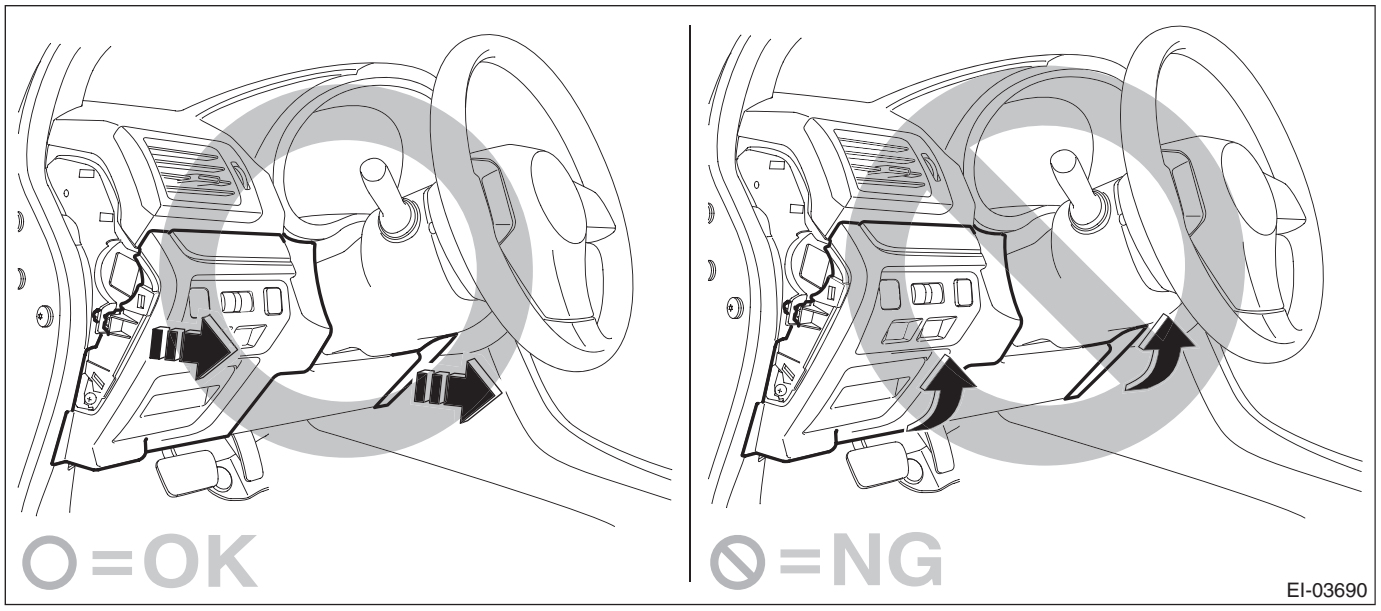

(1) Remove the clips, and remove the cover - instrument panel side LH.

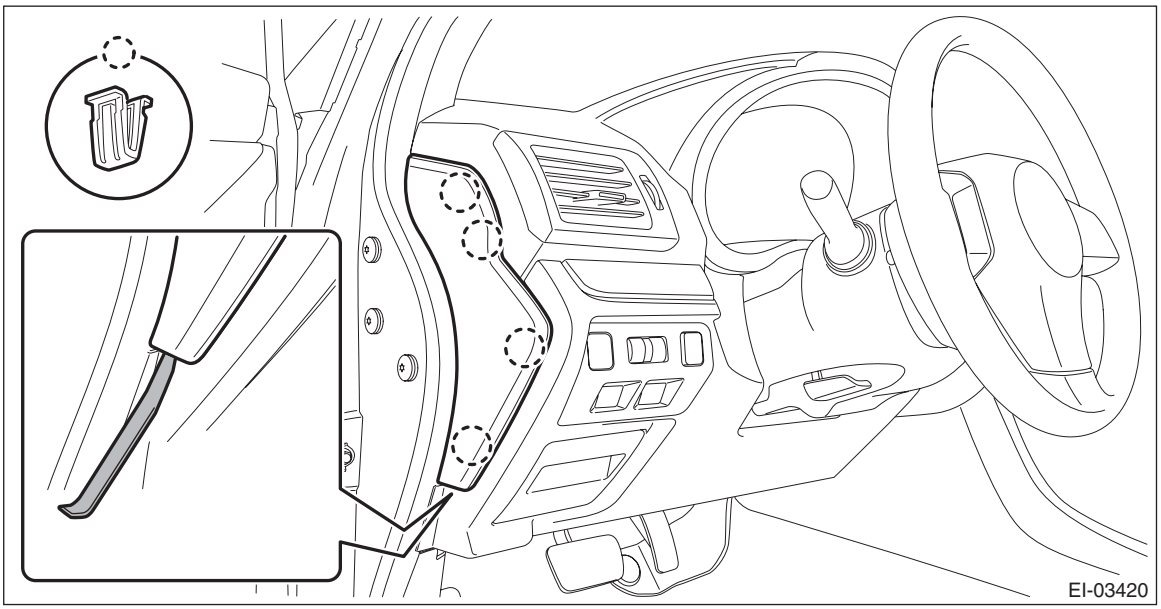

NOTE:
Using a plastic remover, open the cover - instrument panel side LH.

(2) Remove the screws and release the clips and claws.

(3) Disconnect the harness connectors, and remove the cover assembly - instrument panel LWR driver INN and OUT.

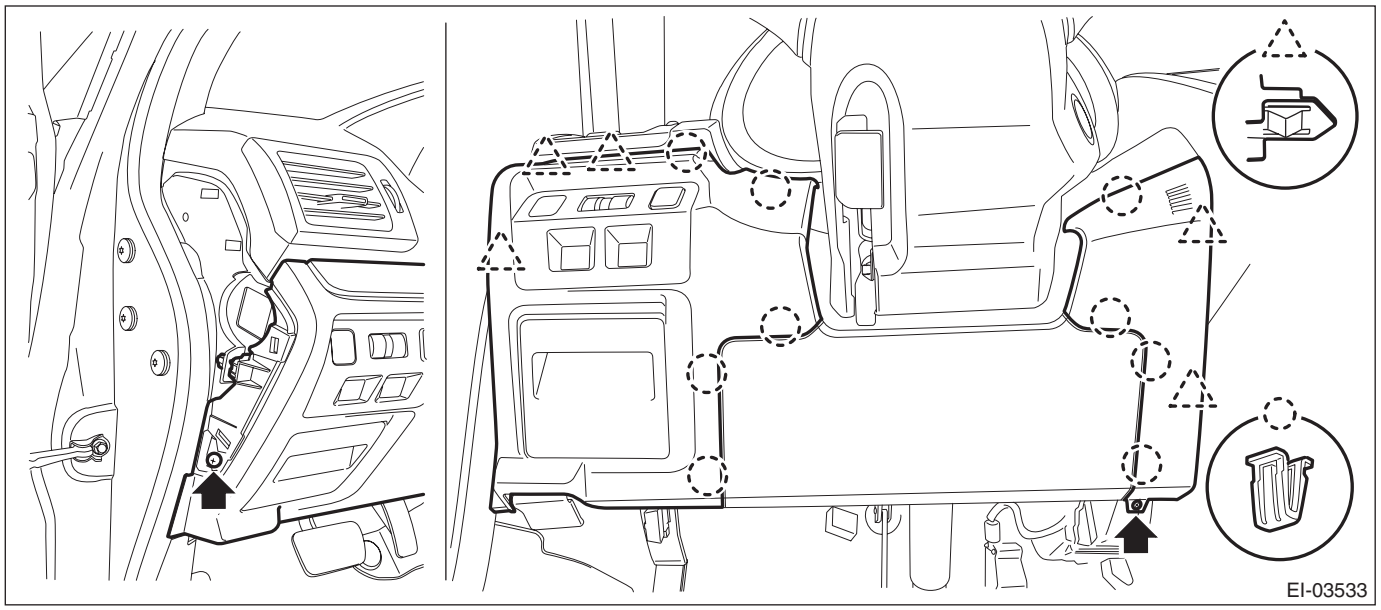

6) Remove the cover switch - starter. (Model without keyless access)
(1) Release the claws and remove the cover switch - starter.
(2) Disconnect the connector and aspirator hose.

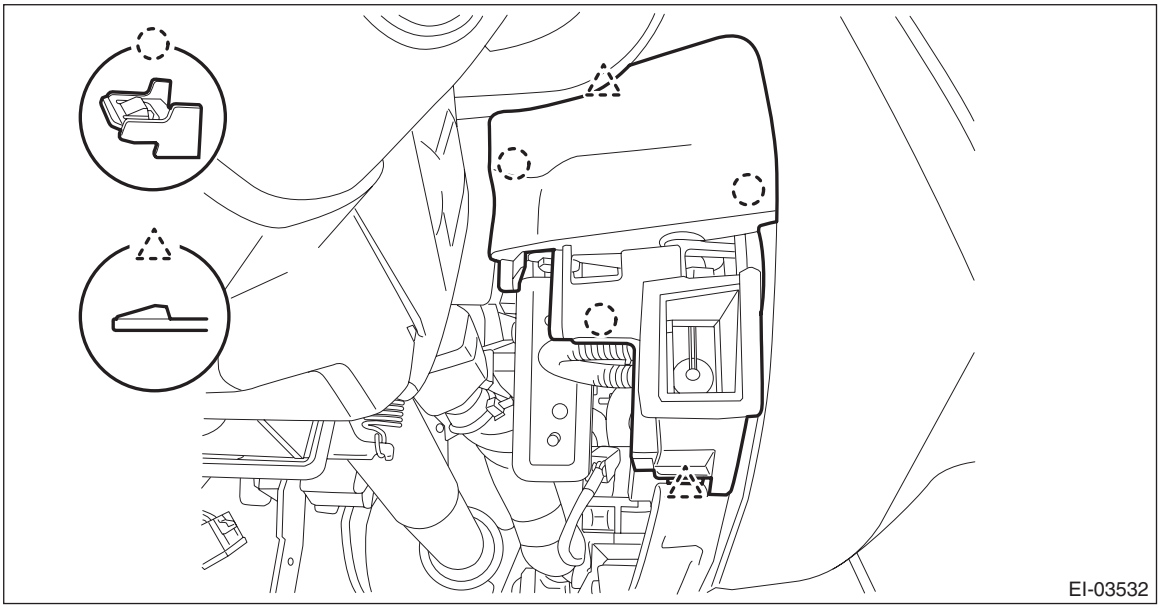

7) Remove the panel - switch. (Model with keyless access)
   (1) Release the claw of the switch - push button start, and disconnect the connector.
   (2) Release the claws, and then remove the panel - switch.
   (3) Disconnect the connector and aspirator hose.

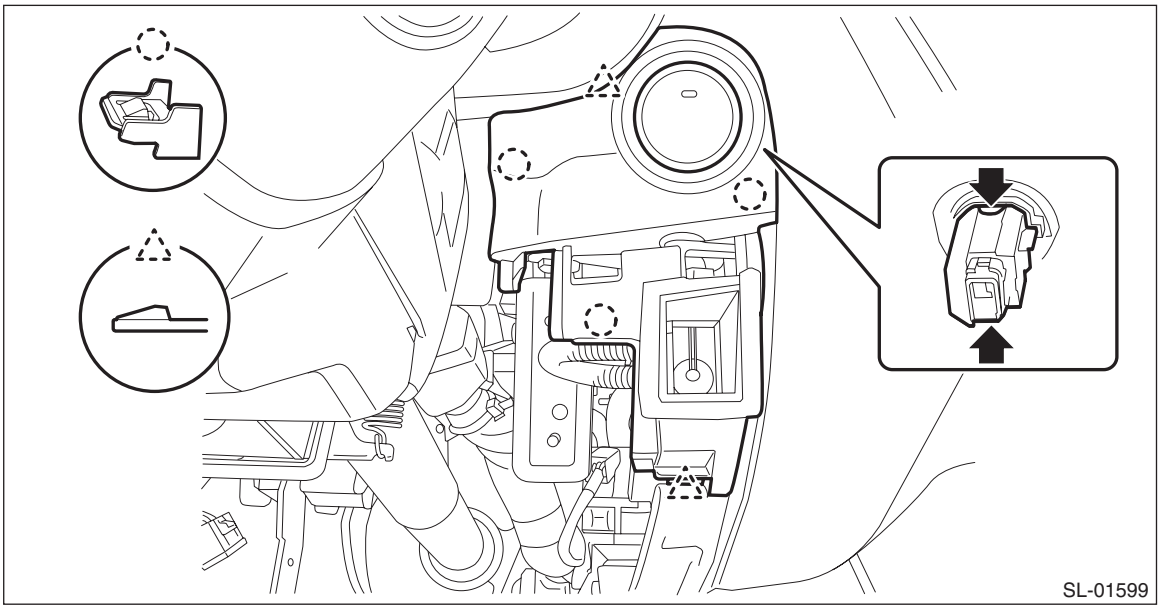

8) Remove the nuts to remove the knee airbag module and disconnect the harness connector. <Ref. to AB-31, KNEE AIRBAG MODULE, PROCEDURE, Airbag Connector.>

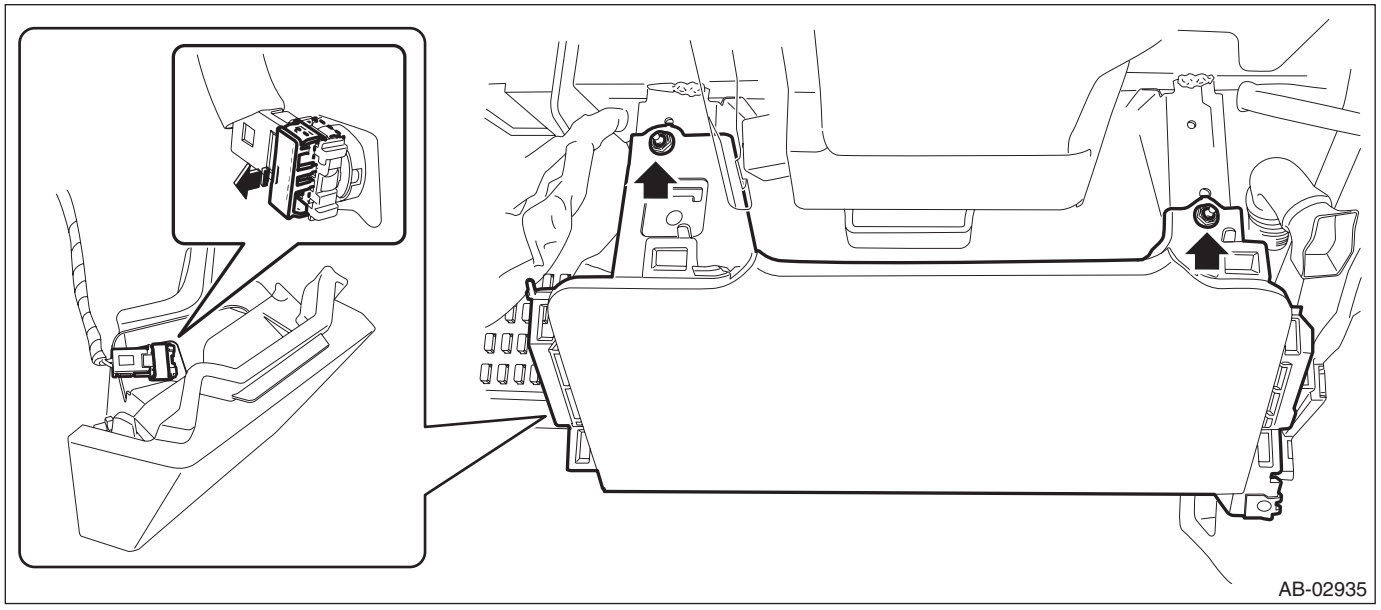

9) Release the clips and claws, then detach the left and right grille speaker side.

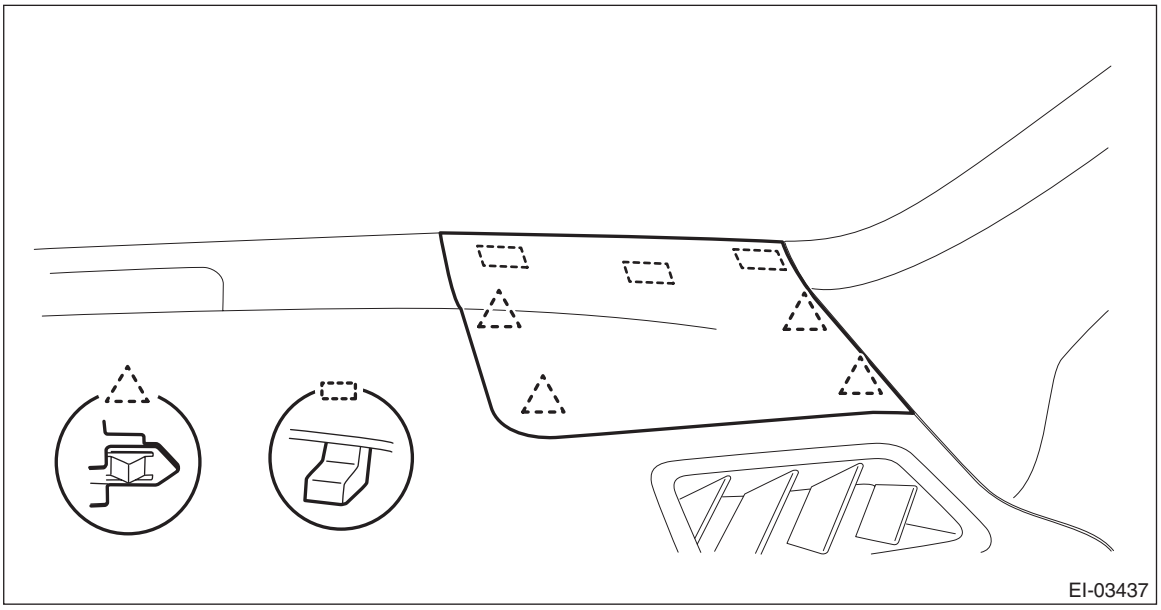

NOTE:
Remove the grille speaker side by using a plastic remover.

10) Remove the trim panel - front pillar UPR on the left and right sides.
(1) Pull the upper part of the trim panel - front pillar UPR towards the center of the vehicle.
(2) Insert long-nose pliers into the top part of the trim, grip the tether clip with the pliers and twist 90° in that position.

CAUTION:
Be careful not to damage the pillar trim surface and curtain airbag module when inserting the pliers.
(3) Holding the tether clip twisted as in the previous step, remove the trim panel - front pillar UPR from the tether clip.
(4) Remove the clips, and remove the trim panel - front pillar UPR.

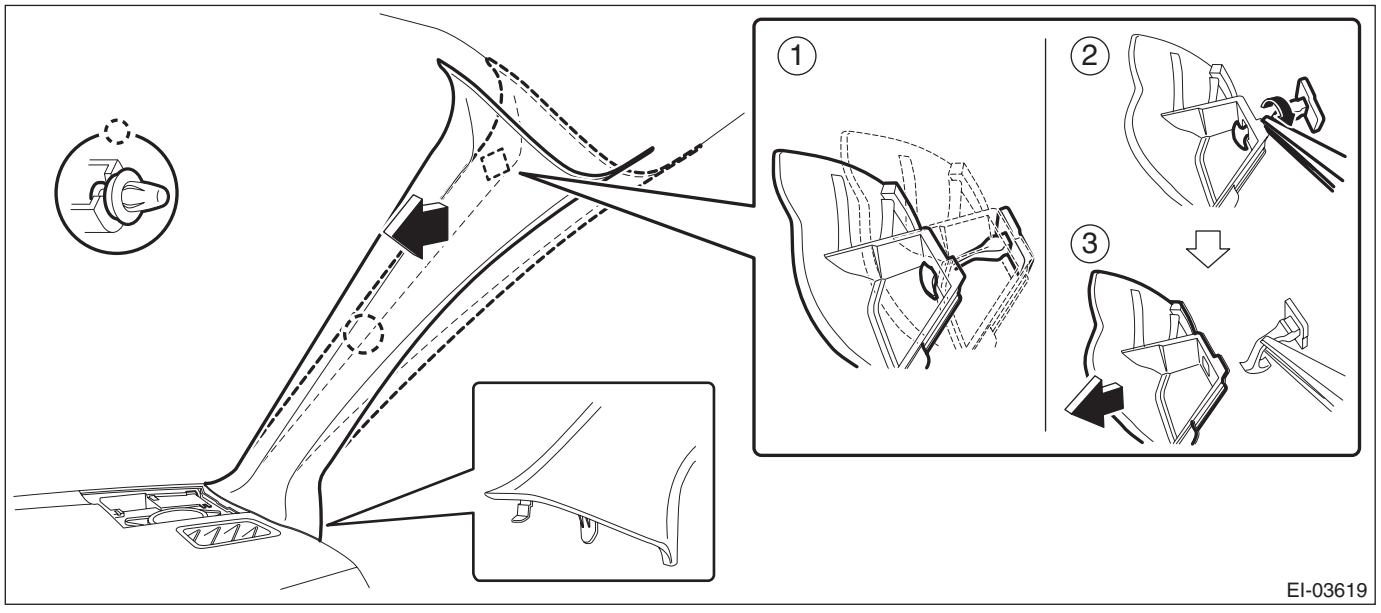

11) Remove the pocket assembly.
(1) Attach the protective tape (a) to the panel center LWR.
(2) Remove the damper COMPL - pocket.
(3) Release the stoppers and remove the pocket assembly by pulling it toward you.

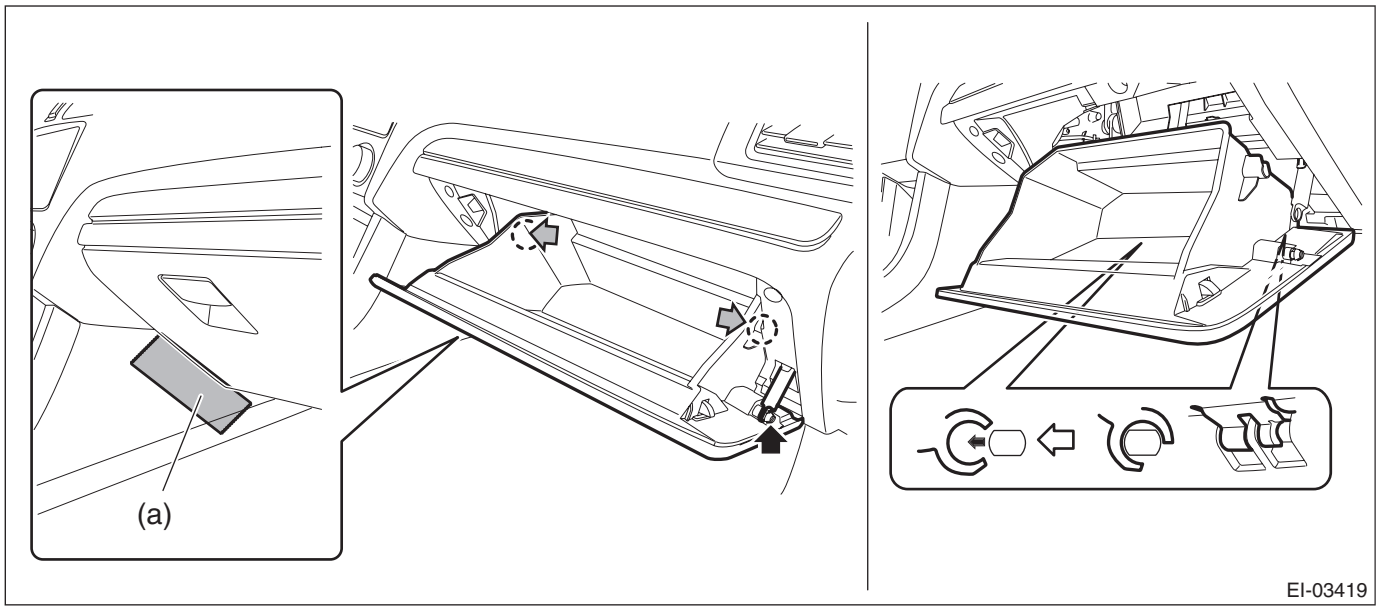

12) Remove the back panel - pocket.
(1) Release the clips, and remove the under cover assembly - passenger.

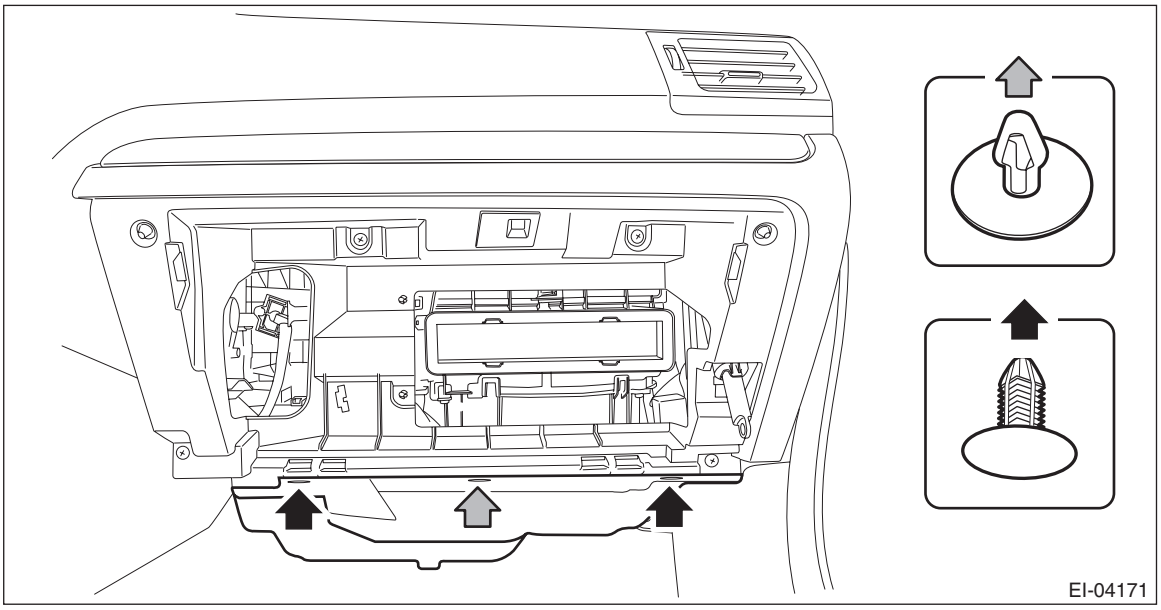

(2) Remove the clips, and remove the cover - instrument panel side RH.

NOTE:
Remove the cover - instrument panel side RH by using a plastic remover.

(3) Release the clips, and remove the ornament - panel assembly passenger.

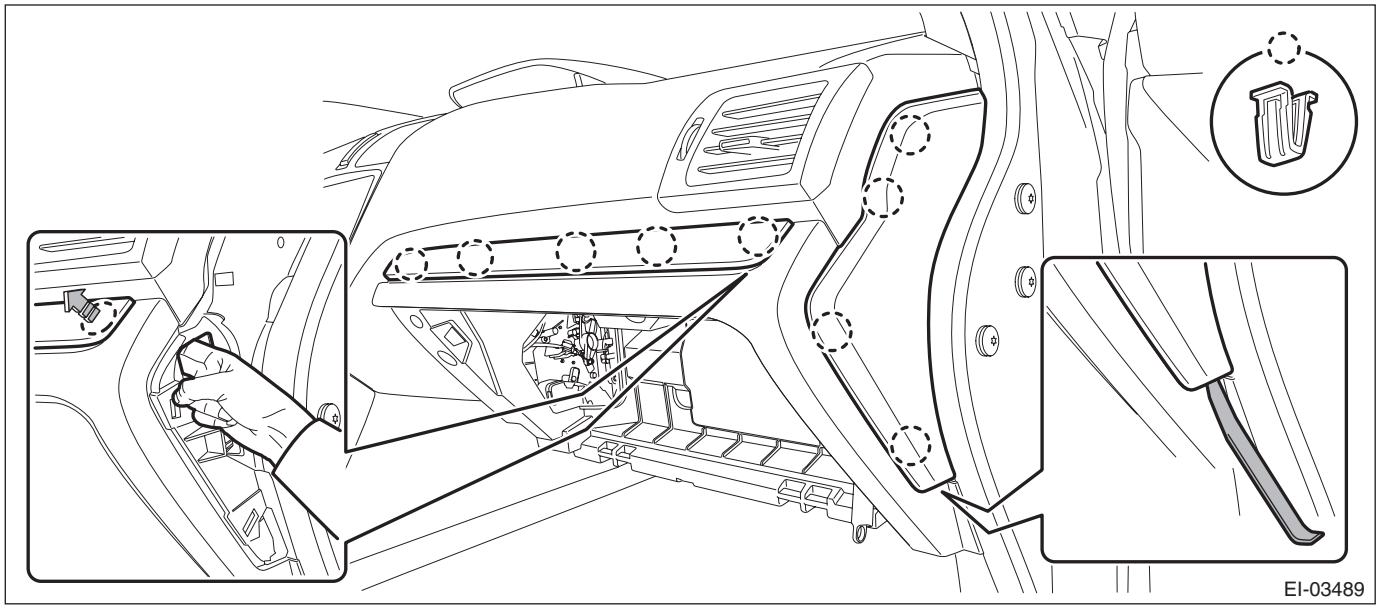

NOTE:
To facilitate the removal, push the clip of the ornament - panel assembly passenger from the backside.

(4) Remove the screws, claws and harness clamp, then remove the back panel - pocket.

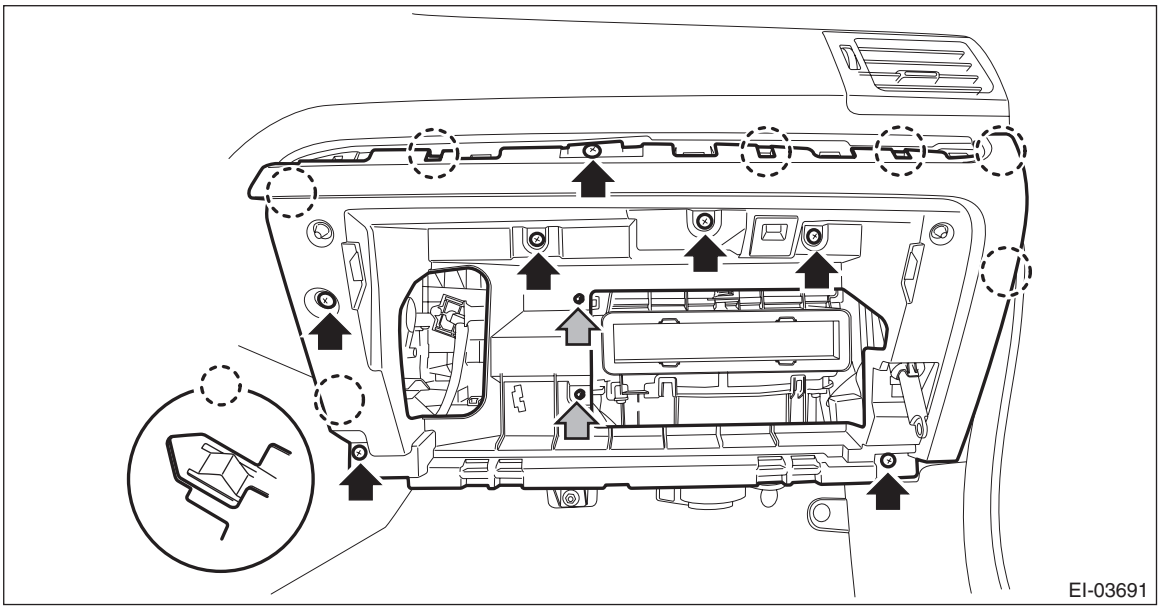

(5) Disconnect the glove box light LED connector.

13) On manual A/C models, disconnect the control cables from both sides of the heater & cooling unit.

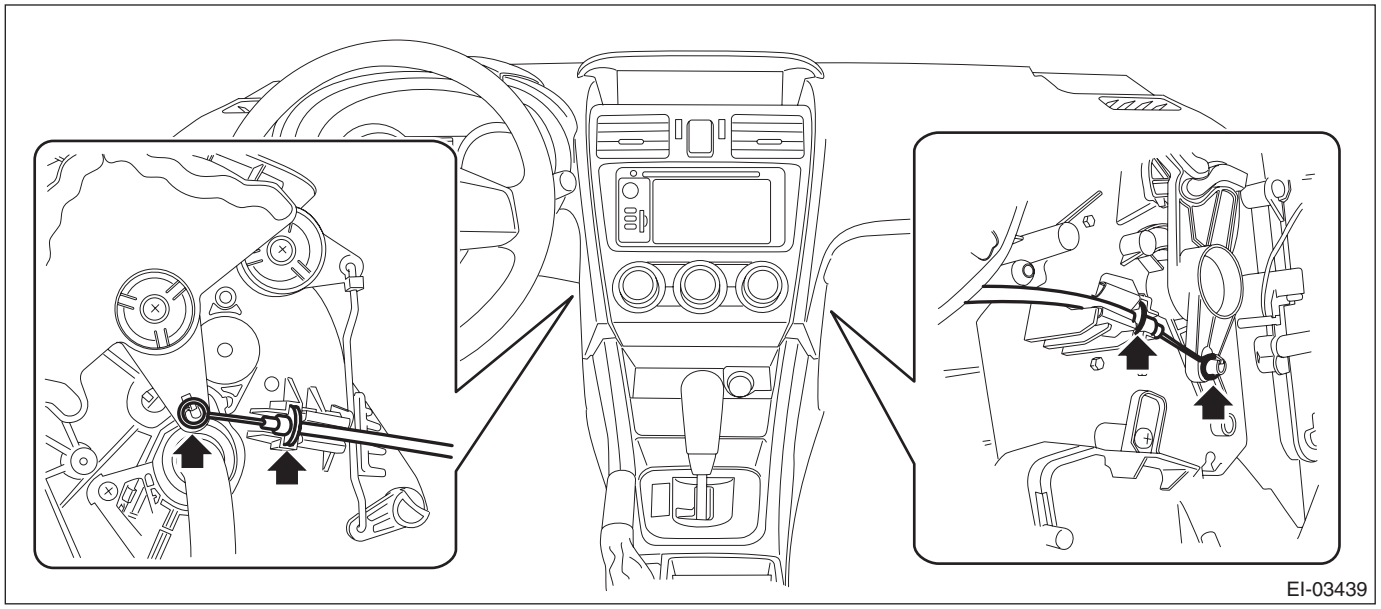

14) Remove the panel center assembly.

CAUTION:
- **Do not put your finger on the fin of the air vent grille. Doing so may damage the fin.**
- **Pull the panel center assembly slowly. Pulling with excessive force may damage the connector.**

(1) Insert a plastic remover to the three areas shown by the arrows, and slightly lift up the panel center assembly.
(2) With the panel center assembly lifted up slightly, release the claw by using a clip remover wrapped with protective tape.
(3) Release the rest of the claws, and pull out the panel center assembly.
(4) Disconnect the connectors, and remove the panel center assembly.

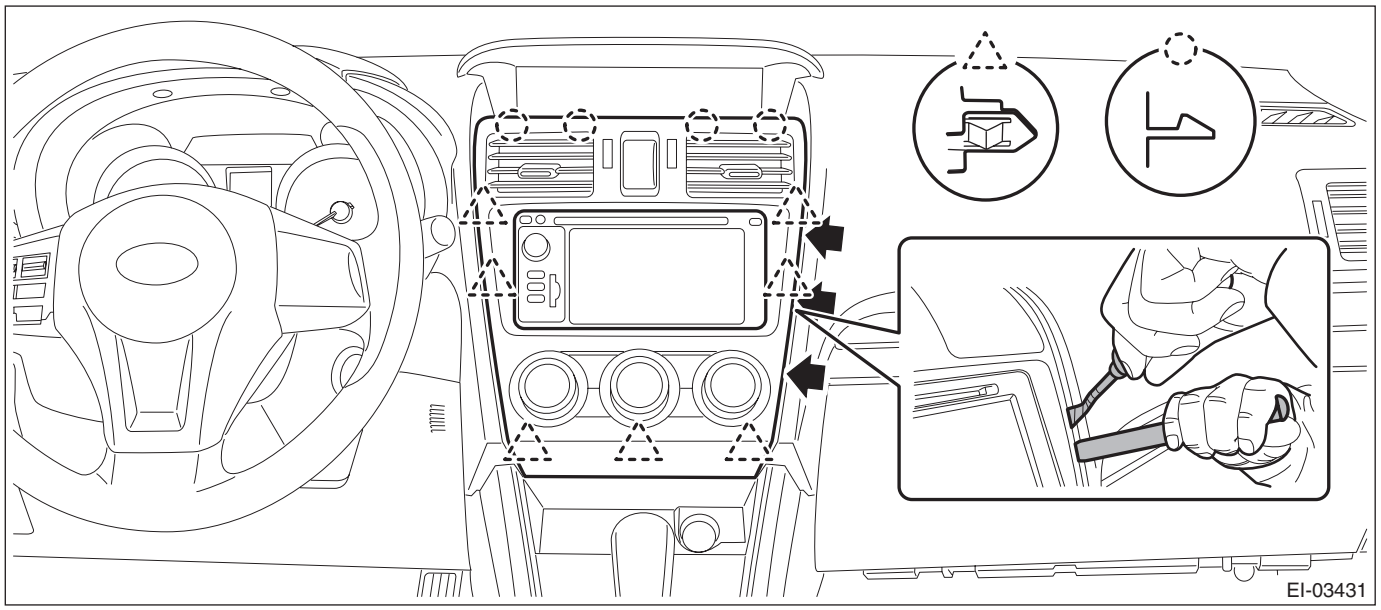

15) Remove the audio assembly or navigation assembly.
(1) Remove the screws, and partially pull out the audio assembly or navigation assembly.
(2) Disconnect the connectors, and remove the audio assembly or navigation assembly.

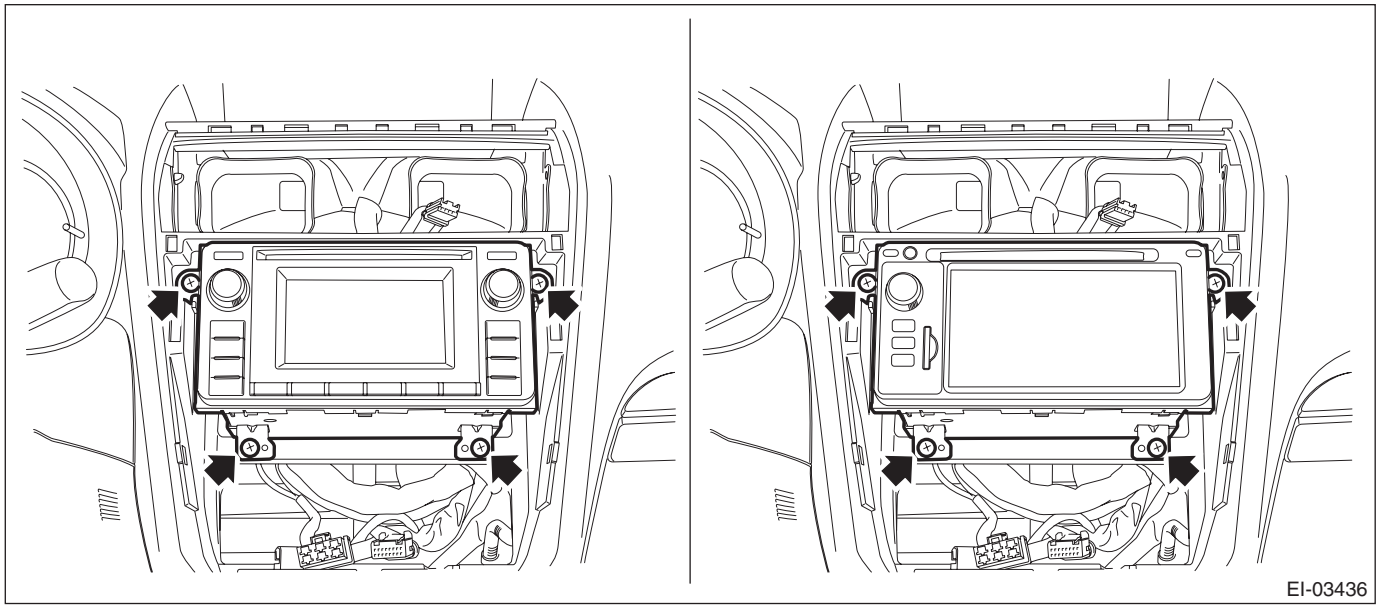

16) Remove the multi-function display assembly.
(1) Disconnect the claws and then remove the cover center UPR.

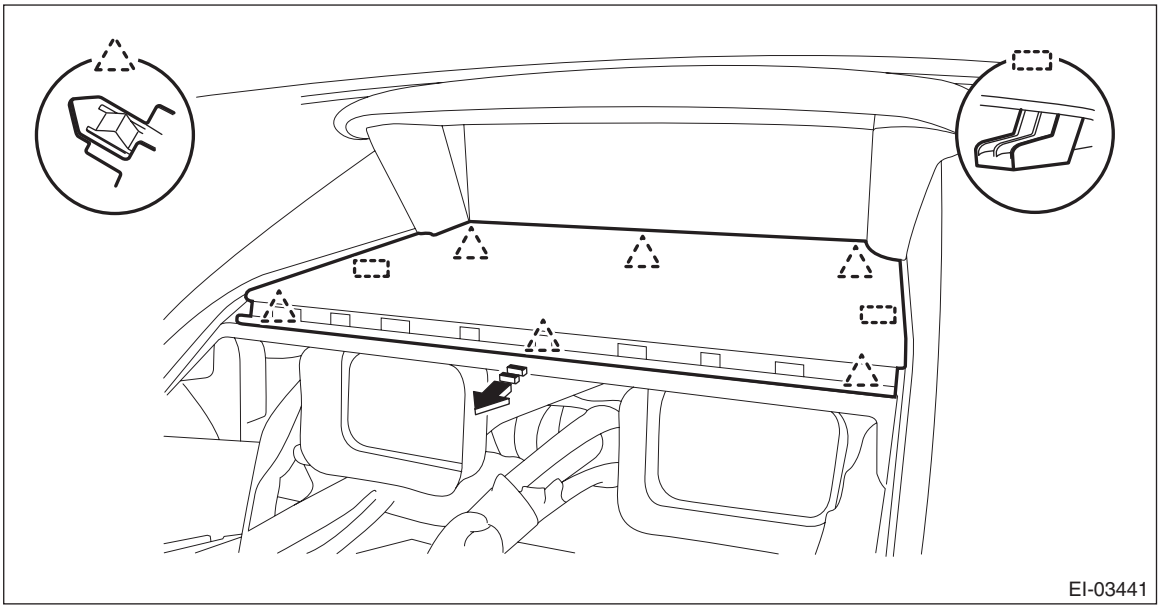

NOTE:
Lightly push up the back of the cover center UPR, hook the finger to the end portion and pull it toward you to remove it.
(2) Remove the screws and release the claws, then remove the panel - display assembly.

NOTE:
Remove the panel - display UPR & panel - display LWR and the multi-function display assembly as a unit.

(3) Disconnect the connector and remove the multi-function display assembly.

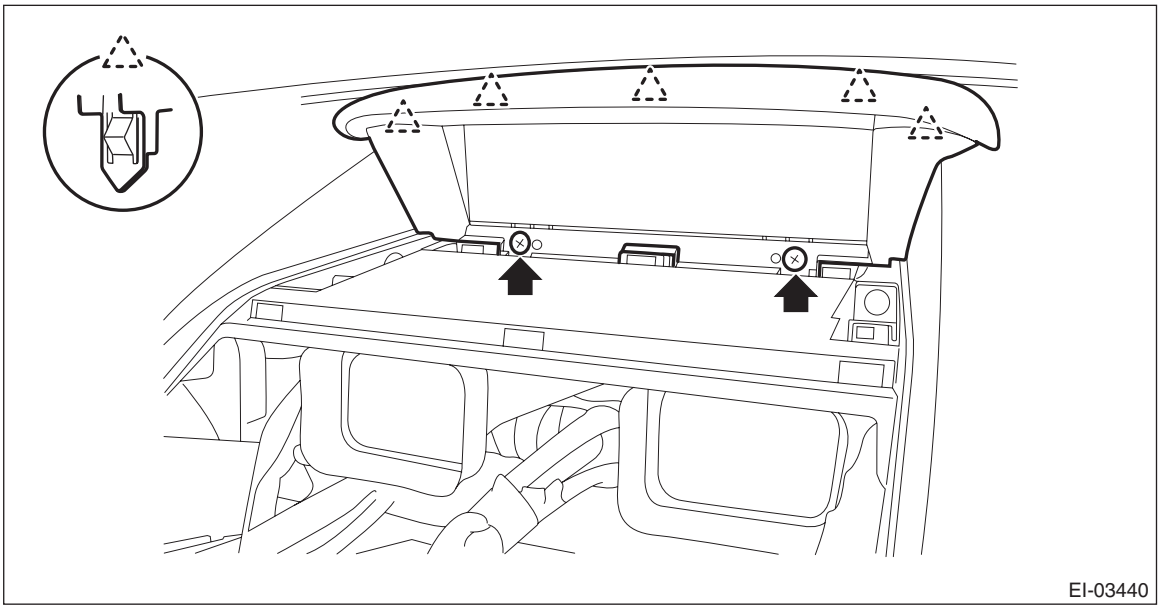

17) Remove the combination meter assembly.

CAUTION:
- **Be careful not to damage the meter or instrument panel.**
- **Pay particular attention to avoid damaging the meter glass.**

(1) Release the lock, tilt the steering column to the lowest end and fully extend the column by the telescopic system.

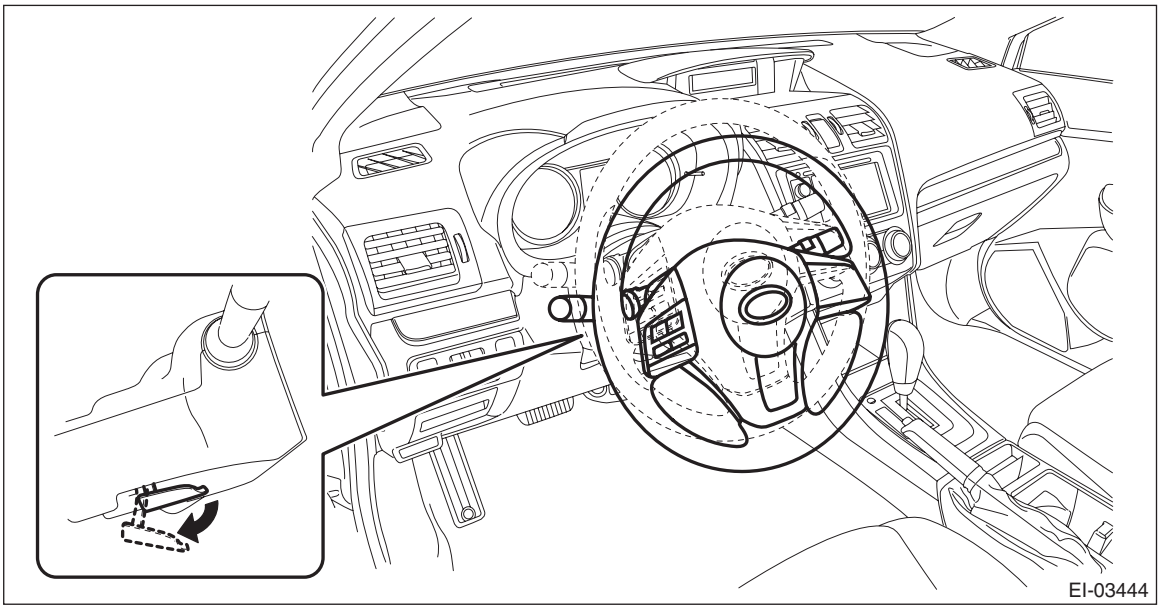

(2) Release the screws and clips, then detach the visor - combination meter.

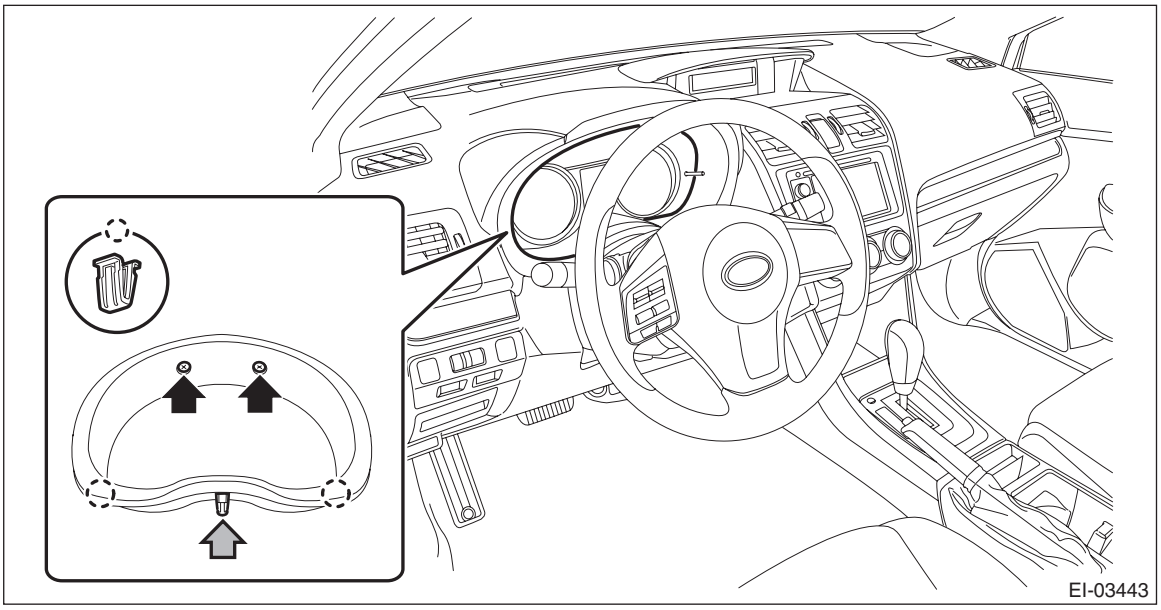

(3) Remove the screws, disconnect the connector and remove the combination meter assembly.

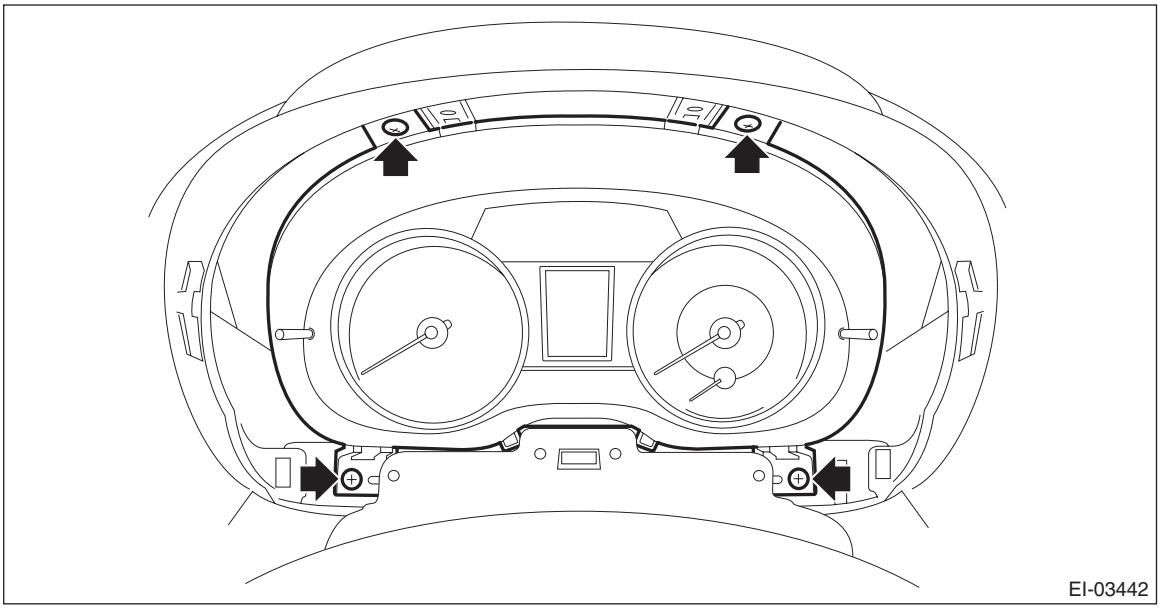

18) Disconnect the passenger's airbag module connector. <Ref. to AB-22, PASSENGER'S AIRBAG MODULE, PROCEDURE, Airbag Connector.>

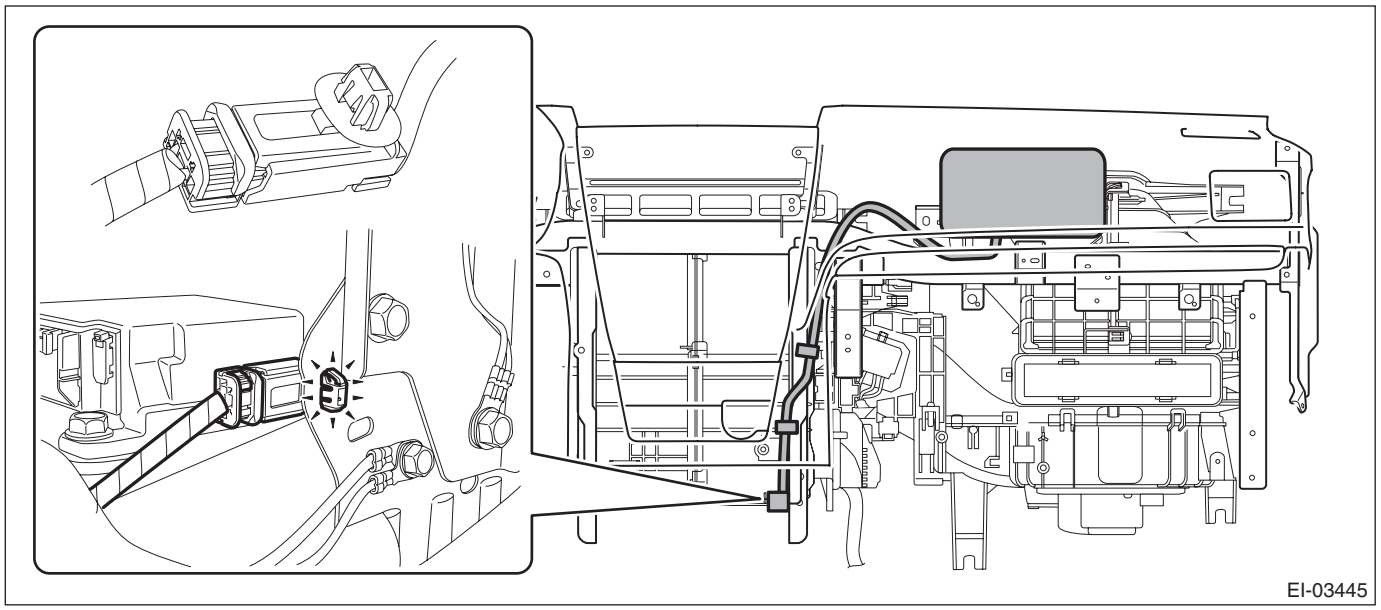
EI-03445

19) Remove the column assembly - steering. <Ref. to PS-18, REMOVAL, Steering Column.>
20) Release the claws, and then remove the cover side sill - front INN on LH and RH sides.

CAUTION:
Do not pull with excessive force. Doing so may damage the claws of the cover side sill - front INN.

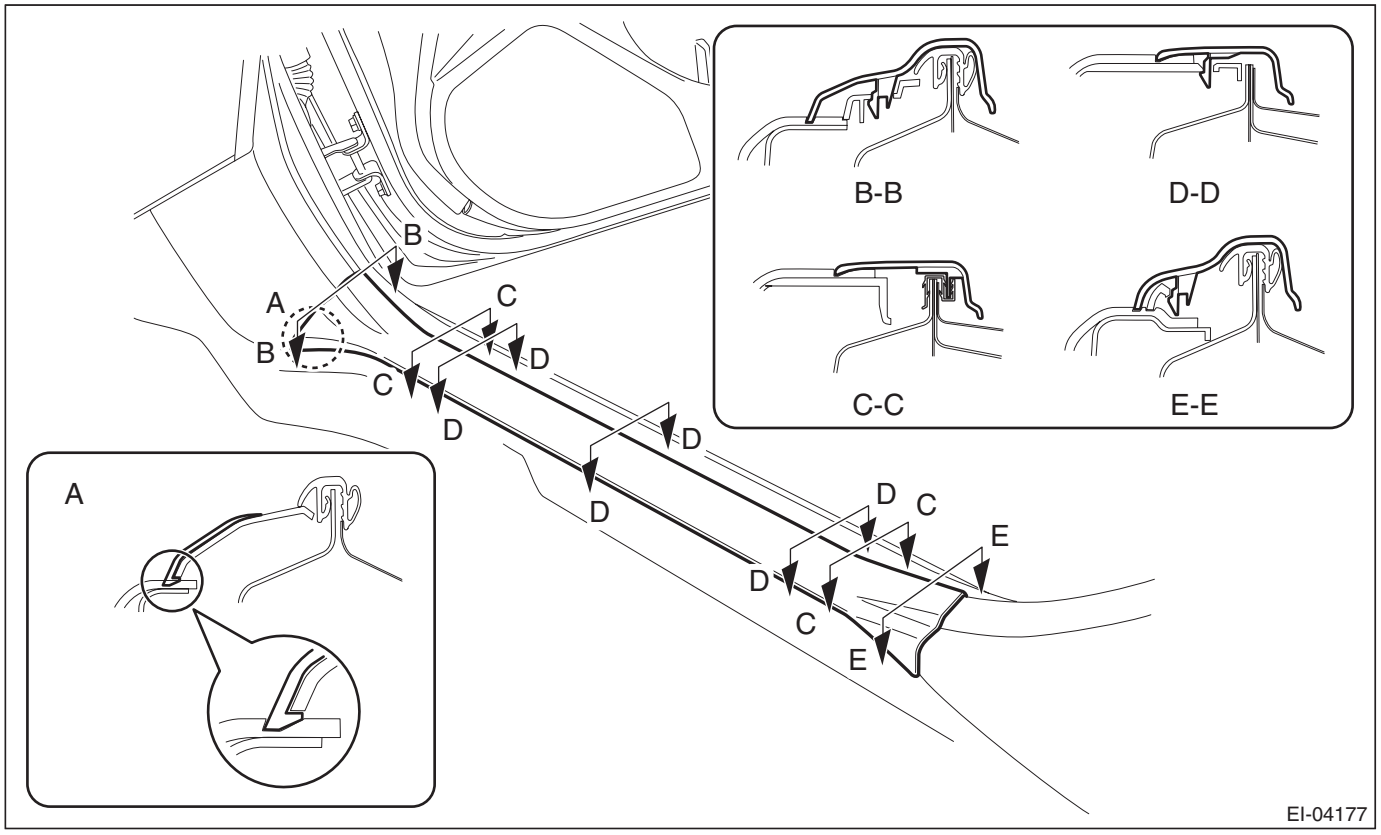

EI-04177

21) Remove the clip, and remove the cover side sill - front on LH and RH sides.

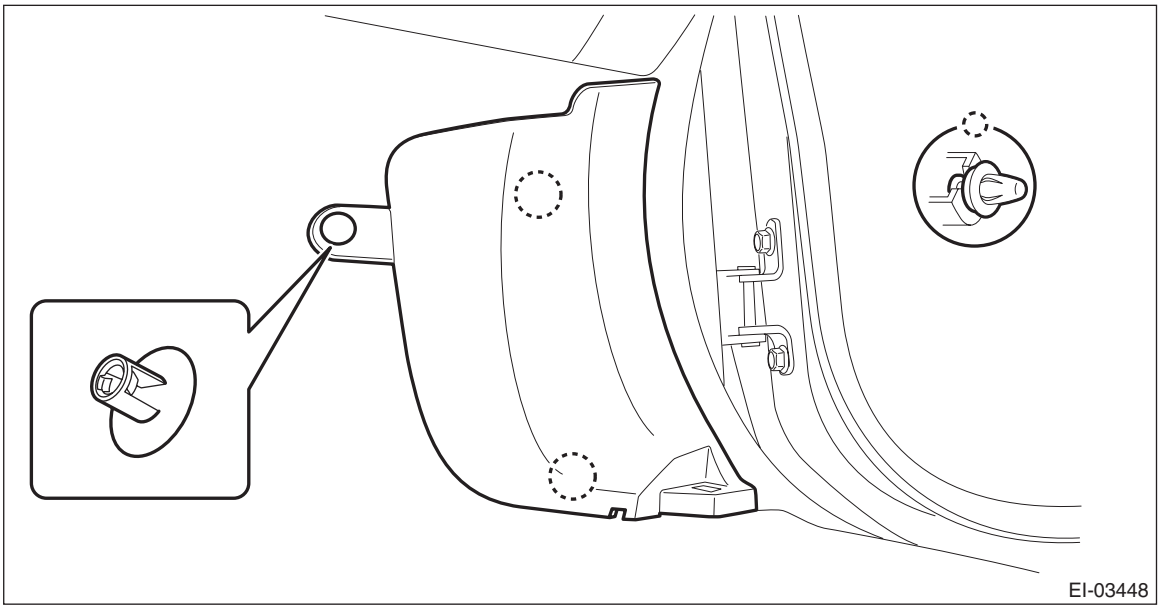

22) Remove the body side weather strip - flange front.

23) Remove the instrument panel assembly and the beam COMPL - steering as a unit.

CAUTION:
The instrument panel assembly and the beam COMPL - steering are heavy. Always work in a team of two persons when removing them from the vehicle, so as not to damage the vehicle interior.

(1) Remove the fuse box and relay box.
(2) Disconnect all harness clamps and connectors of the instrument panel harness.
(3) Remove the TORX® bolt. (a), (b)

Preparation tool:
TORX® T40

(4) Remove the bolts at the floor center. (c), (d)
(5) Remove the bolt. (e), (f)

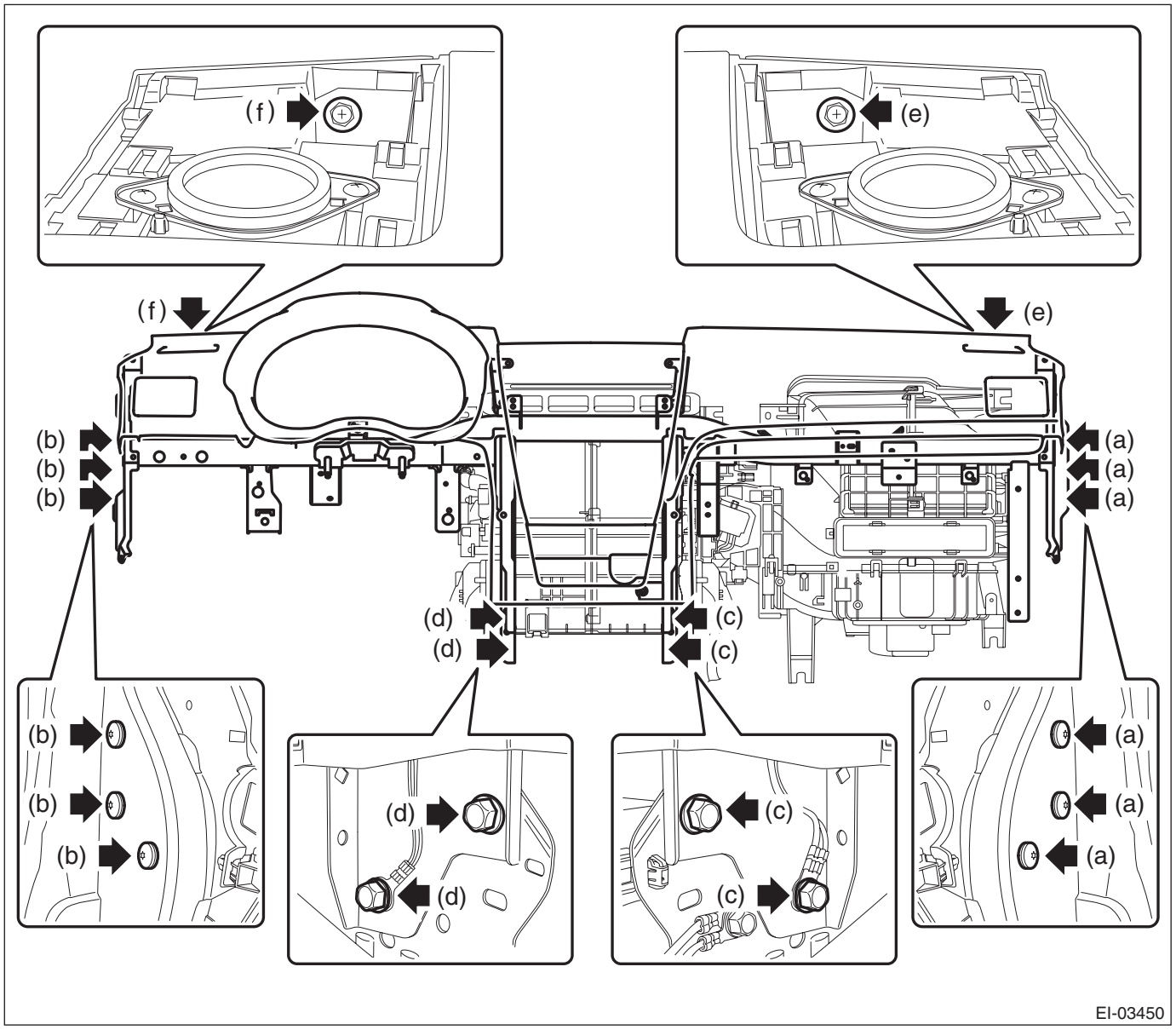

(6) Loosen the adjuster portion (h) of the adjuster - clip space. (only LH side of the beam COMPL - steering)

Preparation tool:
Hexagon wrench: 8 mm (0.31 in)

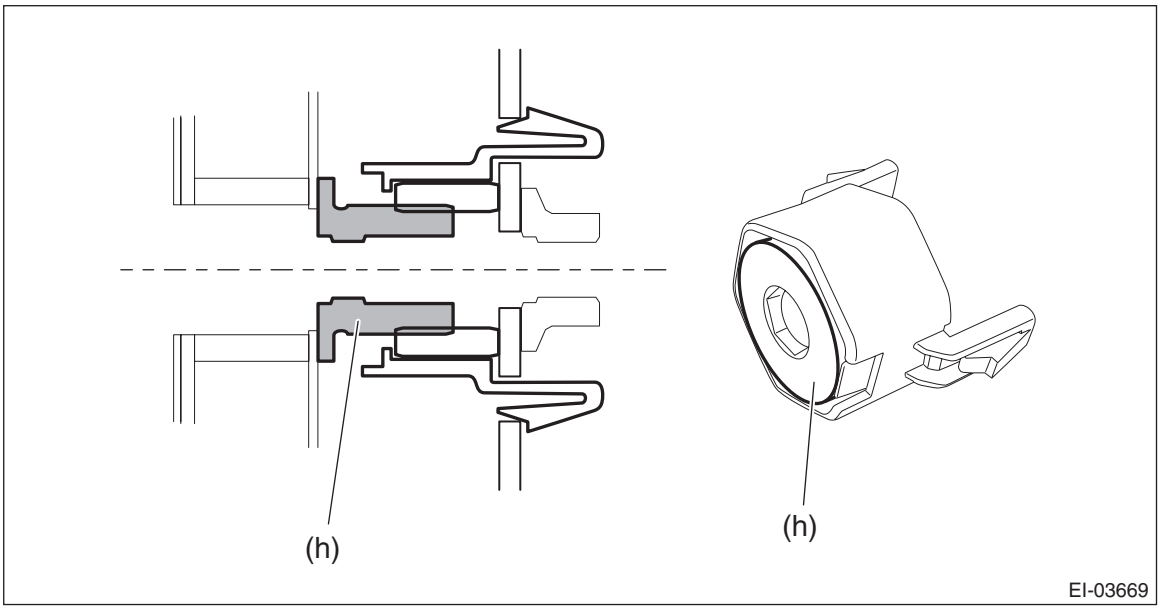

(7) Slightly lift the instrument panel assembly together with the beam COMPL - steering to detach the left and right pins. Then pull it toward you to remove the assembly.

CAUTION:
• Check that all harness clamps and connectors are detached.
• The instrument panel assembly and the beam COMPL - steering are heavy. Always work in a team of two persons when removing them from the vehicle, so as not to damage the vehicle interior.

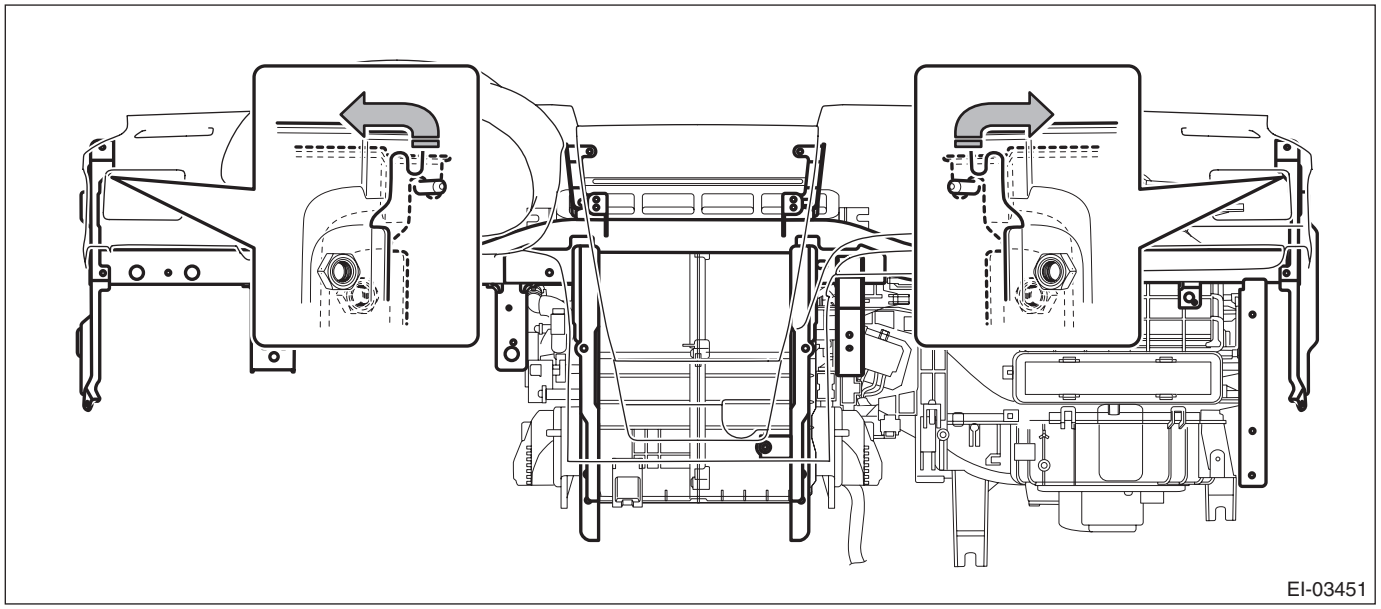

24) Remove the grille front defroster.
(1) Disconnect the connector of the sensor - sunload.
(2) Release the claws and remove the grille front defroster.

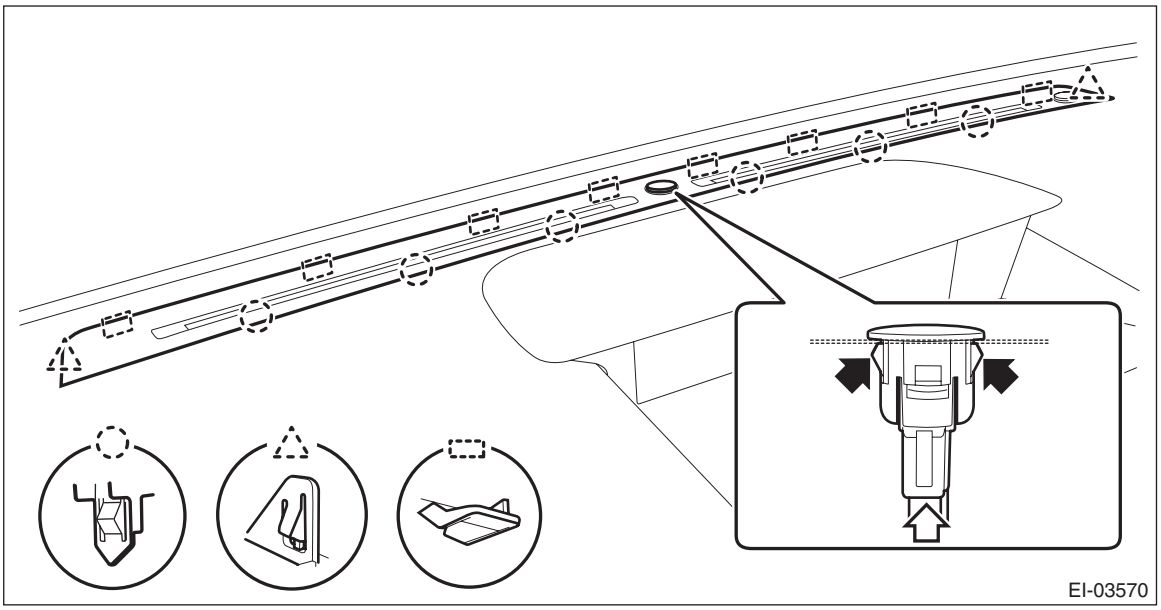

25) Remove the screws and remove the front (A) and side vent duct (B) LH, RH.

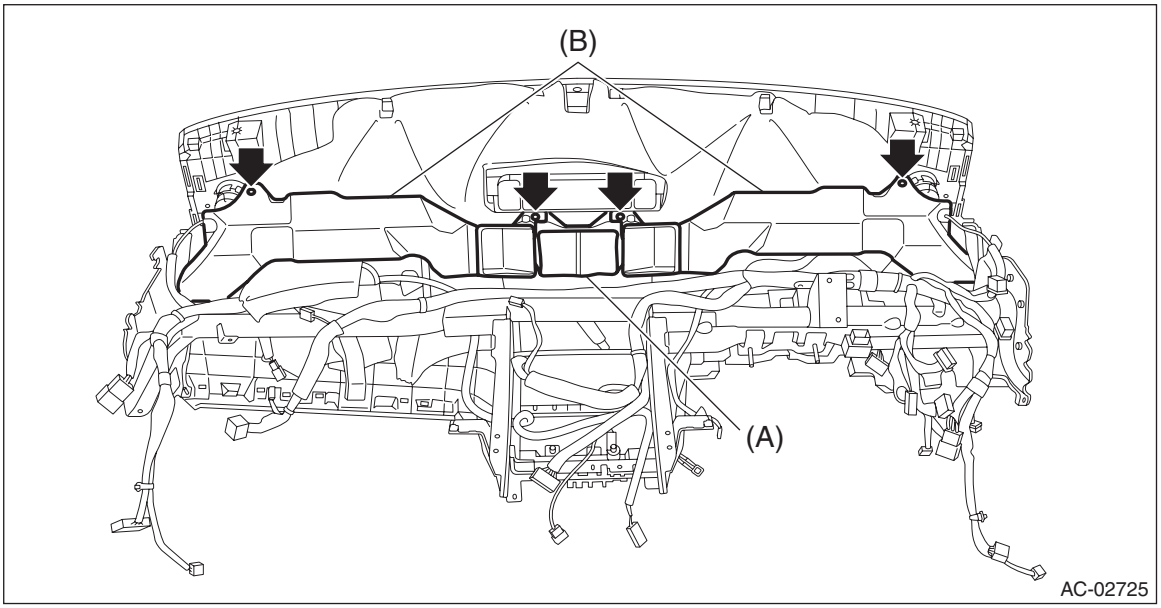

26) Separate the panel COMPL - instrument and the beam COMPL - steering.
(1) Remove the clamps and bolts of the passenger's airbag module harness.

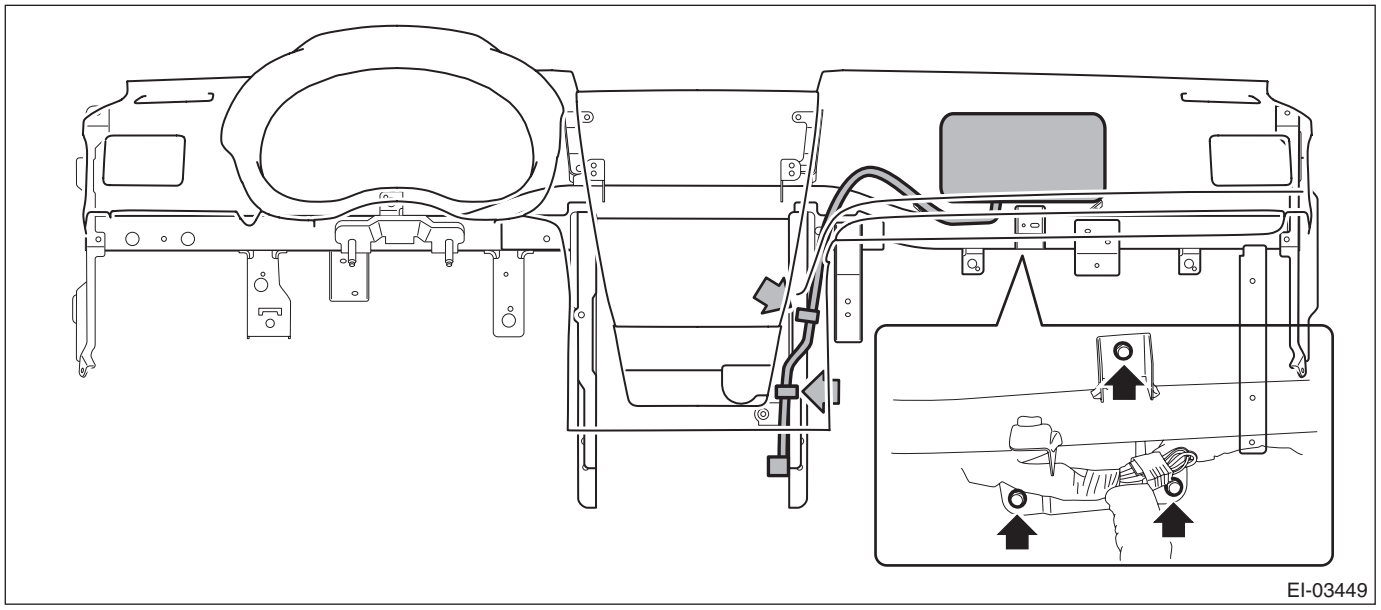
EI-03449

(2) Remove the left and right speakers.

NOTE:
Detach the harness clamp together.

(3) Disconnect the front accessory socket connector.

(4) Remove the nut (a) and screws (b), (c), (d), (e), (f), (g) and (h).
(5) While being careful with the harness, separate the panel COMPL - instrument and the beam COMPL - steering.

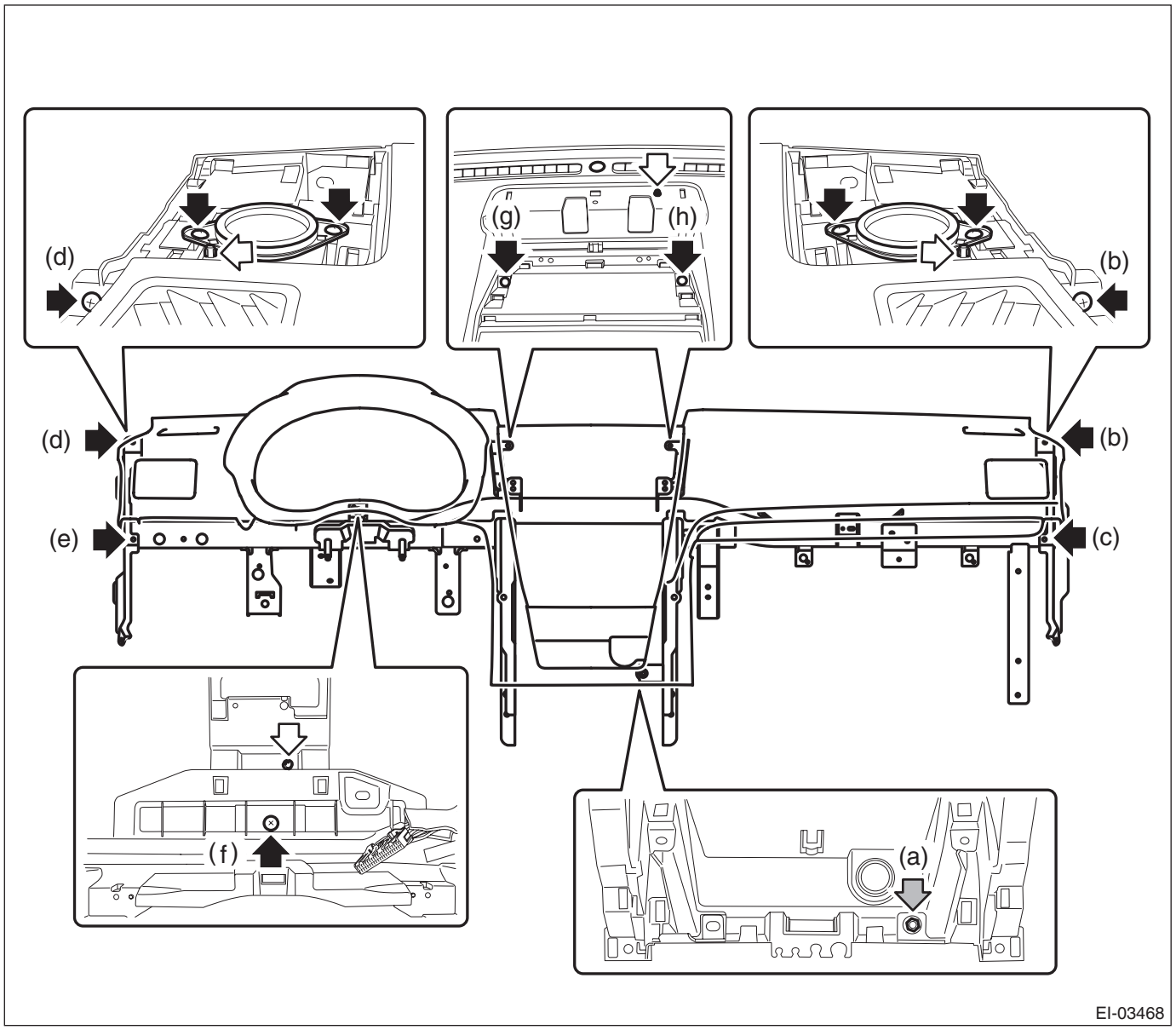

27) Remove the claws, and remove the passenger's airbag module.

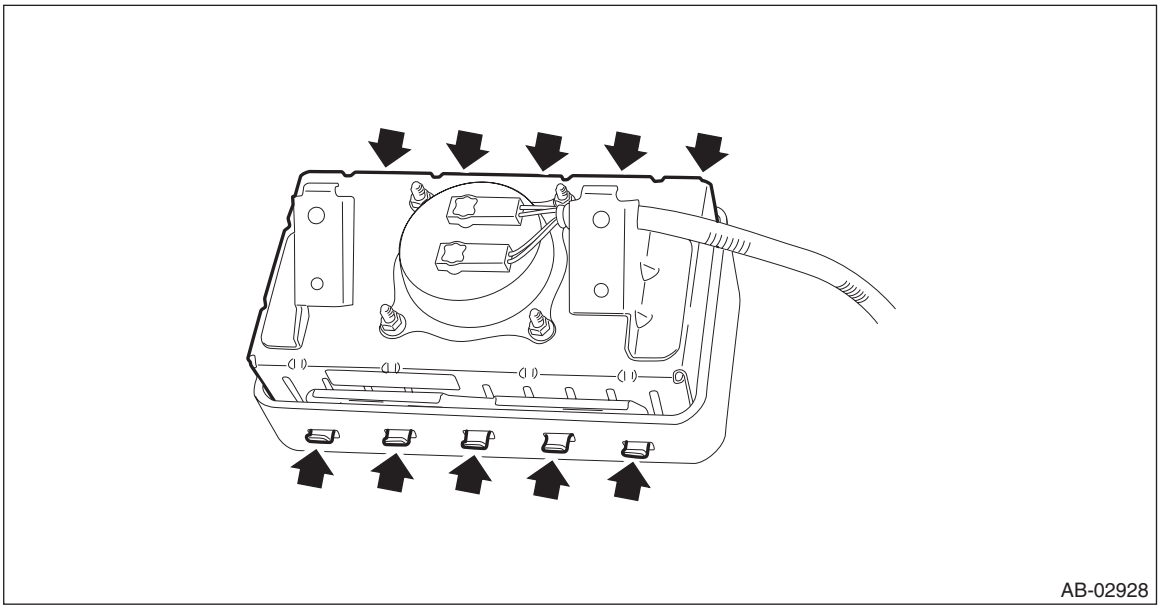

B: INSTALLATION

1) Attach components until the instrument panel assembly is formed, in the reverse order of removal.

Tightening torque:
Passenger's airbag module: 7.5 N·m (0.76 kgf-m, 5.5 ft-lb)

NOTE:
Method of installing insulator
- Adhesive

Use polyurethane adhesive. When assembling the instrument panel assembly, wait until the adhesive has evaporated to prevent filling of the smell in the compartment.
- Double-sided tape

Use commercial double-sided tape. (Use strong double-sided adhesive tape.)
2) Insert the matching pins on the body side (three locations - one in the center and the remaining two on both sides) into the instrument panel assembly and the beam COMPL - steering.
3) Check that the matching pins are inserted securely, and then route the harness.

4) Secure the instrument panel assembly and the beam COMPL - steering to the vehicle body.
(1) Position the instrument panel assembly and the beam COMPL - steering to the vehicle body and tighten the adjuster - clip space.

Preparation tool:
Hexagon wrench: 8 mm (0.31 in)

NOTE:
Tighten so that there is no gap between the adjuster portion (h) and the body.

Tightening torque:
Adjuster - clip space: 0.4 — 4 N·m (0.04 — 0.41 kgf-m, 0.3 — 2.95 ft-lb)

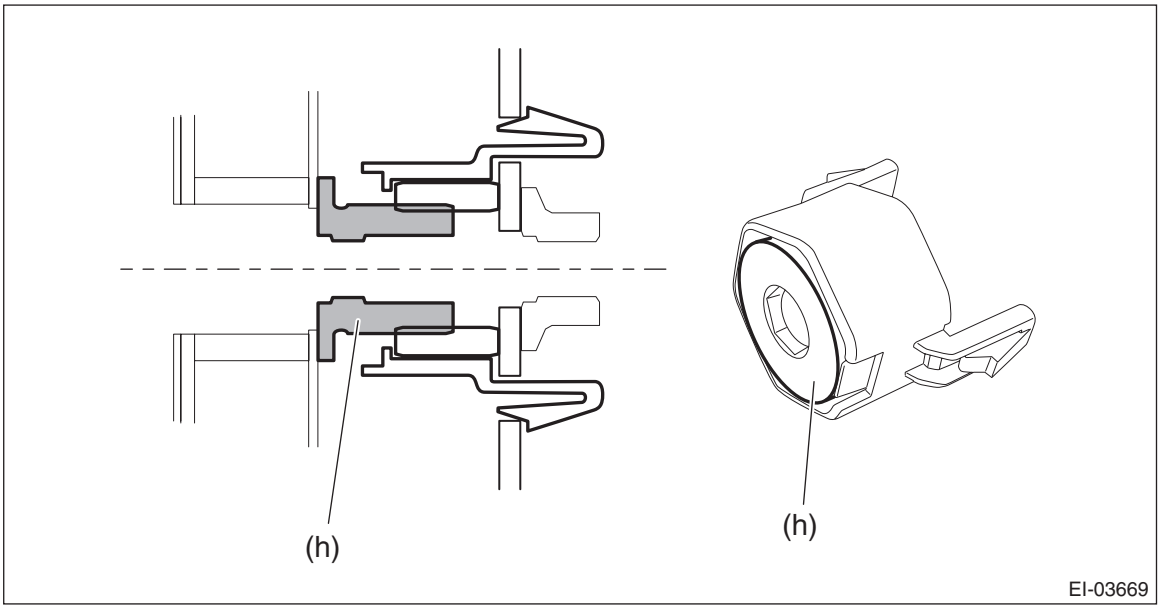

(2) Temporarily tighten the bolts (a), (b), (c) and (d) of the beam COMPL - steering.

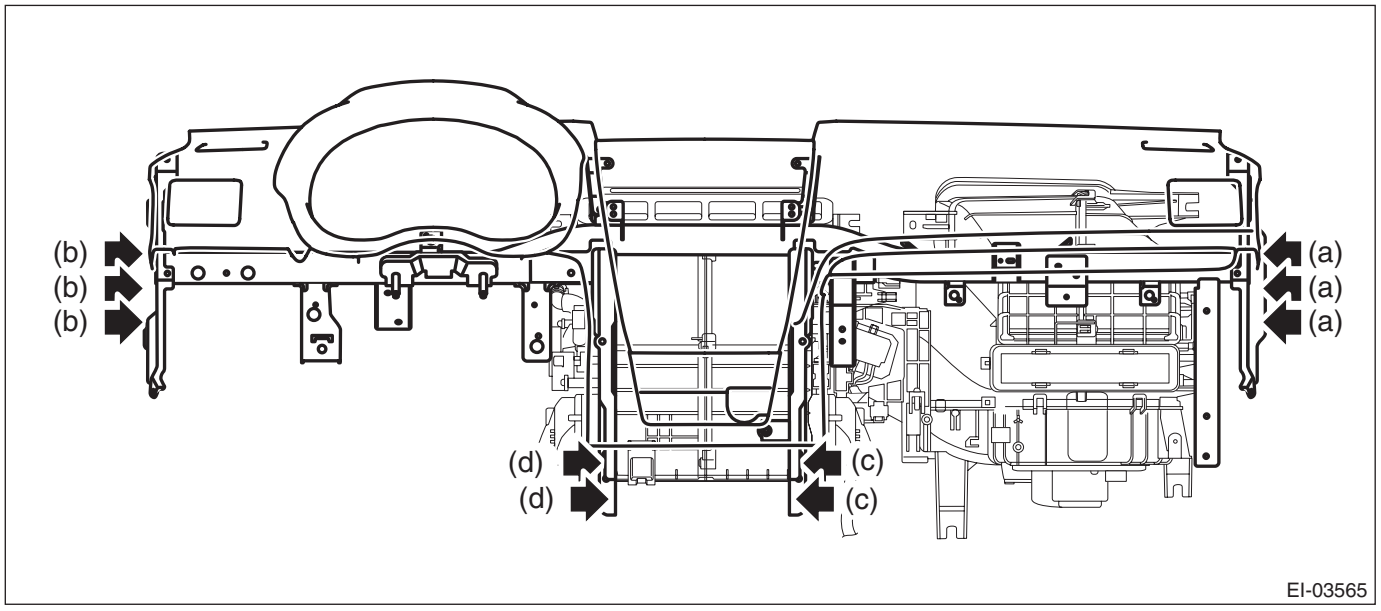

(3) Tighten the beam COMPL - steering in the order from (a) to (d) to the specified torque.

Tightening torque:
Beam COMPL - steering: 25 N·m (2.55 kgf-m, 18.4 ft-lb)

5) Install each part in the reverse order of removal.

CAUTION:
• After installing the panel center assembly, check that the air vent grille of the panel center assembly is inserted correctly into the air vent duct.
• When installing the cover - instrument panel side (a), make sure that the body side weather strip - flange front does not come inside the panel COMPL - instrument (b).

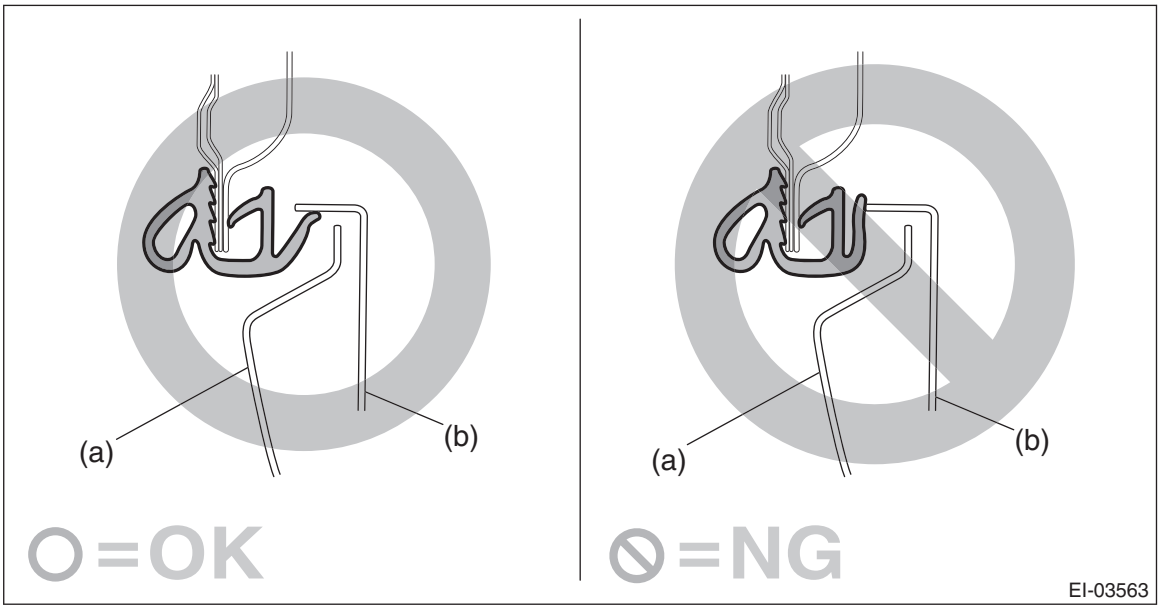

• When reusing the tether clip on the upper part of the trim panel - front pillar UPR, check that there is no damage to the tether clip. If the tether clip is damaged, its holding force is reduced and the trim panel - front pillar UPR may come off. Be sure to replace it with a new tether clip.
• Do not reuse the tether clip removed from the upper part of the trim panel - front pillar UPR. Always replace with a new part.
• Check the installation status of the tether clips and install the trim panel - front pillar UPR.

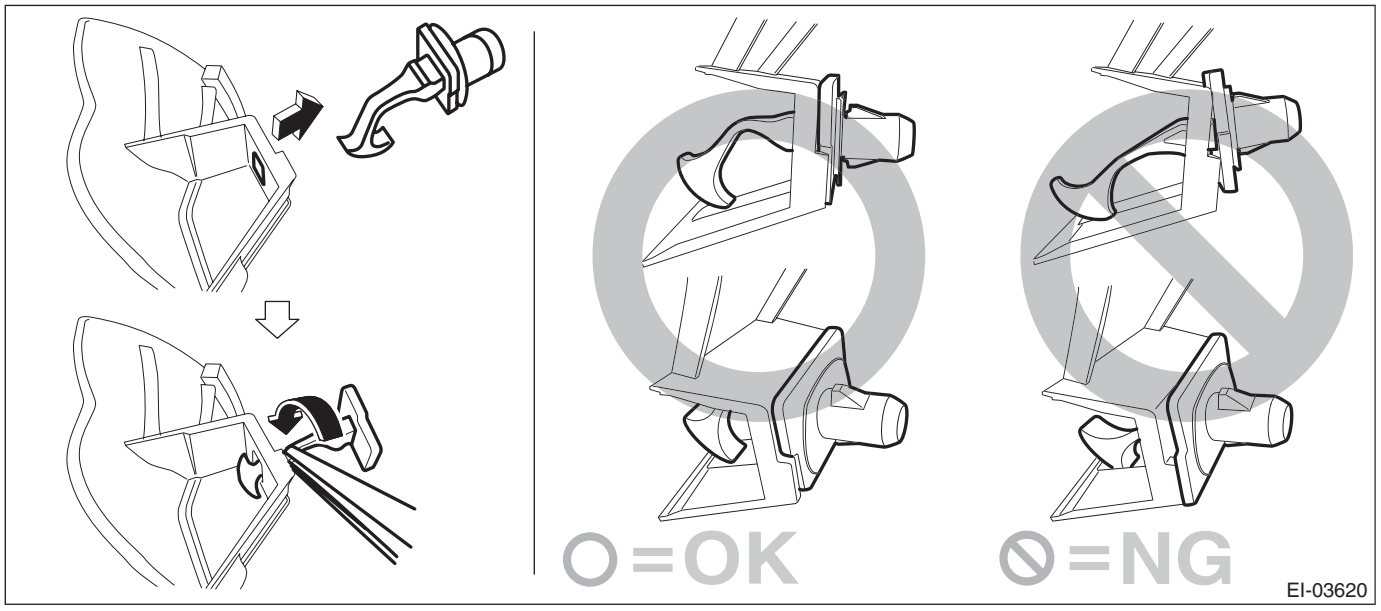

Tightening torque:
Column assembly - steering: <Ref. to PS-3, STEERING WHEEL AND COLUMN, COMPONENT, General Description.>
Console box assembly: 6.5 N·m (0.66 kgf-m, 4.8 ft-lb)

19.Lower Inner Trim

A: REMOVAL

CAUTION:
• Airbag system satellite safing sensor is located in the lower of the rear seat cushion center. Before removing the rear seat, refer to "CAUTION" of "General Description" in "AIRBAG SYSTEM" section. <Ref. to AB-11, CAUTION, General Description.>
• The airbag system is fitted with the airbag power supply. After disconnecting the battery ground cable, the airbag may operate if you do not wait for 60 seconds before starting the service of airbag system.
1) Release the claws, and then remove the cover side sill - front INN.

CAUTION:
Do not pull with excessive force. Doing so may damage the claws of the cover side sill - front INN.

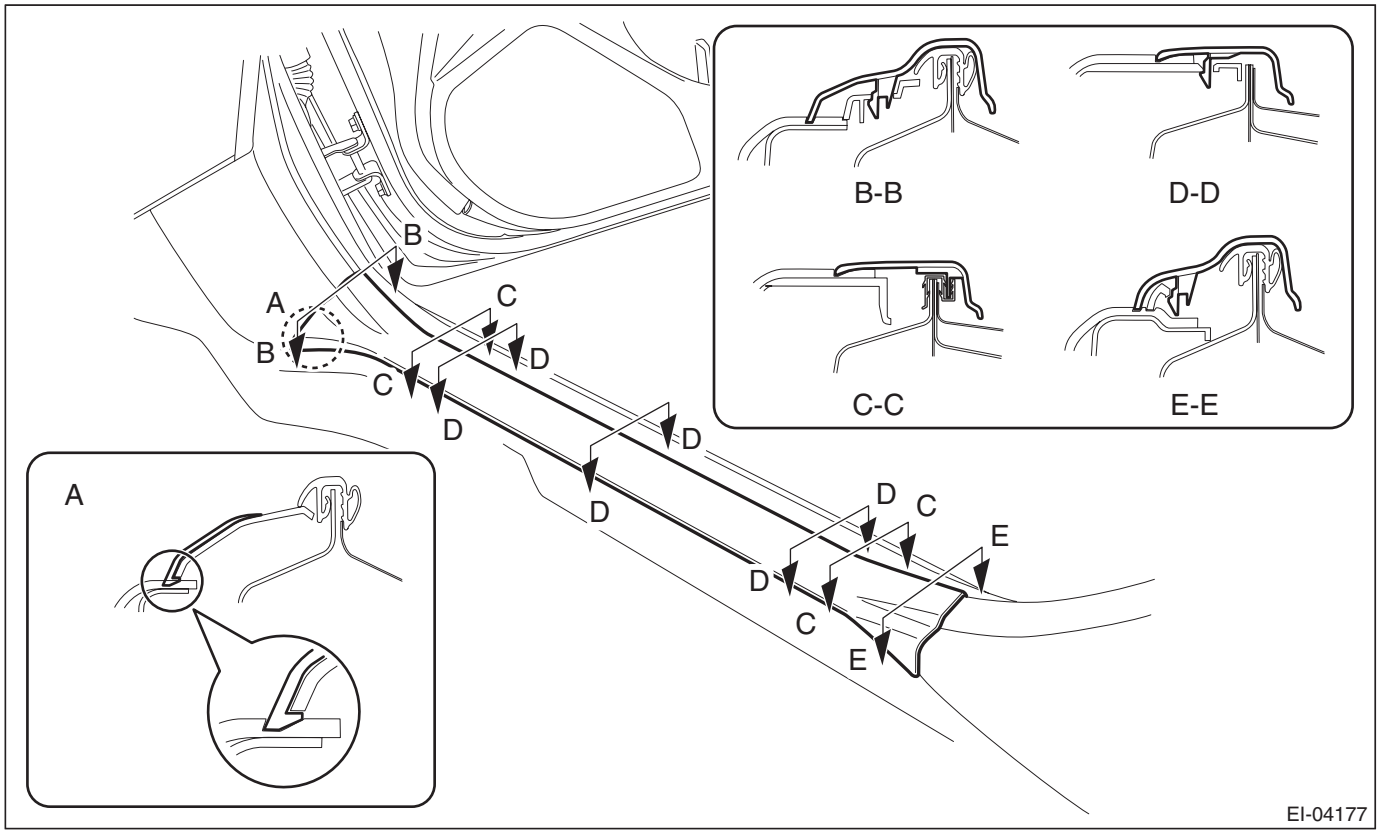

2) Remove the clips, and remove the cover side sill - front.

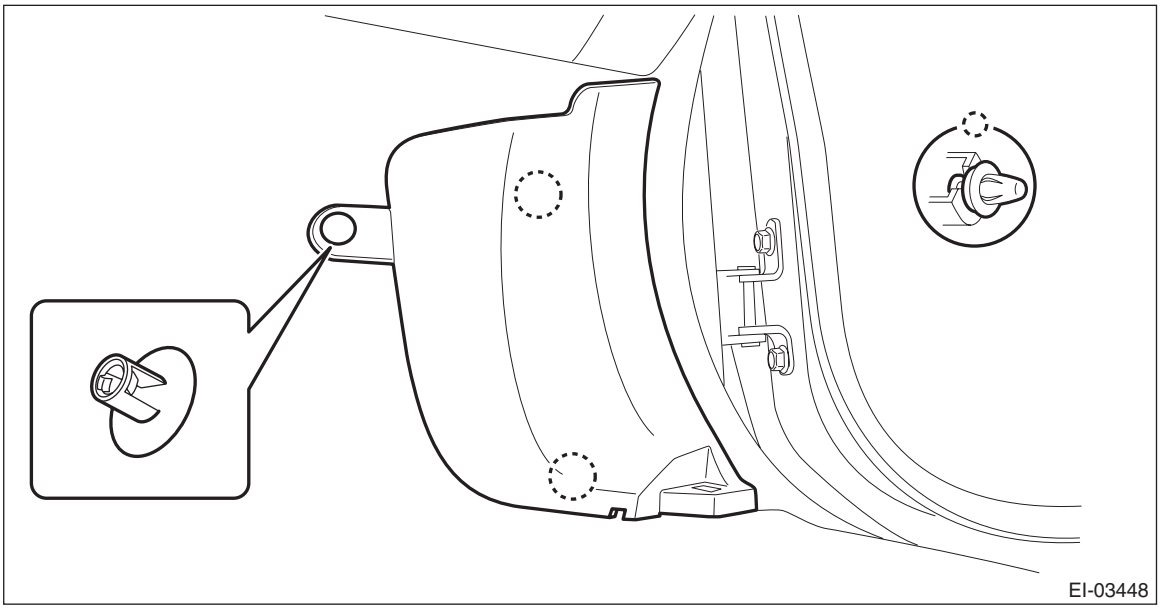

3) Remove the rear seat cushion assembly.
   (1) Push the corners of the rear seat cushion from above.
   (2) While pushing the corners of the rear seat cushion from above, pull the knob of the hook - seat cushion rear towards yourself.
   (3) While pulling the knob towards yourself, disconnect the hooks by lifting up the rear seat cushion.

NOTE:
Pull the left side of the knob to disconnect the LH side hook, and pull the right side of the knob to disconnect the RH side hook.

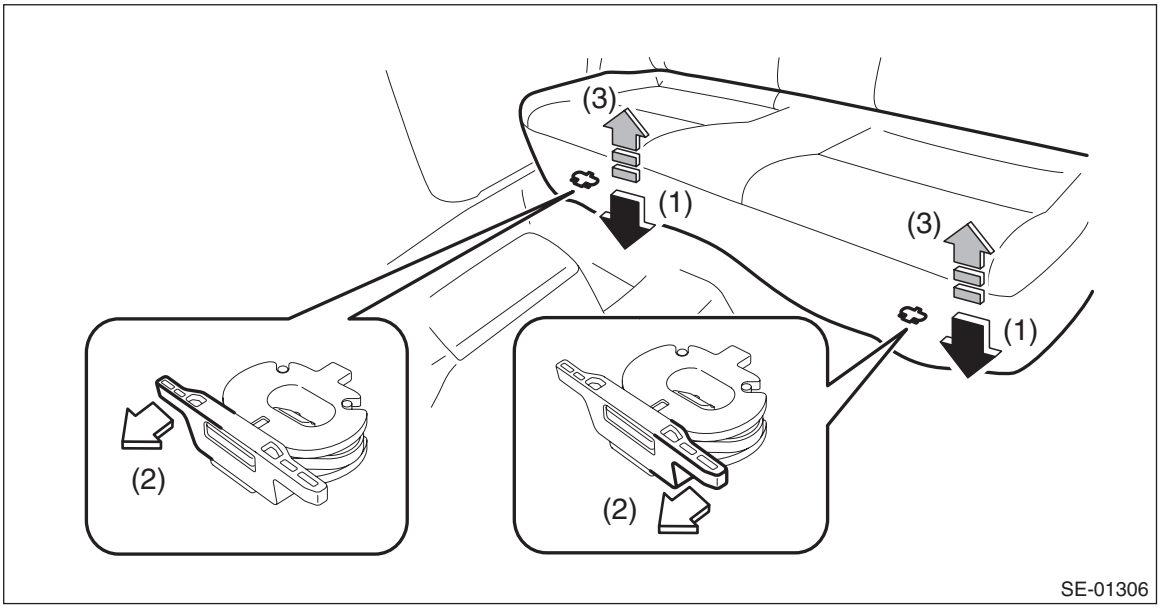

(4) Remove the hook (A) by pushing it back while lifting the front side of the rear seat cushion, and remove the rear seat cushion.

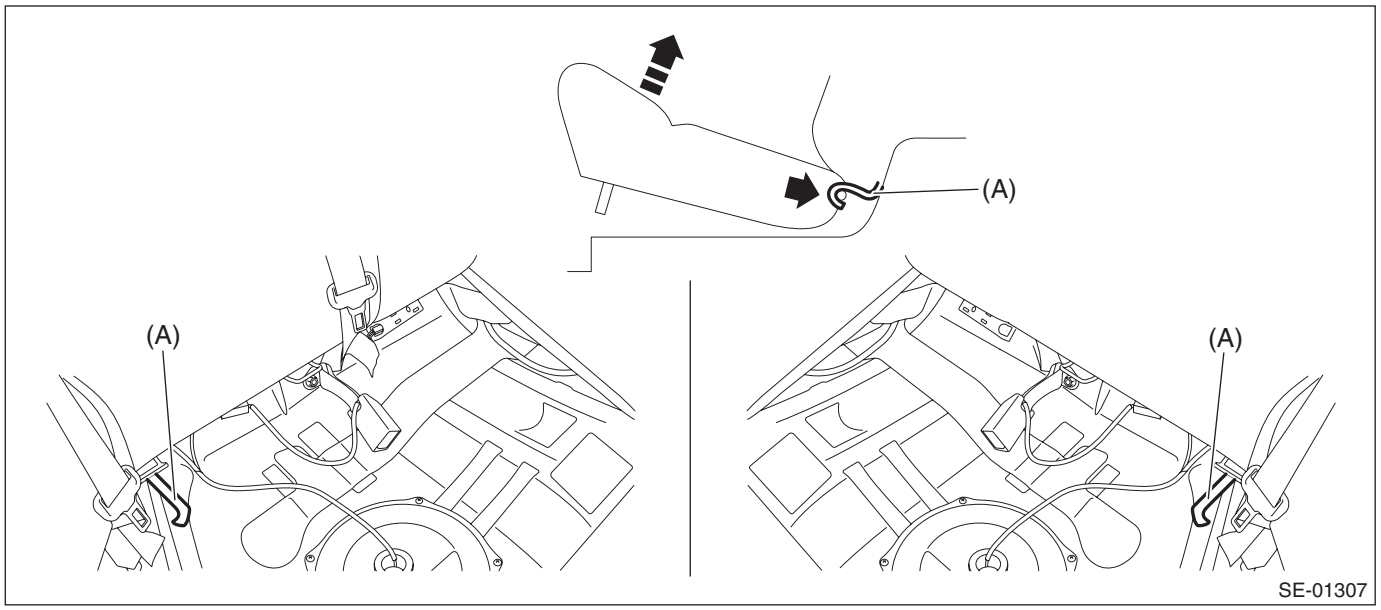

4) Release the clips and claws, and then remove the cover side sill - rear INN.

CAUTION:
Do not pull with excessive force. Doing so may damage the claws of the cover side sill - rear INN.

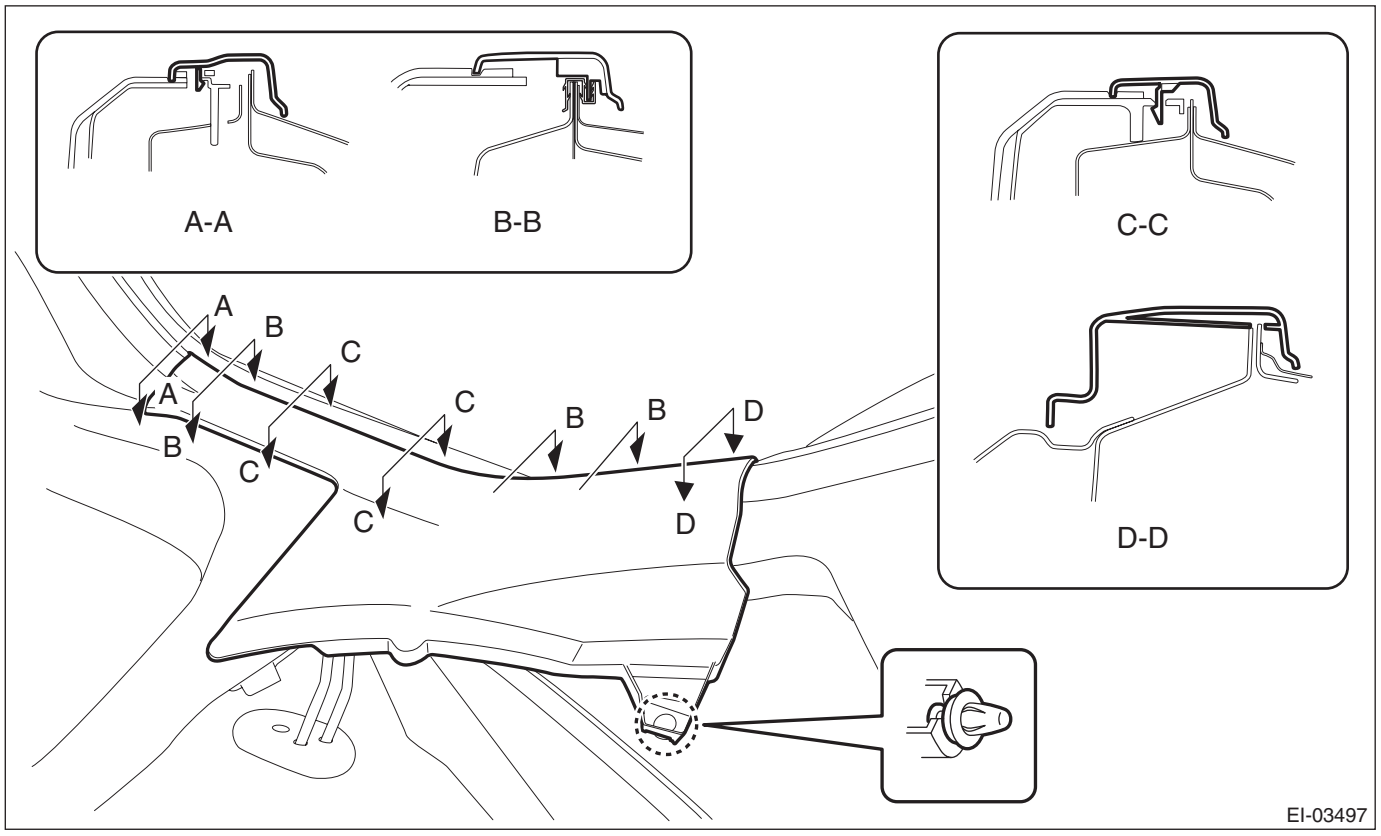

5) Remove the trim panel - center pillar LWR.
(1) Release the clip by pulling the trim panel - center pillar LWR toward you.
(2) Expand the claws of the trim panel - center pillar LWR outward, and remove it from the trim panel - center pillar UPR.

CAUTION:
Do not expand the trim panel - center pillar LWR excessively. Doing so may damage the trim.

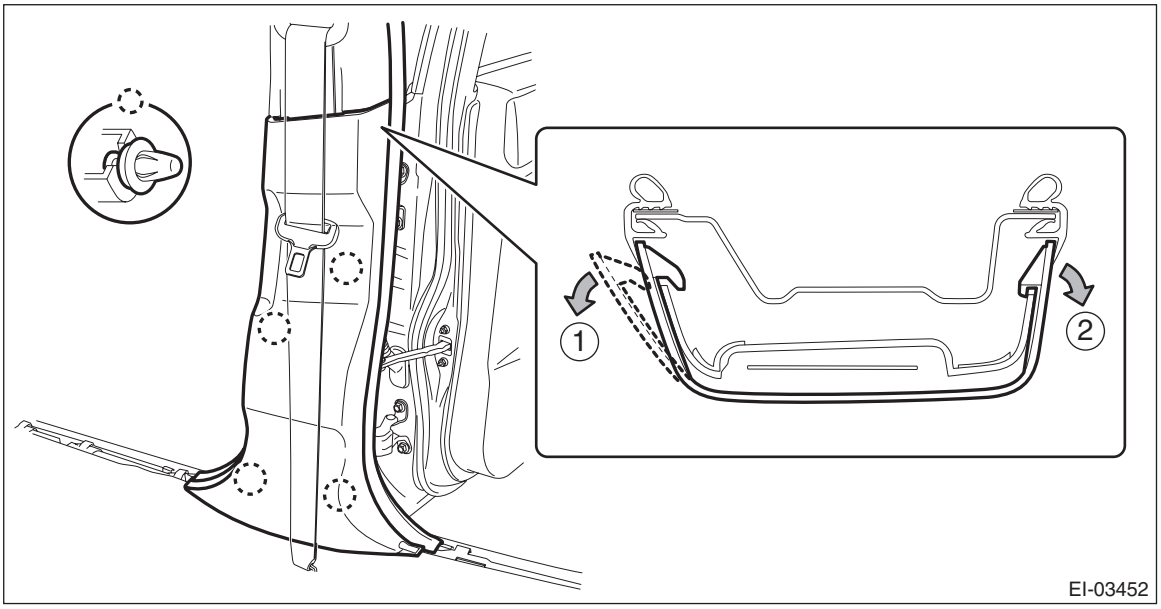

NOTE:
First release the claw located to the front of the vehicle.
6) Disconnect the claws and remove the cover - catcher.

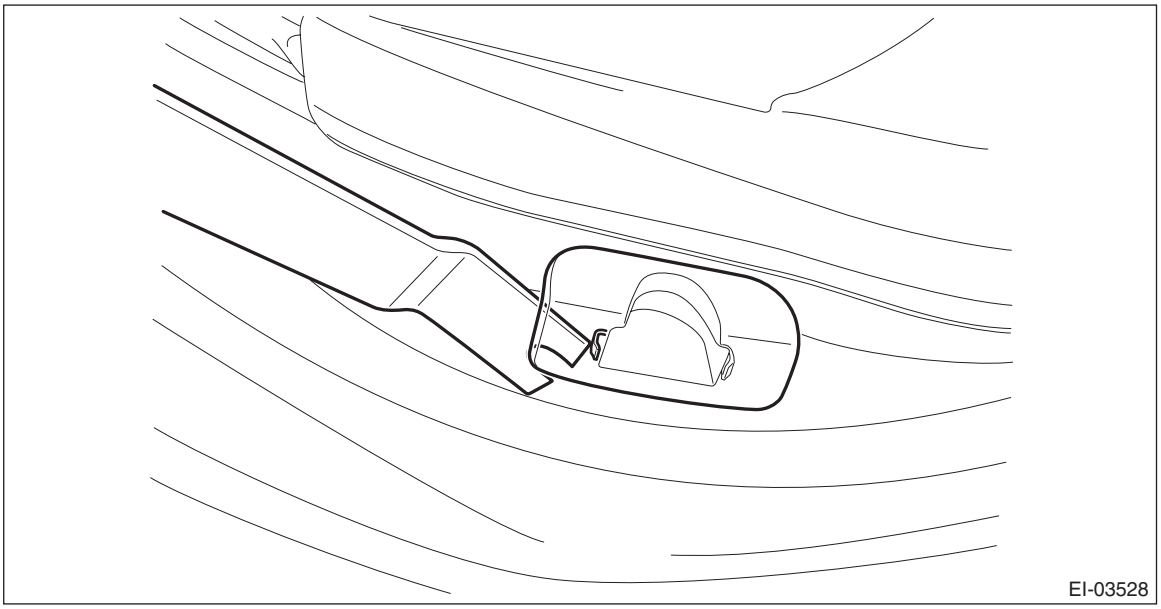

NOTE:
Remove the cover - catcher by using a plastic remover.

B: INSTALLATION

Install each part in the reverse order of removal.

NOTE:
Assemble the trim panel - center pillar LWR to the trim panel - center pillar UPR securely.

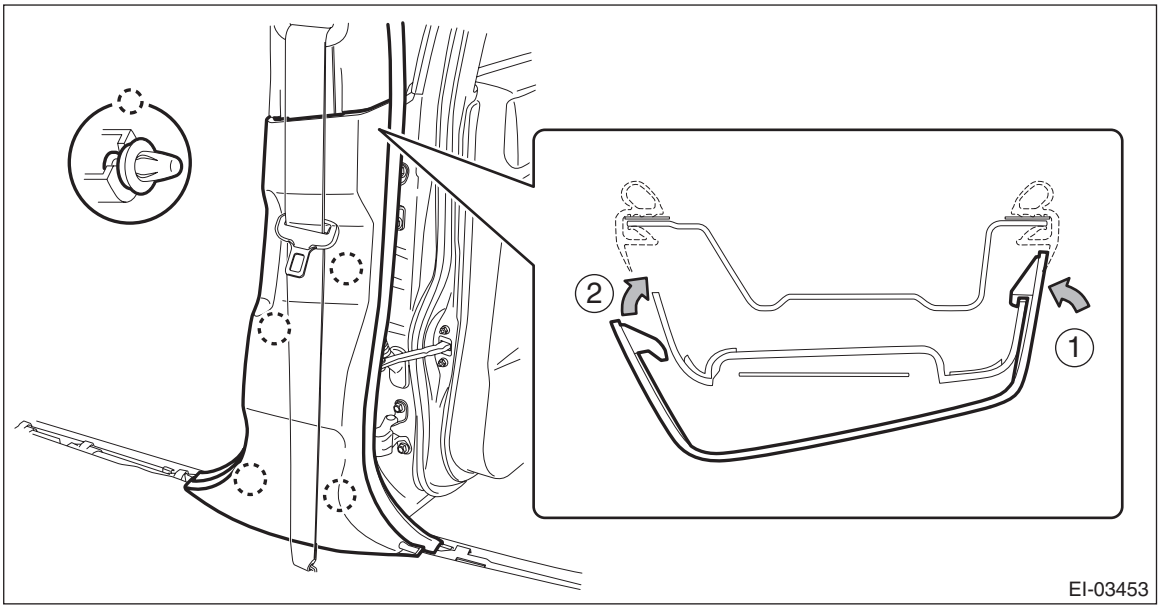

20.Upper Inner Trim

A: REMOVAL

CAUTION:
• Airbag system satellite safing sensor is located in the lower of the rear seat cushion center. Before removing the rear seat, refer to "CAUTION" of "General Description" in "AIRBAG SYSTEM" section. <Ref. to AB-11, CAUTION, General Description.>
• The airbag system is fitted with a backup power supply. After disconnecting the battery ground cable, the airbag may operate if you do not wait for 60 seconds before starting the service of airbag system.

1) Remove the trim panel - front pillar UPR.
   (1) Pull the upper part of the trim panel - front pillar UPR towards the center of the vehicle.
   (2) Insert long-nose pliers into the top part of the trim, grip the tether clip with the pliers and twist 90° in that position.

CAUTION:
Be careful not to damage the pillar trim surface and curtain airbag module when inserting the pliers.
   (3) Holding the tether clip twisted as in the previous step, remove the trim panel - front pillar UPR from the tether clip.
   (4) Remove the clips, and remove the trim panel - front pillar UPR.

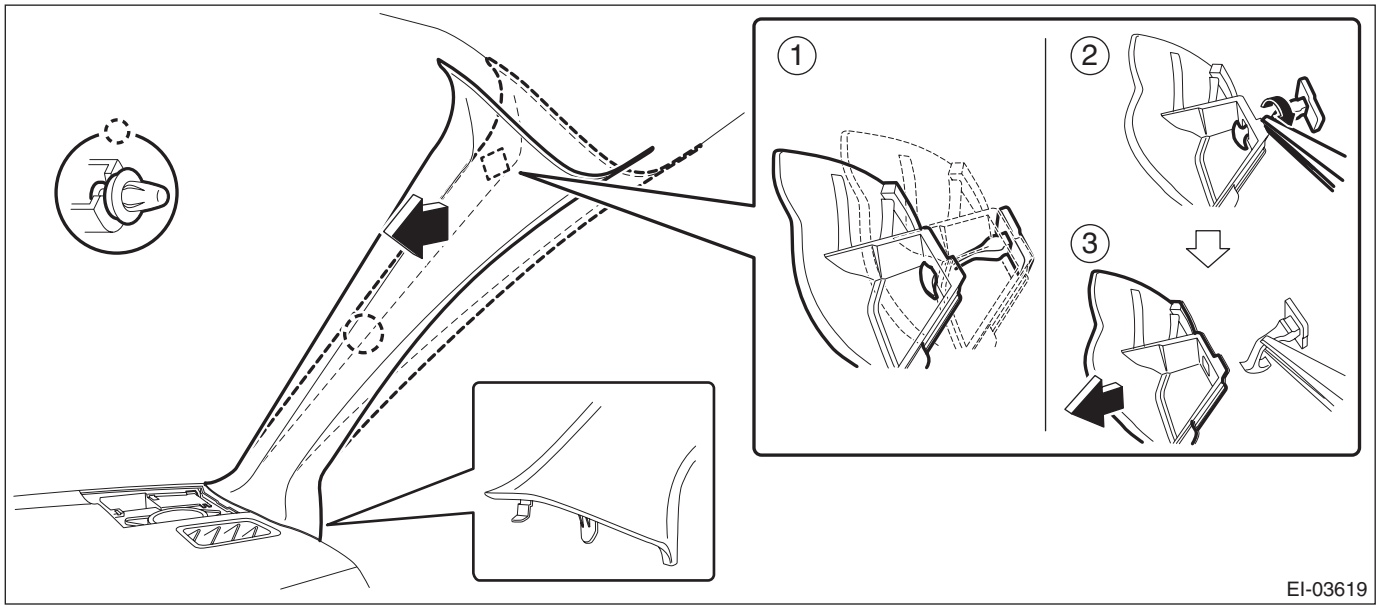

2) Release the claws, and then remove the cover side sill - front INN.

CAUTION:
Do not pull with excessive force. Doing so may damage the claws of the cover side sill - front INN.

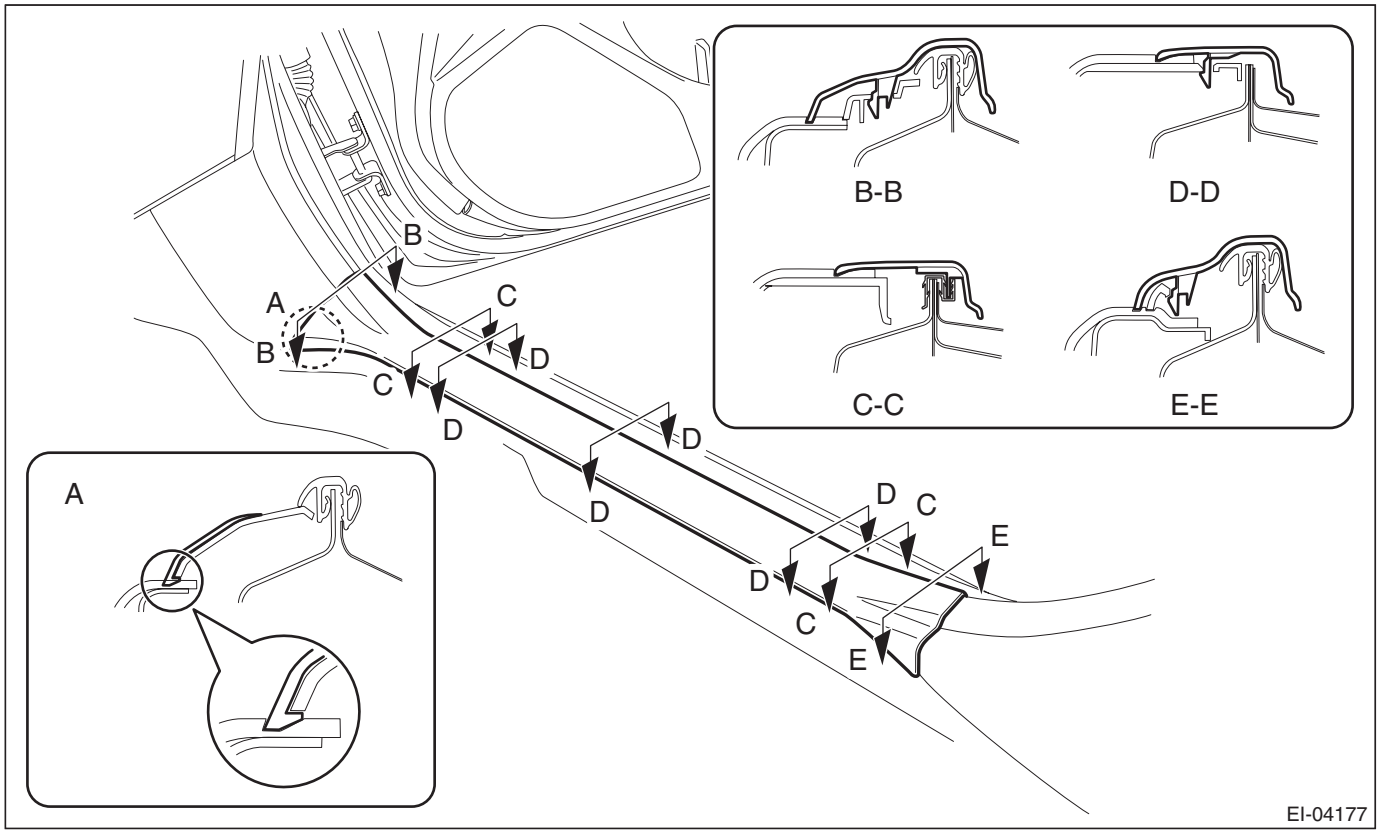

3) Remove the rear seat cushion assembly.
(1) Push the corners of the rear seat cushion from above.
(2) While pushing the corners of the rear seat cushion from above, pull the knob of the hook - seat cushion rear towards yourself.
(3) While pulling the knob towards yourself, disconnect the hooks by lifting up the rear seat cushion.

NOTE:
Pull the left side of the knob to disconnect the LH side hook, and pull the right side of the knob to disconnect the RH side hook.

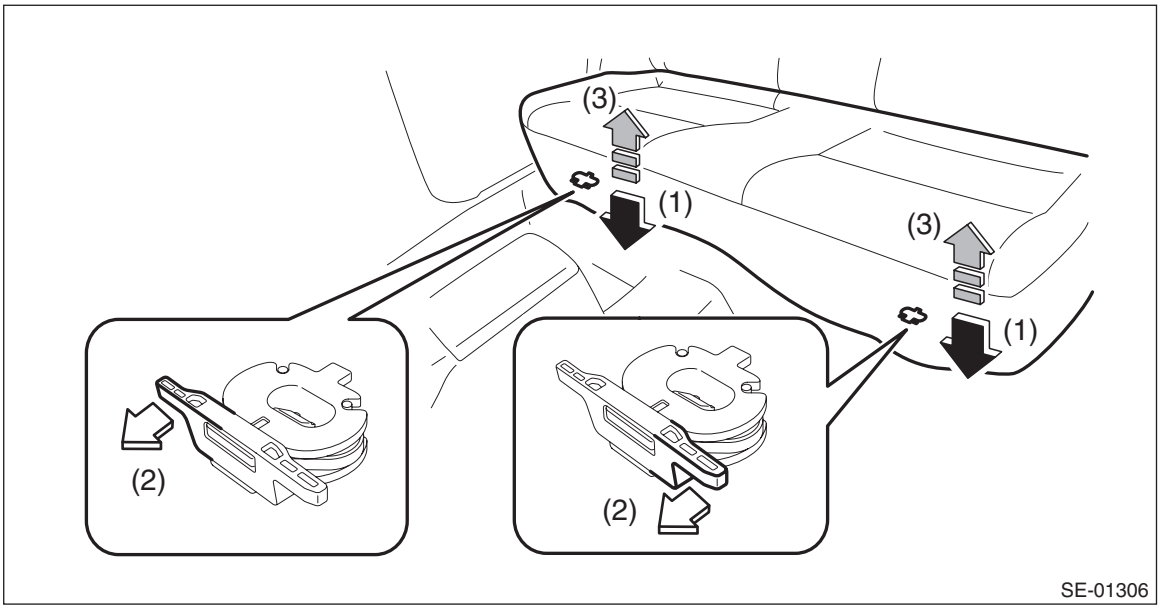

(4) Remove the hook (A) by pushing it back while lifting the front side of the rear seat cushion, and remove the rear seat cushion.

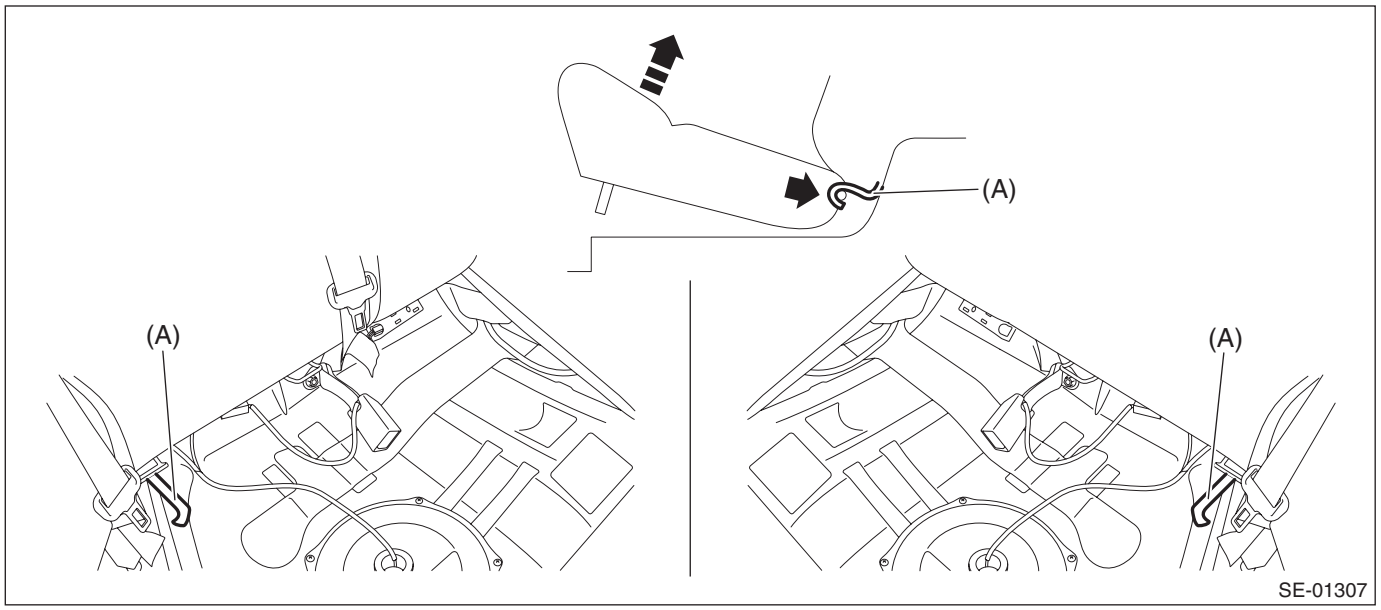

4) Release the clips and claws, and then remove the cover side sill - rear INN.

CAUTION:
Do not pull with excessive force. Doing so may damage the claws of the cover side sill - rear INN.

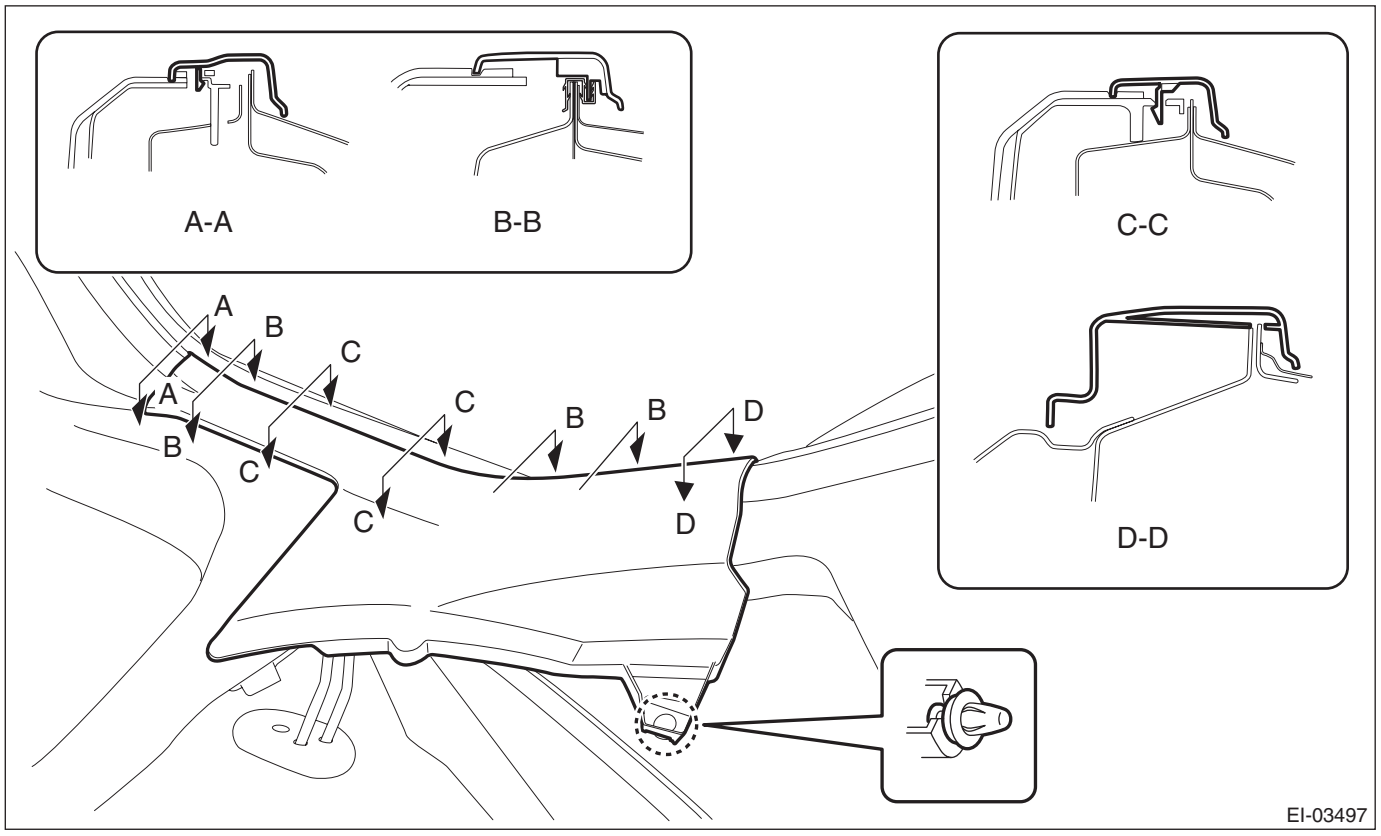

5) Remove the trim panel - center pillar LWR.
(1) Release the clip by pulling the trim panel - center pillar LWR toward you.
(2) Expand the claws of the trim panel - center pillar LWR outward, and remove it from the trim panel - center pillar UPR.

CAUTION:
Do not expand the trim panel - center pillar LWR excessively. Doing so may damage the trim.

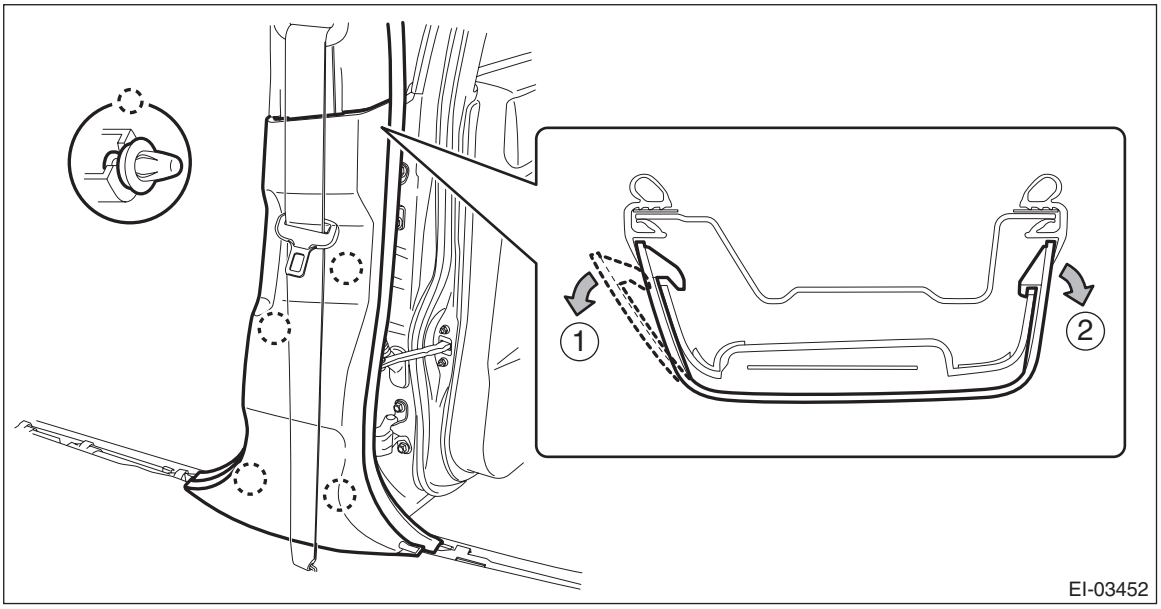

NOTE:
First release the claw located to the front of the vehicle.
6) Remove the trim panel - center pillar UPR.
(1) Remove the cover through (a), and remove the seat belt anchor bolt.
(2) Remove the bolt on the lower side of the trim panel - center pillar UPR.
(3) Remove the clip by pulling the upper part of the trim toward you, and while lowering the entire trim, remove the trim panel - center pillar UPR.

CAUTION:
Do not reuse the upper clips of the trim panel - center pillar UPR. Once the clip is removed, its holding force is reduced. Be sure to replace it with a new clip.

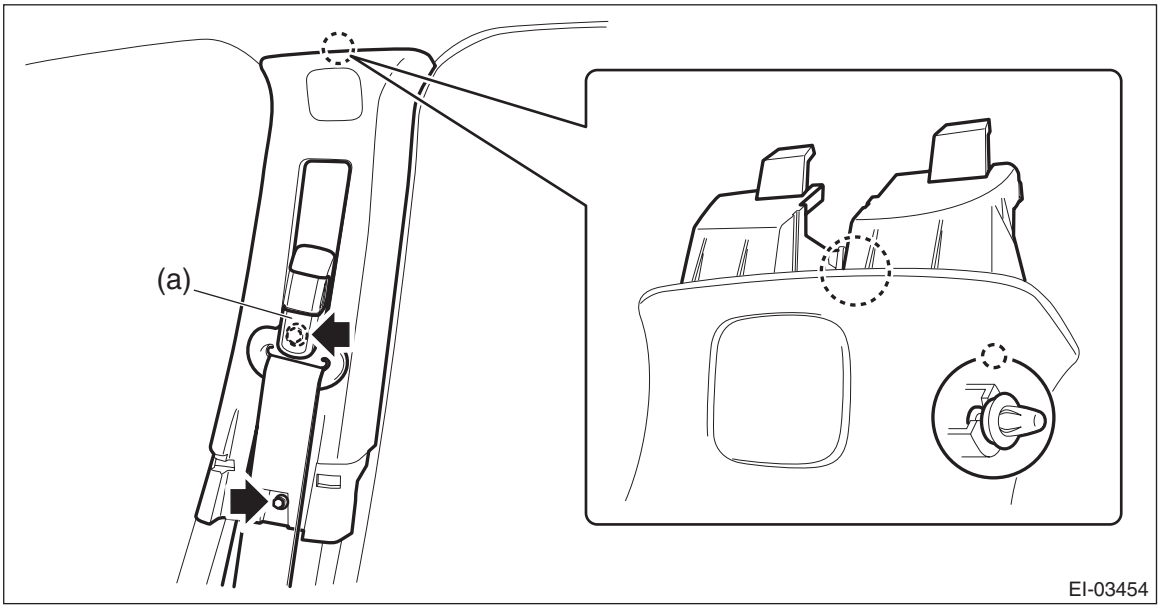

B: INSTALLATION

CAUTION:
• When reusing the tether clip on the upper part of the trim panel - front pillar UPR, check that there is no damage to the tether clip. If the clip is damaged, its holding force is reduced and the trim panel - front pillar UPR may come off. Be sure to replace it with a new clip.
• Do not reuse the tether clip removed from the upper part of the trim panel - front pillar UPR. Always replace with a new part.
• Do not reuse the upper clips of the trim panel - center pillar UPR. Once the clip is removed, its holding force is reduced. Be sure to replace it with a new clip.
• Before installing the trim panel - front pillar UPR, check the condition of protective non-woven fabric (white) of the curtain airbag. If it is damaged (airbag module cloth is exposed), replace the curtain airbag module assembly with a new part.
1) Remove the remaining tether clips from the vehicle body.
2) Install the trim panel - front pillar UPR.
(1) Check the installation status of the tether clips and install the trim panel - front pillar UPR.

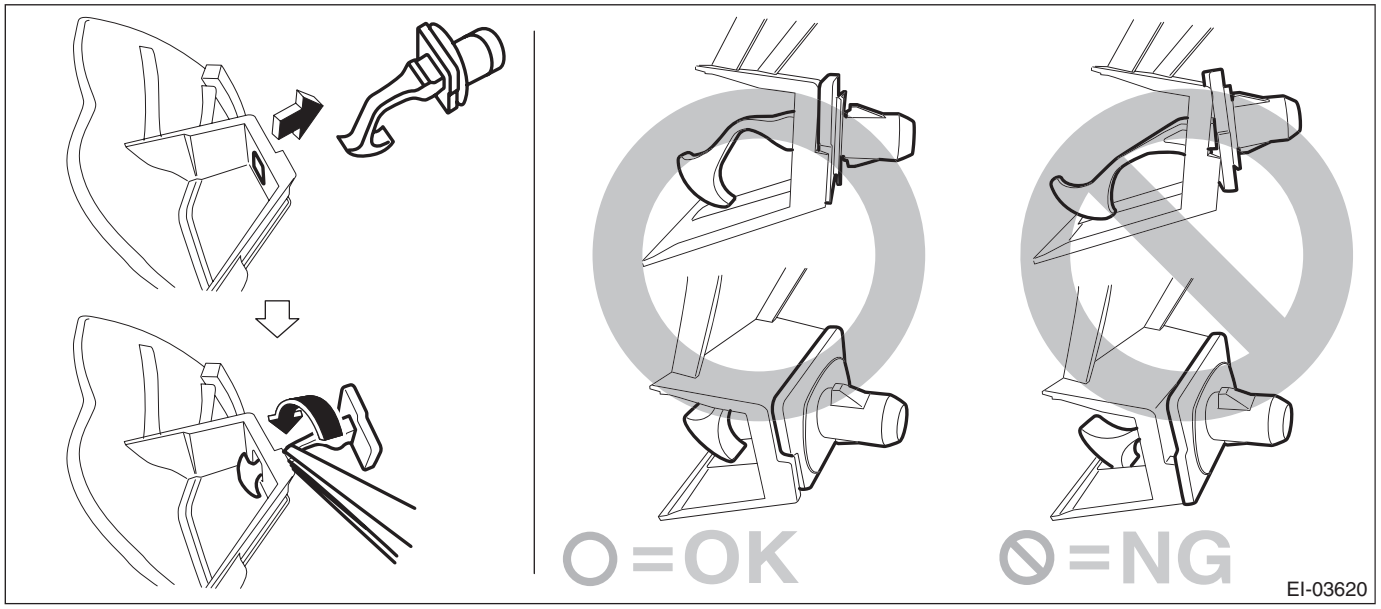

3) Install each part in the reverse order of removal.

Tightening torque
Front seat belt: <Ref. to SB-2, FRONT SEAT BELT, COMPONENT, General Description.>

21.Rear Quarter Trim

A: REMOVAL

1. 4 DOOR MODEL

CAUTION:
• Airbag system satellite safing sensor is located in the lower of the rear seat cushion center. Before removing the rear seat, refer to "CAUTION" of "General Description" in "AIRBAG SYSTEM" section. <Ref. to AB-11, CAUTION, General Description.>
• The airbag system is fitted with a backup power supply. After disconnecting the battery ground cable, the airbag may operate if you do not wait for 60 seconds before starting the service of airbag system.
1) Disconnect the ground cable from battery and wait for at least 60 seconds before starting work.
2) Remove the clips, and remove the trim panel - rear pillar UPR.

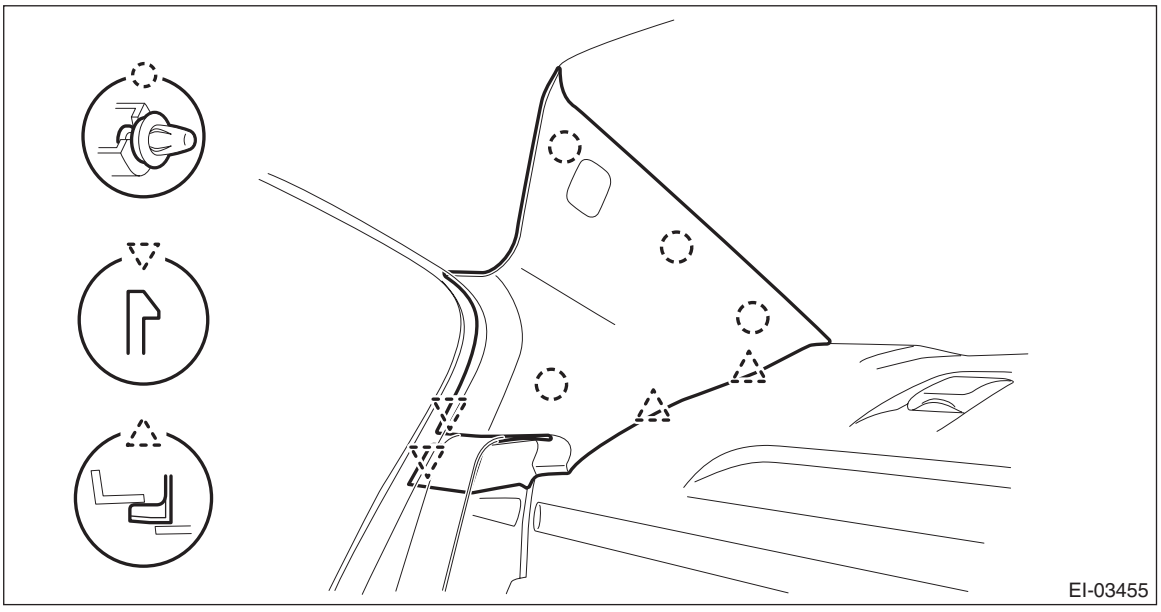

3) Remove the rear seat cushion assembly.
(1) Push the corners of the rear seat cushion from above.
(2) While pushing the corners of the rear seat cushion from above, pull the knob of the hook - seat cushion rear towards yourself.
(3) While pulling the knob towards yourself, disconnect the hooks by lifting up the rear seat cushion.

NOTE:
Pull the left side of the knob to disconnect the LH side hook, and pull the right side of the knob to disconnect the RH side hook.

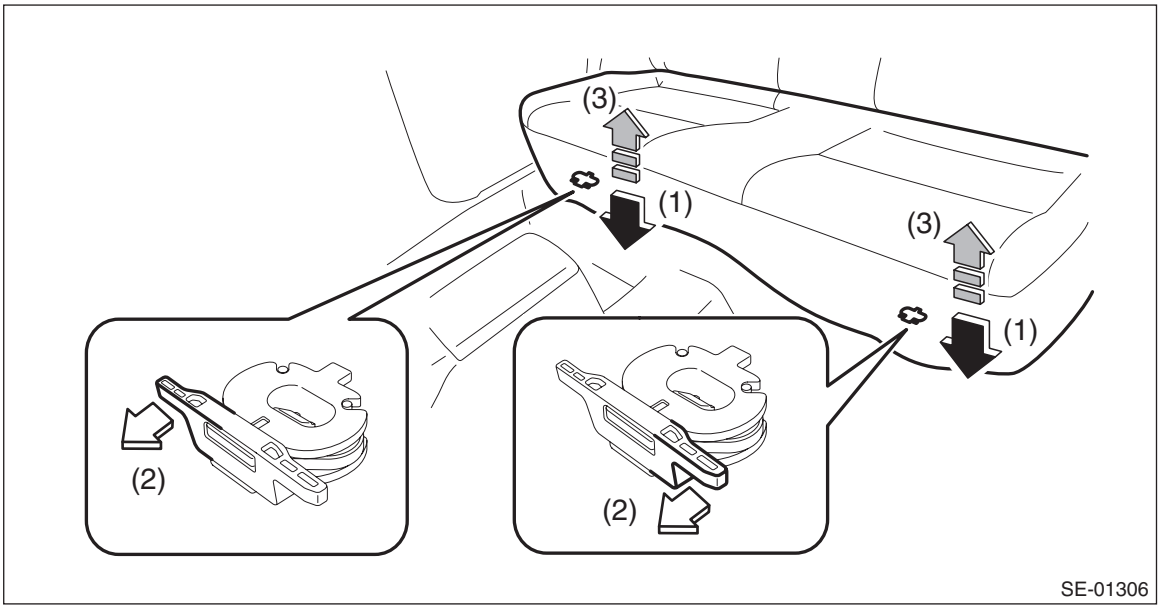

(4) Remove the hook (A) by pushing it back while lifting the front side of the rear seat cushion, and remove the rear seat cushion.

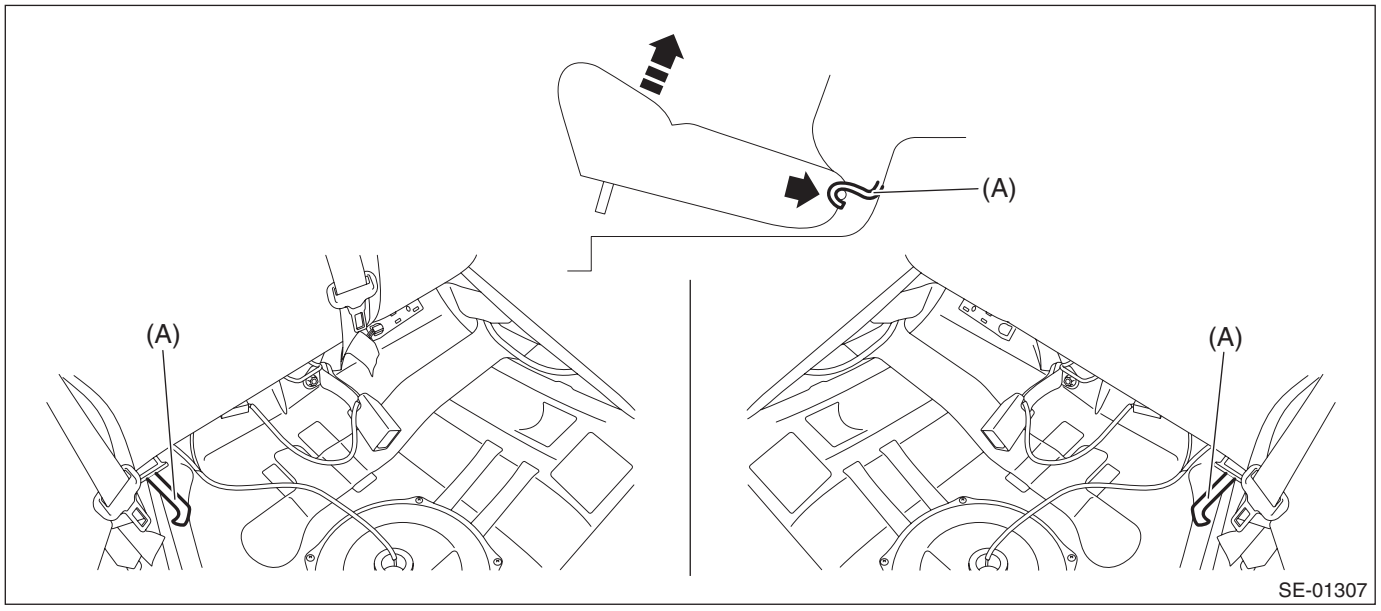

4) Release the clips and claws, and then remove the cover side sill - rear INN.

CAUTION:
Do not pull with excessive force. Doing so may damage the claws of the cover side sill - rear INN.

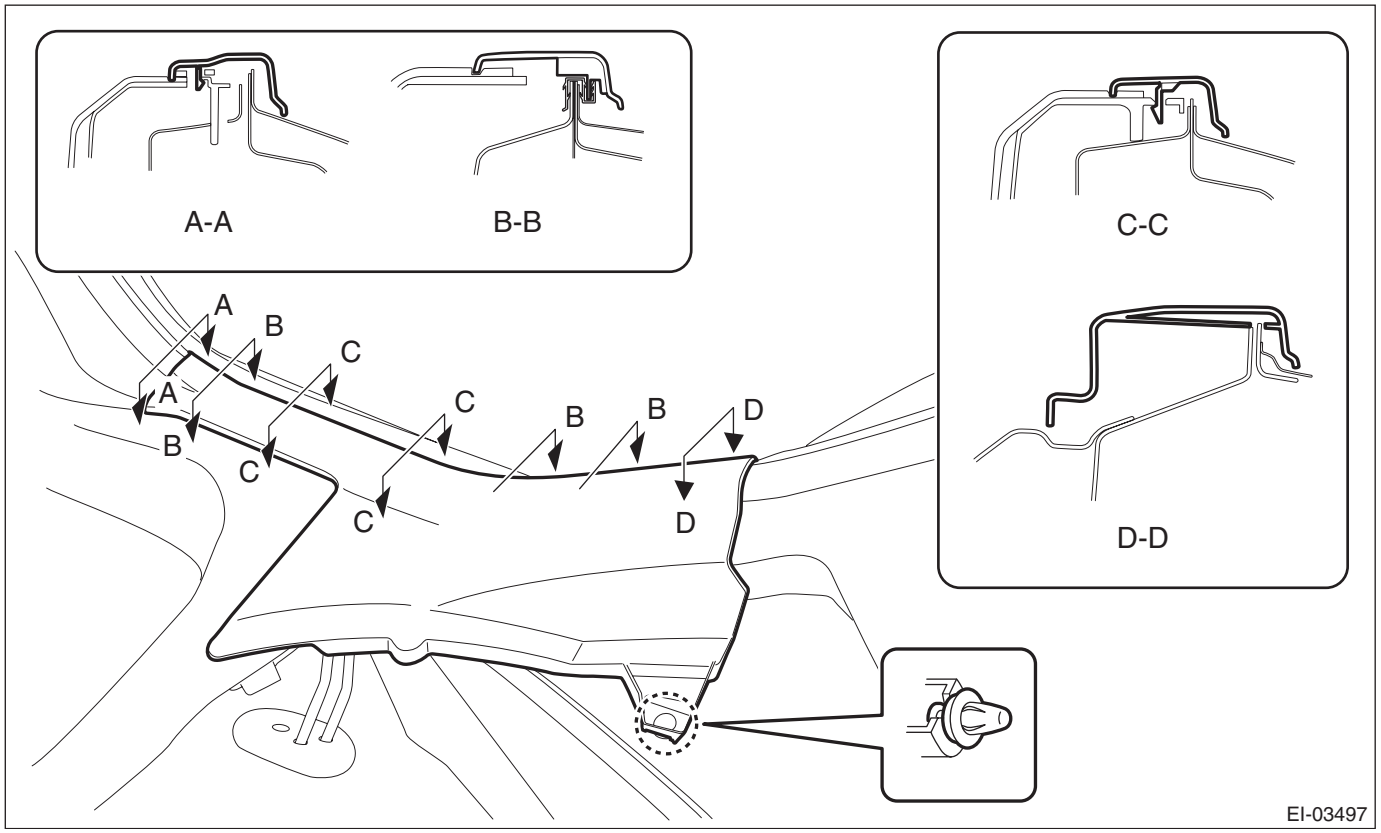

5) Remove the trim panel - rear pillar LWR.
(1) Remove the clips, and turn over the trim panel - trunk side.
(2) Remove the clips, and remove the trim panel - rear pillar LWR.

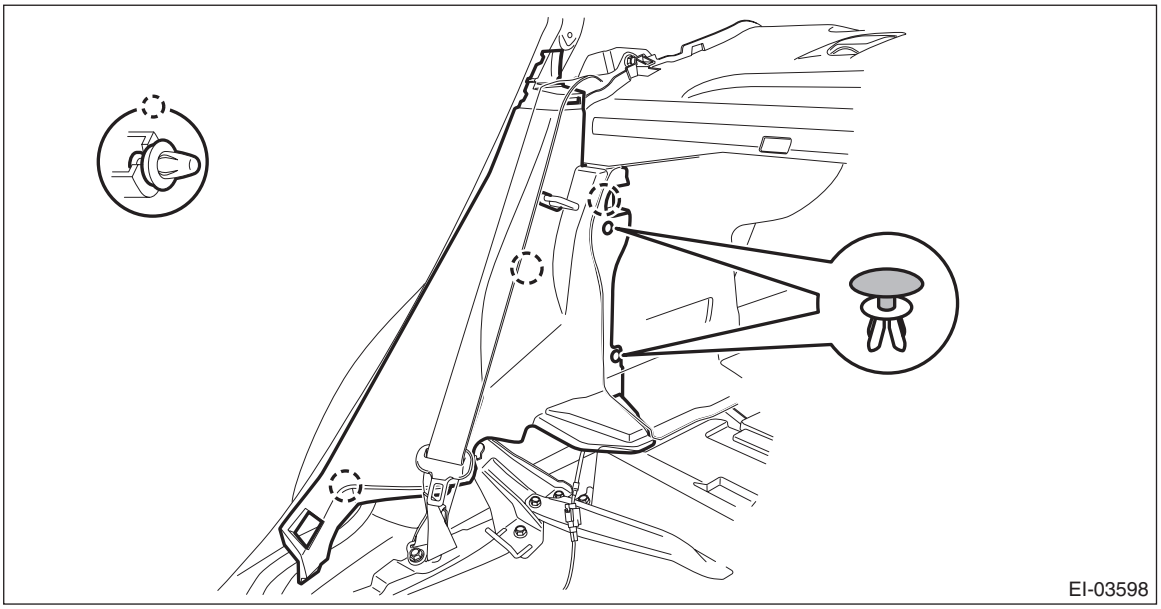

2. 5 DOOR MODEL/XV MODEL

CAUTION:
• Airbag system satellite safing sensor is located in the lower of the rear seat cushion center. Before removing the rear seat, refer to "CAUTION" of "General Description" in "AIRBAG SYSTEM" section. <Ref. to AB-11, CAUTION, General Description.>
• The airbag system is fitted with a backup power supply. After disconnecting the battery ground cable, the airbag may operate if you do not wait for 60 seconds before starting the service of airbag system.
1) Disconnect the ground cable from battery and wait for at least 60 seconds before starting work. <Ref. to NT-5, BATTERY, NOTE, Note.>

NOTE:
For the 12 volt engine restart battery of HEV model, disconnect the ground terminal from 12V engine restart battery sensor.
2) Remove the screws and clips, and remove the trim panel - rear quarter pillar UPR.

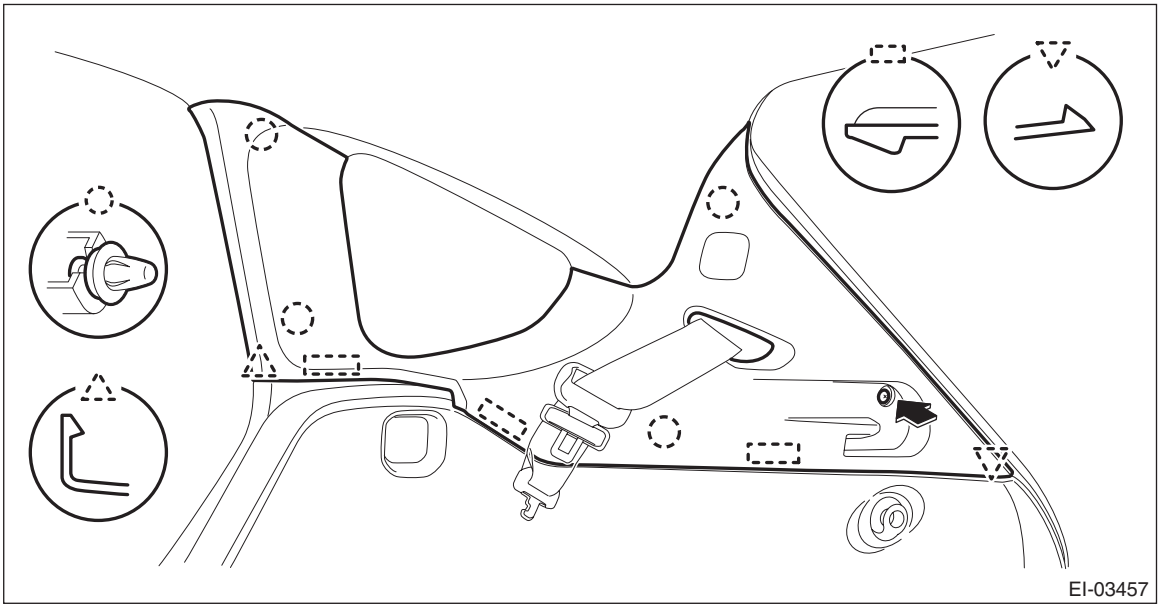

3) Remove the rear seat cushion assembly.
(1) Push the corners of the rear seat cushion from above.
(2) While pushing the corners of the rear seat cushion from above, pull the knob of the hook - seat cushion rear towards yourself.
(3) While pulling the knob towards yourself, disconnect the hooks by lifting up the rear seat cushion.

NOTE:
Pull the left side of the knob to disconnect the LH side hook, and pull the right side of the knob to disconnect the RH side hook.

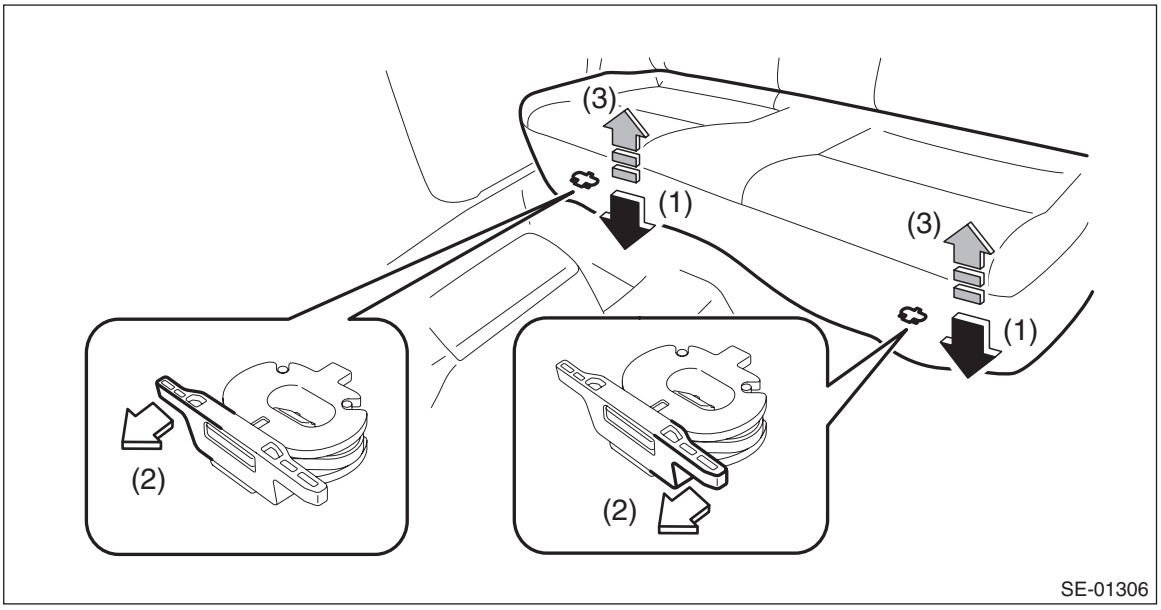

(4) Remove the hook (A) by pushing it back while lifting the front side of the rear seat cushion, and remove the rear seat cushion.

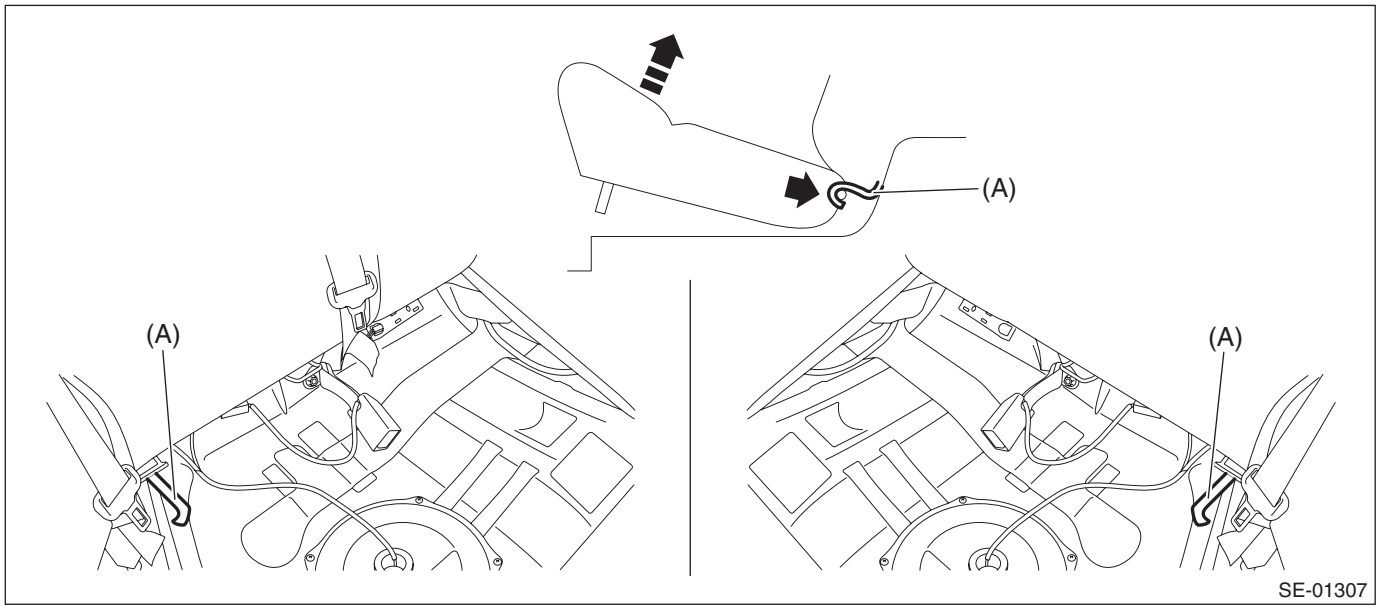

4) Release the clips and claws, and then remove the cover side sill - rear INN.

CAUTION:
Do not pull with excessive force. Doing so may damage the claws of the cover side sill - rear INN.

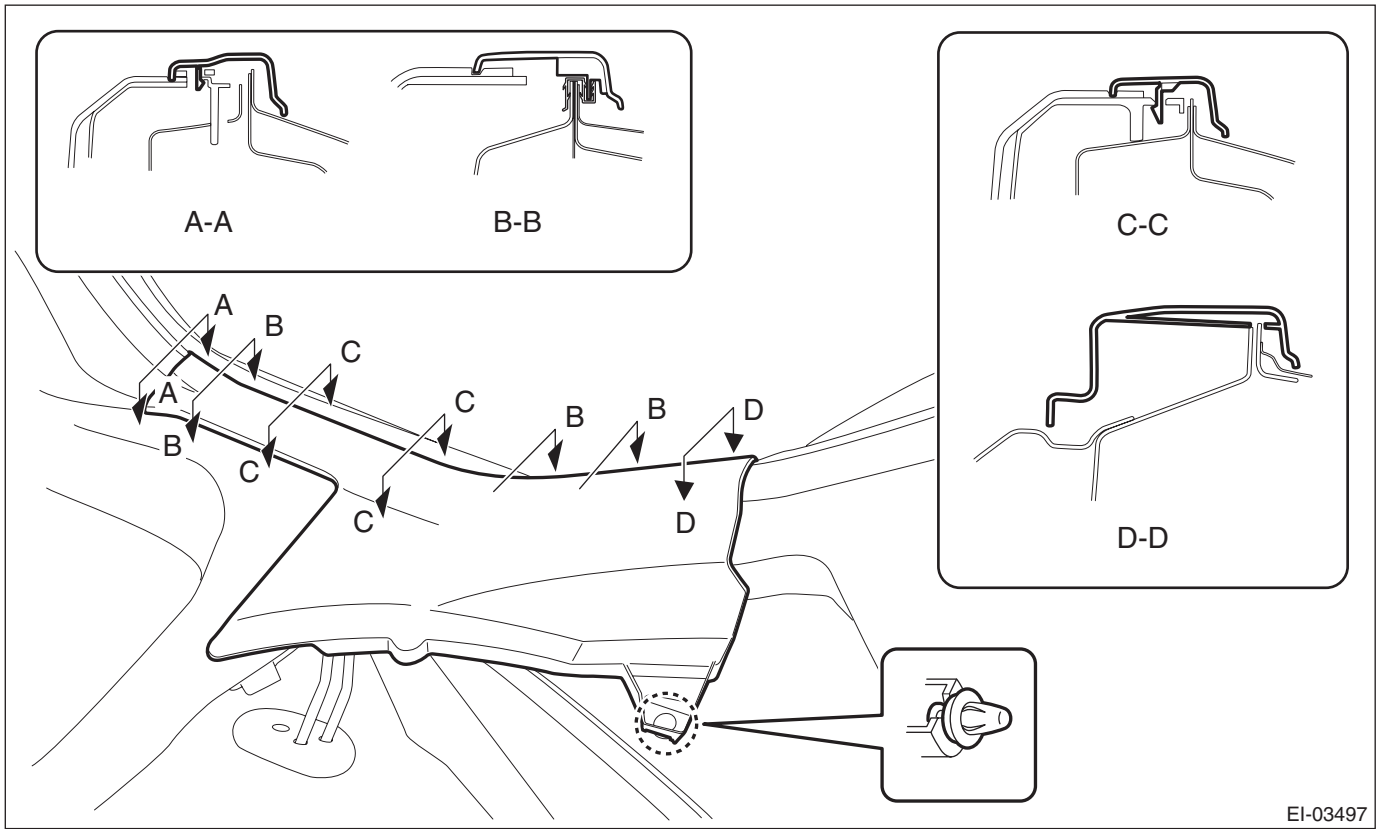

5) Remove the mat - rear floor CTR and the spacer - rear floor side.

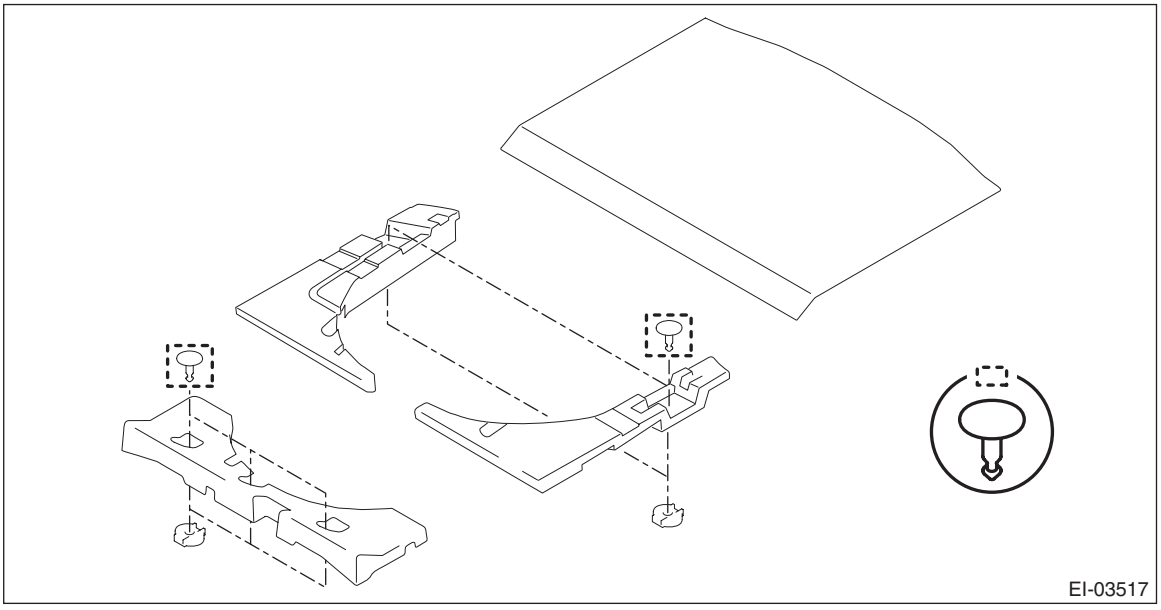

6) Remove the sub-trunk box and side spacers. (HEV model)

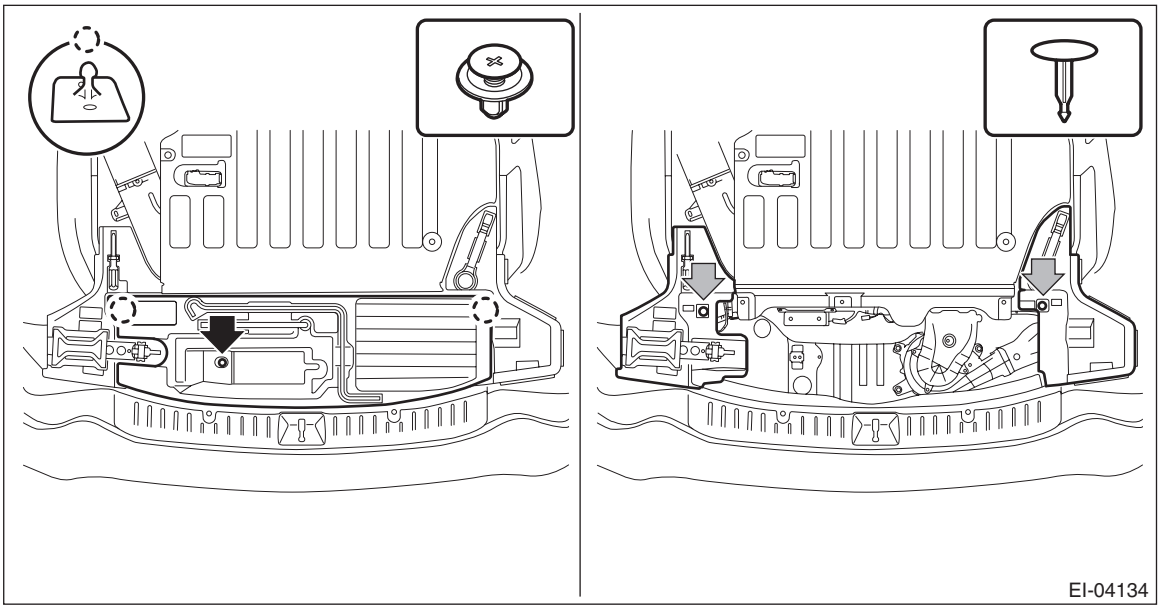

(1) Release the clips and side spacers, then detach the sub-trunk box.
(2) Remove the clips and detach the side spacers.

7) Remove the clips, and remove the trim panel - rear skirt.

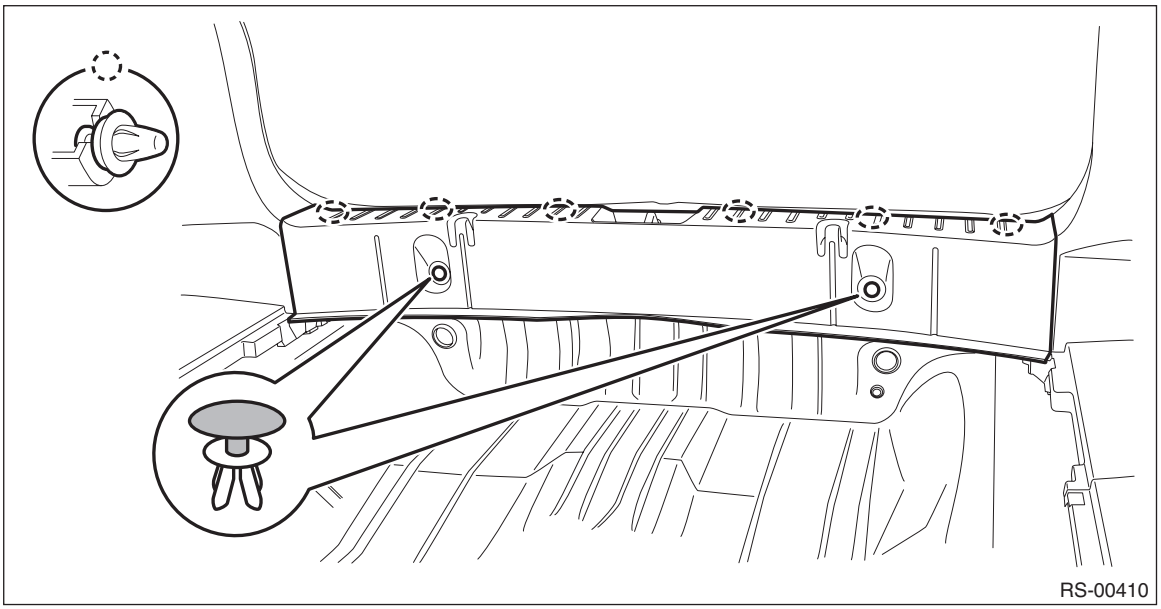

8) Remove the trim panel - rear apron.
(1) Remove the caps, and remove the bolts.
(2) Remove the screws.
(3) Disengage the clips, and remove the trim panel - rear apron.

NOTE:
For LH side, disconnect the connector of the luggage room light.

- Gasoline engine model

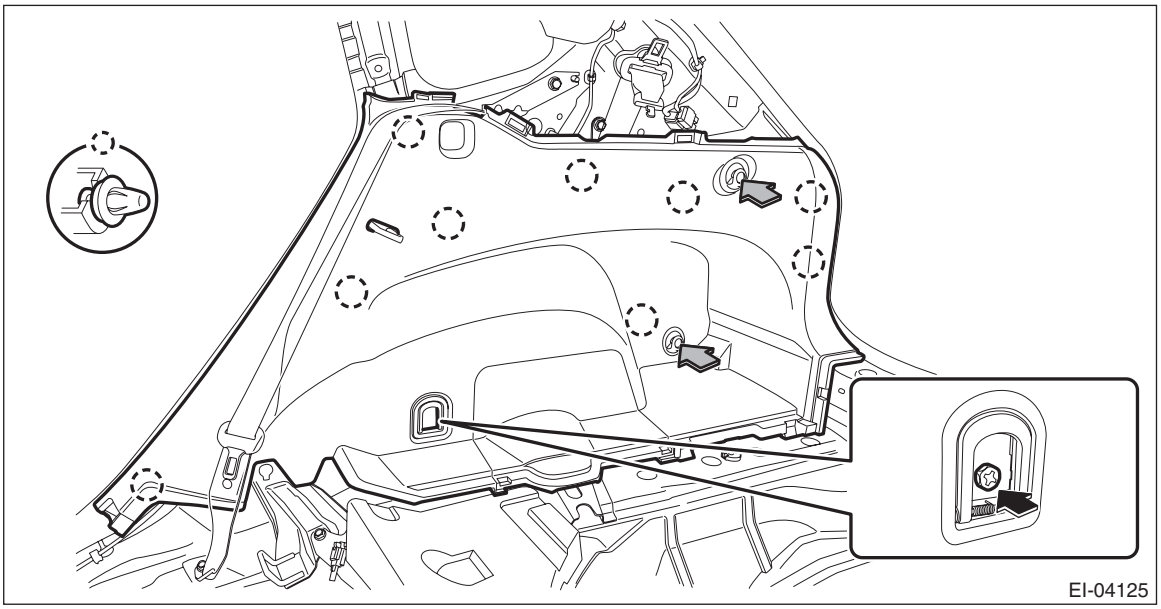
EI-04125

- HEV model

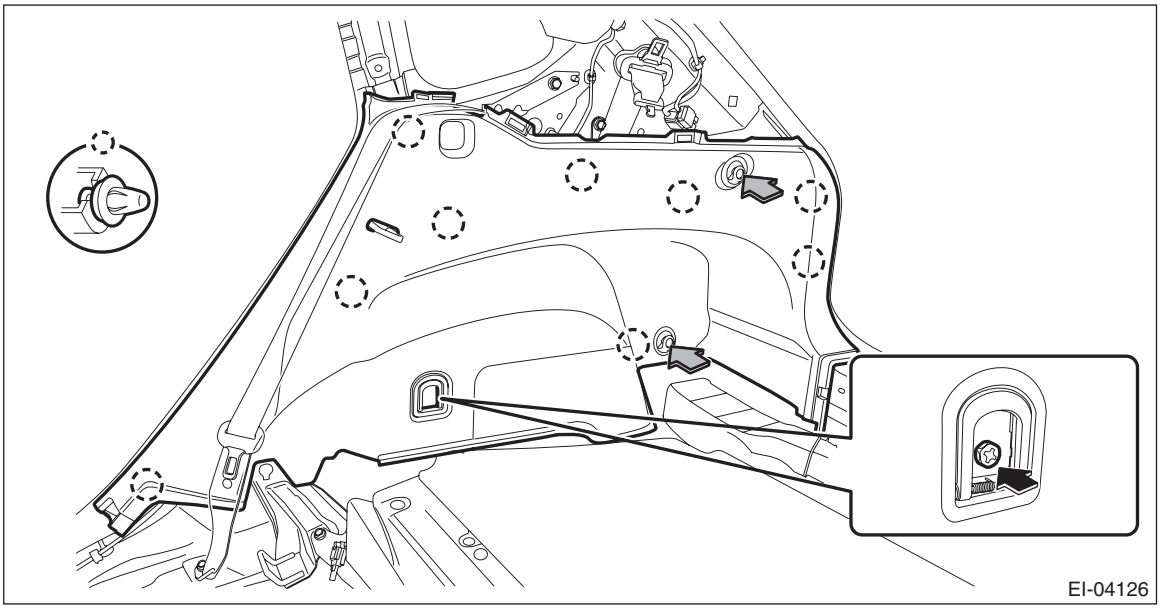
EI-04126

B: INSTALLATION

Install each part in the reverse order of removal.

Tightening torque:
Rear seat backrest assembly: <Ref. to SE-5, REAR SEAT, COMPONENT, General Description.>

22.Rear Shelf Trim

A: REMOVAL

CAUTION:
• Airbag system satellite safing sensor is located in the lower of the rear seat cushion center. Before removing the rear seat, refer to "CAUTION" of "General Description" in "AIRBAG SYSTEM" section. <Ref. to AB-11, CAUTION, General Description.>
• The airbag system is fitted with a backup power supply. After disconnecting the battery ground cable, the airbag may operate if you do not wait for 60 seconds before starting the service of airbag system.
1) Disconnect the ground cable from battery and wait for at least 60 seconds before starting work. <Ref. to NT-5, BATTERY, NOTE, Note.>

NOTE:
For the 12 volt engine restart battery of HEV model, disconnect the ground terminal from 12V engine restart battery sensor.
2) Remove the rear seat cushion assembly.
(1) Push the corners of the rear seat cushion from above.
(2) While pushing the corners of the rear seat cushion from above, pull the knob of the hook - seat cushion rear towards yourself.
(3) While pulling the knob towards yourself, disconnect the hooks by lifting up the rear seat cushion.

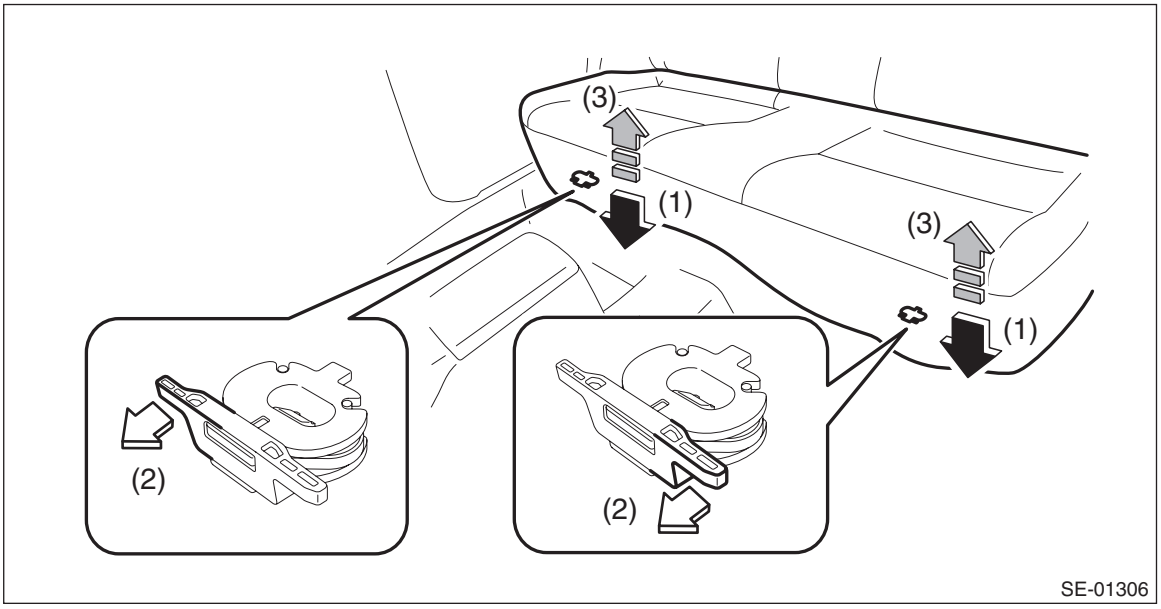

(4) Remove the hook (A) by pushing it back while lifting the front side of the rear seat cushion, and remove the rear seat cushion.

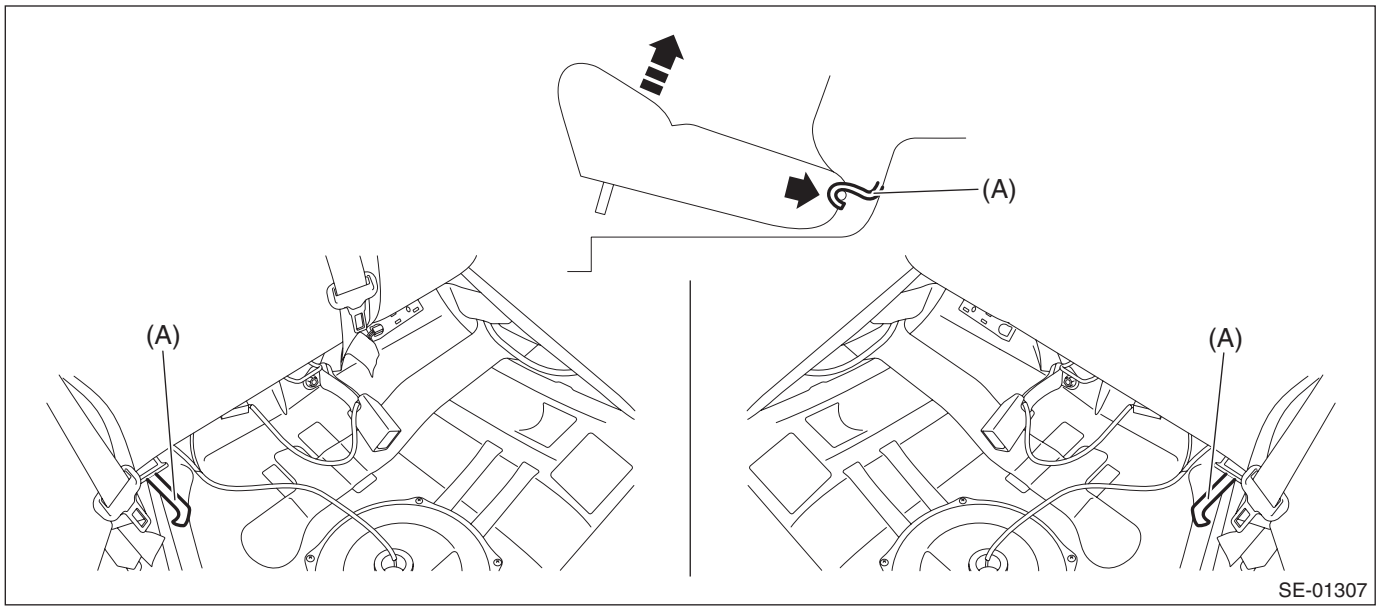

3) Release the clips and claws, and remove the side sill covers - rear INN on the left and right sides.

CAUTION:
Do not pull with excessive force. Doing so may damage the claws of the side sill cover - rear INN.

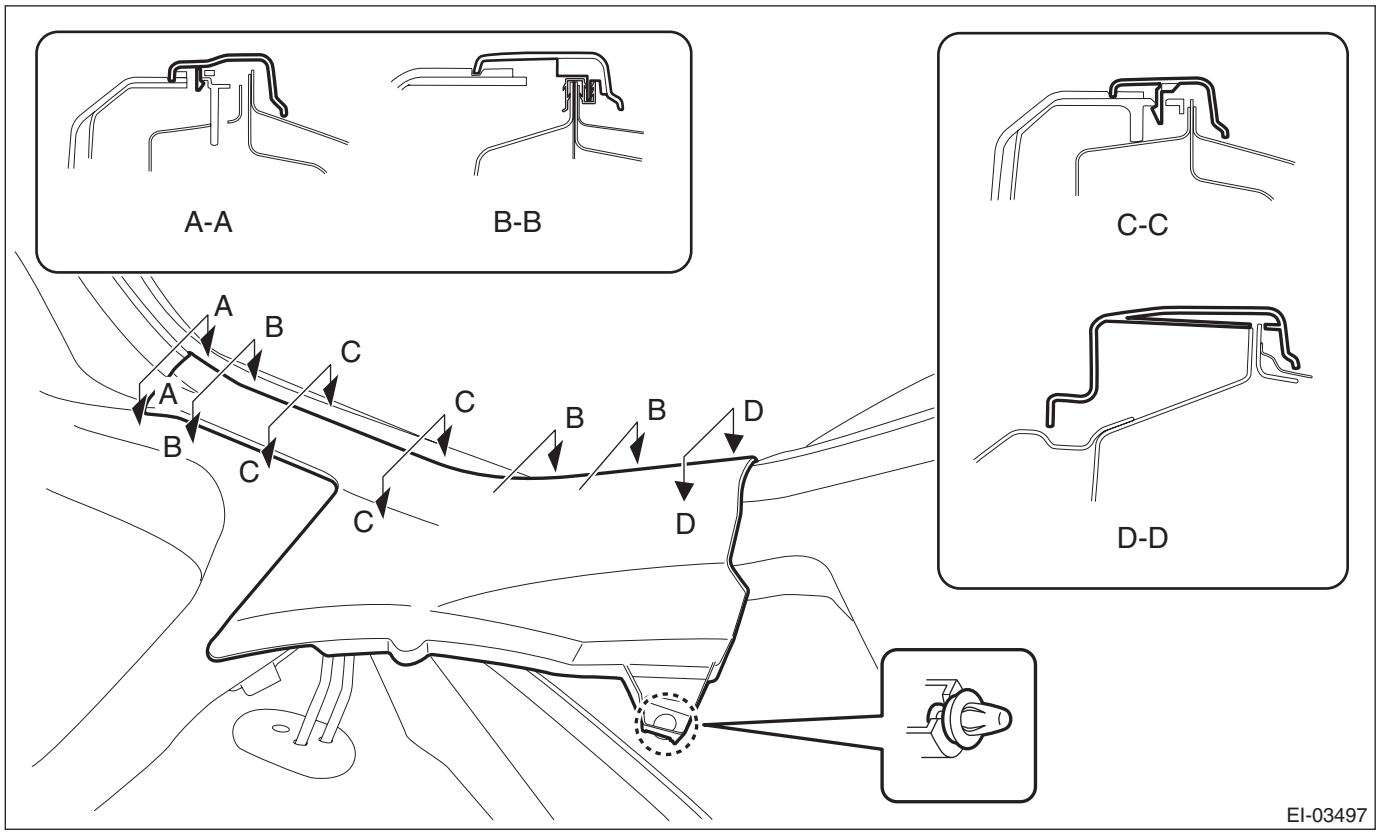

4) Remove the clips, and remove the trim panel - rear pillar UPR on the left and right sides.

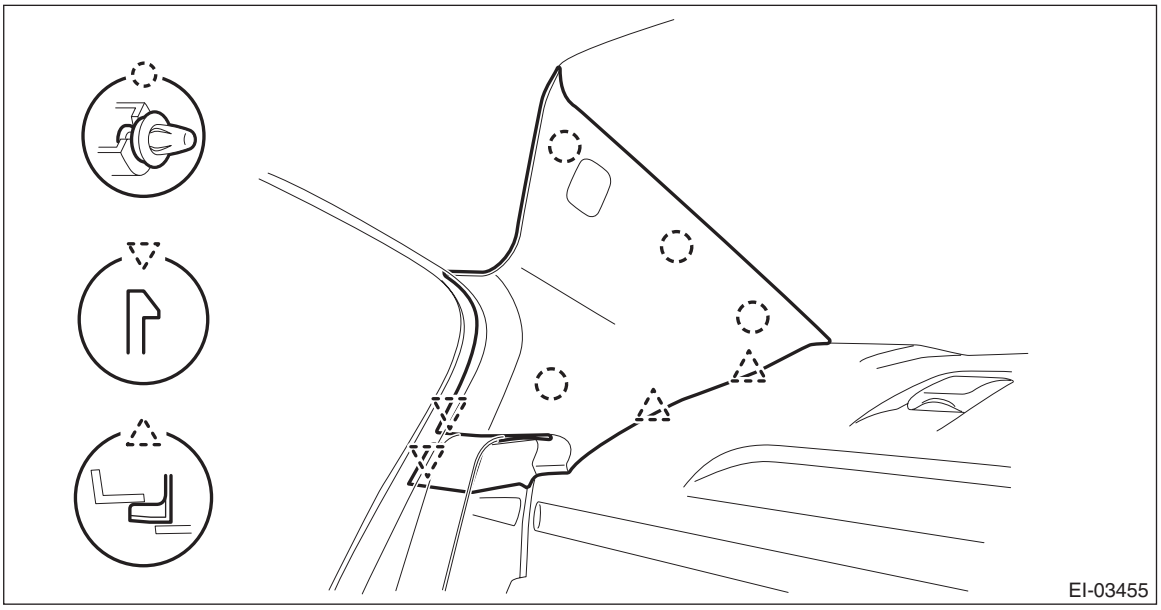

5) Remove the trim panel - rear pillar LWR on the left and right sides.
   (1) Remove the clips, and turn over the trim panel - trunk side.
   (2) Remove the clips, and remove the trim panel - rear pillar LWR.

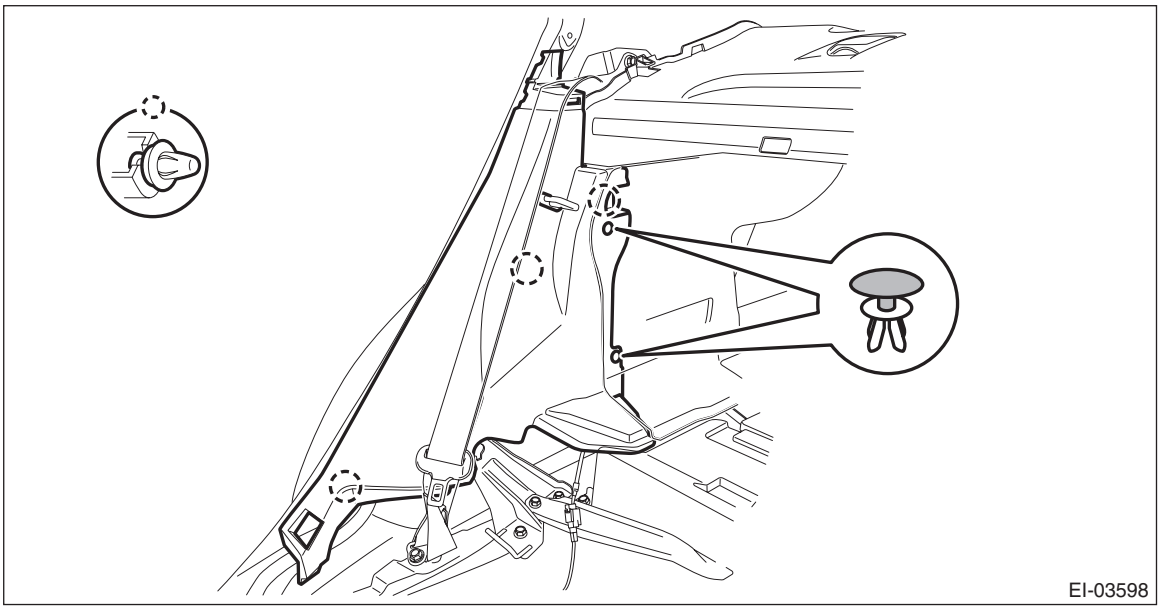

6) Remove the bolts, and remove the lower anchor of the seat belt - rear shoulder CTR.

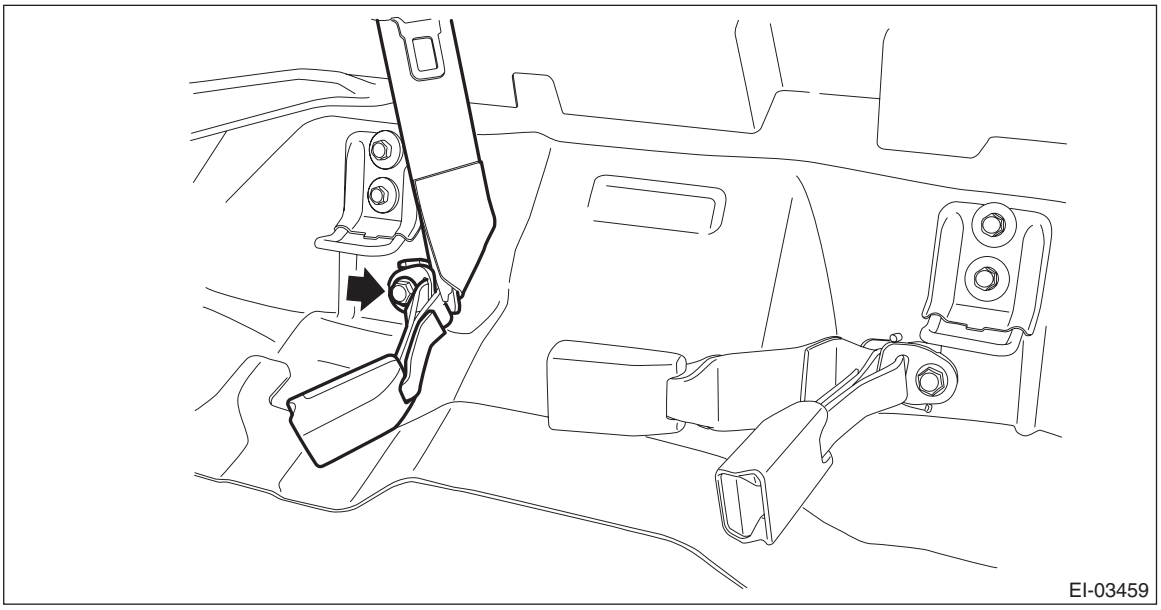

7) Remove the high-mounted stop light.
(1) Disconnect the connector.

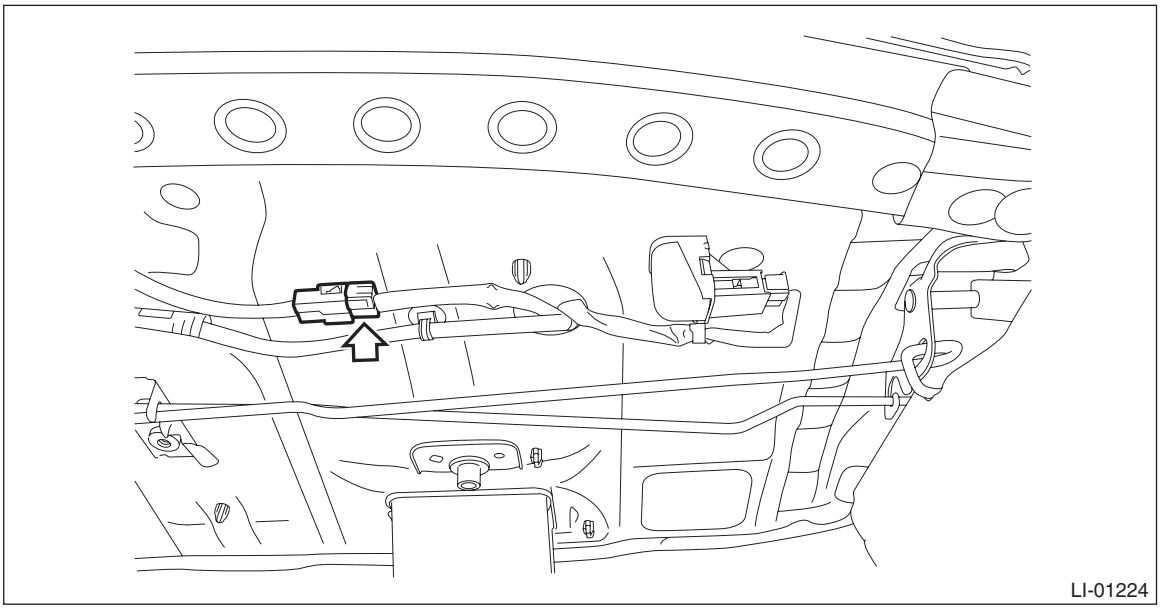

(2) Release the claws, and remove the light assembly - high-mounted.

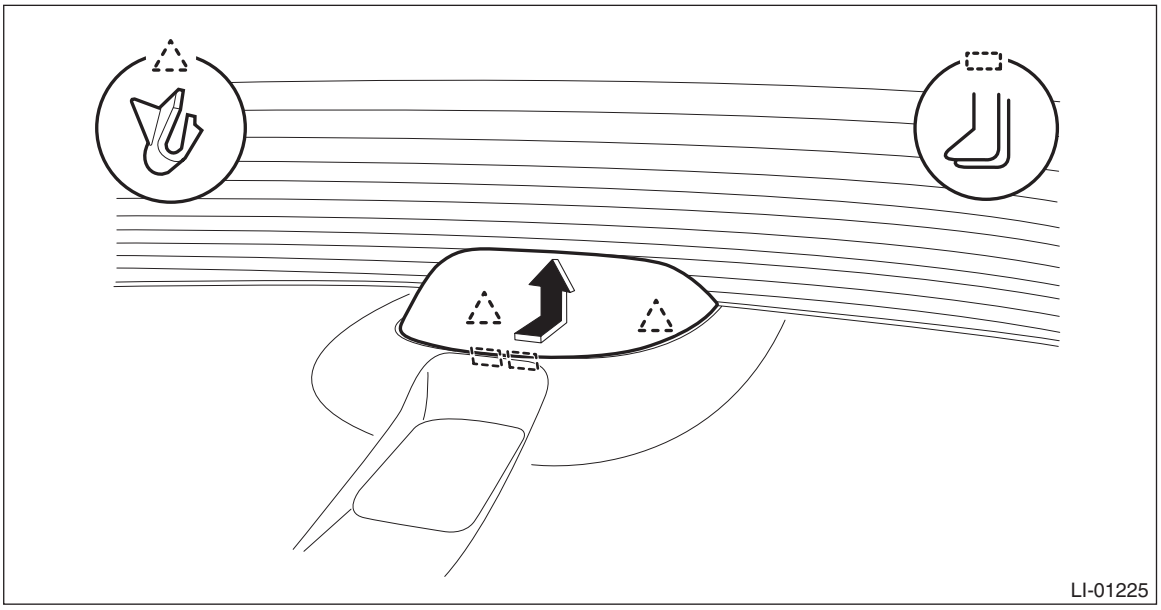

8) Remove the trim panel assembly - rear shelf.
(1) Release the clips to float the trim panel assembly - rear shelf.
(2) Release the belt guide, and guide the anchor of the seat belt - rear shoulder CTR to behind the trim panel - rear shelf assembly.
(3) Disconnect the connector of high-mounted stop light.
(4) Remove the trim panel assembly - rear shelf.

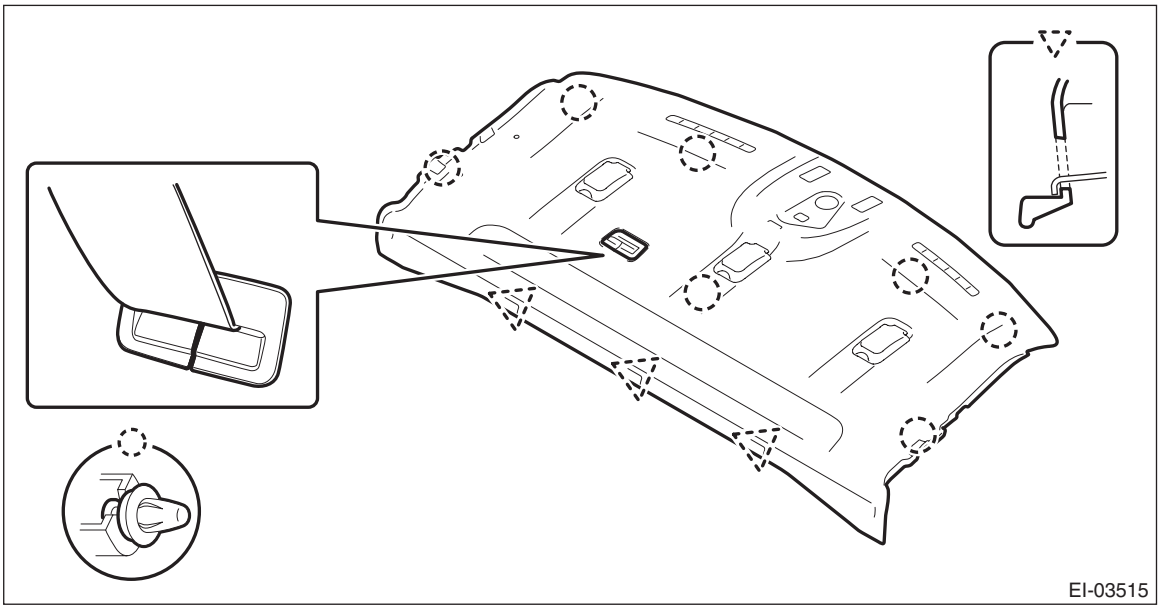

B: INSTALLATION

CAUTION:
Make sure that the claw behind the light assembly - high-mounted is securely attached to the trim panel assembly - rear shelf.
Install each part in the reverse order of removal.

Tightening torque:
Rear seat belt: <Ref. to SB-3, REAR SEAT BELT (4 DOOR MODEL), COMPONENT, General Description.>
Rear seat backrest assembly: <Ref. to SE-5, REAR SEAT, COMPONENT, General Description.>

23.Trunk Room Trim

A: REMOVAL

1. TRUNK LID TRIM

1) Open the trunk lid.
2) Remove the clips, and remove the trim panel - trunk lid.

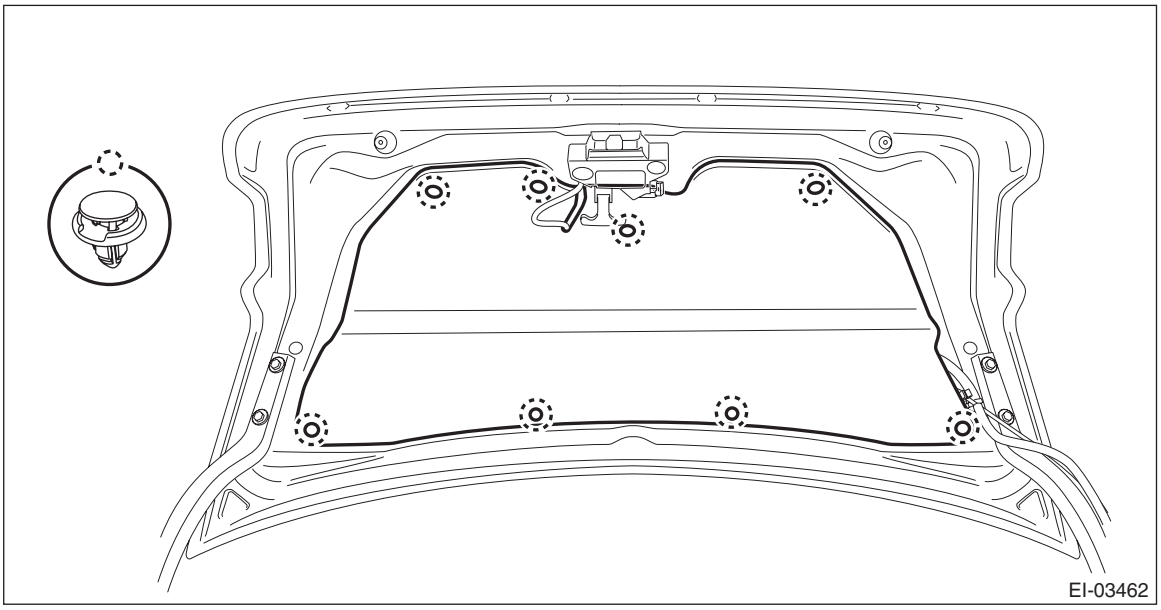

2. TRUNK ROOM TRIM

1) Tilt the backrest assembly forward.
2) Remove the mat - trunk.
3) Remove the trim panel - trunk rear.
   (1) Remove the clip.
   (2) Release the claws, and remove the trim panel - trunk rear.

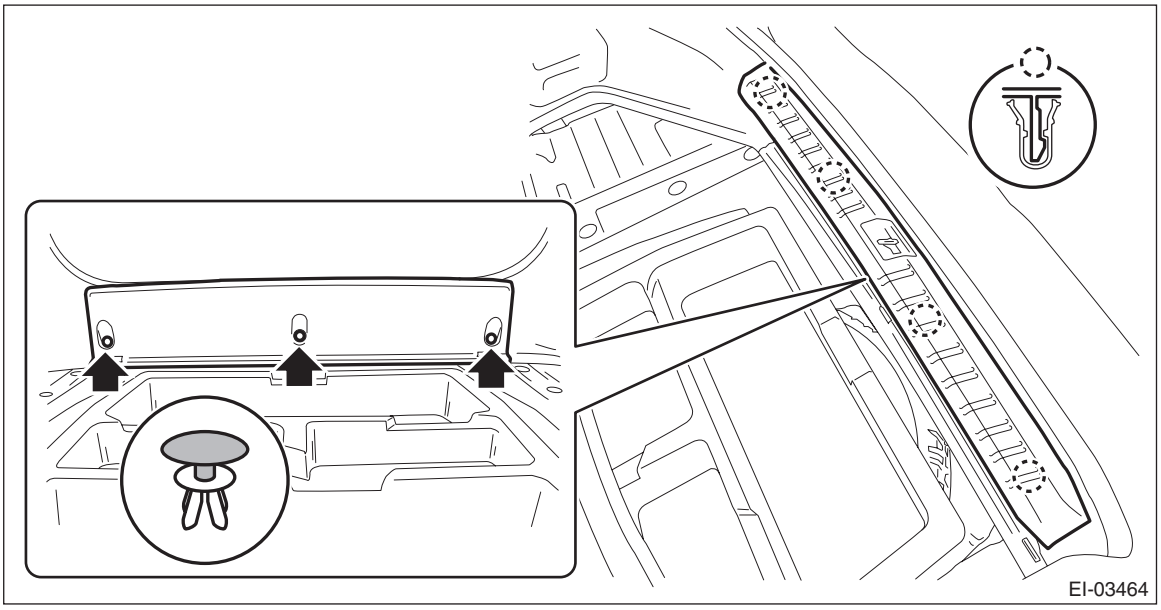

4) Remove the clips, and remove the trim panel - trunk side.

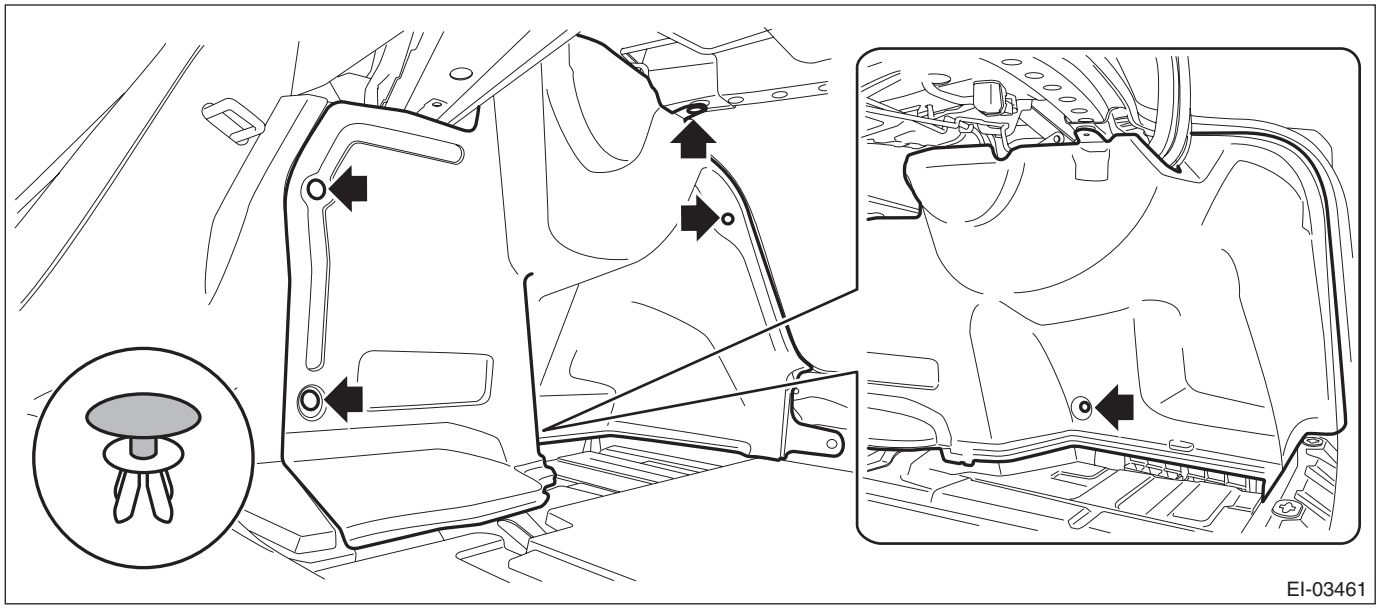

B: INSTALLATION

Install each part in the reverse order of removal.

24.Sun Visor

A: REMOVAL

1) Remove the screws and remove the sun visor assembly.
2) Remove the hook - sun visor.
   (1) Press both sides using a flat tip screwdriver.
   (2) Remove the hook - sun visor by pulling it toward you.

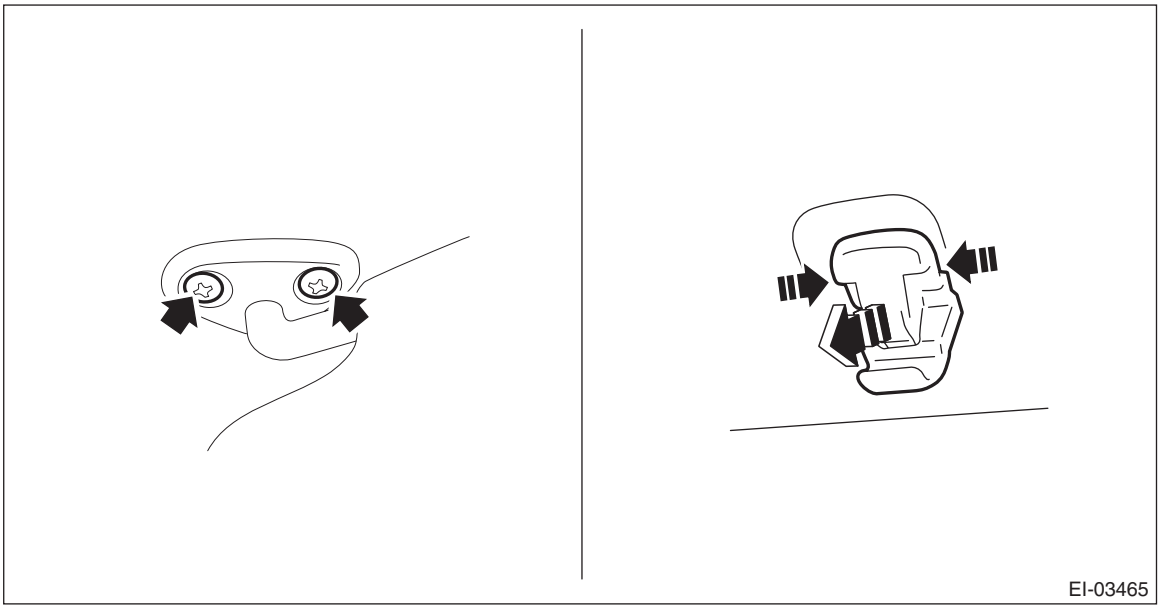

B: INSTALLATION

Install each part in the reverse order of removal.

25.Assist Grip

A: REMOVAL

Remove the assist rail.
1) Remove the cap (a) by pulling the both sides of the cap (a) using a flat tip screwdriver wrapped with a protection tape.
2) Pull the assist grip toward you (to the vehicle center) and remove the metal clip from the bracket.

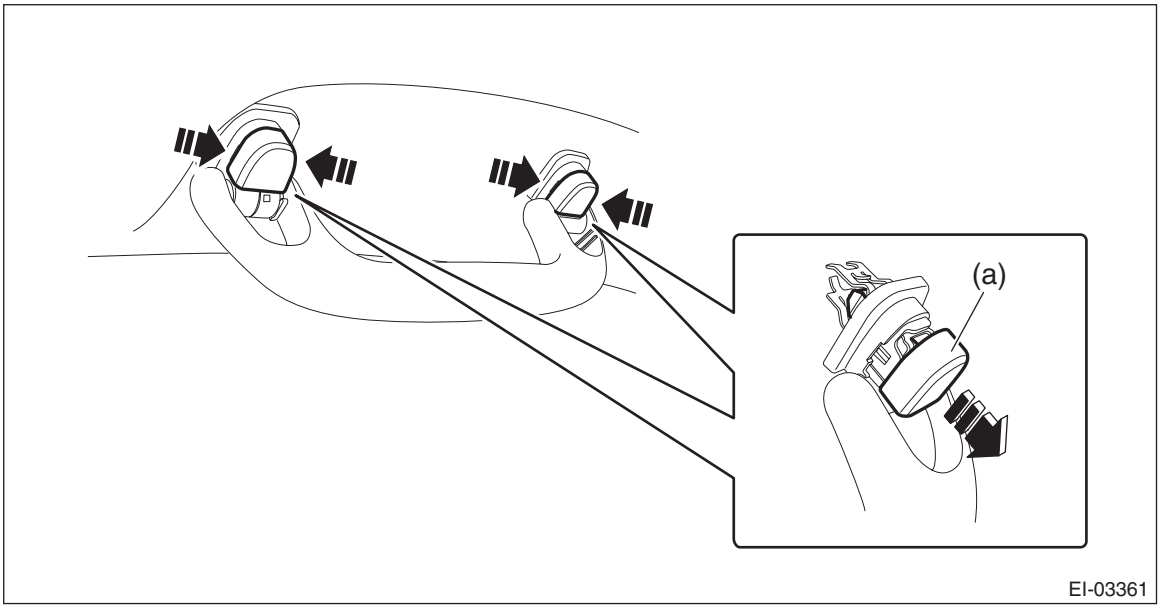

B: INSTALLATION

Install each part in the reverse order of removal.

26.Roof Trim

A: REMOVAL

1. 4 DOOR MODEL

CAUTION:
• Airbag system satellite safing sensor is located in the lower of the rear seat cushion center. Before removing the rear seat, refer to "CAUTION" of "General Description" in "AIRBAG SYSTEM" section. <Ref. to AB-11, CAUTION, General Description.>
• The airbag system is fitted with a backup power supply. After disconnecting the battery ground cable, the airbag may operate if you do not wait for 60 seconds before starting the service of airbag system.

1) Disconnect the ground cable from battery and wait for at least 60 seconds before starting work.
2) Remove the driver's seat.
   (1) Tilt the backrest forward and move the seat to the front most position.
   (2) Remove the rear bolt cover (A) and remove the two bolts.
   (3) Move the seat to the rearmost position, and remove the front bolts.

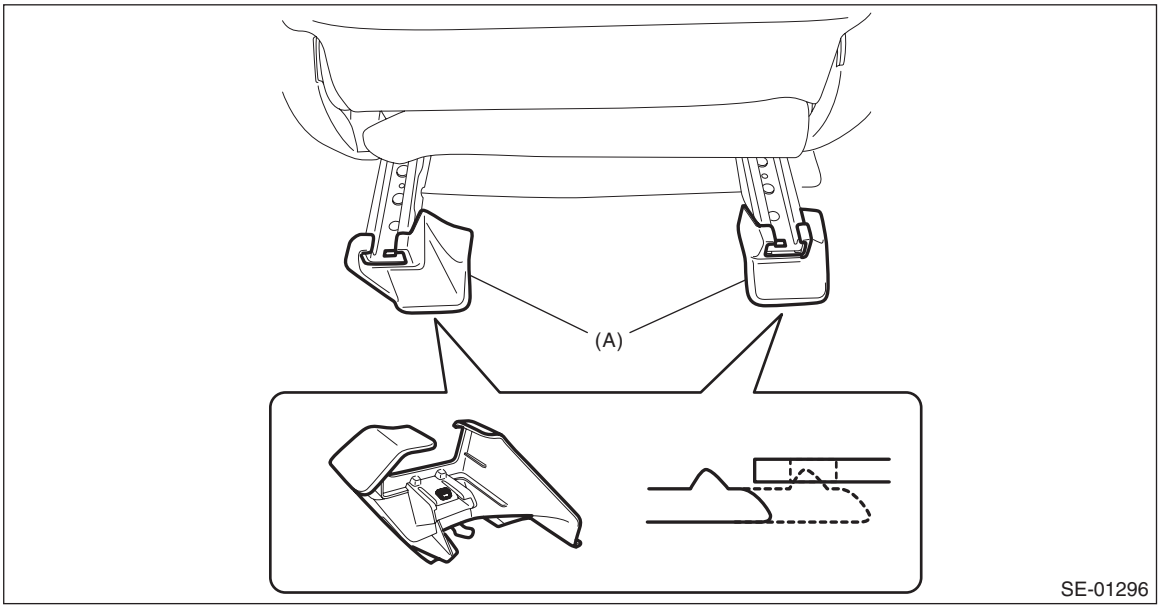

   (4) Disconnect the connector under the front seat.
   • Seat belt warning light connector (driver's seat)
   • Side airbag module connector <Ref. to AB-29, SIDE AIRBAG MODULE, PROCEDURE, Airbag Connector.>
   • Seat heater connector (model with seat heater)
   (5) Remove the headrest and take out the driver's seat from the vehicle.
3) Adjust the passenger's seat position.
   (1) Remove the headrest.
   (2) Move the passenger's seat to the front-most position and tilt the backrest rearward.

4) Remove the console box assembly.
(1) Release the claws, and then remove the boot - hand brake.

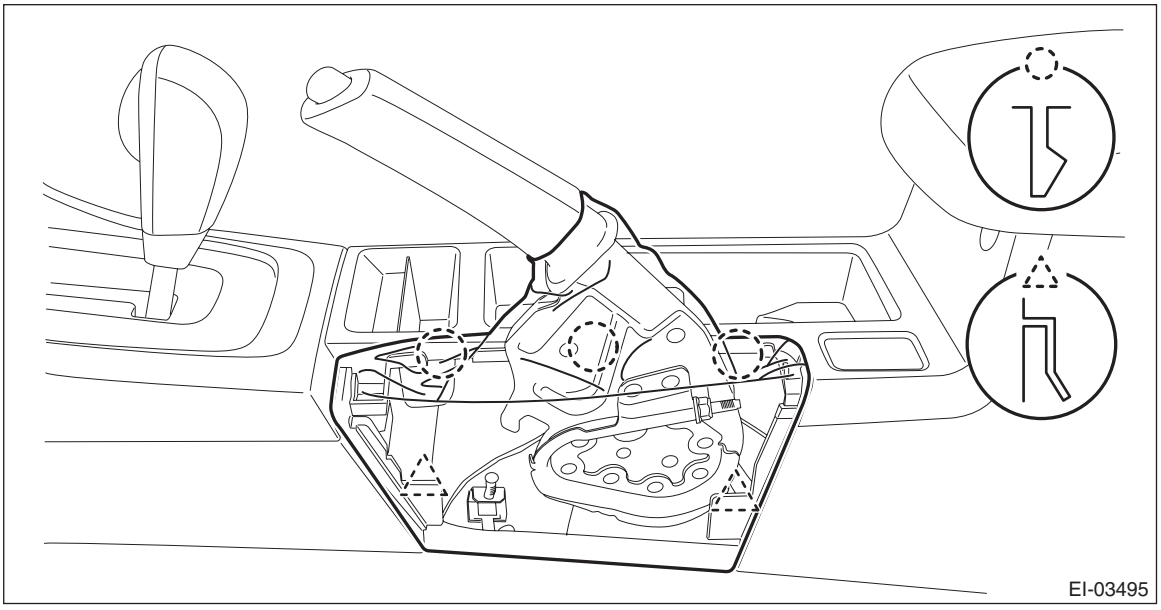

(2) Detach the left and right caps and remove the bolts.
(3) Remove the screws, disconnect the harness connector and remove the console box assembly.

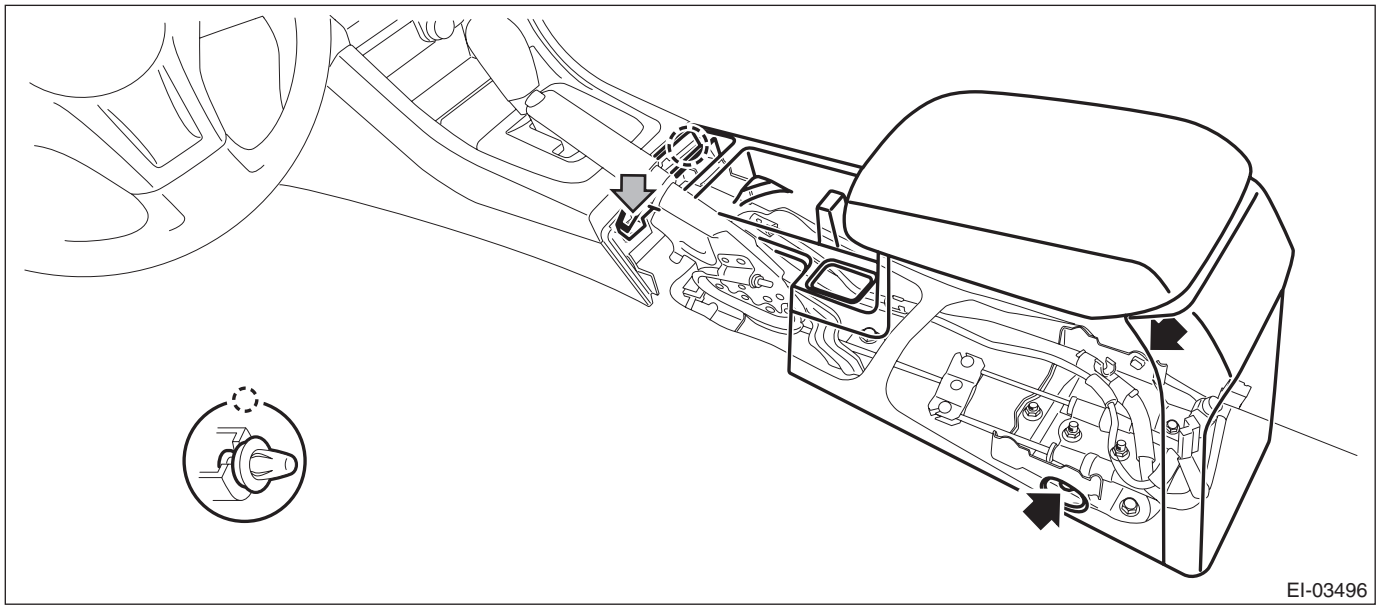

5) Remove the cover - shift lever.
(1) Remove the shift knob. (MT model)
(2) Release the clips and claws, then pull up the cover - shift lever.

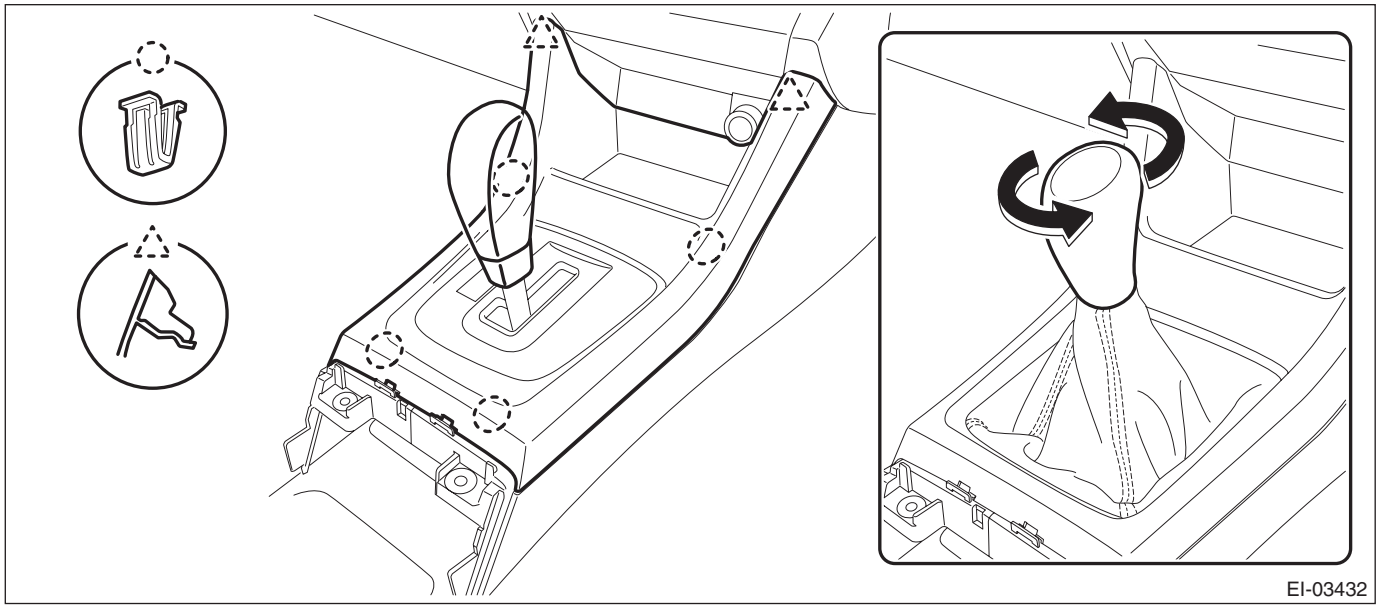
EI-03432

6) Cover the following areas to protect from damage.
- Steering wheel surface
- Instrument panel surface
- Glove box surface

7) Remove the trim panel - front pillar UPR on the left and right sides.
(1) Pull the upper part of the trim panel - front pillar UPR towards the center of the vehicle.
(2) Insert long-nose pliers into the top part of the trim, grip the tether clip with the pliers and twist 90° in that position.

CAUTION:
Be careful not to damage the pillar trim surface and curtain airbag module when inserting the pliers.
(3) Holding the tether clip twisted as in the previous step, remove the trim panel - front pillar UPR from the tether clip.
(4) Remove the clips, and remove the trim panel - front pillar UPR.

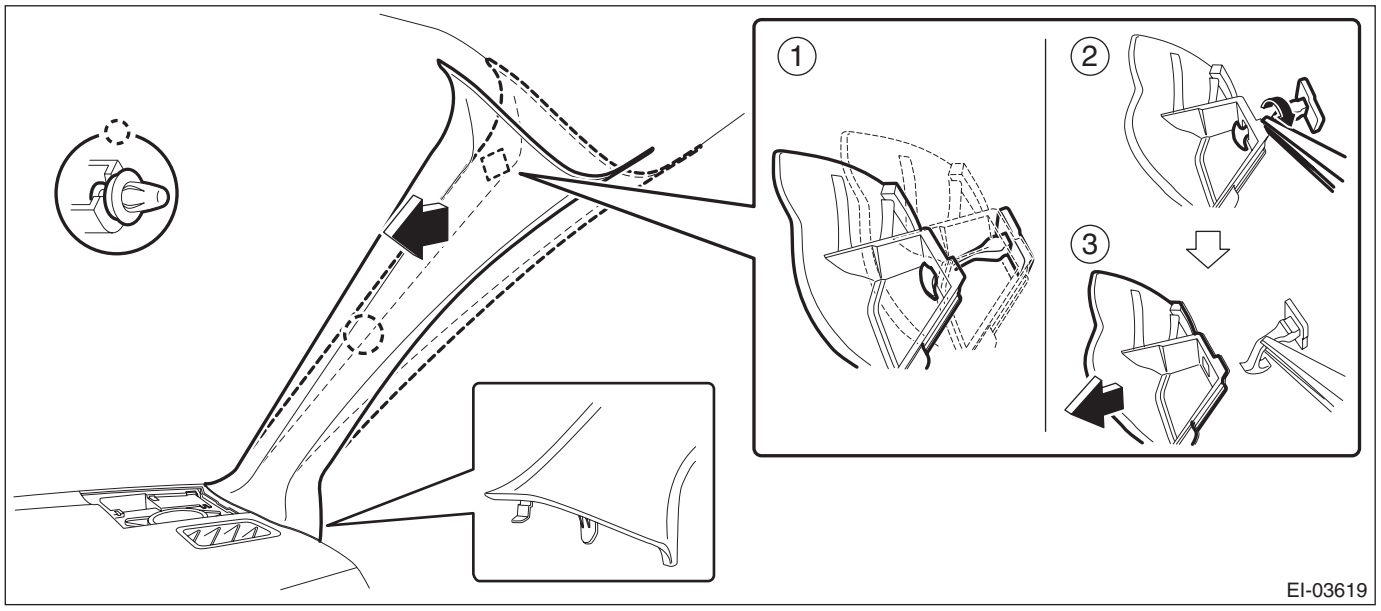

EI-03619

8) Release the claws, and then remove the cover side sill - front INN on LH and RH sides.

CAUTION:
Do not pull with excessive force. Doing so may damage the claws of the cover side sill - front INN.

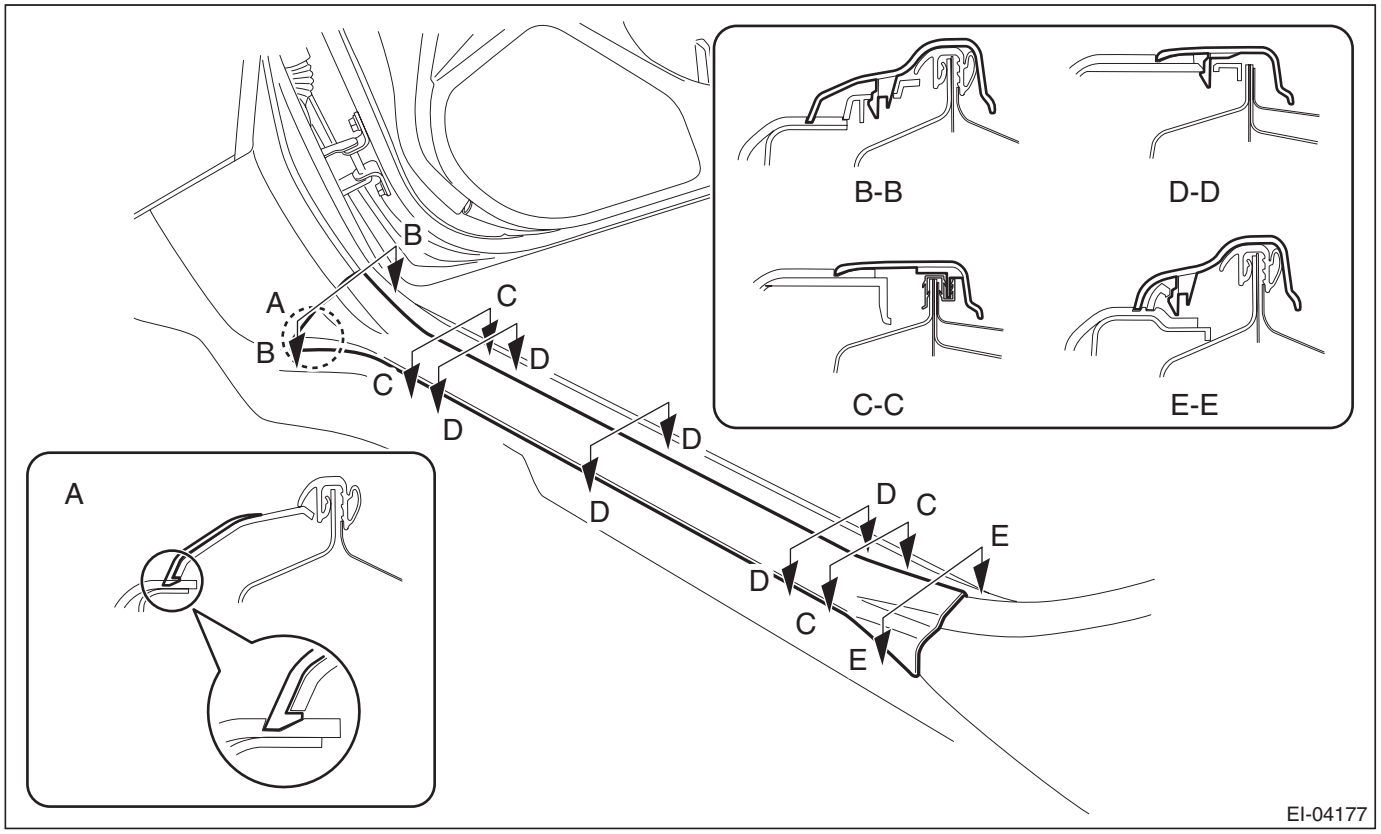

9) Remove the rear seat cushion assembly.
(1) Push the corners of the rear seat cushion from above.
(2) While pushing the corners of the rear seat cushion from above, pull the knob of the hook - seat cushion rear towards yourself.
(3) While pulling the knob towards yourself, disconnect the hooks by lifting up the rear seat cushion.

NOTE:
Pull the left side of the knob to disconnect the LH side hook, and pull the right side of the knob to disconnect the RH side hook.

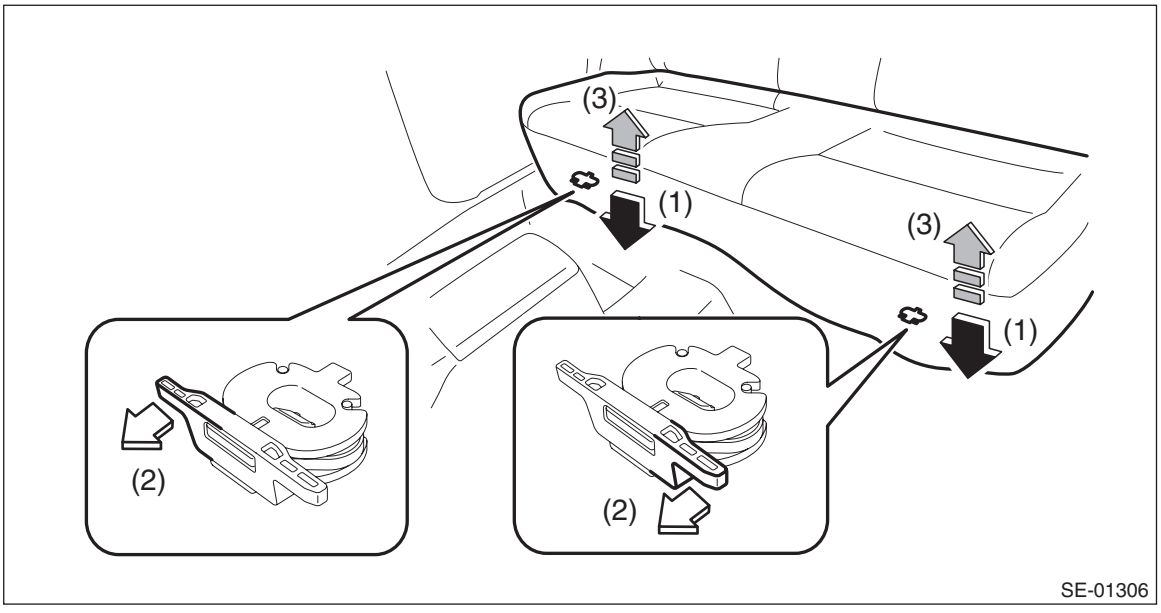

(4) Remove the hook (A) by pushing it back while lifting the front side of the rear seat cushion, and remove the rear seat cushion.

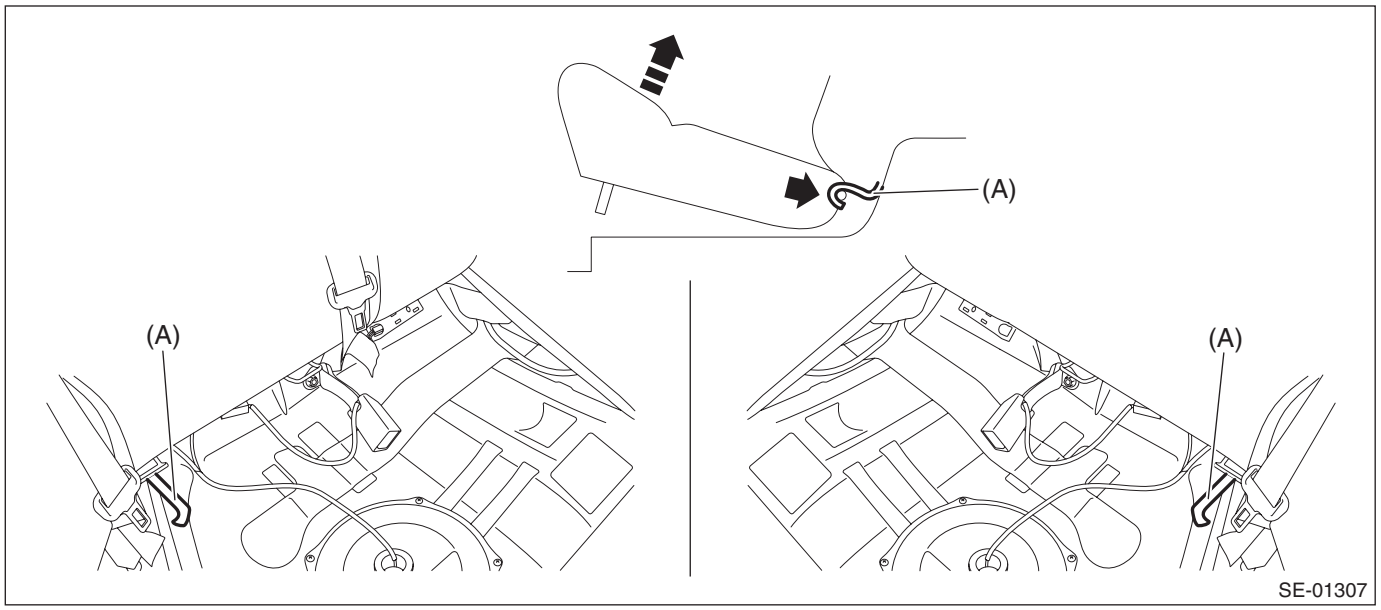

10) Release the clips and claws, and remove the cover side sill - rear INN on LH and RH sides.

CAUTION:
Do not pull with excessive force. Doing so may damage the claws of the cover side sill - rear INN.

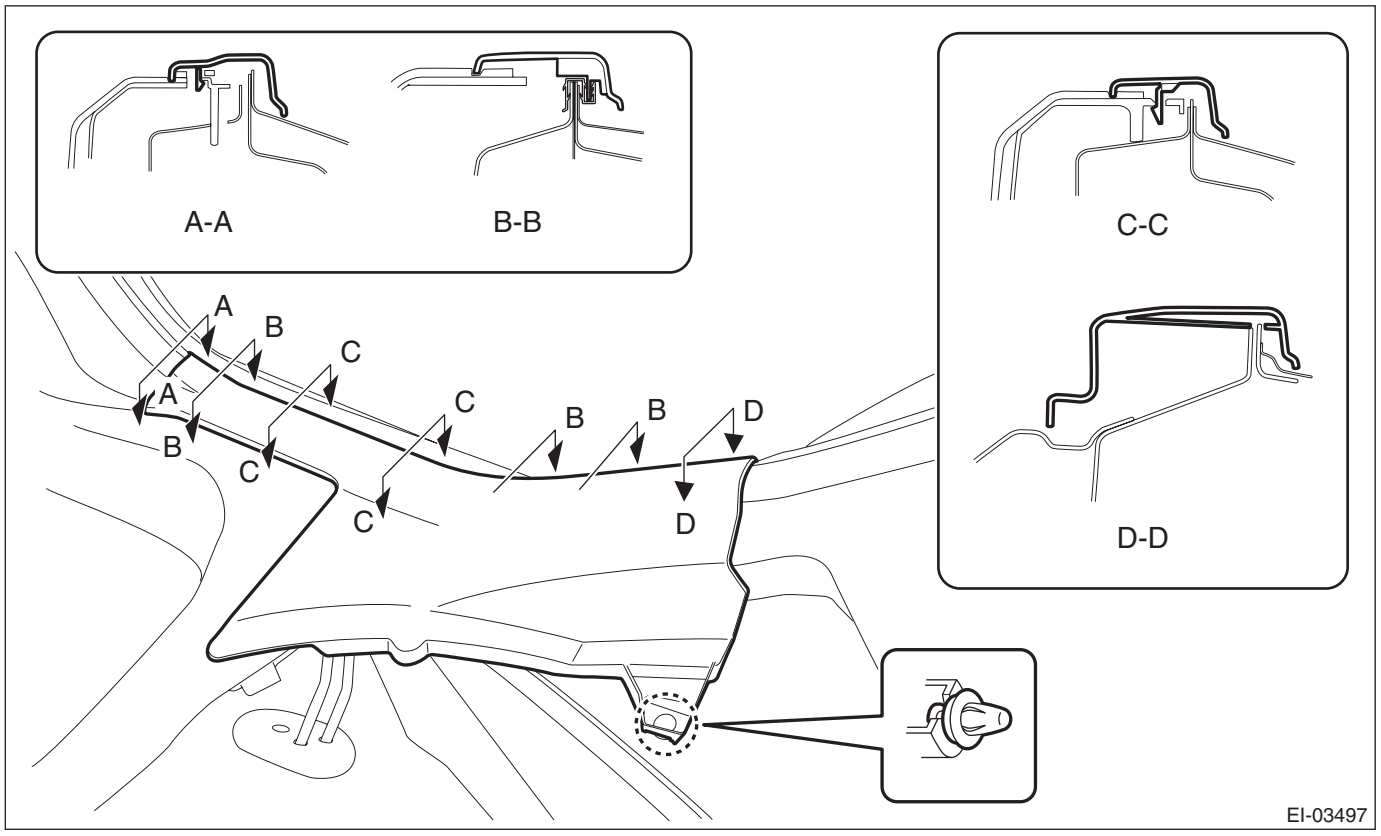

11) Remove the trim panel - center pillar LWR on the left and right sides.
(1) Release the clip by pulling the trim panel - center pillar LWR toward you.
(2) Expand the claws of the trim panel - center pillar LWR outward, and remove it from the trim panel - center pillar UPR.

CAUTION:
Do not expand the trim panel - center pillar LWR excessively. Doing so may damage the trim.

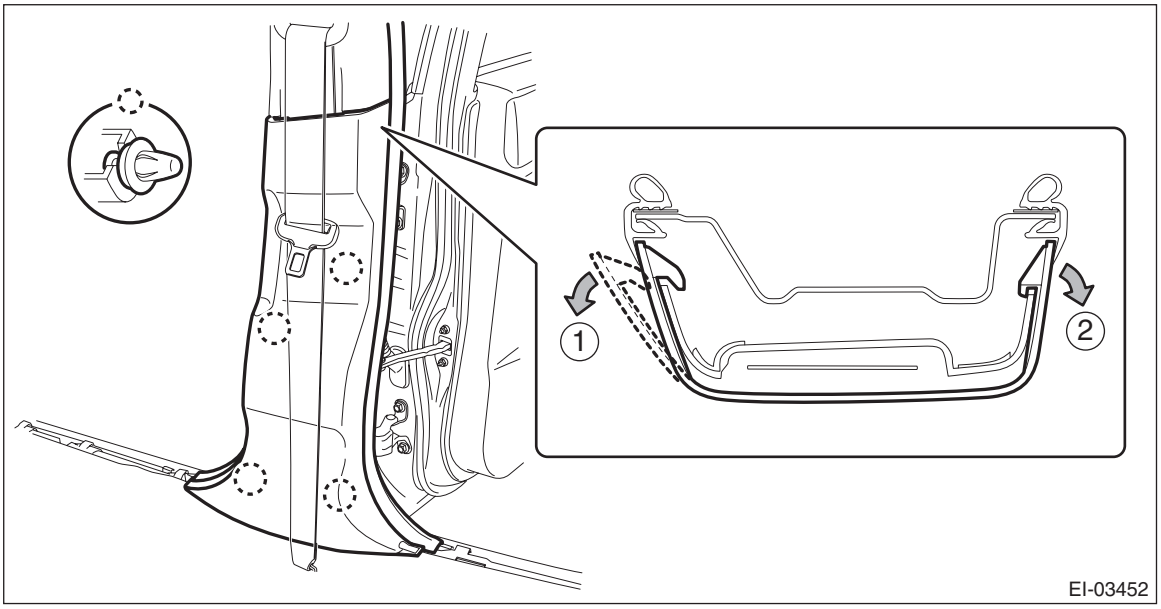

NOTE:
First release the claw located to the front of the vehicle.
12) Remove the trim panel - center pillar UPR on the left and right sides.
(1) Remove the cover through (a), and remove the seat belt anchor bolt.
(2) Remove the bolt on the lower side of the trim panel - center pillar UPR.
(3) Remove the clip by pulling the upper part of the trim toward you, and while lowering the entire trim, remove the trim panel - center pillar UPR.

CAUTION:
Do not reuse the upper clips of the trim panel - center pillar UPR. Once the clip is removed, its holding force is reduced. Be sure to replace it with a new clip.

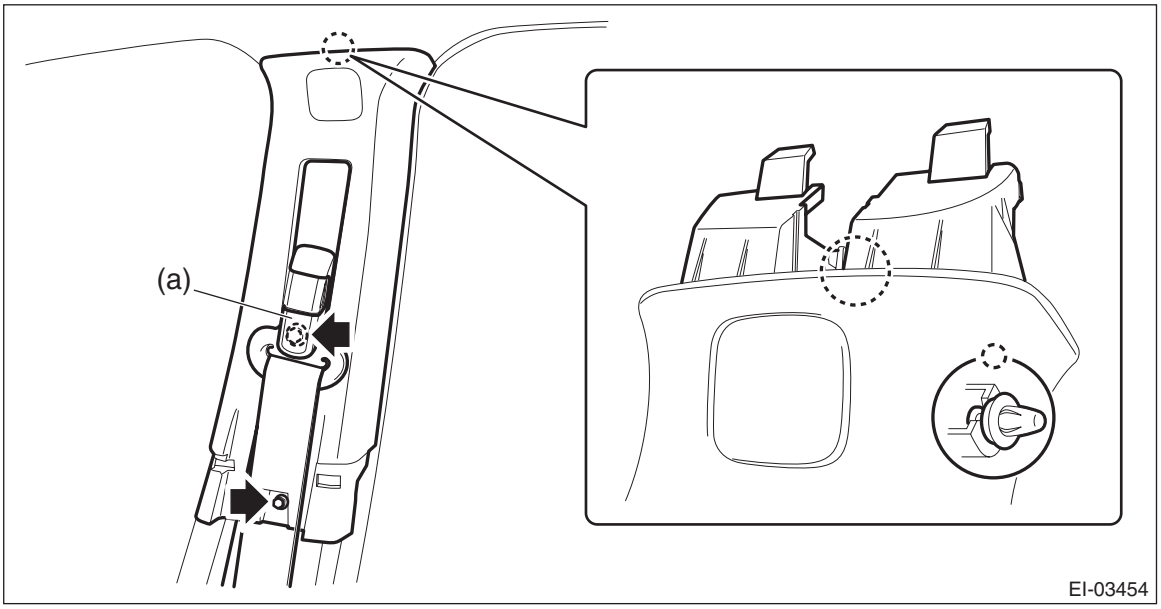

13) Remove the clips, and remove the trim panel - rear pillar UPR on the left and right sides.

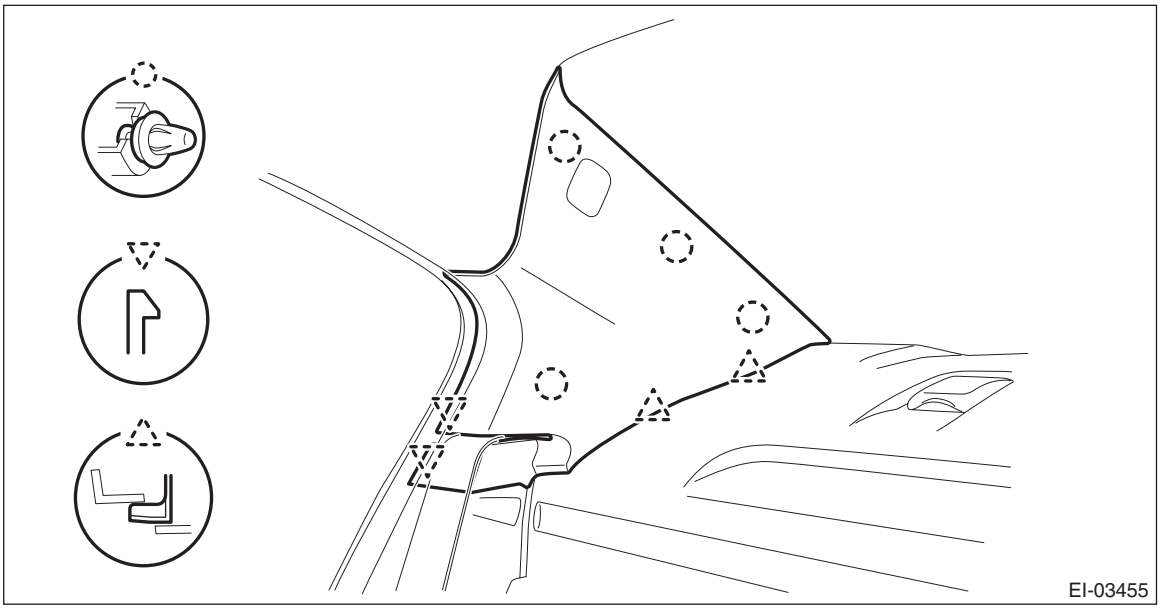

14) Remove the light assembly - map.
(1) Remove the lens and detach the screws.
(2) Disconnect the connector and remove the light assembly - map.

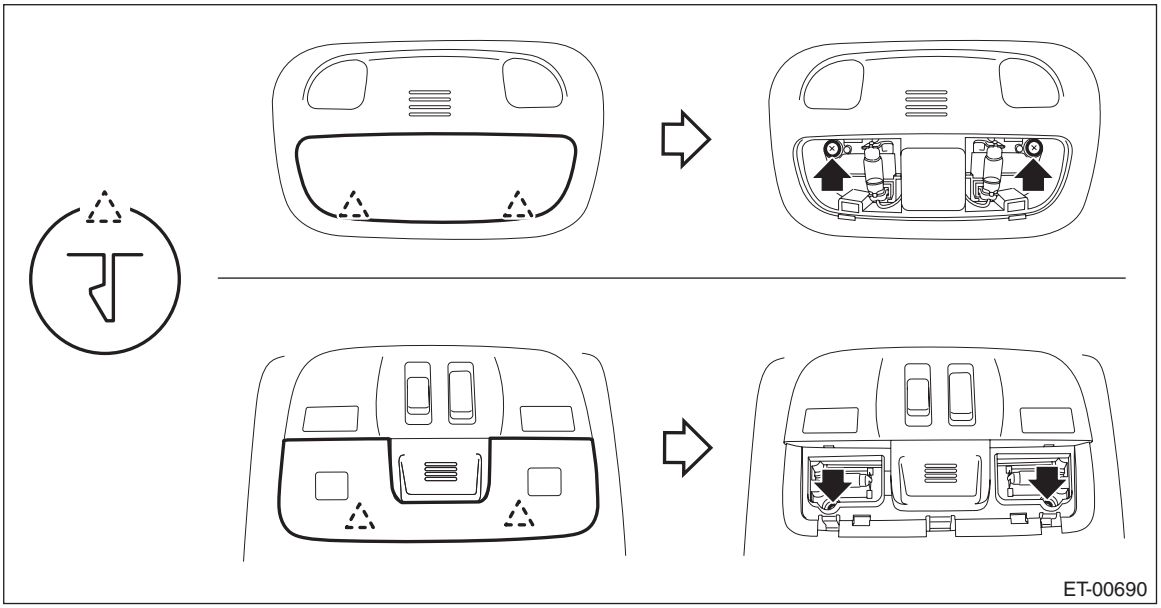

15) Remove the left and right sun visor assembly.
(1) Remove the screws and remove the sun visor assembly.
(2) Press both sides of the hook - sun visor using a flat tip screwdriver.
(3) Remove the hook - sun visor by pulling it toward you.

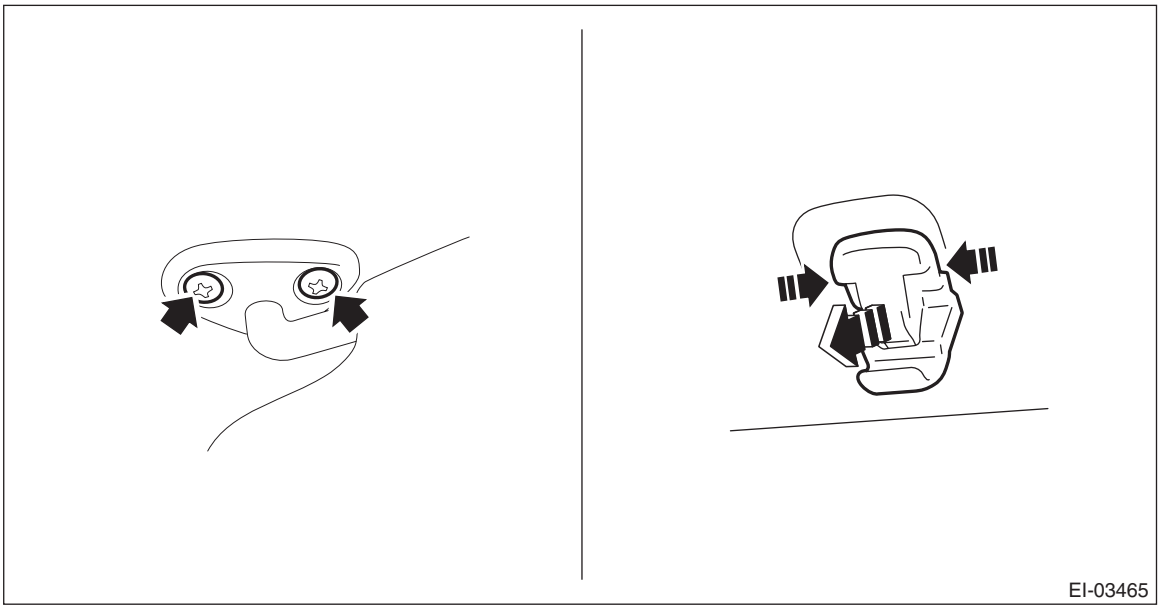

16) Remove the light assembly - room.
(1) Remove the lens and detach the screws.
(2) Disconnect the connector and remove the light assembly - room.

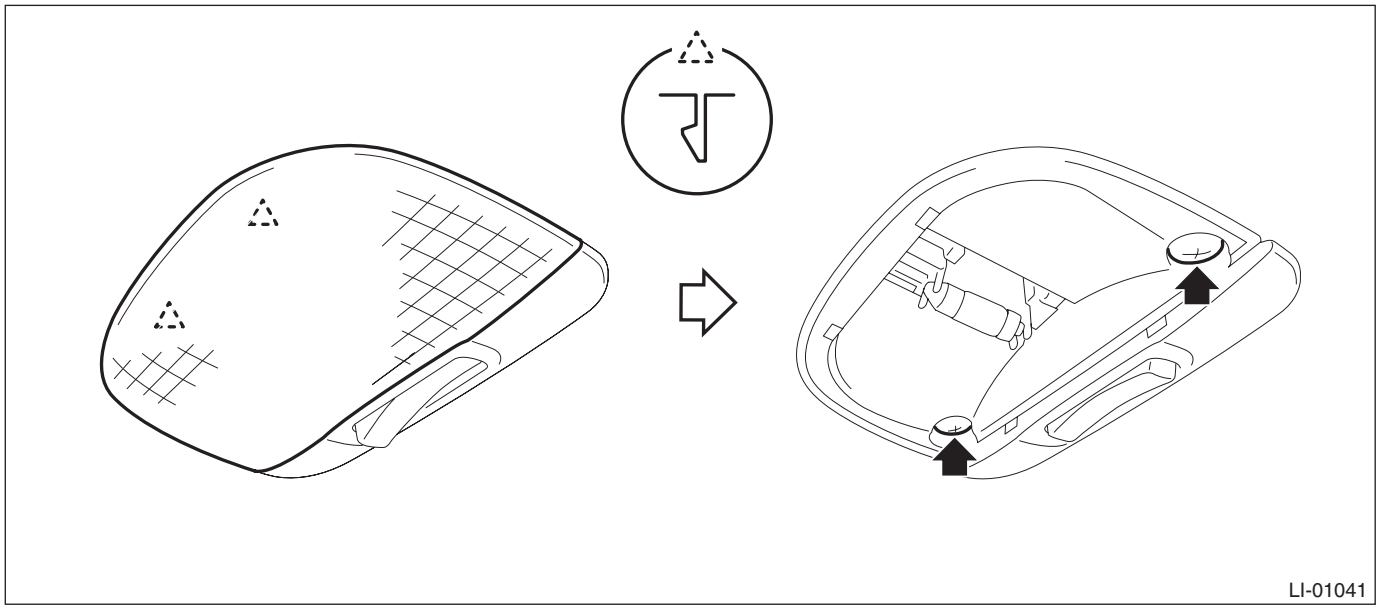

17) Remove all assist rails.
(1) Remove the cap (a) by pulling the both sides of the cap (a) using a flat tip screwdriver wrapped with a protection tape.

(2) Pull the assist grip toward you (to the vehicle center) and remove the metal clip from the bracket.

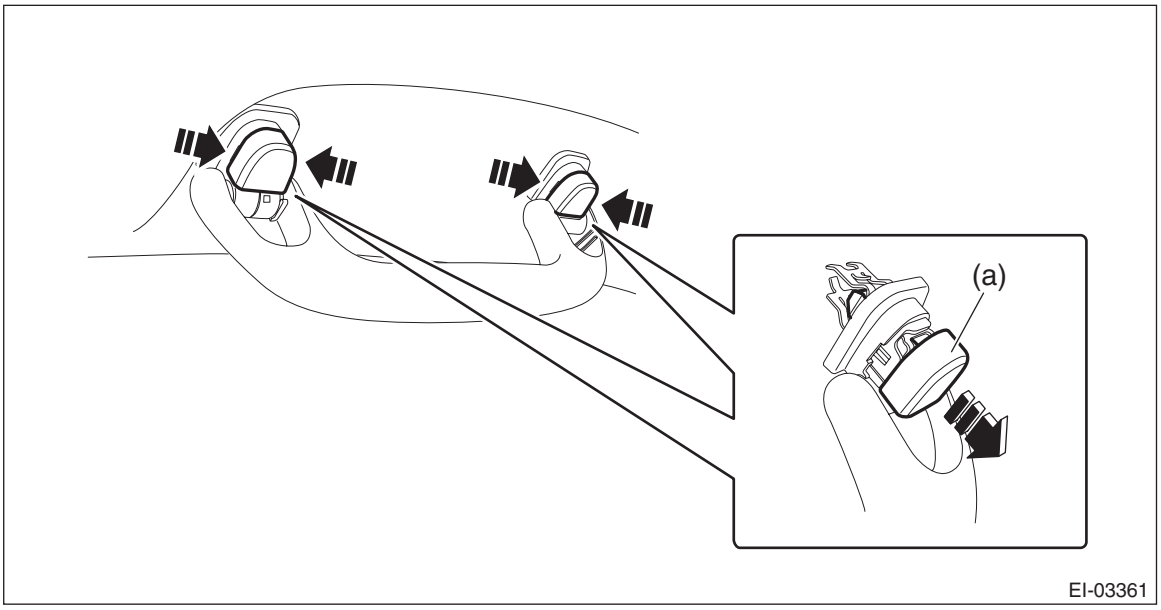

18) Remove the garnish - roof. (Model with sunroof)

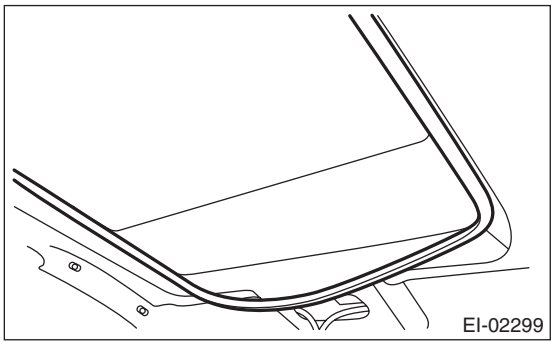

19) Remove the trim panel - roof assembly.
(1) Remove the harness clamp of the cord assembly - antenna feeder and the cord - roof, and disconnect the connectors.
(2) Remove the clips and the Velcro tape behind the room light.
(3) Remove the weather strip - body side flange from the front/rear and left/right doors, and remove the trim panel - roof assembly.

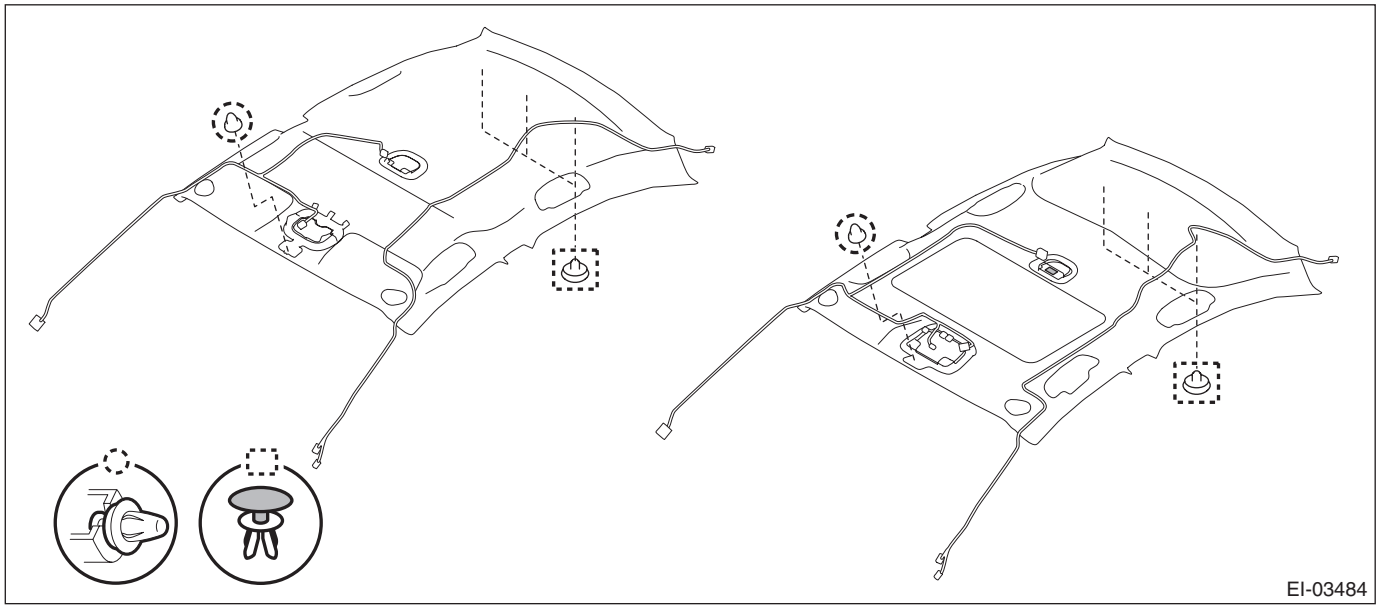

(4) Take out the trim panel - roof assembly from the vehicle.

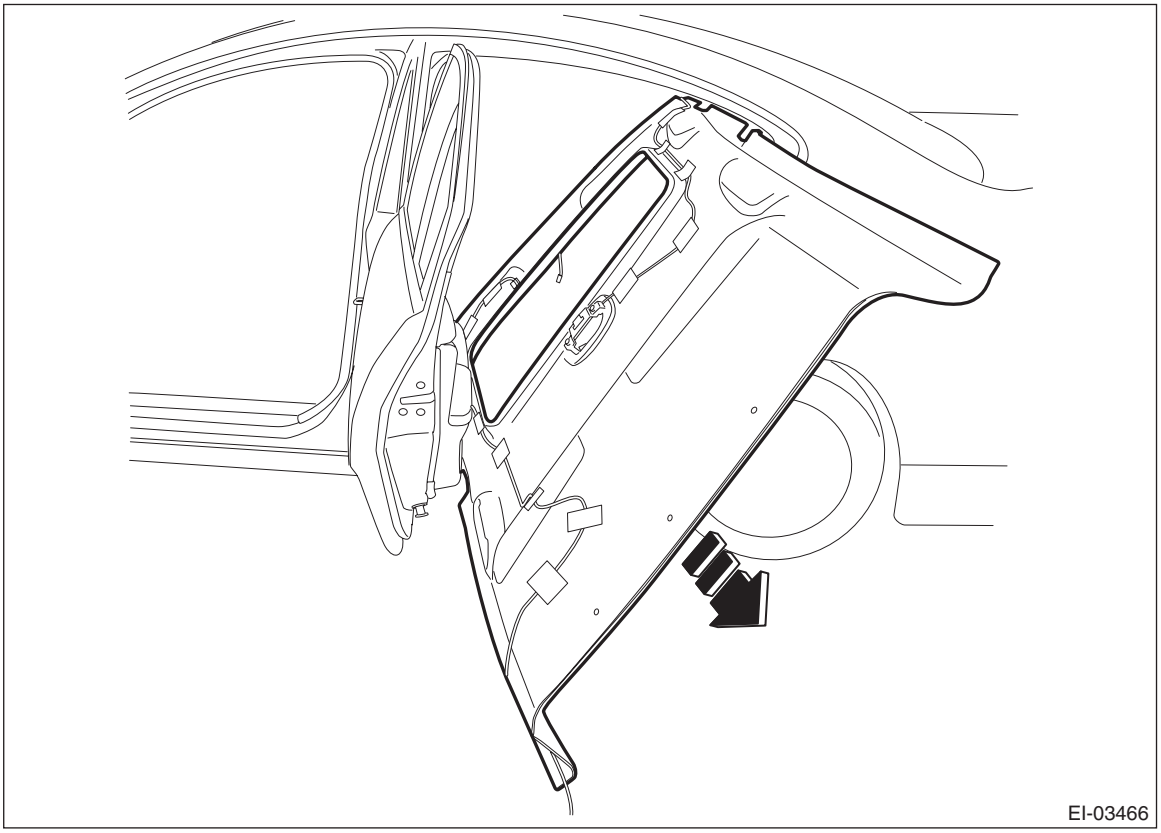

2. 5 DOOR MODEL/XV MODEL

CAUTION:
• Airbag system satellite safing sensor is located in the lower of the rear seat cushion center. Before removing the rear seat, refer to "CAUTION" of "General Description" in "AIRBAG SYSTEM" section. <Ref. to AB-11, CAUTION, General Description.>
• The airbag system is fitted with a backup power supply. After disconnecting the battery ground cable, the airbag may operate if you do not wait for 60 seconds before starting the service of airbag system.

1) Disconnect the ground cable from battery and wait for at least 60 seconds before starting work. <Ref. to NT-5, BATTERY, NOTE, Note.>

NOTE:
For the 12 volt engine restart battery of HEV model, disconnect the ground terminal from 12V engine restart battery sensor.

2) Adjust the front seat position.
   (1) Remove the headrest.
   (2) Move the seat to the front-most position and tilt the backrest rearward.
3) Remove the trim panel - front pillar UPR on the left and right sides.
   (1) Pull the upper part of the trim panel - front pillar UPR towards the center of the vehicle.
   (2) Insert long-nose pliers into the top part of the trim, grip the tether clip with the pliers and twist 90° in that position.

CAUTION:
Be careful not to damage the pillar trim surface and curtain airbag module when inserting the pliers.
   (3) Holding the tether clip twisted as in the previous step, remove the trim panel - front pillar UPR from the tether clip.

(4) Remove the clips, and remove the trim panel - front pillar UPR.

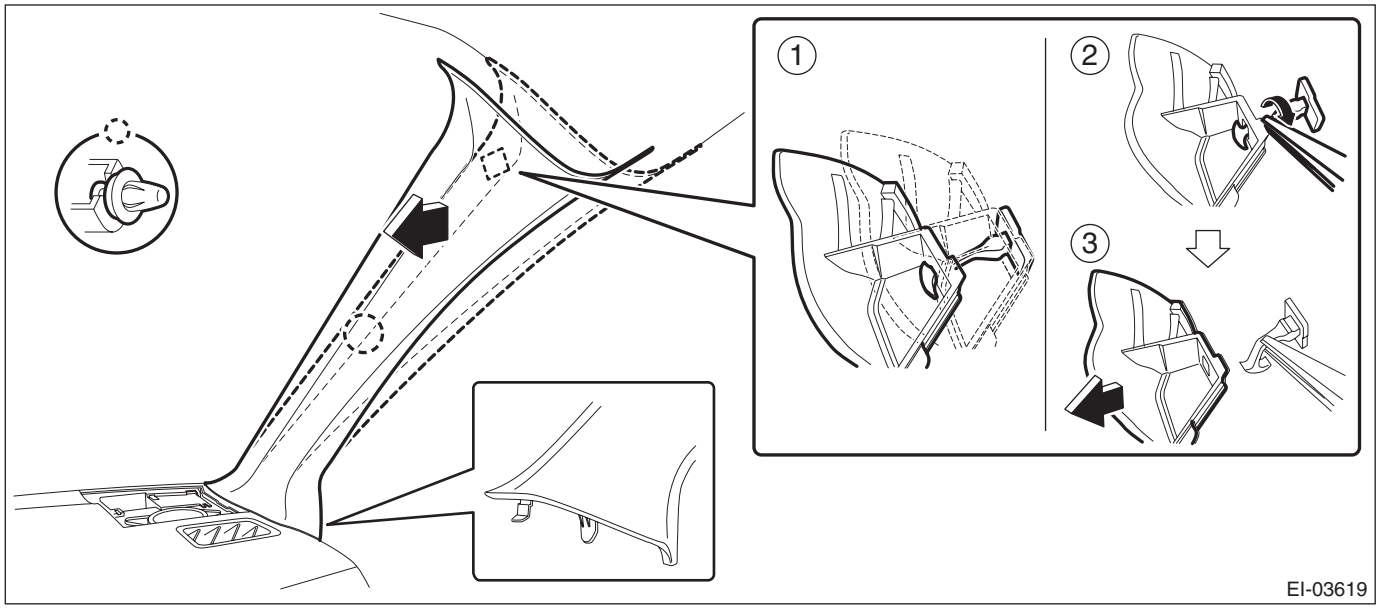

4) Release the claws, and then remove the cover side sill - front INN on LH and RH sides.

CAUTION:
Do not pull with excessive force. Doing so may damage the claws of the cover side sill - front INN.

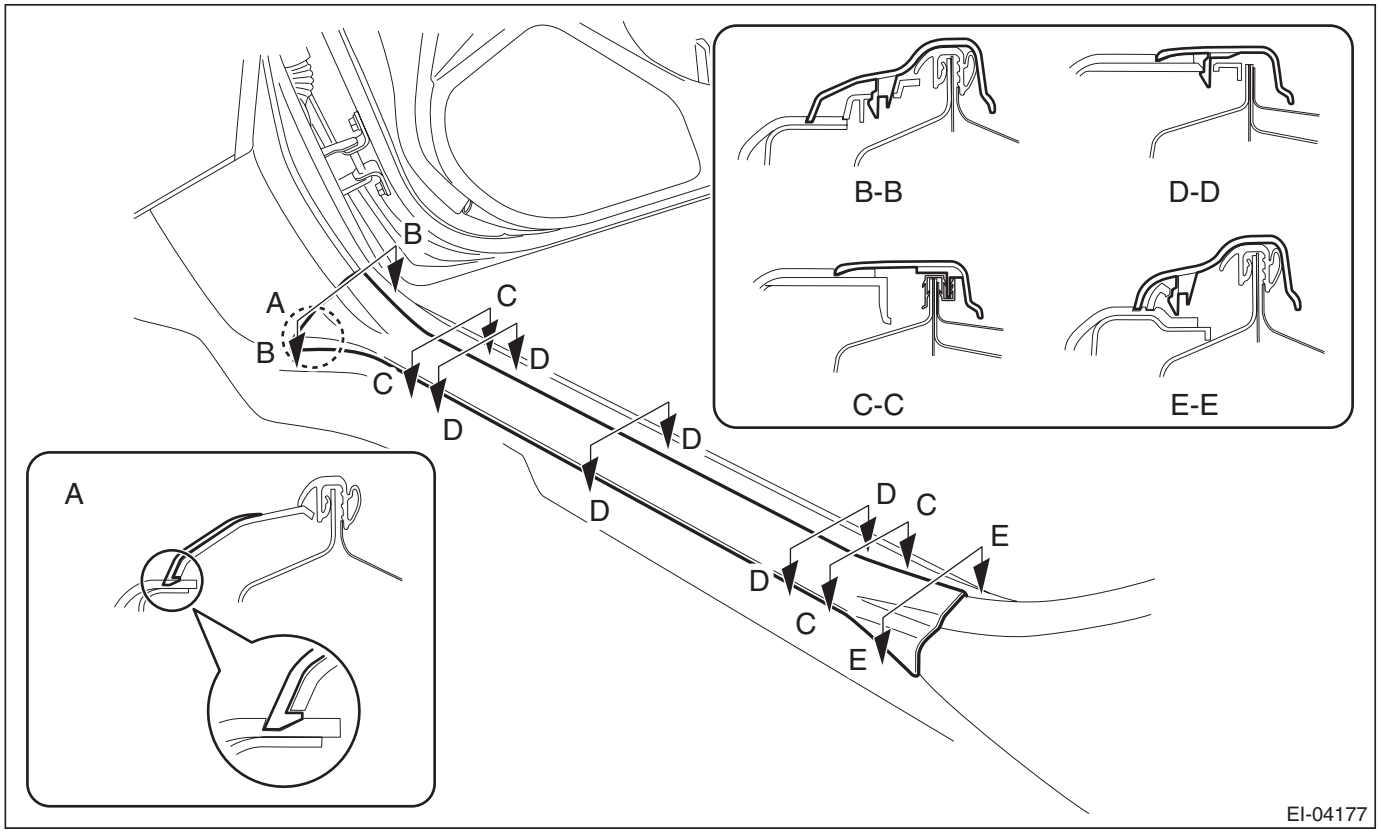

5) Remove the rear seat cushion assembly.
(1) Push the corners of the rear seat cushion from above.
(2) While pushing the corners of the rear seat cushion from above, pull the knob of the hook - seat cushion rear towards yourself.
(3) While pulling the knob towards yourself, disconnect the hooks by lifting up the rear seat cushion.

NOTE:
Pull the left side of the knob to disconnect the LH side hook, and pull the right side of the knob to disconnect the RH side hook.

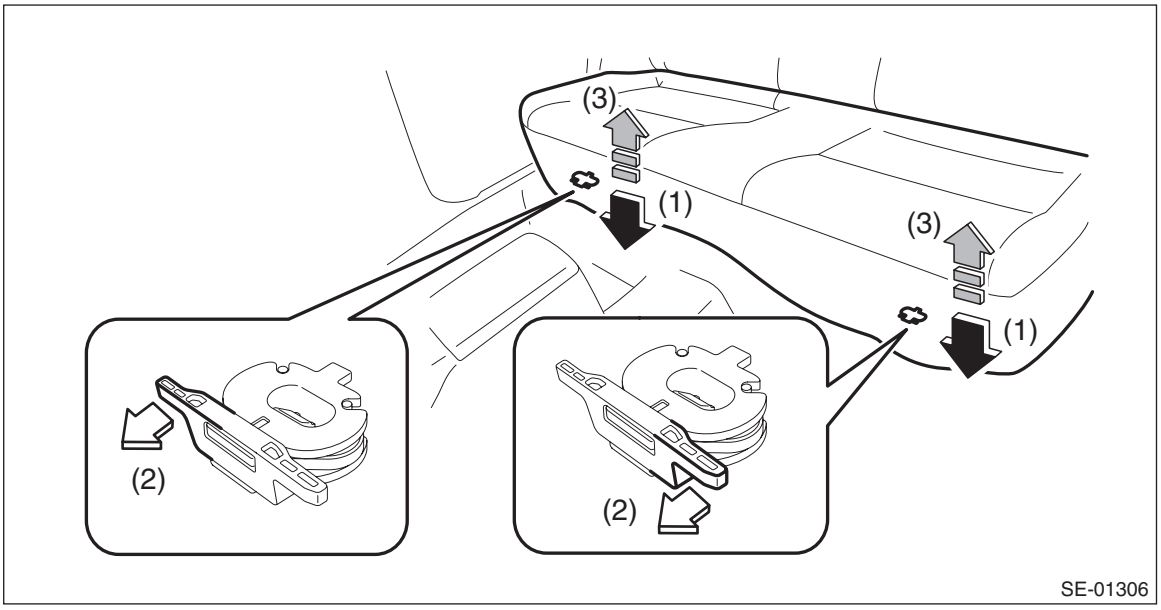

(4) Remove the hook (A) by pushing it back while lifting the front side of the rear seat cushion, and remove the rear seat cushion.

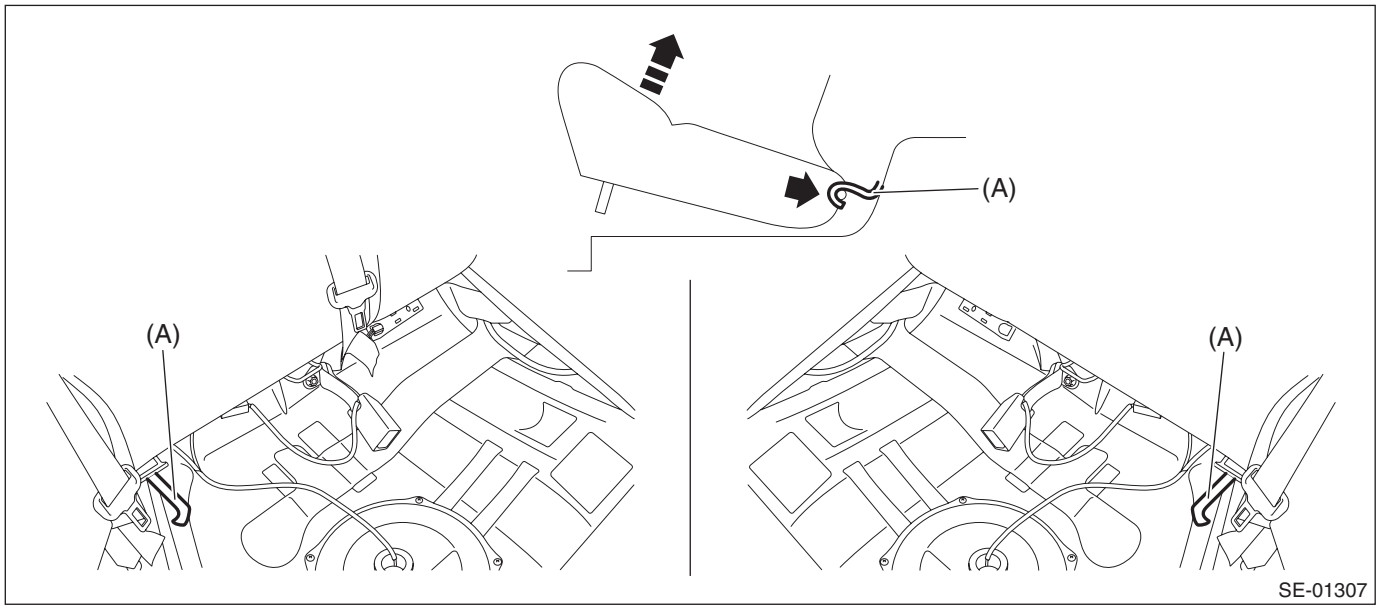

6) Release the clips and claws, and remove the cover side sill - rear INN on LH and RH sides.

CAUTION:
Do not pull with excessive force. Doing so may damage the claws of the cover side sill - rear INN.

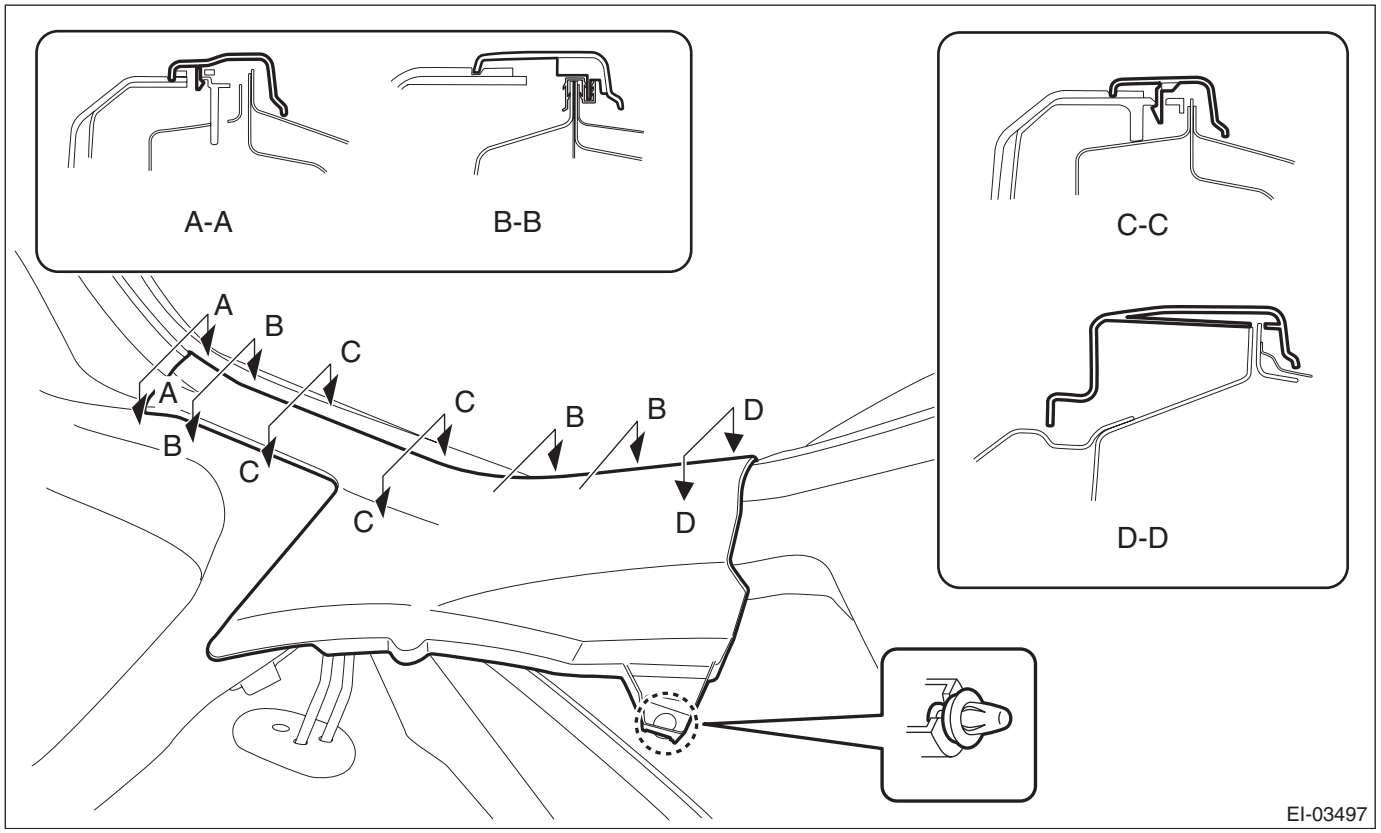

7) Remove the trim panel - center pillar LWR on the left and right sides.
(1) Release the clip by pulling the trim panel - center pillar LWR toward you.
(2) Expand the claws of the trim panel - center pillar LWR outward, and remove it from the trim panel - center pillar UPR.

CAUTION:
Do not expand the trim panel - center pillar LWR excessively. Doing so may damage the trim.

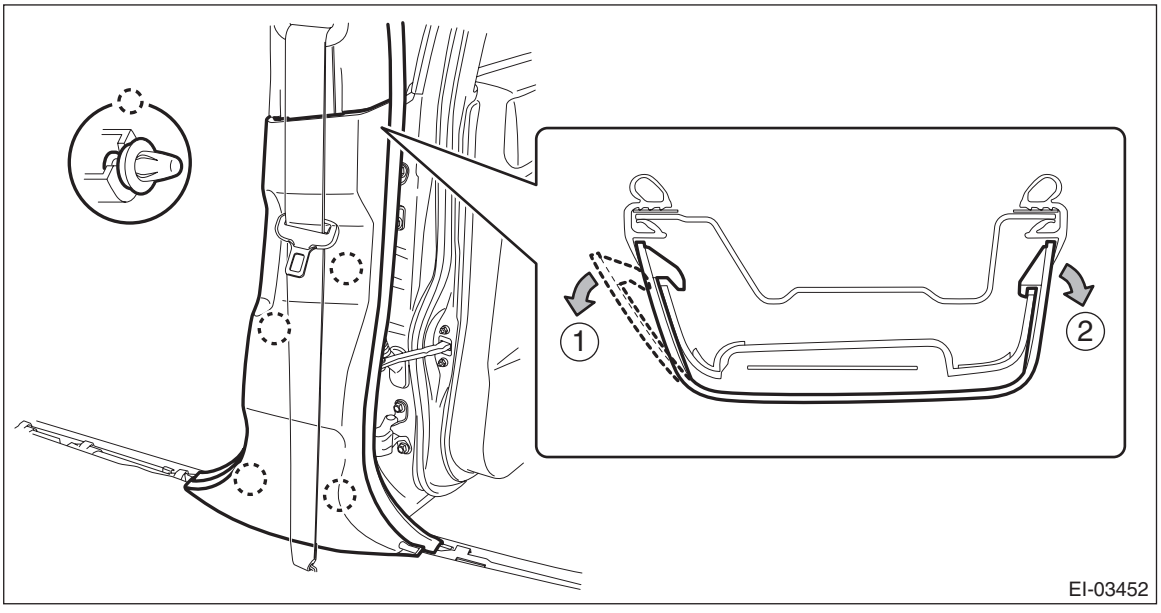

NOTE:
First release the claw located to the front of the vehicle.
8) Remove the trim panel - center pillar UPR on the left and right sides.
(1) Remove the cover through (a), and remove the seat belt anchor bolt.
(2) Remove the bolt on the lower side of the trim panel - center pillar UPR.
(3) Remove the clip by pulling the upper part of the trim toward you, and while lowering the entire trim, remove the trim panel - center pillar UPR.

CAUTION:
Do not reuse the upper clips of the trim panel - center pillar UPR. Once the clip is removed, its holding force is reduced. Be sure to replace it with a new clip.

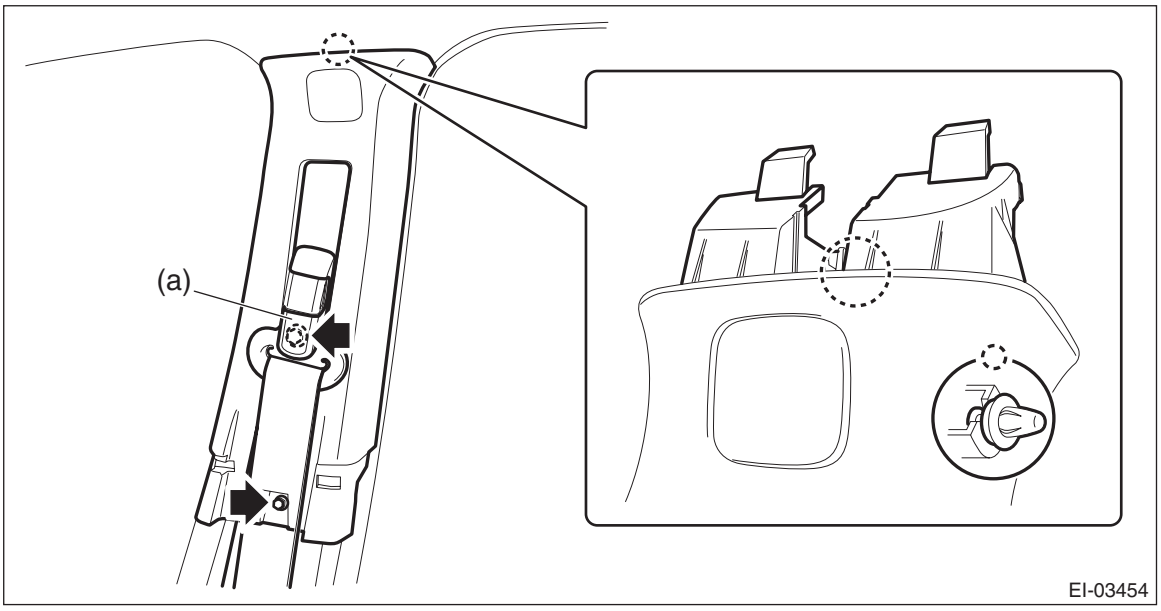

9) Remove the screws and clips, and remove the trim panel - rear quarter pillar UPR on the left and right sides.

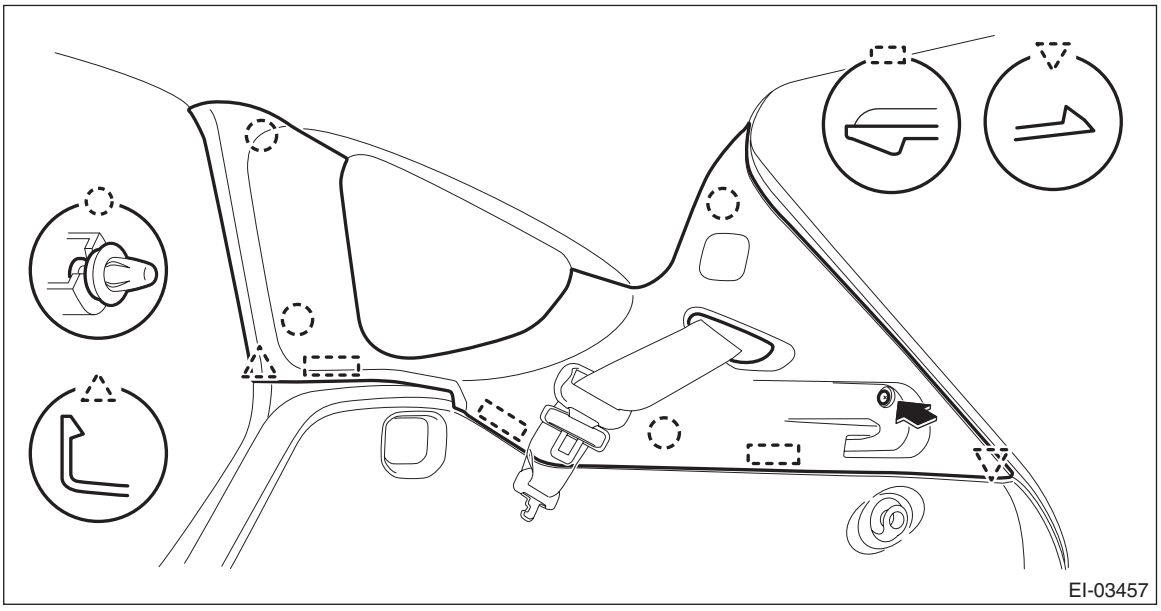

10) Remove the backrest assembly.
(1) Remove the pillow assembly - rear backrest, and tilt the backrest forward.
(2) Remove the clips located at the bottom of the cover COMPL - rear backrest LH and RH of the rear seat back.

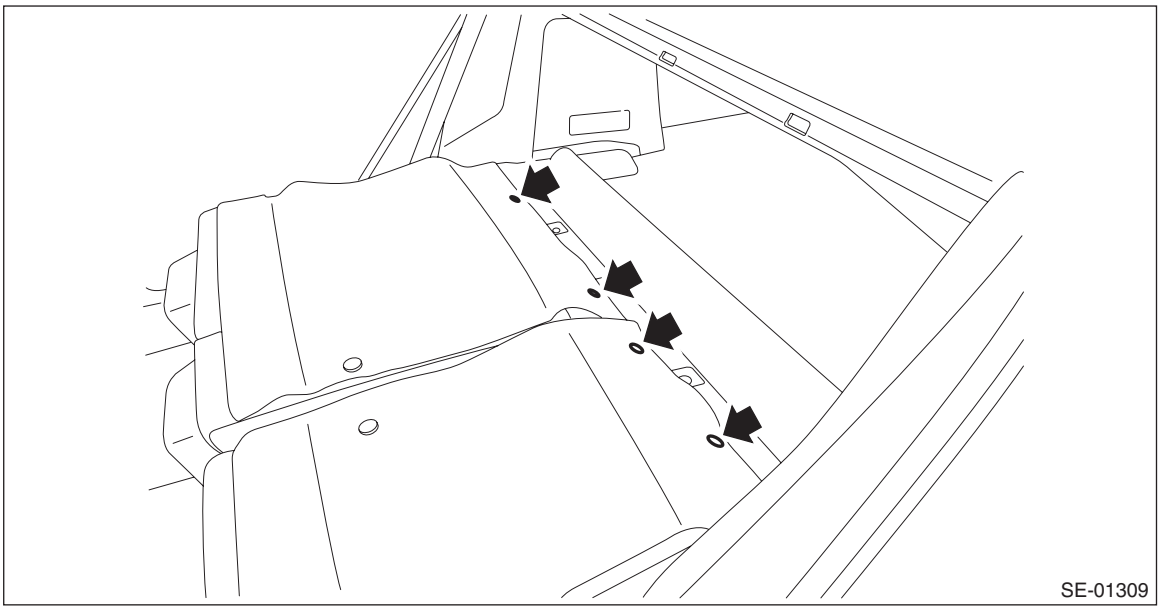
SE-01309

(3) Turn over the cover COMPL - rear backrest to remove the bolts.

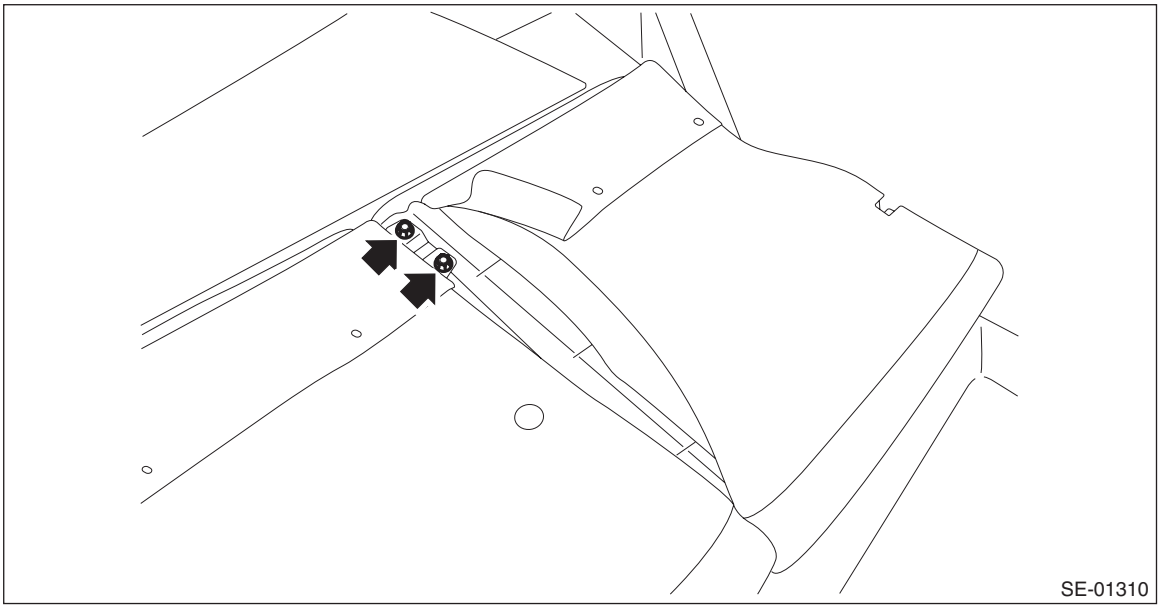
SE-01310

(4) Remove the backrest assembly LH from the hinge assembly.

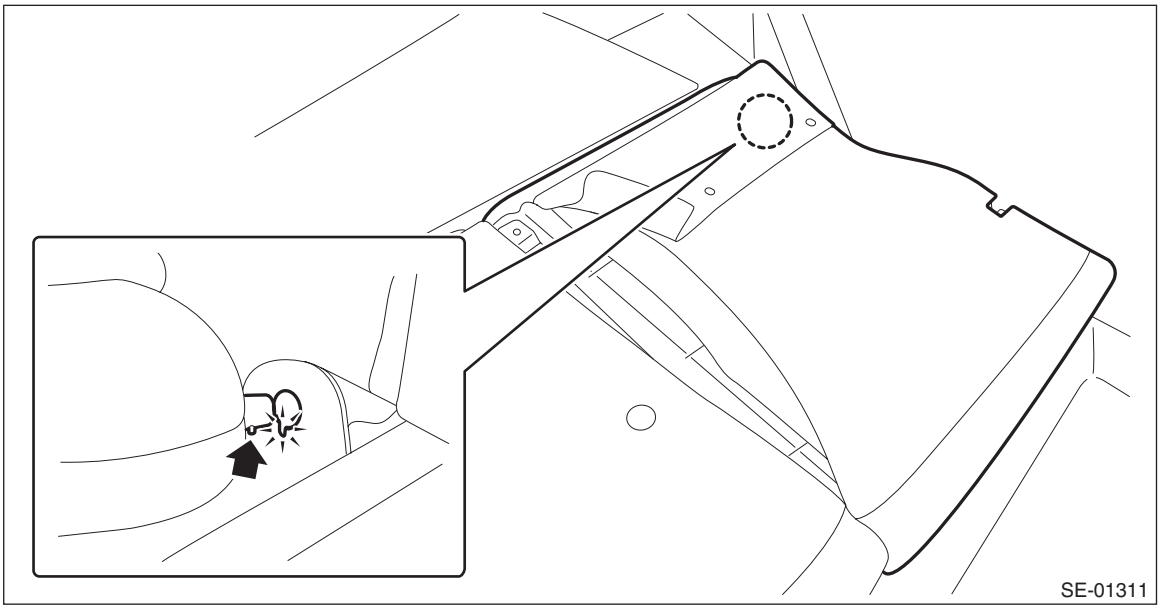

NOTE:
The backrest assembly cannot be removed unless pin positions on the hinge assembly side and backrest assembly side are aligned.

(5) Remove the bolts and nuts, and remove the backrest assembly RH.

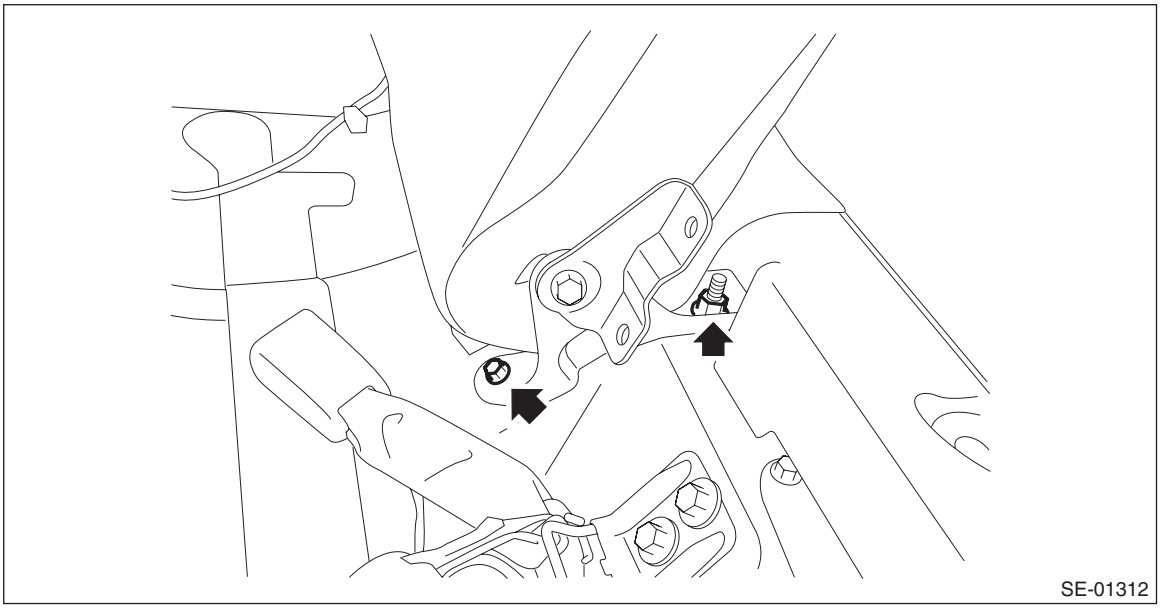

(6) Remove the backrest assembly RH from the hinge assembly.

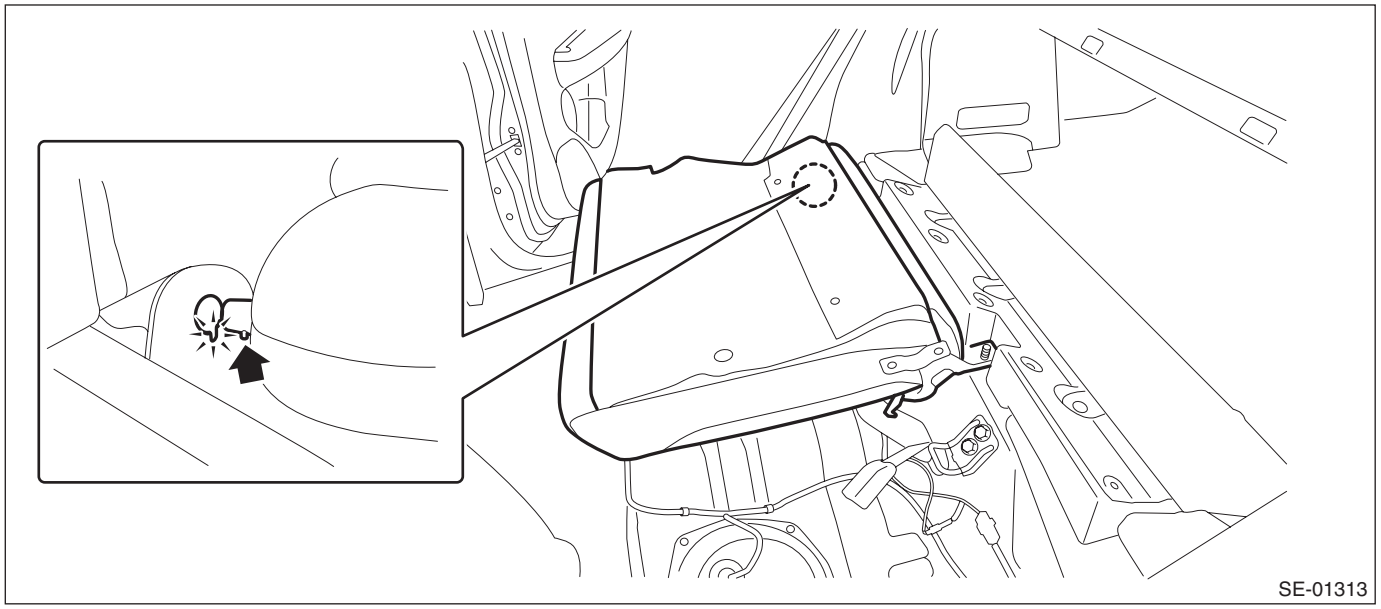

NOTE:
The backrest assembly cannot be removed unless pin positions on the hinge assembly side and backrest assembly side are aligned.

11) Remove the mat - rear floor CTR and the spacer - rear floor side.

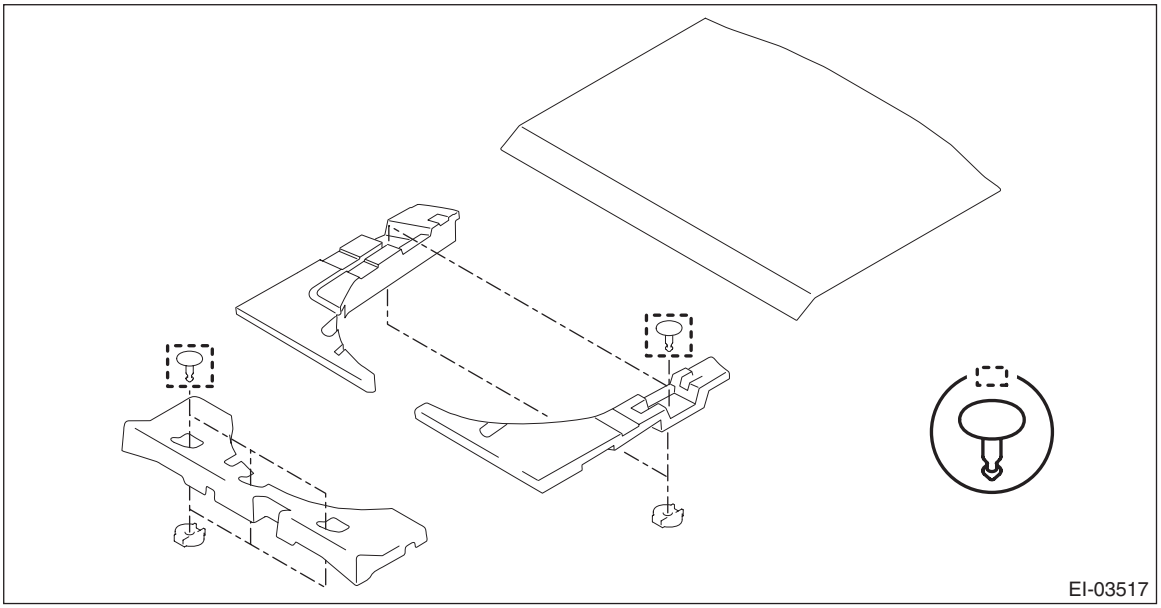

12) Remove the sub-trunk box and side spacers. (HEV model)

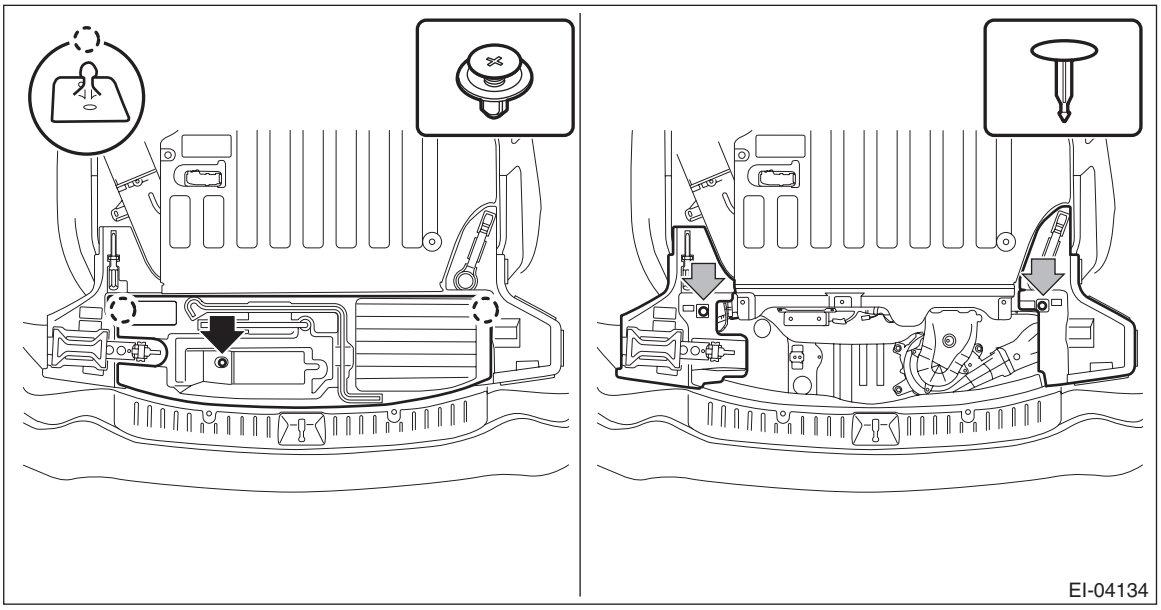

(1) Release the clips and side spacers, then detach the sub-trunk box.
(2) Remove the clips and detach the side spacers.

13) Remove the clips, and remove the trim panel - rear skirt.

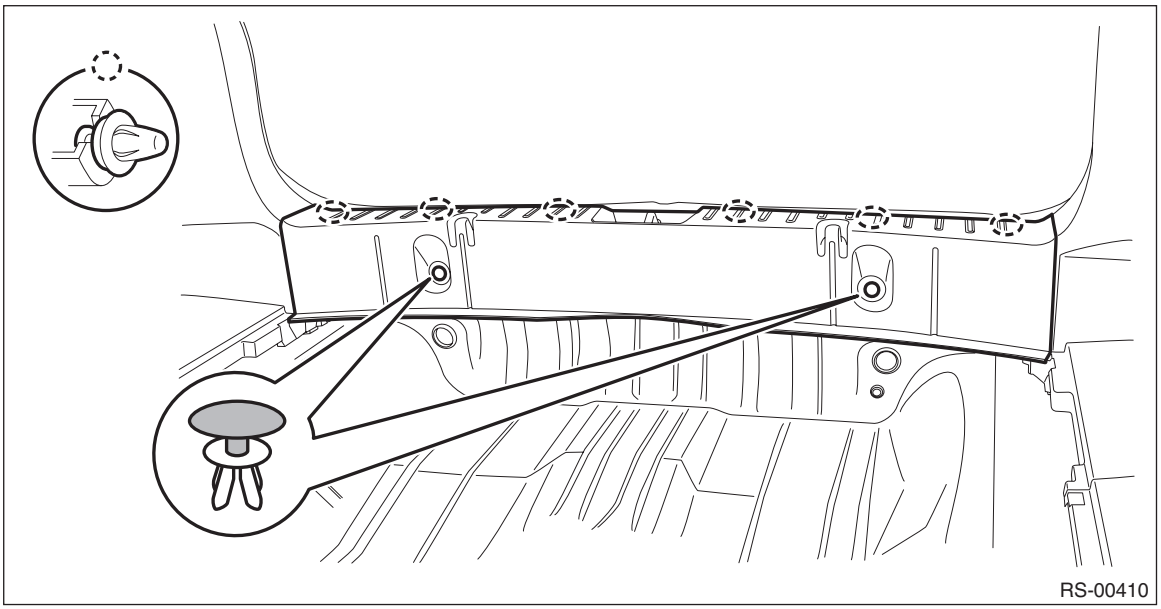

14) Remove the trim panel - rear apron.
(1) Remove the caps, and remove the bolts.
(2) Remove the screws.
(3) Disengage the clips, and remove the trim panel - rear apron.

NOTE:
For LH side, disconnect the connector of the luggage room light.

- Gasoline engine model

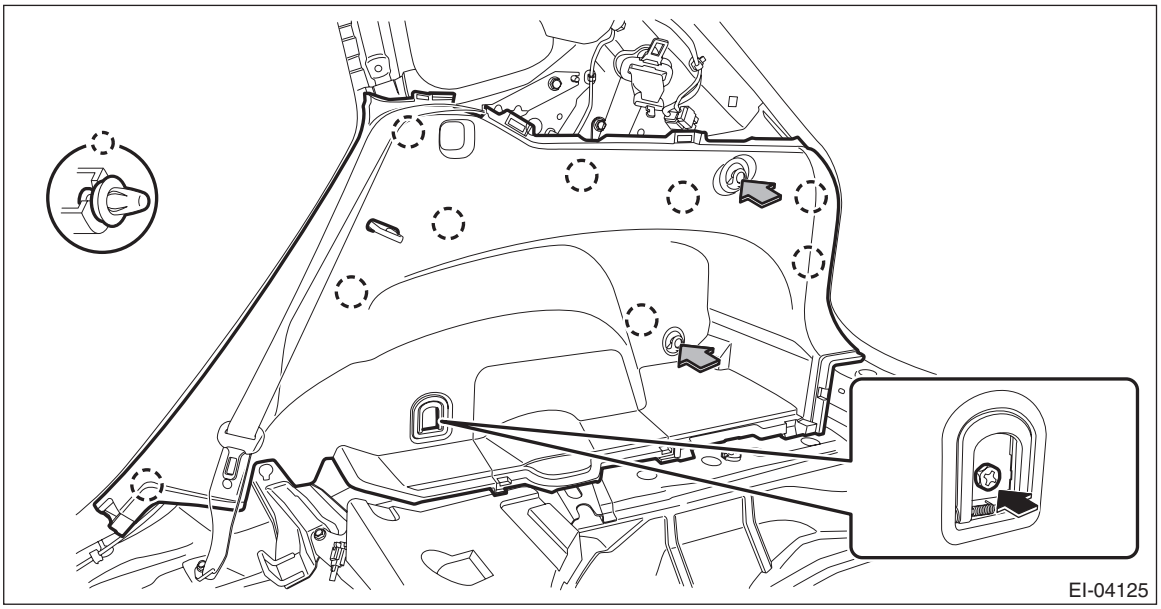

- HEV model

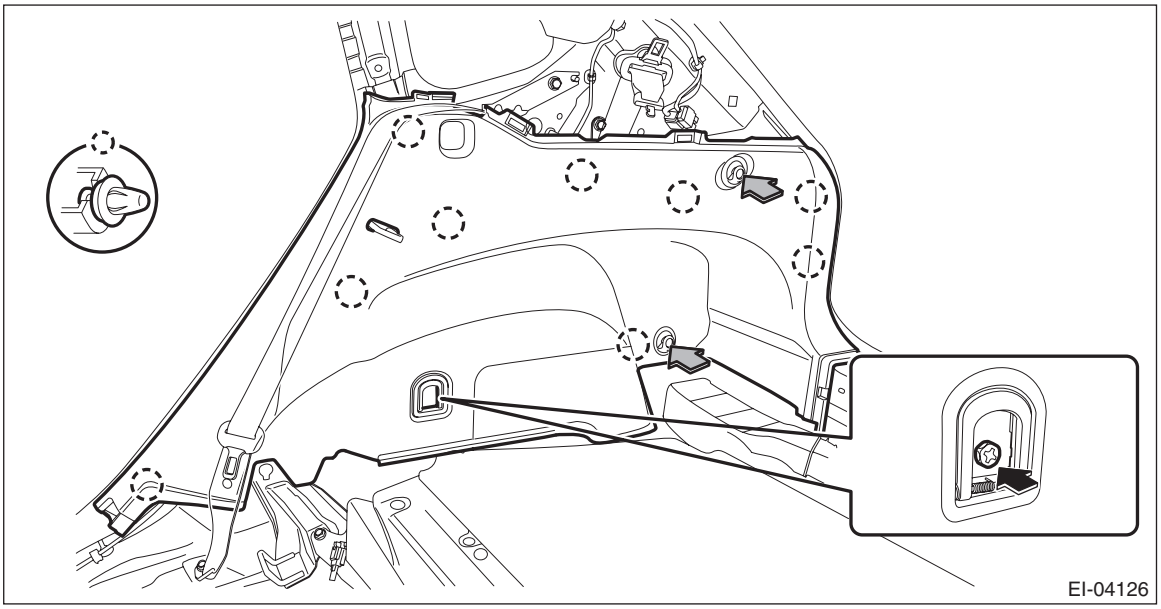

15) Remove the bolts, and remove the striker - backrest rear on the passenger's side.

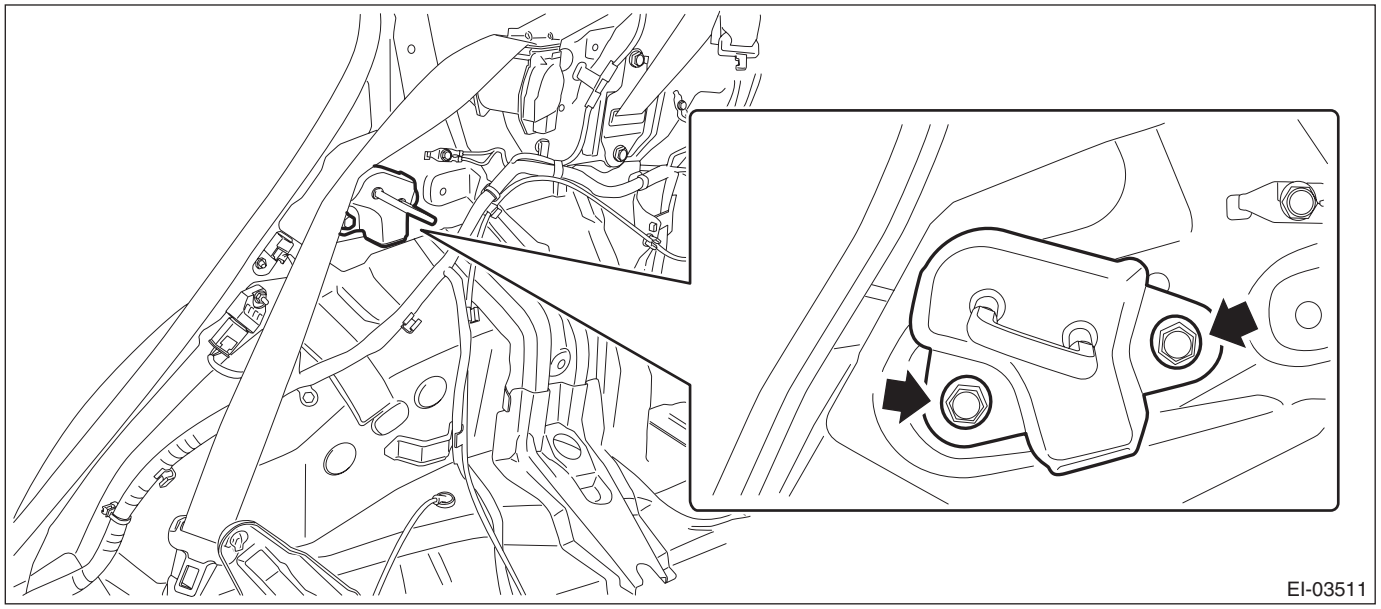

16) Remove the light assembly - map.
(1) Remove the lens and detach the screws.
(2) Disconnect the connector and remove the light assembly - map.

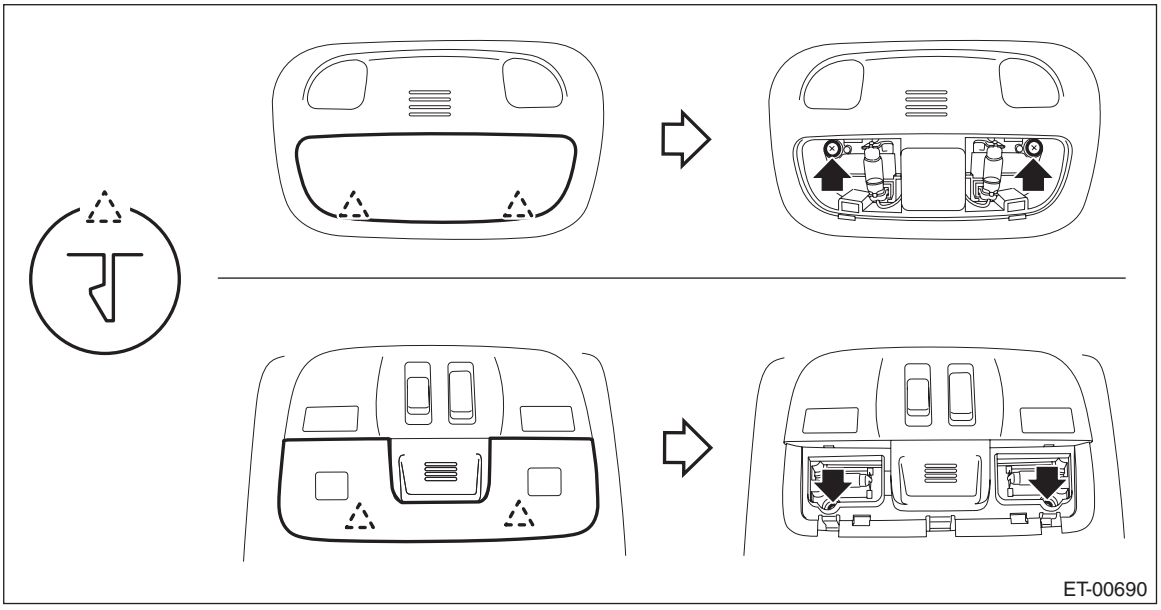

17) Remove the left and right sun visor assembly.
(1) Remove the screws and remove the sun visor assembly.
(2) Press both sides of the hook - sun visor using a flat tip screwdriver.
(3) Remove the hook - sun visor by pulling it toward you.

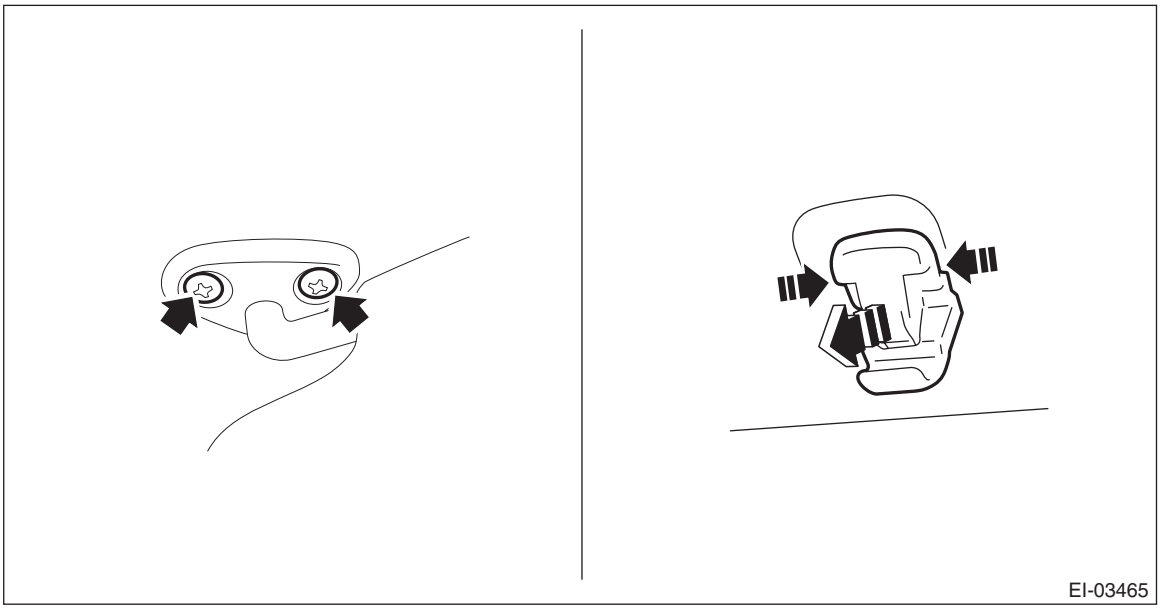

18) Remove the light assembly - room.
(1) Remove the lens and detach the screws.
(2) Disconnect the connector and remove the light assembly - room.

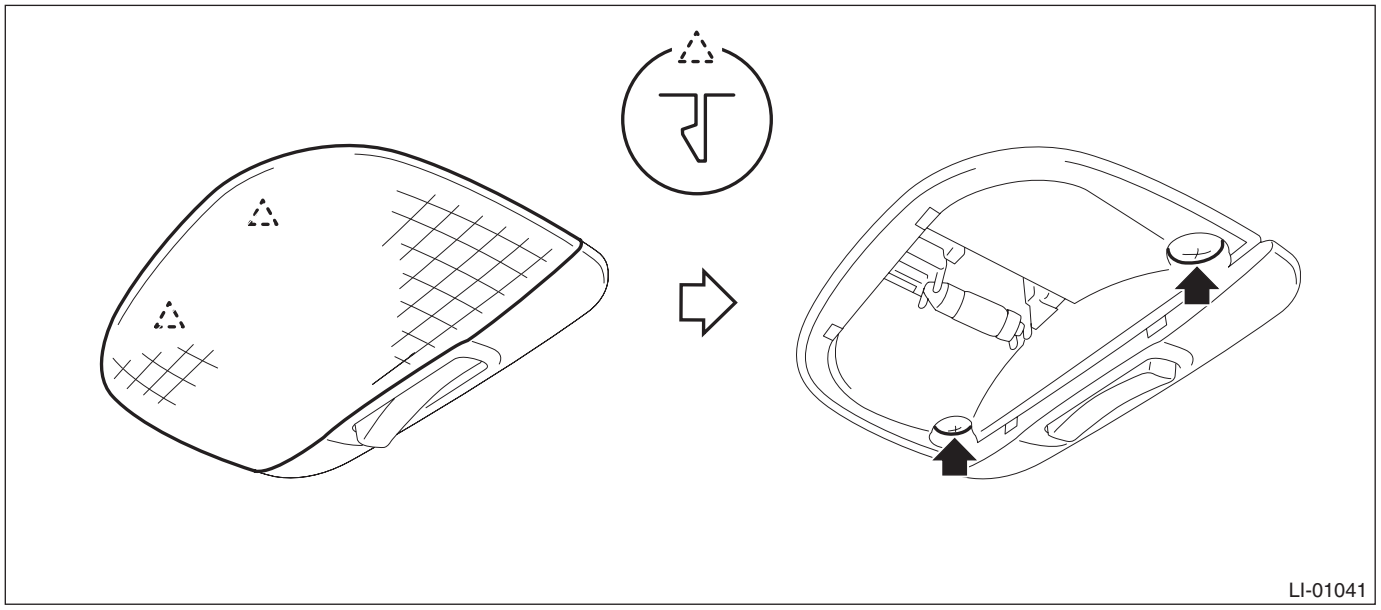

19) Remove all assist rails.
(1) Remove the cap (a) by pulling the both sides of the cap (a) using a flat tip screwdriver wrapped with a protection tape.
(2) Pull the assist grip toward you (to the vehicle center) and remove the metal clip from the bracket.

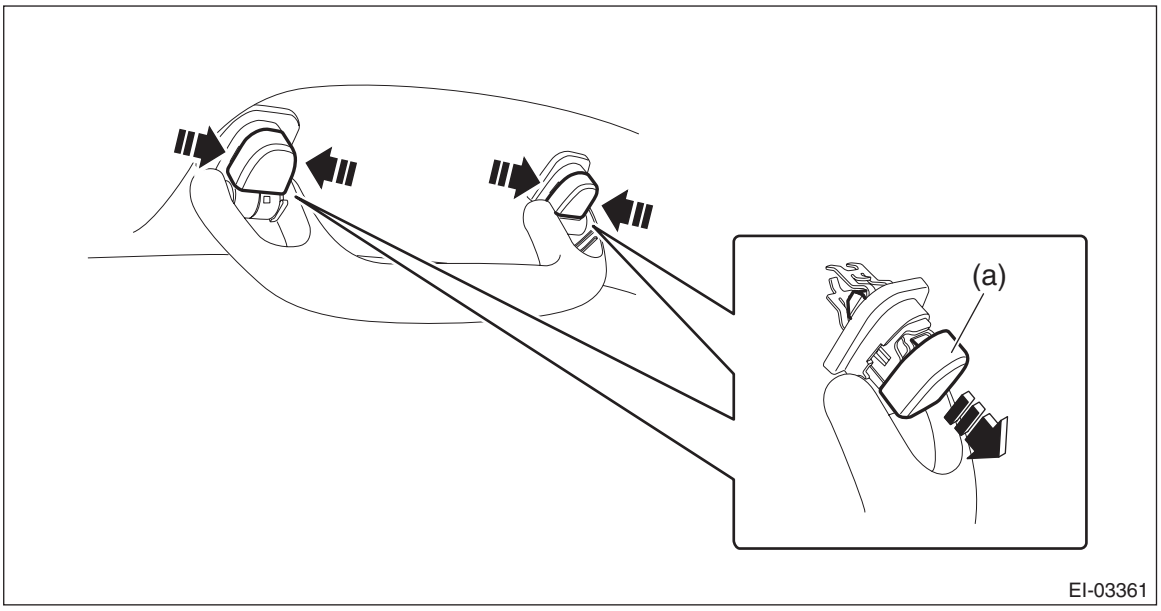

20) Remove the garnish - roof. (Model with sunroof)

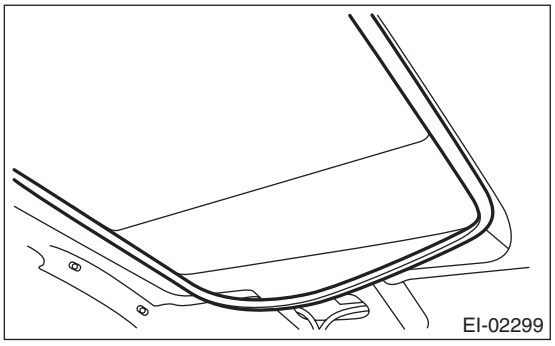

21) Remove the trim panel - roof assembly.
(1) Remove the harness clamp of the cord assembly - antenna feeder and the cord - roof, and disconnect the connectors.
(2) Remove the clips and remove the Velcro tape behind the room light.

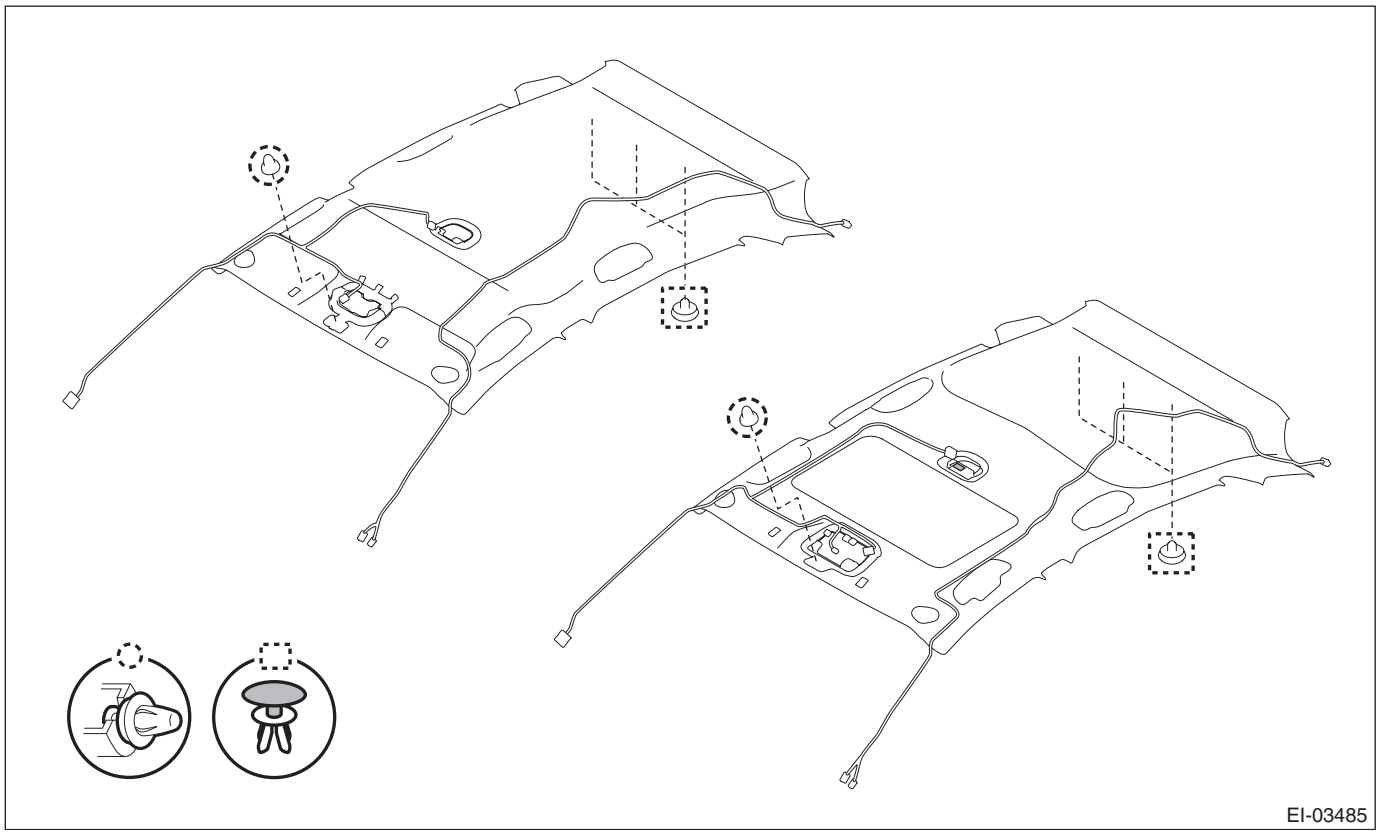

(3) Remove the weather strip - body side flange from the front/rear and left/right doors, and remove the trim panel - roof assembly.
(4) Slightly bend the rear end of the trim panel - roof assembly along the character line, and take it out from the rear gate opening.

CAUTION:
Be careful of the bending direction. If the direction is wrong, the trim panel - roof assembly may be wrinkled.

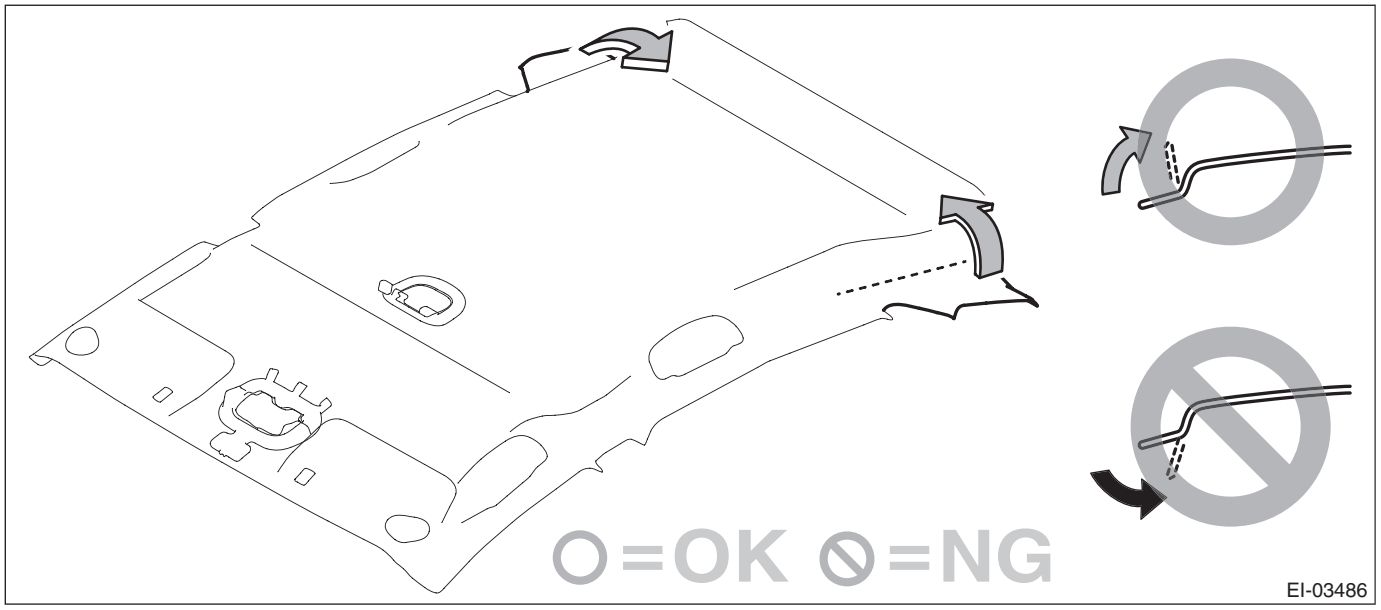

B: INSTALLATION

1) Attach the feeder cord and roof cord to the roof trim.

CAUTION:
Route each cord carefully. The cord may interfere, thus preventing normal deployment of the curtain airbag when necessary.

Tape:
Item number: 86359SC000/TAPE

NOTE:
Use the tape (service parts) by cutting into 80 mm × 50 mm (3.2 in × 2.0 in).

- 4 door model

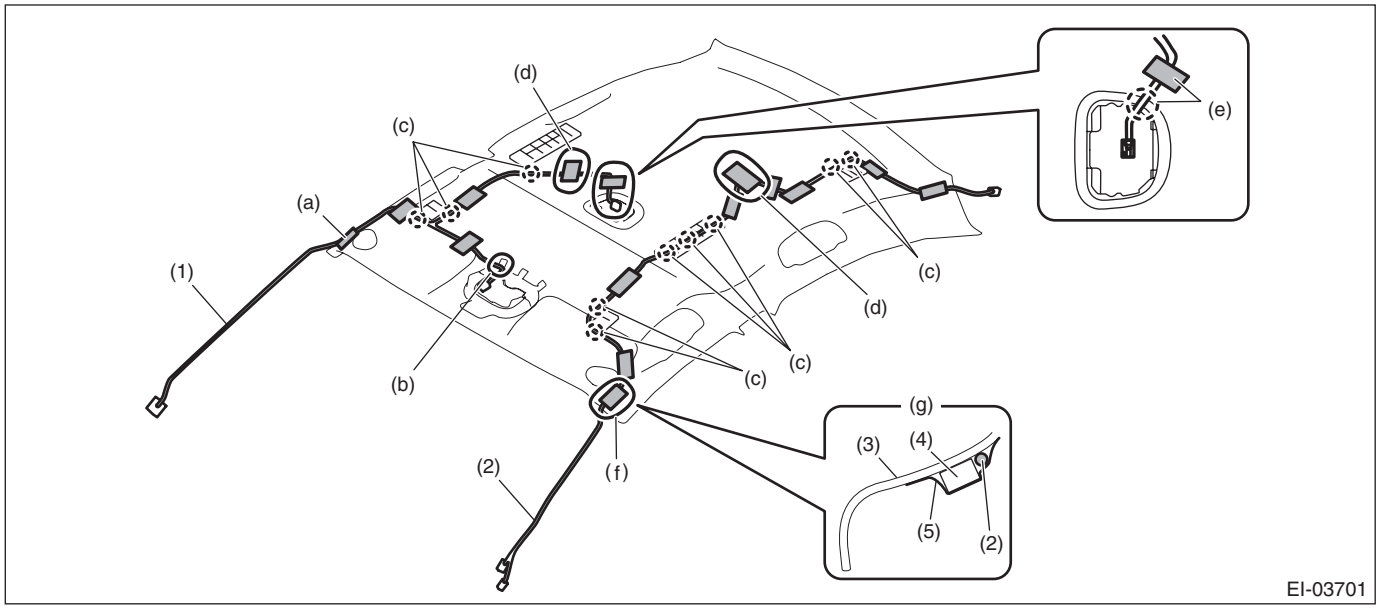

EI-03701

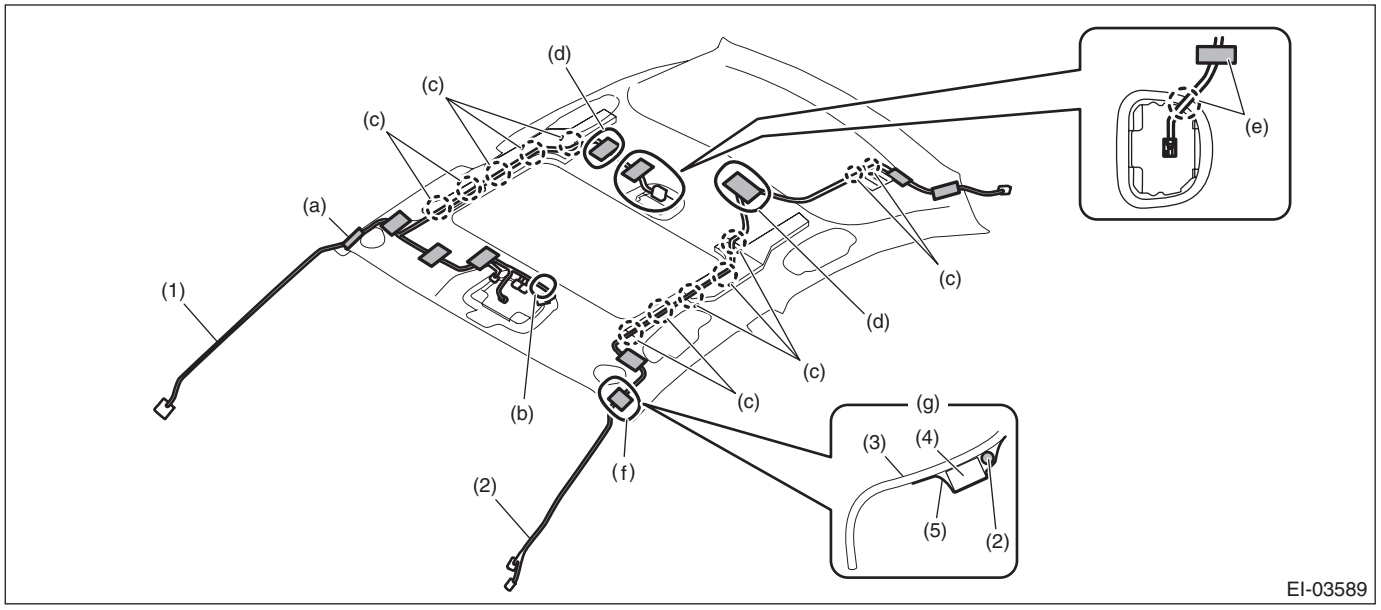

EI-03589

(1)	Roof cord	(3)	Trim panel - roof	(5)	Tape
(2)	Feeder cord	(4)	Cushion		

(a)	Align the center of the marking (white tape) on the cord with the trim end, then secure using the tape.	(d)	Adjust the excess cord at (d) position and secure using the tape.	(g)	Route the cord along inside of the cushion (to the vehicle center) and secure using the tape.
(b)	Align the marking (white tape) of the cord with the clamp to secure.	(e)	Secure the marking (white tape) of the cord using the tape so that the marking cannot be viewed from the passenger room.		
(c)	Secure the cord to the roof pad clamp.	(f)	Align the center of the marking (red tape) on the cord with the roof trim end, then secure using the tape.		

- 5 door model/XV model

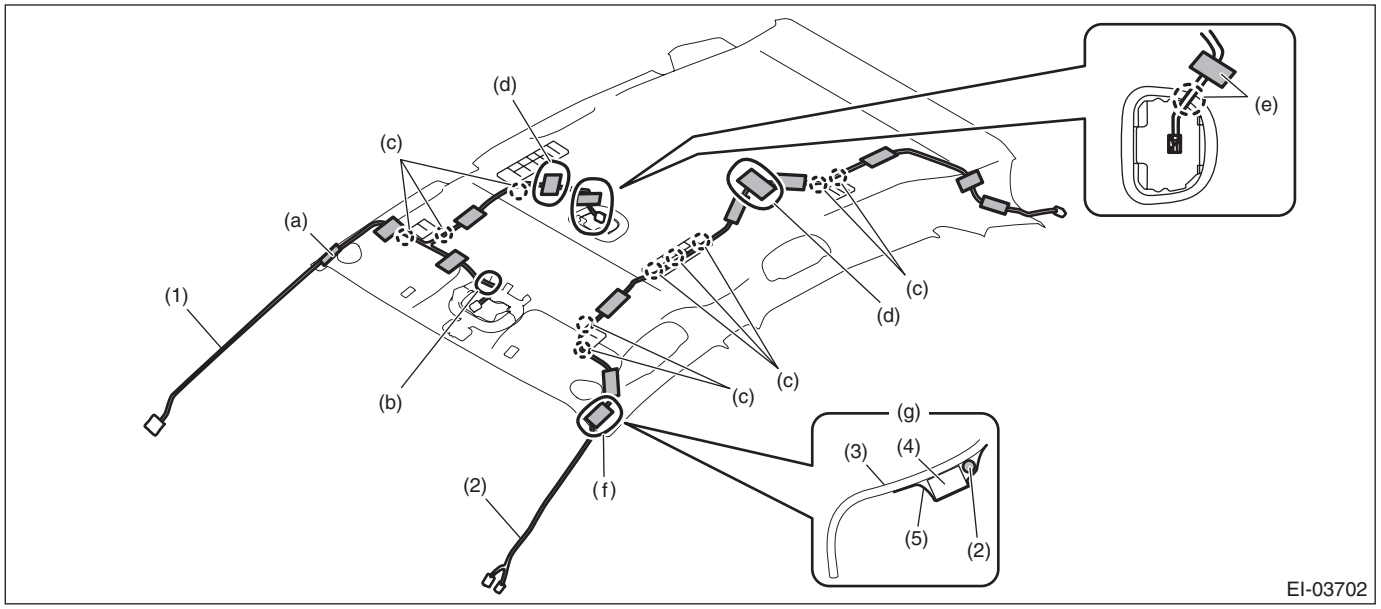

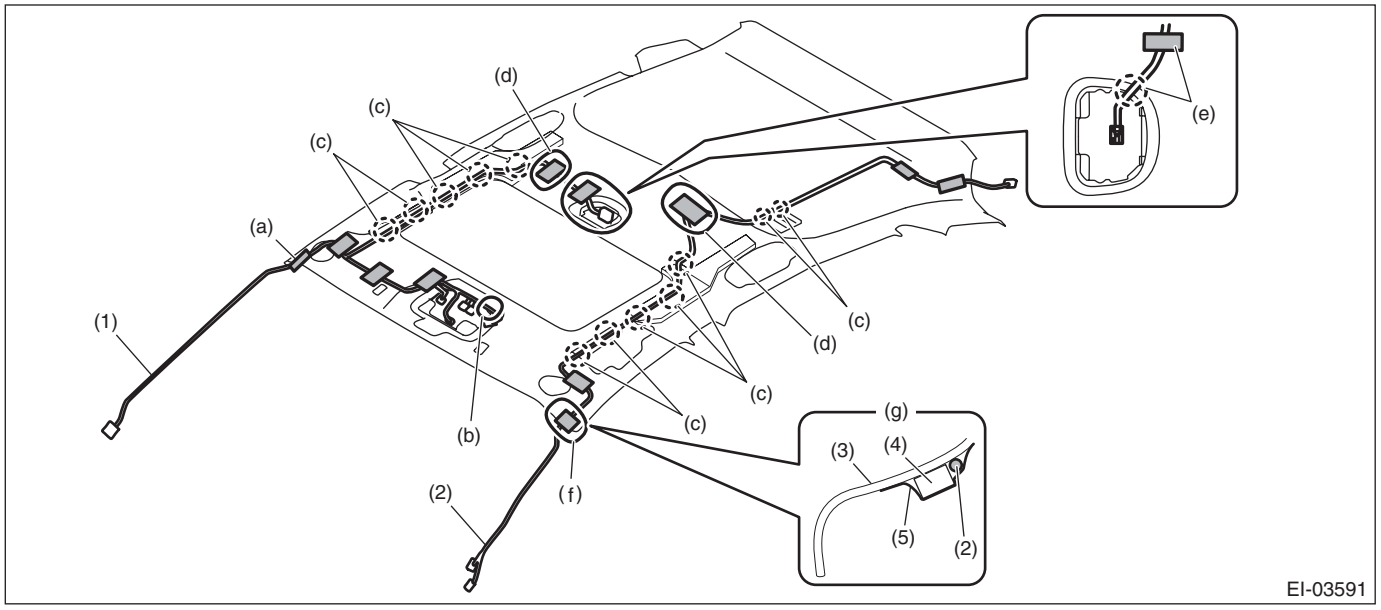

(1) Roof cord
(2) Feeder cord
(3) Trim panel - roof
(4) Cushion
(5) Tape

(a) Align the center of the marking (white tape) on the cord with the trim end, then secure using the tape.
(b) Align the marking (white tape) of the cord with the clamp to secure.
(c) Secure the cord to the roof pad clamp.
(d) Adjust the excess cord at (d) position and secure using the tape.
(e) Secure the marking (white tape) of the cord using the tape so that the marking cannot be viewed from the passenger room.
(f) Align the center of the marking (red tape) on the cord with the roof trim end, then secure using the tape.
(g) Route the cord along inside of the cushion (to the vehicle center) and secure using the tape.

2) Apply the insulator along the mark-off line on the back side of the roof trim.

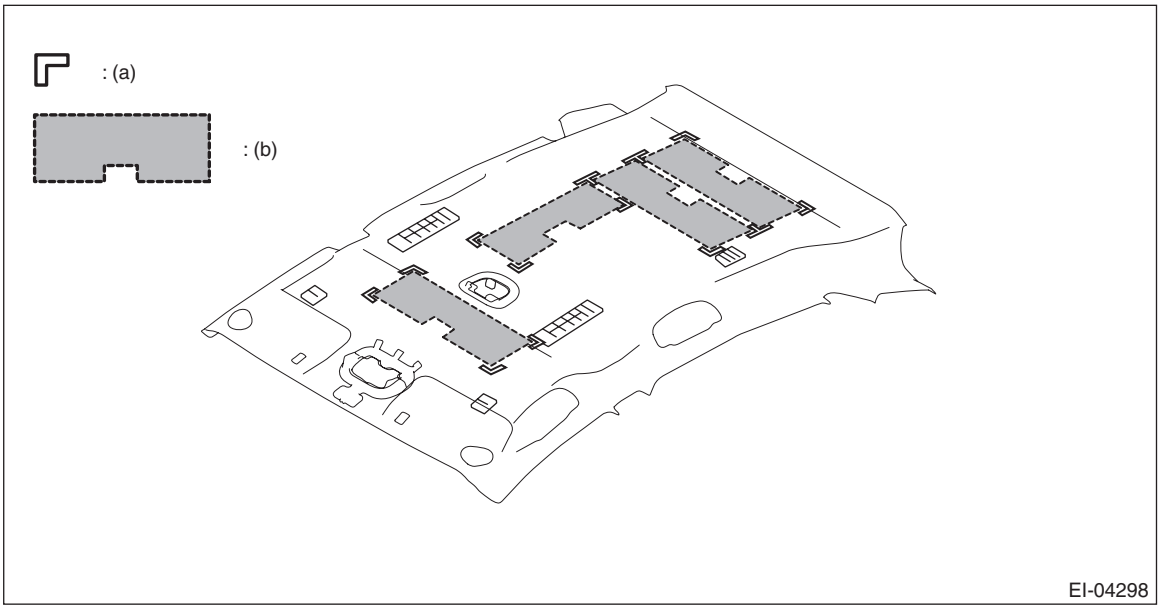

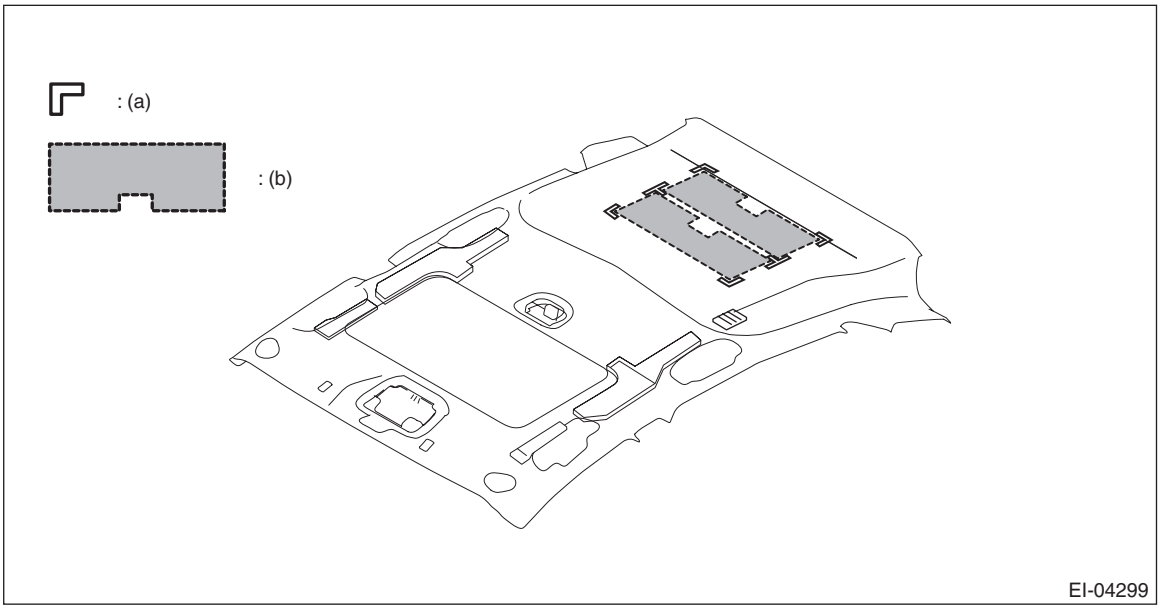

(a) Mark-off line (b) Insulator

3) Install each part in the reverse order of removal.

CAUTION:
• When reusing the tether clip on the upper part of the trim panel - front pillar UPR, check that there is no damage to the tether clip. If the clip is damaged, its holding force is reduced and the trim panel - front pillar UPR may come off. Be sure to replace it with a new clip.
• Do not reuse the tether clip removed from the upper part of the trim panel - front pillar UPR. Always replace with a new part.
• Do not reuse the upper clips of the trim panel - center pillar UPR. Once the clip is removed, its holding force is reduced. Be sure to replace it with a new clip.
• Before installing the trim panel - front pillar UPR, check the condition of protective non-woven fabric (white) of the curtain airbag. If it is damaged (airbag module cloth is exposed), replace the curtain airbag module assembly with a new part.
• Check the installation status of the tether clips and install the trim panel - front pillar UPR.

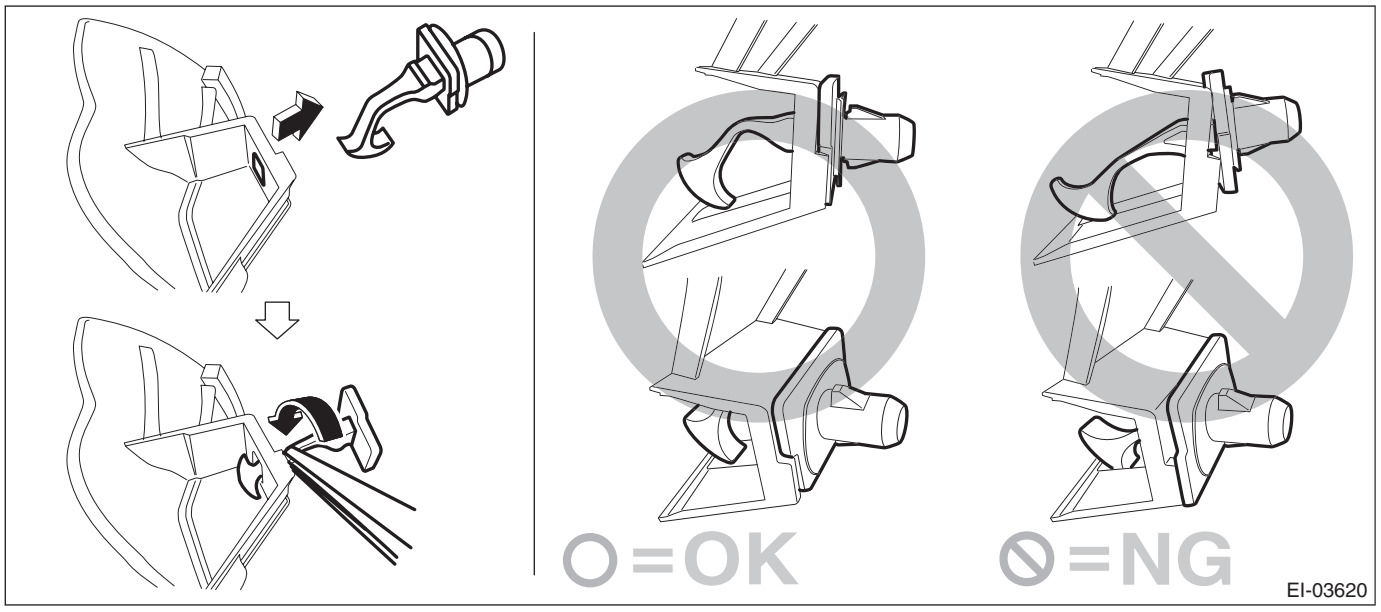

Tightening torque:
Console box assembly: 6.5 N·m (0.66 kgf-m, 4.8 ft-lb)
Rear seat backrest assembly: <Ref. to SE-5, REAR SEAT, COMPONENT, General Description.>

27.Rear Gate Trim

A: REMOVAL

1) Remove the trim panel - rear gate UPR.
   (1) Remove the claws on the trim edge.
   (2) Release the claws in the center of trim, and remove the trim panel - rear gate UPR.

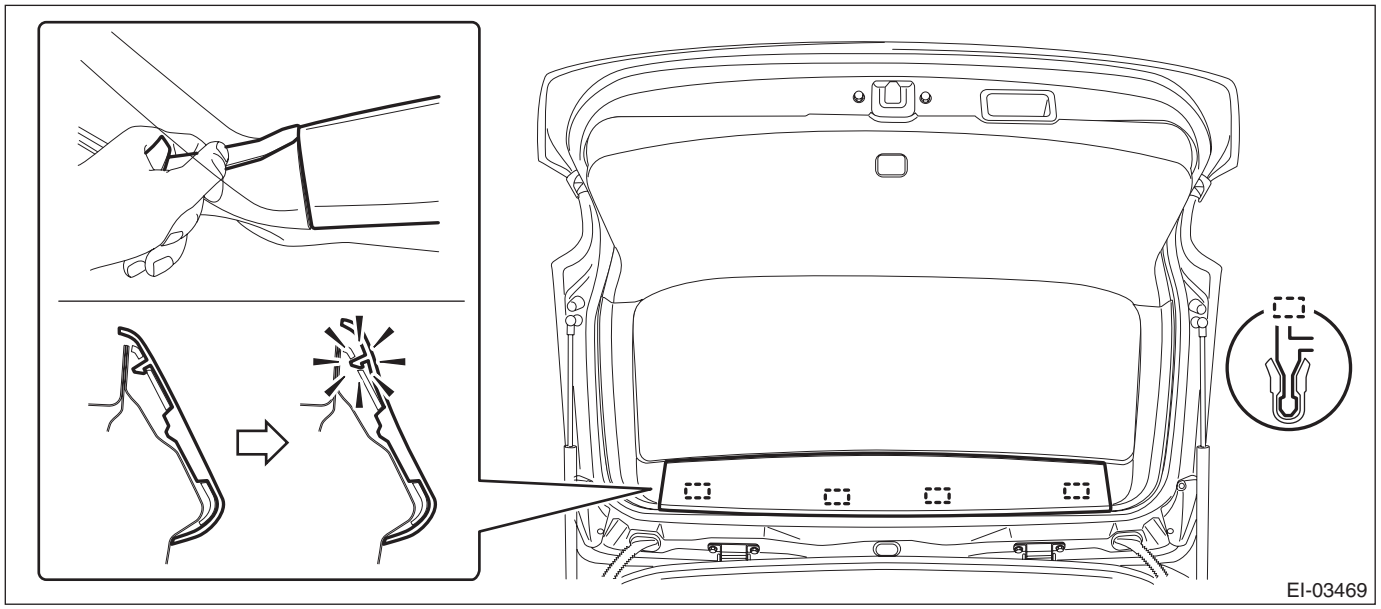

2) Remove the trim panel - rear gate pillar side.
   (1) Release the claws.
   (2) Remove the claws on the bottom of trim, and remove the trim panel - rear gate pillar side.

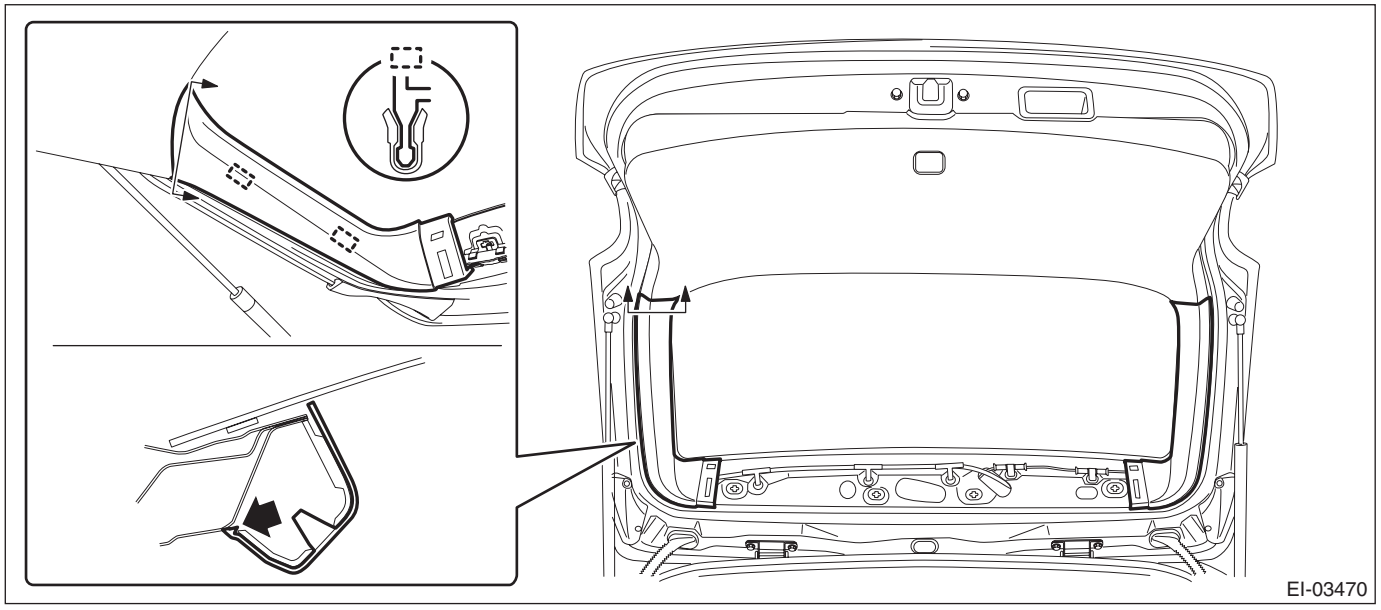

3) Remove the trim panel - rear gate LWR.
   (1) Remove the clips on both ends.
   (2) Release the clips, and remove the trim panel - rear gate LWR.

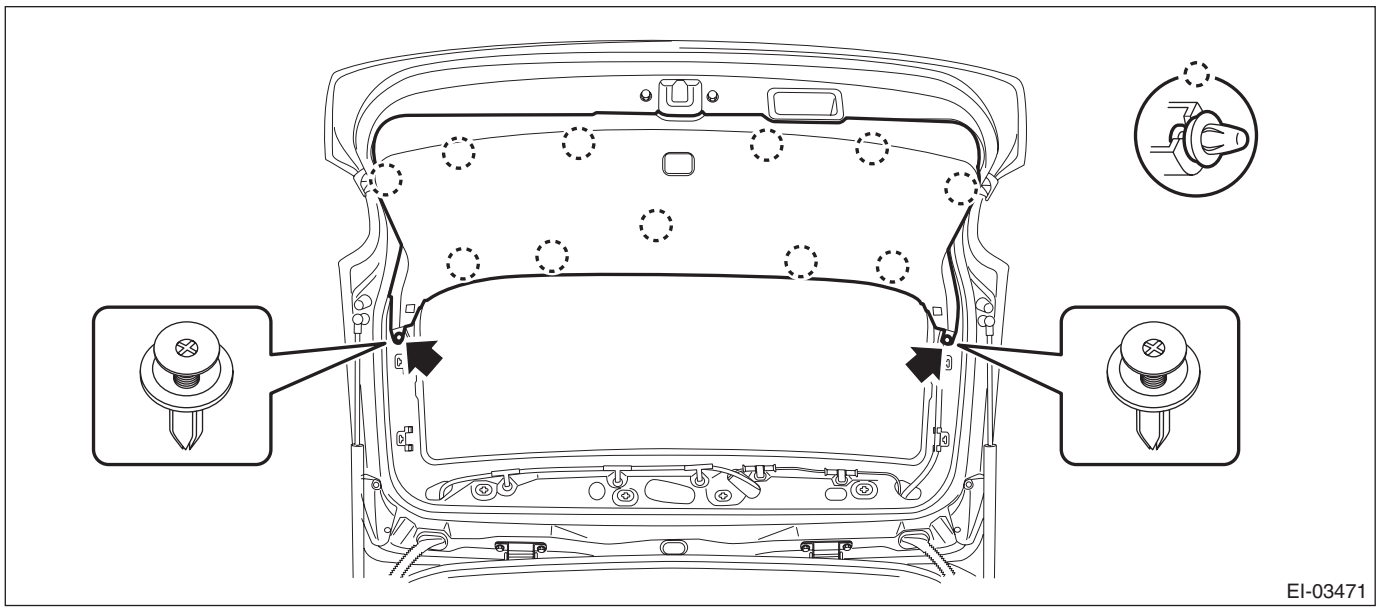

B: INSTALLATION

Install each part in the reverse order of removal.

28.Floor Mat

A: REMOVAL

1) Remove the front seat assembly. <Ref. to SE-7, REMOVAL, Front Seat.>
2) Remove the rear seat cushion assembly. <Ref. to SE-23, REMOVAL, Rear Seat.>
3) Remove the console box assembly and panel center LWR. <Ref. to EI-77, REMOVAL, Console Box.>
4) Remove the lower inner trim. <Ref. to EI-102, REMOVAL, Lower Inner Trim.>
5) Remove the pull handle cover.
   (1) Open the cover by using a flat tip screwdriver.
   (2) Remove the screw and remove the pull handle cover.
   - 4 door model

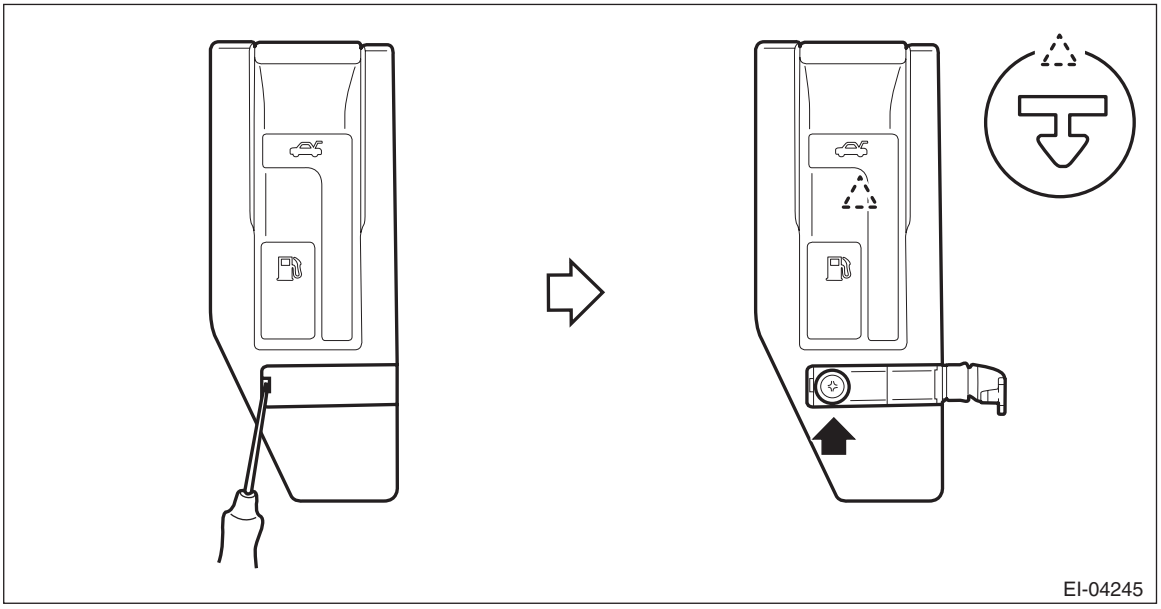
EI-04245

   - 5 door model/XV model

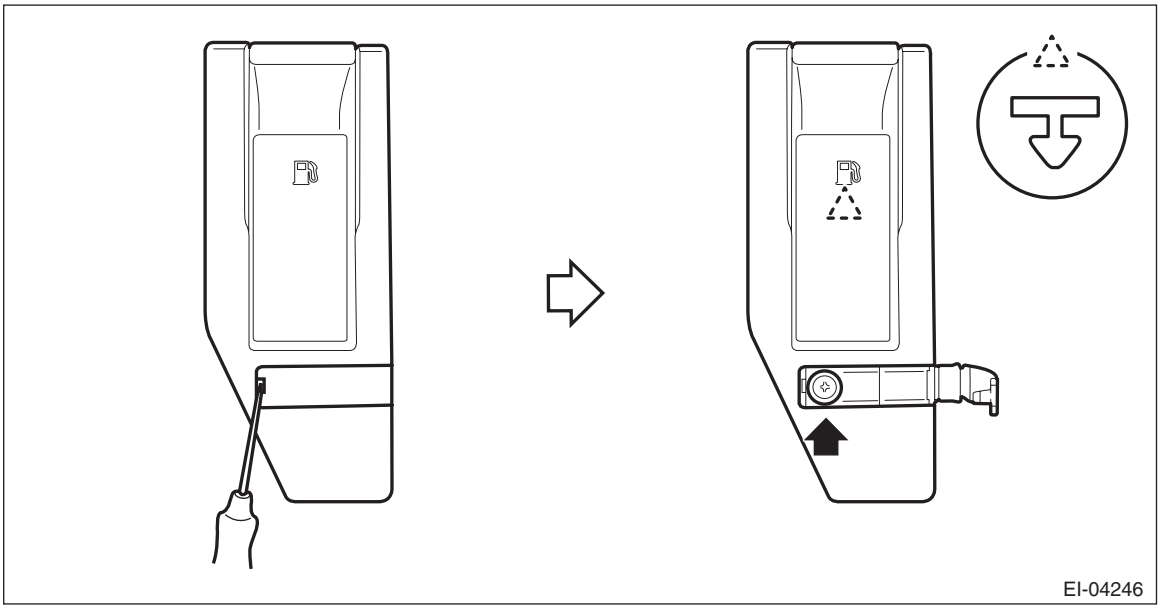
EI-04246

6) Remove the knobs of the hook - seat cushion rear.

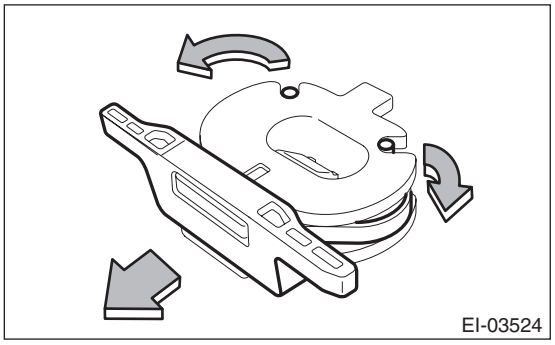
EI-03524

7) Take out the floor mat from the vehicle.
   (1) Remove the clips from the floor mat.
   (2) Remove the mat hook on both sides.
   (3) Take out the floor mat after folding down.

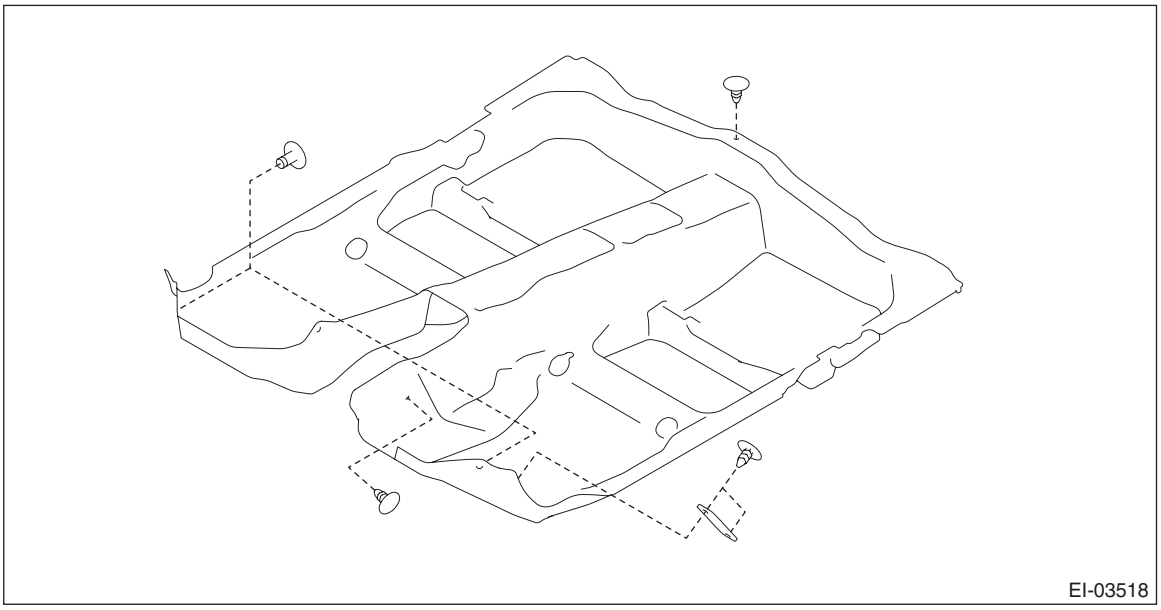
EI-03518

B: INSTALLATION

Install each part in the reverse order of removal.

CAUTION:
Make sure that the knobs of the hook - seat cushion rear are securely installed.

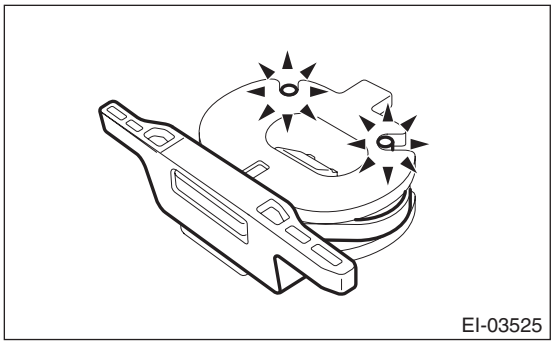
EI-03525

NOTE:
Secure the mat firmly with clips.

29.Trunk Lid Garnish

A: REMOVAL

1) Remove the clips, and remove the trim panel - trunk lid.

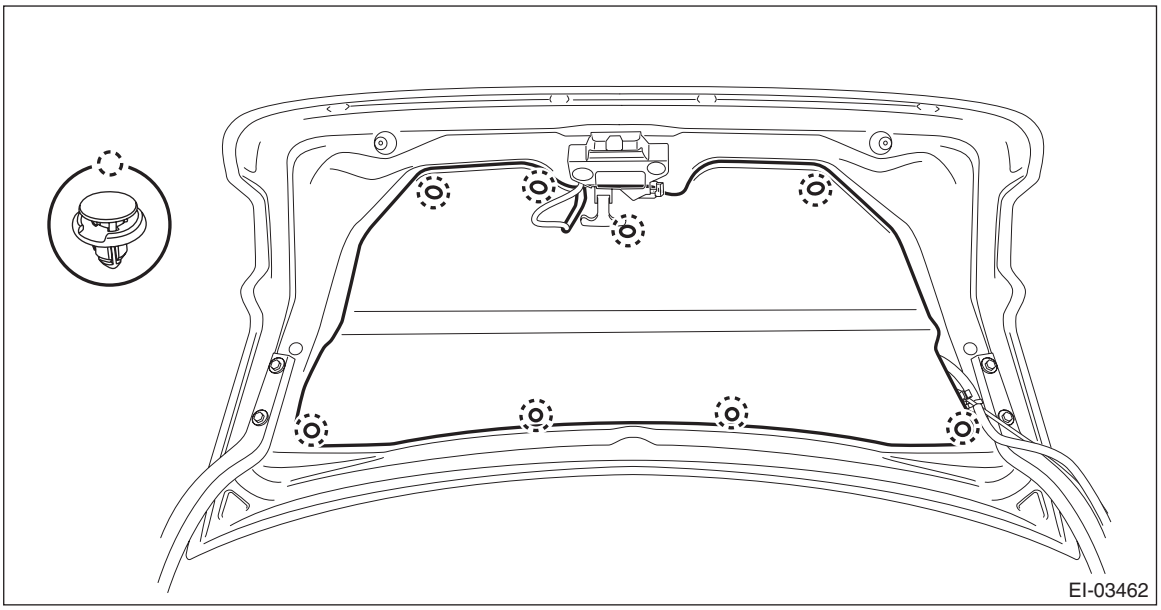

2) Remove the garnish - trunk.
   (1) Remove the nut.
   (2) Remove the clips, and remove the garnish - trunk.

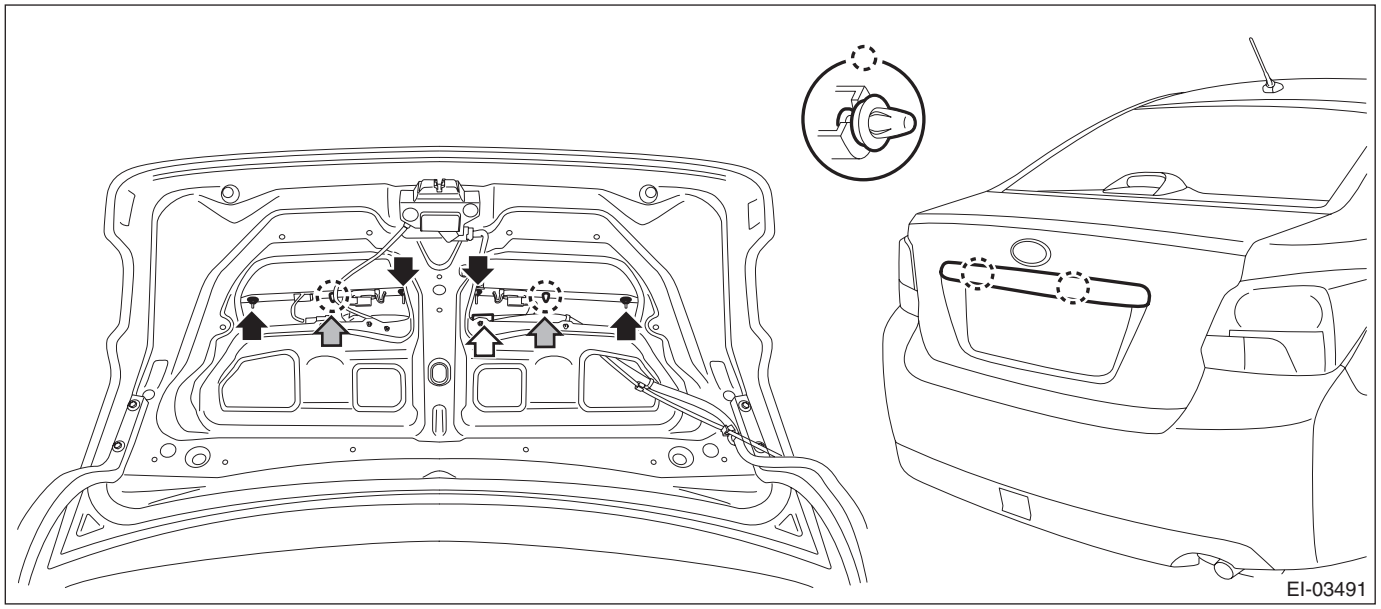

B: INSTALLATION

Install each part in the reverse order of removal.

Tightening torque:
4.5 N·m (0.46 kgf-m, 3.3 ft-lb)

30.Rear Gate Garnish

A: REMOVAL

1) Disconnect the ground cable from battery. <Ref. to NT-5, BATTERY, NOTE, Note.>

NOTE:
For the 12 volt engine restart battery of HEV model, disconnect the ground terminal from 12V engine restart battery sensor.

2) Remove the trim panel - rear gate UPR.
   (1) Remove the claws on the trim edge.
   (2) Release the claws in the center of trim, and remove the trim panel - rear gate UPR.

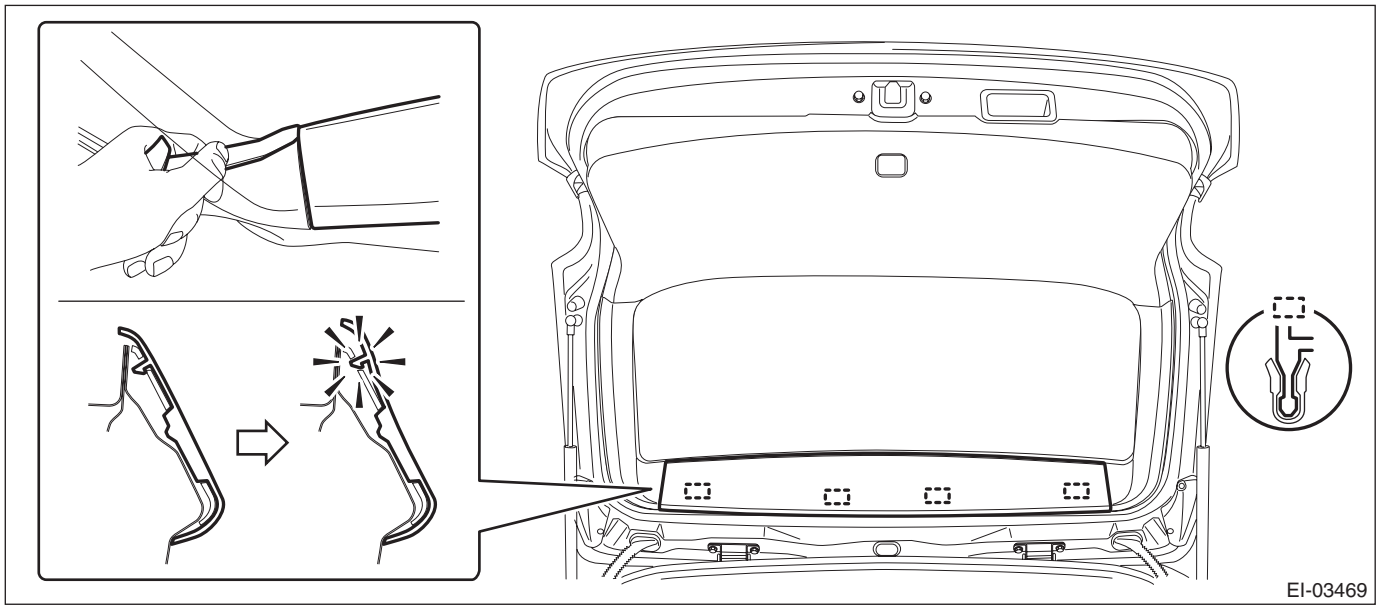

3) Remove the trim panel - rear gate pillar side.
   (1) Release the claws.
   (2) Remove the claws on the bottom of trim, and remove the trim panel - rear gate pillar side.

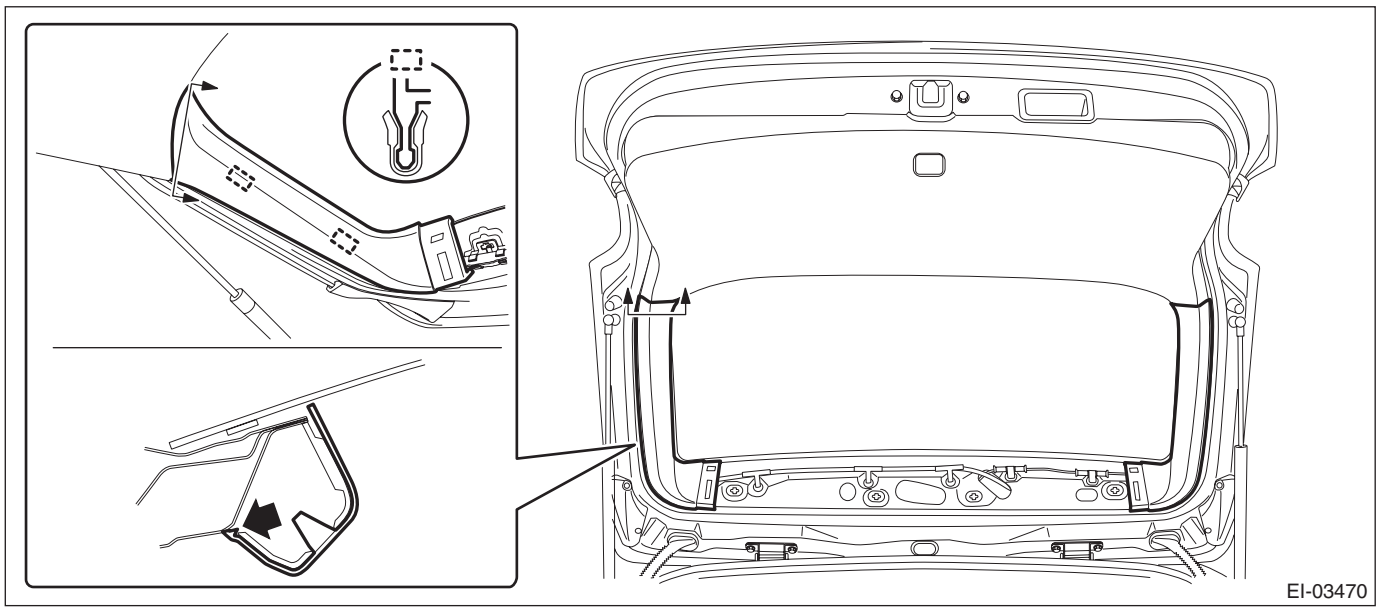

4) Remove the trim panel - rear gate LWR.
   (1) Remove the clips on both ends.
   (2) Release the clips, and remove the trim panel - rear gate LWR.

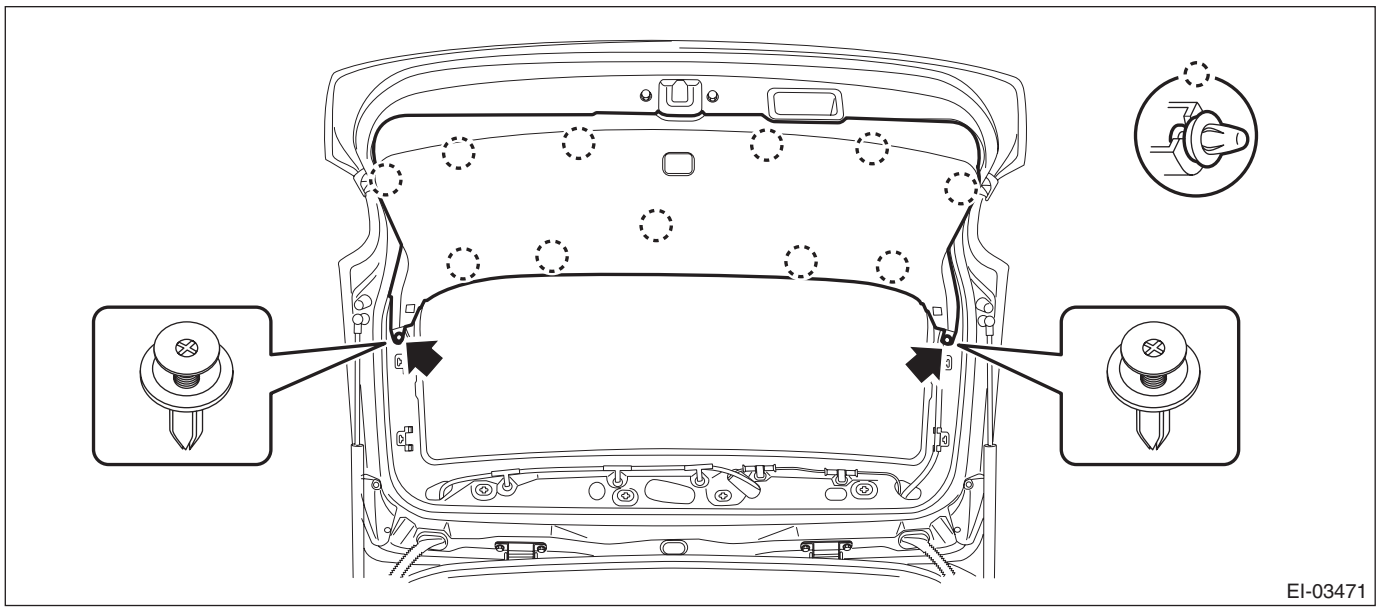
EI-03471

5) Remove the arm assembly - rear wiper.
   (1) Remove the cover - rear wiper arm.
   (2) Remove the nut, and remove the arm assembly - rear wiper.

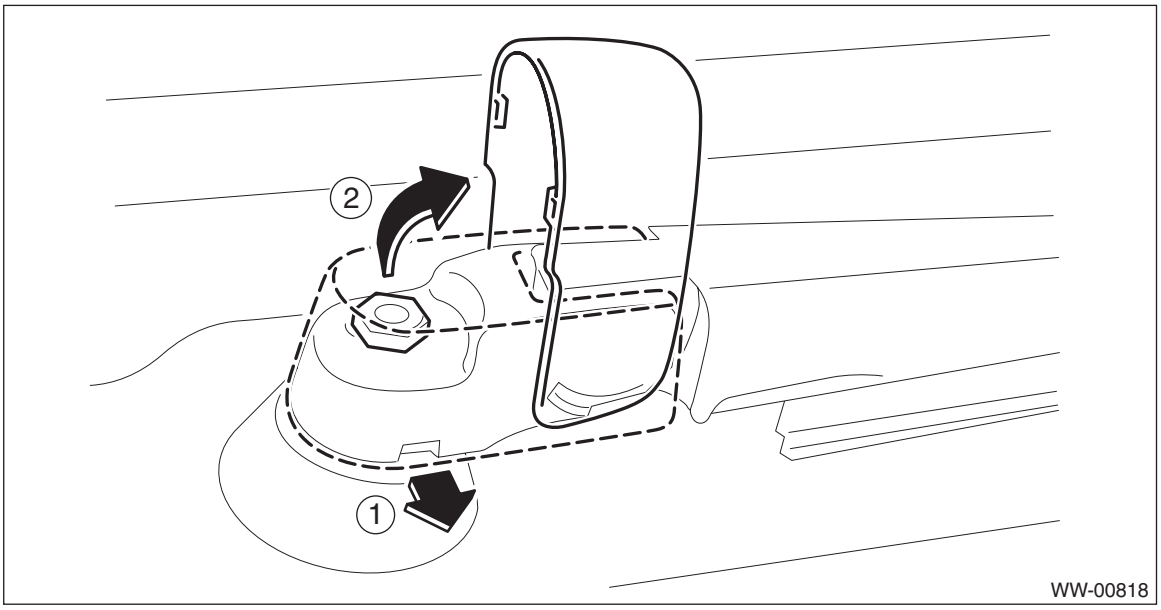

WW-00818

6) Remove the motor assembly - rear wiper.
   (1) Disconnect the harness connector of the motor assembly - rear wiper.
   (2) Remove the bolts, and remove the motor assembly - rear wiper.

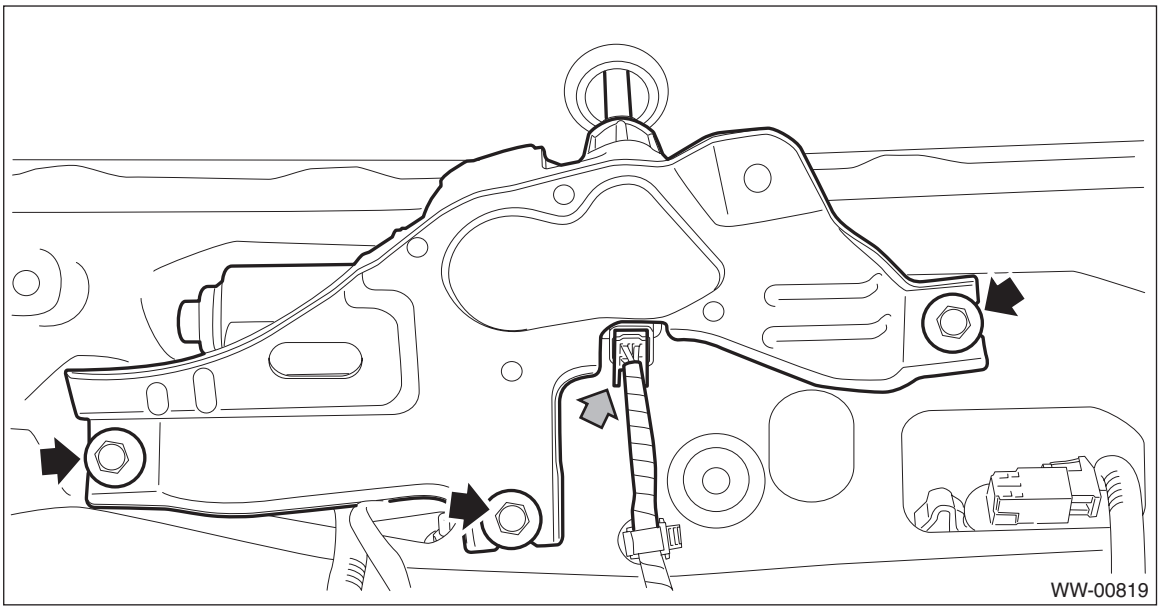

7) Remove the garnish assembly - rear gate.
   (1) Disconnect the harness connector of license plate light assembly.
   (2) Remove the nuts.
   (3) Remove the clips and remove the garnish assembly - rear gate.

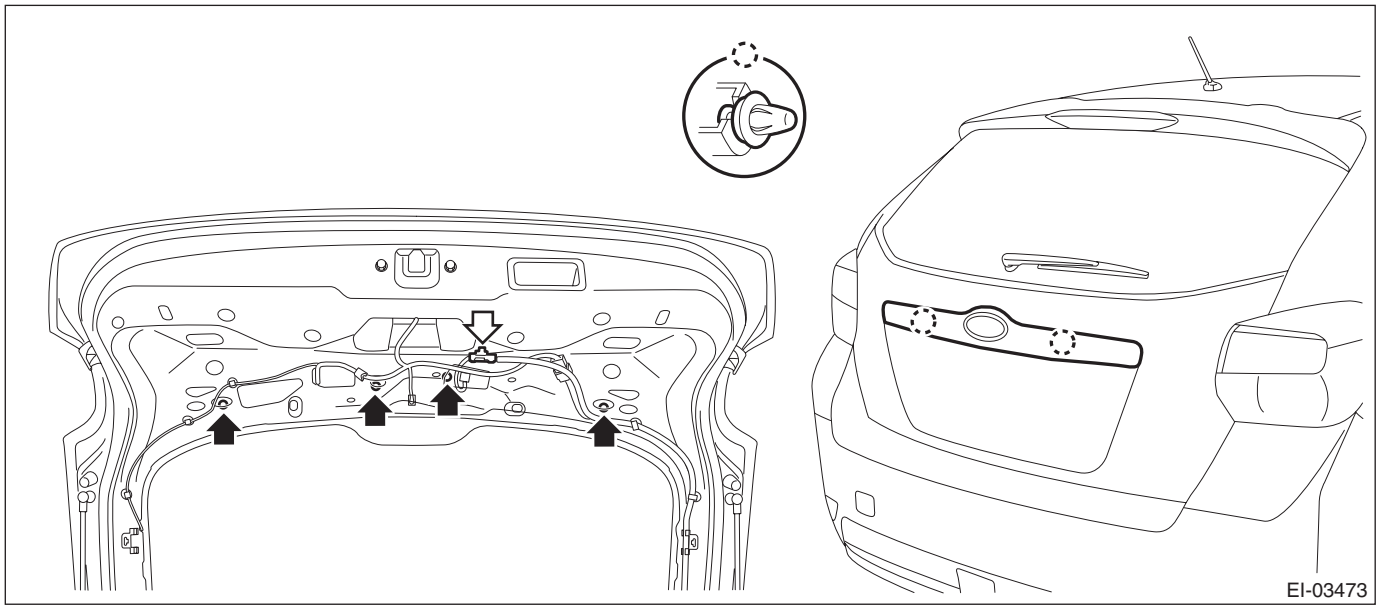

B: INSTALLATION

CAUTION:
Make sure that the harness grommet is securely installed.
If not properly installed, this may cause leaks.
Install each part in the reverse order of removal.

Tightening torque
Garnish assembly - rear gate: 4.5 N·m (0.46 kgf-m, 3.3 ft-lb)
Motor assembly - rear wiper: 6 N·m (0.61 kgf-m, 4.4 ft-lb)
Arm assembly - rear wiper: 8 N·m (0.82 kgf-m, 5.9 ft-lb)

31.Heat Shield Cover

A: NOTE

Refer to “EXHAUST” section for removal and installation procedure of the heat shield cover.

32.Ornament

A: INSTALLATION

1. LETTER MARK

Align the end of application tape with the end of panel, then adhere the letter mark.

- 4 door model

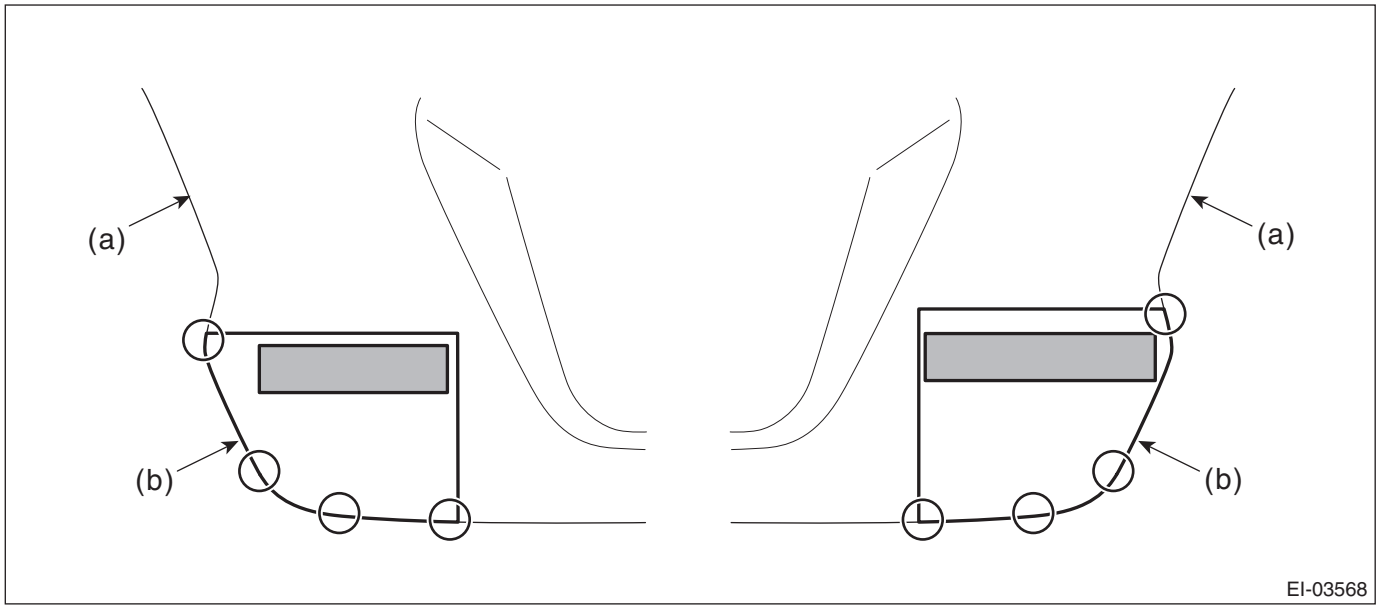

(a) Trunk lid COMPL end (b) Application tape end

- 5 door model/XV model

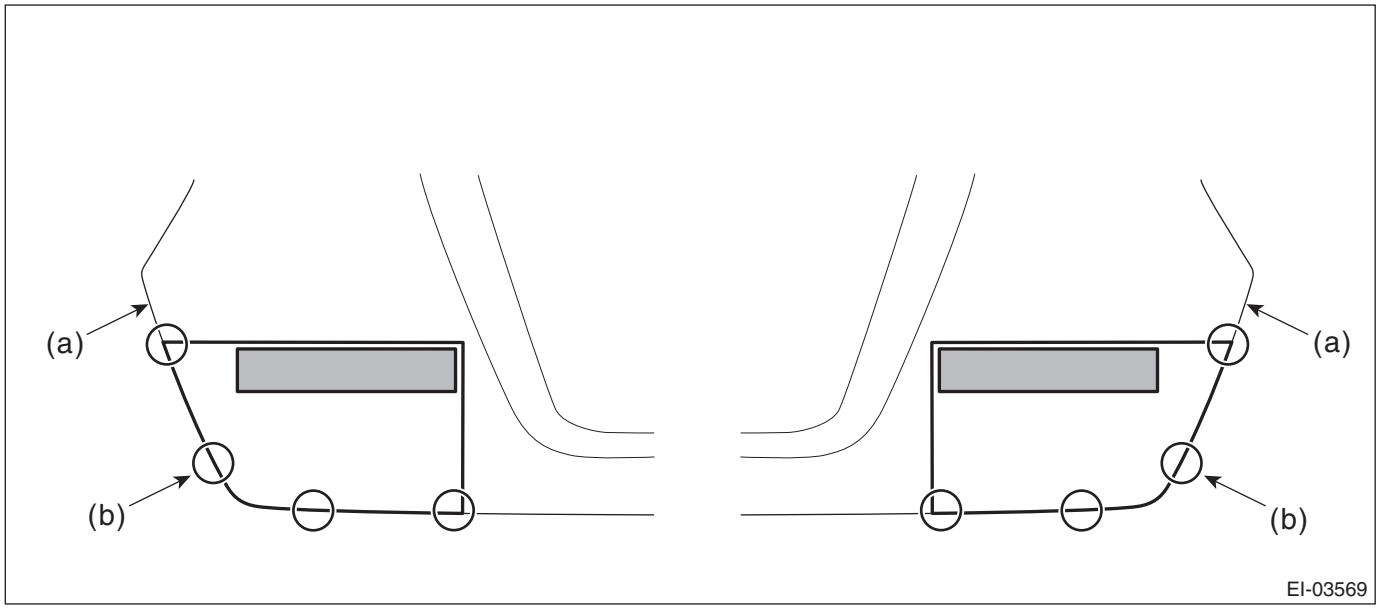

(a) Panel - rear gate end (b) Application tape end

- HEV model

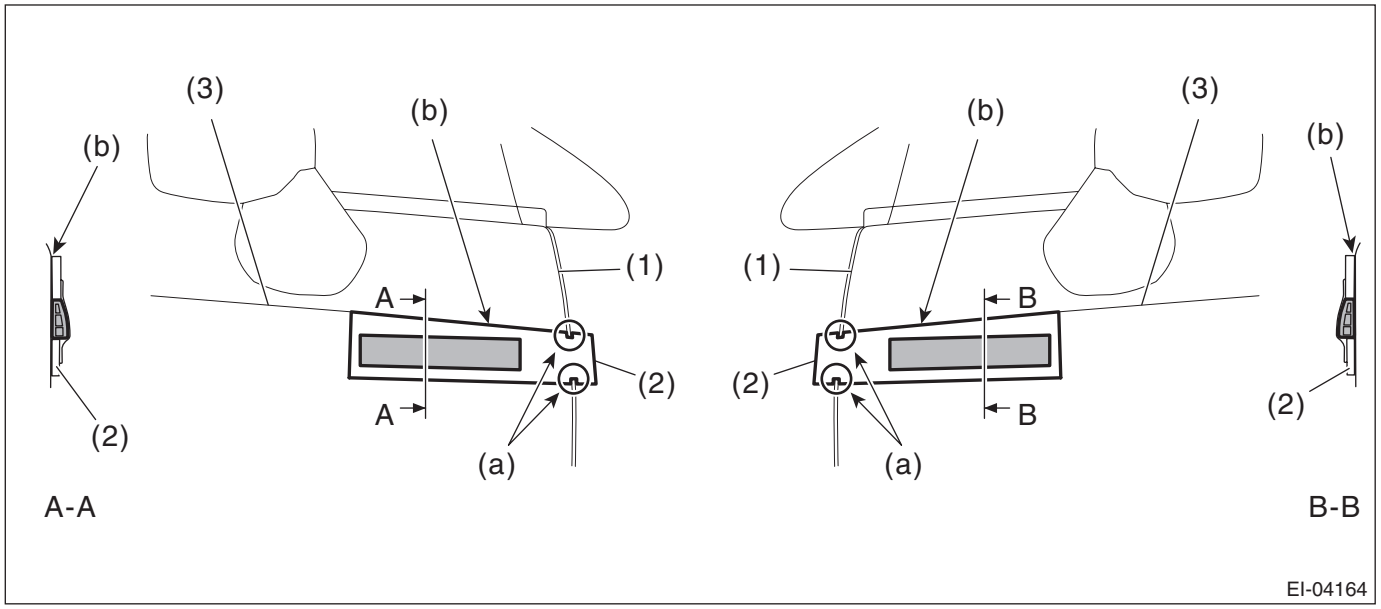

(1) Front door end (2) Application tape end (3) Curved section of character line

NOTE:
- Align the cutout of application tape with the front door end standard. (a)
- Align the top end of application tape with the R section end of the character line. (b)

EXTERIOR BODY PANELS

EB

		Page
1.	General Description	2
2.	Front Hood	9
3.	Front Fender	16
4.	Front Door	23
5.	Front Sealing Cover	33
6.	Rear Door	35
7.	Rear Sealing Cover	42
8.	Door Sash Tape	44
9.	Trunk Lid	56
10.	Rear Gate	60
11.	Protector Tape	68

1. General Description

A: SPECIFICATION

Refer to Body Repair Manual for the dimensions of the body.

B: COMPONENT

1. FRONT HOOD

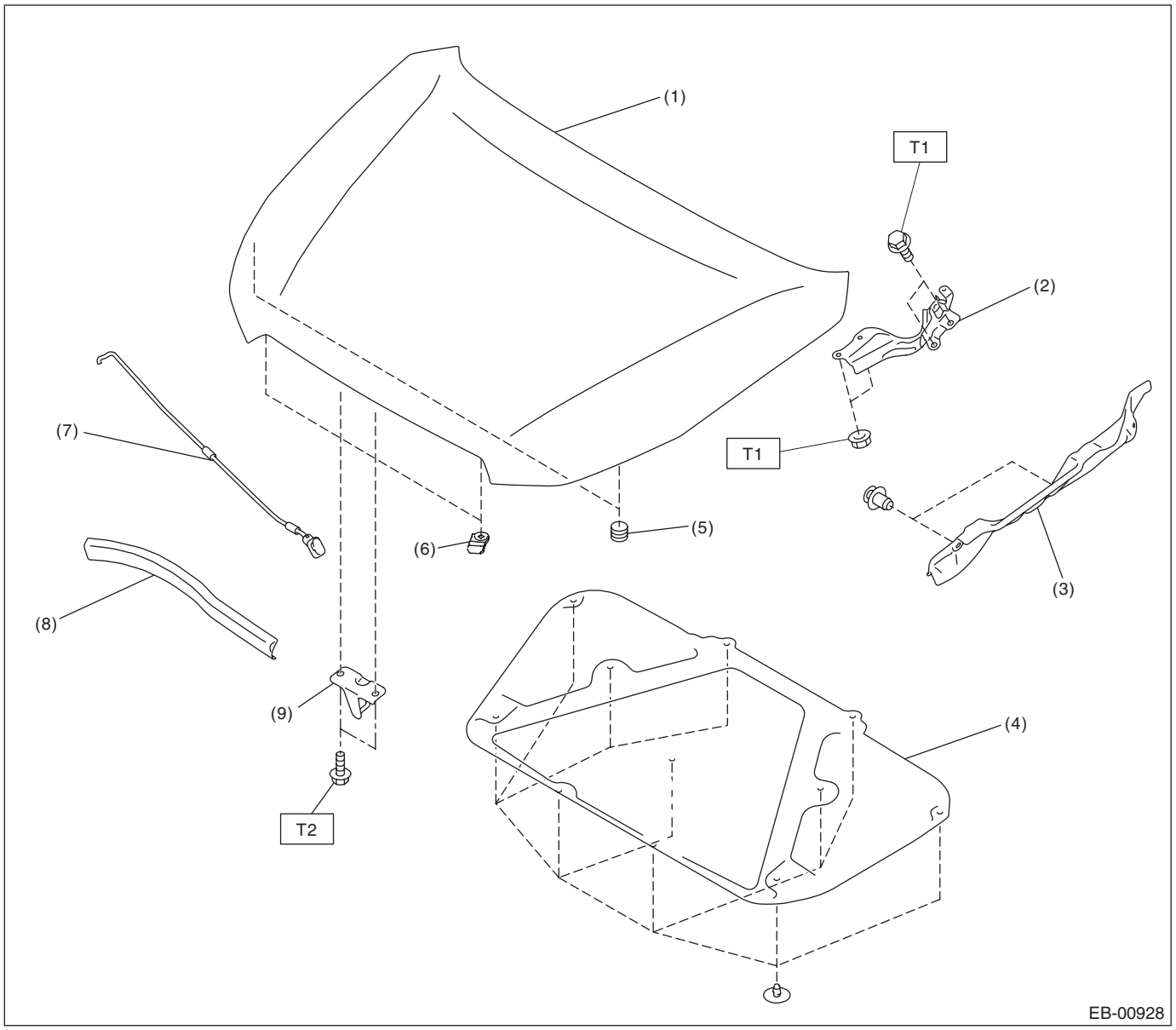

(1) Hood COMPL - front
(2) Hinge COMPL - front hood
(3) Cover - front fender
(4) Insulator - front hood
(5) Buffer - front hood
(6) Stopper - front hood
(7) Stay - hood support
(8) Seal - front duct
(9) Striker - front hood

Tightening torque: N·m (kgf-m, ft-lb)
T1: 25 (2.55, 18.4)
T2: 33 (3.36, 24.5)

2. FRONT FENDER

- Except for XV model

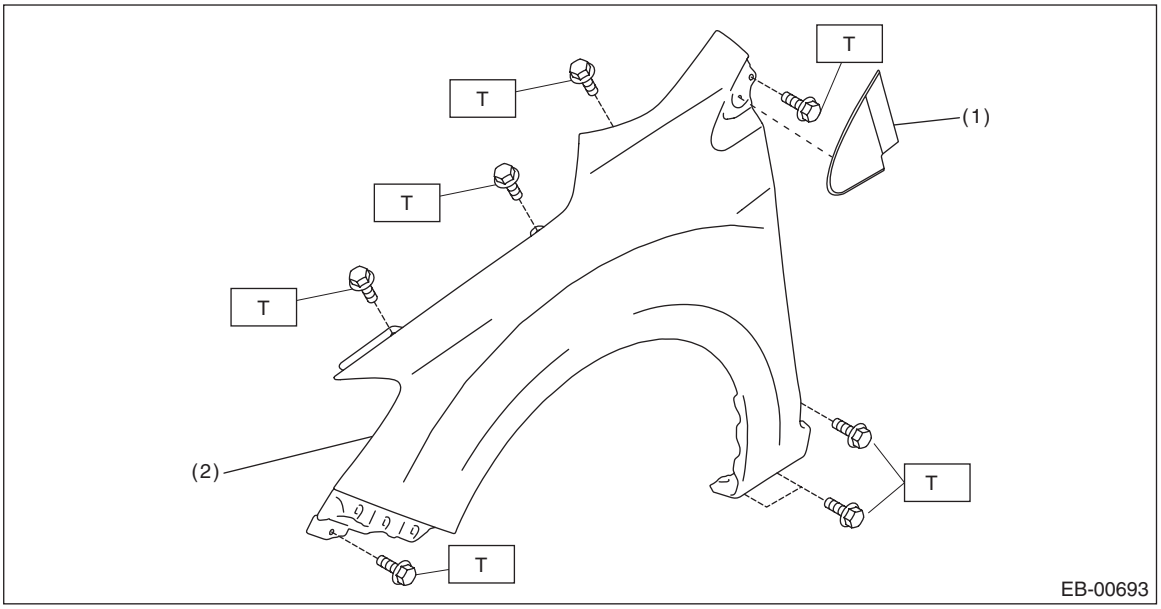

(1) Cover - front pillar ASSY
(2) Fender COMPL - front

Tightening torque: N·m (kgf-m, ft-lb)
T: 7.5 (0.76, 5.5)

- XV model

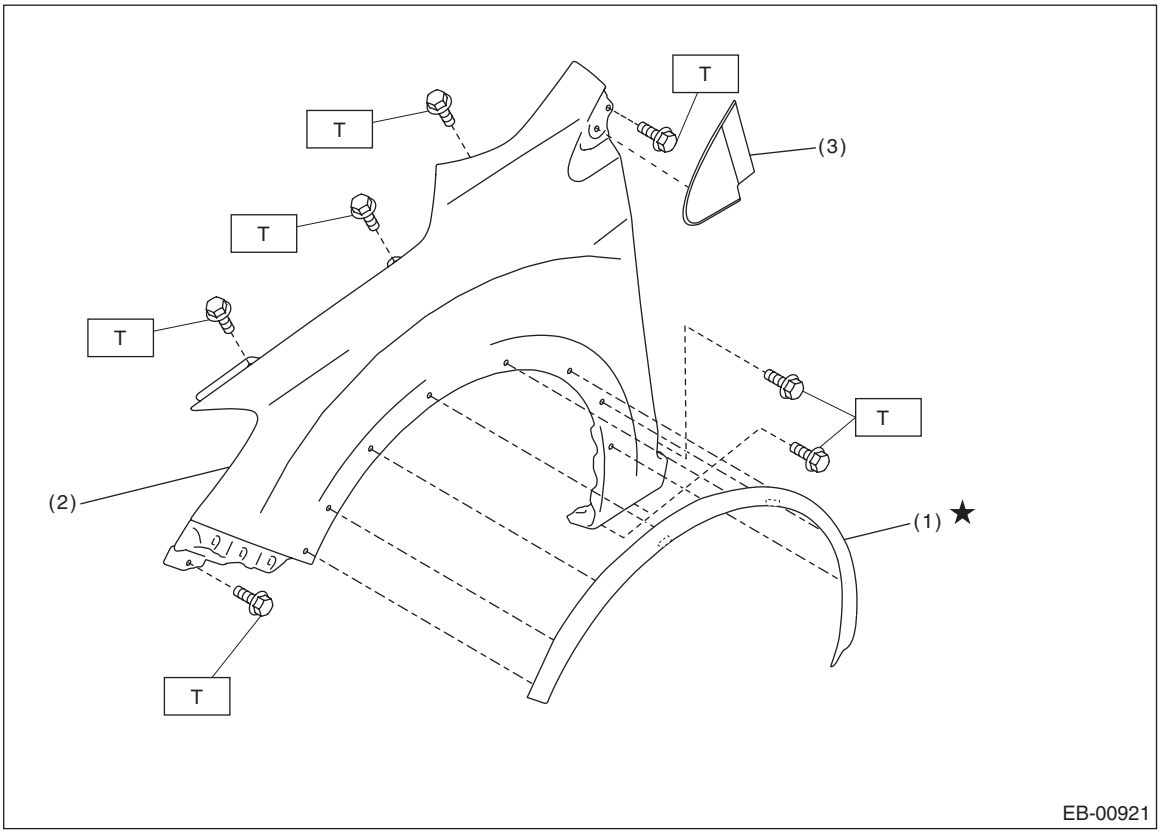

(1) Garnish ASSY - front fender
(2) Fender COMPL - front
(3) Cover - front pillar ASSY

Tightening torque: N·m (kgf-m, ft-lb)
T: 7.5 (0.76, 5.5)

3. FRONT DOOR

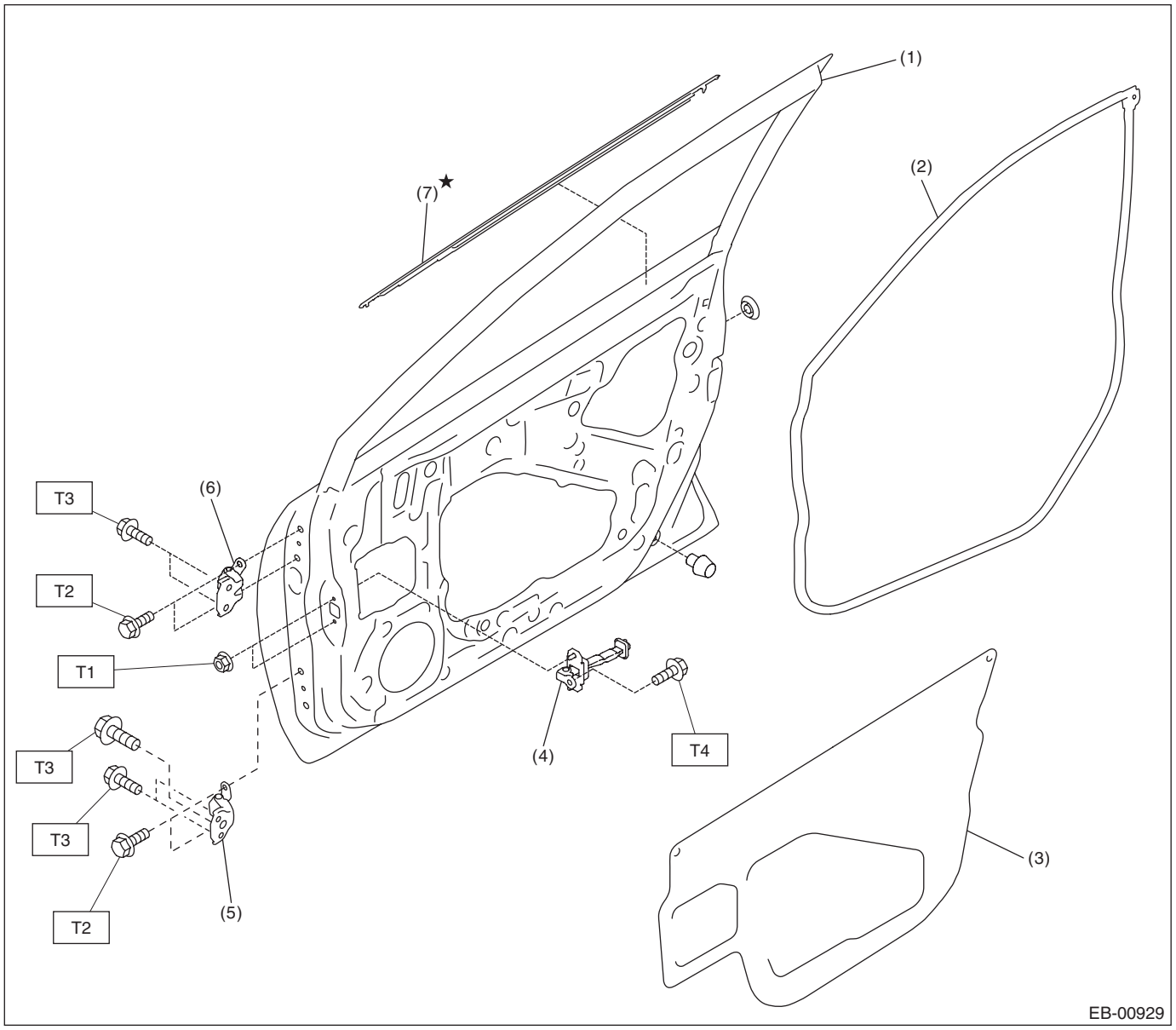

(1) Panel ASSY - front door
(2) Weather strip - front door
(3) Sealing cover - front door
(4) Checker ASSY - front door
(5) Lower hinge - front door
(6) Upper hinge - front door
(7) Weather strip outer - front door

Tightening torque: N·m (kgf-m, ft-lb)
T1: 7.5 (0.76, 5.5)
T2: 25 (2.55, 18.4)
T3: 30 (3.06, 22.1)
T4: 33 (3.36, 24.3)

4. REAR DOOR

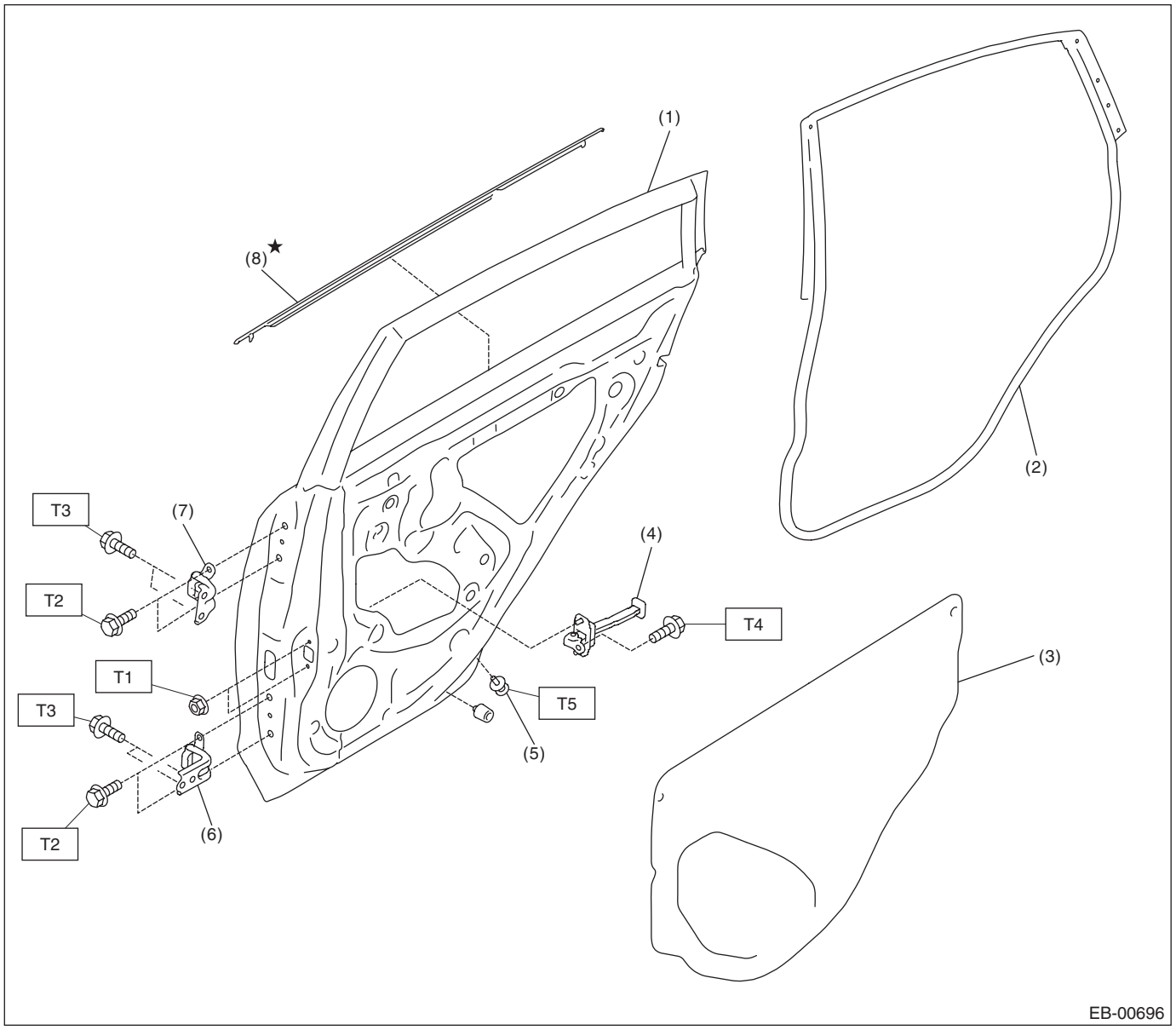

(1) Panel ASSY - rear door
(2) Weather strip - rear door
(3) Sealing cover - rear door
(4) Checker ASSY - rear door
(5) Catcher - rear door
(6) Lower hinge - rear door
(7) Upper hinge - rear door
(8) Weather strip outer - rear door

Tightening torque: N·m (kgf-m, ft-lb)
T1: 7.5 (0.76, 5.5)
T2: 25 (2.55, 18.4)
T3: 30 (3.06, 22.1)
T4: 33 (3.36, 24.3)
T5: 38 (3.87, 28.0)

5. TRUNK LID PANEL

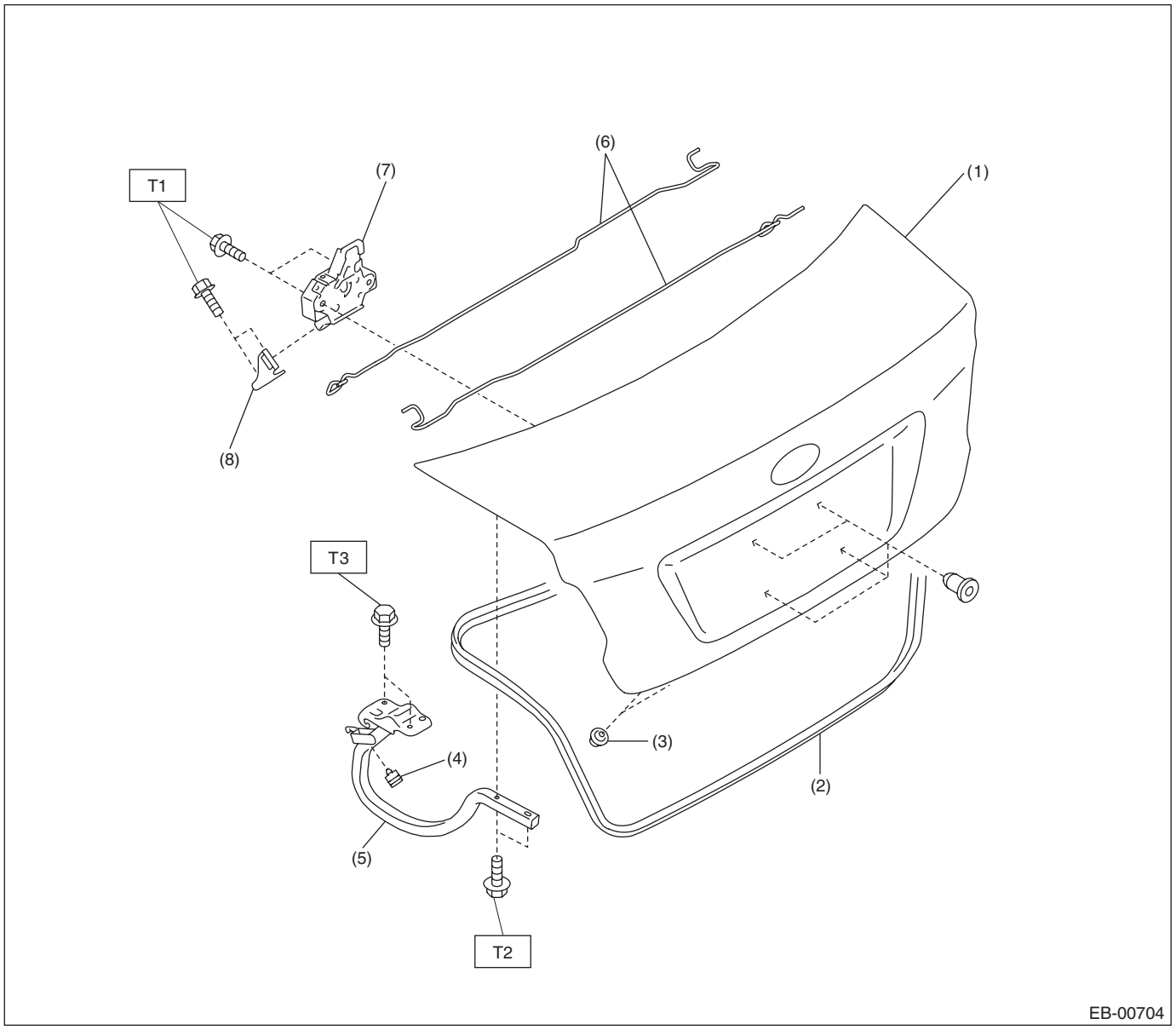

(1)	Trunk lid COMPL	(5)	Trunk lid arm ASSY
(2)	Weather strip - trunk lid	(6)	Torsion bar - trunk lid
(3)	Stopper - trunk lid	(7)	Lock ASSY - trunk lid
(4)	Stopper - trunk	(8)	Striker - trunk

Tightening torque: N·m (kgf-m, ft-lb)
T1: 7.5 (0.76, 5.5)
T2: 14 (1.43, 10.3)
T3: 18 (1.84, 13.3)

6. REAR GATE

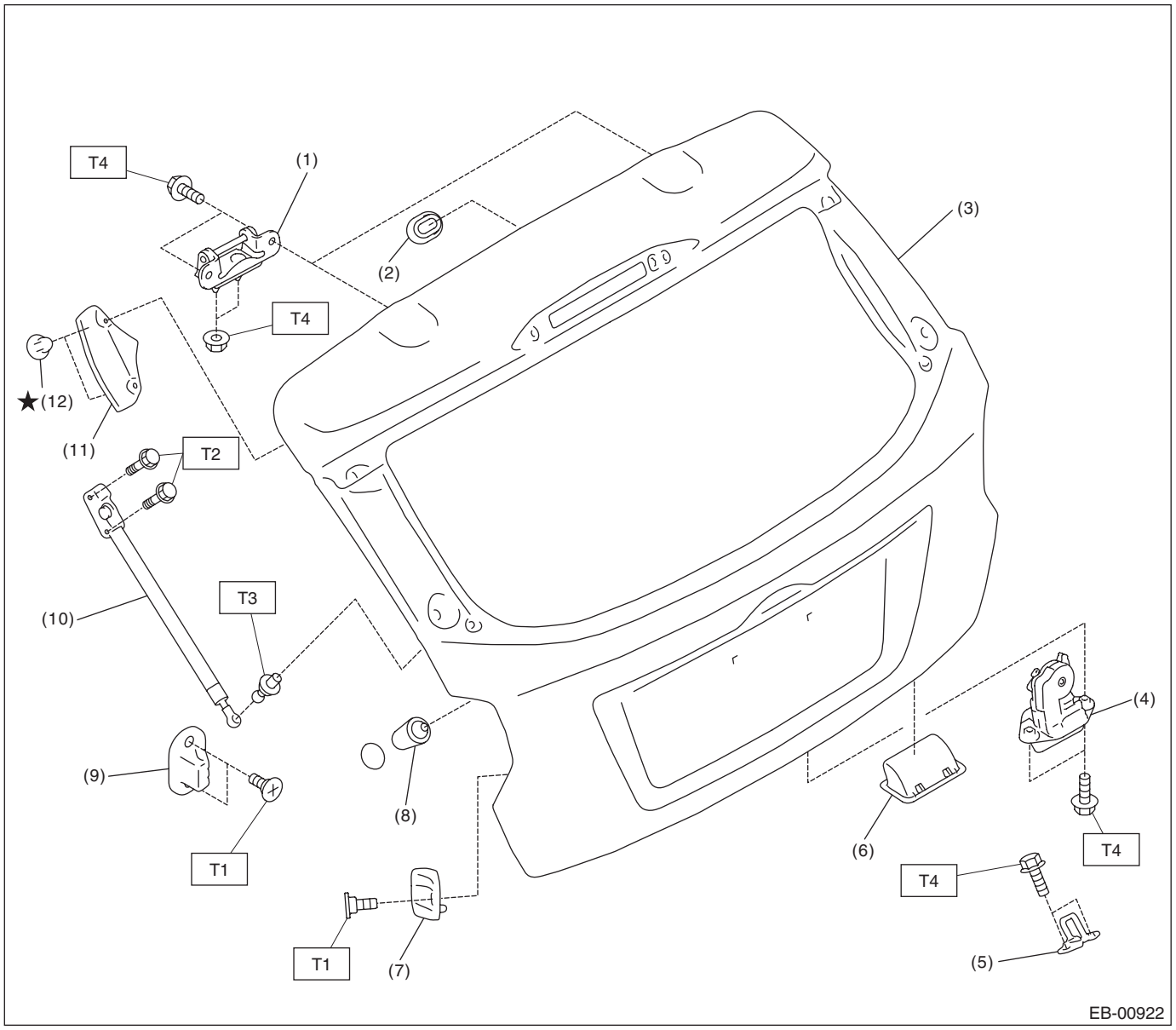

(1)	Hinge - rear gate	(7)	Buffer - rear gate
(2)	Plug - hole	(8)	Stopper - rear gate
(3)	Panel - rear gate	(9)	Buffer - body side
(4)	Latch & actuator - rear gate	(10)	Stay ASSY - rear gate
(5)	Striker - rear gate	(11)	Drip - rear gate
(6)	Handle - rear gate	(12)	Clip

Tightening torque: N·m (kgf-m, ft-lb)
T1: 7.5 (0.76, 5.5)
T2: 10 (1.02, 7.4)
T3: 20 (2.04, 14.8)
T4: 25 (2.55, 18.4)

C: CAUTION

Exterior body panels are heavy. When removing and installing them, do not drop and damage the panels. Also, be careful not to scratch the coated surfaces of the panels.

D: PREPARATION TOOL

1. SPECIAL TOOL

ILLUSTRATION	TOOL NUMBER	DESCRIPTION	REMARKS
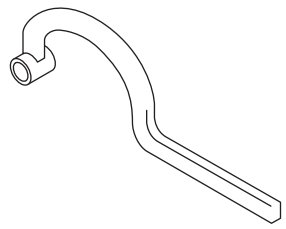 ST-925610000	925610000	WRENCH	Used for removing and installing door hinge.
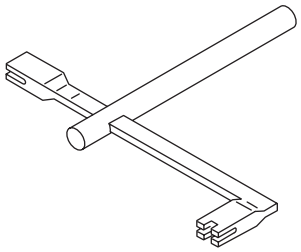 ST-927780000	99099FJ000	REMOVER	Used for removing and installing the trunk torsion bar.

2. GENERAL TOOL

TOOL NAME	REMARKS
Support jack	Used for supporting door panel.
Clip remover	Used for removing various types of clips

2. Front Hood

A: REMOVAL

1. FRONT HOOD PANEL

CAUTION:
The hood COMPL - front is heavy. When removing or installing the hinge COMPL - front hood, be sure to work in a group of two or more.

1) Open the hood COMPL - front.
2) Remove the clips, and remove the insulator - front hood.

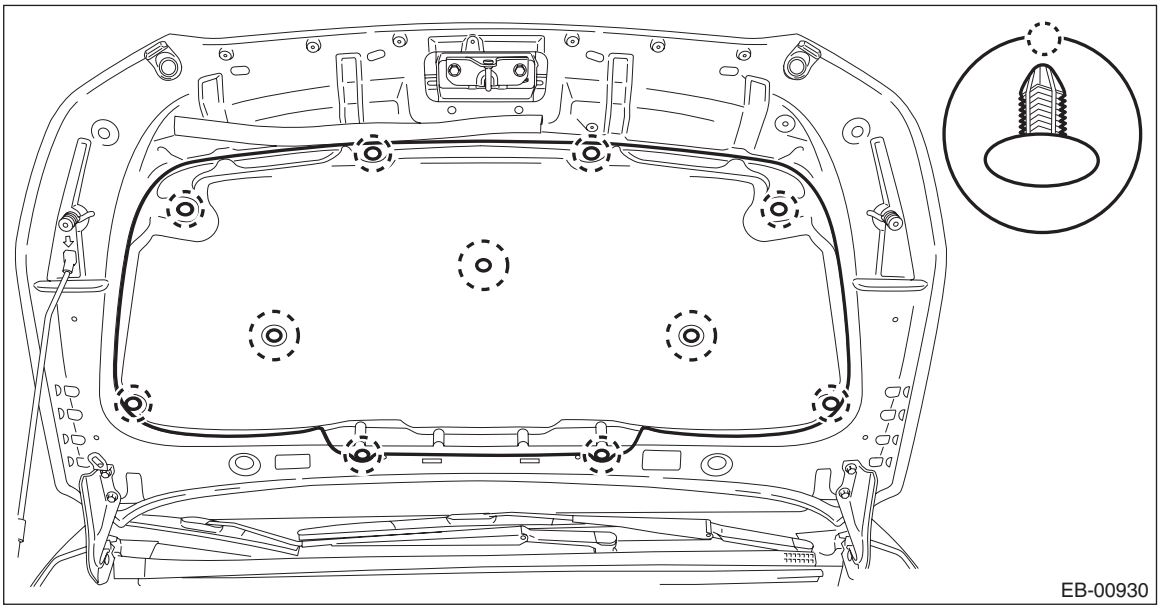

3) Remove the clip, and remove the seal - front duct.

CAUTION:
If the weather strip clip is removed with excessive force, the seal - front duct may be damaged. Be sure to use clip remover, etc. to remove.

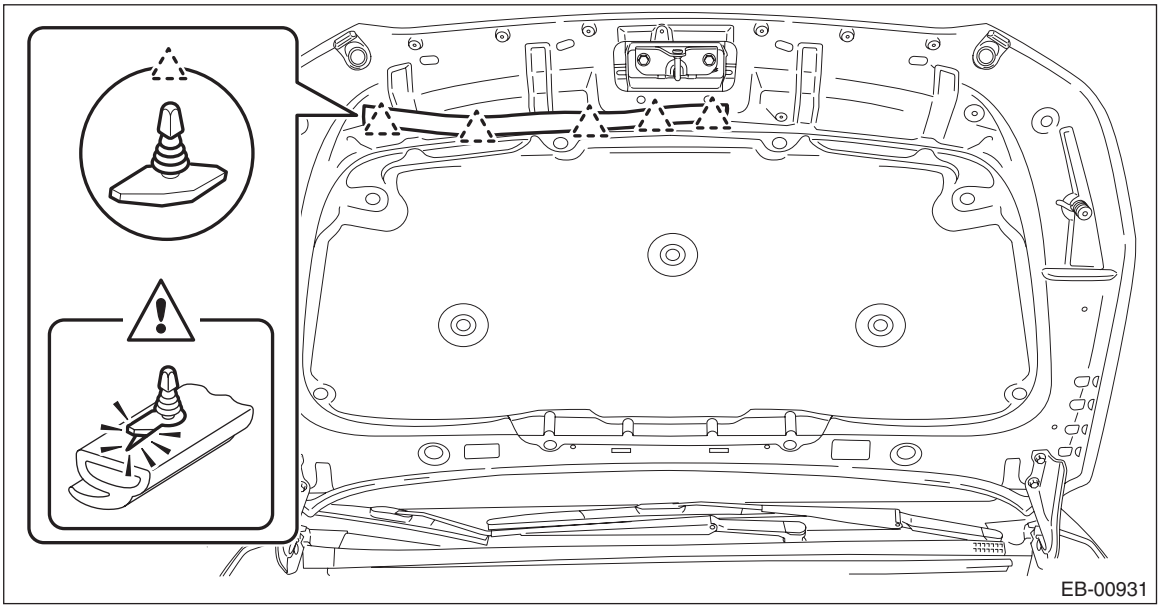

4) Using a marker pen, make alignment marks (A) on the hood COMPL - front and the striker - front hood.

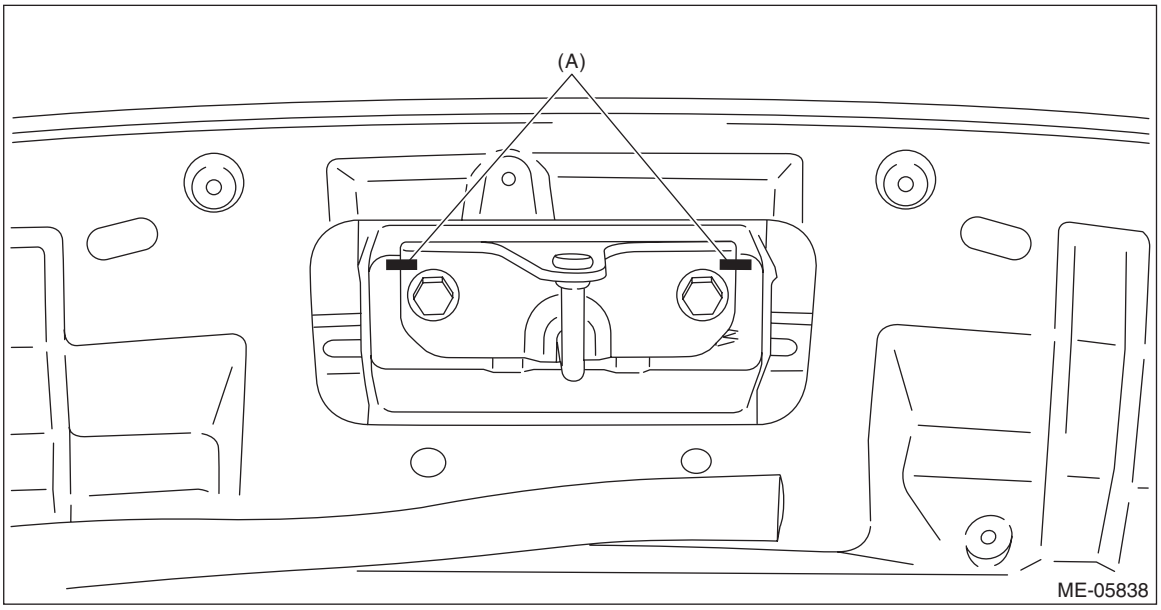

5) Remove the striker - front hood from the hood COMPL - front.

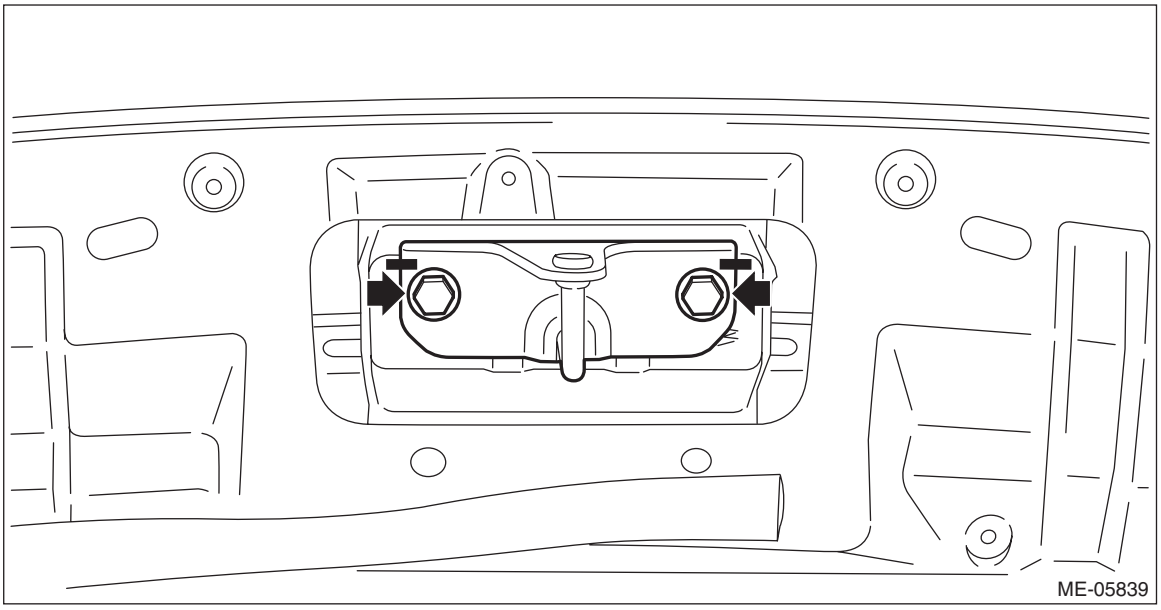

6) Remove the nut on the hood COMPL - front side, and remove the hood COMPL - front.

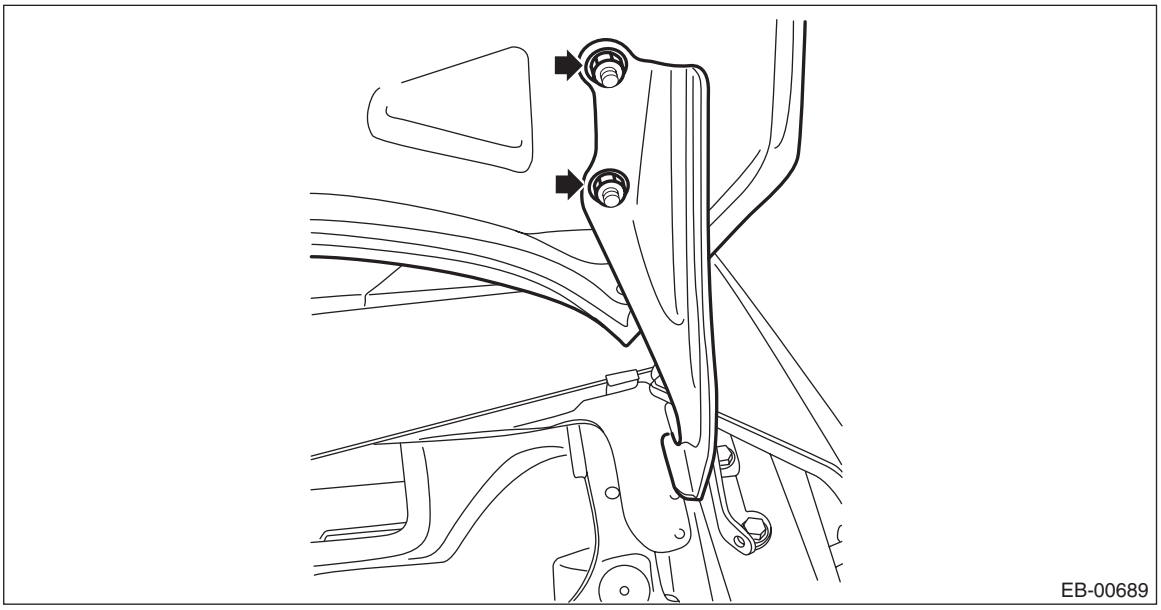

2. FRONT HOOD HINGE

CAUTION:
The hood COMPL - front is heavy. When removing or installing the hinge COMPL - front hood, be sure to work in a group of two or more.

1) Remove the cover - front fender.
   (1) Remove the clip.
   (2) Release the claws by pulling them forward, and remove the cover - front fender.

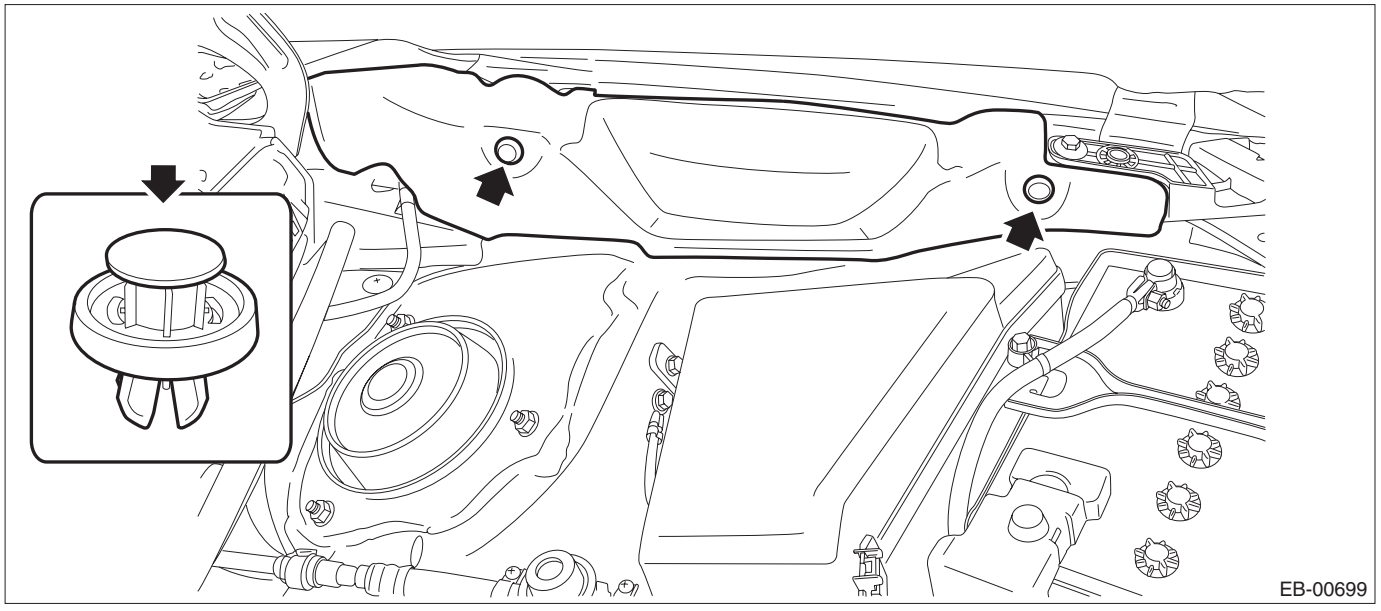

2) Remove the fender COMPL - front. <Ref. to EB-16, REMOVAL, Front Fender.>

3) Remove the hood COMPL - front.
(1) Remove the nuts on the hood panel side, and remove the hood COMPL - front.

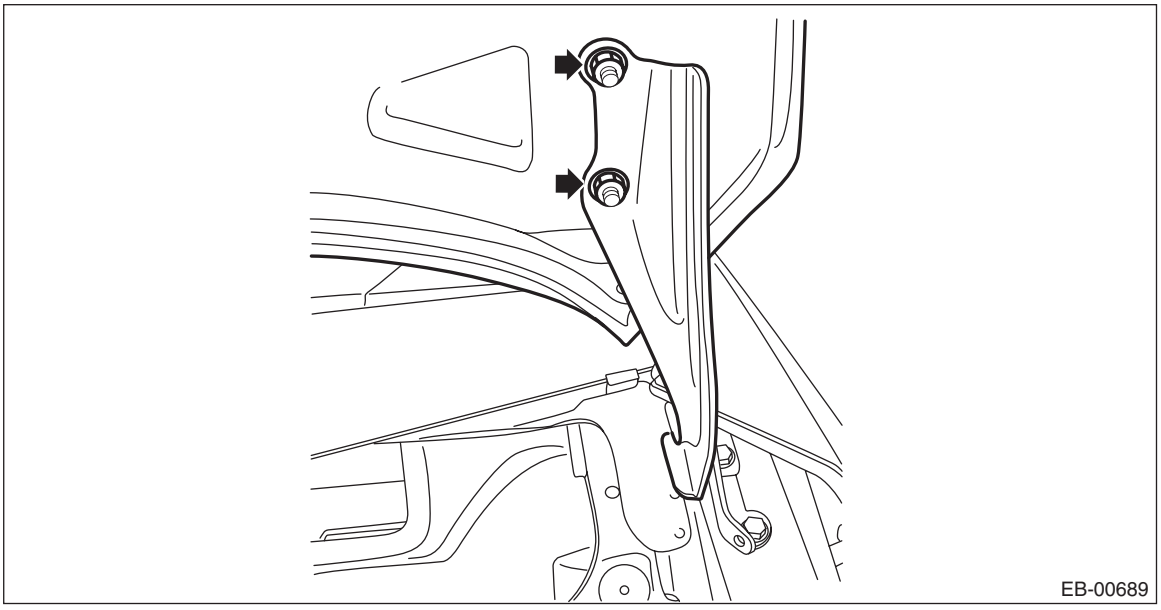

4) Remove the bolts, and remove the hinge COMPL - front hood.

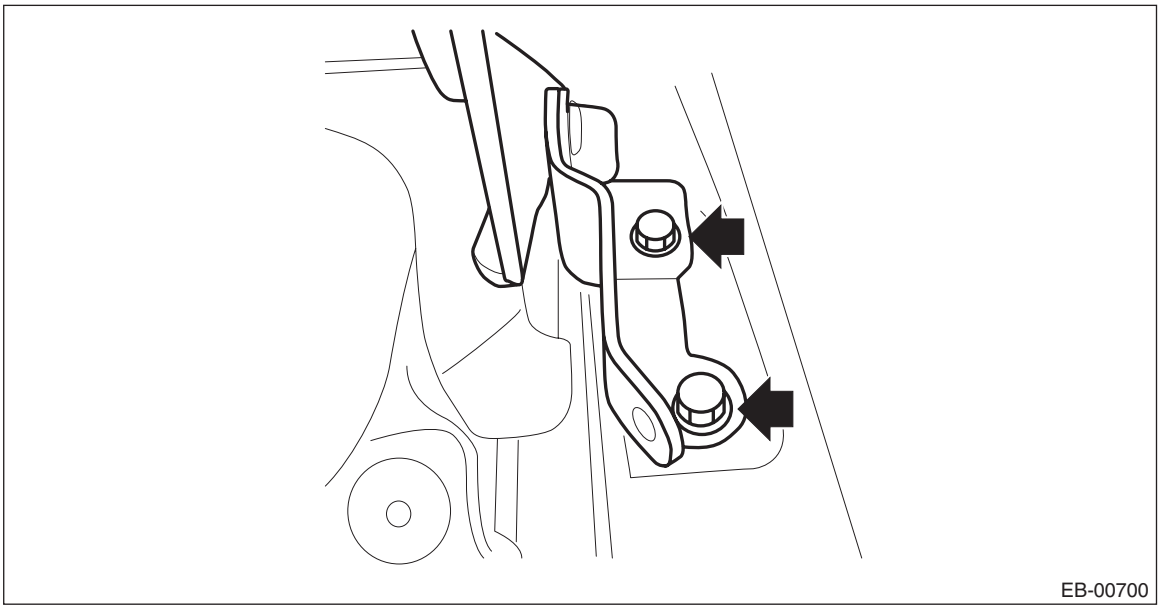

B: INSTALLATION

CAUTION:
The hood COMPL - front is heavy. When removing or installing the hinge COMPL - front hood, be sure to work in a group of two or more.

1) To install the insulator - front hood and the seal - front duct, follow the removal procedure in the reverse order.
2) Align the alignment marks (A), and install the striker - front hood to the hood COMPL - front.

CAUTION:
When installing the striker - front hood, make sure that the front and rear sides are positioned in a correct direction.

Tightening torque:
33 N·m (3.36 kgf-m, 24.3 ft-lb)

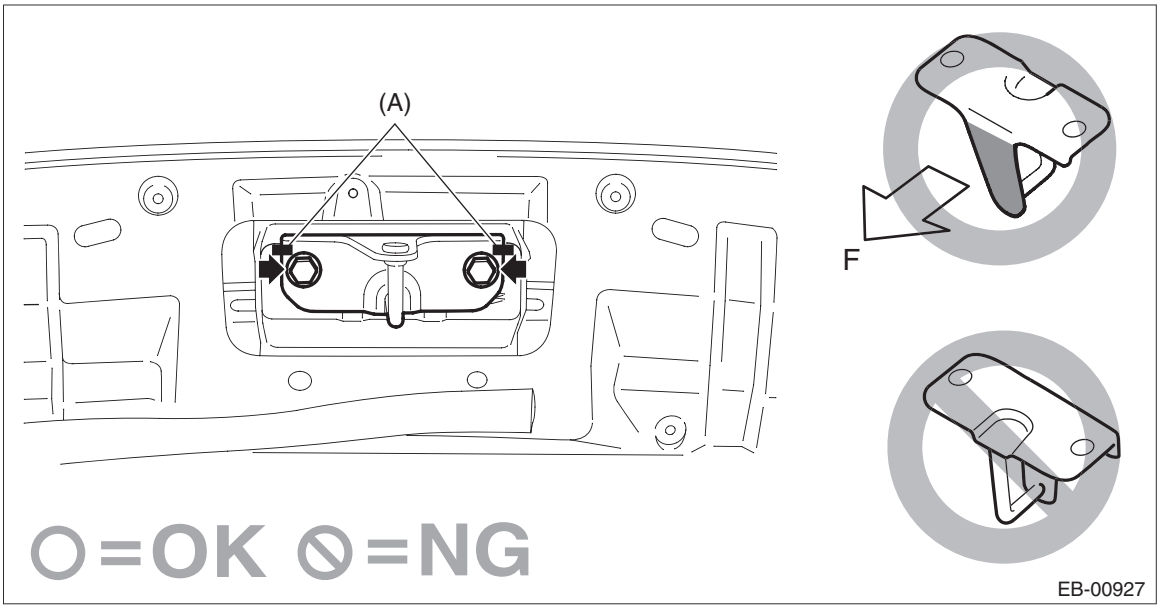

(A) Alignment mark F Front side of vehicle

NOTE:
It is not necessary to adjust the striker - front hood because there is no span of adjustable range.

3) Install the hinge COMPL - front hood to the vehicle body. (When the hinge COMPL - front hood is removed)
4) Temporarily install the hood COMPL - front to the hinge COMPL - front hood.

NOTE:
When installing the hood COMPL - front, make sure that a uniform clearance is created around it.

5) Adjust the clearance around the hood COMPL - front. <Ref. to EB-14, ADJUSTMENT, Front Hood.>
6) Tighten the bolts and nuts of the hinge COMPL - front hood.

Tightening torque:
25 N·m (2.55 kgf-m, 18.4 ft-lb)

7) Install each part of the hood COMPL - front in the reverse order of removal.
- Insulator - front hood
- Seal - front duct

C: ADJUSTMENT

Adjust the clearance around the hood COMPL - front as follows.

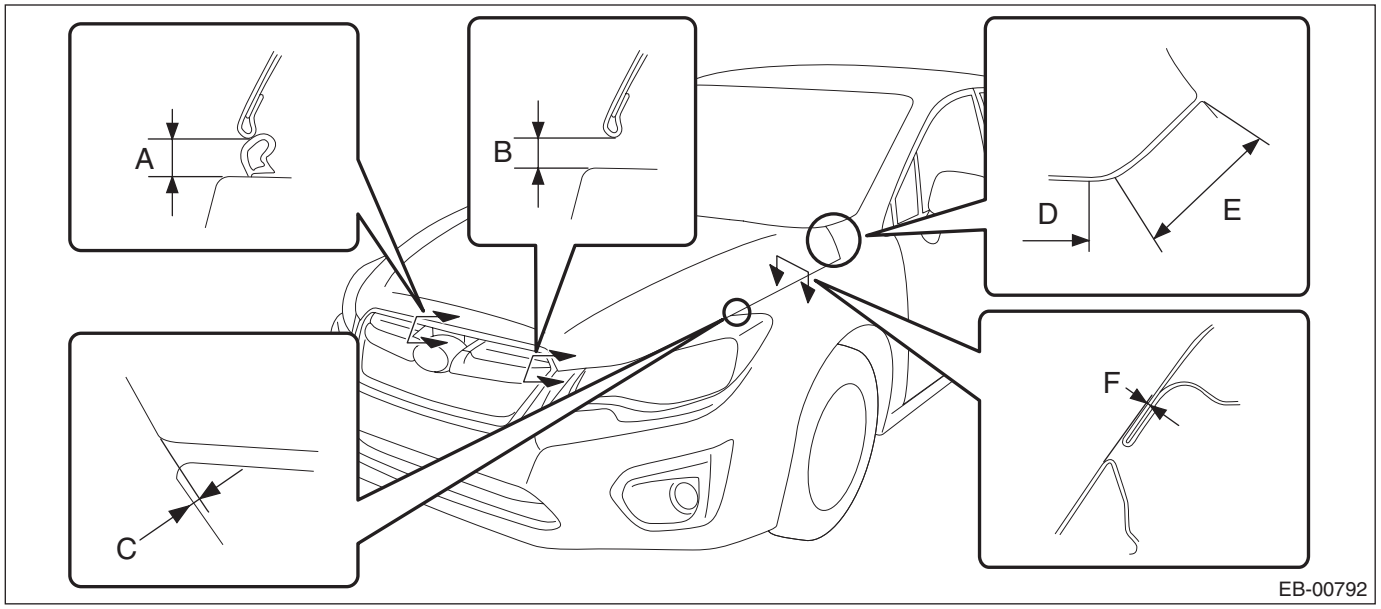

Part		Standard
A	Hood COMPL - front to Front grille	7.5±1.0 mm (0.30±0.04 in)
B	Hood COMPL - front to Bumper face - front	6.0+2.0, –1.0 mm (0.24+0.08, –0.04 in)
C	Offset value: Hood COMPL - front to Front end of fender COMPL - front	0+0.5, –1.0 mm (0+0.02, –0.04 in)
D	Hood COMPL - front to Fender COMPL - front (from front end to just before curved portion)	3.5±1.0 mm (0.14±0.04 in)
E	Hood COMPL - front to Fender COMPL - front (from rear end to just before curved portion)	4.5±1.0 mm (0.18±0.04 in)
F	Surface level gap: Hood COMPL - front to Fender COMPL - front	0.5+0.5, –1.0 mm (0.02+0.02, –0.04 in)

1) Adjust the horizontal position of the hood COMPL - front.
   (1) Loosen the attaching nuts of the hinge COMPL - front hood on the left and right sides.

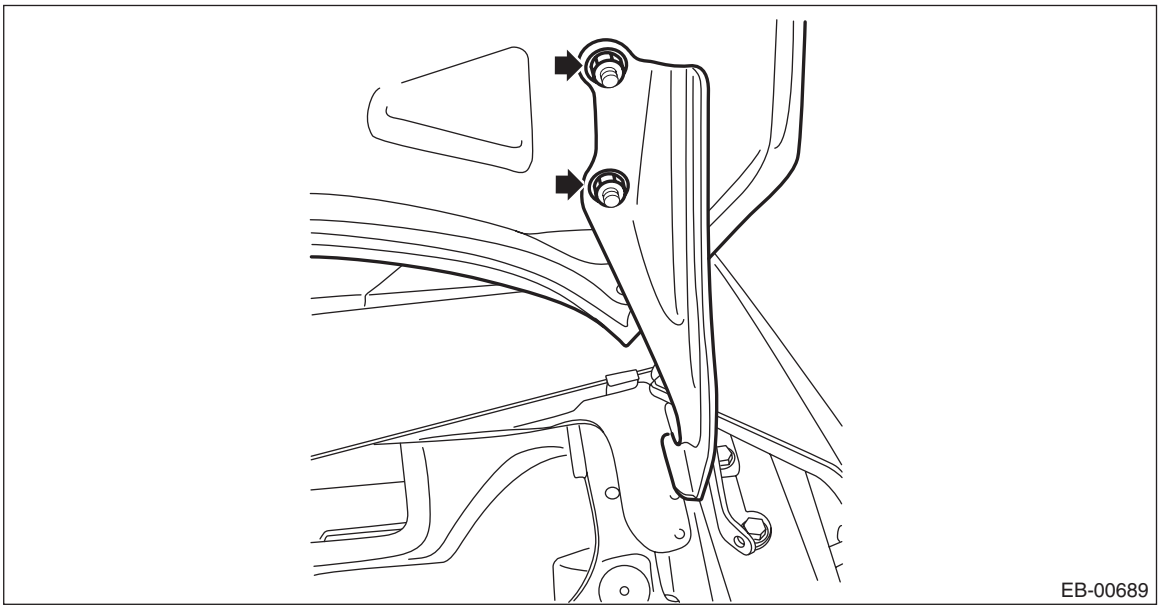

(2) Adjust the horizontal clearance of the hood COMPL - front, and tighten the attaching nuts of the hinge COMPL - front hood.

Tightening torque:
25 N·m (2.55 kgf-m, 18.4 ft-lb)

2) Adjust the front end height of the hood COMPL - front.
(1) Loosen the bolts on the lock assembly - front hood.
(2) Adjust the lock assembly - front hood by moving it up and down.

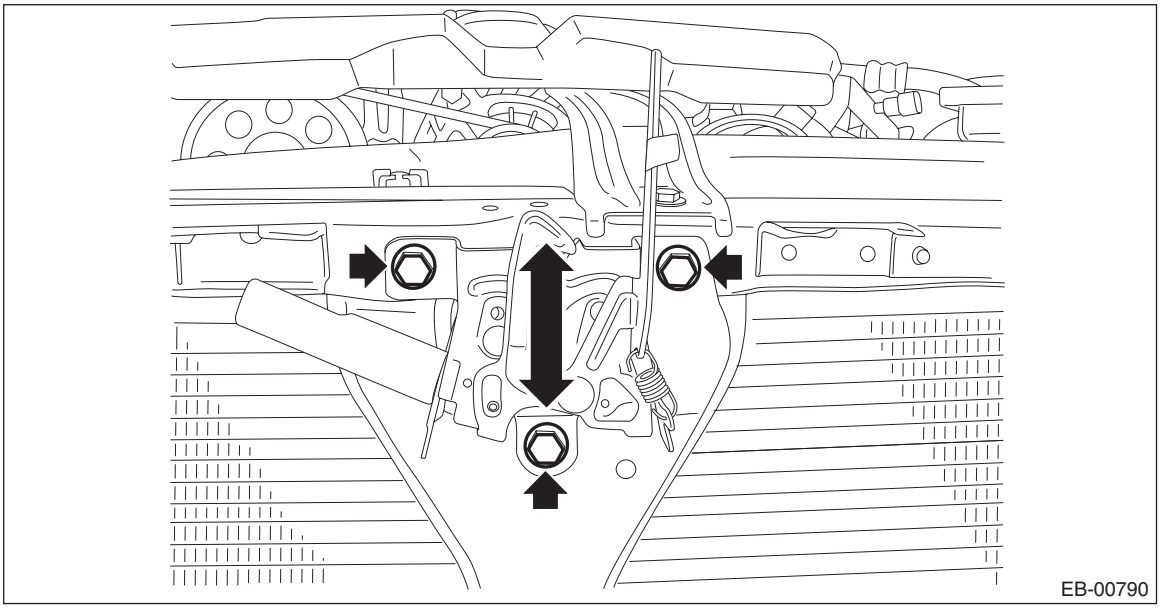
EB-00790

Tightening torque:
33 N·m (3.36 kgf-m, 24.3 ft-lb)

3) Rotate the buffer - front hood of the hood COMPL - front to adjust the height.

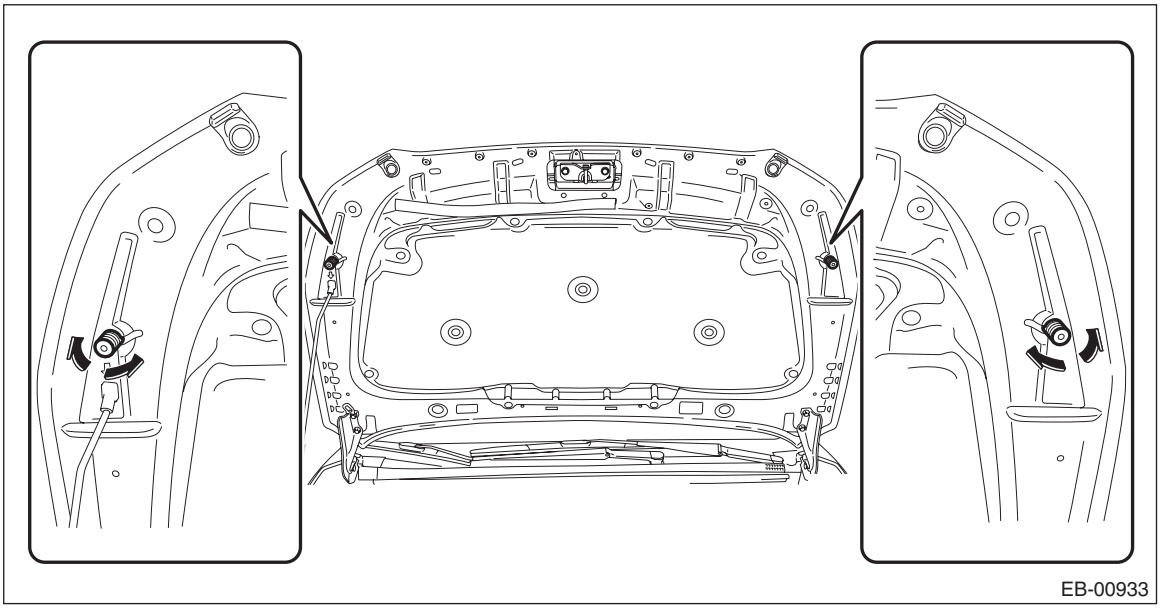
EB-00933

3. Front Fender

A: REMOVAL

1) Disconnect the ground cable from battery. <Ref. to NT-5, BATTERY, NOTE, Note.>

NOTE:
For the 12 volt engine restart battery of HEV model, disconnect the ground terminal from 12V engine restart battery sensor.

2) Remove the bumper face - front.
   (1) Remove the screw and clips, and turn over the mud guard - front.
   (2) Disconnect the connectors of the left and right fog light assembly - front. (Model with fog light)

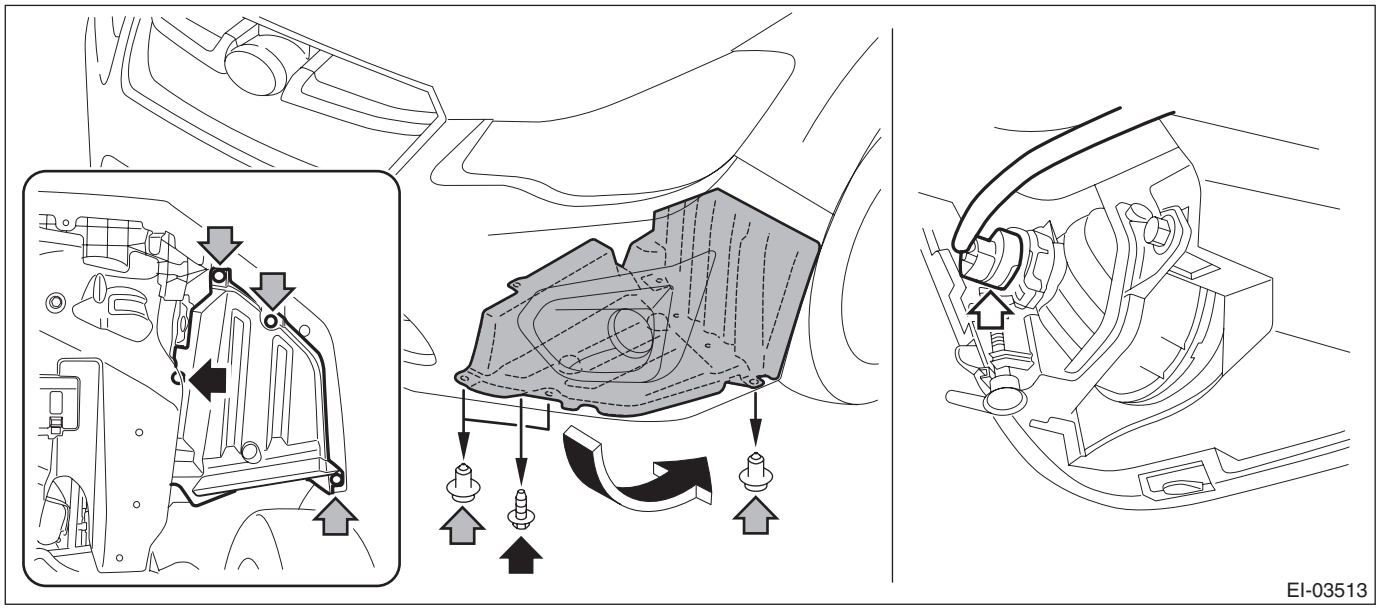

   (3) Remove the clips at the upper side of the bumper face - front.
   (4) Remove the clips from the fender.

(5) Remove the clips at the lower side of the bumper face - front.

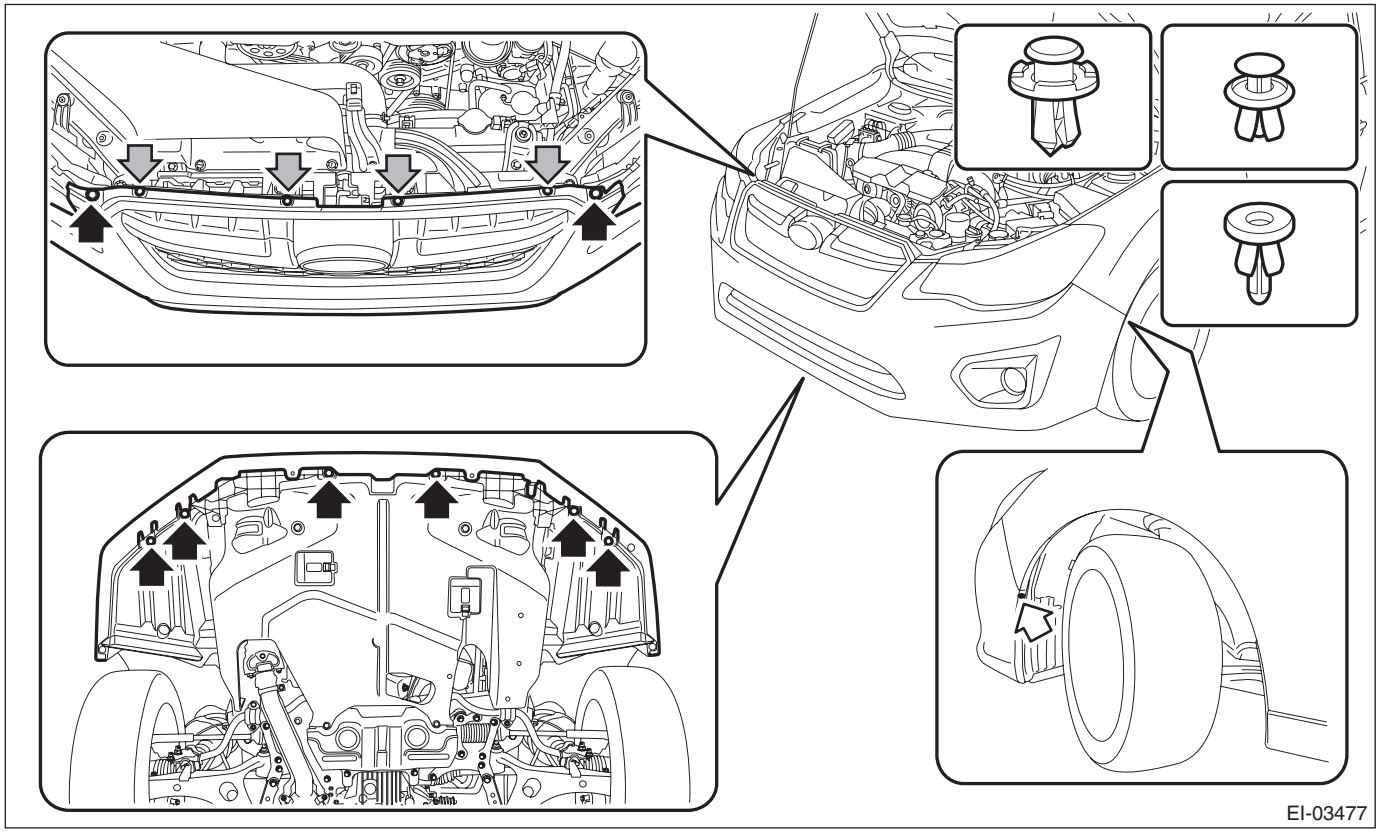

(6) Apply protective tape (A) to the light assembly - head.
(7) Detach the flange section on the bumper face side from the bracket - front bumper side.

CAUTION:
Do not pull forcibly. It may damage the flange section on the bumper face - front side when it comes off from the claws of the bracket - front bumper.

NOTE:
Remove the bumper face - front according to the following procedures.

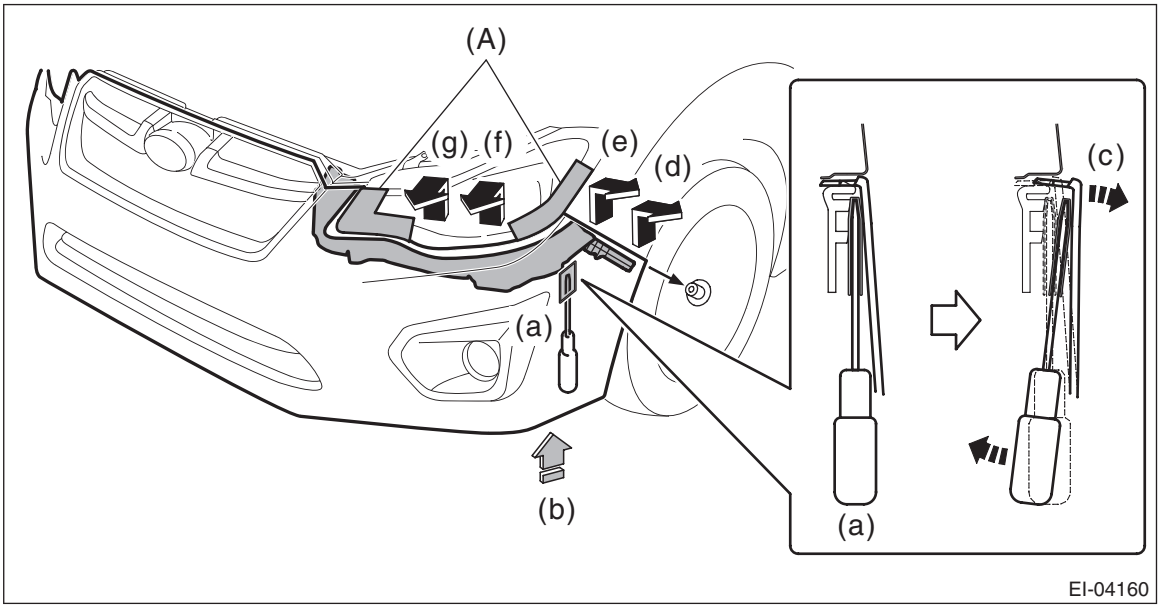

1. Remove the clips, turn over the mud guard, and insert a flat tip screwdriver with protection for damage prevention into the clearance between bumper and bracket. (a)
2. Push out the bumper with the flat tip screwdriver while pushing up the bumper from below. (b), (c)
3. Release the engagement of clips in the order of (d) to (g) while pushing up the bumper from below.
4. Perform the same procedures to remove the opposite side.

3) Remove the cover - front fender.
   (1) Remove the clip.
   (2) Release the claws by pulling them forward, and remove the cover - front fender.

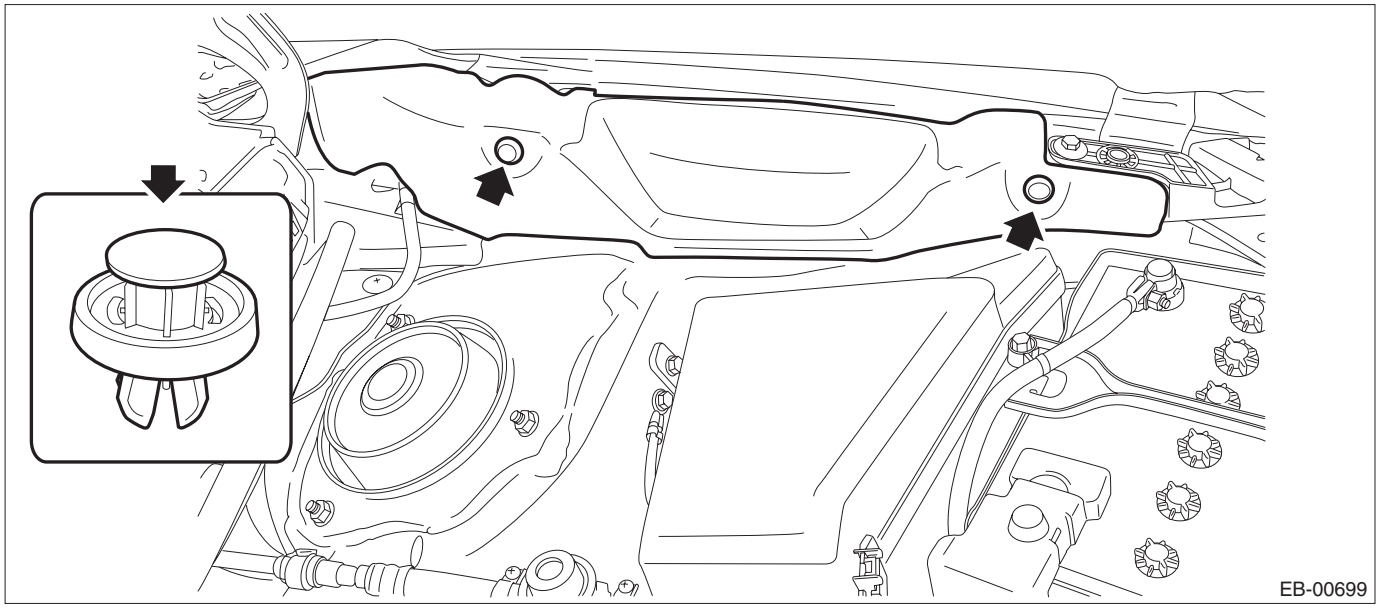

   (3) Remove the light assembly - head. <Ref. to LI-28, WHEN REMOVING RH SIDE, REMOVAL, Headlight Assembly.>

4) Remove the clips and detach the side garnish assembly.

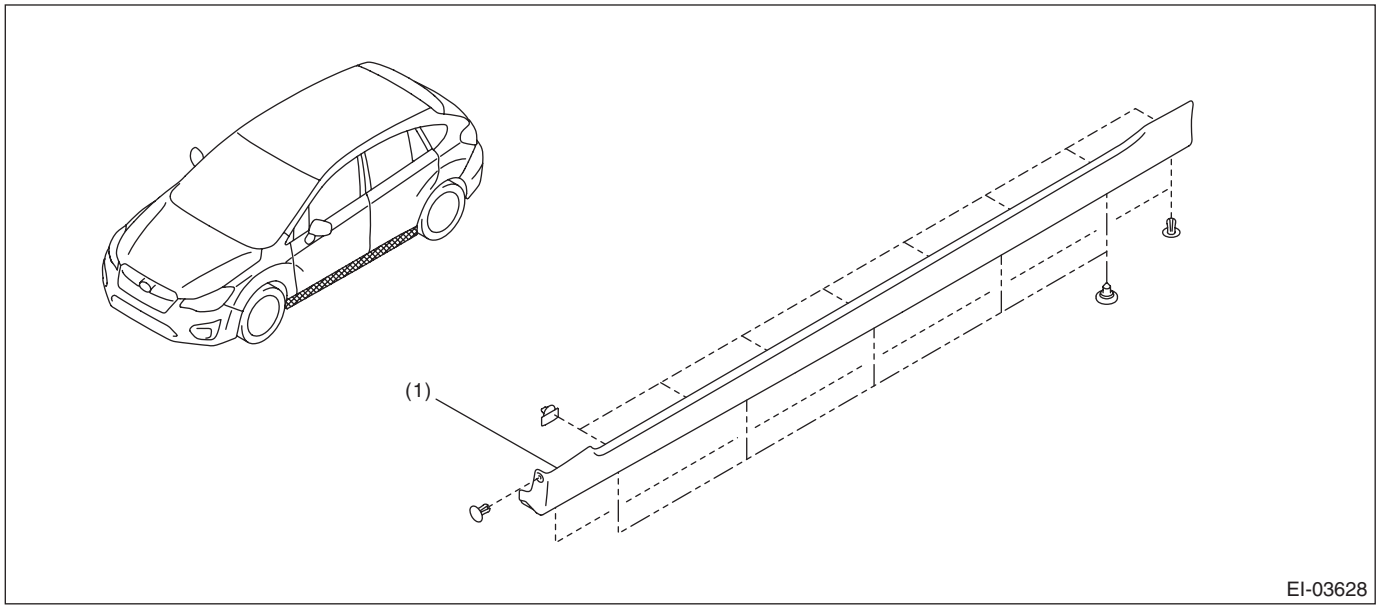

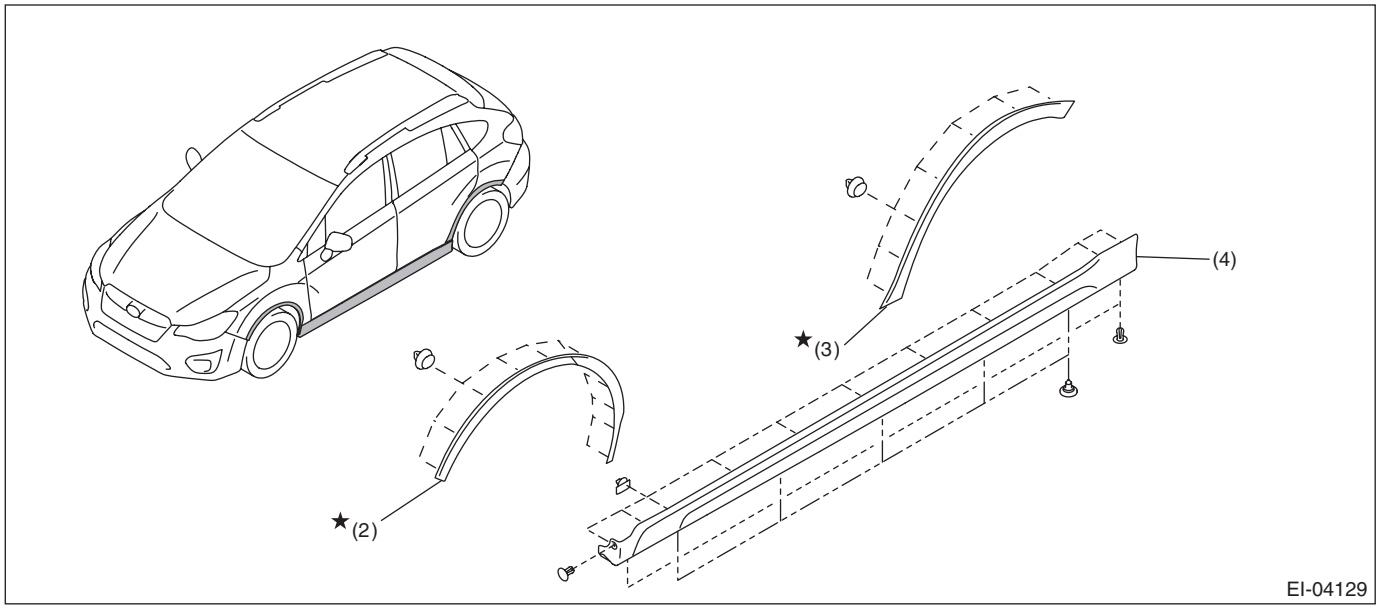

(1) Garnish ASSY - side sill (except for XV model)
(2) Garnish ASSY - fender (XV model)
(3) Garnish ASSY - rear quarter (XV model)
(4) Garnish ASSY - side sill (XV model)

5) Remove the clips, and turn over the mud guard - front (a).

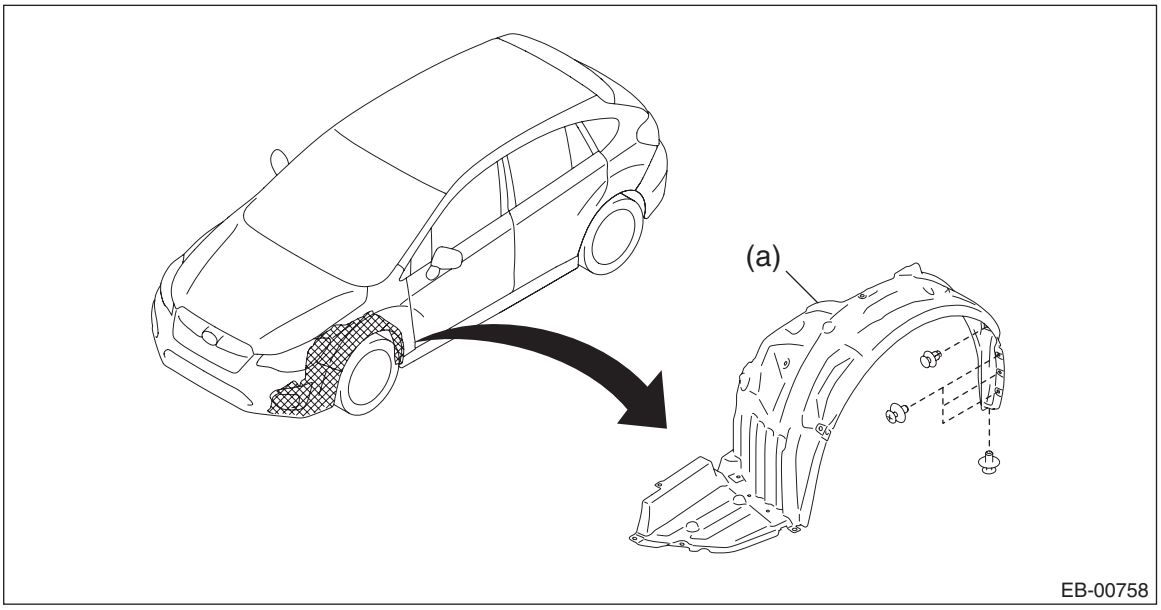

6) Remove the cover - front pillar assembly.

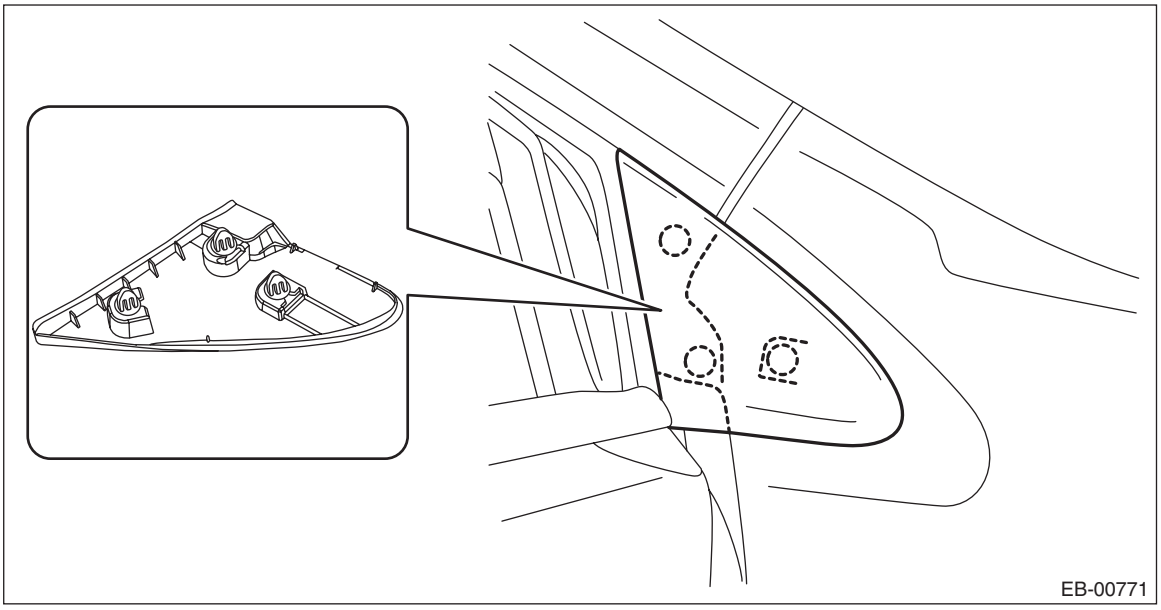

7) Remove the fender COMPL - front.
(1) Remove the garnish assembly - front fender. (XV model)

CAUTION:
Do not reuse the garnish assembly - front fender. Always replace with a new part.

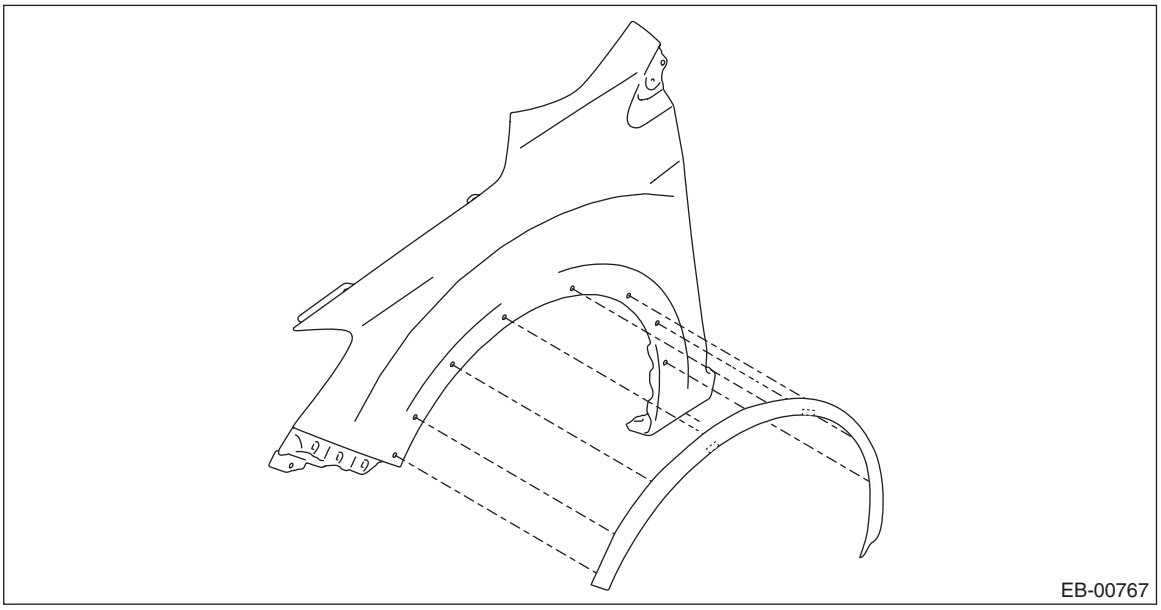

(2) Remove the bolts, and remove the fender COMPL - front.

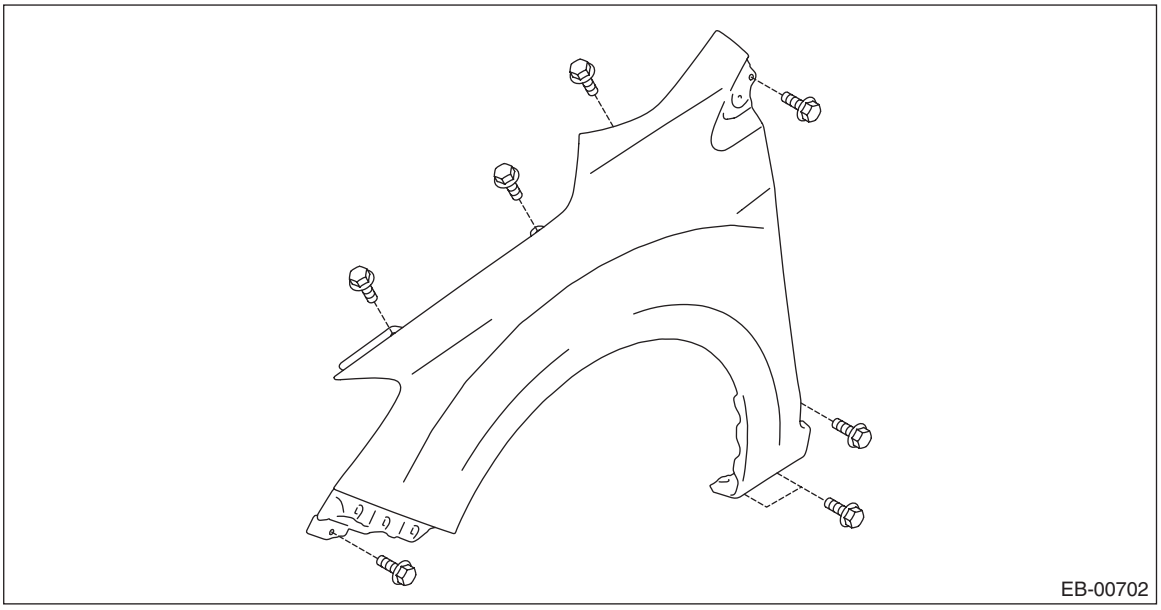

B: INSTALLATION

1) Install each part in the reverse order of removal.

CAUTION:
- **After installing the fender COMPL - front, be sure to perform headlight beam adjustment.**
- **Install the bumper face - front so that the front end of the under cover (b) comes inside the bumper face - front (a).**

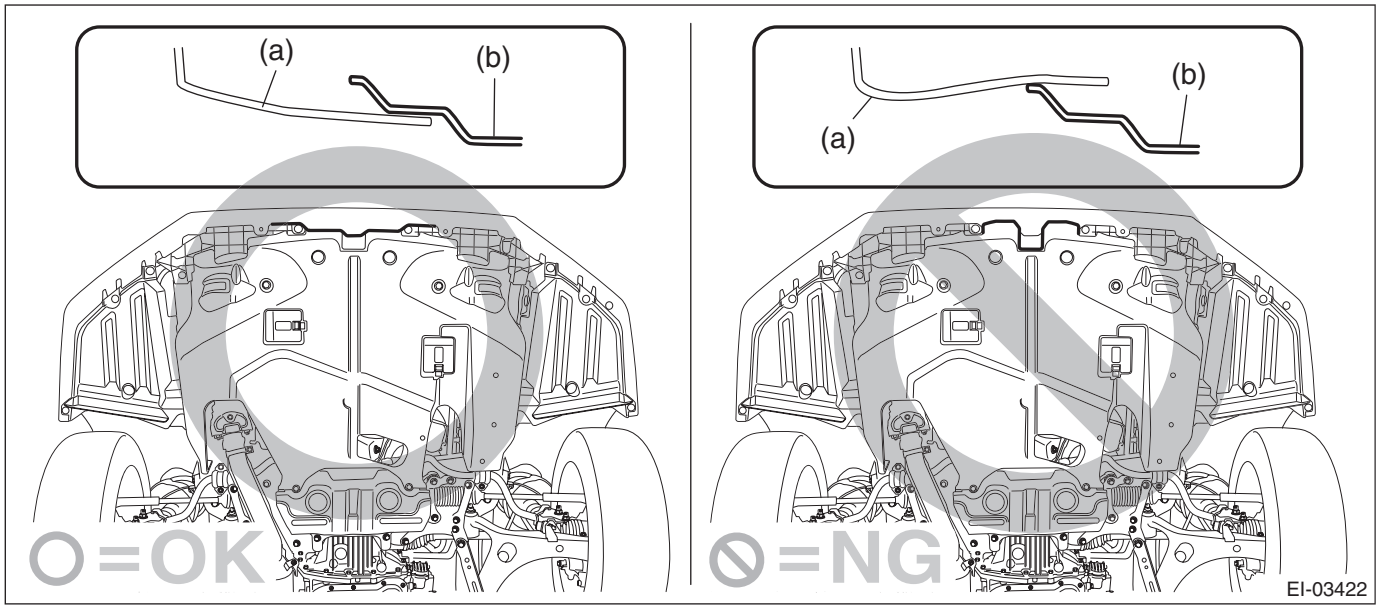

- **Before installing the bumper face, match the claws on the bracket - front bumper with the engaging position of flange section on the bumper face side. If the engaging position is not correct, the flange section may be broken or the clearance between fender panel and bumper face may not be uniform.**

Tightening torque:
Fender COMPL - front: 7.5 N·m (0.76 kgf-m, 5.5 ft-lb)
Light assembly - head: 7.5 N·m (0.76 kgf-m, 5.5 ft-lb)

NOTE:
When installing the fender COMPL - front, make sure that a uniform clearance is created around it.
- Fender COMPL - front to Hood COMPL - front: <Ref. to EB-14, ADJUSTMENT, Front Hood.>
- Fender COMPL - front to Panel assembly - front door: <Ref. to EB-31, ADJUSTMENT, Front Door.>

2) Adjust the headlight beam and fog light beam.
- Adjust the headlight beam. <Ref. to LI-36, HEADLIGHT BEAM ADJUSTMENT, ADJUSTMENT, Headlight Assembly.>
- Adjust the fog light beam. (Model with fog light) <Ref. to LI-56, FOG LIGHT AIMING, ADJUSTMENT, Front Fog Light Assembly.>

4. Front Door

A: REMOVAL

1. FRONT DOOR PANEL

1) Disconnect the ground cable from battery and wait for at least 60 seconds before starting work. <Ref. to NT-5, BATTERY, NOTE, Note.>

NOTE:
For the 12 volt engine restart battery of HEV model, disconnect the ground terminal from 12V engine restart battery sensor.

2) Remove the trim panel - front door. <Ref. to EI-67, FRONT DOOR, REMOVAL, Door Trim.>

3) Remove the sealing cover - front door.

CAUTION:
- **Carefully remove the butyl tape. Excessive force will easily break the cover.**
- **If the sealing cover - front door gets broken, replace it with a new part.**

(1) Remove the screw to remove the bracket - door trim front.

(2) Carefully remove the butyl tape to remove the sealing cover - front door.

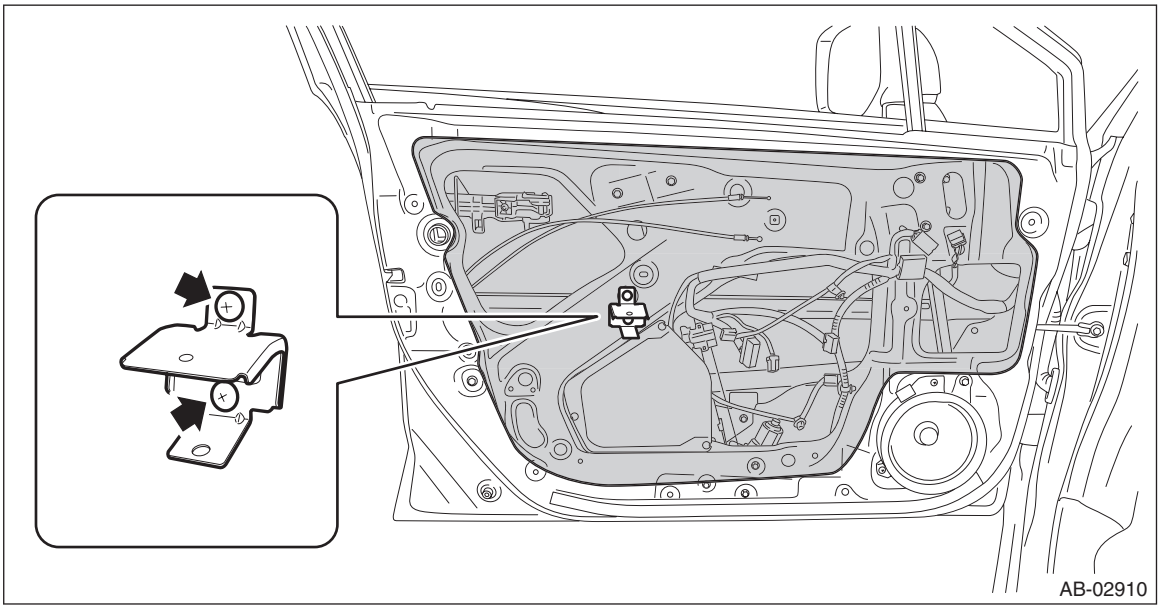

4) Remove the outer mirror assembly. <Ref. to GW-24, REMOVAL, Outer Mirror Assembly.>

5) Remove the front door speaker assembly.
(1) Remove the screws.
(2) Disconnect the connector and remove the front speaker assembly.

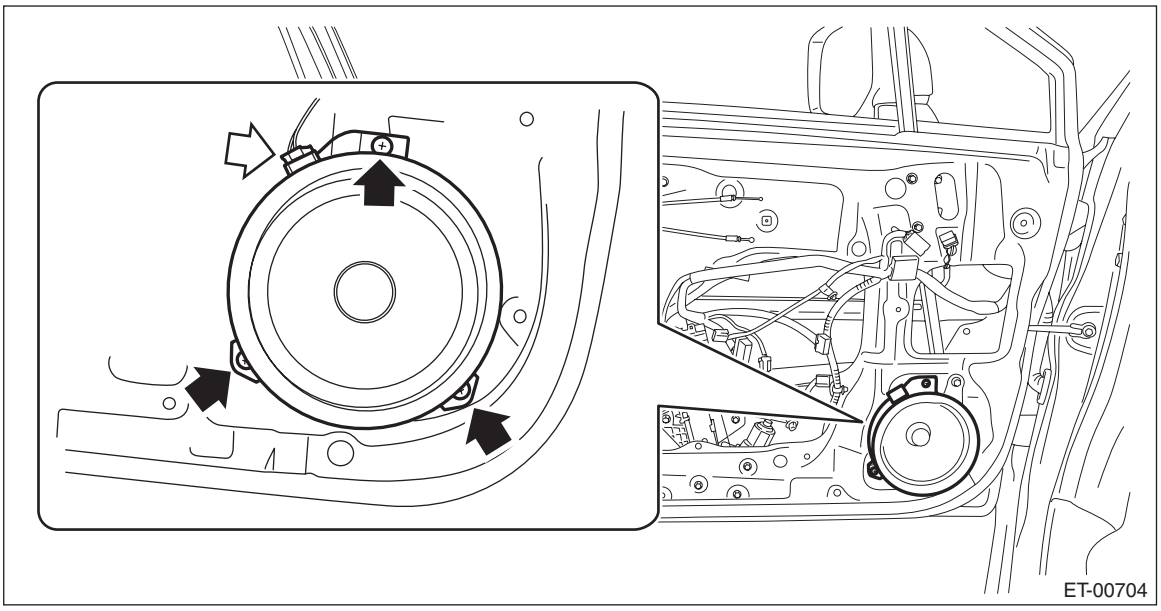

6) Remove the B pillar upper clip.

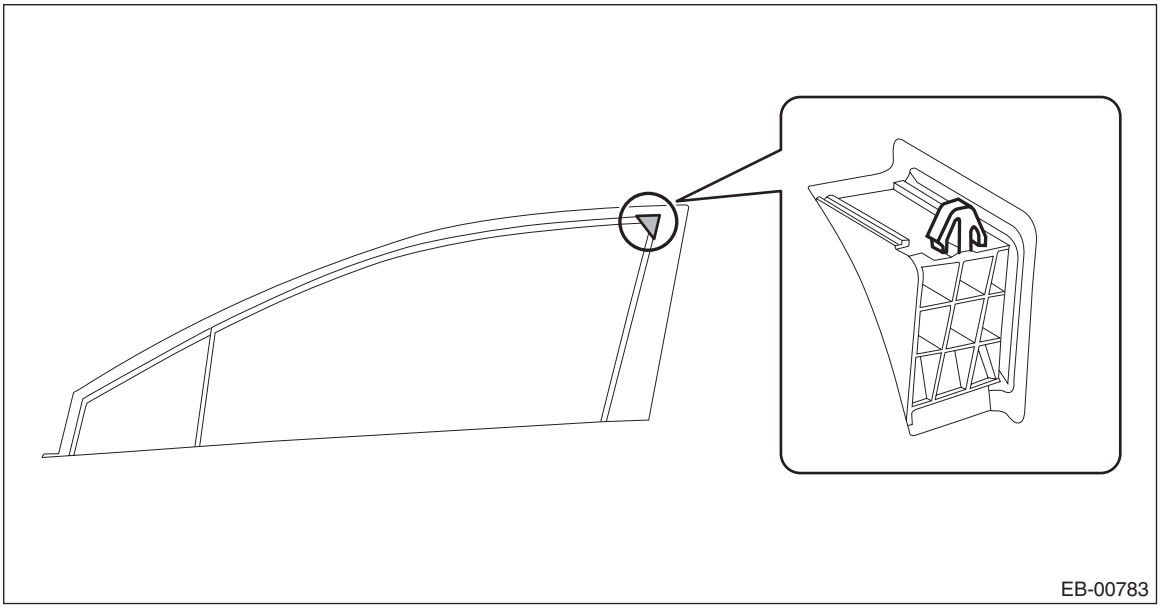

7) Remove the front door impact sensor assembly.
(1) Remove the front door inner pad (a).
(2) Remove the nuts and then remove the front door impact sensor assembly.
(3) Disconnect the airbag connector and remove the airbag door sensor assembly. <Ref. to AB-26, FRONT DOOR IMPACT SENSOR AND SATELLITE SAFING SENSOR, PROCEDURE, Airbag Connector.>

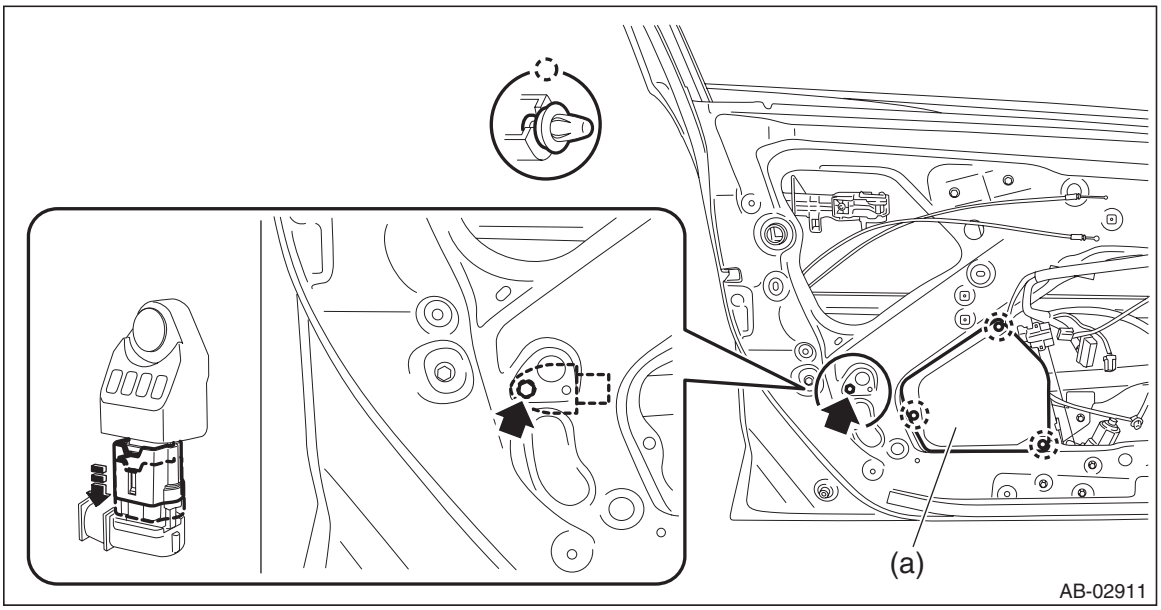

8) Remove the glass assembly - front door and the glass - front door partition. <Ref. to GW-18, REMOVAL, Front Door Glass.>
9) Remove the regulator & motor assembly - front of the front door. <Ref. to GW-21, REMOVAL, Front Regulator and Motor Assembly.>
10) Remove the latch and actuator assembly - front. <Ref. to SL-39, REMOVAL, Front Door Latch and Door Lock Actuator Assembly.>
11) Remove the handle - door outer and the cover - handle front outer. <Ref. to SL-35, REMOVAL, Front Outer Handle.>
12) Remove the weather strip - front door.

CAUTION:
If the weather strip clip is removed with excessive force, the weather strip may be damaged. Be sure to use clip remover to remove.

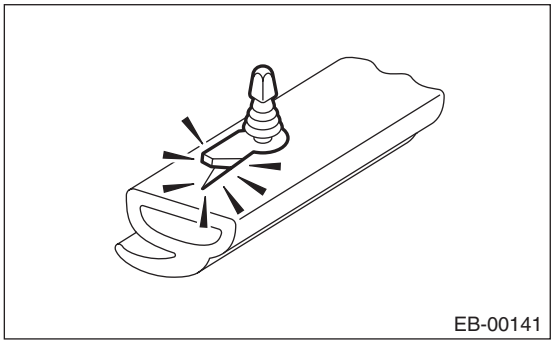

13) Remove the bolts and nuts, and then detach the checker assembly - front door.

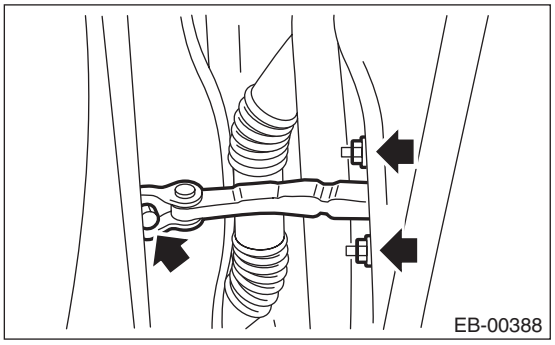

14) Release the claws, and then remove the cover side sill - front INN.

CAUTION:
Do not pull with excessive force. Doing so may damage the claws of the cover side sill - front INN.

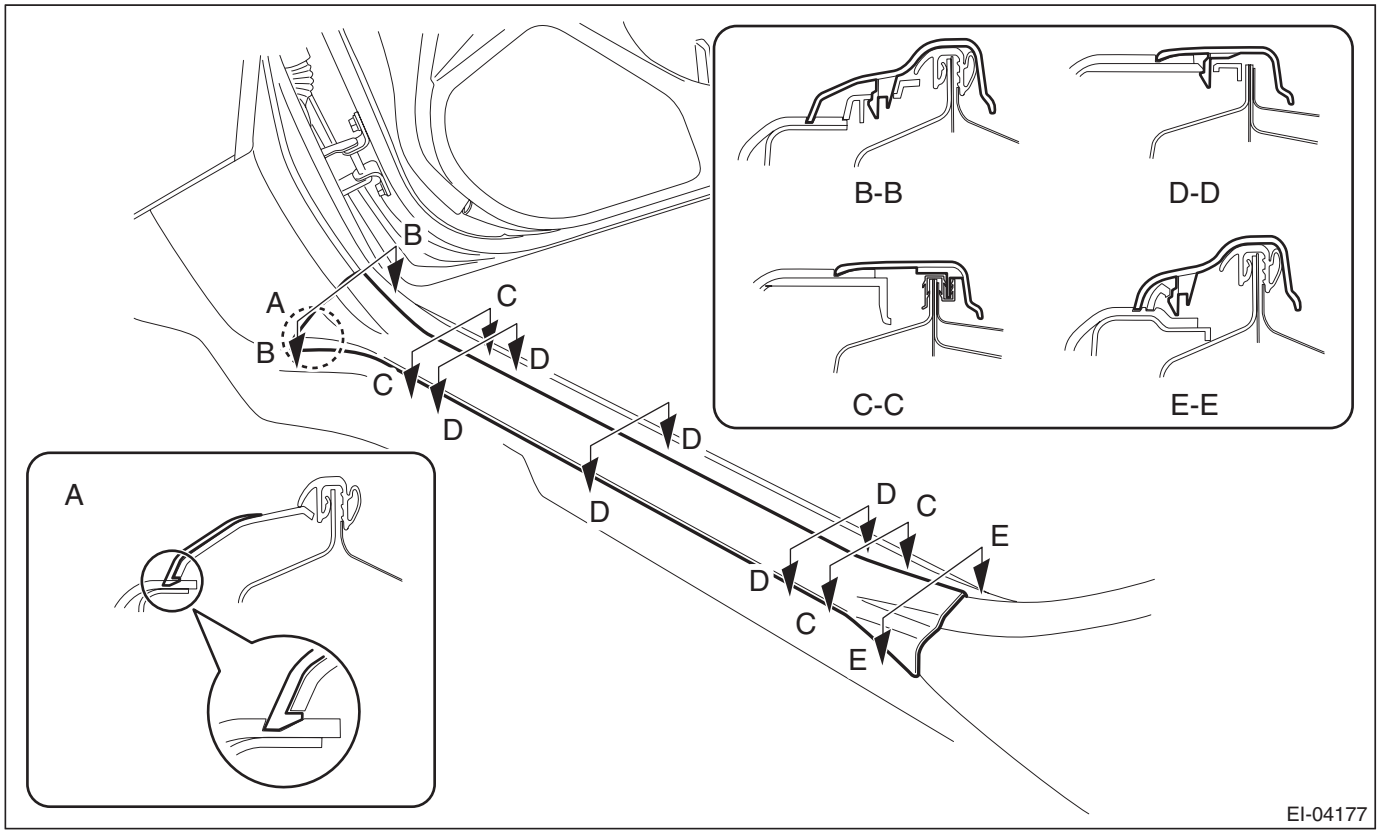

15) Remove the clips, and remove the cover side sill - front.

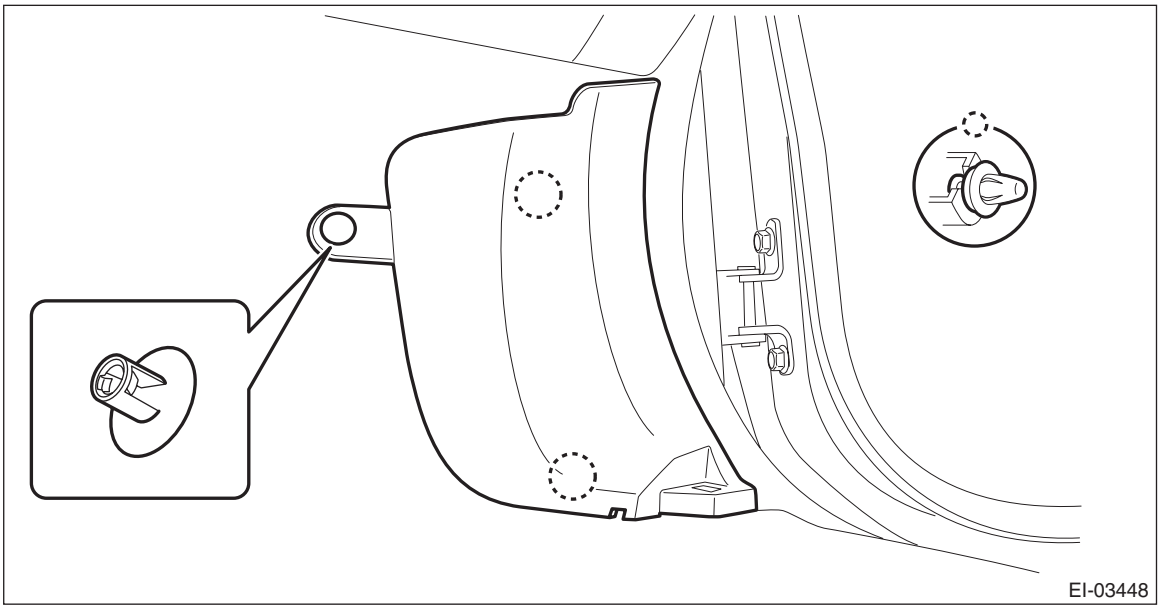

16) Disconnect the front door impact sensor harness connector. <Ref. to AB-27, FRONT DOOR IMPACT SENSOR (BETWEEN AIRBAG REAR HARNESS AND DOOR HARNESS), PROCEDURE, Airbag Connector.>

CAUTION:
Always refer to "CAUTION" of "General Description" in the "AIRBAG SYSTEM" before performing any service that handles the airbag connectors. <Ref. to AB-11, CAUTION, General Description.>

17) Disconnect the front door harness connectors.
(1) Disconnect the connector of door harness from body harness.

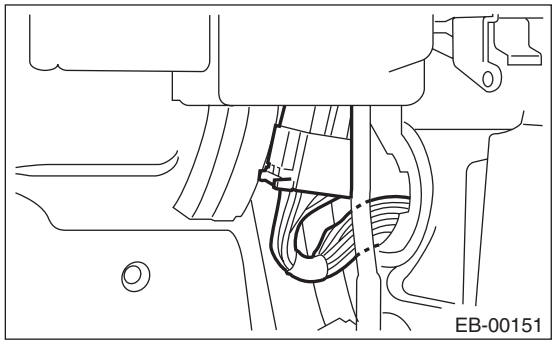

(2) Push in the claws to remove the grommet, and pull out the door harness connector.

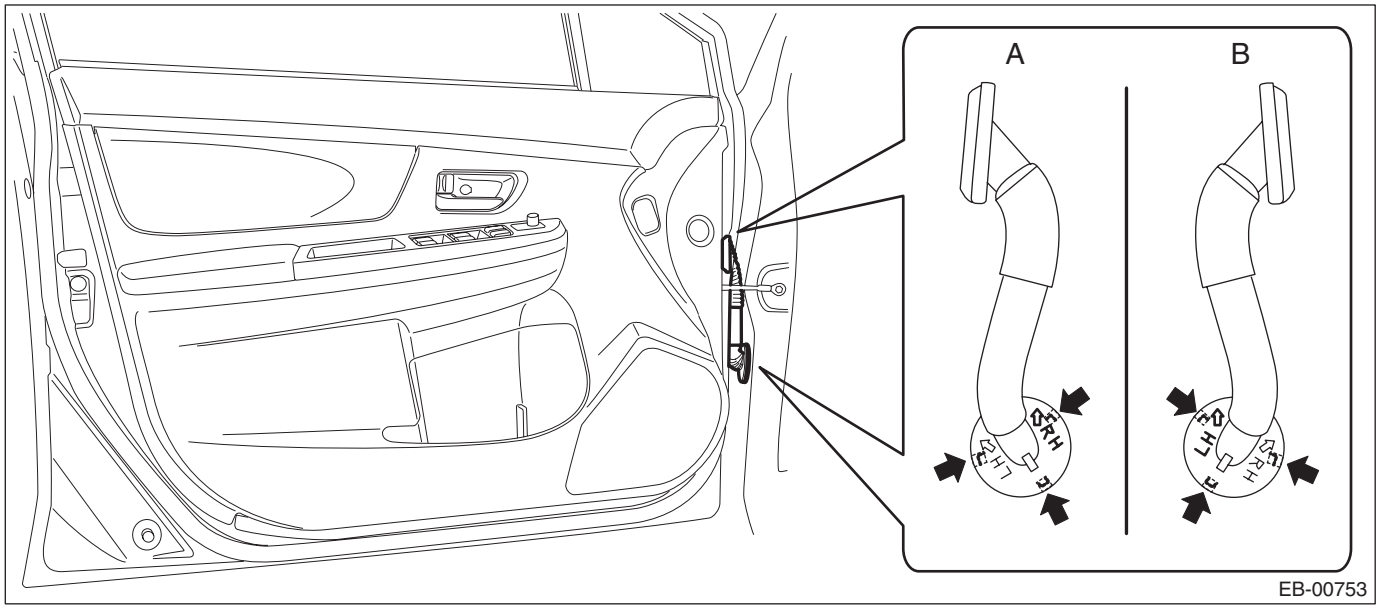

A	Driver's side
B	Passenger's side

18) Before removing the panel assembly - front door, make the following preparations.

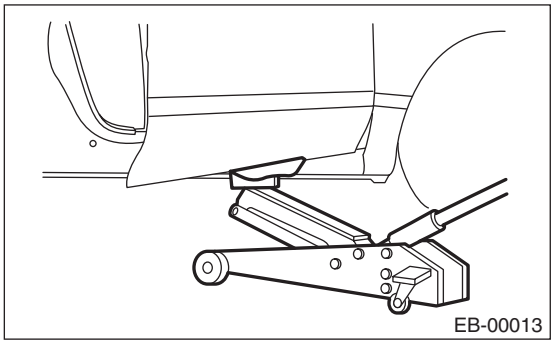

(1) Put a wooden block on a floor jack and place the jack under the panel assembly - front door.
(2) Support the panel assembly - front door with the jack to protect it from damage.

CAUTION:
Do not excessively lift the panel assembly - front door with the floor jack. The door hinges may be damaged.

19) Remove the door-side bolts for the upper hinge - front door and the lower hinge - front door to remove the panel assembly - front door.

CAUTION:
The panel assembly - front door is heavy. When removing and installing it, always work in a team of two or more persons.

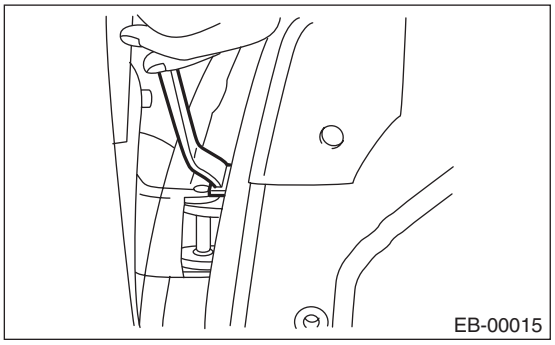

20) Remove the door hinge from vehicle.

2. FRONT DOOR HINGE

1) Remove the bolts from the vehicle side to disconnect the checker assembly - front door.

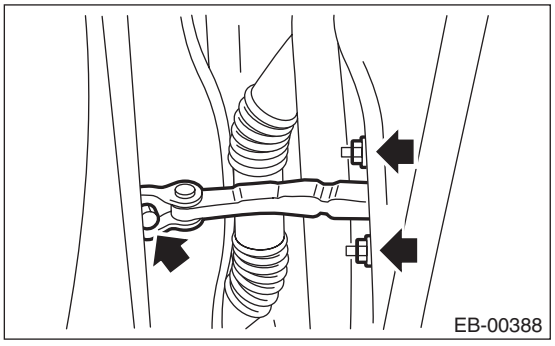

2) Before removing the door hinge, make the following preparations.
   (1) Put a wooden block on a floor jack and place the jack under the panel assembly - front door.
   (2) Support the panel assembly - front door with the jack to protect it from damage.

CAUTION:
Do not excessively lift the panel assembly - front door with the floor jack. The door hinges may be damaged.

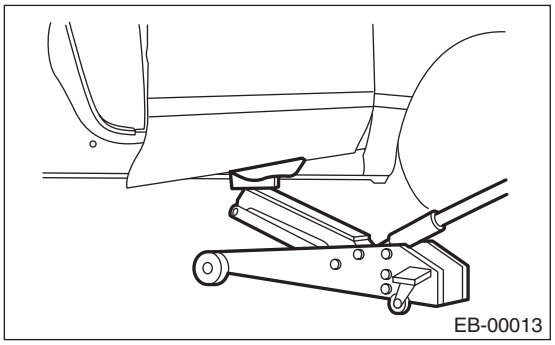

3) Remove the bolts of the upper hinge - front door or the lower hinge - front door.

CAUTION:
Do not remove the upper hinge - front door and the lower hinge - front door at the same time.

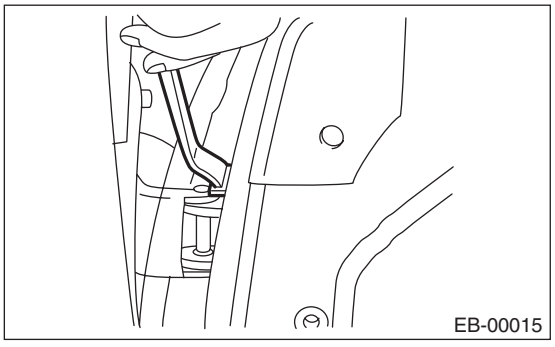

4) Remove the hinge - front door from the vehicle.

B: INSTALLATION

1. FRONT DOOR PANEL

1) Put a wooden block on a jack and place the panel assembly - front door on it.

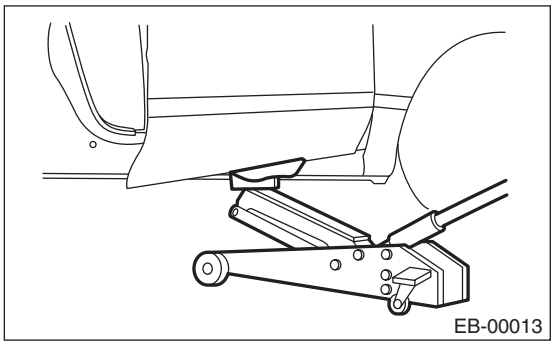

2) Apply grease to the sliding area of door hinges, and install the door hinge to vehicle.
3) Adjust the height by the jack, and temporarily install the panel assembly - front door to the upper hinge - front door and the lower hinge - front door.

NOTE:
• When installing the panel assembly - front door, make sure that a uniform clearance is created around the panel.
• Perform installation while paying attention to the assembly direction of the grommet.

4) Adjust the clearance around the panel assembly - front door. <Ref. to EB-31, ADJUSTMENT, Front Door.>
5) Tighten the bolts and nuts of the door hinge and the checker assembly - front door.

Tightening torque:
Refer to "COMPONENT" of "General Description". <Ref. to EB-4, FRONT DOOR, COMPONENT, General Description.>

6) Install door internal parts in the reverse order of removal.
7) Connect door harness connector, and install the cover side sill - front.

2. FRONT DOOR HINGE

1) Apply grease to the sliding area of door hinges, and install the door hinge to vehicle.
2) Adjust the height by the jack, and temporarily install the panel assembly - front door to the upper hinge - front door and the lower hinge - front door.

NOTE:
When installing the panel assembly - front door, make sure that a uniform clearance is created around the panel.

3) Adjust the clearance around the panel assembly - front door. <Ref. to EB-31, ADJUSTMENT, Front Door.>
4) Tighten the bolts and nuts of the door hinge and the checker assembly - front door.

Tightening torque:
Refer to "COMPONENT" of "General Description". <Ref. to EB-4, FRONT DOOR, COMPONENT, General Description.>

C: ADJUSTMENT

Adjust the clearance around the panel assembly - front door as follows.

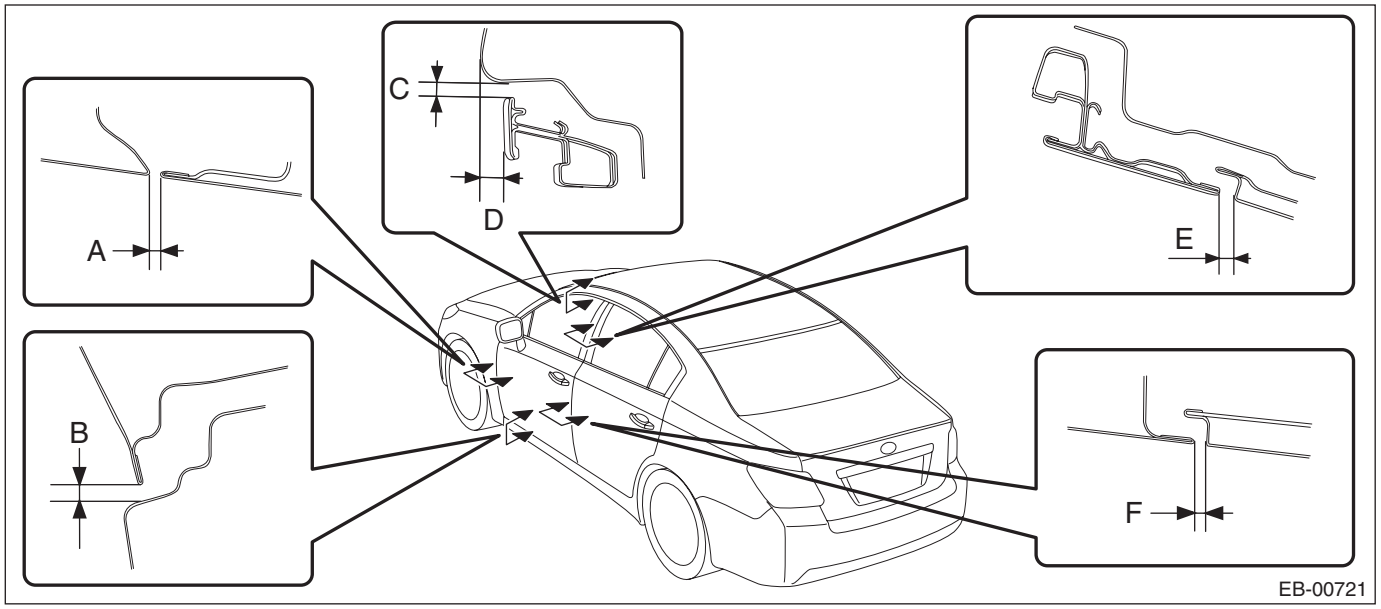

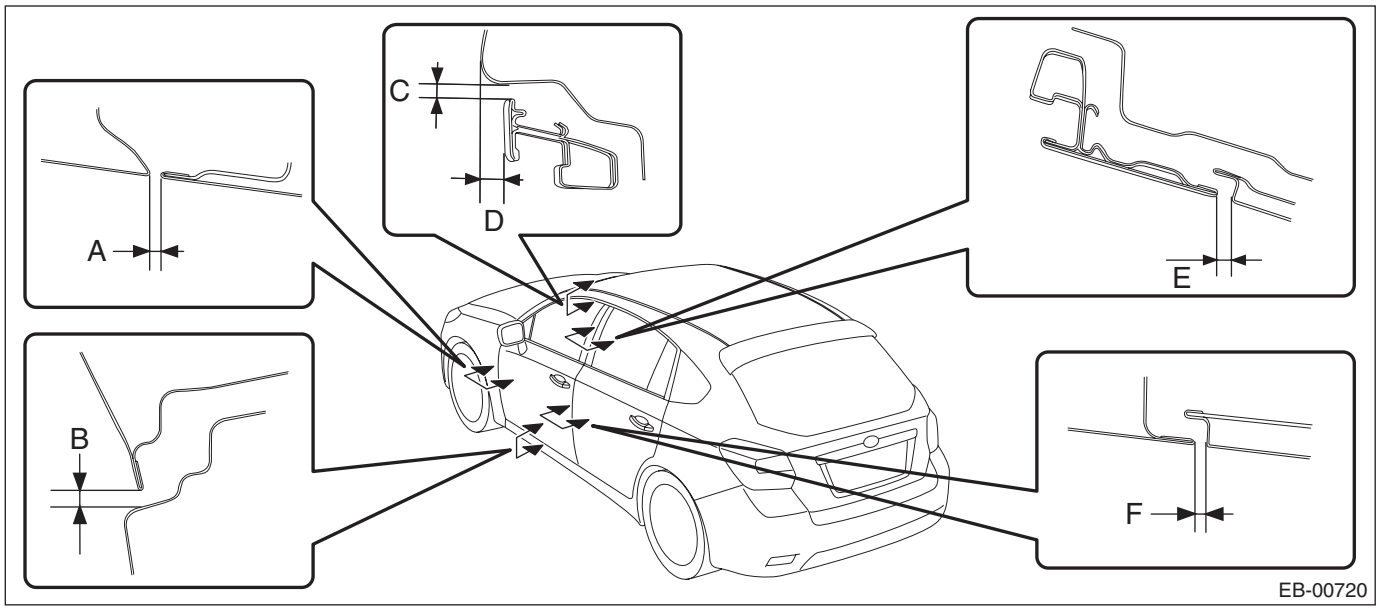

Part		Standard
A	Fender COMPL - front to Panel assembly - front door	4.5±1.0 mm (0.18±0.04 in)
B	Panel assembly - front door to Side sill	6.0+1.5, –1.0 mm (0.24+0.06, -0.04 in)
C	Roof panel to Front door sash	5.1+1.5, –1.0 mm (0.20+0.06, -0.04 in)
D	Surface level gap between roof panel and front door sash	7±1.5 mm (0.28±0.06 in)
E	Front door sash to Rear door sash	5.5+1.5, –1.0 mm (0.22+0.06, -0.04 in)
F	Panel assembly - front door to Panel assembly - rear door	4.5±1.0 mm (0.18±0.04 in)

NOTE:
Common to 4 door model and 5 door model/XV model

1) Adjust the vertical and horizontal positions of the panel assembly - front door.

Preparation tool:
ST: WRENCH (925610000)

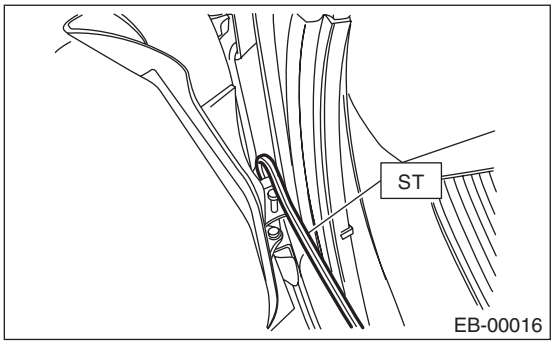

(1) Using ST, loosen the body side bolts of the upper hinge - front door and the lower hinge - front door.
(2) Adjust the vertical and horizontal clearance of the panel assembly - front door.

2) Adjust the surface level gap between the panel assembly - front door and the panel assembly - rear door.

CAUTION:
Do not use an impact wrench. Welding area on the striker nut plate is easily broken.

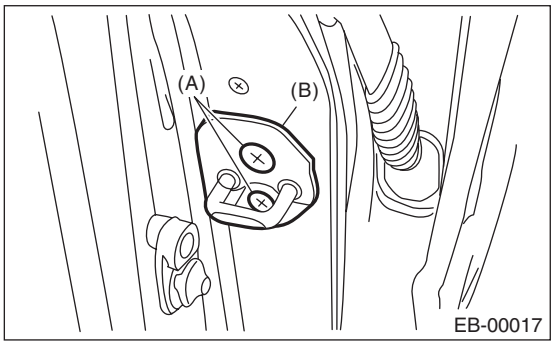

(1) Loosen the screws (A).
(2) Tap the striker - front door (B) using a plastic hammer to adjust the surface level gap between the rear end of the panel assembly - front door and the front end of the panel assembly - rear door.

5. Front Sealing Cover

A: REMOVAL

1) Disconnect the ground cable from battery and wait for at least 60 seconds before starting work. <Ref. to NT-5, BATTERY, NOTE, Note.>

NOTE:
For the 12 volt engine restart battery of HEV model, disconnect the ground terminal from 12V engine restart battery sensor.

2) Remove the trim panel - front door.
   (1) Attach the protective tape (a).
   (2) Open the cover and remove the screw.
   (3) Remove the clips, and remove the trim panel - front door from the panel assembly - front door.

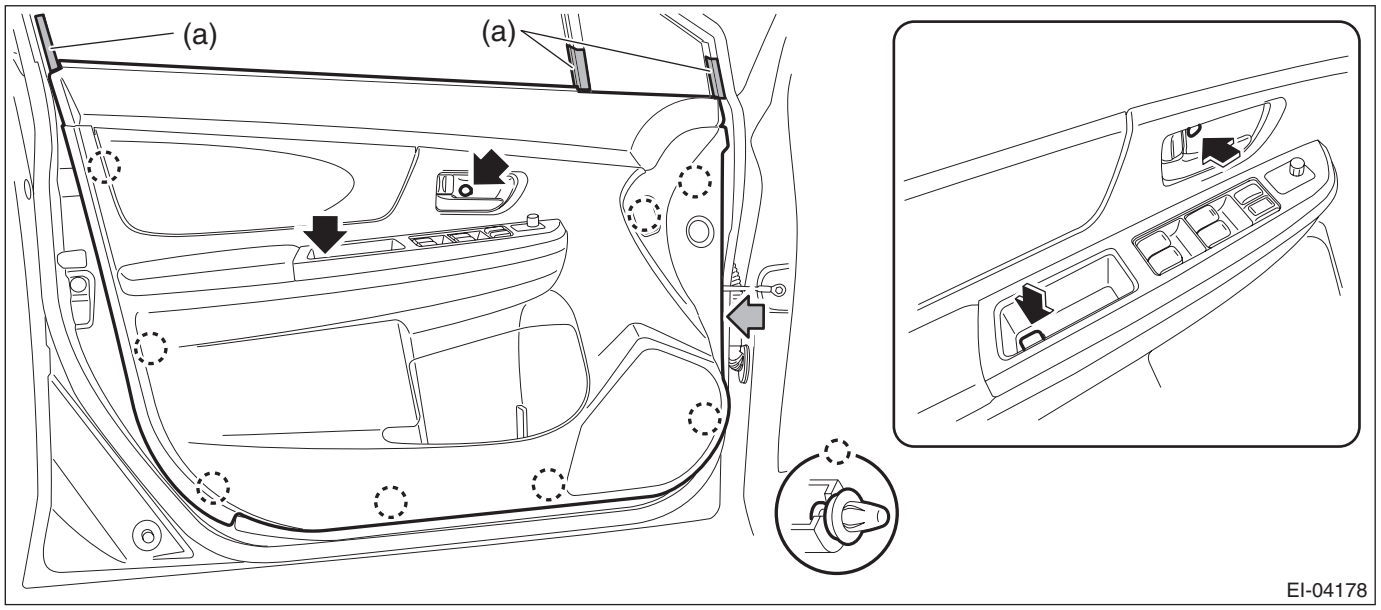

NOTE:
It is easier to remove the trim panel - front door if the removal is performed from the gray arrow section.

   (4) Detach the door lock cable (a) and door open cable (b) from the remote assembly - door.

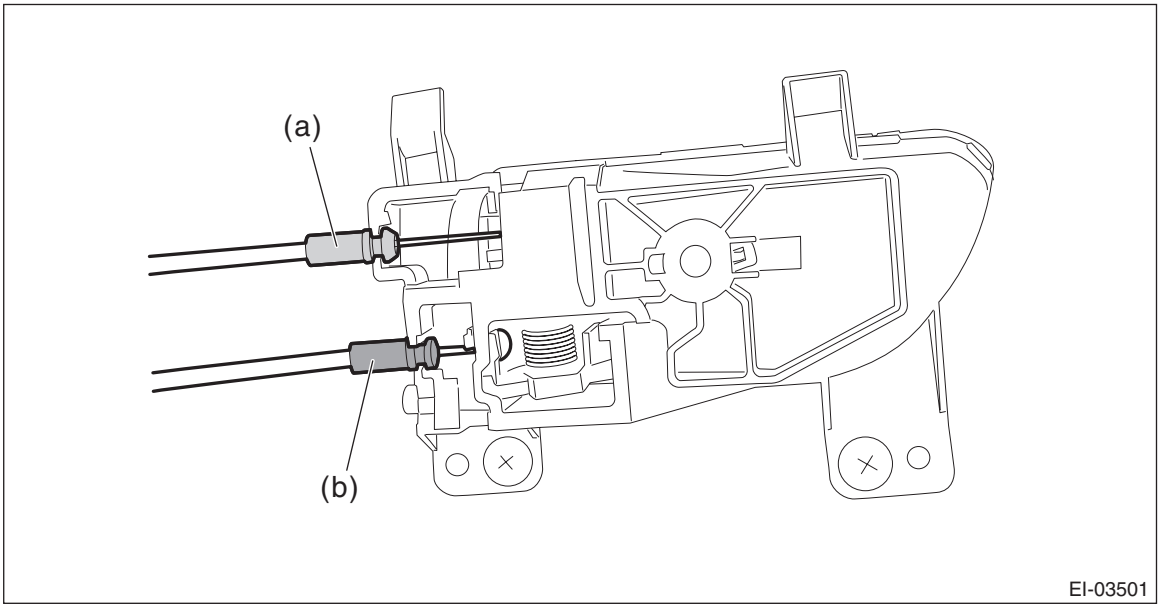

   (5) Disconnect the harness connector and remove the trim panel - front door.

3) Remove the sealing cover - front door.

CAUTION:
- **Carefully remove the butyl tape. Excessive force will easily break the cover.**
- **If the sealing cover - front door gets broken, replace it with a new part.**

(1) Remove the screw to remove the bracket - door trim front.
(2) Carefully remove the butyl tape to remove the sealing cover - front door.

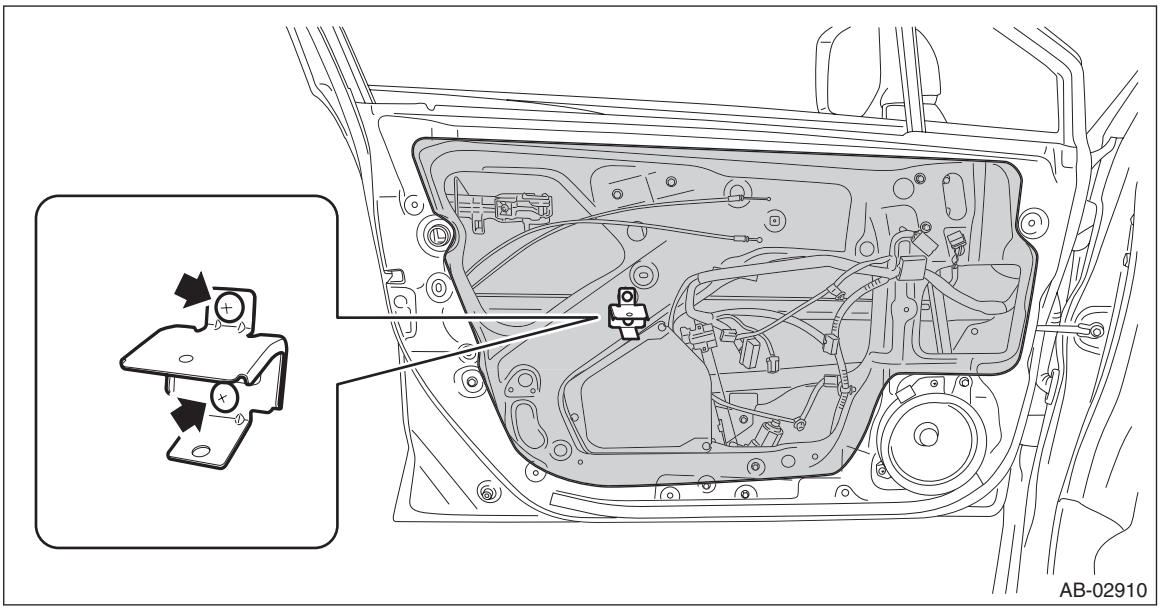

B: INSTALLATION

CAUTION:
- **If the sealing cover - front door gets broken, replace it with a new part.**
- **Apply a uniform bead of butyl tape.**
- **Attach the sealing cover - front door, keeping it from becoming wrinkled.**
- **Breaks in the bead will allow water leakage and contamination.**

1) Install each part in the reverse order of removal.
2) When replacing the sealing cover - front door, use the butyl tape.
3) Press the butyl tape-applied area firmly to prevent any floating on surface.

Butyl tape:
3M Butyl Rubber 8626 or equivalent

C: INSPECTION

If the sealing cover - front door is broken, replace it with a new part.

6. Rear Door

A: REMOVAL

1. REAR DOOR PANEL

1) Disconnect the ground cable from battery. <Ref. to NT-5, BATTERY, NOTE, Note.>

NOTE:
For the 12 volt engine restart battery of HEV model, disconnect the ground terminal from 12V engine restart battery sensor.

2) Remove the trim panel - rear door. <Ref. to EI-68, REAR DOOR, REMOVAL, Door Trim.>

3) Remove the sealing cover - rear door.

CAUTION:
- **Carefully remove the butyl tape. Excessive force will easily break the cover.**
- **If the sealing cover - rear door gets broken, replace it with a new part.**
  (1) Remove the screw to remove the bracket - door trim rear.
  (2) Carefully remove the butyl tape to remove the sealing cover - rear door.

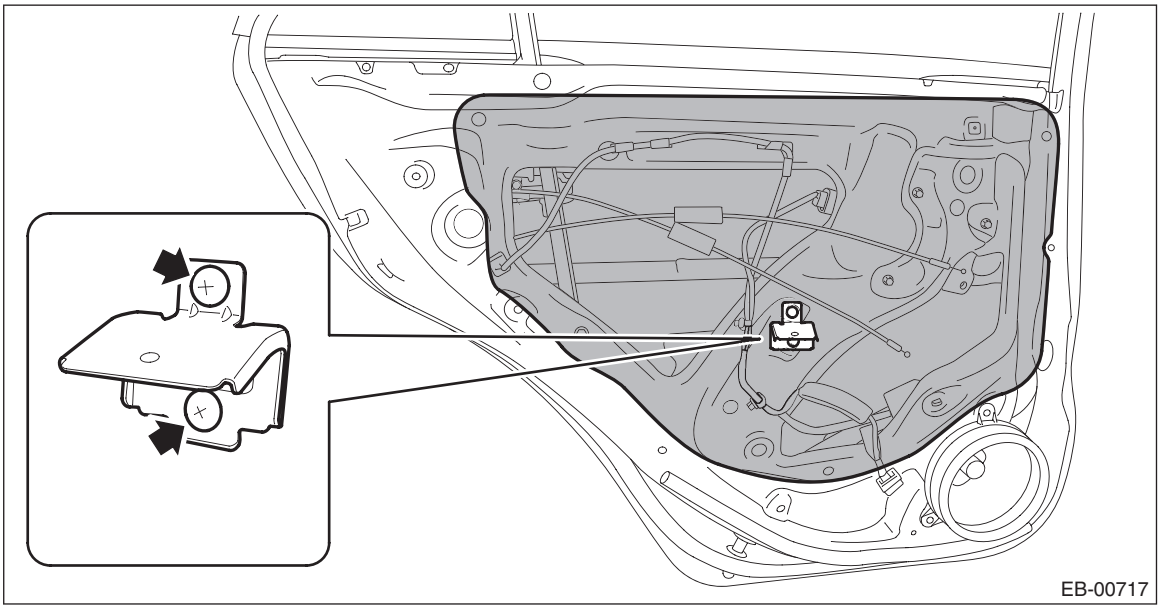

4) Remove the B and C pillar upper clips.
- 4 door model

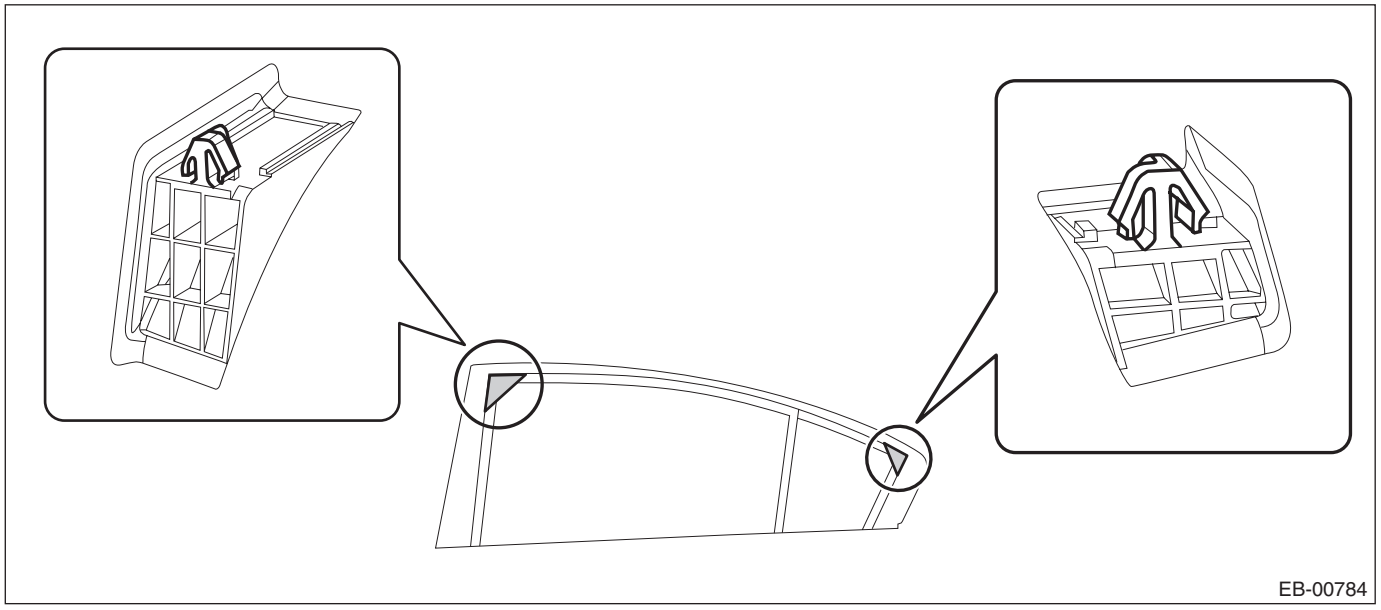

- 5 door model/XV model

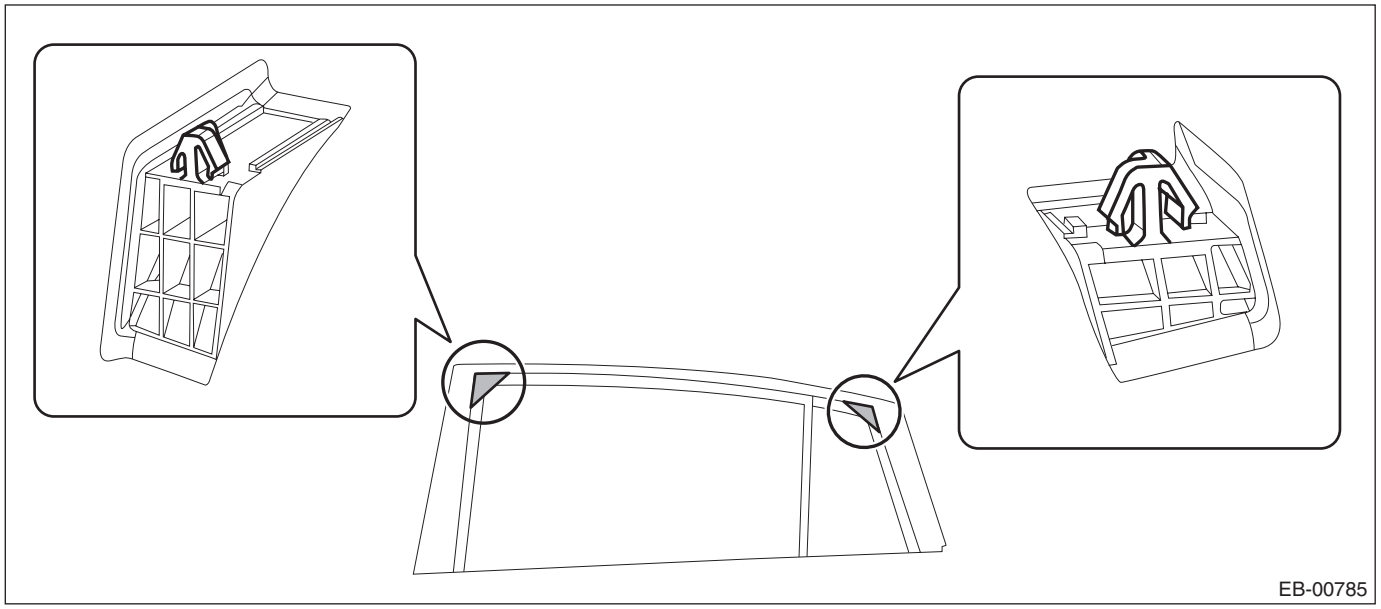

5) Remove the rear door speaker assembly.
   (1) Remove the screws.
   (2) Disconnect the connector behind the speaker and remove the rear speaker assembly.

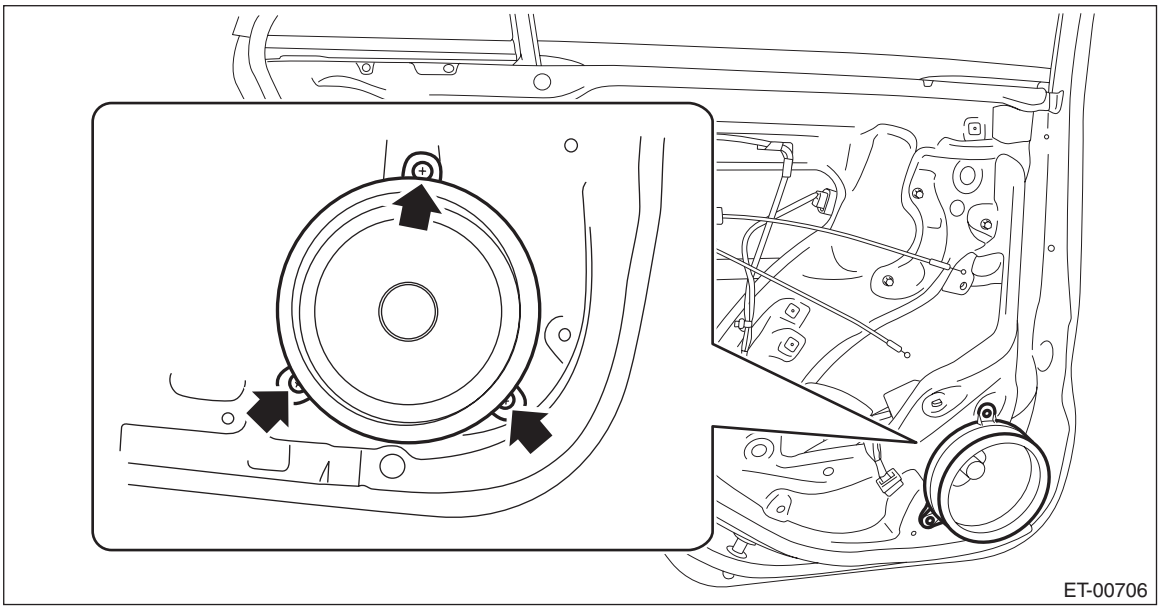

6) Remove the sash COMPL - rear partition and the glass assembly - rear door. <Ref. to GW-32, REMOVAL, Rear Door Glass.>
7) Remove the regulator - rear. <Ref. to GW-34, REMOVAL, Rear Regulator and Motor Assembly.>
8) Remove the latch and actuator assembly - rear. <Ref. to SL-47, REMOVAL, Rear Door Latch and Door Lock Actuator Assembly.>
9) Remove the handle - door outer and the cover - handle rear outer. <Ref. to SL-43, REMOVAL, Rear Outer Handle.>

10) Remove the weather strip - rear door.

CAUTION:
If the weather strip clip is removed with excessive force, the weather strip may be damaged. Be sure to use clip remover to remove.

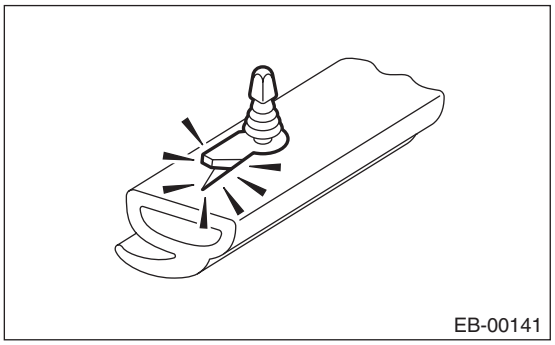

11) Remove the bolts and nuts, and then detach the checker assembly - rear door.

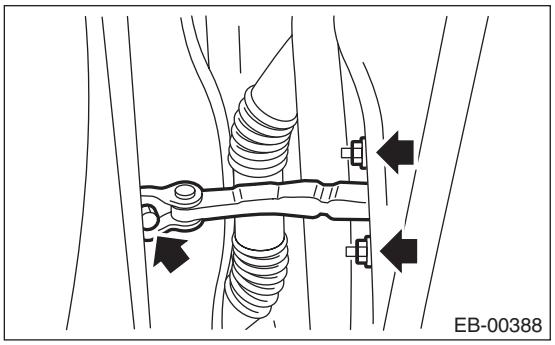

12) Disconnect the rear door harness connectors.
(1) Remove the grommet and pull out the rear door harness connector from inside the center pillar.

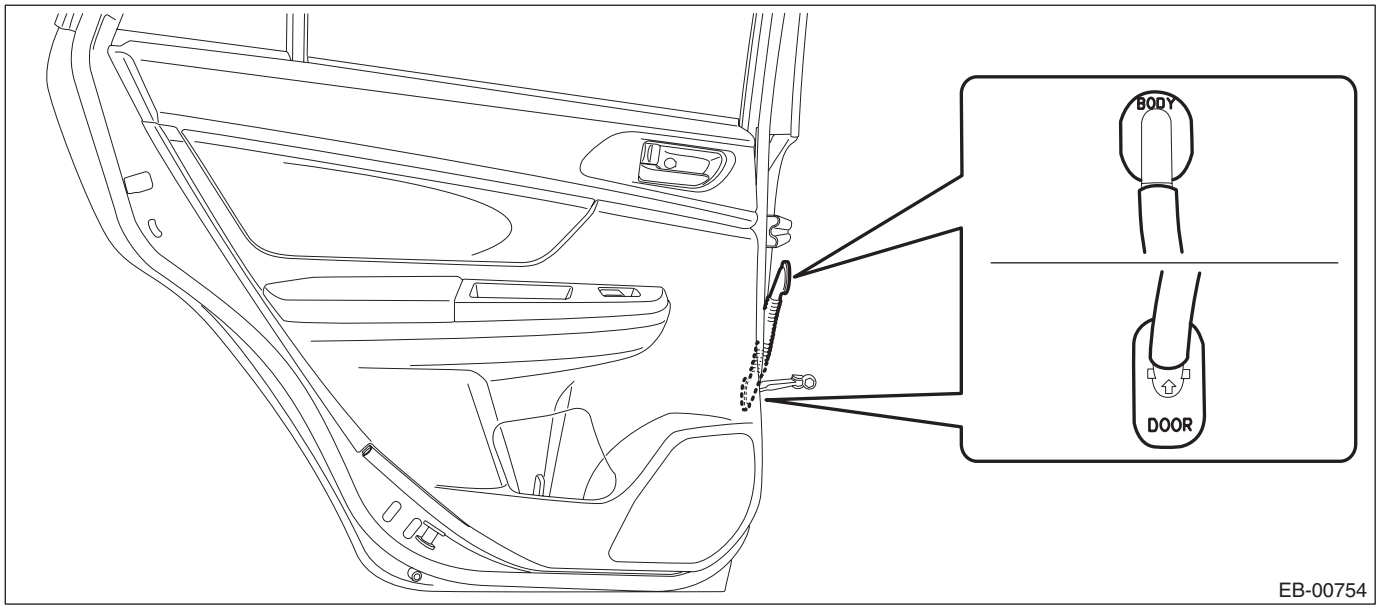

(2) Disconnect the rear door harness connectors.

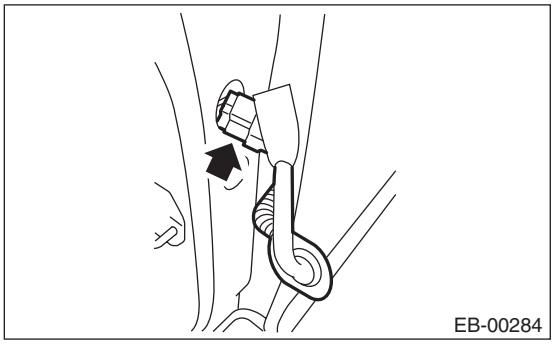

13) Before removing the panel assembly - rear door, make the following preparations.

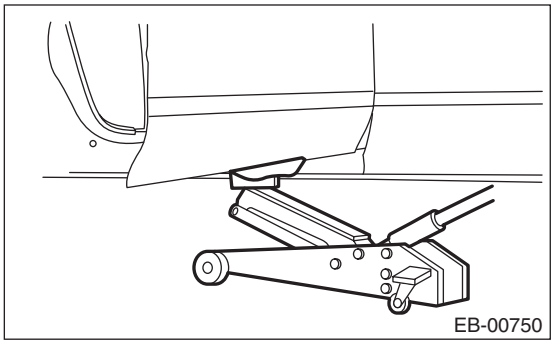

(1) Put a wooden block on a floor jack and place the jack under the panel assembly - rear door.
(2) Support the panel assembly - rear door with the jack to protect it from damage.

CAUTION:
Do not excessively lift the panel assembly - rear door with the floor jack. The door hinges may be damaged.

14) Remove the door-side bolts for the upper hinge - rear door and the lower hinge - rear door to remove the panel assembly - rear door.

CAUTION:
The panel assembly - rear door is heavy. When removing and installing it, always work in a team of two or more persons.

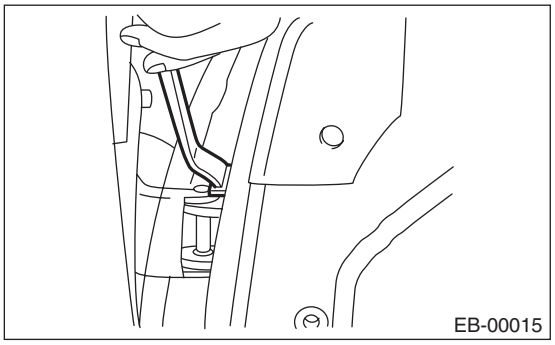

15) Remove the door hinge from vehicle. <Ref. to EB-38, REAR DOOR HINGE, REMOVAL, Rear Door.>

2. REAR DOOR HINGE

1) Open the panel assembly - front door, and remove the bolts of the upper hinge - rear door or the lower hinge - rear door.

CAUTION:
- **Do not remove the upper hinge - rear door and the lower hinge - rear door at the same time.**
- **Removal and installation of the panel assembly - rear door must be performed with the door closed.**

2) Remove the rear door hinge from vehicle.

B: INSTALLATION

1. REAR DOOR PANEL

1) Put a wooden block on a jack and place the panel assembly - rear door on it.

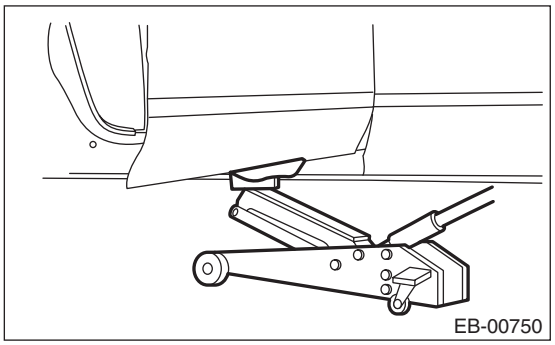

2) Apply grease to the moving part of door hinges.
3) Adjust the height by the jack, and temporarily install the panel assembly - rear door to the upper hinge - rear door and the lower hinge - rear door.

NOTE:
• When installing the panel assembly - rear door, make sure that a uniform clearance is created around the panel.
• Perform installation while paying attention to the assembly direction of the grommet.

4) Adjust the clearance around the panel assembly - rear door. <Ref. to EB-40, ADJUSTMENT, Rear Door.>
5) Tighten the bolts and nuts of the door hinge and the checker assembly - rear door.

Tightening torque:
Refer to "COMPONENT" of "General Description". <Ref. to EB-5, REAR DOOR, COMPONENT, General Description.>

6) Install door internal parts in the reverse order of removal.
7) Connect the door harness connector, and install the trim panel - center pillar LWR.

2. REAR DOOR HINGE

1) Apply grease to the moving part of door hinges.
2) Adjust the clearance around the panel assembly - rear door. <Ref. to EB-40, ADJUSTMENT, Rear Door.>
3) Tighten the door hinge bolts.

Tightening torque:
Refer to "COMPONENT" of "General Description". <Ref. to EB-5, REAR DOOR, COMPONENT, General Description.>

C: ADJUSTMENT

Adjust the clearance around the panel assembly - rear door as follows.

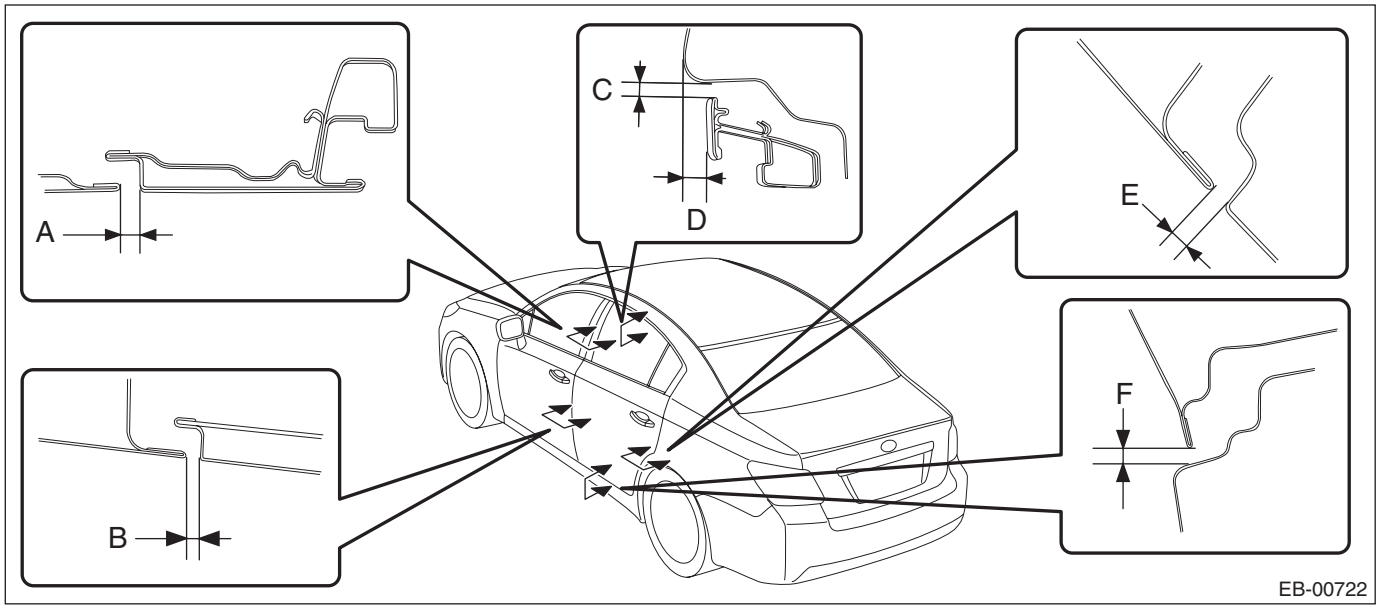

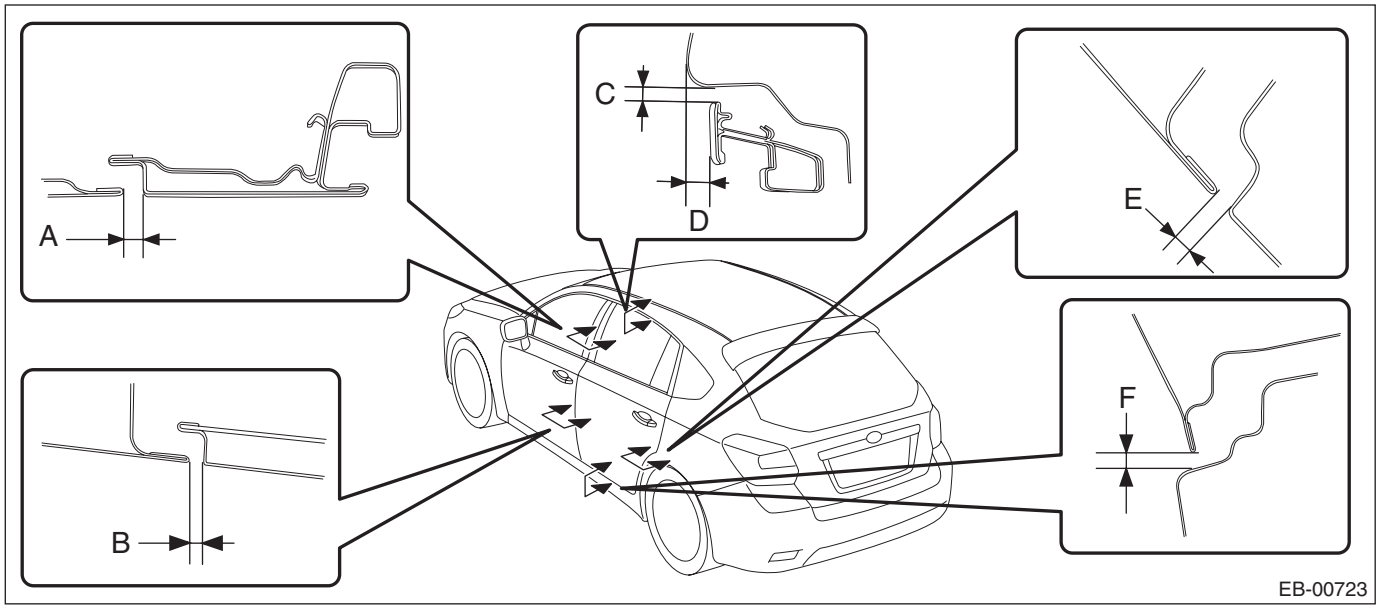

Part		Standard
A	Front door sash to Rear door sash	5.5+1.5, -1.0 mm (0.22+0.06, -0.04 in)
B	Panel assembly - front door to Panel assembly - rear door	4.5±1.0 mm (0.18±0.04 in)
C	Roof panel to Rear door sash	5.1+1.5, -1.0 mm (0.20+0.06, -0.04 in)
D	Surface level gap between roof panel and rear door sash	6.6±1.5 mm (0.26±0.06 in)
E	Panel assembly - rear door to Rear quarter panel	4.1±1.0 mm (0.16±0.04 in)
F	Panel assembly - rear door to Side sill	6.0±1.5 mm (0.24±0.06 in)

1) Adjust the vertical and horizontal positions of the panel assembly - rear door.

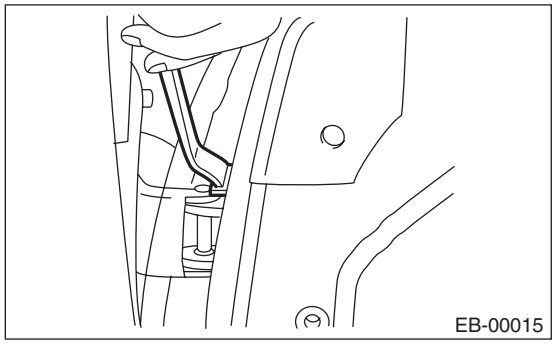

(1) Loosen the body side bolts of the upper hinge - rear door and the lower hinge - rear door.
(2) Adjust the vertical and horizontal clearance of the panel assembly - rear door.

2) Adjust the surface level gap between the panel assembly - rear door and the body.

CAUTION:
Do not use an impact wrench. Welding area on the striker nut plate is easily broken.

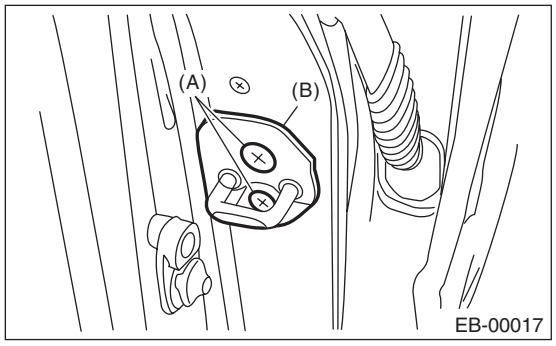

(1) Loosen the screws (A).
(2) Tap the striker - rear door (B) using a plastic hammer to adjust the surface level gap between the rear end of the panel assembly - rear door and the rear quarter.

7. Rear Sealing Cover

A: REMOVAL

1) Disconnect the ground cable from battery. <Ref. to NT-5, BATTERY, NOTE, Note.>

NOTE:
For the 12 volt engine restart battery of HEV model, disconnect the ground terminal from 12V engine restart battery sensor.

2) Remove the trim panel - rear door.
   (1) Attach the protective tape (a).
   (2) Open the cover and remove the screw.
   (3) Remove the clips, and remove the trim panel - rear door from the panel assembly - rear door.

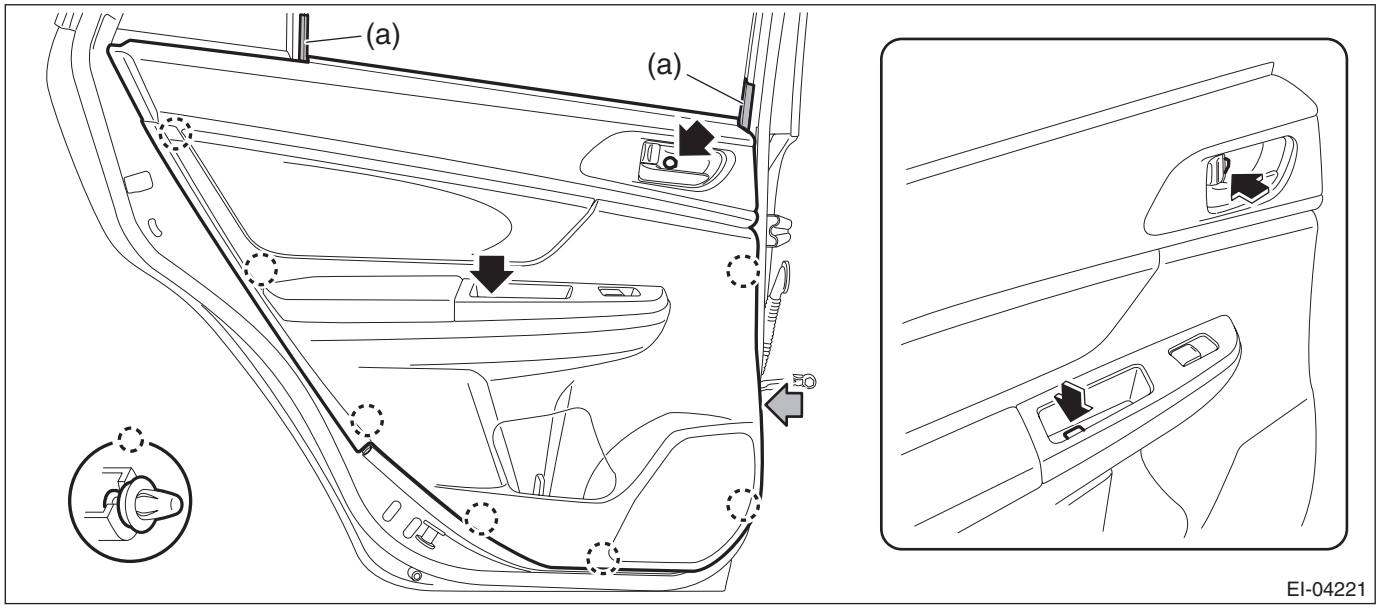

NOTE:
It is easier to remove the door trim if the removal is performed from the gray arrow section.

   (4) Detach the door lock cable (a) and door open cable (b) from the remote assembly - door.

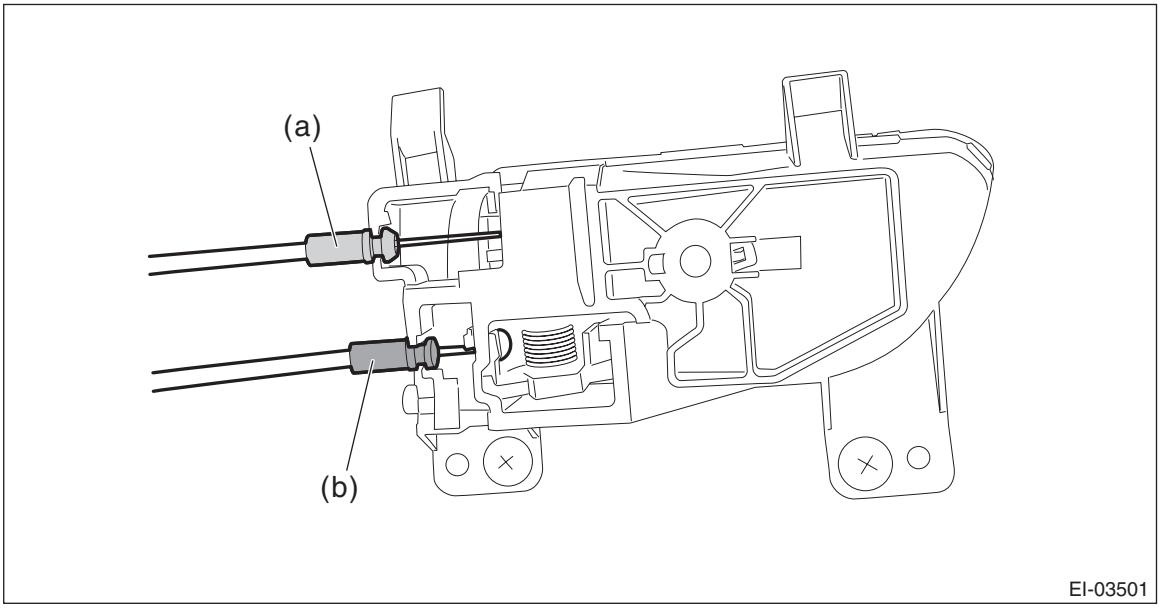

   (5) Disconnect the harness connector and remove the trim panel - rear door.

3) Remove the sealing cover - rear door.

CAUTION:
- **Carefully remove the butyl tape. Excessive force will easily break the cover.**
- **If the sealing cover - rear door gets broken, replace it with a new part.**
  (1) Remove the screw to remove the bracket - door trim rear.
  (2) Carefully remove the butyl tape to remove the sealing cover - rear door.

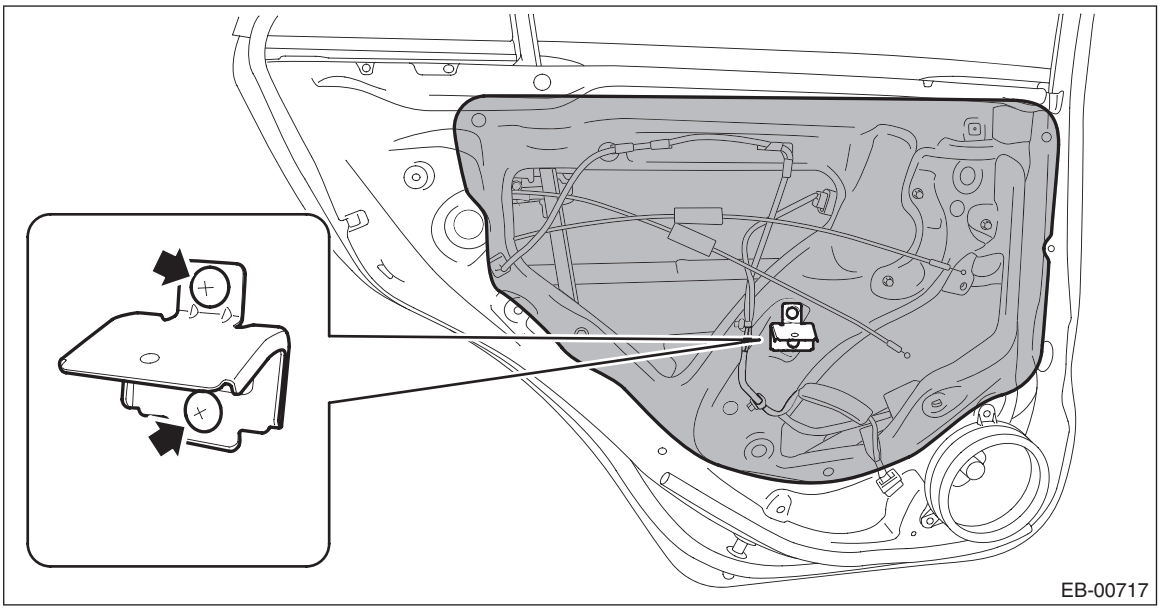

B: INSTALLATION

CAUTION:
- **If the sealing cover - rear door gets broken, replace it with a new part.**
- **Apply a butyl tape evenly.**
- **Attach the sealing cover - rear door, keeping it from becoming wrinkled.**
- **If the butyl tape is applied unevenly, it will cause water leakage and soiling.**

1) Install each part in the reverse order of removal.
2) When replacing the sealing cover - rear door, use the butyl tape.
3) Press the butyl tape-applied area firmly to prevent any floating on surface.

Butyl tape:
3M Butyl Rubber 8626 or equivalent

C: INSPECTION

If the sealing cover - rear door is broken, replace it with a new part.

8. Door Sash Tape

A: REMOVAL

1. FRONT DOOR

1) Disconnect the ground cable from battery and wait for at least 60 seconds before starting work. <Ref. to NT-5, BATTERY, NOTE, Note.>

NOTE:
For the 12 volt engine restart battery of HEV model, disconnect the ground terminal from 12V engine restart battery sensor.

2) Remove the trim panel - front door. <Ref. to EI-67, FRONT DOOR, REMOVAL, Door Trim.>
3) Remove the outer mirror assembly. <Ref. to GW-24, REMOVAL, Outer Mirror Assembly.>
4) Remove the sealing cover - front door.

CAUTION:
- **Carefully remove the butyl tape. Excessive force will easily break the cover.**
- **If the sealing cover - front door gets broken, replace it with a new part.**

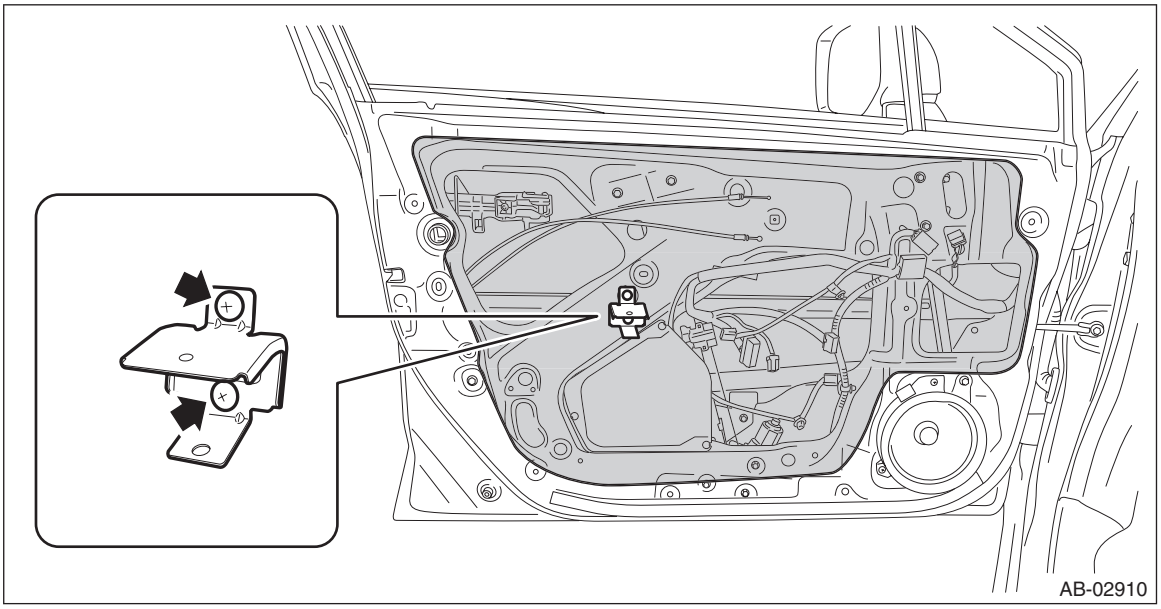

5) Remove the glass assembly - front door. <Ref. to GW-18, REMOVAL, Front Door Glass.>
6) Remove the running channel - front door.

7) Remove the weather strip outer - front door.

CAUTION:
- **When removing the weather strip outer, be careful not to damage the vehicle.**
- **Do not reuse the weather strip outer. Always replace with a new part.**

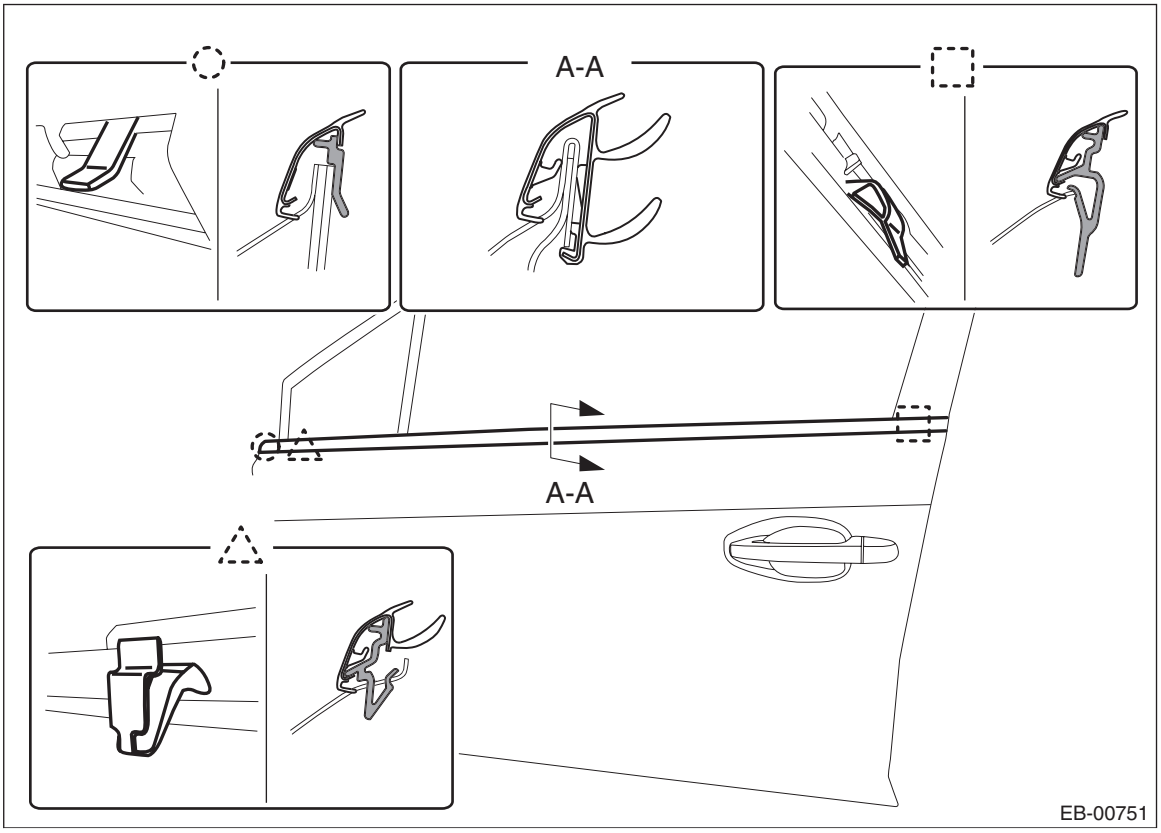

8) Peel the door sash tape from the door sash.

NOTE:
- If the tape is difficult to detach, warm it by a hot air drier.

Use a household hairdryer. Do not use industrial dryers.
- If tape residue is remaining on the door sash, wipe clean.

2. REAR DOOR

1) Disconnect the ground cable from battery. <Ref. to NT-5, BATTERY, NOTE, Note.>

NOTE:
For the 12 volt engine restart battery of HEV model, disconnect the ground terminal from 12V engine restart battery sensor.

2) Remove the trim panel - rear door. <Ref. to EI-68, REAR DOOR, REMOVAL, Door Trim.>

3) Remove the sealing cover - rear door.

CAUTION:
- **Carefully remove the butyl tape. Excessive force will easily break the cover.**
- **If the sealing cover - rear door gets broken, replace it with a new part.**

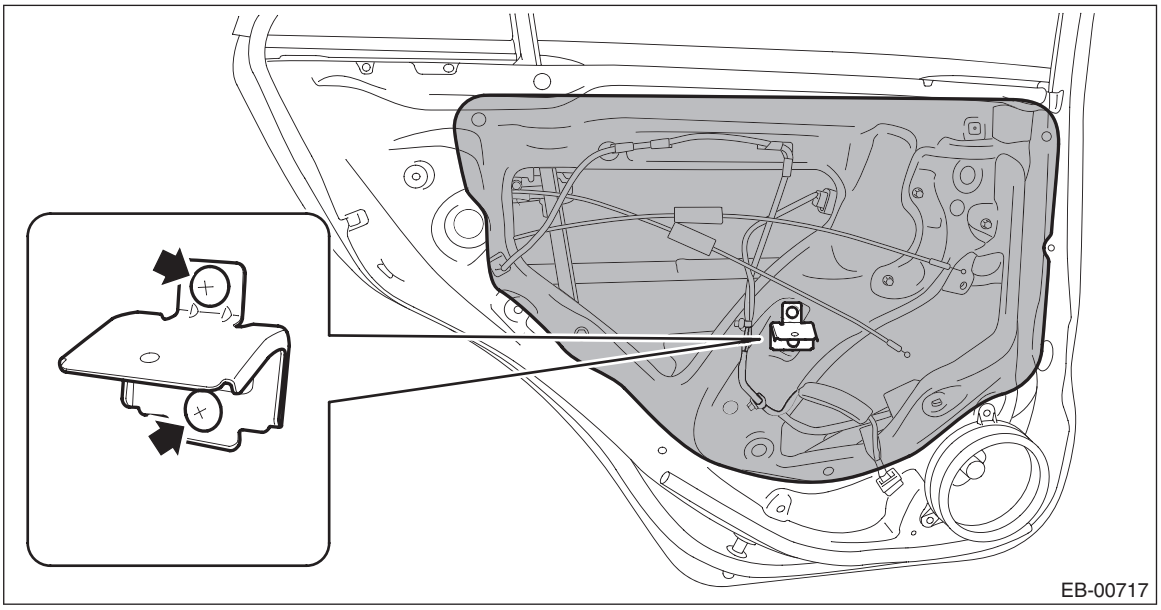

4) Remove the glass assembly - rear door. <Ref. to GW-32, REMOVAL, Rear Door Glass.>
5) Remove the running channel - rear door.
6) Remove the weather strip outer - rear door.

CAUTION:
- **When removing the weather strip outer, be careful not to damage the vehicle.**
- **Do not reuse the weather strip outer. Always replace with a new part.**

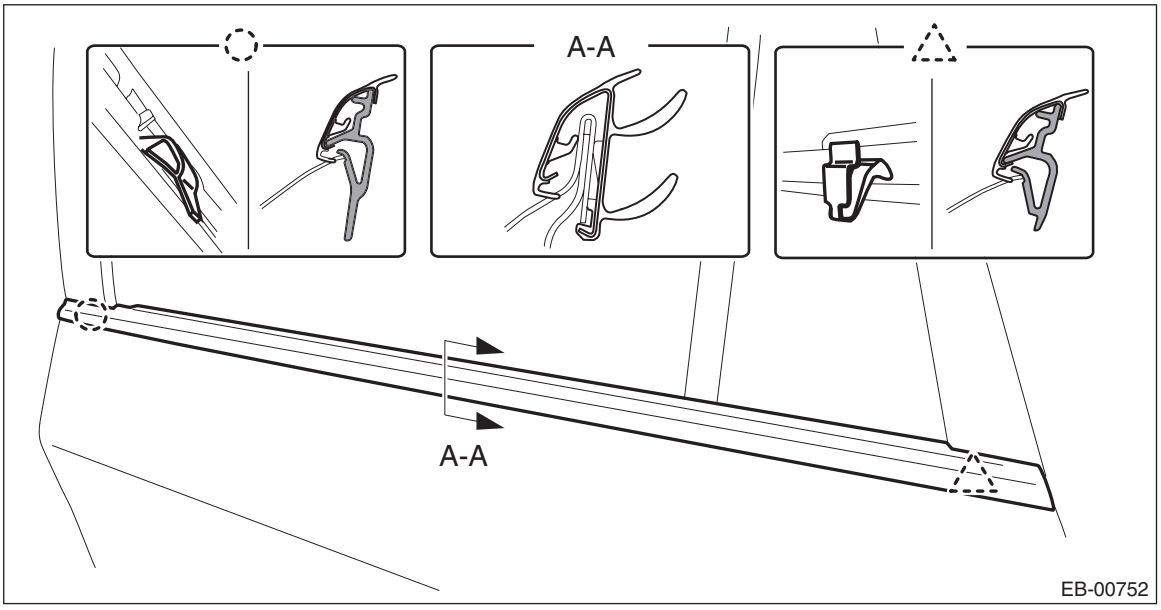

7) Peel the door sash tape from the door sash.

NOTE:
- If the tape is difficult to detach, warm it by a hot air drier.

Use a household hairdryer. Do not use industrial dryers.
- If tape residue is remaining on the door sash, wipe clean.

B: INSTALLATION

CAUTION:
- **Do not reuse the removed door sash tape. Replace it with a new tape.**
- **Press evenly along the sash when applying the tape using a spatula or similar object to make sure no bubbles are formed.**

If air bubbles are formed, reapply the tape.
- **If the tape is wrinkled, etc. during application, replace the tape.**
- **Be sure to press the ends of the tape firmly to adhere securely. If the tape comes off at the ends or where folded, the adhesive strength is weakened and the tape may peel off.**
- **There are locations where the tape ends will overlap each other. When applying the tape, be careful of the order of their application.**
  - **Front**

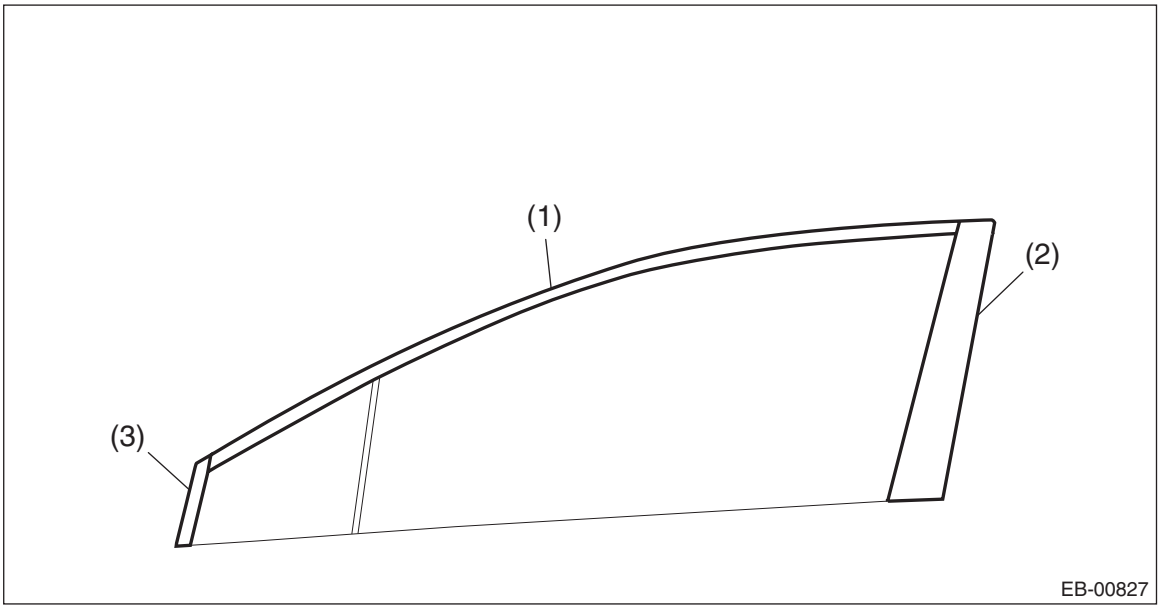

  - **Rear**

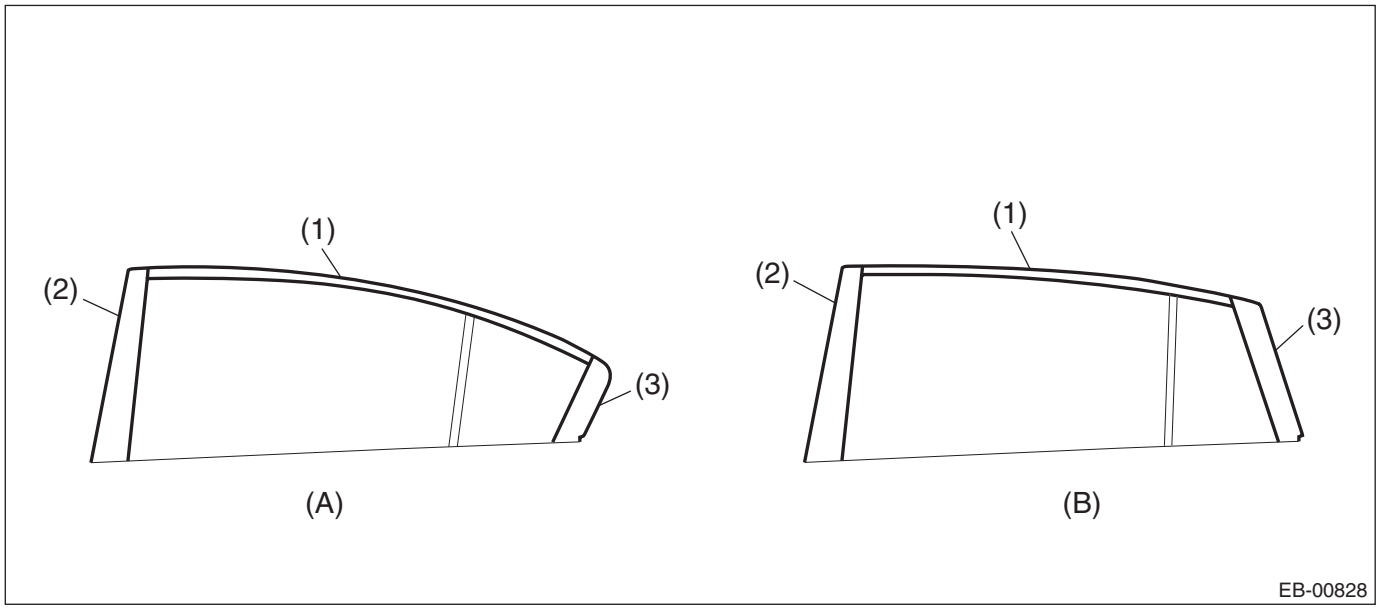

(A) 4 door model (B) 5 door model/XV model

1. FRONT DOOR

1) Apply the front door sash tape - medium from the rear of the vehicle towards the front.

NOTE:
Apply the end of the tape to the position shown in the figure.

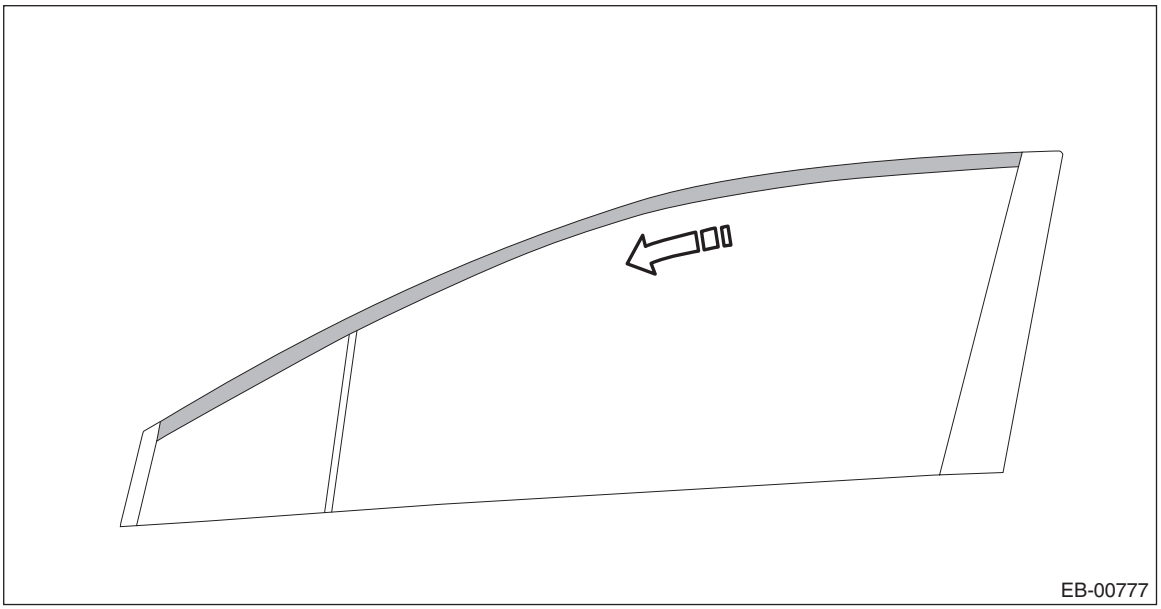

2) Apply the front door sash tape - rear from the top of the vehicle towards the bottom.

NOTE:
Apply the end of the tape to the position shown in the figure.

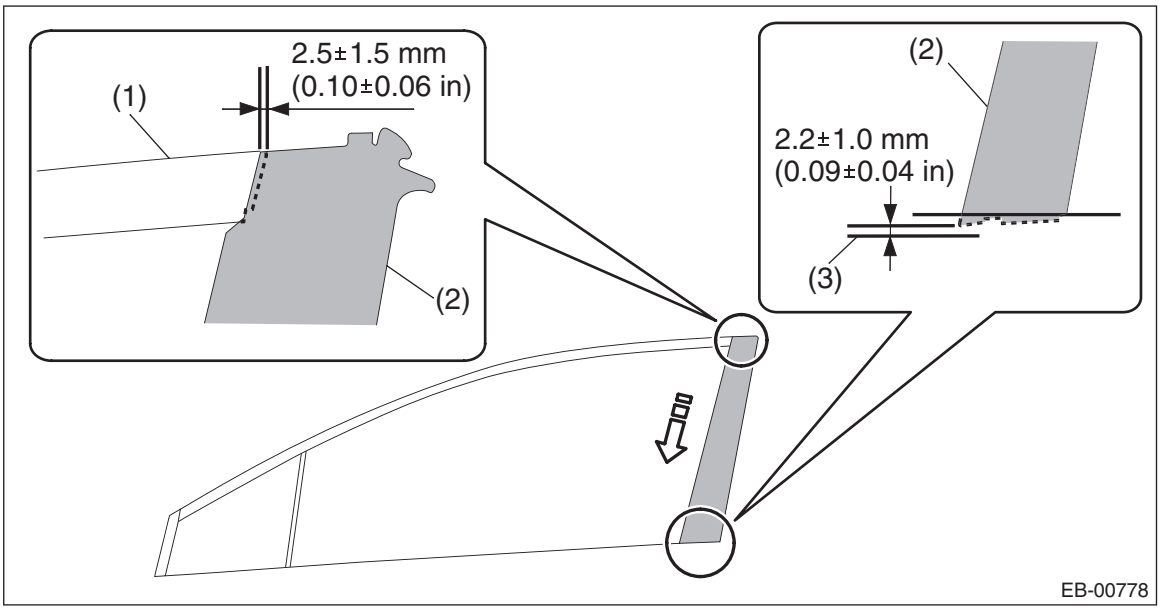

(1) Front door sash tape - medium (2) Front door sash tape - rear (3) End of panel outer

3) Fold the corners at the door upper end area in the order of (1) — (3).

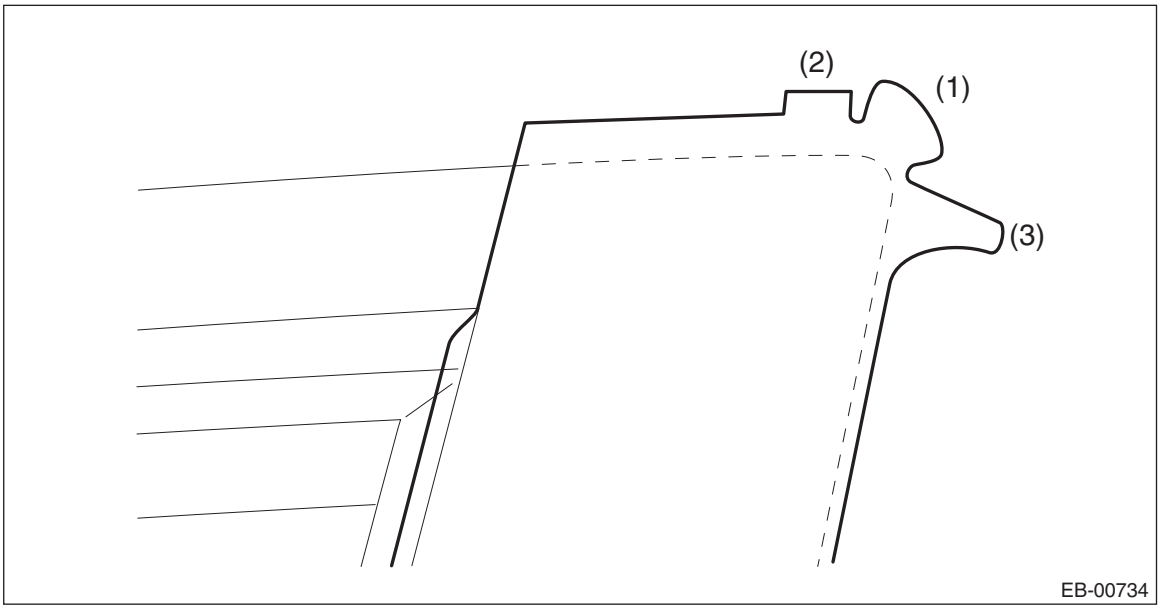

4) Apply the front door sash tape - front from the top of the vehicle towards the bottom.

NOTE:
Apply the end of the tape to the position shown in the figure.

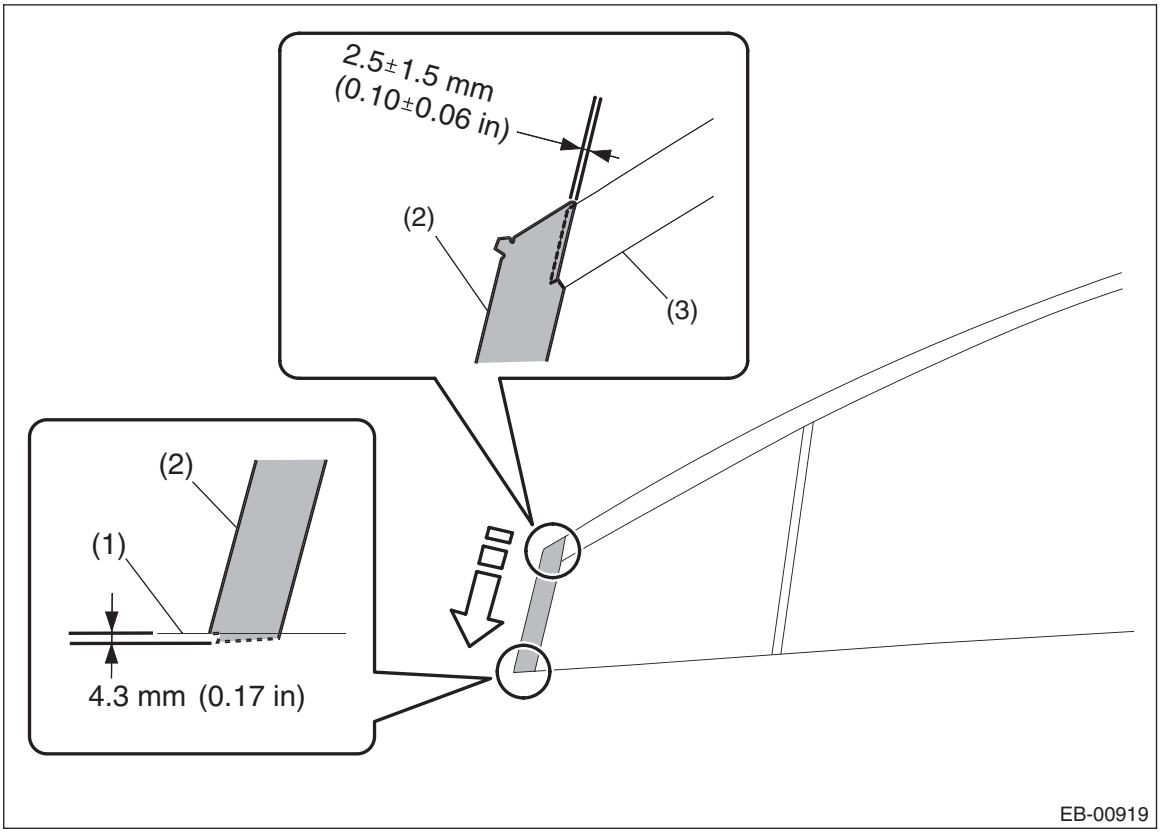

(1) Upper end of weather strip (2) Front door sash tape - front (3) Front door sash tape - medium

5) Fold the corners at the door upper end area in the order of (1) — (3).

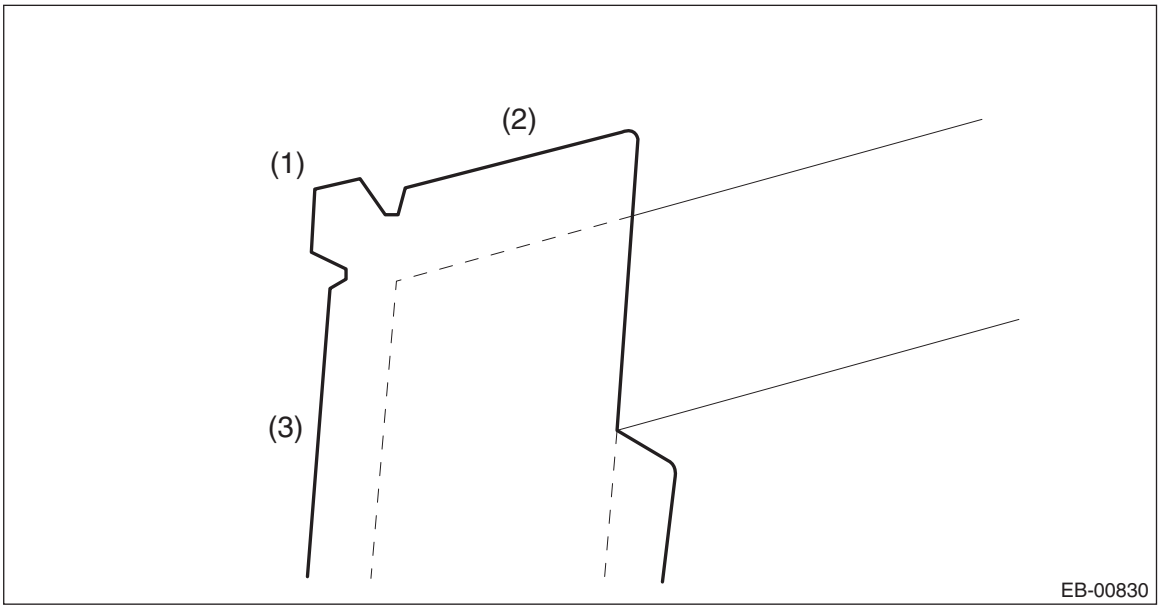

6) Thereafter, install door parts in the reverse order of disassembly.
7) When installing the panel assembly - front door, make sure that a uniform clearance is created around the panel. For the dimension of clearance, refer to “SPECIFICATION” in “General Description”. <Ref. to EB-2, SPECIFICATION, General Description.>

2. REAR DOOR

4 door model

1) Apply the rear door sash tape - medium from the front of the vehicle towards the rear.

NOTE:
Apply the end of the tape to the position shown in the figure.

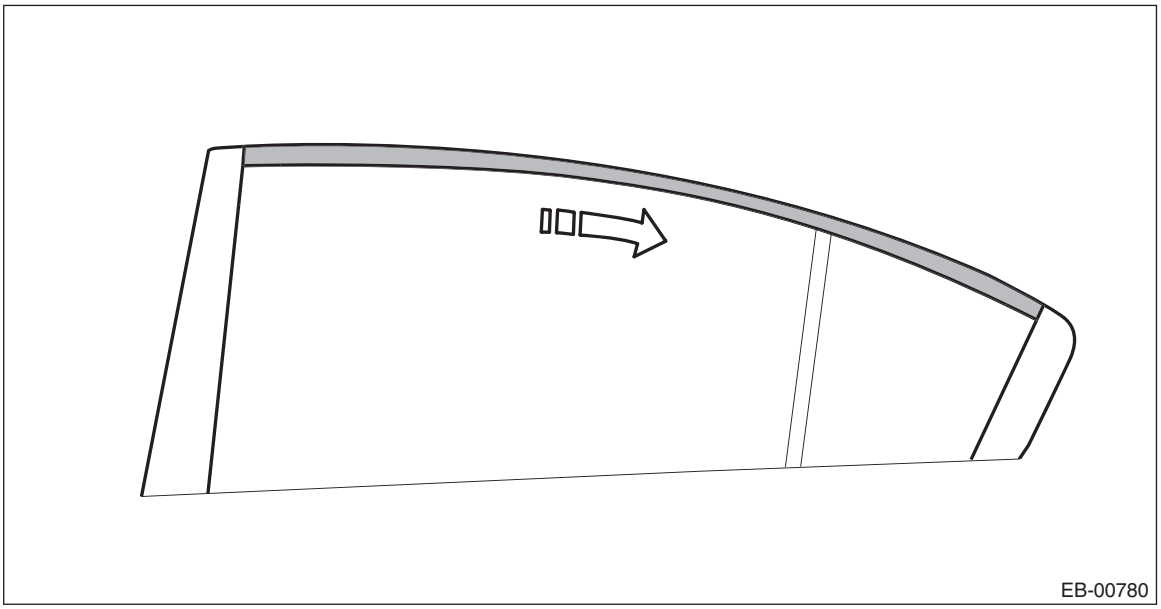

2) Apply the rear door sash tape - front from the top of the vehicle towards the bottom.

NOTE:
Apply the end of the tape to the position shown in the figure.

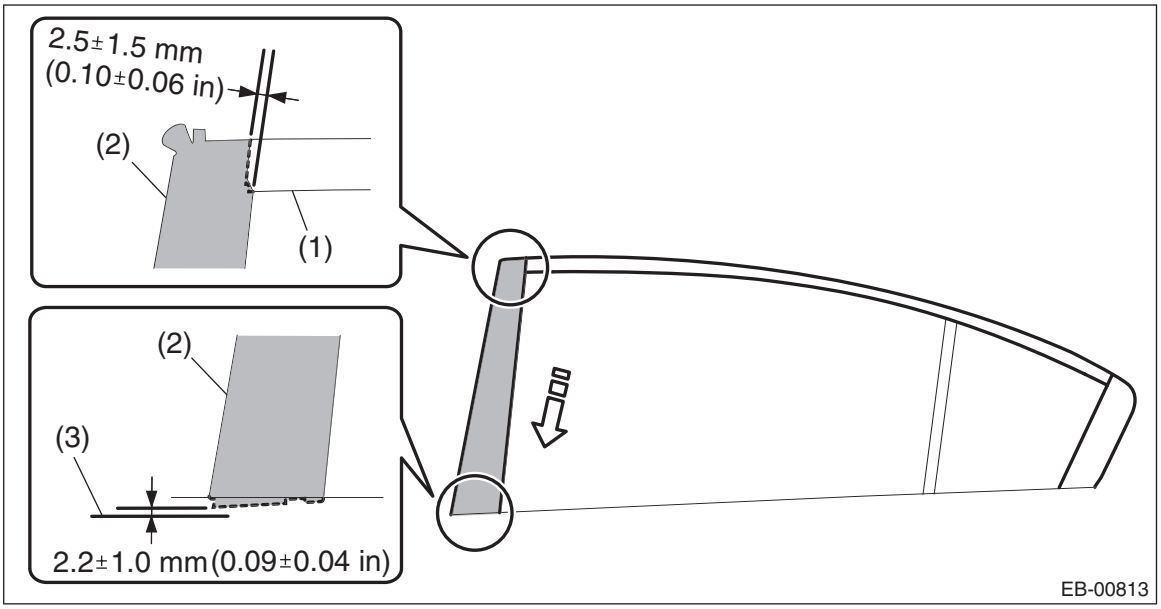

(1) Rear door sash tape - medium (2) Rear door sash tape - front (3) End of panel outer

3) Fold the corners at the door upper end area in the order of (1) — (2).

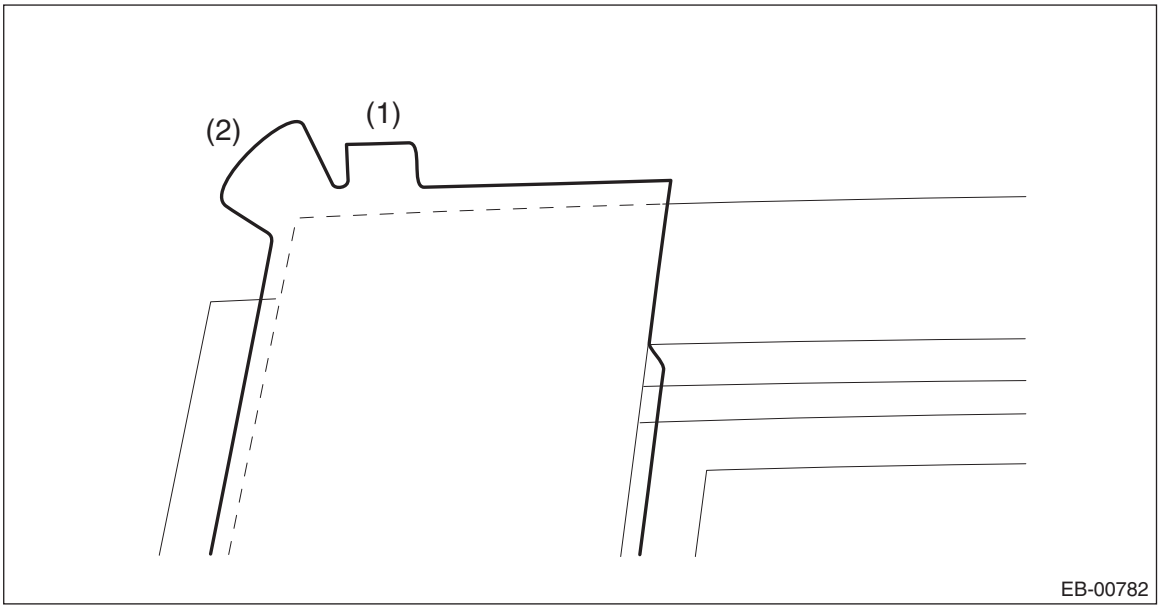

4) Apply the rear door sash tape - rear from the top of the vehicle towards the bottom.

NOTE:
Apply the end of the tape to the position shown in the figure.

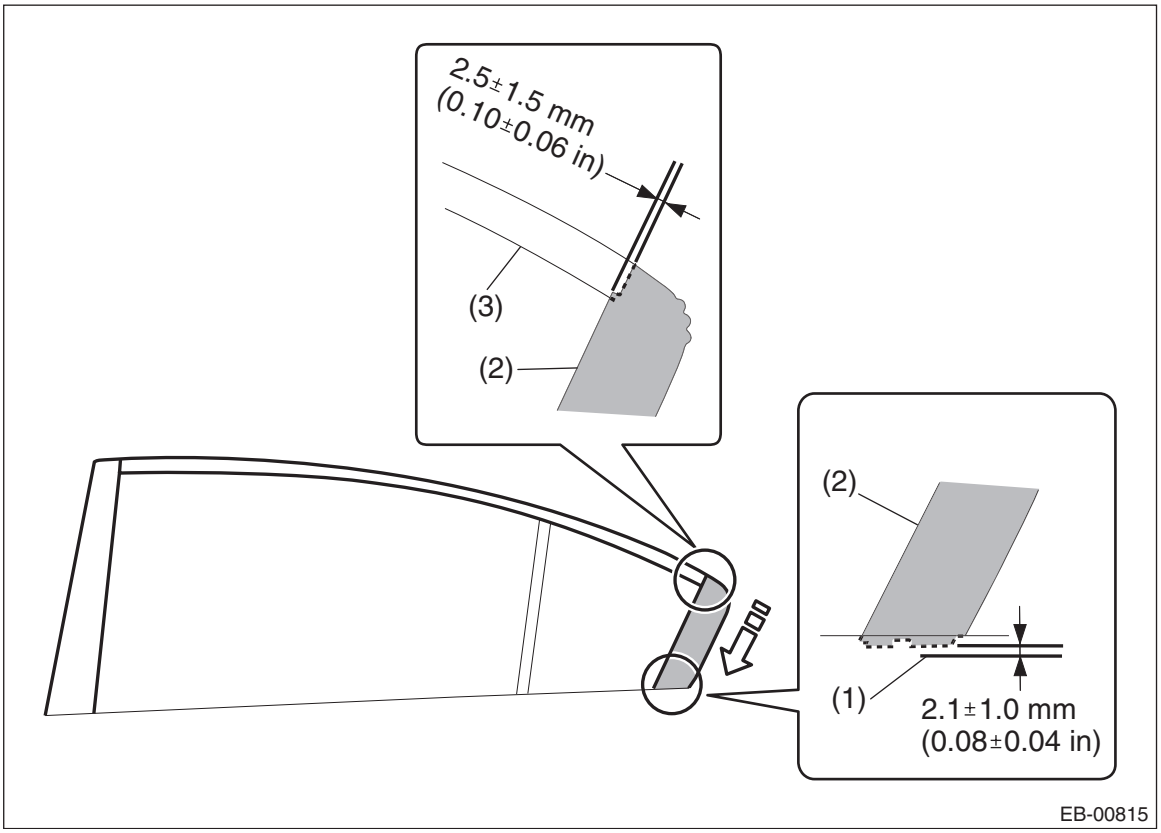

(1) End of panel outer (2) Rear door sash tape - rear (3) Rear door sash tape - medium

5) Fold the corners at the door upper end area in the order of (1) — (3).

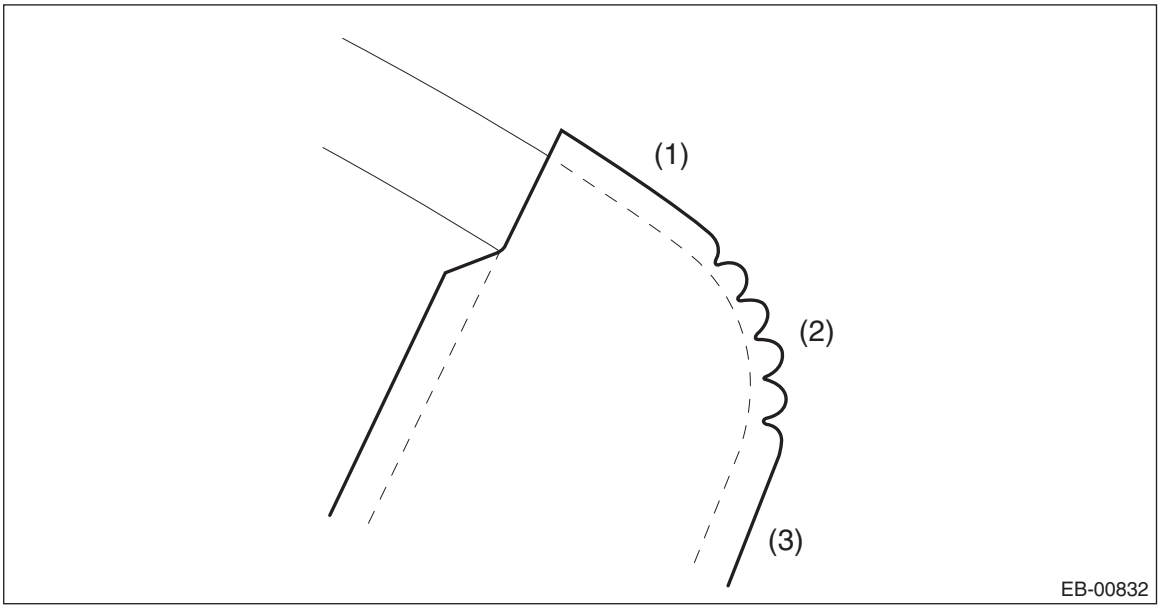

6) Thereafter, install door parts in the reverse order of removal.
7) When installing the panel assembly - front door, make sure that a uniform clearance is created around the panel. For the dimension of clearance, refer to “SPECIFICATION” in “General Description”. <Ref. to EB-2, SPECIFICATION, General Description.>

3. REAR DOOR

5 door model/XV model

1) Apply the rear door sash tape - medium from the front of the vehicle towards the rear.

NOTE:
Apply the end of the tape to the position shown in the figure.

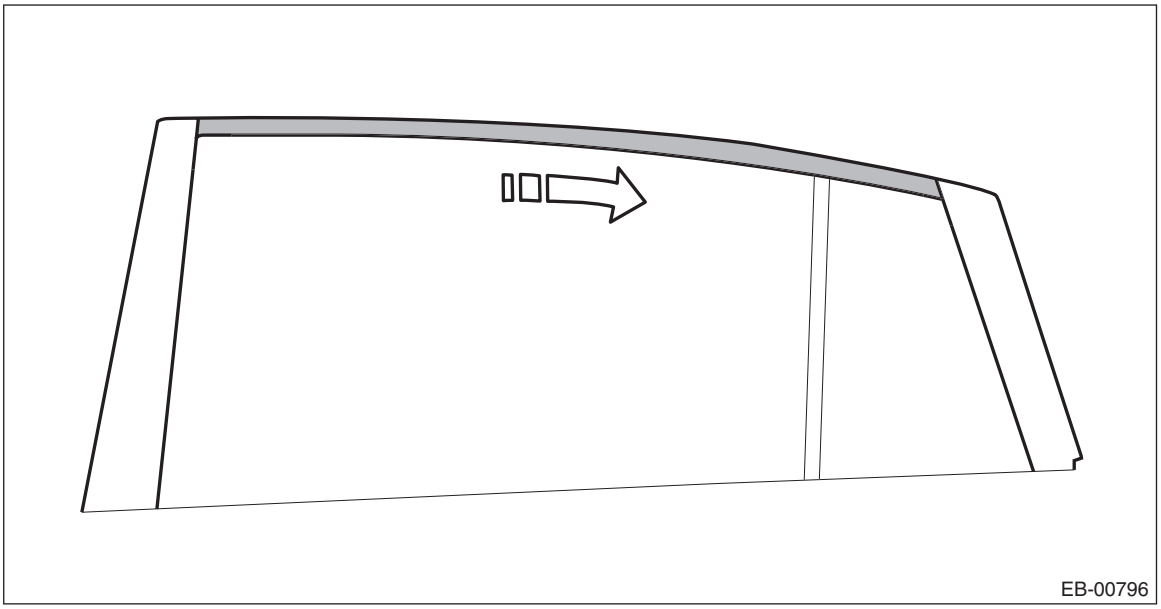

2) Apply the rear door sash tape - front from the top of the vehicle towards the bottom.

NOTE:
Apply the end of the tape to the position shown in the figure.

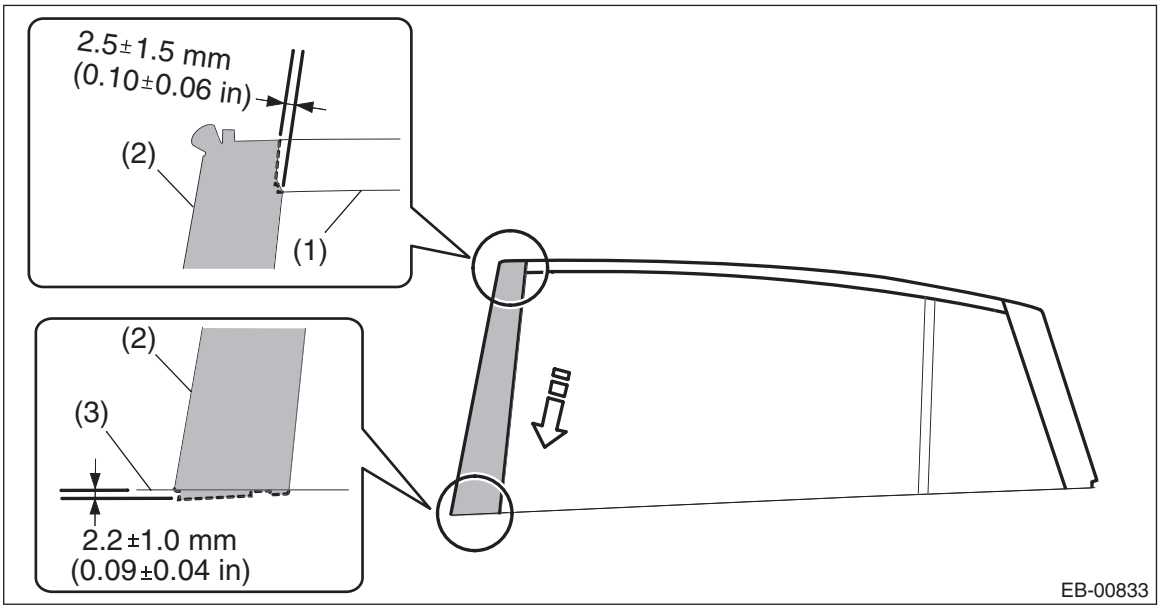

(1) Rear door sash tape - medium (2) Rear door sash tape - front (3) Upper end of weather strip

3) Fold the corners at the door upper end area in the order of (1) — (2).

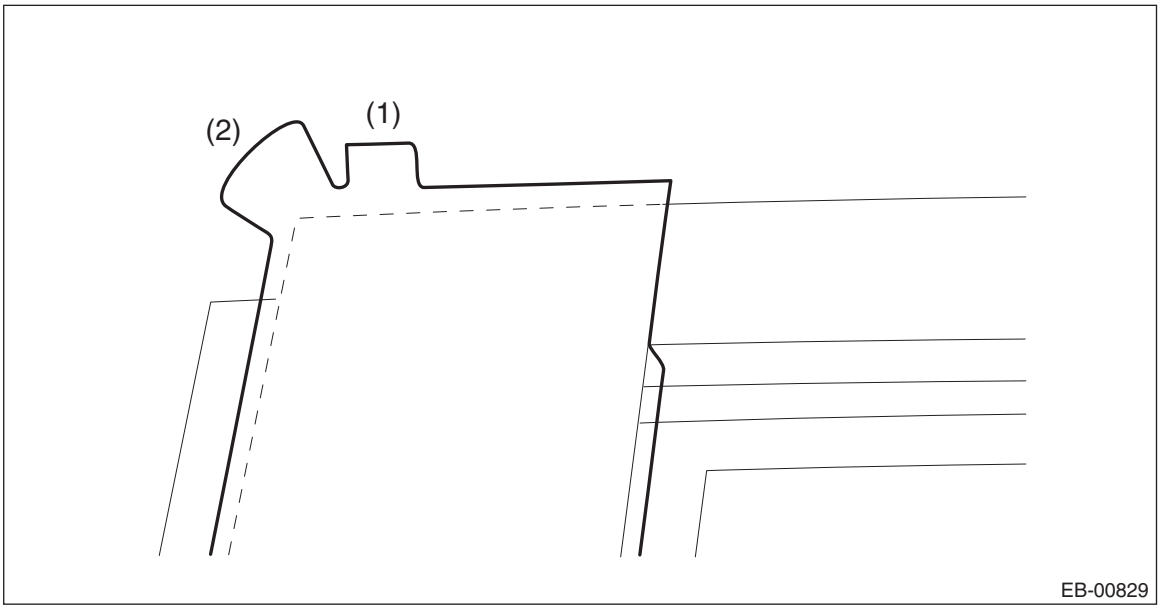

4) Apply the rear door sash tape - rear from the top of the vehicle towards the bottom.

NOTE:
Apply the end of the tape to the position shown in the figure.

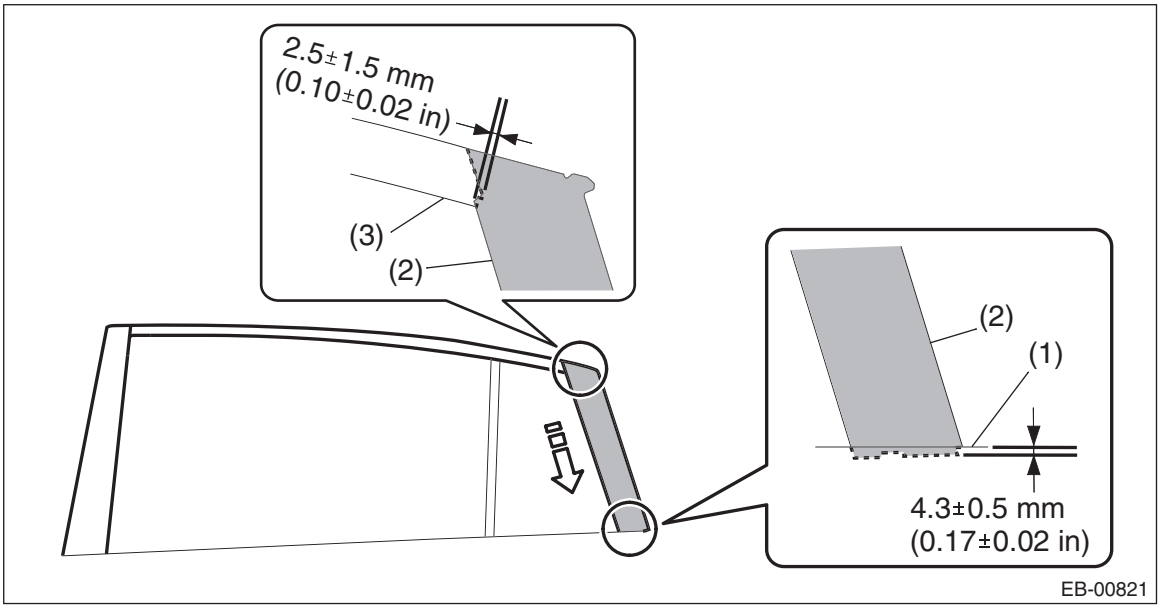

(1) Upper end of weather strip (2) Rear door sash tape - rear (3) Rear door sash tape - medium

5) Fold the corners at the door upper end area in the order of (1) — (3).

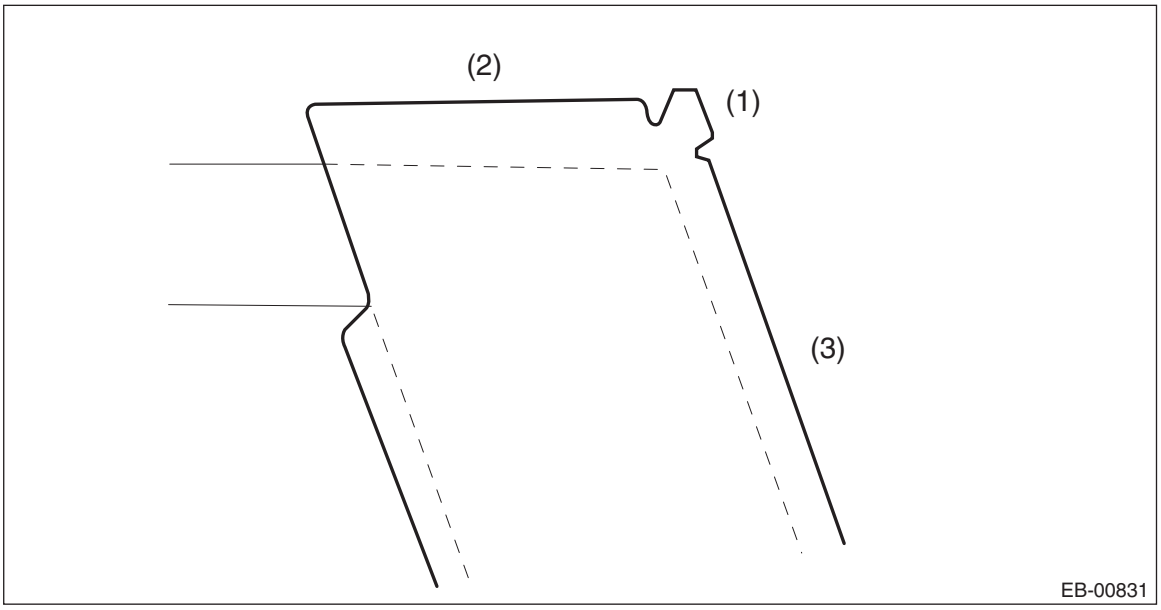

6) Thereafter, install door parts in the reverse order of removal.
7) When installing the panel assembly - front door, make sure that a uniform clearance is created around the panel. For the dimension of clearance, refer to “SPECIFICATION” in “General Description”. <Ref. to EB-2, SPECIFICATION, General Description.>

9. Trunk Lid

A: REMOVAL

1. TORSION BAR

1) Open the trunk lid COMPL.
2) Using the ST, remove the torsion bar - trunk lid.

CAUTION:
During removal and installation, handle the torsion bar - trunk lid carefully, because it will generate reactive force.

Preparation tool:
ST: REMOVER (927780000)

(1) Remove the torsion bar - trunk lid on the LH side from the hinge link.
(2) Remove the torsion bar - trunk lid on the RH side from the hinge link.

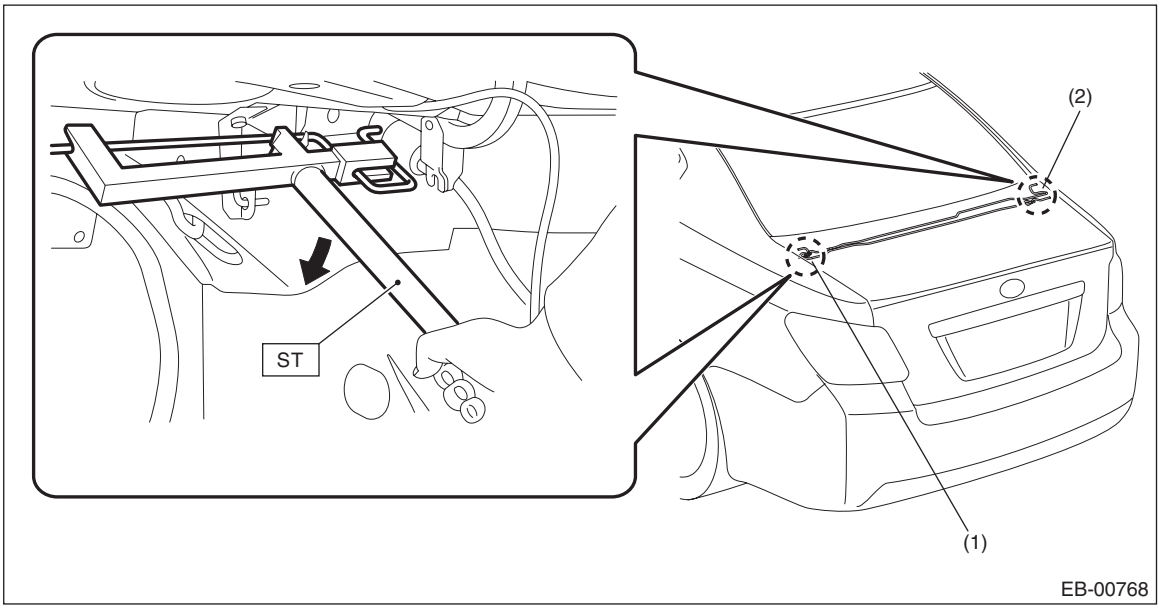

2. TRUNK LID PANEL

1) Disconnect the ground cable from battery.
2) Remove the clips, and remove the trim panel - trunk lid.

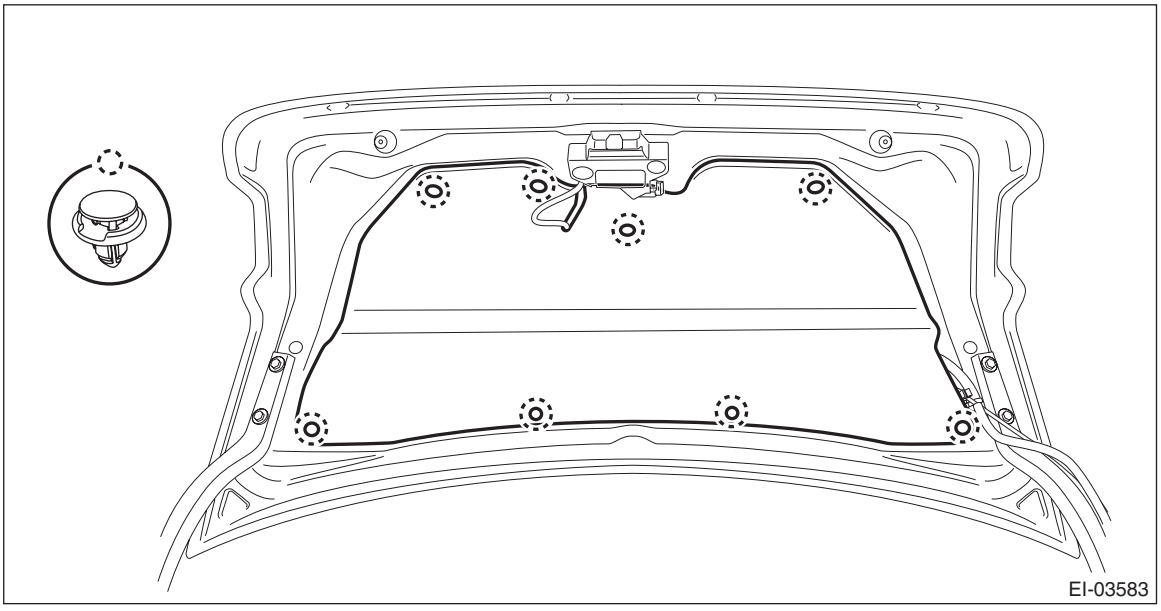

3) Disconnect the connector to remove the trunk lid harness.
4) Remove the lock assembly - trunk lid. <Ref. to SL-53, REMOVAL, Trunk Lid Latch and Actuator Assembly.>
5) Remove the garnish - trunk. <Ref. to EI-161, REMOVAL, Trunk Lid Garnish.>
6) Remove the trunk lid COMPL.
   (1) Remove the grommet and pull out the trunk lid harness. (RH side only)
   (2) Remove the left and right bolts, and remove the trunk lid COMPL.

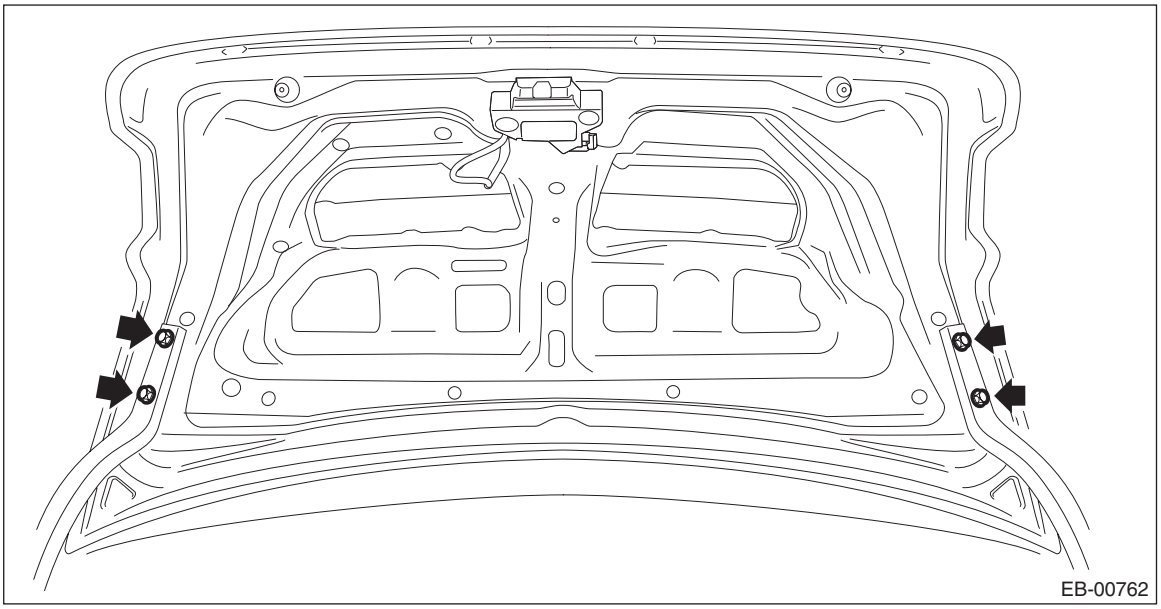

7) Remove the trunk lid arm assembly.
   (1) Remove the torsion bar - trunk lid from the trunk lid arm. <Ref. to EB-56, TORSION BAR, REMOVAL, Trunk Lid.>
   (2) Remove the trim panel assembly - rear shelf. <Ref. to EI-120, REMOVAL, Rear Shelf Trim.>
   (3) Remove the bolts, then remove the trunk lid arm assembly.

B: INSTALLATION

1) Install each part in the reverse order of removal.
2) Apply grease to the rotating area of hinges.
3) Install while paying attention to make a uniform clearance around the trunk lid COMPL. <Ref. to EB-58, ADJUSTMENT, Trunk Lid.>

Tightening torque:
Refer to "COMPONENT" of "General Description". <Ref. to EB-6, TRUNK LID PANEL, COMPONENT, General Description.>

C: ADJUSTMENT

Adjust the clearance around the trunk lid COMPL as follows.

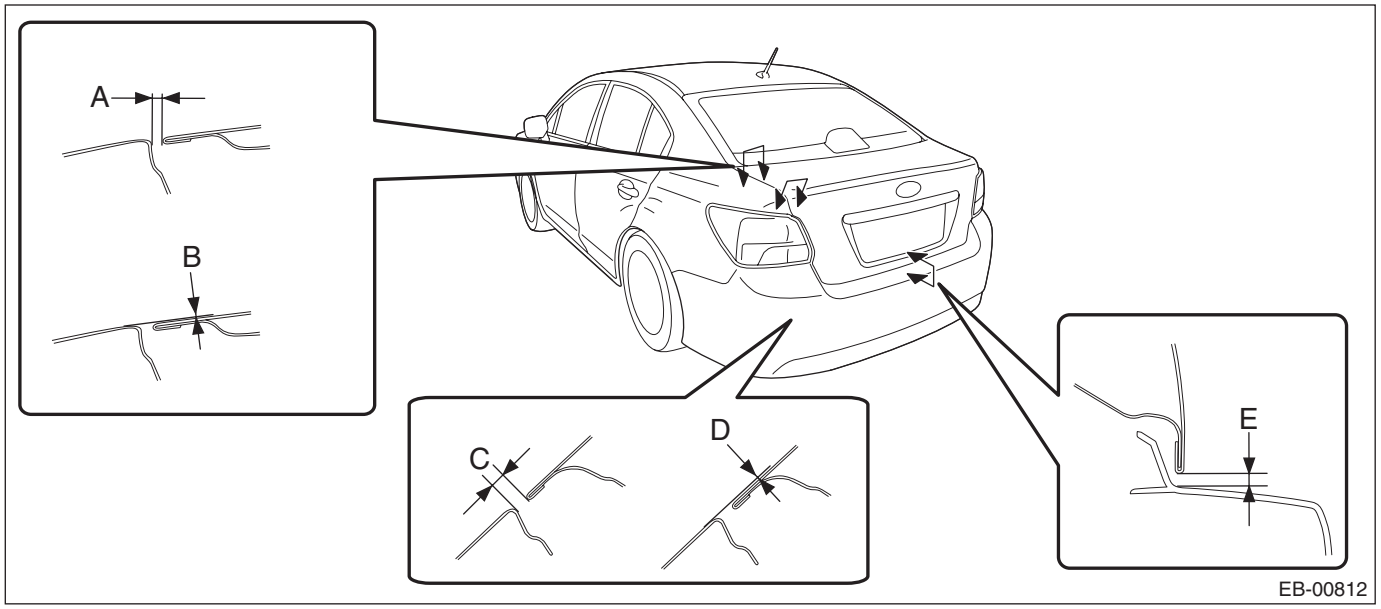

Part		Standard
A	Trunk lid COMPL to Rear quarter panel	3.5±1.0 mm (0.14±0.04 in)
B	Surface level gap between trunk lid COMPL and rear quarter panel	–0.5+1.0, –0.5 mm (–0.02+0.04, –0.02 in)
C	Trunk lid COMPL to Rear quarter panel	3.5±1.0 mm (0.14±0.04 in)
D	Surface level gap between trunk lid COMPL and rear quarter panel	–0.5±0.7 mm (0.02±0.03 in)
E	Trunk lid COMPL to Bumper face - rear	7.5±1.0 mm (0.3±0.04 in)

1) Adjust the horizontal position of the trunk lid COMPL.
   (1) Loosen the mounting bolt.
   (2) Adjust the horizontal clearance of the trunk lid COMPL.

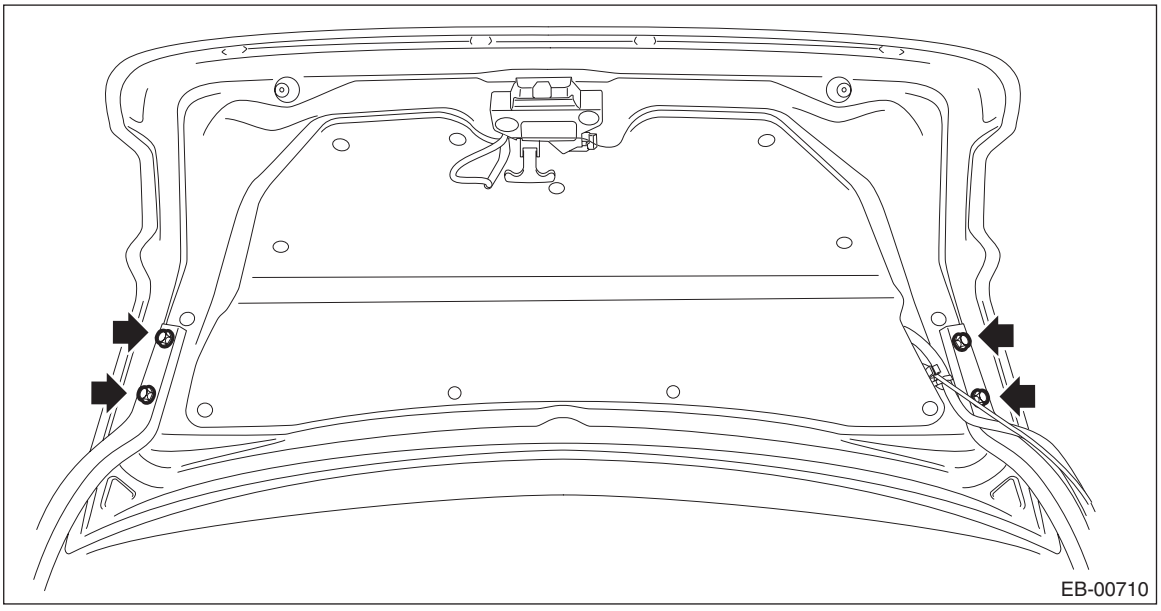

2) Adjust the surface level gap between the trunk lid COMPL and the body.
   (1) Remove the trim panel - trunk rear.
   (2) Loosen the bolt.

(3) Tap the striker - trunk using a plastic hammer to adjust the surface level gap between the trunk lid COMPL and the body.

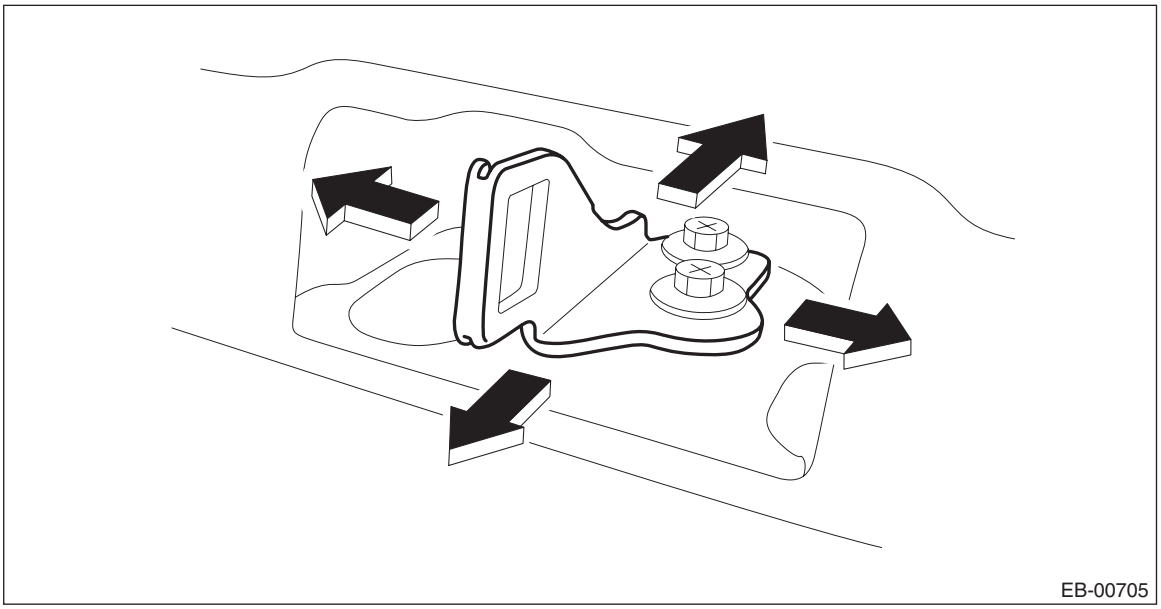

10.Rear Gate

A: REMOVAL

CAUTION:
The panel - rear gate is heavy. When removing and installing it, always work in a team of two or more persons.

1. REAR GATE PANEL

1) Disconnect the ground cable from battery. <Ref. to NT-5, BATTERY, NOTE, Note.>

NOTE:
For the 12 volt engine restart battery of HEV model, disconnect the ground terminal from 12V engine restart battery sensor.

2) Remove the following parts. <Ref. to EI-162, REMOVAL, Rear Gate Garnish.>
- Trim panel - rear gate
- Arm assembly - rear wiper and motor assembly - rear wiper
- Garnish assembly - rear gate

3) Remove the light assembly - high-mounted and the nozzle - rear washer. <Ref. to WW-44, REMOVAL, Rear Washer.>

4) Remove the rear gate latch and actuator - rear gate. <Ref. to SL-51, REMOVAL, Rear Gate Latch and Actuator Assembly.>

5) Remove the clips, and remove the drip - rear gate.

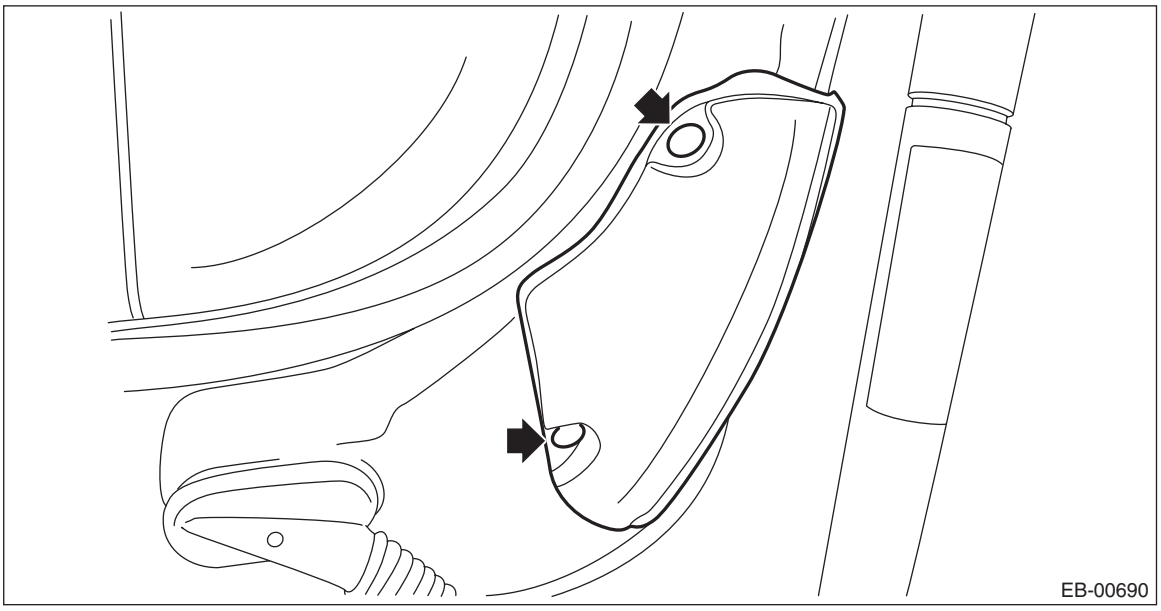

6) Remove the trim panel - rear gate UPR.
   (1) Remove the claws on the trim edge.
   (2) Release the claws in the center of trim, and remove the trim panel - rear gate UPR.

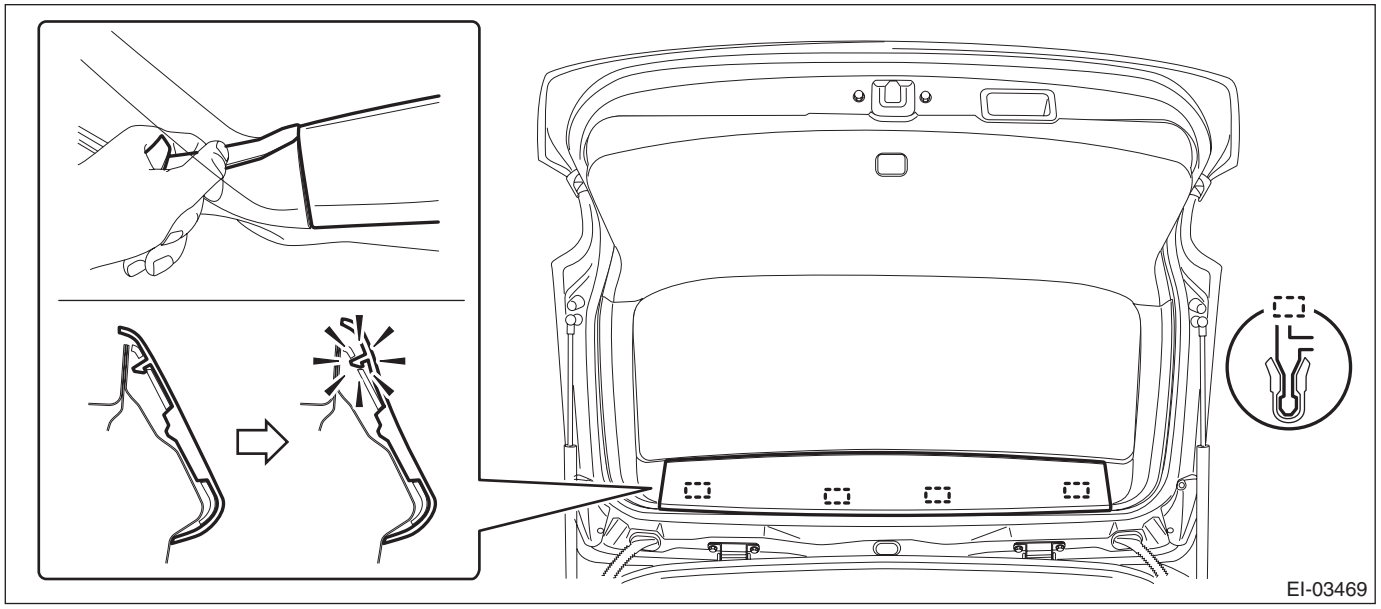

7) Disconnect the hose assembly - rear washer.
   (1) Disconnect the joint portion of the hose assembly - rear washer.
   (2) Remove the clip.

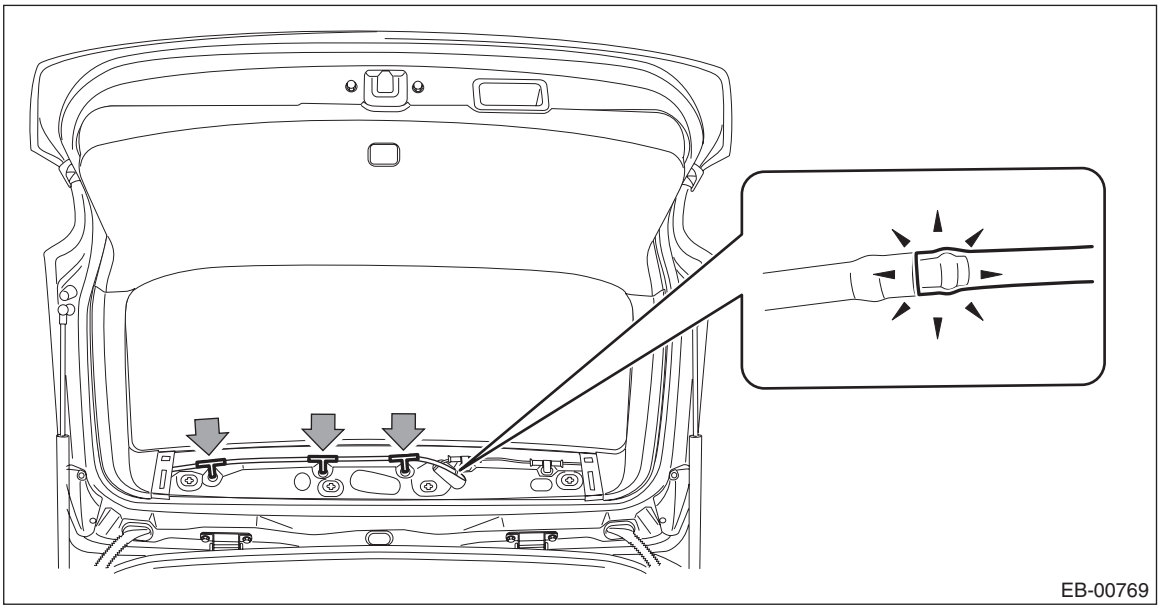

8) Remove the rubber duct (A).
   (1) Pull out the claw while pushing it using a flat tip screwdriver (B) or similar tools.
   (2) Remove the rubber duct (A) connection.

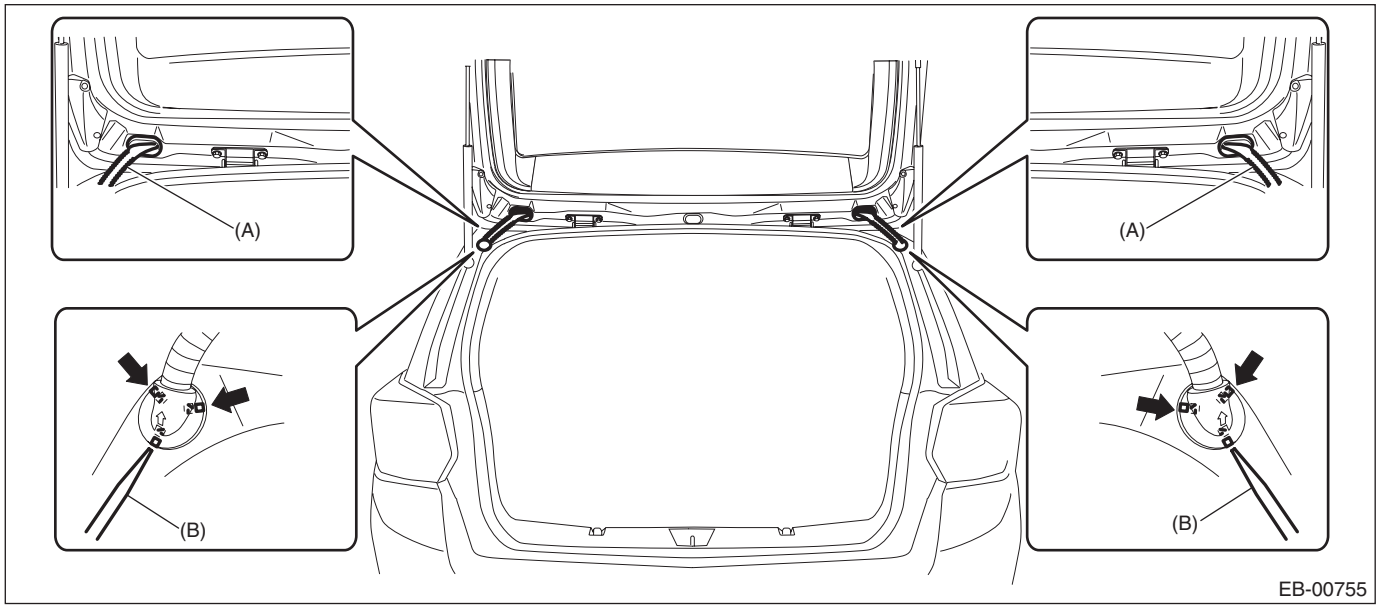

9) Pull out the harness and the hose assembly - rear washer from the panel - rear gate.
10) Remove harness clip of each harness from the panel - rear gate.
11) Before removing the stay assembly - rear gate, prevent the panel - rear gate from closing by using a prop or the like.

CAUTION:
If the prop comes off, operators may get injured and vehicle may get damaged. Make sure to support the panel - rear gate with secure material to prevent injury or damage.

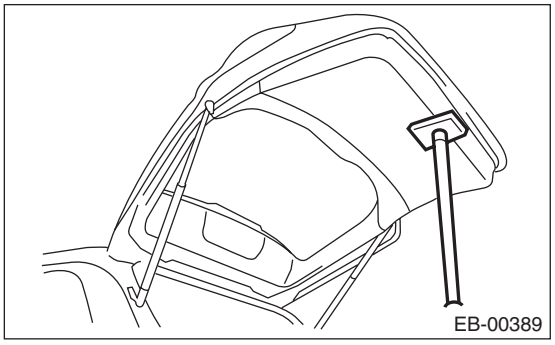

12) Remove the mounting bolts from the stay assembly - rear gate.

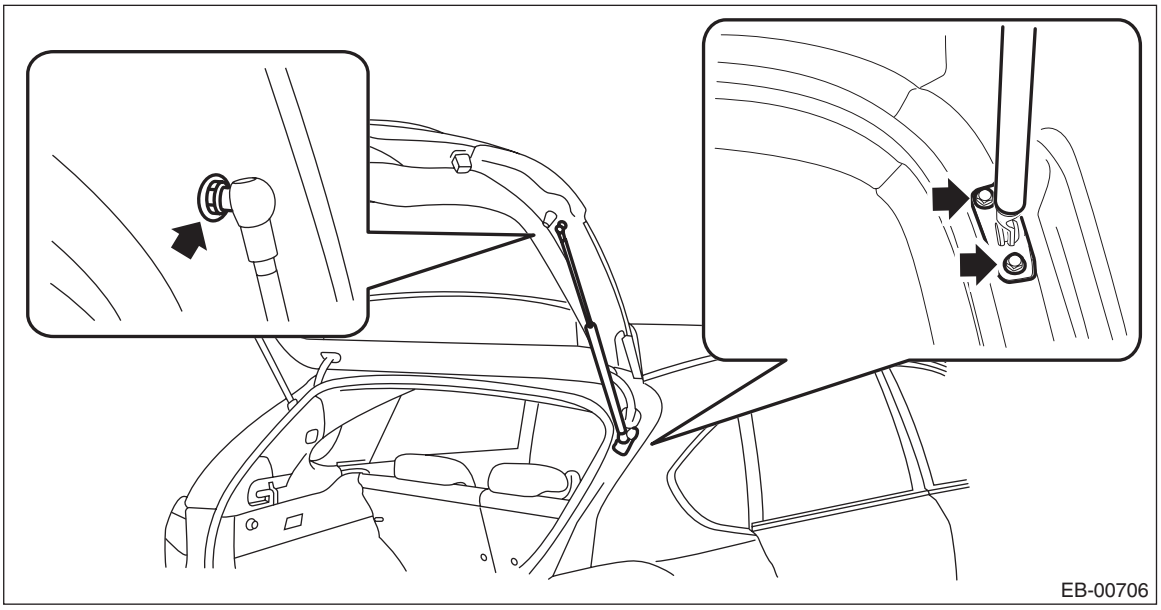

13) Remove the bolts of the hinge - rear gate, and remove the panel - rear gate.

CAUTION:
The panel - rear gate is heavy. When removing and installing it, always work in a team of two or more persons.

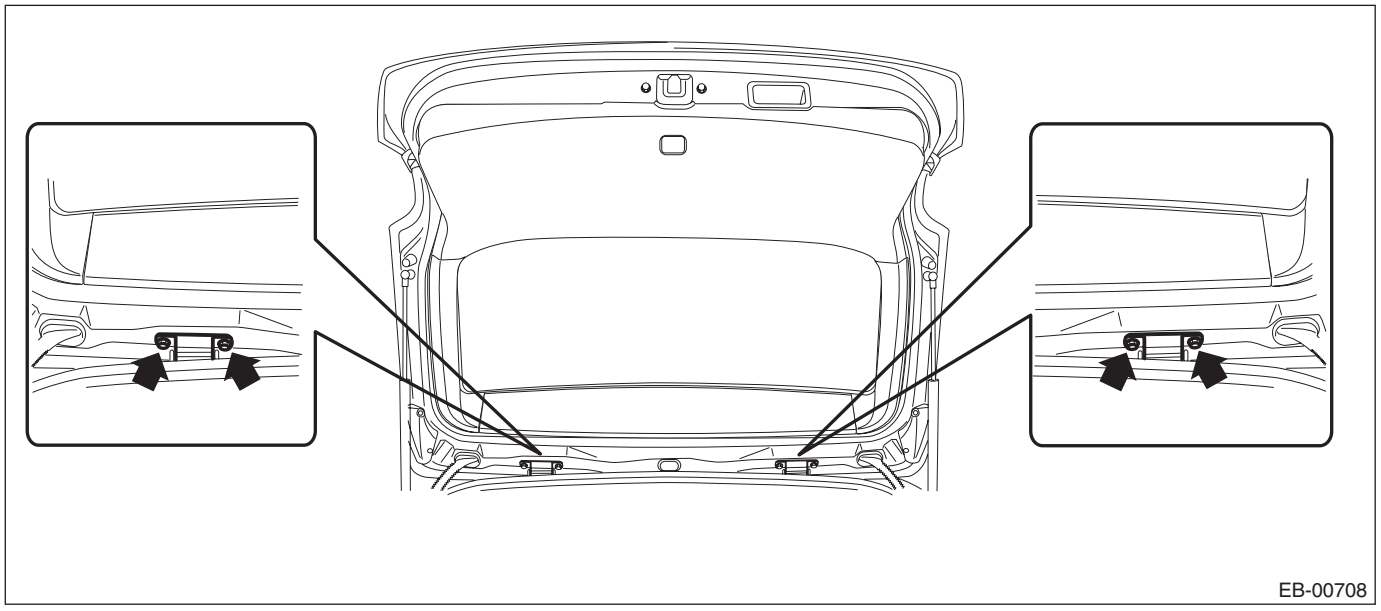

14) Remove the hinge - rear gate from the vehicle.

2. REAR GATE DAMPER STAY

CAUTION:
- **Do not damage piston rods and oil seals.**
- **Never disassemble cylinders: They contain gas.**
- **The panel - rear gate is heavy. When removing and installing it, always work in a team of two or more persons.**

1) Before removing the stay assembly - rear gate, prevent the panel - rear gate from closing by using a prop or the like.

CAUTION:
If the prop comes off, operators may get injured and vehicle may get damaged. Make sure to support the panel - rear gate with secure material to prevent injury or damage.

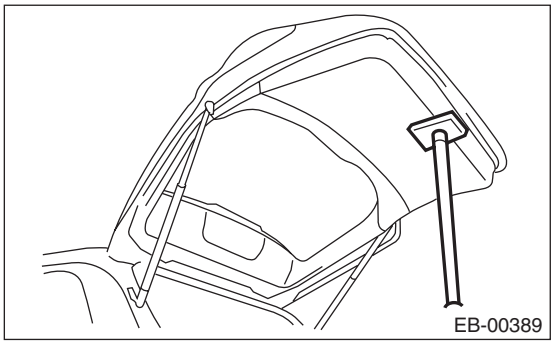

2) Remove the mounting bolts and remove the stay assembly - rear gate.

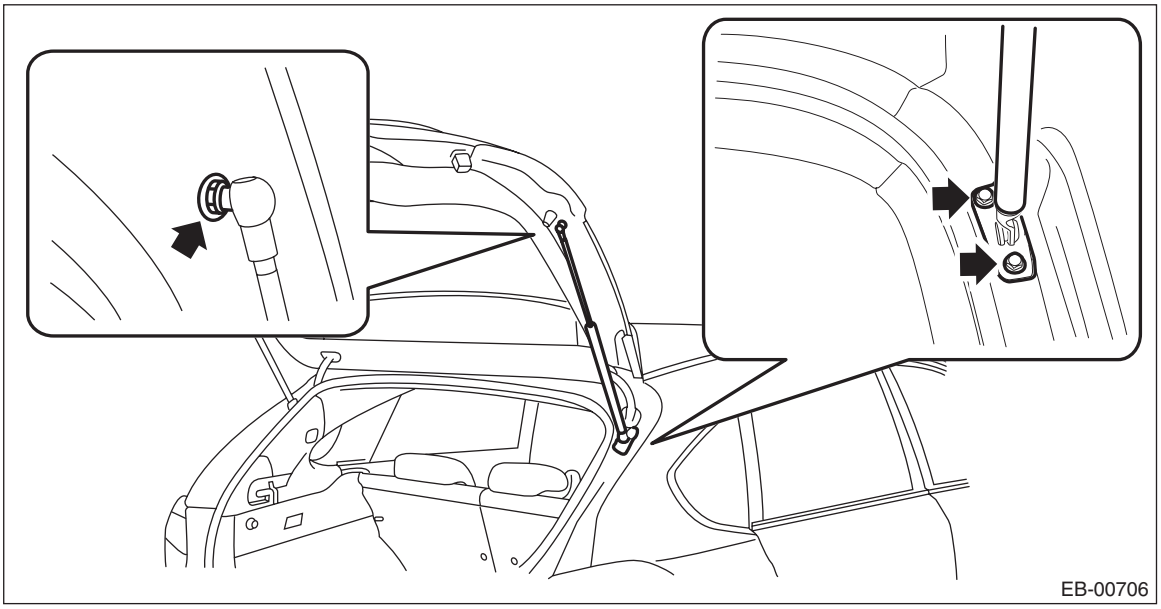

B: INSTALLATION

1. REAR GATE PANEL

CAUTION:
The panel - rear gate is heavy. When removing and installing it, always work in a team of two or more persons.

1) Install the hinge - rear gate to the vehicle body.
2) Temporarily install the panel - rear gate to the hinge - rear gate.

NOTE:
When installing, make sure that a uniform clearance is created around the panel - rear gate.

3) Adjust the clearance around the panel - rear gate. <Ref. to EB-65, ADJUSTMENT, Rear Gate.>
4) Tighten the bolts of the hinge - rear gate.

Tightening torque:
25 N·m (2.55 kgf-m, 18.4 ft-lb)

5) Install each part in the reverse order of removal.

Tightening torque:
Rear gate parts: <Ref. to EB-7, REAR GATE, COMPONENT, General Description.>
Garnish assembly - rear gate: 4.5 N·m (0.46 kgf-m, 3.3 ft-lb)
Arm assembly - rear wiper and motor assembly - rear wiper: <Ref. to WW-3, REAR WIPER, COMPONENT, General Description.>

2. REAR GATE DAMPER STAY

CAUTION:
The panel - rear gate is heavy. When removing and installing it, always work in a team of two or more persons.

1) Prevent the panel - rear gate from closing using prop or the like.

CAUTION:
If the prop comes off, operators may get injured and vehicle may get damaged. Make sure to support the panel - rear gate with secure material to prevent injury or damage.

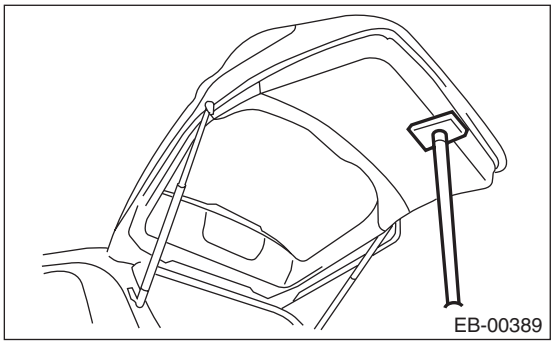

2) Install each part in the reverse order of removal.

Tightening torque:
Refer to "COMPONENT" of "General Description". <Ref. to EB-7, REAR GATE, COMPONENT, General Description.>

C: ADJUSTMENT

Adjust the clearance around the panel - rear gate as follows.

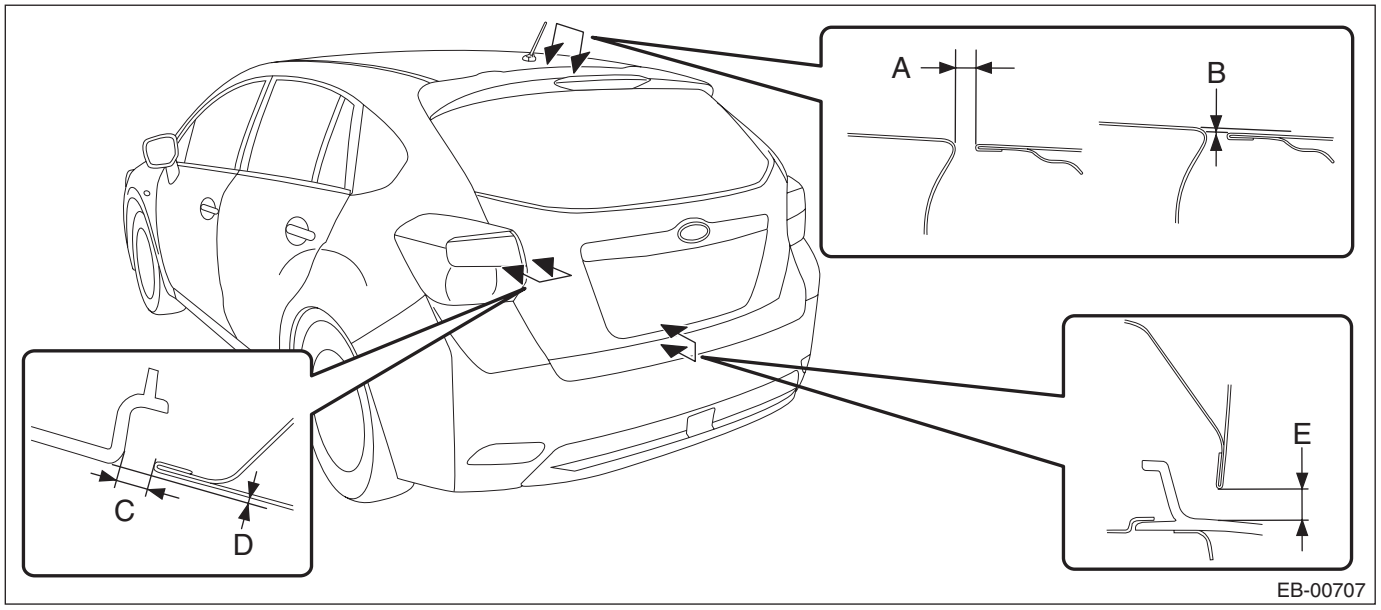

Part		Standard
A	Panel - rear gate to Roof panel	6.0+1.0, –0.5 mm (0.24+0.04, –0.02 in)
B	Surface level gap: Panel - rear gate to Roof panel	1.0±1.0 mm (0.04±0.04 in)
C	Panel - rear gate to Light assembly - rear combination	6.0±1.0 mm (0.24±0.04 in)
D	Surface level gap: Panel - rear gate to Light assembly - rear combination	1.0±1.0 mm (0.04±0.04 in)
E	Panel - rear gate to Bumper face - rear	8.0±1.5 mm (0.31±0.06 in)

1) Adjust the vertical and horizontal positions of the panel - rear gate.

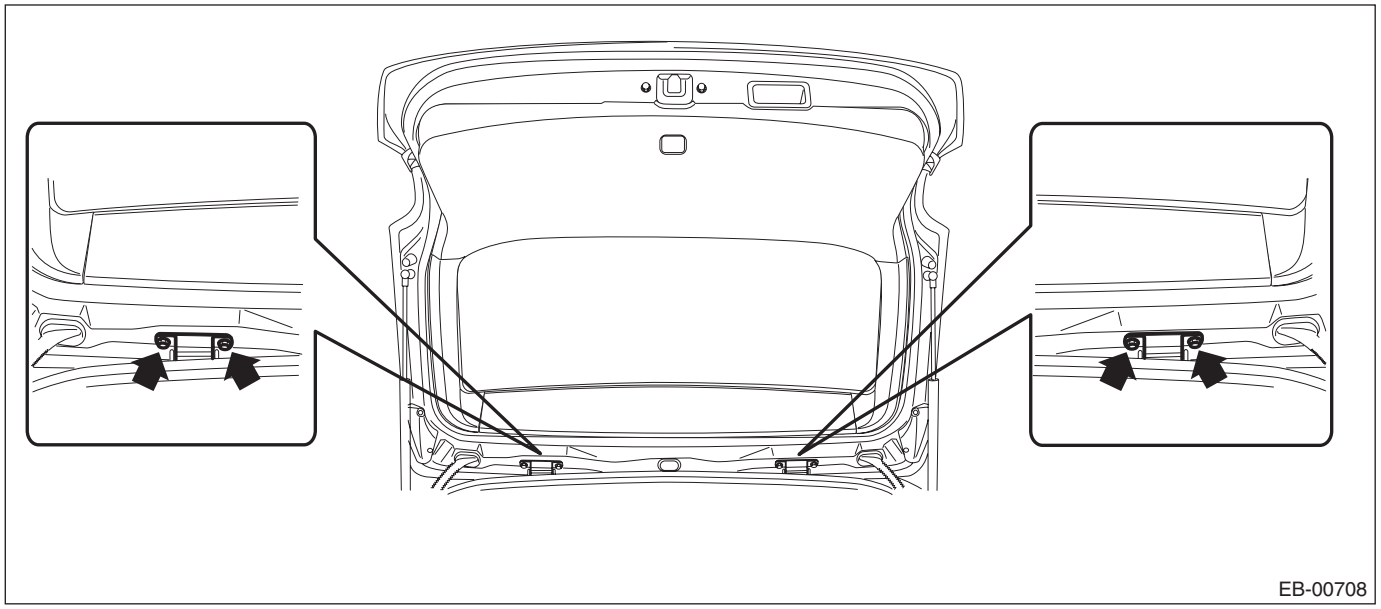

(1) Loosen the mounting bolts of the hinge - rear gate.
(2) Adjust the vertical and horizontal clearance of the panel - rear gate.

Tightening torque:
25 N·m (2.55 kgf-m, 18.4 ft-lb)

2) Adjust the surface level gap between the panel - rear gate and the body.

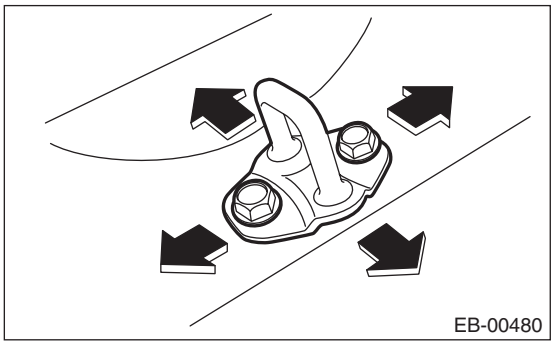

(1) Remove the trim panel - rear skirt.
(2) Loosen the bolt.
(3) Tap the striker - rear gate using a plastic hammer to adjust the surface level gap between the panel - rear gate and the body.

Tightening torque:
25 N·m (2.55 kgf-m, 18.4 ft-lb)

D: DISPOSAL

1. REAR GATE DAMPER STAY

CAUTION:
Gas is colorless, odorless, and harmless. However, gas pressure may spray cutting powder or oil. Be sure to wear dust-resistant goggles.

1) Cover with a vinyl sack as shown in the figure.

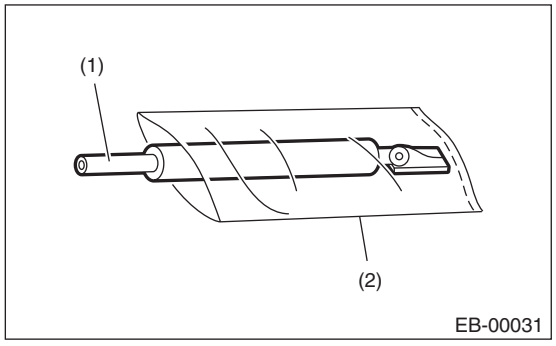

(1) Stay ASSY - rear gate
(2) Vinyl sack

NOTE:
Prevent the vinyl sack from being caught by drill cutting edge.

2) Lift the body side slightly with piston rods fully extended, and secure the body side with vise.
Drill a hole of 2 to 3 mm (0.08 to 0.12 in) diameter at a point 6 to 196 mm (0.24 to 7.72 in) from the body side, and bleed the gas in the stay assembly - rear gate completely.

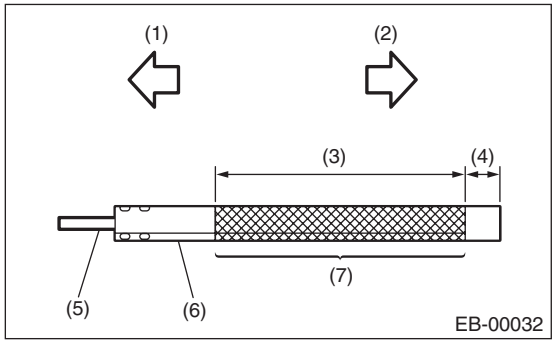

(1) Door side
(2) Body side
(3) 196 mm (7.72 in)
(4) 6 mm (0.24 in)
(5) Piston rod
(6) Cylinder
(7) Portion to be drilled

11.Protector Tape

A: INSTALLATION

Apply the protector tape by the following steps.

1. REAR QUARTER PROTECTOR (MODELS WITHOUT SIDE GARNISH)

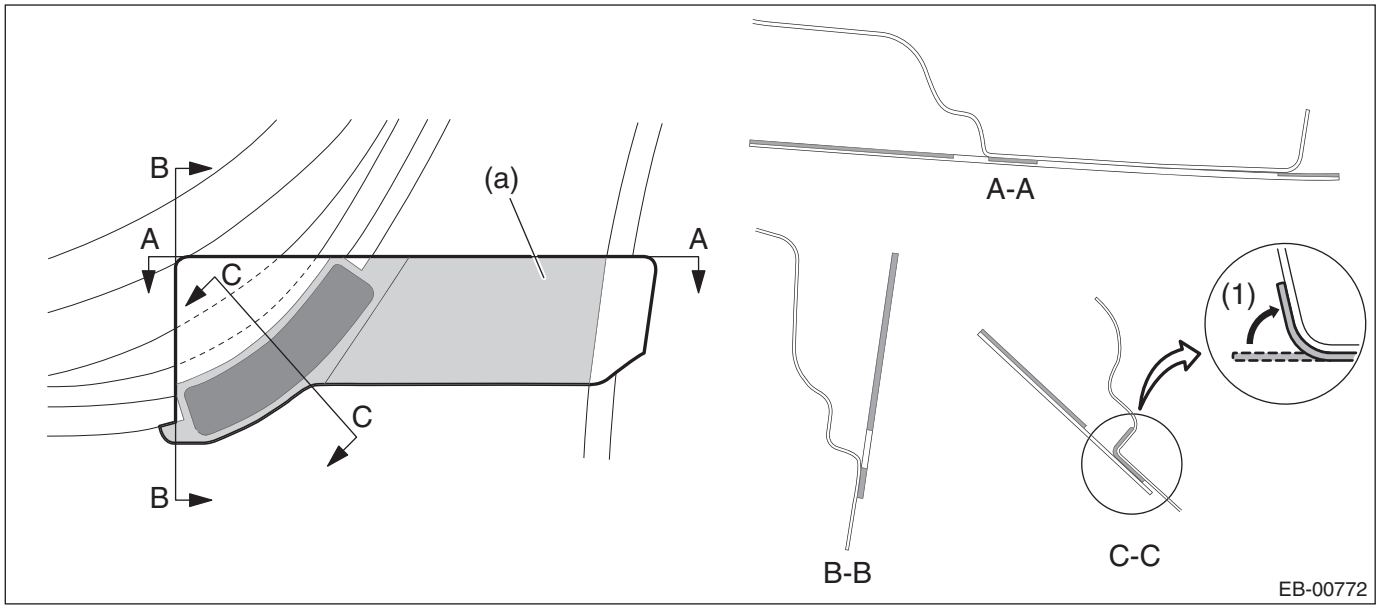

(1) Apply the protector tape by aligning it to the rounded edge.

1) Clean the area around applying position to remove any foreign objects on body.
2) Detach the backing paper from the temporary retention area (a) and apply the protector tape after positioning it correctly.
3) Detach the backing papers, and moisten the applying area and the backside of protector tape by spraying liquid (mild detergent solution at 3% concentration).
4) Apply the protector tape to the vehicle body.

CAUTION:
Remove the water or air bubbles out of the protector tape by using the plastic or rubber spatula.
5) Detach the application tape and temporary retention tape.
6) Bend the tack-in end and apply it as shown by (1) in the figure.

CRUISE CONTROL SYSTEM

CC

		Page
1.	General Description	2
2.	Relay and Fuse	4
3.	Cruise Control System	5
4.	Cruise Control Module	6
5.	Cruise Control Command Switch	7
6.	Combination Meter	13
7.	Stop Light & Brake Switch	14
8.	Clutch Switch	15
9.	Inhibitor Switch	16
10.	Transmission Control Module (TCM)	17
11.	Neutral Position Switch	18
12.	Hybrid Powertrain Control Module	19
13.	Diagnostics with Phenomenon	20

1. General Description

A: COMPONENT

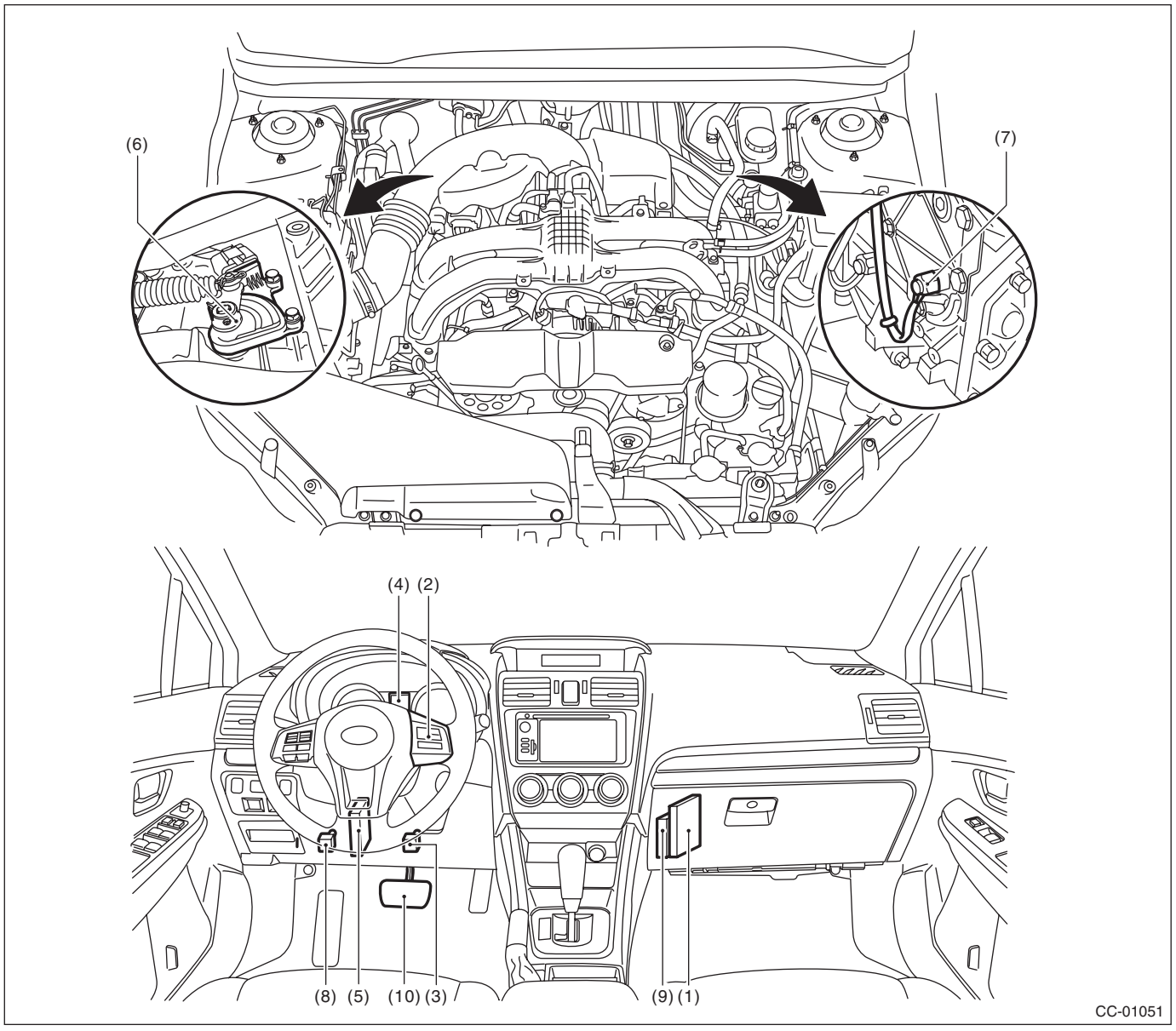

(1)	Engine control module (ECM)	(5)	Transmission control module (TCM) (CVT model)	(8)	Clutch switch (MT model)
(2)	Cruise control command switch	(6)	Inhibitor switch (CVT model)	(9)	Hybrid powertrain control module (HPCM) (HEV model)
(3)	Stop light and brake switch	(7)	Neutral position switch (MT model)	(10)	Brake stroke sensor (brake pedal ASSY) (HEV model)
(4)	Cruise indicator light and cruise set indicator light				

NOTE:
Brake stroke sensor cannot be disassembled from the brake pedal assembly. For procedure, refer to “BRAKE” section. <Ref. to BR-68, Brake Pedal.>

B: CAUTION

• Before disassembling or reassembling parts, always disconnect the battery ground cable from battery. When replacing the audio, control module and other parts provided with memory functions, record the memory contents before disconnecting the battery ground cable. Otherwise, the memory is cleared.
• Reassemble the parts in the reverse order of disassembly procedure unless otherwise indicated.
• Adjust parts to the given specifications.
• Connect the connectors securely during reassembly.
• After reassembly, make sure that the each component operates normally.
• Yellow connectors and harnesses with yellow tapes around them are the connectors and harnesses for the airbag system. Using a tester above such circuits may cause malfunction of airbag system. Follow the cautions of “AIRBAG SYSTEM” in this case. <Ref. to AB-11, CAUTION, General Description.>
• Be careful not to damage the airbag system wiring harness when servicing electrical parts and switches.
• If the steering wheel and steering angle sensor (steering roll connector) are removed, perform “VDC sensor midpoint setting mode” of the VDC. <Ref. to VDC-21, VDC SENSOR MIDPOINT SETTING MODE, ADJUSTMENT, VDC Control Module and Hydraulic Control Unit (VDCCM&H/U).>

C: PREPARATION TOOL

TOOL NAME	REMARKS
Circuit tester	Used for measuring resistance and voltage.
Steering wheel puller	Used for removing the steering wheel.

2. Relay and Fuse

A: LOCATION

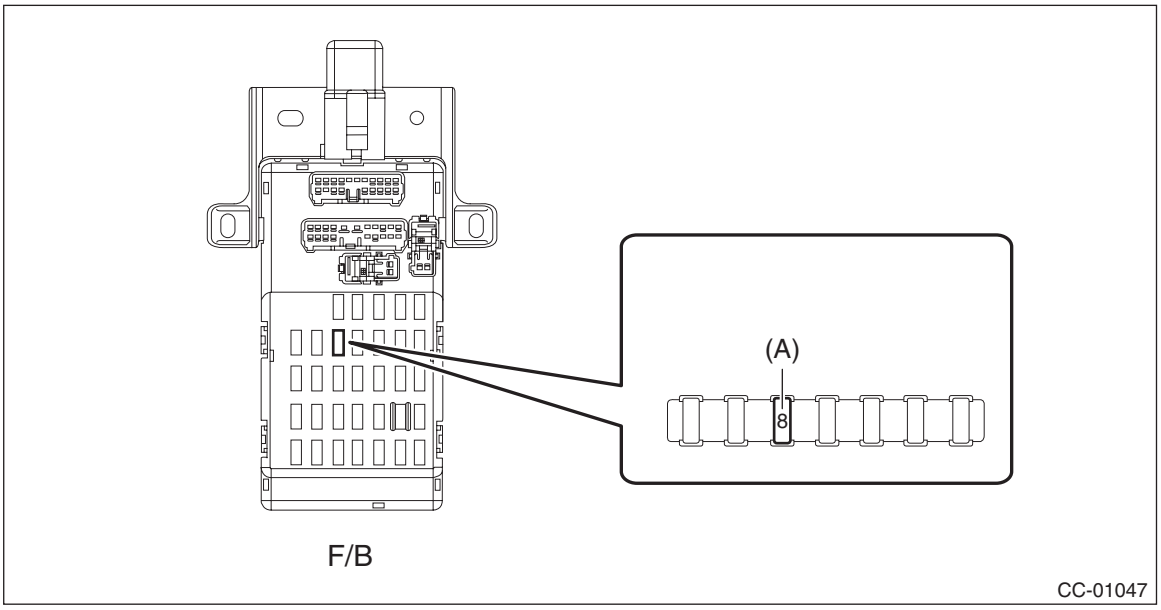

Relay & fuse box	Fuse 15 A (stop light and brake switch)	(A)

NOTE:
For other related fuses, refer to the wiring diagram.
- Gasoline engine model: <Ref. to WI(w/o HEV)-15, Power Supply Circuit.>
- HEV model: <Ref. to WI(HEV)-20, Power Supply Circuit.>

B: INSPECTION

1. CHECK FUSE

1) Remove the fuse and inspect visually.
2) If the fuse is blown out, replace the fuse.

NOTE:
If the fuse is blown again, check the system wiring harness.

3. Cruise Control System

A: WIRING DIAGRAM

Refer to “Cruise Control System” in the wiring diagram.
- Gasoline engine model: <Ref. to WI(w/o HEV)-61, WIRING DIAGRAM, Cruise Control System.>
- HEV model: <Ref. to WI(HEV)-81, WIRING DIAGRAM, Cruise Control System.>

B: INSPECTION

Refer to “Basic Diagnostic Procedure” of “CRUISE CONTROL SYSTEM (DIAGNOSTICS)”.
- Gasoline engine model: <Ref. to CC(w/o HEV)(diag)-2, Basic Diagnostic Procedure.>
- HEV model: <Ref. to CC(HEV)(diag)-2, Basic Diagnostic Procedure.>

C: NOTE

For operation procedures of each component of the cruise control system, refer to the respective section.
- Cruise control module: <Ref. to CC-6, Cruise Control Module.>
- Cruise control command switch: <Ref. to CC-7, Cruise Control Command Switch.>
- Combination meter: <Ref. to CC-13, Combination Meter.>
- Stop light and brake switch: <Ref. to CC-14, Stop Light & Brake Switch.>
- Clutch switch: <Ref. to CC-15, Clutch Switch.>
- Inhibitor switch: <Ref. to CC-16, Inhibitor Switch.>
- Transmission control module (TCM): <Ref. to CC-17, Transmission Control Module (TCM).>
- Neutral position switch: <Ref. to CC-18, Neutral Position Switch.>
- Hybrid powertrain control module (HEV model): <Ref. to CC-19, Hybrid Powertrain Control Module.>
- Brake stroke sensor (HEV model): <Ref. to BR-68, Brake Pedal.>

4. Cruise Control Module

A: NOTE

Cruise control system is controlled by the following modules.
- Engine control module (ECM)
- Hybrid powertrain control module (HEV model)

B: REMOVAL

For removal, refer to the removal procedure of each module.
- Engine control module (ECM)

Gasoline engine model: <Ref. to FU(H4DO(w/o HEV))-106, REMOVAL, Engine Control Module (ECM).>
HEV model: <Ref. to FU(H4DO(HEV))-85, REMOVAL, Engine Control Module (ECM).>
- Hybrid powertrain control module (HEV model): <Ref. to HEV-37, NOTE, Hybrid Powertrain Control Module.>

C: INSTALLATION

For installation, refer to the installation procedure of each module.
- Engine control module (ECM)

Gasoline engine model: <Ref. to FU(H4DO(w/o HEV))-108, INSTALLATION, Engine Control Module (ECM).>
HEV model: <Ref. to FU(H4DO(HEV))-87, INSTALLATION, Engine Control Module (ECM).>
- Hybrid powertrain control module (HEV model): <Ref. to HEV-37, NOTE, Hybrid Powertrain Control Module.>

5. Cruise Control Command Switch

A: REMOVAL

1) Position the front wheels straight ahead. (After moving a vehicle 5 m (16 ft) or more with front wheels positioned straight ahead, make sure that the vehicle moves straight ahead.)
2) Turn the ignition switch to OFF.
3) Disconnect the ground cable from battery and wait for at least 60 seconds before starting work. <Ref. to NT-5, BATTERY, NOTE, Note.>

NOTE:
For the 12 volt engine restart battery of HEV model, disconnect the ground terminal from 12V engine restart battery sensor.
4) Remove the driver's airbag module.

CAUTION:
Before handling the airbag module, refer to "CAUTION" of "General Description" in "AIRBAG SYSTEM". <Ref. to AB-11, CAUTION, General Description.>

(1) Using a hexagon wrench etc. wrapped by protective tape, insert the snap pins and release the locks (3 locations).

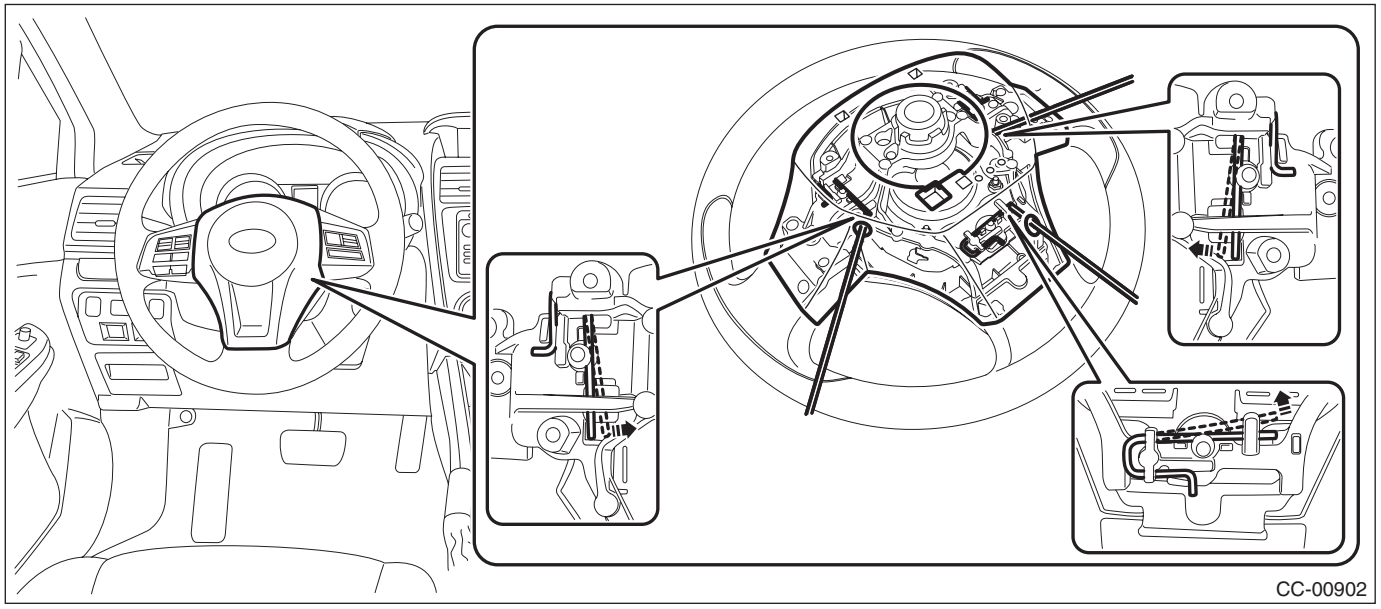

(2) Disconnect the horn harness and airbag connector, and remove the driver's airbag module. <Ref. to AB-20, PROCEDURE, Airbag Connector.>

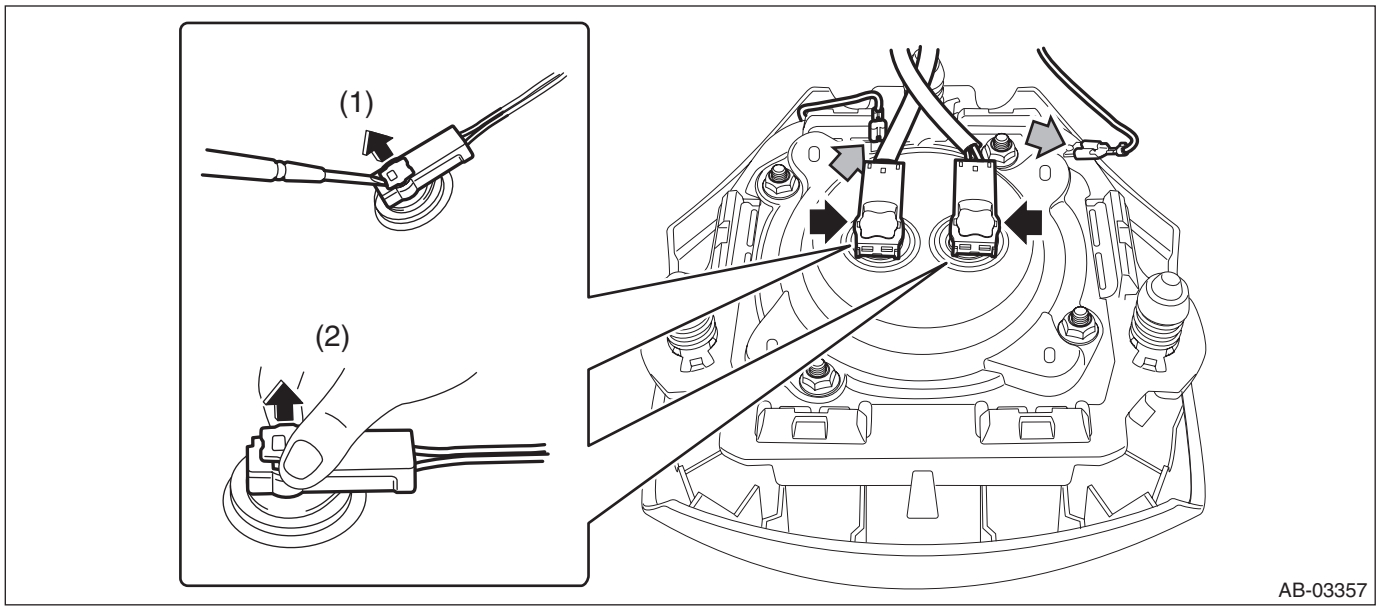

5) Remove the steering wheel.

CAUTION:
• Always use the steering wheel puller for removal to avoid deforming the steering wheel.
• If the steering wheel has been removed, make sure that the roll connector is not turned from the original position.

(1) Disconnect the connector and remove the nut.
(2) Put alignment marks and remove the steering wheel using a steering wheel puller.

Preparation tool:
Steering wheel puller

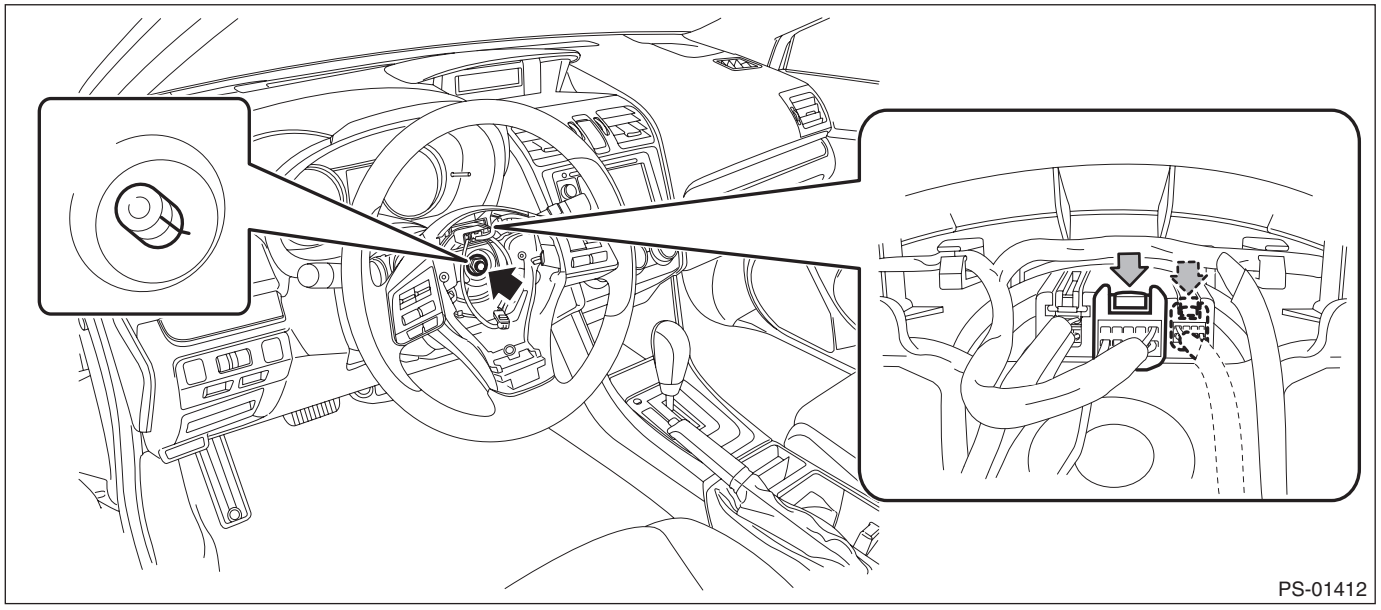

6) Remove the cruise control command switch assembly.
(1) Remove the screw, disconnect the connector and remove the paddle shift switch. (Model with paddle shift)

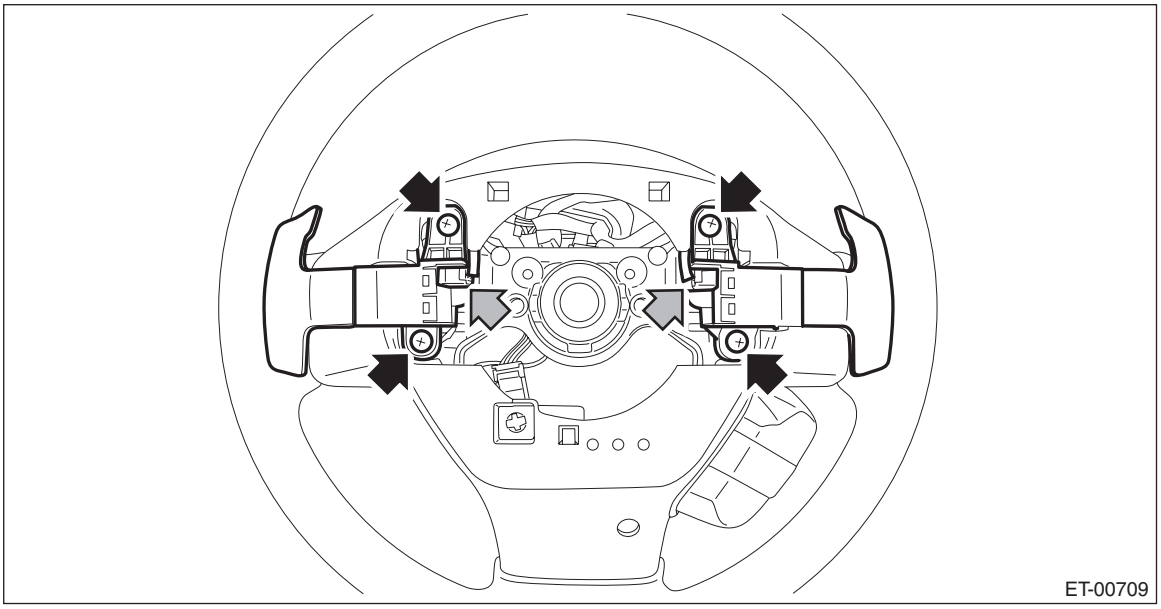

(2) Release the claws and clips, and remove the lower cover - steering wheel LWR.

NOTE:
For model with steering switch, remove the connector and screw.

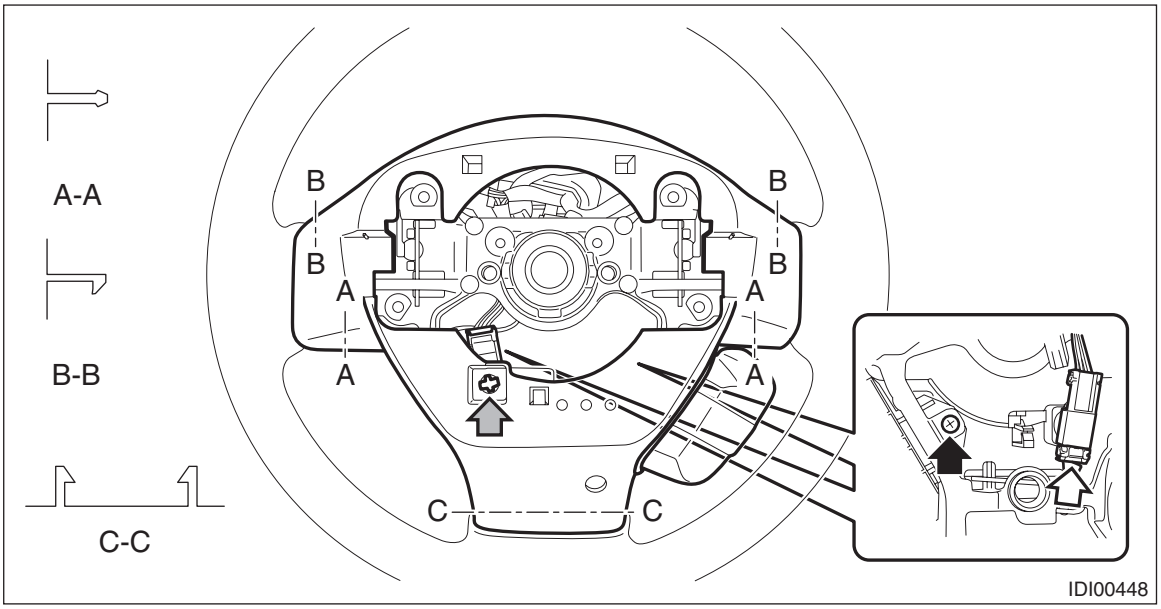

(3) Remove the screw to remove the cruise control command switch assembly.

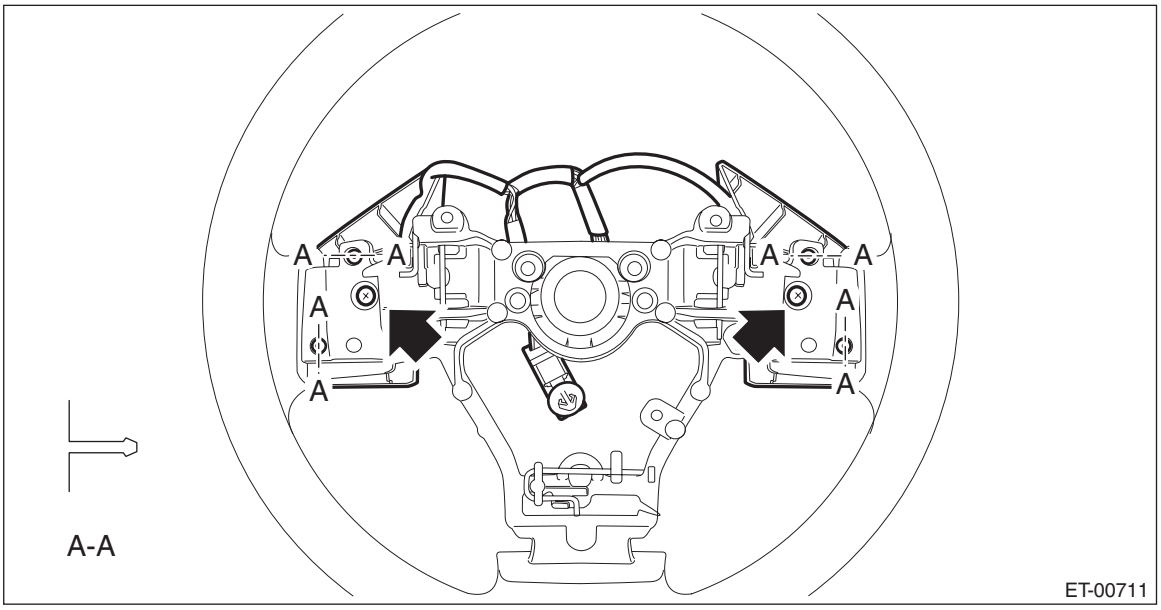

B: INSTALLATION

CAUTION:

- **Before handling the airbag module, refer to "CAUTION" of "General Description" in "AIRBAG SYSTEM". <Ref. to AB-11, CAUTION, General Description.>**
- **Do not allow harness and connectors to interfere or get tangled up with other parts.**
- **If the steering wheel and steering angle sensor (steering roll connector) are removed, perform "VDC sensor midpoint setting mode" of the VDC. <Ref. to VDC-21, VDC SENSOR MIDPOINT SETTING MODE, ADJUSTMENT, VDC Control Module and Hydraulic Control Unit (VDCCM&H/U).>**

1) Before installing steering wheel, be sure to adjust the direction of steering roll connector with steering wheel. <Ref. to AB-110, ADJUSTMENT, Roll Connector.>
2) Install each part in the reverse order of removal.

NOTE:
Align the alignment marks on the steering wheel and the column assembly - steering.

Tightening torque:
Steering wheel: 39 N·m (3.98 kgf-m, 28.8 ft-lb)

Clearance:
Between cover assembly - column and steering wheel: 4 — 6 mm (0.16 — 0.24 in)

C: INSPECTION

1. GASOLINE ENGINE MODEL

UNIT INSPECTION

Preparation tool:
Circuit tester

1) Check the resistance between switch terminals.

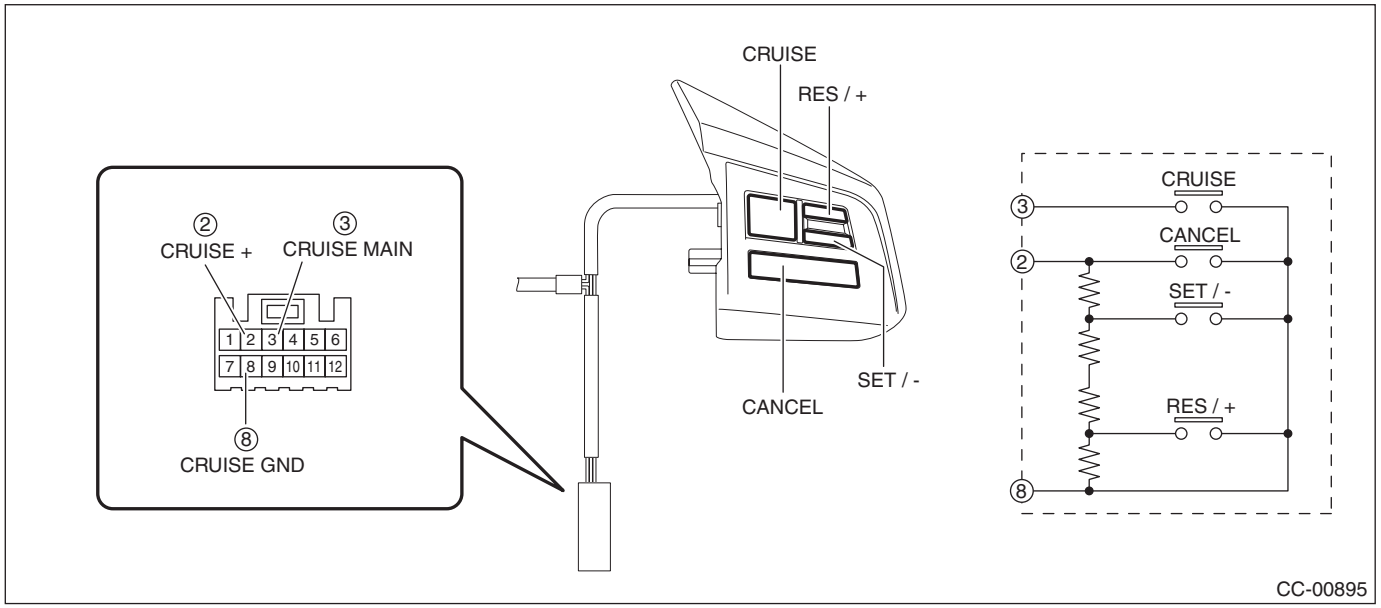

Terminal No.	Inspection conditions		Standard
2 — 8	CANCEL SET/– RES/+	All OFF	Approx. 4020 Ω
2 — 8	CANCEL	ON	Less than 1 Ω
2 — 8	SET/–	ON	Approx. 250 Ω
2 — 8	RES/+	ON	Approx. 1470 Ω
3 — 8	CRUISE (MAIN)	OFF	1 MΩ or more
3 — 8		ON	Less than 1 Ω

2) Replace the cruise control command switch assembly if the inspection result is not within the standard.

2. HEV MODEL

UNIT INSPECTION

Preparation tool:
Circuit tester

1) Check the resistance between switch terminals.

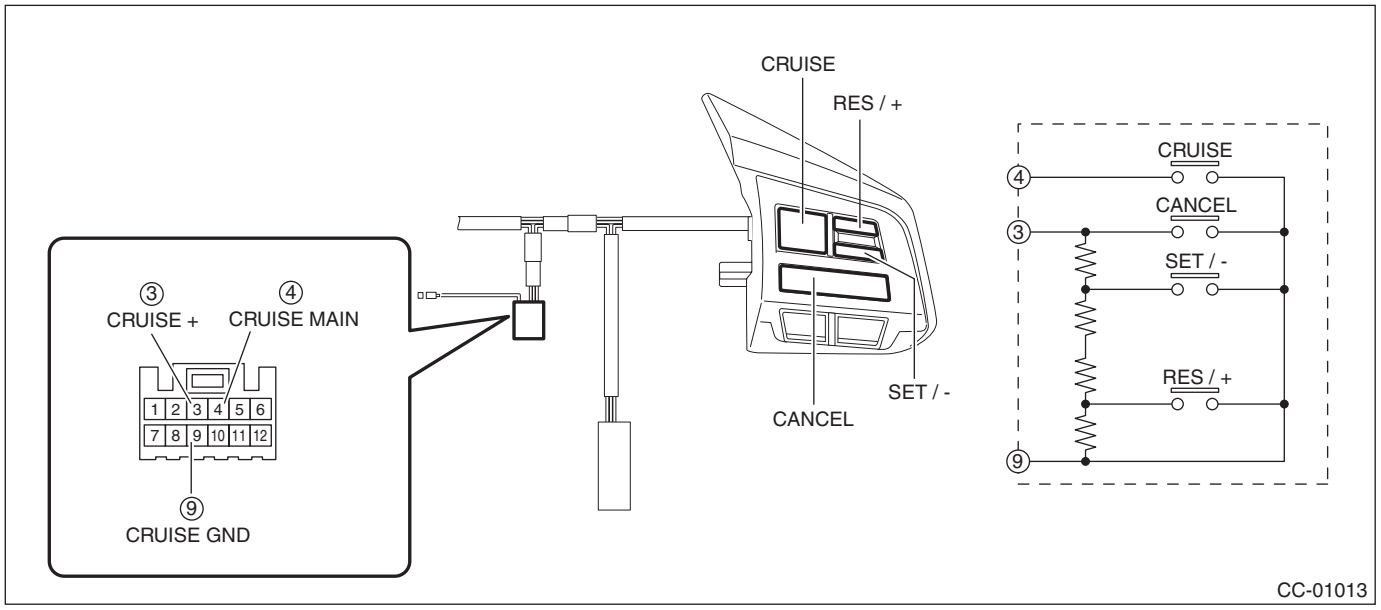

Terminal No.	Inspection conditions		Standard
3 — 9	CANCEL SET/– RES/+	All OFF	Approx. 4020 Ω
3 — 9	CANCEL	ON	Less than 1 Ω
3 — 9	SET/–	ON	Approx. 250 Ω
3 — 9	RES/+	ON	Approx. 1470 Ω
4 — 9	CRUISE (MAIN)	OFF	1 MΩ or more
4 — 9		ON	Less than 1 Ω

2) Replace the cruise control command switch assembly if the inspection result is not within the standard.

6. Combination Meter

A: NOTE

For the combination meter, refer to “INSTRUMENTATION/DRIVER INFO” section. <Ref. to IDI-16, Combination Meter.>

7. Stop Light & Brake Switch

A: NOTE

For stop light and brake switch, refer to “BRAKE” section. <Ref. to BR-72, Stop Light Switch.>

8. Clutch Switch

A: NOTE

For clutch switch, refer to “CLUTCH SYSTEM” section. <Ref. to CL-28, Clutch Switch.>

9. Inhibitor Switch

A: NOTE

For inhibitor switch, refer to “CONTINUOUSLY VARIABLE TRANSMISSION” section.

- Gasoline engine model: <Ref. to CVT(TR580)-139, Transmission Control Module (TCM).>
- HEV model: <Ref. to CVT(TH58A)-156, Transmission Control Module (TCM).>

10.Transmission Control Module (TCM)

A: NOTE

For transmission control module (TCM), refer to “CONTINUOUSLY VARIABLE TRANSMISSION” section.

- Gasoline engine model: <Ref. to CVT(TR580)-139, Transmission Control Module (TCM).>
- HEV model: <Ref. to CVT(TH58A)-156, Transmission Control Module (TCM).>

11.Neutral Position Switch

A: NOTE

For neutral position switch, refer to “MANUAL TRANSMISSION AND DIFFERENTIAL” section. <Ref. to 5MT-35, Switches and Harness.>

12.Hybrid Powertrain Control Module

A: NOTE

For hybrid powertrain control module, refer to “HYBRID ELECTRIC VEHICLE” section. <Ref. to HEV-37, Hybrid Powertrain Control Module.>

13.Diagnostics with Phenomenon

A: INSPECTION

Refer to “Diagnostics with Phenomenon” of “CRUISE CONTROL SYSTEM (DIAGNOSTICS)” section.

- Gasoline engine model: <Ref. to CC(w/o HEV)(diag)-11, Diagnostics with Phenomenon.>
- HEV model: <Ref. to CC(HEV)(diag)-11, Diagnostics with Phenomenon.>

CRUISE CONTROL SYSTEM (DIAGNOSTICS)

CC(w/o HEV)(diag)

		Page
1.	Basic Diagnostic Procedure	2
2.	General Description	5
3.	Electrical Component Location	6
4.	Engine Control Module (ECM) I/O Signal	7
5.	Subaru Select Monitor	8
6.	Read Cancel Code	9
7.	Real-time Diagnosis	10
8.	Diagnostics with Phenomenon	11
9.	List of Cancel Code	13
10.	Diagnostic Procedure with Cancel Code	16

1. Basic Diagnostic Procedure

A: PROCEDURE

CAUTION:
• Before performing all diagnostics or cruise control diagnostics, always start the engine and make sure that the initial illumination of the ABS/VDC warning light has been ended. (If you start the diagnostics before performing the above procedures, the cancel code "43" is recorded and CRUISE indicator does not illuminate even though the CRUISE switch is pressed.)
• When performing diagnosis, observe the legal speed limit on the road.
• The cancel code will be also appear when cruise control is cancelled by the driver's operation. Do not confuse them.
• Be sure to get an assistant to support the diagnosis while driving, and have him/her operate the select monitor.

	Step	Check	Yes	No
1	**CHECK MALFUNCTION INDICATOR LIGHT.** Make sure the malfunction indicator light illuminates.	Does the malfunction indicator light illuminate?	Go to step **5**.	Go to step **2**.
2	**CHECK CRUISE INDICATOR LIGHT.** Make sure the cruise indicator light blinks.	Does the cruise indicator light blink?	Go to step **7**.	Go to step **3**.
3	**CHECK CRUISE SWITCH OPERATION.** Check the CRUISE switch operation. (Check the illumination of the CRUISE indicator.)	Is the CRUISE switch turned on? (Does the CRUISE indicator illuminate?)	Go to step **4**.	Go to phenomenon 1. <Ref. to CC(w/o HEV)(diag)-11, DIAGNOSTIC PROCEDURE WITH PHENOMENON, Diagnostics with Phenomenon.>
4	**CHECK CRUISE CONTROL SET OPERATION.** Check the cruise control setting operation.	Can the cruise control be set while driving at 40 km/h (25 MPH) or more?	Go to step **8**.	Go to step **7**.
5	**CHECK DTC.** Read all DTCs using the Subaru Select Monitor.	Is an engine or ABS/VDC related DTC displayed?	Record the DTC. Go to step **6**.	Go to phenomenon 2. <Ref. to CC(w/o HEV)(diag)-11, DIAGNOSTIC PROCEDURE WITH PHENOMENON, Diagnostics with Phenomenon.>
6	**CHECK FREEZE FRAME DATA.** Using the Subaru Select Monitor, check the Freeze Frame Data or Information in Trouble State.	Was the Freeze Frame Data or Information in Trouble State recorded?	Record the data. Perform the diagnosis according to the engine or ABS/VDC related DTC.	Perform the diagnosis according to the engine or ABS/VDC related DTC.
7	**CHECK CANCEL CODE.** Using the Subaru Select Monitor, read the cancel codes. NOTE: • Do not turn the ignition switch to OFF after the cruise control is deactivated. • Do not operate the cruise control command switch after the cruise control is deactivated. If the above is performed, the cancel code will be cleared.	Is it possible to read the cancel codes?	Perform the diagnosis according to the cancel code. <Ref. to CC(w/o HEV)(diag)-13, LIST, List of Cancel Code.>	Go to step **8**.

	Step	Check	Yes	No
8	**CHECK SET INDICATOR.** Check the illumination of the SET indicator.	Does the SET indicator illuminate?	Go to step **9**.	Go to phenomenon 3. <Ref. to CC(w/o HEV)(diag)-11, DIAGNOSTIC PROCEDURE WITH PHENOMENON, Diagnostics with Phenomenon.>
9	**CHECK VEHICLE SPEED IS HELD WITHIN SET SPEED.** Make sure the vehicle speed is held within set speed.	Is the vehicle speed kept within setting speed ±3 km/h (±2 MPH)? (Make sure that on a level road.)	Go to step **10**.	Go to phenomenon 4. <Ref. to CC(w/o HEV)(diag)-11, DIAGNOSTIC PROCEDURE WITH PHENOMENON, Diagnostics with Phenomenon.>
10	**CHECK RES/+ OPERATION.** Check the RES/+ switch operation.	Does the vehicle speed increase or return to set speed after RES/+ switch has been pressed?	Go to step **11**.	Go to phenomenon 5. <Ref. to CC(w/o HEV)(diag)-11, DIAGNOSTIC PROCEDURE WITH PHENOMENON, Diagnostics with Phenomenon.>
11	**CHECK SET/– OPERATION.** Check the SET/– switch operation.	Does the vehicle speed decrease after SET/– switch has been pressed?	Go to step **12**.	Go to phenomenon 6. <Ref. to CC(w/o HEV)(diag)-11, DIAGNOSTIC PROCEDURE WITH PHENOMENON, Diagnostics with Phenomenon.>
12	**CANCEL OPERATION CHECK.** Check the CANCEL switch operation.	Is the cruise control released after CANCEL switch has been pressed?	Go to step **13**.	Go to phenomenon 7. <Ref. to CC(w/o HEV)(diag)-11, DIAGNOSTIC PROCEDURE WITH PHENOMENON, Diagnostics with Phenomenon.>
13	**CHECK CRUISE CONTROL RELEASE OPERATION.** Check the cruise control release operation.	Is the cruise control released after brake pedal has been depressed?	Go to step **14**.	Go to phenomenon 8. <Ref. to CC(w/o HEV)(diag)-11, DIAGNOSTIC PROCEDURE WITH PHENOMENON, Diagnostics with Phenomenon.>

	Step	Check	Yes	No
14	**CHECK CRUISE CONTROL RELEASE OPERATION.** Check the cruise control release operation.	Is the cruise control released after shifting to the neutral position?	Go to step **15**.	Go to phenomenon 9. <Ref. to CC(w/o HEV)(diag)-11, DIAGNOSTIC PROCEDURE WITH PHENOMENON, Diagnostics with Phenomenon.>
15	**CHECK CRUISE CONTROL RELEASE OPERATION.** Check the cruise control release operation.	Is the cruise control released after depressing the clutch pedal?	Finish the diagnosis.	Go to phenomenon 10. <Ref. to CC(w/o HEV)(diag)-11, DIAGNOSTIC PROCEDURE WITH PHENOMENON, Diagnostics with Phenomenon.>

2. General Description

A: CAUTION

Airbag system wiring harness is routed near the cruise control command switch.

CAUTION:
• Do not use the electrical test equipment on the airbag system wiring harnesses and connector circuits.
• Be careful not to damage the airbag system wiring harness when servicing the cruise control command switch. Airbag system wiring harness is routed near the cruise control command switch.

B: PREPARATION TOOL

1. SPECIAL TOOL

ILLUSTRATION	TOOL NUMBER	DESCRIPTION	REMARKS
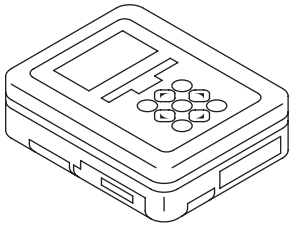 ST1B022XU0	1B022XU0	SUBARU SELECT MONITOR III KIT	Used for troubleshooting the electrical system.

2. GENERAL TOOL

TOOL NAME	REMARKS
Circuit tester	Used for measuring resistance, voltage and current.

C: INSPECTION

Measure the battery voltage and specific gravity of electrolyte.

Standard voltage:
12 V or more

Specific gravity:
1.260 or more

3. Electrical Component Location

A: LOCATION

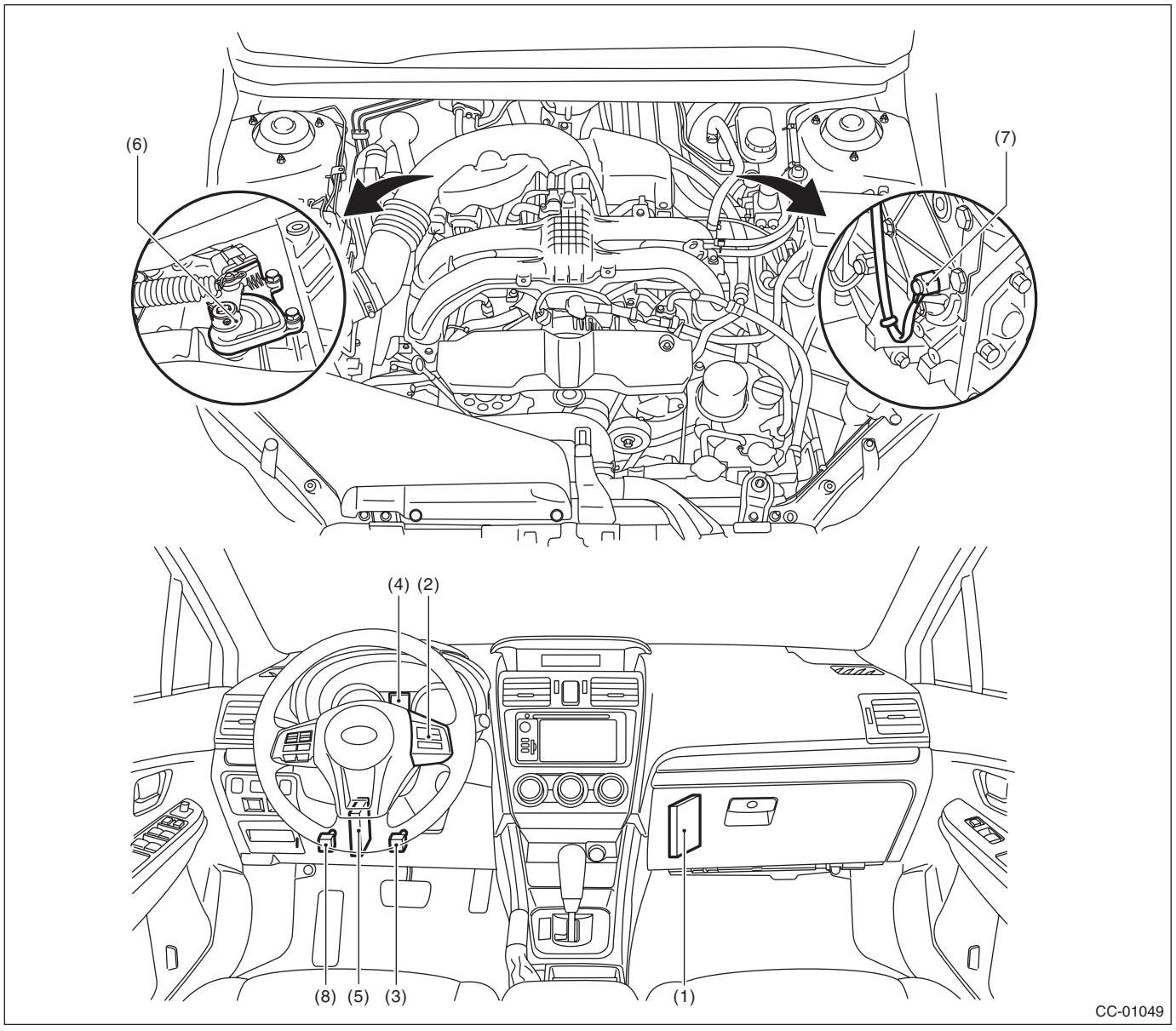

(1)	Engine control module (ECM)	(4)	Cruise indicator light and cruise set indicator light	(7)	Neutral position switch (MT model)
(2)	Cruise control command switch	(5)	Transmission control module (TCM) (CVT model)	(8)	Clutch switch (MT model)
(3)	Stop light and brake switch	(6)	Inhibitor switch (CVT model)		

4. Engine Control Module (ECM) I/O Signal

A: ELECTRICAL SPECIFICATION

For details on the input/output signals for the engine control module, refer to ENGINE (DIAGNOSTICS). <Ref. to EN(H4DO w/o HEV)(diag)-19, ELECTRICAL SPECIFICATION, Engine Control Module (ECM) I/O Signal.>

B: WIRING DIAGRAM

<Ref. to WI(w/o HEV)-61, WIRING DIAGRAM, Cruise Control System.>

5. Subaru Select Monitor

A: OPERATION

1. GENERAL DESCRIPTION

The on-board diagnosis function of the cruise control system uses Subaru Select Monitor.
The on-board diagnosis function operates in two categories, which are used depending on the type of problems;
1) Cruise Control Cancel Conditions Diagnosis:
(1) This category of diagnosis requires actual vehicle driving in order to determine the cause, as when cruise speed is cancelled during driving although cruise cancel condition is not entered.
(2) Cruise control memory in ECM stores the cancel code which occurred during driving. When there are multiple cancel code, they are shown on the Subaru Select Monitor.

CAUTION:
• The cruise control memory stores not only the cruise "cancel" which occurred (although "cancel" operation is not entered by the driver), but also the "cancel" condition input by the driver.
• The content of the latest memory (the latest code) is cleared when the ignition switch is turned to OFF. However, memory contents set by the diagnosis of faulty switches related to the system and cruise control will remain as trouble history (memory code) after the ignition switch is turned to OFF.
2) Real-time Diagnosis:
Real-time diagnosis function is used to determine whether or not the input signal system is in good order, according to signal emitted from switches, sensors, etc.
(1) Vehicle cannot be driven at cruise speed when the problem occurs in the cruise control system or relevant circuits.
(2) Monitor the signal conditions from switches and sensors.

2. BASIC OPERATION

For the operation procedure, refer to the "PC application help for Subaru Select Monitor".

6. Read Cancel Code

A: OPERATION

1) On «Main Menu» display, select {Each System Check}.
On «System Selection Menu» display, select {Engine Control System} and select the [OK]. Select [OK] after the engine type information is displayed.
2) Drive vehicle at 40 km/h (25 MPH) or more and set the cruise control.

CAUTION:
• When performing diagnosis, observe the legal speed limit on the road.
• The cancel code will be also appear when cruise control is cancelled by the driver's operation. Do not confuse them.
• Be sure to get an assistant to support the diagnosis while driving, and have him/her operate the select monitor.
3) When the set speed is cancelled by itself (without any cancel operations such as applying brake) or when the cruise control could not be set by performing the setting operation, selecting the {Cancel Code(s) Display} on the engine malfunction diagnosis screen will display the cancel code on the select monitor display.

NOTE:
The {Latest Diagnostic Code(s)} and {Memorized Diagnostic Code(s)} are contained in the cancel code. The latest code recognized during current test drive is displayed in {Latest Diagnostic Code(s)}. Cancel codes resulting from fault diagnosis of switches relating to the system and cruise control are also displayed in {Memorized Diagnostic Code(s)}.
4) Perform Engine DTC Clear Memory operation. <Ref. to EN(H4DO w/o HEV)(diag)-59, OPERATION, Clear Memory Mode.>
Cancel codes for switches relating to the system and cruise control are deleted by clearing memory on the engine side.

NOTE:
• The latest code will be cleared by turning ignition switch to OFF.
• For detailed operation procedures, refer to "PC application help for Subaru Select Monitor".
• For details on cancel codes, refer to List of Cancel Code. <Ref. to CC(w/o HEV)(diag)-13, List of Cancel Code.>

7. Real-time Diagnosis

A: OPERATION

1) Select {Current Data Display & Save} in «Engine Diagnosis» display screen.
2) Make sure that normal display is shown when operated as follows:
- Depress and release the brake pedal. (Stop light switch and brake switch are turned ON.)
- Turn the “CRUISE” switch to ON.
- Turn the “CANCEL” switch to ON.
- Turn the “SET/–” switch to ON.
- Turn the “RES/+” switch to ON.
- Depress or release the clutch switch.
- Place the shift lever in any position other than neutral.

NOTE:
For detailed operation procedures, refer to “PC application help for Subaru Select Monitor”.

8. Diagnostics with Phenomenon

A: DIAGNOSTIC PROCEDURE WITH PHENOMENON

Phenomenon		Check item	Reference
1	CRUISE switch is not turned ON. (CRUISE indicator does not illuminate.) Or the cruise control is cancelled without CRUISE switch operation.	(1) Perform cruise cancel conditions diagnosis.	Perform the diagnosis according to displayed cancel code.
		(2) Perform the real-time diagnosis.	Check the input signal of cruise control system.
		(3) Check the cruise control command switch.	<Ref. to CC(w/o HEV)(diag)-16, 11, Diagnostic Procedure with Cancel Code.>
		(4) Check the CRUISE indicator.	<Ref. to CC(w/o HEV)(diag)-12, CHECK CRUISE INDICATOR LIGHT AND CRUISE SET INDICATOR LIGHT, Diagnostics with Phenomenon.>
2	Cruise control cannot be set. Or the cruise control is cancelled without canceling operation.	(1) Perform cruise cancel conditions diagnosis.	Perform the diagnosis according to displayed cancel code.
		(2) Perform the real-time diagnosis.	Check the input signal of cruise control system.
		(3) Check the cruise control command switch.	<Ref. to CC(w/o HEV)(diag)-16, 11, Diagnostic Procedure with Cancel Code.>
		(4) Check stop light switch and brake switch.	<Ref. to BR-72, Stop Light Switch.> <Ref. to CC(w/o HEV)(diag)-18, 12, Diagnostic Procedure with Cancel Code.>
		(5) Check clutch switch.	<Ref. to CL-28, Clutch Switch.> <Ref. to CC(w/o HEV)(diag)-20, 13, Diagnostic Procedure with Cancel Code.>
		(6) Check the neutral position switch.	<Ref. to CC(w/o HEV)(diag)-21, 14, Diagnostic Procedure with Cancel Code.> <Ref. to CC(w/o HEV)(diag)-25, 62, Diagnostic Procedure with Cancel Code.>
		(7) Check vehicle speed sensor.	<Ref. to CC(w/o HEV)(diag)-24, 22, Diagnostic Procedure with Cancel Code.>
3	SET indicator does not illuminate.	Check the SET indicator.	<Ref. to CC(w/o HEV)(diag)-12, CHECK CRUISE INDICATOR LIGHT AND CRUISE SET INDICATOR LIGHT, Diagnostics with Phenomenon.>
4	Vehicle speed is not held within set speed ±3 km/h (±2 MPH).	Check the vehicle speed sensor.	<Ref. to CC(w/o HEV)(diag)-24, 22, Diagnostic Procedure with Cancel Code.>
5	Vehicle speed does not increase or does not return to set speed after RES/+ switch has been pressed.	(1) Perform the real-time diagnosis.	Check the input signal of cruise control system.
		(2) Check the RES/+ switch.	<Ref. to CC(w/o HEV)(diag)-16, 11, Diagnostic Procedure with Cancel Code.>
6	Vehicle speed does not decrease after SET/– switch has been pressed.	(1) Perform the real-time diagnosis.	Check the input signal of cruise control system.
		(2) Check the SET/– switch.	<Ref. to CC(w/o HEV)(diag)-16, 11, Diagnostic Procedure with Cancel Code.>
7	Cruise control is not released after CANCEL switch has been pressed.	(1) Perform the real-time diagnosis.	Check the input signal of cruise control system.
		(2) Check the CANCEL switch.	<Ref. to CC(w/o HEV)(diag)-16, 11, Diagnostic Procedure with Cancel Code.>
8	Cruise control is not released after brake pedal has been depressed.	(1) Perform the real-time diagnosis.	Check the input signal of cruise control system.
		(2) Check stop light switch and brake switch.	<Ref. to CC(w/o HEV)(diag)-18, 12, Diagnostic Procedure with Cancel Code.> <Ref. to BR-73, INSTALLATION, Stop Light Switch.>

Phenomenon		Check item	Reference
9	Cruise control is not released after shifting to the neutral position.	(1) Perform the real-time diagnosis.	Check the input signal of cruise control system.
		(2) Check the neutral position switch.	<Ref. to CC(w/o HEV)(diag)-21, 14, Diagnostic Procedure with Cancel Code.> <Ref. to CC-18, Neutral Position Switch.>
10	Cruise control is not released after clutch pedal has been depressed.	(1) Perform the real-time diagnosis.	Check the input signal of cruise control system.
		(2) Check clutch switch.	<Ref. to CC(w/o HEV)(diag)-20, 13, Diagnostic Procedure with Cancel Code.> <Ref. to CL-28, CLUTCH SWITCH, INSTALLATION, Clutch Switch.>

B: CHECK CRUISE INDICATOR LIGHT AND CRUISE SET INDICATOR LIGHT

TROUBLE SYMPTOM:

Cruise control can be set, but the CRUISE indicator and SET indicator do not illuminate.

Step		Check	Yes	No
1	**CHECK CRUISE INDICATOR LIGHT AND CRUISE SET INDICATOR LIGHT.** Check the combination meter. <Ref. to IDI-7, OPERATION, Combination Meter System.>	Do the CRUISE & SET indicators illuminate?	Go to step **2**.	Replace the meter case assembly. <Ref. to IDI-16, Combination Meter.>
2	**CHECK LAN SYSTEM.** Perform the diagnosis for LAN system. <Ref. to LAN(w/o HEV)(diag)-2, Basic Diagnostic Procedure.>	Is a DTC of the LAN system detected?	Perform the diagnosis according to DTC for LAN system.	Replace the ECM. <Ref. to FU(H4DO(w/o HEV))-106, Engine Control Module (ECM).>

9. List of Cancel Code

A: LIST

NOTE:
• The cancel code is registered even when cancel is performed intentionally by the driver.
• Cancel codes are cleared if the ignition switch is turned to OFF.
• If a different cancel code is input after a cancel code (latest code) has been input, the latest code is overwritten.
• If the cruise indicator light is flashing, a malfunction is occurring in the system or cruise control related switch. The cancel code at this time is saved even after ignition switch is OFF as a memory code of a past malfunction.
• To display a cancel code, use the Subaru Select Monitor to read the code after the cruise control is deactivated during a driving test.

Cancel code	Item	Contents of diagnosis	Note
11	Main switch	CRUISE switch of cruise control command switch is turned to OFF, and then the cruise control is released.	This code is displayed without operating the CRUISE switch. <Ref. to CC(w/o HEV)(diag)-16, 11, Diagnostic Procedure with Cancel Code.>
12	Stop & brake switch	Stop light switch or brake switch is turned to ON, and then the cruise control is released.	This code is displayed without depressing the brake pedal. <Ref. to CC(w/o HEV)(diag)-18, 12, Diagnostic Procedure with Cancel Code.>
13	Clutch switch	Clutch switch is turned to ON, and then the cruise control is released.	This code is displayed without depressing the clutch pedal. <Ref. to CC(w/o HEV)(diag)-20, 13, Diagnostic Procedure with Cancel Code.>
14	Neutral switch	Neutral position switch is turned to ON, and then the cruise control is released.	This code is displayed without shifting to neutral position. <Ref. to CC(w/o HEV)(diag)-21, 14, Diagnostic Procedure with Cancel Code.>
15	Cancel switch	Cancel switch is turned to ON, and then the cruise control is released.	This code is displayed without operating the cancel switch. <Ref. to CC(w/o HEV)(diag)-22, 15, Diagnostic Procedure with Cancel Code.>
16	Ignition switch	Ignition switch is turned to OFF, and then the cruise control is released.	This code is displayed without operating the ignition switch. <Ref. to CC(w/o HEV)(diag)-23, 16, Diagnostic Procedure with Cancel Code.>

List of Cancel Code

Cancel code	Item	Contents of diagnosis	Note
21	Cruise control switch malfunction when the ignition switch is ON	When the ignition switch is turned to ON, each switch of cruise control command switch is already turned to ON.	This code is displayed when the ignition switch is turned to ON without operating the cruise control command switch. <Ref. to CC(w/o HEV)(diag)-23, 21, Diagnostic Procedure with Cancel Code.>
22	Abnormality of change in vehicle speed	Malfunction of vehicle speed signal variation is detected.	<Ref. to CC(w/o HEV)(diag)-24, 22, Diagnostic Procedure with Cancel Code.>
24	Abnormality of switches related to cruise control	Open circuit of the cruise control switch is detected during cruise driving. (The system is judged as model without cruise control.)	This code is displayed with normal operation. <Ref. to CC(w/o HEV)(diag)-24, 24, Diagnostic Procedure with Cancel Code.>
31	Abnormal engine speed Signal	• Abnormal increase of engine speed is detected. • Gear is placed in Neutral, 1st or Reverse position.	Cruise in 2nd shift position or more. <Ref. to CC(w/o HEV)(diag)-24, 31, Diagnostic Procedure with Cancel Code.>
32	Cruse Control out of Range	• Controlled vehicle speed decreased under the limit during cruising. • Set operation was performed at vehicle speed unavailable for setting. • RESUME operation was performed without memorized vehicle speed.	This code is displayed, though the vehicle speed is increased to the speed available for cruise set and set operation was performed again. <Ref. to CC(w/o HEV)(diag)-24, 32, Diagnostic Procedure with Cancel Code.>
34	Prohibition of cruise control at continuing big Accel. angle	The vehicle has been driven at higher speed than set vehicle speed for an abnormally long time (approximately 10 minutes) during cruise driving.	This code is displayed when driving for a long period of time at higher speed than appropriate cruise set vehicle speed by operating accelerator pedal. In this case, the cruise setting is deactivated. <Ref. to CC(w/o HEV)(diag)-24, 34, Diagnostic Procedure with Cancel Code.>
35	Prohibition of cruise control at vehicle speed F/B malfunction	Set vehicle speed cannot be kept because of some reasons (steep uphill, parking brake, abnormal decrease of engine output, etc.) during cruise driving.	This code is displayed when driving condition is not suitable for cruise control. Perform cruise set operation again after clearing the possible cause. <Ref. to CC(w/o HEV)(diag)-25, 35, Diagnostic Procedure with Cancel Code.>

List of Cancel Code

Cancel code	Item	Contents of diagnosis	Note
41	VDC/TCS/EPB Operating	Vehicle dynamics control (VDC), TCS or EPB is operated during cruise driving or cruise setting.	This code is displayed when driving condition is not suitable for cruise control. Perform cruise set operation again after clearing the possible cause. <Ref. to CC(w/o HEV)(diag)-25, 41, Diagnostic Procedure with Cancel Code.>
43	ABS/VDC Failure	• During cruise driving or cruise setting, the situation that some or all functions for ABS or VDC can not work is detected. • CRUISE indicator does not illuminate even though you pressed the CRUISE switch before starting the engine.	<Ref. to CC(w/o HEV)(diag)-25, 43, Diagnostic Procedure with Cancel Code.>
44	Body Integrated unit Failure	Body integrated unit system malfunction is detected during cruise driving or cruise setting.	<Ref. to CC(w/o HEV)(diag)-25, 44, Diagnostic Procedure with Cancel Code.>
45	Meter Failure	Combination meter malfunction is detected during cruise driving or cruise setting.	<Ref. to CC(w/o HEV)(diag)-25, 45, Diagnostic Procedure with Cancel Code.>
49	TCM Failure	Transmission control module (TCM) malfunction is detected during cruise driving or cruise setting.	<Ref. to CC(w/o HEV)(diag)-25, 49, Diagnostic Procedure with Cancel Code.>
61	Brake switch abnormal	Malfunction in the stop light & brake switch is detected.	<Ref. to CC(w/o HEV)(diag)-25, 61, Diagnostic Procedure with Cancel Code.>
62	Neutral switch abnormal	Neutral position switch malfunction is detected.	<Ref. to CC(w/o HEV)(diag)-25, 62, Diagnostic Procedure with Cancel Code.>
63	Abnormality 1 of change in vehicle speed	Malfunction of vehicle speed signal variation is detected.	<Ref. to CC(w/o HEV)(diag)-26, 63, Diagnostic Procedure with Cancel Code.>
64	Engine Sensor Failure 1	Malfunction related to engine is detected.	<Ref. to CC(w/o HEV)(diag)-26, 64, Diagnostic Procedure with Cancel Code.>
65	Abnormality of switches related to cruise control 1	Cruise control command switch malfunction is detected. (When the switch is pressed ON for a long time (approximately two minutes), stuck ON condition is detected.)	<Ref. to CC(w/o HEV)(diag)-26, 65, Diagnostic Procedure with Cancel Code.>
66	Cruise Control Calculation Error	Cruise control calculation (microcomputer) malfunction is detected.	<Ref. to CC(w/o HEV)(diag)-26, 66, Diagnostic Procedure with Cancel Code.>

10.Diagnostic Procedure with Cancel Code

A: 11

When CRUISE switch is pressed, or a malfunction related to CRUISE switch occurs, this is detected.

TROUBLE SYMPTOM:

- Cruise control cannot be set. (Cancelled immediately.)
- Cruise control cannot be released.

WIRING DIAGRAM:

Cruise Control System <Ref. to WI(w/o HEV)-61, WIRING DIAGRAM, Cruise Control System.>

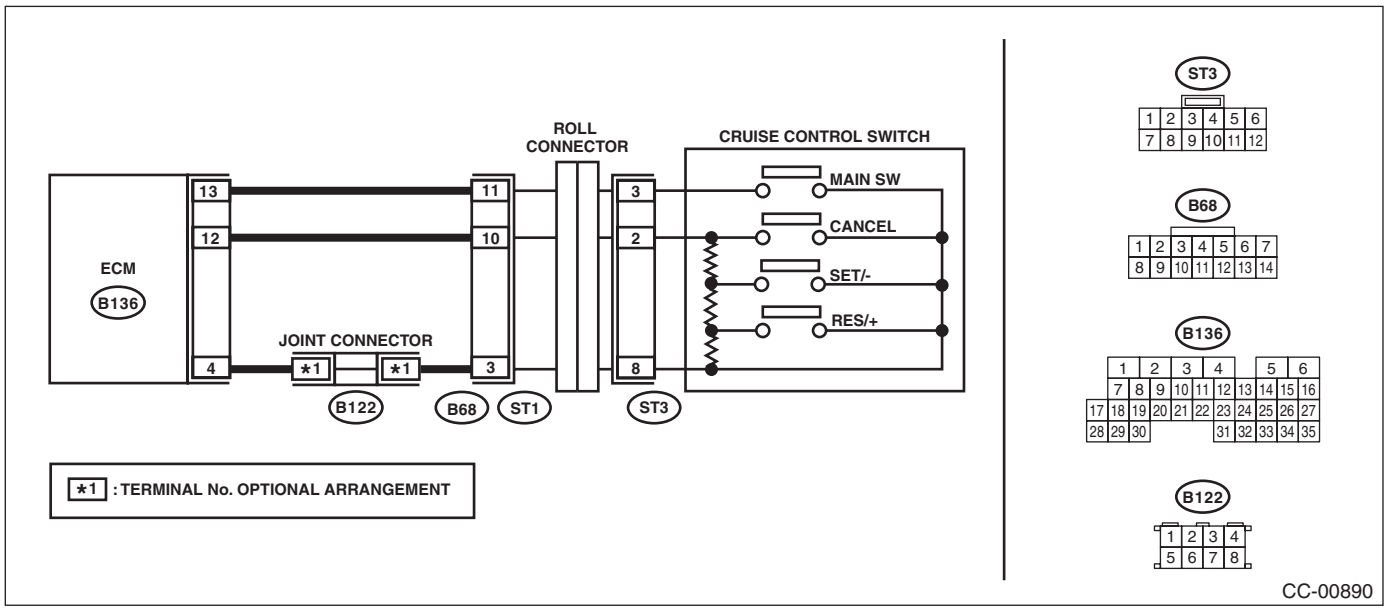

Step		Check	Yes	No
1	**CHECK CRUISE CONTROL COMMAND SWITCH CIRCUIT.** 1) Remove the driver's airbag module. <Ref. to AB-41, REMOVAL, Driver's Airbag Module.> 2) Disconnect the harness connector of cruise control command switch. 3) Turn the ignition switch to ON. 4) Measure the voltage between harness connector terminal and chassis ground. ***Connector & terminal*** ***(ST3) No. 3 (+) — Chassis ground (–):*** ***(ST3) No. 2 (+) — Chassis ground (–):***	Is the voltage 5 V or more?	Go to step **2**.	Check the harness between cruise control command switch and ECM, and the steering roll connector for open or short circuit, or for poor contact.
2	**CHECK CRUISE CONTROL COMMAND SWITCH CIRCUIT.** 1) Turn the ignition switch to OFF. 2) Remove the cruise control command switch. <Ref. to CC-7, REMOVAL, Cruise Control Command Switch.> 3) Measure the resistance between harness connector terminal and chassis ground. ***Connector & terminal*** ***(ST3) No. 8 — Chassis ground:***	Is the resistance less than 10 Ω?	Go to step **3**.	Check for open circuit between cruise control command switch, ECM, and chassis ground and check the ECM.
3	**CHECK CRUISE CONTROL COMMAND SWITCH.** Measure the resistance between switch terminals when the cruise control command switch is not depressed. ***Terminals*** ***No. 2 — No. 8:***	Is the resistance approx. 4 kΩ?	Go to step **4**.	Replace the cruise control command switch. <Ref. to CC-7, Cruise Control Command Switch.>

	Step	Check	Yes	No
4	**CHECK CANCEL SWITCH.** 1) Turn the ignition switch to OFF. 2) Remove the cruise control command switch. <Ref. to CC-7, REMOVAL, Cruise Control Command Switch.> 3) Measure the resistance between switch terminals with the CANCEL switch pressed. ***Terminals*** ***No. 2 — No. 8:***	Is the resistance approx. less than 1 Ω when the CANCEL switch is pressed?	Go to step **5**.	Replace the cruise control command switch. <Ref. to CC-7, Cruise Control Command Switch.>
5	**CHECK SET/– SWITCH.** Measure the resistance between the switch terminals with the SET/– switch pressed. ***Terminals*** ***No. 2 — No. 8:***	Is the resistance approx. 250 Ω when the SET/– switch is pressed?	Go to step **6**.	Replace the cruise control command switch. <Ref. to CC-7, Cruise Control Command Switch.>
6	**CHECK RES/+ SWITCH.** Measure the resistance between the switch terminals with the RES/+ switch pressed. ***Terminals*** ***No. 2 — No. 8:***	Is the resistance approx. 1,500 Ω when the RES/+ switch is pressed?	Replace the ECM. <Ref. to FU(H4DO(w/o HEV))-106, Engine Control Module (ECM).>	Replace the cruise control command switch. <Ref. to CC-7, Cruise Control Command Switch.>

B: 12

Detected when brake pedal is depressed or malfunction related to stop light & brake switch occurs.

TROUBLE SYMPTOM:

- Cruise control cannot be set.
- Cruise control cannot be released.

WIRING DIAGRAM:

Cruise Control System <Ref. to WI(w/o HEV)-61, WIRING DIAGRAM, Cruise Control System.>

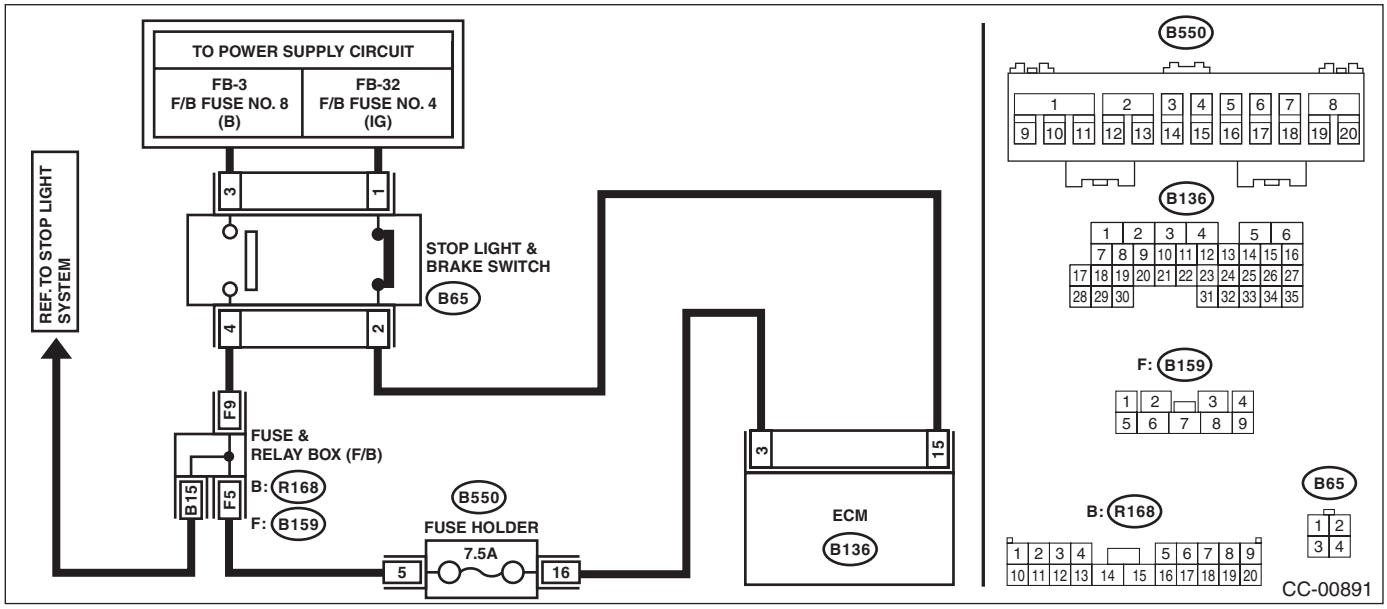

Step		Check	Yes	No
1	**CHECK STOP LIGHT & BRAKE SWITCH.** Check the stop light & brake switch. <Ref. to CC-14, Stop Light & Brake Switch.>	Is the stop light & brake switch and installation position OK?	Go to step **2**.	Replace the stop light & brake switch. Or adjust the installation position.
2	**CHECK STOP LIGHT & BRAKE SWITCH CIRCUIT.** 1) Turn the ignition switch to OFF. 2) Disconnect the stop light & brake switch harness connector. 3) Turn the ignition switch to ON. 4) Measure the voltage between harness connector terminal and chassis ground. ***Connector & terminal*** ***(B65) No. 3 (+) — Chassis ground (–):***	Is the voltage 10 V or more?	Go to step **3**.	• Check fuse No. 8 (in fuse & relay box). • Check for open or short in the harness between stop light & brake switch and fuse & relay box.
3	**CHECK STOP LIGHT & BRAKE SWITCH CIRCUIT.** Measure the voltage between harness connector terminal and chassis ground. ***Connector & terminal*** ***(B65) No. 1 (+) — Chassis ground (–):***	Is the voltage 10 V or more?	Go to step **4**.	• Check fuse No. 4 (in fuse & relay box). • Check for open or short in the harness between stop light & brake switch and fuse & relay box.

	Step	Check	Yes	No
4	**CHECK STOP LIGHT & BRAKE SWITCH CIRCUIT.** 1) Turn the ignition switch to OFF. 2) Disconnect the harness connector of ECM. 3) Measure the resistance between ECM harness connector terminal and stop light & brake switch harness connector terminal. ***Connector & terminal*** ***(B136) No. 3 — (B65) No. 4:*** ***(B136) No. 15 — (B65) No. 2:***	Is the resistance less than 10 Ω?	Replace the ECM. <Ref. to FU(H4DO(w/o HEV))-106, Engine Control Module (ECM).>	Repair the harness.

C: 13

Detected when clutch pedal is depressed or malfunction related to clutch switch occurs.

TROUBLE SYMPTOM:

- Cruise control cannot be set.
- Cruise control cannot be released.

WIRING DIAGRAM:

Cruise Control System <Ref. to WI(w/o HEV)-61, WIRING DIAGRAM, Cruise Control System.>

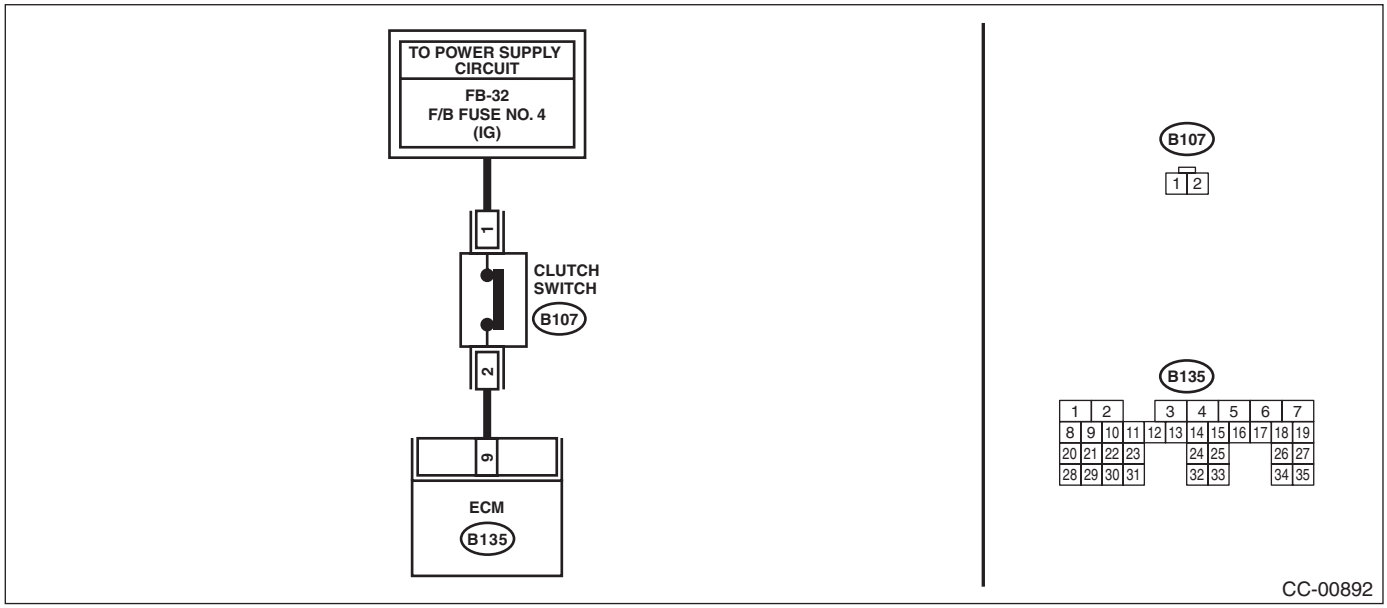

	Step	Check	Yes	No
1	**CHECK CLUTCH SWITCH.** Check the clutch switch. <Ref. to CC-15, Clutch Switch.>	Is the clutch switch and installation position OK?	Go to step **2**.	Replace the clutch switch. Or adjust the installation position.
2	**CHECK CLUTCH SWITCH CIRCUIT.** 1) Turn the ignition switch to OFF. 2) Disconnect the clutch switch harness connector. 3) Turn the ignition switch to ON. 4) Measure the voltage between harness connector terminal and chassis ground. ***Connector & terminal*** ***(B107) No. 1 (+) — Chassis ground (–):***	Is the voltage 10 V or more?	Go to step **3**.	• Check fuse No. 4 (in fuse & relay box). • Check open or shorted circuit of harness between clutch switch and fuse & relay box.
3	**CHECK CLUTCH SWITCH CIRCUIT.** 1) Turn the ignition switch to OFF. 2) Disconnect the harness connector of ECM. 3) Measure the resistance between clutch switch harness connector terminal and ECM harness connector terminal. ***Connector & terminal*** ***(B107) No. 2 — (B135) No. 9:***	Is the resistance less than 10 Ω?	Replace the ECM. <Ref. to FU(H4DO(w/o HEV))-106, Engine Control Module (ECM).>	Repair the harness.

D: 14

Detected when select lever is set in the neutral position, or when malfunction related to neutral position switch occurs.

TROUBLE SYMPTOM:

Cruise control cannot be set.

WIRING DIAGRAM:

Cruise Control System <Ref. to WI(w/o HEV)-61, WIRING DIAGRAM, Cruise Control System.>

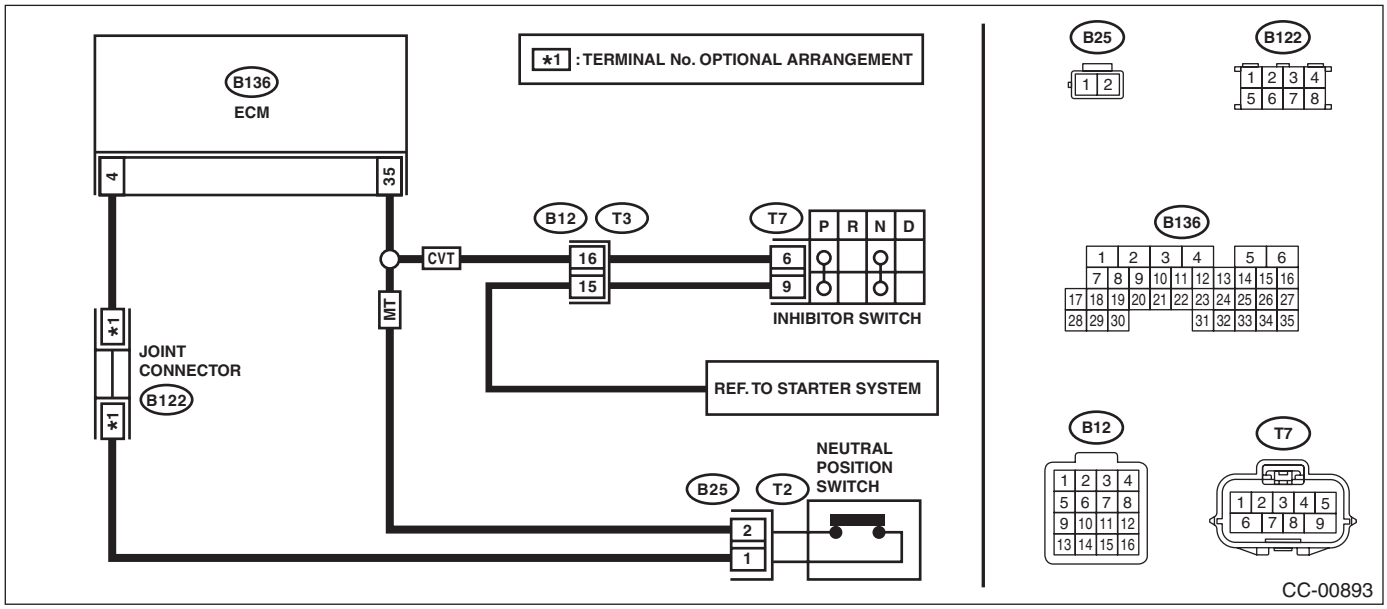

Step		Check	Yes	No
1	**CHECK TRANSMISSION TYPE.**	Is the transmission type CVT?	Go to step **2**.	Go to step **5**. (MT model)
2	**CHECK INHIBITOR SWITCH CIRCUIT.** 1) Turn the ignition switch to OFF. 2) Disconnect the inhibitor switch harness connector. 3) Turn the ignition switch to ON. 4) Measure the voltage between harness connector terminal and chassis ground. ***Connector & terminal*** ***(T7) No. 6 (+) — Chassis ground (–):***	Is the voltage 10 V or more?	Go to step **3**.	Check for open or short in the harness between inhibitor switch and ECM.
3	**CHECK INHIBITOR SWITCH CIRCUIT.** 1) Turn the ignition switch to OFF. 2) Disconnect the starter motor harness connector. 3) Measure the resistance between inhibitor switch harness connector terminal and starter motor. ***Connector & terminal*** ***(T7) No. 9 — Starter motor:***	Is the resistance less than 10 Ω?	Go to step **4**.	Repair the harness.
4	**CHECK INHIBITOR SWITCH.** Remove and check the inhibitor switch. <Ref. to CC-16, Inhibitor Switch.>	Is the inhibitor switch working normal?	Replace the ECM. <Ref. to FU(H4DO(w/o HEV))-106, Engine Control Module (ECM).>	Replace the inhibitor switch.

	Step	Check	Yes	No
5	**CHECK NEUTRAL POSITION SWITCH CIRCUIT.** 1) Turn the ignition switch to OFF. 2) Disconnect the neutral position switch harness connector. 3) Turn the ignition switch to ON. 4) Measure the voltage between harness connector terminal and chassis ground. ***Connector & terminal*** ***(B25) No. 2 (+) — Chassis ground (–):***	Is the voltage 10 V or more?	Go to step **6**.	Check for open or short in the harness between neutral position switch and ECM.
6	**CHECK NEUTRAL POSITION SWITCH CIRCUIT.** 1) Turn the ignition switch to OFF. 2) Measure resistance between harness connector terminal of neutral position switch and chassis ground. ***Connector & terminal*** ***(B25) No. 1 — Chassis ground:***	Is the resistance less than 10 Ω?	Go to step **7**.	Repair the harness.
7	**CHECK NEUTRAL POSITION SWITCH.** Remove and check the neutral position switch. <Ref. to CC-18, Neutral Position Switch.>	Is the neutral position switch OK?	Replace the ECM. <Ref. to FU(H4DO(w/o HEV))-106, Engine Control Module (ECM).>	Replace the neutral position switch.

E: 15

Detected when CANCEL switch is pressed or malfunction related to CRUISE switch occurs.
TROUBLE SYMPTOM:
- Cruise control cannot be set. (Cancelled immediately.)
- Cruise control cannot be released.

Refer to DTC 11 for diagnostic procedure.
<Ref. to CC(w/o HEV)(diag)-16, 11, Diagnostic Procedure with Cancel Code.>

F: 16

Detected when ignition switch is turned to OFF or malfunction related to the ignition switch occurs.
TROUBLE SYMPTOM:
Cruise control cannot be set.
WIRING DIAGRAM:
Cruise Control System <Ref. to WI(w/o HEV)-61, WIRING DIAGRAM, Cruise Control System.>

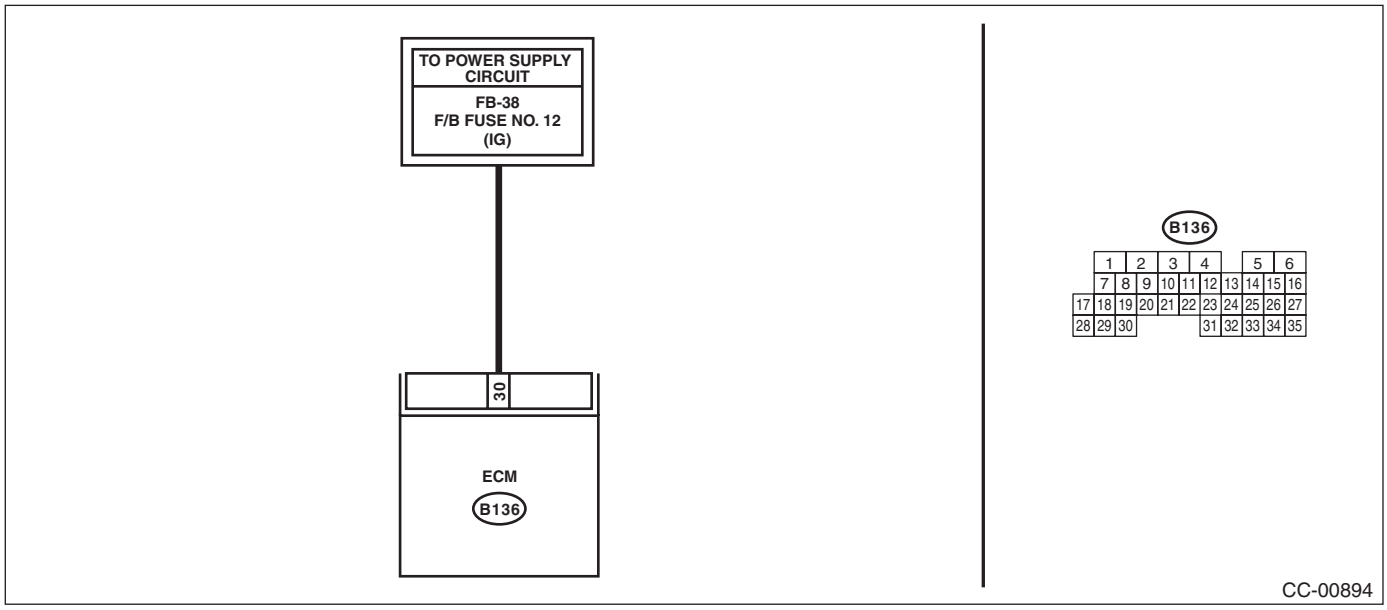

Step		Check	Yes	No
1	**CHECK IGNITION SWITCH CIRCUIT.** 1) Turn the ignition switch to OFF. 2) Disconnect the ECM harness connector. 3) Turn the ignition switch to ON. 4) Measure the voltage between harness connector terminal and chassis ground. ***Connector & terminal*** ***(B136) No. 30 (+) — Chassis ground (–):***	Is the voltage 10 V or more?	Check for poor contact of ECM connector.	• Check fuse No. 12 (in fuse & relay box). • Check the harness for open or short circuit between ignition switch and ECM.

G: 21

Cruise control command switch malfunction is detected.
TROUBLE SYMPTOM:
- Cruise control cannot be set. (Cancelled immediately.)
- Cruise control cannot be released.

Refer to DTC 11 for diagnostic procedure.
<Ref. to CC(w/o HEV)(diag)-16, 11, Diagnostic Procedure with Cancel Code.>

H: 22

Malfunction related to vehicle speed sensor is detected.
DIAGNOSIS:
Open or shorted circuit in vehicle speed sensor system.
TROUBLE SYMPTOM:
Cruise control cannot be set. (Cancelled immediately.)

	Step	Check	Yes	No
1	**CHECK ABS OR VDC WARNING LIGHT.** 1) Turn the ignition switch to ON. 2) After the initial operation of combination meter is completed, check if ABS or VDC warning light continues to illuminate.	Does the warning light continue to illuminate?	Check the VDCCM. <Ref. to VDC(diag)-2, Basic Diagnostic Procedure.>	Go to step **2**.
2	**CHECK DTC OF LAN COMMUNICATION CIRCUIT.** Read the DTC of body integrated unit using Subaru Select Monitor.	Is DTC displayed?	Perform inspection according to DTC.	Replace the ECM. <Ref. to FU(H4DO(w/o HEV))-106, Engine Control Module (ECM).>

I: 24

Malfunction in cruise control-related switch is detected.
TROUBLE SYMPTOM:
- Cruise control cannot be set. (Cancelled immediately.)
- Cruise control cannot be released.

Refer to DTC 11 for diagnostic procedure.
<Ref. to CC(w/o HEV)(diag)-16, 11, Diagnostic Procedure with Cancel Code.>

J: 31

Engine speed signal malfunction is detected.
Abnormal increase of engine speed is detected.
Gear is placed in 1st or Reverse position.
After driving at the 2nd gear position or higher, perform the cruise setting again. If a cancel code is not detected, it is normal.

K: 32

This DTC is detected out of vehicle speed range.
Increase vehicle speed high enough to allow the cruise control to function, and then perform setting operation again.
If cancel code is still detected after setting cruise again, perform the diagnosis for DTC 22.
Refer to DTC 22 for diagnostic procedure.
<Ref. to CC(w/o HEV)(diag)-24, 22, Diagnostic Procedure with Cancel Code.>

L: 34

The vehicle has been driven at a speed higher than set speed for a long time (approximately 10 minutes) during cruise driving.
This cancel code is detected when driving for a long period of time at a speed higher than appropriate for cruise control setting by operating the accelerator pedal.
Perform the cruise control setting operation again. If the cancel code is not detected, it is normal.

M: 35

Detected when it is impossible to perform the vehicle speed feedback.
Set vehicle speed cannot be kept for some reasons (steep uphill, unreleased parking brake, etc.) during cruise driving.
Cancel code is detected when driving conditions are not suitable for cruise control.
Perform cruise set operation again after clearing the possible cause.

N: 41

VDC/TCS/EPB is operated.
Vehicle dynamics control (VDC) or TCS/EPB is operated during cruise driving or cruise setting.
<Ref. to VDC(diag)-2, PROCEDURE, Basic Diagnostic Procedure.>

O: 43

- The situation that some or all functions for ABS/VDC can not work is detected.

During cruise driving or cruise setting, the situation that some or all functions for ABS/VDC can not work is detected.
<Ref. to VDC(diag)-2, PROCEDURE, Basic Diagnostic Procedure.>

- CRUISE indicator does not illuminate even though you pressed the CRUISE switch before starting the engine.

Detected when the CRUISE switch is pressed during the initial diagnosis of ABS/VDC. It is normal if the CRUISE indicator illuminates when you press the CRUISE switch again after starting the engine and confirming that the initial illumination of the ABS/VDC warning light has been ended.

P: 44

Body integrated unit malfunction is detected.
Body integrated unit system malfunction is detected during cruise driving or cruise setting.
<Ref. to LAN(w/o HEV)(diag)-2, PROCEDURE, Basic Diagnostic Procedure.>

Q: 45

Malfunction of the combination meter is detected.
Combination meter malfunction is detected during cruise driving or cruise setting.
<Ref. to LAN(w/o HEV)(diag)-2, PROCEDURE, Basic Diagnostic Procedure.>

R: 49

Automatic transmission malfunction is detected.
Automatic transmission malfunction is detected during cruise driving or cruise control setting.
<Ref. to CVT(w/o HEV)(diag)-2, PROCEDURE, Basic Diagnostic Procedure.>

S: 61

Malfunction in the stop light & brake switch is detected.
TROUBLE SYMPTOM:

- Cruise control cannot be set.
- Cruise control cannot be released.

Refer to DTC 12 for diagnostic procedure.
<Ref. to CC(w/o HEV)(diag)-18, 12, Diagnostic Procedure with Cancel Code.>

T: 62

Neutral position switch malfunction is detected.
TROUBLE SYMPTOM:
Cruise control cannot be set.
Refer to DTC 14 for diagnostic procedure.
<Ref. to CC(w/o HEV)(diag)-21, 14, Diagnostic Procedure with Cancel Code.>

U: 63

Malfunction of vehicle speed signal variation is detected.
TROUBLE SYMPTOM:
Cruise control cannot be set. (Cancelled immediately.)
Refer to DTC 22 for diagnostic procedure.
<Ref. to CC(w/o HEV)(diag)-24, 22, Diagnostic Procedure with Cancel Code.>

V: 64

Malfunction related to engine is detected.
Refer to the Engine Diagnostic Procedure for diagnostic procedure.
<Ref. to EN(H4DO w/o HEV)(diag)-2, PROCEDURE, Basic Diagnostic Procedure.>

W: 65

Cruise control command switch malfunction is detected.
While the command switch is pressed ON for a long time (approximately two minutes), stuck ON condition is detected.
TROUBLE SYMPTOM:
- Cruise control cannot be set. (Cancelled immediately.)
- Cruise control cannot be released.

Refer to DTC 11 for diagnostic procedure.
<Ref. to CC(w/o HEV)(diag)-16, 11, Diagnostic Procedure with Cancel Code.>

X: 66

Cruise control calculation malfunction is detected.
Refer to the Engine Diagnostic Procedure for diagnostic procedure.
<Ref. to EN(H4DO w/o HEV)(diag)-2, PROCEDURE, Basic Diagnostic Procedure.>

CRUISE CONTROL SYSTEM (DIAGNOSTICS)

CC(HEV)(diag)

		Page
1.	Basic Diagnostic Procedure	2
2.	General Description	5
3.	Electrical Component Location	6
4.	Control Module I/O Signal	7
5.	Subaru Select Monitor	8
6.	Read Cancel Code	9
7.	Real-time Diagnosis	10
8.	Diagnostics with Phenomenon	11
9.	List of Cancel Code	13
10.	Diagnostic Procedure with Cancel Code	15

1. Basic Diagnostic Procedure

A: PROCEDURE

CAUTION:
• When performing the entire diagnosis or cruise control diagnosis, first start the engine and wait until initial illumination of the ABS/VDC warning light completes. (If you start the diagnostics before performing the above procedures, the cancel code "43" is recorded and CRUISE indicator does not illuminate even though the CRUISE switch is pressed.)
• When performing diagnosis, observe the legal speed limit on the road.
• The cancel code will also appear when the cruise control is cancelled by the driver's operation. Do not confuse them.
• Be sure to get an assistant to support the diagnosis while driving, and have him/her operate the select monitor.

Step		Check	Yes	No
1	**CHECK HYBRID FAIL LAMP.** Make sure the hybrid fail lamp illuminates.	Does the hybrid fail lamp illuminate?	Go to step **6**.	Go to step **2**.
2	**CHECK MALFUNCTION INDICATOR LIGHT.** Make sure the malfunction indicator light illuminates.	Does the malfunction indicator light illuminate?	Go to step **6**.	Go to step **3**.
3	**CHECK CRUISE INDICATOR LIGHT.** Make sure the cruise indicator light blinks.	Does the cruise indicator light blink?	Go to step **8**.	Go to step **4**.
4	**CHECK CRUISE SWITCH OPERATION.** Check the CRUISE switch operation. (Check the illumination of the CRUISE indicator.)	Is the CRUISE switch turned on? (Does the CRUISE indicator illuminate?)	Go to step **5**.	Go to phenomenon 1. <Ref. to CC(HEV)(diag)-11, DIAGNOSTIC PROCEDURE WITH PHENOMENON, Diagnostics with Phenomenon.>
5	**CHECK CRUISE CONTROL SET OPERATION.** Check the cruise control setting operation.	Can the cruise control be set while driving at 40 km/h (25 MPH) or more?	Go to step **9**.	Go to step **8**.
6	**CHECK DTC.** Read all DTCs using the Subaru Select Monitor.	Is engine, HEV or VDC related DTC displayed?	Record the DTC. Go to step **7**.	Go to phenomenon 2. <Ref. to CC(HEV)(diag)-11, DIAGNOSTIC PROCEDURE WITH PHENOMENON, Diagnostics with Phenomenon.>
7	**CHECK FREEZE FRAME DATA.** Using the Subaru Select Monitor, check the Freeze Frame Data or Information in Trouble State.	Was the Freeze Frame Data or Information in Trouble State recorded?	Record the data. Perform the diagnosis according to the engine, HEV, or VDC related DTC.	Perform the diagnosis according to the engine, HEV, or VDC related DTC.

	Step	Check	Yes	No
8	**CHECK CANCEL CODE.** Using the Subaru Select Monitor, read the cancel codes of the hybrid powertrain control module. <Ref. to CC(HEV)(diag)-9, Read Cancel Code.> NOTE: • Do not turn the ignition switch to OFF after the cruise control is deactivated. • Do not operate the cruise control command switch after the cruise control is deactivated. If the above is performed, the cancel code will be cleared.	Is it possible to read the cancel codes?	Perform the diagnosis according to the cancel code. <Ref. to CC(HEV)(diag)-13, LIST, List of Cancel Code.>	Go to step **9**.
9	**CHECK SET INDICATOR.** Check the illumination of the SET indicator.	Does the SET indicator illuminate?	Go to step **10**.	Go to phenomenon 3. <Ref. to CC(HEV)(diag)-11, DIAGNOSTIC PROCEDURE WITH PHENOMENON, Diagnostics with Phenomenon.>
10	**CHECK VEHICLE SPEED IS HELD WITHIN SET SPEED.** Make sure the vehicle speed is held within set speed.	Is the vehicle speed kept within setting speed ±3 km/h (±2 MPH)? (Make sure that on a level road.)	Go to step **11**.	Go to phenomenon 4. <Ref. to CC(HEV)(diag)-11, DIAGNOSTIC PROCEDURE WITH PHENOMENON, Diagnostics with Phenomenon.>
11	**CHECK RES/+ OPERATION.** Check the RES/+ switch operation.	Does the vehicle speed increase or return to set speed after RES/+ switch has been pressed?	Go to step **12**.	Go to phenomenon 5. <Ref. to CC(HEV)(diag)-11, DIAGNOSTIC PROCEDURE WITH PHENOMENON, Diagnostics with Phenomenon.>
12	**CHECK SET/– OPERATION.** Check the SET/– switch operation.	Does the vehicle speed decrease after SET/– switch has been pressed?	Go to step **13**.	Go to phenomenon 6. <Ref. to CC(HEV)(diag)-11, DIAGNOSTIC PROCEDURE WITH PHENOMENON, Diagnostics with Phenomenon.>
13	**CANCEL OPERATION CHECK.** Check the CANCEL switch operation.	Is the cruise control released after CANCEL switch has been pressed?	Go to step **14**.	Go to phenomenon 7. <Ref. to CC(HEV)(diag)-11, DIAGNOSTIC PROCEDURE WITH PHENOMENON, Diagnostics with Phenomenon.>

	Step	Check	Yes	No
14	**CHECK CRUISE CONTROL RELEASE OPERATION.** Check the cruise control release operation.	Is the cruise control released after brake pedal has been depressed?	Go to step **15**.	Go to phenomenon 8. <Ref. to CC(HEV)(diag)-11, DIAGNOSTIC PROCEDURE WITH PHENOMENON, Diagnostics with Phenomenon.>
15	**CHECK CRUISE CONTROL RELEASE OPERATION.** Check the cruise control release operation.	Is the cruise control released after shifting to the neutral position?	Finish the diagnosis.	Go to phenomenon 9. <Ref. to CC(HEV)(diag)-11, DIAGNOSTIC PROCEDURE WITH PHENOMENON, Diagnostics with Phenomenon.>

2. General Description

A: CAUTION

Airbag system wiring harness is routed near the cruise control command switch.

CAUTION:
• Do not use the electrical test equipment on the airbag system wiring harnesses and connector circuits.
• Be careful not to damage the airbag system wiring harness when servicing the cruise control command switch. Airbag system wiring harness is routed near the cruise control command switch.

B: PREPARATION TOOL

1. SPECIAL TOOL

ILLUSTRATION	TOOL NUMBER	DESCRIPTION	REMARKS
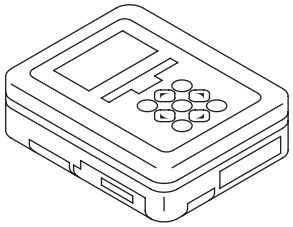 ST1B022XU0	1B022XU0	SUBARU SELECT MONITOR III KIT	Used for troubleshooting the electrical system.

2. GENERAL TOOL

TOOL NAME	REMARKS
Circuit tester	Used for measuring resistance, voltage and current.

C: INSPECTION

Measure the voltage for 12 volt auxiliary battery and specific gravity of electrolyte.

Standard voltage:
12 V or more

Specific gravity:
1.260 or more

3. Electrical Component Location

A: LOCATION

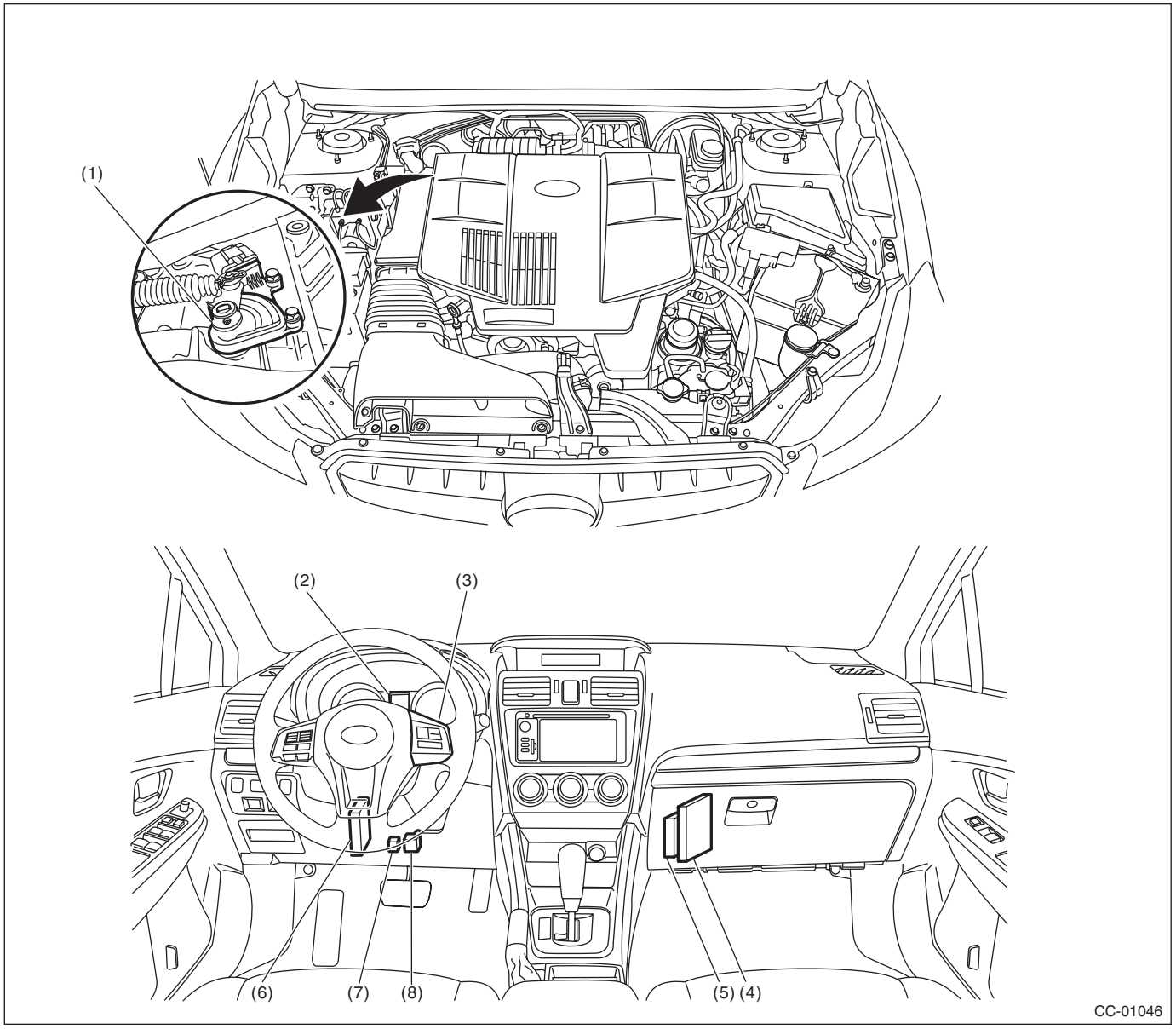

(1)	Inhibitor switch	(4)	Engine control module (ECM)	(7)	Brake stroke sensor (brake pedal ASSY)
(2)	Cruise indicator light and cruise set indicator light	(5)	Hybrid powertrain control module (HPCM)	(8)	Stop light and brake switch
(3)	Cruise control command switch	(6)	Transmission control module (TCM)		

NOTE:
Brake stroke sensor cannot be disassembled from the brake pedal assembly.

4. Control Module I/O Signal

A: ELECTRICAL SPECIFICATION

1. ENGINE CONTROL MODULE (ECM)

For details on the input/output signals for the engine control module, refer to ENGINE (DIAGNOSTICS). <Ref. to EN(H4DO HEV)(diag)-19, ELECTRICAL SPECIFICATION, Control Module I/O Signal.>

2. HYBRID POWERTRAIN CONTROL MODULE (HPCM)

For details on the input/output signals of the hybrid powertrain control module, refer to HEV (DIAGNOSTICS). <Ref. to HEV(diag)-10, HYBRID POWERTRAIN CONTROL MODULE (HPCM), ELECTRICAL SPECIFICATION, Control Module I/O Signal.>

B: WIRING DIAGRAM

Refer to “Cruise Control System” in the wiring diagram. <Ref. to WI(HEV)-81, WIRING DIAGRAM, Cruise Control System.>

5. Subaru Select Monitor

A: OPERATION

1. GENERAL DESCRIPTION

The on-board diagnosis function of the cruise control system uses Subaru Select Monitor.
The on-board diagnosis function operates in two categories, which are used depending on the type of problems;
1) Cruise Control Cancel Conditions Diagnosis:
(1) This category of diagnosis requires actual vehicle driving in order to determine the cause, as when cruise speed is cancelled during driving although cruise cancel condition is not entered.
(2) Cruise control memory in the hybrid powertrain control module stores the cancel code which occurred during driving. When there are multiple cancel code, they are shown on the Subaru Select Monitor.

CAUTION:
• In the cruise control memory, not only the cruise control "cancel" occurred (although the "cancel" operation is not entered by the driver), but also the "cancel" condition input by the driver is stored.
• The latest memory content (latest code) is cleared when ignition switch is turned to OFF. However, memory contents set by the diagnosis of faulty switches related to the system and cruise control will remain as trouble history (memory code) after the ignition switch is turned to OFF.
2) Real-time Diagnosis:
Real-time diagnosis function is used to determine whether or not the input signal system is in good order, according to signal emitted from switches, sensors, etc.
(1) Vehicle cannot be driven at cruise speed when the problem occurs in the cruise control system or relevant circuits.
(2) Monitor the signal conditions from switches and sensors.

2. BASIC OPERATION

For operation procedures, refer to the "PC application help for Subaru Select Monitor".

6. Read Cancel Code

A: OPERATION

1) On «Main Menu» display, select {Each System Check}.
On «System Selection Menu» display, select {Hybrid Powertrain Control System} and select the [OK].
2) Drive vehicle at 40 km/h (25 MPH) or more and set the cruise control.

NOTE:
When performing the entire diagnosis or cruise control diagnosis, first start the engine and wait until initial illumination of the ABS/VDC warning light completes. (If you start the diagnostics before performing the above procedures, the cancel code “43” is recorded and CRUISE indicator does not illuminate even though the CRUISE switch is pressed.)

CAUTION:
• When performing diagnosis, observe the legal speed limit on the road.
• The cancel code will also appear when the cruise control is cancelled by the driver’s operation. Do not confuse them.
• Be sure to get an assistant to support the diagnosis while driving, and have him/her operate the select monitor.
3) When the set speed is cancelled by itself (without any cancel operations such as applying brake) or when the cruise control could not be set by performing the setting operation, selecting the {Cancel Code(s) Display} on the diagnostic screen for the hybrid powertrain control system will display the cancel code on the select monitor display.

NOTE:
The {Latest Cancel Code(s)} and {Memorized Cancel Code(s)} are contained in the cancel code. The latest code recognized during current test drive is displayed in {Latest Cancel Code(s)}. Cancel codes resulting from fault diagnosis of switches relating to the system and cruise control are also displayed in {Memorized Cancel Code(s)}.

4) Perform DTC clear memory operation for hybrid powertrain control system.
Cancel codes for switches relating to the system and cruise control are deleted by clearing memory on the hybrid powertrain control system side.

NOTE:
• The latest code will be cleared by turning ignition switch to OFF.
• For detailed operation procedures, refer to “PC application help for Subaru Select Monitor”.
• For details on cancel codes, refer to List of Cancel Code. <Ref. to CC(HEV)(diag)-13, List of Cancel Code.>

7. Real-time Diagnosis

A: OPERATION

1) On «Hybrid Powertrain Control System» display, select {Current Data Display & Save}. <Ref. to HEV(diag)-40, HYBRID POWERTRAIN CONTROL SYSTEM, OPERATION, Read Current Data.>
2) Make sure that normal display is shown when operated as follows:
- Turn the “CRUISE” switch to ON.
- Turn the “CANCEL” switch to ON.
- Turn the “SET/–” switch to ON.
- Turn the “RES/+” switch to ON.
- Depress and release the brake pedal. (The stop light switch and brake switch are turned on, and accordingly the brake stroke sensor value changes.)
- Place the shift lever in any position other than neutral.

If normal display will not appear, go to the next step.
3) Select {Current Data Display & Save} in «Engine Control System» display screen. <Ref. to EN(H4DO HEV)(diag)-37, DISPLAY CURRENT ENGINE DATA, OPERATION, Subaru Select Monitor.>
4) Make sure that normal display is shown when operated as follows:
- Depress and release the brake pedal. (Stop light switch and brake switch turn ON.)
- Turn the “CRUISE” switch to ON.
- Turn the “CANCEL” switch to ON.
- Turn the “SET/–” switch to ON.
- Turn the “RES/+” switch to ON.
- Place the shift lever in any position other than neutral.

NOTE:
For detailed operation procedures, refer to “PC application help for Subaru Select Monitor”.

8. Diagnostics with Phenomenon

A: DIAGNOSTIC PROCEDURE WITH PHENOMENON

Phenomenon		Check Item	Note
1	CRUISE switch is not turned ON. (CRUISE indicator does not illuminate.) Or the cruise control is cancelled without CRUISE switch operation.	(1) Perform cruise cancel conditions diagnosis.	Perform the diagnosis according to displayed cancel code.
		(2) Perform the real-time diagnosis.	Check the input signal of cruise control system.
		(3) Check the cruise control command switch.	<Ref. to CC(HEV)(diag)-15, 11, Diagnostic Procedure with Cancel Code.>
		(4) Check the CRUISE indicator.	<Ref. to CC(HEV)(diag)-12, CHECK CRUISE INDICATOR LIGHT AND CRUISE SET INDICATOR LIGHT, Diagnostics with Phenomenon.>
2	Cruise control cannot be set. Or cruise control is cancelled without releasing operation.	(1) Perform cruise cancel conditions diagnosis.	Perform the diagnosis according to displayed cancel code.
		(2) Perform the real-time diagnosis.	Check the input signal of cruise control system.
		(3) Check the cruise control command switch.	<Ref. to CC(HEV)(diag)-15, 11, Diagnostic Procedure with Cancel Code.>
		(4) Check stop light switch and brake switch. Check the brake stroke sensor.	<Ref. to BR-72, Stop Light Switch.> <Ref. to CC(HEV)(diag)-17, 12, Diagnostic Procedure with Cancel Code.> <Ref. to HEV(diag)-2, PROCEDURE, Basic Diagnostic Procedure.>
		(5) Check the neutral position switch.	<Ref. to HEV(diag)-2, PROCEDURE, Basic Diagnostic Procedure.>
		(6) Check vehicle speed sensor.	<Ref. to CC(HEV)(diag)-19, 22, Diagnostic Procedure with Cancel Code.>
3	SET indicator does not illuminate.	Check the SET indicator.	<Ref. to CC(HEV)(diag)-12, CHECK CRUISE INDICATOR LIGHT AND CRUISE SET INDICATOR LIGHT, Diagnostics with Phenomenon.>
4	Vehicle speed is not held within set speed ±3 km/h (±2 MPH).	Check the vehicle speed sensor.	<Ref. to CC(HEV)(diag)-19, 22, Diagnostic Procedure with Cancel Code.>
5	Vehicle speed does not increase or does not return to set speed after RES/+ switch has been pressed.	(1) Perform the real-time diagnosis.	Check the input signal of cruise control system.
		(2) Check the RES/+ switch.	<Ref. to CC(HEV)(diag)-15, 11, Diagnostic Procedure with Cancel Code.>
6	Vehicle speed does not decrease after SET/– switch has been pressed.	(1) Perform the real-time diagnosis.	Check the input signal of cruise control system.
		(2) Check the SET/– switch.	<Ref. to CC(HEV)(diag)-15, 11, Diagnostic Procedure with Cancel Code.>
7	Cruise control is not released after CANCEL switch has been pressed.	(1) Perform the real-time diagnosis.	Check the input signal of cruise control system.
		(2) Check the CANCEL switch.	<Ref. to CC(HEV)(diag)-15, 11, Diagnostic Procedure with Cancel Code.>
8	Cruise control is not released after brake pedal has been depressed.	(1) Perform the real-time diagnosis.	Check the input signal of cruise control system.
		(2) Check stop light switch and brake switch. Check the brake stroke sensor.	<Ref. to CC(HEV)(diag)-17, 12, Diagnostic Procedure with Cancel Code.> <Ref. to BR-73, INSTALLATION, Stop Light Switch.> <Ref. to HEV(diag)-2, PROCEDURE, Basic Diagnostic Procedure.>

Phenomenon		Check Item	Note
9	Cruise control is not released after shifting to the neutral position.	(1) Perform the real-time diagnosis.	Check the input signal of cruise control system.
		(2) Check the neutral position switch.	<Ref. to HEV(diag)-2, PROCEDURE, Basic Diagnostic Procedure.>

B: CHECK CRUISE INDICATOR LIGHT AND CRUISE SET INDICATOR LIGHT

TROUBLE SYMPTOM:

Cruise control can be set, but the CRUISE indicator and SET indicator do not illuminate.

Step		Check	Yes	No
1	**CHECK CRUISE INDICATOR LIGHT AND CRUISE SET INDICATOR LIGHT.** Perform the combination meter operation check. <Ref. to IDI(diag)-19, OPERATION, System Operation Check Mode.>	Do the CRUISE & SET indicators illuminate?	Go to step **2**.	Replace the meter case assembly. <Ref. to IDI-16, Combination Meter.>
2	**CHECK LAN SYSTEM.** Perform the diagnosis for LAN system. <Ref. to LAN(HEV)(diag)-2, Basic Diagnostic Procedure.>	Is a DTC of the LAN system detected?	Perform the diagnosis according to DTC for LAN system.	Replace the hybrid powertrain CM. <Ref. to HEV-37, Hybrid Powertrain Control Module.>

9. List of Cancel Code

A: LIST

NOTE:
• The cancel code is registered even when cancel is performed intentionally by the driver.
• Cancel codes are cleared if the ignition switch is turned to OFF.
• If a different cancel code is input after a cancel code (latest code) has been input, the latest code is overwritten.
• If the cruise indicator light is flashing, a malfunction is occurring in the system or cruise control related switch. The cancel code at this time is saved even after ignition switch is OFF as a memory code of a past malfunction.
• To display a cancel code, use the Subaru Select Monitor to read the code after the cruise control is deactivated during a driving test.

Cancel code	Item	Contents of diagnosis	Note
11	Main switch	CRUISE switch of cruise control command switch is turned to OFF, and then the cruise control is released.	This code is displayed without operating the CRUISE switch. <Ref. to CC(HEV)(diag)-15, 11, Diagnostic Procedure with Cancel Code.>
12	Stop & Brake switch	Stop light switch or brake switch is turned to ON, and then the cruise control is released. The cruise control is released by brake stroke sensor.	This code is displayed without depressing the brake pedal. <Ref. to CC(HEV)(diag)-17, 12, Diagnostic Procedure with Cancel Code.>
14	Neutral switch	Neutral position switch is turned to ON, and then the cruise control is released.	This code is displayed without shifting to neutral position. <Ref. to CC(HEV)(diag)-18, 14, Diagnostic Procedure with Cancel Code.>
15	Cancel switch	Cancel switch is turned to ON, and then the cruise control is released.	This code is displayed without operating the cancel switch. <Ref. to CC(HEV)(diag)-18, 15, Diagnostic Procedure with Cancel Code.>
16	Ignition switch	Ignition switch is turned to OFF, and then the cruise control is released.	This code is displayed without operating the ignition switch. <Ref. to CC(HEV)(diag)-19, 16, Diagnostic Procedure with Cancel Code.>
22	Abnormality of change in vehicle speed	Malfunction of vehicle speed signal variation is detected.	<Ref. to CC(HEV)(diag)-19, 22, Diagnostic Procedure with Cancel Code.>
24	Abnormality of switches related to cruise control	Open circuit of the cruise control switch is detected during cruise driving. (The system is judged as model without cruise control.)	This code is displayed with normal operation. <Ref. to CC(HEV)(diag)-20, 24, Diagnostic Procedure with Cancel Code.>
31	Engine Speed	• Abnormal increase of engine speed is detected. • Gear is placed in Neutral, 1st or Reverse position.	Cruise in 2nd shift position or more. <Ref. to CC(HEV)(diag)-20, 31, Diagnostic Procedure with Cancel Code.>
32	Out of Cruise Control Operation Vehicle Speed Range	• Controlled vehicle speed decreased under the limit during cruising. • Set operation was performed at vehicle speed unavailable for setting. • RESUME operation was performed without memorized vehicle speed.	This code is displayed, though the vehicle speed is increased to the speed available for cruise set and set operation was performed again. <Ref. to CC(HEV)(diag)-20, 32, Diagnostic Procedure with Cancel Code.>
34	Prohibition of cruise control at continuing big Accel. angle	The vehicle has been driven at higher speed than set vehicle speed for an abnormally long time (approximately 10 minutes) during cruise driving.	<Ref. to CC(HEV)(diag)-20, 34, Diagnostic Procedure with Cancel Code.>
35	Prohibition of cruise control at vehicle speed F/B malfunction	Set vehicle speed cannot be kept because of some reasons (steep uphill, parking brake, abnormal decrease of engine output, etc.) during cruise driving.	This code is displayed when driving condition is not suitable for cruise control. Perform cruise set operation again after clearing the possible cause. <Ref. to CC(HEV)(diag)-20, 35, Diagnostic Procedure with Cancel Code.>

List of Cancel Code

Cancel code	Item	Contents of diagnosis	Note
41	VDC/TCS Operation	VDC or TCS is activated during cruise driving or cruise setting.	This code is displayed when driving condition is not suitable for cruise control. Perform cruise set operation again after clearing the possible cause. <Ref. to CC(HEV)(diag)-20, 41, Diagnostic Procedure with Cancel Code.>
43	ABS/VDC Failure	• Detected the situation that some or all functions of ABS or VDC can not be activated during cruise driving or cruise setting. • The CRUISE switch was pressed before starting the engine, but the CRUISE indicator did not illuminate.	<Ref. to CC(HEV)(diag)-20, 43, Diagnostic Procedure with Cancel Code.>
44	Integrated Unit Failure	Body integrated unit system malfunction is detected during cruise driving or cruise setting.	<Ref. to CC(HEV)(diag)-20, 44, Diagnostic Procedure with Cancel Code.>
45	Meter Failure	Combination meter malfunction is detected during cruise driving or cruise setting.	<Ref. to CC(HEV)(diag)-21, 45, Diagnostic Procedure with Cancel Code.>
49	TCM Failure	Transmission control module (TCM) malfunction is detected during cruise driving or cruise setting.	<Ref. to CC(HEV)(diag)-21, 49, Diagnostic Procedure with Cancel Code.>
50	HEV System Failure	Hybrid system malfunction is detected during cruise driving or cruise setting.	<Ref. to CC(HEV)(diag)-21, 50, Diagnostic Procedure with Cancel Code.>
61	Brake Switch Failure	Malfunction in the stop light & brake switch is detected.	<Ref. to CC(HEV)(diag)-21, 61, Diagnostic Procedure with Cancel Code.>
63	Abnormality 1 of change in vehicle speed	Malfunction of vehicle speed signal variation is detected.	<Ref. to CC(HEV)(diag)-21, 63, Diagnostic Procedure with Cancel Code.>
64	Engine Sensor Failure 1	Malfunction related to engine is detected.	<Ref. to CC(HEV)(diag)-21, 64, Diagnostic Procedure with Cancel Code.>
65	Abnormality 1 of switches related to cruise control	Cruise control command switch malfunction is detected. (When the switch is pressed ON for a long time (approximately two minutes), stuck ON condition is detected.)	<Ref. to CC(HEV)(diag)-21, 65, Diagnostic Procedure with Cancel Code.>

10.Diagnostic Procedure with Cancel Code

A: 11

When CRUISE switch is pressed, or a malfunction related to CRUISE switch occurs, this is detected.

TROUBLE SYMPTOM:

- Cruise control cannot be set. (Cancelled immediately.)
- Cruise control cannot be released.

WIRING DIAGRAM:

Cruise control system <Ref. to WI(HEV)-81, WIRING DIAGRAM, Cruise Control System.>

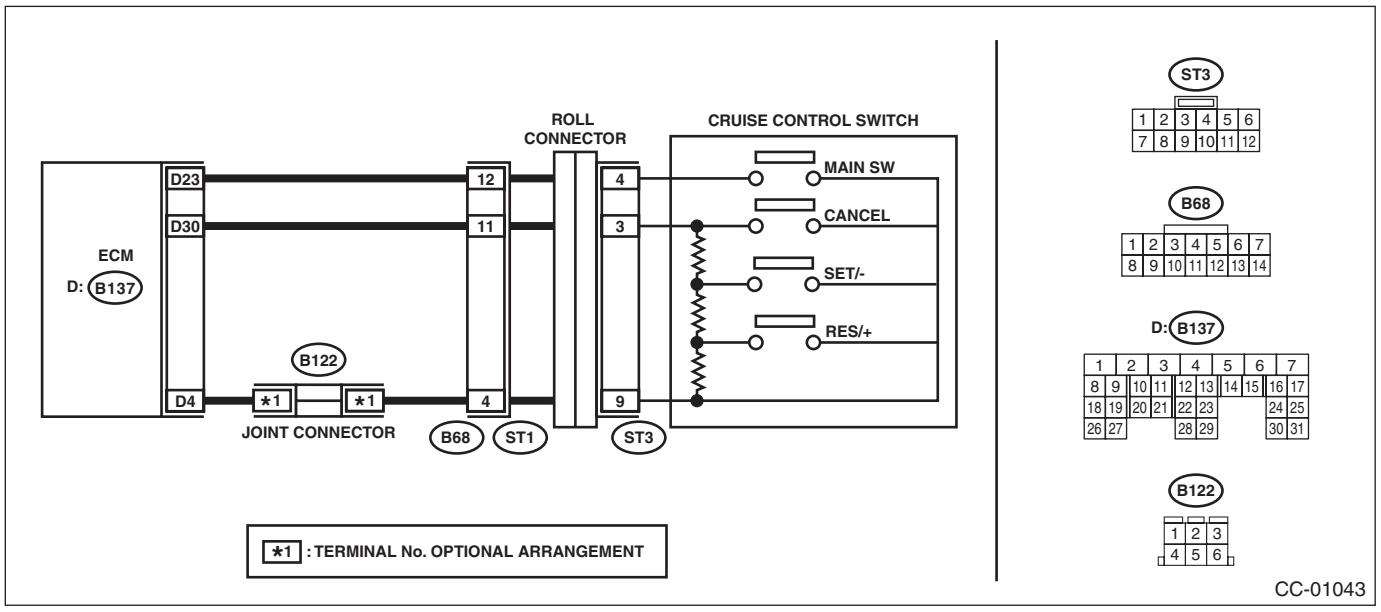

Step		Check	Yes	No
1	**CHECK CRUISE CONTROL COMMAND SWITCH CIRCUIT.** 1) Remove the driver's airbag module. <Ref. to AB-41, REMOVAL, Driver's Airbag Module.> 2) Disconnect the cruise control command switch connector. 3) Turn the ignition switch to ON. 4) Measure the voltage between cruise control command switch connector and chassis ground. ***Connector & terminal*** ***(ST3) No. 4 (+) — Chassis ground (–):*** ***(ST3) No. 3 (+) — Chassis ground (–):***	Is the voltage 5 V or more?	Go to step **2**.	Check the harness between cruise control command switch and ECM, and the steering roll connector for open or short circuit, or for poor contact.
2	**CHECK CRUISE CONTROL COMMAND SWITCH CIRCUIT.** 1) Turn the ignition switch to OFF. 2) Remove the cruise control command switch. <Ref. to CC-7, REMOVAL, Cruise Control Command Switch.> 3) Measure the resistance between cruise control command switch connector and chassis ground. ***Connector & terminal*** ***(ST3) No. 9 — Chassis ground:***	Is the resistance less than 10 Ω?	Go to step **3**.	Check for open circuit between cruise control command switch, ECM, and chassis ground and check the ECM.

	Step	Check	Yes	No
3	**CHECK CRUISE CONTROL COMMAND SWITCH.** Measure the resistance between switch terminals when the cruise control command switch is not depressed. ***Terminals*** ***No. 3 — No. 9:***	Is the resistance approx. 4 kΩ?	Go to step **4**.	Replace the cruise control command switch. <Ref. to CC-7, Cruise Control Command Switch.>
4	**CHECK CANCEL SWITCH.** 1) Turn the ignition switch to OFF. 2) Remove the cruise control command switch. <Ref. to CC-7, REMOVAL, Cruise Control Command Switch.> 3) Measure the resistance between switch terminals with the CANCEL switch pressed. ***Terminals*** ***No. 3 — No. 9:***	Is the resistance approx. less than 1 Ω when the CANCEL switch is pressed?	Go to step **5**.	Replace the cruise control command switch. <Ref. to CC-7, Cruise Control Command Switch.>
5	**CHECK SET/– SWITCH.** Measure the resistance between the switch terminals with the SET/– switch pressed. ***Terminals*** ***No. 3 — No. 9:***	Is the resistance approx. 250 Ω when the SET/– switch is pressed?	Go to step **6**.	Replace the cruise control command switch. <Ref. to CC-7, Cruise Control Command Switch.>
6	**CHECK RES/+ SWITCH.** Measure the resistance between the switch terminals with the RES/+ switch pressed. ***Terminals*** ***No. 3 — No. 9:***	Is the resistance approx. 1,500 Ω when the RES/+ switch is pressed?	Replace the ECM. <Ref. to FU(H4DO(HEV))-85, Engine Control Module (ECM).>	Replace the cruise control command switch. <Ref. to CC-7, Cruise Control Command Switch.>

B: 12

Detected when brake pedal is depressed or malfunction related to stop light & brake switch and brake stroke sensor occurs.

TROUBLE SYMPTOM:

- Cruise control cannot be set.
- Cruise control cannot be released.

WIRING DIAGRAM:

Cruise control system <Ref. to WI(HEV)-81, WIRING DIAGRAM, Cruise Control System.>
Hybrid system <Ref. to WI(HEV)-139, WIRING DIAGRAM, Hybrid Electric Vehicle System.>

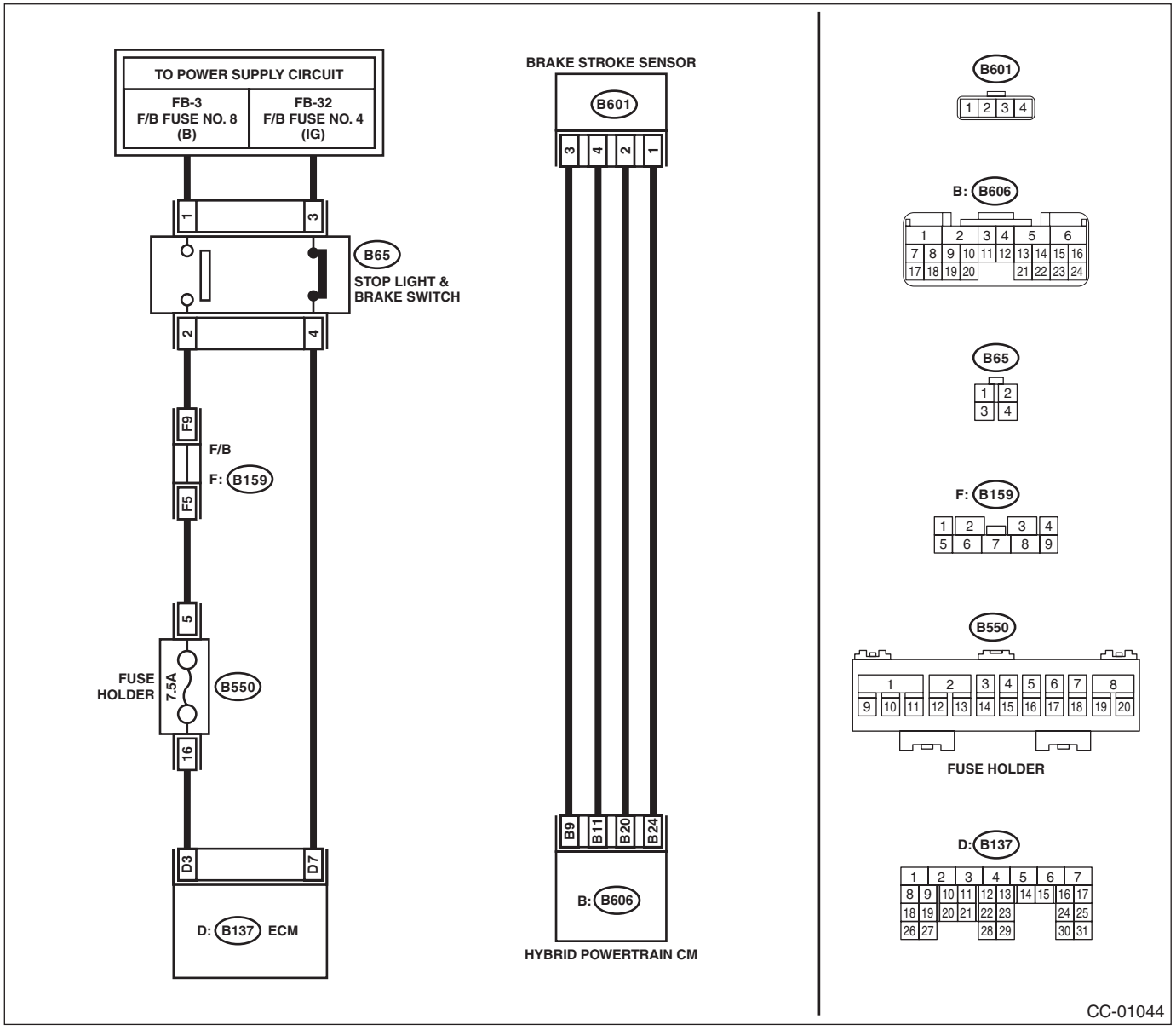

Step		Check	Yes	No
1	**CHECK BRAKE STROKE SENSOR.** Check the brake stroke sensor. (Check the hybrid system.) <Ref. to HEV(diag)-2, PROCEDURE, Basic Diagnostic Procedure.>	Is there any fault?	Perform the inspection according to the diagnosis for hybrid system.	Go to step **2**.

	Step	Check	Yes	No
2	**CHECK STOP LIGHT & BRAKE SWITCH.** Check the stop light & brake switch. <Ref. to CC-14, Stop Light & Brake Switch.>	Is the stop light & brake switch and installation position OK?	Go to step **3**.	Replace the stop light & brake switch. Or adjust the installation position.
3	**CHECK STOP LIGHT & BRAKE SWITCH CIRCUIT.** 1) Turn the ignition switch to OFF. 2) Disconnect the stop light & brake switch connector. 3) Turn the ignition switch to ON. 4) Measure the voltage between the stop light & brake switch connector and chassis ground. ***Connector & terminal*** ***(B65) No. 1 (+) — Chassis ground (–):***	Is the voltage 10 V or more?	Go to step **4**.	• Check fuse No. 8 (in fuse & relay box). • Check for open or short in the harness between stop light & brake switch and fuse & relay box.
4	**CHECK STOP LIGHT & BRAKE SWITCH CIRCUIT.** Measure the voltage between the stop light & brake switch connector and chassis ground. ***Connector & terminal*** ***(B65) No. 3 (+) — Chassis ground (–):***	Is the voltage 10 V or more?	Go to step **5**.	• Check fuse No. 4 (in fuse & relay box). • Check for open or short in the harness between stop light & brake switch and fuse & relay box.
5	**CHECK STOP LIGHT & BRAKE SWITCH CIRCUIT.** 1) Turn the ignition switch to OFF. 2) Disconnect the ECM connector. 3) Measure the resistance between the ECM connector and stop light & brake switch connector. ***Connector & terminal*** ***(B137) No. 7 — (B65) No. 4:*** ***(B137) No. 3 — (B65) No. 2:***	Is the resistance less than 10 Ω?	Replace the ECM. <Ref. to FU(H4DO(HEV))-85, Engine Control Module (ECM).>	Repair the harness.

C: 14

Detected when select lever is set in the neutral position, or when malfunction related to neutral position switch occurs.

TROUBLE SYMPTOM:

Cruise control cannot be set.

For diagnostic procedures, check the hybrid system. <Ref. to HEV(diag)-2, PROCEDURE, Basic Diagnostic Procedure.>

D: 15

Detected when CANCEL switch is pressed or malfunction related to CRUISE switch occurs.

TROUBLE SYMPTOM:

- Cruise control cannot be set. (Cancelled immediately.)
- Cruise control cannot be released.

Refer to DTC 11 for diagnostic procedure.

<Ref. to CC(HEV)(diag)-15, 11, Diagnostic Procedure with Cancel Code.>

E: 16

Detected when ignition switch is turned to OFF or malfunction related to the ignition switch occurs.
TROUBLE SYMPTOM:
Cruise control cannot be set.
WIRING DIAGRAM:
Hybrid system <Ref. to WI(HEV)-139, WIRING DIAGRAM, Hybrid Electric Vehicle System.>

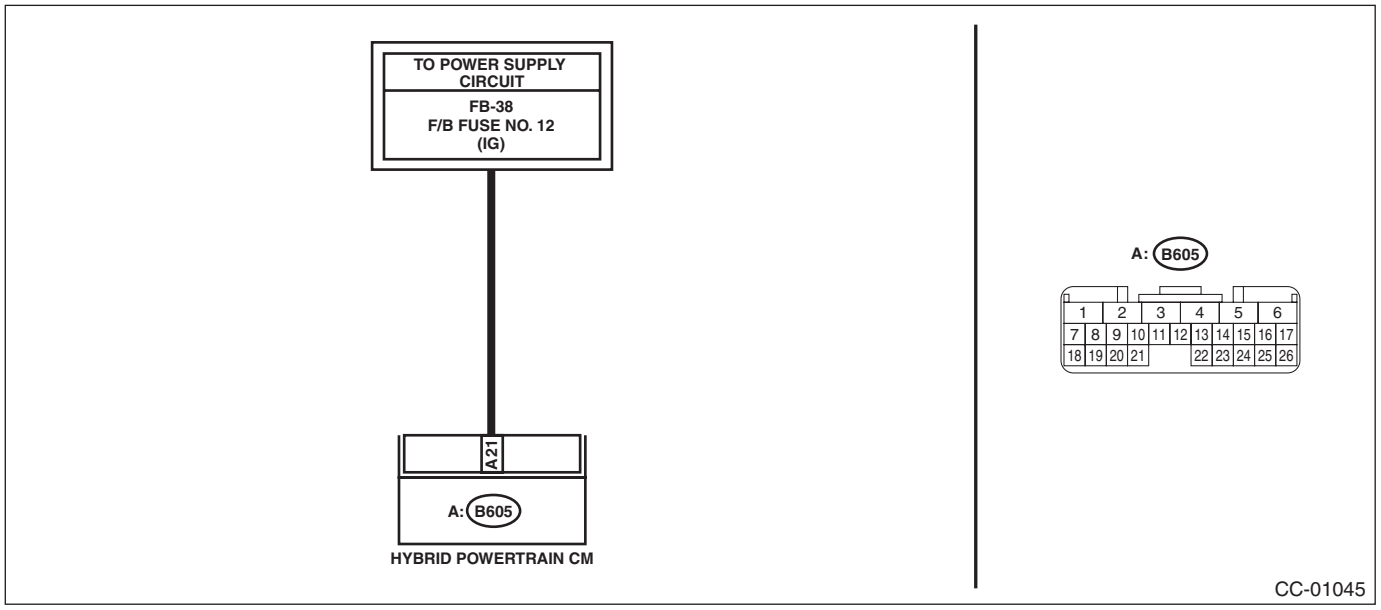

Step		Check	Yes	No
1	**CHECK IGNITION SWITCH CIRCUIT.** 1) Turn the ignition switch to OFF. 2) Disconnect the hybrid powertrain CM connector. 3) Turn the ignition switch to ON. 4) Measure the voltage between the hybrid powertrain CM connector and chassis ground. ***Connector & terminal*** ***(B605) No. 21 (+) — Chassis ground (–):***	Is the voltage 10 V or more?	Check the hybrid powertrain CM connector for poor contact.	• Check fuse No. 12 (in fuse & relay box). • Check the harness for open or short circuit between ignition switch and hybrid powertrain CM.

F: 22

Malfunction related to vehicle speed sensor is detected.
DIAGNOSIS:
Open or shorted circuit in vehicle speed sensor system.
TROUBLE SYMPTOM:
Cruise control cannot be set. (Cancelled immediately.)

Step		Check	Yes	No
1	**CHECK ABS OR VDC WARNING LIGHT.** 1) Turn the ignition switch to ON. 2) After the initial operation of combination meter is completed, check if ABS or VDC warning light continues to illuminate.	Does the warning light continue to illuminate?	Check the VDCCM. <Ref. to VDC(diag)-2, Basic Diagnostic Procedure.>	Go to step **2**.
2	**CHECK DTC OF LAN COMMUNICATION CIRCUIT.** Read the DTC of body integrated unit using Subaru Select Monitor.	Is DTC displayed?	Perform inspection according to DTC.	Replace the hybrid powertrain CM. <Ref. to HEV-37, Hybrid Powertrain Control Module.>

G: 24

Malfunction in cruise control-related switch is detected.
TROUBLE SYMPTOM:
- Cruise control cannot be set. (Cancelled immediately.)
- Cruise control cannot be released.

Refer to DTC 11 for diagnostic procedure.
<Ref. to CC(HEV)(diag)-15, 11, Diagnostic Procedure with Cancel Code.>

H: 31

Engine speed signal malfunction is detected.
Abnormal increase of engine speed is detected.
Gear is placed in 1st or Reverse position.
After driving at the 2nd gear position or higher, perform the cruise setting again. If a cancel code is not detected, it is normal.

I: 32

Detected when the vehicle speed is out of the system controllable range.
Increase vehicle speed high enough to allow the cruise control to function, and then perform setting operation again.
If cancel code is still detected after setting cruise again, perform the diagnosis for DTC 22.
Refer to DTC 22 for diagnostic procedure.
<Ref. to CC(HEV)(diag)-19, 22, Diagnostic Procedure with Cancel Code.>

J: 34

The vehicle has been driven at a speed higher than set speed for a long time (approximately 10 minutes) during cruise driving.
Perform the cruise control setting operation again. If the cancel code is not detected, it is normal.

K: 35

Detected when it is impossible to perform the vehicle speed feedback.
Set vehicle speed cannot be kept for some reasons (steep uphill, unreleased parking brake, etc.) during cruise driving.
Cancel code is detected when driving condition is not suitable for cruise control.
Perform cruise set operation again after clearing the possible cause.

L: 41

VDC/TCS has operated.
Vehicle dynamics control (VDC) or TCS is operated during cruise driving or cruise setting.
<Ref. to VDC(diag)-2, PROCEDURE, Basic Diagnostic Procedure.>

M: 43

- The situation that some or all functions for ABS/VDC can not work is detected.

During cruise driving or cruise setting, the situation that some or all functions for ABS/VDC can not work is detected. <Ref. to VDC(diag)-2, PROCEDURE, Basic Diagnostic Procedure.>
- CRUISE indicator does not illuminate even though you pressed the CRUISE switch before starting the engine.

Detected when the CRUISE switch is pressed during the initial diagnosis of ABS/VDC.
It is normal if the CRUISE indicator illuminates when you press the CRUISE switch again after starting the engine and confirming that the initial illumination of the ABS/VDC warning light has been ended.

N: 44

Body integrated unit malfunction is detected.
Body integrated unit system malfunction is detected during cruise driving or cruise setting.
<Ref. to LAN(HEV)(diag)-2, PROCEDURE, Basic Diagnostic Procedure.>

O: 45

Combination meter malfunction is detected.
Combination meter malfunction is detected during cruise driving or cruise setting.
<Ref. to LAN(HEV)(diag)-2, PROCEDURE, Basic Diagnostic Procedure.>

P: 49

Automatic transmission malfunction is detected.
Automatic transmission malfunction is detected during cruise driving or cruise control setting.
<Ref. to CVT(w/o HEV)(diag)-2, PROCEDURE, Basic Diagnostic Procedure.>

Q: 50

Hybrid system malfunction is detected.
Hybrid system malfunction is detected during cruise driving or cruise setting.
<Ref. to HEV(diag)-2, PROCEDURE, Basic Diagnostic Procedure.>

R: 61

Malfunction in the stop light & brake switch is detected.
TROUBLE SYMPTOM:
- Cruise control cannot be set.
- Cruise control cannot be released.

Refer to DTC 12 for diagnostic procedure.
<Ref. to CC(HEV)(diag)-17, 12, Diagnostic Procedure with Cancel Code.>

S: 63

Malfunction of vehicle speed signal variation is detected.
TROUBLE SYMPTOM:
Cruise control cannot be set. (Cancelled immediately.)
Refer to DTC 22 for diagnostic procedure.
<Ref. to CC(HEV)(diag)-19, 22, Diagnostic Procedure with Cancel Code.>

T: 64

Malfunction related to engine is detected.
Refer to the Engine Diagnostic Procedure for diagnostic procedure.
<Ref. to EN(H4DO HEV)(diag)-2, PROCEDURE, Basic Diagnostic Procedure.>

U: 65

Cruise control command switch malfunction is detected.
While the command switch is pressed ON for a long time (approximately two minutes), stuck ON condition is detected.
TROUBLE SYMPTOM:
- Cruise control cannot be set. (Cancelled immediately.)
- Cruise control cannot be released.

Refer to DTC 11 for diagnostic procedure.
<Ref. to CC(HEV)(diag)-15, 11, Diagnostic Procedure with Cancel Code.>

IMMOBILIZER (DIAGNOSTICS)

IM(diag)

Page

1. Basic Diagnostic Procedure 2
2. General Description 4
3. Electrical Component Location 6
4. Immobilizer Control Module I/O Signal 7
5. Subaru Select Monitor 8
6. Read Diagnostic Trouble Code (DTC) 9
7. Clear Memory Mode 10
8. Diagnostics Chart for Security Indicator Light 11
9. List of Diagnostic Trouble Code (DTC) 15
10. Diagnostic Procedure with Diagnostic Trouble Code (DTC) 17

1. Basic Diagnostic Procedure

A: PROCEDURE

1. MODEL WITHOUT KEYLESS ACCESS

CAUTION:
When the body integrated unit is replaced, registration of the immobilizer system is required. For details, refer to the "REGISTRATION MANUAL FOR IMMOBILIZER".

	Step	Check	Yes	No
1	**CONFIRM NUMBER OF REGISTERED IMMOBILIZER KEY.** Confirm the number of registered immobilizer key. For details, refer to the "REGISTRATION MANUAL FOR IMMOBILIZER".	Is the number of registration 0?	Register the immobilizer system.	Go to step **2**.
2	**CHECK SECURITY INDICATOR LIGHT.** 1) Remove the ignition key from ignition switch. 2) Wait at least 60 seconds.	Does the security indicator light blink?	Go to step **3**.	Check the security indicator light circuit. <Ref. to IM(diag)-11, CHECK SECURITY INDICATOR LIGHT CIRCUIT, INSPECTION, Diagnostics Chart for Security Indicator Light.>
3	**CHECK KEY SWITCH.** Insert the ignition key in the ignition switch. (OFF or ACC)	Does the security indicator light remain blinking?	Check the key switch circuit. <Ref. to IM(diag)-13, CHECK KEY SWITCH CIRCUIT, INSPECTION, Diagnostics Chart for Security Indicator Light.>	Go to step **4**.
4	**CHECK SECURITY INDICATOR LIGHT.** Check the security indicator light status in the condition of step 3.	Does the security indicator light go off?	Go to step **7**.	Go to step **5**.
5	**CHECK SECURITY INDICATOR LIGHT.** Turn the ignition switch to ON.	Does the security indicator light go off?	Go to step **7**.	Go to step **6**.
6	**CHECK ENGINE START.** Turn the ignition switch to START.	Does the starter operate?	Check the LAN communication system. <Ref. to LAN(w/o HEV)(diag)-2, Basic Diagnostic Procedure.> <Ref. to LAN(HEV)(diag)-2, Basic Diagnostic Procedure.>	Go to step **8**.
7	**CHECK ENGINE START.** Turn the ignition switch to START.	Does the engine start?	Immobilizer system is normal.	Go to step **9**.

Step		Check	Yes	No
8	**CHECK DTC.** Read the DTC of body integrated unit and ECM and time stamp using Subaru Select Monitor. NOTE: For time stamp, refer to “LAN SYSTEM”. <Ref. to LAN(w/o HEV)(diag)-6, TIME STAMP, CAUTION, General Description.> <Ref. to LAN(HEV)(diag)-6, TIME STAMP, CAUTION, General Description.>	Is the DTC displayed on screen?	Go to step **10**.	Replace the body integrated unit. <Ref. to SL-82, Body Integrated Unit.>
9	**CHECK DTC.** Read the DTC of body integrated unit and ECM and time stamp using Subaru Select Monitor. NOTE: For time stamp, refer to “LAN SYSTEM”. <Ref. to LAN(w/o HEV)(diag)-6, TIME STAMP, CAUTION, General Description.> <Ref. to LAN(HEV)(diag)-6, TIME STAMP, CAUTION, General Description.>	Is the DTC displayed on screen?	Go to step **10**.	Perform the diagnosis for engine system. <Ref. to EN(H4DO w/o HEV)(diag)-67, PROCEDURE, Diagnostics for Engine Starting Failure.>
10	**CHECK FREEZE FRAME DATA.** Using the Subaru Select Monitor, check the Freeze Frame Data.	Are the data recorded?	Record the data. Go to step **11**.	Go to step **11**.
11	**PERFORM DIAGNOSIS.** 1) Inspect using the “Diagnostic Procedure with Diagnostic Trouble Code (DTC)”. <Ref. to IM(diag)-17, Diagnostic Procedure with Diagnostic Trouble Code (DTC).> 2) Repair the trouble cause. 3) Perform the Clear Memory Mode. 4) Read DTCs again.	Is the DTC displayed on screen?	Inspect using the “Diagnostic Procedure with Diagnostic Trouble Code (DTC)”. <Ref. to IM(diag)-17, Diagnostic Procedure with Diagnostic Trouble Code (DTC).>	Finish the diagnosis.

2. MODEL WITH KEYLESS ACCESS

NOTE:
For immobilizer diagnosis of model with keyless access, refer to “Keyless Access with Push Button Start System”. <Ref. to KPS(diag)-2, Basic Diagnostic Procedure.>

2. General Description

A: CAUTION

CAUTION:
• Do not use the electrical test equipment on the airbag system wiring harnesses and connector circuits.
• Be careful not to damage the airbag system wiring harness.
• While diagnostic items are being checked, do not operate radios, portable telephones, etc. which emit electromagnetic waves near or inside the vehicle.

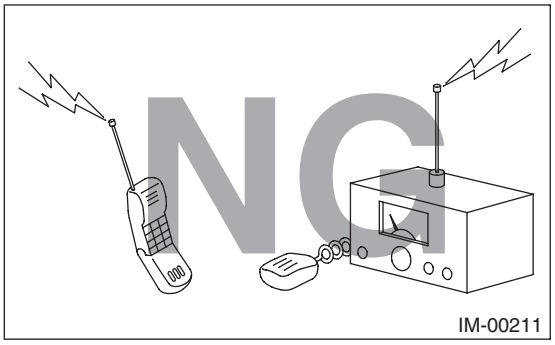

• When turning the ignition switch to ON or OFF while diagnostic items are being checked, do not allow keys with different ID codes close to the ignition switch. If the ignition key is on a key holder, remove it from the key holder before performing diagnoses.

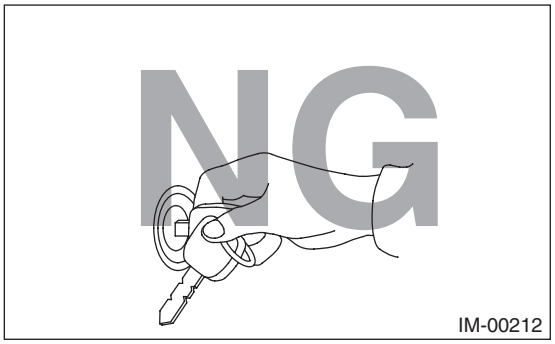

• When repeatedly turning the ignition switch to ON or OFF while diagnostic items are being checked, it should be switched in cycles of "ON" for at least 5 seconds → "OFF" for at least 8 seconds.

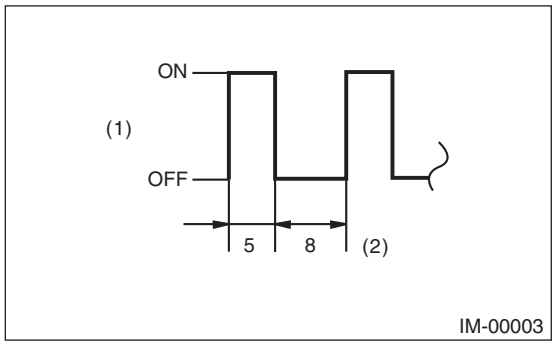

(1) Ignition switch position
(2) Sec.

• If the engine fails to start with a registered ignition key, detach the ignition key from ignition switch and wait for approx. 1 second until security indicator light begins to flash. And then start the engine again.
• Before performing the diagnostics, obtain all keys for the vehicle from the owner.
• Do not register a body integrated unit already registered to another vehicle to diagnose failures or inspect functions.

B: PREPARATION TOOL

1. SPECIAL TOOL

ILLUSTRATION	TOOL NUMBER	DESCRIPTION	REMARKS
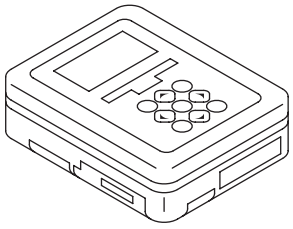 ST1B022XU0	1B022XU0	SUBARU SELECT MONITOR III KIT	Used for troubleshooting the electrical system.

2. GENERAL TOOL

TOOL NAME	REMARKS
Circuit tester	Used for measuring resistance, voltage and current.

3. Electrical Component Location

A: LOCATION

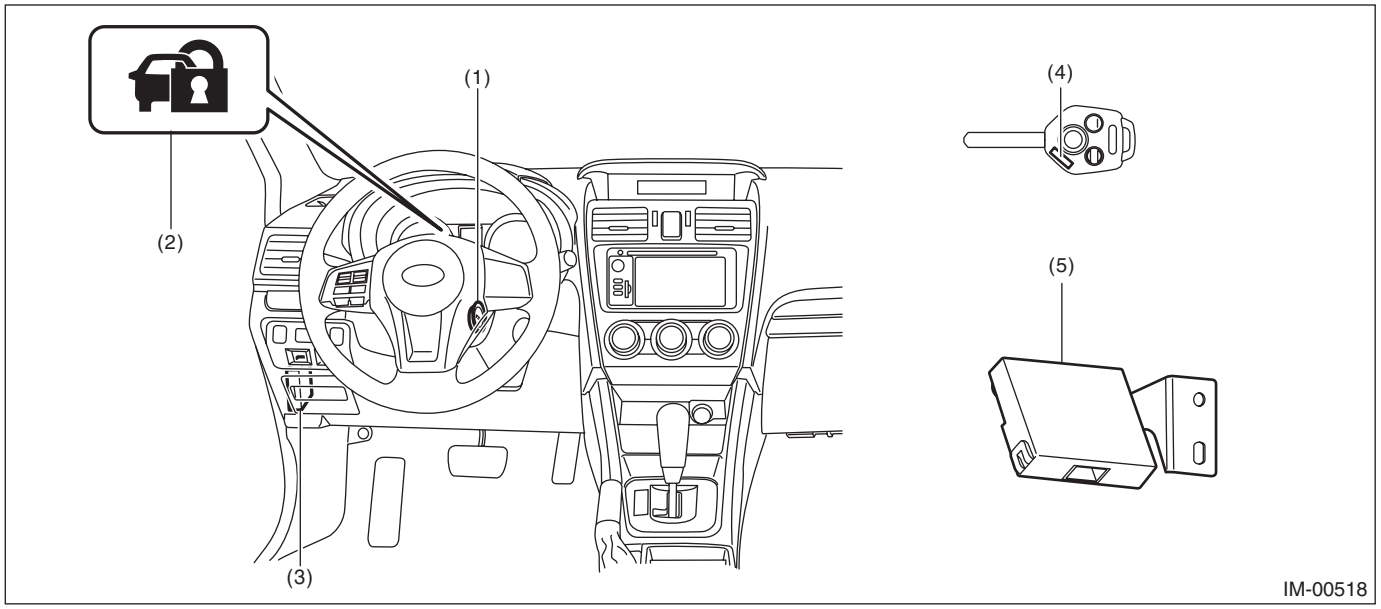

(1) Antenna
(2) Security indicator light (LED bulb)
(3) Body integrated unit
(4) Transponder
(5) Security control module (for C0 and C5 models only)

4. Immobilizer Control Module I/O Signal

A: WIRING DIAGRAM

1. IMMOBILIZER

Refer to “Immobilizer System” in the wiring diagram. <Ref. to WI(w/o HEV)-100, WIRING DIAGRAM, Immobilizer System.> <Ref. to WI(HEV)-150, WIRING DIAGRAM, Immobilizer System.>

5. Subaru Select Monitor

A: OPERATION

1. HOW TO USE THE SUBARU SELECT MONITOR

For operation procedures, refer to the “PC application help for Subaru Select Monitor”.

2. READ DIAGNOSTIC TROUBLE CODE (DTC) FOR ENGINE AND BODY INTEGRATED UNIT

Refer to “Read Diagnostic Trouble Code (DTC)” for information about how to indicate DTC. <Ref. to IM(diag)-9, Read Diagnostic Trouble Code (DTC).>

NOTE:
If a problem is detected, repair the trouble cause. <Ref. to IM(diag)-21, DTC B1572 IMM CIRCUIT FAILURE (EXCEPT ANTENNA CIRCUIT), Diagnostic Procedure with Diagnostic Trouble Code (DTC).>

6. Read Diagnostic Trouble Code (DTC)

A: OPERATION

1. ECM

For operation procedures, refer to the “PC application help for Subaru Select Monitor”.

NOTE:
For details concerning DTC, refer to the List of Diagnostic Trouble Codes (DTC). <Ref. to IM(diag)-15, LIST, List of Diagnostic Trouble Code (DTC).>

2. BODY INTEGRATED UNIT

For operation procedures, refer to the “PC application help for Subaru Select Monitor”.

NOTE:
For details concerning DTC, refer to the List of Diagnostic Trouble Codes (DTC). <Ref. to IM(diag)-15, LIST, List of Diagnostic Trouble Code (DTC).>

7. Clear Memory Mode

A: OPERATION

1. ECM

For operation procedures, refer to the “PC application help for Subaru Select Monitor”.

NOTE:
Initial diagnosis of electronic throttle control is performed after memory clearance. Wait for 10 seconds or more after turning the ignition switch to ON, and then start the engine.

2. BODY INTEGRATED UNIT

For operation procedures, refer to the “PC application help for Subaru Select Monitor”.

8. Diagnostics Chart for Security Indicator Light

A: INSPECTION

1. CHECK SECURITY INDICATOR LIGHT CIRCUIT

CAUTION:
When the body integrated unit is replaced, registration of the immobilizer system is required. For details, refer to the "REGISTRATION MANUAL FOR IMMOBILIZER".
WIRING DIAGRAM:

- Gasoline engine model

Immobilizer system <Ref. to WI(w/o HEV)-100, WIRING DIAGRAM, Immobilizer System.>

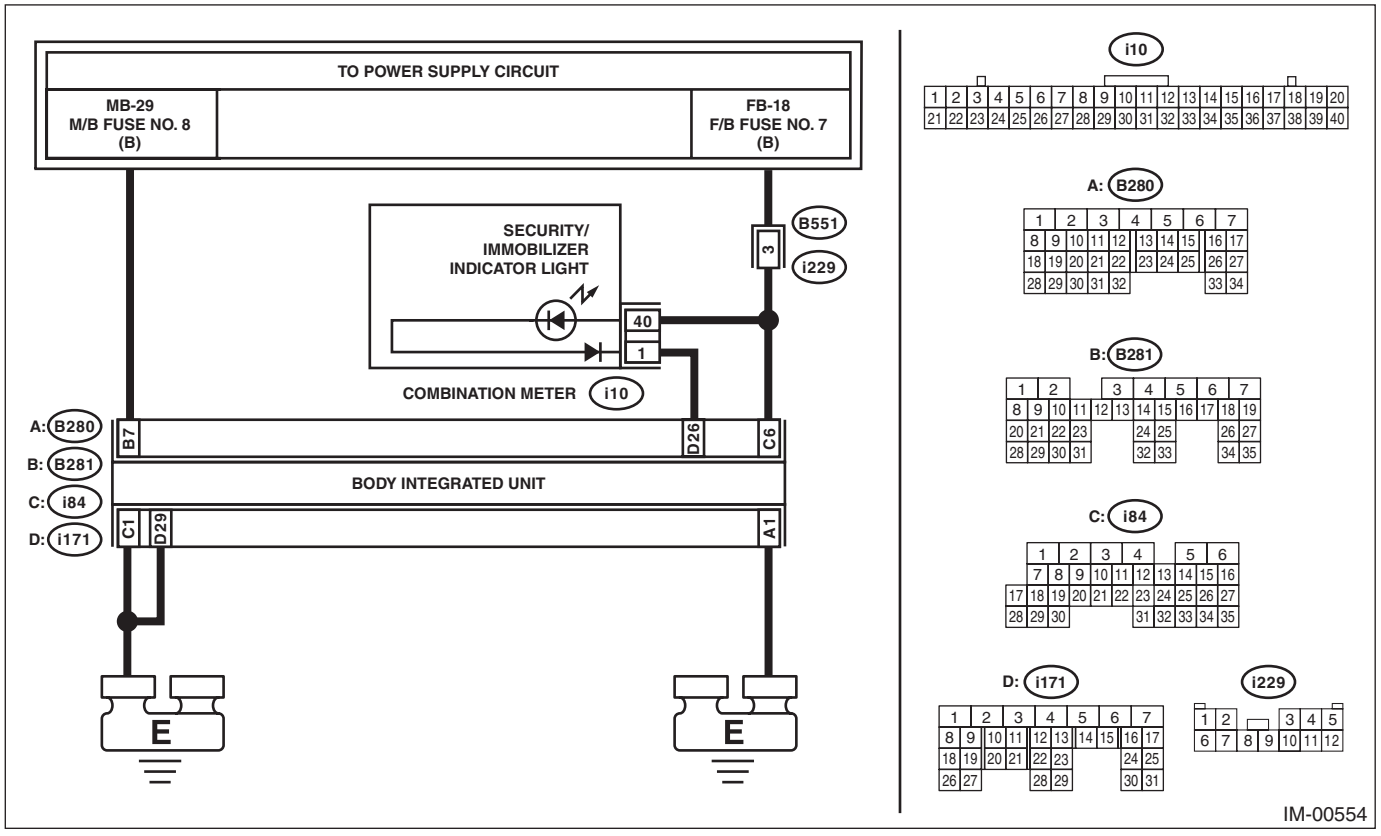

Diagnostics Chart for Security Indicator Light

- HEV model

Immobilizer system <Ref. to WI(HEV)-150, WIRING DIAGRAM, Immobilizer System.>

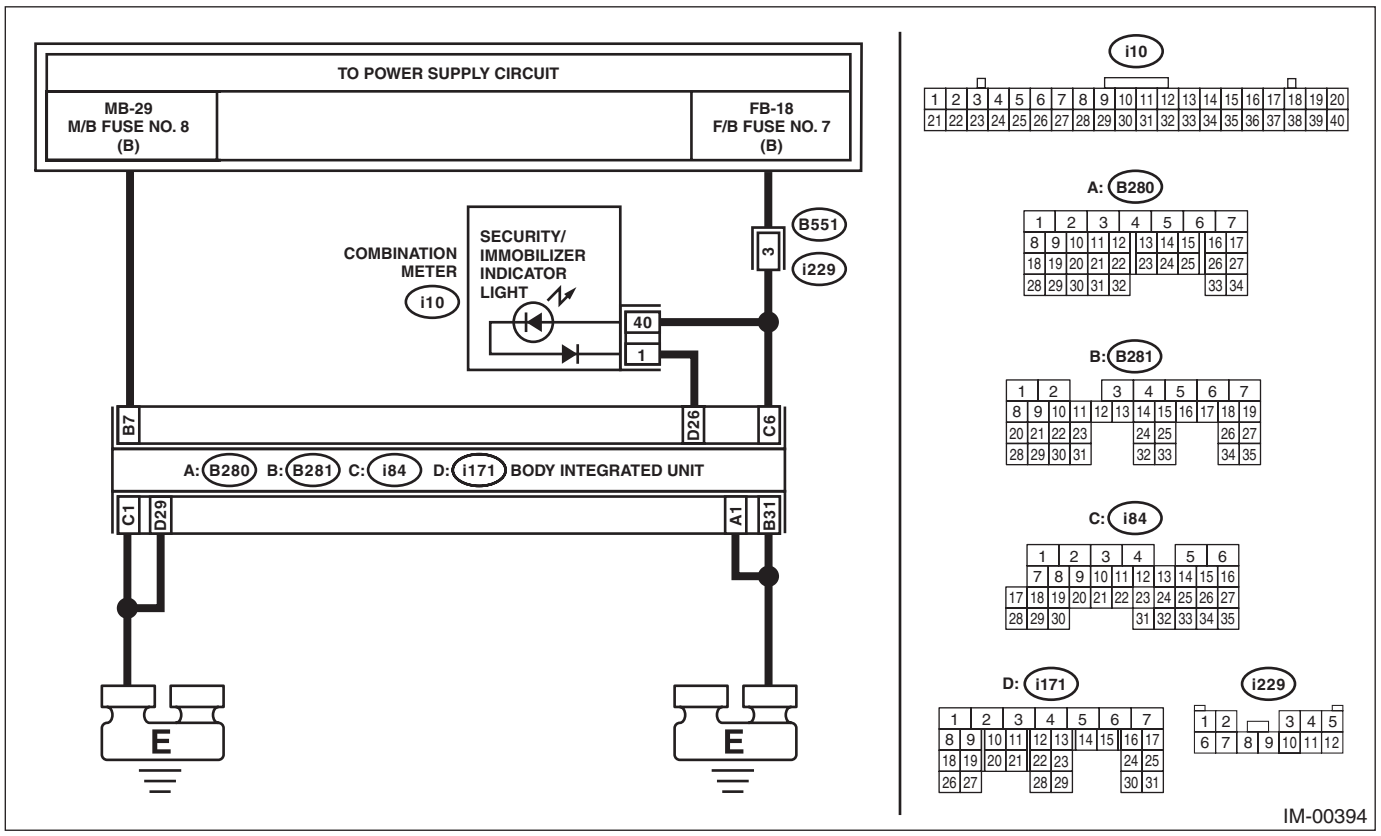

Step		Check	Yes	No
1	**CHECK FUSE.** 1) Remove the ignition key from ignition switch. Or, turn off the power. 2) Check the fuse (M/B No. 8).	Is the fuse OK?	Go to step **2**.	Replace the fuse. If the replaced fuse blows out easily, repair the short circuit in the harness between the fuse and body integrated unit.
2	**CHECK SECURITY INDICATOR LIGHT.** 1) Disconnect the connector from body integrated unit. 2) Connect the resistor (100 Ω) between the body integrated unit connector terminal (i171) No. 26 and chassis ground.	Does the security indicator light illuminate?	Go to step **3**.	Go to step **5**.
3	**CHECK BODY INTEGRATED UNIT GROUND CIRCUIT.** Measure the resistance between the body integrated unit connector terminal and chassis ground. ***Connector & terminal*** ***(B280) No. 1 — Chassis ground:*** ***(i84) No. 1 — Chassis ground:*** ***(i171) No. 29 — Chassis ground:*** ***(B281) No. 31 — Chassis ground: (HEV model only)***	Is the resistance less than 10 Ω?	Go to step **4**.	Repair the open circuit of the body integrated unit ground circuit.

	Step	Check	Yes	No
4	**CHECK BODY INTEGRATED UNIT POWER SUPPLY CIRCUIT.** Measure the voltage between the body integrated unit connector terminal and chassis ground. ***Connector & terminal*** ***(B281) No. 7 (+) — Chassis ground (–):*** ***(i84) No. 6 (+) — Chassis ground (–):***	Is the voltage 10 V or more?	Replace the body integrated unit. <Ref. to SL-82, Body Integrated Unit.>	Check the harness for open or short circuit between body integrated unit and fuse.
5	**CHECK COMBINATION METER CIRCUIT.** 1) Remove the combination meter. <Ref. to IDI-16, Combination Meter.> 2) Measure the voltage between combination meter connector terminal and chassis ground. ***Connector & terminal*** ***(i10) No. 40 (+) — Chassis ground (–):***	Is the voltage 10 V or more?	Go to step **6**.	Check for an open or short circuit in the harness between the combination meter and fuse.
6	**CHECK COMBINATION METER CIRCUIT.** Measure the resistance between the body integrated unit connector terminal and combination meter connector terminal. ***Connector & terminal*** ***(i171) No. 26 — (i10) No. 1:***	Is the resistance less than 10 Ω?	LED bulb is defective. Replace the combination meter case assembly. <Ref. to IDI-18, DISASSEMBLY, Combination Meter.>	Repair the harness or connector.

2. CHECK KEY SWITCH CIRCUIT

CAUTION:
When the body integrated unit is replaced, registration of the immobilizer system is required. For details, refer to the "REGISTRATION MANUAL FOR IMMOBILIZER".
WIRING DIAGRAM:
Immobilizer system <Ref. to WI(w/o HEV)-100, WIRING DIAGRAM, Immobilizer System.> <Ref. to WI(HEV)-150, WIRING DIAGRAM, Immobilizer System.>

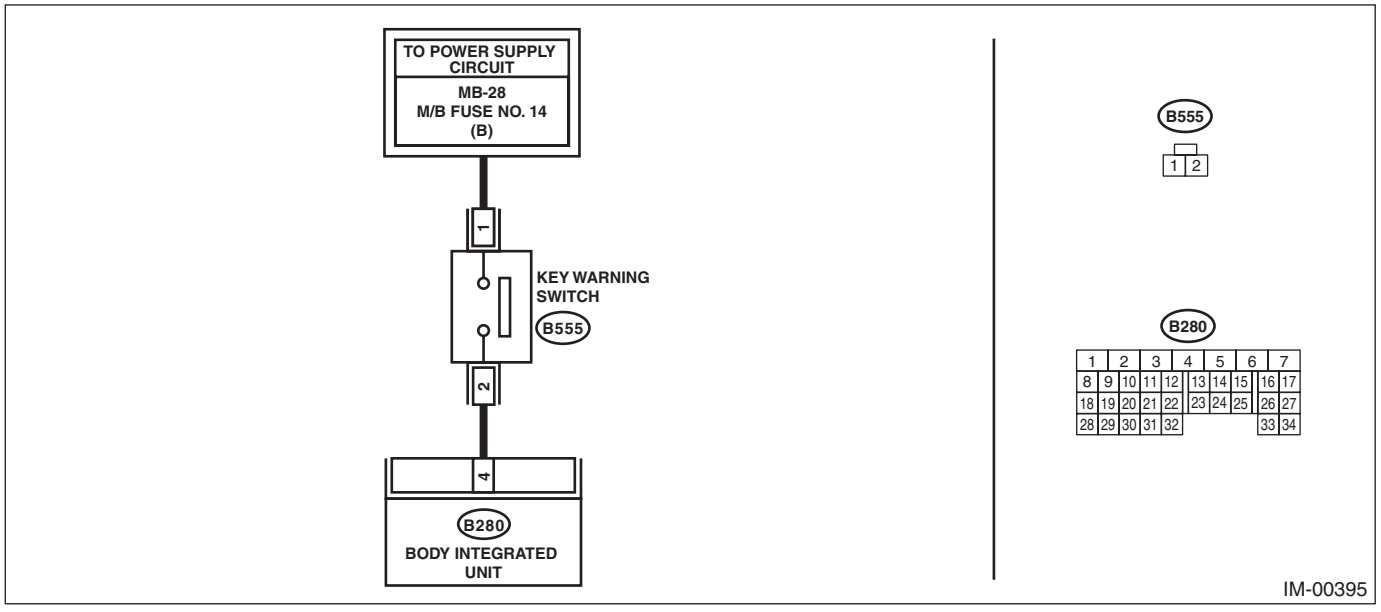

Diagnostics Chart for Security Indicator Light

	Step	Check	Yes	No
1	**CHECK POWER SUPPLY CIRCUIT.** 1) Disconnect the connector from key warning switch. 2) Measure the voltage between key warning switch connector terminal and chassis ground. ***Connector & terminal*** ***(B555) No. 1 (+) — Chassis ground (–):***	Is the voltage 10 V or more?	Go to step **2**.	Check the harness for an open or short between the key warning switch and fuse.
2	**CHECK KEY WARNING SWITCH.** 1) Insert the ignition key in the ignition switch. (OFF or ACC) 2) Measure the resistance between key warning switch connector terminals. ***Connector & terminal*** ***No. 1 — No. 2:***	Is the resistance less than 1 Ω?	Go to step **3**.	Replace the key warning switch.
3	**CHECK KEY WARNING SWITCH.** 1) Remove the ignition key from ignition switch. 2) Measure the resistance between key warning switch connector terminals. ***Connector & terminal*** ***No. 1 — No. 2:***	Is the resistance 1 MΩ or more?	Go to step **4**.	Replace the key warning switch.
4	**CHECK HARNESS BETWEEN KEY WARNING SWITCH AND BODY INTEGRATED UNIT.** 1) Disconnect the connector from body integrated unit. 2) Measure the resistance between key warning switch connector terminal and body integrated unit connector terminal. ***Connector & terminal*** ***(B555) No. 2 — (B280) No. 4:***	Is the resistance less than 10 Ω?	Replace the body integrated unit. <Ref. to SL-82, Body Integrated Unit.>	Repair the harness between key warning switch and body integrated unit.

9. List of Diagnostic Trouble Code (DTC)

A: LIST

1. ECM

DTC	Item	Contents of diagnosis	Index No.
B1570	Antenna	Faulty antenna	<Ref. to IM(diag)-17, DTC B1570 ANTENNA, Diagnostic Procedure with Diagnostic Trouble Code (DTC).>
B1571	Reference Code Incompatibility	Reference code incompatibility between body integrated unit and ECM	<Ref. to IM(diag)-20, DTC B1571 REFERENCE CODE INCOMPATIBILITY, Diagnostic Procedure with Diagnostic Trouble Code (DTC).>
B1572	IMM Circuit Failure (Except Antenna Circuit)	Communication failure between body integrated unit and ECM	<Ref. to IM(diag)-21, DTC B1572 IMM CIRCUIT FAILURE (EXCEPT ANTENNA CIRCUIT), Diagnostic Procedure with Diagnostic Trouble Code (DTC).>
B1574	Key Communication Failure	Communication failure between key and body integrated unit	<Ref. to IM(diag)-25, DTC B1574 KEY COMMUNICATION FAILURE, Diagnostic Procedure with Diagnostic Trouble Code (DTC).>
B1575	Incorrect Immobilizer Key	Incorrect immobilizer key (Use of unregistered key in body integrated unit)	<Ref. to IM(diag)-25, DTC B1575 INCORRECT IMMOBILIZER KEY, Diagnostic Procedure with Diagnostic Trouble Code (DTC).>
B1576	EGI Control Module EEPROM	ECM malfunctioning	<Ref. to IM(diag)-26, DTC B1576 EGI CONTROL MODULE EEPROM, Diagnostic Procedure with Diagnostic Trouble Code (DTC).>
B1577	IMM Control Module EEPROM	Body integrated unit malfunctioning	<Ref. to IM(diag)-26, DTC B1577 IMM CONTROL MODULE EEPROM, Diagnostic Procedure with Diagnostic Trouble Code (DTC).>
B1578	Meter Failure (Except for model for C0 or C5)	• Reference code incompatibility between combination meter and body integrated unit • Communication failure between body integrated unit and ECM	<Ref. to IM(diag)-27, DTC B1578 METER FAILURE, Diagnostic Procedure with Diagnostic Trouble Code (DTC).>
	Meter Failure (Model for C0 or C5)	• Reference code incompatibility between body integrated unit and security control module • Communication failure between body integrated unit and ECM	

NOTE:
Perform diagnosis of engine DTC when a DTC other than an immobilizer DTC is detected. <Ref. to EN(H4DO w/o HEV)(diag)-83, List of Diagnostic Trouble Code (DTC).>

2. BODY INTEGRATED UNIT

DTC	Item	Contents of diagnosis	Index No.	Relation between ECM and DTC
B1401	M Collation NG	Reference code incompatibility between combination meter and body integrated unit	<Ref. to IM(diag)-27, DTC B1401 M COLLATION NG, Diagnostic Procedure with Diagnostic Trouble Code (DTC).>	B1578
B1402	Immobilizer Key Collation NG	• Incorrect immobilizer key (Use of unregistered key in body integrated unit) • Faulty antenna • Communication failure between key and body integrated unit	<Ref. to IM(diag)-28, DTC B1402 IMMOBILIZER KEY COLLATION NG, Diagnostic Procedure with Diagnostic Trouble Code (DTC).>	• B1575 • B1570 • B1574
B1405	SCU Collation NG	Reference code incompatibility between body integrated unit and security control module	<Ref. to IM(diag)-28, DTC B1405 SCU COLLATION NG, Diagnostic Procedure with Diagnostic Trouble Code (DTC).>	B1578
B1406	SCU_EEPROM_NG	Malfunction of security control module	<Ref. to IM(diag)-28, DTC B1406 SCU_EEPROM_NG, Diagnostic Procedure with Diagnostic Trouble Code (DTC).>	B1578
B1407	M Communication Abnormal	Communication failure between body integrated unit and combination meter	<Ref. to IM(diag)-29, DTC B1407 M COMMUNICATION ABNORMAL, Diagnostic Procedure with Diagnostic Trouble Code (DTC).>	B1578
B1408	Meter EEPROM Abnormal	Combination meter malfunction	<Ref. to IM(diag)-29, DTC B1408 METER EEPROM ABNORMAL, Diagnostic Procedure with Diagnostic Trouble Code (DTC).>	B1578
B1409	SCU Communication Abnormal	Communication failure between body integrated unit and security control module	<Ref. to IM(diag)-30, DTC B1409 SCU COMMUNICATION ABNORMAL, Diagnostic Procedure with Diagnostic Trouble Code (DTC).>	B1578
B1410	Transponder Communication Abnormal	Communication failure between key and body integrated unit	<Ref. to IM(diag)-33, DTC B1410 TRANSPONDER COMMUNICATION ABNORMAL, Diagnostic Procedure with Diagnostic Trouble Code (DTC).>	B1574
B1411	Immobilizer Antenna Abnormal	Faulty antenna	<Ref. to IM(diag)-33, DTC B1411 IMMOBILIZER ANTENNA ABNORMAL, Diagnostic Procedure with Diagnostic Trouble Code (DTC).>	B1570

NOTE:
The starter relay control is performed in immobilizer system. When the body integrated unit detects a nonconformity of reference code, it immediately outputs a starter relay cut signal to ECM, and then ECM stops the starter relay operation. In this case, engine does not start, and DTC is not recorded in ECM. Check that the engine does not start on the DTC of body integrated unit.

10.Diagnostic Procedure with Diagnostic Trouble Code (DTC)

A: DTC B1570 ANTENNA

DTC DETECTING CONDITION:

Faulty antenna

CAUTION:

When the body integrated unit is replaced, registration of the immobilizer system is required. For details, refer to the "REGISTRATION MANUAL FOR IMMOBILIZER".

WIRING DIAGRAM:

- Gasoline engine model

Immobilizer system <Ref. to WI(w/o HEV)-100, WIRING DIAGRAM, Immobilizer System.>

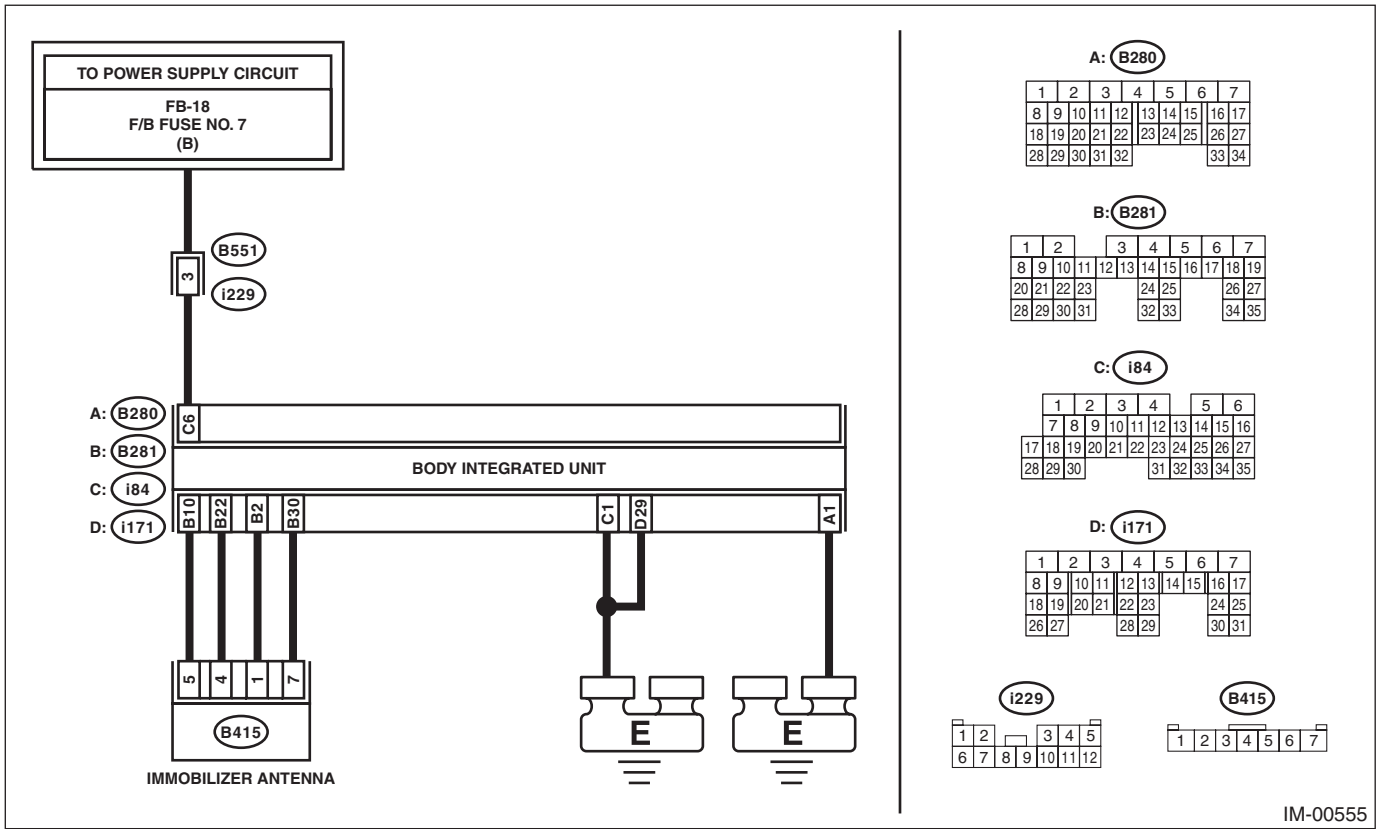

- HEV model

Immobilizer system <Ref. to WI(w/o HEV)-100, WIRING DIAGRAM, Immobilizer System.>

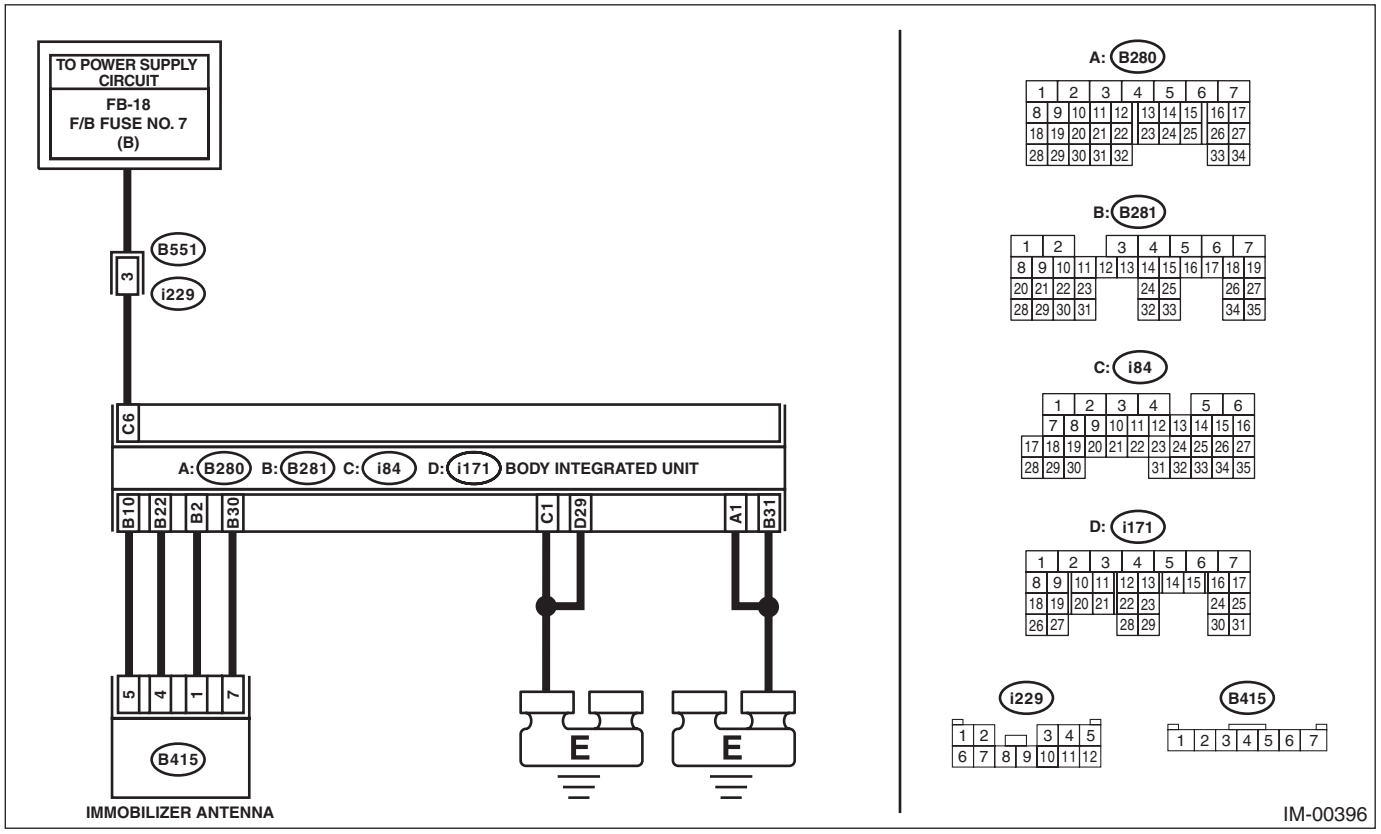

Step		Check	Yes	No
1	**CHECK BODY INTEGRATED UNIT POWER SUPPLY CIRCUIT.** 1) Turn the ignition switch to OFF. 2) Disconnect the connector from body integrated unit. 3) Measure the voltage between the body integrated unit connector terminal and chassis ground. ***Connector & terminal*** ***(i84) No. 6 (+) — Chassis ground (–):***	Is the voltage 10 V or more?	Go to step **2**.	Check the harness for open or short circuit between body integrated unit and fuse.
2	**CHECK BODY INTEGRATED UNIT GROUND CIRCUIT.** Measure the resistance between the body integrated unit connector terminal and chassis ground. ***Connector & terminal*** ***(B280) No. 1 — Chassis ground:*** ***(i84) No. 1 — Chassis ground:*** ***(i171) No. 29 — Chassis ground:*** ***(B281) No. 31 — Chassis ground: (HEV model only)***	Is the resistance less than 10 Ω?	Go to step **3**.	Repair the open circuit of the body integrated unit ground circuit.

	Step	Check	Yes	No
3	**CHECK ANTENNA POWER SUPPLY CIRCUIT.** 1) Connect the connector to body integrated unit. 2) Disconnect the connector from the antenna. 3) Insert the ignition key into the key cylinder, then measure the voltage between the antenna connector terminal and the chassis ground. ***Connector & terminal*** ***(B415) No. 1 (+) — Chassis ground (–):***	Is the voltage 5±0.5 V approx. 200 ms after inserting the ignition key into the key cylinder? And then, does the voltage return to 0 V within 2 s?	Go to step **5**.	Go to step **4**.
4	**CHECK ANTENNA POWER SUPPLY CIRCUIT.** 1) Disconnect the connector from body integrated unit. 2) Measure the resistance of body integrated unit connector terminal and antenna connector terminal. ***Connector & terminal*** ***(B281) No. 2 — (B415) No. 1:***	Is the resistance less than 10 Ω?	Replace the body integrated unit. <Ref. to SL-82, Body Integrated Unit.>	Repair the harness or connector between body integrated unit and antenna.
5	**CHECK ANTENNA GROUND CIRCUIT.** Measure the resistance between antenna connector terminal and chassis ground. ***Connector & terminal*** ***(B417) No. 7 — Chassis ground:***	Is the resistance less than 10 Ω?	Go to step **7**.	Go to step **6**.
6	**CHECK ANTENNA GROUND CIRCUIT.** 1) Disconnect the connector from body integrated unit. 2) Measure the resistance between antenna connector terminal and chassis ground. ***Connector & terminal*** ***(B281) No. 30 — (B415) No. 7:***	Is the resistance less than 10 Ω?	Replace the body integrated unit. <Ref. to SL-82, Body Integrated Unit.>	Repair the harness or connector between body integrated unit and antenna.
7	**CHECK ANTENNA COMMUNICATION CIRCUIT.** Measure the resistance of body integrated unit connector terminal and antenna connector terminal. ***Connector & terminal*** ***(B281) No. 10 — (B415) No. 5:*** ***(B281) No. 22 — (B415) No. 4:***	Is the resistance less than 10 Ω?	Go to step **8**.	Repair the harness or connector between body integrated unit and antenna.
8	**CHECK ANTENNA.** 1) Replace the immobilizer antenna. 2) Insert the ignition key in the ignition switch. (OFF or ACC) 3) Check DTC of body integrated unit.	Is DTC B1411 detected?	Replace the body integrated unit. <Ref. to SL-82, Body Integrated Unit.>	Antenna has a failure.

B: DTC B1571 REFERENCE CODE INCOMPATIBILITY

DTC DETECTING CONDITION:
Reference code incompatibility between body integrated unit and ECM

CAUTION:
When the body integrated unit is replaced, registration of the immobilizer system is required. For details, refer to the "REGISTRATION MANUAL FOR IMMOBILIZER".

	Step	Check	Yes	No
1	**CONFIRM NUMBER OF REGISTERED IMMOBILIZER KEY.** Confirm the number of registered immobilizer key. Refer to the "REGISTRATION MANUAL FOR IMMOBILIZER".	Is the number of registration 0?	Go to step **2**.	Go to step **3**.
2	**PERFORM IMMOBILIZER SYSTEM REGISTRATION.** Register the immobilizer system. Refer to the "REGISTRATION MANUAL FOR IMMOBILIZER".	Is registration complete?	Finish the diagnosis.	Go to step **4**.
3	**PERFORM ECM REGISTRATION.** Perform ECM registration. Refer to the "REGISTRATION MANUAL FOR IMMOBILIZER".	Is registration complete?	Finish the diagnosis.	Go to step **4**.
4	**CHECK FOR ANY OTHER DTC ON DISPLAY.**	Is any other DTC displayed?	Perform the diagnosis according to DTC.	Go to step **5**.
5	**PERFORM ECM REGISTRATION.** 1) Replace the ECM. 2) Perform ECM registration. Refer to the "REGISTRATION MANUAL FOR IMMOBILIZER".	Is registration complete?	Finish the diagnosis.	Replace the body integrated unit. <Ref. to SL-82, Body Integrated Unit.>

C: DTC B1572 IMM CIRCUIT FAILURE (EXCEPT ANTENNA CIRCUIT)

DTC DETECTING CONDITION:

Communication failure between body integrated unit and ECM

CAUTION:

When the body integrated unit is replaced, registration of the immobilizer system is required. For details, refer to the "REGISTRATION MANUAL FOR IMMOBILIZER".

WIRING DIAGRAM:

- Gasoline engine model

Immobilizer system <Ref. to WI(w/o HEV)-100, WIRING DIAGRAM, Immobilizer System.>

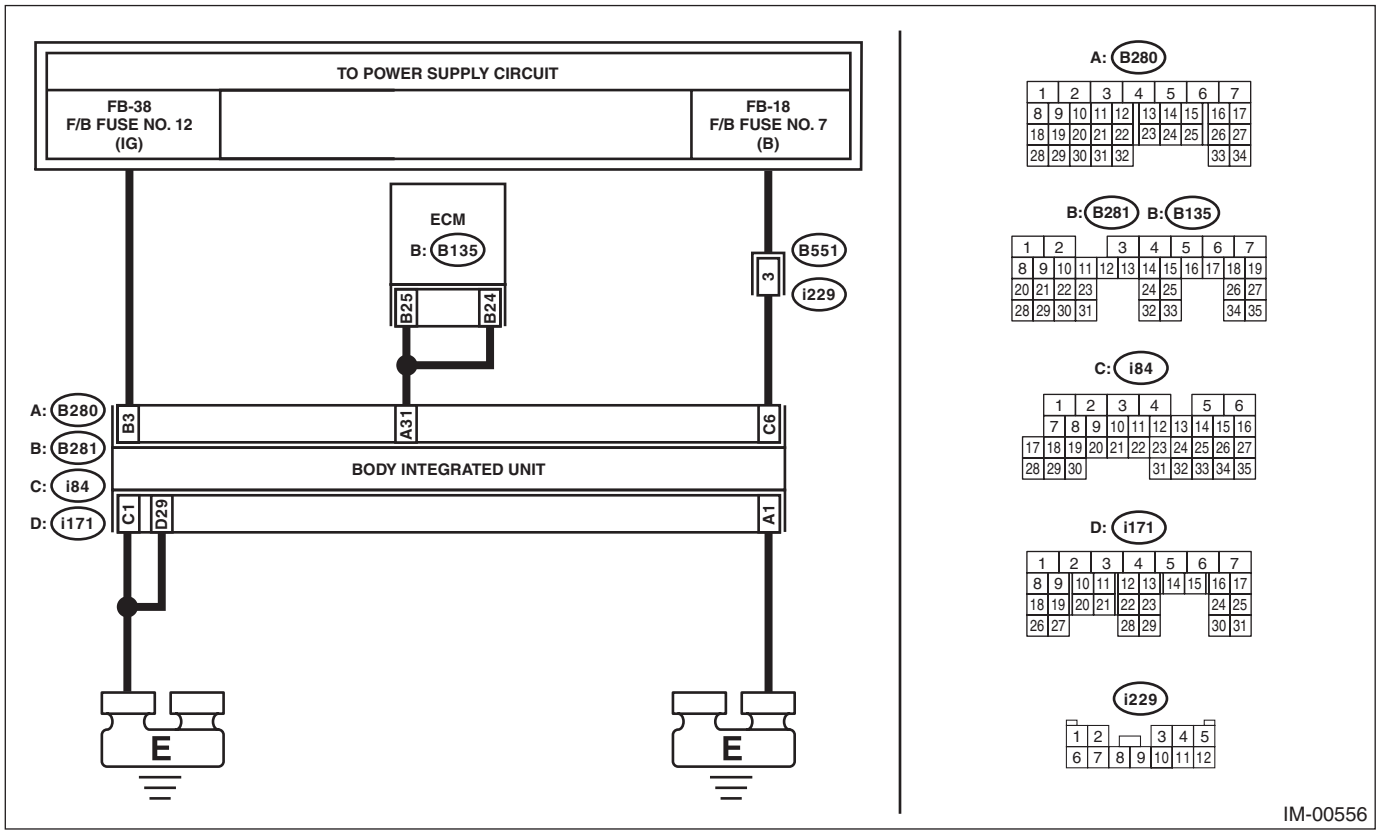

- HEV model

Immobilizer system <Ref. to WI(HEV)-150, WIRING DIAGRAM, Immobilizer System.>

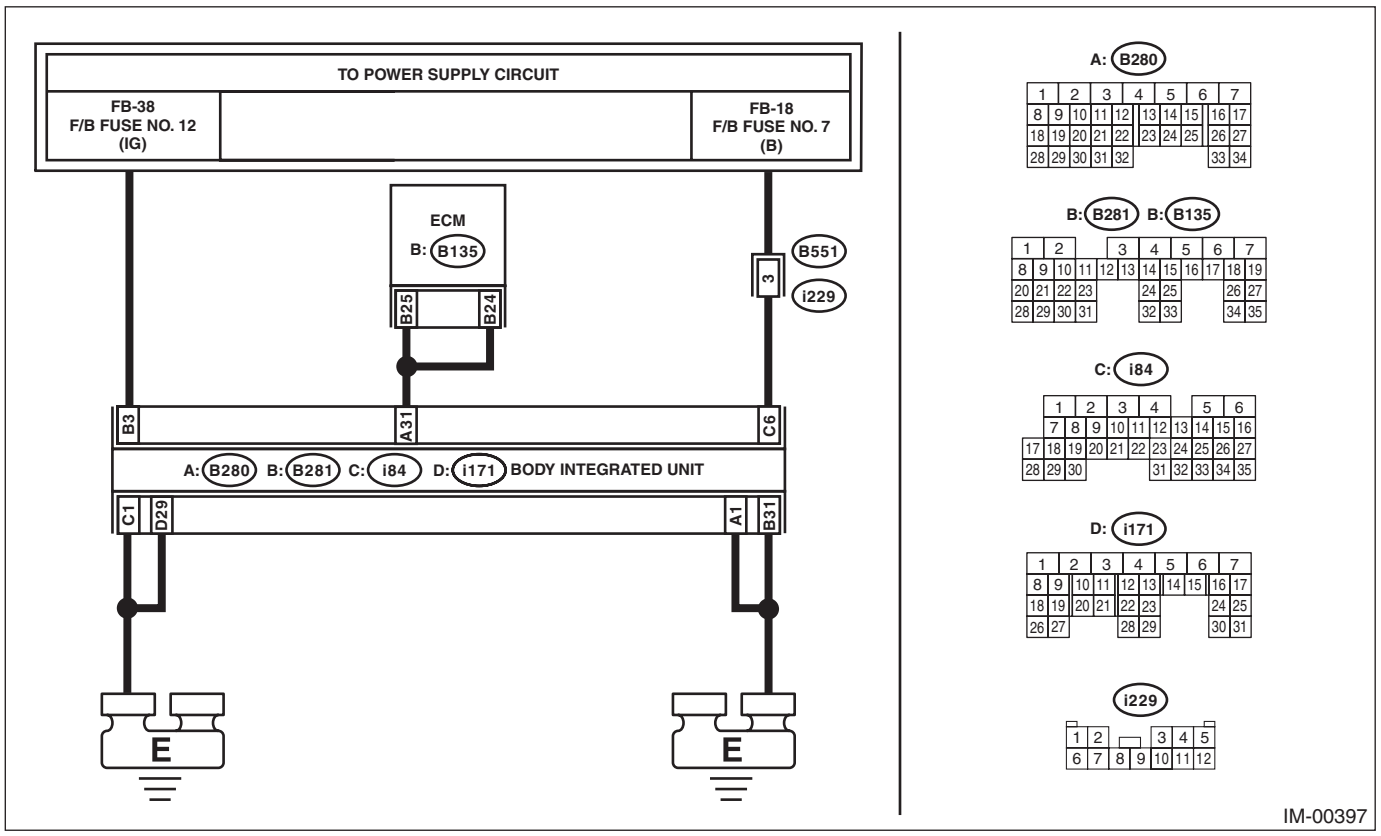

Step		Check	Yes	No
1	**CHECK BODY INTEGRATED UNIT POWER SUPPLY CIRCUIT.** 1) Turn the ignition switch to OFF. 2) Disconnect the connector from body integrated unit. 3) Measure the voltage between the body integrated unit connector terminal and chassis ground. ***Connector & terminal*** ***(i84) No. 6 (+) — Chassis ground (–):***	Is the voltage 10 V or more?	Go to step **2**.	Check the harness for open or short circuit between body integrated unit and fuse.
2	**CHECK BODY INTEGRATED UNIT POWER SUPPLY CIRCUIT.** 1) Turn the ignition switch to ON. 2) Measure the voltage between the body integrated unit connector terminal and chassis ground. ***Connector & terminal*** ***(B281) No. 3 (+) — Chassis ground (–):***	Is the voltage 10 V or more?	Go to step **3**.	Check the harness for open or short circuit between the body integrated unit and ignition switch.

	Step	Check	Yes	No
3	**CHECK BODY INTEGRATED UNIT GROUND CIRCUIT.** 1) Turn the ignition switch to OFF. 2) Measure the resistance between the body integrated unit connector terminal and chassis ground. ***Connector & terminal*** ***(B280) No. 1 — Chassis ground:*** ***(i84) No. 1 — Chassis ground:*** ***(i171) No. 29 — Chassis ground:*** ***(B281) No. 31 — Chassis ground: (HEV model only)***	Is the resistance less than 10 Ω?	Go to step **4**.	Repair the open circuit of the body integrated unit ground circuit.
4	**CHECK GROUND CIRCUIT FOR ECM.** Measure the resistance between the ECM ground terminal and engine ground.	Is the resistance less than 10 Ω?	Go to step **5**.	Repair the ECM ground circuit.
5	**CHECK HARNESS BETWEEN BODY INTEGRATED UNIT AND ECM.** 1) Disconnect the connector from ECM. 2) Measure the resistance between body integrated unit connector terminal and ECM connector terminal. ***Connector & terminal*** ***(B280) No. 31 — (B135) No. 25:*** ***(B280) No. 31 — (B135) No. 24:***	Is the resistance less than 10 Ω?	Go to step **6**.	Repair the open circuit of the harness between the body integrated unit and ECM.
6	**CHECK COMMUNICATION CIRCUIT HARNESS.** 1) Turn the ignition switch to ON. 2) Measure the voltage between the body integrated unit connector terminal and chassis ground. ***Connector & terminal*** ***(B280) No. 31 (+) — Chassis ground (–):***	Is the voltage 6 V or more?	Repair the harness between body integrated unit and ECM.	Go to step **7**.
7	**CHECK COMMUNICATION CIRCUIT HARNESS.** Measure the voltage between ECM connector terminal and engine ground. ***Connector & terminal*** ***(B135) No. 25 (+) — Engine ground (–):*** ***(B135) No. 24 (+) — Engine ground (–):***	Is the voltage 6 V or more?	Repair the harness between body integrated unit and ECM.	Go to step **8**.
8	**CHECK COMMUNICATION CIRCUIT HARNESS.** 1) Turn the ignition switch to OFF. 2) Measure the resistance between the body integrated unit connector terminal and chassis ground. ***Connector & terminal*** ***(B280) No. 31 — Chassis ground:***	Is the resistance less than 10 Ω?	Repair the harness between body integrated unit and ECM.	Go to step **9**.
9	**CHECK COMMUNICATION CIRCUIT HARNESS.** Measure the resistance between ECM connector terminal and engine ground. ***Connector & terminal*** ***(B135) No. 25 — Engine ground:*** ***(B135) No. 24 — Engine ground:***	Is the resistance less than 10 Ω?	Repair the harness between body integrated unit and ECM.	Go to step **10**.

	Step	Check	Yes	No
10	**CHECK ECM.** 1) Replace the ECM. (Do not perform ECM registration.) 2) Turn the ignition switch to ON. 3) Wait for 5 seconds. 4) Read the DTC relating the ECM using the Subaru Select Monitor.	Is DTC B1572 detected?	Replace the body integrated unit. <Ref. to SL-82, Body Integrated Unit.>	ECM has a failure. Perform ECM registration. Refer to the “REGISTRATION MANUAL FOR IMMOBILIZER”.

D: DTC B1574 KEY COMMUNICATION FAILURE

DTC DETECTING CONDITION:
Communication failure between key and body integrated unit

CAUTION:
When the body integrated unit is replaced, registration of the immobilizer system is required. For details, refer to the "REGISTRATION MANUAL FOR IMMOBILIZER".

	Step	Check	Yes	No
1	**CHECK IGNITION KEY.** 1) Remove the ignition key from the ignition switch. 2) Insert the ignition key into the ignition switch, and then turn the ignition switch to ON. 3) Read the DTC of body integrated unit using Subaru Select Monitor.	Is DTC B1410 detected?	Go to step **2**.	Finish the diagnosis.
2	**CHECK IGNITION KEY.** 1) Prepare another ignition key. 2) Insert the ignition key into the ignition switch, and then turn the ignition switch to ON. 3) Read the DTC of body integrated unit using Subaru Select Monitor.	Is DTC B1410 detected?	Go to step **3**.	Ignition key unit was defective.
3	**CHECK IMMOBILIZER ANTENNA.** 1) Replace the immobilizer antenna. 2) Insert the ignition key into the ignition switch, and then turn the ignition switch to ON. 3) Read the DTC of body integrated unit using Subaru Select Monitor.	Is DTC B1410 detected?	Replace the body integrated unit. <Ref. to SL-82, Body Integrated Unit.>	Immobilizer antenna was defective.

E: DTC B1575 INCORRECT IMMOBILIZER KEY

DTC DETECTING CONDITION:
Incorrect immobilizer key (use of unregistered key in body integrated unit)

CAUTION:
When the body integrated unit is replaced, registration of the immobilizer system is required. For details, refer to the "REGISTRATION MANUAL FOR IMMOBILIZER".

	Step	Check	Yes	No
1	**PERFORM IGNITION KEY REGISTRATION.** Perform key registration. Refer to the "REGISTRATION MANUAL FOR IMMOBILIZER".	Is key registration complete?	Finish the diagnosis.	Replace ignition keys (including transponder) which cannot be registered. Go to step **2**.
2	**PERFORM IGNITION KEY REGISTRATION.** Perform key registration. Refer to the "REGISTRATION MANUAL FOR IMMOBILIZER".	Is key registration complete?	Finish the diagnosis.	Replace the body integrated unit. <Ref. to SL-82, Body Integrated Unit.>

F: DTC B1576 EGI CONTROL MODULE EEPROM

DTC DETECTING CONDITION:

- ECM malfunctioning
- Inaccessible ROM in ECM during key registration.

CAUTION:
When the ECM is replaced, registration of the immobilizer system is required. For details, refer to the "REGISTRATION MANUAL FOR IMMOBILIZER".

	Step	Check	Yes	No
1	**PERFORM ECM REGISTRATION.** Perform ECM registration. Refer to the "REGISTRATION MANUAL FOR IMMOBILIZER".	Is registration complete?	Finish the diagnosis.	Go to step **2**.
2	**PERFORM ECM REGISTRATION.** Perform ECM registration. Refer to the "REGISTRATION MANUAL FOR IMMOBILIZER".	Is registration complete?	Finish the diagnosis.	Go to step **3**.
3	**PERFORM ECM REGISTRATION.** Perform ECM registration. Refer to the "REGISTRATION MANUAL FOR IMMOBILIZER".	Is registration complete?	Finish the diagnosis.	Replace the ECM. <Ref. to FU(H4DO(w/o HEV))-106, Engine Control Module (ECM).>

G: DTC B1577 IMM CONTROL MODULE EEPROM

DTC DETECTING CONDITION:

- Body integrated unit malfunctioning
- Failed to access ROM inside the body integrated unit.

CAUTION:
When the body integrated unit is replaced, registration of the immobilizer system is required. For details, refer to the "REGISTRATION MANUAL FOR IMMOBILIZER".

	Step	Check	Yes	No
1	**PERFORM ECM REGISTRATION.** Perform ECM registration. Refer to the "REGISTRATION MANUAL FOR IMMOBILIZER".	Is registration complete?	Finish the diagnosis.	Go to step **2**.
2	**PERFORM ECM REGISTRATION.** Perform ECM registration. Refer to the "REGISTRATION MANUAL FOR IMMOBILIZER".	Is registration complete?	Finish the diagnosis.	Go to step **3**.
3	**PERFORM ECM REGISTRATION.** Perform ECM registration. Refer to the "REGISTRATION MANUAL FOR IMMOBILIZER".	Is registration complete?	Finish the diagnosis.	Replace the body integrated unit. <Ref. to SL-82, Body Integrated Unit.>

H: DTC B1578 METER FAILURE

DTC DETECTING CONDITION:

- Except for C0 and C5 models

Reference code incompatibility between combination meter and body integrated unit or communication failure between body integrated unit and ECM

- For C0 and C5 models

Reference code incompatibility between security control module and body integrated unit or communication failure between body integrated unit and ECM

	Step	Check	Yes	No
1	**CHECK DTC.** Read the DTC of body integrated unit using Subaru Select Monitor.	Is any of DTC B1401, B1405, B1406, B1407, B1408 or B1409 detected?	Perform the diagnosis according to the DTC.	<Ref. to IM(diag)-21, DTC B1572 IMM CIRCUIT FAILURE (EXCEPT ANTENNA CIRCUIT), Diagnostic Procedure with Diagnostic Trouble Code (DTC).>

I: DTC B1401 M COLLATION NG

DTC DETECTING CONDITION:

Reference code incompatibility between combination meter and body integrated unit

CAUTION:

When the combination meter is replaced, registration of the immobilizer system is required. For details, refer to the "REGISTRATION MANUAL FOR IMMOBILIZER".

	Step	Check	Yes	No
1	**CHECK DTC.** Read the DTC of body integrated unit using Subaru Select Monitor.	Is any of DTC B1407 or B1408 detected?	Perform the diagnosis according to the DTC.	Go to step **2**.
2	**CHECK COMBINATION METER REGISTRATION.** Perform registration of combination meter. Refer to the "REGISTRATION MANUAL FOR IMMOBILIZER".	Is registration complete?	Finish the diagnosis.	Go to step **3**.
3	**CHECK DTC.** Read the DTC of body integrated unit using Subaru Select Monitor.	Is any of DTC B1407 or B1408 detected?	Perform the diagnosis according to the DTC.	Replace the combination meter. <Ref. to IDI-16, Combination Meter.>

J: DTC B1402 IMMOBILIZER KEY COLLATION NG

DTC DETECTING CONDITION:

- Incorrect immobilizer key (use of unregistered key in body integrated unit)
- Faulty antenna
- Communication failure between key and body integrated unit

	Step	Check	Yes	No
1	**CHECK DTC.** Read the DTC of body integrated unit using Subaru Select Monitor.	Is any of DTC B1410 or B1411 detected?	Perform the diagnosis according to the DTC.	<Ref. to IM(diag)-25, DTC B1575 INCORRECT IMMOBILIZER KEY, Diagnostic Procedure with Diagnostic Trouble Code (DTC).>

K: DTC B1405 SCU COLLATION NG

DTC DETECTING CONDITION:

Reference code incompatibility between security control module and body integrated unit

CAUTION:

When the security control module is replaced, registration of the immobilizer system is required. For details, refer to the "REGISTRATION MANUAL FOR IMMOBILIZER".

	Step	Check	Yes	No
1	**CHECK DTC.** Read the DTC of body integrated unit using Subaru Select Monitor.	Is any of DTC B1406 or B1409 detected?	Perform the diagnosis according to DTC.	Go to step **2**.
2	**PERFORM SECURITY CONTROL MODULE REGISTRATION.** Perform security control module registration. Refer to the "REGISTRATION MANUAL FOR IMMOBILIZER".	Is registration complete?	Finish the diagnosis.	Go to step **3**.
3	**CHECK DTC.** Read the DTC of body integrated unit using Subaru Select Monitor.	Is any of DTC B1406 or B1409 detected?	Perform the diagnosis according to DTC.	Replace the security control module. <Ref. to SL-75, Security Control Module.>

L: DTC B1406 SCU_EEPROM_NG

DTC DETECTING CONDITION:

- Defective security control module
- ROM of security control module cannot be accessed

CAUTION:

When the security control module is replaced, registration of the immobilizer system is required. For details, refer to the "REGISTRATION MANUAL FOR IMMOBILIZER".

	Step	Check	Yes	No
1	**PERFORM SECURITY CONTROL MODULE REGISTRATION.** 1) Perform security control module registration. Refer to the "REGISTRATION MANUAL FOR IMMOBILIZER". 2) Read the DTC of body integrated unit using Subaru Select Monitor.	Is DTC B1406 detected?	Replace the security control module. <Ref. to SL-75, Security Control Module.>	Finish the diagnosis.

M: DTC B1407 M COMMUNICATION ABNORMAL

DTC DETECTING CONDITION:
Communication failure between body integrated unit and combination meter

CAUTION:
When the combination meter is replaced, registration of the immobilizer system is required. For details, refer to the "REGISTRATION MANUAL FOR IMMOBILIZER".

	Step	Check	Yes	No
1	**CHECK DTC.** Read the DTC of body integrated unit using Subaru Select Monitor.	Is DTC of the body integrated unit except for DTC B1407 displayed?	Perform the diagnosis according to the DTC.	Replace the combination meter. <Ref. to IDI-16, Combination Meter.>

N: DTC B1408 METER EEPROM ABNORMAL

DTC DETECTING CONDITION:
Defective combination meter

CAUTION:
When the combination meter is replaced, registration of the immobilizer system is required. For details, refer to the "REGISTRATION MANUAL FOR IMMOBILIZER".

	Step	Check	Yes	No
1	**CHECK COMBINATION METER REGISTRATION.** 1) Perform registration of combination meter. Refer to the "REGISTRATION MANUAL FOR IMMOBILIZER". 2) Read the DTC of body integrated unit using Subaru Select Monitor.	Is DTC B1408 detected?	Replace the combination meter. <Ref. to IDI-16, Combination Meter.>	Finish the diagnosis.

O: DTC B1409 SCU COMMUNICATION ABNORMAL

DTC DETECTING CONDITION:

Communication failure between body integrated unit and security control module

CAUTION:

When the body integrated unit is replaced, registration of the immobilizer system is required. For details, refer to the "REGISTRATION MANUAL FOR IMMOBILIZER".

WIRING DIAGRAM:

- Gasoline engine model

Immobilizer system <Ref. to WI(w/o HEV)-100, WIRING DIAGRAM, Immobilizer System.>

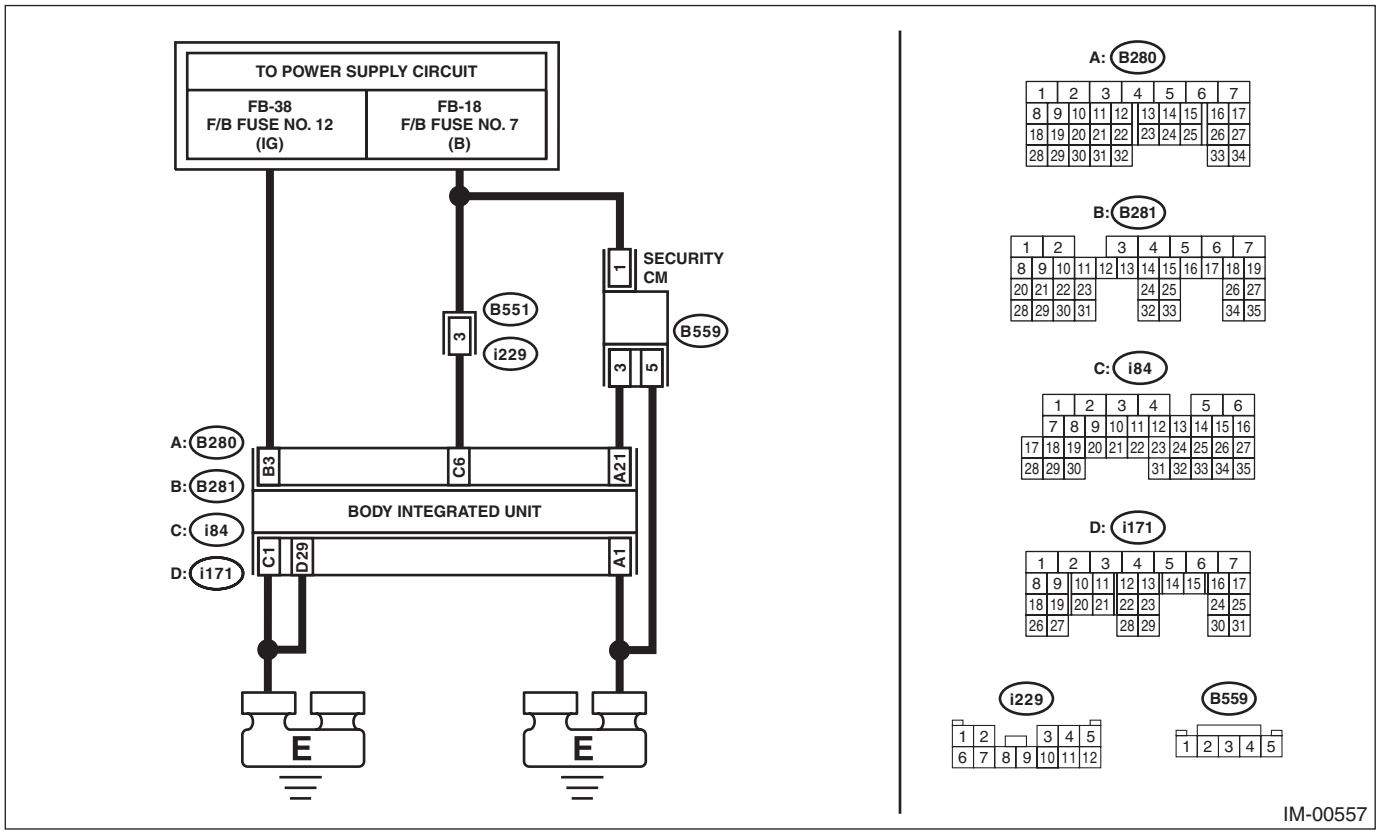

• HEV model

Immobilizer system <Ref. to WI(HEV)-150, WIRING DIAGRAM, Immobilizer System.>

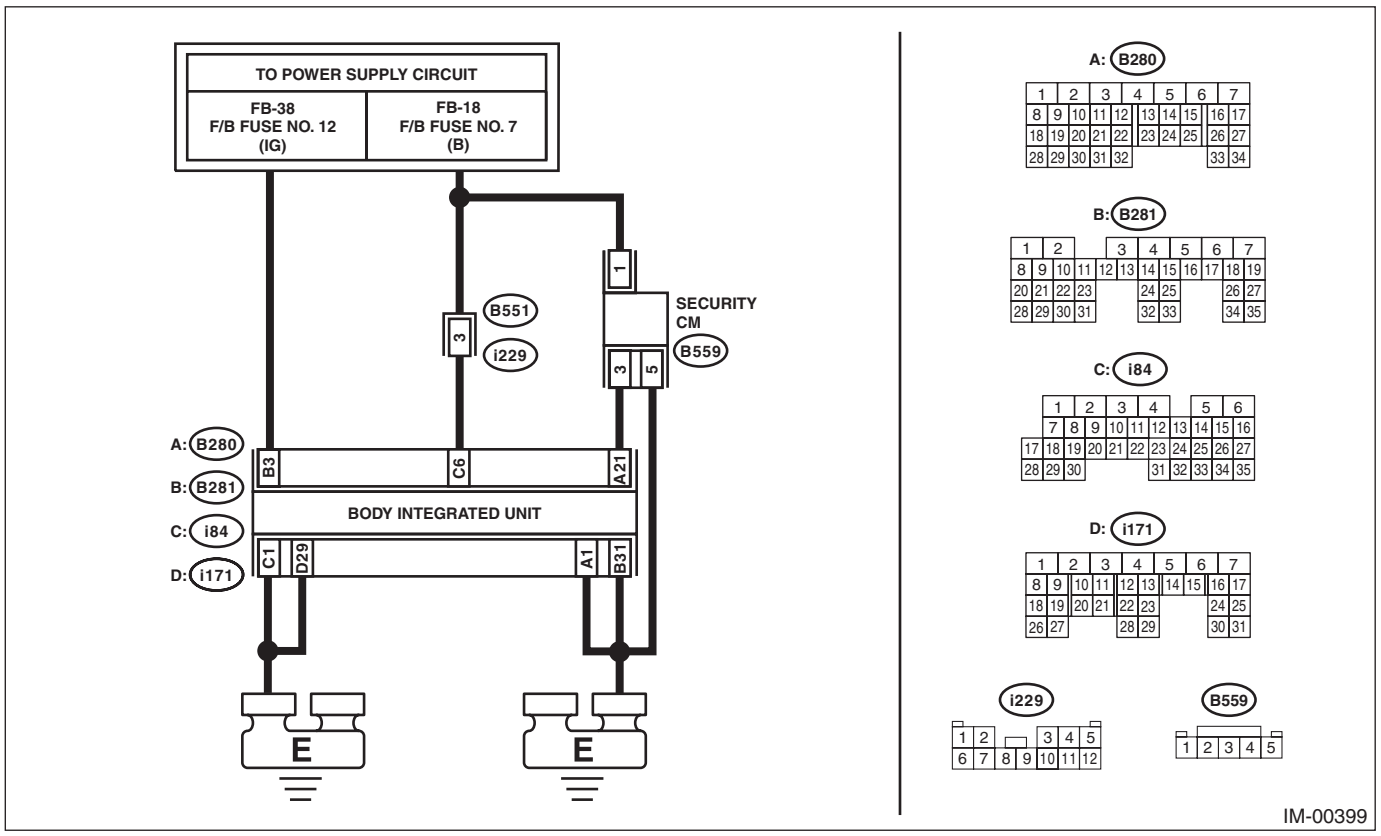

Step		Check	Yes	No
1	**CHECK BODY INTEGRATED UNIT POWER SUPPLY CIRCUIT.** 1) Turn the ignition switch to OFF. 2) Disconnect the connector from body integrated unit. 3) Measure the voltage between the body integrated unit connector terminal and chassis ground. ***Connector & terminal*** ***(i84) No. 6 (+) — Chassis ground (–):***	Is the voltage 10 V or more?	Go to step **2**.	Check the harness for open or short circuit between body integrated unit and fuse.
2	**CHECK BODY INTEGRATED UNIT POWER SUPPLY CIRCUIT.** 1) Turn the ignition switch to ON. 2) Measure the voltage between the body integrated unit connector terminal and chassis ground. ***Connector & terminal*** ***(B281) No. 3 (+) — Chassis ground (–):***	Is the voltage 10 V or more?	Go to step **3**.	Check the harness for open or short circuit between the body integrated unit and ignition switch.

	Step	Check	Yes	No
3	**CHECK BODY INTEGRATED UNIT GROUND CIRCUIT.** 1) Turn the ignition switch to OFF. 2) Measure the resistance between the body integrated unit connector terminal and chassis ground. ***Connector & terminal*** ***(B280) No. 1 — Chassis ground:*** ***(i84) No. 1 — Chassis ground:*** ***(i171) No. 29 — Chassis ground:*** ***(B281) No. 31 — Chassis ground: (HEV model only)***	Is the resistance less than 10 Ω?	Go to step **4**.	Repair the open circuit of the body integrated unit ground circuit.
4	**CHECK SECURITY CONTROL MODULE POWER SUPPLY CIRCUIT.** 1) Disconnect the connector from the security control module. 2) Measure the power supply between security control module connector terminal and chassis ground. ***Connector & terminal*** ***(B559) No. 1 (+) — Chassis ground (–):***	Is the voltage 10 V or more?	Go to step **5**.	Check for an open or short circuit in the harness between security control module and fuse.
5	**CHECK SECURITY CONTROL MODULE GROUND CIRCUIT.** Measure the resistance between security control module connector terminal and chassis ground. ***Connector & terminal*** ***(B559) No. 5 — Chassis ground:***	Is the resistance less than 10 Ω?	Go to step **6**.	Repair the open circuit of the security control module ground circuit.
6	**CHECK HARNESS BETWEEN BODY INTEGRATED UNIT AND SECURITY CONTROL MODULE.** Measure the resistance between the body integrated unit connector terminal and security control module connector terminal. ***Connector & terminal*** ***(B280) No. 21 — (B559) No. 3:***	Is the resistance less than 10 Ω?	Go to step **7**.	Repair the harness between body integrated unit and security control module.
7	**CHECK COMMUNICATION CIRCUIT HARNESS.** 1) Turn the ignition switch to ON. 2) Measure the voltage between security control module connector terminal and chassis ground. ***Connector & terminal*** ***(B559) No. 3 (+) — Chassis ground (–):***	Is the voltage 6 V or more?	Repair the harness between body integrated unit and security control module.	Go to step **8**.
8	**CHECK COMMUNICATION CIRCUIT HARNESS.** 1) Turn the ignition switch to ON. 2) Measure the voltage between the body integrated unit connector terminal and chassis ground. ***Connector & terminal*** ***(B280) No. 21 (+) — Chassis ground (–):***	Is the voltage 6 V or more?	Repair the harness between body integrated unit and security control module.	Go to step **9**.
9	**CHECK COMMUNICATION CIRCUIT HARNESS.** 1) Turn the ignition switch to OFF. 2) Measure the resistance between security control module connector terminal and chassis ground. ***Connector & terminal*** ***(B559) No. 3 — Chassis ground:***	Is the resistance less than 10 Ω?	Repair the harness between body integrated unit and ECM.	Go to step **10**.

	Step	Check	Yes	No
10	**CHECK COMMUNICATION CIRCUIT HARNESS.** 1) Turn the ignition switch to ON. 2) Measure the resistance between the body integrated unit connector terminal and chassis ground. ***Connector & terminal*** ***(B280) No. 21 — Chassis ground:***	Is the resistance less than 10 Ω?	Repair the harness between body integrated unit and security control module.	Go to step **11**.
11	**CHECK SECURITY CONTROL MODULE.** 1) Replace the security control module. (Do not perform security control module registration.) 2) Turn the ignition switch to ON. 3) Read the DTC of body integrated unit using Subaru Select Monitor.	Is DTC B1409 detected?	Replace the body integrated unit. <Ref. to SL-82, Body Integrated Unit.>	Security control module was defective. Perform security control module registration. Refer to the “REGISTRATION MANUAL FOR IMMOBILIZER”.

P: DTC B1410 TRANSPONDER COMMUNICATION ABNORMAL

NOTE:
Refer to DTC B1574 for diagnostic procedure. <Ref. to IM(diag)-25, DTC B1574 KEY COMMUNICATION FAILURE, Diagnostic Procedure with Diagnostic Trouble Code (DTC).>

Q: DTC B1411 IMMOBILIZER ANTENNA ABNORMAL

NOTE:
Refer to DTC B1570 for diagnostic procedure. <Ref. to IM(diag)-17, DTC B1570 ANTENNA, Diagnostic Procedure with Diagnostic Trouble Code (DTC).>

LAN SYSTEM (DIAGNOSTICS)

LAN(w/o HEV)(diag)

		Page
1.	Basic Diagnostic Procedure	2
2.	Check List for Interview	4
3.	General Description	5
4.	Electrical Component Location	9
5.	Control Module I/O Signal	10
6.	Subaru Select Monitor	11
7.	Read Diagnostic Trouble Code (DTC)	23
8.	Clear Memory Mode	24
9.	CAN Communication Circuit Check	25
10.	List of Diagnostic Trouble Code (DTC)	50
11.	Diagnostic Procedure with Diagnostic Trouble Code (DTC)	89
12.	General Diagnostic Table	109

1. Basic Diagnostic Procedure

A: PROCEDURE

CAUTION:
• Subaru Select Monitor is required for reading DTC, performing diagnosis, reading current data, customizing and active test (compulsory drive).
• Remove foreign matter (dust, water, oil, etc.) from each control module connector during removal and installation.
• For model with immobilizer, registration of immobilizer may be needed after the replacement of controller etc. For detailed procedure, refer to the "REGISTRATION MANUAL FOR IMMOBILIZER".

NOTE:
• To check harness for open or short circuits, shake the suspected trouble spot or connector.
• Check List for Interview <Ref. to LAN(w/o HEV)(diag)-4, Check List for Interview.>

	Step	Check	Yes	No
1	**CHECK PRE-INSPECTION.** Ask the customer when and how the trouble occurred using the interview check list. <Ref. to LAN(w/o HEV)(diag)-4, Check List for Interview.>	Did you interview the customer?	Go to step **2**.	Interview the customer.
2	**BASIC INSPECTION (CAN DIAGNOSTIC IS NOT USED).** Check components which might affect CAN communication problem. <Ref. to LAN(w/o HEV)(diag)-7, INSPECTION WITHOUT USING CAN DIAGNOSTIC, INSPECTION, General Description.>	Is the component that might affect CAN communication problem normal?	Go to step **3**.	Repair or replace each component.
3	**CHECK COMMUNICATION FOR INITIALIZING.** Communicate with the all systems by connecting the Subaru Select Monitor.	Is the communication for initializing finished for all modules?	Go to step **4**.	Check the error of communication for initializing. <Ref. to LAN(w/o HEV)(diag)-11, COMMUNICATION FOR INITIALIZING IMPOSSIBLE, Subaru Select Monitor.>
4	**BASIC INSPECTION (CAN DIAGNOSTIC IS USED).** Check components which might affect CAN communication problem. <Ref. to LAN(w/o HEV)(diag)-7, INSPECTION USING CAN DIAGNOSTIC, INSPECTION, General Description.>	Is the component that might affect CAN communication problem normal?	Go to step **5**.	Repair or replace each component.
5	**CHECK DTC.** 1) Start the engine and read all DTCs. NOTE: When the engine does not start, perform the diagnosis for the engine start malfunction. <Ref. to EN(H4DO w/o HEV)(diag)-67, Diagnostics for Engine Starting Failure.> 2) Record all DTCs, time stamp and freeze frame data. NOTE: For time stamp, refer to "TIME STAMP" of General Description. <Ref. to LAN(w/o HEV)(diag)-6, TIME STAMP, CAUTION, General Description.>	Is DTC U**** displayed on Subaru Select Monitor?	Go to step **6**.	Go to step **7**.

	Step	Check	Yes	No
6	**CHECK DTC.** 1) Perform the inspection using the DTC check sheet. <Ref. to LAN(w/o HEV)(diag)-52, CHECK USING THE DTC CHECK SHEET, LIST, List of Diagnostic Trouble Code (DTC).> 2) Using the Subaru Select Monitor, read all DTCs.	Is DTC U**** displayed on Subaru Select Monitor?	Go to step **8**.	Go to step **7**.
7	**PERFORM GENERAL DIAGNOSTICS.** Inspect using the “General Diagnostic Table”. <Ref. to LAN(w/o HEV)(diag)-109, General Diagnostic Table.>	Is result of inspection OK?	LAN system is normal.	Go to step **8**.
8	**PERFORM DIAGNOSIS.** 1) Correct the cause of trouble. 2) Perform the Clear Memory Mode. <Ref. to LAN(w/o HEV)(diag)-24, OPERATION, Clear Memory Mode.> 3) Read the DTC. <Ref. to LAN(w/o HEV)(diag)-23, OPERATION, Read Diagnostic Trouble Code (DTC).>	Is DTC displayed on Subaru Select Monitor?	Repeat step 8 until DTC is not shown.	Finish the diagnosis.

2. Check List for Interview

A: CHECK

Inspect the following item about the vehicle's state.

1. DISPLAY STATUS IN THE COMBINATION METER

Display status in the combination meter	Engine coolant temperature gauge display	❑ OK / ❑ NG
	Fuel gauge display	❑ OK / ❑ NG
	Tachometer display	❑ OK / ❑ NG (0 rpm at idling etc.)
Display of other indicators	Malfunction indicator light	❑ ON / ❑ Blink / ❑ OFF
	Sport indicator light (AT warning light)	❑ ON / ❑ Blink / ❑ OFF
	ABS warning light	❑ ON / ❑ Blink / ❑ OFF
	VDC warning light	❑ ON / ❑ Blink / ❑ OFF
	Immobilizer indicator light	❑ ON / ❑ Blink / ❑ OFF
	AT OIL TEMP warning light	❑ ON / ❑ Blink / ❑ OFF
	Tire pressure warning light	❑ ON / ❑ Blink / ❑ OFF
	Engine coolant temperature warning light	❑ Blue light ON / ❑ Red light ON / ❑ Red light blinks / ❑ Blue and red lights blink
	CRUISE indicator	❑ ON / ❑ Blink / ❑ OFF
	Shift indicator	❑ OK / ❑ NG
	Fuel level warning light	❑ ON / ❑ Blink / ❑ OFF
	Airbag warning light	❑ ON / ❑ OFF
	VDC OFF indicator	❑ ON / ❑ OFF
	Brake warning light	❑ ON / ❑ OFF
	Headlight beam leveler indicator	❑ ON / ❑ OFF

2. CONDITIONS UNDER WHICH TROUBLE OCCURS

Driving condition	❑ At standstill (While idling)				
	❑ When the vehicle is running	Vehicle speed	km/h (MPH)		
	❑ While accelerating	Acceleration	km/h (MPH) to	km/h (MPH)	
	❑ Decelerating (With braking)	Deceleration	km/h (MPH) to	km/h (MPH)	
	❑ Decelerating (Without braking)	Deceleration	km/h (MPH) to	km/h (MPH)	
	❑ Flat road ❑ Uphill ❑ Downhill ❑ Gravel road ❑ Bumpy road ❑ Snowy road				
	Does it occur when operating any part? Operated part: **TROUBLE SYMPTOM:**				
	Are there any other troubles occurred? From where: **TROUBLE SYMPTOM:**				

3. General Description

A: CAUTION

1. SUPPLEMENTAL RESTRAINT SYSTEM "AIRBAG"

Airbag system wiring harness is routed near the body integrated unit and twisted pair line.

CAUTION:
- **Do not use the electrical test equipment on all airbag system wiring harnesses and connectors.**
- **Be careful not to damage the airbag system wiring harness when servicing the body integrated unit and LAN system.**

2. LAN SYSTEM

- Bus line of LAN system is twisted pair line. Be careful not to by-pass or partly unbind the twisted pair line.
- Do not make clearance between bus lines (CAN High, CAN Low).
- Difference of bus line length should be within 10 cm (3.94 in).
- Fray near the connector should be within 8 cm (3.14 in).

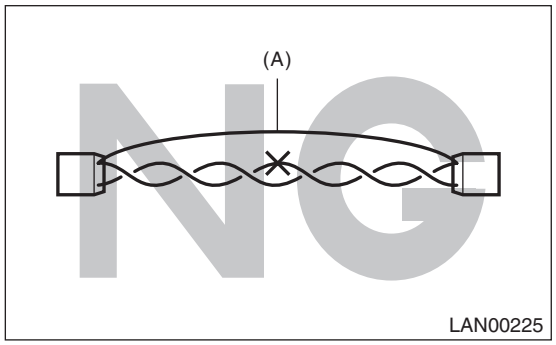

(A) Bypass wire connection

- If the characteristics of the twisted pair line are changed, it may extremely weaken against noise.
- When repairing the harness, connect the wires using soldering and protect it with insulating tape etc.

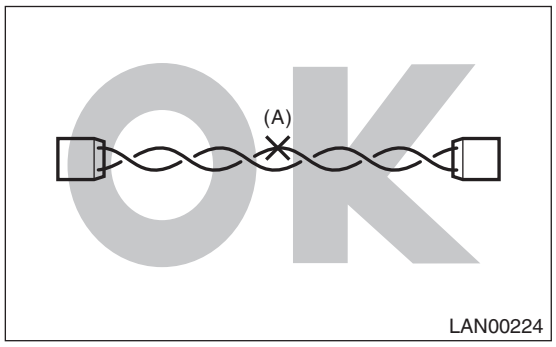

(A) Soldering and protection with insulating tape

3. TIME STAMP

There are three types of record data for the information of time stamp, and they are stored together with diagnostic codes.

NOTE:
Depending on DTCs, time stamp may not be stored.

a. **Trip Count**

This indicates the number of times that the ignition has been turned to ON since the vehicle was manufactured. The ignition ON count of when the diagnostic code is stored is displayed on the diagnostic code check screen.

NOTE:
Subaru Select Monitor screen (A/C system diagnostic code and time stamp)

Code	Description & trouble position	Trouble occurrence record	**Trip Count**	Time Count	Count
B14E1	Air Mix Door Actuator Stepping Motor Circuit Wire Break (Driver's Seat)	Detected on the first time	**983**	18000	Common
B14E7	Heater Core Rear Sensor Circuit Wire Break	Detected on the 2nd time	**984**	117800	Common

The current Trip Count can be checked at "Current Data Display & Save" in "Integ. unit mode".
By comparing the current Trip Count and the Trip Count of when the diagnostic code was stored, it is possible to determine that it is how many ignition-ON operations ago that DTC was stored.

b. **Time Count**

The elapsed time from when the ignition is turned to ON to when the diagnostic code is stored is displayed on the diagnostic code check screen. It is possible to determine the length of time that passed between when the user started driving and when the diagnostic code was stored. Therefore, if Trip Count until the vehicle-received-date is determined by interviewing the user, it is possible to estimate where the user was driving when the diagnostic code was stored, using the information such as Trip Count and Time Count. This estimate is useful information to perform diagnosis including checking of repeatability.

NOTE:
Subaru Select Monitor screen (A/C system diagnostic code and time stamp)

Code	Description & trouble position	Trouble occurrence record	Trip Count	**Time Count**	Count
B14E1	Air Mix Door Actuator Stepping Motor Circuit Wire Break (Driver's Seat)	Detected on the first time	983	**18000**	Common
B14E7	Heater Core Rear Sensor Circuit Wire Break	Detected on the 2nd time	984	**117800**	Common

When multiple diagnostic codes are recorded for one trouble, it is extremely important to determine the diagnostic code that was stored first. (It is important to perform the diagnosis for the first recorded diagnostic code.) In this case, it is also possible to immediately determine which diagnostic code was recorded first, using the information such as Trip Count and Time Count.

c. **Count**
Each unit individually counts the elapsed time since the ignition is turned to ON. However, these time counts may have some errors, and therefore, the control modules need to be adjusted to the time carried by the master-time unit (the body integrated unit). When the count is set as common, it means that each control module is already adjusted to the master time, and the display for the master integrated unit is always indicated as “Common”. When the count is indicated as “Originally”, it means that the time is not synchronized with the master time. In this case, check the communication between the corresponding control module and integrated unit. When all controls other than the body integrated unit is indicated as “Originally”, perform the basic inspection for the body integrated unit. <Ref. to BC(diag)-2, PROCEDURE, Basic Diagnostic Procedure.>

NOTE:
Subaru Select Monitor screen (A/C system diagnostic code and time stamp)

Code	Description & trouble position	Trouble occurrence record	Trip Count	Time Count	**Count**
B14E1	Air Mix Door Actuator Stepping Motor Circuit Wire Break (Driver’s Seat)	Detected on the first time	983	18000	**Common**
B14E7	Heater Core Rear Sensor Circuit Wire Break	Detected on the 2nd time	984	117800	**Common**

Even when multiple diagnostic codes are stored in multiple control modules, it is possible to determine the code stored first through the count function.

NOTE:
Troubleshooting for CAN system U-code occurrence
When the first stored diagnostic code is a U-code for CAN system, perform the troubleshooting as a U code combination, instead of a U code alone. In addition, when CAN open circuit occurs, communication of the diagnostic device itself becomes impossible beyond the particular areas. However, trouble positions can also be determined by the combination of initial communication success/failure. Thus, by performing the basic diagnostic procedure in LAN system, trouble positions can be determined efficiently on the principle above. <Ref. to LAN(w/o HEV)(diag)-2, PROCEDURE, Basic Diagnostic Procedure.>

B: INSPECTION

1. INSPECTION WITHOUT USING CAN DIAGNOSTIC

Before performing diagnosis, check the following items that might affect troubles of each module.
1) Measure the battery voltage and check electrolyte.

Standard voltage: 12 V or more

Specific gravity: 1.260 or more
2) Check the fuse condition.
Make sure that ampere of the fuse is setting value, and it is not blown out.
3) Check the connecting condition of harness and harness connector.

2. INSPECTION USING CAN DIAGNOSTIC

Before performing diagnostics, check the following item which might affect body integrated unit malfunctions.
1) Confirm settings of body integrated unit are corresponded to vehicle equipment. <Ref. to BC(diag)-17, OPERATION, Registration Body Integrated Unit.>
2) Make sure that the User Customizing of the body integrated unit matches the vehicle equipment. <Ref. to BC(diag)-15, OPERATION, User Customizing.>
3) Confirm “Factory initial setting” of body integrated unit registrations is set to “Market”.

C: PREPARATION TOOL

1. SPECIAL TOOL

ILLUSTRATION	TOOL NUMBER	DESCRIPTION	REMARKS
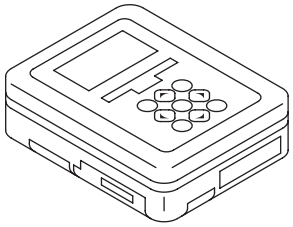 ST1B022XU0	1B022XU0	SUBARU SELECT MONITOR III KIT	Used for troubleshooting the electrical system.

2. GENERAL TOOL

TOOL NAME	REMARKS
Circuit tester	Used for measuring resistance, voltage and current.

4. Electrical Component Location

A: LOCATION

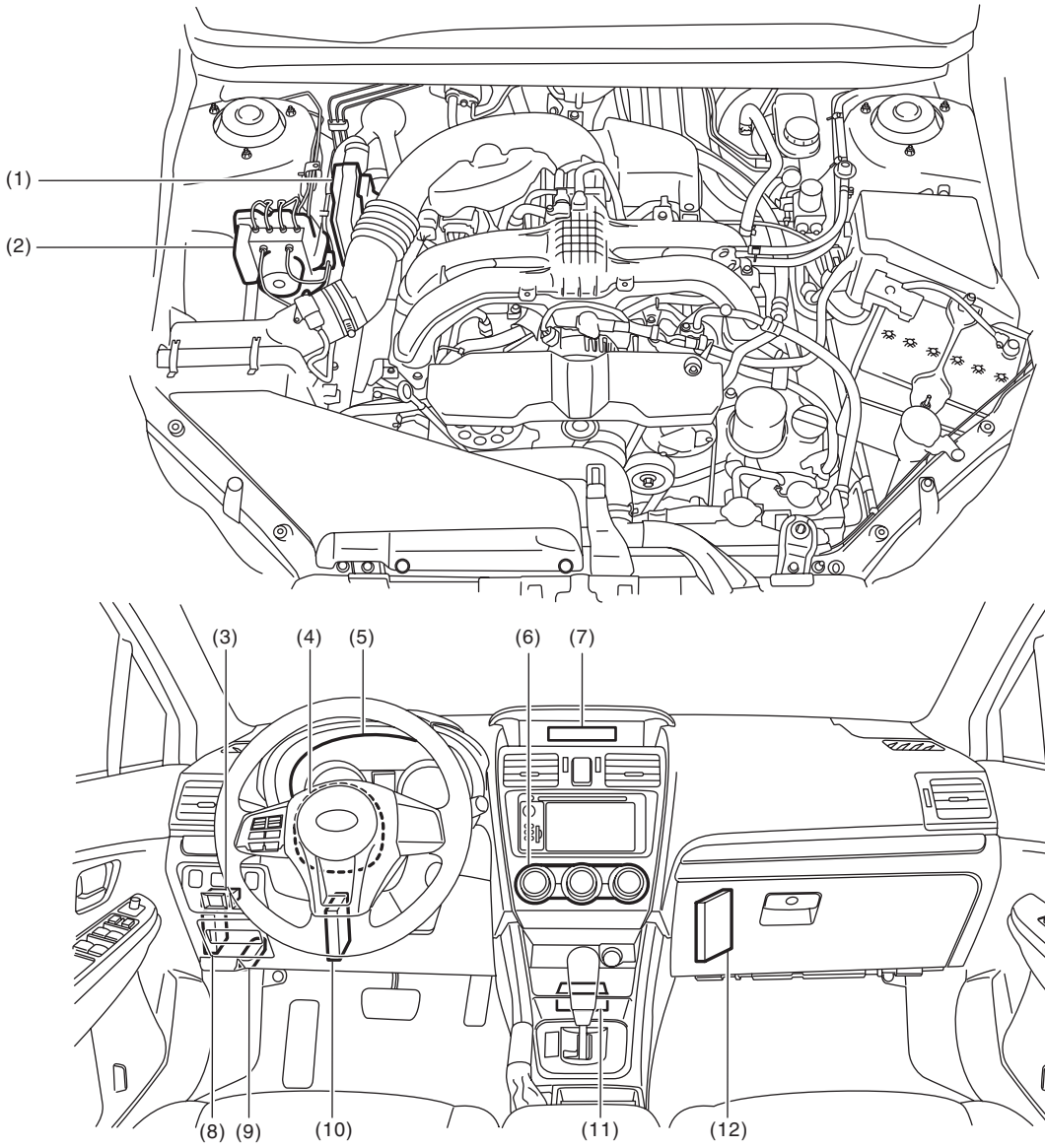

(1) Power steering CM
(2) VDC CM
(3) Auto headlight beam leveler CM
(4) Steering angle sensor
(5) Combination meter
(6) A/C control panel
(7) MFD
(8) Body integrated unit
(9) Data link connector
(10) TCM
(11) Airbag CM
(12) ECM

5. Control Module I/O Signal

A: ELECTRICAL SPECIFICATION

- Body integrated unit

For I/O signals of the body integrated unit, refer to BODY CONTROL SYSTEM (DIAGNOSTICS). <Ref. to BC(diag)-6, Control Module I/O Signal.>

- Engine control module

For I/O signals of ECM, refer to ENGINE (DIAGNOSTICS). <Ref. to EN(H4DO w/o HEV)(diag)-19, Engine Control Module (ECM) I/O Signal.>

- Transmission control module

For I/O signals of TCM, refer to AUTOMATIC TRANSMISSION (DIAGNOSTICS). <Ref. to CVT(w/o HEV)(diag)-11, Transmission Control Module (TCM) I/O Signal.>

- VDC control module

For I/O signals of VDC CM, refer to VEHICLE DYNAMICS CONTROL (VDC) (DIAGNOSTICS). <Ref. to VDC(diag)-12, Control Module I/O Signal.>

- Power steering CM

For unit I/O signals of power steering CM, refer to POWER ASSISTED SYSTEM (POWER STEERING) (DIAGNOSTICS). <Ref. to PS(diag)-11, Control Module I/O Signal.>

- A/C control panel

For unit I/O signals of A/C control panel, refer to HVAC SYSTEM (DIAGNOSTICS). <Ref. to AC(diag)-6, Auto A/C Control Module I/O Signal.>

- Combination meter

For I/O signals of combination meter, refer to INSTRUMENTATION/DRIVER INFO (DIAGNOSTICS). <Ref. to IDI(diag)-7, Control Module I/O Signal.>

- Airbag control module

For I/O signals of the airbag control module, refer to AIRBAG SYSTEM (DIAGNOSTICS). <Ref. to AB(diag)-20, Airbag Control Module I/O Signal.>

- High grade MFD

For I/O signals of high grade MFD, refer to INSTRUMENTATION/DRIVER INFO (DIAGNOSTICS). <Ref. to IDI(diag)-7, Control Module I/O Signal.>

- Auto headlight beam leveler CM

For I/O signals of auto headlight beam leveler CM, refer to INSTRUMENTATION/DRIVER INFO (DIAGNOSTICS). <Ref. to AL(diag)-6, Control Module I/O Signal.>

- Data link connector

For I/O signals of data link connector, refer to ENGINE (DIAGNOSTICS). <Ref. to EN(H4DO w/o HEV)(diag)-30, Data Link Connector.>

* CAN sleep state:

Hold on for approx. one minute with ignition OFF and the doors, trunk, rear gate all closed.

B: WIRING DIAGRAM

<Ref. to WI(w/o HEV)-46, WIRING DIAGRAM, CAN Communication System.>

6. Subaru Select Monitor

A: OPERATION

For details of basic operations, refer to “PC application help for Subaru Select Monitor”.

B: COMMUNICATION FOR INITIALIZING IMPOSSIBLE

DIAGNOSIS:
Subaru Select Monitor communication line is open or shorted.
TROUBLE SYMPTOM:
Not communicable with Subaru Select Monitor.
WIRING DIAGRAM:
CAN communication system <Ref. to WI(w/o HEV)-46, WIRING DIAGRAM, CAN Communication System.>

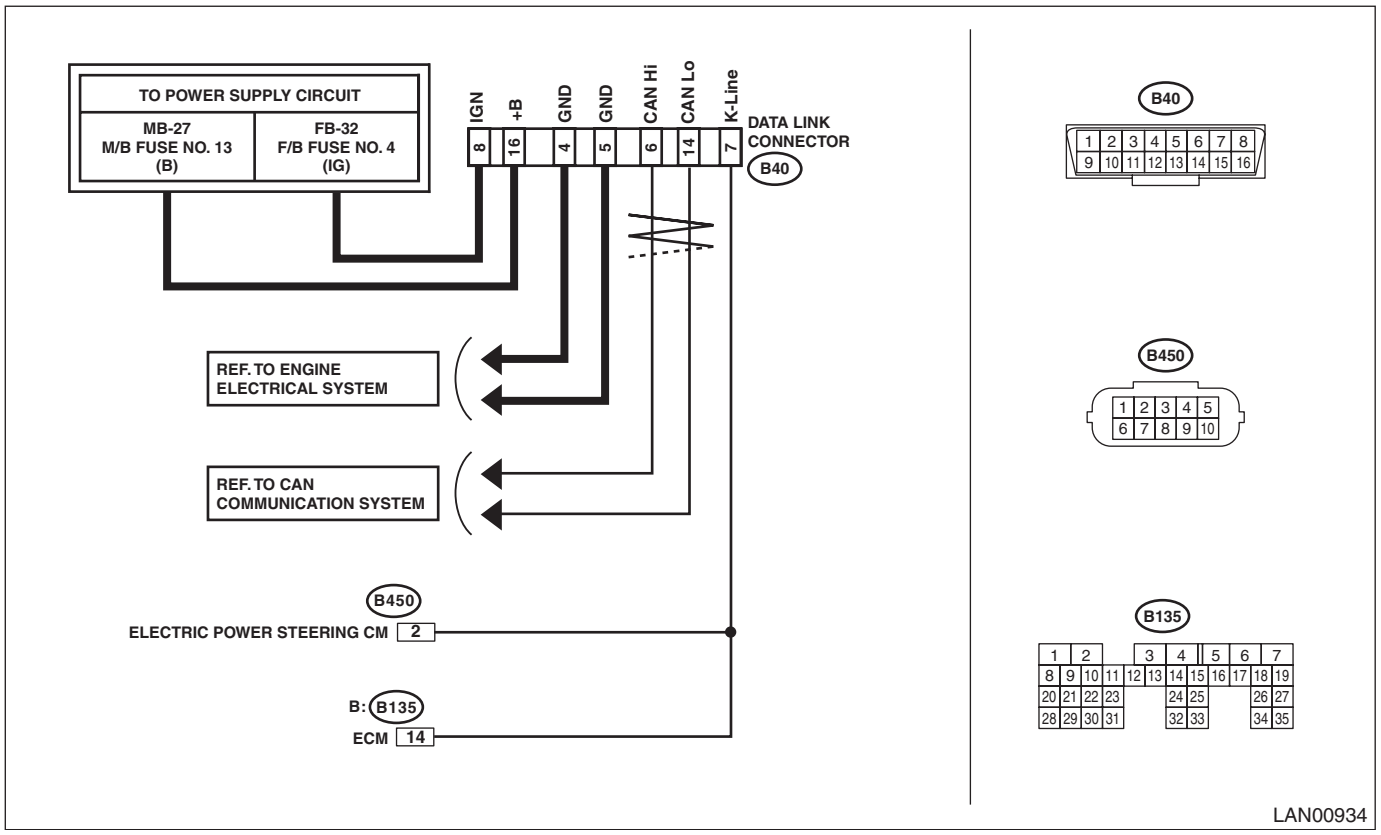

Step		Check	Yes	No
1	**CHECK SUBARU SELECT MONITOR.** 1) Connect the Subaru Select Monitor to another vehicle. 2) Check communication condition between Subaru Select Monitor and vehicle.	Is communication performed normally?	Go to step **2**.	Subaru Select Monitor unit or diagnosis cable is faulty. Or check the fuse on the vehicle side.

	Step	Check	Yes	No
2	**CHECK COMMUNICATION FOR INITIALIZING ERROR.** Perform the communication for initializing with the following modules by connecting the Subaru Select Monitor. (only for installed modules) • VDC • Body integrated unit • Meter • High grade MFD (C0 model only) • A/C • A/B • Auto headlight beam leveler • TCM	Is the communication possible with all modules?	Go to step **3**.	Perform the inspection using the check sheet of communication for initializing. <Ref. to LAN(w/o HEV)(diag)-13, CHECK USING THE CHECK SHEET OF COMMUNICATION FOR INITIALIZING, COMMUNICATION FOR INITIALIZING IMPOSSIBLE, Subaru Select Monitor.>
3	**CHECK K-LINE.** 1) Establish the communication between Select Monitor and K-Line communication module. 2) Using a tester, check continuity between the modules that did not communicate with Select Monitor. ***Connector & terminal*** ***(B40) No. 7 — (B135) No. 14 (ECM):*** ***(B40) No. 7 — (B450) No. 2 (electric power steering):***	Is there continuity?	Go to step **4**.	Repair or replace the open circuit.
4	**CHECK K-LINE.** Using a tester, check continuity between K-line and chassis ground. ***Connector & terminal*** ***(B40) No. 7 — Chassis ground:***	Is there continuity?	Repair or replace the short circuit portion.	Go to step **5**.
5	**CHECK K-LINE.** Using a tester, check voltage between K-line and chassis ground. ***Connector & terminal*** ***(B40) No. 7 (+) — Chassis ground (–):***	Is the voltage 5 V or more with IG ON?	Repair or replace the short circuit portion.	Go to step **6**.
6	**CHECK K-LINE.** Use a tester to check for continuity in the ground circuit. ***Connector & terminal*** ***(B40) No. 4 — Chassis ground:*** ***(B40) No. 5 — Chassis ground:***	Is there continuity?	Go to step **8**.	Go to step **7**.
7	**CHECK K-LINE.** 1) Disconnect the ECM connector. 2) Use a tester to check for continuity in the ground circuit. ***Connector & terminal*** ***(B40) No. 4 — (B137) No. 3:*** ***(B40) No. 5 — (B136) No. 4:***	Is there continuity?	Check ECM ground.	Repair or replace the open circuit.
8	**CHECK K-LINE.** 1) Turn the ignition switch to ON. 2) Using a tester, check the power supply of data link connector. ***Connector & terminal*** ***(B40) No. 8 (+) — Chassis ground (–):*** ***(B40) No. 16 (+) — Chassis ground (–):***	Is the voltage 10 V or more?	K-Line is normal. Check the power supply circuit of each module.	Check the power supply circuits to the data link connector.

1. CHECK USING THE CHECK SHEET OF COMMUNICATION FOR INITIALIZING

- **Network diagram**

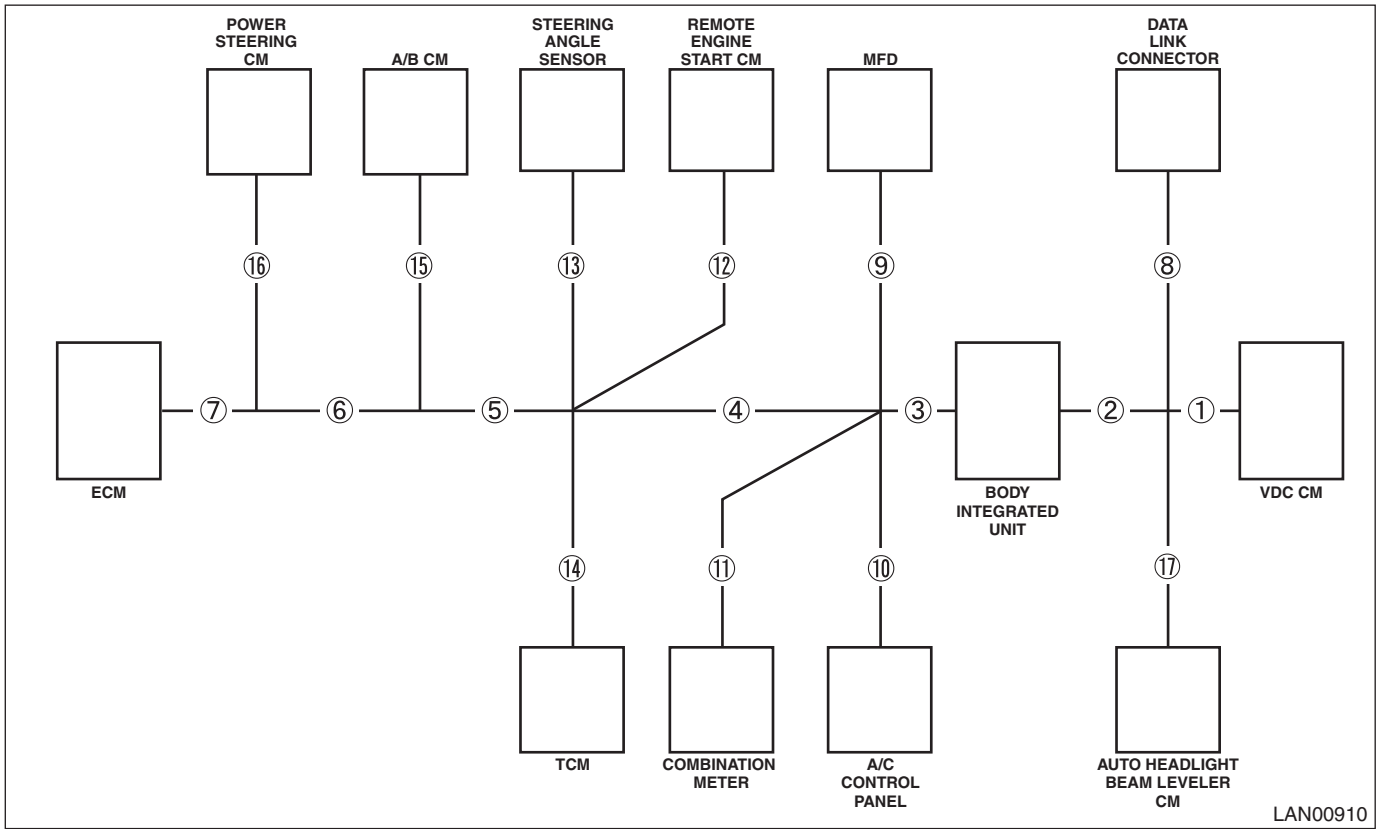

- **Check sheet of communication for initializing**

	(A)	(B)		(E)															
				①	②	③	④	⑤	⑥	⑦	⑧	⑨	⑩	⑪	⑫	⑬	⑭	⑮	⑯	⑰
		(C)	(D)						—	—					—	—			—	
VDC		—			—	—	—	—	—	—		—	—	—	—	—	—	—	—	—
BIU		—		—		—	—	—	—	—		—	—	—	—	—	—	—	—	—
MFD		—		—			—	—	—	—			—	—	—	—	—	—	—	—
A/C		—		—			—	—	—	—		—		—	—	—	—	—	—	—
MET		—		—			—	—	—	—		—	—		—	—	—	—	—	—
RST		—	—	—	—	—	—	—	—	—	—	—	—	—	—	—	—	—	—	—
STR		—	—	—	—	—	—	—	—	—	—	—	—	—	—	—	—	—	—	—
TCM		—		—				—	—	—		—	—	—	—	—		—	—	—
A/B		—		—					—	—		—	—	—	—	—	—		—	—
EPS			—	—	—	—	—	—	—	—	—	—	—	—	—	—	—	—	—	—
EGI			—	—	—	—	—	—	—	—	—	—	—	—	—	—	—	—	—	—
HL		—		—	—	—	—	—	—	—		—	—	—	—	—	—	—	—	

LAN00911

(A) Installation check
(B) Communication initialization
(C) K-Line
(D) CAN
(E) Wiring location

VDC: VDC CM
BIU: Body integrated unit
MFD: High grade MFD
A/C: A/C control panel
MET: Combination meter
RST: Remote engine starter CM
STR: Steering angle sensor
TCM: TCM
A/B: AB CM
EPS: Power steering CM
EGI: ECM
HL: Auto headlight beam leveler CM

1) Module installation check
   (1) Write "-" marks in the field for installation check if the vehicle to be inspected does not have relevant module.
   (2) Write "-" marks in all blank fields on the same row that the "-" mark has filled in.

NOTE:
Example of writing <Ref. to LAN(w/o HEV)(diag)-15, EXAMPLE OF WRITING FOR THE CHECK SHEET OF COMMUNICATION FOR INITIALIZING, COMMUNICATION FOR INITIALIZING IMPOSSIBLE, Subaru Select Monitor.>

2) SSM communication initialization check
   (1) Write "○" marks in the field for communication initialization if the module succeeded in the communication for initializing with Select Monitor.
   If the communication with all modules is not possible, go to 3).
   (2) Write "○" marks in all blank fields on the same row that the "○" mark has filled in.
   (3) When at least one field in a column of wiring location is filled with the "○" mark, then the wiring for that location is normal. Write "○" marks in all blank fields on the same column that the "○" mark has filled in under the circled number.
   (4) Check the open circuit of the modules which have no "○" mark in their columns of the wiring location in ascending order. (only for installed modules)
   (5) If the communication is not possible after checking all harnesses, check the module power supply line.

(6) Replace the module if the power supply line is normal.

NOTE:
• Example of writing <Ref. to LAN(w/o HEV)(diag)-15, EXAMPLE OF WRITING FOR THE CHECK SHEET OF COMMUNICATION FOR INITIALIZING, COMMUNICATION FOR INITIALIZING IMPOSSIBLE, Subaru Select Monitor.>
• Inspection using the communication for initializing of Subaru Select Monitor cannot be used to diagnose the wiring location marked with "-". Example of DTC data not received <Ref. to LAN(w/o HEV)(diag)-53, EXAMPLE OF DTC DATA NOT RECEIVED, LIST, List of Diagnostic Trouble Code (DTC).> and DTC matrix <Ref. to LAN(w/o HEV)(diag)-60, DTC MATRIX, LIST, List of Diagnostic Trouble Code (DTC).> should be used to identify the faulty portion.

3) SSM communication initialization check (impossible to communicate with all modules)

NOTE:
If at least one module becomes possible to communicate, return to 2).

(1) Check for the short circuit to ground. <Ref. to LAN(w/o HEV)(diag)-29, GROUND SHORT INSPECTION, INSPECTION, CAN Communication Circuit Check.> If it is normal, go to the next.
(2) Check for the short circuit to battery. <Ref. to LAN(w/o HEV)(diag)-31, BATTERY SHORT INSPECTION, INSPECTION, CAN Communication Circuit Check.> If it is normal, go to the next.
(3) Perform the inspection for the resistance of 52 Ω or less (short between wires). <Ref. to LAN(w/o HEV)(diag)-35, 52 Ω OR LESS, INSPECTION, CAN Communication Circuit Check.> If it is normal, go to the next.
(4) Check for the open circuit of network diagram No. 8 (data link connector).

2. EXAMPLE OF WRITING FOR THE CHECK SHEET OF COMMUNICATION FOR INITIALIZING

When ① is open

	(A)	(B)		(E)															
				①	②	③	④	⑤	⑥	⑦	⑧	⑨	⑩	⑪	⑫	⑬	⑭	⑮	⑯	⑰
		(C)	(D)		○	○	○	○	—	—	○	○	○	○	—	—	○	○	—	○
VDC	○	—	×		—	—	—	—	—	—	○	—	—	—	—	—	—	—	—	—
BIU	○	—	○	—	○	—	—	—	—	—	○	—	—	—	—	—	—	—	—	—
MFD	○	—	○	—	○	○	—	—	—	—	○	○	—	—	—	—	—	—	—	—
A/C	○	—	○	—	○	○	—	—	—	—	○	—	○	—	—	—	—	—	—	—
MET	○	—	○	—	○	○	—	—	—	—	○	—	—	○	—	—	—	—	—	—
RST	○	—	—	—	—	—	—	—	—	—	—	—	—	—	—	—	—	—	—	—
STR	○	—	—	—	—	—	—	—	—	—	—	—	—	—	—	—	—	—	—	—
TCM	○	—	○	—	○	○	○	—	—	—	○	—	—	—	—	—	○	—	—	—
A/B	○	—	○	—	○	○	○	○	—	—	○	—	—	—	—	—	—	○	—	—
EPS	○	○	—	—	—	—	—	—	—	—	—	—	—	—	—	—	—	—	—	—
EGI	○	○	—	—	—	—	—	—	—	—	—	—	—	—	—	—	—	—	—	—
HL	○	—	○	—	—	—	—	—	—	—	○	—	—	—	—	—	—	—	—	○

LAN00912

When ② is open

	(A)	(B)		(E)															
				①	②	③	④	⑤	⑥	⑦	⑧	⑨	⑩	⑪	⑫	⑬	⑭	⑮	⑯	⑰
		(C)	(D)	○					—	—	○				—	—			—	○
VDC	○	—	○	○	—	—	—	—	—	—	○	—	—	—	—	—	—	—	—	—
BIU	○	—	×	—		—	—	—	—	—	○	—	—	—	—	—	—	—	—	—
MFD	○	—	×	—			—	—	—	—	○		—	—	—	—	—	—	—	—
A/C	○	—	×	—			—	—	—	—	○	—		—	—	—	—	—	—	—
MET	○	—	×	—			—	—	—	—	○	—	—		—	—	—	—	—	—
RST	○	—	—	—	—	—	—	—	—	—	—	—	—	—	—	—	—	—	—	—
STR	○	—	—	—	—	—	—	—	—	—	—	—	—	—	—	—	—	—	—	—
TCM	○	—	×	—				—	—	—	○	—	—	—	—	—		—	—	—
A/B	○	—	×	—					—	—	○	—	—	—	—	—	—		—	—
EPS	○	○	—	—	—	—	—	—	—	—	—	—	—	—	—	—	—	—	—	—
EGI	○	○	—	—	—	—	—	—	—	—	—	—	—	—	—	—	—	—	—	—
HL	○	—	○	—	—	—	—	—	—	—	○	—	—	—	—	—	—	—	—	○

LAN00913

When ③ is open

	(A)	(B)		(E)															
				①	②	③	④	⑤	⑥	⑦	⑧	⑨	⑩	⑪	⑫	⑬	⑭	⑮	⑯	⑰
		(C)	(D)	○	○				—	—	○				—	—			—	○
VDC	○	—	○	○	—	—	—	—	—	—	○	—	—	—	—	—	—	—	—	—
BIU	○	—	○	—	○	—	—	—	—	—	○	—	—	—	—	—	—	—	—	—
MFD	○	—	×	—	○		—	—	—	—	○		—	—	—	—	—	—	—	—
A/C	○	—	×	—	○		—	—	—	—	○	—		—	—	—	—	—	—	—
MET	○	—	×	—	○		—	—	—	—	○	—	—		—	—	—	—	—	—
RST	○	—	—	—	—	—	—	—	—	—	—	—	—	—	—	—	—	—	—	—
STR	○	—	—	—	—	—	—	—	—	—	—	—	—	—	—	—	—	—	—	—
TCM	○	—	×	—	○			—	—	—	○	—	—	—	—	—		—	—	—
A/B	○	—	×	—	○				—	—	○	—	—	—	—	—	—		—	—
EPS	○	○	—	—	—	—	—	—	—	—	—	—	—	—	—	—	—	—	—	—
EGI	○	○	—	—	—	—	—	—	—	—	—	—	—	—	—	—	—	—	—	—
HL	○	—	○	—	—	—	—	—	—	—	○	—	—	—	—	—	—	—	—	○

LAN00914

When either one of ④, ⑤ or ⑮ is open

NOTE:
Locations can be identified by the difference of data no-receive conditions between modules. <Ref. to LAN(w/o HEV)(diag)-60, DTC MATRIX, LIST, List of Diagnostic Trouble Code (DTC).>

	(A)	(B)		(E)															
				①	②	③	④	⑤	⑥	⑦	⑧	⑨	⑩	⑪	⑫	⑬	⑭	⑮	⑯	⑰
		(C)	(D)	○	○	○			—	—	○	○	○	○	—	—			—	○
VDC	○	—	○	○	—	—	—	—	—	—	○	—	—	—	—	—	—	—	—	—
BIU	○	—	○	—	○	—	—	—	—	—	○	—	—	—	—	—	—	—	—	—
MFD	○	—	○	—	○	○	—	—	—	—	○	○	—	—	—	—	—	—	—	—
A/C	○	—	○	—	○	○	—	—	—	—	○	—	○	—	—	—	—	—	—	—
MET	○	—	○	—	○	○	—	—	—	—	○	—	—	○	—	—	—	—	—	—
RST	○	—	—	—	—	—	—	—	—	—	—	—	—	—	—	—	—	—	—	—
STR	○	—	—	—	—	—	—	—	—	—	—	—	—	—	—	—	—	—	—	—
TCM	○	—	×	—	○	○		—	—	—	○	—	—	—	—	—		—	—	—
A/B	○	—	×	—	○	○			—	—	○	—	—	—	—	—	—		—	—
EPS	○	○	—	—	—	—	—	—	—	—	—	—	—	—	—	—	—	—	—	—
EGI	○	○	—	—	—	—	—	—	—	—	—	—	—	—	—	—	—	—	—	—
HL	○	—	○	—	—	—	—	—	—	—	○	—	—	—	—	—	—	—	—	○

LAN00915

When either one of ⑥, ⑦, ⑫, ⑬ or ⑯ is open

NOTE:
Locations can be identified by the difference of data no-receive conditions between modules. <Ref. to LAN(w/o HEV)(diag)-53, EXAMPLE OF DTC DATA NOT RECEIVED, LIST, List of Diagnostic Trouble Code (DTC).> <Ref. to LAN(w/o HEV)(diag)-60, DTC MATRIX, LIST, List of Diagnostic Trouble Code (DTC).>

	(A)	(B)		(E)															
				①	②	③	④	⑤	⑥	⑦	⑧	⑨	⑩	⑪	⑫	⑬	⑭	⑮	⑯	⑰
		(C)	(D)	○	○	○	○	○	—	—	○	○	○	○	—	—	○	○	—	○
VDC	○	—	○	○	—	—	—	—	—	—	○	—	—	—	—	—	—	—	—	—
BIU	○	—	○	—	○	—	—	—	—	—	○	—	—	—	—	—	—	—	—	—
MFD	○	—	○	—	○	○	—	—	—	—	○	○	—	—	—	—	—	—	—	—
A/C	○	—	○	—	○	○	—	—	—	—	○	—	○	—	—	—	—	—	—	—
MET	○	—	○	—	○	○	—	—	—	—	○	—	—	○	—	—	—	—	—	—
RST	○	—	—	—	—	—	—	—	—	—	—	—	—	—	—	—	—	—	—	—
STR	○	—	—	—	—	—	—	—	—	—	—	—	—	—	—	—	—	—	—	—
TCM	○	—	○	—	○	○	○	—	—	—	○	—	—	—	—	—	○	—	—	—
A/B	○	—	○	—	○	○	○	○	—	—	○	—	—	—	—	—	—	○	—	—
EPS	○	○	—	—	—	—	—	—	—	—	—	—	—	—	—	—	—	—	—	—
EGI	○	○	—	—	—	—	—	—	—	—	—	—	—	—	—	—	—	—	—	—
HL	○	—	○	—	—	—	—	—	—	—	○	—	—	—	—	—	—	—	—	○

LAN00916

When ⑧ is open

NOTE:
3) Perform inspection by referring to the communication initialization check (impossible to communicate with all modules). (⑧ There may be a malfunction other than open circuit)

	(A)	(B)		(E)																
				①	②	③	④	⑤	⑥	⑦	⑧	⑨	⑩	⑪	⑫	⑬	⑭	⑮	⑯	⑰
		(C)	(D)						—	—					—	—			—	
VDC	○	—	×		—	—	—	—	—	—		—	—	—	—	—	—	—	—	—
BIU	○	—	×	—		—	—	—	—	—		—	—	—	—	—	—	—	—	—
MFD	○	—	×	—			—	—	—	—			—	—	—	—	—	—	—	—
A/C	○	—	×	—			—	—	—	—		—		—	—	—	—	—	—	—
MET	○	—	×	—			—	—	—	—		—	—		—	—	—	—	—	—
RST	○	—	—	—	—	—	—	—	—	—	—	—	—	—	—	—	—	—	—	—
STR	○	—	—	—	—	—	—	—	—	—	—	—	—	—	—	—	—	—	—	—
TCM	○	—	×	—				—	—	—		—	—	—	—	—		—	—	—
A/B	○	—	×	—					—	—		—	—	—	—	—	—		—	—
EPS	○	○	—	—	—	—	—	—	—	—	—	—	—	—	—	—	—	—	—	—
EGI	○	○	—	—	—	—	—	—	—	—	—	—	—	—	—	—	—	—	—	—
HL	○	—	×	—	—	—	—	—	—	—		—	—	—	—	—	—	—	—	

LAN00917

When ⑨ is open

	(A)	(B)		(E)															
				①	②	③	④	⑤	⑥	⑦	⑧	⑨	⑩	⑪	⑫	⑬	⑭	⑮	⑯	⑰
		(C)	(D)	○	○	○	○	○	—	—	○		○	○	—	—	○	○	—	○
VDC	○	—	○	○	—	—	—	—	—	—	○	—	—	—	—	—	—	—	—	—
BIU	○	—	○	—	○	—	—	—	—	—	○	—	—	—	—	—	—	—	—	—
MFD	○	—	×	—	○	○	—	—	—	—	○		—	—	—	—	—	—	—	—
A/C	○	—	○	—	○	○	—	—	—	—	○	—	○	—	—	—	—	—	—	—
MET	○	—	○	—	○	○	—	—	—	—	○	—	—	○	—	—	—	—	—	—
RST	○	—	—	—	—	—	—	—	—	—	—	—	—	—	—	—	—	—	—	—
STR	○	—	—	—	—	—	—	—	—	—	—	—	—	—	—	—	—	—	—	—
TCM	○	—	○	—	○	○	○	—	—	—	○	—	—	—	—	—	○	—	—	—
A/B	○	—	○	—	○	○	○	○	—	—	○	—	—	—	—	—	—	○	—	—
EPS	○	○	—	—	—	—	—	—	—	—	—	—	—	—	—	—	—	—	—	—
EGI	○	○	—	—	—	—	—	—	—	—	—	—	—	—	—	—	—	—	—	—
HL	○	—	○	—	—	—	—	—	—	—	○	—	—	—	—	—	—	—	—	○

LAN00918

When ⑩ is open

	(A)	(B)		(E)															
				①	②	③	④	⑤	⑥	⑦	⑧	⑨	⑩	⑪	⑫	⑬	⑭	⑮	⑯	⑰
		(C)	(D)	○	○	○	○	○	—	—	○	○		○	—	—	○	○	—	○
VDC	○	—	○	○	—	—	—	—	—	—	○	—	—	—	—	—	—	—	—	—
BIU	○	—	○	—	○	—	—	—	—	—	○	—	—	—	—	—	—	—	—	—
MFD	○	—	○	—	○	○	—	—	—	—	○	○	—	—	—	—	—	—	—	—
A/C	○	—	×	—	○	○	—	—	—	—	○	—		—	—	—	—	—	—	—
MET	○	—	○	—	○	○	—	—	—	—	○	—	—	○	—	—	—	—	—	—
RST	○	—	—	—	—	—	—	—	—	—	—	—	—	—	—	—	—	—	—	—
STR	○	—	—	—	—	—	—	—	—	—	—	—	—	—	—	—	—	—	—	—
TCM	○	—	○	—	○	○	○	—	—	—	○	—	—	—	—	—	○	—	—	—
A/B	○	—	○	—	○	○	○	○	—	—	○	—	—	—	—	—	—	○	—	—
EPS	○	○	—	—	—	—	—	—	—	—	—	—	—	—	—	—	—	—	—	—
EGI	○	○	—	—	—	—	—	—	—	—	—	—	—	—	—	—	—	—	—	—
HL	○	—	○	—	—	—	—	—	—	—	○	—	—	—	—	—	—	—	—	○

LAN00919

When ⑪ is open

	(A)	(B)		(E)															
				①	②	③	④	⑤	⑥	⑦	⑧	⑨	⑩	⑪	⑫	⑬	⑭	⑮	⑯	⑰
		(C)	(D)	○	○	○	○	○	—	—	○	○	○		—	—	○	○	—	○
VDC	○	—	○	○	—	—	—	—	—	—	○	—	—	—	—	—	—	—	—	—
BIU	○	—	○	—	○	—	—	—	—	—	○	—	—	—	—	—	—	—	—	—
MFD	○	—	○	—	○	○	—	—	—	—	○	○	—	—	—	—	—	—	—	—
A/C	○	—	○	—	○	○	—	—	—	—	○	—	○	—	—	—	—	—	—	—
MET	○	—	×	—	○	○	—	—	—	—	○	—	—		—	—	—	—	—	—
RST	○	—	—	—	—	—	—	—	—	—	—	—	—	—	—	—	—	—	—	—
STR	○	—	—	—	—	—	—	—	—	—	—	—	—	—	—	—	—	—	—	—
TCM	○	—	○	—	○	○	○	—	—	—	○	—	—	—	—	—	○	—	—	—
A/B	○	—	○	—	○	○	○	○	—	—	○	—	—	—	—	—	—	○	—	—
EPS	○	○	—	—	—	—	—	—	—	—	—	—	—	—	—	—	—	—	—	—
EGI	○	○	—	—	—	—	—	—	—	—	—	—	—	—	—	—	—	—	—	—
HL	○	—	○	—	—	—	—	—	—	—	○	—	—	—	—	—	—	—	—	○

LAN00920

When ⑭ is open

	(A)	(B)		(E)															
				①	②	③	④	⑤	⑥	⑦	⑧	⑨	⑩	⑪	⑫	⑬	⑭	⑮	⑯	⑰
		(C)	(D)	○	○	○	○	○	—	—	○	○	○	○	—	—		○	—	○
VDC	○	—	○	○	—	—	—	—	—	—	○	—	—	—	—	—	—	—	—	—
BIU	○	—	○	—	○	—	—	—	—	—	○	—	—	—	—	—	—	—	—	—
MFD	○	—	○	—	○	○	—	—	—	—	○	○	—	—	—	—	—	—	—	—
A/C	○	—	○	—	○	○	—	—	—	—	○	—	○	—	—	—	—	—	—	—
MET	○	—	○	—	○	○	—	—	—	—	○	—	—	○	—	—	—	—	—	—
RST	○	—	—	—	—	—	—	—	—	—	—	—	—	—	—	—	—	—	—	—
STR	○	—	—	—	—	—	—	—	—	—	—	—	—	—	—	—	—	—	—	—
TCM	○	—	×	—	○	○	○	—	—	—	○	—	—	—	—	—		—	—	—
A/B	○	—	○	—	○	○	○	○	—	—	○	—	—	—	—	—	—	○	—	—
EPS	○	○	—	—	—	—	—	—	—	—	—	—	—	—	—	—	—	—	—	—
EGI	○	○	—	—	—	—	—	—	—	—	—	—	—	—	—	—	—	—	—	—
HL	○	—	○	—	—	—	—	—	—	—	○	—	—	—	—	—	—	—	—	○

LAN00970

When ⑰ is open

	(A)	(B)		(E)															
				①	②	③	④	⑤	⑥	⑦	⑧	⑨	⑩	⑪	⑫	⑬	⑭	⑮	⑯	⑰
		(C)	(D)	○	○	○	○	○	—	—	○	○	○	○	—	—	○	○	—	
VDC	○	—	○	○	—	—	—	—	—	—	○	—	—	—	—	—	—	—	—	—
BIU	○	—	○	—	○	—	—	—	—	—	○	—	—	—	—	—	—	—	—	—
MFD	○	—	○	—	○	○	—	—	—	—	○	○	—	—	—	—	—	—	—	—
A/C	○	—	○	—	○	○	—	—	—	—	○	—	○	—	—	—	—	—	—	—
MET	○	—	○	—	○	○	—	—	—	—	○	—	—	○	—	—	—	—	—	—
RST	○	—	—	—	—	—	—	—	—	—	—	—	—	—	—	—	—	—	—	—
STR	○	—	—	—	—	—	—	—	—	—	—	—	—	—	—	—	—	—	—	—
TCM	○	—	○	—	○	○	○	—	—	—	○	—	—	—	—	—	○	—	—	—
A/B	○	—	○	—	○	○	○	○	—	—	○	—	—	—	—	—	—	○	—	—
EPS	○	○	—	—	—	—	—	—	—	—	—	—	—	—	—	—	—	—	—	—
EGI	○	○	—	—	—	—	—	—	—	—	—	—	—	—	—	—	—	—	—	—
HL	○	—	×	—	—	—	—	—	—	—	○	—	—	—	—	—	—	—	—	

LAN00921

7. Read Diagnostic Trouble Code (DTC)

A: OPERATION

For details of operation procedures, refer to “PC application help for Subaru Select Monitor”.

8. Clear Memory Mode

A: OPERATION

For details of operation procedures, refer to “PC application help for Subaru Select Monitor”.

9. CAN Communication Circuit Check

A: PROCEDURE

NOTE:
- When measuring the resistance of CAN communication circuit, measure it in sleep status.

To enter sleep status
  – With ignition switch OFF and key or switch operation stopped, keep the doors, trunk, and rear gate all closed for one minute or more.
  – On models with keyless access function, keep the access key 2 m or more away from the vehicle.

- When the bus line is measured, combined resistance of the end resistance (120 Ω) in ECM and the end resistance (120 Ω) in VDC CM can be measured. The combined resistance is supposed to be approximately 53 — 61 Ω with the stabilizing circuit included. If the measured resistance value becomes 52 Ω or less, main wiring harness or related lines may be shorted. Or, the combined resistance may have changed because of a resistance other than the end resistance created on the circuit. If the measured value is 62 Ω or more, there may be a malfunction such as open circuit in one of the end resistances, in the stabilizing circuit, or in the main wiring harness.

Also, even when the resistance value falls within approx. 53 — 61 Ω, related lines may be open if an error of communication for initializing or a CAN system U-code has occurred. (The resistance won't be between approx. 53 — 61 Ω if the main wiring harness is open.)

CAN Communication Circuit Check

WIRING DIAGRAM:

- CVT control system <Ref. to WI(w/o HEV)-66, WIRING DIAGRAM, CVT Control System.>
- Electric power steering system <Ref. to WI(w/o HEV)-73, WIRING DIAGRAM, Electric Power Steering System.>
- Engine electrical system <Ref. to WI(w/o HEV)-74, WIRING DIAGRAM, Engine Electrical System.>
- CAN communication system <Ref. to WI(w/o HEV)-46, WIRING DIAGRAM, CAN Communication System.>

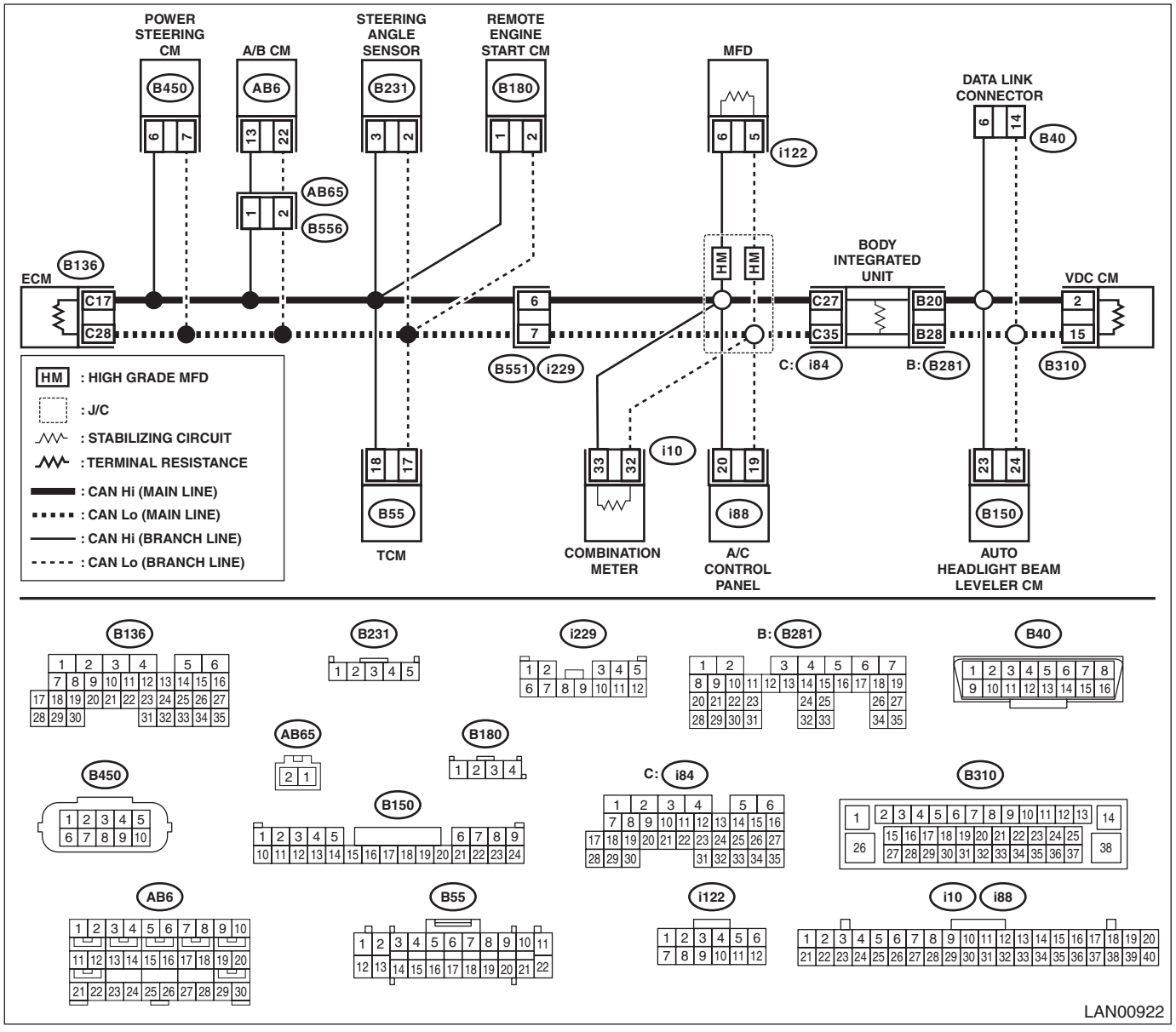

Step		Check	Yes	No
1	**CHECK FROM DATA LINK CONNECTOR.** Using the tester, measure the resistance between terminals. ***Connector & terminal*** ***(B40) No. 6 — Chassis ground:*** ***(B40) No. 14 — Chassis ground:***	Is the resistance 10 Ω or less?	Check for ground short. <Ref. to LAN(w/o HEV)(diag)-29, GROUND SHORT INSPECTION, INSPECTION, CAN Communication Circuit Check.>	Go to step **2**.

	Step	Check	Yes	No
2	**CHECK FROM DATA LINK CONNECTOR.** 1) Turn the ignition switch to ON. 2) Using the tester, measure the voltage between terminals. ***Connector & terminal*** ***(B40) No. 6 — Chassis ground:*** ***(B40) No. 14 — Chassis ground:***	Is the voltage 5 V or less?	Go to step **3**.	Check for battery short. <Ref. to LAN(w/o HEV)(diag)-31, BATTERY SHORT INSPECTION, INSPECTION, CAN Communication Circuit Check.>
3	**CHECK FROM DATA LINK CONNECTOR.** 1) Turn the ignition switch to OFF. 2) Using the tester, measure the resistance between terminals. ***Connector & terminal*** ***(B40) No. 6 — No. 14:***	Is the resistance 52 Ω or less?	Perform the inspection for the resistance of 52 Ω or less. <Ref. to LAN(w/o HEV)(diag)-35, 52 Ω OR LESS, INSPECTION, CAN Communication Circuit Check.>	Go to step **4**.
4	**CHECK FROM DATA LINK CONNECTOR.** Using the tester, measure the resistance between terminals. ***Connector & terminal*** ***(B40) No. 6 — No. 14:***	Is the resistance 62 Ω or more?	Perform the inspection for the resistance of 62 Ω or more. <Ref. to LAN(w/o HEV)(diag)-37, 62 Ω OR MORE, INSPECTION, CAN Communication Circuit Check.>	If the display of CAN system U-code disappears from the current malfunction, the CAN network is currently normal. If the U-code has detected as current malfunction, related lines may be open. Perform the inspection for the related line corresponding to the detected DTC. <Ref. to LAN(w/o HEV)(diag)-28, LIST, CAN Communication Circuit Check.>

B: LIST

Resistance value between CAN Hi and Lo	Contents of inspection	Remarks
Ground short inspection	<Ref. to LAN(w/o HEV)(diag)-29, GROUND SHORT INSPECTION, INSPECTION, CAN Communication Circuit Check.>	Shorted to ground in the communication circuit or control module.
Battery short inspection	<Ref. to LAN(w/o HEV)(diag)-31, BATTERY SHORT INSPECTION, INSPECTION, CAN Communication Circuit Check.>	Shorted to battery power supply in the communication circuit or control module.
53 — 61 Ω	<Ref. to LAN(w/o HEV)(diag)-33, 53 — 61 Ω, INSPECTION, CAN Communication Circuit Check.>	Combined resistance of end resistance does not have malfunction; short to ground or +B short of the CAN communication circuit is possible, however.
52 Ω or less	<Ref. to LAN(w/o HEV)(diag)-35, 52 Ω OR LESS, INSPECTION, CAN Communication Circuit Check.>	Resistance is lower than combined resistance of end resistance. Short to CAN Hi and CAN Lo on the CAN communication circuit is possible.
62 Ω or more	<Ref. to LAN(w/o HEV)(diag)-37, 62 Ω OR MORE, INSPECTION, CAN Communication Circuit Check.>	Resistance is higher than combined resistance of end resistance. Open circuit of CAN communication circuit is possible.
Related lines 53 — 61 Ω (TCM)	<Ref. to LAN(w/o HEV)(diag)-39, RELATED LINES 53 — 61 Ω (TCM), INSPECTION, CAN Communication Circuit Check.>	No TCM data is received. Perform inspection when faulty is detected.
Related lines 53 — 61 Ω (steering angle sensor)	<Ref. to LAN(w/o HEV)(diag)-40, RELATED LINES 53 — 61 Ω (STEERING ANGLE SENSOR), INSPECTION, CAN Communication Circuit Check.>	No steering angle sensor data is received. Perform inspection when faulty is detected.
Related line 53 — 61 Ω (A/C control panel)	<Ref. to LAN(w/o HEV)(diag)-42, RELATED LINE 53 — 61 Ω (A/C CONTROL PANEL), INSPECTION, CAN Communication Circuit Check.>	No A/C data is received. Perform inspection when faulty is detected.
Related lines 53 — 61 Ω (electric power steering CM)	<Ref. to LAN(w/o HEV)(diag)-43, RELATED LINES 53 — 61 Ω (ELECTRIC POWER STEERING CM), INSPECTION, CAN Communication Circuit Check.>	No electric power steering data is received. Perform inspection when faulty is detected.
Related lines 53 — 61 Ω (combination meter)	<Ref. to LAN(w/o HEV)(diag)-45, RELATED LINES 53 — 61 Ω (COMBINATION METER), INSPECTION, CAN Communication Circuit Check.>	No meter data is received. Perform inspection when faulty is detected.
Related lines 53 — 61 Ω (MFD)	<Ref. to LAN(w/o HEV)(diag)-46, RELATED LINES 53 — 61 Ω (MFD), INSPECTION, CAN Communication Circuit Check.>	No MFD data is received. Perform inspection when faulty is detected.
Related lines 53 — 61 Ω (airbags)	<Ref. to LAN(w/o HEV)(diag)-47, RELATED LINES 53 — 61 Ω (A/B CM), INSPECTION, CAN Communication Circuit Check.>	No airbag data is received. Perform inspection when faulty is detected.
Related lines 53 — 61 Ω (headlight beam leveler)	<Ref. to LAN(w/o HEV)(diag)-48, RELATED LINES 53 — 61 Ω (HEADLIGHT BEAM LEVELER), INSPECTION, CAN Communication Circuit Check.>	No headlight beam leveler data is received. Perform inspection when faulty is detected.
Related lines 53 — 61 Ω (remote engine starter)	<Ref. to LAN(w/o HEV)(diag)-49, RELATED LINES 53 — 61 Ω (REMOTE ENGINE STARTER), INSPECTION, CAN Communication Circuit Check.>	Perform inspection when the remote engine starter does not operate, while the mobile key side operates normally.

C: INSPECTION

1. GROUND SHORT INSPECTION

WIRING DIAGRAM:

CAN communication system <Ref. to WI(w/o HEV)-46, WIRING DIAGRAM, CAN Communication System.>

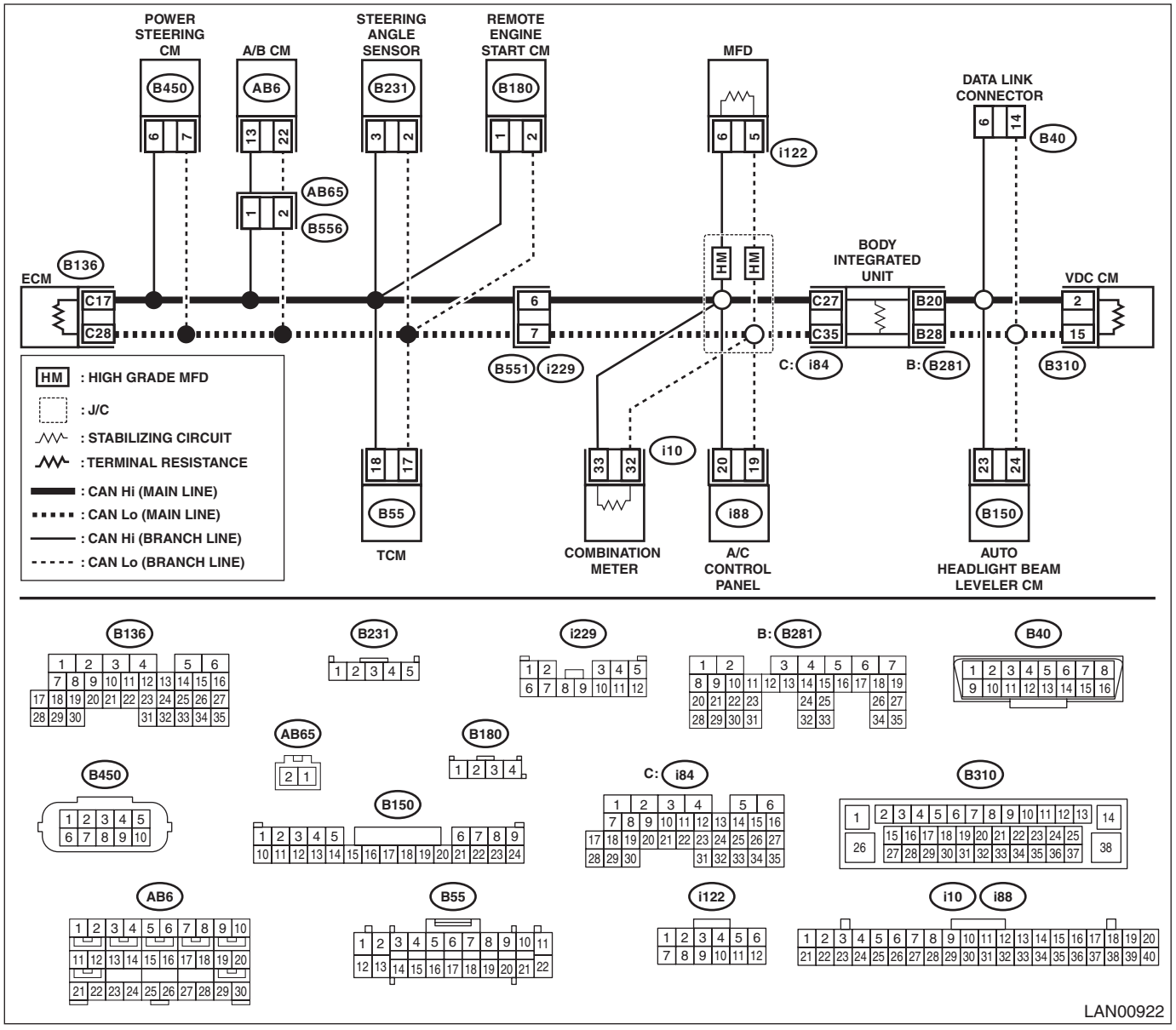

NOTE:
Main wiring harness or related lines may be shorted to ground, or shorted to ground in one of the control modules.

Step		Check	Yes	No
1	**CHECK BETWEEN RELATED LINES AND MAIN WIRING HARNESS.** Using the tester, measure the resistance between terminals. ***Connector & terminal*** ***(B40) No. 6 — Chassis ground:*** ***(B40) No. 14 — Chassis ground:***	Is the resistance 10 Ω or less?	Go to step **2**.	Currently, it is normal.

	Step	Check	Yes	No
2	**CHECK CONTROL MODULE.** With the tester connected, disconnect control module. NOTE: Disconnect the body integrated unit at the end. ***Connector & terminal*** ***(B40) No. 6 — Chassis ground:*** ***(B40) No. 14 — Chassis ground:***	Did the resistance change to 10 Ω or more?	Replace the control module whose resistance has changed. When the value changed at disconnecting the body integrated unit, Go to step **3**.	Repair or replace the short circuit of the main wiring harness and related lines between body integrated unit and VDC CM.
3	**CHECK BETWEEN MAIN WIRING HARNESSES.** Using the tester, measure the resistance between terminals. ***Connector & terminal*** ***(i84) No. 27 — Chassis ground:*** ***(i84) No. 35 — Chassis ground:***	Is the resistance 10 Ω or less?	Repair or replace the short circuit of the main wiring harness and related lines between ECM and body integrated unit.	Replace the body integrated unit. <Ref. to SL-82, REMOVAL, Body Integrated Unit.>

2. BATTERY SHORT INSPECTION

WIRING DIAGRAM:

CAN communication system <Ref. to WI(w/o HEV)-46, WIRING DIAGRAM, CAN Communication System.>

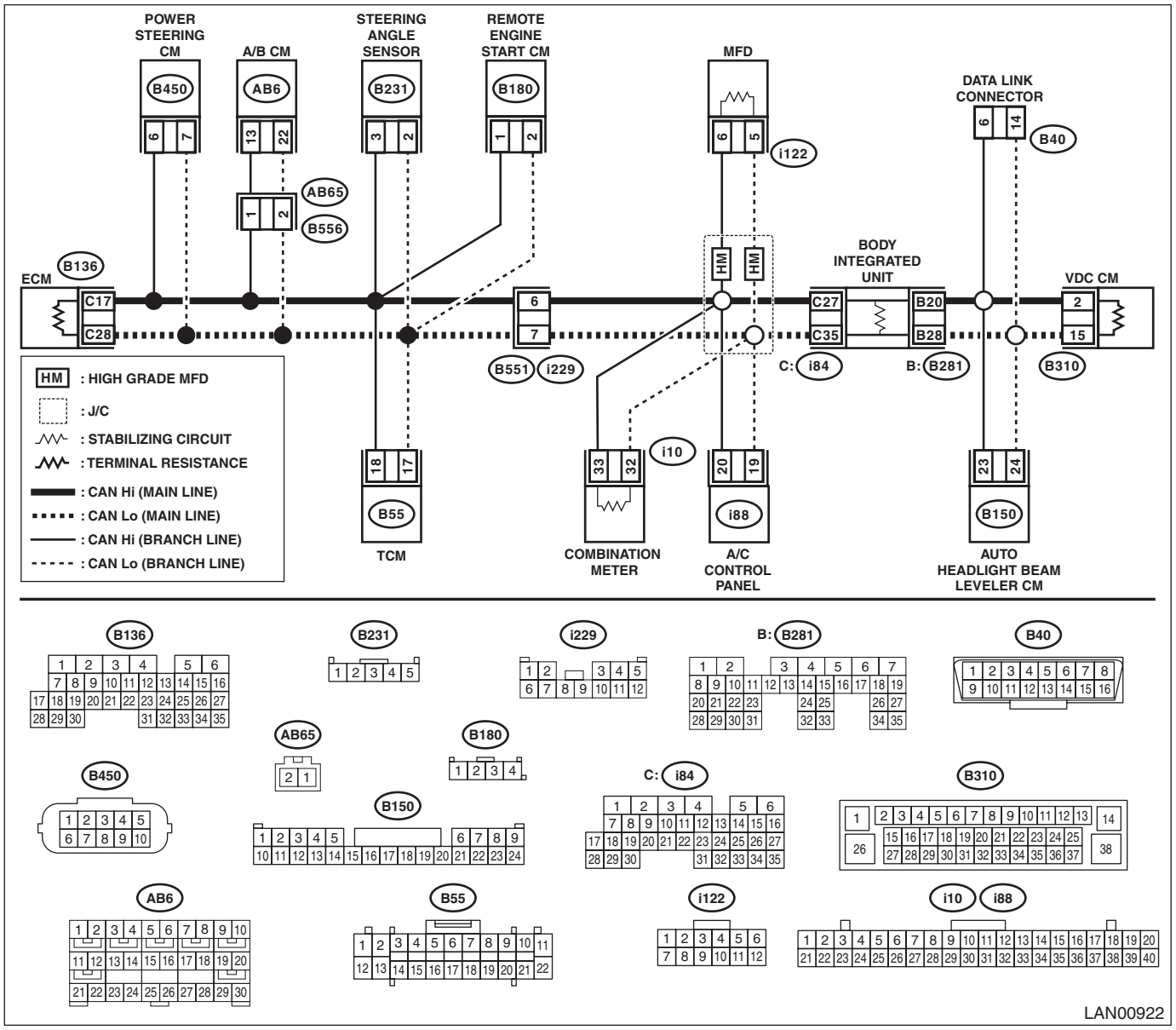

NOTE:
Main wiring harness or related lines may be shorted to battery circuit, or shorted to battery circuit in one of the control modules.

Step		Check	Yes	No
1	**CHECK BETWEEN RELATED LINES AND MAIN WIRING HARNESS.** 1) Turn the ignition switch to ON. 2) Using the tester, measure the voltage between terminals. ***Connector & terminal*** ***(B40) No. 6 — Chassis ground:*** ***(B40) No. 14 — Chassis ground:***	Is the voltage 5 V or less?	Currently, it is normal.	Go to step **2**.

	Step	Check	Yes	No
2	**CHECK CONTROL MODULE.** With the tester connected, disconnect control module. NOTE: Disconnect the body integrated unit at the end. ***Connector & terminal*** ***(B40) No. 6 — Chassis ground:*** ***(B40) No. 14 — Chassis ground:***	Did the voltage change to 5 V or less?	Replace the control module whose voltage has changed. When the value changed at disconnecting the body integrated unit, Go to step **3**.	Repair or replace the short circuit of the harness between body integrated unit and VDC CM.
3	**CHECK BETWEEN MAIN WIRING HARNESSES.** Using the tester, measure the voltage between terminals. ***Connector & terminal*** ***(i84) No. 27 — Chassis ground:*** ***(i84) No. 35 — Chassis ground:***	Is the voltage 5 V or less?	Replace the body integrated unit. <Ref. to SL-82, REMOVAL, Body Integrated Unit.>	Repair or replace the short circuit of the harness between ECM and body integrated unit.

3. 53 — 61 Ω

WIRING DIAGRAM:

CAN communication system <Ref. to WI(w/o HEV)-46, WIRING DIAGRAM, CAN Communication System.>

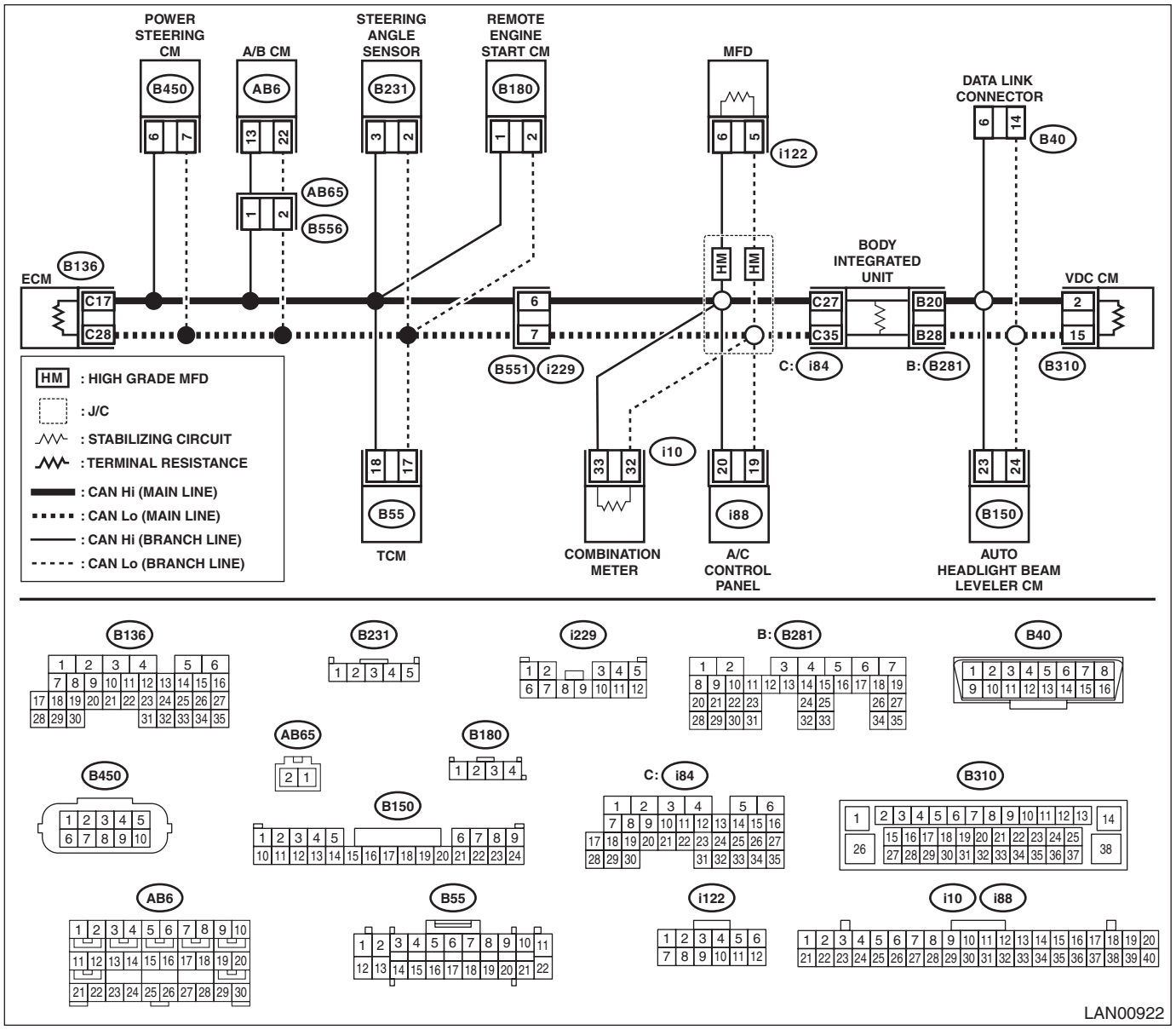

NOTE:

When the measured resistance value is 53 — 61 Ω, main wiring harness or related lines may be shorted to ground, or shorted to power supply line, or related line may be open.

Step		Check	Yes	No
1	**CHECK BETWEEN RELATED LINES AND MAIN WIRING HARNESS.** Using the tester, measure the resistance between terminals. ***Connector & terminal*** ***(B40) No. 6 — Chassis ground:*** ***(B40) No. 14 — Chassis ground:***	Is the resistance 10 Ω or less?	Go to step **2**.	Go to step **4**.

	Step	Check	Yes	No
2	**CHECK CONTROL MODULE.** With the tester connected, disconnect control module. NOTE: Disconnect the body integrated unit at the end. ***Connector & terminal*** ***(B40) No. 6 — Chassis ground:*** ***(B40) No. 14 — Chassis ground:***	Did the resistance change to 10 Ω or more?	Replace the control module whose resistance has changed. When the value changed at disconnecting the body integrated unit, Go to step **3**.	Repair or replace the short circuit of the harness between body integrated unit and VDC CM.
3	**CHECK MAIN WIRING HARNESS AND RELATED LINES.** Using the tester, measure the resistance between terminals. ***Connector & terminal*** ***(i84) No. 27 — Chassis ground:*** ***(i84) No. 35 — Chassis ground:***	Is the resistance 10 Ω or less?	Repair or replace the short circuit of the harness between ECM and body integrated unit.	Replace the body integrated unit. <Ref. to SL-82, REMOVAL, Body Integrated Unit.>
4	**CHECK BETWEEN RELATED LINES AND MAIN WIRING HARNESS.** 1) Turn the ignition switch to ON. 2) Using the tester, measure the voltage between terminals. ***Connector & terminal*** ***(B40) No. 6 — Chassis ground:*** ***(B40) No. 14 — Chassis ground:***	Is the voltage 5 V or less?	CAN communication circuit is normal.	Go to step **5**.
5	**CHECK CONTROL MODULE.** With the tester connected, disconnect control module. NOTE: Disconnect the body integrated unit at the end. ***Connector & terminal*** ***(B40) No. 6 — Chassis ground:*** ***(B40) No. 14 — Chassis ground:***	Did the voltage change to 5 V or less?	Replace the control module whose voltage has changed. When the value changed at disconnecting the body integrated unit, Go to step **6**.	Repair or replace the short circuit of the harness between body integrated unit and VDC CM.
6	**CHECK HARNESS.** Using a tester, measure the voltage between terminals and chassis ground. ***Connector & terminal*** ***(i84) No. 27 — Chassis ground:*** ***(i84) No. 35 — Chassis ground:***	Is the voltage 5 V or less?	Replace the body integrated unit. <Ref. to SL-82, REMOVAL, Body Integrated Unit.>	Repair or replace the short circuit of the harness between ECM and body integrated unit.

4. 52 Ω OR LESS

WIRING DIAGRAM:

CAN communication system <Ref. to WI(w/o HEV)-46, WIRING DIAGRAM, CAN Communication System.>

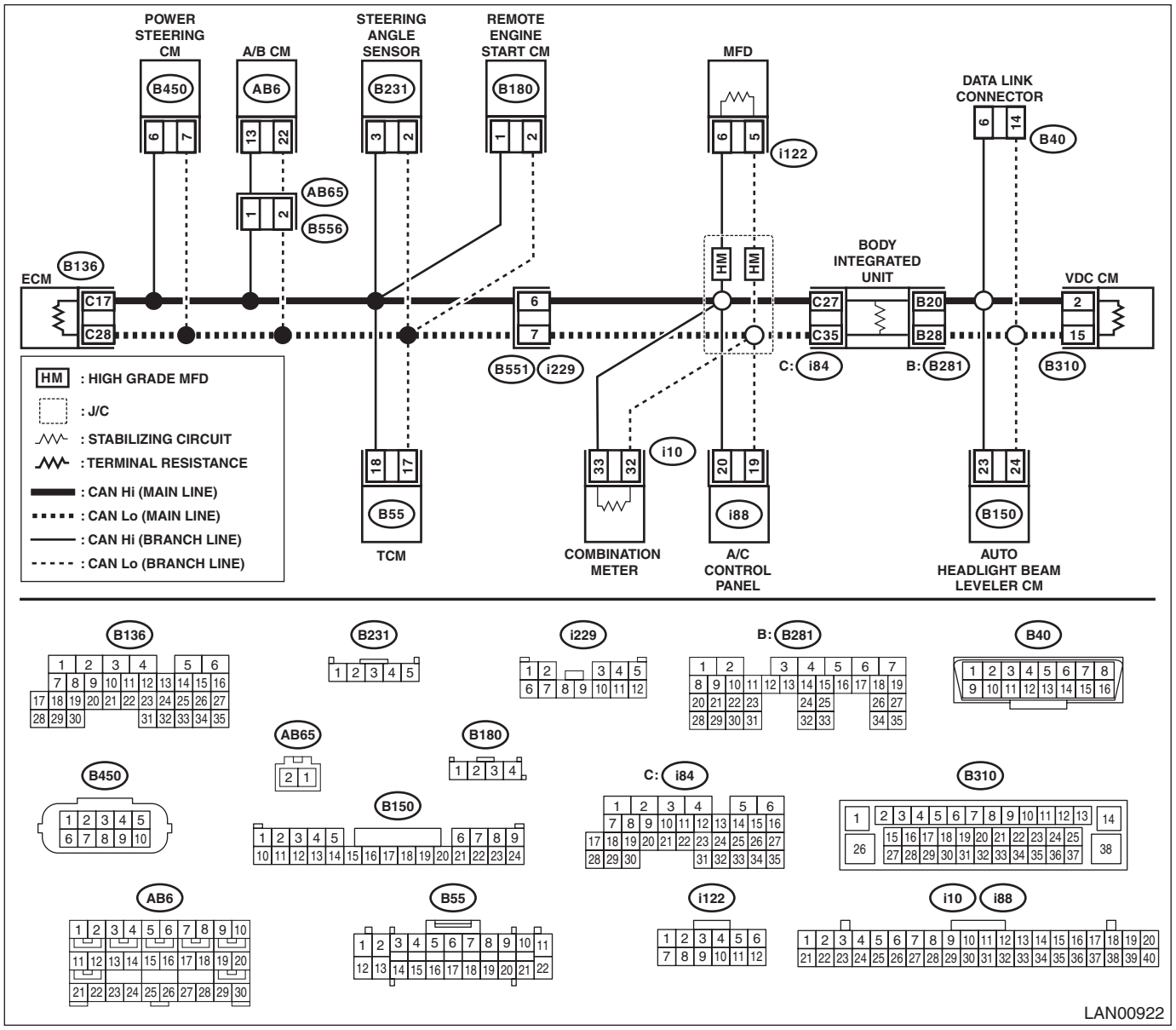

NOTE:

When the bus line is measured, combined resistance of end resistance (120 Ω) in ECM and end resistance (120 Ω) in VDC CM can be measured. The combined resistance is approximately 53 — 61 Ω with the stabilizing circuit included. When the measured resistance value is 52 Ω or less, main wiring harness or related lines may be shorted, or combined resistance may have changed because resistance other than end resistance is created on the circuit.

Step		Check	Yes	No
1	**CHECK BETWEEN RELATED LINES AND MAIN WIRING HARNESS.** Using the tester, measure the resistance between terminals. ***Connector & terminal (B40) No. 6 — No. 14:***	Is the resistance 10 Ω or less?	Go to step **2**.	Go to step **4**.

	Step	Check	Yes	No
2	**CHECK MAIN WIRING HARNESS AND RELATED LINES.** With a tester connected, disconnect control module connectors in order. NOTE: Disconnect the body integrated unit at the end. ***Connector & terminal*** ***(B40) No. 6 — No. 14:***	Is there any control module whose condition has changed from short state?	Replace the control module whose resistance has changed. When the value changed at disconnecting the body integrated unit, Go to step **3**.	Repair or replace the short circuit of the harness between body integrated unit and VDC CM.
3	**CHECK BETWEEN MAIN WIRING HARNESSES.** Using the tester, measure the resistance between terminals. ***Connector & terminal*** ***(i84) No. 27 — No. 35:***	Is the resistance 10 Ω or less?	Repair or replace the short circuit of the harness between ECM and body integrated unit.	Replace the body integrated unit. <Ref. to SL-82, REMOVAL, Body Integrated Unit.>
4	**CHECK CONTROL MODULE.** 1) Disconnect ECM and VDC CM connectors. 2) Using a tester, measure the resistance between control module terminals. ***Connector & terminal*** ***(B136) No. 17 — No. 28:*** ***(B310) No. 2 — No. 15:***	Is the resistance 114 — 126 Ω?	Go to step **5**.	Replace the control module whose end resistance value is out of the specified range.
5	**CHECK CONTROL MODULE.** 1) Disconnect the connector of body integrated unit. 2) Using a tester, measure the resistance between control module terminals. ***Connector & terminal*** ***(B281) No. 28 — (i84) No. 27:*** ***(B281) No. 20 — (i84) No. 35:***	Is the resistance 2,850 — 3,150 Ω?	Go to step **6**.	Replace the body integrated unit. <Ref. to SL-82, REMOVAL, Body Integrated Unit.>
6	**CHECK CONTROL MODULE.** Using a tester, measure the resistance between control module terminals. ***Connector & terminal*** ***(B281) No. 28 — (i84) No. 35:*** ***(B281) No. 20 — (i84) No. 27:***	Is the resistance less than 1 Ω?	Go to step **7**.	Replace the body integrated unit. <Ref. to SL-82, REMOVAL, Body Integrated Unit.>
7	**CHECK CONTROL MODULE.** 1) Disconnect the combination meter connector. 2) Using a tester, measure the resistance between control module terminals. ***Connector & terminal*** ***(i10) No. 32 — No. 33:***	Is the resistance 2,850 — 3,150 Ω?	Go to step **8**.	Replace the combination meter.
8	**CHECK CONTROL MODULE (ONLY FOR MODELS WITH HIGH GRADE MFD).** 1) Disconnect the MFD connector. 2) Using a tester, measure the resistance between control module terminals. ***Connector & terminal*** ***(i122) No. 5 — No. 6:***	Is the resistance 2,850 — 3,150 Ω?	Go to step **9**.	Replace the MFD.
9	**CHECK HARNESS.** Using the tester, check the short circuit portion of each harness. ***Connector & terminal*** ***(B281) No. 28 — No. 20:***	Is the resistance 1 MΩ or more?	Go to step **11**.	Go to step **10**.

Step		Check	Yes	No
10	**CHECK CONTROL MODULE.** With a tester connected, disconnect control modules in order. ***Connector & terminal (B281) No. 28 — No. 20:***	Are there any control modules whose resistance changed to 1 MΩ or more?	Replace the control module that has changed.	Repair or replace the harness part which has resistance component.
11	**CHECK CONTROL MODULE.** With a tester connected, disconnect control modules in order. ***Connector & terminal (i84) No. 27 — No. 35:***	Is there any control module whose resistance has changed to 1 MΩ or more?	Replace the control module that has changed.	Repair or replace the harness part which has resistance component.

5. 62 Ω OR MORE

WIRING DIAGRAM:

CAN communication system <Ref. to WI(w/o HEV)-46, WIRING DIAGRAM, CAN Communication System.>

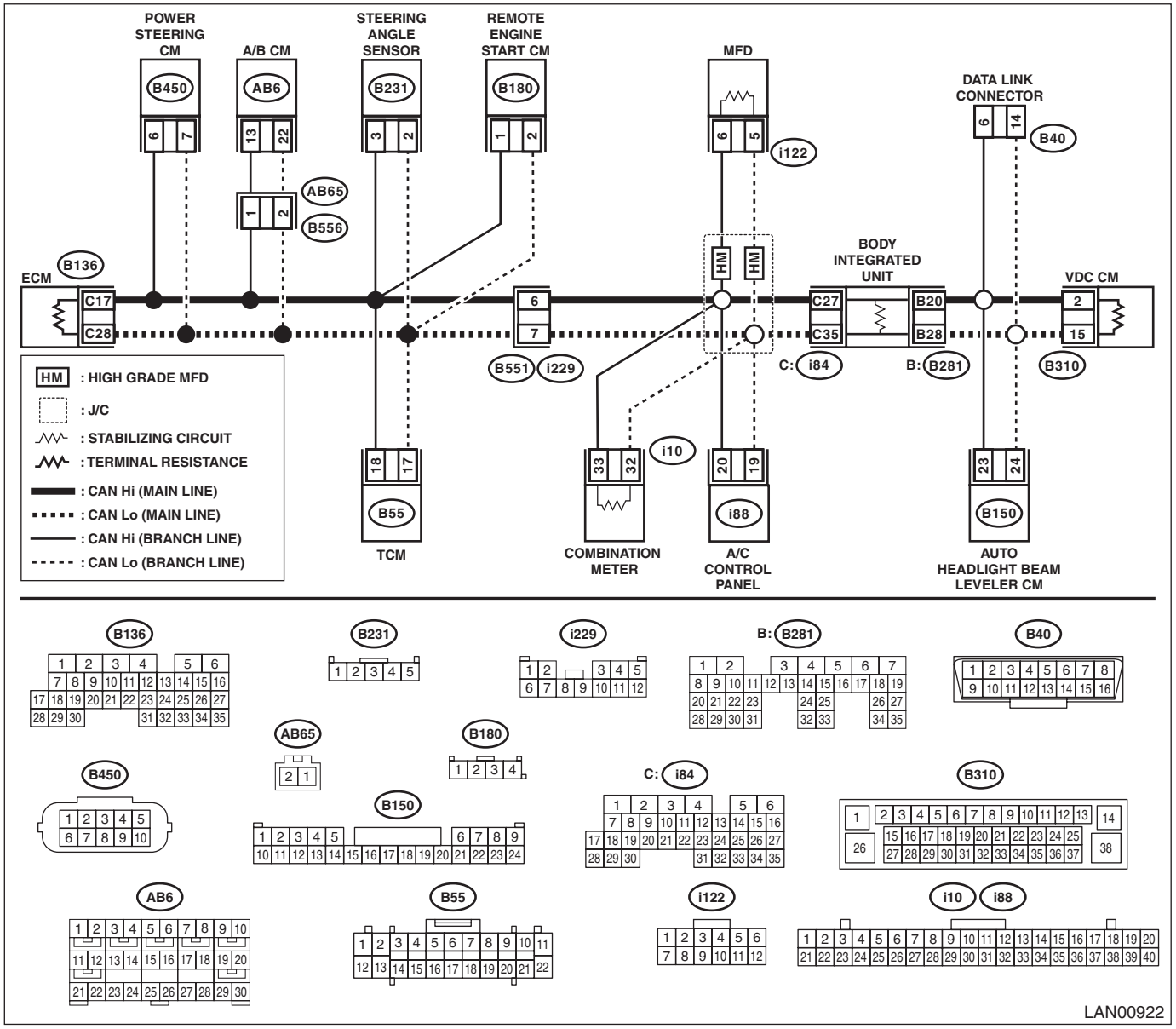

CAN Communication Circuit Check

NOTE:
When CAN communication circuit is measured, combined resistance of end resistance (120 Ω) in ECM and end resistance (120 Ω) in VDC CM can be measured. The combined resistance is approximately 53 — 61 Ω with the stabilizing circuit included. When the measured resistance value is 62 Ω or more, either one of the end resistances, or stabilizing circuit, or main wiring harness may have malfunction such as open circuit.

	Step	Check	Yes	No
1	**CHECK CONTROL MODULE.** 1) Disconnect ECM and VDC CM connectors. 2) Using a tester, measure the resistance between control module terminals. ***Connector & terminal*** ***(B136) No. 17 — No. 28:*** ***(B310) No. 2 — No. 15:***	Is the resistance 114 — 126 Ω?	Go to step **2**.	Replace the control module whose value is out of the specification.
2	**CHECK CONTROL MODULE.** 1) Disconnect the connector of body control module. 2) Using a tester, measure the resistance between control module terminals. ***Connector & terminal*** ***(B281) No. 28 — (i84) No. 27:*** ***(B281) No. 20 — (i84) No. 35:***	Is the resistance 2,850 — 3,150 Ω?	Go to step **3**.	Replace the body integrated unit. <Ref. to SL-82, REMOVAL, Body Integrated Unit.>
3	**CHECK CONTROL MODULE.** Using the tester, measure the resistance between terminals. ***Connector & terminal*** ***(B281) No. 28 — (i84) No. 35:*** ***(B281) No. 20 — (i84) No. 27:***	Is the resistance less than 1 Ω?	Go to step **4**.	Replace the body integrated unit. <Ref. to SL-82, REMOVAL, Body Integrated Unit.>
4	**CHECK CONTROL MODULE.** 1) Disconnect the combination meter connector. 2) Using a tester, measure the resistance between control module terminals. ***Connector & terminal*** ***(i10) No. 32 — No. 33:***	Is the resistance 2,850 — 3,150 Ω?	Go to step **5**.	Replace the combination meter.
5	**CHECK CONTROL MODULE (ONLY FOR MODELS WITH HIGH GRADE MFD).** 1) Disconnect the MFD connector. 2) Using a tester, measure the resistance between control module terminals. ***Connector & terminal*** ***(i122) No. 5 — No. 6:***	Is the resistance 2,850 — 3,150 Ω?	Go to step **6**.	Replace the MFD.
6	**CHECK HARNESS.** Using a tester, check continuity between terminals. ***Connector & terminal*** ***(B40) No. 6 — (B310) No. 2:*** ***(B40) No. 14 — (B310) No. 15:*** ***(B40) No. 6 — (B281) No. 20:*** ***(B40) No. 14 — (B281) No. 28:***	Is there continuity?	Go to step **7**.	Repair or replace the open circuit of harness.
7	**CHECK HARNESS.** 1) Disconnect the ECM connector. 2) Using a tester, check continuity between terminals. ***Connector & terminal*** ***(i84) No. 27 — (B136) No. 17:*** ***(i84) No. 35 — (B136) No. 28:***	Is there continuity?	It is possible that temporary poor communication occurs.	Repair or replace the open circuit of harness.

6. RELATED LINES 53 — 61 Ω (TCM)

WIRING DIAGRAM:

CAN communication system <Ref. to WI(w/o HEV)-46, WIRING DIAGRAM, CAN Communication System.>

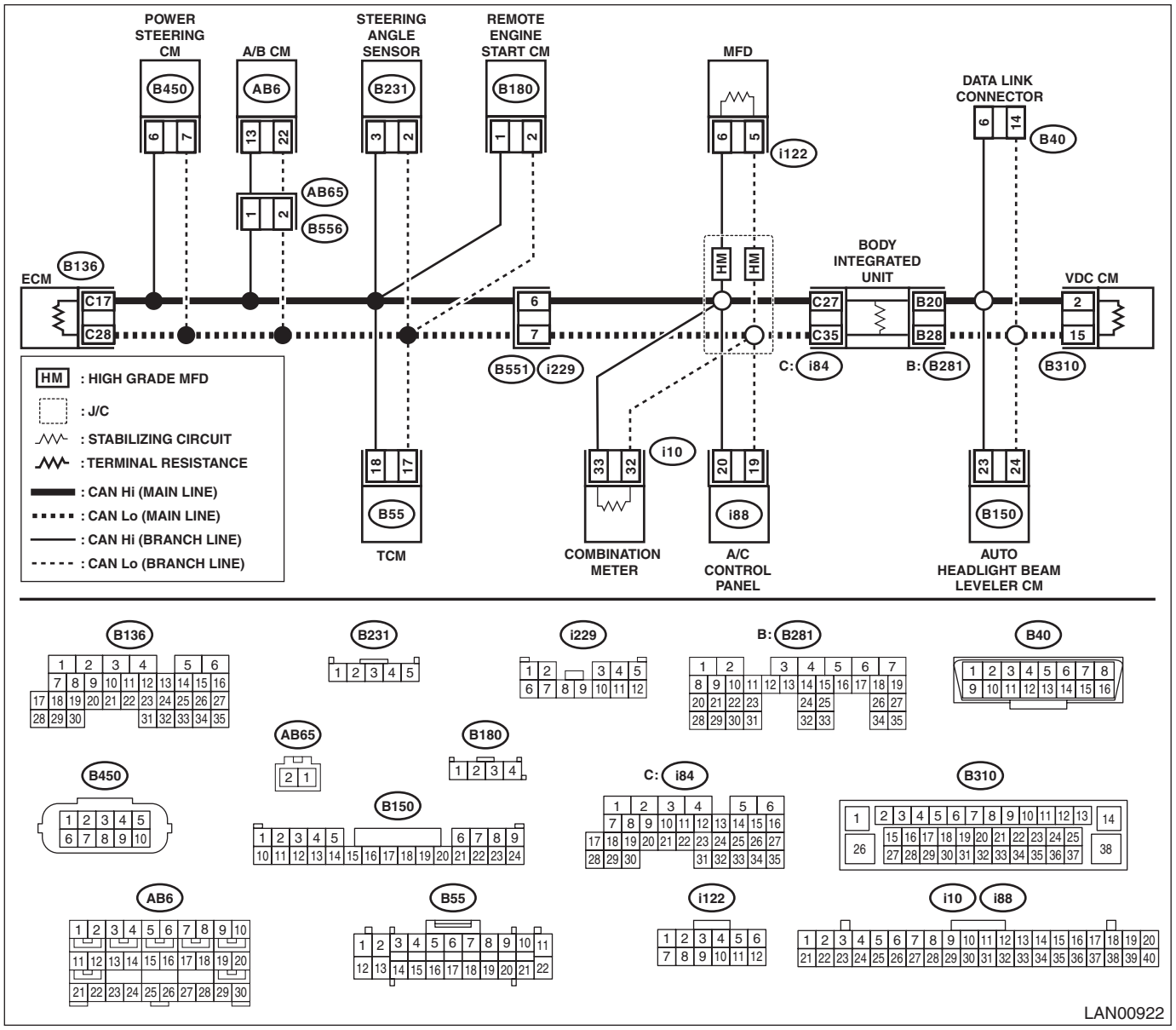

NOTE:
Perform inspection when no data is received, or faulty is detected. This is different from power supply shorted or ground shorted.

Step		Check	Yes	No
1	**CHECK BETWEEN RELATED LINES AND MAIN WIRING HARNESS.** 1) Disconnect the TCM connector. 2) Using the tester, measure the resistance between terminals. ***Connector & terminal (B55) No. 17 — No. 18:***	Is the resistance 400 Ω or more?	Related lines between TCM and main wiring harness is open, or main wiring harness is open at two places or more.	Go to step **2**.

Step		Check	Yes	No
2	**CHECK RELATED LINES.** Using the tester, measure the resistance between terminals. ***Connector & terminal*** ***(B55) No. 17 — (B40) No. 14:*** ***(B55) No. 18 — (B40) No. 6:***	Is the resistance 10 Ω or more?	Repair or replace the open circuit portion of TCM related lines.	Check DTC of TCM. <Ref. to CVT(w/o HEV)(diag)-17, OPERATION, Read Diagnostic Trouble Code (DTC).>

7. RELATED LINES 53 — 61 Ω (STEERING ANGLE SENSOR)

WIRING DIAGRAM:

CAN communication system <Ref. to WI(w/o HEV)-46, WIRING DIAGRAM, CAN Communication System.>

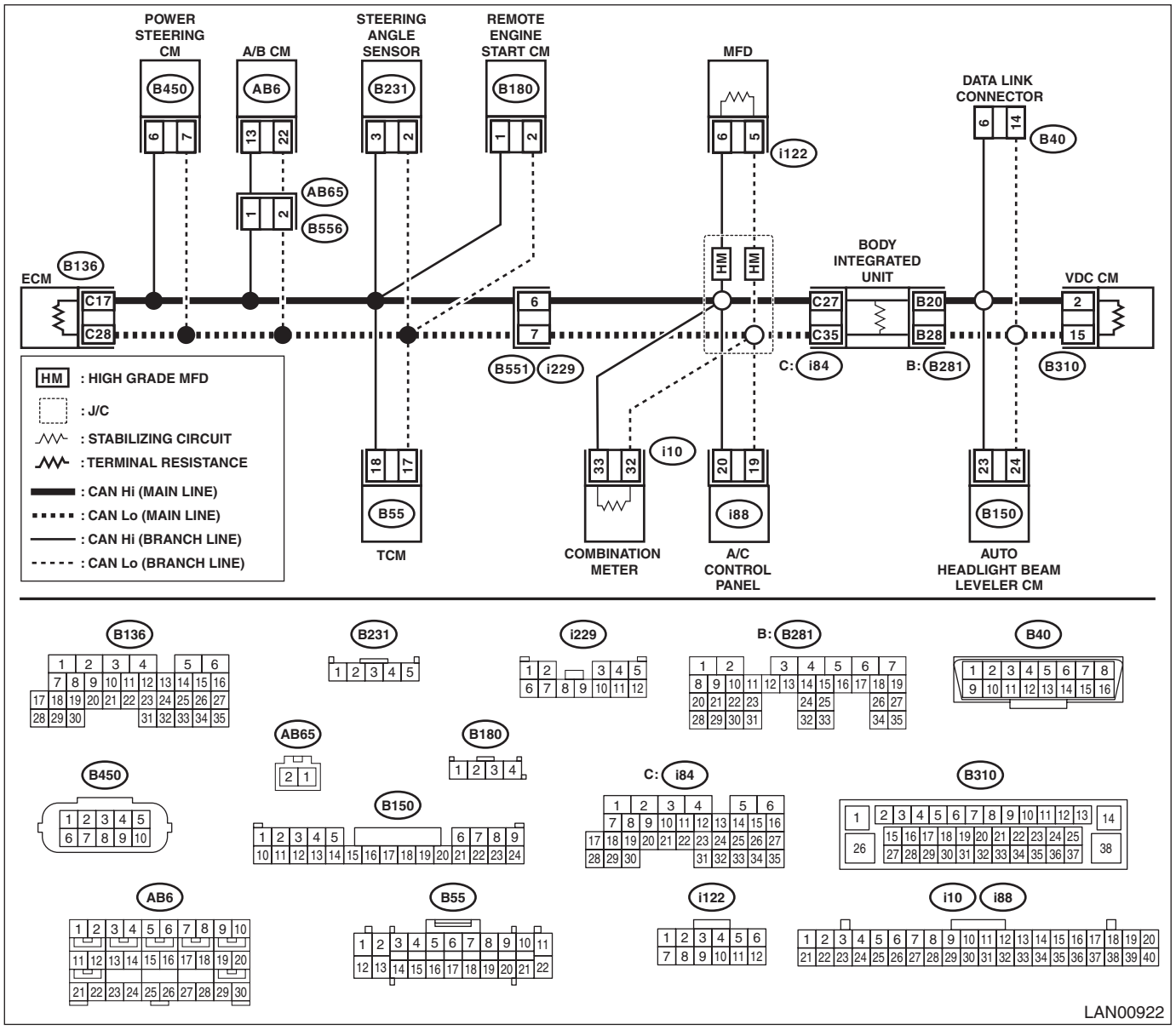

	Step	Check	Yes	No
1	**CHECK BETWEEN RELATED LINES AND MAIN WIRING HARNESS.** 1) Disconnect the steering angle sensor connector. 2) Using the tester, measure the resistance between terminals. ***Connector & terminal*** ***(B231) No. 2 — No. 3:***	Is the resistance 400 Ω or more?	Related lines between steering angle sensor and main wiring harness is open, or main wiring harness is open at two places or more.	Go to step **2**.
2	**CHECK RELATED LINES.** Using the tester, measure the resistance between terminals. ***Connector & terminal*** ***(B231) No. 2 — (B40) No. 14:*** ***(B231) No. 3 — (B40) No. 6:***	Is the resistance 10 Ω or more?	Repair or replace the open circuit portion of steering angle sensor related lines.	Check DTC of VDC CM. <Ref. to VDC(diag)-21, OPERATION, Read Diagnostic Trouble Code (DTC).>

8. RELATED LINE 53 — 61 Ω (A/C CONTROL PANEL)

WIRING DIAGRAM:

CAN communication system <Ref. to WI(w/o HEV)-46, WIRING DIAGRAM, CAN Communication System.>

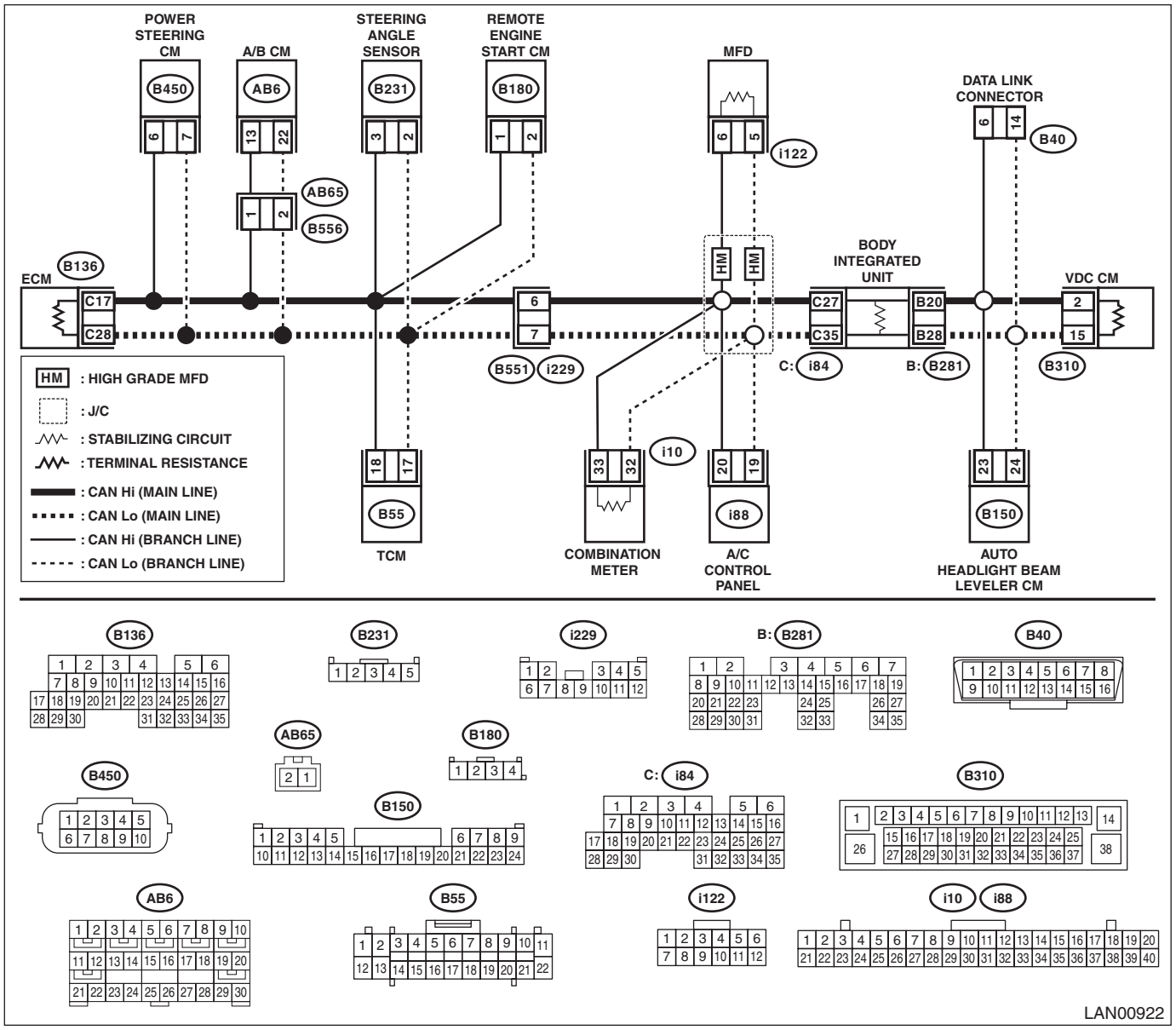

Step		Check	Yes	No
1	**CHECK BETWEEN RELATED LINES AND MAIN WIRING HARNESS.** 1) Disconnect the A/C control panel connector. 2) Using the tester, measure the resistance between terminals. ***Connector & terminal*** ***(i88) No. 19 — No. 20:***	Is the resistance 400 Ω or more?	Related lines between A/C control panel and main wiring harness is open, or main wiring harness is open at two places or more.	Go to step **2**.
2	**CHECK RELATED LINES.** Using the tester, measure the resistance between terminals. ***Connector & terminal*** ***(i88) No. 19 — (B40) No. 14:*** ***(i88) No. 20 — (B40) No. 6:***	Is the resistance 10 Ω or more?	Repair or replace the open circuit of A/C control panel related lines.	Check the DTC of A/C control panel. <Ref. to AC(diag)-42, Read Diagnostic Trouble Code (DTC).>

9. RELATED LINES 53 — 61 Ω (ELECTRIC POWER STEERING CM)

WIRING DIAGRAM:

CAN communication system <Ref. to WI(w/o HEV)-46, WIRING DIAGRAM, CAN Communication System.>

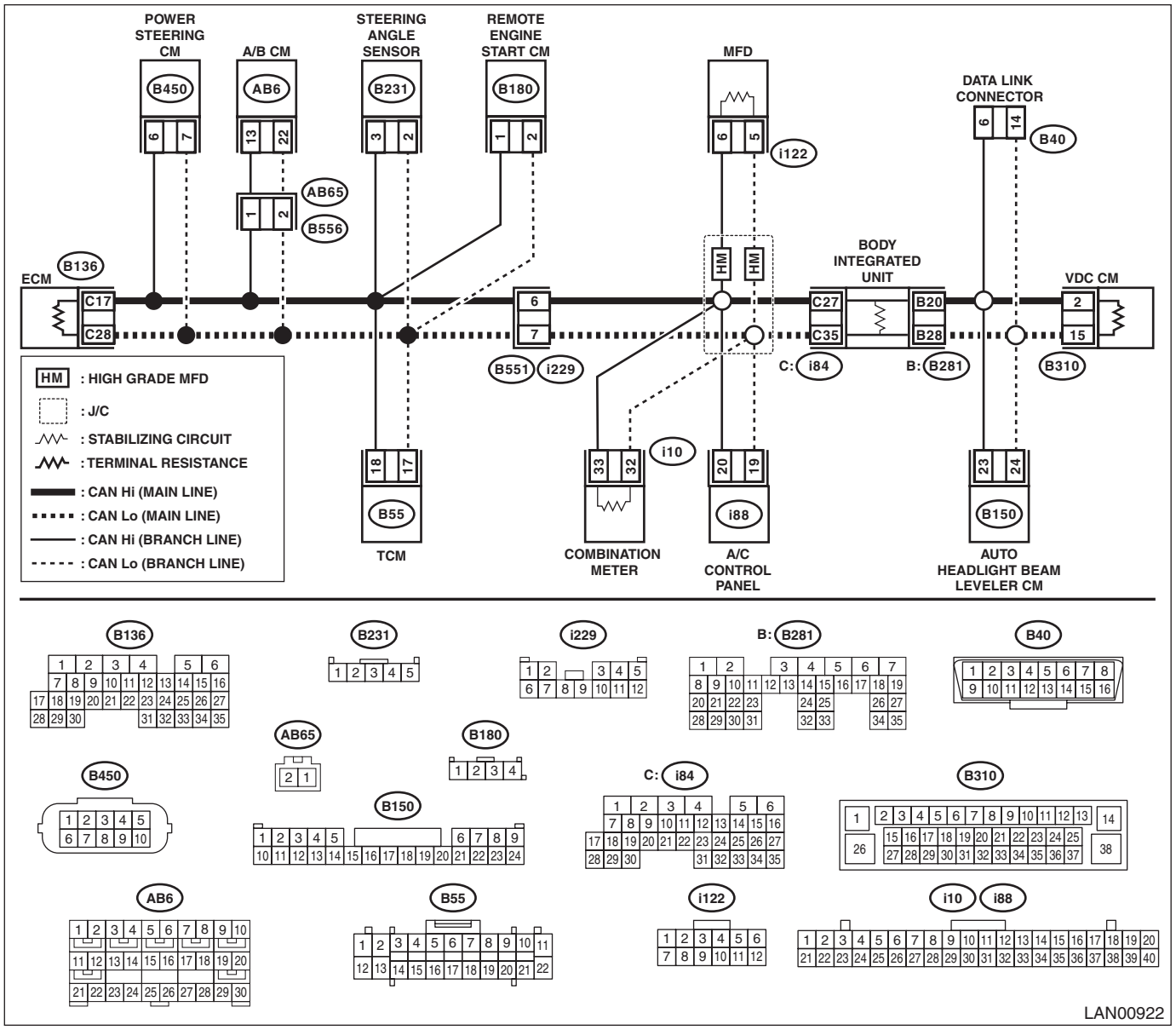

Step		Check	Yes	No
1	**CHECK BETWEEN RELATED LINES AND MAIN WIRING HARNESS.** 1) Disconnect the electric power steering CM connector. 2) Using the tester, measure the resistance between terminals. ***Connector & terminal (B450) No. 6 — No. 7:***	Is the resistance 400 Ω or more?	Related lines or main wiring harness between electric power steering CM and main wiring harness is open at two places or more.	Go to step **2**.

Step		Check	Yes	No
2	**CHECK RELATED LINES.** Using the tester, measure the resistance between terminals. ***Connector & terminal*** ***(B450) No. 6 — (B40) No. 6:*** ***(B450) No. 7 — (B40) No. 14:***	Is the resistance 10 Ω or more?	Repair or replace the open circuit portion of electric power steering CM related lines.	Check DTC of electric power steering CM. <Ref. to PS(diag)-20, OPERATION, Read Diagnostic Trouble Code (DTC).>

10.RELATED LINES 53 — 61 Ω (COMBINATION METER)

WIRING DIAGRAM:

CAN communication system <Ref. to WI(w/o HEV)-46, WIRING DIAGRAM, CAN Communication System.>

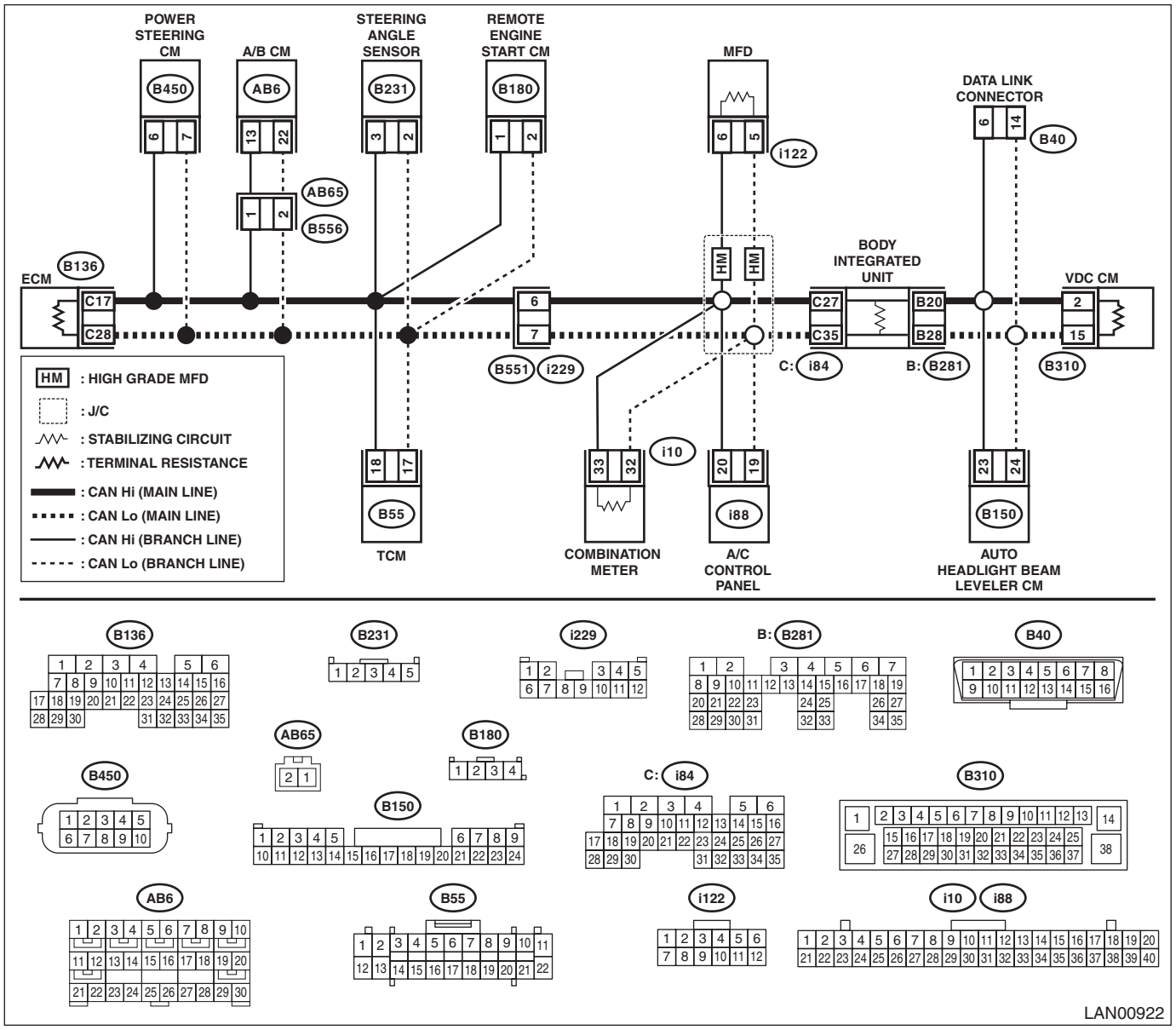

Step		Check	Yes	No
1	**CHECK BETWEEN RELATED LINES AND MAIN WIRING HARNESS.** 1) Disconnect the combination meter connector. 2) Using the tester, measure the resistance between terminals. ***Connector & terminal*** ***(i10) No. 32 — No. 33:***	Is the resistance 400 Ω or more?	Related lines between combination meter and main wiring harness is open, or main wiring harness is open at two places or more.	Go to step **2**.
2	**CHECK RELATED LINES.** Using the tester, measure the resistance between terminals. ***Connector & terminal*** ***(i10) No. 32 — (B40) No. 14:*** ***(i10) No. 33 — (B40) No. 6:***	Is the resistance 10 Ω or more?	Repair or replace the open circuit portion of combination meter related lines.	Check DTC of combination meter.

11.RELATED LINES 53 — 61 Ω (MFD)

WIRING DIAGRAM:

CAN communication system <Ref. to WI(w/o HEV)-46, WIRING DIAGRAM, CAN Communication System.>

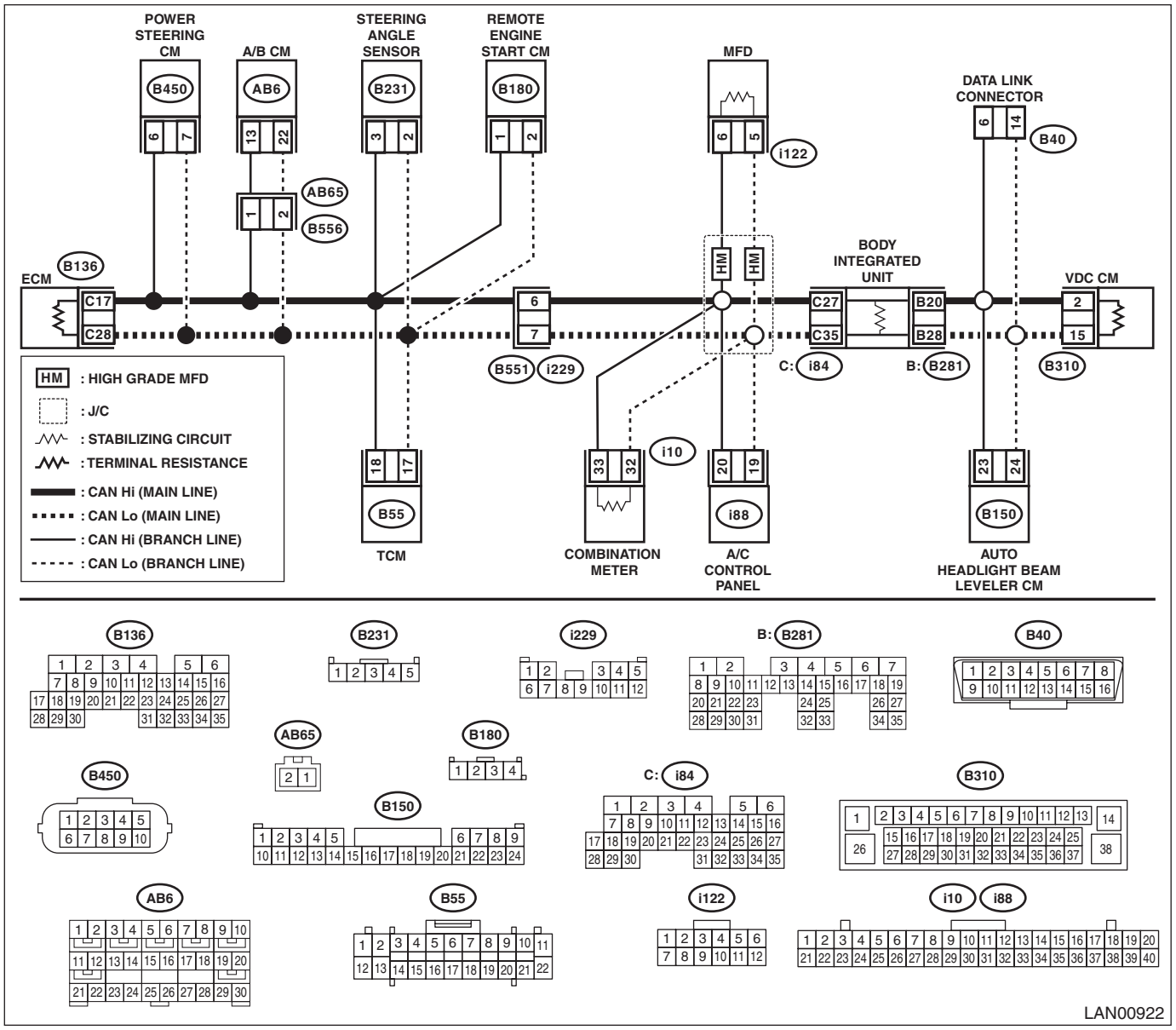

Step		Check	Yes	No
1	**CHECK BETWEEN RELATED LINES AND MAIN WIRING HARNESS.** 1) Disconnect the MFD connector. 2) Using the tester, measure the resistance between terminals. ***Connector & terminal*** ***(i122) No. 5 — No. 6:***	Is the resistance 400 Ω or more?	Related lines between MFD and main wiring harness is open, or main wiring harness is open at two places or more.	Go to step **2**.
2	**CHECK RELATED LINES.** Using the tester, measure the resistance between terminals. ***Connector & terminal*** ***(i122) No. 5 — (B40) No. 14:*** ***(i122) No. 6 — (B40) No. 6:***	Is the resistance 10 Ω or more?	Repair or replace the open circuit of MFD related lines.	Check DTC of MFD.

12.RELATED LINES 53 — 61 Ω (A/B CM)

WIRING DIAGRAM:

CAN communication system <Ref. to WI(w/o HEV)-46, WIRING DIAGRAM, CAN Communication System.>

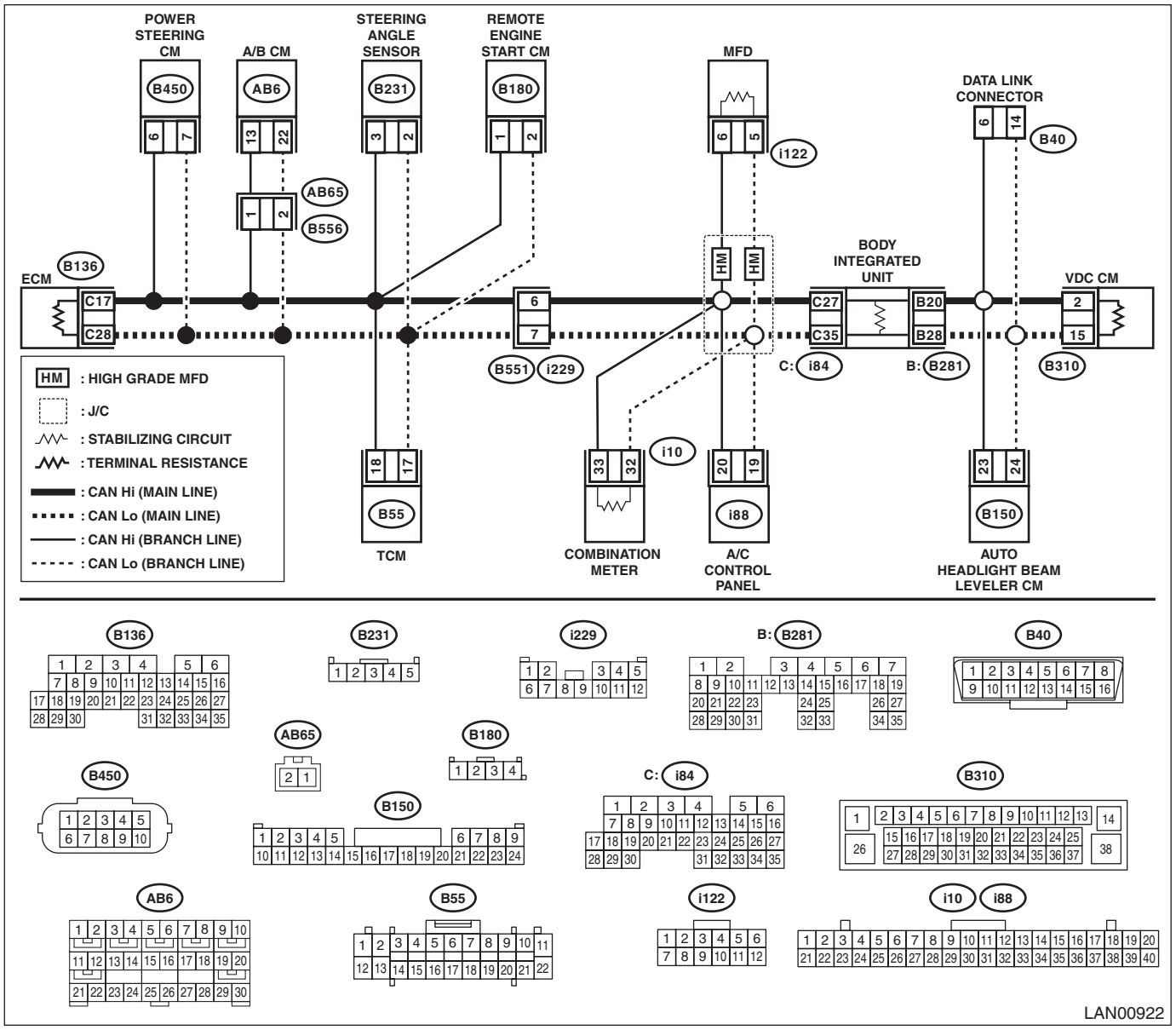

Step		Check	Yes	No
1	**CHECK BETWEEN RELATED LINES AND MAIN WIRING HARNESS.** 1) Disconnect the A/B CM connector. 2) Using the tester, measure the resistance between terminals. ***Connector & terminal*** ***(AB6) No. 13 — No. 22:***	Is the resistance 400 Ω or more?	Related lines between A/B CM and main wiring harness is open, or main wiring harness is open at two places or more.	Go to step **2**.
2	**CHECK RELATED LINES.** Using the tester, measure the resistance between terminals. ***Connector & terminal*** ***(AB6) No. 22 — (B40) No. 14:*** ***(AB6) No. 13 — (B40) No. 6:***	Is the resistance 10 Ω or more?	Repair or replace the open circuit of A/B CM related lines.	Check DTC of A/B CM.

13.RELATED LINES 53 — 61 Ω (HEADLIGHT BEAM LEVELER)

WIRING DIAGRAM:

CAN communication system <Ref. to WI(w/o HEV)-46, WIRING DIAGRAM, CAN Communication System.>

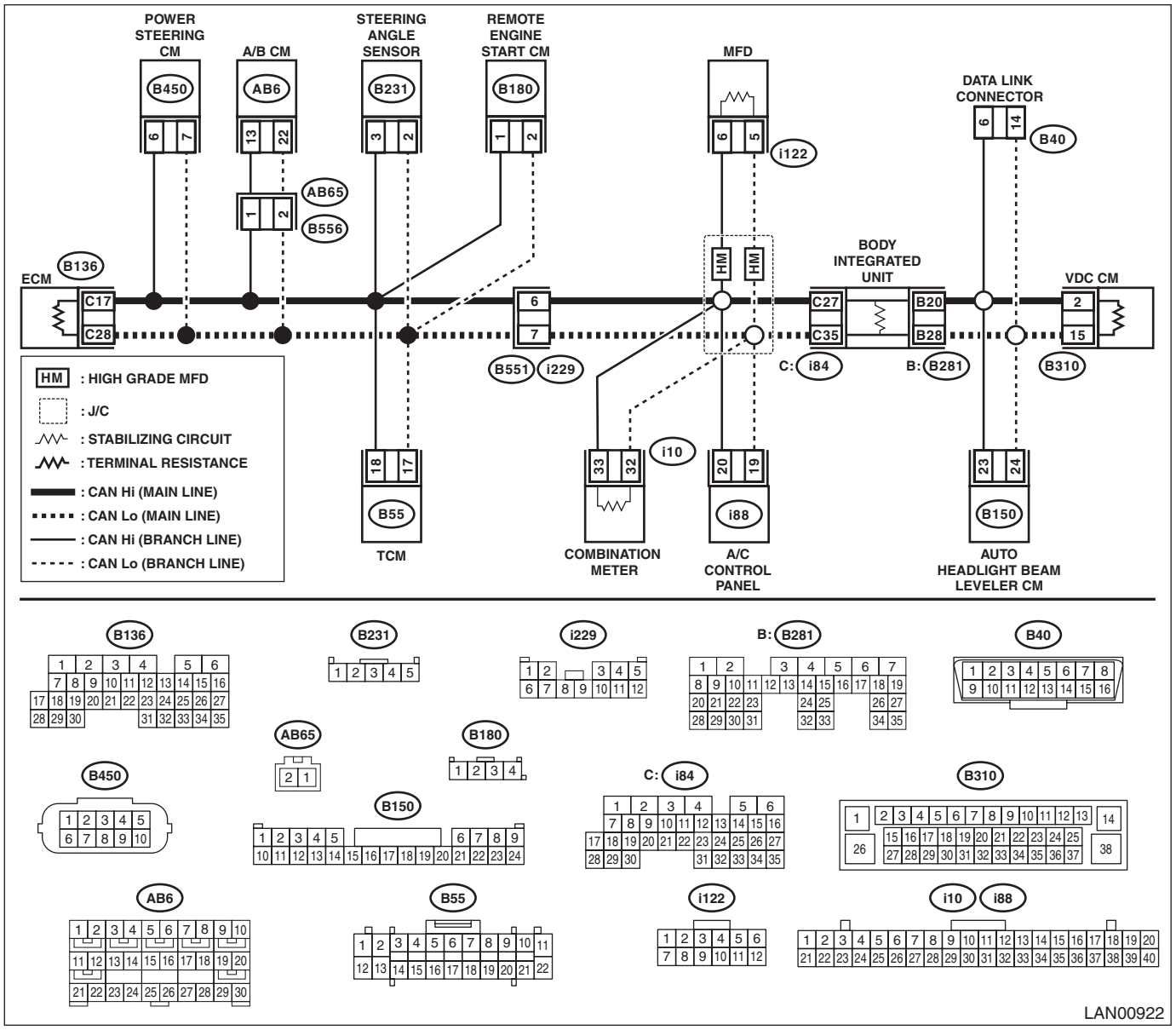

Step		Check	Yes	No
1	**CHECK BETWEEN RELATED LINES AND MAIN WIRING HARNESS.** 1) Disconnect the headlight beam leveler CM connector. 2) Using the tester, measure the resistance between terminals. ***Connector & terminal*** ***(B150) No. 23 — No. 24:***	Is the resistance 400 Ω or more?	Related lines between headlight beam leveler CM and main wiring harness is open, or main wiring harness is open at two places or more.	Go to step **2**.
2	**CHECK RELATED LINES.** Using the tester, measure the resistance between terminals. ***Connector & terminal*** ***(B150) No. 24 — (B40) No. 14:*** ***(B150) No. 23 — (B40) No. 6:***	Is the resistance 10 Ω or more?	Repair or replace the open circuit portion of headlight beam leveler CM related lines.	Check DTC of headlight beam leveler system.

14.RELATED LINES 53 — 61 Ω (REMOTE ENGINE STARTER)

WIRING DIAGRAM:

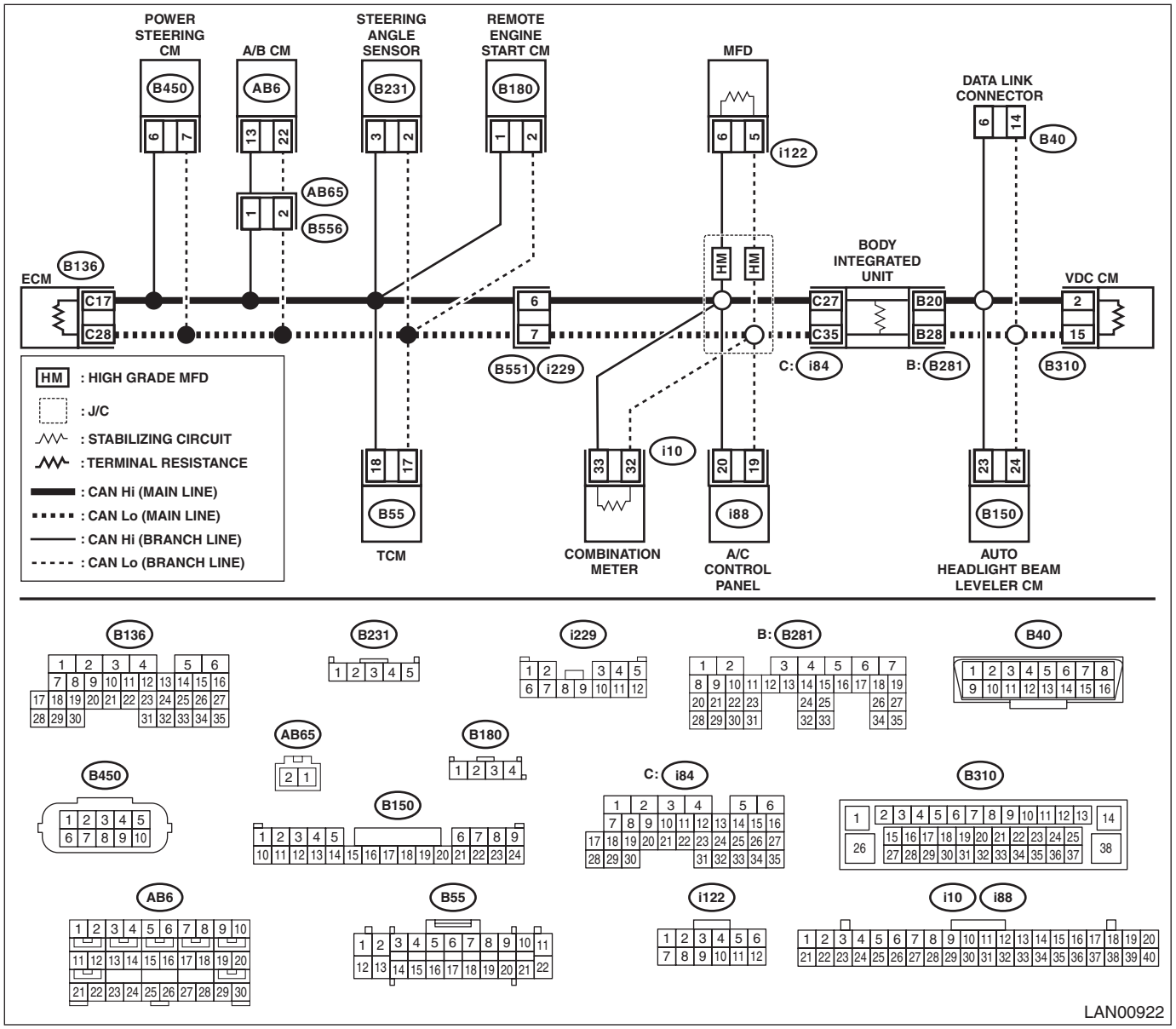

	Step	Check	Yes	No
1	**CHECK BETWEEN RELATED LINES AND MAIN WIRING HARNESS.** 1) Disconnect the remote engine start CM connector. 2) Using the tester, measure the resistance between terminals. ***Connector & terminal*** ***(B180) No. 1 — No. 2:***	Is the resistance 400 Ω or more?	Related lines between remote engine start CM and main wiring harness is open, or main wiring harness is open at two places or more.	Go to step **2**.
2	**CHECK RELATED LINES.** Using the tester, measure the resistance between terminals. ***Connector & terminal*** ***(B180) No. 1 — (B40) No. 6:*** ***(B180) No. 2 — (B40) No. 14:***	Is the resistance 10 Ω or more?	Repair or replace the open circuit portion of remote engine start CM related lines.	The communication harness is normal. Check the remote engine starter CM or the mobile key.

10.List of Diagnostic Trouble Code (DTC)

A: LIST

DTC	Item	Content of diagnosis	Note
U1201	CAN-HS Counter Abnormal	High speed CAN communication error	<Ref. to LAN(w/o HEV)(diag)-89, DTC U1201 CAN-HS COUNTER ABNORMAL, Diagnostic Procedure with Diagnostic Trouble Code (DTC).>
U0073	Control Module Communication Bus Off	Communication of some module is shut down.	<Ref. to LAN(w/o HEV)(diag)-90, DTC U0073 CONTROL MODULE COMMUNICATION BUS OFF, Diagnostic Procedure with Diagnostic Trouble Code (DTC).>
U0401	Invalid Data Received From ECM/PCM “A”	Error data is received from ECM.	<Ref. to LAN(w/o HEV)(diag)-91, DTC U0401 INVALID DATA RECEIVED FROM ECM/PCM “A”, Diagnostic Procedure with Diagnostic Trouble Code (DTC).>
U0402	Invalid Data Received From TCM	Error data is received from TCM.	<Ref. to LAN(w/o HEV)(diag)-92, DTC U0402 INVALID DATA RECEIVED FROM TCM, Diagnostic Procedure with Diagnostic Trouble Code (DTC).>
U0416	Invalid Data Received From Vehicle Dynamics Control Module	Error data is received from VDC module.	<Ref. to LAN(w/o HEV)(diag)-93, DTC U0416 INVALID DATA RECEIVED FROM VEHICLE DYNAMICS CONTROL MODULE, Diagnostic Procedure with Diagnostic Trouble Code (DTC).>
U0420	Invalid Data Received From Power Steering Control Module	Error data is received from EPS module.	<Ref. to LAN(w/o HEV)(diag)-94, DTC U0420 INVALID DATA RECEIVED FROM POWER STEERING CONTROL MODULE, Diagnostic Procedure with Diagnostic Trouble Code (DTC).>
U0422	Invalid Data Received From Body Control Module	Error data is received from body integrated unit.	<Ref. to LAN(w/o HEV)(diag)-95, DTC U0422 INVALID DATA RECEIVED FROM BODY CONTROL MODULE, Diagnostic Procedure with Diagnostic Trouble Code (DTC).>
U0423	Invalid Data Received From Instrument Panel Cluster Control Module	Error data is received from meter.	<Ref. to LAN(w/o HEV)(diag)-96, DTC U0423 INVALID DATA RECEIVED FROM INSTRUMENT PANEL CLUSTER CONTROL MODULE, Diagnostic Procedure with Diagnostic Trouble Code (DTC).>
U0424	Invalid Data Received From HVAC Control Module	Error data is received from A/C control panel.	<Ref. to LAN(w/o HEV)(diag)-97, DTC U0424 INVALID DATA RECEIVED FROM HVAC CONTROL MODULE, Diagnostic Procedure with Diagnostic Trouble Code (DTC).>
U0428	Invalid Data Received From Steering Angle Sensor Module	Error data is received from steering angle sensor.	<Ref. to LAN(w/o HEV)(diag)-98, DTC U0428 INVALID DATA RECEIVED FROM STEERING ANGLE SENSOR MODULE, Diagnostic Procedure with Diagnostic Trouble Code (DTC).>
U0452	Invalid Data Received From Restraints Control Module	Error data is received from airbag module.	<Ref. to LAN(w/o HEV)(diag)-99, DTC U0452 INVALID DATA RECEIVED FROM RESTRAINTS CONTROL MODULE, Diagnostic Procedure with Diagnostic Trouble Code (DTC).>
U0100	Lost Communication With ECM/PCM “A”	Data does not arrive from ECM.	<Ref. to LAN(w/o HEV)(diag)-100, DTC U0100 LOST COMMUNICATION WITH ECM/PCM “A”, Diagnostic Procedure with Diagnostic Trouble Code (DTC).>

DTC	Item	Content of diagnosis	Note
U0101	Lost Communication With TCM	Data does not arrive from TCM.	<Ref. to LAN(w/o HEV)(diag)-101, DTC U0101 LOST COMMUNICATION WITH TCM, Diagnostic Procedure with Diagnostic Trouble Code (DTC).>
U0122	Lost Communication With Vehicle Dynamics Control Module	Data does not arrive from VDC module.	<Ref. to LAN(w/o HEV)(diag)-102, DTC U0122 LOST COMMUNICATION WITH VEHICLE DYNAMICS CONTROL MODULE, Diagnostic Procedure with Diagnostic Trouble Code (DTC).>
U0126	Lost Communication With Steering Angle Sensor Module	Data does not arrive from steering angle sensor.	<Ref. to LAN(w/o HEV)(diag)-103, DTC U0126 LOST COMMUNICATION WITH STEERING ANGLE SENSOR MODULE, Diagnostic Procedure with Diagnostic Trouble Code (DTC).>
U0131	Lost Communication With Power Steering Control Module	Data does not arrive from EPS module.	<Ref. to LAN(w/o HEV)(diag)-104, DTC U0131 LOST COMMUNICATION WITH POWER STEERING CONTROL MODULE, Diagnostic Procedure with Diagnostic Trouble Code (DTC).>
U0140	Lost Communication With Body Control Module	Data does not arrive from body integrated unit.	<Ref. to LAN(w/o HEV)(diag)-105, DTC U0140 LOST COMMUNICATION WITH BODY CONTROL MODULE, Diagnostic Procedure with Diagnostic Trouble Code (DTC).>
U0151	Lost Communication With Restraints Control Module	Data does not arrive from airbag module.	<Ref. to LAN(w/o HEV)(diag)-106, DTC U0151 LOST COMMUNICATION WITH RESTRAINTS CONTROL MODULE, Diagnostic Procedure with Diagnostic Trouble Code (DTC).>
U0155	Lost Communication With Instrument Panel Cluster (IPC) Control Module	Data does not arrive from meter.	<Ref. to LAN(w/o HEV)(diag)-107, DTC U0155 LOST COMMUNICATION WITH INSTRUMENT PANEL CLUSTER (IPC) CONTROL MODULE, Diagnostic Procedure with Diagnostic Trouble Code (DTC).>
U0164	Lost Communication With HVAC Control Module	Data does not arrive from A/C control panel.	<Ref. to LAN(w/o HEV)(diag)-108, DTC U0164 LOST COMMUNICATION WITH HVAC CONTROL MODULE, Diagnostic Procedure with Diagnostic Trouble Code (DTC).>
U1120	Lost Communication With Autostart Stop Control Module	Data does not arrive from combination meter.	<Ref. to LAN(w/o HEV)(diag)-108, DTC U1120 LOST COMMUNICATION WITH AUTOSTART STOP CONTROL MODULE, Diagnostic Procedure with Diagnostic Trouble Code (DTC).>

1. CHECK USING THE DTC CHECK SHEET

DTC check sheet

	(A)	(B)	(C)											(D)										
			VDC	BIU	MFD	A/C	MET	RST	STR	TCM	A/B	EPS	EGI	VDC	BIU	MFD	A/C	MET	RST	STR	TCM	A/B	EPS	EGI
		U0073	U0122	U0140	U0156	U0164	U0155	—	U0126	U0101	U0151	U0131	U0100	U0416	U0422	U0457	U0424	U0423	—	U0428	U0402	U0452	U0420	U0401
VDC			—		—	—	—	—			—	—		—		—	—	—	—			—	—	
HL					—	—	—	—	—	—	—	—	—	—	—	—	—	—	—	—	—	—	—	—	—
BIU				—	—			—	—		—	—			—	—			—	—		—	—	
MFD			—	—	—	—	—	—	—	—	—	—	—	—	—	—	—	—	—	—	—	—	—	—	—
A/C					—	—		—	—		—	—				—	—		—	—		—	—	
MET					—		—	—	—					—	—	—	—	—	—	—	—	—	—	—
RST		—	—	—	—	—	—	—	—	—	—	—	—	—	—	—	—	—	—	—	—	—	—	—
STR		—	—	—	—	—	—	—	—	—	—	—	—	—	—	—	—	—	—	—	—	—	—	—
TCM					—	—		—	—	—	—	—				—	—		—	—	—	—	—	
A/B			—	—	—	—	—	—	—	—	—	—	—	—	—	—	—	—	—	—	—	—	—	—	—
EPS				—	—	—	—	—	—	—	—	—	—		—	—	—	—	—	—	—	—	—	—
EGI				—	—	—		—	—		—	—	—		—	—	—		—	—		—	—	—

LAN00923

(A) Installation check
(B) Bus off detection
(C) Data no-receive detection
(D) Data abnormal detection

VDC: VDC CM
BIU: Body integrated unit
MFD: High grade MFD
A/C: A/C control panel
MET: Combination meter
RST: Remote engine starter CM
STR: Steering angle sensor
TCM: TCM
A/B: AB CM
EPS: Power steering CM
EGI: ECM
HL: Auto headlight beam leveler CM

1) Module installation check
   (1) Write “-” marks in the field for installation check if the vehicle to be inspected does not have relevant module.
   (2) Write “-” marks in all blank fields on the same row that the “-” mark has filled in.
2) Bus off detection / data not received

NOTE:
It becomes impossible for CAN diagnostic module to read DTC, if there is a current malfunction of open harness (data not received). If this occurs, perform the “Check using the check sheet of communication for initializing” <Ref. to LAN(w/o HEV)(diag)-13, CHECK USING THE CHECK SHEET OF COMMUNICATION FOR INITIALIZING, COMMUNICATION FOR INITIALIZING IMPOSSIBLE, Subaru Select Monitor.>, and use this sheet to confirm that the corresponding part becomes the past malfunction.
   (1) Mark “X” in the field corresponding to the DTCs that has been detected by each module in the check sheet.
   (2) Identify and repair the faulty part by referring to the example of DTC data not received and the DTC matrix. <Ref. to LAN(w/o HEV)(diag)-53, EXAMPLE OF DTC DATA NOT RECEIVED, LIST, List of Diagnostic Trouble Code (DTC).> <Ref. to LAN(w/o HEV)(diag)-60, DTC MATRIX, LIST, List of Diagnostic Trouble Code (DTC).>

3) Data abnormal detection

NOTE:
If any “BUS OFF” or “NO-RECEIVE DATA” condition is detected, perform the diagnosis for these problems first.

(1) If several modules detect the DTC for the same module, replace the detected module.
(2) If one module detects the DTC, replace the module of the detected side.
(3) If it does not return to the normal operation, re-install the module which has been replaced, and replace the module of the detected side.
(4) If it does not return to the normal operation, replace both modules.

2. EXAMPLE OF DTC DATA NOT RECEIVED

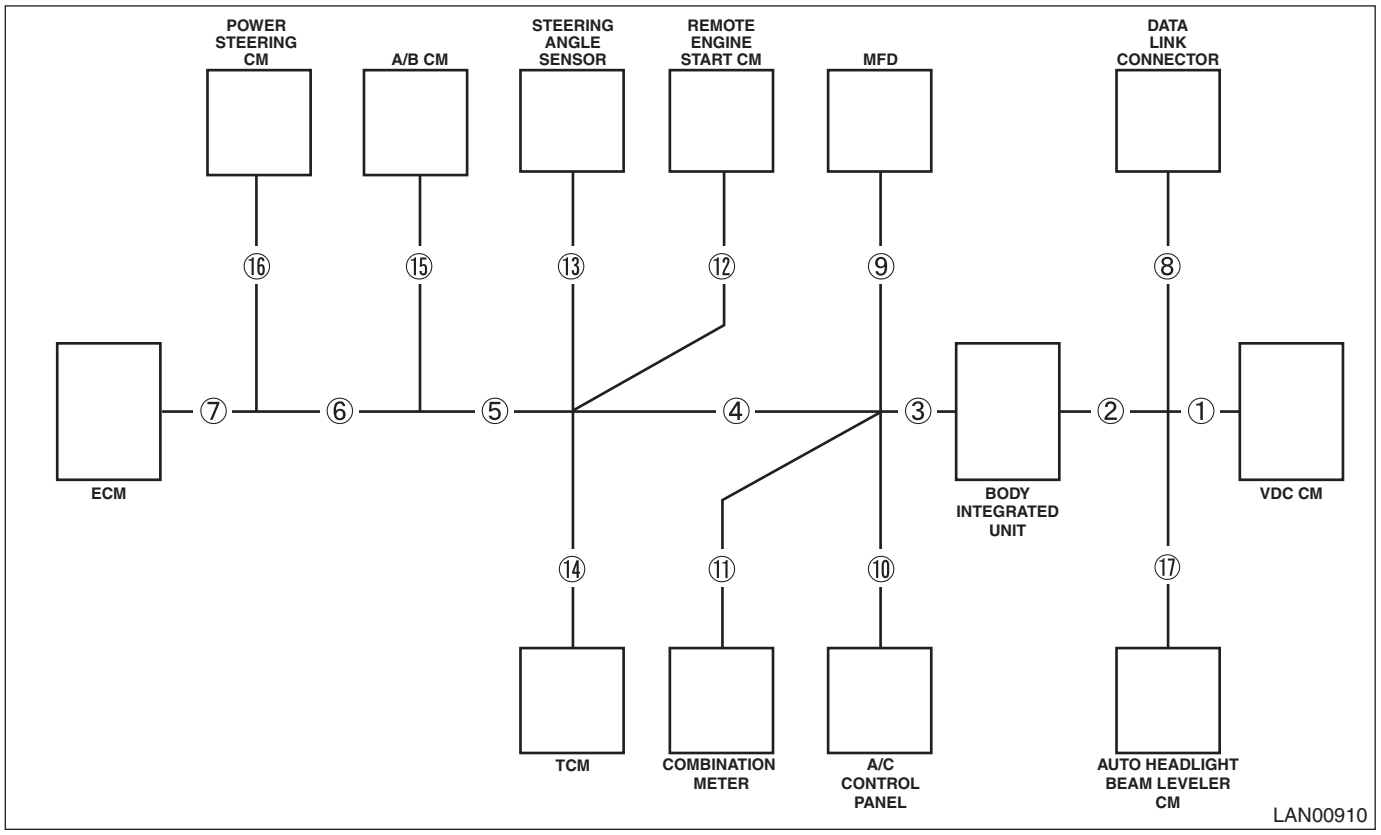

When ④ (main wiring harness between combination meter and steering angle sensor) is open

	(A)	(B)	(C)											(D)										
			VDC	BIU	MFD	A/C	MET	RST	STR	TCM	A/B	EPS	EGI	VDC	BIU	MFD	A/C	MET	RST	STR	TCM	A/B	EPS	EGI
		U0073	U0122	U0140	U0156	U0164	U0155	—	U0126	U0101	U0151	U0131	U0100	U0416	U0422	U0457	U0424	U0423	—	U0428	U0402	U0452	U0420	U0401
VDC			—		—	—	—	—	×	×	—	—	×	—		—	—	—	—			—	—	
HL					—	—	—	—	—	—	—	—	—	—	—	—	—	—	—	—	—	—	—	—
BIU				—	—			—	—	×	—	—	×		—	—			—	—		—	—	
MFD			—	—	—	—	—	—	—	—	—	—	—	—	—	—	—	—	—	—	—	—	—	—
A/C					—	—		—	—	×	—	—	×			—	—		—	—		—	—	
MET					—		—	—	—	×	×	×	×	—	—	—	—	—	—	—	—	—	—	—
RST		—	—	—	—	—	—	—	—	—	—	—	—	—	—	—	—	—	—	—	—	—	—	—
STR		—	—	—	—	—	—	—	—	—	—	—	—	—	—	—	—	—	—	—	—	—	—	—
TCM			×	×	—	—	×	—	—	—	—	—				—	—		—	—	—	—	—	
A/B			—	—	—	—	—	—	—	—	—	—	—	—	—	—	—	—	—	—	—	—	—	—
EPS			×	—	—	—	—	—	—	—	—	—	—		—	—	—	—	—	—	—	—	—	—
EGI			×	—	—	—	×	—	—		—	—	—		—	—	—		—	—		—	—	—

LAN00924

When ⑤ (main wiring harness between steering angle sensor and airbag CM) is open

	(A)	(B)	(C)											(D)										
			VDC	BIU	MFD	A/C	MET	RST	STR	TCM	A/B	EPS	EGI	VDC	BIU	MFD	A/C	MET	RST	STR	TCM	A/B	EPS	EGI
		U0073	U0122	U0140	U0156	U0164	U0155	—	U0126	U0101	U0151	U0131	U0100	U0416	U0422	U0457	U0424	U0423	—	U0428	U0402	U0452	U0420	U0401
VDC			—		—	—	—	—			—	—	×	—		—	—	—	—			—	—	
HL					—	—	—	—	—	—	—	—	—	—	—	—	—	—	—	—	—	—	—	—
BIU				—	—			—	—		—	—	×		—	—			—	—		—	—	
MFD			—	—	—	—	—	—	—	—	—	—	—	—	—	—	—	—	—	—	—	—	—	—
A/C					—	—		—	—		—	—	×			—	—		—	—		—	—	
MET					—		—	—	—		×	×	×	—	—	—	—	—	—	—	—	—	—	—
RST		—	—	—	—	—	—	—	—	—	—	—	—	—	—	—	—	—	—	—	—	—	—	—
STR		—	—	—	—	—	—	—	—	—	—	—	—	—	—	—	—	—	—	—	—	—	—	—
TCM					—	—		—	—	—	—	—	×			—	—		—	—	—	—	—	
A/B			—	—	—	—	—	—	—	—	—	—	—	—	—	—	—	—	—	—	—	—	—	—
EPS			×	—	—	—	—	—	—	—	—	—	—		—	—	—	—	—	—	—	—	—	—
EGI			×	—	—	—	×	—	—	×	—	—	—		—	—	—		—	—		—	—	—

LAN00925

When ⑥ (main wiring harness between airbag CM and power steering CM) is open

	(A)	(B)	(C)											(D)										
			VDC	BIU	MFD	A/C	MET	RST	STR	TCM	A/B	EPS	EGI	VDC	BIU	MFD	A/C	MET	RST	STR	TCM	A/B	EPS	EGI
		U0073	U0122	U0140	U0156	U0164	U0155	—	U0126	U0101	U0151	U0131	U0100	U0416	U0422	U0457	U0424	U0423	—	U0428	U0402	U0452	U0420	U0401
VDC			—		—	—	—	—			—	—	×	—		—	—	—	—			—	—	
HL					—	—	—	—	—	—	—	—	—	—	—	—	—	—	—	—	—	—	—	—
BIU				—	—			—	—		—	—	×		—	—			—	—		—	—	
MFD			—	—	—	—	—	—	—	—	—	—	—	—	—	—	—	—	—	—	—	—	—	—
A/C					—	—		—	—		—	—	×			—	—		—	—		—	—	
MET					—		—	—	—			×	×	—	—	—	—	—	—	—	—	—	—	—
RST		—	—	—	—	—	—	—	—	—	—	—	—	—	—	—	—	—	—	—	—	—	—	—
STR		—	—	—	—	—	—	—	—	—	—	—	—	—	—	—	—	—	—	—	—	—	—	—
TCM					—	—		—	—	—	—	—	×			—	—		—	—	—	—	—	
A/B			—	—	—	—	—	—	—	—	—	—	—	—	—	—	—	—	—	—	—	—	—	—
EPS			×	—	—	—	—	—	—	—	—	—	—		—	—	—	—	—	—	—	—	—	—
EGI			×	—	—	—	×	—	—	×	—	—	—		—	—	—		—	—	—		—	—	—

LAN00926

When ⑦ (ECM vicinity) is open

NOTE:
If bus off occurs, ECM displays only the DTC that indicates bus off. However, other no-receive errors may occur depending on the judgment timing.

	(A)	(B)	(C)											(D)										
			VDC	BIU	MFD	A/C	MET	RST	STR	TCM	A/B	EPS	EGI	VDC	BIU	MFD	A/C	MET	RST	STR	TCM	A/B	EPS	EGI
		U0073	U0122	U0140	U0156	U0164	U0155	—	U0126	U0101	U0151	U0131	U0100	U0416	U0422	U0457	U0424	U0423	—	U0428	U0402	U0452	U0420	U0401
VDC			—		—	—	—	—			—	—	×	—		—	—	—	—			—	—	
HL					—	—	—	—	—	—	—	—	—	—	—	—	—	—	—	—	—	—	—	—
BIU				—	—			—	—		—	—	×		—	—			—	—		—	—	
MFD			—	—	—	—	—	—	—	—	—	—	—	—	—	—	—	—	—	—	—	—	—	—	—
A/C					—	—		—	—		—	—	×			—	—		—	—		—	—	
MET					—		—	—	—				×	—	—	—	—	—	—	—	—	—	—	—	—
RST		—	—	—	—	—	—	—	—	—	—	—	—	—	—	—	—	—	—	—	—	—	—	—	—
STR		—	—	—	—	—	—	—	—	—	—	—	—	—	—	—	—	—	—	—	—	—	—	—	—
TCM					—	—		—	—	—	—	—	×			—	—		—	—	—	—	—	—	
A/B			—	—	—	—	—	—	—	—	—	—	—	—	—	—	—	—	—	—	—	—	—	—	—
EPS				—	—	—	—	—	—	—	—	—	—		—	—	—	—	—	—	—	—	—	—	—
EGI			×	—	—	—		—	—		—	—	—		—	—	—		—	—		—	—	—

LAN00927

When ⑫ (remote engine start CM vicinity) is open

NOTE:
No DTC remains, and the remote engine starter does not function.

	(A)	(B)	(C)											(D)										
			VDC	BIU	MFD	A/C	MET	RST	STR	TCM	A/B	EPS	EGI	VDC	BIU	MFD	A/C	MET	RST	STR	TCM	A/B	EPS	EGI
		U0073	U0122	U0140	U0156	U0164	U0155	—	U0126	U0101	U0151	U0131	U0100	U0416	U0422	U0457	U0424	U0423	—	U0428	U0402	U0452	U0420	U0401
VDC			—		—	—	—	—			—	—		—		—	—	—	—			—	—	
HL					—	—	—	—	—	—	—	—	—	—	—	—	—	—	—	—	—	—	—	—
BIU				—	—			—	—		—	—			—	—			—	—		—	—	
MFD			—	—	—	—	—	—	—	—	—	—	—	—	—	—	—	—	—	—	—	—	—	—	—
A/C					—	—		—	—		—	—				—	—		—	—		—	—	
MET					—		—	—	—					—	—	—	—	—	—	—	—	—	—	—
RST		—	—	—	—	—	—	—	—	—	—	—	—	—	—	—	—	—	—	—	—	—	—	—
STR		—	—	—	—	—	—	—	—	—	—	—	—	—	—	—	—	—	—	—	—	—	—	—
TCM					—	—		—	—	—	—	—				—	—		—	—	—	—	—	
A/B			—	—	—	—	—	—	—	—	—	—	—	—	—	—	—	—	—	—	—	—	—	—	—
EPS				—	—	—	—	—	—	—	—	—	—		—	—	—	—	—	—	—	—	—	—
EGI				—	—	—		—	—		—	—	—		—	—	—		—	—		—	—	—

LAN00923

When ⑬ (steering angle sensor vicinity) is open

	(A)	(B)	(C)											(D)										
			VDC	BIU	MFD	A/C	MET	RST	STR	TCM	A/B	EPS	EGI	VDC	BIU	MFD	A/C	MET	RST	STR	TCM	A/B	EPS	EGI
		U0073	U0122	U0140	U0156	U0164	U0155	—	U0126	U0101	U0151	U0131	U0100	U0416	U0422	U0457	U0424	U0423	—	U0428	U0402	U0452	U0420	U0401
VDC			—		—	—	—	—	×		—	—		—		—	—	—	—			—	—	
HL					—	—	—	—	—	—	—	—	—	—	—	—	—	—	—	—	—	—	—	—
BIU				—	—			—	—		—	—			—	—			—	—		—	—	
MFD			—	—	—	—	—	—	—	—	—	—	—	—	—	—	—	—	—	—	—	—	—	—	—
A/C					—	—		—	—		—	—				—	—		—	—		—	—	
MET					—		—	—	—					—	—	—	—	—	—	—	—	—	—	—
RST		—	—	—	—	—	—	—	—	—	—	—	—	—	—	—	—	—	—	—	—	—	—	—
STR		—	—	—	—	—	—	—	—	—	—	—	—	—	—	—	—	—	—	—	—	—	—	—
TCM					—	—		—	—	—	—	—				—	—		—	—	—	—	—	
A/B			—	—	—	—	—	—	—	—	—	—	—	—	—	—	—	—	—	—	—	—	—	—	—
EPS				—	—	—	—	—	—	—	—	—	—		—	—	—	—	—	—	—	—	—	—
EGI				—	—	—		—	—		—	—	—		—	—	—		—	—		—	—	—

LAN00966

When ⑭ (TCM vicinity) is open

	(A)	(B)	(C)											(D)										
			VDC	BIU	MFD	A/C	MET	RST	STR	TCM	A/B	EPS	EGI	VDC	BIU	MFD	A/C	MET	RST	STR	TCM	A/B	EPS	EGI
		U0073	U0122	U0140	U0156	U0164	U0155	—	U0126	U0101	U0151	U0131	U0100	U0416	U0422	U0457	U0424	U0423	—	U0428	U0402	U0452	U0420	U0401
VDC			—		—	—	—	—		×	—	—		—		—	—	—	—			—	—	
HL					—	—	—	—	—	—	—	—	—	—	—	—	—	—	—	—	—	—	—	—	—
BIU				—	—			—	—	×	—	—			—	—			—	—		—	—	
MFD			—	—	—	—	—	—	—	—	—	—	—	—	—	—	—	—	—	—	—	—	—	—	—
A/C					—	—		—	—	×	—	—				—	—		—	—		—	—	
MET					—		—	—	—	×				—	—	—	—	—	—	—	—	—	—	—
RST		—	—	—	—	—	—	—	—	—	—	—	—	—	—	—	—	—	—	—	—	—	—	—
STR		—	—	—	—	—	—	—	—	—	—	—	—	—	—	—	—	—	—	—	—	—	—	—
TCM			×	×	—	—	×	—	—	—	—	—	×			—	—		—	—	—	—	—	
A/B			—	—	—	—	—	—	—	—	—	—	—	—	—	—	—	—	—	—	—	—	—	—	—
EPS				—	—	—	—	—	—	—	—	—	—		—	—	—	—	—	—	—	—	—	—
EGI				—	—	—		—	—	×	—	—	—		—	—	—		—	—		—	—	—

LAN00967

When ⑮ (airbag CM vicinity) is open

	(A)	(B)	(C)											(D)										
			VDC	BIU	MFD	A/C	MET	RST	STR	TCM	A/B	EPS	EGI	VDC	BIU	MFD	A/C	MET	RST	STR	TCM	A/B	EPS	EGI
		U0073	U0122	U0140	U0156	U0164	U0155	—	U0126	U0101	U0151	U0131	U0100	U0416	U0422	U0457	U0424	U0423	—	U0428	U0402	U0452	U0420	U0401
VDC			—		—	—	—	—			—	—		—		—	—	—	—			—	—	
HL					—	—	—	—	—	—	—	—	—	—	—	—	—	—	—	—	—	—	—	—	—
BIU				—	—			—	—		—	—			—	—			—	—		—	—	
MFD			—	—	—	—	—	—	—	—	—	—	—	—	—	—	—	—	—	—	—	—	—	—	—
A/C					—	—		—	—		—	—				—	—		—	—		—	—	
MET					—		—	—	—		×			—	—	—	—	—	—	—	—	—	—	—
RST		—	—	—	—	—	—	—	—	—	—	—	—	—	—	—	—	—	—	—	—	—	—	—
STR		—	—	—	—	—	—	—	—	—	—	—	—	—	—	—	—	—	—	—	—	—	—	—
TCM					—	—		—	—	—	—	—				—	—		—	—	—	—	—	
A/B			—	—	—	—	—	—	—	—	—	—	—	—	—	—	—	—	—	—	—	—	—	—	—
EPS				—	—	—	—	—	—	—	—	—	—		—	—	—	—	—	—	—	—	—	—
EGI				—	—	—		—	—		—	—	—		—	—	—		—	—		—	—	—

LAN00968

When ⑯ (power steering CM vicinity) is open

NOTE:
Power steering CM may display U1120 (Auto Start Stop COMMUNICATION LOST).

	(A)	(B)	(C)											(D)										
			VDC	BIU	MFD	A/C	MET	RST	STR	TCM	A/B	EPS	EGI	VDC	BIU	MFD	A/C	MET	RST	STR	TCM	A/B	EPS	EGI
		U0073	U0122	U0140	U0156	U0164	U0155	—	U0126	U0101	U0151	U0131	U0100	U0416	U0422	U0457	U0424	U0423	—	U0428	U0402	U0452	U0420	U0401
VDC			—		—	—	—	—			—	—		—		—	—	—	—			—	—	
HL					—	—	—	—	—	—	—	—	—	—	—	—	—	—	—	—	—	—	—	—
BIU				—	—			—	—		—	—			—	—			—	—		—	—	
MFD			—	—	—	—	—	—	—	—	—	—	—	—	—	—	—	—	—	—	—	—	—	—	—
A/C					—	—		—	—		—	—				—	—		—	—		—	—	
MET					—		—	—	—			×		—	—	—	—	—	—	—	—	—	—	—
RST		—	—	—	—	—	—	—	—	—	—	—	—	—	—	—	—	—	—	—	—	—	—	—
STR		—	—	—	—	—	—	—	—	—	—	—	—	—	—	—	—	—	—	—	—	—	—	—
TCM					—	—		—	—	—	—	—				—	—		—	—	—	—	—	
A/B			—	—	—	—	—	—	—	—	—	—	—	—	—	—	—	—	—	—	—	—	—	—	—
EPS			×	—	—	—	—	—	—	—	—	—	—		—	—	—	—	—	—	—	—	—	—	—
EGI				—	—	—		—	—		—	—	—		—	—	—		—	—	—		—	—	—

LAN00969

3. DTC MATRIX

NOTE:
Perform the following procedure when using this chart in which the detailed trouble mode corresponds to the trouble status.
1. Search the trouble mode that corresponds to the vehicle status from the chart.
2. Perform the repair that corresponds to the trouble mode.

<table>
<tr><td colspan="2">Control module
(which module vicinity)</td><td rowspan="4">Trouble mode 1</td><td rowspan="4">Trouble mode 2</td><td rowspan="4">Trouble mode 3</td><td rowspan="4">Trouble mode 4</td><td rowspan="4">Trouble mode 5</td><td rowspan="4">...</td><td rowspan="4">...</td><td rowspan="4">Trouble mode n</td></tr>
<tr><td colspan="2">Detailed location
(which location)</td></tr>
<tr><td colspan="2">Detailed trouble mode
(what kind)</td></tr>
<tr><td colspan="2">Trouble status
(trouble exists/trouble existed)</td></tr>
<tr><td rowspan="10">DTC reading result from each module using Subaru Select Monitor</td><td>VDC CM</td><td rowspan="10">Vehicle status 1</td><td rowspan="10">Vehicle status 2</td><td rowspan="10">Vehicle status 3</td><td rowspan="10">Vehicle status 4</td><td rowspan="10">Vehicle status 5</td><td rowspan="10">...</td><td rowspan="10">...</td><td rowspan="10">Vehicle status n</td></tr>
<tr><td>Body integrated unit</td></tr>
<tr><td>Combination meter</td></tr>
<tr><td>MFD</td></tr>
<tr><td>A/C control panel</td></tr>
<tr><td>TCM</td></tr>
<tr><td>...</td></tr>
<tr><td>...</td></tr>
<tr><td>ECM</td></tr>
<tr><td colspan="2">Indicators illuminate/blink.</td></tr>
</table>

1. Hi-side circuit of CAN communication circuit is open.

NOTE:
- If the module has a limit of DTC memory and the number of DTC occurrence exceeds the limit, older DTCs are preferentially stored.
- When there is no description in Current, it is referred to as “None”.
- When DTC is in parentheses, it is referred to as “Not always occur”.
- “Trouble exists” is referred to as the status before performing inspection and repair. “Trouble existed” is referred to as the status before performing DTC clear after repair.

Control module		VDC CM vicinity	VDC CM vicinity	Body integrated unit (VDC side) vicinity	Body integrated unit (VDC side) vicinity	Body integrated unit (EGI side) vicinity	Body integrated unit (EGI side) vicinity	Combination meter vicinity	Combination meter vicinity
Detailed location		Hi side	Hi side	Hi side	Hi side	Hi side	Hi side	Hi side	Hi side
Detailed trouble mode		Open	Open	Open	Open	Open	Open	Open	Open
Trouble status		Trouble exists	Trouble existed	Trouble exists	Trouble existed	Trouble exists	Trouble existed	Trouble exists	Trouble existed
DTC reading result from each module using Subaru Select Monitor	VDC CM[*1*8]	Communication failure	Current C1431 Past C1431 U0073 U0100 U0101 U0126 U0140	Current U0073 U0100 U0101 U0126 U0140 Past Same as above	Current C1431 Past C1431 U0073 U0100 U0101 U0126 U0140	Current U0100 U0101 U0126 Past Same as above	Current C1431 Past C1431 U0100 U0101 U0126	Current None Past None	Current None Past None
	Body integrated unit[*2]	Current U0122 Past Same as above	Past U0122	Communication failure	Past U0122	Current U0100 U0101 U0155 U0164 U1201 Past Same as above	Past U0100 U0101 U0155 U0164 U1201	Current U0155 Past Same as above	Past U0155
	Combination meter[*3]	Current U0122 Past Same as above	Past U0122	Communication failure	Past U0122	Communication failure	Past U0122 U0140	Communication failure	Past U0073 U0100 U0101 U0122 U0131 U0140 U0151 U0164 Any 5 items from above
	MFD[*4]	Current None Past None	Current None Past None	Communication failure	Current None Past None	Communication failure	Past U1650	Current None Past None	Current None Past None

Control module		VDC CM vicinity	VDC CM vicinity	Body integrated unit (VDC side) vicinity	Body integrated unit (VDC side) vicinity	Body integrated unit (EGI side) vicinity	Body integrated unit (EGI side) vicinity	Combination meter vicinity	Combination meter vicinity
Detailed location		Hi side	Hi side	Hi side	Hi side	Hi side	Hi side	Hi side	Hi side
Detailed trouble mode		Open	Open	Open	Open	Open	Open	Open	Open
Trouble status		Trouble exists	Trouble existed	Trouble exists	Trouble existed	Trouble exists	Trouble existed	Trouble exists	Trouble existed
DTC reading result from each module using Subaru Select Monitor	A/C control panel[*5]	Current U0122 Past Same as above	Past U0122	Communication failure	Past U0122	Communication failure	Past U0122 U0140	Current U0155 Past Same as above	Past U0155
	TCM[*1]	Current U0122 Past Same as above	Past U0122	Communication failure	Past U0122	Communication failure	Past U0122 U0140	Current U0155 Past Same as above	Past U0155
	A/B CM[*6]	Current None Past None	Current None Past None	Communication failure	Current None Past None	Communication failure	Current None Past None	Current None Past None	Current None Past None
	Electric power steering CM[*7]	Current U0122 Latest Same as above	Current None Latest U0122	Current U0122 Latest Same as above	Latest U0122	Current U0122 Latest Same as above	Latest U0122	Current None Latest None	Current None Latest None
	ECM[*1]	Current P0700 U0122 Past Same as above	Past P0700 U0122	Current P0700 U0122 Past Same as above	Past P0700 U0122	Current U0122 Past Same as above	Past U0122	Current U0155 Past Same as above	Past U0155
	Auto headlight beam leveler CM[*6]	Current U0122 Past Same as above	Past U0122	Current U0140 Past Same as above	Past U0140	Current None Past None	Current None Past None	Current None Past None	Current None Past None

Control module	VDC CM vicinity	VDC CM vicinity	Body integrated unit (VDC side) vicinity	Body integrated unit (VDC side) vicinity	Body integrated unit (EGI side) vicinity	Body integrated unit (EGI side) vicinity	Combination meter vicinity	Combination meter vicinity
Detailed location	Hi side	Hi side	Hi side	Hi side	Hi side	Hi side	Hi side	Hi side
Detailed trouble mode	Open	Open	Open	Open	Open	Open	Open	Open
Trouble status	Trouble exists	Trouble existed	Trouble exists	Trouble existed	Trouble exists	Trouble existed	Trouble exists	Trouble existed
Indicators illuminate/blink.	CHECK ENGINE, VDC, VDC off, ABS, BRAKE illuminate. AT OIL TEMP, CRUISE blink. Headlight beam leveler indicator illuminates.	CHECK ENGINE, VDC, ABS illuminate. CRUISE blink	CHECK ENGINE, VDC, ABS, VDC off, BRAKE illuminate. AT OIL TEMP, CRUISE blink. Headlight beam leveler indicator illuminates.	CHECK ENGINE, VDC, ABS illuminate. CRUISE blink	CHECK ENGINE, VDC, VDC off, ABS, BRAKE illuminate. SPORTS illuminates. TPMS blinks → illuminates. AT OIL TEMP, CRUISE blink.	CHECK ENGINE, VDC, ABS illuminate. CRUISE blink	CHECK ENGINE, VDC, A/B illuminate. Below are the items that illuminate intermittently. (Cycles are erratic.) VDC Off, ABS, EMPTY, BRAKE Below are the items that blink intermittently. Engine coolant temperature gauge (blue/red) blinks, AT OIL TEMP, CRUISE, Fuel gauge	CHECK ENGINE, VDC illuminate. CRUISE blink

*1: When U0073 occurs, other U-codes are not stored. (Judge timing affects the storing order.)
*2: The number of DTC memory is limited to 8 items.
*3: The number of DTC memory is limited to 5 items. (Older items are preferentially stored.)
*4: The number of DTC memory is limited to 2 items. (Older items are preferentially stored.)
*5: All types of DTCs can be simultaneously stored. When U0073 occurs, other U-codes are not displayed.
*6: All types of DTCs can be simultaneously stored.
*7: The number of DTC memory is limited to 1 item for Current and 3 items for Latest.
*8: If C1431 contains a current malfunction after repair, perform IGN OFF → ON. (It remains immediately after repair.)

Control module		MFD vicinity	MFD vicinity	A/C control panel vicinity	A/C control panel vicinity	Steering angle sensor vicinity	Steering angle sensor vicinity	AT CM vicinity	AT CM vicinity
Detailed location		Hi side	Hi side	Hi side	Hi side	Hi side	Hi side	Hi side	Hi side
Detailed trouble mode		Open	Open	Open	Open	Open	Open	Open	Open
Trouble status		Trouble exists	Trouble existed	Trouble exists	Trouble existed	Trouble exists	Trouble existed	Trouble exists	Trouble existed
DTC reading result from each module using Subaru Select Monitor	VDC CM[*1*8]	Current None Past None	Current None Past None	Current None Past None	Current None Past None	Current U0126 Past Same as above	Past U0126	Current U0101 Past Same as above	Current C1431 Past C1431 U0101
	Body integrated unit[*2]	Current None Past None	Current None Past None	Current U0164 Past Same as above	Past U0164	Current None Past None	Current None Past None	Current U0101 Past Same as above	Past U0101
	Combination meter[*3]	Current None Past None	Current None Past None	Current U0164 Past None	Past U0164	Current None Past None	Current None Past None	Current U0101 Past Same as above	Past U0101
	MFD[*4]	Communication failure	Past U1201 U0073	Current None Past None	Current None Past None	Current None Past None	Current None Past None	Current None Past None	Current None Past None
	A/C control panel[*5]	Current None Past None	Current None Past None	Communication failure	Past U0100 U0155	Current None Past None	Current None Past None	Current U0101 Past Same as above	Past U0101
	TCM[*1]	Current None Past None	Current None Past None	Current None Past None	Current None Past None	Current None Past None	Current None Past None	Communication failure	Past U0100 U0122 U0140 U0155
	A/B CM[*6]	Current None Past None	Current None Past None	Current None Past None	Current None Past None	Current None Past None	Current None Past None	Current None Past None	Current None Past None
	Electric power steering CM[*7]	Current None Latest None	Current None Latest None	Current None Latest None	Current None Latest None	Current None Latest None	Current None Latest None	Current None Latest None	Current None Latest None
	ECM[*1]	Current None Past None	Current None Past None	Current None Past None	Current None Past None	Current None Past None	Current None Past None	Current U0101 Past Same as above	Past U0101

Control module		MFD vicinity	MFD vicinity	A/C control panel vicinity	A/C control panel vicinity	Steering angle sensor vicinity	Steering angle sensor vicinity	AT CM vicinity	AT CM vicinity
Detailed location		Hi side	Hi side	Hi side	Hi side	Hi side	Hi side	Hi side	Hi side
Detailed trouble mode		Open	Open	Open	Open	Open	Open	Open	Open
Trouble status		Trouble exists	Trouble existed	Trouble exists	Trouble existed	Trouble exists	Trouble existed	Trouble exists	Trouble existed
DTC reading result from each module using Subaru Select Monitor	Auto headlight beam leveler CM[*6]	Current None Past None	Current None Past None	Current None Past None	Current None Past None	Current None Past None	Current None Past None	Current None Past None	Current None Past None
Indicators illuminate/blink.		No change No change in MFD	No change No change in MFD	No change	No change	VDC, ABS illuminate.	No change	CHECK ENGINE, VDC, ABS illuminate. CRUISE blink Shift indicator goes off.	CHECK ENGINE, VDC, ABS illuminate. CRUISE blink

*1: When U0073 occurs, other U-codes are not stored. (Judge timing affects the storing order.)
*2: The number of DTC memory is limited to 8 items.
*3: The number of DTC memory is limited to 5 items. (Older items are preferentially stored.)
*4: The number of DTC memory is limited to 2 items. (Older items are preferentially stored.)
*5: All types of DTCs can be simultaneously stored. When U0073 occurs, other U-codes are not displayed.
*6: All types of DTCs can be simultaneously stored.
*7: The number of DTC memory is limited to 1 item for Current and 3 items for Latest.
*8: If C1431 contains a current malfunction after repair, perform IGN OFF → ON. (It remains immediately after repair.)

List of Diagnostic Trouble Code (DTC)

Control module		A/B CM vicinity	A/B CM vicinity	Electric power steering CM vicinity	Electric power steering CM vicinity	ECM vicinity	ECM vicinity	Auto head-light beam leveler CM vicinity	Auto head-light beam leveler CM vicinity
Detailed location		Hi side	Hi side	Hi side	Hi side	Hi side	Hi side	Hi side	Hi side
Detailed trouble mode		Open	Open	Open	Open	Open	Open	Open	Open
Trouble status		Trouble exists	Trouble existed	Trouble exists	Trouble existed	Trouble exists	Trouble existed	Trouble exists	Trouble existed
DTC reading result from each module using Subaru Select Monitor	VDC CM[*1*8]	Current None Past None	Current None Past None	Current None Past None	Current None Past None	Current C1431 U0100 Past Same as above	Current C1431 Past C1431 U0100	Current None Past None	Current None Past None
	Body integrated unit[*2]	Current None Past None	Current None Past None	Current None Past None	Current None Past None	Current U0100 (U1201) Past Same as above	Past U0100 (U1201)	Current None Past None	Current None Past None
	Combination meter[*3]	Current U0151 Past Same as above	Past U0151	Current U0131 Past Same as above	Past U0131	Current U0100 (U0073) Past Same as above	Past U0100 (U0073)	Current None Past None	Current None Past None
	MFD[*4]	Current None Past None	Current None Past None	Current None Past None	Current None Past None	Current None Past None	Current None Past None	Current None Past None	Current None Past None
	A/C control panel[*5]	Current None Past None	Current None Past None	Current None Past None	Current None Past None	Current U0100 Past Same as above	Past U0100	Current None Past None	Current None Past None
	TCM[*1]	Current None Past None	Current None Past None	Current None Past None	Current None Past None	Current U0100 Past Same as above	Past U0100	Current None Past None	Current None Past None
	A/B CM[*6]	Commu-nication failure	Current None Past None	Current None Past None	Current None Past None	Current None Past None	Current None Past None	Current None Past None	Current None Past None

Control module		A/B CM vicinity	A/B CM vicinity	Electric power steering CM vicinity	Electric power steering CM vicinity	ECM vicinity	ECM vicinity	Auto head-light beam leveler CM vicinity	Auto head-light beam leveler CM vicinity
Detailed location		Hi side	Hi side	Hi side	Hi side	Hi side	Hi side	Hi side	Hi side
Detailed trouble mode		Open	Open	Open	Open	Open	Open	Open	Open
Trouble status		Trouble exists	Trouble existed	Trouble exists	Trouble existed	Trouble exists	Trouble existed	Trouble exists	Trouble existed
DTC reading result from each module using Subaru Select Monitor	Electric power steering CM[*7]	Current None Latest None	Current None Latest None	Current U1120[*9] U0122 C2543 Any 1 item from above Latest U0122 C2543 (U1120[*9])	Latest U0122 C2543 (U1120[*9])	Current C2543 U0073 None or any 1 item from above Latest C2543 U0073	Latest C2543 U0073	Current None Past None	Current None Past None
	ECM[*1]	Current None Past None	Current None Past None	Current None Past None	Current None Past None	Current U0073 Past Same as above	Past U0073	Current None Past None	Current None Past None
	Auto headlight beam leveler CM[*6]	Current None Past None	Current None Past None	Current None Past None	Current None Past None	Current None Past None	Current None Past None	Commu-nication failure	Past U0122 U0140
Indicators illuminate/blink.		A/B illu-minates.	No change	No change	No change	VDC, ABS, CHECK ENGINE, EMPTY illuminate. AT OIL TEMP blinks. Engine coolant tempera-ture gauge (blue/red) blinks. Fuel gauge goes off. Tachome-ter: 0 rpm	CHECK ENGINE, VDC, ABS illu-minate. CRUISE blink	Head-light beam leveler indicator illumi-nates.	No change

*1: When U0073 occurs, other U-codes are not stored. (Judge timing affects the storing order.)
*2: The number of DTC memory is limited to 8 items.
*3: The number of DTC memory is limited to 5 items. (Older items are preferentially stored.)
*4: The number of DTC memory is limited to 2 items. (Older items are preferentially stored.)
*5: All types of DTCs can be simultaneously stored. When U0073 occurs, other U-codes are not displayed.
*6: All types of DTCs can be simultaneously stored.
*7: The number of DTC memory is limited to 1 item for Current and 3 items for Latest.
*8: If C1431 contains a current malfunction after repair, perform IGN OFF → ON. (It remains immediately after repair.)
*9: When this code is displayed, perform the diagnosis as COMMUNICATION MALFUNCTION (METER ECU) (U0155). DTC that occurs in “Current” is displayed in top of the “Latest” list.

2. Lo-side circuit of CAN communication circuit is open.

NOTE:
- If the module has a limit of DTC memory and the number of DTC occurrence exceeds the limit, older DTCs are preferentially stored.
- When there is no description in Current, it is referred to as “None”.
- When DTC is in parentheses, it is referred to as “Not always occur”.
- “Trouble exists” is referred to as the status before performing inspection and repair. “Trouble existed” is referred to as the status before performing DTC clear after repair.

Control module		VDC CM vicinity	VDC CM vicinity	Body integrated unit (VDC side) vicinity	Body integrated unit (VDC side) vicinity	Body integrated unit (EGI side) vicinity	Body integrated unit (EGI side) vicinity	Combination meter vicinity	Combination meter vicinity
Detailed location		Lo side	Lo side	Lo side	Lo side	Lo side	Lo side	Lo side	Lo side
Detailed trouble mode		Open	Open	Open	Open	Open	Open	Open	Open
Trouble status		Trouble exists	Trouble existed	Trouble exists	Trouble existed	Trouble exists	Trouble existed	Trouble exists	Trouble existed
DTC reading result from each module using Subaru Select Monitor	VDC CM[*1*8]	Communication failure	Current C1431 Past C1431 U0073 U0100 U0101 U0126 U0140	Current U0073 U0100 U0101 U0126 U0140 Past Same as above	Current C1431 Past C1431 U0073 U0100 U0101 U0126 U0140	Current U0100 U0101 U0126 Past Same as above	Current C1431 Past C1431 U0100 U0101 U0126	Current None Past None	Current None Past None
	Body integrated unit[*2]	Current U0122 Past Same as above	Past U0122	Communication failure	Past U0122	Current U0100 U0101 U0155 U0164 (U1201) Past Same as above	Past U0100 U0101 U0155 U0164 (U1201)	Current U0155 Past Same as above	Past U0155
	Combination meter[*3]	Current U0122 Past Same as above	Past U0122	Communication failure	Past U0122	Communication failure	Past U0122 U0140	Communication failure	Past U0073 U0100 U0101 U0122 U0131 U0140 U0151 U0164 Any 5 items from above
	MFD[*4]	Current None Past None	Current None Past None	Communication failure	Current None Past None	Communication failure	Past U1650	Current (U1650) (U1201) Past Same as above	Past (U1650) (U1201)

Control module		VDC CM vicinity	VDC CM vicinity	Body integrated unit (VDC side) vicinity	Body integrated unit (VDC side) vicinity	Body integrated unit (EGI side) vicinity	Body integrated unit (EGI side) vicinity	Combination meter vicinity	Combination meter vicinity
Detailed location		Lo side	Lo side	Lo side	Lo side	Lo side	Lo side	Lo side	Lo side
Detailed trouble mode		Open	Open	Open	Open	Open	Open	Open	Open
Trouble status		Trouble exists	Trouble existed	Trouble exists	Trouble existed	Trouble exists	Trouble existed	Trouble exists	Trouble existed
DTC reading result from each module using Subaru Select Monitor	A/C control panel[*5]	Current U0122 Past Same as above	Past U0122	Communication failure	Past U0122	Communication failure	Past U0122 U0140	Current U0155 Past Same as above	Past U0155
	TCM[*1]	Current U0122 Past Same as above	Past U0122	Communication failure	Past U0122	Communication failure	Past U0122 U0140	Current U0155 Past Same as above	Past U0155
	A/B CM[*6]	Current None Past None	Current None Past None	Communication failure	Current None Past None	Communication failure	Current None Past None	Current None Past None	Current None Past None
	Electric power steering CM[*7]	Current U0122 Latest Same as above	Current None Latest U0122	Current U0122 Latest Same as above	Latest U0122	Current U0122 Latest Same as above	Latest U0122	Current (C2543) Latest Same as above	Current (C2544) Latest (C2543) (C2544)
	ECM[*1]	Current P0700 U0122 Past Same as above	Past P0700 U0122	Current P0700 U0122 Past Same as above	Past P0700 U0122	Current U0122 Past Same as above	Past U0122	Current U0155 Past Same as above	Past U0155
	Auto headlight beam leveler CM[*6]	Current U0122 Past Same as above	Past U0122	Current U0140 Past Same as above	Past U0140	Current None Past None	Current None Past None	Current None Past None	Current None Past None

Control module	VDC CM vicinity	VDC CM vicinity	Body integrated unit (VDC side) vicinity	Body integrated unit (VDC side) vicinity	Body integrated unit (EGI side) vicinity	Body integrated unit (EGI side) vicinity	Combination meter vicinity	Combination meter vicinity
Detailed location	Lo side	Lo side	Lo side	Lo side	Lo side	Lo side	Lo side	Lo side
Detailed trouble mode	Open	Open	Open	Open	Open	Open	Open	Open
Trouble status	Trouble exists	Trouble existed	Trouble exists	Trouble existed	Trouble exists	Trouble existed	Trouble exists	Trouble existed
Indicators illuminate/blink.	CHECK ENGINE, VDC, VDC off, ABS, BRAKE illuminate. AT OIL TEMP, CRUISE blink. Headlight beam leveler indicator illuminates.	CHECK ENGINE, VDC, ABS illuminate. CRUISE blink	CHECK ENGINE, VDC, ABS, VDC off, BRAKE illuminate. AT OIL TEMP, CRUISE blink. Headlight beam leveler indicator illuminates.	CHECK ENGINE, VDC, ABS illuminate. CRUISE blink	CHECK ENGINE, VDC, VDC off, ABS, BRAKE illuminate. SPORTS illuminates. TPMS blinks → illuminates. AT OIL TEMP, CRUISE blink.	CHECK ENGINE, VDC, ABS illuminate. CRUISE blink	CHECK ENGINE, A/B, BRAKE, VDC, EMPTY, VDC OFF, ABS illuminate. Engine coolant temperature gauge (blue/red) blinks. TPMS blinks → illuminates. Shift indicator goes off. Fuel level warning indicator goes off. Tachometer: 0 rpm	CHECK ENGINE, VDC illuminate. CRUISE blink

*1: When U0073 occurs, other U-codes are not stored. (Judge timing affects the storing order.)
*2: The number of DTC memory is limited to 8 items.
*3: The number of DTC memory is limited to 5 items. (Older items are preferentially stored.)
*4: The number of DTC memory is limited to 2 items. (Older items are preferentially stored.)
*5: All types of DTCs can be simultaneously stored. When U0073 occurs, other U-codes are not displayed.
*6: All types of DTCs can be simultaneously stored.
*7: The number of DTC memory is limited to 1 item for Current and 3 items for Latest.
*8: If C1431 contains a current malfunction after repair, perform IGN OFF → ON. (It remains immediately after repair.)

Control module		MFD vicinity	MFD vicinity	A/C control panel vicinity	A/C control panel vicinity	Steering angle sensor vicinity	Steering angle sensor vicinity	AT CM vicinity	AT CM vicinity
Detailed location		Lo side	Lo side	Lo side	Lo side	Lo side	Lo side	Lo side	Lo side
Detailed trouble mode		Open	Open	Open	Open	Open	Open	Open	Open
Trouble status		Trouble exists	Trouble existed	Trouble exists	Trouble existed	Trouble exists	Trouble existed	Trouble exists	Trouble existed
DTC reading result from each module using Subaru Select Monitor	VDC CM[*1*8]	Current None Past None	Current None Past None	Current None Past None	Current None Past None	Current U0126 Past Same as above	Past U0126	Current U0101 Past Same as above	Current C1431 Past C1431 U0101
	Body integrated unit[*2]	Current None Past None	Current None Past None	Current U0164 Past Same as above	Past U0164	Current None Past None	Current None Past None	Current U0101 Past Same as above	Past U0101
	Combination meter[*3]	Current None Past None	Current None Past None	Current U0164 Past None	Past U0164	Current None Past None	Current None Past None	Current U0101 Past Same as above	Past U0101
	MFD[*4]	Communication failure	Past U1201 U0073	Current None Past None	Current None Past None	Current None Past None	Current None Past None	Current None Past None	Current None Past None
	A/C control panel[*5]	Current None Past None	Current None Past None	Communication failure	Past U0100 U0155	Current None Past None	Current None Past None	Current U0101 Past Same as above	Past U0101
	TCM[*1]	Current None Past None	Current None Past None	Current None Past None	Current None Past None	Current None Past None	Current None Past None	Communication failure	Past U0100 U0122 U0140 U0155
	A/B CM[*6]	Current None Past None	Current None Past None	Current None Past None	Current None Past None	Current None Past None	Current None Past None	Current None Past None	Current None Past None
	Electric power steering CM[*7]	Current None Latest None	Current None Latest None	Current None Latest None	Current None Latest None	Current None Latest None	Current None Latest None	Current None Latest None	Current None Latest None
	ECM[*1]	Current None Past None	Current None Past None	Current None Past None	Current None Past None	Current None Past None	Current None Past None	Current U0101 Past Same as above	Past U0101

Control module		MFD vicinity	MFD vicinity	A/C control panel vicinity	A/C control panel vicinity	Steering angle sensor vicinity	Steering angle sensor vicinity	AT CM vicinity	AT CM vicinity
Detailed location		Lo side	Lo side	Lo side	Lo side	Lo side	Lo side	Lo side	Lo side
Detailed trouble mode		Open	Open	Open	Open	Open	Open	Open	Open
Trouble status		Trouble exists	Trouble existed	Trouble exists	Trouble existed	Trouble exists	Trouble existed	Trouble exists	Trouble existed
DTC reading result from each module using Subaru Select Monitor	Auto headlight beam leveler CM[*6]	Current None Past None	Current None Past None	Current None Past None	Current None Past None	Current None Past None	Current None Past None	Current None Past None	Current None Past None
Indicators illuminate/blink.		No change No change in MFD	No change No change in MFD	No change	No change	VDC, ABS illuminate.	No change	CHECK ENGINE, VDC, ABS illuminate. CRUISE blink Shift indicator goes off.	CHECK ENGINE, VDC, ABS illuminate. CRUISE blink

*1: When U0073 occurs, other U-codes are not stored. (Judge timing affects the storing order.)
*2: The number of DTC memory is limited to 8 items.
*3: The number of DTC memory is limited to 5 items. (Older items are preferentially stored.)
*4: The number of DTC memory is limited to 2 items. (Older items are preferentially stored.)
*5: All types of DTCs can be simultaneously stored. When U0073 occurs, other U-codes are not displayed.
*6: All types of DTCs can be simultaneously stored.
*7: The number of DTC memory is limited to 1 item for Current and 3 items for Latest.
*8: If C1431 contains a current malfunction after repair, perform IGN OFF → ON. (It remains immediately after repair.)

Control module		A/B CM vicinity	A/B CM vicinity	Electric power steering CM vicinity	Electric power steering CM vicinity	ECM vicinity	ECM vicinity	Auto head-light beam leveler CM vicinity	Auto head-light beam leveler CM vicinity
Detailed location		Lo side	Lo side	Lo side	Lo side	Lo side	Lo side	Lo side	Lo side
Detailed trouble mode		Open	Open	Open	Open	Open	Open	Open	Open
Trouble status		Trouble exists	Trouble existed	Trouble exists	Trouble existed	Trouble exists	Trouble existed	Trouble exists	Trouble existed
DTC reading result from each module using Subaru Select Monitor	VDC CM[*1*8]	Current None Past None	Current None Past None	Current None Past None	Current None Past None	Current C1431 U0100 Past Same as above	Current C1431 Past C1431 U0100	Current None Past None	Current None Past None
	Body integrated unit[*2]	Current None Past None	Current None Past None	Current None Past None	Current None Past None	Current U0100 (U1201) Past Same as above	Past U0100 (U1201)	Current None Past None	Current None Past None
	Combination meter[*3]	Current U0151 Past Same as above	Past U0151	Current U0131 Past Same as above	Past U0131	Current U0100 (U0073) Past Same as above	Past U0100 (U0073)	Current None Past None	Current None Past None
	MFD[*4]	Current None Past None	Current None Past None	Current None Past None	Current None Past None	Current None Past None	Current None Past None	Current None Past None	Current None Past None
	A/C control panel[*5]	Current None Past None	Current None Past None	Current None Past None	Current None Past None	Current U0100 Past Same as above	Past U0100	Current None Past None	Current None Past None
	TCM[*1]	Current None Past None	Current None Past None	Current None Past None	Current None Past None	Current U0100 Past Same as above	Past U0100	Current None Past None	Current None Past None
	A/B CM[*6]	Commu-nication failure	Current None Past None	Current None Past None	Current None Past None	Current None Past None	Current None Past None	Current None Past None	Current None Past None

Control module		A/B CM vicinity	A/B CM vicinity	Electric power steering CM vicinity	Electric power steering CM vicinity	ECM vicinity	ECM vicinity	Auto head-light beam leveler CM vicinity	Auto head-light beam leveler CM vicinity
Detailed location		Lo side	Lo side	Lo side	Lo side	Lo side	Lo side	Lo side	Lo side
Detailed trouble mode		Open	Open	Open	Open	Open	Open	Open	Open
Trouble status		Trouble exists	Trouble existed	Trouble exists	Trouble existed	Trouble exists	Trouble existed	Trouble exists	Trouble existed
DTC reading result from each module using Subaru Select Monitor	Electric power steering CM[*7]	Current None Latest None	Current None Latest None	Current U1120[*9] U0122 C2543 Any 1 item from above Latest U0122 C2543 (U1120[*9])	Latest U0122 C2543 (U1120[*9])	Current C2543 U0073 None or any 1 item from above Latest C2543 U0073	Latest C2543 U0073	Current None Past None	Current None Past None
	ECM[*1]	Current None Past None	Current None Past None	Current None Past None	Current None Past None	Current U0073 Past Same as above	Past U0073	Current None Past None	Current None Past None
	Auto headlight beam leveler CM[*6]	Current None Past None	Current None Past None	Current None Past None	Current None Past None	Current None Past None	Current None Past None	Commu-nication failure	Past U0122 U0140
Indicators illuminate/blink.		A/B illu-minates.	No change	No change	No change	VDC, ABS, CHECK ENGINE, EMPTY illuminate. AT OIL TEMP blinks. Engine coolant tempera-ture gauge (blue/red) blinks. Fuel gauge goes off. Tachome-ter: 0 rpm	CHECK ENGINE, VDC, ABS illu-minate. CRUISE blink	Head-light beam leveler indicator illumi-nates.	No change

*1: When U0073 occurs, other U-codes are not stored. (Judge timing affects the storing order.)
*2: The number of DTC memory is limited to 8 items.
*3: The number of DTC memory is limited to 5 items. (Older items are preferentially stored.)
*4: The number of DTC memory is limited to 2 items. (Older items are preferentially stored.)
*5: All types of DTCs can be simultaneously stored. When U0073 occurs, other U-codes are not displayed.
*6: All types of DTCs can be simultaneously stored.
*7: The number of DTC memory is limited to 1 item for Current and 3 items for Latest.
*8: If C1431 contains a current malfunction after repair, perform IGN OFF → ON. (It remains immediately after repair.)
*9: When this code is displayed, perform the diagnosis as COMMUNICATION MALFUNCTION (METER ECU) (U0155). DTC that occurs in “Current” is displayed in top of the “Latest” list.

3. Hi/Lo-side circuit of CAN communication circuit is open.

NOTE:
- If the module has a limit of DTC memory and the number of DTC occurrence exceeds the limit, older DTCs are preferentially stored.
- When there is no description in Current, it is referred to as “None”.
- When DTC is in parentheses, it is referred to as “Not always occur”.
- “Trouble exists” is referred to as the status before performing inspection and repair. “Trouble existed” is referred to as the status before performing DTC clear after repair.

Control module		VDC CM vicinity	VDC CM vicinity	Body integrated unit (VDC side) vicinity	Body integrated unit (VDC side) vicinity	Body integrated unit (EGI side) vicinity	Body integrated unit (EGI side) vicinity	Combination meter vicinity	Combination meter vicinity
Detailed location		Both sides	Both sides	Both sides	Both sides	Both sides	Both sides	Both sides	Both sides
Detailed trouble mode		Open	Open	Open	Open	Open	Open	Open	Open
Trouble status		Trouble exists	Trouble existed	Trouble exists	Trouble existed	Trouble exists	Trouble existed	Trouble exists	Trouble existed
DTC reading result from each module using Subaru Select Monitor	VDC CM[*1*8]	Communication failure	Current C1431 Past C1431 U0073 U0100 U0101 U0126 U0140	Current U0073 U0100 U0101 U0126 U0140 Past Same as above	Current C1431 Past C1431 U0073 U0100 U0101 U0126 U0140	Current U0100 U0101 U0126 Past Same as above	Current C1431 Past C1431 U0100 U0101 U0126	Current None Past None	Current None Past None
	Body integrated unit[*2]	Current U0122 Past Same as above	Past U0122	Communication failure	Past U0122	Current U0100 U0101 U0155 U0164 Past Same as above	Past U0100 U0101 U0155 U0164	Current U0155 Past Same as above	Past U0155
	Combination meter[*3]	Current U0122 Past Same as above	Past U0122	Communication failure	Past U0122	Communication failure	Past U0122 U0140	Communication failure	Past U0073 U0100 U0101 U0122 U0131 U0140 U0151 U0164 Any 5 items from above
	MFD[*4]	Current None Past None	Current None Past None	Communication failure	Current None Past None	Communication failure	Past U1650	Current U1650 Past Same as above	Past U1650

Control module		VDC CM vicinity	VDC CM vicinity	Body integrated unit (VDC side) vicinity	Body integrated unit (VDC side) vicinity	Body integrated unit (EGI side) vicinity	Body integrated unit (EGI side) vicinity	Combination meter vicinity	Combination meter vicinity
Detailed location		Both sides	Both sides	Both sides	Both sides	Both sides	Both sides	Both sides	Both sides
Detailed trouble mode		Open	Open	Open	Open	Open	Open	Open	Open
Trouble status		Trouble exists	Trouble existed	Trouble exists	Trouble existed	Trouble exists	Trouble existed	Trouble exists	Trouble existed
DTC reading result from each module using Subaru Select Monitor	A/C control panel[*5]	Current U0122 Past Same as above	Past U0122	Communication failure	Past U0122	Communication failure	Past U0122 U0140	Current U0155 Past Same as above	Past U0155
	TCM[*1]	Current U0122 Past Same as above	Past U0122	Communication failure	Past U0122	Communication failure	Past U0122 U0140	Current U0155 Past Same as above	Past U0155
	A/B CM[*6]	Current None Past None	Current None Past None	Communication failure	Current None Past None	Communication failure	Current None Past None	Current None Past None	Current None Past None
	Electric power steering CM[*7]	Current U0122 Latest Same as above	Current None Latest U0122	Current U0122 Latest Same as above	Latest U0122	Current U0122 Latest Same as above	Latest U0122	Current None Latest None	Current None Latest None
	ECM[*1]	Current P0700 U0122 Past Same as above	Past P0700 U0122	Current P0700 U0122 Past Same as above	Past P0700 U0122	Current U0122 Past Same as above	Past U0122	Current U0155 Past Same as above	Past U0155
	Auto headlight beam leveler CM[*6]	Current U0122 Past Same as above	Past U0122	Current U0140 Past Same as above	Past U0140	Current None Past None	Current None Past None	Current None Past None	Current None Past None

Control module	VDC CM vicinity	VDC CM vicinity	Body integrated unit (VDC side) vicinity	Body integrated unit (VDC side) vicinity	Body integrated unit (EGI side) vicinity	Body integrated unit (EGI side) vicinity	Combination meter vicinity	Combination meter vicinity
Detailed location	Both sides	Both sides	Both sides	Both sides	Both sides	Both sides	Both sides	Both sides
Detailed trouble mode	Open	Open	Open	Open	Open	Open	Open	Open
Trouble status	Trouble exists	Trouble existed	Trouble exists	Trouble existed	Trouble exists	Trouble existed	Trouble exists	Trouble existed
Indicators illuminate/blink.	CHECK ENGINE, VDC, VDC off, ABS, BRAKE illuminate. AT OIL TEMP, CRUISE blink. Headlight beam leveler indicator illuminates.	CHECK ENGINE, VDC, ABS illuminate. CRUISE blink	CHECK ENGINE, VDC, ABS, VDC off, BRAKE illuminate. AT OIL TEMP, CRUISE blink. Headlight beam leveler indicator illuminates.	CHECK ENGINE, VDC, ABS illuminate. CRUISE blink	CHECK ENGINE, VDC, VDC off, ABS, BRAKE illuminate. SPORTS illuminates. TPMS blinks → illuminates. AT OIL TEMP, CRUISE blink.	CHECK ENGINE, VDC, ABS illuminate. CRUISE blink	CHECK ENGINE, A/B, BRAKE, VDC, EMPTY, VDC OFF, ABS illuminate. Engine coolant temperature gauge (blue/red) alternately blinks. TPMS blinks → illuminates. Shift indicator goes off. Fuel level warning indicator goes off. Tachometer: 0 rpm	CHECK ENGINE, VDC illuminate. CRUISE blink

*1: When U0073 occurs, other U-codes are not stored. (Judge timing affects the storing order.)
*2: The number of DTC memory is limited to 8 items.
*3: The number of DTC memory is limited to 5 items. (Older items are preferentially stored.)
*4: The number of DTC memory is limited to 2 items. (Older items are preferentially stored.)
*5: All types of DTCs can be simultaneously stored. When U0073 occurs, other U-codes are not displayed.
*6: All types of DTCs can be simultaneously stored.
*7: The number of DTC memory is limited to 1 item for Current and 3 items for Latest.
*8: If C1431 contains a current malfunction after repair, perform IGN OFF → ON. (It remains immediately after repair.)

Control module		MFD vicinity	MFD vicinity	A/C control panel vicinity	A/C control panel vicinity	Steering angle sensor vicinity	Steering angle sensor vicinity	AT CM vicinity	AT CM vicinity
Detailed location		Both sides	Both sides	Both sides	Both sides	Both sides	Both sides	Both sides	Both sides
Detailed trouble mode		Open	Open	Open	Open	Open	Open	Open	Open
Trouble status		Trouble exists	Trouble existed	Trouble exists	Trouble existed	Trouble exists	Trouble existed	Trouble exists	Trouble existed
DTC reading result from each module using Subaru Select Monitor	VDC CM[*1*8]	Current None Past None	Current None Past None	Current None Past None	Current None Past None	Current U0126 Past Same as above	Past U0126	Current U0101 Past Same as above	Current C1431 Past C1431 U0101
	Body integrated unit[*2]	Current None Past None	Current None Past None	Current U0164 Past Same as above	Past U0164	Current None Past None	Current None Past None	Current U0101 Past Same as above	Past U0101
	Combination meter[*3]	Current None Past None	Current None Past None	Current U0164 Past None	Past U0164	Current None Past None	Current None Past None	Current U0101 Past Same as above	Past U0101
	MFD[*4]	Communication failure	Past U1201 (U0073)	Current None Past None	Current None Past None	Current None Past None	Current None Past None	Current None Past None	Current None Past None
	A/C control panel[*5]	Current None Past None	Current None Past None	Communication failure	Past U0100 U0155	Current None Past None	Current None Past None	Current U0101 Past Same as above	Past U0101
	TCM[*1]	Current None Past None	Current None Past None	Current None Past None	Current None Past None	Current None Past None	Current None Past None	Communication failure	Past U0100 U0122 U0140 U0155
	A/B CM[*6]	Current None Past None	Current None Past None	Current None Past None	Current None Past None	Current None Past None	Current None Past None	Current None Past None	Current None Past None
	Electric power steering CM[*7]	Current None Latest None	Current None Latest None	Current None Latest None	Current None Latest None	Current None Latest None	Current None Latest None	Current None Latest None	Current None Latest None
	ECM[*1]	Current None Past None	Current None Past None	Current None Past None	Current None Past None	Current None Past None	Current None Past None	Current U0101 Past Same as above	Past U0101

Control module		MFD vicinity	MFD vicinity	A/C control panel vicinity	A/C control panel vicinity	Steering angle sensor vicinity	Steering angle sensor vicinity	AT CM vicinity	AT CM vicinity
Detailed location		Both sides	Both sides	Both sides	Both sides	Both sides	Both sides	Both sides	Both sides
Detailed trouble mode		Open	Open	Open	Open	Open	Open	Open	Open
Trouble status		Trouble exists	Trouble existed	Trouble exists	Trouble existed	Trouble exists	Trouble existed	Trouble exists	Trouble existed
DTC reading result from each module using Subaru Select Monitor	Auto headlight beam leveler CM[*6]	Current None Past None	Current None Past None	Current None Past None	Current None Past None	Current None Past None	Current None Past None	Current None Past None	Current None Past None
Indicators illuminate/blink.		No change No change in MFD	No change No change in MFD	No change	No change	VDC, ABS illuminate.	No change	CHECK ENGINE, VDC, ABS illuminate. CRUISE blink Shift indicator goes off.	CHECK ENGINE, VDC, ABS illuminate. CRUISE blink

*1: When U0073 occurs, other U-codes are not stored. (Judge timing affects the storing order.)
*2: The number of DTC memory is limited to 8 items.
*3: The number of DTC memory is limited to 5 items. (Older items are preferentially stored.)
*4: The number of DTC memory is limited to 2 items. (Older items are preferentially stored.)
*5: All types of DTCs can be simultaneously stored. When U0073 occurs, other U-codes are not displayed.
*6: All types of DTCs can be simultaneously stored.
*7: The number of DTC memory is limited to 1 item for Current and 3 items for Latest.
*8: If C1431 contains a current malfunction after repair, perform IGN OFF → ON. (It remains immediately after repair.)

List of Diagnostic Trouble Code (DTC)

Control module		A/B CM vicinity	A/B CM vicinity	Electric power steering CM vicinity	Electric power steering CM vicinity	ECM vicinity	ECM vicinity	Auto head-light beam leveler CM vicinity	Auto head-light beam leveler CM vicinity
Detailed location		Both sides	Both sides	Both sides	Both sides	Both sides	Both sides	Both sides	Both sides
Detailed trouble mode		Open	Open	Open	Open	Open	Open	Open	Open
Trouble status		Trouble exists	Trouble existed	Trouble exists	Trouble existed	Trouble exists	Trouble existed	Trouble exists	Trouble existed
DTC reading result from each module using Subaru Select Monitor	VDC CM[*1*8]	Current None Past None	Current None Past None	Current None Past None	Current None Past None	Current C1431 U0100 Past Same as above	Current C1431 Past C1431 U0100	Current None Past None	Current None Past None
	Body integrated unit[*2]	Current None Past None	Current None Past None	Current None Past None	Current None Past None	Current U0100 (U1201) Past Same as above	Past U0100 (U1201)	Current None Past None	Current None Past None
	Combination meter[*3]	Current U0151 Past Same as above	Past U0151	Current U0131 Past Same as above	Past U0131	Current U0100 Past Same as above	Past U0100	Current None Past None	Current None Past None
	MFD[*4]	Current None Past None	Current None Past None	Current None Past None	Current None Past None	Current None Past None	Current None Past None	Current None Past None	Current None Past None
	A/C control panel[*5]	Current None Past None	Current None Past None	Current None Past None	Current None Past None	Current U0100 Past Same as above	Past U0100	Current None Past None	Current None Past None
	TCM[*1]	Current None Past None	Current None Past None	Current None Past None	Current None Past None	Current U0100 Past Same as above	Past U0100	Current None Past None	Current None Past None
	A/B CM[*6]	Commu-nication failure	Current None Past None	Current None Past None	Current None Past None	Current None Past None	Current None Past None	Current None Past None	Current None Past None

Control module		A/B CM vicinity	A/B CM vicinity	Electric power steering CM vicinity	Electric power steering CM vicinity	ECM vicinity	ECM vicinity	Auto head-light beam leveler CM vicinity	Auto head-light beam leveler CM vicinity
Detailed location		Both sides	Both sides	Both sides	Both sides	Both sides	Both sides	Both sides	Both sides
Detailed trouble mode		Open	Open	Open	Open	Open	Open	Open	Open
Trouble status		Trouble exists	Trouble existed	Trouble exists	Trouble existed	Trouble exists	Trouble existed	Trouble exists	Trouble existed
DTC reading result from each module using Subaru Select Monitor	Electric power steering CM[*7]	Current None Latest None	Current None Latest None	Current U1120[*9] U0122 C2543 Any 1 item from above Latest U0122 C2543 (U1120[*9])	Latest U0122 C2543 (U1120[*9])	Current C2543 U0073 None or any 1 item from above Latest C2543 U0073	Latest C2543 U0073	Current None Past None	Current None Past None
	ECM[*1]	Current None Past None	Current None Past None	Current None Past None	Current None Past None	Current U0073 Past Same as above	Past U0073	Current None Past None	Current None Past None
	Auto headlight beam leveler CM[*6]	Current None Past None	Current None Past None	Current None Past None	Current None Past None	Current None Past None	Current None Past None	Commu-nication failure	Past U0122 U0140
Indicators illuminate/blink.		A/B illu-minates.	No change	No change	No change	VDC, ABS, CHECK ENGINE, EMPTY illuminate. AT OIL TEMP blinks. Engine coolant tempera-ture gauge (blue/red) blinks. Fuel gauge goes off. Tachome-ter: 0 rpm	CHECK ENGINE, VDC, ABS illu-minate. CRUISE blink	Head-light beam leveler indicator illumi-nates.	No change

*1: When U0073 occurs, other U-codes are not stored. (Judge timing affects the storing order.)
*2: The number of DTC memory is limited to 8 items.
*3: The number of DTC memory is limited to 5 items. (Older items are preferentially stored.)
*4: The number of DTC memory is limited to 2 items. (Older items are preferentially stored.)
*5: All types of DTCs can be simultaneously stored. When U0073 occurs, other U-codes are not displayed.
*6: All types of DTCs can be simultaneously stored.
*7: The number of DTC memory is limited to 1 item for Current and 3 items for Latest.
*8: If C1431 contains a current malfunction after repair, perform IGN OFF → ON. (It remains immediately after repair.)
*9: When this code is displayed, perform the diagnosis as COMMUNICATION MALFUNCTION (METER ECU) (U0155). DTC that occurs in “Current” is displayed in top of the “Latest” list.

4. Power supply-output short, GND-output short and short circuit in CAN communication circuit

NOTE:
- If the module has a limit of DTC memory and the number of DTC occurrence exceeds the limit, older DTCs are preferentially stored.
- When there is no description in Current, it is referred to as “None”.
- When DTC is in parentheses, it is referred to as “Not always occur”.
- “Trouble exists” is referred to as the status before performing inspection and repair. “Trouble existed” is referred to as the status before performing DTC clear after repair.

Control module[*10]		Option	Option	Option	Option	Option	Option	Option	Option
Detailed location		Hi side	Lo side	Hi to Low	Hi side	Lo side	Hi to Low	Lo side	Hi side
Detailed trouble mode		GND-output short	Power supply-output short	Short circuit	GND-output short	Power supply-output short	Short circuit	GND-output short[*9]	Power supply-output short[*9]
Trouble status		Trouble exists	←	←	Trouble existed	←	←	Trouble exists/ Trouble existed	←
DTC reading result from each module using Subaru Select Monitor	VDC CM[*1*8]	Communication failure	←	←	Current C1431 None or 1 item from above Past U0073 C1431 (U0126)	←	←	Current None Past None	←
	Body integrated unit[*2]	Communication failure	←	←	Past U0073 U0100 U0101 U0122 U0155 U0164 U1201	←	←	Current None Past None	←
	Combination meter[*3]	Communication failure	←	←	Past U0073 U0100 U0101 U0122 U0131 U0140 U0151 U0164 Any 5 items from above	←	←	Current None Past None	←
	MFD[*4]	Communication failure	←	←	Past U0073 U1201 U1650 Any 1 or 2 items from above	←	←	Current None Past None	←

Control module[*10]		Option	Option	Option	Option	Option	Option	Option	Option
Detailed location		Hi side	Lo side	Hi to Low	Hi side	Lo side	Hi to Low	Lo side	Hi side
Detailed trouble mode		GND-output short	Power supply-output short	Short circuit	GND-output short	Power supply-output short	Short circuit	GND-output short[*9]	Power supply-output short[*9]
Trouble status		Trouble exists	←	←	Trouble existed	←	←	Trouble exists/ Trouble existed	←
DTC reading result from each module using Subaru Select Monitor	A/C control panel[*5]	Communication failure	←	←	Past U0073	←	←	Current None Past None	←
	TCM[*1]	Communication failure	←	←	Past U0073 U0100 U0122 U0140 U0155	←	←	Current None Past None	←
	A/B CM[*6]	Communication failure	←	←	Past U0073	←	←	Current None Past None	←
	Electric power steering CM[*7]	Current U0073 U0122 C2543 Any 1 items from above Latest All items above	←	←	Latest U0073 U0122 C2543	←	←	Current None Latest None	←
	ECM[*1]	Current U0073 U0122 U0155 None or any 1 to 4 items from above Past Same as above	←	←	Past U0073 U0101 U0122 U0155 None or any 1 to 4 items from above	←	←	Current None Past None	←
	Auto headlight beam leveler CM[*6]	Communication failure	←	←	Past U0140 U0122	←	←	Current None Past None	←

Control module[*10]	Option	Option	Option	Option	Option	Option	Option	Option
Detailed location	Hi side	Lo side	Hi to Low	Hi side	Lo side	Hi to Low	Lo side	Hi side
Detailed trouble mode	GND-output short	Power supply-output short	Short circuit	GND-output short	Power supply-output short	Short circuit	GND-output short[*9]	Power supply-output short[*9]
Trouble status	Trouble exists	←	←	Trouble existed	←	←	Trouble exists/ Trouble existed	←
Indicators illuminate/blink.	CHECK ENGINE, A/B, BRAKE, VDC, EMPTY, VDC OFF, ABS illuminate. Headlight beam leveler indicator illuminates. Engine coolant temperature gauge (blue/red) alternately blinks. TPMS blinks → illuminates. Shift indicator goes off. Fuel level warning indicator goes off. Tachometer: 0 rpm	←	←	CHECK ENGINE, VDC, ABS illuminate. CRUISE blink	←	←	No change	←

*1: When U0073 occurs, other U-codes are not stored. (Judge timing affects the storing order.)
*2: The number of DTC memory is limited to 8 items.
*3: The number of DTC memory is limited to 5 items. (Older items are preferentially stored.)
*4: The number of DTC memory is limited to 2 items. (Older items are preferentially stored.)
*5: All types of DTCs can be simultaneously stored. When U0073 occurs, other U-codes are not displayed.
*6: All types of DTCs can be simultaneously stored.
*7: The number of DTC memory is limited to 1 item for Current and 3 items for Latest.
*8: If C1431 contains a current malfunction after repair, perform IGN OFF → ON. (It remains immediately after repair.)
*9: This can only be detected by inspection using a tester.
*10: In this trouble mode, a faulty portion can only be identified by inspection using a tester.

11.Diagnostic Procedure with Diagnostic Trouble Code (DTC)

A: DTC U1201 CAN-HS COUNTER ABNORMAL

DTC DETECTING CONDITION:
Communication is unstable because of high speed CAN communication error.
TROUBLE SYMPTOM:
- Display of combination meter indicates faulty.
- Control faulty may occur due to CAN communication error.

	Step	Check	Yes	No
1	**CHECK CAN COMMUNICATION CIRCUIT.** Check CAN communication circuit. <Ref. to LAN(w/o HEV)(diag)-25, PROCEDURE, CAN Communication Circuit Check.>	Is CAN communication circuit faulty?	Repair the faulty portion, following the diagnosis procedure.	Go to step **2**.
2	**CHECK DTC.** 1) Start the engine. 2) Using the Subaru Select Monitor, read DTC of CAN system.	Is U0073 a current malfunction?	Perform the diagnosis of U0073. <Ref. to LAN(w/o HEV)(diag)-90, DTC U0073 CONTROL MODULE COMMUNICATION BUS OFF, Diagnostic Procedure with Diagnostic Trouble Code (DTC).>	Go to step **3**.
3	**CHECK DTC.** Check the displayed DTC.	Is U1201 a current malfunction?	Go to step **4**.	It is possible that temporary poor communication occurs. Perform the clear memory.
4	**CHECK DTC.** 1) Turn the ignition switch to ON. 2) Using the Subaru Select Monitor, read DTC of CAN system.	Is U1201 a current malfunction?	Go to step **5**.	It is possible that temporary poor communication occurs. Perform the clear memory.
5	**CHECK CONTROL MODULE.** 1) Turn the ignition switch to OFF. 2) Disconnect the control modules other than body integrated unit in order. NOTE: When disconnecting ECM or VDC CM, connect resistance of 120 Ω between CAN Hi and CAN Lo as an alternative of end resistance. 3) Turn the ignition switch to ON. 4) Using the Subaru Select Monitor, read DTC of CAN system.	Is there any control module that U1201 is not detected as current malfunction?	Replace the control module.	Repeat 1) to 4) in step 5 until U1201 is not detected.

B: DTC U0073 CONTROL MODULE COMMUNICATION BUS OFF

DTC DETECTING CONDITION:
Integrated unit communication is shut down because of high speed CAN error.
TROUBLE SYMPTOM:
CAN communication is not normal.

	Step	Check	Yes	No
1	**CHECK DTC.** 1) Start the engine. 2) Using the Subaru Select Monitor, read DTC of CAN system.	Is U0073 a current malfunction?	Go to step **2**.	It may be a temporary poor contact. Perform the clear memory.
2	**CHECK CAN COMMUNICATION CIRCUIT.** Check CAN communication circuit. <Ref. to LAN(w/o HEV)(diag)-25, PROCEDURE, CAN Communication Circuit Check.>	Is CAN communication circuit faulty?	Repair the faulty portion, following the diagnosis procedure.	Go to step **3**.
3	**CHECK DTC.** 1) Perform the inspection using the DTC check sheet. <Ref. to LAN(w/o HEV)(diag)-52, CHECK USING THE DTC CHECK SHEET, LIST, List of Diagnostic Trouble Code (DTC).> 2) Using the Subaru Select Monitor, read DTC of CAN system.	Is U0073 a current malfunction?	Go to step **4**.	System is normal.
4	**CHECK CONTROL MODULE.** 1) Turn the ignition switch to OFF. 2) Disconnect the control modules other than body integrated unit in order. NOTE: When disconnecting ECM or VDC CM, connect resistance of 120 Ω between CAN Hi and CAN Lo as an alternative of end resistance. 3) Turn the ignition switch to ON. 4) Using the Subaru Select Monitor, read DTC of CAN system.	Is there any control module that U0073 is not detected as current malfunction?	Replace the control module.	Repeat 1) to 4) in step 3 until U0073 is not detected.

C: DTC U0401 INVALID DATA RECEIVED FROM ECM/PCM "A"

DTC DETECTING CONDITION:
Defective data from ECM.
TROUBLE SYMPTOM:
Defective data on CAN communication occurs.

	Step	Check	Yes	No
1	**CHECK DTC.** Check the displayed DTC.	Are DTCs other than U*** displayed?	Perform the diagnosis according to DTC.	Go to step **2**.
2	**CHECK DTC.** Check the displayed DTC.	Is DTC for the bus off or the data no-receive displayed?	Perform the diagnosis according to DTC.	Go to step **3**.
3	**CHECK DTC.** Check the displayed DTC.	Is U0401 a current malfunction?	Go to step **4**.	Go to step **8**.
4	**CHECK DTC.** 1) Turn the ignition switch to OFF. 2) Disconnect the ECM connector. 3) Connect the disconnected connectors. 4) Read the DTC using Subaru Select Monitor.	Is U0401 a current malfunction?	Go to step **5**.	Go to step **8**.
5	**CHECK DTC.** Using the Subaru Select Monitor, read DTC of all the systems.	Is the engine data abnormal detected in several modules?	Replace the ECM. <Ref. to FU(H4DO(w/o HEV))-106, Engine Control Module (ECM).>	Go to step **6**.
6	**REPLACE MODULE.** 1) Replace the ECM. 2) Read the DTC using Subaru Select Monitor.	Is U0401 a current malfunction?	Go to step **7**.	System is normal.
7	**CHECK MODULE.** 1) Reinstall the ECM. 2) Replace the module that the DTC has been detected. 3) Read the DTC using Subaru Select Monitor.	Is U0401 a current malfunction?	Replace the ECM. <Ref. to FU(H4DO(w/o HEV))-106, Engine Control Module (ECM).>	System is normal.
8	**CHECK HARNESS.** 1) Shake the harness, and check for poor contact. 2) Using the Subaru Select Monitor, read DTC of CAN system.	Is U0401 a current malfunction?	Repair the poor contact of harness, or replace the harness.	Go to step **9**.
9	**CHECK CONNECTOR.** Check the connector used for high speed CAN for poor contact.	Is there poor contact of connector?	Repair the connector that has poor contact, or replace harness.	It is possible that temporary poor communication occurs. Delete the DTC.

D: DTC U0402 INVALID DATA RECEIVED FROM TCM

DTC DETECTING CONDITION:
Received error data from TCM.
TROUBLE SYMPTOM:
Sport indicator light blinks.

	Step	Check	Yes	No
1	**CHECK DTC.** Check the displayed DTC.	Are DTCs other than U*** displayed?	Perform the diagnosis according to DTC.	Go to step **2**.
2	**CHECK DTC.** Check the displayed DTC.	Is DTC for the bus off or the data no-receive displayed?	Perform the diagnosis according to DTC.	Go to step **3**.
3	**CHECK DTC.** Check the displayed DTC.	Is U0402 a current malfunction?	Go to step **4**.	Go to step **8**.
4	**CHECK DTC.** 1) Turn the ignition switch to OFF. 2) Disconnect the TCM connector. 3) Connect the disconnected connectors. 4) Read the DTC using Subaru Select Monitor.	Is U0402 a current malfunction?	Go to step **5**.	Go to step **8**.
5	**CHECK DTC.** Using the Subaru Select Monitor, read DTC of all the systems.	Is the transmission data abnormal detected in several modules?	Replace the TCM. <Ref. to CVT(TR580)-139, Transmission Control Module (TCM).>	Go to step **6**.
6	**REPLACE MODULE.** 1) Replace the TCM. 2) Read the DTC using Subaru Select Monitor.	Is U0402 a current malfunction?	Go to step **7**.	System is normal.
7	**CHECK MODULE.** 1) Reinstall the TCM. 2) Replace the module that the DTC has been detected. 3) Read the DTC using Subaru Select Monitor.	Is U0402 a current malfunction?	Replace the TCM. <Ref. to CVT(TR580)-139, Transmission Control Module (TCM).>	System is normal.
8	**CHECK HARNESS.** 1) Shake the harness, and check for poor contact. 2) Using the Subaru Select Monitor, read DTC of CAN system.	Is U0402 a current malfunction?	Repair the poor contact of harness, or replace the harness.	Go to step **9**.
9	**CHECK CONNECTOR.** Check the connector used for high speed CAN for poor contact.	Is there poor contact of connector?	Repair the connector that has poor contact, or replace harness.	It is possible that temporary poor communication occurs. Delete the DTC.

E: DTC U0416 INVALID DATA RECEIVED FROM VEHICLE DYNAMICS CONTROL MODULE

DTC DETECTING CONDITION:
Data from VDCCM is faulty.
TROUBLE SYMPTOM:
ABS warning light and VDC warning light illuminate.

	Step	Check	Yes	No
1	**CHECK DTC.** Check the displayed DTC.	Are DTCs other than U*** displayed?	Perform the diagnosis according to DTC.	Go to step **2**.
2	**CHECK DTC.** Check the displayed DTC.	Is DTC for the bus off or the data no-receive displayed?	Perform the diagnosis according to DTC.	Go to step **3**.
3	**CHECK DTC.** Check the displayed DTC.	Is U0416 a current malfunction?	Go to step **4**.	Go to step **8**.
4	**CHECK DTC.** 1) Turn the ignition switch to OFF. 2) Disconnect the VDC CM connector. 3) Connect the disconnected connectors. 4) Read the DTC using Subaru Select Monitor.	Is U0416 a current malfunction?	Go to step **5**.	Go to step **8**.
5	**CHECK DTC.** Using the Subaru Select Monitor, read DTC of all the systems.	Is the VDC data abnormal detected in several modules?	Replace the VDC CM. <Ref. to VDC-9, VDC Control Module and Hydraulic Control Unit (VDCCM&H/U).>	Go to step **6**.
6	**REPLACE MODULE.** 1) Replace the VDC CM. 2) Read the DTC using Subaru Select Monitor.	Is U0416 a current malfunction?	Go to step **7**.	System is normal.
7	**CHECK MODULE.** 1) Reinstall the VDC CM. 2) Replace the module that the DTC has been detected. 3) Read the DTC using Subaru Select Monitor.	Is U0416 a current malfunction?	Replace the VDC CM. <Ref. to VDC-9, VDC Control Module and Hydraulic Control Unit (VDCCM&H/U).>	System is normal.
8	**CHECK HARNESS.** 1) Shake the harness, and check for poor contact. 2) Using the Subaru Select Monitor, read DTC of CAN system.	Is U0416 a current malfunction?	Repair the poor contact of harness, or replace the harness.	Go to step **9**.
9	**CHECK CONNECTOR.** Check the connector used for high speed CAN for poor contact.	Is there poor contact of connector?	Repair the connector that has poor contact, or replace harness.	It is possible that temporary poor communication occurs. Delete the DTC.

F: DTC U0420 INVALID DATA RECEIVED FROM POWER STEERING CONTROL MODULE

DTC DETECTING CONDITION:
Defective data was transmitted from EPS CM.
TROUBLE SYMPTOM:
Cooperation control with EPS CM does not operate properly.

	Step	Check	Yes	No
1	**CHECK DTC.** Check the displayed DTC.	Are DTCs other than U*** displayed?	Perform the diagnosis according to DTC.	Go to step **2**.
2	**CHECK DTC.** Check the displayed DTC.	Is DTC for the bus off or the data no-receive displayed?	Perform the diagnosis according to DTC.	Go to step **3**.
3	**CHECK DTC.** Check the displayed DTC.	Is U0420 a current malfunction?	Go to step **4**.	Go to step **8**.
4	**CHECK DTC.** 1) Turn the ignition switch to OFF. 2) Disconnect the power steering CM connector. 3) Connect the disconnected connectors. 4) Read the DTC using Subaru Select Monitor.	Is U0420 a current malfunction?	Go to step **5**.	Go to step **8**.
5	**CHECK DTC.** Using the Subaru Select Monitor, read DTC of all the systems.	Is the electric power steering data abnormal detected in several modules?	Replace the power steering CM. <Ref. to PS-43, Power Steering Control Module.>	Go to step **6**.
6	**REPLACE MODULE.** 1) Replace the power steering CM. 2) Read the DTC using Subaru Select Monitor.	Is U0420 a current malfunction?	Go to step **7**.	System is normal.
7	**CHECK MODULE.** 1) Reinstall the power steering CM. 2) Replace the module that the DTC has been detected. 3) Read the DTC using Subaru Select Monitor.	Is U0420 a current malfunction?	Replace the power steering CM. <Ref. to PS-43, Power Steering Control Module.>	System is normal.
8	**CHECK HARNESS.** 1) Shake the harness, and check for poor contact. 2) Using the Subaru Select Monitor, read DTC of CAN system.	Is U0420 a current malfunction?	Repair the poor contact of harness, or replace the harness.	Go to step **9**.
9	**CHECK CONNECTOR.** Check the connector used for high speed CAN for poor contact.	Is there poor contact of connector?	Repair the connector that has poor contact, or replace harness.	It is possible that temporary poor communication occurs. Delete the DTC.

G: DTC U0422 INVALID DATA RECEIVED FROM BODY CONTROL MODULE

DTC DETECTING CONDITION:
Defective data was transmitted from body integrated unit.
TROUBLE SYMPTOM:
Cooperation control with body integrated unit does not operate properly.

	Step	Check	Yes	No
1	**CHECK DTC.** Check the displayed DTC.	Are DTCs other than U*** displayed?	Perform the diagnosis according to DTC.	Go to step **2**.
2	**CHECK DTC.** Check the displayed DTC.	Is DTC for the bus off or the data no-receive displayed?	Perform the diagnosis according to DTC.	Go to step **3**.
3	**CHECK DTC.** Check the displayed DTC.	Is U0422 a current malfunction?	Go to step **4**.	Go to step **8**.
4	**CHECK DTC.** 1) Turn the ignition switch to OFF. 2) Disconnect the body integrated unit connector. 3) Connect the disconnected connectors. 4) Read the DTC using Subaru Select Monitor.	Is U0422 a current malfunction?	Go to step **5**.	Go to step **8**.
5	**CHECK DTC.** Using the Subaru Select Monitor, read DTC of all the systems.	Is the body integrated data abnormal detected in several modules?	Replace the body integrated unit. <Ref. to SL-82, Body Integrated Unit.>	Go to step **6**.
6	**REPLACE MODULE.** 1) Replace the body integrated unit. 2) Read the DTC using Subaru Select Monitor.	Is U0422 a current malfunction?	Go to step **7**.	System is normal.
7	**CHECK MODULE.** 1) Reinstall the body integrated unit. 2) Replace the module that the DTC has been detected. 3) Read the DTC using Subaru Select Monitor.	Is U0422 a current malfunction?	Replace the body integrated unit. <Ref. to SL-82, Body Integrated Unit.>	System is normal.
8	**CHECK HARNESS.** 1) Shake the harness, and check for poor contact. 2) Using the Subaru Select Monitor, read DTC of CAN system.	Is U0422 a current malfunction?	Repair the poor contact of harness, or replace the harness.	Go to step **9**.
9	**CHECK CONNECTOR.** Check the connector used for high speed CAN for poor contact.	Is there poor contact of connector?	Repair the connector that has poor contact, or replace harness.	It is possible that temporary poor communication occurs. Delete the DTC.

H: DTC U0423 INVALID DATA RECEIVED FROM INSTRUMENT PANEL CLUSTER CONTROL MODULE

DTC DETECTING CONDITION:
Defective data was transmitted from combination meter.
TROUBLE SYMPTOM:
Display of combination meter does not operate properly.

	Step	Check	Yes	No
1	**CHECK DTC.** Check the displayed DTC.	Are DTCs other than U*** displayed?	Perform the diagnosis according to DTC.	Go to step **2**.
2	**CHECK DTC.** Check the displayed DTC.	Is DTC for the bus off or the data no-receive displayed?	Perform the diagnosis according to DTC.	Go to step **3**.
3	**CHECK DTC.** Check the displayed DTC.	Is U0423 a current malfunction?	Go to step **4**.	Go to step **8**.
4	**CHECK DTC.** 1) Turn the ignition switch to OFF. 2) Disconnect the combination meter connector. 3) Connect the disconnected connectors. 4) Read the DTC using Subaru Select Monitor.	Is U0423 a current malfunction?	Go to step **5**.	Go to step **8**.
5	**CHECK DTC.** Using the Subaru Select Monitor, read DTC of all the systems.	Is the meter data abnormal detected in several modules?	Replace the combination meter. <Ref. to IDI-16, Combination Meter.>	Go to step **6**.
6	**REPLACE MODULE.** 1) Replace the combination meter. 2) Read the DTC using Subaru Select Monitor.	Is U0423 a current malfunction?	Go to step **7**.	System is normal.
7	**CHECK MODULE.** 1) Replace the current combination meter with the original combination meter. 2) Replace the module that the DTC has been detected. 3) Read the DTC using Subaru Select Monitor.	Is U0423 a current malfunction?	Replace the combination meter. <Ref. to IDI-16, Combination Meter.>	System is normal.
8	**CHECK HARNESS.** 1) Shake the harness, and check for poor contact. 2) Using the Subaru Select Monitor, read DTC of CAN system.	Is U0423 a current malfunction?	Repair the poor contact of harness, or replace the harness.	Go to step **9**.
9	**CHECK CONNECTOR.** Check the connector used for high speed CAN for poor contact.	Is there poor contact of connector?	Repair the connector that has poor contact, or replace harness.	It is possible that temporary poor communication occurs. Delete the DTC.

I: DTC U0424 INVALID DATA RECEIVED FROM HVAC CONTROL MODULE

DTC DETECTING CONDITION:
Defective data was transmitted from A/C control panel.
TROUBLE SYMPTOM:
Cooperation control of air conditioner does not operate properly.

	Step	Check	Yes	No
1	**CHECK DTC.** Check the displayed DTC.	Are DTCs other than U*** displayed?	Perform the diagnosis according to DTC.	Go to step **2**.
2	**CHECK DTC.** Check the displayed DTC.	Is DTC for the bus off or the data no-receive displayed?	Perform the diagnosis according to DTC.	Go to step **3**.
3	**CHECK DTC.** Check the displayed DTC.	Is U0424 a current malfunction?	Go to step **4**.	Go to step **8**.
4	**CHECK DTC.** 1) Turn the ignition switch to OFF. 2) Disconnect the A/C control panel connector. 3) Connect the disconnected connectors. 4) Read the DTC using Subaru Select Monitor.	Is U0424 a current malfunction?	Go to step **5**.	Go to step **8**.
5	**CHECK DTC.** Using the Subaru Select Monitor, read DTC of all the systems.	Is the air conditioner data abnormal detected in several modules?	Replace the A/C control panel.	Go to step **6**.
6	**REPLACE MODULE.** 1) Replace the A/C control panel. 2) Read the DTC using Subaru Select Monitor.	Is U0424 a current malfunction?	Go to step **7**.	System is normal.
7	**CHECK MODULE.** 1) Restore the A/C control panel. 2) Replace the module that the DTC has been detected. 3) Read the DTC using Subaru Select Monitor.	Is U0424 a current malfunction?	Replace the A/C control panel.	System is normal.
8	**CHECK HARNESS.** 1) Shake the harness, and check for poor contact. 2) Read the DTC using Subaru Select Monitor.	Is U0424 a current malfunction?	Repair the poor contact of harness, or replace the harness.	Go to step **9**.
9	**CHECK CONNECTOR.** Check the connector used for high speed CAN for poor contact.	Is there poor contact of connector?	Repair the connector that has poor contact, or replace harness.	It is possible that temporary poor communication occurs. Delete the DTC.

J: DTC U0428 INVALID DATA RECEIVED FROM STEERING ANGLE SENSOR MODULE

DTC DETECTING CONDITION:
Defective data was transmitted from steering angle sensor.
TROUBLE SYMPTOM:
VDC CM does not operate normally.

	Step	Check	Yes	No
1	**CHECK DTC.** Check the displayed DTC.	Are DTCs other than U*** displayed?	Perform the diagnosis according to DTC.	Go to step **2**.
2	**CHECK DTC.** Check the displayed DTC.	Is DTC for the bus off or the data no-receive displayed?	Perform the diagnosis according to DTC.	Go to step **3**.
3	**CHECK DTC.** Check the displayed DTC.	Is U0428 a current malfunction?	Go to step **4**.	Go to step **8**.
4	**CHECK DTC.** 1) Turn the ignition switch to OFF. 2) Disconnect the steering angle sensor connector. 3) Connect the disconnected connectors. 4) Read the DTC using Subaru Select Monitor.	Is U0428 a current malfunction?	Go to step **5**.	Go to step **8**.
5	**CHECK DTC.** Using the Subaru Select Monitor, read DTC of all the systems.	Is the steering angle sensor data abnormal detected in several modules?	Replace the steering angle sensor. <Ref. to VDC-29, Steering Angle Sensor.>	Go to step **6**.
6	**REPLACE MODULE.** 1) Replace the steering angle sensor. 2) Read the DTC using Subaru Select Monitor.	Is U0428 a current malfunction?	Go to step **7**.	System is normal.
7	**CHECK MODULE.** 1) Reinstall the steering angle sensor. 2) Replace the module that the DTC has been detected. 3) Read the DTC using Subaru Select Monitor.	Is U0428 a current malfunction?	Replace the steering angle sensor. <Ref. to VDC-29, Steering Angle Sensor.>	System is normal.
8	**CHECK HARNESS.** 1) Shake the harness, and check for poor contact. 2) Using the Subaru Select Monitor, read DTC of CAN system.	Is U0428 a current malfunction?	Repair the poor contact of harness, or replace the harness.	Go to step **9**.
9	**CHECK CONNECTOR.** Check the connector used for high speed CAN for poor contact.	Is there poor contact of connector?	Repair the connector that has poor contact, or replace harness.	It is possible that temporary poor communication occurs. Delete the DTC.

K: DTC U0452 INVALID DATA RECEIVED FROM RESTRAINTS CONTROL MODULE

DTC DETECTING CONDITION:
Defective data was transmitted from A/B CM.
TROUBLE SYMPTOM:
Cooperation control with airbag does not operate properly.

	Step	Check	Yes	No
1	**CHECK DTC.** Check the displayed DTC.	Are DTCs other than U*** displayed?	Perform the diagnosis according to DTC.	Go to step **2**.
2	**CHECK DTC.** Check the displayed DTC.	Is DTC for the bus off or the data no-receive displayed?	Perform the diagnosis according to DTC.	Go to step **3**.
3	**CHECK DTC.** Check the displayed DTC.	Is U0452 a current malfunction?	Go to step **4**.	Go to step **8**.
4	**CHECK DTC.** 1) Turn the ignition switch to OFF. 2) Disconnect the A/B CM connector. 3) Connect the disconnected connectors. 4) Read the DTC using Subaru Select Monitor.	Is U0452 a current malfunction?	Go to step **5**.	Go to step **8**.
5	**CHECK DTC.** Using the Subaru Select Monitor, read DTC of all the systems.	Is the airbag data abnormal detected in several modules?	Replace the A/B CM. <Ref. to AB-78, Airbag Control Module.>	Go to step **6**.
6	**REPLACE MODULE.** 1) Replace the A/B CM. 2) Read the DTC using Subaru Select Monitor.	Is U0452 a current malfunction?	Go to step **7**.	System is normal.
7	**CHECK MODULE.** 1) Reinstall the A/B CM. 2) Replace the module that the DTC has been detected. 3) Read the DTC using Subaru Select Monitor.	Is U0452 a current malfunction?	Replace the A/B CM. <Ref. to AB-78, Airbag Control Module.>	System is normal.
8	**CHECK HARNESS.** 1) Shake the harness, and check for poor contact. 2) Using the Subaru Select Monitor, read DTC of CAN system.	Is U0452 a current malfunction?	Repair the poor contact of harness, or replace the harness.	Go to step **9**.
9	**CHECK CONNECTOR.** Check the connector used for high speed CAN for poor contact.	Is there poor contact of connector?	Repair the connector that has poor contact, or replace harness.	It is possible that temporary poor communication occurs. Delete the DTC.

L: DTC U0100 LOST COMMUNICATION WITH ECM/PCM "A"

DTC DETECTING CONDITION:
Not received data from ECM.
TROUBLE SYMPTOM:
Cooperation control of transmission may not operate properly.

	Step	Check	Yes	No
1	**CHECK DTC.** Check the displayed DTC.	Are DTCs other than U*** displayed?	Perform the diagnosis according to DTC.	Go to step **2**.
2	**CHECK DTC.** Check the displayed DTC.	Is U0100 a current malfunction?	Go to step **3**.	Go to step **7**.
3	**CHECK DTC.** 1) Check CAN communication circuit. <Ref. to LAN(w/o HEV)(diag)-25, CAN Communication Circuit Check.> 2) Read the DTC using Subaru Select Monitor.	Is U0100 a current malfunction?	Go to step **4**.	Go to step **7**.
4	**CHECK DTC.** Using the Subaru Select Monitor, read DTC of all the systems.	Is the engine data no-receive detected in several modules?	Replace the ECM. <Ref. to FU(H4DO(w/o HEV))-106, Engine Control Module (ECM).>	Go to step **5**.
5	**REPLACE MODULE.** 1) Replace the ECM. 2) Read the DTC using Subaru Select Monitor.	Is U0100 a current malfunction?	Go to step **6**.	System is normal.
6	**CHECK MODULE.** 1) Reinstall the ECM. 2) Replace the module that the DTC has been detected. 3) Read the DTC using Subaru Select Monitor.	Is U0100 a current malfunction?	Replace the ECM. <Ref. to FU(H4DO(w/o HEV))-106, Engine Control Module (ECM).>	System is normal.
7	**CHECK HARNESS.** 1) Shake the harness, and check for poor contact. 2) Read the DTC using Subaru Select Monitor.	Is U0100 a current malfunction?	Repair the poor contact of harness, or replace the harness.	Go to step **8**.
8	**CHECK CONNECTOR.** Check the connector used for high speed CAN for poor contact.	Is there poor contact of connector?	Repair the connector that has poor contact, or replace harness.	It is possible that temporary poor communication occurs. Delete the DTC.

M: DTC U0101 LOST COMMUNICATION WITH TCM

DTC DETECTING CONDITION:
Not received data from TCM.
TROUBLE SYMPTOM:
Cooperation control with transmission is not performed.

	Step	Check	Yes	No
1	**CHECK DTC.** Check the displayed DTC.	Are DTCs other than U*** displayed?	Perform the diagnosis according to DTC.	Go to step **2**.
2	**CHECK DTC.** Check the displayed DTC.	Is U0101 a current malfunction?	Go to step **3**.	Go to step **7**.
3	**CHECK DTC.** 1) Check CAN communication circuit. <Ref. to LAN(w/o HEV)(diag)-25, CAN Communication Circuit Check.> 2) Read the DTC using Subaru Select Monitor.	Is U0101 a current malfunction?	Go to step **4**.	Go to step **7**.
4	**CHECK DTC.** Using the Subaru Select Monitor, read DTC of all the systems.	Is the transmission data no-receive detected in several modules?	Replace the TCM. <Ref. to CVT(TR580)-139, Transmission Control Module (TCM).>	Go to step **5**.
5	**REPLACE MODULE.** 1) Replace the TCM. 2) Read the DTC using Subaru Select Monitor.	Is U0101 a current malfunction?	Go to step **6**.	System is normal.
6	**CHECK MODULE.** 1) Reinstall the TCM. 2) Replace the module that the DTC has been detected. 3) Read the DTC using Subaru Select Monitor.	Is U0101 a current malfunction?	Replace the TCM. <Ref. to CVT(TR580)-139, Transmission Control Module (TCM).>	System is normal.
7	**CHECK HARNESS.** 1) Shake the harness, and check for poor contact. 2) Read the DTC using Subaru Select Monitor.	Is U0101 a current malfunction?	Repair the poor contact of harness, or replace the harness.	Go to step **8**.
8	**CHECK CONNECTOR.** Check the connector used for high speed CAN for poor contact.	Is there poor contact of connector?	Repair the connector that has poor contact, or replace harness.	It is possible that temporary poor communication occurs. Delete the DTC.

N: DTC U0122 LOST COMMUNICATION WITH VEHICLE DYNAMICS CONTROL MODULE

DTC DETECTING CONDITION:
No data from VDCCM is received.
TROUBLE SYMPTOM:
ABS warning light and VDC warning light illuminate.

	Step	Check	Yes	No
1	**CHECK DTC.** Check the displayed DTC.	Are DTCs other than U*** displayed?	Perform the diagnosis according to DTC.	Go to step **2**.
2	**CHECK DTC.** Check the displayed DTC.	Is U0122 a current malfunction?	Go to step **3**.	Go to step **7**.
3	**CHECK DTC.** 1) Check CAN communication circuit. <Ref. to LAN(w/o HEV)(diag)-25, CAN Communication Circuit Check.> 2) Read the DTC using Subaru Select Monitor.	Is U0122 a current malfunction?	Go to step **4**.	Go to step **7**.
4	**CHECK DTC.** Using the Subaru Select Monitor, read DTC of all the systems.	Is the VDC data no-receive detected in several modules?	Replace the VDC CM. <Ref. to VDC-9, VDC Control Module and Hydraulic Control Unit (VDCCM&H/U).>	Go to step **5**.
5	**REPLACE MODULE.** 1) Replace the VDC CM. 2) Read the DTC using Subaru Select Monitor.	Is U0122 a current malfunction?	Go to step **6**.	System is normal.
6	**CHECK MODULE.** 1) Reinstall the VDC CM. 2) Replace the module that the DTC has been detected. 3) Read the DTC using Subaru Select Monitor.	Is U0122 a current malfunction?	Replace the VDC CM. <Ref. to VDC-9, VDC Control Module and Hydraulic Control Unit (VDCCM&H/U).>	System is normal.
7	**CHECK HARNESS.** 1) Shake the harness, and check for poor contact. 2) Read the DTC using Subaru Select Monitor.	Is U0122 a current malfunction?	Repair the poor contact of harness, or replace the harness.	Go to step **8**.
8	**CHECK CONNECTOR.** Check the connector used for high speed CAN for poor contact.	Is there poor contact of connector?	Repair the connector that has poor contact, or replace harness.	It is possible that temporary poor communication occurs. Delete the DTC.

O: DTC U0126 LOST COMMUNICATION WITH STEERING ANGLE SENSOR MODULE

DTC DETECTING CONDITION:
No data is received from steering angle sensor.
TROUBLE SYMPTOM:
VDC CM does not operate normally.

	Step	Check	Yes	No
1	**CHECK DTC.** Check the displayed DTC.	Are DTCs other than U*** displayed?	Perform the diagnosis according to DTC.	Go to step **2**.
2	**CHECK DTC.** Check the displayed DTC.	Is U0126 a current malfunction?	Go to step **3**.	Go to step **7**.
3	**CHECK DTC.** 1) Check CAN communication circuit. <Ref. to LAN(w/o HEV)(diag)-25, CAN Communication Circuit Check.> 2) Read the DTC using Subaru Select Monitor.	Is U0126 a current malfunction?	Go to step **4**.	Go to step **7**.
4	**CHECK DTC.** Using the Subaru Select Monitor, read DTC of all the systems.	Is the steering angle sensor data no-receive detected in several modules?	Replace the steering angle sensor. <Ref. to VDC-29, Steering Angle Sensor.>	Go to step **5**.
5	**REPLACE MODULE.** 1) Replace the steering angle sensor. 2) Read the DTC using Subaru Select Monitor.	Is U0126 a current malfunction?	Go to step **6**.	System is normal.
6	**CHECK MODULE.** 1) Reinstall the steering angle sensor. 2) Replace the module that the DTC has been detected. 3) Read the DTC using Subaru Select Monitor.	Is U0126 a current malfunction?	Replace the steering angle sensor. <Ref. to VDC-29, Steering Angle Sensor.>	System is normal.
7	**CHECK HARNESS.** 1) Shake the harness, and check for poor contact. 2) Read the DTC using Subaru Select Monitor.	Is U0126 a current malfunction?	Repair the poor contact of harness, or replace the harness.	Go to step **8**.
8	**CHECK CONNECTOR.** Check the connector used for high speed CAN for poor contact.	Is there poor contact of connector?	Repair the connector that has poor contact, or replace harness.	It is possible that temporary poor communication occurs. Delete the DTC.

P: DTC U0131 LOST COMMUNICATION WITH POWER STEERING CONTROL MODULE

DTC DETECTING CONDITION:
No data is received from power steering CM.
TROUBLE SYMPTOM:
Cooperation control with power steering CM does not operate properly.

	Step	Check	Yes	No
1	**CHECK DTC.** Check the displayed DTC.	Are DTCs other than U*** displayed?	Perform the diagnosis according to DTC.	Go to step **2**.
2	**CHECK DTC.** Check the displayed DTC.	Is U0131 a current malfunction?	Go to step **3**.	Go to step **7**.
3	**CHECK DTC.** 1) Check CAN communication circuit. <Ref. to LAN(w/o HEV)(diag)-25, CAN Communication Circuit Check.> 2) Read the DTC using Subaru Select Monitor.	Is U0131 a current malfunction?	Go to step **4**.	Go to step **7**.
4	**CHECK DTC.** Using the Subaru Select Monitor, read DTC of all the systems.	Is the electric power steering data no-receive detected in several modules?	Replace the power steering CM. <Ref. to PS-43, Power Steering Control Module.>	Go to step **5**.
5	**REPLACE MODULE.** 1) Replace the power steering CM. 2) Read the DTC using Subaru Select Monitor.	Is U0131 a current malfunction?	Go to step **6**.	System is normal.
6	**CHECK MODULE.** 1) Reinstall the power steering CM. 2) Replace the module that the DTC has been detected. 3) Read the DTC using Subaru Select Monitor.	Is U0131 a current malfunction?	Replace the power steering CM. <Ref. to PS-43, Power Steering Control Module.>	System is normal.
7	**CHECK HARNESS.** 1) Shake the harness, and check for poor contact. 2) Read the DTC using Subaru Select Monitor.	Is U0131 a current malfunction?	Repair the poor contact of harness, or replace the harness.	Go to step **8**.
8	**CHECK CONNECTOR.** Check the connector used for high speed CAN for poor contact.	Is there poor contact of connector?	Repair the connector that has poor contact, or replace harness.	It is possible that temporary poor communication occurs. Delete the DTC.

Q: DTC U0140 LOST COMMUNICATION WITH BODY CONTROL MODULE

DTC DETECTING CONDITION:
No data is received from body integrated unit.
TROUBLE SYMPTOM:
Cooperation control with body integrated unit does not operate properly.

	Step	Check	Yes	No
1	**CHECK DTC.** Check the displayed DTC.	Are DTCs other than U*** displayed?	Perform the diagnosis according to DTC.	Go to step **2**.
2	**CHECK DTC.** Check the displayed DTC.	Is U0140 a current malfunction?	Go to step **3**.	Go to step **7**.
3	**CHECK DTC.** 1) Check CAN communication circuit. <Ref. to LAN(w/o HEV)(diag)-25, CAN Communication Circuit Check.> 2) Read the DTC using Subaru Select Monitor.	Is U0140 a current malfunction?	Go to step **4**.	Go to step **7**.
4	**CHECK DTC.** Using the Subaru Select Monitor, read DTC of all the systems.	Is the body integrated data no-receive detected in several modules?	Replace the body integrated unit. <Ref. to SL-82, Body Integrated Unit.>	Go to step **5**.
5	**REPLACE MODULE.** 1) Replace the body integrated unit. 2) Read the DTC using Subaru Select Monitor.	Is U0140 a current malfunction?	Go to step **6**.	System is normal.
6	**CHECK MODULE.** 1) Reinstall the body integrated unit. 2) Replace the module that the DTC has been detected. 3) Read the DTC using Subaru Select Monitor.	Is U0140 a current malfunction?	Replace the body integrated unit. <Ref. to SL-82, Body Integrated Unit.>	System is normal.
7	**CHECK HARNESS.** 1) Shake the harness, and check for poor contact. 2) Read the DTC using Subaru Select Monitor.	Is U0140 a current malfunction?	Repair the poor contact of harness, or replace the harness.	Go to step **8**.
8	**CHECK CONNECTOR.** Check the connector used for high speed CAN for poor contact.	Is there poor contact of connector?	Repair the connector that has poor contact, or replace harness.	It is possible that temporary poor communication occurs. Delete the DTC.

R: DTC U0151 LOST COMMUNICATION WITH RESTRAINTS CONTROL MODULE

DTC DETECTING CONDITION:
No data is received from A/B CM.
TROUBLE SYMPTOM:
Cooperation control with A/B CM does not operate properly.

	Step	Check	Yes	No
1	**CHECK DTC.** Check the displayed DTC.	Are DTCs other than U*** displayed?	Perform the diagnosis according to DTC.	Go to step **2**.
2	**CHECK DTC.** Check the displayed DTC.	Is U0151 a current malfunction?	Go to step **3**.	Go to step **7**.
3	**CHECK DTC.** 1) Check CAN communication circuit. <Ref. to LAN(w/o HEV)(diag)-25, CAN Communication Circuit Check.> 2) Read the DTC using Subaru Select Monitor.	Is U0151 a current malfunction?	Go to step **4**.	Go to step **7**.
4	**CHECK DTC.** Using the Subaru Select Monitor, read DTC of all the systems.	Is the airbag data no-receive detected in several modules?	Replace the A/B CM. <Ref. to AB-78, Airbag Control Module.>	Go to step **5**.
5	**REPLACE MODULE.** 1) Replace the A/B CM. 2) Read the DTC using Subaru Select Monitor.	Is U0151 a current malfunction?	Go to step **6**.	System is normal.
6	**CHECK MODULE.** 1) Reinstall the A/B CM. 2) Replace the module that the DTC has been detected. 3) Read the DTC using Subaru Select Monitor.	Is U0151 a current malfunction?	Replace the A/B CM. <Ref. to AB-78, Airbag Control Module.>	System is normal.
7	**CHECK HARNESS.** 1) Shake the harness, and check for poor contact. 2) Read the DTC using Subaru Select Monitor.	Is U0151 a current malfunction?	Repair the poor contact of harness, or replace the harness.	Go to step **8**.
8	**CHECK CONNECTOR.** Check the connector used for high speed CAN for poor contact.	Is there poor contact of connector?	Repair the connector that has poor contact, or replace harness.	It is possible that temporary poor communication occurs. Delete the DTC.

S: DTC U0155 LOST COMMUNICATION WITH INSTRUMENT PANEL CLUSTER (IPC) CONTROL MODULE

DTC DETECTING CONDITION:
No data received from combination meter.
TROUBLE SYMPTOM:
Display of combination meter does not operate properly.

	Step	Check	Yes	No
1	**CHECK DTC.** Check the displayed DTC.	Are DTCs other than U*** displayed?	Perform the diagnosis according to DTC.	Go to step **2**.
2	**CHECK DTC.** Check the displayed DTC.	Is U0155 a current malfunction?	Go to step **3**.	Go to step **7**.
3	**CHECK DTC.** 1) Check CAN communication circuit. <Ref. to LAN(w/o HEV)(diag)-25, CAN Communication Circuit Check.> 2) Read the DTC using Subaru Select Monitor.	Is U0155 a current malfunction?	Go to step **4**.	Go to step **7**.
4	**CHECK DTC.** Using the Subaru Select Monitor, read DTC of all the systems.	Is the meter data no-receive detected in several modules?	Replace the meter. <Ref. to IDI-16, Combination Meter.>	Go to step **5**.
5	**REPLACE MODULE.** 1) Replace the combination meter. 2) Read the DTC using Subaru Select Monitor.	Is U0155 a current malfunction?	Go to step **6**.	System is normal.
6	**CHECK MODULE.** 1) Replace the current combination meter with the original combination meter. 2) Replace the module that the DTC has been detected. 3) Read the DTC using Subaru Select Monitor.	Is U0155 a current malfunction?	Replace the combination meter. <Ref. to IDI-16, Combination Meter.>	System is normal.
7	**CHECK HARNESS.** 1) Shake the harness, and check for poor contact. 2) Read the DTC using Subaru Select Monitor.	Is U0155 a current malfunction?	Repair the poor contact of harness, or replace the harness.	Go to step **8**.
8	**CHECK CONNECTOR.** Check the connector used for high speed CAN for poor contact.	Is there poor contact of connector?	Repair the connector that has poor contact, or replace harness.	It is possible that temporary poor communication occurs. Delete the DTC.

T: DTC U0164 LOST COMMUNICATION WITH HVAC CONTROL MODULE

DTC DETECTING CONDITION:
No data is received from A/C control panel.
TROUBLE SYMPTOM:
Cooperation control of air conditioner does not operate properly.

	Step	Check	Yes	No
1	**CHECK DTC.** Check the displayed DTC.	Are DTCs other than U*** displayed?	Perform the diagnosis according to DTC.	Go to step **2**.
2	**CHECK DTC.** Check the displayed DTC.	Is U0164 a current malfunction?	Go to step **3**.	Go to step **7**.
3	**CHECK DTC.** 1) Check CAN communication circuit. <Ref. to LAN(w/o HEV)(diag)-25, CAN Communication Circuit Check.> 2) Read the DTC using Subaru Select Monitor.	Is U0164 a current malfunction?	Go to step **4**.	Go to step **7**.
4	**CHECK DTC.** Using the Subaru Select Monitor, read DTC of all the systems.	Is the air conditioner data no-receive detected in several modules?	Replace the A/C control panel.	Go to step **5**.
5	**REPLACE MODULE.** 1) Replace the A/C control panel. 2) Read the DTC using Subaru Select Monitor.	Is U0164 a current malfunction?	Go to step **6**.	System is normal.
6	**CHECK MODULE.** 1) Restore the A/C control panel. 2) Replace the module that the DTC has been detected. 3) Read the DTC using Subaru Select Monitor.	Is U0164 a current malfunction?	Replace the A/C control panel.	System is normal.
7	**CHECK HARNESS.** 1) Shake the harness, and check for poor contact. 2) Read the DTC using Subaru Select Monitor.	Is U0164 a current malfunction?	Repair the poor contact of harness, or replace the harness.	Go to step **8**.
8	**CHECK CONNECTOR.** Check the connector used for high speed CAN for poor contact.	Is there poor contact of connector?	Repair the connector that has poor contact, or replace harness.	It is possible that temporary poor communication occurs. Delete the DTC.

U: DTC U1120 LOST COMMUNICATION WITH AUTOSTART STOP CONTROL MODULE

NOTE:
The electric power steering CM identifies whether the Auto Start Stop function is provided or not using information from the combination meter. Therefore, this DTC may be detected if lost communication with the combination meter occurs.
For the diagnostic procedure, refer to DTC U0155 LOST COMMUNICATION WITH INSTRUMENT PANEL CLUSTER (IPC) CONTROL MODULE. <Ref. to LAN(w/o HEV)(diag)-107, DTC U0155 LOST COMMUNICATION WITH INSTRUMENT PANEL CLUSTER (IPC) CONTROL MODULE, Diagnostic Procedure with Diagnostic Trouble Code (DTC).>

12.General Diagnostic Table

A: INSPECTION

Item	Operation	Specifications		Note
		YES	NO	
Diagnostic code	DTC is displayed when inspecting all DTCs.	Perform the diagnosis according to DTC.	System is normal.	—
Speedometer	Faster vehicle speed than the actual speed is displayed.	VDC CM data may not be received.	System is normal.	Also, check vehicle speed pulse circuit.
Fuel gauge	Fuel is present, but displayed less than actual amount.	Communication error may be present.	System is normal.	Also, check the fuel gauge.
Fuel level warning light	Fuel is present, but the light illuminates.	Communication error may be present.	System is normal.	Also, check the fuel gauge.
Engine coolant temperature light	Engine coolant temperature light blinks in red and blue alternately.	Communication error may be present.	System is normal.	Check the engine coolant light related items.
[S], [I] or [S#] indicator	Blinking.	Communication error may be present.	System is normal.	Check the intelligent switch.
VDC indicator	Illuminating.	Communication error may be present.	System is normal.	Check that VDC is not operating.
VDC OFF indicator	Illuminating.	Communication error may be present.	System is normal.	Check that VDC is not OFF.
Brake warning, etc.	Illuminating.	Brake fluid may be low in amount, or communication error may be present.	System is normal.	Check brake related items.
Shift position	Not displayed.	Communication error may be present.	System is normal.	Also, check AT system.
AT temperature light	Blinking.	Communication error may be present.	System is normal.	Also, check AT system.
Door indicator	Not displayed.	Communication error may be present.	System is normal.	Check the door switch.
Clearance indicator	Not illuminating.	Communication error may be present.	System is normal.	Check the combination switch.
Hi beam indicator	Not illuminating.	Communication error may be present.	System is normal.	Check the combination switch.
Front fog indicator	Not illuminating.	Communication error may be present.	System is normal.	Check the combination switch.
Illumination	Illuminating at the maximum brightness.	Communication error may be present.	System is normal.	Also, check the illumination switch.
Cruise control indicator	Not illuminating.	Communication error may be present.	System is normal.	Check the cruise control system.
AWD indicator	Not illuminating.	Communication error may be present.	System is normal.	Check TCM.
Hill hold indicator	Not illuminating.	Communication error may be present.	System is normal.	Also, check VDC CM.

LAN SYSTEM (DIAGNOSTICS)

LAN(HEV)(diag)

		Page
1.	Basic Diagnostic Procedure	2
2.	Check List for Interview	4
3.	General Description	5
4.	Electrical Component Location	9
5.	Control Module I/O Signal	10
6.	Subaru Select Monitor	11
7.	Read Diagnostic Trouble Code (DTC)	29
8.	Clear Memory Mode	30
9.	CAN Communication Circuit Check	31
10.	List of Diagnostic Trouble Code (DTC)	87
11.	Diagnostic Procedure with Diagnostic Trouble Code (DTC)	110
12.	General Diagnostic Table	152

1. Basic Diagnostic Procedure

A: PROCEDURE

CAUTION:
• Subaru Select Monitor is required for reading DTC, performing diagnosis, reading current data, customizing and active test (compulsory drive).
• Remove foreign matter (dust, water, oil, etc.) from each control module connector during removal and installation.
• For model with immobilizer or model with keyless access, registration of immobilizer may be needed after the replacement of controller etc. For detailed procedure, refer to the "REGISTRATION MANUAL FOR IMMOBILIZER".

NOTE:
• To check harness for open or short circuits, shake the suspected trouble spot or connector.
• Check List for Interview <Ref. to LAN(HEV)(diag)-4, Check List for Interview.>

	Step	Check	Yes	No
1	**CHECK PRE-INSPECTION.** Ask the customer when and how the trouble occurred using the interview check list. <Ref. to LAN(HEV)(diag)-4, Check List for Interview.>	Did you interview the customer?	Go to step **2**.	Interview the customer.
2	**BASIC INSPECTION (CAN DIAGNOSTIC IS NOT USED).** Check components which might affect CAN communication problem. <Ref. to LAN(HEV)(diag)-7, INSPECTION WITHOUT USING CAN DIAGNOSTIC, INSPECTION, General Description.>	Is the component that might affect CAN communication problem normal?	Go to step **3**.	Repair or replace each component.
3	**CHECK COMMUNICATION FOR INITIALIZING.** Communicate with the all systems by connecting the Subaru Select Monitor.	Is the communication for initializing finished for all modules?	Go to step **4**.	Check the error of communication for initializing. <Ref. to LAN(HEV)(diag)-11, COMMUNICATION FOR INITIALIZING IMPOSSIBLE, Subaru Select Monitor.>
4	**BASIC INSPECTION (CAN DIAGNOSTIC IS USED).** Check components which might affect CAN communication problem. <Ref. to LAN(HEV)(diag)-7, INSPECTION USING CAN DIAGNOSTIC, INSPECTION, General Description.>	Is the component that might affect CAN communication problem normal?	Go to step **5**.	Repair or replace each component.
5	**CHECK DTC.** 1) Start the engine and read all DTCs. NOTE: • When the engine does not start, perform the diagnosis for the engine start malfunction. <Ref. to EN(H4DO HEV)(diag)-67, Diagnostics for Engine Starting Failure.> 2) Record all DTCs, time stamp and freeze frame data. NOTE: For time stamp, <Ref. to LAN(HEV)(diag)-6, TIME STAMP, CAUTION, General Description.>	Is DTC U**** displayed on Subaru Select Monitor?	Go to step **6**.	Go to step **7**.

Step		Check	Yes	No
6	**CHECK DTC.** 1) Perform the inspection using the DTC check sheet. <Ref. to LAN(HEV)(diag)-90, CHECK USING THE DTC CHECK SHEET, LIST, List of Diagnostic Trouble Code (DTC).> 2) Using the Subaru Select Monitor, read all DTCs.	Is DTC U**** displayed on Subaru Select Monitor?	Go to step **8**.	Go to step **7**.
7	**PERFORM GENERAL DIAGNOSTICS.** Inspect using the “General Diagnostic Table”. <Ref. to LAN(HEV)(diag)-152, General Diagnostic Table.>	Is result of inspection OK?	LAN system is normal.	Go to step **8**.
8	**PERFORM DIAGNOSIS.** 1) Correct the cause of trouble. 2) Perform the Clear Memory Mode. <Ref. to LAN(HEV)(diag)-30, OPERATION, Clear Memory Mode.> 3) Read the DTC. <Ref. to LAN(HEV)(diag)-29, OPERATION, Read Diagnostic Trouble Code (DTC).>	Is DTC displayed on Subaru Select Monitor?	Repeat step 8 until DTC is not shown.	Finish the diagnosis.

2. Check List for Interview

A: CHECK

Inspect the following items regarding the vehicle's state.

1. DISPLAY STATUS IN THE COMBINATION METER

Display status in the combination meter	Engine coolant temperature gauge display	❑ OK / ❑ NG
	Fuel gauge display	❑ OK / ❑ NG
	Tachometer display	❑ OK / ❑ NG (0 rpm at idling etc.)
Display of other indicators	Malfunction indicator light	❑ ON / ❑ Blink / ❑ OFF
	Sport indicator light (AT warning light)	❑ ON / ❑ Blink / ❑ OFF
	ABS warning light	❑ ON / ❑ Blink / ❑ OFF
	VDC warning light	❑ ON / ❑ Blink / ❑ OFF
	Immobilizer indicator light	❑ ON / ❑ Blink / ❑ OFF
	AT OIL TEMP warning light	❑ ON / ❑ Blink / ❑ OFF
	Engine coolant temperature warning light	❑ Blue light ON / ❑ Red light ON / ❑ Red light blinks / ❑ Blue and red lights blink
	CRUISE indicator	❑ ON / ❑ Blink / ❑ OFF
	Shift indicator	❑ OK / ❑ NG
	Fuel level warning light	❑ ON / ❑ Blink / ❑ OFF
	Airbag warning light	❑ ON / ❑ OFF
	VDC OFF indicator	❑ ON / ❑ OFF
	Brake warning light	❑ ON / ❑ OFF
	Headlight beam leveler indicator	❑ ON / ❑ OFF
	Hybrid READY indicator light	❑ ON / ❑ OFF
	Hybrid fail lamp	❑ ON / ❑ OFF

2. CONDITIONS UNDER WHICH TROUBLE OCCURS

Driving condition	❑ At standstill (while idling) ❑ When the vehicle is running Vehicle speed km/h (MPH) ❑ While accelerating Acceleration km/h (MPH) to km/h (MPH) ❑ Decelerating (with braking) Deceleration km/h (MPH) to km/h (MPH) ❑ Decelerating (without braking) Deceleration km/h (MPH) to km/h (MPH)
	❑ Flat road ❑ Uphill ❑ Downhill ❑ Gravel road ❑ Bumpy road ❑ Snowy road
	Does it occur when operating any part? Operated part: **TROUBLE SYMPTOM:**
	Are there any other troubles occurred? From where: **TROUBLE SYMPTOM:**

3. General Description

A: CAUTION

1. SRS AIRBAG SYSTEM

Airbag system wiring harness is routed near the body integrated unit and twisted pair line.

CAUTION:
- **Do not use the electrical test equipment on all airbag system wiring harnesses and connectors.**
- **Be careful not to damage the airbag system wiring harness when servicing the body integrated unit and LAN system.**

2. LAN SYSTEM

- Bus line of LAN system is twisted pair line. Be careful not to by-pass or partly unbind the twisted pair line.
- Do not make clearance between bus lines (CAN High, CAN Low).
- Difference of bus line length should be within 10 cm (3.94 in).
- Fray near the connector should be within 8 cm (3.14 in).

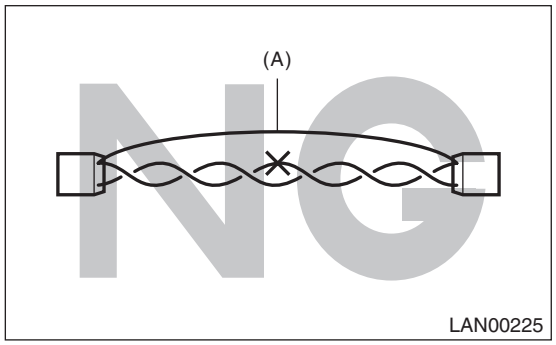

(A) Bypass wire connection

- If the characteristics of the twisted pair line are changed, it may extremely weaken against noise.
- When repairing the harness, connect the wires using soldering and protect it with insulating tape etc.

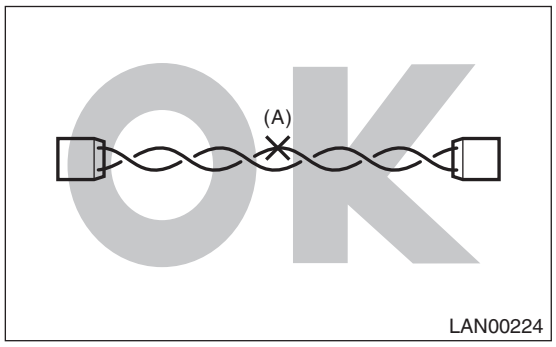

(A) Soldering and protection with insulating tape

3. TIME STAMP

There are three types of record data for the information of time stamp, and they are stored together with diagnostic codes.

NOTE:
Depending on DTCs, time stamp may not be stored.

a. **Trip Count**

This indicates the number of times that the ignition has been turned to ON since the vehicle was manufactured. The ignition ON count of when the diagnostic code is stored is displayed on the diagnostic code check screen.

NOTE:
Subaru Select Monitor screen (A/C system diagnostic code and time stamp)

Code	Description & trouble position	Trouble occurrence record	**Trip Count**	Time Count	Count
B14E1	Air Mix Door Actuator Stepping Motor Circuit Wire Break (Driver's Seat)	Detected on the first time	**983**	18000	Common
B14E7	Heater Core Rear Sensor Circuit Wire Break	Detected on the 2nd time	**984**	117800	Common

The current Trip Count can be checked at "Current Data Display & Save" in "Integ. unit mode".
By comparing the current Trip Count and the Trip Count of when the diagnostic code was stored, it is possible to determine that it is how many ignition-ON operations ago that DTC was stored.

b. **Time Count**

The elapsed time from when the ignition is turned to ON to when the diagnostic code is stored is displayed on the diagnostic code check screen. It is possible to determine the length of time that passed between when the user started driving and when the diagnostic code was stored. Therefore, if Trip Count until the vehicle-received-date is determined by interviewing the user, it is possible to estimate where the user was driving when the diagnostic code was stored, using the information such as Trip Count and Time Count. This estimate is useful information to perform diagnosis including checking of repeatability.

NOTE:
Subaru Select Monitor screen (A/C system diagnostic code and time stamp)

Code	Description & trouble position	Trouble occurrence record	Trip Count	**Time Count**	Count
B14E1	Air Mix Door Actuator Stepping Motor Circuit Wire Break (Driver's Seat)	Detected on the first time	983	**18000**	Common
B14E7	Heater Core Rear Sensor Circuit Wire Break	Detected on the 2nd time	984	**117800**	Common

When multiple diagnostic codes are recorded for one trouble, it is extremely important to determine the diagnostic code that was stored first. (It is important to perform the diagnosis for the first recorded diagnostic code.) In this case, it is also possible to immediately determine which diagnostic code was recorded first, using the information such as Trip Count and Time Count.

c. **Count**
Each unit individually counts the elapsed time since the ignition is turned to ON. However, these time counts may have some errors, and therefore, the control modules need to be adjusted to the time carried by the master-time unit (the body integrated unit). When the count is set as common, it means that each control module is already adjusted to the master time, and the display for the master integrated unit is always indicated as “Common”. When the count is indicated as “Originally”, it means that the time is not synchronized with the master time. In this case, check the communication between the corresponding control module and integrated unit. When all controls other than the body integrated unit is indicated as “Originally”, perform the basic inspection for the body integrated unit. <Ref. to BC(diag)-2, PROCEDURE, Basic Diagnostic Procedure.>

NOTE:
Subaru Select Monitor screen (A/C system diagnostic code and time stamp)

Code	Description & trouble position	Trouble occurrence record	Trip Count	Time Count	**Count**
B14E1	Air Mix Door Actuator Stepping Motor Circuit Wire Break (Driver’s Seat)	Detected on the first time	983	18000	**Common**
B14E7	Heater Core Rear Sensor Circuit Wire Break	Detected on the 2nd time	984	117800	**Common**

Even when multiple diagnostic codes are stored in multiple control modules, it is possible to determine the code stored first through the count function.

NOTE:
Troubleshooting for CAN system U-code occurrence
When the first stored diagnostic code is a U-code for CAN system, perform the troubleshooting as a U code combination, instead of a U code alone. In addition, when CAN open circuit occurs, communication of the diagnostic device itself becomes impossible beyond the particular areas. However, trouble positions can also be determined by the combination of initial communication success/failure. Thus, by performing the basic diagnostic procedure in LAN system, trouble positions can be determined efficiently on the principle above. <Ref. to LAN(HEV)(diag)-2, PROCEDURE, Basic Diagnostic Procedure.>

B: INSPECTION

1. INSPECTION WITHOUT USING CAN DIAGNOSTIC

Before performing diagnosis, check the following items that might affect troubles of each module.
1) Measure the 12 volt auxiliary battery voltage and check electrolyte.

Standard voltage: 12 V or more

Specific gravity: 1.260 or more
2) Check the fuse condition.
Make sure that ampere of the fuse is setting value, and it is not blown out.
3) Check the connecting condition of harness and harness connector.

2. INSPECTION USING CAN DIAGNOSTIC

Before performing diagnostics, check the following item which might affect body integrated unit malfunctions.
1) Confirm settings of body integrated unit are corresponded to vehicle equipment. <Ref. to BC(diag)-17, OPERATION, Registration Body Integrated Unit.>
2) Make sure that the User Customizing of the body integrated unit matches the vehicle equipment. <Ref. to BC(diag)-15, OPERATION, User Customizing.>
3) Confirm “Factory initial setting” of body integrated unit registrations is set to “Market”.

C: PREPARATION TOOL

1. SPECIAL TOOL

ILLUSTRATION	TOOL NUMBER	DESCRIPTION	REMARKS
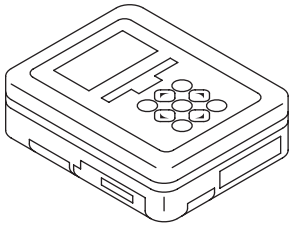 ST1B022XU0	1B022XU0	SUBARU SELECT MONITOR III KIT	Used for troubleshooting the electrical system.

2. GENERAL TOOL

TOOL NAME	REMARKS
Circuit tester	Used for measuring resistance, voltage and current.

4. Electrical Component Location

A: LOCATION

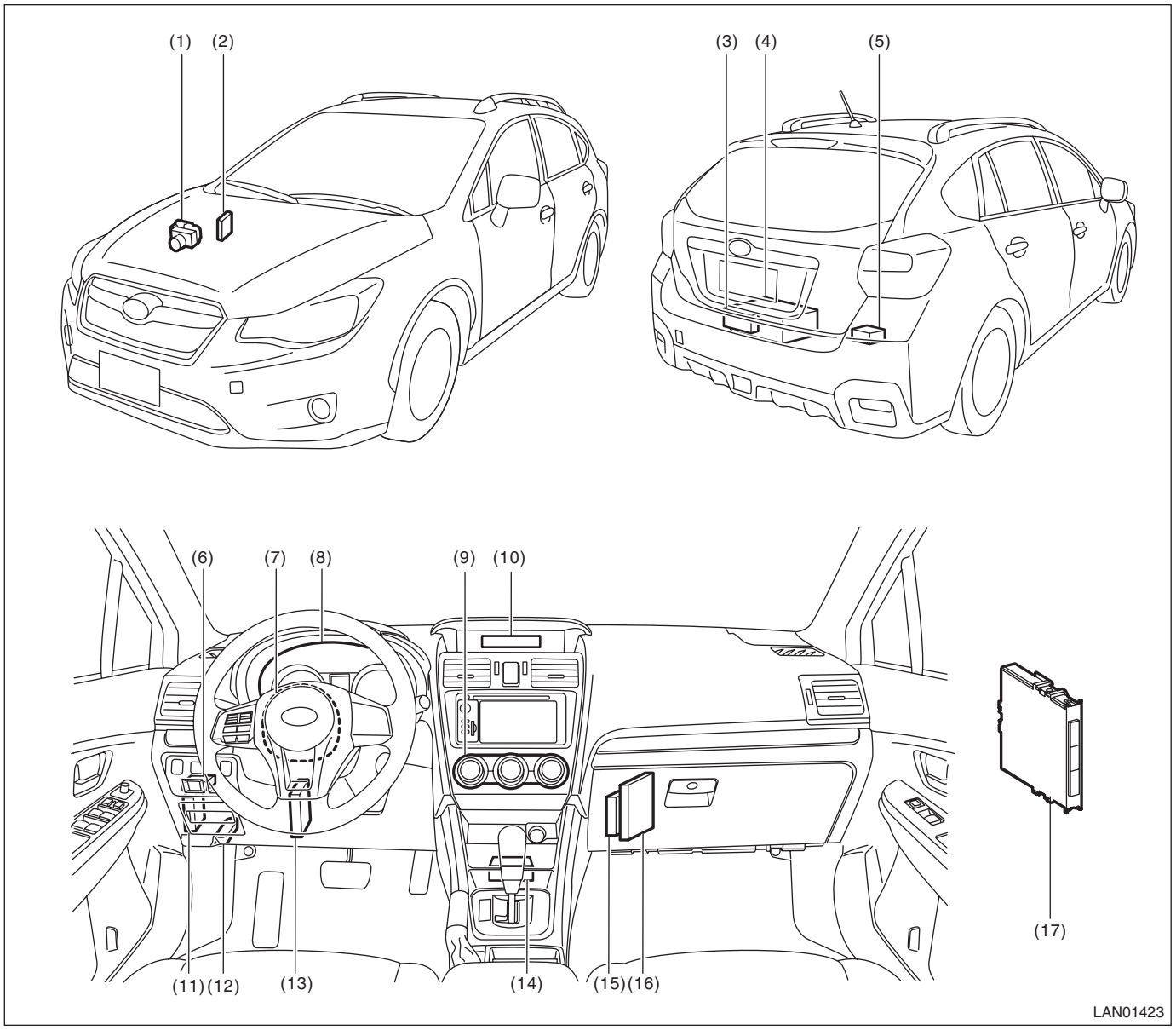

(1) VDC CM
(2) Power steering CM
(3) Drive motor CM
(4) High voltage battery (battery energy CM)
(5) Electric oil pump inverter
(6) Auto headlight beam leveler CM
(7) Steering angle sensor
(8) Combination meter
(9) A/C control panel
(10) MFD
(11) Body integrated unit
(12) Data link connector
(13) TCM
(14) Airbag CM
(15) Hybrid powertrain CM
(16) ECM
(17) Keyless access CM

5. Control Module I/O Signal

A: ELECTRICAL SPECIFICATION

- Body integrated unit

For I/O signals of the body integrated unit, refer to BODY CONTROL SYSTEM (DIAGNOSTICS). <Ref. to BC(diag)-6, Control Module I/O Signal.>

- Engine control module

For I/O signals of ECM, refer to ENGINE (DIAGNOSTICS). <Ref. to EN(H4DO HEV)(diag)-19, ENGINE CONTROL MODULE (ECM), ELECTRICAL SPECIFICATION, Control Module I/O Signal.>

- Transmission control module

For I/O signals of TCM, refer to AUTOMATIC TRANSMISSION (DIAGNOSTICS). <Ref. to CVT(HEV)(diag)-11, Transmission Control Module (TCM) I/O Signal.>

- VDC control module, steering angle sensor, yaw rate & G sensor

For the module I/O signals of VDC CM, steering angle sensor, and yaw rate & G sensor, refer to VEHICLE DYNAMICS CONTROL (VDC) (DIAGNOSTICS). <Ref. to VDC(diag)-12, Control Module I/O Signal.>

- Power steering CM

For unit I/O signals of power steering CM, refer to POWER ASSISTED SYSTEM (POWER STEERING) (DIAGNOSTICS). <Ref. to PS(diag)-11, Control Module I/O Signal.>

- A/C control panel

For unit I/O signals of A/C control panel, refer to HVAC SYSTEM (DIAGNOSTICS). <Ref. to AC(diag)-6, Auto A/C Control Module I/O Signal.>

- Combination meter

For I/O signals of combination meter, refer to INSTRUMENTATION/DRIVER INFO (DIAGNOSTICS). <Ref. to IDI(diag)-7, Control Module I/O Signal.>

- Airbag control module

For I/O signals of the airbag control module, refer to AIRBAG SYSTEM (DIAGNOSTICS). <Ref. to AB(diag)-20, Airbag Control Module I/O Signal.>

- High grade MFD

For I/O signals of high grade MFD, refer to INSTRUMENTATION/DRIVER INFO (DIAGNOSTICS). <Ref. to IDI(diag)-7, Control Module I/O Signal.>

- Keyless access CM

For I/O signals of keyless access CM, refer to KEYLESS ACCESS WITH PUSH BUTTON START SYSTEM (DIAGNOSTICS). <Ref. to KPS(diag)-12, Control Module I/O Signal.>

- Auto headlight beam leveler CM

For I/O signals of auto headlight beam leveler CM, refer to AUTO HEADLIGHT BEAM LEVELER SYSTEM (DIAGNOSTICS). <Ref. to AL(diag)-6, AUTO HEADLIGHT BEAM LEVELER CM, ELECTRICAL SPECIFICATION, Control Module I/O Signal.>

- Hybrid powertrain control module (HPCM)

For I/O signals of HPCM, refer to HEV (DIAGNOSTICS). <Ref. to HEV(diag)-10, HYBRID POWERTRAIN CONTROL MODULE (HPCM), ELECTRICAL SPECIFICATION, Control Module I/O Signal.>

- Drive motor control module (DMCM)

For I/O signals of DMCM, refer to HEV (DIAGNOSTICS). <Ref. to HEV(diag)-12, DRIVE MOTOR CONTROL MODULE (DMCM), ELECTRICAL SPECIFICATION, Control Module I/O Signal.>

- High voltage battery (battery energy control module (BECM))

For I/O signals of BECM, refer to HEV (DIAGNOSTICS). <Ref. to HEV(diag)-13, HIGH VOLTAGE BATTERY, ELECTRICAL SPECIFICATION, Control Module I/O Signal.>

- Data link connector

For I/O signals of data link connector, refer to ENGINE (DIAGNOSTICS). <Ref. to EN(H4DO HEV)(diag)-31, Data Link Connector.>

* CAN sleep state:

Hold on for approx. one minute with ignition OFF and the doors, trunk, rear gate all closed.

B: WIRING DIAGRAM

Refer to “CAN Communication System” in the wiring diagram. <Ref. to WI(HEV)-64, WIRING DIAGRAM, CAN Communication System.>

6. Subaru Select Monitor

A: OPERATION

For details of basic operations, refer to “PC application help for Subaru Select Monitor”.

B: COMMUNICATION FOR INITIALIZING IMPOSSIBLE

DIAGNOSIS:
Subaru Select Monitor communication line is open or shorted.
TROUBLE SYMPTOM:
Not communicable with Subaru Select Monitor.
WIRING DIAGRAM:
CAN communication system <Ref. to WI(HEV)-64, WIRING DIAGRAM, CAN Communication System.>

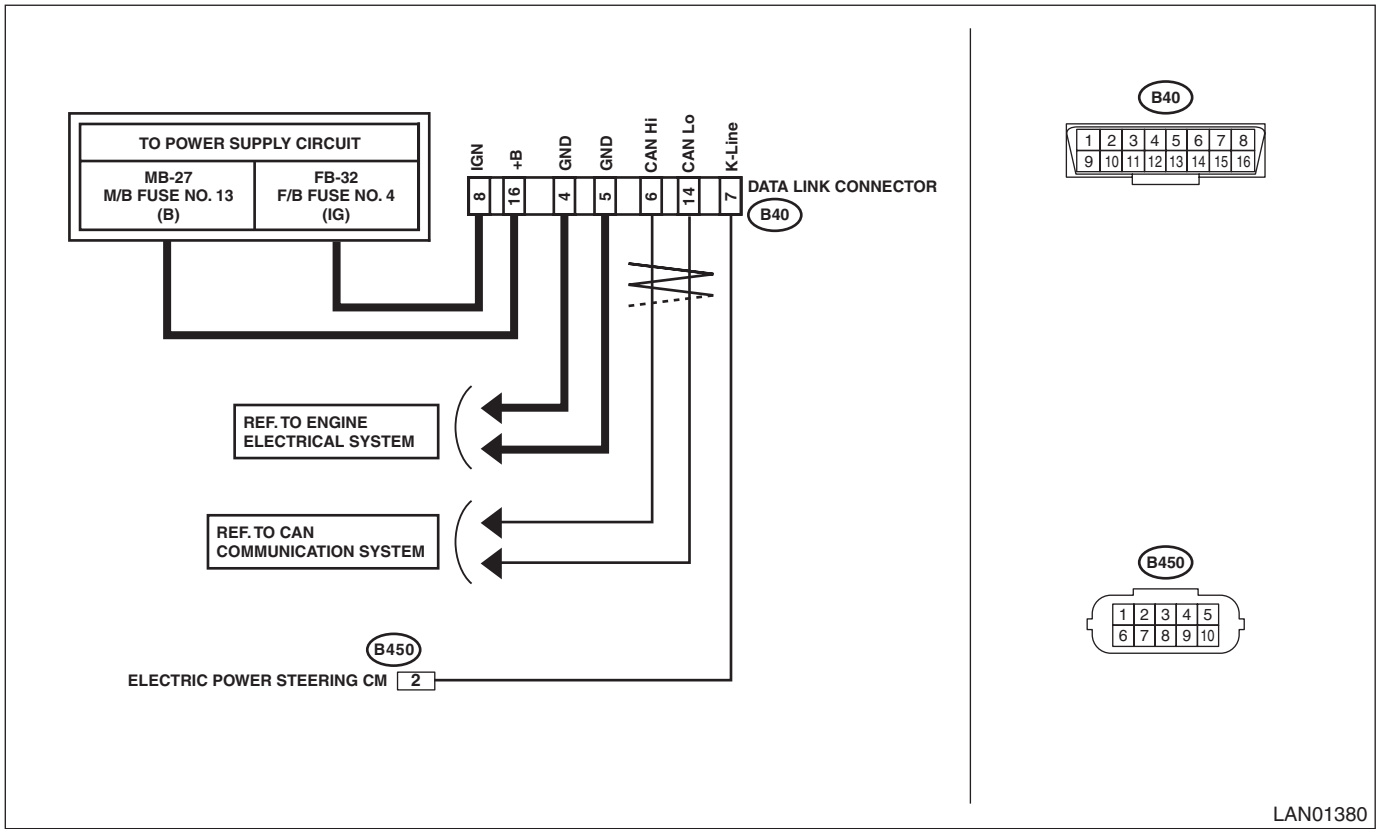

Step		Check	Yes	No
1	**CHECK SUBARU SELECT MONITOR.** 1) Connect the Subaru Select Monitor to another vehicle. 2) Check communication condition between Subaru Select Monitor and vehicle.	Is communication performed normally?	Go to step **2**.	Subaru Select Monitor unit or diagnosis cable is faulty. Or check the fuse on the vehicle side.

	Step	Check	Yes	No
2	**CHECK COMMUNICATION FOR INITIALIZING ERROR.** Perform the communication for initializing with the following modules by connecting the Subaru Select Monitor. (only for installed modules) • ECM • VDC CM • Body integrated unit • Combination meter • High grade MFD • A/C control panel • A/B CM • Keyless access CM • Auto headlight beam leveler CM • TCM • Hybrid powertrain CM • Drive motor CM • Battery energy CM (high voltage battery)	Is the communication possible with all modules?	Go to step **3**.	Perform the inspection using the check sheet of communication for initializing. <Ref. to LAN(HEV)(diag)-13, CHECK USING THE CHECK SHEET OF COMMUNICATION FOR INITIALIZING, COMMUNICATION FOR INITIALIZING IMPOSSIBLE, Subaru Select Monitor.>
3	**CHECK K-LINE.** 1) Establish the communication between Select Monitor and K-Line communication module. 2) Using a tester, check continuity between the modules that did not communicate with Select Monitor. ***Connector & terminal*** ***(B40) No. 7 — (B450) No. 2 (electric power steering):***	Is there continuity?	Go to step **4**.	Repair or replace the open circuit.
4	**CHECK K-LINE.** Using a tester, check continuity between K-line and chassis ground. ***Connector & terminal*** ***(B40) No. 7 — Chassis ground:***	Is there continuity?	Repair or replace the short circuit portion.	Go to step **5**.
5	**CHECK K-LINE.** Using a tester, check voltage between K-line and chassis ground. ***Connector & terminal*** ***(B40) No. 7 (+) — Chassis ground (–):***	Is the voltage 5 V or more with IG ON?	Repair or replace the short circuit portion.	Go to step **6**.
6	**CHECK K-LINE.** Use a tester to check for continuity in the ground circuit. ***Connector & terminal*** ***(B40) No. 4 — Chassis ground:*** ***(B40) No. 5 — Chassis ground:***	Is there continuity?	Go to step **8**.	Go to step **7**.
7	**CHECK K-LINE.** 1) Disconnect the ECM connector. 2) Use a tester to check for continuity in the ground circuit. ***Connector & terminal*** ***(B40) No. 4 — (B136) No. 2:***	Is there continuity?	Check ECM ground.	Repair or replace the open circuit.
8	**CHECK K-LINE.** 1) Turn the ignition switch to ON. 2) Using a tester, check the power supply of data link connector. ***Connector & terminal*** ***(B40) No. 8 (+) — Chassis ground (–):*** ***(B40) No. 16 (+) — Chassis ground (–):***	Is the voltage 10 V or more?	K-Line is normal. Check the power supply circuit of each module.	Check the power supply circuits to the data link connector.

1. CHECK USING THE CHECK SHEET OF COMMUNICATION FOR INITIALIZING

- **Network diagram**

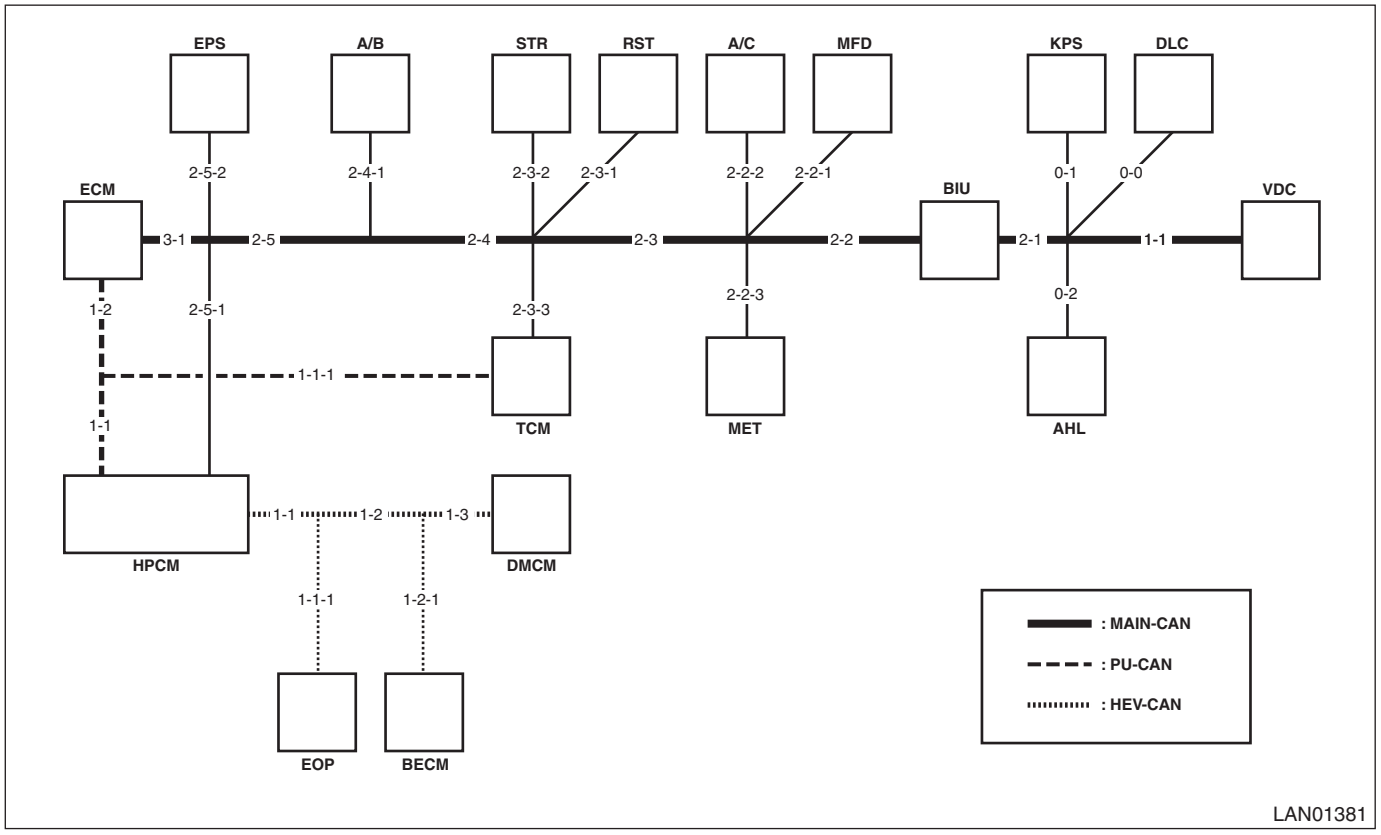

- **Check sheet of communication for initializing**

	(A)	(B)	(C)																												
			MAIN-CAN																					PU-CAN			HEV-CAN				
			1	2						3	0			2										1	1		1			1	
			1	1	2	3	4	5	6	1				2			3			4	5			1	2	1	1	2	3	1	2
			-	-	-	-	-	-	-	-	0	1	2	1	2	3	1	2	3	1	1	2	-	-	1	-	-	-	1	1
																	-	-					-	-	-					
VDC				-	-	-	-	-	-	-		-	-	-	-	-	-	-	-	-	-	-	-	-	-	-	-	-	-	-	-
BIU			-		-	-	-	-	-	-		-	-	-	-	-	-	-	-	-	-	-	-	-	-	-	-	-	-	-	-
MFD			-			-	-	-	-	-		-	-		-	-	-	-	-	-	-	-	-	-	-	-	-	-	-	-	-
A/C			-			-	-	-	-	-		-	-	-		-	-	-	-	-	-	-	-	-	-	-	-	-	-	-	-
MET			-			-	-	-	-	-		-	-	-	-		-	-	-	-	-	-	-	-	-	-	-	-	-	-	-
RST		-	-	-	-	-	-	-	-	-	-	-	-	-	-	-	-	-	-	-	-	-	-	-	-	-	-	-	-	-	-
STR		-	-	-	-	-	-	-	-	-	-	-	-	-	-	-	-	-	-	-	-	-	-	-	-	-	-	-	-	-	-
TCM			-				-	-	-	-		-	-	-	-	-	-	-		-	-	-	-	-	-	-	-	-	-	-	-
A/B			-					-	-	-		-	-	-	-	-	-	-	-		-	-	-	-	-	-	-	-	-	-	-
HPCM			-						-	-		-	-	-	-	-	-	-	-	-		-	-	-	-	-	-	-	-	-	-
EPS		-	-	-	-	-	-	-	-	-	-	-	-	-	-	-	-	-	-	-	-	-	-	-	-	-	-	-	-	-	-
ECM			-									-	-	-	-	-	-	-	-	-	-	-	-	-	-	-	-	-	-	-	-
KPS			-	-	-	-	-	-	-	-			-	-	-	-	-	-	-	-	-	-	-	-	-	-	-	-	-	-	-
AHL			-	-	-	-	-	-	-	-		-		-	-	-	-	-	-	-	-	-	-	-	-	-	-	-	-	-	-
EOP			-							-		-	-	-	-	-	-	-	-	-		-	-	-	-		-	-		-
BECM			-							-		-	-	-	-	-	-	-	-	-		-	-	-	-			-	-	
DMCM			-							-		-	-	-	-	-	-	-	-	-		-	-	-	-				-	-

LAN01382

(A) Installation check
(B) Communication initialization
(C) Wiring location

VDC: VDC CM
BIU: Body integrated unit
MFD: High grade MFD
A/C: A/C control panel
MET: Combination meter
RST: Remote engine starter CM
STR: Steering angle sensor
TCM: Transmission CM
A/B: Airbag CM

HPCM: Hybrid powertrain CM
EPS: Power steering CM
ECM: Engine CM
KPS: Keyless access CM
AHL: Auto headlight beam leveler CM
EOP: Electric oil pump
BECM: Battery energy CM (high voltage battery)
DMCM: Drive motor CM

1) Module installation check
(1) Write "-" marks in the field for installation check if the vehicle to be inspected does not have relevant module.
(2) Write "-" marks in all blank fields on the same row that the "-" mark has filled in.

NOTE:
Example of writing <Ref. to LAN(HEV)(diag)-16, EXAMPLE OF WRITING FOR THE CHECK SHEET OF COMMUNICATION FOR INITIALIZING, COMMUNICATION FOR INITIALIZING IMPOSSIBLE, Subaru Select Monitor.>

2) SSM communication initialization check
(1) Write "○" marks in the field for communication initialization if the module succeeded in the communication for initializing with Select Monitor.
If the communication with all modules is not possible, go to 3).
(2) Write "○" marks in all blank fields on the same row that the "○" mark has filled in.
(3) When at least one field in a column of wiring location is filled with the "○" mark, then the wiring for that location is normal. Write "○" marks in all blank fields on the same column that the "○" mark has filled in under the circled number.
(4) Check the open circuit of the modules which have no "○" mark in their columns of the wiring location in ascending order (closest to the data link connector first). (only for installed modules)
(5) If the communication is not possible after checking all harnesses, check the module power supply line.
(6) Perform the basic diagnostic procedure of the system if the power supply line is normal.
(7) Replace the module if the communication is not possible even after performing the basic diagnostic procedure.

NOTE:
• Example of writing <Ref. to LAN(HEV)(diag)-16, EXAMPLE OF WRITING FOR THE CHECK SHEET OF COMMUNICATION FOR INITIALIZING, COMMUNICATION FOR INITIALIZING IMPOSSIBLE, Subaru Select Monitor.>
• Inspection using the communication for initializing of Subaru Select Monitor cannot be used to diagnose the wiring location marked with "-". Example of DTC data not received <Ref. to LAN(HEV)(diag)-92, EXAMPLE OF DTC DATA NOT RECEIVED, LIST, List of Diagnostic Trouble Code (DTC).> and DTC matrix <Ref. to LAN(HEV)(diag)-95, DTC MATRIX, LIST, List of Diagnostic Trouble Code (DTC).> should be used to identify the faulty portion.

3) SSM communication initialization check (impossible to communicate with all modules)

NOTE:
Perform inspection regarding the trouble mode indicating that all CAN modules do not communicate. If at least one module becomes possible to communicate, return to 2).
(1) Check for the short circuit to ground. <Ref. to LAN(HEV)(diag)-41, GROUND SHORT INSPECTION (MAIN-CAN), INSPECTION, CAN Communication Circuit Check.> If it is normal, go to the next.
(2) Check for the short circuit to battery. <Ref. to LAN(HEV)(diag)-43, BATTERY SHORT INSPECTION (MAIN-CAN), INSPECTION, CAN Communication Circuit Check.> If it is normal, go to the next.
(3) Perform the inspection for the resistance of 52 Ω or less (short between wires). <Ref. to LAN(HEV)(diag)-47, 52 Ω OR LESS, INSPECTION, CAN Communication Circuit Check.> If it is normal, go to the next.
(4) Check for the open circuit of data link connector (No. 0 - 0) in network diagram.

2. EXAMPLE OF WRITING FOR THE CHECK SHEET OF COMMUNICATION FOR INITIALIZING

- When MAIN-CAN 0-0 is open

NOTE:
Perform inspection by referring to the SSM communication initialization check (impossible to communicate with all modules).

	(A)	(B)	(C)																												
			MAIN-CAN																						PU-CAN			HEV-CAN				
			1	2						3	0			2											1		1	1			1	
			1	1	2	3	4	5	6	1				2			3			4	5				1	2	1	1	2	3	1	2
			-	-	-	-	-	-	-	-	0	1	2	1	2	3	1	2	3	1	1	2	-	-	1	-	-	-	1	1
																	-	-					-	-	-					
VDC	○	×		-	-	-	-	-	-	-		-	-	-	-	-	-	-	-	-	-	-	-	-	-	-	-	-	-	-	-
BIU	○	×	-		-	-	-	-	-	-		-	-	-	-	-	-	-	-	-	-	-	-	-	-	-	-	-	-	-	-
MFD	○	×	-			-	-	-	-	-		-	-		-	-	-	-	-	-	-	-	-	-	-	-	-	-	-	-	-
A/C	○	×	-			-	-	-	-	-		-	-	-		-	-	-	-	-	-	-	-	-	-	-	-	-	-	-	-
MET	○	×	-			-	-	-	-	-		-	-	-	-		-	-	-	-	-	-	-	-	-	-	-	-	-	-	-
RST	○	-	-	-	-	-	-	-	-	-	-	-	-	-	-	-	-	-	-	-	-	-	-	-	-	-	-	-	-	-	-
STR	○	-	-	-	-	-	-	-	-	-	-	-	-	-	-	-	-	-	-	-	-	-	-	-	-	-	-	-	-	-	-
TCM	○	×	-				-	-	-	-		-	-	-	-	-	-	-		-	-	-	-	-	-	-	-	-	-	-	-
A/B	○	×	-					-	-	-		-	-	-	-	-	-	-	-		-	-	-	-	-	-	-	-	-	-	-
HPCM	○	×	-						-	-		-	-	-	-	-	-	-	-	-		-	-	-	-	-	-	-	-	-	-
EPS	○	-	-	-	-	-	-	-	-	-	-	-	-	-	-	-	-	-	-	-	-	-	-	-	-	-	-	-	-	-	-
ECM	○	×	-									-	-	-	-	-	-	-	-	-	-	-	-	-	-	-	-	-	-	-	-
KPS	○	×	-	-	-	-	-	-	-	-			-	-	-	-	-	-	-	-	-	-	-	-	-	-	-	-	-	-	-
AHL	○	×	-	-	-	-	-	-	-	-		-		-	-	-	-	-	-	-	-	-	-	-	-	-	-	-	-	-	-
EOP	○	×	-							-		-	-	-	-	-	-	-	-	-		-	-	-	-		-	-		-
BECM	○	×	-							-		-	-	-	-	-	-	-	-	-		-	-	-	-			-	-	
DMCM	○	×	-							-		-	-	-	-	-	-	-	-	-		-	-	-	-				-	-

LAN01383

- When MAIN-CAN 0-1 is open

	(A)	(B)	(C)																												
			MAIN-CAN																					PU-CAN			HEV-CAN				
			1	2						3	0			2										1	1	1			1		
			1	1	2	3	4	5	6	1				2			3			4	5				1	2	1	2	3	1	2
			-	-	-	-	-	-	-	-	0	1	2	1	2	3	1	2	3	1	1	2	-	-	1	-	-	-	1	1
	○	○	○	○	○	○	○	○	○	○		○	○	○	○	-	-	○	○	○	○	-	-	-	○	○	○	○	○
VDC	○	○	○	-	-	-	-	-	-	-	○	-	-	-	-	-	-	-	-	-	-	-	-	-	-	-	-	-	-	-
BIU	○	○	-	○	-	-	-	-	-	-	○	-	-	-	-	-	-	-	-	-	-	-	-	-	-	-	-	-	-	-
MFD	○	○	-	○	○	-	-	-	-	-	○	-	-	○	-	-	-	-	-	-	-	-	-	-	-	-	-	-	-	-
A/C	○	○	-	○	○	-	-	-	-	-	○	-	-	-	○	-	-	-	-	-	-	-	-	-	-	-	-	-	-	-
MET	○	○	-	○	○	-	-	-	-	-	○	-	-	-	-	○	-	-	-	-	-	-	-	-	-	-	-	-	-	-
RST	○	-	-	-	-	-	-	-	-	-	-	-	-	-	-	-	-	-	-	-	-	-	-	-	-	-	-	-	-	-
STR	○	-	-	-	-	-	-	-	-	-	-	-	-	-	-	-	-	-	-	-	-	-	-	-	-	-	-	-	-	-
TCM	○	○	-	○	○	○	-	-	-	-	○	-	-	-	-	-	-	-	○	-	-	-	-	-	-	-	-	-	-	-
A/B	○	○	-	○	○	○	○	-	-	-	○	-	-	-	-	-	-	-	-	○	-	-	-	-	-	-	-	-	-	-
HPCM	○	○	-	○	○	○	○	○	-	-	○	-	-	-	-	-	-	-	-	-	○	-	-	-	-	-	-	-	-	-
EPS	○	-	-	-	-	-	-	-	-	-	-	-	-	-	-	-	-	-	-	-	-	-	-	-	-	-	-	-	-	-
ECM	○	○	-	○	○	○	○	○	○	○	○	-	-	-	-	-	-	-	-	-	-	-	-	-	-	-	-	-	-	-
KPS	○	✕	-	-	-	-	-	-	-	-	○		-	-	-	-	-	-	-	-	-	-	-	-	-	-	-	-	-	-
AHL	○	○	-	-	-	-	-	-	-	-	○	-	○	-	-	-	-	-	-	-	-	-	-	-	-	-	-	-	-	-
EOP	○	○	-	○	○	○	○	○	○	-	○	-	-	-	-	-	-	-	-	-	○	-	-	-	-	○	-	-	○	-
BECM	○	○	-	○	○	○	○	○	○	-	○	-	-	-	-	-	-	-	-	-	○	-	-	-	-	○	○	-	-	○
DMCM	○	○	-	○	○	○	○	○	○	-	○	-	-	-	-	-	-	-	-	-	○	-	-	-	-	○	○	○	-	-

LAN01384

- When MAIN-CAN 0-2 is open

	(A)	(B)	(C)																												
			MAIN-CAN																					PU-CAN			HEV-CAN				
			1	2						3	0			2										1	1	1			1		
			1	1	2	3	4	5	6	1				2			3			4	5				1	2	1	2	3	1	2
			-	-	-	-	-	-	-	-	0	1	2	1	2	3	1	2	3	1	1	2	-	-	1	-	-	-	1	1
	○	○	○	○	○	○	○	○	○	○	○			○	○	○	-	-	○	○	○	○	-	-	-	○	○	○	○	○
VDC	○	○	○	-	-	-	-	-	-	-	○	-	-	-	-	-	-	-	-	-	-	-	-	-	-	-	-	-	-	-
BIU	○	○	-	○	-	-	-	-	-	-	○	-	-	-	-	-	-	-	-	-	-	-	-	-	-	-	-	-	-	-
MFD	○	○	-	○	○	-	-	-	-	-	○	-	-	○	-	-	-	-	-	-	-	-	-	-	-	-	-	-	-	-
A/C	○	○	-	○	○	-	-	-	-	-	○	-	-	-	○	-	-	-	-	-	-	-	-	-	-	-	-	-	-	-
MET	○	○	-	○	○	-	-	-	-	-	○	-	-	-	-	○	-	-	-	-	-	-	-	-	-	-	-	-	-	-
RST	○	-	-	-	-	-	-	-	-	-	-	-	-	-	-	-	-	-	-	-	-	-	-	-	-	-	-	-	-	-
STR	○	-	-	-	-	-	-	-	-	-	-	-	-	-	-	-	-	-	-	-	-	-	-	-	-	-	-	-	-	-
TCM	○	○	-	○	○	○	-	-	-	-	○	-	-	-	-	-	-	-	○	-	-	-	-	-	-	-	-	-	-	-
A/B	○	○	-	○	○	○	○	-	-	-	○	-	-	-	-	-	-	-	-	○	-	-	-	-	-	-	-	-	-	-
HPCM	○	○	-	○	○	○	○	○	-	-	○	-	-	-	-	-	-	-	-	-	○	-	-	-	-	-	-	-	-	-
EPS	○	-	-	-	-	-	-	-	-	-	-	-	-	-	-	-	-	-	-	-	-	-	-	-	-	-	-	-	-	-
ECM	○	○	-	○	○	○	○	○	○	○	○	-	-	-	-	-	-	-	-	-	-	-	-	-	-	-	-	-	-	-
KPS	○	○	-	-	-	-	-	-	-	-	○	○	-	-	-	-	-	-	-	-	-	-	-	-	-	-	-	-	-	-
AHL	○	✕	-	-	-	-	-	-	-	-	○	-		-	-	-	-	-	-	-	-	-	-	-	-	-	-	-	-	-
EOP	○	○	-	○	○	○	○	○	○	-	○	-	-	-	-	-	-	-	-	-	○	-	-	-	-	○	-	-	○	-
BECM	○	○	-	○	○	○	○	○	○	-	○	-	-	-	-	-	-	-	-	-	○	-	-	-	-	○	○	-	-	○
DMCM	○	○	-	○	○	○	○	○	○	-	○	-	-	-	-	-	-	-	-	-	○	-	-	-	-	○	○	○	-	-

LAN01385

- When MAIN-CAN 1-1 is open

	(A)	(B)	(C)																												
			MAIN-CAN																						PU-CAN		HEV-CAN					
			1	2						3	0			2											1	1	1			1	
			1	1	2	3	4	5	6	1				2			3			4	5				1	2	1	2	3	1	2
			-	-	-	-	-	-	-	-	0	1	2	1	2	3	1	2	3	1	1	2	-	-	1	-	-	-	1	1
				○	○	○	○	○	○	○	○	○	○	○	○	○	-	-	○	○	○	○	-	-	-	○	○	○	○	○
VDC	○	╳		-	-	-	-	-	-	-	○	-	-	-	-	-	-	-	-	-	-	-	-	-	-	-	-	-	-	-	-
BIU	○	○	-	○	-	-	-	-	-	-	○	-	-	-	-	-	-	-	-	-	-	-	-	-	-	-	-	-	-	-	-
MFD	○	○	-	○	○	-	-	-	-	-	○	-	-	○	-	-	-	-	-	-	-	-	-	-	-	-	-	-	-	-	-
A/C	○	○	-	○	○	-	-	-	-	-	○	-	-	-	○	-	-	-	-	-	-	-	-	-	-	-	-	-	-	-	-
MET	○	○	-	○	○	-	-	-	-	-	○	-	-	-	-	○	-	-	-	-	-	-	-	-	-	-	-	-	-	-	-
RST	○	-	-	-	-	-	-	-	-	-	-	-	-	-	-	-	-	-	-	-	-	-	-	-	-	-	-	-	-	-	-
STR	○	-	-	-	-	-	-	-	-	-	-	-	-	-	-	-	-	-	-	-	-	-	-	-	-	-	-	-	-	-	-
TCM	○	○	-	○	○	○	-	-	-	-	○	-	-	-	-	-	-	-	○	-	-	-	-	-	-	-	-	-	-	-	-
A/B	○	○	-	○	○	○	○	-	-	-	○	-	-	-	-	-	-	-	-	○	-	-	-	-	-	-	-	-	-	-	-
HPCM	○	○	-	○	○	○	○	○	-	-	○	-	-	-	-	-	-	-	-	-	○	-	-	-	-	-	-	-	-	-	-
EPS	○	-	-	-	-	-	-	-	-	-	-	-	-	-	-	-	-	-	-	-	-	-	-	-	-	-	-	-	-	-	-
ECM	○	○	-	○	○	○	○	○	○	○	○	-	-	-	-	-	-	-	-	-	-	-	-	-	-	-	-	-	-	-	-
KPS	○	○	-	-	-	-	-	-	-	-	○	○	-	-	-	-	-	-	-	-	-	-	-	-	-	-	-	-	-	-	-
AHL	○	○	-	-	-	-	-	-	-	-	○	-	○	-	-	-	-	-	-	-	-	-	-	-	-	-	-	-	-	-	-
EOP	○	○	-	○	○	○	○	○	○	-	○	-	-	-	-	-	-	-	-	-	○	-	-	-	-	○	-	-	○	-
BECM	○	○	-	○	○	○	○	○	○	-	○	-	-	-	-	-	-	-	-	-	○	-	-	-	-	○	○	-	-	○
DMCM	○	○	-	○	○	○	○	○	○	-	○	-	-	-	-	-	-	-	-	-	○	-	-	-	-	○	○	○	-	-

LAN01386

- When MAIN-CAN 2-1 is open

	(A)	(B)	(C)																												
			MAIN-CAN																						PU-CAN		HEV-CAN					
			1	2						3	0			2											1	1	1			1	
			1	1	2	3	4	5	6	1				2			3			4	5				1	2	1	2	3	1	2
			-	-	-	-	-	-	-	-	0	1	2	1	2	3	1	2	3	1	1	2	-	-	1	-	-	-	1	1
			○								○	○	○				-	-					-	-	-					
VDC	○	○	○	-	-	-	-	-	-	-	○	-	-	-	-	-	-	-	-	-	-	-	-	-	-	-	-	-	-	-	-
BIU	○	╳	-		-	-	-	-	-	-	○	-	-	-	-	-	-	-	-	-	-	-	-	-	-	-	-	-	-	-	-
MFD	○	╳	-			-	-	-	-	-	○	-	-		-	-	-	-	-	-	-	-	-	-	-	-	-	-	-	-	-
A/C	○	╳	-			-	-	-	-	-	○	-	-	-		-	-	-	-	-	-	-	-	-	-	-	-	-	-	-	-
MET	○	╳	-			-	-	-	-	-	○	-	-	-	-		-	-	-	-	-	-	-	-	-	-	-	-	-	-	-
RST	○	-	-	-	-	-	-	-	-	-	-	-	-	-	-	-	-	-	-	-	-	-	-	-	-	-	-	-	-	-	-
STR	○	-	-	-	-	-	-	-	-	-	-	-	-	-	-	-	-	-	-	-	-	-	-	-	-	-	-	-	-	-	-
TCM	○	╳	-				-	-	-	-	○	-	-	-	-	-	-	-		-	-	-	-	-	-	-	-	-	-	-	-
A/B	○	╳	-					-	-	-	○	-	-	-	-	-	-	-	-		-	-	-	-	-	-	-	-	-	-	-
HPCM	○	╳	-						-	-	○	-	-	-	-	-	-	-	-	-		-	-	-	-	-	-	-	-	-	-
EPS	○	-	-	-	-	-	-	-	-	-	-	-	-	-	-	-	-	-	-	-	-	-	-	-	-	-	-	-	-	-	-
ECM	○	╳	-								○	-	-	-	-	-	-	-	-	-	-	-	-	-	-	-	-	-	-	-	-
KPS	○	○	-	-	-	-	-	-	-	-	○	○	-	-	-	-	-	-	-	-	-	-	-	-	-	-	-	-	-	-	-
AHL	○	○	-	-	-	-	-	-	-	-	○	-	○	-	-	-	-	-	-	-	-	-	-	-	-	-	-	-	-	-	-
EOP	○	╳	-							-	○	-	-	-	-	-	-	-	-	-		-	-	-	-		-	-		-	-
BECM	○	╳	-							-	○	-	-	-	-	-	-	-	-	-		-	-	-	-			-	-		
DMCM	○	╳	-							-	○	-	-	-	-	-	-	-	-	-		-	-	-	-				-	-	

LAN01387

- When MAIN-CAN 2-2 is open

	(A)	(B)	(C)																												
			MAIN-CAN																					PU-CAN			HEV-CAN				
			1	2						3	0			2										1	1	1			1		
			1	1	2	3	4	5	6	1				2			3			4	5			1	2	1	1	2	3	1	2
			-	-	-	-	-	-	-	-	0	1	2	1	2	3	1	2	3	1	1	2	-	-	1	-	-	-	1	1
			○	○							○	○	○				-	-					-	-	-					
VDC	○	○	○	-	-	-	-	-	-	-	○	-	-	-	-	-	-	-	-	-	-	-	-	-	-	-	-	-	-	-	-	-
BIU	○	○	-	○	-	-	-	-	-	-	○	-	-	-	-	-	-	-	-	-	-	-	-	-	-	-	-	-	-	-	-	-
MFD	○	×	-	○		-	-	-	-	-	○	-	-		-	-	-	-	-	-	-	-	-	-	-	-	-	-	-	-	-	-
A/C	○	×	-	○		-	-	-	-	-	○	-	-	-		-	-	-	-	-	-	-	-	-	-	-	-	-	-	-	-	-
MET	○	×	-	○		-	-	-	-	-	○	-	-	-	-		-	-	-	-	-	-	-	-	-	-	-	-	-	-	-	-
RST	○	-	-	-	-	-	-	-	-	-	-	-	-	-	-	-	-	-	-	-	-	-	-	-	-	-	-	-	-	-	-	-
STR	○	-	-	-	-	-	-	-	-	-	-	-	-	-	-	-	-	-	-	-	-	-	-	-	-	-	-	-	-	-	-	-
TCM	○	×	-	○			-	-	-	-	○	-	-	-	-	-	-	-		-	-	-	-	-	-	-	-	-	-	-	-	-
A/B	○	×	-	○				-	-	-	○	-	-	-	-	-	-	-	-		-	-	-	-	-	-	-	-	-	-	-	-
HPCM	○	×	-	○					-	-	○	-	-	-	-	-	-	-	-	-		-	-	-	-	-	-	-	-	-	-	-
EPS	○	-	-	-	-	-	-	-	-	-	-	-	-	-	-	-	-	-	-	-	-	-	-	-	-	-	-	-	-	-	-	-
ECM	○	×	-	○							○	-	-	-	-	-	-	-	-	-	-	-	-	-	-	-	-	-	-	-	-	-
KPS	○	○	-	-	-	-	-	-	-	-	○	○	-	-	-	-	-	-	-	-	-	-	-	-	-	-	-	-	-	-	-	-
AHL	○	○	-	-	-	-	-	-	-	-	○	-	○	-	-	-	-	-	-	-	-	-	-	-	-	-	-	-	-	-	-	-
EOP	○	×	-	○						-	○	-	-	-	-	-	-	-	-	-		-	-	-	-		-	-		-	-	-
BECM	○	×	-	○						-	○	-	-	-	-	-	-	-	-	-		-	-	-	-			-	-		-	
DMCM	○	×	-	○						-	○	-	-	-	-	-	-	-	-	-		-	-	-	-				-	-	-	-

LAN01388

- When MAIN-CAN 2-2-1 is open

	(A)	(B)	(C)																												
			MAIN-CAN																					PU-CAN			HEV-CAN				
			1	2						3	0			2										1	1	1			1		
			1	1	2	3	4	5	6	1				2			3			4	5			1	2	1	1	2	3	1	2
			-	-	-	-	-	-	-	-	0	1	2	1	2	3	1	2	3	1	1	2	-	-	1	-	-	-	1	1
			○	○	○	○	○	○	○	○	○	○	○		○	○	-	-	○	○	○	○	-	-	-	○	○	○	○	○
VDC	○	○	○	-	-	-	-	-	-	-	○	-	-	-	-	-	-	-	-	-	-	-	-	-	-	-	-	-	-	-	-	-
BIU	○	○	-	○	-	-	-	-	-	-	○	-	-	-	-	-	-	-	-	-	-	-	-	-	-	-	-	-	-	-	-	-
MFD	○	×	-	○	○	-	-	-	-	-	○	-	-		-	-	-	-	-	-	-	-	-	-	-	-	-	-	-	-	-	-
A/C	○	○	-	○	○	-	-	-	-	-	○	-	-	-	○	-	-	-	-	-	-	-	-	-	-	-	-	-	-	-	-	-
MET	○	○	-	○	○	-	-	-	-	-	○	-	-	-	-	○	-	-	-	-	-	-	-	-	-	-	-	-	-	-	-	-
RST	○	-	-	-	-	-	-	-	-	-	-	-	-	-	-	-	-	-	-	-	-	-	-	-	-	-	-	-	-	-	-	-
STR	○	-	-	-	-	-	-	-	-	-	-	-	-	-	-	-	-	-	-	-	-	-	-	-	-	-	-	-	-	-	-	-
TCM	○	○	-	○	○	○	-	-	-	-	○	-	-	-	-	-	-	-	○	-	-	-	-	-	-	-	-	-	-	-	-	-
A/B	○	○	-	○	○	○	○	-	-	-	○	-	-	-	-	-	-	-	-	○	-	-	-	-	-	-	-	-	-	-	-	-
HPCM	○	○	-	○	○	○	○	○	-	-	○	-	-	-	-	-	-	-	-	-	○	-	-	-	-	-	-	-	-	-	-	-
EPS	○	-	-	-	-	-	-	-	-	-	-	-	-	-	-	-	-	-	-	-	-	-	-	-	-	-	-	-	-	-	-	-
ECM	○	○	-	○	○	○	○	○	○	○	○	-	-	-	-	-	-	-	-	-	-	-	-	-	-	-	-	-	-	-	-	-
KPS	○	○	-	-	-	-	-	-	-	-	○	○	-	-	-	-	-	-	-	-	-	-	-	-	-	-	-	-	-	-	-	-
AHL	○	○	-	-	-	-	-	-	-	-	○	-	○	-	-	-	-	-	-	-	-	-	-	-	-	-	-	-	-	-	-	-
EOP	○	○	-	○	○	○	○	○	○	-	○	-	-	-	-	-	-	-	-	-	○	-	-	-	-	○	-	-	○	-		
BECM	○	○	-	○	○	○	○	○	○	-	○	-	-	-	-	-	-	-	-	-	○	-	-	-	-	○	○	-	-	○		
DMCM	○	○	-	○	○	○	○	○	○	-	○	-	-	-	-	-	-	-	-	-	○	-	-	-	-	○	○	○	-	-		

LAN01389

- When MAIN-CAN 2-2-2 is open

	(A)	(B)	(C)																												
			MAIN-CAN																					PU-CAN			HEV-CAN				
			1	2						3	0			2										1	1	1			1		
			1	1	2	3	4	5	6	1				2			3			4	5				1	2	1	2	3	1	2
			-	-	-	-	-	-	-	-	0	1	2	1	2	3	1	2	3	1	1	2	-	-	1	-	-	-	1	1
	○	○	○	○	○	○	○	○	○	○	○	○	○	○		○	-	-	○	○	○	○	-	-	-	○	○	○	○	○
VDC	○	○	○	-	-	-	-	-	-	-	○	-	-	-	-	-	-	-	-	-	-	-	-	-	-	-	-	-	-	-
BIU	○	○	-	○	-	-	-	-	-	-	○	-	-	-	-	-	-	-	-	-	-	-	-	-	-	-	-	-	-	-
MFD	○	○	-	○	○	-	-	-	-	-	○	-	-	○	-	-	-	-	-	-	-	-	-	-	-	-	-	-	-	-
A/C	○	╳	-	○	○	-	-	-	-	-	○	-	-	-		-	-	-	-	-	-	-	-	-	-	-	-	-	-	-
MET	○	○	-	○	○	-	-	-	-	-	○	-	-	-	-	○	-	-	-	-	-	-	-	-	-	-	-	-	-	-
RST	○	-	-	-	-	-	-	-	-	-	-	-	-	-	-	-	-	-	-	-	-	-	-	-	-	-	-	-	-	-
STR	○	-	-	-	-	-	-	-	-	-	-	-	-	-	-	-	-	-	-	-	-	-	-	-	-	-	-	-	-	-
TCM	○	○	-	○	○	○	-	-	-	-	○	-	-	-	-	-	-	-	○	-	-	-	-	-	-	-	-	-	-	-
A/B	○	○	-	○	○	○	○	-	-	-	○	-	-	-	-	-	-	-	-	○	-	-	-	-	-	-	-	-	-	-
HPCM	○	○	-	○	○	○	○	○	-	-	○	-	-	-	-	-	-	-	-	-	○	-	-	-	-	-	-	-	-	-
EPS	○	-	-	-	-	-	-	-	-	-	-	-	-	-	-	-	-	-	-	-	-	-	-	-	-	-	-	-	-	-
ECM	○	○	-	○	○	○	○	○	○	○	○	-	-	-	-	-	-	-	-	-	-	-	-	-	-	-	-	-	-	-
KPS	○	○	-	-	-	-	-	-	-	-	○	○	-	-	-	-	-	-	-	-	-	-	-	-	-	-	-	-	-	-
AHL	○	○	-	-	-	-	-	-	-	-	○	-	○	-	-	-	-	-	-	-	-	-	-	-	-	-	-	-	-	-
EOP	○	○	-	○	○	○	○	○	○	-	○	-	-	-	-	-	-	-	-	-	○	-	-	-	-	○	-	-	○	-
BECM	○	○	-	○	○	○	○	○	○	-	○	-	-	-	-	-	-	-	-	-	○	-	-	-	-	○	○	-	-	○
DMCM	○	○	-	○	○	○	○	○	○	-	○	-	-	-	-	-	-	-	-	-	○	-	-	-	-	○	○	○	-	-

LAN01390

- When MAIN-CAN 2-2-3 is open

	(A)	(B)	(C)																												
			MAIN-CAN																					PU-CAN			HEV-CAN				
			1	2						3	0			2										1	1	1			1		
			1	1	2	3	4	5	6	1				2			3			4	5				1	2	1	2	3	1	2
			-	-	-	-	-	-	-	-	0	1	2	1	2	3	1	2	3	1	1	2	-	-	1	-	-	-	1	1
	○	○	○	○	○	○	○	○	○	○	○	○	○	○	○		-	-	○	○	○	○	-	-	-	○	○	○	○	○
VDC	○	○	○	-	-	-	-	-	-	-	○	-	-	-	-	-	-	-	-	-	-	-	-	-	-	-	-	-	-	-
BIU	○	○	-	○	-	-	-	-	-	-	○	-	-	-	-	-	-	-	-	-	-	-	-	-	-	-	-	-	-	-
MFD	○	○	-	○	○	-	-	-	-	-	○	-	-	○	-	-	-	-	-	-	-	-	-	-	-	-	-	-	-	-
A/C	○	○	-	○	○	-	-	-	-	-	○	-	-	-	○	-	-	-	-	-	-	-	-	-	-	-	-	-	-	-
MET	○	╳	-	○	○	-	-	-	-	-	○	-	-	-	-		-	-	-	-	-	-	-	-	-	-	-	-	-	-
RST	○	-	-	-	-	-	-	-	-	-	-	-	-	-	-	-	-	-	-	-	-	-	-	-	-	-	-	-	-	-
STR	○	-	-	-	-	-	-	-	-	-	-	-	-	-	-	-	-	-	-	-	-	-	-	-	-	-	-	-	-	-
TCM	○	○	-	○	○	○	-	-	-	-	○	-	-	-	-	-	-	-	○	-	-	-	-	-	-	-	-	-	-	-
A/B	○	○	-	○	○	○	○	-	-	-	○	-	-	-	-	-	-	-	-	○	-	-	-	-	-	-	-	-	-	-
HPCM	○	○	-	○	○	○	○	○	-	-	○	-	-	-	-	-	-	-	-	-	○	-	-	-	-	-	-	-	-	-
EPS	○	-	-	-	-	-	-	-	-	-	-	-	-	-	-	-	-	-	-	-	-	-	-	-	-	-	-	-	-	-
ECM	○	○	-	○	○	○	○	○	○	○	○	-	-	-	-	-	-	-	-	-	-	-	-	-	-	-	-	-	-	-
KPS	○	○	-	-	-	-	-	-	-	-	○	○	-	-	-	-	-	-	-	-	-	-	-	-	-	-	-	-	-	-
AHL	○	○	-	-	-	-	-	-	-	-	○	-	○	-	-	-	-	-	-	-	-	-	-	-	-	-	-	-	-	-
EOP	○	○	-	○	○	○	○	○	○	-	○	-	-	-	-	-	-	-	-	-	○	-	-	-	-	○	-	-	○	-
BECM	○	○	-	○	○	○	○	○	○	-	○	-	-	-	-	-	-	-	-	-	○	-	-	-	-	○	○	-	-	○
DMCM	○	○	-	○	○	○	○	○	○	-	○	-	-	-	-	-	-	-	-	-	○	-	-	-	-	○	○	○	-	-

LAN01391

- When MAIN-CAN 2-3 is open

	(A)	(B)	(C)																														
			MAIN-CAN																							PU-CAN			HEV-CAN					
			1	2						3	0			2												1	1	1			1		
			1	1	2	3	4	5	6	1				2			3			4	5				1	2	1	1	2	3	1	2
			-	-	-	-	-	-	-	-	0	1	2	1	2	3	1	2	3	1	1	2	-	-	1	-	-	-	1	1
			○	○	○						○	○	○	○	○	○	-	-					-	-	-					
VDC	○	○	○	-	-	-	-	-	-	-	○	-	-	-	-	-	-	-	-	-	-	-	-	-	-	-	-	-	-	-	-	-
BIU	○	○	-	○	-	-	-	-	-	-	○	-	-	-	-	-	-	-	-	-	-	-	-	-	-	-	-	-	-	-	-	-
MFD	○	○	-	○	○	-	-	-	-	-	○	-	-	○	-	-	-	-	-	-	-	-	-	-	-	-	-	-	-	-	-	-
A/C	○	○	-	○	○	-	-	-	-	-	○	-	-	-	○	-	-	-	-	-	-	-	-	-	-	-	-	-	-	-	-	-
MET	○	○	-	○	○	-	-	-	-	-	○	-	-	-	-	○	-	-	-	-	-	-	-	-	-	-	-	-	-	-	-	-
RST	○	-	-	-	-	-	-	-	-	-	-	-	-	-	-	-	-	-	-	-	-	-	-	-	-	-	-	-	-	-	-	-
STR	○	-	-	-	-	-	-	-	-	-	-	-	-	-	-	-	-	-	-	-	-	-	-	-	-	-	-	-	-	-	-	-
TCM	○	╳	-	○	○		-	-	-	-	○	-	-	-	-	-	-	-		-	-	-	-	-	-	-	-	-	-	-	-	-
A/B	○	╳	-	○	○			-	-	-	○	-	-	-	-	-	-	-	-		-	-	-	-	-	-	-	-	-	-	-	-
HPCM	○	╳	-	○	○				-	-	○	-	-	-	-	-	-	-	-	-		-	-	-	-	-	-	-	-	-	-	-
EPS	○	-	-	-	-	-	-	-	-	-	-	-	-	-	-	-	-	-	-	-	-	-	-	-	-	-	-	-	-	-	-	-
ECM	○	╳	-	○	○						○	-	-	-	-	-	-	-	-	-	-	-	-	-	-	-	-	-	-	-	-	-
KPS	○	○	-	-	-	-	-	-	-	-	○	○	-	-	-	-	-	-	-	-	-	-	-	-	-	-	-	-	-	-	-	-
AHL	○	○	-	-	-	-	-	-	-	-	○	-	○	-	-	-	-	-	-	-	-	-	-	-	-	-	-	-	-	-	-	-
EOP	○	╳	-	○	○					-	○	-	-	-	-	-	-	-	-	-		-	-	-	-		-	-		-
BECM	○	╳	-	○	○					-	○	-	-	-	-	-	-	-	-	-		-	-	-	-			-	-	
DMCM	○	╳	-	○	○					-	○	-	-	-	-	-	-	-	-	-		-	-	-	-				-	-

LAN01392

- When MAIN-CAN 2-3-1/2-3-2/2-5-2 is open

NOTE:
- Locations can be identified by the difference of data no-receive conditions between modules. <Ref. to LAN(HEV)(diag)-92, EXAMPLE OF DTC DATA NOT RECEIVED, LIST, List of Diagnostic Trouble Code (DTC).>
- If the remote engine starter does not operate even though no DTC has been detected, check the lines of the remote engine starter.

	(A)	(B)	(C)																												
			MAIN-CAN																					PU-CAN			HEV-CAN				
			1	2						3	0			2										1	1		1			1	
			1	1	2	3	4	5	6	1				2			3			4	5				1	2	1	1	2	3	1	2
			-	-	-	-	-	-	-	-	0	1	2	1	2	3	1	2	3	1	1	2	-	-	1	-	-	-	1	1
			○	○	○	○	○	○	○	○	○	○	○	○	○	○	-	-	○	○	○	○	-	-	-	○	○	○	○	○
VDC	○	○	○	-	-	-	-	-	-	-	○	-	-	-	-	-	-	-	-	-	-	-	-	-	-	-	-	-	-	-	-
BIU	○	○	-	○	-	-	-	-	-	-	○	-	-	-	-	-	-	-	-	-	-	-	-	-	-	-	-	-	-	-	-
MFD	○	○	-	○	○	-	-	-	-	-	○	-	-	○	-	-	-	-	-	-	-	-	-	-	-	-	-	-	-	-	-
A/C	○	○	-	○	○	-	-	-	-	-	○	-	-	-	○	-	-	-	-	-	-	-	-	-	-	-	-	-	-	-	-
MET	○	○	-	○	○	-	-	-	-	-	○	-	-	-	-	○	-	-	-	-	-	-	-	-	-	-	-	-	-	-	-
RST	○	-	-	-	-	-	-	-	-	-	-	-	-	-	-	-	-	-	-	-	-	-	-	-	-	-	-	-	-	-	-
STR	○	-	-	-	-	-	-	-	-	-	-	-	-	-	-	-	-	-	-	-	-	-	-	-	-	-	-	-	-	-	-
TCM	○	○	-	○	○	○	-	-	-	-	○	-	-	-	-	-	-	-	○	-	-	-	-	-	-	-	-	-	-	-	-
A/B	○	○	-	○	○	○	○	-	-	-	○	-	-	-	-	-	-	-	-	○	-	-	-	-	-	-	-	-	-	-	-
HPCM	○	○	-	○	○	○	○	○	-	-	○	-	-	-	-	-	-	-	-	-	○	-	-	-	-	-	-	-	-	-	-
EPS	○	-	-	-	-	-	-	-	-	-	-	-	-	-	-	-	-	-	-	-	-	-	-	-	-	-	-	-	-	-	-
ECM	○	○	-	○	○	○	○	○	○	○	○	-	-	-	-	-	-	-	-	-	-	-	-	-	-	-	-	-	-	-	-
KPS	○	○	-	-	-	-	-	-	-	-	○	○	-	-	-	-	-	-	-	-	-	-	-	-	-	-	-	-	-	-	-
AHL	○	○	-	-	-	-	-	-	-	-	○	-	○	-	-	-	-	-	-	-	-	-	-	-	-	-	-	-	-	-	-
EOP	○	○	-	○	○	○	○	○	○	-	○	-	-	-	-	-	-	-	-	-	○	-	-	-	-	○	-	-	○	-	-
BECM	○	○	-	○	○	○	○	○	○	-	○	-	-	-	-	-	-	-	-	-	○	-	-	-	-	○	○	-	-	-	○
DMCM	○	○	-	○	○	○	○	○	○	-	○	-	-	-	-	-	-	-	-	-	○	-	-	-	-	○	○	○	-	-	-

LAN01393

- When MAIN-CAN 2-3-3 is open

	(A)	(B)	(C)																												
			MAIN-CAN																					PU-CAN		HEV-CAN					
			1	2						3	0			2										1	1	1			1		
			1	1	2	3	4	5	6	1				2			3			4	5				1	2	1	2	3	1	2
			-	-	-	-	-	-	-	-	0	1	2	1	2	3	1	2	3	1	1	2	-	-	1	-	-	-	1	1
	○	○	○	○	○	○	○	○	○	○	○	○	○	○	○	-	-		○	○	○	-	-	-	○	○	○	○	○
VDC	○	○	○	-	-	-	-	-	-	-	○	-	-	-	-	-	-	-	-	-	-	-	-	-	-	-	-	-	-	-
BIU	○	○	-	○	-	-	-	-	-	-	○	-	-	-	-	-	-	-	-	-	-	-	-	-	-	-	-	-	-	-
MFD	○	○	-	○	○	-	-	-	-	-	○	-	-	○	-	-	-	-	-	-	-	-	-	-	-	-	-	-	-	-
A/C	○	○	-	○	○	-	-	-	-	-	○	-	-	-	○	-	-	-	-	-	-	-	-	-	-	-	-	-	-	-
MET	○	○	-	○	○	-	-	-	-	-	○	-	-	-	-	○	-	-	-	-	-	-	-	-	-	-	-	-	-	-
RST	○	-	-	-	-	-	-	-	-	-	-	-	-	-	-	-	-	-	-	-	-	-	-	-	-	-	-	-	-	-
STR	○	-	-	-	-	-	-	-	-	-	-	-	-	-	-	-	-	-	-	-	-	-	-	-	-	-	-	-	-	-
TCM	○	╳	-	○	○	○	-	-	-	-	○	-	-	-	-	-	-	-		-	-	-	-	-	-	-	-	-	-	-
A/B	○	○	-	○	○	○	○	-	-	-	○	-	-	-	-	-	-	-	-	○	-	-	-	-	-	-	-	-	-	-
HPCM	○	○	-	○	○	○	○	○	-	-	○	-	-	-	-	-	-	-	-	-	○	-	-	-	-	-	-	-	-	-
EPS	○	-	-	-	-	-	-	-	-	-	-	-	-	-	-	-	-	-	-	-	-	-	-	-	-	-	-	-	-	-
ECM	○	○	-	○	○	○	○	○	○	○	○	-	-	-	-	-	-	-	-	-	-	-	-	-	-	-	-	-	-	-
KPS	○	○	-	-	-	-	-	-	-	-	○	○	-	-	-	-	-	-	-	-	-	-	-	-	-	-	-	-	-	-
AHL	○	○	-	-	-	-	-	-	-	-	○	-	○	-	-	-	-	-	-	-	-	-	-	-	-	-	-	-	-	-
EOP	○	○	-	○	○	○	○	○	○	-	○	-	-	-	-	-	-	-	-	-	○	-	-	-	-	○	-	-	○	-
BECM	○	○	-	○	○	○	○	○	○	-	○	-	-	-	-	-	-	-	-	-	○	-	-	-	-	○	○	-	-	○
DMCM	○	○	-	○	○	○	○	○	○	-	○	-	-	-	-	-	-	-	-	-	○	-	-	-	-	○	○	○	-	-

LAN01394

- When MAIN-CAN 2-4 is open

	(A)	(B)	(C)																												
			MAIN-CAN																					PU-CAN		HEV-CAN					
			1	2						3	0			2										1	1	1			1		
			1	1	2	3	4	5	6	1				2			3			4	5				1	2	1	2	3	1	2
			-	-	-	-	-	-	-	-	0	1	2	1	2	3	1	2	3	1	1	2	-	-	1	-	-	-	1	1
	○	○	○	○						○	○	○	○	○	○	-	-	○				-	-	-						
VDC	○	○	○	-	-	-	-	-	-	-	○	-	-	-	-	-	-	-	-	-	-	-	-	-	-	-	-	-	-	-
BIU	○	○	-	○	-	-	-	-	-	-	○	-	-	-	-	-	-	-	-	-	-	-	-	-	-	-	-	-	-	-
MFD	○	○	-	○	○	-	-	-	-	-	○	-	-	○	-	-	-	-	-	-	-	-	-	-	-	-	-	-	-	-
A/C	○	○	-	○	○	-	-	-	-	-	○	-	-	-	○	-	-	-	-	-	-	-	-	-	-	-	-	-	-	-
MET	○	○	-	○	○	-	-	-	-	-	○	-	-	-	-	○	-	-	-	-	-	-	-	-	-	-	-	-	-	-
RST	○	-	-	-	-	-	-	-	-	-	-	-	-	-	-	-	-	-	-	-	-	-	-	-	-	-	-	-	-	-
STR	○	-	-	-	-	-	-	-	-	-	-	-	-	-	-	-	-	-	-	-	-	-	-	-	-	-	-	-	-	-
TCM	○	○	-	○	○	○	-	-	-	-	○	-	-	-	-	-	-	-	○	-	-	-	-	-	-	-	-	-	-	-
A/B	○	╳	-	○	○	○		-	-	-	○	-	-	-	-	-	-	-	-		-	-	-	-	-	-	-	-	-	-
HPCM	○	╳	-	○	○	○			-	-	○	-	-	-	-	-	-	-	-	-		-	-	-	-	-	-	-	-	-
EPS	○	-	-	-	-	-	-	-	-	-	-	-	-	-	-	-	-	-	-	-	-	-	-	-	-	-	-	-	-	-
ECM	○	╳	-	○	○	○					○	-	-	-	-	-	-	-	-	-	-	-	-	-	-	-	-	-	-	-
KPS	○	○	-	-	-	-	-	-	-	-	○	○	-	-	-	-	-	-	-	-	-	-	-	-	-	-	-	-	-	-
AHL	○	○	-	-	-	-	-	-	-	-	○	-	○	-	-	-	-	-	-	-	-	-	-	-	-	-	-	-	-	-
EOP	○	╳	-	○	○	○				-	○	-	-	-	-	-	-	-	-		-	-	-	-	-		-	-		-
BECM	○	╳	-	○	○	○				-	○	-	-	-	-	-	-	-	-		-	-	-	-	-			-	-	
DMCM	○	╳	-	○	○	○				-	○	-	-	-	-	-	-	-	-		-	-	-	-	-				-	-

LAN01395

- When MAIN-CAN 2-4-1 is open

	(A)	(B)	(C)																												
			MAIN-CAN																					PU-CAN			HEV-CAN				
			1	2						3	0			2										1	1	1			1		
			1	1	2	3	4	5	6	1				2			3			4	5				1	2	1	2	3	1	2
			-	-	-	-	-	-	-	-	0	1	2	1	2	3	1	2	3	1	1	2	-	-	1	-	-	-	1	1
			○	○	○	○	○	○	○	○	○	○	○	○	○	○	-	-	○		○	○	-	-	-	○	○	○	○	○
VDC	○	○	○	-	-	-	-	-	-	-	○	-	-	-	-	-	-	-	-	-	-	-	-	-	-	-	-	-	-	-
BIU	○	○	-	○	-	-	-	-	-	-	○	-	-	-	-	-	-	-	-	-	-	-	-	-	-	-	-	-	-	-
MFD	○	○	-	○	○	-	-	-	-	-	○	-	-	○	-	-	-	-	-	-	-	-	-	-	-	-	-	-	-	-
A/C	○	○	-	○	○	-	-	-	-	-	○	-	-	-	○	-	-	-	-	-	-	-	-	-	-	-	-	-	-	-
MET	○	○	-	○	○	-	-	-	-	-	○	-	-	-	-	○	-	-	-	-	-	-	-	-	-	-	-	-	-	-
RST	○	-	-	-	-	-	-	-	-	-	-	-	-	-	-	-	-	-	-	-	-	-	-	-	-	-	-	-	-	-
STR	○	-	-	-	-	-	-	-	-	-	-	-	-	-	-	-	-	-	-	-	-	-	-	-	-	-	-	-	-	-
TCM	○	○	-	○	○	○	-	-	-	-	○	-	-	-	-	-	-	-	○	-	-	-	-	-	-	-	-	-	-	-
A/B	○	╳	-	○	○	○	○	-	-	-	○	-	-	-	-	-	-	-	-		-	-	-	-	-	-	-	-	-	-
HPCM	○	○	-	○	○	○	○	○	-	-	○	-	-	-	-	-	-	-	-	-	○	-	-	-	-	-	-	-	-	-
EPS	○	-	-	-	-	-	-	-	-	-	-	-	-	-	-	-	-	-	-	-	-	-	-	-	-	-	-	-	-	-
ECM	○	○	-	○	○	○	○	○	○	○	○	-	-	-	-	-	-	-	-	-	-	-	-	-	-	-	-	-	-	-
KPS	○	○	-	-	-	-	-	-	-	-	○	○	-	-	-	-	-	-	-	-	-	-	-	-	-	-	-	-	-	-
AHL	○	○	-	-	-	-	-	-	-	-	○	-	○	-	-	-	-	-	-	-	-	-	-	-	-	-	-	-	-	-
EOP	○	○	-	○	○	○	○	○	○	-	○	-	-	-	-	-	-	-	-	-	○	-	-	-	-	○	-	-	○	-
BECM	○	○	-	○	○	○	○	○	○	-	○	-	-	-	-	-	-	-	-	-	○	-	-	-	-	○	○	-	-	○
DMCM	○	○	-	○	○	○	○	○	○	-	○	-	-	-	-	-	-	-	-	-	○	-	-	-	-	○	○	○	-	-

LAN01396

- When MAIN-CAN 2-5 is open

	(A)	(B)	(C)																												
			MAIN-CAN																					PU-CAN			HEV-CAN				
			1	2						3	0			2										1	1	1			1		
			1	1	2	3	4	5	6	1				2			3			4	5				1	2	1	2	3	1	2
			-	-	-	-	-	-	-	-	0	1	2	1	2	3	1	2	3	1	1	2	-	-	1	-	-	-	1	1
			○	○	○	○	○				○	○	○	○	○	○	-	-	○	○			-	-	-					
VDC	○	○	○	-	-	-	-	-	-	-	○	-	-	-	-	-	-	-	-	-	-	-	-	-	-	-	-	-	-	-
BIU	○	○	-	○	-	-	-	-	-	-	○	-	-	-	-	-	-	-	-	-	-	-	-	-	-	-	-	-	-	-
MFD	○	○	-	○	○	-	-	-	-	-	○	-	-	○	-	-	-	-	-	-	-	-	-	-	-	-	-	-	-	-
A/C	○	○	-	○	○	-	-	-	-	-	○	-	-	-	○	-	-	-	-	-	-	-	-	-	-	-	-	-	-	-
MET	○	○	-	○	○	-	-	-	-	-	○	-	-	-	-	○	-	-	-	-	-	-	-	-	-	-	-	-	-	-
RST	○	-	-	-	-	-	-	-	-	-	-	-	-	-	-	-	-	-	-	-	-	-	-	-	-	-	-	-	-	-
STR	○	-	-	-	-	-	-	-	-	-	-	-	-	-	-	-	-	-	-	-	-	-	-	-	-	-	-	-	-	-
TCM	○	○	-	○	○	○	-	-	-	-	○	-	-	-	-	-	-	-	○	-	-	-	-	-	-	-	-	-	-	-
A/B	○	○	-	○	○	○	○	-	-	-	○	-	-	-	-	-	-	-	-	○	-	-	-	-	-	-	-	-	-	-
HPCM	○	╳	-	○	○	○	○		-	-	○	-	-	-	-	-	-	-	-	-		-	-	-	-	-	-	-	-	-
EPS	○	-	-	-	-	-	-	-	-	-	-	-	-	-	-	-	-	-	-	-	-	-	-	-	-	-	-	-	-	-
ECM	○	╳	-	○	○	○	○				○	-	-	-	-	-	-	-	-	-	-	-	-	-	-	-	-	-	-	-
KPS	○	○	-	-	-	-	-	-	-	-	○	○	-	-	-	-	-	-	-	-	-	-	-	-	-	-	-	-	-	-
AHL	○	○	-	-	-	-	-	-	-	-	○	-	○	-	-	-	-	-	-	-	-	-	-	-	-	-	-	-	-	-
EOP	○	╳	-	○	○	○	○			-	○	-	-	-	-	-	-	-	-	-		-	-	-	-		-	-		-
BECM	○	╳	-	○	○	○	○			-	○	-	-	-	-	-	-	-	-	-		-	-	-	-			-	-	
DMCM	○	╳	-	○	○	○	○			-	○	-	-	-	-	-	-	-	-	-		-	-	-	-				-	-

LAN01397

- When MAIN-CAN 2-5-1 is open

	(A)	(B)	(C)																												
			MAIN-CAN																					PU-CAN		HEV-CAN					
			1	2						3	0			2										1	1	1			1		
			1	1	2	3	4	5	6	1				2			3			4	5				1	2	1	2	3	1	2
			-	-	-	-	-	-	-	-	0	1	2	1	2	3	1	2	3	1	1	2	-	-	1	-	-	-	1	1
	○	○	○	○	○	○	○	○	○	○	○	○	○	○	○	-	-	○	○		○	-	-	-					
VDC	○	○	○	-	-	-	-	-	-	-	○	-	-	-	-	-	-	-	-	-	-	-	-	-	-	-	-	-	-	-	-
BIU	○	○	-	○	-	-	-	-	-	-	○	-	-	-	-	-	-	-	-	-	-	-	-	-	-	-	-	-	-	-	-
MFD	○	○	-	○	○	-	-	-	-	-	○	-	-	○	-	-	-	-	-	-	-	-	-	-	-	-	-	-	-	-	-
A/C	○	○	-	○	○	-	-	-	-	-	○	-	-	-	○	-	-	-	-	-	-	-	-	-	-	-	-	-	-	-	-
MET	○	○	-	○	○	-	-	-	-	-	○	-	-	-	-	○	-	-	-	-	-	-	-	-	-	-	-	-	-	-	-
RST	○	-	-	-	-	-	-	-	-	-	-	-	-	-	-	-	-	-	-	-	-	-	-	-	-	-	-	-	-	-	-
STR	○	-	-	-	-	-	-	-	-	-	-	-	-	-	-	-	-	-	-	-	-	-	-	-	-	-	-	-	-	-	-
TCM	○	○	-	○	○	○	-	-	-	-	○	-	-	-	-	-	-	-	○	-	-	-	-	-	-	-	-	-	-	-	-
A/B	○	○	-	○	○	○	○	-	-	-	○	-	-	-	-	-	-	-	-	○	-	-	-	-	-	-	-	-	-	-	-
HPCM	○	✕	-	○	○	○	○	○	-	-	○	-	-	-	-	-	-	-	-	-		-	-	-	-	-	-	-	-	-	-
EPS	○	-	-	-	-	-	-	-	-	-	-	-	-	-	-	-	-	-	-	-	-	-	-	-	-	-	-	-	-	-	-
ECM	○	○	-	○	○	○	○	○	○	○	○	-	-	-	-	-	-	-	-	-	-	-	-	-	-	-	-	-	-	-	-
KPS	○	○	-	-	-	-	-	-	-	-	○	○	-	-	-	-	-	-	-	-	-	-	-	-	-	-	-	-	-	-	-
AHL	○	○	-	-	-	-	-	-	-	-	○	-	○	-	-	-	-	-	-	-	-	-	-	-	-	-	-	-	-	-	-
EOP	○	✕	-	○	○	○	○	○	○	-	○	-	-	-	-	-	-	-	-	-		-	-	-	-		-	-		-	-
BECM	○	✕	-	○	○	○	○	○	○	-	○	-	-	-	-	-	-	-	-	-		-	-	-	-			-	-		
DMCM	○	✕	-	○	○	○	○	○	○	-	○	-	-	-	-	-	-	-	-	-		-	-	-	-				-	-	

LAN01398

- When MAIN-CAN 3-1 is open

	(A)	(B)	(C)																												
			MAIN-CAN																					PU-CAN		HEV-CAN					
			1	2						3	0			2										1	1	1			1		
			1	1	2	3	4	5	6	1				2			3			4	5				1	2	1	2	3	1	2
			-	-	-	-	-	-	-	-	0	1	2	1	2	3	1	2	3	1	1	2	-	-	1	-	-	-	1	1
	○	○	○	○	○	○	○		○	○	○	○	○	○	-	-	○	○	○	○	-	-	-	○	○	○	○	○			
VDC	○	○	○	-	-	-	-	-	-	-	○	-	-	-	-	-	-	-	-	-	-	-	-	-	-	-	-	-	-	-	-
BIU	○	○	-	○	-	-	-	-	-	-	○	-	-	-	-	-	-	-	-	-	-	-	-	-	-	-	-	-	-	-	-
MFD	○	○	-	○	○	-	-	-	-	-	○	-	-	○	-	-	-	-	-	-	-	-	-	-	-	-	-	-	-	-	-
A/C	○	○	-	○	○	-	-	-	-	-	○	-	-	-	○	-	-	-	-	-	-	-	-	-	-	-	-	-	-	-	-
MET	○	○	-	○	○	-	-	-	-	-	○	-	-	-	-	○	-	-	-	-	-	-	-	-	-	-	-	-	-	-	-
RST	○	-	-	-	-	-	-	-	-	-	-	-	-	-	-	-	-	-	-	-	-	-	-	-	-	-	-	-	-	-	-
STR	○	-	-	-	-	-	-	-	-	-	-	-	-	-	-	-	-	-	-	-	-	-	-	-	-	-	-	-	-	-	-
TCM	○	○	-	○	○	○	-	-	-	-	○	-	-	-	-	-	-	-	○	-	-	-	-	-	-	-	-	-	-	-	-
A/B	○	○	-	○	○	○	○	-	-	-	○	-	-	-	-	-	-	-	-	○	-	-	-	-	-	-	-	-	-	-	-
HPCM	○	○	-	○	○	○	○	○	-	-	○	-	-	-	-	-	-	-	-	-	○	-	-	-	-	-	-	-	-	-	-
EPS	○	-	-	-	-	-	-	-	-	-	-	-	-	-	-	-	-	-	-	-	-	-	-	-	-	-	-	-	-	-	-
ECM	○	✕	-	○	○	○	○	○	○		○	-	-	-	-	-	-	-	-	-	-	-	-	-	-	-	-	-	-	-	-
KPS	○	○	-	-	-	-	-	-	-	-	○	○	-	-	-	-	-	-	-	-	-	-	-	-	-	-	-	-	-	-	-
AHL	○	○	-	-	-	-	-	-	-	-	○	-	○	-	-	-	-	-	-	-	-	-	-	-	-	-	-	-	-	-	-
EOP	○	○	-	○	○	○	○	○	○	-	○	-	-	-	-	-	-	-	-	-	○	-	-	-	-	○	-	-	○	-	
BECM	○	○	-	○	○	○	○	○	○	-	○	-	-	-	-	-	-	-	-	-	○	-	-	-	-	○	○	-	-	○	
DMCM	○	○	-	○	○	○	○	○	○	-	○	-	-	-	-	-	-	-	-	-	○	-	-	-	-	○	○	○	-	-	

LAN01399

- When HEV-CAN 1-1 is open

	(A)	(B)	(C)																												
			MAIN-CAN																					PU-CAN		HEV-CAN					
			1	2						3	0			2										1	1	1			1		
			1	1	2	3	4	5	6	1				2			3			4	5			1	2	1	1	2	3	1	2
			-	-	-	-	-	-	-	-	0	1	2	1	2	3	1	2	3	1	1	2	-	-	1	-	-	-	1	1
			○	○	○	○	○	○	○	○	○	○	○	○	○	○	-	-	○	○	○	○	-	-	-					
VDC	○	○	○	-	-	-	-	-	-	-	○	-	-	-	-	-	-	-	-	-	-	-	-	-	-	-	-	-	-	-	-
BIU	○	○	-	○	-	-	-	-	-	-	○	-	-	-	-	-	-	-	-	-	-	-	-	-	-	-	-	-	-	-	-
MFD	○	○	-	○	○	-	-	-	-	-	○	-	-	○	-	-	-	-	-	-	-	-	-	-	-	-	-	-	-	-	-
A/C	○	○	-	○	○	-	-	-	-	-	○	-	-	-	○	-	-	-	-	-	-	-	-	-	-	-	-	-	-	-	-
MET	○	○	-	○	○	-	-	-	-	-	○	-	-	-	-	○	-	-	-	-	-	-	-	-	-	-	-	-	-	-	-
RST	○	-	-	-	-	-	-	-	-	-	-	-	-	-	-	-	-	-	-	-	-	-	-	-	-	-	-	-	-	-	-
STR	○	-	-	-	-	-	-	-	-	-	-	-	-	-	-	-	-	-	-	-	-	-	-	-	-	-	-	-	-	-	-
TCM	○	○	-	○	○	○	-	-	-	-	○	-	-	-	-	-	-	-	○	-	-	-	-	-	-	-	-	-	-	-	-
A/B	○	○	-	○	○	○	○	-	-	-	○	-	-	-	-	-	-	-	-	○	-	-	-	-	-	-	-	-	-	-	-
HPCM	○	○	-	○	○	○	○	○	-	-	○	-	-	-	-	-	-	-	-	-	○	-	-	-	-	-	-	-	-	-	-
EPS	○	-	-	-	-	-	-	-	-	-	-	-	-	-	-	-	-	-	-	-	-	-	-	-	-	-	-	-	-	-	-
ECM	○	○	-	○	○	○	○	○	○	○	○	-	-	-	-	-	-	-	-	-	-	-	-	-	-	-	-	-	-	-	-
KPS	○	○	-	-	-	-	-	-	-	-	○	○	-	-	-	-	-	-	-	-	-	-	-	-	-	-	-	-	-	-	-
AHL	○	○	-	-	-	-	-	-	-	-	○	-	○	-	-	-	-	-	-	-	-	-	-	-	-	-	-	-	-	-	-
EOP	○	✕	-	○	○	○	○	○	○	-	○	-	-	-	-	-	-	-	-	-	○	-	-	-	-		-	-		-	-
BECM	○	✕	-	○	○	○	○	○	○	-	○	-	-	-	-	-	-	-	-	-	○	-	-	-	-			-	-		
DMCM	○	✕	-	○	○	○	○	○	○	-	○	-	-	-	-	-	-	-	-	-	○	-	-	-	-				-	-	

LAN01400

- When HEV-CAN 1-1-1 is open

	(A)	(B)	(C)																												
			MAIN-CAN																					PU-CAN		HEV-CAN					
			1	2						3	0			2										1	1	1			1		
			1	1	2	3	4	5	6	1				2			3			4	5			1	2	1	1	2	3	1	2
			-	-	-	-	-	-	-	-	0	1	2	1	2	3	1	2	3	1	1	2	-	-	1	-	-	-	1	1
			○	○	○	○	○	○	○	○	○	○	○	○	○	○	-	-	○	○	○	○	-	-	-	○	○	○		○
VDC	○	○	○	-	-	-	-	-	-	-	○	-	-	-	-	-	-	-	-	-	-	-	-	-	-	-	-	-	-	-	-
BIU	○	○	-	○	-	-	-	-	-	-	○	-	-	-	-	-	-	-	-	-	-	-	-	-	-	-	-	-	-	-	-
MFD	○	○	-	○	○	-	-	-	-	-	○	-	-	○	-	-	-	-	-	-	-	-	-	-	-	-	-	-	-	-	-
A/C	○	○	-	○	○	-	-	-	-	-	○	-	-	-	○	-	-	-	-	-	-	-	-	-	-	-	-	-	-	-	-
MET	○	○	-	○	○	-	-	-	-	-	○	-	-	-	-	○	-	-	-	-	-	-	-	-	-	-	-	-	-	-	-
RST	○	-	-	-	-	-	-	-	-	-	-	-	-	-	-	-	-	-	-	-	-	-	-	-	-	-	-	-	-	-	-
STR	○	-	-	-	-	-	-	-	-	-	-	-	-	-	-	-	-	-	-	-	-	-	-	-	-	-	-	-	-	-	-
TCM	○	○	-	○	○	○	-	-	-	-	○	-	-	-	-	-	-	-	○	-	-	-	-	-	-	-	-	-	-	-	-
A/B	○	○	-	○	○	○	○	-	-	-	○	-	-	-	-	-	-	-	-	○	-	-	-	-	-	-	-	-	-	-	-
HPCM	○	○	-	○	○	○	○	○	-	-	○	-	-	-	-	-	-	-	-	-	○	-	-	-	-	-	-	-	-	-	-
EPS	○	-	-	-	-	-	-	-	-	-	-	-	-	-	-	-	-	-	-	-	-	-	-	-	-	-	-	-	-	-	-
ECM	○	○	-	○	○	○	○	○	○	○	○	-	-	-	-	-	-	-	-	-	-	-	-	-	-	-	-	-	-	-	-
KPS	○	○	-	-	-	-	-	-	-	-	○	○	-	-	-	-	-	-	-	-	-	-	-	-	-	-	-	-	-	-	-
AHL	○	○	-	-	-	-	-	-	-	-	○	-	○	-	-	-	-	-	-	-	-	-	-	-	-	-	-	-	-	-	-
EOP	○	✕	-	○	○	○	○	○	○	-	○	-	-	-	-	-	-	-	-	-	○	-	-	-	-	○	-	-		-	-
BECM	○	○	-	○	○	○	○	○	○	-	○	-	-	-	-	-	-	-	-	-	○	-	-	-	-	○	○	-	-	○	
DMCM	○	○	-	○	○	○	○	○	○	-	○	-	-	-	-	-	-	-	-	-	○	-	-	-	-	○	○	○	-	-	

LAN01401

- When HEV-CAN 1-2 is open

	(A)	(B)	(C)																												
			MAIN-CAN																						PU-CAN		HEV-CAN					
			1	2						3	0			2											1	1	1			1	
			1	1	2	3	4	5	6	1				2			3			4	5				1	2	1	2	3	1	2
			-	-	-	-	-	-	-	-	0	1	2	1	2	3	1	2	3	1	1	2	-	-	1	-	-	-	1	1
			○	○	○	○	○	○	○	○	○	○	○	○	○	○	-	-	○	○	○	○	-	-	-	○			○	
VDC	○	○	○	-	-	-	-	-	-	-	○	-	-	-	-	-	-	-	-	-	-	-	-	-	-	-	-	-	-	-	-
BIU	○	○	-	○	-	-	-	-	-	-	○	-	-	-	-	-	-	-	-	-	-	-	-	-	-	-	-	-	-	-	-
MFD	○	○	-	○	○	-	-	-	-	-	○	-	-	○	-	-	-	-	-	-	-	-	-	-	-	-	-	-	-	-	-
A/C	○	○	-	○	○	-	-	-	-	-	○	-	-	-	○	-	-	-	-	-	-	-	-	-	-	-	-	-	-	-	-
MET	○	○	-	○	○	-	-	-	-	-	○	-	-	-	-	○	-	-	-	-	-	-	-	-	-	-	-	-	-	-	-
RST	○	-	-	-	-	-	-	-	-	-	-	-	-	-	-	-	-	-	-	-	-	-	-	-	-	-	-	-	-	-	-
STR	○	-	-	-	-	-	-	-	-	-	-	-	-	-	-	-	-	-	-	-	-	-	-	-	-	-	-	-	-	-	-
TCM	○	○	-	○	○	○	-	-	-	-	○	-	-	-	-	-	-	-	○	-	-	-	-	-	-	-	-	-	-	-	-
A/B	○	○	-	○	○	○	○	-	-	-	○	-	-	-	-	-	-	-	-	○	-	-	-	-	-	-	-	-	-	-	-
HPCM	○	○	-	○	○	○	○	○	-	-	○	-	-	-	-	-	-	-	-	-	○	-	-	-	-	-	-	-	-	-	-
EPS	○	-	-	-	-	-	-	-	-	-	-	-	-	-	-	-	-	-	-	-	-	-	-	-	-	-	-	-	-	-	-
ECM	○	○	-	○	○	○	○	○	○	○	○	-	-	-	-	-	-	-	-	-	-	-	-	-	-	-	-	-	-	-	-
KPS	○	○	-	-	-	-	-	-	-	-	○	○	-	-	-	-	-	-	-	-	-	-	-	-	-	-	-	-	-	-	-
AHL	○	○	-	-	-	-	-	-	-	-	○	-	○	-	-	-	-	-	-	-	-	-	-	-	-	-	-	-	-	-	-
EOP	○	○	-	○	○	○	○	○	○	-	○	-	-	-	-	-	-	-	-	-	○	-	-	-	-	○	-	-	○	-	-
BECM	○	✕	-	○	○	○	○	○	○	-	○	-	-	-	-	-	-	-	-	-	○	-	-	-	-	○		-	-		
DMCM	○	✕	-	○	○	○	○	○	○	-	○	-	-	-	-	-	-	-	-	-	○	-	-	-	-	○			-	-	

LAN01402

- When HEV-CAN 1-2-1 is open

	(A)	(B)	(C)																												
			MAIN-CAN																						PU-CAN		HEV-CAN					
			1	2						3	0			2											1	1	1			1	
			1	1	2	3	4	5	6	1				2			3			4	5				1	2	1	2	3	1	2
			-	-	-	-	-	-	-	-	0	1	2	1	2	3	1	2	3	1	1	2	-	-	1	-	-	-	1	1
			○	○	○	○	○	○	○	○	○	○	○	○	○	○	-	-	○	○	○	○	-	-	-	○	○	○	○	
VDC	○	○	○	-	-	-	-	-	-	-	○	-	-	-	-	-	-	-	-	-	-	-	-	-	-	-	-	-	-	-	-
BIU	○	○	-	○	-	-	-	-	-	-	○	-	-	-	-	-	-	-	-	-	-	-	-	-	-	-	-	-	-	-	-
MFD	○	○	-	○	○	-	-	-	-	-	○	-	-	○	-	-	-	-	-	-	-	-	-	-	-	-	-	-	-	-	-
A/C	○	○	-	○	○	-	-	-	-	-	○	-	-	-	○	-	-	-	-	-	-	-	-	-	-	-	-	-	-	-	-
MET	○	○	-	○	○	-	-	-	-	-	○	-	-	-	-	○	-	-	-	-	-	-	-	-	-	-	-	-	-	-	-
RST	○	-	-	-	-	-	-	-	-	-	-	-	-	-	-	-	-	-	-	-	-	-	-	-	-	-	-	-	-	-	-
STR	○	-	-	-	-	-	-	-	-	-	-	-	-	-	-	-	-	-	-	-	-	-	-	-	-	-	-	-	-	-	-
TCM	○	○	-	○	○	○	-	-	-	-	○	-	-	-	-	-	-	-	○	-	-	-	-	-	-	-	-	-	-	-	-
A/B	○	○	-	○	○	○	○	-	-	-	○	-	-	-	-	-	-	-	-	○	-	-	-	-	-	-	-	-	-	-	-
HPCM	○	○	-	○	○	○	○	○	-	-	○	-	-	-	-	-	-	-	-	-	○	-	-	-	-	-	-	-	-	-	-
EPS	○	-	-	-	-	-	-	-	-	-	-	-	-	-	-	-	-	-	-	-	-	-	-	-	-	-	-	-	-	-	-
ECM	○	○	-	○	○	○	○	○	○	○	○	-	-	-	-	-	-	-	-	-	-	-	-	-	-	-	-	-	-	-	-
KPS	○	○	-	-	-	-	-	-	-	-	○	○	-	-	-	-	-	-	-	-	-	-	-	-	-	-	-	-	-	-	-
AHL	○	○	-	-	-	-	-	-	-	-	○	-	○	-	-	-	-	-	-	-	-	-	-	-	-	-	-	-	-	-	-
EOP	○	○	-	○	○	○	○	○	○	-	○	-	-	-	-	-	-	-	-	-	○	-	-	-	-	○	-	-	○	-	-
BECM	○	✕	-	○	○	○	○	○	○	-	○	-	-	-	-	-	-	-	-	-	○	-	-	-	-	○	○	-	-		
DMCM	○	○	-	○	○	○	○	○	○	-	○	-	-	-	-	-	-	-	-	-	○	-	-	-	-	○	○	○	-	-	

LAN01403

- When HEV-CAN 1-3 is open

	(A)	(B)	(C)																												
			MAIN-CAN																					PU-CAN			HEV-CAN				
			1	2						3	0			2										1	1	1			1		
			1	1	2	3	4	5	6	1				2			3			4	5			1	2	1	2	3	1	2
			-	-	-	-	-	-	-	-	0	1	2	1	2	3	1	2	3	1	1	2	-	-	1	-	-	-	1	1
	○	○	○	○	○	○	○	○	○	○	○	○	○	○	○	-	-	○	○	○	○	-	-	-	○	○		○	○
VDC	○	○	○	-	-	-	-	-	-	-	○	-	-	-	-	-	-	-	-	-	-	-	-	-	-	-	-	-	-	-
BIU	○	○	-	○	-	-	-	-	-	-	○	-	-	-	-	-	-	-	-	-	-	-	-	-	-	-	-	-	-	-
MFD	○	○	-	○	○	-	-	-	-	-	○	-	-	○	-	-	-	-	-	-	-	-	-	-	-	-	-	-	-	-
A/C	○	○	-	○	○	-	-	-	-	-	○	-	-	-	○	-	-	-	-	-	-	-	-	-	-	-	-	-	-	-
MET	○	○	-	○	○	-	-	-	-	-	○	-	-	-	-	○	-	-	-	-	-	-	-	-	-	-	-	-	-	-
RST	○	-	-	-	-	-	-	-	-	-	-	-	-	-	-	-	-	-	-	-	-	-	-	-	-	-	-	-	-	-
STR	○	-	-	-	-	-	-	-	-	-	-	-	-	-	-	-	-	-	-	-	-	-	-	-	-	-	-	-	-	-
TCM	○	○	-	○	○	○	-	-	-	-	○	-	-	-	-	-	-	-	○	-	-	-	-	-	-	-	-	-	-	-
A/B	○	○	-	○	○	○	○	-	-	-	○	-	-	-	-	-	-	-	-	○	-	-	-	-	-	-	-	-	-	-
HPCM	○	○	-	○	○	○	○	○	-	-	○	-	-	-	-	-	-	-	-	-	○	-	-	-	-	-	-	-	-	-
EPS	○	-	-	-	-	-	-	-	-	-	-	-	-	-	-	-	-	-	-	-	-	-	-	-	-	-	-	-	-	-
ECM	○	○	-	○	○	○	○	○	○	○	○	-	-	-	-	-	-	-	-	-	-	-	-	-	-	-	-	-	-	-
KPS	○	○	-	-	-	-	-	-	-	-	○	○	-	-	-	-	-	-	-	-	-	-	-	-	-	-	-	-	-	-
AHL	○	○	-	-	-	-	-	-	-	-	○	-	○	-	-	-	-	-	-	-	-	-	-	-	-	-	-	-	-	-
EOP	○	○	-	○	○	○	○	○	○	-	○	-	-	-	-	-	-	-	-	-	○	-	-	-	-	○	-	-	○	-
BECM	○	○	-	○	○	○	○	○	○	-	○	-	-	-	-	-	-	-	-	-	○	-	-	-	-	○	○	-	-	○
DMCM	○	×	-	○	○	○	○	○	○	-	○	-	-	-	-	-	-	-	-	-	○	-	-	-	-	○	○		-	-

LAN01404

7. Read Diagnostic Trouble Code (DTC)

A: OPERATION

For detailed operation procedures, refer to “PC application help for Subaru Select Monitor”.

8. Clear Memory Mode

A: OPERATION

For detailed operation procedures, refer to “PC application help for Subaru Select Monitor”.

9. CAN Communication Circuit Check

A: PROCEDURE

1. MAIN-CAN

NOTE:
- When measuring the resistance of CAN communication circuit, measure it in sleep status.

To enter sleep status
  – With ignition switch OFF and key or switch operation stopped, keep the doors, trunk, and rear gate all closed for one minute or more.
  – On models with keyless access function, keep the access key 2 m or more away from the vehicle.
- When the bus line is measured, combined resistance of the end resistance (120 Ω) in ECM and the end resistance (120 Ω) in VDC CM can be measured. The combined resistance is supposed to be approximately 53 — 61 Ω with the stabilizing circuit included. If the measured resistance value becomes 52 Ω or less, main wiring harness or related lines may be shorted. Or, the combined resistance may have changed because of a resistance other than the end resistance created on the circuit. If the measured value is 62 Ω or more, there may be a malfunction such as open circuit in one of the end resistances, in the stabilizing circuit, or in the main wiring harness.

Also, even when the resistance value falls within approx. 53 — 61 Ω, related lines may be open if an error of communication for initializing or a CAN system U-code has occurred. (The resistance won't be between approx. 53 — 61 Ω if the main wiring harness is open.)

WIRING DIAGRAM:

CAN communication system <Ref. to WI(HEV)-64, WIRING DIAGRAM, CAN Communication System.>

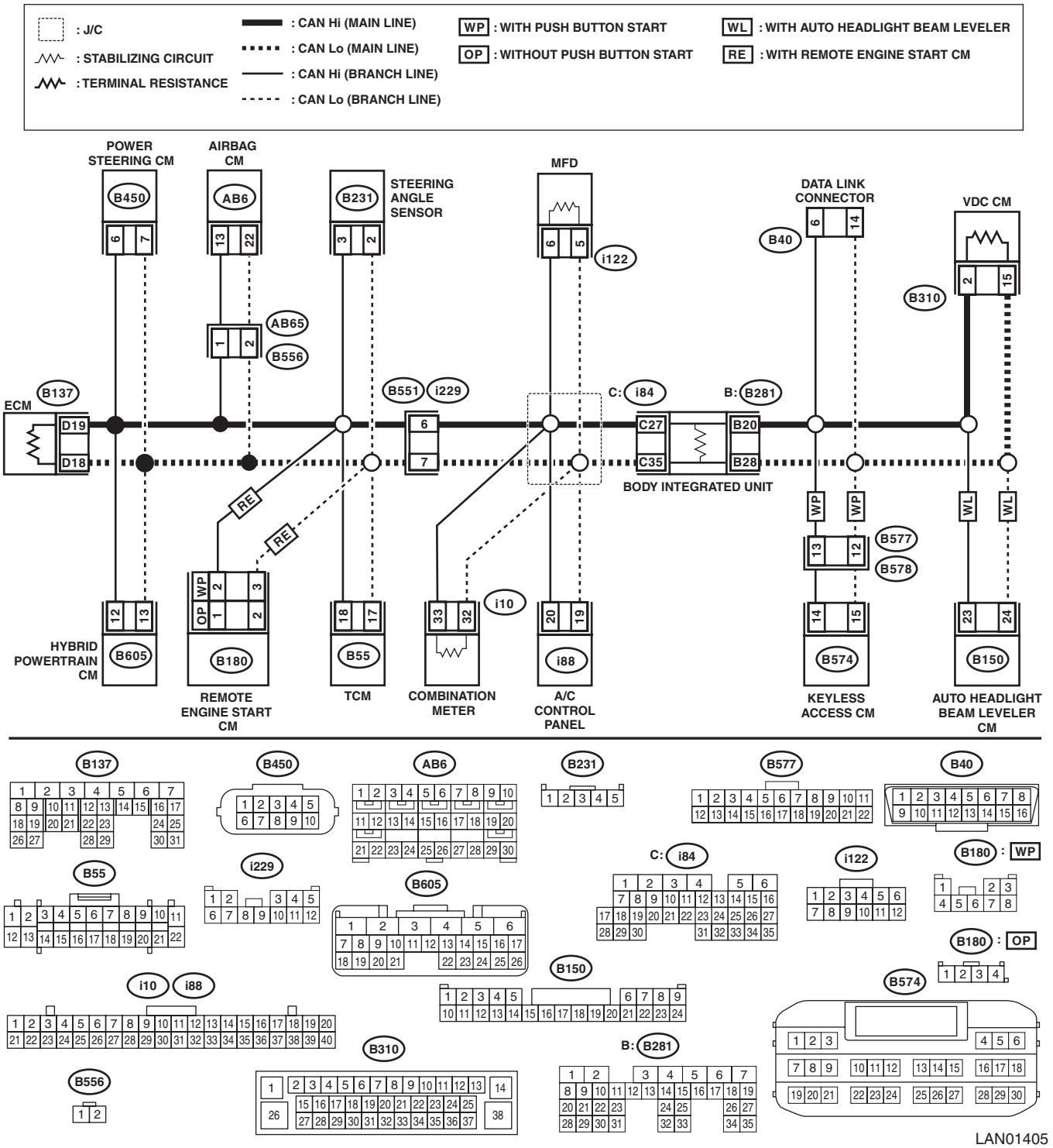

LAN01405

	Step	Check	Yes	No
1	**CHECK BASIC DIAGNOSTIC PROCEDURE.** Confirm that the basic diagnostic procedure was performed up to STEP 3. NOTE: Inspection using Subaru Select Monitor helps to find faulty portion easily before "CAN Communication Circuit Check" using the tester.	Was the basic diagnostic procedure performed?	Go to step **2**.	Perform the basic diagnostic procedure. <Ref. to LAN(HEV)(diag)-2, PROCEDURE, Basic Diagnostic Procedure.>
2	**CHECK FROM DATA LINK CONNECTOR.** Using the tester, measure the resistance between terminals. ***Connector & terminal*** ***(B40) No. 6 — Chassis ground:*** ***(B40) No. 14 — Chassis ground:***	Is the resistance 10 Ω or less?	Check for ground short. <Ref. to LAN(HEV)(diag)-41, GROUND SHORT INSPECTION (MAIN-CAN), INSPECTION, CAN Communication Circuit Check.>	Go to step **3**.
3	**CHECK FROM DATA LINK CONNECTOR.** 1) Turn the ignition switch to ON. 2) Using the tester, measure the voltage between terminals. ***Connector & terminal*** ***(B40) No. 6 — Chassis ground:*** ***(B40) No. 14 — Chassis ground:***	Is the voltage 5 V or less?	Go to step **4**.	Check for battery short. <Ref. to LAN(HEV)(diag)-43, BATTERY SHORT INSPECTION (MAIN-CAN), INSPECTION, CAN Communication Circuit Check.>
4	**CHECK FROM DATA LINK CONNECTOR.** 1) Turn the ignition switch to OFF. 2) Using the tester, measure the resistance between terminals. ***Connector & terminal*** ***(B40) No. 6 — No. 14:***	Is the resistance 52 Ω or less?	Perform the inspection for the resistance of 52 Ω or less. <Ref. to LAN(HEV)(diag)-47, 52 Ω OR LESS, INSPECTION, CAN Communication Circuit Check.>	Go to step **5**.
5	**CHECK FROM DATA LINK CONNECTOR.** Using the tester, measure the resistance between terminals. ***Connector & terminal*** ***(B40) No. 6 — No. 14:***	Is the resistance 62 Ω or more?	Perform the inspection for the resistance of 62 Ω or more. <Ref. to LAN(HEV)(diag)-50, 62 Ω OR MORE, INSPECTION, CAN Communication Circuit Check.>	If the display of CAN system U-code disappears from the current malfunction, the CAN network is currently normal. If the U-code has detected as current malfunction, related lines may be open. Perform the inspection for the related line corresponding to the detected DTC. <Ref. to LAN(HEV)(diag)-38, MAIN-CAN, LIST, CAN Communication Circuit Check.>

2. PU-CAN

NOTE:
• When measuring the resistance of CAN communication circuit, measure it in sleep status.
To enter sleep status
– With ignition switch OFF and key or switch operation stopped, keep the doors, trunk, and rear gate all closed for one minute or more.
– On models with keyless access function, keep the access key 2 m or more away from the vehicle.
• When the bus line is measured, combined resistance of the end resistance (120 Ω) in ECM and the end resistance (120 Ω) in HPCM can be measured. The combined resistance is approximately 57 — 63 Ω. If the measured resistance value becomes 56 Ω or less, main wiring harness or related lines may be shorted. Or, the combined resistance may have changed because of a resistance other than the end resistance created on the circuit. If the measured value is 64 Ω or more, there may be a malfunction such as open circuit in one of the end resistances, in the stabilizing circuit, or in the main wiring harness.
Also, even when the resistance value falls within approx. 57 — 63 Ω, related lines may be open if an error of communication for initializing or a CAN system U-code has occurred. (The resistance won't be between approx. 57 — 63 Ω if the main wiring harness is open.)

WIRING DIAGRAM:
CAN communication system <Ref. to WI(HEV)-64, WIRING DIAGRAM, CAN Communication System.>

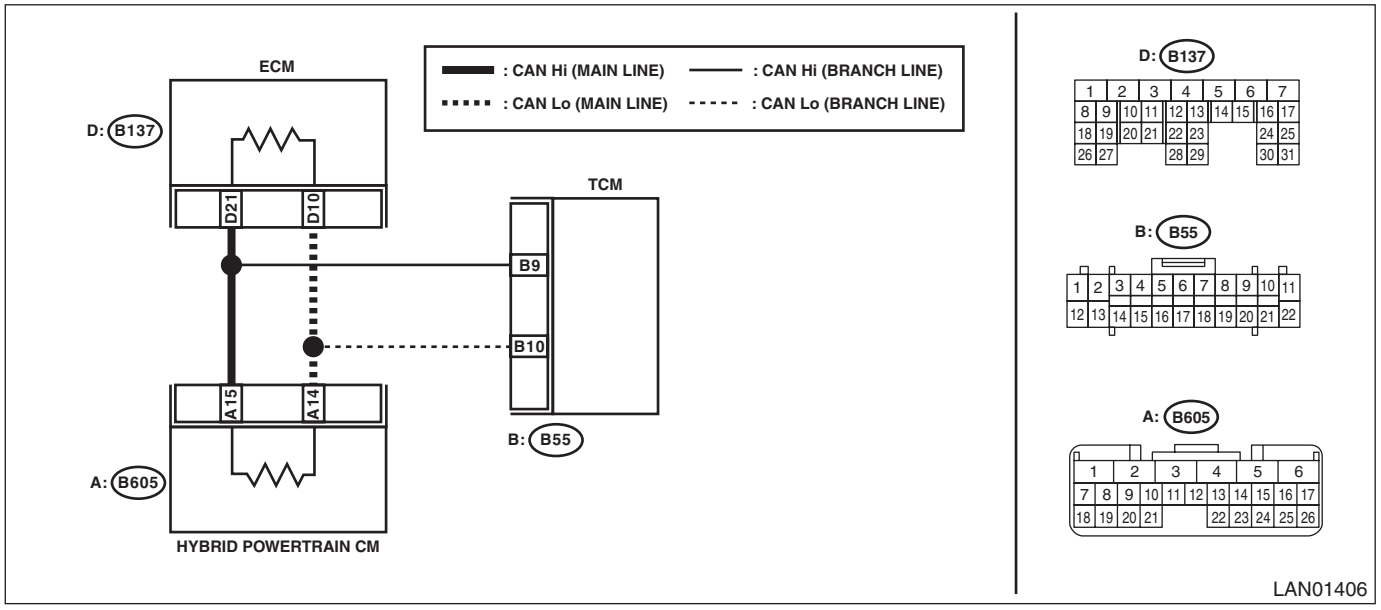

Step		Check	Yes	No
1	**CHECK BASIC DIAGNOSTIC PROCEDURE.** Confirm that the basic diagnostic procedure was performed up to STEP 3. NOTE: Inspection using Subaru Select Monitor helps to find faulty portion easily before “CAN Communication Circuit Check” using the tester.	Was the basic diagnostic procedure performed?	Go to step **2**.	Perform the basic diagnostic procedure. <Ref. to LAN(HEV)(diag)-2, PROCEDURE, Basic Diagnostic Procedure.>
2	**CHECK FROM ECM CONNECTOR.** 1) Disconnect the ECM connector. 2) Using the tester, measure the resistance between terminals. ***Connector & terminal*** ***(B137) No. 21 — Chassis ground:*** ***(B137) No. 10 — Chassis ground:***	Is the resistance 10 Ω or less?	Check for ground short. <Ref. to LAN(HEV)(diag)-73, GROUND SHORT INSPECTION (PU-CAN), INSPECTION, CAN Communication Circuit Check.>	Go to step **3**.

	Step	Check	Yes	No
3	**CHECK FROM ECM CONNECTOR.** 1) Turn the ignition switch to ON. 2) Using the tester, measure the voltage between terminals. ***Connector & terminal*** ***(B137) No. 21 (+) — Chassis ground (–):*** ***(B137) No. 10 (+) — Chassis ground (–):***	Is the voltage 5 V or less?	Go to step **4**.	Check for battery short. <Ref. to LAN(HEV)(diag)-74, BATTERY SHORT INSPECTION (PU-CAN), INSPECTION, CAN Communication Circuit Check.>
4	**CHECK FROM ECM CONNECTOR.** 1) Turn the ignition switch to OFF. 2) Using the tester, measure the resistance between terminals. ***Connector & terminal*** ***(B137) No. 21 — No. 10:***	Is the resistance 56 Ω or less?	Perform the inspection for the resistance of 56 Ω or less. <Ref. to LAN(HEV)(diag)-76, 56 Ω OR LESS (PU-CAN), INSPECTION, CAN Communication Circuit Check.>	Go to step **5**.
5	**CHECK FROM ECM CONNECTOR.** Using the tester, measure the resistance between terminals. ***Connector & terminal*** ***(B137) No. 21 — No. 10:***	Is the resistance 64 Ω or more?	Perform the inspection for the resistance of 64 Ω or more. <Ref. to LAN(HEV)(diag)-77, 64 Ω OR MORE (PU-CAN), INSPECTION, CAN Communication Circuit Check.>	If the display of CAN system U-code disappears from the current malfunction, the CAN network is currently normal. If the U-code has detected as current malfunction, related lines may be open. Perform the inspection for the related line corresponding to the detected DTC. <Ref. to LAN(HEV)(diag)-39, PU-CAN, LIST, CAN Communication Circuit Check.>

3. HEV-CAN

NOTE:
- When measuring the resistance of CAN communication circuit, measure it in sleep status.

To enter sleep status
  – With ignition switch OFF and key or switch operation stopped, keep the doors, trunk, and rear gate all closed for one minute or more.
  – On models with keyless access function, keep the access key 2 m or more away from the vehicle.

- When the bus line is measured, combined resistance of the end resistance (120 Ω) in HPCM and the end resistance (120 Ω) in DMCM can be measured. The combined resistance is approximately 57 — 63 Ω. If the measured resistance value becomes 56 Ω or less, main wiring harness or related lines may be shorted. Or, the combined resistance may have changed because of a resistance other than the end resistance created on the circuit. If the measured value is 64 Ω or more, there may be a malfunction such as open circuit in one of the end resistances, in the stabilizing circuit, or in the main wiring harness.

Also, even when the resistance value falls within approx. 57 — 63 Ω, related lines may be open if an error of communication for initializing or a CAN system U-code has occurred. (The resistance won't be between approx. 57 — 63 Ω if the main wiring harness is open.)

WIRING DIAGRAM:

CAN communication system <Ref. to WI(HEV)-64, WIRING DIAGRAM, CAN Communication System.>

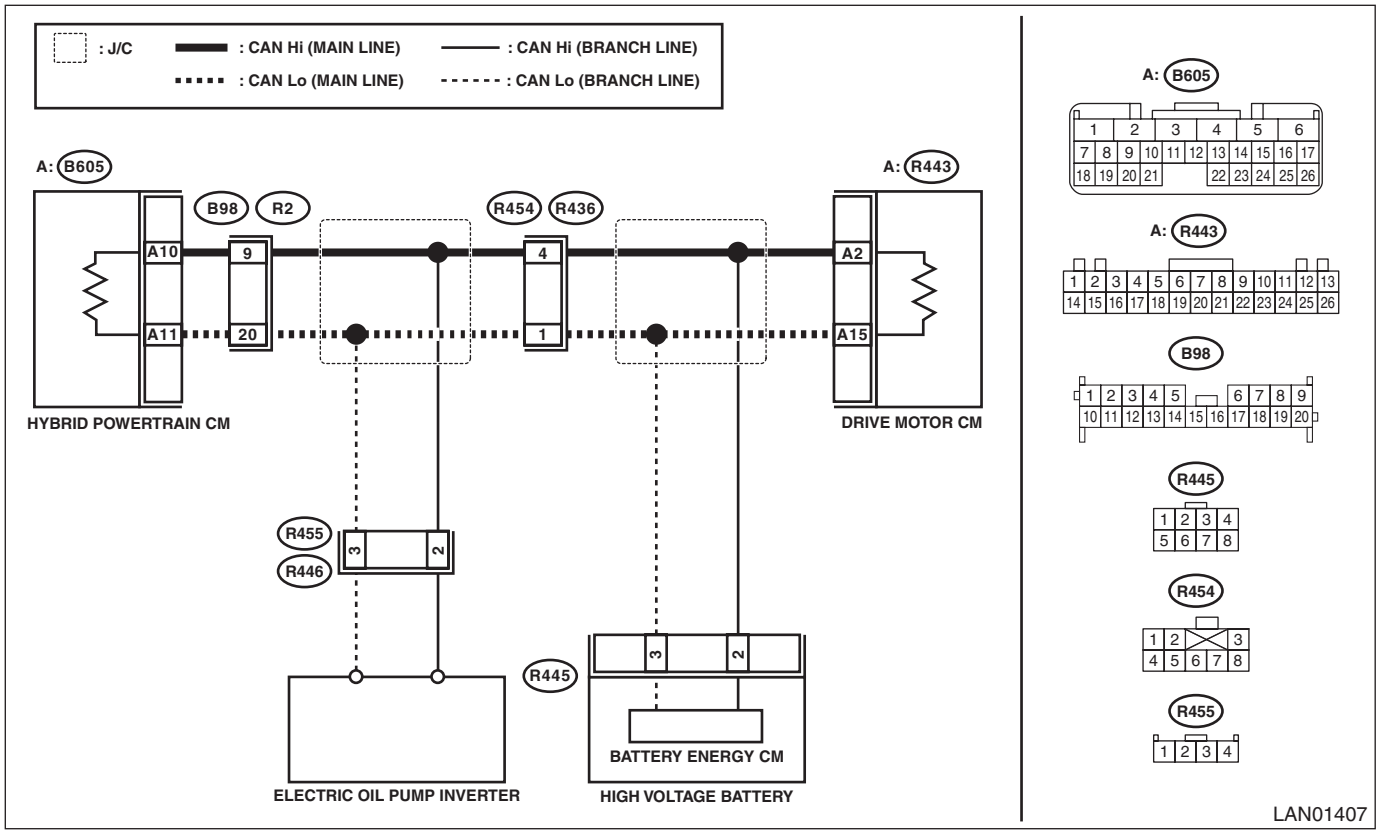

Step		Check	Yes	No
1	**CHECK BASIC DIAGNOSTIC PROCEDURE.** Confirm that the basic diagnostic procedure was performed up to STEP 3. NOTE: Inspection using Subaru Select Monitor helps to find faulty portion easily before “CAN Communication Circuit Check” using the tester.	Was the basic diagnostic procedure performed?	Go to step **2**.	Perform the basic diagnostic procedure. <Ref. to LAN(HEV)(diag)-2, PROCEDURE, Basic Diagnostic Procedure.>

	Step	Check	Yes	No
2	**CHECK FROM HPCM CONNECTOR.** 1) Disconnect the HPCM connector. 2) Using the tester, measure the resistance between terminals. ***Connector & terminal*** ***(B605) No. 10 — Chassis ground:*** ***(B605) No. 11 — Chassis ground:***	Is the resistance 10 Ω or less?	Check for ground short. <Ref. to LAN(HEV)(diag)-79, GROUND SHORT INSPECTION (HEV-CAN), INSPECTION, CAN Communication Circuit Check.>	Go to step **3**.
3	**CHECK FROM HPCM CONNECTOR.** 1) Turn the ignition switch to ON. 2) Using the tester, measure the voltage between terminals. ***Connector & terminal*** ***(B605) No. 10 (+) — Chassis ground (–):*** ***(B605) No. 11 (+) — Chassis ground (–):***	Is the voltage 5 V or less?	Go to step **4**.	Check for battery short. <Ref. to LAN(HEV)(diag)-80, BATTERY SHORT INSPECTION (HEV-CAN), INSPECTION, CAN Communication Circuit Check.>
4	**CHECK FROM HPCM CONNECTOR.** 1) Turn the ignition switch to OFF. 2) Using the tester, measure the resistance between terminals. ***Connector & terminal*** ***(B605) No. 10 — No. 11:***	Is the resistance 56 Ω or less?	Perform the inspection for the resistance of 56 Ω or less. <Ref. to LAN(HEV)(diag)-82, 56 Ω OR LESS (HEV-CAN), INSPECTION, CAN Communication Circuit Check.>	Go to step **5**.
5	**CHECK FROM HPCM CONNECTOR.** Using the tester, measure the resistance between terminals. ***Connector & terminal*** ***(B605) No. 10 — No. 11:***	Is the resistance 64 Ω or more?	Perform the inspection for the resistance of 64 Ω or more. <Ref. to LAN(HEV)(diag)-84, 64 Ω OR MORE (HEV-CAN), INSPECTION, CAN Communication Circuit Check.>	If the display of CAN system U-code disappears from the current malfunction, the CAN network is currently normal. If the U-code has detected as current malfunction, related lines may be open. Perform the inspection for the related line corresponding to the detected DTC. <Ref. to LAN(HEV)(diag)-40, HEV-CAN, LIST, CAN Communication Circuit Check.>

B: LIST

1. MAIN-CAN

Resistance value between CAN Hi and Lo	Contents of inspection	Remarks
Ground short inspection	<Ref. to LAN(HEV)(diag)-41, GROUND SHORT INSPECTION (MAIN-CAN), INSPECTION, CAN Communication Circuit Check.>	Shorted to ground in the communication circuit or control module.
Battery short inspection	<Ref. to LAN(HEV)(diag)-43, BATTERY SHORT INSPECTION (MAIN-CAN), INSPECTION, CAN Communication Circuit Check.>	Shorted to battery power supply in the communication circuit or control module.
53 — 61 Ω	<Ref. to LAN(HEV)(diag)-45, 53 — 61 Ω, INSPECTION, CAN Communication Circuit Check.>	Combined resistance of end resistance does not have malfunction; short to ground or +B short of the CAN communication circuit is possible, however.
52 Ω or less	<Ref. to LAN(HEV)(diag)-47, 52 Ω OR LESS, INSPECTION, CAN Communication Circuit Check.>	Resistance is lower than combined resistance of end resistance. Short to CAN Hi and CAN Lo on the CAN communication circuit is possible.
62 Ω or more	<Ref. to LAN(HEV)(diag)-50, 62 Ω OR MORE, INSPECTION, CAN Communication Circuit Check.>	Resistance is higher than combined resistance of end resistance. Open circuit of CAN communication circuit is possible.
Related lines 53 — 61 Ω (TCM)	<Ref. to LAN(HEV)(diag)-52, RELATED LINES 53 — 61 Ω (TCM), INSPECTION, CAN Communication Circuit Check.>	No TCM data is received. Perform inspection when faulty is detected.
Related lines 53 — 61 Ω (steering angle sensor)	<Ref. to LAN(HEV)(diag)-54, RELATED LINES 53 — 61 Ω (STEERING ANGLE SENSOR), INSPECTION, CAN Communication Circuit Check.>	No steering angle sensor data is received. Perform inspection when faulty is detected.
Related line 53 — 61 Ω (A/C control panel)	<Ref. to LAN(HEV)(diag)-56, RELATED LINE 53 — 61 Ω (A/C CONTROL PANEL), INSPECTION, CAN Communication Circuit Check.>	No A/C data is received. Perform inspection when faulty is detected.
Related lines 53 — 61 Ω (electric power steering CM)	<Ref. to LAN(HEV)(diag)-58, RELATED LINES 53 — 61 Ω (ELECTRIC POWER STEERING CM), INSPECTION, CAN Communication Circuit Check.>	No electric power steering data is received. Perform inspection when faulty is detected.
Related lines 53 — 61 Ω (combination meter)	<Ref. to LAN(HEV)(diag)-60, RELATED LINES 53 — 61 Ω (COMBINATION METER), INSPECTION, CAN Communication Circuit Check.>	No meter data is received. Perform inspection when faulty is detected.
Related lines 53 — 61 Ω (MFD)	<Ref. to LAN(HEV)(diag)-62, RELATED LINES 53 — 61 Ω (MFD), INSPECTION, CAN Communication Circuit Check.>	No MFD data is received. Perform inspection when faulty is detected.
Related lines 53 — 61 Ω (A/B CM)	<Ref. to LAN(HEV)(diag)-64, RELATED LINES 53 — 61 Ω (A/B CM), INSPECTION, CAN Communication Circuit Check.>	No airbag data is received. Perform inspection when faulty is detected.
Related lines 53 — 61 Ω (keyless access system)	<Ref. to LAN(HEV)(diag)-66, RELATED LINES 53 — 61 Ω (KEYLESS ACCESS SYSTEM), INSPECTION, CAN Communication Circuit Check.>	No keyless access CM data is received. Perform inspection when faulty is detected.
Related lines 53 — 61 Ω (remote engine starter)	<Ref. to LAN(HEV)(diag)-68, RELATED LINES 53 — 61 Ω (REMOTE ENGINE STARTER), INSPECTION, CAN Communication Circuit Check.>	Perform inspection when the remote engine starter does not operate, while the mobile key side operates normally.

Resistance value between CAN Hi and Lo	Contents of inspection	Remarks
Related line 53 — 61 Ω (headlight beam leveler)	<Ref. to LAN(HEV)(diag)-70, RELATED LINES 53 — 61 Ω (HEADLIGHT BEAM LEVELER), INSPECTION, CAN Communication Circuit Check.>	No headlight beam leveler data is received. Perform inspection when faulty is detected.
Related lines 53 — 61 Ω (HPCM)	<Ref. to LAN(HEV)(diag)-72, RELATED LINES 53 — 61 Ω (HPCM), INSPECTION, CAN Communication Circuit Check.>	No hybrid data is received. Perform inspection when faulty is detected.

2. PU-CAN

Resistance value between CAN Hi and Lo	Contents of inspection	Remarks
Ground short inspection	<Ref. to LAN(HEV)(diag)-73, GROUND SHORT INSPECTION (PU-CAN), INSPECTION, CAN Communication Circuit Check.>	Shorted to ground in the communication circuit or control module.
Battery short inspection	<Ref. to LAN(HEV)(diag)-74, BATTERY SHORT INSPECTION (PU-CAN), INSPECTION, CAN Communication Circuit Check.>	Shorted to battery power supply in the communication circuit or control module.
57 — 63 Ω	<Ref. to LAN(HEV)(diag)-75, 57 — 63 Ω (PU-CAN), INSPECTION, CAN Communication Circuit Check.>	Combined resistance of end resistance does not have malfunction; short to ground or +B short of the CAN communication circuit is possible, however.
56 Ω or less	<Ref. to LAN(HEV)(diag)-76, 56 Ω OR LESS (PU-CAN), INSPECTION, CAN Communication Circuit Check.>	Resistance is lower than combined resistance of end resistance. Short to CAN Hi and CAN Lo on the CAN communication circuit is possible.
64 Ω or more	<Ref. to LAN(HEV)(diag)-77, 64 Ω OR MORE (PU-CAN), INSPECTION, CAN Communication Circuit Check.>	Resistance is higher than combined resistance of end resistance. Open circuit of CAN communication circuit is possible.
Related lines 57 — 63 Ω (TCM)	<Ref. to LAN(HEV)(diag)-78, 57 — 63 Ω (PU-CAN_TCM), INSPECTION, CAN Communication Circuit Check.>	No TCM data is received. Perform inspection when faulty is detected.

3. HEV-CAN

Resistance value between CAN Hi and Lo	Contents of inspection	Remarks
Ground short inspection	<Ref. to LAN(HEV)(diag)-79, GROUND SHORT INSPECTION (HEV-CAN), INSPECTION, CAN Communication Circuit Check.>	Shorted to ground in the communication circuit or control module.
Battery short inspection	<Ref. to LAN(HEV)(diag)-80, BATTERY SHORT INSPECTION (HEV-CAN), INSPECTION, CAN Communication Circuit Check.>	Shorted to battery power supply in the communication circuit or control module.
57 — 63 Ω	<Ref. to LAN(HEV)(diag)-81, 57 — 63 Ω (HEV-CAN), INSPECTION, CAN Communication Circuit Check.>	Combined resistance of end resistance does not have malfunction; short to ground or +B short of the CAN communication circuit is possible, however.
56 Ω or less	<Ref. to LAN(HEV)(diag)-82, 56 Ω OR LESS (HEV-CAN), INSPECTION, CAN Communication Circuit Check.>	Resistance is lower than combined resistance of end resistance. Short to CAN Hi and CAN Lo on the CAN communication circuit is possible.
64 Ω or more	<Ref. to LAN(HEV)(diag)-84, 64 Ω OR MORE (HEV-CAN), INSPECTION, CAN Communication Circuit Check.>	Resistance is higher than combined resistance of end resistance. Open circuit of CAN communication circuit is possible.
Related lines 57 — 63 Ω (BECM)	<Ref. to LAN(HEV)(diag)-85, 57 — 63 Ω (HEV-CAN_BECM), INSPECTION, CAN Communication Circuit Check.>	No BECM data is received. Perform inspection when faulty is detected.
Related lines 57 — 63 Ω (electric oil pump)	<Ref. to LAN(HEV)(diag)-86, 57 — 63 Ω (HEV-CAN_ELECTRIC OIL PUMP), INSPECTION, CAN Communication Circuit Check.>	No electric oil pump data is received. Perform inspection when faulty is detected.

C: INSPECTION

1. GROUND SHORT INSPECTION (MAIN-CAN)

WIRING DIAGRAM:

CAN communication system <Ref. to WI(HEV)-64, WIRING DIAGRAM, CAN Communication System.>

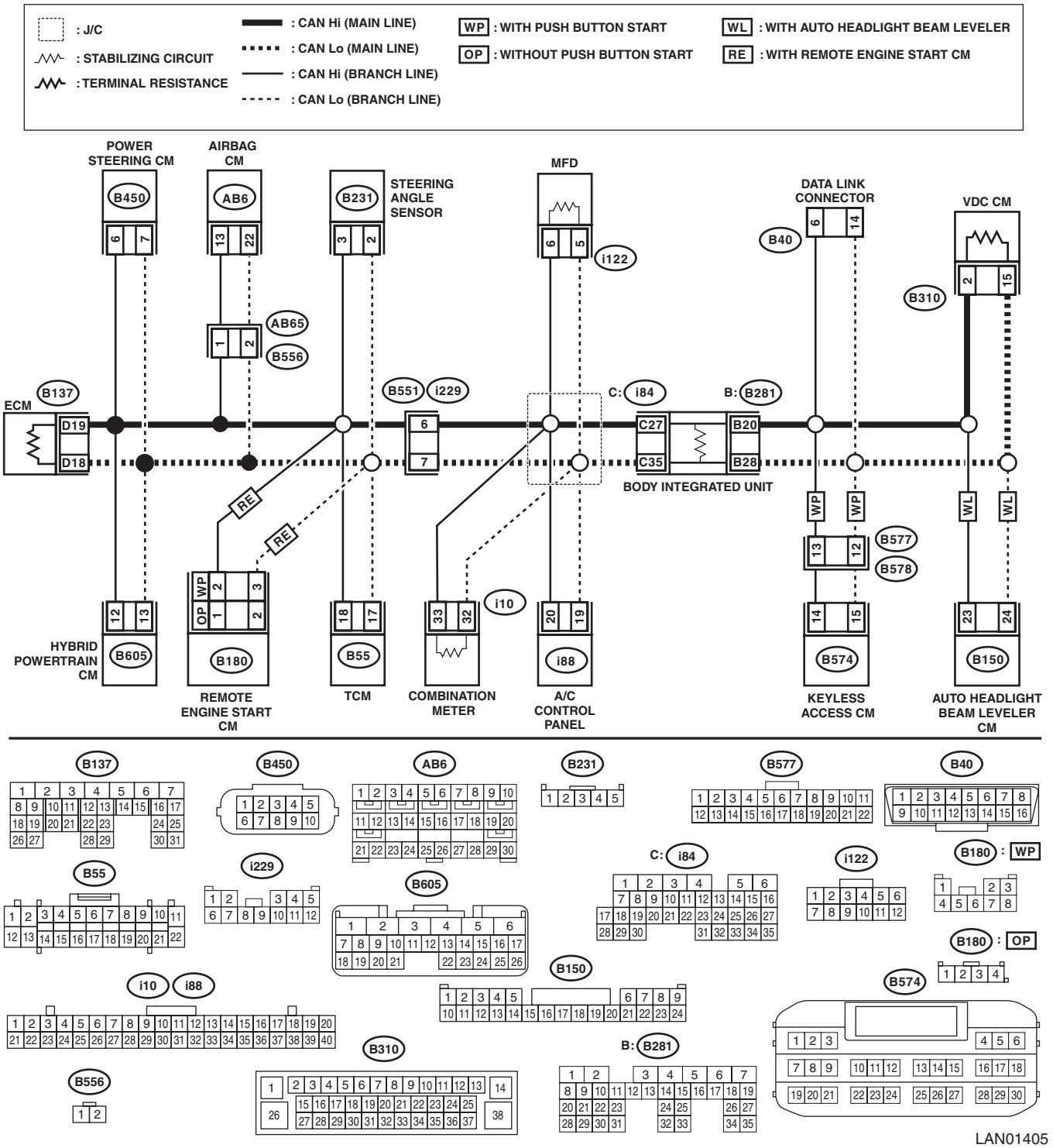

NOTE:
Main wiring harness or related lines may be shorted to ground, or shorted to ground in one of the control modules.

	Step	Check	Yes	No
1	**CHECK BETWEEN RELATED LINES AND MAIN WIRING HARNESS.** Using the tester, measure the resistance between terminals. ***Connector & terminal*** ***(B40) No. 6 — Chassis ground:*** ***(B40) No. 14 — Chassis ground:***	Is the resistance 10 Ω or less?	Go to step **2**.	Currently, it is normal.
2	**CHECK CONTROL MODULE.** With the tester connected, disconnect control module. NOTE: Disconnect the body integrated unit at the end. ***Connector & terminal*** ***(B40) No. 6 — Chassis ground:*** ***(B40) No. 14 — Chassis ground:***	Did the resistance change to 10 Ω or more?	Replace the control module whose resistance has changed. When the value changed at disconnecting the body integrated unit, Go to step **3**.	Repair or replace the short circuit of the main wiring harness and related lines between body integrated unit and VDC CM.
3	**CHECK BETWEEN MAIN WIRING HARNESSES.** Using the tester, measure the resistance between terminals. ***Connector & terminal*** ***(i84) No. 27 — Chassis ground:*** ***(i84) No. 35 — Chassis ground:***	Is the resistance 10 Ω or less?	Repair or replace the short circuit of the main wiring harness and related lines between ECM and body integrated unit.	Replace the body integrated unit. <Ref. to SL-82, REMOVAL, Body Integrated Unit.>

2. BATTERY SHORT INSPECTION (MAIN-CAN)

WIRING DIAGRAM:

CAN communication system <Ref. to WI(HEV)-64, WIRING DIAGRAM, CAN Communication System.>

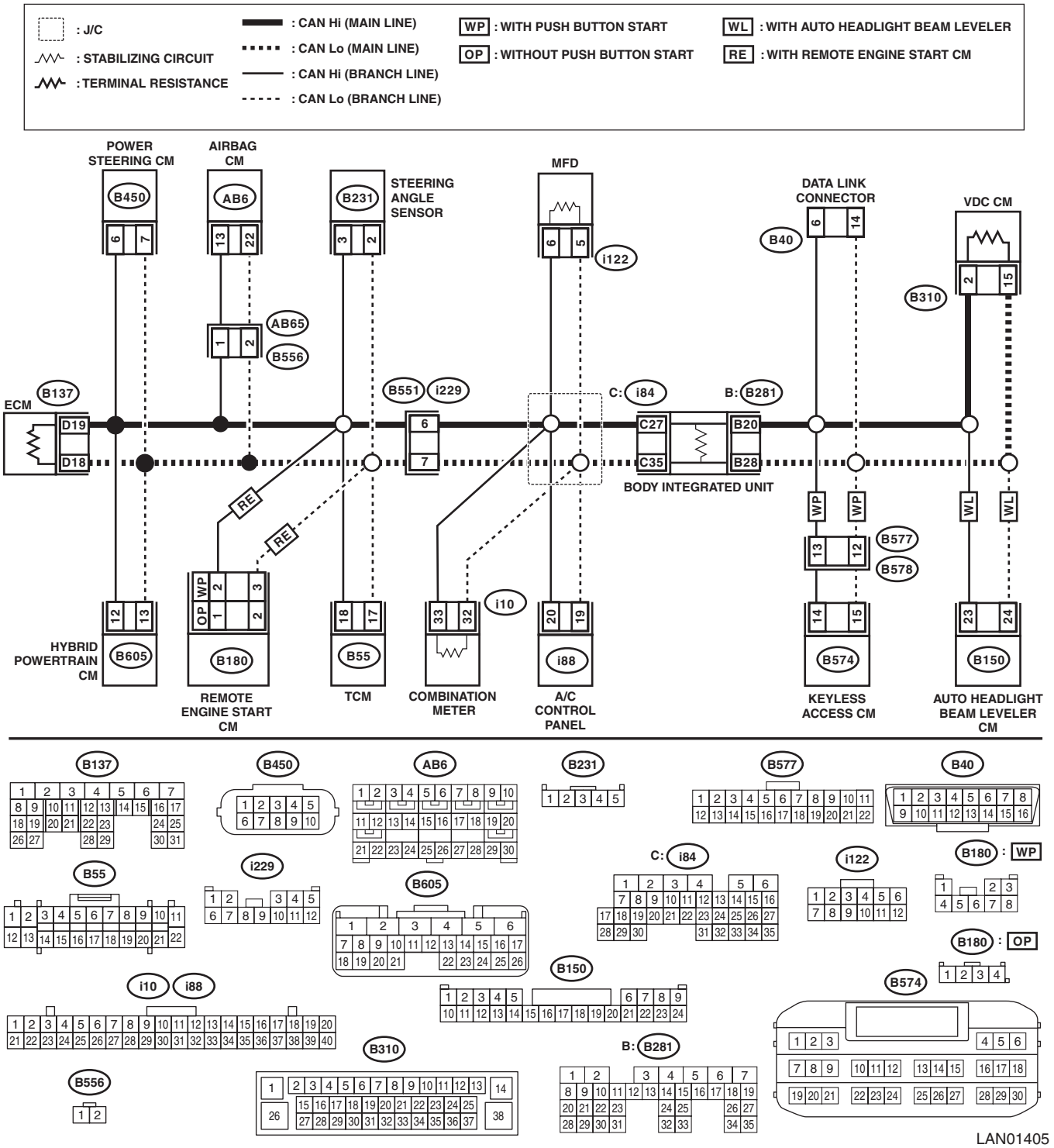

NOTE:

Main wiring harness or related lines may be shorted to battery circuit, or shorted to battery circuit in one of the control modules.

	Step	Check	Yes	No
1	**CHECK BETWEEN RELATED LINES AND MAIN WIRING HARNESS.** 1) Turn the ignition switch to ON. 2) Using the tester, measure the voltage between terminals. ***Connector & terminal*** ***(B40) No. 6 — Chassis ground:*** ***(B40) No. 14 — Chassis ground:***	Is the voltage 5 V or less?	Currently, it is normal.	Go to step **2**.
2	**CHECK CONTROL MODULE.** With the tester connected, disconnect control module. NOTE: Disconnect the body integrated unit at the end. ***Connector & terminal*** ***(B40) No. 6 — Chassis ground:*** ***(B40) No. 14 — Chassis ground:***	Did the voltage change to 5 V or less?	Replace the control module whose voltage has changed. When the value changed at disconnecting the body integrated unit, Go to step **3**.	Repair or replace the short circuit of the harness between body integrated unit and VDC CM.
3	**CHECK BETWEEN MAIN WIRING HARNESSES.** Using the tester, measure the voltage between terminals. ***Connector & terminal*** ***(i84) No. 27 — Chassis ground:*** ***(i84) No. 35 — Chassis ground:***	Is the voltage 5 V or less?	Replace the body integrated unit. <Ref. to SL-82, REMOVAL, Body Integrated Unit.>	Repair or replace the short circuit of the harness between ECM and body integrated unit.

3. 53 — 61 Ω

WIRING DIAGRAM:

CAN communication system <Ref. to WI(HEV)-64, WIRING DIAGRAM, CAN Communication System.>

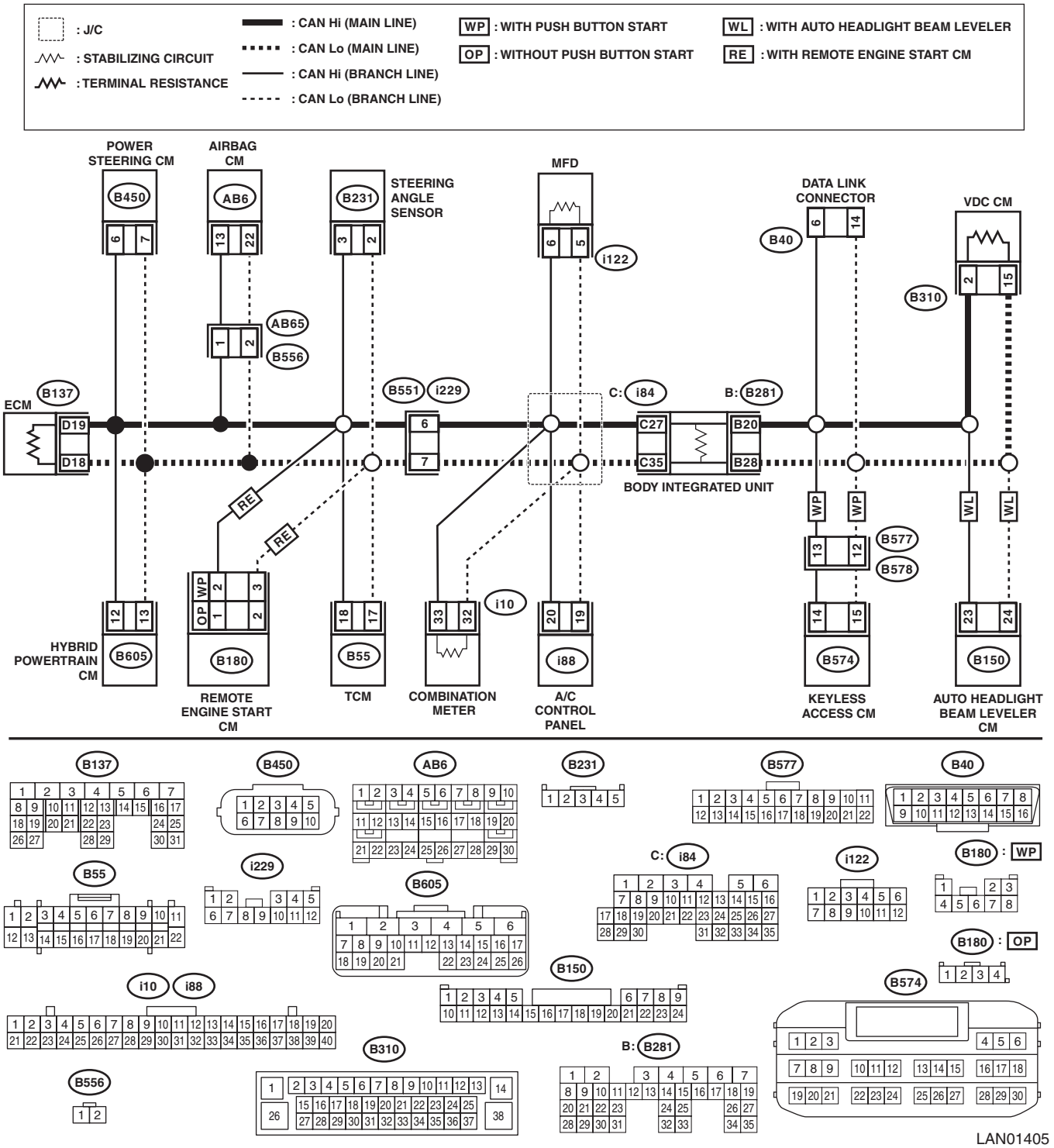

NOTE:
When the measured resistance value is 53 — 61 Ω, main wiring harness or related lines may be shorted to ground, or shorted to power supply line, or related line may be open.

	Step	Check	Yes	No
1	**CHECK BETWEEN RELATED LINES AND MAIN WIRING HARNESS.** Using the tester, measure the resistance between terminals. ***Connector & terminal*** ***(B40) No. 6 — Chassis ground:*** ***(B40) No. 14 — Chassis ground:***	Is the resistance 10 Ω or less?	Go to step **2**.	Go to step **4**.
2	**CHECK CONTROL MODULE.** With the tester connected, disconnect control module. NOTE: Disconnect the body integrated unit at the end. ***Connector & terminal*** ***(B40) No. 6 — Chassis ground:*** ***(B40) No. 14 — Chassis ground:***	Did the resistance change to 10 Ω or more?	Replace the control module whose resistance has changed. When the value changed at disconnecting the body integrated unit, Go to step **3**.	Repair or replace the short circuit of the harness between body integrated unit and VDC CM.
3	**CHECK MAIN WIRING HARNESS AND RELATED LINES.** Using the tester, measure the resistance between terminals. ***Connector & terminal*** ***(i84) No. 27 — Chassis ground:*** ***(i84) No. 35 — Chassis ground:***	Is the resistance 10 Ω or less?	Repair or replace the short circuit of the harness between ECM and body integrated unit.	Replace the body integrated unit. <Ref. to SL-82, REMOVAL, Body Integrated Unit.>
4	**CHECK BETWEEN RELATED LINES AND MAIN WIRING HARNESS.** 1) Turn the ignition switch to ON. 2) Using the tester, measure the voltage between terminals. ***Connector & terminal*** ***(B40) No. 6 — Chassis ground:*** ***(B40) No. 14 — Chassis ground:***	Is the voltage 5 V or less?	CAN communication circuit is normal.	Go to step **5**.
5	**CHECK CONTROL MODULE.** With the tester connected, disconnect control module. NOTE: Disconnect the body integrated unit at the end. ***Connector & terminal*** ***(B40) No. 6 — Chassis ground:*** ***(B40) No. 14 — Chassis ground:***	Did the voltage change to 5 V or less?	Replace the control module whose voltage has changed. When the value changed at disconnecting the body integrated unit, Go to step **6**.	Repair or replace the short circuit of the harness between body integrated unit and VDC CM.
6	**CHECK HARNESS.** Using a tester, measure the voltage between terminals and chassis ground. ***Connector & terminal*** ***(i84) No. 27 — Chassis ground:*** ***(i84) No. 35 — Chassis ground:***	Is the voltage 5 V or less?	Replace the body integrated unit. <Ref. to SL-82, REMOVAL, Body Integrated Unit.>	Repair or replace the short circuit of the harness between ECM and body integrated unit.

4. 52 Ω OR LESS

WIRING DIAGRAM:

CAN communication system <Ref. to WI(HEV)-64, WIRING DIAGRAM, CAN Communication System.>

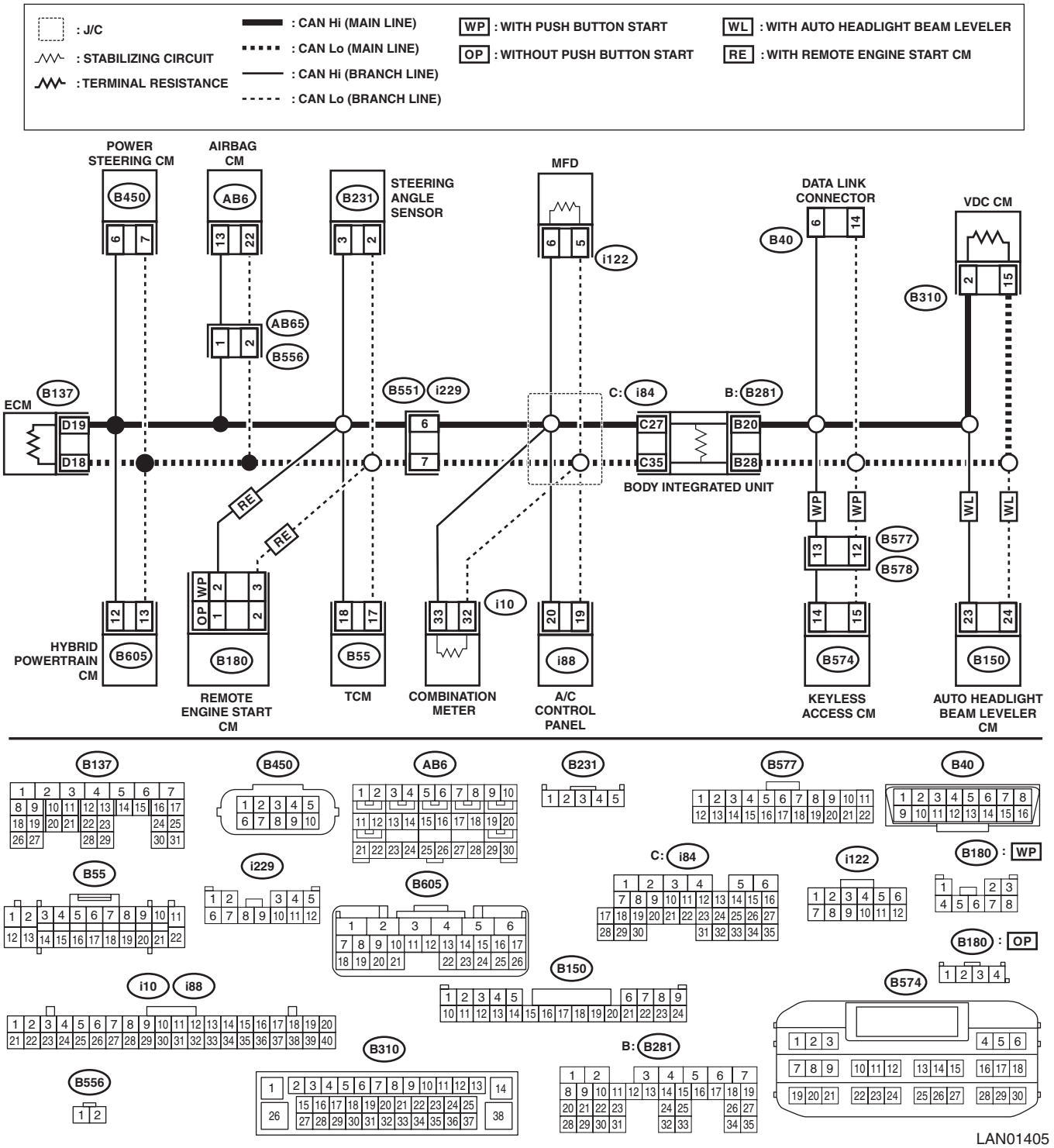

NOTE:

When the bus line is measured, combined resistance of end resistance (120 Ω) in ECM and end resistance (120 Ω) in VDC CM can be measured. The combined resistance is approximately 53 — 61 Ω with the stabilizing circuit included. When the measured resistance value is 52 Ω or less, main wiring harness or related lines may be shorted, or combined resistance may have changed because resistance other than end resistance is created on the circuit.

	Step	Check	Yes	No
1	**CHECK BETWEEN RELATED LINES AND MAIN WIRING HARNESS.** Using the tester, measure the resistance between terminals. ***Connector & terminal*** ***(B40) No. 6 — No. 14:***	Is the resistance 10 Ω or less?	Go to step **2**.	Go to step **4**.
2	**CHECK MAIN WIRING HARNESS AND RELATED LINES.** With a tester connected, disconnect control module connectors in order. NOTE: Disconnect the body integrated unit at the end. ***Connector & terminal*** ***(B40) No. 6 — No. 14:***	Is there any control module whose condition has changed from short state?	Replace the control module whose resistance has changed. When the value changed at disconnecting the body integrated unit, Go to step **3**.	Repair or replace the short circuit of the harness between body integrated unit and VDC CM.
3	**CHECK BETWEEN MAIN WIRING HARNESSES.** Using the tester, measure the resistance between terminals. ***Connector & terminal*** ***(i84) No. 27 — No. 35:***	Is the resistance 10 Ω or less?	Repair or replace the short circuit of the harness between ECM and body integrated unit.	Replace the body integrated unit. <Ref. to SL-82, REMOVAL, Body Integrated Unit.>
4	**CHECK CONTROL MODULE.** 1) Disconnect ECM and VDC CM connectors. 2) Using a tester, measure the resistance between control module terminals. ***Connector & terminal*** ***(B137) No. 19 — No. 18:*** ***(B310) No. 2 — No. 15:***	Is the resistance 114 — 126 Ω?	Go to step **5**.	Replace the control module whose end resistance value is out of the specified range.
5	**CHECK CONTROL MODULE.** 1) Disconnect the connector of body integrated unit. 2) Using a tester, measure the resistance between control module terminals. ***Connector & terminal*** ***(B281) No. 28 — (i84) No. 27:*** ***(B281) No. 20 — (i84) No. 35:***	Is the resistance 2850 — 3150 Ω?	Go to step **6**.	Replace the body integrated unit. <Ref. to SL-82, REMOVAL, Body Integrated Unit.>
6	**CHECK CONTROL MODULE.** Using a tester, measure the resistance between control module terminals. ***Connector & terminal*** ***(B281) No. 28 — (i84) No. 35:*** ***(B281) No. 20 — (i84) No. 27:***	Is the resistance less than 1 Ω?	Go to step **7**.	Replace the body integrated unit. <Ref. to SL-82, REMOVAL, Body Integrated Unit.>
7	**CHECK CONTROL MODULE.** 1) Disconnect the combination meter connector. 2) Using a tester, measure the resistance between control module terminals. ***Connector & terminal*** ***(i10) No. 32 — No. 33:***	Is the resistance 2850 — 3150 Ω?	Go to step **8**.	Replace the combination meter. <Ref. to IDI-16, REMOVAL, Combination Meter.>
8	**CHECK CONTROL MODULE.** 1) Disconnect the MFD connector. 2) Using a tester, measure the resistance between control module terminals. ***Connector & terminal*** ***(i122) No. 5 — No. 6:***	Is the resistance 2850 — 3150 Ω?	Go to step **9**.	Replace the MFD. <Ref. to IDI-23, REMOVAL, Multi-function Display (MFD).>

Step		Check	Yes	No
9	**CHECK HARNESS.** Using the tester, check the short circuit portion of each harness. ***Connector & terminal*** ***(B281) No. 28 — No. 20:***	Is the resistance 1 MΩ or more?	Go to step **11**.	Go to step **10**.
10	**CHECK CONTROL MODULE.** With a tester connected, disconnect control modules in order. ***Connector & terminal*** ***(B281) No. 28 — No. 20:***	Is there any control module whose resistance has changed to 1 MΩ or more?	Replace the control module that has changed.	Repair or replace the harness part which has resistance component.
11	**CHECK CONTROL MODULE.** With a tester connected, disconnect control modules in order. ***Connector & terminal*** ***(i84) No. 27 — No. 35:***	Is there any control module whose resistance has changed to 1 MΩ or more?	Replace the control module that has changed.	Repair or replace the harness part which has resistance component.

5. 62 Ω OR MORE

WIRING DIAGRAM:

CAN communication system <Ref. to WI(HEV)-64, WIRING DIAGRAM, CAN Communication System.>

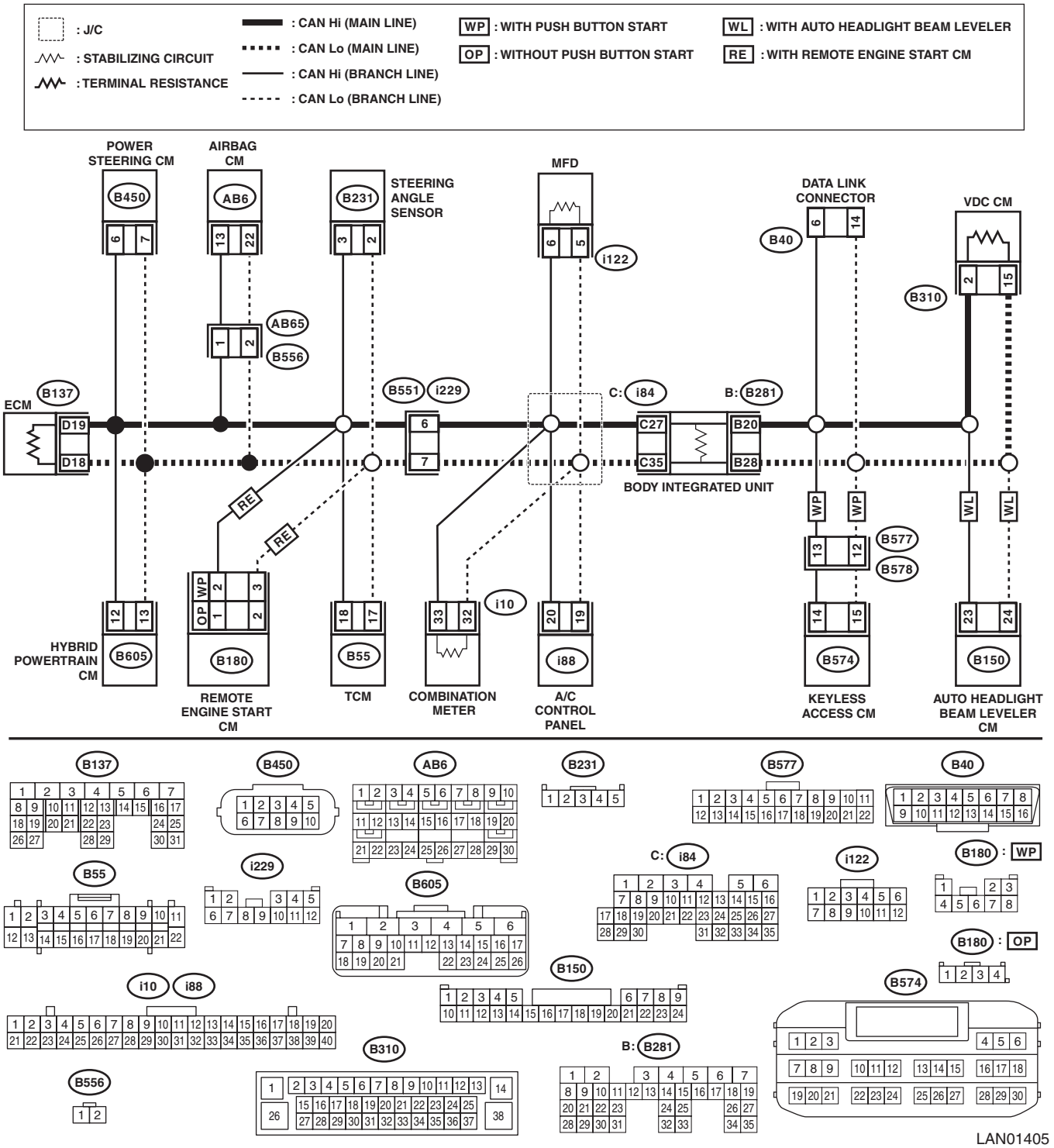

NOTE:

When CAN communication circuit is measured, combined resistance of end resistance (120 Ω) in ECM and end resistance (120 Ω) in VDC CM can be measured. The combined resistance is approximately 53 — 61 Ω with the stabilizing circuit included. When the measured resistance value is 62 Ω or more, either one of the end resistances, or stabilizing circuit, or main wiring harness may have malfunction such as open circuit.

	Step	Check	Yes	No
1	**CHECK CONTROL MODULE.** 1) Disconnect ECM and VDC CM connectors. 2) Using a tester, measure the resistance between control module terminals. ***Connector & terminal*** ***(B137) No. 19 — No. 18:*** ***(B310) No. 2 — No. 15:***	Is the resistance 114 — 126 Ω?	Go to step **2**.	Replace the control module whose value is out of the specification.
2	**CHECK CONTROL MODULE.** 1) Disconnect the connector of body control module. 2) Using a tester, measure the resistance between control module terminals. ***Connector & terminal*** ***(B281) No. 28 — (i84) No. 27:*** ***(B281) No. 20 — (i84) No. 35:***	Is the resistance 2850 — 3150 Ω?	Go to step **3**.	Replace the body integrated unit. <Ref. to SL-82, REMOVAL, Body Integrated Unit.>
3	**CHECK CONTROL MODULE.** Using the tester, measure the resistance between terminals. ***Connector & terminal*** ***(B281) No. 28 — (i84) No. 35:*** ***(B281) No. 20 — (i84) No. 27:***	Is the resistance less than 1 Ω?	Go to step **4**.	Replace the body integrated unit. <Ref. to SL-82, REMOVAL, Body Integrated Unit.>
4	**CHECK CONTROL MODULE.** 1) Disconnect the combination meter connector. 2) Using a tester, measure the resistance between control module terminals. ***Connector & terminal*** ***(i10) No. 32 — No. 33:***	Is the resistance 2850 — 3150 Ω?	Go to step **5**.	Replace the combination meter. <Ref. to IDI-16, REMOVAL, Combination Meter.>
5	**CHECK CONTROL MODULE.** 1) Disconnect the MFD connector. 2) Using a tester, measure the resistance between control module terminals. ***Connector & terminal*** ***(i122) No. 5 — No. 6:***	Is the resistance 2850 — 3150 Ω?	Go to step **6**.	Replace the MFD. <Ref. to IDI-23, REMOVAL, Multi-function Display (MFD).>
6	**CHECK HARNESS.** Using a tester, check continuity between terminals. ***Connector & terminal*** ***(B40) No. 6 — (B137) No. 19:*** ***(B40) No. 14 — (B137) No. 18:*** ***(B40) No. 6 — (i84) No. 27:*** ***(B40) No. 14 — (i84) No. 35:***	Is there continuity?	Go to step **7**.	Repair or replace the open circuit of harness.
7	**CHECK HARNESS.** Using a tester, check continuity between terminals. ***Connector & terminal*** ***(B281) No. 20 — (B310) No. 2:*** ***(B281) No. 28 — (B310) No. 15:***	Is there continuity?	It is possible that temporary poor communication occurs.	Repair or replace the open circuit of harness.

6. RELATED LINES 53 — 61 Ω (TCM)

WIRING DIAGRAM:

CAN communication system <Ref. to WI(HEV)-64, WIRING DIAGRAM, CAN Communication System.>

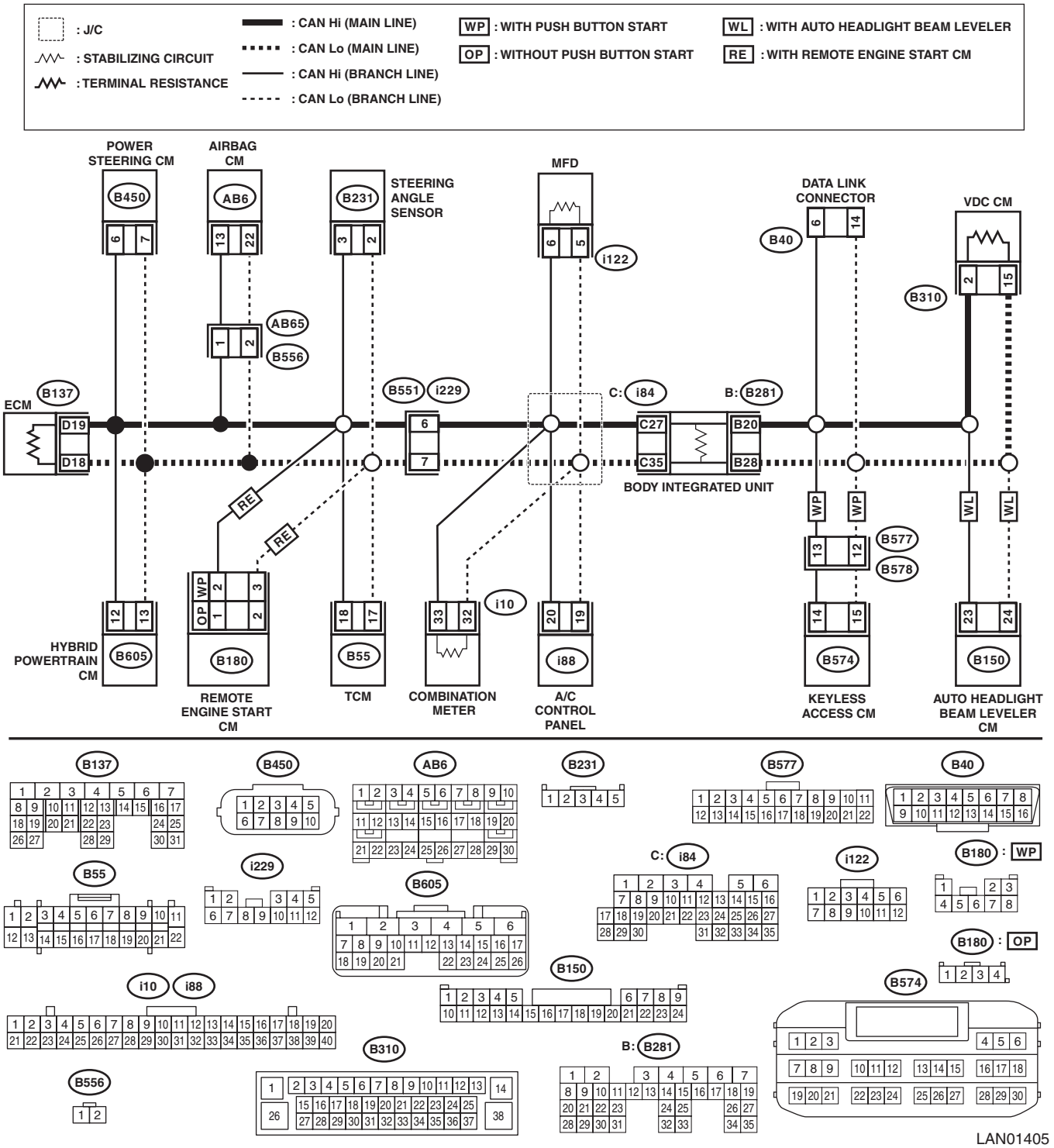

NOTE:
Perform inspection when no data is received, or faulty is detected. This is different from power supply shorted or ground shorted.

	Step	Check	Yes	No
1	**CHECK BETWEEN RELATED LINES AND MAIN WIRING HARNESS.** 1) Disconnect the TCM connector. 2) Using the tester, measure the resistance between terminals. ***Connector & terminal*** ***(B55) No. 17 — No. 18:***	Is the resistance 400 Ω or more?	Related lines between TCM and main wiring harness is open, or main wiring harness is open at two places or more.	Go to step **2**.
2	**CHECK RELATED LINES.** Using the tester, measure the resistance between terminals. ***Connector & terminal*** ***(B55) No. 17 — (B40) No. 14:*** ***(B55) No. 18 — (B40) No. 6:***	Is the resistance 10 Ω or more?	Repair or replace the open circuit portion of TCM related lines.	Check DTC of TCM. <Ref. to CVT(HEV)(diag)-18, OPERATION, Read Diagnostic Trouble Code (DTC).>

7. RELATED LINES 53 — 61 Ω (STEERING ANGLE SENSOR)

WIRING DIAGRAM:

CAN communication system <Ref. to WI(HEV)-64, WIRING DIAGRAM, CAN Communication System.>

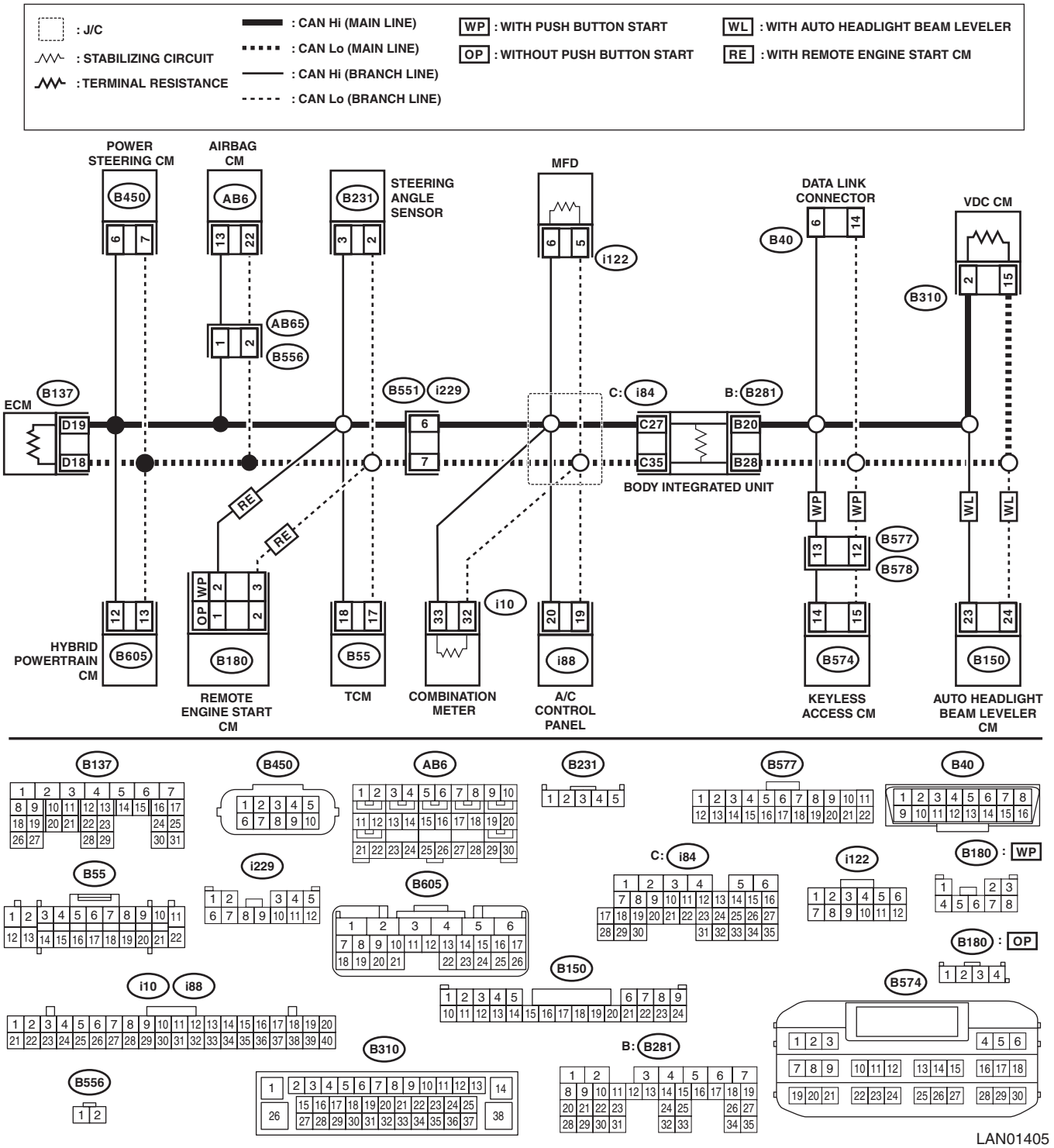

	Step	Check	Yes	No
1	**CHECK BETWEEN RELATED LINES AND MAIN WIRING HARNESS.** 1) Disconnect the steering angle sensor connector. 2) Using the tester, measure the resistance between terminals. ***Connector & terminal*** ***(B231) No. 2 — No. 3:***	Is the resistance 400 Ω or more?	Related lines between steering angle sensor and main wiring harness is open, or main wiring harness is open at two places or more.	Go to step **2**.
2	**CHECK RELATED LINES.** Using the tester, measure the resistance between terminals. ***Connector & terminal*** ***(B231) No. 2 — (B40) No. 14:*** ***(B231) No. 3 — (B40) No. 6:***	Is the resistance 10 Ω or more?	Repair or replace the open circuit portion of steering angle sensor related lines.	Check DTC of VDC CM. <Ref. to VDC(diag)-21, OPERATION, Read Diagnostic Trouble Code (DTC).>

8. RELATED LINE 53 — 61 Ω (A/C CONTROL PANEL)

WIRING DIAGRAM:

CAN communication system <Ref. to WI(HEV)-64, WIRING DIAGRAM, CAN Communication System.>

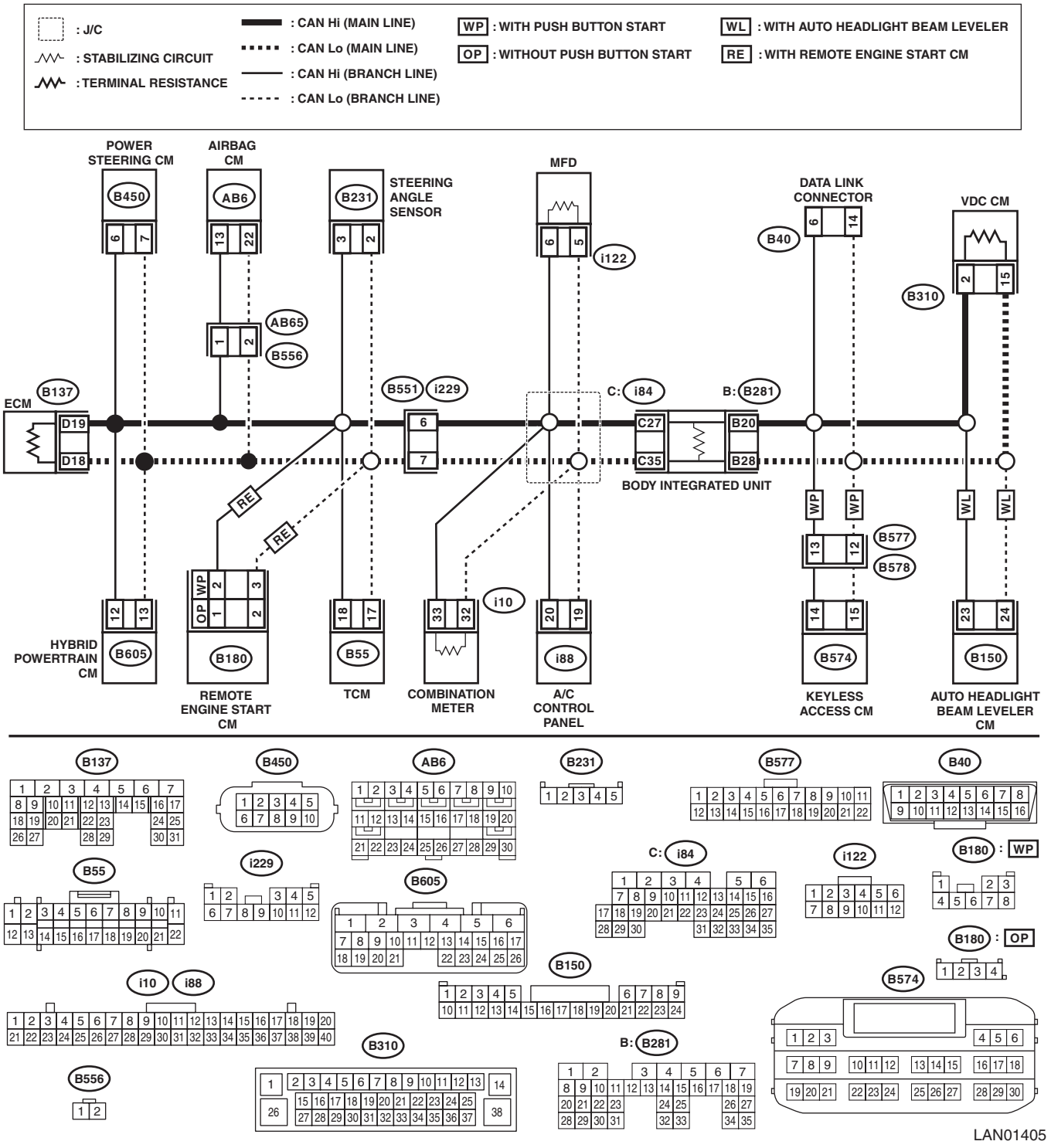

	Step	Check	Yes	No
1	**CHECK BETWEEN RELATED LINES AND MAIN WIRING HARNESS.** 1) Disconnect the A/C control panel connector. 2) Using the tester, measure the resistance between terminals. ***Connector & terminal*** ***(i88) No. 19 — No. 20:***	Is the resistance 400 Ω or more?	Related lines between A/C control panel and main wiring harness is open, or main wiring harness is open at two places or more.	Go to step **2**.
2	**CHECK RELATED LINES.** Using the tester, measure the resistance between terminals. ***Connector & terminal*** ***(i88) No. 19 — (B40) No. 14:*** ***(i88) No. 20 — (B40) No. 6:***	Is the resistance 10 Ω or more?	Repair or replace the open circuit of A/C control panel related lines.	Check the DTC of A/C control panel. <Ref. to AC(diag)-42, Read Diagnostic Trouble Code (DTC).>

9. RELATED LINES 53 — 61 Ω (ELECTRIC POWER STEERING CM)

WIRING DIAGRAM:

CAN communication system <Ref. to WI(HEV)-64, WIRING DIAGRAM, CAN Communication System.>

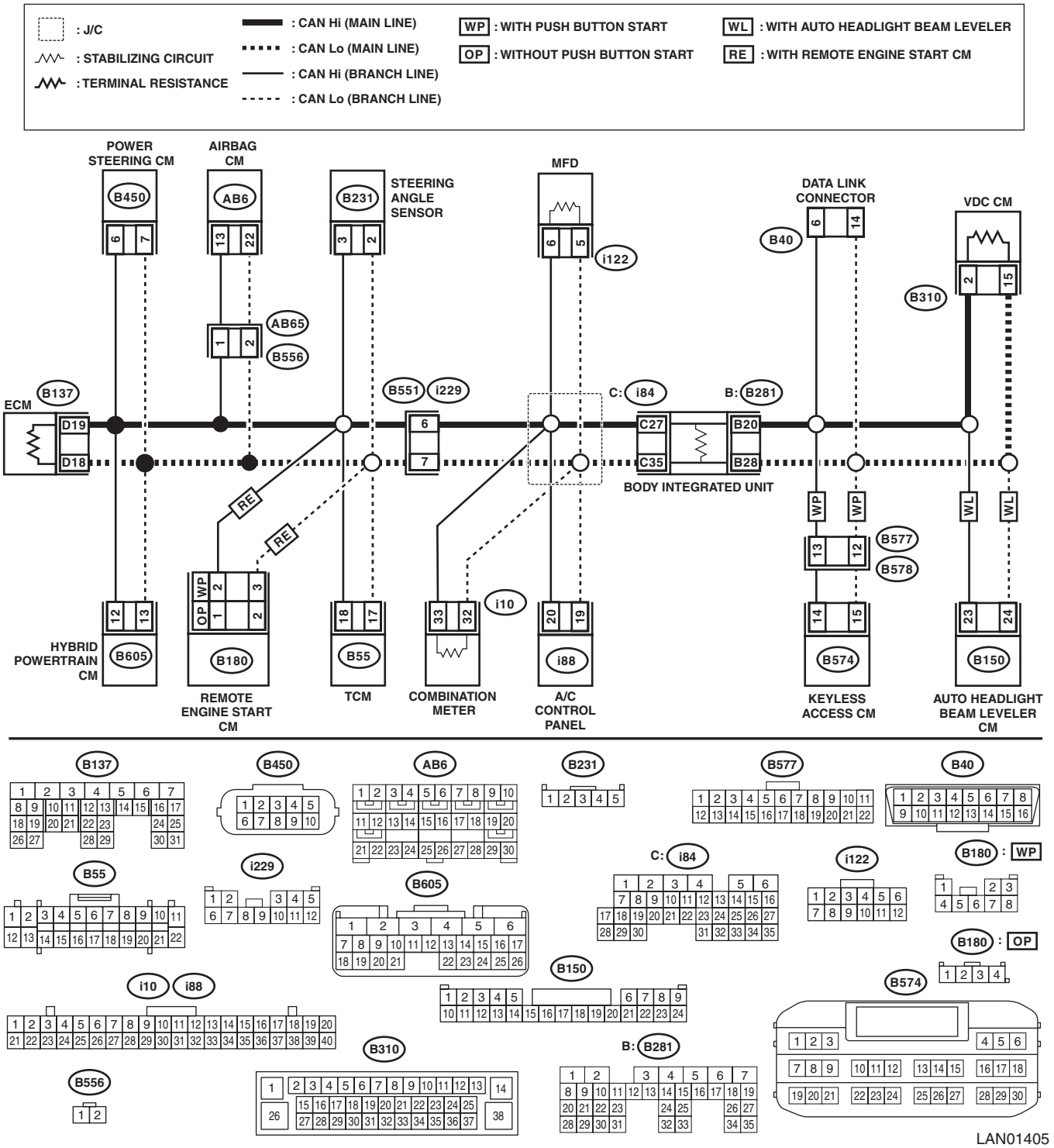

LAN01405

	Step	Check	Yes	No
1	**CHECK BETWEEN RELATED LINES AND MAIN WIRING HARNESS.** 1) Disconnect the electric power steering CM connector. 2) Using the tester, measure the resistance between terminals. ***Connector & terminal*** ***(B450) No. 6 — No. 7:***	Is the resistance 400 Ω or more?	Related lines between electric power steering CM and main wiring harness, or main wiring harness is open at two places or more.	Go to step **2**.
2	**CHECK RELATED LINES.** Using the tester, measure the resistance between terminals. ***Connector & terminal*** ***(B450) No. 6 — (B40) No. 6:*** ***(B450) No. 7 — (B40) No. 14:***	Is the resistance 10 Ω or more?	Repair or replace the open circuit portion of electric power steering CM related lines.	Check DTC of electric power steering CM. <Ref. to PS(diag)-20, OPERATION, Read Diagnostic Trouble Code (DTC).>

10.RELATED LINES 53 — 61 Ω (COMBINATION METER)

WIRING DIAGRAM:

CAN communication system <Ref. to WI(HEV)-64, WIRING DIAGRAM, CAN Communication System.>

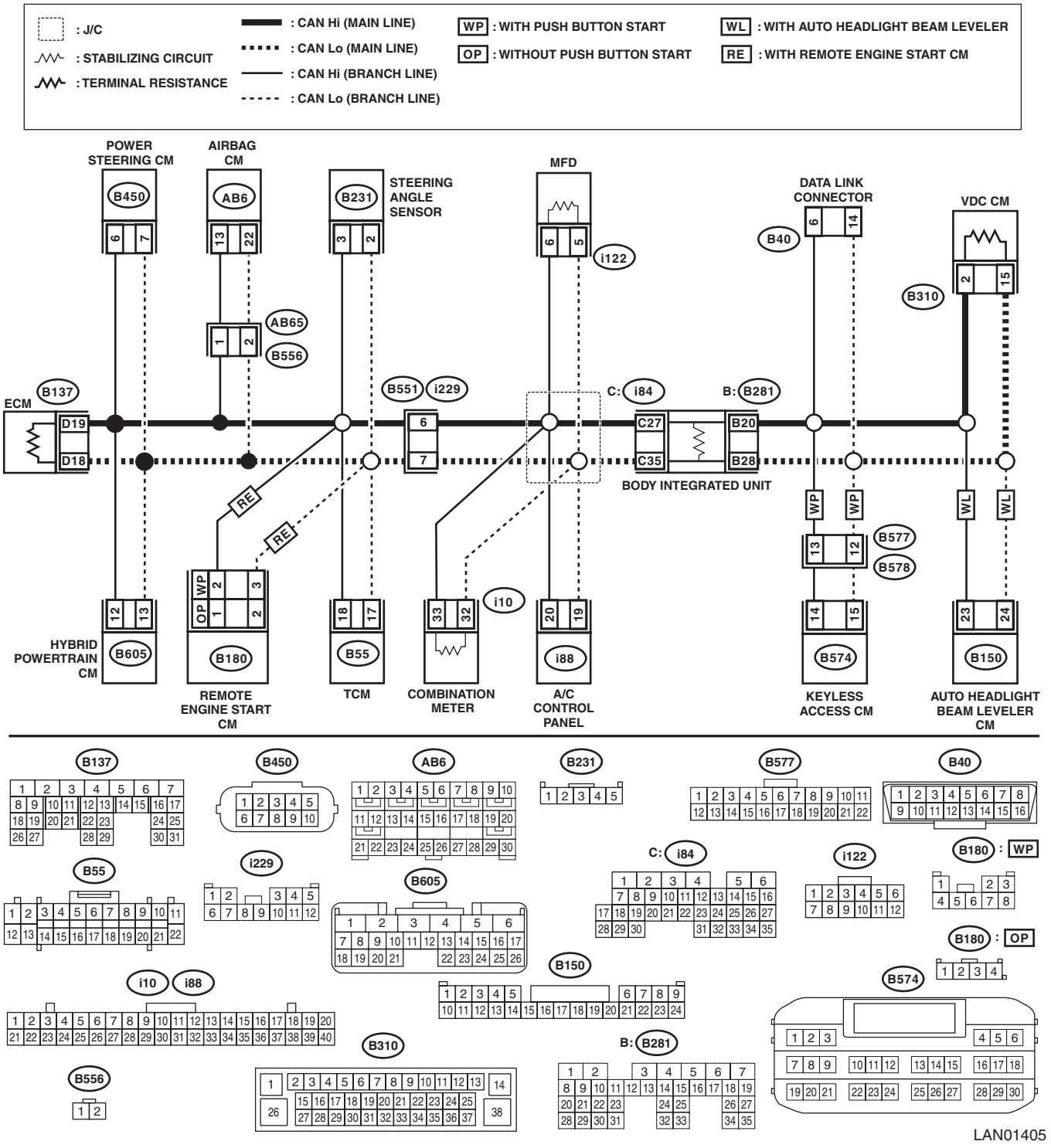

	Step	Check	Yes	No
1	**CHECK BETWEEN RELATED LINES AND MAIN WIRING HARNESS.** 1) Disconnect the combination meter connector. 2) Using the tester, measure the resistance between terminals. ***Connector & terminal*** ***(i10) No. 32 — No. 33:***	Is the resistance 400 Ω or more?	Related lines between combination meter and main wiring harness is open, or main wiring harness is open at two places or more.	Go to step **2**.
2	**CHECK RELATED LINES.** Using the tester, measure the resistance between terminals. ***Connector & terminal*** ***(i10) No. 32 — (B40) No. 14:*** ***(i10) No. 33 — (B40) No. 6:***	Is the resistance 10 Ω or more?	Repair or replace the open circuit portion of combination meter related lines.	Check DTC of combination meter. <Ref. to IDI(diag)-14, OPERATION, Read Diagnostic Trouble Code (DTC).>

11.RELATED LINES 53 — 61 Ω (MFD)

WIRING DIAGRAM:

CAN communication system <Ref. to WI(HEV)-64, WIRING DIAGRAM, CAN Communication System.>

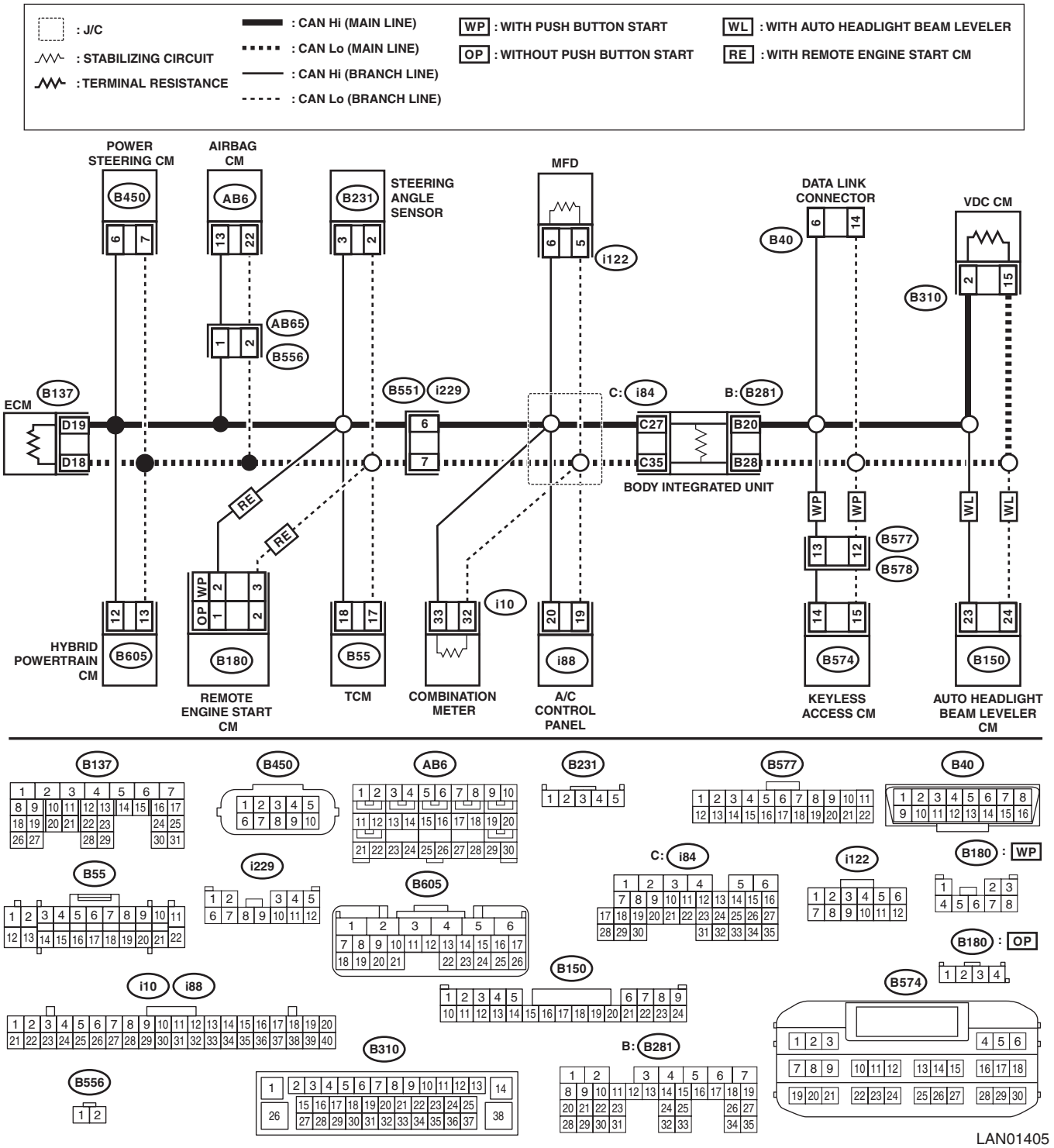

	Step	Check	Yes	No
1	**CHECK BETWEEN RELATED LINES AND MAIN WIRING HARNESS.** 1) Disconnect the MFD connector. 2) Using the tester, measure the resistance between terminals. ***Connector & terminal*** ***(i122) No. 5 — No. 6:***	Is the resistance 400 Ω or more?	Related lines between MFD and main wiring harness is open, or main wiring harness is open at two places or more.	Go to step **2**.
2	**CHECK RELATED LINES.** Using the tester, measure the resistance between terminals. ***Connector & terminal*** ***(i122) No. 5 — (B40) No. 14:*** ***(i122) No. 6 — (B40) No. 6:***	Is the resistance 10 Ω or more?	Repair or replace the open circuit of MFD related lines.	Check DTC of MFD. <Ref. to IDI(diag)-14, OPERATION, Read Diagnostic Trouble Code (DTC).>

12.RELATED LINES 53 — 61 Ω (A/B CM)

WIRING DIAGRAM:

CAN communication system <Ref. to WI(HEV)-64, WIRING DIAGRAM, CAN Communication System.>

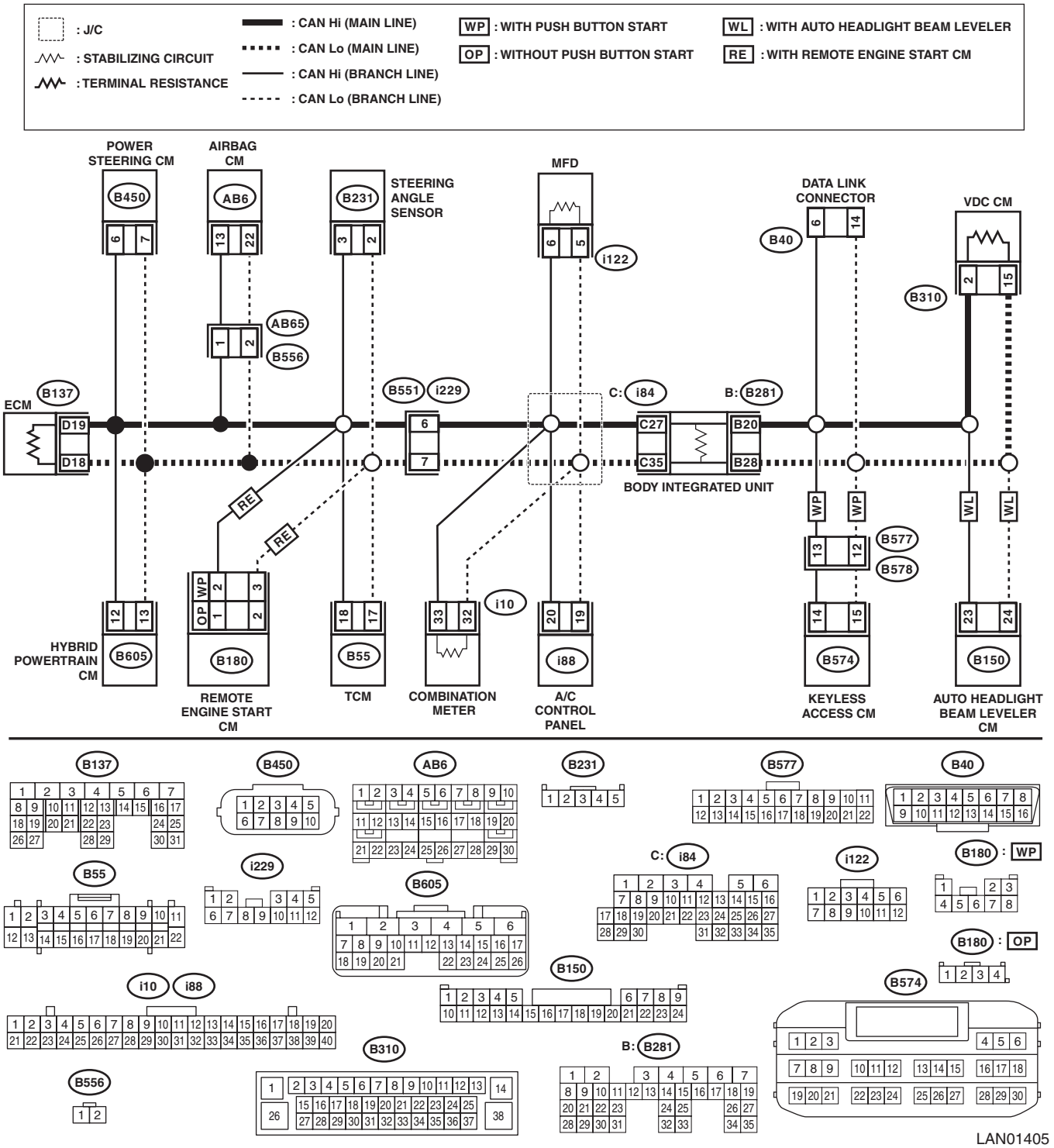

	Step	Check	Yes	No
1	**CHECK BETWEEN RELATED LINES AND MAIN WIRING HARNESS.** NOTE: For test harness, refer to AIRBAG SYSTEM (DIAGNOSTICS). <Ref. to AB(diag)-4, PREPARATION TOOL, General Description.> 1) Turn the ignition switch to OFF. Disconnect the ground cable from the 12 volt auxiliary battery and disconnect the ground cable from the 12V engine restart battery sensor of the 12 volt engine restart battery, and then wait for 60 seconds or more. <Ref. to NT-5, BATTERY, NOTE, Note.> 2) Remove the instrument panel lower cover and column cover, and disconnect the connectors (AB7) and (AB2). 3) Remove the console front panel and disconnect the connector (AB9). 4) Disconnect the connectors (AB6, AB17, AB18) from airbag control module. 5) Connect the connector (1AH) in the test harness AH to the connectors (AB6, AB17, AB18). 6) Connect the connector (2AH) in the test harness AH and the connector (1AG) in the test harness AG. 7) Using the tester, measure the resistance between terminals. ***Connector & terminal*** ***(2AG) No. 2 — (4AG) No. 2:***	Is the resistance 400 Ω or more?	Related lines between A/B CM and main wiring harness is open, or main wiring harness is open at two places or more.	Go to step **2**.
2	**CHECK RELATED LINES.** Using the tester, measure the resistance between terminals. ***Connector & terminal*** ***(2AG) No. 2 — (B40) No. 14:*** ***(4AG) No. 2 — (B40) No. 6:***	Is the resistance 10 Ω or more?	Repair or replace the open circuit of A/B CM related lines.	Check DTC of A/B CM. <Ref. to AB(diag)-26, OPERATION, Read Diagnostic Trouble Code (DTC).>

13.RELATED LINES 53 — 61 Ω (KEYLESS ACCESS SYSTEM)

WIRING DIAGRAM:

CAN communication system <Ref. to WI(HEV)-64, WIRING DIAGRAM, CAN Communication System.>

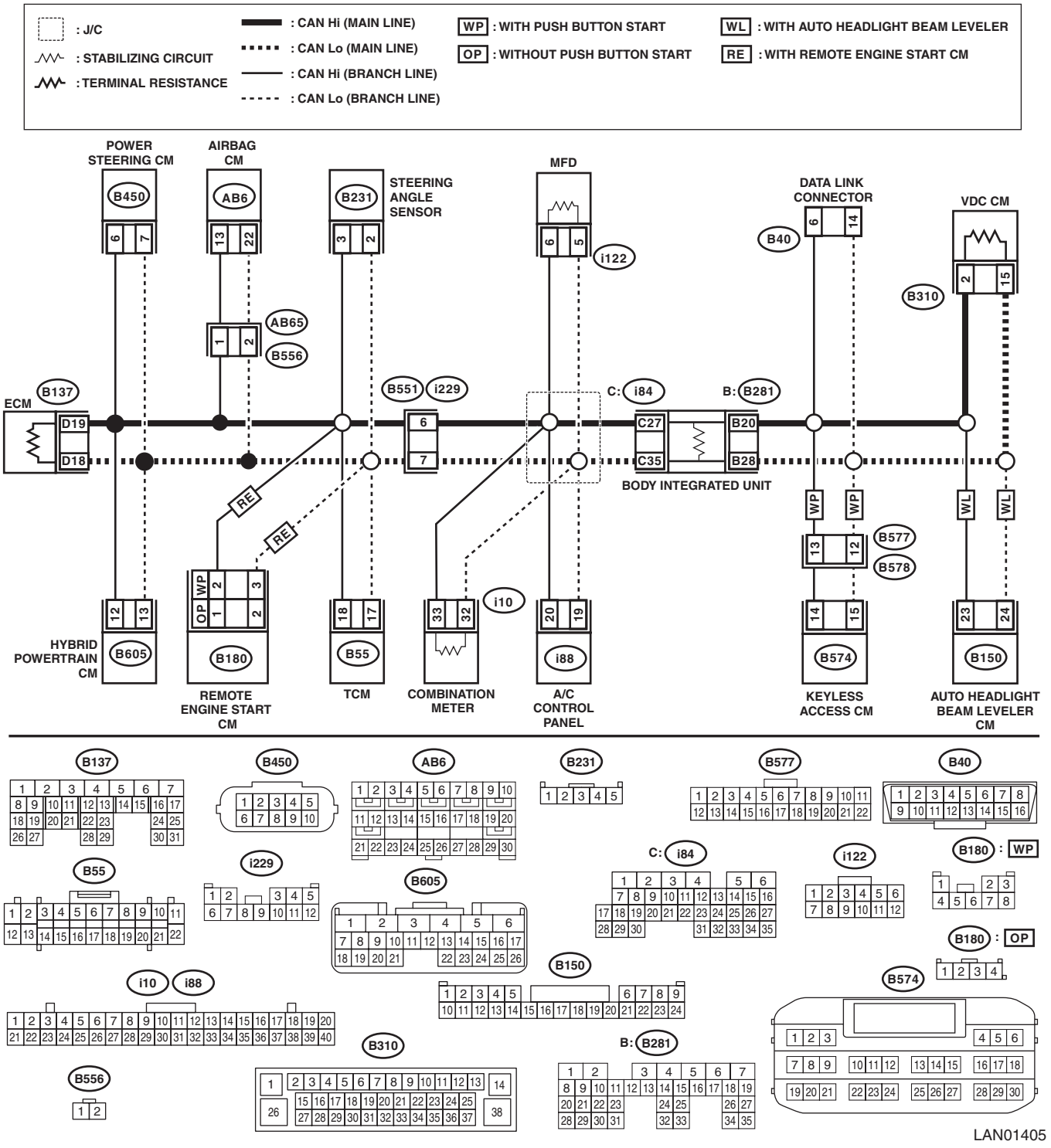

	Step	Check	Yes	No
1	**CHECK BETWEEN RELATED LINES AND MAIN WIRING HARNESS.** 1) Disconnect the keyless access CM connector. 2) Using the tester, measure the resistance between terminals. ***Connector & terminal*** ***(B574) No. 14 — No. 15:***	Is the resistance 400 Ω or more?	Related lines between keyless access CM and main wiring harness is open, or main wiring harness is open at two places or more.	Go to step **2**.
2	**CHECK RELATED LINES.** Using the tester, measure the resistance between terminals. ***Connector & terminal*** ***(B574) No. 15 — (B40) No. 14:*** ***(B574) No. 14 — (B40) No. 6:***	Is the resistance 10 Ω or more?	Repair or replace the open circuit portion of keyless access CM related lines.	Check DTC of keyless access CM. <Ref. to KPS(diag)-25, OPERATION, Read Diagnostic Trouble Code (DTC).>

14.RELATED LINES 53 — 61 Ω (REMOTE ENGINE STARTER)

WIRING DIAGRAM:

CAN communication system <Ref. to WI(HEV)-64, WIRING DIAGRAM, CAN Communication System.>

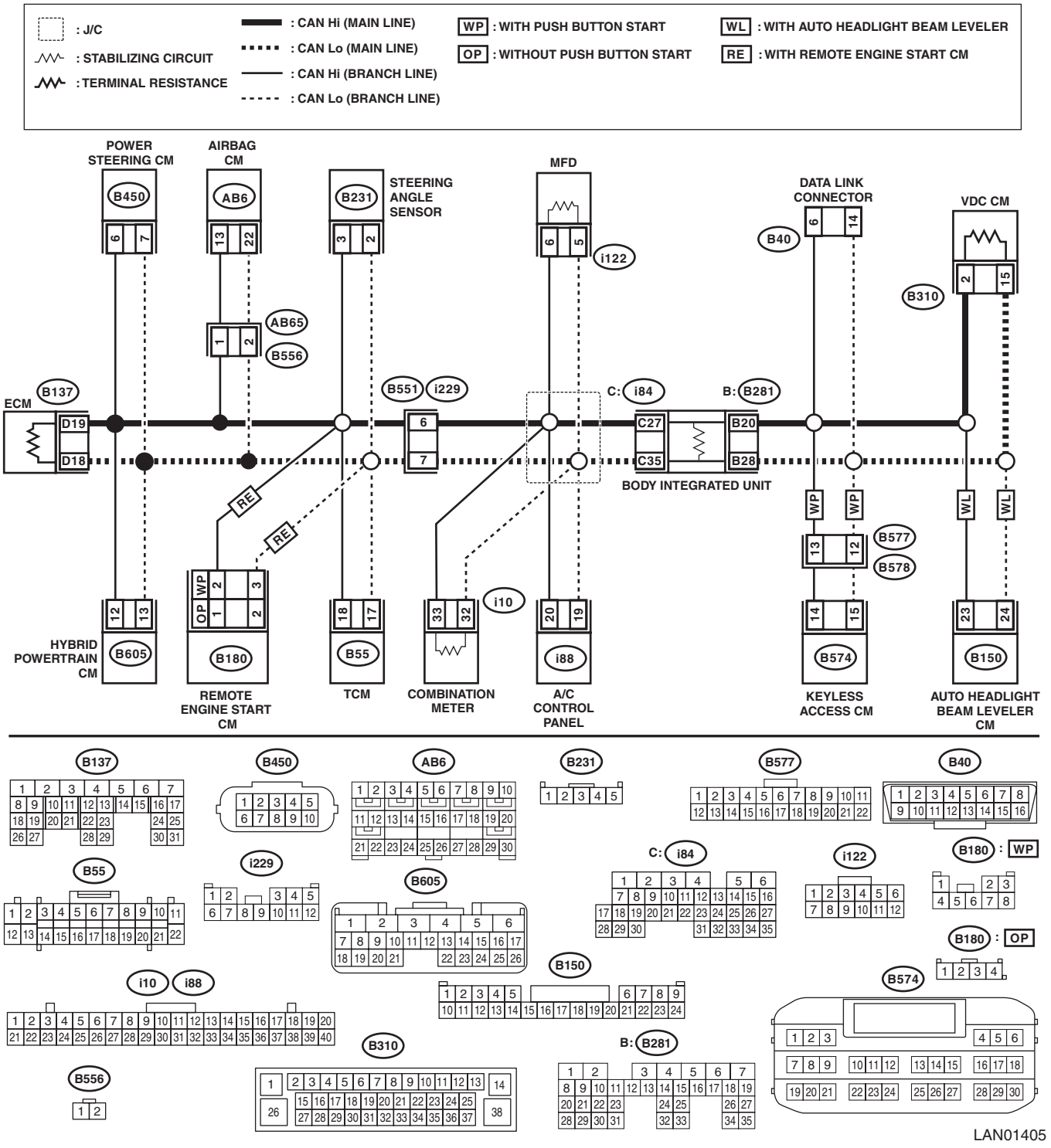

	Step	Check	Yes	No
1	**CHECK BETWEEN RELATED LINES AND MAIN WIRING HARNESS.** 1) Disconnect the remote engine start CM connector. 2) Using the tester, measure the resistance between terminals. ***Connector & terminal*** ***Without push button start*** ***(B180) No. 1 — (B180) No. 2:*** ***With push button start*** ***(B180) No. 2 — (B180) No. 3:***	Is the resistance 400 Ω or more?	Related lines between remote engine start CM and main wiring harness is open, or main wiring harness is open at two places or more.	Go to step **2**.
2	**CHECK RELATED LINES.** Using the tester, measure the resistance between terminals. ***Connector & terminal*** ***Without push button start*** ***(B180) No. 1 — (B40) No. 6:*** ***(B180) No. 2 — (B40) No. 14:*** ***With push button start*** ***(B180) No. 2 — (B40) No. 6:*** ***(B180) No. 3 — (B40) No. 14:***	Is the resistance 10 Ω or more?	Repair or replace the open circuit portion of remote engine start CM related lines.	The communication harness is normal. Check the remote engine starter CM or the mobile key.

15.RELATED LINES 53 — 61 Ω (HEADLIGHT BEAM LEVELER)

WIRING DIAGRAM:

CAN communication system <Ref. to WI(HEV)-64, WIRING DIAGRAM, CAN Communication System.>

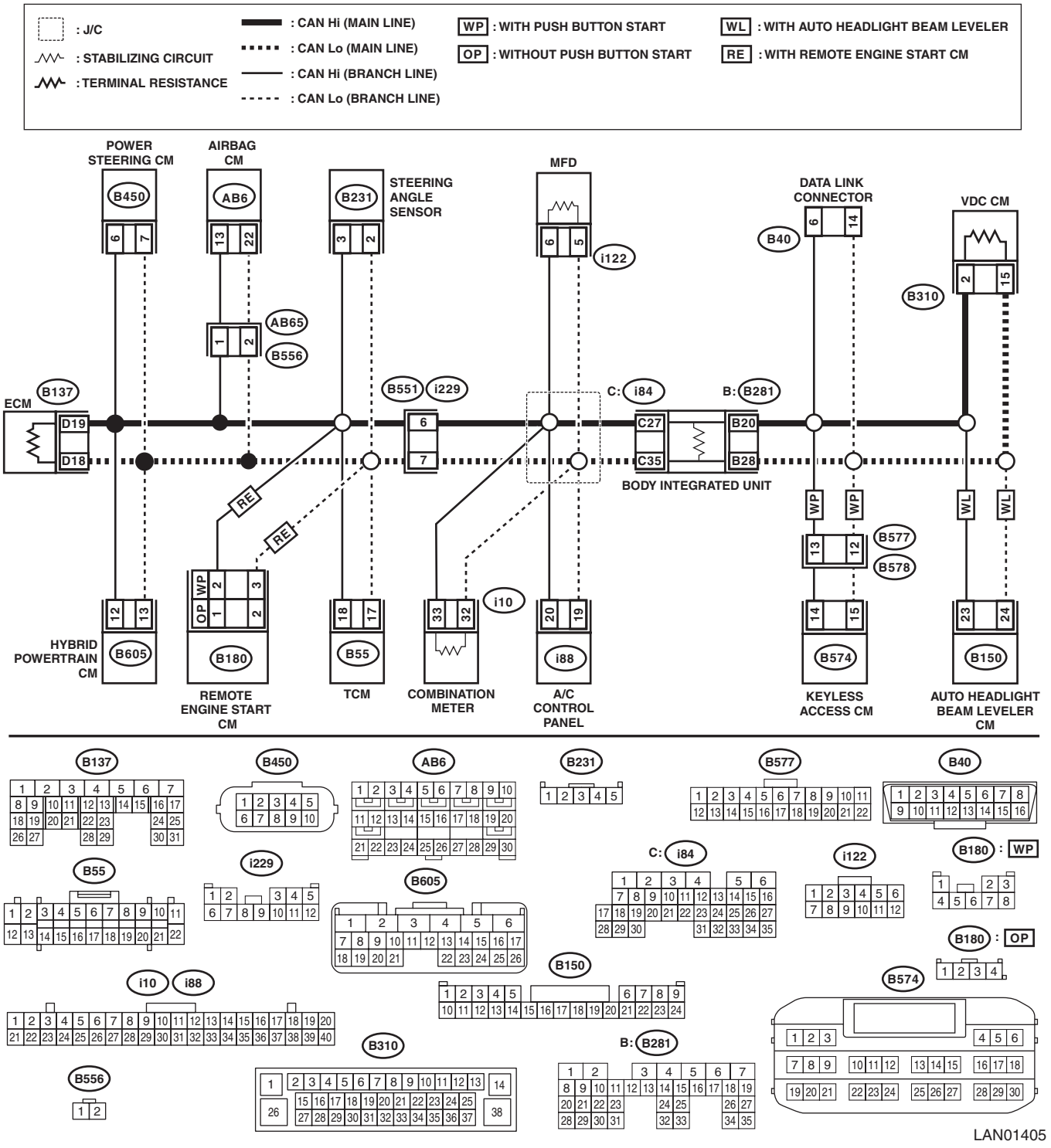

	Step	Check	Yes	No
1	**CHECK BETWEEN RELATED LINES AND MAIN WIRING HARNESS.** 1) Disconnect the headlight beam leveler CM connector. 2) Using the tester, measure the resistance between terminals. ***Connector & terminal*** ***(B150) No. 23 — No. 24:***	Is the resistance 400 Ω or more?	Related lines between headlight beam leveler CM and main wiring harness is open, or main wiring harness is open at two places or more.	Go to step **2**.
2	**CHECK RELATED LINES.** Using the tester, measure the resistance between terminals. ***Connector & terminal*** ***(B150) No. 24 — (B40) No. 14:*** ***(B150) No. 23 — (B40) No. 6:***	Is the resistance 10 Ω or more?	Repair or replace the open circuit portion of headlight beam leveler CM related lines.	Check DTC of headlight beam leveler system. <Ref. to AL(diag)-10, OPERATION, Read Diagnostic Trouble Code (DTC).>

16.RELATED LINES 53 — 61 Ω (HPCM)

WIRING DIAGRAM:

CAN communication system <Ref. to WI(HEV)-64, WIRING DIAGRAM, CAN Communication System.>

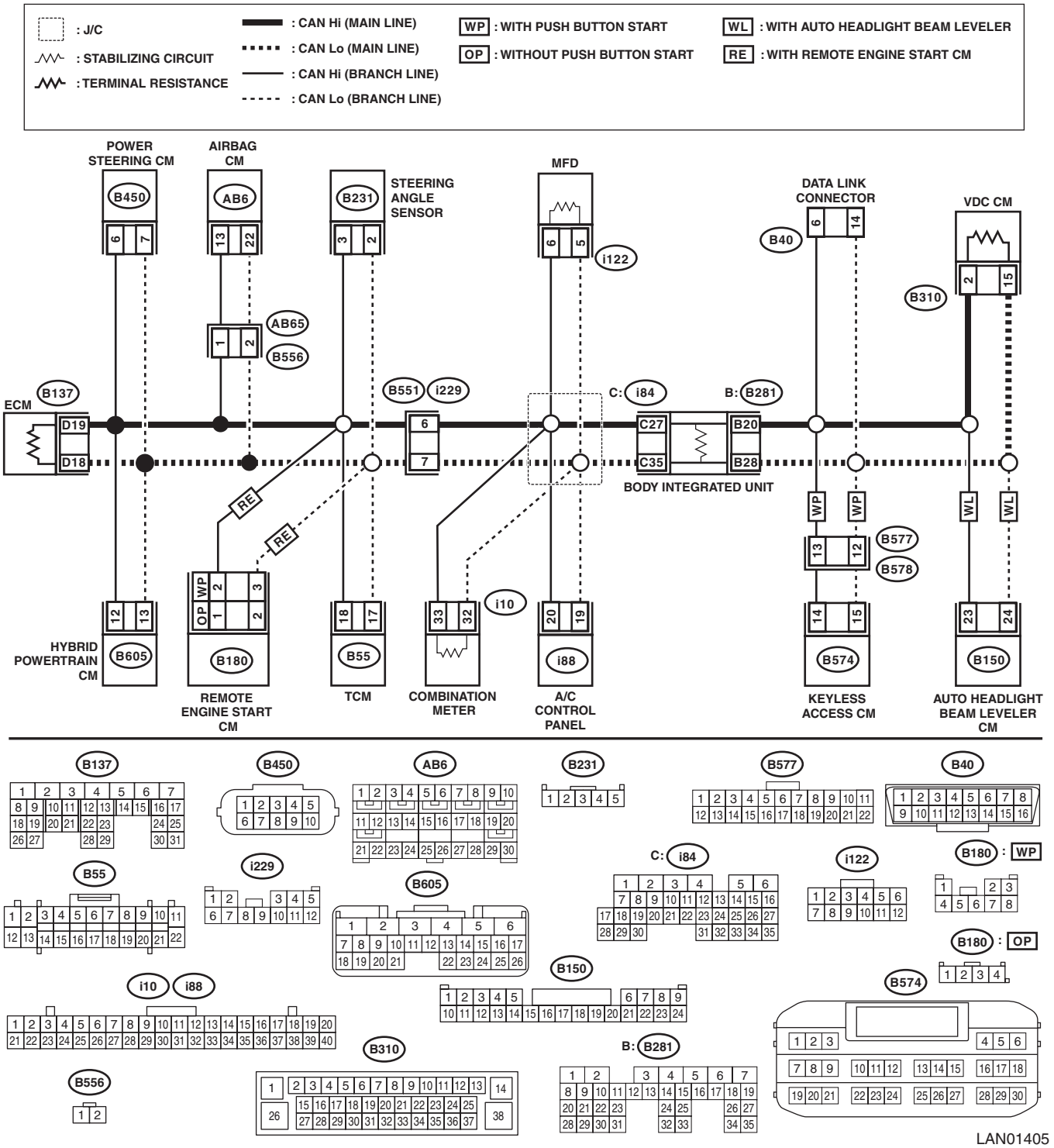

	Step	Check	Yes	No
1	**CHECK BETWEEN RELATED LINES AND MAIN WIRING HARNESS.** 1) Disconnect the HPCM connector. 2) Using the tester, measure the resistance between terminals. ***Connector & terminal*** ***(B605) No. 12 — No. 13:***	Is the resistance 400 Ω or more?	Related lines between HPCM and main wiring harness is open, or main wiring harness is open at two places or more.	Go to step **2**.
2	**CHECK RELATED LINES.** Using the tester, measure the resistance between terminals. ***Connector & terminal*** ***(B605) No. 13 — (B40) No. 14:*** ***(B605) No. 12 — (B40) No. 6:***	Is the resistance 10 Ω or more?	Repair or replace the open circuit of HPCM related lines.	The communication harness is normal. Check the impact sensor.

17.GROUND SHORT INSPECTION (PU-CAN)

WIRING DIAGRAM:

CAN communication system <Ref. to WI(HEV)-64, WIRING DIAGRAM, CAN Communication System.>

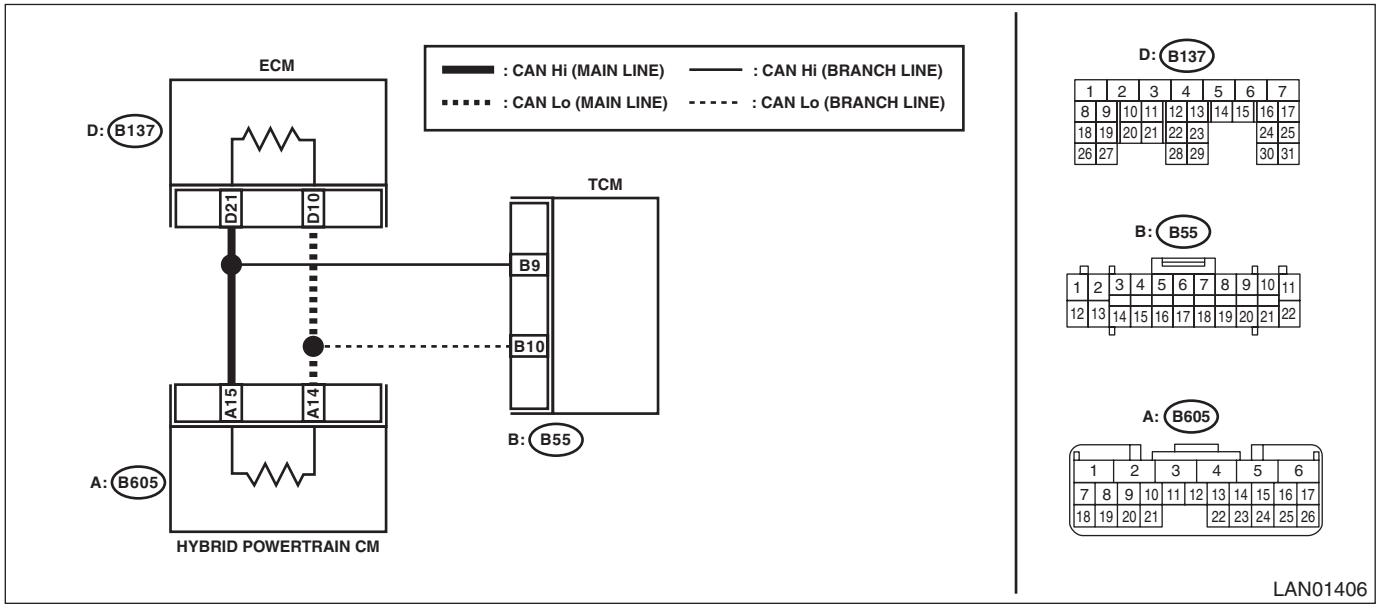

NOTE:
Main wiring harness or related lines may be shorted to ground, or shorted to ground in one of the control modules.

	Step	Check	Yes	No
1	**CHECK BETWEEN RELATED LINES AND MAIN WIRING HARNESS.** 1) Disconnect the ECM connector. 2) Using the tester, measure the resistance between terminals. ***Connector & terminal*** ***(B137) No. 21 — Chassis ground:*** ***(B137) No. 10 — Chassis ground:***	Is the resistance 10 Ω or less?	Go to step **2**.	Currently, it is normal.
2	**CHECK CONTROL MODULE.** 1) With the tester connected, disconnect control module. 2) Using the tester, measure the resistance between terminals. ***Connector & terminal*** ***(B137) No. 21 — Chassis ground:*** ***(B137) No. 10 — Chassis ground:***	Did the resistance change to 10 Ω or more?	Replace the control module whose resistance has changed.	Repair or replace the short circuit of the main wiring harness and related lines between ECM and HPCM.

18.BATTERY SHORT INSPECTION (PU-CAN)

WIRING DIAGRAM:

CAN communication system <Ref. to WI(HEV)-64, WIRING DIAGRAM, CAN Communication System.>

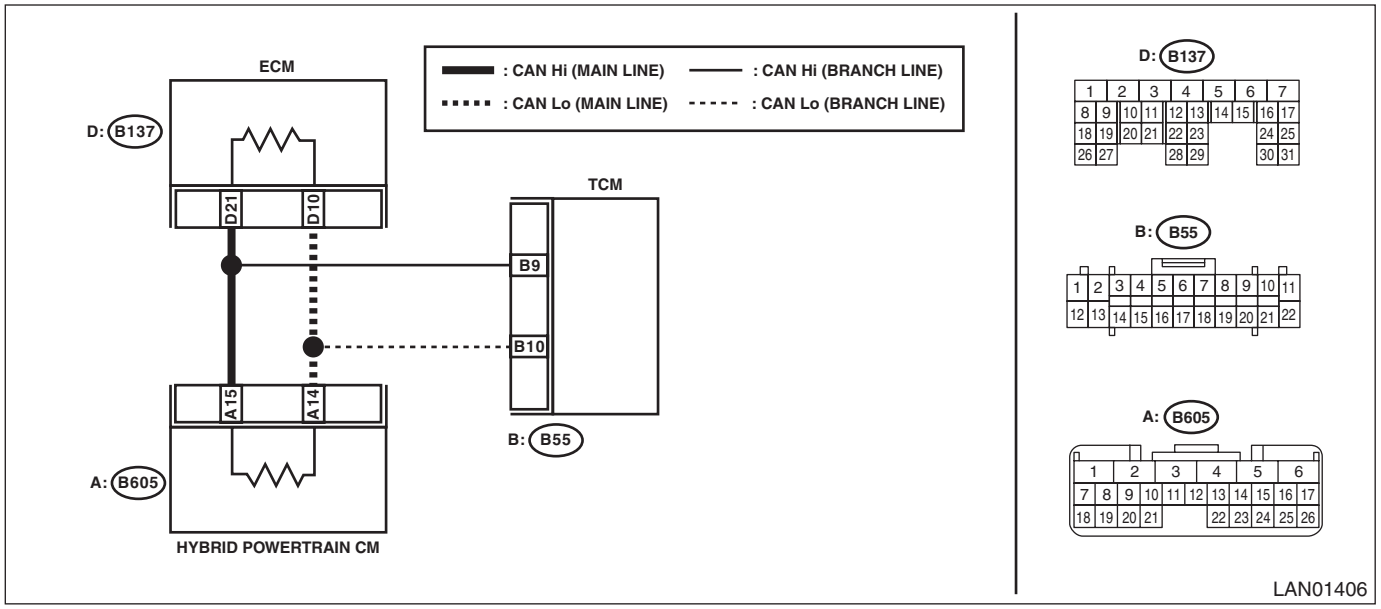

NOTE:
Main wiring harness or related lines may be shorted to battery circuit, or shorted to battery circuit in one of the control modules.

	Step	Check	Yes	No
1	**CHECK BETWEEN RELATED LINES AND MAIN WIRING HARNESS.** 1) Turn the ignition switch to ON. 2) Using the tester, measure the voltage between terminals. ***Connector & terminal*** ***(B137) No. 21 (+) — Chassis ground (–):*** ***(B137) No. 10 (+) — Chassis ground (–):***	Is the voltage 5 V or less?	Currently, it is normal.	Go to step **2**.
2	**CHECK CONTROL MODULE.** 1) With the tester connected, disconnect control module. 2) Using the tester, measure the voltage between terminals. ***Connector & terminal*** ***(B137) No. 21 (+) — Chassis ground (–):*** ***(B137) No. 10 (+) — Chassis ground (–):***	Did the voltage change to 5 V or less?	Replace the control module whose voltage has changed.	Repair or replace the short circuit of the main wiring harness and related lines between ECM and HPCM.

19.57 — 63 Ω (PU-CAN)

WIRING DIAGRAM:

CAN communication system <Ref. to WI(HEV)-64, WIRING DIAGRAM, CAN Communication System.>

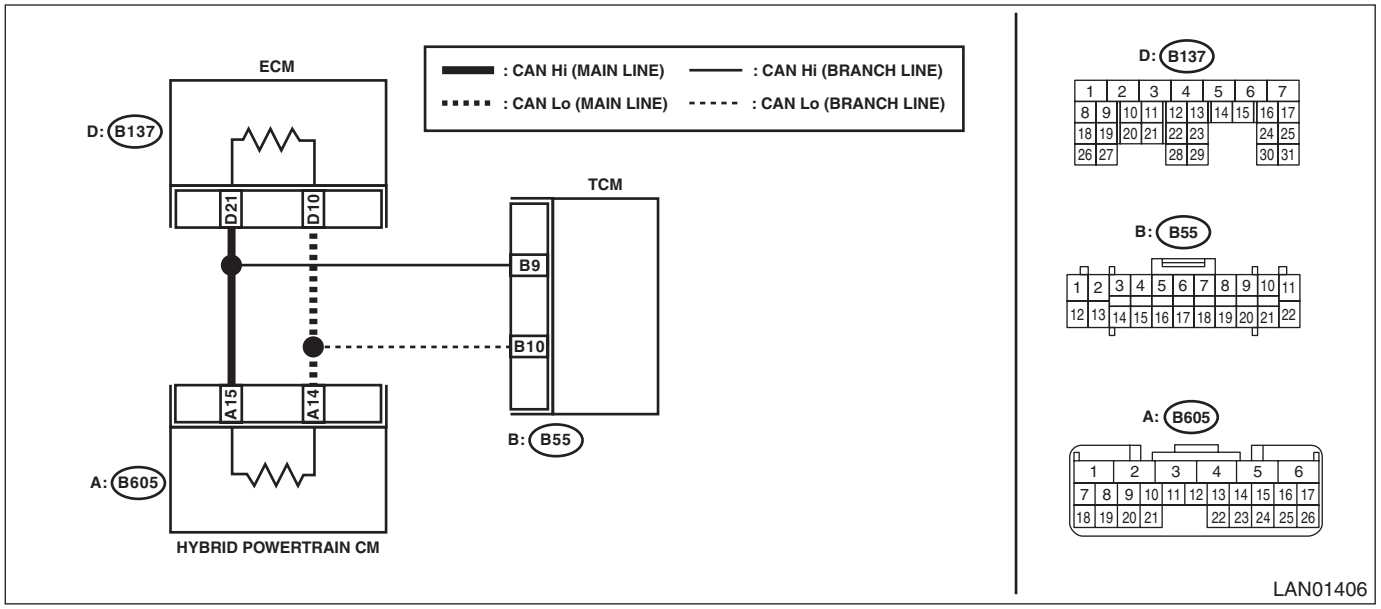

NOTE:
When the measured resistance value is 57 — 63 Ω, main wiring harness or related lines may be shorted to ground, or shorted to power supply line, or related line may be open.

	Step	Check	Yes	No
1	**CHECK BETWEEN RELATED LINES AND MAIN WIRING HARNESS.** Using the tester, measure the resistance between terminals. ***Connector & terminal*** ***(B137) No. 21 — Chassis ground:*** ***(B137) No. 10 — Chassis ground:***	Is the resistance 10 Ω or less?	Go to step **2**.	Go to step **4**.
2	**CHECK CONTROL MODULE.** With the tester connected, disconnect control module. ***Connector & terminal*** ***(B137) No. 21 — Chassis ground:*** ***(B137) No. 10 — Chassis ground:***	Did the resistance change to 10 Ω or more?	Replace the control module whose resistance has changed.	Repair or replace the short circuit of the main wiring harness and related lines between ECM and HPCM.
3	**CHECK MAIN WIRING HARNESS AND RELATED LINES.** 1) Turn the ignition switch to ON. 2) Using the tester, measure the voltage between terminals. ***Connector & terminal*** ***(B137) No. 21 (+) — Chassis ground (–):*** ***(B137) No. 10 (+) — Chassis ground (–):***	Is the voltage 5 V or less?	Currently, it is normal.	Go to step **4**.
4	**CHECK BETWEEN RELATED LINES AND MAIN WIRING HARNESS.** 1) With the tester connected, disconnect control module. 2) Using the tester, measure the voltage between terminals. ***Connector & terminal*** ***(B137) No. 21 (+) — Chassis ground (–):*** ***(B137) No. 10 (+) — Chassis ground (–):***	Did the voltage change to 5 V or less?	Replace the control module whose voltage has changed.	Repair or replace the short circuit of the main wiring harness and related lines between ECM and HPCM.

20.56 Ω OR LESS (PU-CAN)

WIRING DIAGRAM:

CAN communication system <Ref. to WI(HEV)-64, WIRING DIAGRAM, CAN Communication System.>

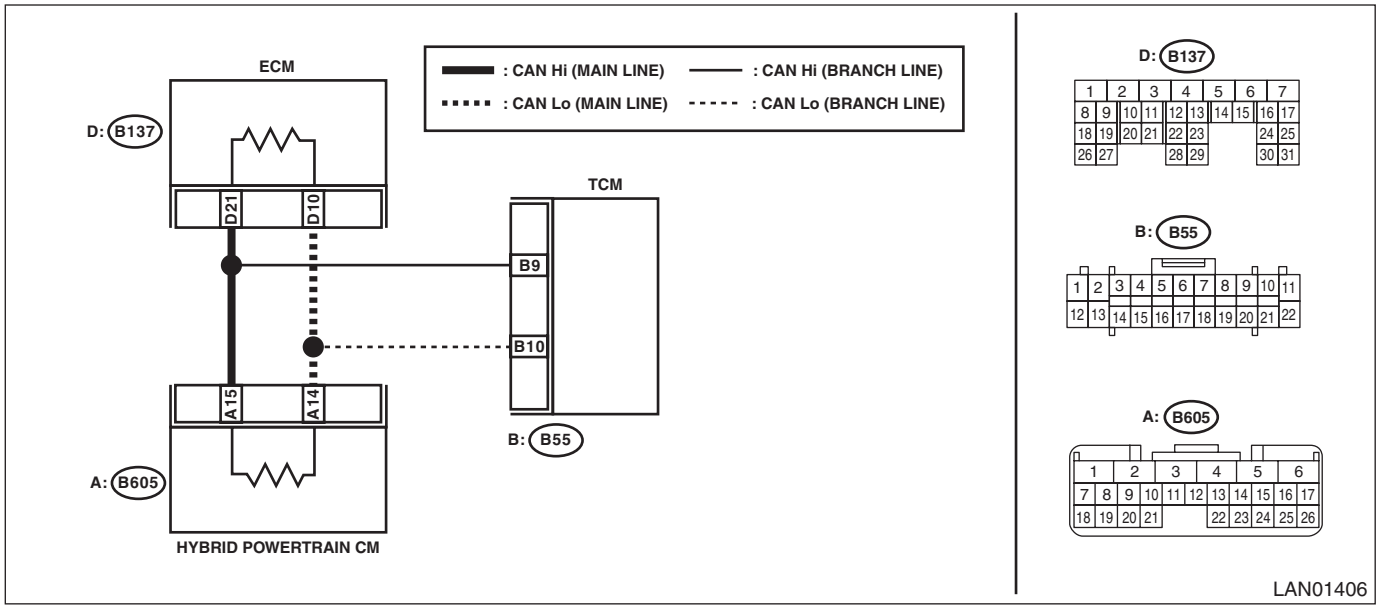

NOTE:
When the bus line is measured, combined resistance of the end resistance (120 Ω) in ECM and the end resistance (120 Ω) in HPCM can be measured. The combined resistance is approximately 57 — 63 Ω. When the measured resistance value is 56 Ω or less, main wiring harness or related lines may be shorted, or combined resistance may have changed because resistance other than end resistance is created on the circuit.

	Step	Check	Yes	No
1	**CHECK BETWEEN RELATED LINES AND MAIN WIRING HARNESS.** 1) Disconnect the ECM connector. 2) Using the tester, measure the resistance between terminals. ***Connector & terminal*** ***(B137) No. 21 — (B137) No. 10:***	Is the resistance 10 Ω or less?	Go to step **2**.	Go to step **3**.
2	**CHECK MAIN WIRING HARNESS AND RELATED LINES.** With a tester connected, disconnect control module connectors in order. ***Connector & terminal*** ***(B137) No. 21 — (B137) No. 10:***	Is there any control module whose condition has changed from short state?	Replace the control module whose resistance has changed.	Repair or replace the short circuit of the main wiring harness and related lines between ECM and HPCM.
3	**CHECK CONTROL MODULE.** 1) Disconnect the ECM and HPCM connectors. 2) Using a tester, measure the resistance between control module terminals. ***Connector & terminal*** ***(B137) No. 21 — (B137) No. 10:*** ***(B605) No. 15 — (B605) No. 14:***	Is the resistance 114 — 126 Ω?	Go to step **4**.	Replace the control module whose end resistance value is out of the specified range.
4	**CHECK CONTROL MODULE.** With the tester connected, disconnect TCM. ***Connector & terminal*** ***(B137) No. 21 — (B137) No. 10:***	Is there any control module whose resistance has changed to 1 MΩ or more?	Replace the TCM. <Ref. to CVT(TH58A)-156, Transmission Control Module (TCM).>	Repair or replace the harness due to resistance component.

21.64 Ω OR MORE (PU-CAN)

WIRING DIAGRAM:

CAN communication system <Ref. to WI(HEV)-64, WIRING DIAGRAM, CAN Communication System.>

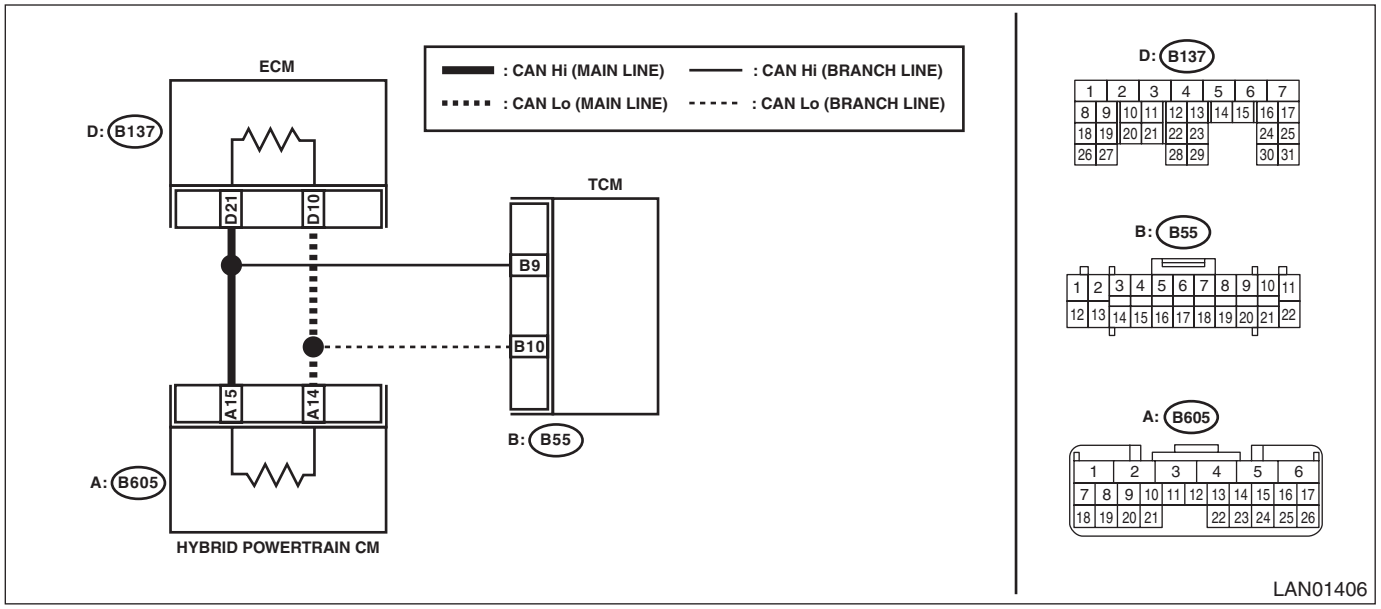

NOTE:
When the bus line is measured, combined resistance of the end resistance (120 Ω) in ECM and the end resistance (120 Ω) in HPCM can be measured. The combined resistance is approximately 57 — 63 Ω. When the measured resistance value is 64 Ω or more, either of end resistance or main wiring harness may have malfunction such as open circuit.

	Step	Check	Yes	No
1	**CHECK CONTROL MODULE.** 1) Disconnect the ECM and HPCM connectors. 2) Using a tester, measure the resistance between control module terminals. ***Connector & terminal*** ***(B137) No. 21 — (B137) No. 10:*** ***(B605) No. 15 — (B605) No. 14:***	Is the resistance 114 — 126 Ω?	Go to step **2**.	Replace the control module whose value is out of the specification.
2	**CHECK HARNESS.** Using a tester, check continuity between terminals. ***Connector & terminal*** ***(B137) No. 21 — (B605) No. 15:*** ***(B137) No. 10 — (B605) No. 14:***	Is there continuity?	It is possible that temporary poor communication occurs.	Repair or replace the open circuit of harness.

22.57 — 63 Ω (PU-CAN_TCM)

WIRING DIAGRAM:

CAN communication system <Ref. to WI(HEV)-64, WIRING DIAGRAM, CAN Communication System.>

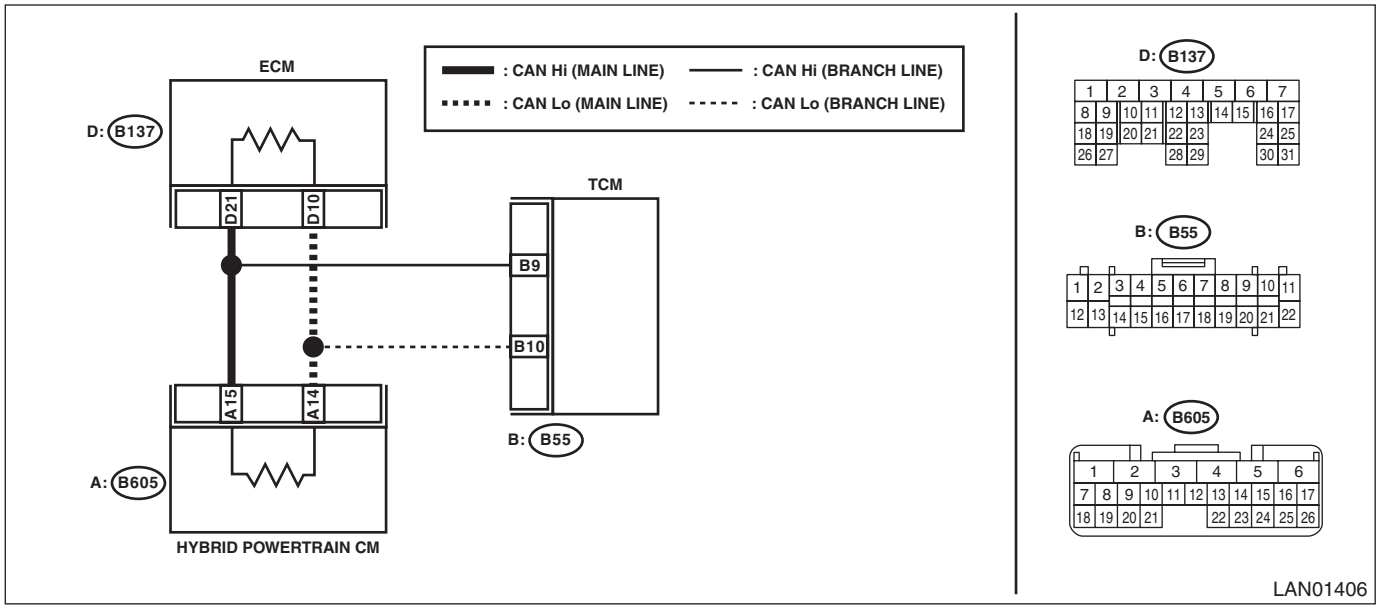

NOTE:
When the measured resistance value is 57 — 63 Ω, main wiring harness or related lines may be shorted to ground, or shorted to power supply line, or related line may be open.

	Step	Check	Yes	No
1	**CHECK BETWEEN RELATED LINES AND MAIN WIRING HARNESS.** 1) Disconnect the TCM connector. 2) Using a tester, measure the resistance between control module terminals. ***Connector & terminal*** ***(B55) No. 9 — No. 10:***	Is the resistance 400 Ω or more?	Related lines between TCM and main wiring harness is open, or main wiring harness is open at two places or more.	Go to step **2**.
2	**CHECK RELATED LINES.** 1) Disconnect the ECM connector. 2) Using a tester, check continuity between terminals. ***Connector & terminal*** ***(B55) No. 9 — (B137) No. 21:*** ***(B55) No. 10 — (B137) No. 10:***	Is the resistance 10 Ω or more?	Repair or replace the open circuit portion of TCM related lines.	Check the TCM. <Ref. to CVT(HEV)(diag)-18, OPERATION, Read Diagnostic Trouble Code (DTC).>

23.GROUND SHORT INSPECTION (HEV-CAN)

WIRING DIAGRAM:

CAN communication system <Ref. to WI(HEV)-64, WIRING DIAGRAM, CAN Communication System.>

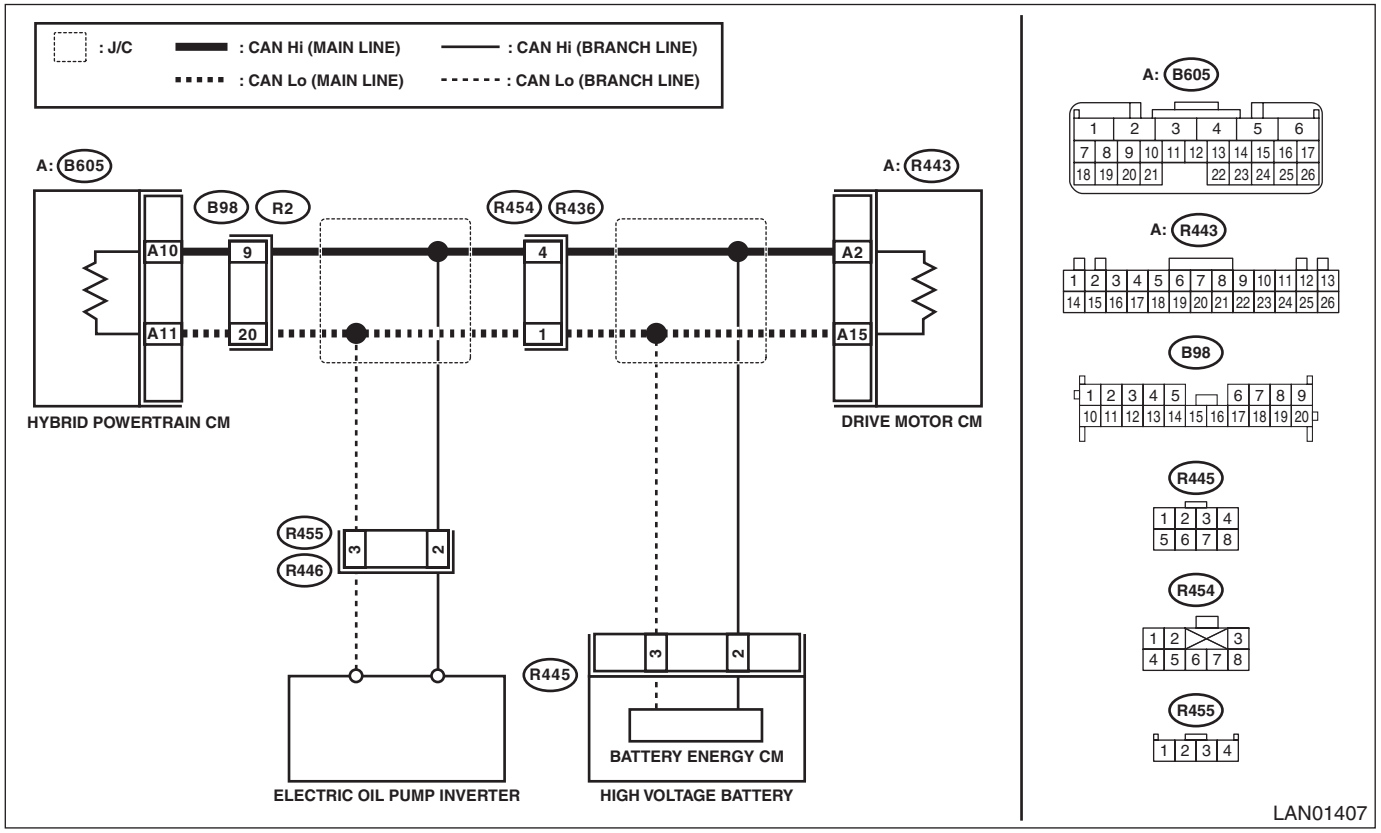

NOTE:
Main wiring harness or related lines may be shorted to ground, or shorted to ground in one of the control modules.

Step		Check	Yes	No
1	**CHECK BETWEEN RELATED LINES AND MAIN WIRING HARNESS.** 1) Disconnect the HPCM connector. 2) Using the tester, measure the resistance between terminals. ***Connector & terminal*** ***(B605) No. 10 — Chassis ground:*** ***(B605) No. 11 — Chassis ground:***	Is the resistance 10 Ω or less?	Go to step **2**.	Currently, it is normal.
2	**CHECK CONTROL MODULE.** 1) With the tester connected, disconnect control module. 2) Using the tester, measure the resistance between terminals. ***Connector & terminal*** ***(B605) No. 10 — Chassis ground:*** ***(B605) No. 11 — Chassis ground:***	Did the resistance change to 10 Ω or more?	Replace the control module whose resistance has changed.	Repair or replace the short circuit of the main wiring harness and related lines between HPCM and DMCM.

24.BATTERY SHORT INSPECTION (HEV-CAN)

WIRING DIAGRAM:

CAN communication system <Ref. to WI(HEV)-64, WIRING DIAGRAM, CAN Communication System.>

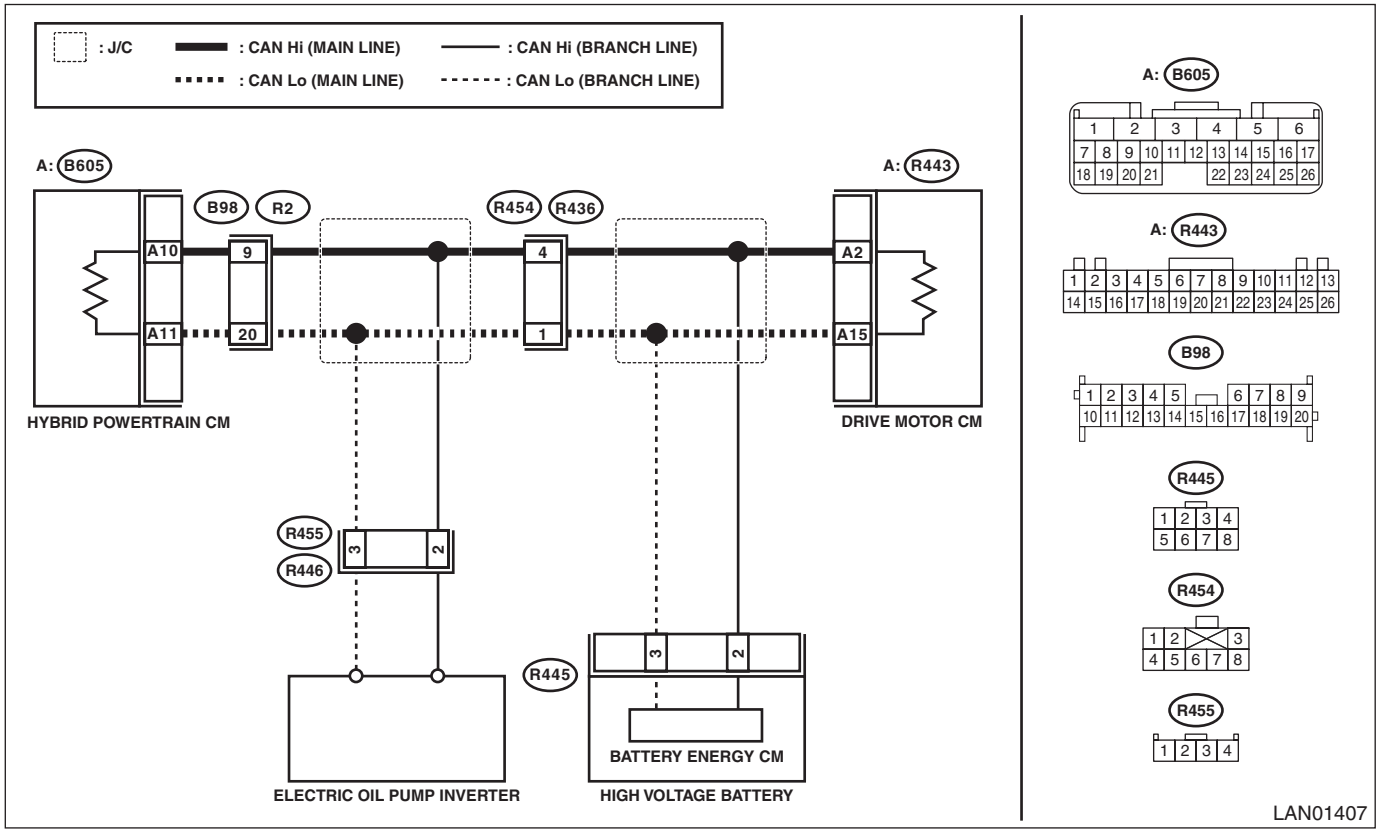

NOTE:
Main wiring harness or related lines may be shorted to battery circuit, or shorted to battery circuit in one of the control modules.

	Step	Check	Yes	No
1	**CHECK BETWEEN RELATED LINES AND MAIN WIRING HARNESS.** 1) Turn the ignition switch to ON. 2) Using the tester, measure the voltage between terminals. ***Connector & terminal*** ***(B605) No. 10 (+) — Chassis ground (–):*** ***(B605) No. 11 (+) — Chassis ground (–):***	Is the voltage 5 V or less?	Currently, it is normal.	Go to step **2**.
2	**CHECK CONTROL MODULE.** 1) With the tester connected, disconnect control module. 2) Using the tester, measure the voltage between terminals. ***Connector & terminal*** ***(B605) No. 10 (+) — Chassis ground (–):*** ***(B605) No. 11 (+) — Chassis ground (–):***	Did the voltage change to 5 V or less?	Replace the control module whose voltage has changed.	Repair or replace the short circuit of the main wiring harness and related lines between HPCM and DMCM.

25.57 — 63 Ω (HEV-CAN)

WIRING DIAGRAM:

CAN communication system <Ref. to WI(HEV)-64, WIRING DIAGRAM, CAN Communication System.>

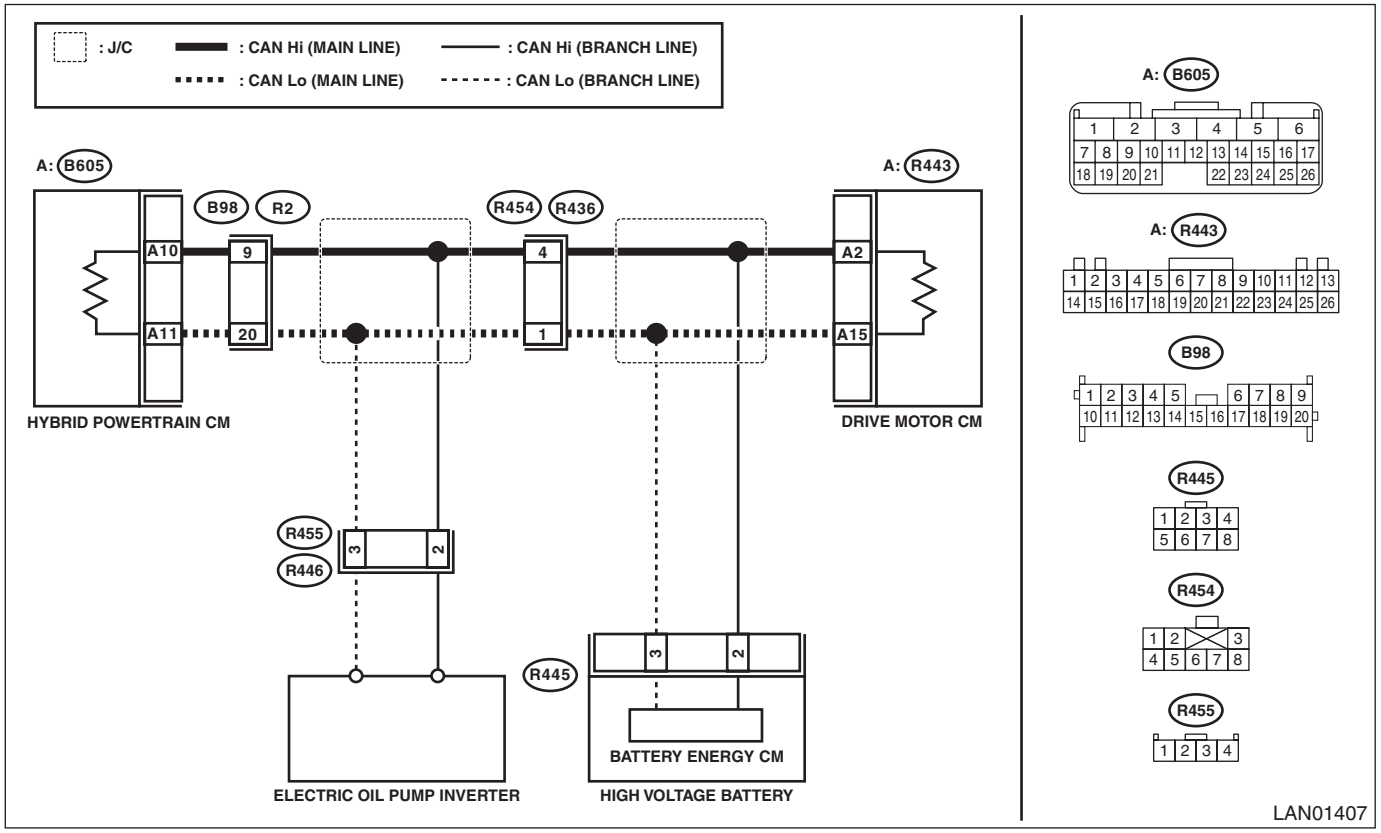

NOTE:
When the measured resistance value is 57 — 63 Ω, main wiring harness or related lines may be shorted to ground, or shorted to power supply line, or related line may be open.

	Step	Check	Yes	No
1	**CHECK BETWEEN RELATED LINES AND MAIN WIRING HARNESS.** Using the tester, measure the resistance between terminals. ***Connector & terminal*** ***(B605) No. 10 — Chassis ground:*** ***(B605) No. 11 — Chassis ground:***	Is the resistance 10 Ω or less?	Go to step **2**.	Go to step **4**.
2	**CHECK CONTROL MODULE.** 1) With the tester connected, disconnect control module. 2) Using the tester, measure the resistance between terminals. ***Connector & terminal*** ***(B605) No. 10 — Chassis ground:*** ***(B605) No. 11 — Chassis ground:***	Did the resistance change to 10 Ω or more?	Replace the control module whose resistance has changed.	Repair or replace the short circuit of the main wiring harness and related lines between HPCM and DMCM.
3	**CHECK MAIN WIRING HARNESS AND RELATED LINES.** 1) Turn the ignition switch to ON. 2) Using the tester, measure the voltage between terminals. ***Connector & terminal*** ***(B605) No. 10 (+) — Chassis ground (–):*** ***(B605) No. 11 (+) — Chassis ground (–):***	Is the voltage 5 V or less?	Currently, it is normal.	Go to step **4**.

Step		Check	Yes	No
4	**CHECK BETWEEN RELATED LINES AND MAIN WIRING HARNESS.** 1) With the tester connected, disconnect control module. 2) Using the tester, measure the voltage between terminals. ***Connector & terminal*** ***(B605) No. 10 (+) — Chassis ground (–):*** ***(B605) No. 11 (+) — Chassis ground (–):***	Did the voltage change to 5 V or less?	Replace the control module whose voltage has changed.	Repair or replace the short circuit of the main wiring harness and related lines between HPCM and DMCM.

26.56 Ω OR LESS (HEV-CAN)

WIRING DIAGRAM:

CAN communication system <Ref. to WI(HEV)-64, WIRING DIAGRAM, CAN Communication System.>

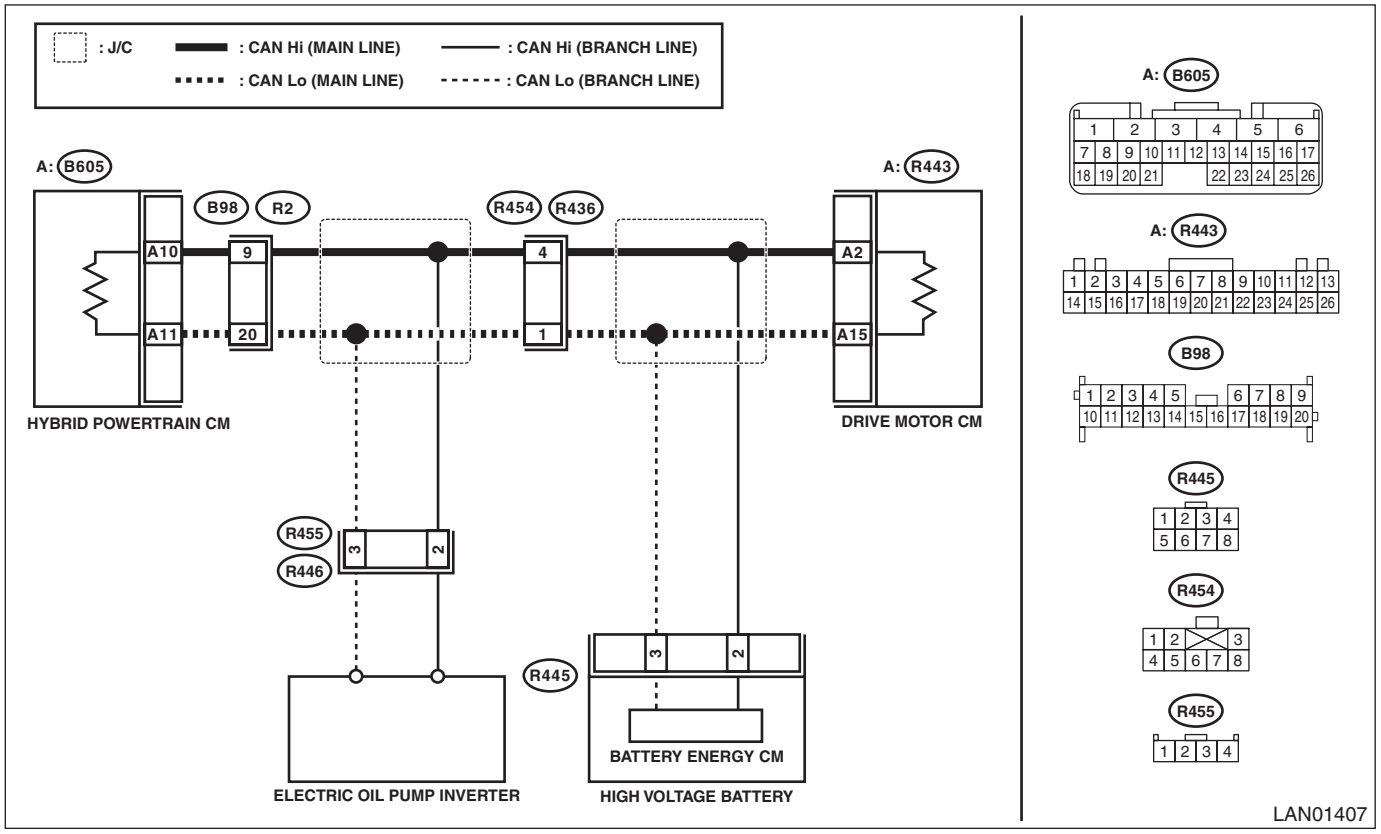

NOTE:
When the bus line is measured, combined resistance of the end resistance (120 Ω) in HPCM and the end resistance (120 Ω) in DMCM can be measured. The combined resistance is approximately 57 — 63 Ω. When the measured resistance value is 56 Ω or less, main wiring harness or related lines may be shorted, or combined resistance may have changed because resistance other than end resistance is created on the circuit.

Step		Check	Yes	No
1	**CHECK BETWEEN RELATED LINES AND MAIN WIRING HARNESS.** 1) Disconnect the HPCM connector. 2) Using the tester, measure the resistance between terminals. ***Connector & terminal*** ***(B605) No. 10 — (B605) No. 11:***	Is the resistance 10 Ω or less?	Go to step **2**.	Go to step **3**.

	Step	Check	Yes	No
2	**CHECK MAIN WIRING HARNESS AND RELATED LINES.** With a tester connected, disconnect control module connectors in order. ***Connector & terminal*** ***(B605) No. 10 — (B605) No. 11:***	Is there any control module whose condition has changed from short state?	Replace the control module whose resistance has changed.	Repair or replace the short circuit of the main wiring harness and related lines between HPCM and DMCM.
3	**CHECK CONTROL MODULE.** 1) Disconnect the ECM and DMCM connectors. 2) Using a tester, measure the resistance between control module terminals. ***Connector & terminal*** ***(B605) No. 10 — (B605) No. 11:*** ***(R443) No. 2 — (R443) No. 15:***	Is the resistance 114 — 126 Ω?	Go to step **4**.	Replace the control module whose end resistance value is out of the specified range.
4	**CHECK CONTROL MODULE.** With a tester connected, disconnect control modules in order. ***Connector & terminal*** ***(B605) No. 10 — (B605) No. 11:***	Are there any control modules whose resistance changed to 1 MΩ or more?	Replace the control module that has changed.	Repair or replace the harness due to resistance component.

27.64 Ω OR MORE (HEV-CAN)

WIRING DIAGRAM:

CAN communication system <Ref. to WI(HEV)-64, WIRING DIAGRAM, CAN Communication System.>

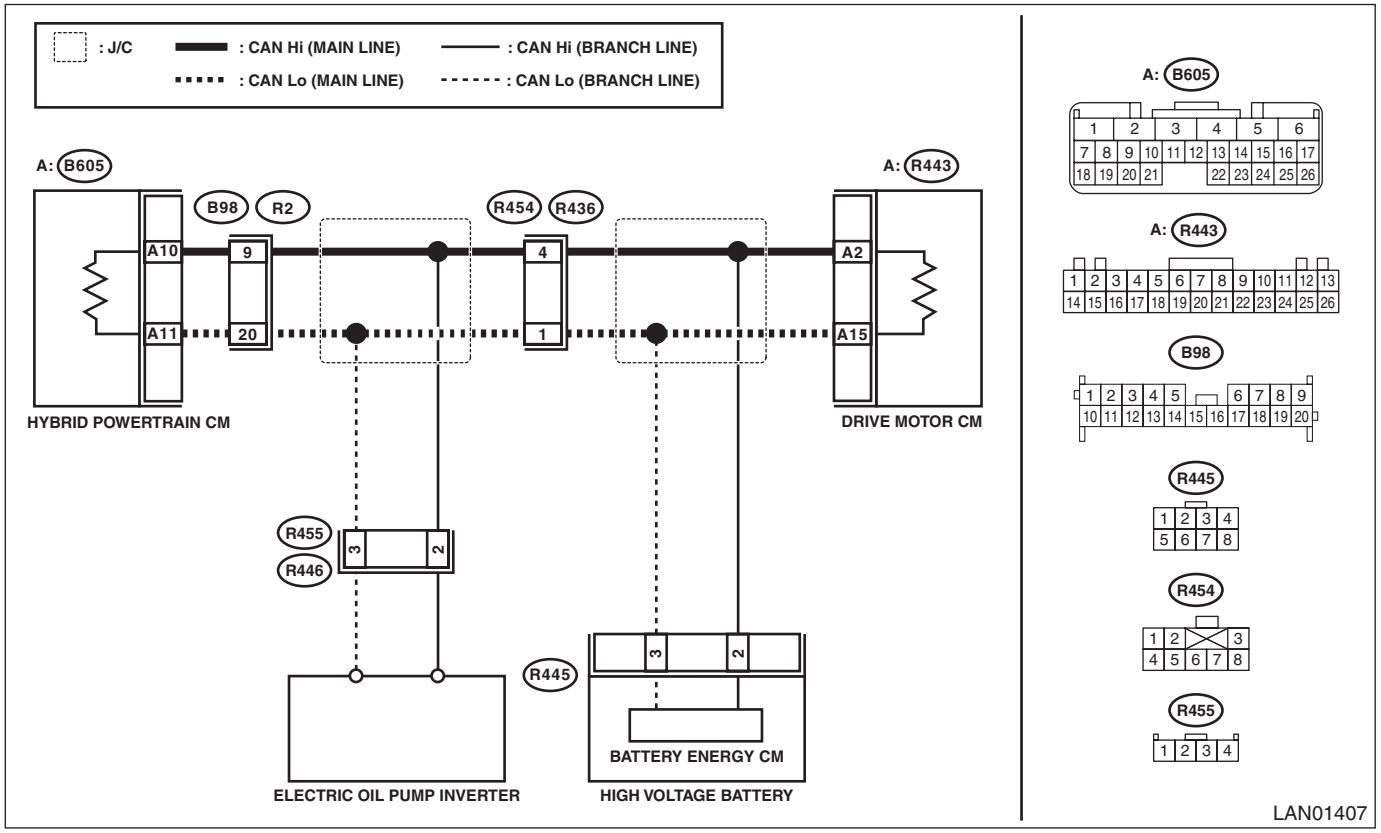

NOTE:
When the bus line is measured, combined resistance of the end resistance (120 Ω) in HPCM and the end resistance (120 Ω) in DMCM can be measured. The combined resistance is approximately 57 — 63 Ω. When the measured resistance value is 64 Ω or more, either of end resistance or main wiring harness may have malfunction such as open circuit.

	Step	Check	Yes	No
1	**CHECK CONTROL MODULE.** 1) Disconnect the DMCM and HPCM connectors. 2) Using a tester, measure the resistance between control module terminals. ***Connector & terminal*** ***(B605) No. 10 — (B605) No. 11:*** ***(R443) No. 2 — (R443) No. 15:***	Is the resistance 114 — 126 Ω?	Go to step **2**.	Replace the control module whose value is out of the specification.
2	**CHECK HARNESS.** Using a tester, check continuity between terminals. ***Connector & terminal*** ***(B605) No. 10 — (R443) No. 2:*** ***(B605) No. 11 — (R443) No. 15:***	Is there continuity?	It is possible that temporary poor communication occurs.	Repair or replace the open circuit of harness.

28.57 — 63 Ω (HEV-CAN_BECM)

WIRING DIAGRAM:

CAN communication system <Ref. to WI(HEV)-64, WIRING DIAGRAM, CAN Communication System.>

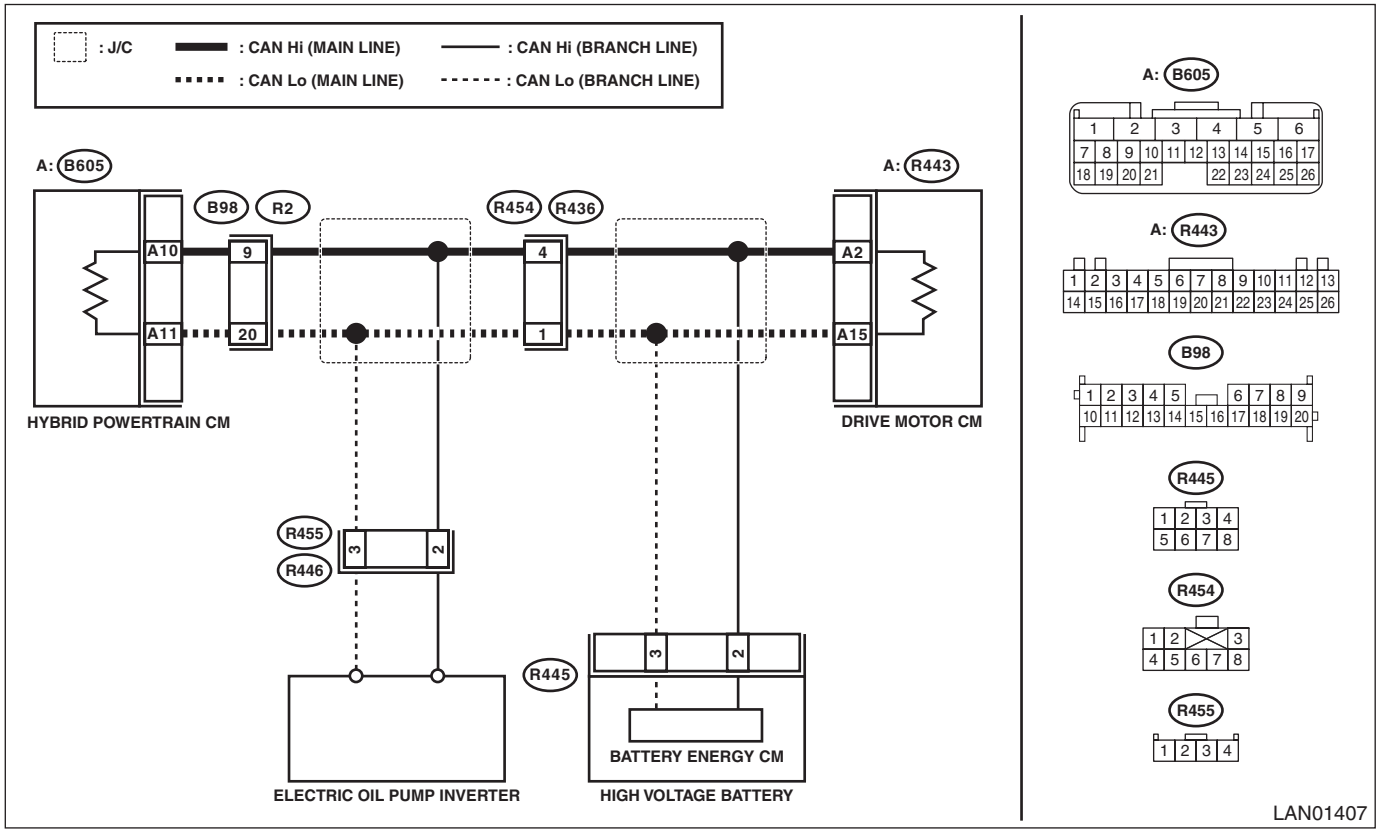

NOTE:
When the measured resistance value is 57 — 63 Ω, main wiring harness or related lines may be shorted to ground, or shorted to power supply line, or related line may be open.

Step		Check	Yes	No
1	**CHECK BETWEEN RELATED LINES AND MAIN WIRING HARNESS.** 1) Disconnect the high voltage battery connector. 2) Using the tester, measure the resistance between high voltage battery terminals. ***Connector & terminal*** ***(R445) No. 2 — No. 3:***	Is the resistance 400 Ω or more?	Related lines between high voltage battery and main wiring harness is open, or main wiring harness is open at two places or more.	Go to step **2**.
2	**CHECK RELATED LINES.** 1) Disconnect the HPCM connector. 2) Using a tester, check continuity between terminals. ***Connector & terminal*** ***(R445) No. 2 — (B605) No. 10:*** ***(R445) No. 3 — (B605) No. 11:***	Is the resistance 10 Ω or more?	Repair or replace the open circuit portion of high voltage battery related lines.	Check the BECM (high voltage battery). <Ref. to HEV(diag)-23, BATTERY ENERGY CONTROL SYSTEM, OPERATION, Read Diagnostic Trouble Code (DTC).>

29.57 — 63 Ω (HEV-CAN_ELECTRIC OIL PUMP)

WIRING DIAGRAM:

CAN communication system <Ref. to WI(HEV)-64, WIRING DIAGRAM, CAN Communication System.>

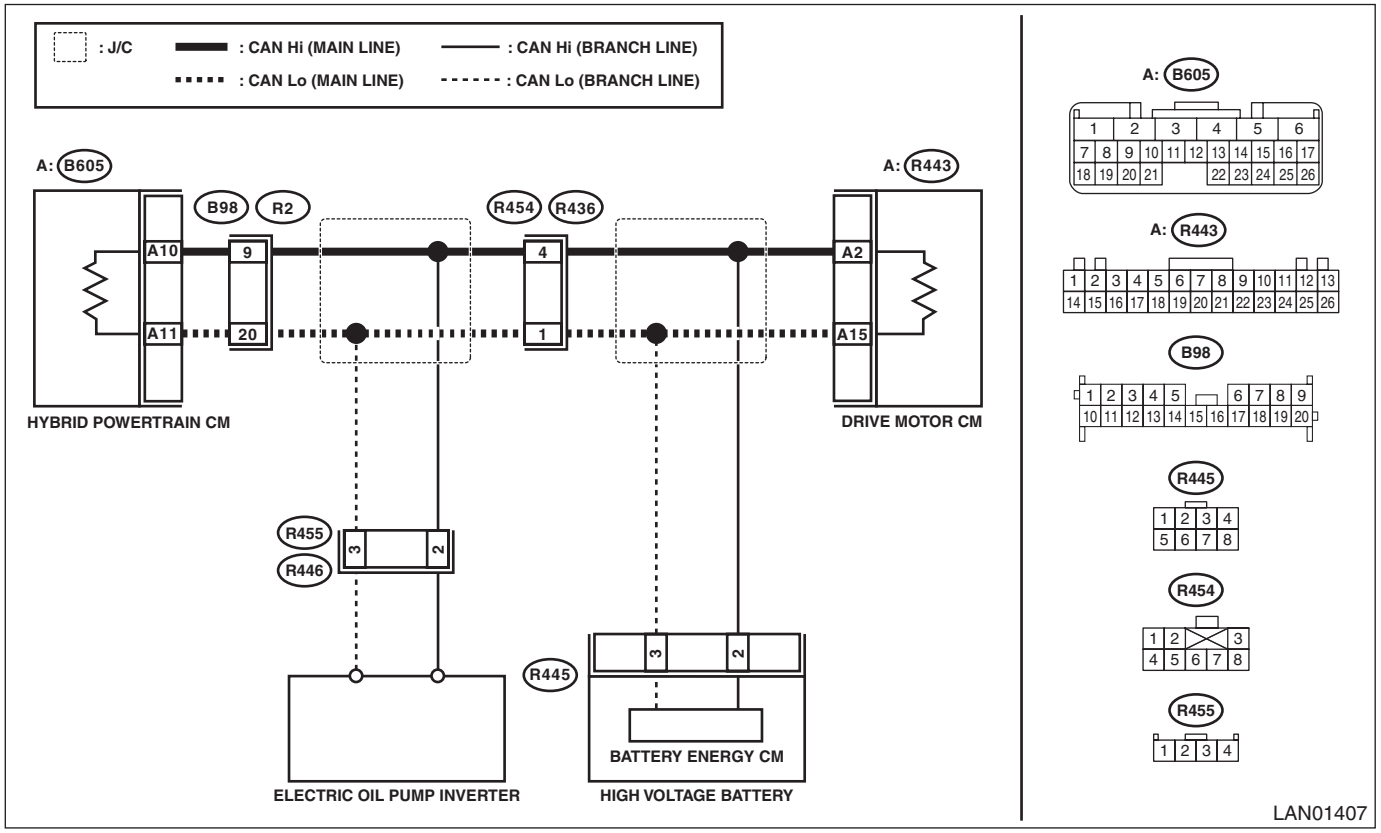

NOTE:
When the measured resistance value is 57 — 63 Ω, main wiring harness or related lines may be shorted to ground, or shorted to power supply line, or related line may be open.

Step		Check	Yes	No
1	**CHECK BETWEEN RELATED LINES AND MAIN WIRING HARNESS.** 1) Disconnect the electric oil pump inverter connector. 2) Using the tester, measure the resistance between electric oil pump inverter terminals. ***Connector & terminal*** ***(R455) No. 2 — No. 3:***	Is the resistance 400 Ω or more?	Related lines between electric oil pump inverter and main wiring harness is open, or main wiring harness is open at two places or more.	Go to step **2**.
2	**CHECK RELATED LINES.** 1) Disconnect the HPCM connector. 2) Using a tester, check continuity between terminals. ***Connector & terminal*** ***(R455) No. 2 — (B605) No. 10:*** ***(R455) No. 3 — (B605) No. 11:***	Is the resistance 10 Ω or more?	Repair or replace the open circuit of electric oil pump inverter related lines.	Check the HPCM. <Ref. to HEV(diag)-23, HYBRID POWERTRAIN CONTROL SYSTEM, OPERATION, Read Diagnostic Trouble Code (DTC).>

10.List of Diagnostic Trouble Code (DTC)

A: LIST

DTC	Item	Content of diagnosis	Note
U0073	Control Module Communication Bus Off	Communication of some module is shut down.	<Ref. to LAN(HEV)(diag)-111, DTC U0073 CONTROL MODULE COMMUNICATION BUS OFF, Diagnostic Procedure with Diagnostic Trouble Code (DTC).>
U0075	Control Module Communication Bus "PU-CAN" Off	Communication of some module is shut down.	<Ref. to LAN(HEV)(diag)-112, DTC U0075 CONTROL MODULE COMMUNICATION BUS "PU-CAN" OFF, Diagnostic Procedure with Diagnostic Trouble Code (DTC).>
U0076	Control Module Communication Bus "HEV-CAN" Off	Communication of some module is shut down.	<Ref. to LAN(HEV)(diag)-113, DTC U0076 CONTROL MODULE COMMUNICATION BUS "HEV-CAN" OFF, Diagnostic Procedure with Diagnostic Trouble Code (DTC).>
U0100	Lost Communication With ECM/PCM “A”	Data does not arrive from ECM.	<Ref. to LAN(HEV)(diag)-133, DTC U0100 LOST COMMUNICATION WITH ECM/PCM “A”, Diagnostic Procedure with Diagnostic Trouble Code (DTC).>
U0101	Lost Communication With TCM	Data does not arrive from TCM.	<Ref. to LAN(HEV)(diag)-134, DTC U0101 LOST COMMUNICATION WITH TCM, Diagnostic Procedure with Diagnostic Trouble Code (DTC).>
U0110	Lost Communication With Drive Motor Control Module "A"	Data does not arrive from DMCM.	<Ref. to LAN(HEV)(diag)-135, DTC U0110 LOST COMMUNICATION WITH DRIVE MOTOR CONTROL MODULE "A", Diagnostic Procedure with Diagnostic Trouble Code (DTC).>
U0111	Lost Communication With Battery Energy Control Module	Data does not arrive from BECM (high voltage battery).	<Ref. to LAN(HEV)(diag)-136, DTC U0111 LOST COMMUNICATION WITH BATTERY ENERGY CONTROL MODULE, Diagnostic Procedure with Diagnostic Trouble Code (DTC).>
U0122	Lost Communication With Vehicle Dynamics Control Module	Data does not arrive from VDC module.	<Ref. to LAN(HEV)(diag)-137, DTC U0122 LOST COMMUNICATION WITH VEHICLE DYNAMICS CONTROL MODULE, Diagnostic Procedure with Diagnostic Trouble Code (DTC).>
U0126	Lost Communication With Steering Angle Sensor Module	Data does not arrive from steering angle sensor.	<Ref. to LAN(HEV)(diag)-138, DTC U0126 LOST COMMUNICATION WITH STEERING ANGLE SENSOR MODULE, Diagnostic Procedure with Diagnostic Trouble Code (DTC).>
U0131	Lost Communication With Power Steering Control Module	Data does not arrive from EPS module.	<Ref. to LAN(HEV)(diag)-139, DTC U0131 LOST COMMUNICATION WITH POWER STEERING CONTROL MODULE, Diagnostic Procedure with Diagnostic Trouble Code (DTC).>
U0140	Lost Communication With Body Control Module	Data does not arrive from body integrated unit.	<Ref. to LAN(HEV)(diag)-140, DTC U0140 LOST COMMUNICATION WITH BODY CONTROL MODULE, Diagnostic Procedure with Diagnostic Trouble Code (DTC).>
U0151	Lost Communication With Restraints Control Module	Data does not arrive from airbag module.	<Ref. to LAN(HEV)(diag)-141, DTC U0151 LOST COMMUNICATION WITH RESTRAINTS CONTROL MODULE, Diagnostic Procedure with Diagnostic Trouble Code (DTC).>
U0155	Lost Communication With Instrument Panel Cluster (IPC) Control Module	Data does not arrive from meter.	<Ref. to LAN(HEV)(diag)-142, DTC U0155 LOST COMMUNICATION WITH INSTRUMENT PANEL CLUSTER (IPC) CONTROL MODULE, Diagnostic Procedure with Diagnostic Trouble Code (DTC).>
U0164	Lost Communication With HVAC Control Module	Data does not arrive from A/C control panel.	<Ref. to LAN(HEV)(diag)-143, DTC U0164 LOST COMMUNICATION WITH HVAC CONTROL MODULE, Diagnostic Procedure with Diagnostic Trouble Code (DTC).>
U0287	Lost Communication With Transmission Fluid Pump Module	Data does not arrive from electric oil pump.	<Ref. to LAN(HEV)(diag)-144, DTC U0287 LOST COMMUNICATION WITH TRANSMISSION FLUID PUMP MODULE, Diagnostic Procedure with Diagnostic Trouble Code (DTC).>

DTC	Item	Content of diagnosis	Note
U0293	Lost Communication With Hybrid Powertrain Control Module	Data does not arrive from HPCM.	<Ref. to LAN(HEV)(diag)-145, DTC U0293 LOST COMMUNICATION WITH HYBRID POWERTRAIN CONTROL MODULE, Diagnostic Procedure with Diagnostic Trouble Code (DTC).>
U0327	Software Incompatibility With Vehicle Security Control Module	Data does not arrive from keyless access CM.	<Ref. to LAN(HEV)(diag)-146, DTC U0327 SOFTWARE INCOMPATIBILITY WITH VEHICLE SECURITY CONTROL MODULE, Diagnostic Procedure with Diagnostic Trouble Code (DTC).>
U0401	Invalid Data Received From ECM/PCM “A”	Error data is received from ECM.	<Ref. to LAN(HEV)(diag)-114, DTC U0401 INVALID DATA RECEIVED FROM ECM/PCM “A”, Diagnostic Procedure with Diagnostic Trouble Code (DTC).>
U0402	Invalid Data Received From TCM	Error data is received from TCM.	<Ref. to LAN(HEV)(diag)-115, DTC U0402 INVALID DATA RECEIVED FROM TCM, Diagnostic Procedure with Diagnostic Trouble Code (DTC).>
U0411	Invalid Data Received From Drive Motor Control Module "A"	Error data is received from DMCM.	<Ref. to LAN(HEV)(diag)-116, DTC U0411 INVALID DATA RECEIVED FROM DRIVE MOTOR CONTROL MODULE "A", Diagnostic Procedure with Diagnostic Trouble Code (DTC).>
U0412	Invalid Data Received From Battery Energy Control Module	Error data is received from BECM (high voltage battery).	<Ref. to LAN(HEV)(diag)-117, DTC U0412 INVALID DATA RECEIVED FROM BATTERY ENERGY CONTROL MODULE, Diagnostic Procedure with Diagnostic Trouble Code (DTC).>
U0416	Invalid Data Received From Vehicle Dynamics Control Module	Error data is received from VDC module.	<Ref. to LAN(HEV)(diag)-118, DTC U0416 INVALID DATA RECEIVED FROM VEHICLE DYNAMICS CONTROL MODULE, Diagnostic Procedure with Diagnostic Trouble Code (DTC).>
U0420	Invalid Data Received From Power Steering Control Module	Error data is received from EPS module.	<Ref. to LAN(HEV)(diag)-119, DTC U0420 INVALID DATA RECEIVED FROM POWER STEERING CONTROL MODULE, Diagnostic Procedure with Diagnostic Trouble Code (DTC).>
U0422	Invalid Data Received From Body Control Module	Error data is received from body integrated unit.	<Ref. to LAN(HEV)(diag)-120, DTC U0422 INVALID DATA RECEIVED FROM BODY CONTROL MODULE, Diagnostic Procedure with Diagnostic Trouble Code (DTC).>
U0423	Invalid Data Received From Instrument Panel Cluster Control Module	Error data is received from combination meter.	<Ref. to LAN(HEV)(diag)-121, DTC U0423 INVALID DATA RECEIVED FROM INSTRUMENT PANEL CLUSTER CONTROL MODULE, Diagnostic Procedure with Diagnostic Trouble Code (DTC).>
U0424	Invalid Data Received From HVAC Control Module	Error data is received from A/C control panel.	<Ref. to LAN(HEV)(diag)-122, DTC U0424 INVALID DATA RECEIVED FROM HVAC CONTROL MODULE, Diagnostic Procedure with Diagnostic Trouble Code (DTC).>
U0427	Invalid Data Received From Vehicle Security Control Module	Error data is received from keyless access CM.	<Ref. to LAN(HEV)(diag)-123, DTC U0427 INVALID DATA RECEIVED FROM VEHICLE SECURITY CONTROL MODULE, Diagnostic Procedure with Diagnostic Trouble Code (DTC).>
U0428	Invalid Data Received From Steering Angle Sensor Module	Error data is received from steering angle sensor.	<Ref. to LAN(HEV)(diag)-124, DTC U0428 INVALID DATA RECEIVED FROM STEERING ANGLE SENSOR MODULE, Diagnostic Procedure with Diagnostic Trouble Code (DTC).>
U0452	Invalid Data Received From Restraints Control Module	Error data is received from airbag module.	<Ref. to LAN(HEV)(diag)-125, DTC U0452 INVALID DATA RECEIVED FROM RESTRAINTS CONTROL MODULE, Diagnostic Procedure with Diagnostic Trouble Code (DTC).>
U0588	Invalid Data Received From Transmission Fluid Pump Module	Error data is received from electric oil pump.	<Ref. to LAN(HEV)(diag)-126, DTC U0588 INVALID DATA RECEIVED FROM TRANSMISSION FLUID PUMP MODULE, Diagnostic Procedure with Diagnostic Trouble Code (DTC).>

DTC	Item	Content of diagnosis	Note
U0594	Invalid Data Received From Hybrid Powertrain Control Module	Error data is received from HPCM.	<Ref. to LAN(HEV)(diag)-127, DTC U0594 INVALID DATA RECEIVED FROM HYBRID POWERTRAIN CONTROL MODULE, Diagnostic Procedure with Diagnostic Trouble Code (DTC).>
U1100	Lost Communication With ECM/PCM PU-CAN	Data does not arrive from ECM.	<Ref. to LAN(HEV)(diag)-147, DTC U1100 LOST COMMUNICATION WITH ECM/PCM PU-CAN, Diagnostic Procedure with Diagnostic Trouble Code (DTC).>
U1101	Lost Communication With TCM PU-CAN	Data does not arrive from TCM.	<Ref. to LAN(HEV)(diag)-148, DTC U1101 LOST COMMUNICATION WITH TCM PU-CAN, Diagnostic Procedure with Diagnostic Trouble Code (DTC).>
U1120	Lost Communication With Autostart Stop Control Module	Data does not arrive from HPCM.	<Ref. to LAN(HEV)(diag)-149, DTC U1120 LOST COMMUNICATION WITH AUTOSTART STOP CONTROL MODULE, Diagnostic Procedure with Diagnostic Trouble Code (DTC).>
U1201	CAN-HS Counter Abnormal	CAN communication error	<Ref. to LAN(HEV)(diag)-110, DTC U1201 CAN-HS COUNTER ABNORMAL, Diagnostic Procedure with Diagnostic Trouble Code (DTC).>
U1290	Lost Communication With Hybrid Powertrain Control Module HEV-CAN	Data does not arrive from HPCM.	<Ref. to LAN(HEV)(diag)-150, DTC U1290 LOST COMMUNICATION WITH HYBRID POWERTRAIN CONTROL MODULE HEV-CAN, Diagnostic Procedure with Diagnostic Trouble Code (DTC).>
U1293	Lost Communication With Hybrid Powertrain Control Module PU-CAN	Data does not arrive from HPCM.	<Ref. to LAN(HEV)(diag)-151, DTC U1293 LOST COMMUNICATION WITH HYBRID POWERTRAIN CONTROL MODULE PU-CAN, Diagnostic Procedure with Diagnostic Trouble Code (DTC).>
U1401	Invalid Data Received From ECM/PCM PU-CAN	Error data is received from ECM.	<Ref. to LAN(HEV)(diag)-128, DTC U1401 INVALID DATA RECEIVED FROM ECM/PCM PU-CAN, Diagnostic Procedure with Diagnostic Trouble Code (DTC).>
U1402	Invalid Data Received From TCM PU-CAN	Error data is received from TCM.	<Ref. to LAN(HEV)(diag)-129, DTC U1402 INVALID DATA RECEIVED FROM TCM PU-CAN, Diagnostic Procedure with Diagnostic Trouble Code (DTC).>
U1469	Invalid Data Received From Autostart Stop Control Module	Error data is received from HPCM.	<Ref. to LAN(HEV)(diag)-130, DTC U1469 INVALID DATA RECEIVED FROM AUTOSTART STOP CONTROL MODULE, Diagnostic Procedure with Diagnostic Trouble Code (DTC).>
U1591	Invalid Data Received From Hybrid Powertrain Control Module HEV-CAN	Error data is received from HPCM.	<Ref. to LAN(HEV)(diag)-131, DTC U1591 INVALID DATA RECEIVED FROM HYBRID POWERTRAIN CONTROL MODULE HEV-CAN, Diagnostic Procedure with Diagnostic Trouble Code (DTC).>
U1594	Invalid Data Received From Hybrid Powertrain Control Module PU-CAN	Error data is received from HPCM.	<Ref. to LAN(HEV)(diag)-132, DTC U1594 INVALID DATA RECEIVED FROM HYBRID POWERTRAIN CONTROL MODULE PU-CAN, Diagnostic Procedure with Diagnostic Trouble Code (DTC).>

1. CHECK USING THE DTC CHECK SHEET

DTC check sheet

- Bus off detection / data not received

	(A)	(B)			(C)																				
		MAIN-CAN	PU-CAN	HEV-CAN	ECM		TCM		DMCM	BECM	VDC	STR	EPS	BIU	A/B	MET	MFD	A/C	EOP	HPCM			KPS
					MAIN	PU	MAIN	PU												MAIN	HEV	PU	
		U0073	U0075	U0076	U0100	U1100	U0101	U1101	U0110	U0111	U0122	U0126	U0131	U0140	U0151	U0155	U0156	U0164	U0287	U0293 U1120	U1290	U1293	U0327
VDC			-	-		-		-	-	-	-		-		-	-	-	-	-		-	-	-
BIU			-	-		-		-	-	-		-	-	-	-		-		-	-	-	-	
MFD			-	-	-	-	-	-	-	-	-	-	-	-	-	-	-	-	-	-	-	-	-
A/C			-	-		-		-	-	-		-	-		-		-	-	-		-	-	-
MET			-	-		-		-	-	-		-				-	-		-		-	-	
RST		-	-	-	-	-	-	-	-	-	-	-	-	-	-	-	-	-	-	-	-	-	-
STR		-	-	-	-	-	-	-	-	-	-	-	-	-	-	-	-	-	-	-	-	-	-
TCM				-			-	-		-		-	-		-		-	-			-		-
A/B			-	-	-	-	-	-	-	-	-	-	-	-	-	-	-	-	-	-	-	-	-
HPCM												-					-			-	-	-	-
EPS			-	-	-	-	-	-	-	-		-	-	-	-	-	-	-	-	-	-	-	-
ECM				-	-	-			-	-		-	-	-	-		-	-	-		-		-
KPS			-	-		-		-	-	-		-	-		-		-	-	-		-	-	-
AHL			-	-	-	-	-	-	-	-		-	-		-	-	-	-	-	-	-	-	-
EOP		-	-		-	-		-	-	-	-	-	-	-	-	-	-	-	-	-	-	-	-
BECM		-	-		-	-	-	-		-	-	-	-	-	-	-	-	-	-	-		-	-
DMCM		-	-		-	-	-	-	-		-	-	-		-	-	-	-	-	-		-	-

LAN01408

- Data abnormal detection

(D)

	ECM		TCM		DMCM	BECM	VDC	STR	EPS	BIU	A/B	MET	MFD	A/C	EOP	HPCM			KPS
	MAIN	PU	MAIN	PU												MAIN	HEV	PU	
	U0401	U1401	U0402	U1402	U0411	U0412	U0416	U0428	U0420	U0422	U0452	U0423	U0457	U0424	U0588	U0594 U1469	U1591	U1594	U0427
VDC		-		-	-	-	-		-		-	-	-	-	-		-	-	-
BIU		-		-	-	-		-	-	-	-		-		-	-	-	-	
MFD	-	-	-	-	-	-	-	-	-	-	-	-	-	-	-	-	-	-	-
A/C		-		-	-	-		-	-		-		-	-	-		-	-	-
MET	-	-	-	-	-	-	-	-	-	-	-	-	-	-	-	-	-	-	-
RST	-	-	-	-	-	-	-	-	-	-	-	-	-	-	-	-	-	-	-
STR	-	-	-	-	-	-	-	-	-	-	-	-	-	-	-	-	-	-	-
TCM			-	-		-		-	-		-		-	-			-		-
A/B	-	-	-	-	-	-	-	-	-	-	-	-	-	-	-	-	-	-	-
HPCM								-					-			-	-	-	-
EPS	-	-	-	-	-	-		-	-	-	-	-	-	-	-	-	-	-	-
ECM	-	-			-	-		-	-	-	-		-	-	-		-		-
KPS		-	-	-	-	-	-	-	-		-	-	-	-	-	-	-	-	-
AHL	-	-	-	-	-	-	-	-	-	-	-	-	-	-	-	-	-	-	-
EOP	-	-		-	-	-	-	-	-	-	-	-	-	-	-	-	-	-	-
BECM	-	-	-	-		-	-	-	-	-	-	-	-	-	-	-		-	-
DMCM	-	-	-	-	-		-	-	-	-	-	-	-	-	-	-		-	-

LAN01409

(A) Installation check
(B) Bus off detection
(C) Data no-receive detection
(D) Data abnormal detection

VDC: VDC CM
BIU: Body integrated unit
MFD: High grade MFD
A/C: A/C control panel
MET: Combination meter
RST: Remote engine starter CM
STR: Steering angle sensor
TCM: Transmission CM
A/B: Airbag CM

HPCM: Hybrid powertrain CM
EPS: Power steering CM
ECM: Engine CM
KPS: Keyless access CM
AHL: Auto headlight beam leveler CM
EOP: Electric oil pump
BECM: Battery energy CM (high voltage battery)
DMCM: Drive motor CM

1) Module installation check
   (1) Write "-" marks in the field for installation check if the vehicle to be inspected does not have relevant module.
   (2) Write "-" marks in all blank fields on the same row that the "-" mark has filled in.
2) Bus off detection / data not received

NOTE:
It becomes impossible for CAN diagnostic module to read DTC, if there is a current malfunction of open harness (data not received). If this occurs, perform the "Check using the check sheet of communication for initializing" <Ref. to LAN(HEV)(diag)-13, CHECK USING THE CHECK SHEET OF COMMUNICATION FOR INITIALIZING, COMMUNICATION FOR INITIALIZING IMPOSSIBLE, Subaru Select Monitor.>, and use this sheet to confirm that the corresponding part becomes the past malfunction.
   (1) Mark "X" in the field corresponding to the DTCs that has been detected by each module in the check sheet.
   (2) Identify and repair the faulty part by referring to the example of DTC data not received and the DTC matrix. <Ref. to LAN(HEV)(diag)-92, EXAMPLE OF DTC DATA NOT RECEIVED, LIST, List of Diagnostic Trouble Code (DTC).> <Ref. to LAN(HEV)(diag)-95, DTC MATRIX, LIST, List of Diagnostic Trouble Code (DTC).>

3) Data abnormal detection

NOTE:
If any DTC code that starts with P, B or C is detected after restarting the engine, perform the diagnosis for that code first. If any “BUS OFF” or “NO-RECEIVE DATA” condition is detected, perform the diagnosis for these problems first.

(1) If several modules detect the DTC for the same module, replace the detected module.
(2) If one module detects the DTC, replace the module of the detected side.
(3) If it does not return to the normal operation, re-install the module which has been replaced, and replace the module of the detected side.
(4) If it does not return to the normal operation, replace both modules.

2. EXAMPLE OF DTC DATA NOT RECEIVED

NOTE:
Only the sheet for bus off, data no-receive entry is shown.
(This is because, when data error occurs at the bus off, data no-receive condition, the diagnosis for these problems is performed first.)

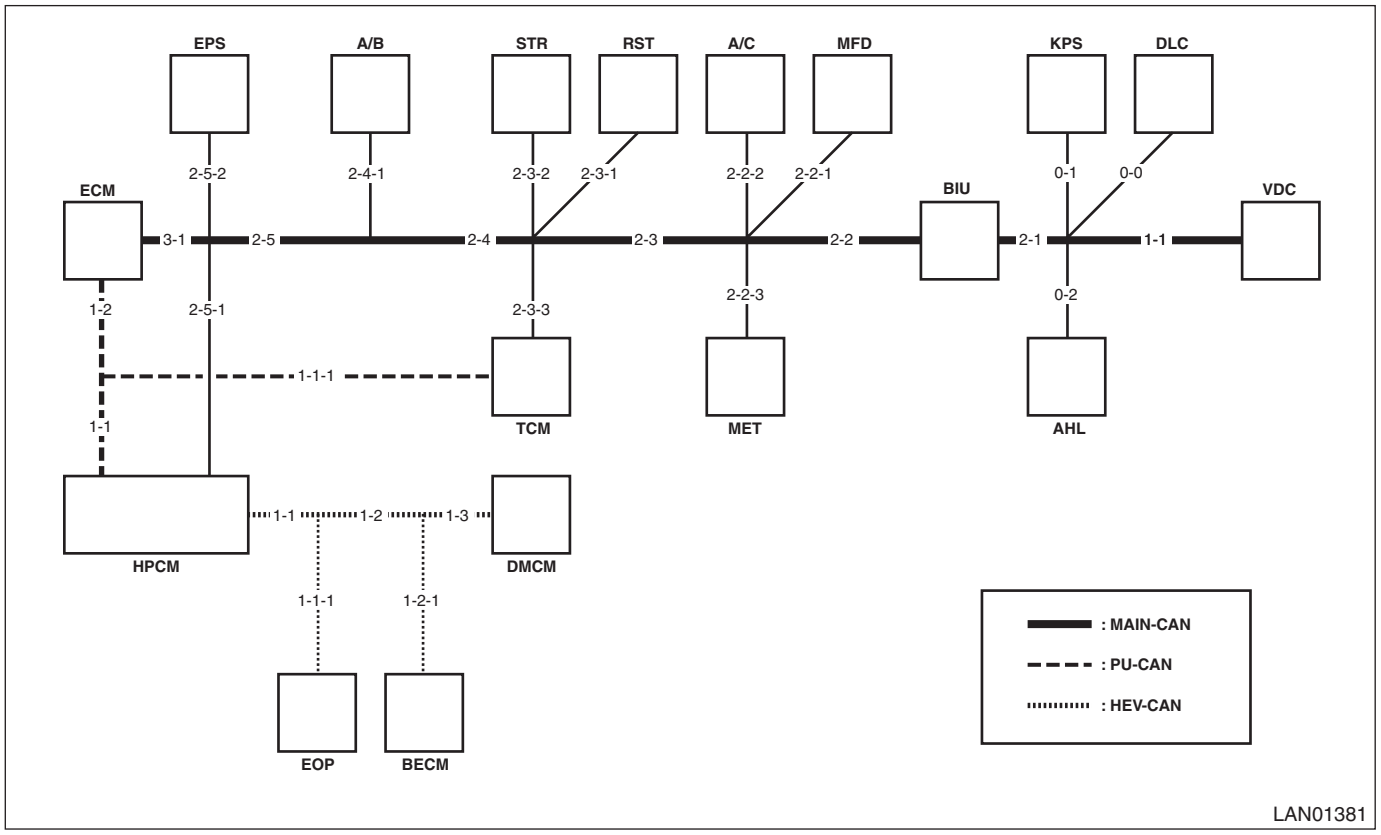

When 2-3-1 (remote engine start CM vicinity) is open

NOTE:
The remote engine starter does not operate while no DTC is detected.

	(A)	(B)			(C)																				
		MAIN-CAN	PU-CAN	HEV-CAN	ECM		TCM		DMCM	BECM	VDC	STR	EPS	BIU	A/B	MET	MFD	A/C	EOP	HPCM			KPS
					MAIN	PU	MAIN	PU												MAIN	HEV	PU	
		U0073	U0075	U0076	U0100	U1100	U0101	U1101	U0110	U0111	U0122	U0126	U0131	U0140	U0151	U0155	U0156	U0164	U0287	U0293 U1120	U1290	U1293	U0327
VDC			-	-		-		-	-	-	-		-		-	-	-	-	-		-	-	-
BIU			-	-		-		-	-	-		-	-	-	-		-		-	-	-	-	
MFD			-	-	-	-	-	-	-	-	-	-	-	-	-	-	-	-	-	-	-	-	-
A/C			-	-		-		-	-	-		-	-		-		-	-	-		-	-	-
MET			-	-		-		-	-	-		-				-	-		-		-	-	
RST		-	-	-	-	-	-	-	-	-	-	-	-	-	-	-	-	-	-	-	-	-	-
STR		-	-	-	-	-	-	-	-	-	-	-	-	-	-	-	-	-	-	-	-	-	-
TCM				-			-	-		-		-	-		-		-	-			-		-
A/B			-	-	-	-	-	-	-	-	-	-	-	-	-	-	-	-	-	-	-	-	-
HPCM												-					-			-	-	-	-
EPS			-	-	-	-	-	-	-	-		-	-	-	-	-	-	-	-	-	-	-	-
ECM				-	-	-			-	-		-	-	-	-		-	-	-		-		-
KPS			-	-		-		-	-	-		-	-		-		-	-	-		-	-	-
AHL			-	-	-	-	-	-	-	-		-	-		-	-	-	-	-	-	-	-	-
EOP		-	-		-	-		-	-	-	-	-	-	-	-	-	-	-	-	-	-	-	-
BECM		-	-		-	-	-	-		-	-	-	-	-	-	-	-	-	-	-		-	-
DMCM		-	-		-	-	-	-	-		-	-	-		-	-	-	-	-	-		-	-

LAN01408

When 2-3-2 (steering angle sensor vicinity) is open

	(A)	(B)			(C)																				
		MAIN-CAN	PU-CAN	HEV-CAN	ECM		TCM		DMCM	BECM	VDC	STR	EPS	BIU	A/B	MET	MFD	A/C	EOP	HPCM			KPS
					MAIN	PU	MAIN	PU												MAIN	HEV	PU	
		U0073	U0075	U0076	U0100	U1100	U0101	U1101	U0110	U0111	U0122	U0126	U0131	U0140	U0151	U0155	U0156	U0164	U0287	U0293 U1120	U1290	U1293	U0327
VDC			-	-		-		-	-	-	-	X	-		-	-	-	-	-		-	-	-
BIU			-	-		-		-	-	-		-	-	-	-		-		-	-	-	-	
MFD			-	-	-	-	-	-	-	-	-	-	-	-	-	-	-	-	-	-	-	-	-
A/C			-	-		-		-	-	-		-	-		-		-	-	-		-	-	-
MET			-	-		-		-	-	-		-				-	-		-		-	-	
RST		-	-	-	-	-	-	-	-	-	-	-	-	-	-	-	-	-	-	-	-	-	-
STR		-	-	-	-	-	-	-	-	-	-	-	-	-	-	-	-	-	-	-	-	-	-
TCM				-			-	-		-		-	-		-		-	-			-		-
A/B			-	-	-	-	-	-	-	-	-	-	-	-	-	-	-	-	-	-	-	-	-
HPCM												-					-			-	-	-	-
EPS			-	-	-	-	-	-	-	-		-	-	-	-	-	-	-	-	-	-	-	-
ECM				-	-	-			-	-		-	-	-	-		-	-	-		-		-
KPS			-	-		-		-	-	-		-	-		-		-	-	-		-	-	-
AHL			-	-	-	-	-	-	-	-		-	-		-	-	-	-	-	-	-	-	-
EOP		-	-		-	-		-	-	-	-	-	-	-	-	-	-	-	-	-	-	-	-
BECM		-	-		-	-	-	-		-	-	-	-	-	-	-	-	-	-	-		-	-
DMCM		-	-		-	-	-	-	-		-	-	-		-	-	-	-	-	-		-	-

LAN01410

When 2-5-2 (electric power steering CM vicinity) is open

	(A)	(B)			(C)																				
		MAIN-CAN	PU-CAN	HEV-CAN	ECM		TCM		DMCM	BECM	VDC	STR	EPS	BIU	A/B	MET	MFD	A/C	EOP	HPCM			KPS
					MAIN	PU	MAIN	PU												MAIN	HEV	PU	
		U0073	U0075	U0076	U0100	U1100	U0101	U1101	U0110	U0111	U0122	U0126	U0131	U0140	U0151	U0155	U0156	U0164	U0287	U0293 U1120	U1290	U1293	U0327
VDC			-	-		-		-	-	-	-		-		-	-	-	-	-		-	-	-
BIU			-	-		-		-	-	-		-	-	-	-		-		-	-	-	-	
MFD			-	-	-	-	-	-	-	-	-	-	-	-	-	-	-	-	-	-	-	-	-
A/C			-	-		-		-	-	-		-	-		-		-	-	-		-	-	-
MET			-	-		-		-	-	-		-	X			-	-		-		-	-	
RST		-	-	-	-	-	-	-	-	-	-	-	-	-	-	-	-	-	-	-	-	-	-
STR		-	-	-	-	-	-	-	-	-	-	-	-	-	-	-	-	-	-	-	-	-	-
TCM				-			-	-		-		-	-		-		-	-			-		-
A/B			-	-	-	-	-	-	-	-	-	-	-	-	-	-	-	-	-	-	-	-	-
HPCM												-	X				-			-	-	-	-
EPS			-	-	-	-	-	-	-	-	X	-	-	-	-	-	-	-	-	-	-	-	-
ECM				-	-	-			-	-		-	-	-	-		-	-	-		-		-
KPS			-	-		-		-	-	-		-	-		-		-	-	-		-	-	-
AHL			-	-	-	-	-	-	-	-		-	-		-	-	-	-	-	-	-	-	-
EOP		-	-		-	-		-	-	-	-	-	-	-	-	-	-	-	-	-	-	-	-
BECM		-	-		-	-	-	-		-	-	-	-	-	-	-	-	-	-	-		-	-
DMCM		-	-		-	-	-	-	-		-	-	-		-	-	-	-	-	-		-	-

LAN01411

3. DTC MATRIX

NOTE:
Perform the following procedure when using this chart in which the detailed trouble mode corresponds to the trouble status.
1. Search the trouble mode that corresponds to the vehicle status from the chart.
2. Perform the repair that corresponds to the trouble mode.

Condition				DTC reading result from each module using Subaru Select Monitor						
Modules (Which module vicinity)	Detailed location (Which location)	Trouble mode (What kind)	Vehicle status (Current status)	ECM	TCM	· · ·	· · ·	· · ·	· · ·	AHL
Trouble mode 1				Vehicle status 1						
Trouble mode 2				Vehicle status 2						
· · ·				· · ·						
· · ·										
Trouble mode n				Vehicle status n						

Condition				Indicator						
Modules (Which module vicinity)	Detailed location (Which location)	Trouble mode (What kind)	Vehicle status (Current status)	READY	HYBRID	· · ·	· · ·	· · ·	· · ·	OTHER WARNING INDICATIONS
Trouble mode 1				Vehicle status 1						
Trouble mode 2				Vehicle status 2						
· · ·				· · ·						
· · ·				· · ·						
Trouble mode n				Vehicle status n						

LAN01336

1. CAN communication circuit is open (DTC)

NOTE:

- If the module has a limit of DTC memory and the number of DTC occurrence exceeds the limit, older DTCs are preferentially stored.
- When there is no description in Current, it is referred to as “None”.
- When DTC is in parentheses, it is referred to as “Not always occur”.
- “Trouble exists” is referred to as the status before performing inspection and repair. “Trouble existed” is referred to as the status before performing DTC clear after repair.

*1: When U0073 occurs, other U-codes are not stored. (Judge timing affects the storing order.)
*2: The number of DTC memory is limited to 8 items.
*3: All types of DTCs can be simultaneously stored.
*4: All types of DTCs can be simultaneously stored. When U0073 occurs, other U-codes are not stored.
*5: The number of DTC memory is limited to 4 items. (when the 5 or more DTC occurs, these will be memorized on memory areas from 2nd to 4th.)
*6: The number of DTC memory is limited to 5 items. (Older items are preferentially stored.)
*7: The number of DTC memory is limited to 2 items. (Older items are preferentially stored.)

Condition				DTC reading result from each module using Subaru Select Monitor												
Control module	Detailed location	Trouble mode	Vehicle status	ECM (*1)	TCM (*1)	VDC (*1)	BIU (*2)	A/B (*3)	A/C (*4)	EPS (*1) (*5)	KPS (*3)	MET (*6)	MFD (*7)	DMCM (*3)	HPCM (*3)	BECM (*3)	AHL (*3)
VDC Vicinity	Hi side Lo side Both sides	Open circuit	Trouble exists	Current U0122 Past Same as above	Current U0122 Past Same as above	Communication failure	Current U0122 Past Same as above	Current None Past None	Current U0122 Past Same as above	Current U0122 Latest Same as above	Current U0122 Past Same as above	Current U0122 Past Same as above	Current None Past None	Current None Past None	Current U0122 Past Same as above	Current None Past None	Current U0122 Past Same as above
VDC Vicinity	Hi side Lo side Both sides	Open circuit	Trouble existed	Past U0122	Past U0122	Current C1424 (C1431) Past C1424 (C1431) U0073 U0100 U0101 U0126 U0140 U0293	Past U0122	Current None Past None	Past U0122	Current U0122 Latest None	Past U0122	Past U0122	Current None Past None	Current None Past None	Past U0122	Current None Past None	Past U0122
KPS Vicinity	Hi side Lo side Both sides	Open circuit	Trouble exists	Current None Past None	Current None Past None	Current None Past None	Current U0327 Past Same as above	Current None Past None	Current None Past None	Current None Latest None	Communication failure	Current U0327 Past Same as above	Current None Past None	Current None Past None	Current None Past None	Current None Past None	Current None Past None
KPS Vicinity	Hi side Lo side Both sides	Open circuit	Trouble existed	Current None Past None	Current None Past None	Current None Past None	Past U0327	Current None Past None	Current None Past None	Current None Latest None	Past U0100 U0101 U0122 U0140 U0155 U1120	Past U0327	Current None Past None	Current None Past None	Current None Past None	Current None Past None	Current None Past None
AHL Vicinity	Hi side Lo side Both sides	Open circuit	Trouble exists	Current None Past None	Current None Past None	Current None Past None	Current None Past None	Current None Past None	Current None Past None	Current None Latest None	Current None Past None	Current None Past None	Current None Past None	Current None Past None	Current None Past None	Current None Past None	Communication failure
AHL Vicinity	Hi side Lo side Both sides	Open circuit	Trouble existed	Current None Past None	Current None Past None	Current None Past None	Current None Past None	Current None Past None	Current None Past None	Current None Latest None	Current None Past None	Current None Past None	Current None Past None	Current None Past None	Current None Past None	Current None Past None	Past U0122 U0140

LAN01412

Condition				DTC reading result from each module using Subaru Select Monitor												
Control module	Detailed location	Trouble mode	Vehicle status	ECM (*1)	TCM (*1)	VDC (*1)	BIU (*2)	A/B (*3)	A/C (*4)	EPS (*1) (*5)	KPS (*3)	MET (*6)	MFD (*7)	DMCM (*3)	HPCM (*3)	BECM (*3)	AHL (*3)
BIU (VDC side) Vicinity	Hi side Lo side Both sides	Open circuit	Trouble exists	Communication failure	Communication failure	Current U0100 U0101 U0126 U0140 U0293 Past Same as above	Communication failure	Communication failure	Communication failure	Current U0122 Latest Same as above	Current U0100 U0101 U0140 U0155 U1120 Past Same as above	Communication failure	Communication failure	Communication failure	Communication failure	Communication failure	Current U0140 Past Same as above
BIU (VDC side) Vicinity	Hi side Lo side Both sides	Open circuit	Trouble existed	Past U0122	Past U0122	Current C1424 C1431 Past C1424 C1431 U0100 U0101 U0126 U0140 U0293	Past U0122 U0327	Current None Past None	Past U0122	Latest U0122	Past U0100 U0101 U0140 U0155 U1120	Past U0122 U0327	Current None Past None	Current None Past None	Past U0122	Current None Past None	Past U0140
BIU (ECM side) Vicinity	Hi side Lo side Both sides	Open circuit	Trouble exists	Communication failure	Communication failure	Current U0100 U0101 U0126 U0293 Past Same as above	Current U0100 U0101 U0155 U0164 Past Same as above	Communication failure	Communication failure	Current U0122 Latest Same as above	Current U0100 U0101 U0155 U1120 Past Same as above	Communication failure	Communication failure	Communication failure	Communication failure	Communication failure	Current None Past None
BIU (ECM side) Vicinity	Hi side Lo side Both sides	Open circuit	Trouble existed	Past U0122	Past U0122 U0140	Current C1424 C1431 Past C1424 C1431 U0100 U0101 U0126 U0293	Past U0100 U0101 U0155 U0164	Current None Past None	Past U0122 U0140	Latest U0122	Past U0100 U0101 U0155 U1120	Past U0122 U0140 U0327	Past U1650	Current None Past None	Past U0122 U0140	Current None Past None	Current None Past None
MFD Vicinity	Hi side Lo side Both sides	Open circuit	Trouble exists	Current None Past None	Current None Past None	Current None Past None	Current None Past None	Current None Past None	Current None Past None	Current None Latest None	Current None Past None	Current None Past None	Communication failure	Current None Past None	Current None Past None	Current None Past None	Current None Past None
MFD Vicinity	Hi side Lo side Both sides	Open circuit	Trouble existed	Current None Past None	Current None Past None	Current None Past None	Current None Past None	Current None Past None	Current None Past None	Current None Latest None	Current None Past None	Current None Past None	Past (U0073)	Current None Past None	Current None Past None	Current None Past None	Current None Past None

LAN01413

Condition				DTC reading result from each module using Subaru Select Monitor													
Control module	Detailed location	Trouble mode	Vehicle status	ECM (*1)	TCM (*1)	VDC (*1)	BIU (*2)	A/B (*3)	A/C (*4)	EPS (*1) (*5)	KPS (*3)	MET (*6)	MFD (*7)	DMCM (*3)	HPCM (*3)	BECM (*3)	AHL (*3)
A/C Vicinity	Hi side Lo side Both sides	Open circuit	Trouble exists	Current None Past None	Current None Past None	Current None Past None	Current U0164 Past Same as above	Current None Past None	Communication failure	Current None Latest None	Current None Past None	Current U0164 Past Same as above	Current None Past None	Current None Past None	Current U0164 Past Same as above	Current None Past None	Current None Past None
A/C Vicinity	Hi side Lo side Both sides	Open circuit	Trouble existed	Current None Past None	Current None Past None	Current None Past None	Past U0164	Current None Past None	Past U0100 U0101 U0122 U0140 U0155 U1120	Current None Latest None	Current None Past None	Past U0164	Current None Past None	Current None Past None	Past U0164	Current None Past None	Current None Past None
MET Vicinity	Hi side Lo side	Open circuit	Trouble exists	Current U0155 Past Same as above	Current U0155 Past Same as above	Current C1424 Past Same as above	Current U0155 Past Same as above	Current None Past None	Current U0155 Past Same as above	Latest None Current None	Current U0155 Past Same as above	Communication failure	Current (U1650) Past (U1650)	Current None Past None	Current U0155 Past U0155	Current None Past None	Current None Past None
MET Vicinity	Both sides	Open circuit	Trouble exists	Current U0155 Past Same as above	Current U0155 Past Same as above	Current C1424 Past Same as above	Current U0155 Past Same as above	Current None Past None	Current U0155 Past Same as above	Latest None Current None	Current U0155 Past Same as above	Communication failure	Current (U1650) Past (U1650)	Current None Past None	Current U0155 Past U0155	Current None Past None	Current None Past None
MET Vicinity	Hi side	Open circuit	Trouble existed	Past U0155	Past U0155	Current C1424 Past Same as above	Past U0155	Current None Past None	Past U0155	Latest None Current None	Past U0155	Past U0073 U0100 U0101 U0122 U0131 U0140 U0151 U0164 U0293 U0327 U1120 Any 5 items from above	Past (U1650)	Current None Past None	Past U0155	Current None Past None	Current None Past None
STR Vicinity	Hi side Lo side Both sides	Open circuit	Trouble exists	Current None Past None	Current None Past None	Current U0126 Past Same as above	Current None Past None	Current None Past None	Current None Past None	Current None Latest None	Current None Past None	Current None Past None	Current None Past None	Current None Past None	Current None Past None	Current None Past None	Current None Past None
STR Vicinity	Hi side Lo side Both sides	Open circuit	Trouble existed	Current None Past None	Current None Past None	Past U0126	Current None Past None	Current None Past None	Current None Past None	Current None Latest None	Current None Past None	Current None Past None	Current None Past None	Current None Past None	Current None Past None	Current None Past None	Current None Past None

LAN01414

Condition				DTC reading result from each module using Subaru Select Monitor												
Control module	Detailed location	Trouble mode	Vehicle status	ECM (*1)	TCM (*1)	VDC (*1)	BIU (*2)	A/B (*3)	A/C (*4)	EPS (*1) (*5)	KPS (*3)	MET (*6)	MFD (*7)	DMCM (*3)	HPCM (*3)	BECM (*3)	AHL (*3)
TCM (MAIN) Vicinity	Hi side Lo side Both sides	Open circuit	Trouble exists	Current U0101 Past Same as above	Communication failure	Current C1424 U0101 Past Same as above	Current U0101 Past Same as above	Current None Past None	Current U0101 Past Same as above	Current None Latest None	Current U0101 Past Same as above	Current U0101 Past Same as above	Current None Past None	Current None Past None	Current U0101 Past Same as above	Current None Past None	Current None Past None
TCM (MAIN) Vicinity	Hi side Lo side Both sides	Open circuit	Trouble existed	Past U0101	Past U0100 U0122 U0131 U0140 U0155 U0293 U1235	Current C1424 C1431 Past C1424 C1431 U0101	Past U0101	Current None Past None	Past U0101	Current None Latest None	Past U0101	Past U0101	Current None Past None	Current None Past None	Past U0101	Current None Past None	Current None Past None
A/B Vicinity	Hi side Lo side Both sides	Open circuit	Trouble exists	Current None Past None	Current None Past None	Current None Past None	Current None Past None	Communication failure	Current None Past None	Current None Latest None	Current None Past None	Current U0151 Past Same as above	Current None Past None	Current None Past None	Current U0151 Past Same as above	Current None Past None	Current None Past None
A/B Vicinity	Hi side Lo side Both sides	Open circuit	Trouble existed	Current None Past None	Current None Past None	Current None Past None	Current None Past None	Current None Past None	Current None Past None	Current None Latest None	Current None Past None	Past U0151	Current None Past None	Current None Past None	Past U0151	Current None Past None	Current None Past None
HPCM (MAIN) Vicinity	Hi side Lo side Both sides	Open circuit	Trouble exists	Current U0293 Past Same as above	Current U0293 Past Same as above	Current C1424 C1431 U0293 Past Same as above	Current None Past None	Current None Past None	Current U1120 Past Same as above	Current None Latest None	Current U1120 Past Same as above	Current U0293 U1120 Past Same as above	Current None Past None	Communication failure	Communication failure	Communication failure	Current None Past None
HPCM (MAIN) Vicinity	Hi side Lo side Both sides	Open circuit	Trouble existed	Past U0293	Past U0293	Current C1424 C1431 Past C1424 C1431 U0293	Current None Past None	Current None Past None	Past U1120	Current None Latest None	Past U1120	Past U0293 U1120	Current None Past None	Current None Past None	Past U0100 U0101 U0122 U0131 U0140 U0151 U0155 U0164 U1235	Current None Past None	Current None Past None

LAN01415

List of Diagnostic Trouble Code (DTC)

Condition				DTC reading result from each module using Subaru Select Monitor													
Control module	Detailed location	Trouble mode	Vehicle status	ECM (*1)	TCM (*1)	VDC (*1)	BIU (*2)	A/B (*3)	A/C (*4)	EPS (*1) (*5)	KPS (*3)	MET (*6)	MFD (*7)	DMCM (*3)	HPCM (*3)	BECM (*3)	AHL (*3)
EPS Vicinity	Hi side Lo side Both sides	Open circuit	Trouble exists	Current None Past None	Current U0131 Past Same as above	Current None Past None	Current None Past None	Current None Past None	Current None Past None	Current U0122 Latest C2543 U0122	Current None Past None	Current U0131 Past Same as above	Current None Past None	Current None Past None	Current U0131 Past Same as above	Current None Past None	Current None Past None
EPS Vicinity	Hi side Lo side Both sides	Open circuit	Trouble existed	Current None Past None	Past U0131	Current None Past None	Current None Past None	Current None Past None	Current None Past None	Latest C2543 U0122	Current None Past None	Past U0131	Current None Past None	Current None Past None	Past U0131	Current None Past None	Current None Past None
ECM (MAIN) Vicinity	Hi side Lo side Both sides	Open circuit	Trouble exists	Communication failure	Current U0100 Past Same as above	Current C1431 U0100 Past Same as above	Current U0100 Past Same as above	Current None Past None	Current U0100 Past Same as above	Current None Latest None	Current U0100 Past Same as above	Current U0100 Past Same as above	Current None Past None	Current None Past None	Current U0100 Past Same as above	Current None Past None	Current None Past None
ECM (MAIN) Vicinity	Hi side Lo side Both sides	Open circuit	Trouble existed	Past U0073	Past U0100	Current C1424 C1431 Past C1424 C1431 U0100	Past U0100	Current None Past None	Past U0100	Current None Latest None	Past U0100	Past U0100	Current None Past None	Current None Past None	Past U0100	Current None Past None	Current None Past None
ECM (PU) Vicinity	Hi side Lo side Both sides	Open circuit	Trouble exists	Current U0075 Past Same as above	Current U1100 Past Same as above	Current C1424 C1431 Past Same as above	Current None Past None	Current None Past None	Current None Past None	Current None Latest None	Current None Past None	Current None Past None	Current None Past None	Current None Past None	Current U1100 Past Same as above	Current None Past None	Current None Past None
ECM (PU) Vicinity	Hi side Lo side Both sides	Open circuit	Trouble existed	Past U0075	Past U1100	Current C1424 C1431 Past Same as above	Current None Past None	Current None Past None	Current None Past None	Current None Latest None	Current None Past None	Current None Past None	Current None Past None	Current None Past None	Past U1100	Current None Past None	Current None Past None

LAN01416

Condition				DTC reading result from each module using Subaru Select Monitor												
Control module	Detailed location	Trouble mode	Vehicle status	ECM (*1)	TCM (*1)	VDC (*1)	BIU (*2)	A/B (*3)	A/C (*4)	EPS (*1) (*5)	KPS (*3)	MET (*6)	MFD (*7)	DMCM (*3)	HPCM (*3)	BECM (*3)	AHL (*3)
TCM (PU) Vicinity	Hi side Lo side Both sides	Open circuit	Trouble exists	Current U1101 Past Same as above	Current U0110 U0287 U1100 U1293 Past Same as above	Current C1424 C1431 Past Same as above	Current None Past None	Current None Past None	Current None Past None	Current None Latest None	Current None Past None	Current None Past None	Current None Past None	Current None Past None	Current U1101 Past Same as above	Current None Past None	Current None Past None
TCM (PU) Vicinity	Hi side Lo side Both sides	Open circuit	Trouble existed	Past U1101	Past U0110 U0287 U1100 U1293	Current C1424 C1431 Past Same as above	Current None Past None	Current None Past None	Current None Past None	Current None Latest None	Current None Past None	Current None Past None	Current None Past None	Current None Past None	Past U1101	Current None Past None	Current None Past None
HPCM (PU) Vicinity	Hi side Lo side Both sides	Open circuit	Trouble exists	Current U1293 Past Same as above	Current U0110 U0287 U1293 Past Same as above	Current C1424 C1431 Past Same as above	Current None Past None	Current None Past None	Current None Past None	Current None Latest None	Current None Past None	Current None Past None	Current None Past None	Current None Past None	Current U1100 U1101 Past Same as above	Current None Past None	Current None Past None
HPCM (PU) Vicinity	Hi side Lo side Both sides	Open circuit	Trouble existed	Past U1293	Past U0110 U0287 U1293	Current C1424 C1431 Past Same as above	Current None Past None	Current None Past None	Current None Past None	Current None Latest None	Current None Past None	Current None Past None	Current None Past None	Current None Past None	Past U1100 U1101	Current None Past None	Current None Past None
HPCM (HPCM) Vicinity	Hi side Lo side Both sides	Open circuit	Trouble exists	Current None Past None	Current U0110 U0287 Past Same as above	Current C1431 Past Same as above	Current None Past None	Current None Past None	Current None Past None	Current None Latest None	Current None Past None	Current None Past None	Current None Past None	Communication failure	Current U0110 U0111 U0287 Past Same as above	Communication failure	Current None Past None
HPCM (HPCM) Vicinity	Hi side Lo side Both sides	Open circuit	Trouble existed	Current None Past None	Past U0110 U0287	Current C1431 Past Same as above	Current None Past None	Current None Past None	Current None Past None	Current None Latest None	Current None Past None	Current None Past None	Current None Past None	Current U1290 Past Same as above	Past U0110 U0111 U0287	Current U1290 Past Same as above	Current None Past None

LAN01417

Condition				DTC reading result from each module using Subaru Select Monitor												
Control module	Detailed location	Trouble mode	Vehicle status	ECM (*1)	TCM (*1)	VDC (*1)	BIU (*2)	A/B (*3)	A/C (*4)	EPS (*1) (*5)	KPS (*3)	MET (*6)	MFD (*7)	DMCM (*3)	HPCM (*3)	BECM (*3)	AHL (*3)
EOP Vicinity	Hi side Lo side Both sides	Open circuit	Trouble exists	Current None Past None	Current U0287 Past Same as above	Current C1431 Past Same as above	Current None Past None	Current None Past None	Current None Past None	Current None Latest None	Current None Past None	Current None Past None	Current None Past None	Current None Past None	Current U0287 Past Same as above	Current None Past None	Current None Past None
EOP Vicinity	Hi side Lo side Both sides	Open circuit	Trouble existed	Current None Past None	Past U0287	Current C1431 Past Same as above	Current None Past None	Current None Past None	Current None Past None	Current None Latest None	Current None Past None	Current None Past None	Current None Past None	Current None Past None	Past U0287	Current None Past None	Current None Past None
BECM Vicinity	Hi side Lo side Both sides	Open circuit	Trouble exists	Current None Past None	Current None Past None	Current None Past None	Current None Past None	Current None Past None	Current None Past None	Current None Latest None	Current None Past None	Current None Past None	Current None Past None	Current U0111 Past Same as above	Current U0111 Past Same as above	Communication failure	Current None Past None
BECM Vicinity	Hi side Lo side Both sides	Open circuit	Trouble existed	Current None Past None	Current None Past None	Current None Past None	Current None Past None	Current None Past None	Current None Past None	Current None Latest None	Current None Past None	Current None Past None	Current None Past None	Past U0111	Past U0111	Past U0110 U1290	Current None Past None
DMCM Vicinity	Hi side Lo side Both sides	Open circuit	Trouble exists	Current None Past None	Current U0110 Past Same as above	Current C1431 Past Same as above	Current None Past None	Current None Past None	Current None Past None	Current None Latest None	Current None Past None	Current None Past None	Current None Past None	Communication failure	Current U0110 Past Same as above	Current U0110 Past Same as above	Current None Past None
DMCM Vicinity	Hi side Lo side Both sides	Open circuit	Trouble existed	Current None Past None	Past U0110	Current C1431 Past Same as above	Current None Past None	Current None Past None	Current None Past None	Current None Latest None	Current None Past None	Current None Past None	Current None Past None	Past U0111 U1290	Past U0110	Past U0110	Current None Past None

LAN01418

2. CAN communication circuit is open (indicator)

NOTE:
“Trouble exists” is referred to as the status before performing inspection and repair. “Trouble existed” is referred to as the status before performing DTC clear after repair.
*1: When Hi is open/illuminates sometimes. When Lo is open/goes off sometimes.
*2: When Hi is open/red illuminates sometimes, orange goes off sometimes. When Lo is open/red illuminates sometimes, orange illuminates sometimes.
*3: When Hi is open/red and blue blink, and goes off sometimes. When Lo is open/red and blue blink, and illuminates sometimes.
*4: Hard to illuminate when Lo is open.
*5: Red and orange illuminate.
*6: When C1431 does not occur, VDC and ABS warning lights do not illuminate.
*7: Security warning light illuminates once in approximately 10 seconds when the rear defogger does not respond/when not reflected to door open MFD/and when door is open.
*8: MFD does not display OPEN status when the door is open.
*9: Air conditioner operation does not reflected to MFD. Rear defogger does not respond.
*10: Symptom displayed in the MFD but not reflected in the meter occurs intermittently when the door is open. MFD itself might be reset. Meter dims sometimes.
*11: Displayed in the MFD but not reflected in the meter when the door is open.
*12: MFD orange frame is disappeared.
*13: Engine, motor and BATT icon in MFD is disappeared. (wallpaper is only displayed)
*14: Engine orange frame in MFD is disappeared.
*15: Remaining battery capacity in MFD is 0 (0 is displayed in normal condition). Engine orange frame is disappeared.
*16: Remaining battery capacity in MFD is 0 (0 is displayed in normal condition).

List of Diagnostic Trouble Code (DTC)

○: Illuminate △: Blink X: Off

Condition				Indicator																												
Control module	Detailed location	Trouble mode	Vehicle status	READY	HYBRID	CHECK ENGINE	AT OIL TEMP	AUTO HEADLIGHT BEAM LEVELER	AIRBAG	BRAKE	VDC	AUTO START STOP	EMPTY	CHARGE WARNING	VDC OFF	OIL PRESSURE	ABS	EPS	AWD	HILL HOLD	ACCESS KEY WARNING	SECURITY INDICATOR	AUTO START STOP INDICATOR	ENGINE COOLANT TEMPERATURE GAUGE	CRUISE	SI DRIVE [i] INDICATOR	SHIFT INDICATOR	REMAINING FUEL GAUGE	TACHOMETER	DOOR	SEAT BELT	OTHER WARNING INDICATIONS
VDC Vicinity	Hi side Lo side Both sides	Open circuit	Trouble exists	○	○	○	△	○		○	○				○		○			○						△						
VDC Vicinity	Hi side Lo side Both sides	Open circuit	Trouble existed	○	○	○	△				(*6)						(*6)			○						△						
KPS Vicinity	Hi side Lo side Both sides	Open circuit	Trouble exists	○																												
KPS Vicinity	Hi side Lo side Both sides	Open circuit	Trouble existed	○																												
AHL Vicinity	Hi side Lo side Both sides	Open circuit	Trouble exists	○				○																								
AHL Vicinity	Hi side Lo side Both sides	Open circuit	Trouble existed	○																												
BIU (VDC side) Vicinity	Hi side Lo side Both sides	Open circuit	Trouble exists	○	○	○	△	○		○	○				○		○			○						△						
BIU (VDC side) Vicinity	Hi side Lo side Both sides	Open circuit	Trouble existed	○		○					○						○			○						△						
BIU (ECM side) Vicinity	Hi side Lo side Both sides	Open circuit	Trouble exists	○	○	○	△			○	○				○		○			○						△				×		(*7)
BIU (ECM side) Vicinity	Hi side Lo side Both sides	Open circuit	Trouble existed	○		○					○						○			○						△						
MFD Vicinity	Hi side Lo side Both sides	Open circuit	Trouble exists	○																												(*8)
MFD Vicinity	Hi side Lo side Both sides	Open circuit	Trouble existed	○																												
A/C Vicinity	Hi side Lo side Both sides	Open circuit	Trouble exists	○	○																											(*9)
A/C Vicinity	Hi side Lo side Both sides	Open circuit	Trouble existed	○																												
MET Vicinity	Hi side Lo side	Open circuit	Trouble exists	(*1)	Inter-mittent ○ (*4)	Inter-mittent ○ (*4)	Inter-mittent △		Sometimes occurs ○	(*2)	Inter-mittent ○ (*4)		Inter-mittent ○ (*4)	Inter-mittent ○ (*4)	Inter-mittent ○ (*4)		Inter-mittent ○ (*4)	Inter-mittent ○ (*4)		Inter-mittent ○ (*4)				(*3)		△ Sometimes occurs ×	Some-times occurs ○	Some-times occurs ×	Some-times occurs 0rpm			(*10)
MET Vicinity	Both sides	Open circuit	Trouble exists	×	○	○			○	(*5)	○		○	○	○		○			○				Red/ Blue △		△	×	×	×			(*11)
MET Vicinity	Hi side	Open circuit	Trouble existed	○		○														○						△						
STR Vicinity	Hi side Lo side Both sides	Open circuit	Trouble exists	○							○						○			△ (○)												
STR Vicinity	Hi side Lo side Both sides	Open circuit	Trouble existed	○							○									○												
TCM (MAIN) Vicinity	Hi side Lo side Both sides	Open circuit	Trouble exists	×	○	○					○						○			○						△	×					(*12)
TCM (MAIN) Vicinity	Hi side Lo side Both sides	Open circuit	Trouble existed	○		○					○						○			○						△						

LAN01419

○: Illuminate △: Blink x : Off

Condition				Indicator																												
Control module	Detailed location	Trouble mode	Vehicle status	READY	HYBRID	CHECK ENGINE	AT OIL TEMP	AUTO HEADLIGHT BEAM LEVELER	AIRBAG	BRAKE	VDC	AUTO START STOP	EMPTY	CHARGE WARNING	VDC OFF	OIL PRESSURE	ABS	EPS	AWD	HILL HOLD	ACCESS KEY WARNING	SECURITY INDICATOR	AUTO START STOP INDICATOR	ENGINE COOLANT TEMPERATURE GAUGE	CRUISE	SI DRIVE [I] INDICATOR	SHIFT INDICATOR	REMAINING FUEL GAUGE	TACHOMETER	DOOR	SEAT BELT	OTHER WARNING INDICATIONS
A/B Vicinity	Hi side Lo side Both sides	Open circuit	Trouble exists	○	○				○																							
A/B Vicinity	Hi side Lo side Both sides	Open circuit	Trouble existed	○																												
HPCM (MAIN) Vicinity	Hi side Lo side Both sides	Open circuit	Trouble exists	×	○	○	△			○	○			○			○			○						△						(*13)
HPCM (MAIN) Vicinity	Hi side Lo side Both sides	Open circuit	Trouble existed	×	○	○					○						○			○						△						(*14)
EPS Vicinity	Hi side Lo side Both sides	Open circuit	Trouble exists	○	○													○														
EPS Vicinity	Hi side Lo side Both sides	Open circuit	Trouble existed	○																												
ECM (MAIN) Vicinity	Hi side Lo side Both sides	Open circuit	Trouble exists	×	○	○	○ (△)				○		○				○	○	○	○		△		Red/ Blue △		△		×	0rpm			(*14)
ECM (MAIN) Vicinity	Hi side Lo side Both sides	Open circuit	Trouble existed	○	○	○					○						○			○		△				△						
ECM (PU) Vicinity	Hi side Lo side Both sides	Open circuit	Trouble exists	×	○	○	△				○						○			○						△						(*14)
ECM (PU) Vicinity	Hi side Lo side Both sides	Open circuit	Trouble existed	○		○					○						○			○						△						
TCM (PU) Vicinity	Hi side Lo side Both sides	Open circuit	Trouble exists	×	○	○	△				○						○			○						△						(*14)
TCM (PU) Vicinity	Hi side Lo side Both sides	Open circuit	Trouble existed	×	○	○					○						○			○						△						(*14)
HPCM (PU) Vicinity	Hi side Lo side Both sides	Open circuit	Trouble exists	×	○	○	△				○						○			○						△						(*14)
HPCM (PU) Vicinity	Hi side Lo side Both sides	Open circuit	Trouble existed	×	○	○					○						○			○						△						(*14)
HPCM (HPCM) Vicinity	Hi side Lo side Both sides	Open circuit	Trouble exists	×	○	○	△				○			○			○			○												(*15)
HPCM (HPCM) Vicinity	Hi side Lo side Both sides	Open circuit	Trouble existed	×	○	○					○						○			○												
EOP Vicinity	Hi side Lo side Both sides	Open circuit	Trouble exists	○	○		△				○						○			○												
EOP Vicinity	Hi side Lo side Both sides	Open circuit	Trouble existed	○	○						○						○			○												
BECM Vicinity	Hi side Lo side Both sides	Open circuit	Trouble exists	×	○																											(*16)
BECM Vicinity	Hi side Lo side Both sides	Open circuit	Trouble existed	×	○																											
DMCM Vicinity	Hi side Lo side Both sides	Open circuit	Trouble exists	×	○		△				○						○			○												(*14)
DMCM Vicinity	Hi side Lo side Both sides	Open circuit	Trouble existed	×	○		△				○						○			○												

LAN01420

3. CAN communication circuit is shorted (DTC)

NOTE:

- If the module has a limit of DTC memory and the number of DTC occurrence exceeds the limit, older DTCs are preferentially stored.
- When there is no description in Current, it is referred to as “None”.
- When DTC is in parentheses, it is referred to as “Not always occur”.
- “Trouble exists” is referred to as the status before performing inspection and repair. “Trouble existed” is referred to as the status before performing DTC clear after repair.

*1: When U0073 occurs, other U-codes are not stored. (Judge timing affects the storing order.)
*2: The number of DTC memory is limited to 8 items.
*3: All types of DTCs can be simultaneously stored.
*4: All types of DTCs can be simultaneously stored. When U0073 occurs, other U-codes are not stored.
*5: The number of DTC memory is limited to 4 items. (when the 5 or more DTC occurs, these will be memorized on memory areas from 2nd to 4th.)
*6: The number of DTC memory is limited to 5 items. (Older items are preferentially stored.)
*7: The number of DTC memory is limited to 2 items. (Older items are preferentially stored.)

Condition				DTC reading result from each module using Subaru Select Monitor												
Control module	Detailed location	Trouble mode	Vehicle status	ECM (*1)	TCM (*1)	VDC (*1)	BIU (*2)	A/B (*3)	A/C (*4)	EPS (*1) (*5)	KPS (*3)	MET (*6)	MFD (*7)	DMCM (*3)	HPCM (*3)	BECM (*3)	AHL (*3)
MAIN-CAN Option Vicinity	Hi side	GND-output short	Trouble exists	Communication failure	Communication failure	Communication failure	Communication failure	Communication failure	Communication failure	Current C2543 Latest C2543 U0073	Communication failure	Communication failure	Communication failure	Communication failure	Communication failure	Communication failure	Communication failure
	Hi side Lo side	Power supply-output short															
	Between wire	Short circuit															
MAIN-CAN Option Vicinity	Hi side	GND-output short	Trouble existed	Past U0073	Past U0073 U0100 U0122 U0131 U0140 U0155 U1235 U0293	Current C1424 (C1431) Past C1424 (C1431) U0073	Past U0073 U0100 U0101 U0122 U0155 U0164 U0327 U1201	Past U0073	Past U0073	Latest C2543 U0073	Past U0073	Past U0073 U0100 U0101 U0122 U0131 U0140 U0151 U0164 U0293 U0327 U1120 Any 5 items from above	Past U1201 U1650	Current None Past None	Past U0073 U0100 U0101 U0122 U0131 U0140 U0151 U0155 U0164 U1235	Current None Past None	Past U0122 U0140
	Hi side Lo side	Power supply-output short															
	Between wire	Short circuit															
PU-CAN Option Vicinity	Hi side	GND-output short	Trouble exists	Current U0075 Past Same as above	Current U0075 U0110 U0287 U1100 U1293 Past Same as above	Current C1424 C1431 Past Same as above	Current None Past None	Current None Past None	Current None Past None	Current None Past None	Current None Past None	Current None Past None	Current None Past None	Current None Past None	Current U0075 U1100 U1101 Past Same as above	Current None Past None	Current None Past None
	Hi side Lo side	Power supply-output short															
	Between wire	Short circuit															
PU-CAN Option Vicinity	Hi side	GND-output short	Trouble existed	Past U0075	Past U0075 U0110 U0287 U1100 U1293	Current C1424 C1431 Past Same as above	Current None Past None	Current None Past None	Current None Past None	Current None Past None	Current None Past None	Current None Past None	Current None Past None	Current None Past None	Past U0075 U1100 U1101	Current None Past None	Current None Past None
	Hi side Lo side	Power supply-output short															
	Between wire	Short circuit															
HEV-CAN Option Vicinity	Hi side	GND-output short	Trouble exists	Current None Past None	Current U0110 U0287 Past Same as above	Current C1431 Past Same as above	Current None Past None	Current None Past None	Current None Past None	Current None Past None	Current None Past None	Current None Past None	Current None Past None	Communication failure	Current U0076 U0110 U0111 U0287 Past Same as above	Communication failure	Current None Past None
	Hi side Lo side	Power supply-output short															
	Between wire	Short circuit															
HEV-CAN Option Vicinity	Hi side	GND-output short	Trouble existed	Current None Past None	Past U0110 U0287	Current C1431 Past Same as above	Current None Past None	Current None Past None	Current None Past None	Current None Past None	Current None Past None	Current None Past None	Current None Past None	Past U0076 U0111 U1290	Past U0076 U0110 U0111 U0287	Past U0076 U0110 U1290	Current None Past None
	Hi side Lo side	Power supply-output short															
	Between wire	Short circuit															
Option Vicinity	Lo side	GND-output short	Trouble exists/ Trouble existed	Current None Past None	Current None Past None	Current None Past None	Current None Past None	Current None Past None	Current None Past None	Current None Past None	Current None Past None	Current None Past None	Current None Past None	Current None Past None	Current None Past None	Current None Past None	Current None Past None

LAN01421

4. CAN communication circuit is shorted (indicator)

NOTE:

“Trouble exists” is referred to as the status before performing inspection and repair. “Trouble existed” is referred to as the status before performing DTC clear after repair.

*1: Only when C1431 remains in VDC.

*2: Although some U codes or warning light illumination related to these code may occur, because the noise resistance are weakened, identifying the faulty portion is impossible if the tester check are not used.

*3: Engine, motor and BATT icon in MFD is disappeared. (wallpaper is only displayed)

*4: Engine orange frame is disappeared.

*5: Remaining battery capacity in MFD is 0 (0 is displayed in normal condition).

Control module	Detailed location	Trouble mode	Vehicle status	READY	HYBRID	CHECK ENGINE	AT OIL TEMP	AUTO HEADLIGHT BEAM LEVELER	AIRBAG	BRAKE	VDC	AUTO START STOP	EMPTY	CHARGE WARNING	VDC OFF	OIL PRESSURE	ABS	EPS	AWD	HILL HOLD	ACCESS KEY WARNING	SECURITY INDICATOR	AUTO START STOP INDICATOR	ENGINE COOLANT TEMPERATURE GAUGE	CRUISE	SI DRIVE	SHIFT INDICATOR	REMAINING FUEL GAUGE	TACHOMETER	DOOR	SEAT BELT	OTHER WARNING INDICATIONS
MAIN-CAN Option Vicinity	Hi side	GND-output short	Trouble exists	Off	Illuminate	Illuminate		Illuminate	Illuminate	Red and orange illuminate	Illuminate		Illuminate	Illuminate	Illuminate		Illuminate	Illuminate		Illuminate				Red/Blue blinks		i blink	Off	Off	0rpm	Off		(*3)
	Hi side Lo side	Power supply-output short																														
	Between wire	Short circuit																														
MAIN-CAN Option Vicinity	Hi side	GND-output short	Trouble existed	Illuminate	Illuminate (*1)	Illuminate	Blink				Illuminate (*1)									Illuminate						i blink						
	Hi side Lo side	Power supply-output short																														
	Between wire	Short circuit																														
PU-CAN Option Vicinity	Hi side	GND-output short	Trouble exists	Off	Illuminate	Illuminate	Blink				Illuminate						Illuminate			Illuminate						i blink						(*4)
	Hi side Lo side	Power supply-output short																														
	Between wire	Short circuit																														
PU-CAN Option Vicinity	Hi side	GND-output short	Trouble existed	Illuminate	Illuminate	Illuminate					Illuminate						Illuminate			Illuminate						i blink						
	Hi side Lo side	Power supply-output short																														
	Between wire	Short circuit																														
HEV-CAN Option Vicinity	Hi side	GND-output short	Trouble exists	Off	Illuminate		Blink				Illuminate						Illuminate			Illuminate												(*4) (*5)
	Hi side Lo side	Power supply-output short																														
	Between wire	Short circuit																														
HEV-CAN Option Vicinity	Hi side	GND-output short	Trouble existed	Off	Illuminate						Illuminate						Illuminate			Illuminate												
	Hi side Lo side	Power supply-output short																														
	Between wire	Short circuit																														
Option Vicinity	Lo side	GND-output short (*2)	Trouble exists/ Trouble existed	Illuminate																												

LAN01422

11.Diagnostic Procedure with Diagnostic Trouble Code (DTC)

A: DTC U1201 CAN-HS COUNTER ABNORMAL

DTC DETECTING CONDITION:
Communication is unstable because of high speed CAN communication error.
TROUBLE SYMPTOM:
- Display of combination meter indicates faulty.
- Control faulty may occur due to CAN communication error.

	Step	Check	Yes	No
1	**CHECK PERFORMING OF BASIC DIAGNOSTIC PROCEDURE.**	Was the basic diagnostic procedure performed up to STEP 3?	Go to step **2**.	Perform the basic diagnostic procedure. <Ref. to LAN(HEV)(diag)-2, Basic Diagnostic Procedure.>
2	**CHECK DTC.** 1) Start the engine. 2) Using the Subaru Select Monitor, read DTC of CAN system.	Is U0073 a current malfunction?	Perform the diagnosis of U0073. <Ref. to LAN(HEV)(diag)-111, DTC U0073 CONTROL MODULE COMMUNICATION BUS OFF, Diagnostic Procedure with Diagnostic Trouble Code (DTC).>	Go to step **3**.
3	**CHECK DTC.** Check the displayed DTC.	Is U1201 a current malfunction?	Go to step **4**.	It is possible that temporary poor communication occurs. Perform the clear memory.
4	**CHECK DTC.** 1) Turn the ignition switch to ON. 2) Using the Subaru Select Monitor, read DTC of CAN system.	Is U1201 a current malfunction?	Go to step **5**.	It is possible that temporary poor communication occurs. Perform the clear memory.
5	**CHECK CONTROL MODULE.** 1) Turn the ignition switch to OFF. 2) Disconnect the control modules other than body integrated unit in order. NOTE: When disconnecting ECM or VDC CM, connect resistance of 120 Ω between CAN Hi and CAN Lo as an alternative of end resistance. 3) Turn the ignition switch to ON. 4) Using the Subaru Select Monitor, read DTC of CAN system.	Is there any control module that U1201 is not detected as current malfunction?	Replace the control module.	Repeat 1) to 4) in step 5 until U1201 is not detected.

B: DTC U0073 CONTROL MODULE COMMUNICATION BUS OFF

DTC DETECTING CONDITION:
Integrated unit communication is shut down because of high speed CAN error.
TROUBLE SYMPTOM:
CAN communication is not normal.

	Step	Check	Yes	No
1	**CHECK PERFORMING OF BASIC DIAGNOSTIC PROCEDURE.**	Was the basic diagnostic procedure performed up to STEP 3?	Go to step **2**.	Perform the basic diagnostic procedure. <Ref. to LAN(HEV)(diag)-2, Basic Diagnostic Procedure.>
2	**CHECK DTC.** 1) Start the engine. 2) Using the Subaru Select Monitor, read DTC of CAN system.	Is U0073 a current malfunction?	Go to step **3**.	It may be a temporary poor contact. Perform the clear memory.
3	**CHECK CAN COMMUNICATION CIRCUIT.** Check CAN communication circuit. <Ref. to LAN(HEV)(diag)-31, PROCEDURE, CAN Communication Circuit Check.>	Is CAN communication circuit faulty?	Repair the faulty portion, following the diagnosis procedure.	Go to step **4**.
4	**CHECK DTC.** 1) Perform the inspection using the DTC check sheet. <Ref. to LAN(HEV)(diag)-90, CHECK USING THE DTC CHECK SHEET, LIST, List of Diagnostic Trouble Code (DTC).> 2) Using the Subaru Select Monitor, read DTC of CAN system.	Is U0073 a current malfunction?	Go to step **5**.	System is normal.
5	**CHECK CONTROL MODULE.** 1) Turn the ignition switch to OFF. 2) Disconnect the control modules other than body integrated unit in order. NOTE: When disconnecting ECM or VDC CM, connect resistance of 120 Ω between CAN Hi and CAN Lo as an alternative of end resistance. 3) Turn the ignition switch to ON. 4) Using the Subaru Select Monitor, read DTC of CAN system.	Is there any control module that U0073 is not detected as current malfunction?	Replace the control module.	Repeat 1) to 4) in step 5 until U0073 is not detected.

C: DTC U0075 CONTROL MODULE COMMUNICATION BUS "PU-CAN" OFF

DTC DETECTING CONDITION:
PU-CAN communication is shut down.
TROUBLE SYMPTOM:
PU-CAN communication is not normal.

	Step	Check	Yes	No
1	**CHECK PERFORMING OF BASIC DIAGNOSTIC PROCEDURE.**	Was the basic diagnostic procedure performed up to STEP 3?	Go to step **2**.	Perform the basic diagnostic procedure. <Ref. to LAN(HEV)(diag)-2, Basic Diagnostic Procedure.>
2	**CHECK DTC.** 1) Start the engine. 2) Using the Subaru Select Monitor, read DTC of CAN system.	Is U0075 a current malfunction?	Go to step **3**.	It may be a temporary poor contact. Perform the clear memory.
3	**CHECK CAN COMMUNICATION CIRCUIT.** Check CAN communication circuit. <Ref. to LAN(HEV)(diag)-31, PROCEDURE, CAN Communication Circuit Check.>	Is CAN communication circuit faulty?	Repair the faulty portion, following the diagnosis procedure.	Go to step **4**.
4	**CHECK DTC.** 1) Perform the inspection using the DTC check sheet. <Ref. to LAN(HEV)(diag)-90, CHECK USING THE DTC CHECK SHEET, LIST, List of Diagnostic Trouble Code (DTC).> 2) Using the Subaru Select Monitor, read DTC of CAN system.	Is U0075 a current malfunction?	Go to step **5**.	System is normal.
5	**CHECK CONTROL MODULE.** 1) Turn the ignition switch to OFF. 2) Disconnect HPCM, TCM, ECM in order. NOTE: When disconnecting ECM or HPCM, connect resistance of 120 Ω between CAN Hi and CAN Lo as an alternative of end resistance. 3) Turn the ignition switch to ON. 4) Using the Subaru Select Monitor, read DTC of CAN system.	Is there any control module that U0075 is not detected as current malfunction?	Replace the control module.	Repeat 1) to 4) in step 5 until U0075 is not detected.

D: DTC U0076 CONTROL MODULE COMMUNICATION BUS "HEV-CAN" OFF

DTC DETECTING CONDITION:
HEV-CAN communication is shut down.
TROUBLE SYMPTOM:
HEV-CAN communication is not normal.

	Step	Check	Yes	No
1	**CHECK PERFORMING OF BASIC DIAGNOSTIC PROCEDURE.**	Was the basic diagnostic procedure performed up to STEP 3?	Go to step **2**.	Perform the basic diagnostic procedure. <Ref. to LAN(HEV)(diag)-2, Basic Diagnostic Procedure.>
2	**CHECK DTC.** 1) Start the engine. 2) Using the Subaru Select Monitor, read DTC of CAN system.	Is U0076 a current malfunction?	Go to step **3**.	It may be a temporary poor contact. Perform the clear memory.
3	**CHECK CAN COMMUNICATION CIRCUIT.** Check CAN communication circuit. <Ref. to LAN(HEV)(diag)-31, PROCEDURE, CAN Communication Circuit Check.>	Is CAN communication circuit faulty?	Repair the faulty portion, following the diagnosis procedure.	Go to step **4**.
4	**CHECK DTC.** 1) Perform the inspection using the DTC check sheet. <Ref. to LAN(HEV)(diag)-90, CHECK USING THE DTC CHECK SHEET, LIST, List of Diagnostic Trouble Code (DTC).> 2) Using the Subaru Select Monitor, read DTC of CAN system.	Is U0076 a current malfunction?	Go to step **5**.	System is normal.
5	**CHECK CONTROL MODULE.** 1) Turn the ignition switch to OFF. 2) Disconnect HPCM, DMCM, electric oil pump, BECM (high voltage battery) in order. NOTE: When disconnecting HPCM or DMCM, connect resistance of 120 Ω between CAN Hi and CAN Lo as an alternative of end resistance. 3) Turn the ignition switch to ON. 4) Using the Subaru Select Monitor, read DTC of CAN system.	Is there any control module that U0076 is not detected as current malfunction?	Replace the control module.	Repeat 1) to 4) in step 5 until U0076 is not detected.

E: DTC U0401 INVALID DATA RECEIVED FROM ECM/PCM "A"

DTC DETECTING CONDITION:
Defective data from ECM.
TROUBLE SYMPTOM:
Defective data on CAN communication occurs.

	Step	Check	Yes	No
1	**CHECK PERFORMING OF BASIC DIAGNOSTIC PROCEDURE.**	Was the basic diagnostic procedure performed up to STEP 3?	Go to step **2**.	Perform the basic diagnostic procedure. <Ref. to LAN(HEV)(diag)-2, Basic Diagnostic Procedure.>
2	**CHECK DTC.** Check the displayed DTC.	Are DTCs other than U*** displayed?	Perform the diagnosis according to DTC.	Go to step **3**.
3	**CHECK DTC.** Check the displayed DTC.	Is DTC for the bus off or the data no-receive displayed?	Perform the diagnosis according to DTC.	Go to step **4**.
4	**CHECK DTC.** Check the displayed DTC.	Is U0401 a current malfunction?	Go to step **5**.	Go to step **9**.
5	**CHECK DTC.** 1) Turn the ignition switch to OFF. 2) Disconnect the ECM connector. 3) Connect the disconnected connectors. 4) Read the DTC using Subaru Select Monitor.	Is U0401 a current malfunction?	Go to step **6**.	Go to step **9**.
6	**CHECK DTC.** Using the Subaru Select Monitor, read DTC of all the systems.	Is the engine data abnormal detected in several modules?	Replace the ECM. <Ref. to FU(H4DO(HEV))-85, Engine Control Module (ECM).>	Go to step **7**.
7	**REPLACE MODULE.** 1) Replace the ECM. 2) Read the DTC using Subaru Select Monitor.	Is U0401 a current malfunction?	Go to step **8**.	System is normal.
8	**CHECK MODULE.** 1) Reinstall the ECM. 2) Replace the module that the DTC has been detected. 3) Read the DTC using Subaru Select Monitor.	Is U0401 a current malfunction?	Replace the ECM. <Ref. to FU(H4DO(HEV))-85, Engine Control Module (ECM).>	System is normal.
9	**CHECK HARNESS.** 1) Shake the harness, and check for poor contact. 2) Using the Subaru Select Monitor, read DTC of CAN system.	Is U0401 a current malfunction?	Repair the poor contact of harness, or replace the harness.	Go to step **10**.
10	**CHECK CONNECTOR.** Check the connector used for high speed CAN for poor contact.	Is there poor contact of connector?	Repair the connector that has poor contact, or replace harness.	It is possible that temporary poor communication occurs. Delete the DTC.

F: DTC U0402 INVALID DATA RECEIVED FROM TCM

DTC DETECTING CONDITION:
Received error data from TCM.
TROUBLE SYMPTOM:
Sport indicator light blinks.

	Step	Check	Yes	No
1	**CHECK PERFORMING OF BASIC DIAGNOSTIC PROCEDURE.**	Was the basic diagnostic procedure performed up to STEP 3?	Go to step **2**.	Perform the basic diagnostic procedure. <Ref. to LAN(HEV)(diag)-2, Basic Diagnostic Procedure.>
2	**CHECK DTC.** Check the displayed DTC.	Are DTCs other than U*** displayed?	Perform the diagnosis according to DTC.	Go to step **3**.
3	**CHECK DTC.** Check the displayed DTC.	Is DTC for the bus off or the data no-receive displayed?	Perform the diagnosis according to DTC.	Go to step **4**.
4	**CHECK DTC.** Check the displayed DTC.	Is U0402 a current malfunction?	Go to step **5**.	Go to step **9**.
5	**CHECK DTC.** 1) Turn the ignition switch to OFF. 2) Disconnect the TCM connector. 3) Connect the disconnected connectors. 4) Read the DTC using Subaru Select Monitor.	Is U0402 a current malfunction?	Go to step **6**.	Go to step **9**.
6	**CHECK DTC.** Using the Subaru Select Monitor, read DTC of all the systems.	Is the transmission data abnormal detected in several modules?	Replace the TCM. <Ref. to CVT(TH58A)-156, Transmission Control Module (TCM).>	Go to step **7**.
7	**REPLACE MODULE.** 1) Replace the TCM. <Ref. to CVT(TH58A)-156, Transmission Control Module (TCM).> 2) Read the DTC using Subaru Select Monitor.	Is U0402 a current malfunction?	Go to step **8**.	System is normal.
8	**CHECK MODULE.** 1) Reinstall the TCM. 2) Replace the module that the DTC has been detected. 3) Read the DTC using Subaru Select Monitor.	Is U0402 a current malfunction?	Replace the TCM. <Ref. to CVT(TH58A)-156, Transmission Control Module (TCM).>	System is normal.
9	**CHECK HARNESS.** 1) Shake the harness, and check for poor contact. 2) Using the Subaru Select Monitor, read DTC of CAN system.	Is U0402 a current malfunction?	Repair the poor contact of harness, or replace the harness.	Go to step **10**.
10	**CHECK CONNECTOR.** Check the connector used for high speed CAN for poor contact.	Is there poor contact of connector?	Repair the connector that has poor contact, or replace harness.	It is possible that temporary poor communication occurs. Delete the DTC.

G: DTC U0411 INVALID DATA RECEIVED FROM DRIVE MOTOR CONTROL MODULE "A"

DTC DETECTING CONDITION:
Received error data from drive motor control module.
TROUBLE SYMPTOM:
Hybrid fail lamp illuminates.

	Step	Check	Yes	No
1	**CHECK PERFORMING OF BASIC DIAGNOSTIC PROCEDURE.**	Was the basic diagnostic procedure performed up to STEP 3?	Go to step **2**.	Perform the basic diagnostic procedure. <Ref. to LAN(HEV)(diag)-2, Basic Diagnostic Procedure.>
2	**CHECK DTC.** Check the displayed DTC.	Are DTCs other than U*** displayed?	Perform the diagnosis according to DTC.	Go to step **3**.
3	**CHECK DTC.** Check the displayed DTC.	Is DTC for the bus off or the data no-receive displayed?	Perform the diagnosis according to DTC.	Go to step **4**.
4	**CHECK DTC.** Check the displayed DTC.	Is U0411 a current malfunction?	Go to step **5**.	Go to step **9**.
5	**CHECK DTC.** 1) Turn the ignition switch to OFF. 2) Disconnect the drive motor control module connector. 3) Connect the disconnected connectors. 4) Read the DTC using Subaru Select Monitor.	Is U0411 a current malfunction?	Go to step **6**.	Go to step **9**.
6	**CHECK DTC.** Using the Subaru Select Monitor, read DTC of all the systems.	Is the motor control module data abnormal detected in several modules?	Replace the drive motor control module. <Ref. to CVT(TH58A)-155, Drive Motor Control Module.>	Go to step **7**.
7	**REPLACE MODULE.** 1) Replace the drive motor control module. <Ref. to CVT(TH58A)-155, Drive Motor Control Module.> 2) Read the DTC using Subaru Select Monitor.	Is U0411 a current malfunction?	Go to step **8**.	System is normal.
8	**CHECK MODULE.** 1) Reinstall the drive motor control module. 2) Replace the module that the DTC has been detected. 3) Read the DTC using Subaru Select Monitor.	Is U0411 a current malfunction?	Replace the drive motor control module. <Ref. to CVT(TH58A)-155, Drive Motor Control Module.>	System is normal.
9	**CHECK HARNESS.** 1) Shake the harness, and check for poor contact. 2) Using the Subaru Select Monitor, read DTC of CAN system.	Is U0411 a current malfunction?	Repair the poor contact of harness, or replace the harness.	Go to step **10**.
10	**CHECK CONNECTOR.** Check the connector used for high speed CAN for poor contact.	Is there poor contact of connector?	Repair the connector that has poor contact, or replace harness.	It is possible that temporary poor communication occurs. Delete the DTC.

H: DTC U0412 INVALID DATA RECEIVED FROM BATTERY ENERGY CONTROL MODULE

DTC DETECTING CONDITION:
Received error data from battery energy control module.
TROUBLE SYMPTOM:
Hybrid fail lamp illuminates.

	Step	Check	Yes	No
1	**CHECK PERFORMING OF BASIC DIAGNOSTIC PROCEDURE.**	Was the basic diagnostic procedure performed up to STEP 3?	Go to step **2**.	Perform the basic diagnostic procedure. <Ref. to LAN(HEV)(diag)-2, Basic Diagnostic Procedure.>
2	**CHECK DTC.** Check the displayed DTC.	Are DTCs other than U*** displayed?	Perform the diagnosis according to DTC.	Go to step **3**.
3	**CHECK DTC.** Check the displayed DTC.	Is DTC for the bus off or the data no-receive displayed?	Perform the diagnosis according to DTC.	Go to step **4**.
4	**CHECK DTC.** Check the displayed DTC.	Is U0412 a current malfunction?	Go to step **5**.	Go to step **9**.
5	**CHECK DTC.** 1) Turn the ignition switch to OFF. 2) Disconnect the high voltage battery connector. 3) Connect the disconnected connectors. 4) Read the DTC using Subaru Select Monitor.	Is U0412 a current malfunction?	Go to step **6**.	Go to step **9**.
6	**CHECK DTC.** Using the Subaru Select Monitor, read DTC of all the systems.	Is the battery energy control module data abnormal detected in several modules?	Replace the high voltage battery. <Ref. to HEV-17, High Voltage Battery.>	Go to step **7**.
7	**REPLACE MODULE.** 1) Replace the high voltage battery. <Ref. to HEV-17, High Voltage Battery.> 2) Read the DTC using Subaru Select Monitor.	Is U0412 a current malfunction?	Go to step **8**.	System is normal.
8	**CHECK MODULE.** 1) Reinstall the high voltage battery. 2) Replace the module that the DTC has been detected. 3) Read the DTC using Subaru Select Monitor.	Is U0412 a current malfunction?	Replace the high voltage battery. <Ref. to HEV-17, High Voltage Battery.>	System is normal.
9	**CHECK HARNESS.** 1) Shake the harness, and check for poor contact. 2) Using the Subaru Select Monitor, read DTC of CAN system.	Is U0412 a current malfunction?	Repair the poor contact of harness, or replace the harness.	Go to step **10**.
10	**CHECK CONNECTOR.** Check the connector used for high speed CAN for poor contact.	Is there poor contact of connector?	Repair the connector that has poor contact, or replace harness.	It is possible that temporary poor communication occurs. Delete the DTC.

I: DTC U0416 INVALID DATA RECEIVED FROM VEHICLE DYNAMICS CONTROL MODULE

DTC DETECTING CONDITION:
Data from VDCCM is faulty.
TROUBLE SYMPTOM:
ABS warning light and VDC warning light illuminate.

	Step	Check	Yes	No
1	**CHECK PERFORMING OF BASIC DIAGNOSTIC PROCEDURE.**	Was the basic diagnostic procedure performed up to STEP 3?	Go to step **2**.	Perform the basic diagnostic procedure. <Ref. to LAN(HEV)(diag)-2, Basic Diagnostic Procedure.>
2	**CHECK DTC.** Check the displayed DTC.	Are DTCs other than U*** displayed?	Perform the diagnosis according to DTC.	Go to step **3**.
3	**CHECK DTC.** Check the displayed DTC.	Is DTC for the bus off or the data no-receive displayed?	Perform the diagnosis according to DTC.	Go to step **4**.
4	**CHECK DTC.** Check the displayed DTC.	Is U0416 a current malfunction?	Go to step **5**.	Go to step **9**.
5	**CHECK DTC.** 1) Turn the ignition switch to OFF. 2) Disconnect the VDC CM connector. 3) Connect the disconnected connectors. 4) Read the DTC using Subaru Select Monitor.	Is U0416 a current malfunction?	Go to step **6**.	Go to step **9**.
6	**CHECK DTC.** Using the Subaru Select Monitor, read DTC of all the systems.	Is the VDC data abnormal detected in several modules?	Replace the VDC CM. <Ref. to VDC-9, VDC Control Module and Hydraulic Control Unit (VDCCM&H/U).>	Go to step **7**.
7	**REPLACE MODULE.** 1) Replace the VDC CM. 2) Read the DTC using Subaru Select Monitor.	Is U0416 a current malfunction?	Go to step **8**.	System is normal.
8	**CHECK MODULE.** 1) Reinstall the VDC CM. 2) Replace the module that the DTC has been detected. 3) Read the DTC using Subaru Select Monitor.	Is U0416 a current malfunction?	Replace the VDC CM. <Ref. to VDC-9, VDC Control Module and Hydraulic Control Unit (VDCCM&H/U).>	System is normal.
9	**CHECK HARNESS.** 1) Shake the harness, and check for poor contact. 2) Using the Subaru Select Monitor, read DTC of CAN system.	Is U0416 a current malfunction?	Repair the poor contact of harness, or replace the harness.	Go to step **10**.
10	**CHECK CONNECTOR.** Check the connector used for high speed CAN for poor contact.	Is there poor contact of connector?	Repair the connector that has poor contact, or replace harness.	It is possible that temporary poor communication occurs. Delete the DTC.

J: DTC U0420 INVALID DATA RECEIVED FROM POWER STEERING CONTROL MODULE

DTC DETECTING CONDITION:
Defective data was transmitted from EPS CM.
TROUBLE SYMPTOM:
Cooperation control with EPS CM does not operate properly.

	Step	Check	Yes	No
1	**CHECK PERFORMING OF BASIC DIAGNOSTIC PROCEDURE.**	Was the basic diagnostic procedure performed up to STEP 3?	Go to step **2**.	Perform the basic diagnostic procedure. <Ref. to LAN(HEV)(diag)-2, Basic Diagnostic Procedure.>
2	**CHECK DTC.** Check the displayed DTC.	Are DTCs other than U*** displayed?	Perform the diagnosis according to DTC.	Go to step **3**.
3	**CHECK DTC.** Check the displayed DTC.	Is DTC for the bus off or the data no-receive displayed?	Perform the diagnosis according to DTC.	Go to step **4**.
4	**CHECK DTC.** Check the displayed DTC.	Is U0420 a current malfunction?	Go to step **5**.	Go to step **9**.
5	**CHECK DTC.** 1) Turn the ignition switch to OFF. 2) Disconnect the power steering CM connector. 3) Connect the disconnected connectors. 4) Read the DTC using Subaru Select Monitor.	Is U0420 a current malfunction?	Go to step **6**.	Go to step **9**.
6	**CHECK DTC.** Using the Subaru Select Monitor, read DTC of all the systems.	Is the electric power steering data abnormal detected in several modules?	Replace the power steering CM. <Ref. to PS-43, Power Steering Control Module.>	Go to step **7**.
7	**REPLACE MODULE.** 1) Replace the power steering CM. 2) Read the DTC using Subaru Select Monitor.	Is U0420 a current malfunction?	Go to step **8**.	System is normal.
8	**CHECK MODULE.** 1) Reinstall the power steering CM. 2) Replace the module that the DTC has been detected. 3) Read the DTC using Subaru Select Monitor.	Is U0420 a current malfunction?	Replace the power steering CM. <Ref. to PS-43, Power Steering Control Module.>	System is normal.
9	**CHECK HARNESS.** 1) Shake the harness, and check for poor contact. 2) Using the Subaru Select Monitor, read DTC of CAN system.	Is U0420 a current malfunction?	Repair the poor contact of harness, or replace the harness.	Go to step **10**.
10	**CHECK CONNECTOR.** Check the connector used for high speed CAN for poor contact.	Is there poor contact of connector?	Repair the connector that has poor contact, or replace harness.	It is possible that temporary poor communication occurs. Delete the DTC.

K: DTC U0422 INVALID DATA RECEIVED FROM BODY CONTROL MODULE

DTC DETECTING CONDITION:
Defective data was transmitted from body integrated unit.
TROUBLE SYMPTOM:
Cooperation control with body integrated unit does not operate properly.

	Step	Check	Yes	No
1	**CHECK PERFORMING OF BASIC DIAGNOSTIC PROCEDURE.**	Was the basic diagnostic procedure performed up to STEP 3?	Go to step **2**.	Perform the basic diagnostic procedure. <Ref. to LAN(HEV)(diag)-2, Basic Diagnostic Procedure.>
2	**CHECK DTC.** Check the displayed DTC.	Are DTCs other than U*** displayed?	Perform the diagnosis according to DTC.	Go to step **3**.
3	**CHECK DTC.** Check the displayed DTC.	Is DTC for the bus off or the data no-receive displayed?	Perform the diagnosis according to DTC.	Go to step **4**.
4	**CHECK DTC.** Check the displayed DTC.	Is U0422 a current malfunction?	Go to step **5**.	Go to step **9**.
5	**CHECK DTC.** 1) Turn the ignition switch to OFF. 2) Disconnect the body integrated unit connector. 3) Connect the disconnected connectors. 4) Read the DTC using Subaru Select Monitor.	Is U0422 a current malfunction?	Go to step **6**.	Go to step **9**.
6	**CHECK DTC.** Using the Subaru Select Monitor, read DTC of all the systems.	Is the body integrated data abnormal detected in several modules?	Replace the body integrated unit. <Ref. to SL-82, Body Integrated Unit.>	Go to step **7**.
7	**REPLACE MODULE.** 1) Replace the body integrated unit. 2) Read the DTC using Subaru Select Monitor.	Is U0422 a current malfunction?	Go to step **8**.	System is normal.
8	**CHECK MODULE.** 1) Reinstall the body integrated unit. 2) Replace the module that the DTC has been detected. 3) Read the DTC using Subaru Select Monitor.	Is U0422 a current malfunction?	Replace the body integrated unit. <Ref. to SL-82, Body Integrated Unit.>	System is normal.
9	**CHECK HARNESS.** 1) Shake the harness, and check for poor contact. 2) Using the Subaru Select Monitor, read DTC of CAN system.	Is U0422 a current malfunction?	Repair the poor contact of harness, or replace the harness.	Go to step **10**.
10	**CHECK CONNECTOR.** Check the connector used for high speed CAN for poor contact.	Is there poor contact of connector?	Repair the connector that has poor contact, or replace harness.	It is possible that temporary poor communication occurs. Delete the DTC.

L: DTC U0423 INVALID DATA RECEIVED FROM INSTRUMENT PANEL CLUSTER CONTROL MODULE

DTC DETECTING CONDITION:
Defective data was transmitted from combination meter.
TROUBLE SYMPTOM:
Display of combination meter does not operate properly.

	Step	Check	Yes	No
1	**CHECK PERFORMING OF BASIC DIAGNOSTIC PROCEDURE.**	Was the basic diagnostic procedure performed up to STEP 3?	Go to step **2**.	Perform the basic diagnostic procedure. <Ref. to LAN(HEV)(diag)-2, Basic Diagnostic Procedure.>
2	**CHECK DTC.** Check the displayed DTC.	Are DTCs other than U*** displayed?	Perform the diagnosis according to DTC.	Go to step **3**.
3	**CHECK DTC.** Check the displayed DTC.	Is DTC for the bus off or the data no-receive displayed?	Perform the diagnosis according to DTC.	Go to step **4**.
4	**CHECK DTC.** Check the displayed DTC.	Is U0423 a current malfunction?	Go to step **5**.	Go to step **9**.
5	**CHECK DTC.** 1) Turn the ignition switch to OFF. 2) Disconnect the combination meter connector. 3) Connect the disconnected connectors. 4) Read the DTC using Subaru Select Monitor.	Is U0423 a current malfunction?	Go to step **6**.	Go to step **9**.
6	**CHECK DTC.** Using the Subaru Select Monitor, read DTC of all the systems.	Is the meter data abnormal detected in several modules?	Replace the combination meter. <Ref. to IDI-16, Combination Meter.>	Go to step **7**.
7	**REPLACE MODULE.** 1) Replace the combination meter. 2) Read the DTC using Subaru Select Monitor.	Is U0423 a current malfunction?	Go to step **8**.	System is normal.
8	**CHECK MODULE.** 1) Replace the current combination meter with the original combination meter. 2) Replace the module that the DTC has been detected. 3) Read the DTC using Subaru Select Monitor.	Is U0423 a current malfunction?	Replace the combination meter. <Ref. to IDI-16, Combination Meter.>	System is normal.
9	**CHECK HARNESS.** 1) Shake the harness, and check for poor contact. 2) Using the Subaru Select Monitor, read DTC of CAN system.	Is U0423 a current malfunction?	Repair the poor contact of harness, or replace the harness.	Go to step **10**.
10	**CHECK CONNECTOR.** Check the connector used for high speed CAN for poor contact.	Is there poor contact of connector?	Repair the connector that has poor contact, or replace harness.	It is possible that temporary poor communication occurs. Delete the DTC.

M: DTC U0424 INVALID DATA RECEIVED FROM HVAC CONTROL MODULE

DTC DETECTING CONDITION:
Defective data was transmitted from A/C control panel.
TROUBLE SYMPTOM:
Cooperation control of air conditioner does not operate properly.

	Step	Check	Yes	No
1	**CHECK PERFORMING OF BASIC DIAGNOSTIC PROCEDURE.**	Was the basic diagnostic procedure performed up to STEP 3?	Go to step **2**.	Perform the basic diagnostic procedure. <Ref. to LAN(HEV)(diag)-2, Basic Diagnostic Procedure.>
2	**CHECK DTC.** Check the displayed DTC.	Are DTCs other than U*** displayed?	Perform the diagnosis according to DTC.	Go to step **3**.
3	**CHECK DTC.** Check the displayed DTC.	Is DTC for the bus off or the data no-receive displayed?	Perform the diagnosis according to DTC.	Go to step **4**.
4	**CHECK DTC.** Check the displayed DTC.	Is U0424 a current malfunction?	Go to step **5**.	Go to step **9**.
5	**CHECK DTC.** 1) Turn the ignition switch to OFF. 2) Disconnect the A/C control panel connector. 3) Connect the disconnected connectors. 4) Read the DTC using Subaru Select Monitor.	Is U0424 a current malfunction?	Go to step **6**.	Go to step **9**.
6	**CHECK DTC.** Using the Subaru Select Monitor, read DTC of all the systems.	Is the air conditioner data abnormal detected in several modules?	Replace the A/C control panel. <Ref. to AC-50, Control Panel.>	Go to step **7**.
7	**REPLACE MODULE.** 1) Replace the A/C control panel. 2) Read the DTC using Subaru Select Monitor.	Is U0424 a current malfunction?	Go to step **8**.	System is normal.
8	**CHECK MODULE.** 1) Restore the A/C control panel. 2) Replace the module that the DTC has been detected. 3) Read the DTC using Subaru Select Monitor.	Is U0424 a current malfunction?	Replace the A/C control panel. <Ref. to AC-50, Control Panel.>	System is normal.
9	**CHECK HARNESS.** 1) Shake the harness, and check for poor contact. 2) Read the DTC using Subaru Select Monitor.	Is U0424 a current malfunction?	Repair the poor contact of harness, or replace the harness.	Go to step **10**.
10	**CHECK CONNECTOR.** Check the connector used for high speed CAN for poor contact.	Is there poor contact of connector?	Repair the connector that has poor contact, or replace harness.	It is possible that temporary poor communication occurs. Delete the DTC.

N: DTC U0427 INVALID DATA RECEIVED FROM VEHICLE SECURITY CONTROL MODULE

DTC DETECTING CONDITION:
Defective data was transmitted from keyless access CM.
TROUBLE SYMPTOM:
Cooperation control of keyless access does not operate properly.

	Step	Check	Yes	No
1	**CHECK PERFORMING OF BASIC DIAGNOSTIC PROCEDURE.**	Was the basic diagnostic procedure performed up to STEP 3?	Go to step **2**.	Perform the basic diagnostic procedure. <Ref. to LAN(HEV)(diag)-2, Basic Diagnostic Procedure.>
2	**CHECK DTC.** Check the displayed DTC.	Are DTCs other than U*** displayed?	Perform the diagnosis according to DTC.	Go to step **3**.
3	**CHECK DTC.** Check the displayed DTC.	Is DTC for the bus off or the data no-receive displayed?	Perform the diagnosis according to DTC.	Go to step **4**.
4	**CHECK DTC.** Check the displayed DTC.	Is U0427 a current malfunction?	Go to step **5**.	Go to step **9**.
5	**CHECK DTC.** 1) Turn the ignition switch to OFF. 2) Disconnect the keyless access CM connector. 3) Connect the disconnected connectors. 4) Read the DTC using Subaru Select Monitor.	Is U0427 a current malfunction?	Go to step **6**.	Go to step **9**.
6	**CHECK DTC.** Using the Subaru Select Monitor, read DTC of all the systems.	Is the smart data abnormal detected in several modules?	Replace the keyless access CM. <Ref. to SL-102, Keyless Access CM.>	Go to step **7**.
7	**REPLACE MODULE.** 1) Replace the keyless access CM. NOTE: Do not perform keyless access CM registration. 2) Read the DTC using Subaru Select Monitor.	Is U0427 a current malfunction?	Go to step **8**.	System is normal. NOTE: Be sure to perform keyless access CM registration.
8	**CHECK MODULE.** 1) Reinstall the keyless access CM. 2) Replace the body integrated unit. <Ref. to SL-82, Body Integrated Unit.> 3) Read the DTC using Subaru Select Monitor.	Is U0427 a current malfunction?	Replace the keyless access CM. <Ref. to SL-102, Keyless Access CM.>	System is normal.
9	**CHECK HARNESS.** 1) Shake the harness, and check for poor contact. 2) Read the DTC using Subaru Select Monitor.	Is U0427 a current malfunction?	Repair the poor contact of harness, or replace the harness.	Go to step **10**.
10	**CHECK CONNECTOR.** Check the connector used for high speed CAN for poor contact.	Is there poor contact of connector?	Repair the connector that has poor contact, or replace harness.	It is possible that temporary poor communication occurs. Delete the DTC.

O: DTC U0428 INVALID DATA RECEIVED FROM STEERING ANGLE SENSOR MODULE

DTC DETECTING CONDITION:
Defective data was transmitted from steering angle sensor.
TROUBLE SYMPTOM:
VDC CM does not operate normally.

	Step	Check	Yes	No
1	**CHECK PERFORMING OF BASIC DIAGNOSTIC PROCEDURE.**	Was the basic diagnostic procedure performed up to STEP 3?	Go to step **2**.	Perform the basic diagnostic procedure. <Ref. to LAN(HEV)(diag)-2, Basic Diagnostic Procedure.>
2	**CHECK DTC.** Check the displayed DTC.	Are DTCs other than U*** displayed?	Perform the diagnosis according to DTC.	Go to step **3**.
3	**CHECK DTC.** Check the displayed DTC.	Is DTC for the bus off or the data no-receive displayed?	Perform the diagnosis according to DTC.	Go to step **4**.
4	**CHECK DTC.** Check the displayed DTC.	Is U0428 a current malfunction?	Go to step **5**.	Go to step **9**.
5	**CHECK DTC.** 1) Turn the ignition switch to OFF. 2) Disconnect the steering angle sensor connector. 3) Connect the disconnected connectors. 4) Read the DTC using Subaru Select Monitor.	Is U0428 a current malfunction?	Go to step **6**.	Go to step **9**.
6	**CHECK DTC.** Using the Subaru Select Monitor, read DTC of all the systems.	Is the steering angle sensor data abnormal detected in several modules?	Replace the steering angle sensor. <Ref. to VDC-29, Steering Angle Sensor.>	Go to step **7**.
7	**REPLACE MODULE.** 1) Replace the steering angle sensor. 2) Read the DTC using Subaru Select Monitor.	Is U0428 a current malfunction?	Go to step **8**.	System is normal.
8	**CHECK MODULE.** 1) Reinstall the steering angle sensor. 2) Replace the module that the DTC has been detected. 3) Read the DTC using Subaru Select Monitor.	Is U0428 a current malfunction?	Replace the steering angle sensor. <Ref. to VDC-29, Steering Angle Sensor.>	System is normal.
9	**CHECK HARNESS.** 1) Shake the harness, and check for poor contact. 2) Using the Subaru Select Monitor, read DTC of CAN system.	Is U0428 a current malfunction?	Repair the poor contact of harness, or replace the harness.	Go to step **10**.
10	**CHECK CONNECTOR.** Check the connector used for high speed CAN for poor contact.	Is there poor contact of connector?	Repair the connector that has poor contact, or replace harness.	It is possible that temporary poor communication occurs. Delete the DTC.

P: DTC U0452 INVALID DATA RECEIVED FROM RESTRAINTS CONTROL MODULE

DTC DETECTING CONDITION:
Defective data was transmitted from A/B CM.
TROUBLE SYMPTOM:
Cooperation control with airbag does not operate properly.

	Step	Check	Yes	No
1	**CHECK PERFORMING OF BASIC DIAGNOSTIC PROCEDURE.**	Was the basic diagnostic procedure performed up to STEP 3?	Go to step **2**.	Perform the basic diagnostic procedure. <Ref. to LAN(HEV)(diag)-2, Basic Diagnostic Procedure.>
2	**CHECK DTC.** Check the displayed DTC.	Are DTCs other than U*** displayed?	Perform the diagnosis according to DTC.	Go to step **3**.
3	**CHECK DTC.** Check the displayed DTC.	Is DTC for the bus off or the data no-receive displayed?	Perform the diagnosis according to DTC.	Go to step **4**.
4	**CHECK DTC.** Check the displayed DTC.	Is U0452 a current malfunction?	Go to step **5**.	Go to step **9**.
5	**CHECK DTC.** 1) Turn the ignition switch to OFF. 2) Disconnect the A/B CM connector. 3) Connect the disconnected connectors. 4) Read the DTC using Subaru Select Monitor.	Is U0452 a current malfunction?	Go to step **6**.	Go to step **9**.
6	**CHECK DTC.** Using the Subaru Select Monitor, read DTC of all the systems.	Is the airbag data abnormal detected in several modules?	Replace the A/B CM. <Ref. to AB-78, Airbag Control Module.>	Go to step **7**.
7	**REPLACE MODULE.** 1) Replace the A/B CM. 2) Read the DTC using Subaru Select Monitor.	Is U0452 a current malfunction?	Go to step **8**.	System is normal.
8	**CHECK MODULE.** 1) Reinstall the A/B CM. 2) Replace the module that the DTC has been detected. 3) Read the DTC using Subaru Select Monitor.	Is U0452 a current malfunction?	Replace the A/B CM. <Ref. to AB-78, Airbag Control Module.>	System is normal.
9	**CHECK HARNESS.** 1) Shake the harness, and check for poor contact. 2) Using the Subaru Select Monitor, read DTC of CAN system.	Is U0452 a current malfunction?	Repair the poor contact of harness, or replace the harness.	Go to step **10**.
10	**CHECK CONNECTOR.** Check the connector used for high speed CAN for poor contact.	Is there poor contact of connector?	Repair the connector that has poor contact, or replace harness.	It is possible that temporary poor communication occurs. Delete the DTC.

Q: DTC U0588 INVALID DATA RECEIVED FROM TRANSMISSION FLUID PUMP MODULE

DTC DETECTING CONDITION:
Received error data from electric oil pump inverter.
TROUBLE SYMPTOM:
Hybrid fail lamp illuminates.

	Step	Check	Yes	No
1	**CHECK PERFORMING OF BASIC DIAGNOSTIC PROCEDURE.**	Was the basic diagnostic procedure performed up to STEP 3?	Go to step **2**.	Perform the basic diagnostic procedure. <Ref. to LAN(HEV)(diag)-2, Basic Diagnostic Procedure.>
2	**CHECK DTC.** Check the displayed DTC.	Are DTCs other than U*** displayed?	Perform the diagnosis according to DTC.	Go to step **3**.
3	**CHECK DTC.** Check the displayed DTC.	Is DTC for the bus off or the data no-receive displayed?	Perform the diagnosis according to DTC.	Go to step **4**.
4	**CHECK DTC.** Check the displayed DTC.	Is U0588 a current malfunction?	Go to step **5**.	Go to step **9**.
5	**CHECK DTC.** 1) Turn the ignition switch to OFF. 2) Disconnect the electric oil pump inverter connector. 3) Connect the disconnected connectors. 4) Read the DTC using Subaru Select Monitor.	Is U0588 a current malfunction?	Go to step **6**.	Go to step **9**.
6	**CHECK DTC.** Using the Subaru Select Monitor, read DTC of all the systems.	Is the electric oil pump data abnormal detected in several modules?	Replace the electric oil pump inverter. <Ref. to HEV-42, Inverter.>	Go to step **7**.
7	**REPLACE MODULE.** 1) Replace the electric oil pump inverter. <Ref. to HEV-42, Inverter.> 2) Read the DTC using Subaru Select Monitor.	Is U0588 a current malfunction?	Go to step **8**.	System is normal.
8	**CHECK MODULE.** 1) Reinstall the electric oil pump inverter. 2) Replace the module that the DTC has been detected. 3) Read the DTC using Subaru Select Monitor.	Is U0588 a current malfunction?	Replace the electric oil pump inverter. <Ref. to HEV-42, Inverter.>	System is normal.
9	**CHECK HARNESS.** 1) Shake the harness, and check for poor contact. 2) Using the Subaru Select Monitor, read DTC of CAN system.	Is U0588 a current malfunction?	Repair the poor contact of harness, or replace the harness.	Go to step **10**.
10	**CHECK CONNECTOR.** Check the connector used for high speed CAN for poor contact.	Is there poor contact of connector?	Repair the connector that has poor contact, or replace harness.	It is possible that temporary poor communication occurs. Delete the DTC.

R: DTC U0594 INVALID DATA RECEIVED FROM HYBRID POWERTRAIN CONTROL MODULE

DTC DETECTING CONDITION:
Received error data from hybrid powertrain CM.
TROUBLE SYMPTOM:
Hybrid fail lamp illuminates.

	Step	Check	Yes	No
1	**CHECK PERFORMING OF BASIC DIAGNOSTIC PROCEDURE.**	Was the basic diagnostic procedure performed up to STEP 3?	Go to step **2**.	Perform the basic diagnostic procedure. <Ref. to LAN(HEV)(diag)-2, Basic Diagnostic Procedure.>
2	**CHECK DTC.** Check the displayed DTC.	Are DTCs other than U*** displayed?	Perform the diagnosis according to DTC.	Go to step **3**.
3	**CHECK DTC.** Check the displayed DTC.	Is DTC for the bus off or the data no-receive displayed?	Perform the diagnosis according to DTC.	Go to step **4**.
4	**CHECK DTC.** Check the displayed DTC.	Is U0594 a current malfunction?	Go to step **5**.	Go to step **9**.
5	**CHECK DTC.** 1) Turn the ignition switch to OFF. 2) Disconnect the hybrid powertrain CM connector. 3) Connect the disconnected connectors. 4) Read the DTC using Subaru Select Monitor.	Is U0594 a current malfunction?	Go to step **6**.	Go to step **9**.
6	**CHECK DTC.** Using the Subaru Select Monitor, read DTC of all the systems.	Is the hybrid data abnormal or Auto Start Stop data abnormal detected in several modules?	Replace the hybrid powertrain CM. <Ref. to HEV-37, Hybrid Powertrain Control Module.>	Go to step **7**.
7	**REPLACE MODULE.** 1) Replace the hybrid powertrain CM. <Ref. to HEV-37, Hybrid Powertrain Control Module.> 2) Read the DTC using Subaru Select Monitor.	Is U0594 a current malfunction?	Go to step **8**.	System is normal.
8	**CHECK MODULE.** 1) Reinstall the hybrid powertrain CM. 2) Replace the module that the DTC has been detected. 3) Read the DTC using Subaru Select Monitor.	Is U0594 a current malfunction?	Replace the hybrid powertrain CM. <Ref. to HEV-37, Hybrid Powertrain Control Module.>	System is normal.
9	**CHECK HARNESS.** 1) Shake the harness, and check for poor contact. 2) Using the Subaru Select Monitor, read DTC of CAN system.	Is U0594 a current malfunction?	Repair the poor contact of harness, or replace the harness.	Go to step **10**.
10	**CHECK CONNECTOR.** Check the connector used for high speed CAN for poor contact.	Is there poor contact of connector?	Repair the connector that has poor contact, or replace harness.	It is possible that temporary poor communication occurs. Delete the DTC.

S: DTC U1401 INVALID DATA RECEIVED FROM ECM/PCM PU-CAN

DTC DETECTING CONDITION:
Received error data from ECM.
TROUBLE SYMPTOM:
Hybrid fail lamp illuminates.

	Step	Check	Yes	No
1	**CHECK PERFORMING OF BASIC DIAGNOSTIC PROCEDURE.**	Was the basic diagnostic procedure performed up to STEP 3?	Go to step **2**.	Perform the basic diagnostic procedure. <Ref. to LAN(HEV)(diag)-2, Basic Diagnostic Procedure.>
2	**CHECK DTC.** Check the displayed DTC.	Are DTCs other than U*** displayed?	Perform the diagnosis according to DTC.	Go to step **3**.
3	**CHECK DTC.** Check the displayed DTC.	Is DTC for the bus off or the data no-receive displayed?	Perform the diagnosis according to DTC.	Go to step **4**.
4	**CHECK DTC.** Check the displayed DTC.	Is U1401 a current malfunction?	Go to step **5**.	Go to step **9**.
5	**CHECK DTC.** 1) Turn the ignition switch to OFF. 2) Disconnect the ECM connector. 3) Connect the disconnected connectors. 4) Read the DTC using Subaru Select Monitor.	Is U1401 a current malfunction?	Go to step **6**.	Go to step **9**.
6	**CHECK DTC.** Using the Subaru Select Monitor, read DTC of all the systems.	Is the engine PU-CAN data abnormal detected in several modules?	Replace the ECM. <Ref. to FU(H4DO(HEV))-85, Engine Control Module (ECM).>	Go to step **7**.
7	**REPLACE MODULE.** 1) Replace the ECM. <Ref. to FU(H4DO(HEV))-85, Engine Control Module (ECM).> 2) Read the DTC using Subaru Select Monitor.	Is U1401 a current malfunction?	Go to step **8**.	System is normal.
8	**CHECK MODULE.** 1) Reinstall the ECM. 2) Replace the module that the DTC has been detected. 3) Read the DTC using Subaru Select Monitor.	Is U1401 a current malfunction?	Replace the ECM. <Ref. to FU(H4DO(HEV))-85, Engine Control Module (ECM).>	System is normal.
9	**CHECK HARNESS.** 1) Shake the harness, and check for poor contact. 2) Using the Subaru Select Monitor, read DTC of CAN system.	Is U1401 a current malfunction?	Repair the poor contact of harness, or replace the harness.	Go to step **10**.
10	**CHECK CONNECTOR.** Check the connector used for high speed CAN for poor contact.	Is there poor contact of connector?	Repair the connector that has poor contact, or replace harness.	It is possible that temporary poor communication occurs. Delete the DTC.

T: DTC U1402 INVALID DATA RECEIVED FROM TCM PU-CAN

DTC DETECTING CONDITION:
Received error data from TCM.
TROUBLE SYMPTOM:
Hybrid fail lamp illuminates.

	Step	Check	Yes	No
1	**CHECK PERFORMING OF BASIC DIAGNOSTIC PROCEDURE.**	Was the basic diagnostic procedure performed up to STEP 3?	Go to step **2**.	Perform the basic diagnostic procedure. <Ref. to LAN(HEV)(diag)-2, Basic Diagnostic Procedure.>
2	**CHECK DTC.** Check the displayed DTC.	Are DTCs other than U*** displayed?	Perform the diagnosis according to DTC.	Go to step **3**.
3	**CHECK DTC.** Check the displayed DTC.	Is DTC for the bus off or the data no-receive displayed?	Perform the diagnosis according to DTC.	Go to step **4**.
4	**CHECK DTC.** Check the displayed DTC.	Is U1402 a current malfunction?	Go to step **5**.	Go to step **9**.
5	**CHECK DTC.** 1) Turn the ignition switch to OFF. 2) Disconnect the TCM connector. 3) Connect the disconnected connectors. 4) Read the DTC using Subaru Select Monitor.	Is U1402 a current malfunction?	Go to step **6**.	Go to step **9**.
6	**CHECK DTC.** Using the Subaru Select Monitor, read DTC of all the systems.	Is the transmission PU-CAN data abnormal detected in several modules?	Replace the TCM. <Ref. to CVT(TH58A)-156, Transmission Control Module (TCM).>	Go to step **7**.
7	**REPLACE MODULE.** 1) Replace the TCM. <Ref. to CVT(TH58A)-156, Transmission Control Module (TCM).> 2) Read the DTC using Subaru Select Monitor.	Is U1402 a current malfunction?	Go to step **8**.	System is normal.
8	**CHECK MODULE.** 1) Reinstall the TCM. 2) Replace the module that the DTC has been detected. 3) Read the DTC using Subaru Select Monitor.	Is U1402 a current malfunction?	Replace the TCM. <Ref. to CVT(TH58A)-156, Transmission Control Module (TCM).>	System is normal.
9	**CHECK HARNESS.** 1) Shake the harness, and check for poor contact. 2) Using the Subaru Select Monitor, read DTC of CAN system.	Is U1402 a current malfunction?	Repair the poor contact of harness, or replace the harness.	Go to step **10**.
10	**CHECK CONNECTOR.** Check the connector used for high speed CAN for poor contact.	Is there poor contact of connector?	Repair the connector that has poor contact, or replace harness.	It is possible that temporary poor communication occurs. Delete the DTC.

U: DTC U1469 INVALID DATA RECEIVED FROM AUTOSTART STOP CONTROL MODULE

DTC DETECTING CONDITION:
Received error data from hybrid powertrain CM.
TROUBLE SYMPTOM:
Hybrid fail lamp illuminates.

	Step	Check	Yes	No
1	**CHECK PERFORMING OF BASIC DIAGNOSTIC PROCEDURE.**	Was the basic diagnostic procedure performed up to STEP 3?	Go to step **2**.	Perform the basic diagnostic procedure. <Ref. to LAN(HEV)(diag)-2, Basic Diagnostic Procedure.>
2	**CHECK DTC.** Check the displayed DTC.	Are DTCs other than U*** displayed?	Perform the diagnosis according to DTC.	Go to step **3**.
3	**CHECK DTC.** Check the displayed DTC.	Is DTC for the bus off or the data no-receive displayed?	Perform the diagnosis according to DTC.	Go to step **4**.
4	**CHECK DTC.** Check the displayed DTC.	Is U1469 a current malfunction?	Go to step **5**.	Go to step **9**.
5	**CHECK DTC.** 1) Turn the ignition switch to OFF. 2) Disconnect the hybrid powertrain CM connector. 3) Connect the disconnected connectors. 4) Read the DTC using Subaru Select Monitor.	Is U1469 a current malfunction?	Go to step **6**.	Go to step **9**.
6	**CHECK DTC.** Using the Subaru Select Monitor, read DTC of all the systems.	Is the hybrid data abnormal or Auto Start Stop data abnormal detected in several modules?	Replace the hybrid powertrain CM. <Ref. to HEV-37, Hybrid Powertrain Control Module.>	Go to step **7**.
7	**REPLACE MODULE.** 1) Replace the hybrid powertrain CM. <Ref. to HEV-37, Hybrid Powertrain Control Module.> 2) Read the DTC using Subaru Select Monitor.	Is U1469 a current malfunction?	Go to step **8**.	System is normal.
8	**CHECK MODULE.** 1) Reinstall the hybrid powertrain CM. 2) Replace the module that the DTC has been detected. 3) Read the DTC using Subaru Select Monitor.	Is U1469 a current malfunction?	Replace the hybrid powertrain CM. <Ref. to HEV-37, Hybrid Powertrain Control Module.>	System is normal.
9	**CHECK HARNESS.** 1) Shake the harness, and check for poor contact. 2) Using the Subaru Select Monitor, read DTC of CAN system.	Is U1469 a current malfunction?	Repair the poor contact of harness, or replace the harness.	Go to step **10**.
10	**CHECK CONNECTOR.** Check the connector used for high speed CAN for poor contact.	Is there poor contact of connector?	Repair the connector that has poor contact, or replace harness.	It is possible that temporary poor communication occurs. Delete the DTC.

V: DTC U1591 INVALID DATA RECEIVED FROM HYBRID POWERTRAIN CONTROL MODULE HEV-CAN

DTC DETECTING CONDITION:
Received error data from hybrid powertrain CM.
TROUBLE SYMPTOM:
Hybrid fail lamp illuminates.

	Step	Check	Yes	No
1	**CHECK PERFORMING OF BASIC DIAGNOSTIC PROCEDURE.**	Was the basic diagnostic procedure performed up to STEP 3?	Go to step **2**.	Perform the basic diagnostic procedure. <Ref. to LAN(HEV)(diag)-2, Basic Diagnostic Procedure.>
2	**CHECK DTC.** Check the displayed DTC.	Are DTCs other than U*** displayed?	Perform the diagnosis according to DTC.	Go to step **3**.
3	**CHECK DTC.** Check the displayed DTC.	Is DTC for the bus off or the data no-receive displayed?	Perform the diagnosis according to DTC.	Go to step **4**.
4	**CHECK DTC.** Check the displayed DTC.	Is U1591 a current malfunction?	Go to step **5**.	Go to step **9**.
5	**CHECK DTC.** 1) Turn the ignition switch to OFF. 2) Disconnect the hybrid powertrain CM connector. 3) Connect the disconnected connectors. 4) Read the DTC using Subaru Select Monitor.	Is U1591 a current malfunction?	Go to step **6**.	Go to step **9**.
6	**CHECK DTC.** Using the Subaru Select Monitor, read DTC of all the systems.	Is the hybrid powertrain control module HEV-CAN data abnormal detected in several modules?	Replace the hybrid powertrain CM. <Ref. to HEV-37, Hybrid Powertrain Control Module.>	Go to step **7**.
7	**REPLACE MODULE.** 1) Replace the hybrid powertrain CM. <Ref. to HEV-37, Hybrid Powertrain Control Module.> 2) Read the DTC using Subaru Select Monitor.	Is U1591 a current malfunction?	Go to step **8**.	System is normal.
8	**CHECK MODULE.** 1) Reinstall the hybrid powertrain CM. 2) Replace the module that the DTC has been detected. 3) Read the DTC using Subaru Select Monitor.	Is U1591 a current malfunction?	Replace the hybrid powertrain CM. <Ref. to HEV-37, Hybrid Powertrain Control Module.>	System is normal.
9	**CHECK HARNESS.** 1) Shake the harness, and check for poor contact. 2) Using the Subaru Select Monitor, read DTC of CAN system.	Is U1591 a current malfunction?	Repair the poor contact of harness, or replace the harness.	Go to step **10**.
10	**CHECK CONNECTOR.** Check the connector used for high speed CAN for poor contact.	Is there poor contact of connector?	Repair the connector that has poor contact, or replace harness.	It is possible that temporary poor communication occurs. Delete the DTC.

W: DTC U1594 INVALID DATA RECEIVED FROM HYBRID POWERTRAIN CONTROL MODULE PU-CAN

DTC DETECTING CONDITION:
Received error data from hybrid powertrain CM.
TROUBLE SYMPTOM:
Hybrid fail lamp illuminates.

	Step	Check	Yes	No
1	**CHECK PERFORMING OF BASIC DIAGNOSTIC PROCEDURE.**	Was the basic diagnostic procedure performed up to STEP 3?	Go to step **2**.	Perform the basic diagnostic procedure. <Ref. to LAN(HEV)(diag)-2, Basic Diagnostic Procedure.>
2	**CHECK DTC.** Check the displayed DTC.	Are DTCs other than U*** displayed?	Perform the diagnosis according to DTC.	Go to step **3**.
3	**CHECK DTC.** Check the displayed DTC.	Is DTC for the bus off or the data no-receive displayed?	Perform the diagnosis according to DTC.	Go to step **4**.
4	**CHECK DTC.** Check the displayed DTC.	Is U1594 a current malfunction?	Go to step **5**.	Go to step **9**.
5	**CHECK DTC.** 1) Turn the ignition switch to OFF. 2) Disconnect the hybrid powertrain CM connector. 3) Connect the disconnected connectors. 4) Read the DTC using Subaru Select Monitor.	Is U1594 a current malfunction?	Go to step **6**.	Go to step **9**.
6	**CHECK DTC.** Using the Subaru Select Monitor, read DTC of all the systems.	Is the hybrid powertrain control module PU-CAN data abnormal detected in several modules?	Replace the hybrid powertrain CM. <Ref. to HEV-37, Hybrid Powertrain Control Module.>	Go to step **7**.
7	**REPLACE MODULE.** 1) Replace the hybrid powertrain CM. <Ref. to HEV-37, Hybrid Powertrain Control Module.> 2) Read the DTC using Subaru Select Monitor.	Is U1594 a current malfunction?	Go to step **8**.	System is normal.
8	**CHECK MODULE.** 1) Reinstall the hybrid powertrain CM. 2) Replace the module that the DTC has been detected. 3) Read the DTC using Subaru Select Monitor.	Is U1594 a current malfunction?	Replace the hybrid powertrain CM. <Ref. to HEV-37, Hybrid Powertrain Control Module.>	System is normal.
9	**CHECK HARNESS.** 1) Shake the harness, and check for poor contact. 2) Using the Subaru Select Monitor, read DTC of CAN system.	Is U1594 a current malfunction?	Repair the poor contact of harness, or replace the harness.	Go to step **10**.
10	**CHECK CONNECTOR.** Check the connector used for high speed CAN for poor contact.	Is there poor contact of connector?	Repair the connector that has poor contact, or replace harness.	It is possible that temporary poor communication occurs. Delete the DTC.

X: DTC U0100 LOST COMMUNICATION WITH ECM/PCM "A"

DTC DETECTING CONDITION:
Not received data from ECM.
TROUBLE SYMPTOM:
Cooperation control of transmission may not operate properly.

	Step	Check	Yes	No
1	**CHECK PERFORMING OF BASIC DIAGNOSTIC PROCEDURE.**	Was the basic diagnostic procedure performed up to STEP 3?	Go to step **2**.	Perform the basic diagnostic procedure. <Ref. to LAN(HEV)(diag)-2, Basic Diagnostic Procedure.>
2	**CHECK DTC.** Check the displayed DTC.	Is U0100 a current malfunction?	Go to step **3**.	Go to step **6**.
3	**CHECK DTC.** Using the Subaru Select Monitor, read DTC of all the systems.	Is the engine data no-receive detected in several modules?	Replace the ECM. <Ref. to FU(H4DO(HEV))-85, Engine Control Module (ECM).>	Go to step **4**.
4	**REPLACE MODULE.** 1) Replace the ECM. <Ref. to FU(H4DO(HEV))-85, Engine Control Module (ECM).> 2) Read the DTC using Subaru Select Monitor.	Is U0100 a current malfunction?	Go to step **5**.	System is normal.
5	**CHECK MODULE.** 1) Reinstall the ECM. 2) Replace the module that the DTC has been detected. 3) Read the DTC using Subaru Select Monitor.	Is U0100 a current malfunction?	Replace the ECM. <Ref. to FU(H4DO(HEV))-85, Engine Control Module (ECM).>	System is normal.
6	**CHECK HARNESS.** 1) Shake the harness, and check for poor contact. 2) Read the DTC using Subaru Select Monitor.	Is U0100 a current malfunction?	Repair the poor contact of harness, or replace the harness.	Go to step **7**.
7	**CHECK CONNECTOR.** Check the connector used for high speed CAN for poor contact.	Is there poor contact of connector?	Repair the connector that has poor contact, or replace harness.	It is possible that temporary poor communication occurs. Delete the DTC.

Y: DTC U0101 LOST COMMUNICATION WITH TCM

DTC DETECTING CONDITION:
Not received data from TCM.
TROUBLE SYMPTOM:
Cooperation control with transmission is not performed.

	Step	Check	Yes	No
1	**CHECK PERFORMING OF BASIC DIAGNOSTIC PROCEDURE.**	Was the basic diagnostic procedure performed up to STEP 3?	Go to step **2**.	Perform the basic diagnostic procedure. <Ref. to LAN(HEV)(diag)-2, Basic Diagnostic Procedure.>
2	**CHECK DTC.** Check the displayed DTC.	Is U0101 a current malfunction?	Go to step **3**.	Go to step **6**.
3	**CHECK DTC.** Using the Subaru Select Monitor, read DTC of all the systems.	Is the transmission data no-receive detected in several modules?	Replace the TCM. <Ref. to CVT(TH58A)-156, Transmission Control Module (TCM).>	Go to step **4**.
4	**REPLACE MODULE.** 1) Replace the TCM. <Ref. to CVT(TH58A)-156, Transmission Control Module (TCM).> 2) Read the DTC using Subaru Select Monitor.	Is U0101 a current malfunction?	Go to step **5**.	System is normal.
5	**CHECK MODULE.** 1) Reinstall the TCM. 2) Replace the module that the DTC has been detected. 3) Read the DTC using Subaru Select Monitor.	Is U0101 a current malfunction?	Replace the TCM. <Ref. to CVT(TH58A)-156, Transmission Control Module (TCM).>	System is normal.
6	**CHECK HARNESS.** 1) Shake the harness, and check for poor contact. 2) Read the DTC using Subaru Select Monitor.	Is U0101 a current malfunction?	Repair the poor contact of harness, or replace the harness.	Go to step **7**.
7	**CHECK CONNECTOR.** Check the connector used for high speed CAN for poor contact.	Is there poor contact of connector?	Repair the connector that has poor contact, or replace harness.	It is possible that temporary poor communication occurs. Delete the DTC.

Z: DTC U0110 LOST COMMUNICATION WITH DRIVE MOTOR CONTROL MODULE "A"

DTC DETECTING CONDITION:
Not received data from drive motor CM.
TROUBLE SYMPTOM:
Cooperation control with hybrid system is not performed.

	Step	Check	Yes	No
1	**CHECK PERFORMING OF BASIC DIAGNOSTIC PROCEDURE.**	Was the basic diagnostic procedure performed up to STEP 3?	Go to step **2**.	Perform the basic diagnostic procedure. <Ref. to LAN(HEV)(diag)-2, Basic Diagnostic Procedure.>
2	**CHECK DTC.** Check the displayed DTC.	Is U0110 a current malfunction?	Go to step **3**.	Go to step **6**.
3	**CHECK DTC.** Using the Subaru Select Monitor, read DTC of all the systems.	Is the motor control module data no-receive detected in several modules?	Replace the drive motor CM. <Ref. to CVT(TH58A)-155, Drive Motor Control Module.>	Go to step **4**.
4	**REPLACE MODULE.** 1) Replace the drive motor CM. <Ref. to CVT(TH58A)-155, Drive Motor Control Module.> 2) Read the DTC using Subaru Select Monitor.	Is U0110 a current malfunction?	Go to step **5**.	System is normal.
5	**CHECK MODULE.** 1) Reinstall the drive motor CM. 2) Replace the module that the DTC has been detected. 3) Read the DTC using Subaru Select Monitor.	Is U0110 a current malfunction?	Replace the drive motor CM. <Ref. to CVT(TH58A)-155, Drive Motor Control Module.>	System is normal.
6	**CHECK HARNESS.** 1) Shake the harness, and check for poor contact. 2) Read the DTC using Subaru Select Monitor.	Is U0110 a current malfunction?	Repair the poor contact of harness, or replace the harness.	Go to step **7**.
7	**CHECK CONNECTOR.** Check the connector used for high speed CAN for poor contact.	Is there poor contact of connector?	Repair the connector that has poor contact, or replace harness.	It is possible that temporary poor communication occurs. Delete the DTC.

AA:DTC U0111 LOST COMMUNICATION WITH BATTERY ENERGY CONTROL MODULE

DTC DETECTING CONDITION:
Not received data from battery energy CM (high voltage battery).
TROUBLE SYMPTOM:
Cooperation control with hybrid system is not performed.

	Step	Check	Yes	No
1	**CHECK PERFORMING OF BASIC DIAGNOSTIC PROCEDURE.**	Was the basic diagnostic procedure performed up to STEP 3?	Go to step **2**.	Perform the basic diagnostic procedure. <Ref. to LAN(HEV)(diag)-2, Basic Diagnostic Procedure.>
2	**CHECK DTC.** Check the displayed DTC.	Is U0111 a current malfunction?	Go to step **3**.	Go to step **6**.
3	**CHECK DTC.** Using the Subaru Select Monitor, read DTC of all the systems.	Is the battery energy control module data no-receive detected in several modules?	Replace the high voltage battery. <Ref. to HEV-17, High Voltage Battery.>	Go to step **4**.
4	**REPLACE MODULE.** 1) Replace the high voltage battery. <Ref. to HEV-17, High Voltage Battery.> 2) Read the DTC using Subaru Select Monitor.	Is U0111 a current malfunction?	Go to step **5**.	System is normal.
5	**CHECK MODULE.** 1) Reinstall the high voltage battery. 2) Replace the module that the DTC has been detected. 3) Read the DTC using Subaru Select Monitor.	Is U0111 a current malfunction?	Replace the high voltage battery. <Ref. to HEV-17, High Voltage Battery.>	System is normal.
6	**CHECK HARNESS.** 1) Shake the harness, and check for poor contact. 2) Read the DTC using Subaru Select Monitor.	Is U0111 a current malfunction?	Repair the poor contact of harness, or replace the harness.	Go to step **7**.
7	**CHECK CONNECTOR.** Check the connector used for high speed CAN for poor contact.	Is there poor contact of connector?	Repair the connector that has poor contact, or replace harness.	It is possible that temporary poor communication occurs. Delete the DTC.

AB:DTC U0122 LOST COMMUNICATION WITH VEHICLE DYNAMICS CONTROL MODULE

DTC DETECTING CONDITION:
No data from VDCCM is received.
TROUBLE SYMPTOM:
ABS warning light and VDC warning light illuminate.

	Step	Check	Yes	No
1	**CHECK PERFORMING OF BASIC DIAGNOSTIC PROCEDURE.**	Was the basic diagnostic procedure performed up to STEP 3?	Go to step **2**.	Perform the basic diagnostic procedure. <Ref. to LAN(HEV)(diag)-2, Basic Diagnostic Procedure.>
2	**CHECK DTC.** Check the displayed DTC.	Is U0122 a current malfunction?	Go to step **3**.	Go to step **6**.
3	**CHECK DTC.** Using the Subaru Select Monitor, read DTC of all the systems.	Is the VDC data no-receive detected in several modules?	Replace the VDC CM. <Ref. to VDC-9, VDC Control Module and Hydraulic Control Unit (VDCCM&H/U).>	Go to step **4**.
4	**REPLACE MODULE.** 1) Replace the VDC CM. 2) Read the DTC using Subaru Select Monitor.	Is U0122 a current malfunction?	Go to step **5**.	System is normal.
5	**CHECK MODULE.** 1) Reinstall the VDC CM. 2) Replace the module that the DTC has been detected. 3) Read the DTC using Subaru Select Monitor.	Is U0122 a current malfunction?	Replace the VDC CM. <Ref. to VDC-9, VDC Control Module and Hydraulic Control Unit (VDCCM&H/U).>	System is normal.
6	**CHECK HARNESS.** 1) Shake the harness, and check for poor contact. 2) Read the DTC using Subaru Select Monitor.	Is U0122 a current malfunction?	Repair the poor contact of harness, or replace the harness.	Go to step **7**.
7	**CHECK CONNECTOR.** Check the connector used for high speed CAN for poor contact.	Is there poor contact of connector?	Repair the connector that has poor contact, or replace harness.	It is possible that temporary poor communication occurs. Delete the DTC.

AC:DTC U0126 LOST COMMUNICATION WITH STEERING ANGLE SENSOR MODULE

DTC DETECTING CONDITION:
No data is received from steering angle sensor.
TROUBLE SYMPTOM:
VDC CM does not operate normally.

	Step	Check	Yes	No
1	**CHECK PERFORMING OF BASIC DIAGNOSTIC PROCEDURE.**	Was the basic diagnostic procedure performed up to STEP 3?	Go to step **2**.	Perform the basic diagnostic procedure. <Ref. to LAN(HEV)(diag)-2, Basic Diagnostic Procedure.>
2	**CHECK DTC.** Check the displayed DTC.	Is U0126 a current malfunction?	Go to step **3**.	Go to step **6**.
3	**CHECK DTC.** Using the Subaru Select Monitor, read DTC of all the systems.	Is the steering angle sensor data no-receive detected in several modules?	Replace the steering angle sensor. <Ref. to VDC-29, Steering Angle Sensor.>	Go to step **4**.
4	**REPLACE MODULE.** 1) Replace the steering angle sensor. 2) Read the DTC using Subaru Select Monitor.	Is U0126 a current malfunction?	Go to step **5**.	System is normal.
5	**CHECK MODULE.** 1) Reinstall the steering angle sensor. 2) Replace the module that the DTC has been detected. 3) Read the DTC using Subaru Select Monitor.	Is U0126 a current malfunction?	Replace the steering angle sensor. <Ref. to VDC-29, Steering Angle Sensor.>	System is normal.
6	**CHECK HARNESS.** 1) Shake the harness, and check for poor contact. 2) Read the DTC using Subaru Select Monitor.	Is U0126 a current malfunction?	Repair the poor contact of harness, or replace the harness.	Go to step **7**.
7	**CHECK CONNECTOR.** Check the connector used for high speed CAN for poor contact.	Is there poor contact of connector?	Repair the connector that has poor contact, or replace harness.	It is possible that temporary poor communication occurs. Delete the DTC.

AD:DTC U0131 LOST COMMUNICATION WITH POWER STEERING CONTROL MODULE

DTC DETECTING CONDITION:
No data is received from power steering CM.
TROUBLE SYMPTOM:
Cooperation control with power steering CM does not operate properly.

	Step	Check	Yes	No
1	**CHECK PERFORMING OF BASIC DIAGNOSTIC PROCEDURE.**	Was the basic diagnostic procedure performed up to STEP 3?	Go to step **2**.	Perform the basic diagnostic procedure. <Ref. to LAN(HEV)(diag)-2, Basic Diagnostic Procedure.>
2	**CHECK DTC.** Check the displayed DTC.	Is U0131 a current malfunction?	Go to step **3**.	Go to step **6**.
3	**CHECK DTC.** Using the Subaru Select Monitor, read DTC of all the systems.	Is the electric power steering data no-receive detected in several modules?	Replace the power steering CM. <Ref. to PS-43, Power Steering Control Module.>	Go to step **4**.
4	**REPLACE MODULE.** 1) Replace the power steering CM. 2) Read the DTC using Subaru Select Monitor.	Is U0131 a current malfunction?	Go to step **5**.	System is normal.
5	**CHECK MODULE.** 1) Reinstall the power steering CM. 2) Replace the module that the DTC has been detected. 3) Read the DTC using Subaru Select Monitor.	Is U0131 a current malfunction?	Replace the power steering CM. <Ref. to PS-43, Power Steering Control Module.>	System is normal.
6	**CHECK HARNESS.** 1) Shake the harness, and check for poor contact. 2) Read the DTC using Subaru Select Monitor.	Is U0131 a current malfunction?	Repair the poor contact of harness, or replace the harness.	Go to step **7**.
7	**CHECK CONNECTOR.** Check the connector used for high speed CAN for poor contact.	Is there poor contact of connector?	Repair the connector that has poor contact, or replace harness.	It is possible that temporary poor communication occurs. Delete the DTC.

AE:DTC U0140 LOST COMMUNICATION WITH BODY CONTROL MODULE

DTC DETECTING CONDITION:
No data is received from body integrated unit.
TROUBLE SYMPTOM:
Cooperation control with body integrated unit does not operate properly.

	Step	Check	Yes	No
1	**CHECK PERFORMING OF BASIC DIAGNOSTIC PROCEDURE.**	Was the basic diagnostic procedure performed up to STEP 3?	Go to step **2**.	Perform the basic diagnostic procedure. <Ref. to LAN(HEV)(diag)-2, Basic Diagnostic Procedure.>
2	**CHECK DTC.** Check the displayed DTC.	Is U0140 a current malfunction?	Go to step **3**.	Go to step **6**.
3	**CHECK DTC.** Using the Subaru Select Monitor, read DTC of all the systems.	Is the body integrated data no-receive detected in several modules?	Replace the body integrated unit. <Ref. to SL-82, Body Integrated Unit.>	Go to step **4**.
4	**REPLACE MODULE.** 1) Replace the body integrated unit. 2) Read the DTC using Subaru Select Monitor.	Is U0140 a current malfunction?	Go to step **5**.	System is normal.
5	**CHECK MODULE.** 1) Reinstall the body integrated unit. 2) Replace the module that the DTC has been detected. 3) Read the DTC using Subaru Select Monitor.	Is U0140 a current malfunction?	Replace the body integrated unit. <Ref. to SL-82, Body Integrated Unit.>	System is normal.
6	**CHECK HARNESS.** 1) Shake the harness, and check for poor contact. 2) Read the DTC using Subaru Select Monitor.	Is U0140 a current malfunction?	Repair the poor contact of harness, or replace the harness.	Go to step **7**.
7	**CHECK CONNECTOR.** Check the connector used for high speed CAN for poor contact.	Is there poor contact of connector?	Repair the connector that has poor contact, or replace harness.	It is possible that temporary poor communication occurs. Delete the DTC.

AF:DTC U0151 LOST COMMUNICATION WITH RESTRAINTS CONTROL MODULE

DTC DETECTING CONDITION:
No data is received from A/B CM.
TROUBLE SYMPTOM:
Cooperation control with A/B CM does not operate properly.

	Step	Check	Yes	No
1	**CHECK PERFORMING OF BASIC DIAGNOSTIC PROCEDURE.**	Was the basic diagnostic procedure performed up to STEP 3?	Go to step **2**.	Perform the basic diagnostic procedure. <Ref. to LAN(HEV)(diag)-2, Basic Diagnostic Procedure.>
2	**CHECK DTC.** Check the displayed DTC.	Is U0151 a current malfunction?	Go to step **3**.	Go to step **6**.
3	**CHECK DTC.** Using the Subaru Select Monitor, read DTC of all the systems.	Is the airbag data no-receive detected in several modules?	Replace the A/B CM. <Ref. to AB-78, Airbag Control Module.>	Go to step **4**.
4	**REPLACE MODULE.** 1) Replace the A/B CM. 2) Read the DTC using Subaru Select Monitor.	Is U0151 a current malfunction?	Go to step **5**.	System is normal.
5	**CHECK MODULE.** 1) Reinstall the A/B CM. 2) Replace the module that the DTC has been detected. 3) Read the DTC using Subaru Select Monitor.	Is U0151 a current malfunction?	Replace the A/B CM. <Ref. to AB-78, Airbag Control Module.>	System is normal.
6	**CHECK HARNESS.** 1) Shake the harness, and check for poor contact. 2) Read the DTC using Subaru Select Monitor.	Is U0151 a current malfunction?	Repair the poor contact of harness, or replace the harness.	Go to step **7**.
7	**CHECK CONNECTOR.** Check the connector used for high speed CAN for poor contact.	Is there poor contact of connector?	Repair the connector that has poor contact, or replace harness.	It is possible that temporary poor communication occurs. Delete the DTC.

AG:DTC U0155 LOST COMMUNICATION WITH INSTRUMENT PANEL CLUSTER (IPC) CONTROL MODULE

DTC DETECTING CONDITION:
No data received from combination meter.
TROUBLE SYMPTOM:
Display of combination meter does not operate properly.

	Step	Check	Yes	No
1	**CHECK PERFORMING OF BASIC DIAGNOSTIC PROCEDURE.**	Was the basic diagnostic procedure performed up to STEP 3?	Go to step **2**.	Perform the basic diagnostic procedure. <Ref. to LAN(HEV)(diag)-2, Basic Diagnostic Procedure.>
2	**CHECK DTC.** Check the displayed DTC.	Is U0155 a current malfunction?	Go to step **3**.	Go to step **6**.
3	**CHECK DTC.** Using the Subaru Select Monitor, read DTC of all the systems.	Is the meter data no-receive detected in several modules?	Replace the meter. <Ref. to IDI-16, Combination Meter.>	Go to step **4**.
4	**REPLACE MODULE.** 1) Replace the combination meter. 2) Read the DTC using Subaru Select Monitor.	Is U0155 a current malfunction?	Go to step **5**.	System is normal.
5	**CHECK MODULE.** 1) Replace the current combination meter with the original combination meter. 2) Replace the module that the DTC has been detected. 3) Read the DTC using Subaru Select Monitor.	Is U0155 a current malfunction?	Replace the combination meter. <Ref. to IDI-16, Combination Meter.>	System is normal.
6	**CHECK HARNESS.** 1) Shake the harness, and check for poor contact. 2) Read the DTC using Subaru Select Monitor.	Is U0155 a current malfunction?	Repair the poor contact of harness, or replace the harness.	Go to step **7**.
7	**CHECK CONNECTOR.** Check the connector used for high speed CAN for poor contact.	Is there poor contact of connector?	Repair the connector that has poor contact, or replace harness.	It is possible that temporary poor communication occurs. Delete the DTC.

AH:DTC U0164 LOST COMMUNICATION WITH HVAC CONTROL MODULE

DTC DETECTING CONDITION:
No data is received from A/C control panel.
TROUBLE SYMPTOM:
Cooperation control of air conditioner does not operate properly.

	Step	Check	Yes	No
1	**CHECK PERFORMING OF BASIC DIAGNOSTIC PROCEDURE.**	Was the basic diagnostic procedure performed up to STEP 3?	Go to step **2**.	Perform the basic diagnostic procedure. <Ref. to LAN(HEV)(diag)-2, Basic Diagnostic Procedure.>
2	**CHECK DTC.** Check the displayed DTC.	Is U0164 a current malfunction?	Go to step **3**.	Go to step **6**.
3	**CHECK DTC.** Using the Subaru Select Monitor, read DTC of all the systems.	Is the air conditioner data no-receive detected in several modules?	Replace the A/C control panel. <Ref. to AC-50, Control Panel.>	Go to step **4**.
4	**REPLACE MODULE.** 1) Replace the A/C control panel. 2) Read the DTC using Subaru Select Monitor.	Is U0164 a current malfunction?	Go to step **5**.	System is normal.
5	**CHECK MODULE.** 1) Restore the A/C control panel. 2) Replace the module that the DTC has been detected. 3) Read the DTC using Subaru Select Monitor.	Is U0164 a current malfunction?	Replace the A/C control panel. <Ref. to AC-50, Control Panel.>	System is normal.
6	**CHECK HARNESS.** 1) Shake the harness, and check for poor contact. 2) Read the DTC using Subaru Select Monitor.	Is U0164 a current malfunction?	Repair the poor contact of harness, or replace the harness.	Go to step **7**.
7	**CHECK CONNECTOR.** Check the connector used for high speed CAN for poor contact.	Is there poor contact of connector?	Repair the connector that has poor contact, or replace harness.	It is possible that temporary poor communication occurs. Delete the DTC.

AI: DTC U0287 LOST COMMUNICATION WITH TRANSMISSION FLUID PUMP MODULE

DTC DETECTING CONDITION:
No data is received from electric oil pump inverter.
TROUBLE SYMPTOM:
Electric oil pump does not operate properly.

	Step	Check	Yes	No
1	**CHECK PERFORMING OF BASIC DIAGNOSTIC PROCEDURE.**	Was the basic diagnostic procedure performed up to STEP 3?	Go to step **2**.	Perform the basic diagnostic procedure. <Ref. to LAN(HEV)(diag)-2, Basic Diagnostic Procedure.>
2	**CHECK DTC.** Check the displayed DTC.	Is U0287 a current malfunction?	Go to step **3**.	Go to step **6**.
3	**CHECK DTC.** Using the Subaru Select Monitor, read DTC of all the systems.	Is the electric oil pump data no-receive detected in several modules?	Replace the electric oil pump inverter. <Ref. to HEV-42, Inverter.>	Go to step **4**.
4	**REPLACE MODULE.** 1) Replace the electric oil pump inverter. <Ref. to HEV-42, Inverter.> 2) Read the DTC using Subaru Select Monitor.	Is U0287 a current malfunction?	Go to step **5**.	System is normal.
5	**CHECK MODULE.** 1) Reinstall the electric oil pump inverter. 2) Replace the module that the DTC has been detected. 3) Read the DTC using Subaru Select Monitor.	Is U0287 a current malfunction?	Replace the electric oil pump inverter. <Ref. to HEV-42, Inverter.>	System is normal.
6	**CHECK HARNESS.** 1) Shake the harness, and check for poor contact. 2) Read the DTC using Subaru Select Monitor.	Is U0287 a current malfunction?	Repair the poor contact of harness, or replace the harness.	Go to step **7**.
7	**CHECK CONNECTOR.** Check the connector used for high speed CAN for poor contact.	Is there poor contact of connector?	Repair the connector that has poor contact, or replace harness.	It is possible that temporary poor communication occurs. Delete the DTC.

AJ:DTC U0293 LOST COMMUNICATION WITH HYBRID POWERTRAIN CONTROL MODULE

DTC DETECTING CONDITION:
No data is received from hybrid powertrain CM.
TROUBLE SYMPTOM:
Cooperation control of hybrid system does not operate properly.

	Step	Check	Yes	No
1	**CHECK PERFORMING OF BASIC DIAGNOSTIC PROCEDURE.**	Was the basic diagnostic procedure performed up to STEP 3?	Go to step **2**.	Perform the basic diagnostic procedure. <Ref. to LAN(HEV)(diag)-2, Basic Diagnostic Procedure.>
2	**CHECK DTC.** Check the displayed DTC.	Is U0293 a current malfunction?	Go to step **3**.	Go to step **6**.
3	**CHECK DTC.** Using the Subaru Select Monitor, read DTC of all the systems.	Is the hybrid data no-receive or Auto Start Stop data no-receive detected in several modules?	Replace the hybrid powertrain CM. <Ref. to HEV-37, Hybrid Powertrain Control Module.>	Go to step **4**.
4	**REPLACE MODULE.** 1) Replace the hybrid powertrain CM. <Ref. to HEV-37, Hybrid Powertrain Control Module.> 2) Read the DTC using Subaru Select Monitor.	Is U0293 a current malfunction?	Go to step **5**.	System is normal.
5	**CHECK MODULE.** 1) Reinstall the hybrid powertrain CM. 2) Replace the module that the DTC has been detected. 3) Read the DTC using Subaru Select Monitor.	Is U0293 a current malfunction?	Replace the hybrid powertrain CM. <Ref. to HEV-37, Hybrid Powertrain Control Module.>	System is normal.
6	**CHECK HARNESS.** 1) Shake the harness, and check for poor contact. 2) Read the DTC using Subaru Select Monitor.	Is U0293 a current malfunction?	Repair the poor contact of harness, or replace the harness.	Go to step **7**.
7	**CHECK CONNECTOR.** Check the connector used for high speed CAN for poor contact.	Is there poor contact of connector?	Repair the connector that has poor contact, or replace harness.	It is possible that temporary poor communication occurs. Delete the DTC.

AK:DTC U0327 SOFTWARE INCOMPATIBILITY WITH VEHICLE SECURITY CONTROL MODULE

DTC DETECTING CONDITION:
No data is received from keyless access CM.
TROUBLE SYMPTOM:
Cooperation control of keyless access does not operate properly.

	Step	Check	Yes	No
1	**CHECK PERFORMING OF BASIC DIAGNOSTIC PROCEDURE.**	Was the basic diagnostic procedure performed up to STEP 3?	Go to step **2**.	Perform the basic diagnostic procedure. <Ref. to LAN(HEV)(diag)-2, Basic Diagnostic Procedure.>
2	**CHECK DTC.** Check the displayed DTC.	Is U0327 a current malfunction?	Go to step **3**.	Go to step **6**.
3	**CHECK DTC.** Using the Subaru Select Monitor, read DTC of all the systems.	Is the smart data no-receive detected in several modules?	Replace the keyless access CM. <Ref. to SL-102, Keyless Access CM.>	Go to step **4**.
4	**REPLACE MODULE.** 1) Replace the keyless access CM. NOTE: Do not perform keyless access CM registration. 2) Read the DTC using Subaru Select Monitor.	Is U0327 a current malfunction?	Go to step **5**.	System is normal. NOTE: Be sure to perform keyless access CM registration.
5	**CHECK MODULE.** 1) Reinstall the keyless access CM. 2) Replace the module that the DTC has been detected. 3) Read the DTC using Subaru Select Monitor.	Is U0327 a current malfunction?	Replace the keyless access CM. <Ref. to SL-102, Keyless Access CM.>	System is normal.
6	**CHECK HARNESS.** 1) Shake the harness, and check for poor contact. 2) Read the DTC using Subaru Select Monitor.	Is U0327 a current malfunction?	Repair the poor contact of harness, or replace the harness.	Go to step **7**.
7	**CHECK CONNECTOR.** Check the connector used for high speed CAN for poor contact.	Is there poor contact of connector?	Repair the connector that has poor contact, or replace harness.	It is possible that temporary poor communication occurs. Delete the DTC.

AL:DTC U1100 LOST COMMUNICATION WITH ECM/PCM PU-CAN

DTC DETECTING CONDITION:
Not received data from ECM.
TROUBLE SYMPTOM:
Cooperation control of hybrid system does not operate properly.

	Step	Check	Yes	No
1	**CHECK PERFORMING OF BASIC DIAGNOSTIC PROCEDURE.**	Was the basic diagnostic procedure performed up to STEP 3?	Go to step **2**.	Perform the basic diagnostic procedure. <Ref. to LAN(HEV)(diag)-2, Basic Diagnostic Procedure.>
2	**CHECK DTC.** Check the displayed DTC.	Is U1100 a current malfunction?	Go to step **3**.	Go to step **6**.
3	**CHECK DTC.** Using the Subaru Select Monitor, read DTC of all the systems.	Is the engine PU-CAN data no-receive detected in several modules?	Replace the ECM. <Ref. to FU(H4DO(HEV))-85, Engine Control Module (ECM).>	Go to step **4**.
4	**REPLACE MODULE.** 1) Replace the ECM. <Ref. to FU(H4DO(HEV))-85, Engine Control Module (ECM).> 2) Read the DTC using Subaru Select Monitor.	Is U1100 a current malfunction?	Go to step **5**.	System is normal.
5	**CHECK MODULE.** 1) Reinstall the ECM. 2) Replace the module that the DTC has been detected. 3) Read the DTC using Subaru Select Monitor.	Is U1100 a current malfunction?	Replace the ECM. <Ref. to FU(H4DO(HEV))-85, Engine Control Module (ECM).>	System is normal.
6	**CHECK HARNESS.** 1) Shake the harness, and check for poor contact. 2) Read the DTC using Subaru Select Monitor.	Is U1100 a current malfunction?	Repair the poor contact of harness, or replace the harness.	Go to step **7**.
7	**CHECK CONNECTOR.** Check the connector used for high speed CAN for poor contact.	Is there poor contact of connector?	Repair the connector that has poor contact, or replace harness.	It is possible that temporary poor communication occurs. Delete the DTC.

AM:DTC U1101 LOST COMMUNICATION WITH TCM PU-CAN

DTC DETECTING CONDITION:
Not received data from TCM.
TROUBLE SYMPTOM:
Cooperation control of hybrid system does not operate properly.

	Step	Check	Yes	No
1	**CHECK PERFORMING OF BASIC DIAGNOSTIC PROCEDURE.**	Was the basic diagnostic procedure performed up to STEP 3?	Go to step **2**.	Perform the basic diagnostic procedure. <Ref. to LAN(HEV)(diag)-2, Basic Diagnostic Procedure.>
2	**CHECK DTC.** Check the displayed DTC.	Is U1101 a current malfunction?	Go to step **3**.	Go to step **6**.
3	**CHECK DTC.** Using the Subaru Select Monitor, read DTC of all the systems.	Is the transmission PU-CAN data no-receive detected in several modules?	Replace the TCM. <Ref. to CVT(TH58A)-156, Transmission Control Module (TCM).>	Go to step **4**.
4	**REPLACE MODULE.** 1) Replace the TCM. <Ref. to CVT(TH58A)-156, Transmission Control Module (TCM).> 2) Read the DTC using Subaru Select Monitor.	Is U1101 a current malfunction?	Go to step **5**.	System is normal.
5	**CHECK MODULE.** 1) Reinstall the TCM. 2) Replace the module that the DTC has been detected. 3) Read the DTC using Subaru Select Monitor.	Is U1101 a current malfunction?	Replace the TCM. <Ref. to CVT(TH58A)-156, Transmission Control Module (TCM).>	System is normal.
6	**CHECK HARNESS.** 1) Shake the harness, and check for poor contact. 2) Read the DTC using Subaru Select Monitor.	Is U1101 a current malfunction?	Repair the poor contact of harness, or replace the harness.	Go to step **7**.
7	**CHECK CONNECTOR.** Check the connector used for high speed CAN for poor contact.	Is there poor contact of connector?	Repair the connector that has poor contact, or replace harness.	It is possible that temporary poor communication occurs. Delete the DTC.

AN:DTC U1120 LOST COMMUNICATION WITH AUTOSTART STOP CONTROL MODULE

DTC DETECTING CONDITION:
No data is received from hybrid powertrain CM.
TROUBLE SYMPTOM:
Cooperation control of hybrid system does not operate properly.

	Step	Check	Yes	No
1	**CHECK PERFORMING OF BASIC DIAGNOSTIC PROCEDURE.**	Was the basic diagnostic procedure performed up to STEP 3?	Go to step **2**.	Perform the basic diagnostic procedure. <Ref. to LAN(HEV)(diag)-2, Basic Diagnostic Procedure.>
2	**CHECK DTC.** Check the displayed DTC.	Is U1120 a current malfunction?	Go to step **3**.	Go to step **6**.
3	**CHECK DTC.** Using the Subaru Select Monitor, read DTC of all the systems.	Is the hybrid data no-receive or Auto Start Stop data no-receive detected in several modules?	Replace the hybrid powertrain CM. <Ref. to HEV-37, Hybrid Powertrain Control Module.>	Go to step **4**.
4	**REPLACE MODULE.** 1) Replace the hybrid powertrain CM. <Ref. to HEV-37, Hybrid Powertrain Control Module.> 2) Read the DTC using Subaru Select Monitor.	Is U1120 a current malfunction?	Go to step **5**.	System is normal.
5	**CHECK MODULE.** 1) Reinstall the hybrid powertrain CM. 2) Replace the module that the DTC has been detected. 3) Read the DTC using Subaru Select Monitor.	Is U1120 a current malfunction?	Replace the hybrid powertrain CM. <Ref. to HEV-37, Hybrid Powertrain Control Module.>	System is normal.
6	**CHECK HARNESS.** 1) Shake the harness, and check for poor contact. 2) Read the DTC using Subaru Select Monitor.	Is U1120 a current malfunction?	Repair the poor contact of harness, or replace the harness.	Go to step **7**.
7	**CHECK CONNECTOR.** Check the connector used for high speed CAN for poor contact.	Is there poor contact of connector?	Repair the connector that has poor contact, or replace harness.	It is possible that temporary poor communication occurs. Delete the DTC.

AO:DTC U1290 LOST COMMUNICATION WITH HYBRID POWERTRAIN CONTROL MODULE HEV-CAN

DTC DETECTING CONDITION:
No data is received from hybrid powertrain CM.
TROUBLE SYMPTOM:
Cooperation control of hybrid system does not operate properly.

	Step	Check	Yes	No
1	**CHECK PERFORMING OF BASIC DIAGNOSTIC PROCEDURE.**	Was the basic diagnostic procedure performed up to STEP 3?	Go to step **2**.	Perform the basic diagnostic procedure. <Ref. to LAN(HEV)(diag)-2, Basic Diagnostic Procedure.>
2	**CHECK DTC.** Check the displayed DTC.	Is U1290 a current malfunction?	Go to step **3**.	Go to step **6**.
3	**CHECK DTC.** Using the Subaru Select Monitor, read DTC of all the systems.	Is the hybrid powertrain control module HEV-CAN data no-receive detected in several modules?	Replace the hybrid powertrain CM. <Ref. to HEV-37, Hybrid Powertrain Control Module.>	Go to step **4**.
4	**REPLACE MODULE.** 1) Replace the hybrid powertrain CM. <Ref. to HEV-37, Hybrid Powertrain Control Module.> 2) Read the DTC using Subaru Select Monitor.	Is U1290 a current malfunction?	Go to step **5**.	System is normal.
5	**CHECK MODULE.** 1) Reinstall the hybrid powertrain CM. 2) Replace the module that the DTC has been detected. 3) Read the DTC using Subaru Select Monitor.	Is U1290 a current malfunction?	Replace the hybrid powertrain CM. <Ref. to HEV-37, Hybrid Powertrain Control Module.>	System is normal.
6	**CHECK HARNESS.** 1) Shake the harness, and check for poor contact. 2) Read the DTC using Subaru Select Monitor.	Is U1290 a current malfunction?	Repair the poor contact of harness, or replace the harness.	Go to step **7**.
7	**CHECK CONNECTOR.** Check the connector used for high speed CAN for poor contact.	Is there poor contact of connector?	Repair the connector that has poor contact, or replace harness.	It is possible that temporary poor communication occurs. Delete the DTC.

AP:DTC U1293 LOST COMMUNICATION WITH HYBRID POWERTRAIN CONTROL MODULE PU-CAN

DTC DETECTING CONDITION:
No data is received from hybrid powertrain CM.
TROUBLE SYMPTOM:
Cooperation control of hybrid system does not operate properly.

	Step	Check	Yes	No
1	**CHECK PERFORMING OF BASIC DIAGNOSTIC PROCEDURE.**	Was the basic diagnostic procedure performed up to STEP 3?	Go to step **2**.	Perform the basic diagnostic procedure. <Ref. to LAN(HEV)(diag)-2, Basic Diagnostic Procedure.>
2	**CHECK DTC.** Check the displayed DTC.	Is U1293 a current malfunction?	Go to step **3**.	Go to step **6**.
3	**CHECK DTC.** Using the Subaru Select Monitor, read DTC of all the systems.	Is the hybrid powertrain control module PU-CAN data no-receive detected in several modules?	Replace the hybrid powertrain CM. <Ref. to HEV-37, Hybrid Powertrain Control Module.>	Go to step **4**.
4	**REPLACE MODULE.** 1) Replace the hybrid powertrain CM. <Ref. to HEV-37, Hybrid Powertrain Control Module.> 2) Read the DTC using Subaru Select Monitor.	Is U1293 a current malfunction?	Go to step **5**.	System is normal.
5	**CHECK MODULE.** 1) Reinstall the hybrid powertrain CM. 2) Replace the module that the DTC has been detected. 3) Read the DTC using Subaru Select Monitor.	Is U1293 a current malfunction?	Replace the hybrid powertrain CM. <Ref. to HEV-37, Hybrid Powertrain Control Module.>	System is normal.
6	**CHECK HARNESS.** 1) Shake the harness, and check for poor contact. 2) Read the DTC using Subaru Select Monitor.	Is U1293 a current malfunction?	Repair the poor contact of harness, or replace the harness.	Go to step **7**.
7	**CHECK CONNECTOR.** Check the connector used for high speed CAN for poor contact.	Is there poor contact of connector?	Repair the connector that has poor contact, or replace harness.	It is possible that temporary poor communication occurs. Delete the DTC.

12.General Diagnostic Table

A: INSPECTION

Item	Operation	Specifications		Note
		YES	NO	
Diagnostic code	DTC is displayed when inspecting all DTCs.	Perform the diagnosis according to DTC.	System is normal.	—
Speedometer	Faster vehicle speed than the actual speed is displayed.	VDC CM data may not be received.	System is normal.	Also, check vehicle speed pulse circuit.
Fuel gauge	Fuel is present, but displayed less than actual amount.	Communication error may be present.	System is normal.	Also, check the fuel gauge.
Fuel level warning light	Fuel is present, but the light illuminates.	Communication error may be present.	System is normal.	Also, check the fuel gauge.
Engine coolant temperature light	Engine coolant temperature light blinks in red and blue alternately.	Communication error may be present.	System is normal.	Check the engine coolant light related items.
[S], [I] or [S#] indicator	Blinking.	Communication error may be present.	System is normal.	Check the intelligent switch.
VDC indicator	Illuminating.	Communication error may be present.	System is normal.	Check that VDC is not operating.
VDC OFF indicator	Illuminating.	Communication error may be present.	System is normal.	Check that VDC is not OFF.
Brake warning, etc.	Illuminating.	Brake fluid may be low in amount, or communication error may be present.	System is normal.	Check brake related items.
Shift position	Not displayed.	Communication error may be present.	System is normal.	Also, check AT system.
AT temperature light	Blinking.	Communication error may be present.	System is normal.	Also, check AT system.
Door indicator	Not displayed when the door is opened. Otherwise, not turn off when the door is closed.	Communication error may be present.	System is normal.	Check the door switch.
Clearance indicator	Not illuminating.	Communication error may be present.	System is normal.	Check the combination switch.
Hi beam indicator	Not illuminating.	Communication error may be present.	System is normal.	Check the combination switch.
Front fog indicator	Not illuminating.	Communication error may be present.	System is normal.	Check the combination switch.
Illumination	Illuminating at the maximum brightness.	Communication error may be present.	System is normal.	Also, check the illumination switch.
Cruise control indicator	Not illuminating.	Communication error may be present.	System is normal.	Check the cruise control system.
AWD indicator	Not illuminating.	Communication error may be present.	System is normal.	Check TCM.
Hill hold indicator	Not illuminating.	Communication error may be present.	System is normal.	Also, check VDC CM.

HYBRID ELECTRIC VEHICLE

HEV

		Page
1.	General Description	2
2.	Relay and Fuse	12
3.	Hybrid Electric Vehicle System	14
4.	Service Plug	15
5.	High Voltage Battery	17
6.	Battery Energy Control Module	26
7.	Drive Motor Inverter Current Sensor	27
8.	Noise Filter	31
9.	Hybrid Powertrain Control Module	37
10.	DC/DC Converter	38
11.	Inverter	42
12.	Power Cable	51
13.	High Voltage Battery Cooling System	59
14.	Drive Motor Control Module	73
15.	Drive Motor Assembly	75
16.	Active Grille Shutter	76
17.	Diagnostics with Phenomenon	78

1. General Description

A: SPECIFICATION

High voltage battery	Type	Ni - MH (nickel metal hydride) battery
	Total voltage	100.8 V
	Rated capacity	5.5 Ah
	Maximum output	13.5 kW
Drive motor inverter	Type	Pulse width modulation
	Maximum output	15 kW
DC/DC converter	Type	Pulse width modulation
	Rated output	12 V - 130 A
Cooling fan assembly	Type	Plastic flange integrated brushless motor
	Rated voltage	12 V
	Maximum output	72 W
	Fan diameter (diameter × width)	130 × 43.7 mm (5.12 × 1.72 in)

B: LOCATION

For installation location of the hybrid system electrical components, refer to “Electrical Component Location” in the “HYBRID ELECTRIC VEHICLE (DIAGNOSTICS)” section. <Ref. to HEV(diag)-9, Electrical Component Location.>

C: COMPONENT

1. HIGH VOLTAGE BATTERY

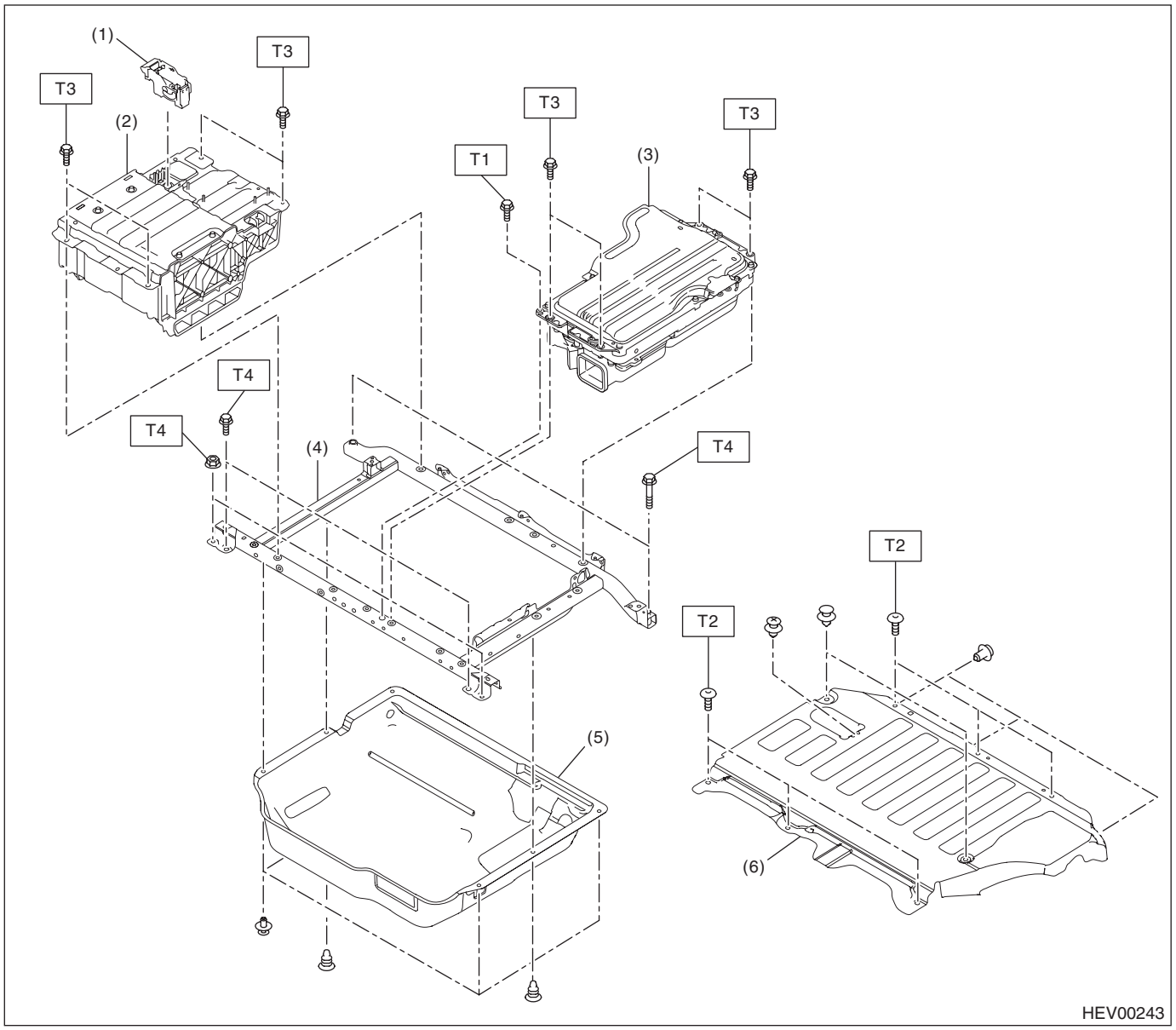

(1)	Service disconnect plug	(4)	High voltage battery frame ASSY	***Tightening torque: N·m (kgf-m, ft-lb)***
(2)	High voltage battery (including battery energy control module (BECM))	(5)	Cover - battery LWR	***T1: 6.5 (0.7, 4.8)***
(3)	Inverter ASSY	(6)	Battery cover	***T2: 7.5 (0.8, 5.5)***
				T3: 22 (2.2, 16.2)
				T4: 24.5 (2.5, 18.1)

2. INVERTER ASSEMBLY

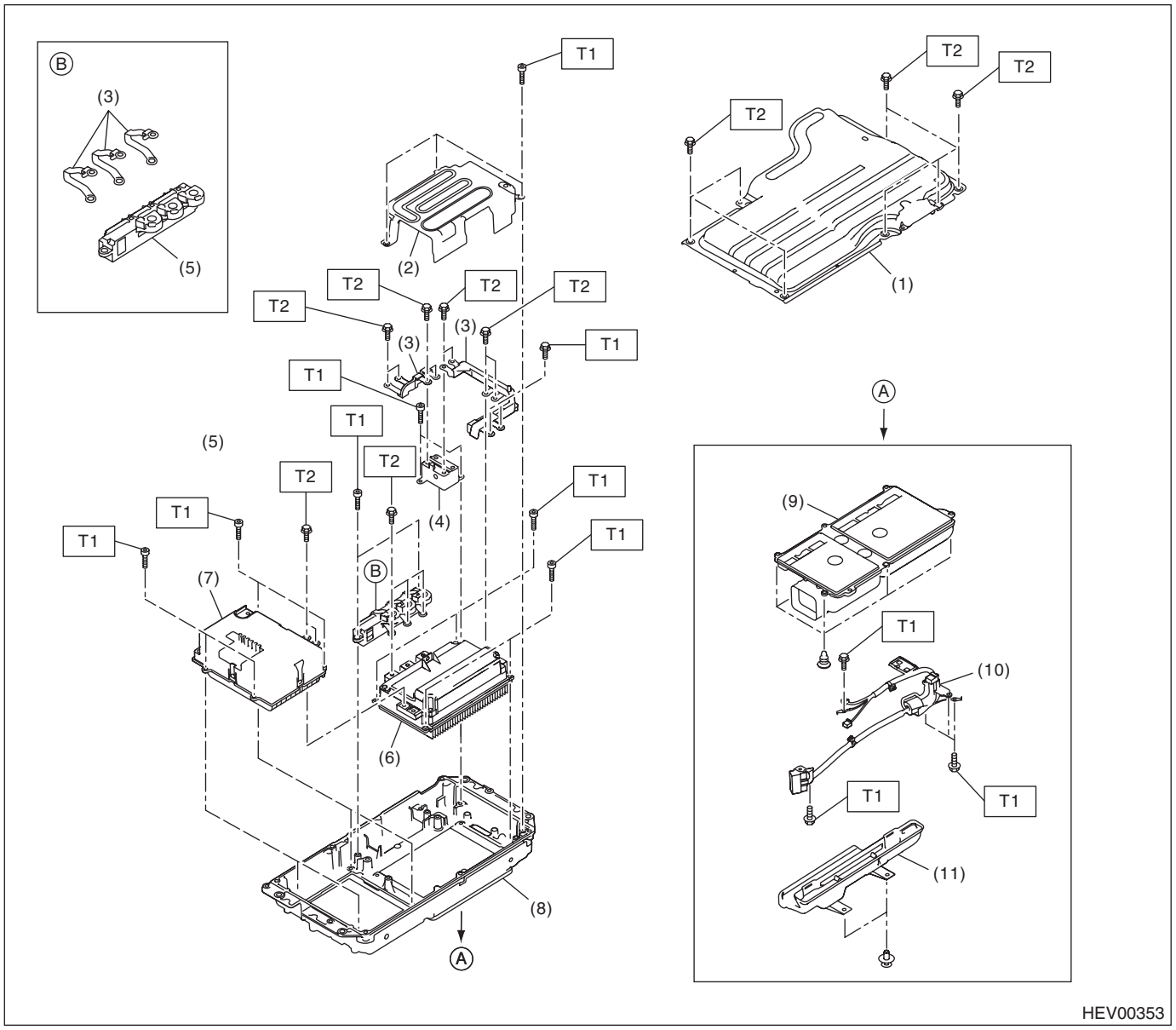

HEV00353

(1) Inverter cover
(2) Inverter shield
(3) Bus bar
(4) Electric noise filter
(5) Drive motor inverter amperage sensor
(6) Drive motor inverter
(7) DC/DC converter
(8) Inverter frame ASSY
(9) Duct inverter OUT
(10) Inverter harness
(11) Duct inverter IN

Tightening torque: N·m (kgf-m, ft-lb)
T1: 6.5 (0.7, 4.8)
T2: 7.5 (0.8, 5.5)

3. ELECTRIC OIL PUMP INVERTER

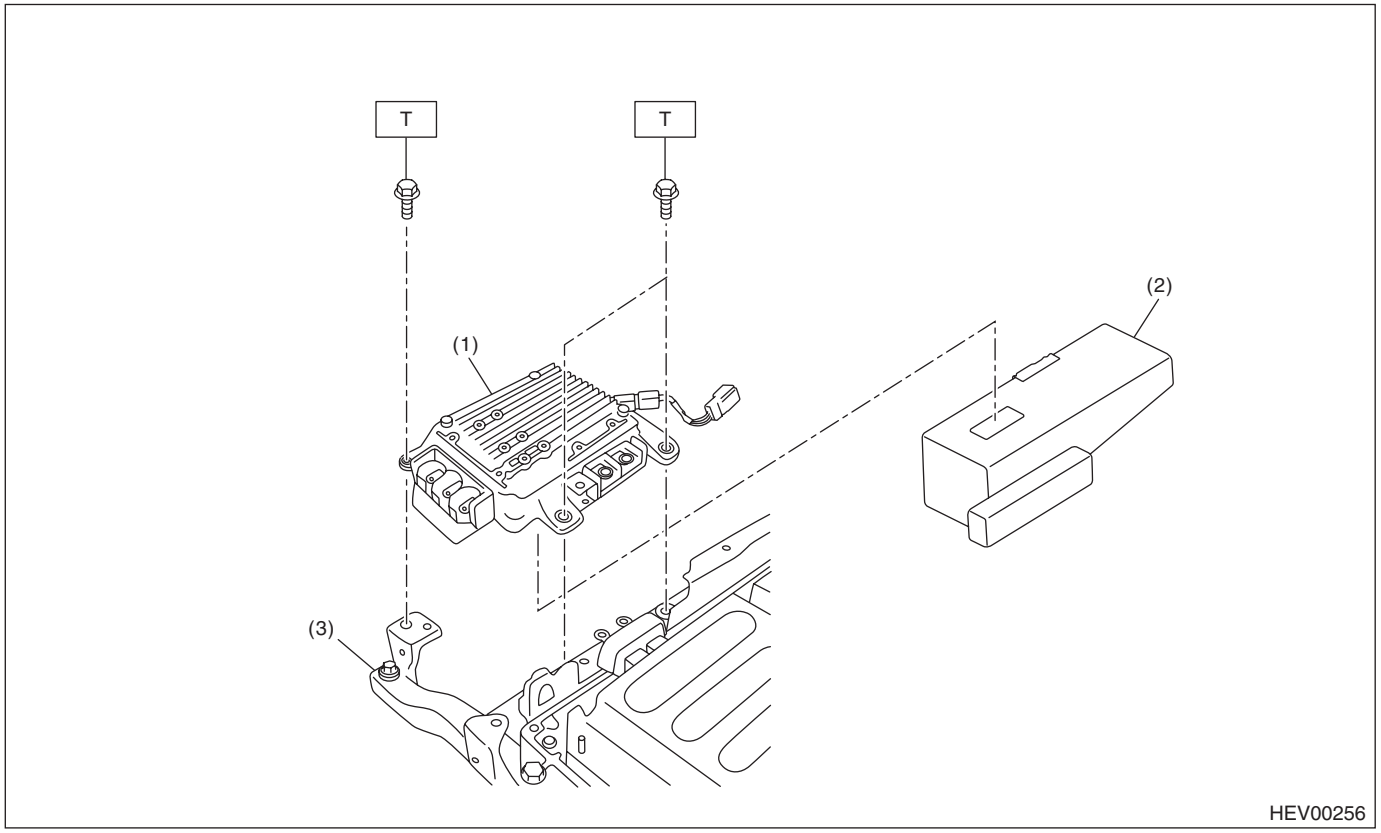

(1) Electric oil pump inverter
(2) Inverter spacer
(3) High voltage battery frame ASSY

Tightening torque: N·m (kgf-m, ft-lb)
T: 22 (2.2, 16.2)

4. HIGH VOLTAGE BATTERY COOLING SYSTEM

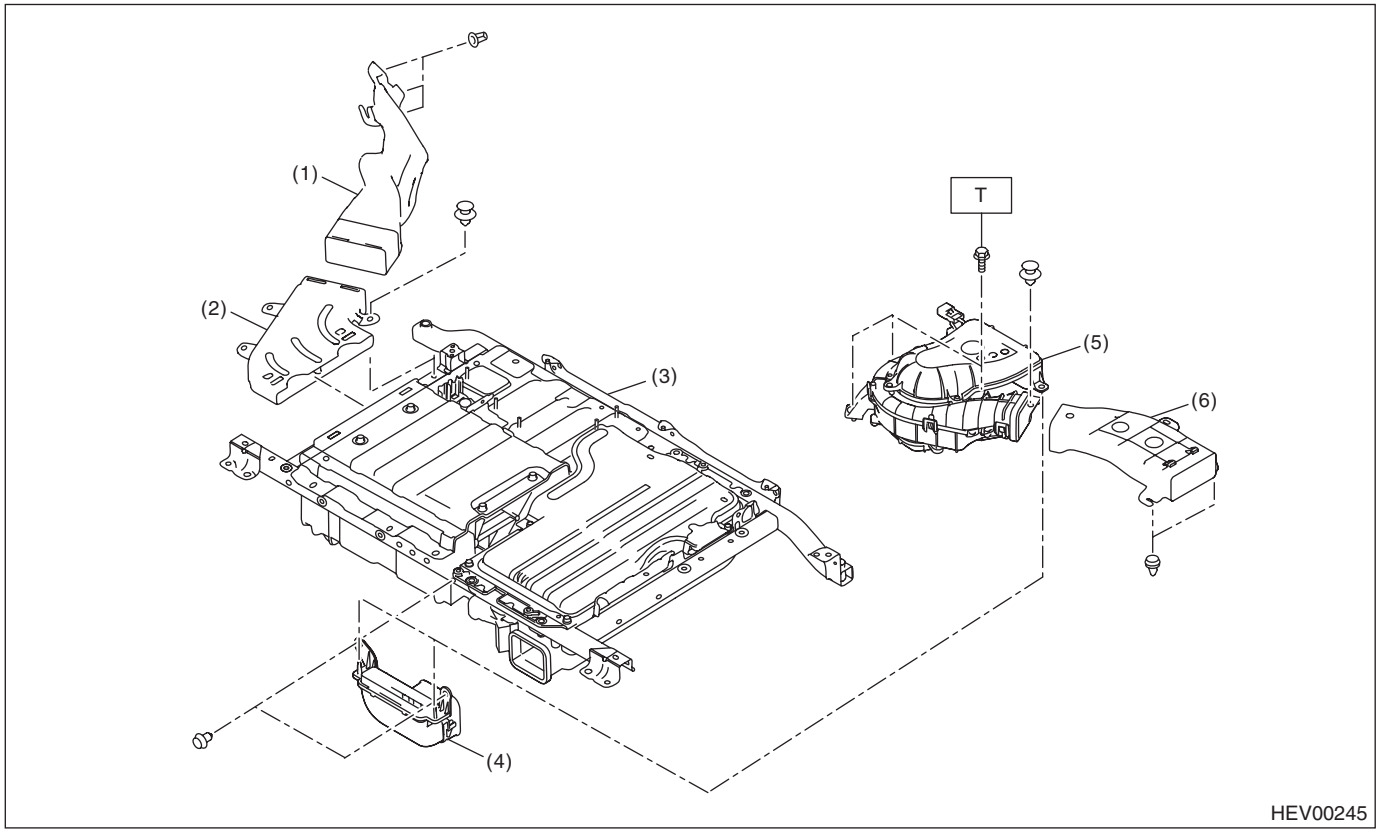

(1) Cooling duct front (front)
(2) Cooling duct front (rear)
(3) Hybrid system SUB-ASSY
(4) Cooling fan duct
(5) Cooling fan ASSY
(6) Cooling duct rear

Tightening torque: N·m (kgf-m, ft-lb)
T: 7.5 (0.8, 5.5)

5. POWER CABLE

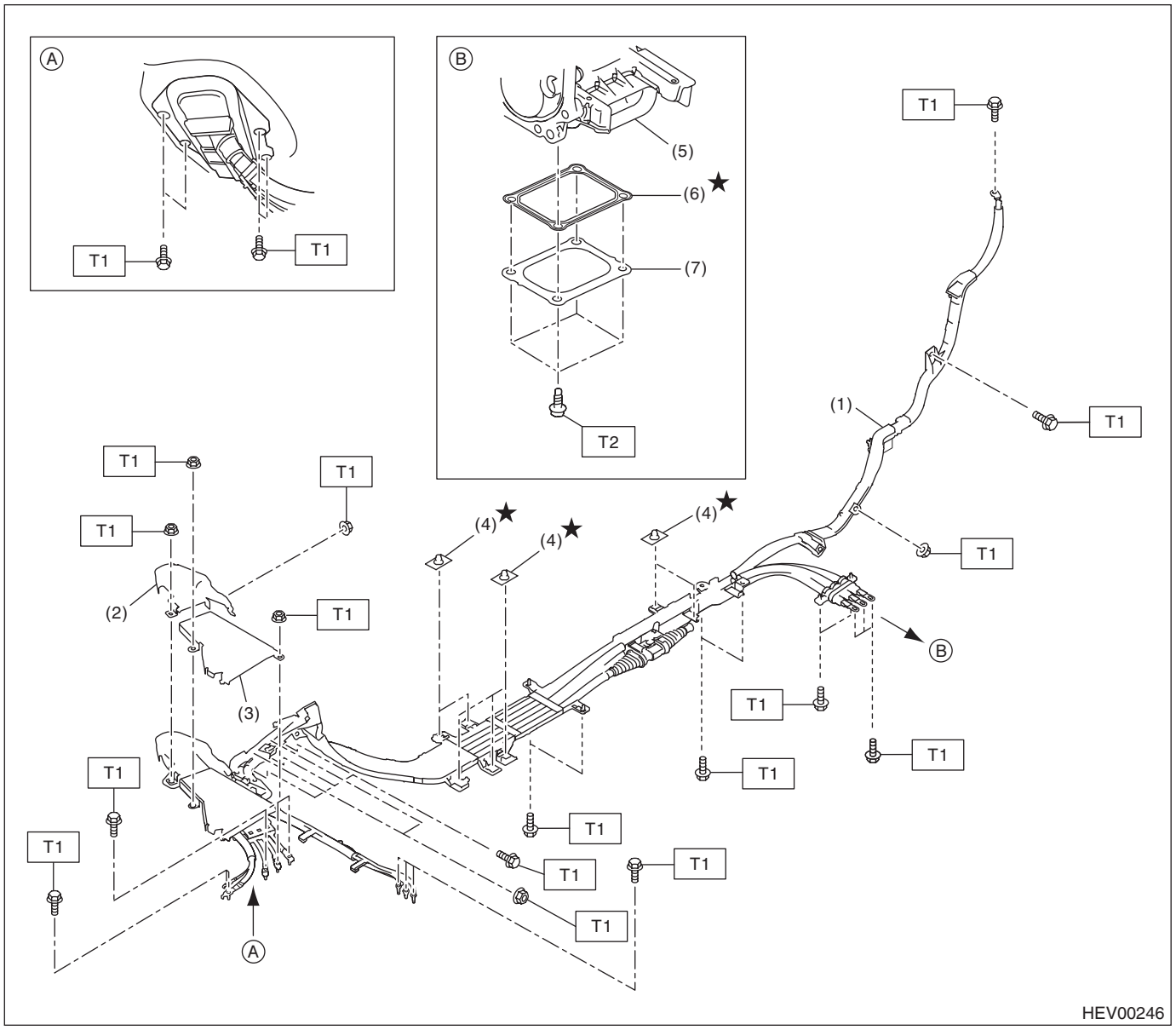

(1) Power cable
(2) Cover - shield seat
(3) Cover - shield battery
(4) Clip
(5) Drive motor case ASSY
(6) Gasket
(7) Power connect cover

Tightening torque: N·m (kgf-m, ft-lb)
T1: 7.5 (0.8, 5.5)
T2: 25 (2.5, 18.4)

6. DRIVE MOTOR CONTROL MODULE & RELAY

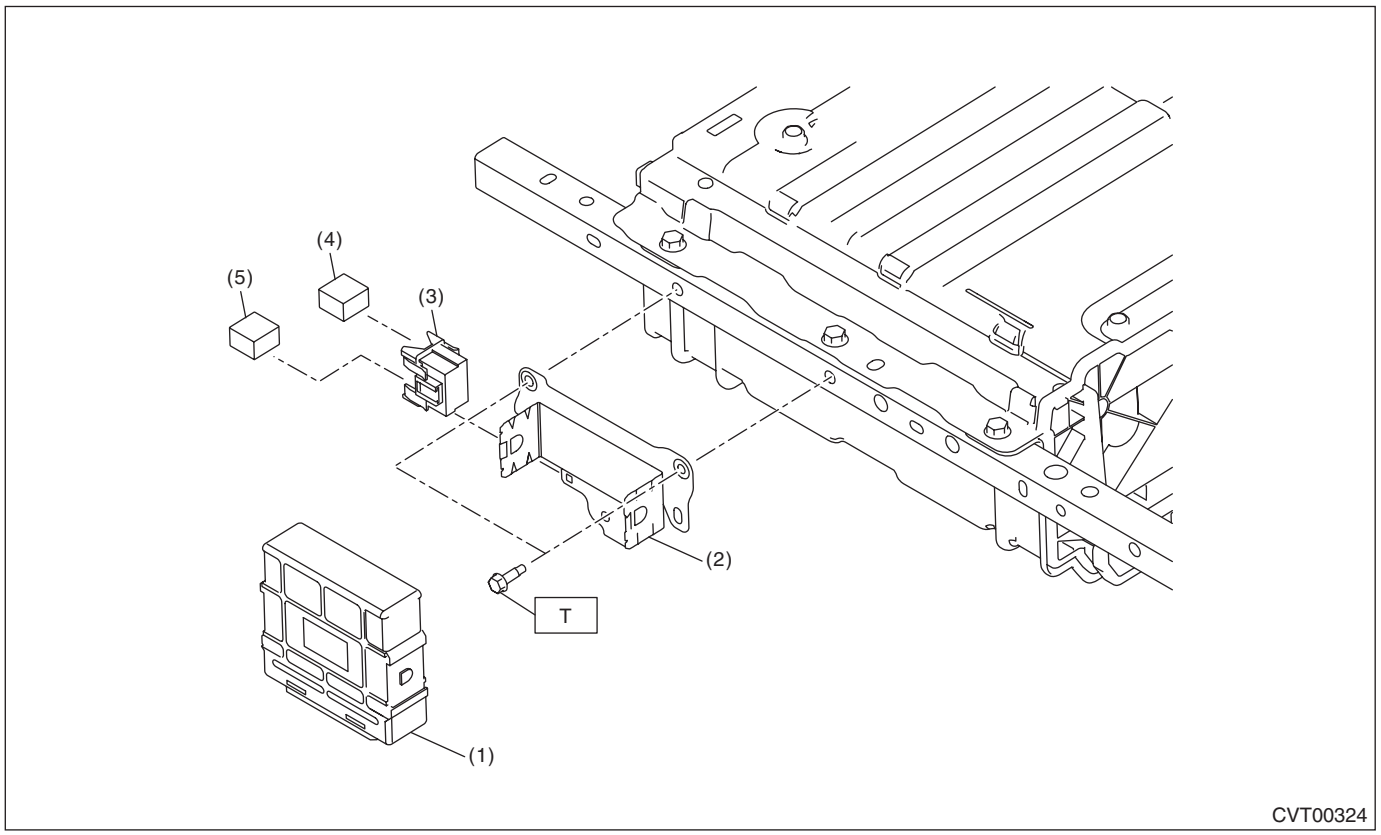

(1) Drive motor control module (DMCM)
(2) DMCM bracket
(3) Relay holder
(4) DMCM power relay
(5) Cooling fan / drive motor inverter power supply relay

Tightening torque: N·m (kgf-m, ft-lb)

T: 6.5 (0.7, 4.8)

7. HYBRID POWERTRAIN CONTROL MODULE

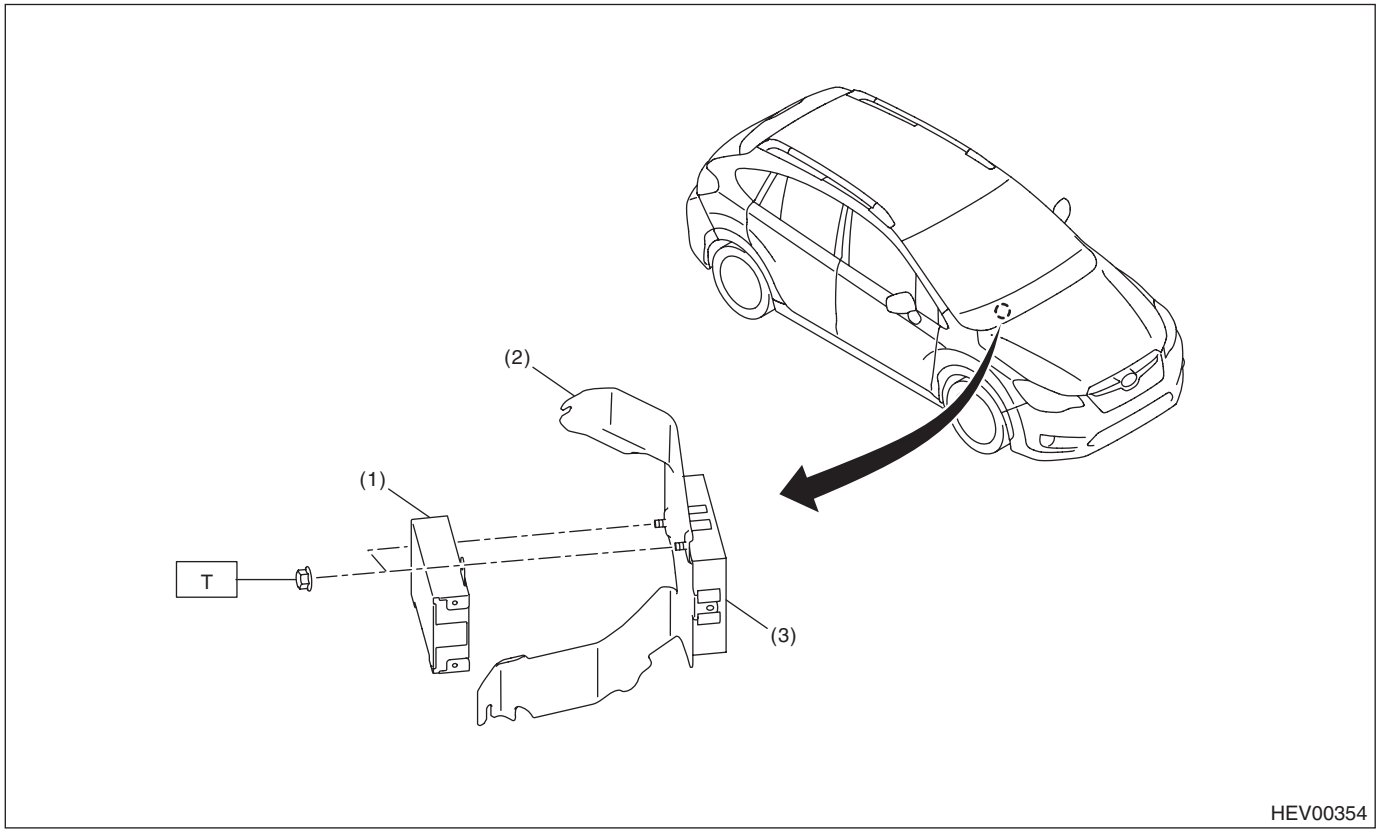

(1) Hybrid powertrain control module (HPCM)
(2) Bracket
(3) Engine control module (ECM)

Tightening torque: N·m (kgf-m, ft-lb)

T: 7.5 (0.8, 5.5)

8. ACTIVE GRILLE SHUTTER

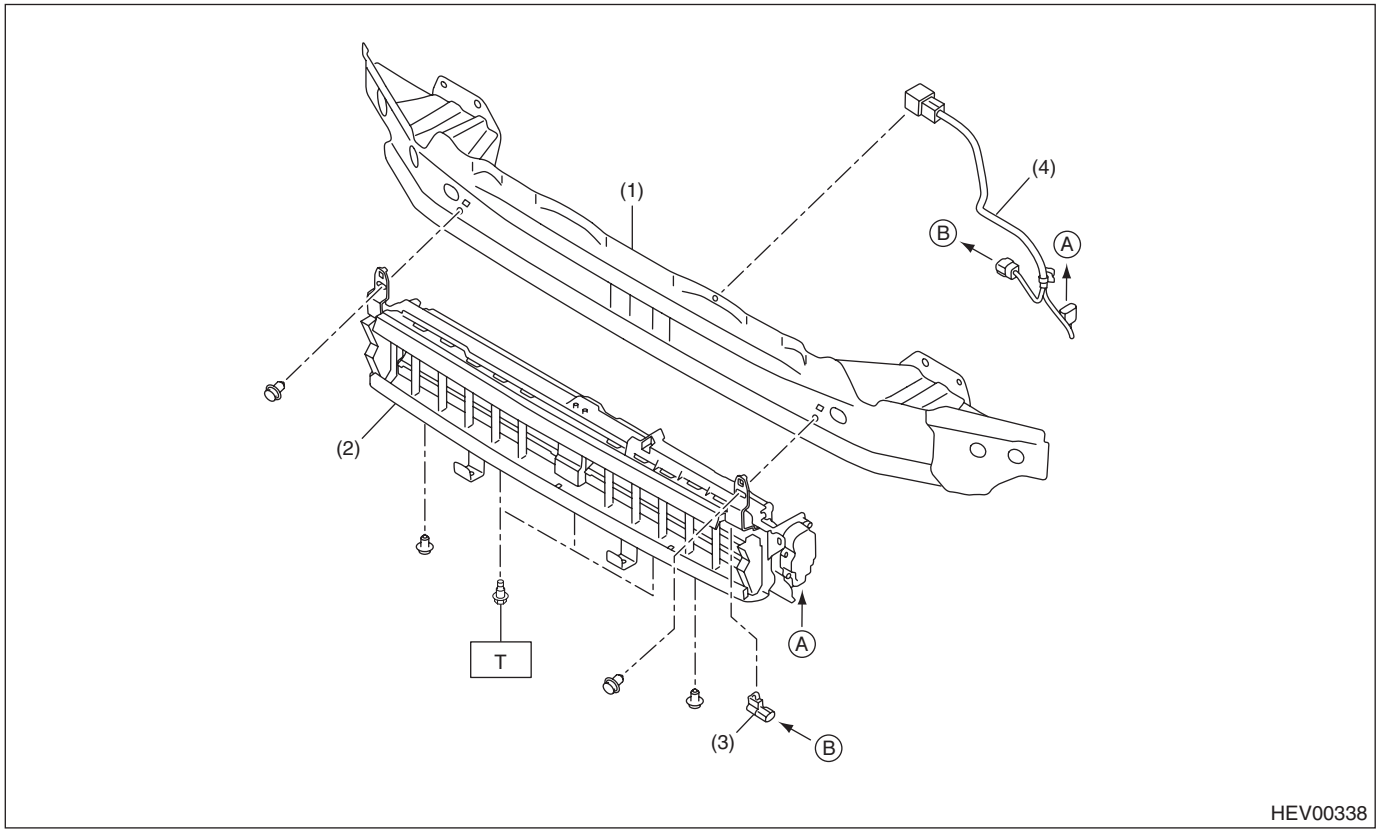

(1)	Bumper beam COMPL - front	(3)	Ambient sensor	***Tightening torque: N·m (kgf-m, ft-lb)***
(2)	Active grille shutter (ACTGS)	(4)	Harness - ACTGS	***T: 7.5 (0.8, 5.5)***

D: CAUTION

• The hybrid system includes a high voltage circuit. Mishandling could cause accidents such as electric shock or leak. Always check "CAUTION (HYBRID SYSTEM)" and perform the proper operation. <Ref. to PC-6, CAUTION (HYBRID SYSTEM), Precaution.>

• When replacing the parts provided with memory functions, record the memory contents before disconnecting the battery ground cable. Otherwise, the memory is cleared.
• Reassemble the parts in the reverse order of disassembly procedure unless otherwise indicated.
• Connect the connectors securely during reassembly.
• After reassembly, make sure that the functional parts operate normally.

E: PREPARATION TOOL

1. SPECIAL TOOL

ILLUSTRATION	TOOL NUMBER	DESCRIPTION	REMARKS
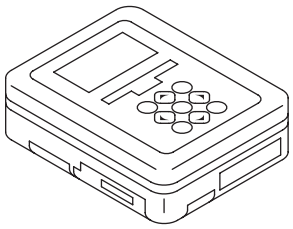 ST1B022XU0	1B022XU0	SUBARU SELECT MONITOR III KIT	Used for troubleshooting the electrical system.

2. GENERAL TOOL

TOOL NAME	REMARKS
Personal Protective Equipment (PPE)	Used for removing and installing high voltage components.
Insulation multimeter	Used for measuring resistance and voltage of high voltage components.
Insulating tape	Used for power cable terminals and high voltage battery terminals.
TORX® bit T25 or T30	Used to remove and install the battery cover.
Circuit tester	Used for measuring resistance and voltage.

2. Relay and Fuse

A: LOCATION

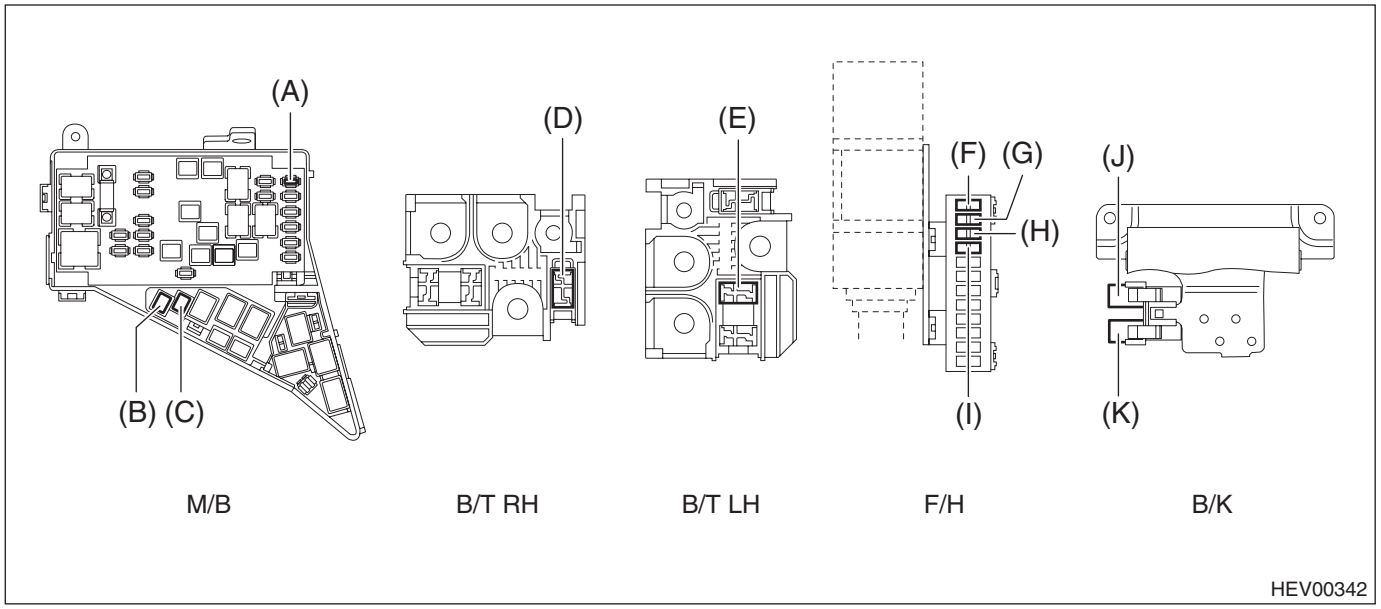

Main fuse box	Fuse 7.5 A (HPCM)	(A)
	SBF fuse 30A (cooling fan ASSY / drive motor inverter power supply relay)	(B)
	SBF fuse 30A (BECM / DMCM power supply relay / HPCM)	(C)
Battery terminal RH	SBF fuse 60A (12V engine restart battery sensor)	(D)
Battery terminal LH	SBF fuse 200A (DC/DC converter)	(E)
Fuse holder	Fuse 15A (cooling fan ASSY / drive motor inverter power supply relay)	(F)
	Fuse 7.5 A (HPCM)	(G)
	Fuse 7.5A (BECM)	(H)
	Fuse 15A (DMCM)	(I)
DMCM bracket	DMCM power relay	(J)
	Cooling fan ASSY / drive motor inverter power supply relay	(K)

NOTE:
For other related fuses, refer to the wiring diagram. <Ref. to WI(HEV)-139, WIRING DIAGRAM, Hybrid Electric Vehicle System.>

B: INSPECTION

1. CHECK FUSE

1) Remove the fuse and inspect visually.
2) If the fuse is blown out, replace the fuse.

NOTE:
If the fuse is blown again, check the system wiring harness.

2. CHECK RELAY

1) Check the resistance between relay terminals.

Terminal No.	Inspection conditions	Standard	Circuit
1 — 2	Always	1 MΩ or more	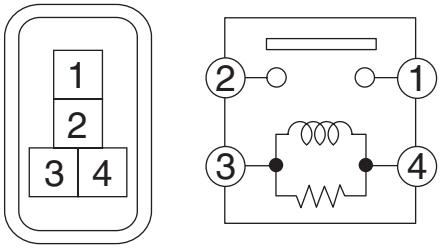 LI-01273
1 — 2	Apply 12 volt engine restart battery between terminals 4 and 3.	Less than 1 Ω	

2) Replace the relay if the inspection result is not within the standard value.

3. Hybrid Electric Vehicle System

A: WIRING DIAGRAM

Refer to “Hybrid Electric Vehicle System” in WI section. <Ref. to WI(HEV)-139, WIRING DIAGRAM, Hybrid Electric Vehicle System.>

B: INSPECTION

Refer to “Basic Diagnostic Procedure” of “HYBRID ELECTRIC VEHICLE (DIAGNOSTICS)” section. <Ref. to HEV(diag)-2, Basic Diagnostic Procedure.>

C: NOTE

For procedure of each component in the hybrid system, refer to the respective sections.

- Service disconnect plug: <Ref. to HEV-15, Service Plug.>
- High voltage battery: <Ref. to HEV-17, High Voltage Battery.>
- Battery energy control module: <Ref. to HEV-26, Battery Energy Control Module.>
- Drive motor inverter amperage sensor: <Ref. to HEV-27, Drive Motor Inverter Current Sensor.>
- Electric noise filter: <Ref. to HEV-31, Noise Filter.>
- Hybrid powertrain control module: <Ref. to HEV-37, Hybrid Powertrain Control Module.>
- DC/DC converter: <Ref. to HEV-38, DC/DC Converter.>
- Inverter: <Ref. to HEV-42, Inverter.>
- Power cable: <Ref. to HEV-51, Power Cable.>
- High voltage battery cooling system: <Ref. to HEV-59, High Voltage Battery Cooling System.>
- Drive motor control module: <Ref. to HEV-73, Drive Motor Control Module.>
- Drive motor assembly: <Ref. to HEV-75, Drive Motor Assembly.>

4. Service Plug

A: REMOVAL

WARNING:
The hybrid system includes a high voltage circuit. Mishandling could cause accidents such as electric shock or leak. Always check "CAUTION (HYBRID SYSTEM)" and perform the proper operation. <Ref. to PC-6, CAUTION (HYBRID SYSTEM), Precaution.>

CAUTION:
Take the ignition key or access key out of the vehicle to avoid malfunctions of hybrid system.
1) Disconnect the ground cable from battery. <Ref. to NT-5, BATTERY, NOTE, Note.>

NOTE:
For the 12 volt engine restart battery, disconnect the ground terminal from 12V engine restart battery sensor.
2) Remove the mat - rear floor CTR.
3) Remove the service disconnect plug.

WARNING:
• Carry the removed service disconnect plug in your pocket in order to prevent other engineers from accidentally installing the plug during work.
• After removal of the service disconnect plug, the condenser inside the inverter still have been charged to a high voltage. Wait for at least 10 minutes before handling the high voltage components, wiring, terminals or connectors.

(1) Pull up the lever until it touches the stopper.
(2) Lift the lever while pressing the tab (a).

NOTE:
The lever locks in the vertical position.

(3) Pull out the service disconnect plug from high voltage battery.

CAUTION:
After removing the service disconnect plug, cover the connection with a tape to protect from intrusion of foreign matter such as water or dust.

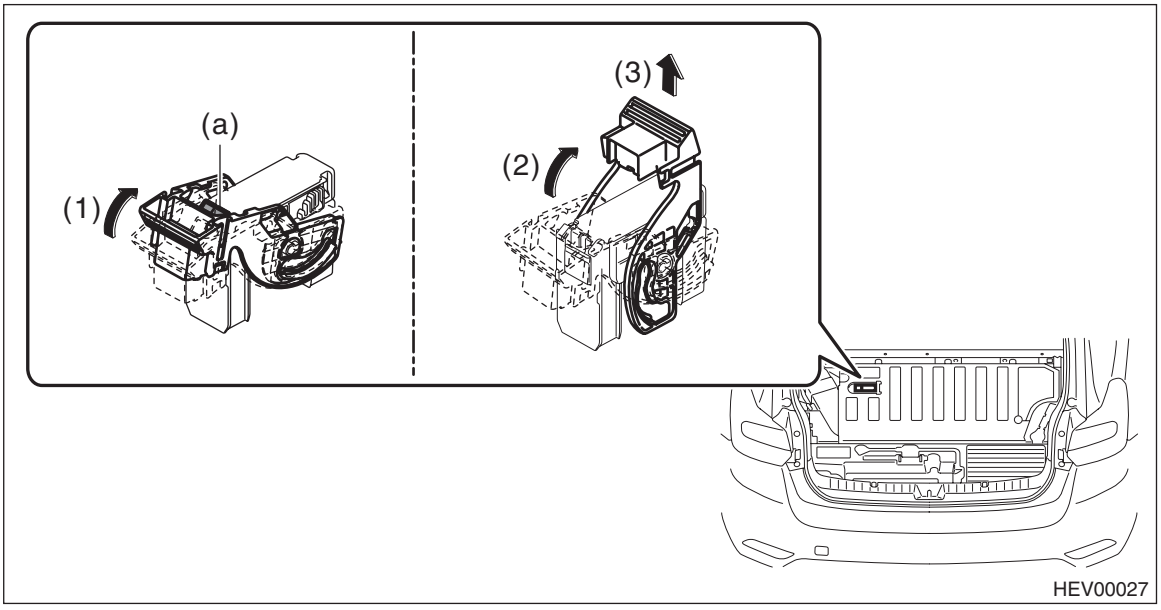

B: INSTALLATION

WARNING:
The hybrid system includes a high voltage circuit. Mishandling could cause accidents such as electric shock or leak. Always check "CAUTION (HYBRID SYSTEM)" and perform the proper operation. <Ref. to PC-6, CAUTION (HYBRID SYSTEM), Precaution.>

CAUTION:
- **Before attaching the service disconnect plug, make sure there are no tools left inside and also double check that the high voltage terminal is tight and the connectors are properly connected.**
- **Always replace faulty service disconnect plug with a new part.**
- **Always use the original service disconnect plug to install. Never use a service disconnect plug removed from another vehicle.**

Install each part in the reverse order of removal.

NOTE:
Move the lever to the horizontal position and push it until a click is heard and securely locked.

C: INSPECTION

UNIT INSPECTION

Preparation tool:
Circuit tester

1) Measure the resistance between service disconnect plug terminals.

Terminal No.	Inspection conditions	Standard	Connection diagram
1 — 2	Always	Less than 1 Ω	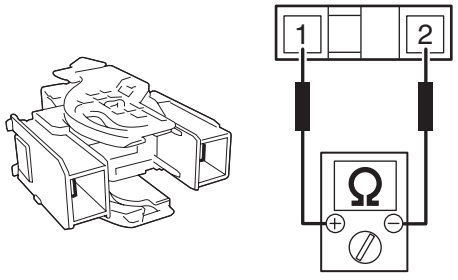 HEV00028

2) If the service result is different from the standard value, replace the service disconnect plug.

5. High Voltage Battery

A: REMOVAL

WARNING:
The hybrid system includes a high voltage circuit. Mishandling could cause accidents such as electric shock or leak. Always check "CAUTION (HYBRID SYSTEM)" and perform the proper operation. <Ref. to PC-6, CAUTION (HYBRID SYSTEM), Precaution.>

CAUTION:
• Return the replaced high voltage battery to a qualified collection service for safety reasons. If you use manufacturer's designated channel, the battery will be handled properly and safely by a qualified collection service.
• If high voltage battery is not properly processed and disposed of or left unprocessed, it could cause electrical shock accidents. Always have the high voltage battery collected by the manufacturer.
• Do not leave the removed high voltage batteries in a place where water may splash. It could cause fire accidents.

1) Remove the service disconnect plug. <Ref. to HEV-15, REMOVAL, Service Plug.>
2) Release the clips and claws, then detach the sub-trunk assembly and the spacer - rear floor side.

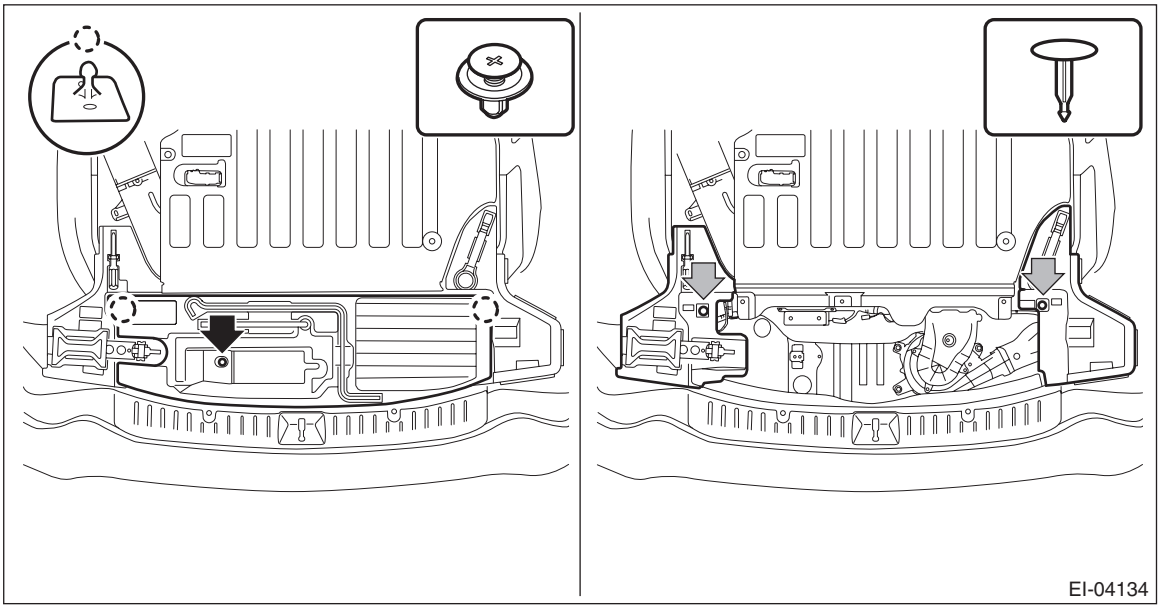

3) Remove the rear seat cushion and fold the backrest assemblies LH and RH. <Ref. to SE-23, REMOVAL, Rear Seat.>
4) Remove the spacer - rear floor front.
   (1) Release the clips, and fold back the bottom of the cover COMPL - rear backrest LH and RH of the rear seat back.

(2) Release the clips and claws, then detach the spacer - rear floor front.

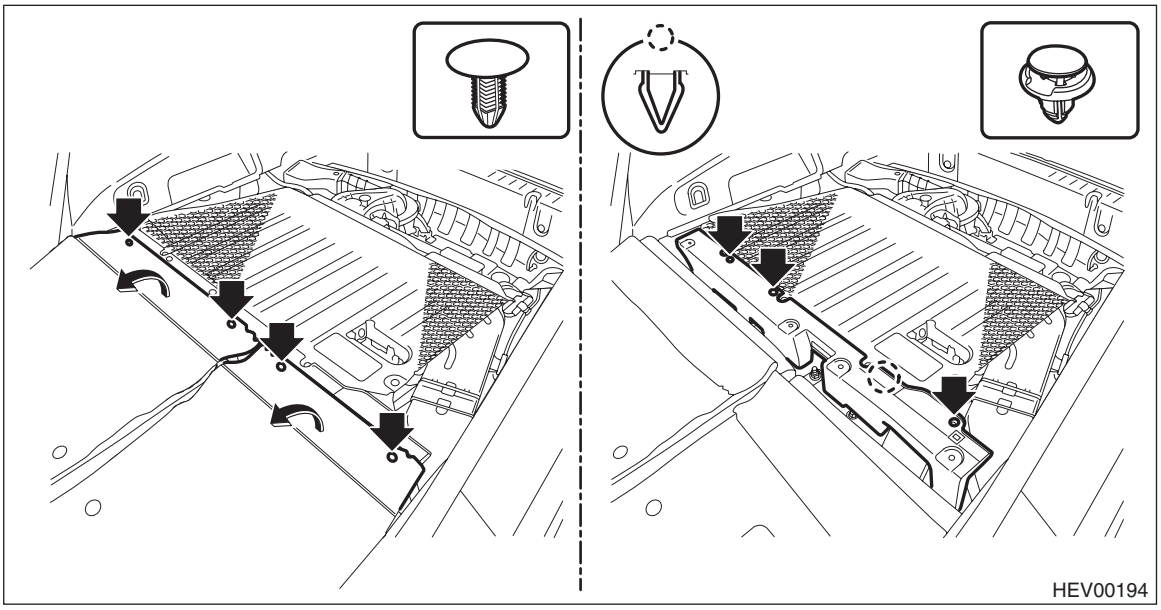

5) Remove the TORX® bolts, release the clips, and then remove the battery cover.

Preparation tool:
TORX® T25 or T30

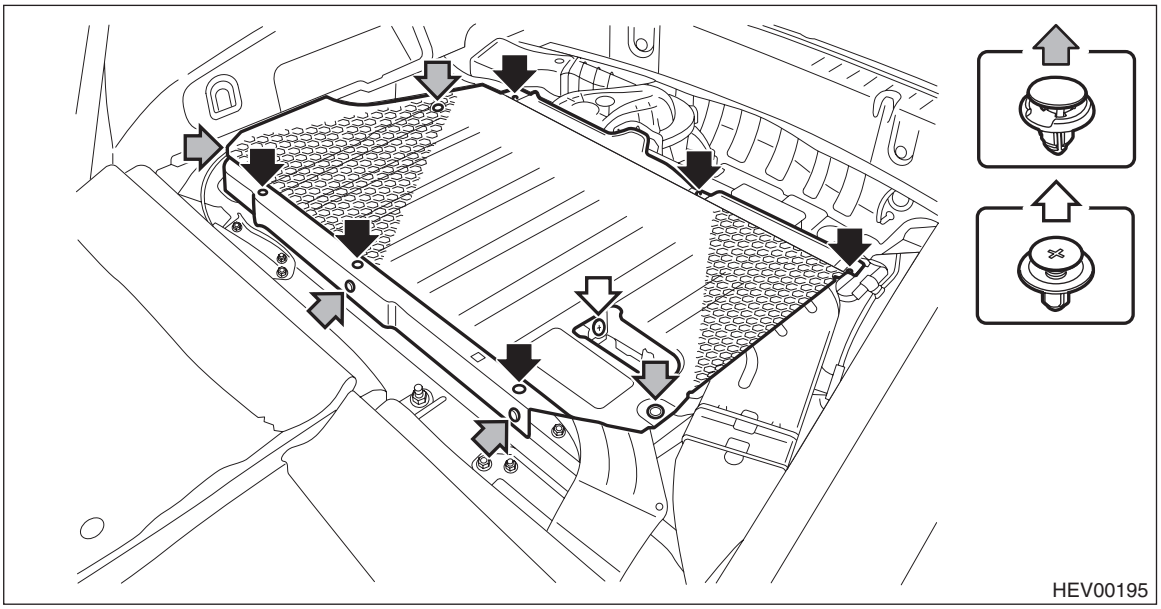

6) Remove the inverter cover.
   (1) Remove the bolts and ground terminal.
   (2) Release the cable clips, and remove the inverter cover.

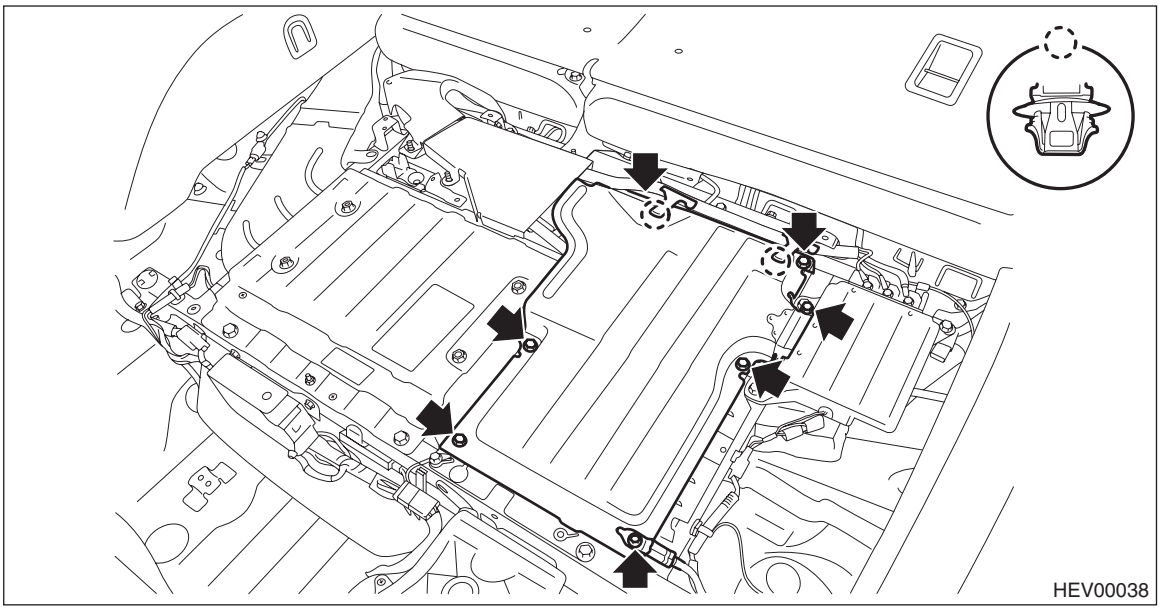

7) Perform zero-voltage test.
   (1) Measure the voltage of the high voltage DC line at the high voltage battery side of the electric noise filter.

Preparation tool:
Insulation multimeter

Standard: 0 V

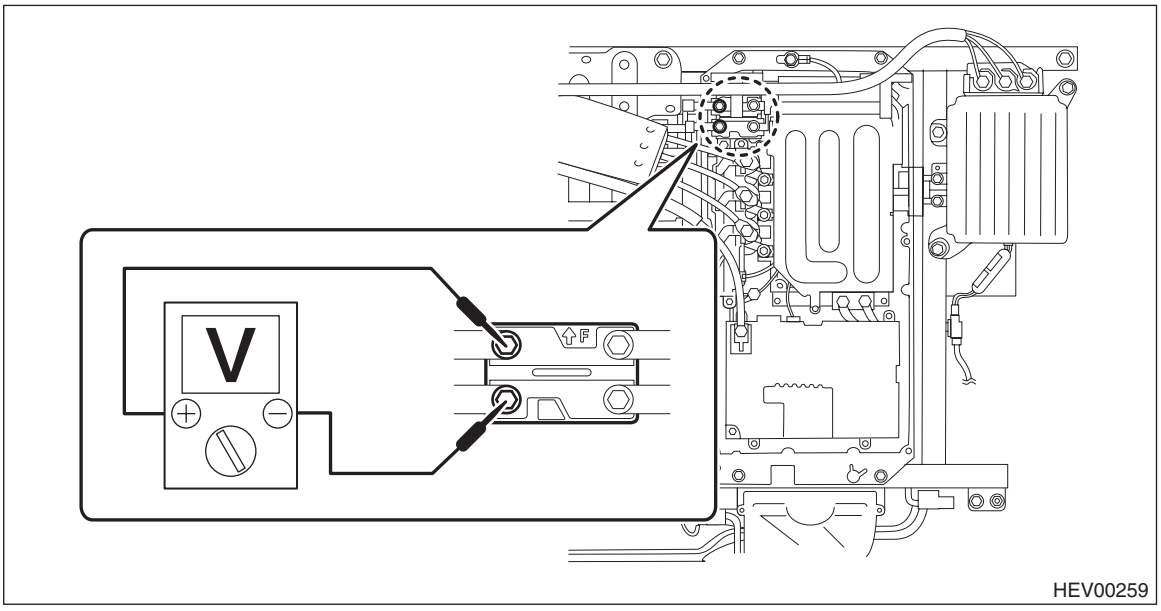

8) Remove the nut and remove the cover - shield battery and the cover - shield seat.

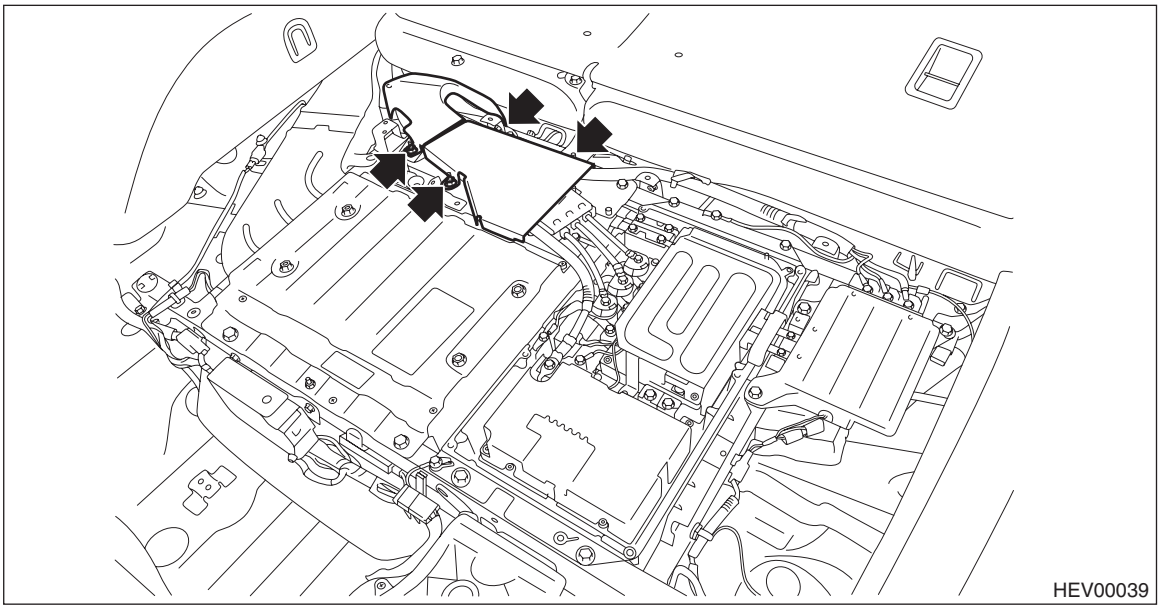

9) Remove the bolts and nuts and disconnect the ground terminal and the power cable.

CAUTION:
- **Be careful not to use excessive force when disconnecting the power cable to avoid any damage.**
- **Always wrap the disconnected power cable terminals with insulating tape.**

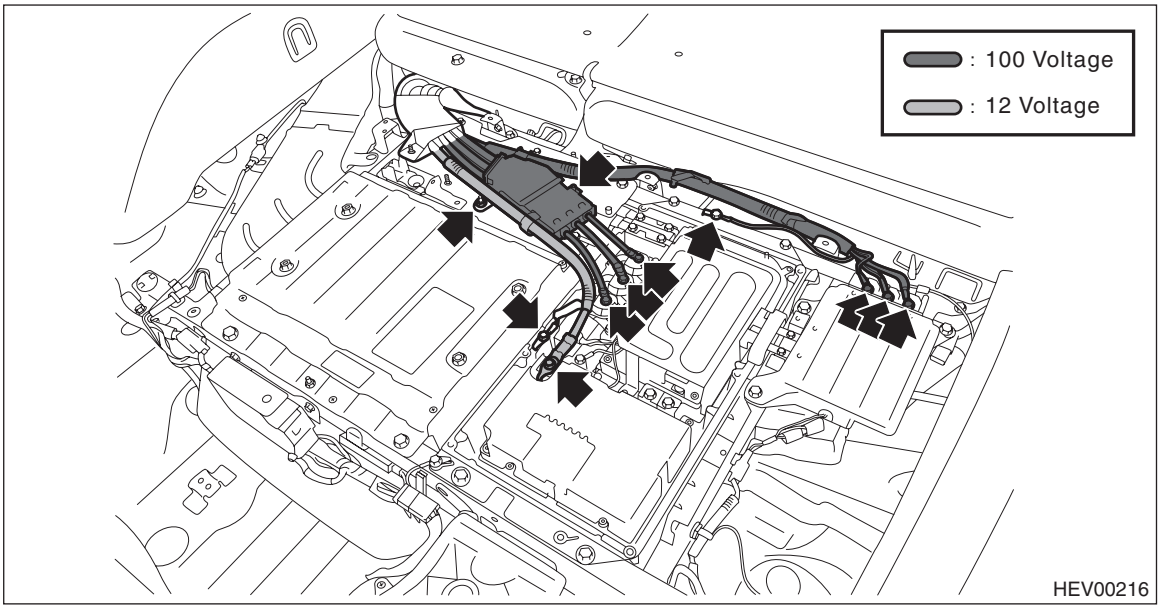

10) Remove the cooling duct front (rear). <Ref. to HEV-61, COOLING DUCT FRONT (REAR), REMOVAL, High Voltage Battery Cooling System.>
11) Remove the cooling fan assembly. <Ref. to HEV-69, COOLING FAN ASSEMBLY, REMOVAL, High Voltage Battery Cooling System.>

12) Remove the inverter assembly.
(1) Remove the bolts to remove the inverter shield.
(2) Remove the bolts and disconnect the bus bars between the high voltage battery and electric noise filter and between the electric noise filter and electric oil pump inverter respectively.

CAUTION:
Always wrap the high voltage battery terminal with insulating tape.

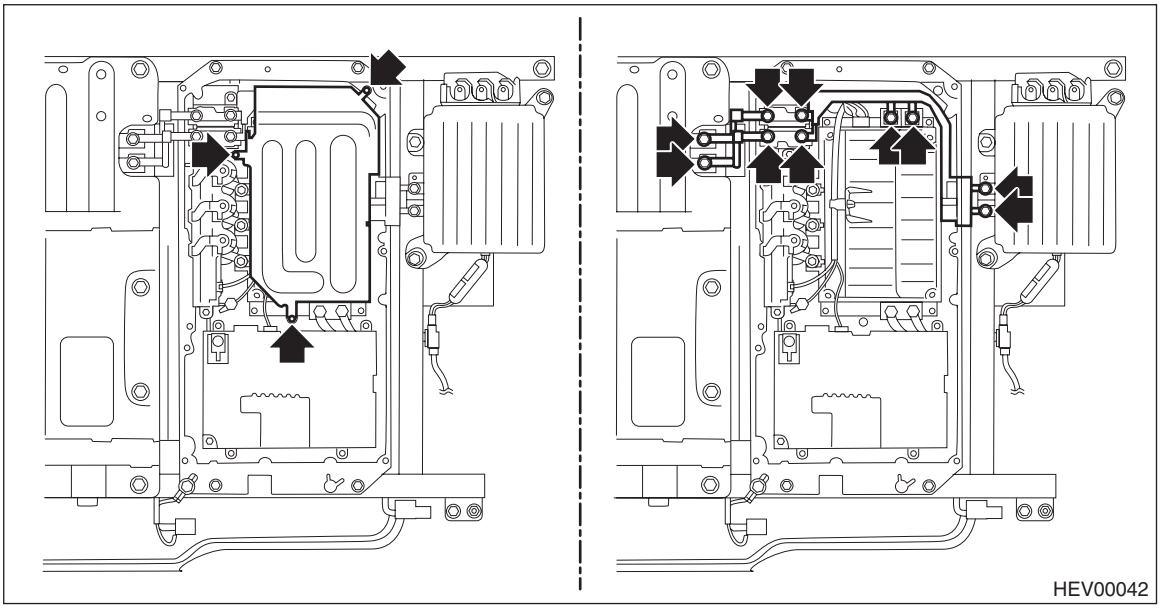

(3) Disconnect the connector.
(4) Remove all the mounting bolts of the high voltage battery to make the battery free.
(5) Remove the bolts, and then detach the ground terminal and the inverter assembly.

CAUTION:
Be careful not to damage the duct seal located underneath the high voltage battery.

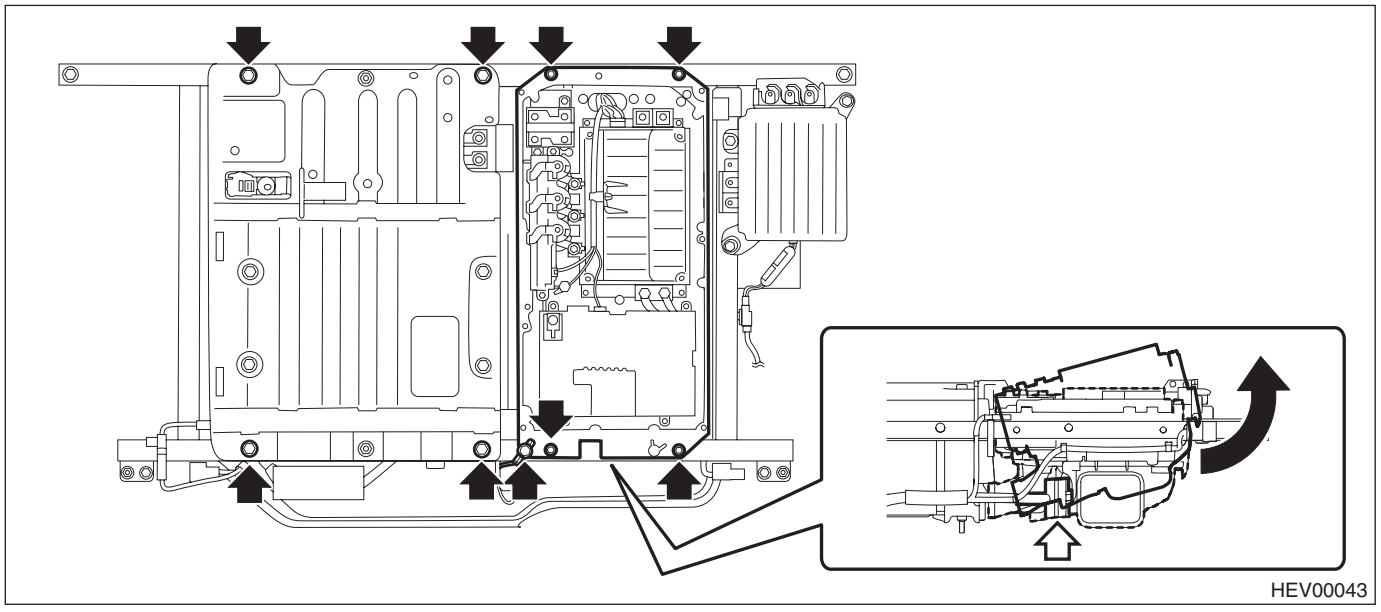

13) Remove the high voltage battery.

CAUTION:
• Since the high voltage battery weighs a lot, do not hold it by the area (a). Otherwise it may break or deform. Also, two persons must work together when removing the high voltage battery.
• The high voltage battery is a non-disassembly part. Do not try to remove the cover or other parts for disassembly.

(1) Disconnect the connector.
(2) Remove the high voltage battery from the high voltage battery frame assembly.

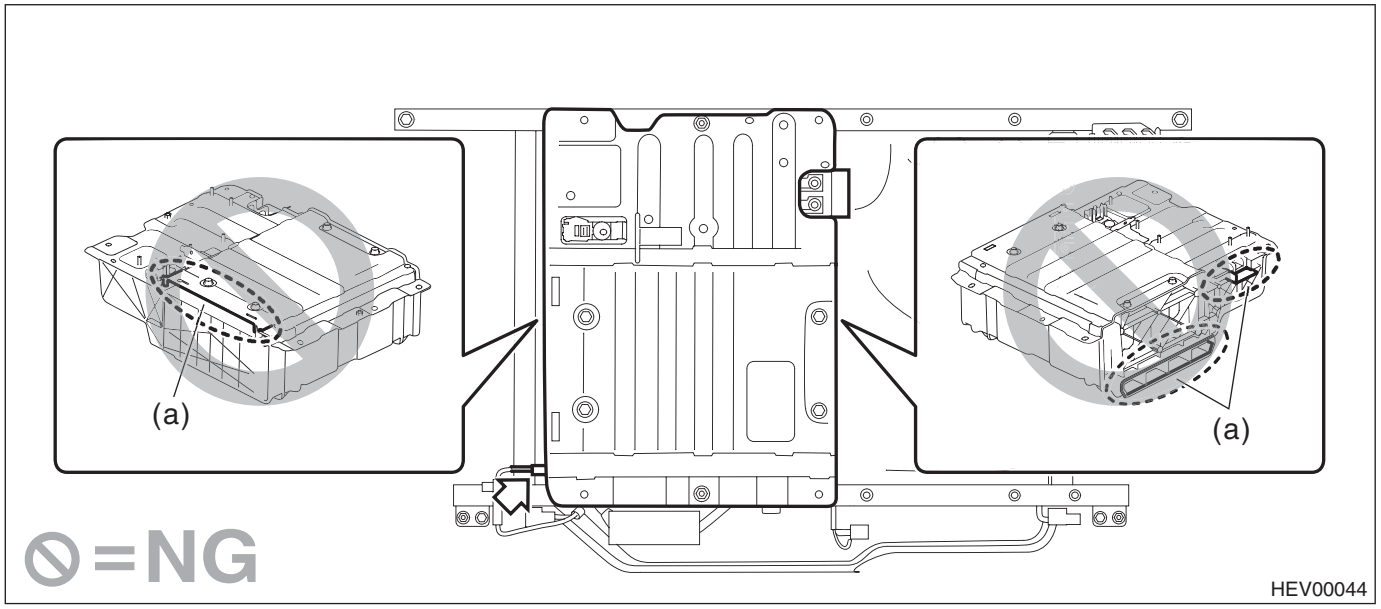

14) Remove the high voltage battery frame assembly.
(1) Remove the connectors and bolts, and remove the electric oil pump inverter.

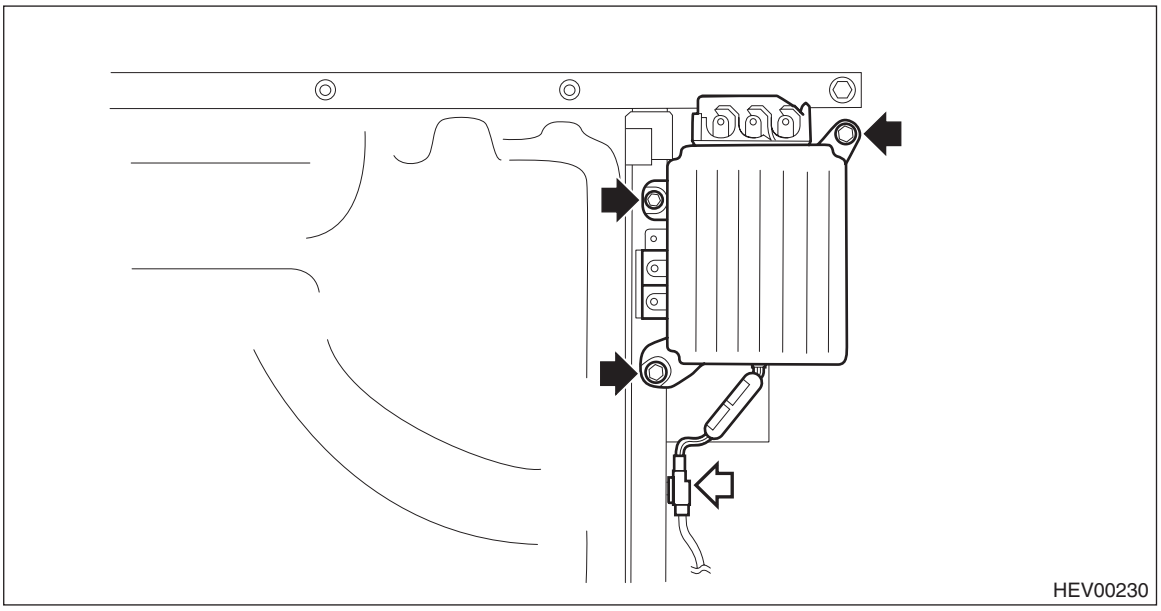

(2) Remove the connector clip and release the harness clip.

(3) Remove the bolts and nuts to remove the high voltage battery frame assembly from the vehicle.

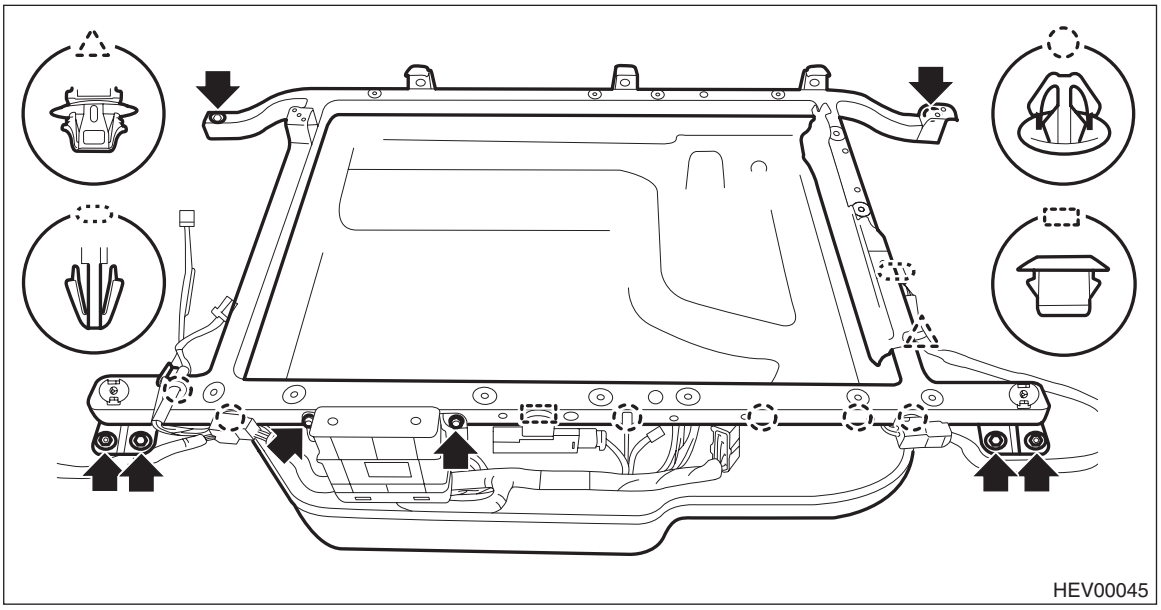

(4) Release the clips, and remove the cover - battery LWR from the high voltage battery frame assembly.

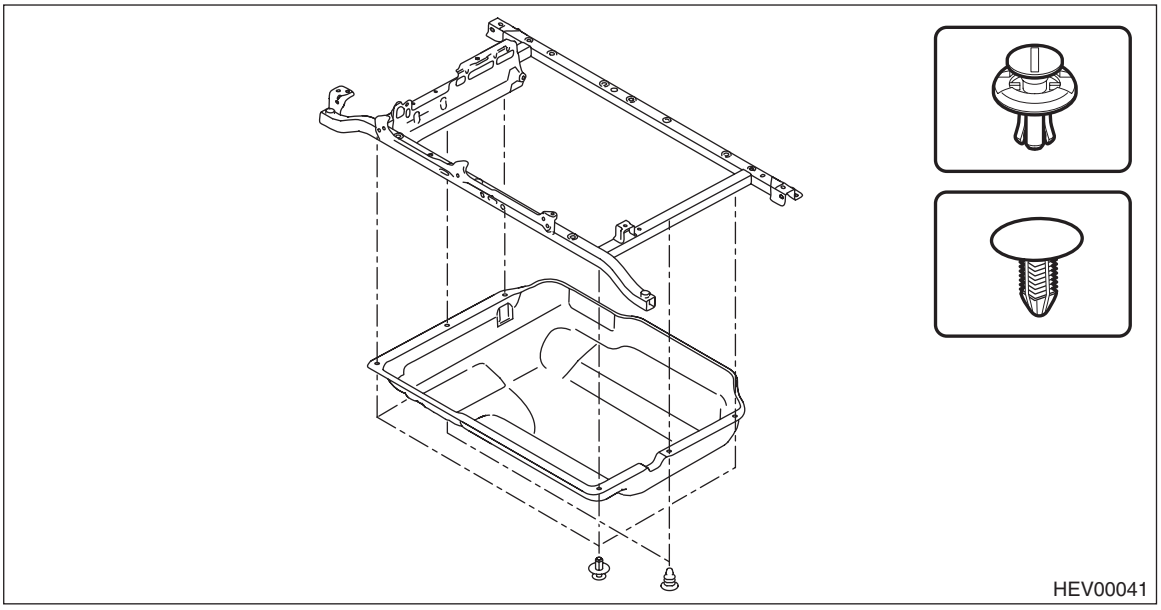

B: INSTALLATION

WARNING:
The hybrid system includes a high voltage circuit. Mishandling could cause accidents such as electric shock or leak. Always check "CAUTION (HYBRID SYSTEM)" and perform the proper operation. <Ref. to PC-6, CAUTION (HYBRID SYSTEM), Precaution.>

CAUTION:
When replacing the high voltage battery with a new part, be sure to use the service disconnect plug bundled with the new battery. Also, never use the service disconnect plug from the old high voltage battery for another vehicle.

1) Install the cover - battery LWR.
2) Install the high voltage battery frame assembly.

Tightening torque:
24.5 N·m (2.5 kgf-m, 18.1 ft-lb)

3) Install the electric oil pump inverter.

Tightening torque:
22 N·m (2.2 kgf-m, 16.2 ft-lb)

4) Mount the high voltage battery on the high voltage battery frame assembly, then install the inverter assembly.

CAUTION:
- **If the duct seal is damaged, replace it with a new part.**
- **Be sure that the high voltage battery is securely attached to the cooling duct inverter duct.**

Tightening torque:
High voltage battery and inverter assembly: 22 N·m (2.2 kgf-m, 16.2 ft-lb)
Ground terminal: 6.5 N·m (0.7 kgf-m, 4.8 ft-lb)

5) Connect the bus bar.

Tightening torque:
T1: 6.5 N·m (0.7 kgf-m, 4.8 ft-lb)
T2: 7.5 N·m (0.8 kgf-m, 5.5 ft-lb)

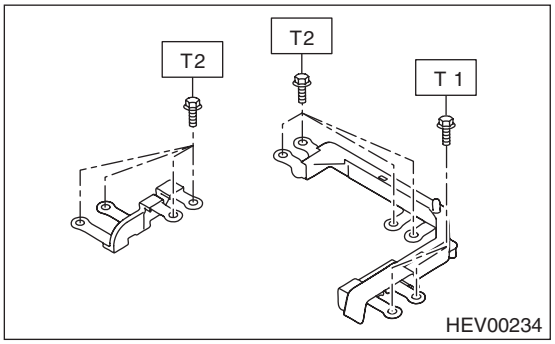

6) Install the inverter shield.

Tightening torque:
6.5 N·m (0.7 kgf-m, 4.8 ft-lb)

7) Install the cooling fan assembly. <Ref. to HEV-72, COOLING FAN ASSEMBLY, INSTALLATION, High Voltage Battery Cooling System.>
8) Install the cooling duct front (rear). <Ref. to HEV-70, COOLING DUCT FRONT (REAR), INSTALLATION, High Voltage Battery Cooling System.>

9) Connect the ground terminal and the power cable.

CAUTION:
• When connecting the power cable, pay attention to the letters (U, V, and W) imprinted on the drive motor inverter amperage sensor body as well as on the protector of the power cable.
• Connect the power cable properly referring to the letters (U, V, and W) imprinted on the electric oil pump inverter body. The power cable with the identification tape is connected to (U) and the power cable with a claw is connected to (V).
• Do not apply excessive force to the terminals and watch to make sure the cable is not damaged or pinched.

Tightening torque:
7.5 N·m (0.8 kgf-m, 5.5 ft-lb)
10) Install the cover - shield battery and the cover - shield seat.

Tightening torque:
7.5 N·m (0.8 kgf-m, 5.5 ft-lb)
11) Install the ground terminal and inverter cover.

CAUTION:
Check that the sound proofing material on the inverter cover is not detached or damaged.

Tightening torque:
7.5 N·m (0.8 kgf-m, 5.5 ft-lb)
12) Install the battery cover.

Tightening torque:
7.5 N·m (0.8 kgf-m, 5.5 ft-lb)
13) Install the spacer - rear floor front.
14) Install the rear seat cushion. <Ref. to SE-26, INSTALLATION, Rear Seat.>
15) Install the sub-trunk assembly and the spacer - rear floor side.
16) Install the service disconnect plug. <Ref. to HEV-16, INSTALLATION, Service Plug.>

C: INSPECTION

1) Check that the high voltage battery has no deformation, cracks or other damages. <Ref. to PC-14, PRECAUTION FOR HIGH VOLTAGE BATTERY, CAUTION (HYBRID SYSTEM), Precaution.>
2) Connect the Subaru Select Monitor, and read the Diagnostic Trouble Code (DTC). If any diagnosis code (DTC) is displayed, refer to “List of Diagnostic Trouble Code (DTC)” in “HYBRID ELECTRIC VEHICLE (DIAGNOSTICS)” section. <Ref. to HEV(diag)-74, List of Diagnostic Trouble Code (DTC).>

6. Battery Energy Control Module

A: NOTE

The battery energy control module is integral part of the high voltage battery. Refer to “High Voltage Battery” section for the work procedures. <Ref. to HEV-17, High Voltage Battery.>

7. Drive Motor Inverter Current Sensor

A: REMOVAL

WARNING:
The hybrid system includes a high voltage circuit. Mishandling could cause accidents such as electric shock or leak. Always check "CAUTION (HYBRID SYSTEM)" and perform the proper operation. <Ref. to PC-6, CAUTION (HYBRID SYSTEM), Precaution.>

1) Remove the service disconnect plug. <Ref. to HEV-15, REMOVAL, Service Plug.>
2) Release the clips and claws, then detach the sub-trunk assembly and the spacer - rear floor side.

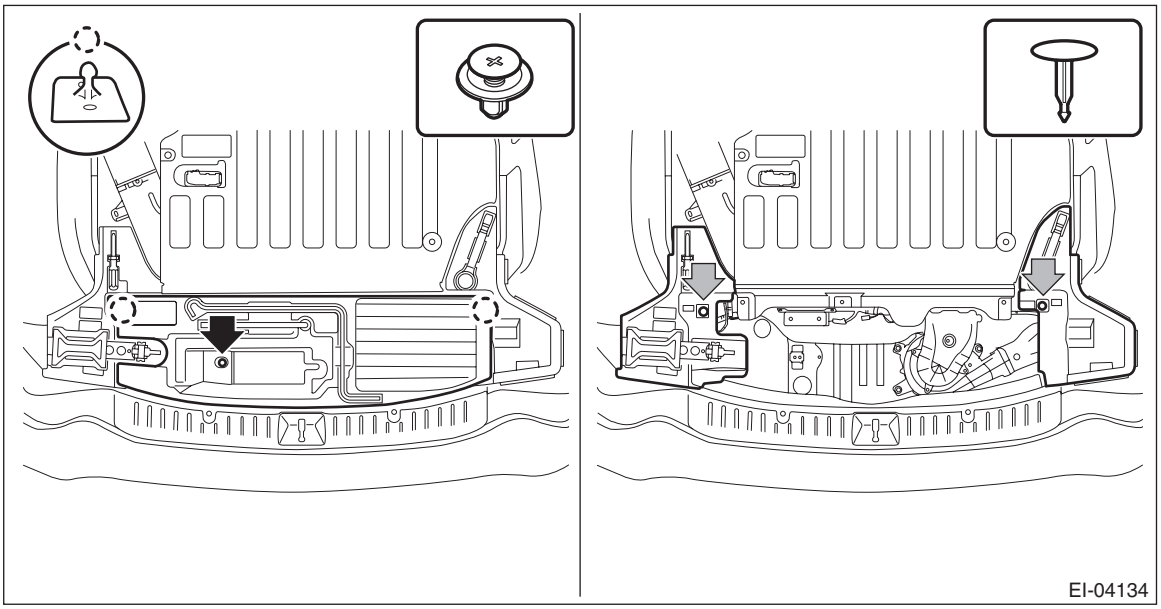

3) Remove the rear seat cushion and fold the backrest assemblies LH and RH. <Ref. to SE-23, REMOVAL, Rear Seat.>
4) Remove the spacer - rear floor front.
   (1) Release the clips, and fold back the bottom of the cover COMPL - rear backrest LH and RH of the rear seat back.
   (2) Release the clips and claws, then detach the spacer - rear floor front.

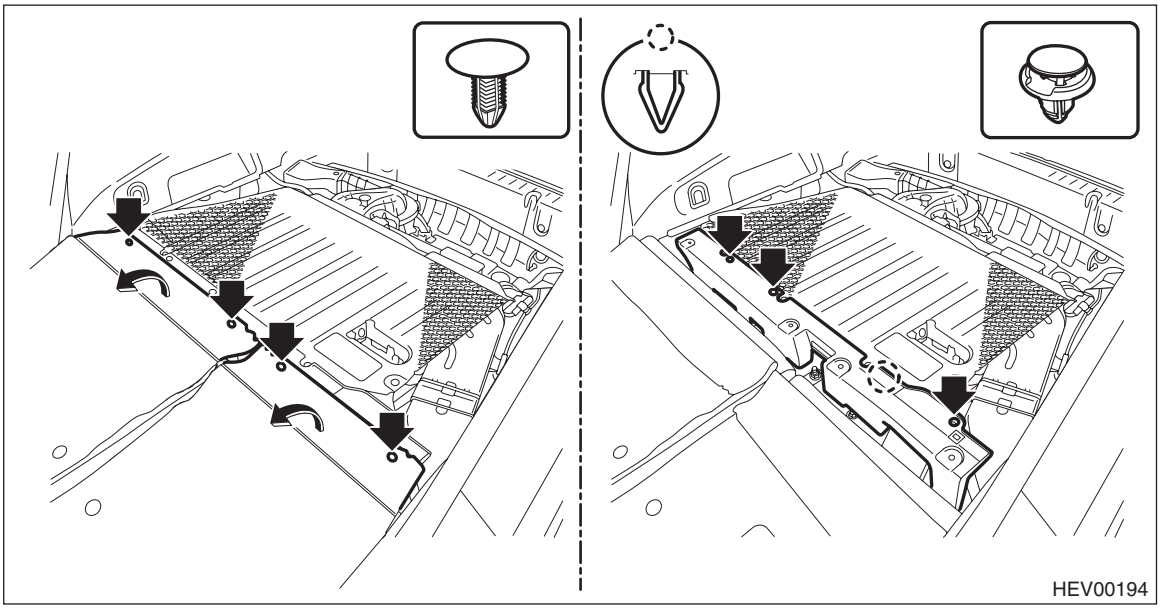

5) Remove the TORX® bolts, release the clips, and then remove the battery cover.

Preparation tool:
TORX® T25 or T30

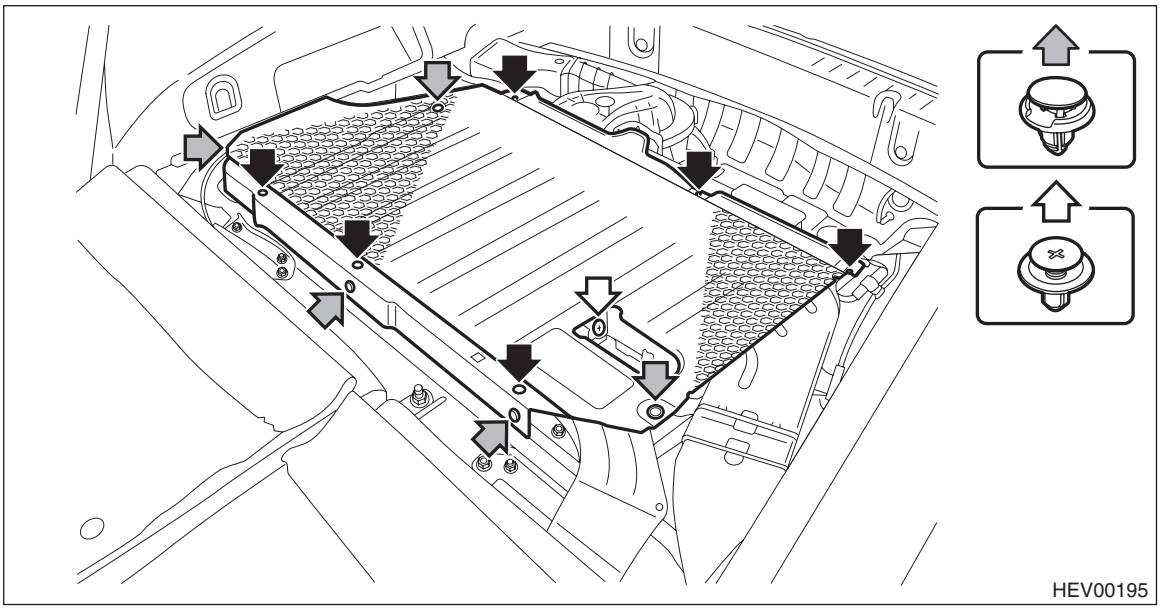

6) Remove the inverter cover.
(1) Remove the bolts and ground terminal.
(2) Release the cable clips, and remove the inverter cover.

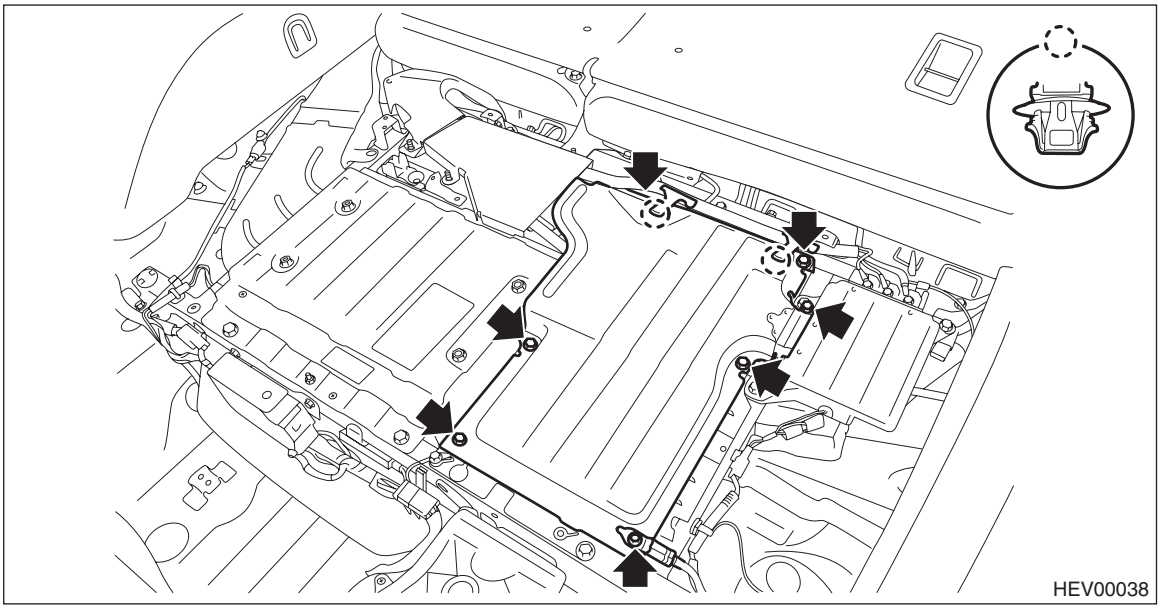

7) Perform zero-voltage test.
(1) Measure the voltage of the high voltage DC line at the high voltage battery side of the electric noise filter.

Preparation tool:
Insulation multimeter

Standard: 0 V

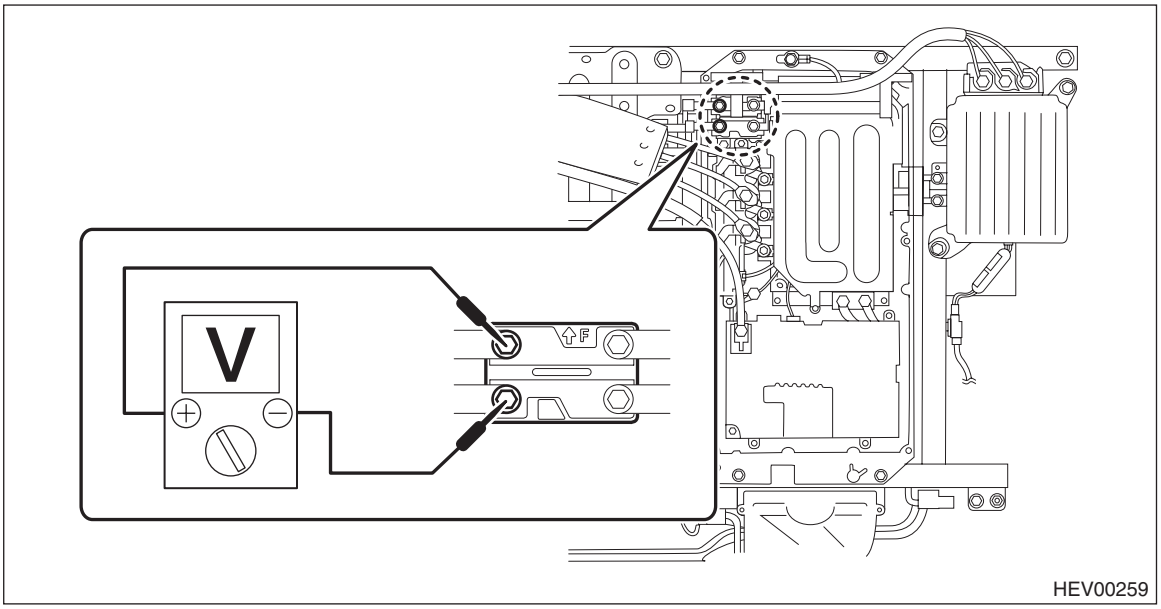

8) Remove the drive motor inverter amperage sensor.

CAUTION:
- **Be careful not to use excessive force when disconnecting the power cable to avoid any damage.**
- **Always wrap the disconnected power cable terminals with insulating tape.**

(1) Remove the bolts and disconnect the ground terminal and the power cable.
(2) Remove the connectors and bolts, and remove the drive motor inverter amperage sensor.

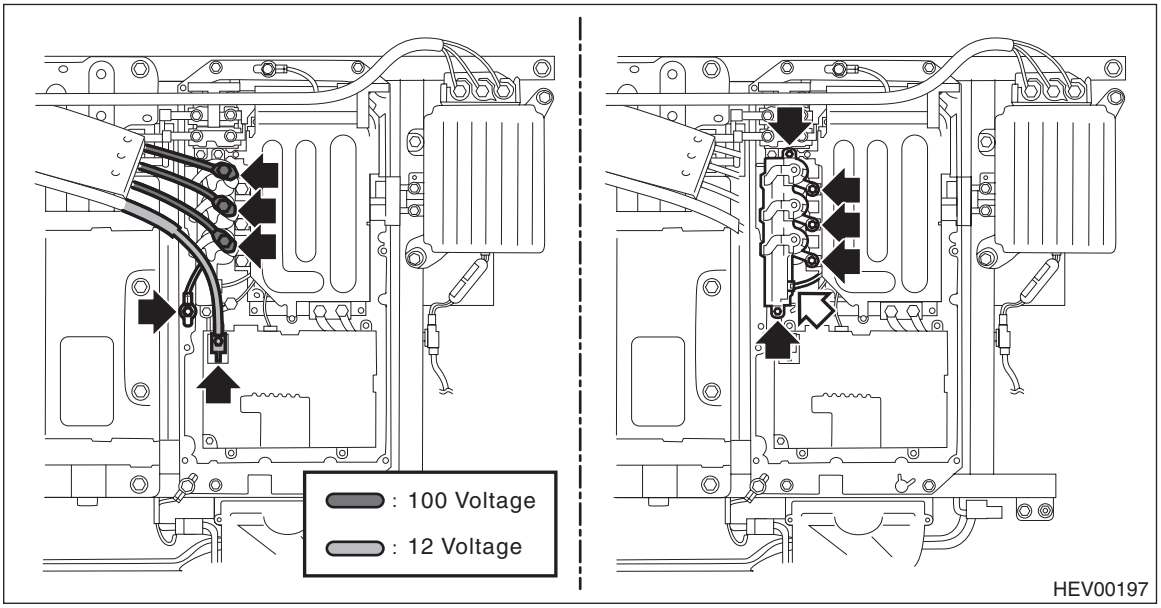

(3) Remove the bus bar from the drive motor inverter amperage sensor.

B: INSTALLATION

WARNING:
The hybrid system includes a high voltage circuit. Mishandling could cause accidents such as electric shock or leak. Always check "CAUTION (HYBRID SYSTEM)" and perform the proper operation. <Ref. to PC-6, CAUTION (HYBRID SYSTEM), Precaution.>

1) Install the drive motor inverter amperage sensor.

Tightening torque:
6.5 N·m (0.7 kgf-m, 4.8 ft-lb)

2) Connect the ground terminal and the power cable.

CAUTION:
• When connecting the power cable, pay attention to the letters (U, V, and W) imprinted on the drive motor inverter amperage sensor body as well as on the protector of the power cable.
• Do not apply excessive force to the terminals and watch to make sure the cable is not damaged or pinched.

Tightening torque:
7.5 N·m (0.8 kgf-m, 5.5 ft-lb)

3) Install the ground terminal and inverter cover.

CAUTION:
Check that the sound proofing material on the inverter cover is not detached or damaged.

Tightening torque:
7.5 N·m (0.8 kgf-m, 5.5 ft-lb)

4) Install the battery cover.

Tightening torque:
7.5 N·m (0.8 kgf-m, 5.5 ft-lb)

5) Install the spacer - rear floor front.
6) Install the rear seat cushion. <Ref. to SE-26, INSTALLATION, Rear Seat.>
7) Install the sub-trunk assembly and the spacer - rear floor side.
8) Install the service disconnect plug. <Ref. to HEV-16, INSTALLATION, Service Plug.>

8. Noise Filter

A: REMOVAL

WARNING:
The hybrid system includes a high voltage circuit. Mishandling could cause accidents such as electric shock or leak. Always check "CAUTION (HYBRID SYSTEM)" and perform the proper operation. <Ref. to PC-6, CAUTION (HYBRID SYSTEM), Precaution.>

1) Remove the service disconnect plug. <Ref. to HEV-15, REMOVAL, Service Plug.>
2) Release the clips and claws, then detach the sub-trunk assembly and the spacer - rear floor side.

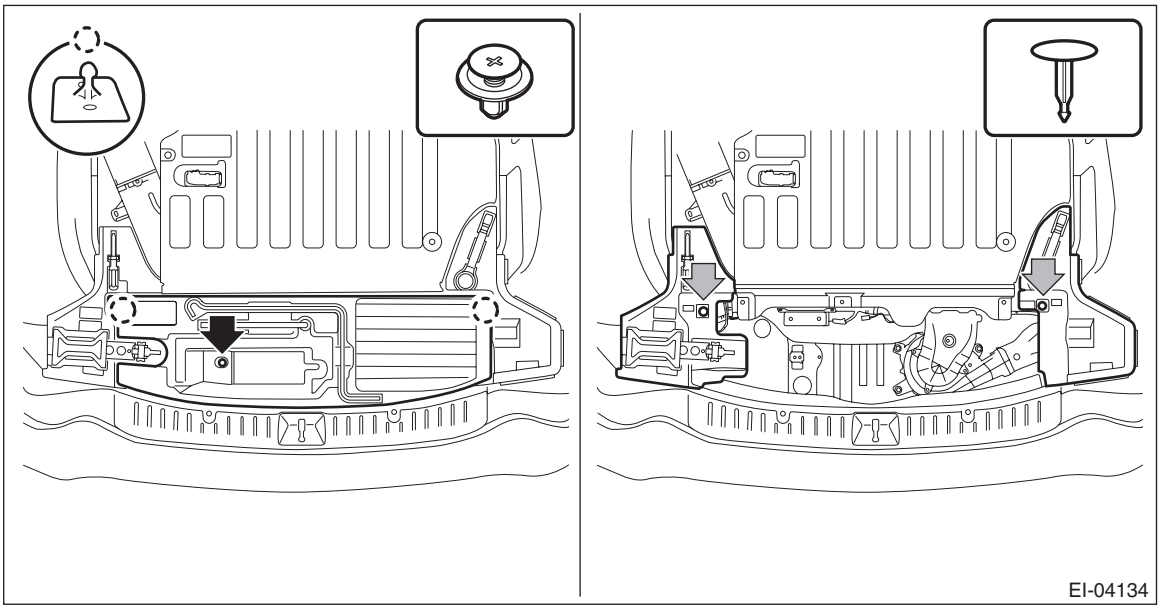

3) Remove the rear seat cushion and fold the backrest assemblies LH and RH. <Ref. to SE-23, REMOVAL, Rear Seat.>
4) Remove the spacer - rear floor front.
   (1) Release the clips, and fold back the bottom of the cover COMPL - rear backrest LH and RH of the rear seat back.
   (2) Release the clips and claws, then detach the spacer - rear floor front.

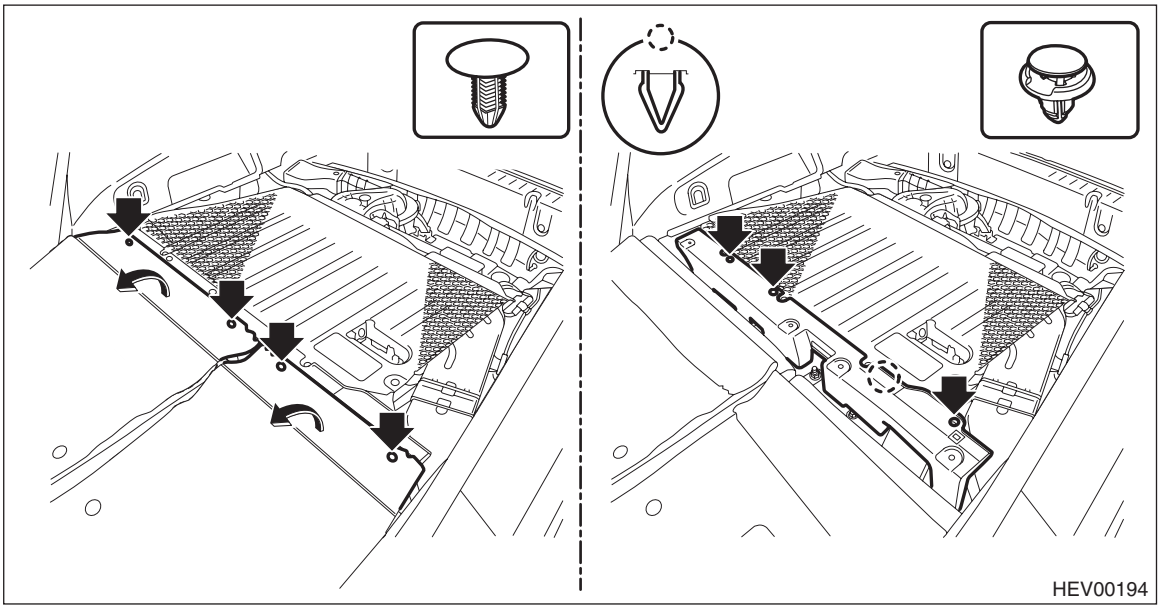

5) Remove the TORX® bolts, release the clips, and then remove the battery cover.

Preparation tool:
TORX® T25 or T30

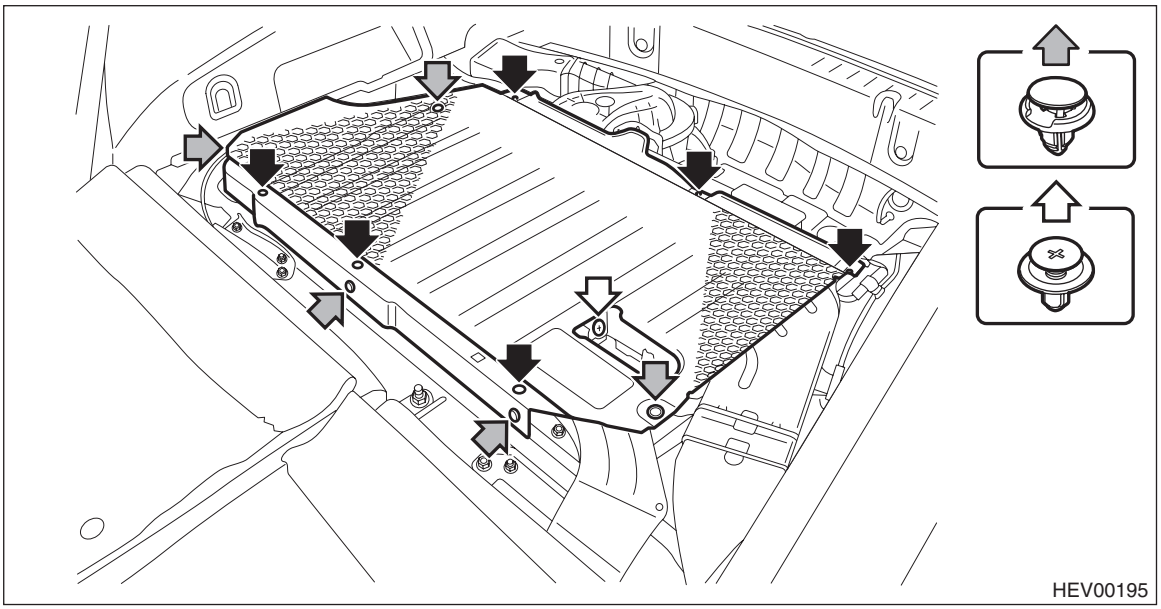

6) Remove the inverter cover.
(1) Remove the bolts and ground terminal.
(2) Release the cable clips, and remove the inverter cover.

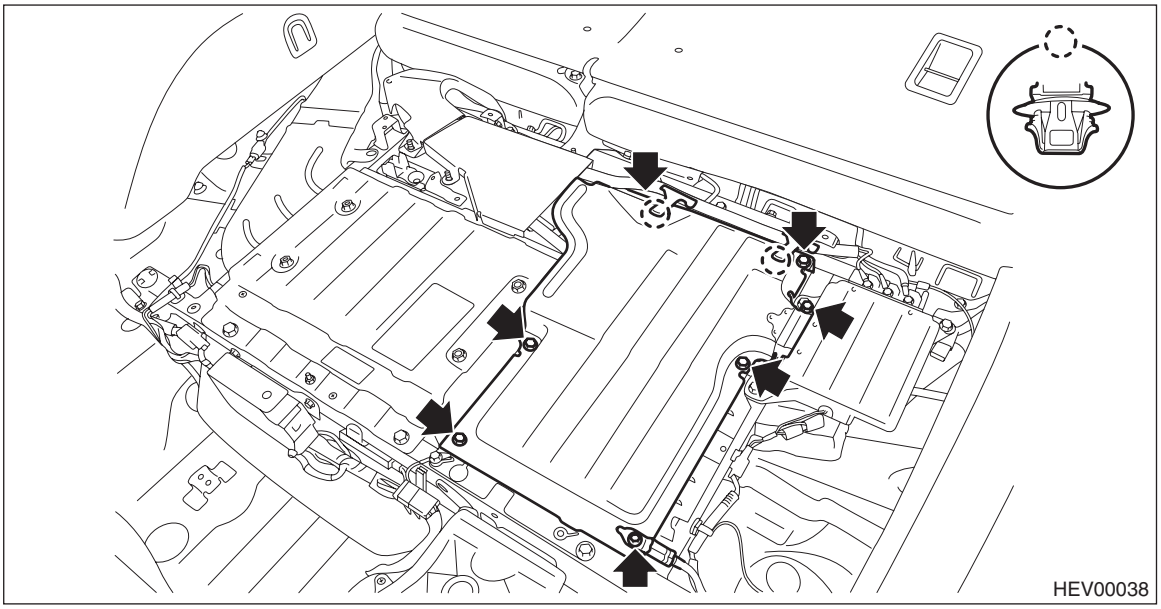

7) Perform zero-voltage test.
(1) Measure the voltage of the high voltage DC line at the high voltage battery side of the electric noise filter.

Preparation tool:
Insulation multimeter

Standard: 0 V

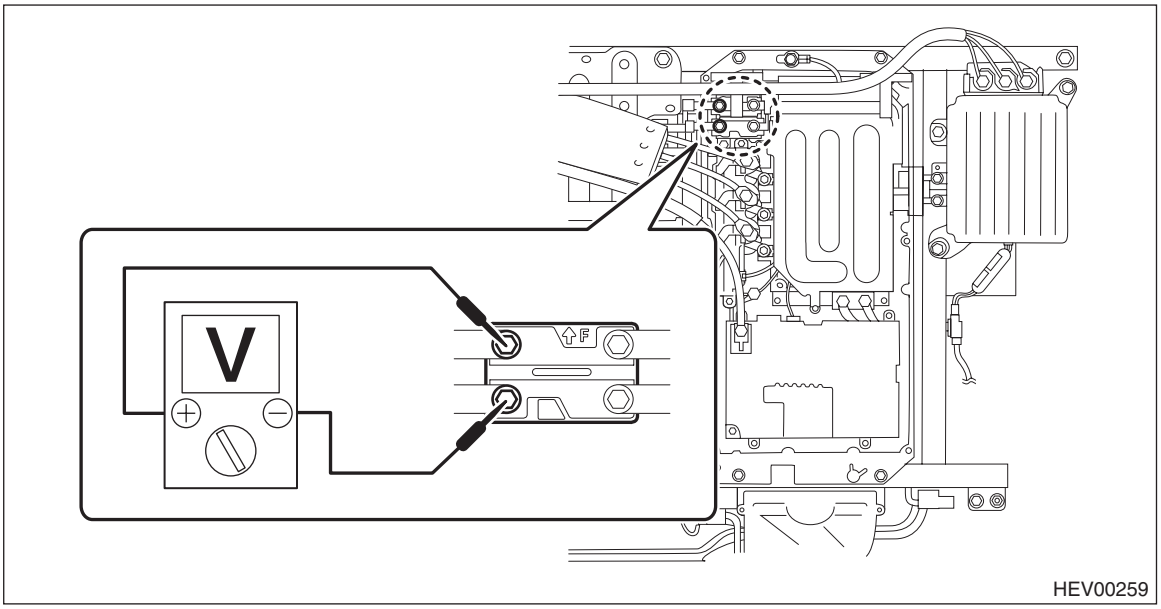

8) Remove the nut and remove the cover - shield battery and the cover - shield seat.

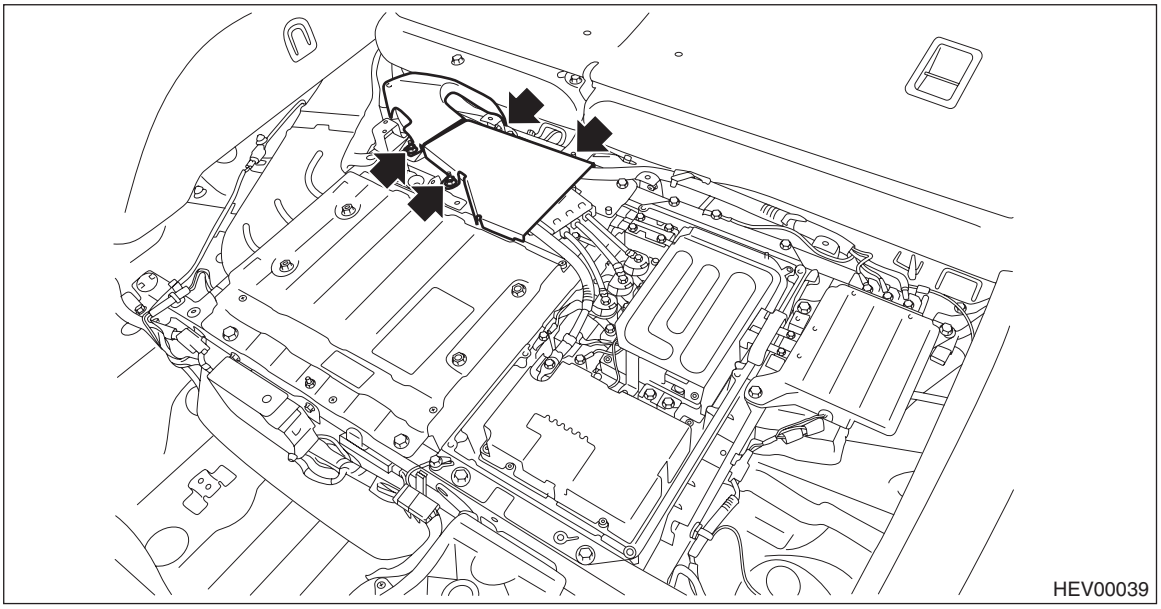

9) Remove the bolts and nuts and disconnect the ground terminal and the power cable.

CAUTION:
- **Be careful not to use excessive force when disconnecting the power cable to avoid any damage.**
- **Always wrap the disconnected power cable terminals with insulating tape.**

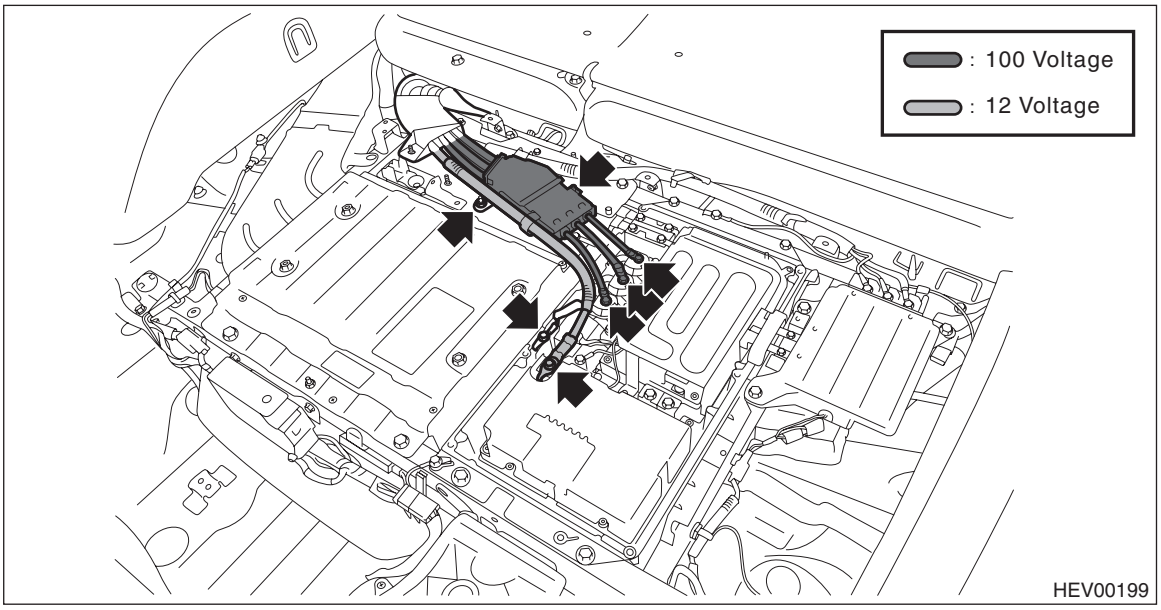

10) Remove the electric noise filter.
(1) Remove the bolts to remove the inverter shield.
(2) Remove the bolts and disconnect the bus bars between the high voltage battery and electric noise filter and between the electric noise filter and electric oil pump inverter respectively.

CAUTION:
Always wrap the high voltage battery terminal with insulating tape.

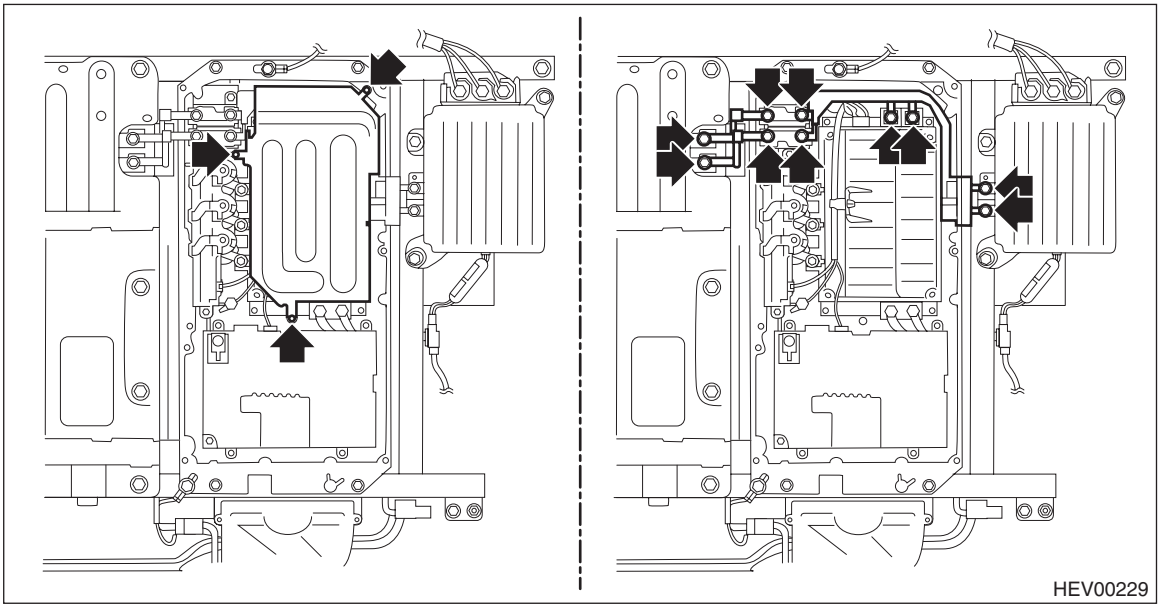

(3) Remove the bolts, and then remove the electric noise filter.

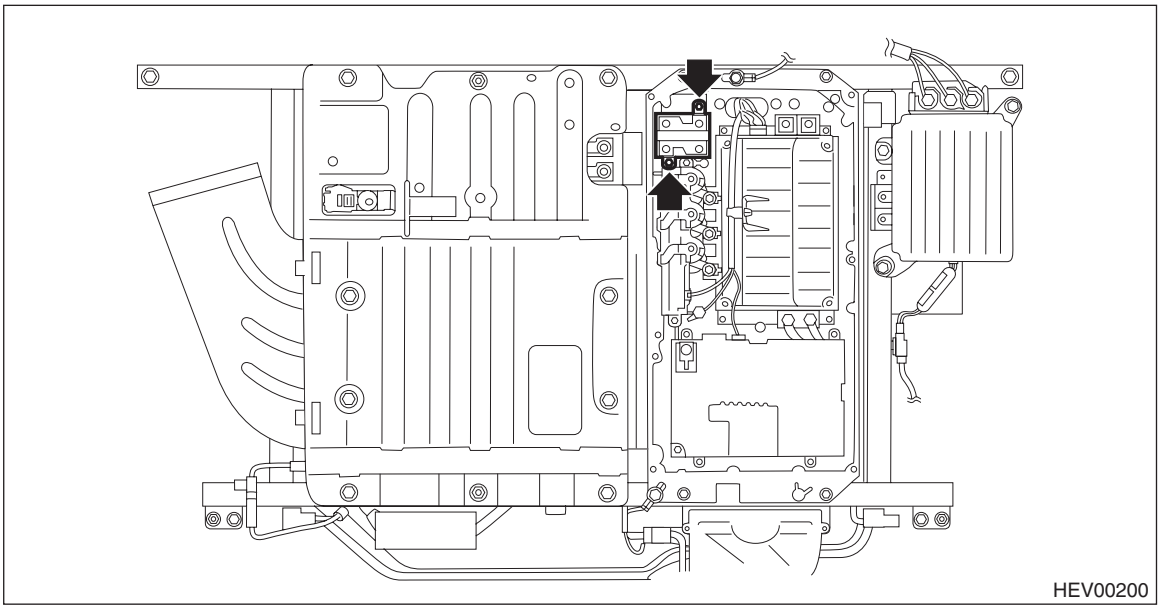

B: INSTALLATION

WARNING:
The hybrid system includes a high voltage circuit. Mishandling could cause accidents such as electric shock or leak. Always check "CAUTION (HYBRID SYSTEM)" and perform the proper operation. <Ref. to PC-6, CAUTION (HYBRID SYSTEM), Precaution.>

1) Install the electric noise filter.

NOTE:
The "F" mark of the electric noise filter should face toward the front of the vehicle when installed.

Tightening torque:
6.5 N·m (0.7 kgf-m, 4.8 ft-lb)

2) Connect the bus bar.

Tightening torque:
T1: 6.5 N·m (0.7 kgf-m, 4.8 ft-lb)
T2: 7.5 N·m (0.8 kgf-m, 5.5 ft-lb)

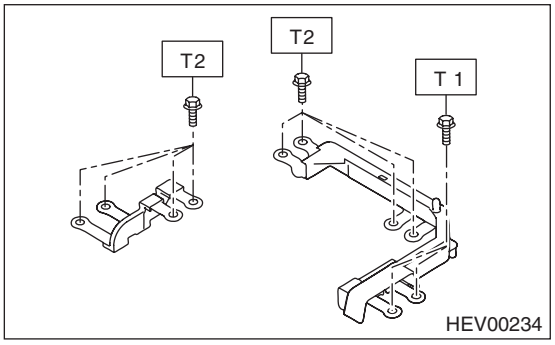

3) Install the inverter shield.

Tightening torque:
6.5 N·m (0.7 kgf-m, 4.8 ft-lb)

4) Connect the ground terminal and the power cable.

CAUTION:
• When connecting the power cable, pay attention to the letters (U, V, and W) imprinted on the drive motor inverter amperage sensor body as well as on the protector of the power cable.
• Do not apply excessive force to the terminals and watch to make sure the cable is not damaged or pinched.

Tightening torque:
7.5 N·m (0.8 kgf-m, 5.5 ft-lb)
5) Install the cover - shield battery and the cover - shield seat.

Tightening torque:
7.5 N·m (0.8 kgf-m, 5.5 ft-lb)
6) Install the ground terminal and inverter cover.

CAUTION:
Check that the sound proofing material on the inverter cover is not detached or damaged.

Tightening torque:
7.5 N·m (0.8 kgf-m, 5.5 ft-lb)
7) Install the battery cover.

Tightening torque:
7.5 N·m (0.8 kgf-m, 5.5 ft-lb)
8) Install the spacer - rear floor front.
9) Install the rear seat cushion. <Ref. to SE-26, INSTALLATION, Rear Seat.>
10) Install the sub-trunk assembly and the spacer - rear floor side.
11) Install the service disconnect plug. <Ref. to HEV-16, INSTALLATION, Service Plug.>

9. Hybrid Powertrain Control Module

A: NOTE

The hybrid powertrain control module is fixed to the engine control module (ECM) bracket. Refer to “FUEL INJECTION (FUEL SYSTEMS)” section for the work procedures. <Ref. to FU(H4DO(HEV))-85, Engine Control Module (ECM).>

10.DC/DC Converter

A: REMOVAL

WARNING:
The hybrid system includes a high voltage circuit. Mishandling could cause accidents such as electric shock or leak. Always check "CAUTION (HYBRID SYSTEM)" and perform the proper operation. <Ref. to PC-6, CAUTION (HYBRID SYSTEM), Precaution.>

1) Remove the service disconnect plug. <Ref. to HEV-15, REMOVAL, Service Plug.>
2) Release the clips and claws, then detach the sub-trunk assembly and the spacer - rear floor side.

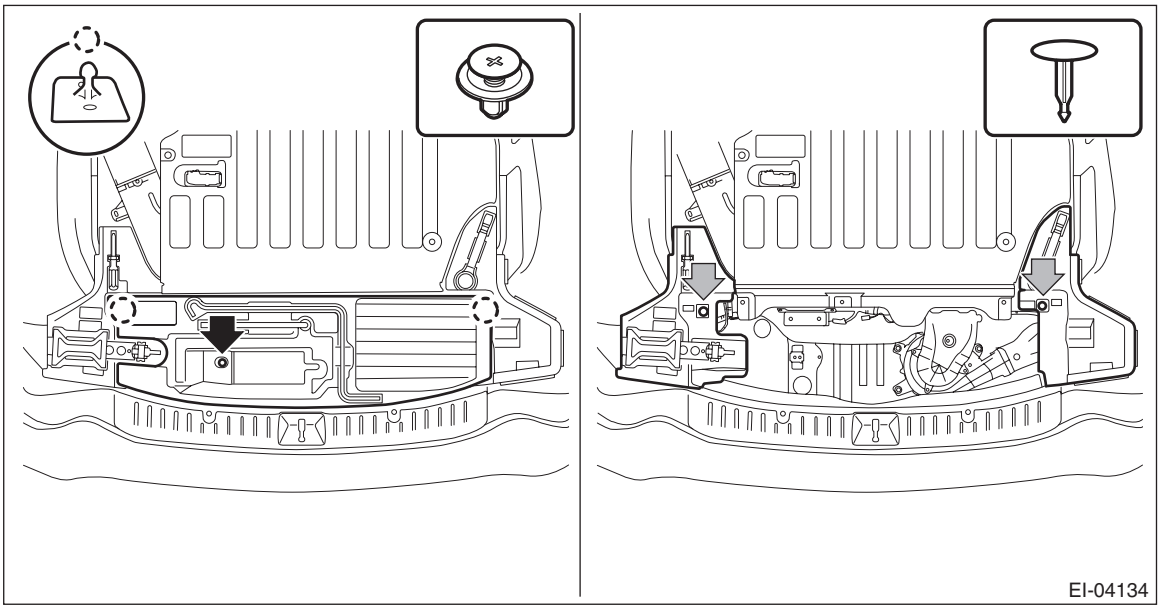

3) Remove the rear seat cushion and fold the backrest assemblies LH and RH. <Ref. to SE-23, REMOVAL, Rear Seat.>
4) Remove the spacer - rear floor front.
   (1) Release the clips, and fold back the bottom of the cover COMPL - rear backrest LH and RH of the rear seat back.
   (2) Release the clips and claws, then detach the spacer - rear floor front.

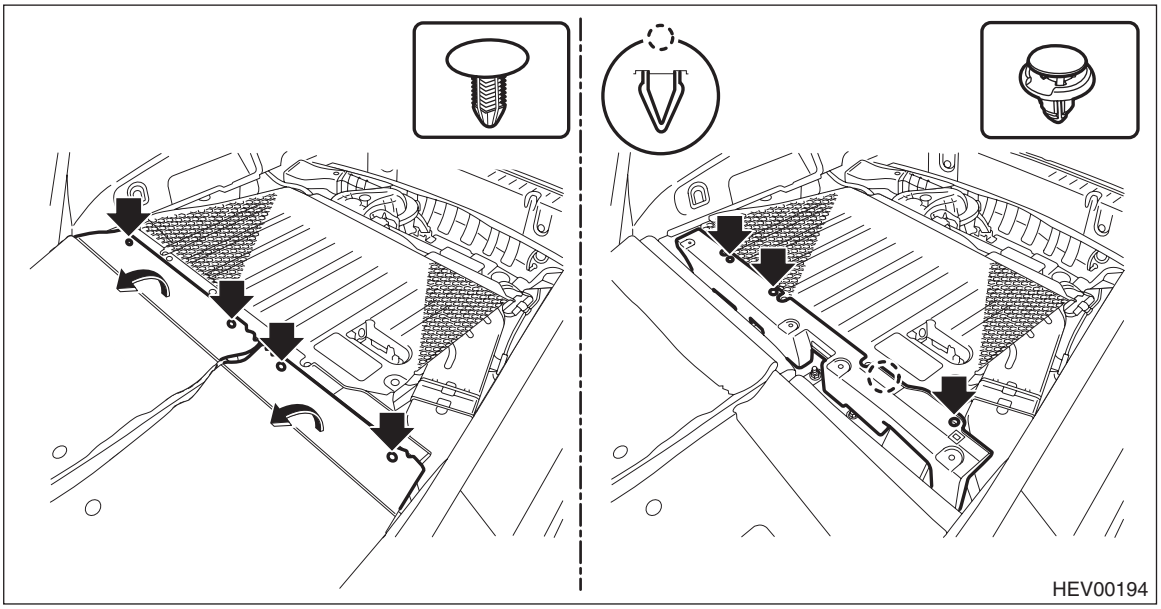

5) Remove the TORX® bolts, release the clips, and then remove the battery cover.

Preparation tool:
TORX® T25 or T30

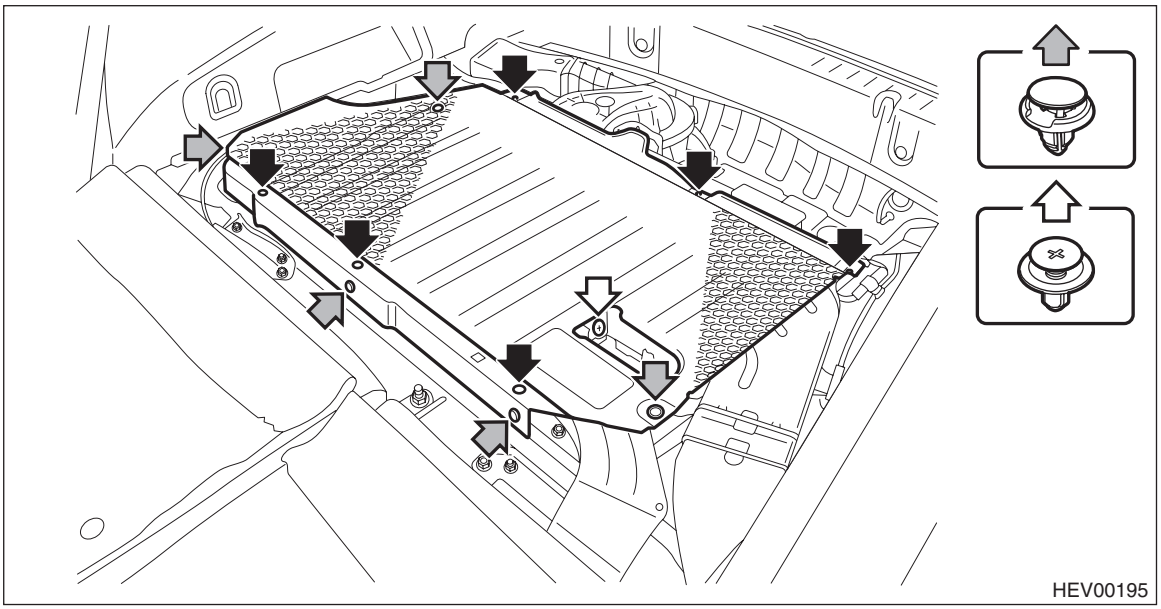

6) Remove the inverter cover.
(1) Remove the bolts and ground terminal.
(2) Release the cable clips, and remove the inverter cover.

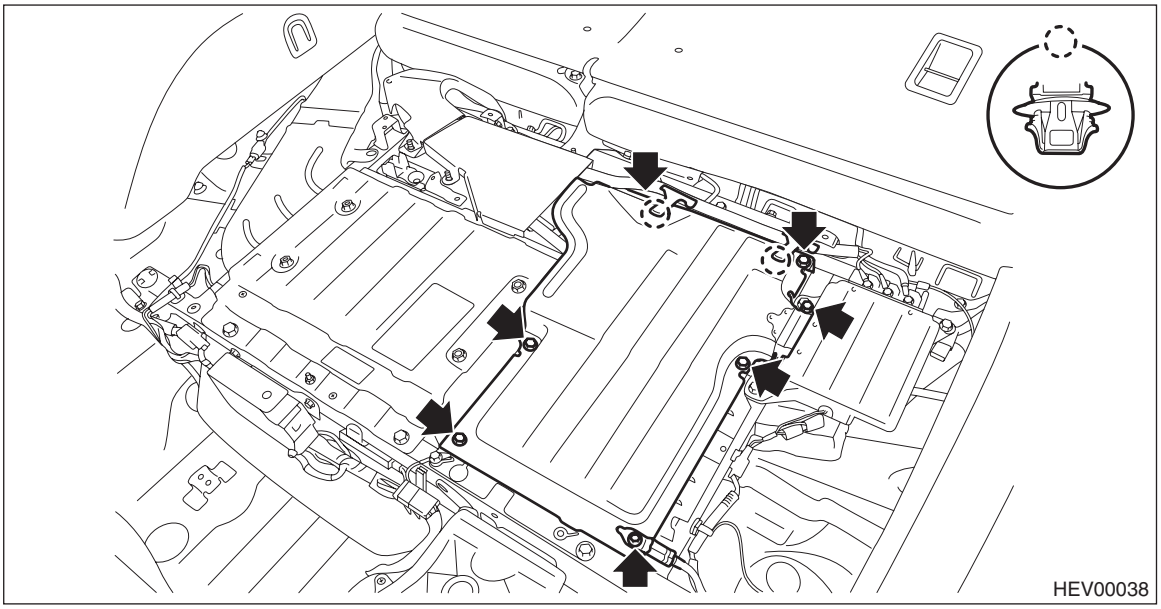

7) Perform zero-voltage test.
(1) Measure the voltage of the high voltage DC line at the high voltage battery side of the electric noise filter.

Preparation tool:
Insulation multimeter

Standard: 0 V

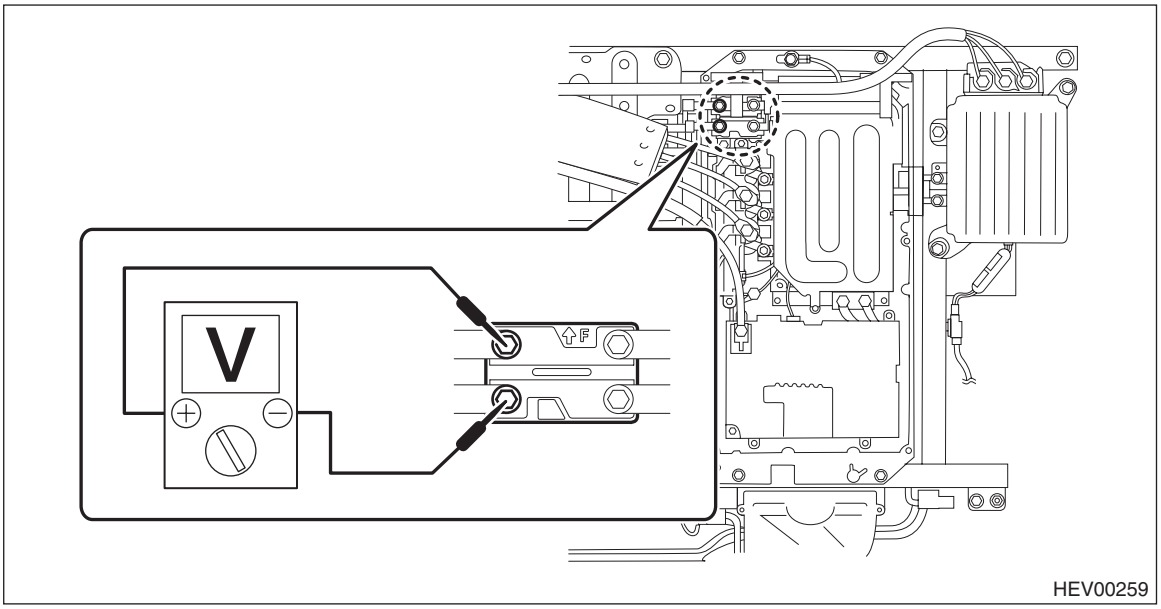

8) Remove the DC/DC converter.
(1) Remove the bolt and disconnect the power cable (12 V).

CAUTION:
Be careful not to use excessive force when disconnecting the power cable to avoid any damage.
(2) Remove the bolts, then disconnect the bus bar.
(3) Remove the connectors and bolts, and remove the DC/DC converter.

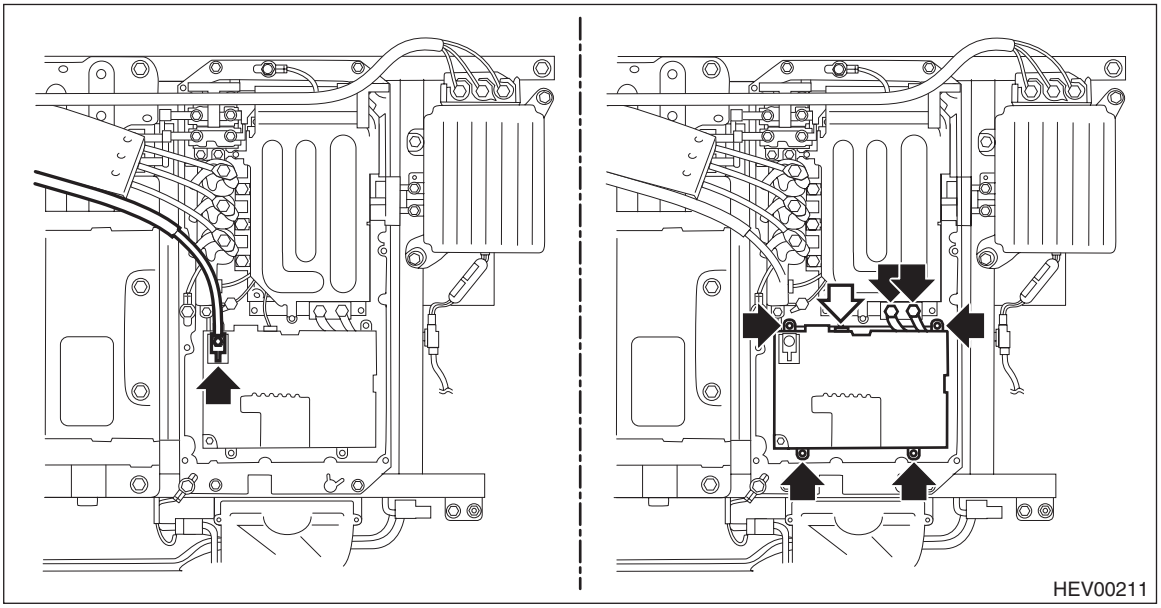

B: INSTALLATION

WARNING:
The hybrid system includes a high voltage circuit. Mishandling could cause accidents such as electric shock or leak. Always check "CAUTION (HYBRID SYSTEM)" and perform the proper operation. <Ref. to PC-6, CAUTION (HYBRID SYSTEM), Precaution.>

1) Install the DC/DC converter.

Tightening torque:
6.5 N·m (0.7 kgf-m, 4.8 ft-lb)

2) Connect the bus bar.

Tightening torque:
7.5 N·m (0.8 kgf-m, 5.5 ft-lb)

3) Connect the power cable (12 V).

CAUTION:
Do not apply excessive force to the terminals and watch to make sure the cable is not damaged or pinched.

Tightening torque:
7.5 N·m (0.8 kgf-m, 5.5 ft-lb)

4) Install the ground terminal and inverter cover.

CAUTION:
Check that the sound proofing material on the inverter cover is not detached or damaged.

Tightening torque:
7.5 N·m (0.8 kgf-m, 5.5 ft-lb)

5) Install the battery cover.

Tightening torque:
7.5 N·m (0.8 kgf-m, 5.5 ft-lb)

6) Install the spacer - rear floor front.
7) Install the rear seat cushion. <Ref. to SE-26, INSTALLATION, Rear Seat.>
8) Install the sub-trunk assembly and the spacer - rear floor side.
9) Install the service disconnect plug. <Ref. to HEV-16, INSTALLATION, Service Plug.>

11.Inverter

A: REMOVAL

1. DRIVE MOTOR INVERTER

WARNING:
The hybrid system includes a high voltage circuit. Mishandling could cause accidents such as electric shock or leak. Always check "CAUTION (HYBRID SYSTEM)" and perform the proper operation. <Ref. to PC-6, CAUTION (HYBRID SYSTEM), Precaution.>

1) Remove the service disconnect plug. <Ref. to HEV-15, REMOVAL, Service Plug.>
2) Release the clips and claws, then detach the sub-trunk assembly and the spacer - rear floor side.

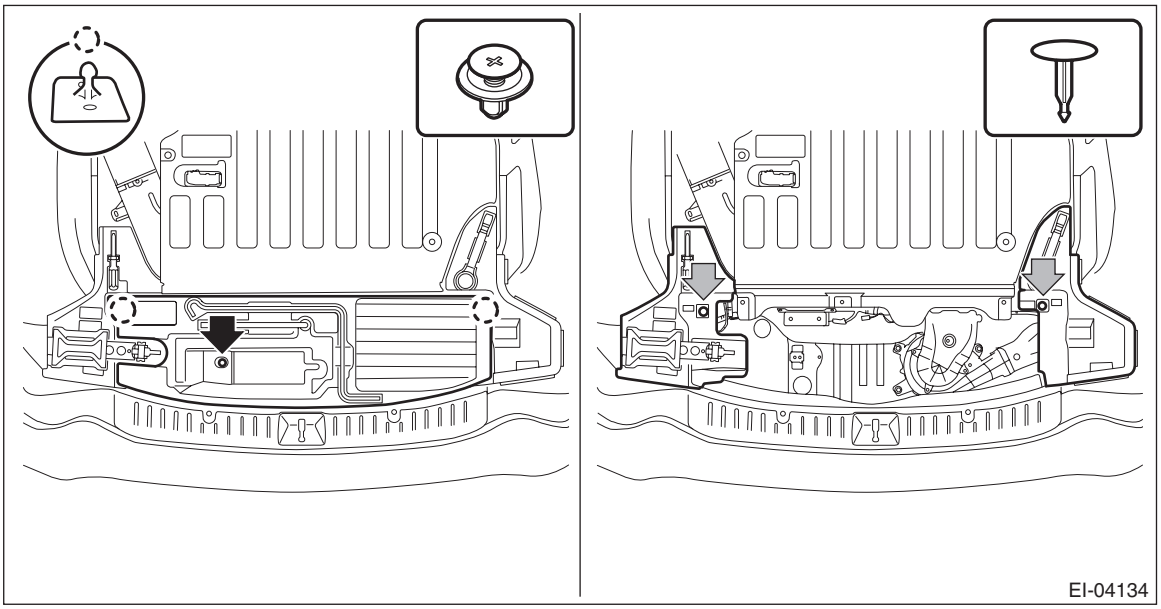

3) Remove the rear seat cushion and fold the backrest assemblies LH and RH. <Ref. to SE-23, REMOVAL, Rear Seat.>
4) Remove the spacer - rear floor front.
   (1) Release the clips, and fold back the bottom of the cover COMPL - rear backrest LH and RH of the rear seat back.
   (2) Release the clips and claws, then detach the spacer - rear floor front.

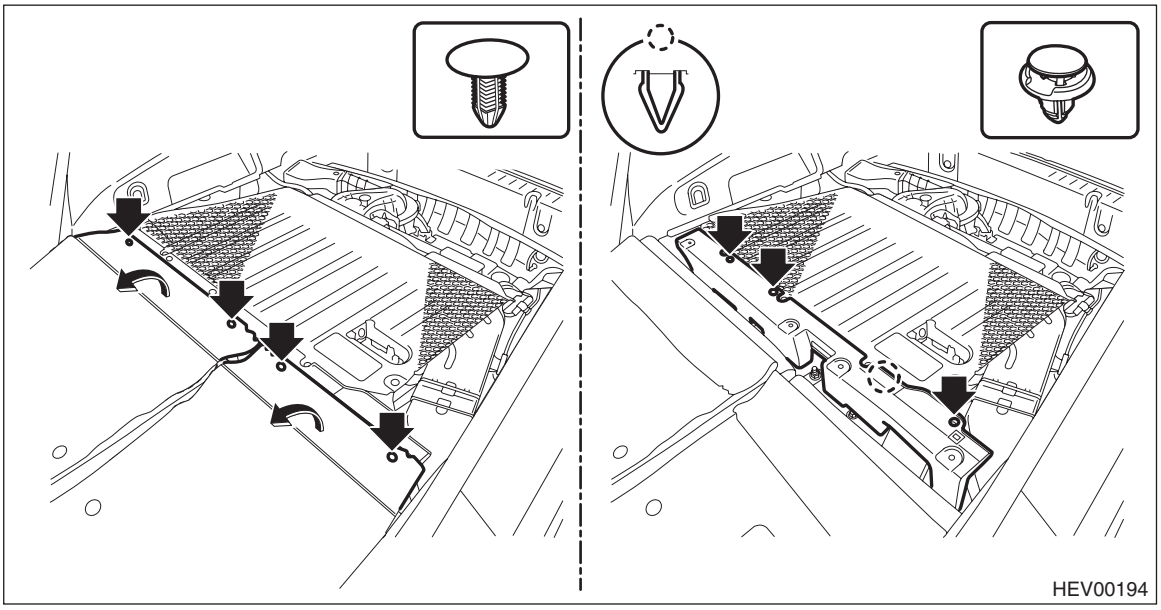

5) Remove the TORX® bolts, release the clips, and then remove the battery cover.

Preparation tool:
TORX® T25 or T30

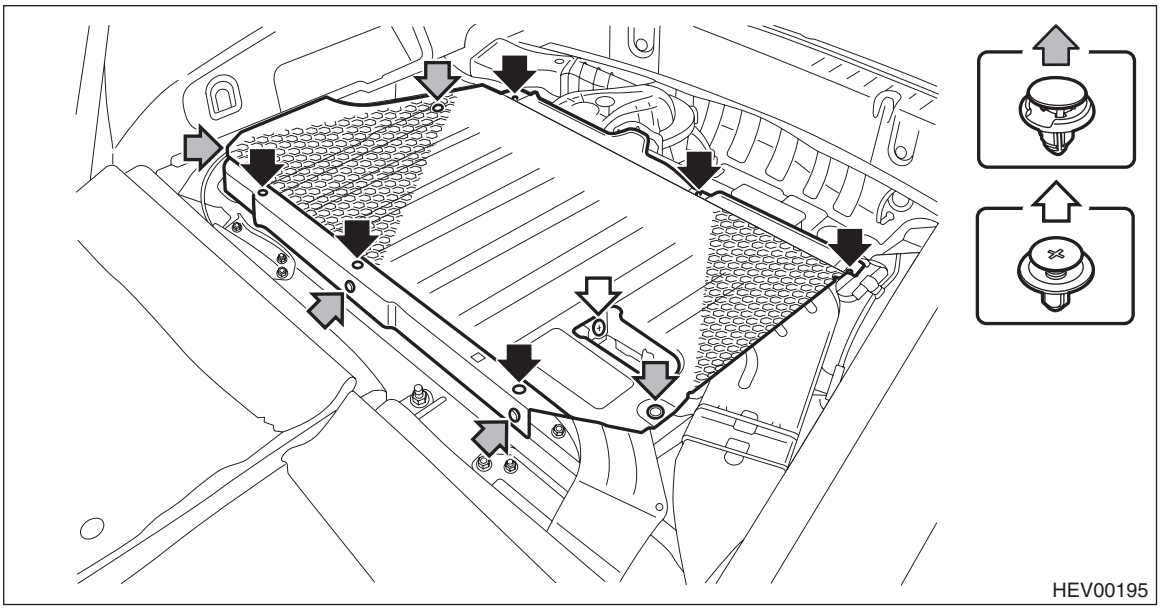

6) Remove the inverter cover.
(1) Remove the bolts and ground terminal.
(2) Release the cable clips, and remove the inverter cover.

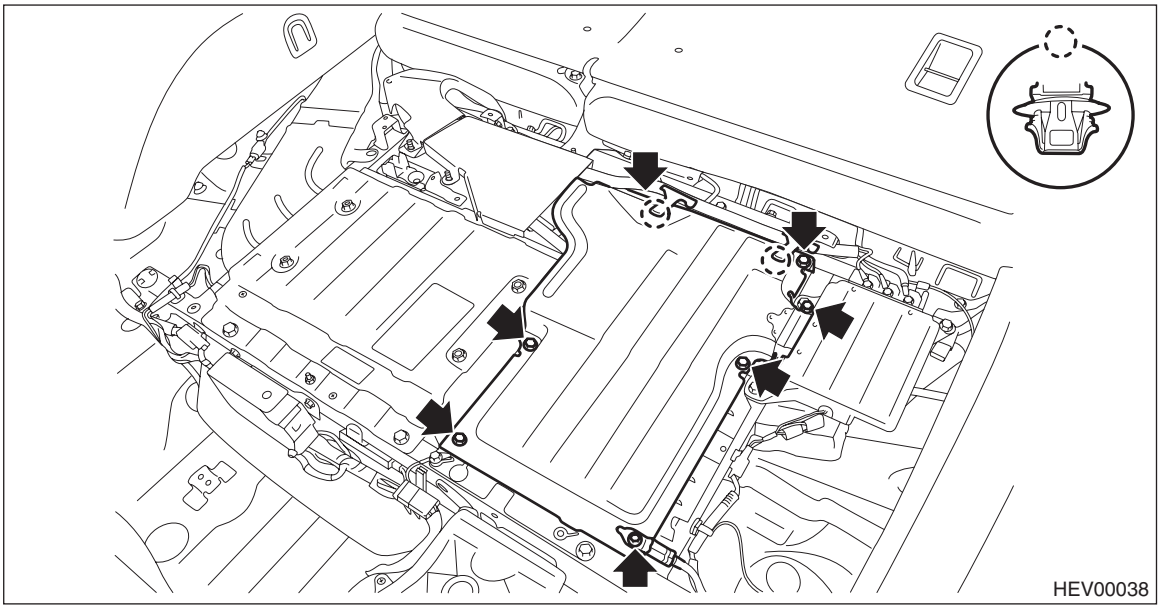

7) Perform zero-voltage test.
(1) Measure the voltage of the high voltage DC line at the high voltage battery side of the electric noise filter.

Preparation tool:
Insulation multimeter

Standard: 0 V

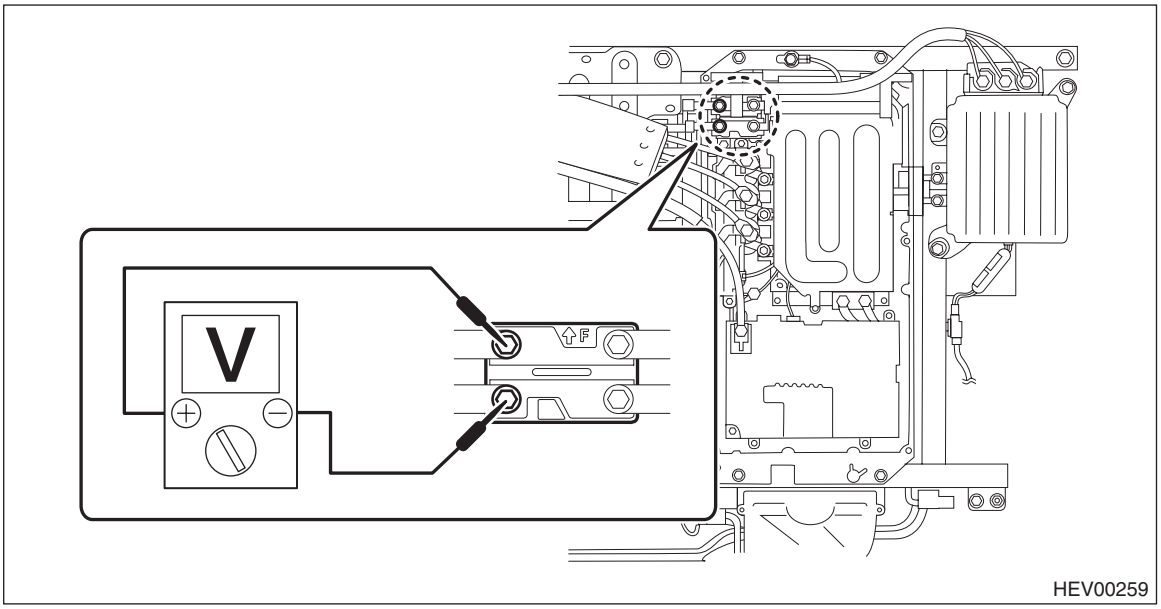

8) Remove the DC/DC converter. <Ref. to HEV-38, REMOVAL, DC/DC Converter.>
9) Remove the drive motor inverter amperage sensor. <Ref. to HEV-27, REMOVAL, Drive Motor Inverter Current Sensor.>
10) Remove the drive motor inverter.
(1) Remove the bolts to remove the inverter shield.
(2) Remove the bolts, then disconnect the bus bar between the electric noise filter and the electric oil pump inverter.

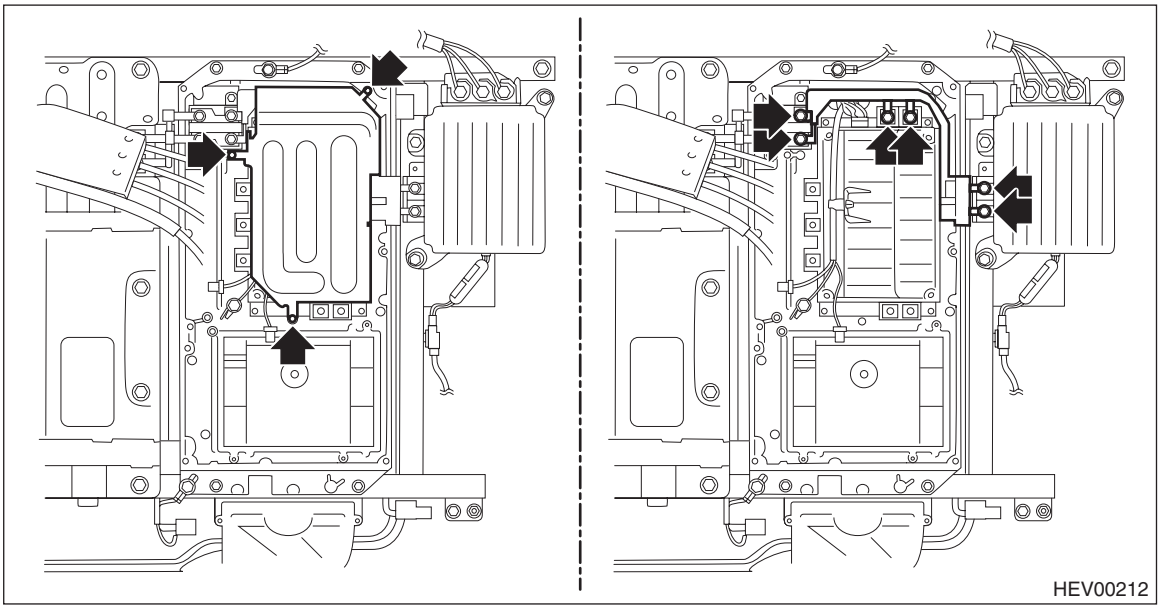

(3) Release the connector and the harness clip.

(4) Remove the bolts, and then remove the drive motor inverter.

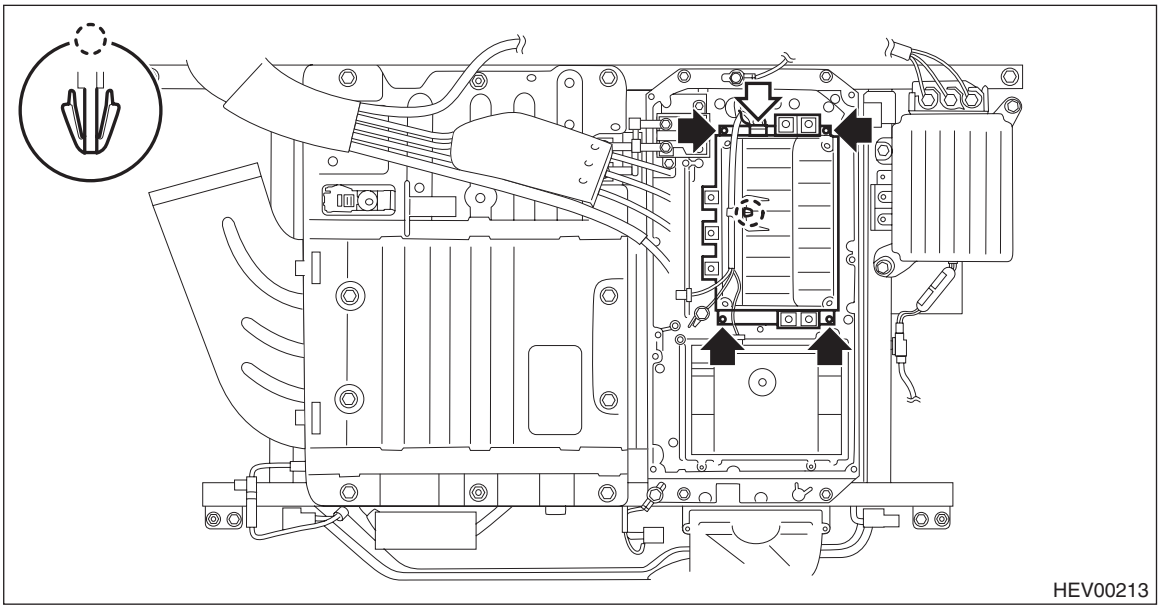

2. ELECTRIC OIL PUMP INVERTER

WARNING:
The hybrid system includes a high voltage circuit. Mishandling could cause accidents such as electric shock or leak. Always check "CAUTION (HYBRID SYSTEM)" and perform the proper operation. <Ref. to PC-6, CAUTION (HYBRID SYSTEM), Precaution.>

1) Remove the service disconnect plug. <Ref. to HEV-15, REMOVAL, Service Plug.>
2) Release the clips and claws, then detach the sub-trunk assembly and the spacer - rear floor side.

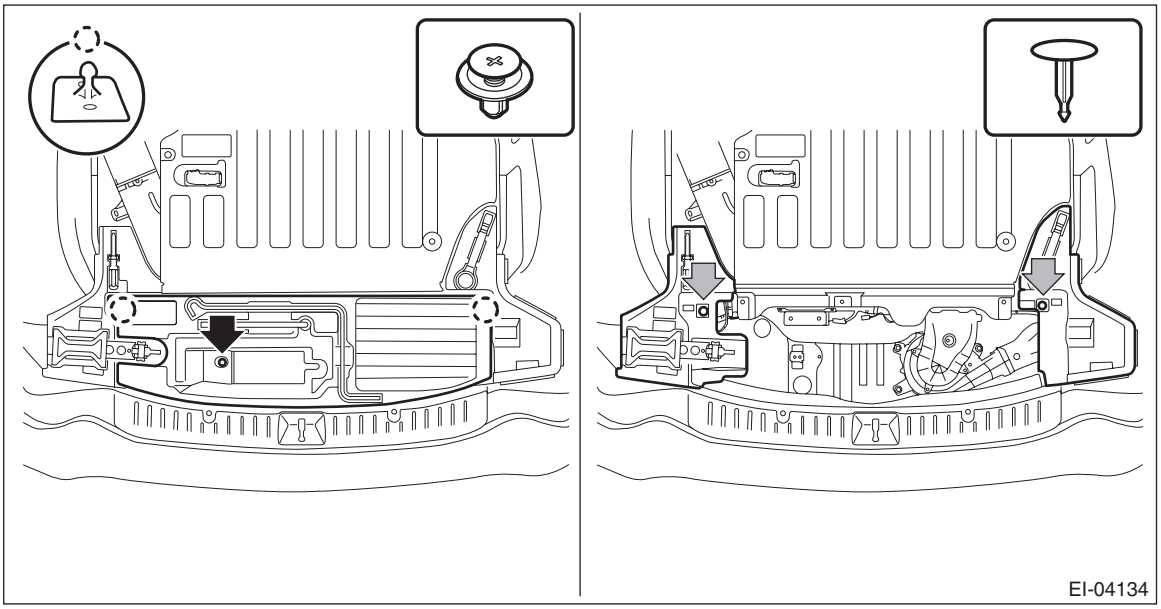

3) Remove the rear seat cushion and fold the backrest assemblies LH and RH. <Ref. to SE-23, REMOVAL, Rear Seat.>

4) Remove the spacer - rear floor front.
   (1) Release the clips, and fold back the bottom of the cover COMPL - rear backrest LH and RH of the rear seat back.
   (2) Release the clips and claws, then detach the spacer - rear floor front.

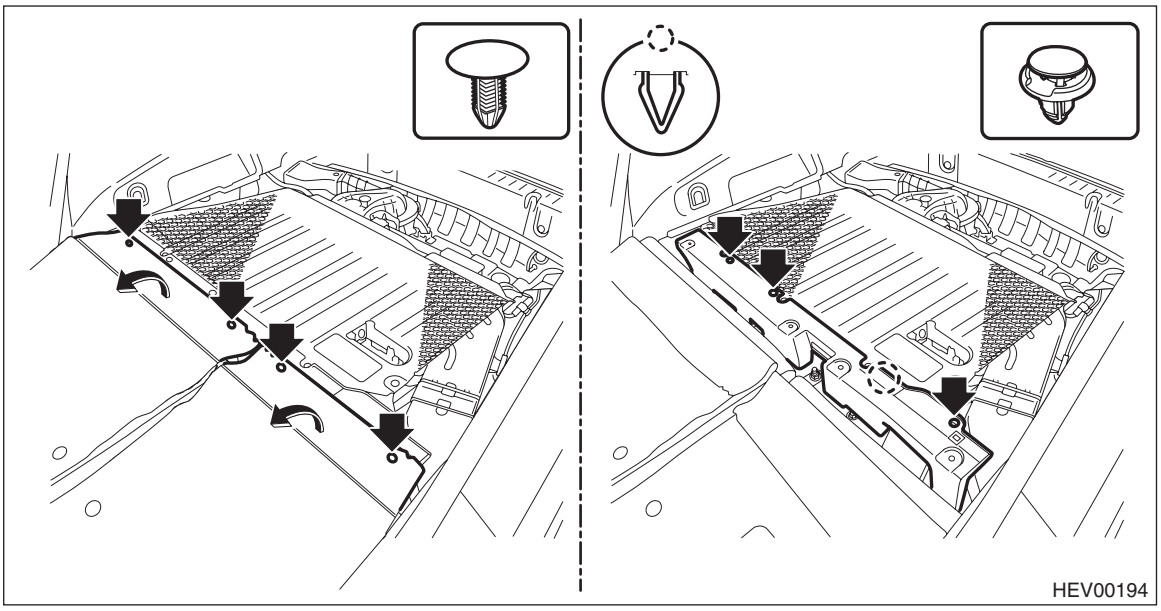

5) Remove the TORX® bolts, release the clips, and then remove the battery cover.

Preparation tool:
TORX® T25 or T30

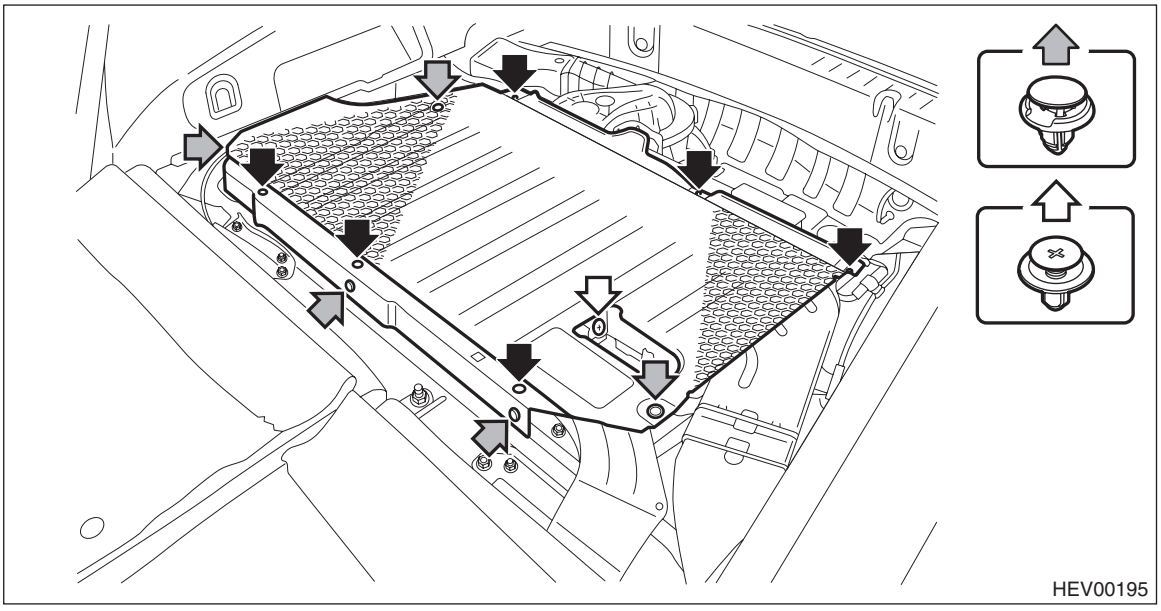

6) Remove the inverter cover.
   (1) Remove the bolts and ground terminal.
   (2) Release the cable clips, and remove the inverter cover.

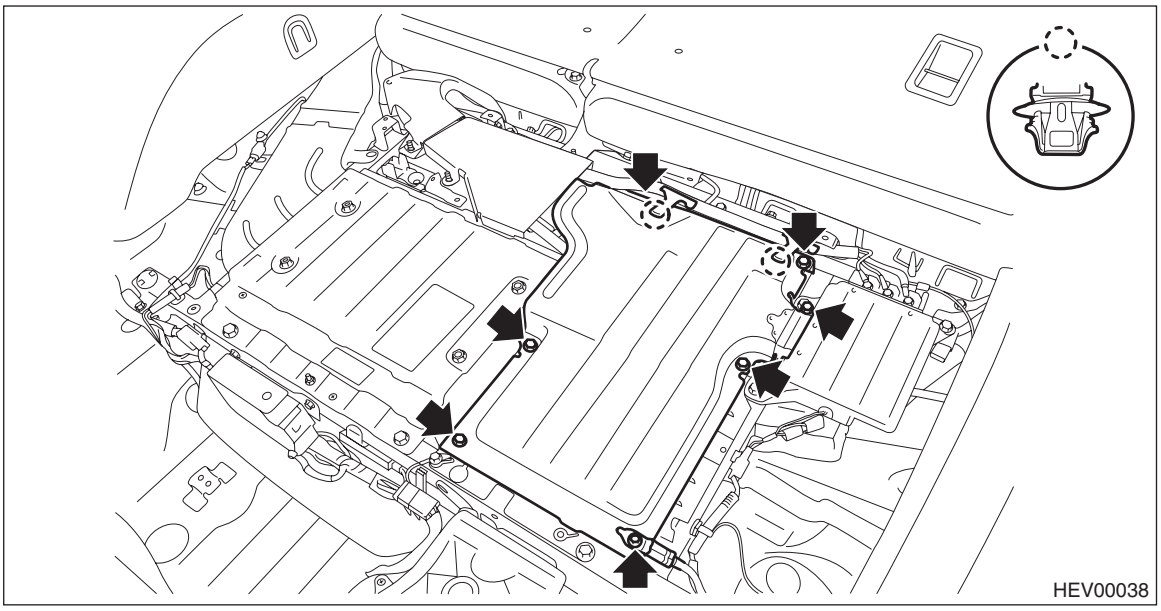

7) Perform zero-voltage test.
   (1) Measure the voltage of the high voltage DC line at the high voltage battery side of the electric noise filter.

Preparation tool:
Insulation multimeter

Standard: 0 V

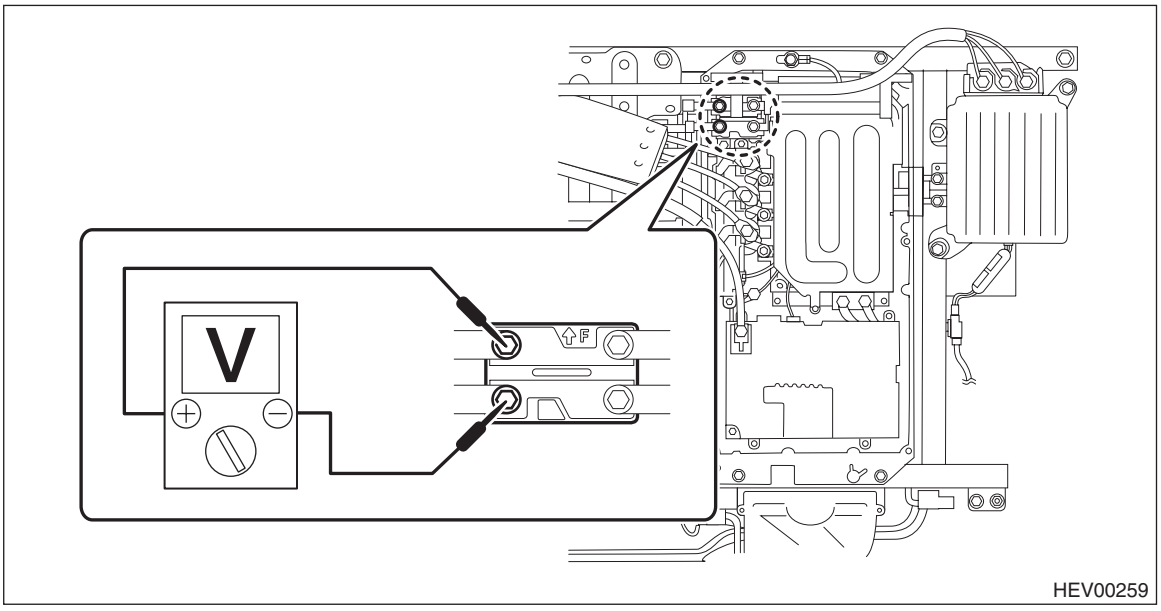

8) Remove the electric oil pump inverter.
(1) Remove the bolt and disconnect the power cable (100 V).

CAUTION:
- **Be careful not to use excessive force when disconnecting the power cable to avoid any damage.**
- **Always wrap the disconnected power cable terminals with insulating tape.**

(2) Remove the bolts to remove the inverter shield.

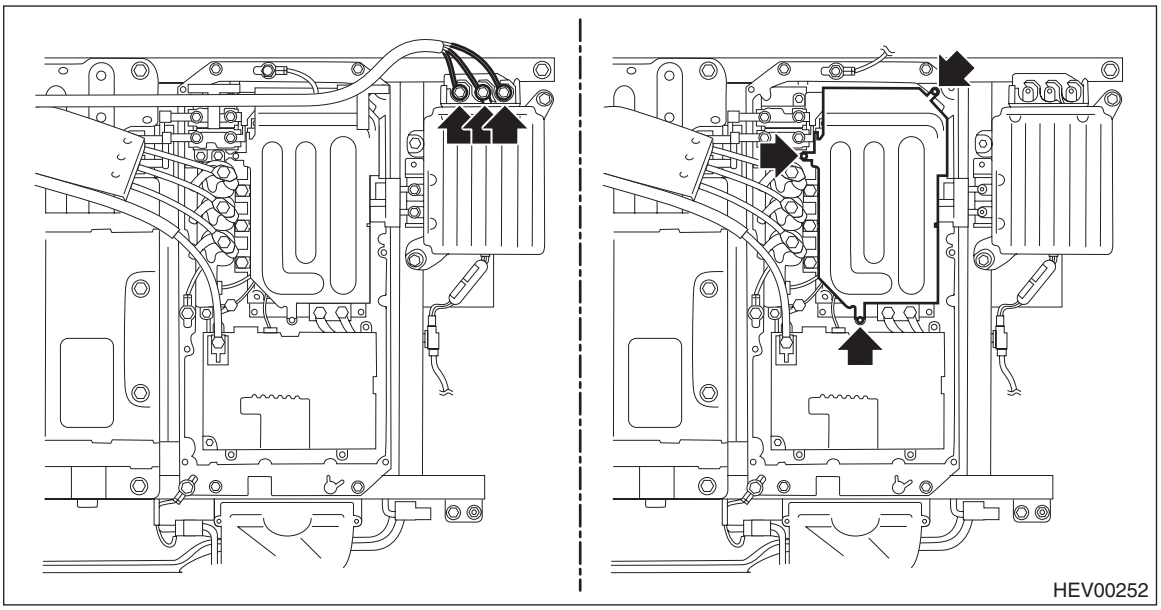

(3) Remove the bolts, then disconnect the bus bar between the electric noise filter and the electric oil pump inverter.
(4) Remove the connectors and bolts, and remove the electric oil pump inverter.

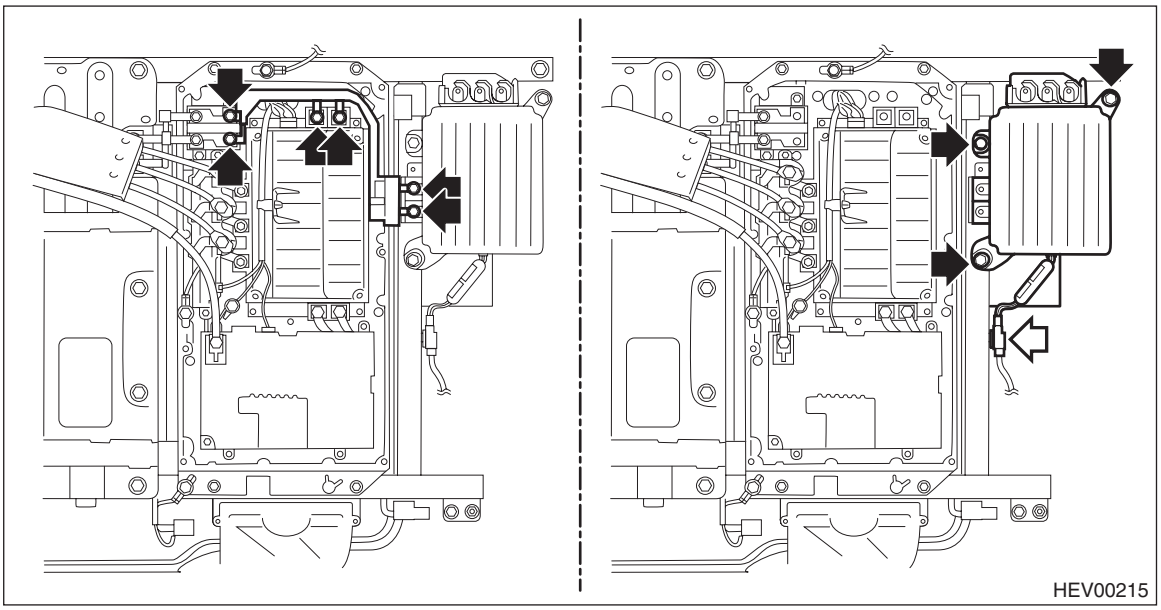

(5) Remove the inverter spacer from the electric oil pump inverter as necessary.

B: INSTALLATION

1. DRIVE MOTOR INVERTER

WARNING:
The hybrid system includes a high voltage circuit. Mishandling could cause accidents such as electric shock or leak. Always check "CAUTION (HYBRID SYSTEM)" and perform the proper operation. <Ref. to PC-6, CAUTION (HYBRID SYSTEM), Precaution.>

1) Install the drive motor inverter.

CAUTION:
Replace the EPT sealer attached to the inverter frame assembly with a new part.

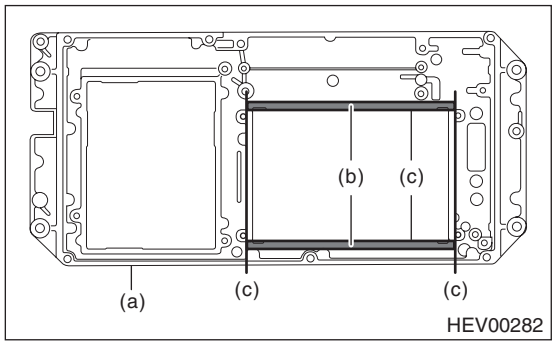

(a) Inverter frame ASSY
(b) EPT sealer
(c) Reference line for attachment

Tightening torque:
6.5 N·m (0.7 kgf-m, 4.8 ft-lb)

2) Connect the bus bar.

Tightening torque:
T1: 6.5 N·m (0.7 kgf-m, 4.8 ft-lb)
T2: 7.5 N·m (0.8 kgf-m, 5.5 ft-lb)

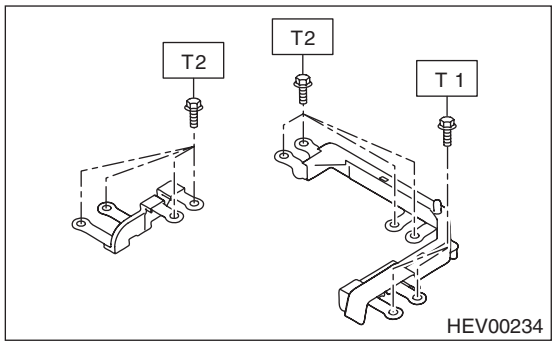

3) Install the inverter shield.

Tightening torque:
6.5 N·m (0.7 kgf-m, 4.8 ft-lb)

4) Install the drive motor inverter amperage sensor. <Ref. to HEV-30, INSTALLATION, Drive Motor Inverter Current Sensor.>
5) Install the DC/DC converter. <Ref. to HEV-41, INSTALLATION, DC/DC Converter.>
6) Install the ground terminal and inverter cover.

CAUTION:
Check that the sound proofing material on the inverter cover is not detached or damaged before installing the inverter cover.

Tightening torque:
7.5 N·m (0.8 kgf-m, 5.5 ft-lb)

7) Install the battery cover.

Tightening torque:
7.5 N·m (0.8 kgf-m, 5.5 ft-lb)

8) Install the spacer - rear floor front.
9) Install the rear seat cushion. <Ref. to SE-26, INSTALLATION, Rear Seat.>
10) Install the sub-trunk assembly and the spacer - rear floor side.

11) Install the service disconnect plug. <Ref. to HEV-16, INSTALLATION, Service Plug.>

2. ELECTRIC OIL PUMP INVERTER

WARNING:
The hybrid system includes a high voltage circuit. Mishandling could cause accidents such as electric shock or leak. Always check "CAUTION (HYBRID SYSTEM)" and perform the proper operation. <Ref. to PC-6, CAUTION (HYBRID SYSTEM), Precaution.>

1) Install the electric oil pump inverter.

NOTE:
If the inverter spacer has been removed, install it to the electric oil pump inverter.

Tightening torque:
22 N·m (2.2 kgf-m, 16.2 ft-lb)

2) Connect the bus bar.

Tightening torque:
T1: 6.5 N·m (0.7 kgf-m, 4.8 ft-lb)
T2: 7.5 N·m (0.8 kgf-m, 5.5 ft-lb)

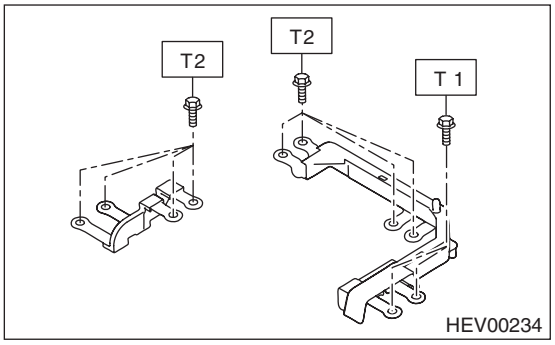

3) Install the inverter shield.

Tightening torque:
6.5 N·m (0.7 kgf-m, 4.8 ft-lb)

4) Connect the power cable (100 V).

CAUTION:
• Connect the power cable properly referring to the letters (U, V, and W) imprinted on the electric oil pump inverter body. The power cable with the identification tape is connected to (U) and the power cable with a claw is connected to (V).
• Do not apply excessive force to the terminals and watch to make sure the cable is not damaged or pinched.

Tightening torque:
7.5 N·m (0.8 kgf-m, 5.5 ft-lb)

5) Install the ground terminal and inverter cover.

CAUTION:
Check that the sound proofing material on the inverter cover is not detached or damaged.

Tightening torque:
7.5 N·m (0.8 kgf-m, 5.5 ft-lb)

6) Install the battery cover.

Tightening torque:
7.5 N·m (0.8 kgf-m, 5.5 ft-lb)

7) Install the spacer - rear floor front.
8) Install the rear seat cushion. <Ref. to SE-26, INSTALLATION, Rear Seat.>
9) Install the sub-trunk assembly and the spacer - rear floor side.
10) Install the service disconnect plug. <Ref. to HEV-16, INSTALLATION, Service Plug.>

12.Power Cable

A: REMOVAL

WARNING:
The hybrid system includes a high voltage circuit. Mishandling could cause accidents such as electric shock or leak. Always check "CAUTION (HYBRID SYSTEM)" and perform the proper operation. <Ref. to PC-6, CAUTION (HYBRID SYSTEM), Precaution.>

1) Remove the service disconnect plug. <Ref. to HEV-15, REMOVAL, Service Plug.>
2) Release the clips and claws, then detach the sub-trunk assembly and the spacer - rear floor side.

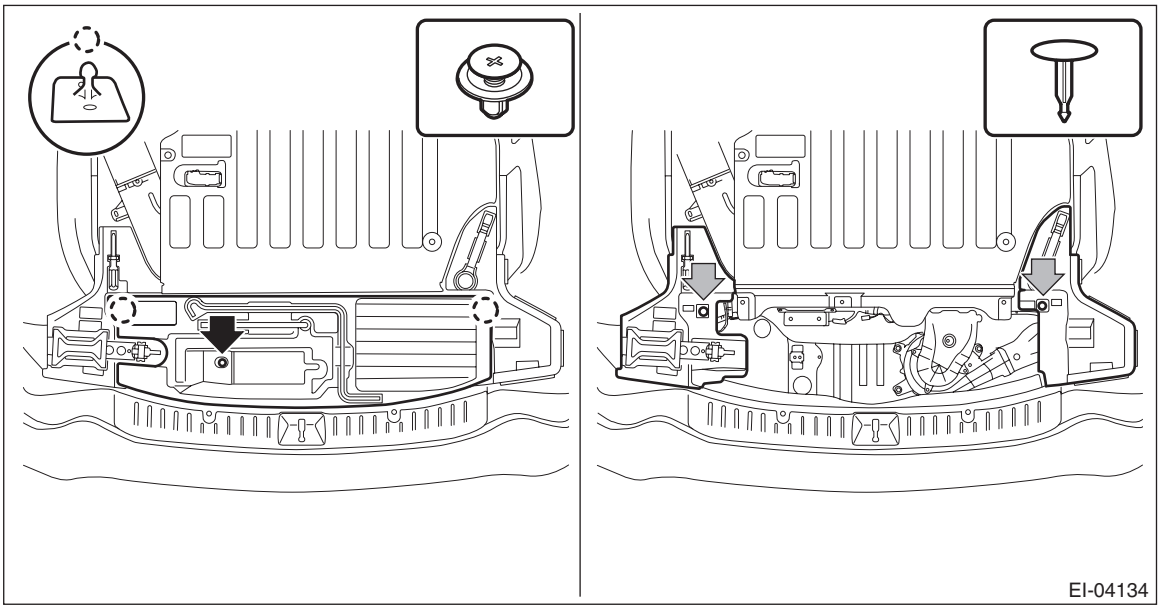

3) Remove the rear seat cushion and fold the backrest assemblies LH and RH. <Ref. to SE-23, REMOVAL, Rear Seat.>
4) Remove the spacer - rear floor front.
   (1) Release the clips, and fold back the bottom of the cover COMPL - rear backrest LH and RH of the rear seat back.
   (2) Release the clips and claws, then detach the spacer - rear floor front.

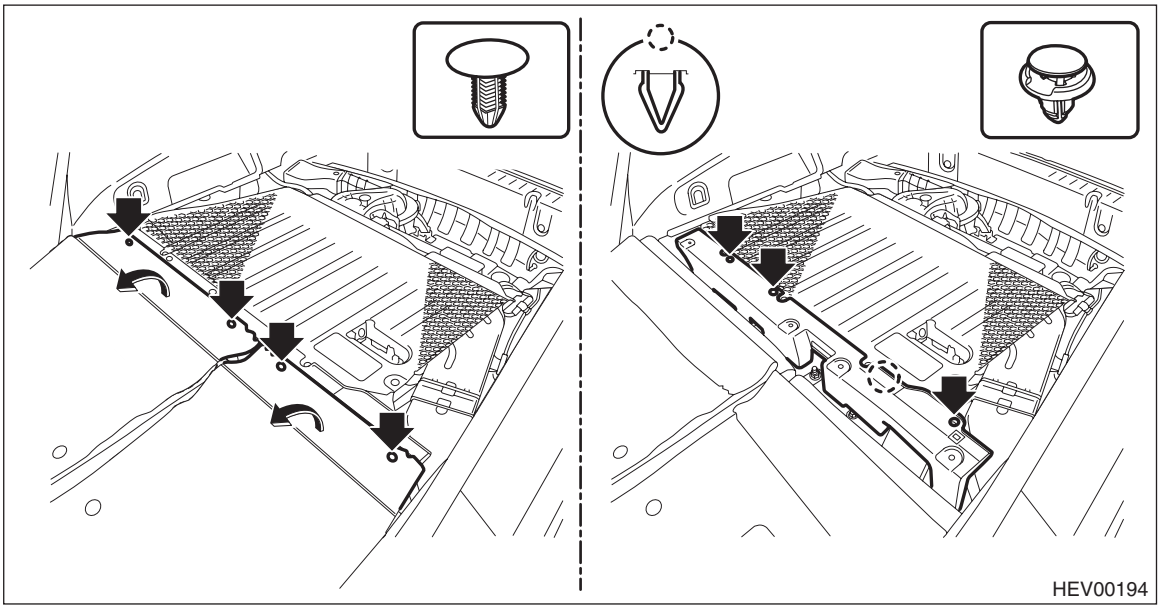

5) Remove the TORX® bolts, release the clips, and then remove the battery cover.

Preparation tool:
TORX® T25 or T30

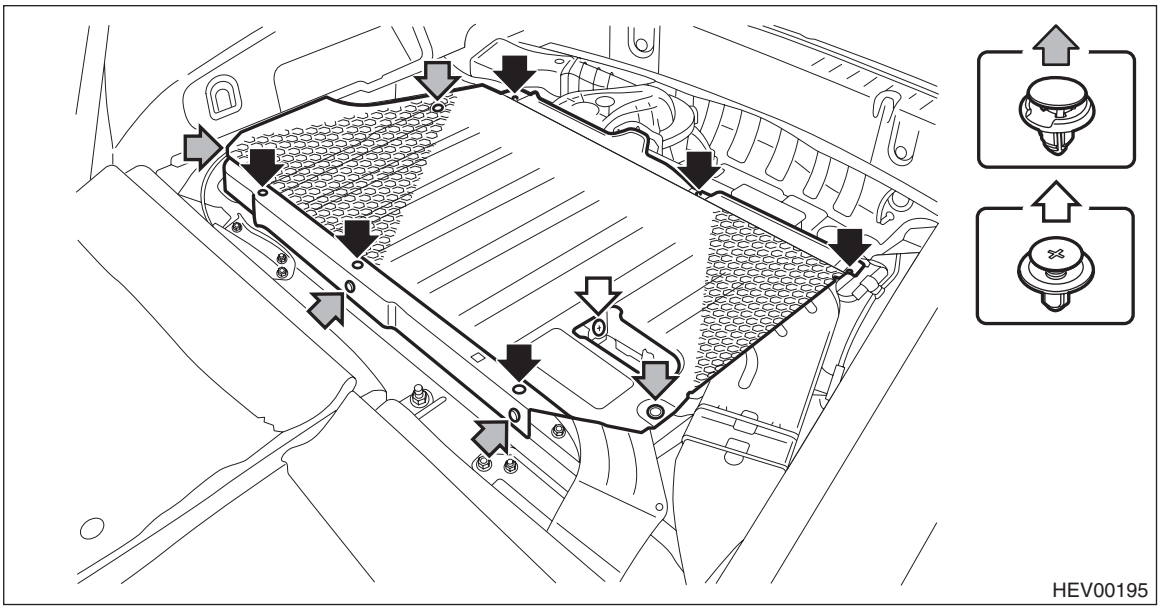

6) Remove the inverter cover.
(1) Remove the bolts and ground terminal.
(2) Release the cable clips, and remove the inverter cover.

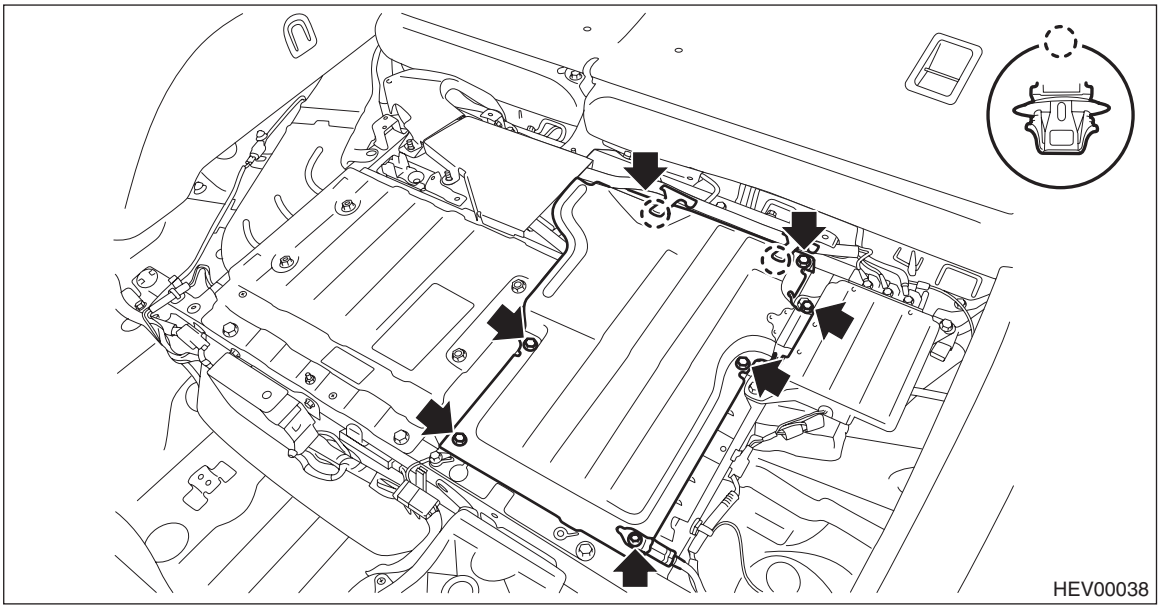

7) Perform zero-voltage test.
(1) Measure the voltage of the high voltage DC line at the high voltage battery side of the electric noise filter.

Preparation tool:
Insulation multimeter

Standard: 0 V

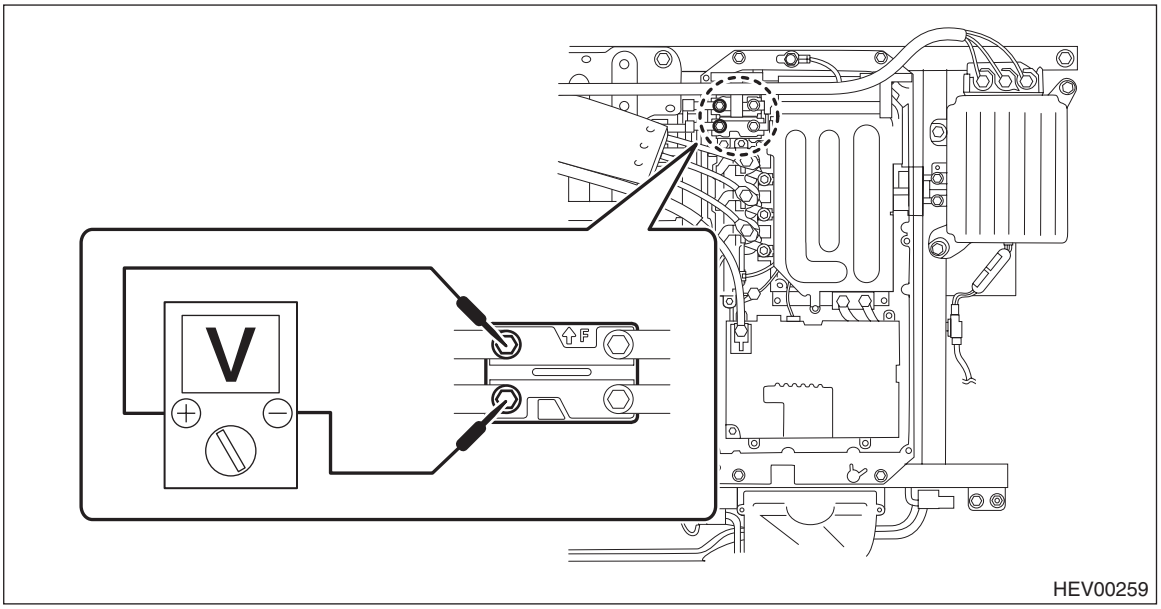

8) Remove the nut and remove the cover - shield battery and the cover - shield seat.

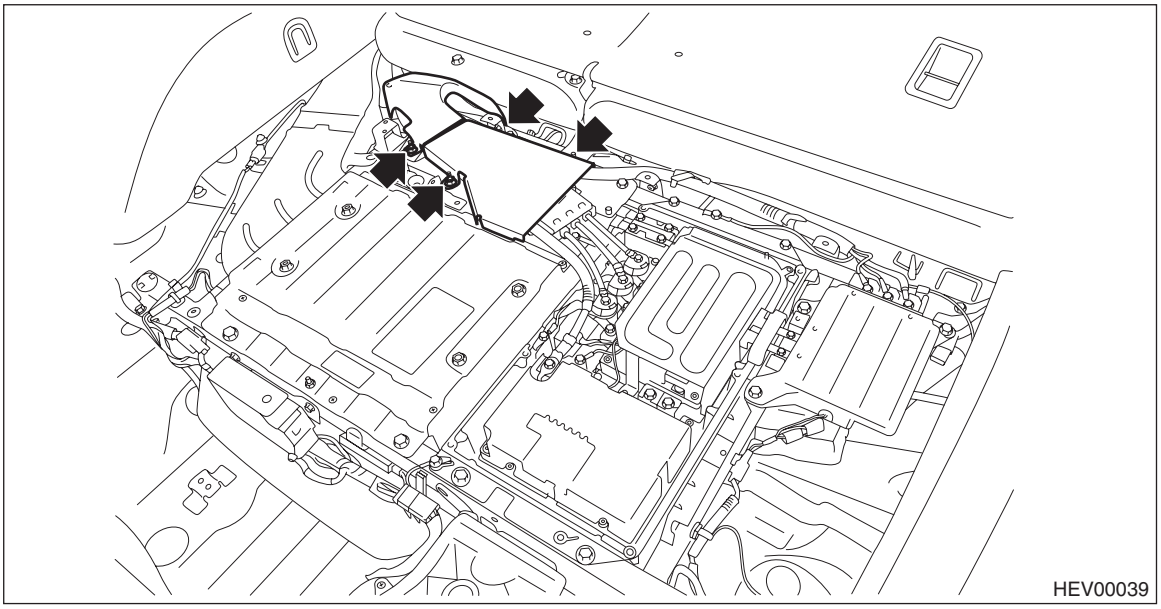

9) Remove the front under cover. <Ref. to EI-29, REMOVAL, Front Under Cover.>
10) Remove the floor under protector. <Ref. to EI-31, REMOVAL, Floor Under Protector.>
11) Remove the fuel tank. <Ref. to FU(H4DO(HEV))-105, REMOVAL, Fuel Tank.>

12) Remove the bolt securing the cable assembly - parking brake.

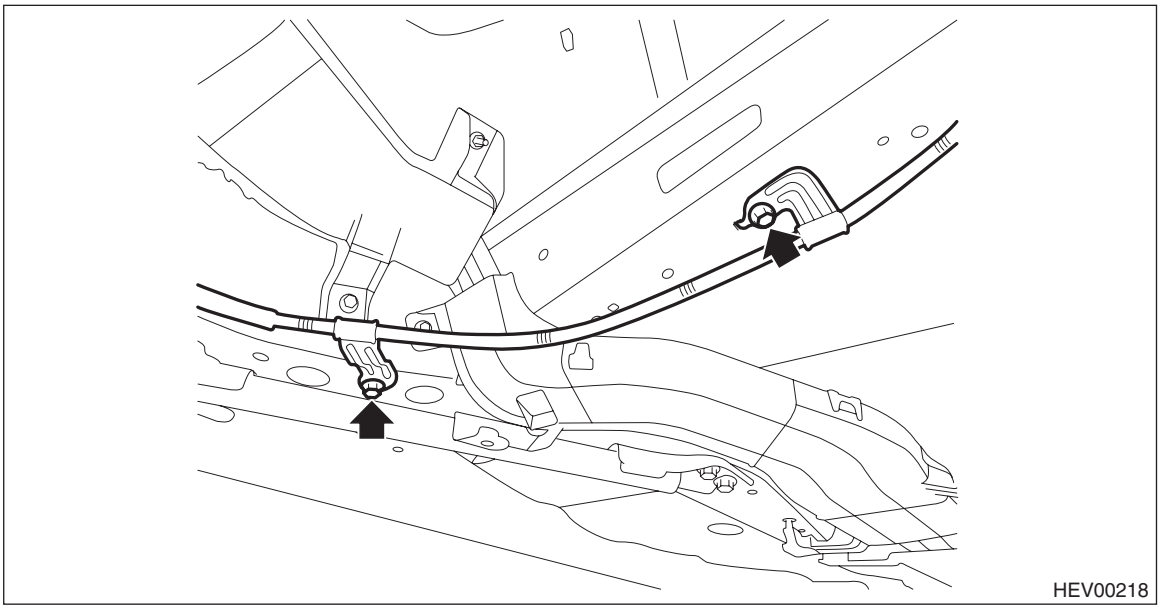

13) Remove the power cable.
(1) Remove the bolts and nuts and disconnect the ground terminal and the power cable.

CAUTION:
- **Be careful not to use excessive force when disconnecting the power cable to avoid any damage.**
- **Always wrap the disconnected power cable terminals with insulating tape.**

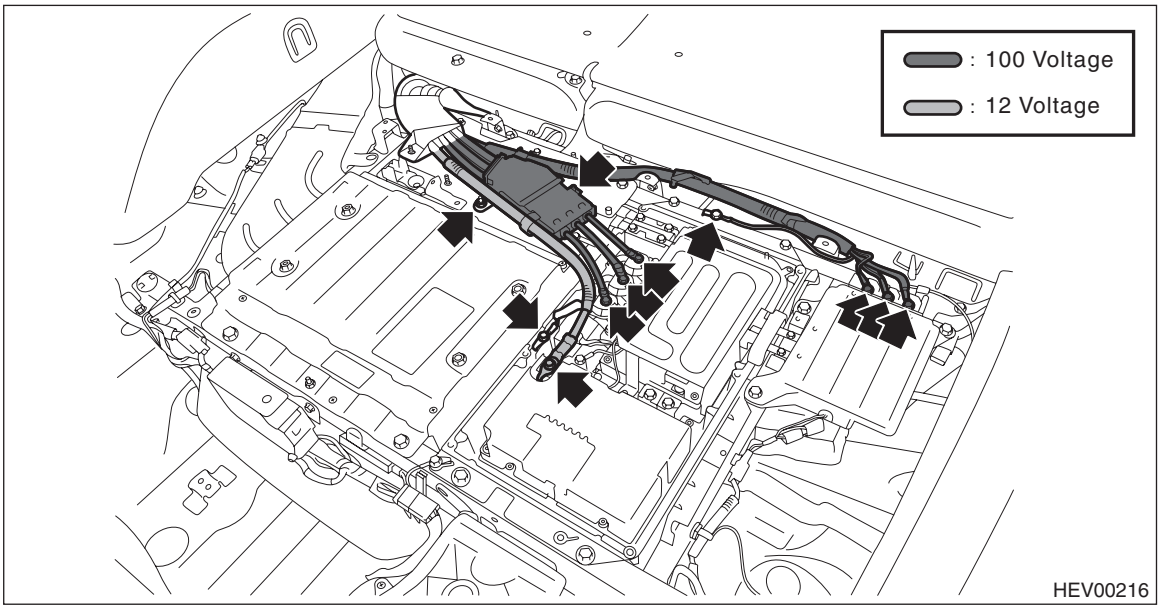

(2) Remove the nut and disconnect the power cable positive terminal from the 12 volt auxiliary battery.

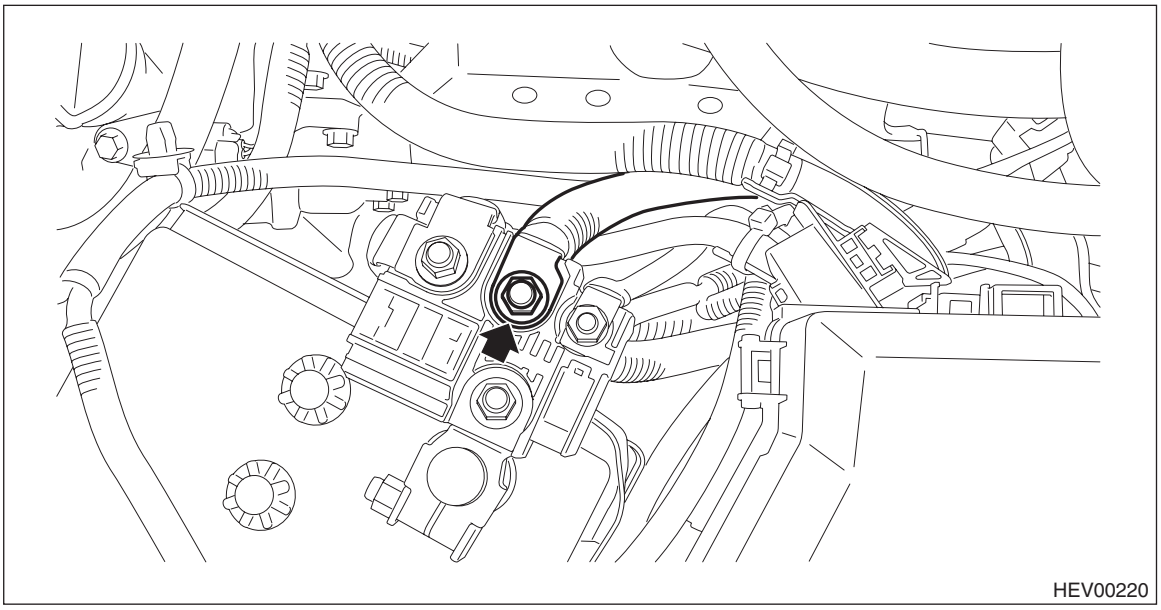

(3) Release the power cable clamp and the power cable clip.

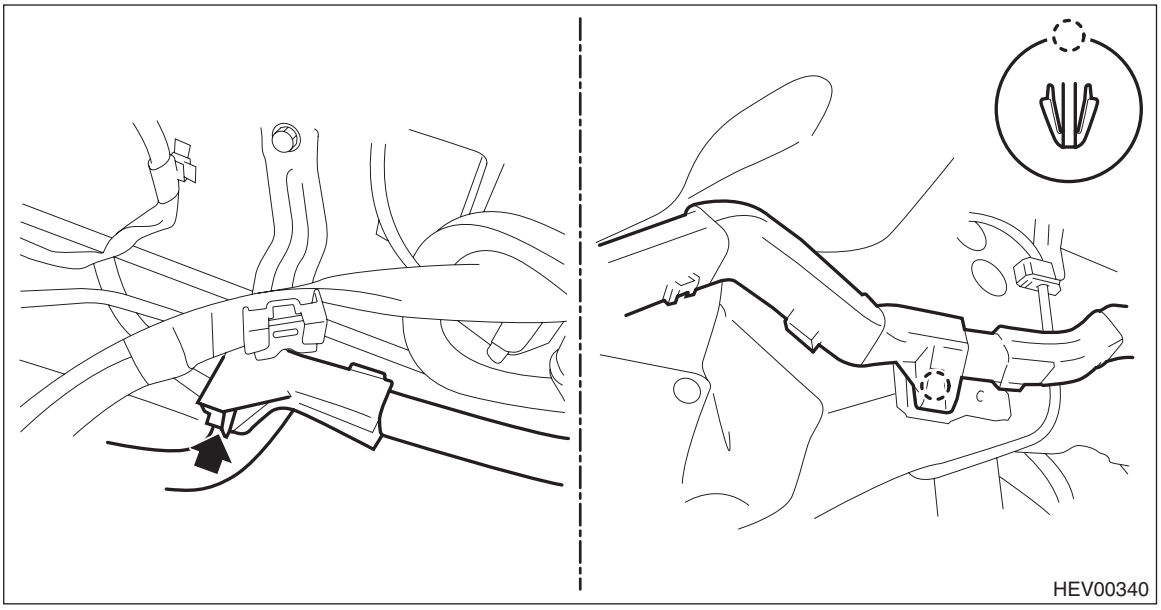

(4) Remove the bolt, then remove the power connect cover and the gasket.

(5) Remove the bolts and nuts to pull out the terminal box assembly.

CAUTION:
- **Be sure to insulate the power cable terminal by wrapping it with electrical tape.**
- **Be careful not to use excessive force or damage the power cable during removal.**

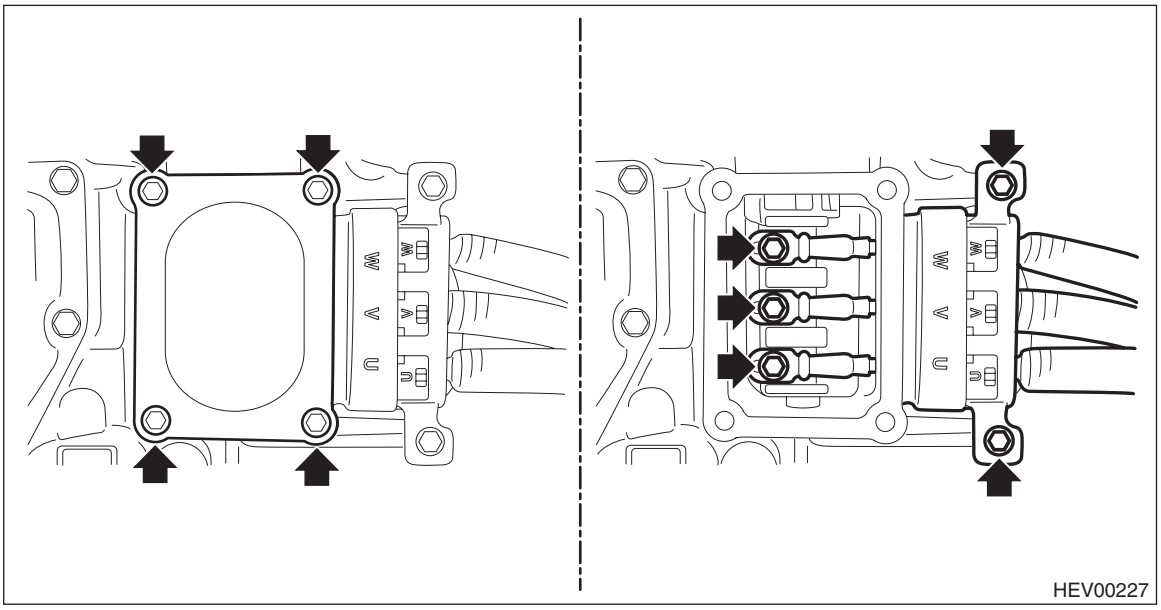

HEV00227

NOTE:
To prevent intrusion of foreign matter such as oil, water and dirt after removal, install the power connect cover and cover the terminal box assembly with tape.

(6) Push the claw (B) while pulling the slide lock (A) in the direction of the arrow, and then disconnect the electric oil pump harness connector.

CAUTION:
- **After disconnecting the connectors, cover the female side connector with a clean cloth or plastic bag to protect from intrusion of foreign matter such as oil, water, or dust. Also, cover the male side connector using electrical tape.**
- **If any foreign matter is found, remove them carefully so that the electrodes in the connector are not damaged. If there is any moisture, dry it completely.**
- **Be careful not to use excessive force when removing the electric oil pump harness connector to avoid any damage.**

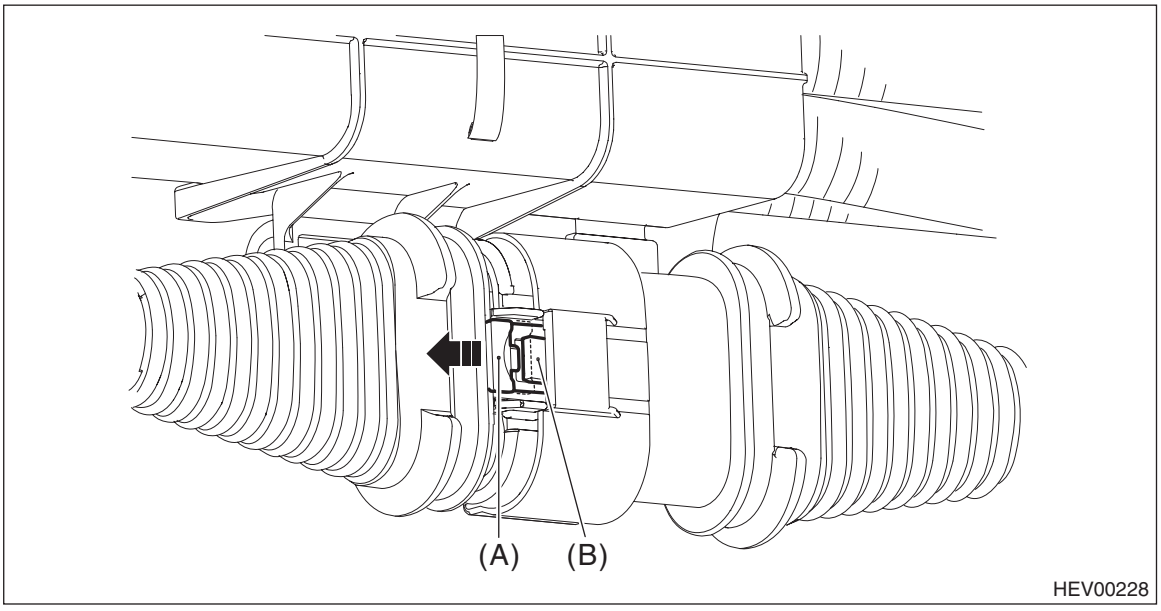

HEV00228

(7) Remove the bolts and nuts, release the clips and claws, and disconnect the power cable from the vehicle.

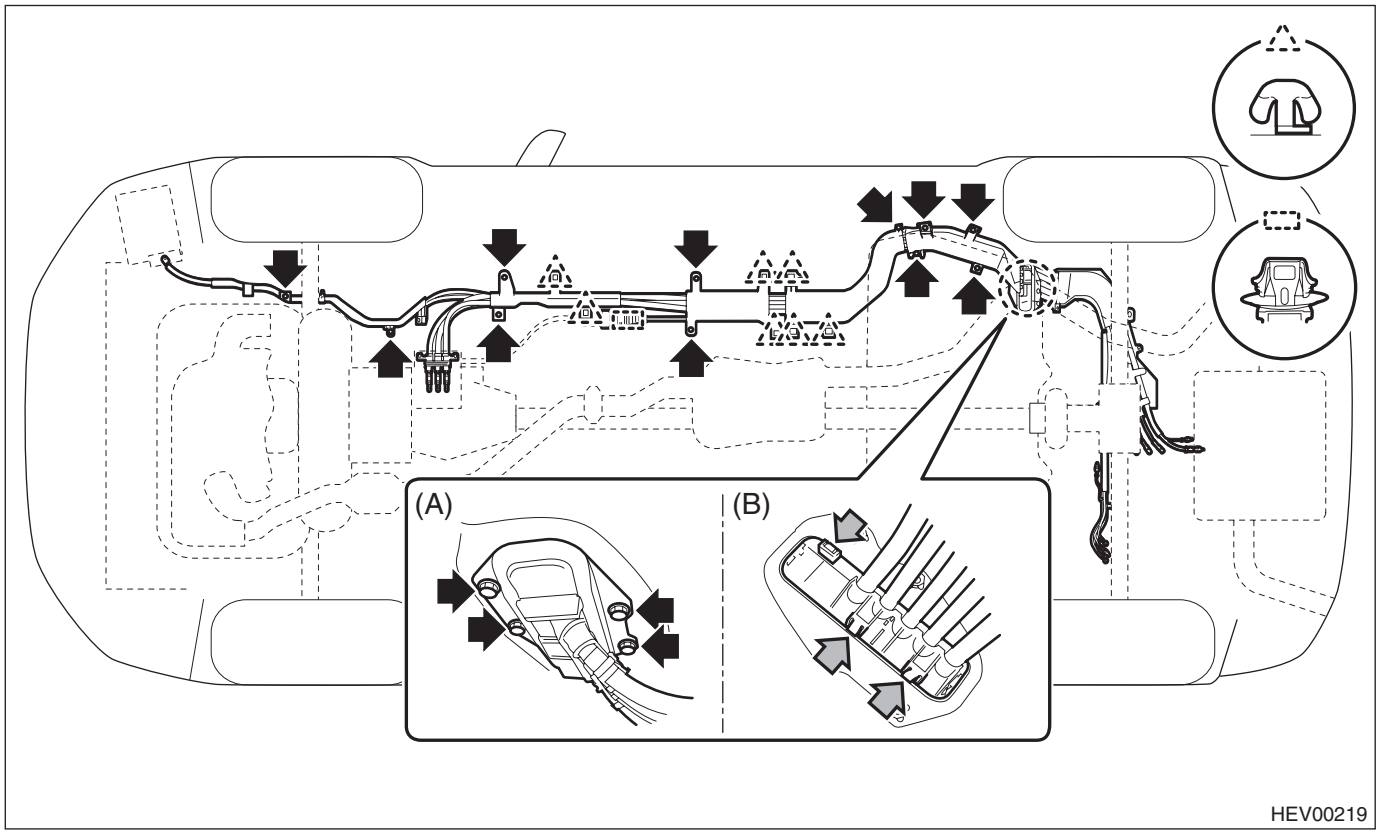

(A) Outside passenger room (B) Passenger room side

B: INSTALLATION

WARNING:
The hybrid system includes a high voltage circuit. Mishandling could cause accidents such as electric shock or leak. Always check "CAUTION (HYBRID SYSTEM)" and perform the proper operation. <Ref. to PC-6, CAUTION (HYBRID SYSTEM), Precaution.>

1) Install the power cable.

CAUTION:
• When connecting the power cable, pay attention to the letters (U, V, and W) imprinted on the drive motor inverter amperage sensor body as well as on the protector of the power cable.
• Connect the power cable properly referring to the letters (U, V, and W) imprinted on the electric oil pump inverter body. The power cable with the identification tape is connected to (U) and the power cable with a claw is connected to (V).
• Match the letters (U, V, and W) imprinted on both the power cable and the transmission body, then insert the cable to the transmission and fix securely.
• Insert the electric oil pump connector into the mating connector until a click is heard and lock it securely.
• Be careful not to allow foreign matter from entering the drive motor case assembly. If any foreign matter is found, remove them carefully so that the electrodes are not damaged.
• If there is any moisture in the drive motor case assembly, dry it completely before continuing work.
• Do not apply excessive force to the terminals and watch to make sure the cable is not damaged or pinched.
• Replace the power cable clip with a new part.
• Replace power connect cover gasket with a new part.

Tightening torque:
Power cable: 7.5 N·m (0.8 kgf-m, 5.5 ft-lb)
Power connect cover: 25 N·m (2.5 kgf-m, 18.4 ft-lb)

2) Install the cable assembly - parking brake bolt.

Tightening torque:
18 N·m (1.8 kgf-m, 13.3 ft-lb)

3) Install the fuel tank. <Ref. to FU(H4DO(HEV))-111, INSTALLATION, Fuel Tank.>
4) Install the front under protector. <Ref. to EI-32, INSTALLATION, Floor Under Protector.>
5) Install the front under cover. <Ref. to EI-29, INSTALLATION, Front Under Cover.>
6) Install the cover - shield battery and the cover - shield seat.

Tightening torque:
7.5 N·m (0.8 kgf-m, 5.5 ft-lb)

7) Install the ground terminal and inverter cover.

CAUTION:
Check that the sound proofing material on the inverter cover is not detached or damaged.

Tightening torque:
7.5 N·m (0.8 kgf-m, 5.5 ft-lb)

8) Install the battery cover.

Tightening torque:
7.5 N·m (0.8 kgf-m, 5.5 ft-lb)

9) Install the spacer - rear floor front.
10) Install the rear seat cushion. <Ref. to SE-26, INSTALLATION, Rear Seat.>
11) Install the sub-trunk assembly and the spacer - rear floor side.
12) Install the service disconnect plug. <Ref. to HEV-16, INSTALLATION, Service Plug.>

13.High Voltage Battery Cooling System

A: REMOVAL

1. COOLING DUCT FRONT (FRONT)

1) Disconnect the ground cable from battery. <Ref. to NT-5, BATTERY, NOTE, Note.>

NOTE:
For the 12 volt engine restart battery, disconnect the ground terminal from 12V engine restart battery sensor.
2) Remove the mat - rear floor CTR.
3) Release the clips and claws, then detach the sub-trunk assembly and the spacer - rear floor side LH.

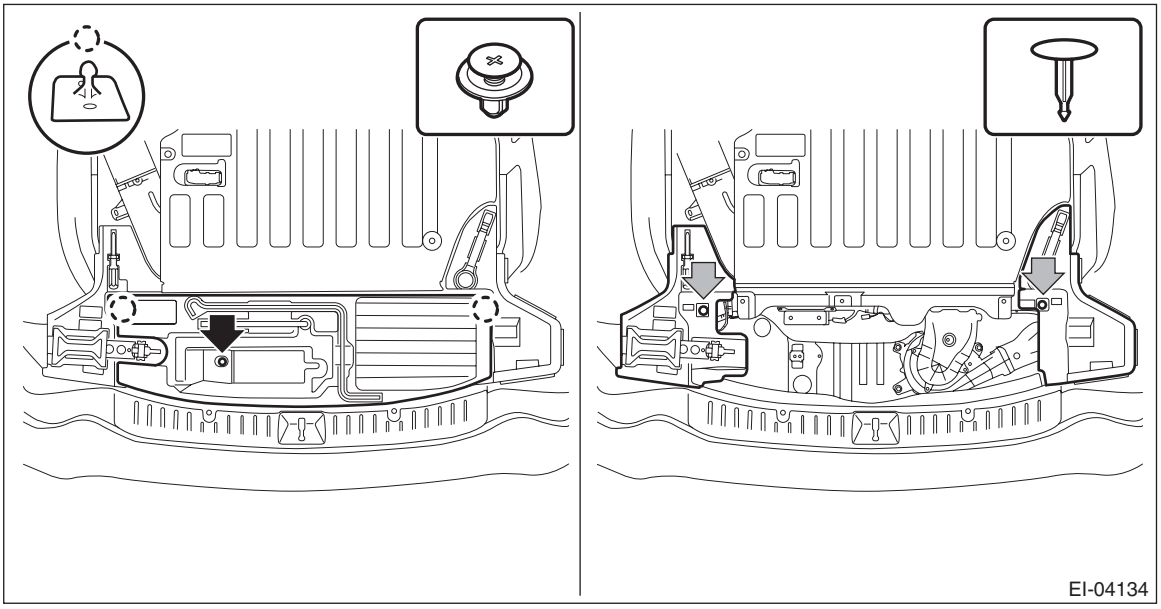

4) Remove the trim panel - rear apron LH.
   (1) Remove the following parts. Refer to “Rear Quarter Trim” of “EXTERIOR/INTERIOR TRIM” section for the work procedures. <Ref. to EI-112, REMOVAL, Rear Quarter Trim.>
   - Trim panel - rear quarter pillar UPR LH
   - Rear seat cushion assembly
   - Cover side sill - rear INN LH
   - Trim panel - rear skirt

   (2) Remove the caps, and remove the bolts.
   (3) Remove the screws, and release the clips.

(4) Disconnect the connectors and remove the trim panel - rear apron LH.

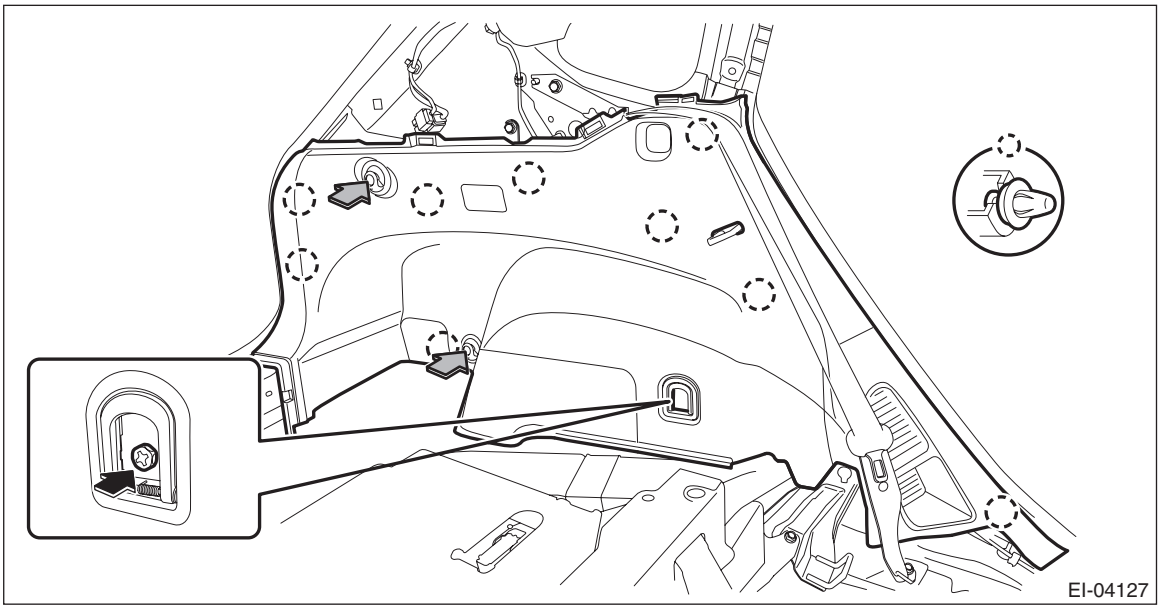

5) Remove the backrest assembly LH. <Ref. to SE-23, REMOVAL, Rear Seat.>
6) Remove the bolts, and remove the hinge assembly - rear backrest.

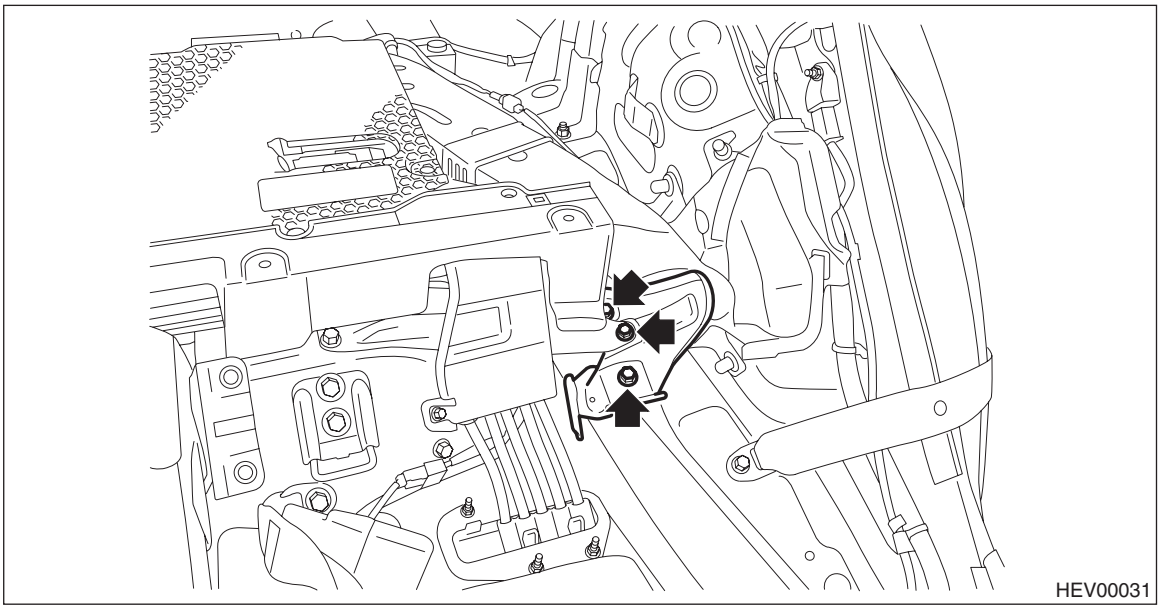

7) Remove the cooling duct front (front).
   (1) Release the clip of the spacer - rear floor front.
   (2) Release the plastic nut and slide lock, and remove the cooling duct front (front).

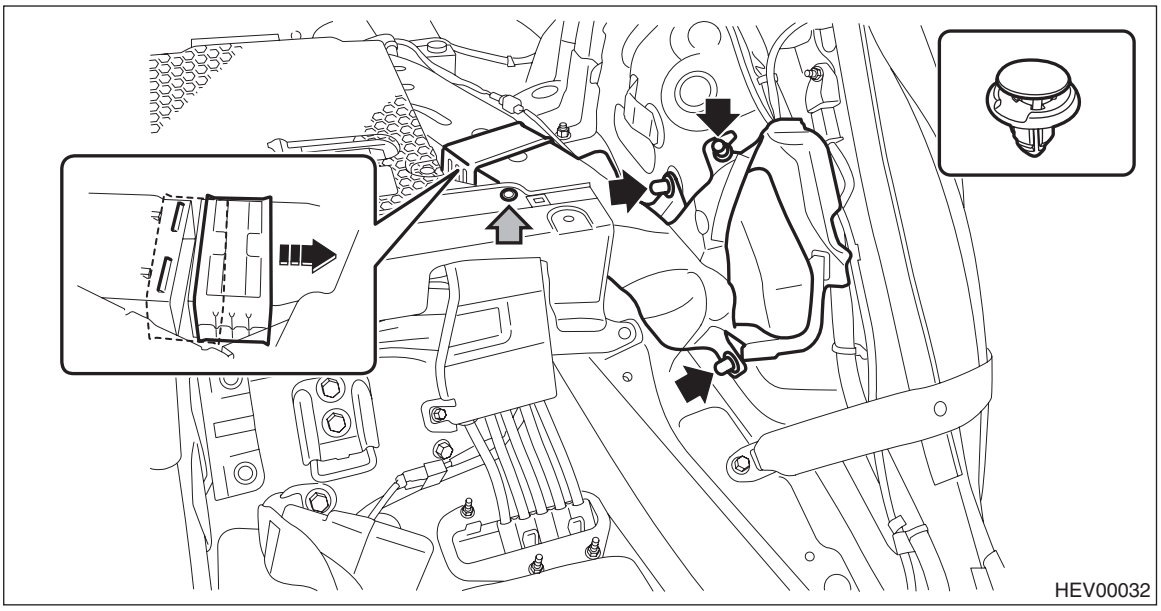

2. COOLING DUCT FRONT (REAR)

WARNING:
The hybrid system includes a high voltage circuit. Mishandling could cause accidents such as electric shock or leak. Always check "CAUTION (HYBRID SYSTEM)" and perform the proper operation. <Ref. to PC-6, CAUTION (HYBRID SYSTEM), Precaution.>

1) Remove the service disconnect plug. <Ref. to HEV-15, REMOVAL, Service Plug.>
2) Release the clips and claws, then detach the sub-trunk assembly and the spacer - rear floor side.

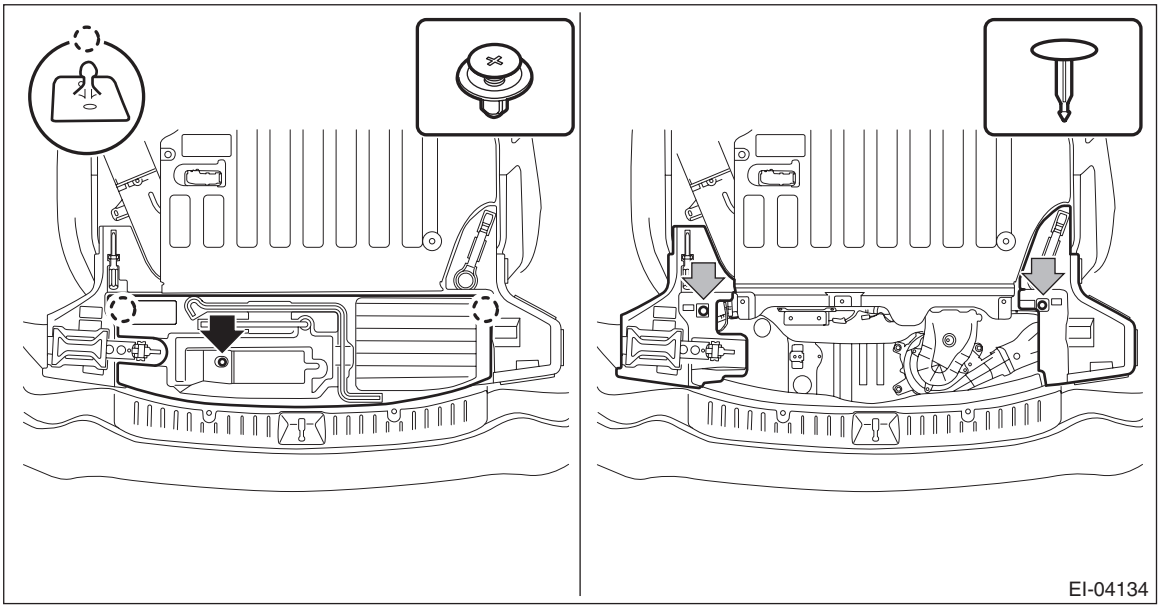

3) Remove the spacer - rear floor front.
(1) Release the clips, and fold back the bottom of the cover COMPL - rear backrest LH and RH of the rear seat back.
(2) Release the clips and claws, then detach the spacer - rear floor front.

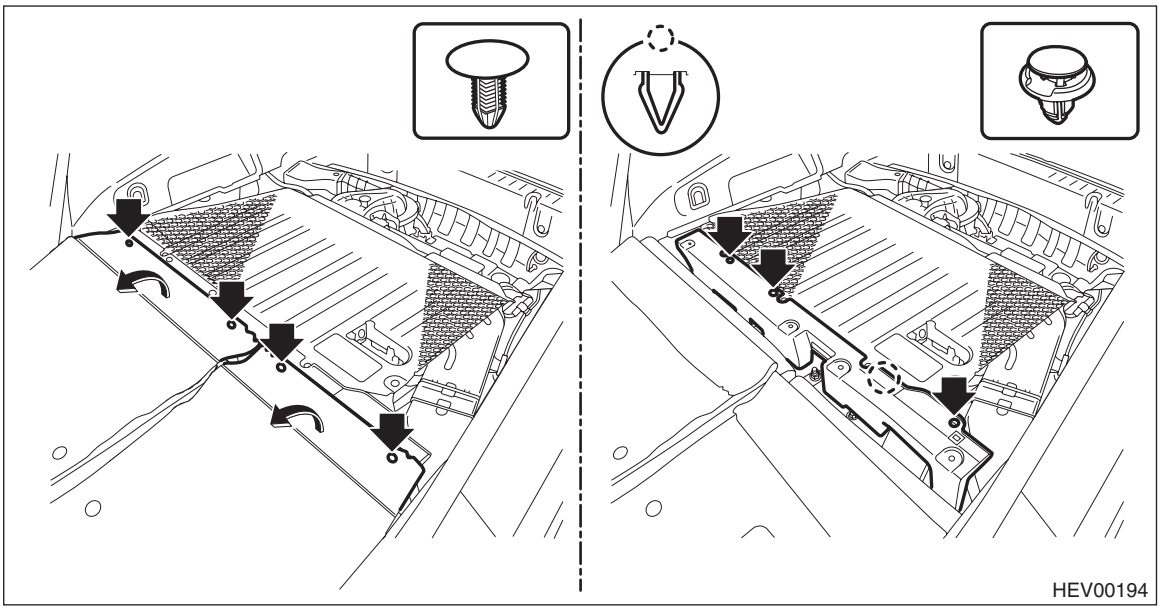

4) Remove the TORX® bolts, release the clips, and then remove the battery cover.

Preparation tool:
TORX® T25 or T30

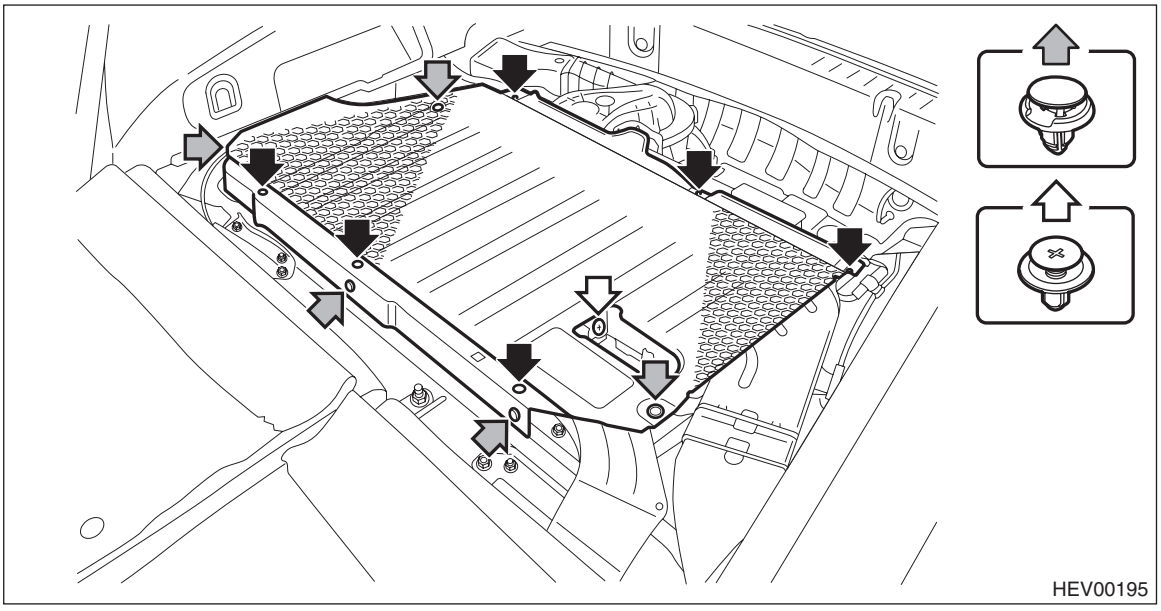

5) Remove the cooling duct front (rear).
   (1) Release the slide lock, clip, and harness clip.
   (2) Release the claws, and remove the cooling duct front (rear).

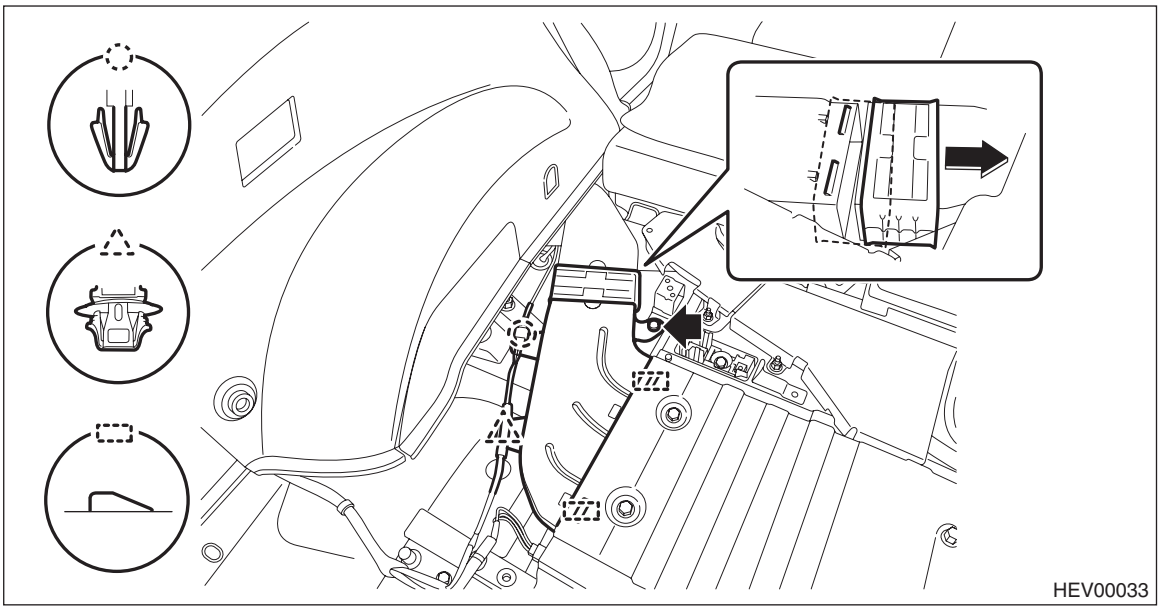

3. COOLING DUCT REAR

1) Remove the mat - rear floor CTR.
2) Release the clips and claws, then detach the sub-trunk assembly and the spacer - rear floor side RH.

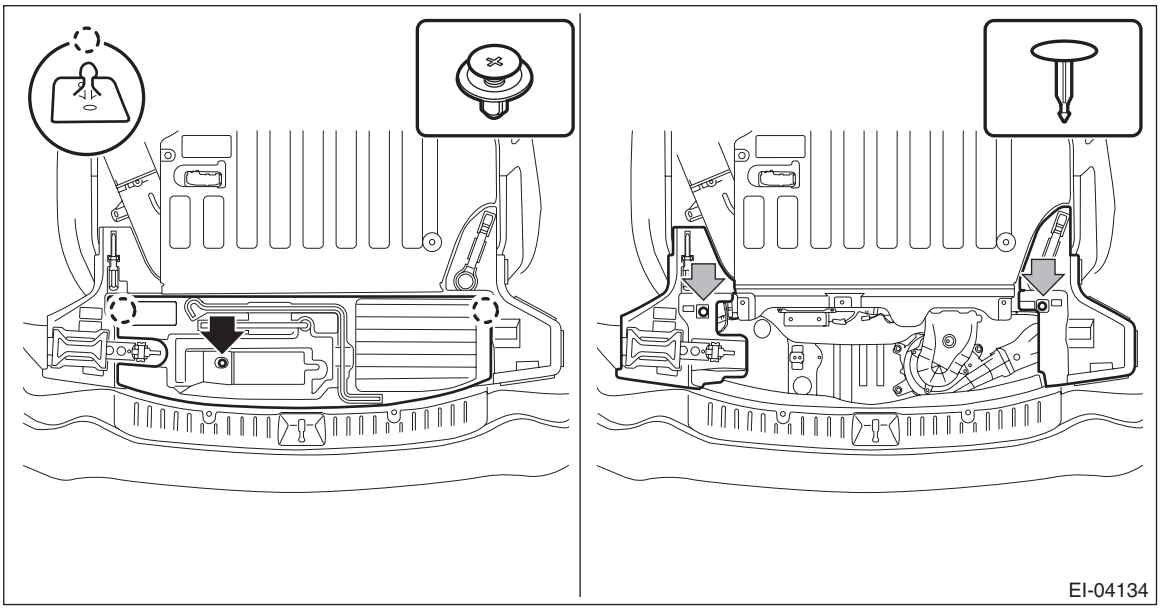

3) Release the clips and harness clips, then detach the cooling duct rear.

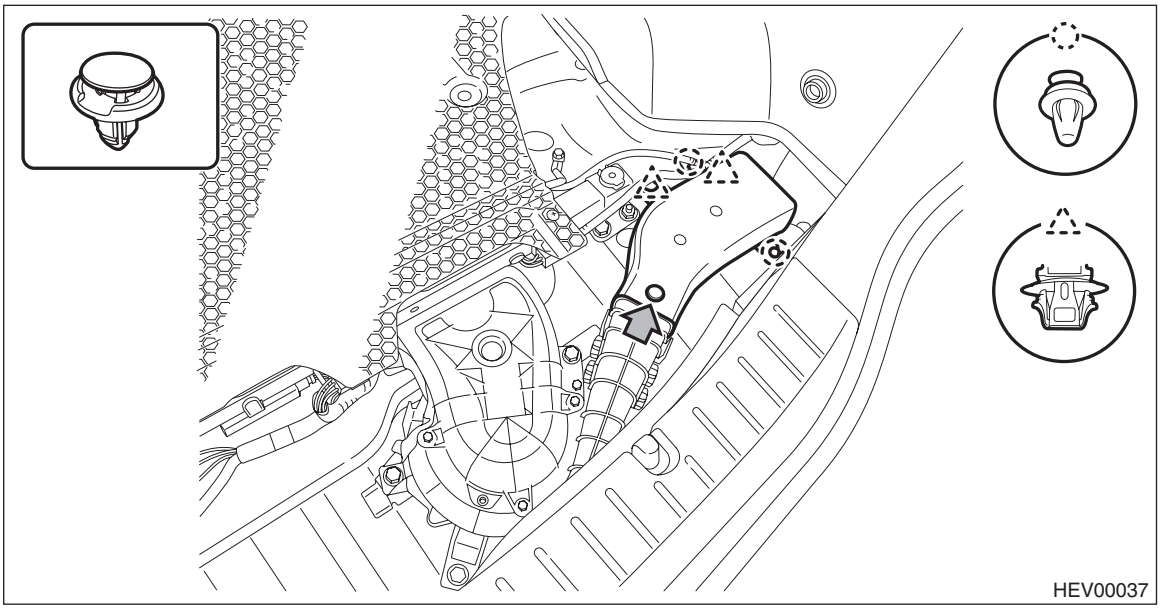

4. COOLING DUCT INVERTER ASSEMBLY

WARNING:
The hybrid system includes a high voltage circuit. Mishandling could cause accidents such as electric shock or leak. Always check "CAUTION (HYBRID SYSTEM)" and perform the proper operation. <Ref. to PC-6, CAUTION (HYBRID SYSTEM), Precaution.>

1) Remove the service disconnect plug. <Ref. to HEV-15, REMOVAL, Service Plug.>
2) Release the clips and claws, then detach the sub-trunk assembly and the spacer - rear floor side.

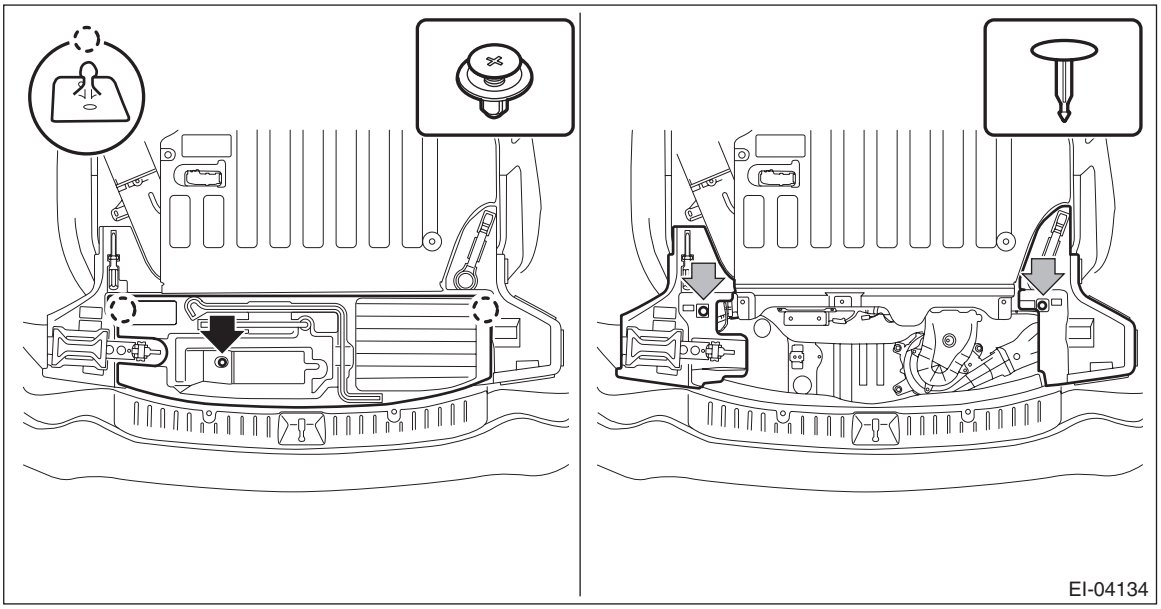

3) Remove the rear seat cushion and fold the backrest assemblies LH and RH. <Ref. to SE-23, REMOVAL, Rear Seat.>

4) Remove the spacer - rear floor front.
(1) Release the clips, and fold back the bottom of the cover COMPL - rear backrest LH and RH of the rear seat back.
(2) Release the clips and claws, then detach the spacer - rear floor front.

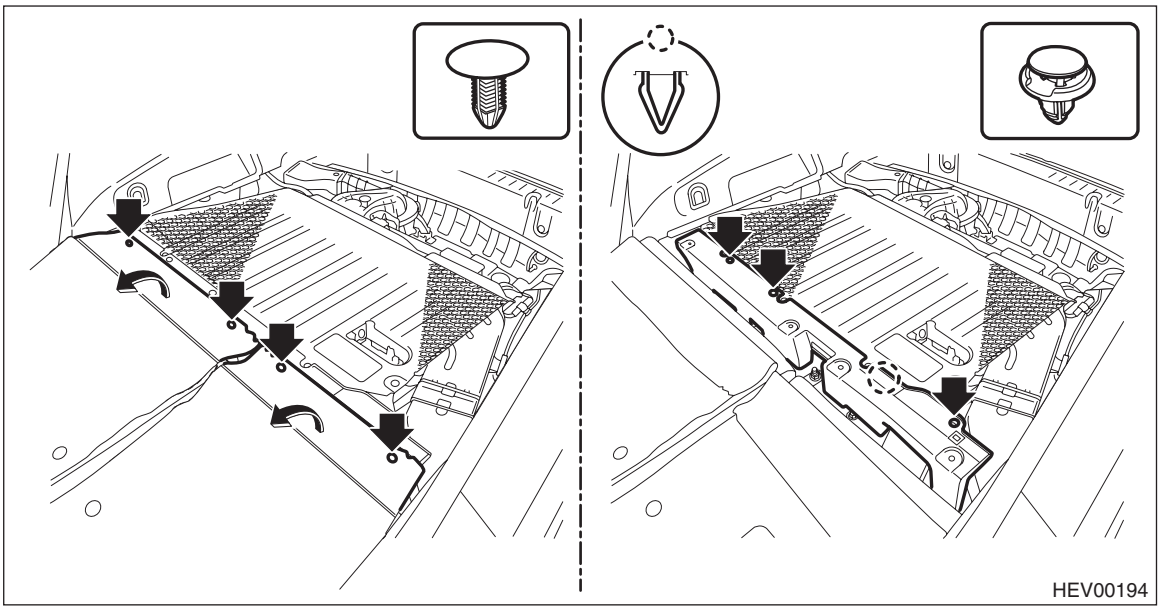

5) Remove the TORX® bolts, release the clips, and then remove the battery cover.

Preparation tool:
TORX® T25 or T30

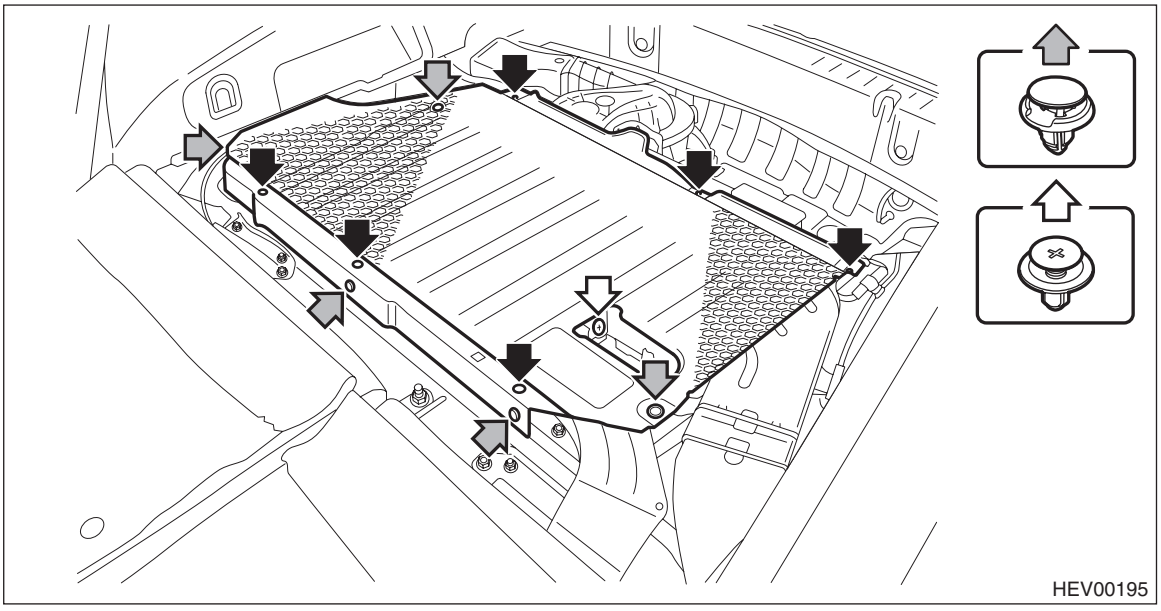

6) Remove the inverter cover.
   (1) Remove the bolts and ground terminal.
   (2) Release the cable clips, and remove the inverter cover.

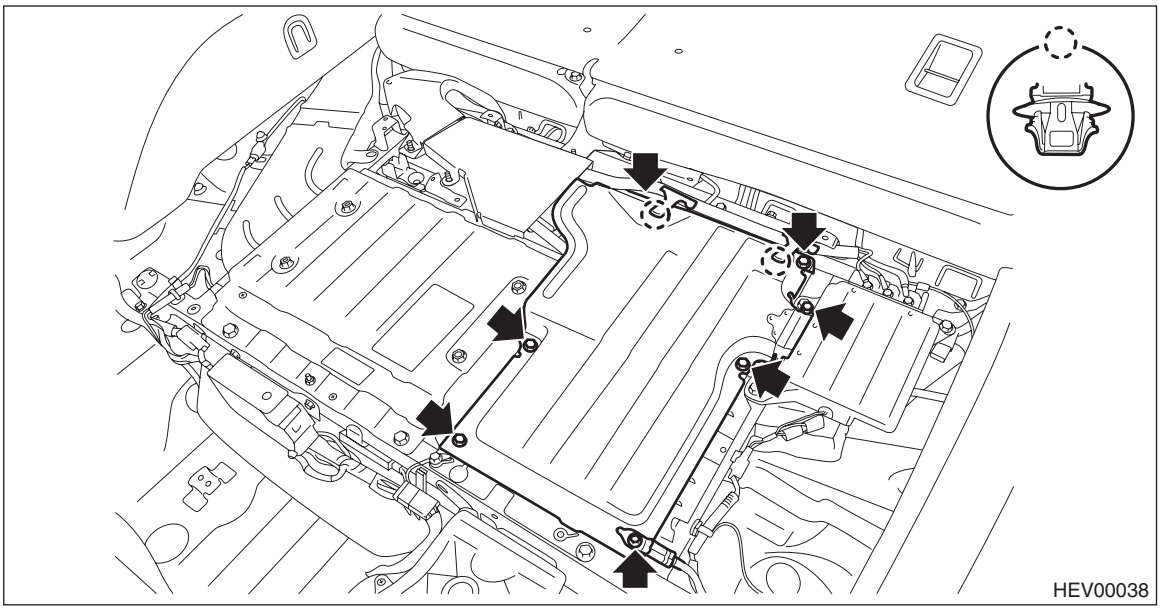

7) Perform zero-voltage test.
   (1) Measure the voltage of the high voltage DC line at the high voltage battery side of the electric noise filter.

Preparation tool:
Insulation multimeter

Standard: 0 V

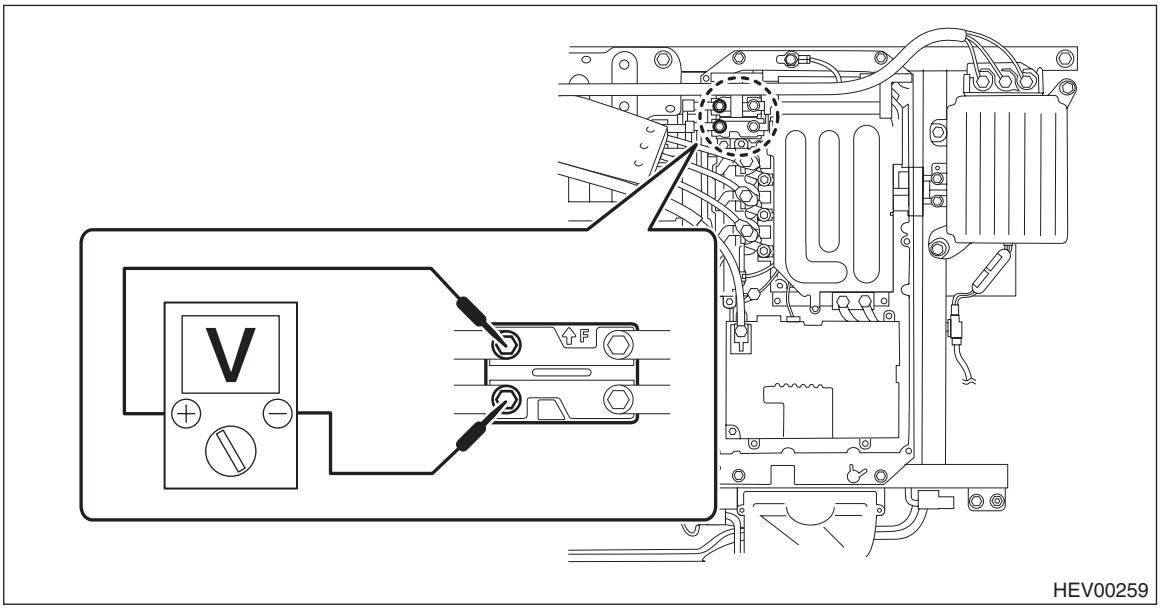

8) Remove the nut and remove the cover - shield battery and the cover - shield seat.

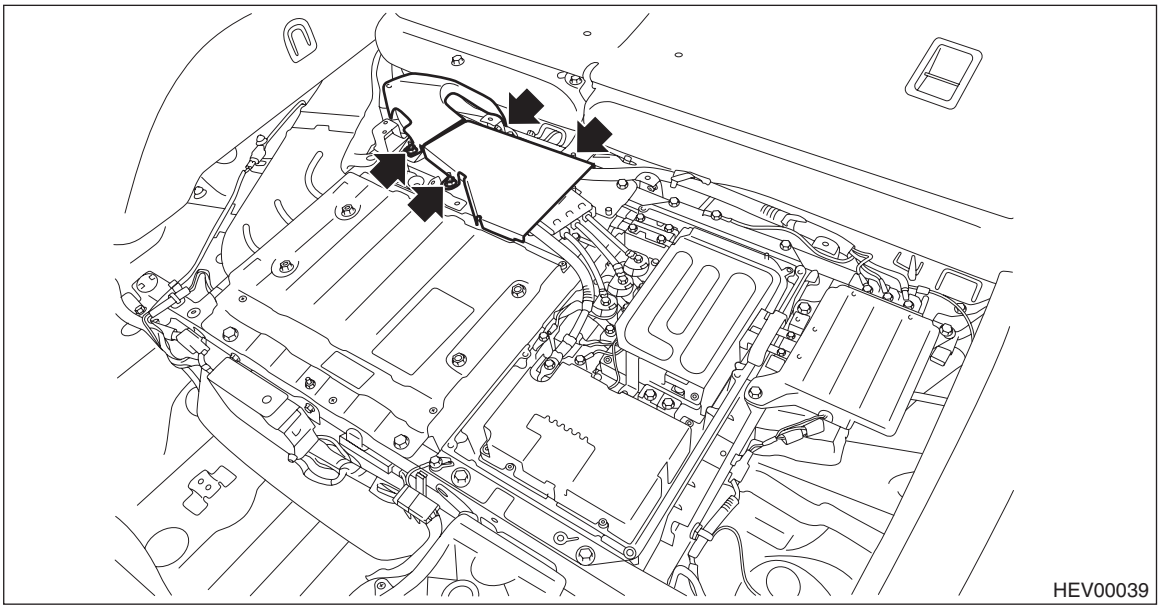

9) Remove the bolts and nuts and disconnect the ground terminal and the power cable.

CAUTION:
- **Be careful not to use excessive force when disconnecting the power cable to avoid any damage.**
- **Always wrap the disconnected power cable terminals with insulating tape.**

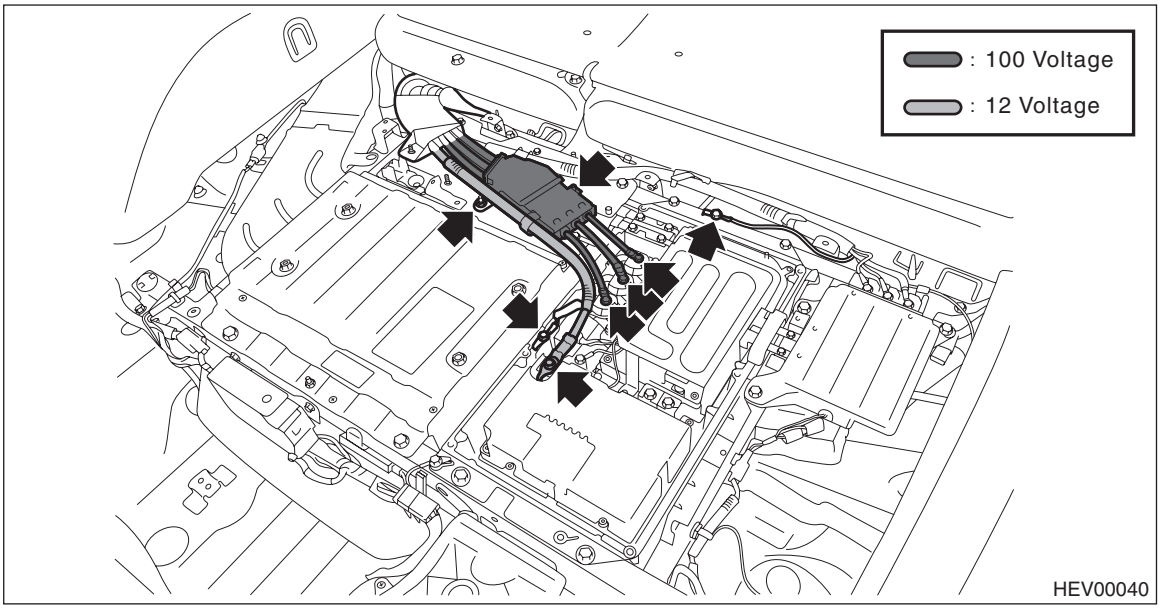

10) Remove the cooling duct front (rear). <Ref. to HEV-61, COOLING DUCT FRONT (REAR), REMOVAL, High Voltage Battery Cooling System.>
11) Remove the cooling fan assembly. <Ref. to HEV-69, COOLING FAN ASSEMBLY, REMOVAL, High Voltage Battery Cooling System.>

12) Remove the inverter assembly.
(1) Remove the bolts to remove the inverter shield.
(2) Remove the bolts and disconnect the bus bars between the high voltage battery and electric noise filter and between the electric noise filter and electric oil pump inverter respectively.

CAUTION:
Always wrap the high voltage battery terminal with insulating tape.

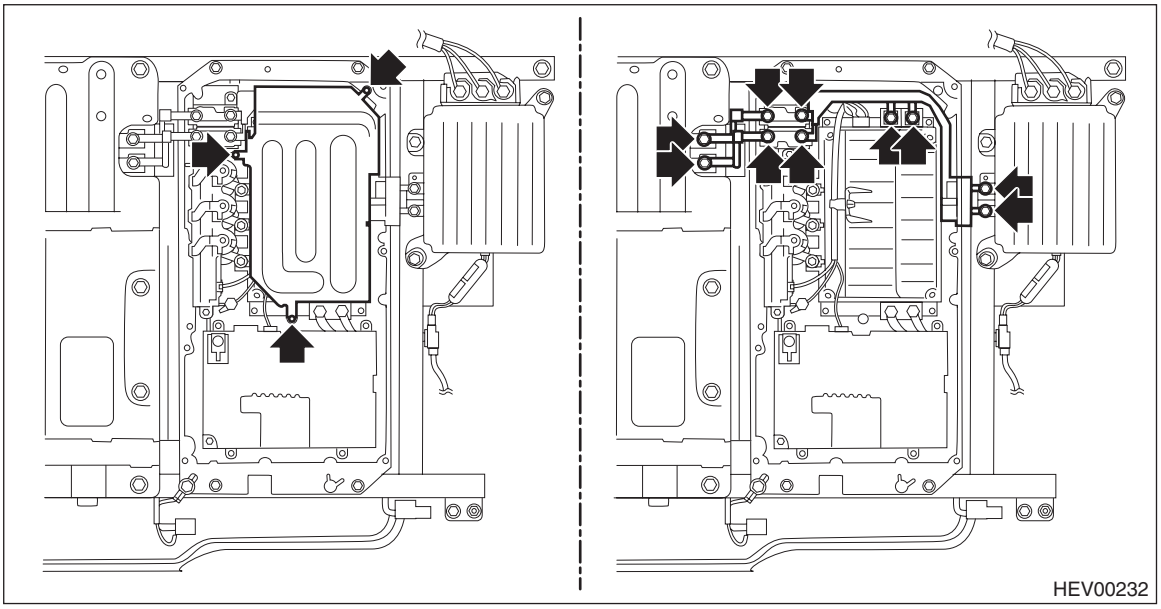

(3) Disconnect the connector.
(4) Remove all the mounting bolts of the high voltage battery to make the battery free.
(5) Remove the bolts, and then detach the ground terminal and the inverter assembly.

CAUTION:
Be careful not to damage the duct seal located underneath the high voltage battery.

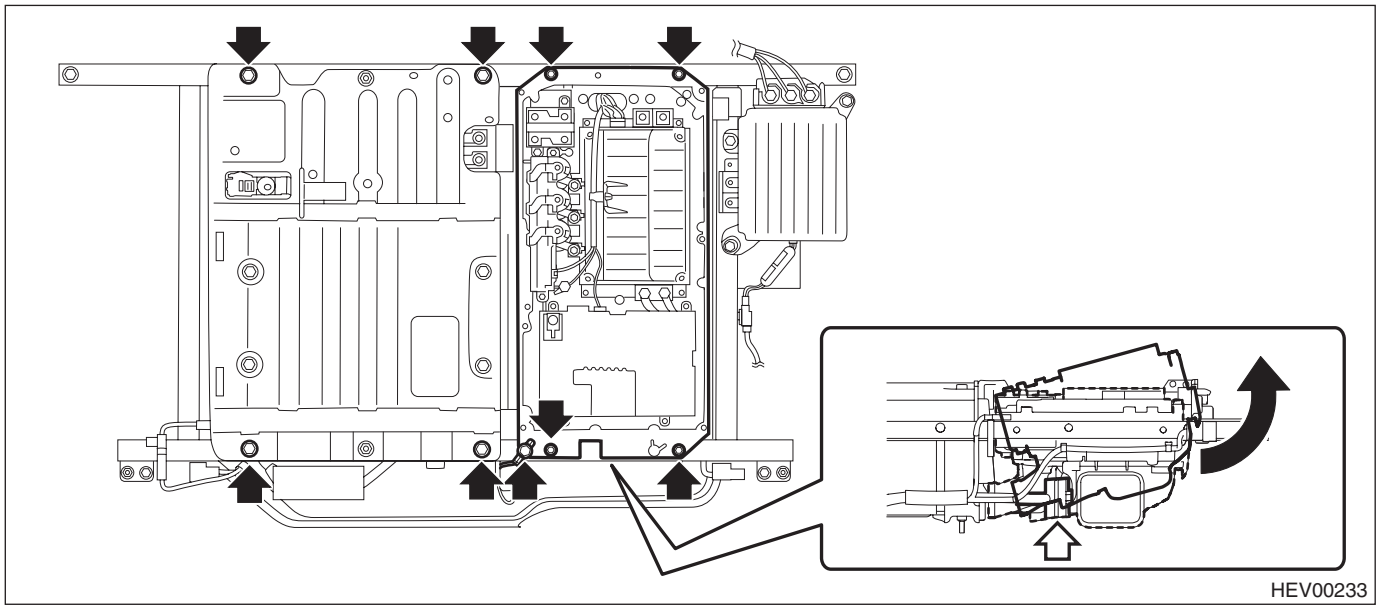

13) Remove the cooling duct inverter assembly.
(1) Release the clips and hooks, then remove the duct inverter IN (a).
(2) Remove the bolt.
(3) Release the clips and harness clips, then remove the duct inverter OUT (b).

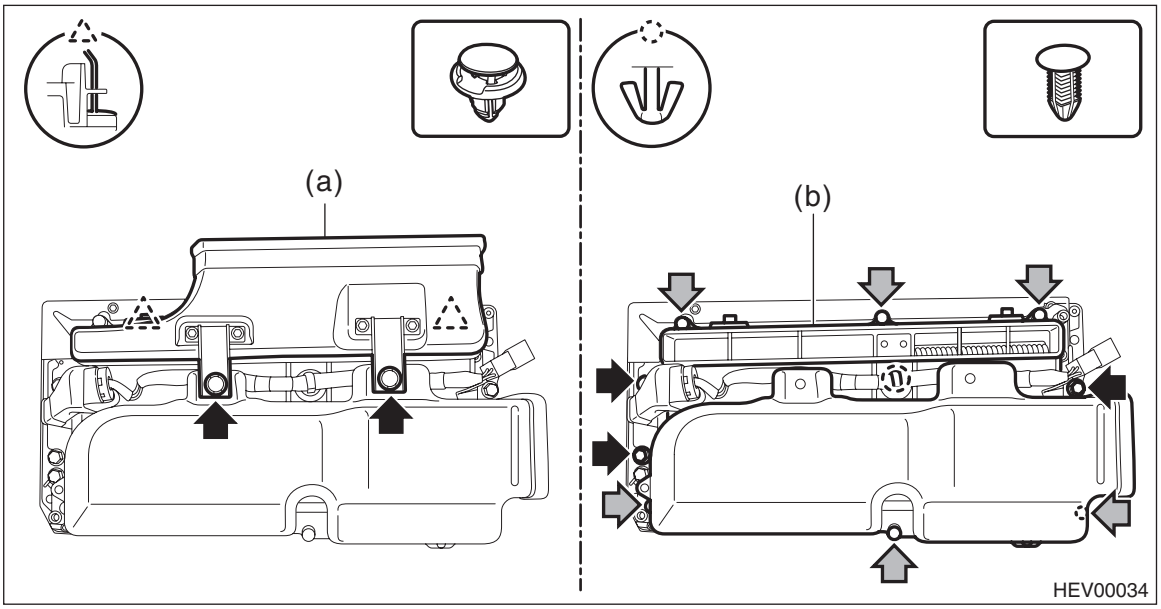

NOTE:
Leave the harness on the inverter frame assembly side.

5. COOLING FAN ASSEMBLY

1) Disconnect the ground cable from battery. <Ref. to NT-5, BATTERY, NOTE, Note.>

NOTE:
For the 12 volt engine restart battery, disconnect the ground terminal from 12V engine restart battery sensor.
2) Remove the mat - rear floor CTR.
3) Release the clips and claws, then detach the sub-trunk assembly and the spacer - rear floor side RH.
4) Release the clips, then remove the trim panel - rear skirt.

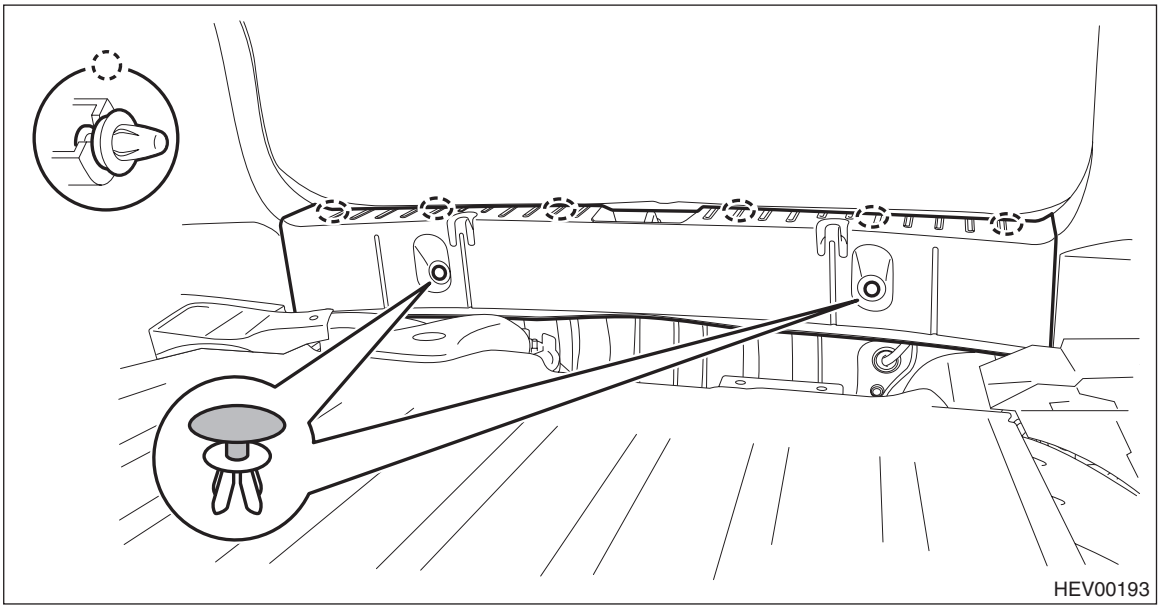

5) Remove the cooling duct rear. <Ref. to HEV-63, COOLING DUCT REAR, REMOVAL, High Voltage Battery Cooling System.>

6) Remove the cooling fan assembly.
   (1) Release the connector and the clip.
   (2) Remove the bolts, then remove the cooling fan assembly.

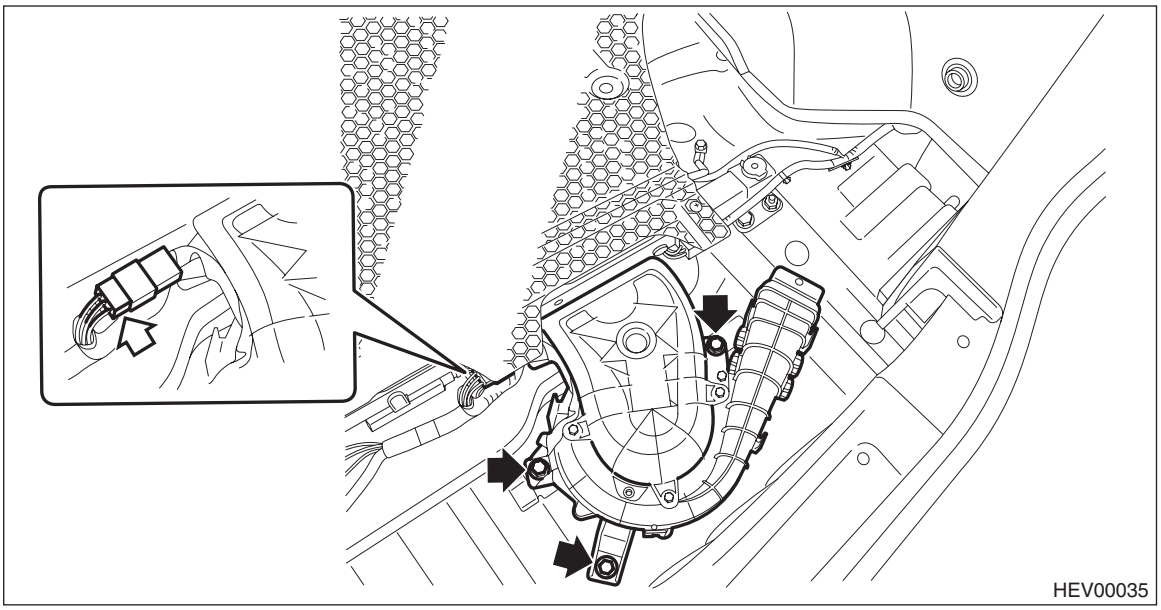

7) Release the clips, and remove the cooling fan duct from the cooling duct inverter assembly.

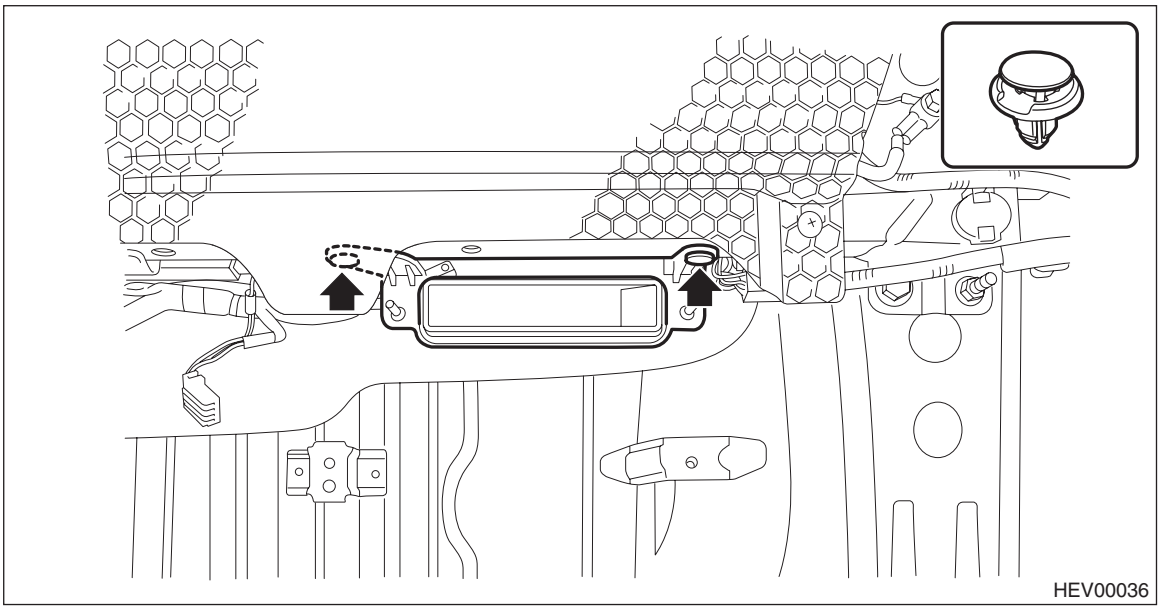

B: INSTALLATION

1. COOLING DUCT FRONT (FRONT)

Install each part in the reverse order of removal.

Tightening torque:
33 N·m (3.4 kgf-m, 24.3 ft-lb)

2. COOLING DUCT FRONT (REAR)

WARNING:
The hybrid system includes a high voltage circuit. Mishandling could cause accidents such as electric shock or leak. Always check "CAUTION (HYBRID SYSTEM)" and perform the proper operation. <Ref. to PC-6, CAUTION (HYBRID SYSTEM), Precaution.>

1) Install the cooling duct front (rear).

2) Install the battery cover.

Tightening torque:
7.5 N·m (0.8 kgf-m, 5.5 ft-lb)
3) Install the spacer - rear floor front.
4) Install the rear seat cushion. <Ref. to SE-26, INSTALLATION, Rear Seat.>
5) Install the sub-trunk assembly and the spacer - rear floor side LH.
6) Install the service disconnect plug. <Ref. to HEV-16, INSTALLATION, Service Plug.>

3. COOLING DUCT REAR

Install each part in the reverse order of removal.

4. COOLING DUCT INVERTER ASSEMBLY

WARNING:
The hybrid system includes a high voltage circuit. Mishandling could cause accidents such as electric shock or leak. Always check "CAUTION (HYBRID SYSTEM)" and perform the proper operation. <Ref. to PC-6, CAUTION (HYBRID SYSTEM), Precaution.>
1) Install the cooling duct inverter assembly.

Tightening torque:
6.5 N·m (0.7 kgf-m, 4.8 ft-lb)
2) Mount the high voltage battery on the high voltage battery frame assembly, then install the inverter assembly.

CAUTION:
- **If the duct seal is damaged, replace it with a new part.**
- **Be sure that the high voltage battery is securely attached to the cooling duct inverter duct.**

Tightening torque:
High voltage battery and inverter assembly: 22 N·m (2.2 kgf-m, 16.2 ft-lb)
Ground terminal: 6.5 N·m (0.7 kgf-m, 4.8 ft-lb)
3) Connect the bus bar.

Tightening torque:
T1: 6.5 N·m (0.7 kgf-m, 4.8 ft-lb)
T2: 7.5 N·m (0.8 kgf-m, 5.5 ft-lb)

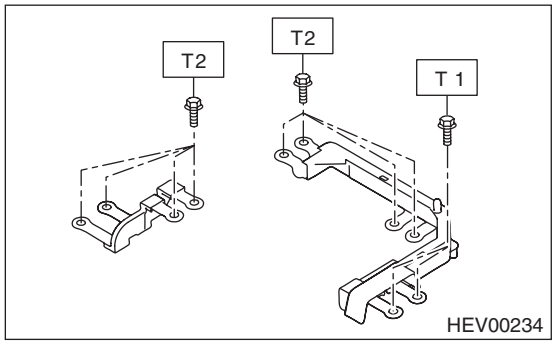

4) Install the inverter shield.

Tightening torque:
6.5 N·m (0.7 kgf-m, 4.8 ft-lb)
5) Install the cooling fan assembly. <Ref. to HEV-72, COOLING FAN ASSEMBLY, INSTALLATION, High Voltage Battery Cooling System.>
6) Install the cooling duct front (rear). <Ref. to HEV-70, COOLING DUCT FRONT (REAR), INSTALLATION, High Voltage Battery Cooling System.>

7) Connect the ground terminal and the power cable.

CAUTION:
• When connecting the power cable, pay attention to the letters (U, V, and W) imprinted on the drive motor inverter amperage sensor body as well as on the protector of the power cable.
• Do not apply excessive force to the terminals and watch to make sure the cable is not damaged or pinched.

Tightening torque:
7.5 N·m (0.8 kgf-m, 5.5 ft-lb)
8) Install the cover - shield battery and the cover - shield seat.

Tightening torque:
7.5 N·m (0.8 kgf-m, 5.5 ft-lb)
9) Install the ground terminal and inverter cover.

CAUTION:
Check that the sound proofing material on the inverter cover is not detached or damaged.

Tightening torque:
7.5 N·m (0.8 kgf-m, 5.5 ft-lb)
10) Install the battery cover.

Tightening torque:
7.5 N·m (0.8 kgf-m, 5.5 ft-lb)
11) Install the spacer - rear floor front.
12) Install the rear seat cushion. <Ref. to SE-26, INSTALLATION, Rear Seat.>
13) Install the sub-trunk assembly and the spacer - rear floor side.
14) Install the service disconnect plug. <Ref. to HEV-16, INSTALLATION, Service Plug.>

5. COOLING FAN ASSEMBLY

Install each part in the reverse order of removal.

Tightening torque:
7.5 N·m (0.8 kgf-m, 5.5 ft-lb)

C: INSPECTION

1. DUCT

Check the duct for clogging, crack, or deformation. If defective, replace the duct.

2. FAN MOTOR

UNIT INSPECTION

1) Check the motor operation when battery voltage is applied between the terminals of motor.

Terminal No.	Inspection conditions	Specification	Connection diagram
4 (+) — 1 (–)	Connect battery to the terminals	Rotation	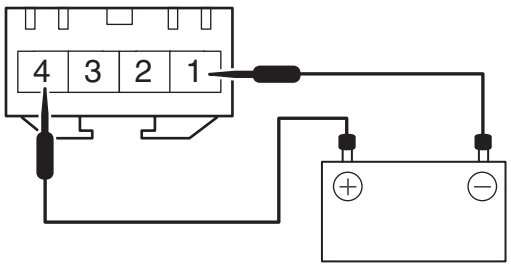 HEV00192

2) If it does not operate normally, replace the cooling fan assembly.

14.Drive Motor Control Module

A: REMOVAL

1) Disconnect the ground cable from battery. <Ref. to NT-5, BATTERY, NOTE, Note.>

NOTE:
For the 12 volt engine restart battery, disconnect the ground terminal from 12V engine restart battery sensor.

2) Remove the mat - rear floor CTR.
3) Release the clips and claws, then remove the sub-trunk box.

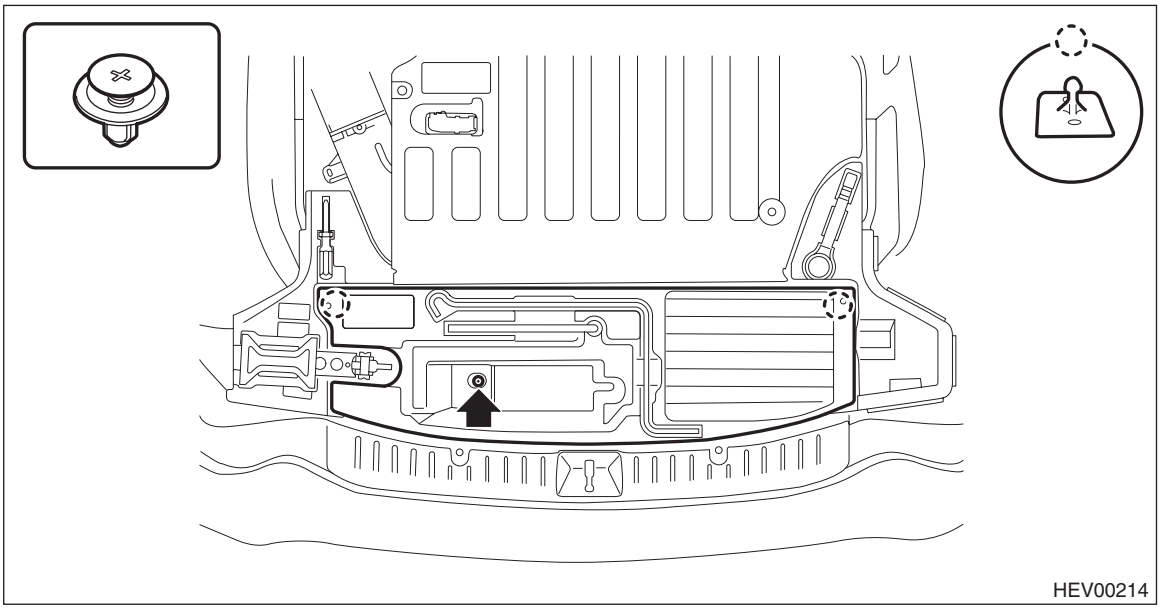

4) Remove the drive motor control module.
   (1) Remove the drive motor control module mounting bolts.

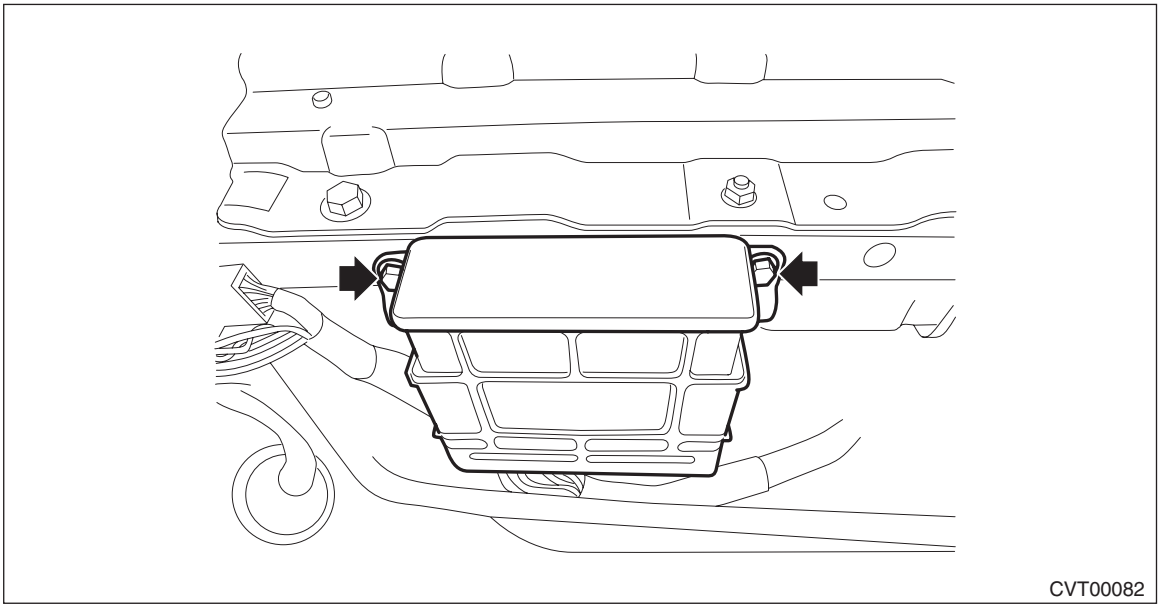

   (2) Disconnect the connector from the drive motor control module.
   (3) Release the relay holder, ground terminal, and harness clip.

NOTE:
Replace the drive motor control module and the bracket as a set.

B: INSTALLATION

CAUTION:
- **If replaced with a new one, install the drive motor control module on the bracket.**
- **To avoid the damage to bracket and the drive motor control module, do not remove module once installed on the bracket. If installed by mistake, the part must be replaced with a new part.**

Install each part in the reverse order of removal.

Tightening torque:
6.5 N·m (0.7 kgf-m, 4.8 ft-lb)

15.Drive Motor Assembly

A: NOTE

For drive motor assembly, refer to “CONTINUOUSLY VARIABLE TRANSMISSION” section. <Ref. to CVT(TH58A)-215, Drive Motor Assembly.>

16.Active Grille Shutter

A: REMOVAL

1) Disconnect the ground cable from battery. <Ref. to NT-5, BATTERY, NOTE, Note.>

NOTE:
For the 12 volt engine restart battery side, disconnect the ground terminal from the 12V engine restart battery sensor.

2) Remove the front under cover. <Ref. to EI-29, REMOVAL, Front Under Cover.>
3) Remove the bumper face - front. <Ref. to EI-37, REMOVAL, Front Bumper.>
4) Remove the active grille shutter.
   (1) Disconnect each connector and release the harness clip.
   (2) Remove the bolts, release the clips, and then remove the active grille shutter.

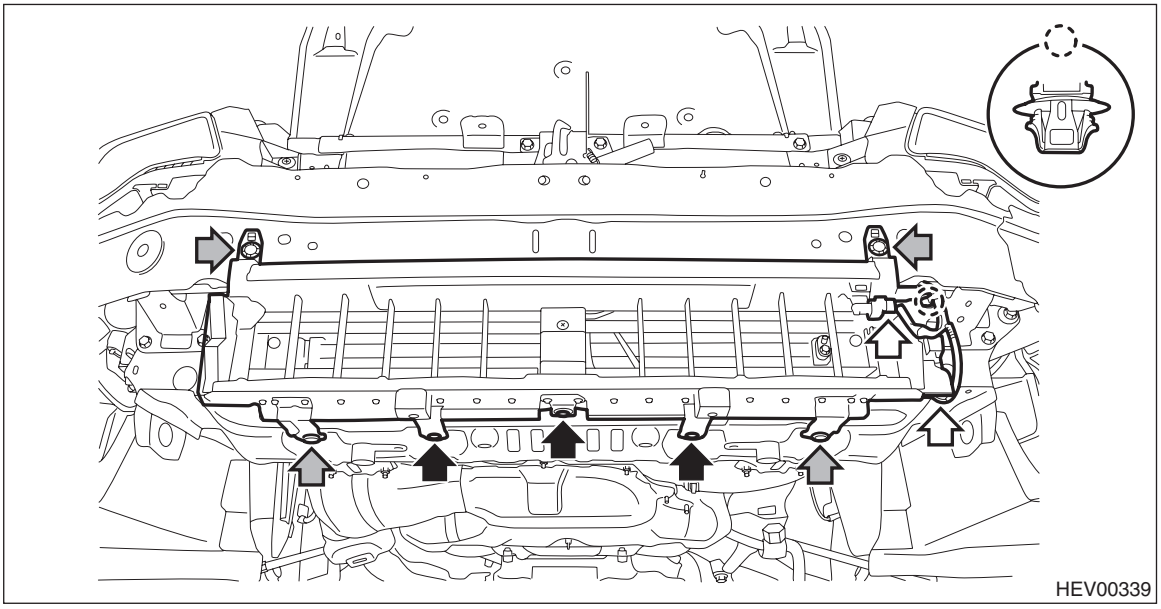
HEV00339

(3) Release the claws and then remove the ambient sensor.

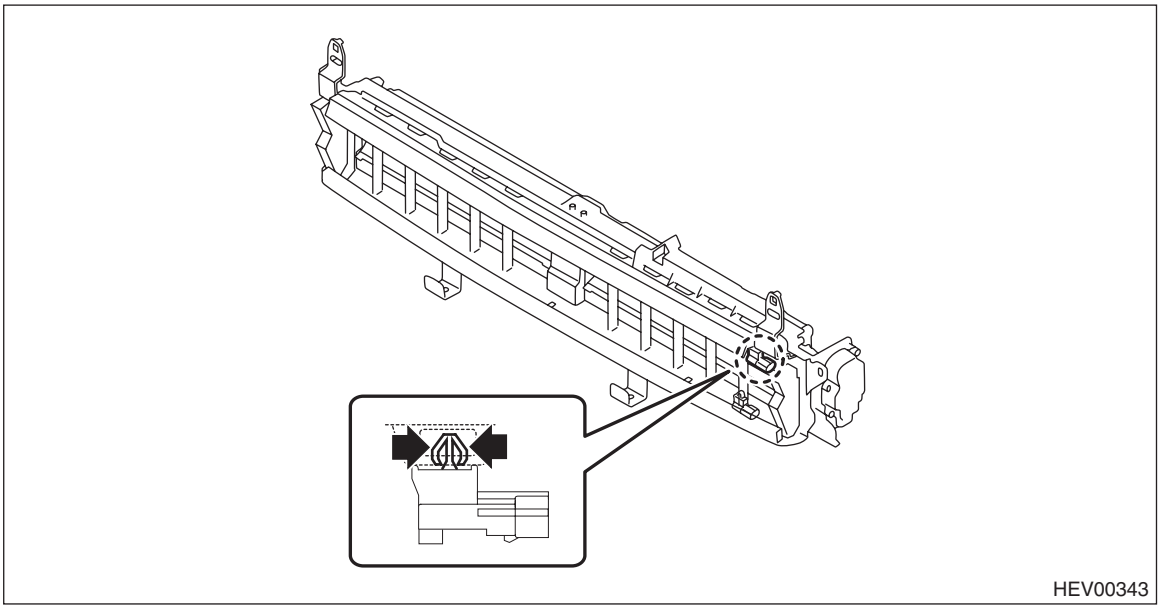
HEV00343

B: INSTALLATION

1) Install each part in the reverse order of removal.

Tightening torque:
7.5 N·m (0.8 kgf-m, 5.5 ft-lb)

2) When the active grille shutter has been replaced, perform calibration procedure (system operation check of the ACTGS control system). <Ref. to EN(H4DO HEV)(diag)-64, OPERATION, System Operation Check Mode.>

17.Diagnostics with Phenomenon

A: INSPECTION

Refer to “Diagnostics with Phenomenon” in the “HYBRID ELECTRIC VEHICLE (DIAGNOSTICS)” section. <Ref. to HEV(diag)-333, Diagnostics with Phenomenon.>

HYBRID ELECTRIC VEHICLE (DIAGNOSTICS)

HEV(diag)

		Page
1.	Basic Diagnostic Procedure	2
2.	Check List for Interview	5
3.	General Description	8
4.	Electrical Component Location	9
5.	Control Module I/O Signal	10
6.	General Scan Tool	14
7.	Subaru Select Monitor	17
8.	Read Diagnostic Trouble Code (DTC)	23
9.	Clear Memory Mode	24
10.	All Readiness Diagnostic Code(s)	25
11.	Inspection Mode	26
12.	Drive Cycle	31
13.	Read Current Data	40
14.	Freeze Frame Data Display	63
15.	System Operation Check Mode	72
16.	List of Diagnostic Trouble Code (DTC)	74
17.	Fail-Safe Chart	84
18.	Diagnostic Procedure with Diagnostic Trouble Code (DTC)	91
19.	Diagnostics with Phenomenon	333

1. Basic Diagnostic Procedure

A: PROCEDURE

	Step	Check	Yes	No
1	**CHECK PRE-INSPECTION.** Ask the customer when and how the trouble occurred using the interview check list. <Ref. to HEV(diag)-5, Check List for Interview.>	Was the customer interview performed?	Go to step **2**.	Perform customer interview.
2	**CHECK HYBRID FAIL LAMP.** Check the hybrid fail lamp.	Does the hybrid fail lamp illuminate after starting the engine?	Go to step **3**.	Perform appropriate inspection using Diagnostics with Phenomenon. <Ref. to HEV(diag)-333, Diagnostics with Phenomenon.>
3	**CHECK COMBINATION METER.** Using the Subaru Select Monitor, read DTC of combination meter.	Is either DTC U0073, U0293, or U0594 detected? (current malfunction)	Perform the inspection according to the diagnosis for LAN system. <Ref. to LAN(HEV)(diag)-2, PROCEDURE, Basic Diagnostic Procedure.>	Go to step **4**.
4	**CHECK DTC.** Using the Subaru Select Monitor, read DTC of the hybrid powertrain control module. NOTE: • Refer to “Read Diagnostic Trouble Code (DTC)” for detailed operation procedure. <Ref. to HEV(diag)-23, OPERATION, Read Diagnostic Trouble Code (DTC).> • If the communication function of the Subaru Select Monitor does not operate properly, check the communication circuit. <Ref. to HEV(diag)-17, COMMUNICATION FOR INITIALIZING IMPOSSIBLE, Subaru Select Monitor.>	Is DTC detected? (current malfunction)	Record DTC, time stamp, and freeze frame data, then perform inspection using “Diagnostic Procedure with Diagnostic Trouble Code (DTC)”. <Ref. to HEV(diag)-74, List of Diagnostic Trouble Code (DTC).> After repair, Go to step **10**. NOTE: • For the time stamp, refer to LAN section. <Ref. to LAN(HEV)(diag)-6, TIME STAMP, CAUTION, General Description.> • Depending on DTCs, time stamp may not be stored.	Go to step **5**.
5	**CHECK CURRENT DATA.** Confirm the current data of hybrid powertrain control system, the value of «Hybrid Fail Lamp Signal (DMCU)» using the Subaru Select Monitor. <Ref. to HEV(diag)-40, HYBRID POWERTRAIN CONTROL SYSTEM, OPERATION, Read Current Data.>	Does the value show «ON»?	Go to step **6**.	Go to step **7**.

Step		Check	Yes	No
6	**CHECK DTC.** Read the DTC of the drive motor control system using the Subaru Select Monitor. NOTE: • Refer to “Read Diagnostic Trouble Code (DTC)” for detailed operation procedure. <Ref. to HEV(diag)-23, OPERATION, Read Diagnostic Trouble Code (DTC).> • If the communication function of the Subaru Select Monitor does not operate properly, check the communication circuit. <Ref. to HEV(diag)-17, COMMUNICATION FOR INITIALIZING IMPOSSIBLE, Subaru Select Monitor.>	Is DTC detected? (current malfunction)	Record DTC, time stamp, and freeze frame data, then perform inspection using “Diagnostic Procedure with Diagnostic Trouble Code (DTC)”. <Ref. to HEV(diag)-74, List of Diagnostic Trouble Code (DTC).> After repair, Go to step **10**. NOTE: • For the time stamp, refer to LAN section. <Ref. to LAN(HEV)(diag)-6, TIME STAMP, CAUTION, General Description.> • Depending on DTCs, time stamp may not be stored.	Replace DMCM. <Ref. to CVT(TH58A)-155, Drive Motor Control Module.>
7	**CHECK CURRENT DATA.** Confirm the current data of hybrid powertrain control system, the value of «Hybrid Fail Lamp Signal (BECU)» using the Subaru Select Monitor. <Ref. to HEV(diag)-40, HYBRID POWERTRAIN CONTROL SYSTEM, OPERATION, Read Current Data.>	Does the value show «ON»?	Go to step **8**.	Go to step **9**.
8	**CHECK DTC.** Read DTC of the battery energy control system using the Subaru Select Monitor. NOTE: • Refer to “Read Diagnostic Trouble Code (DTC)” for detailed operation procedure. <Ref. to HEV(diag)-23, OPERATION, Read Diagnostic Trouble Code (DTC).> • If the communication function of the Subaru Select Monitor does not operate properly, check the communication circuit. <Ref. to HEV(diag)-17, COMMUNICATION FOR INITIALIZING IMPOSSIBLE, Subaru Select Monitor.>	Is DTC detected? (current malfunction)	Record DTC, time stamp, and freeze frame data, then perform inspection using “Diagnostic Procedure with Diagnostic Trouble Code (DTC)”. <Ref. to HEV(diag)-74, List of Diagnostic Trouble Code (DTC).> After repair, Go to step **10**. NOTE: • For the time stamp, refer to LAN section. <Ref. to LAN(HEV)(diag)-6, TIME STAMP, CAUTION, General Description.> • Depending on DTCs, time stamp may not be stored.	Replace the high voltage battery. <Ref. to HEV-17, High Voltage Battery.>

	Step	Check	Yes	No
9	**CHECK HYBRID FAIL LAMP.** 1) Turn the ignition switch to OFF. 2) Wait at least 30 seconds. 3) Turn the ignition switch to ON.	Does the hybrid fail lamp illuminate?	Replace the HPCM. <Ref. to HEV-37, Hybrid Powertrain Control Module.>	It is possible that temporary poor communication occurs.
10	**PERFORM DIAGNOSIS.** 1) Perform the Clear Memory Mode. <Ref. to HEV(diag)-24, Clear Memory Mode.> 2) Perform the Inspection Mode or Drive Cycle. <Ref. to HEV(diag)-26, Inspection Mode.> <Ref. to HEV(diag)-31, Drive Cycle.>	Is DTC displayed on Subaru Select Monitor?	Inspect using “Diagnostic Procedure with Diagnostic Trouble Code (DTC)”. <Ref. to HEV(diag)-74, List of Diagnostic Trouble Code (DTC).>	Finish the diagnosis.

2. Check List for Interview

A: CHECK

1. CHECK LIST NO. 1

When a problem occurs, perform the following customer interview.

Customer's name	
Date of purchase	
Date of repair	
V.I.N.	
Engine No.	
Fuel type	
Transmission model	
Odometer reading	km (miles)
Weather	❑ Fine ❑ Cloudy ❑ Rainy ❑ Snowy
	❑ Others:
Ambient air temperature	°C (°F)
	❑ Hot ❑ Warm ❑ Cool ❑ Cold
Place	❑ Highway ❑ Suburbs ❑ Inner city ❑ Uphill ❑ Downhill ❑ Rough road
	❑ Others:
Engine temperature	❑ Cold ❑ During warming-up ❑ After warming-up ❑ Temp. of either of them
	❑ Others:
Engine speed	rpm
Vehicle speed	km/h (MPH)
Driving conditions	❑ No effect ❑ Start-up ❑ Restart ❑ Idling ❑ Racing ❑ Accelerating ❑ Cruising ❑ Decelerating ❑ Cornering (right/left turn) ❑ Cruise control ❑ Other
Vehicle conditions	❑ EV traveling ❑ Auto Start Stop active
Select lever position	❑ P ❑ R ❑ N ❑ D ❑ Manual mode
Hybrid READY indicator light	❑ ON ❑ OFF
EV mode lamp	❑ ON ❑ OFF
Remaining high voltage battery level of MFD	
Manual mode	❑ ON ❑ OFF
Headlight	❑ ON ❑ OFF
Rear defogger	❑ ON ❑ OFF
Blower	❑ ON ❑ OFF
Audio	❑ ON ❑ OFF
A/C compressor	❑ ON ❑ OFF
Rear entertainment system	❑ ON ❑ OFF
Radiator fan	❑ ON ❑ OFF
Car phone	❑ ON ❑ OFF
Front wiper	❑ ON ❑ OFF
Rear wiper	❑ ON ❑ OFF
Wireless device	❑ ON ❑ OFF

2. CHECK LIST NO. 2

If any indicator lights illuminate, perform the following additional customer interview.

a) Warning lights or indicators illuminate.	❑ Yes ❑ No
❑ ABS warning light ❑ Steering control warning light ❑ AT oil temperature warning light ❑ AWD warning light ❑ VDC warning light/VDC indicator light ❑ Fuel level warning light ❑ Malfunction Indicator Light ❑ SRS airbag warning light ❑ Water temperature warning light (red) ❑ Oil pressure warning light ❑ Charge warning Light ❑ Security indicator light ❑ Brake warning light ❑ Vacuum pump fail lamp ❑ Hybrid fail lamp ❑ Others:	
b) 12 volt auxiliary battery	
Manufacturer's genuine battery is equipped	❑ Yes ❑ No
Battery voltage	V
Battery replacement	❑ Yes ❑ No
Travel distance at replacement	km (miles)
c) 12 volt engine restart battery	
Manufacturer's genuine battery is equipped	❑ Yes ❑ No
Battery voltage	V
Battery replacement	❑ Yes ❑ No
Travel distance at replacement	km (miles)
d) Starter	
Start count (refer to current data)	
Starter has ever been replaced	❑ Yes ❑ No
e) Fuel level	
Lack of fuel	❑ Yes ❑ No
Indicator position of fuel gauge	❑ FULL ❑ 3/4 ❑ 1/2 ❑ 1/4 ❑ Other
Experienced running out of fuel	❑ Yes ❑ No
f) Intentional connecting or disconnecting of vehicle harness connectors	❑ Yes ❑ No
Name of parts or points of disconnection	
g) Intentional connecting or disconnecting of vehicle hoses	❑ Yes ❑ No
Name of parts or points of disconnection	
h) Installing parts other than genuine parts	❑ Yes ❑ No
Parts	
Where	
i) Occurrence of noise	❑ Yes ❑ No
From where	
What kind	
j) Occurrence of smell	❑ Yes ❑ No
From where	
What kind	
k) Ingress of water into engine compartment	❑ Yes ❑ No
l) Ingress of water into luggage room	❑ Yes ❑ No
m) Ingress of water into passenger compartment	❑ Yes ❑ No
n) Troubles occurred	

Check List for Interview

❑Engine speed drops ❑Engine speed does not drop ❑Rough idling ❑Slow acceleration
❑Back fire ❑After fire ❑Shifting is wrong (specifically:) ❑ Excessive shift shock
❑Shock or judder during driving ❑Engine speed increases abruptly during driving ❑Shock or judder during standing start
❑Unable to switch to EV traveling ❑READY ON does not occur
❑Batteries (12 volt auxiliary battery and high voltage battery) are not charged
❑Auto Start Stop does not operate ❑Engine does not restart after Auto Start Stop/EV traveling
❑ Buzzer sounds (intermittently or continuously) during Auto Start Stop
❑When restarting, the audio/navigation system is reset (initialized).
❑When restarting, the combination meter and MFD blink.
❑ Electrical equipment such as automatic air conditioner, audio, navigation system, or combination meter does not operate.
❑ Others:

3. General Description

A: CAUTION

1. AIRBAG SYSTEM

Refer to “CAUTION” in “General Description” in AIRBAG SYSTEM. <Ref. to AB-11, CAUTION, General Description.>

2. HYBRID SYSTEM

Refer to “CAUTION (HYBRID SYSTEM)”. <Ref. to PC-6, CAUTION (HYBRID SYSTEM), Precaution.>

B: INSPECTION

Before performing diagnostics, check the following item which might affect hybrid system problems.
1) Check 12 volt auxiliary battery and 12 volt engine restart battery. <Ref. to SC(H4DO(HEV))-38, Battery.>
2) Check the condition of the main and other fuses, and harnesses and connectors. Also check for proper grounding. <Ref. to HEV-12, Relay and Fuse.>

C: PREPARATION TOOL

1. SPECIAL TOOL

ILLUSTRATION	TOOL NUMBER	DESCRIPTION	REMARKS
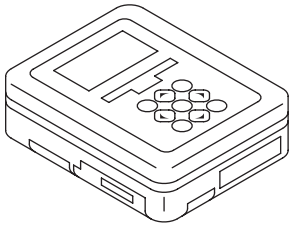 ST1B022XU0	1B022XU0	SUBARU SELECT MONITOR III KIT	Used for troubleshooting the electrical system.

2. GENERAL TOOL

TOOL NAME	REMARKS
Circuit tester	Used for measuring resistance, voltage and current.
Insulation multimeter	Used for measuring insulation resistance.
Milliohm tester	Used for troubleshooting of power cable and drive motor. NOTE: Although troubleshooting can be done without a milliohm tester, it allows technicians to troubleshoot problems with high precision.

4. Electrical Component Location

A: LOCATION

1. HYBRID SYSTEM

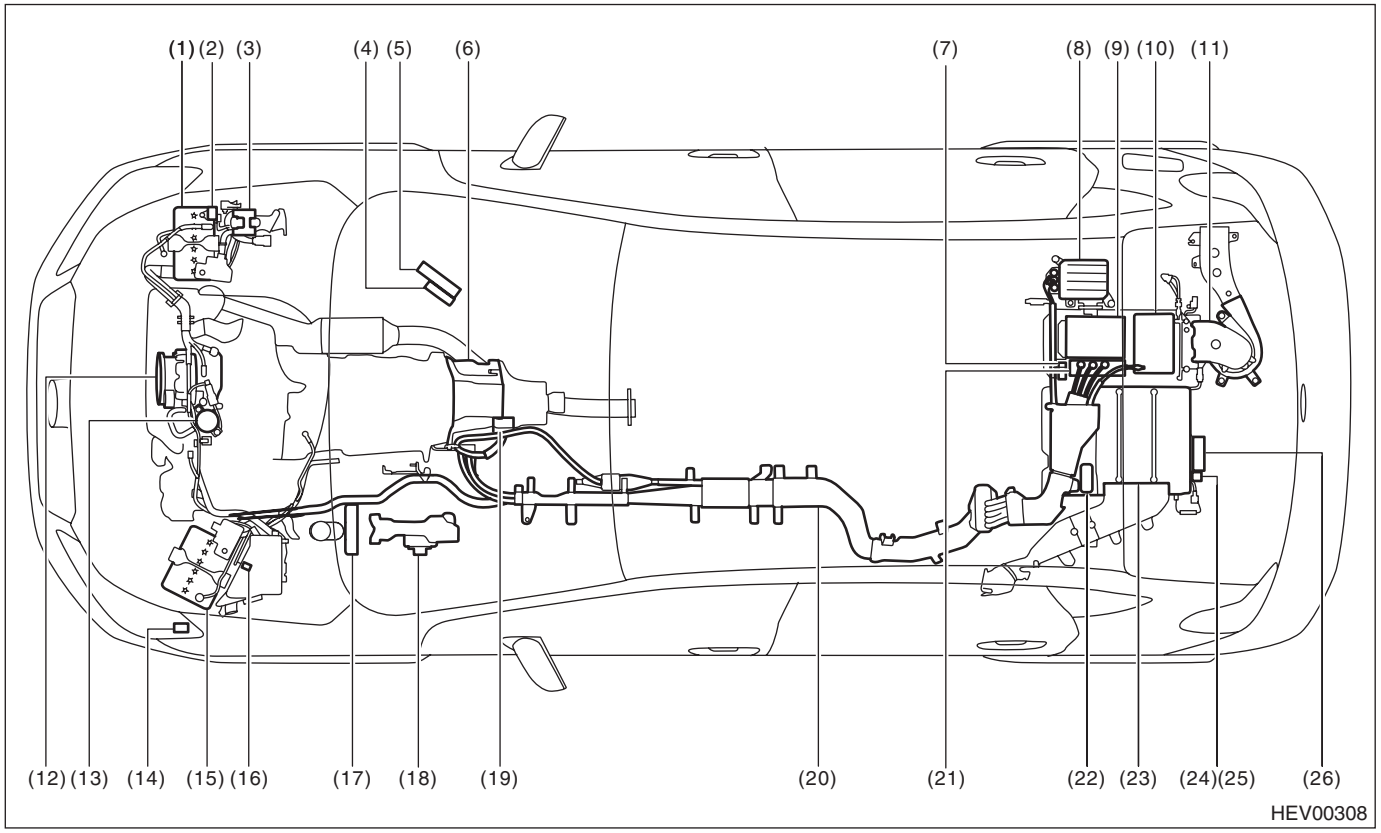

(1)	12 volt engine restart battery	(10)	DC/DC converter	(19)	Electric oil pump
(2)	12V engine restart battery sensor	(11)	High voltage battery cooling fan	(20)	Power cable
(3)	12V battery relay	(12)	Integrated starter generator (ISG)	(21)	Drive motor inverter amperage sensor
(4)	Hybrid powertrain control module (HPCM)	(13)	Brake vacuum pump	(22)	Service disconnect plug
(5)	Engine control module (ECM)	(14)	Battery temperature sensor	(23)	High voltage battery (including battery energy control module (BECM))
(6)	Drive motor ASSY	(15)	12 volt auxiliary battery	(24)	DMCM power relay
(7)	Electric noise filter	(16)	Brake vacuum pump relay	(25)	High voltage battery cooling fan/ drive motor inverter power supply relay
(8)	Electric oil pump inverter	(17)	Brake booster (including brake booster pressure sensor)	(26)	Drive motor control module (DMCM)
(9)	Drive motor inverter	(18)	Brake pedal ASSY (including brake stroke sensor)		

5. Control Module I/O Signal

A: ELECTRICAL SPECIFICATION

1. HYBRID POWERTRAIN CONTROL MODULE (HPCM)

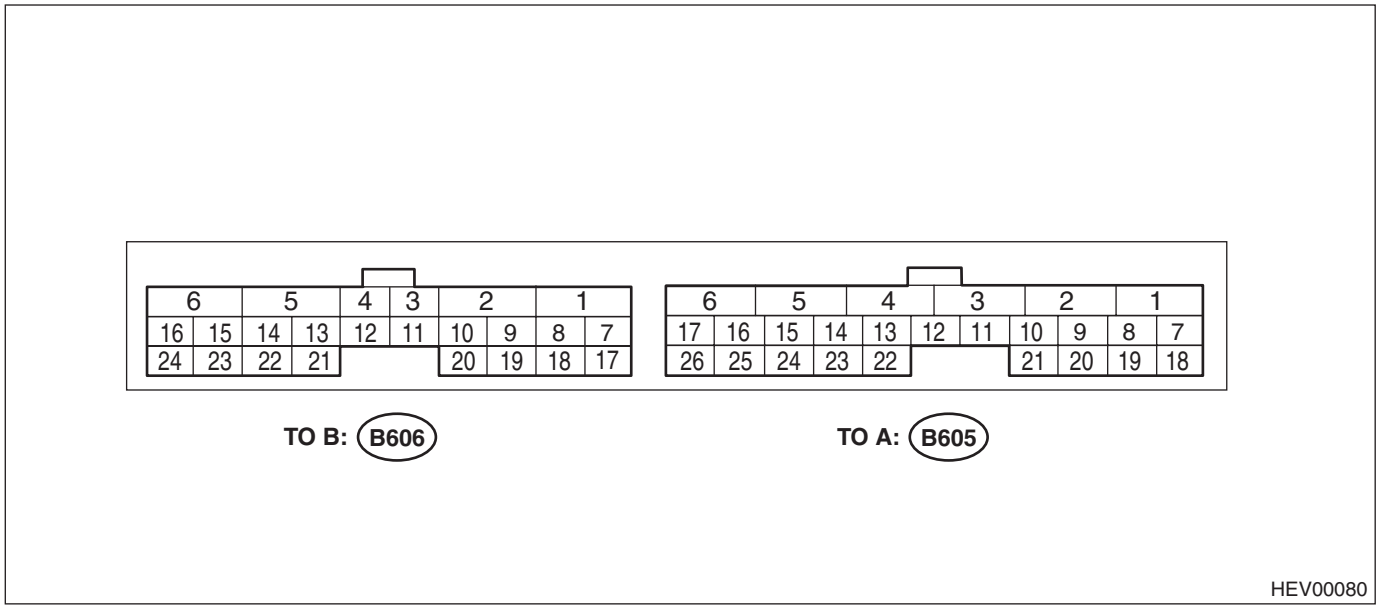

Terminal No. (terminal symbol)	Item	Measuring condition	Measurement value	Note
(B605) No. 1	Linear solenoid output	—	Cannot be measured	—
(B605) No. 2	Main power supply 1	Always	11 — 15 V	—
(B605) No. 3	Main power supply 2	Always	11 — 15 V	—
(B605) No. 4	LIN communication	—	Cannot be measured	LIN communication line
(B605) No. 5	GND1	Always	0 V	—
(B605) No. 6	GND2	Always	0 V	—
(B605) No. 7	(Not used)	—	—	—
(B605) No. 8	(Not used)	—	—	—
(B605) No. 9	(Not used)	—	—	—
(B605) No. 10	HEV CAN H	—	Cannot be measured	CAN communication line
(B605) No. 11	HEV CAN L	—	Cannot be measured	CAN communication line
(B605) No. 12	MAIN CAN H	—	Cannot be measured	CAN communication line
(B605) No. 13	MAIN CAN L	—	Cannot be measured	CAN communication line
(B605) No. 14	PU CAN H	—	Cannot be measured	CAN communication line
(B605) No. 15	PU CAN L	—	Cannot be measured	CAN communication line
(B605) No. 16	(Not used)	—	—	—
(B605) No. 17	(Not used)	—	—	—
(B605) No. 18	Oil pressure SW input	Engine running	11 — 15 V	—
		When ignition switch is ON	0 V	—
(B605) No. 19	(Not used)	—	—	—
(B605) No. 20	(Not used)	—	—	—
(B605) No. 21	IG SW input	Ignition switch ON	11 — 15 V	—
(B605) No. 22	Starter drive request signal	Model without push button start at cranking	8 — 14 V	—
		Model with push button start at cranking	Waveform	—
(B605) No. 23	P range SW input	P range	Less than 1 V	—
		Except for P range	8 V or more	—

Terminal No. (terminal symbol)	Item	Measuring condition	Measurement value	Note
(B605) No. 24	R range SW input	R range	Less than 1 V	—
		Except for R range	8 V or more	—
(B605) No. 25	N range SW input	N range	Less than 1 V	—
		Except for N range	8 V or more	—
(B605) No. 26	D range SW input	D range	Less than 1 V	—
		Except for D range	8 V or more	—
(B606) No. 1	GND1 for sensors	Always	0 V	—
(B606) No. 2	GND2 for sensors	Always	0 V	—
(B606) No. 3	Brake booster pressure sensor input 1	Always	0.5 — 4.5 V	—
(B606) No. 4	Brake booster pressure sensor input 2	Always	0.5 — 4.5 V	—
(B606) No. 5	(Not used)	—	—	—
(B606) No. 6	(Not used)	—	—	
(B606) No. 7	Sensor power supply output 1	When ignition switch is ON	4.5 V or more	—
(B606) No. 8	(Not used)	—	—	—
(B606) No. 9	Sensor power supply output 3	When ignition switch is ON	4.5 V or more	—
(B606) No. 10	(Not used)	—	—	—
(B606) No. 11	Brake stroke sensor input 1	When brake pedal is depressed	Approx. 1 V or more	—
		When brake is not depressed	Approx. 1 V	—
(B606) No. 12	(Not used)	—	—	—
(B606) No. 13	(Not used)	—	—	—
(B606) No. 14	ISG CRK output	When ignition switch is ON	Less than 1 V	—
(B606) No. 15	ISG INH output	When ignition switch is ON	Less than 2 V	—
(B606) No. 16	Brake vacuum pump relay output	When brake vacuum pump operates	9 V or more	—
		When brake vacuum pump not activated	0 V	—
(B606) No. 17	Sensor power supply output 2	When ignition switch is ON	4.5 V or more	—
(B606) No. 18	Battery voltage 2 monitor input	Always	11 — 15 V	—
(B606) No. 19	Vacuum pump relay monitor input	When brake vacuum pump operates	9 V or more	—
		When brake vacuum pump not activated	0 V	—
(B606) No. 20	Brake stroke sensor input 2	When brake pedal is depressed	Approx. 4 V or less	—
		When brake is not depressed	Approx. 4 V	—
(B606) No. 21	(Not used)	—	—	—
(B606) No. 22	Battery relay CLOSE output	—	—	—
(B606) No. 23	Battery relay OPEN output	—	—	—
(B606) No. 24	GND3 for sensors	Always	0 V	—

2. DRIVE MOTOR CONTROL MODULE (DMCM)

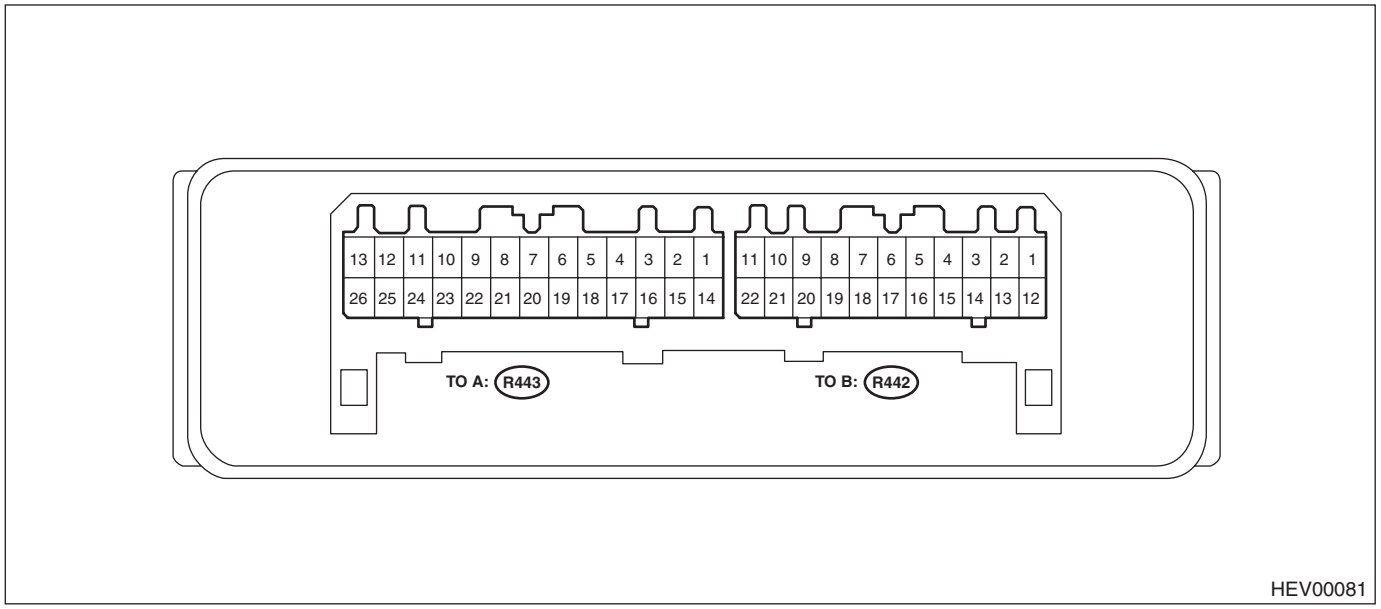

Terminal No. (terminal symbol)	Item	Measuring condition	Measurement value	Note
(R443) No. 1	(Not used)	—	—	—
(R443) No. 2	HEVCAN H	—	Cannot be measured	CAN communication line
(R443) No. 3	CT W	When ignition switch is ON	2.45 — 2.55 V	—
(R443) No. 4	(Not used)	—	—	—
(R443) No. 5	CT V	When ignition switch is ON	2.45 — 2.55 V	—
(R443) No. 6	SVCC2	When ignition switch is ON	4.9 — 5.1 V	—
(R443) No. 7	CT U	When ignition switch is ON	2.45 — 2.55 V	—
(R443) No. 8	SVCC1	When ignition switch is ON	4.9 — 5.1 V	—
(R443) No. 9	(Not used)	—	—	—
(R443) No. 10	IG	When ignition switch is ON	11 — 15 V	—
(R443) No. 11	SS RY	When ignition switch is ON	0 V	—
(R443) No. 12	GND1	Always	0 V	—
(R443) No. 13	IG SS1	When ignition switch is ON	11 — 15 V	—
(R443) No. 14	(Not used)	—	—	—
(R443) No. 15	HEVCAN L	—	Cannot be measured	CAN communication line
(R443) No. 16	(Not used)	—	—	—
(R443) No. 17	SGND2	When ignition switch is ON	0 V	—
(R443) No. 18	SGND1	When ignition switch is ON	0 V	—
(R443) No. 19	SCIMOCO	—	Cannot be measured	SCI communication line
(R443) No. 20	SCICOMO	—	Cannot be measured	SCI communication line
(R443) No. 21	FANPIN	When ignition switch is ON	11 — 15 V	—
(R443) No. 22	FANPOUT	When ignition switch is ON	11 — 15 V	—
(R443) No. 23	(Not used)	—	—	—
(R443) No. 24	IPUPWR RY	When ignition switch is ON	0 V	—
(R443) No. 25	GND2	Always	0 V	—
(R443) No. 26	IG SS2	When ignition switch is ON	11 — 15 V	—
(R442) No. 1	UN	—	Cannot be measured	—
(R442) No. 2	UP	—	Cannot be measured	—
(R442) No. 3	TMP B	When ignition switch is ON	0.23 V — 4.6 V	—
(R442) No. 4	TMP A	When ignition switch is ON	0.23 V — 4.6 V	—

Terminal No. (terminal symbol)	Item	Measuring condition	Measurement value	Note
(R442) No. 5	AGND1	Always	0 V	—
(R442) No. 6	R1	—	Cannot be measured	—
(R442) No. 7	S4	—	Cannot be measured	—
(R442) No. 8	S3	—	Cannot be measured	—
(R442) No. 9	S2	—	Cannot be measured	—
(R442) No. 10	S1	—	Cannot be measured	—
(R442) No. 11	(Not used)	—	—	—
(R442) No. 12	WN	—	Cannot be measured	—
(R442) No. 13	WP	—	Cannot be measured	—
(R442) No. 14	VN	—	Cannot be measured	—
(R442) No. 15	VP	—	Cannot be measured	—
(R442) No. 16	(Not used)	—	—	—
(R442) No. 17	R2	—	Cannot be measured	—
(R442) No. 18	(Not used)	—	—	—
(R442) No. 19	(Not used)	—	—	—
(R442) No. 20	(Not used)	—	—	—
(R442) No. 21	(Not used)	—	—	—
(R442) No. 22	SCIIPU	—	Cannot be measured	SCI communication line

3. HIGH VOLTAGE BATTERY

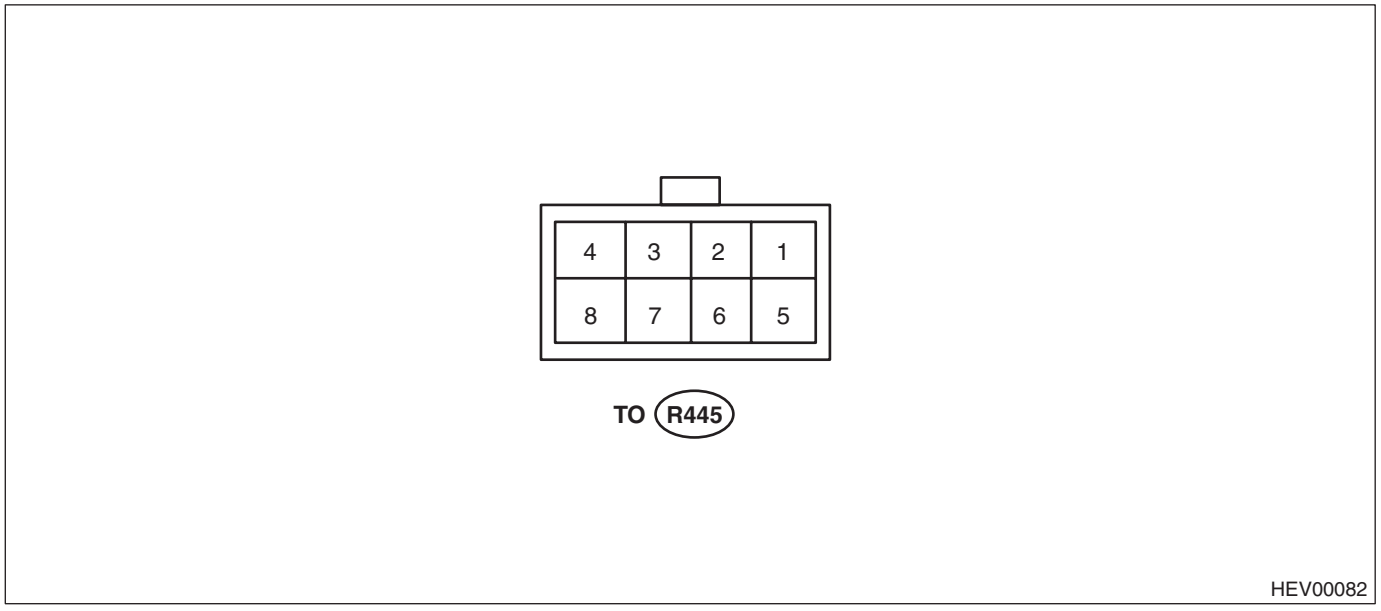

Terminal No. (terminal symbol)	Item	Measuring condition	Measurement value	Note
(R445) No. 1	Main power supply 1	Always	11 — 15 V	—
(R445) No. 2	HEVCAN H	—	Cannot be measured	CAN communication line
(R445) No. 3	HEVCAN L	—	Cannot be measured	CAN communication line
(R445) No. 4	GND	Always	0 V	—
(R445) No. 5	Main power supply 2	Always	11 — 15 V	—
(R445) No. 6	IG power supply	When ignition switch is ON	11 — 15 V	—
(R445) No. 7	(Not used)	—	—	—
(R445) No. 8	GND	Always	0 V	—

6. General Scan Tool

A: OPERATION

1. HOW TO USE GENERAL SCAN TOOL

1) Prepare a scan tool (general scan tool) required by SAE J1978.
2) Connect the general scan tool to data link connector located in the lower portion of the instrument panel (on the driver's side).

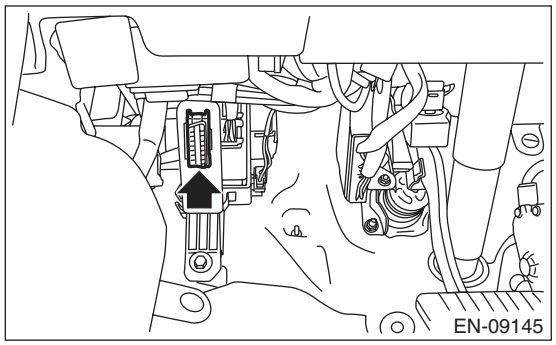

3) Using the general scan tool, call up each data. General scan tool functions consist of:
   (1) MODE $01: Current diagnostic data
   (2) MODE $02: Freeze frame data
   (3) MODE $03: Emission-related DTC
   (4) MODE $04: Clear/Reset emission-related diagnostic information
   (5) MODE $07: Request on-board monitoring test results for continuously monitored systems
   (6) MODE $09: Request vehicle information
   (7) MODE $0A: Emission-related DTC (with Permanent Status)
4) Read out the data according to repair procedures. (For detailed operation procedures, refer to the general scan tool operation manual.)

NOTE:
For details concerning DTC, refer to "List of Diagnostic Trouble Code (DTC)". <Ref. to HEV(diag)-74, List of Diagnostic Trouble Code (DTC).>

2. MODE $01: (CURRENT DIAGNOSTIC DATA)

Refer to data denoting the current operating condition of analog input/output, digital input/output or the powertrain system.
A list of the support data and PID (Parameter Identification) codes are shown in the following table.

- Hybrid powertrain control system

PID	Data	Unit of measure
$01	Number of emission-related DTC, and malfunction indicator light status and diagnosis support information	—
$51	Fuel used at present	—

- Drive motor control system

PID	Data	Unit of measure
$01	Number of emission-related DTC, and malfunction indicator light status and diagnosis support information	—

- Battery energy control system

PID	Data	Unit of measure
$01	Number of emission-related DTC, and malfunction indicator light status and diagnosis support information	—
$5B	Hybrid/EV battery pack level	%

NOTE:
Refer to general scan tool manufacturer's operation manual to access current diagnostic data (MODE $01).

3. MODE $02 (FREEZE FRAME DATA)

Refer to data denoting the operating condition when trouble is detected by on-board diagnosis system.
A list of the support data and PID (Parameter Identification) codes are shown in the following table.

- Hybrid powertrain control system

PID	Data	Unit of measure
$02	DTC that caused freeze frame data to be stored	—
$51	Fuel used at present	—

- Battery energy control system

PID	Data	Unit of measure
$02	DTC that caused freeze frame data to be stored	—
$5B	Hybrid/EV battery pack level	%

NOTE:
Refer to general scan tool manufacturer's instruction manual to access current freeze frame data (MODE $02).

4. MODE $03 (EMISSION-RELATED DTC)

Refer to "List of Diagnostic Trouble Code (DTC)" for information about data denoting emission-related DTC. <Ref. to HEV(diag)-74, List of Diagnostic Trouble Code (DTC).>

5. MODE $04 (CLEAR/RESET EMISSION-RELATED DIAGNOSTIC INFORMATION)

Refer to the mode used to clear or reset emission-related diagnostic information.

NOTE:
Refer to general scan tool manufacturer's instruction manual to clear the emission-related diagnostic information (MODE $04).

6. MODE $07 (REQUEST ON-BOARD MONITORING TEST RESULTS FOR CONTINUOUSLY MONITORED SYSTEMS)

Refer to the data of DTC (pending code) for troubleshooting result about emission in the first time.

7. MODE $09 (REQUEST VEHICLE INFORMATION)

Refer to the data of the vehicle specification.

8. MODE $0A (EMISSION-RELATED DTC (WITH PERMANENT STATUS))

Refer to “List of Diagnostic Trouble Code (DTC)” for information about data denoting emission-related DTC. <Ref. to HEV(diag)-74, List of Diagnostic Trouble Code (DTC).>

7. Subaru Select Monitor

A: OPERATION

- For detailed operation procedures, refer to “PC application help for Subaru Select Monitor”.
- When communication with Subaru Select Monitor is not established, perform “COMMUNICATION FOR INITIALIZING IMPOSSIBLE”. <Ref. to HEV(diag)-17, COMMUNICATION FOR INITIALIZING IMPOSSIBLE, Subaru Select Monitor.>

B: COMMUNICATION FOR INITIALIZING IMPOSSIBLE

Subaru Select Monitor communication line is open or shorted.

1. HYBRID POWERTRAIN CONTROL SYSTEM

DIAGNOSIS:

- Defective harness
- Power supply circuit malfunction
- Defective HPCM
- Defective CAN communication circuit
- Defective Subaru Select Monitor

TROUBLE SYMPTOM:

Not communicable with Subaru Select Monitor.

WIRING DIAGRAM:

Hybrid system <Ref. to WI(HEV)-139, WIRING DIAGRAM, Hybrid Electric Vehicle System.>

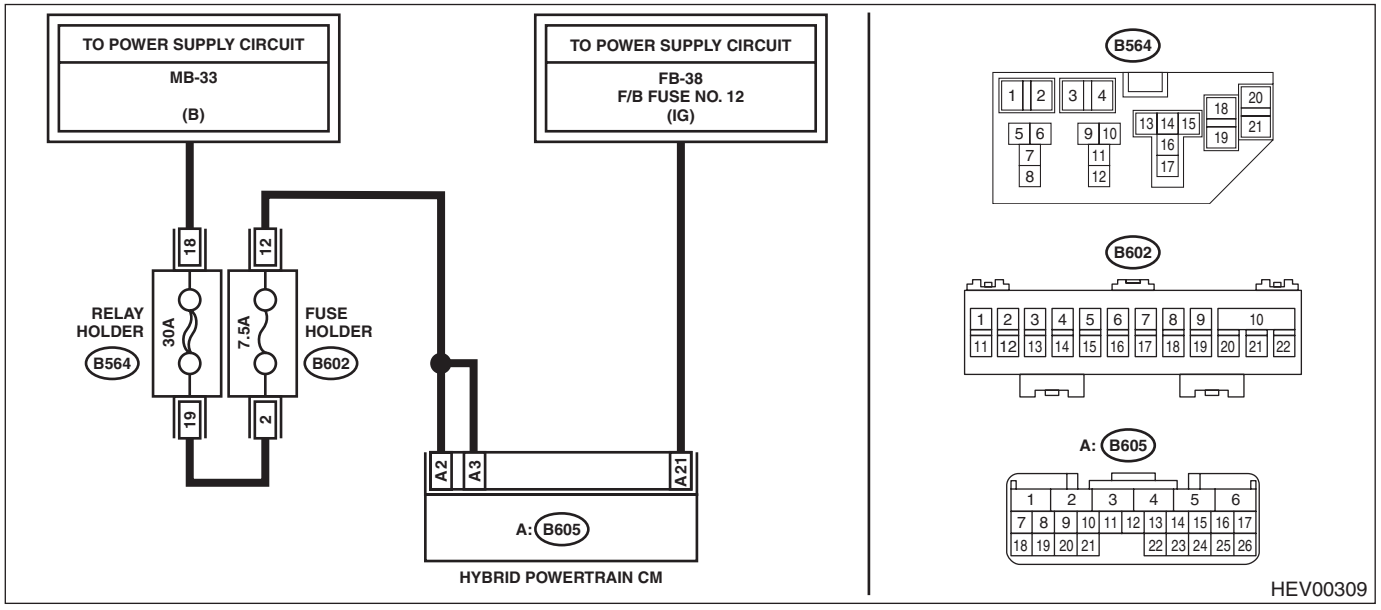

Step		Check	Yes	No
1	**CHECK FUSE.** Check HPCM fuse. <Ref. to HEV-12, Relay and Fuse.>	Is the condition normal?	Go to step **2**.	Replace the fuse. When the replaced fuse is blown immediately, repair ground short circuit of harness between 12 volt auxiliary battery and HPCM.

	Step	Check	Yes	No
2	**CHECK HARNESS.** 1) Turn the ignition switch to OFF. 2) Disconnect the HPCM connector. 3) Turn the ignition switch to ON. 4) Using a tester, measure the voltage between the HPCM connector and chassis ground. ***Connector & terminal*** ***(B605) No. 2 (+) — Chassis ground (–):*** ***(B605) No. 3 (+) — Chassis ground (–):*** ***(B605) No. 21 (+) — Chassis ground (–):***	Is the voltage 10 — 13 V?	Go to step **3**.	Repair the open circuit of the harness between the HPCM connector and the fuse.
3	**CHECK OTHER COMMUNICATION.** Communicate with the system other than the hybrid powertrain control module using the Subaru Select Monitor.	Is the communication to other control module possible?	Go to step **4**.	Perform the "Communication for Initializing Impossible" of LAN system. <Ref. to LAN(HEV)(diag)-11, COMMUNICATION FOR INITIALIZING IMPOSSIBLE, Subaru Select Monitor.>
4	**CHECK LAN SYSTEM.** Inspect LAN system. <Ref. to LAN(HEV)(diag)-2, PROCEDURE, Basic Diagnostic Procedure.>	Is there any fault?	Perform the inspection according to the diagnosis for LAN system.	Go to step **5**.
5	**CHECK HPCM.** 1) Turn the ignition switch to OFF. 2) Connect the HPCM connector. 3) Communicate with the hybrid powertrain control system using the Subaru Select Monitor.	Is communication possible?	It is possible that temporary poor communication occurs.	Replace the HPCM. <Ref. to HEV-37, Hybrid Powertrain Control Module.>

2. DRIVE MOTOR CONTROL SYSTEM

DIAGNOSIS:

- Defective harness
- Power supply circuit malfunction
- Defective DMCM
- Defective CAN communication circuit
- Defective Subaru Select Monitor

TROUBLE SYMPTOM:

Not communicable with Subaru Select Monitor.

WIRING DIAGRAM:

Hybrid system <Ref. to WI(HEV)-139, WIRING DIAGRAM, Hybrid Electric Vehicle System.>

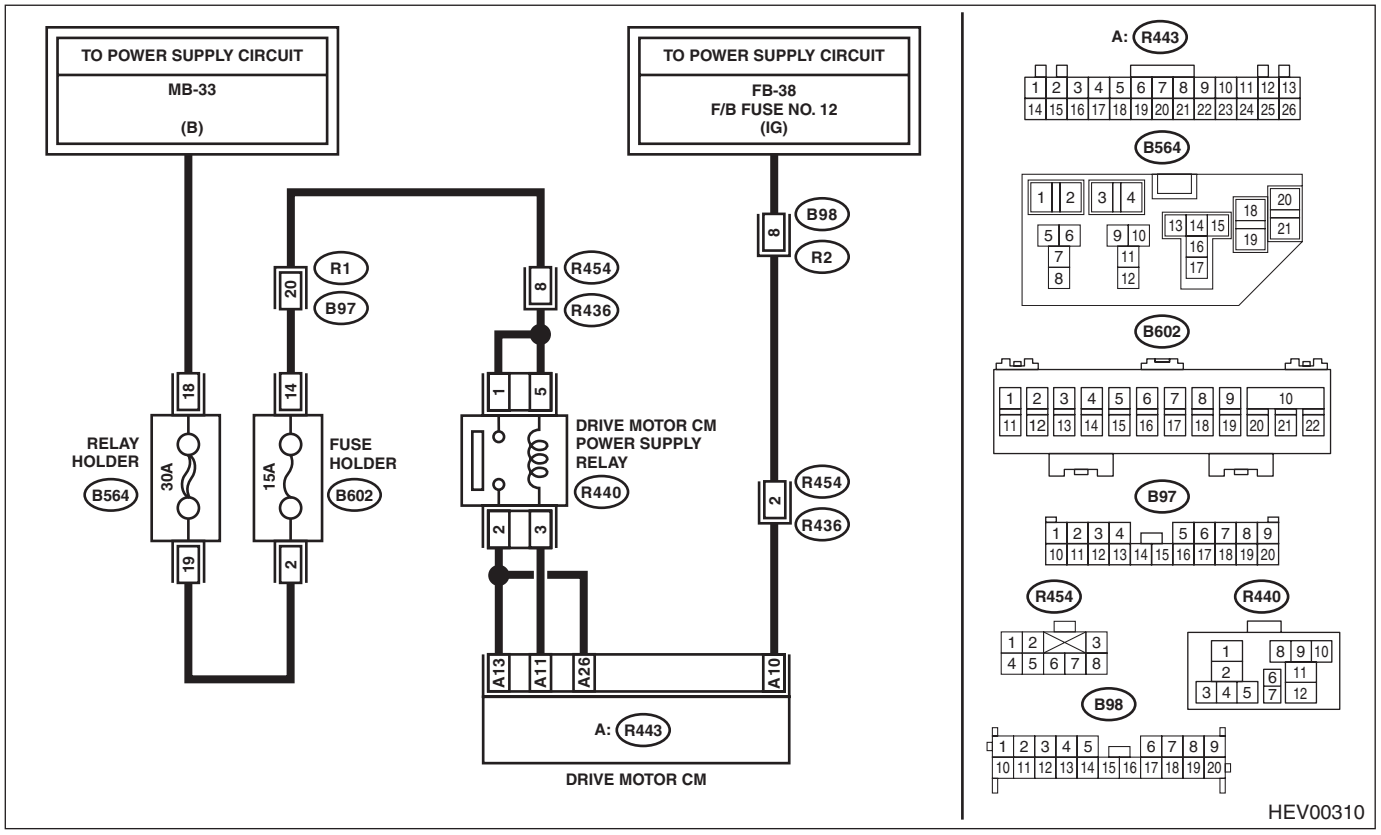

Step		Check	Yes	No
1	**CHECK FUSE.** Check DMCM fuse. <Ref. to HEV-12, Relay and Fuse.>	Is the condition normal?	Go to step **2**.	Replace the fuse. When the replaced fuse is blown immediately, repair ground short circuit of harness between 12 volt auxiliary battery and HPCM.
2	**CHECK HARNESS.** 1) Turn the ignition switch to OFF. 2) Disconnect the DMCM connector. 3) Turn the ignition switch to ON. 4) Using a tester, measure the voltage between the DMCM connector and chassis ground. ***Connector & terminal*** ***(B443) No. 11 (+) — Chassis ground (–):*** ***(B443) No. 10 (+) — Chassis ground (–):***	Is the voltage 10 — 13 V?	Go to step **3**.	Repair the open circuit of the harness between the DMCM connector and the fuse.

	Step	Check	Yes	No
3	**CHECK OTHER COMMUNICATION.** Communicate with the system other than the drive motor control system using the Subaru Select Monitor.	Is the communication to other control module possible?	Go to step **4**.	Perform the "Communication for Initializing Impossible" of LAN system. <Ref. to LAN(HEV)(diag)-11, COMMUNICATION FOR INITIALIZING IMPOSSIBLE, Subaru Select Monitor.>
4	**CHECK LAN SYSTEM.** Inspect LAN system. <Ref. to LAN(HEV)(diag)-2, PROCEDURE, Basic Diagnostic Procedure.>	Is there any fault?	Perform the inspection according to the diagnosis for LAN system.	Go to step **5**.
5	**CHECK DMCM.** 1) Turn the ignition switch to OFF. 2) Connect the DMCM connector. 3) Communicate with the drive motor control system using the Subaru Select Monitor.	Is communication possible?	It is possible that temporary poor communication occurs.	Replace DMCM. <Ref. to CVT(TH58A)-155, Drive Motor Control Module.>

3. BATTERY ENERGY CONTROL SYSTEM

DIAGNOSIS:

- Defective harness
- Power supply circuit malfunction
- Defective high voltage battery
- Defective CAN communication circuit
- Defective Subaru Select Monitor

TROUBLE SYMPTOM:

Not communicable with Subaru Select Monitor.

WIRING DIAGRAM:

Hybrid system <Ref. to WI(HEV)-139, WIRING DIAGRAM, Hybrid Electric Vehicle System.>

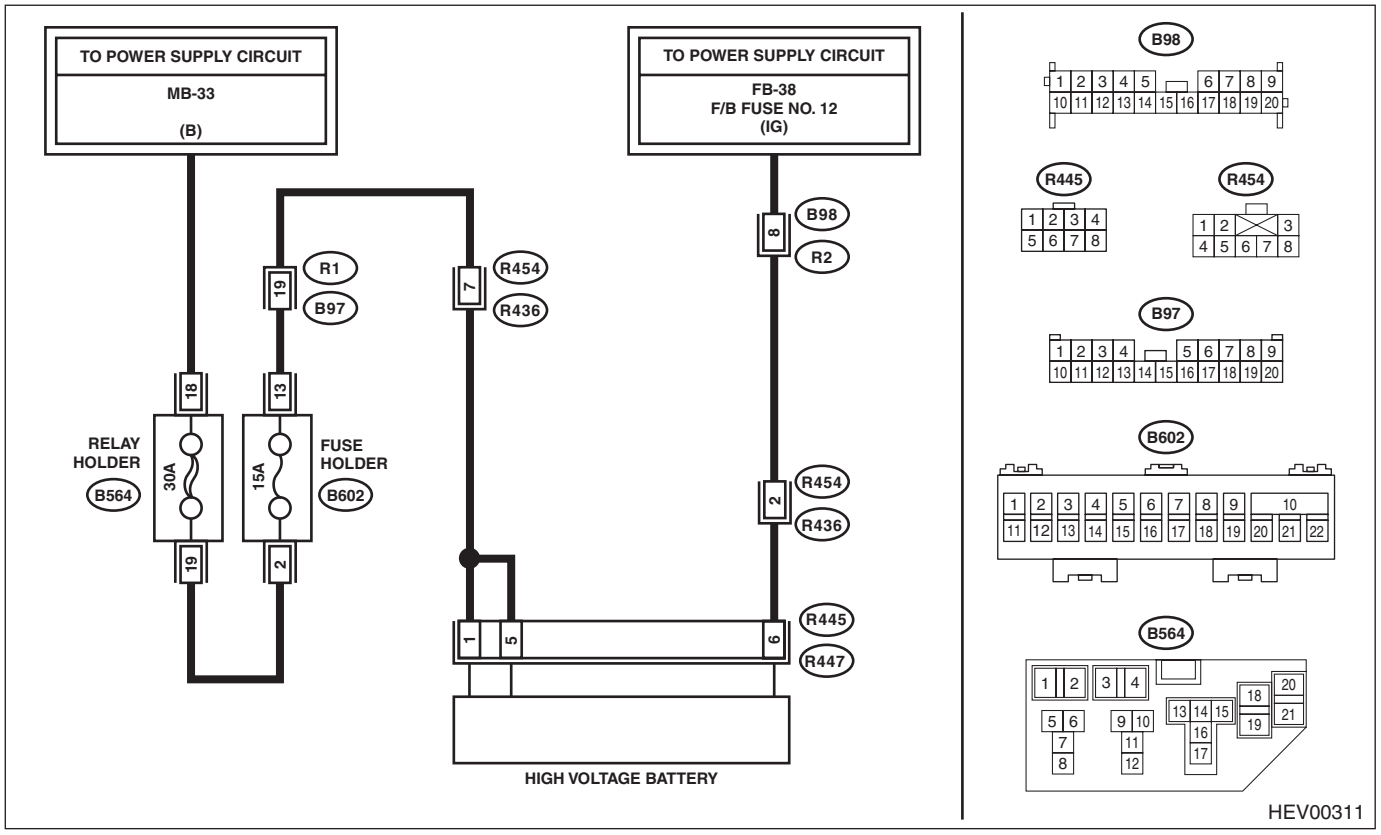

Step		Check	Yes	No
1	**CHECK FUSE.** Check High voltage battery fuse. <Ref. to HEV-12, Relay and Fuse.>	Is the condition normal?	Go to step **2**.	Replace the fuse. When the replaced fuse is blown immediately, repair ground short circuit of harness between 12 volt auxiliary battery and the high voltage battery.

	Step	Check	Yes	No
2	**CHECK HARNESS.** 1) Turn the ignition switch to OFF. 2) Disconnect the high voltage battery connector. 3) Turn the ignition switch to ON. 4) Using a tester, measure the voltage between the BECM connector and chassis ground. ***Connector & terminal*** ***(B445) No. 6 (+) — Chassis ground (–):*** ***(B445) No. 1 (+) — Chassis ground (–):*** ***(B445) No. 5 (+) — Chassis ground (–):***	Is the voltage 10 — 13 V?	Go to step **3**.	Repair the open circuit of the harness between the high voltage battery connector and the fuse.
3	**CHECK OTHER COMMUNICATION.** Communicate with the system other than the battery energy control system using the Subaru Select Monitor.	Is the communication to other control module possible?	Go to step **4**.	Perform the “Communication for Initializing Impossible” of LAN system.
4	**CHECK LAN SYSTEM.** Inspect LAN system. <Ref. to LAN(HEV)(diag)-2, PROCEDURE, Basic Diagnostic Procedure.>	Is there any fault?	Perform the inspection according to the diagnosis for LAN system.	Go to step **5**.
5	**CHECK HIGH VOLTAGE BATTERY.** 1) Turn the ignition switch to OFF. 2) Disconnect the high voltage battery connector. 3) Connect the disconnected connectors. 4) Communicate with the battery energy control system using the Subaru Select Monitor.	Is communication possible?	It is possible that temporary poor communication occurs.	Replace the high voltage battery. <Ref. to HEV-17, High Voltage Battery.>

8. Read Diagnostic Trouble Code (DTC)

A: OPERATION

- For detailed operation procedures, refer to “PC application help for Subaru Select Monitor”.
- For details concerning DTC, refer to “List of Diagnostic Trouble Code (DTC)”. <Ref. to HEV(diag)-74, List of Diagnostic Trouble Code (DTC).>

1. HYBRID POWERTRAIN CONTROL SYSTEM

1) On «Main Menu» display, select {Each System Check}.
2) On «Each System Check» display, select {HEV System}.
3) On «HEV System» display, select {Hybrid Powertrain Control System}.
4) Select the {Diagnostic Code(s) Display} in «Hybrid Powertrain Control System» display.

2. DRIVE MOTOR CONTROL SYSTEM

1) On «Main Menu» display, select {Each System Check}.
2) On «Each System Check» display, select {HEV System}.
3) On «HEV System» display, select {Drive Motor Control System}.
4) Select the {Diagnostic Code(s) Display} in «Drive Motor Control System» display.

3. BATTERY ENERGY CONTROL SYSTEM

1) On «Main Menu» display, select {Each System Check}.
2) On «Each System Check» display, select {HEV System}.
3) On «HEV System» display, select {Battery Energy Control System}.
4) Select the {Diagnostic Code(s) Display} in «Battery Energy Control System» display.

9. Clear Memory Mode

A: OPERATION

For detailed operation procedures, refer to “PC application help for Subaru Select Monitor”.

1. HYBRID POWERTRAIN CONTROL SYSTEM

NOTE:
After memory is cleared, turn the ignition switch to OFF, and wait for 30 seconds or more before turning the ignition switch to ON.
1) On «Main Menu» display, select {Each System Check}.
2) On «Each System Check» display, select {HEV System}.
3) On «HEV System» display, select {Hybrid Powertrain Control System}.
4) On «Hybrid Powertrain Control System» display, select {Clear Memory}.

2. DRIVE MOTOR CONTROL SYSTEM

1) On «Main Menu» display, select {Each System Check}.
2) On «Each System Check» display, select {HEV System}.
3) On «HEV System» display, select {Drive Motor Control System}.
4) On «Drive Motor Control System» display, select {Clear Memory}.

3. BATTERY ENERGY CONTROL SYSTEM

1) On «Main Menu» display, select {Each System Check}.
2) On «Each System Check» display, select {HEV System}.
3) On «HEV System» display, select {Battery Energy Control System}.
4) On «Battery Energy Control System» display, select {Clear Memory}.

10.All Readiness Diagnostic Code(s)

A: OPERATION

NOTE:
• “Readiness code” denotes a self-diagnosis state in relation to DTC in each control module.
The DTCs displayed here are either not yet self-diagnosed or self-diagnosed but not completed. They will disappear once are diagnosed as normal or abnormal.
• When a diagnostic trouble code is set and the problem is addressed, the readiness code is used to check whether the repair has been properly completed.
When Clear Memory Mode is run after the repair, either Inspection Mode <Ref. to HEV(diag)-26, Inspection Mode.> or the drive cycle <Ref. to HEV(diag)-31, Drive Cycle.> is run against the concerned diagnostic trouble code (DTC), then the readiness code is checked. If the DTC is not displayed, the self-diagnosis for the DTC is considered complete.
Following this, the DTC is read. If the concerned DTC is not set as a current malfunction, the repair is considered complete.
• For detailed operation procedures, refer to “PC application help for Subaru Select Monitor”.
• Sometimes after the self-diagnosis is complete and the readiness code disappears, cycling the ignition switch OFF then ON may cause the readiness code reappear. This happens because the self-diagnosis for each DTC is run every time the ignition switch is turned ON.

1. HYBRID POWERTRAIN CONTROL SYSTEM

1) On «Main Menu» display, select {Each System Check}.
2) On «Each System Check» display, select {HEV System}.
3) On «HEV System» display, select {Hybrid Powertrain Control System}.
4) Select the {Diagnostic Code(s) Display} in «Hybrid Powertrain Control System» display.
5) Select the {Readiness code} in «Diagnostic Code(s) Display» display.

2. DRIVE MOTOR CONTROL SYSTEM

1) On «Main Menu» display, select {Each System Check}.
2) On «Each System Check» display, select {HEV System}.
3) On «HEV System» display, select {Drive Motor Control System}.
4) Select the {Diagnostic Code(s) Display} in «Drive Motor Control System» display.
5) Select the {Readiness code} in «Diagnostic Code(s) Display» display.

3. BATTERY ENERGY CONTROL SYSTEM

1) On «Main Menu» display, select {Each System Check}.
2) On «Each System Check» display, select {HEV System}.
3) On «HEV System» display, select {Battery Energy Control System}.
4) Select the {Diagnostic Code(s) Display} in «Battery Energy Control System» display.
5) Select the {Readiness code} in «Diagnostic Code(s) Display» display.

11.Inspection Mode

A: PROCEDURE

Perform the diagnosis shown in the following DTC table.
When performing the diagnosis not listed in “List of Diagnostic Trouble Code (DTC)”, refer to the item on the drive cycle. <Ref. to HEV(diag)-31, Drive Cycle.>

- Hybrid powertrain control system

DTC	Item	Condition
P0516	Battery Temperature Sensor Circuit Low	—
P0517	Battery Temperature Sensor Circuit High	—
P0556	Brake Booster Pressure Sensor Circuit Range/Performance	After idling the engine for a while, depress and release the brake pedal.
P0572	Brake Switch "A" [Stop Lamp Switch] Circuit Low	After idling the engine for a while, depress and release the brake pedal.
P0573	Brake Switch "A" [Stop Lamp Switch] Circuit High	After idling the engine for a while, depress and release the brake pedal.
P057B	Brake Pedal Position Sensor Circuit Range/Performance	After idling the engine for a while, depress and release the brake pedal.
P057C	Brake Pedal Position Sensor Circuit Low	—
P057D	Brake Pedal Position Sensor Circuit High	—
P058D	Battery Monitor Module Voltage Monitoring Performance	—
P0604	Internal Control Module Random Access Memory (RAM) Error	—
P0605	Internal Control Module Read Only Memory (ROM) Error	—
P0719	Brake Switch "B" Circuit Low	After idling the engine for a while, depress and release the brake pedal.
P0724	Brake Switch "B" Circuit High	After idling the engine for a while, depress and release the brake pedal.
P0A1D	Hybrid Powertrain Control Module	—
P1C00	Battery "2" Monitor Module Performance	—
P1C04	Output Clutch Linear Solenoid Control Circuit Low	After idling, turn off the ignition switch to OFF and read the readiness code. (This is because the diagnosis is performed when the ignition switch is off.)
P1C05	Output Clutch Linear Solenoid Control Circuit High	After idling, turn off the ignition switch to OFF and read the readiness code. (This is because the diagnosis is performed when the ignition switch is off.)
P1C0C	Brake Pedal Position Sensor "2" Circuit Low	—
P1C0D	Brake Pedal Position Sensor "2" Circuit High	—
P1C11	Vacuum Pump Supply Voltage Low	—
P1C12	Vacuum Pump Supply Voltage High	—
P1C14	Generator Performance	—
P1C1E	Autodisconnect Experience	Inspection not possible. (Inspection using drive cycle is not possible either.)

DTC	Item	Condition
U0073	Control Module Communication Bus Off	—
U0075	Control Module Communication Bus "PU-CAN" Off	—
U0076	Control Module Communication Bus "HEV-CAN" Off	—
U0100	Lost Communication With ECM/PCM “A”	—
U0101	Lost Communication With TCM	—
U0110	Lost Communication With Drive Motor Control Module "A"	—
U0111	Lost Communication With Battery Energy Control Module	—
U0122	Lost Communication With Vehicle Dynamics Control Module	—
U0131	Lost Communication With Power Steering Control Module	—
U0140	Lost Communication With Body Control Module	—
U0151	Lost Communication With Restraints Control Module	—
U0155	Lost Communication With Instrument Panel Cluster (IPC) Control Module	—
U0164	Lost Communication With HVAC Control Module	—
U0287	Lost Communication With Transmission Fluid Pump Module	—
U0401	Invalid Data Received From ECM/PCM “A”	—
U0402	Invalid Data Received From TCM	—
U0411	Invalid Data Received From Drive Motor Control Module "A"	—
U0412	Invalid Data Received From Battery Energy Control Module	—
U0416	Invalid Data Received From Vehicle Dynamics Control Module	—
U0420	Invalid Data Received From Power Steering Control Module	—
U0422	Invalid Data Received From Body Control Module	—
U0423	Invalid Data Received From Instrument Panel Cluster Control Module	—
U0424	Invalid Data Received From HVAC Control Module	—
U0452	Invalid Data Received From Restraints Control Module	—
U0588	Invalid Data Received From Transmission Fluid Pump Module	—
U1100	Lost Communication With ECM/PCM PU-CAN	—
U1101	Lost Communication With TCM PU-CAN	—
U1401	Invalid Data Received From ECM/PCM PU-CAN	—
U1402	Invalid Data Received From TCM PU-CAN	—
U1676	LIN Communication Bus Error Hybrid Powertrain Control Module	—
U1711	Lost Communication With Battery "2" Monitor Module	—
U1720	Lost Communication With Integrated Starter Generator	—

- Drive motor control system

DTC	Item	Condition
P0604	Internal Control Module Random Access Memory (RAM) Error	—
P0605	Internal Control Module Read Only Memory (ROM) Error	—
P06B1	Sensor Power Supply "A" Circuit Low	—
P06B2	Sensor Power Supply "A" Circuit High	—
P0A1B	Drive Motor "A" Control Module	—
P0A2C	Drive Motor "A" Temperature Sensor Circuit Low	—
P0A2D	Drive Motor "A" Temperature Sensor Circuit High	—
P0A3C	Drive Motor "A" Inverter Over Temperature	—
P0A40	Drive Motor "A" Position Sensor Circuit Range/Performance	—
P0A43	Drive Motor "A" Position Sensor Circuit Intermittent	—
P0A44	Drive Motor "A" Position Sensor Circuit Overspeed	—
P0A94	DC/DC Converter Performance	—
P0AED	Drive Motor Inverter Temperature Sensor "A" Circuit	—
P0AF2	Drive Motor Inverter Temperature Sensor "B" Circuit	—
P0BD1	Drive Motor Inverter Temperature Sensor "C" Circuit	—
P0BE6	Drive Motor "A" Phase U Current Sensor Circuit Range/Performance	—
P0BE7	Drive Motor "A" Phase U Current Sensor Circuit Low	—
P0BE8	Drive Motor "A" Phase U Current Sensor Circuit High	—
P0BEA	Drive Motor "A" Phase V Current Sensor Circuit Range/Performance	—
P0BEB	Drive Motor "A" Phase V Current Sensor Circuit Low	—
P0BEC	Drive Motor "A" Phase V Current Sensor Circuit High	—
P0BEE	Drive Motor "A" Phase W Current Sensor Circuit Range/Performance	—
P0BEF	Drive Motor "A" Phase W Current Sensor Circuit Low	—
P0BF0	Drive Motor "A" Phase W Current Sensor Circuit High	—
P0BFD	Drive Motor "A" Phase U-V-W Current Sensor Correlation	—
P0C0C	Drive Motor "A" Inverter Power Supply Circuit Low	—
P0C0D	Drive Motor "A" Inverter Power Supply Circuit High	—
P0C52	Drive Motor "A" Position Sensor Circuit "A" Low	—
P0C5C	Drive Motor "A" Position Sensor Circuit "B" Low	—
P0C79	Drive Motor "A" Inverter Voltage Too High	—
P0CDC	Drive Motor "A" Position Sensor Circuit "C" Low	—
P0CDD	Drive Motor "A" Position Sensor Circuit "C" High	—
P0DA8	Hybrid/Ev Battery Voltage/Drive Motor "A" Inverter Voltage Correlation	—
P1C20	Manufacturer Controlled DTC	—
P1C22	Manufacturer Controlled DTC	—
P1C25	Manufacturer Controlled DTC	—
P1C26	Manufacturer Controlled DTC	—
P1C30	Manufacturer Controlled DTC	—
P1C31	Manufacturer Controlled DTC	—
P1C34	Manufacturer Controlled DTC	—
P1C35	Manufacturer Controlled DTC	—
U0076	Control Module Communication Bus "HEV-CAN" Off	—
U0111	Lost Communication With Battery Energy Control Module	—
U0412	Invalid Data Received From Battery Energy Control Module	—
U1290	Lost Communication With Hybrid Powertrain Control Module HEV-CAN	—
U1591	Invalid Data Received From Hybrid Powertrain Control Module HEV-CAN	—

- Battery energy control system

DTC	Item	Condition
P0604	Internal Control Module Random Access Memory (RAM) Error	—
P0605	Internal Control Module Read Only Memory (ROM) Error	—
P062F	Internal Control Module EEPROM Error	—
P0A1F	Battery Energy Control Module	—
P0A7D	Hybrid Battery Pack State of Charge Low	—
P0A7E	Hybrid Battery Pack Over Temperature	—
P0A95	High Voltage Fuse	—
P0A9C	Hybrid Battery Temperature Sensor "A" Circuit Range/Performance	—
P0A9D	Hybrid Battery Temperature Sensor "A" Circuit Low	—
P0A9E	Hybrid Battery Temperature Sensor "A" Circuit High	—
P0AA4	Hybrid Battery Negative Contactor Circuit Stuck Closed	—
P0AA7	Hybrid Battery Voltage System Isolation Sensor Circuit	—
P0AAE	Hybrid Battery Pack Air Temperature Sensor "A" Circuit Low	—
P0AAF	Hybrid Battery Pack Air Temperature Sensor "A" Circuit High	—
P0AC0	Hybrid Battery Pack Current Sensor "A" Circuit Range/Performance	—
P0AC1	Hybrid Battery Pack Current Sensor "A" Circuit Low	—
P0AC2	Hybrid Battery Pack Current Sensor "A" Circuit High	—
P0AC3	Hybrid Battery Pack Current Sensor "A" Circuit Intermittent/Erratic	—
P0AC6	Hybrid Battery Temperature Sensor "B" Circuit Range/Performance	—
P0AC7	Hybrid Battery Temperature Sensor "B" Circuit Low	—
P0AC8	Hybrid Battery Temperature Sensor "B" Circuit High	—
P0ACB	Hybrid Battery Temperature Sensor "C" Circuit Range/Performance	—
P0ACC	Hybrid Battery Temperature Sensor "C" Circuit Low	—
P0ACD	Hybrid Battery Temperature Sensor "C" Circuit High	—
P0AD9	Hybrid Battery Positive Contactor Control Circuit/Open	—
P0ADB	Hybrid Battery Positive Contactor Control Circuit Low	—
P0ADD	Hybrid Battery Negative Contactor Control Circuit/Open	—
P0ADF	Hybrid Battery Negative Contactor Control Circuit Low	—
P0AE4	Hybrid Battery Precharge Contactor Control Circuit	—
P0AE6	Hybrid Battery Precharge Contactor Control Circuit Low	—
P0B25	Hybrid Battery "A" Voltage Low	—
P0B26	Hybrid Battery "A" Voltage High	—
P0B37	High Voltage Service Disconnect Open	—
P0B3C	Hybrid Battery Voltage Sense "A" Circuit Range/Performance	—
P0B3D	Hybrid Battery Voltage Sense "A" Circuit Low	—
P0B3E	Hybrid Battery Voltage Sense "A" Circuit High	—
P0B41	Hybrid Battery Voltage Sense "B" Circuit Range/Performance	—
P0B42	Hybrid Battery Voltage Sense "B" Circuit Low	—
P0B43	Hybrid Battery Voltage Sense "B" Circuit High	—
P0B46	Hybrid Battery Voltage Sense "C" Circuit Range/Performance	—
P0B47	Hybrid Battery Voltage Sense "C" Circuit Low	—
P0B48	Hybrid Battery Voltage Sense "C" Circuit High	—
P0B4A	Hybrid Battery Voltage Sense "D" Circuit	—
P0B4B	Hybrid Battery Voltage Sense "D" Circuit Range/Performance	—
P0B4C	Hybrid Battery Voltage Sense "D" Circuit Low	—
P0B4D	Hybrid Battery Voltage Sense "D" Circuit High	—
P0B50	Hybrid Battery Voltage Sense "E" Circuit Range/Performance	—
P0B51	Hybrid Battery Voltage Sense "E" Circuit Low	—
P0B52	Hybrid Battery Voltage Sense "E" Circuit High	—

DTC	Item	Condition
P0B55	Hybrid Battery Voltage Sense "F" Circuit Range/Performance	—
P0B56	Hybrid Battery Voltage Sense "F" Circuit Low	—
P0B57	Hybrid Battery Voltage Sense "F" Circuit High	—
P0B5A	Hybrid Battery Voltage Sense "G" Circuit Range/Performance	—
P0B5B	Hybrid Battery Voltage Sense "G" Circuit Low	—
P0B5C	Hybrid Battery Voltage Sense "G" Circuit High	—
P0BB8	Hybrid Battery Voltage Sense "Z" Circuit	—
P0C78	Hybrid Battery System Precharge Time Too Long	—
P0CA6	Hybrid Battery Charging Current High	—
P0CA7	Hybrid Battery Discharging Current High	—
P1C40	Hybrid Battery Positive Contactor or Pre-Charge Contactor Circuit Stuck Closed	After idling, turn off the ignition switch to OFF and read the readiness code. (This is because the diagnosis is performed when the ignition switch is off.)
P1C41	High Voltage Circuit Short	—
P1C42	High Voltage Circuit Open	—
P1C43	Hybrid Battery Contactor Power Supply Circuit	—
P1C44	Sub CPU in BECM	—
P1C45	Hybrid Battery Block 1 Balancing Performance	—
P1C46	Hybrid Battery Block 2 Balancing Performance	—
P1C47	Hybrid Battery Block 3 Balancing Performance	—
P1C48	Hybrid Battery Block 4 Balancing Performance	—
P1C49	Hybrid Battery Block 5 Balancing Performance	—
P1C4A	Hybrid Battery Block 6 Balancing Performance	—
P1C5E	Hybrid Battery Block Voltage Too Low	—
U0076	Control Module Communication Bus "HEV-CAN" Off	—
U0110	Lost Communication With Drive Motor Control Module "A"	—
U0411	Invalid Data Received From Drive Motor Control Module "A"	—
U1290	Lost Communication With Hybrid Powertrain Control Module HEV-CAN	—
U1591	Invalid Data Received From Hybrid Powertrain Control Module HEV-CAN	—

PROCEDURE
1) Check that the 12 volt auxiliary battery voltage is 12 V or more and fuel remains approx. half [20 — 40 L (5.3 — 10.6 US gal, 4.4 — 8.8 Imp gal)].
2) Perform the Clear Memory Mode. <Ref. to HEV(diag)-24, Clear Memory Mode.>
3) Read the DTC and check that the DTC is not displayed. <Ref. to HEV(diag)-23, Read Diagnostic Trouble Code (DTC).>

NOTE:
If the DTC is displayed on the screen, the trouble is still present. Perform the diagnosis according to DTC. <Ref. to HEV(diag)-74, List of Diagnostic Trouble Code (DTC).> After solving the DTC, repeat from step 2).
4) Start the engine, and run the engine at idle for 10 seconds or more.
5) Read the readiness code and check that the concerned DTC is not displayed. <Ref. to HEV(diag)-25, All Readiness Diagnostic Code(s).>

NOTE:
If the concerned DTC is displayed, the self-diagnosis of the DTC is not complete. Repeat from step 4).
6) Read the DTC and check that the DTC is not displayed. <Ref. to HEV(diag)-23, Read Diagnostic Trouble Code (DTC).>

NOTE:
If the DTC is displayed on the screen, the trouble is still present. Perform the diagnosis according to DTC. <Ref. to HEV(diag)-74, List of Diagnostic Trouble Code (DTC).> After solving the DTC, repeat from step 2).

12.Drive Cycle

A: PROCEDURE

It is necessary to perform the drive cycle listed below if DTC is not found in the Inspection Mode. It is possible to complete diagnosis of the DTC by performing the indicated drive cycle. After the repair for the DTC, perform a necessary drive cycle and make sure the function recovers and the DTC is recorded.

1. PREPARATION FOR DRIVE CYCLE

1) Check that the 12 volt auxiliary battery voltage is 12 V or more and fuel remains approx. half [20 — 40 L (5.3 — 10.6 US gal, 4.4 — 8.8 Imp gal)].
2) Perform the Clear Memory Mode. <Ref. to HEV(diag)-24, Clear Memory Mode.>
3) Read the DTC and check that the DTC is not displayed. <Ref. to HEV(diag)-23, Read Diagnostic Trouble Code (DTC).>

NOTE:
• If the DTC is displayed on the screen, the trouble is still present. Perform the diagnosis according to DTC. <Ref. to HEV(diag)-74, List of Diagnostic Trouble Code (DTC).> After solving the DTC, repeat from step 2).
• Perform the drive cycle after warming up the engine except when any conditions such as oil temperature at starting are specified.

2. DRIVE CYCLE A

• Hybrid powertrain control system

DTC	Item	Condition
P1C10	Vacuum Pump Performance	In EV traveling, operate vacuum pump by performing drive cycle A. If the vacuum pressure is sufficient but the vacuum pump still does not operate, turn the ignition switch to ON, then run «Brake Vacuum Pump System Check» from the “System Operation Check Mode” of the hybrid powertrain control system. <Ref. to HEV(diag)-72, HYBRID POWERTRAIN CONTROL SYSTEM, OPERATION, System Operation Check Mode.>
P2158	Vehicle Speed Sensor "B"	—

- Drive motor control system

DTC	Item	Condition
P0A2A	Drive Motor "A" Temperature Sensor Circuit	Setting the ignition switch to ON, confirm that current data of drive motor control system, the values of «Drive Motor Inverter Temperature A»«Drive Motor Inverter Temperature B»«Drive Motor Inverter Temperature C», and «High Voltage Battery Temperature (MIN)» are at 30°C (86°F) or more, run the engine at idling speed for 1 minute, then begin drive cycle A. <Ref. to HEV(diag)-51, DRIVE MOTOR CONTROL SYSTEM, OPERATION, Read Current Data.>
P0A3F	Drive Motor "A" Position Sensor Circuit	—
P0A5D	Drive Motor "A" Phase U Current	—
P0A60	Drive Motor "A" Phase V Current	—
P0A63	Drive Motor "A" Phase W Current	—
P0A78	Drive Motor "A" Inverter Performance	—
P0C05	Drive Motor "A" Phase U-V-W Circuit/Open	—
P1C24	Manufacturer Controlled DTC	Setting the ignition switch to ON, confirm that current data of drive motor control system, the values of «Drive Motor Inverter Temperature A»«Drive Motor Inverter Temperature B»«Drive Motor Inverter Temperature C», and «High Voltage Battery Temperature (MIN)» are at 30°C (86°F) or more, run the engine at idling speed for 1 minute, then begin drive cycle A. <Ref. to HEV(diag)-51, DRIVE MOTOR CONTROL SYSTEM, OPERATION, Read Current Data.>
P1C2A	Manufacturer Controlled DTC	—

- Battery energy control system

DTC	Item	Condition
U1591	Invalid Data Received From Hybrid Powertrain Control Module HEV-CAN	—

Diagnostic procedure:
1) Prepare for drive cycle. <Ref. to HEV(diag)-31, PREPARATION FOR DRIVE CYCLE, PROCEDURE, Drive Cycle.>
2) Drive at 10 km/h (6.2 MPH) or more.
3) Read the readiness code and check that the concerned DTC is not displayed. <Ref. to HEV(diag)-25, All Readiness Diagnostic Code(s).>

NOTE:
If the concerned DTC is displayed, the self-diagnosis of the DTC is not complete. Repeat from step 1).
4) Read the DTC and check that the DTC is not displayed. <Ref. to HEV(diag)-23, Read Diagnostic Trouble Code (DTC).>

NOTE:
If the DTC is displayed on the screen, the trouble is still present. Perform the diagnosis according to DTC. <Ref. to HEV(diag)-74, List of Diagnostic Trouble Code (DTC).> After repairing the cause of setting DTC, repeat from preparation for drive cycle. <Ref. to HEV(diag)-31, PREPARATION FOR DRIVE CYCLE, PROCEDURE, Drive Cycle.>

3. DRIVE CYCLE B

- Drive motor control system

DTC	Item	Condition
P0A90	Drive Motor "A" Performance	—
P0AEE	Drive Motor Inverter Temperature Sensor "A" Circuit Range/Performance	Setting the ignition switch to ON, confirm that current data of drive motor control system, the values of «Drive Motor Inverter Temperature A»«Drive Motor Inverter Temperature B»«Drive Motor Inverter Temperature C» are within 30 — 50°C (86 — 122°F) range, run the engine at idling speed for 5 minutes, then begin drive cycle B. <Ref. to HEV(diag)-51, DRIVE MOTOR CONTROL SYSTEM, OPERATION, Read Current Data.>
P0AF3	Drive Motor Inverter Temperature Sensor "B" Circuit Range/Performance	Setting the ignition switch to ON, confirm that current data of drive motor control system, the values of «Drive Motor Inverter Temperature A»«Drive Motor Inverter Temperature B»«Drive Motor Inverter Temperature C» are within 30 — 50°C (86 — 122°F) range, run the engine at idling speed for 5 minutes, then begin drive cycle B. <Ref. to HEV(diag)-51, DRIVE MOTOR CONTROL SYSTEM, OPERATION, Read Current Data.>

DTC	Item	Condition
P0BD2	Drive Motor Inverter Temperature Sensor "C" Circuit Range/Performance	Setting the ignition switch to ON, confirm that current data of drive motor control system, the values of «Drive Motor Inverter Temperature A»«Drive Motor Inverter Temperature B»«Drive Motor Inverter Temperature C» are within 30 — 50°C (86 — 122°F) range, run the engine at idling speed for 5 minutes, then begin drive cycle B. <Ref. to HEV(diag)-51, DRIVE MOTOR CONTROL SYSTEM, OPERATION, Read Current Data.>
P1C27	Manufacturer Controlled DTC	Setting the ignition switch to ON, confirm that current data of drive motor control system, the values of «Drive Motor Temperature A»«Drive Motor Temperature B» are within 30 — 50°C (86 — 122°F) range, run the engine at idling speed for 5 minutes, then begin drive cycle B. <Ref. to HEV(diag)-51, DRIVE MOTOR CONTROL SYSTEM, OPERATION, Read Current Data.>

- Battery energy control system

DTC	Item	Condition
P0A7F	Hybrid Battery Pack Deterioration	Confirm that current data of the battery energy control system, the value of «High Voltage Battery Temperature 1»«High Voltage Battery Temperature 2»«High Voltage Battery Temperature 3» are at 25°C (77°F) or more before running the drive cycle. <Ref. to HEV(diag)-57, BATTERY ENERGY CONTROL SYSTEM, OPERATION, Read Current Data.>
P0AA6	Hybrid Battery Voltage System Isolation Fault	—

DTC	Item	Condition
P0ABF	Hybrid Battery Pack Current Sensor "A" Circuit	Confirm that current data of the battery energy control system, the value of «High Voltage Battery Temperature 1»«High Voltage Battery Temperature 2»«High Voltage Battery Temperature 3» are at 25°C (77°F) or more before running the drive cycle. <Ref. to HEV(diag)-57, BATTERY ENERGY CONTROL SYSTEM, OPERATION, Read Current Data.>

Diagnostic procedure:
1) Prepare for drive cycle. <Ref. to HEV(diag)-31, PREPARATION FOR DRIVE CYCLE, PROCEDURE, Drive Cycle.>
2) Drive for 10 minutes or more at a speed of 30 km/h (18.6 MPH) or more.
3) Read the readiness code and check that the concerned DTC is not displayed. <Ref. to HEV(diag)-25, All Readiness Diagnostic Code(s).>

NOTE:
If the concerned DTC is displayed, the self-diagnosis of the DTC is not complete. Repeat from step 1).
4) Read the DTC and check that the DTC is not displayed. <Ref. to HEV(diag)-23, Read Diagnostic Trouble Code (DTC).>

NOTE:
If the DTC is displayed on the screen, the trouble is still present. Perform the diagnosis according to DTC. <Ref. to HEV(diag)-74, List of Diagnostic Trouble Code (DTC).> After repairing the cause of setting DTC, repeat from preparation for drive cycle. <Ref. to HEV(diag)-31, PREPARATION FOR DRIVE CYCLE, PROCEDURE, Drive Cycle.>

4. DRIVE CYCLE C

- Hybrid powertrain control system

DTC	Item	Condition
P065A	Generator System Performance	—
P1C18	Generator System "B" Performance	—

Diagnostic procedure:
1) Prepare for drive cycle. <Ref. to HEV(diag)-31, PREPARATION FOR DRIVE CYCLE, PROCEDURE, Drive Cycle.>
2) Set the shift lever to “P” range.
3) Check that «Open» is displayed for the current data «12V Battery Relay Mode Target» of the hybrid powertrain control system. <Ref. to HEV(diag)-40, HYBRID POWERTRAIN CONTROL SYSTEM, OPERATION, Read Current Data.>
4) Race the engine at 2000 rpm for 3 minutes.
5) Read the readiness code and check that the concerned DTC is not displayed. <Ref. to HEV(diag)-25, All Readiness Diagnostic Code(s).>

NOTE:
If the concerned DTC is displayed, the self-diagnosis of the DTC is not complete. Repeat from step 1).
6) Read the DTC and check that the DTC is not displayed. <Ref. to HEV(diag)-23, Read Diagnostic Trouble Code (DTC).>

NOTE:
If the DTC is displayed on the screen, the trouble is still present. Perform the diagnosis according to DTC. <Ref. to HEV(diag)-74, List of Diagnostic Trouble Code (DTC).> After repairing the cause of setting DTC, repeat from preparation for drive cycle. <Ref. to HEV(diag)-31, PREPARATION FOR DRIVE CYCLE, PROCEDURE, Drive Cycle.>

5. DRIVE CYCLE D

- Hybrid powertrain control system

DTC	Item	Condition
P0620	Generator Control Circuit	—
P06EF	Engine Restart Performance	—

Diagnostic procedure:
1) Prepare for drive cycle. <Ref. to HEV(diag)-31, PREPARATION FOR DRIVE CYCLE, PROCEDURE, Drive Cycle.>
2) Set the shift lever to “D” range.
3) At standing still (vehicle speed is at 0 km/h (0 MPH)), depress the brake pedal several times ON ←→ OFF from Auto Start Stop, then start the engine.
4) Read the readiness code and check that the concerned DTC is not displayed. <Ref. to HEV(diag)-25, All Readiness Diagnostic Code(s).>

NOTE:
If the concerned DTC is displayed, the self-diagnosis of the DTC is not complete. Repeat from step 1).
5) Read the DTC and check that the DTC is not displayed. <Ref. to HEV(diag)-23, Read Diagnostic Trouble Code (DTC).>

NOTE:
If the DTC is displayed on the screen, the trouble is still present. Perform the diagnosis according to DTC. <Ref. to HEV(diag)-74, List of Diagnostic Trouble Code (DTC).> After repairing the cause of setting DTC, repeat from preparation for drive cycle. <Ref. to HEV(diag)-31, PREPARATION FOR DRIVE CYCLE, PROCEDURE, Drive Cycle.>

6. DRIVE CYCLE E

- Hybrid powertrain control system

DTC	Item	Condition
P1C06	12V Battery Relay Close Circuit Performance	—
P1C07	12V Battery Relay Open Circuit Performance	—
P1C08	12V Battery Relay Performance or Stuck Off	—
P1C09	12V Battery Relay Performance or Stuck On	—

Diagnostic procedure:
1) Prepare for drive cycle. <Ref. to HEV(diag)-31, PREPARATION FOR DRIVE CYCLE, PROCEDURE, Drive Cycle.>
2) Set the shift lever to “P” range.
3) Increase electrical load of auxiliary devices, wait until the value of current data «High Voltage Battery SOC» of the hybrid powertrain control system drops below 37% and the display for «12V Battery Relay Mode Target» turns to «Close». <Ref. to HEV(diag)-40, HYBRID POWERTRAIN CONTROL SYSTEM, OPERATION, Read Current Data.>
4) Drive for 10 minutes or more at a speed of 30 km/h (18.6 MPH) or more.
5) Check that the value of current data «High Voltage Battery SOC» of the hybrid powertrain control system increases to 42% or more and the display for «12V Battery Relay Mode Target» turns to «Open». <Ref. to HEV(diag)-40, HYBRID POWERTRAIN CONTROL SYSTEM, OPERATION, Read Current Data.>
6) Read the readiness code and check that the concerned DTC is not displayed. <Ref. to HEV(diag)-25, All Readiness Diagnostic Code(s).>

NOTE:
If the concerned DTC is displayed, the self-diagnosis of the DTC is not complete. Repeat from step 1).
7) Read the DTC and check that the DTC is not displayed. <Ref. to HEV(diag)-23, Read Diagnostic Trouble Code (DTC).>

NOTE:
If the DTC is displayed on the screen, the trouble is still present. Perform the diagnosis according to DTC. <Ref. to HEV(diag)-74, List of Diagnostic Trouble Code (DTC).> After repairing the cause of setting DTC, repeat from preparation for drive cycle. <Ref. to HEV(diag)-31, PREPARATION FOR DRIVE CYCLE, PROCEDURE, Drive Cycle.>

7. DRIVE CYCLE F

- Battery energy control system

DTC	Item	Condition
P0C30	Hybrid Battery Pack State of Charge High	—

Diagnostic procedure:
1) Prepare for drive cycle. <Ref. to HEV(diag)-31, PREPARATION FOR DRIVE CYCLE, PROCEDURE, Drive Cycle.>
2) Start the engine, and run the engine at idle for 60 seconds or more.
3) Read the readiness code and check that the concerned DTC is not displayed. <Ref. to HEV(diag)-25, All Readiness Diagnostic Code(s).>

NOTE:
If the concerned DTC is displayed, the self-diagnosis of the DTC is not complete. Repeat from step 1).
4) Read the DTC and check that the DTC is not displayed. <Ref. to HEV(diag)-23, Read Diagnostic Trouble Code (DTC).>

NOTE:
If the DTC is displayed on the screen, the trouble is still present. Perform the diagnosis according to DTC. <Ref. to HEV(diag)-74, List of Diagnostic Trouble Code (DTC).> After repairing the cause of setting DTC, repeat from preparation for drive cycle. <Ref. to HEV(diag)-31, PREPARATION FOR DRIVE CYCLE, PROCEDURE, Drive Cycle.>

8. DRIVE CYCLE G

- Battery energy control system

DTC	Item	Condition
P0AAD	Hybrid Battery Pack Air Temperature Sensor "A" Circuit Range/Performance	—

Diagnostic procedure:
1) Prepare for drive cycle. <Ref. to HEV(diag)-31, PREPARATION FOR DRIVE CYCLE, PROCEDURE, Drive Cycle.>
2) After leaving the vehicle unattended for 6 hours or longer, start the engine and run at idling speed for 20 seconds.
3) Read the readiness code and check that the concerned DTC is not displayed. <Ref. to HEV(diag)-25, All Readiness Diagnostic Code(s).>

NOTE:
If the concerned DTC is displayed, the self-diagnosis of the DTC is not complete. Repeat from step 1).
4) Read the DTC and check that the DTC is not displayed. <Ref. to HEV(diag)-23, Read Diagnostic Trouble Code (DTC).>

NOTE:
If the DTC is displayed on the screen, the trouble is still present. Perform the diagnosis according to DTC. <Ref. to HEV(diag)-74, List of Diagnostic Trouble Code (DTC).> After repairing the cause of setting DTC, repeat from preparation for drive cycle. <Ref. to HEV(diag)-31, PREPARATION FOR DRIVE CYCLE, PROCEDURE, Drive Cycle.>

9. DRIVE CYCLE H

- Drive motor control system

DTC	Item	Condition
P0A82	Hybrid/Ev Battery Pack Cooling Fan 1 Performance/Stuck Off	—
P0A83	Hybrid/Ev Battery Pack Cooling Fan 1 Stuck On	—

Diagnostic procedure:
1) Prepare for drive cycle. <Ref. to HEV(diag)-31, PREPARATION FOR DRIVE CYCLE, PROCEDURE, Drive Cycle.>
2) Select the System Operation Check Mode «High Voltage Battery Cooling Fan» of the drive motor control system. <Ref. to HEV(diag)-73, DRIVE MOTOR CONTROL SYSTEM, OPERATION, System Operation Check Mode.>
3) On «High Voltage Battery Cooling Fan» display, select {Step1}.
4) On «High Voltage Battery Cooling Fan» display, select {Stop}.
5) Read the readiness code and check that the concerned DTC is not displayed. <Ref. to HEV(diag)-25, All Readiness Diagnostic Code(s).>

NOTE:
If the concerned DTC is displayed, the self-diagnosis of the DTC is not complete. Repeat from step 1).
6) Read the DTC and check that the DTC is not displayed. <Ref. to HEV(diag)-23, Read Diagnostic Trouble Code (DTC).>

NOTE:
If the DTC is displayed on the screen, the trouble is still present. Perform the diagnosis according to DTC. <Ref. to HEV(diag)-74, List of Diagnostic Trouble Code (DTC).> After repairing the cause of setting DTC, repeat from preparation for drive cycle. <Ref. to HEV(diag)-31, PREPARATION FOR DRIVE CYCLE, PROCEDURE, Drive Cycle.>

10.DRIVE CYCLE I

- Hybrid powertrain control system

DTC	Item	Condition
P0506	Idle Air Control System RPM Lower Than Expected	—
P0507	Idle Air Control System RPM Higher Than Expected	—
P1C16	Idle Control System RPM Lower Than Expected (HPCM)	—
P1C17	Idle Control System RPM Higher Than Expected (HPCM)	—

Diagnostic procedure:
1) Prepare for drive cycle. <Ref. to HEV(diag)-31, PREPARATION FOR DRIVE CYCLE, PROCEDURE, Drive Cycle.>
2) Drive at 10 km/h (6.2 MPH) or more.
3) Increase electrical load of auxiliary devices, wait until the value of current data «High Voltage Battery SOC» of the hybrid powertrain control system falls between 37% and below 40%.
4) Depress the brake pedal, set the shift lever to “D” range, and wait for 30 seconds. (Perform the power generation at stand still.)
5) Read the readiness code and check that the concerned DTC is not displayed. <Ref. to HEV(diag)-25, All Readiness Diagnostic Code(s).>

NOTE:
If the concerned DTC is displayed, the self-diagnosis of the DTC is not complete. Repeat from step 1).
6) Read the DTC and check that the DTC is not displayed. <Ref. to HEV(diag)-23, Read Diagnostic Trouble Code (DTC).>

NOTE:
If the DTC is displayed on the screen, the trouble is still present. Perform the diagnosis according to DTC. <Ref. to HEV(diag)-74, List of Diagnostic Trouble Code (DTC).> After repairing the cause of setting DTC, repeat from preparation for drive cycle. <Ref. to HEV(diag)-31, PREPARATION FOR DRIVE CYCLE, PROCEDURE, Drive Cycle.>

13.Read Current Data

A: OPERATION

NOTE:
For detailed operation procedures, refer to “PC application help for Subaru Select Monitor”.

1. HYBRID POWERTRAIN CONTROL SYSTEM

1) On «Main Menu» display, select {Each System Check}.
2) On «Each System Check» display, select {HEV System}.
3) On «HEV System» display, select {Hybrid Powertrain Control System}.
4) On «Hybrid Powertrain Control System» display, select {Current Data Display & Save}.

Display	Description	Note (when normal)	Unit of measure
Vehicle speed	Vehicle speed calculated by VDC CM (CAN communication data)	0 — 210	km/h
Vehicle Speed (Control)	Vehicle speed for control	0 — 255	km/h
Ambient Temperature	Ambient temperature calculated by combination meter (CAN communication data)	–40 — 80	°C
Power Target	Power target	–2100 — 9650	N
Target Acceleration (Cruise Control)	Target acceleration (cruise control)	–5.5 — 5.5	m/s^2
Acceleration by Driver Request	Target acceleration calculated based on accelerator opening angle and vehicle speed for control	–5.5 — 5.5	m/s^2
Engine Torque	Engine axle torque calculated by ECM (CAN communication data)	–1000 — 2276.7	Nm
Engine Torque Target	Target engine axle torque	–70 — 191	Nm
Engine Torque Upper (ECM)	Upper limit of target engine torque calculated by ECM (CAN communication data)	0 — 408	Nm
Engine Speed	Engine speed calculated by ECM (CAN communication data)	0 — 6400	rpm
Coolant Temperature	Engine coolant temperature calculated by ECM (CAN communication data)	–40 — 214	°C
Conventional Starter ON Permit Signal	Status of permission from HPCM for starting engine by starter	OFF ON	—
CVT Input Torque Upper (TCM)	Upper limit of input torque to transmission calculated by TCM (CAN communication data)	0 — 510	Nm
Gear Ratio Target	Target gear ratio	0 — 3.99	—
Gear Ratio Actual	Gear ratio calculated by TCM (CAN communication data)	0 — 3.99	—
Input Clutch Target	Target status of input clutch	No Request Req.Engaged Req.Disengage	—
Input Clutch Actual	Input clutch status judged by TCM (CAN communication data)	Engaging2 Engaged Disengaged Engaging1 Disengaging	—
Output Clutch Target	Target status of output clutch	No Request Req.Engaged Req.Disengage	—
Output Clutch Actual	Output clutch status judged by TCM (CAN communication data)	Engaging Engaged Disengaged Disengaging	—
Turbine Revolution Speed	Transmission turbine speed calculated by TCM (CAN communication data)	0 — 6600	rpm

Display	Description	Note (when normal)	Unit of measure
Output Shaft Speed	Transmission output axle speed calculated by TCM (CAN communication data)	0 — 12300	rpm
A/T Oil Temperature	ATF temperature calculated by TCM (CAN communication data)	–50 — 205	°C
Trip Count	Number of times the ignition is ON judged by body integrated unit (CAN communication data)	—	times
Count	Identification information of synchronization/asynchronization of Trip Count, Time Count	Common Originally	—
Time Count	Detailed time elapsed after the ignition is ON calculated by body integrated unit (CAN communication data)	—	ms
Ignition switch	Ignition switch status	OFF ON	—
Starter SW	Starter switch status	OFF ON	—
P Range	Parking range status judged by TCM (CAN communication data)	OFF ON	—
R Range	Reverse range status judged by TCM (CAN communication data)	OFF ON	—
N Range	Neutral range status judged by TCM (CAN communication data)	OFF ON	—
D Range	Drive range status judged by TCM (CAN communication data)	OFF ON	—
Accel opening angle	Accelerator opening angle ratio calculated by ECM (CAN communication data)	0 — 100	%
Master Cylinder Pressure	Brake fluid pressure calculated by VDC CM (CAN communication data)	0 — 29.3	MPa
ECU ACC	Voltage supplied to HPCM	10 — 15	V
Main Brake Pedal Stroke	Brake stroke calculated by main brake stroke sensor voltage	0 — 100	%
Main Brake Pedal Position Sensor Voltage	Voltage detected by main brake stroke sensor	0 — 5.16	V
Sub Brake Pedal Stroke	Brake stroke calculated by sub brake stroke sensor voltage	0 — 100	%
Sub Brake Pedal Position Sensor Voltage	Voltage detected by sub brake stroke sensor	0 — 5.16	V
Brake Booster Pressure 1	Vacuum pressure calculated by brake vacuum sensor voltage 1	13.3 — 106.7	kPa
Brake Booster Pressure Sensor Voltage 1	Voltage detected by brake vacuum sensor 1	0 — 5.16	V
Brake Booster Pressure 2	Vacuum pressure calculated by brake vacuum sensor voltage 2	13.3 — 106.7	kPa
Brake Booster Pressure Sensor Voltage 2	Voltage detected by brake vacuum sensor 2	0 — 5.16	V
Atmospheric pressure	Atmospheric pressure calculated by ECM (CAN communication data)	13 — 115	kPa
12V Battery Relay Target Mode	12V battery relay commanded status	Close Open	—
12V Battery Relay Close Signal	12V battery relay close operation request status	OFF ON (regularly ON for 100 ms every 10 seconds while Close)	—

Display	Description	Note (when normal)	Unit of measure
12V Battery Relay Open Signal	12V battery relay open operation request status	OFF ON (regularly ON for 100 ms every 10 seconds while Open)	—
Vacuum Pump Relay ON Signal	Brake vacuum pump relay operation request status	OFF ON	—
Vacuum Pump Relay Actual	Voltage applied to brake vacuum pump relay	0 — 20	V
Clutch Solenoid Control Signal	Output clutch solenoid operation request status	OFF ON	—
Power Sensor Voltage 1	Voltage supplied to main brake stoke sensor	5	V
Power Sensor Voltage 2	Voltage supplied to sub brake stoke sensor	5	V
Power Sensor Voltage 3	Voltage supplied to brake vacuum sensors 1 and 2	5	V
HPCM Target Control Mode	Target control mode of HPCM	00 01 02 03 04 06 09	—
HPCM Current Control Mode	Current control mode of HPCM	00 01 02 03 04 06 09	—
Auto Start Stop Function Permit Signal	Permission status of Auto Start Stop	STOP Allowance	—
Auto Start Stop or EV Status	Auto Start Stop/EV traveling status	Auto Start Stop or EV Status Auto Start Stop or EV Status	—
Ready Status	HEV-READY status	OFF Ready Status	—
Drive Motor Inverter Operation Signal	Drive motor inverter operation request status	OFF ON	—
Drive Motor Inverter Input Voltage	Drive motor inverter input voltage calculated by DMCM (CAN communication data)	9 — 155	V
Drive Motor Inverter Temperature (MAX)	The highest temperature among drive motor inverter temperature values detected through multiple sensors by DMCM (CAN communication data)	–50 — 150	°C
Drive Motor Output Torque Actual	Drive motor output torque calculated by DMCM (CAN communication data)	–65 — 65	Nm
Drive Motor Torque Target	Target torque of drive motor	–65 — 65	Nm
Drive Motor Torque Upper Limit (DMCM)	Upper limit of drive motor torque calculated by DMCM (CAN communication data)	0 — 65	Nm
Drive Motor Torque Lower Limit (DMCM)	Lower limit of drive motor torque calculated by DMCM (CAN communication data)	–65 — 0	Nm
Drive Motor Speed	Drive motor speed calculated by DMCM (CAN communication data)	–7000 — 7000	rpm
Drive Motor Speed Target	Target speed of drive motor	—	rpm

Display	Description	Note (when normal)	Unit of measure
Drive Motor Inverter Control Mode Target	Target control mode of drive motor inverter	—	—
Drive Motor Temperature A	Drive motor temperature A calculated by DMCM (CAN communication data)	–55 — 140	°C
Drive Motor Temperature B	Drive motor temperature B calculated by DMCM (CAN communication data)	–55 — 140	°C
ISG cranking demand	Integrated starter generator (ISG) cranking request status	OFF ON	—
ISG prohibit drive demand	Integrated starter generator (ISG) drive prohibition request status	OFF ON	—
ISG Terminal Voltage	Terminal voltage calculated by integrated starter generator (ISG) (LIN communication data)	10.6 — 16.975	V
ISG Cranking Status	Cranking demand acceptance status judged by integrated starter generator (ISG) (LIN communication data)	W/O Request Request	—
ISG Control Mode Actual	Current control mode judged by integrated starter generator (ISG) (LIN communication data)	Neutral GeneratePower Restart First Start Stop assistance	—
ISG Control Mode Target	Target control mode of integrated starter generator (ISG)	Neutral GeneratePower Start Start Ant. Preliminary excitation Stop assistance	—
ISG Cranking Permit Signal	Cranking permission status judged by integrated starter generator (ISG) (LIN communication data)	STOP Allowance	—
ISG Excitation Current Actual	Excitation current calculated by integrated starter generator (ISG) (LIN communication data)	0 — 25.5	A
ISG Excitation Current Upper Target	Upper limit of excitation current of integrated starter generator (ISG)	0 — 16	A
ISG Rotor Speed	Rotor speed calculated by integrated starter generator (ISG) (LIN communication data)	0 — 19125	rpm
ISG Temperature	Temperature calculated by integrated starter generator (ISG) (LIN communication data)	–42 — 210	°C
ISG Voltage Target	Target generated voltage of integrated starter generator (ISG)	10.6 — 16	V
DCDC Converter Status	Operating condition of DC/DC converter judged by DMCM (CAN communication data)	Inactive ON	—
DCDC Converter Output Permit Signal	Output permission status of DC/DC converter	STOP Allowance	—
DCDC Converter Output Voltage Actual	DC/DC converter output voltage calculated by DMCM (CAN communication data)	10 — 15.5	V
DCDC Converter Output Voltage Target	DC/DC converter target output indicate voltage	0 — 25.5	V
DCDC Converter Output Amperage	DC/DC converter output current calculated by DMCM (CAN communication data)	0 — 130	A
DCDC Converter Temperature	DC/DC converter temperature calculated by DMCM (CAN communication data)	–50 — 160	°C
Electric Oil Pump Output Current	Output current calculated by electric oil pump (CAN communication data)	0 — 15.9375	A
Electric Oil Pump Motor Speed	Motor speed calculated by electric oil pump (CAN communication data)	0 — 4095	rpm
Service Plug Status	Service disconnect plug lock status judged by BECM (CAN communication data)	OFF ON	—

Display	Description	Note (when normal)	Unit of measure
High Voltage Battery SOC	High voltage battery residual quantity calculated by BECM (CAN communication data)	5 — 95	%
High Voltage Battery SOH	Battery status auxiliary parameter of high voltage battery calculated by BECM (CAN communication data)	25 — 100	%
High Voltage Battery Total Voltage	High voltage battery voltage calculated by BECM (CAN communication data)	70 — 140	V
High Voltage Battery Amperage	High voltage battery current calculated by BECM (CAN communication data)	–110 — 180	A
High Voltage Battery Discharge Power Limit 1	High voltage battery discharge power limit calculated by BECM (CAN communication data)	0 — 14.0	kW
High Voltage Battery Charge Power Limit 1	High voltage battery charge power limit calculated by BECM (CAN communication data)	0 — 14.0	kW
High Voltage Battery SOC Subservience Parameter (MIN)	SOC auxiliary parameter of high voltage battery calculated by BECM (CAN communication data)	0 — 100	%
High Voltage Battery Temperature (MAX)	The highest temperature among high voltage battery temperature values detected through multiple sensors by BECM (CAN communication data)	–40 — 63	°C
High Voltage Battery Temperature (MIN)	The lowest temperature among high voltage battery temperature values detected through multiple sensors by BECM (CAN communication data)	–40 — 63	°C
High Voltage Battery Intake Air Temperature	High voltage battery intake are temperature calculated by BECM (CAN communication data)	–40 — 86.5	°C
High Voltage Battery Cooling Fan Speed	High voltage battery cooling fan speed calculated by DMCM (CAN communication data)	0 — 6000	rpm
High Voltage Battery Cooling Fan Duty Target	High voltage battery cooling fan target duty request	0 — 100 (20 — 70%: normal, 100%: failure, 0 — 20%: dead zone)	%
Blower Fan Level	Blower fan lever judged by auto A/C CM (CAN communication data)	OFF LO M1 M2 M3 M4 M5 Hi	—
BECM Control Status	BECM control mode judged by BECM (CAN communication data)	Init. Normal Output Limit Open Request Forced Open NG OFF Signal	—
Contactor Close Status	Contactor close status judged by BECM (CAN communication data)	Non Close	—
Contactor Open Status	Contactor open status judged by BECM (CAN communication data)	Non Open	—
Contactor Signal	Contactor operation request status	OFF ON Abnormal OFF	—
12V Engine Restart Battery Voltage	12 volt engine restart battery voltage calculated by 12 volt engine restart battery sensor (LIN communication data)	0 — 50	V
12V Engine Restart Battery Amperage	12 volt engine restart battery current calculated by 12 volt engine restart battery sensor (LIN communication data)	–200 — 200	A
12V Engine Restart Battery SOC	12 volt engine restart battery capacity calculated by 12 volt engine restart battery sensor (LIN communication data)	0 — 100	%

Display	Description	Note (when normal)	Unit of measure
12V Engine Restart Battery SOC Control	12 volt engine restart battery control capacity	0 — 100	%
12V Engine Restart Battery SOC Validity	Validity of 12 volt engine restart battery capacity judged by 12 volt engine restart battery sensor (LIN communication data)	Invalid Valid	—
12V Engine Restart Battery Temperature	12 volt engine restart battery temperature calculated by 12 volt engine restart battery sensor (LIN communication data)	–40 — 125	°C
12V Auxiliary Battery Voltage	12 volt auxiliary battery voltage	0 — 25.5	V
12V Auxiliary Battery Temperature	12 volt auxiliary battery temperature	–40 — 100	°C
12V Auxiliary Battery Temperature Sensor Voltage	Voltage detected by 12 volt auxiliary battery temperature sensor, calculated by ECM (CAN communication data)	0 — 5	V
OBD Test Status	Diagnosis status of emission-related diagnosis	Test Not Comp Normal Failure	—
ECM Fail Safe Request Status	Fail safe request on/off from ECM	Req.Now Req.Cur.Dri. Req.LastDri. Req.Past No Request	—
ECM Fail Safe Request Check	Fail safe request detailed information from ECM	00 — FF	—
TCM Fail Safe Request Status	Fail safe request on/off from TCM	Req.Now Req.Cur.Dri. Req.LastDri. Req.Past No Request	—
TCM Fail Safe Request Check	Fail safe request detailed information from TCM	00 — FF	—
DMCM Fail Safe Request Status	Fail safe request on/off from DMCM	Req.Now Req.Cur.Dri. Req.LastDri. Req.Past No Request	—
DMCM Fail Safe Request Check	Fail safe request detailed information from DMCM	00 — FF	—
BECM Fail Safe Request Status	Fail safe request on/off from BECM	Req.Now Req.Cur.Dri. Req.LastDri. Req.Past No Request	—
BECM Fail Safe Request Check	Fail safe request detailed information from BECM	00 — FF	—
VDCM Fail Safe Request Status	Fail safe request on/off from VDC CM	Req.Now Req.Cur.Dri. Req.LastDri. Req.Past No Request	—
Hybrid Fail Lamp Signal	Hybrid fail lamp signal status	Light off Light up Flashing	—
Hybrid Fail Lamp Signal (DMCM)	Hybrid fail lamp signal from DMCM (CAN communication data)	OFF ON	—

Display	Description	Note (when normal)	Unit of measure
Hybrid Fail Lamp Signal (BECM)	Hybrid fail lamp signal from BECM (CAN communication data)	OFF ON	—
CHARGE Lamp Signal	Charge waning light signal status	Light off Light up	—
Vacuum Pump Fail Lamp Signal	Brake vacuum pump warning light signal status	Light off Light up	—
A/C Request for Cooperation Mode	Requested engine speed changing operation mode judged by auto A/C CM (CAN communication data)	W/O Request Cooling H Heating H Cooling L Heating L Heating M Heating LL	—
SI Drive Mode	SI-DRIVE mode judged by ECM (CAN communication data)	I S ECO-C	—
AUTO/MANUAL Mode Switch	Manual mode switch status judged by TCM (CAN communication data)	OFF ON	—
Up Switch	Manual mode up switch status judged by TCM (CAN communication data)	OFF ON	—
Down Switch	Manual mode down switch status judged by TCM (CAN communication data)	OFF ON	—
Oil Pressure Switch	Oil pressure switch status	OFF ON	—
Oil pressure Lamp	Oil pressure waning light signal status	Light off Light up	—
EV Mode Lamp	EV indicator light signal status	Light off Light up	—
High Voltage Battery SOC (MFD Display)	High voltage battery capacity indicated in multi-function display	0 — 100	%
Energy Flow (MFD Display)	Energy flow request status indicated in multi-function display	Idling Auto Start Stop Motor Assist EV Powering EV Regenerate Engine Drive MotorGenerate EngBrakeRegen DGenerate Engine Stop	—
Interrupt Information (MFD Display)	Interrupt information request status indicated in multi-function display	No Display Alarm General AlarmSpec.1 AlarmSpec.2 Protect Mode EV Door Open AutoOffCrash AutoOffPast Maintenance	—
Fuel Saving Amount (MFD Display)	Fuel saving amount indicated by multi-function display	0 — 2.55	cc/sec
Fuel Saving Amount Sign (MFD Display)	Fuel saving amount sign indicated by multi-function display	+ –	—
Auto Start Stop Buzzer Signal	Buzzer beeping request status of Auto Start Stop	No Buzzer Continue	—

Display	Description	Note (when normal)	Unit of measure
Manual Mode Gear Position (MFD Display)	Shift gear position indication request status of select indicator/shift position indicator light (manual mode)	Light off 1 2 3 4 5 6	—
Up (MFD Display)	Upshifting possible indicator light illumination request status (manual mode)	Light off Light up	—
Down (MFD Display)	Downshifting possible indicator light illumination request status (manual mode)	Light off Light up	—
Buzzer Signal	Buzzer beeping request status (manual mode)	No Buzzer Pattern 2	—
Memorized Cruise Speed	Set speed (cruise control)	40 — 145	km/h
Main switch	Cruise switch status judged by ECM (CAN communication data)	OFF ON	—
SET/COAST SW	SET/– switch status judged by ECM (CAN communication data)	OFF ON	—
RESUME/ACCEL SW	RES/+ switch status judged by ECM (CAN communication data)	OFF ON	—
Distance Change Switch Signal	Distance change switch status judged by ECM (CAN communication data)	OFF ON	—
Cruise Control Cancel Switch Signal	CANCEL switch status judged by ECM (CAN communication data)	OFF ON	—
Neutral switch	Neutral switch status judged by cruise control	Other than Neutral Neutral	—
Brake SW	Brake switch status judged by ECM (CAN communication data)	OFF ON	—
Judgment of Main Brake Pedal Position Sensor	Judgment of brake by main brake stroke sensor	OFF ON	—
Judgment of Sub Brake Pedal Position Sensor	Judgment of brake by sub brake stroke sensor	OFF ON	—
Stop light SW	Stop lamp status judged by body integrated unit (CAN communication data)	OFF ON	—
Brake Pedal Position Learning Status	Brake stroke sensor learning status	Incomplete Complete	—
Main Brake Pedal Position Sensor Learning Value	Main brake stroke sensor learning value	–12.8 — 10.4	deg
Sub Brake Pedal Position Sensor Learning Value	Sub brake stroke sensor learning value	–12.8 — 10.4	deg
HPCM Check 1	Detailed information of control	—	—
HPCM Check 2	Detailed information of control	—	—
HPCM Check 3	Detailed information of control	—	—
HPCM Check 4	Detailed information of control	—	—
HPCM Check 5	12V battery relay overall operation number	—	times
HPCM Check 6	Brake vacuum pump overall operation number	—	times
HPCM Check 7	Brake vacuum pump overall operation hour	—	Sec
HPCM Check 9	Detailed information of control	—	—
HPCM Check 10	Detailed information of control	—	—
HPCM Check 11	Detailed information of control	—	—
HPCM Check 20	Detailed information of control	—	—

Display	Description	Note (when normal)	Unit of measure
HPCM Check 21	Detailed information of control	—	—
HPCM Check 22	Detailed information of control	—	—
HPCM Check 23	Detailed information of control	—	—
HPCM Check 24	Detailed information of control	—	—
HPCM Check 25	Detailed information of control	—	—
HPCM Check 40	Detailed information of control	—	mΩ
HPCM Check 41	Detailed information of control	—	mΩ
HPCM Check 75	Detailed information of control	—	%
HPCM Check 76	Detailed information of control	—	%
HPCM Check 77	Detailed information of control	—	—
HPCM Check 80	Detailed information of control	—	—
HPCM Check 81	Detailed information of control	—	—
HPCM Check 82	Detailed information of control	—	—
HPCM Check 85	Detailed information of control	—	—
HPCM Check 86	Detailed information of control	—	—
HPCM Check 87	Detailed information of control	—	—
HPCM Check 90	Detailed information of control	—	—
HPCM Check 92	Detailed information of control	—	—
HPCM Check 100	Detailed information of control	—	—
HPCM Check 103	Detailed information of control	—	—
HPCM Check 104	Detailed information of control	—	—
HPCM Check 114	Detailed information of control	—	—
HPCM Check 117	Detailed information of control	—	—
HPCM Check 125	Detailed information of control	—	—
HPCM Check 126	Detailed information of control	—	—
HPCM Check 131	Detailed information of control	—	—
HPCM Check 132	Detailed information of control	—	—
HPCM Check 137	Detailed information of control	—	—
HPCM Check 138	Detailed information of control	—	—
HPCM Check 139	Detailed information of control	—	—
HPCM Check 140	Detailed information of control	—	—
HPCM Check 141	Detailed information of control	—	—
HPCM Check 142	Detailed information of control	—	—
HPCM Check 143	Detailed information of control	—	—
HPCM Check 144	Detailed information of control	—	—
HPCM Check 145	Detailed information of control	—	—
HPCM Check 146	Detailed information of control	—	—
HPCM Check 147	Detailed information of control	—	—
HPCM Check 148	Detailed information of control	—	—
HPCM Check 149	Detailed information of control	—	—
HPCM Check 151	Detailed information of control	—	—
HPCM Check 153	Detailed information of control	—	—
HPCM Check 154	Detailed information of control	—	—
HPCM Check 155	Detailed information of control	—	—
HPCM Check 156	Detailed information of control	—	—
HPCM Check 157	Detailed information of control	—	—
HPCM Check 158	Detailed information of control	—	—
HPCM Check 159	Detailed information of control	—	—
HPCM Check 160	Detailed information of control	—	—

Display	Description	Note (when normal)	Unit of measure
HPCM Check 161	Detailed information of control	—	—
HPCM Check 162	Detailed information of control	—	—
HPCM Check 163	Detailed information of control	—	—
HPCM Check 164	Detailed information of control	—	—
HPCM Check 165	Detailed information of control	—	—
HPCM Check 166	Detailed information of control	—	—
HPCM Check 167	Detailed information of control	—	—
HPCM Check 168	Detailed information of control	—	—

2. HYBRID POWERTRAIN CONTROL SYSTEM (Auto Start Stop AND EV TRAVELING CONDITIONS)

NOTE:
For Auto Start Stop and EV traveling conditions of hybrid powertrain control system, refer to the table below.

Display	Auto Start Stop		EV traveling		Note
	Condition for permission	Condition for cancel	Condition for permission	Condition for cancel	
Brake Booster Pressure 1	< 63.83 kPa	> 69.83 kPa	< 63.83 kPa	> 69.83 kPa	Those values change depending on vehicle speed or atmospheric pressure. The reference value shown in upper row is expected when atmospheric pressure is 1 bar and vehicle speed is 0 km/h (0 MPH). The value shown in lower row is expected when atmospheric pressure is 1 bar and vehicle speed is 50 km/h (31.1 MPH).
Brake Booster Pressure 2	< 51.33 kPa	> 55.33 kPa	< 51.33 kPa	> 55.33 kPa	
12V Engine Restart Battery SOC Control	≥ 70.0%	< 60.0%	≥ 70.0%	< 60.0%	When the level decreases below 60%, the operation is not permitted until the level increases to at 70%. Also, when the level is recovered to 70%, the operation is permitted until the level decreases to 60%.
12V Engine Restart Battery Voltage	≥ 12.6 V	≤ 11.4 V	≥ 12.6 V	≤ 11.4 V	—
12V Engine Restart Battery Temperature	≥ –10°C (14°F) and ≤ 78°C (172.4°F)	< –12°C (10.4°F) or ≥ 80°C (176°F)	≥ –10°C (14°F) and ≤ 78°C (172.4°F)	< –12°C (10.4°F) or ≥ 80°C (176°F)	—
HPCM Check 40	< 10 mΩ	≥ 15 mΩ	< 10 mΩ	≥ 15 mΩ	—
HPCM Check 41	< 10 mΩ	≥ 15 mΩ	< 10 mΩ	≥ 15 mΩ	—
Coolant Temperature	≥ 60°C (140.0°F)	≤ 57°C (134.6°F)	≥ 60°C (140.0°F)	≤ 57°C (134.6°F)	—

Display	Auto Start Stop		EV traveling		Note
	Condition for permission	Condition for cancel	Condition for permission	Condition for cancel	
D Range	ON	OFF	ON	OFF	• Although only “D range” is the initial range for Auto Start Stop, the control is continued even if the shifter is selected to one of the following ranges. Shifting positions: P range, R range, N range • Although only “D range” is the initial range for EV traveling, operation continues in R range as well. Also, EV traveling may continues when shifter is moved through N range or P range transitionally.
High Voltage Battery SOC	≥ 40.0%	≤ 38.5%	≥ 43.0% and < 73.0%	≤ 40.0% or > 76.0%	—
ISG Temperature	< 100°C (212°F)	≥ 140°C (284°F)	< 100°C (212°F)	≥ 140°C (284°F)	It is canceled when temperature increases above 140°C (284°F) and not permitted to operate until temperature decreases to 100°C (212°F). Also, when temperature decreased to 100°C (212°F), the operation is permitted until temperature increases to 140°C (284°F).
Vehicle Speed (Control)	≤ 0.1 km/h (0.1 MPH)	> 8 km/h (5 MPH)	—	—	Vehicle speed which is suitable for EV traveling is 20 — 60 km/h (12 — 37 MPH) range.
HPCM Check 76	≤ | 0 — ±8 | %	> | ±8 | %	< 5 — 20%	≥ 15 — 100%	—
Accel opening angle	≤ 0.5%	≥ 0.7%	—	> 19.9%	—
Main Brake Pedal Stroke	≥ 10.6%	≤ 9.0%	< 11.8 — 23.5%	≥ 11.8 — 23.5%	The brake stroke for permitting/canceling EV traveling depends on vehicle speed. It should be noted that threshold values for both permission and prohibition are the same.
DCDC Converter Status	ON	Inactive	ON	Inactive	—

3. DRIVE MOTOR CONTROL SYSTEM

1) On «Main Menu» display, select {Each System Check}.
2) On «Each System Check» display, select {HEV System}.
3) On «HEV System» display, select {Drive Motor Control System}.
4) On «Drive Motor Control System» display, select {Current Data Display & Save}.

Display	Description	Note (when normal)	Unit of measure
ECU ACC	Voltage supplied to DMCM	10 — 15	V
Ignition switch	Ignition switch status	OFF ON	—
Ignition Switch Signal (CAN receive)	Ignition switch status detected by HPCM (CAN communication data)	OFF ON	—
Accel opening angle	Accelerator opening angle ratio detected by ECM (CAN communication data)	0 — 100	%
Judgment of Idling	Idle switch status detected by ECM (CAN communication data)	OFF ON	—
Main Brake Pedal Stroke	Main brake stroke sensor status calculated by HPCM (CAN communication data)	0 — 100	%
Engine Speed	Engine speed detected by ECM (CAN communication data)	0 — 6400	rpm
Vehicle speed	Vehicle speed calculated by VDC CM (CAN communication data)	0 — 210	km/h
Coolant Temperature	Engine coolant temperature calculated by ECM (CAN communication data)	–40 — 214	°C
A/T Oil Temperature	ATF temperature calculated by TCM (CAN communication data)	–50 — 205	°C
D Range	Drive range status judged by TCM (CAN communication data)	OFF ON	—
N Range	Neutral range status judged by TCM (CAN communication data)	OFF ON	—
R Range	Reverse range status judged by TCM (CAN communication data)	OFF ON	—
P Range	Parking range status judged by TCM (CAN communication data)	OFF ON	—
Trip Count	Number of times the ignition is ON judged by body integrated unit (CAN communication data)	—	times
Time Count	Detailed time elapsed after the ignition is ON calculated by body integrated unit (CAN communication data)	—	ms
Detailed Time Counter	Calculated detailed time elapsed after the ignition is ON	0 — 100	ms
Count	Identification information of synchronization/asynchronization of Trip Count, Time Count	Common Originally	—
Drive Motor Torque Target (HPCM)	Drive motor target torque calculated by HPCM (CAN communication data)	–65 — 65	Nm
Drive Motor Output Torque Actual	Target drive motor torque	–65 — 65	Nm
Drive Motor Torque Upper Limit	Upper limit of drive motor torque	0 — 65	Nm
Drive Motor Torque Lower Limit	Lower limit of drive motor torque	–65 — 0	Nm
Drive Motor Speed Target (HPCM)	Target drive motor speed calculated by HPCM (CAN communication data)	—	rpm
Drive Motor Speed	Drive motor speed	–7000 — 7000	rpm
Drive Motor Inverter Input High Voltage Sensor (Serial)	Drive motor inverter input high voltage (serial)	9 — 155	V

Display	Description	Note (when normal)	Unit of measure
High Voltage Battery Total Voltage	High voltage battery voltage calculated by BECM (CAN communication data)	70 — 140	V
High Voltage Battery Amperage	High voltage battery current calculated by BECM (CAN communication data)	–110 — 180	A
Phase U Voltage Target	DMCM output value	0 — 100	%
Phase V Voltage Target	DMCM output value	0 — 100	%
Phase W Voltage Target	DMCM output value	0 — 100	%
Phase U Amperage	Drive motor current	–350 — 350	A
Phase U Amperage Sensor Voltage	Current sensor voltage	0.5 — 4.5	V
Phase V Amperage	Drive motor current	–350 — 350	A
Phase V Amperage Sensor Voltage	Current sensor voltage	0.5 — 4.5	V
Phase W Amperage	Drive motor current	–350 — 350	A
Phase W Amperage Sensor Voltage	Current sensor voltage	0.5 — 4.5	V
Drive Motor Amperage Sensor Power Supply Voltage	Current sensor power supply voltage	4.9 — 5.1	V
Drive Motor Output Power Actual	Drive motor output	—	W
High Voltage Battery Temperature (MIN)	The lowest temperature among high voltage battery temperature values detected through multiple sensors by BECM (CAN communication data)	–40 — 63	°C
Drive Motor Inverter Temperature A	Drive motor inverter temperature (serial)	–50 — 150	°C
Drive Motor Inverter Temperature B	Drive motor inverter temperature (serial)	–50 — 150	°C
Drive Motor Inverter Temperature C	Drive motor inverter temperature (serial)	–50 — 150	°C
Drive Motor Temperature A	Drive motor temperature	–55 — 140	°C
Drive Motor Temperature A Sensor Voltage	Drive motor temperature sensor voltage	0.23 — 4.5	V
Drive Motor Temperature B	Drive motor temperature	–55 — 140	°C
Drive Motor Temperature B Sensor Voltage	Drive motor temperature sensor voltage	0.23 — 4.5	V
Drive Motor Inverter Operation Signal(HPCM)	Drive motor inverter operation request (HPCM) (CAN communication data)	OFF ON	—
Drive Motor Inverter Operation Status	Drive motor inverter operation status	OFF ON	—
Drive Motor Inverter Operation Update Signal Count (Serial)	Drive motor inverter operation counter	0 — 255	Count
Drive Motor Inverter Power Supply Relay Output Signal	Drive motor inverter power supply relay operation signal	OFF ON	—
Drive Motor Inverter Power Supply Relay Output Actual	Monitor signal for drive motor inverter power supply relay operation signal	OFF ON	—
Contactor Signal(HPCM)	Contactor operation request status (HPCM) (CAN communication data)	OFF ON Abnormal OFF	—

Display	Description	Note (when normal)	Unit of measure
Contactor Weld Diagnosis Status	Contactor stuck closed status judged by BECM (CAN communication data)	OFF Processing	—
Contactor Close Status	Contactor close status judged by BECM (CAN communication data)	Non Close	—
Contactor Close Sequence Status	Contactor status judged by BECM (CAN communication data)	OFF Processing	—
Contactor Open Status	Contactor status judged by BECM (CAN communication data)	Non Open	—
High Voltage Battery Cooling Fan Duty Target (HPCM)	High voltage battery cooling fan duty target calculated by HPCM (CAN communication data)	0 — 100 (20 — 70%: normal, 100%: failure, 0 — 20%: dead zone)	%
High Voltage Battery Cooling Fan Duty Output	High voltage battery cooling fan duty	0 — 90	%
High Voltage Battery Cooling Fan Speed	High voltage battery cooling fan speed	0 — 6000	rpm
DCDC Converter Output Permit Signal (HPCM)	DC/DC converter output permission status calculated by HPCM (CAN communication data)	STOP Allowance	—
DCDC Converter Output Voltage Target (HPCM)	DC/DC converter output indicate voltage calculated by HPCM (CAN communication data)	—	V
DCDC Converter Output Voltage Actual	Voltage output at DC/DC converter	10 — 15.5	V
DCDC Converter Output Amperage	Current output at DC/DC converter	0 — 130	A
DCDC Converter Output Limit Amperage	DC/DC converter set value	130	A
DCDC Converter Input Voltage	Input high voltage detected at DC/DC converter	30 — 160	V
DCDC Converter Temperature	Temperature calculated at DC/DC converter	–50 — 160	°C
DCDC Converter Status Check	DC/DC converter control value	0/8/24	—
DCDC Converter Check 1	DC/DC converter control value	0	—
DCDC Converter Check 2	DC/DC converter control value	0	—
DCDC Converter Operation Update Signal Count (Serial)	DC/DC converter operation counter	0 — 255	Count
DCDC Converter Output Permit Signal (Serial)	DC/DC converter output permission Serial transmission data (DMCM)	STOP Allowance	—
DCDC Converter Output Voltage Target (Serial)	DC/DC converter output indicate voltage Serial transmission data (DMCM)	—	V
DCDC Converter Output Voltage (Serial)	DC/DC converter output voltage Serial reception data (DC/DC)	10 — 15.5	V
DCDC Converter Output Amperage (Serial)	DC/DC converter output current Serial reception data (DC/DC)	0 — 130	A
DCDC Converter Output Limit Amperage (Serial)	DC/DC converter output limit Serial reception data (DC/DC)	130	A
DCDC Converter Input Voltage (Serial)	DC/DC converter input voltage Serial reception data (DC/DC)	30 — 160	V
DCDC Converter Temperature (Serial)	DC/DC converter temperature Serial reception data (DC/DC)	–50 — 160	°C
DCDC Converter Status Check (Serial)	DC/DC converter status information Serial reception data (DC/DC)	0/8/24	—

Display	Description	Note (when normal)	Unit of measure
DCDC Converter Check 1 (Serial)	DC/DC converter protection information Serial reception data (DC/DC)	0	—
DCDC Converter Check 2 (Serial)	DC/DC converter trouble information Serial reception data (DC/DC)	0	—
DCDC Converter Initialize Completion	DC/DC converter initialize completion status	Incomplete Complete	—
DCDC Converter Serial Check	DC/DC converter serial communication failure	0	—
Hybrid Fail Lamp Signal	Hybrid fail lamp signal	OFF ON	—
OBD Test Status	OBD related diagnosis result	Test Not Comp Normal Failure	—
Drive Motor Inverter Control Mode Target(HPCM)	Target control mode of drive motor inverter calculated by HPCM	—	—
Sequence Status Check	DMCM set value	—	—
Drive Motor Inverter Check	DMCM input value	0	—
Drive Motor Torque Limit Check	DMCM output value	0	—
Drive Motor Torque Limit Status	DMCM output value	Normal Limitation	—
Drive Motor Mechanical Angle Pulse	Drive motor mechanical angle	0 — 4095	Pulse
Drive Motor Electrical Angle	Calculated drive motor electrical angle	0 — 2π	rad
d-axis Current Value	DMCM control value	—	A
q-axis Current Value	DMCM control value	—	A
Carrier Period	DMCM set value	—	us
Drive Motor Inverter Temperature Estimated	Drive motor inverter temperature	—	°C
Allow Drive Motor Position Sensor Diagnosis	DMCM control value	STOP Allowance	—
Allow 14V Condition Diagnosis	DMCM control value	STOP Allowance	—
Delivery Mode Connector	Delivery mode terminal information detected by ECM	—	—
Drive Motor Inverter Serial Check	Drive motor inverter serial communication failure	—	—
P0A3F-Detail Code 0300	P0A3F - detail code 0300	—	—
P0A3F-Detail Code 0301	P0A3F - detail code 0301	—	—
P0A3F-Detail Code 0302	P0A3F - detail code 0302	—	—
P0A3F-Detail Code 0303	P0A3F - detail code 0303	—	—
P0A3F-Detail Code 0304	P0A3F - detail code 0304	—	—
P0A3F-Detail Code 0305	P0A3F - detail code 0305	—	—
P0A3F-Detail Code 0306	P0A3F - detail code 0306	—	—
P0A3F-Detail Code 0307	P0A3F - detail code 0307	—	—
P0A3F-Detail Code 030A	P0A3F - detail code 030A	—	—
P0A78-Detail Code 0500	P0A78 - detail code 0500	—	—
P0A78-Detail Code 0501	P0A78 - detail code 0501	—	—
P0A78-Detail Code 0502	P0A78 - detail code 0502	—	—

Display	Description	Note (when normal)	Unit of measure
P0A78-Detail Code 0503	P0A78 - detail code 0503	—	—
P0A78-Detail Code 0504	P0A78 - detail code 0504	—	—
P0A78-Detail Code 0505	P0A78 - detail code 0505	—	—
P0A78-Detail Code 0506	P0A78 - detail code 0506	—	—
P0A78-Detail Code 0507	P0A78 - detail code 0507	—	—
P0A78-Detail Code 0508	P0A78 - detail code 0508	—	—
P0A94-Detail Code 0800	P0A94 - detail code 0800	—	—
P0A94-Detail Code 0801	P0A94 - detail code 0801	—	—
P0A94-Detail Code 0802	P0A94 - detail code 0802	—	—
P0A94-Detail Code 0803	P0A94 - detail code 0803	—	—
P0A94-Detail Code 0804	P0A94 - detail code 0804	—	—
P0A94-Detail Code 0805	P0A94 - detail code 0805	—	—
P0A94-Detail Code 0806	P0A94 - detail code 0806	—	—
DMCU Check A	DMCM detailed information A	—	—
DMCU Check B	DMCM detailed information B	—	—
DMCU Check C	DMCM detailed information C	—	—
DMCU Check D	DMCM detailed information D	—	—
CAN Received Check 1	CAN received counter 1	—	Count
CAN Received Check 2	CAN received counter 2	—	Count
CAN Received Check 3	CAN received counter 3	—	Count
CAN Received Check 4	CAN received counter 4	—	Count
CAN Received Check 5	CAN received counter 5	—	Count
DMCM Detail Check A-0	DMCM detailed information A-0	—	—
DMCM Detail Check A-1	DMCM detailed information A-1	—	—
DMCM Detail Check A-2	DMCM detailed information A-2	—	—
DMCM Detail Check A-3	DMCM detailed information A-3	—	—
DMCM Detail Check A-4	DMCM detailed information A-4	—	—
DMCM Detail Check A-5	DMCM detailed information A-5	—	—
DMCM Detail Check A-6	DMCM detailed information A-6	—	—
DMCM Detail Check A-7	DMCM detailed information A-7	—	—
DMCM Detail Check A-8	DMCM detailed information A-8	—	—
DMCM Detail Check A-9	DMCM detailed information A-9	—	—
DMCM Detail Check A-10	DMCM detailed information A-10	—	—
DMCM Detail Check A-11	DMCM detailed information A-11	—	—
DMCM Detail Check A-12	DMCM detailed information A-12	—	—
DMCM Detail Check A-13	DMCM detailed information A-13	—	—
DMCM Detail Check A-14	DMCM detailed information A-14	—	—
DMCM Detail Check A-15	DMCM detailed information A-15	—	—
DMCM Detail Check A-16	DMCM detailed information A-16	—	—
DMCM Detail Check A-17	DMCM detailed information A-17	—	—
DMCM Detail Check B-0	DMCM detailed information B-0	—	—
DMCM Detail Check B-1	DMCM detailed information B-1	—	—

Display	Description	Note (when normal)	Unit of measure
DMCM Detail Check B-2	DMCM detailed information B-2	—	—
DMCM Detail Check B-3	DMCM detailed information B-3	—	—
DMCM Detail Check C-8	DMCM detailed information C-8	—	—
DMCM Detail Check C-9	DMCM detailed information C-9	—	—
DMCM Detail Check D-0	DMCM detailed information D-0	—	—
DMCM Detail Check D-1	DMCM detailed information D-1	—	—
DMCM Detail Check D-2	DMCM detailed information D-2	—	—
DMCM Detail Check D-3	DMCM detailed information D-3	—	—
DMCM Detail Check D-4	DMCM detailed information D-4	—	—
DMCM Detail Check D-5	DMCM detailed information D-5	—	—
DMCM Detail Check D-6	DMCM detailed information D-6	—	—
DMCM Detail Check E-9	DMCM detailed information D-9	—	—
DMCM Detail Check E-10	DMCM detailed information D-10	—	—
DMCM Detail Check E-11	DMCM detailed information D-11	—	—
DMCM Detail Check E-12	DMCM detailed information D-12	—	—
DMCM Detail Check E-13	DMCM detailed information D-13	—	—
DMCM Detail Check F-0	DMCM detailed information F-0	—	—
DMCM Detail Check F-1	DMCM detailed information F-1	—	—
DMCM Detail Check G-0	DMCM detailed information G-0	—	—
DMCM Detail Check G-1	DMCM detailed information G-1	—	—
DMCM Detail Check I-0	DMCM detailed information I-0	—	—
DMCM Detail Check I-1	DMCM detailed information I-1	—	—
DMCM Detail Check I-2	DMCM detailed information I-2	—	—
DMCM Detail Check I-3	DMCM detailed information I-3	—	—
DMCM Detail Check I-4	DMCM detailed information I-4	—	—
DMCM Detail Check I-5	DMCM detailed information I-5	—	—
DMCM Detail Check I-6	DMCM detailed information I-6	—	—
DMCM Detail Check I-7	DMCM detailed information I-7	—	—
DMCM Detail Check I-8	DMCM detailed information I-8	—	—
DMCM Detail Check I-9	DMCM detailed information I-9	—	—
DMCM Detail Check I-10	DMCM detailed information I-10	—	—
DMCM Detail Check I-11	DMCM detailed information I-11	—	—
DMCM Detail Check I-12	DMCM detailed information I-12	—	—
DMCM Detail Check I-13	DMCM detailed information I-13	—	—
DMCM Detail Check I-14	DMCM detailed information I-14	—	—
DMCM Detail Check I-15	DMCM detailed information I-15	—	—
DMCM Detail Check J-0	DMCM detailed information J-0	—	—
DMCM Detail Check J-1	DMCM detailed information J-1	—	—
DMCM Detail Check J-2	DMCM detailed information J-2	—	—
DMCM Detail Check J-3	DMCM detailed information J-3	—	—
DMCM Detail Check J-4	DMCM detailed information J-4	—	—
DMCM Detail Check J-5	DMCM detailed information J-5	—	—
DMCM Detail Check J-6	DMCM detailed information J-6	—	—
DMCM Detail Check J-7	DMCM detailed information J-7	—	—
DMCM Detail Check J-8	DMCM detailed information J-8	—	—
DMCM Detail Check J-9	DMCM detailed information J-9	—	—

Display	Description	Note (when normal)	Unit of measure
DMCM Detail Check -10	DMCM detailed information J-10	—	—
DMCM Detail Check -11	DMCM detailed information J-11	—	—
DMCM Detail Check J-12	DMCM detailed information J-12	—	—
DMCM Detail Check J-13	DMCM detailed information J-13	—	—
DMCM Detail Check J-14	DMCM detailed information J-14	—	—
DMCM Detail Check J-15	DMCM detailed information J-15	—	—
DMCM Detail Check J-16	DMCM detailed information J-16	—	—
DMCM Detail Check K-0	DMCM detailed information K-0	—	—
DMCM Detail Check K-1	DMCM detailed information K-1	—	—
DMCM Detail Check K-2	DMCM detailed information K-2	—	—
DMCM Detail Check K-3	DMCM detailed information K-3	—	—
DMCM Detail Check K-4	DMCM detailed information K-4	—	—
DMCM Detail Check K-5	DMCM detailed information K-5	—	—
DMCM Detail Check K-6	DMCM detailed information K-6	—	—
DMCM Detail Check L-0	DMCM detailed information L-0	—	—
System Check 1	Detailed information 1	—	—
System Check 2	Detailed information 2	—	—
System Check 8	Detailed information 8	—	—
System Check 9	Detailed information 9	—	—
System Check 11	Detailed information 11	—	—
System Check 12	Detailed information 12	—	—
Drive Motor Control Mode Check 1	DMCM control information 1	—	—
Drive Motor Control Mode Check 4	DMCM control information 4	—	—
Drive Motor Control Mode Check 5	DMCM control information 5	—	—
Drive Motor Control Mode Check 6	DMCM control information 6	—	—

4. BATTERY ENERGY CONTROL SYSTEM

1) On «Main Menu» display, select {Each System Check}.
2) On «Each System Check» display, select {HEV System}.
3) On «HEV System» display, select {Battery Energy Control System}.
4) On «Battery Energy Control System» display, select {Current Data Display & Save}.

Display	Description	Note (when normal)	Unit of measure
High Voltage Battery Control Status	BECM control mode	01 — 06	—
High Voltage Battery SOC	High voltage battery residual quantity	5 — 95	%
High Voltage Battery SOH	Battery status subservience parameter of high voltage battery	25 — 100	%
High Voltage Battery Total Voltage	High voltage battery voltage	70 — 140	V
High Voltage Battery Amperage	High voltage battery current	–110 — 180	A

Display	Description	Note (when normal)	Unit of measure
High Voltage Battery Charge Power Limit 1	High voltage battery charge control power value	0 — 14.0	kw
High Voltage Battery Discharge Power Limit 1	High voltage battery discharge control power value	0 — 14.0	kw
High Voltage Battery Temperature 1	High voltage battery temperature 1	–40 — 63	Deg.c
High Voltage Battery Temperature 2	High voltage battery temperature 2	–40 — 63	Deg.c
High Voltage Battery Temperature 3	High voltage battery temperature 3	–40 — 63	Deg.c
High Voltage Battery Intake Air Temperature	High voltage battery intake temperature	–40 — 86.5	Deg.c
High Voltage Battery Internal Resistance	High voltage battery internal resistance	0 — 4.0	ohm
HEV System Leakage Resistance (+)	Entire HEV system leakage resistance (+)	1000	kohm
High Voltage Battery Pack Leakage Resistance (+)	High voltage battery internal leakage resistance (+)	1000	kohm
HEV System Leakage Resistance (-)	Entire HEV system leakage resistance (–)	1000	kohm
High Voltage Battery Pack Leakage Resistance (-)	High voltage battery internal leakage resistance (–)	1000	kohm
OBD Test Status	Diagnosis status of emission-related diagnosis	Test Not Comp Normal Failure	—
Hybrid Fail Lamp Signal	Hybrid fail lamp signal requested by BECM	OFF ON	—
Trip Count	Number of times the ignition is ON judged by body integrated unit (CAN communication data)	—	times
Time Count	Detailed time elapsed after the ignition is ON calculated by body integrated unit (CAN communication data)	—	ms
Count	Identification information of synchronization/asynchronization of Trip Count, Time Count	Common Originally	—
Ignition switch	Ignition switch condition	OFF ON	—
Service Plug Status	Service disconnect plug lock status	OFF ON	—
High Voltage Battery Fuse Condition	High voltage battery fuse status	Normal Blow out	—
Positive Contactor Status	+ side contactor open/close status	Open Close	—
Negative Contactor Status	– side contactor open/close status	Open Close	—
Pre-Charge Contactor Status	Pre-charge contactor open/close status	Open Close	—
BECM Control Check 23	Detailed information of control	—	—
High Voltage Battery Block 1 SOC	High voltage battery block SOC	5 — 95	%
High Voltage Battery Block 2 SOC	High voltage battery block SOC	5 — 95	%
High Voltage Battery Block 3 SOC	High voltage battery block SOC	5 — 95	%

Display	Description	Note (when normal)	Unit of measure
High Voltage Battery Block 4 SOC	High voltage battery block SOC	5 — 95	%
High Voltage Battery Block 5 SOC	High voltage battery block SOC	5 — 95	%
High Voltage Battery Block 6 SOC	High voltage battery block SOC	5 — 95	%
High Voltage Battery Block 7 SOC	High voltage battery block SOC	5 — 95	%
High Voltage Battery Block 8 SOC	High voltage battery block SOC	5 — 95	%
High Voltage Battery Block 9 SOC	High voltage battery block SOC	5 — 95	%
High Voltage Battery Block 10 SOC	High voltage battery block SOC	5 — 95	%
High Voltage Battery Block 11 SOC	High voltage battery block SOC	5 — 95	%
High Voltage Battery Block Voltage 1	High voltage battery block voltage	8 — 14	V
High Voltage Battery Block Voltage 2	High voltage battery block voltage	8 — 14	V
High Voltage Battery Block Voltage 3	High voltage battery block voltage	8 — 14	V
High Voltage Battery Block Voltage 4	High voltage battery block voltage	8 — 14	V
High Voltage Battery Block Voltage 5	High voltage battery block voltage	8 — 14	V
High Voltage Battery Block Voltage 6	High voltage battery block voltage	8 — 14	V
High Voltage Battery Block Voltage 7	High voltage battery block voltage	8 — 14	V
High Voltage Battery Block Voltage 8	High voltage battery block voltage	8 — 14	V
High Voltage Battery Block Voltage 9	High voltage battery block voltage	8 — 14	V
High Voltage Battery Block Voltage 10	High voltage battery block voltage	8 — 14	V
High Voltage Battery Block Voltage 11	High voltage battery block voltage	8 — 14	V
High Voltage Battery Voltage 0	High voltage battery block voltage (voltage sensor value)	9.6 — 96	V
High Voltage Battery Voltage 1	High voltage battery block voltage (voltage sensor value)	6.4 — 64	V
High Voltage Battery Voltage 2	High voltage battery block voltage (voltage sensor value)	3.2 — 32	V
High Voltage Battery Voltage 3	High voltage battery block voltage (voltage sensor value)	–2.1 — 2.1	V
High Voltage Battery Voltage 4	High voltage battery block voltage (voltage sensor value)	–16 — –1.6	V
High Voltage Battery Voltage 5	High voltage battery block voltage (voltage sensor value)	–48 — –4.8	V
High Voltage Battery Voltage 6	High voltage battery block voltage (voltage sensor value)	–72 — –7.2	V
BECM Control Check 24	Detailed information of control	—	—
BECM Control Check 25	Detailed information of control	—	—

Display	Description	Note (when normal)	Unit of measure
High Voltage Battery Amperage Sensor Output	High voltage battery current sensor value	–110 — 180	A
High Voltage Battery Amperage Offset Value	High voltage battery current sensor offset value	0 — 1	A
ECU ACC	Voltage supplied to BECM	10 — 15	V
Drive Motor Inverter Input Voltage	Drive motor inverter input voltage calculated by DMCM (CAN communication data)	9 — 155	V
Contactor Signal (HPCM)	Contactor operation request status judged by HPCM (CAN communication data)	OFF ON Abnormal OFF	—
Engine Speed	Engine speed calculated by ECM (CAN communication data)	0 — 6400	rpm
P Range	Parking range status judged by TCM (CAN communication data)	OFF ON	—
Vehicle speed	Vehicle speed calculated by VDC (CAN communication data)	0 — 210	km/h
Drive Motor Inverter Operation Status	Drive motor inverter operation status calculated by DMCM (CAN communication data)	OFF ON	—
Drive Motor Torque Target (HPCM)	Target drive motor torque calculated by HPCM (CAN communication data)	–65 — 65	Nm
Drive Motor Output Torque Actual	Drive motor output torque calculated by DMCM (CAN communication data)	–65 — 65	Nm
Drive Motor Speed Target (HPCM)	Target drive motor speed calculated by HPCM (CAN communication data)	—	rpm
Drive Motor Speed	Drive motor speed calculated by DMCM (CAN communication data)	–7000 — 7000	rpm
High Voltage Battery Cooling Fan Duty Target (HPCM)	High voltage battery cooling fan duty target calculated by HPCM (CAN communication data)	0 — 100 (20 — 70%: normal, 100%: failure, 0 — 20%: dead zone)	%
High Voltage Battery Cooling Fan Speed	High voltage battery cooling fan speed calculated by DMCM (CAN communication data)	0 — 6000	rpm
High Voltage Battery Charge Power Limit 2	High voltage battery charge control power value (assist)	—	—
High Voltage Battery Discharge Power Limit 2	High voltage battery discharge control power value (assist)	—	—
BECM Control Check 26	Detailed information of control	—	—
BECM Control Check 27	Detailed information of control	—	—
BECM Control Check 28	Detailed information of control	—	—
BECM Control Check 29	Detailed information of control	—	—
BECM Control Check 15	Detailed information of control	—	—
BECM Control Check 16	Detailed information of control	—	—
BECM Control Check 30	Detailed information of control	—	—
BECM Control Check 32	Detailed information of control	—	—
High Voltage Battery SOC Subservience Parameter 1	Detailed information of control	—	—
High Voltage Battery SOC Subservience Parameter 2	Detailed information of control	—	—
High Voltage Battery SOC Subservience Parameter 3	Detailed information of control	—	—

Display	Description	Note (when normal)	Unit of measure
High Voltage Battery SOC Subservience Parameter 4	Detailed information of control	—	—
High Voltage Battery SOC Subservience Parameter 5	Detailed information of control	—	—
High Voltage Battery SOC Subservience Parameter 6	Detailed information of control	—	—
High Voltage Battery SOC Subservience Parameter 7	Detailed information of control	—	—
High Voltage Battery SOC Subservience Parameter 8	Detailed information of control	—	—
High Voltage Battery SOC Subservience Parameter 9	Detailed information of control	—	—
High Voltage Battery SOC Subservience Parameter 10	Detailed information of control	—	—
High Voltage Battery SOC Subservience Parameter 11	Detailed information of control	—	—
System Check 1	Detailed information of control	—	—
System Check 2	Detailed information of control	—	—
System Check 3	Detailed information of control	—	—
System Check 4	Detailed information of control	—	—
BECM Control Check 1	Detailed information of control	—	—
BECM Control Check 2	Detailed information of control	—	—
BECM Control Check 3	Detailed information of control	—	—
BECM Control Check 4	Detailed information of control	—	—
BECM Control Check 5	Detailed information of control	—	—
BECM Control Check 6	Detailed information of control	—	—
BECM Control Check 7	Detailed information of control	—	—
BECM Control Check 8	Detailed information of control	—	—
BECM Control Check 9	Detailed information of control	—	—
BECM Control Check 10	Detailed information of control	—	—
BECM Control Check 11	Detailed information of control	—	—
BECM Control Check 12	Detailed information of control	—	—
BECM Control Check 13	Detailed information of control	—	—
BECM Control Check 14	Detailed information of control	—	—
BECM Control Check 17	Detailed information of control	—	—
BECM Control Check 18	Detailed information of control	—	—
BECM Control Check 19	Detailed information of control	—	—
BECM Control Check 20	Detailed information of control	—	—
BECM Control Check 21	Detailed information of control	—	—
High Voltage Battery Temp. Info 1(IGON)	Detailed information of control	—	—
High Voltage Battery Temp. Info 2(IGON)	Detailed information of control	—	—

Display	Description	Note (when normal)	Unit of measure
High Voltage Battery Temp. Info 3(IGON)	Detailed information of control	—	—
High Voltage Battery Temp. Info 4(IGON)	Detailed information of control	—	—
High Voltage Battery Temp. Info 5(IGON)	Detailed information of control	—	—
High Voltage Battery Temp. Info 6(IGON)	Detailed information of control	—	—
High Voltage Battery Temp. Info 7(IGON)	Detailed information of control	—	—
High Voltage Battery Temp. Info 8(IGON)	Detailed information of control	—	—
High Voltage Battery Temp. Info 9(IGON)	Detailed information of control	—	—
High Voltage Battery Temp. Info 10(IGON)	Detailed information of control	—	—
High Voltage Battery Temp. Info 11(IGON)	Detailed information of control	—	—
High Voltage Battery Temp. Info 12(IGON)	Detailed information of control	—	—
High Voltage Battery Temp. Info 13(IGON)	Detailed information of control	—	—
High Voltage Battery Temp. Info 1(IGOFF)	Detailed information of control	—	—
High Voltage Battery Temp. Info 2(IGOFF)	Detailed information of control	—	—
High Voltage Battery Temp. Info 3(IGOFF)	Detailed information of control	—	—
High Voltage Battery Temp. Info 4(IGOFF)	Detailed information of control	—	—
High Voltage Battery Temp. Info 5(IGOFF)	Detailed information of control	—	—
High Voltage Battery Temp. Info 6(IGOFF)	Detailed information of control	—	—
High Voltage Battery Temp. Info 7(IGOFF)	Detailed information of control	—	—
High Voltage Battery Temp. Info 8(IGOFF)	Detailed information of control	—	—
High Voltage Battery Temp. Info 9(IGOFF)	Detailed information of control	—	—
High Voltage Battery Temp. Info 10(IGOFF)	Detailed information of control	—	—
High Voltage Battery Temp. Info 11(IGOFF)	Detailed information of control	—	—
High Voltage Battery Temp. Info 12(IGOFF)	Detailed information of control	—	—
High Voltage Battery Temp. Info 13(IGOFF)	Detailed information of control	—	—

14.Freeze Frame Data Display

A: OPERATION

NOTE:
For detailed operation procedures, refer to “PC application help for Subaru Select Monitor”.

1. HYBRID POWERTRAIN CONTROL SYSTEM

1) On «Main Menu» display, select {Each System Check}.
2) On «Each System Check» display, select {HEV System}.
3) On «HEV System» display, select {Hybrid Powertrain Control System}.
4) On «Hybrid Powertrain Control System» display, select {Freeze Frame Data Display}.

Display	Contents	Unit of measure
Vehicle speed	Vehicle speed calculated by VDC CM (CAN communication data)	km/h
Ambient Temperature	Ambient temperature calculated by combination meter (CAN communication data)	°C
Engine Speed	Engine speed calculated by ECM (CAN communication data)	rpm
Coolant Temperature	Engine coolant temperature calculated by ECM (CAN communication data)	°C
Gear Ratio Actual	Gear ratio calculated by TCM (CAN communication data)	—
A/T Oil Temperature	ATF temperature calculated by TCM (CAN communication data)	°C
Trip Count	Number of times the ignition is ON judged by body integrated unit (CAN communication data)	times
Count	Identification information of synchronization/asynchronization of Trip Count, Time Count	—
Time Count	Detailed time elapsed after the ignition is ON calculated by body integrated unit (CAN communication data)	ms
Ignition switch	Ignition switch status	—
Starter SW	Starter switch status	—
P Range	Parking range status judged by TCM (CAN communication data)	—
R Range	Reverse range status judged by TCM (CAN communication data)	—
N Range	Neutral range status judged by TCM (CAN communication data)	—
D Range	Drive range status judged by TCM (CAN communication data)	—
Accel opening angle	Accelerator opening angle ratio calculated by ECM (CAN communication data)	%
Main Brake Pedal Stroke	Brake stroke calculated by main brake stroke sensor voltage	%
Sub Brake Pedal Stroke	Brake stroke calculated by sub brake stroke sensor voltage	%
Brake Booster Pressure 1	Vacuum pressure calculated by brake vacuum sensor voltage 1	kPa
Brake Booster Pressure 2	Vacuum pressure calculated by brake vacuum sensor voltage 2	kPa
Atmospheric pressure	Atmospheric pressure calculated by ECM (CAN communication data)	kPa
12V Battery Relay Target Mode	12V battery relay commanded status	—
Vacuum Pump Relay Actual	Voltage applied to brake vacuum pump relay	V
HPCM Target Control Mode	Target control mode of HPCM	—
HPCM Current Control Mode	Current control mode of HPCM	—
Drive Motor Inverter Input Voltage	Drive motor inverter input voltage calculated by DMCM (CAN communication data)	V
Drive Motor Output Torque Actual	Drive motor output torque calculated by DMCM (CAN communication data)	Nm
Drive Motor Speed	Drive motor speed calculated by DMCM (CAN communication data)	rpm
ISG Terminal Voltage	Terminal voltage calculated by integrated starter generator (ISG) (LIN communication data)	V

Display	Contents	Unit of measure
ISG Cranking Status	Cranking demand acceptance status judged by integrated starter generator (ISG) (LIN communication data)	—
ISG Control Mode Actual	Current control mode judged by integrated starter generator (ISG) (LIN communication data)	—
DCDC Converter Output Voltage Actual	DC/DC converter output voltage calculated by DMCM (CAN communication data)	V
Electric Oil Pump Motor Speed	Motor speed calculated by electric oil pump (CAN communication data)	rpm
High Voltage Battery SOC	High voltage battery residual quantity calculated by BECM (CAN communication data)	%
High Voltage Battery Total Voltage	High voltage battery voltage calculated by BECM (CAN communication data)	V
High Voltage Battery Discharge Power Limit 1	High voltage battery discharge power limit calculated by BECM (CAN communication data)	kW
High Voltage Battery Charge Power Limit 1	High voltage battery charge power limit calculated by BECM (CAN communication data)	kW
High Voltage Battery Cooling Fan Speed	High voltage battery cooling fan speed calculated by DMCM (CAN communication data)	rpm
BECM Control Status	BECM control mode judged by BECM (CAN communication data)	—
Contactor Close Status	Contactor close status judged by BECM (CAN communication data)	—
12V Engine Restart Battery Voltage	12 volt engine restart battery voltage calculated by 12 volt engine restart battery sensor (LIN communication data)	V
12V Engine Restart Battery SOC	12 volt engine restart battery capacity calculated by 12 volt engine restart battery sensor (LIN communication data)	%
12V Auxiliary Battery Voltage	12 volt auxiliary battery voltage	V
OBD Test Status	Diagnosis status of emission-related diagnosis	—
ECM Fail Safe Request Check	Fail safe request detailed information from ECM	—
TCM Fail Safe Request Check	Fail safe request detailed information from TCM	—
DMCM Fail Safe Request Check	Fail safe request detailed information from DMCM	—
BECM Fail Safe Request Check	Fail safe request detailed information from BECM	—
AUTO/MANUAL Mode Switch	Manual mode switch status judged by TCM (CAN communication data)	—
Brake Pedal Position Learning Status	Brake stroke sensor learning status	—
HPCM Check 20	Detailed information of control	—
HPCM Check 21	Detailed information of control	—
HPCM Check 22	Detailed information of control	—
HPCM Check 23	Detailed information of control	—
HPCM Check 24	Detailed information of control	—
HPCM Check 25	Detailed information of control	—
HPCM Check 40	Detailed information of control	mΩ
HPCM Check 78	Detailed information of control	—
HPCM Check 82	Detailed information of control	—
HPCM Check 125	Detailed information of control	—
HPCM Check 126	Detailed information of control	—
HPCM Check 127	Detailed information of control	—
HPCM Check 128	Detailed information of control	—

Display	Contents	Unit of measure
HPCM Check 129	Detailed information of control	—
HPCM Check 130	Detailed information of control	—
HPCM Check 133	Detailed information of control	—
HPCM Check 134	Detailed information of control	—
HPCM Check 135	Detailed information of control	—
HPCM Check 136	Detailed information of control	—
HPCM Check 159	Detailed information of control	—
HPCM Check 171	Detailed information of control	—

2. DRIVE MOTOR CONTROL SYSTEM

1) On «Main Menu» display, select {Each System Check}.
2) On «Each System Check» display, select {HEV System}.
3) On «HEV System» display, select {Drive Motor Control System}.
4) On «Drive Motor Control System» display, select {Freeze Frame Data Display}.

Display	Contents	Unit of measure
ECU ACC	Voltage supplied to DMCM	V
Ignition switch	Ignition switch status	—
Ignition Switch Signal (CAN receive)	Ignition switch status detected by HPCM (CAN communication data)	—
Accel opening angle	Accelerator opening angle ratio detected by ECM (CAN communication data)	%
Judgment of Idling	Idle switch status detected by ECM (CAN communication data)	—
Main Brake Pedal Stroke	Main brake stroke sensor status calculated by HPCM (CAN communication data)	%
Engine Speed	Engine speed detected by ECM (CAN communication data)	rpm
Vehicle speed	Vehicle speed calculated by VDC CM (CAN communication data)	km/h
Coolant Temperature	Engine coolant temperature calculated by ECM (CAN communication data)	°C
A/T Oil Temperature	ATF temperature calculated by TCM (CAN communication data)	°C
D Range	Drive range status judged by TCM (CAN communication data)	—
N Range	Neutral range status judged by TCM (CAN communication data)	—
R Range	Reverse range status judged by TCM (CAN communication data)	—
P Range	Parking range status judged by TCM (CAN communication data)	—
Trip Count	Number of times the ignition is ON judged by body integrated unit (CAN communication data)	times
Time Count	Detailed time elapsed after the ignition is ON calculated by body integrated unit (CAN communication data)	ms
Detailed Time Counter	Calculated detailed time elapsed after the ignition is ON	ms
DMCM Check Detailed Code	—	—
Count	Identification information of synchronization/asynchronization of Trip Count, Time Count	—
Drive Motor Torque Target (HPCM)	Drive motor target torque calculated by HPCM (CAN communication data)	Nm
Drive Motor Output Torque Actual	Target drive motor torque	Nm
Drive Motor Torque Upper Limit	DMCM set value	Nm
Drive Motor Torque Lower Limit	DMCM set value	Nm
Drive Motor Speed Target (HPCM)	Target drive motor speed calculated by HPCM (CAN communication data)	rpm
Drive Motor Speed	Drive motor speed	rpm

Display	Contents	Unit of measure
Drive Motor Inverter Input High Voltage Sensor (Serial)	Drive motor inverter input high voltage (serial)	V
High Voltage Battery Total Voltage	High voltage battery voltage calculated by BECM (CAN communication data)	V
High Voltage Battery Amperage	High voltage battery current calculated by BECM (CAN communication data)	A
Phase U Voltage Target	DMCM output value	%
Phase V Voltage Target	DMCM output value	%
Phase W Voltage Target	DMCM output value	%
Phase U Amperage	Drive motor current	A
Phase U Amperage Sensor Voltage	Current sensor voltage	V
Phase V Amperage	Drive motor current	A
Phase V Amperage Sensor Voltage	Current sensor voltage	V
Phase W Amperage	Drive motor current	A
Phase W Amperage Sensor Voltage	Current sensor voltage	V
Drive Motor Amperage Sensor Power Supply Voltage	Current sensor power supply voltage	V
Drive Motor Output Power Actual	Drive motor output	W
High Voltage Battery Temperature (MIN)	The lowest temperature among high voltage battery temperature values detected through multiple sensors by BECM (CAN communication data)	°C
Drive Motor Inverter Temperature A	Drive motor inverter temperature (serial)	°C
Drive Motor Inverter Temperature B	Drive motor inverter temperature (serial)	°C
Drive Motor Inverter Temperature C	Drive motor inverter temperature (serial)	°C
Drive Motor Temperature A	Drive motor temperature	°C
Drive Motor Temperature A Sensor Voltage	Drive motor temperature sensor voltage	V
Drive Motor Temperature B	Drive motor temperature	°C
Drive Motor Temperature B Sensor Voltage	Drive motor temperature sensor voltage	V
Drive Motor Inverter Operation Signal(HPCM)	Drive motor inverter operation request (HPCM) (CAN communication data)	—
Drive Motor Inverter Operation Status	Drive motor inverter operation status	—
Drive Motor Inverter Power Supply Relay Output Signal	Drive motor inverter power supply relay operation signal	—
Drive Motor Inverter Power Supply Relay Output Actual	Monitor signal for drive motor inverter power supply relay operation signal	—
Contactor Signal(HPCM)	Contactor operation request status (HPCM) (CAN communication data)	—
Contactor Weld Diagnosis Status	Contactor stuck closed status judged by BECM (CAN communication data)	—
Contactor Close Status	Contactor close status judged by BECM (CAN communication data)	—

Display	Contents	Unit of measure
Contactor Close Sequence Status	Contactor status judged by BECM (CAN communication data)	—
Contactor Open Status	Contactor status judged by BECM (CAN communication data)	—
High Voltage Battery Cooling Fan Duty Target (HPCM)	High voltage battery cooling fan duty target calculated by HPCM (CAN communication data)	%
High Voltage Battery Cooling Fan Duty Output	High voltage battery cooling fan duty	%
High Voltage Battery Cooling Fan Speed	High voltage battery cooling fan speed	rpm
DCDC Converter Output Permit Signal (HPCM)	DC/DC converter output permission status calculated by HPCM (CAN communication data)	—
DCDC Converter Output Voltage Target (HPCM)	DC/DC converter output indicate voltage calculated by HPCM (CAN communication data)	V
DCDC Converter Output Voltage Actual	Voltage output at DC/DC converter	V
DCDC Converter Output Amperage	Current output at DC/DC converter	A
DCDC Converter Output Limit Amperage	DC/DC converter set value	A
DCDC Converter Input Voltage	Input high voltage detected at DC/DC converter	V
DCDC Converter Temperature	Temperature calculated at DC/DC converter	°C
DCDC Converter Status Check	DC/DC converter control value	—
DCDC Converter Check 1	DC/DC converter control value	—
DCDC Converter Check 2	DC/DC converter control value	—
DCDC Converter Operation Update Signal Count (Serial)	DC/DC converter operation counter	Count
DCDC Converter Output Permit Signal (Serial)	DC/DC converter output permission Serial transmission data (DMCM)	—
DCDC Converter Output Voltage Target (Serial)	DC/DC converter output indicate voltage Serial transmission data (DMCM)	V
DCDC Converter Initialize Completion	DC/DC converter initialize completion status	—
DCDC Converter Serial Check	DC/DC converter serial communication failure	—
Drive Motor Inverter Control Mode Target(HPCM)	Target control mode of drive motor inverter calculated by HPCM	—
Sequence Status Check	DMCM set value	—
Drive Motor Inverter Check	DMCM input value	—
Drive Motor Torque Limit Check	DMCM output value	—
Drive Motor Torque Limit Status	DMCM output value	—
Drive Motor Mechanical Angle Pulse	Drive motor mechanical angle	Pulse
DMCU Check A	DMCM detailed information A	—

Display	Contents	Unit of measure
DMCU Check B	DMCM detailed information B	—
DMCU Check C	DMCM detailed information C	—
DMCU Check D	DMCM detailed information D	—
System Check 1	Detailed information 1	—
System Check 2	Detailed information 2	—
Drive Motor Control Mode Check 1	DMCM control information 1	—

3. BATTERY ENERGY CONTROL SYSTEM

1) On «Main Menu» display, select {Each System Check}.
2) On «Each System Check» display, select {HEV System}.
3) On «HEV System» display, select {Battery Energy Control System}.
4) On «Battery Energy Control System» display, select {Freeze Frame Data Display}.

Display	Contents	Unit of measure
High Voltage Battery Control Status	BECM control mode	—
High Voltage Battery SOC	High voltage battery residual quantity	%
High Voltage Battery SOH	Battery status subservience parameter of high voltage battery	%
High Voltage Battery Total Voltage	High voltage battery voltage	V
High Voltage Battery Amperage	High voltage battery current	A
High Voltage Battery Charge Power Limit 1	High voltage battery charge control power value	kw
High Voltage Battery Discharge Power Limit 1	High voltage battery discharge control power value	kw
High Voltage Battery Temperature 1	High voltage battery temperature 1	Deg.c
High Voltage Battery Temperature 2	High voltage battery temperature 2	Deg.c
High Voltage Battery Temperature 3	High voltage battery temperature 3	Deg.c
High Voltage Battery Intake Air Temperature	High voltage battery intake temperature	Deg.c
High Voltage Battery Internal Resistance	High voltage battery internal resistance	ohm
HEV System Leakage Resistance (+)	Entire HEV system leakage resistance (+)	kohm
High Voltage Battery Pack Leakage Resistance (+)	High voltage battery internal leakage resistance (+)	kohm
HEV System Leakage Resistance (-)	Entire HEV system leakage resistance (–)	kohm
High Voltage Battery Pack Leakage Resistance (-)	High voltage battery internal leakage resistance (–)	kohm
Trip Count	Number of times the ignition is ON judged by body integrated unit (CAN communication data)	times
Time Count	Detailed time elapsed after the ignition is ON calculated by body integrated unit (CAN communication data)	ms

Display	Contents	Unit of measure
Count	Identification information of synchronization/asynchronization of Trip Count, Time Count	—
Ignition switch	Ignition switch condition	—
Positive Contactor Status	+ side contactor open/close status	—
Negative Contactor Status	– side contactor open/close status	—
Pre-Charge Contactor Status	Pre-charge contactor open/close status	—
High Voltage Battery Block 1 SOC	High voltage battery block SOC	%
High Voltage Battery Block 2 SOC	High voltage battery block SOC	%
High Voltage Battery Block 3 SOC	High voltage battery block SOC	%
High Voltage Battery Block 4 SOC	High voltage battery block SOC	%
High Voltage Battery Block 5 SOC	High voltage battery block SOC	%
High Voltage Battery Block 6 SOC	High voltage battery block SOC	%
High Voltage Battery Block 7 SOC	High voltage battery block SOC	%
High Voltage Battery Block 8 SOC	High voltage battery block SOC	%
High Voltage Battery Block 9 SOC	High voltage battery block SOC	%
High Voltage Battery Block 10 SOC	High voltage battery block SOC	%
High Voltage Battery Block 11 SOC	High voltage battery block SOC	%
High Voltage Battery Block Voltage 1	High voltage battery block voltage	V
High Voltage Battery Block Voltage 2	High voltage battery block voltage	V
High Voltage Battery Block Voltage 3	High voltage battery block voltage	V
High Voltage Battery Block Voltage 4	High voltage battery block voltage	V
High Voltage Battery Block Voltage 5	High voltage battery block voltage	V
High Voltage Battery Block Voltage 6	High voltage battery block voltage	V
High Voltage Battery Block Voltage 7	High voltage battery block voltage	V
High Voltage Battery Block Voltage 8	High voltage battery block voltage	V
High Voltage Battery Block Voltage 9	High voltage battery block voltage	V
High Voltage Battery Block Voltage 10	High voltage battery block voltage	V
High Voltage Battery Block Voltage 11	High voltage battery block voltage	V

Display	Contents	Unit of measure
High Voltage Battery Voltage 0	High voltage battery block voltage (voltage sensor value)	V
High Voltage Battery Voltage 1	High voltage battery block voltage (voltage sensor value)	V
High Voltage Battery Voltage 2	High voltage battery block voltage (voltage sensor value)	V
High Voltage Battery Voltage 3	High voltage battery block voltage (voltage sensor value)	V
High Voltage Battery Voltage 4	High voltage battery block voltage (voltage sensor value)	V
High Voltage Battery Voltage 5	High voltage battery block voltage (voltage sensor value)	V
High Voltage Battery Voltage 6	High voltage battery block voltage (voltage sensor value)	V
BECM Control Check 24	Detailed information of control	V
BECM Control Check 25	Detailed information of control	V
High Voltage Battery Amperage Sensor Output	High voltage battery current sensor value	A
ECU ACC	Voltage supplied to BECM	V
Drive Motor Inverter Input Voltage	Drive motor inverter input voltage calculated by DMCM (CAN communication data)	V
Contactor Signal (HPCM)	Contactor operation request status judged by HPCM (CAN communication data)	—
Engine Speed	Engine speed calculated by ECM (CAN communication data)	rpm
P Range	Parking range status judged by TCM (CAN communication data)	—
Vehicle speed	Vehicle speed calculated by VDC (CAN communication data)	km/h
Drive Motor Inverter Operation Status	Drive motor inverter operation status calculated by DMCM (CAN communication data)	—
Drive Motor Torque Target (HPCM)	Target drive motor torque calculated by HPCM (CAN communication data)	Nm
Drive Motor Output Torque Actual	Drive motor output torque calculated by DMCM (CAN communication data)	Nm
Drive Motor Speed Target (HPCM)	Target drive motor speed calculated by HPCM (CAN communication data)	rpm
Drive Motor Speed	Drive motor speed calculated by DMCM (CAN communication data)	rpm
High Voltage Battery Cooling Fan Duty Target (HPCM)	High voltage battery cooling fan duty target calculated by HPCM (CAN communication data)	%
High Voltage Battery Cooling Fan Speed	High voltage battery cooling fan speed calculated by DMCM (CAN communication data)	rpm
High Voltage Battery Charge Power Limit 2	High voltage battery charge control power value (assist)	—
High Voltage Battery Discharge Power Limit 2	High voltage battery discharge control power value (assist)	—
High Voltage Battery SOC Subservience Parameter 1	Detailed information of control	—
High Voltage Battery SOC Subservience Parameter 2	Detailed information of control	—
High Voltage Battery SOC Subservience Parameter 3	Detailed information of control	—

Display	Contents	Unit of measure
High Voltage Battery SOC Subservience Parameter 4	Detailed information of control	—
High Voltage Battery SOC Subservience Parameter 5	Detailed information of control	—
High Voltage Battery SOC Subservience Parameter 6	Detailed information of control	—
High Voltage Battery SOC Subservience Parameter 7	Detailed information of control	—
High Voltage Battery SOC Subservience Parameter 8	Detailed information of control	—
High Voltage Battery SOC Subservience Parameter 9	Detailed information of control	—
High Voltage Battery SOC Subservience Parameter 10	Detailed information of control	—
High Voltage Battery SOC Subservience Parameter 11	Detailed information of control	—
System Check 1	Detailed information of control	—
System Check 2	Detailed information of control	—
System Check 3	Detailed information of control	—
System Check 4	Detailed information of control	—
BECM Control Check 1	Detailed information of control	—

15.System Operation Check Mode

A: OPERATION

CAUTION:
After System Operation Check Mode is run, perform the Clear Memory Mode.

NOTE:
For detailed operation procedures, refer to “PC application help for Subaru Select Monitor”.

1. HYBRID POWERTRAIN CONTROL SYSTEM

1) On «Main Menu» display, select {Each System Check}.
2) On «Each System Check» display, select {HEV System}.
3) On «HEV System» display, select {Hybrid Powertrain Control System}.
4) On «Hybrid Powertrain Control System» display, select {Work Support}.
5) On «Work Support» display, select {System Operation Check Mode}.

NOTE:
A communication error will be displayed if any other modes are run while performing {System Operation Check Mode}.

Items under system operation check mode	Display	Note
ISG Cranking Operation	—	Perform engine cranking with integrated starter generator (ISG). Example of use: Used to check engine start with integrated starter generator (ISG).
ISG Voltage Control	Mid High ExtraHigh	Perform generated voltage control with the integrated starter generator (ISG). Example of use: Used to check electrical charge with integrated starter generator (ISG).
Brake Vacuum Pump System Check	—	Brake vacuum pump operates. Example of use: Used to check brake vacuum pump as a single unit.
12V Battery Relay Operation	—	Switch the 12V battery relay on/off. Example of use: Used to check operation of the 12V battery relay.
DCDC Converter Output Voltage Control	Mid High	Perform DC/DC converter output voltage control. Example of use: Used to check DC/DC converter as a single unit.
Engine only Drive Mode*	—	Drive vehicle without motor operation. Example of use: Used to check influence by motor for diagnosing noise or vibration problem.
Auto Start Stop Cancel Drive Mode (Engine only or Engine + Motor)*	—	Drive vehicle without operating Auto Start Stop or motor. (Transition of mode is possible in the operation described in Notes in the margin.) Example of use: Used to check influence by engine and motor for diagnosing noise or vibration problem. It is also used to drive vehicle or perform inspection with Auto Start Stop deactivated.

*: During this mode, the hybrid fail lamp blinks and the message “Hybrid system service mode is active” is displayed in MFD. The maintenance mode will end after 30 seconds or more have passed since the ignition switch is OFF.

NOTE:
In «Auto Start Stop Cancel Drive Mode (Engine only or Engine + Motor)», transition of mode is enabled by performing the following operation.
1. Turn the ignition switch to ON and perform the following procedures while depressing the brake pedal before starting the engine.
2. Set the shift lever to “N” and depress the accelerator pedal twice. (Fully closed → Fully open → Fully closed → Fully open)

3. Set the shift lever to “P” and depress the accelerator pedal twice. (Fully closed → Fully open → Fully closed → Fully open)
4. Set the shift lever to “N” and depress the accelerator pedal twice. (Fully closed → Fully open → Fully closed → Fully open)
5. Shift into P range.
(The hybrid fail lamp in the combination meter blinks, indicating that the service mode is active in MFD.)
6. Start the engine.
7. The maintenance mode will end after 30 seconds or more have passed since the ignition switch is OFF.
   *: This operation must be performed within 60 seconds after the ignition is turned ON.
   *: If the accelerator pedal is operated too fast, the operation may not be accepted.
   *: If any procedures are performed improperly, they are not accepted until the ignition switch is turned OFF.
   *: If any abnormal conditions are detected, cancel the procedure.

2. DRIVE MOTOR CONTROL SYSTEM

1) On «Main Menu» display, select {Each System Check}.
2) On «Each System Check» display, select {HEV System}.
3) On «HEV System» display, select {Drive Motor Control System}.
4) On «Drive Motor Control System» display, select {Work Support}.
5) On «Work Support» display, select {System Operation Check Mode}.

Items under system operation check mode	Display		Note
High Voltage Battery Cooling Fan	Target Output Mode	Stop Step1 Step2 Step3	Perform high voltage battery cooling fan compulsory drive. Example of use: Used to check high voltage battery cooling fan circuits.
	High Voltage Battery Cooling Fan Speed	0 — 6000 rpm	
Drive Motor Inverter power supply relay	Target Output Mode	OFF ON	Perform high voltage battery cooling fan/drive motor inverter power supply relay compulsory drive. Example of use: Used to check operation of high voltage battery cooling fan/drive motor inverter power supply relay.
	Drive Motor Inverter Operation Update Signal Count (Serial)	0 — 255 Count	

NOTE:
The conditions listed below must be met to perform the mode.

Display of current data	Value
Ignition switch	ON
ECU ACC	11.0 V or more
Drive Motor Inverter Operation Signal(HPCM)	OFF
Contactor Open Status	Open
High Voltage Battery Cooling Fan Duty Target (HPCM)	0%

16.List of Diagnostic Trouble Code (DTC)

A: LIST

1. HYBRID POWERTRAIN CONTROL SYSTEM

DTC	Item	Note
P0506	Idle Air Control System RPM Lower Than Expected	<Ref. to HEV(diag)-91, DTC P0506 IDLE AIR CONTROL SYSTEM RPM LOWER THAN EXPECTED, Diagnostic Procedure with Diagnostic Trouble Code (DTC).>
P0507	Idle Air Control System RPM Higher Than Expected	<Ref. to HEV(diag)-92, DTC P0507 IDLE AIR CONTROL SYSTEM RPM HIGHER THAN EXPECTED, Diagnostic Procedure with Diagnostic Trouble Code (DTC).>
P0516	Battery Temperature Sensor Circuit Low	<Ref. to HEV(diag)-93, DTC P0516 BATTERY TEMPERATURE SENSOR CIRCUIT LOW, Diagnostic Procedure with Diagnostic Trouble Code (DTC).>
P0517	Battery Temperature Sensor Circuit High	<Ref. to HEV(diag)-95, DTC P0517 BATTERY TEMPERATURE SENSOR CIRCUIT HIGH, Diagnostic Procedure with Diagnostic Trouble Code (DTC).>
P0556	Brake Booster Pressure Sensor Circuit Range/Performance	<Ref. to HEV(diag)-97, DTC P0556 BRAKE BOOSTER PRESSURE SENSOR CIRCUIT RANGE/PERFORMANCE, Diagnostic Procedure with Diagnostic Trouble Code (DTC).>
P0572	Brake Switch "A" [Stop Lamp Switch] Circuit Low	<Ref. to HEV(diag)-100, DTC P0572 BRAKE SWITCH "A" [STOP LAMP SWITCH] CIRCUIT LOW, Diagnostic Procedure with Diagnostic Trouble Code (DTC).>
P0573	Brake Switch "A" [Stop Lamp Switch] Circuit High	<Ref. to HEV(diag)-101, DTC P0573 BRAKE SWITCH "A" [STOP LAMP SWITCH] CIRCUIT HIGH, Diagnostic Procedure with Diagnostic Trouble Code (DTC).>
P057B	Brake Pedal Position Sensor Circuit Range/Performance	<Ref. to HEV(diag)-102, DTC P057B BRAKE PEDAL POSITION SENSOR CIRCUIT RANGE/PERFORMANCE, Diagnostic Procedure with Diagnostic Trouble Code (DTC).>
P057C	Brake Pedal Position Sensor Circuit Low	<Ref. to HEV(diag)-104, DTC P057C BRAKE PEDAL POSITION SENSOR CIRCUIT LOW, Diagnostic Procedure with Diagnostic Trouble Code (DTC).>
P057D	Brake Pedal Position Sensor Circuit High	<Ref. to HEV(diag)-106, DTC P057D BRAKE PEDAL POSITION SENSOR CIRCUIT HIGH, Diagnostic Procedure with Diagnostic Trouble Code (DTC).>
P058D	Battery Monitor Module Voltage Monitoring Performance	<Ref. to HEV(diag)-108, DTC P058D BATTERY MONITOR MODULE VOLTAGE MONITORING PERFORMANCE, Diagnostic Procedure with Diagnostic Trouble Code (DTC).>
P0604	Internal Control Module Random Access Memory (RAM) Error	<Ref. to HEV(diag)-110, HYBRID POWERTRAIN CONTROL SYSTEM, DTC P0604 INTERNAL CONTROL MODULE RANDOM ACCESS MEMORY (RAM) ERROR, Diagnostic Procedure with Diagnostic Trouble Code (DTC).>
P0605	Internal Control Module Read Only Memory (ROM) Error	<Ref. to HEV(diag)-112, HYBRID POWERTRAIN CONTROL SYSTEM, DTC P0605 INTERNAL CONTROL MODULE READ ONLY MEMORY (ROM) ERROR, Diagnostic Procedure with Diagnostic Trouble Code (DTC).>
P0620	Generator Control Circuit	<Ref. to HEV(diag)-114, DTC P0620 GENERATOR CONTROL CIRCUIT, Diagnostic Procedure with Diagnostic Trouble Code (DTC).>
P065A	Generator System Performance	<Ref. to HEV(diag)-116, DTC P065A GENERATOR SYSTEM PERFORMANCE, Diagnostic Procedure with Diagnostic Trouble Code (DTC).>
P06EF	Engine Restart Performance	<Ref. to HEV(diag)-119, DTC P06EF ENGINE RESTART PERFORMANCE, Diagnostic Procedure with Diagnostic Trouble Code (DTC).>
P0719	Brake Switch "B" Circuit Low	<Ref. to HEV(diag)-121, DTC P0719 BRAKE SWITCH "B" CIRCUIT LOW, Diagnostic Procedure with Diagnostic Trouble Code (DTC).>
P0724	Brake Switch "B" Circuit High	<Ref. to HEV(diag)-122, DTC P0724 BRAKE SWITCH "B" CIRCUIT HIGH, Diagnostic Procedure with Diagnostic Trouble Code (DTC).>
P0A1D	Hybrid Powertrain Control Module	<Ref. to HEV(diag)-123, DTC P0A1D HYBRID POWERTRAIN CONTROL MODULE, Diagnostic Procedure with Diagnostic Trouble Code (DTC).>
P1C00	Battery "2" Monitor Module Performance	<Ref. to HEV(diag)-124, DTC P1C00 BATTERY "2" MONITOR MODULE PERFORMANCE, Diagnostic Procedure with Diagnostic Trouble Code (DTC).>
P1C04	Output Clutch Linear Solenoid Control Circuit Low	<Ref. to HEV(diag)-125, DTC P1C04 OUTPUT CLUTCH LINEAR SOLENOID CONTROL CIRCUIT LOW, Diagnostic Procedure with Diagnostic Trouble Code (DTC).>
P1C05	Output Clutch Linear Solenoid Control Circuit High	<Ref. to HEV(diag)-127, DTC P1C05 OUTPUT CLUTCH LINEAR SOLENOID CONTROL CIRCUIT HIGH, Diagnostic Procedure with Diagnostic Trouble Code (DTC).>

DTC	Item	Note
P1C06	12V Battery Relay Close Circuit Performance	<Ref. to HEV(diag)-129, DTC P1C06 12V BATTERY RELAY CLOSE CIRCUIT PERFORMANCE, Diagnostic Procedure with Diagnostic Trouble Code (DTC).>
P1C07	12V Battery Relay Open Circuit Performance	<Ref. to HEV(diag)-131, DTC P1C07 12V BATTERY RELAY OPEN CIRCUIT PERFORMANCE, Diagnostic Procedure with Diagnostic Trouble Code (DTC).>
P1C08	12V Battery Relay Performance or Stuck Off	<Ref. to HEV(diag)-133, DTC P1C08 12V BATTERY RELAY PERFORMANCE OR STUCK OFF, Diagnostic Procedure with Diagnostic Trouble Code (DTC).>
P1C09	12V Battery Relay Performance or Stuck On	<Ref. to HEV(diag)-135, DTC P1C09 12V BATTERY RELAY PERFORMANCE OR STUCK ON, Diagnostic Procedure with Diagnostic Trouble Code (DTC).>
P1C0C	Brake Pedal Position Sensor "2" Circuit Low	<Ref. to HEV(diag)-136, DTC P1C0C BRAKE PEDAL POSITION SENSOR "2" CIRCUIT LOW, Diagnostic Procedure with Diagnostic Trouble Code (DTC).>
P1C0D	Brake Pedal Position Sensor "2" Circuit High	<Ref. to HEV(diag)-138, DTC P1C0D BRAKE PEDAL POSITION SENSOR "2" CIRCUIT HIGH, Diagnostic Procedure with Diagnostic Trouble Code (DTC).>
P1C10	Vacuum Pump Performance	<Ref. to HEV(diag)-140, DTC P1C10 VACUUM PUMP PERFORMANCE, Diagnostic Procedure with Diagnostic Trouble Code (DTC).>
P1C11	Vacuum Pump Supply Voltage Low	<Ref. to HEV(diag)-141, DTC P1C11 VACUUM PUMP SUPPLY VOLTAGE LOW, Diagnostic Procedure with Diagnostic Trouble Code (DTC).>
P1C12	Vacuum Pump Supply Voltage High	<Ref. to HEV(diag)-143, DTC P1C12 VACUUM PUMP SUPPLY VOLTAGE HIGH, Diagnostic Procedure with Diagnostic Trouble Code (DTC).>
P1C14	Generator Performance	<Ref. to HEV(diag)-144, DTC P1C14 GENERATOR PERFORMANCE, Diagnostic Procedure with Diagnostic Trouble Code (DTC).>
P1C16	Idle Control System RPM Lower Than Expected (HPCM)	<Ref. to HEV(diag)-145, DTC P1C16 IDLE CONTROL SYSTEM RPM LOWER THAN EXPECTED (HPCM), Diagnostic Procedure with Diagnostic Trouble Code (DTC).>
P1C17	Idle Control System RPM Higher Than Expected (HPCM)	<Ref. to HEV(diag)-145, DTC P1C17 IDLE CONTROL SYSTEM RPM HIGHER THAN EXPECTED (HPCM), Diagnostic Procedure with Diagnostic Trouble Code (DTC).>
P1C18	Generator System "B" Performance	<Ref. to HEV(diag)-146, DTC P1C18 GENERATOR SYSTEM "B" PERFORMANCE, Diagnostic Procedure with Diagnostic Trouble Code (DTC).>
P1C1E	Autodisconnect Experience	<Ref. to HEV(diag)-148, DTC P1C1E AUTODISCONNECT EXPERIENCE, Diagnostic Procedure with Diagnostic Trouble Code (DTC).>
P2158	Vehicle Speed Sensor "B"	<Ref. to HEV(diag)-148, DTC P2158 VEHICLE SPEED SENSOR "B", Diagnostic Procedure with Diagnostic Trouble Code (DTC).>
U0073	Control Module Communication Bus Off	<Ref. to HEV(diag)-319, DTC U0073 CONTROL MODULE COMMUNICATION BUS OFF, Diagnostic Procedure with Diagnostic Trouble Code (DTC).>
U0075	Control Module Communication Bus "PU-CAN" Off	<Ref. to HEV(diag)-319, DTC U0075 CONTROL MODULE COMMUNICATION BUS "PU-CAN" OFF, Diagnostic Procedure with Diagnostic Trouble Code (DTC).>
U0076	Control Module Communication Bus "HEV-CAN" Off	<Ref. to HEV(diag)-320, DTC U0076 CONTROL MODULE COMMUNICATION BUS "HEV-CAN" OFF, Diagnostic Procedure with Diagnostic Trouble Code (DTC).>
U0100	Lost Communication With ECM/PCM “A”	<Ref. to HEV(diag)-320, DTC U0100 LOST COMMUNICATION WITH ECM/PCM “A”, Diagnostic Procedure with Diagnostic Trouble Code (DTC).>
U0101	Lost Communication With TCM	<Ref. to HEV(diag)-320, DTC U0101 LOST COMMUNICATION WITH TCM, Diagnostic Procedure with Diagnostic Trouble Code (DTC).>
U0110	Lost Communication With Drive Motor Control Module "A"	<Ref. to HEV(diag)-320, DTC U0110 LOST COMMUNICATION WITH DRIVE MOTOR CONTROL MODULE "A", Diagnostic Procedure with Diagnostic Trouble Code (DTC).>
U0111	Lost Communication With Battery Energy Control Module	<Ref. to LAN(HEV)(diag)-136, DTC U0111 LOST COMMUNICATION WITH BATTERY ENERGY CONTROL MODULE, Diagnostic Procedure with Diagnostic Trouble Code (DTC).>
U0122	Lost Communication With Vehicle Dynamics Control Module	<Ref. to HEV(diag)-321, DTC U0122 LOST COMMUNICATION WITH VEHICLE DYNAMICS CONTROL MODULE, Diagnostic Procedure with Diagnostic Trouble Code (DTC).>
U0131	Lost Communication With Power Steering Control Module	<Ref. to HEV(diag)-321, DTC U0131 LOST COMMUNICATION WITH POWER STEERING CONTROL MODULE, Diagnostic Procedure with Diagnostic Trouble Code (DTC).>

DTC	Item	Note
U0140	Lost Communication With Body Control Module	<Ref. to HEV(diag)-321, DTC U0140 LOST COMMUNICATION WITH BODY CONTROL MODULE, Diagnostic Procedure with Diagnostic Trouble Code (DTC).>
U0151	Lost Communication With Restraints Control Module	<Ref. to HEV(diag)-322, DTC U0151 LOST COMMUNICATION WITH RESTRAINTS CONTROL MODULE, Diagnostic Procedure with Diagnostic Trouble Code (DTC).>
U0155	Lost Communication With Instrument Panel Cluster (IPC) Control Module	<Ref. to HEV(diag)-322, DTC U0155 LOST COMMUNICATION WITH INSTRUMENT PANEL CLUSTER (IPC) CONTROL MODULE, Diagnostic Procedure with Diagnostic Trouble Code (DTC).>
U0164	Lost Communication With HVAC Control Module	<Ref. to HEV(diag)-322, DTC U0164 LOST COMMUNICATION WITH HVAC CONTROL MODULE, Diagnostic Procedure with Diagnostic Trouble Code (DTC).>
U0287	Lost Communication With Transmission Fluid Pump Module	<Ref. to HEV(diag)-322, DTC U0287 LOST COMMUNICATION WITH TRANSMISSION FLUID PUMP MODULE, Diagnostic Procedure with Diagnostic Trouble Code (DTC).>
U0401	Invalid Data Received From ECM/PCM “A”	<Ref. to HEV(diag)-323, DTC U0401 INVALID DATA RECEIVED FROM ECM/PCM “A”, Diagnostic Procedure with Diagnostic Trouble Code (DTC).>
U0402	Invalid Data Received From TCM	<Ref. to HEV(diag)-323, DTC U0402 INVALID DATA RECEIVED FROM TCM, Diagnostic Procedure with Diagnostic Trouble Code (DTC).>
U0411	Invalid Data Received From Drive Motor Control Module "A"	<Ref. to HEV(diag)-323, DTC U0411 INVALID DATA RECEIVED FROM DRIVE MOTOR CONTROL MODULE "A", Diagnostic Procedure with Diagnostic Trouble Code (DTC).>
U0412	Invalid Data Received From Battery Energy Control Module	<Ref. to HEV(diag)-323, DTC U0412 INVALID DATA RECEIVED FROM BATTERY ENERGY CONTROL MODULE, Diagnostic Procedure with Diagnostic Trouble Code (DTC).>
U0416	Invalid Data Received From Vehicle Dynamics Control Module	<Ref. to HEV(diag)-324, DTC U0416 INVALID DATA RECEIVED FROM VEHICLE DYNAMICS CONTROL MODULE, Diagnostic Procedure with Diagnostic Trouble Code (DTC).>
U0420	Invalid Data Received From Power Steering Control Module	<Ref. to HEV(diag)-324, DTC U0420 INVALID DATA RECEIVED FROM POWER STEERING CONTROL MODULE, Diagnostic Procedure with Diagnostic Trouble Code (DTC).>
U0422	Invalid Data Received From Body Control Module	<Ref. to HEV(diag)-324, DTC U0422 INVALID DATA RECEIVED FROM BODY CONTROL MODULE, Diagnostic Procedure with Diagnostic Trouble Code (DTC).>
U0423	Invalid Data Received From Instrument Panel Cluster Control Module	<Ref. to HEV(diag)-324, DTC U0423 INVALID DATA RECEIVED FROM INSTRUMENT PANEL CLUSTER CONTROL MODULE, Diagnostic Procedure with Diagnostic Trouble Code (DTC).>
U0424	Invalid Data Received From HVAC Control Module	<Ref. to HEV(diag)-324, DTC U0424 INVALID DATA RECEIVED FROM HVAC CONTROL MODULE, Diagnostic Procedure with Diagnostic Trouble Code (DTC).>
U0452	Invalid Data Received From Restraints Control Module	<Ref. to HEV(diag)-325, DTC U0452 INVALID DATA RECEIVED FROM RESTRAINTS CONTROL MODULE, Diagnostic Procedure with Diagnostic Trouble Code (DTC).>
U0588	Invalid Data Received From Transmission Fluid Pump Module	<Ref. to HEV(diag)-325, DTC U0588 INVALID DATA RECEIVED FROM TRANSMISSION FLUID PUMP MODULE, Diagnostic Procedure with Diagnostic Trouble Code (DTC).>
U1100	Lost Communication With ECM/PCM PU-CAN	<Ref. to HEV(diag)-325, DTC U1100 LOST COMMUNICATION WITH ECM/PCM PU-CAN, Diagnostic Procedure with Diagnostic Trouble Code (DTC).>
U1101	Lost Communication With TCM PU-CAN	<Ref. to HEV(diag)-325, DTC U1101 LOST COMMUNICATION WITH TCM PU-CAN, Diagnostic Procedure with Diagnostic Trouble Code (DTC).>
U1401	Invalid Data Received From ECM/PCM PU-CAN	<Ref. to HEV(diag)-326, DTC U1401 INVALID DATA RECEIVED FROM ECM/PCM PU-CAN, Diagnostic Procedure with Diagnostic Trouble Code (DTC).>
U1402	Invalid Data Received From TCM PU-CAN	<Ref. to HEV(diag)-326, DTC U1402 INVALID DATA RECEIVED FROM TCM PU-CAN, Diagnostic Procedure with Diagnostic Trouble Code (DTC).>
U1676	LIN Communication Bus Error Hybrid Powertrain Control Module	<Ref. to HEV(diag)-327, DTC U1676 LIN COMMUNICATION BUS ERROR HYBRID POWERTRAIN CONTROL MODULE, Diagnostic Procedure with Diagnostic Trouble Code (DTC).>
U1711	Lost Communication With Battery "2" Monitor Module	<Ref. to HEV(diag)-329, DTC U1711 LOST COMMUNICATION WITH BATTERY "2" MONITOR MODULE, Diagnostic Procedure with Diagnostic Trouble Code (DTC).>

DTC	Item	Note
U1720	Lost Communication With Integrated Starter Generator	<Ref. to HEV(diag)-331, DTC U1720 LOST COMMUNICATION WITH INTEGRATED STARTER GENERATOR, Diagnostic Procedure with Diagnostic Trouble Code (DTC).>

2. DRIVE MOTOR CONTROL SYSTEM

DTC	Item	Note
P0A2A	Drive Motor "A" Temperature Sensor Circuit	<Ref. to HEV(diag)-149, DTC P0A2A DRIVE MOTOR "A" TEMPERATURE SENSOR CIRCUIT, Diagnostic Procedure with Diagnostic Trouble Code (DTC).>
P0A2C	Drive Motor "A" Temperature Sensor Circuit Low	<Ref. to HEV(diag)-153, DTC P0A2C DRIVE MOTOR "A" TEMPERATURE SENSOR CIRCUIT LOW, Diagnostic Procedure with Diagnostic Trouble Code (DTC).>
P0A2D	Drive Motor "A" Temperature Sensor Circuit High	<Ref. to HEV(diag)-157, DTC P0A2D DRIVE MOTOR "A" TEMPERATURE SENSOR CIRCUIT HIGH, Diagnostic Procedure with Diagnostic Trouble Code (DTC).>
P0A3C	Drive Motor "A" Inverter Over Temperature	<Ref. to HEV(diag)-159, DTC P0A3C DRIVE MOTOR "A" INVERTER OVER TEMPERATURE, Diagnostic Procedure with Diagnostic Trouble Code (DTC).>
P0A3F	Drive Motor "A" Position Sensor Circuit	<Ref. to HEV(diag)-160, DTC P0A3F DRIVE MOTOR "A" POSITION SENSOR CIRCUIT, Diagnostic Procedure with Diagnostic Trouble Code (DTC).>
P0A40	Drive Motor "A" Position Sensor Circuit Range/Performance	<Ref. to HEV(diag)-163, DTC P0A40 DRIVE MOTOR "A" POSITION SENSOR CIRCUIT RANGE/PERFORMANCE, Diagnostic Procedure with Diagnostic Trouble Code (DTC).>
P0A43	Drive Motor "A" Position Sensor Circuit Intermittent	<Ref. to HEV(diag)-164, DTC P0A43 DRIVE MOTOR "A" POSITION SENSOR CIRCUIT INTERMITTENT, Diagnostic Procedure with Diagnostic Trouble Code (DTC).>
P0A44	Drive Motor "A" Position Sensor Circuit Overspeed	<Ref. to HEV(diag)-168, DTC P0A44 DRIVE MOTOR "A" POSITION SENSOR CIRCUIT OVERSPEED, Diagnostic Procedure with Diagnostic Trouble Code (DTC).>
P0C52	Drive Motor "A" Position Sensor Circuit "A" Low	<Ref. to HEV(diag)-171, DTC P0C52 DRIVE MOTOR "A" POSITION SENSOR CIRCUIT "A" LOW, Diagnostic Procedure with Diagnostic Trouble Code (DTC).>
P0C5C	Drive Motor "A" Position Sensor Circuit "B" Low	<Ref. to HEV(diag)-171, DTC P0C5C DRIVE MOTOR "A" POSITION SENSOR CIRCUIT "B" LOW, Diagnostic Procedure with Diagnostic Trouble Code (DTC).>
P0CDC	Drive Motor "A" Position Sensor Circuit "C" Low	<Ref. to HEV(diag)-171, DTC P0CDC DRIVE MOTOR "A" POSITION SENSOR CIRCUIT "C" LOW, Diagnostic Procedure with Diagnostic Trouble Code (DTC).>
P0CDD	Drive Motor "A" Position Sensor Circuit "C" High	<Ref. to HEV(diag)-171, DTC P0CDD DRIVE MOTOR "A" POSITION SENSOR CIRCUIT "C" HIGH, Diagnostic Procedure with Diagnostic Trouble Code (DTC).>
P0A5D	Drive Motor "A" Phase U Current	<Ref. to HEV(diag)-172, DTC P0A5D DRIVE MOTOR "A" PHASE U CURRENT, Diagnostic Procedure with Diagnostic Trouble Code (DTC).>
P0A60	Drive Motor "A" Phase V Current	<Ref. to HEV(diag)-181, DTC P0A60 DRIVE MOTOR "A" PHASE V CURRENT, Diagnostic Procedure with Diagnostic Trouble Code (DTC).>
P0A63	Drive Motor "A" Phase W Current	<Ref. to HEV(diag)-190, DTC P0A63 DRIVE MOTOR "A" PHASE W CURRENT, Diagnostic Procedure with Diagnostic Trouble Code (DTC).>
P0A78	Drive Motor "A" Inverter Performance	<Ref. to HEV(diag)-199, DTC P0A78 DRIVE MOTOR "A" INVERTER PERFORMANCE, Diagnostic Procedure with Diagnostic Trouble Code (DTC).>
P0A82	Hybrid/Ev Battery Pack Cooling Fan 1 Performance/Stuck Off	<Ref. to HEV(diag)-210, DTC P0A82 HYBRID/EV BATTERY PACK COOLING FAN 1 PERFORMANCE/STUCK OFF, Diagnostic Procedure with Diagnostic Trouble Code (DTC).>
P0A83	Hybrid/Ev Battery Pack Cooling Fan 1 Stuck On	<Ref. to HEV(diag)-212, DTC P0A83 HYBRID/EV BATTERY PACK COOLING FAN 1 STUCK ON, Diagnostic Procedure with Diagnostic Trouble Code (DTC).>
P0A90	Drive Motor "A" Performance	<Ref. to HEV(diag)-214, DTC P0A90 DRIVE MOTOR "A" PERFORMANCE, Diagnostic Procedure with Diagnostic Trouble Code (DTC).>
P0A94	DC/DC Converter Performance	<Ref. to HEV(diag)-220, DTC P0A94 DC/DC CONVERTER PERFORMANCE, Diagnostic Procedure with Diagnostic Trouble Code (DTC).>
P0AED	Drive Motor Inverter Temperature Sensor "A" Circuit	<Ref. to HEV(diag)-222, DTC P0AED DRIVE MOTOR INVERTER TEMPERATURE SENSOR "A" CIRCUIT, Diagnostic Procedure with Diagnostic Trouble Code (DTC).>
P0AEE	Drive Motor Inverter Temperature Sensor "A" Circuit Range/Performance	<Ref. to HEV(diag)-223, DTC P0AEE DRIVE MOTOR INVERTER TEMPERATURE SENSOR "A" CIRCUIT RANGE/PERFORMANCE, Diagnostic Procedure with Diagnostic Trouble Code (DTC).>
P0AF2	Drive Motor Inverter Temperature Sensor "B" Circuit	<Ref. to HEV(diag)-224, DTC P0AF2 DRIVE MOTOR INVERTER TEMPERATURE SENSOR "B" CIRCUIT, Diagnostic Procedure with Diagnostic Trouble Code (DTC).>

DTC	Item	Note
P0AF3	Drive Motor Inverter Temperature Sensor "B" Circuit Range/Performance	<Ref. to HEV(diag)-224, DTC P0AF3 DRIVE MOTOR INVERTER TEMPERATURE SENSOR "B" CIRCUIT RANGE/PERFORMANCE, Diagnostic Procedure with Diagnostic Trouble Code (DTC).>
P0BD1	Drive Motor Inverter Temperature Sensor "C" Circuit	<Ref. to HEV(diag)-225, DTC P0BD1 DRIVE MOTOR INVERTER TEMPERATURE SENSOR "C" CIRCUIT, Diagnostic Procedure with Diagnostic Trouble Code (DTC).>
P0BD2	Drive Motor Inverter Temperature Sensor "C" Circuit Range/Performance	<Ref. to HEV(diag)-225, DTC P0BD2 DRIVE MOTOR INVERTER TEMPERATURE SENSOR "C" CIRCUIT RANGE/PERFORMANCE, Diagnostic Procedure with Diagnostic Trouble Code (DTC).>
P0BE6	Drive Motor "A" Phase U Current Sensor Circuit Range/Performance	<Ref. to HEV(diag)-226, DTC P0BE6 DRIVE MOTOR "A" PHASE U CURRENT SENSOR CIRCUIT RANGE/PERFORMANCE, Diagnostic Procedure with Diagnostic Trouble Code (DTC).>
P0BE7	Drive Motor "A" Phase U Current Sensor Circuit Low	<Ref. to HEV(diag)-229, DTC P0BE7 DRIVE MOTOR "A" PHASE U CURRENT SENSOR CIRCUIT LOW, Diagnostic Procedure with Diagnostic Trouble Code (DTC).>
P0BE8	Drive Motor "A" Phase U Current Sensor Circuit High	<Ref. to HEV(diag)-232, DTC P0BE8 DRIVE MOTOR "A" PHASE U CURRENT SENSOR CIRCUIT HIGH, Diagnostic Procedure with Diagnostic Trouble Code (DTC).>
P0BEA	Drive Motor "A" Phase V Current Sensor Circuit Range/Performance	<Ref. to HEV(diag)-234, DTC P0BEA DRIVE MOTOR "A" PHASE V CURRENT SENSOR CIRCUIT RANGE/PERFORMANCE, Diagnostic Procedure with Diagnostic Trouble Code (DTC).>
P0BEB	Drive Motor "A" Phase V Current Sensor Circuit Low	<Ref. to HEV(diag)-234, DTC P0BEB DRIVE MOTOR "A" PHASE V CURRENT SENSOR CIRCUIT LOW, Diagnostic Procedure with Diagnostic Trouble Code (DTC).>
P0BEC	Drive Motor "A" Phase V Current Sensor Circuit High	<Ref. to HEV(diag)-234, DTC P0BEC DRIVE MOTOR "A" PHASE V CURRENT SENSOR CIRCUIT HIGH, Diagnostic Procedure with Diagnostic Trouble Code (DTC).>
P0BEE	Drive Motor "A" Phase W Current Sensor Circuit Range/Performance	<Ref. to HEV(diag)-234, DTC P0BEE DRIVE MOTOR "A" PHASE W CURRENT SENSOR CIRCUIT RANGE/PERFORMANCE, Diagnostic Procedure with Diagnostic Trouble Code (DTC).>
P0BEF	Drive Motor "A" Phase W Current Sensor Circuit Low	<Ref. to HEV(diag)-235, DTC P0BEF DRIVE MOTOR "A" PHASE W CURRENT SENSOR CIRCUIT LOW, Diagnostic Procedure with Diagnostic Trouble Code (DTC).>
P0BF0	Drive Motor "A" Phase W Current Sensor Circuit High	<Ref. to HEV(diag)-235, DTC P0BF0 DRIVE MOTOR "A" PHASE W CURRENT SENSOR CIRCUIT HIGH, Diagnostic Procedure with Diagnostic Trouble Code (DTC).>
P0BFD	Drive Motor "A" Phase U-V-W Current Sensor Correlation	<Ref. to HEV(diag)-236, DTC P0BFD DRIVE MOTOR "A" PHASE U-V-W CURRENT SENSOR CORRELATION, Diagnostic Procedure with Diagnostic Trouble Code (DTC).>
P0C05	Drive Motor "A" Phase U-V-W Circuit/Open	<Ref. to HEV(diag)-239, DTC P0C05 DRIVE MOTOR "A" PHASE U-V-W CIRCUIT/OPEN, Diagnostic Procedure with Diagnostic Trouble Code (DTC).>
P0C0C	Drive Motor "A" Inverter Power Supply Circuit Low	<Ref. to HEV(diag)-242, DTC P0C0C DRIVE MOTOR "A" INVERTER POWER SUPPLY CIRCUIT LOW, Diagnostic Procedure with Diagnostic Trouble Code (DTC).>
P0C0D	Drive Motor "A" Inverter Power Supply Circuit High	<Ref. to HEV(diag)-244, DTC P0C0D DRIVE MOTOR "A" INVERTER POWER SUPPLY CIRCUIT HIGH, Diagnostic Procedure with Diagnostic Trouble Code (DTC).>
P0C79	Drive Motor "A" Inverter Voltage Too High	<Ref. to HEV(diag)-246, DTC P0C79 DRIVE MOTOR "A" INVERTER VOLTAGE TOO HIGH, Diagnostic Procedure with Diagnostic Trouble Code (DTC).>
P0DA8	Hybrid/Ev Battery Voltage/Drive Motor "A" Inverter Voltage Correlation	<Ref. to HEV(diag)-247, DTC P0DA8 HYBRID/EV BATTERY VOLTAGE/DRIVE MOTOR "A" INVERTER VOLTAGE CORRELATION, Diagnostic Procedure with Diagnostic Trouble Code (DTC).>
P1C20	Manufacturer Controlled DTC	<Ref. to HEV(diag)-249, DTC P1C20 MANUFACTURER CONTROLLED DTC, Diagnostic Procedure with Diagnostic Trouble Code (DTC).>
P1C22	Manufacturer Controlled DTC	<Ref. to HEV(diag)-252, DTC P1C22 MANUFACTURER CONTROLLED DTC, Diagnostic Procedure with Diagnostic Trouble Code (DTC).>
P1C24	Manufacturer Controlled DTC	<Ref. to HEV(diag)-254, DTC P1C24 MANUFACTURER CONTROLLED DTC, Diagnostic Procedure with Diagnostic Trouble Code (DTC).>
P1C25	Manufacturer Controlled DTC	<Ref. to HEV(diag)-254, DTC P1C25 MANUFACTURER CONTROLLED DTC, Diagnostic Procedure with Diagnostic Trouble Code (DTC).>
P1C26	Manufacturer Controlled DTC	<Ref. to HEV(diag)-254, DTC P1C26 MANUFACTURER CONTROLLED DTC, Diagnostic Procedure with Diagnostic Trouble Code (DTC).>
P1C27	Manufacturer Controlled DTC	<Ref. to HEV(diag)-255, DTC P1C27 MANUFACTURER CONTROLLED DTC, Diagnostic Procedure with Diagnostic Trouble Code (DTC).>

DTC	Item	Note
P1C2A	Manufacturer Controlled DTC	<Ref. to HEV(diag)-257, DTC P1C2A MANUFACTURER CONTROLLED DTC, Diagnostic Procedure with Diagnostic Trouble Code (DTC).>
P1C30	Manufacturer Controlled DTC	<Ref. to HEV(diag)-258, DTC P1C30 MANUFACTURER CONTROLLED DTC, Diagnostic Procedure with Diagnostic Trouble Code (DTC).>
P1C31	Manufacturer Controlled DTC	<Ref. to HEV(diag)-261, DTC P1C31 MANUFACTURER CONTROLLED DTC, Diagnostic Procedure with Diagnostic Trouble Code (DTC).>
P1C34	Manufacturer Controlled DTC	<Ref. to HEV(diag)-263, DTC P1C34 MANUFACTURER CONTROLLED DTC, Diagnostic Procedure with Diagnostic Trouble Code (DTC).>
P1C35	Manufacturer Controlled DTC	<Ref. to HEV(diag)-265, DTC P1C35 MANUFACTURER CONTROLLED DTC, Diagnostic Procedure with Diagnostic Trouble Code (DTC).>
P0604	Internal Control Module Random Access Memory (RAM) Error	<Ref. to HEV(diag)-110, DRIVE MOTOR CONTROL SYSTEM, DTC P0604 INTERNAL CONTROL MODULE RANDOM ACCESS MEMORY (RAM) ERROR, Diagnostic Procedure with Diagnostic Trouble Code (DTC).>
P0605	Internal Control Module Read Only Memory (ROM) Error	<Ref. to HEV(diag)-112, DRIVE MOTOR CONTROL SYSTEM, DTC P0605 INTERNAL CONTROL MODULE READ ONLY MEMORY (ROM) ERROR, Diagnostic Procedure with Diagnostic Trouble Code (DTC).>
P0A1B	Drive Motor "A" Control Module	<Ref. to HEV(diag)-267, DTC P0A1B DRIVE MOTOR "A" CONTROL MODULE, Diagnostic Procedure with Diagnostic Trouble Code (DTC).>
P06B1	Sensor Power Supply "A" Circuit Low	<Ref. to HEV(diag)-268, DTC P06B1 SENSOR POWER SUPPLY "A" CIRCUIT LOW, Diagnostic Procedure with Diagnostic Trouble Code (DTC).>
P06B2	Sensor Power Supply "A" Circuit High	<Ref. to HEV(diag)-270, DTC P06B2 SENSOR POWER SUPPLY "A" CIRCUIT HIGH, Diagnostic Procedure with Diagnostic Trouble Code (DTC).>
U0076	Control Module Communication Bus "HEV-CAN" Off	<Ref. to HEV(diag)-320, DTC U0076 CONTROL MODULE COMMUNICATION BUS "HEV-CAN" OFF, Diagnostic Procedure with Diagnostic Trouble Code (DTC).>
U0111	Lost Communication With Battery Energy Control Module	<Ref. to HEV(diag)-321, DTC U0111 LOST COMMUNICATION WITH BATTERY ENERGY CONTROL MODULE, Diagnostic Procedure with Diagnostic Trouble Code (DTC).>
U0412	Invalid Data Received From Battery Energy Control Module	<Ref. to HEV(diag)-323, DTC U0412 INVALID DATA RECEIVED FROM BATTERY ENERGY CONTROL MODULE, Diagnostic Procedure with Diagnostic Trouble Code (DTC).>
U1290	Lost Communication With Hybrid Powertrain Control Module HEV-CAN	<Ref. to HEV(diag)-326, DTC U1290 LOST COMMUNICATION WITH HYBRID POWERTRAIN CONTROL MODULE HEV-CAN, Diagnostic Procedure with Diagnostic Trouble Code (DTC).>
U1591	Invalid Data Received From Hybrid Powertrain Control Module HEV-CAN	<Ref. to HEV(diag)-326, DTC U1591 INVALID DATA RECEIVED FROM HYBRID POWERTRAIN CONTROL MODULE HEV-CAN, Diagnostic Procedure with Diagnostic Trouble Code (DTC).>

3. BATTERY ENERGY CONTROL SYSTEM

DTC	Item	Note
P0604	Internal Control Module Random Access Memory (RAM) Error	<Ref. to HEV(diag)-111, BATTERY ENERGY CONTROL SYSTEM, DTC P0604 INTERNAL CONTROL MODULE RANDOM ACCESS MEMORY (RAM) ERROR, Diagnostic Procedure with Diagnostic Trouble Code (DTC).>
P0605	Internal Control Module Read Only Memory (ROM) Error	<Ref. to HEV(diag)-113, BATTERY ENERGY CONTROL SYSTEM, DTC P0605 INTERNAL CONTROL MODULE READ ONLY MEMORY (ROM) ERROR, Diagnostic Procedure with Diagnostic Trouble Code (DTC).>
P062F	Internal Control Module EEPROM Error	<Ref. to HEV(diag)-272, DTC P062F INTERNAL CONTROL MODULE EEPROM ERROR, Diagnostic Procedure with Diagnostic Trouble Code (DTC).>
P0A1F	Battery Energy Control Module	<Ref. to HEV(diag)-273, DTC P0A1F BATTERY ENERGY CONTROL MODULE, Diagnostic Procedure with Diagnostic Trouble Code (DTC).>
P0A7D	Hybrid Battery Pack State of Charge Low	<Ref. to HEV(diag)-274, DTC P0A7D HYBRID BATTERY PACK STATE OF CHARGE LOW, Diagnostic Procedure with Diagnostic Trouble Code (DTC).>
P0A7E	Hybrid Battery Pack Over Temperature	<Ref. to HEV(diag)-275, DTC P0A7E HYBRID BATTERY PACK OVER TEMPERATURE, Diagnostic Procedure with Diagnostic Trouble Code (DTC).>
P0A7F	Hybrid Battery Pack Deterioration	<Ref. to HEV(diag)-277, DTC P0A7F HYBRID BATTERY PACK DETERIORATION, Diagnostic Procedure with Diagnostic Trouble Code (DTC).>

DTC	Item	Note
P0A95	High Voltage Fuse	<Ref. to HEV(diag)-278, DTC P0A95 HIGH VOLTAGE FUSE, Diagnostic Procedure with Diagnostic Trouble Code (DTC).>
P0A9C	Hybrid Battery Temperature Sensor "A" Circuit Range/Performance	<Ref. to HEV(diag)-279, DTC P0A9C HYBRID BATTERY TEMPERATURE SENSOR "A" CIRCUIT RANGE/PERFORMANCE, Diagnostic Procedure with Diagnostic Trouble Code (DTC).>
P0A9D	Hybrid Battery Temperature Sensor "A" Circuit Low	<Ref. to HEV(diag)-279, DTC P0A9D HYBRID BATTERY TEMPERATURE SENSOR "A" CIRCUIT LOW, Diagnostic Procedure with Diagnostic Trouble Code (DTC).>
P0A9E	Hybrid Battery Temperature Sensor "A" Circuit High	<Ref. to HEV(diag)-279, DTC P0A9E HYBRID BATTERY TEMPERATURE SENSOR "A" CIRCUIT HIGH, Diagnostic Procedure with Diagnostic Trouble Code (DTC).>
P0AA4	Hybrid Battery Negative Contactor Circuit Stuck Closed	<Ref. to HEV(diag)-280, DTC P0AA4 HYBRID BATTERY NEGATIVE CONTACTOR CIRCUIT STUCK CLOSED, Diagnostic Procedure with Diagnostic Trouble Code (DTC).>
P0AA6	Hybrid Battery Voltage System Isolation Fault	<Ref. to HEV(diag)-281, DTC P0AA6 HYBRID BATTERY VOLTAGE SYSTEM ISOLATION FAULT, Diagnostic Procedure with Diagnostic Trouble Code (DTC).>
P0AA7	Hybrid Battery Voltage System Isolation Sensor Circuit	<Ref. to HEV(diag)-285, DTC P0AA7 HYBRID BATTERY VOLTAGE SYSTEM ISOLATION SENSOR CIRCUIT, Diagnostic Procedure with Diagnostic Trouble Code (DTC).>
P0AAD	Hybrid Battery Pack Air Temperature Sensor "A" Circuit Range/Performance	<Ref. to HEV(diag)-285, DTC P0AAD HYBRID BATTERY PACK AIR TEMPERATURE SENSOR "A" CIRCUIT RANGE/PERFORMANCE, Diagnostic Procedure with Diagnostic Trouble Code (DTC).>
P0AAE	Hybrid Battery Pack Air Temperature Sensor "A" Circuit Low	<Ref. to HEV(diag)-285, DTC P0AAE HYBRID BATTERY PACK AIR TEMPERATURE SENSOR "A" CIRCUIT LOW, Diagnostic Procedure with Diagnostic Trouble Code (DTC).>
P0AAF	Hybrid Battery Pack Air Temperature Sensor "A" Circuit High	<Ref. to HEV(diag)-285, DTC P0AAF HYBRID BATTERY PACK AIR TEMPERATURE SENSOR "A" CIRCUIT HIGH, Diagnostic Procedure with Diagnostic Trouble Code (DTC).>
P0ABF	Hybrid Battery Pack Current Sensor "A" Circuit	<Ref. to HEV(diag)-286, DTC P0ABF HYBRID BATTERY PACK CURRENT SENSOR "A" CIRCUIT, Diagnostic Procedure with Diagnostic Trouble Code (DTC).>
P0AC0	Hybrid Battery Pack Current Sensor "A" Circuit Range/Performance	<Ref. to HEV(diag)-286, DTC P0AC0 HYBRID BATTERY PACK CURRENT SENSOR "A" CIRCUIT RANGE/PERFORMANCE, Diagnostic Procedure with Diagnostic Trouble Code (DTC).>
P0AC1	Hybrid Battery Pack Current Sensor "A" Circuit Low	<Ref. to HEV(diag)-286, DTC P0AC1 HYBRID BATTERY PACK CURRENT SENSOR "A" CIRCUIT LOW, Diagnostic Procedure with Diagnostic Trouble Code (DTC).>
P0AC2	Hybrid Battery Pack Current Sensor "A" Circuit High	<Ref. to HEV(diag)-286, DTC P0AC2 HYBRID BATTERY PACK CURRENT SENSOR "A" CIRCUIT HIGH, Diagnostic Procedure with Diagnostic Trouble Code (DTC).>
P0AC3	Hybrid Battery Pack Current Sensor "A" Circuit Intermittent/Erratic	<Ref. to HEV(diag)-287, DTC P0AC3 HYBRID BATTERY PACK CURRENT SENSOR "A" CIRCUIT INTERMITTENT/ERRATIC, Diagnostic Procedure with Diagnostic Trouble Code (DTC).>
P0AC6	Hybrid Battery Temperature Sensor "B" Circuit Range/Performance	<Ref. to HEV(diag)-288, DTC P0AC6 HYBRID BATTERY TEMPERATURE SENSOR "B" CIRCUIT RANGE/PERFORMANCE, Diagnostic Procedure with Diagnostic Trouble Code (DTC).>
P0AC7	Hybrid Battery Temperature Sensor "B" Circuit Low	<Ref. to HEV(diag)-288, DTC P0AC7 HYBRID BATTERY TEMPERATURE SENSOR "B" CIRCUIT LOW, Diagnostic Procedure with Diagnostic Trouble Code (DTC).>
P0AC8	Hybrid Battery Temperature Sensor "B" Circuit High	<Ref. to HEV(diag)-288, DTC P0AC8 HYBRID BATTERY TEMPERATURE SENSOR "B" CIRCUIT HIGH, Diagnostic Procedure with Diagnostic Trouble Code (DTC).>
P0ACB	Hybrid Battery Temperature Sensor "C" Circuit Range/Performance	<Ref. to HEV(diag)-288, DTC P0ACB HYBRID BATTERY TEMPERATURE SENSOR "C" CIRCUIT RANGE/PERFORMANCE, Diagnostic Procedure with Diagnostic Trouble Code (DTC).>
P0ACC	Hybrid Battery Temperature Sensor "C" Circuit Low	<Ref. to HEV(diag)-289, DTC P0ACC HYBRID BATTERY TEMPERATURE SENSOR "C" CIRCUIT LOW, Diagnostic Procedure with Diagnostic Trouble Code (DTC).>
P0ACD	Hybrid Battery Temperature Sensor "C" Circuit High	<Ref. to HEV(diag)-289, DTC P0ACD HYBRID BATTERY TEMPERATURE SENSOR "C" CIRCUIT HIGH, Diagnostic Procedure with Diagnostic Trouble Code (DTC).>

DTC	Item	Note
P0AD9	Hybrid Battery Positive Contactor Control Circuit/Open	<Ref. to HEV(diag)-289, DTC P0AD9 HYBRID BATTERY POSITIVE CONTACTOR CONTROL CIRCUIT/OPEN, Diagnostic Procedure with Diagnostic Trouble Code (DTC).>
P0ADB	Hybrid Battery Positive Contactor Control Circuit Low	<Ref. to HEV(diag)-289, DTC P0ADB HYBRID BATTERY POSITIVE CONTACTOR CONTROL CIRCUIT LOW, Diagnostic Procedure with Diagnostic Trouble Code (DTC).>
P0ADD	Hybrid Battery Negative Contactor Control Circuit/Open	<Ref. to HEV(diag)-290, DTC P0ADD HYBRID BATTERY NEGATIVE CONTACTOR CONTROL CIRCUIT/OPEN, Diagnostic Procedure with Diagnostic Trouble Code (DTC).>
P0ADF	Hybrid Battery Negative Contactor Control Circuit Low	<Ref. to HEV(diag)-290, DTC P0ADF HYBRID BATTERY NEGATIVE CONTACTOR CONTROL CIRCUIT LOW, Diagnostic Procedure with Diagnostic Trouble Code (DTC).>
P0AE4	Hybrid Battery Precharge Contactor Control Circuit	<Ref. to HEV(diag)-290, DTC P0AE4 HYBRID BATTERY PRECHARGE CONTACTOR CONTROL CIRCUIT, Diagnostic Procedure with Diagnostic Trouble Code (DTC).>
P0AE6	Hybrid Battery Precharge Contactor Control Circuit Low	<Ref. to HEV(diag)-290, DTC P0AE6 HYBRID BATTERY PRECHARGE CONTACTOR CONTROL CIRCUIT LOW, Diagnostic Procedure with Diagnostic Trouble Code (DTC).>
P0B25	Hybrid Battery "A" Voltage Low	<Ref. to HEV(diag)-291, DTC P0B25 HYBRID BATTERY "A" VOLTAGE LOW, Diagnostic Procedure with Diagnostic Trouble Code (DTC).>
P0B26	Hybrid Battery "A" Voltage High	<Ref. to HEV(diag)-293, DTC P0B26 HYBRID BATTERY "A" VOLTAGE HIGH, Diagnostic Procedure with Diagnostic Trouble Code (DTC).>
P0B37	High Voltage Service Disconnect Open	<Ref. to HEV(diag)-295, DTC P0B37 HIGH VOLTAGE SERVICE DISCONNECT OPEN, Diagnostic Procedure with Diagnostic Trouble Code (DTC).>
P0B3C	Hybrid Battery Voltage Sense "A" Circuit Range/Performance	<Ref. to HEV(diag)-296, DTC P0B3C HYBRID BATTERY VOLTAGE SENSE "A" CIRCUIT RANGE/PERFORMANCE, Diagnostic Procedure with Diagnostic Trouble Code (DTC).>
P0B3D	Hybrid Battery Voltage Sense "A" Circuit Low	<Ref. to HEV(diag)-296, DTC P0B3D HYBRID BATTERY VOLTAGE SENSE "A" CIRCUIT LOW, Diagnostic Procedure with Diagnostic Trouble Code (DTC).>
P0B3E	Hybrid Battery Voltage Sense "A" Circuit High	<Ref. to HEV(diag)-296, DTC P0B3E HYBRID BATTERY VOLTAGE SENSE "A" CIRCUIT HIGH, Diagnostic Procedure with Diagnostic Trouble Code (DTC).>
P0B41	Hybrid Battery Voltage Sense "B" Circuit Range/Performance	<Ref. to HEV(diag)-297, DTC P0B41 HYBRID BATTERY VOLTAGE SENSE "B" CIRCUIT RANGE/PERFORMANCE, Diagnostic Procedure with Diagnostic Trouble Code (DTC).>
P0B42	Hybrid Battery Voltage Sense "B" Circuit Low	<Ref. to HEV(diag)-297, DTC P0B42 HYBRID BATTERY VOLTAGE SENSE "B" CIRCUIT LOW, Diagnostic Procedure with Diagnostic Trouble Code (DTC).>
P0B43	Hybrid Battery Voltage Sense "B" Circuit High	<Ref. to HEV(diag)-297, DTC P0B43 HYBRID BATTERY VOLTAGE SENSE "B" CIRCUIT HIGH, Diagnostic Procedure with Diagnostic Trouble Code (DTC).>
P0B46	Hybrid Battery Voltage Sense "C" Circuit Range/Performance	<Ref. to HEV(diag)-297, DTC P0B46 HYBRID BATTERY VOLTAGE SENSE "C" CIRCUIT RANGE/PERFORMANCE, Diagnostic Procedure with Diagnostic Trouble Code (DTC).>
P0B47	Hybrid Battery Voltage Sense "C" Circuit Low	<Ref. to HEV(diag)-298, DTC P0B47 HYBRID BATTERY VOLTAGE SENSE "C" CIRCUIT LOW, Diagnostic Procedure with Diagnostic Trouble Code (DTC).>
P0B48	Hybrid Battery Voltage Sense "C" Circuit High	<Ref. to HEV(diag)-298, DTC P0B48 HYBRID BATTERY VOLTAGE SENSE "C" CIRCUIT HIGH, Diagnostic Procedure with Diagnostic Trouble Code (DTC).>
P0B4A	Hybrid Battery Voltage Sense "D" Circuit	<Ref. to HEV(diag)-298, DTC P0B4A HYBRID BATTERY VOLTAGE SENSE "D" CIRCUIT, Diagnostic Procedure with Diagnostic Trouble Code (DTC).>
P0B4B	Hybrid Battery Voltage Sense "D" Circuit Range/Performance	<Ref. to HEV(diag)-298, DTC P0B4B HYBRID BATTERY VOLTAGE SENSE "D" CIRCUIT RANGE/PERFORMANCE, Diagnostic Procedure with Diagnostic Trouble Code (DTC).>
P0B4C	Hybrid Battery Voltage Sense "D" Circuit Low	<Ref. to HEV(diag)-298, DTC P0B4C HYBRID BATTERY VOLTAGE SENSE "D" CIRCUIT LOW, Diagnostic Procedure with Diagnostic Trouble Code (DTC).>
P0B4D	Hybrid Battery Voltage Sense "D" Circuit High	<Ref. to HEV(diag)-299, DTC P0B4D HYBRID BATTERY VOLTAGE SENSE "D" CIRCUIT HIGH, Diagnostic Procedure with Diagnostic Trouble Code (DTC).>

DTC	Item	Note
P0B50	Hybrid Battery Voltage Sense "E" Circuit Range/Performance	<Ref. to HEV(diag)-299, DTC P0B50 HYBRID BATTERY VOLTAGE SENSE "E" CIRCUIT RANGE/PERFORMANCE, Diagnostic Procedure with Diagnostic Trouble Code (DTC).>
P0B51	Hybrid Battery Voltage Sense "E" Circuit Low	<Ref. to HEV(diag)-299, DTC P0B51 HYBRID BATTERY VOLTAGE SENSE "E" CIRCUIT LOW, Diagnostic Procedure with Diagnostic Trouble Code (DTC).>
P0B52	Hybrid Battery Voltage Sense "E" Circuit High	<Ref. to HEV(diag)-299, DTC P0B52 HYBRID BATTERY VOLTAGE SENSE "E" CIRCUIT HIGH, Diagnostic Procedure with Diagnostic Trouble Code (DTC).>
P0B55	Hybrid Battery Voltage Sense "F" Circuit Range/Performance	<Ref. to HEV(diag)-300, DTC P0B55 HYBRID BATTERY VOLTAGE SENSE "F" CIRCUIT RANGE/PERFORMANCE, Diagnostic Procedure with Diagnostic Trouble Code (DTC).>
P0B56	Hybrid Battery Voltage Sense "F" Circuit Low	<Ref. to HEV(diag)-300, DTC P0B56 HYBRID BATTERY VOLTAGE SENSE "F" CIRCUIT LOW, Diagnostic Procedure with Diagnostic Trouble Code (DTC).>
P0B57	Hybrid Battery Voltage Sense "F" Circuit High	<Ref. to HEV(diag)-300, DTC P0B57 HYBRID BATTERY VOLTAGE SENSE "F" CIRCUIT HIGH, Diagnostic Procedure with Diagnostic Trouble Code (DTC).>
P0B5A	Hybrid Battery Voltage Sense "G" Circuit Range/Performance	<Ref. to HEV(diag)-300, DTC P0B5A HYBRID BATTERY VOLTAGE SENSE "G" CIRCUIT RANGE/PERFORMANCE, Diagnostic Procedure with Diagnostic Trouble Code (DTC).>
P0B5B	Hybrid Battery Voltage Sense "G" Circuit Low	<Ref. to HEV(diag)-301, DTC P0B5B HYBRID BATTERY VOLTAGE SENSE "G" CIRCUIT LOW, Diagnostic Procedure with Diagnostic Trouble Code (DTC).>
P0B5C	Hybrid Battery Voltage Sense "G" Circuit High	<Ref. to HEV(diag)-301, DTC P0B5C HYBRID BATTERY VOLTAGE SENSE "G" CIRCUIT HIGH, Diagnostic Procedure with Diagnostic Trouble Code (DTC).>
P0BB8	Hybrid Battery Voltage Sense "Z" Circuit	<Ref. to HEV(diag)-301, DTC P0BB8 HYBRID BATTERY VOLTAGE SENSE "Z" CIRCUIT, Diagnostic Procedure with Diagnostic Trouble Code (DTC).>
P0C30	Hybrid Battery Pack State of Charge High	<Ref. to HEV(diag)-302, DTC P0C30 HYBRID BATTERY PACK STATE OF CHARGE HIGH, Diagnostic Procedure with Diagnostic Trouble Code (DTC).>
P0C78	Hybrid Battery System Precharge Time Too Long	<Ref. to HEV(diag)-303, DTC P0C78 HYBRID BATTERY SYSTEM PRECHARGE TIME TOO LONG, Diagnostic Procedure with Diagnostic Trouble Code (DTC).>
P0CA6	Hybrid Battery Charging Current High	<Ref. to HEV(diag)-306, DTC P0CA6 HYBRID BATTERY CHARGING CURRENT HIGH, Diagnostic Procedure with Diagnostic Trouble Code (DTC).>
P0CA7	Hybrid Battery Discharging Current High	<Ref. to HEV(diag)-308, DTC P0CA7 HYBRID BATTERY DISCHARGING CURRENT HIGH, Diagnostic Procedure with Diagnostic Trouble Code (DTC).>
P1C40	Hybrid Battery Positive Contactor or Pre-Charge Contactor Circuit Stuck Closed	<Ref. to HEV(diag)-310, DTC P1C40 HYBRID BATTERY POSITIVE CONTACTOR OR PRE-CHARGE CONTACTOR CIRCUIT STUCK CLOSED, Diagnostic Procedure with Diagnostic Trouble Code (DTC).>
P1C41	High Voltage Circuit Short	<Ref. to HEV(diag)-312, DTC P1C41 HIGH VOLTAGE CIRCUIT SHORT, Diagnostic Procedure with Diagnostic Trouble Code (DTC).>
P1C42	High Voltage Circuit Open	<Ref. to HEV(diag)-315, DTC P1C42 HIGH VOLTAGE CIRCUIT OPEN, Diagnostic Procedure with Diagnostic Trouble Code (DTC).>
P1C43	Hybrid Battery Contactor Power Supply Circuit	<Ref. to HEV(diag)-317, DTC P1C43 HYBRID BATTERY CONTACTOR POWER SUPPLY CIRCUIT, Diagnostic Procedure with Diagnostic Trouble Code (DTC).>
P1C44	Sub CPU in BECM	<Ref. to HEV(diag)-317, DTC P1C44 SUB CPU IN BECM, Diagnostic Procedure with Diagnostic Trouble Code (DTC).>
P1C45	Hybrid Battery Block 1 Balancing Performance	<Ref. to HEV(diag)-318, DTC P1C45 HYBRID BATTERY BLOCK 1 BALANCING PERFORMANCE, Diagnostic Procedure with Diagnostic Trouble Code (DTC).>
P1C46	Hybrid Battery Block 2 Balancing Performance	<Ref. to HEV(diag)-318, DTC P1C46 HYBRID BATTERY BLOCK 2 BALANCING PERFORMANCE, Diagnostic Procedure with Diagnostic Trouble Code (DTC).>
P1C47	Hybrid Battery Block 3 Balancing Performance	<Ref. to HEV(diag)-318, DTC P1C47 HYBRID BATTERY BLOCK 3 BALANCING PERFORMANCE, Diagnostic Procedure with Diagnostic Trouble Code (DTC).>
P1C48	Hybrid Battery Block 4 Balancing Performance	<Ref. to HEV(diag)-318, DTC P1C48 HYBRID BATTERY BLOCK 4 BALANCING PERFORMANCE, Diagnostic Procedure with Diagnostic Trouble Code (DTC).>
P1C49	Hybrid Battery Block 5 Balancing Performance	<Ref. to HEV(diag)-318, DTC P1C49 HYBRID BATTERY BLOCK 5 BALANCING PERFORMANCE, Diagnostic Procedure with Diagnostic Trouble Code (DTC).>
P1C4A	Hybrid Battery Block 6 Balancing Performance	<Ref. to HEV(diag)-319, DTC P1C4A HYBRID BATTERY BLOCK 6 BALANCING PERFORMANCE, Diagnostic Procedure with Diagnostic Trouble Code (DTC).>

DTC	Item	Note
P1C5E	Hybrid Battery Block Voltage Too Low	<Ref. to HEV(diag)-319, DTC P1C5E HYBRID BATTERY BLOCK VOLTAGE TOO LOW, Diagnostic Procedure with Diagnostic Trouble Code (DTC).>
U0076	Control Module Communication Bus "HEV-CAN" Off	<Ref. to HEV(diag)-320, DTC U0076 CONTROL MODULE COMMUNICATION BUS "HEV-CAN" OFF, Diagnostic Procedure with Diagnostic Trouble Code (DTC).>
U0110	Lost Communication With Drive Motor Control Module "A"	<Ref. to HEV(diag)-320, DTC U0110 LOST COMMUNICATION WITH DRIVE MOTOR CONTROL MODULE "A", Diagnostic Procedure with Diagnostic Trouble Code (DTC).>
U0411	Invalid Data Received From Drive Motor Control Module "A"	<Ref. to HEV(diag)-323, DTC U0411 INVALID DATA RECEIVED FROM DRIVE MOTOR CONTROL MODULE "A", Diagnostic Procedure with Diagnostic Trouble Code (DTC).>
U1290	Lost Communication With Hybrid Powertrain Control Module HEV-CAN	<Ref. to HEV(diag)-326, DTC U1290 LOST COMMUNICATION WITH HYBRID POWERTRAIN CONTROL MODULE HEV-CAN, Diagnostic Procedure with Diagnostic Trouble Code (DTC).>
U1591	Invalid Data Received From Hybrid Powertrain Control Module HEV-CAN	<Ref. to HEV(diag)-326, DTC U1591 INVALID DATA RECEIVED FROM HYBRID POWERTRAIN CONTROL MODULE HEV-CAN, Diagnostic Procedure with Diagnostic Trouble Code (DTC).>

17.Fail-Safe Chart

A: LIST

1. HYBRID POWERTRAIN CONTROL SYSTEM

If any of the following DTCs are stored in the hybrid powertrain control system, the vehicle enter the appropriate fail safe pattern.

DTC	Fail safe pattern	Prohibited concurrent controls	Availability of system operation check mode
P0506	Fail safe pattern 1: Illuminates the hybrid fail lamp.	—	*2
P0507		—	*2
P0516		—	*2
P0517		—	*2
P0572		—	*2
P0573		—	*2
P058D		—	*4
P0719		—	*2
P0724		—	*2
P1C04		—	*2
P1C05		—	*2
P1C16		—	*2
P1C17		—	*2
U0131		—	*1
U0140		—	*1
U0151		—	*1
U0155		—	*1
U0287		—	*1
U0420		—	*1
U0422		—	*1
U0423		—	*1
U0452		—	*1
U0588		—	*1

DTC	Fail safe pattern	Prohibited concurrent controls	Availability of system operation check mode
P0556	Fail safe pattern 2: Prohibits EV traveling and Auto Start Stop. If EV traveling or Auto Start Stop is in process, the engine is restarted. Illuminates the hybrid fail lamp.	—	*2
P057B		Prohibits regeneration control by brake system.	*2
P057C		Prohibits regeneration control by brake system.	*2
P057D		Prohibits regeneration control by brake system.	*2
P065A		—	*2
P1C00		—	*4
P1C08		—	*2
P1C0C		Prohibits regeneration control by brake system.	*2
P1C0D		Prohibits regeneration control by brake system.	*2
P1C10		—	*2
P1C11		—	*2
P1C12		—	*2
P2158		Prohibits regeneration control by brake system.	*2
U0164		—	*1
U0122		—	*1
U0416		—	*1
U0424		—	*1
U1711		—	*1
P0620	Fail safe pattern 3: Prohibits EV traveling and Auto Start Stop. If EV traveling or Auto Start Stop is in process, the engine is not restarted. Illuminates the hybrid fail lamp.	—	*2
P6EF		—	*2
P1C06		—	*2
P1C07		—	*2
P1C09		—	*2
P1C14		—	*3
P1C18		—	*2
U1676		—	*1
U1720		—	*1
U0111	Fail safe pattern 4: Deactivates the hybrid system. Illuminates the hybrid fail lamp.	—	*1
U0412		—	*1
P1C1E		Prohibits reconnection of the High voltage battery until the condition is restored.	*2

DTC	Fail safe pattern	Prohibited concurrent controls	Availability of system operation check mode
P0604	Fail safe pattern 5: Deactivates the hybrid system. Also, driving power and shifting commands by the hybrid powertrain CM are stopped, and instead they are controlled by ECM and TCM respectively. Illuminates the hybrid fail lamp.	—	*2
P0605		—	*2
P0A1D		—	*2
U0073		—	*1
U0075		—	*1
U0076		—	*1
U0100		—	*1
U0101		—	*1
U0110		—	*1
U0401		—	*1
U0402		—	*1
U0411		—	*1
U1100		—	*1
U1101		—	*1
U1401		—	*1
U1402		—	*1

*1: Prohibits all «System Operation Check Modes».
*2: Prohibits «Engine only Drive Mode» and «Auto Start Stop Cancel Drive Mode (Engine only or Engine + Motor)».
*3: Prohibits «Engine only Drive Mode», «Auto Start Stop Cancel Drive Mode (Engine only or Engine + Motor)», and «ISG Voltage Control».
*4: Prohibits «Engine only Drive Mode», «Auto Start Stop Cancel Drive Mode (Engine only or Engine + Motor)», and «12V Battery Relay Operation».

2. DRIVE MOTOR CONTROL SYSTEM

If any of the following DTCs are stored in the drive motor control system, the vehicle enter the appropriate fail safe pattern.

DTC	Fail safe pattern	Prohibited concurrent controls	Availability of system operation check mode
P0A90	Fail safe pattern 1: Illuminates the hybrid fail lamp.	—	—
P0C0D		—	—
P0A94	Fail safe pattern 2: Prohibits EV traveling and Auto Start Stop. If EV traveling or Auto Start Stop is in process, the engine is restarted. Illuminates the hybrid fail lamp.	—	—
P1C34		—	—
P1C35		—	—

Fail-Safe Chart

DTC	Fail safe pattern	Prohibited concurrent controls	Availability of system operation check mode
P0604	Fail safe pattern 3: Deactivates the hybrid system. Illuminates the hybrid fail lamp.	—	—
P0605		—	—
P06B1		—	—
P06B2		—	—
P0A1B		—	*1
P0A2A		—	—
P0A2C		—	—
P0A2D		—	—
P0A3C		—	—
P0A44		—	—
P0A5D		—	—
P0A60		—	—
P0A63		—	—
P0A78		—	—
P0AED		—	—
P0AEE		—	—
P0AF2		—	—
P0AF3		—	—
P0BD1		—	—
P0BD2		—	—
P0BE6		—	—
P0BE7		—	—
P0BE8		—	—
P0BEA		—	—
P0BEB		—	—
P0BEC		—	—
P0BEE		—	—
P0BEF		—	—
P0BF0		—	—
P0BFD		—	—
P0C05		—	—
P0C0C		—	—
P0C79		—	—
P0DA8		—	—
P1C20		—	—
P1C22		—	*1
P1C24		—	—
P1C25		—	—
P1C26		—	—
P1C27		—	—
P1C2A		—	—
P1C30		—	—
P1C31		—	—
U0076		—	*1
U0111		—	*1
U0412		—	*1
U1290		—	*1
U1591		—	*1
P0A82		—	—
P0A83		—	—

DTC	Fail safe pattern	Prohibited concurrent controls	Availability of system operation check mode
P0A3F	Fail safe pattern 4: Deactivates the hybrid system. Also, driving power and shifting commands by the hybrid powertrain CM are stopped, and instead they are controlled by ECM and TCM respectively. Illuminates the hybrid fail lamp.	—	—
P0A43		—	—
P0A40		—	—
P0C52		—	—
P0C5C		—	—
P0CDC		—	—
P0CDD		—	—

*1: Prohibits all «System Operation Check Modes».

3. BATTERY ENERGY CONTROL SYSTEM

If any of the following DTCs are stored in the battery energy control system, the vehicle enter the appropriate fail safe pattern.

DTC	Fail safe pattern
P0AA4	Fail safe pattern 1: Illuminates the hybrid fail lamp.
P0A7F	
P0AA6	
P0AA7	
P0AAD	
P0AAE	
P0AAF	
P0ADF	
P0AE6	
P0B4A	
U0110	
U0411	

DTC	Fail safe pattern
P0A9C	Fail safe pattern 2: Prohibits EV traveling and Auto Start Stop. If EV traveling or Auto Start Stop is in process, the engine is not restarted. Illuminates the hybrid fail lamp.
P0A9D	
P0A9E	
P0ABF	
P0AC0	
P0AC1	
P0AC2	
P0AC3	
P0AC6	
P0AC7	
P0AC8	
P0ACB	
P0ACC	
P0ACD	
P0B3C	
P0B3D	
P0B3E	
P0B41	
P0B42	
P0B43	
P0B46	
P0B47	
P0B48	
P0B4B	
P0B4C	
P0B4D	
P0B50	
P0B51	
P0B52	
P0B55	
P0B56	
P0B57	
P0B5A	
P0B5B	
P0B5C	

Fail-Safe Chart

DTC	Fail safe pattern
P0604	Fail safe pattern 3: Deactivates the hybrid system. Illuminates the hybrid fail lamp.
P0605	
P062F	
P0A1F	
P0A7D	
P0A7E	
P0A95	
P0AD9	
P0ADB	
P0ADD	
P0AE4	
P0B25	
P0B26	
P0B37	
P0BB8	
P0C30	
P0C78	
P0CA6	
P0CA7	
P1C40	
P1C41	
P1C42	
P1C43	
P1C44	
P1C45	
P1C46	
P1C47	
P1C48	
P1C49	
P1C4A	
P1C5E	
U0076	
U1290	
U1591	

18.Diagnostic Procedure with Diagnostic Trouble Code (DTC)

A: DTC P0506 IDLE AIR CONTROL SYSTEM RPM LOWER THAN EXPECTED

DIAGNOSIS:

• Detected when two consecutive driving cycles with fault occur. (Single engine startup is counted as one drive cycle.)

• GENERAL DESCRIPTION <Ref. to GD(HEV)-11, DTC P0506 IDLE AIR CONTROL SYSTEM RPM LOWER THAN EXPECTED, Diagnostic Trouble Code (DTC) Detecting Criteria.>

TROUBLE SYMPTOM:

Normal control

CAUTION:

Before performing diagnosis, refer to "CAUTION" in "General Description". <Ref. to HEV(diag)-8, CAUTION, General Description.>

	Step	Check	Yes	No
1	**CHECK DTC.** Read DTCs of the following system. • Engine • Hybrid powertrain control system <Ref. to HEV(diag)-23, HYBRID POWERTRAIN CONTROL SYSTEM, OPERATION, Read Diagnostic Trouble Code (DTC).>	Are any other DTCs detected? (current malfunction)	First perform the diagnosis according to other DTCs.	Go to step **2**.
2	**CHECK AIR CLEANER ELEMENT.** 1) Turn the ignition switch to OFF. 2) Check the air cleaner element.	Is there excessive clogging on air cleaner element?	Replace the air cleaner element. <Ref. to IN(H4DO(w/o HEV))-4, Air Cleaner Element.>	Go to step **3**.
3	**CHECK ELECTRONIC THROTTLE CONTROL.** 1) Remove the electronic throttle control. <Ref. to FU(H4DO(w/o HEV))-15, REMOVAL, Throttle Body.> 2) Check the electronic throttle control.	Are foreign matter found inside electronic throttle control?	Remove foreign matter from electronic throttle control.	Perform the diagnosis of DTC P2101 of engine. <Ref. to EN(H4DO HEV)(diag)-327, DTC P2101 THROTTLE ACTUATOR CONTROL MOTOR CIRCUIT RANGE/PERFORMANCE, Diagnostic Procedure with Diagnostic Trouble Code (DTC).>

B: DTC P0507 IDLE AIR CONTROL SYSTEM RPM HIGHER THAN EXPECTED

DIAGNOSIS:

• Detected when two consecutive driving cycles with fault occur. (Single engine startup is counted as one drive cycle.)

• GENERAL DESCRIPTION <Ref. to GD(HEV)-12, DTC P0507 IDLE AIR CONTROL SYSTEM RPM HIGHER THAN EXPECTED, Diagnostic Trouble Code (DTC) Detecting Criteria.>

TROUBLE SYMPTOM:

Normal control

CAUTION:

Before performing diagnosis, refer to "CAUTION" in "General Description". <Ref. to HEV(diag)-8, CAUTION, General Description.>

	Step	Check	Yes	No
1	**CHECK DTC.** Read DTCs of the following system. • Engine • Hybrid powertrain control system <Ref. to HEV(diag)-23, HYBRID POWERTRAIN CONTROL SYSTEM, OPERATION, Read Diagnostic Trouble Code (DTC).>	Are any other DTCs detected? (current malfunction)	First perform the diagnosis according to other DTCs.	Go to step **2**.
2	**CHECK AIR INTAKE SYSTEM.** 1) Start and idle the engine. 2) Check the following items. • Loose installation of intake manifold and throttle body • Cracks of intake manifold gasket and throttle body gasket • Disconnection of vacuum hoses	Is there any fault in air intake system?	Repair air suction and leaks.	Go to step **3**.
3	**CHECK ELECTRONIC THROTTLE CONTROL.** 1) Turn the ignition switch to OFF. 2) Remove the electronic throttle control. <Ref. to FU(H4DO(w/o HEV))-15, REMOVAL, Throttle Body.> 3) Check the electronic throttle control.	Are foreign matter found inside electronic throttle control?	Remove foreign matter from electronic throttle control.	Perform the diagnosis of DTC P2101 of engine. <Ref. to EN(H4DO HEV)(diag)-327, DTC P2101 THROTTLE ACTUATOR CONTROL MOTOR CIRCUIT RANGE/PERFORMANCE, Diagnostic Procedure with Diagnostic Trouble Code (DTC).>

C: DTC P0516 BATTERY TEMPERATURE SENSOR CIRCUIT LOW

DIAGNOSIS:

- Detects short circuit to ground of 12 volt auxiliary battery temperature sensor harness.
- Judge as NG when the detection result is out of specification.
- Immediately at fault recognition

TROUBLE SYMPTOM:

Normal control

CAUTION:

Before performing diagnosis, refer to "CAUTION" in "General Description". <Ref. to HEV(diag)-8, CAUTION, General Description.>

WIRING DIAGRAM:

Engine electrical system <Ref. to WI(HEV)-100, WIRING DIAGRAM, Engine Electrical System.>

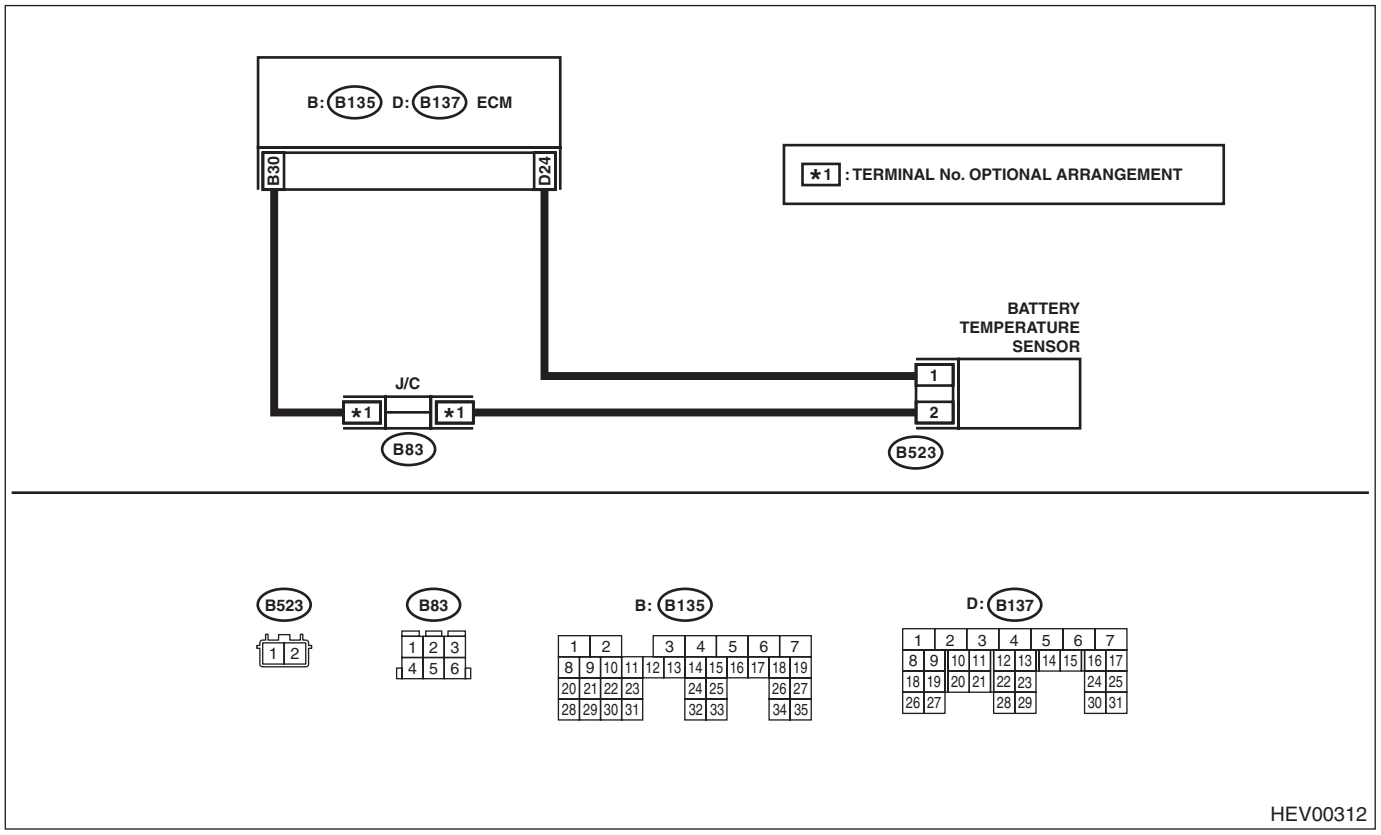

HEV00312

Step		Check	Yes	No
1	**CHECK CURRENT DATA.** 1) Start the engine. 2) Using the Subaru Select Monitor, confirm the current data of hybrid powertrain control system, the value of «12V Auxiliary Battery Temperature». <Ref. to HEV(diag)-40, HYBRID POWERTRAIN CONTROL SYSTEM, OPERATION, Read Current Data.>	Is the value 100°C (212°F) or more?	Go to step **2**.	Even if DTC is detected, the circuit has returned to a normal condition at this time. Reproduce the failure, and then perform the diagnosis again. NOTE: In this case, temporary poor contact of connector, temporary open or short circuit of harness may be the cause.

	Step	Check	Yes	No
2	**CHECK HARNESS (SHORT TO GROUND).** 1) Turn the ignition switch to OFF. 2) Disconnect the ECM connector and battery temperature sensor connector. 3) Using a tester, measure the resistance between the ECM connector and chassis ground. ***Connector & terminal*** ***(B137) No. 24 — Chassis ground:***	Is the resistance 1 MΩ or more?	Replace the battery temperature sensor. <Ref. to SC(H4DO(HEV))-56, Battery Temperature Sensor.>	Repair the short circuit to ground in the harness between the ECM connector and battery temperature sensor connector.

D: DTC P0517 BATTERY TEMPERATURE SENSOR CIRCUIT HIGH

DIAGNOSIS:

- Detects open circuit and short circuit of 12 volt auxiliary battery temperature sensor harness.
- Judge as NG when the detection result is out of specification.
- Immediately at fault recognition

TROUBLE SYMPTOM:

Normal control

CAUTION:

Before performing diagnosis, refer to "CAUTION" in "General Description". <Ref. to HEV(diag)-8, CAUTION, General Description.>

WIRING DIAGRAM:

Engine electrical system <Ref. to WI(HEV)-100, WIRING DIAGRAM, Engine Electrical System.>

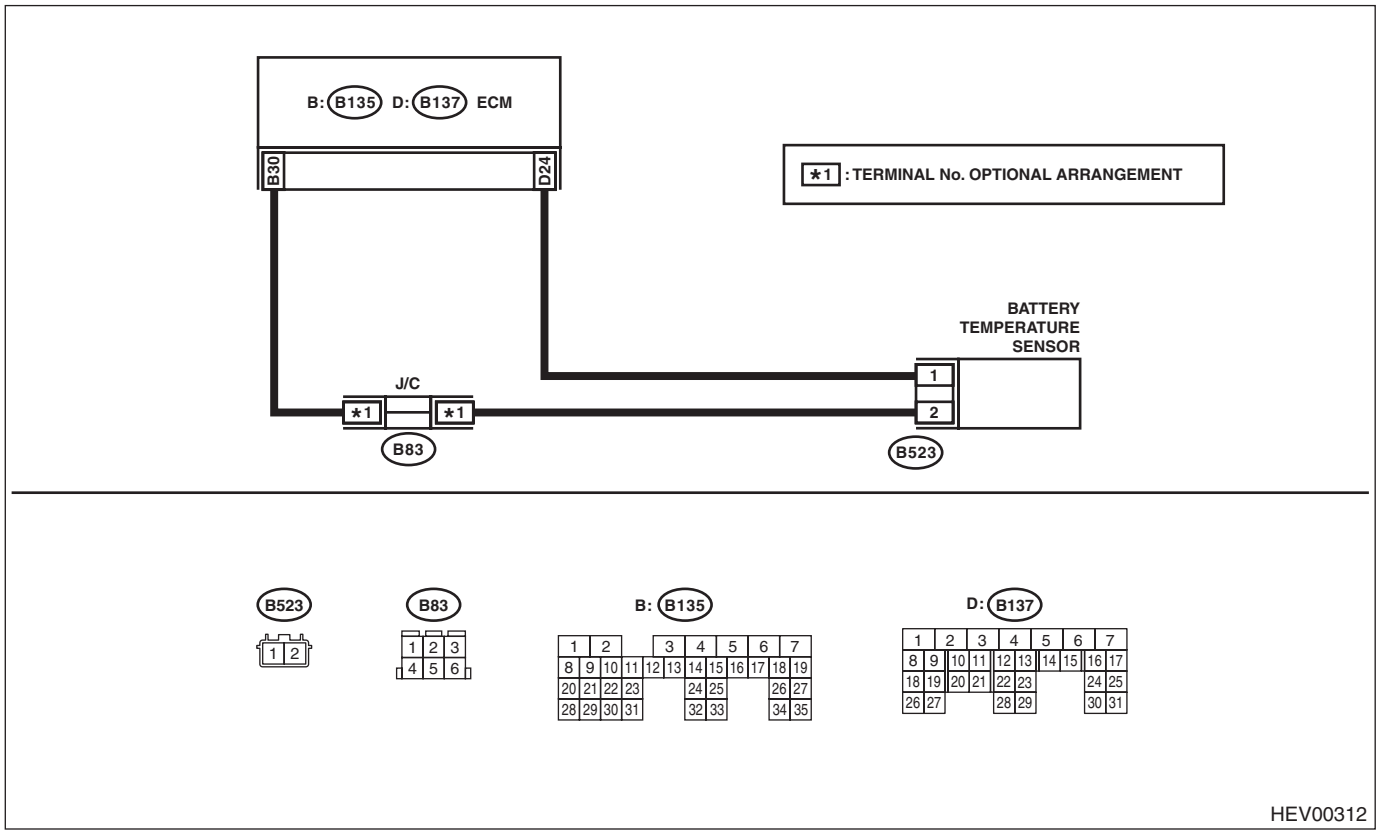

Step		Check	Yes	No
1	**CHECK CURRENT DATA.** 1) Start the engine. 2) Using the Subaru Select Monitor, confirm the current data of hybrid powertrain control system, the value of «12V Auxiliary Battery Temperature». <Ref. to HEV(diag)-40, HYBRID POWERTRAIN CONTROL SYSTEM, OPERATION, Read Current Data.>	Is the value –40°C (–40°F) or less?	Go to step **2**.	Even if DTC is detected, the circuit has returned to a normal condition at this time. Reproduce the failure, and then perform the diagnosis again. NOTE: In this case, temporary poor contact of connector, temporary open or short circuit of harness may be the cause.

	Step	Check	Yes	No
2	**CHECK HARNESS (OPEN CIRCUIT).** 1) Turn the ignition switch to OFF. 2) Disconnect the connectors from the ECM and battery temperature sensor. 3) Using a tester, measure the resistance of harness between ECM connector and battery temperature sensor connector. ***Connector & terminal*** ***(B137) No. 24 — (B523) No. 1:*** ***(B135) No. 30 — (B523) No. 2:***	Is the resistance less than 1 Ω?	Go to step **3**.	Repair the open circuit in the harness between the ECM connector and battery temperature sensor connector.
3	**CHECK HARNESS (SHORT TO POWER).** 1) Connect all connectors. 2) Turn the ignition switch to ON. 3) Measure the voltage between ECM connector and chassis ground. ***Connector & terminal*** ***(B137) No. 24 (+) — Chassis ground (–):***	Is the voltage 5 V or more?	Repair the short circuit to power in harness between ECM connector and battery temperature sensor connector.	Replace the battery temperature sensor. <Ref. to SC(H4DO(HEV))-56, Battery Temperature Sensor.>

E: DTC P0556 BRAKE BOOSTER PRESSURE SENSOR CIRCUIT RANGE/PERFORMANCE

DIAGNOSIS:

- Detects abnormal conditions of brake booster pressure sensor range/performance.
- Judge as NG when the detection result is out of specification.
- Immediately at fault recognition

TROUBLE SYMPTOM:

- EV traveling/Auto Start Stop does not operate.
- Vacuum pump fail lamp illuminates.

CAUTION:

Before performing diagnosis, refer to "CAUTION" in "General Description". <Ref. to HEV(diag)-8, CAUTION, General Description.>

WIRING DIAGRAM:

Hybrid system <Ref. to WI(HEV)-139, WIRING DIAGRAM, Hybrid Electric Vehicle System.>

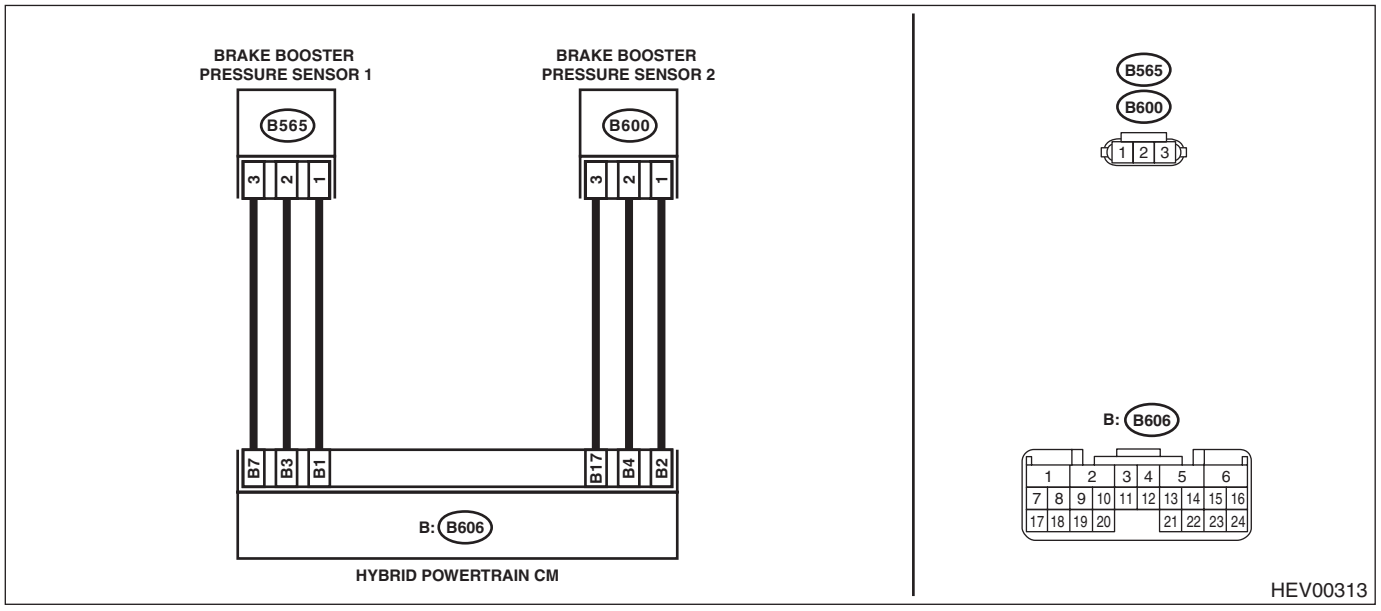

Step		Check	Yes	No
1	**CHECK DTC.** Read the DTC. <Ref. to HEV(diag)-23, HYBRID POWERTRAIN CONTROL SYSTEM, OPERATION, Read Diagnostic Trouble Code (DTC).>	Are any other DTCs (brake booster pressure sensor related) detected? (current malfunction)	First diagnose other DTCs.	Go to step **2**.
2	**CHECK CURRENT DATA.** Using the Subaru Select Monitor, confirm the current data of hybrid powertrain control system, the value of «Power Sensor Voltage 1»«Power Sensor Voltage 2». <Ref. to HEV(diag)-40, HYBRID POWERTRAIN CONTROL SYSTEM, OPERATION, Read Current Data.>	Is the value approx. 5 V?	Go to step **3**.	Go to step **9**.

	Step	Check	Yes	No
3	**CHECK CURRENT DATA.** 1) Turn the ignition switch to ON. 2) Depress the brake pedal 10 times. 3) Using the Subaru Select Monitor, confirm the current data of hybrid powertrain control system, the value of «Brake Booster Pressure 1»«Brake Booster Pressure 2»«Atmosphere Pressure». <Ref. to HEV(diag)-40, HYBRID POWERTRAIN CONTROL SYSTEM, OPERATION, Read Current Data.>	Do «Brake Booster Pressure 1»«Brake Booster Pressure 2»«Atmosphere Pressure» match?	Even if DTC is detected, the circuit has returned to a normal condition at this time. Reproduce the failure, and then perform the diagnosis again. NOTE: In this case, temporary poor contact of connector, temporary open or short circuit of harness may be the cause.	Go to step **4**.
4	**CHECK SENSORS.** 1) Interchange brake booster pressure sensor 1 and brake booster pressure sensor 2. 2) Turn the ignition switch to ON. 3) Depress the brake pedal 10 times. 4) Using the Subaru Select Monitor, confirm the current data of hybrid powertrain control system, the value of «Brake Booster Pressure 1»«Brake Booster Pressure 2». <Ref. to HEV(diag)-40, HYBRID POWERTRAIN CONTROL SYSTEM, OPERATION, Read Current Data.>	Did those two values interchange each other?	Replace the brake booster. <Ref. to BR-49, Brake Booster.>	Go to step **5**.
5	**CHECK CURRENT DATA.** Using the Subaru Select Monitor, confirm the current data of hybrid powertrain control system, the value of «Brake Booster Pressure Sensor Voltage 1»«Brake Booster Pressure Sensor Voltage 2». <Ref. to HEV(diag)-40, HYBRID POWERTRAIN CONTROL SYSTEM, OPERATION, Read Current Data.>	Is the value between 0.3 — 4.7 V?	Even if DTC is detected, the circuit has returned to a normal condition at this time. Reproduce the failure, and then perform the diagnosis again. NOTE: In this case, temporary poor contact of connector, temporary open or short circuit of harness may be the cause.	If 0.3 V or less Go to step **6**. If 4.7 V or more Go to step **7**.
6	**CHECK HARNESS (SHORT TO GROUND).** 1) Disconnect the connectors of brake booster pressure sensor 1 and brake booster pressure sensor 2 and the HPCM connector. 2) Using a tester, measure the resistance between brake booster pressure sensor 1 and brake booster pressure sensor 2 connectors and chassis ground. ***Connector & terminal*** ***(B565) No. 2 — Chassis ground:*** ***(B600) No. 2 — Chassis ground:***	Is the resistance 1 MΩ or more?	Replace the HPCM. <Ref. to HEV-37, Hybrid Powertrain Control Module.>	Repair the ground short circuit of harness between HPCM connector and brake booster pressure sensor connector.

	Step	Check	Yes	No
7	**CHECK HARNESS (OPEN CIRCUIT).** 1) Disconnect the connectors of brake booster pressure sensor 1 and brake booster pressure sensor 2. 2) Using a tester, measure the resistance between brake booster pressure sensor 1 and brake booster pressure sensor 2 connectors and the HPCM connector. ***Connector & terminal*** ***(B565) No. 2 — (B606) No. 3:*** ***(B600) No. 2 — (B606) No. 4:***	Is the resistance 1 Ω or less?	Go to step **8**.	Repair the open circuit of harness between HPCM connector and brake booster pressure sensor connector.
8	**CHECK HARNESS (SHORT TO POWER).** 1) Turn the ignition switch to ON. 2) Using a tester, measure the voltage between brake booster pressure sensor 1 and brake booster pressure sensor 2 connectors and chassis ground. ***Connector & terminal*** ***(B565) No. 2 (+) — Chassis ground (–):*** ***(B600) No. 2 (+) — Chassis ground (–):***	Is the voltage 5 V or less?	Replace the HPCM. <Ref. to HEV-37, Hybrid Powertrain Control Module.>	Repair short circuit to power in harness between HPCM connector and brake booster pressure sensor connector.
9	**CHECK CURRENT DATA.** 1) Disconnect the HPCM connector (B606). 2) Turn the ignition switch to ON. 3) Using the Subaru Select Monitor, confirm the current data of hybrid powertrain control system, the value of «Power Sensor Voltage 1»«Power Sensor Voltage 2».	Is the value approx. 5 V?	Go to step **10**.	Replace the HPCM. <Ref. to HEV-37, Hybrid Powertrain Control Module.>
10	**CHECK HARNESS (OPEN CIRCUIT).** 1) Disconnect the connectors of brake booster pressure sensor 1 and brake booster pressure sensor 2. 2) Using a tester, measure the resistance between brake booster pressure sensor 1 and brake booster pressure sensor 2 connectors and the HPCM connector. ***Connector & terminal*** ***(B565) No. 3 — (B606) No. 7:*** ***(B600) No. 3 — (B606) No. 17:***	Is the resistance 1 Ω or less?	Go to step **11**.	Repair the open circuit of harness between HPCM connector and brake booster pressure sensor connector.
11	**CHECK HARNESS (SHORT TO GROUND).** 1) Disconnect the connectors of brake booster pressure sensor 1 and brake booster pressure sensor 2. 2) Using a tester, measure the resistance between brake booster pressure sensor 1 and brake booster pressure sensor 2 connectors and chassis ground. ***Connector & terminal*** ***(B565) No. 3 — Chassis ground:*** ***(B600) No. 3 — Chassis ground:***	Is the resistance 1 MΩ or more?	Replace the HPCM. <Ref. to HEV-37, Hybrid Powertrain Control Module.>	Repair the ground short circuit of harness between HPCM connector and brake booster pressure sensor connector.

F: DTC P0572 BRAKE SWITCH "A" [STOP LAMP SWITCH] CIRCUIT LOW

DIAGNOSIS:
GENERAL DESCRIPTION <Ref. to GD(HEV)-13, DTC P0572 BRAKE SWITCH "A" [STOP LAMP SWITCH] CIRCUIT LOW, Diagnostic Trouble Code (DTC) Detecting Criteria.>

CAUTION:
Before performing diagnosis, refer to "CAUTION" in "General Description". <Ref. to HEV(diag)-8, CAUTION, General Description.>
WIRING DIAGRAM:
Stop light system <Ref. to WI(HEV)-208, WIRING DIAGRAM, Stop Light System.>

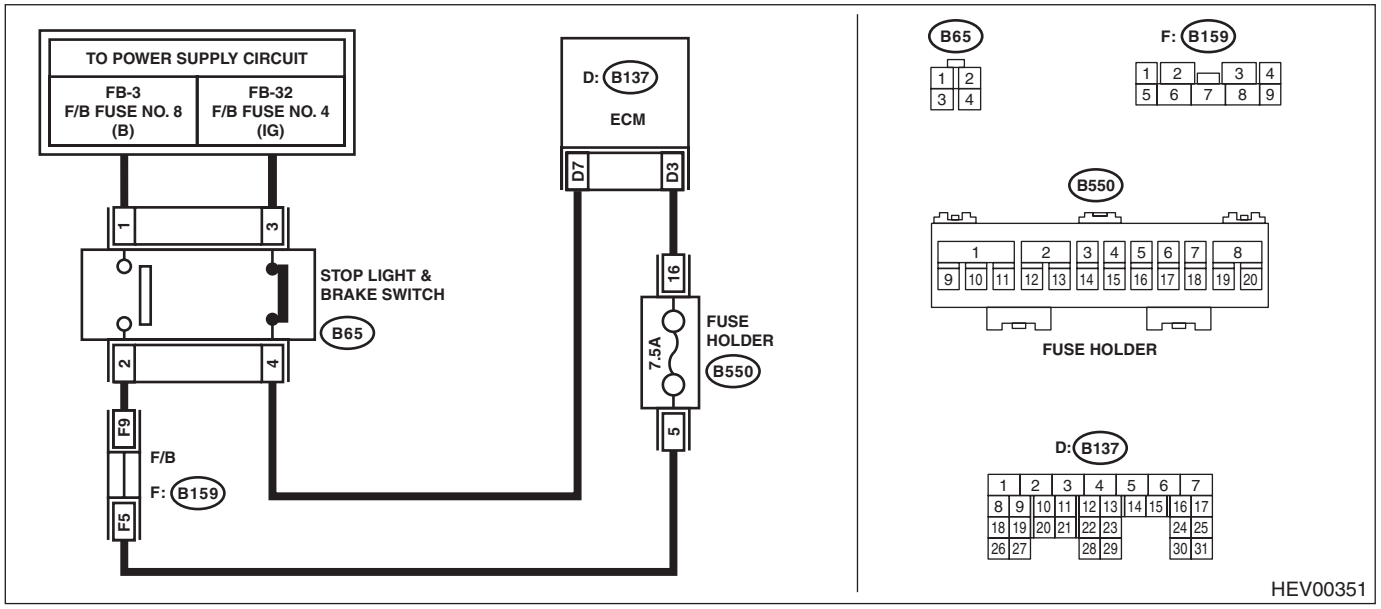

Step		Check	Yes	No
1	**CHECK STOP LIGHT & BRAKE SWITCH.** Check the stop light & brake switch. <Ref. to CC-14, Stop Light & Brake Switch.>	Is the stop light & brake switch and installation position OK?	Go to step **2**.	Replace the stop light & brake switch. Or adjust the installation position.
2	**CHECK STOP LIGHT & BRAKE SWITCH CIRCUIT.** 1) Turn the ignition switch to OFF. 2) Disconnect the stop light & brake switch connector. 3) Turn the ignition switch to ON. 4) Measure the voltage between the stop light & brake switch connector and chassis ground. ***Connector & terminal*** ***(B65) No. 3 (+) — Chassis ground (–):***	Is the voltage 10 V or more?	Go to step **3**.	• Check fuse No. 8 (in fuse & relay box). • Check for open or short in the harness between stop light & brake switch and fuse & relay box.
3	**CHECK STOP LIGHT & BRAKE SWITCH CIRCUIT.** 1) Turn the ignition switch to OFF. 2) Disconnect the ECM connector. 3) Measure the resistance between the ECM connector and stop light & brake switch connector. ***Connector & terminal*** ***(B137) No. 7 — (B65) No. 4:***	Is the resistance less than 10 Ω?	Replace the ECM. <Ref. to FU(H4DO(HEV))-85, Engine Control Module (ECM).>	Repair the open circuit of harness between ECM connector and stop light & brake switch connector.

G: DTC P0573 BRAKE SWITCH "A" [STOP LAMP SWITCH] CIRCUIT HIGH

DIAGNOSIS:

GENERAL DESCRIPTION <Ref. to GD(HEV)-14, DTC P0573 BRAKE SWITCH "A" [STOP LAMP SWITCH] CIRCUIT HIGH, Diagnostic Trouble Code (DTC) Detecting Criteria.>

NOTE:

For the diagnostic procedure, refer to “DTC P0572 BRAKE SWITCH "A" [STOP LAMP SWITCH] CIRCUIT LOW”. <Ref. to HEV(diag)-100, DTC P0572 BRAKE SWITCH "A" [STOP LAMP SWITCH] CIRCUIT LOW, Diagnostic Procedure with Diagnostic Trouble Code (DTC).>

H: DTC P057B BRAKE PEDAL POSITION SENSOR CIRCUIT RANGE/PERFORMANCE

DIAGNOSIS:

- Immediately at fault recognition
- GENERAL DESCRIPTION <Ref. to GD(HEV)-16, DTC P057B BRAKE PEDAL POSITION SENSOR CIRCUIT RANGE/PERFORMANCE, Diagnostic Trouble Code (DTC) Detecting Criteria.>

TROUBLE SYMPTOM:

EV traveling/Auto Start Stop does not operate.

CAUTION:

Before performing diagnosis, refer to "CAUTION" in "General Description". <Ref. to HEV(diag)-8, CAUTION, General Description.>

WIRING DIAGRAM:

Hybrid system <Ref. to WI(HEV)-139, WIRING DIAGRAM, Hybrid Electric Vehicle System.>

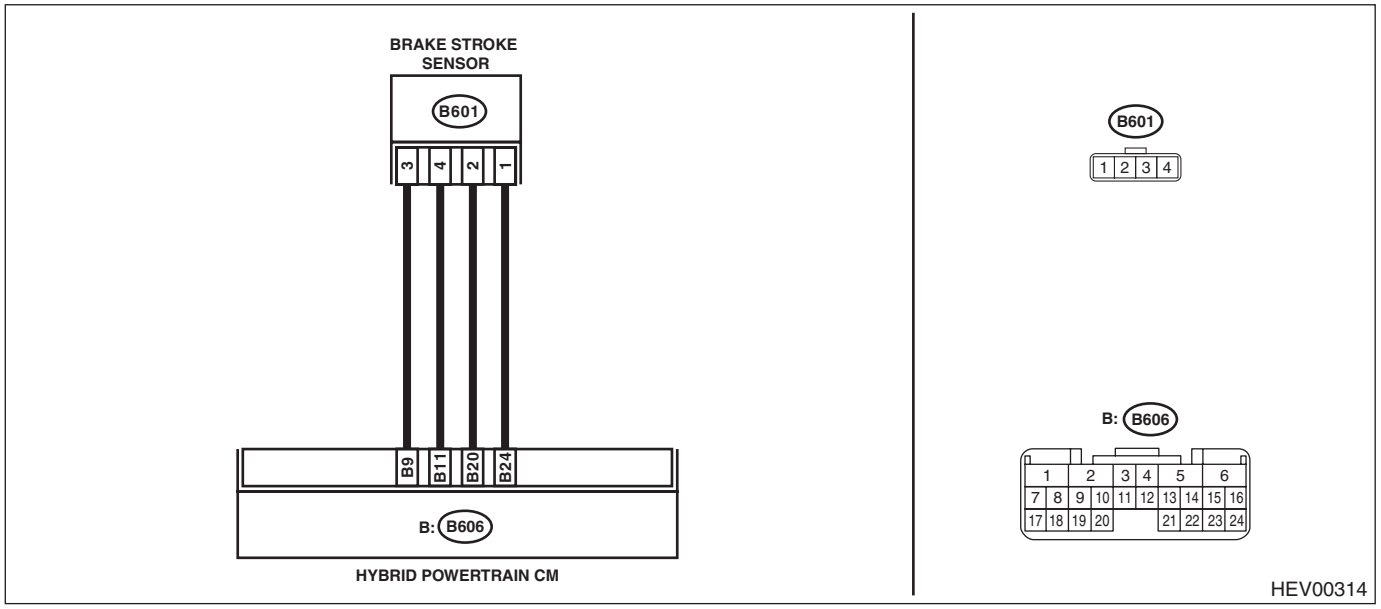

Step		Check	Yes	No
1	**CHECK CURRENT DATA.** Using the Subaru Select Monitor, confirm the current data of hybrid powertrain control system, the value of «Main Brake Pedal Position Sensor Voltage»«Sub Brake Pedal Position Sensor Voltage». <Ref. to HEV(diag)-40, HYBRID POWERTRAIN CONTROL SYSTEM, OPERATION, Read Current Data.>	Is the value of «Main Brake Pedal Position Sensor Voltage» approximately 1 V, and the value of «Sub Brake Pedal Position Sensor Voltage» approximately 4 V when the pedal is not depressed? Also, do values of «Main Brake Pedal Position Sensor Voltage» and «Sub Brake Pedal Position Sensor Voltage» change when the pedal is depressed?	Even if DTC is detected, the circuit has returned to a normal condition at this time. Reproduce the failure, and then perform the diagnosis again. NOTE: In this case, temporary poor contact of connector, temporary open or short circuit of harness may be the cause.	Go to step **2**.

	Step	Check	Yes	No
2	**CHECK CURRENT DATA.** 1) Turn the ignition switch to OFF. 2) Disconnect the HPCM connector (B606). 3) Turn the ignition switch to ON. 4) Using the Subaru Select Monitor, confirm the current data of hybrid powertrain control system, the value of «Power Sensor Voltage 3». <Ref. to HEV(diag)-40, HYBRID POWER-TRAIN CONTROL SYSTEM, OPERATION, Read Current Data.>	Is the value approx. 5 V?	Go to step **3**.	Replace the HPCM. <Ref. to HEV-37, Hybrid Powertrain Control Module.>
3	**CHECK HARNESS (OPEN CIRCUIT).** 1) Turn the ignition switch to OFF. 2) Disconnect the brake stroke sensor connector. 3) Using a tester, measure the resistance between the HPCM connector and brake stroke sensor connector. ***Connector & terminal*** ***(B601) No. 2 — (B606) No. 20:*** ***(B601) No. 4 — (B606) No. 11:*** ***(B601) No. 1 — (B606) No. 24:***	Is the resistance less than 1 Ω?	Go to step **4**.	Repair the open circuit of the harness between the HPCM connector and the brake stroke sensor connector.
4	**CHECK HARNESS (SHORT TO GROUND).** Using a tester, measure the resistance between brake stroke sensor connector and chassis ground. ***Connector & terminal*** ***(B601) No. 2 — Chassis ground:*** ***(B601) No. 4 — Chassis ground:*** ***(B601) No. 1 — Chassis ground:***	Is the resistance 1 MΩ or more?	Go to step **5**.	Repair ground short circuit of harness between the HPCM connector and the brake stroke sensor connector.
5	**CHECK HARNESS (SHORT TO POWER).** 1) Disconnect the brake stroke sensor connector. 2) Turn the ignition switch to ON. 3) Using a tester, measure the voltage between brake stroke sensor connector and chassis ground. ***Connector & terminal*** ***(B601) No. 2 (+) — Chassis ground (–):*** ***(B601) No. 4 (+) — Chassis ground (–):*** ***(B601) No. 1 (+) — Chassis ground (–):***	Is the voltage less than 1 V?	Replace the brake pedal assembly. <Ref. to BR-68, Brake Pedal.>	Repair the short circuit to power in harness between the HPCM connector and the brake stroke sensor connector.

I: DTC P057C BRAKE PEDAL POSITION SENSOR CIRCUIT LOW

DIAGNOSIS:

- Immediately at fault recognition
- GENERAL DESCRIPTION <Ref. to GD(HEV)-18, DTC P057C BRAKE PEDAL POSITION SENSOR CIRCUIT LOW, Diagnostic Trouble Code (DTC) Detecting Criteria.>

TROUBLE SYMPTOM:

EV traveling/Auto Start Stop does not operate.

CAUTION:

Before performing diagnosis, refer to "CAUTION" in "General Description". <Ref. to HEV(diag)-8, CAUTION, General Description.>

WIRING DIAGRAM:

Hybrid system <Ref. to WI(HEV)-139, WIRING DIAGRAM, Hybrid Electric Vehicle System.>

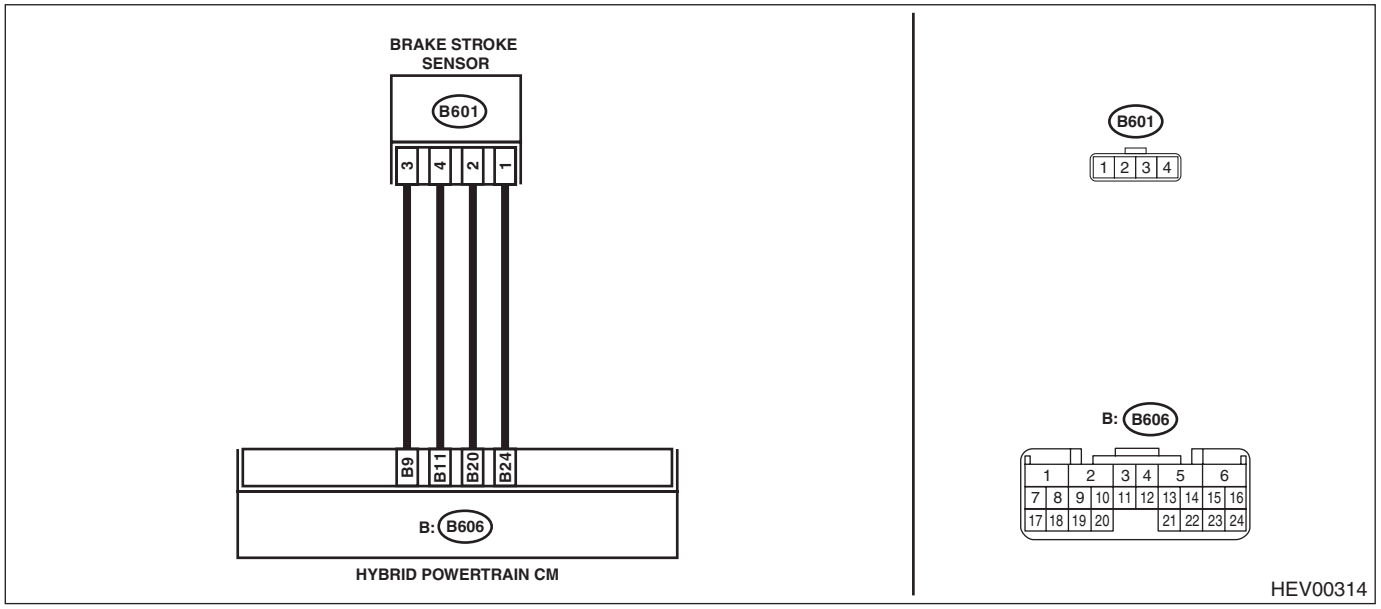

Step		Check	Yes	No
1	**CHECK DTC.** Read the DTC. <Ref. to HEV(diag)-23, HYBRID POWERTRAIN CONTROL SYSTEM, OPERATION, Read Diagnostic Trouble Code (DTC).>	Is DTC P1C0C detected? (current malfunction)	Go to step **6**.	Go to step **2**.
2	**CHECK CURRENT DATA.** Using the Subaru Select Monitor, confirm the current data of hybrid powertrain control system, the value of «Main Brake Pedal Position Sensor Voltage»«Sub Brake Pedal Position Sensor Voltage». <Ref. to HEV(diag)-40, HYBRID POWERTRAIN CONTROL SYSTEM, OPERATION, Read Current Data.>	Is the value of «Main Brake Pedal Position Sensor Voltage» approximately 1 V, and the value of «Sub Brake Pedal Position Sensor Voltage» approximately 4 V when the pedal is not depressed? Also, do values of «Main Brake Pedal Position Sensor Voltage» and «Sub Brake Pedal Position Sensor Voltage» change when the pedal is depressed?	Even if DTC is detected, the circuit has returned to a normal condition at this time. Reproduce the failure, and then perform the diagnosis again. NOTE: In this case, temporary poor contact of connector, temporary open or short circuit of harness may be the cause.	Go to step **3**.

	Step	Check	Yes	No
3	**CHECK CURRENT DATA.** 1) Turn the ignition switch to OFF. 2) Disconnect the HPCM connector (B606). 3) Using the Subaru Select Monitor, confirm the current data of hybrid powertrain control system, the value of «Power Sensor Voltage 3». <Ref. to HEV(diag)-40, HYBRID POWER-TRAIN CONTROL SYSTEM, OPERATION, Read Current Data.>	Is the value approx. 5 V?	Go to step **4**.	Replace the HPCM. <Ref. to HEV-37, Hybrid Powertrain Control Module.>
4	**CHECK HARNESS (OPEN CIRCUIT).** 1) Turn the ignition switch to OFF. 2) Disconnect the brake stroke sensor connector. 3) Using a tester, measure the resistance between the brake stroke sensor connector and the HPCM connector. ***Connector & terminal*** ***(B601) No. 2 — (B606) No. 20:*** ***(B601) No. 1 — (B606) No. 24:***	Is the resistance less than 1 Ω?	Go to step **5**.	Repair the open circuit of the harness between the HPCM connector and the brake stroke sensor connector.
5	**CHECK HARNESS (SHORT TO GROUND).** Using a tester, measure the resistance between brake stroke sensor connector and chassis ground. ***Connector & terminal*** ***(B601) No. 2 — Chassis ground:*** ***(B601) No. 1 — Chassis ground:***	Is the resistance 1 MΩ or more?	Replace the brake pedal assembly. <Ref. to BR-68, Brake Pedal.>	Repair ground short circuit of harness between the HPCM connector and the brake stroke sensor connector.
6	**CHECK HARNESS (OPEN CIRCUIT).** 1) Turn the ignition switch to OFF. 2) Disconnect the brake stroke sensor connector and the HPCM connector. 3) Using a tester, measure the resistance between the brake stroke sensor connector and the HPCM connector. ***Connector & terminal*** ***(B601) No. 3 — (B606) No. 9:***	Is the resistance less than 1 Ω?	Go to step **7**.	Repair the open circuit of the harness between the HPCM connector and the brake stroke sensor connector.
7	**CHECK HARNESS (SHORT TO GROUND).** Using a tester, measure the resistance between brake stroke sensor connector and chassis ground. ***Connector & terminal*** ***(B601) No. 3 — Chassis ground:***	Is the resistance 1 MΩ or more?	Replace the brake pedal assembly. <Ref. to BR-68, Brake Pedal.>	Repair ground short circuit of harness between the HPCM connector and the brake stroke sensor connector.

J: DTC P057D BRAKE PEDAL POSITION SENSOR CIRCUIT HIGH

DIAGNOSIS:

- Immediately at fault recognition
- GENERAL DESCRIPTION <Ref. to GD(HEV)-19, DTC P057D BRAKE PEDAL POSITION SENSOR CIRCUIT HIGH, Diagnostic Trouble Code (DTC) Detecting Criteria.>

TROUBLE SYMPTOM:

EV traveling/Auto Start Stop does not operate.

CAUTION:

Before performing diagnosis, refer to "CAUTION" in "General Description". <Ref. to HEV(diag)-8, CAUTION, General Description.>

WIRING DIAGRAM:

Hybrid system <Ref. to WI(HEV)-139, WIRING DIAGRAM, Hybrid Electric Vehicle System.>

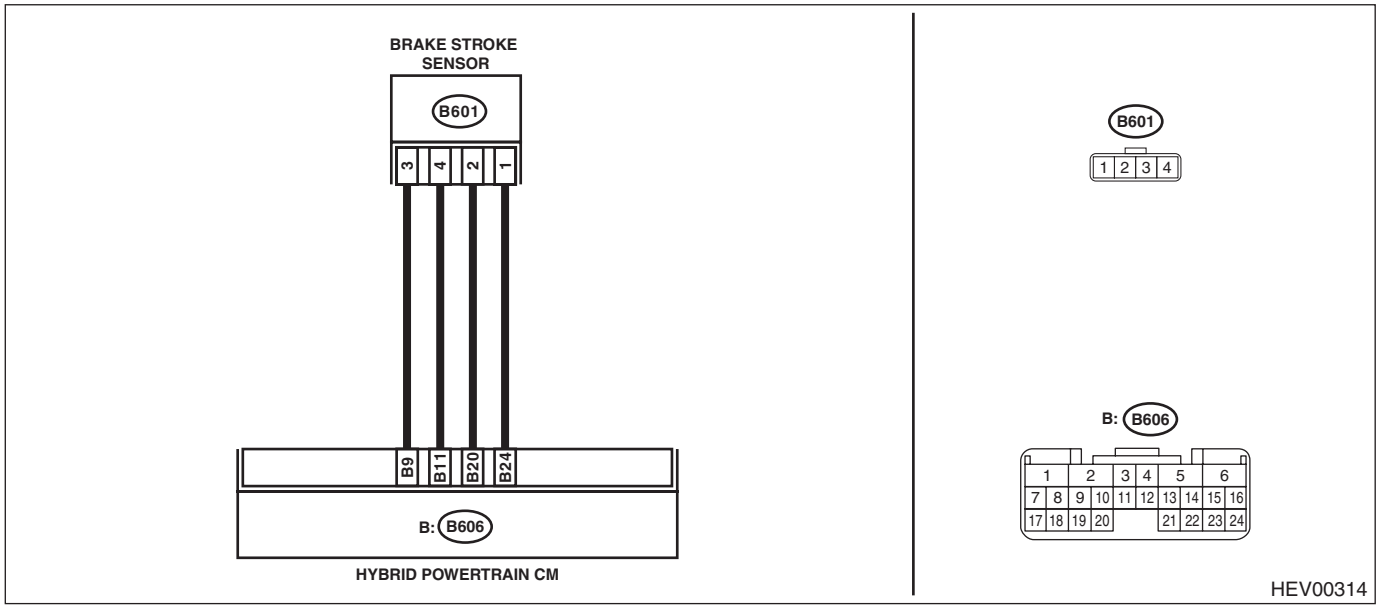

Step		Check	Yes	No
1	**CHECK CURRENT DATA.** Using the Subaru Select Monitor, confirm the current data of hybrid powertrain control system, the value of «Main Brake Pedal Position Sensor Voltage»«Sub Brake Pedal Position Sensor Voltage». <Ref. to HEV(diag)-40, HYBRID POWERTRAIN CONTROL SYSTEM, OPERATION, Read Current Data.>	Is the value of «Main Brake Pedal Position Sensor Voltage» approximately 1 V, and the value of «Sub Brake Pedal Position Sensor Voltage» approximately 4 V when the pedal is not depressed? Also, do values of «Main Brake Pedal Position Sensor Voltage» and «Sub Brake Pedal Position Sensor Voltage» change when the pedal is depressed?	Even if DTC is detected, the circuit has returned to a normal condition at this time. Reproduce the failure, and then perform the diagnosis again. NOTE: In this case, temporary poor contact of connector, temporary open or short circuit of harness may be the cause.	Go to step **2**.

	Step	Check	Yes	No
2	**CHECK CURRENT DATA.** 1) Turn the ignition switch to OFF. 2) Disconnect the HPCM connector (B606). 3) Turn the ignition switch to ON. 4) Using the Subaru Select Monitor, confirm the current data of hybrid powertrain control system, the value of «Power Sensor Voltage 3». <Ref. to HEV(diag)-40, HYBRID POWER-TRAIN CONTROL SYSTEM, OPERATION, Read Current Data.>	Is the value approx. 5 V?	Go to step **3**.	Replace the HPCM. <Ref. to HEV-37, Hybrid Powertrain Control Module.>
3	**CHECK HARNESS (SHORT TO POWER).** 1) Turn the ignition switch to ON. 2) Using a tester, measure the voltage between brake stroke sensor connector and chassis ground. ***Connector & terminal*** ***(B601) No. 2 (+) — Chassis ground (–):*** ***(B601) No. 1 (+) — Chassis ground (–):***	Is the voltage less than 1 V?	Replace the brake pedal assembly. <Ref. to BR-68, Brake Pedal.>	Repair the short circuit to power in harness between the HPCM connector and the brake stroke sensor connector.

K: DTC P058D BATTERY MONITOR MODULE VOLTAGE MONITORING PERFORMANCE

DIAGNOSIS:
- Detects open circuit and short circuit to ground of 12 volt auxiliary battery sensor.
- Judge as NG when the detection result is out of specification.
- Immediately at fault recognition

TROUBLE SYMPTOM:
- Normal control
- System operation check mode is prohibited. <Ref. to HEV(diag)-84, Fail-Safe Chart.>

CAUTION:
Before performing diagnosis, refer to "CAUTION" in "General Description". <Ref. to HEV(diag)-8, CAUTION, General Description.>

WIRING DIAGRAM:
Hybrid system <Ref. to WI(HEV)-139, WIRING DIAGRAM, Hybrid Electric Vehicle System.>

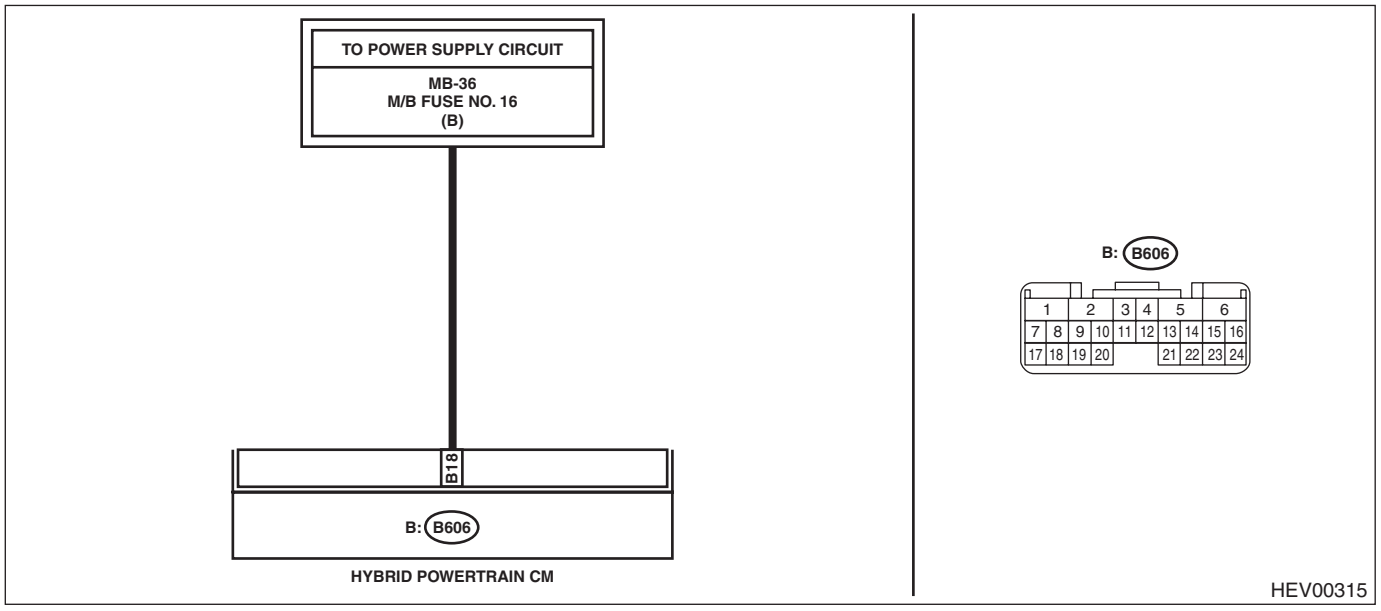

Step		Check	Yes	No
1	**CHECK FUSE.** Check the fuse. <Ref. to HEV-12, Relay and Fuse.>	Is the condition normal?	Go to step **2**.	Replace the fuse. When the replaced fuse is blown immediately, repair ground short circuit of harness between HPCM connector and the battery.

	Step	Check	Yes	No
2	**CHECK CURRENT DATA.** Using the Subaru Select Monitor, confirm the current data of hybrid powertrain control system, the value of «12V Auxiliary Battery Voltage». <Ref. to HEV(diag)-40, HYBRID POWERTRAIN CONTROL SYSTEM, OPERATION, Read Current Data.>	Is the value 6 V or more?	Even if DTC is detected, the circuit has returned to a normal condition at this time. Reproduce the failure, and then perform the diagnosis again. NOTE: In this case, temporary poor contact of connector, temporary open or short circuit of harness may be the cause.	Go to step **3**.
3	**CHECK HARNESS (OPEN CIRCUIT).** 1) Turn the ignition switch to OFF. 2) Disconnect the HPCM connector. 3) Disconnect the ground cable of the 12 volt auxiliary battery, and as for the 12 volt engine restart battery, disconnect the ground cable from the 12V engine restart battery sensor. <Ref. to NT-5, BATTERY, NOTE, Note.> 4) Disconnect the positive cable from the 12 volt auxiliary battery. 5) Using a tester, measure the resistance between the positive terminal of the 12 volt auxiliary battery and HPCM connector. ***Connector & terminal*** ***M/B fuse No. 16 — (B606) No. 18:***	Is the resistance 1 Ω or less?	Go to step **4**.	Repair the open circuit of the harness between the HPCM connector and the positive terminal of the 12 volt auxiliary battery.
4	**CHECK HARNESS (SHORT TO GROUND).** Using a tester, measure the resistance between the positive terminal of the 12 volt auxiliary battery and chassis ground. ***Connector & terminal*** ***M/B fuse No. 16 — chassis ground:***	Is the resistance 1 MΩ or more?	Even if DTC is detected, the circuit has returned to a normal condition at this time. Reproduce the failure, and then perform the diagnosis again. NOTE: In this case, temporary poor contact of connector, temporary open or short circuit of harness may be the cause.	Repair short circuit to ground in harness between the HPCM connector and the positive terminal of the 12 volt auxiliary battery.

L: DTC P0604 INTERNAL CONTROL MODULE RANDOM ACCESS MEMORY (RAM) ERROR

1. HYBRID POWERTRAIN CONTROL SYSTEM

DIAGNOSIS:

- Immediately at fault recognition
- GENERAL DESCRIPTION <Ref. to GD(HEV)-20, DTC P0604 INTERNAL CONTROL MODULE RANDOM ACCESS MEMORY (RAM) ERROR, Diagnostic Trouble Code (DTC) Detecting Criteria.>

TROUBLE SYMPTOM:

- EV traveling/Auto Start Stop does not operate.
- Motor assist does not regenerates.
- Sometimes driving power and shifting behavior are different from the normal states.

CAUTION:

Before performing diagnosis, refer to "CAUTION" in "General Description". <Ref. to HEV(diag)-8, CAUTION, General Description.>

	Step	Check	Yes	No
1	**CHECK HPCM.** 1) Perform the Clear Memory Mode. <Ref. to HEV(diag)-24, HYBRID POWERTRAIN CONTROL SYSTEM, OPERATION, Clear Memory Mode.> 2) Turn the ignition switch to OFF → ON. 3) Read the DTC again. <Ref. to HEV(diag)-23, HYBRID POWERTRAIN CONTROL SYSTEM, OPERATION, Read Diagnostic Trouble Code (DTC).>	Is DTC P0604 detected? (current malfunction)	Replace the HPCM. <Ref. to HEV-37, Hybrid Powertrain Control Module.>	Even if DTC is detected, the circuit has returned to a normal condition at this time. Reproduce the failure, and then perform the diagnosis again. NOTE: In this case, temporary poor contact of connector, temporary open or short circuit of harness may be the cause.

2. DRIVE MOTOR CONTROL SYSTEM

DIAGNOSIS:

- Immediately at fault recognition
- GENERAL DESCRIPTION <Ref. to GD(HEV)-20, DTC P0604 INTERNAL CONTROL MODULE RANDOM ACCESS MEMORY (RAM) ERROR, Diagnostic Trouble Code (DTC) Detecting Criteria.>

TROUBLE SYMPTOM:

- EV traveling/Auto Start Stop does not operate.
- Motor assist does not regenerates.

CAUTION:

Before performing diagnosis, refer to "CAUTION" in "General Description". <Ref. to HEV(diag)-8, CAUTION, General Description.>

	Step	Check	Yes	No
1	**CHECK DMCM.** 1) Perform the Clear Memory Mode. <Ref. to HEV(diag)-24, DRIVE MOTOR CONTROL SYSTEM, OPERATION, Clear Memory Mode.> 2) Read the DTC again. <Ref. to HEV(diag)-23, DRIVE MOTOR CONTROL SYSTEM, OPERATION, Read Diagnostic Trouble Code (DTC).>	Is DTC P0604 detected? (current malfunction)	Replace DMCM. <Ref. to CVT(TH58A)-155, Drive Motor Control Module.>	Even if DTC is detected, the circuit has returned to a normal condition at this time. Reproduce the failure, and then perform the diagnosis again. NOTE: In this case, temporary poor contact of connector, temporary open or short circuit of harness may be the cause.

3. BATTERY ENERGY CONTROL SYSTEM

DIAGNOSIS:

- Immediately at fault recognition
- GENERAL DESCRIPTION <Ref. to GD(HEV)-20, DTC P0604 INTERNAL CONTROL MODULE RANDOM ACCESS MEMORY (RAM) ERROR, Diagnostic Trouble Code (DTC) Detecting Criteria.>

TROUBLE SYMPTOM:

- EV traveling/Auto Start Stop does not operate.
- Motor assist does not regenerates.

CAUTION:

Before performing diagnosis, refer to "CAUTION" in "General Description". <Ref. to HEV(diag)-8, CAUTION, General Description.>

	Step	Check	Yes	No
1	**CHECK BECM.** 1) Perform the Clear Memory Mode. <Ref. to HEV(diag)-24, BATTERY ENERGY CONTROL SYSTEM, OPERATION, Clear Memory Mode.> 2) Turn the ignition switch to OFF → ON. 3) Read the DTC again. <Ref. to HEV(diag)-23, BATTERY ENERGY CONTROL SYSTEM, OPERATION, Read Diagnostic Trouble Code (DTC).>	Is the same DTC detected? (current malfunction)	Replace the high voltage battery. <Ref. to HEV-17, High Voltage Battery.>	Even if DTC is detected, the circuit has returned to a normal condition at this time. Reproduce the failure, and then perform the diagnosis again. NOTE: In this case, temporary poor contact of connector, temporary open or short circuit of harness may be the cause.

M: DTC P0605 INTERNAL CONTROL MODULE READ ONLY MEMORY (ROM) ERROR

1. HYBRID POWERTRAIN CONTROL SYSTEM

DIAGNOSIS:

- Immediately at fault recognition
- GENERAL DESCRIPTION <Ref. to GD(HEV)-22, DTC P0605 INTERNAL CONTROL MODULE READ ONLY MEMORY (ROM) ERROR, Diagnostic Trouble Code (DTC) Detecting Criteria.>

TROUBLE SYMPTOM:

- EV traveling/Auto Start Stop does not operate.
- Motor assist does not regenerates.
- Sometimes driving power and shifting behavior are different from the normal states.

CAUTION:

Before performing diagnosis, refer to "CAUTION" in "General Description". <Ref. to HEV(diag)-8, CAUTION, General Description.>

	Step	Check	Yes	No
1	**CHECK HPCM.** 1) Perform the Clear Memory Mode. <Ref. to HEV(diag)-24, HYBRID POWERTRAIN CONTROL SYSTEM, OPERATION, Clear Memory Mode.> 2) Turn the ignition switch to OFF → ON. 3) Read the DTC again. <Ref. to HEV(diag)-23, HYBRID POWERTRAIN CONTROL SYSTEM, OPERATION, Read Diagnostic Trouble Code (DTC).>	Is DTC P0605 detected? (current malfunction)	Replace the HPCM. <Ref. to HEV-37, Hybrid Powertrain Control Module.>	Even if DTC is detected, the circuit has returned to a normal condition at this time. Reproduce the failure, and then perform the diagnosis again. NOTE: In this case, temporary poor contact of connector, temporary open or short circuit of harness may be the cause.

2. DRIVE MOTOR CONTROL SYSTEM

DIAGNOSIS:

- Immediately at fault recognition
- GENERAL DESCRIPTION <Ref. to GD(HEV)-22, DTC P0605 INTERNAL CONTROL MODULE READ ONLY MEMORY (ROM) ERROR, Diagnostic Trouble Code (DTC) Detecting Criteria.>

TROUBLE SYMPTOM:

- EV traveling/Auto Start Stop does not operate.
- Motor assist does not regenerates.

CAUTION:

Before performing diagnosis, refer to "CAUTION" in "General Description". <Ref. to HEV(diag)-8, CAUTION, General Description.>

	Step	Check	Yes	No
1	**CHECK DMCM.** 1) Perform the Clear Memory Mode. <Ref. to HEV(diag)-24, DRIVE MOTOR CONTROL SYSTEM, OPERATION, Clear Memory Mode.> 2) Read the DTC again. <Ref. to HEV(diag)-23, DRIVE MOTOR CONTROL SYSTEM, OPERATION, Read Diagnostic Trouble Code (DTC).>	Is DTC P0605 detected? (current malfunction)	Replace DMCM. <Ref. to CVT(TH58A)-155, Drive Motor Control Module.>	Even if DTC is detected, the circuit has returned to a normal condition at this time. Reproduce the failure, and then perform the diagnosis again. NOTE: In this case, temporary poor contact of connector, temporary open or short circuit of harness may be the cause.

3. BATTERY ENERGY CONTROL SYSTEM

DIAGNOSIS:

- Immediately at fault recognition
- GENERAL DESCRIPTION <Ref. to GD(HEV)-22, DTC P0605 INTERNAL CONTROL MODULE READ ONLY MEMORY (ROM) ERROR, Diagnostic Trouble Code (DTC) Detecting Criteria.>

TROUBLE SYMPTOM:

- EV traveling/Auto Start Stop does not operate.
- Motor assist does not regenerates.

CAUTION:

Before performing diagnosis, refer to "CAUTION" in "General Description". <Ref. to HEV(diag)-8, CAUTION, General Description.>

	Step	Check	Yes	No
1	**CHECK BECM.** 1) Perform the Clear Memory Mode. <Ref. to HEV(diag)-24, BATTERY ENERGY CONTROL SYSTEM, OPERATION, Clear Memory Mode.> 2) Turn the ignition switch to OFF. 3) Wait for 30 seconds. 4) Turn the ignition switch to ON. 5) Read the DTC again. <Ref. to HEV(diag)-23, BATTERY ENERGY CONTROL SYSTEM, OPERATION, Read Diagnostic Trouble Code (DTC).>	Is the same DTC detected? (current malfunction)	Replace the high voltage battery. <Ref. to HEV-17, High Voltage Battery.>	Even if DTC is detected, the circuit has returned to a normal condition at this time. Reproduce the failure, and then perform the diagnosis again. NOTE: In this case, temporary poor contact of connector, temporary open or short circuit of harness may be the cause.

N: DTC P0620 GENERATOR CONTROL CIRCUIT

DIAGNOSIS:

- Detects open circuit, short circuit to ground, and short circuit to power in ISG INHCRK line.
- Immediately at fault recognition

TROUBLE SYMPTOM:

EV traveling/Auto Start Stop does not operate.
(Engine does not restart under EV traveling/Auto Start Stop condition.)

CAUTION:

Before performing diagnosis, refer to "CAUTION" in "General Description". <Ref. to HEV(diag)-8, CAUTION, General Description.>

WIRING DIAGRAM:

Hybrid system <Ref. to WI(HEV)-139, WIRING DIAGRAM, Hybrid Electric Vehicle System.>

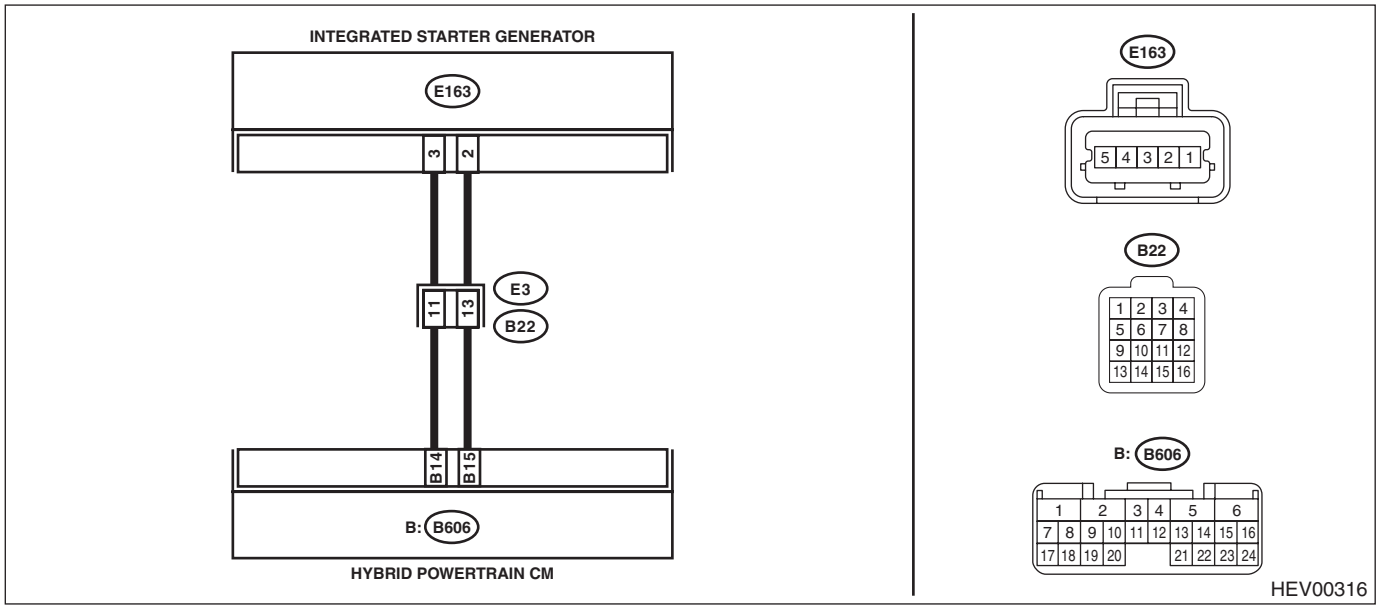

Step		Check	Yes	No
1	**CHECK HARNESS (OPEN CIRCUIT).** 1) Disconnect the HPCM connector. 2) Disconnect the integrated starter generator connector. 3) Using a tester, measure the resistance between the HPCM connector and integrated starter generator connector. ***Connector & terminal*** ***(B606) No. 14 — (E163) No. 3:*** ***(B606) No. 15 — (E163) No. 2:***	Is the resistance less than 1 Ω?	Go to step **2**.	Repair the open circuit of the harness between the HPCM connector and integrated starter generator connector, or repair the intermediate connector.
2	**CHECK HARNESS (SHORT TO GROUND).** Using a tester, measure the resistance between HPCM connector and chassis ground. ***Connector & terminal*** ***(B606) No. 14 — Chassis ground:*** ***(B606) No. 15 — Chassis ground:***	Is the resistance 1 MΩ or more?	Go to step **3**.	Repair the short circuit to ground in the harness between the HPCM connector and integrated starter generator connector, or repair the intermediate connector.

	Step	Check	Yes	No
3	**CHECK HARNESS (SHORT TO GROUND).** 1) Turn the ignition switch to ON. 2) Using a tester, measure the voltage between the HPCM connector and chassis ground. ***Connector & terminal*** ***(B606) No. 14 (+) — Chassis ground (–):*** ***(B606) No. 15 (+) — Chassis ground (–):***	Is the voltage less than 1 V?	Replace the integrated starter generator. <Ref. to SC(H4DO(HEV))-31, Integrated Starter Generator (ISG).>	Repair the short circuit to power in the harness between the HPCM connector and integrated starter generator connector, or repair the intermediate connector.

O: DTC P065A GENERATOR SYSTEM PERFORMANCE

DIAGNOSIS:

- Detects abnormal conditions in battery charging functions.
- Immediately at fault recognition

TROUBLE SYMPTOM:

- EV traveling/Auto Start Stop does not operate.
- Charge warning light illuminates.

CAUTION:

Before performing diagnosis, refer to "CAUTION" in "General Description". <Ref. to HEV(diag)-8, CAUTION, General Description.>

WIRING DIAGRAM:

Hybrid system <Ref. to WI(HEV)-139, WIRING DIAGRAM, Hybrid Electric Vehicle System.>
Power Supply Circuit <Ref. to WI(HEV)-20, WIRING DIAGRAM, Power Supply Circuit.>

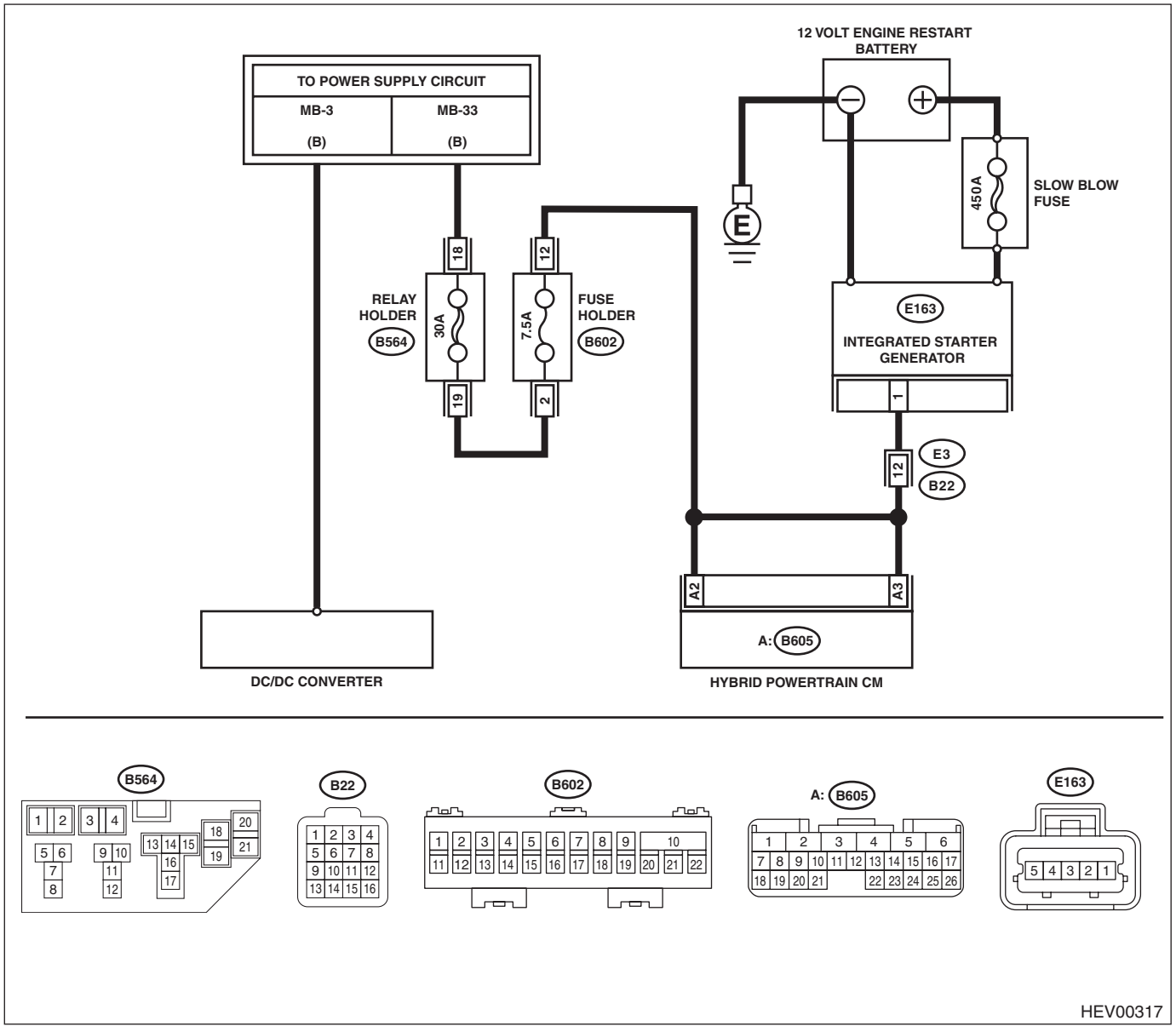

	Step	Check	Yes	No
1	**CHECK FUSE.** Check the slow blow fuse of the 12 volt auxiliary battery.	Is the condition normal?	Go to step **2**.	Replace the fuse. When the replaced fuse blows out easily, repair short circuit to ground in harness between DC/DC converter and the battery.
2	**CHECK DC/DC CONVERTER FASTENING AREA.** 1) Disconnect the ground cable of the 12 volt auxiliary battery, and as for the 12 volt engine restart battery, disconnect the ground cable from the 12V engine restart battery sensor. <Ref. to NT-5, BATTERY, NOTE, Note.> 2) Disconnect the positive cable from the 12 volt auxiliary battery. 3) Remove the service disconnect plug. <Ref. to HEV-15, Service Plug.> 4) Wait for 10 minutes. 5) Check the fastening areas of the DC/DC converter 12 volt cable.	Is the condition normal? (Check for loose bolts, insecure connection, foreign matter caught, trace of arc (burnt terminals) etc.)	Go to step **3**.	Retighten the bolts.
3	**CHECK HARNESS (OPEN CIRCUIT).** 1) Disconnect the 12 volt cable of the DC/DC converter. 2) Using a tester, measure the resistance between the positive terminal of the 12 volt auxiliary battery and the fastening area of the DC/DC converter power cable. ***Connector & terminal*** ***12 volt auxiliary battery — DC/DC converter:***	Is the resistance less than 1 Ω?	Go to step **4**.	Repair the open circuit of the power cable between the DC/DC converter and the positive terminal of the 12 volt auxiliary battery.
4	**CHECK BATTERY.** Check the 12 volt auxiliary battery. <Ref. to SC(H4DO(HEV))-38, Battery.> NOTE: Check for conditions such as loose terminals.	Is the condition normal?	Go to step **5**.	Charge or replace the battery.
5	**CHECK DCDC.** Using the Subaru Select Monitor, perform «DCDC Converter Output Voltage Control» of System Operation Check Mode for the hybrid powertrain control system. <Ref. to HEV(diag)-72, HYBRID POWERTRAIN CONTROL SYSTEM, OPERATION, System Operation Check Mode.>	Is the condition normal?	Go to step **6**.	Perform the diagnosis of DTC P0A94. <Ref. to HEV(diag)-220, DTC P0A94 DC/DC CONVERTER PERFORMANCE, Diagnostic Procedure with Diagnostic Trouble Code (DTC).>
6	**CHECK FUSE.** Check the fuse. <Ref. to HEV-12, Relay and Fuse.>	Is the condition normal?	Go to step **7**.	Replace the fuse. If the fuse blows out easily, repair the short circuit of harness.
7	**CHECK BELTS.** Check the belt. <Ref. to ME(H4DO(w/o HEV))-120, V-belt.>	Is the condition normal?	Go to step **8**.	Adjust or replace the belt.

	Step	Check	Yes	No
8	**CHECK CURRENT DATA.** Using the Subaru Select Monitor, confirm the current data of hybrid powertrain control system, the value of «ISG Control Mode Actual»«12V Engine Restart Battery Voltage»«ISG Terminal Voltage». <Ref. to HEV(diag)-40, HYBRID POWERTRAIN CONTROL SYSTEM, OPERATION, Read Current Data.>	Is «12V Engine Restart Battery Voltage»«ISG Terminal Voltage» 12 — 15 V when the engine speed is at 2000 rpm or more and «ISG Control Mode Actual» is generating power?	Even if DTC is detected, the circuit has returned to a normal condition at this time. Reproduce the failure, and then perform the diagnosis again. NOTE: In this case, temporary poor contact of connector, temporary open or short circuit of harness may be the cause.	Go to step **9**.
9	**CHECK CURRENT DATA.** Using the Subaru Select Monitor, confirm the current data of hybrid powertrain control system, the value of «HPCM Check 40». <Ref. to HEV(diag)-40, HYBRID POWERTRAIN CONTROL SYSTEM, OPERATION, Read Current Data.>	Is the value 30 m Ω or more?	Check for poor contact of 12 volt engine restart battery terminals. <Ref. to NT-5, BATTERY, NOTE, Note.>	Go to step **10**.
10	**CHECK HARNESS (OPEN CIRCUIT).** 1) Turn the ignition switch to OFF. 2) Disconnect the HPCM connector. 3) Disconnect the integrated starter generator connector. 4) Using a tester, measure the resistance between the HPCM connector and integrated starter generator connector. ***Connector & terminal*** ***(B605) No. 2 — (E163) No. 1:*** ***(B605) No. 3 — (E163) No. 1:***	Is the resistance less than 1 Ω?	Go to step **11**.	Repair the open circuit of the harness between the HPCM connector and the integrated starter generator terminal.
11	**CHECK BATTERY.** Check the 12 volt engine restart battery. <Ref. to SC(H4DO(HEV))-38, Battery.>	Is the condition normal?	Replace the integrated starter generator. <Ref. to SC(H4DO(HEV))-31, Integrated Starter Generator (ISG).>	Charge or replace the 12 volt engine restart battery.

P: DTC P06EF ENGINE RESTART PERFORMANCE

DIAGNOSIS:

- Detects communication error, open harness, engine restart system error due to trouble in starting devices.
- Immediately at fault recognition

TROUBLE SYMPTOM:

EV traveling/Auto Start Stop does not operate.
(Engine does not restart under EV traveling/Auto Start Stop condition.)

CAUTION:

Before performing diagnosis, refer to "CAUTION" in "General Description". <Ref. to HEV(diag)-8, CAUTION, General Description.>

WIRING DIAGRAM:

Hybrid system <Ref. to WI(HEV)-139, WIRING DIAGRAM, Hybrid Electric Vehicle System.>

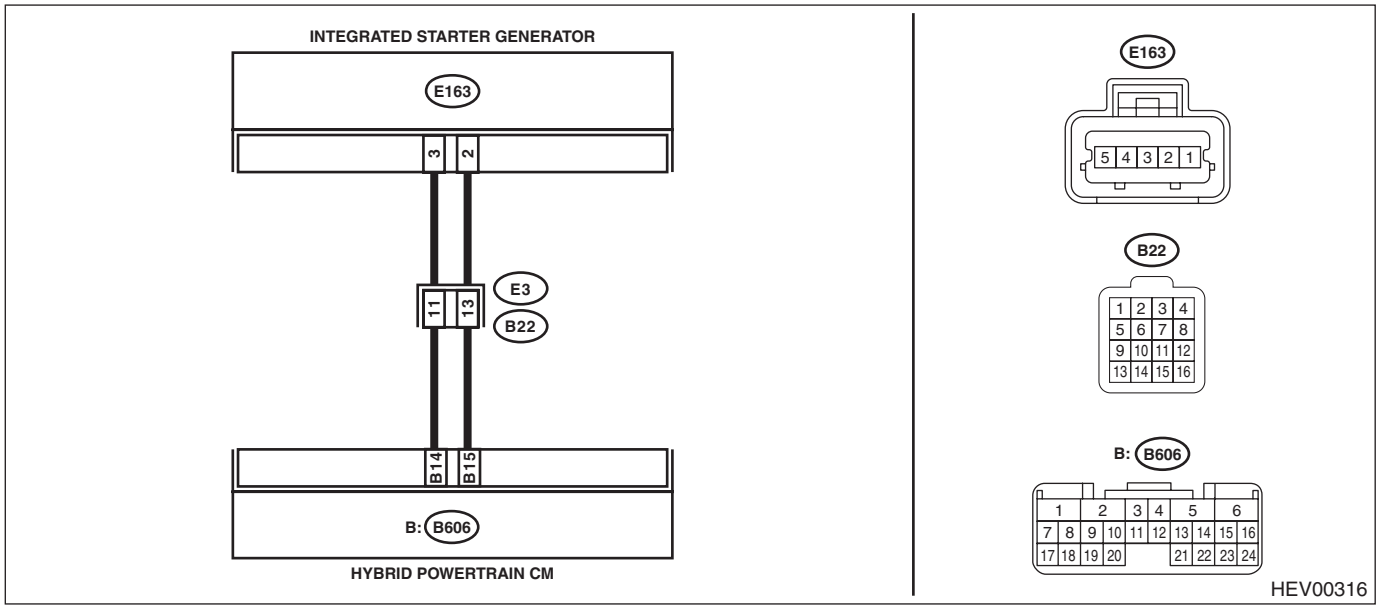

Step		Check	Yes	No
1	**CHECK DTC.** Read the DTC. <Ref. to HEV(diag)-23, HYBRID POWERTRAIN CONTROL SYSTEM, OPERATION, Read Diagnostic Trouble Code (DTC).>	Are any other DTCs detected? (current malfunction)	Perform the diagnosis according to DTC. <Ref. to HEV(diag)-74, HYBRID POWERTRAIN CONTROL SYSTEM, LIST, List of Diagnostic Trouble Code (DTC).>	Go to step **2**.
2	**CHECK INTEGRATED STARTER GENERATOR (SHORT TO GROUND).** 1) Disconnect the ground cable of the 12 volt auxiliary battery, and as for the 12 volt engine restart battery, disconnect the ground cable from the 12V engine restart battery sensor. <Ref. to NT-5, BATTERY, NOTE, Note.> 2) Check the installation condition of integrated starter generator. <Ref. to SC(H4DO(HEV))-31, Integrated Starter Generator (ISG).>	Is the condition normal?	Go to step **3**.	Attach the integrated starter generator securely.

	Step	Check	Yes	No
3	**CHECK HARNESS (OPEN CIRCUIT).** 1) Disconnect the HPCM connector. 2) Disconnect the integrated starter generator connector. 3) Using a tester, measure the resistance between the HPCM connector and integrated starter generator connector. ***Connector & terminal*** ***(B606) No. 15 — (E162) No. 2:***	Is the resistance less than 1 Ω?	Go to step **4**.	Repair the open circuit of the harness between the HPCM connector and the integrated starter generator connector.
4	**CHECK HARNESS (SHORT TO GROUND).** Using a tester, measure the resistance between HPCM connector and chassis ground. ***Connector & terminal*** ***(B606) No. 15 — Chassis ground:***	Is the resistance 1 MΩ or more?	Go to step **5**.	Repair ground short circuit of harness between the HPCM connector and the integrated starter generator connector.
5	**CHECK HARNESS (SHORT TO POWER).** 1) Connect the disconnected battery. 2) Turn the ignition switch to ON. 3) Using a tester, measure the voltage between the HPCM connector and chassis ground. ***Connector & terminal*** ***(B606) No. 15 (+) — Chassis ground (–):***	Is the voltage less than 1 V?	Go to step **6**.	Repair the short circuit to power in harness between the HPCM connector and the integrated starter generator connector.
6	**INSPECTION OF INTEGRATED STARTER GENERATOR UNIT.** Check the integrated starter generator as a single part. <Ref. to SC(H4DO(HEV))-31, Integrated Starter Generator (ISG).>	Is the condition normal?	Go to step **7**.	Replace the integrated starter generator.
7	**CHECK BATTERY.** Check the 12 volt engine restart battery. <Ref. to SC(H4DO(HEV))-38, Battery.>	Is the condition normal?	Replace the HPCM. <Ref. to HEV-37, Hybrid Powertrain Control Module.>	Charge or replace the battery.

Q: DTC P0719 BRAKE SWITCH "B" CIRCUIT LOW

DIAGNOSIS:
GENERAL DESCRIPTION <Ref. to GD(HEV)-24, DTC P0719 BRAKE SWITCH "B" CIRCUIT LOW, Diagnostic Trouble Code (DTC) Detecting Criteria.>

CAUTION:
Before performing diagnosis, refer to "CAUTION" in "General Description". <Ref. to HEV(diag)-8, CAUTION, General Description.>
WIRING DIAGRAM:
Stop light system <Ref. to WI(HEV)-208, WIRING DIAGRAM, Stop Light System.>

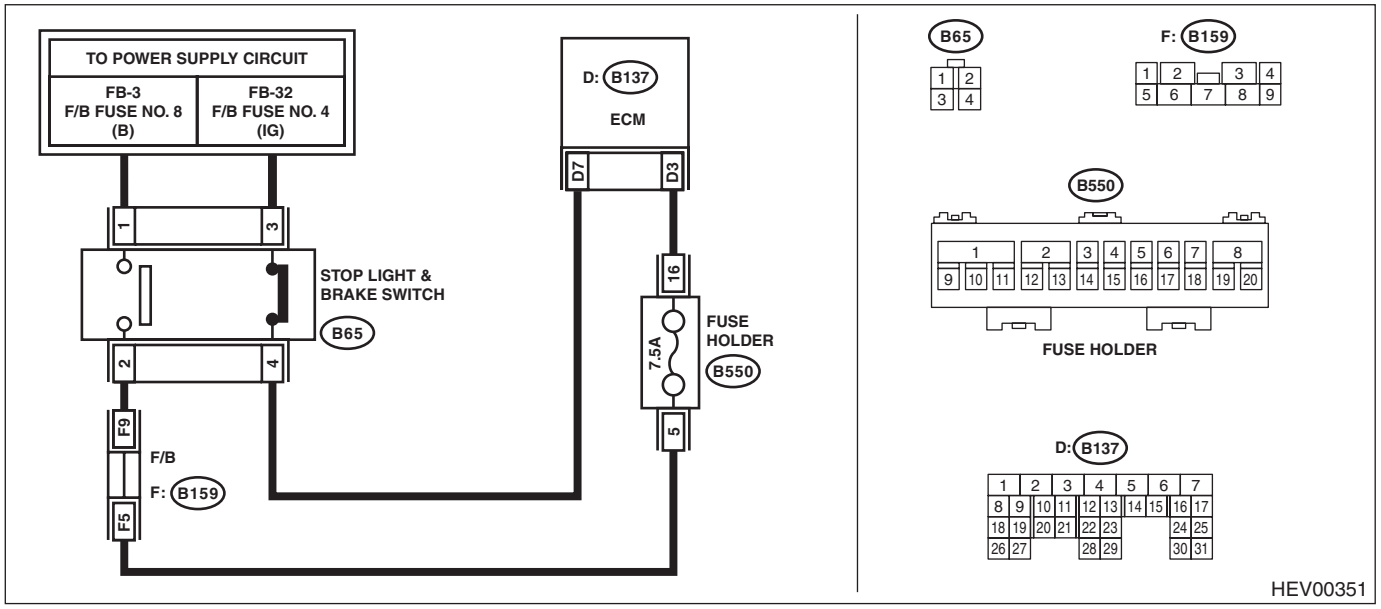

Step		Check	Yes	No
1	**CHECK STOP LIGHT & BRAKE SWITCH.** Check the stop light & brake switch. <Ref. to CC-14, Stop Light & Brake Switch.>	Is the stop light & brake switch and installation position OK?	Go to step **2**.	Replace the stop light & brake switch. Or adjust the installation position.
2	**CHECK STOP LIGHT & BRAKE SWITCH CIRCUIT.** 1) Turn the ignition switch to OFF. 2) Disconnect the stop light & brake switch connector. 3) Turn the ignition switch to ON. 4) Measure the voltage between the stop light & brake switch connector and chassis ground. ***Connector & terminal*** ***(B65) No. 1 (+) — Chassis ground (–):***	Is the voltage 10 V or more?	Go to step **3**.	• Check fuse No. 8 (in fuse & relay box). • Check for open or short in the harness between stop light & brake switch and fuse & relay box.
3	**CHECK STOP LIGHT & BRAKE SWITCH CIRCUIT.** 1) Turn the ignition switch to OFF. 2) Disconnect the ECM connector. 3) Measure the resistance between the ECM connector and stop light & brake switch connector. ***Connector & terminal*** ***(B137) No. 3 — (B65) No. 2:***	Is the resistance less than 10 Ω?	Replace the ECM. <Ref. to FU(H4DO(HEV))-85, Engine Control Module (ECM).>	Repair the open circuit of harness between ECM connector and stop light & brake switch connector.

R: DTC P0724 BRAKE SWITCH "B" CIRCUIT HIGH

DIAGNOSIS:

GENERAL DESCRIPTION <Ref. to GD(HEV)-25, DTC P0724 BRAKE SWITCH "B" CIRCUIT HIGH, Diagnostic Trouble Code (DTC) Detecting Criteria.>

NOTE:

For the diagnostic procedure, refer to “DTC P0719 BRAKE SWITCH "B" CIRCUIT LOW”. <Ref. to HEV(diag)-121, DTC P0719 BRAKE SWITCH "B" CIRCUIT LOW, Diagnostic Procedure with Diagnostic Trouble Code (DTC).>

S: DTC P0A1D HYBRID POWERTRAIN CONTROL MODULE

DIAGNOSIS:

- Immediately at fault recognition
- GENERAL DESCRIPTION <Ref. to GD(HEV)-26, DTC P0A1D HYBRID POWERTRAIN CONTROL MODULE, Diagnostic Trouble Code (DTC) Detecting Criteria.>

TROUBLE SYMPTOM:

- EV traveling/Auto Start Stop does not operate.
- Motor assist does not regenerates.
- Sometimes driving power and shifting behavior are different from the normal states.

CAUTION:
Before performing diagnosis, refer to "CAUTION" in "General Description". <Ref. to HEV(diag)-8, CAUTION, General Description.>

	Step	Check	Yes	No
1	**CHECK HPCM.** 1) Turn the ignition switch to OFF. 2) Wait for 30 seconds. 3) Turn the ignition switch to ON. 4) Perform the Clear Memory Mode. <Ref. to HEV(diag)-24, HYBRID POWERTRAIN CONTROL SYSTEM, OPERATION, Clear Memory Mode.> 5) Read the DTC again. <Ref. to HEV(diag)-23, HYBRID POWERTRAIN CONTROL SYSTEM, OPERATION, Read Diagnostic Trouble Code (DTC).>	Is DTC P0A1D detected? (current malfunction)	Replace the HPCM. <Ref. to HEV-37, Hybrid Powertrain Control Module.>	Even if DTC is detected, the circuit has returned to a normal condition at this time. Reproduce the failure, and then perform the diagnosis again. NOTE: In this case, temporary poor contact of connector, temporary open or short circuit of harness may be the cause.

T: DTC P1C00 BATTERY "2" MONITOR MODULE PERFORMANCE

DIAGNOSIS:
- Detects functional errors of the 12 volt engine restart battery sensor.
- Immediately at fault recognition

TROUBLE SYMPTOM:
- EV traveling/Auto Start Stop does not operate.
- System operation check mode is prohibited. <Ref. to HEV(diag)-84, Fail-Safe Chart.>
- Charge warning light illuminates.

CAUTION:
Before performing diagnosis, refer to "CAUTION" in "General Description". <Ref. to HEV(diag)-8, CAUTION, General Description.>

Step		Check	Yes	No
1	**CHECK DTC.** Read the DTC. <Ref. to HEV(diag)-23, HYBRID POWERTRAIN CONTROL SYSTEM, OPERATION, Read Diagnostic Trouble Code (DTC).>	Is DTC P1C00 detected? (current malfunction)	Replace the 12V engine restart battery sensor. <Ref. to SC(H4DO(HEV))-54, Battery Sensor.>	Even if DTC is detected, the circuit has returned to a normal condition at this time. Reproduce the failure, and then perform the diagnosis again. NOTE: In this case, temporary poor contact of connector, temporary open or short circuit of harness may be the cause.

U: DTC P1C04 OUTPUT CLUTCH LINEAR SOLENOID CONTROL CIRCUIT LOW

DIAGNOSIS:

- Detects short circuit to ground of output clutch linear solenoid HPCM side circuit (LOW).
- Judge as NG when the detection result is out of specification.
- Immediately at fault recognition

TROUBLE SYMPTOM:

Normal control

CAUTION:

Before performing diagnosis, refer to "CAUTION" in "General Description". <Ref. to HEV(diag)-8, CAUTION, General Description.>

WIRING DIAGRAM:

CVT control system <Ref. to WI(HEV)-86, WIRING DIAGRAM, CVT Control System.>

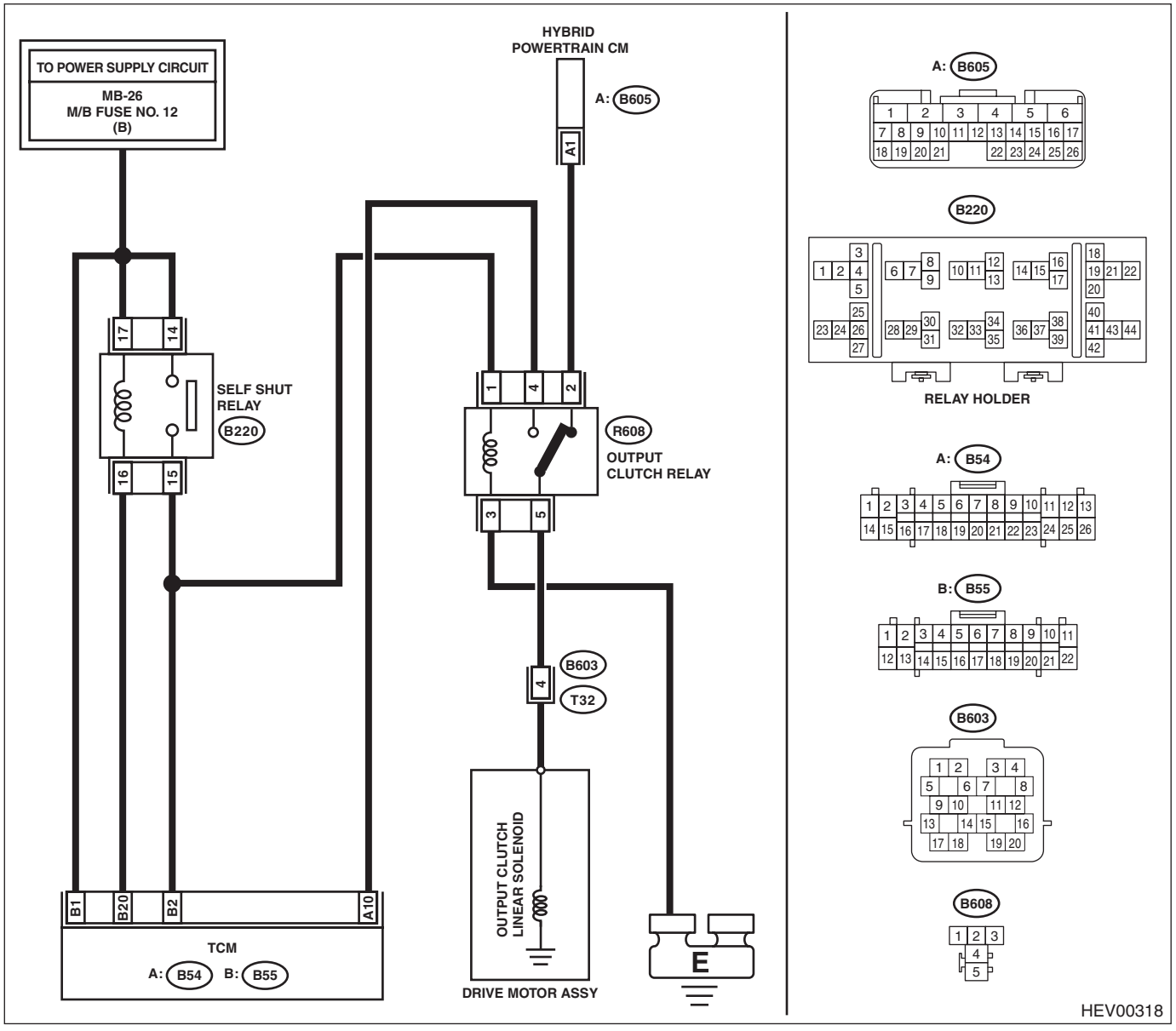

	Step	Check	Yes	No
1	**CHECK DTC.** Read DTCs of the following system. • Transmission <Ref. to CVT(HEV)(diag)-18, Read Diagnostic Trouble Code (DTC).>	Is either DTC P2719, P2720, or P2721 detected? (current malfunction)	Perform the diagnosis according to DTC. <Ref. to CVT(HEV)(diag)-32, List of Diagnostic Trouble Code (DTC).>	Go to step **2**.
2	**CHECK HARNESS (OPEN CIRCUIT).** 1) Disconnect the HPCM connector. 2) Remove the output clutch relay. 3) Using a tester, measure the resistance between the HPCM connector and output clutch relay connector. ***Connector & terminal*** ***(B605) No. 1 — (B608) No. 2:***	Is the resistance less than 1 Ω?	Go to step **3**.	Repair the open circuit of the harness between the HPCM connector and the output clutch relay connector.
3	**CHECK RELAY.** Check the output clutch relay. <Ref. to CVT(TH58A)-158, Relay and Fuse.>	Is the output clutch relay OK?	Replace the HPCM. <Ref. to HEV-37, Hybrid Powertrain Control Module.>	Replace the output clutch relay.

V: DTC P1C05 OUTPUT CLUTCH LINEAR SOLENOID CONTROL CIRCUIT HIGH

DIAGNOSIS:

- Detects open circuit and short circuit to power in output clutch linear solenoid HPCM side circuit (LOW).
- Judge as NG when the detection result is out of specification.
- Immediately at fault recognition

TROUBLE SYMPTOM:

Normal control

CAUTION:

Before performing diagnosis, refer to "CAUTION" in "General Description". <Ref. to HEV(diag)-8, CAUTION, General Description.>

WIRING DIAGRAM:

CVT control system <Ref. to WI(HEV)-86, WIRING DIAGRAM, CVT Control System.>

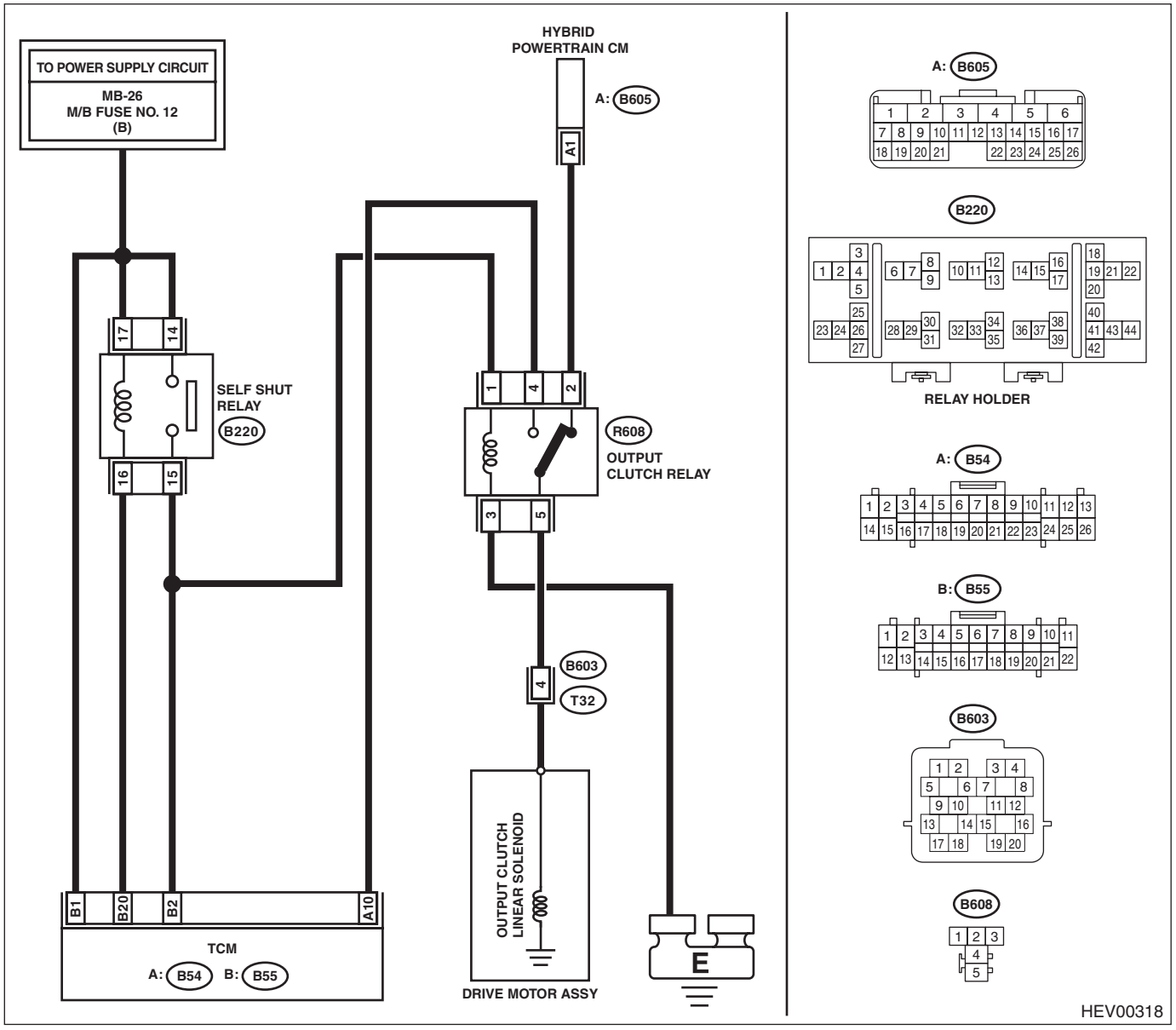

	Step	Check	Yes	No
1	**CHECK DTC.** Read DTCs of the following system. • Transmission <Ref. to CVT(HEV)(diag)-18, Read Diagnostic Trouble Code (DTC).>	Is either DTC P2719, P2720, or P2721 detected? (current malfunction)	Perform the diagnosis according to DTC. <Ref. to CVT(HEV)(diag)-32, List of Diagnostic Trouble Code (DTC).>	Go to step **2**.
2	**CHECK HARNESS (SHORT TO GROUND).** 1) Disconnect the HPCM connector. 2) Remove the output clutch relay. 3) Using a tester, measure the resistance between the output clutch connector and chassis ground. ***Connector & terminal*** ***(B608) No. 2 — Chassis ground:***	Is the resistance 1 MΩ or more?	Go to step **3**.	Repair the short circuit to ground in harness between output clutch relay connector and chassis ground.
3	**CHECK RELAY.** Check the output clutch relay. <Ref. to CVT(TH58A)-158, Relay and Fuse.>	Is the output clutch relay OK?	Replace the HPCM. <Ref. to HEV-37, Hybrid Powertrain Control Module.>	Replace the output clutch relay.

W: DTC P1C06 12V BATTERY RELAY CLOSE CIRCUIT PERFORMANCE

DIAGNOSIS:

- Detects open circuit, short circuit to ground, and short circuit to power in the harness of 12V battery relay close circuit.
- Judge as NG when the detection result is out of specification.
- Immediately at fault recognition

TROUBLE SYMPTOM:

- EV traveling/Auto Start Stop does not operate.

(Engine does not restart under EV traveling/Auto Start Stop condition.)

- Charge warning light illuminates.

CAUTION:

Before performing diagnosis, refer to "CAUTION" in "General Description". <Ref. to HEV(diag)-8, CAUTION, General Description.>

NOTE:
If those trouble occurs, the 12 volt auxiliary battery may run out.

WIRING DIAGRAM:

Power Supply Circuit <Ref. to WI(HEV)-20, WIRING DIAGRAM, Power Supply Circuit.>

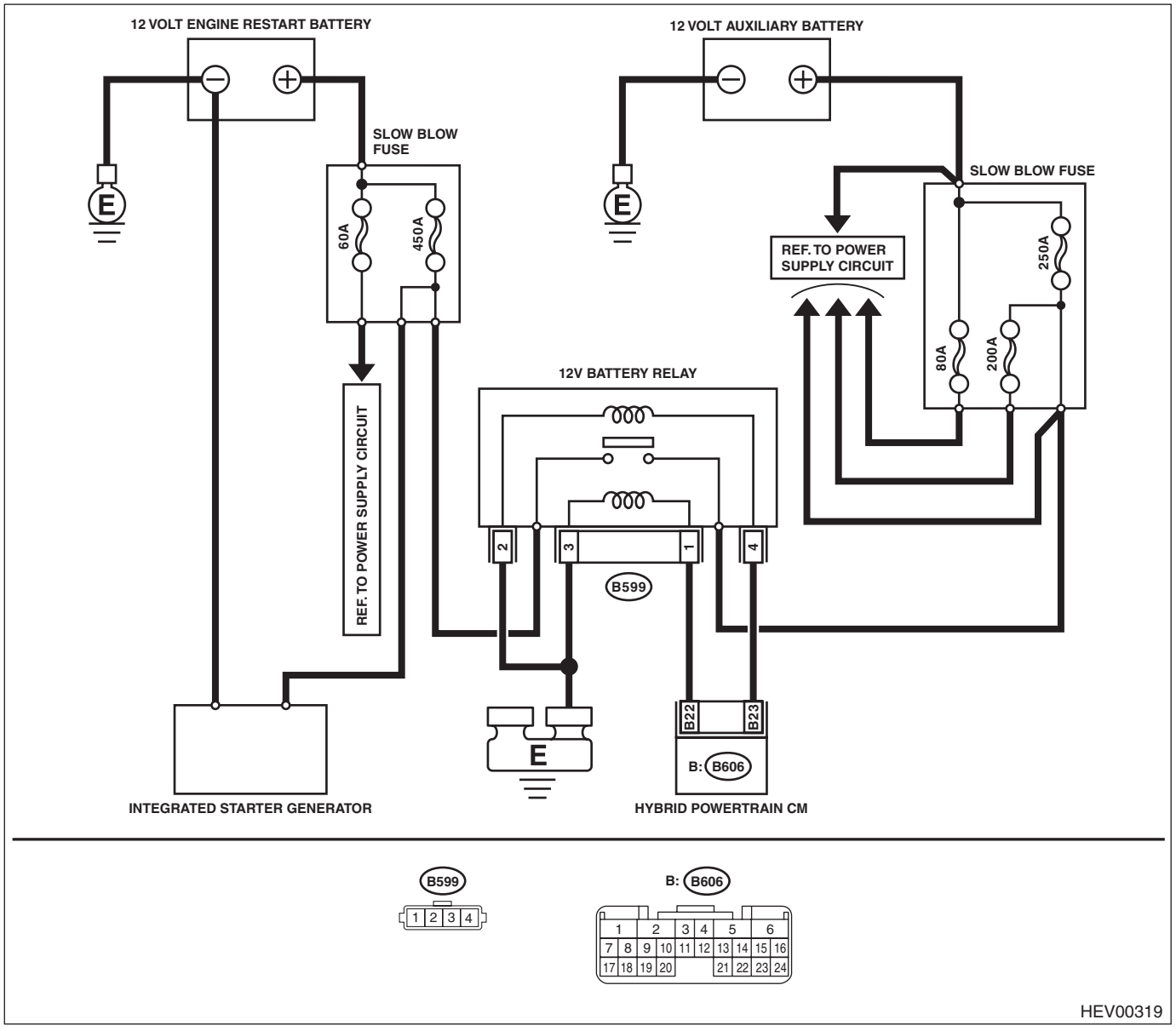

	Step	Check	Yes	No
1	**CHECK HARNESS (OPEN CIRCUIT).** 1) Disconnect the battery relay connector. 2) Disconnect the HPCM connector. 3) Using a tester, measure the resistance between the 12V battery relay connector and the HPCM connector and the resistance between 12V battery relay connector and chassis ground. ***Connector & terminal*** ***(B599) No. 1 — (B606) No. 22:*** ***(B606) No. 3 — Chassis ground:***	Is the resistance less than 1 Ω?	Go to step **2**.	Repair open circuit in harness between the 12V battery relay connector and the HPCM connector and the harness between 12V battery relay connector and chassis ground.
2	**CHECK HARNESS (SHORT TO GROUND).** Using a tester, measure the resistance between 12V battery relay connector and chassis ground. ***Connector & terminal*** ***(B606) No. 22 — Chassis ground:***	Is the resistance 1 MΩ or more?	Go to step **3**.	Repair the short circuit to ground in the harness between the 12V battery relay connector and the HPCM connector.
3	**CHECK HARNESS (SHORT TO POWER).** 1) Turn the ignition switch to ON. 2) Using a tester, measure the voltage between 12V battery relay connector and chassis ground. ***Connector & terminal*** ***(B599) No. 1 — Chassis ground:*** ***(B606) No. 22 — Chassis ground:***	Is the voltage less than 1 V?	Replace the HPCM. <Ref. to HEV-37, Hybrid Powertrain Control Module.>	Repair the short circuit to power in the harness between the 12V battery relay connector and the HPCM connector.

X: DTC P1C07 12V BATTERY RELAY OPEN CIRCUIT PERFORMANCE

DIAGNOSIS:

- Detects open circuit, short circuit to ground, and short circuit to power in the harness of 12V battery relay open circuit.
- Judge as NG when the detection result is out of specification.
- Immediately at fault recognition

TROUBLE SYMPTOM:

- EV traveling/Auto Start Stop does not operate.

(Engine does not restart under EV traveling/Auto Start Stop condition.)

- Charge warning light illuminates.

CAUTION:

Before performing diagnosis, refer to "CAUTION" in "General Description". <Ref. to HEV(diag)-8, CAUTION, General Description.>

WIRING DIAGRAM:

Power Supply Circuit <Ref. to WI(HEV)-20, WIRING DIAGRAM, Power Supply Circuit.>

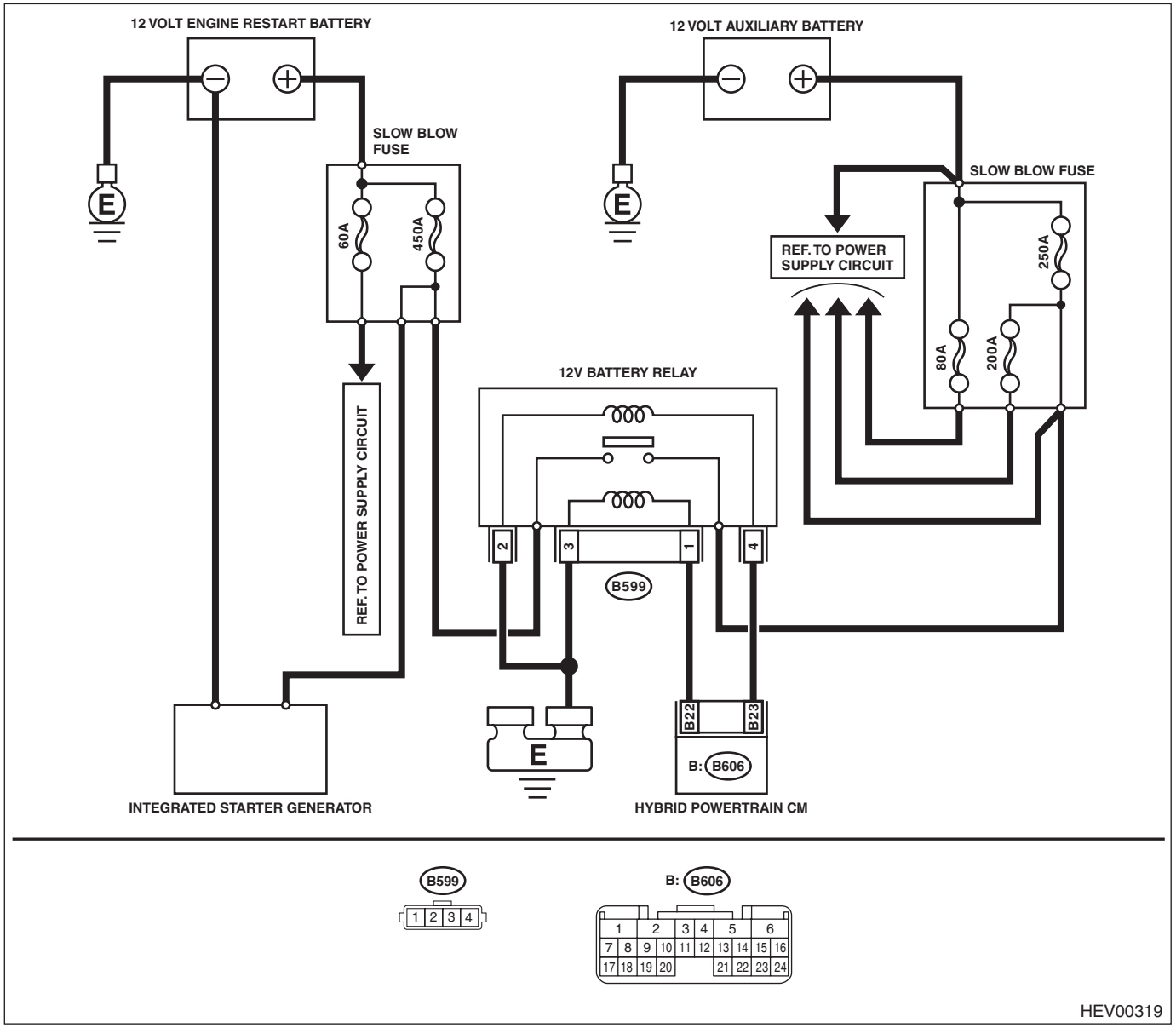

	Step	Check	Yes	No
1	**CHECK HARNESS (OPEN CIRCUIT).** 1) Disconnect the 12V battery relay connector. 2) Disconnect the HPCM connector. 3) Using a tester, measure the resistance between the 12V battery relay connector and the HPCM connector and the resistance between 12V battery relay connector and chassis ground. ***Connector & terminal*** ***(B599) No. 4 — (B606) No. 23:*** ***(B599) No. 3 — Chassis ground:***	Is the resistance less than 1 Ω?	Go to step **2**.	Repair open circuit in harness between the 12V battery relay connector and the HPCM connector and the harness between 12V battery relay connector and chassis ground.
2	**CHECK HARNESS (SHORT TO GROUND).** Using a tester, measure the resistance between 12V battery relay connector and chassis ground. ***Connector & terminal*** ***(B599) No. 4 — Chassis ground:***	Is the resistance 1 MΩ or more?	Go to step **3**.	Repair the short circuit to ground in the harness between the 12V battery relay connector and the HPCM connector.
3	**CHECK HARNESS (SHORT TO POWER).** 1) Turn the ignition switch to ON. 2) Using a tester, measure the voltage between 12V battery relay connector and chassis ground. ***Connector & terminal*** ***(B599) No. 4 — Chassis ground:*** ***(B599) No. 3 — Chassis ground:***	Is the voltage less than 1 V?	Replace the HPCM. <Ref. to HEV-37, Hybrid Powertrain Control Module.>	Repair the short circuit to power in the harness between the 12V battery relay connector and the HPCM connector.

Y: DTC P1C08 12V BATTERY RELAY PERFORMANCE OR STUCK OFF

DIAGNOSIS:

- Detects a stuck condition in 12V battery relay open circuit.
- Judge as NG when the detection result is out of specification.
- Immediately at fault recognition

TROUBLE SYMPTOM:

- EV traveling/Auto Start Stop does not operate.
- Charge warning light illuminates.

CAUTION:

Before performing diagnosis, refer to "CAUTION" in "General Description". <Ref. to HEV(diag)-8, CAUTION, General Description.>

NOTE:

If those trouble occurs, the 12 volt auxiliary battery may run out.

WIRING DIAGRAM:

Power Supply Circuit <Ref. to WI(HEV)-20, WIRING DIAGRAM, Power Supply Circuit.>

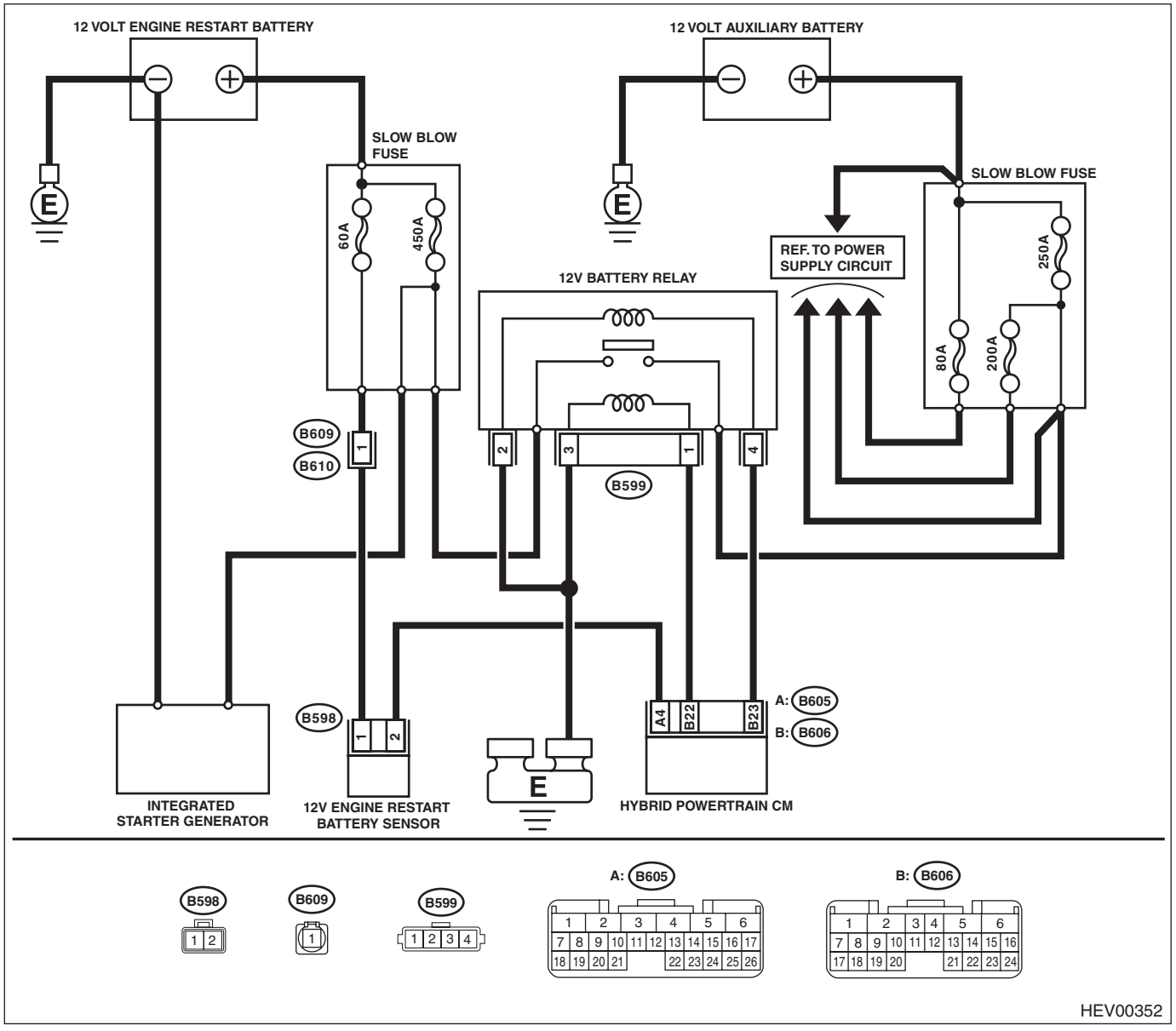

	Step	Check	Yes	No
1	**CHECK CONNECTOR.** Check the connector (B598) of 12V engine restart battery sensor.	Is there looseness or poor contact of connector?	Repair the connector.	Go to step **2**.
2	**CHECK FUSE.** Check the slow blow fuse of the 12 volt auxiliary battery and 12 volt engine restart battery.	Is the condition normal?	Go to step **3**.	Replace the fuse. When the replaced fuse is blown immediately, repair ground short circuit of harness between 12 volt engine restart battery and the 12 volt battery relay and the harness between 12 volt auxiliary battery and the 12V battery relay.
3	**CHECK RELAY.** Using the Subaru Select Monitor, perform «12V Battery Relay Operation» of System Operation Check Mode for the hybrid powertrain control system. <Ref. to HEV(diag)-72, HYBRID POWERTRAIN CONTROL SYSTEM, OPERATION, System Operation Check Mode.>	Does the relay operate?	Even if DTC is detected, the circuit has returned to a normal condition at this time. Reproduce the failure, and then perform the diagnosis again. NOTE: In this case, temporary poor contact of connector, temporary open or short circuit of harness may be the cause.	Go to step **4**.
4	**CHECK RELAY.** Check the 12V battery relay. <Ref. to SC(H4DO(HEV))-58, 12V Battery Relay.>	Is the condition normal?	Go to step **5**.	Replace the 12V battery relay.
5	**CHECK TERMINALS.** Check the 12V battery relay for loose bolts or corrosion.	Is the condition normal?	Go to step **6**.	Repair the terminals.
6	**CHECK HARNESS (SHORT TO GROUND).** Using a tester, measure the resistance between 12V battery relay connector and each battery. ***Connector & terminal*** ***Positive terminal of 12 volt engine restart battery — 12V battery relay terminal (12 volt engine restart battery side):*** ***Positive terminal of 12 volt auxiliary battery — 12V battery relay terminal (12 volt auxiliary battery side):***	Is the resistance 1 Ω or less?	Replace the HPCM. <Ref. to HEV-37, Hybrid Powertrain Control Module.>	Repair the open circuit in harness between the 12V battery relay connector and each battery.

Z: DTC P1C09 12V BATTERY RELAY PERFORMANCE OR STUCK ON

DIAGNOSIS:

- Detects a stuck condition in 12V battery relay close circuit.
- Judge as NG when the detection result is out of specification.
- Immediately at fault recognition

TROUBLE SYMPTOM:

EV traveling/Auto Start Stop does not operate.
(Engine does not restart under EV traveling/Auto Start Stop condition.)

NOTE:
For the diagnostic procedure, “DTC P1C08 12V BATTERY RELAY PERFORMANCE OR STUCK OFF”. <Ref. to HEV(diag)-133, DTC P1C08 12V BATTERY RELAY PERFORMANCE OR STUCK OFF, Diagnostic Procedure with Diagnostic Trouble Code (DTC).>

AA:DTC P1C0C BRAKE PEDAL POSITION SENSOR "2" CIRCUIT LOW

DIAGNOSIS:

- Immediately at fault recognition
- GENERAL DESCRIPTION <Ref. to GD(HEV)-27, DTC P1C0C BRAKE PEDAL POSITION SENSOR "2" CIRCUIT LOW, Diagnostic Trouble Code (DTC) Detecting Criteria.>

TROUBLE SYMPTOM:

EV traveling/Auto Start Stop does not operate.

CAUTION:

Before performing diagnosis, refer to “CAUTION” in “General Description”. <Ref. to HEV(diag)-8, CAUTION, General Description.>

WIRING DIAGRAM:

Hybrid system <Ref. to WI(HEV)-139, WIRING DIAGRAM, Hybrid Electric Vehicle System.>

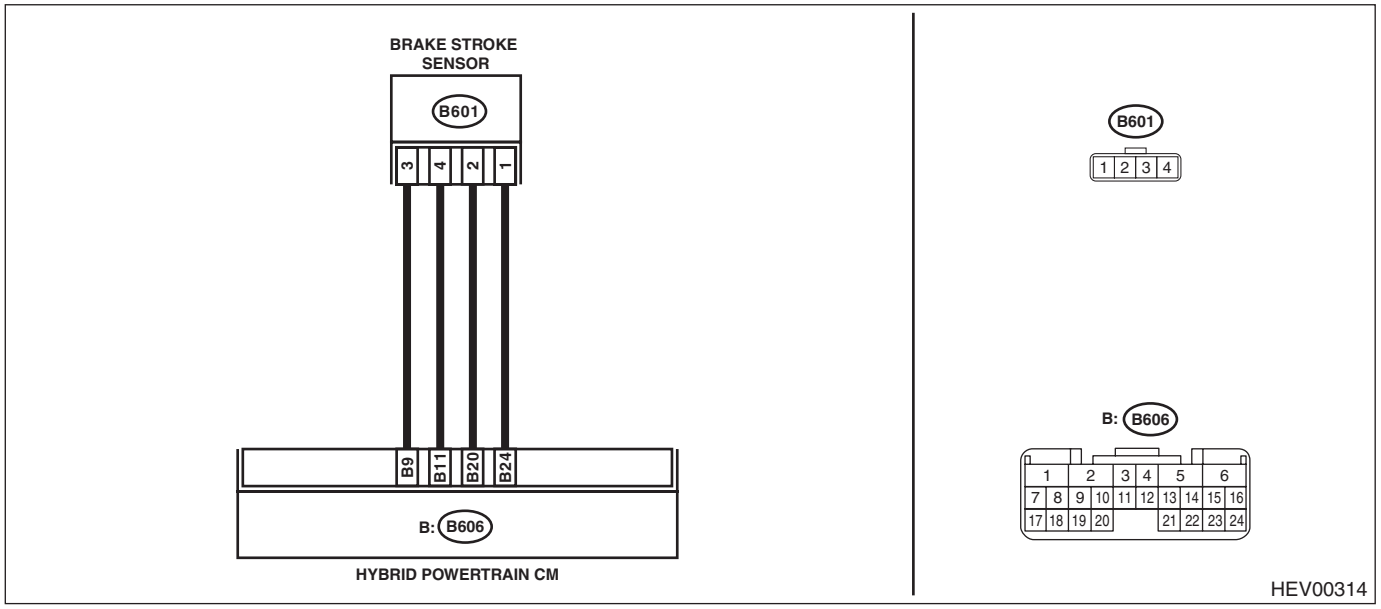

Step		Check	Yes	No
1	**CHECK DTC.** Read the DTC. <Ref. to HEV(diag)-23, HYBRID POWERTRAIN CONTROL SYSTEM, OPERATION, Read Diagnostic Trouble Code (DTC).>	Is DTC P057C detected? (current malfunction)	Go to step **6**.	Go to step **2**.
2	**CHECK CURRENT DATA.** Using the Subaru Select Monitor, confirm the current data of hybrid powertrain control system, the value of «Main Brake Pedal Position Sensor Voltage»«Sub Brake Pedal Position Sensor Voltage». <Ref. to HEV(diag)-40, HYBRID POWERTRAIN CONTROL SYSTEM, OPERATION, Read Current Data.>	Is the value of «Main Brake Pedal Position Sensor Voltage» approximately 1 V, and the value of «Sub Brake Pedal Position Sensor Voltage» approximately 4 V when the pedal is not depressed? Also, do values of «Main Brake Pedal Position Sensor Voltage» and «Sub Brake Pedal Position Sensor Voltage» change when the pedal is depressed?	Even if DTC is detected, the circuit has returned to a normal condition at this time. Reproduce the failure, and then perform the diagnosis again. NOTE: In this case, temporary poor contact of connector, temporary open or short circuit of harness may be the cause.	Go to step **3**.

	Step	Check	Yes	No
3	**CHECK CURRENT DATA.** 1) Turn the ignition switch to OFF. 2) Disconnect the HPCM connector (B606). 3) Turn the ignition switch to ON. 4) Using the Subaru Select Monitor, confirm the current data of hybrid powertrain control system, the value of «Power Sensor Voltage 3». <Ref. to HEV(diag)-40, HYBRID POWERTRAIN CONTROL SYSTEM, OPERATION, Read Current Data.>	Is the value approx. 5 V?	Go to step **4**.	Replace the HPCM. <Ref. to HEV-37, Hybrid Powertrain Control Module.>
4	**CHECK HARNESS (OPEN CIRCUIT).** 1) Turn the ignition switch to OFF. 2) Disconnect the brake stroke sensor connector. 3) Using a tester, measure the resistance between the brake stroke sensor connector and the HPCM connector. ***Connector & terminal*** ***(B601) No. 4 — (B606) No. 11:*** ***(B601) No. 1 — (B606) No. 24:***	Is the resistance less than 1 Ω?	Go to step **5**.	Repair the open circuit of the harness between the HPCM connector and the brake stroke sensor connector.
5	**CHECK HARNESS (SHORT TO GROUND).** Using a tester, measure the resistance between brake stroke sensor connector and chassis ground. ***Connector & terminal*** ***(B601) No. 4 — Chassis ground:*** ***(B601) No. 1 — Chassis ground:***	Is the resistance 1 MΩ or more?	Replace the brake pedal assembly. <Ref. to BR-68, Brake Pedal.>	Repair ground short circuit of harness between the HPCM connector and the brake stroke sensor connector.
6	**CHECK HARNESS (OPEN CIRCUIT).** 1) Turn the ignition switch to OFF. 2) Disconnect the brake stroke sensor connector. 3) Using a tester, measure the resistance between the brake stroke sensor connector and the HPCM connector. ***Connector & terminal*** ***(B601) No. 3 — (B606) No. 9:***	Is the resistance less than 1 Ω?	Go to step **7**.	Repair the open circuit of the harness between the HPCM connector and the brake stroke sensor connector.
7	**CHECK HARNESS (SHORT TO GROUND).** Using a tester, measure the resistance between brake stroke sensor connector and chassis ground. ***Connector & terminal*** ***(B601) No. 3 — Chassis ground:***	Is the resistance 1 MΩ or more?	Replace the brake pedal assembly. <Ref. to BR-68, Brake Pedal.>	Repair ground short circuit of harness between the HPCM connector and the brake stroke sensor connector.

AB:DTC P1C0D BRAKE PEDAL POSITION SENSOR "2" CIRCUIT HIGH

DIAGNOSIS:

- Immediately at fault recognition
- GENERAL DESCRIPTION <Ref. to GD(HEV)-28, DTC P1C0D BRAKE PEDAL POSITION SENSOR "2" CIRCUIT HIGH, Diagnostic Trouble Code (DTC) Detecting Criteria.>

TROUBLE SYMPTOM:

EV traveling/Auto Start Stop does not operate.

CAUTION:

Before performing diagnosis, refer to "CAUTION" in "General Description". <Ref. to HEV(diag)-8, CAUTION, General Description.>

WIRING DIAGRAM:

Hybrid system <Ref. to WI(HEV)-139, WIRING DIAGRAM, Hybrid Electric Vehicle System.>

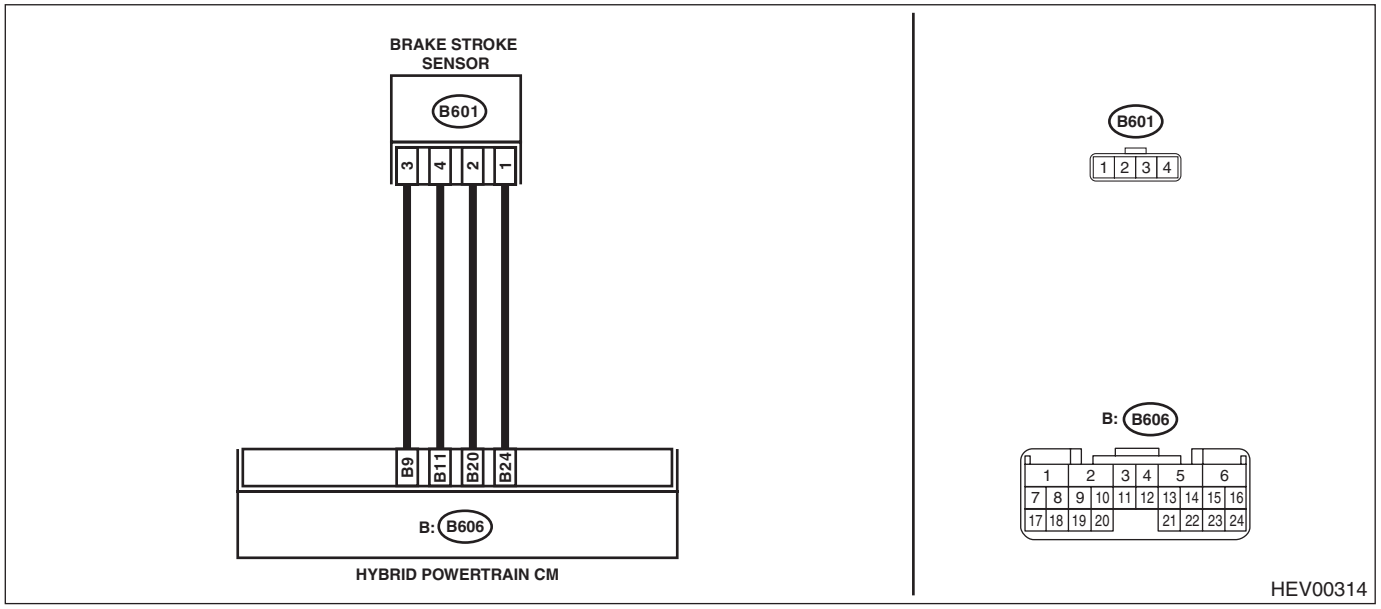

Step		Check	Yes	No
1	**CHECK CURRENT DATA.** Using the Subaru Select Monitor, confirm the current data of hybrid powertrain control system, the value of «Main Brake Pedal Position Sensor Voltage»«Sub Brake Pedal Position Sensor Voltage». <Ref. to HEV(diag)-40, HYBRID POWERTRAIN CONTROL SYSTEM, OPERATION, Read Current Data.>	Is the value of «Main Brake Pedal Position Sensor Voltage» approximately 1 V, and the value of «Sub Brake Pedal Position Sensor Voltage» approximately 4 V when the pedal is not depressed? Also, do values of «Main Brake Pedal Position Sensor Voltage» and «Sub Brake Pedal Position Sensor Voltage» change when the pedal is depressed?	Even if DTC is detected, the circuit has returned to a normal condition at this time. Reproduce the failure, and then perform the diagnosis again. NOTE: In this case, temporary poor contact of connector, temporary open or short circuit of harness may be the cause.	Go to step **2**.

	Step	Check	Yes	No
2	**CHECK CURRENT DATA.** 1) Turn the ignition switch to OFF. 2) Disconnect the HPCM connector (B606). 3) Turn the ignition switch to ON. 4) Using the Subaru Select Monitor, confirm the current data of hybrid powertrain control system, the value of «Power Sensor Voltage 3». <Ref. to HEV(diag)-40, HYBRID POWER-TRAIN CONTROL SYSTEM, OPERATION, Read Current Data.>	Is the value approx. 5 V?	Go to step **3**.	Replace the HPCM. <Ref. to HEV-37, Hybrid Powertrain Control Module.>
3	**CHECK HARNESS (SHORT TO POWER).** 1) Turn the ignition switch to ON. 2) Using a tester, measure the voltage between brake stroke sensor connector and chassis ground. ***Connector & terminal*** ***(B601) No. 4 — Chassis ground:*** ***(B601) No. 1 — Chassis ground:***	Is the voltage less than 1 V?	Replace the brake pedal assembly. <Ref. to BR-68, Brake Pedal.>	Repair the short circuit to power in harness between the HPCM connector and the brake stroke sensor connector.

AC:DTC P1C10 VACUUM PUMP PERFORMANCE

DIAGNOSIS:

- Detects abnormal conditions in vacuum pump system functions.
- Judge as NG when the detection result is out of specification.
- The DTC is set when the condition occurs three times in total.

TROUBLE SYMPTOM:

- EV traveling/Auto Start Stop does not operate.
- Vacuum pump fail lamp illuminates.

CAUTION:

Before performing diagnosis, refer to "CAUTION" in "General Description". <Ref. to HEV(diag)-8, CAUTION, General Description.>

	Step	Check	Yes	No
1	**CHECK VACUUM PRESSURE.** 1) Turn the ignition switch to ON. 2) Using the Subaru Select Monitor, perform «Brake Vacuum Pump System Check» of System Operation Check Mode for the hybrid powertrain control system. <Ref. to HEV(diag)-72, HYBRID POWERTRAIN CONTROL SYSTEM, OPERATION, System Operation Check Mode.>	Is the result of operation check mode OK?	Even if DTC is detected, the circuit has returned to a normal condition at this time. Reproduce the failure, and then perform the diagnosis again. NOTE: In this case, temporary poor contact of connector, temporary open or short circuit of harness may be the cause.	Go to step **2**.
2	**CHECK BRAKE VACUUM HOSE.** Check the brake vacuum hose. (Check the hose for any external damage and also check that air only flows in one direction, when air is blown into or sucked from the hose.)	Is the condition normal?	Replace the brake vacuum pump. <Ref. to BR-78, Brake Vacuum Pump.>	Replace the brake vacuum hose. <Ref. to BR-78, Brake Vacuum Pump.>

AD:DTC P1C11 VACUUM PUMP SUPPLY VOLTAGE LOW

DIAGNOSIS:

- Detects a stuck condition in the vacuum pump supply voltage circuit (LOW).
- Judge as NG when the detection result is out of specification.
- Immediately at fault recognition

TROUBLE SYMPTOM:

- EV traveling/Auto Start Stop does not operate.
- Vacuum pump fail lamp illuminates.

CAUTION:

Before performing diagnosis, refer to "CAUTION" in "General Description". <Ref. to HEV(diag)-8, CAUTION, General Description.>

WIRING DIAGRAM:

Hybrid system <Ref. to WI(HEV)-139, WIRING DIAGRAM, Hybrid Electric Vehicle System.>

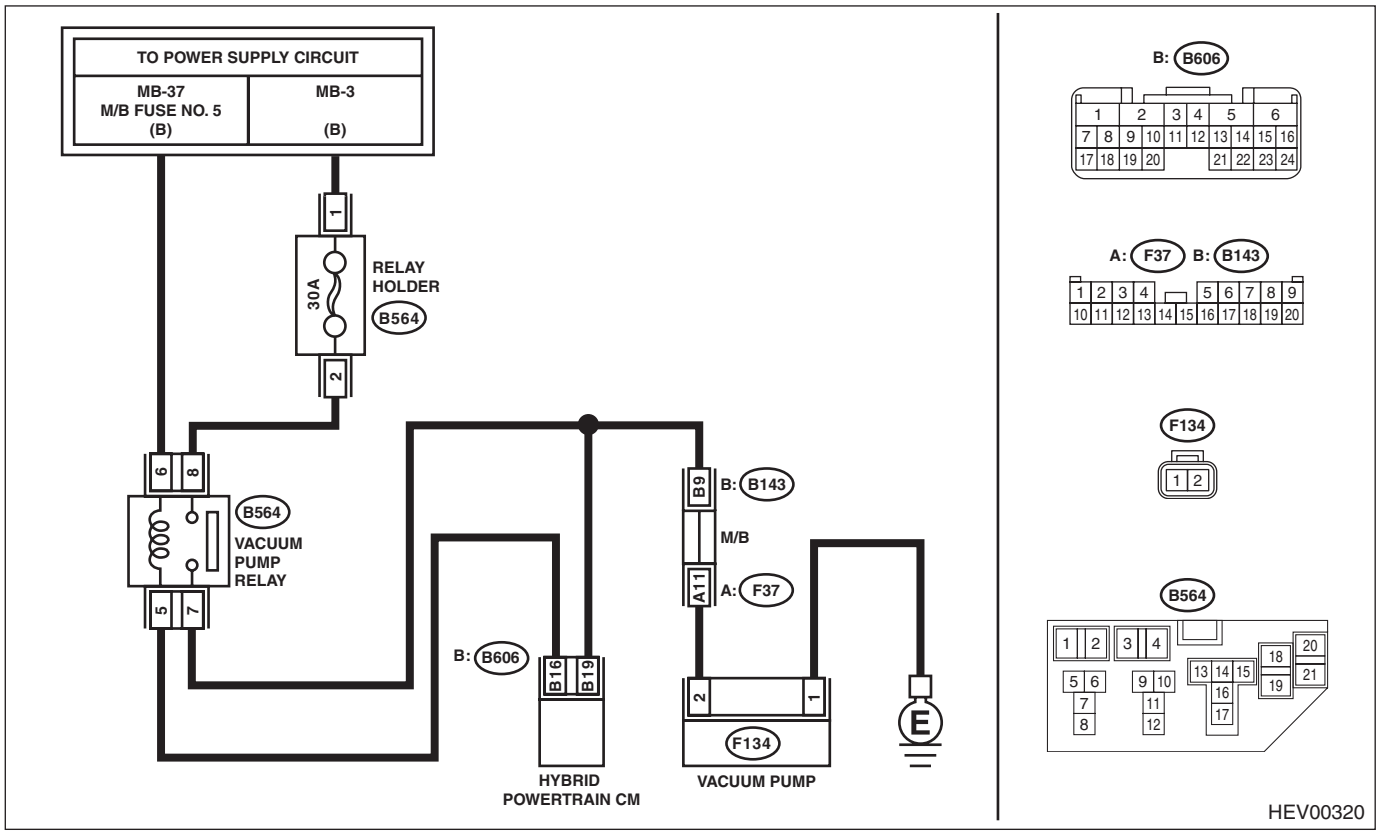

Step		Check	Yes	No
1	**CHECK FUSE.** Check the fuse. <Ref. to BR-16, Relay and Fuse.>	Is the condition normal?	Go to step **2**.	Replace the fuse. When the replaced fuse blows out easily, repair short circuit to power in harness between 12 volt auxiliary battery and the brake vacuum pump relay.
2	**CHECK BRAKE VACUUM PUMP RELAY.** Check the relay. <Ref. to BR-16, Relay and Fuse.>	Is the condition normal?	Go to step **3**.	Replace the relay. <Ref. to BR-16, Relay and Fuse.>

Step		Check	Yes	No
3	**CHECK HARNESS (OPEN CIRCUIT).** 1) Turn the ignition switch to OFF. 2) Disconnect the HPCM connector. 3) Remove the brake vacuum pump relay. 4) Using a tester, measure the resistance between HPCM connector and the brake vacuum pump relay connector. ***Connector & terminal (open)*** ***(B564) No. 5 — (B606) No. 16:*** ***(B564) No. 7 — (F134) No. 2:*** ***(F134) No. 1 — Chassis ground:***	Is the resistance less than 1 Ω?	Go to step **4**.	Repair the open circuit of the harness between the HPCM connector and the brake vacuum pump relay connector.
4	**CHECK HARNESS (SHORT TO POWER).** 1) Turn the ignition switch to ON. 2) Using a tester, measure the voltage between the brake vacuum pump relay connector and chassis ground. ***Connector & terminal (open)*** ***(B564) No. 5 (+) — Chassis ground (–):***	Is the voltage less than 1 V?	Replace the HPCM. <Ref. to HEV-37, Hybrid Powertrain Control Module.>	Repair the short circuit to power in harness between the HP connector and the brake vacuum pump relay connector.

AE:DTC P1C12 VACUUM PUMP SUPPLY VOLTAGE HIGH

DIAGNOSIS:

- Detects a stuck condition in the vacuum pump supply voltage circuit (HIGH).
- Judge as NG when the detection result is out of specification.
- Immediately at fault recognition

TROUBLE SYMPTOM:

- EV traveling/Auto Start Stop does not operate.
- Vacuum pump fail lamp illuminates.

CAUTION:

Before performing diagnosis, refer to "CAUTION" in "General Description". <Ref. to HEV(diag)-8, CAUTION, General Description.>

WIRING DIAGRAM:

Hybrid system <Ref. to WI(HEV)-139, WIRING DIAGRAM, Hybrid Electric Vehicle System.>

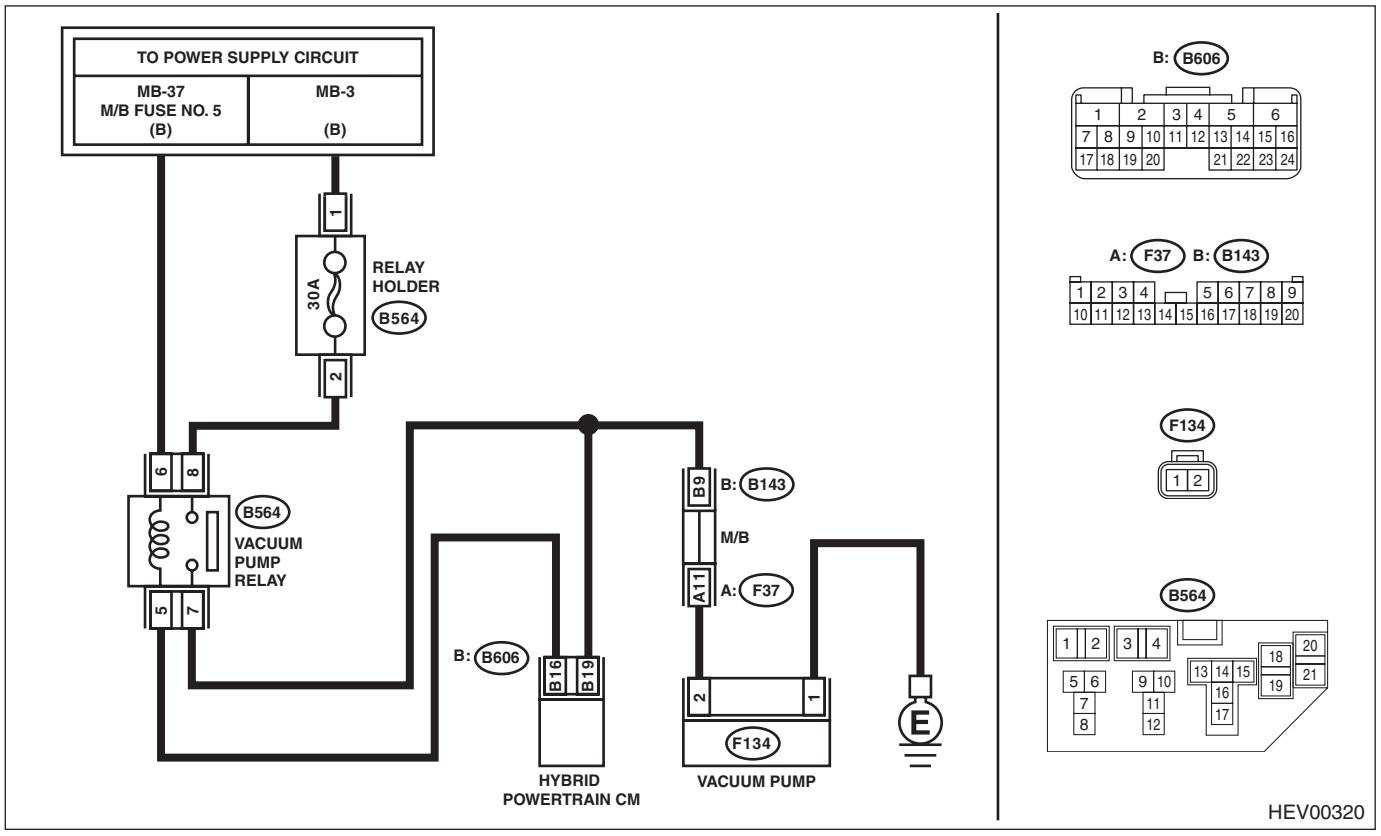

Step		Check	Yes	No
1	**CHECK BRAKE VACUUM PUMP RELAY.** Check the relay. <Ref. to BR-16, Relay and Fuse.>	Is the condition normal?	Go to step **2**.	Replace the relay.
2	**CHECK HARNESS (SHORT TO GROUND).** 1) Turn the ignition switch to OFF. 2) Disconnect the HPCM connector. 3) Remove the brake vacuum pump relay. 4) Using a tester, measure the resistance between HPCM connector and chassis ground. ***Connector & terminal*** ***(B606) No. 16 — Chassis ground:***	Is the resistance 1 MΩ or more?	Go to step **3**.	Repair short circuit to ground in harness between the HPCM connector and the brake vacuum pump relay connector.

	Step	Check	Yes	No
3	**CHECK HARNESS (SHORT TO POWER).** 1) Turn the ignition switch to ON. 2) Using a tester, measure the voltage between the brake vacuum pump relay connector and chassis ground. ***Connector & terminal*** ***(B564) No. 7 (+) — Chassis ground (–):***	Is the voltage less than 1 V?	Replace the HPCM. <Ref. to HEV-37, Hybrid Powertrain Control Module.>	Repair the short circuit to power in harness between the HP connector and the brake vacuum pump relay connector.

AF:DTC P1C14 GENERATOR PERFORMANCE

DIAGNOSIS:

- Detects functional errors of the integrated starter generator.
- Immediately at fault recognition

TROUBLE SYMPTOM:

- EV traveling/Auto Start Stop does not operate.

(Engine does not restart under EV traveling/Auto Start Stop condition.)

- Charge warning light illuminates.

CAUTION:

Before performing diagnosis, refer to "CAUTION" in "General Description". <Ref. to HEV(diag)-8, CAUTION, General Description.>

	Step	Check	Yes	No
1	**CHECK DTC.** Read the DTC. <Ref. to HEV(diag)-23, HYBRID POWERTRAIN CONTROL SYSTEM, OPERATION, Read Diagnostic Trouble Code (DTC).>	Is DTC P1C14 detected? (current malfunction)	Replace the integrated starter generator. <Ref. to SC(H4DO(HEV))-31, Integrated Starter Generator (ISG).>	Even if DTC is detected, the circuit has returned to a normal condition at this time. Reproduce the failure, and then perform the diagnosis again. NOTE: In this case, temporary poor contact of connector, temporary open or short circuit of harness may be the cause.

AG:DTC P1C16 IDLE CONTROL SYSTEM RPM LOWER THAN EXPECTED (HPCM)

DIAGNOSIS:

- Detected when two consecutive driving cycles with fault occur. (Single engine startup is counted as one drive cycle.)
- GENERAL DESCRIPTION <Ref. to GD(HEV)-28, DTC P1C16 IDLE CONTROL SYSTEM RPM LOWER THAN EXPECTED (HPCM), Diagnostic Trouble Code (DTC) Detecting Criteria.>

TROUBLE SYMPTOM:

Normal control.

NOTE:

For the diagnostic procedure, refer to DTC P0506 IDLE AIR CONTROL SYSTEM RPM LOWER THAN EXPECTED. <Ref. to HEV(diag)-91, DTC P0506 IDLE AIR CONTROL SYSTEM RPM LOWER THAN EXPECTED, Diagnostic Procedure with Diagnostic Trouble Code (DTC).>

AH:DTC P1C17 IDLE CONTROL SYSTEM RPM HIGHER THAN EXPECTED (HPCM)

DIAGNOSIS:

- Detected when two consecutive driving cycles with fault occur. (Single engine startup is counted as one drive cycle.)
- GENERAL DESCRIPTION <Ref. to GD(HEV)-28, DTC P1C17 IDLE CONTROL SYSTEM RPM HIGHER THAN EXPECTED (HPCM), Diagnostic Trouble Code (DTC) Detecting Criteria.>

TROUBLE SYMPTOM:

Normal control.

NOTE:

For the diagnostic procedure, refer to DTC P0507 IDLE AIR CONTROL SYSTEM RPM HIGHER THAN EXPECTED. <Ref. to HEV(diag)-92, DTC P0507 IDLE AIR CONTROL SYSTEM RPM HIGHER THAN EXPECTED, Diagnostic Procedure with Diagnostic Trouble Code (DTC).>

AI: DTC P1C18 GENERATOR SYSTEM "B" PERFORMANCE

DIAGNOSIS:

- Detects malfunctions due to open harness or trouble in the charging device.
- Detects abnormal conditions in the charging system for the 12 volt engine restart battery due to the integrated starter generator.
- Immediately at fault recognition

TROUBLE SYMPTOM:

- EV traveling/Auto Start Stop does not operate.

(Engine does not restart under EV traveling/Auto Start Stop condition.)

- Charge warning light illuminates.

CAUTION:

Before performing diagnosis, refer to "CAUTION" in "General Description". <Ref. to HEV(diag)-8, CAUTION, General Description.>

WIRING DIAGRAM:

Hybrid system <Ref. to WI(HEV)-139, WIRING DIAGRAM, Hybrid Electric Vehicle System.>

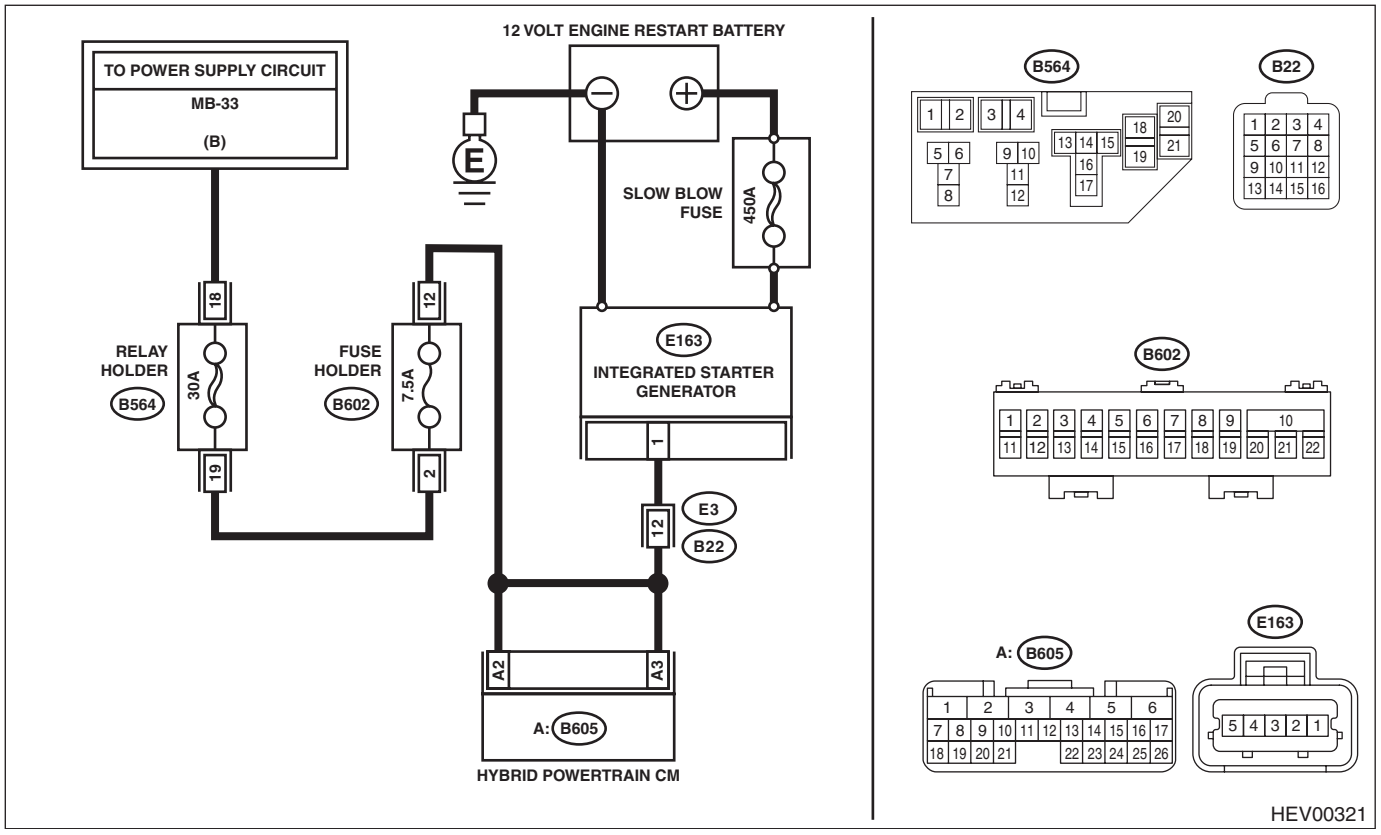

Step		Check	Yes	No
1	**CHECK FUSE.** Check the fuse. <Ref. to HEV-12, Relay and Fuse.>	Is the condition normal?	Go to step **2**.	Replace the fuse. If the fuse blows out easily, repair the short circuit of harness.
2	**CHECK BELTS.** Check the belt. <Ref. to ME(H4DO(w/o HEV))-120, V-belt.>	Is the condition normal?	Go to step **3**.	Adjust or replace the belt.

	Step	Check	Yes	No
3	**CHECK CURRENT DATA.** Using the Subaru Select Monitor, confirm the current data of hybrid powertrain control system, the value of «ISG Control Mode Actual»«12V Engine Restart Battery Voltage»«ISG Terminal Voltage». <Ref. to HEV(diag)-40, HYBRID POWERTRAIN CONTROL SYSTEM, OPERATION, Read Current Data.>	Is «12V Engine Restart Battery Voltage»«ISG Terminal Voltage» 12 — 15 V when the engine speed is at 2000 rpm or more and «ISG Control Mode Actual» is generating power?	Even if DTC is detected, the circuit has returned to a normal condition at this time. Reproduce the failure, and then perform the diagnosis again. NOTE: In this case, temporary poor contact of connector, temporary open or short circuit of harness may be the cause.	Go to step **4**.
4	**CHECK CURRENT DATA.** Using the Subaru Select Monitor, confirm the current data of hybrid powertrain control system, the value of «HPCM Check 40». <Ref. to HEV(diag)-40, HYBRID POWERTRAIN CONTROL SYSTEM, OPERATION, Read Current Data.>	Is the value 30 m Ω or more?	Check for poor contact of 12 volt engine restart battery terminals. <Ref. to NT-5, BATTERY, NOTE, Note.>	Go to step **5**.
5	**CHECK HARNESS (OPEN CIRCUIT).** 1) Turn the ignition switch to OFF. 2) Disconnect the HPCM connector. 3) Disconnect the integrated starter generator connector. 4) Using a tester, measure the resistance between the HPCM connector and integrated starter generator connector. ***Connector & terminal*** ***(B605) No. 2 — (E163) No. 1:*** ***(B605) No. 3 — (E163) No. 1:***	Is the resistance less than 1 Ω?	Go to step **6**.	Repair the open circuit of the harness between the HPCM connector and the integrated starter generator terminal.
6	**CHECK BATTERY.** Check the 12 volt engine restart battery. <Ref. to SC(H4DO(HEV))-38, Battery.>	Is the condition normal?	Replace the integrated starter generator. <Ref. to SC(H4DO(HEV))-31, Integrated Starter Generator (ISG).>	Charge or replace the 12 volt engine restart battery.

AJ:DTC P1C1E AUTODISCONNECT EXPERIENCE

DIAGNOSIS:
Detects collision history of the vehicle.
TROUBLE SYMPTOM:
- EV traveling/Auto Start Stop does not operate.
- Motor assist does not regenerates.
- Vehicle speed is limited to 20 km/h (12.4 MPH) or below.

CAUTION:
Before performing diagnosis, refer to "CAUTION" in "General Description". <Ref. to HEV(diag)-8, CAUTION, General Description.>

NOTE:
- At normal condition, this cannot be deleted from the readiness code.
- The high voltage battery must not be reconnected until the repair is complete.

	Step	Check	Yes	No
1	**CHECK VEHICLE.** Check the vehicle conditions.	Are the vehicle conditions normal? (Check for evidence of collision, etc.)	Go to step **2**.	Repair the problem.
2	**CHECK HPCM.** 1) Perform the Clear Memory Mode. <Ref. to HEV(diag)-24, HYBRID POWERTRAIN CONTROL SYSTEM, OPERATION, Clear Memory Mode.> 2) Turn the ignition switch to OFF. 3) Wait for 30 seconds. 4) Turn the ignition switch to ON. 5) Read the DTC again. <Ref. to HEV(diag)-23, HYBRID POWERTRAIN CONTROL SYSTEM, OPERATION, Read Diagnostic Trouble Code (DTC).>	Is DTC P1C1E detected? (current malfunction)	Replace the HPCM. <Ref. to HEV-37, Hybrid Powertrain Control Module.>	Even if DTC is detected, the circuit has returned to a normal condition at this time. Reproduce the failure, and then perform the diagnosis again. NOTE: In this case, temporary poor contact of connector, temporary open or short circuit of harness may be the cause.

AK:DTC P2158 VEHICLE SPEED SENSOR "B"

DIAGNOSIS FOR DTC:
- Immediately at fault recognition
- GENERAL DESCRIPTION <Ref. to GD(HEV)-29, DTC P2158 VEHICLE SPEED SENSOR "B", Diagnostic Trouble Code (DTC) Detecting Criteria.>

TROUBLE SYMPTOM:
EV traveling/Auto Start Stop does not operate.

NOTE:
For the diagnostic procedure, refer to the Vehicle Dynamics Control System (VDC) (DIAGNOSTICS). <Ref. to VDC(diag)-2, PROCEDURE, Basic Diagnostic Procedure.>

AL:DTC P0A2A DRIVE MOTOR "A" TEMPERATURE SENSOR CIRCUIT

DIAGNOSIS:

- Immediately at fault recognition
- GENERAL DESCRIPTION <Ref. to GD(HEV)-30, DTC P0A2A DRIVE MOTOR "A" TEMPERATURE SENSOR CIRCUIT, Diagnostic Trouble Code (DTC) Detecting Criteria.>

TROUBLE SYMPTOM:

- EV traveling/Auto Start Stop does not operate.
- Motor assist does not regenerates.

CAUTION:

Before performing diagnosis, refer to “CAUTION” in “General Description”. <Ref. to HEV(diag)-8, CAUTION, General Description.>

WIRING DIAGRAM:

CVT control system <Ref. to WI(HEV)-86, WIRING DIAGRAM, CVT Control System.>

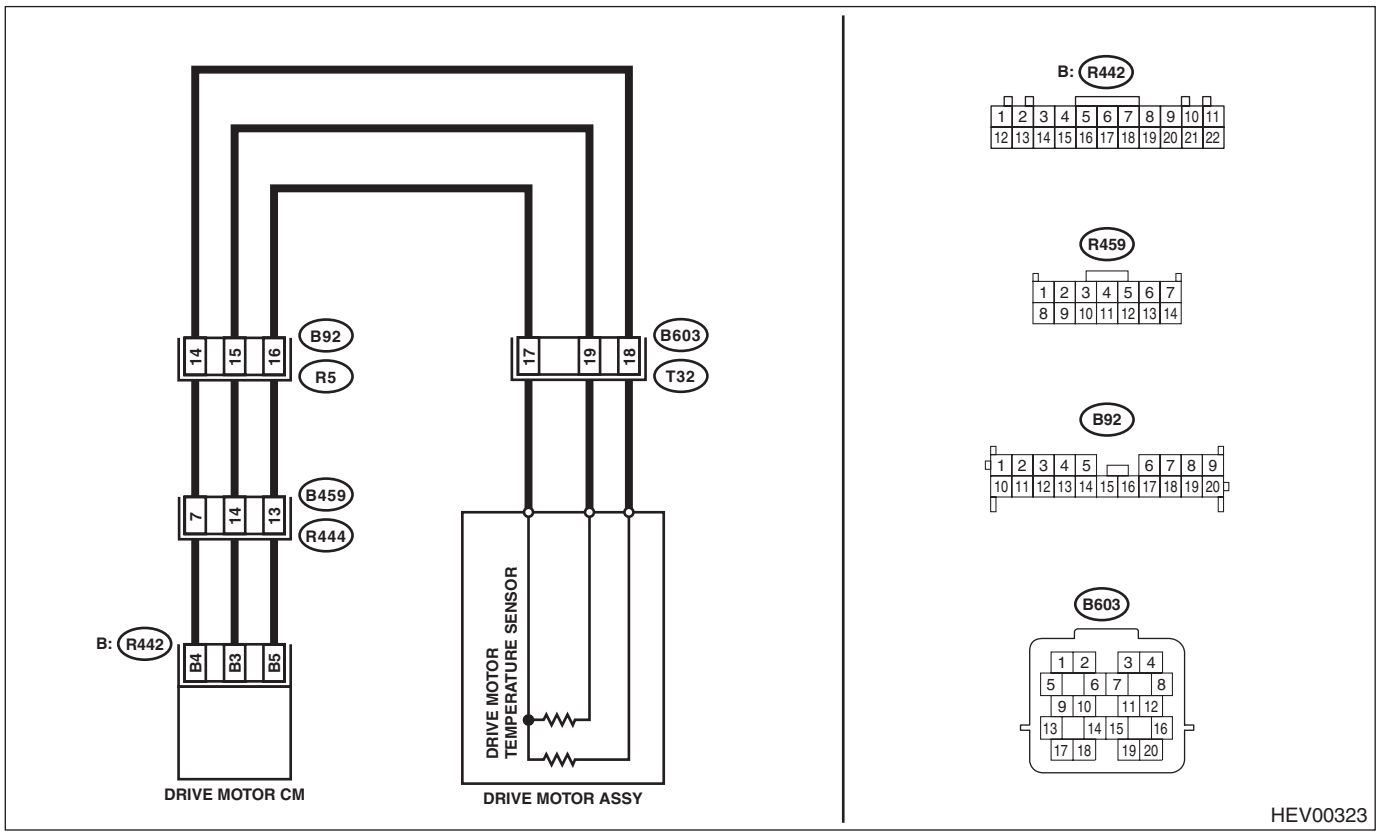

	Step	Check	Yes	No
1	**CHECK CURRENT DATA.** 1) Warm up the engine. 2) Using the Subaru Select Monitor, confirm the current data of drive motor control system, the values of «A/T Oil Temperature»«Drive Motor Temperature A Sensor Voltage». <Ref. to HEV(diag)-51, DRIVE MOTOR CONTROL SYSTEM, OPERATION, Read Current Data.>	Is the value of «Drive Motor Temperature A Sensor Voltage» 4.5 V or more when «A/T Oil Temperature» is 40°C (104°F) or more?	Go to step **2**.	Even if DTC is detected, the circuit has returned to a normal condition at this time. Reproduce the failure, and then perform the diagnosis again. NOTE: In this case, temporary poor contact of connector, temporary open or short circuit of harness may be the cause.
2	**CHECK HARNESS AND DRIVE MOTOR.** 1) Turn the ignition switch to OFF. 2) Disconnect the DMCM connector (R442). 3) Using a tester, measure the resistance between terminals in the DMCM connector. ***Connector & terminal*** ***(R442) No. 4 — (R442) No. 5:*** ***(R442) No. 3 — (R442) No. 5:***	Does the resistance between either two points show 218 kΩ or more?	Go to step **3**.	Replace DMCM. <Ref. to CVT(TH58A)-155, Drive Motor Control Module.>
3	**CHECK DRIVE MOTOR.** 1) Disconnect the drive motor assembly connector (R603). 2) Using a tester, measure the resistance between terminals in the drive motor assembly connector. ***Connector & terminal*** ***(T32) No. 18 — (T32) No. 17:*** ***(T32) No. 19 — (T32) No. 17:***	Does the resistance between either two points show 218 kΩ or more?	Replace the drive motor assembly. <Ref. to CVT(TH58A)-215, Drive Motor Assembly.>	Repair the open circuit of harness between DMCM connector and drive motor assembly connector, or repair the intermediate connector.

NOTE:
Characteristic curve of temperature sensor

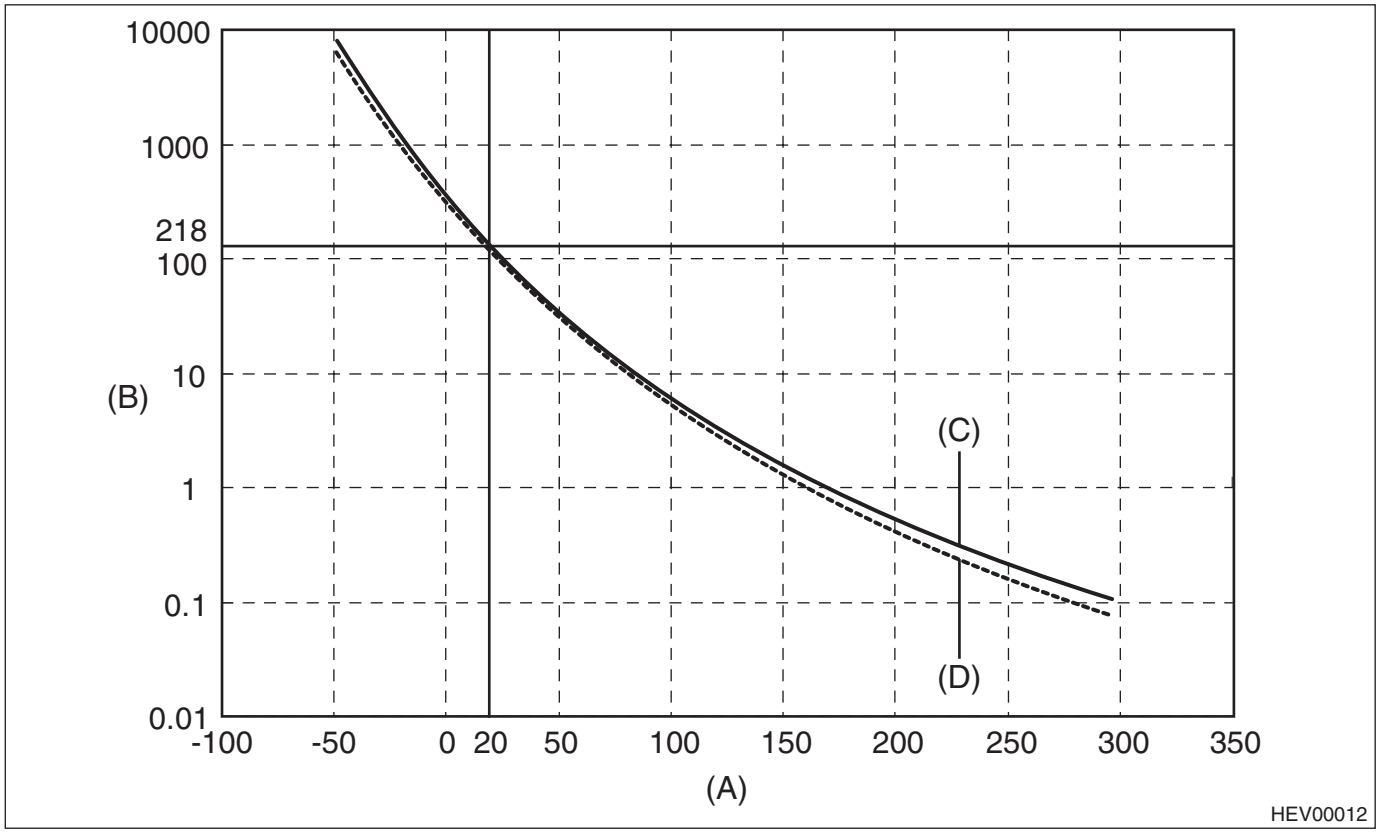

(A) Temperature
(B) Resistance
(C) Standard at Max.
(D) Standard at Min.

Temp. (°C)	Temp. (°F)	Standard at Max. (kΩ)	Standard at Min. (kΩ)
–50	–58	9,847	7,755
–45	–49	6,735	5,383
–40	–40	4,682	3,796
–35	–31	3,282	2,698
–30	–22	2,334	1,945
–25	–13	1,676	1,414
–20	–4	1,219	1,041
–15	5	893.2	772.8
–10	14	662.4	579.8
–5	23	494.8	438.2
0	32	373.7	334.5
5	41	284.1	257
10	50	218.1	199.4
15	59	168.5	155.6
20	68	131.3	122.4
25	77	103	97
30	86	82.12	76.62
35	95	65.86	60.9
40	104	53.2	48.76
45	113	43.17	39.23
50	122	35.26	31.78

Temp. (°C)	Temp. (°F)	Standard at Max. (kΩ)	Standard at Min. (kΩ)
55	131	28.94	25.87
60	140	23.89	21.19
65	149	19.81	17.43
70	158	16.51	14.43
75	167	13.82	11.99
80	176	11.63	10.01
85	185	9.822	8.403
90	194	8.333	7.082
95	203	7.093	5.988
100	212	6.063	5.086
105	221	5.203	4.337
110	230	4.482	3.714
115	239	3.874	3.191
120	248	3.361	2.752
125	257	2.924	2.381
130	266	2.553	2.067
135	275	2.235	1.8
140	284	1.963	1.572
145	293	1.729	1.377
150	302	1.527	1.21
155	311	1.352	1.066
160	320	1.2	0.9427
165	329	1.068	0.835
170	338	0.9535	0.7417
175	347	0.8526	0.6602
180	356	0.7643	0.5892
185	365	0.6866	0.527
190	374	0.6183	0.4725
195	383	0.5578	0.4245
200	392	0.5043	0.3822
205	401	0.4568	0.3448
210	410	0.4147	0.3117
215	419	0.3771	0.2824
220	428	0.3435	0.2563
225	437	0.3135	0.233
230	446	0.2866	0.2122
235	455	0.2624	0.1936
240	464	0.2407	0.177
245	473	0.2212	0.162
250	482	0.2035	0.1486
255	491	0.1876	0.1365
260	500	0.1731	0.1256
265	509	0.16	0.1157
270	518	0.1481	0.1067
275	527	0.1373	0.09867
280	536	0.1274	0.0913
285	545	0.1184	0.0846
290	554	0.1102	0.07849
295	563	0.1027	0.07292
300	572	0.09578	0.06784

AM:DTC P0A2C DRIVE MOTOR "A" TEMPERATURE SENSOR CIRCUIT LOW

DIAGNOSIS:

- Immediately at fault recognition
- GENERAL DESCRIPTION <Ref. to GD(HEV)-31, DTC P0A2C DRIVE MOTOR "A" TEMPERATURE SENSOR CIRCUIT LOW, Diagnostic Trouble Code (DTC) Detecting Criteria.>

TROUBLE SYMPTOM:

- EV traveling/Auto Start Stop does not operate.
- Motor assist does not regenerates.

CAUTION:

Before performing diagnosis, refer to “CAUTION” in “General Description”. <Ref. to HEV(diag)-8, CAUTION, General Description.>

WIRING DIAGRAM:

CVT control system <Ref. to WI(HEV)-86, WIRING DIAGRAM, CVT Control System.>

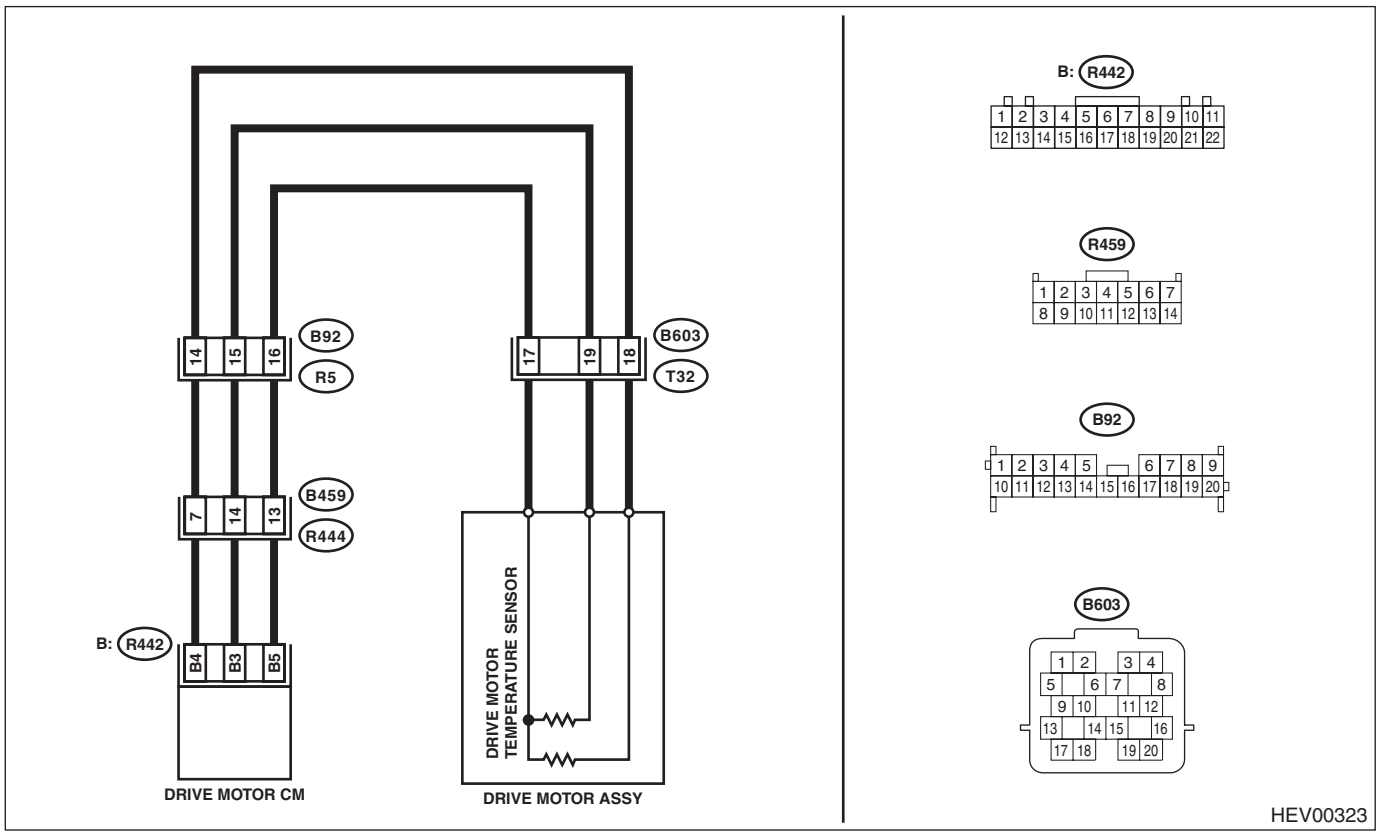

	Step	Check	Yes	No
1	**CHECK CURRENT DATA.** Using the Subaru Select Monitor, confirm the current data of drive motor control system, the value of «Drive Motor Temperature A Sensor Voltage». <Ref. to HEV(diag)-51, DRIVE MOTOR CONTROL SYSTEM, OPERATION, Read Current Data.>	Is the value less than 0.23 V?	Go to step **2**.	Even if DTC is detected, the circuit has returned to a normal condition at this time. Reproduce the failure, and then perform the diagnosis again. NOTE: In this case, temporary poor contact of connector, temporary open or short circuit of harness may be the cause.
2	**CHECK HARNESS AND DRIVE MOTOR.** 1) Turn the ignition switch to OFF. 2) Disconnect the DMCM connector (R442). 3) Using a tester, measure the resistance between DMCM connector and the ground bolt of inverter frame body. ***Connector & terminal*** ***(R442) No. 4 — Ground bolt of inverter frame body:*** ***(R442) No. 3 — Ground bolt of inverter frame body:***	Does the resistance between either two points show 256.4 Ω or less?	Go to step **3**.	Replace DMCM. <Ref. to CVT(TH58A)-155, Drive Motor Control Module.>
3	**CHECK DRIVE MOTOR.** 1) Disconnect the drive motor assembly connector (B603). 2) Using a tester, measure the resistance between the drive motor assembly connector and chassis ground. ***Connector & terminal*** ***(T32) No. 18 — Chassis ground:*** ***(T32) No. 19 — Chassis ground:***	Does the resistance between either two points show 256.4 Ω or less?	Replace the drive motor assembly. <Ref. to CVT(TH58A)-215, Drive Motor Assembly.>	Repair the short circuit to ground in harness between DMCM connector and drive motor assembly connector.

NOTE:
Characteristic curve of temperature sensor

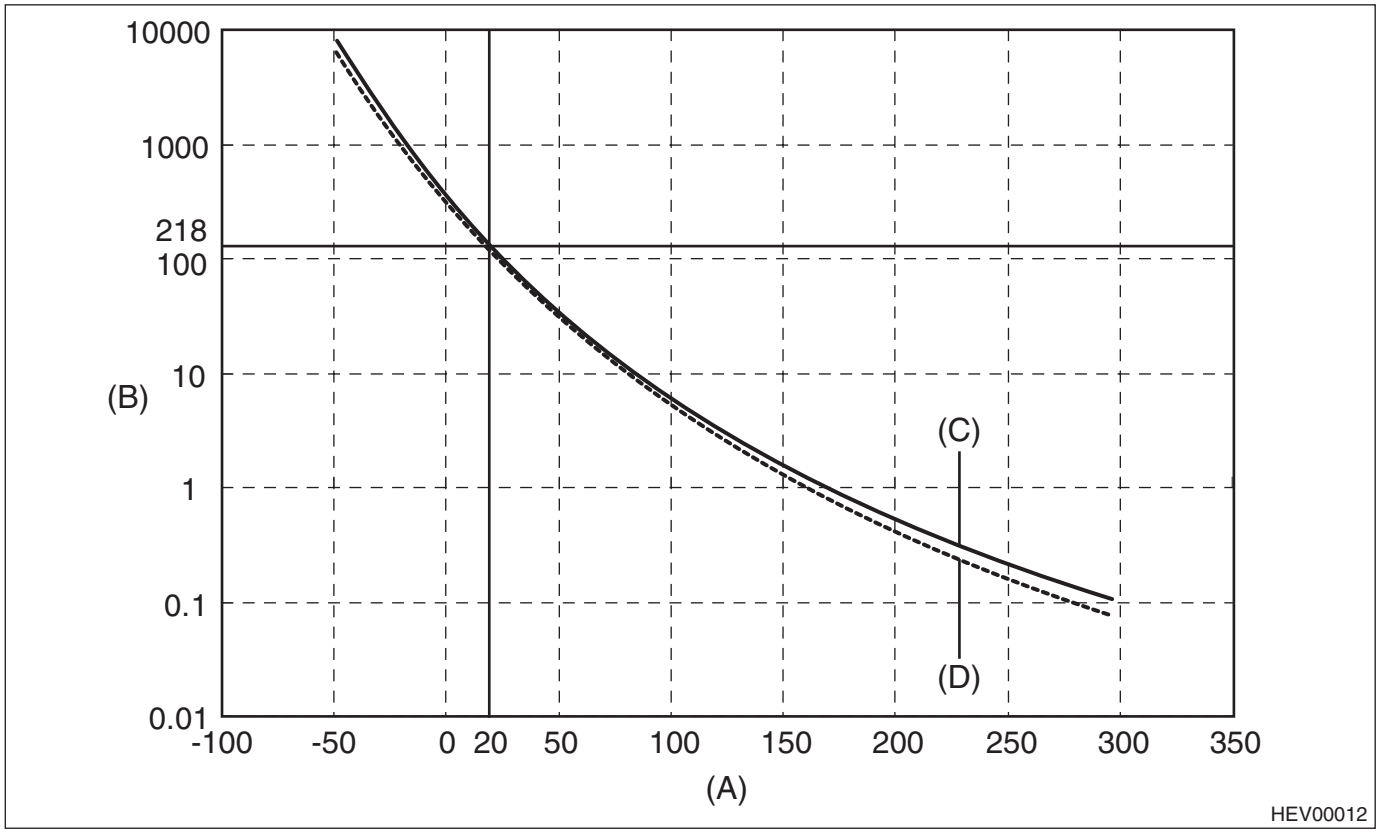

(A) Temperature
(B) Resistance
(C) Standard at Max.
(D) Standard at Min.

Temp. (°C)	Temp. (°F)	Standard at Max. (kΩ)	Standard at Min. (kΩ)
–50	–58	9,847	7,755
–45	–49	6,735	5,383
–40	–40	4,682	3,796
–35	–31	3,282	2,698
–30	–22	2,334	1,945
–25	–13	1,676	1,414
–20	–4	1,219	1,041
–15	5	893.2	772.8
–10	14	662.4	579.8
–5	23	494.8	438.2
0	32	373.7	334.5
5	41	284.1	257
10	50	218.1	199.4
15	59	168.5	155.6
20	68	131.3	122.4
25	77	103	97
30	86	82.12	76.62
35	95	65.86	60.9
40	104	53.2	48.76
45	113	43.17	39.23
50	122	35.26	31.78

Temp. (°C)	Temp. (°F)	Standard at Max. (kΩ)	Standard at Min. (kΩ)
55	131	28.94	25.87
60	140	23.89	21.19
65	149	19.81	17.43
70	158	16.51	14.43
75	167	13.82	11.99
80	176	11.63	10.01
85	185	9.822	8.403
90	194	8.333	7.082
95	203	7.093	5.988
100	212	6.063	5.086
105	221	5.203	4.337
110	230	4.482	3.714
115	239	3.874	3.191
120	248	3.361	2.752
125	257	2.924	2.381
130	266	2.553	2.067
135	275	2.235	1.8
140	284	1.963	1.572
145	293	1.729	1.377
150	302	1.527	1.21
155	311	1.352	1.066
160	320	1.2	0.9427
165	329	1.068	0.835
170	338	0.9535	0.7417
175	347	0.8526	0.6602
180	356	0.7643	0.5892
185	365	0.6866	0.527
190	374	0.6183	0.4725
195	383	0.5578	0.4245
200	392	0.5043	0.3822
205	401	0.4568	0.3448
210	410	0.4147	0.3117
215	419	0.3771	0.2824
220	428	0.3435	0.2563
225	437	0.3135	0.233
230	446	0.2866	0.2122
235	455	0.2624	0.1936
240	464	0.2407	0.177
245	473	0.2212	0.162
250	482	0.2035	0.1486
255	491	0.1876	0.1365
260	500	0.1731	0.1256
265	509	0.16	0.1157
270	518	0.1481	0.1067
275	527	0.1373	0.09867
280	536	0.1274	0.0913
285	545	0.1184	0.0846
290	554	0.1102	0.07849
295	563	0.1027	0.07292
300	572	0.09578	0.06784

AN:DTC P0A2D DRIVE MOTOR "A" TEMPERATURE SENSOR CIRCUIT HIGH

DIAGNOSIS:

- Immediately at fault recognition
- GENERAL DESCRIPTION <Ref. to GD(HEV)-32, DTC P0A2D DRIVE MOTOR "A" TEMPERATURE SENSOR CIRCUIT HIGH, Diagnostic Trouble Code (DTC) Detecting Criteria.>

TROUBLE SYMPTOM:

- EV traveling/Auto Start Stop does not operate.
- Motor assist does not regenerates.

CAUTION:

Before performing diagnosis, refer to “CAUTION” in “General Description”. <Ref. to HEV(diag)-8, CAUTION, General Description.>

WIRING DIAGRAM:

CVT control system <Ref. to WI(HEV)-86, WIRING DIAGRAM, CVT Control System.>

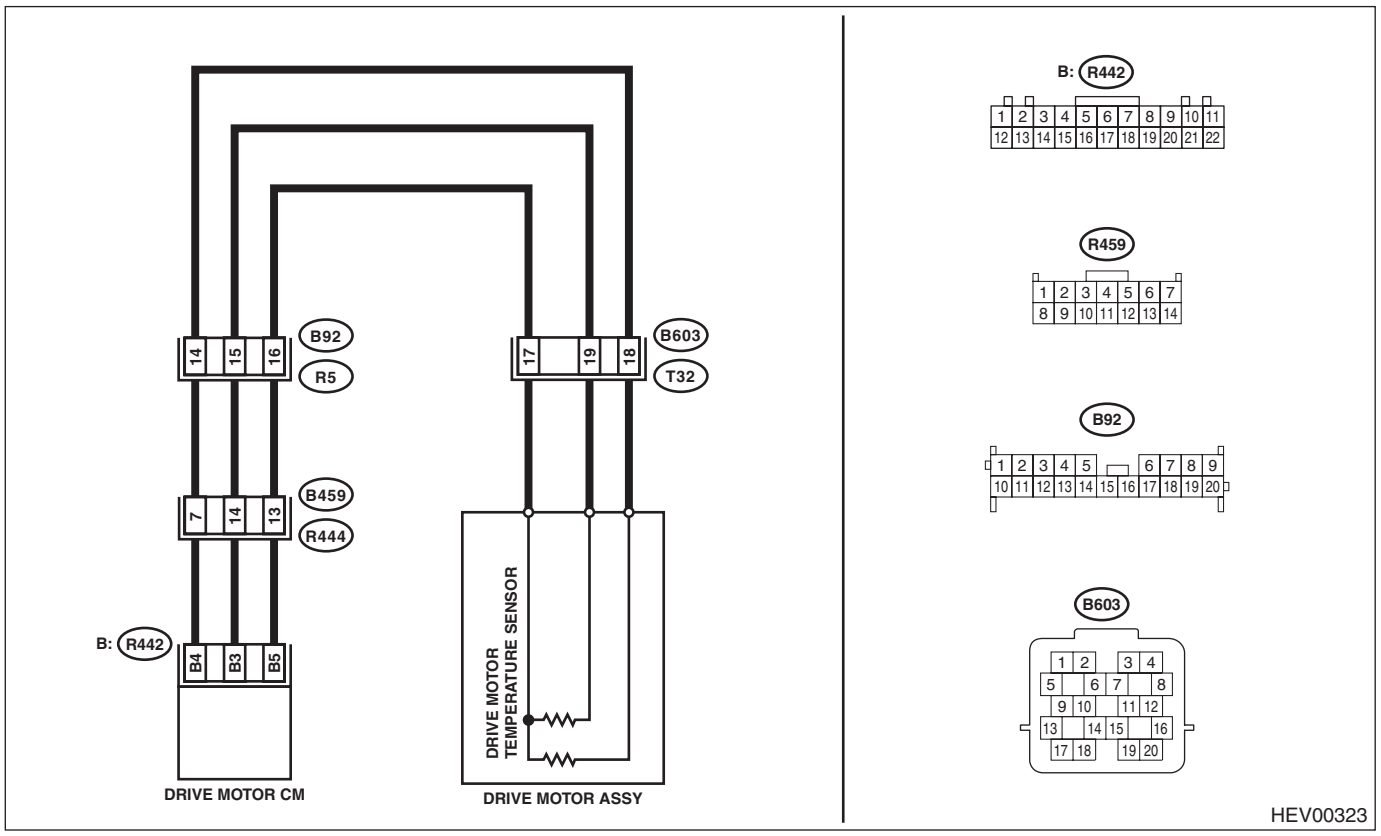

	Step	Check	Yes	No
1	**CHECK CURRENT DATA.** Using the Subaru Select Monitor, confirm the current data of drive motor control system, the value of «Drive Motor Temperature A Sensor Voltage». <Ref. to HEV(diag)-51, DRIVE MOTOR CONTROL SYSTEM, OPERATION, Read Current Data.>	Is the value 4.6 V or more?	Go to step **2**.	Even if DTC is detected, the circuit has returned to a normal condition at this time. Reproduce the failure, and then perform the diagnosis again. NOTE: In this case, temporary poor contact of connector, temporary open or short circuit of harness may be the cause.
2	**CHECK HARNESS (SHORT).** 1) Turn the ignition switch to OFF. 2) Disconnect the DMCM connector (R442, R443). 3) Disconnect the drive motor assembly connector (B603). 4) Using a tester, measure the resistance between terminals in the DMCM connector and between the terminals in the drive motor assembly connector. ***Connector & terminal*** ***DMCM side*** ***(R442) No. 3 — (R442) No. 1 — 22 (except No. 5):*** ***(R442) No. 3 — (R443) No. 1 — 26:*** ***(R442) No. 4 — (R442) No. 1 — 22 (except No. 5):*** ***(R442) No. 4 — (R443) No. 1 — 26:*** ***Drive motor side*** ***(B603) No. 18 — (B603) No. 1 — 19 (except No. 17):*** ***(B603) No. 19 — (B603) No. 1 — 19 (except No. 17):***	Does the resistance between either two points show 1 MΩ or more?	Go to step **3**.	Repair the short circuit to power in harness between DMCM connector and drive motor assembly connector, or repair the intermediate connector.
3	**CHECK DRIVE MOTOR.** Using a tester, measure the resistance between terminals in the drive motor assembly connector. ***Connector & terminal*** ***(T32) No. 18 — (T32) No. 1 — 19 (except No. 17):*** ***(T32) No. 19 — (T32) No. 1 — 19 (except No. 17):***	Does the resistance between either two points show 1 MΩ or more?	Replace DMCM. <Ref. to CVT(TH58A)-155, Drive Motor Control Module.>	Replace the drive motor assembly. <Ref. to CVT(TH58A)-215, Drive Motor Assembly.>

AO:DTC P0A3C DRIVE MOTOR "A" INVERTER OVER TEMPERATURE

DIAGNOSIS:

- Immediately at fault recognition
- GENERAL DESCRIPTION <Ref. to GD(HEV)-33, DTC P0A3C DRIVE MOTOR "A" INVERTER OVER TEMPERATURE, Diagnostic Trouble Code (DTC) Detecting Criteria.>

TROUBLE SYMPTOM:

- EV traveling/Auto Start Stop does not operate.
- Motor assist does not regenerates.

CAUTION:

Before performing diagnosis, refer to "CAUTION" in "General Description". <Ref. to HEV(diag)-8, CAUTION, General Description.>

	Step	Check	Yes	No
1	**CHECK DTC.** Read the DTC. <Ref. to HEV(diag)-23, DRIVE MOTOR CONTROL SYSTEM, OPERATION, Read Diagnostic Trouble Code (DTC).>	Are DTC P0A5D, P0A60, and P0A63 detected? (current malfunction)	Perform a check according to the DTC. <Ref. to HEV(diag)-77, DRIVE MOTOR CONTROL SYSTEM, LIST, List of Diagnostic Trouble Code (DTC).>	Go to step **2**.
2	**CHECK HIGH VOLTAGE BATTERY COOLING FAN.** Using the Subaru Select Monitor, perform «High Voltage Battery Cooling Fan» of System Operation Check Mode for the drive motor control system. <Ref. to HEV(diag)-73, DRIVE MOTOR CONTROL SYSTEM, OPERATION, System Operation Check Mode.>	Does the high voltage battery cooling fan operate?	Go to step **3**.	Check the high voltage battery cooling fan as a single part. <Ref. to HEV-59, High Voltage Battery Cooling System.>
3	**CHECK DUCT.** Check the high voltage battery cooling fan ducts. <Ref. to HEV-59, High Voltage Battery Cooling System.>	Are the conditions of ducts normal? (Check for clogging, dislodging of connections, etc.)	Go to step **4**.	Repair the ducts.
4	**CHECK DTC.** 1) Replace the drive motor inverter. <Ref. to HEV-42, Inverter.> 2) Perform the Clear Memory Mode. <Ref. to HEV(diag)-24, DRIVE MOTOR CONTROL SYSTEM, OPERATION, Clear Memory Mode.> 3) Check the freeze frame data and drive the vehicle to reproduce the same conditions. <Ref. to HEV(diag)-65, DRIVE MOTOR CONTROL SYSTEM, OPERATION, Freeze Frame Data Display.> 4) Read the DTC again. <Ref. to HEV(diag)-23, DRIVE MOTOR CONTROL SYSTEM, OPERATION, Read Diagnostic Trouble Code (DTC).>	Is the same DTC detected? (current malfunction)	Replace DMCM. <Ref. to CVT(TH58A)-155, Drive Motor Control Module.>	Problem is present in drive motor inverter.

AP:DTC P0A3F DRIVE MOTOR "A" POSITION SENSOR CIRCUIT

DIAGNOSIS:

- Immediately at fault recognition
- GENERAL DESCRIPTION <Ref. to GD(HEV)-34, DTC P0A3F DRIVE MOTOR "A" POSITION SENSOR CIRCUIT, Diagnostic Trouble Code (DTC) Detecting Criteria.>

TROUBLE SYMPTOM:

- EV traveling/Auto Start Stop does not operate.
- Motor assist does not regenerates.
- Sometimes driving power and shifting behavior are different from the normal states.

CAUTION:

Before performing diagnosis, refer to "CAUTION" in "General Description". <Ref. to HEV(diag)-8, CAUTION, General Description.>

WIRING DIAGRAM:

CVT control system <Ref. to WI(HEV)-86, WIRING DIAGRAM, CVT Control System.>

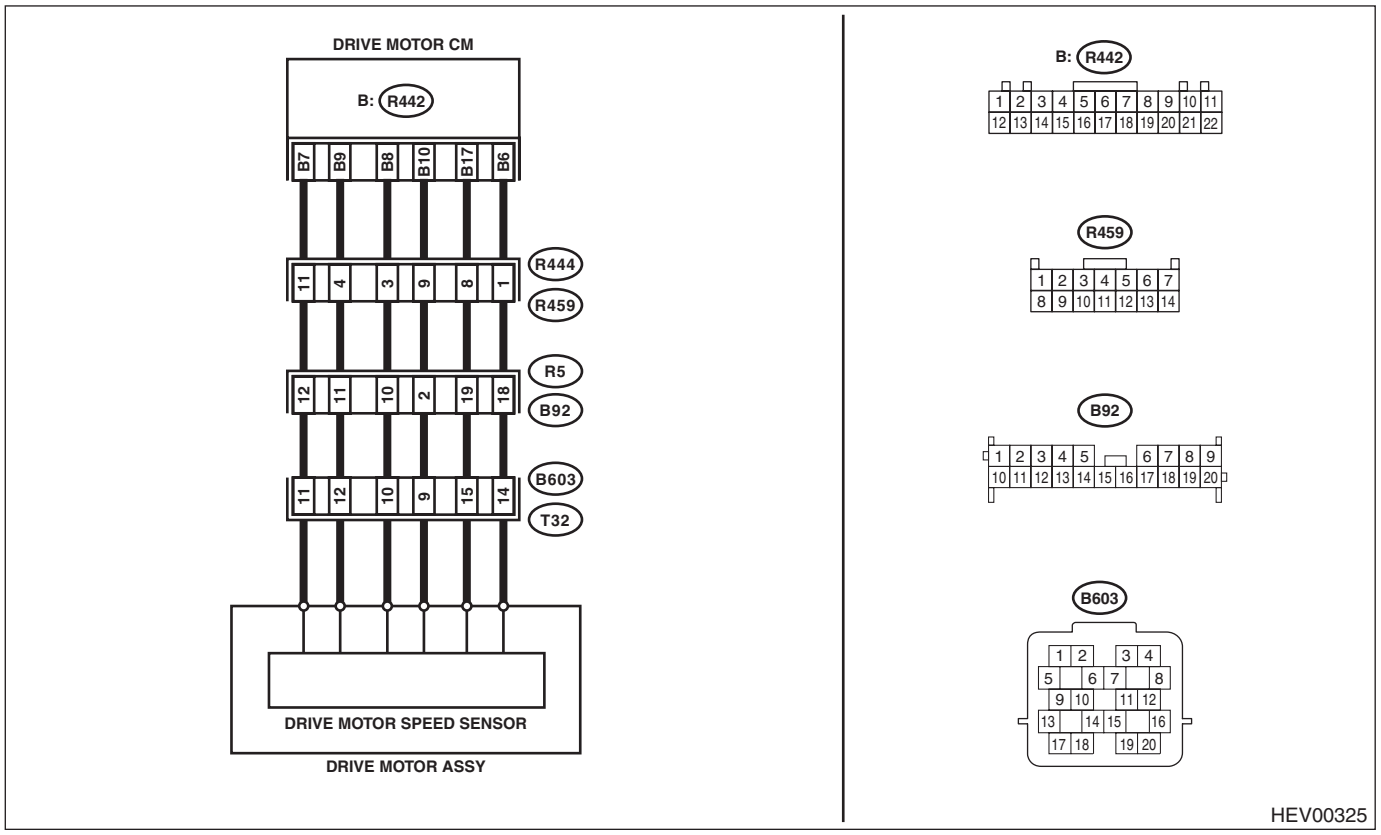

Step		Check	Yes	No
1	**CHECK HARNESS AND DRIVE MOTOR.** 1) Turn the ignition switch to OFF. 2) Disconnect the DMCM connector (R442). 3) Using a tester, measure the resistance between terminals in DMCM connector. ***Connector & terminal*** ***R1-R2*** ***(R442) No. 6 — (R442) No. 17:*** ***S1-S3*** ***(R442) No. 10 — (R442) No. 8:*** ***S2-S4*** ***(R442) No. 9 — (R442) No. 7:***	Is each resistance value as shown in below? R1-R2: Is the value out of 7 — 23 Ω range? or S1-S3: Is the value out of 10 — 39 Ω range? or S2-S4: Is the value out of 11 — 40 Ω range?	Go to step **2**.	Go to step **3**.

	Step	Check	Yes	No
2	**CHECK DRIVE MOTOR.** 1) Disconnect the drive motor assembly connector. 2) Using a tester, measure the resistance between terminals in the drive motor assembly connector. ***Connector & terminal*** ***R1-R2*** ***(T32) No. 14 — (T32) No. 15:*** ***S1-S3*** ***(T32) No. 9 — (T32) No. 10:*** ***S2-S4*** ***(T32) No. 12 — (T32) No. 11:***	Is each resistance value as shown in below? R1-R2: Is the value out of 7 — 23 Ω range? or S1-S3: Is the value out of 10 — 39 Ω range? or S2-S4: Is the value out of 11 — 40 Ω range?	Replace the drive motor assembly. <Ref. to CVT(TH58A)-215, Drive Motor Assembly.>	Repair the open circuit and short circuit to ground in harness between DMCM connector and drive motor assembly connector.
3	**CHECK HARNESS AND DRIVE MOTOR.** Using a tester, check the resistance between DMCM connector terminals and the ground bolt of inverter frame body. ***Connector & terminal*** ***(R442) No. 6 — Ground bolt of inverter frame body:*** ***(R442) No. 10 — Ground bolt of inverter frame body:*** ***(R442) No. 9 — Ground bolt of inverter frame body:***	Does the resistance between either two points show 1 MΩ or less?	Go to step **4**.	Go to step **5**.
4	**CHECK DRIVE MOTOR.** 1) Disconnect the drive motor assembly connector. 2) Using a tester, measure the resistance between the drive motor assembly connector and chassis ground. ***Connector & terminal*** ***(T32) No. 14 — Chassis ground:*** ***(T32) No. 9 — Chassis ground:*** ***(T32) No. 12 — Chassis ground:***	Does the resistance between either two points show 1 MΩ or less?	Replace the drive motor assembly. <Ref. to CVT(TH58A)-215, Drive Motor Assembly.>	Repair the short circuit to ground in harness between DMCM connector and drive motor assembly connector.

	Step	Check	Yes	No
5	**CHECK HARNESS.** 1) Disconnect the DMCM connector (R443). 2) Disconnect the intermediate connector (R436). 3) Using a tester, measure the resistance between terminals in the DMCM connector and between the terminals in the intermediate connector (R436). ***Connector & terminal*** ***(R442) No. 10 — (R442) No. 1 — 22 (except No. 8):*** ***(R442) No. 10 — (R443) No. 1 — 26:*** ***(R442) No. 10 — (R436) No. 1 — 8:*** ***(R442) No. 8 — (R442) No. 1 — 22 (except No. 10):*** ***(R442) No. 8 — (R443) No. 1 — 26:*** ***(R442) No. 8 — (R436) No. 1 — 8:*** ***(R442) No. 9 — (R442) No. 1 — 22 (except No. 7):*** ***(R442) No. 9 — (R443) No. 1 — 26:*** ***(R442) No. 9 — (R436) No. 1 — 8:*** ***(R442) No. 7 — (R442) No. 1 — 22 (except No. 9):*** ***(R442) No. 7 — (R443) No. 1 — 26:*** ***(R442) No. 7 — (R436) No. 1 — 8:*** ***(R442) No. 6 — (R442) No. 1 — 22 (except No. 17):*** ***(R442) No. 6 — (R443) No. 1 — 26:*** ***(R442) No. 6 — (R436) No. 1 — 8:*** ***(R442) No. 17 — (R442) No. 1 — 22 (except No. 6):*** ***(R442) No. 17 — (R443) No. 1 — 26:*** ***(R442) No. 17 — (R436) No. 1 — 8:***	Does the resistance between either two points show 1 MΩ or more?	Go to step **6**.	Repair the short circuit of harness between DMCM connector and drive motor assembly connector, or repair the intermediate connector.
6	**CHECK HARNESS.** 1) Disconnect the drive motor assembly connector. 2) Using a tester, measure the resistance between terminals in the drive motor assembly connector. ***Connector & terminal*** ***(B603) No. 9 — (B603) No. 1 — 20 (except No. 10):*** ***(B603) No. 10 — (B603) No. 1 — 20 (except No. 9):*** ***(B603) No. 12 — (B603) No. 1 — 20 (except No. 11):*** ***(B603) No. 11 — (B603) No. 1 — 20 (except No. 12):*** ***(B603) No. 14 — (B603) No. 1 — 20 (except No. 15):*** ***(B603) No. 15 — (B603) No. 1 — 20 (except No. 14):***	Does the resistance between either two points show 1 MΩ or more?	Go to step **7**.	Repair the short circuit of harness between DMCM connector and drive motor assembly connector, or repair the intermediate connector.

	Step	Check	Yes	No
7	**CHECK DRIVE MOTOR.** Using a tester, measure the resistance between terminals in the drive motor assembly connector. ***Connector & terminal*** ***(T32) No. 9 — (T32) No. 1 — 20 (except No. 10):*** ***(T32) No. 10 — (T32) No. 1 — 20 (except No. 9):*** ***(T32) No. 12 — (T32) No. 1 — 20 (except No. 11):*** ***(T32) No. 11 — (T32) No. 1 — 20 (except No. 12):*** ***(T32) No. 14 — (T32) No. 1 — 20 (except No. 15):*** ***(T32) No. 15 — (T32) No. 1 — 20 (except No. 14):***	Does the resistance between either two points show 1 MΩ or more?	Replace DMCM. <Ref. to CVT(TH58A)-155, Drive Motor Control Module.>	Replace the drive motor assembly. <Ref. to CVT(TH58A)-215, Drive Motor Assembly.>

AQ:DTC P0A40 DRIVE MOTOR "A" POSITION SENSOR CIRCUIT RANGE/PERFORMANCE

DIAGNOSIS:

- Immediately at fault recognition
- GENERAL DESCRIPTION <Ref. to GD(HEV)-35, DTC P0A40 DRIVE MOTOR "A" POSITION SENSOR CIRCUIT RANGE/PERFORMANCE, Diagnostic Trouble Code (DTC) Detecting Criteria.>

NOTE:
For the diagnostic procedure, “DTC P0A3F DRIVE MOTOR "A" POSITION SENSOR CIRCUIT”. <Ref. to HEV(diag)-160, DTC P0A3F DRIVE MOTOR "A" POSITION SENSOR CIRCUIT, Diagnostic Procedure with Diagnostic Trouble Code (DTC).>

AR:DTC P0A43 DRIVE MOTOR "A" POSITION SENSOR CIRCUIT INTERMITTENT

DIAGNOSIS:

- Immediately at fault recognition
- GENERAL DESCRIPTION <Ref. to GD(HEV)-36, DTC P0A43 DRIVE MOTOR "A" POSITION SENSOR CIRCUIT INTERMITTENT, Diagnostic Trouble Code (DTC) Detecting Criteria.>

TROUBLE SYMPTOM:

- EV traveling/Auto Start Stop does not operate.
- Motor assist does not regenerates.
- Sometimes driving power and shifting behavior are different from the normal states.

CAUTION:

Before performing diagnosis, refer to "CAUTION" in "General Description". <Ref. to HEV(diag)-8, CAUTION, General Description.>

WIRING DIAGRAM:

CVT control system <Ref. to WI(HEV)-86, WIRING DIAGRAM, CVT Control System.>

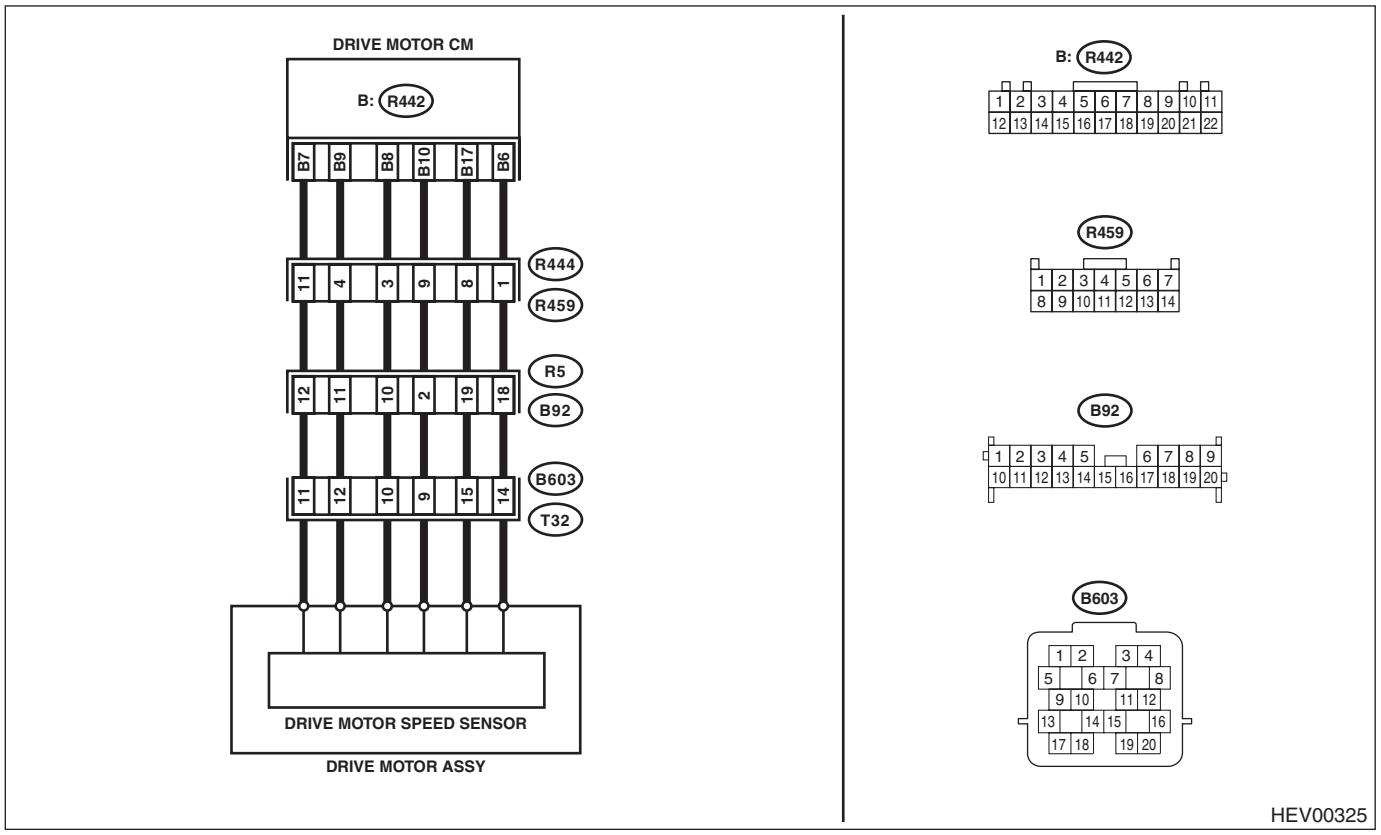

Step		Check	Yes	No
1	**CHECK DTC.** Read the DTC. <Ref. to HEV(diag)-23, DRIVE MOTOR CONTROL SYSTEM, OPERATION, Read Diagnostic Trouble Code (DTC).>	Is DTC P0A3F detected? (current malfunction)	Perform the diagnosis according to DTC. <Ref. to HEV(diag)-77, DRIVE MOTOR CONTROL SYSTEM, LIST, List of Diagnostic Trouble Code (DTC).>	Go to step **2**.

Step		Check	Yes	No
2	**CHECK HARNESS AND DRIVE MOTOR.** 1) Turn the ignition switch to OFF. 2) Disconnect the DMCM connector (R442). 3) Using a tester, measure the resistance between terminals in DMCM connector. ***Connector & terminal*** ***R1-R2*** ***(R442) No. 6 — (R442) No. 17:*** ***S1-S3*** ***(R442) No. 10 — (R442) No. 8:*** ***S2-S4*** ***(R442) No. 9 — (R442) No. 7:***	Is each resistance value as shown in below? R1-R2: Is the value out of 7 — 23 Ω range? or S1-S3: Is the value out of 10 — 39 Ω range? or S2-S4: Is the value out of 11 — 40 Ω range?	Go to step **3**.	Go to step **4**.
3	**CHECK DRIVE MOTOR.** 1) Disconnect the drive motor assembly connector. 2) Using a tester, measure the resistance between terminals in the drive motor assembly connector. ***Connector & terminal*** ***R1-R2*** ***(T32) No. 14 — (T32) No. 15:*** ***S1-S3*** ***(T32) No. 9 — (T32) No. 10:*** ***S2-S4*** ***(T32) No. 12 — (T32) No. 11:***	Is each resistance value as shown in below? R1-R2: Is the value out of 7 — 23 Ω range? or S1-S3: Is the value out of 10 — 39 Ω range? or S2-S4: Is the value out of 11 — 40 Ω range?	Replace the drive motor assembly. <Ref. to CVT(TH58A)-215, Drive Motor Assembly.>	Repair the open circuit and short circuit to ground in harness between DMCM connector and drive motor assembly connector.
4	**CHECK HARNESS AND DRIVE MOTOR.** Using a tester, measure the resistance between DMCM connector terminals and the ground bolt of inverter frame body. ***Connector & terminal*** ***(R442) No. 6 — Ground bolt of inverter frame body:*** ***(R442) No. 10 — Ground bolt of inverter frame body:*** ***(R442) No. 9 — Ground bolt of inverter frame body:***	Does the resistance between either two points show 1 MΩ or less?	Go to step **5**.	Go to step **6**.
5	**CHECK DRIVE MOTOR.** 1) Disconnect the drive motor assembly connector. 2) Using a tester, measure the resistance between the drive motor assembly connector and chassis ground. ***Connector & terminal*** ***(T32) No. 14 — Chassis ground:*** ***(T32) No. 9 — Chassis ground:*** ***(T32) No. 12 — Chassis ground:***	Does the resistance between either two points show 1 MΩ or less?	Replace the drive motor assembly. <Ref. to CVT(TH58A)-215, Drive Motor Assembly.>	Repair the short circuit to ground in harness between DMCM connector and drive motor assembly connector.

	Step	Check	Yes	No
6	**CHECK HARNESS.** 1) Disconnect the drive motor assembly connector. 2) Using a tester, measure the resistance between terminals in the DMCM connector (R442, R443), between the terminals in the intermediate connector (R436), and between terminals in the drive motor assembly connector. ***Connector & terminal*** ***(R442) No. 10 — (R442) No. 1 — 22 (except No. 8):*** ***(R442) No. 10 — (R443) No. 1 — 26:*** ***(R442) No. 10 — (R436) No. 1 — 8:*** ***(R442) No. 8 — (R442) No. 1 — 22 (except No. 10):*** ***(R442) No. 8 — (R443) No. 1 — 26:*** ***(R442) No. 8 — (R436) No. 1 — 8:*** ***(R442) No. 9 — (R442) No. 1 — 22 (except No. 7):*** ***(R442) No. 9 — (R443) No. 1 — 26:*** ***(R442) No. 9 — (R436) No. 1 — 8:*** ***(R442) No. 7 — (R442) No. 1 — 22 (except No. 9):*** ***(R442) No. 7 — (R443) No. 1 — 26:*** ***(R442) No. 7 — (R436) No. 1 — 8:*** ***(R442) No. 6 — (R442) No. 1 — 22 (except No. 17):*** ***(R442) No. 6 — (R443) No. 1 — 26:*** ***(R442) No. 6 — (R436) No. 1 — 8:*** ***(R442) No. 17 — (R442) No. 1 — 22 (except No. 6):*** ***(R442) No. 17 — (R443) No. 1 — 26:*** ***(R442) No. 17 — (R436) No. 1 — 8:***	Does the resistance between either two points show 1 MΩ or more?	Go to step **7**.	Repair the short circuit of harness between DMCM connector and drive motor assembly connector, or repair the intermediate connector.
7	**CHECK HARNESS.** 1) Disconnect the drive motor assembly connector. 2) Using a tester, measure the resistance between terminals in the drive motor assembly connector. ***Connector & terminal*** ***(B603) No. 9 — (B603) No. 1 — 20 (except No. 10):*** ***(B603) No. 10 — (B603) No. 1 — 20 (except No. 9):*** ***(B603) No. 12 — (B603) No. 1 — 20 (except No. 11):*** ***(B603) No. 11 — (B603) No. 1 — 20 (except No. 12):*** ***(B603) No. 14 — (B603) No. 1 — 20 (except No. 15):*** ***(B603) No. 15 — (B603) No. 1 — 20 (except No. 14):***	Does the resistance between either two points show 1 MΩ or more?	Go to step **8**.	Repair the short circuit of harness between DMCM connector and drive motor assembly connector, or repair the intermediate connector.

Step		Check	Yes	No
8	**CHECK DRIVE MOTOR.** Using a tester, measure the resistance between terminals in the drive motor assembly connector. ***Connector & terminal*** ***(T32) No. 9 — (T32) No. 1 — 20 (except No. 10):*** ***(T32) No. 12 — (T32) No. 1 — 20 (except No. 11):*** ***(T32) No. 14 — (T32) No. 1 — 20 (except No. 15):***	Does the resistance between either two points show 1 MΩ or more?	Replace DMCM. <Ref. to CVT(TH58A)-155, Drive Motor Control Module.>	Replace the drive motor assembly. <Ref. to CVT(TH58A)-215, Drive Motor Assembly.>

AS:DTC P0A44 DRIVE MOTOR "A" POSITION SENSOR CIRCUIT OVERSPEED

DIAGNOSIS:

- Immediately at fault recognition
- GENERAL DESCRIPTION <Ref. to GD(HEV)-37, DTC P0A44 DRIVE MOTOR "A" POSITION SENSOR CIRCUIT OVERSPEED, Diagnostic Trouble Code (DTC) Detecting Criteria.>

TROUBLE SYMPTOM:

- EV traveling/Auto Start Stop does not operate.
- Motor assist does not regenerates.

CAUTION:

Before performing diagnosis, refer to “CAUTION” in “General Description”. <Ref. to HEV(diag)-8, CAUTION, General Description.>

WIRING DIAGRAM:

CVT control system <Ref. to WI(HEV)-86, WIRING DIAGRAM, CVT Control System.>

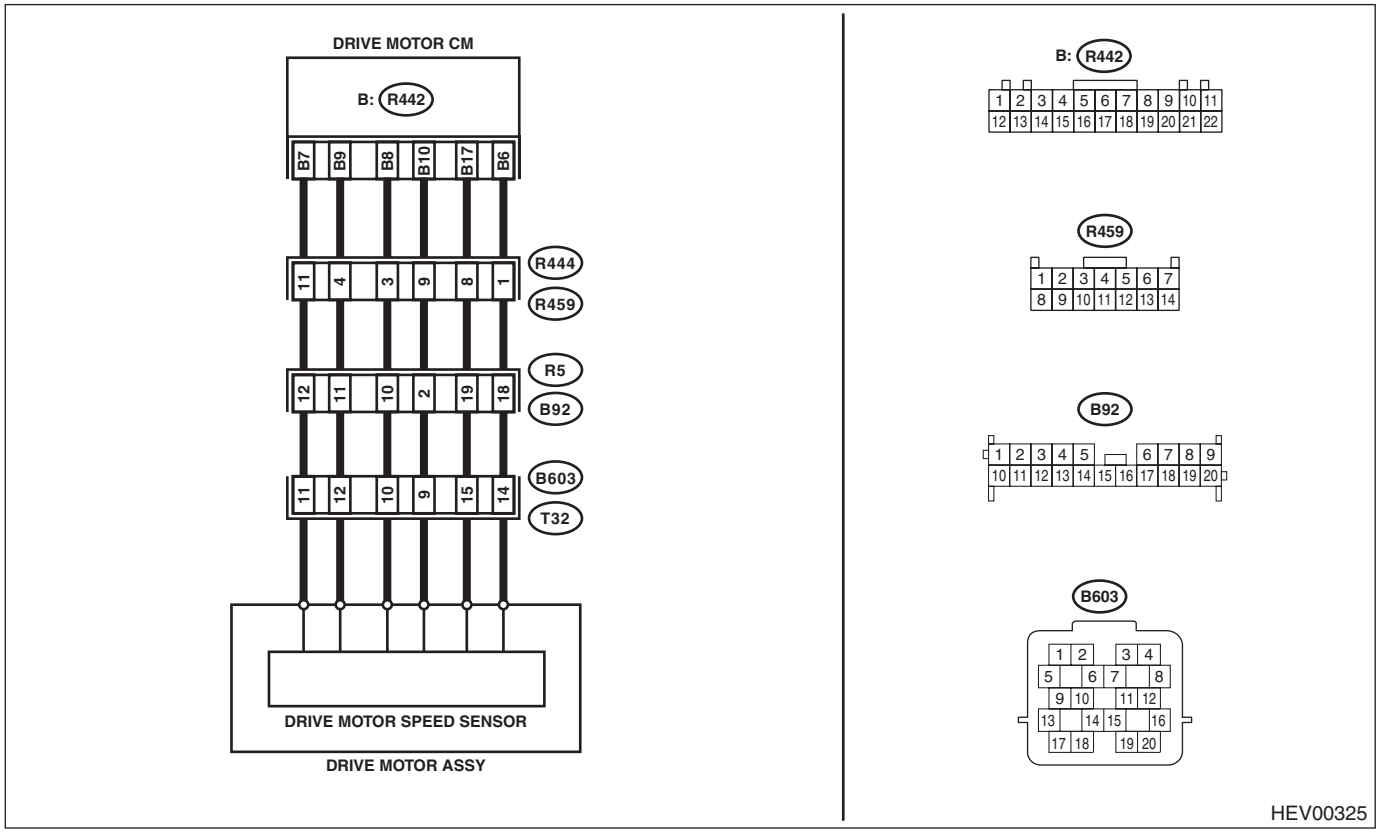

	Step	Check	Yes	No
1	**CHECK DTC.** Read DTCs of the following system. • Transmission <Ref. to CVT(HEV)(diag)-18, Read Diagnostic Trouble Code (DTC).>	Is DTC detected? (current malfunction)	Perform the diagnosis according to DTC. <Ref. to CVT(HEV)(diag)-32, List of Diagnostic Trouble Code (DTC).>	Go to step **2**.
2	**CHECK DTC.** Read the DTC. <Ref. to HEV(diag)-23, DRIVE MOTOR CONTROL SYSTEM, OPERATION, Read Diagnostic Trouble Code (DTC).>	Is either DTC P0A3F or P0A43 detected? (current malfunction)	Perform the diagnosis according to DTC. <Ref. to HEV(diag)-77, DRIVE MOTOR CONTROL SYSTEM, LIST, List of Diagnostic Trouble Code (DTC).>	Go to step **3**.

Step		Check	Yes	No
3	**CHECK HARNESS AND DRIVE MOTOR.** 1) Turn the ignition switch to OFF. 2) Disconnect the DMCM connector (R442). 3) Using a tester, measure the resistance between terminals in DMCM connector. ***Connector & terminal*** ***R1-R2*** ***(R442) No. 6 — (R442) No. 17:*** ***S1-S3*** ***(R442) No. 10 — (R442) No. 8:*** ***S2-S4*** ***(R442) No. 9 — (R442) No. 7:***	Is each resistance value as shown in below? R1-R2: Is the value out of 7 — 23 Ω range? or S1-S3: Is the value out of 10 — 39 Ω range? or S2-S4: Is the value out of 11 — 40 Ω range?	Go to step **4**.	Go to step **5**.
4	**CHECK DRIVE MOTOR.** 1) Disconnect the drive motor assembly connector. 2) Using a tester, measure the resistance between terminals in the drive motor assembly connector. ***Connector & terminal*** ***R1-R2*** ***(T32) No. 14 — (T32) No. 15:*** ***S1-S3*** ***(T32) No. 9 — (T32) No. 10:*** ***S2-S4*** ***(T32) No. 12 — (T32) No. 11:***	Is each resistance value as shown in below? R1-R2: Is the value out of 7 — 23 Ω range? or S1-S3: Is the value out of 10 — 39 Ω range? or S2-S4: Is the value out of 11 — 40 Ω range?	Replace the drive motor assembly. <Ref. to CVT(TH58A)-215, Drive Motor Assembly.>	Repair the open circuit and short circuit to ground in harness between DMCM connector and drive motor assembly connector.
5	**CHECK HARNESS AND DRIVE MOTOR.** Using a tester, measure the resistance between DMCM connector terminals and the ground bolt of inverter frame body. ***Connector & terminal*** ***(R442) No. 6 — Ground bolt of inverter frame body:*** ***(R442) No. 10 — Ground bolt of inverter frame body:*** ***(R442) No. 9 — Ground bolt of inverter frame body:***	Does the resistance between either two points show 1 MΩ or less?	Go to step **6**.	Go to step **7**.
6	**CHECK DRIVE MOTOR.** 1) Disconnect the drive motor assembly connector. 2) Using a tester, measure the resistance between the drive motor assembly connector and chassis ground. ***Connector & terminal*** ***(T32) No. 14 — Chassis ground:*** ***(T32) No. 9 — Chassis ground:*** ***(T32) No. 12 — Chassis ground:***	Does the resistance between either two points show 1 MΩ or less?	Replace the drive motor assembly. <Ref. to CVT(TH58A)-215, Drive Motor Assembly.>	Repair the short circuit to ground in harness between DMCM connector and drive motor assembly connector.

	Step	Check	Yes	No
7	**CHECK HARNESS.** 1) Disconnect the drive motor assembly connector. 2) Using a tester, measure the resistance between terminals in the DMCM connector (R442, R443), between the terminals in the intermediate connector (R436), and between terminals in the drive motor assembly connector. ***Connector & terminal*** ***(R442) No. 10 — (R442) No. 1 — 22 (except No. 8):*** ***(R442) No. 10 — (R443) No. 1 — 26:*** ***(R442) No. 10 — (R436) No. 1 — 8:*** ***(R442) No. 8 — (R442) No. 1 — 22 (except No. 10):*** ***(R442) No. 8 — (R443) No. 1 — 26:*** ***(R442) No. 8 — (R436) No. 1 — 8:*** ***(R442) No. 9 — (R442) No. 1 — 22 (except No. 7):*** ***(R442) No. 9 — (R443) No. 1 — 26:*** ***(R442) No. 9 — (R436) No. 1 — 8:*** ***(R442) No. 7 — (R442) No. 1 — 22 (except No. 9):*** ***(R442) No. 7 — (R443) No. 1 — 26:*** ***(R442) No. 7 — (R436) No. 1 — 8:*** ***(R442) No. 6 — (R442) No. 1 — 22 (except No. 17):*** ***(R442) No. 6 — (R443) No. 1 — 26:*** ***(R442) No. 6 — (R436) No. 1 — 8:*** ***(R442) No. 17 — (R442) No. 1 — 22 (except No. 6):*** ***(R442) No. 17 — (R443) No. 1 — 26:*** ***(R442) No. 17 — (R436) No. 1 — 8:***	Does the resistance between either two points show 1 MΩ or more?	Go to step **8**.	Repair the short circuit of harness between DMCM connector and drive motor assembly connector, or repair the intermediate connector.
8	**CHECK HARNESS.** 1) Disconnect the drive motor assembly connector. 2) Using a tester, measure the resistance between terminals in the drive motor assembly connector. ***Connector & terminal*** ***(B603) No. 9 — (B603) No. 1 — 20 (except No. 10):*** ***(B603) No. 10 — (B603) No. 1 — 20 (except No. 9):*** ***(B603) No. 12 — (B603) No. 1 — 20 (except No. 11):*** ***(B603) No. 11 — (B603) No. 1 — 20 (except No. 12):*** ***(B603) No. 14 — (B603) No. 1 — 20 (except No. 15):*** ***(B603) No. 15 — (B603) No. 1 — 20 (except No. 14):***	Does the resistance between either two points show 1 MΩ or more?	Go to step **9**.	Repair the short circuit of harness between DMCM connector and drive motor assembly connector, or repair the intermediate connector.

Step		Check	Yes	No
9	**CHECK DRIVE MOTOR.** Using a tester, measure the resistance between terminals in the drive motor assembly connector. ***Connector & terminal*** ***(T32) No. 9 — (T32) No. 1 — 20 (except No. 10):*** ***(T32) No. 12 — (T32) No. 1 — 20 (except No. 11):*** ***(T32) No. 14 — (T32) No. 1 — 20 (except No. 15):***	Does the resistance between either two points show 1 MΩ or more?	Replace DMCM. <Ref. to CVT(TH58A)-155, Drive Motor Control Module.>	Replace the drive motor assembly. <Ref. to CVT(TH58A)-215, Drive Motor Assembly.>

AT:DTC P0C52 DRIVE MOTOR "A" POSITION SENSOR CIRCUIT "A" LOW

DIAGNOSIS:

- Immediately at fault recognition
- GENERAL DESCRIPTION <Ref. to GD(HEV)-67, DTC P0C52 DRIVE MOTOR "A" POSITION SENSOR CIRCUIT "A" LOW, Diagnostic Trouble Code (DTC) Detecting Criteria.>

NOTE:
For the diagnostic procedure, “DTC P0A3F DRIVE MOTOR "A" POSITION SENSOR CIRCUIT”. <Ref. to HEV(diag)-160, DTC P0A3F DRIVE MOTOR "A" POSITION SENSOR CIRCUIT, Diagnostic Procedure with Diagnostic Trouble Code (DTC).>

AU:DTC P0C5C DRIVE MOTOR "A" POSITION SENSOR CIRCUIT "B" LOW

DIAGNOSIS:

- Immediately at fault recognition
- GENERAL DESCRIPTION <Ref. to GD(HEV)-68, DTC P0C5C DRIVE MOTOR "A" POSITION SENSOR CIRCUIT "B" LOW, Diagnostic Trouble Code (DTC) Detecting Criteria.>

NOTE:
For the diagnostic procedure, “DTC P0A3F DRIVE MOTOR "A" POSITION SENSOR CIRCUIT”. <Ref. to HEV(diag)-160, DTC P0A3F DRIVE MOTOR "A" POSITION SENSOR CIRCUIT, Diagnostic Procedure with Diagnostic Trouble Code (DTC).>

AV:DTC P0CDC DRIVE MOTOR "A" POSITION SENSOR CIRCUIT "C" LOW

DIAGNOSIS:

- Immediately at fault recognition
- GENERAL DESCRIPTION <Ref. to GD(HEV)-70, DTC P0CDC DRIVE MOTOR "A" POSITION SENSOR CIRCUIT "C" LOW, Diagnostic Trouble Code (DTC) Detecting Criteria.>

NOTE:
For the diagnostic procedure, “DTC P0A3F DRIVE MOTOR "A" POSITION SENSOR CIRCUIT”. <Ref. to HEV(diag)-160, DTC P0A3F DRIVE MOTOR "A" POSITION SENSOR CIRCUIT, Diagnostic Procedure with Diagnostic Trouble Code (DTC).>

AW:DTC P0CDD DRIVE MOTOR "A" POSITION SENSOR CIRCUIT "C" HIGH

DIAGNOSIS:

- Immediately at fault recognition
- GENERAL DESCRIPTION <Ref. to GD(HEV)-71, DTC P0CDD DRIVE MOTOR "A" POSITION SENSOR CIRCUIT "C" HIGH, Diagnostic Trouble Code (DTC) Detecting Criteria.>

NOTE:
For the diagnostic procedure, “DTC P0A3F DRIVE MOTOR "A" POSITION SENSOR CIRCUIT”. <Ref. to HEV(diag)-160, DTC P0A3F DRIVE MOTOR "A" POSITION SENSOR CIRCUIT, Diagnostic Procedure with Diagnostic Trouble Code (DTC).>

AX:DTC P0A5D DRIVE MOTOR "A" PHASE U CURRENT

DIAGNOSIS:

- Immediately at fault recognition
- GENERAL DESCRIPTION <Ref. to GD(HEV)-38, DTC P0A5D DRIVE MOTOR "A" PHASE U CURRENT, Diagnostic Trouble Code (DTC) Detecting Criteria.>

TROUBLE SYMPTOM:

- EV traveling/Auto Start Stop does not operate.
- Motor assist does not regenerates.

CAUTION:

Before performing diagnosis, refer to “CAUTION” in “General Description”. <Ref. to HEV(diag)-8, CAUTION, General Description.>

WIRING DIAGRAM:

Hybrid system <Ref. to WI(HEV)-139, WIRING DIAGRAM, Hybrid Electric Vehicle System.>

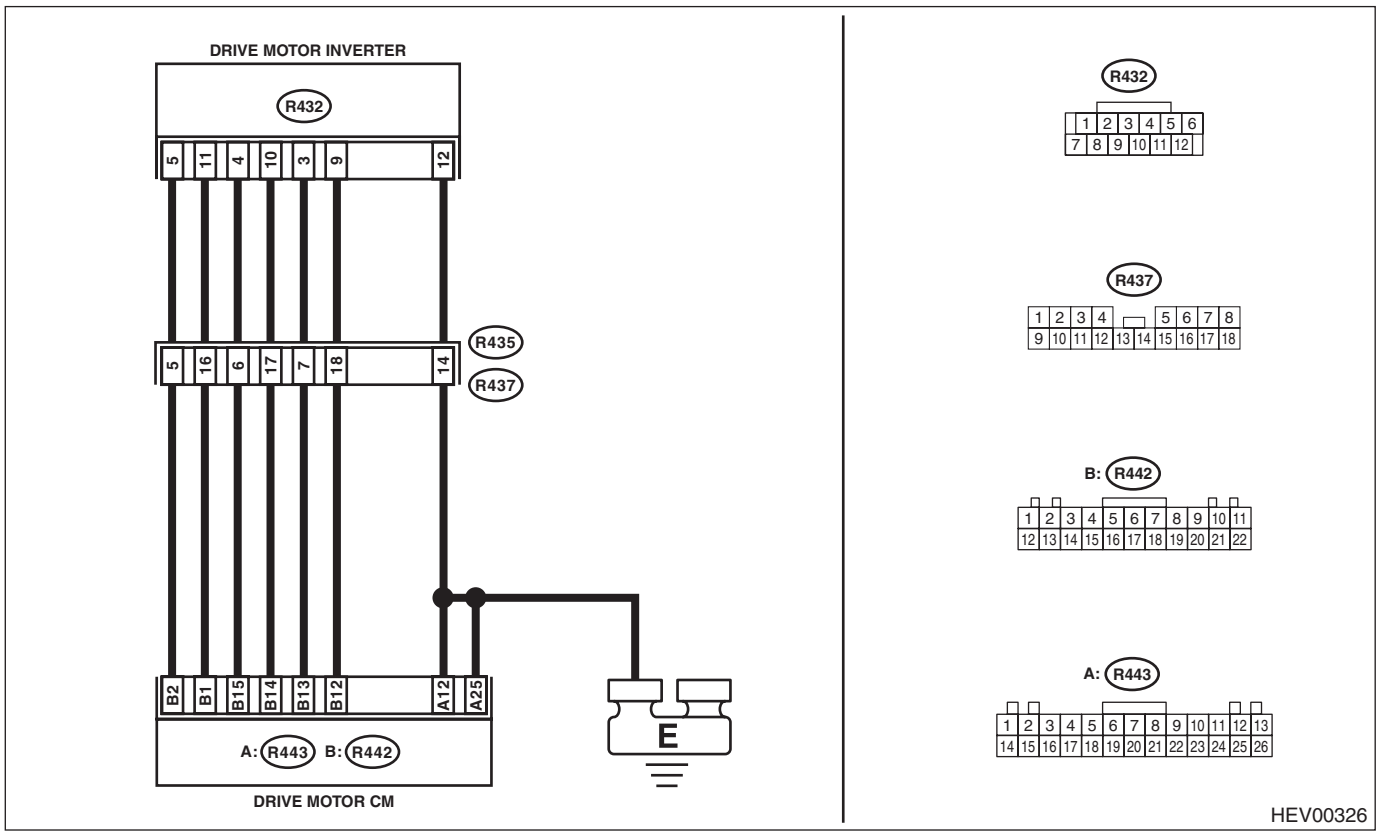

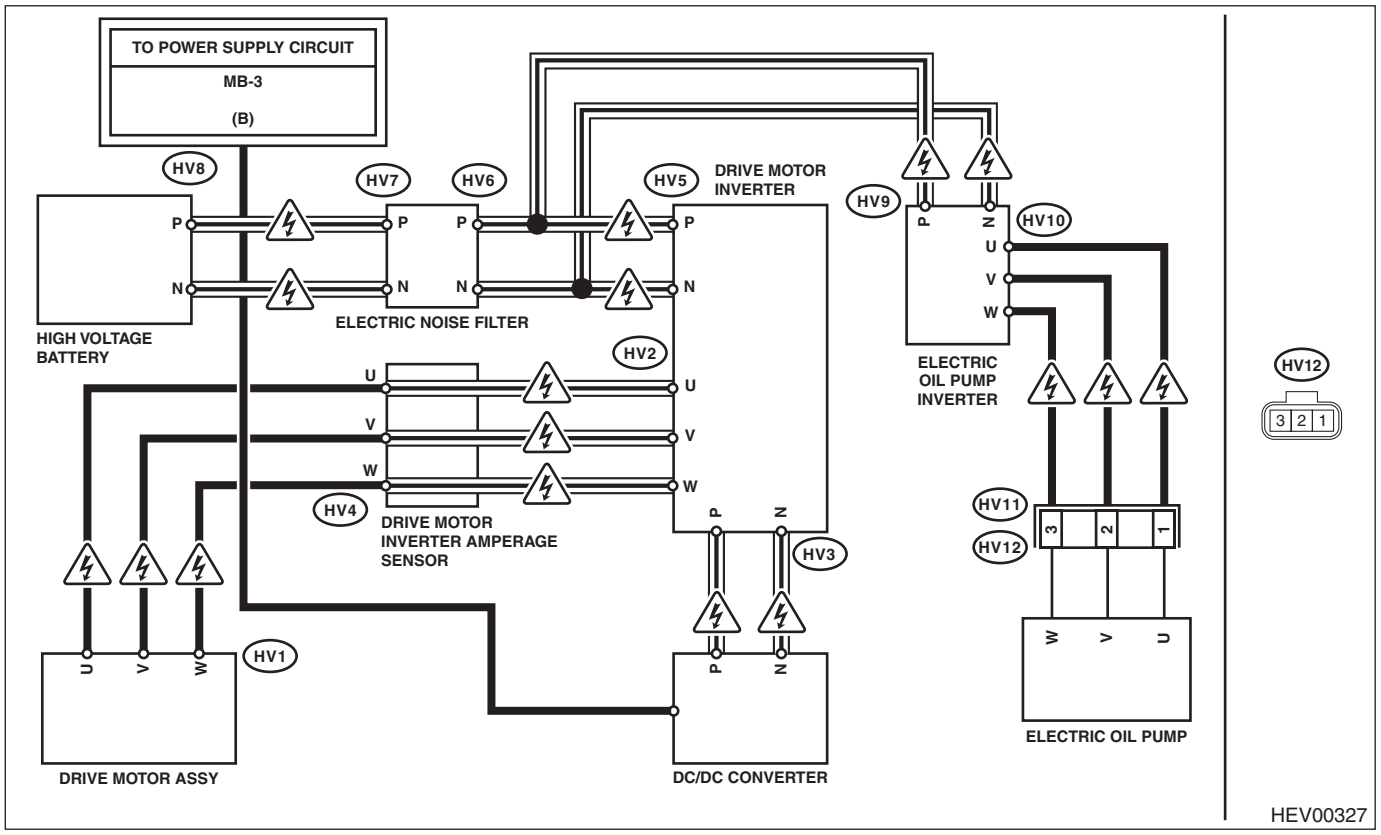

Step		Check	Yes	No
1	**CHECK DTC.** Read the DTC. <Ref. to HEV(diag)-23, DRIVE MOTOR CONTROL SYSTEM, OPERATION, Read Diagnostic Trouble Code (DTC).>	Are any other DTCs detected? (current malfunction)	Perform the diagnosis according to DTC. <Ref. to HEV(diag)-77, DRIVE MOTOR CONTROL SYSTEM, LIST, List of Diagnostic Trouble Code (DTC).>	Go to step **2**.
2	**CHECK CURRENT DATA.** Using the Subaru Select Monitor, confirm the current data of drive motor control system, the value of «Phase U Amperage Sensor Voltage». <Ref. to HEV(diag)-51, DRIVE MOTOR CONTROL SYSTEM, OPERATION, Read Current Data.>	Is the value 2.5 V ±0.1 V with IG ON?	Go to step **3**.	Perform the diagnosis according to DTC P0BE6 and P06B1. <Ref. to HEV(diag)-77, DRIVE MOTOR CONTROL SYSTEM, LIST, List of Diagnostic Trouble Code (DTC).>

Step		Check	Yes	No
3	**CHECK HARNESS (GATE SIGNAL SHORT TO POWER AND SHORT IN OTHER SIGNAL LINES).** 1) Turn the ignition switch to OFF. 2) Disconnect the ground cable of the 12 volt auxiliary battery, and as for the 12 volt engine restart battery, disconnect the ground cable from the 12V engine restart battery sensor. <Ref. to NT-5, BATTERY, NOTE, Note.> 3) Remove the service disconnect plug. <Ref. to HEV-15, Service Plug.> 4) Wait for 10 minutes. 5) Disconnect the DMCM connector (R442, R443). 6) Disconnect the intermediate connector (R436). 7) Disconnect the drive motor inverter connector. 8) Using a tester, measure the resistance between terminals in DMCM connectors (R442, R443) and between each terminal in inverter connector. ***Connector & terminal*** ***(R442) No. 2 — (R442) No. 1 — 22:*** ***(R442) No. 2 — (R443) No. 1 — 26:*** ***(R442) No. 2 — (R436) No. 1 — 8:*** ***(R442) No. 2 — (R432) No. 7:*** ***(R442) No. 1 — (R442) No. 1 — 22:*** ***(R442) No. 1 — (R443) No. 1 — 26:*** ***(R442) No. 1 — (R436) No. 1 — 8:*** ***(R442) No. 1 — (R432) No. 7:*** ***(R442) No. 15 — (R442) No. 1 — 22:*** ***(R442) No. 15 — (R443) No. 1 — 26:*** ***(R442) No. 15 — (R436) No. 1 — 8:*** ***(R442) No. 15 — (R432) No. 7:*** ***(R442) No. 14 — (R442) No. 1 — 22:*** ***(R442) No. 14 — (R443) No. 1 — 26:*** ***(R442) No. 14 — (R436) No. 1 — 8:*** ***(R442) No. 14 — (R432) No. 7:*** ***(R442) No. 13 — (R442) No. 1 — 22:*** ***(R442) No. 13 — (R443) No. 1 — 26:*** ***(R442) No. 13 — (R436) No. 1 — 8:*** ***(R442) No. 13 — (R432) No. 7:*** ***(R442) No. 12 — (R442) No. 1 — 22:*** ***(R442) No. 12 — (R443) No. 1 — 26:*** ***(R442) No. 12 — (R436) No. 1 — 8:*** ***(R442) No. 12 — (R432) No. 7:***	Is the resistance 1 MΩ or more?	Go to step **4**.	Repair short circuit in harness between DMCM connector and drive motor inverter, or repair the intermediate connector.

	Step	Check	Yes	No
4	**CHECK DRIVE MOTOR INVERTER (INTERNAL SHORT).** 1) Disconnects power cable terminals (HV2, HV3) of the drive motor inverter and bus bar (HV5). NOTE: Be sure to use insulating tape. 2) Using a tester, check for continuity between drive motor inverter terminals. NOTE: When checking continuity, always follow the combinations as follows with correct polarities. If polarities are reversed when checking, the trouble may not be accurately diagnosed. ***Connector & terminal*** ***(HV5) P (+) — (HV2) U (–):*** ***(HV2) U (+) — (HV5) N (–):*** ***(HV5) P (+) — (HV2) V (–):*** ***(HV2) V (+) — (HV5) N (–):*** ***(HV5) P (+) — (HV2) W (–):*** ***(HV2) W (+) — (HV5) N (–):*** ***(HV5) P (+) — (HV5) N (–):*** ***(HV2) U (+) — (HV2) V (–):*** ***(HV2) U (+) — (HV2) W (–):*** ***(HV2) V (+) — (HV2) W (–):*** ***(HV5) P (+) — Chassis ground (–):*** ***(HV5) N (+) — Chassis ground (–):*** ***(HV2) U (+) — Chassis ground (–):*** ***(HV2) V (+) — Chassis ground (–):*** ***(HV2) W (+) — Chassis ground (–):***	Is there continuity?	Replace the drive motor inverter. <Ref. to HEV-42, Inverter.> Go to step **13**.	Go to step **5**.
5	**CHECK DRIVE MOTOR INVERTER (RELEASED).** Using diode voltage measuring mode on an insulation multimeter, measure the voltage between the terminals of the drive motor inverter. NOTE: When checking voltage values, always follow the combinations as follows with correct polarities. If polarities are reversed when checking, the trouble may not be accurately diagnosed. ***Connector & terminal*** ***(HV2) U (+) — (HV5) P (–):*** ***(HV5) N (+) — (HV2) U (–):*** ***(HV2) V (+) — (HV5) P (–):*** ***(HV5) N (+) — (HV2) V (–):*** ***(HV2) W (+) — (HV5) P (–):*** ***(HV5) N (+) — (HV2) W (–):***	Is “O.L” indicated?	Replace the drive motor inverter. <Ref. to HEV-42, Inverter.> Go to step **13**.	Go to step **6**.

	Step	Check	Yes	No
6	**CHECK HIGH VOLTAGE UNIT (SHORT).** 1) Remove electric noise filter, DC/DC converter, and electric oil pump inverter. 2) Check continuity between each terminal of the unit. NOTE: • When checking voltage values, always follow the combinations as follows with correct polarities. If polarities are reversed when checking, the trouble may not be accurately diagnosed. • For ground measuring points of electric noise filter, DC/DC converter, and electric oil pump inverter, refer to Notes in the margin. ***Connector & terminal*** ***(HV6) P (+) — (HV7) N (–):*** ***(HV6) P (+) — Electric noise filter ground (–):*** ***(HV6) N (+) — Electric noise filter ground (–):*** ***(HV3) P (+) — (HV3) N (–):*** ***(HV3) P (+) — DC/DC converter ground (–) :*** ***(HV3) N (+) — DC/DC converter ground (–):*** ***(HV9) P (+) — (HV9) N (–):*** ***(HV9) P (+) — (HV10) U (–):*** ***(HV9) P (+) — (HV10) V (–):*** ***(HV9) P (+) — (HV10) W (–):*** ***(HV10) U (+) — (HV9) N (–):*** ***(HV10) V (+) — (HV9) N (–):*** ***(HV10) W (+) — (HV9) N (–):*** ***(HV10) U (+) — (HV10) V (–):*** ***(HV10) U (+) — (HV10) W (–):*** ***(HV10) V (+) — (HV10) W (–):*** ***(HV9) P (+) — Electric oil pump inverter ground (–):*** ***(HV9) N (+) — Electric oil pump inverter ground (–):*** ***(HV10) U (+) — Electric oil pump inverter ground (–):*** ***(HV10) V (+) — Electric oil pump inverter ground (–) :*** ***(HV10) W (+) — Electric oil pump inverter ground (–):*** ***(HV8) P (+) — (HV8) N (–):*** ***(HV8) P (+) — Chassis ground (–):*** ***(HV8) N (+) — Chassis ground (–):***	Is there continuity?	Replace the unit that has continuity. Go to step **13**.	Go to step **7**.
7	**CHECK POWER CABLE AND DRIVE MOTOR (SHORT TO GROUND).** Using an insulation multimeter (250 V range), measure the resistance between power cable terminal (HV2) of the drive motor inverter and the ground bolt of inverter frame body. ***Connector & terminal*** ***(HV2) U — Ground bolt of inverter frame body:*** ***(HV2) V — Ground bolt of inverter frame body:*** ***(HV2) W — Ground bolt of inverter frame body:***	Is the resistance 2 MΩ or more?	If you have a milliohm tester at hand, Go to step **8**. If a milliohm tester is NOT at hand, Go to step **11**.	Go to step **9**.

	Step	Check	Yes	No
8	**CHECK POWER CABLE AND DRIVE MOTOR (SHORT).** Using a milliohm tester, measure the resistance between terminals of drive motor inverter power cable. ***Connector & terminal*** ***(HV2) U — (HV2) V:*** ***(HV2) U — (HV2) W:*** ***(HV2) V — (HV2) W:***	Is resistance between either lines less than 25 mΩ?	Go to step **10**.	Replace DMCM. <Ref. to CVT(TH58A)-155, Drive Motor Control Module.>
9	**CHECK DRIVE MOTOR (SHORT TO GROUND).** 1) Leave the vehicle under temperature of 40°C (104°F) or less for 10 minutes. 2) Disconnect the drive motor power cable (HV1). NOTE: The gasket is NOT reusable. 3) Using an insulation multimeter (250 V range), measure the resistance between each terminal and chassis ground. ***Connector & terminal*** ***(HV1) U — Chassis ground:*** ***(HV1) V — Chassis ground:*** ***(HV1) W — Chassis ground:***	Does the resistance between any points show less than 2 MΩ?	Replace the drive motor assembly. <Ref. to CVT(TH58A)-215, Drive Motor Assembly.>	Repair or replace the short circuit of the power cable. Go to step **13**.
10	**CHECK DRIVE MOTOR (SHORT).** 1) Leave the vehicle under temperature of 40°C (104°F) or less for 10 minutes. 2) Disconnect the drive motor power cable (HV1). NOTE: The gasket is NOT reusable. 3) Using a milliohm tester, measure the resistance between power cable terminals. ***Connector & terminal*** ***(HV1) U — (HV1) V:*** ***(HV1) U — (HV1) W:*** ***(HV1) V — (HV1) W:***	Is resistance between either lines less than 20 mΩ?	Replace the drive motor assembly. <Ref. to CVT(TH58A)-215, Drive Motor Assembly.>	Repair or replace the short circuit of the power cable. Go to step **13**.
11	**CHECK DRIVE MOTOR (SHORT).** 1) Replace the removed/disconnected parts back to the vehicle. 2) With the 12 V battery connected, remove the service disconnect plug. <Ref. to HEV-15, Service Plug.> **CAUTION:** **Watch for an electrical short at each harness because the 12 V battery is connected.** 3) Lift up the vehicle. 4) Start the engine, and set the shift lever to "D" range. 5) Using the Subaru Select Monitor, confirm the current data of drive motor control system, the values of «A/T Oil Temperature»«Drive Motor Speed»«Drive Motor Inverter Input High Voltage Sensor (Serial)». <Ref. to HEV(diag)-51, DRIVE MOTOR CONTROL SYSTEM, OPERATION, Read Current Data.>	Are any of the following statements relevant? • «Drive Motor Inverter Input High Voltage Sensor (Serial)» is out of the standard specified in Note when «ATF Temperature» is 20 — 60°C (68 — 140°F) and «Drive Motor Speed» is 600 — 1400 rpm. • Abnormal noise and changes in rotation speed occur near 600 rpm.	Go to step **12**.	Replace DMCM. <Ref. to CVT(TH58A)-155, Drive Motor Control Module.>

	Step	Check	Yes	No
12	**CHECK POWER CABLE (SHORT).** 1) Turn the ignition switch to OFF. 2) Disconnect the ground cable of the 12 volt auxiliary battery, and as for the 12 volt engine restart battery, disconnect the ground cable from the 12V engine restart battery sensor. <Ref. to NT-5, BATTERY, NOTE, Note.> 3) Remove the service disconnect plug. <Ref. to HEV-15, Service Plug.> 4) Wait for 10 minutes. 5) Disconnect the drive motor power cable (HV1). NOTE: The gasket is NOT reusable. 6) Disconnect the power cable (HV2) of drive motor inverter. 7) Using an insulation multimeter (250 V range), measure the resistance between power cable terminals. ***Connector & terminal*** ***(HV2) U — (HV2) V:*** ***(HV2) U — (HV2) W:*** ***(HV2) V — (HV2) W:***	Does the resistance between any points show 2 MΩ or more?	Replace the drive motor assembly. <Ref. to CVT(TH58A)-215, Drive Motor Assembly.>	Repair or replace the short circuit of the power cable. Go to step **13**.
13	**CHECK OF DRIVE MOTOR (DEMAGNETIZATION).** 1) Replace the removed/disconnected parts back to the vehicle. 2) With the 12 V battery connected, remove the service disconnect plug. <Ref. to HEV-15, Service Plug.> **CAUTION:** **Watch for an electrical short at each harness because the 12 V battery is connected.** 3) Lift up the vehicle. 4) Start the engine, and set the shift lever to “D” range. 5) Using the Subaru Select Monitor, confirm the current data of drive motor control system, the values of «A/T Oil Temperature»«Drive Motor Speed»«Drive Motor Inverter Input High Voltage Sensor (Serial)». <Ref. to HEV(diag)-51, DRIVE MOTOR CONTROL SYSTEM, OPERATION, Read Current Data.>	«Drive Motor Inverter Input High Voltage Sensor (Serial)» is within the standard specified in Note when «ATF Temperature» is 20 — 60°C (68 — 140°F) and «Drive Motor Speed» is 600 — 1400 rpm.	Even if DTC is detected, the circuit has returned to a normal condition at this time. Reproduce the failure, and then perform the diagnosis again. NOTE: In this case, temporary poor contact of connector, temporary open or short circuit of harness may be the cause.	Replace the drive motor assembly. <Ref. to CVT(TH58A)-215, Drive Motor Assembly.>

NOTE:
Ground measuring points

- Electric noise filter

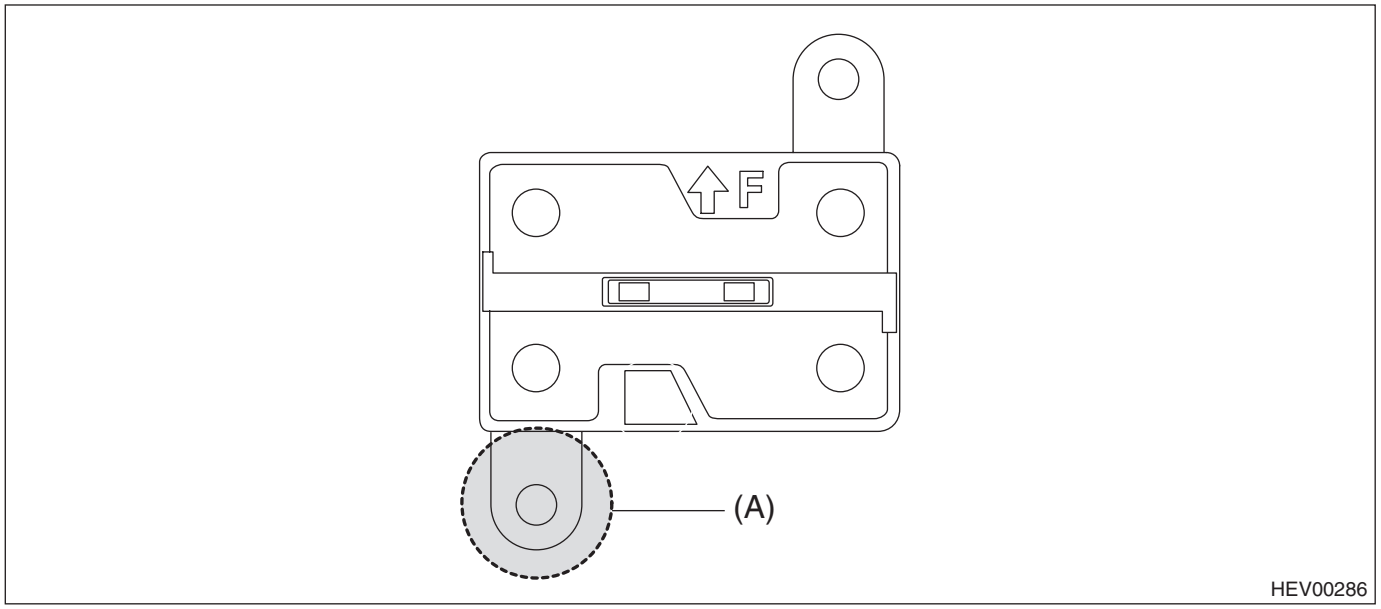

(A) Ground measuring points

- DC/DC converter

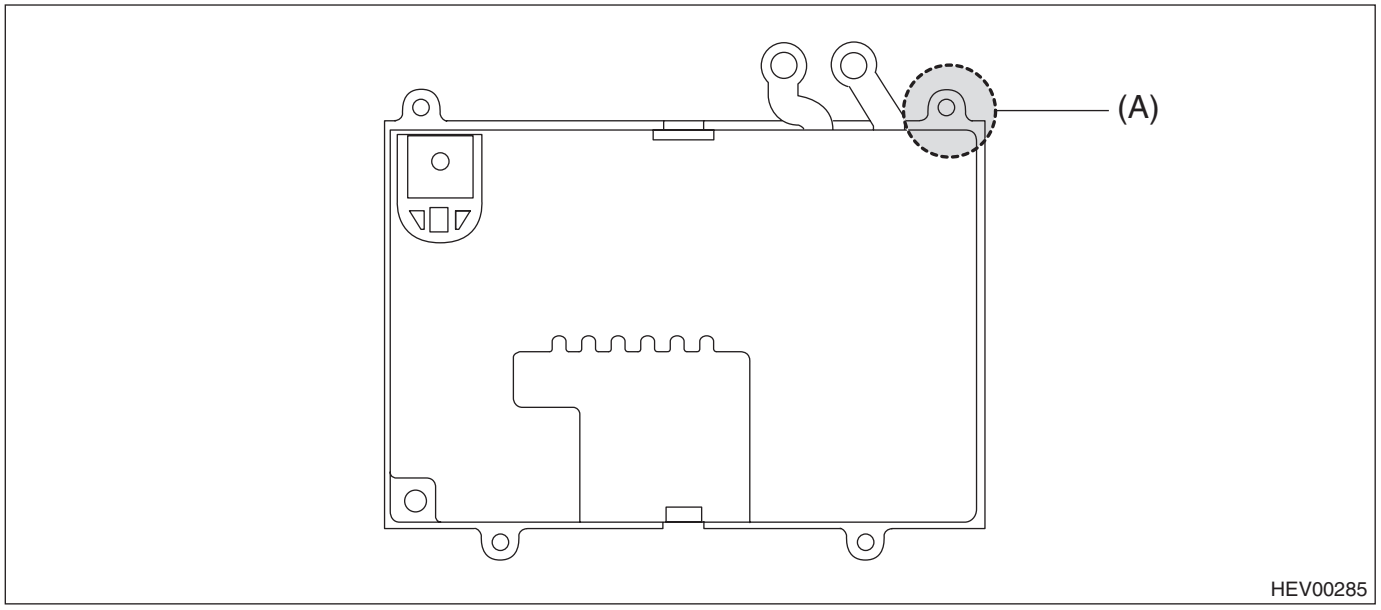

(A) Ground measuring points

- Electric oil pump inverter

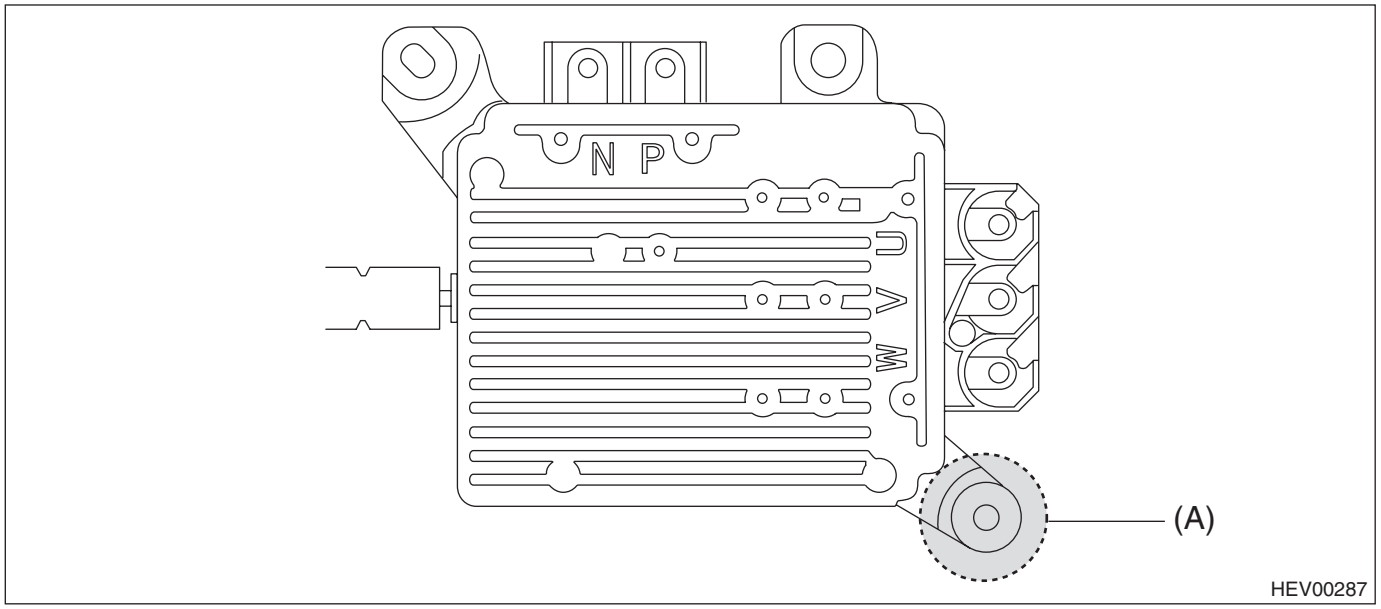

(A) Ground measuring points

NOTE:
Value of «Drive Motor Inverter Input High Voltage Sensor (Serial)» is proportional to «Drive Motor Speed».
- 1000 rpm: 18 V — 37 V
- 1400 rpm: 25 V — 52 V

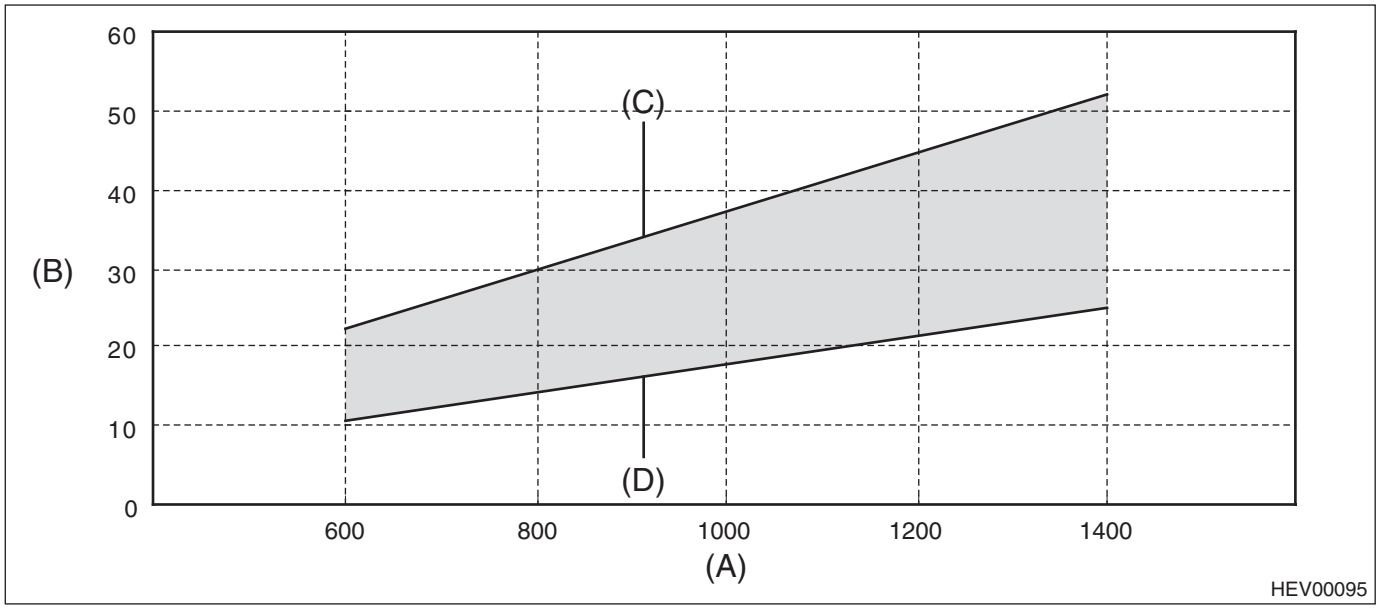

(A) Drive motor speed
(B) Drive Motor Inverter Input High Voltage Sensor (Serial)
(C) Standard at Max.
(D) Standard at Min.

AY:DTC P0A60 DRIVE MOTOR "A" PHASE V CURRENT

DIAGNOSIS:

- Immediately at fault recognition
- GENERAL DESCRIPTION <Ref. to GD(HEV)-39, DTC P0A60 DRIVE MOTOR "A" PHASE V CURRENT, Diagnostic Trouble Code (DTC) Detecting Criteria.>

TROUBLE SYMPTOM:

- EV traveling/Auto Start Stop does not operate.
- Motor assist does not regenerates.

CAUTION:

Before performing diagnosis, refer to “CAUTION” in “General Description”. <Ref. to HEV(diag)-8, CAUTION, General Description.>

WIRING DIAGRAM:

Hybrid system <Ref. to WI(HEV)-139, WIRING DIAGRAM, Hybrid Electric Vehicle System.>

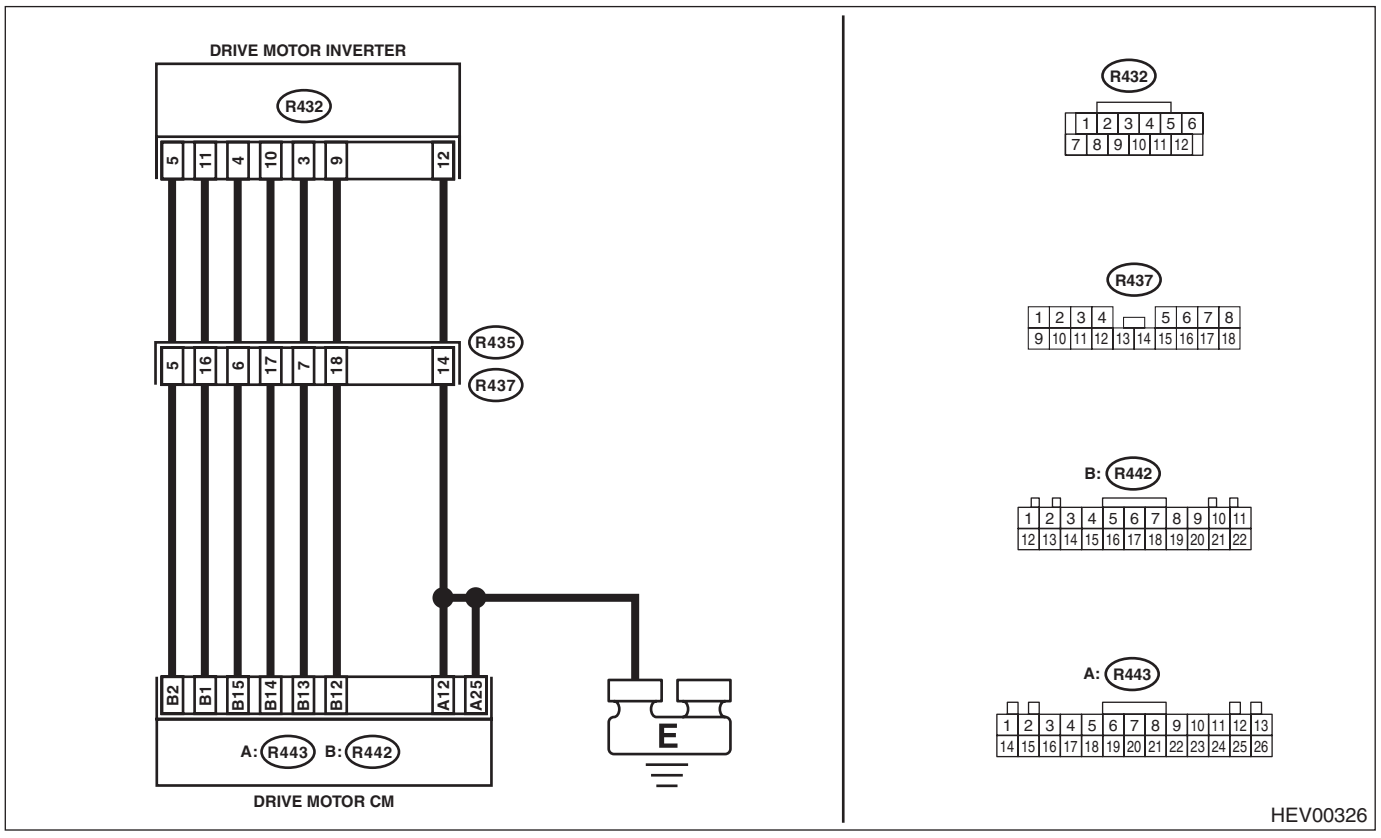

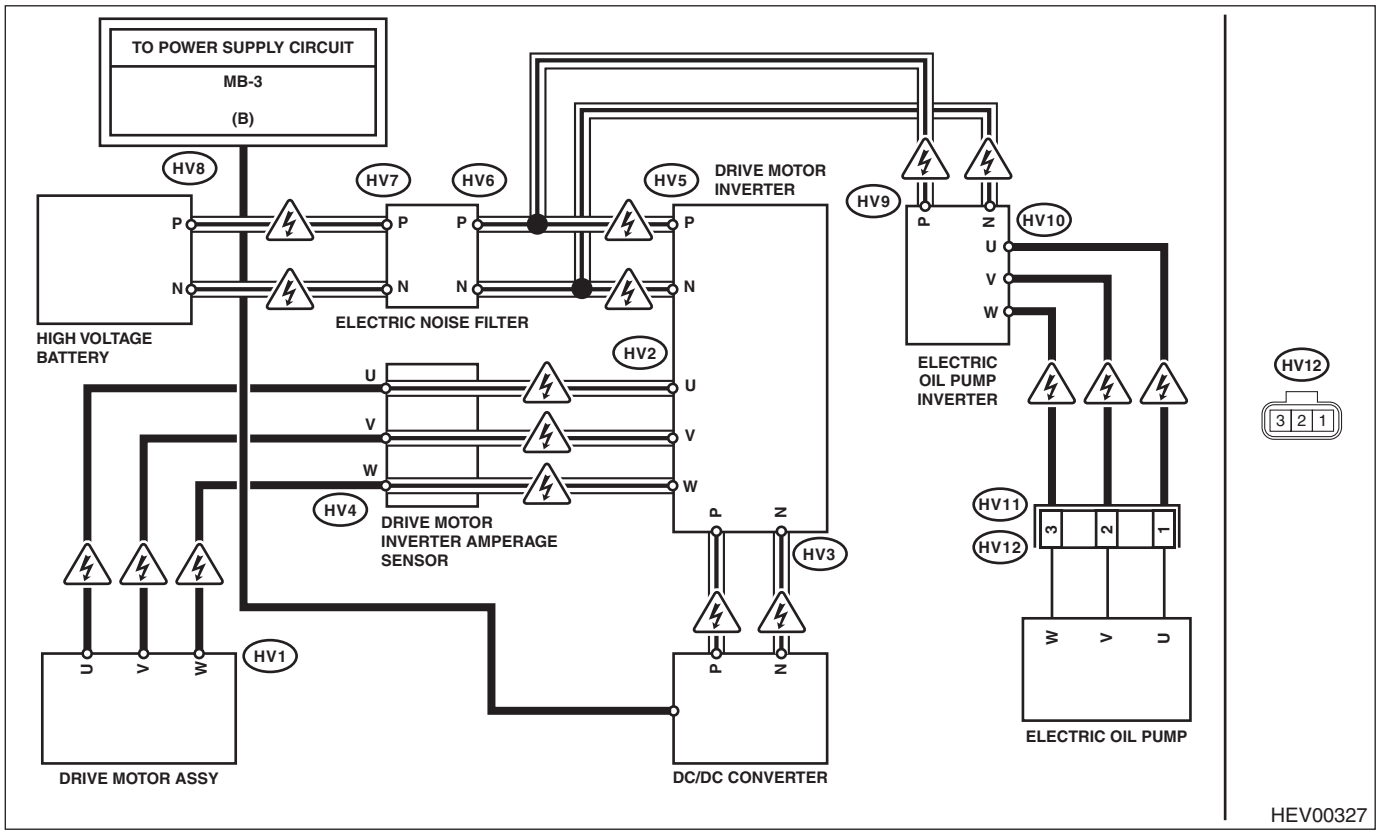

Step		Check	Yes	No
1	**CHECK DTC.** Read the DTC. <Ref. to HEV(diag)-23, DRIVE MOTOR CONTROL SYSTEM, OPERATION, Read Diagnostic Trouble Code (DTC).>	Is DTC P0A78 detected? (current malfunction)	Perform the diagnosis according to DTC. <Ref. to HEV(diag)-77, DRIVE MOTOR CONTROL SYSTEM, LIST, List of Diagnostic Trouble Code (DTC).>	Go to step **2**.
2	**CHECK CURRENT DATA.** Using the Subaru Select Monitor, confirm the current data of drive motor control system, the value of «Phase V Amperage Sensor Voltage». <Ref. to HEV(diag)-51, DRIVE MOTOR CONTROL SYSTEM, OPERATION, Read Current Data.>	Is the value 2.5 V ±0.1 V with IG ON?	Go to step **3**.	Perform the diagnosis according to DTC P0BE6 and P06B1. <Ref. to HEV(diag)-77, DRIVE MOTOR CONTROL SYSTEM, LIST, List of Diagnostic Trouble Code (DTC).>

	Step	Check	Yes	No
3	**CHECK HARNESS (GATE SIGNAL SHORT TO POWER AND SHORT IN OTHER SIGNAL LINES).** 1) Turn the ignition switch to OFF. 2) Disconnect the ground cable of the 12 volt auxiliary battery, and as for the 12 volt engine restart battery, disconnect the ground cable from the 12V engine restart battery sensor. <Ref. to NT-5, BATTERY, NOTE, Note.> 3) Remove the service disconnect plug. <Ref. to HEV-15, Service Plug.> 4) Wait for 10 minutes. 5) Disconnect the DMCM connector (R442, R443). 6) Disconnect the intermediate connector (R436). 7) Disconnect the drive motor inverter connector. 8) Using a tester, measure the resistance between terminals in DMCM connectors (R442, R443) and between each terminal in inverter connector. ***Connector & terminal*** ***(R442) No. 2 — (R442) No. 1 — 22:*** ***(R442) No. 2 — (R443) No. 1 — 26:*** ***(R442) No. 2 — (R436) No. 1 — 8:*** ***(R442) No. 2 — (R432) No. 7:*** ***(R442) No. 1 — (R442) No. 1 — 22:*** ***(R442) No. 1 — (R443) No. 1 — 26:*** ***(R442) No. 1 — (R436) No. 1 — 8:*** ***(R442) No. 1 — (R432) No. 7:*** ***(R442) No. 15 — (R442) No. 1 — 22:*** ***(R442) No. 15 — (R443) No. 1 — 26:*** ***(R442) No. 15 — (R436) No. 1 — 8:*** ***(R442) No. 15 — (R432) No. 7:*** ***(R442) No. 14 — (R442) No. 1 — 22:*** ***(R442) No. 14 — (R443) No. 1 — 26:*** ***(R442) No. 14 — (R436) No. 1 — 8:*** ***(R442) No. 14 — (R432) No. 7:*** ***(R442) No. 13 — (R442) No. 1 — 22:*** ***(R442) No. 13 — (R443) No. 1 — 26:*** ***(R442) No. 13 — (R436) No. 1 — 8:*** ***(R442) No. 13 — (R432) No. 7:*** ***(R442) No. 12 — (R442) No. 1 — 22:*** ***(R442) No. 12 — (R443) No. 1 — 26:*** ***(R442) No. 12 — (R436) No. 1 — 8:*** ***(R442) No. 12 — (R432) No. 7:***	Does the resistance between either two points show 1 MΩ or more?	Go to step **4**.	Repair short circuit in harness between DMCM connector and drive motor inverter, or repair the intermediate connector.

	Step	Check	Yes	No
4	**CHECK DRIVE MOTOR INVERTER (INTERNAL SHORT).** 1) Disconnects power cable terminals (HV2, HV3) of the drive motor inverter and bus bar (HV5). NOTE: Be sure to use insulating tape. 2) Using a tester, check for continuity between drive motor inverter terminals. NOTE: When checking continuity, always follow the combinations as follows with correct polarities. If polarities are reversed when checking, the trouble may not be accurately diagnosed. ***Connector & terminal*** ***(HV5) P (+) — (HV2) U (–):*** ***(HV2) U (+) — (HV5) N (–):*** ***(HV5) P (+) — (HV2) V (–):*** ***(HV2) V (+) — (HV5) N (–):*** ***(HV5) P (+) — (HV2) W (–):*** ***(HV2) W (+) — (HV5) N (–):*** ***(HV5) P (+) — (HV5) N (–):*** ***(HV2) U (+) — (HV2) V (–):*** ***(HV2) U (+) — (HV2) W (–):*** ***(HV2) V (+) — (HV2) W (–):*** ***(HV5) P (+) — Chassis ground (–):*** ***(HV5) N (+) — Chassis ground (–):*** ***(HV2) U (+) — Chassis ground (–):*** ***(HV2) V (+) — Chassis ground (–):*** ***(HV2) W (+) — Chassis ground (–):***	Is there continuity?	Replace the drive motor inverter. <Ref. to HEV-42, Inverter.> Go to step **13**.	Go to step **5**.
5	**CHECK DRIVE MOTOR INVERTER (RELEASED).** Using diode voltage measuring mode on an insulation multimeter, measure the voltage between the terminals of the drive motor inverter. NOTE: When checking voltage values, always follow the combinations as follows with correct polarities. If polarities are reversed when checking, the trouble may not be accurately diagnosed. ***Connector & terminal*** ***(HV2) U (+) — (HV5) P (–):*** ***(HV5) N (+) — (HV2) U (–):*** ***(HV2) V (+) — (HV5) P (–):*** ***(HV5) N (+) — (HV2) V (–):*** ***(HV2) W (+) — (HV5) P (–):*** ***(HV5) N (+) — (HV2) W (–):***	Is “O.L” indicated?	Replace the drive motor inverter. <Ref. to HEV-42, Inverter.> Go to step **13**.	Go to step **6**.

	Step	Check	Yes	No
6	**CHECK HIGH VOLTAGE UNIT (SHORT).** 1) Remove electric noise filter, DC/DC converter, and electric oil pump inverter. 2) Check continuity between each terminal of the unit. NOTE: • When checking voltage values, always follow the combinations as follows with correct polarities. If polarities are reversed when checking, the trouble may not be accurately diagnosed. • For ground measuring points of electric noise filter, DC/DC converter, and electric oil pump inverter, refer to Notes in the margin. ***Connector & terminal*** ***(HV6) P (+) — (HV7) N (–):*** ***(HV6) P (+) — Electric noise filter ground (–):*** ***(HV6) N (+) — Electric noise filter ground (–):*** ***(HV3) P (+) — (HV3) N (–):*** ***(HV3) P (+) — DC/DC converter ground (–) :*** ***(HV3) N (+) — DC/DC converter ground (–):*** ***(HV9) P (+) — (HV9) N (–):*** ***(HV9) P (+) — (HV10) U (–):*** ***(HV9) P (+) — (HV10) V (–):*** ***(HV9) P (+) — (HV10) W (–):*** ***(HV10) U (+) — (HV9) N (–):*** ***(HV10) V (+) — (HV9) N (–):*** ***(HV10) W (+) — (HV9) N (–):*** ***(HV10) U (+) — (HV10) V (–):*** ***(HV10) U (+) — (HV10) W (–):*** ***(HV10) V (+) — (HV10) W (–):*** ***(HV9) P (+) — Electric oil pump inverter ground (–):*** ***(HV9) N (+) — Electric oil pump inverter ground (–):*** ***(HV10) U (+) — Electric oil pump inverter ground (–):*** ***(HV10) V (+) — Electric oil pump inverter ground (–) :*** ***(HV10) W (+) — Electric oil pump inverter ground (–):*** ***(HV8) P (+) — (HV8) N (–):*** ***(HV8) P (+) — Chassis ground (–):*** ***(HV8) N (+) — Chassis ground (–):***	Is there continuity?	Replace the unit that has continuity. Go to step **13**.	Go to step **7**.
7	**CHECK POWER CABLE AND DRIVE MOTOR (SHORT TO GROUND).** Using an insulation multimeter (250 V range), measure the resistance between power cable terminal (HV2) of the drive motor inverter and the ground bolt of inverter frame body. ***Connector & terminal*** ***(HV2) U — Ground bolt of inverter frame body:*** ***(HV2) V — Ground bolt of inverter frame body:*** ***(HV2) W — Ground bolt of inverter frame body:***	Is the resistance 2 MΩ or more?	If you have a milliohm tester at hand, Go to step **8**. If a milliohm tester is NOT at hand, Go to step **11**.	Go to step **9**.

	Step	Check	Yes	No
8	**CHECK POWER CABLE AND DRIVE MOTOR (SHORT).** Using a milliohm tester, measure the resistance between terminals of drive motor inverter power cable. ***Connector & terminal*** ***(HV2) U — (HV2) V:*** ***(HV2) U — (HV2) W:*** ***(HV2) V — (HV2) W:***	Is resistance between either lines less than 25 mΩ?	Go to step **10**.	Replace DMCM. <Ref. to CVT(TH58A)-155, Drive Motor Control Module.>
9	**CHECK DRIVE MOTOR (SHORT TO GROUND).** 1) Leave the vehicle under temperature of 40°C (104°F) or less for 10 minutes. 2) Disconnect the drive motor power cable (HV1). NOTE: The gasket is NOT reusable. 3) Using an insulation multimeter (250 V range), measure the resistance between each terminal and chassis ground. ***Connector & terminal*** ***(HV1) U — Chassis ground:*** ***(HV1) V — Chassis ground:*** ***(HV1) W — Chassis ground:***	Does the resistance between any points show less than 2 MΩ?	Replace the drive motor assembly. <Ref. to CVT(TH58A)-215, Drive Motor Assembly.>	Repair or replace the short circuit of the power cable. Go to step **13**.
10	**CHECK DRIVE MOTOR (SHORT).** 1) Leave the vehicle under temperature of 40°C (104°F) or less for 10 minutes. 2) Disconnect the drive motor power cable (HV1). NOTE: The gasket is NOT reusable. 3) Using a milliohm tester, measure the resistance between power cable terminals. ***Connector & terminal*** ***(HV1) U — (HV1) V:*** ***(HV1) U — (HV1) W:*** ***(HV1) V — (HV1) W:***	Is resistance between either lines less than 20 mΩ?	Replace the drive motor assembly. <Ref. to CVT(TH58A)-215, Drive Motor Assembly.>	Repair or replace the short circuit of the power cable. Go to step **13**.
11	**CHECK DRIVE MOTOR (SHORT).** 1) Replace the removed/disconnected parts back to the vehicle. 2) With the 12 V battery connected, remove the service disconnect plug. <Ref. to HEV-15, Service Plug.> **CAUTION:** **Watch for an electrical short at each harness because the 12 V battery is connected.** 3) Lift up the vehicle. 4) Start the engine, and set the shift lever to "D" range. 5) Using the Subaru Select Monitor, confirm the current data of drive motor control system, the values of «A/T Oil Temperature»«Drive Motor Speed»«Drive Motor Inverter Input High Voltage Sensor (Serial)». <Ref. to HEV(diag)-51, DRIVE MOTOR CONTROL SYSTEM, OPERATION, Read Current Data.>	Are any of the following statements relevant? • «Drive Motor Inverter Input High Voltage Sensor (Serial)» is out of the standard specified in Note when «ATF Temperature» is 20 — 60°C (68 — 140°F) and «Drive Motor Speed» is 600 — 1400 rpm. • Abnormal noise and changes in rotation speed occur near 600 rpm.	Go to step **12**.	Replace DMCM. <Ref. to CVT(TH58A)-155, Drive Motor Control Module.>

	Step	Check	Yes	No
12	**CHECK POWER CABLE (SHORT).** 1) Turn the ignition switch to OFF. 2) Disconnect the ground cable of the 12 volt auxiliary battery, and as for the 12 volt engine restart battery, disconnect the ground cable from the 12V engine restart battery sensor. <Ref. to NT-5, BATTERY, NOTE, Note.> 3) Remove the service disconnect plug. <Ref. to HEV-15, Service Plug.> 4) Wait for 10 minutes. 5) Disconnect the drive motor power cable (HV1). NOTE: The gasket is NOT reusable. 6) Disconnect the power cable (HV2) of drive motor inverter. 7) Using an insulation multimeter (250 V range), measure the resistance between power cable terminals. ***Connector & terminal*** ***(HV2) U — (HV2) V:*** ***(HV2) U — (HV2) W:*** ***(HV2) V — (HV2) W:***	Does the resistance between any points show 2 MΩ or more?	Replace the drive motor assembly. <Ref. to CVT(TH58A)-215, Drive Motor Assembly.>	Repair or replace the short circuit of the power cable. Go to step **13**.
13	**CHECK OF DRIVE MOTOR (DEMAGNETIZATION).** 1) Replace the removed/disconnected parts back to the vehicle. 2) With the 12 V battery connected, remove the service disconnect plug. <Ref. to HEV-15, Service Plug.> **CAUTION:** **Watch for an electrical short at each harness because the 12 V battery is connected.** 3) Lift up the vehicle. 4) Start the engine, and set the shift lever to “D” range. 5) Using the Subaru Select Monitor, confirm the current data of drive motor control system, the values of «A/T Oil Temperature»«Drive Motor Speed»«Drive Motor Inverter Input High Voltage Sensor (Serial)». <Ref. to HEV(diag)-51, DRIVE MOTOR CONTROL SYSTEM, OPERATION, Read Current Data.>	«Drive Motor Inverter Input High Voltage Sensor (Serial)» is within the standard specified in Note when «ATF Temperature» is 20 — 60°C (68 — 140°F) and «Drive Motor Speed» is 600 — 1400 rpm.	Even if DTC is detected, the circuit has returned to a normal condition at this time. Reproduce the failure, and then perform the diagnosis again. NOTE: In this case, temporary poor contact of connector, temporary open or short circuit of harness may be the cause.	Replace the drive motor assembly. <Ref. to CVT(TH58A)-215, Drive Motor Assembly.>

NOTE:
Ground measuring points

- Electric noise filter

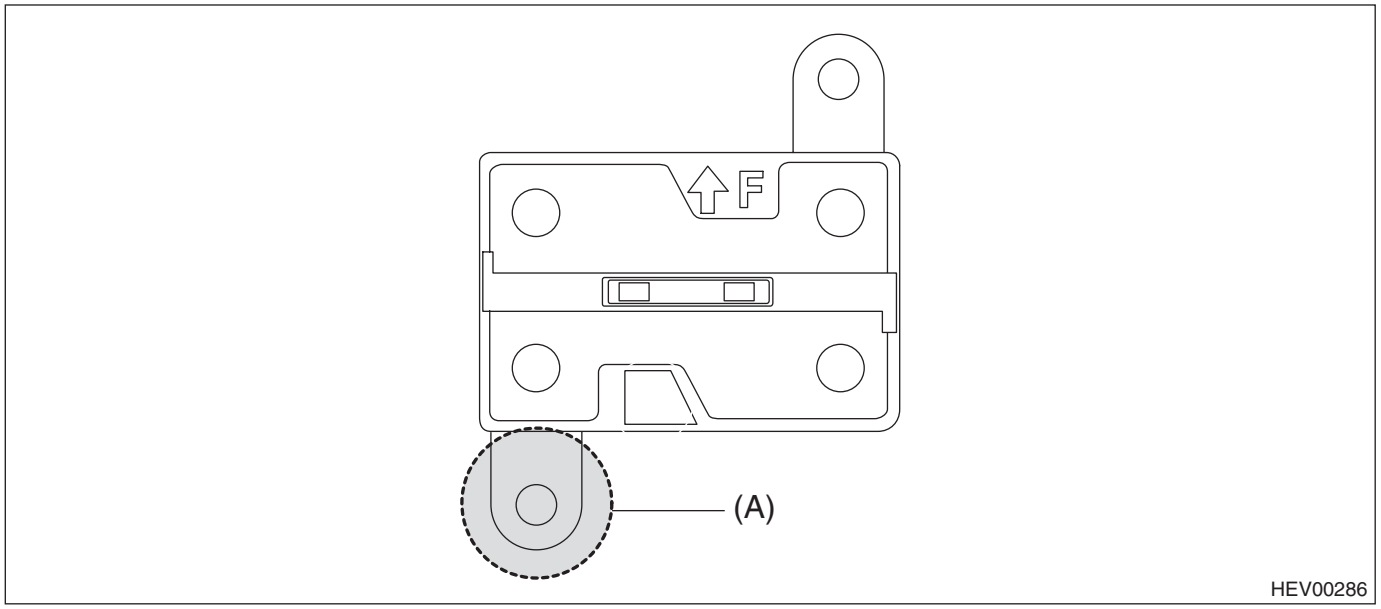

(A) Ground measuring points

- DC/DC converter

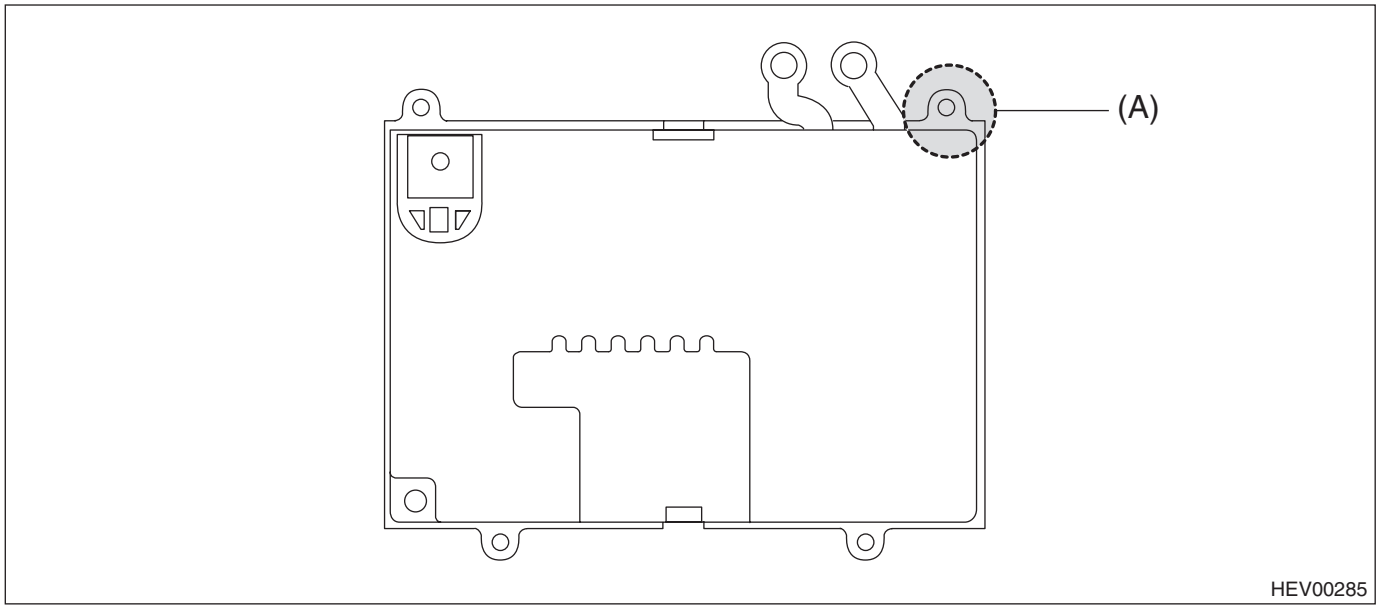

(A) Ground measuring points

- Electric oil pump inverter

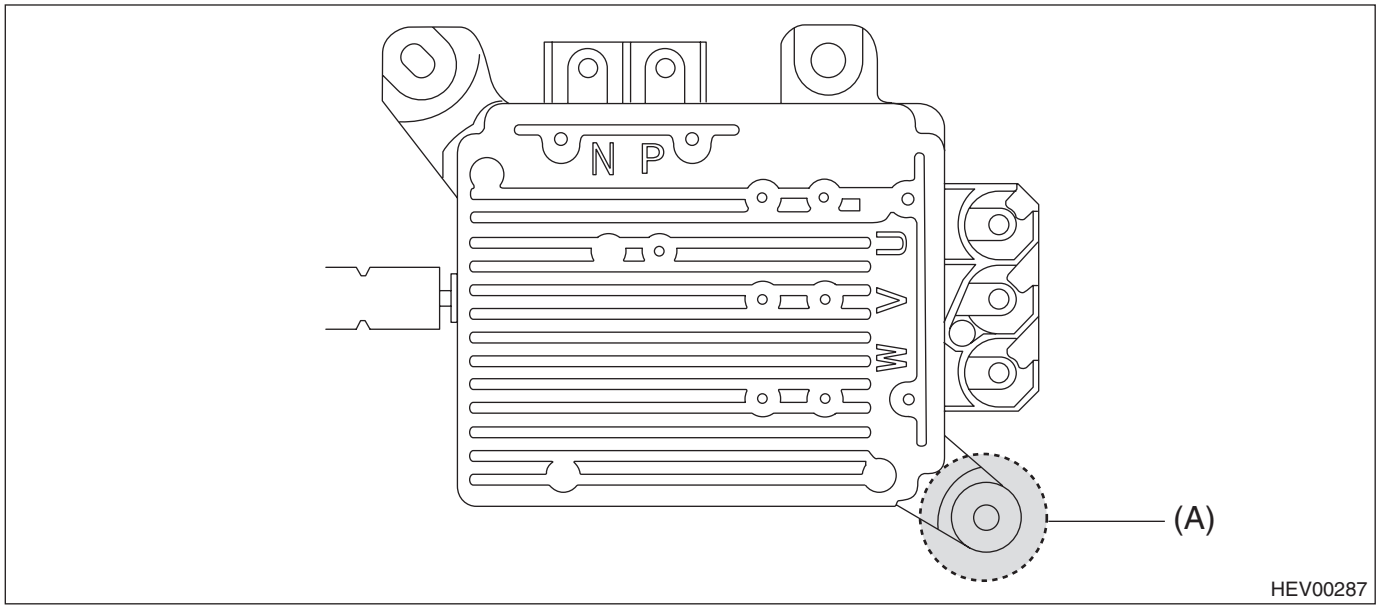

(A) Ground measuring points

NOTE:
Value of «Drive Motor Inverter Input High Voltage Sensor (Serial)» is proportional to «Drive Motor Speed».
- 1000 rpm: 18 V — 37 V
- 1400 rpm: 25 V — 52 V

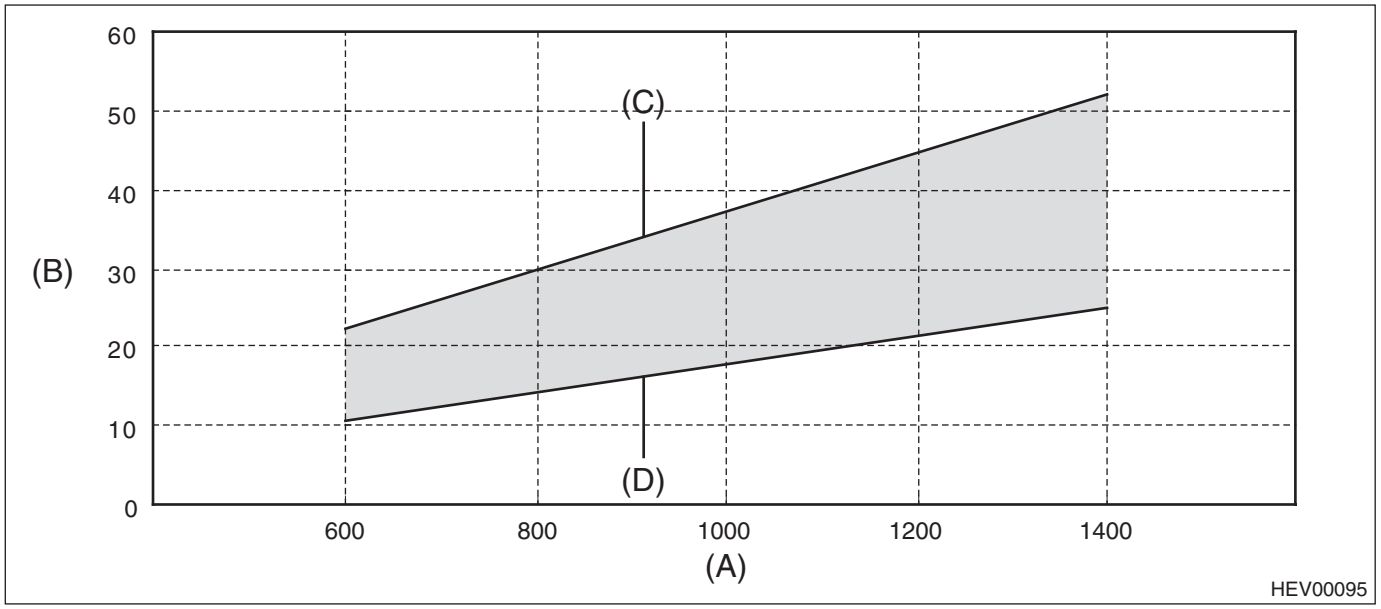

(A) Drive motor speed
(B) Drive Motor Inverter Input High Voltage Sensor (Serial)
(C) Standard at Max.
(D) Standard at Min.

AZ:DTC P0A63 DRIVE MOTOR "A" PHASE W CURRENT

DIAGNOSIS:

- Immediately at fault recognition
- GENERAL DESCRIPTION <Ref. to GD(HEV)-40, DTC P0A63 DRIVE MOTOR "A" PHASE W CURRENT, Diagnostic Trouble Code (DTC) Detecting Criteria.>

TROUBLE SYMPTOM:

- EV traveling/Auto Start Stop does not operate.
- Motor assist does not regenerates.

CAUTION:

Before performing diagnosis, refer to “CAUTION” in “General Description”. <Ref. to HEV(diag)-8, CAUTION, General Description.>

WIRING DIAGRAM:

Hybrid system <Ref. to WI(HEV)-139, WIRING DIAGRAM, Hybrid Electric Vehicle System.>

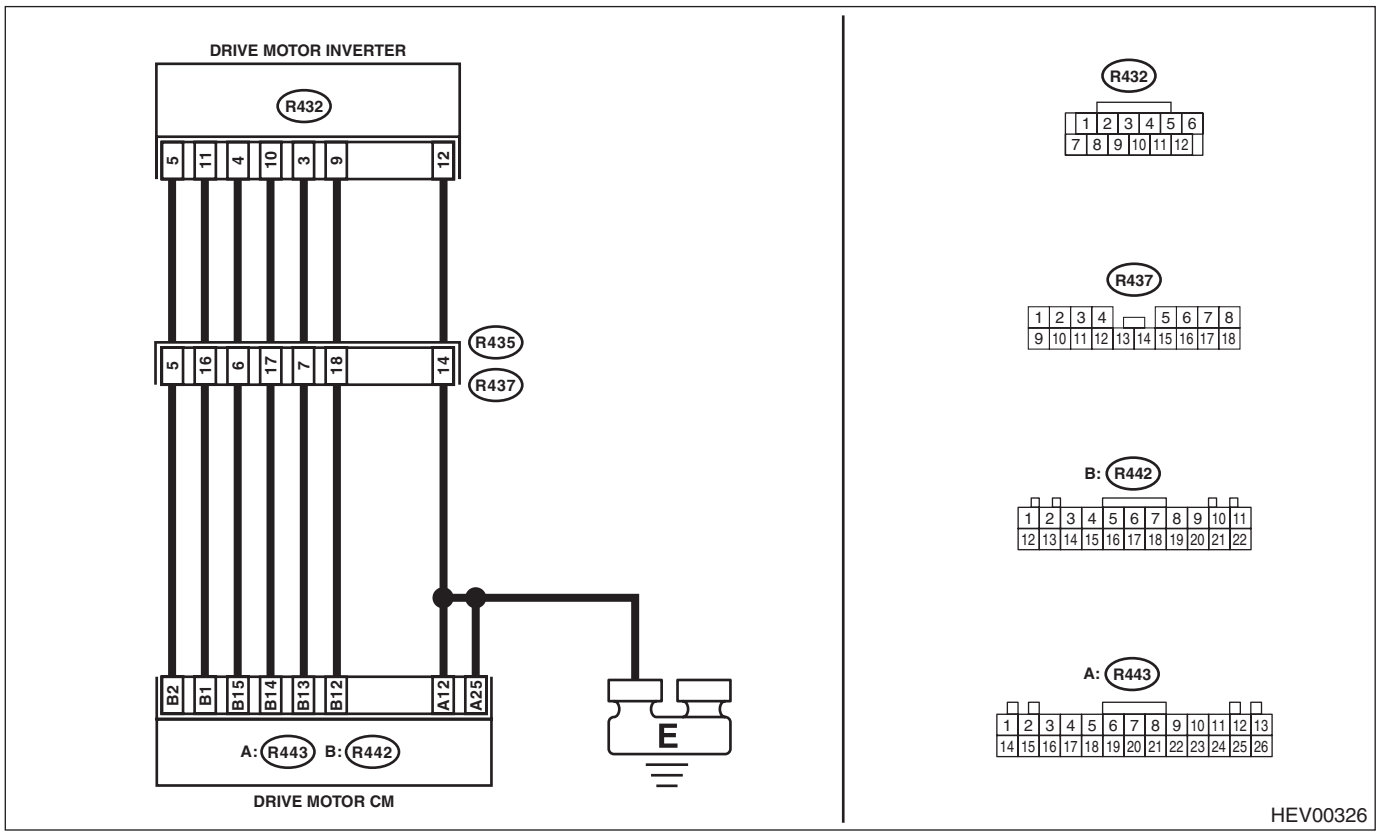

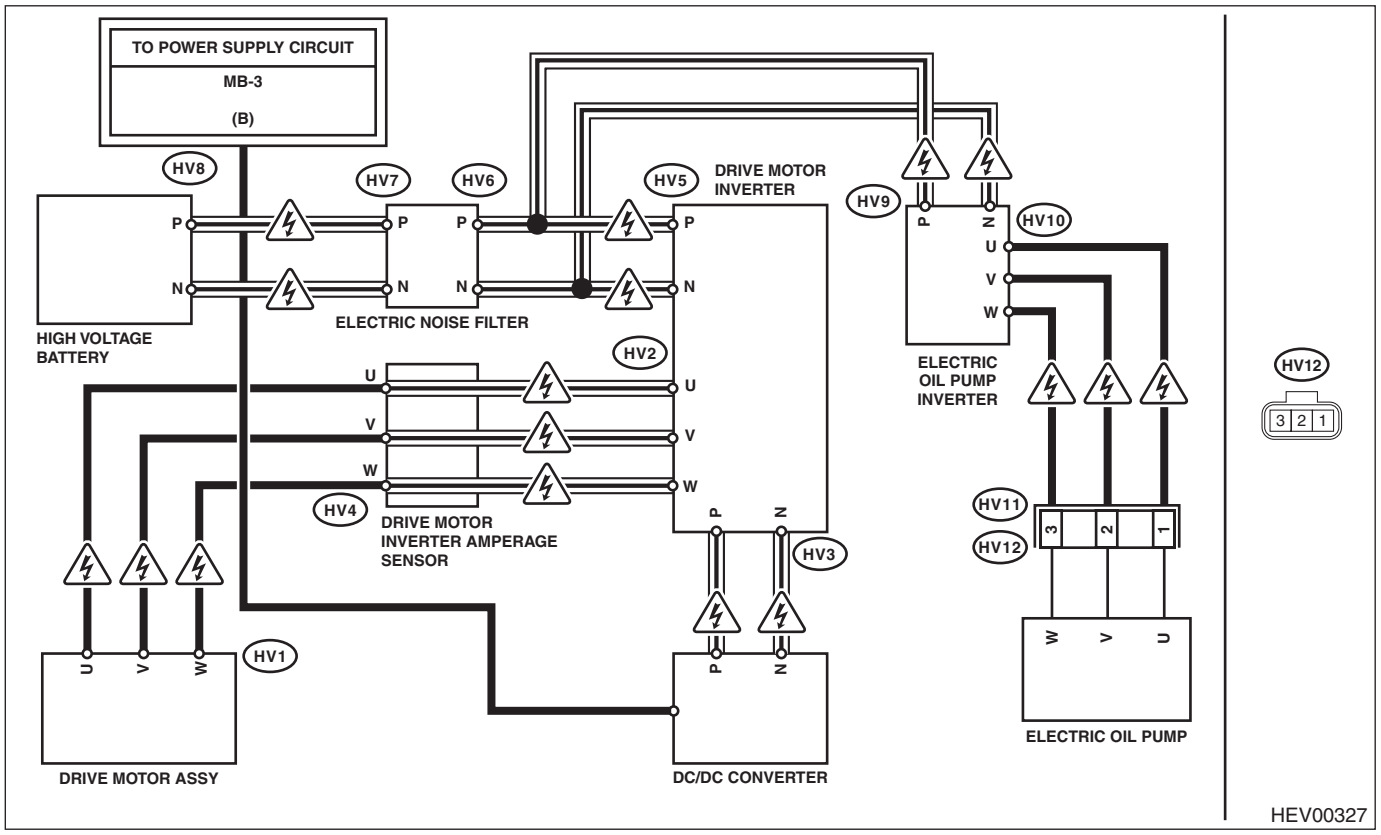

Step		Check	Yes	No
1	**CHECK DTC.** Read the DTC. <Ref. to HEV(diag)-23, DRIVE MOTOR CONTROL SYSTEM, OPERATION, Read Diagnostic Trouble Code (DTC).>	Is DTC P0A78 detected? (current malfunction)	Perform the diagnosis according to DTC. <Ref. to HEV(diag)-77, DRIVE MOTOR CONTROL SYSTEM, LIST, List of Diagnostic Trouble Code (DTC).>	Go to step **2**.
2	**CHECK CURRENT DATA.** Using the Subaru Select Monitor, confirm the current data of drive motor control system, the value of «Phase W Amperage Sensor Voltage». <Ref. to HEV(diag)-51, DRIVE MOTOR CONTROL SYSTEM, OPERATION, Read Current Data.>	Is the value 2.5 V ±0.1 V with IG ON?	Go to step **3**.	Perform the diagnosis according to DTC P0BE6 and P06B1. <Ref. to HEV(diag)-77, DRIVE MOTOR CONTROL SYSTEM, LIST, List of Diagnostic Trouble Code (DTC).>

	Step	Check	Yes	No
3	**CHECK HARNESS (GATE SIGNAL SHORT TO POWER AND SHORT IN OTHER SIGNAL LINES).** 1) Turn the ignition switch to OFF. 2) Disconnect the ground cable of the 12 volt auxiliary battery, and as for the 12 volt engine restart battery, disconnect the ground cable from the 12V engine restart battery sensor. <Ref. to NT-5, BATTERY, NOTE, Note.> 3) Remove the service disconnect plug. <Ref. to HEV-15, Service Plug.> 4) Wait for 10 minutes. 5) Disconnect the DMCM connector (R442, R443). 6) Disconnect the intermediate connector (R436). 7) Disconnect the drive motor inverter connector. 8) Using a tester, measure the resistance between terminals in DMCM connectors (R442, R443) and between each terminal in inverter connector. ***Connector & terminal*** ***(R442) No. 2 — (R442) No. 1 — 22:*** ***(R442) No. 2 — (R443) No. 1 — 26:*** ***(R442) No. 2 — (R436) No. 1 — 8:*** ***(R442) No. 2 — (R432) No. 7:*** ***(R442) No. 1 — (R442) No. 1 — 22:*** ***(R442) No. 1 — (R443) No. 1 — 26:*** ***(R442) No. 1 — (R436) No. 1 — 8:*** ***(R442) No. 1 — (R432) No. 7:*** ***(R442) No. 15 — (R442) No. 1 — 22:*** ***(R442) No. 15 — (R443) No. 1 — 26:*** ***(R442) No. 15 — (R436) No. 1 — 8:*** ***(R442) No. 15 — (R432) No. 7:*** ***(R442) No. 14 — (R442) No. 1 — 22:*** ***(R442) No. 14 — (R443) No. 1 — 26:*** ***(R442) No. 14 — (R436) No. 1 — 8:*** ***(R442) No. 14 — (R432) No. 7:*** ***(R442) No. 13 — (R442) No. 1 — 22:*** ***(R442) No. 13 — (R443) No. 1 — 26:*** ***(R442) No. 13 — (R436) No. 1 — 8:*** ***(R442) No. 13 — (R432) No. 7:*** ***(R442) No. 12 — (R442) No. 1 — 22:*** ***(R442) No. 12 — (R443) No. 1 — 26:*** ***(R442) No. 12 — (R436) No. 1 — 8:*** ***(R442) No. 12 — (R432) No. 7:***	Does the resistance between either two points show 1 MΩ or more?	Go to step **4**.	Repair short circuit in harness between DMCM connector and drive motor inverter, or repair the intermediate connector.

	Step	Check	Yes	No
4	**CHECK DRIVE MOTOR INVERTER (INTERNAL SHORT).** 1) Disconnects power cable terminals (HV2, HV3) of the drive motor inverter and bus bar (HV5). NOTE: Be sure to use insulating tape. 2) Using a tester, check for continuity between drive motor inverter terminals. NOTE: When checking continuity, always follow the combinations as follows with correct polarities. If polarities are reversed when checking, the trouble may not be accurately diagnosed. ***Connector & terminal*** ***(HV5) P (+) — (HV2) U (–):*** ***(HV2) U (+) — (HV5) N (–):*** ***(HV5) P (+) — (HV2) V (–):*** ***(HV2) V (+) — (HV5) N (–):*** ***(HV5) P (+) — (HV2) W (–):*** ***(HV2) W (+) — (HV5) N (–):*** ***(HV5) P (+) — (HV5) N (–):*** ***(HV2) U (+) — (HV2) V (–):*** ***(HV2) U (+) — (HV2) W (–):*** ***(HV2) V (+) — (HV2) W (–):*** ***(HV5) P (+) — Chassis ground (–):*** ***(HV5) N (+) — Chassis ground (–):*** ***(HV2) U (+) — Chassis ground (–):*** ***(HV2) V (+) — Chassis ground (–):*** ***(HV2) W (+) — Chassis ground (–):***	Is there continuity?	Replace the drive motor inverter. <Ref. to HEV-42, Inverter.> Go to step **13**.	Go to step **5**.
5	**CHECK DRIVE MOTOR INVERTER (RELEASED).** Using diode voltage measuring mode on an insulation multimeter, measure the voltage between the terminals of the drive motor inverter. NOTE: When checking voltage values, always follow the combinations as follows with correct polarities. If polarities are reversed when checking, the trouble may not be accurately diagnosed. ***Connector & terminal*** ***(HV2) U (+) — (HV5) P (–):*** ***(HV5) N (+) — (HV2) U (–):*** ***(HV2) V (+) — (HV5) P (–):*** ***(HV5) N (+) — (HV2) V (–):*** ***(HV2) W (+) — (HV5) P (–):*** ***(HV5) N (+) — (HV2) W (–):***	Is “O.L” indicated?	Replace the drive motor inverter. <Ref. to HEV-42, Inverter.> Go to step **13**.	Go to step **6**.

	Step	Check	Yes	No
6	**CHECK HIGH VOLTAGE UNIT (SHORT).** 1) Remove electric noise filter, DC/DC converter, and electric oil pump inverter. 2) Check continuity between each terminal of the unit. NOTE: • When checking voltage values, always follow the combinations as follows with correct polarities. If polarities are reversed when checking, the trouble may not be accurately diagnosed. • For ground measuring points of electric noise filter, DC/DC converter, and electric oil pump inverter, refer to Notes in the margin. ***Connector & terminal*** ***(HV6) P (+) — (HV7) N (–):*** ***(HV6) P (+) — Electric noise filter ground (–):*** ***(HV6) N (+) — Electric noise filter ground (–):*** ***(HV3) P (+) — (HV3) N (–):*** ***(HV3) P (+) — DC/DC converter ground (–) :*** ***(HV3) N (+) — DC/DC converter ground (–):*** ***(HV9) P (+) — (HV9) N (–):*** ***(HV9) P (+) — (HV10) U (–):*** ***(HV9) P (+) — (HV10) V (–):*** ***(HV9) P (+) — (HV10) W (–):*** ***(HV10) U (+) — (HV9) N (–):*** ***(HV10) V (+) — (HV9) N (–):*** ***(HV10) W (+) — (HV9) N (–):*** ***(HV10) U (+) — (HV10) V (–):*** ***(HV10) U (+) — (HV10) W (–):*** ***(HV10) V (+) — (HV10) W (–):*** ***(HV9) P (+) — Electric oil pump inverter ground (–):*** ***(HV9) N (+) — Electric oil pump inverter ground (–):*** ***(HV10) U (+) — Electric oil pump inverter ground (–):*** ***(HV10) V (+) — Electric oil pump inverter ground (–) :*** ***(HV10) W (+) — Electric oil pump inverter ground (–):*** ***(HV8) P (+) — (HV8) N (–):*** ***(HV8) P (+) — Chassis ground (–):*** ***(HV8) N (+) — Chassis ground (–):***	Is there continuity?	Replace the unit that has continuity. Go to step **13**.	Go to step **7**.
7	**CHECK POWER CABLE AND DRIVE MOTOR (SHORT TO GROUND).** Using an insulation multimeter (250 V range), measure the resistance between power cable terminal (HV2) of the drive motor inverter and the ground bolt of inverter frame body. ***Connector & terminal*** ***(HV2) U — Ground bolt of inverter frame body:*** ***(HV2) V — Ground bolt of inverter frame body:*** ***(HV2) W — Ground bolt of inverter frame body:***	Is the resistance 2 MΩ or more?	If you have a milliohm tester at hand, Go to step **8**. If a milliohm tester is NOT at hand, Go to step **11**.	Go to step **9**.

	Step	Check	Yes	No
8	**CHECK POWER CABLE AND DRIVE MOTOR (SHORT).** Using a milliohm tester, measure the resistance between terminals of drive motor inverter power cable. ***Connector & terminal*** ***(HV2) U — (HV2) V:*** ***(HV2) U — (HV2) W:*** ***(HV2) V — (HV2) W:***	Is resistance between either lines less than 25 mΩ?	Go to step **10**.	Replace DMCM. <Ref. to CVT(TH58A)-155, Drive Motor Control Module.>
9	**CHECK DRIVE MOTOR (SHORT TO GROUND).** 1) Leave the vehicle under temperature of 40°C (104°F) or less for 10 minutes. 2) Disconnect the drive motor power cable (HV1). NOTE: The gasket is NOT reusable. 3) Using an insulation multimeter (250 V range), measure the resistance between each terminal and chassis ground. ***Connector & terminal*** ***(HV1) U — Chassis ground:*** ***(HV1) V — Chassis ground:*** ***(HV1) W — Chassis ground:***	Does the resistance between any points show less than 2 MΩ?	Replace the drive motor assembly. <Ref. to CVT(TH58A)-215, Drive Motor Assembly.>	Repair or replace the short circuit of the power cable. Go to step **13**.
10	**CHECK DRIVE MOTOR (SHORT).** 1) Leave the vehicle under temperature of 40°C (104°F) or less for 10 minutes. 2) Disconnect the drive motor power cable (HV1). NOTE: The gasket is NOT reusable. 3) Using a milliohm tester, measure the resistance between power cable terminals. ***Connector & terminal*** ***(HV1) U — (HV1) V:*** ***(HV1) U — (HV1) W:*** ***(HV1) V — (HV1) W:***	Is resistance between either lines less than 20 mΩ?	Replace the drive motor assembly. <Ref. to CVT(TH58A)-215, Drive Motor Assembly.>	Repair or replace the short circuit of the power cable. Go to step **13**.
11	**CHECK DRIVE MOTOR (SHORT).** 1) Replace the removed/disconnected parts back to the vehicle. 2) With the 12 V battery connected, remove the service disconnect plug. <Ref. to HEV-15, Service Plug.> **CAUTION:** **Watch for an electrical short at each harness because the 12 V battery is connected.** 3) Lift up the vehicle. 4) Start the engine, and set the shift lever to "D" range. 5) Using the Subaru Select Monitor, confirm the current data of drive motor control system, the values of «A/T Oil Temperature»«Drive Motor Speed»«Drive Motor Inverter Input High Voltage Sensor (Serial)». <Ref. to HEV(diag)-51, DRIVE MOTOR CONTROL SYSTEM, OPERATION, Read Current Data.>	Are any of the following statements relevant? • «Drive Motor Inverter Input High Voltage Sensor (Serial)» is out of the standard specified in Note when «ATF Temperature» is 20 — 60°C (68 — 140°F) and «Drive Motor Speed» is 600 — 1400 rpm. • Abnormal noise and changes in rotation speed occur near 600 rpm.	Go to step **12**.	Replace DMCM. <Ref. to CVT(TH58A)-155, Drive Motor Control Module.>

	Step	Check	Yes	No
12	**CHECK POWER CABLE (SHORT).** 1) Turn the ignition switch to OFF. 2) Disconnect the ground cable of the 12 volt auxiliary battery, and as for the 12 volt engine restart battery, disconnect the ground cable from the 12V engine restart battery sensor. <Ref. to NT-5, BATTERY, NOTE, Note.> 3) Remove the service disconnect plug. 4) Wait for 10 minutes. 5) Disconnect the drive motor power cable (HV1). NOTE: The gasket is NOT reusable. 6) Disconnect the power cable (HV2) of drive motor inverter. 7) Using an insulation multimeter (250 V range), measure the resistance between power cable terminals. ***Connector & terminal*** ***(HV2) U — (HV2) V:*** ***(HV2) U — (HV2) W:*** ***(HV2) V — (HV2) W:***	Does the resistance between any points show 2 MΩ or more?	Replace the drive motor assembly. <Ref. to CVT(TH58A)-215, Drive Motor Assembly.>	Repair or replace the short circuit of the power cable. Go to step **13**.
13	**CHECK OF DRIVE MOTOR (DEMAGNETIZATION).** 1) Replace the removed/disconnected parts back to the vehicle. 2) With the 12 V battery connected, remove the service disconnect plug. <Ref. to HEV-15, Service Plug.> **CAUTION:** **Watch for an electrical short at each harness because the 12 V battery is connected.** 3) Lift up the vehicle. 4) Start the engine, and set the shift lever to "D" range. 5) Using the Subaru Select Monitor, confirm the current data of drive motor control system, the values of «A/T Oil Temperature»«Drive Motor Speed»«Drive Motor Inverter Input High Voltage Sensor (Serial)». <Ref. to HEV(diag)-51, DRIVE MOTOR CONTROL SYSTEM, OPERATION, Read Current Data.>	«Drive Motor Inverter Input High Voltage Sensor (Serial)» is within the standard specified in Note when «ATF Temperature» is 20 — 60°C (68 — 140°F) and «Drive Motor Speed» is 600 — 1400 rpm.	Even if DTC is detected, the circuit has returned to a normal condition at this time. Reproduce the failure, and then perform the diagnosis again. NOTE: In this case, temporary poor contact of connector, temporary open or short circuit of harness may be the cause.	Replace the drive motor assembly. <Ref. to CVT(TH58A)-215, Drive Motor Assembly.>

NOTE:
Ground measuring points

- Electric noise filter

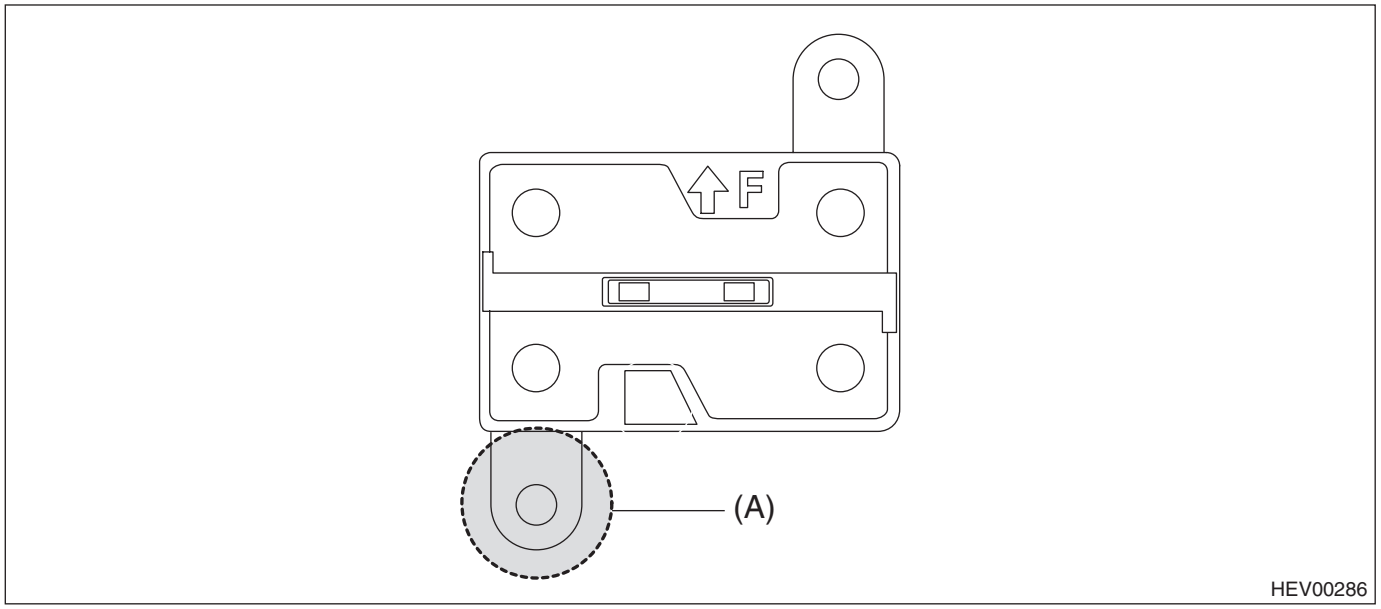

(A) Ground measuring points

- DC/DC converter

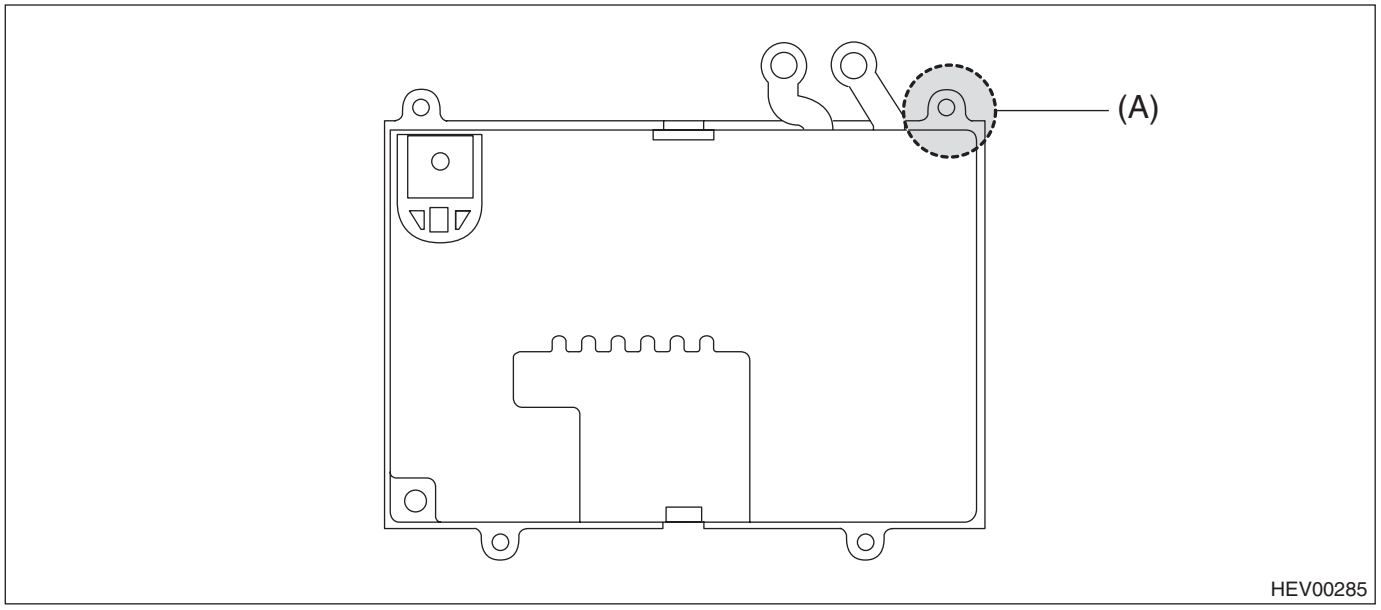

(A) Ground measuring points

- Electric oil pump inverter

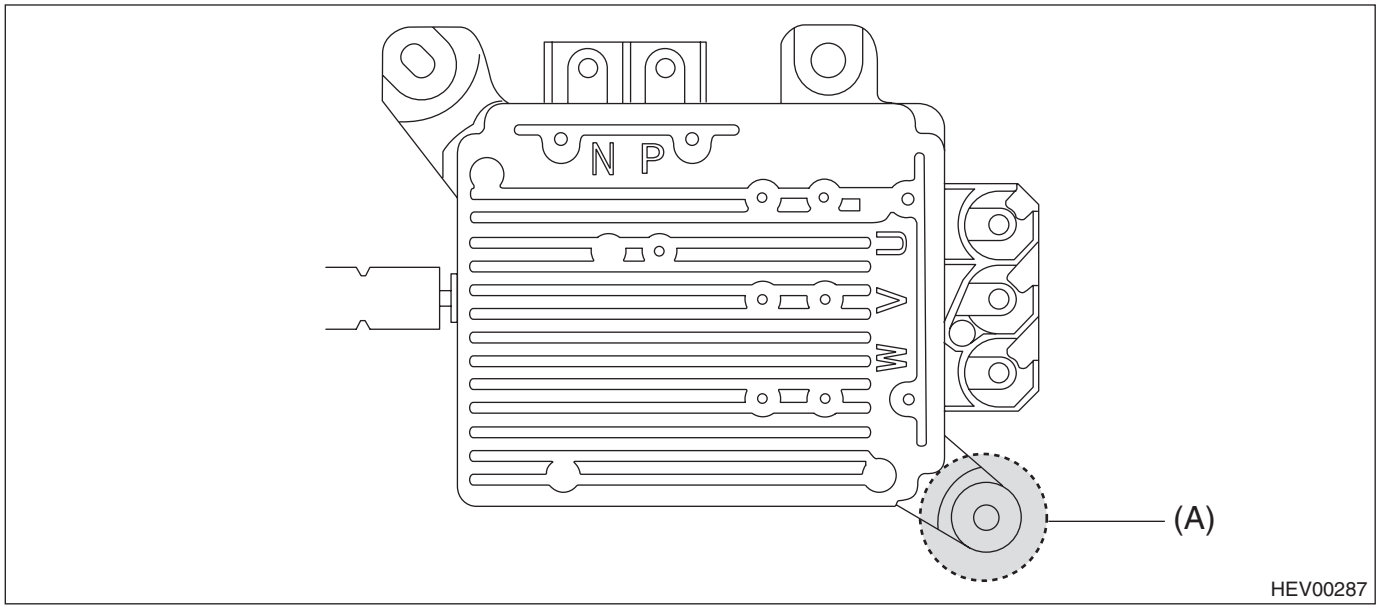

(A) Ground measuring points

NOTE:
Value of «Drive Motor Inverter Input High Voltage Sensor (Serial)» is proportional to «Drive Motor Speed».
- 1000 rpm: 18 V — 37 V
- 1400 rpm: 25 V — 52 V

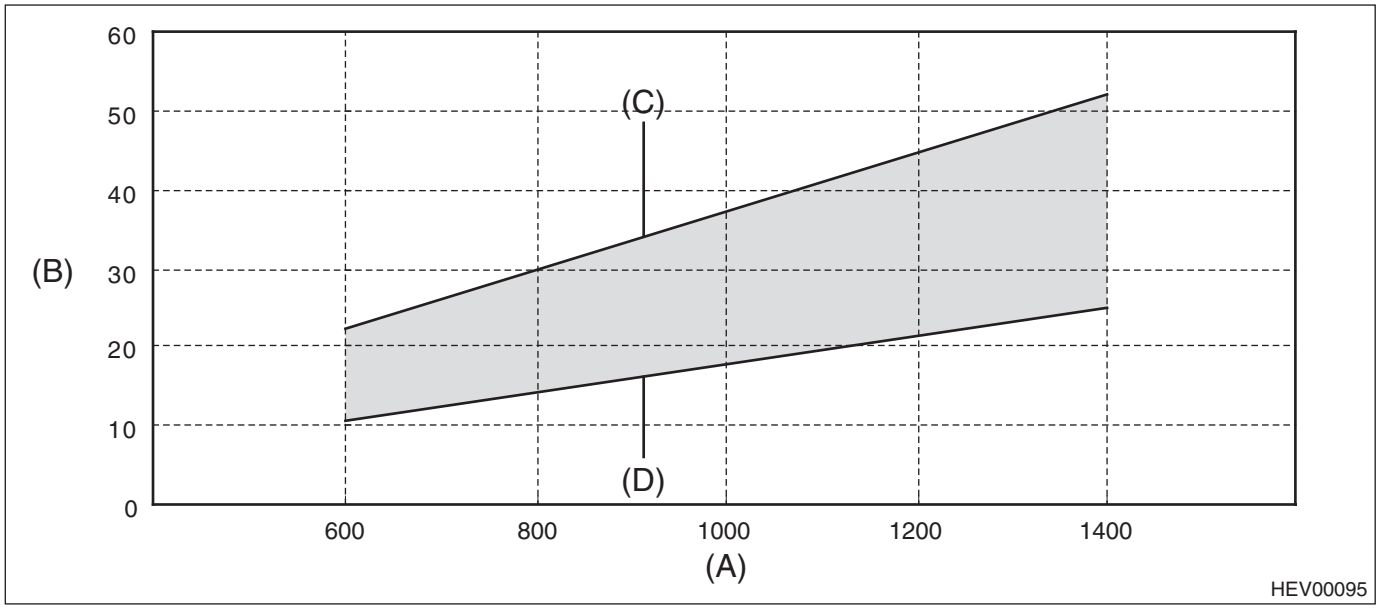

(A) Drive motor speed
(B) Drive Motor Inverter Input High Voltage Sensor (Serial)
(C) Standard at Max.
(D) Standard at Min.

BA:DTC P0A78 DRIVE MOTOR "A" INVERTER PERFORMANCE

DIAGNOSIS:

- Immediately at fault recognition
- GENERAL DESCRIPTION <Ref. to GD(HEV)-41, DTC P0A78 DRIVE MOTOR "A" INVERTER PERFORMANCE, Diagnostic Trouble Code (DTC) Detecting Criteria.>

TROUBLE SYMPTOM:

- EV traveling/Auto Start Stop does not operate.
- Motor assist does not regenerates.

CAUTION:

Before performing diagnosis, refer to “CAUTION” in “General Description”. <Ref. to HEV(diag)-8, CAUTION, General Description.>

WIRING DIAGRAM:

Hybrid system <Ref. to WI(HEV)-139, WIRING DIAGRAM, Hybrid Electric Vehicle System.>

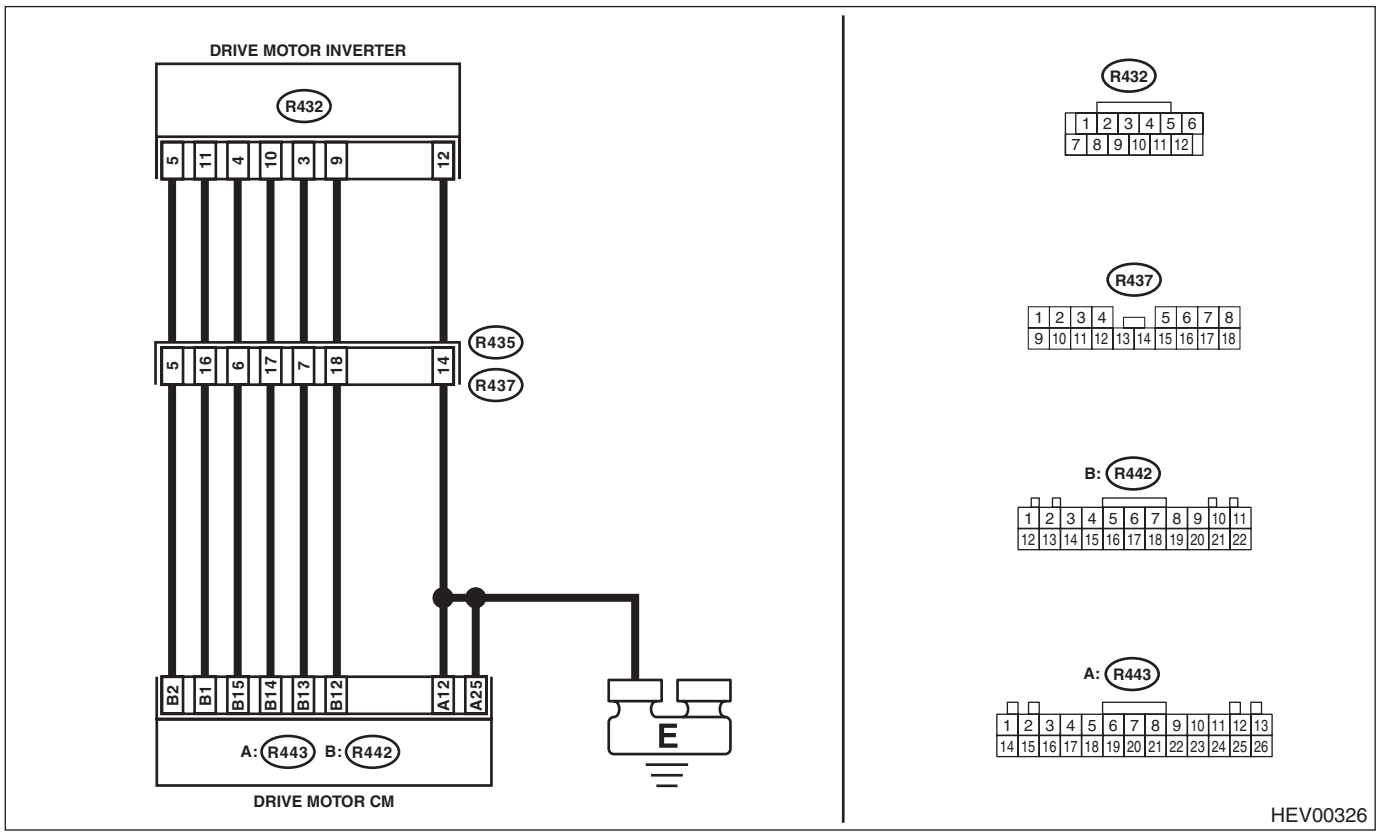

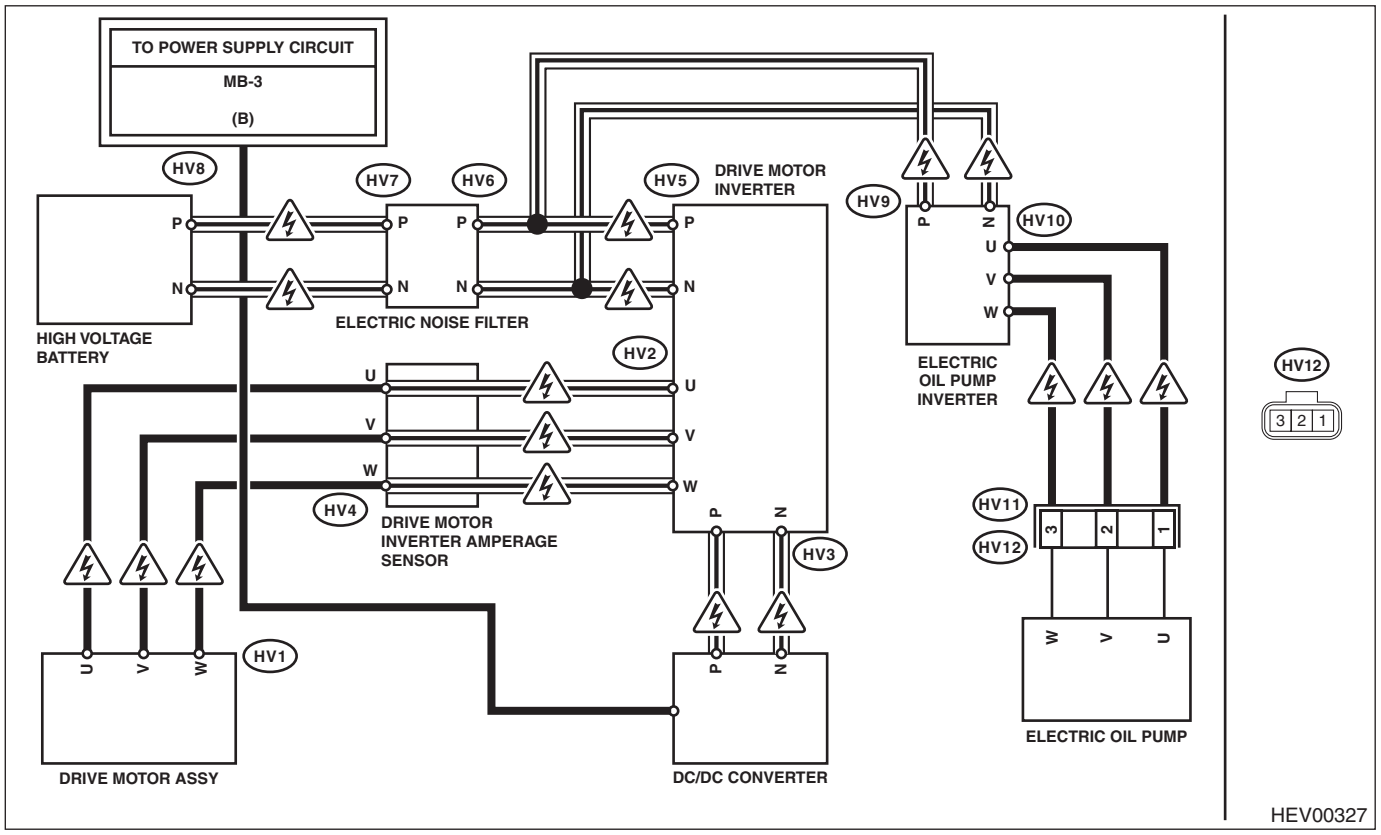

Step		Check	Yes	No
1	**CHECK DETAIL CODE.** Using the Subaru Select Monitor, confirm the current data of drive motor control system, the value of «Detail code». <Ref. to HEV(diag)-51, DRIVE MOTOR CONTROL SYSTEM, OPERATION, Read Current Data.>	Is «Detail code» displayed?	If 500 is displayed, Go to step **2**. If 501, 502 are displayed, Go to step **17**. If 503 — 508 is displayed, Go to step **19**. NOTE: Check all the counting codes.	Replace DMCM. <Ref. to CVT(TH58A)-155, Drive Motor Control Module.>
2	**CHECK CURRENT DATA.** Using the Subaru Select Monitor, confirm the current data of drive motor control system, the value of «Drive Motor Inverter Serial Check». <Ref. to HEV(diag)-51, DRIVE MOTOR CONTROL SYSTEM, OPERATION, Read Current Data.>	Does the value show «Abnormal»?	Perform the diagnosis according to DTC P1C30. <Ref. to HEV(diag)-258, DTC P1C30 MANUFACTURER CONTROLLED DTC, Diagnostic Procedure with Diagnostic Trouble Code (DTC).>	Go to step **3**.
3	**CHECK DTC.** Read the DTC. <Ref. to HEV(diag)-23, DRIVE MOTOR CONTROL SYSTEM, OPERATION, Read Diagnostic Trouble Code (DTC).>	Are any other DTCs detected? (current malfunction)	Perform the diagnosis according to DTC. <Ref. to HEV(diag)-77, DRIVE MOTOR CONTROL SYSTEM, LIST, List of Diagnostic Trouble Code (DTC).>	Go to step **4**.

	Step	Check	Yes	No
4	**CHECK CURRENT DATA.** Using the Subaru Select Monitor, confirm the current data of drive motor control system, the values of «Phase U Amperage Sensor Voltage»«Phase V Amperage Sensor Voltage»«Phase W Amperage Sensor Voltage». <Ref. to HEV(diag)-51, DRIVE MOTOR CONTROL SYSTEM, OPERATION, Read Current Data.>	Is the value 2.5 V±0.1 V?	Go to step **5**.	Perform the diagnosis according to DTC P0BE6 and P06B1. <Ref. to HEV(diag)-77, DRIVE MOTOR CONTROL SYSTEM, LIST, List of Diagnostic Trouble Code (DTC).>
5	**CHECK HARNESS (GATE SIGNAL SHORT TO POWER AND SHORT IN OTHER SIGNAL LINES).** 1) Turn the ignition switch to OFF. 2) Disconnect the DMCM connector. 3) Disconnect the drive motor inverter connector. 4) Disconnect the intermediate connector (R436). 5) Using a tester, measure the resistance between DMCM connector and individual connectors. ***Connector & terminal*** ***(R442) No. 2 — (R442) No. 1 — 22:*** ***(R442) No. 2 — (R443) No. 1 — 26:*** ***(R442) No. 2 — (R436) No. 1 — 8:*** ***(R442) No. 2 — (R432) No. 7:*** ***(R442) No. 1 — (R442) No. 1 — 22:*** ***(R442) No. 1 — (R443) No. 1 — 26:*** ***(R442) No. 1 — (R436) No. 1 — 8:*** ***(R442) No. 1 — (R432) No. 7:*** ***(R442) No. 15 — (R442) No. 1 — 22:*** ***(R442) No. 15 — (R443) No. 1 — 26:*** ***(R442) No. 15 — (R436) No. 1 — 8:*** ***(R442) No. 15 — (R432) No. 7:*** ***(R442) No. 14 — (R442) No. 1 — 22:*** ***(R442) No. 14 — (R443) No. 1 — 26:*** ***(R442) No. 14 — (R436) No. 1 — 8:*** ***(R442) No. 14 — (R432) No. 7:*** ***(R442) No. 13 — (R442) No. 1 — 22:*** ***(R442) No. 13 — (R443) No. 1 — 26:*** ***(R442) No. 13 — (R436) No. 1 — 8:*** ***(R442) No. 13 — (R432) No. 7:*** ***(R442) No. 12 — (R442) No. 1 — 22:*** ***(R442) No. 12 — (R443) No. 1 — 26:*** ***(R442) No. 12 — (R436) No. 1 — 8:*** ***(R442) No. 12 — (R432) No. 7:***	Is the resistance 1 MΩ or more?	Go to step **6**.	Repair short circuit in harness between DMCM connector and drive motor inverter connector, or repair the intermediate connector.

	Step	Check	Yes	No
6	**CHECK DRIVE MOTOR INVERTER (SHORT).** 1) Disconnect the ground cable of the 12 volt auxiliary battery, and as for the 12 volt engine restart battery, disconnect the ground cable from the 12V engine restart battery sensor. <Ref. to NT-5, BATTERY, NOTE, Note.> 2) Remove the service disconnect plug. <Ref. to HEV-15, Service Plug.> 3) Wait for 10 minutes. 4) Disconnects power cable (HV2, HV3) and bus bar (HV5) from the drive motor inverter. NOTE: Be sure to use insulating tape. 5) Using a tester, check continuity between drive motor inverter terminals. NOTE: When checking voltage values, always follow the combinations as follows with correct polarities. If polarities are reversed when checking, the trouble may not be accurately diagnosed. ***Connector & terminal*** ***(HV5) P (+) — (HV2) U (–):*** ***(HV5) P (+) — (HV2) V (–):*** ***(HV5) P (+) — (HV2) W (–):*** ***(HV2) U (+) — (HV5) N (–):*** ***(HV2) V (+) — (HV2) N (–):*** ***(HV2) W (+) — (HV2) N (–):*** ***(HV5) P (+) — (HV5) N (–):*** ***(HV2) U (+) — (HV2) V (–):*** ***(HV2) U (+) — (HV2) W (–):*** ***(HV2) V (+) — (HV2) W (–):*** ***(HV5) P (+) — Chassis ground (–):*** ***(HV5) N (+) — Chassis ground (–):*** ***(HV2) U (+) — Chassis ground (–):*** ***(HV2) V (+) — Chassis ground (–):*** ***(HV2) W (+) — Chassis ground (–):***	Is there continuity?	Replace the drive motor inverter. <Ref. to HEV-42, Inverter.> Go to step **15**.	Go to step **7**.
7	**CHECK DRIVE MOTOR INVERTER (RELEASED).** Using diode voltage measuring mode on an insulation multimeter, measure the voltage between the terminals of the drive motor inverter. NOTE: When checking voltage values, always follow the combinations as follows with correct polarities. If polarities are reversed when checking, the trouble may not be accurately diagnosed. ***Connector & terminal*** ***(HV2) U (+) — (HV5) P (–):*** ***(HV5) N (+) — (HV2) U (–):*** ***(HV2) V (+) — (HV5) P (–):*** ***(HV5) N (+) — (HV2) V (–):*** ***(HV2) W (+) — (HV5) P (–):*** ***(HV5) N (+) — (HV2) W (–):***	Is “O.L” indicated?	Replace the drive motor inverter. <Ref. to HEV-42, Inverter.> Go to step **15**.	Go to step **8**.

	Step	Check	Yes	No
8	**CHECK HIGH VOLTAGE UNIT (SHORT).** 1) Remove electric noise filter, DC/DC converter, and electric oil pump inverter. 2) Using a tester, check for continuity between terminals of each unit. NOTE: • When checking voltage values, always follow the combinations as follows with correct polarities. If polarities are reversed when checking, the trouble may not be accurately diagnosed. • For ground measuring points of electric noise filter, DC/DC converter, and electric oil pump inverter, refer to Notes in the margin. ***Connector & terminal*** ***(HV6) P (+) — (HV7) N (–):*** ***(HV6) P (+) — Electric noise filter ground (–):*** ***(HV6) N (+) — Electric noise filter ground (–):*** ***(HV3) P (+) — (HV3) N (–):*** ***(HV3) P (+) — DC/DC converter ground (–) :*** ***(HV3) N (+) — DC/DC converter ground (–):*** ***(HV9) P (+) — (HV9) N (–):*** ***(HV9) P (+) — (HV10) U (–):*** ***(HV9) P (+) — (HV10) V (–):*** ***(HV9) P (+) — (HV10) W (–):*** ***(HV10) U (+) — (HV9) N (–):*** ***(HV10) V (+) — (HV9) N (–):*** ***(HV10) W (+) — (HV9) N (–):*** ***(HV10) U (+) — (HV10) V (–):*** ***(HV10) U (+) — (HV10) W (–):*** ***(HV10) V (+) — (HV10) W (–):*** ***(HV9) P (+) — Electric oil pump inverter ground (–):*** ***(HV9) N (+) — Electric oil pump inverter ground (–):*** ***(HV10) U (+) — Electric oil pump inverter ground (–):*** ***(HV10) V (+) — Electric oil pump inverter ground (–) :*** ***(HV10) W (+) — Electric oil pump inverter ground (–):*** ***(HV8) P (+) — (HV8) N (–):*** ***(HV8) P (+) — Chassis ground (–):*** ***(HV8) N (+) — Chassis ground (–):***	Is there continuity?	Replace the unit that has continuity. Go to step **14**.	Go to step **9**.
9	**CHECK POWER CABLE AND DRIVE MOTOR (SHORT TO GROUND).** Using an insulation multimeter (250 V range), measure the resistance between power cable terminals and chassis ground. ***Connector & terminal*** ***(HV2) U — Chassis ground:*** ***(HV2) V — Chassis ground:*** ***(HV2) W — Chassis ground:***	Is the resistance 2 MΩ or more?	If you have a milliohm tester at hand, Go to step **10**. If a milliohm tester is NOT at hand, Go to step **13**.	Go to step **11**.

	Step	Check	Yes	No
10	**CHECK POWER CABLE AND DRIVE MOTOR (SHORT).** Using a milliohm tester, measure the resistance between power cable terminals. ***Connector & terminal*** ***(HV2) U — (HV2) V:*** ***(HV2) U — (HV2) W:*** ***(HV2) V — (HV2) W:***	Is either resistance value less than 25 mΩ?	Go to step **12**.	Go to step **16**.
11	**CHECK POWER CABLE AND DRIVE MOTOR (SHORT TO GROUND).** 1) Leave the vehicle under temperature of 40°C (104°F) or less for 10 minutes. 2) Disconnect the drive motor power cable (HV1). NOTE: The gasket is NOT reusable. 3) Using an insulation multimeter (250 V range), measure the resistance between power cable terminals and chassis ground. ***Connector & terminal*** ***(HV1) U — Chassis ground:*** ***(HV1) V — Chassis ground:*** ***(HV1) W — Chassis ground:***	Does the resistance between any points show less than 2 MΩ?	Replace the drive motor assembly. <Ref. to CVT(TH58A)-215, Drive Motor Assembly.>	Repair or replace the short circuit of the power cable. Go to step **15**.
12	**CHECK POWER CABLE AND DRIVE MOTOR (SHORT).** 1) Leave the vehicle under temperature of 40°C (104°F) or less for 10 minutes. 2) Disconnect the drive motor power cable (HV1). NOTE: The gasket is NOT reusable. 3) Using a milliohm tester, measure the resistance between power cable terminals and chassis ground. ***Connector & terminal*** ***(HV1) U — Chassis ground:*** ***(HV1) V — Chassis ground:*** ***(HV1) W — Chassis ground:***	Is resistance between either lines less than 20 mΩ?	Replace the drive motor assembly. <Ref. to CVT(TH58A)-215, Drive Motor Assembly.>	Repair or replace the short circuit of the power cable. Go to step **15**.
13	**CHECK DRIVE MOTOR (SHORT).** 1) Replace the removed/disconnected parts back to the vehicle. 2) With the 12 V battery connected, remove the service disconnect plug. <Ref. to HEV-15, Service Plug.> **CAUTION:** **Watch for an electrical short at each harness because the 12 V battery is connected.** 3) Lift up the vehicle. 4) Start the engine, and set the shift lever to "D" range. 5) Using the Subaru Select Monitor, confirm the current data of drive motor control system, the values of «A/T Oil Temperature»«Drive Motor Speed»«Drive Motor Inverter Input High Voltage Sensor (Serial)». <Ref. to HEV(diag)-51, DRIVE MOTOR CONTROL SYSTEM, OPERATION, Read Current Data.>	Are any of the following statements relevant? • «Drive Motor Inverter Input High Voltage Sensor (Serial)» is out of the standard specified in Note when «ATF Temperature» is 20 — 60°C (68 — 140°F) and «Drive Motor Speed» is 600 — 1400 rpm. • Abnormal noise and changes in rotation speed occur near 600 rpm.	Go to step **14**.	Go to step **16**.

	Step	Check	Yes	No
14	**CHECK DRIVE MOTOR AND POWER CABLE.** 1) Turn the ignition switch to OFF. 2) Disconnect the ground cable of the 12 volt auxiliary battery, and as for the 12 volt engine restart battery, disconnect the ground cable from the 12V engine restart battery sensor. <Ref. to NT-5, BATTERY, NOTE, Note.> 3) Disconnect the power cable (HV2) of drive motor inverter. 4) Disconnect the drive motor power cable (HV1). NOTE: The gasket is NOT reusable. 5) Using an insulation multimeter (250 V range), measure the resistance between power cable terminals. ***Connector & terminal*** ***(HV2) U — (HV2) V:*** ***(HV2) U — (HV2) W:*** ***(HV2) V — (HV2) W:***	Does the resistance between any points show 2 MΩ or more?	Replace the drive motor assembly. <Ref. to CVT(TH58A)-215, Drive Motor Assembly.>	Repair or replace the short circuit of the power cable. Go to step **15**.
15	**CHECK OF DRIVE MOTOR (DEMAGNETIZATION).** 1) Replace the removed/disconnected parts back to the vehicle. 2) With the 12 V battery connected, remove the service disconnect plug. <Ref. to HEV-15, Service Plug.> **CAUTION:** **Watch for an electrical short at each harness because the 12 V battery is connected.** 3) Lift up the vehicle. 4) Start the engine, and set the shift lever to "D" range. 5) Using the Subaru Select Monitor, confirm the current data of drive motor control system, the values of «A/T Oil Temperature»«Drive Motor Speed»«Drive Motor Inverter Input High Voltage Sensor (Serial)». <Ref. to HEV(diag)-51, DRIVE MOTOR CONTROL SYSTEM, OPERATION, Read Current Data.>	«Drive Motor Inverter Input High Voltage Sensor (Serial)» is within the standard specified in Note when «ATF Temperature» is 20 — 60°C (68 — 140°F) and «Drive Motor Speed» is 600 — 1400 rpm.	Even if DTC is detected, the circuit has returned to a normal condition at this time. Reproduce the failure, and then perform the diagnosis again. NOTE: In this case, temporary poor contact of connector, temporary open or short circuit of harness may be the cause.	Replace the drive motor assembly. <Ref. to CVT(TH58A)-215, Drive Motor Assembly.>
16	**CHECK DRIVE MOTOR INVERTER.** 1) Replace the drive motor inverter. <Ref. to HEV-42, Inverter.> 2) Perform drive cycle A. <Ref. to HEV(diag)-31, DRIVE CYCLE A, PROCEDURE, Drive Cycle.>	Is the same DTC detected? (current malfunction)	Replace DMCM. <Ref. to CVT(TH58A)-155, Drive Motor Control Module.>	Problem is present in drive motor inverter.
17	**CHECK CURRENT DATA.** Using the Subaru Select Monitor, confirm the current data of drive motor control system, the value of «Drive Motor Inverter Serial Check». <Ref. to HEV(diag)-51, DRIVE MOTOR CONTROL SYSTEM, OPERATION, Read Current Data.>	Does the value show «Abnormal»?	Perform the diagnosis according to DTC P1C30. <Ref. to HEV(diag)-258, DTC P1C30 MANUFACTURER CONTROLLED DTC, Diagnostic Procedure with Diagnostic Trouble Code (DTC).>	Go to step **18**.

	Step	Check	Yes	No
18	**CHECK DRIVE MOTOR INVERTER.** 1) Replace the drive motor inverter. <Ref. to HEV-42, Inverter.> 2) Perform drive cycle A. <Ref. to HEV(diag)-31, DRIVE CYCLE A, PROCEDURE, Drive Cycle.>	Is the same DTC detected? (current malfunction)	Replace DMCM. <Ref. to CVT(TH58A)-155, Drive Motor Control Module.>	Problem is present in drive motor inverter.
19	**CHECK DTC.** Read the DTC. <Ref. to HEV(diag)-23, DRIVE MOTOR CONTROL SYSTEM, OPERATION, Read Diagnostic Trouble Code (DTC).>	Are any other DTCs detected? (current malfunction)	Perform the diagnosis according to DTC. <Ref. to HEV(diag)-77, DRIVE MOTOR CONTROL SYSTEM, LIST, List of Diagnostic Trouble Code (DTC).>	Go to step **20**.
20	**CHECK CURRENT DATA.** Using the Subaru Select Monitor, confirm the current data of drive motor control system, the values of «Phase U Amperage Sensor Voltage»«Phase V Amperage Sensor Voltage»«Phase W Amperage Sensor Voltage». <Ref. to HEV(diag)-51, DRIVE MOTOR CONTROL SYSTEM, OPERATION, Read Current Data.>	Is the value 2.5 V±0.1 V?	Go to step **21**.	Perform the diagnosis according to DTC P0BE6 and P06B1. <Ref. to HEV(diag)-77, DRIVE MOTOR CONTROL SYSTEM, LIST, List of Diagnostic Trouble Code (DTC).>
21	**CHECK DRIVE MOTOR INVERTER (INTERNAL SHORT).** 1) Disconnect the ground cable of the 12 volt auxiliary battery, and as for the 12 volt engine restart battery, disconnect the ground cable from the 12V engine restart battery sensor. <Ref. to NT-5, BATTERY, NOTE, Note.> 2) Remove the service disconnect plug. <Ref. to HEV-15, Service Plug.> 3) Wait for 10 minutes. 4) Disconnect the DMCM connector. 5) Disconnect the drive motor inverter connector. 6) Using a tester, measure the resistance between DMCM connector and the ground bolt of inverter frame body. ***Connector & terminal*** ***(R442) No. 2 — Ground bolt of inverter frame body:*** ***(R442) No. 1 — Ground bolt of inverter frame body:*** ***(R442) No. 15 — Ground bolt of inverter frame body:*** ***(R442) No. 14 — Ground bolt of inverter frame body:*** ***(R442) No. 13 — Ground bolt of inverter frame body:*** ***(R442) No. 12 — Ground bolt of inverter frame body:***	Is the resistance 1 MΩ or more?	Go to step **22**.	Repair short to ground circuit in harness between DMCM connector and drive motor inverter connector, or repair the intermediate connector.

	Step	Check	Yes	No
22	**CHECK HARNESS (OPEN CIRCUIT).** Using a tester, measure the resistance between the drive motor inverter connector and DMCM connector. ***Connector & terminal*** ***(R442) No. 2 — (R432) No. 5:*** ***(R442) No. 1 — (R432) No. 11:*** ***(R442) No. 15 — (R432) No. 4:*** ***(R442) No. 14 — (R432) No. 10:*** ***(R442) No. 13 — (R432) No. 3:*** ***(R442) No. 12 — (R432) No. 9:***	Is the resistance less than 1 Ω?	Go to step **23**.	Repair open circuit in harness between DMCM connector and drive motor inverter connector, or repair the intermediate connector.
23	**CHECK POWER CABLE AND DRIVE MOTOR (OPEN CIRCUIT).** 1) Leave the vehicle for ten minutes under temperature of 40°C (104°F) or less. 2) Disconnect the power cable (HV2) from drive motor inverter. 3) Using a tester, measure the resistance between power cable terminals. ***Connector & terminal*** ***(HV2) U — (HV2) V:*** ***(HV2) U — (HV2) W:*** ***(HV2) V — (HV2) W:***	Is resistance between either lines 1 Ω or more?	Go to step **24**.	Go to step **25**.
24	**CHECK DRIVE MOTOR (OPEN CIRCUIT).** 1) Leave the vehicle under temperature of 40°C (104°F) or less for 10 minutes. 2) Disconnect the drive motor power cable (HV1). NOTE: The gasket is NOT reusable. 3) Using a tester, measure the resistance between drive motor terminals. ***Connector & terminal*** ***(HV1) U — (HV1) V:*** ***(HV1) U — (HV1) W:*** ***(HV1) V — (HV1) W:***	Is resistance between either lines 1 Ω or more?	Replace the drive motor assembly. <Ref. to CVT(TH58A)-215, Drive Motor Assembly.>	Repair or replace the open circuit of the power cable.
25	**CHECK DRIVE MOTOR INVERTER.** 1) Replace the drive motor inverter. <Ref. to HEV-42, Inverter.> 2) Perform drive cycle A. <Ref. to HEV(diag)-31, DRIVE CYCLE A, PROCEDURE, Drive Cycle.>	Is the same DTC detected? (current malfunction)	Replace DMCM. <Ref. to CVT(TH58A)-155, Drive Motor Control Module.>	Problem is present in drive motor inverter.

NOTE:
Ground measuring points

- Electric noise filter

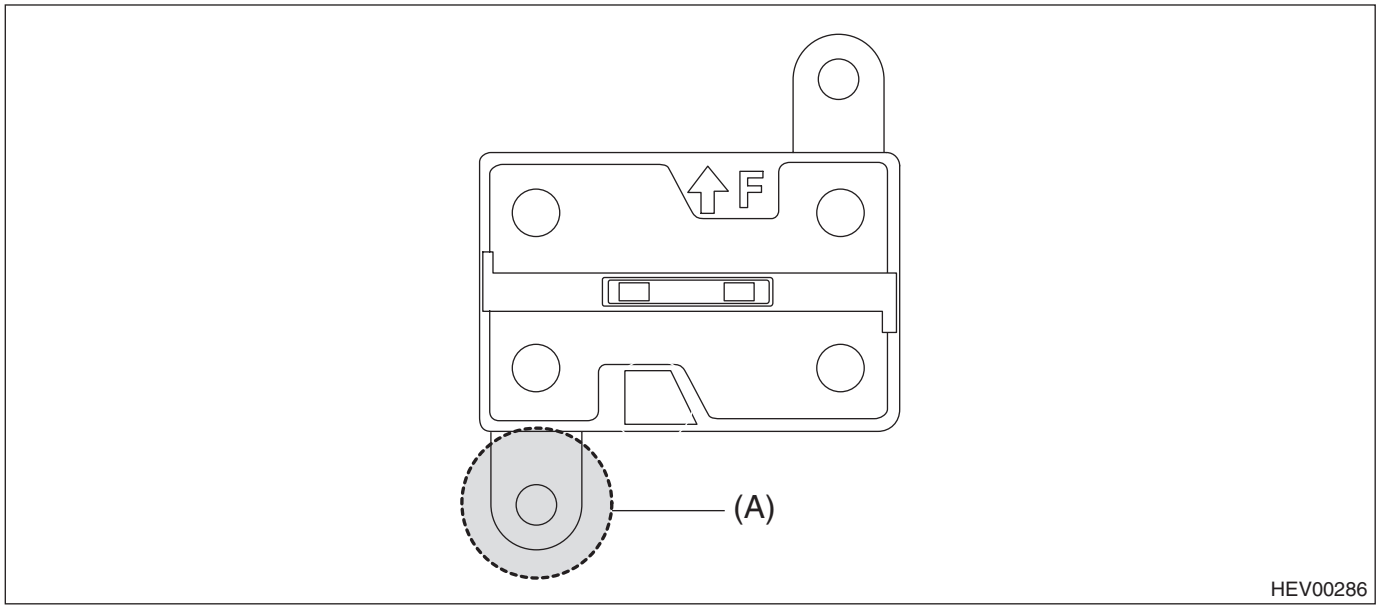

(A) Ground measuring points

- DC/DC converter

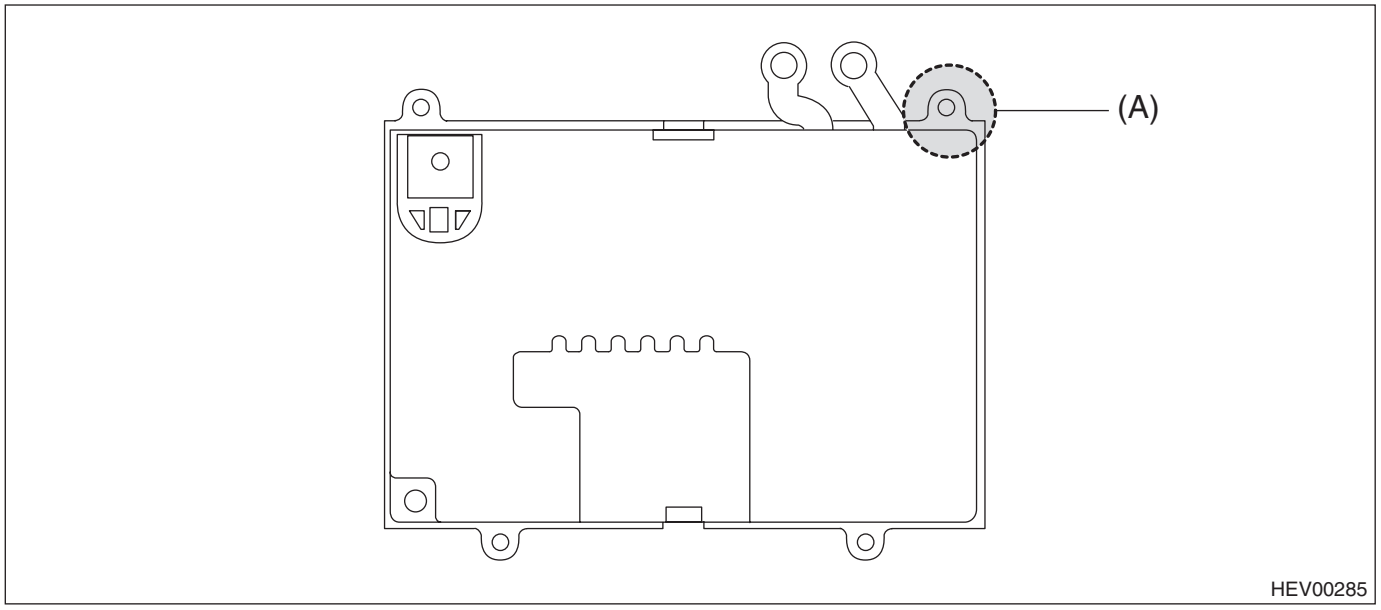

(A) Ground measuring points

- Electric oil pump inverter

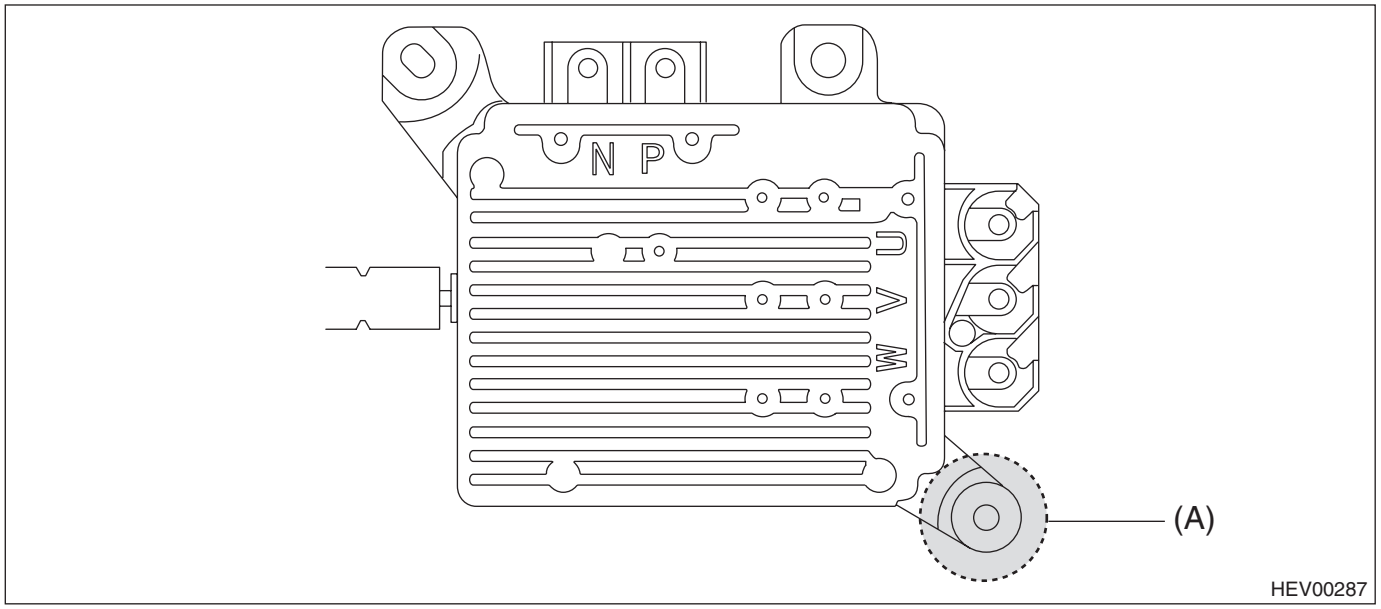

(A) Ground measuring points

NOTE:
Value of «Drive Motor Inverter Input High Voltage Sensor (Serial)» is proportional to «Drive Motor Speed».
- 1000 rpm: 18 V — 37 V
- 1400 rpm: 25 V — 52 V

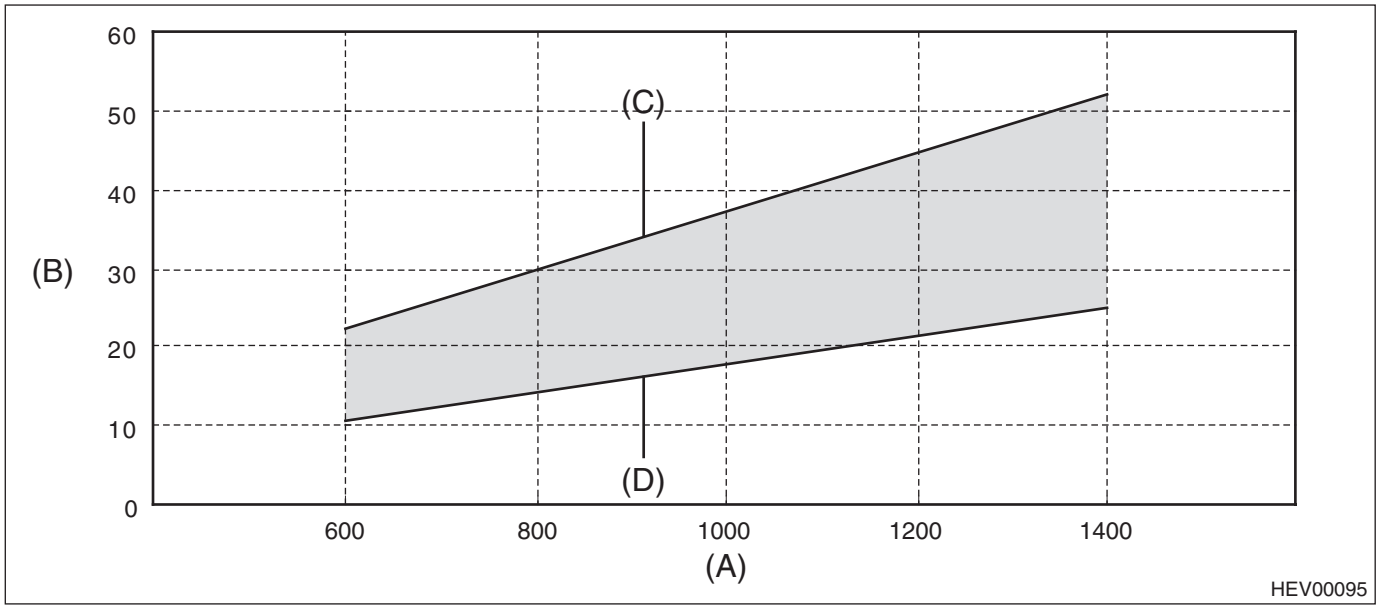

(A) Drive motor speed
(B) Drive Motor Inverter Input High Voltage Sensor (Serial)
(C) Standard at Max.
(D) Standard at Min.

BB:DTC P0A82 HYBRID/EV BATTERY PACK COOLING FAN 1 PERFORMANCE/ STUCK OFF

DIAGNOSIS:

- Detected when two consecutive driving cycles with fault occur. (Single engine startup is counted as one drive cycle.)
- GENERAL DESCRIPTION <Ref. to GD(HEV)-42, DTC P0A82 HYBRID/EV BATTERY PACK COOLING FAN 1 PERFORMANCE/STUCK OFF, Diagnostic Trouble Code (DTC) Detecting Criteria.>

TROUBLE SYMPTOM:

- EV traveling/Auto Start Stop does not operate.
- Motor assist does not regenerates.

CAUTION:

Before performing diagnosis, refer to "CAUTION" in "General Description". <Ref. to HEV(diag)-8, CAUTION, General Description.>

WIRING DIAGRAM:

Hybrid system <Ref. to WI(HEV)-139, WIRING DIAGRAM, Hybrid Electric Vehicle System.>

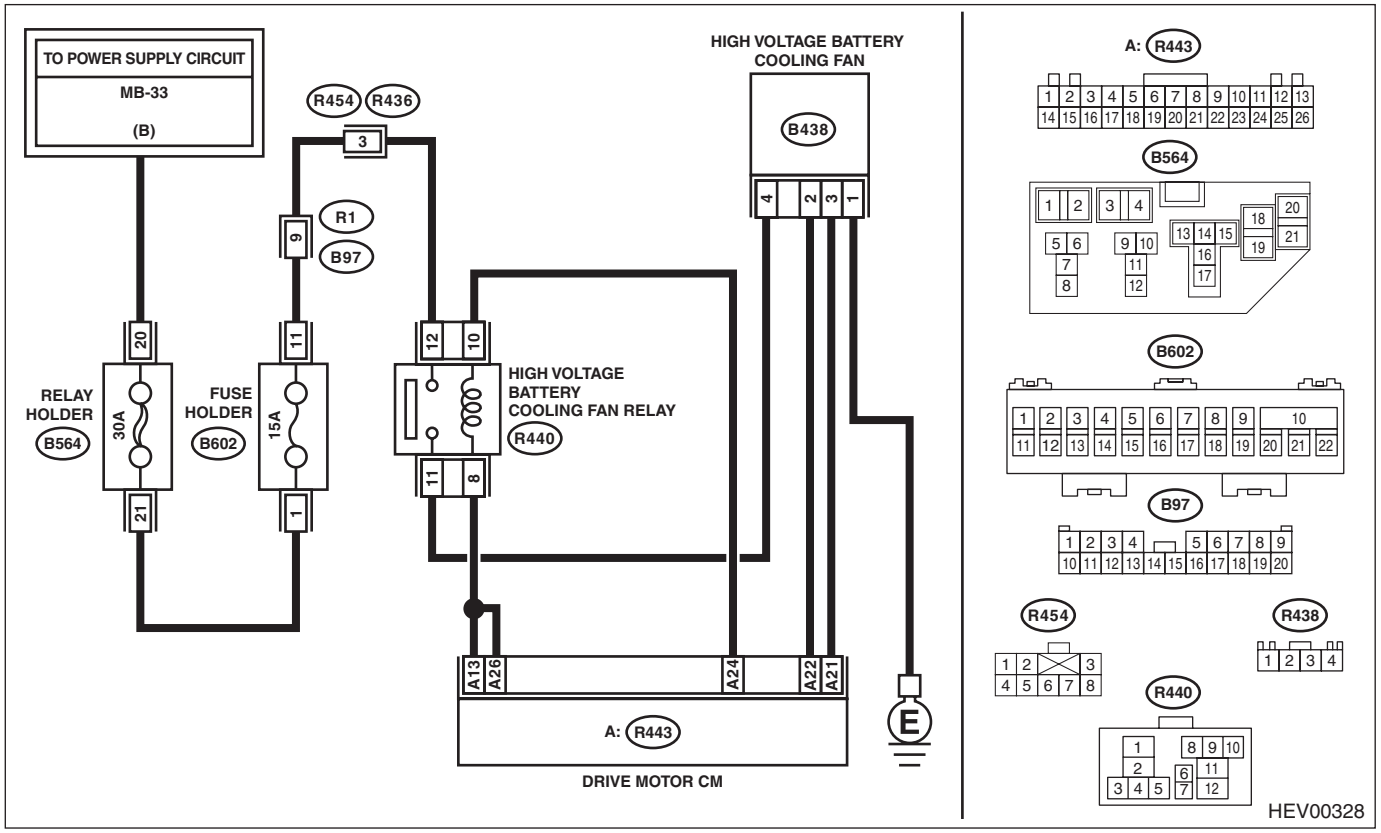

	Step	Check	Yes	No
1	**CHECK HIGH VOLTAGE BATTERY COOLING FAN.** Using the Subaru Select Monitor, perform «High Voltage Battery Cooling Fan» of System Operation Check Mode for the drive motor control system. <Ref. to HEV(diag)-73, DRIVE MOTOR CONTROL SYSTEM, OPERATION, System Operation Check Mode.>	Does the cooling fan speed change when the speed is switched across 4 steps (Stop, Steps 1 — 3)?	Even if DTC is detected, the circuit has returned to a normal condition at this time. Reproduce the failure, and then perform the diagnosis again. NOTE: In this case, temporary poor contact of connector, temporary open or short circuit of harness may be the cause.	Go to step **2**.
2	**CHECK HARNESS (OPEN CIRCUIT).** 1) Turn the ignition switch to OFF. 2) Disconnect the DMCM connector. 3) Disconnect the high voltage battery cooling fan connector. 4) Using a tester, measure the resistance between the high voltage battery cooling fan connector and the ground bolt of inverter frame body. ***Connector & terminal*** ***(R443) No. 21 — (R438) No. 3:*** ***(R443) No. 22 — (R438) No. 2:*** ***(R438) No. 1 — Ground bolt of inverter frame body:*** ***(R438) No. 4 — (R440) No. 11:***	Is the resistance less than 1 Ω?	Go to step **3**.	Repair open circuit in harness between DMCM connector and high voltage battery cooling fan connector, or repair the intermediate connector.
3	**CHECK HARNESS (SHORT TO POWER).** Using a tester, measure the resistance between the high voltage battery cooling fan connector and other signal lines. ***Connector & terminal*** ***(R443) No. 21 — (R438) No. 4:*** ***(R443) No. 21 — (R443) No. 1 — 26:*** ***(R443) No. 21 — (R442) No. 1 — 22:*** ***(R443) No. 21 — (R436) No. 1 — 8:*** ***(R443) No. 22 — (R438) No. 4:*** ***(R443) No. 22 — (R443) No. 1 — 26:*** ***(R443) No. 22 — (R442) No. 1 — 22:*** ***(R443) No. 22 — (R436) No. 1 — 8:***	Is the resistance 1 MΩ or more?	Go to step **4**.	Repair short circuit to power in harness between DMCM connector and high voltage battery cooling fan connector, or repair the intermediate connector.
4	**CHECK DTC.** 1) Replace the high voltage battery cooling fan. <Ref. to HEV-59, High Voltage Battery Cooling System.> 2) Perform drive cycle H. <Ref. to HEV(diag)-38, DRIVE CYCLE H, PROCEDURE, Drive Cycle.>	Is the same DTC detected? (current malfunction)	Replace DMCM. <Ref. to CVT(TH58A)-155, Drive Motor Control Module.>	There is an abnormal condition in the high voltage battery cooling fan.

BC:DTC P0A83 HYBRID/EV BATTERY PACK COOLING FAN 1 STUCK ON

DIAGNOSIS:

- Detected when two consecutive driving cycles with fault occur. (Single engine startup is counted as one drive cycle.)
- GENERAL DESCRIPTION <Ref. to GD(HEV)-43, DTC P0A83 HYBRID/EV BATTERY PACK COOLING FAN 1 STUCK ON, Diagnostic Trouble Code (DTC) Detecting Criteria.>

TROUBLE SYMPTOM:

- EV traveling/Auto Start Stop does not operate.
- Motor assist does not regenerates.

CAUTION:

Before performing diagnosis, refer to "CAUTION" in "General Description". <Ref. to HEV(diag)-8, CAUTION, General Description.>

WIRING DIAGRAM:

Hybrid system <Ref. to WI(HEV)-139, WIRING DIAGRAM, Hybrid Electric Vehicle System.>

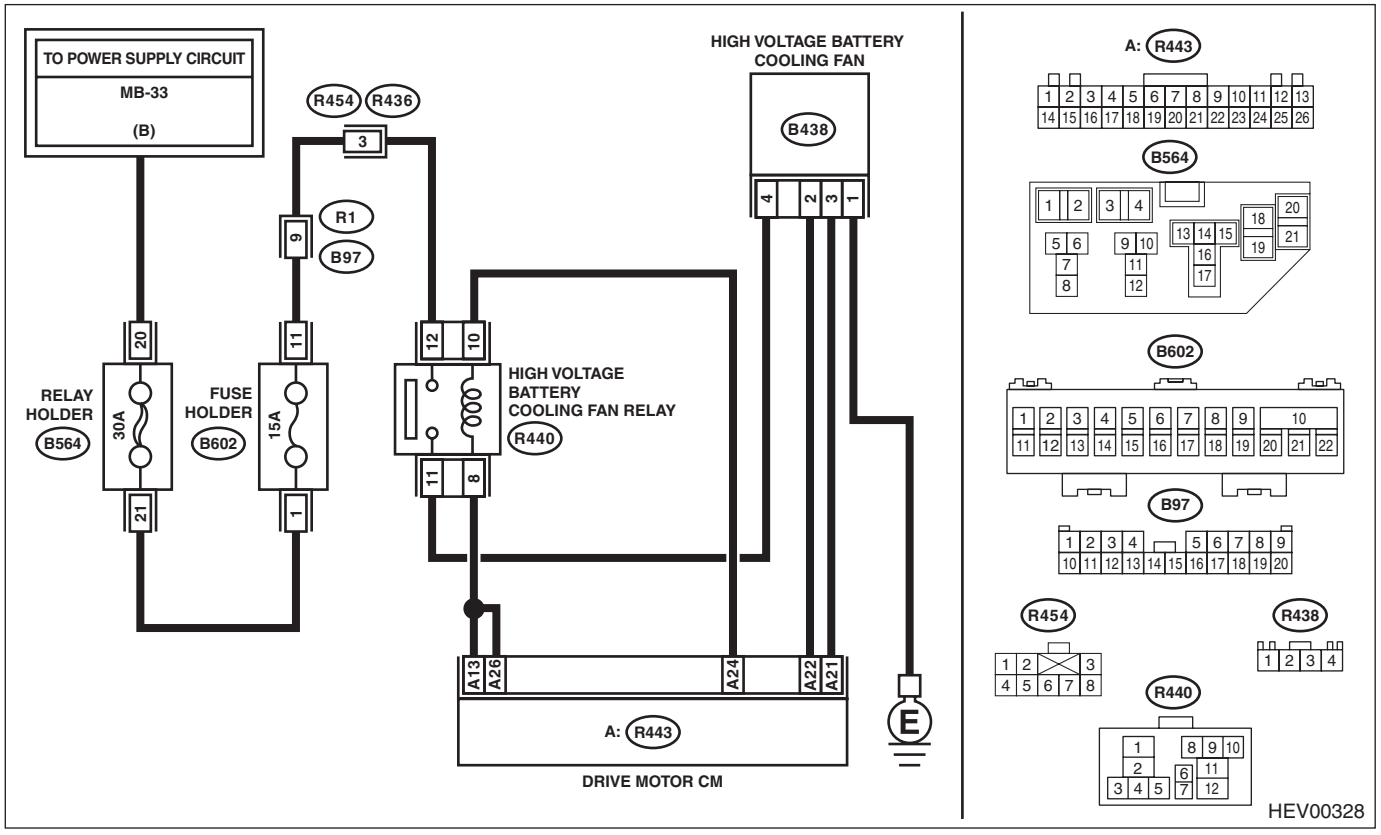

	Step	Check	Yes	No
1	**CHECK HIGH VOLTAGE BATTERY COOLING FAN.** Using the Subaru Select Monitor, perform «High Voltage Battery Cooling Fan» of System Operation Check Mode for the drive motor control system. <Ref. to HEV(diag)-73, DRIVE MOTOR CONTROL SYSTEM, OPERATION, System Operation Check Mode.>	Does the cooling fan speed change when the speed is switched across 4 steps (Stop, Steps 1 — 3)?	Even if DTC is detected, the circuit has returned to a normal condition at this time. Reproduce the failure, and then perform the diagnosis again. NOTE: In this case, temporary poor contact of connector, temporary open or short circuit of harness may be the cause.	Go to step **2**.
2	**CHECK HARNESS (SHORT TO GROUND).** 1) Turn the ignition switch to OFF. 2) Disconnect the DMCM connector. 3) Disconnect the high voltage battery cooling fan connector. 4) Using a tester, measure the resistance between the high voltage battery cooling fan connector and the ground bolt of inverter frame body. ***Connector & terminal*** ***(R438) No. 2 — Ground bolt of inverter frame body:***	Is the resistance 1 MΩ or more?	Go to step **3**.	Repair short to ground circuit in harness between DMCM connector and high voltage battery cooling fan connector, or repair the intermediate connector.
3	**CHECK DTC.** 1) Replace the high voltage battery cooling fan. <Ref. to HEV-59, High Voltage Battery Cooling System.> 2) Perform drive cycle H. <Ref. to HEV(diag)-38, DRIVE CYCLE H, PROCEDURE, Drive Cycle.>	Is the same DTC detected? (current malfunction)	Replace DMCM. <Ref. to CVT(TH58A)-155, Drive Motor Control Module.>	There is an abnormal condition in the high voltage battery cooling fan.

BD:DTC P0A90 DRIVE MOTOR "A" PERFORMANCE

DIAGNOSIS:

- Immediately at fault recognition
- GENERAL DESCRIPTION <Ref. to GD(HEV)-44, DTC P0A90 DRIVE MOTOR "A" PERFORMANCE, Diagnostic Trouble Code (DTC) Detecting Criteria.>

TROUBLE SYMPTOM:

Normal control

CAUTION:

Before performing diagnosis, refer to "CAUTION" in "General Description". <Ref. to HEV(diag)-8, CAUTION, General Description.>

WIRING DIAGRAM:

Hybrid system <Ref. to WI(HEV)-139, WIRING DIAGRAM, Hybrid Electric Vehicle System.>

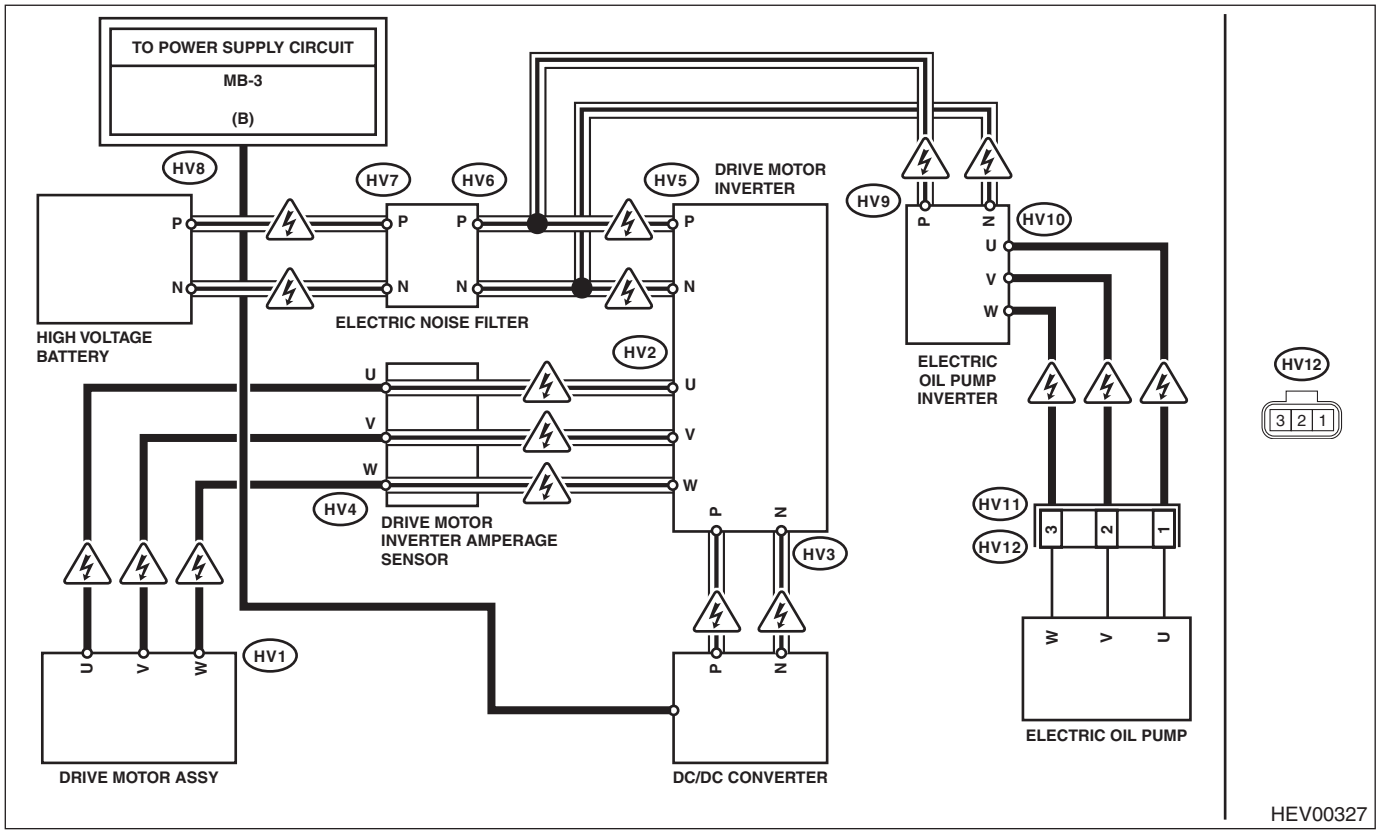

Step		Check	Yes	No
1	**CHECK DTC.** Read the DTC. <Ref. to HEV(diag)-23, DRIVE MOTOR CONTROL SYSTEM, OPERATION, Read Diagnostic Trouble Code (DTC).>	Are DTCs (relating to current sensors, speed sensors) detected? (current malfunction)	Perform the diagnosis according to DTC. <Ref. to HEV(diag)-77, DRIVE MOTOR CONTROL SYSTEM, LIST, List of Diagnostic Trouble Code (DTC).>	Go to step **2**.

	Step	Check	Yes	No
2	**CHECK CURRENT DATA.** Using the Subaru Select Monitor, confirm the current data of drive motor control system, the values of «Phase U Amperage Sensor Voltage»«Phase V Amperage Sensor Voltage»«Phase W Amperage Sensor Voltage». <Ref. to HEV(diag)-51, DRIVE MOTOR CONTROL SYSTEM, OPERATION, Read Current Data.>	Is the value 2.5 V±0.1 V?	Go to step **3**.	Perform the diagnosis according to DTC P0BE6. <Ref. to HEV(diag)-226, DTC P0BE6 DRIVE MOTOR "A" PHASE U CURRENT SENSOR CIRCUIT RANGE/PERFORMANCE, Diagnostic Procedure with Diagnostic Trouble Code (DTC).>
3	**CHECK DRIVE MOTOR AND POWER CABLE (DEMAGNETIZATION, SHORT).** 1) With the 12 V battery connected, remove the service disconnect plug. <Ref. to HEV-15, Service Plug.> **CAUTION:** **Watch for an electrical short at each harness because the 12 V battery is connected.** 2) Lift up the vehicle. 3) Start the engine, and set the shift lever to "D" range. 4) Using the Subaru Select Monitor, confirm the current data of drive motor control system, the values of «A/T Oil Temperature»«Drive Motor Speed»«Drive Motor Inverter Input High Voltage Sensor (Serial)». <Ref. to HEV(diag)-51, DRIVE MOTOR CONTROL SYSTEM, OPERATION, Read Current Data.>	Are any of the following statements relevant? • «Drive Motor Inverter Input High Voltage Sensor (Serial)» is out of the standard specified in Note when «ATF Temperature» is 20 — 60°C (68 — 140°F) and «Drive Motor Speed» is 600 — 1400 rpm. • Abnormal noise and changes in rotation speed occur near 600 rpm.	If you have a milliohm tester at hand, Go to step **6**. If a milliohm tester is NOT at hand, Go to step **11**.	If you have a milliohm tester at hand, Go to step **4**. If a milliohm tester is NOT at hand, Go to step **10**.
4	**CHECK DRIVE MOTOR AND POWER CABLE (SHORT).** 1) Leave the vehicle under temperature of 40°C (104°F) or less for 10 minutes. 2) Using the Subaru Select Monitor, confirm the current data of drive motor control system, the values of «Drive Motor Temperature A»«Drive Motor Temperature B» are 40°C (104°F) or less. <Ref. to HEV(diag)-51, DRIVE MOTOR CONTROL SYSTEM, OPERATION, Read Current Data.> 3) Turn the ignition switch to OFF. 4) Disconnect the ground cable of the 12 volt auxiliary battery, and as for the 12 volt engine restart battery, disconnect the ground cable from the 12V engine restart battery sensor. <Ref. to NT-5, BATTERY, NOTE, Note.> 5) Disconnect the power cable (HV2) of drive motor inverter. 6) Using a milliohm tester, measure the resistance between power cable terminals. ***Connector & terminal*** ***(HV2) U — (HV2) V:*** ***(HV2) U — (HV2) W:*** ***(HV2) V — (HV2) W:***	Is either resistance value 25 mΩ or less?	Go to step **5**.	Replace the drive motor assembly. <Ref. to CVT(TH58A)-215, Drive Motor Assembly.>

	Step	Check	Yes	No
5	**CHECK DRIVE MOTOR (SHORT).** 1) Disconnect the drive motor power cable (HV1). NOTE: The gasket is NOT reusable. 2) Using a milliohm tester, measure the resistance between power cable terminals. ***Connector & terminal*** ***(HV1) U — (HV1) V:*** ***(HV1) U — (HV1) W:*** ***(HV1) V — (HV1) W:***	Is either resistance value 20 mΩ or less?	Replace the drive motor assembly. <Ref. to CVT(TH58A)-215, Drive Motor Assembly.>	Replace the power cable. <Ref. to HEV-51, Power Cable.> Go to step **16**.
6	**CHECK BUS BAR.** 1) Turn the ignition to OFF. 2) Disconnect the ground cable of the 12 volt auxiliary battery, and as for the 12 volt engine restart battery, disconnect the ground cable from the 12V engine restart battery sensor. <Ref. to NT-5, BATTERY, NOTE, Note.> 3) Remove the service disconnect plug. <Ref. to HEV-15, Service Plug.> 4) Wait for 10 minutes. 5) Check the bus bar.	Is the condition normal? (Check for loose bolts, insecure connection, foreign matter caught, trace of arc (burnt terminals) etc.)	Go to step **7**.	Retighten the bolts. Or replace the bus bar.
7	**CHECK DRIVE MOTOR AND POWER CABLE.** 1) Leave the vehicle under temperature of 40°C (104°F) or less for 10 minutes. 2) Using the Subaru Select Monitor, confirm the current data of drive motor control system, the values of «Drive Motor Temperature A»«Drive Motor Temperature B» are 40°C (104°F) or less. <Ref. to HEV(diag)-51, DRIVE MOTOR CONTROL SYSTEM, OPERATION, Read Current Data.> 3) Turn the ignition switch to OFF. 4) Disconnect the ground cable of the 12 volt auxiliary battery, and as for the 12 volt engine restart battery, disconnect the ground cable from the 12V engine restart battery sensor. <Ref. to NT-5, BATTERY, NOTE, Note.> 5) Disconnect the power cable (HV2) of drive motor inverter. 6) Using a milliohm tester, measure the resistance between power cable terminals. ***Connector & terminal*** ***(HV2) U — (HV2) V:*** ***(HV2) U — (HV2) W:*** ***(HV2) V — (HV2) W:***	Is either resistance value out of 25 — 80 mΩ range?	Go to step **8**.	Go to step **9**.
8	**CHECK DRIVE MOTOR.** 1) Disconnect the drive motor power cable (HV1). NOTE: The gasket is NOT reusable. 2) Using a milliohm tester, measure the resistance between power cable terminals. ***Connector & terminal*** ***(HV1) U — (HV1) V:*** ***(HV1) U — (HV1) W:*** ***(HV1) V — (HV1) W:***	Is either resistance value out of 20 — 70 mΩ range?	Replace the drive motor assembly. <Ref. to CVT(TH58A)-215, Drive Motor Assembly.>	Replace the power cable. <Ref. to HEV-51, Power Cable.> Go to step **16**.

	Step	Check	Yes	No
9	**CHECK DRIVE MOTOR INVERTER.** 1) Replace the drive motor inverter. <Ref. to HEV-42, Inverter.> 2) Replace the removed/disconnected parts back to the vehicle. 3) Perform drive cycle B. <Ref. to HEV(diag)-33, DRIVE CYCLE B, PROCEDURE, Drive Cycle.>	Is the same DTC detected? (current malfunction)	Replace DMCM. <Ref. to CVT(TH58A)-155, Drive Motor Control Module.>	Problem is present in drive motor inverter.
10	**CHECK POWER CABLE (SHORT).** 1) Turn the ignition switch to OFF. 2) Disconnect the ground cable of the 12 volt auxiliary battery, and as for the 12 volt engine restart battery, disconnect the ground cable from the 12V engine restart battery sensor. <Ref. to NT-5, BATTERY, NOTE, Note.> 3) Disconnect the power cable (HV2) of drive motor inverter. 4) Using an insulation multimeter (250 V range), measure the resistance between power cable terminals. ***Connector & terminal*** ***(HV2) U — (HV2) V:*** ***(HV2) U — (HV2) W:*** ***(HV2) V — (HV2) W:***	Does the resistance between any points show 2 MΩ or more?	Replace the drive motor assembly. <Ref. to CVT(TH58A)-215, Drive Motor Assembly.>	Replace the power cable. <Ref. to HEV-51, Power Cable.> Go to step **16**.
11	**CHECK BUS BAR.** Check the bus bar.	Is the condition normal? (Check for loose bolts, insecure connection, foreign matter caught, trace of arc (burnt terminals) etc.)	Go to step **12**.	Retighten the bolts. Or replace the bus bar.
12	**CHECK DRIVE MOTOR AND POWER CABLE.** 1) Leave the vehicle under temperature of 40°C (104°F) or less for 10 minutes. 2) Using the Subaru Select Monitor, confirm the current data of drive motor control system, the values of «Drive Motor Temperature A»«Drive Motor Temperature B» are 40°C (104°F) or less. <Ref. to HEV(diag)-51, DRIVE MOTOR CONTROL SYSTEM, OPERATION, Read Current Data.> 3) Turn the ignition switch to OFF. 4) Disconnect the ground cable of the 12 volt auxiliary battery, and as for the 12 volt engine restart battery, disconnect the ground cable from the 12V engine restart battery sensor. <Ref. to NT-5, BATTERY, NOTE, Note.> 5) Disconnect the power cable (HV2) of drive motor inverter. 6) Using an insulation multimeter, measure the resistance between power cable terminals. ***Connector & terminal*** ***(HV2) U — (HV2) V:*** ***(HV2) U — (HV2) W:*** ***(HV2) V — (HV2) W:***	Is either resistance value 0.3 Ω or more?	Go to step **13**.	Go to step **14**.

	Step	Check	Yes	No
13	**CHECK DRIVE MOTOR.** 1) Disconnect the drive motor power cable (HV1). NOTE: The gasket is NOT reusable. 2) Using an insulation multimeter, measure the resistance between power cable terminals. ***Connector & terminal*** ***(HV1) U — (HV1) V:*** ***(HV1) U — (HV1) W:*** ***(HV1) V — (HV1) W:***	Is either resistance value 0.3 Ω or more?	Replace the drive motor assembly. <Ref. to CVT(TH58A)-215, Drive Motor Assembly.>	Replace the power cable. <Ref. to HEV-51, Power Cable.>
14	**CHECK DRIVE MOTOR AND POWER CABLE.** 1) Replace the drive motor assembly. <Ref. to CVT(TH58A)-215, Drive Motor Assembly.> 2) Replace the power cable. <Ref. to HEV-51, Power Cable.> 3) Replace the removed/disconnected parts back to the vehicle. 4) Perform drive cycle B. <Ref. to HEV(diag)-33, DRIVE CYCLE B, PROCEDURE, Drive Cycle.>	Is the same DTC detected? (current malfunction)	Go to step **15**.	Problem is present in drive motor assembly or power cable.
15	**CHECK DRIVE MOTOR INVERTER.** 1) Replace the drive motor inverter. <Ref. to HEV-42, Inverter.> 2) Perform drive cycle B. <Ref. to HEV(diag)-33, DRIVE CYCLE B, PROCEDURE, Drive Cycle.>	Is the same DTC detected? (current malfunction)	Replace DMCM. <Ref. to CVT(TH58A)-155, Drive Motor Control Module.>	Problem is present in drive motor inverter.
16	**CHECK OF DRIVE MOTOR (DEMAGNETIZATION).** 1) Replace the removed/disconnected parts back to the vehicle. 2) With the 12 V battery connected, remove the service disconnect plug. <Ref. to HEV-15, Service Plug.> **CAUTION:** **Watch for an electrical short at each harness because the 12 V battery is connected.** 3) Lift up the vehicle. 4) Start the engine, and set the shift lever to “D” range. 5) Using the Subaru Select Monitor, confirm the current data of drive motor control system, the values of «A/T Oil Temperature»«Drive Motor Speed»«Drive Motor Inverter Input High Voltage Sensor (Serial)». <Ref. to HEV(diag)-51, DRIVE MOTOR CONTROL SYSTEM, OPERATION, Read Current Data.>	«Drive Motor Inverter Input High Voltage Sensor (Serial)» is within the standard specified in Note when «ATF Temperature» is 20 — 60°C (68 — 140°F) and «Drive Motor Speed» is 600 — 1400 rpm.	Even if DTC is detected, the circuit has returned to a normal condition at this time. Reproduce the failure, and then perform the diagnosis again. NOTE: In this case, temporary poor contact of connector, temporary open or short circuit of harness may be the cause.	Replace the drive motor assembly. <Ref. to CVT(TH58A)-215, Drive Motor Assembly.>

NOTE:
Value of «Drive Motor Inverter Input High Voltage Sensor (Serial)» is proportional to «Drive Motor Speed».

- 1000 rpm: 18 V — 37 V
- 1400 rpm: 25 V — 52 V

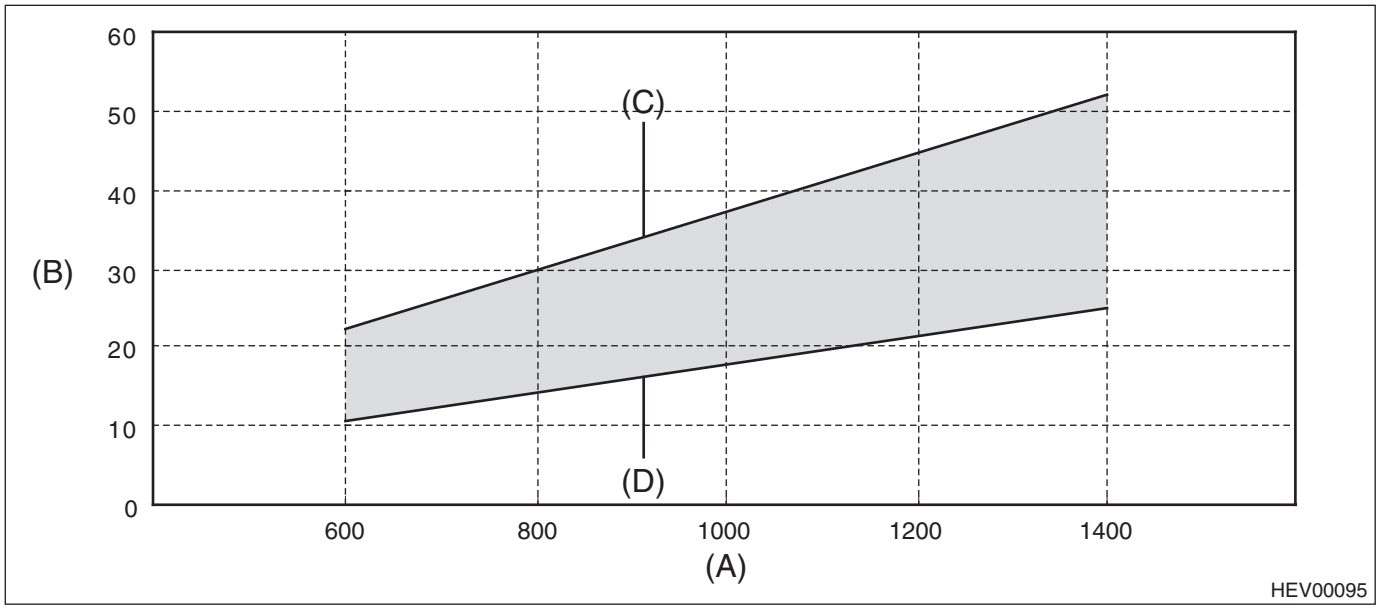

(A) Drive motor speed
(B) Drive Motor Inverter Input High Voltage Sensor (Serial)
(C) Standard at Max.
(D) Standard at Min.

BE:DTC P0A94 DC/DC CONVERTER PERFORMANCE

DIAGNOSIS:

- Detects abnormal conditions in DC/DC converter.
- If the DC/DC converter detects serial communication errors with the drive motor control module, or internal errors are detected in the DC/DC converter, it is judged as NG.
- Immediately at fault recognition

TROUBLE SYMPTOM:

EV traveling/Auto Start Stop does not operate.

CAUTION:

Before performing diagnosis, refer to "CAUTION" in "General Description". <Ref. to HEV(diag)-8, CAUTION, General Description.>

WIRING DIAGRAM:

Hybrid system <Ref. to WI(HEV)-139, WIRING DIAGRAM, Hybrid Electric Vehicle System.>

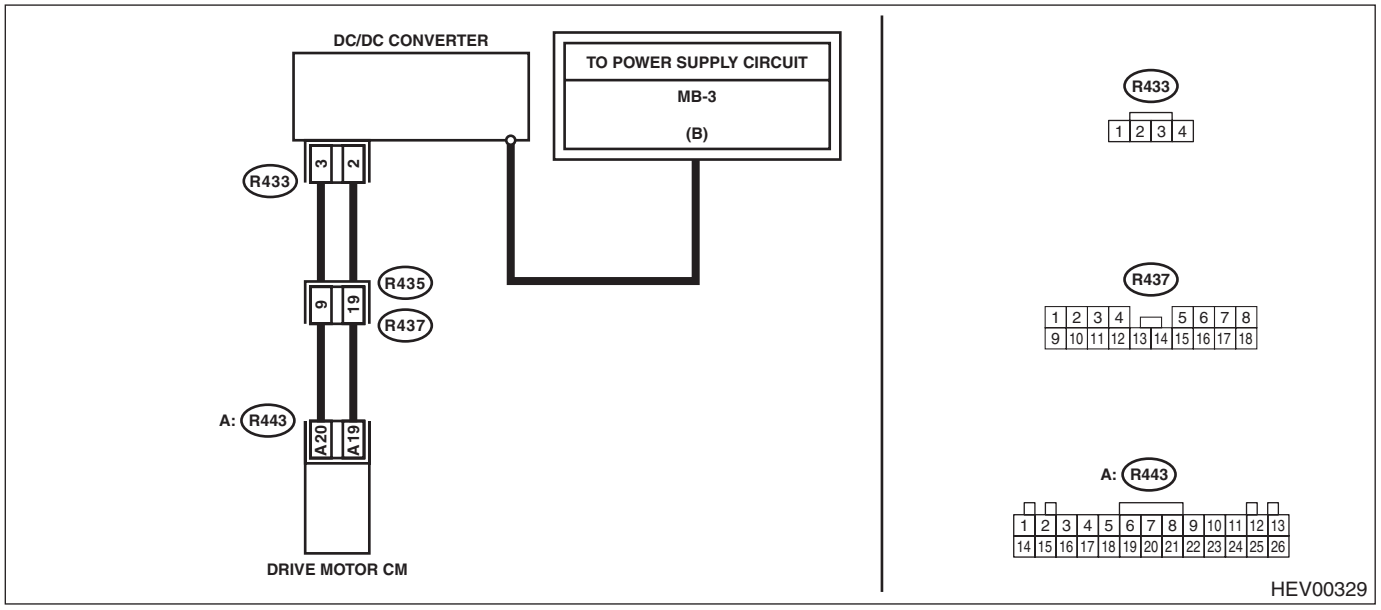

	Step	Check	Yes	No
1	**CHECK DTC.** Read the DTC. <Ref. to HEV(diag)-23, DRIVE MOTOR CONTROL SYSTEM, OPERATION, Read Diagnostic Trouble Code (DTC).>	Are any other DTCs detected? (current malfunction)	Perform the diagnosis according to DTC. <Ref. to HEV(diag)-77, DRIVE MOTOR CONTROL SYSTEM, LIST, List of Diagnostic Trouble Code (DTC).>	Go to step **2**.
2	**CHECK DETAIL CODE.** Using the Subaru Select Monitor, confirm «Detail code» in the freeze frame data of the drive motor control system. <Ref. to HEV(diag)-65, DRIVE MOTOR CONTROL SYSTEM, OPERATION, Freeze Frame Data Display.>	Is «Detail code» displayed?	If 0800 is displayed, Go to step **3**. If 0801 — 0806 is displayed, replace the DC/DC converter. <Ref. to HEV-38, DC/DC Converter.>	Replace DMCM. <Ref. to CVT(TH58A)-155, Drive Motor Control Module.>

	Step	Check	Yes	No
3	**CHECK HARNESS (SHORT TO GROUND).** 1) Disconnect the DC/DC converter connector. 2) Disconnect the DMCM connector. 3) Using a tester, measure the resistance between DC/DC converter connector and the ground bolt of inverter frame body. ***Connector & terminal*** ***(R433) No. 2 — Ground bolt of inverter frame body:***	Is the resistance 1 MΩ or more?	Go to step **4**.	Repair short to ground circuit in harness between DC/DC converter connector and DMCM connector, or repair the intermediate connector.
4	**CHECK HARNESS (OPEN CIRCUIT).** Using a tester, measure the resistance between DC/DC converter connector and DMCM connector. ***Connector & terminal*** ***(R433) No. 2 — (R443) No. 19:***	Is the resistance less than 1 Ω?	Go to step **5**.	Repair open circuit in harness between DC/DC converter connector and DMCM connector, or repair the intermediate connector.
5	**CHECK HARNESS (SHORT TO OTHER SIGNAL).** Using the tester, measure the resistance in the DMCM connector. ***Connector & terminal*** ***(R443) No. 19 — (R442) No. 1 — 22:*** ***(R443) No. 19 — (R443) No. 1 — 26:*** ***(R443) No. 19 — (R436) No. 1 — 8:*** ***(R443) No. 19 — (R432) No. 7:*** ***(R443) No. 19 — DC/DC converter 12 V output line:***	Is the resistance 1 MΩ or more?	Go to step **6**.	Repair short circuit in harness between DC/DC converter connector and DMCM connector, or repair the intermediate connector.
6	**CHECK DTC.** 1) Replace the DC/DC converter. <Ref. to HEV-38, DC/DC Converter.> 2) Perform the Inspection Mode. <Ref. to HEV(diag)-26, Inspection Mode.>	Is the same DTC detected? (current malfunction)	Replace DMCM. <Ref. to CVT(TH58A)-155, Drive Motor Control Module.>	Problem is present in DC/DC converter.

BF:DTC P0AED DRIVE MOTOR INVERTER TEMPERATURE SENSOR "A" CIRCUIT

DIAGNOSIS:

- Immediately at fault recognition
- GENERAL DESCRIPTION <Ref. to GD(HEV)-45, DTC P0AED DRIVE MOTOR INVERTER TEMPERATURE SENSOR "A" CIRCUIT, Diagnostic Trouble Code (DTC) Detecting Criteria.>

TROUBLE SYMPTOM:

- EV traveling/Auto Start Stop does not operate.
- Motor assist does not regenerates.

CAUTION:

Before performing diagnosis, refer to "CAUTION" in "General Description". <Ref. to HEV(diag)-8, CAUTION, General Description.>

	Step	Check	Yes	No
1	**CHECK CURRENT DATA.** Using the Subaru Select Monitor, confirm the current data of drive motor control system, the value of «Drive Motor Inverter Temperature A». <Ref. to HEV(diag)-51, DRIVE MOTOR CONTROL SYSTEM, OPERATION, Read Current Data.>	Is the value 204°C (399°F)?	Replace the drive motor inverter. <Ref. to HEV-42, Inverter.>	Even if DTC is detected, the circuit has returned to a normal condition at this time. Reproduce the failure, and then perform the diagnosis again. NOTE: In this case, temporary poor contact of connector, temporary open or short circuit of harness may be the cause.

BG:DTC P0AEE DRIVE MOTOR INVERTER TEMPERATURE SENSOR "A" CIRCUIT RANGE/PERFORMANCE

DIAGNOSIS:

- Detected when two consecutive driving cycles with fault occur. (Single engine startup is counted as one drive cycle.)
- GENERAL DESCRIPTION <Ref. to GD(HEV)-46, DTC P0AEE DRIVE MOTOR INVERTER TEMPERATURE SENSOR "A" CIRCUIT RANGE/PERFORMANCE, Diagnostic Trouble Code (DTC) Detecting Criteria.>

TROUBLE SYMPTOM:

- EV traveling/Auto Start Stop does not operate.
- Motor assist does not regenerates.

CAUTION:

Before performing diagnosis, refer to "CAUTION" in "General Description". <Ref. to HEV(diag)-8, CAUTION, General Description.>

	Step	Check	Yes	No
1	**CHECK CURRENT DATA.** 1) Turn the ignition switch to OFF and leave the vehicle 10 minutes unattended. 2) Using the Subaru Select Monitor, confirm the current data of drive motor control system, the value of «Drive Motor Inverter Operation Update Counter». <Ref. to HEV(diag)-51, DRIVE MOTOR CONTROL SYSTEM, OPERATION, Read Current Data.>	Has the value changed (when the ignition is turned to ON)?	Go to step **2**.	Perform the diagnosis according to DTC P0C0C and P1C30. <Ref. to HEV(diag)-77, DRIVE MOTOR CONTROL SYSTEM, LIST, List of Diagnostic Trouble Code (DTC).>
2	**CHECK CURRENT DATA.** Using the Subaru Select Monitor, confirm the current data of drive motor control system, the values of «Drive Motor Inverter Temperature A»«Drive Motor Inverter Temperature B»«Drive Motor Inverter Temperature C». <Ref. to HEV(diag)-51, DRIVE MOTOR CONTROL SYSTEM, OPERATION, Read Current Data.>	Is either value at 204°C (399°F)?	Replace the drive motor inverter. <Ref. to HEV-42, Inverter.>	Go to step **3**.
3	**CHECK CURRENT DATA.** Using the Subaru Select Monitor, confirm the current data of drive motor control system, the values of «Drive Motor Inverter Temperature A»«Drive Motor Inverter Temperature B»«Drive Motor Inverter Temperature C». <Ref. to HEV(diag)-51, DRIVE MOTOR CONTROL SYSTEM, OPERATION, Read Current Data.>	Is the difference between each temperature 30°C (54°F) or less?	Go to step **4**.	Replace the drive motor inverter. <Ref. to HEV-42, Inverter.>
4	**CHECK CURRENT DATA.** 1) With the Subaru Select Monitor connected, drive the vehicle for 10 minutes or more. 2) Using the Subaru Select Monitor, confirm the current data of drive motor control system, the values of «Drive Motor Inverter Temperature A»«Drive Motor Inverter Temperature B»«Drive Motor Inverter Temperature C». <Ref. to HEV(diag)-51, DRIVE MOTOR CONTROL SYSTEM, OPERATION, Read Current Data.>	Have any of those values changed 10°C (18°F) or more from the temperature before driving the vehicle?	Replace DMCM. <Ref. to CVT(TH58A)-155, Drive Motor Control Module.>	Replace the drive motor inverter. <Ref. to HEV-42, Inverter.>

BH:DTC P0AF2 DRIVE MOTOR INVERTER TEMPERATURE SENSOR "B" CIRCUIT

DIAGNOSIS:

- Immediately at fault recognition
- GENERAL DESCRIPTION <Ref. to GD(HEV)-48, DTC P0AF2 DRIVE MOTOR INVERTER TEMPERATURE SENSOR "B" CIRCUIT, Diagnostic Trouble Code (DTC) Detecting Criteria.>

TROUBLE SYMPTOM:

- EV traveling/Auto Start Stop does not operate.
- Motor assist does not regenerates.

CAUTION:

Before performing diagnosis, refer to "CAUTION" in "General Description". <Ref. to HEV(diag)-8, CAUTION, General Description.>

	Step	Check	Yes	No
1	**CHECK CURRENT DATA.** Using the Subaru Select Monitor, confirm the current data of drive motor control system, the value of «Drive Motor Inverter Temperature B». <Ref. to HEV(diag)-51, DRIVE MOTOR CONTROL SYSTEM, OPERATION, Read Current Data.>	Is the value 204°C (399°F)?	Replace the drive motor inverter. <Ref. to HEV-42, Inverter.>	Even if DTC is detected, the circuit has returned to a normal condition at this time. Reproduce the failure, and then perform the diagnosis again. NOTE: In this case, temporary poor contact of connector, temporary open or short circuit of harness may be the cause.

BI: DTC P0AF3 DRIVE MOTOR INVERTER TEMPERATURE SENSOR "B" CIRCUIT RANGE/PERFORMANCE

DIAGNOSIS:

- Detected when two consecutive driving cycles with fault occur. (Single engine startup is counted as one drive cycle.)
- GENERAL DESCRIPTION <Ref. to GD(HEV)-49, DTC P0AF3 DRIVE MOTOR INVERTER TEMPERATURE SENSOR "B" CIRCUIT RANGE/PERFORMANCE, Diagnostic Trouble Code (DTC) Detecting Criteria.>

NOTE:

For the diagnostic procedure, refer to "DTC P0AEE DRIVE MOTOR INVERTER TEMPERATURE SENSOR "A" CIRCUIT RANGE/PERFORMANCE". <Ref. to HEV(diag)-223, DTC P0AEE DRIVE MOTOR INVERTER TEMPERATURE SENSOR "A" CIRCUIT RANGE/PERFORMANCE, Diagnostic Procedure with Diagnostic Trouble Code (DTC).>

BJ:DTC P0BD1 DRIVE MOTOR INVERTER TEMPERATURE SENSOR "C" CIRCUIT

DIAGNOSIS:

- Immediately at fault recognition
- GENERAL DESCRIPTION <Ref. to GD(HEV)-51, DTC P0BD1 DRIVE MOTOR INVERTER TEMPERATURE SENSOR "C" CIRCUIT, Diagnostic Trouble Code (DTC) Detecting Criteria.>

TROUBLE SYMPTOM:

- EV traveling/Auto Start Stop does not operate.
- Motor assist does not regenerates.

CAUTION:

Before performing diagnosis, refer to “CAUTION” in “General Description”. <Ref. to HEV(diag)-8, CAUTION, General Description.>

	Step	Check	Yes	No
1	**CHECK CURRENT DATA.** Using the Subaru Select Monitor, confirm the current data of drive motor control system, the value of «Drive Motor Inverter Temperature C». <Ref. to HEV(diag)-51, DRIVE MOTOR CONTROL SYSTEM, OPERATION, Read Current Data.>	Is the value 204°C (399°F)?	Replace the drive motor inverter. <Ref. to HEV-42, Inverter.>	Even if DTC is detected, the circuit has returned to a normal condition at this time. Reproduce the failure, and then perform the diagnosis again. NOTE: In this case, temporary poor contact of connector, temporary open or short circuit of harness may be the cause.

BK:DTC P0BD2 DRIVE MOTOR INVERTER TEMPERATURE SENSOR "C" CIRCUIT RANGE/PERFORMANCE

DIAGNOSIS:

- Detected when two consecutive driving cycles with fault occur. (Single engine startup is counted as one drive cycle.)
- GENERAL DESCRIPTION <Ref. to GD(HEV)-52, DTC P0BD2 DRIVE MOTOR INVERTER TEMPERATURE SENSOR "C" CIRCUIT RANGE/PERFORMANCE, Diagnostic Trouble Code (DTC) Detecting Criteria.>

NOTE:

For the diagnostic procedure, refer to “DTC P0AEE DRIVE MOTOR INVERTER TEMPERATURE SENSOR "A" CIRCUIT RANGE/PERFORMANCE”. <Ref. to HEV(diag)-223, DTC P0AEE DRIVE MOTOR INVERTER TEMPERATURE SENSOR "A" CIRCUIT RANGE/PERFORMANCE, Diagnostic Procedure with Diagnostic Trouble Code (DTC).>

BL:DTC P0BE6 DRIVE MOTOR "A" PHASE U CURRENT SENSOR CIRCUIT RANGE/PERFORMANCE

DIAGNOSIS:

- Immediately at fault recognition
- GENERAL DESCRIPTION <Ref. to GD(HEV)-54, DTC P0BE6 DRIVE MOTOR "A" PHASE U CURRENT SENSOR CIRCUIT RANGE/PERFORMANCE, Diagnostic Trouble Code (DTC) Detecting Criteria.>

TROUBLE SYMPTOM:

- EV traveling/Auto Start Stop does not operate.
- Motor assist does not regenerates.

CAUTION:

Before performing diagnosis, refer to "CAUTION" in "General Description". <Ref. to HEV(diag)-8, CAUTION, General Description.>

WIRING DIAGRAM

Hybrid system <Ref. to WI(HEV)-139, WIRING DIAGRAM, Hybrid Electric Vehicle System.>

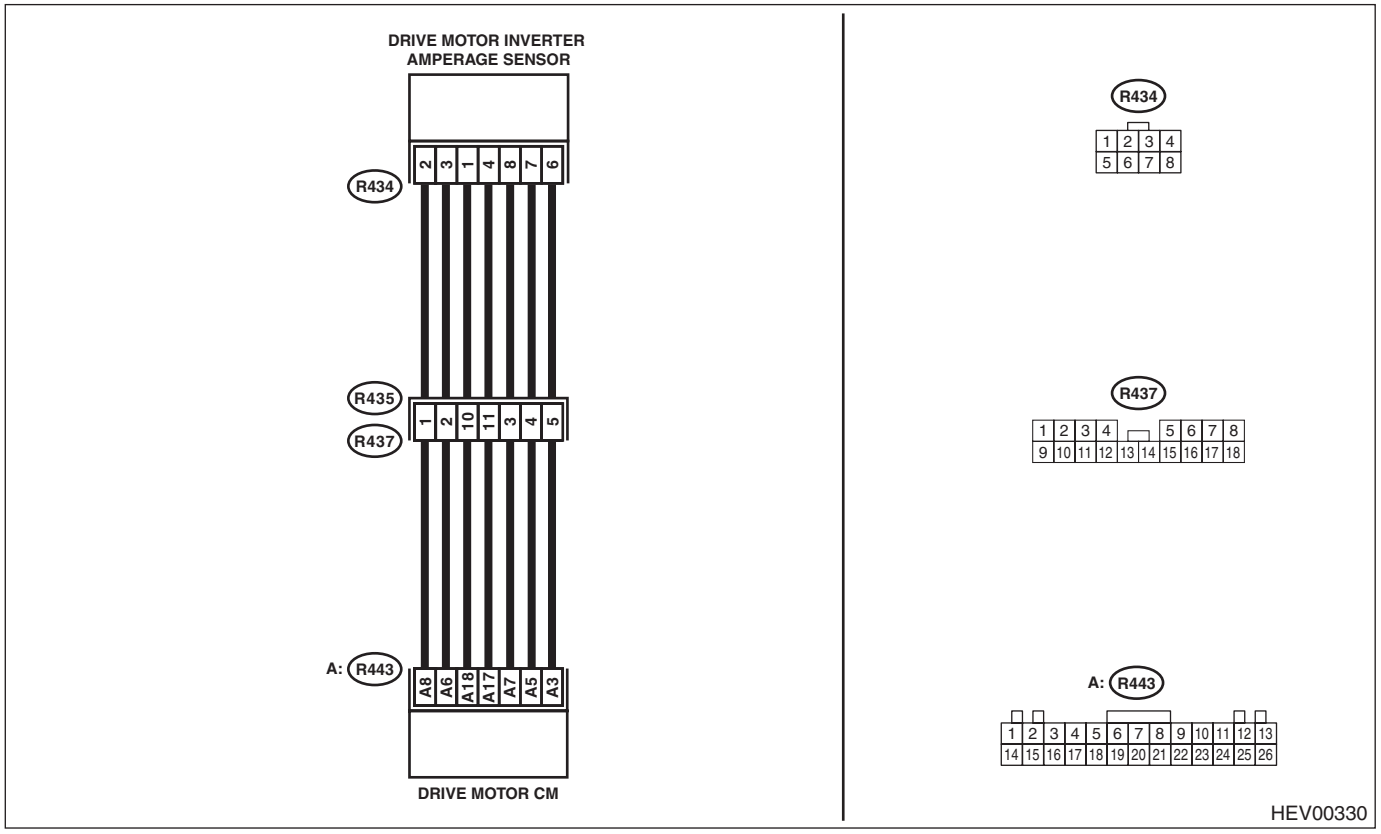

	Step	Check	Yes	No
1	**CHECK CURRENT DATA.** Using the Subaru Select Monitor, confirm the current data of drive motor control system, the value of «Phase U Amperage Sensor Voltage». <Ref. to HEV(diag)-51, DRIVE MOTOR CONTROL SYSTEM, OPERATION, Read Current Data.>	Is the value 2.5 V±0.1 V?	Even if DTC is detected, the circuit has returned to a normal condition at this time. Reproduce the failure, and then perform the diagnosis again. NOTE: In this case, temporary poor contact of connector, temporary open or short circuit of harness may be the cause.	Go to step **2**.
2	**CHECK HARNESS (SHORT TO GROUND).** 1) Turn the ignition switch to OFF. 2) Disconnect the ground cable of the 12 volt auxiliary battery, and as for the 12 volt engine restart battery, disconnect the ground cable from the 12V engine restart battery sensor. <Ref. to NT-5, BATTERY, NOTE, Note.> 3) Remove the service disconnect plug. <Ref. to HEV-15, Service Plug.> 4) Wait for 10 minutes. 5) Disconnect the DMCM connector. 6) Disconnect the drive motor inverter amperage sensor connector. 7) Using a tester, measure the resistance between DMCM connector and the ground bolt of inverter frame body. ***Connector & terminal*** ***(R443) No. 7 — Ground bolt of inverter frame body:*** ***(R443) No. 5 — Ground bolt of inverter frame body:*** ***(R443) No. 3 — Ground bolt of inverter frame body:***	Is the resistance 1 MΩ or more?	Go to step **3**.	Repair short to ground circuit in harness between DMCM connector and drive motor inverter amperage sensor connector, or repair the intermediate connector.
3	**CHECK HARNESS (OPEN CIRCUIT).** Using a tester, measure the resistance between DMCM connector and the drive motor inverter amperage sensor connector. ***Connector & terminal:*** ***(R443) No. 7 — (R434) No. 8:*** ***(R443) No. 5 — (R434) No. 7:*** ***(R443) No. 3 — (R434) No. 6:***	Is the resistance less than 1 Ω?	Go to step **4**.	Repair open circuit in harness between DMCM connector and drive motor inverter amperage sensor connector, or repair the intermediate connector.

	Step	Check	Yes	No
4	**CHECK HARNESS (SHORT TO POWER AND SHORT TO OTHER SIGNAL LINES).** 1) Disconnect the drive motor inverter connector. 2) Disconnect the intermediate connector (R436). 3) Using a tester, measure the resistance within the DMCM connector and between the DMCM connector and the drive motor inverter connector. ***Connector & terminal:*** ***(R443) No. 7 — (R442) No. 1 — 22:*** ***(R443) No. 7 — (R443) No. 1 — 26:*** ***(R443) No. 7 — (R436) No. 1 — 8:*** ***(R443) No. 7 — (R432) No. 7:*** ***(R443) No. 5 — (R442) No. 1 — 22:*** ***(R443) No. 5 — (R443) No. 1 — 26:*** ***(R443) No. 5 — (R436) No. 1 — 8:*** ***(R443) No. 5 — (R432) No. 7:*** ***(R443) No. 3 — (R442) No. 1 — 22:*** ***(R443) No. 3 — (R443) No. 1 — 26:*** ***(R443) No. 3 — (R436) No. 1 — 8:*** ***(R443) No. 3 — (R432) No. 7:***	Is the resistance 1 MΩ or more?	Go to step **5**.	Repair short circuit to power in harness between DMCM connector and drive motor inverter amperage sensor connector, or repair the intermediate connector.
5	**CHECK DRIVE MOTOR INVERTER AMPERAGE SENSOR.** 1) Replace the drive motor inverter amperage sensor. <Ref. to HEV-27, Drive Motor Inverter Current Sensor.> 2) Perform the Inspection Mode. <Ref. to HEV(diag)-26, Inspection Mode.>	Is the same DTC detected? (current malfunction)	Replace DMCM. <Ref. to CVT(TH58A)-155, Drive Motor Control Module.>	Problem is present in drive motor inverter amperage sensor.

BM:DTC P0BE7 DRIVE MOTOR "A" PHASE U CURRENT SENSOR CIRCUIT LOW

DIAGNOSIS:

- Immediately at fault recognition
- GENERAL DESCRIPTION <Ref. to GD(HEV)-55, DTC P0BE7 DRIVE MOTOR "A" PHASE U CURRENT SENSOR CIRCUIT LOW, Diagnostic Trouble Code (DTC) Detecting Criteria.>

TROUBLE SYMPTOM:

- EV traveling/Auto Start Stop does not operate.
- Motor assist does not regenerates.

CAUTION:

Before performing diagnosis, refer to "CAUTION" in "General Description". <Ref. to HEV(diag)-8, CAUTION, General Description.>

WIRING DIAGRAM

Hybrid system <Ref. to WI(HEV)-139, WIRING DIAGRAM, Hybrid Electric Vehicle System.>

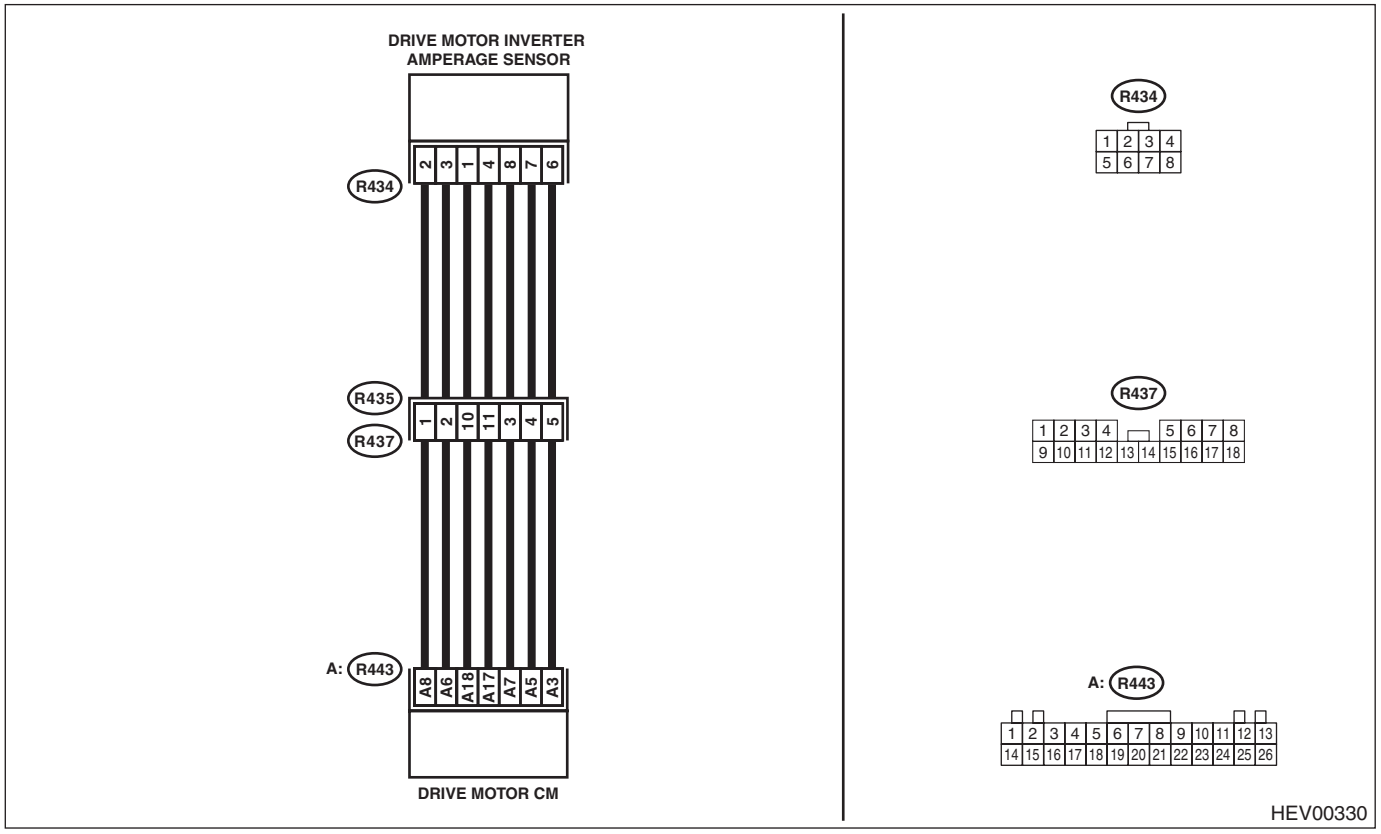

	Step	Check	Yes	No
1	**CHECK CURRENT DATA.** Using the Subaru Select Monitor, confirm the current data of drive motor control system, the value of «Phase U Amperage Sensor Voltage». <Ref. to HEV(diag)-51, DRIVE MOTOR CONTROL SYSTEM, OPERATION, Read Current Data.>	Is the value 0.5 V or less?	Go to step **2**.	Even if DTC is detected, the circuit has returned to a normal condition at this time. Reproduce the failure, and then perform the diagnosis again. NOTE: In this case, temporary poor contact of connector, temporary open or short circuit of harness may be the cause.
2	**CHECK HARNESS (SHORT TO GROUND).** 1) Turn the ignition switch to OFF. 2) Disconnect the ground cable of the 12 volt auxiliary battery, and as for the 12 volt engine restart battery, disconnect the ground cable from the 12V engine restart battery sensor. <Ref. to NT-5, BATTERY, NOTE, Note.> 3) Remove the service disconnect plug. <Ref. to HEV-15, Service Plug.> 4) Wait for 10 minutes. 5) Disconnect the DMCM connector. 6) Disconnect the drive motor inverter amperage sensor connector. 7) Using a tester, measure the resistance between DMCM connector and the ground bolt of inverter frame body. ***Connector & terminal*** ***(R443) No. 7 — Ground bolt of inverter frame body:*** ***(R443) No. 5 — Ground bolt of inverter frame body:*** ***(R443) No. 3 — Ground bolt of inverter frame body:*** ***(R443) No. 8 — Ground bolt of inverter frame body:*** ***(R443) No. 6 — Ground bolt of inverter frame body:***	Is the resistance 1 MΩ or more?	Go to step **3**.	Repair short to ground circuit in harness between DMCM connector and drive motor inverter amperage sensor connector, or repair the intermediate connector.
3	**CHECK HARNESS (OPEN CIRCUIT).** Using a tester, measure the resistance between DMCM connector and the drive motor inverter amperage sensor connector. ***Connector & terminal:*** ***(R443) No. 7 — (R434) No. 8:*** ***(R443) No. 5 — (R434) No. 7:*** ***(R443) No. 3 — (R434) No. 6:*** ***(R443) No. 8 — (R434) No. 2:*** ***(R443) No. 6 — (R434) No. 3:***	Is the resistance less than 1 Ω?	Go to step **4**.	Repair open circuit in harness between DMCM connector and drive motor inverter amperage sensor connector, or repair the intermediate connector.

	Step	Check	Yes	No
4	**CHECK HARNESS (SHORT TO POWER AND SHORT TO OTHER SIGNAL LINES).** 1) Disconnect the drive motor inverter connector. 2) Disconnect the intermediate connector (R436). 3) Using a tester, measure the resistance within the DMCM connector and between the DMCM connector and the drive motor inverter connector. ***Connector & terminal:*** ***(R443) No. 7 — (R442) No. 1 — 22:*** ***(R443) No. 7 — (R443) No. 1 — 26:*** ***(R443) No. 7 — (R436) No. 1 — 8:*** ***(R443) No. 7 — (R432) No. 7:*** ***(R443) No. 5 — (R442) No. 1 — 22:*** ***(R443) No. 5 — (R443) No. 1 — 26:*** ***(R443) No. 5 — (R436) No. 1 — 8:*** ***(R443) No. 5 — (R432) No. 7:*** ***(R443) No. 3 — (R442) No. 1 — 22:*** ***(R443) No. 3 — (R443) No. 1 — 26:*** ***(R443) No. 3 — (R436) No. 1 — 8:*** ***(R443) No. 3 — (R432) No. 7:***	Is the resistance 1 MΩ or more?	Go to step **5**.	Repair short circuit to power in harness between DMCM connector and drive motor inverter amperage sensor connector, or repair the intermediate connector.
5	**CHECK DRIVE MOTOR INVERTER AMPERAGE SENSOR.** 1) Replace the drive motor inverter amperage sensor. <Ref. to HEV-27, Drive Motor Inverter Current Sensor.> 2) Perform the Inspection Mode. <Ref. to HEV(diag)-26, Inspection Mode.>	Is the same DTC detected? (current malfunction)	Replace DMCM. <Ref. to CVT(TH58A)-155, Drive Motor Control Module.>	Problem is present in drive motor inverter amperage sensor.

BN:DTC P0BE8 DRIVE MOTOR "A" PHASE U CURRENT SENSOR CIRCUIT HIGH

DIAGNOSIS:

- Immediately at fault recognition
- GENERAL DESCRIPTION <Ref. to GD(HEV)-56, DTC P0BE8 DRIVE MOTOR "A" PHASE U CURRENT SENSOR CIRCUIT HIGH, Diagnostic Trouble Code (DTC) Detecting Criteria.>

TROUBLE SYMPTOM:

- EV traveling/Auto Start Stop does not operate.
- Motor assist does not regenerates.

CAUTION:

Before performing diagnosis, refer to "CAUTION" in "General Description". <Ref. to HEV(diag)-8, CAUTION, General Description.>

WIRING DIAGRAM

Hybrid system <Ref. to WI(HEV)-139, WIRING DIAGRAM, Hybrid Electric Vehicle System.>

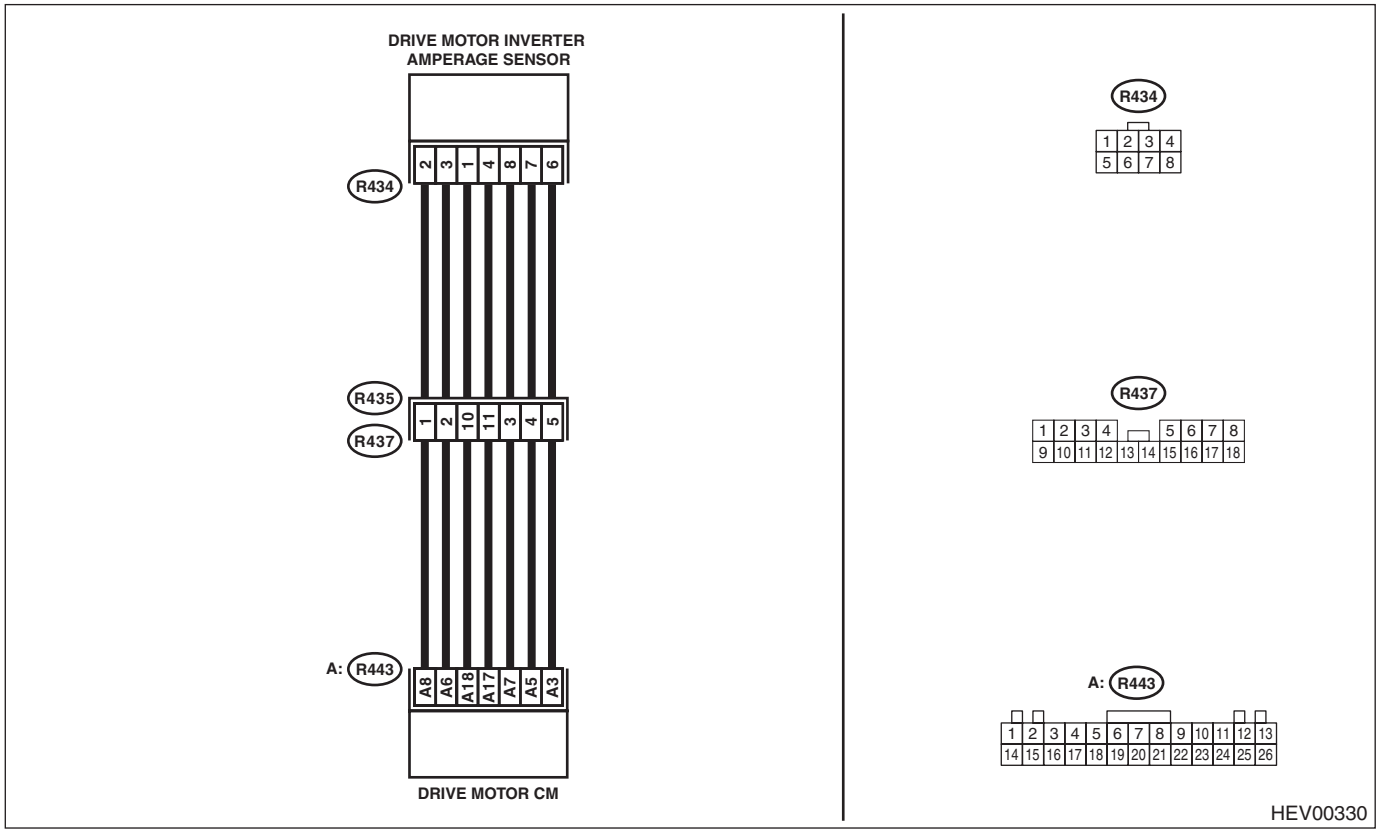

	Step	Check	Yes	No
1	**CHECK CURRENT DATA.** Using the Subaru Select Monitor, confirm the current data of drive motor control system, the value of «Phase U Amperage Sensor Voltage». <Ref. to HEV(diag)-51, DRIVE MOTOR CONTROL SYSTEM, OPERATION, Read Current Data.>	Is the value 4.5 V or more?	Go to step **2**.	Even if DTC is detected, the circuit has returned to a normal condition at this time. Reproduce the failure, and then perform the diagnosis again. NOTE: In this case, temporary poor contact of connector, temporary open or short circuit of harness may be the cause.
2	**CHECK HARNESS (SHORT TO GROUND).** 1) Turn the ignition switch to OFF. 2) Disconnect the ground cable of the 12 volt auxiliary battery, and as for the 12 volt engine restart battery, disconnect the ground cable from the 12V engine restart battery sensor. <Ref. to NT-5, BATTERY, NOTE, Note.> 3) Remove the service disconnect plug. <Ref. to HEV-15, Service Plug.> 4) Wait for 10 minutes. 5) Disconnect the DMCM connector. 6) Disconnect the drive motor inverter amperage sensor connector. 7) Using a tester, measure the resistance between DMCM connector and the ground bolt of inverter frame body. ***Connector & terminal*** ***(R443) No. 18 — (R434) No. 1:*** ***(R443) No. 17 — (R434) No. 4:***	Is the resistance less than 1 Ω?	Go to step **3**.	Repair short to ground circuit in harness between DMCM connector and drive motor inverter amperage sensor connector, or repair the intermediate connector.
3	**CHECK HARNESS (SHORT TO POWER AND SHORT TO OTHER SIGNAL LINES).** 1) Disconnect the drive motor inverter connector. 2) Disconnect the intermediate connector (R436). 3) Using a tester, measure the resistance within the DMCM connector and between the DMCM connector and the drive motor inverter connector. ***Connector & terminal:*** ***(R443) No. 7 — (R442) No. 1 — 22:*** ***(R443) No. 7 — (R443) No. 1 — 26:*** ***(R443) No. 7 — (R436) No. 1 — 8:*** ***(R443) No. 7 — (R432) No. 7:*** ***(R443) No. 5 — (R442) No. 1 — 22:*** ***(R443) No. 5 — (R443) No. 1 — 26:*** ***(R443) No. 5 — (R436) No. 1 — 8:*** ***(R443) No. 5 — (R432) No. 7:*** ***(R443) No. 3 — (R442) No. 1 — 22:*** ***(R443) No. 3 — (R443) No. 1 — 26:*** ***(R443) No. 3 — (R436) No. 1 — 8:*** ***(R443) No. 3 — (R432) No. 7:***	Is the resistance 1 MΩ or more?	Go to step **4**.	Repair short circuit to power in harness between DMCM connector and drive motor inverter amperage sensor connector, or repair the intermediate connector.

	Step	Check	Yes	No
4	**CHECK DRIVE MOTOR INVERTER AMPERAGE SENSOR.** 1) Replace the drive motor inverter amperage sensor. <Ref. to HEV-27, Drive Motor Inverter Current Sensor.> 2) Perform the Inspection Mode. <Ref. to HEV(diag)-26, Inspection Mode.>	Is the same DTC detected?	Replace DMCM. <Ref. to CVT(TH58A)-155, Drive Motor Control Module.>	Problem is present in drive motor inverter amperage sensor.

BO:DTC P0BEA DRIVE MOTOR "A" PHASE V CURRENT SENSOR CIRCUIT RANGE/PERFORMANCE

DIAGNOSIS:

- Immediately at fault recognition
- GENERAL DESCRIPTION <Ref. to GD(HEV)-57, DTC P0BEA DRIVE MOTOR "A" PHASE V CURRENT SENSOR CIRCUIT RANGE/PERFORMANCE, Diagnostic Trouble Code (DTC) Detecting Criteria.>

NOTE:
Refer to DTC P0BE6 DRIVE MOTOR "A" PHASE U CURRENT SENSOR CIRCUIT RANGE/PERFORMANCE. <Ref. to HEV(diag)-226, DTC P0BE6 DRIVE MOTOR "A" PHASE U CURRENT SENSOR CIRCUIT RANGE/PERFORMANCE, Diagnostic Procedure with Diagnostic Trouble Code (DTC).>

BP:DTC P0BEB DRIVE MOTOR "A" PHASE V CURRENT SENSOR CIRCUIT LOW

DIAGNOSIS:

- Immediately at fault recognition
- GENERAL DESCRIPTION <Ref. to GD(HEV)-58, DTC P0BEB DRIVE MOTOR "A" PHASE V CURRENT SENSOR CIRCUIT LOW, Diagnostic Trouble Code (DTC) Detecting Criteria.>

NOTE:
Refer to DTC P0BE7 DRIVE MOTOR "A" PHASE U CURRENT SENSOR CIRCUIT LOW. <Ref. to HEV(diag)-229, DTC P0BE7 DRIVE MOTOR "A" PHASE U CURRENT SENSOR CIRCUIT LOW, Diagnostic Procedure with Diagnostic Trouble Code (DTC).>

BQ:DTC P0BEC DRIVE MOTOR "A" PHASE V CURRENT SENSOR CIRCUIT HIGH

DIAGNOSIS:

- Immediately at fault recognition
- GENERAL DESCRIPTION <Ref. to GD(HEV)-59, DTC P0BEC DRIVE MOTOR "A" PHASE V CURRENT SENSOR CIRCUIT HIGH, Diagnostic Trouble Code (DTC) Detecting Criteria.>

NOTE:
Refer to DTC P0BE8 DRIVE MOTOR "A" PHASE U CURRENT SENSOR CIRCUIT HIGH. <Ref. to HEV(diag)-232, DTC P0BE8 DRIVE MOTOR "A" PHASE U CURRENT SENSOR CIRCUIT HIGH, Diagnostic Procedure with Diagnostic Trouble Code (DTC).>

BR:DTC P0BEE DRIVE MOTOR "A" PHASE W CURRENT SENSOR CIRCUIT RANGE/PERFORMANCE

DIAGNOSIS:

- Immediately at fault recognition
- GENERAL DESCRIPTION <Ref. to GD(HEV)-60, DTC P0BEE DRIVE MOTOR "A" PHASE W CURRENT SENSOR CIRCUIT RANGE/PERFORMANCE, Diagnostic Trouble Code (DTC) Detecting Criteria.>

NOTE:
Refer to DTC P0BE6 DRIVE MOTOR "A" PHASE U CURRENT SENSOR CIRCUIT RANGE/PERFORMANCE. <Ref. to HEV(diag)-226, DTC P0BE6 DRIVE MOTOR "A" PHASE U CURRENT SENSOR CIRCUIT RANGE/PERFORMANCE, Diagnostic Procedure with Diagnostic Trouble Code (DTC).>

BS:DTC P0BEF DRIVE MOTOR "A" PHASE W CURRENT SENSOR CIRCUIT LOW

DIAGNOSIS:

- Immediately at fault recognition
- GENERAL DESCRIPTION <Ref. to GD(HEV)-61, DTC P0BEF DRIVE MOTOR "A" PHASE W CURRENT SENSOR CIRCUIT LOW, Diagnostic Trouble Code (DTC) Detecting Criteria.>

NOTE:
Refer to DTC P0BE7 DRIVE MOTOR "A" PHASE U CURRENT SENSOR CIRCUIT LOW. <Ref. to HEV(diag)-229, DTC P0BE7 DRIVE MOTOR "A" PHASE U CURRENT SENSOR CIRCUIT LOW, Diagnostic Procedure with Diagnostic Trouble Code (DTC).>

BT:DTC P0BF0 DRIVE MOTOR "A" PHASE W CURRENT SENSOR CIRCUIT HIGH

DIAGNOSIS:

- Immediately at fault recognition
- GENERAL DESCRIPTION <Ref. to GD(HEV)-62, DTC P0BF0 DRIVE MOTOR "A" PHASE W CURRENT SENSOR CIRCUIT HIGH, Diagnostic Trouble Code (DTC) Detecting Criteria.>

NOTE:
Refer to DTC P0BE8 DRIVE MOTOR "A" PHASE U CURRENT SENSOR CIRCUIT HIGH. <Ref. to HEV(diag)-232, DTC P0BE8 DRIVE MOTOR "A" PHASE U CURRENT SENSOR CIRCUIT HIGH, Diagnostic Procedure with Diagnostic Trouble Code (DTC).>

BU:DTC P0BFD DRIVE MOTOR "A" PHASE U-V-W CURRENT SENSOR CORRELATION

DIAGNOSIS:

- Immediately at fault recognition
- GENERAL DESCRIPTION <Ref. to GD(HEV)-63, DTC P0BFD DRIVE MOTOR "A" PHASE U-V-W CURRENT SENSOR CORRELATION, Diagnostic Trouble Code (DTC) Detecting Criteria.>

TROUBLE SYMPTOM:

- EV traveling/Auto Start Stop does not operate.
- Motor assist does not regenerates.

CAUTION:

Before performing diagnosis, refer to "CAUTION" in "General Description". <Ref. to HEV(diag)-8, CAUTION, General Description.>

WIRING DIAGRAM

Hybrid system <Ref. to WI(HEV)-139, WIRING DIAGRAM, Hybrid Electric Vehicle System.>

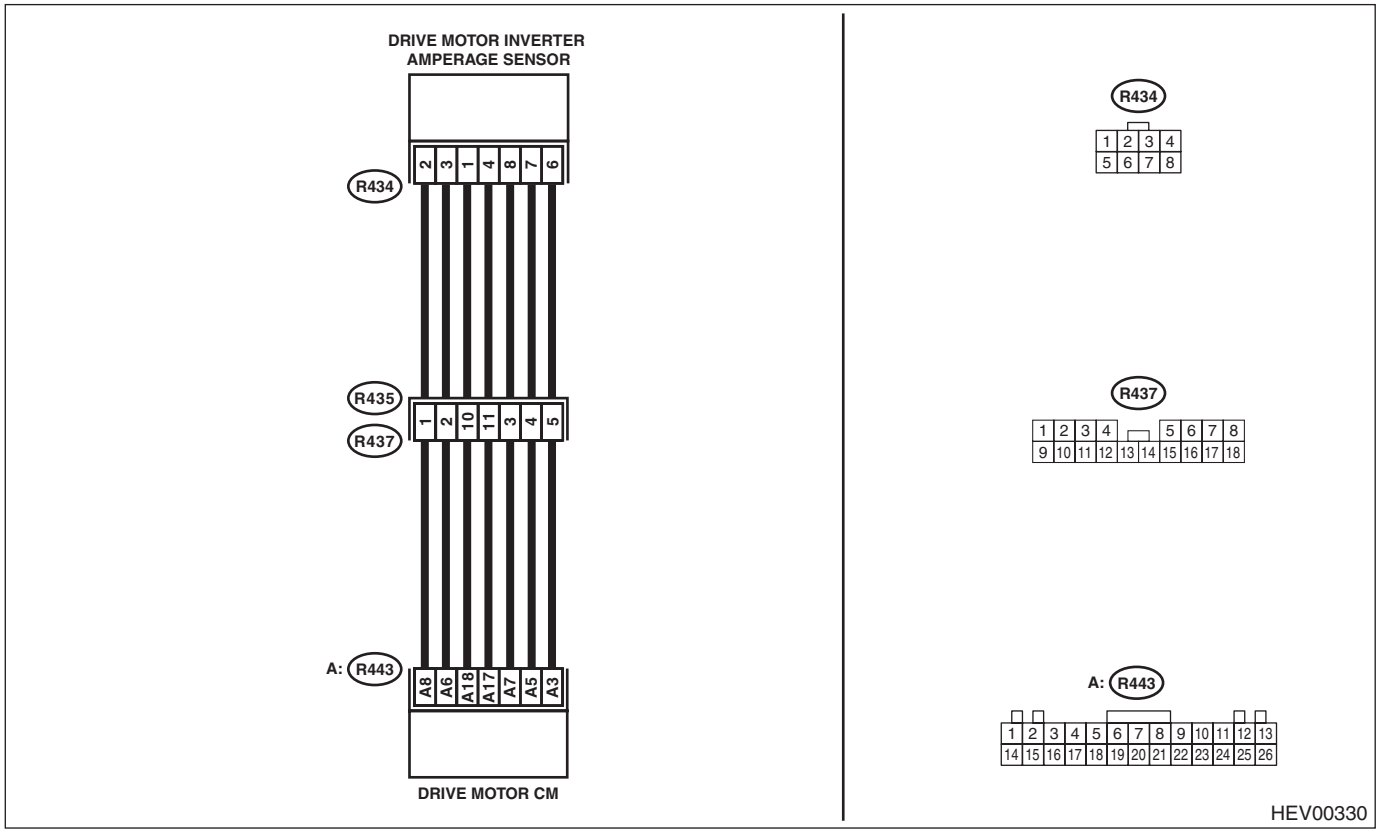

	Step	Check	Yes	No
1	**CHECK CURRENT DATA.** Using the Subaru Select Monitor, confirm the current data of drive motor control system, the values of «Phase U Amperage»«Phase V Amperage»«Phase W Amperage». <Ref. to HEV(diag)-51, DRIVE MOTOR CONTROL SYSTEM, OPERATION, Read Current Data.>	Is the sum of those three values 45 A or more?	Go to step **2**.	Even if DTC is detected, the circuit has returned to a normal condition at this time. Reproduce the failure, and then perform the diagnosis again. NOTE: In this case, temporary poor contact of connector, temporary open or short circuit of harness may be the cause.
2	**CHECK HARNESS (OPEN CIRCUIT).** 1) Turn the ignition switch to OFF. 2) Disconnect the ground cable of the 12 volt auxiliary battery, and as for the 12 volt engine restart battery, disconnect the ground cable from the 12V engine restart battery sensor. <Ref. to NT-5, BATTERY, NOTE, Note.> 3) Remove the service disconnect plug. <Ref. to HEV-15, Service Plug.> 4) Wait for 10 minutes. 5) Disconnect the DMCM connector. 6) Disconnect the drive motor inverter amperage sensor connector. 7) Using a tester, measure the resistance between DMCM connector and the current sensor connector. Connector & terminal ***Connector & terminal:*** ***(R443) No. 7 — (R434) No. 8:*** ***(R443) No. 5 — (R434) No. 7:*** ***(R443) No. 3 — (R434) No. 6:***	Is the resistance less than 1 Ω?	Go to step **3**.	Repair open circuit in harness between DMCM connector and drive motor inverter amperage sensor connector, or repair the intermediate connector.
3	**CHECK HARNESS (SHORT TO GROUND).** Using a tester, measure the resistance between DMCM connector and the ground bolt of inverter frame body. ***Connector & terminal:*** ***(R443) No. 7 — Ground bolt of inverter frame body:*** ***(R443) No. 5 — Ground bolt of inverter frame body:*** ***(R443) No. 3 — Ground bolt of inverter frame body:***	Is the resistance 1 MΩ or more?	Go to step **4**.	Repair short to ground circuit in harness between DMCM connector and drive motor inverter amperage sensor connector, or repair the intermediate connector.

	Step	Check	Yes	No
4	**CHECK HARNESS (BATTERY SHORT AND SHORT IN OTHER SIGNAL LINES).** 1) Disconnect the drive motor inverter connector. 2) Disconnect the intermediate connector (R436). 3) Using a tester, measure the resistance between the DMCM connector, each signal pin of DMCM, and the inverter connector. ***Connector & terminal:*** ***(R443) No. 7 — (R442) No. 1 — 22:*** ***(R443) No. 7 — (R443) No. 1 — 26:*** ***(R443) No. 7 — (R436) No. 1 — 8:*** ***(R443) No. 7 — (R432) No. 7:*** ***(R443) No. 5 — (R442) No. 1 — 22:*** ***(R443) No. 5 — (R443) No. 1 — 26:*** ***(R443) No. 5 — (R436) No. 1 — 8:*** ***(R443) No. 5 — (R432) No. 7:*** ***(R443) No. 3 — (R442) No. 1 — 22:*** ***(R443) No. 3 — (R443) No. 1 — 26:*** ***(R443) No. 3 — (R436) No. 1 — 8:*** ***(R443) No. 3 — (R432) No. 7:***	Is the resistance 1 MΩ or more?	Go to step **5**.	Repair short circuit to power in harness between DMCM connector and drive motor inverter amperage sensor connector, or repair the intermediate connector.
5	**CHECK DRIVE MOTOR INVERTER AMPERAGE SENSOR.** 1) Replace the drive motor inverter amperage sensor. <Ref. to HEV-27, Drive Motor Inverter Current Sensor.> 2) Perform the Inspection Mode. <Ref. to HEV(diag)-26, Inspection Mode.>	Is the same DTC detected? (current malfunction)	Replace DMCM. <Ref. to CVT(TH58A)-155, Drive Motor Control Module.>	Problem is present in drive motor inverter amperage sensor.

BV:DTC P0C05 DRIVE MOTOR "A" PHASE U-V-W CIRCUIT/OPEN

DIAGNOSIS:

- Immediately at fault recognition
- GENERAL DESCRIPTION <Ref. to GD(HEV)-64, DTC P0C05 DRIVE MOTOR "A" PHASE U-V-W CIRCUIT/OPEN, Diagnostic Trouble Code (DTC) Detecting Criteria.>

TROUBLE SYMPTOM:

- EV traveling/Auto Start Stop does not operate.
- Motor assist does not regenerates.

CAUTION:

Before performing diagnosis, refer to “CAUTION” in “General Description”. <Ref. to HEV(diag)-8, CAUTION, General Description.>

WIRING DIAGRAM

Hybrid system <Ref. to WI(HEV)-139, WIRING DIAGRAM, Hybrid Electric Vehicle System.>

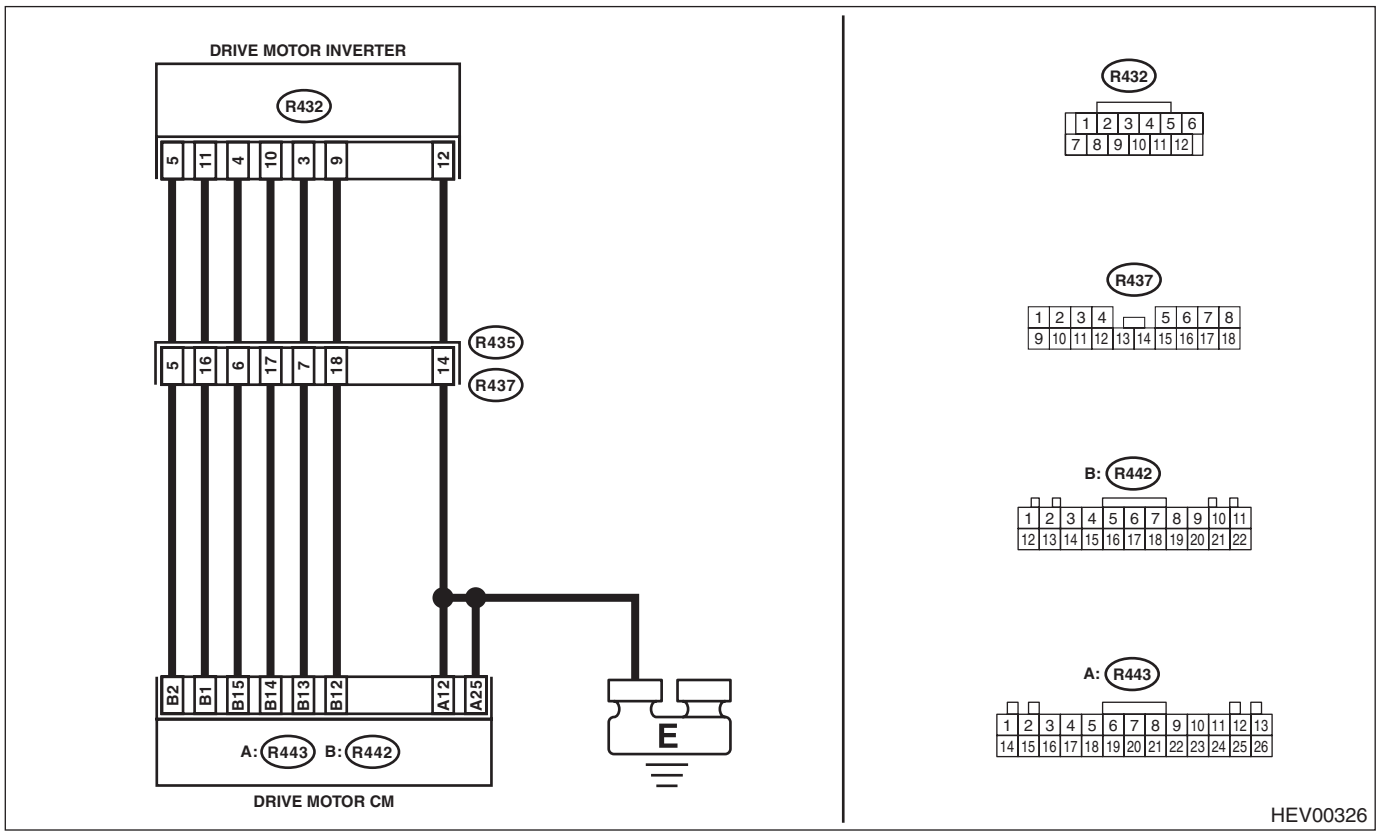

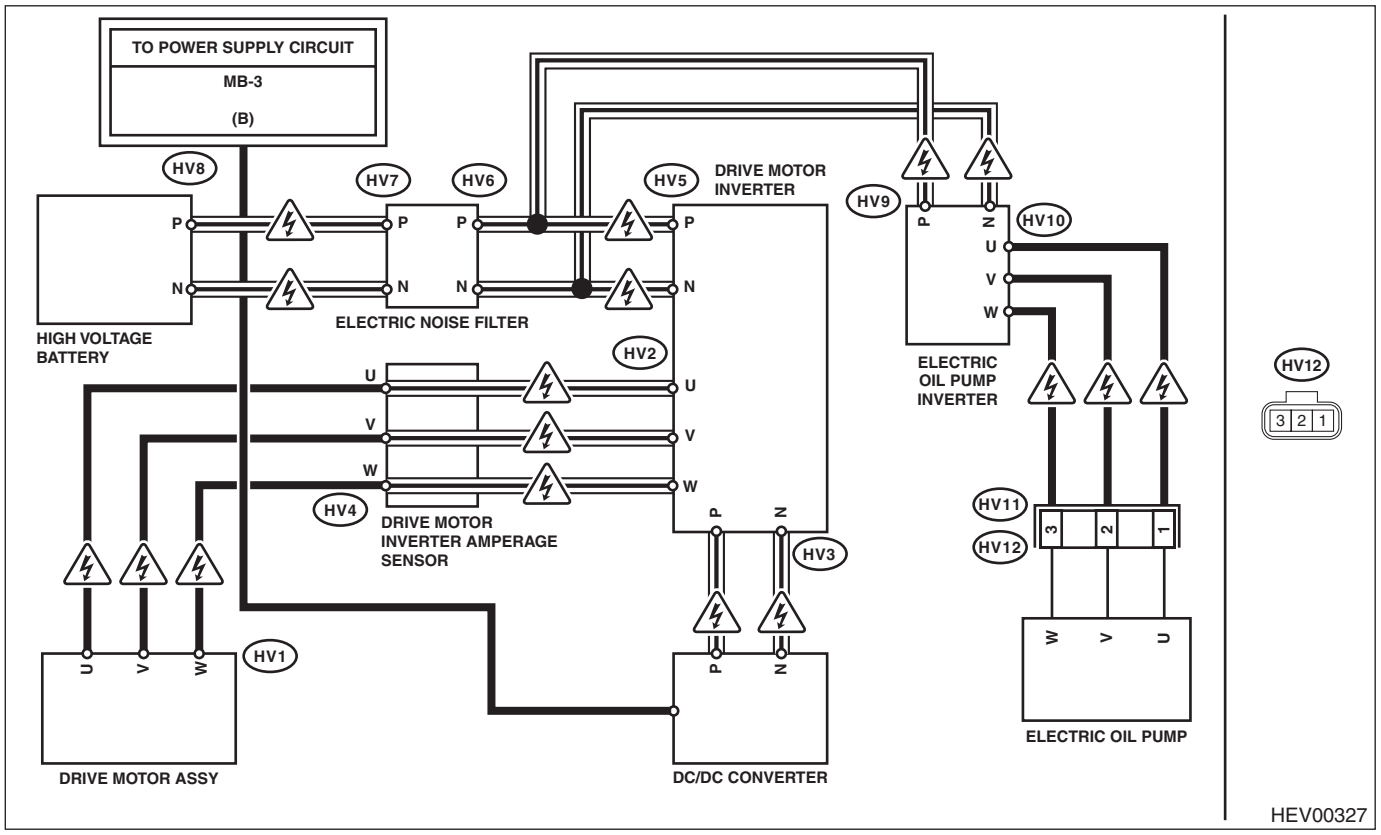

Step		Check	Yes	No
1	**CHECK DTC.** Read the DTC. <Ref. to HEV(diag)-23, DRIVE MOTOR CONTROL SYSTEM, OPERATION, Read Diagnostic Trouble Code (DTC).>	Are any other DTCs detected? (current malfunction)	Perform the diagnosis according to DTC. <Ref. to HEV(diag)-77, DRIVE MOTOR CONTROL SYSTEM, LIST, List of Diagnostic Trouble Code (DTC).>	Go to step **2**.
2	**CHECK HARNESS (OPEN CIRCUIT IN INVERTER CONTROL GND).** 1) Turn the ignition switch to OFF. 2) Disconnect the ground cable of the 12 volt auxiliary battery, and as for the 12 volt engine restart battery, disconnect the ground cable from the 12V engine restart battery sensor. <Ref. to NT-5, BATTERY, NOTE, Note.> 3) Remove the service disconnect plug. <Ref. to HEV-15, Service Plug.> 4) Wait for 10 minutes. 5) Disconnect the DMCM connector. 6) Disconnect the drive motor inverter connector. 7) Using a tester, measure the resistance between the drive motor inverter connector and the ground bolt of inverter frame body. ***Connector & terminal:*** ***(R432) No. 12 — Ground bolt of inverter frame body:***	Is the resistance less than 1 Ω?	Go to step **3**.	Repair open circuit in harness between drive motor inverter connector and chassis ground, or repair the intermediate connector.

	Step	Check	Yes	No
3	**CHECK HARNESS (OPEN CIRCUIT).** Using a tester, measure the resistance between the drive motor inverter connector and DMCM connector. ***Connector & terminal:*** ***(R442) No. 2 — (R432) No. 5:*** ***(R442) No. 1 — (R432) No. 11:*** ***(R442) No. 15 — (R432) No. 4:*** ***(R442) No. 14 — (R432) No. 10:*** ***(R442) No. 13 — (R432) No. 3:*** ***(R442) No. 12 — (R432) No. 9:***	Is the resistance less than 1 Ω?	Go to step **4**.	Repair open circuit in harness between drive motor inverter connector and DMCM connector, or repair the intermediate connector.
4	**CHECK HARNESS (SHORT TO GROUND).** Measure the resistance between drive motor inverter connector and chassis ground. ***Connector & terminal:*** ***(R432) No. 5 — Ground bolt of inverter frame body:*** ***(R432) No. 11 — Ground bolt of inverter frame body:*** ***(R432) No. 4 — Ground bolt of inverter frame body:*** ***(R432) No. 10 — Ground bolt of inverter frame body:*** ***(R432) No. 3 — Ground bolt of inverter frame body:*** ***(R432) No. 9 — Ground bolt of inverter frame body:***	Is the resistance 1 MΩ or more?	Go to step **5**.	Repair or replace the circuit in harness and the intermediate connector.
5	**CHECK DRIVE MOTOR AND POWER CABLE (OPEN CIRCUIT).** 1) Leave the vehicle under temperature of 40°C (104°F) or less for 10 minutes. 2) Disconnect the power cable (HV2) of drive motor inverter. 3) Measure the resistance between each terminal of the power cable. ***(HV2) U — (HV2) V:*** ***(HV2) W — (HV2) U:*** ***(HV2) V — (HV2) W:***	Is resistance between either lines 1 Ω or more?	Go to step **6**.	Go to step **7**.
6	**CHECK DRIVE MOTOR (OPEN CIRCUIT).** 1) Disconnect the drive motor power cable (HV1). NOTE: Supply the gasket because it must be replaced. 2) Measure the resistance between each terminal of the power cable. ***Connector & terminal:*** ***(HV1) U — (HV1) V:*** ***(HV1) W — (HV1) U:*** ***(HV1) V — (HV1) W:***	Is resistance between either lines 1 Ω or more?	Replace the drive motor assembly. <Ref. to CVT(TH58A)-215, Drive Motor Assembly.>	Replace the power cable. <Ref. to HEV-51, Power Cable.>
7	**CHECK DRIVE MOTOR INVERTER.** 1) Replace the drive motor inverter. <Ref. to HEV-42, Inverter.> 2) Perform drive cycle A. <Ref. to HEV(diag)-31, DRIVE CYCLE A, PROCEDURE, Drive Cycle.>	Is the same DTC detected? (current malfunction)	Replace DMCM. <Ref. to CVT(TH58A)-155, Drive Motor Control Module.>	Problem is present in drive motor inverter.

BW:DTC P0C0C DRIVE MOTOR "A" INVERTER POWER SUPPLY CIRCUIT LOW

DIAGNOSIS:

- Immediately at fault recognition
- GENERAL DESCRIPTION <Ref. to GD(HEV)-65, DTC P0C0C DRIVE MOTOR "A" INVERTER POWER SUPPLY CIRCUIT LOW, Diagnostic Trouble Code (DTC) Detecting Criteria.>

TROUBLE SYMPTOM:

- EV traveling/Auto Start Stop does not operate.
- Motor assist does not regenerates.

CAUTION:

Before performing diagnosis, refer to “CAUTION” in “General Description”. <Ref. to HEV(diag)-8, CAUTION, General Description.>

WIRING DIAGRAM

Hybrid system <Ref. to WI(HEV)-139, WIRING DIAGRAM, Hybrid Electric Vehicle System.>

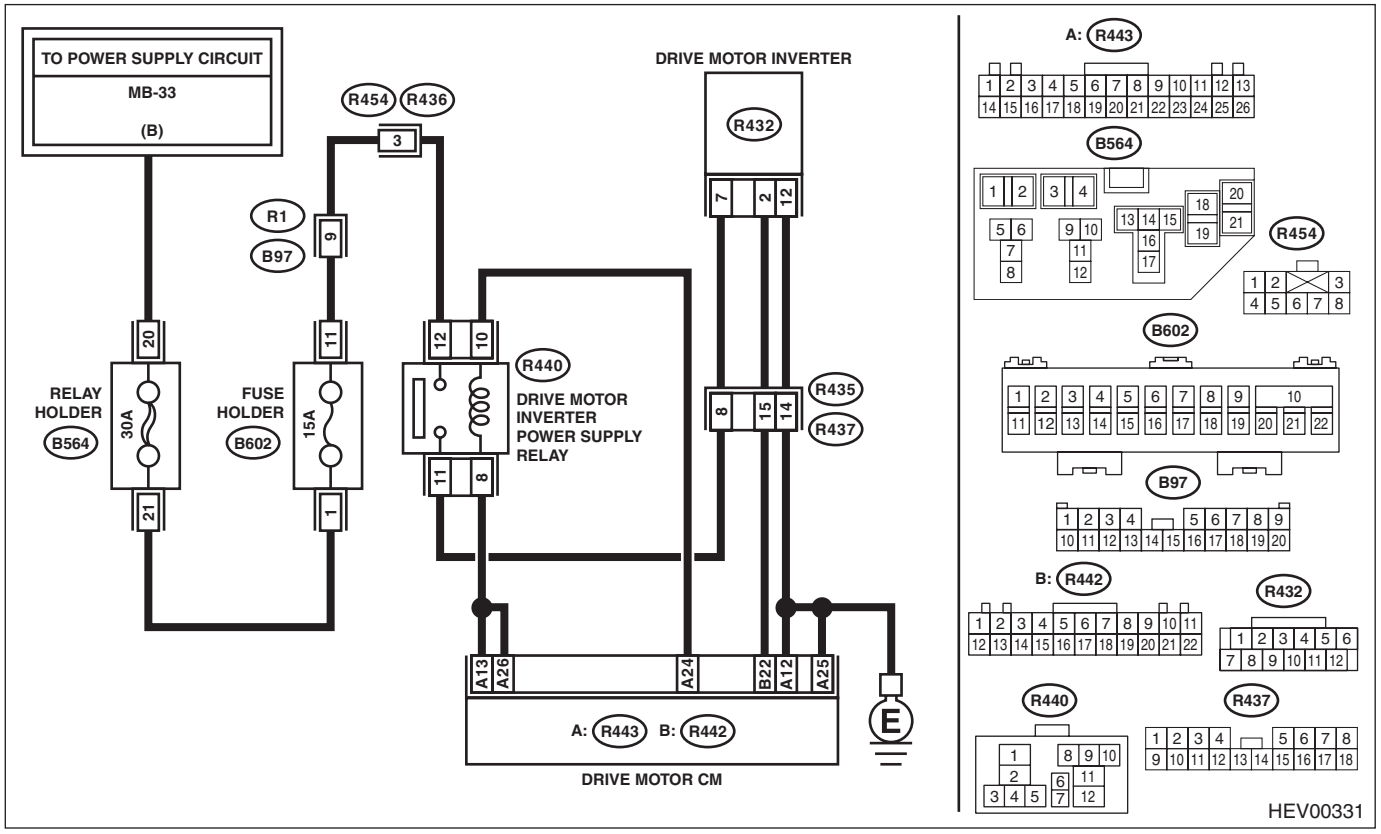

Step		Check	Yes	No
1	**CHECK RELAY.** Using the Subaru Select Monitor, perform «Drive Motor Inverter power supply relay» of System Operation Check Mode for the drive motor control system. <Ref. to HEV(diag)-73, DRIVE MOTOR CONTROL SYSTEM, OPERATION, System Operation Check Mode.>	Does the relay operate?	Go to step **2**.	Go to step **3**.

	Step	Check	Yes	No
2	**CHECK CURRENT DATA.** Using the Subaru Select Monitor, confirm the current data of drive motor control system, the value of «Drive Motor Inverter Operation Update Counter». <Ref. to HEV(diag)-51, DRIVE MOTOR CONTROL SYSTEM, OPERATION, Read Current Data.>	Does the value change?	Even if DTC is detected, the circuit has returned to a normal condition at this time. Reproduce the failure, and then perform the diagnosis again. NOTE: In this case, temporary poor contact of connector, temporary open or short circuit of harness may be the cause.	Perform the diagnosis according to DTC P1C30. <Ref. to HEV(diag)-258, DTC P1C30 MANUFACTURER CONTROLLED DTC, Diagnostic Procedure with Diagnostic Trouble Code (DTC).>
3	**CHECK RELAY.** Check the inverter power supply relay as a single unit. <Ref. to HEV-12, Relay and Fuse.>	Is the condition normal? (Check for continuity between terminals, damage, etc.)	Go to step **4**.	Replace the relay.
4	**CHECK HARNESS (OPEN CIRCUIT).** 1) Turn the ignition switch to OFF. 2) Disconnect the ground cable of the 12 volt auxiliary battery, and as for the 12 volt engine restart battery, disconnect the ground cable from the 12V engine restart battery sensor. <Ref. to NT-5, BATTERY, NOTE, Note.> 3) Remove the service disconnect plug. <Ref. to HEV-15, Service Plug.> 4) Wait for 10 minutes. 5) Disconnect the DMCM connector. 6) Remove the inverter power supply relay. 7) Using a tester, measure the resistance between the inverter power supply relay and DMCM connector. ***Connector & terminal*** ***(R440) No. 10 — (R443) No. 24:*** ***(R440) No. 8 — (R443) No. 13:*** ***(R440) No. 8 — (R443) No. 26:***	Is the resistance less than 1 Ω?	Go to step **5**.	Repair open circuit in harness between DMCM connector and inverter power supply relay connector, or repair the intermediate connector.
5	**CHECK HARNESS (SHORT TO GROUND).** 1) Using a tester, measure the resistance between the inverter power supply relay and the ground bolt of inverter frame body. ***Connector & terminal*** ***(R440) No. 10 — Ground bolt of inverter frame body:*** ***(R440) No. 8 — Ground bolt of inverter frame body:***	Is the resistance 1 MΩ or more?	Replace DMCM. <Ref. to CVT(TH58A)-155, Drive Motor Control Module.>	Repair short circuit to ground in harness between DMCM connector and inverter power supply relay connector or between inverter power supply relay and inverter connector, or repair the intermediate connector.

BX:DTC P0C0D DRIVE MOTOR "A" INVERTER POWER SUPPLY CIRCUIT HIGH

DIAGNOSIS:

- Immediately at fault recognition
- GENERAL DESCRIPTION <Ref. to GD(HEV)-66, DTC P0C0D DRIVE MOTOR "A" INVERTER POWER SUPPLY CIRCUIT HIGH, Diagnostic Trouble Code (DTC) Detecting Criteria.>

TROUBLE SYMPTOM:

Normal control

CAUTION:

Before performing diagnosis, refer to "CAUTION" in "General Description". <Ref. to HEV(diag)-8, CAUTION, General Description.>

WIRING DIAGRAM

Hybrid system <Ref. to WI(HEV)-139, WIRING DIAGRAM, Hybrid Electric Vehicle System.>

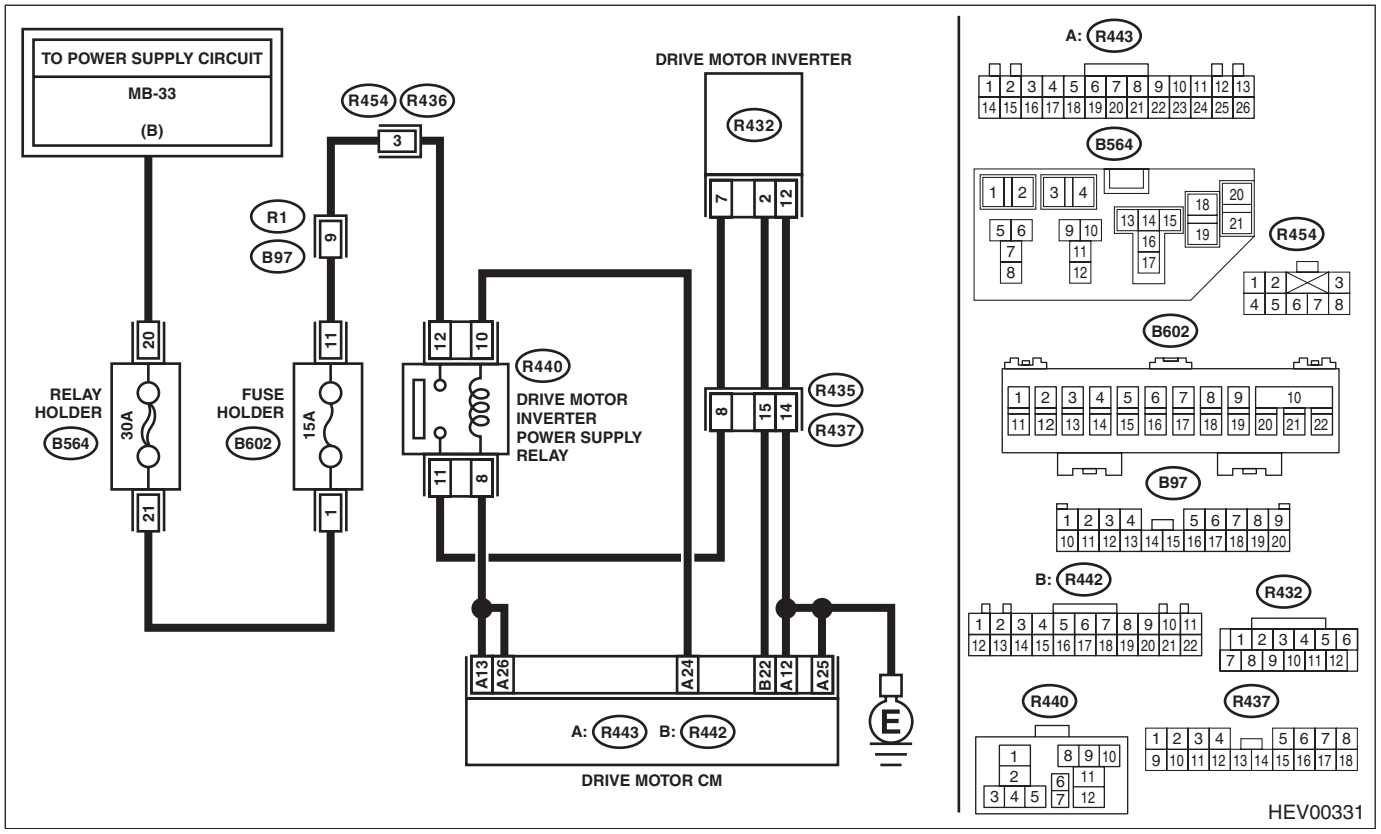

Step		Check	Yes	No
1	**CHECK CURRENT DATA.** 1) Using the Subaru Select Monitor, perform «Drive Motor Inverter power supply relay» of System Operation Check Mode for the drive motor control system. <Ref. to HEV(diag)-73, DRIVE MOTOR CONTROL SYSTEM, OPERATION, System Operation Check Mode.> 2) Confirm the current data of in System Operation Check Mode, the value of «Drive Motor Inverter Operation Update Counter».	Does «Drive Motor Inverter Operation Update Counter» stop when «Drive Motor Inverter power supply relay» is OFF?	Even if DTC is detected, the circuit has returned to a normal condition at this time. Reproduce the failure, and then perform the diagnosis again. NOTE: In this case, temporary poor contact of connector, temporary open or short circuit of harness may be the cause.	Go to step **2**.

	Step	Check	Yes	No
2	**CHECK RELAY.** Check the inverter power supply relay as a single unit. <Ref. to HEV-12, Relay and Fuse.>	Is the condition normal? (Check for continuity between terminals, damage, etc.)	Go to step **3**.	Replace the relay.
3	**CHECK HARNESS (SHORT TO GROUND).** 1) Disconnect the DMCM connector. 2) Using a tester, measure the resistance between DMCM connector and the ground bolt of inverter frame body. ***Connector & terminal*** ***(R443) No. 24 — Ground bolt of inverter frame body:***	Is the resistance 1 MΩ or more?	Go to step **4**.	Repair short circuit to ground in harness between DMCM connector and inverter power supply relay connector, or repair the intermediate connector.
4	**CHECK HARNESS (SHORT TO POWER AND SHORT TO OTHER SIGNAL LINES).** 1) Turn the ignition to OFF. 2) Disconnect the ground cable of the 12 volt auxiliary battery, and as for the 12 volt engine restart battery, disconnect the ground cable from the 12V engine restart battery sensor. <Ref. to NT-5, BATTERY, NOTE, Note.> 3) Remove the service disconnect plug. <Ref. to HEV-15, Service Plug.> 4) Wait for 10 minutes. 5) Disconnect the drive motor inverter connector. 6) Disconnect the intermediate connector (R436). 7) Remove the inverter power supply relay. 8) Using a tester, measure the resistance between inverter power supply relay connector and all DMCM signal pins. ***Connector & terminal*** ***(R440) No. 12 — (R442) No. 1 — 22:*** ***(R440) No. 12 — (R443) No. 1 — 26:*** ***(R440) No. 12 — (R436) No. 1 — 8 (except No. 3):*** ***(R440) No. 10 — (R442) No. 1 — 22:*** ***(R440) No. 10 — (R443) No. 1 — 26 (except No. 24):*** ***(R440) No. 10 — (R436) No. 1 — 8:*** ***(R440) No. 10 — (R432) No. 7:***	Is the resistance 1 MΩ or more?	Replace DMCM. <Ref. to CVT(TH58A)-155, Drive Motor Control Module.>	Repair short circuit in harness between the inverter power supply relay and DMCM, harness between inverter power supply relay and drive motor inverter, or repair the intermediate connector.

BY:DTC P0C79 DRIVE MOTOR "A" INVERTER VOLTAGE TOO HIGH

DIAGNOSIS:

- Immediately at fault recognition
- GENERAL DESCRIPTION <Ref. to GD(HEV)-69, DTC P0C79 DRIVE MOTOR "A" INVERTER VOLTAGE TOO HIGH, Diagnostic Trouble Code (DTC) Detecting Criteria.>

TROUBLE SYMPTOM:

- EV traveling/Auto Start Stop does not operate.
- Motor assist does not regenerates.

CAUTION:

Before performing diagnosis, refer to "CAUTION" in "General Description". <Ref. to HEV(diag)-8, CAUTION, General Description.>

	Step	Check	Yes	No
1	**CHECK FREEZE FRAME DATA.** Using the Subaru Select Monitor, confirm the value of «Contactor Signal(HPCM)» in the freeze frame data of the drive motor control system. <Ref. to HEV(diag)-65, DRIVE MOTOR CONTROL SYSTEM, OPERATION, Freeze Frame Data Display.>	Is either «OFF» or «Abnormal OFF» displayed?	Go to step **2**.	Go to step **3**.
2	**CHECK DTC.** Read DTCs of the following system. <Ref. to HEV(diag)-23, OPERATION, Read Diagnostic Trouble Code (DTC).> • Drive motor control system • Battery energy control system	Are any other DTCs detected? (current malfunction)	Perform the diagnosis according to DTC. <Ref. to HEV(diag)-74, LIST, List of Diagnostic Trouble Code (DTC).>	Go to step **3**.
3	**CHECK BUS BAR.** 1) Turn the ignition to OFF. 2) Disconnect the ground cable of the 12 volt auxiliary battery, and as for the 12 volt engine restart battery, disconnect the ground cable from the 12V engine restart battery sensor. <Ref. to NT-5, BATTERY, NOTE, Note.> 3) Remove the service disconnect plug. <Ref. to HEV-15, Service Plug.> 4) Wait for 10 minutes. 5) Check the bus bar.	Is the condition normal? (Check for loose bolts, insecure connection, foreign matter caught, trace of arc (burnt terminals) etc.)	Go to step **4**.	Retighten the bolts. Or replace the bus bar.
4	**CHECK DRIVE MOTOR INVERTER.** 1) Replace the drive motor inverter. <Ref. to HEV-42, Inverter.> 2) Perform the Inspection Mode. <Ref. to HEV(diag)-26, Inspection Mode.>	Is the same DTC detected? (current malfunction)	Replace DMCM. <Ref. to CVT(TH58A)-155, Drive Motor Control Module.>	Problem is present in drive motor inverter.

BZ:DTC P0DA8 HYBRID/EV BATTERY VOLTAGE/DRIVE MOTOR "A" INVERTER VOLTAGE CORRELATION

DIAGNOSIS:

- Immediately at fault recognition
- GENERAL DESCRIPTION <Ref. to GD(HEV)-72, DTC P0DA8 HYBRID/EV BATTERY VOLTAGE/DRIVE MOTOR "A" INVERTER VOLTAGE CORRELATION, Diagnostic Trouble Code (DTC) Detecting Criteria.>

TROUBLE SYMPTOM:

- EV traveling/Auto Start Stop does not operate.
- Motor assist does not regenerates.

CAUTION:
Before performing diagnosis, refer to "CAUTION" in "General Description". <Ref. to HEV(diag)-8, CAUTION, General Description.>

	Step	Check	Yes	No
1	**CHECK DTC.** Read the DTC. <Ref. to HEV(diag)-23, DRIVE MOTOR CONTROL SYSTEM, OPERATION, Read Diagnostic Trouble Code (DTC).>	Are any other DTCs detected? (current malfunction)	Perform the diagnosis according to DTC. <Ref. to HEV(diag)-77, DRIVE MOTOR CONTROL SYSTEM, LIST, List of Diagnostic Trouble Code (DTC).>	Go to step **2**.
2	**CHECK DRIVE MOTOR INVERTER.** 1) With the 12 V battery connected, remove the service disconnect plug. <Ref. to HEV-15, Service Plug.> **CAUTION:** **Watch for an electrical short at each harness because the 12 V battery is connected.** 2) Lift up the vehicle. 3) Start the engine, and set the shift lever to "D" range. 4) Using the Subaru Select Monitor, confirm the current data of drive motor control system, the values of «A/T Oil Temperature»«Drive Motor Speed»«Drive Motor Inverter Input High Voltage Sensor (Serial)». <Ref. to HEV(diag)-51, DRIVE MOTOR CONTROL SYSTEM, OPERATION, Read Current Data.>	«Drive Motor Inverter Input High Voltage Sensor (Serial)» is within the standard specified in Note when «ATF Temperature» is 20 — 60°C (68 — 140°F) and «Drive Motor Speed» is 600 — 1400 rpm.	Go to step **3**.	Replace the drive motor inverter. <Ref. to HEV-42, Inverter.>
3	**CHECK BUS BAR.** 1) Turn the ignition to OFF. 2) Disconnect the ground cable of the 12 volt auxiliary battery, and as for the 12 volt engine restart battery, disconnect the ground cable from the 12V engine restart battery sensor. <Ref. to NT-5, BATTERY, NOTE, Note.> 3) Remove the service disconnect plug. <Ref. to HEV-15, Service Plug.> 4) Wait for 10 minutes. 5) Check the bus bar.	Is the condition normal? (Check for loose bolts, insecure connection, foreign matter caught, trace of arc (burnt terminals) etc.)	Go to step **4**.	Retighten the bolts. Or replace the bus bar.
4	**CHECK DMCM.** 1) Replace DMCM. <Ref. to CVT(TH58A)-155, Drive Motor Control Module.> 2) Perform the Inspection Mode. <Ref. to HEV(diag)-26, Inspection Mode.>	Is the same DTC detected? (current malfunction)	Replace the high voltage battery. <Ref. to HEV-17, High Voltage Battery.>	Problem is present in DMCM.

NOTE:
Value of «Drive Motor Inverter Input High Voltage Sensor (Serial)» is proportional to «Drive Motor Speed».

- 1000 rpm: 18 V — 37 V
- 1400 rpm: 25 V — 52 V

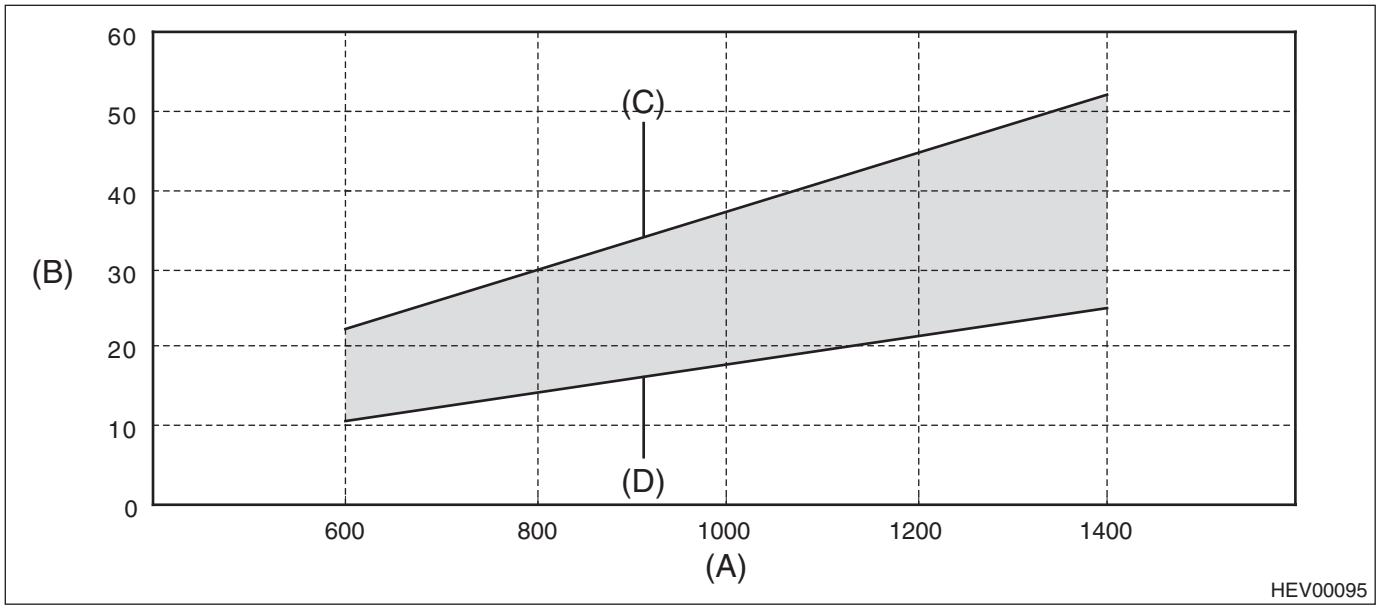

(A) Drive motor speed
(B) Drive Motor Inverter Input High Voltage Sensor (Serial)
(C) Standard at Max.
(D) Standard at Min.

CA:DTC P1C20 MANUFACTURER CONTROLLED DTC

DIAGNOSIS:

- Immediately at fault recognition
- GENERAL DESCRIPTION <Ref. to GD(HEV)-73, DTC P1C20 MANUFACTURER CONTROLLED DTC, Diagnostic Trouble Code (DTC) Detecting Criteria.>

TROUBLE SYMPTOM:

- EV traveling/Auto Start Stop does not operate.
- Motor assist does not regenerates.

CAUTION:

Before performing diagnosis, refer to "CAUTION" in "General Description". <Ref. to HEV(diag)-8, CAUTION, General Description.>

WIRING DIAGRAM

Hybrid system <Ref. to WI(HEV)-139, WIRING DIAGRAM, Hybrid Electric Vehicle System.>

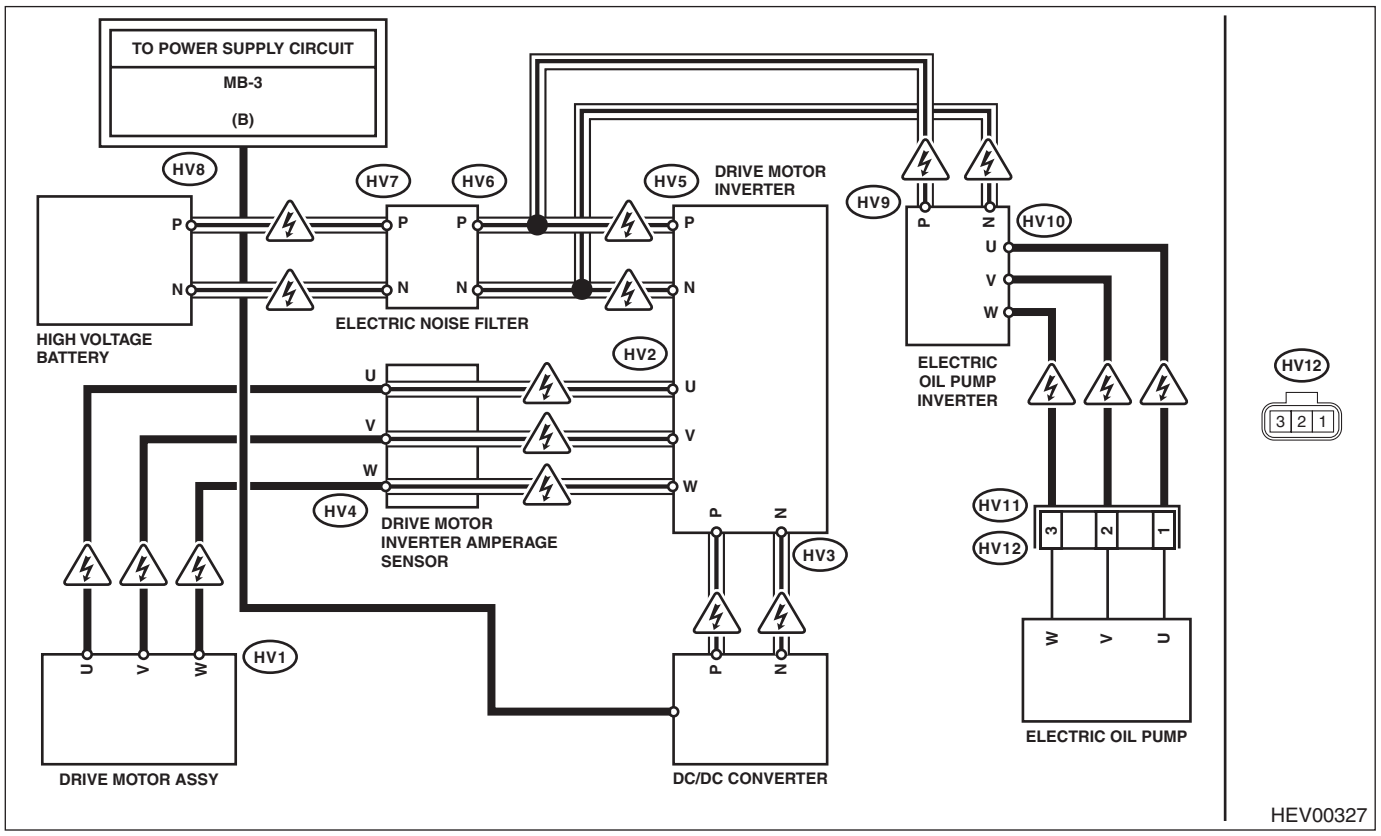

Step		Check	Yes	No
1	**CHECK DTC.** Read DTCs of the following system. • Battery energy control system <Ref. to HEV(diag)-23, BATTERY ENERGY CONTROL SYSTEM, OPERATION, Read Diagnostic Trouble Code (DTC).>	Is DTC detected? (current malfunction)	Perform the diagnosis according to DTC. <Ref. to HEV(diag)-79, BATTERY ENERGY CONTROL SYSTEM, LIST, List of Diagnostic Trouble Code (DTC).>	Go to step **2**.

	Step	Check	Yes	No
2	**CHECK READY.** Start the engine.	Does READY come on?	Even if DTC is detected, the circuit has returned to a normal condition at this time. Reproduce the failure, and then perform the diagnosis again. NOTE: In this case, temporary poor contact of connector, temporary open or short circuit of harness may be the cause.	Go to step **3**.
3	**CHECK DTC.** With engine running, read DTCs of the following system. • Hybrid powertrain control system <Ref. to HEV(diag)-23, HYBRID POWERTRAIN CONTROL SYSTEM, OPERATION, Read Diagnostic Trouble Code (DTC).> • Battery energy control system <Ref. to HEV(diag)-23, BATTERY ENERGY CONTROL SYSTEM, OPERATION, Read Diagnostic Trouble Code (DTC).> • Drive motor control system <Ref. to HEV(diag)-23, DRIVE MOTOR CONTROL SYSTEM, OPERATION, Read Diagnostic Trouble Code (DTC).> • Engine <Ref. to EN(H4DO HEV)(diag)-46, Read Diagnostic Trouble Code (DTC).> • Transmission <Ref. to CVT(HEV)(diag)-18, Read Diagnostic Trouble Code (DTC).>	Are any DTCs other than DTC P1C20 detected? (current malfunction)	Perform the diagnosis according to DTC. <Ref. to HEV(diag)-74, LIST, List of Diagnostic Trouble Code (DTC).>	Go to step **4**.
4	**CHECK BUS BAR.** 1) Turn the ignition to OFF. 2) Disconnect the ground cable of the 12 volt auxiliary battery, and as for the 12 volt engine restart battery, disconnect the ground cable from the 12V engine restart battery sensor. <Ref. to NT-5, BATTERY, NOTE, Note.> 3) Remove the service disconnect plug. <Ref. to HEV-15, Service Plug.> 4) Wait for 10 minutes. 5) Check the bus bar.	Is the condition normal? (Check for loose bolts, insecure connection, foreign matter caught, trace of arc (burnt terminals) etc.)	Go to step **5**.	Retighten the bolts. Or replace the bus bar.
5	**CHECK ELECTRIC NOISE FILTER (INTERNAL SHORT).** 1) Remove the electric noise filter. 2) Measure the resistance between each terminal of electric noise filter. ***Connector & terminal*** ***(HV6) P — (HV6) N:*** ***(HV6) P — Electric noise filter ground:*** ***(HV6) N — Electric noise filter ground:***	Is the resistance 1 MΩ or more?	Go to step **6**.	Replace the electric noise filter. <Ref. to HEV-31, Noise Filter.>

	Step	Check	Yes	No
6	**CHECK DRIVE MOTOR INVERTER.** 1) Replace the drive motor inverter. <Ref. to HEV-42, Inverter.> 2) Perform the Inspection Mode. <Ref. to HEV(diag)-26, Inspection Mode.>	Is the same DTC detected? (current malfunction)	Replace DMCM. <Ref. to CVT(TH58A)-155, Drive Motor Control Module.>	Problem is present in drive motor inverter.

CB:DTC P1C22 MANUFACTURER CONTROLLED DTC

DIAGNOSIS:

- Detects drive motor control module voltage malfunction.
- If the drive motor control module detects that power supply voltage is out of the standard, it is judged as NG.
- Detected when two consecutive driving cycles with fault occur. (Single engine startup is counted as one drive cycle.)

TROUBLE SYMPTOM:

- EV traveling/Auto Start Stop does not operate.
- Motor assist does not regenerates.

CAUTION:

Before performing diagnosis, refer to "CAUTION" in "General Description". <Ref. to HEV(diag)-8, CAUTION, General Description.>

WIRING DIAGRAM

Hybrid system <Ref. to WI(HEV)-139, WIRING DIAGRAM, Hybrid Electric Vehicle System.>

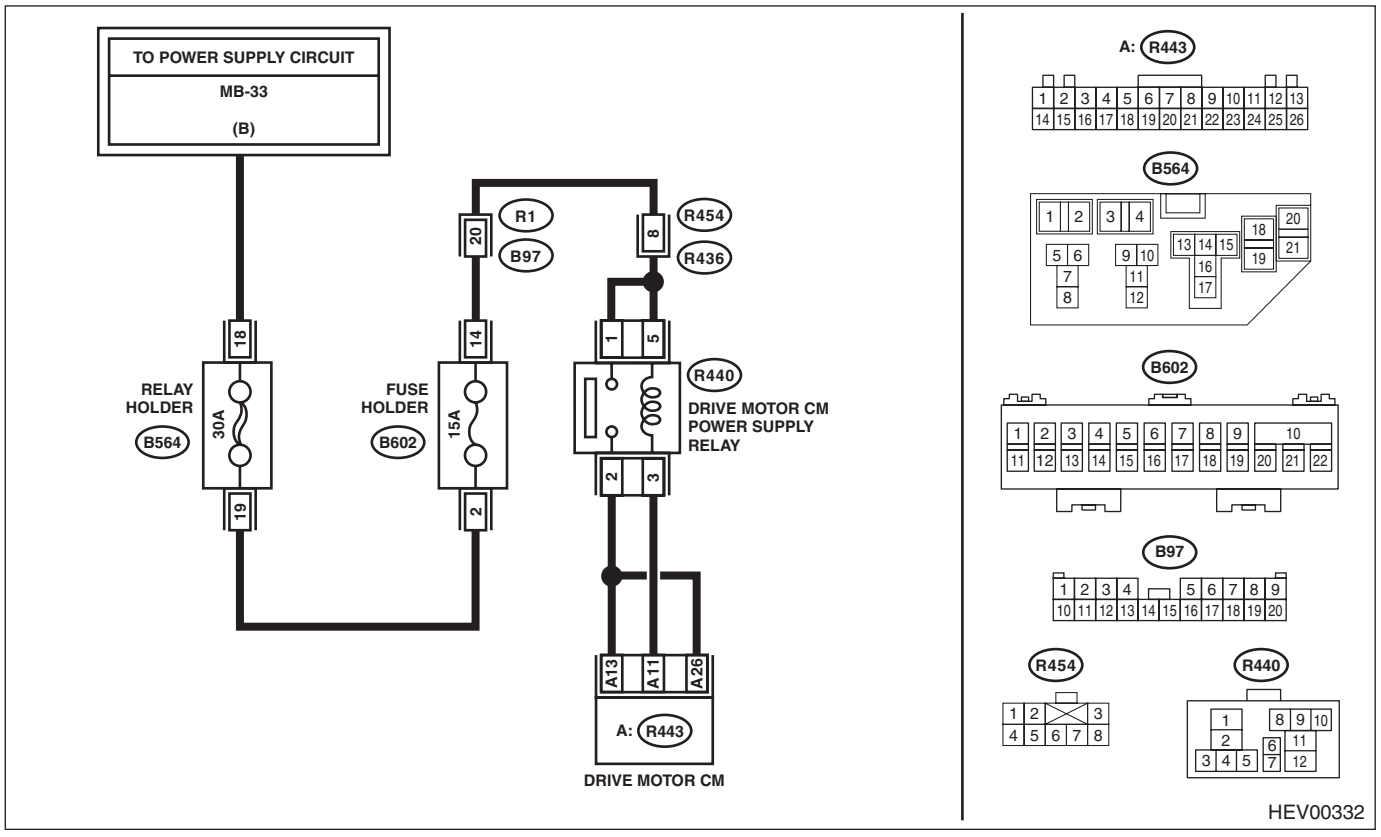

	Step	Check	Yes	No
1	**CHECK CURRENT DATA.** Using the Subaru Select Monitor, confirm the current data of drive motor control system, the value of «Control Module Voltage». <Ref. to HEV(diag)-51, DRIVE MOTOR CONTROL SYSTEM, OPERATION, Read Current Data.>	Is the value 9 V or less?	Go to step **2**.	Even if DTC is detected, the circuit has returned to a normal condition at this time. Reproduce the failure, and then perform the diagnosis again. NOTE: In this case, temporary poor contact of connector, temporary open or short circuit of harness may be the cause.
2	**CHECK BATTERY.** 1) Turn the ignition switch to OFF. 2) Disconnect battery terminals. 3) Check the 12 volt auxiliary battery as a single part. <Ref. to SC(H4DO(HEV))-38, Battery.>	Is the condition normal?	Go to step **3**.	Charge or replace the battery.
3	**CHECK HARNESS (OPEN CIRCUIT).** 1) Connect the 12 volt auxiliary battery. 2) Using a tester, measure the voltage between the DMCM power relay and the ground bolt of inverter frame body. ***Connector & terminal*** ***(R440) No. 2 (+) — Ground bolt of inverter frame body (–):***	Is the voltage 9 V or less?	Repair open circuit in harness between DMCM power supply relay connector and 12 volt auxiliary battery, or repair the intermediate connector.	Go to step **4**.
4	**CHECK HARNESS (SHORT TO GROUND).** 1) Disconnect the DMCM connector. 2) Remove the DMCU power relay. <Ref. to CVT(TH58A)-158, Relay and Fuse.> 3) Using a tester, measure the resistance between DMCM connector terminals and the ground bolt of inverter frame body. ***Connector & terminal*** ***(R443) No. 13 — Ground bolt of inverter frame body:*** ***(R443) No. 26 — Ground bolt of inverter frame body:***	Is the resistance 1 MΩ or more?	Replace DMCM. <Ref. to CVT(TH58A)-155, Drive Motor Control Module.>	Repair short to ground circuit in harness between DMCM power supply relay connector and 12 volt auxiliary battery, or repair the intermediate connector.

CC:DTC P1C24 MANUFACTURER CONTROLLED DTC

DIAGNOSIS:

- Immediately at fault recognition
- GENERAL DESCRIPTION <Ref. to GD(HEV)-74, DTC P1C24 MANUFACTURER CONTROLLED DTC, Diagnostic Trouble Code (DTC) Detecting Criteria.>

NOTE:
For the diagnostic procedure, refer to “DTC P0A2A DRIVE MOTOR "A" TEMPERATURE SENSOR CIRCUIT”. <Ref. to HEV(diag)-149, DTC P0A2A DRIVE MOTOR "A" TEMPERATURE SENSOR CIRCUIT, Diagnostic Procedure with Diagnostic Trouble Code (DTC).>

CD:DTC P1C25 MANUFACTURER CONTROLLED DTC

DIAGNOSIS:

- Immediately at fault recognition
- GENERAL DESCRIPTION <Ref. to GD(HEV)-75, DTC P1C25 MANUFACTURER CONTROLLED DTC, Diagnostic Trouble Code (DTC) Detecting Criteria.>

NOTE:
For the diagnostic procedure, refer to “DTC P0A2C DRIVE MOTOR "A" TEMPERATURE SENSOR CIRCUIT LOW”. <Ref. to HEV(diag)-153, DTC P0A2C DRIVE MOTOR "A" TEMPERATURE SENSOR CIRCUIT LOW, Diagnostic Procedure with Diagnostic Trouble Code (DTC).>

CE:DTC P1C26 MANUFACTURER CONTROLLED DTC

DIAGNOSIS:

- Immediately at fault recognition
- GENERAL DESCRIPTION <Ref. to GD(HEV)-76, DTC P1C26 MANUFACTURER CONTROLLED DTC, Diagnostic Trouble Code (DTC) Detecting Criteria.>

NOTE:
For the diagnostic procedure, refer to “DTC P0A2D DRIVE MOTOR "A" TEMPERATURE SENSOR CIRCUIT HIGH”. <Ref. to HEV(diag)-157, DTC P0A2D DRIVE MOTOR "A" TEMPERATURE SENSOR CIRCUIT HIGH, Diagnostic Procedure with Diagnostic Trouble Code (DTC).>

CF:DTC P1C27 MANUFACTURER CONTROLLED DTC

DIAGNOSIS:

- Detected when two consecutive driving cycles with fault occur. (Single engine startup is counted as one drive cycle.)
- GENERAL DESCRIPTION <Ref. to GD(HEV)-77, DTC P1C27 MANUFACTURER CONTROLLED DTC, Diagnostic Trouble Code (DTC) Detecting Criteria.>

TROUBLE SYMPTOM:

- EV traveling/Auto Start Stop does not operate.
- Motor assist does not regenerates.

CAUTION:

Before performing diagnosis, refer to "CAUTION" in "General Description". <Ref. to HEV(diag)-8, CAUTION, General Description.>

WIRING DIAGRAM

CVT control system <Ref. to WI(HEV)-86, WIRING DIAGRAM, CVT Control System.>

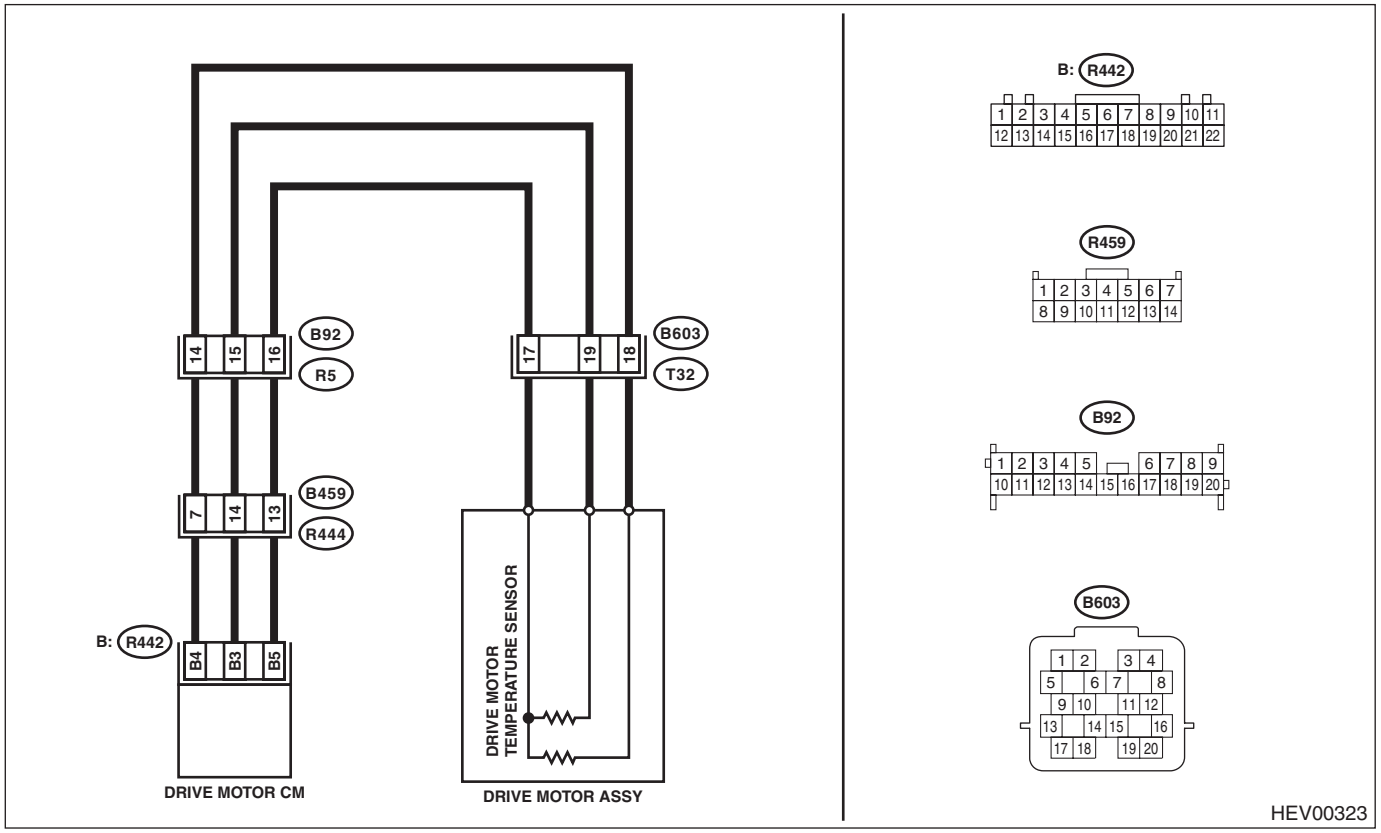

Step		Check	Yes	No
1	**CHECK DTC.** Read the DTC. <Ref. to HEV(diag)-23, DRIVE MOTOR CONTROL SYSTEM, OPERATION, Read Diagnostic Trouble Code (DTC).>	Are any other DTCs (related to temperature sensor) detected?	Perform the diagnosis according to DTC. <Ref. to HEV(diag)-77, DRIVE MOTOR CONTROL SYSTEM, LIST, List of Diagnostic Trouble Code (DTC).>	Go to step **2**.

	Step	Check	Yes	No
2	**CHECK CURRENT DATA.** 1) Warm up the engine. 2) Using the Subaru Select Monitor, confirm the current data of drive motor control system, the values of «Drive Motor Temperature A»«Drive Motor Temperature B». <Ref. to HEV(diag)-51, DRIVE MOTOR CONTROL SYSTEM, OPERATION, Read Current Data.>	Is the difference in temperature between «Drive Motor Temperature A»«Drive Motor Temperature B» 20°C (36°F) or more when the temperature of «Drive Motor Temperature A» or «Drive Motor Temperature B» is in 30 — 140°C (86 — 284°F) range?	Go to step **3**.	Even if DTC is detected, the circuit has returned to a normal condition at this time. Reproduce the failure, and then perform the diagnosis again. NOTE: In this case, temporary poor contact of connector, temporary open or short circuit of harness may be the cause.
3	**CHECK HARNESS AND DMCM.** 1) Disconnect the DMCM connector (R442). 2) Using a tester, measure the resistance between terminals in the DMCM connector. ***Connector & terminal*** ***TMPA*** ***(R442) No. 4 — (R442) No. 5:*** ***TMPB*** ***(R442) No. 3 — (R442) No. 5:***	Is the difference in resistance between TMPA and TMPB 136 kΩ or more?	Go to step **4**.	Replace DMCM. <Ref. to CVT(TH58A)-155, Drive Motor Control Module.>
4	**CHECK DRIVE MOTOR.** 1) Disconnect the drive motor assembly connector (B603). 2) Using a tester, measure the resistance between terminals in the drive motor assembly connector. ***Connector & terminal*** ***TMPA*** ***(T32) No. 18 — (T32) No. 17:*** ***TMPB*** ***(T32) No. 10 — (T32) No. 17:***	Is the difference in resistance between TMPA and TMPB 136 kΩ or more?	Replace the drive motor assembly. <Ref. to CVT(TH58A)-215, Drive Motor Assembly.>	Repair the harness between DMCM connector and drive motor assembly connector.

CG:DTC P1C2A MANUFACTURER CONTROLLED DTC

DIAGNOSIS:

- Detect the malfunction of drive motor inverter.
- If malfunction is detected in the internal circuit of drive motor inverter, it is judged as NG.
- Immediately at fault recognition

TROUBLE SYMPTOM:

- EV traveling/Auto Start Stop does not operate.
- Motor assist does not regenerates.

CAUTION:

Before performing diagnosis, refer to “CAUTION” in “General Description”. <Ref. to HEV(diag)-8, CAUTION, General Description.>

Step		Check	Yes	No
1	**CHECK DTC.** Read the DTC. <Ref. to HEV(diag)-23, DRIVE MOTOR CONTROL SYSTEM, OPERATION, Read Diagnostic Trouble Code (DTC).>	Is DTC P0A78 detected? (current malfunction)	Perform the diagnosis according to DTC. <Ref. to HEV(diag)-199, DTC P0A78 DRIVE MOTOR "A" INVERTER PERFORMANCE, Diagnostic Procedure with Diagnostic Trouble Code (DTC).> Replace the power cable after completing the diagnosis. <Ref. to HEV-51, Power Cable.>	Replace DMCM. <Ref. to CVT(TH58A)-155, Drive Motor Control Module.>

CH:DTC P1C30 MANUFACTURER CONTROLLED DTC

DIAGNOSIS:

- Immediately at fault recognition
- GENERAL DESCRIPTION <Ref. to GD(HEV)-79, DTC P1C30 MANUFACTURER CONTROLLED DTC, Diagnostic Trouble Code (DTC) Detecting Criteria.>

TROUBLE SYMPTOM:

- EV traveling/Auto Start Stop does not operate.
- Motor assist does not regenerates.

CAUTION:

Before performing diagnosis, refer to "CAUTION" in "General Description". <Ref. to HEV(diag)-8, CAUTION, General Description.>

WIRING DIAGRAM

Hybrid system <Ref. to WI(HEV)-139, WIRING DIAGRAM, Hybrid Electric Vehicle System.>

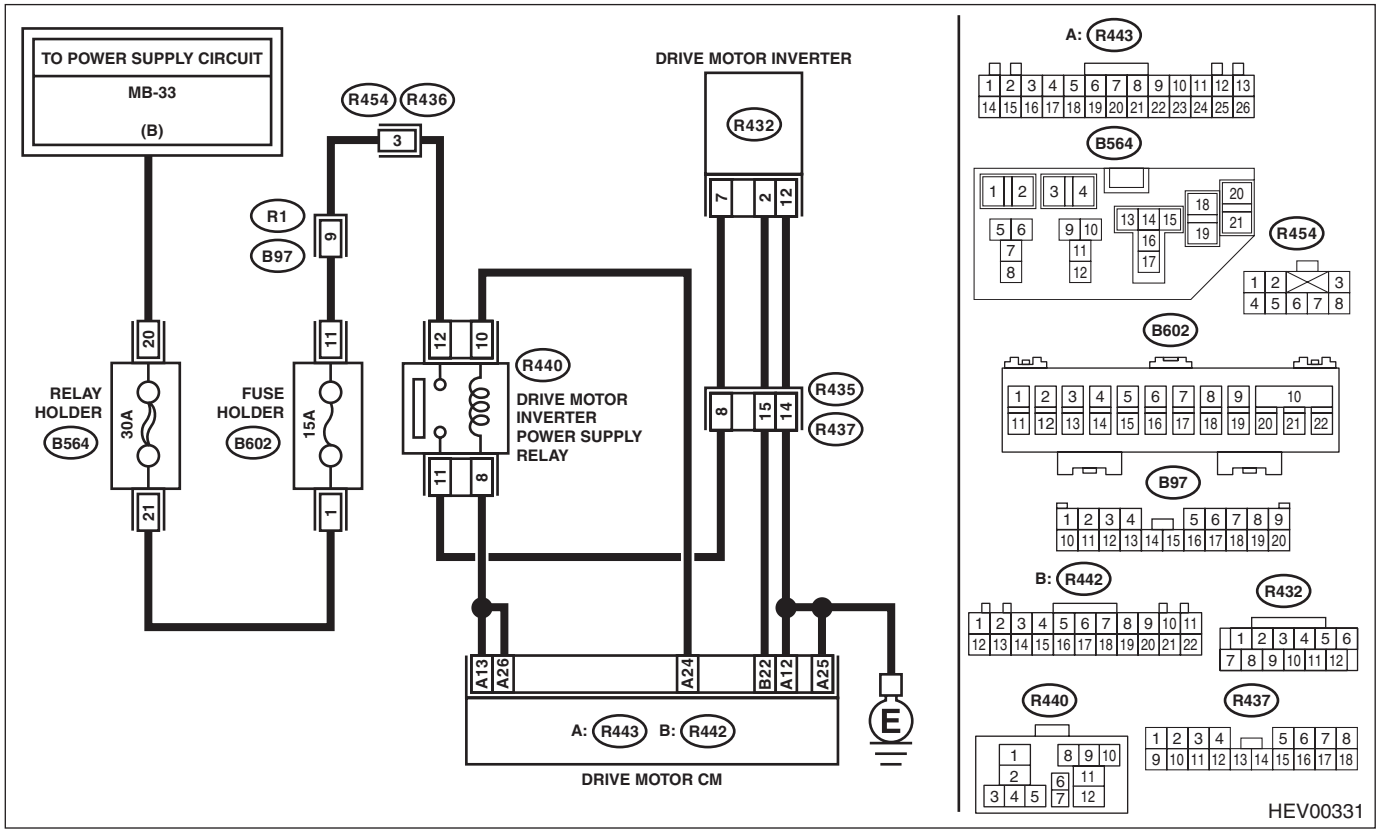

	Step	Check	Yes	No
1	**CHECK CURRENT DATA.** 1) Using the Subaru Select Monitor, perform «Drive Motor Inverter power supply relay» of System Operation Check Mode for the drive motor control system. <Ref. to HEV(diag)-73, DRIVE MOTOR CONTROL SYSTEM, OPERATION, System Operation Check Mode.> 2) Confirm the current data of in System Operation Check Mode, the value of «Drive Motor Inverter Operation Update Counter».	Does «Drive Motor Inverter Operation Update Counter» stop when «Drive Motor Inverter power supply relay» is OFF?	Even if DTC is detected, the circuit has returned to a normal condition at this time. Reproduce the failure, and then perform the diagnosis again. NOTE: In this case, temporary poor contact of connector, temporary open or short circuit of harness may be the cause.	Go to step **2**.
2	**CHECK RELAY.** Check the inverter power supply relay as a single unit. <Ref. to HEV-12, Relay and Fuse.>	Is the condition normal? (Check for continuity between terminals, damage, etc.)	Go to step **3**.	Replace the relay.
3	**CHECK HARNESS (SHORT TO GROUND).** 1) Turn the ignition to OFF. 2) Disconnect the ground cable of the 12 volt auxiliary battery, and as for the 12 volt engine restart battery, disconnect the ground cable from the 12V engine restart battery sensor. <Ref. to NT-5, BATTERY, NOTE, Note.> 3) Remove the service disconnect plug. <Ref. to HEV-15, Service Plug.> 4) Wait for 10 minutes. 5) Disconnect the drive motor inverter connector. 6) Disconnect the DMCM connector. 7) Using a tester, measure the resistance between the drive motor inverter connector and the ground bolt of inverter frame body. ***Connector & terminal*** ***(R432) No. 2 — Ground bolt of inverter frame body:*** ***(R432) No. 7 — Ground bolt of inverter frame body:***	Is the resistance 1 MΩ or more?	Go to step **4**.	Repair short circuit to ground in harness between drive motor inverter connector and DMCM connector, or repair the intermediate connector.
4	**CHECK HARNESS (OPEN CIRCUIT).** Using a tester, measure the resistance between drive motor inverter connector and DMCM connector and between the ground bolt of inverter frame body and inverter power supply relay. ***Connector & terminal:*** ***(R442) No. 22 — (R432) No. 2:*** ***(R440) No. 11 — (R432) No. 7:*** ***(R432) No. 12 — Ground bolt of inverter frame body:***	Is the resistance less than 1 Ω?	Go to step **5**.	Repair open circuit in harness between drive motor inverter connector and DMCM connector or between drive motor inverter connector and inverter power supply relay, or repair the intermediate connector.

	Step	Check	Yes	No
5	**CHECK HARNESS (SHORT TO POWER AND SHORT TO OTHER SIGNAL LINES).** 1) Disconnect the intermediate connector (R436). 2) Using a tester, measure the resistance within DMCM connector, between DMCM connector and intermediate connector (R436), and within drive motor inverter connector. ***Connector & terminal:*** ***(R442) No. 22 — (R442) No. 1 — 22:*** ***(R442) No. 22 — (R443) No. 1 — 26:*** ***(R442) No. 22 — (R436) No. 1 — 8:*** ***(R442) No. 22 — (R432) No. 7:***	Is the resistance 1 MΩ or more?	Go to step **6**.	Repair short circuit in harness between drive motor inverter connector and DMCM connector or repair the intermediate connector.
6	**CHECK DRIVE MOTOR INVERTER.** 1) Replace the drive motor inverter. <Ref. to HEV-42, Inverter.> 2) Perform the Inspection Mode. <Ref. to HEV(diag)-26, Inspection Mode.>	Is the same DTC detected? (current malfunction)	Replace DMCM. <Ref. to CVT(TH58A)-155, Drive Motor Control Module.>	Problem is present in drive motor inverter.

CI: DTC P1C31 MANUFACTURER CONTROLLED DTC

DIAGNOSIS:

- Immediately at fault recognition
- GENERAL DESCRIPTION <Ref. to GD(HEV)-80, DTC P1C31 MANUFACTURER CONTROLLED DTC, Diagnostic Trouble Code (DTC) Detecting Criteria.>

TROUBLE SYMPTOM:

- EV traveling/Auto Start Stop does not operate.
- Motor assist does not regenerates.

CAUTION:

Before performing diagnosis, refer to "CAUTION" in "General Description". <Ref. to HEV(diag)-8, CAUTION, General Description.>

	Step	Check	Yes	No
1	**CHECK DTC.** Read the DTC. <Ref. to HEV(diag)-23, DRIVE MOTOR CONTROL SYSTEM, OPERATION, Read Diagnostic Trouble Code (DTC).>	Is DTC P1C31 detected? (current malfunction)	Go to step **2**.	Even if DTC is detected, the circuit has returned to a normal condition at this time. Reproduce the failure, and then perform the diagnosis again. NOTE: In this case, temporary poor contact of connector, temporary open or short circuit of harness may be the cause.
2	**CHECK GROUND WIRE.** 1) Turn the ignition to OFF. 2) Disconnect the ground cable of the 12 volt auxiliary battery, and as for the 12 volt engine restart battery, disconnect the ground cable from the 12V engine restart battery sensor. <Ref. to NT-5, BATTERY, NOTE, Note.> 3) Remove the service disconnect plug. <Ref. to HEV-15, Service Plug.> 4) Wait for 10 minutes. 5) Check the fastening area shown in the margin.	Is the condition normal? (Check for loose bolts, insecure connection, foreign matter caught, etc.)	Go to step **3**.	Retighten the bolts. Or replace the harness.
3	**CHECK DRIVE MOTOR INVERTER.** 1) Replace the drive motor inverter. <Ref. to HEV-42, Inverter.> 2) Perform the Inspection Mode. <Ref. to HEV(diag)-26, Inspection Mode.>	Is the same DTC detected? (current malfunction)	Replace DMCM. <Ref. to CVT(TH58A)-155, Drive Motor Control Module.>	Problem is present in drive motor inverter.

NOTE:

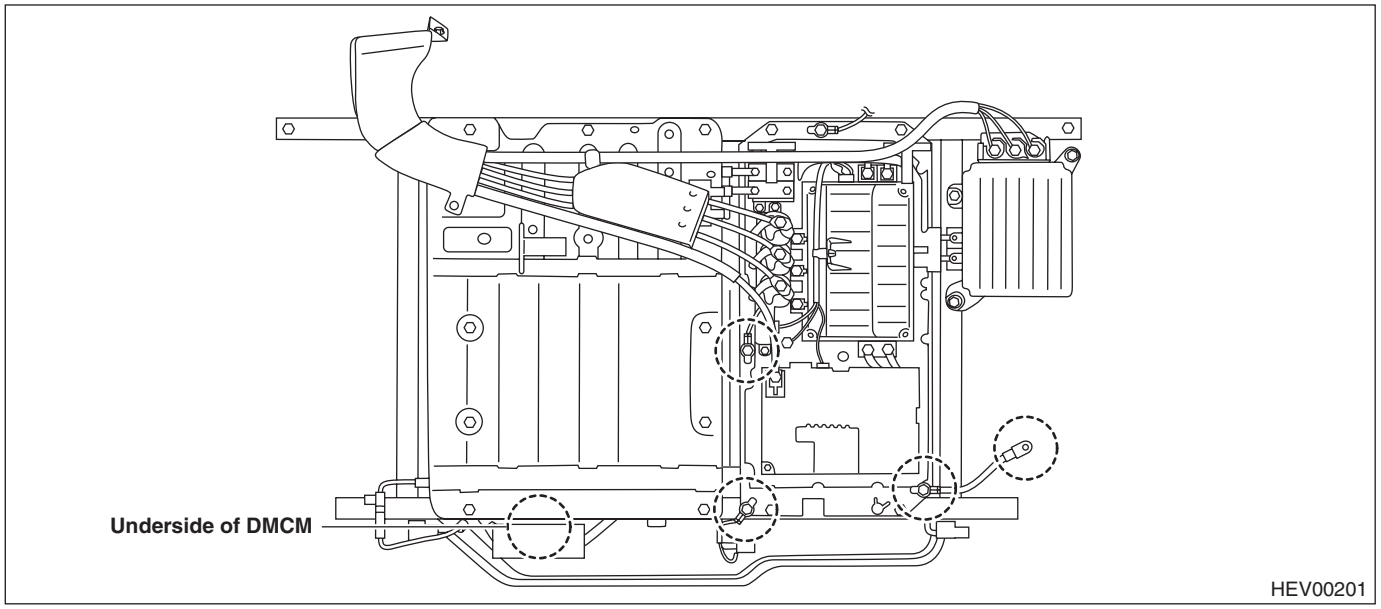

CJ:DTC P1C34 MANUFACTURER CONTROLLED DTC

DIAGNOSIS:

- Detects serial communication error with DC/DC converter.
- If serial data from the DC/DC converter is not received, it is judged as NG.
- Immediately at fault recognition

TROUBLE SYMPTOM:

EV traveling/Auto Start Stop does not operate.

CAUTION:

Before performing diagnosis, refer to "CAUTION" in "General Description". <Ref. to HEV(diag)-8, CAUTION, General Description.>

WIRING DIAGRAM

Hybrid system <Ref. to WI(HEV)-139, WIRING DIAGRAM, Hybrid Electric Vehicle System.>

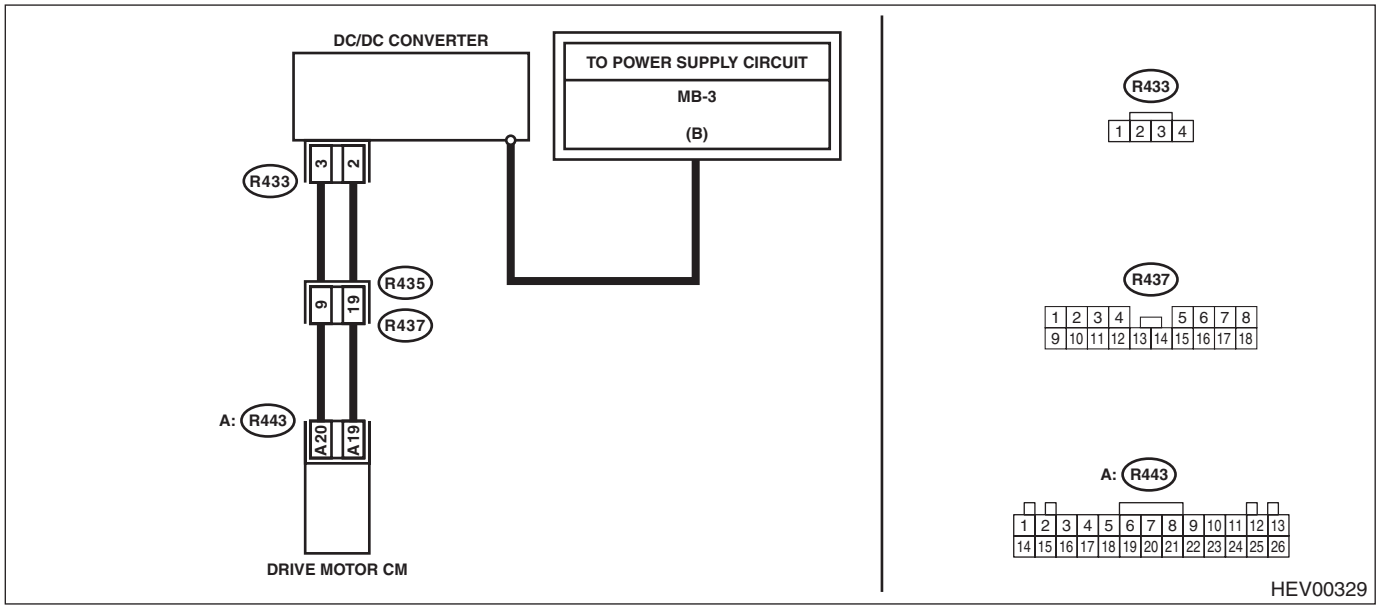

Step		Check	Yes	No
1	**CHECK DTC.** 1) Start the engine. 2) Read the DTC. <Ref. to HEV(diag)-23, DRIVE MOTOR CONTROL SYSTEM, OPERATION, Read Diagnostic Trouble Code (DTC).>	Is DTC P1C34 detected? (current malfunction)	Go to step **2**.	Even if DTC is detected, the circuit has returned to a normal condition at this time. Reproduce the failure, and then perform the diagnosis again. NOTE: In this case, temporary poor contact of connector, temporary open or short circuit of harness may be the cause.

	Step	Check	Yes	No
2	**CHECK CONNECTOR.** 1) Turn the ignition to OFF. 2) Disconnect the ground cable of the 12 volt auxiliary battery, and as for the 12 volt engine restart battery, disconnect the ground cable from the 12V engine restart battery sensor. <Ref. to NT-5, BATTERY, NOTE, Note.> 3) Remove the service disconnect plug. <Ref. to HEV-15, Service Plug.> 4) Wait for 10 minutes. 5) Visually check each connector and fastening areas of the DC/DC converter.	Is the condition normal? (Check for loose bolts, insecure connection, foreign matter caught, etc.)	Go to step **3**.	Repair or replace faulty parts.
3	**CHECK HARNESS.** 1) Disconnect the DC/DC converter connector. 2) Disconnect the DMCM connector. 3) Using a tester, measure the resistance between DMCM connector and the ground bolt of inverter frame body. ***Connector & terminal*** ***(R443) No. 20 — Ground bolt of inverter frame body:***	Is the resistance 1 MΩ or more?	Go to step **4**.	Repair short to ground circuit in harness between DMCM connector and DC/DC converter connector, or repair the intermediate connector.
4	**CHECK HARNESS.** Using a tester, measure the resistance between DC/DC converter connector and DMCM connector. ***Connector & terminal*** ***(R443) No. 20 — (R433) No. 3:***	Is the resistance less than 1 Ω?	Go to step **5**.	Repair open circuit in harness between DMCM connector and DC/DC converter connector, or repair the intermediate connector.
5	**CHECK HARNESS (SHORT TO OTHER SIGNAL).** 1) Disconnect the drive motor inverter connector. 2) Disconnect the intermediate connector (R436). 3) Using a tester, measure the resistance between DMCM connector and individual connectors of drive motor inverter. ***Connector & terminal:*** ***(R443) No. 20 — (R442) No. 1 — 22:*** ***(R443) No. 20 — (R443) No. 1 — 26:*** ***(R443) No. 20 — (R436) No. 1 — 8:*** ***(R443) No. 20 — (R432) No. 7:***	Is the resistance 1 MΩ or more?	Go to step **6**.	Repair short circuit in harness between DMCM connector and DC/DC converter connector, or repair the intermediate connector.
6	**CHECK HARNESS (SHORT TO POWER).** Using a tester, measure the resistance between DC/DC converter connector and DC/DC converter 12 V output line. ***Connector & terminal*** ***(R433) No. 3 — DC/DC converter 12 V output line:***	Is the resistance 1 MΩ or more?	Go to step **7**.	Repair short circuit in harness between DMCM connector and DC/DC converter 12 V output line or repair the intermediate connector.
7	**CHECK DC/DC CONVERTER.** 1) Replace the DC/DC converter. <Ref. to HEV-38, DC/DC Converter.> 2) Perform the Inspection Mode. <Ref. to HEV(diag)-26, Inspection Mode.>	Is the same DTC detected? (current malfunction)	Replace DMCM. <Ref. to CVT(TH58A)-155, Drive Motor Control Module.>	Problem is present in DC/DC converter.

CK:DTC P1C35 MANUFACTURER CONTROLLED DTC

DIAGNOSIS:

- Detects serial communication error with DC/DC converter.
- If an incorrect serial data is received from DC/DC converter, it is judged as NG.
- Immediately at fault recognition

TROUBLE SYMPTOM:

EV traveling/Auto Start Stop does not operate.

CAUTION:

Before performing diagnosis, refer to "CAUTION" in "General Description". <Ref. to HEV(diag)-8, CAUTION, General Description.>

WIRING DIAGRAM

Hybrid system <Ref. to WI(HEV)-139, WIRING DIAGRAM, Hybrid Electric Vehicle System.>

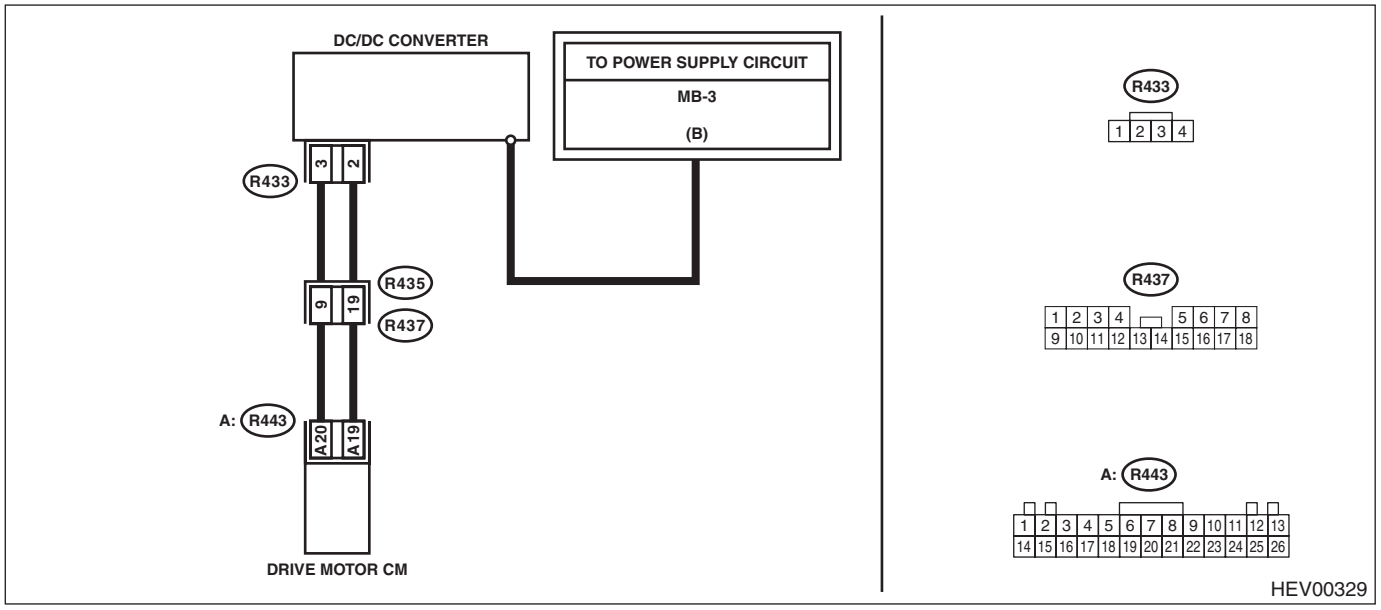

Step		Check	Yes	No
1	**CHECK DTC.** 1) Start the engine. 2) Read the DTC. <Ref. to HEV(diag)-23, DRIVE MOTOR CONTROL SYSTEM, OPERATION, Read Diagnostic Trouble Code (DTC).>	Is DTC P1C35 detected? (current malfunction)	Go to step **2**.	Even if DTC is detected, the circuit has returned to a normal condition at this time. Reproduce the failure, and then perform the diagnosis again. NOTE: In this case, temporary poor contact of connector, temporary open or short circuit of harness may be the cause.

	Step	Check	Yes	No
2	**CHECK GROUND WIRE.** 1) Turn the ignition to OFF. 2) Disconnect the ground cable of the 12 volt auxiliary battery, and as for the 12 volt engine restart battery, disconnect the ground cable from the 12V engine restart battery sensor. <Ref. to NT-5, BATTERY, NOTE, Note.> 3) Remove the service disconnect plug. <Ref. to HEV-15, Service Plug.> 4) Wait for 10 minutes. 5) Check the fastening area shown in the margin.	Is the condition normal? (Check for loose bolts, insecure connection, foreign matter caught, etc.)	Go to step **3**.	Retighten the bolts. Or replace the harness.
3	**CHECK HARNESS (SHORT TO OTHER SIGNAL).** 1) Disconnect the drive motor inverter connector. 2) Disconnect the intermediate connector (R436). 3) Using a tester, measure the resistance between DMCM connector and individual connectors of drive motor inverter. ***Connector & terminal:*** ***(R443) No. 20 — (R442) No. 1 — 22:*** ***(R443) No. 20 — (R443) No. 1 — 26:*** ***(R443) No. 20 — (R436) No. 1 — 8:*** ***(R443) No. 20 — (R432) No. 7:***	Is the resistance 1 MΩ or more?	Go to step **4**.	Repair short circuit in harness between DMCM connector and DC/DC converter connector, or repair the intermediate connector.
4	**CHECK DC/DC CONVERTER.** 1) Replace the DC/DC converter. <Ref. to HEV-38, DC/DC Converter.> 2) Perform the Inspection Mode. <Ref. to HEV(diag)-26, Inspection Mode.>	Is the same DTC detected? (current malfunction)	Replace DMCM. <Ref. to CVT(TH58A)-155, Drive Motor Control Module.>	Problem is present in DC/DC converter.

NOTE:

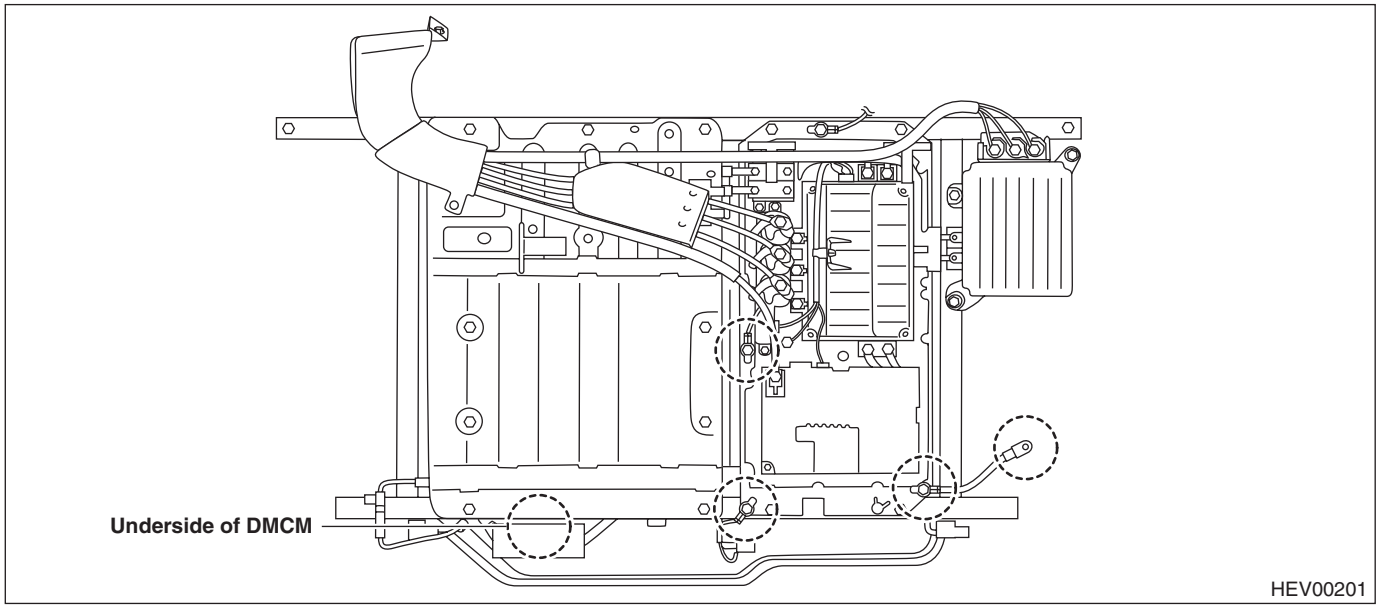

CL:DTC P0A1B DRIVE MOTOR "A" CONTROL MODULE

DIAGNOSIS:

- Immediately at fault recognition
- GENERAL DESCRIPTION <Ref. to GD(HEV)-81, DTC P0A1B DRIVE MOTOR "A" CONTROL MODULE, Diagnostic Trouble Code (DTC) Detecting Criteria.>

NOTE:
For the diagnostic procedure, refer to “DTC P0604 INTERNAL CONTROL MODULE RANDOM ACCESS MEMORY (RAM) ERROR”. <Ref. to HEV(diag)-110, DRIVE MOTOR CONTROL SYSTEM, DTC P0604 INTERNAL CONTROL MODULE RANDOM ACCESS MEMORY (RAM) ERROR, Diagnostic Procedure with Diagnostic Trouble Code (DTC).>

CM:DTC P06B1 SENSOR POWER SUPPLY "A" CIRCUIT LOW

DIAGNOSIS:

- Immediately at fault recognition
- GENERAL DESCRIPTION <Ref. to GD(HEV)-82, DTC P06B1 SENSOR POWER SUPPLY "A" CIRCUIT LOW, Diagnostic Trouble Code (DTC) Detecting Criteria.>

TROUBLE SYMPTOM:

- EV traveling/Auto Start Stop does not operate.
- Motor assist does not regenerates.

CAUTION:

Before performing diagnosis, refer to “CAUTION” in “General Description”. <Ref. to HEV(diag)-8, CAUTION, General Description.>

WIRING DIAGRAM

Hybrid system <Ref. to WI(HEV)-139, WIRING DIAGRAM, Hybrid Electric Vehicle System.>

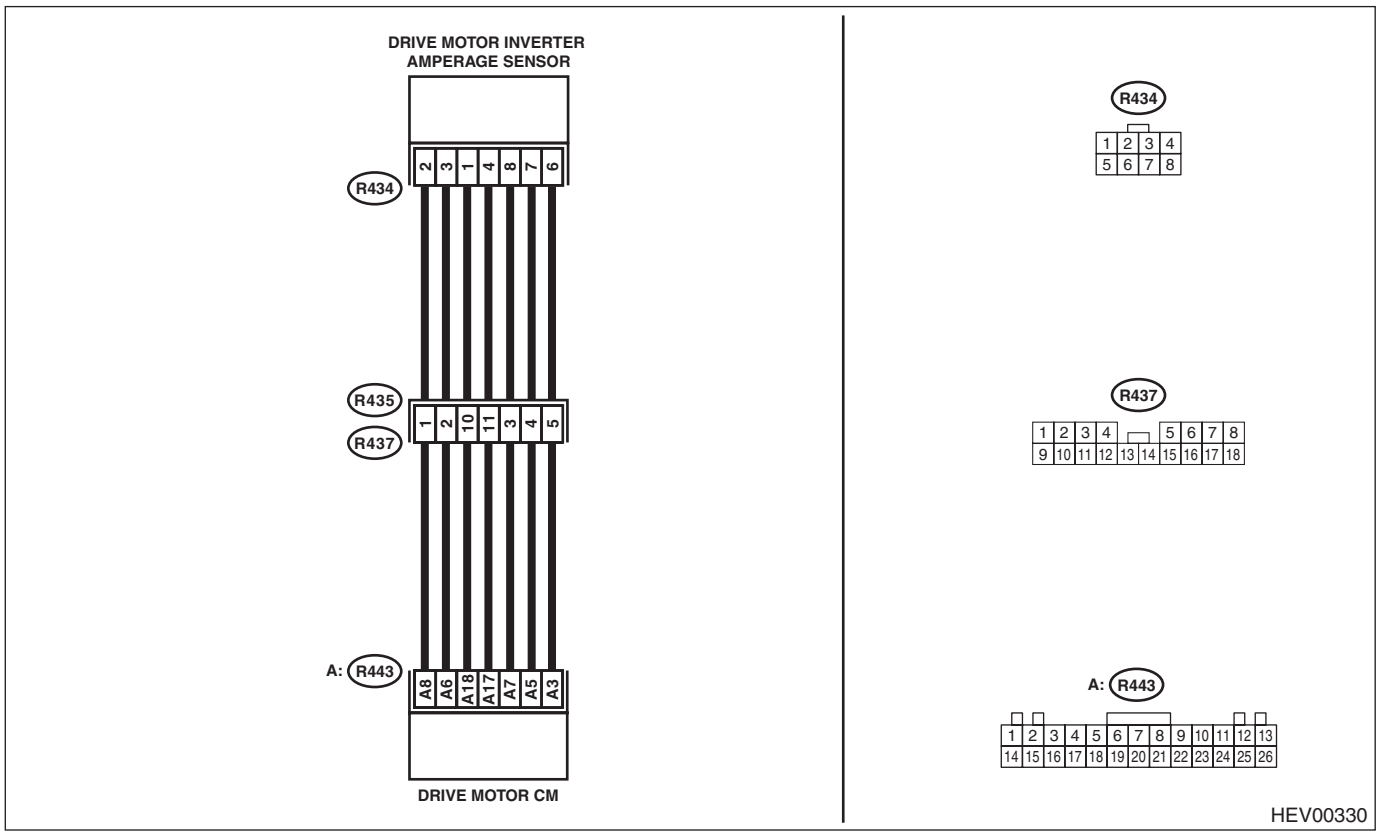

	Step	Check	Yes	No
1	**CHECK CURRENT DATA.** Using the Subaru Select Monitor, confirm the current data of drive motor control system, the value of «Drive Motor Amperage Sensor Power Supply Voltage». <Ref. to HEV(diag)-51, DRIVE MOTOR CONTROL SYSTEM, OPERATION, Read Current Data.>	Is the value less than 4.536 V?	Go to step **2**.	Even if DTC is detected, the circuit has returned to a normal condition at this time. Reproduce the failure, and then perform the diagnosis again. NOTE: In this case, temporary poor contact of connector, temporary open or short circuit of harness may be the cause.
2	**CHECK HARNESS (SHORT TO GROUND).** 1) Turn the ignition switch to OFF. 2) Disconnect the ground cable of the 12 volt auxiliary battery, and as for the 12 volt engine restart battery, disconnect the ground cable from the 12V engine restart battery sensor. <Ref. to NT-5, BATTERY, NOTE, Note.> 3) Remove the service disconnect plug. <Ref. to HEV-15, Service Plug.> 4) Wait for 10 minutes. 5) Disconnect the DMCM connector. 6) Disconnect the drive motor inverter amperage sensor connector. 7) Using a tester, measure the resistance between DMCM connector and the ground bolt of inverter frame body. ***Connector & terminal*** ***(R443) No. 8 — Ground bolt of inverter frame body:*** ***(R443) No. 6 — Ground bolt of inverter frame body:***	Is the resistance 1 MΩ or more?	Go to step **3**.	Repair short circuit in harness between drive motor inverter amperage sensor connector and DMCM connector or repair the intermediate connector.
3	**CHECK DRIVE MOTOR INVERTER AMPERAGE SENSOR.** 1) Replace the drive motor inverter amperage sensor. <Ref. to HEV-27, Drive Motor Inverter Current Sensor.> 2) Perform the Inspection Mode. <Ref. to HEV(diag)-26, Inspection Mode.>	Is the same DTC detected? (current malfunction)	Replace DMCM. <Ref. to CVT(TH58A)-155, Drive Motor Control Module.>	Problem is present in drive motor inverter amperage sensor.

CN:DTC P06B2 SENSOR POWER SUPPLY "A" CIRCUIT HIGH

DIAGNOSIS:

- Immediately at fault recognition
- GENERAL DESCRIPTION <Ref. to GD(HEV)-83, DTC P06B2 SENSOR POWER SUPPLY "A" CIRCUIT HIGH, Diagnostic Trouble Code (DTC) Detecting Criteria.>

TROUBLE SYMPTOM:

- EV traveling/Auto Start Stop does not operate.
- Motor assist does not regenerates.

CAUTION:

Before performing diagnosis, refer to “CAUTION” in “General Description”. <Ref. to HEV(diag)-8, CAUTION, General Description.>

WIRING DIAGRAM

Hybrid system <Ref. to WI(HEV)-139, WIRING DIAGRAM, Hybrid Electric Vehicle System.>

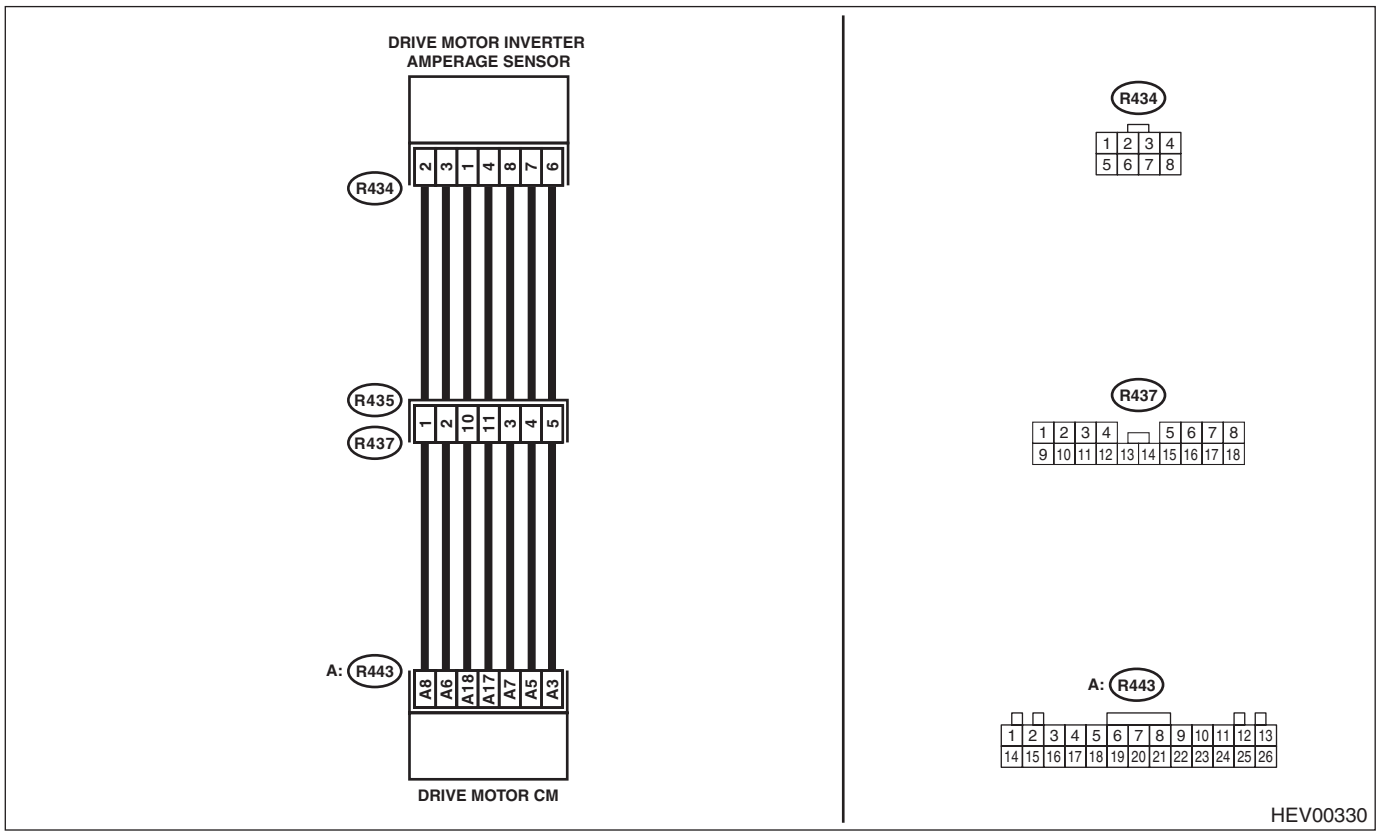

	Step	Check	Yes	No
1	**CHECK CURRENT DATA.** Using the Subaru Select Monitor, confirm the current data of drive motor control system, the value of «Drive Motor Amperage Sensor Power Supply Voltage». <Ref. to HEV(diag)-51, DRIVE MOTOR CONTROL SYSTEM, OPERATION, Read Current Data.>	Is the value more than 5.418 V?	Go to step **2**.	Even if DTC is detected, the circuit has returned to a normal condition at this time. Reproduce the failure, and then perform the diagnosis again. NOTE: In this case, temporary poor contact of connector, temporary open or short circuit of harness may be the cause.
2	**CHECK HARNESS (SHORT TO POWER AND SHORT TO OTHER SIGNAL LINES).** 1) Turn the ignition switch to OFF. 2) Disconnect the ground cable of the 12 volt auxiliary battery, and as for the 12 volt engine restart battery, disconnect the ground cable from the 12V engine restart battery sensor. <Ref. to NT-5, BATTERY, NOTE, Note.> 3) Remove the service disconnect plug. <Ref. to HEV-15, Service Plug.> 4) Wait for 10 minutes. 5) Disconnect the drive motor inverter amperage sensor connector. 6) Disconnect the DMCM connector. 7) Disconnect the drive motor inverter connector. 8) Disconnect the intermediate connector (R436). 9) Using a tester, measure the resistance between DMCM connector and other signal lines and within inverter connector. ***Connector & terminal*** ***(R443) No. 8 — (R442) No. 1 — 22 (except No. 6):*** ***(R443) No. 8 — (R443) No. 1 — 26:*** ***(R443) No. 8 — (R436) No. 1 — 8:*** ***(R443) No. 8 — (R432) No. 7:*** ***(R443) No. 6 — (R442) No. 1 — 22 (except No. 8):*** ***(R443) No. 6 — (R443) No. 1 — 26:*** ***(R443) No. 6 — (R436) No. 1 — 8:*** ***(R443) No. 6 — (R432) No. 7:***	Is the resistance 1 MΩ or more?	Go to step **3**.	Repair short circuit in harness between drive motor inverter amperage sensor connector and DMCM connector or repair the intermediate connector.
3	**CHECK DRIVE MOTOR INVERTER AMPERAGE SENSOR.** 1) Replace the drive motor inverter amperage sensor. <Ref. to HEV-27, Drive Motor Inverter Current Sensor.> 2) Perform the Inspection Mode. <Ref. to HEV(diag)-26, Inspection Mode.>	Is the same DTC detected? (current malfunction)	Replace DMCM. <Ref. to CVT(TH58A)-155, Drive Motor Control Module.>	Problem is present in drive motor inverter amperage sensor.

CO:DTC P062F INTERNAL CONTROL MODULE EEPROM ERROR

DIAGNOSIS:

- Immediately at fault recognition
- GENERAL DESCRIPTION <Ref. to GD(HEV)-84, DTC P062F INTERNAL CONTROL MODULE EEPROM ERROR, Diagnostic Trouble Code (DTC) Detecting Criteria.>

TROUBLE SYMPTOM:

- EV traveling/Auto Start Stop does not operate.
- Motor assist does not regenerates.

CAUTION:

Before performing diagnosis, refer to "CAUTION" in "General Description". <Ref. to HEV(diag)-8, CAUTION, General Description.>

	Step	Check	Yes	No
1	**CHECK BECM.** 1) Perform the Clear Memory Mode. <Ref. to HEV(diag)-24, BATTERY ENERGY CONTROL SYSTEM, OPERATION, Clear Memory Mode.> 2) Turn the ignition switch to OFF. 3) Wait for 30 seconds. 4) Turn the ignition switch to ON. 5) Read the DTC again. <Ref. to HEV(diag)-23, BATTERY ENERGY CONTROL SYSTEM, OPERATION, Read Diagnostic Trouble Code (DTC).>	Is the same DTC detected? (current malfunction)	Replace the high voltage battery. <Ref. to HEV-17, High Voltage Battery.>	Even if DTC is detected, the circuit has returned to a normal condition at this time. Reproduce the failure, and then perform the diagnosis again. NOTE: In this case, temporary poor contact of connector, temporary open or short circuit of harness may be the cause.

CP:DTC P0A1F BATTERY ENERGY CONTROL MODULE

DIAGNOSIS:

- Immediately at fault recognition
- GENERAL DESCRIPTION <Ref. to GD(HEV)-85, DTC P0A1F BATTERY ENERGY CONTROL MODULE, Diagnostic Trouble Code (DTC) Detecting Criteria.>

TROUBLE SYMPTOM:

- EV traveling/Auto Start Stop does not operate.
- Motor assist does not regenerates.

CAUTION:

Before performing diagnosis, refer to "CAUTION" in "General Description". <Ref. to HEV(diag)-8, CAUTION, General Description.>

	Step	Check	Yes	No
1	**CHECK BECM.** 1) Perform the Clear Memory Mode. <Ref. to HEV(diag)-24, BATTERY ENERGY CONTROL SYSTEM, OPERATION, Clear Memory Mode.> 2) Turn the ignition switch to OFF. 3) Wait for 30 seconds. 4) Turn the ignition switch to ON. 5) Read the DTC again. <Ref. to HEV(diag)-23, BATTERY ENERGY CONTROL SYSTEM, OPERATION, Read Diagnostic Trouble Code (DTC).>	Is the same DTC detected? (current malfunction)	Replace the high voltage battery. <Ref. to HEV-17, High Voltage Battery.>	Even if DTC is detected, the circuit has returned to a normal condition at this time. Reproduce the failure, and then perform the diagnosis again. NOTE: In this case, temporary poor contact of connector, temporary open or short circuit of harness may be the cause.

CQ:DTC P0A7D HYBRID BATTERY PACK STATE OF CHARGE LOW

DIAGNOSIS:

- Immediately at fault recognition
- GENERAL DESCRIPTION <Ref. to GD(HEV)-86, DTC P0A7D HYBRID BATTERY PACK STATE OF CHARGE LOW, Diagnostic Trouble Code (DTC) Detecting Criteria.>

TROUBLE SYMPTOM:

- EV traveling/Auto Start Stop does not operate.
- Motor assist does not regenerates.

CAUTION:

Before performing diagnosis, refer to "CAUTION" in "General Description". <Ref. to HEV(diag)-8, CAUTION, General Description.>

	Step	Check	Yes	No
1	**CHECK FREEZE FRAME DATA.** Using the Subaru Select Monitor, confirm the value of «High Voltage Battery Amperage» in the freeze frame data of battery energy control system. <Ref. to HEV(diag)-68, BATTERY ENERGY CONTROL SYSTEM, OPERATION, Freeze Frame Data Display.>	Is the value 1A (discharge) or more?	Go to step **2**.	Replace the high voltage battery. <Ref. to HEV-17, High Voltage Battery.>
2	**CHECK DTC.** Using the Subaru Select Monitor, read DTCs of the following system. • Hybrid powertrain control system <Ref. to HEV(diag)-23, HYBRID POWERTRAIN CONTROL SYSTEM, OPERATION, Read Diagnostic Trouble Code (DTC).> • Drive motor control system <Ref. to HEV(diag)-23, DRIVE MOTOR CONTROL SYSTEM, OPERATION, Read Diagnostic Trouble Code (DTC).> • CVT System <Ref. to CVT(HEV)(diag)-18, OPERATION, Read Diagnostic Trouble Code (DTC).>	Are any other DTCs detected? (current malfunction)	Perform the diagnosis according to DTC. <Ref. to HEV(diag)-74, LIST, List of Diagnostic Trouble Code (DTC).> <Ref. to CVT(HEV)(diag)-32, LIST, List of Diagnostic Trouble Code (DTC).>	Go to step **3**.
3	**CHECK CURRENT DATA.** 1) Turn the ignition to OFF. 2) Start the engine. 3) Check illumination of "Hybrid READY indicator light" in the meter.	Is the indicator illuminating?	Go to step **4**.	Replace the HPCM. <Ref. to HEV-37, Hybrid Powertrain Control Module.>
4	**CHECK CURRENT DATA.** 1) Drive approximately 2 km (1.2 miles) at a speed of 30 km/h (18.6 MPH) or more. 2) Using the Subaru Select Monitor, confirm the current data of battery energy control system, the value of «High Voltage Battery SOC». <Ref. to HEV(diag)-57, BATTERY ENERGY CONTROL SYSTEM, OPERATION, Read Current Data.>	Is the value 6% or more?	Even if DTC is detected, the circuit has returned to a normal condition at this time. Reproduce the failure, and then perform the diagnosis again. NOTE: In this case, temporary poor contact of connector, temporary open or short circuit of harness may be the cause.	Replace the high voltage battery. <Ref. to HEV-17, High Voltage Battery.>

CR:DTC P0A7E HYBRID BATTERY PACK OVER TEMPERATURE

DIAGNOSIS:

- Immediately at fault recognition
- GENERAL DESCRIPTION <Ref. to GD(HEV)-87, DTC P0A7E HYBRID BATTERY PACK OVER TEMPERATURE, Diagnostic Trouble Code (DTC) Detecting Criteria.>

TROUBLE SYMPTOM:

- EV traveling/Auto Start Stop does not operate.
- Motor assist does not regenerates.

CAUTION:

Before performing diagnosis, refer to "CAUTION" in "General Description". <Ref. to HEV(diag)-8, CAUTION, General Description.>

	Step	Check	Yes	No
1	**CHECK DTC.** Using the Subaru Select Monitor, read DTCs of the following system. • Drive motor control system <Ref. to HEV(diag)-23, BATTERY ENERGY CONTROL SYSTEM, OPERATION, Read Diagnostic Trouble Code (DTC).>	Is either DTC P0A83 or P0A82 detected? (current malfunction)	Perform the diagnosis according to DTC. <Ref. to HEV(diag)-77, DRIVE MOTOR CONTROL SYSTEM, LIST, List of Diagnostic Trouble Code (DTC).>	Go to step **2**.
2	**CHECK FREEZE FRAME DATA.** Using the Subaru Select Monitor, confirm the value of «High Voltage Battery Cooling Fan Duty Target(HPCM)» in the freeze frame data of battery energy control system. <Ref. to HEV(diag)-13, HIGH VOLTAGE BATTERY, ELECTRICAL SPECIFICATION, Control Module I/O Signal.>	Is the value 20% or more?	Go to step **3**.	Replace the HPCM. <Ref. to HEV-37, Hybrid Powertrain Control Module.>
3	**CHECK HIGH VOLTAGE BATTERY COOLING FAN.** Using the Subaru Select Monitor, perform «High Voltage Battery Cooling Fan» of System Operation Check Mode for the drive motor control system. <Ref. to HEV(diag)-73, DRIVE MOTOR CONTROL SYSTEM, OPERATION, System Operation Check Mode.>	Does the high voltage battery cooling fan operate?	Go to step **4**.	Check the high voltage battery cooling fan as a single part. <Ref. to HEV-59, High Voltage Battery Cooling System.>
4	**CHECK DUCT.** Check the high voltage battery cooling fan ducts. <Ref. to HEV-59, High Voltage Battery Cooling System.>	Are the conditions of ducts normal? (Check for clogging, dislodging, etc.)	Go to step **5**.	Repair the ducts.
5	**CHECK FREEZE FRAME DATA.** Using the Subaru Select Monitor, confirm the value of «High Voltage Battery Discharge Power Limit 1» in the freeze frame data of battery energy control system. <Ref. to HEV(diag)-68, BATTERY ENERGY CONTROL SYSTEM, OPERATION, Freeze Frame Data Display.>	Is the value 0.5 kw or less?	Go to step **6**.	Replace the high voltage battery. <Ref. to HEV-17, High Voltage Battery.>
6	**CHECK FREEZE FRAME DATA.** Using the Subaru Select Monitor, confirm the value of «High Voltage Battery Charge Power 1» in the freeze frame data of battery energy control system. <Ref. to HEV(diag)-68, BATTERY ENERGY CONTROL SYSTEM, OPERATION, Freeze Frame Data Display.>	Is the value 0.5 kw or less?	Go to step **7**.	Replace the high voltage battery. <Ref. to HEV-17, High Voltage Battery.>

	Step	Check	Yes	No
7	**CHECK FREEZE FRAME DATA.** Using the Subaru Select Monitor, confirm the values of «Drive Motor Torque Target(HPCM)»«Drive Motor Speed Target(HPCM)» in the freeze frame data of battery energy control system. <Ref. to HEV(diag)-68, BATTERY ENERGY CONTROL SYSTEM, OPERATION, Freeze Frame Data Display.>	Are the values of «Drive Motor Torque Target(HPCM)» and «Drive Motor Speed Target(HPCM)» within the standard in the margin?	Go to step **8**.	Replace the HPCM. <Ref. to HEV-37, Hybrid Powertrain Control Module.>
8	**CHECK FREEZE FRAME DATA.** Using the Subaru Select Monitor, confirm the values of «Drive Motor Output Torque Actual»«Drive Motor Speed» in the freeze frame data of battery energy control system. <Ref. to HEV(diag)-68, BATTERY ENERGY CONTROL SYSTEM, OPERATION, Freeze Frame Data Display.>	Are the values of «Drive Motor Output Torque Actual» and «Drive Motor Speed» within the standard in the margin?	Replace the high voltage battery. <Ref. to HEV-17, High Voltage Battery.>	Replace DMCM. <Ref. to CVT(TH58A)-155, Drive Motor Control Module.>

NOTE:

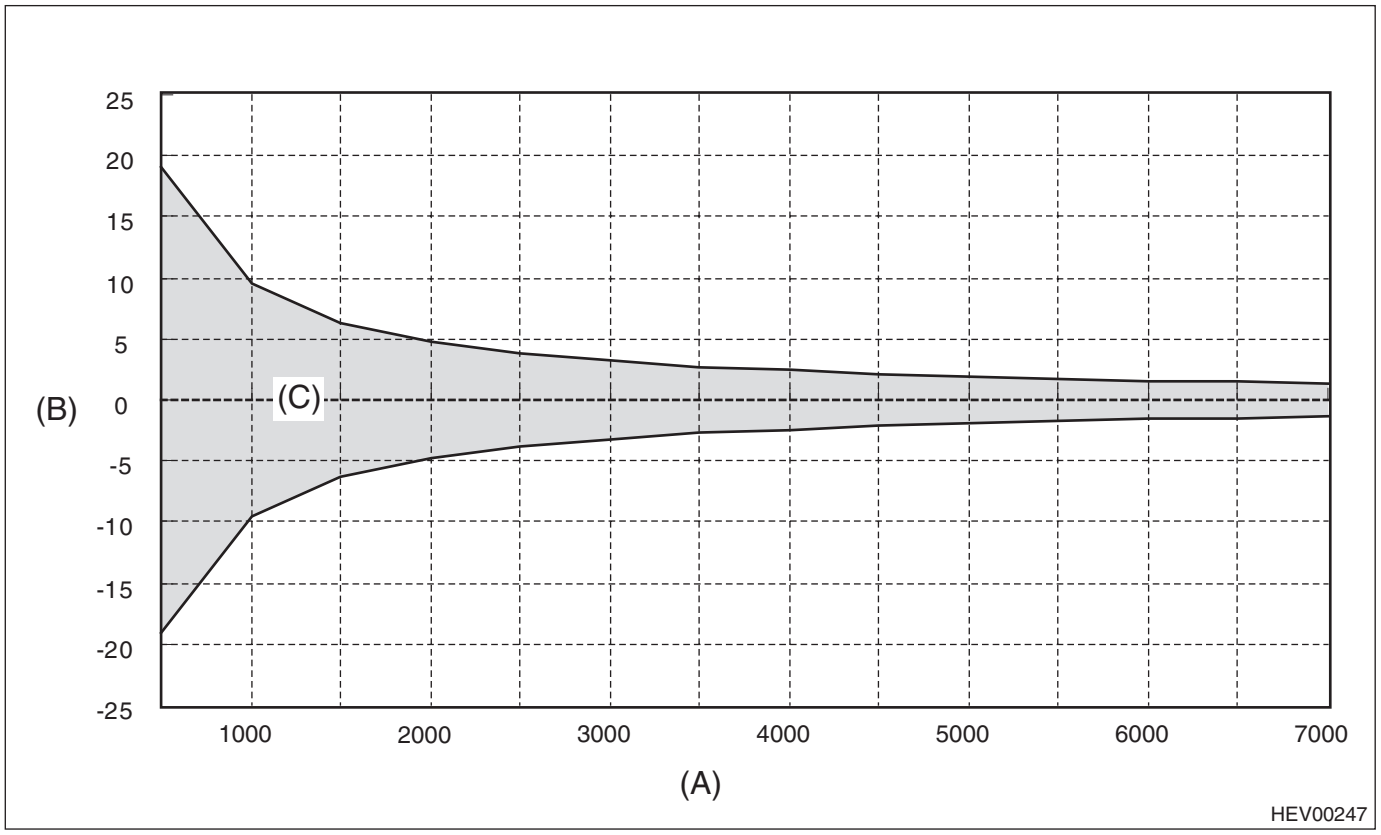

(A) Drive Motor Speed Target(HPCM) or Drive Motor Speed
(B) Drive Motor Torque Target (HPCM) or Drive Motor Output Torque Actual
(C) Standard

CS:DTC P0A7F HYBRID BATTERY PACK DETERIORATION

DIAGNOSIS:

- Immediately at fault recognition
- GENERAL DESCRIPTION <Ref. to GD(HEV)-88, DTC P0A7F HYBRID BATTERY PACK DETERIORATION, Diagnostic Trouble Code (DTC) Detecting Criteria.>

TROUBLE SYMPTOM:

Normal control

NOTE:
If this DTC is detected, replace the high voltage battery. <Ref. to HEV-17, High Voltage Battery.>

CT:DTC P0A95 HIGH VOLTAGE FUSE

DIAGNOSIS:

- Immediately at fault recognition
- GENERAL DESCRIPTION <Ref. to GD(HEV)-90, DTC P0A95 HIGH VOLTAGE FUSE, Diagnostic Trouble Code (DTC) Detecting Criteria.>

TROUBLE SYMPTOM:

- EV traveling/Auto Start Stop does not operate.
- Motor assist does not regenerates.

CAUTION:

Before performing diagnosis, refer to "CAUTION" in "General Description". <Ref. to HEV(diag)-8, CAUTION, General Description.>

	Step	Check	Yes	No
1	**CHECK SERVICE DISCONNECT PLUG.** Check installation condition of service disconnect plug. <Ref. to HEV-15, Service Plug.>	Is the service disconnect plug securely installed? Is it locked?	Go to step **2**.	Securely install the service disconnect plug.
2	**CHECK CURRENT DATA.** Using the Subaru Select Monitor, confirm the current data of battery energy control system, the value of «High Voltage Battery Fuse Condition». <Ref. to HEV(diag)-57, BATTERY ENERGY CONTROL SYSTEM, OPERATION, Read Current Data.>	Does the value show «Blow out»?	Go to step **3**.	Even if DTC is detected, the circuit has returned to a normal condition at this time. Reproduce the failure, and then perform the diagnosis again. NOTE: In this case, temporary poor contact of connector, temporary open or short circuit of harness may be the cause.
3	**CHECK SERVICE DISCONNECT PLUG.** 1) Turn the ignition switch to OFF. 2) Disconnect the ground cable of the 12 volt auxiliary battery, and as for the 12 volt engine restart battery, disconnect the ground cable from the 12V engine restart battery sensor. <Ref. to NT-5, BATTERY, NOTE, Note.> 3) Remove the service disconnect plug. <Ref. to HEV-15, Service Plug.> 4) Measure the resistance between service disconnect plug terminals.	Is the resistance less than 1 Ω?	Replace the high voltage battery. <Ref. to HEV-17, High Voltage Battery.>	Replace the service disconnect plug.

CU:DTC P0A9C HYBRID BATTERY TEMPERATURE SENSOR "A" CIRCUIT RANGE/PERFORMANCE

DIAGNOSIS:

- Immediately at fault recognition
- GENERAL DESCRIPTION <Ref. to GD(HEV)-91, DTC P0A9C HYBRID BATTERY TEMPERATURE SENSOR "A" CIRCUIT RANGE/PERFORMANCE, Diagnostic Trouble Code (DTC) Detecting Criteria.>

TROUBLE SYMPTOM:

EV traveling/Auto Start Stop does not operate.
(Engine does not restart under EV traveling/Auto Start Stop condition.)

NOTE:
If this DTC is detected, replace the high voltage battery. <Ref. to HEV-17, High Voltage Battery.>

CV:DTC P0A9D HYBRID BATTERY TEMPERATURE SENSOR "A" CIRCUIT LOW

DIAGNOSIS:

- Immediately at fault recognition
- GENERAL DESCRIPTION <Ref. to GD(HEV)-92, DTC P0A9D HYBRID BATTERY TEMPERATURE SENSOR "A" CIRCUIT LOW, Diagnostic Trouble Code (DTC) Detecting Criteria.>

TROUBLE SYMPTOM:

EV traveling/Auto Start Stop does not operate.
(Engine does not restart under EV traveling/Auto Start Stop condition.)

NOTE:
If this DTC is detected, replace the high voltage battery. <Ref. to HEV-17, High Voltage Battery.>

CW:DTC P0A9E HYBRID BATTERY TEMPERATURE SENSOR "A" CIRCUIT HIGH

DIAGNOSIS:

- Immediately at fault recognition
- GENERAL DESCRIPTION <Ref. to GD(HEV)-93, DTC P0A9E HYBRID BATTERY TEMPERATURE SENSOR "A" CIRCUIT HIGH, Diagnostic Trouble Code (DTC) Detecting Criteria.>

TROUBLE SYMPTOM:

EV traveling/Auto Start Stop does not operate.
(Engine does not restart under EV traveling/Auto Start Stop condition.)

NOTE:
If this DTC is detected, replace the high voltage battery. <Ref. to HEV-17, High Voltage Battery.>

CX:DTC P0AA4 HYBRID BATTERY NEGATIVE CONTACTOR CIRCUIT STUCK CLOSED

DIAGNOSIS:

- Immediately at fault recognition
- GENERAL DESCRIPTION <Ref. to GD(HEV)-94, DTC P0AA4 HYBRID BATTERY NEGATIVE CONTACTOR CIRCUIT STUCK CLOSED, Diagnostic Trouble Code (DTC) Detecting Criteria.>

TROUBLE SYMPTOM:

Normal control

CAUTION:

Before performing diagnosis, refer to "CAUTION" in "General Description". <Ref. to HEV(diag)-8, CAUTION, General Description.>

Step		Check	Yes	No
1	**CHECK BECM.** 1) Perform the Clear Memory Mode. <Ref. to HEV(diag)-24, BATTERY ENERGY CONTROL SYSTEM, OPERATION, Clear Memory Mode.> 2) Start the engine. 3) Turn the ignition switch to OFF. 4) Wait for 30 seconds. 5) Turn the ignition switch to ON. 6) Read the DTC again. <Ref. to HEV(diag)-23, BATTERY ENERGY CONTROL SYSTEM, OPERATION, Read Diagnostic Trouble Code (DTC).>	Is DTC P0AA4 detected? (current malfunction)	Replace the high voltage battery. <Ref. to HEV-17, High Voltage Battery.>	Even if DTC is detected, the circuit has returned to a normal condition at this time. Reproduce the failure, and then perform the diagnosis again. NOTE: In this case, temporary poor contact of connector, temporary open or short circuit of harness may be the cause.

CY:DTC P0AA6 HYBRID BATTERY VOLTAGE SYSTEM ISOLATION FAULT

DIAGNOSIS:

- Detects leakage in high voltage system circuit.
- If hybrid system leakage resistance, leakage resistance in high voltage battery are smaller than the standard, it is judged as NG.
- Immediately at fault recognition

TROUBLE SYMPTOM:

Normal control

CAUTION:

Before performing diagnosis, refer to "CAUTION" in "General Description". <Ref. to HEV(diag)-8, CAUTION, General Description.>

WIRING DIAGRAM

Hybrid system <Ref. to WI(HEV)-139, WIRING DIAGRAM, Hybrid Electric Vehicle System.>

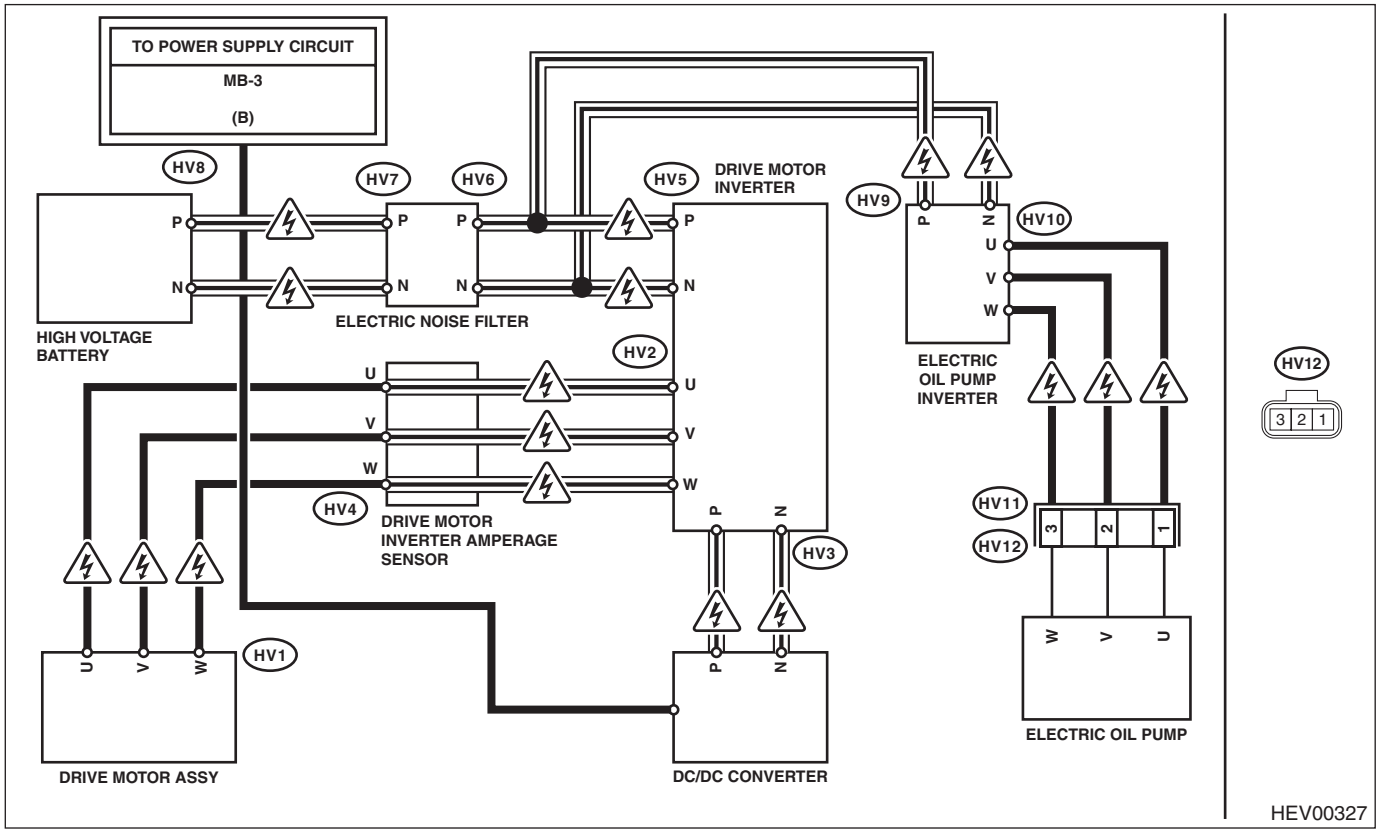

Step		Check	Yes	No
1	**CHECK CURRENT DATA.** 1) Turn the ignition switch to OFF → ON. 2) Leave the vehicle 1 minute unattended. 3) Using the Subaru Select Monitor, confirm the current data of battery energy control system, the values of «High Voltage Battery Pack Leakage Resistance (+)»«High Voltage Battery Pack Leakage Resistance (–)». <Ref. to HEV(diag)-57, BATTERY ENERGY CONTROL SYSTEM, OPERATION, Read Current Data.>	Is the value of «High Voltage Battery Pack Leakage Resistance (+)» or «High Voltage Battery Pack Leakage Resistance (–)» 290 kΩ or less?	Replace the high voltage battery. <Ref. to HEV-17, High Voltage Battery.>	Go to step **2**.

	Step	Check	Yes	No
2	**CHECK CURRENT DATA.** 1) Stop the engine. 2) Start the engine. 3) Using the Subaru Select Monitor, display the current data of battery energy control system, the values of «HEV System Leakage Resistance (+)» «HEV System Leakage Resistance (–)». <Ref. to HEV(diag)-57, BATTERY ENERGY CONTROL SYSTEM, OPERATION, Read Current Data.> 4) With the current data displayed, drive the vehicle at 10 km/h (6.2 MPH) or faster at least 1 minute. 5) Using the Subaru Select Monitor, confirm the current data of battery energy control system, the recorded values of «HEV System Leakage Resistance (+)» «HEV System Leakage Resistance (–)». <Ref. to HEV(diag)-57, BATTERY ENERGY CONTROL SYSTEM, OPERATION, Read Current Data.>	Is the minimum value of «HEV System Leakage Resistance (+)» or «HEV System Leakage Resistance (–)» 290 kΩ or less?	Go to step **3**.	Even if DTC is detected, the circuit has returned to a normal condition at this time. Reproduce the failure, and then perform the diagnosis again. NOTE: In this case, temporary poor contact of connector, temporary open or short circuit of harness may be the cause.
3	**CHECK POWER CABLE AND BUS BAR.** 1) Turn the ignition switch to OFF. 2) Disconnect the ground cable of the 12 volt auxiliary battery, and as for the 12 volt engine restart battery, disconnect the ground cable from the 12V engine restart battery sensor. <Ref. to NT-5, BATTERY, NOTE, Note.> 3) Remove the service disconnect plug. <Ref. to HEV-15, Service Plug.> 4) Wait for 10 minutes. 5) Disconnect the power cable (HV4) from drive motor inverter amperage sensor. 6) Using an insulation multimeter (250 V range), measure the resistance between high voltage battery side terminal and chassis ground of electric noise filter. ***Connector & terminal*** ***(HV7) P — Chassis ground:*** ***(HV7) N — Chassis ground:***	Is the resistance 2 MΩ or more?	Go to step **13**.	Go to step **4**.
4	**CHECK POWER CABLE AND BUS BAR.** 1) Disconnect the power cable (HV10) from electric oil pump. 2) Using an insulation multimeter (250 V range), measure the resistance between high voltage battery side terminal and chassis ground of electric noise filter. ***Connector & terminal*** ***(HV7) P — Chassis ground:*** ***(HV7) N — Chassis ground:***	Is the resistance 2 MΩ or more?	Go to step **14**.	Go to step **5**.

	Step	Check	Yes	No
5	**CHECK BUS BAR.** 1) Check the bus bar between the high voltage battery (HV8) and the electric noise filter (HV7) and the surrounding area for metallic foreign bodies, and if there are any, remove them. 2) Using an insulation multimeter (250 V range), measure the resistance between high voltage battery side terminal and chassis ground of electric noise filter. ***Connector & terminal*** ***(HV7) P — Chassis ground:*** ***(HV7) N — Chassis ground:***	Is the resistance 2 MΩ or more?	Even if DTC is detected, the circuit has returned to a normal condition at this time. Reproduce the failure, and then perform the diagnosis again.	Go to step **6**.
6	**CHECK POWER CABLE AND BUS BAR.** 1) Remove the bus bar between high voltage battery (HV8) and the electric noise filter (HV7). 2) Using an insulation multimeter (250 V range), measure the resistance between High Voltage battery terminals and chassis ground. ***Connector & terminal*** ***(HV8) P — Chassis ground:*** ***(HV8) N — Chassis ground:***	Is the resistance 2 MΩ or more?	Go to step **7**.	Replace the high voltage battery. <Ref. to HEV-17, High Voltage Battery.>
7	**CHECK POWER CABLE AND BUS BAR.** 1) Check bus bars between the electric noise filter (HV6), the drive motor inverter (HV5), and electric oil pump inverter (HV9) and the surrounding area for metallic foreign bodies, and if there are any, remove them. 2) Using an insulation multimeter (250 V range), measure the resistance between high voltage battery side terminal and chassis ground of electric noise filter. ***Connector & terminal*** ***(HV7) P — Chassis ground:*** ***(HV7) N — Chassis ground:***	Is the resistance 2 MΩ or more?	Even if DTC is detected, the circuit has returned to a normal condition at this time. Reproduce the failure, and then perform the diagnosis again.	Go to step **8**.
8	**CHECK POWER CABLE AND BUS BAR.** 1) Remove the DC/DC converter (HV3). 2) Using an insulation multimeter (250 V range), measure the resistance between high voltage battery side terminal and chassis ground of electric noise filter. ***Connector & terminal*** ***(HV7) P — Chassis ground:*** ***(HV7) N — Chassis ground:***	Is the resistance 2 MΩ or more?	Replace the DC/DC converter. <Ref. to HEV-38, DC/DC Converter.>	Go to step **9**.
9	**CHECK POWER CABLE AND BUS BAR.** 1) Remove the electric oil pump inverter (HV9). 2) Using an insulation multimeter (250 V range), measure the resistance between high voltage battery side terminal and chassis ground of electric noise filter. ***Connector & terminal*** ***(HV7) P — Chassis ground:*** ***(HV7) N — Chassis ground:***	Is the resistance 2 MΩ or more?	Replace the electric oil pump inverter. <Ref. to HEV-42, Inverter.>	Go to step **10**.

	Step	Check	Yes	No
10	**CHECK POWER CABLE AND BUS BAR.** 1) Remove the drive motor inverter amperage sensor (HV2) from the drive motor inverter. 2) Check the bus bar of the drive motor inverter amperage sensor (HV2) and the surrounding area for metallic foreign bodies, and remove them if there any, then reinstall the sensor. 3) Using an insulation multimeter (250 V range), measure the resistance between high voltage battery side terminal and chassis ground of electric noise filter. ***Connector & terminal*** ***(HV7) P — Chassis ground:*** ***(HV7) N — Chassis ground:***	Is the resistance 2 MΩ or more?	Even if DTC is detected, the circuit has returned to a normal condition at this time. Reproduce the failure, and then perform the diagnosis again.	Go to step **11**.
11	**CHECK POWER CABLE AND BUS BAR.** 1) Remove the drive motor inverter amperage sensor (HV2) from the drive motor inverter. 2) Using an insulation multimeter (250 V range), measure the resistance between high voltage battery side terminal and chassis ground of electric noise filter. ***Connector & terminal*** ***(HV7) P — Chassis ground:*** ***(HV7) N — Chassis ground:***	Is the resistance 2 MΩ or more?	Replace the drive motor inverter amperage sensor. <Ref. to HEV-27, Drive Motor Inverter Current Sensor.>	Go to step **12**.
12	**CHECK POWER CABLE AND BUS BAR.** 1) Remove the bus bar between the electric noise filter (HV6) and the drive motor inverter (HV5). 2) Using an insulation multimeter (250 V range), measure the resistance between high voltage battery side terminal and chassis ground of electric noise filter. ***Connector & terminal*** ***(HV7) P — Chassis ground:*** ***(HV7) N — Chassis ground:***	Is the resistance 2 MΩ or more?	Replace the drive motor inverter. <Ref. to HEV-42, Inverter.>	Replace the electric noise filter. <Ref. to HEV-31, Noise Filter.>
13	**CHECK POWER CABLE AND DRIVE MOTOR ASSEMBLY.** 1) Disconnect the power cable (HV1) from the drive motor assembly. NOTE: The gasket is NOT reusable. 2) Using an insulation multimeter (250 V range), measure the resistance between drive motor assembly and chassis ground. ***Connector & terminal*** ***(HV1) U — Chassis ground:*** ***(HV1) V — Chassis ground:*** ***(HV1) W — Chassis ground:***	Is the resistance 2 MΩ or more?	Replace the power cable. <Ref. to HEV-51, Power Cable.>	Replace the drive motor assembly. <Ref. to CVT(TH58A)-215, Drive Motor Assembly.>
14	**CHECK POWER CABLE AND ELECTRIC OIL PUMP.** 1) Disconnect the power cable (HV12) from electric oil pump. 2) Using an insulation multimeter (250 V range), measure the resistance between electric oil pump and chassis ground. ***Connector & terminal*** ***(HV12) U — Chassis ground:*** ***(HV12) V — Chassis ground:*** ***(HV12) W — Chassis ground:***	Is the resistance 2 MΩ or more?	Replace the power cable. <Ref. to HEV-51, Power Cable.>	Replace the electric oil pump. <Ref. to CVT(TH58A)-132, Electric Fluid Pump.>

CZ:DTC P0AA7 HYBRID BATTERY VOLTAGE SYSTEM ISOLATION SENSOR CIRCUIT

DIAGNOSIS:
- Detects a fault in leakage detection circuit.
- Detects open, short conditions in switches within the leakage detection circuit.
- Immediately at fault recognition

TROUBLE SYMPTOM:
Normal control

NOTE:
If this DTC is detected, replace the high voltage battery. <Ref. to HEV-17, High Voltage Battery.>

DA:DTC P0AAD HYBRID BATTERY PACK AIR TEMPERATURE SENSOR "A" CIRCUIT RANGE/PERFORMANCE

DIAGNOSIS:
- Detected when two consecutive driving cycles with fault occur. (Single engine startup is counted as one drive cycle.)
- GENERAL DESCRIPTION <Ref. to GD(HEV)-95, DTC P0AAD HYBRID BATTERY PACK AIR TEMPERATURE SENSOR "A" CIRCUIT RANGE/PERFORMANCE, Diagnostic Trouble Code (DTC) Detecting Criteria.>

TROUBLE SYMPTOM:
Normal control

NOTE:
If this DTC is detected, replace the high voltage battery. <Ref. to HEV-17, High Voltage Battery.>

DB:DTC P0AAE HYBRID BATTERY PACK AIR TEMPERATURE SENSOR "A" CIRCUIT LOW

DIAGNOSIS:
- Immediately at fault recognition
- GENERAL DESCRIPTION <Ref. to GD(HEV)-96, DTC P0AAE HYBRID BATTERY PACK AIR TEMPERATURE SENSOR "A" CIRCUIT LOW, Diagnostic Trouble Code (DTC) Detecting Criteria.>

TROUBLE SYMPTOM:
Normal control

NOTE:
If this DTC is detected, replace the high voltage battery. <Ref. to HEV-17, High Voltage Battery.>

DC:DTC P0AAF HYBRID BATTERY PACK AIR TEMPERATURE SENSOR "A" CIRCUIT HIGH

DIAGNOSIS:
- Immediately at fault recognition
- GENERAL DESCRIPTION <Ref. to GD(HEV)-97, DTC P0AAF HYBRID BATTERY PACK AIR TEMPERATURE SENSOR "A" CIRCUIT HIGH, Diagnostic Trouble Code (DTC) Detecting Criteria.>

TROUBLE SYMPTOM:
Normal control

NOTE:
If this DTC is detected, replace the high voltage battery. <Ref. to HEV-17, High Voltage Battery.>

DD:DTC P0ABF HYBRID BATTERY PACK CURRENT SENSOR "A" CIRCUIT

DIAGNOSIS:

- Immediately at fault recognition
- GENERAL DESCRIPTION <Ref. to GD(HEV)-98, DTC P0ABF HYBRID BATTERY PACK CURRENT SENSOR "A" CIRCUIT, Diagnostic Trouble Code (DTC) Detecting Criteria.>

TROUBLE SYMPTOM:

EV traveling/Auto Start Stop does not operate.
(Engine does not restart under EV traveling/Auto Start Stop condition.)

NOTE:
If this DTC is detected, replace the high voltage battery. <Ref. to HEV-17, High Voltage Battery.>

DE:DTC P0AC0 HYBRID BATTERY PACK CURRENT SENSOR "A" CIRCUIT RANGE/PERFORMANCE

DIAGNOSIS:

- Immediately at fault recognition
- GENERAL DESCRIPTION <Ref. to GD(HEV)-99, DTC P0AC0 HYBRID BATTERY PACK CURRENT SENSOR "A" CIRCUIT RANGE/PERFORMANCE, Diagnostic Trouble Code (DTC) Detecting Criteria.>

TROUBLE SYMPTOM:

EV traveling/Auto Start Stop does not operate.
(Engine does not restart under EV traveling/Auto Start Stop condition.)

NOTE:
If this DTC is detected, replace the high voltage battery. <Ref. to HEV-17, High Voltage Battery.>

DF:DTC P0AC1 HYBRID BATTERY PACK CURRENT SENSOR "A" CIRCUIT LOW

DIAGNOSIS:

- Immediately at fault recognition
- GENERAL DESCRIPTION <Ref. to GD(HEV)-100, DTC P0AC1 HYBRID BATTERY PACK CURRENT SENSOR "A" CIRCUIT LOW, Diagnostic Trouble Code (DTC) Detecting Criteria.>

TROUBLE SYMPTOM:

EV traveling/Auto Start Stop does not operate.
(Engine does not restart under EV traveling/Auto Start Stop condition.)

NOTE:
If this DTC is detected, replace the high voltage battery. <Ref. to HEV-17, High Voltage Battery.>

DG:DTC P0AC2 HYBRID BATTERY PACK CURRENT SENSOR "A" CIRCUIT HIGH

DIAGNOSIS:

- Immediately at fault recognition
- GENERAL DESCRIPTION <Ref. to GD(HEV)-101, DTC P0AC2 HYBRID BATTERY PACK CURRENT SENSOR "A" CIRCUIT HIGH, Diagnostic Trouble Code (DTC) Detecting Criteria.>

TROUBLE SYMPTOM:

EV traveling/Auto Start Stop does not operate.
(Engine does not restart under EV traveling/Auto Start Stop condition.)

NOTE:
If this DTC is detected, replace the high voltage battery. <Ref. to HEV-17, High Voltage Battery.>

DH:DTC P0AC3 HYBRID BATTERY PACK CURRENT SENSOR "A" CIRCUIT INTERMITTENT/ERRATIC

DIAGNOSIS:

- Immediately at fault recognition
- GENERAL DESCRIPTION <Ref. to GD(HEV)-102, DTC P0AC3 HYBRID BATTERY PACK CURRENT SENSOR "A" CIRCUIT INTERMITTENT/ERRATIC, Diagnostic Trouble Code (DTC) Detecting Criteria.>

TROUBLE SYMPTOM:

EV traveling/Auto Start Stop does not operate.
(Engine does not restart under EV traveling/Auto Start Stop condition.)

CAUTION:

Before performing diagnosis, refer to "CAUTION" in "General Description". <Ref. to HEV(diag)-8, CAUTION, General Description.>

	Step	Check	Yes	No
1	**CHECK DTC.** Using the Subaru Select Monitor, read DTCs of the following system. • Drive motor control system <Ref. to HEV(diag)-23, DRIVE MOTOR CONTROL SYSTEM, OPERATION, Read Diagnostic Trouble Code (DTC).>	Are any other DTCs detected? (current malfunction)	Perform the diagnosis according to DTC. <Ref. to HEV(diag)-77, DRIVE MOTOR CONTROL SYSTEM, LIST, List of Diagnostic Trouble Code (DTC).>	Go to step **2**.
2	**CHECK CURRENT DATA.** 1) Perform the Clear Memory Mode. <Ref. to HEV(diag)-24, HYBRID POWERTRAIN CONTROL SYSTEM, OPERATION, Clear Memory Mode.> 2) Start the engine. 3) Using the Subaru Select Monitor, confirm the current data of battery energy control system, the value of «High Voltage Battery Amperage Sensor Output». <Ref. to HEV(diag)-57, BATTERY ENERGY CONTROL SYSTEM, OPERATION, Read Current Data.>	Is the value 1 A or more? (When ignition is ON)	Replace the high voltage battery. <Ref. to HEV-17, High Voltage Battery.>	Even if DTC is detected, the circuit has returned to a normal condition at this time. Reproduce the failure, and then perform the diagnosis again. NOTE: In this case, temporary poor contact of connector, temporary open or short circuit of harness may be the cause.

DI: DTC P0AC6 HYBRID BATTERY TEMPERATURE SENSOR "B" CIRCUIT RANGE/PERFORMANCE

DIAGNOSIS:

- Immediately at fault recognition
- GENERAL DESCRIPTION <Ref. to GD(HEV)-104, DTC P0AC6 HYBRID BATTERY TEMPERATURE SENSOR "B" CIRCUIT RANGE/PERFORMANCE, Diagnostic Trouble Code (DTC) Detecting Criteria.>

TROUBLE SYMPTOM:

EV traveling/Auto Start Stop does not operate.
(Engine does not restart under EV traveling/Auto Start Stop condition.)

NOTE:
If this DTC is detected, replace the high voltage battery. <Ref. to HEV-17, High Voltage Battery.>

DJ:DTC P0AC7 HYBRID BATTERY TEMPERATURE SENSOR "B" CIRCUIT LOW

DIAGNOSIS:

- Immediately at fault recognition
- GENERAL DESCRIPTION <Ref. to GD(HEV)-105, DTC P0AC7 HYBRID BATTERY TEMPERATURE SENSOR "B" CIRCUIT LOW, Diagnostic Trouble Code (DTC) Detecting Criteria.>

TROUBLE SYMPTOM:

EV traveling/Auto Start Stop does not operate.
(Engine does not restart under EV traveling/Auto Start Stop condition.)

NOTE:
If this DTC is detected, replace the high voltage battery. <Ref. to HEV-17, High Voltage Battery.>

DK:DTC P0AC8 HYBRID BATTERY TEMPERATURE SENSOR "B" CIRCUIT HIGH

DIAGNOSIS:

- Immediately at fault recognition
- GENERAL DESCRIPTION <Ref. to GD(HEV)-106, DTC P0AC8 HYBRID BATTERY TEMPERATURE SENSOR "B" CIRCUIT HIGH, Diagnostic Trouble Code (DTC) Detecting Criteria.>

TROUBLE SYMPTOM:

EV traveling/Auto Start Stop does not operate.
(Engine does not restart under EV traveling/Auto Start Stop condition.)

NOTE:
If this DTC is detected, replace the high voltage battery. <Ref. to HEV-17, High Voltage Battery.>

DL:DTC P0ACB HYBRID BATTERY TEMPERATURE SENSOR "C" CIRCUIT RANGE/PERFORMANCE

DIAGNOSIS:

- Immediately at fault recognition
- GENERAL DESCRIPTION <Ref. to GD(HEV)-107, DTC P0ACB HYBRID BATTERY TEMPERATURE SENSOR "C" CIRCUIT RANGE/PERFORMANCE, Diagnostic Trouble Code (DTC) Detecting Criteria.>

TROUBLE SYMPTOM:

EV traveling/Auto Start Stop does not operate.
(Engine does not restart under EV traveling/Auto Start Stop condition.)

NOTE:
If this DTC is detected, replace the high voltage battery. <Ref. to HEV-17, High Voltage Battery.>

DM:DTC P0ACC HYBRID BATTERY TEMPERATURE SENSOR "C" CIRCUIT LOW

DIAGNOSIS:

- Immediately at fault recognition
- GENERAL DESCRIPTION <Ref. to GD(HEV)-108, DTC P0ACC HYBRID BATTERY TEMPERATURE SENSOR "C" CIRCUIT LOW, Diagnostic Trouble Code (DTC) Detecting Criteria.>

TROUBLE SYMPTOM:

EV traveling/Auto Start Stop does not operate.
(Engine does not restart under EV traveling/Auto Start Stop condition.)

NOTE:
If this DTC is detected, replace the high voltage battery. <Ref. to HEV-17, High Voltage Battery.>

DN:DTC P0ACD HYBRID BATTERY TEMPERATURE SENSOR "C" CIRCUIT HIGH

DIAGNOSIS:

- Immediately at fault recognition
- GENERAL DESCRIPTION <Ref. to GD(HEV)-109, DTC P0ACD HYBRID BATTERY TEMPERATURE SENSOR "C" CIRCUIT HIGH, Diagnostic Trouble Code (DTC) Detecting Criteria.>

TROUBLE SYMPTOM:

EV traveling/Auto Start Stop does not operate.
(Engine does not restart under EV traveling/Auto Start Stop condition.)

NOTE:
If this DTC is detected, replace the high voltage battery. <Ref. to HEV-17, High Voltage Battery.>

DO:DTC P0AD9 HYBRID BATTERY POSITIVE CONTACTOR CONTROL CIRCUIT/OPEN

DIAGNOSIS:

- Immediately at fault recognition
- GENERAL DESCRIPTION <Ref. to GD(HEV)-110, DTC P0AD9 HYBRID BATTERY POSITIVE CONTACTOR CONTROL CIRCUIT/OPEN, Diagnostic Trouble Code (DTC) Detecting Criteria.>

TROUBLE SYMPTOM:

- EV traveling/Auto Start Stop does not operate.
- Motor assist does not regenerates.

NOTE:
If this DTC is detected, replace the high voltage battery. <Ref. to HEV-17, High Voltage Battery.>

DP:DTC P0ADB HYBRID BATTERY POSITIVE CONTACTOR CONTROL CIRCUIT LOW

DIAGNOSIS:

- Immediately at fault recognition
- GENERAL DESCRIPTION <Ref. to GD(HEV)-111, DTC P0ADB HYBRID BATTERY POSITIVE CONTACTOR CONTROL CIRCUIT LOW, Diagnostic Trouble Code (DTC) Detecting Criteria.>

TROUBLE SYMPTOM:

- EV traveling/Auto Start Stop does not operate.
- Motor assist does not regenerates.

NOTE:
If this DTC is detected, replace the high voltage battery. <Ref. to HEV-17, High Voltage Battery.>

DQ:DTC P0ADD HYBRID BATTERY NEGATIVE CONTACTOR CONTROL CIRCUIT/OPEN

DIAGNOSIS:
- Immediately at fault recognition
- GENERAL DESCRIPTION <Ref. to GD(HEV)-112, DTC P0ADD HYBRID BATTERY NEGATIVE CONTACTOR CONTROL CIRCUIT/OPEN, Diagnostic Trouble Code (DTC) Detecting Criteria.>

TROUBLE SYMPTOM:
- EV traveling/Auto Start Stop does not operate.
- Motor assist does not regenerates.

NOTE:
If this DTC is detected, replace the high voltage battery. <Ref. to HEV-17, High Voltage Battery.>

DR:DTC P0ADF HYBRID BATTERY NEGATIVE CONTACTOR CONTROL CIRCUIT LOW

DIAGNOSIS:
- Detects short conditions in – side contactor control signal line.
- If short conditions are detected in – side contactor control signal line, it is judged as NG.
- Immediately at fault recognition

TROUBLE SYMPTOM:
Normal control

NOTE:
If this DTC is detected, replace the high voltage battery. <Ref. to HEV-17, High Voltage Battery.>

DS:DTC P0AE4 HYBRID BATTERY PRECHARGE CONTACTOR CONTROL CIRCUIT

DIAGNOSIS:
- Immediately at fault recognition
- GENERAL DESCRIPTION <Ref. to GD(HEV)-113, DTC P0AE4 HYBRID BATTERY PRECHARGE CONTACTOR CONTROL CIRCUIT, Diagnostic Trouble Code (DTC) Detecting Criteria.>

TROUBLE SYMPTOM:
- EV traveling/Auto Start Stop does not operate.
- Motor assist does not regenerates.

NOTE:
If this DTC is detected, replace the high voltage battery. <Ref. to HEV-17, High Voltage Battery.>

DT:DTC P0AE6 HYBRID BATTERY PRECHARGE CONTACTOR CONTROL CIRCUIT LOW

DIAGNOSIS:
- Detects short conditions in precharge contactor control signal line.
- If short conditions are detected in precharge contactor control signal line, it is judged as NG.
- Immediately at fault recognition

TROUBLE SYMPTOM:
Normal control

NOTE:
If this DTC is detected, replace the high voltage battery. <Ref. to HEV-17, High Voltage Battery.>

DU:DTC P0B25 HYBRID BATTERY "A" VOLTAGE LOW

DIAGNOSIS:

- Immediately at fault recognition
- GENERAL DESCRIPTION <Ref. to GD(HEV)-114, DTC P0B25 HYBRID BATTERY "A" VOLTAGE LOW, Diagnostic Trouble Code (DTC) Detecting Criteria.>

TROUBLE SYMPTOM:

- EV traveling/Auto Start Stop does not operate.
- Motor assist does not regenerates.

CAUTION:

Before performing diagnosis, refer to “CAUTION” in “General Description”. <Ref. to HEV(diag)-8, CAUTION, General Description.>

	Step	Check	Yes	No
1	**CHECK FREEZE FRAME DATA.** Using the Subaru Select Monitor, confirm the value of «High Voltage Battery Discharge Power Limit 1» in the freeze frame data of battery energy control system. <Ref. to HEV(diag)-68, BATTERY ENERGY CONTROL SYSTEM, OPERATION, Freeze Frame Data Display.>	Does the value show 0 kw?	Go to step **2**.	Replace the high voltage battery. <Ref. to HEV-17, High Voltage Battery.>
2	**CHECK FREEZE FRAME DATA.** Using the Subaru Select Monitor, confirm the values of «Drive Motor Torque Target(HPCM)»«Drive Motor Speed Target(HPCM)» in the freeze frame data of battery energy control system. <Ref. to HEV(diag)-68, BATTERY ENERGY CONTROL SYSTEM, OPERATION, Freeze Frame Data Display.>	Are the values of «Drive Motor Torque Target(HPCM)» and «Drive Motor Speed Target(HPCM)» within the standard in the margin?	Go to step **3**.	Replace the HPCM. <Ref. to HEV-37, Hybrid Powertrain Control Module.>
3	**CHECK FREEZE FRAME DATA.** Using the Subaru Select Monitor, confirm the values of «Drive Motor Output Torque Actual»«Drive Motor Speed» in the freeze frame data of battery energy control system. <Ref. to HEV(diag)-68, BATTERY ENERGY CONTROL SYSTEM, OPERATION, Freeze Frame Data Display.>	Are the values of «Drive Motor Output Torque Actual» and «Drive Motor Speed» within the standard in the margin?	Replace the high voltage battery. <Ref. to HEV-17, High Voltage Battery.>	Replace DMCM. <Ref. to CVT(TH58A)-155, Drive Motor Control Module.>

NOTE:

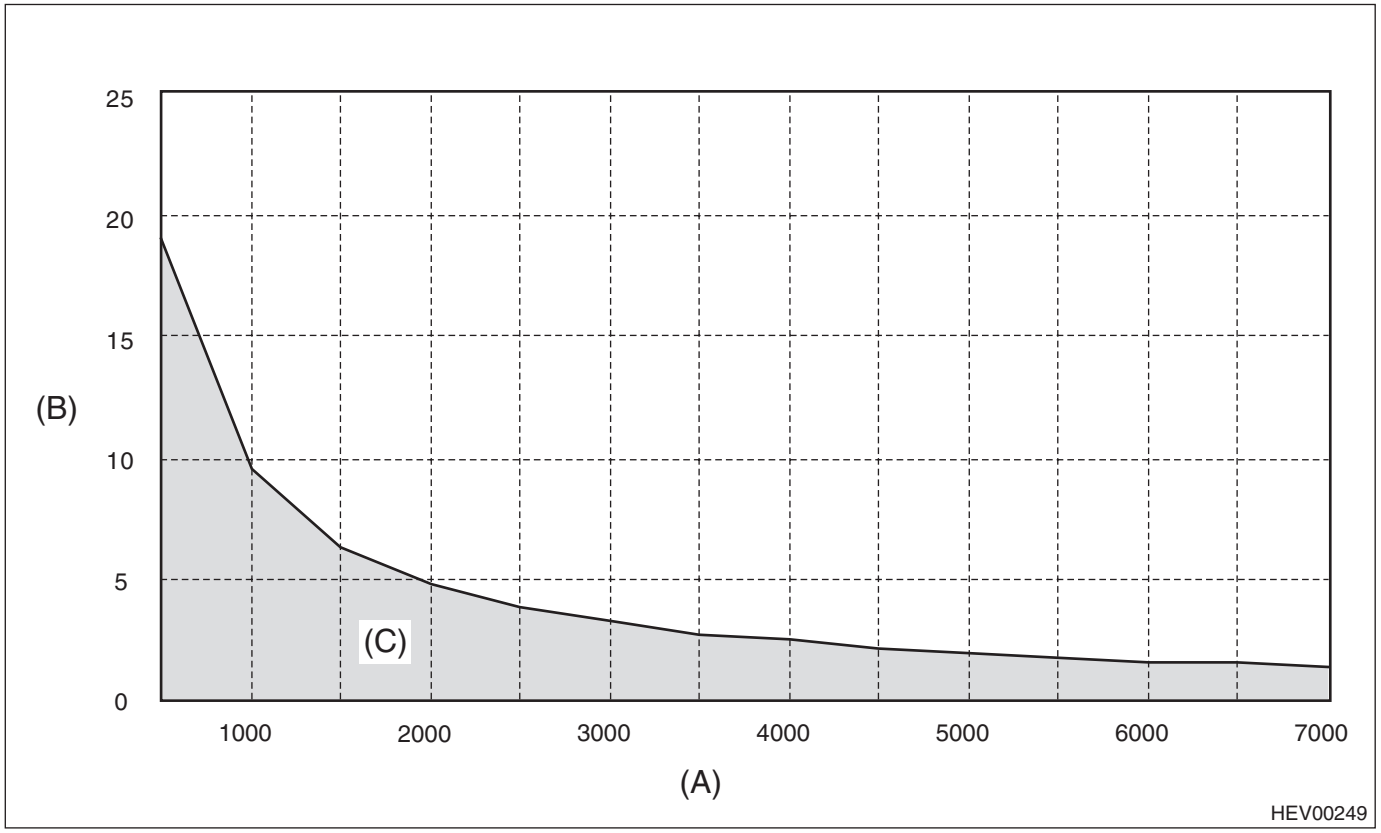

(A) Drive Motor Speed Target(HPCM) or Drive Motor Speed
(B) Drive Motor Torque Target (HPCM) or Drive Motor Output Torque Actual
(C) Standard

DV:DTC P0B26 HYBRID BATTERY "A" VOLTAGE HIGH

DIAGNOSIS:

- Immediately at fault recognition
- GENERAL DESCRIPTION <Ref. to GD(HEV)-115, DTC P0B26 HYBRID BATTERY "A" VOLTAGE HIGH, Diagnostic Trouble Code (DTC) Detecting Criteria.>

TROUBLE SYMPTOM:

- EV traveling/Auto Start Stop does not operate.
- Motor assist does not regenerates.

CAUTION:

Before performing diagnosis, refer to “CAUTION” in “General Description”. <Ref. to HEV(diag)-8, CAUTION, General Description.>

	Step	Check	Yes	No
1	**CHECK FREEZE FRAME DATA.** Using the Subaru Select Monitor, confirm the value of «High Voltage Battery Charge Power 1» in the freeze frame data of battery energy control system. <Ref. to HEV(diag)-68, BATTERY ENERGY CONTROL SYSTEM, OPERATION, Freeze Frame Data Display.>	Does the value show 0 kw?	Go to step **2**.	Replace the high voltage battery. <Ref. to HEV-17, High Voltage Battery.>
2	**CHECK FREEZE FRAME DATA.** Using the Subaru Select Monitor, confirm the values of «Drive Motor Torque Target(HPCM)»«Drive Motor Speed Target(HPCM)» in the freeze frame data of battery energy control system. <Ref. to HEV(diag)-68, BATTERY ENERGY CONTROL SYSTEM, OPERATION, Freeze Frame Data Display.>	Are the values of «Drive Motor Torque Target(HPCM)» and «Drive Motor Speed Target(HPCM)» within the standard in the margin?	Go to step **3**.	Replace the HPCM. <Ref. to HEV-37, Hybrid Powertrain Control Module.>
3	**CHECK FREEZE FRAME DATA.** Using the Subaru Select Monitor, confirm the values of «Drive Motor Output Torque Actual»«Drive Motor Speed» in the freeze frame data of battery energy control system. <Ref. to HEV(diag)-68, BATTERY ENERGY CONTROL SYSTEM, OPERATION, Freeze Frame Data Display.>	Are the values of «Drive Motor Output Torque Actual» and «Drive Motor Speed» within the standard in the margin?	Replace the high voltage battery. <Ref. to HEV-17, High Voltage Battery.>	Replace DMCM. <Ref. to CVT(TH58A)-155, Drive Motor Control Module.>

NOTE:

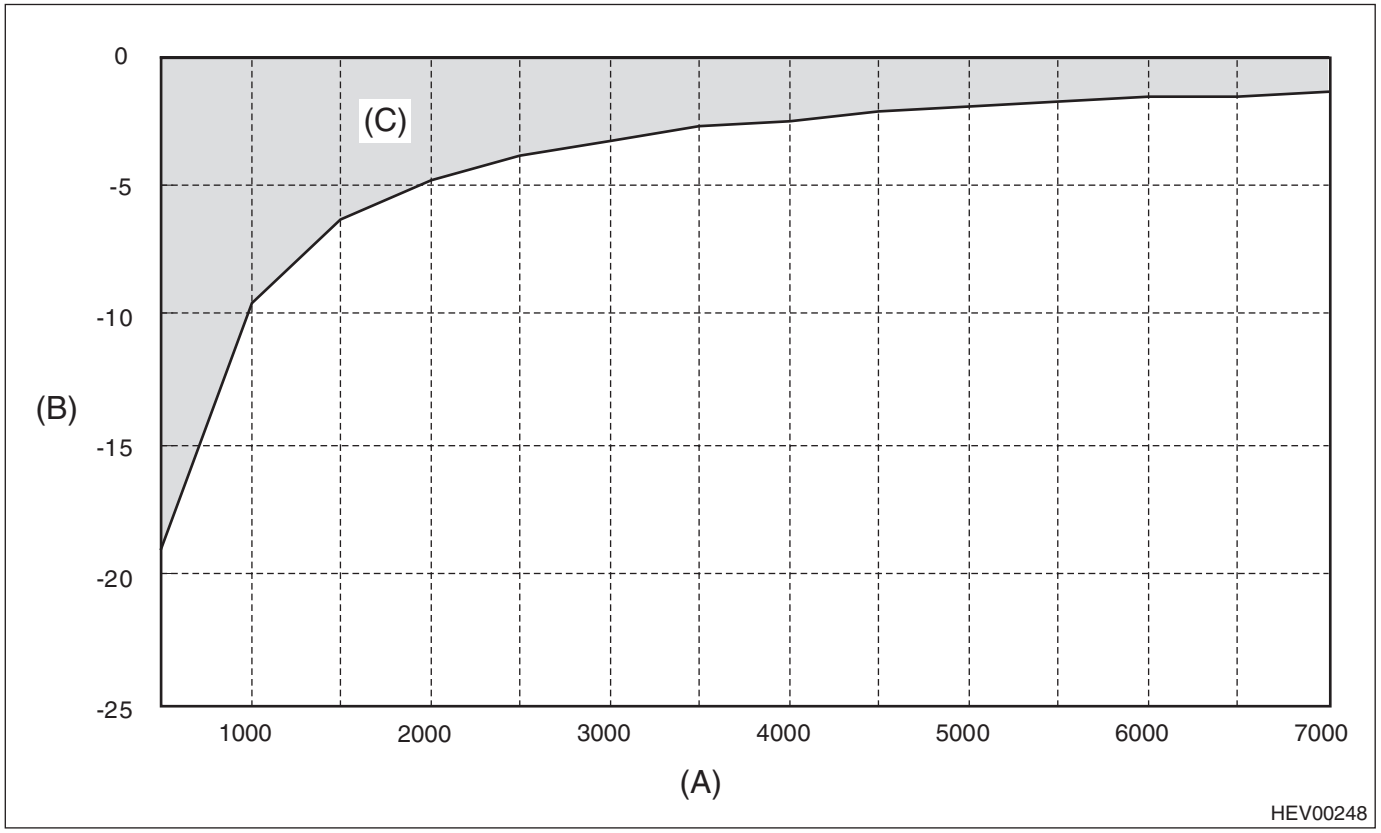

(A) Drive Motor Speed Target(HPCM) or Drive Motor Speed
(B) Drive Motor Torque Target (HPCM) or Drive Motor Output Torque Actual
(C) Standard

DW:DTC P0B37 HIGH VOLTAGE SERVICE DISCONNECT OPEN

DIAGNOSIS:

- Immediately at fault recognition
- GENERAL DESCRIPTION <Ref. to GD(HEV)-116, DTC P0B37 HIGH VOLTAGE SERVICE DISCONNECT OPEN, Diagnostic Trouble Code (DTC) Detecting Criteria.>

TROUBLE SYMPTOM:

- EV traveling/Auto Start Stop does not operate.
- Motor assist does not regenerates.

CAUTION:

Before performing diagnosis, refer to "CAUTION" in "General Description". <Ref. to HEV(diag)-8, CAUTION, General Description.>

	Step	Check	Yes	No
1	**CHECK SERVICE DISCONNECT PLUG.** Check installation condition of service disconnect plug. <Ref. to HEV-15, Service Plug.>	Is the service disconnect plug securely installed? Is it locked?	Go to step **2**.	Securely install the service disconnect plug.
2	**CHECK SERVICE DISCONNECT PLUG.** 1) Turn the ignition to OFF. 2) Disconnect the ground cable of the 12 volt auxiliary battery, and as for the 12 volt engine restart battery, disconnect the ground cable from the 12V engine restart battery sensor. <Ref. to NT-5, BATTERY, NOTE, Note.> 3) Remove the service disconnect plug. <Ref. to HEV-15, Service Plug.>	Is the condition of service disconnect plug normal? (Check for defective lock, rust or contamination in terminals, etc.)	Go to step **3**.	Replace the service disconnect plug.
3	**CHECK CURRENT DATA.** 1) Install the service disconnect plug. 2) Turn the ignition switch to ON. 3) Using the Subaru Select Monitor, confirm the current data of battery energy control system, the value of «Service Plug Status». <Ref. to HEV(diag)-57, BATTERY ENERGY CONTROL SYSTEM, OPERATION, Read Current Data.>	Does the value show «OFF»?	Go to step **4**.	Even if DTC is detected, the circuit has returned to a normal condition at this time. Reproduce the failure, and then perform the diagnosis again. NOTE: In this case, temporary poor contact of connector, temporary open or short circuit of harness may be the cause.

	Step	Check	Yes	No
4	**CHECK CURRENT DATA.** 1) Turn the ignition to OFF. 2) Disconnect the ground cable of the 12 volt auxiliary battery, and as for the 12 volt engine restart battery, disconnect the ground cable from the 12V engine restart battery sensor. <Ref. to NT-5, BATTERY, NOTE, Note.> 3) Remove the service disconnect plug. <Ref. to HEV-15, Service Plug.> 4) Install the service disconnect plug. 5) Turn the ignition switch to OFF. 6) Wait for 30 seconds. 7) Turn the ignition switch to ON. 8) Using the Subaru Select Monitor, confirm the current data of battery energy control system, the value of «Service Plug Status». <Ref. to HEV(diag)-57, BATTERY ENERGY CONTROL SYSTEM, OPERATION, Read Current Data.>	Does the value show «OFF»?	Replace the high voltage battery. <Ref. to HEV-17, High Voltage Battery.>	Even if DTC is detected, the circuit has returned to a normal condition at this time. Reproduce the failure, and then perform the diagnosis again. NOTE: In this case, temporary poor contact of connector, temporary open or short circuit of harness may be the cause.

DX:DTC P0B3C HYBRID BATTERY VOLTAGE SENSE "A" CIRCUIT RANGE/ PERFORMANCE

DIAGNOSIS:

- Immediately at fault recognition
- GENERAL DESCRIPTION <Ref. to GD(HEV)-117, DTC P0B3C HYBRID BATTERY VOLTAGE SENSE "A" CIRCUIT RANGE/PERFORMANCE, Diagnostic Trouble Code (DTC) Detecting Criteria.>

TROUBLE SYMPTOM:

EV traveling/Auto Start Stop does not operate.
(Engine does not restart under EV traveling/Auto Start Stop condition.)

NOTE:
If this DTC is detected, replace the high voltage battery. <Ref. to HEV-17, High Voltage Battery.>

DY:DTC P0B3D HYBRID BATTERY VOLTAGE SENSE "A" CIRCUIT LOW

DIAGNOSIS:

- Immediately at fault recognition
- GENERAL DESCRIPTION <Ref. to GD(HEV)-118, DTC P0B3D HYBRID BATTERY VOLTAGE SENSE "A" CIRCUIT LOW, Diagnostic Trouble Code (DTC) Detecting Criteria.>

TROUBLE SYMPTOM:

EV traveling/Auto Start Stop does not operate.
(Engine does not restart under EV traveling/Auto Start Stop condition.)

NOTE:
If this DTC is detected, replace the high voltage battery. <Ref. to HEV-17, High Voltage Battery.>

DZ:DTC P0B3E HYBRID BATTERY VOLTAGE SENSE "A" CIRCUIT HIGH

DIAGNOSIS:

- Immediately at fault recognition
- GENERAL DESCRIPTION <Ref. to GD(HEV)-119, DTC P0B3E HYBRID BATTERY VOLTAGE SENSE "A" CIRCUIT HIGH, Diagnostic Trouble Code (DTC) Detecting Criteria.>

TROUBLE SYMPTOM:

EV traveling/Auto Start Stop does not operate.
(Engine does not restart under EV traveling/Auto Start Stop condition.)

NOTE:
If this DTC is detected, replace the high voltage battery. <Ref. to HEV-17, High Voltage Battery.>

EA:DTC P0B41 HYBRID BATTERY VOLTAGE SENSE "B" CIRCUIT RANGE/ PERFORMANCE

DIAGNOSIS:

- Immediately at fault recognition
- GENERAL DESCRIPTION <Ref. to GD(HEV)-120, DTC P0B41 HYBRID BATTERY VOLTAGE SENSE "B" CIRCUIT RANGE/PERFORMANCE, Diagnostic Trouble Code (DTC) Detecting Criteria.>

TROUBLE SYMPTOM:

EV traveling/Auto Start Stop does not operate.
(Engine does not restart under EV traveling/Auto Start Stop condition.)

NOTE:
If this DTC is detected, replace the high voltage battery. <Ref. to HEV-17, High Voltage Battery.>

EB:DTC P0B42 HYBRID BATTERY VOLTAGE SENSE "B" CIRCUIT LOW

DIAGNOSIS:

- Immediately at fault recognition
- GENERAL DESCRIPTION <Ref. to GD(HEV)-121, DTC P0B42 HYBRID BATTERY VOLTAGE SENSE "B" CIRCUIT LOW, Diagnostic Trouble Code (DTC) Detecting Criteria.>

TROUBLE SYMPTOM:

EV traveling/Auto Start Stop does not operate.
(Engine does not restart under EV traveling/Auto Start Stop condition.)

NOTE:
If this DTC is detected, replace the high voltage battery. <Ref. to HEV-17, High Voltage Battery.>

EC:DTC P0B43 HYBRID BATTERY VOLTAGE SENSE "B" CIRCUIT HIGH

DIAGNOSIS:

- Immediately at fault recognition
- GENERAL DESCRIPTION <Ref. to GD(HEV)-122, DTC P0B43 HYBRID BATTERY VOLTAGE SENSE "B" CIRCUIT HIGH, Diagnostic Trouble Code (DTC) Detecting Criteria.>

TROUBLE SYMPTOM:

EV traveling/Auto Start Stop does not operate.
(Engine does not restart under EV traveling/Auto Start Stop condition.)

NOTE:
If this DTC is detected, replace the high voltage battery. <Ref. to HEV-17, High Voltage Battery.>

ED:DTC P0B46 HYBRID BATTERY VOLTAGE SENSE "C" CIRCUIT RANGE/ PERFORMANCE

DIAGNOSIS:

- Immediately at fault recognition
- GENERAL DESCRIPTION <Ref. to GD(HEV)-123, DTC P0B46 HYBRID BATTERY VOLTAGE SENSE "C" CIRCUIT RANGE/PERFORMANCE, Diagnostic Trouble Code (DTC) Detecting Criteria.>

TROUBLE SYMPTOM:

EV traveling/Auto Start Stop does not operate.
(Engine does not restart under EV traveling/Auto Start Stop condition.)

NOTE:
If this DTC is detected, replace the high voltage battery. <Ref. to HEV-17, High Voltage Battery.>

EE:DTC P0B47 HYBRID BATTERY VOLTAGE SENSE "C" CIRCUIT LOW

DIAGNOSIS:

- Immediately at fault recognition
- GENERAL DESCRIPTION <Ref. to GD(HEV)-124, DTC P0B47 HYBRID BATTERY VOLTAGE SENSE "C" CIRCUIT LOW, Diagnostic Trouble Code (DTC) Detecting Criteria.>

TROUBLE SYMPTOM:

EV traveling/Auto Start Stop does not operate.
(Engine does not restart under EV traveling/Auto Start Stop condition.)

NOTE:
If this DTC is detected, replace the high voltage battery. <Ref. to HEV-17, High Voltage Battery.>

EF:DTC P0B48 HYBRID BATTERY VOLTAGE SENSE "C" CIRCUIT HIGH

DIAGNOSIS:

- Immediately at fault recognition
- GENERAL DESCRIPTION <Ref. to GD(HEV)-125, DTC P0B48 HYBRID BATTERY VOLTAGE SENSE "C" CIRCUIT HIGH, Diagnostic Trouble Code (DTC) Detecting Criteria.>

TROUBLE SYMPTOM:

EV traveling/Auto Start Stop does not operate.
(Engine does not restart under EV traveling/Auto Start Stop condition.)

NOTE:
If this DTC is detected, replace the high voltage battery. <Ref. to HEV-17, High Voltage Battery.>

EG:DTC P0B4A HYBRID BATTERY VOLTAGE SENSE "D" CIRCUIT

DIAGNOSIS:

- Immediately at fault recognition
- GENERAL DESCRIPTION <Ref. to GD(HEV)-126, DTC P0B4A HYBRID BATTERY VOLTAGE SENSE "D" CIRCUIT, Diagnostic Trouble Code (DTC) Detecting Criteria.>

TROUBLE SYMPTOM:

Normal control

NOTE:
If this DTC is detected, replace the high voltage battery. <Ref. to HEV-17, High Voltage Battery.>

EH:DTC P0B4B HYBRID BATTERY VOLTAGE SENSE "D" CIRCUIT RANGE/ PERFORMANCE

DIAGNOSIS:

- Immediately at fault recognition
- GENERAL DESCRIPTION <Ref. to GD(HEV)-127, DTC P0B4B HYBRID BATTERY VOLTAGE SENSE "D" CIRCUIT RANGE/PERFORMANCE, Diagnostic Trouble Code (DTC) Detecting Criteria.>

TROUBLE SYMPTOM:

EV traveling/Auto Start Stop does not operate.
(Engine does not restart under EV traveling/Auto Start Stop condition.)

NOTE:
If this DTC is detected, replace the high voltage battery. <Ref. to HEV-17, High Voltage Battery.>

EI: DTC P0B4C HYBRID BATTERY VOLTAGE SENSE "D" CIRCUIT LOW

DIAGNOSIS:

- Immediately at fault recognition
- GENERAL DESCRIPTION <Ref. to GD(HEV)-128, DTC P0B4C HYBRID BATTERY VOLTAGE SENSE "D" CIRCUIT LOW, Diagnostic Trouble Code (DTC) Detecting Criteria.>

TROUBLE SYMPTOM:

EV traveling/Auto Start Stop does not operate.
(Engine does not restart under EV traveling/Auto Start Stop condition.)

NOTE:
If this DTC is detected, replace the high voltage battery. <Ref. to HEV-17, High Voltage Battery.>

EJ:DTC P0B4D HYBRID BATTERY VOLTAGE SENSE "D" CIRCUIT HIGH

DIAGNOSIS:

- Immediately at fault recognition
- GENERAL DESCRIPTION <Ref. to GD(HEV)-129, DTC P0B4D HYBRID BATTERY VOLTAGE SENSE "D" CIRCUIT HIGH, Diagnostic Trouble Code (DTC) Detecting Criteria.>

TROUBLE SYMPTOM:

EV traveling/Auto Start Stop does not operate.
(Engine does not restart under EV traveling/Auto Start Stop condition.)

NOTE:
If this DTC is detected, replace the high voltage battery. <Ref. to HEV-17, High Voltage Battery.>

EK:DTC P0B50 HYBRID BATTERY VOLTAGE SENSE "E" CIRCUIT RANGE/ PERFORMANCE

DIAGNOSIS:

- Immediately at fault recognition
- GENERAL DESCRIPTION <Ref. to GD(HEV)-130, DTC P0B50 HYBRID BATTERY VOLTAGE SENSE "E" CIRCUIT RANGE/PERFORMANCE, Diagnostic Trouble Code (DTC) Detecting Criteria.>

TROUBLE SYMPTOM:

EV traveling/Auto Start Stop does not operate.
(Engine does not restart under EV traveling/Auto Start Stop condition.)

NOTE:
If this DTC is detected, replace the high voltage battery. <Ref. to HEV-17, High Voltage Battery.>

EL:DTC P0B51 HYBRID BATTERY VOLTAGE SENSE "E" CIRCUIT LOW

DIAGNOSIS:

- Immediately at fault recognition
- GENERAL DESCRIPTION <Ref. to GD(HEV)-131, DTC P0B51 HYBRID BATTERY VOLTAGE SENSE "E" CIRCUIT LOW, Diagnostic Trouble Code (DTC) Detecting Criteria.>

TROUBLE SYMPTOM:

EV traveling/Auto Start Stop does not operate.
(Engine does not restart under EV traveling/Auto Start Stop condition.)

NOTE:
If this DTC is detected, replace the high voltage battery. <Ref. to HEV-17, High Voltage Battery.>

EM:DTC P0B52 HYBRID BATTERY VOLTAGE SENSE "E" CIRCUIT HIGH

DIAGNOSIS:

- Immediately at fault recognition
- GENERAL DESCRIPTION <Ref. to GD(HEV)-132, DTC P0B52 HYBRID BATTERY VOLTAGE SENSE "E" CIRCUIT HIGH, Diagnostic Trouble Code (DTC) Detecting Criteria.>

TROUBLE SYMPTOM:

EV traveling/Auto Start Stop does not operate.
(Engine does not restart under EV traveling/Auto Start Stop condition.)

NOTE:
If this DTC is detected, replace the high voltage battery. <Ref. to HEV-17, High Voltage Battery.>

EN:DTC P0B55 HYBRID BATTERY VOLTAGE SENSE "F" CIRCUIT RANGE/ PERFORMANCE

DIAGNOSIS:

- Immediately at fault recognition
- GENERAL DESCRIPTION <Ref. to GD(HEV)-133, DTC P0B55 HYBRID BATTERY VOLTAGE SENSE "F" CIRCUIT RANGE/PERFORMANCE, Diagnostic Trouble Code (DTC) Detecting Criteria.>

TROUBLE SYMPTOM:

EV traveling/Auto Start Stop does not operate.
(Engine does not restart under EV traveling/Auto Start Stop condition.)

NOTE:
If this DTC is detected, replace the high voltage battery. <Ref. to HEV-17, High Voltage Battery.>

EO:DTC P0B56 HYBRID BATTERY VOLTAGE SENSE "F" CIRCUIT LOW

DIAGNOSIS:

- Immediately at fault recognition
- GENERAL DESCRIPTION <Ref. to GD(HEV)-134, DTC P0B56 HYBRID BATTERY VOLTAGE SENSE "F" CIRCUIT LOW, Diagnostic Trouble Code (DTC) Detecting Criteria.>

TROUBLE SYMPTOM:

EV traveling/Auto Start Stop does not operate.
(Engine does not restart under EV traveling/Auto Start Stop condition.)

NOTE:
If this DTC is detected, replace the high voltage battery. <Ref. to HEV-17, High Voltage Battery.>

EP:DTC P0B57 HYBRID BATTERY VOLTAGE SENSE "F" CIRCUIT HIGH

DIAGNOSIS:

- Immediately at fault recognition
- GENERAL DESCRIPTION <Ref. to GD(HEV)-135, DTC P0B57 HYBRID BATTERY VOLTAGE SENSE "F" CIRCUIT HIGH, Diagnostic Trouble Code (DTC) Detecting Criteria.>

TROUBLE SYMPTOM:

EV traveling/Auto Start Stop does not operate.
(Engine does not restart under EV traveling/Auto Start Stop condition.)

NOTE:
If this DTC is detected, replace the high voltage battery. <Ref. to HEV-17, High Voltage Battery.>

EQ:DTC P0B5A HYBRID BATTERY VOLTAGE SENSE "G" CIRCUIT RANGE/ PERFORMANCE

DIAGNOSIS:

- Immediately at fault recognition
- GENERAL DESCRIPTION <Ref. to GD(HEV)-136, DTC P0B5A HYBRID BATTERY VOLTAGE SENSE "G" CIRCUIT RANGE/PERFORMANCE, Diagnostic Trouble Code (DTC) Detecting Criteria.>

TROUBLE SYMPTOM:

EV traveling/Auto Start Stop does not operate.
(Engine does not restart under EV traveling/Auto Start Stop condition.)

NOTE:
If this DTC is detected, replace the high voltage battery. <Ref. to HEV-17, High Voltage Battery.>

ER:DTC P0B5B HYBRID BATTERY VOLTAGE SENSE "G" CIRCUIT LOW

DIAGNOSIS:

- Immediately at fault recognition
- GENERAL DESCRIPTION <Ref. to GD(HEV)-137, DTC P0B5B HYBRID BATTERY VOLTAGE SENSE "G" CIRCUIT LOW, Diagnostic Trouble Code (DTC) Detecting Criteria.>

TROUBLE SYMPTOM:

EV traveling/Auto Start Stop does not operate.
(Engine does not restart under EV traveling/Auto Start Stop condition.)

NOTE:
If this DTC is detected, replace the high voltage battery. <Ref. to HEV-17, High Voltage Battery.>

ES:DTC P0B5C HYBRID BATTERY VOLTAGE SENSE "G" CIRCUIT HIGH

DIAGNOSIS:

- Immediately at fault recognition
- GENERAL DESCRIPTION <Ref. to GD(HEV)-138, DTC P0B5C HYBRID BATTERY VOLTAGE SENSE "G" CIRCUIT HIGH, Diagnostic Trouble Code (DTC) Detecting Criteria.>

TROUBLE SYMPTOM:

EV traveling/Auto Start Stop does not operate.
(Engine does not restart under EV traveling/Auto Start Stop condition.)

NOTE:
If this DTC is detected, replace the high voltage battery. <Ref. to HEV-17, High Voltage Battery.>

ET:DTC P0BB8 HYBRID BATTERY VOLTAGE SENSE "Z" CIRCUIT

DIAGNOSIS:

- Immediately at fault recognition
- GENERAL DESCRIPTION <Ref. to GD(HEV)-139, DTC P0BB8 HYBRID BATTERY VOLTAGE SENSE "Z" CIRCUIT, Diagnostic Trouble Code (DTC) Detecting Criteria.>

TROUBLE SYMPTOM:

- EV traveling/Auto Start Stop does not operate.
- Motor assist does not regenerates.

NOTE:
If this DTC is detected, replace the high voltage battery. <Ref. to HEV-17, High Voltage Battery.>

EU:DTC P0C30 HYBRID BATTERY PACK STATE OF CHARGE HIGH

DIAGNOSIS:

- Immediately at fault recognition
- GENERAL DESCRIPTION <Ref. to GD(HEV)-140, DTC P0C30 HYBRID BATTERY PACK STATE OF CHARGE HIGH, Diagnostic Trouble Code (DTC) Detecting Criteria.>

TROUBLE SYMPTOM:

- EV traveling/Auto Start Stop does not operate.
- Motor assist does not regenerates.

CAUTION:

Before performing diagnosis, refer to "CAUTION" in "General Description". <Ref. to HEV(diag)-8, CAUTION, General Description.>

	Step	Check	Yes	No
1	**CHECK FREEZE FRAME DATA.** Using the Subaru Select Monitor, confirm the value of «High Voltage Battery Amperage» in the freeze frame data of battery energy control system. <Ref. to HEV(diag)-68, BATTERY ENERGY CONTROL SYSTEM, OPERATION, Freeze Frame Data Display.>	Is the value –1A or less?	Go to step **2**.	Replace the high voltage battery. <Ref. to HEV-17, High Voltage Battery.>
2	**CHECK INDICATOR.** 1) Turn the ignition switch to OFF. 2) Start the engine. 3) Check illumination of "Hybrid READY indicator light" in the meter.	Is the indicator illuminating?	Go to step **3**.	Replace HPCM and the high voltage battery. <Ref. to HEV-37, Hybrid Powertrain Control Module.> <Ref. to HEV-17, High Voltage Battery.>
3	**CHECK CURRENT DATA.** 1) Drive approximately 2 km (1.2 miles) at a speed of 30 km/h (18.6 MPH) or more. 2) Using the Subaru Select Monitor, confirm the current data of battery energy control system, the value of «High Voltage Battery SOC». <Ref. to HEV(diag)-57, BATTERY ENERGY CONTROL SYSTEM, OPERATION, Read Current Data.>	Is the value 94% or less?	Even if DTC is detected, the circuit has returned to a normal condition at this time. Reproduce the failure, and then perform the diagnosis again. NOTE: In this case, temporary poor contact of connector, temporary open or short circuit of harness may be the cause.	Replace the high voltage battery. <Ref. to HEV-17, High Voltage Battery.>

EV:DTC P0C78 HYBRID BATTERY SYSTEM PRECHARGE TIME TOO LONG

DIAGNOSIS:

- Immediately at fault recognition
- GENERAL DESCRIPTION <Ref. to GD(HEV)-141, DTC P0C78 HYBRID BATTERY SYSTEM PRECHARGE TIME TOO LONG, Diagnostic Trouble Code (DTC) Detecting Criteria.>

TROUBLE SYMPTOM:

- EV traveling/Auto Start Stop does not operate.
- Motor assist does not regenerates.

CAUTION:

Before performing diagnosis, refer to "CAUTION" in "General Description". <Ref. to HEV(diag)-8, CAUTION, General Description.>

WIRING DIAGRAM:

Hybrid system <Ref. to WI(HEV)-139, WIRING DIAGRAM, Hybrid Electric Vehicle System.>

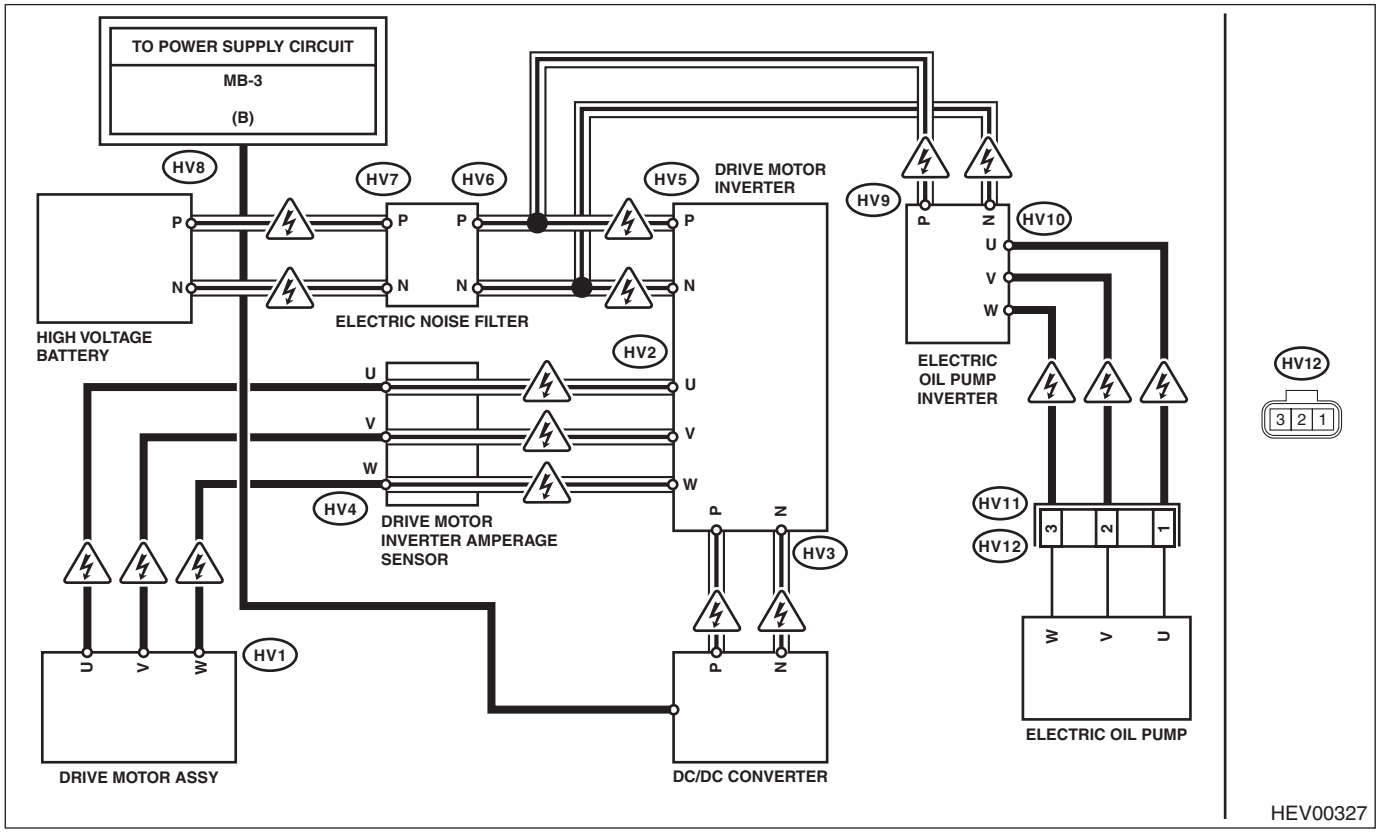

Step		Check	Yes	No
1	**CHECK DTC.** Using the Subaru Select Monitor, read DTCs of the following system. • Drive motor control system <Ref. to HEV(diag)-23, DRIVE MOTOR CONTROL SYSTEM, OPERATION, Read Diagnostic Trouble Code (DTC).>	Are any other DTCs detected? (current malfunction)	Perform the diagnosis according to DTC. <Ref. to HEV(diag)-77, DRIVE MOTOR CONTROL SYSTEM, LIST, List of Diagnostic Trouble Code (DTC).>	Go to step **2**.
2	**CHECK CURRENT DATA.** Using the Subaru Select Monitor, confirm the current data of battery energy control system, the value of «High voltage Battery Total Voltage». <Ref. to HEV(diag)-57, BATTERY ENERGY CONTROL SYSTEM, OPERATION, Read Current Data.>	Is the value 75 V or more?	Go to step **3**.	Replace the high voltage battery. <Ref. to HEV-17, High Voltage Battery.>

Step		Check	Yes	No
3	**CHECK DRIVE MOTOR.** 1) With the 12 V battery connected, remove the service disconnect plug. <Ref. to HEV-15, Service Plug.> **CAUTION:** **Watch for an electrical short at each harness because the 12 V battery is connected.** 2) Lift up the vehicle. 3) Start the engine, and set the shift lever to "D" range. 4) Using the Subaru Select Monitor, confirm the current data of battery energy control system, the values of «Drive Motor Speed»«Drive Motor Inverter Input Voltage». <Ref. to HEV(diag)-57, BATTERY ENERGY CONTROL SYSTEM, OPERATION, Read Current Data.> NOTE: When current data of the drive motor control system, «ATF Temperature» is 20 — 60°C (68 — 140°F). <Ref. to HEV(diag)-51, DRIVE MOTOR CONTROL SYSTEM, OPERATION, Read Current Data.>	Is «Drive Motor Inverter Input Voltage» within the standard in the margin when «Drive Motor Speed» is 600 — 1400 rpm?	Go to step **4**.	Replace the drive motor inverter. <Ref. to HEV-42, Inverter.>
4	**CHECK BUS BAR.** 1) Turn the ignition to OFF. 2) Disconnect the ground cable of the 12 volt auxiliary battery, and as for the 12 volt engine restart battery, disconnect the ground cable from the 12V engine restart battery sensor. <Ref. to NT-5, BATTERY, NOTE, Note.> 3) Remove the service disconnect plug. 4) Wait for 10 minutes. 5) Check the bus bar.	Is the condition normal? (Check for loose bolts, insecure connection, foreign matter caught, trace of arc (burnt terminals) etc.)	Go to step **5**.	Retighten the bolts. Or replace the bus bar.
5	**CHECK BUS BAR.** 1) Remove the bus bar. 2) Using the tester, measure the resistance between bus bar terminals. ***Connector & terminal*** ***(HV5) P — (HV6) P:*** ***(HV5) N — (HV6) N:*** ***(HV5) P — (HV9) P:*** ***(HV5) N — (HV9) N:*** ***(HV7) P — (HV8) P:*** ***(HV7) N — (HV8) N:***	Is the resistance less than 1 Ω?	Replace the high voltage battery. <Ref. to HEV-17, High Voltage Battery.>	Replace the bus bar.

NOTE:
Value of «Drive Motor Inverter Input Voltage» is proportional to «Drive Motor Speed».
- 1000 rpm: 18 V — 37 V
- 1400 rpm: 25 V — 52 V

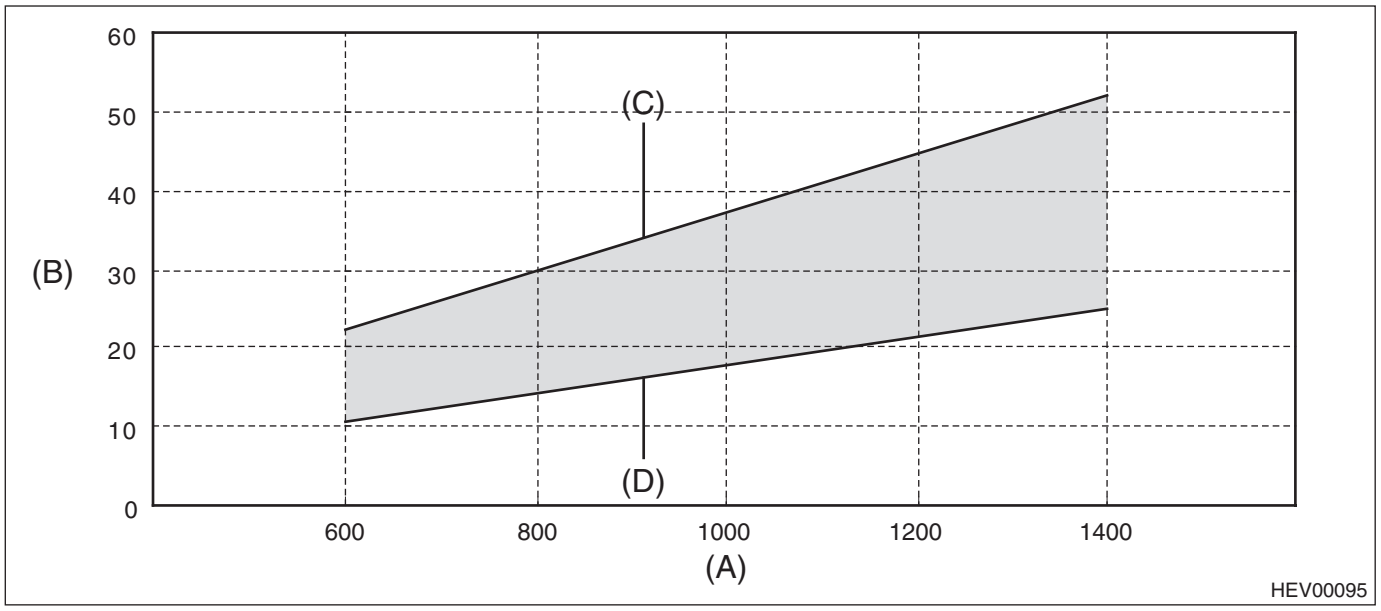

(A) Drive motor speed
(B) Drive Motor Inverter Input Voltage
(C) Standard at Max.
(D) Standard at Min.

EW:DTC P0CA6 HYBRID BATTERY CHARGING CURRENT HIGH

DIAGNOSIS:

- Immediately at fault recognition
- GENERAL DESCRIPTION <Ref. to GD(HEV)-142, DTC P0CA6 HYBRID BATTERY CHARGING CURRENT HIGH, Diagnostic Trouble Code (DTC) Detecting Criteria.>

TROUBLE SYMPTOM:

- EV traveling/Auto Start Stop does not operate.
- Motor assist does not regenerates.

CAUTION:

Before performing diagnosis, refer to "CAUTION" in "General Description". <Ref. to HEV(diag)-8, CAUTION, General Description.>

	Step	Check	Yes	No
1	**CHECK DTC.** Read DTCs of the following system. • Drive motor control system <Ref. to HEV(diag)-23, DRIVE MOTOR CONTROL SYSTEM, OPERATION, Read Diagnostic Trouble Code (DTC).>	Are any other DTCs detected? (current malfunction)	Perform the diagnosis according to DTC. <Ref. to HEV(diag)-77, DRIVE MOTOR CONTROL SYSTEM, LIST, List of Diagnostic Trouble Code (DTC).>	Go to step **2**.
2	**CHECK FREEZE FRAME DATA.** Using the Subaru Select Monitor, confirm the value of «Drive Motor Torque Target(HPCM)» in the freeze frame data of the battery energy control system. <Ref. to HEV(diag)-68, BATTERY ENERGY CONTROL SYSTEM, OPERATION, Freeze Frame Data Display.>	Does the value show 0 N or less?	Go to step **3**.	Replace the high voltage battery. <Ref. to HEV-17, High Voltage Battery.>
3	**CHECK FREEZE FRAME DATA.** Using the Subaru Select Monitor, confirm the values of «Drive Motor Torque Target(HPCM)»«Drive Motor Speed Target(HPCM)» in the freeze frame data of battery energy control system. <Ref. to HEV(diag)-68, BATTERY ENERGY CONTROL SYSTEM, OPERATION, Freeze Frame Data Display.>	Are the values of «Drive Motor Torque Target(HPCM)» and «Drive Motor Speed Target(HPCM)» within the standard in the margin?	Go to step **4**.	Replace the HPCM. <Ref. to HEV-37, Hybrid Powertrain Control Module.>
4	**CHECK FREEZE FRAME DATA.** Using the Subaru Select Monitor, confirm the values of «Drive Motor Torque»«Drive Motor Speed» in the freeze frame data of battery energy control system. <Ref. to HEV(diag)-68, BATTERY ENERGY CONTROL SYSTEM, OPERATION, Freeze Frame Data Display.>	Are the values of «Drive Motor Output Torque Actual» and «Drive Motor Speed» within the standard in the margin?	Replace the high voltage battery. <Ref. to HEV-17, High Voltage Battery.>	Replace DMCM. <Ref. to CVT(TH58A)-155, Drive Motor Control Module.>

NOTE:

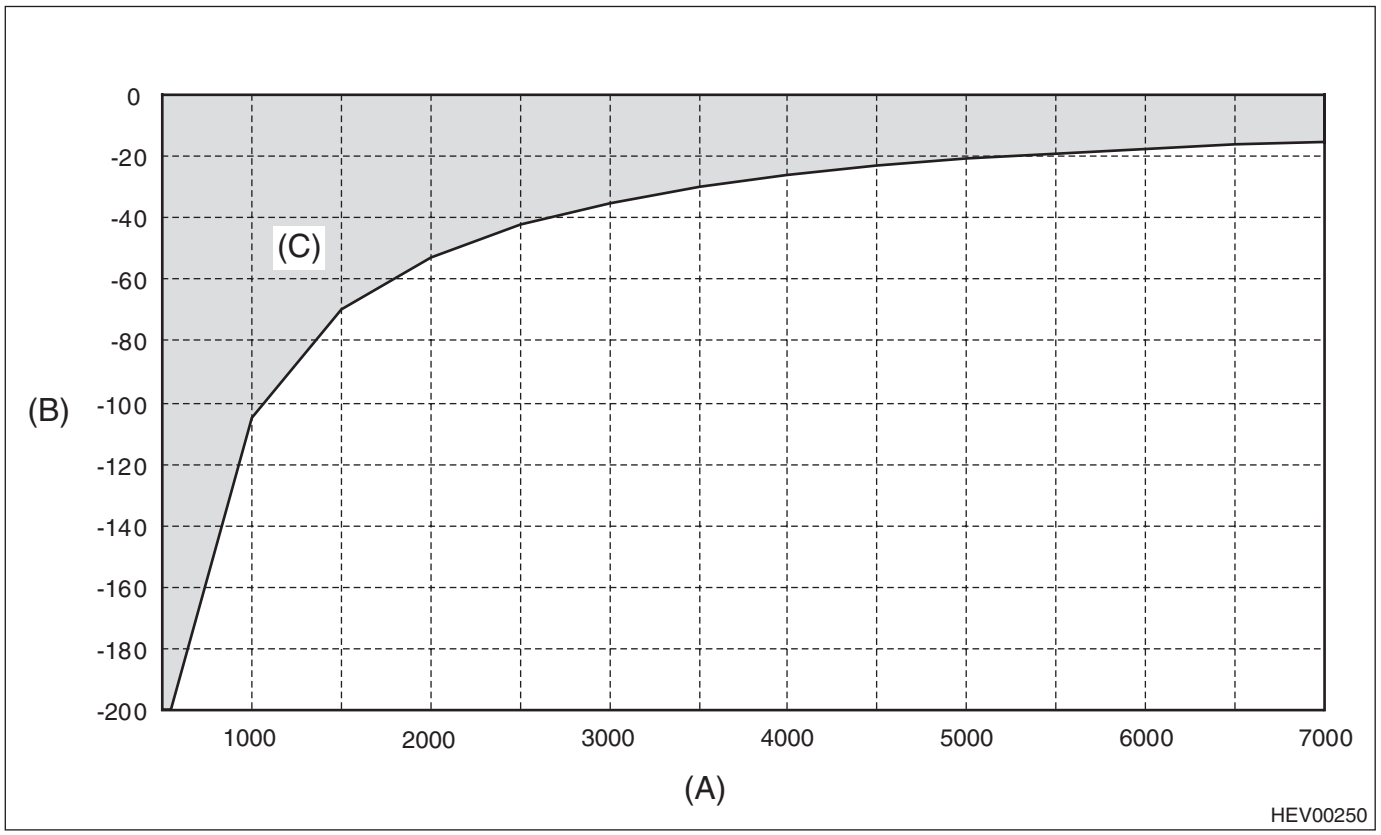

(A) Drive Motor Speed Target(HPCM) or Drive Motor Speed
(B) Drive Motor Torque Target (HPCM) or Drive Motor Output Torque Actual
(C) Standard

EX:DTC P0CA7 HYBRID BATTERY DISCHARGING CURRENT HIGH

DIAGNOSIS:

- Immediately at fault recognition
- GENERAL DESCRIPTION <Ref. to GD(HEV)-143, DTC P0CA7 HYBRID BATTERY DISCHARGING CURRENT HIGH, Diagnostic Trouble Code (DTC) Detecting Criteria.>

TROUBLE SYMPTOM:

- EV traveling/Auto Start Stop does not operate.
- Motor assist does not regenerates.

CAUTION:

Before performing diagnosis, refer to "CAUTION" in "General Description". <Ref. to HEV(diag)-8, CAUTION, General Description.>

	Step	Check	Yes	No
1	**CHECK DTC.** Read DTCs of the following system. • Drive motor control system <Ref. to HEV(diag)-23, DRIVE MOTOR CONTROL SYSTEM, OPERATION, Read Diagnostic Trouble Code (DTC).>	Are any other DTCs detected? (current malfunction)	Perform the diagnosis according to DTC. <Ref. to HEV(diag)-77, DRIVE MOTOR CONTROL SYSTEM, LIST, List of Diagnostic Trouble Code (DTC).>	Go to step **2**.
2	**CHECK FREEZE FRAME DATA.** Using the Subaru Select Monitor, confirm the value of «Drive Motor Output Torque Actual» in the freeze frame data of battery energy control system. <Ref. to HEV(diag)-68, BATTERY ENERGY CONTROL SYSTEM, OPERATION, Freeze Frame Data Display.>	Does the value show 0 N or more?	Go to step **3**.	Replace the high voltage battery. <Ref. to HEV-17, High Voltage Battery.>
3	**CHECK FREEZE FRAME DATA.** Using the Subaru Select Monitor, confirm the values of «Drive Motor Torque Target(HPCM)»«Drive Motor Speed Target(HPCM)» in the freeze frame data of battery energy control system. <Ref. to HEV(diag)-68, BATTERY ENERGY CONTROL SYSTEM, OPERATION, Freeze Frame Data Display.>	Are the values of «Drive Motor Torque Target(HPCM)» and «Drive Motor Speed Target(HPCM)» within the standard in the margin?	Go to step **4**.	Replace the HPCM. <Ref. to HEV-37, Hybrid Powertrain Control Module.>
4	**CHECK FREEZE FRAME DATA.** Using the Subaru Select Monitor, confirm the values of «Drive Motor Output Torque Actual» and «Drive Motor Speed» in the freeze frame data of battery energy control system. <Ref. to HEV(diag)-68, BATTERY ENERGY CONTROL SYSTEM, OPERATION, Freeze Frame Data Display.>	Are the values of «Drive Motor Output Torque Actual» and «Drive Motor Speed» within the standard in the margin?	Replace the high voltage battery. <Ref. to HEV-17, High Voltage Battery.>	Replace DMCM. <Ref. to CVT(TH58A)-155, Drive Motor Control Module.>

NOTE:

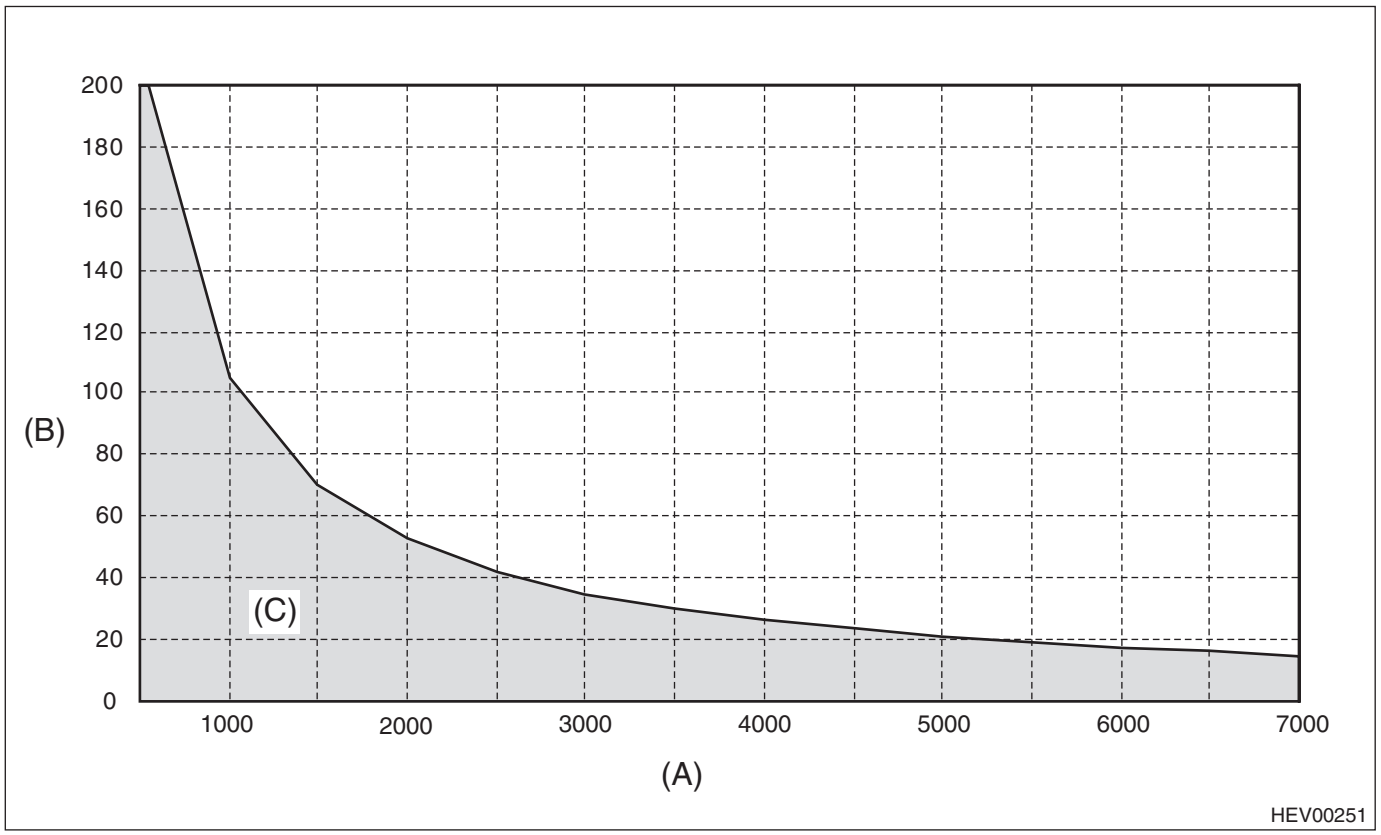

(A) Drive Motor Speed Target(HPCM) or Drive Motor Speed
(B) Drive Motor Torque Target (HPCM) or Drive Motor Output Torque Actual
(C) Standard

EY:DTC P1C40 HYBRID BATTERY POSITIVE CONTACTOR OR PRE-CHARGE CONTACTOR CIRCUIT STUCK CLOSED

DIAGNOSIS:

- Immediately at fault recognition
- GENERAL DESCRIPTION <Ref. to GD(HEV)-144, DTC P1C40 HYBRID BATTERY POSITIVE CONTACTOR OR PRE-CHARGE CONTACTOR CIRCUIT STUCK CLOSED, Diagnostic Trouble Code (DTC) Detecting Criteria.>

TROUBLE SYMPTOM:

- EV traveling/Auto Start Stop does not operate.
- Motor assist does not regenerates.

CAUTION:

Before performing diagnosis, refer to "CAUTION" in "General Description". <Ref. to HEV(diag)-8, CAUTION, General Description.>

	Step	Check	Yes	No
1	**CHECK DTC.** Read DTCs of the following system. • Engine • Transmission <Ref. to CVT(HEV)(diag)-18, OPERATION, Read Diagnostic Trouble Code (DTC).> • Hybrid powertrain control system <Ref. to HEV(diag)-23, HYBRID POWERTRAIN CONTROL SYSTEM, OPERATION, Read Diagnostic Trouble Code (DTC).> • Drive motor control system <Ref. to HEV(diag)-23, DRIVE MOTOR CONTROL SYSTEM, OPERATION, Read Diagnostic Trouble Code (DTC).> • Airbag system <Ref. to AB(diag)-26, OPERATION, Read Diagnostic Trouble Code (DTC).>	Are any other DTCs detected? (current malfunction)	First perform the diagnosis according to other DTCs.	Go to step **2**.
2	**CHECK BECM.** 1) Perform the Clear Memory Mode. <Ref. to HEV(diag)-24, BATTERY ENERGY CONTROL SYSTEM, OPERATION, Clear Memory Mode.> 2) Start the engine. 3) Turn the ignition switch to OFF. 4) Wait for 30 seconds. 5) Turn the ignition switch to ON. 6) Read the DTC again. <Ref. to HEV(diag)-23, BATTERY ENERGY CONTROL SYSTEM, OPERATION, Read Diagnostic Trouble Code (DTC).>	Is the same DTC detected? (current malfunction)	Replace the high voltage battery. <Ref. to HEV-17, High Voltage Battery.>	Even if DTC is detected, the circuit has returned to a normal condition at this time. Reproduce the failure, and then perform the diagnosis again. NOTE: In this case, temporary poor contact of connector, temporary open or short circuit of harness may be the cause.

NOTE:
Operation of contactor relay under the normal condition.

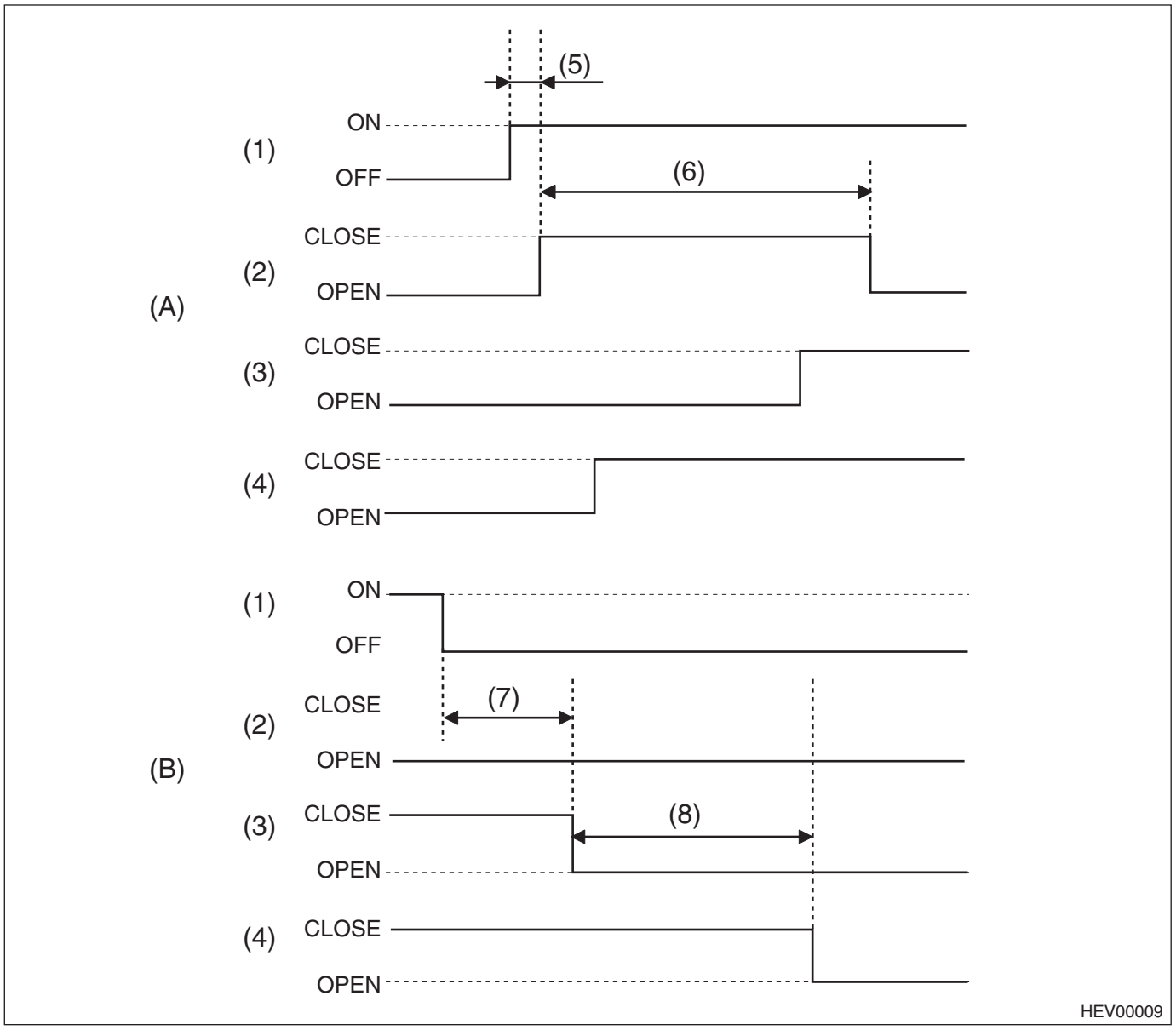

(A) Contactor relay closing sequence
(B) Contactor relay opening sequence

(1) Contactor command
(2) Precharge contactor status
(3) Positive contactor status
(4) Negative contactor status
(5) 10 seconds
(6) 0.8 seconds maximum
(7) 2.0 seconds maximum
(8) 1.3 seconds maximum

EZ:DTC P1C41 HIGH VOLTAGE CIRCUIT SHORT

DIAGNOSIS:

- Immediately at fault recognition
- GENERAL DESCRIPTION <Ref. to GD(HEV)-145, DTC P1C41 HIGH VOLTAGE CIRCUIT SHORT, Diagnostic Trouble Code (DTC) Detecting Criteria.>

TROUBLE SYMPTOM:

- EV traveling/Auto Start Stop does not operate.
- Motor assist does not regenerates.

CAUTION:

Before performing diagnosis, refer to "CAUTION" in "General Description". <Ref. to HEV(diag)-8, CAUTION, General Description.>

WIRING DIAGRAM:

Hybrid system <Ref. to WI(HEV)-139, WIRING DIAGRAM, Hybrid Electric Vehicle System.>

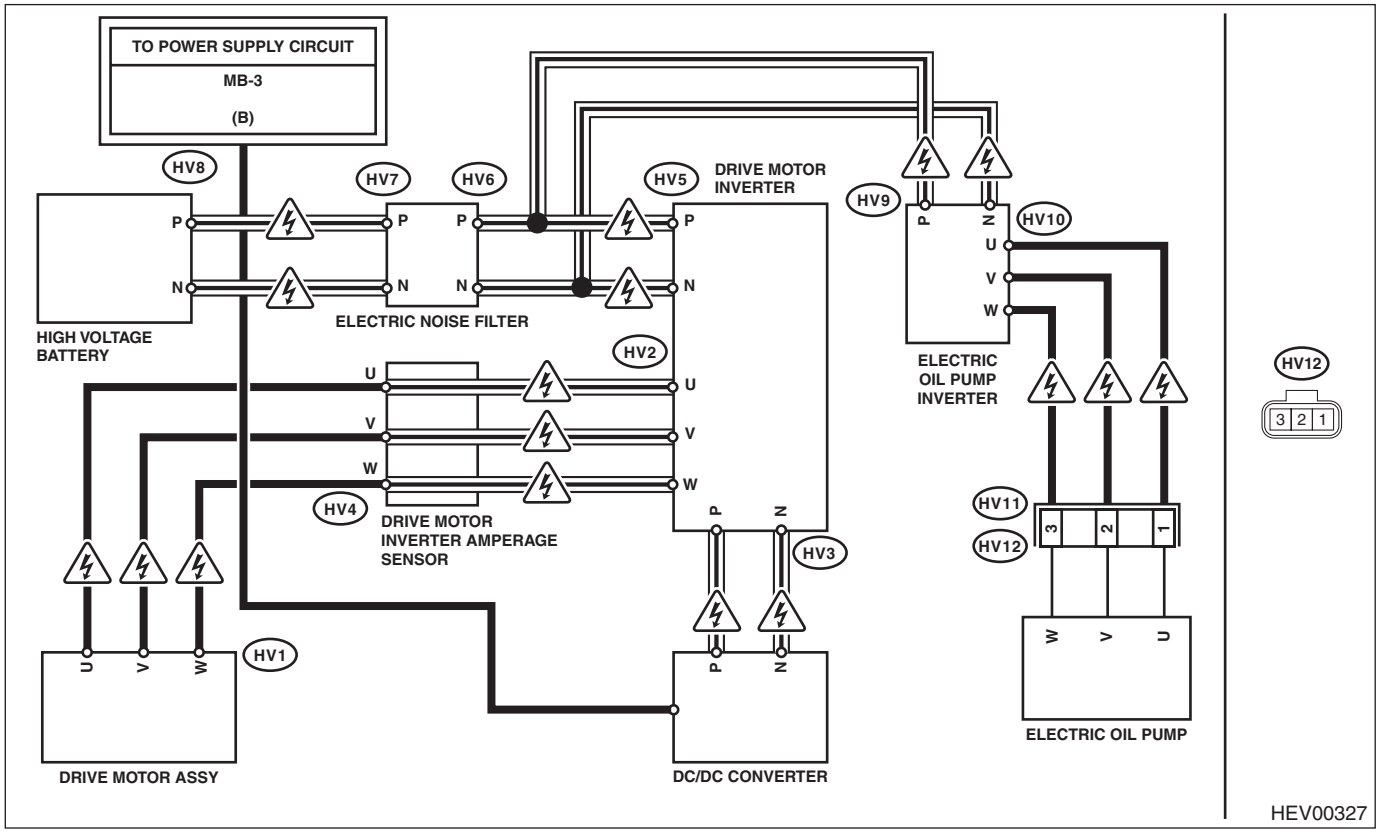

Step		Check	Yes	No
1	**CHECK DTC.** Read the DTC.	Are any other DTCs detected? (current malfunction)	First perform the diagnosis according to other DTCs.	Go to step **2**.
2	**CHECK BUS BAR.** 1) Turn the ignition to OFF. 2) Disconnect the ground cable of the 12 volt auxiliary battery, and as for the 12 volt engine restart battery, disconnect the ground cable from the 12V engine restart battery sensor. <Ref. to NT-5, BATTERY, NOTE, Note.> 3) Remove the service disconnect plug. <Ref. to HEV-15, Service Plug.> 4) Wait for 10 minutes. 5) Visually check the bus bar.	Is the condition normal? (Check for loose bolts, insecure connection, foreign matter caught, trace of arc (burnt terminals) etc.)	Go to step **3**.	Retighten the bolts. Or replace the bus bar.

	Step	Check	Yes	No
3	**CHECK POWER CABLE.** Visually check the power cable.	Is the condition normal? (Check for loose bolts, insecure connection, foreign matter caught, trace of arc (burnt terminals) etc.)	Go to step **4**.	Retighten the bolts. Or replace the power cable. <Ref. to HEV-51, Power Cable.>
4	**CHECK EACH MODULE.** Using a tester, measure the resistance between electric noise filter terminals on the high voltage battery side. ***Connector & terminal*** ***(HV7) P — (HV7) N:***	Is the resistance 1 Ω or more?	Go to step **7**.	Go to step **5**.
5	**CHECK DC/DC CONVERTER.** 1) Remove the DC/DC converter. 2) Using a tester, measure the resistance between electric noise filter terminals on the high voltage battery side. ***Connector & terminal*** ***(HV7) P — (HV7) N:***	Is the resistance 1 Ω or more?	Replace the DC/DC converter. <Ref. to HEV-38, DC/DC Converter.>	Go to step **6**.
6	**CHECK EACH MODULE.** 1) Disconnect the power cable (HV4) from drive motor inverter amperage sensor. 2) Remove the drive motor inverter amperage sensor (HV2). 3) Remove bus bars (HV5, HV6, HV7, HV8, HV9). 4) Using a tester, measure the resistance between terminals of each module. ***Connector & terminal*** ***Drive motor inverter*** ***(HV5) P — (HV5) N:*** ***Electric noise filter*** ***(HV7) P — (HV7) N:*** ***High voltage battery*** ***(HV8) P — (HV8) N:*** ***Electric oil pump inverter*** ***(HV9) P — (HV9) N:***	Is the resistance 1 Ω or more?	Even if DTC is detected, the circuit has returned to a normal condition at this time. Reproduce the failure, and then perform the diagnosis again.	Replace the unit that has short circuits.
7	**CHECK EACH MODULE.** Using a tester, measure the resistance between drive motor inverter amperage sensor terminals on the power cable side. ***Connector & terminal*** ***(HV4) W — (HV4) V:*** ***(HV4) W — (HV4) U:*** ***(HV4) V — (HV4) U:***	Is the resistance 1 Ω or more?	Go to step **9**.	Go to step **8**.

	Step	Check	Yes	No
8	**CHECK EACH MODULE.** 1) Disconnect the power cable (HV4) from drive motor inverter amperage sensor. 2) Remove the drive motor inverter amperage sensor (HV2). 3) Disconnect the power cable (HV1) from the drive motor assembly. NOTE: The gasket is NOT reusable. 4) Using a tester, measure the resistance between each module and power cable terminals. ***Connector & terminal*** ***Drive motor assembly*** ***(HV1) W — (HV1) V:*** ***(HV1) W — (HV1) U:*** ***(HV1) V — (HV1) U:*** ***Drive motor inverter*** ***(HV2) W — (HV2) V:*** ***(HV2) W — (HV2) U:*** ***(HV2) V — (HV2) U:*** ***Drive motor inverter amperage sensor*** ***(HV4) W — (HV4) V:*** ***(HV4) W — (HV4) U:*** ***(HV4) V — (HV4) U:*** ***Power cable*** ***(HV4) W — (HV4) V:*** ***(HV4) W — (HV4) U:*** ***(HV4) V — (HV4) U:***	Is the resistance 1 Ω or more?	Even if DTC is detected, the circuit has returned to a normal condition at this time. Reproduce the failure, and then perform the diagnosis again.	Replace the unit that has short circuits.
9	**CHECK EACH MODULE.** 1) Disconnect the power cable (HV10) from electric oil pump inverter. 2) Disconnect the power cable (HV12) from electric oil pump. 3) Using a tester, measure the resistance between each module and power cable terminals. ***Connector & terminal*** ***Electric oil pump inverter*** ***(HV10) W — (HV10) V:*** ***(HV10) W — (HV10) U:*** ***(HV10) V — (HV10) U:*** ***Electric oil pump*** ***(HV12) W — (HV12) V:*** ***(HV12) W — (HV12) U:*** ***(HV12) V — (HV12) U:*** ***Power cable*** ***(HV10) W — (HV10) V:*** ***(HV10) W — (HV10) U:*** ***(HV10) V — (HV10) U:***	Is the resistance 1 Ω or more?	Even if DTC is detected, the circuit has returned to a normal condition at this time. Reproduce the failure, and then perform the diagnosis again.	Replace the unit that has short circuits.

FA:DTC P1C42 HIGH VOLTAGE CIRCUIT OPEN

DIAGNOSIS:

- Immediately at fault recognition
- GENERAL DESCRIPTION <Ref. to GD(HEV)-146, DTC P1C42 HIGH VOLTAGE CIRCUIT OPEN, Diagnostic Trouble Code (DTC) Detecting Criteria.>

TROUBLE SYMPTOM:

- EV traveling/Auto Start Stop does not operate.
- Motor assist does not regenerates.

CAUTION:

Before performing diagnosis, refer to "CAUTION" in "General Description". <Ref. to HEV(diag)-8, CAUTION, General Description.>

WIRING DIAGRAM:

Hybrid system <Ref. to WI(HEV)-139, WIRING DIAGRAM, Hybrid Electric Vehicle System.>

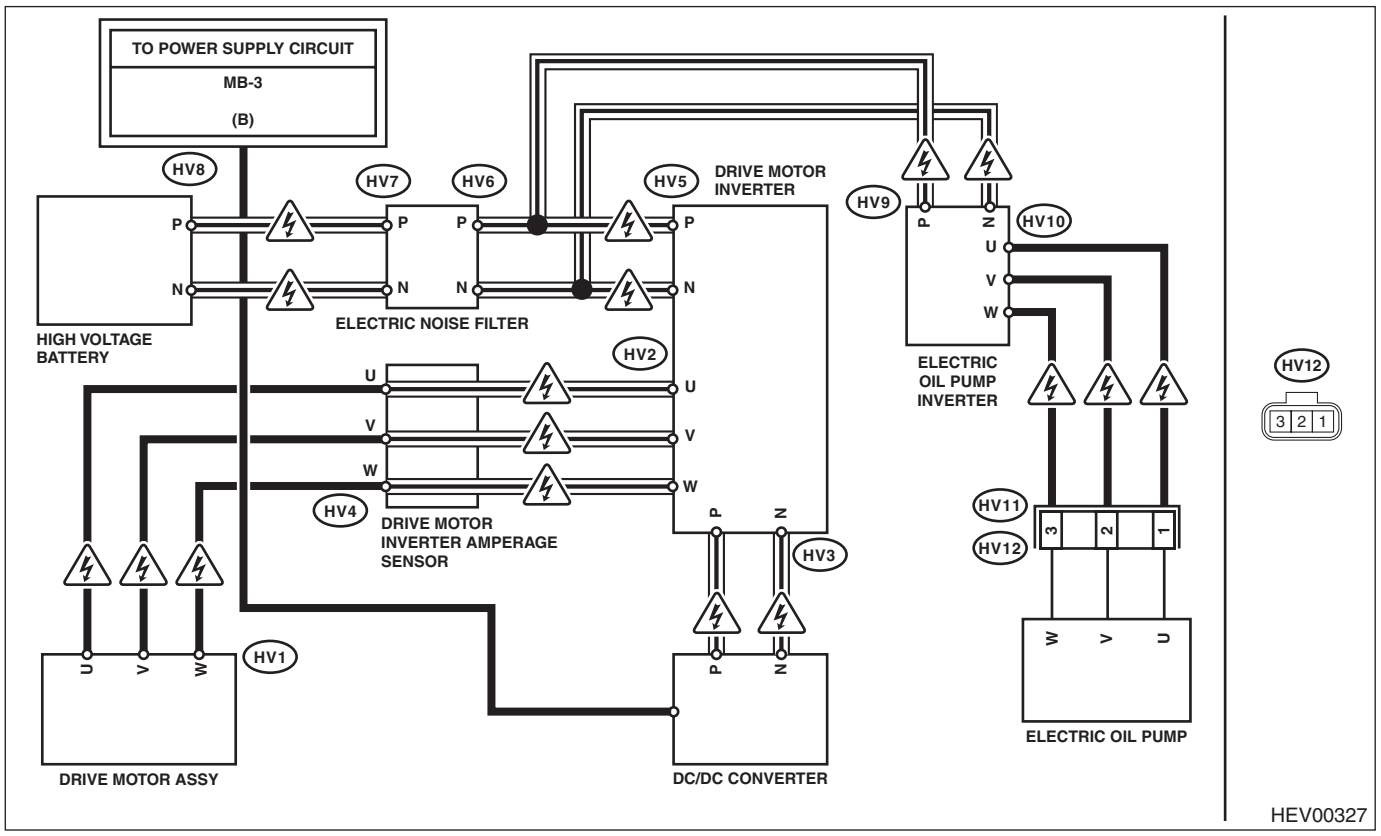

Step		Check	Yes	No
1	**CHECK BUS BAR.** 1) Turn the ignition to OFF. 2) Disconnect the ground cable of the 12 volt auxiliary battery, and as for the 12 volt engine restart battery, disconnect the ground cable from the 12V engine restart battery sensor. <Ref. to NT-5, BATTERY, NOTE, Note.> 3) Remove the service disconnect plug. <Ref. to HEV-15, Service Plug.> 4) Wait for 10 minutes. 5) Visually check the bus bar.	Is the condition normal? (Check for loose bolts, etc.)	Go to step **2**.	Retighten the bolts. Or replace the bus bar.

	Step	Check	Yes	No
2	**CHECK BUS BAR.** 1) Remove the bus bar. 2) Using the tester, measure the resistance between bus bar terminals. ***Connector & terminal*** ***(HV5) P — (HV6) P:*** ***(HV5) N — (HV6) N:***	Is the resistance less than 1 Ω?	Go to step **3**.	Replace the bus bar. (Between electric noise filter and drive motor inverter.)
3	**CHECK ELECTRIC NOISE FILTER.** Using a tester, measure the resistance between electric noise filter terminals. ***Connector & terminal*** ***(HV6) P — (HV7) P:*** ***(HV6) N — (HV7) N:***	Is the resistance less than 1 Ω?	Go to step **4**.	Replace the electric noise filter. <Ref. to HEV-31, Noise Filter.>
4	**CHECK BUS BAR.** Using the tester, measure the resistance between bus bar terminals. ***Connector & terminal*** ***(HV7) P — (HV8) P:*** ***(HV7) N — (HV8) N:***	Is the resistance less than 1 Ω?	Go to step **5**.	Replace the bus bar. (Between high voltage battery and electric noise filter.)
5	**CHECK DRIVE MOTOR.** 1) Replace the removed/disconnected parts back to the vehicle. 2) With the 12 V battery connected, remove the service disconnect plug. <Ref. to HEV-15, Service Plug.> **CAUTION:** **Watch for an electrical short at each harness because the 12 V battery is connected.** 3) Lift up the vehicle. 4) Start the engine, and set the shift lever to “D” range. 5) Using the Subaru Select Monitor, confirm the current data of battery energy control system, the values of «Drive Motor Speed»«Drive Motor Inverter Input Voltage». <Ref. to HEV(diag)-57, BATTERY ENERGY CONTROL SYSTEM, OPERATION, Read Current Data.> NOTE: When current data of the drive motor control system, «ATF Temperature» is 20 — 60°C (68 — 140°F). <Ref. to HEV(diag)-51, DRIVE MOTOR CONTROL SYSTEM, OPERATION, Read Current Data.>	Is «Drive Motor Inverter Input Voltage» within the standard in the margin when «Drive Motor Speed» is 600 — 1400 rpm?	Replace the high voltage battery. <Ref. to HEV-17, High Voltage Battery.>	Replace the drive motor inverter. <Ref. to HEV-42, Inverter.>

NOTE:
Value of «Drive Motor Inverter Input Voltage» is proportional to «Drive Motor Speed».
- 1000 rpm: 18 V — 37 V
- 1400 rpm: 25 V — 52 V

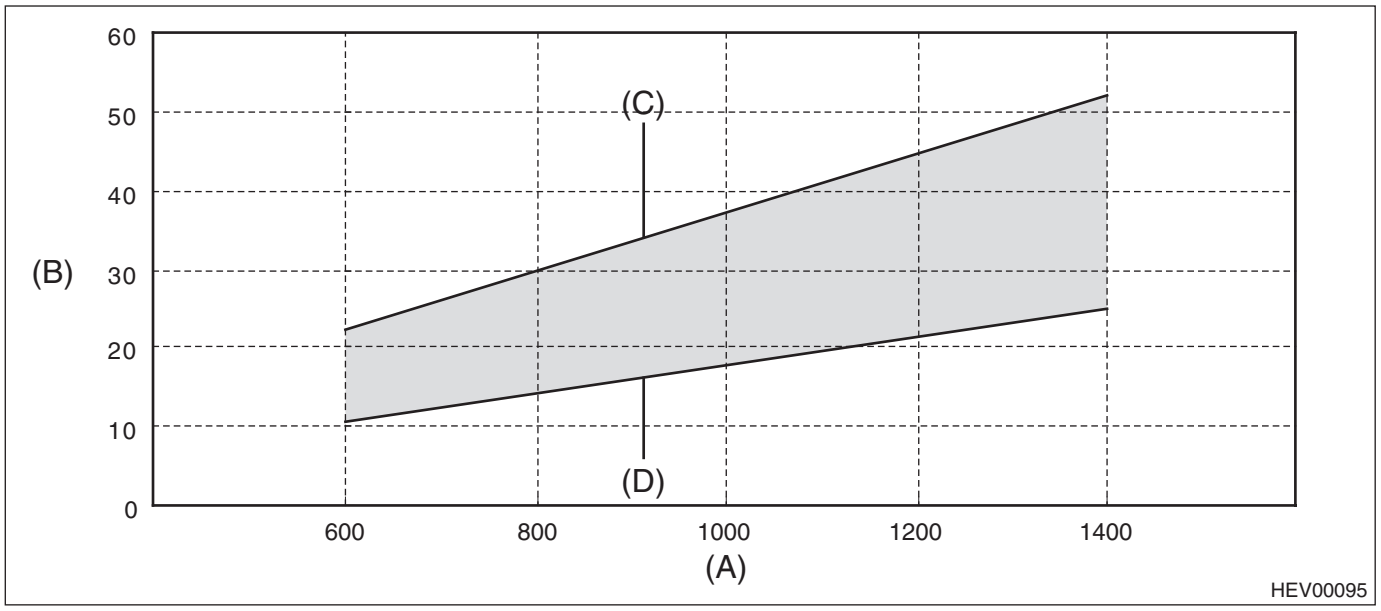

(A) Drive motor speed
(B) Drive Motor Inverter Input Voltage
(C) Standard at Max.
(D) Standard at Min.

FB:DTC P1C43 HYBRID BATTERY CONTACTOR POWER SUPPLY CIRCUIT

DIAGNOSIS:
- Immediately at fault recognition
- GENERAL DESCRIPTION <Ref. to GD(HEV)-147, DTC P1C43 HYBRID BATTERY CONTACTOR POWER SUPPLY CIRCUIT, Diagnostic Trouble Code (DTC) Detecting Criteria.>

TROUBLE SYMPTOM:
- EV traveling/Auto Start Stop does not operate.
- Motor assist does not regenerates.

NOTE:
If this DTC is detected, replace the high voltage battery. <Ref. to HEV-17, High Voltage Battery.>

FC:DTC P1C44 SUB CPU IN BECM

DIAGNOSIS:
- Immediately at fault recognition
- GENERAL DESCRIPTION <Ref. to GD(HEV)-148, DTC P1C44 SUB CPU IN BECM, Diagnostic Trouble Code (DTC) Detecting Criteria.>

TROUBLE SYMPTOM:
- EV traveling/Auto Start Stop does not operate.
- Motor assist does not regenerates.

NOTE:
If this DTC is detected, replace the high voltage battery. <Ref. to HEV-17, High Voltage Battery.>

FD:DTC P1C45 HYBRID BATTERY BLOCK 1 BALANCING PERFORMANCE

DIAGNOSIS:

- Immediately at fault recognition
- GENERAL DESCRIPTION <Ref. to GD(HEV)-149, DTC P1C45 HYBRID BATTERY BLOCK 1 BALANCING PERFORMANCE, Diagnostic Trouble Code (DTC) Detecting Criteria.>

TROUBLE SYMPTOM:

- EV traveling/Auto Start Stop does not operate.
- Motor assist does not regenerates.

NOTE:
If this DTC is detected, replace the high voltage battery. <Ref. to HEV-17, High Voltage Battery.>

FE:DTC P1C46 HYBRID BATTERY BLOCK 2 BALANCING PERFORMANCE

DIAGNOSIS:

- Immediately at fault recognition
- GENERAL DESCRIPTION <Ref. to GD(HEV)-150, DTC P1C46 HYBRID BATTERY BLOCK 2 BALANCING PERFORMANCE, Diagnostic Trouble Code (DTC) Detecting Criteria.>

TROUBLE SYMPTOM:

- EV traveling/Auto Start Stop does not operate.
- Motor assist does not regenerates.

NOTE:
If this DTC is detected, replace the high voltage battery. <Ref. to HEV-17, High Voltage Battery.>

FF:DTC P1C47 HYBRID BATTERY BLOCK 3 BALANCING PERFORMANCE

DIAGNOSIS:

- Immediately at fault recognition
- GENERAL DESCRIPTION <Ref. to GD(HEV)-151, DTC P1C47 HYBRID BATTERY BLOCK 3 BALANCING PERFORMANCE, Diagnostic Trouble Code (DTC) Detecting Criteria.>

TROUBLE SYMPTOM:

- EV traveling/Auto Start Stop does not operate.
- Motor assist does not regenerates.

NOTE:
If this DTC is detected, replace the high voltage battery. <Ref. to HEV-17, High Voltage Battery.>

FG:DTC P1C48 HYBRID BATTERY BLOCK 4 BALANCING PERFORMANCE

DIAGNOSIS:

- Immediately at fault recognition
- GENERAL DESCRIPTION <Ref. to GD(HEV)-152, DTC P1C48 HYBRID BATTERY BLOCK 4 BALANCING PERFORMANCE, Diagnostic Trouble Code (DTC) Detecting Criteria.>

TROUBLE SYMPTOM:

- EV traveling/Auto Start Stop does not operate.
- Motor assist does not regenerates.

NOTE:
If this DTC is detected, replace the high voltage battery. <Ref. to HEV-17, High Voltage Battery.>

FH:DTC P1C49 HYBRID BATTERY BLOCK 5 BALANCING PERFORMANCE

DIAGNOSIS:

- Immediately at fault recognition
- GENERAL DESCRIPTION <Ref. to GD(HEV)-153, DTC P1C49 HYBRID BATTERY BLOCK 5 BALANCING PERFORMANCE, Diagnostic Trouble Code (DTC) Detecting Criteria.>

TROUBLE SYMPTOM:

- EV traveling/Auto Start Stop does not operate.
- Motor assist does not regenerates.

NOTE:
If this DTC is detected, replace the high voltage battery. <Ref. to HEV-17, High Voltage Battery.>

FI: DTC P1C4A HYBRID BATTERY BLOCK 6 BALANCING PERFORMANCE

DIAGNOSIS:

- Immediately at fault recognition
- GENERAL DESCRIPTION <Ref. to GD(HEV)-154, DTC P1C4A HYBRID BATTERY BLOCK 6 BALANCING PERFORMANCE, Diagnostic Trouble Code (DTC) Detecting Criteria.>

TROUBLE SYMPTOM:

- EV traveling/Auto Start Stop does not operate.
- Motor assist does not regenerates.

NOTE:
If this DTC is detected, replace the high voltage battery. <Ref. to HEV-17, High Voltage Battery.>

FJ: DTC P1C5E HYBRID BATTERY BLOCK VOLTAGE TOO LOW

DIAGNOSIS:

- Immediately at fault recognition
- GENERAL DESCRIPTION <Ref. to GD(HEV)-155, DTC P1C5E HYBRID BATTERY BLOCK VOLTAGE TOO LOW, Diagnostic Trouble Code (DTC) Detecting Criteria.>

TROUBLE SYMPTOM:

- EV traveling/Auto Start Stop does not operate.
- Motor assist does not regenerates.

NOTE:
If this DTC is detected, replace the high voltage battery. <Ref. to HEV-17, High Voltage Battery.>

FK:DTC U0073 CONTROL MODULE COMMUNICATION BUS OFF

DIAGNOSIS:

- Immediately at fault recognition
- GENERAL DESCRIPTION <Ref. to GD(HEV)-156, DTC U0073 CONTROL MODULE COMMUNICATION BUS OFF, Diagnostic Trouble Code (DTC) Detecting Criteria.>

TROUBLE SYMPTOM:

- EV traveling/Auto Start Stop does not operate.
- Motor assist does not regenerates.
- Sometimes driving power and shifting behavior are different from the normal states.

NOTE:
Perform the diagnosis for LAN system. <Ref. to LAN(HEV)(diag)-2, PROCEDURE, Basic Diagnostic Procedure.>

FL:DTC U0075 CONTROL MODULE COMMUNICATION BUS "PU-CAN" OFF

DIAGNOSIS:

- Immediately at fault recognition
- GENERAL DESCRIPTION <Ref. to GD(HEV)-157, DTC U0075 CONTROL MODULE COMMUNICATION BUS "PU-CAN" OFF, Diagnostic Trouble Code (DTC) Detecting Criteria.>

TROUBLE SYMPTOM:

- EV traveling/Auto Start Stop does not operate.
- Motor assist does not regenerates.
- Sometimes driving power and shifting behavior are different from the normal states.

NOTE:
Perform the diagnosis for LAN system. <Ref. to LAN(HEV)(diag)-2, PROCEDURE, Basic Diagnostic Procedure.>

FM:DTC U0076 CONTROL MODULE COMMUNICATION BUS "HEV-CAN" OFF

DIAGNOSIS:

- Immediately at fault recognition
- GENERAL DESCRIPTION <Ref. to GD(HEV)-158, DTC U0076 CONTROL MODULE COMMUNICATION BUS "HEV-CAN" OFF, Diagnostic Trouble Code (DTC) Detecting Criteria.>

TROUBLE SYMPTOM:

- EV traveling/Auto Start Stop does not operate.
- Motor assist does not regenerates.
- Sometimes driving power and shifting behavior are different from the normal states.

NOTE:
Perform the diagnosis for LAN system. <Ref. to LAN(HEV)(diag)-2, PROCEDURE, Basic Diagnostic Procedure.>

FN:DTC U0100 LOST COMMUNICATION WITH ECM/PCM “A”

DIAGNOSIS:

- Immediately at fault recognition
- GENERAL DESCRIPTION <Ref. to GD(HEV)-160, DTC U0100 LOST COMMUNICATION WITH ECM/PCM “A”, Diagnostic Trouble Code (DTC) Detecting Criteria.>

TROUBLE SYMPTOM:

- EV traveling/Auto Start Stop does not operate.
- Motor assist does not regenerates.
- Sometimes driving power and shifting behavior are different from the normal states.

NOTE:
Perform the diagnosis for LAN system. <Ref. to LAN(HEV)(diag)-2, PROCEDURE, Basic Diagnostic Procedure.>

FO:DTC U0101 LOST COMMUNICATION WITH TCM

DIAGNOSIS:

- Immediately at fault recognition
- GENERAL DESCRIPTION <Ref. to GD(HEV)-161, DTC U0101 LOST COMMUNICATION WITH TCM, Diagnostic Trouble Code (DTC) Detecting Criteria.>

TROUBLE SYMPTOM:

- EV traveling/Auto Start Stop does not operate.
- Motor assist does not regenerates.
- Sometimes driving power and shifting behavior are different from the normal states.

NOTE:
Perform the diagnosis for LAN system. <Ref. to LAN(HEV)(diag)-2, PROCEDURE, Basic Diagnostic Procedure.>

FP:DTC U0110 LOST COMMUNICATION WITH DRIVE MOTOR CONTROL MODULE "A"

DIAGNOSIS:

- Immediately at fault recognition
- GENERAL DESCRIPTION <Ref. to GD(HEV)-162, DTC U0110 LOST COMMUNICATION WITH DRIVE MOTOR CONTROL MODULE "A", Diagnostic Trouble Code (DTC) Detecting Criteria.>

TROUBLE SYMPTOM:

- EV traveling/Auto Start Stop does not operate.
- Motor assist does not regenerates.
- Sometimes driving power and shifting behavior are different from the normal states.

NOTE:
Perform the diagnosis for LAN system. <Ref. to LAN(HEV)(diag)-2, PROCEDURE, Basic Diagnostic Procedure.>

FQ:DTC U0111 LOST COMMUNICATION WITH BATTERY ENERGY CONTROL MODULE

DIAGNOSIS:
- Immediately at fault recognition
- GENERAL DESCRIPTION <Ref. to GD(HEV)-164, DTC U0111 LOST COMMUNICATION WITH BATTERY ENERGY CONTROL MODULE, Diagnostic Trouble Code (DTC) Detecting Criteria.>

TROUBLE SYMPTOM:
- EV traveling/Auto Start Stop does not operate.
- Motor assist does not regenerates.

NOTE:
Perform the diagnosis for LAN system. <Ref. to LAN(HEV)(diag)-2, PROCEDURE, Basic Diagnostic Procedure.>

FR:DTC U0122 LOST COMMUNICATION WITH VEHICLE DYNAMICS CONTROL MODULE

DIAGNOSIS:
- Immediately at fault recognition
- GENERAL DESCRIPTION <Ref. to GD(HEV)-166, DTC U0122 LOST COMMUNICATION WITH VEHICLE DYNAMICS CONTROL MODULE, Diagnostic Trouble Code (DTC) Detecting Criteria.>

TROUBLE SYMPTOM:
EV traveling/Auto Start Stop does not operate.

NOTE:
Perform the diagnosis for LAN system. <Ref. to LAN(HEV)(diag)-2, PROCEDURE, Basic Diagnostic Procedure.>

FS:DTC U0131 LOST COMMUNICATION WITH POWER STEERING CONTROL MODULE

DIAGNOSIS:
- Detects CAN communication error with electric power steering system.
- Immediately at fault recognition

TROUBLE SYMPTOM:
Normal control

NOTE:
Perform the diagnosis for LAN system. <Ref. to LAN(HEV)(diag)-2, PROCEDURE, Basic Diagnostic Procedure.>

FT:DTC U0140 LOST COMMUNICATION WITH BODY CONTROL MODULE

DIAGNOSIS:
- Detects CAN communication error with body integrated unit.
- Immediately at fault recognition

TROUBLE SYMPTOM:
Normal control

NOTE:
Perform the diagnosis for LAN system. <Ref. to LAN(HEV)(diag)-2, PROCEDURE, Basic Diagnostic Procedure.>

FU:DTC U0151 LOST COMMUNICATION WITH RESTRAINTS CONTROL MODULE

DIAGNOSIS:
- Detects CAN communication error with airbag system.
- Immediately at fault recognition

TROUBLE SYMPTOM:
Normal control

NOTE:
Perform the diagnosis for LAN system. <Ref. to LAN(HEV)(diag)-2, PROCEDURE, Basic Diagnostic Procedure.>

FV:DTC U0155 LOST COMMUNICATION WITH INSTRUMENT PANEL CLUSTER (IPC) CONTROL MODULE

DIAGNOSIS:
- Detects CAN communication error with combination meter.
- Immediately at fault recognition

TROUBLE SYMPTOM:
Normal control

NOTE:
Perform the diagnosis for LAN system. <Ref. to LAN(HEV)(diag)-2, PROCEDURE, Basic Diagnostic Procedure.>

FW:DTC U0164 LOST COMMUNICATION WITH HVAC CONTROL MODULE

DIAGNOSIS:
- Detects CAN communication error with air conditioner.
- Immediately at fault recognition

TROUBLE SYMPTOM:
EV traveling/Auto Start Stop does not operate.

NOTE:
Perform the diagnosis for LAN system. <Ref. to LAN(HEV)(diag)-2, PROCEDURE, Basic Diagnostic Procedure.>

FX:DTC U0287 LOST COMMUNICATION WITH TRANSMISSION FLUID PUMP MODULE

DIAGNOSIS:
- Detects CAN communication error with electric oil pump.
- Immediately at fault recognition

TROUBLE SYMPTOM:
Normal control

NOTE:
Perform the diagnosis for LAN system. <Ref. to LAN(HEV)(diag)-2, PROCEDURE, Basic Diagnostic Procedure.>

FY:DTC U0401 INVALID DATA RECEIVED FROM ECM/PCM “A”

DIAGNOSIS:
- Immediately at fault recognition
- GENERAL DESCRIPTION <Ref. to GD(HEV)-167, DTC U0401 INVALID DATA RECEIVED FROM ECM/PCM “A”, Diagnostic Trouble Code (DTC) Detecting Criteria.>

TROUBLE SYMPTOM:
- EV traveling/Auto Start Stop does not operate.
- Motor assist does not regenerates.
- Sometimes driving power and shifting behavior are different from the normal states.

NOTE:
Perform the diagnosis for LAN system. <Ref. to LAN(HEV)(diag)-2, PROCEDURE, Basic Diagnostic Procedure.>

FZ:DTC U0402 INVALID DATA RECEIVED FROM TCM

DIAGNOSIS:
- Immediately at fault recognition
- GENERAL DESCRIPTION <Ref. to GD(HEV)-168, DTC U0402 INVALID DATA RECEIVED FROM TCM, Diagnostic Trouble Code (DTC) Detecting Criteria.>

TROUBLE SYMPTOM:
- EV traveling/Auto Start Stop does not operate.
- Motor assist does not regenerates.
- Sometimes driving power and shifting behavior are different from the normal states.

NOTE:
Perform the diagnosis for LAN system. <Ref. to LAN(HEV)(diag)-2, PROCEDURE, Basic Diagnostic Procedure.>

GA:DTC U0411 INVALID DATA RECEIVED FROM DRIVE MOTOR CONTROL MODULE "A"

DIAGNOSIS:
- Immediately at fault recognition
- GENERAL DESCRIPTION <Ref. to GD(HEV)-169, DTC U0411 INVALID DATA RECEIVED FROM DRIVE MOTOR CONTROL MODULE "A", Diagnostic Trouble Code (DTC) Detecting Criteria.>

TROUBLE SYMPTOM:
- EV traveling/Auto Start Stop does not operate.
- Motor assist does not regenerates.
- Sometimes driving power and shifting behavior are different from the normal states.

NOTE:
Perform the diagnosis for LAN system. <Ref. to LAN(HEV)(diag)-2, PROCEDURE, Basic Diagnostic Procedure.>

GB:DTC U0412 INVALID DATA RECEIVED FROM BATTERY ENERGY CONTROL MODULE

DIAGNOSIS:
- Immediately at fault recognition
- GENERAL DESCRIPTION <Ref. to GD(HEV)-171, DTC U0412 INVALID DATA RECEIVED FROM BATTERY ENERGY CONTROL MODULE, Diagnostic Trouble Code (DTC) Detecting Criteria.>

TROUBLE SYMPTOM:
- EV traveling/Auto Start Stop does not operate.
- Motor assist does not regenerates.

NOTE:
Perform the diagnosis for LAN system. <Ref. to LAN(HEV)(diag)-2, PROCEDURE, Basic Diagnostic Procedure.>

GC:DTC U0416 INVALID DATA RECEIVED FROM VEHICLE DYNAMICS CONTROL MODULE

DIAGNOSIS:
- Immediately at fault recognition
- GENERAL DESCRIPTION <Ref. to GD(HEV)-173, DTC U0416 INVALID DATA RECEIVED FROM VEHICLE DYNAMICS CONTROL MODULE, Diagnostic Trouble Code (DTC) Detecting Criteria.>

TROUBLE SYMPTOM:
EV traveling/Auto Start Stop does not operate.

NOTE:
Perform the diagnosis for LAN system. <Ref. to LAN(HEV)(diag)-2, PROCEDURE, Basic Diagnostic Procedure.>

GD:DTC U0420 INVALID DATA RECEIVED FROM POWER STEERING CONTROL MODULE

DIAGNOSIS:
- Detects CAN communication error with electric power steering system.
- Immediately at fault recognition

TROUBLE SYMPTOM:
Normal control

NOTE:
Perform the diagnosis for LAN system. <Ref. to LAN(HEV)(diag)-2, PROCEDURE, Basic Diagnostic Procedure.>

GE:DTC U0422 INVALID DATA RECEIVED FROM BODY CONTROL MODULE

DIAGNOSIS:
- Detects CAN communication error with body integrated unit.
- Immediately at fault recognition

TROUBLE SYMPTOM:
Normal control

NOTE:
Perform the diagnosis for LAN system. <Ref. to LAN(HEV)(diag)-2, PROCEDURE, Basic Diagnostic Procedure.>

GF:DTC U0423 INVALID DATA RECEIVED FROM INSTRUMENT PANEL CLUSTER CONTROL MODULE

DIAGNOSIS:
- Detects CAN communication error with combination meter.
- Immediately at fault recognition

TROUBLE SYMPTOM:
Normal control

NOTE:
Perform the diagnosis for LAN system. <Ref. to LAN(HEV)(diag)-2, PROCEDURE, Basic Diagnostic Procedure.>

GG:DTC U0424 INVALID DATA RECEIVED FROM HVAC CONTROL MODULE

DIAGNOSIS:
- Detects CAN communication error with air conditioner.
- Immediately at fault recognition

TROUBLE SYMPTOM:
EV traveling/Auto Start Stop does not operate.

NOTE:
Perform the diagnosis for LAN system. <Ref. to LAN(HEV)(diag)-2, PROCEDURE, Basic Diagnostic Procedure.>

GH:DTC U0452 INVALID DATA RECEIVED FROM RESTRAINTS CONTROL MODULE

DIAGNOSIS:
- Detects CAN communication error with airbag system.
- Immediately at fault recognition

TROUBLE SYMPTOM:
Normal control

NOTE:
Perform the diagnosis for LAN system. <Ref. to LAN(HEV)(diag)-2, PROCEDURE, Basic Diagnostic Procedure.>

GI: DTC U0588 INVALID DATA RECEIVED FROM TRANSMISSION FLUID PUMP MODULE

DIAGNOSIS:
- Detects CAN communication error with electric oil pump.
- Immediately at fault recognition

TROUBLE SYMPTOM:
Normal control

NOTE:
Perform the diagnosis for LAN system. <Ref. to LAN(HEV)(diag)-2, PROCEDURE, Basic Diagnostic Procedure.>

GJ:DTC U1100 LOST COMMUNICATION WITH ECM/PCM PU-CAN

DIAGNOSIS:
- Immediately at fault recognition
- GENERAL DESCRIPTION <Ref. to GD(HEV)-174, DTC U1100 LOST COMMUNICATION WITH ECM/PCM PU-CAN, Diagnostic Trouble Code (DTC) Detecting Criteria.>

TROUBLE SYMPTOM:
- EV traveling/Auto Start Stop does not operate.
- Motor assist does not regenerates.
- Sometimes driving power and shifting behavior are different from the normal states.

NOTE:
Perform the diagnosis for LAN system. <Ref. to LAN(HEV)(diag)-2, PROCEDURE, Basic Diagnostic Procedure.>

GK:DTC U1101 LOST COMMUNICATION WITH TCM PU-CAN

DIAGNOSIS:
- Immediately at fault recognition
- GENERAL DESCRIPTION <Ref. to GD(HEV)-175, DTC U1101 LOST COMMUNICATION WITH TCM PU-CAN, Diagnostic Trouble Code (DTC) Detecting Criteria.>

TROUBLE SYMPTOM:
- EV traveling/Auto Start Stop does not operate.
- Motor assist does not regenerates.
- Sometimes driving power and shifting behavior are different from the normal states.

NOTE:
Perform the diagnosis for LAN system. <Ref. to LAN(HEV)(diag)-2, PROCEDURE, Basic Diagnostic Procedure.>

GL:DTC U1290 LOST COMMUNICATION WITH HYBRID POWERTRAIN CONTROL MODULE HEV-CAN

DIAGNOSIS:
- Immediately at fault recognition
- GENERAL DESCRIPTION <Ref. to GD(HEV)-176, DTC U1290 LOST COMMUNICATION WITH HYBRID POWERTRAIN CONTROL MODULE HEV-CAN, Diagnostic Trouble Code (DTC) Detecting Criteria.>

TROUBLE SYMPTOM:
- EV traveling/Auto Start Stop does not operate.
- Motor assist does not regenerates.

NOTE:
Perform the diagnosis for LAN system. <Ref. to LAN(HEV)(diag)-2, PROCEDURE, Basic Diagnostic Procedure.>

GM:DTC U1401 INVALID DATA RECEIVED FROM ECM/PCM PU-CAN

DIAGNOSIS:
- Immediately at fault recognition
- GENERAL DESCRIPTION <Ref. to GD(HEV)-178, DTC U1401 INVALID DATA RECEIVED FROM ECM/PCM PU-CAN, Diagnostic Trouble Code (DTC) Detecting Criteria.>

TROUBLE SYMPTOM:
- EV traveling/Auto Start Stop does not operate.
- Motor assist does not regenerates.
- Sometimes driving power and shifting behavior are different from the normal states.

NOTE:
Perform the diagnosis for LAN system. <Ref. to LAN(HEV)(diag)-2, PROCEDURE, Basic Diagnostic Procedure.>

GN:DTC U1402 INVALID DATA RECEIVED FROM TCM PU-CAN

DIAGNOSIS:
- Immediately at fault recognition
- GENERAL DESCRIPTION <Ref. to GD(HEV)-179, DTC U1402 INVALID DATA RECEIVED FROM TCM PU-CAN, Diagnostic Trouble Code (DTC) Detecting Criteria.>

TROUBLE SYMPTOM:
- EV traveling/Auto Start Stop does not operate.
- Motor assist does not regenerates.
- Sometimes driving power and shifting behavior are different from the normal states.

NOTE:
Perform the diagnosis for LAN system. <Ref. to LAN(HEV)(diag)-2, PROCEDURE, Basic Diagnostic Procedure.>

GO:DTC U1591 INVALID DATA RECEIVED FROM HYBRID POWERTRAIN CONTROL MODULE HEV-CAN

DIAGNOSIS:
- Immediately at fault recognition
- GENERAL DESCRIPTION <Ref. to GD(HEV)-180, DTC U1591 INVALID DATA RECEIVED FROM HYBRID POWERTRAIN CONTROL MODULE HEV-CAN, Diagnostic Trouble Code (DTC) Detecting Criteria.>

TROUBLE SYMPTOM:
- EV traveling/Auto Start Stop does not operate.
- Motor assist does not regenerates.

NOTE:
Perform the diagnosis for LAN system. <Ref. to LAN(HEV)(diag)-2, PROCEDURE, Basic Diagnostic Procedure.>

GP:DTC U1676 LIN COMMUNICATION BUS ERROR HYBRID POWERTRAIN CONTROL MODULE

DIAGNOSIS:

- Detects LIN communication error.
- Immediately at fault recognition

TROUBLE SYMPTOM:

- EV traveling/Auto Start Stop does not operate.

(Engine does not restart under EV traveling/Auto Start Stop condition.)

- Charge warning light illuminates.

CAUTION:

Before performing diagnosis, refer to "CAUTION" in "General Description". <Ref. to HEV(diag)-8, CAUTION, General Description.>

WIRING DIAGRAM

Hybrid system <Ref. to WI(HEV)-139, WIRING DIAGRAM, Hybrid Electric Vehicle System.>

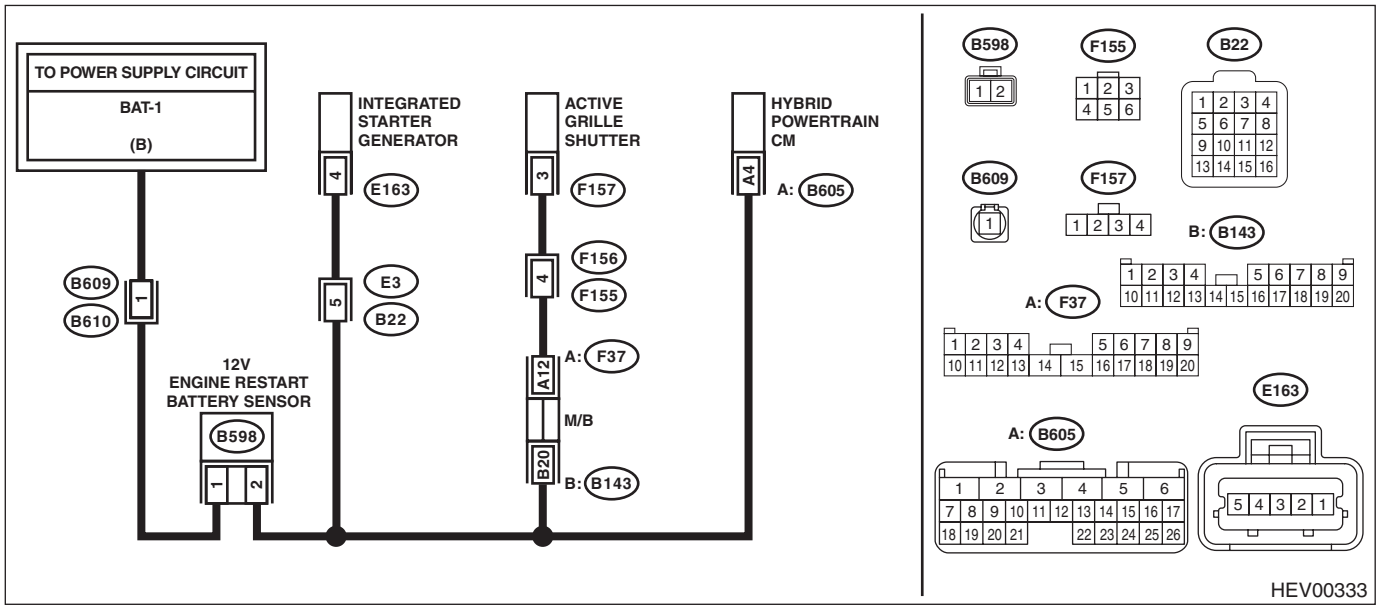

Step		Check	Yes	No
1	**CHECK BATTERY.** Check the 12 volt engine restart battery.	Is the condition normal?	Go to step **2**.	Charge or replace the 12 volt engine restart battery.
2	**CHECK MODULES.** 1) Disconnect the integrated starter generator connector. 2) Perform the Clear Memory Mode. <Ref. to HEV(diag)-24, HYBRID POWERTRAIN CONTROL SYSTEM, OPERATION, Clear Memory Mode.> 3) Read the DTC again. <Ref. to HEV(diag)-23, HYBRID POWERTRAIN CONTROL SYSTEM, OPERATION, Read Diagnostic Trouble Code (DTC).>	Is DTC U1676 detected? (current malfunction)	Go to step **3**.	Replace the integrated starter generator. <Ref. to SC(H4DO(HEV))-31, Integrated Starter Generator (ISG).>

	Step	Check	Yes	No
3	**CHECK MODULES.** 1) Turn the ignition switch to OFF. 2) Disconnect the 12V engine restart battery sensor connector. 3) Perform the Clear Memory Mode. <Ref. to HEV(diag)-24, HYBRID POWERTRAIN CONTROL SYSTEM, OPERATION, Clear Memory Mode.> 4) Read the DTC again. <Ref. to HEV(diag)-23, HYBRID POWERTRAIN CONTROL SYSTEM, OPERATION, Read Diagnostic Trouble Code (DTC).>	Is DTC U1676 detected? (current malfunction)	Go to step **4**.	Replace the 12V engine restart battery sensor. <Ref. to SC(H4DO(HEV))-54, Battery Sensor.>
4	**CHECK MODULES.** 1) Turn the ignition switch to OFF. 2) Disconnect the active grille shutter connector. 3) Perform the Clear Memory Mode. <Ref. to HEV(diag)-24, HYBRID POWERTRAIN CONTROL SYSTEM, OPERATION, Clear Memory Mode.> 4) Read the DTC again. <Ref. to HEV(diag)-23, HYBRID POWERTRAIN CONTROL SYSTEM, OPERATION, Read Diagnostic Trouble Code (DTC).>	Is DTC U1676 detected? (current malfunction)	Go to step **5**.	Replace the active grille shutter.
5	**CHECK HARNESS (OPEN CIRCUIT).** 1) Turn the ignition switch to OFF. 2) Disconnect the HPCM connector. 3) Using a tester, measure the resistance between the HPCM connector and connector of each unit. ***Connector & terminal*** ***(B605) No. 4 — (F157) No. 3:*** ***(B605) No. 4 — (B598) No. 2:*** ***(B605) No. 4 — (E163) No. 4:***	Is the resistance less than 1 Ω?	Go to step **6**.	Repair open circuit of the harness between HPCM connector and connector of each unit.
6	**CHECK HARNESS (SHORT TO GROUND).** Using a tester, measure the resistance between HPCM connector and chassis ground. ***Connector & terminal*** ***(B605) No. 4 — Chassis ground:***	Is the resistance 1 MΩ or more?	Go to step **7**.	Repair ground short circuit of harness between the HPCM connector and the integrated starter generator connector.
7	**CHECK HARNESS (SHORT TO POWER).** Using a tester, measure the voltage between the HPCM connector and chassis ground. ***Connector & terminal*** ***(B605) No. 4 (+) — Chassis ground (–):***	Is the voltage less than 1 V?	Replace the HPCM. <Ref. to HEV-37, Hybrid Powertrain Control Module.>	Repair the short circuit to power in harness between the HPCM connector and the integrated starter generator connector.

GQ:DTC U1711 LOST COMMUNICATION WITH BATTERY "2" MONITOR MODULE

DIAGNOSIS:
- Detects LIN communication error with 12V engine restart battery sensor.
- Immediately at fault recognition

TROUBLE SYMPTOM:
- EV traveling/Auto Start Stop does not operate.
- Charge warning light illuminates.

CAUTION:
Before performing diagnosis, refer to "CAUTION" in "General Description". <Ref. to HEV(diag)-8, CAUTION, General Description.>

NOTE:
This DTC may be set when terminals of the 12 volt engine restart battery are disconnected.

WIRING DIAGRAM
Hybrid system <Ref. to WI(HEV)-139, WIRING DIAGRAM, Hybrid Electric Vehicle System.>

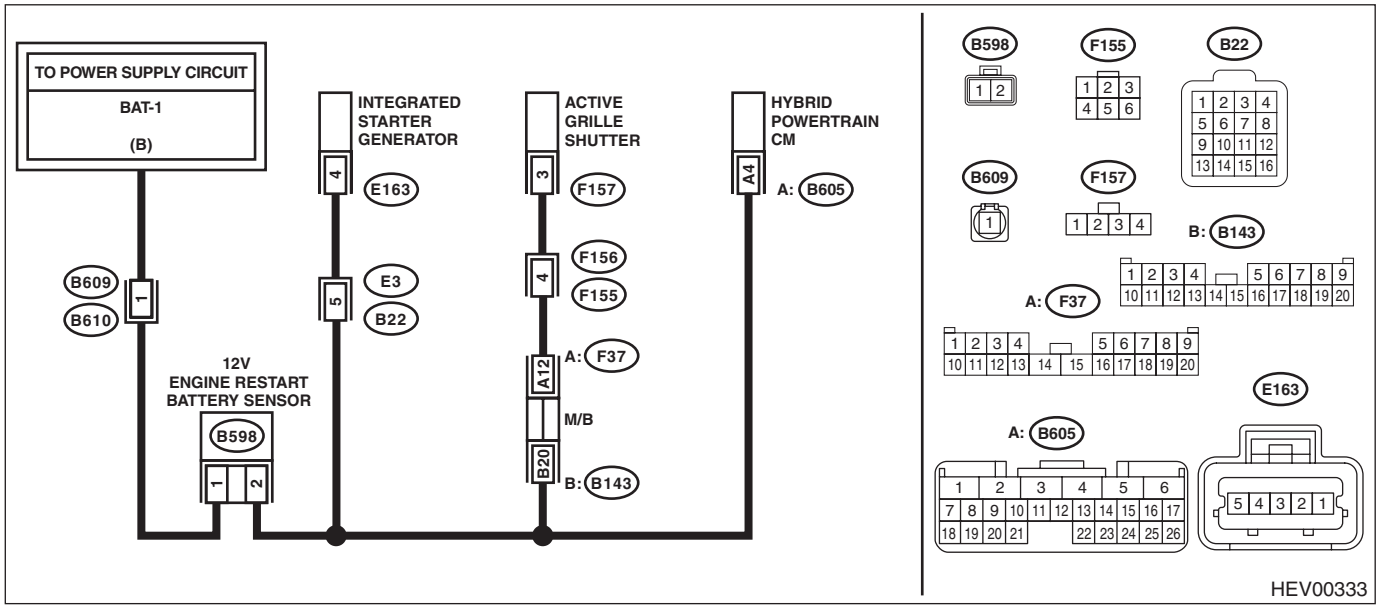

Step		Check	Yes	No
1	**CHECK HARNESS (OPEN CIRCUIT).** 1) Disconnect the HPCM connector. 2) Disconnect the 12V engine restart battery sensor connector. 3) Using a tester, measure the resistance between the HPCM connector and 12V engine restart battery sensor connector. ***Connector & terminal*** ***(B605) No. 4 — (B598) No. 2:*** ***(B598) No. 1 — 12 volt engine restart battery positive terminal:***	Is the resistance less than 1 Ω?	Go to step **2**.	Repair the open circuit of the harness between the HPCM connector and the 12 volt engine restart battery and the 12V engine restart battery sensor connector or replace fuses.
2	**CHECK HARNESS (SHORT TO GROUND).** 1) Disconnect the integrated starter generator connector. 2) Using a tester, measure the resistance between HPCM connector and chassis ground. ***Connector & terminal*** ***(B605) No. 4 — Chassis ground:***	Is the resistance 1 MΩ or more?	Go to step **3**.	Repair ground short circuit of harness between the HPCM connector and the 12V engine restart battery sensor connector.

	Step	Check	Yes	No
3	**CHECK HARNESS (SHORT TO POWER).** Using a tester, measure the voltage between the HPCM connector and chassis ground. ***Connector & terminal*** ***(B605) No. 4 (+) — Chassis ground (–):***	Is the voltage less than 1 V?	Go to step **4**.	Repair the short circuit to power in harness between the HPCM connector and the 12V engine restart battery sensor connector.
4	**CHECK BATTERY.** Check the 12 volt engine restart battery. <Ref. to SC(H4DO(HEV))-38, Battery.>	Is the condition normal?	Replace the 12V engine restart battery sensor. <Ref. to SC(H4DO(HEV))-54, Battery Sensor.>	Replace or charge the battery.

GR:DTC U1720 LOST COMMUNICATION WITH INTEGRATED STARTER GENERATOR

DIAGNOSIS:
- Detects LIN communication error with integrated starter generator.
- Immediately at fault recognition

TROUBLE SYMPTOM:
- EV traveling/Auto Start Stop does not operate.

(Engine does not restart under EV traveling/Auto Start Stop condition.)
- Charge warning light illuminates.

CAUTION:
Before performing diagnosis, refer to "CAUTION" in "General Description". <Ref. to HEV(diag)-8, CAUTION, General Description.>

NOTE:
This DTC may be set when terminals of the 12 volt engine restart battery are disconnected.

WIRING DIAGRAM
Hybrid system <Ref. to WI(HEV)-139, WIRING DIAGRAM, Hybrid Electric Vehicle System.>

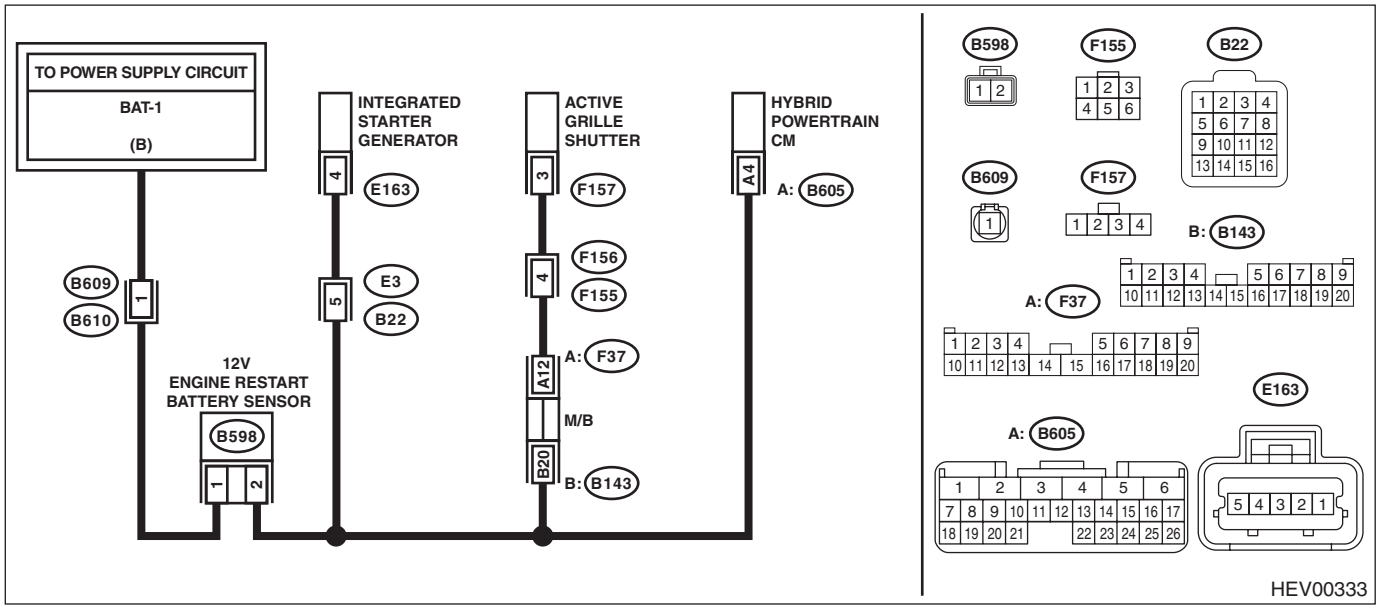

Step		Check	Yes	No
1	**CHECK BATTERY.** Check the 12 volt engine restart battery.	Is the condition normal?	Go to step **2**.	Replace or charge the battery.
2	**CHECK HARNESS (SHORT TO GROUND).** 1) Turn the ignition switch to OFF. 2) Disconnect the HPCM connector. 3) Disconnect the integrated starter generator connector. 4) Disconnect the 12V engine restart battery sensor connector. 5) Using a tester, measure the resistance between HPCM connector and chassis ground. ***Connector & terminal*** ***(B605) No. 4 — Chassis ground:***	Is the resistance 1 MΩ or more?	Go to step **3**.	Repair ground short circuit of harness between the HPCM connector and the integrated starter generator connector.

	Step	Check	Yes	No
3	**CHECK HARNESS (SHORT TO POWER).** Using a tester, measure the voltage between the HPCM connector and chassis ground. ***Connector & terminal*** ***(B605) No. 4 (+) — Chassis ground (–):***	Is the voltage less than 1 V?	Go to step **4**.	Repair the short circuit to power in harness between the HPCM connector and the integrated starter generator connector.
4	**CHECK HARNESS (OPEN CIRCUIT).** Using a tester, measure the resistance between the HPCM connector and integrated starter generator connector. ***Connector & terminal*** ***(B605) No. 4 — (E163) No. 4:***	Is the resistance less than 1 Ω?	Replace the integrated starter generator. <Ref. to SC(H4DO(HEV))-31, Integrated Starter Generator (ISG).>	Repair the open circuit of the harness between the HPCM connector and the integrated starter generator connector.

19.Diagnostics with Phenomenon

A: INSPECTION

1. SYMPTOM TABLE

Symptoms	Maintenance parts	Note
Hybrid fail lamp does not illuminate.	CAN communication	Perform the basic inspection for LAN system. <Ref. to LAN(HEV)(diag)-2, PROCEDURE, Basic Diagnostic Procedure.>
	Combination meter assembly	Perform the basic inspection for meter system. <Ref. to IDI(diag)-2, COMBINATION METER, PROCEDURE, Basic Diagnostic Procedure.>
Hybrid fail lamp remains ON. (If DTCs are detected, perform inspection according to those DTC diagnostic procedures.)	CAN communication	Perform the basic inspection for LAN system. <Ref. to LAN(HEV)(diag)-2, PROCEDURE, Basic Diagnostic Procedure.>
	Combination meter assembly	Perform the basic inspection for meter system. <Ref. to IDI(diag)-2, COMBINATION METER, PROCEDURE, Basic Diagnostic Procedure.>
Charge warning light illuminates.	Integrated starter generator	Check the charge warning light. <Ref. to SC(H4DO(HEV))-37, CHECK CHARGE WARNING LIGHT, INSPECTION, Integrated Starter Generator (ISG).>
Unable to switch to EV traveling.	CAN communication	Perform the basic inspection for LAN system. <Ref. to LAN(HEV)(diag)-2, PROCEDURE, Basic Diagnostic Procedure.>
	Combination meter assembly	Perform the basic inspection for meter system. <Ref. to IDI(diag)-2, COMBINATION METER, PROCEDURE, Basic Diagnostic Procedure.>
	Check EV traveling conditions. <Ref. to HEV(diag)-49, HYBRID POWERTRAIN CONTROL SYSTEM (Auto Start Stop AND EV TRAVELING CONDITIONS), OPERATION, Read Current Data.>	The brake vacuum pressure must be sufficient. (The vacuum pressure may decrease at high altitude or repetitive brake operation.)
		The 12 volt engine restart battery must not have abnormality.
		Engine coolant temperature must not be too low. (60°C (140°F) or more)
		The shift lever must be in “D” range.
		Battery pack must not have abnormality.
		Integrated starter generator must not have abnormality.
		ABS must not be operating.
		There must not be a steep incline in uphill.
		Accelerator pedal must not be depressed.
		Brake pedal must not be depressed.
		Warning lights are not illuminating.
		DC/DC converter must be operating normally.
		System Operation Check Mode must not be active.

Symptoms	Maintenance parts	Note
EV MODE indicator light does not illuminate.	CAN communication	Perform the basic inspection for LAN system. <Ref. to LAN(HEV)(diag)-2, PROCEDURE, Basic Diagnostic Procedure.>
	Combination meter assembly	Perform the basic inspection for meter system. <Ref. to IDI(diag)-2, COMBINATION METER, PROCEDURE, Basic Diagnostic Procedure.>
EV MODE indicator light remains on.	CAN communication	Perform the basic inspection for LAN system. <Ref. to LAN(HEV)(diag)-2, PROCEDURE, Basic Diagnostic Procedure.>
	Combination meter assembly	Perform the basic inspection for meter system. <Ref. to IDI(diag)-2, COMBINATION METER, PROCEDURE, Basic Diagnostic Procedure.>
Poor acceleration	Hybrid system	Perform the basic inspection for hybrid system. <Ref. to HEV(diag)-2, PROCEDURE, Basic Diagnostic Procedure.>
	Engine system	Perform the basic inspection for engine system. <Ref. to EN(H4DO HEV)(diag)-2, PROCEDURE, Basic Diagnostic Procedure.>
	CVT System	Perform the basic inspection for CVT system. <Ref. to CVT(HEV)(diag)-2, PROCEDURE, Basic Diagnostic Procedure.>
READY ON does not occur. (Models without keyless access system)	Ignition switch assembly	Perform unit check for the ignition switch.
	IG relay	Perform unit check for the ignition relay.
	ECM power supply system	Perform the basic inspection for engine system. <Ref. to EN(H4DO HEV)(diag)-2, PROCEDURE, Basic Diagnostic Procedure.>
	Check READY mode conditions	The current data «Contactor Close Status» must be «close». (The ignition switch is OFF, battery runout prevention control is active, no fault conditions)
		Current data «Engine Speed» must have input.
		Drive motor must not have abnormality.
	Combination meter assembly	Perform the basic inspection for meter system. <Ref. to IDI(diag)-2, PROCEDURE, Basic Diagnostic Procedure.>
	Hybrid system	Perform the basic inspection for hybrid system. <Ref. to HEV(diag)-2, PROCEDURE, Basic Diagnostic Procedure.>
	Engine system	Perform the basic inspection for engine system. <Ref. to EN(H4DO HEV)(diag)-2, PROCEDURE, Basic Diagnostic Procedure.>

Symptoms	Maintenance parts	Note
READY ON does not occur. (Models with keyless access system)	Keyless access system	Perform the basic inspection for keyless access system. <Ref. to KPS(diag)-2, PROCEDURE, Basic Diagnostic Procedure.>
	ECM power supply system	Perform the basic inspection for engine system. <Ref. to EN(H4DO HEV)(diag)-2, PROCEDURE, Basic Diagnostic Procedure.>
	Check READY mode conditions	The current data «Contactor Close Status» must be «close». (The ignition switch is OFF, battery runout prevention control is active, no fault conditions)
		Current data «Engine Speed» must have input.
		Drive motor must not have abnormality.
	Combination meter assembly	Perform the basic inspection for meter system. <Ref. to IDI(diag)-2, PROCEDURE, Basic Diagnostic Procedure.>
	Hybrid system	Perform the basic inspection for hybrid system. <Ref. to HEV(diag)-2, PROCEDURE, Basic Diagnostic Procedure.>
	Engine system	Perform the basic inspection for engine system. <Ref. to EN(H4DO HEV)(diag)-2, PROCEDURE, Basic Diagnostic Procedure.>
Defective operation of Auto Start Stop	Check Auto Start Stop mode conditions. <Ref. to HEV(diag)-49, HYBRID POWERTRAIN CONTROL SYSTEM (Auto Start Stop AND EV TRAVELING CONDITIONS), OPERATION, Read Current Data.>	The brake vacuum pressure must be sufficient. (The vacuum pressure may decrease at high altitude or repetitive brake operation.)
		The 12 volt engine restart battery must not have abnormality.
		Engine coolant temperature must not be too low. (60°C (140°F) or more)
		The shift lever must be in “D” range.
		Battery pack must not have abnormality.
		Drive motor must not have abnormality.
		Integrated starter generator must not have abnormality.
		The vehicle must not be moving. (0.1 km/h (0.1 MPH) or less)
		ABS must not be operating.
		There must not be a steep incline in uphill.
		Accelerator pedal must not be depressed.
		Defroster must not be on.
		Warning lights are not illuminating.
		DC/DC converter must be operating normally.
		System Operation Check Mode must not be active.

Symptoms	Maintenance parts	Note
The braking force is weak.	VDC system	Perform the basic inspection for VDC system. <Ref. to VDC(diag)-2, PROCEDURE, Basic Diagnostic Procedure.>
	Hybrid system (brake vacuum pump)	Perform the basic inspection for hybrid system. <Ref. to HEV(diag)-2, PROCEDURE, Basic Diagnostic Procedure.>
Engine does not restart under Auto Start Stop or EV traveling.	Engine system	Perform the basic inspection for engine system. <Ref. to EN(H4DO HEV)(diag)-2, PROCEDURE, Basic Diagnostic Procedure.>
	Hybrid system	Perform the basic inspection for hybrid system. <Ref. to HEV(diag)-2, PROCEDURE, Basic Diagnostic Procedure.> NOTE: Restarting the engine may be temporarily prohibited due to certain voltage or temperature condition. In such case, the engine may be restarted when normal voltage or temperature condition is restored.

GENERAL DESCRIPTION (HEV)

GD(HEV)

Page

1. List of Diagnostic Trouble Code (DTC) 2
2. Diagnostic Trouble Code (DTC) Detecting Criteria 11

1. List of Diagnostic Trouble Code (DTC)

A: LIST

1. HYBRID POWERTRAIN CONTROL SYSTEM

DTC	Item	Note
P0506	Idle Air Control System RPM Lower Than Expected	<Ref. to GD(HEV)-11, DTC P0506 IDLE AIR CONTROL SYSTEM RPM LOWER THAN EXPECTED, Diagnostic Trouble Code (DTC) Detecting Criteria.>
P0507	Idle Air Control System RPM Higher Than Expected	<Ref. to GD(HEV)-12, DTC P0507 IDLE AIR CONTROL SYSTEM RPM HIGHER THAN EXPECTED, Diagnostic Trouble Code (DTC) Detecting Criteria.>
P0572	Brake Switch "A" [Stop Lamp Switch] Circuit Low	<Ref. to GD(HEV)-13, DTC P0572 BRAKE SWITCH "A" [STOP LAMP SWITCH] CIRCUIT LOW, Diagnostic Trouble Code (DTC) Detecting Criteria.>
P0573	Brake Switch "A" [Stop Lamp Switch] Circuit High	<Ref. to GD(HEV)-14, DTC P0573 BRAKE SWITCH "A" [STOP LAMP SWITCH] CIRCUIT HIGH, Diagnostic Trouble Code (DTC) Detecting Criteria.>
P057B	Brake Pedal Position Sensor Circuit Range/Performance	<Ref. to GD(HEV)-16, DTC P057B BRAKE PEDAL POSITION SENSOR CIRCUIT RANGE/PERFORMANCE, Diagnostic Trouble Code (DTC) Detecting Criteria.>
P057C	Brake Pedal Position Sensor Circuit Low	<Ref. to GD(HEV)-18, DTC P057C BRAKE PEDAL POSITION SENSOR CIRCUIT LOW, Diagnostic Trouble Code (DTC) Detecting Criteria.>
P057D	Brake Pedal Position Sensor Circuit High	<Ref. to GD(HEV)-19, DTC P057D BRAKE PEDAL POSITION SENSOR CIRCUIT HIGH, Diagnostic Trouble Code (DTC) Detecting Criteria.>
P0604	Internal Control Module Random Access Memory (RAM) Error	<Ref. to GD(HEV)-20, DTC P0604 INTERNAL CONTROL MODULE RANDOM ACCESS MEMORY (RAM) ERROR, Diagnostic Trouble Code (DTC) Detecting Criteria.>
P0605	Internal Control Module Read Only Memory (ROM) Error	<Ref. to GD(HEV)-22, DTC P0605 INTERNAL CONTROL MODULE READ ONLY MEMORY (ROM) ERROR, Diagnostic Trouble Code (DTC) Detecting Criteria.>
P0719	Brake Switch "B" Circuit Low	<Ref. to GD(HEV)-24, DTC P0719 BRAKE SWITCH "B" CIRCUIT LOW, Diagnostic Trouble Code (DTC) Detecting Criteria.>
P0724	Brake Switch "B" Circuit High	<Ref. to GD(HEV)-25, DTC P0724 BRAKE SWITCH "B" CIRCUIT HIGH, Diagnostic Trouble Code (DTC) Detecting Criteria.>
P0A1D	Hybrid Powertrain Control Module	<Ref. to GD(HEV)-26, DTC P0A1D HYBRID POWERTRAIN CONTROL MODULE, Diagnostic Trouble Code (DTC) Detecting Criteria.>
P1C0C	Brake Pedal Position Sensor "2" Circuit Low	<Ref. to GD(HEV)-27, DTC P1C0C BRAKE PEDAL POSITION SENSOR "2" CIRCUIT LOW, Diagnostic Trouble Code (DTC) Detecting Criteria.>
P1C0D	Brake Pedal Position Sensor "2" Circuit High	<Ref. to GD(HEV)-28, DTC P1C0D BRAKE PEDAL POSITION SENSOR "2" CIRCUIT HIGH, Diagnostic Trouble Code (DTC) Detecting Criteria.>
P1C16	Idle Control System RPM Lower Than Expected (HPCM)	<Ref. to GD(HEV)-28, DTC P1C16 IDLE CONTROL SYSTEM RPM LOWER THAN EXPECTED (HPCM), Diagnostic Trouble Code (DTC) Detecting Criteria.>
P1C17	Idle Control System RPM Higher Than Expected (HPCM)	<Ref. to GD(HEV)-28, DTC P1C17 IDLE CONTROL SYSTEM RPM HIGHER THAN EXPECTED (HPCM), Diagnostic Trouble Code (DTC) Detecting Criteria.>
P2158	Vehicle Speed Sensor "B"	<Ref. to GD(HEV)-29, DTC P2158 VEHICLE SPEED SENSOR "B", Diagnostic Trouble Code (DTC) Detecting Criteria.>
U0073	CAN Failure, Bus ‘Off’ Detection	<Ref. to GD(HEV)-156, DTC U0073 CONTROL MODULE COMMUNICATION BUS OFF, Diagnostic Trouble Code (DTC) Detecting Criteria.>

DTC	Item	Note
U0075	Control Module Communication Bus "PU-CAN" Off	<Ref. to GD(HEV)-157, DTC U0075 CONTROL MODULE COMMUNICATION BUS "PU-CAN" OFF, Diagnostic Trouble Code (DTC) Detecting Criteria.>
U0076	Control Module Communication Bus "HEV-CAN" Off	<Ref. to GD(HEV)-158, DTC U0076 CONTROL MODULE COMMUNICATION BUS "HEV-CAN" OFF, Diagnostic Trouble Code (DTC) Detecting Criteria.>
U0100	Lost Communication With ECM/PCM “A”	<Ref. to GD(HEV)-160, DTC U0100 LOST COMMUNICATION WITH ECM/PCM “A”, Diagnostic Trouble Code (DTC) Detecting Criteria.>
U0101	Lost Communication With TCM	<Ref. to GD(HEV)-161, DTC U0101 LOST COMMUNICATION WITH TCM, Diagnostic Trouble Code (DTC) Detecting Criteria.>
U0110	Lost Communication With Drive Motor Control Module "A"	<Ref. to GD(HEV)-162, DTC U0110 LOST COMMUNICATION WITH DRIVE MOTOR CONTROL MODULE "A", Diagnostic Trouble Code (DTC) Detecting Criteria.>
U0111	Lost Communication With Battery Energy Control Module	<Ref. to GD(HEV)-164, DTC U0111 LOST COMMUNICATION WITH BATTERY ENERGY CONTROL MODULE, Diagnostic Trouble Code (DTC) Detecting Criteria.>
U0122	Lost Communication With Vehicle Dynamics Control Module	<Ref. to GD(HEV)-166, DTC U0122 LOST COMMUNICATION WITH VEHICLE DYNAMICS CONTROL MODULE, Diagnostic Trouble Code (DTC) Detecting Criteria.>
U0401	Invalid Data Received From ECM/PCM “A”	<Ref. to GD(HEV)-167, DTC U0401 INVALID DATA RECEIVED FROM ECM/PCM “A”, Diagnostic Trouble Code (DTC) Detecting Criteria.>
U0402	Invalid Data Received From TCM	<Ref. to GD(HEV)-168, DTC U0402 INVALID DATA RECEIVED FROM TCM, Diagnostic Trouble Code (DTC) Detecting Criteria.>
U0411	Invalid Data Received From Drive Motor Control Module "A"	<Ref. to GD(HEV)-169, DTC U0411 INVALID DATA RECEIVED FROM DRIVE MOTOR CONTROL MODULE "A", Diagnostic Trouble Code (DTC) Detecting Criteria.>
U0412	Invalid Data Received From Battery Energy Control Module	<Ref. to GD(HEV)-171, DTC U0412 INVALID DATA RECEIVED FROM BATTERY ENERGY CONTROL MODULE, Diagnostic Trouble Code (DTC) Detecting Criteria.>
U0416	Invalid Data Received From Vehicle Dynamics Control Module	<Ref. to GD(HEV)-173, DTC U0416 INVALID DATA RECEIVED FROM VEHICLE DYNAMICS CONTROL MODULE, Diagnostic Trouble Code (DTC) Detecting Criteria.>
U1100	Lost Communication With ECM/PCM PU-CAN	<Ref. to GD(HEV)-174, DTC U1100 LOST COMMUNICATION WITH ECM/PCM PU-CAN, Diagnostic Trouble Code (DTC) Detecting Criteria.>
U1101	Lost Communication With TCM PU-CAN	<Ref. to GD(HEV)-175, DTC U1101 LOST COMMUNICATION WITH TCM PU-CAN, Diagnostic Trouble Code (DTC) Detecting Criteria.>
U1401	Invalid Data Received From ECM/PCM PU-CAN	<Ref. to GD(HEV)-178, DTC U1401 INVALID DATA RECEIVED FROM ECM/PCM PU-CAN, Diagnostic Trouble Code (DTC) Detecting Criteria.>
U1402	Invalid Data Received From TCM PU-CAN	<Ref. to GD(HEV)-179, DTC U1402 INVALID DATA RECEIVED FROM TCM PU-CAN, Diagnostic Trouble Code (DTC) Detecting Criteria.>

2. DRIVE MOTOR CONTROL SYSTEM

DTC	Item	Note
P0A2A	Drive Motor "A" Temperature Sensor Circuit	<Ref. to GD(HEV)-30, DTC P0A2A DRIVE MOTOR "A" TEMPERATURE SENSOR CIRCUIT, Diagnostic Trouble Code (DTC) Detecting Criteria.>
P0A2C	Drive Motor "A" Temperature Sensor Circuit Low	<Ref. to GD(HEV)-31, DTC P0A2C DRIVE MOTOR "A" TEMPERATURE SENSOR CIRCUIT LOW, Diagnostic Trouble Code (DTC) Detecting Criteria.>
P0A2D	Drive Motor "A" Temperature Sensor Circuit High	<Ref. to GD(HEV)-32, DTC P0A2D DRIVE MOTOR "A" TEMPERATURE SENSOR CIRCUIT HIGH, Diagnostic Trouble Code (DTC) Detecting Criteria.>

DTC	Item	Note
P0A3C	Drive Motor "A" Inverter Over Temperature	<Ref. to GD(HEV)-33, DTC P0A3C DRIVE MOTOR "A" INVERTER OVER TEMPERATURE, Diagnostic Trouble Code (DTC) Detecting Criteria.>
P0A3F	Drive Motor "A" Position Sensor Circuit	<Ref. to GD(HEV)-34, DTC P0A3F DRIVE MOTOR "A" POSITION SENSOR CIRCUIT, Diagnostic Trouble Code (DTC) Detecting Criteria.>
P0A40	Drive Motor "A" Position Sensor Circuit Range/Performance	<Ref. to GD(HEV)-35, DTC P0A40 DRIVE MOTOR "A" POSITION SENSOR CIRCUIT RANGE/PERFORMANCE, Diagnostic Trouble Code (DTC) Detecting Criteria.>
P0A43	Drive Motor "A" Position Sensor Circuit Intermittent	<Ref. to GD(HEV)-36, DTC P0A43 DRIVE MOTOR "A" POSITION SENSOR CIRCUIT INTERMITTENT, Diagnostic Trouble Code (DTC) Detecting Criteria.>
P0A44	Drive Motor "A" Position Sensor Circuit Overspeed	<Ref. to GD(HEV)-37, DTC P0A44 DRIVE MOTOR "A" POSITION SENSOR CIRCUIT OVERSPEED, Diagnostic Trouble Code (DTC) Detecting Criteria.>
P0A5D	Drive Motor "A" Phase U Current	<Ref. to GD(HEV)-38, DTC P0A5D DRIVE MOTOR "A" PHASE U CURRENT, Diagnostic Trouble Code (DTC) Detecting Criteria.>
P0A60	Drive Motor "A" Phase V Current	<Ref. to GD(HEV)-39, DTC P0A60 DRIVE MOTOR "A" PHASE V CURRENT, Diagnostic Trouble Code (DTC) Detecting Criteria.>
P0A63	Drive Motor "A" Phase W Current	<Ref. to GD(HEV)-40, DTC P0A63 DRIVE MOTOR "A" PHASE W CURRENT, Diagnostic Trouble Code (DTC) Detecting Criteria.>
P0A78	Drive Motor "A" Inverter Performance	<Ref. to GD(HEV)-41, DTC P0A78 DRIVE MOTOR "A" INVERTER PERFORMANCE, Diagnostic Trouble Code (DTC) Detecting Criteria.>
P0A82	Hybrid/Ev Battery Pack Cooling Fan 1 Performance/Stuck Off	<Ref. to GD(HEV)-42, DTC P0A82 HYBRID/EV BATTERY PACK COOLING FAN 1 PERFORMANCE/STUCK OFF, Diagnostic Trouble Code (DTC) Detecting Criteria.>
P0A83	Hybrid/Ev Battery Pack Cooling Fan 1 Stuck On	<Ref. to GD(HEV)-43, DTC P0A83 HYBRID/EV BATTERY PACK COOLING FAN 1 STUCK ON, Diagnostic Trouble Code (DTC) Detecting Criteria.>
P0A90	Drive Motor "A" Performance	<Ref. to GD(HEV)-44, DTC P0A90 DRIVE MOTOR "A" PERFORMANCE, Diagnostic Trouble Code (DTC) Detecting Criteria.>
P0AED	Drive Motor Inverter Temperature Sensor "A" Circuit	<Ref. to GD(HEV)-45, DTC P0AED DRIVE MOTOR INVERTER TEMPERATURE SENSOR "A" CIRCUIT, Diagnostic Trouble Code (DTC) Detecting Criteria.>
P0AEE	Drive Motor Inverter Temperature Sensor "A" Circuit Range/Performance	<Ref. to GD(HEV)-46, DTC P0AEE DRIVE MOTOR INVERTER TEMPERATURE SENSOR "A" CIRCUIT RANGE/PERFORMANCE, Diagnostic Trouble Code (DTC) Detecting Criteria.>
P0AF2	Drive Motor Inverter Temperature Sensor "B" Circuit	<Ref. to GD(HEV)-48, DTC P0AF2 DRIVE MOTOR INVERTER TEMPERATURE SENSOR "B" CIRCUIT, Diagnostic Trouble Code (DTC) Detecting Criteria.>
P0AF3	Drive Motor Inverter Temperature Sensor "B" Circuit Range/Performance	<Ref. to GD(HEV)-49, DTC P0AF3 DRIVE MOTOR INVERTER TEMPERATURE SENSOR "B" CIRCUIT RANGE/PERFORMANCE, Diagnostic Trouble Code (DTC) Detecting Criteria.>
P0BD1	Drive Motor Inverter Temperature Sensor "C" Circuit	<Ref. to GD(HEV)-51, DTC P0BD1 DRIVE MOTOR INVERTER TEMPERATURE SENSOR "C" CIRCUIT, Diagnostic Trouble Code (DTC) Detecting Criteria.>
P0BD2	Drive Motor Inverter Temperature Sensor "C" Circuit Range/Performance	<Ref. to GD(HEV)-52, DTC P0BD2 DRIVE MOTOR INVERTER TEMPERATURE SENSOR "C" CIRCUIT RANGE/PERFORMANCE, Diagnostic Trouble Code (DTC) Detecting Criteria.>
P0BE6	Drive Motor "A" Phase U Current Sensor Circuit Range/Performance	<Ref. to GD(HEV)-54, DTC P0BE6 DRIVE MOTOR "A" PHASE U CURRENT SENSOR CIRCUIT RANGE/PERFORMANCE, Diagnostic Trouble Code (DTC) Detecting Criteria.>
P0BE7	Drive Motor "A" Phase U Current Sensor Circuit Low	<Ref. to GD(HEV)-55, DTC P0BE7 DRIVE MOTOR "A" PHASE U CURRENT SENSOR CIRCUIT LOW, Diagnostic Trouble Code (DTC) Detecting Criteria.>

DTC	Item	Note
P0BE8	Drive Motor "A" Phase U Current Sensor Circuit High	<Ref. to GD(HEV)-56, DTC P0BE8 DRIVE MOTOR "A" PHASE U CURRENT SENSOR CIRCUIT HIGH, Diagnostic Trouble Code (DTC) Detecting Criteria.>
P0BEA	Drive Motor "A" Phase V Current Sensor Circuit Range/Performance	<Ref. to GD(HEV)-57, DTC P0BEA DRIVE MOTOR "A" PHASE V CURRENT SENSOR CIRCUIT RANGE/PERFORMANCE, Diagnostic Trouble Code (DTC) Detecting Criteria.>
P0BEB	Drive Motor "A" Phase V Current Sensor Circuit Low	<Ref. to GD(HEV)-58, DTC P0BEB DRIVE MOTOR "A" PHASE V CURRENT SENSOR CIRCUIT LOW, Diagnostic Trouble Code (DTC) Detecting Criteria.>
P0BEC	Drive Motor "A" Phase V Current Sensor Circuit High	<Ref. to GD(HEV)-59, DTC P0BEC DRIVE MOTOR "A" PHASE V CURRENT SENSOR CIRCUIT HIGH, Diagnostic Trouble Code (DTC) Detecting Criteria.>
P0BEE	Drive Motor "A" Phase W Current Sensor Circuit Range/Performance	<Ref. to GD(HEV)-60, DTC P0BEE DRIVE MOTOR "A" PHASE W CURRENT SENSOR CIRCUIT RANGE/PERFORMANCE, Diagnostic Trouble Code (DTC) Detecting Criteria.>
P0BEF	Drive Motor "A" Phase W Current Sensor Circuit Low	<Ref. to GD(HEV)-61, DTC P0BEF DRIVE MOTOR "A" PHASE W CURRENT SENSOR CIRCUIT LOW, Diagnostic Trouble Code (DTC) Detecting Criteria.>
P0BF0	Drive Motor "A" Phase W Current Sensor Circuit High	<Ref. to GD(HEV)-62, DTC P0BF0 DRIVE MOTOR "A" PHASE W CURRENT SENSOR CIRCUIT HIGH, Diagnostic Trouble Code (DTC) Detecting Criteria.>
P0BFD	Drive Motor "A" Phase U-V-W Current Sensor Correlation	<Ref. to GD(HEV)-63, DTC P0BFD DRIVE MOTOR "A" PHASE U-V-W CURRENT SENSOR CORRELATION, Diagnostic Trouble Code (DTC) Detecting Criteria.>
P0C05	Drive Motor "A" Phase U-V-W Circuit/ Open	<Ref. to GD(HEV)-64, DTC P0C05 DRIVE MOTOR "A" PHASE U-V-W CIRCUIT/OPEN, Diagnostic Trouble Code (DTC) Detecting Criteria.>
P0C0C	Drive Motor "A" Inverter Power Supply Circuit Low	<Ref. to GD(HEV)-65, DTC P0C0C DRIVE MOTOR "A" INVERTER POWER SUPPLY CIRCUIT LOW, Diagnostic Trouble Code (DTC) Detecting Criteria.>
P0C0D	Drive Motor "A" Inverter Power Supply Circuit High	<Ref. to GD(HEV)-66, DTC P0C0D DRIVE MOTOR "A" INVERTER POWER SUPPLY CIRCUIT HIGH, Diagnostic Trouble Code (DTC) Detecting Criteria.>
P0C52	Drive Motor "A" Position Sensor Circuit "A" Low	<Ref. to GD(HEV)-67, DTC P0C52 DRIVE MOTOR "A" POSITION SENSOR CIRCUIT "A" LOW, Diagnostic Trouble Code (DTC) Detecting Criteria.>
P0C5C	Drive Motor "A" Position Sensor Circuit "B" Low	<Ref. to GD(HEV)-68, DTC P0C5C DRIVE MOTOR "A" POSITION SENSOR CIRCUIT "B" LOW, Diagnostic Trouble Code (DTC) Detecting Criteria.>
P0C79	Drive Motor "A" Inverter Voltage Too High	<Ref. to GD(HEV)-69, DTC P0C79 DRIVE MOTOR "A" INVERTER VOLTAGE TOO HIGH, Diagnostic Trouble Code (DTC) Detecting Criteria.>
P0CDC	Drive Motor "A" Position Sensor Circuit "C" Low	<Ref. to GD(HEV)-70, DTC P0CDC DRIVE MOTOR "A" POSITION SENSOR CIRCUIT "C" LOW, Diagnostic Trouble Code (DTC) Detecting Criteria.>
P0CDD	Drive Motor "A" Position Sensor Circuit "C" High	<Ref. to GD(HEV)-71, DTC P0CDD DRIVE MOTOR "A" POSITION SENSOR CIRCUIT "C" HIGH, Diagnostic Trouble Code (DTC) Detecting Criteria.>
P0DA8	Hybrid/Ev Battery Voltage/Drive Motor "A" Inverter Voltage Correlation	<Ref. to GD(HEV)-72, DTC P0DA8 HYBRID/EV BATTERY VOLTAGE/ DRIVE MOTOR "A" INVERTER VOLTAGE CORRELATION, Diagnostic Trouble Code (DTC) Detecting Criteria.>
P1C20	Manufacturer Controlled DTC	<Ref. to GD(HEV)-73, DTC P1C20 MANUFACTURER CONTROLLED DTC, Diagnostic Trouble Code (DTC) Detecting Criteria.>
P1C24	Manufacturer Controlled DTC	<Ref. to GD(HEV)-74, DTC P1C24 MANUFACTURER CONTROLLED DTC, Diagnostic Trouble Code (DTC) Detecting Criteria.>
P1C25	Manufacturer Controlled DTC	<Ref. to GD(HEV)-75, DTC P1C25 MANUFACTURER CONTROLLED DTC, Diagnostic Trouble Code (DTC) Detecting Criteria.>

DTC	Item	Note
P1C26	Manufacturer Controlled DTC	<Ref. to GD(HEV)-76, DTC P1C26 MANUFACTURER CONTROLLED DTC, Diagnostic Trouble Code (DTC) Detecting Criteria.>
P1C27	Manufacturer Controlled DTC	<Ref. to GD(HEV)-77, DTC P1C27 MANUFACTURER CONTROLLED DTC, Diagnostic Trouble Code (DTC) Detecting Criteria.>
P1C30	Manufacturer Controlled DTC	<Ref. to GD(HEV)-79, DTC P1C30 MANUFACTURER CONTROLLED DTC, Diagnostic Trouble Code (DTC) Detecting Criteria.>
P1C31	Manufacturer Controlled DTC	<Ref. to GD(HEV)-80, DTC P1C31 MANUFACTURER CONTROLLED DTC, Diagnostic Trouble Code (DTC) Detecting Criteria.>
P0604	Internal Control Module Random Access Memory (RAM) Error	<Ref. to GD(HEV)-20, DTC P0604 INTERNAL CONTROL MODULE RANDOM ACCESS MEMORY (RAM) ERROR, Diagnostic Trouble Code (DTC) Detecting Criteria.>
P0605	Internal Control Module Read Only Memory (ROM) Error	<Ref. to GD(HEV)-22, DTC P0605 INTERNAL CONTROL MODULE READ ONLY MEMORY (ROM) ERROR, Diagnostic Trouble Code (DTC) Detecting Criteria.>
P0A1B	Drive Motor "A" Control Module	<Ref. to GD(HEV)-81, DTC P0A1B DRIVE MOTOR "A" CONTROL MODULE, Diagnostic Trouble Code (DTC) Detecting Criteria.>
P06B1	Sensor Power Supply "A" Circuit Low	<Ref. to GD(HEV)-82, DTC P06B1 SENSOR POWER SUPPLY "A" CIRCUIT LOW, Diagnostic Trouble Code (DTC) Detecting Criteria.>
P06B2	Sensor Power Supply "A" Circuit High	<Ref. to GD(HEV)-83, DTC P06B2 SENSOR POWER SUPPLY "A" CIRCUIT HIGH, Diagnostic Trouble Code (DTC) Detecting Criteria.>
U0076	Control Module Communication Bus "HEV-CAN" Off	<Ref. to GD(HEV)-158, DTC U0076 CONTROL MODULE COMMUNICATION BUS "HEV-CAN" OFF, Diagnostic Trouble Code (DTC) Detecting Criteria.>
U0111	Lost Communication With Battery Energy Control Module	<Ref. to GD(HEV)-164, DTC U0111 LOST COMMUNICATION WITH BATTERY ENERGY CONTROL MODULE, Diagnostic Trouble Code (DTC) Detecting Criteria.>
U0412	Invalid Data Received From Battery Energy Control Module	<Ref. to GD(HEV)-171, DTC U0412 INVALID DATA RECEIVED FROM BATTERY ENERGY CONTROL MODULE, Diagnostic Trouble Code (DTC) Detecting Criteria.>
U1290	Lost Communication With Hybrid Powertrain Control Module HEV-CAN	<Ref. to GD(HEV)-176, DTC U1290 LOST COMMUNICATION WITH HYBRID POWERTRAIN CONTROL MODULE HEV-CAN, Diagnostic Trouble Code (DTC) Detecting Criteria.>
U1591	Invalid Data Received From Hybrid Powertrain Control Module HEV-CAN	<Ref. to GD(HEV)-180, DTC U1591 INVALID DATA RECEIVED FROM HYBRID POWERTRAIN CONTROL MODULE HEV-CAN, Diagnostic Trouble Code (DTC) Detecting Criteria.>

3. BATTERY ENERGY CONTROL SYSTEM

DTC	Item	Note
P0604	Internal Control Module Random Access Memory (RAM) Error	<Ref. to GD(HEV)-20, DTC P0604 INTERNAL CONTROL MODULE RANDOM ACCESS MEMORY (RAM) ERROR, Diagnostic Trouble Code (DTC) Detecting Criteria.>
P0605	Internal Control Module Read Only Memory (ROM) Error	<Ref. to GD(HEV)-22, DTC P0605 INTERNAL CONTROL MODULE READ ONLY MEMORY (ROM) ERROR, Diagnostic Trouble Code (DTC) Detecting Criteria.>
P062F	Internal Control Module EEPROM Error	<Ref. to GD(HEV)-84, DTC P062F INTERNAL CONTROL MODULE EEPROM ERROR, Diagnostic Trouble Code (DTC) Detecting Criteria.>
P0A1F	Battery Energy Control Module	<Ref. to GD(HEV)-85, DTC P0A1F BATTERY ENERGY CONTROL MODULE, Diagnostic Trouble Code (DTC) Detecting Criteria.>
P0A7D	Hybrid Battery Pack State of Charge Low	<Ref. to GD(HEV)-86, DTC P0A7D HYBRID BATTERY PACK STATE OF CHARGE LOW, Diagnostic Trouble Code (DTC) Detecting Criteria.>
P0A7E	Hybrid Battery Pack Over Temperature	<Ref. to GD(HEV)-87, DTC P0A7E HYBRID BATTERY PACK OVER TEMPERATURE, Diagnostic Trouble Code (DTC) Detecting Criteria.>
P0A7F	Hybrid Battery Pack Deterioration	<Ref. to GD(HEV)-88, DTC P0A7F HYBRID BATTERY PACK DETERIORATION, Diagnostic Trouble Code (DTC) Detecting Criteria.>

DTC	Item	Note
P0A95	High Voltage Fuse	<Ref. to GD(HEV)-90, DTC P0A95 HIGH VOLTAGE FUSE, Diagnostic Trouble Code (DTC) Detecting Criteria.>
P0A9C	Hybrid Battery Temperature Sensor "A" Circuit Range/Performance	<Ref. to GD(HEV)-91, DTC P0A9C HYBRID BATTERY TEMPERATURE SENSOR "A" CIRCUIT RANGE/PERFORMANCE, Diagnostic Trouble Code (DTC) Detecting Criteria.>
P0A9D	Hybrid Battery Temperature Sensor "A" Circuit Low	<Ref. to GD(HEV)-92, DTC P0A9D HYBRID BATTERY TEMPERATURE SENSOR "A" CIRCUIT LOW, Diagnostic Trouble Code (DTC) Detecting Criteria.>
P0A9E	Hybrid Battery Temperature Sensor "A" Circuit High	<Ref. to GD(HEV)-93, DTC P0A9E HYBRID BATTERY TEMPERATURE SENSOR "A" CIRCUIT HIGH, Diagnostic Trouble Code (DTC) Detecting Criteria.>
P0AAD	Hybrid Battery Pack Air Temperature Sensor "A" Circuit Range/Performance	<Ref. to GD(HEV)-95, DTC P0AAD HYBRID BATTERY PACK AIR TEMPERATURE SENSOR "A" CIRCUIT RANGE/PERFORMANCE, Diagnostic Trouble Code (DTC) Detecting Criteria.>
P0AAE	Hybrid Battery Pack Air Temperature Sensor "A" Circuit Low	<Ref. to GD(HEV)-96, DTC P0AAE HYBRID BATTERY PACK AIR TEMPERATURE SENSOR "A" CIRCUIT LOW, Diagnostic Trouble Code (DTC) Detecting Criteria.>
P0AAF	Hybrid Battery Pack Air Temperature Sensor "A" Circuit High	<Ref. to GD(HEV)-97, DTC P0AAF HYBRID BATTERY PACK AIR TEMPERATURE SENSOR "A" CIRCUIT HIGH, Diagnostic Trouble Code (DTC) Detecting Criteria.>
P0ABF	Hybrid Battery Pack Current Sensor "A" Circuit	<Ref. to GD(HEV)-98, DTC P0ABF HYBRID BATTERY PACK CURRENT SENSOR "A" CIRCUIT, Diagnostic Trouble Code (DTC) Detecting Criteria.>
P0AC0	Hybrid Battery Pack Current Sensor "A" Circuit Range/Performance	<Ref. to GD(HEV)-99, DTC P0AC0 HYBRID BATTERY PACK CURRENT SENSOR "A" CIRCUIT RANGE/PERFORMANCE, Diagnostic Trouble Code (DTC) Detecting Criteria.>
P0AC1	Hybrid Battery Pack Current Sensor "A" Circuit Low	<Ref. to GD(HEV)-100, DTC P0AC1 HYBRID BATTERY PACK CURRENT SENSOR "A" CIRCUIT LOW, Diagnostic Trouble Code (DTC) Detecting Criteria.>
P0AC2	Hybrid Battery Pack Current Sensor "A" Circuit High	<Ref. to GD(HEV)-101, DTC P0AC2 HYBRID BATTERY PACK CURRENT SENSOR "A" CIRCUIT HIGH, Diagnostic Trouble Code (DTC) Detecting Criteria.>
P0AC3	Hybrid Battery Pack Current Sensor "A" Circuit Intermittent/Erratic	<Ref. to GD(HEV)-102, DTC P0AC3 HYBRID BATTERY PACK CURRENT SENSOR "A" CIRCUIT INTERMITTENT/ERRATIC, Diagnostic Trouble Code (DTC) Detecting Criteria.>
P0AC6	Hybrid Battery Temperature Sensor "B" Circuit Range/Performance	<Ref. to GD(HEV)-104, DTC P0AC6 HYBRID BATTERY TEMPERATURE SENSOR "B" CIRCUIT RANGE/PERFORMANCE, Diagnostic Trouble Code (DTC) Detecting Criteria.>
P0AC7	Hybrid Battery Temperature Sensor "B" Circuit Low	<Ref. to GD(HEV)-105, DTC P0AC7 HYBRID BATTERY TEMPERATURE SENSOR "B" CIRCUIT LOW, Diagnostic Trouble Code (DTC) Detecting Criteria.>
P0AC8	Hybrid Battery Temperature Sensor "B" Circuit High	<Ref. to GD(HEV)-106, DTC P0AC8 HYBRID BATTERY TEMPERATURE SENSOR "B" CIRCUIT HIGH, Diagnostic Trouble Code (DTC) Detecting Criteria.>
P0ACB	Hybrid Battery Temperature Sensor "C" Circuit Range/Performance	<Ref. to GD(HEV)-107, DTC P0ACB HYBRID BATTERY TEMPERATURE SENSOR "C" CIRCUIT RANGE/PERFORMANCE, Diagnostic Trouble Code (DTC) Detecting Criteria.>
P0ACC	Hybrid Battery Temperature Sensor "C" Circuit Low	<Ref. to GD(HEV)-108, DTC P0ACC HYBRID BATTERY TEMPERATURE SENSOR "C" CIRCUIT LOW, Diagnostic Trouble Code (DTC) Detecting Criteria.>
P0ACD	Hybrid Battery Temperature Sensor "C" Circuit High	<Ref. to GD(HEV)-109, DTC P0ACD HYBRID BATTERY TEMPERATURE SENSOR "C" CIRCUIT HIGH, Diagnostic Trouble Code (DTC) Detecting Criteria.>
P0AD9	Hybrid Battery Positive Contactor Control Circuit/Open	<Ref. to GD(HEV)-110, DTC P0AD9 HYBRID BATTERY POSITIVE CONTACTOR CONTROL CIRCUIT/OPEN, Diagnostic Trouble Code (DTC) Detecting Criteria.>

DTC	Item	Note
P0ADB	Hybrid Battery Positive Contactor Control Circuit Low	<Ref. to GD(HEV)-111, DTC P0ADB HYBRID BATTERY POSITIVE CONTACTOR CONTROL CIRCUIT LOW, Diagnostic Trouble Code (DTC) Detecting Criteria.>
P0ADD	Hybrid Battery Negative Contactor Control Circuit/Open	<Ref. to GD(HEV)-112, DTC P0ADD HYBRID BATTERY NEGATIVE CONTACTOR CONTROL CIRCUIT/OPEN, Diagnostic Trouble Code (DTC) Detecting Criteria.>
P0AE4	Hybrid Battery Precharge Contactor Control Circuit	<Ref. to GD(HEV)-113, DTC P0AE4 HYBRID BATTERY PRE-CHARGE CONTACTOR CONTROL CIRCUIT, Diagnostic Trouble Code (DTC) Detecting Criteria.>
P0B25	Hybrid Battery "A" Voltage Low	<Ref. to GD(HEV)-114, DTC P0B25 HYBRID BATTERY "A" VOLTAGE LOW, Diagnostic Trouble Code (DTC) Detecting Criteria.>
P0B26	Hybrid Battery "A" Voltage High	<Ref. to GD(HEV)-115, DTC P0B26 HYBRID BATTERY "A" VOLTAGE HIGH, Diagnostic Trouble Code (DTC) Detecting Criteria.>
P0B37	High Voltage Service Disconnect Open	<Ref. to GD(HEV)-116, DTC P0B37 HIGH VOLTAGE SERVICE DISCONNECT OPEN, Diagnostic Trouble Code (DTC) Detecting Criteria.>
P0B3C	Hybrid Battery Voltage Sense "A" Circuit Range/Performance	<Ref. to GD(HEV)-117, DTC P0B3C HYBRID BATTERY VOLTAGE SENSE "A" CIRCUIT RANGE/PERFORMANCE, Diagnostic Trouble Code (DTC) Detecting Criteria.>
P0B3D	Hybrid Battery Voltage Sense "A" Circuit Low	<Ref. to GD(HEV)-118, DTC P0B3D HYBRID BATTERY VOLTAGE SENSE "A" CIRCUIT LOW, Diagnostic Trouble Code (DTC) Detecting Criteria.>
P0B3E	Hybrid Battery Voltage Sense "A" Circuit High	<Ref. to GD(HEV)-119, DTC P0B3E HYBRID BATTERY VOLTAGE SENSE "A" CIRCUIT HIGH, Diagnostic Trouble Code (DTC) Detecting Criteria.>
P0B41	Hybrid Battery Voltage Sense "B" Circuit Range/Performance	<Ref. to GD(HEV)-120, DTC P0B41 HYBRID BATTERY VOLTAGE SENSE "B" CIRCUIT RANGE/PERFORMANCE, Diagnostic Trouble Code (DTC) Detecting Criteria.>
P0B42	Hybrid Battery Voltage Sense "B" Circuit Low	<Ref. to GD(HEV)-121, DTC P0B42 HYBRID BATTERY VOLTAGE SENSE "B" CIRCUIT LOW, Diagnostic Trouble Code (DTC) Detecting Criteria.>
P0B43	Hybrid Battery Voltage Sense "B" Circuit High	<Ref. to GD(HEV)-122, DTC P0B43 HYBRID BATTERY VOLTAGE SENSE "B" CIRCUIT HIGH, Diagnostic Trouble Code (DTC) Detecting Criteria.>
P0B46	Hybrid Battery Voltage Sense "C" Circuit Range/Performance	<Ref. to GD(HEV)-123, DTC P0B46 HYBRID BATTERY VOLTAGE SENSE "C" CIRCUIT RANGE/PERFORMANCE, Diagnostic Trouble Code (DTC) Detecting Criteria.>
P0B47	Hybrid Battery Voltage Sense "C" Circuit Low	<Ref. to GD(HEV)-124, DTC P0B47 HYBRID BATTERY VOLTAGE SENSE "C" CIRCUIT LOW, Diagnostic Trouble Code (DTC) Detecting Criteria.>
P0B48	Hybrid Battery Voltage Sense "C" Circuit High	<Ref. to GD(HEV)-125, DTC P0B48 HYBRID BATTERY VOLTAGE SENSE "C" CIRCUIT HIGH, Diagnostic Trouble Code (DTC) Detecting Criteria.>
P0B4A	Hybrid Battery Voltage Sense "D" Circuit	<Ref. to GD(HEV)-126, DTC P0B4A HYBRID BATTERY VOLTAGE SENSE "D" CIRCUIT, Diagnostic Trouble Code (DTC) Detecting Criteria.>
P0B4B	Hybrid Battery Voltage Sense "D" Circuit Range/Performance	<Ref. to GD(HEV)-127, DTC P0B4B HYBRID BATTERY VOLTAGE SENSE "D" CIRCUIT RANGE/PERFORMANCE, Diagnostic Trouble Code (DTC) Detecting Criteria.>
P0B4C	Hybrid Battery Voltage Sense "D" Circuit Low	<Ref. to GD(HEV)-128, DTC P0B4C HYBRID BATTERY VOLTAGE SENSE "D" CIRCUIT LOW, Diagnostic Trouble Code (DTC) Detecting Criteria.>
P0B4D	Hybrid Battery Voltage Sense "D" Circuit High	<Ref. to GD(HEV)-129, DTC P0B4D HYBRID BATTERY VOLTAGE SENSE "D" CIRCUIT HIGH, Diagnostic Trouble Code (DTC) Detecting Criteria.>

DTC	Item	Note
P0B50	Hybrid Battery Voltage Sense "E" Circuit Range/Performance	<Ref. to GD(HEV)-130, DTC P0B50 HYBRID BATTERY VOLTAGE SENSE "E" CIRCUIT RANGE/PERFORMANCE, Diagnostic Trouble Code (DTC) Detecting Criteria.>
P0B51	Hybrid Battery Voltage Sense "E" Circuit Low	<Ref. to GD(HEV)-131, DTC P0B51 HYBRID BATTERY VOLTAGE SENSE "E" CIRCUIT LOW, Diagnostic Trouble Code (DTC) Detecting Criteria.>
P0B52	Hybrid Battery Voltage Sense "E" Circuit High	<Ref. to GD(HEV)-132, DTC P0B52 HYBRID BATTERY VOLTAGE SENSE "E" CIRCUIT HIGH, Diagnostic Trouble Code (DTC) Detecting Criteria.>
P0B55	Hybrid Battery Voltage Sense "F" Circuit Range/Performance	<Ref. to GD(HEV)-133, DTC P0B55 HYBRID BATTERY VOLTAGE SENSE "F" CIRCUIT RANGE/PERFORMANCE, Diagnostic Trouble Code (DTC) Detecting Criteria.>
P0B56	Hybrid Battery Voltage Sense "F" Circuit Low	<Ref. to GD(HEV)-134, DTC P0B56 HYBRID BATTERY VOLTAGE SENSE "F" CIRCUIT LOW, Diagnostic Trouble Code (DTC) Detecting Criteria.>
P0B57	Hybrid Battery Voltage Sense "F" Circuit High	<Ref. to GD(HEV)-135, DTC P0B57 HYBRID BATTERY VOLTAGE SENSE "F" CIRCUIT HIGH, Diagnostic Trouble Code (DTC) Detecting Criteria.>
P0B5A	Hybrid Battery Voltage Sense "G" Circuit Range/Performance	<Ref. to GD(HEV)-136, DTC P0B5A HYBRID BATTERY VOLTAGE SENSE "G" CIRCUIT RANGE/PERFORMANCE, Diagnostic Trouble Code (DTC) Detecting Criteria.>
P0B5B	Hybrid Battery Voltage Sense "G" Circuit Low	<Ref. to GD(HEV)-137, DTC P0B5B HYBRID BATTERY VOLTAGE SENSE "G" CIRCUIT LOW, Diagnostic Trouble Code (DTC) Detecting Criteria.>
P0B5C	Hybrid Battery Voltage Sense "G" Circuit High	<Ref. to GD(HEV)-138, DTC P0B5C HYBRID BATTERY VOLTAGE SENSE "G" CIRCUIT HIGH, Diagnostic Trouble Code (DTC) Detecting Criteria.>
P0BB8	Hybrid Battery Voltage Sense "Z" Circuit	<Ref. to GD(HEV)-139, DTC P0BB8 HYBRID BATTERY VOLTAGE SENSE "Z" CIRCUIT, Diagnostic Trouble Code (DTC) Detecting Criteria.>
P0C30	Hybrid Battery Pack State of Charge High	<Ref. to GD(HEV)-140, DTC P0C30 HYBRID BATTERY PACK STATE OF CHARGE HIGH, Diagnostic Trouble Code (DTC) Detecting Criteria.>
P0C78	Hybrid Battery System Precharge Time Too Long	<Ref. to GD(HEV)-141, DTC P0C78 HYBRID BATTERY SYSTEM PRECHARGE TIME TOO LONG, Diagnostic Trouble Code (DTC) Detecting Criteria.>
P0CA6	Hybrid Battery Charging Current High	<Ref. to GD(HEV)-142, DTC P0CA6 HYBRID BATTERY CHARGING CURRENT HIGH, Diagnostic Trouble Code (DTC) Detecting Criteria.>
P0CA7	Hybrid Battery Discharging Current High	<Ref. to GD(HEV)-143, DTC P0CA7 HYBRID BATTERY DISCHARGING CURRENT HIGH, Diagnostic Trouble Code (DTC) Detecting Criteria.>
P1C40	Hybrid Battery Positive Contactor or Pre-Charge Contactor Circuit Stuck Closed	<Ref. to GD(HEV)-144, DTC P1C40 HYBRID BATTERY POSITIVE CONTACTOR OR PRE-CHARGE CONTACTOR CIRCUIT STUCK CLOSED, Diagnostic Trouble Code (DTC) Detecting Criteria.>
P1C41	High Voltage Circuit Short	<Ref. to GD(HEV)-145, DTC P1C41 HIGH VOLTAGE CIRCUIT SHORT, Diagnostic Trouble Code (DTC) Detecting Criteria.>
P1C42	High Voltage Circuit Open	<Ref. to GD(HEV)-146, DTC P1C42 HIGH VOLTAGE CIRCUIT OPEN, Diagnostic Trouble Code (DTC) Detecting Criteria.>
P1C43	Hybrid Battery Contactor Power Supply Circuit	<Ref. to GD(HEV)-147, DTC P1C43 HYBRID BATTERY CONTACTOR POWER SUPPLY CIRCUIT, Diagnostic Trouble Code (DTC) Detecting Criteria.>
P1C44	Sub CPU in BECM	<Ref. to GD(HEV)-148, DTC P1C44 SUB CPU IN BECM, Diagnostic Trouble Code (DTC) Detecting Criteria.>
P1C45	Hybrid Battery Block 1 Balancing Performance	<Ref. to GD(HEV)-149, DTC P1C45 HYBRID BATTERY BLOCK 1 BALANCING PERFORMANCE, Diagnostic Trouble Code (DTC) Detecting Criteria.>

DTC	Item	Note
P1C46	Hybrid Battery Block 2 Balancing Performance	<Ref. to GD(HEV)-150, DTC P1C46 HYBRID BATTERY BLOCK 2 BALANCING PERFORMANCE, Diagnostic Trouble Code (DTC) Detecting Criteria.>
P1C47	Hybrid Battery Block 3 Balancing Performance	<Ref. to GD(HEV)-151, DTC P1C47 HYBRID BATTERY BLOCK 3 BALANCING PERFORMANCE, Diagnostic Trouble Code (DTC) Detecting Criteria.>
P1C48	Hybrid Battery Block 4 Balancing Performance	<Ref. to GD(HEV)-152, DTC P1C48 HYBRID BATTERY BLOCK 4 BALANCING PERFORMANCE, Diagnostic Trouble Code (DTC) Detecting Criteria.>
P1C49	Hybrid Battery Block 5 Balancing Performance	<Ref. to GD(HEV)-153, DTC P1C49 HYBRID BATTERY BLOCK 5 BALANCING PERFORMANCE, Diagnostic Trouble Code (DTC) Detecting Criteria.>
P1C4A	Hybrid Battery Block 6 Balancing Performance	<Ref. to GD(HEV)-154, DTC P1C4A HYBRID BATTERY BLOCK 6 BALANCING PERFORMANCE, Diagnostic Trouble Code (DTC) Detecting Criteria.>
P1C5E	Hybrid Battery Block Voltage Too Low	<Ref. to GD(HEV)-155, DTC P1C5E HYBRID BATTERY BLOCK VOLTAGE TOO LOW, Diagnostic Trouble Code (DTC) Detecting Criteria.>
U0076	Control Module Communication Bus "HEV-CAN" Off	<Ref. to GD(HEV)-158, DTC U0076 CONTROL MODULE COMMUNICATION BUS "HEV-CAN" OFF, Diagnostic Trouble Code (DTC) Detecting Criteria.>
U0110	Lost Communication With Drive Motor Control Module "A"	<Ref. to GD(HEV)-162, DTC U0110 LOST COMMUNICATION WITH DRIVE MOTOR CONTROL MODULE "A", Diagnostic Trouble Code (DTC) Detecting Criteria.>
U0411	Invalid Data Received From Drive Motor Control Module "A"	<Ref. to GD(HEV)-169, DTC U0411 INVALID DATA RECEIVED FROM DRIVE MOTOR CONTROL MODULE "A", Diagnostic Trouble Code (DTC) Detecting Criteria.>
U1290	Lost Communication With Hybrid Powertrain Control Module HEV-CAN	<Ref. to GD(HEV)-176, DTC U1290 LOST COMMUNICATION WITH HYBRID POWERTRAIN CONTROL MODULE HEV-CAN, Diagnostic Trouble Code (DTC) Detecting Criteria.>
U1591	Invalid Data Received From Hybrid Powertrain Control Module HEV-CAN	<Ref. to GD(HEV)-180, DTC U1591 INVALID DATA RECEIVED FROM HYBRID POWERTRAIN CONTROL MODULE HEV-CAN, Diagnostic Trouble Code (DTC) Detecting Criteria.>

2. Diagnostic Trouble Code (DTC) Detecting Criteria

A: DTC P0506 IDLE AIR CONTROL SYSTEM RPM LOWER THAN EXPECTED

1. OUTLINE OF DIAGNOSIS

Detect the malfunction of ISC.
Judge as NG when the detection result is out of specification.

2. ENABLE CONDITIONS

Secondary Parameters	Enable Conditions
12V battery system voltage	≥ 10.9 V
Measured lambda	≥ 0.85 and < 1.151
Vehicle speed	= 0 mph
Engine Auto Stop command by HPCM	False
SOC of hybrid battery	≤ 44%
CVT secondary pulley shaft speed	≥ 100 rpm
Accelerator pedal position	= 0%

3. DIAGNOSTIC METHOD

• Abnormality Judgment

If the duration of time while the following conditions are met is longer than the time indicated, judge as NG.

Judgment Value

Malfunction Criteria	Threshold Value
(Actual engine speed) – (Target engine speed)	< – 100 rpm

Time Needed for Diagnosis: 15 seconds
Malfunction Indicator Light Illumination: detects when malfunction occurs in 2 continuous driving cycles. (Single engine startup is counted as one drive cycle.)

• Normality Judgment

Judge as OK and clear the NG if the continuous time while the following conditions are established is more than the predetermined time.

Judgment Value

Malfunction Criteria	Threshold Value
(Actual engine speed) – (Target engine speed)	≥ – 100 rpm

Time Needed for Diagnosis: 15 seconds

B: DTC P0507 IDLE AIR CONTROL SYSTEM RPM HIGHER THAN EXPECTED

1. OUTLINE OF DIAGNOSIS

Detect the malfunction of ISC.
Judge as NG when the detection result is out of specification.

2. ENABLE CONDITIONS

Secondary Parameters	Enable Conditions
12V battery system voltage	≥ 10.9 V
Measured lambda	≥ 0.85 and < 1.151
Vehicle speed	= 0 mph
Engine Auto Stop command by HPCM	False
SOC of hybrid battery	≤ 44%
CVT secondary pulley shaft speed	≥ 100 rpm
Accelerator pedal position	= 0%

3. DIAGNOSTIC METHOD

- **Abnormality Judgment**

If the duration of time while the following conditions are met is longer than the time indicated, judge as NG.

Judgment Value

Malfunction Criteria	Threshold Value
(Actual engine speed) – (Target engine speed)	> 200 rpm

Time Needed for Diagnosis: 15 seconds
Malfunction Indicator Light Illumination: detects when malfunction occurs in 2 continuous driving cycles. (Single engine startup is counted as one drive cycle.)

- **Normality Judgment**

Judge as OK and clear the NG if the continuous time while the following conditions are established is more than the predetermined time.

Judgment Value

Malfunction Criteria	Threshold Value
(Actual engine speed) – (Target engine speed)	≤ 200 rpm

Time Needed for Diagnosis: 15 seconds

C: DTC P0572 BRAKE SWITCH "A" [STOP LAMP SWITCH] CIRCUIT LOW

1. OUTLINE OF DIAGNOSIS

Detect brake pedal SW-A ON/OFF stuck.
Judge as NG when the detection result is out of specification.

2. ENABLE CONDITIONS

Secondary Parameters	Enable Conditions
a: Ignition state	Run or crank
b: 12 V battery system voltage	≥ 10.9
Elapsed time of a and b	≥ 0.2 s
Brake switch B signal from ECM	OFF
(Brake pedal)	(Not Pressed)
(Current BPP sensor 1 angle) – (BPP sensor 1 angle that was stored when the brake switch B status has been changed from ON to OFF)	≤ –0.69 deg
(Brake pedal)	(Not Pressed)

3. DIAGNOSTIC METHOD

- **Abnormality Judgment**

If the duration of time while the following conditions are met is longer than the time indicated, judge as NG.

Judgment Value

Malfunction Criteria	Threshold Value
Brake switch A signal from ECM	OFF
(Brake pedal)	Pressed
NOTE: For a normal system, when applying the brakes switch B will go from ON to OFF immediately, and from switch B OFF, switch A will go OFF to ON after 0.69 degrees of travel in the direction of decreasing the value of the brake pedal angle.	

Time Needed for Diagnosis: 1 s x 5 times
Malfunction Indicator Light Illumination: Illuminates as soon as a malfunction occurs.

- **Normality Judgment**

If the duration of time while the following conditions are met is longer than the time indicated, judge as OK.
Do not clear NG during hybrid system activated.

Judgment Value

Malfunction Criteria	Threshold Value
Brake switch A signal from ECM	ON
(Brake pedal)	Not Pressed
NOTE: For a normal system, when applying the brakes switch B will go from ON to OFF immediately, and from switch B OFF, switch A will go OFF to ON after 0.69 degrees of travel in the direction of decreasing the value of the brake pedal angle.	

Time Needed for Diagnosis: 1 seconds

D: DTC P0573 BRAKE SWITCH "A" [STOP LAMP SWITCH] CIRCUIT HIGH

1. OUTLINE OF DIAGNOSIS

Detect brake pedal SW-A ON/OFF stuck.
Judge as NG when the detection result is out of specification.

2. ENABLE CONDITIONS

Secondary Parameters	Enable Conditions
a: Ignition state	Run or crank
b: 12 V battery system voltage	≥ 10.9
Elapsed time of a and b	≥ 0.2 s
Brake switch B signal from ECM	ON
(Brake pedal)	(Pressed)
(Current BPP sensor 1 angle) – (BPP sensor 1 angle that was stored when the brake switch B status has been changed from OFF to ON)	≥ +0.69 deg
(Brake pedal)	(Pressed)
a: Ignition state	Run or crank
b: 12 V battery system voltage	≥ 10.9
Elapsed time of a and b	≥ 0.2 s
(Current BPP sensor 1 angle) – (Minimum BPP sensor 1 angle that has experienced from ignition switch: ON)	≥ +3.5 deg
(Brake pedal)	(Pressed)

3. DIAGNOSTIC METHOD

- **Abnormality Judgment**

If the duration of time while the following conditions are met is longer than the time indicated, judge as NG.

Judgment Value

Malfunction Criteria	Threshold Value
Brake switch A signal from ECM	ON
(Brake pedal)	Not pressed
NOTE: For a normal system, when applying the brakes switch B will go from OFF to ON immediately, and from switch B ON, switch A will go ON to OFF after 0.69 degrees of travel in the direction of increasing the value of the brake pedal angle.	
NOTE: For a normal system, switch A will go ON to OFF within 3.5 degrees of travel in the direction of increasing the value of the brake pedal angle from initial brake pedal position.	

Time Needed for Diagnosis: 1 s x 5 times
Malfunction Indicator Light Illumination: Illuminates as soon as a malfunction occurs.

- **Normality Judgment**

If the duration of time while the following conditions are met is longer than the time indicated, judge as OK. Do not clear NG during hybrid system activated.

Judgment Value

Malfunction Criteria	Threshold Value
Brake switch A signal from ECM (Brake pedal) NOTE: For a normal system, when applying the brakes switch B will go from OFF to ON immediately, and from switch B ON, switch A will go ON to OFF after 0.69 degrees of travel in the direction of increasing the value of the brake pedal angle. NOTE: For a normal system, switch A will go ON to OFF within 3.5 degrees of travel in the direction of increasing the value of the brake pedal angle from initial brake pedal position.	OFF Pressed

Time Needed for Diagnosis: 1 seconds

E: DTC P057B BRAKE PEDAL POSITION SENSOR CIRCUIT RANGE/PERFORMANCE

1. OUTLINE OF DIAGNOSIS

Detect the malfunction of brake stroke sensor 1 and 2.
Judge as NG when the detection result is out of specification.

2. ENABLE CONDITIONS

Secondary Parameters	Enable Conditions
Diagnosis 1	
a: Ignition state	Run or crank
b: 12 V battery system voltage	≥ 10.9
Elapsed time of a and b	≥ 0.2 s
Diagnosis 2	
a: Ignition state	Run or crank
b: 12 V battery system voltage	≥ 10.9
Elapsed time of a and b	≥ 0.2 s
Current BPP sensor 1 angle – Min (BPP sensor 1 angle)	≥ 1 deg or
Current BPP sensor 2 angle – Min (BPP sensor 2 angle)	≥ 1 deg

3. DIAGNOSTIC METHOD

- **Abnormality Judgment**

If the duration of time while the following conditions are met is longer than the time indicated, judge as NG.

Judgment Value

Malfunction Criteria	Threshold Value
Diagnosis 1	
Max (BPP sensor 1 angle) – Current BPP sensor 1 angle	< 0.5 deg and
Max (BPP sensor 2 angle) – Current BPP sensor 2 angle	≥ 2 deg or
Max (BPP sensor 1 angle) – Current BPP sensor 1angle	≥ 2 deg and
Max (BPP sensor 2 angle) – Current BPP sensor 2 angle	< 0.5 deg
Diagnosis 2	
BPP sensor 1 voltage + BPP sensor 2 voltage	≤ 3.5 V
NOTE: The sum should be 5 V for typical sensors	or ≥ 6.5 V

Time Needed for Diagnosis: 0.1 seconds
Malfunction Indicator Light Illumination: Illuminates as soon as a malfunction occurs.

- **Normality Judgment**

Judge as OK and clear NG when continuous time when the following conditions are met is predetermined time or more (diagnosis 1 and diagnosis 2).

Judgment Value

Malfunction Criteria	Threshold Value
Diagnosis 1	
Max (BPP sensor 1 angle) – Current BPP sensor 1 angle	≥ 0.5 deg
Max (BPP sensor 2 angle) – Current BPP sensor 2 angle	≥ 2 deg
Max (BPP sensor 1 angle) – Current BPP sensor 1angle	≥ 2 deg
Max (BPP sensor 2 angle) – Current BPP sensor 2 angle	≥ 0.5 deg
Diagnosis 2	
BPP sensor 1 voltage + BPP sensor 2 voltage	> 3.5 V
NOTE: The sum should be 5 V for typical sensors	or < 6.5 V

Time Needed for Diagnosis: 0.2 seconds

F: DTC P057C BRAKE PEDAL POSITION SENSOR CIRCUIT LOW

1. OUTLINE OF DIAGNOSIS

Detect the open circuit of brake stroke sensor 1 and ground short.
Judge as NG when the detection result is out of specification.

2. ENABLE CONDITIONS

Secondary Parameters	Enable Conditions
a: Ignition state	Run or crank
b: 12 V battery system voltage	≥ 10.9
Elapsed time of a and b	≥ 0.2 s

3. DIAGNOSTIC METHOD

- **Abnormality Judgment**

If the duration of time while the following conditions are met is longer than the time indicated, judge as NG.

Judgment Value

Malfunction Criteria	Threshold Value
Brake Pedal Position Sensor 1 (Mechanical pedal angle)	≤ 0.25 V (≤ –11.25 deg)

Time Needed for Diagnosis: 0.1 seconds
Malfunction Indicator Light Illumination: Illuminates as soon as a malfunction occurs.

- **Normality Judgment**

Judge as OK and clear the NG if the continuous time while the following conditions are established is more than the predetermined time.

Judgment Value

Malfunction Criteria	Threshold Value
Brake Pedal Position Sensor 1 (Mechanical pedal angle)	> 0.25 V (> –11.25 deg)

Time Needed for Diagnosis: 0.2 seconds

G: DTC P057D BRAKE PEDAL POSITION SENSOR CIRCUIT HIGH

1. OUTLINE OF DIAGNOSIS

Detect the power supply short of brake stroke sensor 1.
Judge as NG when the detection result is out of specification.

2. ENABLE CONDITIONS

Secondary Parameters	Enable Conditions
a: Ignition state	Run or crank
b: 12 V battery system voltage	≥ 10.9
Elapsed time of a and b	≥ 0.2 s

3. DIAGNOSTIC METHOD

- **Abnormality Judgment**

If the duration of time while the following conditions are met is longer than the time indicated, judge as NG.

Judgment Value

Malfunction Criteria	Threshold Value
Brake Pedal Position Sensor 1 (Mechanical pedal angle)	≥ 3.4 V (≥ 36 deg)

Time Needed for Diagnosis: 0.1 seconds
Malfunction Indicator Light Illumination: Illuminates as soon as a malfunction occurs.

- **Normality Judgment**

Judge as OK and clear the NG if the continuous time while the following conditions are established is more than the predetermined time.

Judgment Value

Malfunction Criteria	Threshold Value
Brake Pedal Position Sensor 1 (Mechanical pedal angle)	< 3.4 V (< 36 deg)

Time Needed for Diagnosis: 0.2 seconds

H: DTC P0604 INTERNAL CONTROL MODULE RANDOM ACCESS MEMORY (RAM) ERROR

HYBRID POWERTRAIN CONTROL SYSTEM

1. OUTLINE OF DIAGNOSIS

Detect the malfunction of microcomputer (RAM).
Judge as NG when the detection result is out of specification.

2. ENABLE CONDITIONS

Secondary Parameters	Enable Conditions
Ignition state	Run or crank

3. DIAGNOSTIC METHOD

- **Abnormality Judgment**

If the duration of time while the following conditions are met is longer than the time indicated, judge as NG.

Judgment Value

Malfunction Criteria	Threshold Value
The written data in the whole area of RAM	≠ The read data

Time Needed for Diagnosis: Immediately
Malfunction Indicator Light Illumination: Illuminates as soon as a malfunction occurs.

- **Normality Judgment**

Judge as OK and clear the NG if the continuous time while the following conditions are established is more than the predetermined time.

Judgment Value

Malfunction Criteria	Threshold Value
The written data in the whole area of RAM	The read data

Time Needed for Diagnosis: Immediately
DRIVE MOTOR CONTROL SYSTEM

4. OUTLINE OF DIAGNOSIS

Detect the malfunction of drive motor control module.
Judge as NG when the malfunction is detected at the peripheral function of drive motor control module microcomputer.

5. ENABLE CONDITIONS

Secondary Parameters	Enable Conditions
Ignition state	OFF to ON (ON = Run or crank) (OFF ≠ Run or crank)

6. DIAGNOSTIC METHOD

• Abnormality Judgment

If the duration of time while the following conditions are met is longer than the time indicated, judge as NG.

Judgment Value

Malfunction Criteria	Threshold Value
Written data in RAM	≠ The read data

Time Needed for Diagnosis: Immediately
Malfunction Indicator Light Illumination: Illuminates as soon as a malfunction occurs.

• Normality Judgment

Judge as OK and clear the NG if the continuous time while the following conditions are established is more than the predetermined time.

Judgment Value

Malfunction Criteria	Threshold Value
Written data in RAM	Read data

Time Needed for Diagnosis: Immediately
BATTERY ENERGY CONTROL SYSTEM

7. OUTLINE OF DIAGNOSIS

Detect the malfunction of microcomputer RAM.

8. ENABLE CONDITIONS

Secondary Parameters	Enable Conditions
Ignition state	Run or crank
12V battery system voltage	≥ 6.5 V and ≤ 17 V
BECM precharge contactor command	Open
BECM positive contactor command	Open
BECM negative contactor command	Open

9. DIAGNOSTIC METHOD

• Abnormality Judgment

If the duration of time while the following conditions are met is longer than the time indicated, judge as NG.

Judgment Value

Malfunction Criteria	Threshold Value
Inconsistency between the write and read to RAM within the BECM Main CPU	Detected

Time Needed for Diagnosis: Less than 0.01 second
Malfunction Indicator Light Illumination: Illuminates as soon as a malfunction occurs.

• Normality Judgment

Judge as OK and clear the NG if the continuous time while the following conditions are established is more than the predetermined time.

Judgment Value

Malfunction Criteria	Threshold Value
Inconsistency between the write and read to RAM within the BECM Main CPU	Not Detected

Time Needed for Diagnosis: Less than 0.01 second

I: DTC P0605 INTERNAL CONTROL MODULE READ ONLY MEMORY (ROM) ERROR

HYBRID POWERTRAIN CONTROL SYSTEM

1. OUTLINE OF DIAGNOSIS

Detect the malfunction of microcomputer (ROM).
Judge as NG when the detection result is out of specification.

2. ENABLE CONDITIONS

Secondary Parameters	Enable Conditions
Ignition state	Run or crank

3. DIAGNOSTIC METHOD

- **Abnormality Judgment**

If the duration of time while the following conditions are met is longer than the time indicated, judge as NG.

Judgment Value

Malfunction Criteria	Threshold Value
Checksum (ROM)	Error

Time Needed for Diagnosis: Immediately
Malfunction Indicator Light Illumination: Illuminates as soon as a malfunction occurs.

- **Normality Judgment**

Judge as OK and clear the NG if the continuous time while the following conditions are established is more than the predetermined time.

Judgment Value

Malfunction Criteria	Threshold Value
Checksum (ROM)	≠ Error

Time Needed for Diagnosis: Immediately
DRIVE MOTOR CONTROL SYSTEM

4. OUTLINE OF DIAGNOSIS

Detect the malfunction of drive motor control module.
Judge as NG when the malfunction is detected at the peripheral function of drive motor control module microcomputer.

5. ENABLE CONDITIONS

Secondary Parameters	Enable Conditions
Ignition state	OFF to ON (ON = Run or crank)

6. DIAGNOSTIC METHOD

• Abnormality Judgment

If the duration of time while the following conditions are met is longer than the time indicated, judge as NG.

Judgment Value

Malfunction Criteria	Threshold Value
Checksum (ROM)	Error

Time Needed for Diagnosis: Immediately
Malfunction Indicator Light Illumination: Illuminates as soon as a malfunction occurs.

• Normality Judgment

Judge as OK and clear the NG if the continuous time while the following conditions are established is more than the predetermined time.

Judgment Value

Malfunction Criteria	Threshold Value
Checksum (ROM)	≠ Error

Time Needed for Diagnosis: Less than 1 second
BATTERY ENERGY CONTROL SYSTEM

7. OUTLINE OF DIAGNOSIS

Detect the malfunction of microcomputer FlashROM.

8. ENABLE CONDITIONS

Secondary Parameters	Enable Conditions
Ignition state	Run or crank
12V battery system voltage	≥ 6.5 V and ≤ 17 V
BECM precharge contactor command	Closed
BECM positive contactor command	Closed
BECM negative contactor command	Closed

9. DIAGNOSTIC METHOD

• Abnormality Judgment

If the duration of time while the following conditions are met is longer than the time indicated, judge as NG.

Judgment Value

Malfunction Criteria	Threshold Value
Checksum error of Flash EEPROM within the BECM Main CPU (Program area)	Detected

Time Needed for Diagnosis: 2 seconds
Malfunction Indicator Light Illumination: Illuminates as soon as a malfunction occurs.

• Normality Judgment

Judge as OK and clear the NG if the continuous time while the following conditions are established is more than the predetermined time.

Judgment Value

Malfunction Criteria	Threshold Value
Checksum error of Flash EEPROM within the BECM Main CPU (Program area)	Not Detected

Time Needed for Diagnosis: Less than 2 second

J: DTC P0719 BRAKE SWITCH "B" CIRCUIT LOW

1. OUTLINE OF DIAGNOSIS

Detect brake pedal SW-B ON/OFF stuck.
Judge as NG when the detection result is out of specification.

2. ENABLE CONDITIONS

Secondary Parameters	Enable Conditions
a: Ignition state	Run or crank
b: 12 V battery system voltage	≥ 10.9
Elapsed time of a and b	≥ 0.2 s
Brake switch B signal from ECM	OFF
(Brake pedal)	(Pressed)
(Current BPP sensor 1 angle) – (BPP sensor 1 angle that was stored when the brake switch A status has been changed from ON to OFF)	≥ +0.69 deg
(Brake pedal)	(Pressed)
(Current BPP sensor 1 angle) – (Minimum BPP sensor 1 value that has experienced from ignition switch: ON)	≥ +3.5 deg
(Brake pedal)	(Pressed)

3. DIAGNOSTIC METHOD

- **Abnormality Judgment**

If the duration of time while the following conditions are met is longer than the time indicated, judge as NG.

Judgment Value

Malfunction Criteria	Threshold Value
Brake switch B signal from ECM	OFF
(Brake pedal)	Not pressed
NOTE: For a normal system, when applying the brakes switch A will go from ON to OFF immediately, and from switch A OFF, switch B will go OFF to ON after 0.69 degrees of travel in the direction of increasing the value of the brake pedal angle.	
NOTE: For a normal system, switch B will go OFF to ON within 3.5 degrees of travel in the direction of increasing the value of the brake pedal angle from initial brake pedal position.	

Time Needed for Diagnosis: 1 s x 5 times
Malfunction Indicator Light Illumination: Illuminates as soon as a malfunction occurs.

- **Normality Judgment**

If the duration of time while the following conditions are met is longer than the time indicated, judge as OK.
Do not clear NG during hybrid system activated.

Judgment Value

Malfunction Criteria	Threshold Value
Brake switch B signal from ECM	ON
(Brake pedal)	Pressed
NOTE: For a normal system, when applying the brakes switch A will go from ON to OFF immediately, and from switch A OFF, switch B will go OFF to ON after 0.69 degrees of travel in the direction of increasing the value of the brake pedal angle.	
NOTE: For a normal system, switch B will go OFF to ON within 3.5 degrees of travel in the direction of increasing the value of the brake pedal angle from initial brake pedal position.	

Time Needed for Diagnosis: 1 seconds

K: DTC P0724 BRAKE SWITCH "B" CIRCUIT HIGH

1. OUTLINE OF DIAGNOSIS

Detect brake pedal SW-B ON/OFF stuck.
Judge as NG when the detection result is out of specification.

2. ENABLE CONDITIONS

Secondary Parameters	Enable Conditions
a: Ignition state	Run or crank
b: 12 V battery system voltage	≥ 10.9
Elapsed time of a and b	≥ 0.2 s
Brake switch B signal from ECM	ON
(Brake pedal)	(Not pressed)
(Current BPP sensor 1 angle) – (BPP sensor 1 angle that was stored when the brake switch A status has been changed from OFF to ON)	≤ –0.69 deg
(Brake pedal)	(Not pressed)

3. DIAGNOSTIC METHOD

- **Abnormality Judgment**

If the duration of time while the following conditions are met is longer than the time indicated, judge as NG.

Judgment Value

Malfunction Criteria	Threshold Value
Brake switch B signal from ECM	ON
(Brake pedal)	Pressed
NOTE: For a normal system, when applying the brakes switch A will go from OFF to ON immediately, and from switch A ON, switch B will go ON to OFF after 0.69 degrees of travel in the direction of decreasing the value of the brake pedal angle.	

Time Needed for Diagnosis: 1 s x 5 times
Malfunction Indicator Light Illumination: Illuminates as soon as a malfunction occurs.

- **Normality Judgment**

If the duration of time while the following conditions are met is longer than the time indicated, judge as OK.
Do not clear NG during hybrid system activated.

Judgment Value

Malfunction Criteria	Threshold Value
Brake switch B signal from ECM	OFF
(Brake pedal)	Pressed
NOTE: For a normal system, when applying the brakes switch A will go from OFF to ON immediately, and from switch A ON, switch B will go ON to OFF after 0.69 degrees of travel in the direction of decreasing the value of the brake pedal angle.	

Time Needed for Diagnosis: 1 seconds

L: DTC P0A1D HYBRID POWERTRAIN CONTROL MODULE

1. OUTLINE OF DIAGNOSIS

Detect the malfunction of hybrid powertrain control module.
Judge as NG when the detection result is out of specification.

2. ENABLE CONDITIONS

Secondary Parameters	Enable Conditions
Ignition state	Run or crank

3. DIAGNOSTIC METHOD

- **Abnormality Judgment**

If the duration of time while the following conditions are met is longer than the time indicated, judge as NG.

Judgment Value

Malfunction Criteria	Threshold Value
Internal Hardware module error Exception interrupt by the HPCM CPU	Detected or Detected

Time Needed for Diagnosis: Immediately
Malfunction Indicator Light Illumination: Illuminates as soon as a malfunction occurs.

- **Normality Judgment**

Judge as OK and clear the NG if the continuous time while the following conditions are established is more than the predetermined time.

Judgment Value

Malfunction Criteria	Threshold Value
Internal Hardware module error Exception interrupt by the HPCM CPU	≠ Detected and ≠ Detected

Time Needed for Diagnosis: Immediately

M: DTC P1C0C BRAKE PEDAL POSITION SENSOR "2" CIRCUIT LOW

1. OUTLINE OF DIAGNOSIS

Detect the open circuit of brake stroke sensor 2 and ground short.
Judge as NG when the detection result is out of specification.

2. ENABLE CONDITIONS

Secondary Parameters	Enable Conditions
a: Ignition state	Run or crank
b: 12 V battery system voltage	≥ 10.9
Elapsed time of a and b	≥ 0.2 s

3. DIAGNOSTIC METHOD

- **Abnormality Judgment**

If the duration of time while the following conditions are met is longer than the time indicated, judge as NG.

Judgment Value

Malfunction Criteria	Threshold Value
Brake Pedal Position Sensor 2 (Mechanical pedal angle)	≤ 1.5 V (≥ 37.5 deg)

Time Needed for Diagnosis: 0.1 seconds
Malfunction Indicator Light Illumination: Illuminates as soon as a malfunction occurs.

- **Normality Judgment**

Judge as OK and clear the NG if the continuous time while the following conditions are established is more than the predetermined time.

Judgment Value

Malfunction Criteria	Threshold Value
Brake Pedal Position Sensor 1 (Mechanical pedal angle)	> 1.5 V (< 37.5 deg)

Time Needed for Diagnosis: 0.2 seconds

N: DTC P1C0D BRAKE PEDAL POSITION SENSOR "2" CIRCUIT HIGH

1. OUTLINE OF DIAGNOSIS

Detect the power supply short of brake stroke sensor 2.
Judge as NG when the detection result is out of specification.

2. ENABLE CONDITIONS

Secondary Parameters	Enable Conditions
a: Ignition state	Run or crank
b: 12 V battery system voltage	≥ 10.9
Elapsed time of a and b	≥ 0.2 s

3. DIAGNOSTIC METHOD

• Abnormality Judgment

If the duration of time while the following conditions are met is longer than the time indicated, judge as NG.

Judgment Value

Malfunction Criteria	Threshold Value
Brake Pedal Position Sensor 2 (Mechanical pedal angle)	≥ 4.7 V (≤ –10.5 deg)

Time Needed for Diagnosis: 0.1 seconds
Malfunction Indicator Light Illumination: Illuminates as soon as a malfunction occurs.

• Normality Judgment

Judge as OK and clear the NG if the continuous time while the following conditions are established is more than the predetermined time.

Judgment Value

Malfunction Criteria	Threshold Value
Brake Pedal Position Sensor 1 (Mechanical pedal angle)	< 4.7 V (> –10.5 deg)

Time Needed for Diagnosis: 0.2 seconds

O: DTC P1C16 IDLE CONTROL SYSTEM RPM LOWER THAN EXPECTED (HPCM)

1. OUTLINE OF DIAGNOSIS

NOTE:
For the detection standard, refer to DTC P0506. <Ref. to GD(HEV)-11, DTC P0506 IDLE AIR CONTROL SYSTEM RPM LOWER THAN EXPECTED, Diagnostic Trouble Code (DTC) Detecting Criteria.>

P: DTC P1C17 IDLE CONTROL SYSTEM RPM HIGHER THAN EXPECTED (HPCM)

1. OUTLINE OF DIAGNOSIS

NOTE:
For the detection standard, refer to DTC P0507. <Ref. to GD(HEV)-12, DTC P0507 IDLE AIR CONTROL SYSTEM RPM HIGHER THAN EXPECTED, Diagnostic Trouble Code (DTC) Detecting Criteria.>

Q: DTC P2158 VEHICLE SPEED SENSOR "B"

1. OUTLINE OF DIAGNOSIS

Detect the malfunction of the wheel speed of rear wheels.
Judge as NG when the detection result is out of specification.

2. ENABLE CONDITIONS

Secondary Parameters	Enable Conditions
a: Ignition state	Run or crank
b: 12 V battery system voltage	≥ 10.9
Elapsed time of a and b	≥ 0.2 s

3. DIAGNOSTIC METHOD

- **Abnormality Judgment**

If the duration of time while the following conditions are met is longer than the time indicated, judge as NG.

Judgment Value

Malfunction Criteria	Threshold Value
Vehicle speed (Rear) from Vehicle Dynamics NOTE: The VDC controller detects malfunction if one of the speed sensors does not output a signal and the other vehicle speed sensor output signal is above 7.46 MPH.	≥ 186.4 MPH

Time Needed for Diagnosis: 2.5 seconds
Malfunction Indicator Light Illumination: Illuminates as soon as a malfunction occurs.

- **Normality Judgment**

Judge as OK and clear the NG if the continuous time while the following conditions are established is more than the predetermined time.

Judgment Value

Malfunction Criteria	Threshold Value
Wheel speed of rear wheel (either left or right) and Wheel speed of rear wheel (both left and right)	< 186 MPH > 0 MPH

Time Needed for Diagnosis: 2.5 seconds

R: DTC P0A2A DRIVE MOTOR "A" TEMPERATURE SENSOR CIRCUIT

1. OUTLINE OF DIAGNOSIS

Detect the open or short circuit of drive motor temperature sensor.
Judge as NG when the value of drive motor temperature sensor is out of specification.

2. ENABLE CONDITIONS

Secondary Parameters	Enable Conditions
PWM output to the drive motor inverter	ON
a: Ignition state	Run or crank
b: 12 V battery system voltage	> 10 V
Continuous time of a and b	≥ 15 s
Generated energy of drive motor	≥ Map1
Assist energy of drive motor	≥ Map2

Map 1

Hybrid battery temperature and Drive motor inverter temperature either lower temperature (°C (°F))	–30 (–22)	–10 (14)	0 (32)	10 (50)	30 (86)	40 (104)
Generated energy of drive motor (Wh)	630	320	200	130	0	0

Map 2

Hybrid battery temperature and Drive motor inverter temperature either lower temperature (°C (°F))	–30 (–22)	–10 (14)	0 (32)	10 (50)	30 (86)	40 (104)
Assist energy of drive motor (Wh)	270	130	75	50	0	0

3. DIAGNOSTIC METHOD

- **Abnormality Judgment**

If the duration of time while the following conditions are met is longer than the time indicated, judge as NG.

Judgment Value

Malfunction Criteria	Threshold Value
Output voltage	> 4.5 V
(Temperature equivalent)	< –3.4°C (25.9°F)

Time Needed for Diagnosis: 2 seconds
Malfunction Indicator Light Illumination: Illuminates as soon as a malfunction occurs.

- **Normality Judgment**

Judge as OK and clear the NG if the continuous time while the following conditions are established is more than the predetermined time.

Judgment Value

Malfunction Criteria	Threshold Value
Output voltage	≤ 4.5 V
(Temperature equivalent)	≥ -3.4°C (25.9°F)

Time Needed for Diagnosis: 4 seconds

S: DTC P0A2C DRIVE MOTOR "A" TEMPERATURE SENSOR CIRCUIT LOW

1. OUTLINE OF DIAGNOSIS

Detect the open or short circuit of drive motor temperature sensor.
Judge as NG when the value of drive motor temperature sensor is out of specification.

2. ENABLE CONDITIONS

Secondary Parameters	Enable Conditions
Ignition state	Run or crank

3. DIAGNOSTIC METHOD

- **Abnormality Judgment**

If the duration of time while the following conditions are met is longer than the time indicated, judge as NG.

Judgment Value

Malfunction Criteria	Threshold Value
Output voltage	< 0.23 V
(Temperature equivalent)	> 234°C (453.2°F)

Time Needed for Diagnosis: 1 seconds
Malfunction Indicator Light Illumination: Illuminates as soon as a malfunction occurs.

- **Normality Judgment**

Judge as OK and clear the NG if the continuous time while the following conditions are established is more than the predetermined time.

Judgment Value

Malfunction Criteria	Threshold Value
Output voltage	≥ 0.23 V
(Temperature equivalent)	≤ 234°C (453.2°F)

Time Needed for Diagnosis: 2 seconds

T: DTC P0A2D DRIVE MOTOR "A" TEMPERATURE SENSOR CIRCUIT HIGH

1. OUTLINE OF DIAGNOSIS

Detect the open or short circuit of drive motor temperature sensor.
Judge as NG when the value of drive motor temperature sensor is out of specification.

2. ENABLE CONDITIONS

Secondary Parameters	Enable Conditions
Ignition state	Run or crank

3. DIAGNOSTIC METHOD

- **Abnormality Judgment**

If the duration of time while the following conditions are met is longer than the time indicated, judge as NG.

Judgment Value

Malfunction Criteria	Threshold Value
Output voltage (Temperature equivalent)	> 4.6 V (< –55°C (–67°F))

Time Needed for Diagnosis: 1 seconds
Malfunction Indicator Light Illumination: Illuminates as soon as a malfunction occurs.

- **Normality Judgment**

Judge as OK and clear the NG if the continuous time while the following conditions are established is more than the predetermined time.

Judgment Value

Malfunction Criteria	Threshold Value
Output voltage (Temperature equivalent)	≤ 4.6 V (≥ -55°C (–67°F))

Time Needed for Diagnosis: 2 seconds

U: DTC P0A3C DRIVE MOTOR "A" INVERTER OVER TEMPERATURE

1. OUTLINE OF DIAGNOSIS

Detect the malfunction of drive motor inverter temperature.
Judge as NG when the value of drive motor inverter temperature is out of specification.

2. ENABLE CONDITIONS

Secondary Parameters	Enable Conditions
a: Ignition state	Run or crank
b: 12 V battery system voltage	> 8 V
Continuous time of a and b	≥ 1 s
First SCI data from drive motor inverter	Received

3. DIAGNOSTIC METHOD

- **Abnormality Judgment**

If the duration of time while the following conditions are met is longer than the time indicated, judge as NG.

Judgment Value

Malfunction Criteria	Threshold Value
Malfunction signal (over temperature) from IC in the drive motor inverter	ON

Time Needed for Diagnosis: 0.2 seconds
Malfunction Indicator Light Illumination: Illuminates as soon as a malfunction occurs.

- **Normality Judgment**

Judge as OK and clear the NG if the continuous time while the following conditions are established is more than the predetermined time.

Judgment Value

Malfunction Criteria	Threshold Value
Malfunction signal (over temperature) from IC in the drive motor inverter	OFF

Time Needed for Diagnosis: 0.2 seconds

V: DTC P0A3F DRIVE MOTOR "A" POSITION SENSOR CIRCUIT

1. OUTLINE OF DIAGNOSIS

Detect the malfunction of the drive motor rotation angle sensor.
Judge as NG when the malfunction of drive motor rotation angle sensor is detected.

2. ENABLE CONDITIONS

Secondary Parameters	Enable Conditions
Diagnosis 1	
Ignition state	OFF to ON (ON = Run or crank) (OFF ≠ Run or crank)
Diagnosis 2	
Ignition state	Run or crank

3. DIAGNOSTIC METHOD

- **Abnormality Judgment**

If the duration of time while the following conditions are met is longer than the time indicated, judge as NG.

Judgment Value

Malfunction Criteria	Threshold Value
Diagnosis 1	
SCI data from the resolver to digital (R/D) converter	Parity error
Diagnosis 2	
R/D converter error output (Internal tracking error)	Detected

Time Needed for Diagnosis:
- **Diagnosis 1:** 0.0002 s
- **Diagnosis 2:** 0.0005 s

Malfunction Indicator Light Illumination: Illuminates as soon as a malfunction occurs.

- **Normality Judgment**

Judge as OK and clear the NG if the continuous time while the following conditions are established is more than the predetermined time.

Judgment Value

Malfunction Criteria	Threshold Value
Diagnosis 1	
SCI data from the resolver to digital (R/D) converter	≠ Parity error
Diagnosis 2	
R/D converter error output (Internal tracking error)	Not detected

Time Needed for Diagnosis:
- **Diagnosis 1:** Immediately
- **Diagnosis 2:** 0.02 s

W: DTC P0A40 DRIVE MOTOR "A" POSITION SENSOR CIRCUIT RANGE/PERFORMANCE

1. OUTLINE OF DIAGNOSIS

Detect the malfunction of the drive motor rotation angle sensor.
Judge as NG when the detected angle of drive motor rotation angle sensor is out of specification.

2. ENABLE CONDITIONS

Secondary Parameters	Enable Conditions
Ignition state	Run or crank
Resolver initialization	Completed
NOTE: It is defined that "Resolver initialization=Completed", if all of the following conditions are satisfied: 1. The communication between the R/D converter and DMCM is established. 2. The R/D converter succeed to recognize the first motor position (angle) after power-up.	

3. DIAGNOSTIC METHOD

- **Abnormality Judgment**

If the duration of time while the following conditions are met is longer than the time indicated, judge as NG.

Judgment Value

Malfunction Criteria	Threshold Value
Diagnosis 1	
Measured drive motor angle	> 180.5 deg
Diagnosis 2	
Measured drive motor angle (When the reference pulse occurs)	< 179.5 deg and > 0.5 deg
NOTE: Diagnosis will be performed only when the reference pulse is generated	

Time Needed for Diagnosis: 0.0003 seconds
Malfunction Indicator Light Illumination: Illuminates as soon as a malfunction occurs.

- **Normality Judgment**

Judge as OK and clear the NG if the continuous time while the following conditions are established is more than the predetermined time.

Judgment Value

Malfunction Criteria	Threshold Value
Diagnosis 1	
Measured drive motor angle	≤ 180.5 deg
Diagnosis 2	
Measured drive motor angle (When the reference pulse occurs)	≥ 179.5 deg and ≤ 0.5 deg

Time Needed for Diagnosis: 0.02 seconds

X: DTC P0A43 DRIVE MOTOR "A" POSITION SENSOR CIRCUIT INTERMITTENT

1. OUTLINE OF DIAGNOSIS

Detect the malfunction of the drive motor rotation angle sensor.
Judge as NG when the angle detected by drive motor rotation angle sensor is not continuous.

2. ENABLE CONDITIONS

Secondary Parameters	Enable Conditions
Resolver initialization	Completed
a: Ignition state	Run or crank
b: 12 V battery system voltage	> 6 V
Continuous time of a and b	≥ 1 s

3. DIAGNOSTIC METHOD

• Abnormality Judgment

If the duration of time while the following conditions are met is longer than the time indicated, judge as NG.

Judgment Value

Malfunction Criteria	Threshold Value
ABS (Difference between the current and previous values of Measured drive motor angle) NOTE: • ABS: Absolute value • Sampling time = 0.001 s	> 11.25 deg

Time Needed for Diagnosis: Immediately
Malfunction Indicator Light Illumination: Illuminates as soon as a malfunction occurs.

• Normality Judgment

Judge as OK and clear the NG if the continuous time while the following conditions are established is more than the predetermined time.

Judgment Value

Malfunction Criteria	Threshold Value
ABS (Difference between the current and previous values of Measured drive motor angle)	≤ 11.25 deg

Time Needed for Diagnosis: 0.02 seconds

Y: DTC P0A44 DRIVE MOTOR "A" POSITION SENSOR CIRCUIT OVERSPEED

1. OUTLINE OF DIAGNOSIS

Detect the malfunction of drive motor rotation count.
Judge as NG when the rotation count of drive motor is out of specification.

2. ENABLE CONDITIONS

Secondary Parameters	Enable Conditions
Resolver initialization	Completed
a: Ignition state	Run or crank
b: 12 V battery system voltage	> 6 V
Continuous time of a and b	≥ 1 s

3. DIAGNOSTIC METHOD

- **Abnormality Judgment**

If the duration of time while the following conditions are met is longer than the time indicated, judge as NG.

Judgment Value

Malfunction Criteria	Threshold Value
ABS (Motor speed) NOTE: ABS: Absolute value	> 7000 rpm

Time Needed for Diagnosis: 1 seconds
Malfunction Indicator Light Illumination: Illuminates as soon as a malfunction occurs.

- **Normality Judgment**

Judge as OK and clear the NG if the continuous time while the following conditions are established is more than the predetermined time.

Judgment Value

Malfunction Criteria	Threshold Value
ABS (Motor speed) NOTE: ABS: Absolute value	≤ 7000 rpm

Time Needed for Diagnosis: 2 seconds

Z: DTC P0A5D DRIVE MOTOR "A" PHASE U CURRENT

1. OUTLINE OF DIAGNOSIS

Detect the malfunction of the current flowing in drive motor.
Judge as NG when the current flowing in drive motor is out of specification.

2. ENABLE CONDITIONS

Secondary Parameters	Enable Conditions
PWM output to the drive motor inverter	ON

3. DIAGNOSTIC METHOD

• Abnormality Judgment

If the duration of time while the following conditions are met is longer than the time indicated, judge as NG.

Judgment Value

Malfunction Criteria	Threshold Value
ABS (Iu) NOTE: • ABS: Absolute value • Iu: U phase current	> 350 A

Time Needed for Diagnosis: 0.0003 seconds
Malfunction Indicator Light Illumination: Illuminates as soon as a malfunction occurs.

• Normality Judgment

Judge as OK and clear the NG if the continuous time while the following conditions are established is more than the predetermined time.

Judgment Value

Malfunction Criteria	Threshold Value
ABS (Iu)	≤ 350 A

Time Needed for Diagnosis: 0.0006 seconds

AA:DTC P0A60 DRIVE MOTOR "A" PHASE V CURRENT

1. OUTLINE OF DIAGNOSIS

Detect the malfunction of the current flowing in drive motor.
Judge as NG when the current flowing in drive motor is out of specification.

2. ENABLE CONDITIONS

Secondary Parameters	Enable Conditions
PWM output to the drive motor inverter	ON

3. DIAGNOSTIC METHOD

• Abnormality Judgment

If the duration of time while the following conditions are met is longer than the time indicated, judge as NG.

Judgment Value

Malfunction Criteria	Threshold Value
ABS (Iv) NOTE: • ABS: Absolute value • Iv: V phase current	> 350 A

Time Needed for Diagnosis: 0.0003 seconds
Malfunction Indicator Light Illumination: Illuminates as soon as a malfunction occurs.

• Normality Judgment

Judge as OK and clear the NG if the continuous time while the following conditions are established is more than the predetermined time.

Judgment Value

Malfunction Criteria	Threshold Value
ABS (Iv)	≤ 350 A

Time Needed for Diagnosis: 0.0006 seconds

AB:DTC P0A63 DRIVE MOTOR "A" PHASE W CURRENT

1. OUTLINE OF DIAGNOSIS

Detect the malfunction of the current flowing in drive motor.
Judge as NG when the current flowing in drive motor is out of specification.

2. ENABLE CONDITIONS

Secondary Parameters	Enable Conditions
PWM output to the drive motor inverter	ON

3. DIAGNOSTIC METHOD

• Abnormality Judgment

If the duration of time while the following conditions are met is longer than the time indicated, judge as NG.

Judgment Value

Malfunction Criteria	Threshold Value
ABS (Iw) NOTE: • ABS: Absolute value • Iw: W phase current	> 350 A

Time Needed for Diagnosis: 0.0003 seconds
Malfunction Indicator Light Illumination: Illuminates as soon as a malfunction occurs.

• Normality Judgment

Judge as OK and clear the NG if the continuous time while the following conditions are established is more than the predetermined time.

Judgment Value

Malfunction Criteria	Threshold Value
ABS (Iw)	≤ 350 A

Time Needed for Diagnosis: 0.0006 seconds

AC:DTC P0A78 DRIVE MOTOR "A" INVERTER PERFORMANCE

1. OUTLINE OF DIAGNOSIS

Detect the malfunction of drive motor inverter.
Judge as NG when the malfunction is detected in the internal circuit of drive motor inverter.

2. ENABLE CONDITIONS

Secondary Parameters	Enable Conditions
a: Ignition state	Run or crank
b: 12 V battery system voltage	> 8 V
Continuous time of a and b	≥ 1 s
First SCI data from drive motor inverter	Received

3. DIAGNOSTIC METHOD

- **Abnormality Judgment**

If the duration of time while the following conditions are met is longer than the time indicated, judge as NG.

Judgment Value

Malfunction Criteria	Threshold Value
Malfunction signal (internal data) from IC in the drive motor inverter	ON

Time Needed for Diagnosis: 0.03 seconds
Malfunction Indicator Light Illumination: Illuminates as soon as a malfunction occurs.

- **Normality Judgment**

Judge as OK and clear the NG if the continuous time while the following conditions are established is more than the predetermined time.

Judgment Value

Malfunction Criteria	Threshold Value
Malfunction signal (internal data) from IC in the drive motor inverter	OFF

Time Needed for Diagnosis: 0.02 seconds

AD:DTC P0A82 HYBRID/EV BATTERY PACK COOLING FAN 1 PERFORMANCE/ STUCK OFF

1. OUTLINE OF DIAGNOSIS

Detect the malfunction of high voltage battery cooling fan.
Judge as NG when the performance of high voltage battery cooling fan is out of specification.

2. ENABLE CONDITIONS

Secondary Parameters	Enable Conditions
Commanded cooling fan duty	≥ 20%
12V battery system voltage	> 9.3 V

3. DIAGNOSTIC METHOD

- **Abnormality Judgment**

If the duration of time while the following conditions are met is longer than the time indicated, judge as NG.

Judgment Value

Malfunction Criteria	Threshold Value
Measured cooling fan speed	< Map

Map

Commanded cooling fan duty (%)	20	40	60	80	100
Measured inverter cooling fan motor speed (rpm)	300	700	1050	1200	1200

Time Needed for Diagnosis: 20 seconds
Malfunction Indicator Light Illumination: detects when malfunction occurs in 2 continuous driving cycles. (Single engine startup is counted as one drive cycle.)

- **Normality Judgment**

Judge as OK and clear the NG if the continuous time while the following conditions are established is more than the predetermined time.

Judgment Value

Malfunction Criteria	Threshold Value
Measured cooling fan speed	≥ Map

Time Needed for Diagnosis: 1 seconds

AE:DTC P0A83 HYBRID/EV BATTERY PACK COOLING FAN 1 STUCK ON

1. OUTLINE OF DIAGNOSIS

Detect the malfunction of high voltage battery cooling fan.
Judge as NG when the performance of high voltage battery cooling fan is out of specification.

2. ENABLE CONDITIONS

Secondary Parameters	Enable Conditions
Commanded cooling fan duty	= 0%
12V battery system voltage	> 9.3 V

3. DIAGNOSTIC METHOD

- **Abnormality Judgment**

If the duration of time while the following conditions are met is longer than the time indicated, judge as NG.

Judgment Value

Malfunction Criteria	Threshold Value
Measured cooling fan speed	> 300 rpm

Time Needed for Diagnosis: 20 seconds
Malfunction Indicator Light Illumination: detects when malfunction occurs in 2 continuous driving cycles. (Single engine startup is counted as one drive cycle.)

- **Normality Judgment**

Judge as OK and clear the NG if the continuous time while the following conditions are established is more than the predetermined time.

Judgment Value

Malfunction Criteria	Threshold Value
Measured cooling fan speed	≤ 300 rpm

Time Needed for Diagnosis: 20 seconds

AF:DTC P0A90 DRIVE MOTOR "A" PERFORMANCE

1. OUTLINE OF DIAGNOSIS

Detect the malfunction of drive motor.
Judge as NG when the performance of drive motor is out of specification.

2. ENABLE CONDITIONS

Secondary Parameters	Enable Conditions
a: PWM output to the drive motor inverter	ON
b: ABS (Commanded motor output power) NOTE: ABS: Absolute value	> 5 kW
c: Motor speed	> 1000 rpm and < 3500 rpm
Continuous time of a, b and c	> 0.5 s

3. DIAGNOSTIC METHOD

• Abnormality Judgment

If the duration of time while the following conditions are met is longer than the time indicated, judge as NG.

Judgment Value

Malfunction Criteria	Threshold Value
(Estimated motor output power / Commanded motor output power) × 100 NOTE: • Estimated motor output power = (V × I) • Commanded motor output power = (N × T × 2 × π) / 60 • V: Commanded motor voltage • I: Measured motor current • N: Motor speed • T: Commanded motor torque	< 40%

Time Needed for Diagnosis: 1 seconds
Malfunction Indicator Light Illumination: Illuminates as soon as a malfunction occurs.

• Normality Judgment

Judge as OK and clear the NG if the continuous time while the following conditions are established is more than the predetermined time.

Judgment Value

Malfunction Criteria	Threshold Value
(Estimated motor output power / Commanded motor output power) × 100	≥ 40%

Time Needed for Diagnosis: 2 seconds

AG:DTC P0AED DRIVE MOTOR INVERTER TEMPERATURE SENSOR "A" CIRCUIT

1. OUTLINE OF DIAGNOSIS

Detect the open or short circuit of drive motor inverter temperature sensor.
Judge as NG when the value of drive motor inverter temperature sensor is out of specification.

2. ENABLE CONDITIONS

Secondary Parameters	Enable Conditions
a: Ignition state	Run or crank
b: 12 V battery system voltage	> 8 V
Continuous time of a and b	≥ 1 s
First SCI data from drive motor inverter	Received

3. DIAGNOSTIC METHOD

- **Abnormality Judgment**

If the duration of time while the following conditions are met is longer than the time indicated, judge as NG.

Judgment Value

Malfunction Criteria	Threshold Value
Fault data (temperature sensor) from IC in the drive motor inverter	Received

Time Needed for Diagnosis: 2 seconds
Malfunction Indicator Light Illumination: Illuminates as soon as a malfunction occurs.

- **Normality Judgment**

Judge as OK and clear the NG if the continuous time while the following conditions are established is more than the predetermined time.

Judgment Value

Malfunction Criteria	Threshold Value
Fault data (temperature sensor) from IC in the drive motor inverter	Not received

Time Needed for Diagnosis: 0.02 seconds

AH:DTC P0AEE DRIVE MOTOR INVERTER TEMPERATURE SENSOR "A" CIRCUIT RANGE/PERFORMANCE

1. OUTLINE OF DIAGNOSIS

Detect the malfunction of drive motor inverter temperature sensor.
Judge as NG when the characteristic of drive motor inverter temperature sensor is out of specification.

2. ENABLE CONDITIONS

Secondary Parameters	Enable Conditions
Diagnosis 1	
a: Ignition state	Run or crank
b: 12 V battery system voltage	> 10 V
Continuous time of a and b	≥ 240 s
c: ABS (Drive motor speed)	> 125 rpm
NOTE: ABS: Absolute value	
or	
d: ABS (Commanded motor torque)	< 15 N·m (1.5 kgf-m, 11.1 ft-lb)
Continuous time of c or d	≥ 240 s
Inverter temperature median	> 30°C (86°F)
NOTE: Inverter temperature median: The median value of the Inverter temperature sensor A, B and C	
First SCI data from drive motor inverter	Received
Diagnosis 2	
a: Ignition state	Run or crank
b: 12 V battery system voltage	> 10 V
Continuous time of a and b	≥ 240 s
c: ABS (Drive motor speed)	> 125 rpm
NOTE: ABS: Absolute value	
or	
d: ABS (Commanded motor torque)	< 15 N·m (1.5 kgf-m, 11.1 ft-lb)
Continuous time of c or d	≥ 240 s
Inverter temperature median	> 30°C (86°F)
NOTE: Inverter temperature median: The median value of the Inverter temperature sensor A, B and C	
First SCI data from drive motor inverter	Received
ABS (Variation of inverter temperature median)	> 20°C (68°F)

3. DIAGNOSTIC METHOD

• Abnormality Judgment

If the duration of time while the following conditions are met is longer than the time indicated, judge as NG.

Judgment Value

Malfunction Criteria	Threshold Value
Diagnosis 1 ABS (Inverter temperature A – Inverter temperature median)	> 30°C (54°F)
Diagnosis 2 ABS ((Variation of Inverter temperature A) – (Variation of Inverter temperature median)) NOTE: • Variation of Inverter temperature A = Max (Inverter temperature A) – Min (Inverter temperature A) • Variation of Inverter temperature median = Max (Inverter temperature median) – Min (Inverter temperature median) • Max: The maximum value of the experience in the current driving cycle • Min: The minimum value of the experience in the current driving cycle	> 10°C (18°F)

Time Needed for Diagnosis: 10 seconds
Malfunction Indicator Light Illumination: detects when malfunction occurs in 2 continuous driving cycles. (Single engine startup is counted as one drive cycle.)

• Normality Judgment

Judge as OK and clear NG when continuous time when the following conditions are met is predetermined time or more (diagnosis 1 and diagnosis 2).

Judgment Value

Malfunction Criteria	Threshold Value
Diagnosis 1 ABS (Inverter temperature A – Inverter temperature median)	≤ 30°C (54°F)
Diagnosis 2 ABS ((Variation of Inverter temperature A) – (Variation of Inverter temperature median))	≤ 10°C (18°F)

Time Needed for Diagnosis: 20 seconds

AI: DTC P0AF2 DRIVE MOTOR INVERTER TEMPERATURE SENSOR "B" CIRCUIT

1. OUTLINE OF DIAGNOSIS

Detect the open or short circuit of drive motor inverter temperature sensor.
Judge as NG when the value of drive motor inverter temperature sensor is out of specification.

2. ENABLE CONDITIONS

Secondary Parameters	Enable Conditions
a: Ignition state	Run or crank
b: 12 V battery system voltage	> 8 V
Continuous time of a and b	≥ 1 s
First SCI data from drive motor inverter	Received

3. DIAGNOSTIC METHOD

- **Abnormality Judgment**

If the duration of time while the following conditions are met is longer than the time indicated, judge as NG.

Judgment Value

Malfunction Criteria	Threshold Value
Fault data (temperature sensor) from IC in the drive motor inverter	Received

Time Needed for Diagnosis: 2 seconds
Malfunction Indicator Light Illumination: Illuminates as soon as a malfunction occurs.

- **Normality Judgment**

Judge as OK and clear the NG if the continuous time while the following conditions are established is more than the predetermined time.

Judgment Value

Malfunction Criteria	Threshold Value
Fault data (temperature sensor) from IC in the drive motor inverter	Not received

Time Needed for Diagnosis: 2 seconds

AJ:DTC P0AF3 DRIVE MOTOR INVERTER TEMPERATURE SENSOR "B" CIRCUIT RANGE/PERFORMANCE

1. OUTLINE OF DIAGNOSIS

Detect the malfunction of drive motor inverter temperature sensor.
Judge as NG when the characteristic of drive motor inverter temperature sensor is out of specification.

2. ENABLE CONDITIONS

Secondary Parameters	Enable Conditions
Diagnosis 1	
a: Ignition state	Run or crank
b: 12 V battery system voltage	> 10 V
Continuous time of a and b	≥ 240 s
c: ABS (Drive motor speed)	> 125 rpm
NOTE: ABS: Absolute value	
or	
d: ABS (Commanded motor torque)	< 15 N·m (1.5 kgf-m, 11.1 ft-lb)
Continuous time of c or d	≥ 240 s
Inverter temperature median	> 30°C (86°F)
NOTE: Inverter temperature median: The median value of the Inverter temperature sensor A, B and C	
First SCI data from drive motor inverter	Received
Diagnosis 2	
a: Ignition state	Run or crank
b: 12 V battery system voltage	> 10 V
Continuous time of a and b	≥ 240 s
c: ABS (Drive motor speed)	> 125 rpm
NOTE: ABS: Absolute value	
or	
d: ABS (Commanded motor torque)	< 15 N·m (1.5 kgf-m, 11.1 ft-lb)
Continuous time of c or d	≥ 240 s
Inverter temperature median	> 30°C (86°F)
NOTE: Inverter temperature median: The median value of the Inverter temperature sensor A, B and C	
First SCI data from drive motor inverter	Received
ABS (Variation of inverter temperature median)	> 20°C (68°F)

3. DIAGNOSTIC METHOD

• Abnormality Judgment

If the duration of time while the following conditions are met is longer than the time indicated, judge as NG.

Judgment Value

Malfunction Criteria	Threshold Value
Diagnosis 1 ABS (Inverter temperature B – Inverter temperature median)	> 30°C (54°F)
Diagnosis 2 ABS ((Variation of Inverter temperature B) – (Variation of Inverter temperature median)) NOTE: • Variation of Inverter temperature B = Max (Inverter temperature B) – Min (Inverter temperature B) • Variation of Inverter temperature median = Max (Inverter temperature median) – Min (Inverter temperature median) • Max: The maximum value of the experience in the current driving cycle • Min: The minimum value of the experience in the current driving cycle	> 10°C (18°F)

Time Needed for Diagnosis: 10 seconds
Malfunction Indicator Light Illumination: detects when malfunction occurs in 2 continuous driving cycles. (Single engine startup is counted as one drive cycle.)

• Normality Judgment

Judge as OK and clear NG when continuous time when the following conditions are met is predetermined time or more (diagnosis 1 and diagnosis 2).

Judgment Value

Malfunction Criteria	Threshold Value
Diagnosis 1 ABS (Inverter temperature B – Inverter temperature median)	≤ 30°C (54°F)
Diagnosis 2 ABS ((Variation of Inverter temperature B) – (Variation of Inverter temperature median))	≤ 10°C (18°F)

Time Needed for Diagnosis: 20 seconds

AK:DTC P0BD1 DRIVE MOTOR INVERTER TEMPERATURE SENSOR "C" CIRCUIT

1. OUTLINE OF DIAGNOSIS

Detect the open or short circuit of drive motor inverter temperature sensor.
Judge as NG when the value of drive motor inverter temperature sensor is out of specification.

2. ENABLE CONDITIONS

Secondary Parameters	Enable Conditions
a: Ignition state	Run or crank
b: 12 V battery system voltage	> 8 V
Continuous time of a and b	≥ 1 s
First SCI data from drive motor inverter	Received

3. DIAGNOSTIC METHOD

- **Abnormality Judgment**

If the duration of time while the following conditions are met is longer than the time indicated, judge as NG.

Judgment Value

Malfunction Criteria	Threshold Value
Fault data (temperature sensor) from IC in the drive motor inverter	Received

Time Needed for Diagnosis: 2 seconds
Malfunction Indicator Light Illumination: Illuminates as soon as a malfunction occurs.

- **Normality Judgment**

Judge as OK and clear the NG if the continuous time while the following conditions are established is more than the predetermined time.

Judgment Value

Malfunction Criteria	Threshold Value
Fault data (temperature sensor) from IC in the drive motor inverter	Not received

Time Needed for Diagnosis: 2 seconds

AL:DTC P0BD2 DRIVE MOTOR INVERTER TEMPERATURE SENSOR "C" CIRCUIT RANGE/PERFORMANCE

1. OUTLINE OF DIAGNOSIS

Detect the malfunction of drive motor inverter temperature sensor.
Judge as NG when the characteristic of drive motor inverter temperature sensor is out of specification.

2. ENABLE CONDITIONS

Secondary Parameters	Enable Conditions
Diagnosis 1	
a: Ignition state	Run or crank
b: 12 V battery system voltage	> 10 V
Continuous time of a and b	≥ 240 s
c: ABS (Drive motor speed)	> 125 rpm
NOTE: ABS: Absolute value	
or	
d: ABS (Commanded motor torque)	< 15 N·m (1.5 kgf-m, 11.1 ft-lb)
Continuous time of c or d	≥ 240 s
Inverter temperature median	> 30°C (86°F)
NOTE: Inverter temperature median: The median value of the Inverter temperature sensor A, B and C	
First SCI data from drive motor inverter	Received
Diagnosis 2	
a: Ignition state	Run or crank
b: 12 V battery system voltage	> 10 V
Continuous time of a and b	≥ 240 s
c: ABS (Drive motor speed)	> 125 rpm
NOTE: ABS: Absolute value	
or	
d: ABS (Commanded motor torque)	< 15 N·m (1.5 kgf-m, 11.1 ft-lb)
Continuous time of c or d	≥ 240 s
Inverter temperature median	> 30°C (86°F)
NOTE: Inverter temperature median: The median value of the Inverter temperature sensor A, B and C	
First SCI data from drive motor inverter	Received
ABS (Variation of inverter temperature median)	> 20°C (68°F)

3. DIAGNOSTIC METHOD

• Abnormality Judgment

If the duration of time while the following conditions are met is longer than the time indicated, judge as NG.

Judgment Value

Malfunction Criteria	Threshold Value
Diagnosis 1 ABS (Inverter temperature C – Inverter temperature median)	> 30°C (54°F)
Diagnosis 2 ABS ((Variation of Inverter temperature C) – (Variation of Inverter temperature median)) NOTE: • Variation of Inverter temperature C = Max (Inverter temperature C) – Min (Inverter temperature C) • Variation of Inverter temperature median = Max (Inverter temperature median) – Min (Inverter temperature median) • Max: The maximum value of the experience in the current driving cycle • Min: The minimum value of the experience in the current driving cycle	> 10°C (18°F)

Time Needed for Diagnosis: 10 seconds
Malfunction Indicator Light Illumination: detects when malfunction occurs in 2 continuous driving cycles. (Single engine startup is counted as one drive cycle.)

• Normality Judgment

Judge as OK and clear NG when continuous time when the following conditions are met is predetermined time or more (diagnosis 1 and diagnosis 2).

Judgment Value

Malfunction Criteria	Threshold Value
Diagnosis 1 ABS (Inverter temperature C – Inverter temperature median)	≤ 30°C (54°F)
Diagnosis 2 ABS ((Variation of Inverter temperature C) – (Variation of Inverter temperature median))	≤ 10°C (18°F)

Time Needed for Diagnosis: 20 seconds

AM:DTC P0BE6 DRIVE MOTOR "A" PHASE U CURRENT SENSOR CIRCUIT RANGE/PERFORMANCE

1. OUTLINE OF DIAGNOSIS

Detect the malfunction of drive motor inverter amperage sensor circuit.
Judge as NG when the value of drive motor inverter amperage sensor is out of specification.

2. ENABLE CONDITIONS

Secondary Parameters	Enable Conditions
PWM output to the drive motor inverter	OFF

3. DIAGNOSTIC METHOD

- **Abnormality Judgment**

If the duration of time while the following conditions are met is longer than the time indicated, judge as NG.

Judgment Value

Malfunction Criteria	Threshold Value
ABS (U phase average offset current) NOTE: ABS: Absolute value	> 31 A

Time Needed for Diagnosis: 0.01 seconds
Malfunction Indicator Light Illumination: Illuminates as soon as a malfunction occurs.

- **Normality Judgment**

Judge as OK and clear the NG if the continuous time while the following conditions are established is more than the predetermined time.

Judgment Value

Malfunction Criteria	Threshold Value
ABS (U phase average offset current)	≤ 31 A

Time Needed for Diagnosis: 0.01 seconds

AN:DTC P0BE7 DRIVE MOTOR "A" PHASE U CURRENT SENSOR CIRCUIT LOW

1. OUTLINE OF DIAGNOSIS

Detect the open or short circuit of drive motor inverter amperage sensor.
Judge as NG when the value of drive motor inverter amperage sensor is out of specification.

2. ENABLE CONDITIONS

Secondary Parameters	Enable Conditions
Ignition state	Run or crank

3. DIAGNOSTIC METHOD

- **Abnormality Judgment**

If the duration of time while the following conditions are met is longer than the time indicated, judge as NG.

Judgment Value

Malfunction Criteria	Threshold Value
U phase current sensor output voltage	≤ 0.5 V
(Current equivalent)	≤ –400 A

Time Needed for Diagnosis: 0.03 seconds
Malfunction Indicator Light Illumination: Illuminates as soon as a malfunction occurs.

- **Normality Judgment**

Judge as OK and clear the NG if the continuous time while the following conditions are established is more than the predetermined time.

Judgment Value

Malfunction Criteria	Threshold Value
U phase current sensor output voltage	> 0.5 V
(Current equivalent)	> –400 A

Time Needed for Diagnosis: 0.06 seconds

AO:DTC P0BE8 DRIVE MOTOR "A" PHASE U CURRENT SENSOR CIRCUIT HIGH

1. OUTLINE OF DIAGNOSIS

Detect the open or short circuit of drive motor inverter amperage sensor.
Judge as NG when the value of drive motor inverter amperage sensor is out of specification.

2. ENABLE CONDITIONS

Secondary Parameters	Enable Conditions
Ignition state	Run or crank

3. DIAGNOSTIC METHOD

- **Abnormality Judgment**

If the duration of time while the following conditions are met is longer than the time indicated, judge as NG.

Judgment Value

Malfunction Criteria	Threshold Value
U phase current sensor output voltage	≥ 4.5 V
(Current equivalent)	≥ 400 A

Time Needed for Diagnosis: 0.03 seconds
Malfunction Indicator Light Illumination: Illuminates as soon as a malfunction occurs.

- **Normality Judgment**

Judge as OK and clear the NG if the continuous time while the following conditions are established is more than the predetermined time.

Judgment Value

Malfunction Criteria	Threshold Value
U phase current sensor output voltage	< 4.5 V
(Current equivalent)	< 400 A

Time Needed for Diagnosis: 0.06 seconds

AP:DTC P0BEA DRIVE MOTOR "A" PHASE V CURRENT SENSOR CIRCUIT RANGE/PERFORMANCE

1. OUTLINE OF DIAGNOSIS

Detect the malfunction of drive motor inverter amperage sensor circuit.
Judge as NG when the value of drive motor inverter amperage sensor is out of specification.

2. ENABLE CONDITIONS

Secondary Parameters	Enable Conditions
PWM output to the drive motor inverter	OFF

3. DIAGNOSTIC METHOD

- **Abnormality Judgment**

If the duration of time while the following conditions are met is longer than the time indicated, judge as NG.

Judgment Value

Malfunction Criteria	Threshold Value
ABS (V phase average offset current) NOTE: ABS: Absolute value	> 31 A

Time Needed for Diagnosis: 0.01 seconds
Malfunction Indicator Light Illumination: Illuminates as soon as a malfunction occurs.

- **Normality Judgment**

Judge as OK and clear the NG if the continuous time while the following conditions are established is more than the predetermined time.

Judgment Value

Malfunction Criteria	Threshold Value
ABS (V phase average offset current)	≤ 31 A

Time Needed for Diagnosis: 0.01 seconds

AQ:DTC P0BEB DRIVE MOTOR "A" PHASE V CURRENT SENSOR CIRCUIT LOW

1. OUTLINE OF DIAGNOSIS

Detect the open or short circuit of drive motor inverter amperage sensor.
Judge as NG when the value of drive motor inverter amperage sensor is out of specification.

2. ENABLE CONDITIONS

Secondary Parameters	Enable Conditions
Ignition state	Run or crank

3. DIAGNOSTIC METHOD

• Abnormality Judgment

If the duration of time while the following conditions are met is longer than the time indicated, judge as NG.

Judgment Value

Malfunction Criteria	Threshold Value
V phase current sensor output voltage	≤ 0.5 V
(Current equivalent)	≤ –400 A

Time Needed for Diagnosis: 0.03 seconds
Malfunction Indicator Light Illumination: Illuminates as soon as a malfunction occurs.

• Normality Judgment

Judge as OK and clear the NG if the continuous time while the following conditions are established is more than the predetermined time.

Judgment Value

Malfunction Criteria	Threshold Value
V phase current sensor output voltage	> 0.5 V
(Current equivalent)	> –400 A

Time Needed for Diagnosis: 0.06 seconds

AR:DTC P0BEC DRIVE MOTOR "A" PHASE V CURRENT SENSOR CIRCUIT HIGH

1. OUTLINE OF DIAGNOSIS

Detect the open or short circuit of drive motor inverter amperage sensor.
Judge as NG when the value of drive motor inverter amperage sensor is out of specification.

2. ENABLE CONDITIONS

Secondary Parameters	Enable Conditions
Ignition state	Run or crank

3. DIAGNOSTIC METHOD

- **Abnormality Judgment**

If the duration of time while the following conditions are met is longer than the time indicated, judge as NG.

Judgment Value

Malfunction Criteria	Threshold Value
V phase current sensor output voltage	≥ 4.5 V
(Current equivalent)	≥ 400 A

Time Needed for Diagnosis: 0.03 seconds
Malfunction Indicator Light Illumination: Illuminates as soon as a malfunction occurs.

- **Normality Judgment**

Judge as OK and clear the NG if the continuous time while the following conditions are established is more than the predetermined time.

Judgment Value

Malfunction Criteria	Threshold Value
V phase current sensor output voltage	< 4.5 V
(Current equivalent)	< 400 A

Time Needed for Diagnosis: 0.06 seconds

AS:DTC P0BEE DRIVE MOTOR "A" PHASE W CURRENT SENSOR CIRCUIT RANGE/PERFORMANCE

1. OUTLINE OF DIAGNOSIS

Detect the malfunction of drive motor inverter amperage sensor circuit.
Judge as NG when the value of drive motor inverter amperage sensor is out of specification.

2. ENABLE CONDITIONS

Secondary Parameters	Enable Conditions
PWM output to the drive motor inverter	OFF

3. DIAGNOSTIC METHOD

- **Abnormality Judgment**

If the duration of time while the following conditions are met is longer than the time indicated, judge as NG.

Judgment Value

Malfunction Criteria	Threshold Value
ABS (W phase average offset current) NOTE: ABS: Absolute value	> 31 A

Time Needed for Diagnosis: 0.01 seconds
Malfunction Indicator Light Illumination: Illuminates as soon as a malfunction occurs.

- **Normality Judgment**

Judge as OK and clear the NG if the continuous time while the following conditions are established is more than the predetermined time.

Judgment Value

Malfunction Criteria	Threshold Value
ABS (W phase average offset current)	≤ 31 A

Time Needed for Diagnosis: 0.01 seconds

AT:DTC P0BEF DRIVE MOTOR "A" PHASE W CURRENT SENSOR CIRCUIT LOW

1. OUTLINE OF DIAGNOSIS

Detect the open or short circuit of drive motor inverter amperage sensor.
Judge as NG when the value of drive motor inverter amperage sensor is out of specification.

2. ENABLE CONDITIONS

Secondary Parameters	Enable Conditions
Ignition state	Run or crank

3. DIAGNOSTIC METHOD

- **Abnormality Judgment**

If the duration of time while the following conditions are met is longer than the time indicated, judge as NG.

Judgment Value

Malfunction Criteria	Threshold Value
W phase current sensor output voltage	≤ 0.5 V
(Current equivalent)	≤ –400 A

Time Needed for Diagnosis: 0.03 seconds
Malfunction Indicator Light Illumination: Illuminates as soon as a malfunction occurs.

- **Normality Judgment**

Judge as OK and clear the NG if the continuous time while the following conditions are established is more than the predetermined time.

Judgment Value

Malfunction Criteria	Threshold Value
W phase current sensor output voltage	> 0.5 V
(Current equivalent)	> –400 A

Time Needed for Diagnosis: 0.06 seconds

AU:DTC P0BF0 DRIVE MOTOR "A" PHASE W CURRENT SENSOR CIRCUIT HIGH

1. OUTLINE OF DIAGNOSIS

Detect the open or short circuit of drive motor inverter amperage sensor.
Judge as NG when the value of drive motor inverter amperage sensor is out of specification.

2. ENABLE CONDITIONS

Secondary Parameters	Enable Conditions
Ignition state	Run or crank

3. DIAGNOSTIC METHOD

- **Abnormality Judgment**

If the duration of time while the following conditions are met is longer than the time indicated, judge as NG.

Judgment Value

Malfunction Criteria	Threshold Value
W phase current sensor output voltage	≥ 4.5 V
(Current equivalent)	≥ 400 A

Time Needed for Diagnosis: 0.03 seconds
Malfunction Indicator Light Illumination: Illuminates as soon as a malfunction occurs.

- **Normality Judgment**

Judge as OK and clear the NG if the continuous time while the following conditions are established is more than the predetermined time.

Judgment Value

Malfunction Criteria	Threshold Value
W phase current sensor output voltage	< 4.5 V
(Current equivalent)	< 400 A

Time Needed for Diagnosis: 0.06 seconds

AV:DTC P0BFD DRIVE MOTOR "A" PHASE U-V-W CURRENT SENSOR CORRELATION

1. OUTLINE OF DIAGNOSIS

Detect the malfunction of drive motor inverter amperage sensor circuit.
Judge as NG when the value of drive motor inverter amperage sensor is out of specification.

2. ENABLE CONDITIONS

Secondary Parameters	Enable Conditions
Ignition state	Run or crank

3. DIAGNOSTIC METHOD

• Abnormality Judgment

If the duration of time while the following conditions are met is longer than the time indicated, judge as NG.

Judgment Value

Malfunction Criteria	Threshold Value
ABS (Iu + Iv + Iw) NOTE: • ABS: Absolute value • Iu: U phase current • Iv: V phase current • Iw: W phase current	> 45 A

Time Needed for Diagnosis: 1 seconds
Malfunction Indicator Light Illumination: Illuminates as soon as a malfunction occurs.

• Normality Judgment

Judge as OK and clear the NG if the continuous time while the following conditions are established is more than the predetermined time.

Judgment Value

Malfunction Criteria	Threshold Value
ABS (Iu + Iv + Iw)	≤ 45 A

Time Needed for Diagnosis: 2 seconds

AW:DTC P0C05 DRIVE MOTOR "A" PHASE U-V-W CIRCUIT/OPEN

1. OUTLINE OF DIAGNOSIS

Detect the malfunction of the current flowing in drive motor.
Judge as NG when the current flowing in drive motor is out of specification.

2. ENABLE CONDITIONS

Secondary Parameters	Enable Conditions
PWM output to the drive motor inverter	ON
a: Ignition state	Run or crank
b: 12 V battery system voltage	> 10 V
Continuous time of a and b	≥ 1 s
c: ABS (Motor speed) NOTE: ABS: Absolute value	≥ 125 rpm and ≤ 1500 rpm
Continuous time of c	≥ 0.12 s
d: ABS (Commanded motor torque)	≥ 7 N·m (0.7 kgf-m, 5.2 ft-lb)
Continuous time of d	≥ 0.13 s

3. DIAGNOSTIC METHOD

• Abnormality Judgment

If the duration of time while the following conditions are met is longer than the time indicated, judge as NG.

Judgment Value

Malfunction Criteria	Threshold Value
Tu1 – Tu2 or Tv1 – Tv2 or Tw1 – Tw2 NOTE: • Tu1: Integrated time that ABS (Iu) is less than or equal to 13.5 A • Tu2: Integrated time that ABS (Iu) is greater than 13.5 A • Tv1, Tw1: Similar to Tu1 • Tv2, Tw2: Similar to Tu2 • Iu: U phase current • Iv: V phase current • Iw: W phase current	≥ 0.3 s

Time Needed for Diagnosis: Immediately
Malfunction Indicator Light Illumination: Illuminates as soon as a malfunction occurs.

• Normality Judgment

Judge as OK and clear the NG if the continuous time while the following conditions are established is more than the predetermined time.

Judgment Value

Malfunction Criteria	Threshold Value
Tu1 – Tu2 and Tv1 – Tv2 and Tw1 – Tw2	< 0.3 s

Time Needed for Diagnosis: 0.6 seconds

AX:DTC P0C0C DRIVE MOTOR "A" INVERTER POWER SUPPLY CIRCUIT LOW

1. OUTLINE OF DIAGNOSIS

Detect the open or short circuit of high voltage battery cooling fan and drive motor inverter power supply relay.
Judge as NG when the drive signal of high voltage battery cooling fan and drive motor inverter power supply relay circuit is abnormal.

2. ENABLE CONDITIONS

Secondary Parameters	Enable Conditions
Diagnosis 1	
a: Ignition state	Run or crank
Continuous time of a	≥ 0.142 s
DMCM commanded inverter power supply relay	Open
b: DMCM measured inverter power supply relay	Closed
Continuous time of b	≥ 0.051 s
Diagnosis 2	
c: 12V battery system voltage	≥ 8 V
Continuous time of c	≥ 1 s
DMCM commanded inverter power supply relay	Closed

3. DIAGNOSTIC METHOD

- **Abnormality Judgment**

If the duration of time while the following conditions are met is longer than the time indicated, judge as NG.

Judgment Value

Malfunction Criteria	Threshold Value
Diagnosis 1	
SCI data from drive motor Inverter	Not received
Diagnosis 2	
DMCM measured inverter power supply relay	Open

Time Needed for Diagnosis:
- **Diagnosis 1:** 0.0104 s
- **Diagnosis 2:** 0.04 s

Malfunction Indicator Light Illumination: Illuminates as soon as a malfunction occurs.

- **Normality Judgment**

Judge as OK and clear the NG if the continuous time while the following conditions are established is more than the predetermined time.

Judgment Value

Malfunction Criteria	Threshold Value
Diagnosis 1	
SCI data from drive motor Inverter	Received
Diagnosis 2	
DMCM measured inverter power supply relay	Closed

Time Needed for Diagnosis:
- **Diagnosis 1:** 0.0104 s
- **Diagnosis 2:** 0.08 s

AY:DTC P0C0D DRIVE MOTOR "A" INVERTER POWER SUPPLY CIRCUIT HIGH

1. OUTLINE OF DIAGNOSIS

Detect the open or short circuit of high voltage battery cooling fan and drive motor inverter power supply relay.
Judge as NG when the drive signal of high voltage battery cooling fan and drive motor inverter power supply relay circuit is abnormal.

2. ENABLE CONDITIONS

Secondary Parameters	Enable Conditions
Diagnosis 1	
a: Ignition state	Run or crank
Continuous time of a	≥ 0.142 s
DMCM commanded inverter power supply relay	Open
b: DMCM measured inverter power supply relay	Open
Continuous time of b	≥ 0.051 s
Diagnosis 2	
a: Ignition state	Run or crank
Continuous time of a	≥ 0.142 s
DMCM commanded inverter power supply relay	Open
b: DMCM measured inverter power supply relay	Closed
Continuous time of b	≥ 0.051 s

3. DIAGNOSTIC METHOD

- **Abnormality Judgment**

If the duration of time while the following conditions are met is longer than the time indicated, judge as NG.

Judgment Value

Malfunction Criteria	Threshold Value
SCI message from the drive motor Inverter	Received

Time Needed for Diagnosis: 0.0104 seconds
Malfunction Indicator Light Illumination: detects when malfunction occurs in 2 continuous driving cycles. (Single engine startup is counted as one drive cycle.)

- **Normality Judgment**

Judge as OK and clear the NG if the continuous time while the following conditions are established is more than the predetermined time.

Judgment Value

Malfunction Criteria	Threshold Value
SCI message from the drive motor Inverter	Not received

Time Needed for Diagnosis: 0.0104 seconds

AZ:DTC P0C52 DRIVE MOTOR "A" POSITION SENSOR CIRCUIT "A" LOW

1. OUTLINE OF DIAGNOSIS

Detect the open or short circuit of drive motor rotation angle sensor.
Judge as NG when the voltage of drive motor rotation angle sensor terminal (S1) is out of specification.

2. ENABLE CONDITIONS

Secondary Parameters	Enable Conditions
Ignition state	Run or crank

3. DIAGNOSTIC METHOD

- **Abnormality Judgment**

If the duration of time while the following conditions are met is longer than the time indicated, judge as NG.

Judgment Value

Malfunction Criteria	Threshold Value
Resolver S13 circuit error	Detected

Time Needed for Diagnosis: 0.01 seconds
Malfunction Indicator Light Illumination: Illuminates as soon as a malfunction occurs.

- **Normality Judgment**

Judge as OK and clear the NG if the continuous time while the following conditions are established is more than the predetermined time.

Judgment Value

Malfunction Criteria	Threshold Value
Resolver S13 circuit error	Not Detected

Time Needed for Diagnosis: 0.01 seconds

BA:DTC P0C5C DRIVE MOTOR "A" POSITION SENSOR CIRCUIT "B" LOW

1. OUTLINE OF DIAGNOSIS

Detect the open or short circuit of drive motor rotation angle sensor.
Judge as NG when the voltage of drive motor rotation angle sensor terminal (S2) is out of specification.

2. ENABLE CONDITIONS

Secondary Parameters	Enable Conditions
Ignition state	Run or crank

3. DIAGNOSTIC METHOD

- **Abnormality Judgment**

If the duration of time while the following conditions are met is longer than the time indicated, judge as NG.

Judgment Value

Malfunction Criteria	Threshold Value
Resolver S24 circuit error	Detected

Time Needed for Diagnosis: 0.01 seconds
Malfunction Indicator Light Illumination: Illuminates as soon as a malfunction occurs.

- **Normality Judgment**

Judge as OK and clear the NG if the continuous time while the following conditions are established is more than the predetermined time.

Judgment Value

Malfunction Criteria	Threshold Value
Resolver S24 circuit error	Not Detected

Time Needed for Diagnosis: 0.01 seconds

BB:DTC P0C79 DRIVE MOTOR "A" INVERTER VOLTAGE TOO HIGH

1. OUTLINE OF DIAGNOSIS

Detect the malfunction of drive motor inverter input voltage.
Judge as NG when the input voltage value of drive motor inverter is out of specification.

2. ENABLE CONDITIONS

Secondary Parameters	Enable Conditions
a: Ignition state	Run or crank
b: 12 V battery system voltage	> 8 V
Continuous time of a and b	≥ 1 s
First SCI data from drive motor inverter	Received

3. DIAGNOSTIC METHOD

- **Abnormality Judgment**

If the duration of time while the following conditions are met is longer than the time indicated, judge as NG.

Judgment Value

Malfunction Criteria	Threshold Value
Inverter voltage	≥ 155 V

Time Needed for Diagnosis: Immediately
Malfunction Indicator Light Illumination: Illuminates as soon as a malfunction occurs.

- **Normality Judgment**

Judge as OK and clear the NG if the continuous time while the following conditions are established is more than the predetermined time.

Judgment Value

Malfunction Criteria	Threshold Value
Inverter voltage	< 155 V

Time Needed for Diagnosis: 0.02 seconds

BC:DTC P0CDC DRIVE MOTOR "A" POSITION SENSOR CIRCUIT "C" LOW

1. OUTLINE OF DIAGNOSIS

Detect the open or short circuit of drive motor rotation angle sensor.
Judge as NG when the voltage of drive motor rotation angle sensor terminal (R1, R2) is out of specification.

2. ENABLE CONDITIONS

Secondary Parameters	Enable Conditions
Ignition state	Run or crank

3. DIAGNOSTIC METHOD

- **Abnormality Judgment**

If the duration of time while the following conditions are met is longer than the time indicated, judge as NG.

Judgment Value

Malfunction Criteria	Threshold Value
Resolver R12 circuit error	Detected

Time Needed for Diagnosis: 0.01 seconds
Malfunction Indicator Light Illumination: Illuminates as soon as a malfunction occurs.

- **Normality Judgment**

Judge as OK and clear the NG if the continuous time while the following conditions are established is more than the predetermined time.

Judgment Value

Malfunction Criteria	Threshold Value
Resolver R12 circuit error	Not Detected

Time Needed for Diagnosis: 0.01 seconds

BD:DTC P0CDD DRIVE MOTOR "A" POSITION SENSOR CIRCUIT "C" HIGH

1. OUTLINE OF DIAGNOSIS

Detect the open or short circuit of drive motor rotation angle sensor.
Judge as NG when the voltage of drive motor rotation angle sensor terminal (R1, R2) is out of specification.

2. ENABLE CONDITIONS

Secondary Parameters	Enable Conditions
Ignition state	Run or crank

3. DIAGNOSTIC METHOD

- **Abnormality Judgment**

If the duration of time while the following conditions are met is longer than the time indicated, judge as NG.

Judgment Value

Malfunction Criteria	Threshold Value
Resolver R12 circuit error	Detected

Time Needed for Diagnosis: 0.01 seconds
Malfunction Indicator Light Illumination: Illuminates as soon as a malfunction occurs.

- **Normality Judgment**

Judge as OK and clear the NG if the continuous time while the following conditions are established is more than the predetermined time.

Judgment Value

Malfunction Criteria	Threshold Value
Resolver R12 circuit error	Not Detected

Time Needed for Diagnosis: 0.01 seconds

BE:DTC P0DA8 HYBRID/EV BATTERY VOLTAGE/DRIVE MOTOR "A" INVERTER VOLTAGE CORRELATION

1. OUTLINE OF DIAGNOSIS

Detect the malfunction of drive motor inverter input voltage.
Judge as NG when the difference between the input voltage value of drive motor inverter and the total voltage of high voltage battery is out of specification.

2. ENABLE CONDITIONS

Secondary Parameters	Enable Conditions
a: Ignition state	Run or crank
b: 12 V battery system voltage	> 10 V
Continuous time of a and b	≥ 1 s
HPCM contactor request	Closed
BECM pre-charge contactor command	Open
BECM positive contactor command	Closed
BECM negative contactor command	Closed
First SCI data from drive motor inverter	Received

3. DIAGNOSTIC METHOD

- **Abnormality Judgment**

If the duration of time while the following conditions are met is longer than the time indicated, judge as NG.

Judgment Value

Malfunction Criteria	Threshold Value
ABS (Inverter voltage – Battery pack voltage) NOTE: ABS: Absolute value	> 20 V

Time Needed for Diagnosis: 2 seconds
Malfunction Indicator Light Illumination: Illuminates as soon as a malfunction occurs.

- **Normality Judgment**

Judge as OK and clear the NG if the continuous time while the following conditions are established is more than the predetermined time.

Judgment Value

Malfunction Criteria	Threshold Value
ABS (Inverter voltage – Battery pack voltage)	≤ 20 V

Time Needed for Diagnosis: 4 seconds

BF:DTC P1C20 MANUFACTURER CONTROLLED DTC

1. OUTLINE OF DIAGNOSIS

Detect the malfunction of drive motor inverter input voltage.
Judge as NG when the input voltage value of drive motor inverter is out of specification.

2. ENABLE CONDITIONS

Secondary Parameters	Enable Conditions
a: Ignition state	Run or crank
b: 12 V battery system voltage	> 8 V
Continuous time of a and b	≥ 1 s
First SCI data from drive motor inverter	Received
HPCM contactor request	Closed
BECM pre-charge contactor command	Open
BECM positive contactor command	Closed
BECM negative contactor command	Closed

3. DIAGNOSTIC METHOD

- **Abnormality Judgment**

If the duration of time while the following conditions are met is longer than the time indicated, judge as NG.

Judgment Value

Malfunction Criteria	Threshold Value
Inverter voltage	≤ 70 V

Time Needed for Diagnosis: Immediately
Malfunction Indicator Light Illumination: Illuminates as soon as a malfunction occurs.

- **Normality Judgment**

Judge as OK and clear the NG if the continuous time while the following conditions are established is more than the predetermined time.

Judgment Value

Malfunction Criteria	Threshold Value
Inverter voltage	> 70 V

Time Needed for Diagnosis: 0.02 seconds

BG:DTC P1C24 MANUFACTURER CONTROLLED DTC

1. OUTLINE OF DIAGNOSIS

Detect the open or short circuit of drive motor temperature sensor.
Judge as NG when the value of drive motor temperature sensor is out of specification.

2. ENABLE CONDITIONS

Secondary Parameters	Enable Conditions
PWM output to the drive motor inverter	ON
a: Ignition state	Run or crank
b: 12 V battery system voltage	> 10 V
Continuous time of a and b	≥ 15 s
Generated energy of drive motor	> Map1
Assist energy of drive motor	> Map2
First SCI data from drive motor inverter	Received

Map 1

Hybrid battery temperature and Drive motor inverter temperature either lower temperature (°C (°F))	–30 (–22)	–10 (14)	0 (32)	10 (50)	30 (86)	40 (104)
Generated energy of drive motor (Wh)	630	320	200	130	0	0

Map 2

Hybrid battery temperature and Drive motor inverter temperature either lower temperature (°C (°F))	–30 (–22)	–10 (14)	0 (32)	10 (50)	30 (86)	40 (104)
Assist energy of drive motor (Wh)	270	130	75	50	0	0

3. DIAGNOSTIC METHOD

- **Abnormality Judgment**

If the duration of time while the following conditions are met is longer than the time indicated, judge as NG.

Judgment Value

Malfunction Criteria	Threshold Value
Output voltage	> 4.5 V
(Temperature equivalent)	< –3.4°C (25.9°F)

Time Needed for Diagnosis: 2 seconds
Malfunction Indicator Light Illumination: Illuminates as soon as a malfunction occurs.

- **Normality Judgment**

Judge as OK and clear the NG if the continuous time while the following conditions are established is more than the predetermined time.

Judgment Value

Malfunction Criteria	Threshold Value
Output voltage	≤ 4.5 V
(Temperature equivalent)	≥ –3.4°C (25.9°F)

Time Needed for Diagnosis: 4 seconds

BH:DTC P1C25 MANUFACTURER CONTROLLED DTC

1. OUTLINE OF DIAGNOSIS

Detect the open or short circuit of drive motor temperature sensor.
Judge as NG when the value of drive motor temperature sensor is out of specification.

2. ENABLE CONDITIONS

Secondary Parameters	Enable Conditions
Ignition state	Run or crank

3. DIAGNOSTIC METHOD

- **Abnormality Judgment**

If the duration of time while the following conditions are met is longer than the time indicated, judge as NG.

Judgment Value

Malfunction Criteria	Threshold Value
Output voltage	< 0.23 V
(Temperature equivalent)	> 234°C (453.2°F)

Time Needed for Diagnosis: 1 seconds
Malfunction Indicator Light Illumination: Illuminates as soon as a malfunction occurs.

- **Normality Judgment**

Judge as OK and clear the NG if the continuous time while the following conditions are established is more than the predetermined time.

Judgment Value

Malfunction Criteria	Threshold Value
Output voltage	≥ 0.23 V
(Temperature equivalent)	≤ 234°C (453.2°F)

Time Needed for Diagnosis: 2 seconds

BI: DTC P1C26 MANUFACTURER CONTROLLED DTC

1. OUTLINE OF DIAGNOSIS

Detect the open or short circuit of drive motor temperature sensor.
Judge as NG when the value of drive motor temperature sensor is out of specification.

2. ENABLE CONDITIONS

Secondary Parameters	Enable Conditions
Ignition state	Run or crank

3. DIAGNOSTIC METHOD

- **Abnormality Judgment**

If the duration of time while the following conditions are met is longer than the time indicated, judge as NG.

Judgment Value

Malfunction Criteria	Threshold Value
Output voltage (Temperature equivalent)	> 4.6 V < –55°C (–67°F)

Time Needed for Diagnosis: 1 seconds
Malfunction Indicator Light Illumination: Illuminates as soon as a malfunction occurs.

- **Normality Judgment**

Judge as OK and clear the NG if the continuous time while the following conditions are established is more than the predetermined time.

Judgment Value

Malfunction Criteria	Threshold Value
Output voltage (Temperature equivalent)	≤ 4.6 V ≥ –55°C (–67°F)

Time Needed for Diagnosis: 2 seconds

BJ:DTC P1C27 MANUFACTURER CONTROLLED DTC

1. OUTLINE OF DIAGNOSIS

Detect the malfunction of drive motor temperature sensor.
Judge as NG when the characteristic of drive motor temperature sensor is out of specification.

2. ENABLE CONDITIONS

Secondary Parameters	Enable Conditions
Diagnosis 1	
a: Ignition state	Run or crank
b: 12 V battery system voltage	> 10 V
Continuous time of a and b	≥ 240 s
c: ABS (Drive motor speed)	> 125 rpm
NOTE: ABS: Absolute value	
or	
d: ABS (Commanded motor torque)	< 15 N·m (1.5 kgf-m, 11.1 ft-lb)
Continuous time of c or d	≥ 240 s
Drive motor temperature A	> 30°C (86°F) and < 140°C (284°F)
or	
Drive motor temperature B	> 30°C (86°F) and < 140°C (284°F)
Diagnosis 2	
a: Ignition state	Run or crank
b: 12 V battery system voltage	> 10 V
Continuous time of a and b	≥ 240 s
c: ABS (Drive motor speed)	> 125 rpm
NOTE: ABS: Absolute value	
or	
d: ABS (Commanded motor torque)	< 15 N·m (1.5 kgf-m, 11.1 ft-lb)
Continuous time of c or d	≥ 240 s
Drive motor temperature A	> 30°C (86°F) and < 140°C (284°F)
or	
Drive motor temperature B	> 30°C (86°F) and < 140°C (284°F)
Variation of motor temperature A or Variation of motor temperature B	> 25°C (77°F)

3. DIAGNOSTIC METHOD

• Abnormality Judgment

If the duration of time while the following conditions are met is longer than the time indicated, judge as NG.

Judgment Value

Malfunction Criteria	Threshold Value
Diagnosis 1 ABS (Motor temperature A – Motor temperature B) NOTE: ABS: Absolute value	> 20°C (36°F)
Diagnosis 2 ABS (Variation of motor temperature A – Variation of motor temperature B) NOTE: • Variation of motor temperature A = Max (Motor temperature A) – Min (Motor temperature A) • Variation of motor temperature B = Max (Motor temperature B) – Min (Motor temperature B) • Max: The maximum value of the experience in the current driving cycle • Min: The minimum value of the experience in the current driving cycle	> 20°C (36°F)

Time Needed for Diagnosis: 10 seconds
Malfunction Indicator Light Illumination: detects when malfunction occurs in 2 continuous driving cycles. (Single engine startup is counted as one drive cycle.)

• Normality Judgment

Judge as OK and clear the NG if the continuous time while the following conditions are established is more than the predetermined time.

Judgment Value

Malfunction Criteria	Threshold Value
Diagnosis 1 ABS (Motor temperature A – Motor temperature B)	≤ 20°C (36°F)
Diagnosis 2 ABS (Variation of motor temperature A – Variation of motor temperature B)	≤ 20°C (36°F)

Time Needed for Diagnosis: 20 seconds

BK:DTC P1C30 MANUFACTURER CONTROLLED DTC

1. OUTLINE OF DIAGNOSIS

Detect the malfunction of serial communication with drive motor inverter.
Judge as NG when the serial data from drive motor inverter is not received.

2. ENABLE CONDITIONS

Secondary Parameters	Enable Conditions
a: Ignition state	Run or crank
b: 12 V battery system voltage	> 8 V
Continuous time of a and b	≥ 1 s
Inverter power supply relay control signal	ON

3. DIAGNOSTIC METHOD

- **Abnormality Judgment**

If the duration of time while the following conditions are met is longer than the time indicated, judge as NG.

Judgment Value

Malfunction Criteria	Threshold Value
SCI data from drive motor inverter	Lost

Time Needed for Diagnosis: 0.5 seconds
Malfunction Indicator Light Illumination: Illuminates as soon as a malfunction occurs.

- **Normality Judgment**

Judge as OK and clear the NG if the continuous time while the following conditions are established is more than the predetermined time.

Judgment Value

Malfunction Criteria	Threshold Value
SCI data from drive motor inverter	Received

Time Needed for Diagnosis: 1 seconds

BL:DTC P1C31 MANUFACTURER CONTROLLED DTC

1. OUTLINE OF DIAGNOSIS

Detect the malfunction of serial communication with drive motor inverter.
Judged as NG when incorrect serial data is received from drive motor inverter.

2. ENABLE CONDITIONS

Secondary Parameters	Enable Conditions
Diagnosis 1 and 2	
a: Ignition state	Run or crank
b: 12 V battery system voltage	> 8 V
Continuous time of a and b	≥ 1 s
SCI data from drive motor inverter	Received
Diagnosis 3	
a: Ignition state	Run or crank
b: 12 V battery system voltage	> 8 V
Continuous time of a and b	≥ 1 s
SCI data from drive motor inverter	Received
SCI data from drive motor inverter	≠ Parity error
SCI data from drive motor inverter	≠ Framing error

3. DIAGNOSTIC METHOD

- **Abnormality Judgment**

If the duration of time while the following conditions are met is longer than the time indicated, judge as NG.

Judgment Value

Malfunction Criteria	Threshold Value
Diagnosis 1	
SCI data from drive motor inverter	Parity error
Diagnosis 2	
SCI data from drive motor inverter	Framing error
Diagnosis 3	
SCI data from drive motor inverter	Checksum error

Time Needed for Diagnosis: 0.015 seconds
Malfunction Indicator Light Illumination: Illuminates as soon as a malfunction occurs.

- **Normality Judgment**

Judge as OK and clear the NG if the continuous time while the following conditions are established is more than the predetermined time.

Judgment Value

Malfunction Criteria	Threshold Value
Diagnosis 1	
SCI data from drive motor inverter	≠ Parity error
Diagnosis 2	
SCI data from drive motor inverter	≠ Framing error
Diagnosis 3	
SCI data from drive motor inverter	≠ Checksum error

Time Needed for Diagnosis: 0.03 seconds

BM:DTC P0A1B DRIVE MOTOR "A" CONTROL MODULE

1. OUTLINE OF DIAGNOSIS

Detect the malfunction of drive motor control module.
Judge as NG when the malfunction is detected at the peripheral function of drive motor control module microcomputer.

2. ENABLE CONDITIONS

Secondary Parameters	Enable Conditions
Ignition state	Run or crank

3. DIAGNOSTIC METHOD

• Abnormality Judgment

If the duration of time while the following conditions are met is longer than the time indicated, judge as NG.

Judgment Value

Malfunction Criteria	Threshold Value
Diagnosis 1 Internal Hardware module error	Detected
Diagnosis 2 Exception interrupt by the DMCM CPU	Detected

Time Needed for Diagnosis: Immediately
Malfunction Indicator Light Illumination: Illuminates as soon as a malfunction occurs.

• Normality Judgment

Judge as OK and clear the NG if the continuous time while the following conditions are established is more than the predetermined time.

Judgment Value

Malfunction Criteria	Threshold Value
Diagnosis 1 Internal Hardware module error	Not detected
Diagnosis 2 Exception interrupt by the DMCM CPU	Not detected

Time Needed for Diagnosis: Immediately

BN:DTC P06B1 SENSOR POWER SUPPLY "A" CIRCUIT LOW

1. OUTLINE OF DIAGNOSIS

Detect the malfunction of drive motor inverter amperage sensor power supply circuit.
Judge as NG when the power supply voltage of drive motor inverter amperage sensor is out of specification.

2. ENABLE CONDITIONS

Secondary Parameters	Enable Conditions
Ignition state	Run or crank

3. DIAGNOSTIC METHOD

- **Abnormality Judgment**

If the duration of time while the following conditions are met is longer than the time indicated, judge as NG.

Judgment Value

Malfunction Criteria	Threshold Value
Measured sensor power supply output voltage at DMCM	≤ 4.536 V

Time Needed for Diagnosis: 1 seconds
Malfunction Indicator Light Illumination: Illuminates as soon as a malfunction occurs.

- **Normality Judgment**

Judge as OK and clear the NG if the continuous time while the following conditions are established is more than the predetermined time.

Judgment Value

Malfunction Criteria	Threshold Value
Measured sensor power supply output voltage at DMCM	> 4.536 V

Time Needed for Diagnosis: 2 seconds

BO:DTC P06B2 SENSOR POWER SUPPLY "A" CIRCUIT HIGH

1. OUTLINE OF DIAGNOSIS

Detect the malfunction of drive motor inverter amperage sensor power supply circuit.
Judge as NG when the power supply voltage of drive motor inverter amperage sensor is out of specification.

2. ENABLE CONDITIONS

Secondary Parameters	Enable Conditions
Ignition state	Run or crank

3. DIAGNOSTIC METHOD

- **Abnormality Judgment**

If the duration of time while the following conditions are met is longer than the time indicated, judge as NG.

Judgment Value

Malfunction Criteria	Threshold Value
Measured sensor power supply output voltage at DMCM	> 5.418 V

Time Needed for Diagnosis: 1 seconds
Malfunction Indicator Light Illumination: Illuminates as soon as a malfunction occurs.

- **Normality Judgment**

Judge as OK and clear the NG if the continuous time while the following conditions are established is more than the predetermined time.

Judgment Value

Malfunction Criteria	Threshold Value
Measured sensor power supply output voltage at DMCM	≤ 5.418 V

Time Needed for Diagnosis: 2 seconds

BP:DTC P062F INTERNAL CONTROL MODULE EEPROM ERROR

1. OUTLINE OF DIAGNOSIS

Detect the malfunction of microcomputer DataFlashROM.

2. ENABLE CONDITIONS

Secondary Parameters	Enable Conditions
Ignition state	Run or crank
12V battery system voltage	≥ 6.5 V and ≤ 17 V
BECM precharge contactor command	Open
BECM positive contactor command	Open
BECM negative contactor command	Open

3. DIAGNOSTIC METHOD

- **Abnormality Judgment**

If the duration of time while the following conditions are met is longer than the time indicated, judge as NG.

Judgment Value

Malfunction Criteria	Threshold Value
Checksum error of Flash EEPROM within the BECM Main CPU (Data area)	Detected

Time Needed for Diagnosis: Immediately
Malfunction Indicator Light Illumination: Illuminates as soon as a malfunction occurs.

- **Normality Judgment**

Judge as OK and clear the NG if the continuous time while the following conditions are established is more than the predetermined time.

Judgment Value

Malfunction Criteria	Threshold Value
Checksum error of Flash EEPROM within the BECM Main CPU (Data area)	Not Detected

Time Needed for Diagnosis: Less than 0.01 second

BQ:DTC P0A1F BATTERY ENERGY CONTROL MODULE

1. OUTLINE OF DIAGNOSIS

Detect the malfunction of microcomputer AD converter.

2. ENABLE CONDITIONS

Secondary Parameters	Enable Conditions
Diagnosis 1	
Ignition state	Run or crank
12V battery system voltage	≥ 6.5 V and ≤ 17 V
Diagnosis 2 and 3	
Ignition state	OFF to ON (Run or crank)
12V battery system voltage	≥ 6.5 V and ≤ 17 V
BECM precharge contactor command	Open
BECM positive contactor command	Open
BECM negative contactor command	Open

3. DIAGNOSTIC METHOD

• Abnormality Judgment

If the duration of time while the following conditions are met is longer than the time indicated, judge as NG.

Judgment Value

Malfunction Criteria	Threshold Value
Diagnosis 1	
Power sustain circuit monitor signal	High (Power ON)
Diagnosis 2	
Power sustain circuit monitor signal	Low (Power OFF)
Diagnosis 3	
Elapsed time of A / D conversion	≤ 0.0002 s

Time Needed for Diagnosis: Less than 0.05 second
Malfunction Indicator Light Illumination: Illuminates as soon as a malfunction occurs.

• Normality Judgment

Judge as OK and clear the NG if the continuous time while the following conditions are established is more than the predetermined time.

Judgment Value

Malfunction Criteria	Threshold Value
Diagnosis 1	
Power sustain circuit monitor signal	≠ High (Power ON)
Diagnosis 2	
Power sustain circuit monitor signal	≠ Low (Power OFF)
Diagnosis 3	
Elapsed time of A / D conversion	> 0.0002 s

Time Needed for Diagnosis: Less than 0.05 second

BR:DTC P0A7D HYBRID BATTERY PACK STATE OF CHARGE LOW

1. OUTLINE OF DIAGNOSIS

Detect high voltage battery SOC low.
Judge as NG when the high voltage battery SOC is at the specified value or less.

2. ENABLE CONDITIONS

Secondary Parameters	Enable Conditions
Ignition state	Run or crank
12V battery system voltage	≥ 6.5 V and ≤ 17 V

3. DIAGNOSTIC METHOD

- **Abnormality Judgment**

If the duration of time while the following conditions are met is longer than the time indicated, judge as NG.

Judgment Value

Malfunction Criteria	Threshold Value
SOC NOTE: SOC: State Of Charge	≤ 5%

Time Needed for Diagnosis: 10 seconds
Malfunction Indicator Light Illumination: Illuminates as soon as a malfunction occurs.

- **Normality Judgment**

Judge as OK and clear the NG if the continuous time while the following conditions are established is more than the predetermined time.

Judgment Value

Malfunction Criteria	Threshold Value
SOC	> 5%

Time Needed for Diagnosis: 10 seconds

BS:DTC P0A7E HYBRID BATTERY PACK OVER TEMPERATURE

1. OUTLINE OF DIAGNOSIS

Detect high temperature abnormality of high voltage battery.
Judge as NG when the high voltage battery temperature is above the specified value.

2. ENABLE CONDITIONS

Secondary Parameters	Enable Conditions
Ignition state	Run or crank
12V battery system voltage	≥ 6.5 V and ≤ 17 V

3. DIAGNOSTIC METHOD

- **Abnormality Judgment**

If the duration of time while the following conditions are met is longer than the time indicated, judge as NG.

Judgment Value

Malfunction Criteria	Threshold Value
Maximum temperature of hybrid battery	> 63°C (145.4°F)

Time Needed for Diagnosis: 1 seconds
Malfunction Indicator Light Illumination: Illuminates as soon as a malfunction occurs.

- **Normality Judgment**

Judge as OK and clear the NG if the continuous time while the following conditions are established is more than the predetermined time.

Judgment Value

Malfunction Criteria	Threshold Value
Maximum temperature of hybrid battery	≤ 63°C (145.4°F)

Time Needed for Diagnosis: 1 seconds

BT:DTC P0A7F HYBRID BATTERY PACK DETERIORATION

1. OUTLINE OF DIAGNOSIS

Detect the low output (longevity) of high voltage battery.
Judge as NG when the internal resistance value of high voltage battery is at the specified value or more.

2. ENABLE CONDITIONS

Secondary Parameters	Enable Conditions
Condition #1	
Ignition state	Run or crank
12V battery system voltage	≥ 6.5 V and ≤ 17 V
| Hybrid battery current x Hybrid battery voltage | NOTE: Hybrid battery current < 0: Discharge	≥ Map1 ×0.1 kw < Map1 kw
or	
| Hybrid battery current x Hybrid battery voltage | NOTE: Hybrid battery current ≥ 0: Discharge	≥ Map2 ×0.1 kw < Map2 kw
HPCM contactor request	Closed
Condition #2	
NOTE: During a 60 second block the following conditions must be satisfied:	
Number of the Hybrid battery current and the Hybrid battery voltage data that satisfies Condition #1	≥ 50 counts
Number of the Hybrid battery current and Hybrid battery voltage data that satisfies the following:	≥ 1 count
| Hybrid battery current x Hybrid battery voltage |	≥ Map1 ×0.5 kw
Number of the Hybrid battery current and Hybrid battery voltage data that satisfies the following:	≥ 1 count
| Hybrid battery current x Hybrid battery voltage |	≥ Map2 ×0.5 kw
The highest value among the Hybrid battery temperature A, B and C	≥ – 5.0°C (23°F)) and ≤ 45°C (113°F)
|Change of the highest value among the Hybrid battery temperature A, B and C|	≤ 2.0°C (35.6°F)/60 s

Map 1

Maximum discharge Power (kW)		SOH (%)		
		100	62.5	25
Battery Temperature (°C (°F))	–10 (14)	4.7	3.3	1.9
	0 (32)	7.0	4.7	2.7
	10 (50)	10.4	6.3	3.6
	15 (59)	12.1	7.2	4.1
	25 (77)	14.0	9.9	5.5
	45 (113)	14.0	9.9	5.5

Map 2

Maximum charge power (kW)		SOH (%)		
		100	62.5	25
Battery Temperature (°C (°F))	–10 (14)	4.2	3.5	2.2
	0 (32)	6.7	5.0	3.0
	10 (50)	10.1	6.7	4.0
	15 (59)	11.6	7.5	4.4
	25 (77)	13.4	10.5	6.0
	45 (113)	13.4	10.5	6.0

3. DIAGNOSTIC METHOD

- **Abnormality Judgment**

If the duration of time while the following conditions are met is longer than the time indicated, judge as NG.

Judgment Value

Malfunction Criteria	Threshold Value
Diagnostic Value (DV) (Hybrid battery internal resistance)	> Map 3 Ω

Map 3

Minimum hybrid battery temperature (°C (°F))	–5 (23)	0 (32)	5 (41)	20 (68)	40 (104)
Hybrid battery internal resistance (mΩ)	998	809	662	420	287

Time Needed for Diagnosis: 60 s x 10 times

NOTE:
Failure count can increment over multiple driving cycles until cleared by passing result
Malfunction Indicator Light Illumination: Illuminates as soon as a malfunction occurs.

- **Normality Judgment**

Judge as OK and clear the NG if the continuous time while the following conditions are established is more than the predetermined time.

Judgment Value

Malfunction Criteria	Threshold Value
Diagnostic Value (DV) (Hybrid battery internal resistance)	≤ Map 3 Ω

Time Needed for Diagnosis: depends on driving (charge/discharge amount)

BU:DTC P0A95 HIGH VOLTAGE FUSE

1. OUTLINE OF DIAGNOSIS

Detect the malfunction of the fuse.
Judge as NG when the fuse is open.

2. ENABLE CONDITIONS

Secondary Parameters	Enable Conditions
Ignition state	Run or crank

3. DIAGNOSTIC METHOD

• Abnormality Judgment

If the duration of time while the following conditions are met is longer than the time indicated, judge as NG.

Judgment Value

Malfunction Criteria	Threshold Value
Any two of following conditions are satisfied	
Hybrid battery voltage “C”	< –25 mV
Hybrid battery voltage “D”	< –25 mV

Time Needed for Diagnosis: 0.1 seconds
Malfunction Indicator Light Illumination: Illuminates as soon as a malfunction occurs.

• Normality Judgment

Judge as OK and clear the NG if the continuous time while the following conditions are established is more than the predetermined time.

Judgment Value

Malfunction Criteria	Threshold Value
Any two of following conditions are satisfied	
Hybrid battery voltage “C”	≥ –25 mV
Hybrid battery voltage “D”	≥ –25 mV

Time Needed for Diagnosis: 0.1 seconds

BV:DTC P0A9C HYBRID BATTERY TEMPERATURE SENSOR "A" CIRCUIT RANGE/PERFORMANCE

1. OUTLINE OF DIAGNOSIS

Detect the abnormality of high voltage battery temperature 1.
Judge as NG when the deviation of high voltage battery temperature is large.

2. ENABLE CONDITIONS

Secondary Parameters	Enable Conditions
Ignition state	Run or crank
12V battery system voltage	≥ 6.5 V and ≤ 17 V

3. DIAGNOSTIC METHOD

- **Abnormality Judgment**

If the duration of time while the following conditions are met is longer than the time indicated, judge as NG.

Judgment Value

Malfunction Criteria	Threshold Value
Diagnosis 1	
Hybrid battery temperature A – Hybrid battery temperature B	> 20°C (68°F)
Hybrid battery temperature A – Hybrid battery temperature C	> 20°C (68°F)
Diagnosis 2	
Hybrid battery temperature B – Hybrid battery temperature A	> 20°C (68°F)
Hybrid battery temperature C – Hybrid battery temperature A	> 20°C (68°F)

Time Needed for Diagnosis: 10 seconds
Malfunction Indicator Light Illumination: Illuminates as soon as a malfunction occurs.

- **Normality Judgment**

Judge as OK and clear the NG if the continuous time while the following conditions are established is more than the predetermined time.

Judgment Value

Malfunction Criteria	Threshold Value
Diagnosis 1	
Hybrid battery temperature A – Hybrid battery temperature B	≤ 20°C (68°F)
Hybrid battery temperature A – Hybrid battery temperature C	≤ 20°C (68°F)
Diagnosis 2	
Hybrid battery temperature B – Hybrid battery temperature A	≤ 20°C (68°F)
Hybrid battery temperature C – Hybrid battery temperature A	≤ 20°C (68°F)

Time Needed for Diagnosis: 10 seconds

BW:DTC P0A9D HYBRID BATTERY TEMPERATURE SENSOR "A" CIRCUIT LOW

1. OUTLINE OF DIAGNOSIS

Detect the abnormality of high voltage battery temperature 1.
Judge as NG when the high voltage battery temperature 1 is below the specified value.

2. ENABLE CONDITIONS

Secondary Parameters	Enable Conditions
Ignition state	Run or crank
12V battery system voltage	≥ 6.5 V and ≤ 17 V

3. DIAGNOSTIC METHOD

- **Abnormality Judgment**

If the duration of time while the following conditions are met is longer than the time indicated, judge as NG.

Judgment Value

Malfunction Criteria	Threshold Value
Hybrid battery temperature A sensor output voltage (temperature equivalent)	< 0.49 V (> 95°C (203°F))

Time Needed for Diagnosis: 8 seconds
Malfunction Indicator Light Illumination: Illuminates as soon as a malfunction occurs.

- **Normality Judgment**

Judge as OK and clear the NG if the continuous time while the following conditions are established is more than the predetermined time.

Judgment Value

Malfunction Criteria	Threshold Value
Hybrid battery temperature A sensor output voltage (temperature equivalent)	≥ 0.49 V (≤ 95°C (203°F)

Time Needed for Diagnosis: 8 seconds

BX:DTC P0A9E HYBRID BATTERY TEMPERATURE SENSOR "A" CIRCUIT HIGH

1. OUTLINE OF DIAGNOSIS

Detect the abnormality of high voltage battery temperature 1.
Judge as NG when the high voltage battery temperature 1 is above the specified value.

2. ENABLE CONDITIONS

Secondary Parameters	Enable Conditions
Ignition state	Run or crank
12V battery system voltage	≥ 6.5 V and ≤ 17 V

3. DIAGNOSTIC METHOD

- **Abnormality Judgment**

If the duration of time while the following conditions are met is longer than the time indicated, judge as NG.

Judgment Value

Malfunction Criteria	Threshold Value
Hybrid battery temperature A sensor output voltage (temperature equivalent)	> 4.82 V (< –45°C (–49°F))

Time Needed for Diagnosis: 8 seconds
Malfunction Indicator Light Illumination: Illuminates as soon as a malfunction occurs.

- **Normality Judgment**

Judge as OK and clear the NG if the continuous time while the following conditions are established is more than the predetermined time.

Judgment Value

Malfunction Criteria	Threshold Value
Hybrid battery temperature A sensor output voltage (temperature equivalent)	≤ 4.82 V (≥ –45°C (–49°F))

Time Needed for Diagnosis: 8 seconds

BY:DTC P0AA4 HYBRID BATTERY NEGATIVE CONTACTOR CIRCUIT STUCK CLOSED

1. OUTLINE OF DIAGNOSIS

Detect the adhesion of –side contactor and precharge contactor.
Judge as NG when the difference between the total voltage value of high voltage battery when contactor is open and the inverter voltage is at the specified value or more.

2. ENABLE CONDITIONS

Secondary Parameters	Enable Conditions
Contactors request from HPCM	Closed
Pre-charge contactor command	Closed
Positive contactor command	Open
Negative contactor command	Open
SubCPU in BECM: P1C44	No failure
High voltage fuse: P0A95	No failure
Hybrid battery voltage sense circuit “Z”: P0BB8	No failure
Hybrid Battery Positive or Precharge Contactor Circuit:	No failure

3. DIAGNOSTIC METHOD

- **Abnormality Judgment**

If the duration of time while the following conditions are met is longer than the time indicated, judge as NG.

Judgment Value

Malfunction Criteria	Threshold Value
Inverter voltage / Hybrid battery pack voltage	≥ 0.8

Time Needed for Diagnosis: 0.1 seconds
Malfunction Indicator Light Illumination: Illuminates as soon as a malfunction occurs.

- **Normality Judgment**

Judge as OK and clear the NG if the continuous time while the following conditions are established is more than the predetermined time.

Judgment Value

Malfunction Criteria	Threshold Value
Inverter voltage / Hybrid battery pack voltage	< 0.8

Time Needed for Diagnosis: Less than 0.1 second

BZ:DTC P0AAD HYBRID BATTERY PACK AIR TEMPERATURE SENSOR "A" CIRCUIT RANGE/PERFORMANCE

1. OUTLINE OF DIAGNOSIS

Detect the malfunction of the intake air temperature sensor.
Judge as NG when the deviation of high voltage battery temperature is large.

2. ENABLE CONDITIONS

Secondary Parameters	Enable Conditions
Ignition state	Run or crank
12V battery system voltage	≥ 6.5 V and ≤ 17 V
Soak time from ECM	≥ 6.0 h

3. DIAGNOSTIC METHOD

• Abnormality Judgment

If the duration of time while the following conditions are met is longer than the time indicated, judge as NG.

Judgment Value

Malfunction Criteria	Threshold Value
Diagnostic Value (DV) NOTE: The smallest value among follows |Hybrid Battery Pack Air Temperature – Hybrid battery temperature A| |Hybrid Battery Pack Air Temperature – Hybrid battery temperature B| |Hybrid Battery Pack Air Temperature – Hybrid battery temperature C|	> 16°C (60.8°F)

Time Needed for Diagnosis: 15 seconds
Malfunction Indicator Light Illumination: detects when malfunction occurs in 2 continuous driving cycles. (Single engine startup is counted as one drive cycle.)

• Normality Judgment

Judge as OK and clear the NG if the continuous time while the following conditions are established is more than the predetermined time.

Judgment Value

Malfunction Criteria	Threshold Value
Diagnostic Value (DV) NOTE: The smallest value among follows |Hybrid Battery Pack Air Temperature – Hybrid battery temperature A| |Hybrid Battery Pack Air Temperature – Hybrid battery temperature B| |Hybrid Battery Pack Air Temperature – Hybrid battery temperature C|	≤ 16°C (60.8°F)

Time Needed for Diagnosis: 15 seconds

CA:DTC P0AAE HYBRID BATTERY PACK AIR TEMPERATURE SENSOR "A" CIRCUIT LOW

1. OUTLINE OF DIAGNOSIS

Detect the malfunction of the intake air temperature sensor.
Judge as NG when the intake air temperature is out of specification.

2. ENABLE CONDITIONS

Secondary Parameters	Enable Conditions
Ignition state	Run or crank
12V battery system voltage	≥ 6.5 V and ≤ 17 V

3. DIAGNOSTIC METHOD

- **Abnormality Judgment**

If the duration of time while the following conditions are met is longer than the time indicated, judge as NG.

Judgment Value

Malfunction Criteria	Threshold Value
Hybrid battery pack air temperature sensor output voltage (temperature equivalent)	< 0.49 V (> 95°C (203°F))

Time Needed for Diagnosis: 10 seconds
Malfunction Indicator Light Illumination: Illuminates as soon as a malfunction occurs.

- **Normality Judgment**

Judge as OK and clear the NG if the continuous time while the following conditions are established is more than the predetermined time.

Judgment Value

Malfunction Criteria	Threshold Value
Hybrid battery pack air temperature sensor output voltage (temperature equivalent)	≥ 0.49 V (≤ 95°C (203°F)

Time Needed for Diagnosis: 10 seconds

CB:DTC P0AAF HYBRID BATTERY PACK AIR TEMPERATURE SENSOR "A" CIRCUIT HIGH

1. OUTLINE OF DIAGNOSIS

Detect the malfunction of the intake air temperature sensor.
Judge as NG when the intake air temperature is out of specification.

2. ENABLE CONDITIONS

Secondary Parameters	Enable Conditions
Ignition state	Run or crank
12V battery system voltage	≥ 6.5 V and ≤ 17 V

3. DIAGNOSTIC METHOD

- **Abnormality Judgment**

If the duration of time while the following conditions are met is longer than the time indicated, judge as NG.

Judgment Value

Malfunction Criteria	Threshold Value
Hybrid battery pack air temperature sensor output voltage (temperature equivalent)	> 4.82 V (< –45°C (–49°F))

Time Needed for Diagnosis: 10 seconds
Malfunction Indicator Light Illumination: Illuminates as soon as a malfunction occurs.

- **Normality Judgment**

Judge as OK and clear the NG if the continuous time while the following conditions are established is more than the predetermined time.

Judgment Value

Malfunction Criteria	Threshold Value
Hybrid battery pack air temperature sensor output voltage (temperature equivalent)	≤ 4.82 V (≥ –45°C (–49°F))

Time Needed for Diagnosis: 10 seconds

CC:DTC P0ABF HYBRID BATTERY PACK CURRENT SENSOR "A" CIRCUIT

1. OUTLINE OF DIAGNOSIS

Detect the malfunction of the current sensor circuit.
Judge as NG when the high voltage battery current value is below the specified value under the condition that the motor operates at overload.

2. ENABLE CONDITIONS

Secondary Parameters	Enable Conditions
Ignition state	Run or crank
12V battery system voltage	≥ 6.5 V and ≤ 17 V
(Commanded Drive Motor Torque	› 15 Nm
Measured Drive Motor Speed)	› 125 rpm
or	
(Commanded Drive Motor Torque	< –40 Nm
Measured Drive Motor Speed)	› 1700 rpm

3. DIAGNOSTIC METHOD

- **Abnormality Judgment**

If the duration of time while the following conditions are met is longer than the time indicated, judge as NG.

Judgment Value

Malfunction Criteria	Threshold Value
Absolute value of hybrid battery pack current	< 1 A

Time Needed for Diagnosis: 1 seconds
Malfunction Indicator Light Illumination: Illuminates as soon as a malfunction occurs.

- **Normality Judgment**

Judge as OK and clear the NG if the continuous time while the following conditions are established is more than the predetermined time.

Judgment Value

Malfunction Criteria	Threshold Value
Absolute value of hybrid battery pack current	≥ 1 A

Time Needed for Diagnosis: 1 seconds

CD:DTC P0AC0 HYBRID BATTERY PACK CURRENT SENSOR "A" CIRCUIT RANGE/PERFORMANCE

1. OUTLINE OF DIAGNOSIS

Detect the offset malfunction of high voltage battery current sensor.
Judge as NG when the high voltage battery current offset is above the specified value.

2. ENABLE CONDITIONS

Secondary Parameters	Enable Conditions
a: Ignition state	Run or crank
Continuous time of a	≤ 0.2 s
12V battery system voltage	≥ 6.5 V and ≤ 17 V

3. DIAGNOSTIC METHOD

- **Abnormality Judgment**

If the duration of time while the following conditions are met is longer than the time indicated, judge as NG.

Judgment Value

Malfunction Criteria	Threshold Value
Absolute value of hybrid battery pack current	> 1 A

Time Needed for Diagnosis: 0.01 seconds
Malfunction Indicator Light Illumination: Illuminates as soon as a malfunction occurs.

- **Normality Judgment**

Judge as OK and clear the NG if the continuous time while the following conditions are established is more than the predetermined time.

Judgment Value

Malfunction Criteria	Threshold Value
Absolute value of hybrid battery pack current	≤ 1 A

Time Needed for Diagnosis: 0.01 seconds

CE:DTC P0AC1 HYBRID BATTERY PACK CURRENT SENSOR "A" CIRCUIT LOW

1. OUTLINE OF DIAGNOSIS

Detect the malfunction of high voltage battery current sensor.
Judge as NG when the high voltage battery current value is below the specified value.

2. ENABLE CONDITIONS

Secondary Parameters	Enable Conditions
Ignition state	Run or crank
12V battery system voltage	≥ 6.5 V and ≤ 17 V
HPCM contactor request	Closed
BECM positive contactor command	Closed
BECM negative contactor command	Closed

3. DIAGNOSTIC METHOD

- **Abnormality Judgment**

If the duration of time while the following conditions are met is longer than the time indicated, judge as NG.

Judgment Value

Malfunction Criteria	Threshold Value
Hybrid battery pack current sensor output voltage (current equivalent)	< –1.91 V (< –240 A)

Time Needed for Diagnosis: 0.4 seconds
Malfunction Indicator Light Illumination: Illuminates as soon as a malfunction occurs.

- **Normality Judgment**

Judge as OK and clear the NG if the continuous time while the following conditions are established is more than the predetermined time.

Judgment Value

Malfunction Criteria	Threshold Value
Hybrid battery pack current sensor output voltage (current equivalent)	≥ –1.91 V (≥ –240 A)

Time Needed for Diagnosis: 0.4 seconds

CF:DTC P0AC2 HYBRID BATTERY PACK CURRENT SENSOR "A" CIRCUIT HIGH

1. OUTLINE OF DIAGNOSIS

Detect the malfunction of high voltage battery current sensor.
Judge as NG when the high voltage battery current value is above the specified value.

2. ENABLE CONDITIONS

Secondary Parameters	Enable Conditions
Ignition state	Run or crank
12V battery system voltage	≥ 6.5 V and ≤ 17 V
HPCM contactor request	Closed
BECM positive contactor command	Closed
BECM negative contactor command	Closed

3. DIAGNOSTIC METHOD

- **Abnormality Judgment**

If the duration of time while the following conditions are met is longer than the time indicated, judge as NG.

Judgment Value

Malfunction Criteria	Threshold Value
Hybrid battery pack current sensor output voltage (current equivalent)	> 1.91 V (> 240 A)

Time Needed for Diagnosis: 0.4 seconds
Malfunction Indicator Light Illumination: Illuminates as soon as a malfunction occurs.

- **Normality Judgment**

Judge as OK and clear the NG if the continuous time while the following conditions are established is more than the predetermined time.

Judgment Value

Malfunction Criteria	Threshold Value
Hybrid battery pack current sensor output voltage (current equivalent)	≤ –1.91 V (≤ –240 A)

Time Needed for Diagnosis: 0.4 seconds

CG:DTC P0AC3 HYBRID BATTERY PACK CURRENT SENSOR "A" CIRCUIT INTERMITTENT/ERRATIC

1. OUTLINE OF DIAGNOSIS

Detect the malfunction of high voltage battery current sensor.
Judge as NG when the stuck of high voltage battery current sensor value is detected.

2. ENABLE CONDITIONS

Secondary Parameters	Enable Conditions
Diagnosis 1	
Ignition state	Run or crank
12V battery system voltage	≥ 6.5 V and ≤ 17 V
Hybrid battery voltage D (Actual state: discharge)	< –120 mV
HPCM contactor request	Closed
BECM positive contactor command	Closed
BECM negative contactor command	Closed
Diagnosis 2	
Ignition state	Run or crank
12V battery system voltage	≥ 6.5 V and ≤ 17 V
Hybrid battery voltage D (Actual state: discharge)	> 120 mV
HPCM contactor request	Closed
BECM positive contactor command	Closed
BECM negative contactor command	Closed

3. DIAGNOSTIC METHOD

- **Abnormality Judgment**

If the duration of time while the following conditions are met is longer than the time indicated, judge as NG.

Judgment Value

Malfunction Criteria	Threshold Value
Diagnosis 1	
Hybrid battery pack current	≥ 10 A
(Detected state: charge)	≤ 110 A
NOTE: (The system should be discharging, but a charge condition is detected.)	
Diagnosis 2	
Hybrid battery pack current	≤ –10 A
(Detected state: discharge)	≥ –190 A
NOTE: (The system should be charging, but a discharge condition is detected.)	

Time Needed for Diagnosis: 1 seconds
Malfunction Indicator Light Illumination: Illuminates as soon as a malfunction occurs.

- **Normality Judgment**

Judge as OK and clear the NG if the continuous time while the following conditions are established is more than the predetermined time.

Judgment Value

Malfunction Criteria	Threshold Value
Diagnosis 1	
Hybrid battery pack current	≤ –10 A
(Detected state: discharge)	≥ –190 A
Diagnosis 2	
Hybrid battery pack current	≥ 10 A
(Detected state: charge)	≤ 110 A

Time Needed for Diagnosis: 1 seconds

CH:DTC P0AC6 HYBRID BATTERY TEMPERATURE SENSOR "B" CIRCUIT RANGE/PERFORMANCE

1. OUTLINE OF DIAGNOSIS

Detect the abnormality of high voltage battery temperature 2.
Judge as NG when the deviation of high voltage battery temperature is large.

2. ENABLE CONDITIONS

Secondary Parameters	Enable Conditions
Ignition state	Run or crank
12V battery system voltage	≥ 6.5 V and ≤ 17 V

3. DIAGNOSTIC METHOD

- **Abnormality Judgment**

If the duration of time while the following conditions are met is longer than the time indicated, judge as NG.

Judgment Value

Malfunction Criteria	Threshold Value
Diagnosis 1	
Hybrid battery temperature B – Hybrid battery temperature A	> 20°C (68°F)
Hybrid battery temperature B – Hybrid battery temperature C	> 20°C (68°F)
Diagnosis 2	
Hybrid battery temperature A – Hybrid battery temperature B	> 20°C (68°F)
Hybrid battery temperature C – Hybrid battery temperature B	> 20°C (68°F)

Time Needed for Diagnosis: 10 seconds
Malfunction Indicator Light Illumination: Illuminates as soon as a malfunction occurs.

- **Normality Judgment**

Judge as OK and clear the NG if the continuous time while the following conditions are established is more than the predetermined time.

Judgment Value

Malfunction Criteria	Threshold Value
Diagnosis 1	
Hybrid battery temperature B – Hybrid battery temperature A	≤ 20°C (68°F)
Hybrid battery temperature B – Hybrid battery temperature C	≤ 20°C (68°F)
Diagnosis 2	
Hybrid battery temperature A – Hybrid battery temperature B	≤ 20°C (68°F)
Hybrid battery temperature C – Hybrid battery temperature B	≤ 20°C (68°F)

Time Needed for Diagnosis: 10 seconds

CI: DTC P0AC7 HYBRID BATTERY TEMPERATURE SENSOR "B" CIRCUIT LOW

1. OUTLINE OF DIAGNOSIS

Detect the abnormality of high voltage battery temperature 2.
Judge as NG when the high voltage battery temperature 2 is below the specified value.

2. ENABLE CONDITIONS

Secondary Parameters	Enable Conditions
Ignition state	Run or crank
12V battery system voltage	≥ 6.5 V and ≤ 17 V

3. DIAGNOSTIC METHOD

- **Abnormality Judgment**

If the duration of time while the following conditions are met is longer than the time indicated, judge as NG.

Judgment Value

Malfunction Criteria	Threshold Value
Hybrid battery temperature B sensor output voltage (temperature equivalent)	< 0.49 V (> 95°C (203°F))

Time Needed for Diagnosis: 8 seconds
Malfunction Indicator Light Illumination: Illuminates as soon as a malfunction occurs.

- **Normality Judgment**

Judge as OK and clear the NG if the continuous time while the following conditions are established is more than the predetermined time.

Judgment Value

Malfunction Criteria	Threshold Value
Hybrid battery temperature B sensor output voltage (temperature equivalent)	≥ 0.49 V (≤ 95°C (203°F)

Time Needed for Diagnosis: 8 seconds

CJ:DTC P0AC8 HYBRID BATTERY TEMPERATURE SENSOR "B" CIRCUIT HIGH

1. OUTLINE OF DIAGNOSIS

Detect the abnormality of high voltage battery temperature 2.
Judge as NG when the high voltage battery temperature 2 is above the specified value.

2. ENABLE CONDITIONS

Secondary Parameters	Enable Conditions
Ignition state	Run or crank
12V battery system voltage	≥ 6.5 V and ≤ 17 V

3. DIAGNOSTIC METHOD

- **Abnormality Judgment**

If the duration of time while the following conditions are met is longer than the time indicated, judge as NG.

Judgment Value

Malfunction Criteria	Threshold Value
Hybrid battery temperature B sensor output voltage (temperature equivalent)	> 4.82 V (< –45°C (–49°F))

Time Needed for Diagnosis: 8 seconds
Malfunction Indicator Light Illumination: Illuminates as soon as a malfunction occurs.

- **Normality Judgment**

Judge as OK and clear the NG if the continuous time while the following conditions are established is more than the predetermined time.

Judgment Value

Malfunction Criteria	Threshold Value
Hybrid battery temperature B sensor output voltage (temperature equivalent)	≤ 4.82 V (≥ –45°C (–49°F))

Time Needed for Diagnosis: 8 seconds

CK:DTC P0ACB HYBRID BATTERY TEMPERATURE SENSOR "C" CIRCUIT RANGE/PERFORMANCE

1. OUTLINE OF DIAGNOSIS

Detect the abnormality of high voltage battery temperature 3.
Judge as NG when the deviation of high voltage battery temperature is large.

2. ENABLE CONDITIONS

Secondary Parameters	Enable Conditions
Ignition state	Run or crank
12V battery system voltage	≥ 6.5 V and ≤ 17 V

3. DIAGNOSTIC METHOD

- **Abnormality Judgment**

If the duration of time while the following conditions are met is longer than the time indicated, judge as NG.

Judgment Value

Malfunction Criteria	Threshold Value
Diagnosis 1	
Hybrid battery temperature C – Hybrid battery temperature B	> 20°C (68°F)
Hybrid battery temperature C – Hybrid battery temperature A	> 20°C (68°F)
Diagnosis 2	
Hybrid battery temperature A – Hybrid battery temperature C	> 20°C (68°F)
Hybrid battery temperature B – Hybrid battery temperature C	> 20°C (68°F)

Time Needed for Diagnosis: 10 seconds
Malfunction Indicator Light Illumination: Illuminates as soon as a malfunction occurs.

- **Normality Judgment**

Judge as OK and clear the NG if the continuous time while the following conditions are established is more than the predetermined time.

Judgment Value

Malfunction Criteria	Threshold Value
Diagnosis 1	
Hybrid battery temperature C – Hybrid battery temperature B	≤ 20°C (68°F)
Hybrid battery temperature C – Hybrid battery temperature A	≤ 20°C (68°F)
Diagnosis 2	
Hybrid battery temperature A – Hybrid battery temperature C	≤ 20°C (68°F)
Hybrid battery temperature B – Hybrid battery temperature C	≤ 20°C (68°F)

Time Needed for Diagnosis: 10 seconds

CL:DTC P0ACC HYBRID BATTERY TEMPERATURE SENSOR "C" CIRCUIT LOW

1. OUTLINE OF DIAGNOSIS

Detect the abnormality of high voltage battery temperature 3.
Judge as NG when the high voltage battery temperature 3 is below the specified value.

2. ENABLE CONDITIONS

Secondary Parameters	Enable Conditions
Ignition state	Run or crank
12V battery system voltage	≥ 6.5 V and ≤ 17 V

3. DIAGNOSTIC METHOD

- **Abnormality Judgment**

If the duration of time while the following conditions are met is longer than the time indicated, judge as NG.

Judgment Value

Malfunction Criteria	Threshold Value
Hybrid battery temperature C sensor output voltage (temperature equivalent)	< 0.49 V (> 95°C (203°F))

Time Needed for Diagnosis: 8 seconds
Malfunction Indicator Light Illumination: Illuminates as soon as a malfunction occurs.

- **Normality Judgment**

Judge as OK and clear the NG if the continuous time while the following conditions are established is more than the predetermined time.

Judgment Value

Malfunction Criteria	Threshold Value
Hybrid battery temperature C sensor output voltage (temperature equivalent)	≥ 0.49 V (≤ 95°C (203°F)

Time Needed for Diagnosis: 8 seconds

CM:DTC P0ACD HYBRID BATTERY TEMPERATURE SENSOR "C" CIRCUIT HIGH

1. OUTLINE OF DIAGNOSIS

Detect the abnormality of high voltage battery temperature 3.
Judge as NG when the high voltage battery temperature 3 is above the specified value.

2. ENABLE CONDITIONS

Secondary Parameters	Enable Conditions
Ignition state	Run or crank
12V battery system voltage	≥ 6.5 V and ≤ 17 V

3. DIAGNOSTIC METHOD

- **Abnormality Judgment**

If the duration of time while the following conditions are met is longer than the time indicated, judge as NG.

Judgment Value

Malfunction Criteria	Threshold Value
Hybrid battery temperature C sensor output voltage (temperature equivalent)	> 4.82 V (< –45°C (–49°F))

Time Needed for Diagnosis: 8 seconds
Malfunction Indicator Light Illumination: Illuminates as soon as a malfunction occurs.

- **Normality Judgment**

Judge as OK and clear the NG if the continuous time while the following conditions are established is more than the predetermined time.

Judgment Value

Malfunction Criteria	Threshold Value
Hybrid battery temperature C sensor output voltage (temperature equivalent)	≤ 4.82 V (≥ –45°C (–49°F))

Time Needed for Diagnosis: 8 seconds

CN:DTC P0AD9 HYBRID BATTERY POSITIVE CONTACTOR CONTROL CIRCUIT/OPEN

1. OUTLINE OF DIAGNOSIS

Detect the open circuit of +side contactor drive signal line.
Judge as NG when the open circuit of +side contactor drive signal line is detected.

2. ENABLE CONDITIONS

Secondary Parameters	Enable Conditions
Ignition state	Run or crank
12V battery system voltage	≥ 6.5 V and ≤ 17 V
HPCM contactor request	Closed
BECM positive contactor command	Closed
Measured Positive contactor control signal (BECM main CPU output)	Closed

3. DIAGNOSTIC METHOD

- **Abnormality Judgment**

If the duration of time while the following conditions are met is longer than the time indicated, judge as NG.

Judgment Value

Malfunction Criteria	Threshold Value
Measured Positive contactor control signal (BECM output)	Open

Time Needed for Diagnosis: 0.5 seconds
Malfunction Indicator Light Illumination: Illuminates as soon as a malfunction occurs.

- **Normality Judgment**

Judge as OK and clear the NG if the continuous time while the following conditions are established is more than the predetermined time.

Judgment Value

Malfunction Criteria	Threshold Value
Measured Positive contactor control signal (BECM output)	Closed

Time Needed for Diagnosis: 0.5 seconds

CO:DTC P0ADB HYBRID BATTERY POSITIVE CONTACTOR CONTROL CIRCUIT LOW

1. OUTLINE OF DIAGNOSIS

Detect the short circuit of +side contactor drive signal line.
Judge as NG when the short circuit of +side contactor drive signal line is detected.

2. ENABLE CONDITIONS

Secondary Parameters	Enable Conditions
Diagnosis 1	
Ignition state	Run or crank
12V battery system voltage	≥ 6.5 V and ≤ 17 V
HPCM contactor request	Closed
BECM positive contactor command	Closed
Measured Positive contactor control signal (BECM main CPU output)	Closed
Diagnosis 2	
Ignition state	Run or crank
12V battery system voltage	≥ 6.5 V and ≤ 17 V
HPCM contactor request	Closed
BECM positive contactor command	Closed

3. DIAGNOSTIC METHOD

- **Abnormality Judgment**

If the duration of time while the following conditions are met is longer than the time indicated, judge as NG.

Judgment Value

Malfunction Criteria	Threshold Value
Diagnosis 1	
Measured Positive contactor control signal (BECM output)	Closed
Diagnosis 2	
Measured Positive contactor control signal	Closed

Time Needed for Diagnosis: 0.1 seconds
Malfunction Indicator Light Illumination: Illuminates as soon as a malfunction occurs.

- **Normality Judgment**

Judge as OK and clear the NG if the continuous time while the following conditions are established is more than the predetermined time.

Judgment Value

Malfunction Criteria	Threshold Value
Diagnosis 1	
Measured Positive contactor control signal (BECM output)	Open
Diagnosis 2	
Measured Positive contactor control signal	Open

Time Needed for Diagnosis: 0.1 seconds

CP:DTC P0ADD HYBRID BATTERY NEGATIVE CONTACTOR CONTROL CIRCUIT/OPEN

1. OUTLINE OF DIAGNOSIS

Detect the open circuit of –side contactor drive signal line.
Judge as NG when the open circuit of –side contactor drive signal line is detected.

2. ENABLE CONDITIONS

Secondary Parameters	Enable Conditions
Ignition state	Run or crank
12V battery system voltage	≥ 6.5 V and ≤ 17 V
HPCM contactor request	Closed
BECM negative contactor command	Closed
Measured negative contactor control signal (BECM main CPU output)	Closed

3. DIAGNOSTIC METHOD

- **Abnormality Judgment**

If the duration of time while the following conditions are met is longer than the time indicated, judge as NG.

Judgment Value

Malfunction Criteria	Threshold Value
Measured Negative contactor control signal (BECM output)	Open

Time Needed for Diagnosis: 0.5 seconds
Malfunction Indicator Light Illumination: Illuminates as soon as a malfunction occurs.

- **Normality Judgment**

Judge as OK and clear the NG if the continuous time while the following conditions are established is more than the predetermined time.

Judgment Value

Malfunction Criteria	Threshold Value
Measured Negative contactor control signal (BECM output)	Closed

Time Needed for Diagnosis: 0.5 seconds

CQ:DTC P0AE4 HYBRID BATTERY PRECHARGE CONTACTOR CONTROL CIRCUIT

1. OUTLINE OF DIAGNOSIS

Detect the open circuit of precharge contactor drive signal line.
Judge as NG when the open circuit of precharge contactor drive signal line is detected.

2. ENABLE CONDITIONS

Secondary Parameters	Enable Conditions
Request contractors from HPCM	Closed
Precharge contactor command	Closed
Precharge contactor control circuit monitor signal	High
(Drive control circuit output)	(Closed)

3. DIAGNOSTIC METHOD

- **Abnormality Judgment**

If the duration of time while the following conditions are met is longer than the time indicated, judge as NG.

Judgment Value

Malfunction Criteria	Threshold Value
Precharge contactor control signal (BECM main CPU output)	High (Open)

Time Needed for Diagnosis: 0.5 seconds
Malfunction Indicator Light Illumination: Illuminates as soon as a malfunction occurs.

- **Normality Judgment**

Judge as OK and clear the NG if the continuous time while the following conditions are established is more than the predetermined time.

Judgment Value

Malfunction Criteria	Threshold Value
Checksum error of Flash EEPROM within the BECM Main CPU (Data area)	Not Detected

Time Needed for Diagnosis: Less than 0.01 second

CR:DTC P0B25 HYBRID BATTERY "A" VOLTAGE LOW

1. OUTLINE OF DIAGNOSIS

Detect that the high voltage battery voltage is below the lowest voltage.
Judge as NG when the high voltage battery voltage value is below the specified value.

2. ENABLE CONDITIONS

Secondary Parameters	Enable Conditions
Ignition state	Run or crank
12V battery system voltage	≥ 6.5 V and ≤ 17 V

3. DIAGNOSTIC METHOD

- **Abnormality Judgment**

If the duration of time while the following conditions are met is longer than the time indicated, judge as NG.

Judgment Value

Malfunction Criteria	Threshold Value
Hybrid battery pack voltage	< 73.6 V

Time Needed for Diagnosis: 5 seconds
Malfunction Indicator Light Illumination: Illuminates as soon as a malfunction occurs.

- **Normality Judgment**

Judge as OK and clear the NG if the continuous time while the following conditions are established is more than the predetermined time.

Judgment Value

Malfunction Criteria	Threshold Value
Hybrid battery pack voltage	≥ 73.6 V

Time Needed for Diagnosis: 5 seconds

CS:DTC P0B26 HYBRID BATTERY "A" VOLTAGE HIGH

1. OUTLINE OF DIAGNOSIS

Detect that the high voltage battery voltage exceeds the highest voltage.
Judge as NG when the voltage value of high voltage battery is above the specified value.

2. ENABLE CONDITIONS

Secondary Parameters	Enable Conditions
Ignition state	Run or crank
12V battery system voltage	≥ 6.5 V and ≤ 17 V

3. DIAGNOSTIC METHOD

- **Abnormality Judgment**

If the duration of time while the following conditions are met is longer than the time indicated, judge as NG.

Judgment Value

Malfunction Criteria	Threshold Value
Hybrid battery pack voltage	> 136.4 V

Time Needed for Diagnosis: 5 seconds
Malfunction Indicator Light Illumination: Illuminates as soon as a malfunction occurs.

- **Normality Judgment**

Judge as OK and clear the NG if the continuous time while the following conditions are established is more than the predetermined time.

Judgment Value

Malfunction Criteria	Threshold Value
Hybrid battery pack voltage	≤ 136.4 V

Time Needed for Diagnosis: 5 seconds

CT:DTC P0B37 HIGH VOLTAGE SERVICE DISCONNECT OPEN

1. OUTLINE OF DIAGNOSIS

Detect the malfunction of service disconnect plug.
Judge as NG when service disconnect plug unplugs or service disconnect plug SW is open.

2. ENABLE CONDITIONS

Secondary Parameters	Enable Conditions
Ignition state	Run or crank

3. DIAGNOSTIC METHOD

- **Abnormality Judgment**

If the duration of time while the following conditions are met is longer than the time indicated, judge as NG.

Judgment Value

Malfunction Criteria	Threshold Value
Interlock switch signal	Open

Time Needed for Diagnosis: 0.05 seconds
Malfunction Indicator Light Illumination: Illuminates as soon as a malfunction occurs.

- **Normality Judgment**

Judge as OK and clear the NG if the continuous time while the following conditions are established is more than the predetermined time.

Judgment Value

Malfunction Criteria	Threshold Value
Interlock switch signal	Closed

Time Needed for Diagnosis: 0.05 seconds

CU:DTC P0B3C HYBRID BATTERY VOLTAGE SENSE "A" CIRCUIT RANGE/ PERFORMANCE

1. OUTLINE OF DIAGNOSIS

Detect the malfunction of high voltage battery voltage sensor 0.
Judge as NG when the stuck of high voltage battery voltage 0 is detected.

2. ENABLE CONDITIONS

Secondary Parameters	Enable Conditions
Ignition state	Run or crank
12V battery system voltage	≥ 6.5 V and ≤ 17 V

3. DIAGNOSTIC METHOD

- **Abnormality Judgment**

If the duration of time while the following conditions are met is longer than the time indicated, judge as NG.

Judgment Value

Malfunction Criteria	Threshold Value
Diagnosis 1	
Hybrid battery voltage A	> 96.0 V ≤ 98.54 V (High side)
Diagnosis 2	
Hybrid battery voltage A	≥ –98.54 V < 9.60 V (Low side)

Time Needed for Diagnosis: 1 seconds
Malfunction Indicator Light Illumination: Illuminates as soon as a malfunction occurs.

- **Normality Judgment**

Judge as OK and clear the NG if the continuous time while the following conditions are established is more than the predetermined time.

Judgment Value

Malfunction Criteria	Threshold Value
Diagnosis 1	
Hybrid battery voltage A	≤ 96.0 V > 98.54 V (High side)
Diagnosis 2	
Hybrid battery voltage A	< –98.54 V ≥ 9.60 V (Low side)

Time Needed for Diagnosis: 1 seconds

CV:DTC P0B3D HYBRID BATTERY VOLTAGE SENSE "A" CIRCUIT LOW

1. OUTLINE OF DIAGNOSIS

Detect the malfunction of high voltage battery voltage sensor 0.
Judge as NG when the high voltage battery voltage 0 is below the specified value.

2. ENABLE CONDITIONS

Secondary Parameters	Enable Conditions
Ignition state	Run or crank
12V battery system voltage	≥ 6.5 V and ≤ 17 V

3. DIAGNOSTIC METHOD

- **Abnormality Judgment**

If the duration of time while the following conditions are met is longer than the time indicated, judge as NG.

Judgment Value

Malfunction Criteria	Threshold Value
Hybrid battery voltage A	< –98.54 V

Time Needed for Diagnosis: 0.1 seconds
Malfunction Indicator Light Illumination: Illuminates as soon as a malfunction occurs.

- **Normality Judgment**

Judge as OK and clear the NG if the continuous time while the following conditions are established is more than the predetermined time.

Judgment Value

Malfunction Criteria	Threshold Value
Hybrid battery voltage A	≥ –98.54 V

Time Needed for Diagnosis: 0.1 seconds

CW:DTC P0B3E HYBRID BATTERY VOLTAGE SENSE "A" CIRCUIT HIGH

1. OUTLINE OF DIAGNOSIS

Detect the malfunction of high voltage battery voltage sensor 0.
Judge as NG when the high voltage battery voltage 0 is above the specified value.

2. ENABLE CONDITIONS

Secondary Parameters	Enable Conditions
Ignition state	Run or crank
12V battery system voltage	≥ 6.5 V and ≤ 17 V

3. DIAGNOSTIC METHOD

- **Abnormality Judgment**

If the duration of time while the following conditions are met is longer than the time indicated, judge as NG.

Judgment Value

Malfunction Criteria	Threshold Value
Hybrid battery voltage A	> 98.54 V

Time Needed for Diagnosis: 0.1 seconds
Malfunction Indicator Light Illumination: Illuminates as soon as a malfunction occurs.

- **Normality Judgment**

Judge as OK and clear the NG if the continuous time while the following conditions are established is more than the predetermined time.

Judgment Value

Malfunction Criteria	Threshold Value
Hybrid battery voltage A	≤ 98.54 V

Time Needed for Diagnosis: 0.1 seconds

CX:DTC P0B41 HYBRID BATTERY VOLTAGE SENSE "B" CIRCUIT RANGE/ PERFORMANCE

1. OUTLINE OF DIAGNOSIS

Detect the malfunction of high voltage battery voltage sensor 1.
Judge as NG when the stuck of high voltage battery voltage 1 is detected.

2. ENABLE CONDITIONS

Secondary Parameters	Enable Conditions
Ignition state	Run or crank
12V battery system voltage	≥ 6.5 V and ≤ 17 V

3. DIAGNOSTIC METHOD

- **Abnormality Judgment**

If the duration of time while the following conditions are met is longer than the time indicated, judge as NG.

Judgment Value

Malfunction Criteria	Threshold Value
Diagnosis 1	
Hybrid battery voltage B	> 64.0 V ≤ 66.27 V (High side)
Diagnosis 2	
Hybrid battery voltage B	≥ –66.27 V < 6.40 V (Low side)

Time Needed for Diagnosis: 1 seconds
Malfunction Indicator Light Illumination: Illuminates as soon as a malfunction occurs.

- **Normality Judgment**

Judge as OK and clear the NG if the continuous time while the following conditions are established is more than the predetermined time.

Judgment Value

Malfunction Criteria	Threshold Value
Diagnosis 1	
Hybrid battery voltage B	≤ 64.0 V > 66.27 V (High side)
Diagnosis 2	
Hybrid battery voltage B	< –66.27 V ≥ 6.40 V (Low side)

Time Needed for Diagnosis: 1 seconds

CY:DTC P0B42 HYBRID BATTERY VOLTAGE SENSE "B" CIRCUIT LOW

1. OUTLINE OF DIAGNOSIS

Detect the malfunction of high voltage battery voltage sensor 1.
Judge as NG when the high voltage battery voltage 1 is below the specified value.

2. ENABLE CONDITIONS

Secondary Parameters	Enable Conditions
Ignition state	Run or crank
12V battery system voltage	≥ 6.5 V and ≤ 17 V

3. DIAGNOSTIC METHOD

- **Abnormality Judgment**

If the duration of time while the following conditions are met is longer than the time indicated, judge as NG.

Judgment Value

Malfunction Criteria	Threshold Value
Hybrid battery voltage B	< –66.27 V

Time Needed for Diagnosis: 1 seconds
Malfunction Indicator Light Illumination: Illuminates as soon as a malfunction occurs.

- **Normality Judgment**

Judge as OK and clear the NG if the continuous time while the following conditions are established is more than the predetermined time.

Judgment Value

Malfunction Criteria	Threshold Value
Hybrid battery voltage B	≥ –66.27 V

Time Needed for Diagnosis: 1 seconds

CZ:DTC P0B43 HYBRID BATTERY VOLTAGE SENSE "B" CIRCUIT HIGH

1. OUTLINE OF DIAGNOSIS

Detect the malfunction of high voltage battery voltage sensor 1.
Judge as NG when the high voltage battery voltage 1 is above the specified value.

2. ENABLE CONDITIONS

Secondary Parameters	Enable Conditions
Ignition state	Run or crank
12V battery system voltage	≥ 6.5 V and ≤ 17 V

3. DIAGNOSTIC METHOD

- **Abnormality Judgment**

If the duration of time while the following conditions are met is longer than the time indicated, judge as NG.

Judgment Value

Malfunction Criteria	Threshold Value
Hybrid battery voltage B	> 66.27 V

Time Needed for Diagnosis: 1 seconds
Malfunction Indicator Light Illumination: Illuminates as soon as a malfunction occurs.

- **Normality Judgment**

Judge as OK and clear the NG if the continuous time while the following conditions are established is more than the predetermined time.

Judgment Value

Malfunction Criteria	Threshold Value
Hybrid battery voltage B	≤ 66.27 V

Time Needed for Diagnosis: 1 seconds

DA:DTC P0B46 HYBRID BATTERY VOLTAGE SENSE "C" CIRCUIT RANGE/ PERFORMANCE

1. OUTLINE OF DIAGNOSIS

Detect the malfunction of high voltage battery voltage sensor 2.
Judge as NG when the stuck of high voltage battery voltage 2 is detected.

2. ENABLE CONDITIONS

Secondary Parameters	Enable Conditions
Ignition state	Run or crank
12V battery system voltage	≥ 6.5 V and ≤ 17 V

3. DIAGNOSTIC METHOD

- **Abnormality Judgment**

If the duration of time while the following conditions are met is longer than the time indicated, judge as NG.

Judgment Value

Malfunction Criteria	Threshold Value
Diagnosis 1 Hybrid battery voltage C	 > 32.0 V ≤ 56.34 V (High side)
Diagnosis 2 Hybrid battery voltage C	 ≥ –56.34 V < 3.20 V (Low side)

Time Needed for Diagnosis: 1 seconds
Malfunction Indicator Light Illumination: Illuminates as soon as a malfunction occurs.

- **Normality Judgment**

Judge as OK and clear the NG if the continuous time while the following conditions are established is more than the predetermined time.

Judgment Value

Malfunction Criteria	Threshold Value
Diagnosis 1 Hybrid battery voltage C	 ≤ 32.0 V > 56.34 V (High side)
Diagnosis 2 Hybrid battery voltage C	 < –56.34 V ≥ 3.20 V (Low side)

Time Needed for Diagnosis: 1 seconds

DB:DTC P0B47 HYBRID BATTERY VOLTAGE SENSE "C" CIRCUIT LOW

1. OUTLINE OF DIAGNOSIS

Detect the malfunction of high voltage battery voltage sensor 2.
Judge as NG when the high voltage battery voltage 2 is below the specified value.

2. ENABLE CONDITIONS

Secondary Parameters	Enable Conditions
Ignition state	Run or crank
12V battery system voltage	≥ 6.5 V and ≤ 17 V

3. DIAGNOSTIC METHOD

- **Abnormality Judgment**

If the duration of time while the following conditions are met is longer than the time indicated, judge as NG.

Judgment Value

Malfunction Criteria	Threshold Value
Hybrid battery voltage C	< –56.34 V

Time Needed for Diagnosis: 1 seconds
Malfunction Indicator Light Illumination: Illuminates as soon as a malfunction occurs.

- **Normality Judgment**

Judge as OK and clear the NG if the continuous time while the following conditions are established is more than the predetermined time.

Judgment Value

Malfunction Criteria	Threshold Value
Hybrid battery voltage C	≥ –56.34 V

Time Needed for Diagnosis: 1 seconds

DC:DTC P0B48 HYBRID BATTERY VOLTAGE SENSE "C" CIRCUIT HIGH

1. OUTLINE OF DIAGNOSIS

Detect the malfunction of high voltage battery voltage sensor 2.
Judge as NG when the high voltage battery voltage 2 is above the specified value.

2. ENABLE CONDITIONS

Secondary Parameters	Enable Conditions
Ignition state	Run or crank
12V battery system voltage	≥ 6.5 V and ≤ 17 V

3. DIAGNOSTIC METHOD

- **Abnormality Judgment**

If the duration of time while the following conditions are met is longer than the time indicated, judge as NG.

Judgment Value

Malfunction Criteria	Threshold Value
Hybrid battery voltage C	> 56.34 V

Time Needed for Diagnosis: 1 seconds
Malfunction Indicator Light Illumination: Illuminates as soon as a malfunction occurs.

- **Normality Judgment**

Judge as OK and clear the NG if the continuous time while the following conditions are established is more than the predetermined time.

Judgment Value

Malfunction Criteria	Threshold Value
Hybrid battery voltage C	≤ 56.34 V

Time Needed for Diagnosis: 1 seconds

DD:DTC P0B4A HYBRID BATTERY VOLTAGE SENSE "D" CIRCUIT

1. OUTLINE OF DIAGNOSIS

Detect the malfunction of high voltage battery voltage sensor 3.
Judge as NG when the open circuit of high voltage battery voltage sensor 3 is detected.

2. ENABLE CONDITIONS

Secondary Parameters	Enable Conditions
a: Ignition state	Run or crank
Elapsed time of a	≤ 0.2 s
12V battery system voltage	≥ 6.5 V and ≤ 17 V

3. DIAGNOSTIC METHOD

- **Abnormality Judgment**

If the duration of time while the following conditions are met is longer than the time indicated, judge as NG.

Judgment Value

Malfunction Criteria	Threshold Value
Status fault flag for 'Voltage Sense "D" Circuit' as determined by the BECM Sub CPU	Open

Time Needed for Diagnosis: 0.01 seconds
Malfunction Indicator Light Illumination: Illuminates as soon as a malfunction occurs.

- **Normality Judgment**

Judge as OK and clear the NG if the continuous time while the following conditions are established is more than the predetermined time.

Judgment Value

Malfunction Criteria	Threshold Value
Status fault flag for 'Voltage Sense "D" Circuit' as determined by the BECM Sub CPU	Close

Time Needed for Diagnosis: 0.01 seconds

DE:DTC P0B4B HYBRID BATTERY VOLTAGE SENSE "D" CIRCUIT RANGE/ PERFORMANCE

1. OUTLINE OF DIAGNOSIS

Detect the malfunction of high voltage battery voltage sensor 3.
Judge as NG when the stuck of high voltage battery voltage 3 is detected.

2. ENABLE CONDITIONS

Secondary Parameters	Enable Conditions
Ignition state	Run or crank
12V battery system voltage	≥ 6.5 V and ≤ 17 V

3. DIAGNOSTIC METHOD

• Abnormality Judgment

If the duration of time while the following conditions are met is longer than the time indicated, judge as NG.

Judgment Value

Malfunction Criteria	Threshold Value
Diagnosis 1 Hybrid battery voltage D	> 2.10V ≤ 76.2V (High side)
Diagnosis 2 Hybrid battery voltage C	≥ –76.2 V < –2.10V (Low side)

Time Needed for Diagnosis: 10 seconds
Malfunction Indicator Light Illumination: Illuminates as soon as a malfunction occurs.

• Normality Judgment

Judge as OK and clear the NG if the continuous time while the following conditions are established is more than the predetermined time.

Judgment Value

Malfunction Criteria	Threshold Value
Diagnosis 1 Hybrid battery voltage C	≤ 2.10 V > 76.2 V (High side)
Diagnosis 2 Hybrid battery voltage C	< –76.2 V ≥ –2.10V (Low side)

Time Needed for Diagnosis: 10 seconds

DF:DTC P0B4C HYBRID BATTERY VOLTAGE SENSE "D" CIRCUIT LOW

1. OUTLINE OF DIAGNOSIS

Detect the malfunction of high voltage battery voltage sensor 3.
Judge as NG when the high voltage battery voltage 3 is below the specified value.

2. ENABLE CONDITIONS

Secondary Parameters	Enable Conditions
Ignition state	Run or crank
12V battery system voltage	≥ 6.5 V and ≤ 17 V

3. DIAGNOSTIC METHOD

- **Abnormality Judgment**

If the duration of time while the following conditions are met is longer than the time indicated, judge as NG.

Judgment Value

Malfunction Criteria	Threshold Value
Hybrid battery voltage D	< –76.20 V

Time Needed for Diagnosis: 0.1 seconds
Malfunction Indicator Light Illumination: Illuminates as soon as a malfunction occurs.

- **Normality Judgment**

Judge as OK and clear the NG if the continuous time while the following conditions are established is more than the predetermined time.

Judgment Value

Malfunction Criteria	Threshold Value
Hybrid battery voltage D	> –76.20 V

Time Needed for Diagnosis: 0.1 seconds

DG:DTC P0B4D HYBRID BATTERY VOLTAGE SENSE "D" CIRCUIT HIGH

1. OUTLINE OF DIAGNOSIS

Detect the malfunction of high voltage battery voltage sensor 3.
Judge as NG when the high voltage battery voltage 3 is above the specified value.

2. ENABLE CONDITIONS

Secondary Parameters	Enable Conditions
Ignition state	Run or crank
12V battery system voltage	≥ 6.5 V and ≤ 17 V

3. DIAGNOSTIC METHOD

- **Abnormality Judgment**

If the duration of time while the following conditions are met is longer than the time indicated, judge as NG.

Judgment Value

Malfunction Criteria	Threshold Value
Hybrid battery voltage D	> 76.20 V

Time Needed for Diagnosis: 0.1 seconds
Malfunction Indicator Light Illumination: Illuminates as soon as a malfunction occurs.

- **Normality Judgment**

Judge as OK and clear the NG if the continuous time while the following conditions are established is more than the predetermined time.

Judgment Value

Malfunction Criteria	Threshold Value
Hybrid battery voltage D	≤ 76.20 V

Time Needed for Diagnosis: 0.1 seconds

DH:DTC P0B50 HYBRID BATTERY VOLTAGE SENSE "E" CIRCUIT RANGE/ PERFORMANCE

1. OUTLINE OF DIAGNOSIS

Detect the malfunction of high voltage battery voltage sensor 4.
Judge as NG when the stuck of high voltage battery voltage 4 is detected.

2. ENABLE CONDITIONS

Secondary Parameters	Enable Conditions
Ignition state	Run or crank
12V battery system voltage	≥ 6.5 V and ≤ 17 V

3. DIAGNOSTIC METHOD

- **Abnormality Judgment**

If the duration of time while the following conditions are met is longer than the time indicated, judge as NG.

Judgment Value

Malfunction Criteria	Threshold Value
Diagnosis 1 Hybrid battery voltage E	> –1.60V ≤ 23.03 V (High side)
Diagnosis 2 Hybrid battery voltage E	≥ –23.03 V < –16.00 V (Low side)

Time Needed for Diagnosis: 1 seconds
Malfunction Indicator Light Illumination: Illuminates as soon as a malfunction occurs.

- **Normality Judgment**

Judge as OK and clear the NG if the continuous time while the following conditions are established is more than the predetermined time.

Judgment Value

Malfunction Criteria	Threshold Value
Diagnosis 1 Hybrid battery voltage E	≤ –1.60 V > 23.03 V (High side)
Diagnosis 2 Hybrid battery voltage E	< –23.03 V ≥ –16.00 V (Low side)

Time Needed for Diagnosis: 1 seconds

DI: DTC P0B51 HYBRID BATTERY VOLTAGE SENSE "E" CIRCUIT LOW

1. OUTLINE OF DIAGNOSIS

Detect the malfunction of high voltage battery voltage sensor 4.
Judge as NG when the high voltage battery voltage 4 is below the specified value.

2. ENABLE CONDITIONS

Secondary Parameters	Enable Conditions
Ignition state	Run or crank
12V battery system voltage	≥ 6.5 V and ≤ 17 V

3. DIAGNOSTIC METHOD

- **Abnormality Judgment**

If the duration of time while the following conditions are met is longer than the time indicated, judge as NG.

Judgment Value

Malfunction Criteria	Threshold Value
Hybrid battery voltage E	< –23.03 V

Time Needed for Diagnosis: 1 seconds
Malfunction Indicator Light Illumination: Illuminates as soon as a malfunction occurs.

- **Normality Judgment**

Judge as OK and clear the NG if the continuous time while the following conditions are established is more than the predetermined time.

Judgment Value

Malfunction Criteria	Threshold Value
Hybrid battery voltage E	≥ –23.03 V

Time Needed for Diagnosis: 1 seconds

DJ:DTC P0B52 HYBRID BATTERY VOLTAGE SENSE "E" CIRCUIT HIGH

1. OUTLINE OF DIAGNOSIS

Detect the malfunction of high voltage battery voltage sensor 4.
Judge as NG when the high voltage battery voltage 4 is above the specified value.

2. ENABLE CONDITIONS

Secondary Parameters	Enable Conditions
Ignition state	Run or crank
12V battery system voltage	≥ 6.5 V and ≤ 17 V

3. DIAGNOSTIC METHOD

- **Abnormality Judgment**

If the duration of time while the following conditions are met is longer than the time indicated, judge as NG.

Judgment Value

Malfunction Criteria	Threshold Value
Hybrid battery voltage E	> 23.03 V

Time Needed for Diagnosis: 1 seconds
Malfunction Indicator Light Illumination: Illuminates as soon as a malfunction occurs.

- **Normality Judgment**

Judge as OK and clear the NG if the continuous time while the following conditions are established is more than the predetermined time.

Judgment Value

Malfunction Criteria	Threshold Value
Hybrid battery voltage E	≤ 23.03 V

Time Needed for Diagnosis: 1 seconds

DK:DTC P0B55 HYBRID BATTERY VOLTAGE SENSE "F" CIRCUIT RANGE/ PERFORMANCE

1. OUTLINE OF DIAGNOSIS

Detect the malfunction of high voltage battery voltage sensor 5.
Judge as NG when the stuck of high voltage battery voltage 5 is detected.

2. ENABLE CONDITIONS

Secondary Parameters	Enable Conditions
Ignition state	Run or crank
12V battery system voltage	≥ 6.5 V and ≤ 17 V

3. DIAGNOSTIC METHOD

- **Abnormality Judgment**

If the duration of time while the following conditions are met is longer than the time indicated, judge as NG.

Judgment Value

Malfunction Criteria	Threshold Value
Diagnosis 1	
Hybrid battery voltage F	> –4.80 V ≤ 98.54 V (High side)
Diagnosis 2	
Hybrid battery voltage F	≥ –98.54 V < –48.00 V (Low side)

Time Needed for Diagnosis: 1 seconds
Malfunction Indicator Light Illumination: Illuminates as soon as a malfunction occurs.

- **Normality Judgment**

Judge as OK and clear the NG if the continuous time while the following conditions are established is more than the predetermined time.

Judgment Value

Malfunction Criteria	Threshold Value
Diagnosis 1	
Hybrid battery voltage F	≤ –4.80 V > 98.54 V (High side)
Diagnosis 2	
Hybrid battery voltage F	< –98.54 V ≥ –48.00 V (Low side)

Time Needed for Diagnosis: 1 seconds

DL:DTC P0B56 HYBRID BATTERY VOLTAGE SENSE "F" CIRCUIT LOW

1. OUTLINE OF DIAGNOSIS

Detect the malfunction of high voltage battery voltage sensor 5.
Judge as NG when the high voltage battery voltage 5 is below the specified value.

2. ENABLE CONDITIONS

Secondary Parameters	Enable Conditions
Ignition state	Run or crank
12V battery system voltage	≥ 6.5 V and ≤ 17 V

3. DIAGNOSTIC METHOD

- **Abnormality Judgment**

If the duration of time while the following conditions are met is longer than the time indicated, judge as NG.

Judgment Value

Malfunction Criteria	Threshold Value
Hybrid battery voltage F	< –98.54 V

Time Needed for Diagnosis: 1 seconds
Malfunction Indicator Light Illumination: Illuminates as soon as a malfunction occurs.

- **Normality Judgment**

Judge as OK and clear the NG if the continuous time while the following conditions are established is more than the predetermined time.

Judgment Value

Malfunction Criteria	Threshold Value
Hybrid battery voltage F	≥ –98.54 V

Time Needed for Diagnosis: 1 seconds

DM:DTC P0B57 HYBRID BATTERY VOLTAGE SENSE "F" CIRCUIT HIGH

1. OUTLINE OF DIAGNOSIS

Detect the malfunction of high voltage battery voltage sensor 5.
Judge as NG when the high voltage battery voltage 5 is above the specified value.

2. ENABLE CONDITIONS

Secondary Parameters	Enable Conditions
Ignition state	Run or crank
12V battery system voltage	≥ 6.5 V and ≤ 17 V

3. DIAGNOSTIC METHOD

- **Abnormality Judgment**

If the duration of time while the following conditions are met is longer than the time indicated, judge as NG.

Judgment Value

Malfunction Criteria	Threshold Value
Hybrid battery voltage F	> 98.54 V

Time Needed for Diagnosis: 1 seconds
Malfunction Indicator Light Illumination: Illuminates as soon as a malfunction occurs.

- **Normality Judgment**

Judge as OK and clear the NG if the continuous time while the following conditions are established is more than the predetermined time.

Judgment Value

Malfunction Criteria	Threshold Value
Hybrid battery voltage F	≤ 98.54 V

Time Needed for Diagnosis: 1 seconds

DN:DTC P0B5A HYBRID BATTERY VOLTAGE SENSE "G" CIRCUIT RANGE/ PERFORMANCE

1. OUTLINE OF DIAGNOSIS

Detect the malfunction of high voltage battery voltage sensor 6.
Judge as NG when the stuck of high voltage battery voltage 6 is detected.

2. ENABLE CONDITIONS

Secondary Parameters	Enable Conditions
Ignition state	Run or crank
12V battery system voltage	≥ 6.5 V and ≤ 17 V

3. DIAGNOSTIC METHOD

- **Abnormality Judgment**

If the duration of time while the following conditions are met is longer than the time indicated, judge as NG.

Judgment Value

Malfunction Criteria	Threshold Value
Diagnosis 1 Hybrid battery voltage G	> –7.20 V ≤ 98.54 V (High side)
Diagnosis 2 Hybrid battery voltage G	≥ –98.54 V < –72.00 V (Low side)

Time Needed for Diagnosis: 1 seconds
Malfunction Indicator Light Illumination: Illuminates as soon as a malfunction occurs.

- **Normality Judgment**

Judge as OK and clear the NG if the continuous time while the following conditions are established is more than the predetermined time.

Judgment Value

Malfunction Criteria	Threshold Value
Diagnosis 1 Hybrid battery voltage G	≤ –7.20 V > 98.54 V (High side)
Diagnosis 2 Hybrid battery voltage G	< –98.54 V ≥ –72.00 V (Low side)

Time Needed for Diagnosis: 1 seconds

DO:DTC P0B5B HYBRID BATTERY VOLTAGE SENSE "G" CIRCUIT LOW

1. OUTLINE OF DIAGNOSIS

Detect the malfunction of high voltage battery voltage sensor 6.
Judge as NG when the high voltage battery voltage 6 is below the specified value.

2. ENABLE CONDITIONS

Secondary Parameters	Enable Conditions
Ignition state	Run or crank
12V battery system voltage	≥ 6.5 V and ≤ 17 V

3. DIAGNOSTIC METHOD

- **Abnormality Judgment**

If the duration of time while the following conditions are met is longer than the time indicated, judge as NG.

Judgment Value

Malfunction Criteria	Threshold Value
Hybrid battery voltage G	< –98.54 V

Time Needed for Diagnosis: 0.1 seconds
Malfunction Indicator Light Illumination: Illuminates as soon as a malfunction occurs.

- **Normality Judgment**

Judge as OK and clear the NG if the continuous time while the following conditions are established is more than the predetermined time.

Judgment Value

Malfunction Criteria	Threshold Value
Hybrid battery voltage G	≥ –98.54 V

Time Needed for Diagnosis: 0.1 seconds

DP:DTC P0B5C HYBRID BATTERY VOLTAGE SENSE "G" CIRCUIT HIGH

1. OUTLINE OF DIAGNOSIS

Detect the malfunction of high voltage battery voltage sensor 6.
Judge as NG when the high voltage battery voltage 6 is above the specified value.

2. ENABLE CONDITIONS

Secondary Parameters	Enable Conditions
Ignition state	Run or crank
12V battery system voltage	≥ 6.5 V and ≤ 17 V

3. DIAGNOSTIC METHOD

- **Abnormality Judgment**

If the duration of time while the following conditions are met is longer than the time indicated, judge as NG.

Judgment Value

Malfunction Criteria	Threshold Value
Hybrid battery voltage G	> 98.54 V

Time Needed for Diagnosis: 0.1 seconds
Malfunction Indicator Light Illumination: Illuminates as soon as a malfunction occurs.

- **Normality Judgment**

Judge as OK and clear the NG if the continuous time while the following conditions are established is more than the predetermined time.

Judgment Value

Malfunction Criteria	Threshold Value
Hybrid battery voltage G	≤ 98.54 V

Time Needed for Diagnosis: 0.1 seconds

DQ:DTC P0BB8 HYBRID BATTERY VOLTAGE SENSE "Z" CIRCUIT

1. OUTLINE OF DIAGNOSIS

Detect the abnormality of high voltage battery GND.
Judge as NG when the high voltage battery GND is out of specification.

2. ENABLE CONDITIONS

Secondary Parameters	Enable Conditions
Ignition state	Run or crank
12V battery system voltage	≥ 6.5 V and ≤ 17 V

3. DIAGNOSTIC METHOD

• Abnormality Judgment

If the duration of time while the following conditions are met is longer than the time indicated, judge as NG.

Judgment Value

Malfunction Criteria	Threshold Value
Status fault flag for 'Voltage Sense "Z" Circuit' as determined by the BECM Sub CPU	Open

Time Needed for Diagnosis: 0.1 seconds
Malfunction Indicator Light Illumination: Illuminates as soon as a malfunction occurs.

• Normality Judgment

Judge as OK and clear the NG if the continuous time while the following conditions are established is more than the predetermined time.

Judgment Value

Malfunction Criteria	Threshold Value
Status fault flag for 'Voltage Sense "Z" Circuit' as determined by the BECM Sub CPU	Close

Time Needed for Diagnosis: 0.1 seconds

DR:DTC P0C30 HYBRID BATTERY PACK STATE OF CHARGE HIGH

1. OUTLINE OF DIAGNOSIS

Detect high voltage battery SOC high.
Judge as NG when the high voltage battery SOC is at the specified value or more.

2. ENABLE CONDITIONS

Secondary Parameters	Enable Conditions
Ignition state	Run or crank
12V battery system voltage	≥ 6.5 V and ≤ 17 V

3. DIAGNOSTIC METHOD

- **Abnormality Judgment**

If the duration of time while the following conditions are met is longer than the time indicated, judge as NG.

Judgment Value

Malfunction Criteria	Threshold Value
SOC NOTE: SOC: State Of Charge	≥ 95%

Time Needed for Diagnosis: 60 seconds
Malfunction Indicator Light Illumination: Illuminates as soon as a malfunction occurs.

- **Normality Judgment**

Judge as OK and clear the NG if the continuous time while the following conditions are established is more than the predetermined time.

Judgment Value

Malfunction Criteria	Threshold Value
SOC	< 95%

Time Needed for Diagnosis: 60 seconds

DS:DTC P0C78 HYBRID BATTERY SYSTEM PRECHARGE TIME TOO LONG

1. OUTLINE OF DIAGNOSIS

Detect the abnormality of high voltage circuit open and precharge resistance.
Judge as NG when the difference between the total voltage value of high voltage battery when contactor is close and the inverter voltage is above the specified value.

2. ENABLE CONDITIONS

Secondary Parameters	Enable Conditions
Ignition state	Run or crank
12V battery system voltage	≥ 6.5 V and ≤ 17 V
HPCM contactor request	Closed
BECM precharge contactor command	Closed
BECM positive contactor command	Open
BECM negative contactor command	Closed

3. DIAGNOSTIC METHOD

- **Abnormality Judgment**

If the duration of time while the following conditions are met is longer than the time indicated, judge as NG.

Judgment Value

Malfunction Criteria	Threshold Value
ABS (Hybrid battery pack voltage – Inverter voltage) NOTE: ABS: Absolute value	> 20 V

Time Needed for Diagnosis: 0.6 seconds
Malfunction Indicator Light Illumination: Illuminates as soon as a malfunction occurs.

- **Normality Judgment**

Judge as OK and clear the NG if the continuous time while the following conditions are established is more than the predetermined time.

Judgment Value

Malfunction Criteria	Threshold Value
ABS (Hybrid battery pack voltage – Inverter voltage) NOTE: ABS: Absolute value	≤ 20 V

Time Needed for Diagnosis: 0.6 seconds

DT:DTC P0CA6 HYBRID BATTERY CHARGING CURRENT HIGH

1. OUTLINE OF DIAGNOSIS

Detect that the high voltage battery current exceeds the rated charging current.
Judge as NG when the current value (charging) is above the specified value.

2. ENABLE CONDITIONS

Secondary Parameters	Enable Conditions
Ignition state	Run or crank
12V battery system voltage	≥ 6.5 V and ≤ 17 V
HPCM contactor request	Closed
BECM positive contactor command	Closed
BECM negative contactor command	Closed

3. DIAGNOSTIC METHOD

- **Abnormality Judgment**

If the duration of time while the following conditions are met is longer than the time indicated, judge as NG.

Judgment Value

Malfunction Criteria	Threshold Value
Hybrid battery pack current (Detected state: charge) NOTE: (Detected state: charge)	> 110 A

Time Needed for Diagnosis: 2 seconds
Malfunction Indicator Light Illumination: Illuminates as soon as a malfunction occurs.

- **Normality Judgment**

Judge as OK and clear the NG if the continuous time while the following conditions are established is more than the predetermined time.

Judgment Value

Malfunction Criteria	Threshold Value
Hybrid battery pack current (Detected state: charge) NOTE: (Detected state: charge)	≤ 110 A

Time Needed for Diagnosis: 2 seconds

DU:DTC P0CA7 HYBRID BATTERY DISCHARGING CURRENT HIGH

1. OUTLINE OF DIAGNOSIS

Detect that the high voltage battery current exceeds the rated charging current.
Judge as NG when the current value (discharging) is above the specified value.

2. ENABLE CONDITIONS

Secondary Parameters	Enable Conditions
Ignition state	Run or crank
12V battery system voltage	≥ 6.5 V and ≤ 17 V
HPCM contactor request	Closed
BECM positive contactor command	Closed
BECM negative contactor command	Closed

3. DIAGNOSTIC METHOD

- **Abnormality Judgment**

If the duration of time while the following conditions are met is longer than the time indicated, judge as NG.

Judgment Value

Malfunction Criteria	Threshold Value
Hybrid battery pack current (Detected state: discharge)	< –190 A

Time Needed for Diagnosis: 2 seconds
Malfunction Indicator Light Illumination: Illuminates as soon as a malfunction occurs.

- **Normality Judgment**

Judge as OK and clear the NG if the continuous time while the following conditions are established is more than the predetermined time.

Judgment Value

Malfunction Criteria	Threshold Value
Hybrid battery pack current (Detected state: discharge)	≥ –190 A

Time Needed for Diagnosis: 2 seconds

DV:DTC P1C40 HYBRID BATTERY POSITIVE CONTACTOR OR PRE-CHARGE CONTACTOR CIRCUIT STUCK CLOSED

1. OUTLINE OF DIAGNOSIS

Detect the adhesion of +side contactor and precharge contactor.
Judge as NG when the difference between the total voltage value of high voltage battery when contactor is open and the inverter voltage is at the specified value or more.

2. ENABLE CONDITIONS

Secondary Parameters	Enable Conditions
Ignition state	Run or crank
12V battery system voltage	≥ 6.5 V and ≤ 17 V
HPCM contactor request	Open
BECM precharge contactor command	Open
BECM positive contactor command	Open
BECM negative contactor command	Closed

3. DIAGNOSTIC METHOD

- **Abnormality Judgment**

If the duration of time while the following conditions are met is longer than the time indicated, judge as NG.

Judgment Value

Malfunction Criteria	Threshold Value
Inverter voltage / Hybrid battery pack voltage	≥ 0.8 V

Time Needed for Diagnosis: 1.3 seconds
Malfunction Indicator Light Illumination: Illuminates as soon as a malfunction occurs.

- **Normality Judgment**

Judge as OK and clear the NG if the continuous time while the following conditions are established is more than the predetermined time.

Judgment Value

Malfunction Criteria	Threshold Value
Inverter voltage / Hybrid battery pack voltage	< 0.8 V

Time Needed for Diagnosis: 1.3 seconds

DW:DTC P1C41 HIGH VOLTAGE CIRCUIT SHORT

1. OUTLINE OF DIAGNOSIS

Detect the short circuit of high voltage line + and –.
Judge as NG when the current at contactor close is at the specified value or more.
Judge as NG when the high voltage battery voltage value at close is below the specified value.

2. ENABLE CONDITIONS

Secondary Parameters	Enable Conditions
Diagnosis 1	
Ignition state	Run or crank
12V battery system voltage	≥ 6.5 V and ≤ 17 V
HPCM contactor request	Closed
BECM precharge contactor command	Closed
BECM positive contactor command	Open
BECM negative contactor command	Closed
Diagnosis 2	
Ignition state	Run or crank
12V battery system voltage	≥ 6.5 V and ≤ 17 V
HPCM contactor request	Closed
BECM precharge contactor command	Open
BECM positive contactor command	Closed
BECM negative contactor command	Closed

3. DIAGNOSTIC METHOD

- **Abnormality Judgment**

If the duration of time while the following conditions are met is longer than the time indicated, judge as NG.

Judgment Value

Malfunction Criteria	Threshold Value
Diagnosis 1	
Hybrid battery pack discharge current	> 1.75 A
Diagnosis 2	
Hybrid battery pack voltage	< 48 V

Time Needed for Diagnosis:
- **Diagnosis 1:** less than 0.6 s
- **Diagnosis 2:** 0.1 s

Malfunction Indicator Light Illumination: Illuminates as soon as a malfunction occurs.

- **Normality Judgment**

Judge as OK and clear the NG if the continuous time while the following conditions are established is more than the predetermined time.

Judgment Value

Malfunction Criteria	Threshold Value
Diagnosis 1	
Hybrid battery pack discharge current	≤ 1.75 A
Diagnosis 2	
Hybrid battery pack voltage	≥ 48 V

Time Needed for Diagnosis: 0.6 s after engine start

DX:DTC P1C42 HIGH VOLTAGE CIRCUIT OPEN

1. OUTLINE OF DIAGNOSIS

Detect the high voltage circuit open at driving.
Judge as NG both when the difference between the high voltage battery voltage value and the inverter voltage value is at the specified value or more, and when the high voltage battery current value is within specification.

2. ENABLE CONDITIONS

Secondary Parameters	Enable Conditions
Ignition state	Run or crank
12V battery system voltage	≥ 6.5 V and ≤ 17 V
HPCM contactor request	Closed
Measured Positive contactor control signal (BECM main CPU output)	Closed
Measured Positive contactor control signal (BECM output)	Closed
Measured Negative contactor control signal (BECM main CPU output)	Closed
Measured Negative contactor control signal (BECM output)	Closed
Measured contactor power supply control signal	ON
Measured contactor power supply voltage	≥ 4 V

3. DIAGNOSTIC METHOD

- **Abnormality Judgment**

If the duration of time while the following conditions are met is longer than the time indicated, judge as NG.

Judgment Value

Malfunction Criteria	Threshold Value
Absolute value of hybrid battery pack current	≤ 1 A
Inverter voltage / Hybrid battery voltage	≤ 0.8

Time Needed for Diagnosis: 1 seconds
Malfunction Indicator Light Illumination: Illuminates as soon as a malfunction occurs.

- **Normality Judgment**

Judge as OK and clear the NG if the continuous time while the following conditions are established is more than the predetermined time.

Judgment Value

Malfunction Criteria	Threshold Value
Absolute value of hybrid battery pack current	> 1 A
Inverter voltage / Hybrid battery voltage	> 0.8

Time Needed for Diagnosis: 1 seconds

DY:DTC P1C43 HYBRID BATTERY CONTACTOR POWER SUPPLY CIRCUIT

1. OUTLINE OF DIAGNOSIS

Detect the malfunction of power supply instantaneous interruption detection circuit and power supply circuit of contactor.
Judge as NG when the open circuit of power supply instantaneous interruption detection circuit and power supply circuit of contactor is detected.

2. ENABLE CONDITIONS

Secondary Parameters	Enable Conditions
Diagnosis 1	
Ignition state	Run or crank
12V battery system voltage	≥ 6.5 V and ≤ 17 V
BECM positive contactor command	Closed or
BECM negative contactor command	Closed or
BECM precharge contactor command	Closed
Diagnosis 2	
Ignition state	Run or crank
12V battery system voltage	≥ 6.5 V and ≤ 17 V
Measured Contactor power supply monitoring signal	Power on

3. DIAGNOSTIC METHOD

- **Abnormality Judgment**

If the duration of time while the following conditions are met is longer than the time indicated, judge as NG.

Judgment Value

Malfunction Criteria	Threshold Value
Diagnosis 1	
Measured Contactor power supply monitoring signal	Power off
Diagnosis 2	
Measured contactor power supply voltage dropped signal	ON

Time Needed for Diagnosis: 0.5 seconds
Malfunction Indicator Light Illumination: Illuminates as soon as a malfunction occurs.

- **Normality Judgment**

Judge as OK and clear the NG if the continuous time while the following conditions are established is more than the predetermined time.

Judgment Value

Malfunction Criteria	Threshold Value
Diagnosis 1 Measured contactor power supply monitoring signal	Power on
Diagnosis 2 Measured contactor power supply voltage dropped signal	Off

Time Needed for Diagnosis: 0.5 seconds

DZ:DTC P1C44 SUB CPU IN BECM

1. OUTLINE OF DIAGNOSIS

Detect the communication failure of MAINCPU and SubCPU.
Judge as NG when data is not received from SubCPU.

2. ENABLE CONDITIONS

Secondary Parameters	Enable Conditions
Ignition state	Run or crank
12V battery system voltage	≥ 6.5 V and ≤ 17 V

3. DIAGNOSTIC METHOD

• Abnormality Judgment

If the duration of time while the following conditions are met is longer than the time indicated, judge as NG.

Judgment Value

Malfunction Criteria	Threshold Value
Diagnosis 1 Serial communication between BECM Main CPU and BECM Sub CPU is lost (no message received)	Detected
Diagnosis 2 Hybrid Battery voltage input circuit error for BECM Sub CPU	Detected
Diagnosis 3 A/D Converter failure for BECM Sub CPU	Detected
Diagnosis 4 Multiplex connection error for BECM Sub CPU	Detected

Time Needed for Diagnosis: 10 seconds
Malfunction Indicator Light Illumination: Illuminates as soon as a malfunction occurs.

• Normality Judgment

Judge as OK and clear the NG if the continuous time while the following conditions are established is more than the predetermined time.

Judgment Value

Malfunction Criteria	Threshold Value
Diagnosis 1 Serial communication between BECM Main CPU and BECM Sub CPU is lost (no message received)	Not detected
Diagnosis 2 Hybrid Battery voltage input circuit error for BECM Sub CPU	Not detected
Diagnosis 3 A/D Converter failure for BECM Sub CPU	Not detected
Diagnosis 4 Multiplex connection error for BECM Sub CPU	Not detected

Time Needed for Diagnosis: 10 seconds

EA:DTC P1C45 HYBRID BATTERY BLOCK 1 BALANCING PERFORMANCE

1. OUTLINE OF DIAGNOSIS

Detect the cell malfunction of high voltage battery block 1.
Judge as NG when the deviation of high voltage battery block voltage is large.

2. ENABLE CONDITIONS

Secondary Parameters	Enable Conditions
Ignition state	Run or crank
12V battery system voltage	≥ 6.5 V and ≤ 17 V

3. DIAGNOSTIC METHOD

• Abnormality Judgment

If the duration of time while the following conditions are met is longer than the time indicated, judge as NG.

Judgment Value

Malfunction Criteria	Threshold Value
Diagnostic value = (Adjusted average module voltage – Min. module voltage) x N N=4 NOTE: This DTC will be stored only if the “Min. module voltage” equal to the average module voltage of Block 1.	> 1.2 V

Time Needed for Diagnosis: 10 seconds
Malfunction Indicator Light Illumination: Illuminates as soon as a malfunction occurs.

• Normality Judgment

Judge as OK and clear the NG if the continuous time while the following conditions are established is more than the predetermined time.

Judgment Value

Malfunction Criteria	Threshold Value
Diagnostic value = (Adjusted average module voltage – Min. module voltage) x N N=4 NOTE: This DTC will be stored only if the “Min. module voltage” equal to the average module voltage of Block 1.	≤ 1.2 V

Time Needed for Diagnosis: 10 seconds

EB:DTC P1C46 HYBRID BATTERY BLOCK 2 BALANCING PERFORMANCE

1. OUTLINE OF DIAGNOSIS

Detect the cell malfunction of high voltage battery block 2.
Judge as NG when the deviation of high voltage battery block voltage is large.

2. ENABLE CONDITIONS

Secondary Parameters	Enable Conditions
Ignition state	Run or crank
12V battery system voltage	≥ 6.5 V and ≤ 17 V

3. DIAGNOSTIC METHOD

• Abnormality Judgment

If the duration of time while the following conditions are met is longer than the time indicated, judge as NG.

Judgment Value

Malfunction Criteria	Threshold Value
Diagnostic value = (Adjusted average module voltage – Min. module voltage) x N N=4 NOTE: This DTC will be stored only if the “Min. module voltage” equal to the average module voltage of Block 2.	> 1.2 V

Time Needed for Diagnosis: 10 seconds
Malfunction Indicator Light Illumination: Illuminates as soon as a malfunction occurs.

• Normality Judgment

Judge as OK and clear the NG if the continuous time while the following conditions are established is more than the predetermined time.

Judgment Value

Malfunction Criteria	Threshold Value
Diagnostic value = (Adjusted average module voltage – Min. module voltage) x N N=4 NOTE: This DTC will be stored only if the “Min. module voltage” equal to the average module voltage of Block 2.	≤ 1.2 V

Time Needed for Diagnosis: 10 seconds

EC:DTC P1C47 HYBRID BATTERY BLOCK 3 BALANCING PERFORMANCE

1. OUTLINE OF DIAGNOSIS

Detect the abnormality of voltage deviation between high voltage battery cells.
Judge as NG when the deviation of high voltage battery block voltage is large.

2. ENABLE CONDITIONS

Secondary Parameters	Enable Conditions
Ignition state	Run or crank
12V battery system voltage	≥ 6.5 V and ≤ 17 V

3. DIAGNOSTIC METHOD

• Abnormality Judgment

If the duration of time while the following conditions are met is longer than the time indicated, judge as NG.

Judgment Value

Malfunction Criteria	Threshold Value
Diagnostic value = (Adjusted average module voltage – Min. module voltage) x N N=4 NOTE: This DTC will be stored only if the “Min. module voltage” equal to the average module voltage of Block 3.	> 1.2 V

Time Needed for Diagnosis: 10 seconds
Malfunction Indicator Light Illumination: Illuminates as soon as a malfunction occurs.

• Normality Judgment

Judge as OK and clear the NG if the continuous time while the following conditions are established is more than the predetermined time.

Judgment Value

Malfunction Criteria	Threshold Value
Diagnostic value = (Adjusted average module voltage – Min. module voltage) x N N=4 NOTE: This DTC will be stored only if the “Min. module voltage” equal to the average module voltage of Block 3.	≤ 1.2 V

Time Needed for Diagnosis: 10 seconds

ED:DTC P1C48 HYBRID BATTERY BLOCK 4 BALANCING PERFORMANCE

1. OUTLINE OF DIAGNOSIS

Detect the abnormality of voltage deviation between high voltage battery cells.
Judge as NG when the deviation of high voltage battery block voltage is large.

2. ENABLE CONDITIONS

Secondary Parameters	Enable Conditions
Ignition state	Run or crank
12V battery system voltage	≥ 6.5 V and ≤ 17 V

3. DIAGNOSTIC METHOD

• Abnormality Judgment

If the duration of time while the following conditions are met is longer than the time indicated, judge as NG.

Judgment Value

Malfunction Criteria	Threshold Value
Diagnostic value = (Adjusted average module voltage – Min. module voltage) x N N=2 NOTE: This DTC will be stored only if the “Min. module voltage” equal to the average module voltage of Block 4.	> 1.2 V

Time Needed for Diagnosis: 10 seconds
Malfunction Indicator Light Illumination: Illuminates as soon as a malfunction occurs.

• Normality Judgment

Judge as OK and clear the NG if the continuous time while the following conditions are established is more than the predetermined time.

Judgment Value

Malfunction Criteria	Threshold Value
Diagnostic value = (Adjusted average module voltage – Min. module voltage) x N N=2 NOTE: This DTC will be stored only if the “Min. module voltage” equal to the average module voltage of Block 4.	≤ 1.2 V

Time Needed for Diagnosis: 10 seconds

EE:DTC P1C49 HYBRID BATTERY BLOCK 5 BALANCING PERFORMANCE

1. OUTLINE OF DIAGNOSIS

Detect the abnormality of voltage deviation between high voltage battery cells.
Judge as NG when the deviation of high voltage battery block voltage is large.

2. ENABLE CONDITIONS

Secondary Parameters	Enable Conditions
Ignition state	Run or crank
12V battery system voltage	≥ 6.5 V and ≤ 17 V

3. DIAGNOSTIC METHOD

• Abnormality Judgment

If the duration of time while the following conditions are met is longer than the time indicated, judge as NG.

Judgment Value

Malfunction Criteria	Threshold Value
Diagnostic value = (Adjusted average module voltage – Min. module voltage) x N N=4 NOTE: This DTC will be stored only if the “Min. module voltage” equal to the average module voltage of Block 5.	> 1.2 V

Time Needed for Diagnosis: 10 seconds
Malfunction Indicator Light Illumination: Illuminates as soon as a malfunction occurs.

• Normality Judgment

Judge as OK and clear the NG if the continuous time while the following conditions are established is more than the predetermined time.

Judgment Value

Malfunction Criteria	Threshold Value
Diagnostic value = (Adjusted average module voltage – Min. module voltage) x N N=4 NOTE: This DTC will be stored only if the “Min. module voltage” equal to the average module voltage of Block 5.	≤ 1.2 V

Time Needed for Diagnosis: 10 seconds

EF:DTC P1C4A HYBRID BATTERY BLOCK 6 BALANCING PERFORMANCE

1. OUTLINE OF DIAGNOSIS

Detect the abnormality of voltage deviation between high voltage battery cells.
Judge as NG when the deviation of high voltage battery block voltage is large.

2. ENABLE CONDITIONS

Secondary Parameters	Enable Conditions
Ignition state	Run or crank
12V battery system voltage	≥ 6.5 V and ≤ 17 V

3. DIAGNOSTIC METHOD

• Abnormality Judgment

If the duration of time while the following conditions are met is longer than the time indicated, judge as NG.

Judgment Value

Malfunction Criteria	Threshold Value
Diagnostic value = (Adjusted average module voltage – Min. module voltage) x N N=3 NOTE: This DTC will be stored only if the “Min. module voltage” equal to the average module voltage of Block 6.	> 1.2 V

Time Needed for Diagnosis: 10 seconds
Malfunction Indicator Light Illumination: Illuminates as soon as a malfunction occurs.

• Normality Judgment

Judge as OK and clear the NG if the continuous time while the following conditions are established is more than the predetermined time.

Judgment Value

Malfunction Criteria	Threshold Value
Diagnostic value = (Adjusted average module voltage – Min. module voltage) x N N=3 NOTE: This DTC will be stored only if the “Min. module voltage” equal to the average module voltage of Block 6.	≤ 1.2 V

Time Needed for Diagnosis: 10 seconds

EG:DTC P1C5E HYBRID BATTERY BLOCK VOLTAGE TOO LOW

1. OUTLINE OF DIAGNOSIS

Detect high voltage battery block voltage low.
Judge as NG when the high voltage battery block voltage is less than specified value.

2. ENABLE CONDITIONS

Secondary Parameters	Enable Conditions
Ignition state	Run or crank
12V battery system voltage	≥ 6.5 V and ≤ 17 V
HPCM contactor request	Open
BECM precharge contactor command	Open
BECM positive contactor command	Open
BECM negative contactor command	Open

3. DIAGNOSTIC METHOD

• Abnormality Judgment

If the duration of time while the following conditions are met is longer than the time indicated, judge as NG.

Judgment Value

Malfunction Criteria	Threshold Value
Minimum average module voltage of block	< Map4

Map 4

Minimum Hybrid battery temperature (°C (°F))	–40 (–40)	–20 (–4)	–10 (14)	0 (32)	10 (50)	25 (77)	35 (95)	45 (113)	50 (122)
Minimum average module voltage of block (V)	4.485	4.365	4.340	4.320	4.290	4.230	4.195	4.170	4.170

Time Needed for Diagnosis: 0.1 seconds
Malfunction Indicator Light Illumination: Illuminates as soon as a malfunction occurs.

• Normality Judgment

Judge as OK and clear the NG if the continuous time while the following conditions are established is more than the predetermined time.

Judgment Value

Malfunction Criteria	Threshold Value
Minimum average module voltage of block	≥ Map4

Time Needed for Diagnosis: 0.1 seconds

EH:DTC U0073 CONTROL MODULE COMMUNICATION BUS OFF

1. OUTLINE OF DIAGNOSIS

Detect the bus error of CAN channel 1.
Judge as NG when the detection result is out of specification.

2. ENABLE CONDITIONS

Secondary Parameters	Enable Conditions
a: Ignition state	Run or crank
b: 12 V battery system voltage	≥ 10.9 V
Elapsed time of a and b	≥ 1 s

3. DIAGNOSTIC METHOD

- **Abnormality Judgment**

If the duration of time while the following conditions are met is longer than the time indicated, judge as NG.

Judgment Value

Malfunction Criteria	Threshold Value
CAN bus condition	Bus off

Time Needed for Diagnosis: 0.48 seconds
Malfunction Indicator Light Illumination: Illuminates as soon as a malfunction occurs.

- **Normality Judgment**

Judge as OK and clear the NG if the continuous time while the following conditions are established is more than the predetermined time.

Judgment Value

Malfunction Criteria	Threshold Value
CAN bus condition	≠ Bus off

Time Needed for Diagnosis: 0 seconds

EI: DTC U0075 CONTROL MODULE COMMUNICATION BUS "PU-CAN" OFF

1. OUTLINE OF DIAGNOSIS

Detect the bus error of CAN channel 2.
Judge as NG when the detection result is out of specification.

2. ENABLE CONDITIONS

Secondary Parameters	Enable Conditions
a: Ignition state	Run or crank
b: 12 V battery system voltage	≥ 10.9
Elapsed time of a and b	≥ 1 s

3. DIAGNOSTIC METHOD

- **Abnormality Judgment**

If the duration of time while the following conditions are met is longer than the time indicated, judge as NG.

Judgment Value

Malfunction Criteria	Threshold Value
CAN bus condition	Bus off

Time Needed for Diagnosis: 0.48 seconds
Malfunction Indicator Light Illumination: Illuminates as soon as a malfunction occurs.

- **Normality Judgment**

Judge as OK and clear the NG if the continuous time while the following conditions are established is more than the predetermined time.

Judgment Value

Malfunction Criteria	Threshold Value
CAN bus condition	≠ Bus off

Time Needed for Diagnosis: 0 seconds

EJ:DTC U0076 CONTROL MODULE COMMUNICATION BUS "HEV-CAN" OFF

HYBRID POWERTRAIN CONTROL SYSTEM

1. OUTLINE OF DIAGNOSIS

Detect the CAN failure and bus error of HEV-CAN.
Judge as NG when the detection result is out of specification.

2. ENABLE CONDITIONS

Secondary Parameters	Enable Conditions
a: Ignition state	Run or crank
b: 12 V battery system voltage	≥ 10.9
Elapsed time of a and b	≥ 1 s

3. DIAGNOSTIC METHOD

- **Abnormality Judgment**

If the duration of time while the following conditions are met is longer than the time indicated, judge as NG.

Judgment Value

Malfunction Criteria	Threshold Value
CAN bus condition	Bus off

Time Needed for Diagnosis: Less than 0.48 second
Malfunction Indicator Light Illumination: Illuminates as soon as a malfunction occurs.

- **Normality Judgment**

Judge as OK and clear the NG if the continuous time while the following conditions are established is more than the predetermined time.

Judgment Value

Malfunction Criteria	Threshold Value
CAN bus condition	≠ Bus off

Time Needed for Diagnosis: 0 seconds
DRIVE MOTOR CONTROL SYSTEM

4. OUTLINE OF DIAGNOSIS

Detect the serial communication failure with inverter.
Judge as NG when the data from inverter is not received correctly.

5. ENABLE CONDITIONS

Secondary Parameters	Enable Conditions
a: 12 V battery system voltage	≥ 10 V
Continuous time of a	≥ 1 s

6. DIAGNOSTIC METHOD

• Abnormality Judgment

If the duration of time while the following conditions are met is longer than the time indicated, judge as NG.

Judgment Value

Malfunction Criteria	Threshold Value
CAN bus condition	Bus off

Time Needed for Diagnosis: Immediately
Malfunction Indicator Light Illumination: Illuminates as soon as a malfunction occurs.

• Normality Judgment

Judge as OK and clear the NG if the continuous time while the following conditions are established is more than the predetermined time.

Judgment Value

Malfunction Criteria	Threshold Value
CAN bus condition	≠ Bus off

Time Needed for Diagnosis: Immediately
BATTERY ENERGY CONTROL SYSTEM

7. OUTLINE OF DIAGNOSIS

Detect CAN bus off error.

8. ENABLE CONDITIONS

Secondary Parameters	Enable Conditions
a: (Ignition state	Run or crank
12 V battery system voltage)	≥ 9 V and ≤ 17 V
Continuous time of a	≥ 1 s

9. DIAGNOSTIC METHOD

• Abnormality Judgment

If the duration of time while the following conditions are met is longer than the time indicated, judge as NG.

Judgment Value

Malfunction Criteria	Threshold Value
CAN bus condition	Bus off

Time Needed for Diagnosis: 0.2 seconds
Malfunction Indicator Light Illumination: Illuminates as soon as a malfunction occurs.

• Normality Judgment

Judge as OK and clear the NG if the continuous time while the following conditions are established is more than the predetermined time.

Judgment Value

Malfunction Criteria	Threshold Value
CAN bus condition	≠ Bus off

Time Needed for Diagnosis: 0.2 seconds

EK:DTC U0100 LOST COMMUNICATION WITH ECM/PCM "A"

1. OUTLINE OF DIAGNOSIS

Detect the engine data not received.
Judge as NG when the detection result is out of specification.

2. ENABLE CONDITIONS

Secondary Parameters	Enable Conditions
a: Ignition state	Run or crank
b: 12 V battery system voltage	≥ 10.9
Elapsed time of a and b	≥ 1 s

3. DIAGNOSTIC METHOD

- **Abnormality Judgment**

If the duration of time while the following conditions are met is longer than the time indicated, judge as NG.

Judgment Value

Malfunction Criteria	Threshold Value
CAN data from ECM	Lost

Time Needed for Diagnosis: 0.5 seconds
Malfunction Indicator Light Illumination: Illuminates as soon as a malfunction occurs.

- **Normality Judgment**

Judge as OK and clear the NG if the continuous time while the following conditions are established is more than the predetermined time.

Judgment Value

Malfunction Criteria	Threshold Value
CAN data from ECM	≠ Lost

Time Needed for Diagnosis: 0 seconds

EL:DTC U0101 LOST COMMUNICATION WITH TCM

1. OUTLINE OF DIAGNOSIS

Detect the transmission data not received.
Judge as NG when the detection result is out of specification.

2. ENABLE CONDITIONS

Secondary Parameters	Enable Conditions
a: Ignition state	Run or crank
b: 12 V battery system voltage	≥ 10.9
Elapsed time of a and b	≥ 1 s

3. DIAGNOSTIC METHOD

- **Abnormality Judgment**

If the duration of time while the following conditions are met is longer than the time indicated, judge as NG.

Judgment Value

Malfunction Criteria	Threshold Value
CAN data from TCM	Lost

Time Needed for Diagnosis: 0.5 seconds
Malfunction Indicator Light Illumination: Illuminates as soon as a malfunction occurs.

- **Normality Judgment**

Judge as OK and clear the NG if the continuous time while the following conditions are established is more than the predetermined time.

Judgment Value

Malfunction Criteria	Threshold Value
CAN data from ECM	≠ Lost

Time Needed for Diagnosis: 0 seconds

EM:DTC U0110 LOST COMMUNICATION WITH DRIVE MOTOR CONTROL MODULE "A"

HYBRID POWERTRAIN CONTROL SYSTEM

1. OUTLINE OF DIAGNOSIS

Detect the motor control module data not received.

2. ENABLE CONDITIONS

Secondary Parameters	Enable Conditions
a: Ignition state	Run or crank
b: 12 V battery system voltage	≥ 10.9
Elapsed time of a and b	≥ 1 s

3. DIAGNOSTIC METHOD

- **Abnormality Judgment**

If the duration of time while the following conditions are met is longer than the time indicated, judge as NG.

Judgment Value

Malfunction Criteria	Threshold Value
CAN data from DMCM	Lost

Time Needed for Diagnosis: 1 seconds
Malfunction Indicator Light Illumination: Illuminates as soon as a malfunction occurs.

- **Normality Judgment**

Judge as OK and clear the NG if the continuous time while the following conditions are established is more than the predetermined time.

Judgment Value

Malfunction Criteria	Threshold Value
CAN bus condition	≠ Lost

Time Needed for Diagnosis: 0 seconds
BATTERY ENERGY CONTROL SYSTEM

4. OUTLINE OF DIAGNOSIS

Detect the malfunction of CAN data not received from drive motor control module.

5. ENABLE CONDITIONS

Secondary Parameters	Enable Conditions
a: (Ignition state	Run or crank
12 V battery system voltage)	≥ 9 V and ≤ 17 V
Continuous time of a	≥ 1 s

6. DIAGNOSTIC METHOD

- **Abnormality Judgment**

If the duration of time while the following conditions are met is longer than the time indicated, judge as NG.

Judgment Value

Malfunction Criteria	Threshold Value
CAN data from DMCM	Lost

Time Needed for Diagnosis: 1 seconds
Malfunction Indicator Light Illumination: Illuminates as soon as a malfunction occurs.

- **Normality Judgment**

Judge as OK and clear the NG if the continuous time while the following conditions are established is more than the predetermined time.

Judgment Value

Malfunction Criteria	Threshold Value
CAN bus condition	Received

Time Needed for Diagnosis: 1 seconds

EN:DTC U0111 LOST COMMUNICATION WITH BATTERY ENERGY CONTROL MODULE

HYBRID POWERTRAIN CONTROL SYSTEM

1. OUTLINE OF DIAGNOSIS

Detect the battery energy control module data not received.
Judge as NG when the detection result is out of specification.

2. ENABLE CONDITIONS

Secondary Parameters	Enable Conditions
a: Ignition state	Run or crank
b: 12 V battery system voltage	≥ 10.9
Elapsed time of a and b	≥ 1 s

3. DIAGNOSTIC METHOD

- **Abnormality Judgment**

If the duration of time while the following conditions are met is longer than the time indicated, judge as NG.

Judgment Value

Malfunction Criteria	Threshold Value
CAN data from BECM	Lost

Time Needed for Diagnosis: 2 seconds
Malfunction Indicator Light Illumination: Illuminates as soon as a malfunction occurs.

- **Normality Judgment**

Judge as OK and clear the NG if the continuous time while the following conditions are established is more than the predetermined time.

Judgment Value

Malfunction Criteria	Threshold Value
CAN data from BECM	≠ Lost

Time Needed for Diagnosis: 0 seconds
DRIVE MOTOR CONTROL SYSTEM

4. OUTLINE OF DIAGNOSIS

Detect the serial communication failure with inverter.
Judge as NG when the data from inverter is not received correctly.

5. ENABLE CONDITIONS

Secondary Parameters	Enable Conditions
a: 12 V battery system voltage	≥ 10 V
Continuous time of a	≥ 1 s

6. DIAGNOSTIC METHOD

- **Abnormality Judgment**

If the duration of time while the following conditions are met is longer than the time indicated, judge as NG.

Judgment Value

Malfunction Criteria	Threshold Value
CAN data from BECM	Lost

Time Needed for Diagnosis: 0.5 seconds
Malfunction Indicator Light Illumination: Illuminates as soon as a malfunction occurs.

- **Normality Judgment**

Judge as OK and clear the NG if the continuous time while the following conditions are established is more than the predetermined time.

Judgment Value

Malfunction Criteria	Threshold Value
CAN data from BECM	Received

Time Needed for Diagnosis: 8 seconds

EO:DTC U0122 LOST COMMUNICATION WITH VEHICLE DYNAMICS CONTROL MODULE

1. OUTLINE OF DIAGNOSIS

Detect the VDC data not received.
Judge as NG when the detection result is out of specification.

2. ENABLE CONDITIONS

Secondary Parameters	Enable Conditions
a: Ignition state	Run or crank
b: 12 V battery system voltage	≥ 10.9
Elapsed time of a and b	≥ 1 s

3. DIAGNOSTIC METHOD

- **Abnormality Judgment**

If the duration of time while the following conditions are met is longer than the time indicated, judge as NG.

Judgment Value

Malfunction Criteria	Threshold Value
CAN data from Vehicle Dynamics Control Module	Lost

Time Needed for Diagnosis: 0.5 seconds
Malfunction Indicator Light Illumination: Illuminates as soon as a malfunction occurs.

- **Normality Judgment**

Judge as OK and clear the NG if the continuous time while the following conditions are established is more than the predetermined time.

Judgment Value

Malfunction Criteria	Threshold Value
CAN data from ECM	≠ Lost

Time Needed for Diagnosis: 0 seconds

EP:DTC U0401 INVALID DATA RECEIVED FROM ECM/PCM "A"

1. OUTLINE OF DIAGNOSIS

Detect the engine data error.
Judge as NG when the detection result is out of specification.

2. ENABLE CONDITIONS

Secondary Parameters	Enable Conditions
a: Ignition state	Run or crank
b: 12 V battery system voltage	≥ 10.9
Elapsed time of a and b	≥ 1 s

3. DIAGNOSTIC METHOD

- **Abnormality Judgment**

If the duration of time while the following conditions are met is longer than the time indicated, judge as NG.

Judgment Value

Malfunction Criteria	Threshold Value
Diagnosis 1 CAN data from ECM	Parity error
Diagnosis 2 CAN data from ECM	Did not change

Time Needed for Diagnosis:
- **Diagnosis 1:** 0.15 s
- **Diagnosis 2:** 2.5 s

Malfunction Indicator Light Illumination: Illuminates as soon as a malfunction occurs.

- **Normality Judgment**

Judge as OK and clear the NG if the continuous time while the following conditions are established is more than the predetermined time.

Judgment Value

Malfunction Criteria	Threshold Value
Diagnosis 1 CAN data from ECM	≠ Parity error
Diagnosis 2 CAN data from ECM	≠ Did not change

Time Needed for Diagnosis: 0 seconds

EQ:DTC U0402 INVALID DATA RECEIVED FROM TCM

1. OUTLINE OF DIAGNOSIS

Detect the transmission data error.
Judge as NG when the detection result is out of specification.

2. ENABLE CONDITIONS

Secondary Parameters	Enable Conditions
a: Ignition state	Run or crank
b: 12 V battery system voltage	≥ 10.9
Elapsed time of a and b	≥ 1 s

3. DIAGNOSTIC METHOD

- **Abnormality Judgment**

If the duration of time while the following conditions are met is longer than the time indicated, judge as NG.

Judgment Value

Malfunction Criteria	Threshold Value
Diagnosis 1	
CAN data from TCM	Parity error
Diagnosis 2	
CAN data from TCM	Did not change

Time Needed for Diagnosis:
- **Diagnosis 1:** 0.15 s
- **Diagnosis 2:** 0.5 s

Malfunction Indicator Light Illumination: Illuminates as soon as a malfunction occurs.

- **Normality Judgment**

Judge as OK and clear the NG if the continuous time while the following conditions are established is more than the predetermined time.

Judgment Value

Malfunction Criteria	Threshold Value
Diagnosis 1	
CAN data from TCM	≠ Parity error
Diagnosis 2	
CAN data from TCM	≠ Did not change

Time Needed for Diagnosis: 0 seconds

ER:DTC U0411 INVALID DATA RECEIVED FROM DRIVE MOTOR CONTROL MODULE "A"

HYBRID POWERTRAIN CONTROL SYSTEM

1. OUTLINE OF DIAGNOSIS

Detect the data error of drive motor control module.
Judge as NG when the detection result is out of specification.

2. ENABLE CONDITIONS

Secondary Parameters	Enable Conditions
a: Ignition state	Run or crank
b: 12 V battery system voltage	≥ 10.9
Elapsed time of a and b	≥ 1 s

3. DIAGNOSTIC METHOD

- **Abnormality Judgment**

If the duration of time while the following conditions are met is longer than the time indicated, judge as NG.

Judgment Value

Malfunction Criteria	Threshold Value
Diagnosis 1	
CAN data from DMCM	Checksum error
Diagnosis 2	
CAN data from DMCM	Did not change

Time Needed for Diagnosis:
- **Diagnosis 1:** 0.3 s
- **Diagnosis 2:** 0.5 s

Malfunction Indicator Light Illumination: Illuminates as soon as a malfunction occurs.

- **Normality Judgment**

Judge as OK and clear the NG if the continuous time while the following conditions are established is more than the predetermined time.

Judgment Value

Malfunction Criteria	Threshold Value
Diagnosis 1	
CAN data from DMCM	≠ Checksum error
Diagnosis 2	
CAN data from DMCM	≠ Did not change

Time Needed for Diagnosis: 0 seconds

BATTERY ENERGY CONTROL SYSTEM

4. OUTLINE OF DIAGNOSIS

Detect the CAN data stuck failure from drive motor control module.

5. ENABLE CONDITIONS

Secondary Parameters	Enable Conditions
Diagnosis 1	
a: (Ignition state	Run or crank
12 V battery system voltage)	≥ 9 V and ≤ 17 V
Continuous time of a	≥ 1 s
Diagnosis 2	
a: (Ignition state	Run or crank
12 V battery system voltage)	≥ 9 V and ≤ 17 V
Continuous time of a	≥ 1 s
CAN data from DMCM	Changed

6. DIAGNOSTIC METHOD

- **Abnormality Judgment**

If the duration of time while the following conditions are met is longer than the time indicated, judge as NG.

Judgment Value

Malfunction Criteria	Threshold Value
Diagnosis 1	
CAN data from DMCM	Did not change
Diagnosis 2	
CAN data from DMCM	Checksum error

Time Needed for Diagnosis:
- **Diagnosis 1:** 0.5 s
- **Diagnosis 2:** 3 times

Malfunction Indicator Light Illumination: Illuminates as soon as a malfunction occurs.

- **Normality Judgment**

Judge as OK and clear the NG if the continuous time while the following conditions are established is more than the predetermined time.

Judgment Value

Malfunction Criteria	Threshold Value
Diagnosis 1	
CAN data from DMCM	change
Diagnosis 2	
CAN data from DMCM	≠ Checksum error

Time Needed for Diagnosis: 0.5 seconds

ES:DTC U0412 INVALID DATA RECEIVED FROM BATTERY ENERGY CONTROL MODULE

HYBRID POWERTRAIN CONTROL SYSTEM

1. OUTLINE OF DIAGNOSIS

Detect the data error of battery energy control module.
Judge as NG when the detection result is out of specification.

2. ENABLE CONDITIONS

Secondary Parameters	Enable Conditions
a: Ignition state	Run or crank
b: 12 V battery system voltage	≥ 10.9
Elapsed time of a and b	≥ 1 s

3. DIAGNOSTIC METHOD

- **Abnormality Judgment**

If the duration of time while the following conditions are met is longer than the time indicated, judge as NG.

Judgment Value

Malfunction Criteria	Threshold Value
Diagnosis 1	
CAN data from BECM	Checksum error
Diagnosis 2	
CAN data from BECM	Did not change

Time Needed for Diagnosis:
- **Diagnosis 1:** 0.3 s
- **Diagnosis 2:** 20 s

Malfunction Indicator Light Illumination: Illuminates as soon as a malfunction occurs.

- **Normality Judgment**

Judge as OK and clear the NG if the continuous time while the following conditions are established is more than the predetermined time.

Judgment Value

Malfunction Criteria	Threshold Value
Diagnosis 1	
CAN data from BECM	≠ Checksum error
Diagnosis 2	
CAN data from BECM	Changed

Time Needed for Diagnosis: 0 seconds

DRIVE MOTOR CONTROL SYSTEM

4. OUTLINE OF DIAGNOSIS

Detect the communication error with battery energy control module.
Judge as NG when the data from battery energy control module is not received correctly.

5. ENABLE CONDITIONS

Secondary Parameters	Enable Conditions
Diagnosis 1	
CAN data from BECM	Received
CAN data from BECM	≠ Checksum error
a: 12 V battery system voltage	≥ 10 V
Continuous time of a	≥ 1 s
Diagnosis 2	
CAN data from BECM	Received
a: 12 V battery system voltage	≥ 10 V
Continuous time of a	≥ 1 s

6. DIAGNOSTIC METHOD

- **Abnormality Judgment**

If the duration of time while the following conditions are met is longer than the time indicated, judge as NG.

Judgment Value

Malfunction Criteria	Threshold Value
Diagnosis 1	
CAN data from BECM	Did not change
Diagnosis 2	
CAN data from BECM	Checksum error

Time Needed for Diagnosis:
- **Diagnosis 1:** 0.6 s
- **Diagnosis 2:** 0.03 s

Malfunction Indicator Light Illumination: Illuminates as soon as a malfunction occurs.

- **Normality Judgment**

Judge as OK and clear the NG if the continuous time while the following conditions are established is more than the predetermined time.

Judgment Value

Malfunction Criteria	Threshold Value
Diagnosis 1	
CAN data from BECM	Changed
Diagnosis 2	
CAN data from BECM	≠ Checksum error

Time Needed for Diagnosis:
- **Diagnosis 1:** 2.2 s
- **Diagnosis 2:** 0.6 s

ET:DTC U0416 INVALID DATA RECEIVED FROM VEHICLE DYNAMICS CONTROL MODULE

1. OUTLINE OF DIAGNOSIS

Detect the VDC data error.
Judge as NG when the detection result is out of specification.

2. ENABLE CONDITIONS

Secondary Parameters	Enable Conditions
a: Ignition state	Run or crank
b: 12 V battery system voltage	≥ 10.9
Elapsed time of a and b	≥ 1 s

3. DIAGNOSTIC METHOD

- **Abnormality Judgment**

If the duration of time while the following conditions are met is longer than the time indicated, judge as NG.

Judgment Value

Malfunction Criteria	Threshold Value
Diagnosis 1 CAN data from Vehicle Dynamics Control Module	Parity error
Diagnosis 2 CAN data from Vehicle Dynamics Control Module	Did not change

Time Needed for Diagnosis:
- **Diagnosis 1:** 0.06 s
- **Diagnosis 2:** 0.5 s

Malfunction Indicator Light Illumination: Illuminates as soon as a malfunction occurs.

- **Normality Judgment**

Judge as OK and clear the NG if the continuous time while the following conditions are established is more than the predetermined time.

Judgment Value

Malfunction Criteria	Threshold Value
Diagnosis 1 CAN data from Vehicle Dynamics Control Module	≠ Parity error
Diagnosis 2 CAN data from Vehicle Dynamics Control Module	≠ Did not change

Time Needed for Diagnosis: 0 seconds

EU:DTC U1100 LOST COMMUNICATION WITH ECM/PCM PU-CAN

1. OUTLINE OF DIAGNOSIS

Detect the engine PU-CAN data not received.
Judge as NG when the detection result is out of specification.

2. ENABLE CONDITIONS

Secondary Parameters	Enable Conditions
a: Ignition state	Run or crank
b: 12 V battery system voltage	≥ 10.9
Elapsed time of a and b	≥ 1 s

3. DIAGNOSTIC METHOD

- **Abnormality Judgment**

If the duration of time while the following conditions are met is longer than the time indicated, judge as NG.

Judgment Value

Malfunction Criteria	Threshold Value
CAN data from ECM	Lost

Time Needed for Diagnosis: 2 seconds
Malfunction Indicator Light Illumination: Illuminates as soon as a malfunction occurs.

- **Normality Judgment**

Judge as OK and clear the NG if the continuous time while the following conditions are established is more than the predetermined time.

Judgment Value

Malfunction Criteria	Threshold Value
CAN data from ECM	≠ Lost

Time Needed for Diagnosis: 0 seconds

EV:DTC U1101 LOST COMMUNICATION WITH TCM PU-CAN

1. OUTLINE OF DIAGNOSIS

Detect the transmission PU-CAN data not received.
Judge as NG when the detection result is out of specification.

2. ENABLE CONDITIONS

Secondary Parameters	Enable Conditions
a: Ignition state	Run or crank
b: 12 V battery system voltage	≥ 10.9
Elapsed time of a and b	≥ 1 s

3. DIAGNOSTIC METHOD

- **Abnormality Judgment**

If the duration of time while the following conditions are met is longer than the time indicated, judge as NG.

Judgment Value

Malfunction Criteria	Threshold Value
CAN data from TCM	Lost

Time Needed for Diagnosis: 0.5 seconds
Malfunction Indicator Light Illumination: Illuminates as soon as a malfunction occurs.

- **Normality Judgment**

Judge as OK and clear the NG if the continuous time while the following conditions are established is more than the predetermined time.

Judgment Value

Malfunction Criteria	Threshold Value
CAN data from TCM	≠ Lost

Time Needed for Diagnosis: 0 seconds

EW:DTC U1290 LOST COMMUNICATION WITH HYBRID POWERTRAIN CONTROL MODULE HEV-CAN

DRIVE MOTOR CONTROL SYSTEM

1. OUTLINE OF DIAGNOSIS

Detect the communication error with hybrid powertrain control module.
Judge as NG when the data from hybrid powertrain control module is not received correctly.

2. ENABLE CONDITIONS

Secondary Parameters	Enable Conditions
a: 12 V battery system voltage	≥ 10 V
Continuous time of a	≥ 1 s

3. DIAGNOSTIC METHOD

- **Abnormality Judgment**

If the duration of time while the following conditions are met is longer than the time indicated, judge as NG.

Judgment Value

Malfunction Criteria	Threshold Value
CAN data from HPCM	Lost

Time Needed for Diagnosis: 0.5 seconds
Malfunction Indicator Light Illumination: Illuminates as soon as a malfunction occurs.

- **Normality Judgment**

Judge as OK and clear the NG if the continuous time while the following conditions are established is more than the predetermined time.

Judgment Value

Malfunction Criteria	Threshold Value
CAN data from HPCM	Received

Time Needed for Diagnosis: 2 seconds

BATTERY ENERGY CONTROL SYSTEM

4. OUTLINE OF DIAGNOSIS

Detect the malfunction of CAN data not received from hybrid powertrain control module.

5. ENABLE CONDITIONS

Secondary Parameters	Enable Conditions
a: (Ignition state	Run or crank
12 V battery system voltage)	≥ 9 V and ≤ 17 V
Continuous time of a	≥ 1 s

6. DIAGNOSTIC METHOD

- **Abnormality Judgment**

If the duration of time while the following conditions are met is longer than the time indicated, judge as NG.

Judgment Value

Malfunction Criteria	Threshold Value
CAN data from HPCM	Lost

Time Needed for Diagnosis: 0.5 seconds
Malfunction Indicator Light Illumination: Illuminates as soon as a malfunction occurs.

- **Normality Judgment**

Judge as OK and clear the NG if the continuous time while the following conditions are established is more than the predetermined time.

Judgment Value

Malfunction Criteria	Threshold Value
CAN data from HPCM	Received

Time Needed for Diagnosis: 0.5 seconds

EX:DTC U1401 INVALID DATA RECEIVED FROM ECM/PCM PU-CAN

1. OUTLINE OF DIAGNOSIS

Detect the engine PU-CAN data error.
Judge as NG when the detection result is out of specification.

2. ENABLE CONDITIONS

Secondary Parameters	Enable Conditions
a: Ignition state	Run or crank
b: 12 V battery system voltage	≥ 10.9
Elapsed time of a and b	≥ 1 s

3. DIAGNOSTIC METHOD

- **Abnormality Judgment**

If the duration of time while the following conditions are met is longer than the time indicated, judge as NG.

Judgment Value

Malfunction Criteria	Threshold Value
Diagnosis 1 CAN data from ECM	Checksum error
Diagnosis 2 CAN data from ECM	Did not change

Time Needed for Diagnosis:
- **Diagnosis 1:** 0.03 s
- **Diagnosis 2:** 0.5 s

Malfunction Indicator Light Illumination: Illuminates as soon as a malfunction occurs.

- **Normality Judgment**

Judge as OK and clear the NG if the continuous time while the following conditions are established is more than the predetermined time.

Judgment Value

Malfunction Criteria	Threshold Value
Diagnosis 1 CAN data from ECM	≠ Checksum error
Diagnosis 2 CAN data from ECM	≠ Did not change

Time Needed for Diagnosis: 0 seconds

EY:DTC U1402 INVALID DATA RECEIVED FROM TCM PU-CAN

1. OUTLINE OF DIAGNOSIS

Detect the transmission PU-CAN data error.
Judge as NG when the detection result is out of specification.

2. ENABLE CONDITIONS

Secondary Parameters	Enable Conditions
a: Ignition state	Run or crank
b: 12 V battery system voltage	≥ 10.9
Elapsed time of a and b	≥ 1 s

3. DIAGNOSTIC METHOD

- **Abnormality Judgment**

If the duration of time while the following conditions are met is longer than the time indicated, judge as NG.

Judgment Value

Malfunction Criteria	Threshold Value
Diagnosis 1 CAN data from TCM	Checksum error
Diagnosis 2 CAN data from TCM	Did not change

Time Needed for Diagnosis:
- **Diagnosis 1:** 0.03 s
- **Diagnosis 2:** 0.5 s

Malfunction Indicator Light Illumination: Illuminates as soon as a malfunction occurs.

- **Normality Judgment**

Judge as OK and clear the NG if the continuous time while the following conditions are established is more than the predetermined time.

Judgment Value

Malfunction Criteria	Threshold Value
Diagnosis 1 CAN data from TCM	≠ Checksum error
Diagnosis 2 CAN data from TCM	≠ Did not change

Time Needed for Diagnosis: 0 seconds

EZ:DTC U1591 INVALID DATA RECEIVED FROM HYBRID POWERTRAIN CONTROL MODULE HEV-CAN

Drive motor control module

1. OUTLINE OF DIAGNOSIS

Detect the CAN communication error with hybrid powertrain control module.
Judge as NG when the data from hybrid powertrain control module is not received correctly.

2. ENABLE CONDITIONS

Secondary Parameters	Enable Conditions
Diagnosis 1	
CAN data from HPCM	Received
CAN data from HPCM	≠ Checksum error
a: 12 V battery system voltage	≥ 10 V
Continuous time of a	≥ 1 s
Diagnosis 2	
CAN data from HPCM	Received
a: 12 V battery system voltage	≥ 10 V
Continuous time of a	≥ 1 s

3. DIAGNOSTIC METHOD

- **Abnormality Judgment**

If the duration of time while the following conditions are met is longer than the time indicated, judge as NG.

Judgment Value

Malfunction Criteria	Threshold Value
Diagnosis 1	
CAN data from HPCM	Did not change
Diagnosis 2	
CAN data from HPCM	Checksum error

Time Needed for Diagnosis:
- **Diagnosis 1:** 0.6 s
- **Diagnosis 2:** 0.03 s

Malfunction Indicator Light Illumination: Illuminates as soon as a malfunction occurs.

- **Normality Judgment**

Judge as OK and clear the NG if the continuous time while the following conditions are established is more than the predetermined time.

Judgment Value

Malfunction Criteria	Threshold Value
Diagnosis 1	
CAN data from HPCM	Changed
Diagnosis 2	
CAN data from HPCM	≠ Checksum error

Time Needed for Diagnosis:
- **Diagnosis 1:** 2.2 s
- **Diagnosis 2:** 0.3 s

Battery energy control module

4. OUTLINE OF DIAGNOSIS

Detect the CAN data stuck failure from hybrid powertrain control module.

5. ENABLE CONDITIONS

Secondary Parameters	Enable Conditions
Diagnosis 1	
a: (Ignition state	Run or crank
12 V battery system voltage)	≥ 9 V and ≤ 17 V
Continuous time of a	≥ 1 s
Diagnosis 2	
a: (Ignition state	Run or crank
12 V battery system voltage)	≥ 9 V and ≤ 17 V
Continuous time of a	≥ 1 s
CAN data from HPCM	Changed

6. DIAGNOSTIC METHOD

- **Abnormality Judgment**

If the duration of time while the following conditions are met is longer than the time indicated, judge as NG.

Judgment Value

Malfunction Criteria	Threshold Value
Diagnosis 1	
CAN data from HPCM	Did not change
Diagnosis 2	
CAN data from HPCM	Checksum error

Time Needed for Diagnosis:
- **Diagnosis 1:** 0.5 s
- **Diagnosis 2:** 3 times

Malfunction Indicator Light Illumination: Illuminates as soon as a malfunction occurs.

- **Normality Judgment**

Judge as OK and clear the NG if the continuous time while the following conditions are established is more than the predetermined time.

Judgment Value

Malfunction Criteria	Threshold Value
Diagnosis 1	
CAN data from HPCM	Changed
Diagnosis 2	
CAN data from HPCM	≠ Checksum error

Time Needed for Diagnosis:
- **Diagnosis 1:** 0.5 s
- **Diagnosis 2:** 0.5 s

PEDESTRIAN ALERT SYSTEM

PA

Page

1. General Description 2
2. Relay and Fuse 4
3. Pedestrian Alert System 5
4. Pedestrian Alert Control Unit 6
5. Pedestrian Alert Speaker 7
6. Combination Meter 9
7. Stop Light & Brake Switch 10
8. Diagnostics with Phenomenon 11

1. General Description

A: COMPONENT

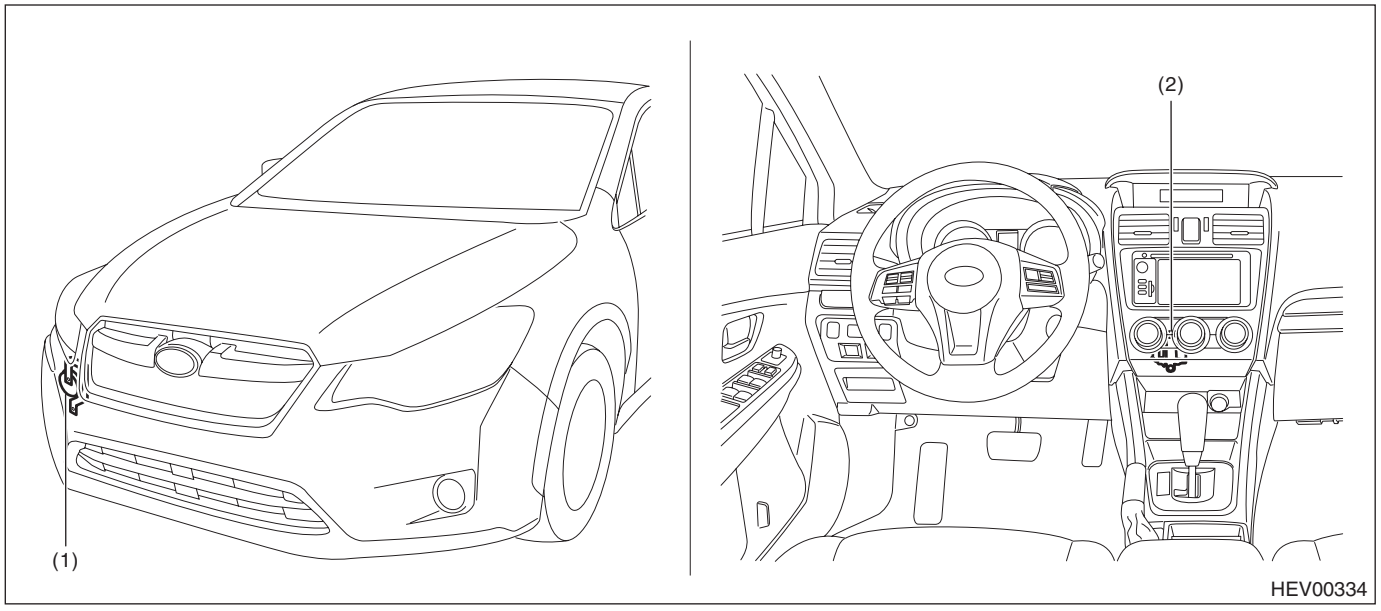

(1) Pedestrian alert speaker (2) Pedestrian alert control unit

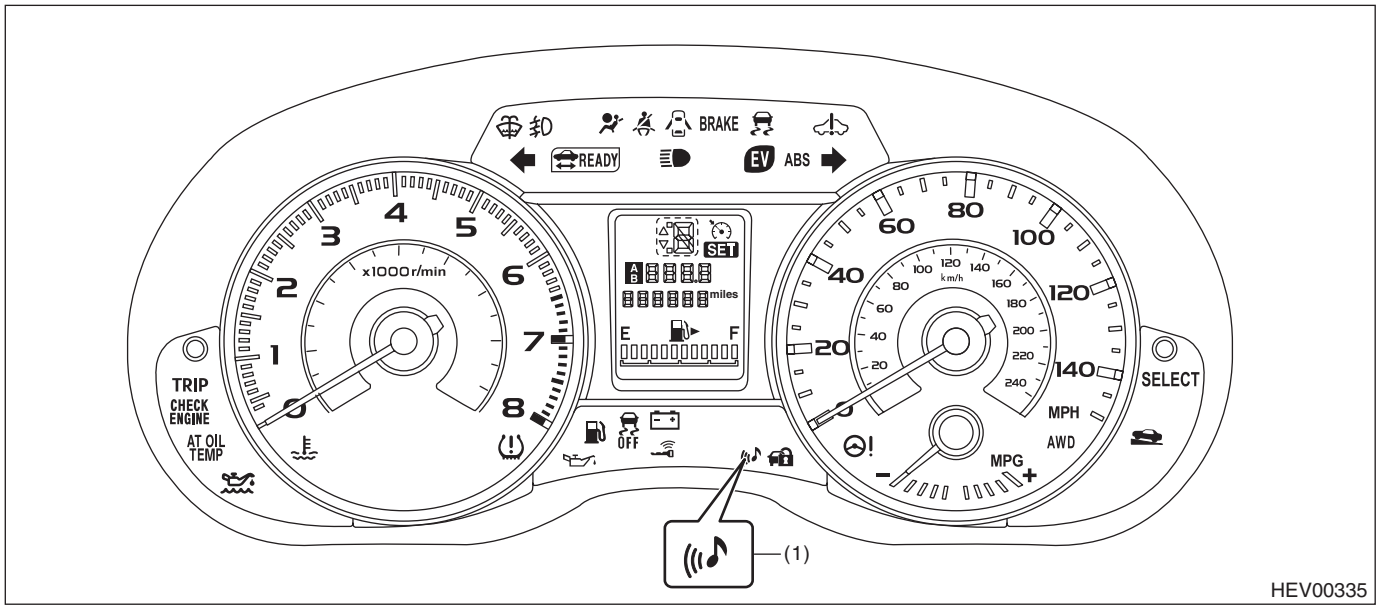

(1) Pedestrian alert warning light

B: CAUTION

• Before disassembling or reassembling parts, always disconnect the battery ground cable from battery. When replacing the audio, control module and other parts provided with memory functions, record the memory contents before disconnecting the battery ground cable. Otherwise, the memory is cleared.
• Reassemble the parts in the reverse order of disassembly procedure unless otherwise indicated.
• Connect the connectors securely during reassembly.
• After reassembly, make sure that the each component operates normally.
• Yellow connectors and harnesses with yellow tapes around them are the connectors and harnesses for the airbag system. Use great care to protect the connector or wiring harness from being damaged. Otherwise, malfunction may occur in the airbag system.
• The report sound may not be heard well in loud ambient sound, or to people behind the vehicle.
• When the front of speaker is covered with foreign matter such as mud and snow, it may change the tone of report sound.

C: PREPARATION TOOL

1. SPECIAL TOOL

ILLUSTRATION	TOOL NUMBER	DESCRIPTION	REMARKS
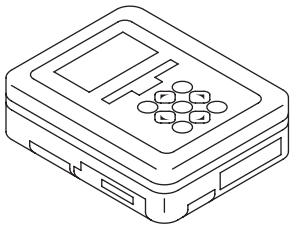 ST1B022XU0	1B022XU0	SUBARU SELECT MONITOR III KIT	Used for troubleshooting the electrical system.

2. GENERAL TOOL

TOOL NAME	REMARKS
Circuit tester	Used for measuring resistance and voltage.

2. Relay and Fuse

A: LOCATION

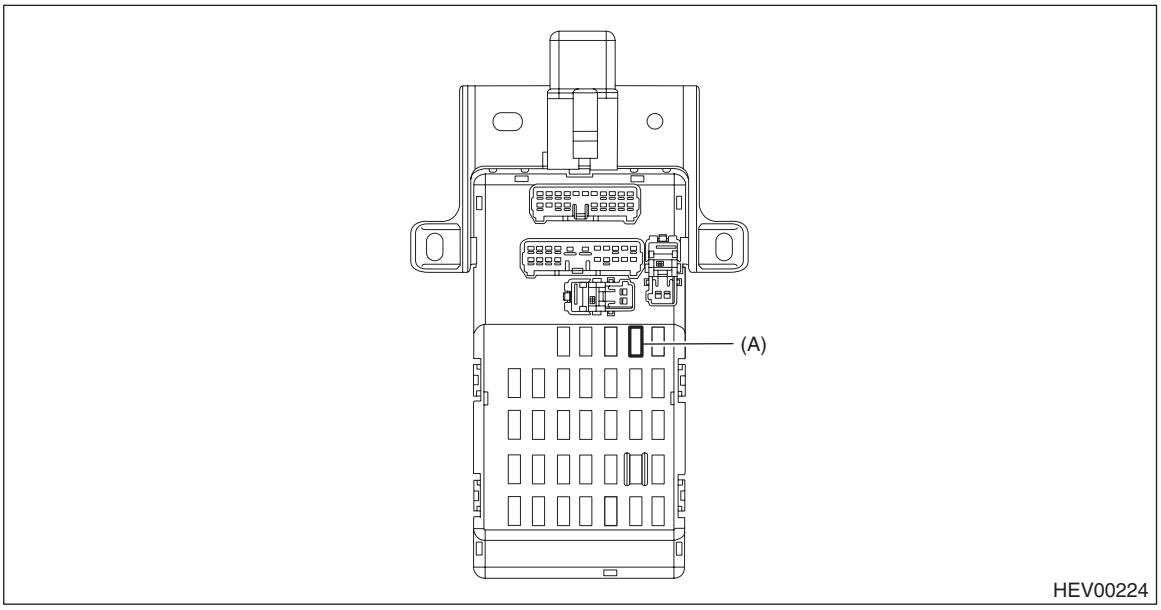

Relay & fuse box	Fuse 10 A (pedestrian alert control unit)	(A)

NOTE:
For other related fuses, refer to the wiring diagram. <Ref. to WI(HEV)-20, Power Supply Circuit.>

B: INSPECTION

1. CHECK FUSE

1) Remove the fuse and inspect visually.
2) If the fuse is blown out, replace the fuse.

NOTE:
If the fuse is blown again, check the system wiring harness.

3. Pedestrian Alert System

A: WIRING DIAGRAM

Refer to “Pedestrian Alert System” in the wiring diagram. <Ref. to WI(HEV)-214, WIRING DIAGRAM, Pedestrian Alert System.>

B: INSPECTION

Refer to “Basic Diagnostic Procedure” of “PEDESTRIAN ALERT SYSTEM (DIAGNOSTICS)” section. <Ref. to PA(diag)-2, Basic Diagnostic Procedure.>

C: NOTE

For procedure of each component in the pedestrian alert system, refer to the respective section.

- Pedestrian alert control unit: <Ref. to PA-6, Pedestrian Alert Control Unit.>
- Pedestrian alert speaker: <Ref. to PA-7, Pedestrian Alert Speaker.>

4. Pedestrian Alert Control Unit

A: REMOVAL

1) Disconnect the ground cable from battery. <Ref. to NT-5, BATTERY, NOTE, Note.>

NOTE:
For the 12 volt engine restart battery, disconnect the ground terminal from 12V engine restart battery sensor.

2) Remove the panel center assembly. <Ref. to EI-75, REMOVAL, Center Console.>
3) Remove the pedestrian alert control unit.
   (1) Remove the screws.
   (2) Pull out the pedestrian alert control unit toward you, and disconnect the connector.

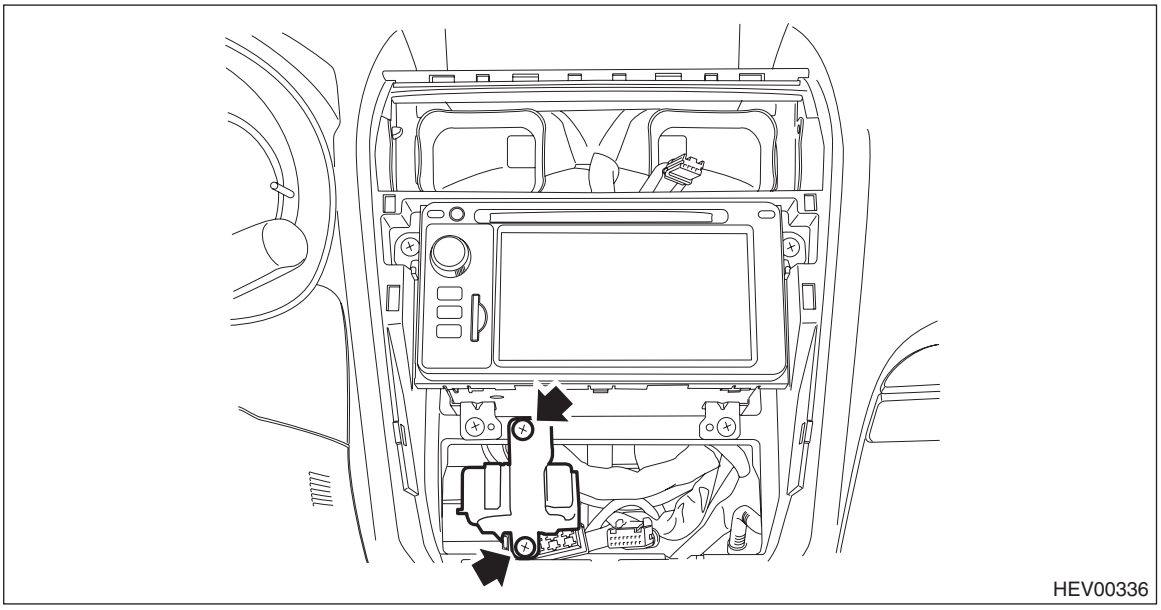

B: INSTALLATION

Install each part in the reverse order of removal.

5. Pedestrian Alert Speaker

A: REMOVAL

1) Disconnect the ground cable from battery. <Ref. to NT-5, BATTERY, NOTE, Note.>

NOTE:
For the 12 volt engine restart battery, disconnect the ground terminal from 12V engine restart battery sensor.
2) Lift up the vehicle.
3) Remove the clips, and turn over the front side of the mud guard - front.

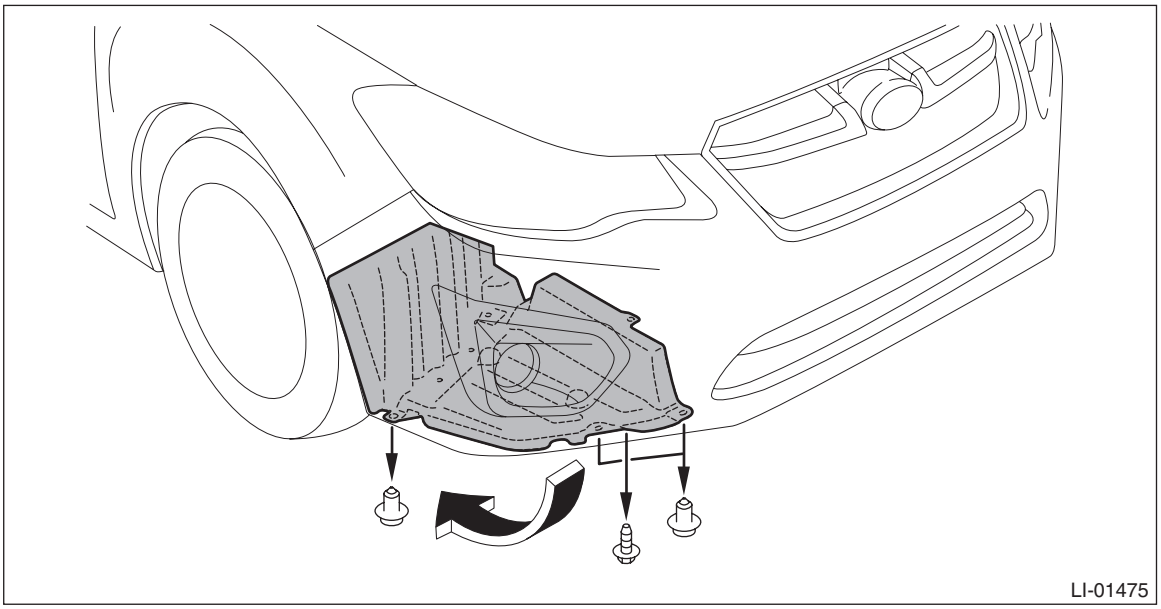

4) Remove the pedestrian alert speaker.
(1) Disconnect the connector.

NOTE:
On models with keyless access, disconnect the keyless buzzer connector.
(2) Remove the bolt, and remove the pedestrian alert speaker and bracket as a unit.

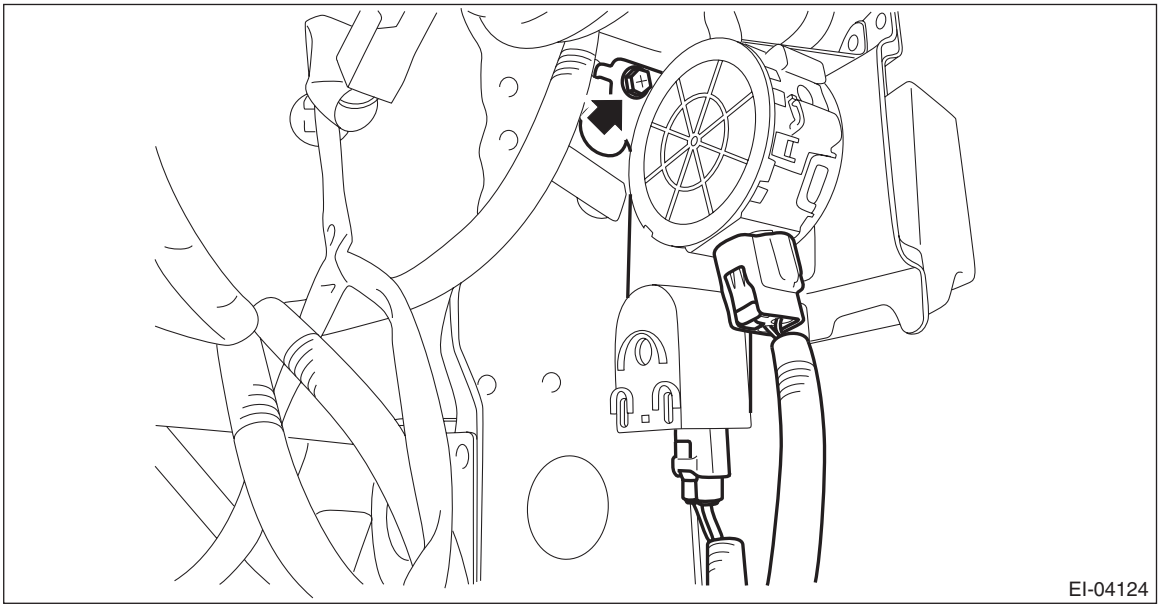

(3) Remove the keyless buzzer from bracket. (Model with keyless access)

B: INSTALLATION

Install each part in the reverse order of removal.

Tightening torque:
Pedestrian alert speaker: 7.5 N·m (0.76 kgf-m, 5.5 ft-lb)

C: INSPECTION

Using the Subaru Select Monitor, perform the compulsory sound generation of the speaker. <Ref. to PA(diag)-12, System Operation Check Mode.>
When a malfunction is detected for the speaker, refer to “Diagnostics with Phenomenon” of “PEDESTRIAN ALERT SYSTEM (DIAGNOSTICS)” section. <Ref. to PA(diag)-16, Diagnostics with Phenomenon.>

6. Combination Meter

A: NOTE

For the combination meter, refer to “INSTRUMENTATION/DRIVER INFO” section. <Ref. to IDI-16, Combination Meter.>

7. Stop Light & Brake Switch

A: NOTE

For stop light and brake switch, refer to “BRAKE” section. <Ref. to BR-74, INSPECTION, Stop Light Switch.>

8. Diagnostics with Phenomenon

A: INSPECTION

Refer to “Diagnostics with Phenomenon” of “PEDESTRIAN ALERT SYSTEM (DIAGNOSTICS)” section. <Ref. to PA(diag)-16, Diagnostics with Phenomenon.>

PEDESTRIAN ALERT SYSTEM (DIAGNOSTICS)

PA(diag)

		Page
1.	Basic Diagnostic Procedure	2
2.	Check List for Interview	3
3.	General Description	4
4.	Electrical Component Location	5
5.	Control Module I/O Signal	6
6.	Subaru Select Monitor	7
7.	Read Diagnostic Trouble Code (DTC)	9
8.	Clear Memory Mode	10
9.	Read Current Data	11
10.	System Operation Check Mode	12
11.	List of Diagnostic Trouble Code (DTC)	13
12.	Diagnostic Procedure with Diagnostic Trouble Code (DTC)	14
13.	Diagnostics with Phenomenon	16

1. Basic Diagnostic Procedure

A: PROCEDURE

	Step	Check	Yes	No
1	**PERFORM CUSTOMER INTERVIEW.** Using the Check List for Interview, ask the customer the condition of how trouble occurs.	Did you interview the customer?	Go to step **2**.	Interview the customer. <Ref. to PA(diag)-3, CHECK, Check List for Interview.>
2	**CHECK SUBARU SELECT MONITOR COMMUNICATION.** Using Subaru Select Monitor, check that it can normally communicate with the pedestrian alert system. NOTE: If the communication function of the Subaru Select Monitor cannot be executed properly, check the communication circuit. <Ref. to PA(diag)-7, COMMUNICATION FOR INITIALIZING IMPOSSIBLE, INSPECTION, Subaru Select Monitor.>	Is communication possible?	Go to step **3**.	Check the communication circuit. <Ref. to PA(diag)-7, COMMUNICATION FOR INITIALIZING IMPOSSIBLE, INSPECTION, Subaru Select Monitor.>
3	**CHECK PEDESTRIAN ALERT SYSTEM.** Read the DTC of the pedestrian alert system using the Subaru Select Monitor. <Ref. to PA(diag)-9, OPERATION, Read Diagnostic Trouble Code (DTC).>	Is DTC detected?	Perform the diagnosis according to DTC. <Ref. to PA(diag)-13, LIST, List of Diagnostic Trouble Code (DTC).>	Go to step **4**.
4	**PERFORM DIAGNOSTICS WITH PHENOMENON.** Check the list for diagnostics with phenomenon. <Ref. to PA(diag)-16, INSPECTION, Diagnostics with Phenomenon.>	Does the symptom apply?	Perform diagnosis according to the procedures in the diagnostics with phenomenon.	Go to step **5**.
5	**CHECK TROUBLE PHENOMENON.** 1) Perform the basic inspection. <Ref. to PA(diag)-4, General Description.> 2) Check the pedestrian alert CM. <Ref. to PA(diag)-6, Control Module I/O Signal.> 3) Perform check of current data. <Ref. to PA(diag)-11, Read Current Data.> 4) Perform a unit check.	Was the trouble cause found?	Correct or repair the cause of trouble, and then clear the memory. <Ref. to PA(diag)-10, OPERATION, Clear Memory Mode.>	System is normal.

2. Check List for Interview

A: CHECK

- Inspect the following items regarding the vehicle's state.
- Print out this page for interviewing customers.

Pedestrian alert system check list for interview		Date of Vehicle Bring-in Year Month Date	
Customer's name		Registration No.	Initial year of registration Year Month Date
		Vehicle model	Frame number
Interviewer	Inspector	Engine type	Odometer reading
Customer specified content • • •			
Date when problem occurred	Year Month Date	Frequency of trouble occurrence	Always occurs Sometimes occurs (times per day, times per month)
Condition of trouble occurrence (How the trouble occurs)		Weather	Fine • Cloudy • Rainy • Snowy • Others ( )
		Temperature	°C (°F) — °C (°F)
Road conditions		Occurrence location	
Accessory installation condition			
Confirmation of trouble condition	❑ No sound comes out from the pedestrian alert speaker.		
	❑ Other		
Diagnostic code			

3. General Description

A: CAUTION

1. PEDESTRIAN ALERT SYSTEM

a. The sound pressure or tone of the pedestrian alert system may change in the following cases:
• When the vehicle is parked under the scorching sun or in snow-covered areas for a prolonged time. (Over time, the symptom is recovered.)
• When pedestrian alert speaker is directly subject to high-pressure water sprayer from under the vehicle.
• When front of pedestrian alert speaker is covered with foreign matters such as mud, snow, or ice.
• When whole of pedestrian alert speaker is frozen.
b. Warning sound may be difficult to be heard in the following cases:
• When the ambient noise is too loud. (In the very crowded crossing or when emergency vehicle is approaching.)
• When there is a person at the rear of the vehicle, he or she cannot hear the warning sound.

B: INSPECTION

1. BASIC INSPECTION

Before performing diagnosis, check the following items which might affect pedestrian alert system related problems.
1) Check 12 volt auxiliary battery. <Ref. to SC(H4DO(HEV))-41, INSPECTION, Battery.>
2) Check the relay and fuse condition. <Ref. to PA-4, Relay and Fuse.>
3) Check the connecting condition of harness and harness connector.

C: PREPARATION TOOL

1. SPECIAL TOOL

ILLUSTRATION	TOOL NUMBER	DESCRIPTION	REMARKS
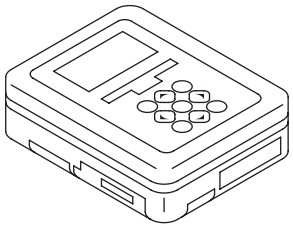 ST1B022XU0	ST1B022XU0	SUBARU SELECT MONITOR III KIT	Used for troubleshooting the electrical system.

2. GENERAL TOOL

TOOL NAME	REMARKS
Circuit tester	Used for measuring resistance, voltage and current.

4. Electrical Component Location

A: LOCATION

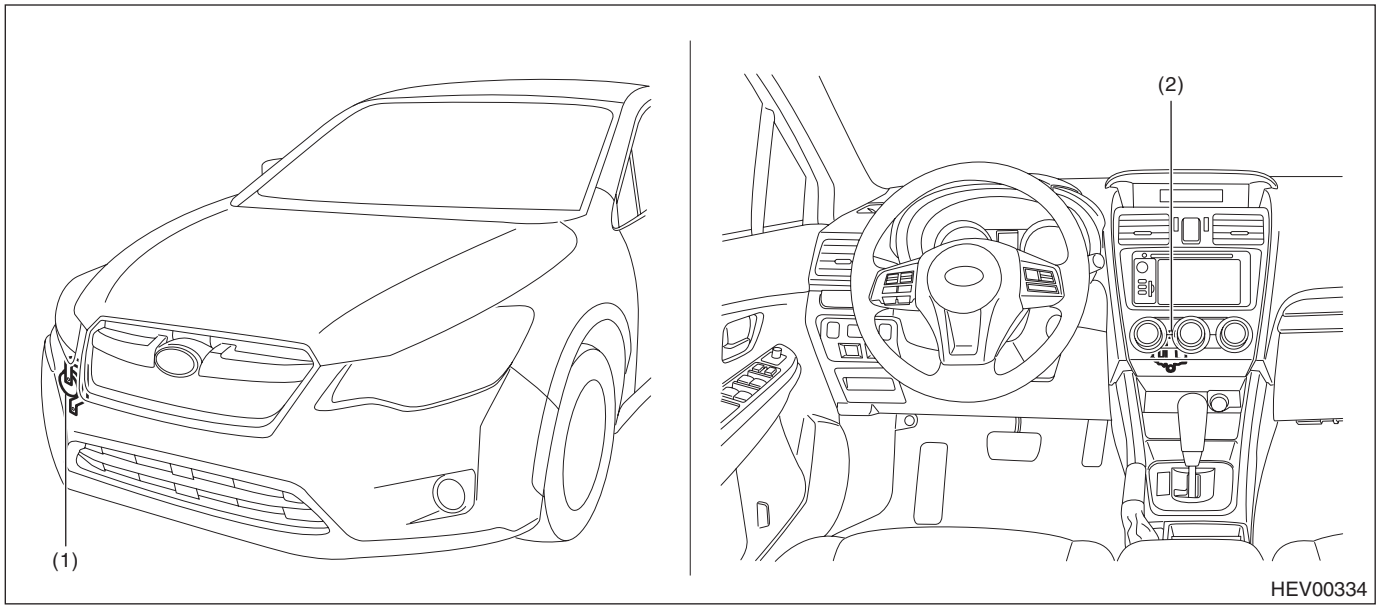

(1) Pedestrian alert speaker (2) Pedestrian alert control unit

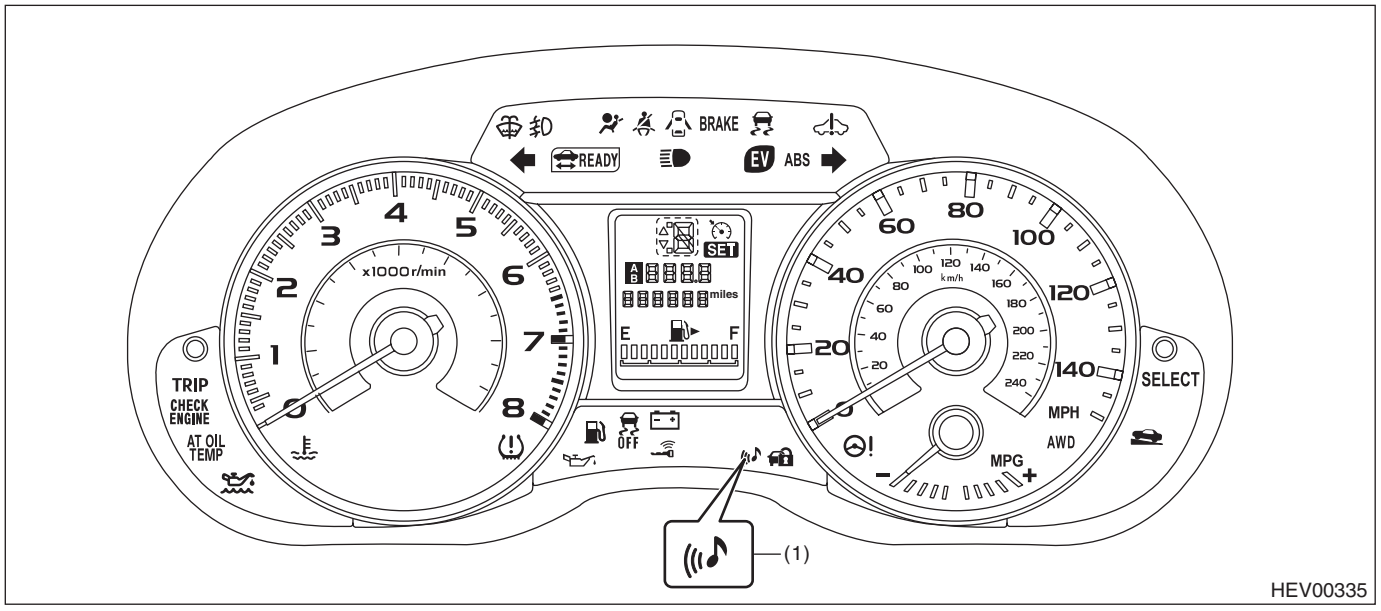

(1) Pedestrian alert warning light

5. Control Module I/O Signal

A: ELECTRICAL SPECIFICATION

1. PEDESTRIAN ALERT CONTROL UNIT

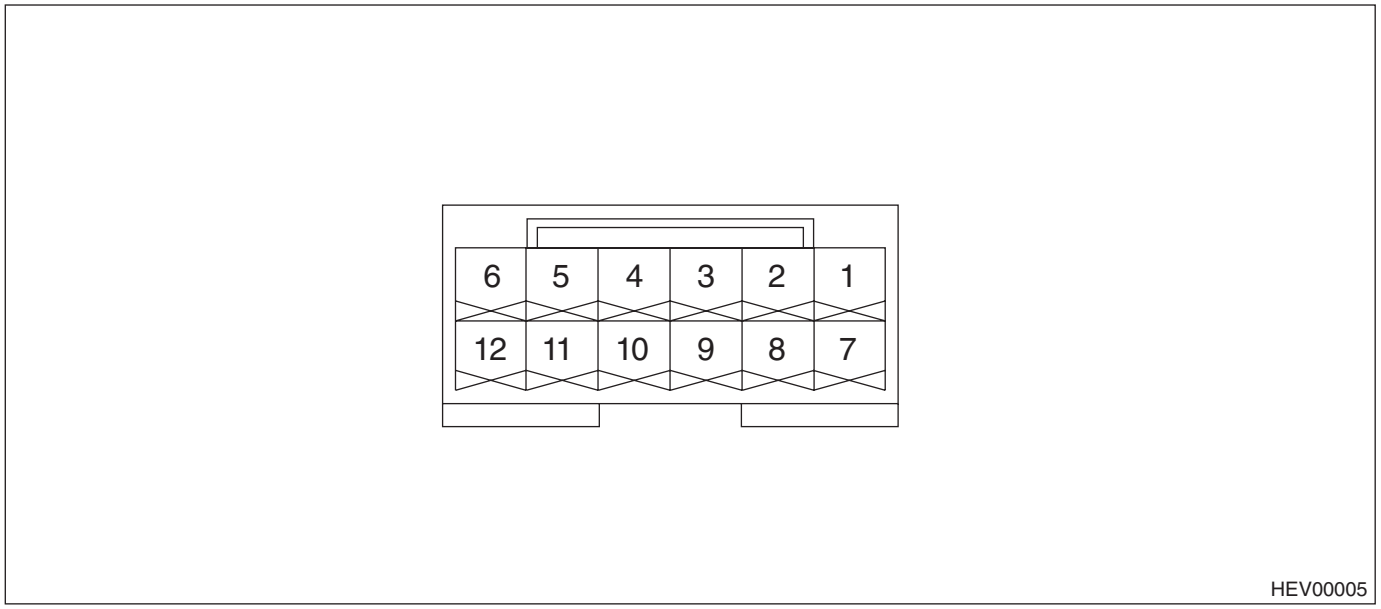

Item	Terminal No. (terminal symbol)	Measuring condition	Measurement value	Note
Operational power supply	1 (IG)	IG ON	10 V or more	—
STOP light signal	2 (STP)	Brake pedal ON → OFF	8 V or more → less than 1 V	—
Pedestrian alert speaker output (+)	3 (SP+)	—	—	Pulse output
Vehicle speed signal	6 (SPD)	—	—	Pulse output
GND	7 (GND)	Always	0 V	—
Pedestrian alert speaker output (–)	8 (SP–)	—	—	Pulse output
K-line	9 (PRST)	—	—	Communication line
IND output	10 (IND)	OFF	8 V or more	—
Shift position signal	11 (SFTP)	Except for P range	8 V or more	—
Oil pressure signal	12 (OPSW)	Engine running	8 V or more	—

B: WIRING DIAGRAM

Refer to “Pedestrian Alert System” in the wiring diagram. <Ref. to WI(HEV)-214, WIRING DIAGRAM, Pedestrian Alert System.>

6. Subaru Select Monitor

A: OPERATION

- For operation procedures, refer to the “PC application help for Subaru Select Monitor”.
- When the pedestrian alert system cannot communicate with Subaru Select Monitor, perform “COMMUNICATION FOR INITIALIZING IMPOSSIBLE”.

B: INSPECTION

1. COMMUNICATION FOR INITIALIZING IMPOSSIBLE

Communication error with pedestrian alert CM

DETECTING CONDITION:

- Defective harness connector
- Power supply circuit malfunction
- Defective pedestrian alert CM
- Defective K-line communication circuit
- Defective Subaru Select Monitor

TROUBLE SYMPTOM:

Communication is impossible between the pedestrian alert control unit and Subaru Select Monitor.

WIRING DIAGRAM:

Pedestrian alert system <Ref. to WI(HEV)-214, WIRING DIAGRAM, Pedestrian Alert System.>

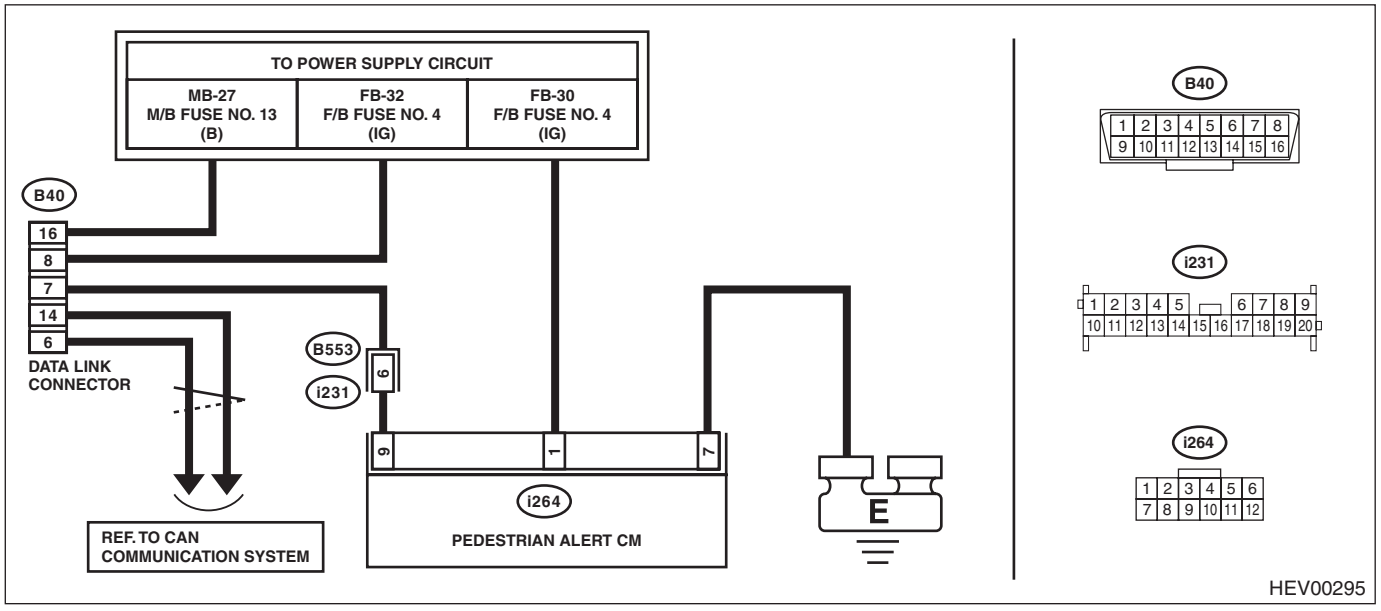

Step		Check	Yes	No
1	**CHECK IGNITION SWITCH.**	Is the ignition switch ON?	Go to step **2**.	Turn the ignition switch to ON, and select the pedestrian alert system using the Subaru Select Monitor.
2	**CHECK BATTERY.** 1) Turn the ignition switch to OFF. 2) Measure the voltage for 12 volt auxiliary battery.	Is the voltage 11 V or more?	Go to step **3**.	Charge or replace the battery.
3	**CHECK BATTERY TERMINAL.** Check the terminal for 12 volt auxiliary battery.	Is there poor contact at battery terminal?	Repair or tighten the battery terminal.	Go to step **4**.

	Step	Check	Yes	No
4	**CHECK COMMUNICATION OF SUBARU SELECT MONITOR.** 1) Turn the ignition switch to ON. 2) Using the Subaru Select Monitor, check whether communication to other systems can be executed normally.	Is the system name displayed?	Go to step **8**.	Go to step **5**.
5	**CHECK DATA LINK CONNECTOR.** 1) Turn the ignition switch to OFF. 2) Using the tester, measure the resistance between data link connector and chassis ground. ***Connector & terminal*** ***(B40) No. 7 — Chassis ground:***	Is the resistance 1 MΩ or more?	Go to step **6**.	Repair or replace the short circuit of the harness.
6	**CHECK DATA LINK CONNECTOR.** 1) Turn the ignition switch to ON. 2) Using the tester, measure the voltage between data link connector and chassis ground. ***Connector & terminal*** ***(B40) No. 7 (+) — Chassis ground (–):***	Is the voltage less than 1 V?	Go to step **7**.	Repair or replace the short circuit of the harness.
7	**CHECK DATA LINK CONNECTOR.** 1) Turn the ignition switch to OFF. 2) Disconnect the pedestrian alert CM connector. 3) Using the tester, measure the resistance between data link connector and pedestrian alert CM (harness side). ***Connector & terminal*** ***(B40) No. 7 — (i264) No. 9:***	Is the resistance less than 1 Ω?	Go to step **8**.	Repair or replace the open circuit of harness.
8	**CHECK POWER SUPPLY CIRCUIT.** 1) Turn the ignition switch to ON. 2) Using the tester, measure the voltage between pedestrian alert CM (harness side) and chassis ground. ***Connector & terminal*** ***(i264) No. 1 (+) — Chassis ground (–):***	Is the voltage 10 V or more?	Go to step **9**.	Repair or replace the open circuit of harness.
9	**CHECK GROUND CIRCUIT.** 1) Turn the ignition switch to OFF. 2) Using the tester, measure the resistance between pedestrian alert CM (harness side) and chassis ground. ***Connector & terminal*** ***(i264) No. 7 — Chassis ground:***	Is the resistance less than 1 Ω?	Go to step **10**.	Repair or replace the open circuit of harness.
10	**CHECK POOR CONTACT OF CONNECTOR.**	Is there poor contact of pedestrian alert CM connector and data link connector?	Repair the poor contact of connector.	Replace the pedestrian alert CM. <Ref. to PA-6, Pedestrian Alert Control Unit.>

7. Read Diagnostic Trouble Code (DTC)

A: OPERATION

- For operation procedures, refer to the “PC application help for Subaru Select Monitor”.
- For details concerning DTC, refer to the List of Diagnostic Trouble Codes (DTC). <Ref. to PA(diag)-13, List of Diagnostic Trouble Code (DTC).>

8. Clear Memory Mode

A: OPERATION

For operation procedures, refer to the “PC application help for Subaru Select Monitor”.

9. Read Current Data

A: OPERATION

For detailed operation procedures, refer to “PC application help for Subaru Select Monitor”.
1) On «Main Menu» display, select {Each System Check}.
2) On «Each System Check» display, select {Approach Info UNIT}.
3) On «Approach Info UNIT» display, select {Current Data Display & Save}.

B: LIST

Display	Description	Note (when normal)	Unit of measure
P-Range SW	Gear shift position	P range: when in P range Other than P range: when in other than P range	—
OIL Pressure SW	Status of oil pressure switch	Engine RUN: during engine start	—
Foot Brakes SW	Status of stop light switch	ON: when brake pedal is ON	—
Vehicle speed	Vehicle speed	Show vehicle speed	mpH
Voltage of IGN	Value of IGN power supply voltage	0 — 20.4 V	V
Speaker Terminal voltage	Value of vehicle approach information speaker voltage	0 — 4.998 V	V
P-Range SW voltage	Value of shift switch voltage	0 — 4.998 V	V
OIL Pressure SW voltage	Value of oil pressure switch voltage	0 — 4.998 V	V

10.System Operation Check Mode

A: OPERATION

For detailed operation procedures, refer to “PC application help for Subaru Select Monitor”.

B: LIST

1) On «Main Menu» display, select {Each System Check}.
2) On «Each System Check» display, select {Approach Info UNIT}.
3) On «Approach Info UNIT» display, select {Work Support}.
4) On «Work Support» display, select {System Operation Check Mode}.

Data	Customize setting	Note
Speaker Check	320 Hz	Make a single sound at a frequency of 320 Hz.
	1 kHz	Make a single sound at a frequency of 1 kHz.
	3.2 kHz	Make a single sound at a frequency of 3.2 kHz.

11.List of Diagnostic Trouble Code (DTC)

A: LIST

DTC	Item	Content of diagnosis	Note
B1700	Approach Information Speaker Abnormal	Vehicle approach information speaker harness is open or shorted.	<Ref. to PA(diag)-14, DTC B1700 APPROACH INFORMATION SPEAKER ABNORMAL, Diagnostic Procedure with Diagnostic Trouble Code (DTC).>

12.Diagnostic Procedure with Diagnostic Trouble Code (DTC)

A: DTC B1700 APPROACH INFORMATION SPEAKER ABNORMAL

DTC DETECTING CONDITION:

Detected when harness between pedestrian alert CM and pedestrian alert speaker is open or shorted, or when internal voice coil of pedestrian alert speaker is open or shorted.

TROUBLE SYMPTOM:

- No sound comes out from the pedestrian alert speaker during EV mode driving.
- After turning to IGN-ON, the light illuminates → blinks → illuminates.

WIRING DIAGRAM:

Pedestrian alert system <Ref. to WI(HEV)-214, WIRING DIAGRAM, Pedestrian Alert System.>

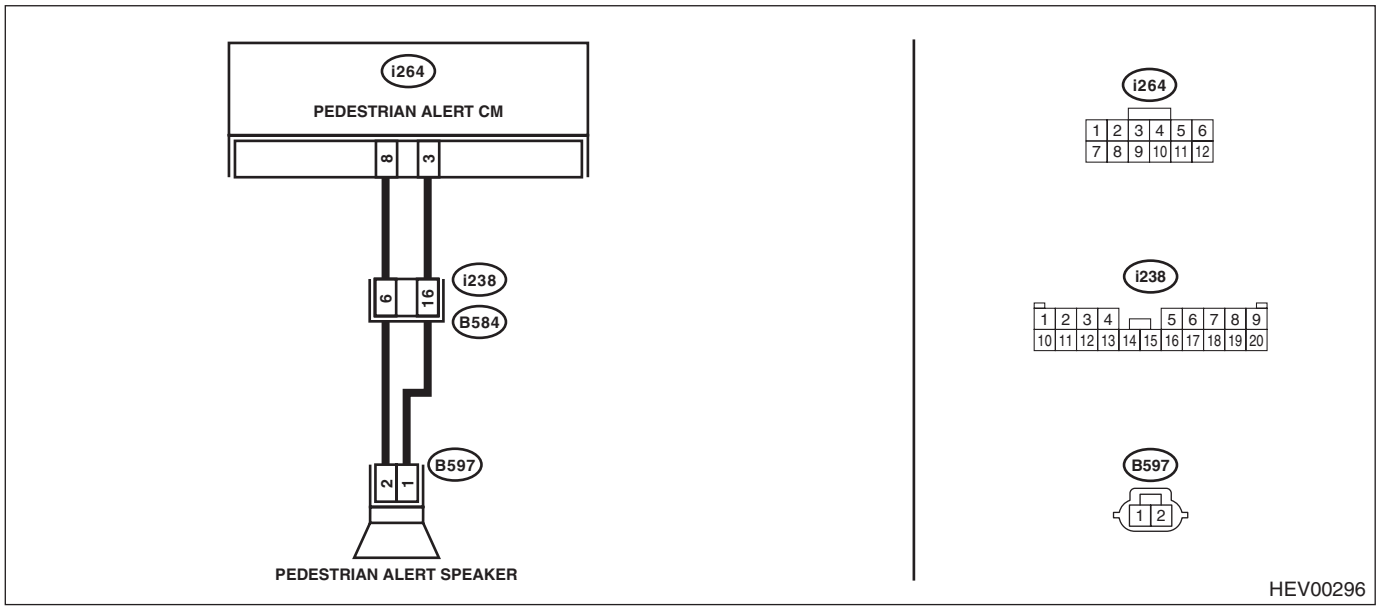

Step		Check	Yes	No
1	**CHECK DTC.** Read DTCs of the pedestrian alert CM using the Subaru Select Monitor.	Is B1700 displayed?	Go to step **2**.	Go to step **4**.
2	**CHECK CONNECTOR.** 1) Turn the ignition switch to OFF. 2) Disconnect the pedestrian alert CM connector. 3) Check the pedestrian alert CM connector.	Is the connector OK?	Go to step **3**.	Repair or replace the connector.
3	**CHECK HARNESS (SHORT).** Using the tester, measure the resistance between pedestrian alert CM connector (harness side). ***Connector & terminal*** ***(i264) No. 3 — (i264) No. 8:***	Is the resistance less than 2 Ω?	Repair the pedestrian alert speaker or the short circuit of the harness. Go to step **5**.	Go to step **4**.
4	**CHECK HARNESS (OPEN CIRCUIT).** Using the tester, measure the resistance between pedestrian alert CM connector (harness side). ***Connector & terminal*** ***(i264) No. 3 — (i264) No. 8:***	Is the resistance 20 Ω or more?	Repair the pedestrian alert speaker or the open circuit of the harness. Go to step **5**.	Replace the pedestrian alert CM. <Ref. to PA-6, Pedestrian Alert Control Unit.>

	Step	Check	Yes	No
5	**CHECK PEDESTRIAN ALERT SYSTEM.** 1) Connect the disconnected connectors. 2) Using the Subaru Select Monitor, perform «Speaker Check» of the system operation check mode. <Ref. to PA(diag)-12, System Operation Check Mode.>	Does any sound come out from the pedestrian alert speaker?	Even if DTC is detected, the circuit has returned to a normal condition at this time. Reproduce the failure, and then perform the diagnosis again. NOTE: In this case, temporary poor contact of connector, temporary open or short circuit of harness may be the cause.	Replace the pedestrian alert CM. <Ref. to PA-6, Pedestrian Alert Control Unit.>

13.Diagnostics with Phenomenon

A: INSPECTION

Symptoms	Reference
When the ignition switch is turned on, the pedestrian alert warning light on the combination meter does not illuminate.	<Ref. to PA(diag)-16, PEDESTRIAN ALERT WARNING LIGHT DOES NOT ILLUMINATE, INSPECTION, Diagnostics with Phenomenon.>
No sound comes out immediately after the brake pedal is released when the vehicle stops.	<Ref. to PA(diag)-18, CHECK STOP LIGHT SWITCH CIRCUIT, INSPECTION, Diagnostics with Phenomenon.>
No sound comes out during EV mode driving (at 24 km/h (15 MPH) or less). Or speaker sound is very small. (Perform steps listed on the right column in numerical order.)	1. <Ref. to PA(diag)-17, CHECK POWER SUPPLY CIRCUIT, INSPECTION, Diagnostics with Phenomenon.>
	2. <Ref. to PA(diag)-19, CHECK P RANGE SWITCH CIRCUIT, INSPECTION, Diagnostics with Phenomenon.>
	3. <Ref. to PA(diag)-20, CHECK OIL PRESSURE SWITCH CIRCUIT, INSPECTION, Diagnostics with Phenomenon.>
	4. <Ref. to PA(diag)-21, CHECK VEHICLE SPEED SIGNAL CIRCUIT, INSPECTION, Diagnostics with Phenomenon.>
	5. Replace the pedestrian alert CM. <Ref. to PA-6, Pedestrian Alert Control Unit.>

1. PEDESTRIAN ALERT WARNING LIGHT DOES NOT ILLUMINATE

WIRING DIAGRAM:

Pedestrian alert system <Ref. to WI(HEV)-214, WIRING DIAGRAM, Pedestrian Alert System.>

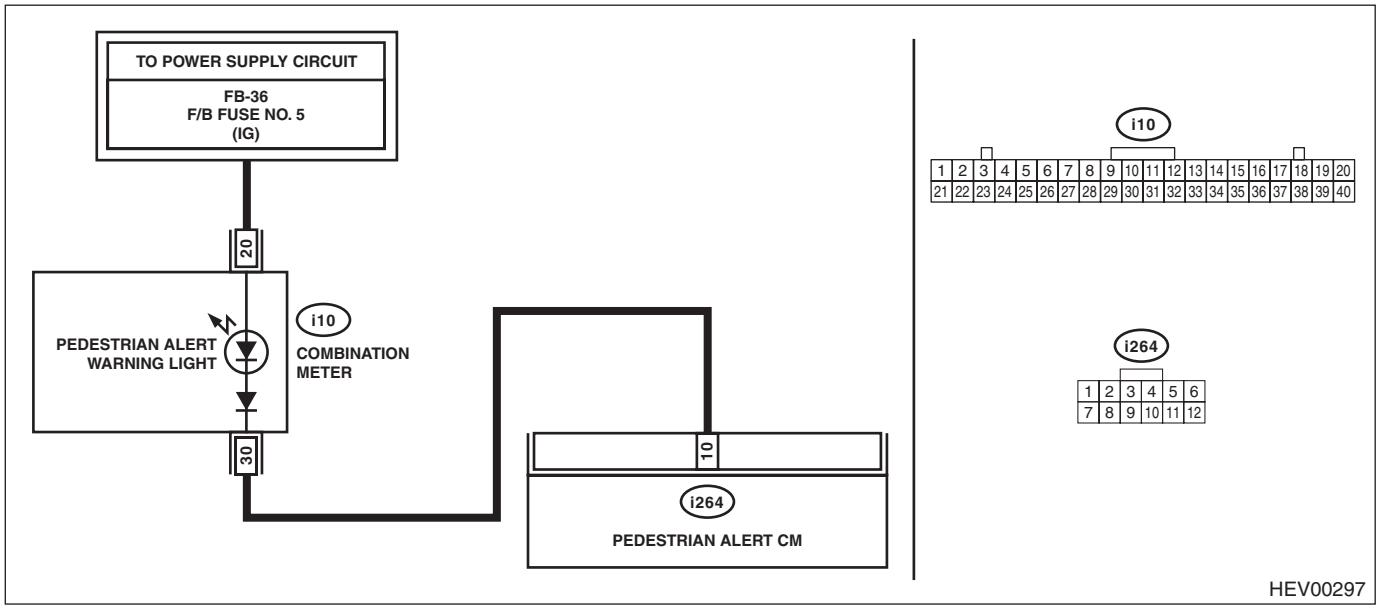

Step		Check	Yes	No
1	**CHECK FUSE.** Check the fuse for the combination meter.	Is the fuse OK?	Go to step **2**.	Replace the fuse. When the replaced fuse is blown immediately, repair or replace the short-circuited portion of the harness.

	Step	Check	Yes	No
2	**CHECK HARNESS.** 1) Turn the ignition switch to OFF. 2) Disconnect the pedestrian alert CM connector. 3) Turn the ignition switch to ON. 4) Using the tester, measure the voltage between pedestrian alert CM connector (harness side) and chassis ground. ***Connector & terminal*** ***(i264) No. 10 (+) — Chassis ground (–):***	Is the voltage 10 V or more?	Replace the pedestrian alert CM. <Ref. to PA-6, Pedestrian Alert Control Unit.>	Repair or replace the open circuit of harness. Or, repair it according to combination meter inspection.

2. CHECK POWER SUPPLY CIRCUIT

WIRING DIAGRAM:

Pedestrian alert system <Ref. to WI(HEV)-214, WIRING DIAGRAM, Pedestrian Alert System.>

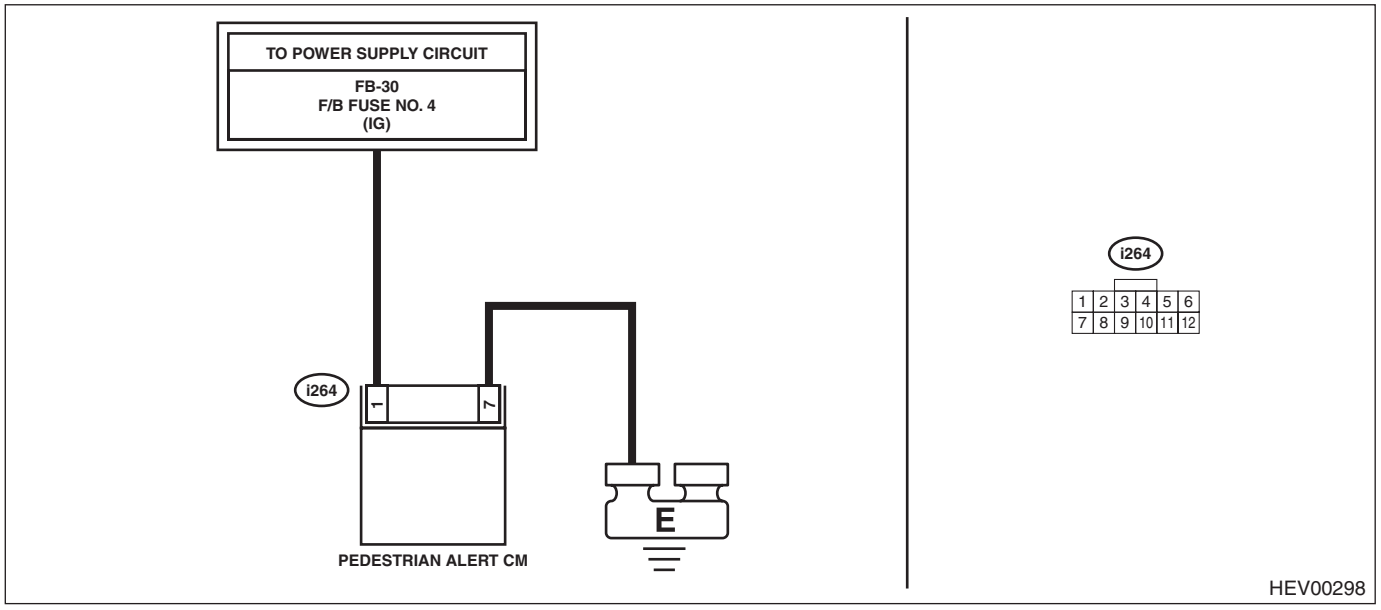

	Step	Check	Yes	No
1	**CHECK FUSE.** 1) Turn the ignition switch to OFF. 2) Check the fuse. <Ref. to PA-4, Relay and Fuse.>	Is the fuse OK?	Go to step **2**.	Replace the defective fuse. When the fuse is blown immediately, repair the short circuit.
2	**CHECK HARNESS.** 1) Disconnect the pedestrian alert CM connector. 2) Using the tester, measure the voltage between pedestrian alert CM connector (harness side) and chassis ground. ***Connector & terminal*** ***(i264) No. 1 (+) — Chassis ground (–):***	Is the voltage 10 V or more?	Go to step **3**.	Repair or replace the open circuit of harness.
3	**CHECK HARNESS.** Using the tester, measure the resistance between pedestrian alert CM connector (harness side) and chassis ground. ***Connector & terminal*** ***(i264) No. 7 — Chassis ground:***	Is the resistance 1 Ω or less?	Go to step **4**.	Repair or replace the open circuit of harness.

	Step	Check	Yes	No
4	**CHECK CURRENT DATA.** Check «Voltage of IGN» using the Subaru Select Monitor. <Ref. to PA(diag)-11, Read Current Data.>	Is the voltage 10 V or more when the ignition switch is ON?	Even if abnormality is detected, the circuit has returned to a normal condition at this time. Reproduce the failure, and then perform the diagnosis again. NOTE: In this case, temporary poor contact of connector, temporary open or short circuit of harness may be the cause.	Replace the pedestrian alert CM. <Ref. to PA-6, Pedestrian Alert Control Unit.>

3. CHECK STOP LIGHT SWITCH CIRCUIT

WIRING DIAGRAM:

Stop light system <Ref. to WI(HEV)-208, WIRING DIAGRAM, Stop Light System.>

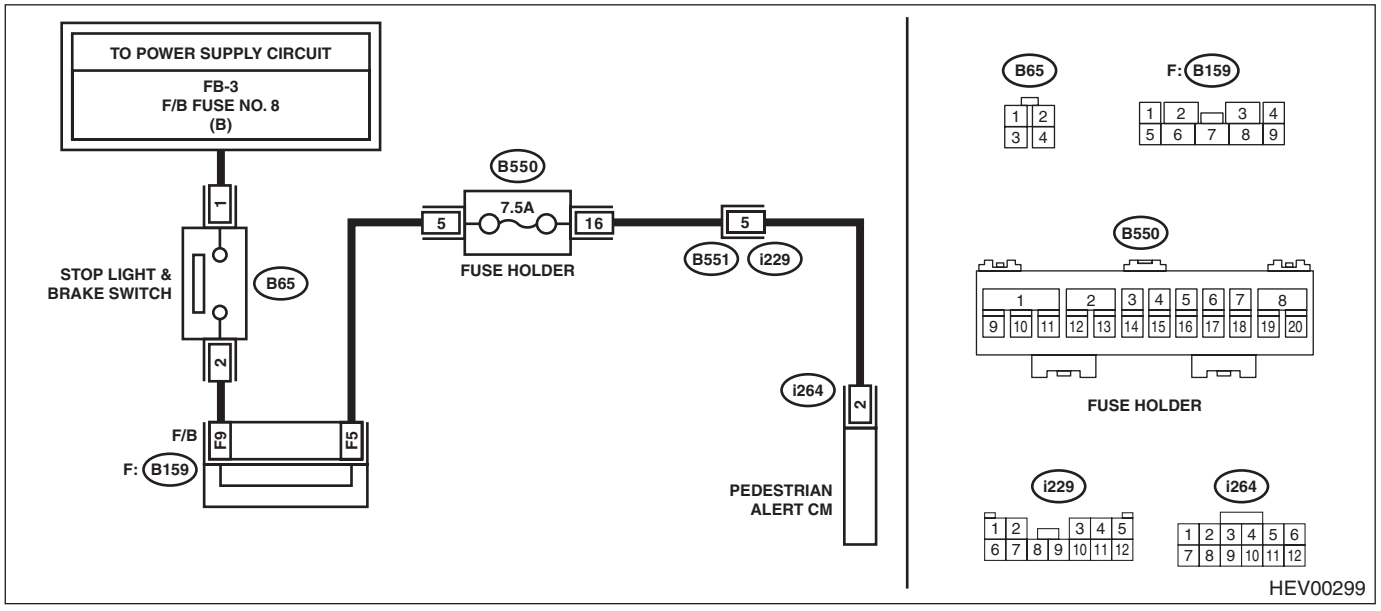

	Step	Check	Yes	No
1	**CHECK STOP LIGHT.** Check the illumination status of the stop light.	Do all stop lights illuminate?	Go to step **2**.	Repair the stop lights. Go to step **2**.
2	**CHECK HARNESS.** 1) Disconnect the pedestrian alert CM connector. 2) Using the tester, measure the voltage between pedestrian alert CM connector (harness side) and chassis ground. ***Connector & terminal*** ***(i264) No. 2 (+) — Chassis ground (–):***	Is the voltage 10 V or more when the brake pedal is depressed and less than 1 V when not depressed?	Replace the pedestrian alert CM. <Ref. to PA-6, Pedestrian Alert Control Unit.>	Repair the stop light circuit. Go to step **3**.

Step		Check	Yes	No
3	**CHECK HARNESS.** 1) Connect the disconnected connectors. 2) Apply parking brake. 3) Turn the ignition switch to ON. 4) Set the select lever from P to N while depressing the brake pedal. 5) Check that sound comes out from the pedestrian alert speaker immediately after the brake pedal is released. (For 3 seconds)	Does any sound come out?	Even if abnormality is detected, the circuit has returned to a normal condition at this time. Reproduce the failure, and then perform the diagnosis again. NOTE: In this case, temporary poor contact of connector, temporary open or short circuit of harness may be the cause.	Replace the pedestrian alert CM. <Ref. to PA-6, Pedestrian Alert Control Unit.>

4. CHECK P RANGE SWITCH CIRCUIT

WIRING DIAGRAM:

Pedestrian alert system <Ref. to WI(HEV)-214, WIRING DIAGRAM, Pedestrian Alert System.>

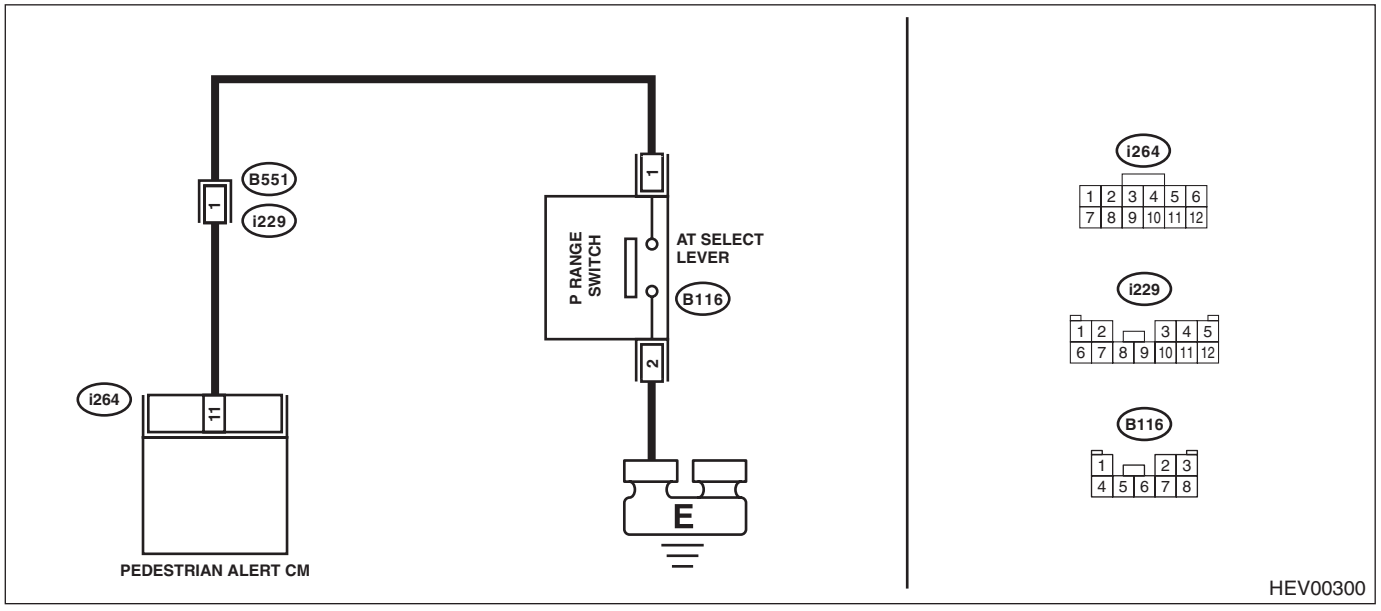

	Step	Check	Yes	No
1	**CHECK CURRENT DATA.** 1) Turn the ignition switch to ON. 2) Check «P-Range SW» using the Subaru Select Monitor. <Ref. to PA(diag)-11, Read Current Data.> 3) Move the select lever to P range ←→ other than P range.	Is the display normal?	Even if abnormality is detected, the circuit has returned to a normal condition at this time. Reproduce the failure, and then perform the diagnosis again. NOTE: In this case, temporary poor contact of connector, temporary open or short circuit of harness may be the cause.	Go to step **2**.
2	**CHECK P RANGE SWITCH.** 1) Disconnect the ground terminal from the 12 volt auxiliary battery. 2) Disconnect the pedestrian alert CM connector. 3) Using the tester, measure the resistance between pedestrian alert CM connector (harness side) and chassis ground. ***Connector & terminal*** ***(i264) No. 11 — Chassis ground:***	Is the resistance 1 Ω or less when the shift lever is in P range and 1 kΩ or more when the shift lever is in other than P range?	Replace the pedestrian alert CM. <Ref. to PA-6, Pedestrian Alert Control Unit.>	Repair or replace the P range switch circuit.

5. CHECK OIL PRESSURE SWITCH CIRCUIT

WIRING DIAGRAM:

Hybrid system <Ref. to WI(HEV)-139, WIRING DIAGRAM, Hybrid Electric Vehicle System.>

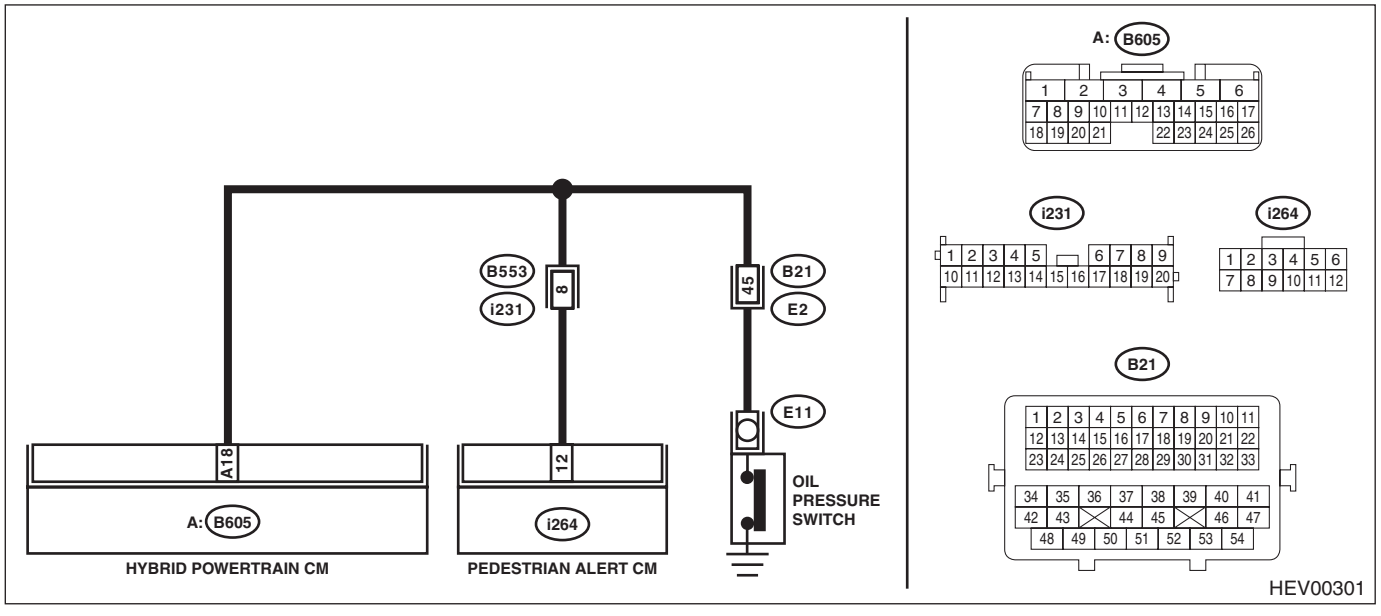

	Step	Check	Yes	No
1	**CHECK CURRENT DATA.** 1) Using the Subaru Select Monitor, check «OIL Pressure SW». <Ref. to PA(diag)-11, Read Current Data.> 2) Apply the parking brake. 3) Move the select lever in P range. 4) Start the engine.	Is the display normal?	Even if abnormality is detected, the circuit has returned to a normal condition at this time. Reproduce the failure, and then perform the diagnosis again. NOTE: In this case, temporary poor contact of connector, temporary open or short circuit of harness may be the cause.	Go to step **2**.
2	**CHECK SWITCH CIRCUIT.** 1) Turn the ignition switch to OFF. 2) Disconnect the pedestrian alert CM connector. 3) Using the tester, measure the voltage between pedestrian alert CM connector (harness side) and chassis ground. ***Connector & terminal*** ***(i264) No. 12 (+) — Chassis ground (–):***	Is the voltage less than 1 V when the ignition switch is turned to ON and 8 V or more while the engine is starting?	Replace the pedestrian alert CM. <Ref. to PA-6, Pedestrian Alert Control Unit.>	Repair the oil pressure switch or the short circuit portion of the harness.

6. CHECK VEHICLE SPEED SIGNAL CIRCUIT

WIRING DIAGRAM:

Pedestrian alert system <Ref. to WI(HEV)-214, WIRING DIAGRAM, Pedestrian Alert System.>

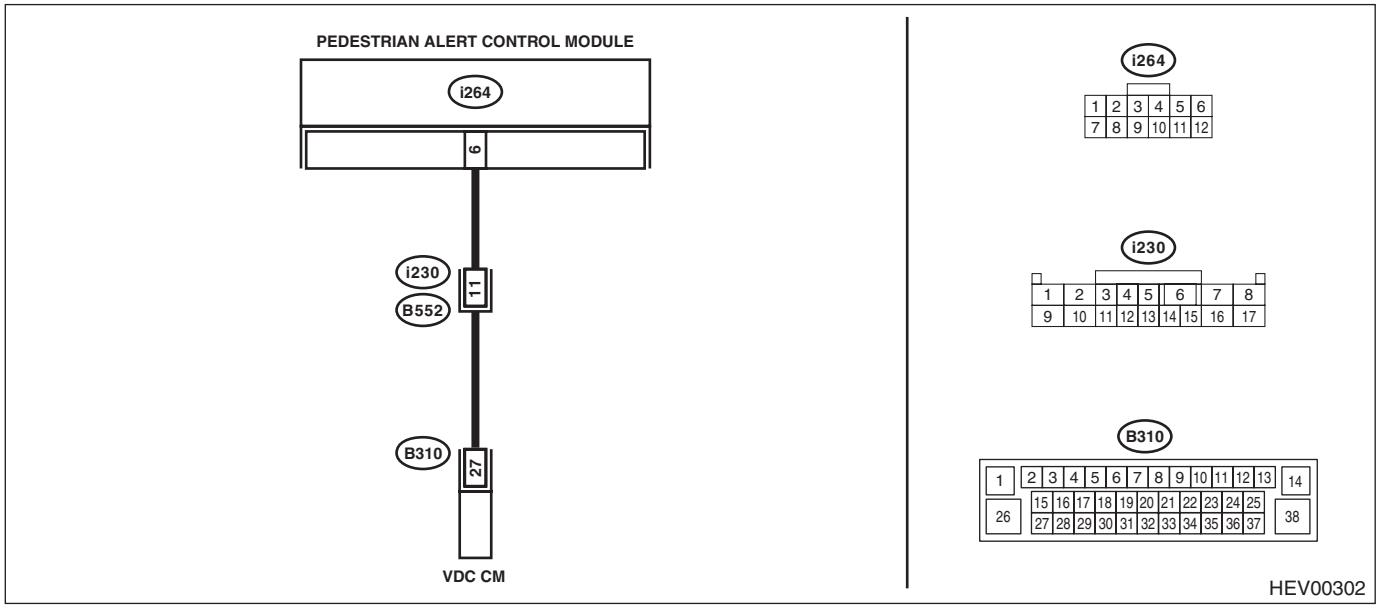

	Step	Check	Yes	No
1	**CHECK CURRENT DATA.** Check «Vehicle Speed» using Subaru Select Monitor. <Ref. to PA(diag)-11, Read Current Data.>	Is the display normal?	Even if abnormality is detected, the circuit has returned to a normal condition at this time. Reproduce the failure, and then perform the diagnosis again. NOTE: In this case, temporary poor contact of connector, temporary open or short circuit of harness may be the cause.	Go to step **2**.
2	**CHECK VDC.** Check the VDC system. <Ref. to VDC(diag)-2, Basic Diagnostic Procedure.>	Is the VDC system normal?	Go to step **3**.	Perform the diagnosis according to inspection for the VDC system.
3	**CHECK HARNESS.** 1) Turn the ignition switch to OFF. 2) Disconnect the pedestrian alert CM connector. 3) Disconnect the VDC CM connector. 4) Using the tester, measure the resistance between pedestrian alert CM connector (harness side) and VDC CM connector (harness side). ***Connector & terminal*** ***(i264) No. 6 — (B310) No. 27:***	Is the resistance 1 Ω or less?	Even if abnormality is detected, the circuit has returned to a normal condition at this time. Reproduce the failure, and then perform the diagnosis again. NOTE: In this case, temporary poor contact of connector, temporary open or short circuit of harness may be the cause.	Repair or replace the open circuit of harness.

KEYLESS ACCESS WITH PUSH BUTTON START SYSTEM (DIAGNOSTICS)

KPS(diag)

		Page
1.	Basic Diagnostic Procedure	2
2.	Check List for Interview	4
3.	General Description	5
4.	Electrical Component Location	10
5.	Control Module I/O Signal	12
6.	Subaru Select Monitor	22
7.	Read Diagnostic Trouble Code (DTC)	25
8.	Read Current Data	26
9.	Clear Memory Mode	32
10.	Keyless Access System Check	33
11.	System Operation Check Mode	34
12.	List of Diagnostic Trouble Code (DTC)	35
13.	Diagnostic Procedure with Diagnostic Trouble Code (DTC)	39
14.	General Diagnostic Table	98
15.	Diagnostics with Phenomenon	100

1. Basic Diagnostic Procedure

A: PROCEDURE

CAUTION:
• Subaru Select Monitor kit is required for reading DTC, performing diagnosis and reading current data.
• Before removal or installation, be sure to remove any foreign matter (dust, moisture, oil, etc.).
• For models with the keyless access system, registration of the immobilizer may be required after a replacement of the control module, etc. For detailed procedure, refer to the "REGISTRATION MANUAL FOR IMMOBILIZER".

NOTE:
• Using the Function Setting (Customize), check that the keyless access system is not in a cancelled state. <Ref. to SL-120, OPERATION, Function Setting (Customize).>
• Check List for Interview <Ref. to KPS(diag)-4, Check List for Interview.>

	Step	Check	Yes	No
1	**CHECK BATTERY.** Using a tester, measure the voltage for 12 volt auxiliary battery.	Is the voltage 11 V or more?	Go to step **2**.	Charge or replace the battery and perform check pre-inspection. Go to step **2**.
2	**CHECK PRE-INSPECTION.** Use the interview check list to interview the user. <Ref. to KPS(diag)-4, Check List for Interview.>	Was the symptoms of the trouble recorded in the interview?	Go to step **3**.	Interview the user again.
3	**BASIC INSPECTION.** Perform the inspection for LAN system. <Ref. to LAN(HEV)(diag)-2, PROCEDURE, Basic Diagnostic Procedure.>	Is LAN system normal?	Go to step **4**.	Perform the inspection according to the diagnosis for LAN system. <Ref. to LAN(HEV)(diag)-2, PROCEDURE, Basic Diagnostic Procedure.>
4	**CHECK TROUBLE SYMPTOM.** 1) Read diagnostic trouble code (DTC) for the keyless access system. <Ref. to KPS(diag)-25, OPERATION, Read Diagnostic Trouble Code (DTC).> NOTE: If the communication function of the Subaru Select Monitor cannot be executed properly, check the communication circuit. <Ref. to KPS(diag)-22, COMMUNICATION FOR INITIALIZING IMPOSSIBLE, Subaru Select Monitor.> 2) Record all DTCs, time stamp and freeze frame data. NOTE: For time stamp, refer to "LAN SYSTEM". <Ref. to LAN(HEV)(diag)-6, TIME STAMP, CAUTION, General Description.>	Is DTC displayed on Subaru Select Monitor?	Perform diagnosis according to the DTC.	Go to step **5**.
5	**CHECK PHENOMENON LIST.** Check the "Phenomenon List". <Ref. to KPS(diag)-98, General Diagnostic Table.>	Is there a symptom that corresponds in the phenomenon list?	Perform diagnosis according to the procedures in the phenomenon list.	Go to step **6**.

Step		Check	Yes	No
6	**CHECK TROUBLE PHENOMENON.** 1) Perform check of current data. 2) Perform a function check. 3) Perform a unit check.	Was the trouble cause found?	Repair the cause of trouble.	Repeat a basic check again.

2. Check List for Interview

A: CHECK

Inspect the following items regarding the vehicle's state.

<table>
<tr><td colspan="4">Keyless Access with Push Button Start System Trouble Check List for Interview Received Year Month Date</td></tr>
<tr><td colspan="2" rowspan="2">Customer's name</td><td>Registration No.</td><td>Initial year of registration
Year Month Date</td></tr>
<tr><td>Vehicle model</td><td>Frame number</td></tr>
<tr><td>Interviewer</td><td>Inspector</td><td>Engine type</td><td>Odometer reading</td></tr>
<tr><td colspan="4">Customer specified content</td></tr>
<tr><td>Date and time when the trouble occurred</td><td></td><td>Frequency of trouble occurrence</td><td></td></tr>
<tr><td>Condition of trouble occurrence</td><td></td><td>Weather</td><td></td></tr>
<tr><td>Road conditions</td><td></td><td>Occurrence location</td><td></td></tr>
<tr><td>Accessory installation condition</td><td colspan="3"></td></tr>
<tr><td colspan="4">Trouble condition</td></tr>
<tr><td colspan="2">❑ Diagnostic code</td><td colspan="2">❑ ( )</td></tr>
<tr><td>❑ Immobilizer system</td><td colspan="2">Engine does not start</td><td>❑ Starter does not operate
❑ Starter operates but engine does not start
❑ Engine starts but stops immediately</td></tr>
<tr><td></td><td colspan="3">Does not start with remote engine starter</td></tr>
<tr><td rowspan="2">❑ Steering lock system</td><td colspan="3">The steering lock is not released</td></tr>
<tr><td colspan="3">The steering lock does not lock</td></tr>
<tr><td rowspan="7">❑ Keyless access system</td><td colspan="3">Cannot lock/unlock using the touch sensor (lock), touch sensor (unlock), rear gate opener button and rear lock button</td></tr>
<tr><td colspan="2">Cannot lock with the touch sensor (lock)
Cannot unlock with the touch sensor (unlock)
Cannot lock nor unlock with the touch sensor (lock), touch sensor (unlock)
Rear gate can not be locked with the rear lock button</td><td>❑ Driver's side door
❑ Passenger's side door
❑ Rear gate door</td></tr>
<tr><td colspan="3">Cannot unlock with the rear gate opener button</td></tr>
<tr><td colspan="2">Access key lockout protection function does not operate.</td><td>❑ Passenger room
❑ Luggage room</td></tr>
<tr><td colspan="3">The LED does not illuminate when the access key button is pressed</td></tr>
<tr><td colspan="3">The external buzzer does not beep</td></tr>
<tr><td colspan="3">The passenger room buzzer does not sound</td></tr>
<tr><td>❑ Other</td><td colspan="3">The room light or map light does not illuminate
( )</td></tr>
</table>

NOTE:
- Perform the diagnostics according to the basic diagnostic procedure.
- If the room light or map light does not illuminate and the steering lock does not lock at the same time, the back-up fuse may be loose or blown.

3. General Description

A: CAUTION

1. SRS AIRBAG SYSTEM

The airbag system wiring harness is routed near the keyless access with push button start system.

CAUTION:
- **Do not use electrical test equipment on any wiring harnesses and connectors in the airbag system.**
- **Be careful not to damage the wiring harness of the airbag system when servicing the keyless access with push button start system.**

2. KEYLESS ACCESS WITH PUSH BUTTON START SYSTEM

NOTE:
- Using the function setting (ECM customizing), check that the keyless access system is not OFF. <Ref. to SL-120, OPERATION, Function Setting (Customize).>
- The dark current is approx. 400 mA if there is communication between the vehicle and access key.
- The dark current is approx. 40 mA if there is no communication between the vehicle and access key.*

* No communication with the vehicle means that the keyless access function has been cancelled or that the access key has not been near the vehicle for 15 minutes or more after door locking.

1) Keyless access door unlock function check

(1) When carrying the access key with all doors locked by keyless lock operation, check that when the touch sensor (unlock) built in to the back side surface of door outer handle of front door is touched, the door will unlock (model with double lock), all doors will unlock (model without double lock) and the answer-back function operates (hazard light blinks twice).

(2) In the keyless access door unlock detection area, hold the access key at the same height as the outer handle (approx. 80 cm from the ground) and in the direction shown in the figure, and check that the vehicle becomes unlock mode [access key LED (red) blinks] at 40 to 80 cm (A) from the vehicle.

NOTE:
Check the access key battery if the LED (red) does not illuminates when the access key button is pressed. <Ref. to SL-89, INSPECTION, Access Key.>

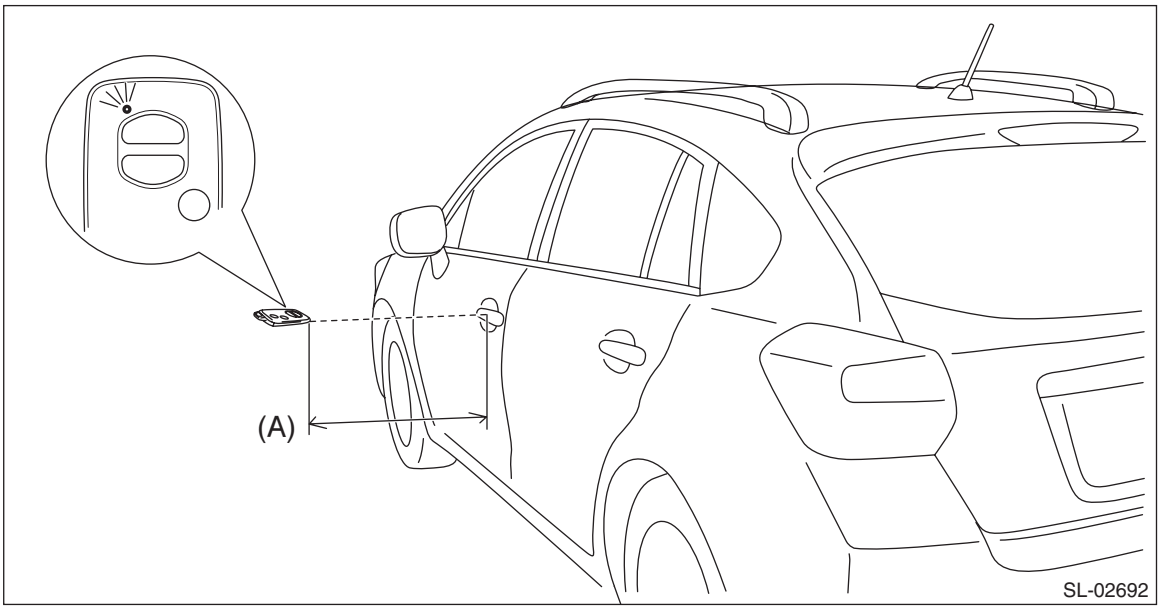

2) Check keyless access door lock function

(1) When carrying the access key outside of the vehicle with all doors closed and unlocked, check that when the touch sensor (lock) on the surface of door outer handle of front door is touched, all doors will lock and the answer-back function operates (hazard light blinks once).

CAUTION:

If the access key is within the vehicle but not within the detection area (in the instrument panel, on the rear tray, in the glove box, on the floor, in the door trim pocket or at the corner of the luggage room), then lockout protection will not function when the doors are locked and the access key will be locked into the vehicle.

(2) To check the keyless access door lock operation range, hold the access key at a height (B) of 10 cm under the bottom edge of the door glass (approx. 80 cm from the ground) in the direction shown in the figure, and check that all doors lock and the answer-back function operates (hazard light blinks once) when you touch the touch sensor (lock) at a distance (A) of approx. 30 cm from the vehicle.

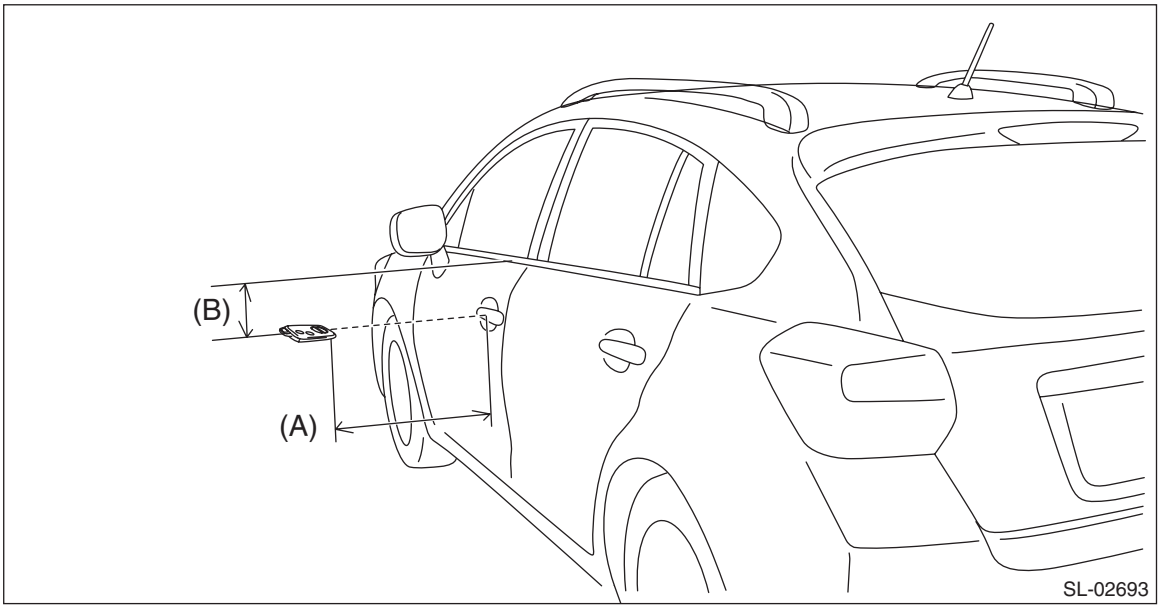

(3) Check the passenger's side door in the same manner.

NOTE:

- When the door cannot lock if the touch sensor (lock) is touched, touch the touch sensor (lock) with palm.
- Since communication is not possible within close range (20 cm or less) of the door outer handle, the access key may not operate if you touch the touch sensor (lock) with the same hand you are holding the access key.
- If the lockout prevention buzzer sounds, it is possible that the interior transmitter has radio wave leakage.

3) Check of the keyless access rear gate function

(1) With the rear gate locked, check that the all doors unlock and rear gate opens simultaneously and the answer-back function operates (hazard light blinks twice) when you press the rear gate opener button while carrying the access key.

(2) To check the range for keyless access rear gate open operation, hold the access key behind and in the center of the vehicle at the same height as the rear gate opener button (90 cm from the ground) in the direction shown in the figure, and check that all doors unlock, the rear gate opens, and the answer-back function operates (hazard light blinks twice) when the rear gate opener button is pressed at a distance of 40 to 80 cm (A) from the vehicle.

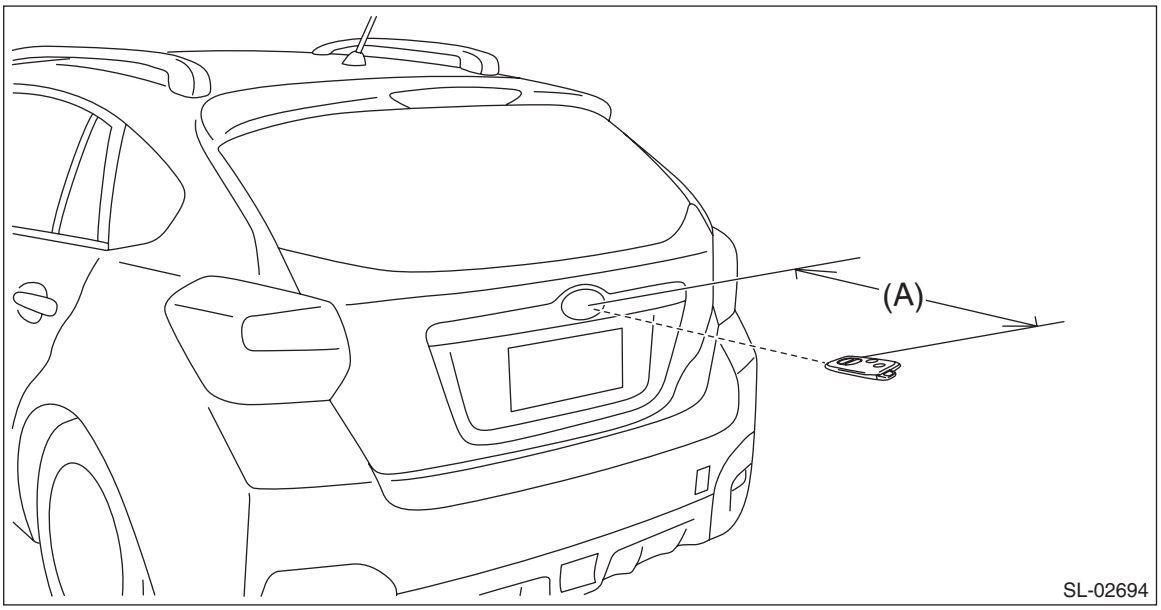

(3) With the rear gate unlocked, check that all doors lock and the answer-back function operates (hazard light blinks once) when you press the rear lock button while carrying the access key.

4) Check of the keyless access ignition switching function

(1) With the ignition OFF, enter the vehicle while carrying the access key. With the shift lever in the P range, check that the push button ignition switch indicator is illuminated in green when you depress the brake pedal, and check that the engine starts when you press the push button ignition switch while the indicator illuminated in green.

(2) While carrying the access key, check that when you press the push button ignition switch without depressing the brake pedal, the following occurs: 'Ignition OFF' → 'ACC ON' → 'Ignition ON' → 'Ignition OFF'. If the shift lever is in any range except for the P range and the push button ignition switch is pressed from ignition ON, then it will change to ACC ON without changing to ignition OFF.

(3) After the vehicle has stopped, press the push button ignition switch and ignition is turned OFF (engine stopped · all power supplies OFF). However, if the shift lever is in any range except for the P range and the push button ignition switch is pressed with the vehicle stopped, then the ignition is not turned OFF and instead the power supplies changes to ACC ON. Check that the steering lock operates if the door is opened in the ignition OFF state (shift P range).

(4) To check the range of the keyless access ignition operation, check that the engine can start when you set the access key at the check position on the sheet in the direction indicated in the figure.

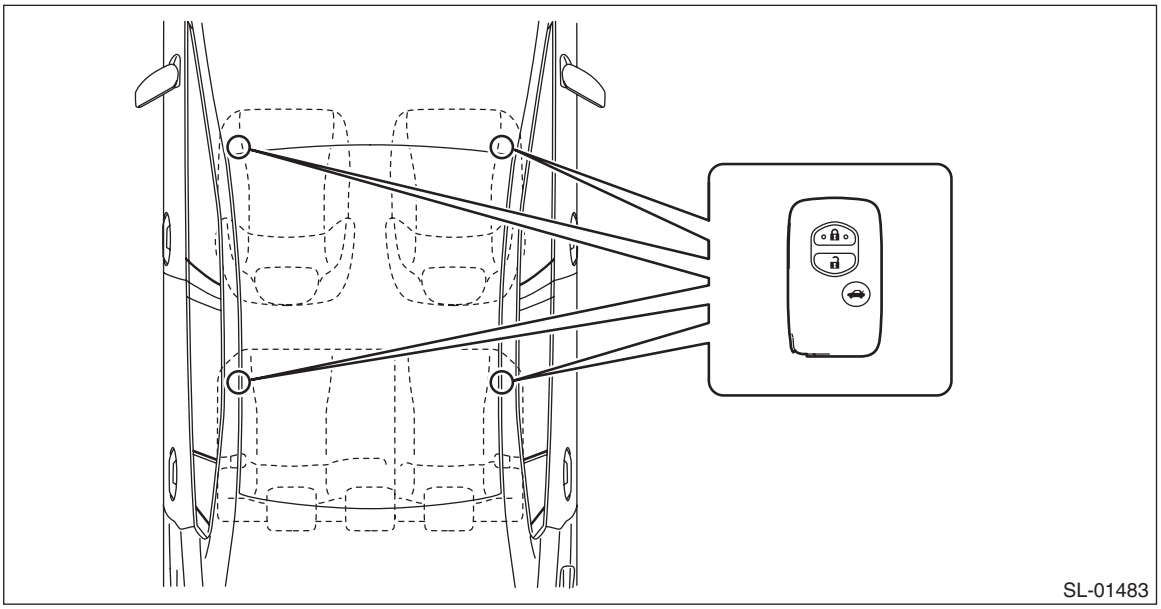

CAUTION:
The access key may not be correctly detected even though it is within the detection area within the passenger room, if it is in the instrument panel, on the rear tray, in the glove box, on the floor, in the door trim pocket, or at the corner of the luggage room.

NOTE:
Perform the check twice, once each with the access key positioned on the driver's, passenger's and rear seats.

5) Lockout protection function check (in the passenger room)

CAUTION:
Open one of the windows before performing this check in order to prevent the key from being locked inside the vehicle.

(1) Position the access key on the driver's or passenger's seat.
(2) Close all doors. (with all doors unlocked)
(3) Check that the doors do not lock and the lockout protection buzzer (exterior) sounds for 2 seconds when you touch the touch sensor (lock) of either the driver's or passenger's door.

6) Check of the keyless access cancel function

(1) After setting the keyless access cancel function, check that all keyless access and start system (keyless access) functions are inoperable. (For cancel setting, refer to <Ref. to SL-120, OPERATION, Function Setting (Customize).>)

NOTE:
When keyless access is cancelled, door lock and unlock can be operated by access key button operation and the starter system can be operated by passing the access key over the push button ignition switch with the access key button toward you.

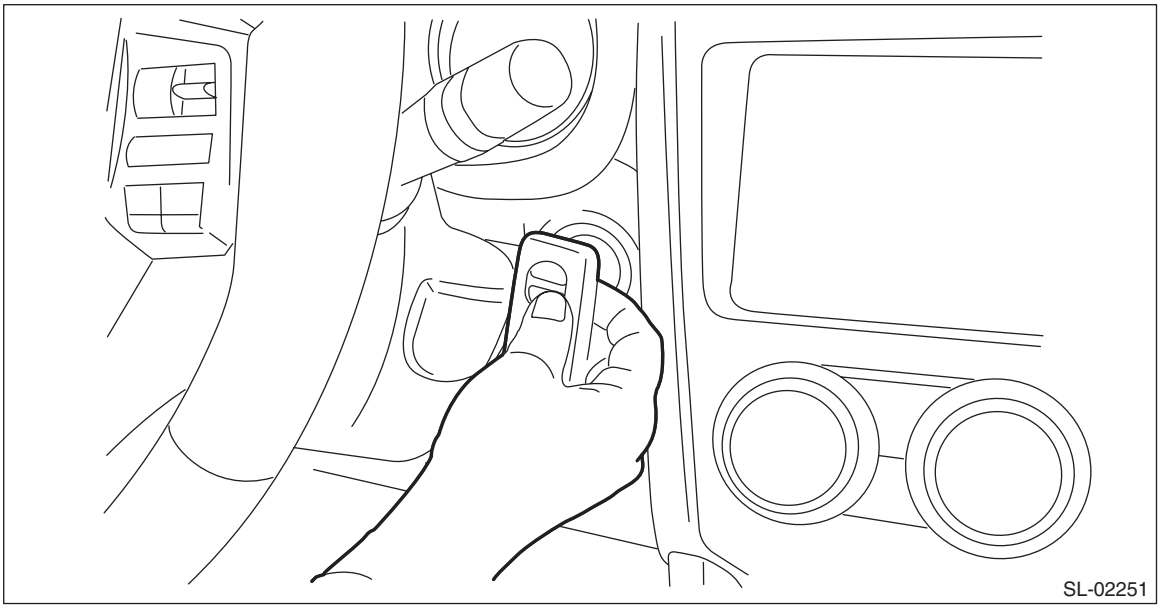

7) Access key diagnostic mode
(1) Connect the Subaru Select Monitor, and select «Work Support» of {Keyless access system}. <Ref. to KPS(diag)-33, Keyless Access System Check.>
(2) From {Work Support}, select «Function Check Sequence».
(3) From {Function Check Sequence}, select «Keyless access system check».
(4) Select the transmitter to check from the items.
(5) Check that the door lock buzzer sounds (short blips, a continuous beeping sound for the center room antenna) when the access key is near the selected transmitter or antenna.

B: PREPARATION TOOL

1. SPECIAL TOOL

ILLUSTRATION	TOOL NUMBER	DESCRIPTION	REMARKS
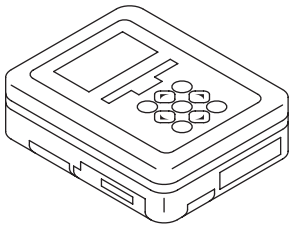 ST1B022XU0	1B022XU0	SUBARU SELECT MONITOR III KIT	Used for troubleshooting the electrical system.

2. GENERAL TOOL

TOOL NAME	REMARKS
Circuit tester	Used for measuring resistance, voltage and current.

4. Electrical Component Location

A: LOCATION

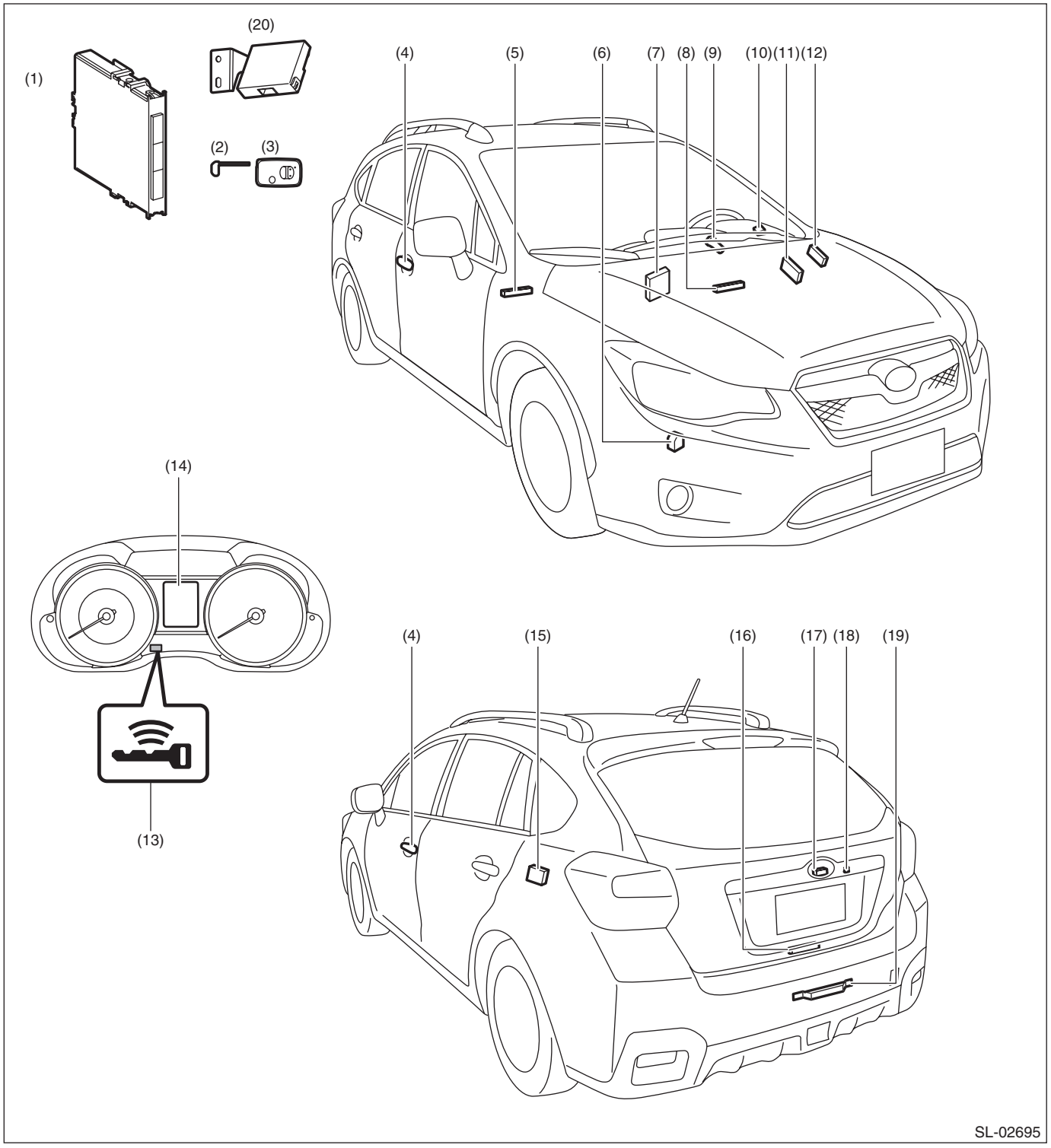

(1) Keyless access CM
(2) Mechanical key
(3) Access key
(4) Front outer handle (front exterior antenna)
– Touch sensor (lock)
– Touch sensor (unlock)
(5) Center interior antenna
(6) Access buzzer
(7) ECM
(8) Front interior antenna
(9) Push button ignition switch
(10) Steering lock CM
(11) TCM
(12) Body integrated unit
(13) Access key warning light
(14) Multi information display
(15) Receiver
(16) Rear interior antenna
(17) Rear gate opener button
(18) Rear lock button
(19) Rear exterior antenna
(20) ID code box
(For C0 and C5 model only)

5. Control Module I/O Signal

A: ELECTRICAL SPECIFICATION

1. KEYLESS ACCESS CM

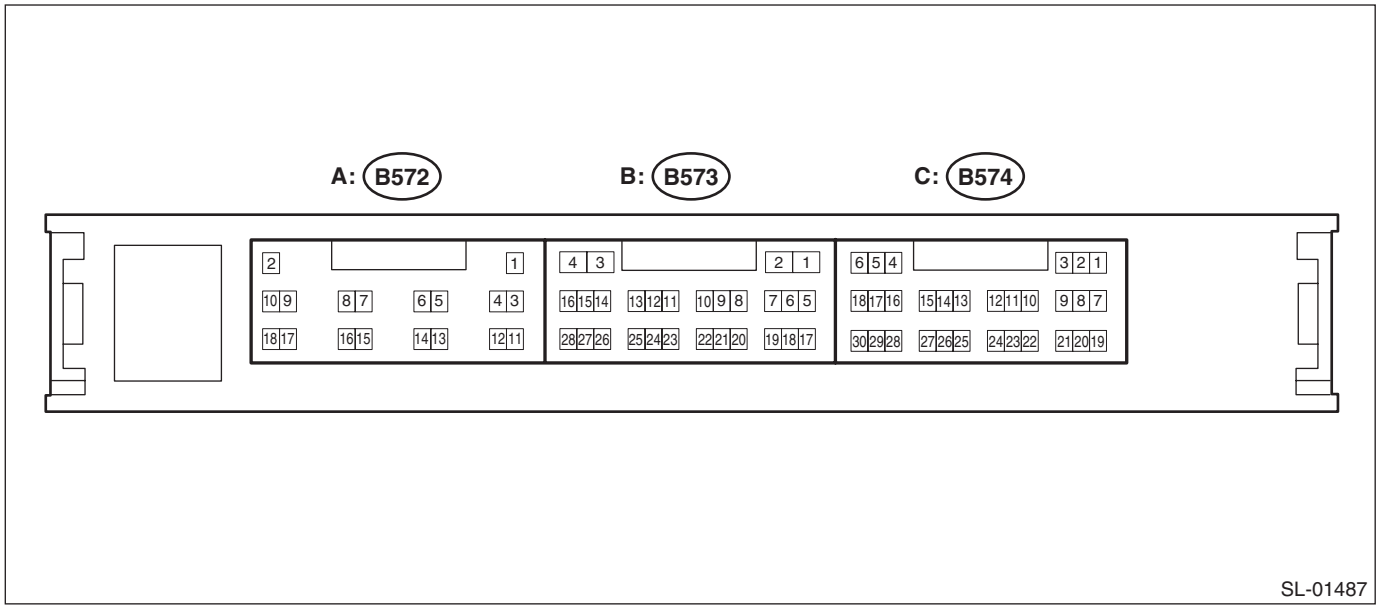

Terminal No.	Terminal symbol	Description
(B572) No. 2	+B	+B
(B572) No. 3	INDS	Start switch indicator (green) output
(B572) No. 5	N-SW	Neutral switch input
(B572) No. 7	STSW	STSW output
(B572) No. 9	IG2D	IG2 relay drive output
(B572) No. 10	CLUT	Clutch switch input
(B572) No. 11	GND	GND
(B572) No. 13	EGIO	Immobilizer communication 1
(B572) No. 14	EGII	Immobilizer communication 2
(B572) No. 17	TACH	Engine speed input
(B572) No. 18	STPI	Stop light switch input
(B573) No. 1	CG8B	Outside rear antenna output –
(B573) No. 2	CLG8	Outside rear antenna output +
(B573) No. 5	RCO	Tuner power supply
(B573) No. 8	CG7B	Inside rear antenna output –
(B573) No. 9	CLG7	Inside rear antenna output +
(B573) No. 10	CG6B	Inside center antenna output –
(B573) No. 11	CLG6	Inside center antenna output +
(B573) No. 17	RDA	Tuner reception data input
(B573) No. 19	RSSI	Tuner reception start signal input
(B573) No. 27	TSW5	Rear gate lock request switch input
(B573) No. 28	ACCR	ACC cutoff input
(B574) No. 1	VC5	Immobilizer amplifier power supply (start switch)
(B574) No. 2	CG5B	Inside front antenna output –
(B574) No. 3	CLG5	Inside front antenna output +
(B574) No. 4	ACCD	ACC relay drive output
(B574) No. 5	IG	IGN power supply
(B574) No. 6	IG1D	IG1 relay drive output

Terminal No.	Terminal symbol	Description
(B574) No. 7	CODE	Immobilizer signal reception (start switch)
(B574) No. 8	TSW2	Passenger's lock sensor signal input
(B574) No. 9	TXCT	Immobilizer signal transmission (start switch)
(B574) No. 10	CG2B	Passenger's antenna output –
(B574) No. 11	CLG2	Passenger's antenna output +
(B574) No. 12	CLG1	Driver's antenna output +
(B574) No. 13	CG1B	Driver's antenna output –
(B574) No. 14	CANH	HS-CAN H
(B574) No. 15	CANL	HS-CAN L
(B574) No. 16	SWIL	Start switch character illumination output
(B574) No. 17	LIN	LIN communication
(B574) No. 18	INDW	Start switch indicator (orange) output
(B574) No. 19	POS1	Driver's sensor drive power supply
(B574) No. 20	TSW1	Driver's lock sensor signal input
(B574) No. 21	POS1	Passenger's sensor drive power supply
(B574) No. 22	SEN1	Driver's unlock sensor signal input
(B574) No. 23	SEN2	Passenger's unlock sensor signal input
(B574) No. 24	AGND	Immobilizer amplifier GND (start switch)
(B574) No. 25	P	Parking position switch input
(B574) No. 26	SLP	Steering lock position input
(B574) No. 27	SPD	Vehicle speed signal input
(B574) No. 28	SSW1	Start switch input 1
(B574) No. 29	SLR+	Steering motor power supply signal output
(B574) No. 30	SSW2	Start switch input 2

Disconnect the control module connector (B572) before checking the following items.

NOTE:
If the measured value is out of standard, it is possible that the vehicle has a fault.

Terminal No.	Item	Measuring condition	Standard
(B572) No. 2 (+B) ←→ (B572) No. 11 (E)	Voltage	Always	9.5 — 16 V
(B572) No. 11 (E) ←→ Chassis ground	Resistance	Always	Less than 1 Ω

Disconnect the control module connector (B573) before checking the following items.

NOTE:
If the measured value is out of standard, it is possible that the vehicle has a fault.

Terminal No.	Item	Measuring condition	Standard
(B573) No. 15 (IDW) ←→ Chassis ground (For C0 and C5 model only)	Continuity	Always	Continuity exists

Disconnect the control module connectors (B574) and (B572) before checking the following items.

NOTE:
If the measured value is out of standard, it is possible that the vehicle has a fault.

Terminal No.	Item	Measuring condition	Standard
(B574) No. 4 (ACCD) ←→ Chassis ground	Resistance	Always (20°C)	152.61 — 216.5 Ω
(B572) No. 9 (IG2D) ←→ Chassis ground	Resistance	Always (20°C)	74.15 — 460.88 Ω
(B574) No. 6 (IG1D) ←→ Chassis ground	Resistance	Always (20°C)	50.87 — 72.17 Ω
(B572) No. 18 (STP1) ←→ Chassis ground (AT model only)	Voltage	Brake pedal depressed → released	11 — 14 V → 1 V or less
(B574) No. 25 (P) ←→ Chassis ground (AT model only)	Resistance	Except for shift positions P → Shift position P	40 kΩ or more → 200 Ω or less
(B574) No. 27 (SPD) ←→ Chassis ground	Resistance	Always	30 kΩ or more
(B574) No. 28 (SSW1) ←→ Chassis ground	Resistance	Push button ignition switch pressed → released	Less than 1 Ω → 10 kΩ or more
(B574) No. 29 (SLR+) ←→ Chassis ground	Resistance	Always	10 kΩ or more
(B574) No. 30 (SSW2) ←→ Chassis ground	Resistance	Push button ignition switch pressed → released	Less than 1 Ω → 10 kΩ or more
(B574) No. 17 (LIN) ←→ Chassis ground	Continuity	Always	Continuity does not exist
(B574) No. 14 (CANH) ←→ Chassis ground	Pulse	ACC ON or IGN ON or ACC and IGN OFF and open/close the door	Pulse generation
(B574) No. 15 (CANL) ←→ Chassis ground	Pulse	ACC ON or IGN ON or ACC and IGN OFF and open/close the door	Pulse generation

Connect the control module connector before checking the following items.

NOTE:
If the measured value is out of standard, it is possible that the keyless access CM has a fault.

Terminal No.	Item	Measuring condition	Standard
(B574) No. 1 (VC5) ←→ (B574) No. 24 (AGND)	Voltage	30 seconds or more have passed after the door was opened or closed with IG OFF and the brake pedal released.	1 V or less
	Waveform	Within 30 seconds after the push button ignition switch is pressed with IG OFF and access key not in the passenger room.	Waveform 1
(B574) No. 2 (CG5B) ←→ (B572) No. 11 (E)	Pulse	All doors closed, ACC and IG OFF, access key not in passenger room, touch sensor (lock) OFF → ON	No pulse output → Pulse output detected
(B574) No. 3 (CLG5) ←→ (B572) No. 11 (E)	Pulse	All doors closed, ACC and IG OFF, access key not in passenger room, touch sensor (lock) OFF → ON	No pulse output → Pulse output detected
(B574) No. 4 (ACCD) ←→ (B572) No. 11 (E)	Voltage	IG OFF → ACC ON	1 V or less → 9 — 14 V
(B574) No. 6 (IG1D) ←→ (B572) No. 11 (E)	Voltage	ACC ON → IG ON	1 V or less → 9 — 14 V
(B574) No. 7 (CODE) ←→ (B574) No. 24 (AGND)	Voltage	30 seconds or more have passed after the door was opened or closed with IG OFF and the brake pedal released.	1 V or less
	Waveform	Turn the ignition switch to OFF and with the access key near the push button ignition switch, press the push button ignition switch*1	Waveform 2

Terminal No.	Item	Measuring condition	Standard
(B574) No. 9 (TXCT) ←→ (B574) No. 24 (AGND)	Voltage	30 seconds or more have passed after the door was opened or closed with IG OFF and the brake pedal released.	1 V or less
	Waveform	Turn the ignition switch to OFF and with the access key near the push button ignition switch, press the push button ignition switch*1	Waveform 3
(B574) No. 10 (CG2B) ←→ (B572) No. 11 (E)	Pulse	ACC and IG OFF, all doors closed, all doors locked by lock operation with wireless remote control, access key not in passenger room	No pulse output → Pulse output detected
(B574) No. 11 (CLG2) ←→ (B572) No. 11 (E)	Pulse	ACC and IG OFF, all doors closed, all doors locked by lock operation with wireless remote control, access key not in passenger room	No pulse output → Pulse output detected
(B574) No. 12 (CLG1) ←→ (B572) No. 11 (E)	Pulse	ACC and IG OFF, all doors closed, all doors locked by lock operation with wireless remote control, access key not in passenger room	No pulse output → Pulse output detected
(B574) No. 13 (CG1B) ←→ (B572) No. 11 (E)	Pulse	ACC and IG OFF, all doors closed, all doors locked by lock operation with wireless remote control, access key not in passenger room	No pulse output → Pulse output detected
(B574) No. 19 (SEL1) ←→ (B572) No. 11 (E)	Voltage	ACC and IG OFF, access key carried, driver's seat touch sensor OFF → ON	9 — 14 V → less than 2 V
(B574) No. 21 (SEL2) ←→ (B572) No. 11 (E)	Voltage	ACC and IG OFF, access key carried, driver's seat touch sensor OFF → ON	9 — 14 V → less than 2 V
(B574) No. 24 (AGND) ←→ Chassis ground	Resistance	Always	Less than 1 Ω
(B574) No. 25 (P) ←→ (B572) No. 11 (E) (AT model only)	Voltage	Except for shift positions P → Shift position P	9 — 14 V or more → 1.5 V or less
(B574) No. 26 (SLP) ←→ (B572) No. 11 (E)	Voltage	With ignition switch OFF and shift position P, Steering lock → Steering unlock	11 — 14 V → 1.2 V or less
(B574) No. 27 (SPD) ←→ Chassis ground	Pulse	Driving at approx. 5 km/h	Pulse generation according to vehicle speed (approx. 5 km/h: 3.54 Hz)
(B574) No. 28 (SSW1) ←→ (B572) No. 11 (E)	Voltage	Push button ignition switch released → pressed	11 — 14 V → 1 V or less
(B574) No. 29 (SLR+) ←→ (B572) No. 11 (E)	Voltage	When the following conditions are met, the doors are closed → opened, and steering lock motor is driven • Steering lock is unlocked • IG OFF • Shift position P	11 — 14 V (Steering lock motor is stopped) → 1 V or less (Steering lock motor is driven)
(B574) No. 30 (SSW2) ←→ (B572) No. 11 (E)	Voltage	Push button ignition switch released → pressed	11 — 14 V → 1 V or less
(B573) No. 1 (CG8B) ←→ (B572) No. 11 (E)	Pulse	ACC and IG OFF, all doors closed, rear gate opener button OFF → ON	No pulse output → Pulse output detected
(B573) No. 2 (CLG8) ←→ (B572) No. 11 (E)	Pulse	ACC and IG OFF, all doors closed, rear gate opener button OFF → ON	No pulse output → Pulse output detected
(B573) No. 5 (RCO) ←→ (B572) No. 11 (E)	Voltage	ACC and IG OFF, access key is locked or unlock switch OFF → ON	1 V or less → 4.5 — 5.5 V
(B573) No. 8 (CG7B) ←→ (B572) No. 11 (E)	Pulse	All doors closed, ACC and IG OFF, access key not in passenger room, touch sensor (lock) OFF → ON	No pulse output → Pulse output detected
(B573) No. 9 (CLG7) ←→ (B572) No. 11 (E)	Pulse	All doors closed, ACC and IG OFF, access key not in passenger room, touch sensor (lock) OFF → ON	No pulse output → Pulse output detected

Terminal No.	Item	Measuring condition	Standard
(B573) No. 19 (RSSI) ←→ (B572) No. 11 (E)	Voltage	All doors closed, all doors locked, access key is locked or unlock switch OFF → ON	11 — 14 V → 2 V or less
(B573) No. 27 (TSW5) ←→ (B572) No. 11 (E)	Pulse/voltage	ACC and IG OFF, all doors locked, rear gate lock button OFF → ON	9 V or more → less than 2 V
(B572) No. 9 (IG2D) ←→ (B572) No. 11 (E)	Voltage	ACC ON → IG ON	1 V or less → 9 — 14 V
(B572) No. 13 (EGIO) ←→ (B574) No. 24 (AGND)	Voltage/pulse	IG ON	11 to 14 V (Waveform 4)
(B574) No. 8 (TSW2) ←→ (B572) No. 11 (E)	Voltage	ACC and IG OFF, all doors closed, all doors locked, access key carried, passenger's seat touch sensor (lock) OFF → ON	9 V or more → less than 2 V (→ 9 V or more)
(B574) No. 20 (TSW1) ←→ (B572) No. 11 (E)	Voltage	ACC and IG OFF, all doors closed, all doors locked, access key carried, driver's seat touch sensor (lock) OFF → ON	9 V or more → less than 2 V (→ 9 V or more)
(B574) No. 23 (SEN2) ←→ (B572) No. 11 (E)	Voltage	ACC and IG OFF, all doors closed, all doors locked, access key carried, passenger's seat touch sensor (unlock) OFF → ON	9 V or more → less than 2 V (→ 9 V or more)
(B574) No. 22 (SEN1) ←→ (B572) No. 11 (E)	Voltage	ACC and IG OFF, all doors closed, all doors locked, access key carried, driver's seat touch sensor (unlock) OFF → ON	9 V or more → less than 2 V (→ 9 V or more)
(B574) No. 16 (SWIL) ←→ (B572) No. 11 (E)	Voltage	When illumination of start switch goes off, headlight goes off after setting the illumination control to MAX	Less than 2 V → 9 V or more
(B572) No. 17 (TACH) ←→ Chassis ground	Waveform	While engine idling	Pulse generation (waveform 5)
(B573) No. 28 (ACCR) ←→ (B572) No. 11 (E)	Voltage	Brake pedal depressed, push button ignition switch pressed (while cranking) → Except when cranking	Less than 2 V → 9 V or more
(B572) No. 5 (N-SW) ←→ (B572) No. 11 (E) (AT model only)	Voltage	Shift position N → other than P or N	Less than 2 V → 9 V or more
(B573) No. 17 (RDA) ←→ (B572) No. 11 (E)	Pulse	All doors closed, all doors locked, access key is locked or unlock switch OFF → ON	2 V or less → 11 — 14 V → 2 V or less
(B572) No. 7 (STSW) ←→ (B572) No. 11 (E)	Voltage	Shift lever is in position P or position N and access key is in passenger room. While depressing the brake pedal, press the push button ignition switch. (Engine start)	Less than 2 V → 9 V or more
(B572) No. 3 (INDS) ←→ (B572) No. 11 (E)	Voltage	Depress the brake pedal.	9 V or more
(B574) No. 18 (INDW) ←→ (B572) No. 11 (E)	Voltage	With ACC ON or IG ON, brake pedal not depressed.	9 V or more

NOTE:
*1: Remove the access key battery before checking.

1. Waveform 1

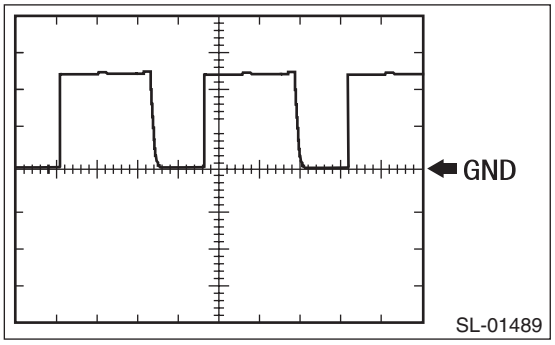

Item	Content
Measured terminal	(B574) No. 1 (VC5) ←→ (B574) No. 24 (AGND)
Equipment setting	2 V/DIV, 200 ms/DIV
Measuring condition	Within 30 seconds after the push button ignition switch is pressed with IG OFF and access key not in the passenger room.

2. Waveform 2

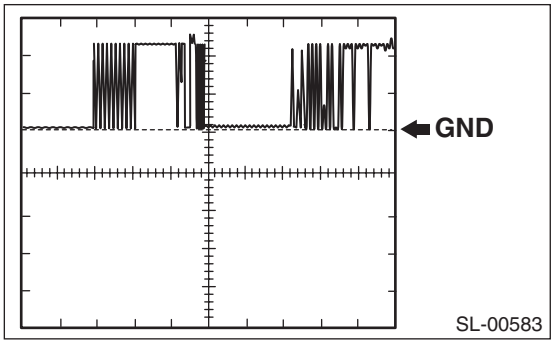

Item	Content
Measured terminal	(B574) No. 7 (CODE) ←→ (B574) No. 24 (AGND)
Equipment setting	2 V/DIV, 20 ms/DIV
Measuring condition	Turn the ignition switch to OFF and with the access key near the push button ignition switch, press the push button ignition switch. *1

NOTE:
*1: Remove the access key battery before checking.

3. Waveform 3

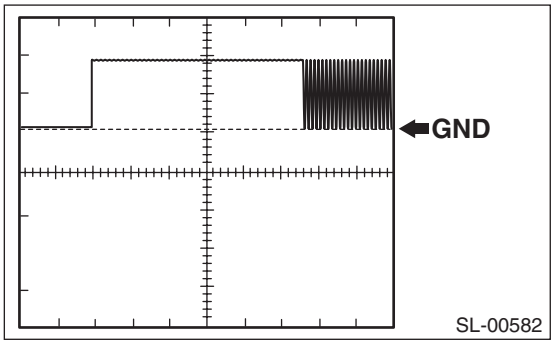

Item	Content
Measured terminal	(B574) No. 9 (TXCT) ←→ (B574) No. 24 (AGND)
Equipment setting	2 V/DIV, 20 ms/DIV
Measuring condition	Within 30 seconds after the push button ignition switch is pressed with IG OFF and access key not in the passenger room.

4. Waveform 4

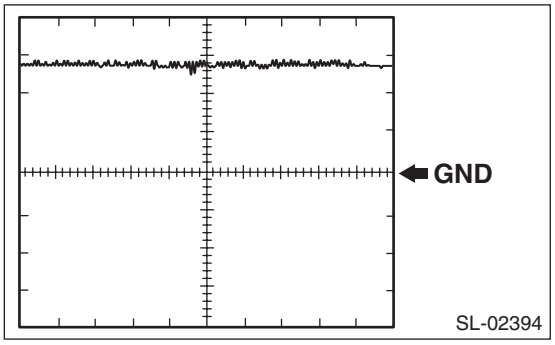

Item	Content
Measured terminal	(B572) No. 13 (EGIO) ⟷ (B572) No. 11 (GND)
Equipment setting	5 V/DIV, 100 ms/DIV
Measuring condition	Ignition ON

5. Waveform 5

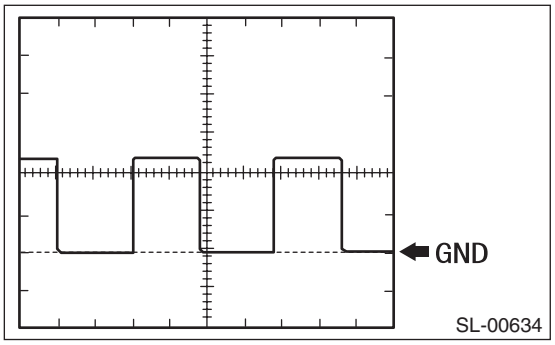

Item	Content
Equipment setting	5 V/DIV, 100 ms/DIV

2. ID CODE BOX

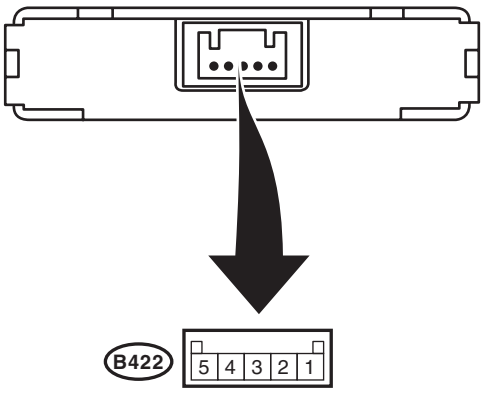

SL-01558

Terminal No.	Terminal symbol	Content
(B422) No. 1	+B	+B
(B422) No. 2	LIN	LIN communication
(B422) No. 3	IMO2	Immobilizer communication 2
(B422) No. 4	IMO1	Immobilizer communication 1
(B422) No. 5	GND	GND

NOTE:
Disconnect the control module connector before checking the following items.

Terminal No.	Standard	Measuring condition	Item
1(+B) ←→ 5 (GND)	10 — 14 V	Always	Voltage
3 (IMO2) ←→ 5 (GND)	0 V	Ignition OFF	Voltage
4 (IMO1) ←→ 5 (GND)	0 V	Ignition OFF	Voltage
5 (GND) ←→ Chassis ground	Continuity exists	Always	Continuity

NOTE:
Connect the control module connector before checking the following items.

Terminal No.	Standard	Measuring condition	Item
3 (IMO2) ←→ 5 (GND)	0 V	Ignition OFF	Voltage
3 (IMO2) ←→ 5 (GND)	Waveform 1	Ignition ON	Voltage
4 (IMO1) ←→ 5 (GND)	0 V	Ignition OFF	Voltage
4 (IMO1) ←→ 5 (GND)	Waveform 1	Ignition ON	Voltage

Waveform 1

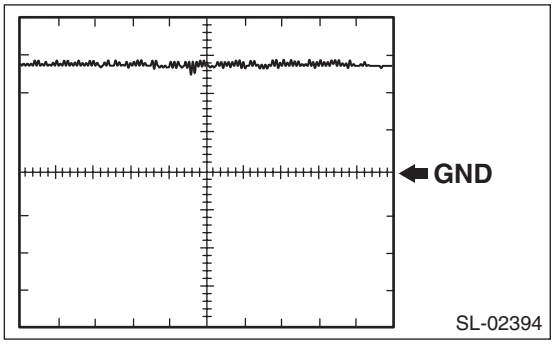

Item	Content
Measured terminal	4 (IMO1) ←→ 5 (GND)
Equipment setting	5 V/DIV, 100 ms/DIV
Measuring condition	Ignition ON

3. BODY INTEGRATED UNIT

Refer to the BODY CONTROL SYSTEM (DIAGNOSTICS) for the I/O Signal of the body integrated unit. <Ref. to BC(diag)-6, ELECTRICAL SPECIFICATION, Control Module I/O Signal.>

4. STEERING LOCK CM

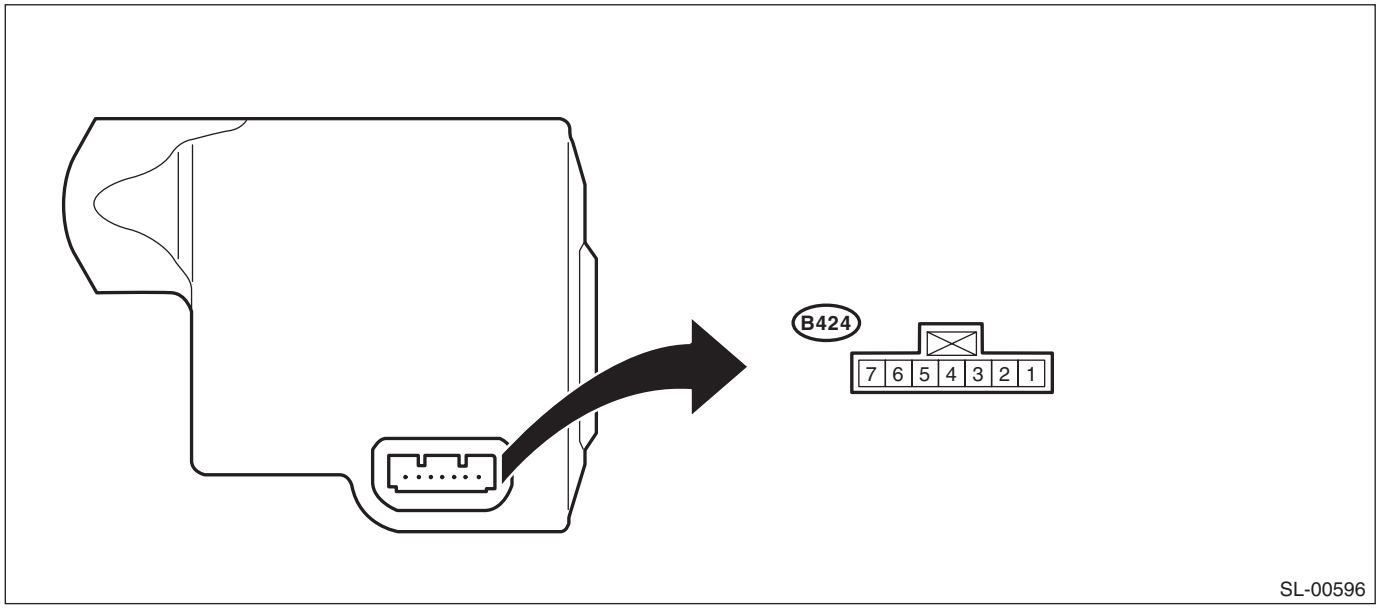

Terminal No.	Terminal symbol	Content
(B424) No. 1	GND	GND
(B424) No. 3	SLR+	Steering lock motor drive power supply
(B424) No. 4	SLP	Unlock position output
(B424) No. 5	LIN	LIN communication
(B424) No. 6	IG2	IGN power supply
(B424) No. 7	B	+B

NOTE:
Perform the following check from the back side of the connector, with the connector of the control module connected.

If the measured value is out of standard, it is possible that the vehicle has a fault.

Terminal No.	Standard	Measuring condition	Item
1 (GND) ←→ Chassis ground	Continuity exists	Always	Continuity
—	—	—	—
3 (SLR+) ←→ Chassis ground	10 — 14 V → 1 V or less	Motor not operating → Motor operating	Voltage
4 (SLP) ←→ Chassis ground	10 — 14 V → 1 V or less	Lock → Unlock	Voltage
5 (LIN)	Input/output signal	—	—
6 (IG2) ←→ Chassis ground	10 — 14 V	Ignition ON	Voltage
7 (B) ←→ Chassis ground	10 — 14 V	Always	Voltage

B: WIRING DIAGRAM

Refer to “Keyless Access System” in the wiring diagram. <Ref. to WI(HEV)-157, WIRING DIAGRAM, Keyless Access System.>

6. Subaru Select Monitor

A: OPERATION

For operation procedures, refer to the “PC application help for Subaru Select Monitor”.

B: COMMUNICATION FOR INITIALIZING IMPOSSIBLE

NOTE:
Confirm that the LAN system is working properly before the diagnosis.
Subaru Select Monitor communication line is open or shorted.

DETECTING CONDITION:

- Defective harness
- Power supply circuit malfunction
- Defective keyless access CM
- Defective CAN communication circuit
- Defective Subaru Select Monitor

TROUBLE SYMPTOM:

Not communicable with Subaru Select Monitor.

WIRING DIAGRAM:

- Push button start system <Ref. to WI(HEV)-180, WIRING DIAGRAM, Push Button Start System.>
- CAN communication system <Ref. to WI(HEV)-64, WIRING DIAGRAM, CAN Communication System.>

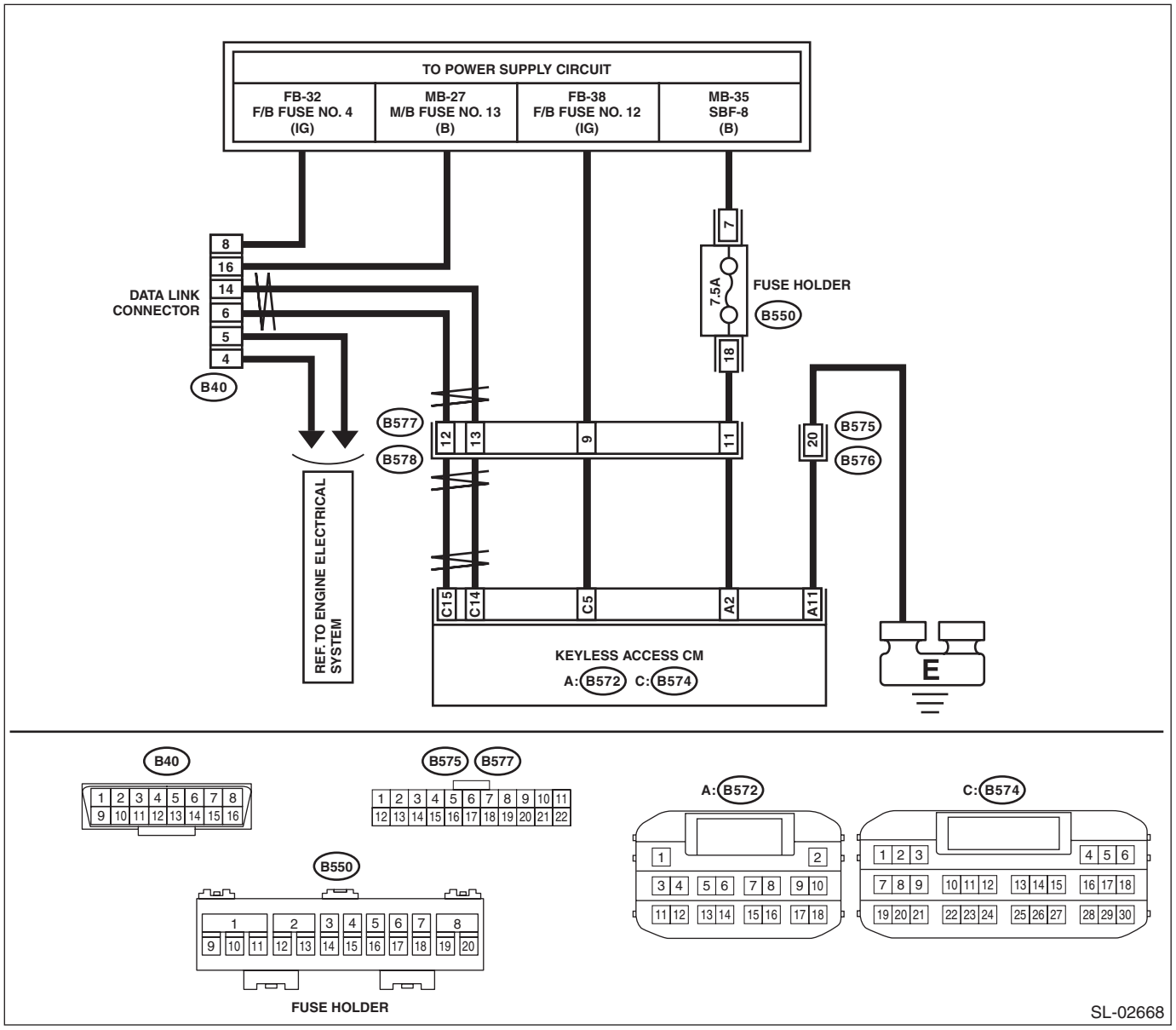

Step		Check	Yes	No
1	**CHECK OTHER COMMUNICATION.** Communicate with the system other than the keyless access system using the Subaru Select Monitor.	Is the communication to other control module possible?	Go to step **2**.	Perform the "Communication for Initializing Impossible" of LAN system. <Ref. to LAN(HEV)(diag)-11, COMMUNICATION FOR INITIALIZING IMPOSSIBLE, Subaru Select Monitor.>

Step		Check	Yes	No
2	**CHECK DTC.** Read the DTC of the LAN system using the Subaru Select Monitor. <Ref. to LAN(HEV)(diag)-29, OPERATION, Read Diagnostic Trouble Code (DTC).>	Is DTC detected?	Perform the diagnosis according to DTC.	Go to step **3**.
3	**CHECK KEYLESS ACCESS CM.** 1) Turn the ignition switch to OFF. 2) Disconnect the keyless access CM connector. 3) Connect the disconnected connectors. 4) Perform communication with the keyless access system using the Subaru Select Monitor.	Is communication possible?	It is possible that temporary poor communication occurs.	Replace the keyless access CM. <Ref. to SL-102, Keyless Access CM.>

CAUTION:
For replacement procedure of keyless access CM, refer to the "REGISTRATION MANUAL FOR IMMOBILIZER".

7. Read Diagnostic Trouble Code (DTC)

A: OPERATION

For operation procedures, refer to the “PC application help for Subaru Select Monitor”.

8. Read Current Data

A: OPERATION

For operation procedures, refer to the “PC application help for Subaru Select Monitor”.

B: LIST

1. Keyless access system

Items to be displayed	Unit of measure	Remarks	Note
Driver’s unlock touch sensor switch	ON/OFF	Keyless access CM input value	ON when the touch sensor (unlock) built on the back surface of the driver’s door outer handle is touched
Passenger’s unlock touch sensor switch	ON/OFF	Keyless access CM input value	ON when the touch sensor (unlock) built on the back surface of the passenger’s door outer handle is touched
Driver’s lock touch sensor SW	ON/OFF	Keyless access CM input value	ON when the touch sensor (lock) built on the surface of the driver’s door outer handle is touched
Passenger’s lock touch sensor SW	ON/OFF	Keyless access CM input value	ON when the touch sensor (lock) built on the surface of the passenger’s door outer handle is touched
Rear Gate Request SW	ON/OFF	Keyless access CM input value	ON when rear lock button is pressed (5 door models only)
IGN SW	ON/OFF	Keyless access CM input value	ON when ignition is ON
B/up fuse	Connecting/Not connected	Keyless access CM internal value	When backup fuse is connected/connecting
ACC SW	ON/OFF	Keyless access CM input value	ON when accessory or ignition is ON
Incorrect vehicle ID	Yes/No	Keyless access CM internal value	Yes when the access key is different when keyless access is performed
No response	Yes/No	Keyless access CM internal value	Yes when there is no response from the access key when keyless access is performed
Incorrect response code, format	Yes/No	Keyless access CM internal value	Yes if the response from the access key differs when keyless access is performed
Exhausted battery	Yes/No	Keyless access CM internal value	Yes if the access key battery is depleted
Incorrect response code, ID code	Yes/No	Keyless access CM internal value	Yes if the response from the access key differs when keyless access is performed
Incorrect response code, collation result	Yes/No	Keyless access CM internal value	Yes if the response from the access key differs when keyless access is performed
Incorrect ID code	Yes/No	Keyless access CM internal value	Yes if the response from the access key differs when keyless access is performed
Incorrect rolling code	Yes/No	Keyless access CM internal value	Yes if the response from the access key differs when keyless access is performed
Smart Cancel	Cancel/Normal	Keyless access CM internal value	Cancel in the keyless access function stopped condition
ID Code Box W/H Connection State	Connecting/Not connected	Keyless access CM internal value	When ID code box is connected/connecting
ID Code Box Existence Judging	ON/OFF/Existence Judging	Keyless access CM internal value	
Immobilizer	Set/Unset	Keyless access CM internal value	
Remote engine starter communication ID confirmation	Collation NG/Collation OK	Keyless access CM internal value	

Items to be displayed	Unit of measure	Remarks	Note
Remote engine starter code registration confirmation	Unregistered/Registered	Keyless access CM internal value	
STLC sleep possible status	Possible/Impossible	Steering lock CM internal value	
STLC wake-up transmission status	Transmission/No transmission	Steering lock CM internal value	
Lock side sensor status	ON/OFF	Steering lock CM internal value	
Unlock side sensor status	ON/OFF	Steering lock CM internal value	
Lock confirmation	Confirmed/Unconfirmed	Steering lock CM internal value	Confirmed when steering lock is locked
Unlock confirmation	Confirmed/Unconfirmed	Steering lock CM internal value	Confirmed when steering lock is unlocked
Sensor initialization	Completed/Not Completed	Steering lock CM internal value	
Motor protection control status	Rejected range/Permitted range	Steering lock CM internal value	
Motor operation prohibition voltage evaluation	ON/OFF	Steering lock CM internal value	
Diagnosis response	Normal/Response	Steering lock CM internal value	
Sensor abnormal	Normal/Abnormal	Steering lock CM internal value	Abnormal when a trouble occurs in steering lock CM
Motor power supply short-circuit abnormal	Normal/Abnormal	Steering lock CM internal value	Abnormal when a trouble occurs in steering lock CM
Motor driver short-circuit abnormal	Normal/Abnormal	Steering lock CM internal value	Abnormal when a trouble occurs in steering lock CM
Lock bar engagement abnormal	Normal/Abnormal	Steering lock CM internal value	ON when the steering lock bar has experienced interference
Push start abnormal	Normal/Abnormal	Steering lock CM internal value	Abnormal when a trouble occurs in steering lock CM
Lock side relay operation	Stopped/Activating	Steering lock CM internal value	
Unlock side relay operation	Stopped/Activating	Steering lock CM internal value	
Motor drive FET drive	Stopped/Activating	Steering lock CM internal value	
Motor reversal protection control	Stopped/Activating	Steering lock CM internal value	
Engine start	Engine start permission/Engine start prohibition	Steering lock CM internal value	Permission when ignition ON
Sensor abnormal (past)	Normal/Abnormal	Steering lock CM internal value	Abnormal when a trouble occurs in steering lock CM
Motor power supply short-circuit abnormal (past)	Normal/Abnormal	Steering lock CM internal value	Abnormal when a trouble occurs in steering lock CM
Motor driver short-circuit abnormal (past)	Normal/Abnormal	Steering lock CM internal value	Abnormal when a trouble occurs in steering lock CM
Steering lock lock/unlock command reception history	ON/OFF	Steering lock CM internal value	ON when steering lock is locked → unlocked, unlocked → locked
Lock bar engagement abnormal (past)	ON/OFF	Steering lock CM internal value	ON when the steering lock bar has experienced interference in the past
Push start abnormal (past)	Normal/Abnormal	Steering lock CM internal value	Abnormal when a trouble occurs in steering lock CM

Items to be displayed	Unit of measure	Remarks	Note
STLC Abnormal EEPROM access	Normal/Abnormal	Steering lock CM internal value	Abnormal when a trouble occurs in steering lock CM
ID code BOX sleep possible status	Impossible/Possible	Keyless access CM internal value (models without ID code box) or ID code box internal value (models with ID code box)	
ID code BOX wake-up transmission status	No transmission/ Transmission	Keyless access CM internal value (models without ID code box) or ID code box internal value (models with ID code box)	
ID code BOX Abnormal EEPROM access (now)	Normal/Abnormal	Keyless access CM internal value (models without ID code box) or ID code box internal value (models with ID code box)	
EGI code reception status	Reception/Not yet received	Keyless access CM internal value (models without ID code box) or ID code box internal value (models with ID code box)	Reception at engine start operation
Engine start permission request reception status	Reception/Not yet received	Keyless access CM internal value (models without ID code box) or ID code box internal value (models with ID code box)	Reception at ignition ON
Provisional injection request reception status	Reception/Not yet received	Keyless access CM internal value (models without ID code box) or ID code box internal value (models with ID code box)	Reception at ignition ON
Code collation result between smart ECM and ID code box	Normal/Abnormal	Keyless access CM internal value (models without ID code box) or ID code box internal value (models with ID code box)	Normal when engine start is allowed
Code collation result between steering locked ECM and ID code box	Normal/Abnormal	Keyless access CM internal value (models without ID code box) or ID code box internal value (models with ID code box)	Normal when steering lock operation allowed
Steering lock unlock request reception status	Reception (keep 10 sec)/Not yet received	Keyless access CM internal value (models without ID code box) or ID code box internal value (models with ID code box)	Reception when steering lock is performing unlock
Steering lock lock request reception status	Reception (keep 10 sec)/Not yet received	Keyless access CM internal value (models without ID code box) or ID code box internal value (models with ID code box)	Reception when steering lock is performing lock
Driver's external transmitter output circuit abnormal	Normal/Abnormal	Keyless access CM internal value	Abnormal when a trouble occurs in transmitter output circuit
Passenger's external transmitter output circuit abnormal	Normal/Abnormal	Keyless access CM internal value	Abnormal when a trouble occurs in transmitter output circuit
Driver's external transmitter output circuit abnormal (past)	Normal/Abnormal	Keyless access CM internal value	Abnormal when a trouble occurs in transmitter output circuit in the past

Items to be displayed	Unit of measure	Remarks	Note
Passenger's external transmitter output circuit abnormal (past)	Normal/Abnormal	Keyless access CM internal value	Abnormal when a trouble occurs in transmitter output circuit in the past
ID code registration mode status	Normal/Regist./Deletion	—	For immobilizer registration
Smart related ECM code registration mode status	On mode/Normal		
ID code collation completion confirmation	Completed/Normal		
ID code registration completion confirmation	Completed/Normal		
Smart related ECM code registration completion confirmation	Completed/Normal		
Registered smart key confirmation status	Confirming/Normal		
Smart related ECM code confirmation status	Confirming/Normal		
ID code registration status	Registering/Normal		
ID code collation status	Normal/Collating the immobilizer/Collating the smart		
All registered keys confirmation status	Confirming/Normal		
Confirmed number of all registered keys	0 — 7		
Number of required registrations (smart)	0 — 7		
Number of collation completed (smart)	0 — 7		
Number of registration completed (smart)	0 — 7	Keyless access CM internal value	Number of recognized keyless access CM
ID Code Box	Connecting/Not connected	Keyless access CM internal value	Connecting with ID code box normal connection
Steering Lock ECM	Connecting/Not connected	Keyless access CM internal value	Connecting with steering lock CM normal connection

Items to be displayed	Unit of measure	Remarks	Note
Driver's lock request SW/ touch sensor switch ON edge record	ON/OFF	Keyless access CM internal value	The display is continued when the collation is once established by the combination indicated on the left. NOTE: When confirming the data on the left, confirm after performing the keyless access system check. <Ref. to KPS(diag)-33, Keyless Access System Check.>
Passenger's unlock request SW/touch sensor switch ON edge record	ON/OFF	Keyless access CM internal value	
Rear gate lock request SW ON edge history	ON/OFF	Keyless access CM internal value	
Driver's unlock touch sensor switch ON edge record	ON/OFF	Keyless access CM internal value	
Passenger's unlock touch sensor switch ON edge record	ON/OFF	Keyless access CM internal value	
Collation OK result history (driver's external transmitter + interior tuner)	ON/OFF	Keyless access CM internal value	
Collation OK result history (passenger's external transmitter + interior tuner)	ON/OFF	Keyless access CM internal value	
Collation OK result history (front interior transmitter + interior tuner)	ON/OFF	Keyless access CM internal value	
Collation OK result history (rear interior transmitter + interior tuner)	ON/OFF	Keyless access CM internal value	
Collation OK result history (rear gate internal transmitter + interior tuner)	ON/OFF	Keyless access CM internal value	
Collation OK result history (rear gate external transmitter + interior tuner)	ON/OFF	Keyless access CM internal value	
Collation OK result history (immobilizer amplifier + immobilizer amplifier)	ON/OFF	Keyless access CM internal value	
Push start SW 1	ON/OFF	Keyless access CM input value	ON when push button start is pressed
Push start SW 2	ON/OFF	Keyless access CM input value	ON when push button start is pressed
Stop light SW	ON/OFF	Keyless access CM input value	ON when brake pedal is depressed
Steering Unlock Switch	ON/OFF	Keyless access CM input value	OFF when steering locked
Shift P signal(AT only)	ON/OFF	Keyless access CM input value	ON when the shift position is "P"
Neutral SW/Clutch SW	ON/OFF	Keyless access CM output value	ON when the shift position is at "P" or "N"
Shift N signal(AT only)	ON/OFF	Keyless access CM input value	ON when the shift position is "N"
Delivery mode signal(AT only)	ON/OFF	Keyless access CM input value	
IGN2 relay monitor (drive output)	ON/OFF	Keyless access CM output value	ON during IG relay 2 (push button start) drive output
IGN1 relay monitor (drive output)	ON/OFF	Keyless access CM output value	ON during IG relay 1 (push button start) drive output
ACC relay monitor	ON/OFF	Keyless access CM output value	ON during accessory relay (push button start) drive output

Items to be displayed	Unit of measure	Remarks	Note
IGN2 relay monitor (coil voltage)	ON/OFF	Keyless access CM output value	ON during IG relay 2 (push button start) drive output
IGN1 relay monitor (coil voltage)	ON/OFF	ON during IG relay 1 (push button start) drive output	ON during IG relay 1 (push button start) drive output
IGN latch monitor	ON/OFF	Keyless access CM output value	ON during IG relay 2 (push button start) drive output
STSW signal monitor	ON/OFF	Keyless access CM output value	ON when brake pedal (except MT model) or clutch pedal (MT model) is depressed, and push button ignition switch is pressed
ACCR signal	ON/OFF	Keyless access CM input value	ON during starter relay drive output
Vehicle speed signal	Drive status/Stop status	Keyless access CM input value	Set as “Drive status” when vehicle speed is input
Engine Speed	Rotating/Stopped	Keyless access CM input value	Set as “Rotating” while the engine is running
Power supply status	All OFF status	Keyless access CM output value	Displayed when IG relay 1 (push button start), IG relay 2 (push button start), and accessory relay (push button start) are all OFF
	ACC relay ON status	Keyless access CM output value	Displayed when accessory ON
	IGN1 relay ON status	Keyless access CM output value	Displayed when ignition ON
	IGN2 relay ON status	Keyless access CM output value	Displayed when ignition ON
	STSW Condition	Keyless access CM output value	Displayed when brake pedal (except MT model) or clutch pedal (MT model) is depressed, and push button ignition switch is pressed
Vehicle identification	GAS MT/GAS AT/HEV AT/Auto Start Stop MT/Auto Start Stop AT	Keyless access CM output value	Equipped vehicle is displayed.
IGN1 external circuit abnormal	No/Yes	Keyless access CM output value	
IGN2 external circuit abnormal	No/Yes	Keyless access CM output value	
Start SW trouble	No/Yes	Keyless access CM output value	
P signal mismatch	No/Yes	Keyless access CM output value	
Steering lock unlock waiting time out	No/Yes	Keyless access CM output value	
Key collation waiting time out	No/Yes	Keyless access CM output value	

2. Body integrated unit

Refer to the BODY CONTROL SYSTEM (DIAGNOSTICS) for the current data of the body integrated unit. <Ref. to BC(diag)-11, LIST, Read Current Data.>

9. Clear Memory Mode

A: OPERATION

For operation procedures, refer to the “PC application help for Subaru Select Monitor”.

NOTE:
Initial diagnosis of electronic throttle control is performed after memory clearance. Wait for 10 seconds or more after turning the ignition switch to ON, and then start the engine.

10.Keyless Access System Check

A: OPERATION

1) On «Main Menu» display, select {Each System Check}.
2) On «System Selection Menu» display, select {Keyless access system}.
3) On «Keyless access system» display, select {Work Support}.
4) Select {Function Check Sequence}.
5) Select {Keyless access system check}.
6) Select the transmitter to be checked and click [OK].
7) Select [Exit] to exit the system check. The screen will return to the «Keyless access system check» screen.

Data	Customize setting	Remarks
Keyless access system check	Driver side external transmitter - internal tuner	When the setting content on the left is selected, the access key is neared to the selected transmitter (access antenna) and collation matches, the buzzer will sound.
	Passenger side external transmitter - internal tuner	
	Fr internal transmitter - internal tuner	
	Rr internal transmitter - internal tuner	
	R gate internal transmitter - internal tuner	
	R gate external transmitter - internal tuner	
	Immobilizer amplifier transmission	
Collation result history Clear	Execution	
	—	

NOTE:
For detailed operation procedures, refer to “PC application help for Subaru Select Monitor”.

11.System Operation Check Mode

A: OPERATION

1) On «Main Menu» display, select {Each System Check}.
2) On «System Selection Menu» display, select {Keyless access system}.
3) On «Keyless access system» display, select {Work Support}.
4) Select {System Operation Check Mode}.
5) Select the check point and click [OK].
6) Select [Exit] to exit the drive item mode. The screen will return to the «Drive item» screen.

NOTE:
Each output check continues to run for five seconds before stopping automatically.

Data	Keyless access CM output check	Remarks
Tuner power supply ON (indoor tuner)	Output	Perform the power supply check for the receiver.
	Stop	
Driver's external transmitter	Output	Perform the output check for the driver's side door outside antenna.
	Stop	
Passenger's external transmitter	Output	Perform the output check for the passenger's side door outside antenna.
	Stop	
STSW	Output	Turn on the STSW. *2
	Stop	
IGN2	Output	Turn on the IGN2.
	Stop	
IGN1	Output	Turn on the IGN1.
	Stop	
ACC	Output	Turn on the ACC.
	Stop	
Start SW character illumination lighted	Output	Perform ON output of the push button ignition switch back-up light. *1
	Stop	
Start SW indicator lighted (green)	Output	Perform ON output of the push button ignition switch back-up light. *1
	Stop	
Start SW indicator lighted (orange)	Output	Perform ON output of the push button ignition switch back-up light. *1
	Stop	
Steering lock power supply	Output	Output power supply signal from power supply CM to steering lock CM.
	Stop	

*1: When lit by a condition other than for a system operation check mode, it will not become unlit even when set to OFF or no output.
*2: When performed with ignition switch ON, engine will start. Therefore, great care must be exercised.

NOTE:
For detailed operation procedures, refer to “PC application help for Subaru Select Monitor”.

12.List of Diagnostic Trouble Code (DTC)

A: LIST

1. Keyless access system

DTC	Item	Content of diagnosis	Note
U0073	Control Module Communication Bus Off	Detected when CAN line abnormality is detected.	<Ref. to KPS(diag)-39, DTC U0073 CONTROL MODULE COMMUNICATION BUS OFF, Diagnostic Procedure with Diagnostic Trouble Code (DTC).>
U0100	Lost Communication With ECM/PCM “A”	Detected when CAN data from the engine control module (ECM) does not arrive.	<Ref. to KPS(diag)-39, DTC U0100 LOST COMMUNICATION WITH ECM/PCM “A”, Diagnostic Procedure with Diagnostic Trouble Code (DTC).>
U0101	Lost Communication With TCM	Detected when CAN data from TCM does not arrive.	<Ref. to KPS(diag)-39, DTC U0101 LOST COMMUNICATION WITH TCM, Diagnostic Procedure with Diagnostic Trouble Code (DTC).>
U0122	Lost Communication With Vehicle Dynamics Control Module	Detected when CAN data from VDC does not arrive.	<Ref. to KPS(diag)-39, DTC U0122 LOST COMMUNICATION WITH VEHICLE DYNAMICS CONTROL MODULE, Diagnostic Procedure with Diagnostic Trouble Code (DTC).>
U0140	Lost Communication With Body Control Module	Detected when CAN data from BIU does not arrive.	<Ref. to KPS(diag)-39, DTC U0140 LOST COMMUNICATION WITH BODY CONTROL MODULE, Diagnostic Procedure with Diagnostic Trouble Code (DTC).>
U0155	Lost Communication With Instrument Panel Cluster (IPC) Control Module	Detected when CAN data from meter does not arrive.	<Ref. to KPS(diag)-39, DTC U0155 LOST COMMUNICATION WITH INSTRUMENT PANEL CLUSTER (IPC) CONTROL MODULE, Diagnostic Procedure with Diagnostic Trouble Code (DTC).>
U0401	Invalid Data Received From ECM/PCM “A”	Detected when there is malfunction in CAN data from the engine control module (ECM).	<Ref. to KPS(diag)-39, DTC U0401 INVALID DATA RECEIVED FROM ECM/PCM “A”, Diagnostic Procedure with Diagnostic Trouble Code (DTC).>
U0422	Invalid Data Received From Body Control Module	Detected when CAN data from BIU is abnormal.	<Ref. to KPS(diag)-39, DTC U0422 INVALID DATA RECEIVED FROM BODY CONTROL MODULE, Diagnostic Procedure with Diagnostic Trouble Code (DTC).>
U1120	Lost Communication With Autostart Stop Control Module	Detected when CAN data from ISS unit does not arrive.	<Ref. to KPS(diag)-40, DTC U1120 LOST COMMUNICATION WITH AUTOSTART STOP CONTROL MODULE, Diagnostic Procedure with Diagnostic Trouble Code (DTC).>
B1242	Wireless Tuner Abnormal	When short circuit occurs in harness between keyless access CM and receiver.	<Ref. to KPS(diag)-41, DTC B1242 WIRELESS TUNER ABNORMAL, Diagnostic Procedure with Diagnostic Trouble Code (DTC).>
B2271	IGN Fuse Blown or IGN Circuit Abnormal	• When malfunction is detected in IG1 and IG2 drive circuits in the keyless access CM. • When malfunction is detected in IG hold circuit in the keyless access CM.	<Ref. to KPS(diag)-43, DTC B2271 IGN FUSE BLOWN OR IGN CIRCUIT ABNORMAL, Diagnostic Procedure with Diagnostic Trouble Code (DTC).>
B2274	ACC Monitor	When malfunction is detected in ACC relay drive circuit in the keyless access CM or external circuit.	<Ref. to KPS(diag)-45, DTC B2274 ACC MONITOR, Diagnostic Procedure with Diagnostic Trouble Code (DTC).>

DTC	Item	Content of diagnosis	Note
B2275	STSW Circuit Abnormal	• When malfunction is detected in engine start permission signal output circuit in the keyless access CM. • When malfunction is detected in external engine start permission signal circuit.	<Ref. to KPS(diag)-47, DTC B2275 STSW CIRCUIT ABNORMAL, Diagnostic Procedure with Diagnostic Trouble Code (DTC).>
B2276	ACCR Signal Abnormal	When input error occurs in accessory relay cut input signal of keyless access CM.	<Ref. to KPS(diag)-49, DTC B2276 ACCR SIGNAL ABNORMAL, Diagnostic Procedure with Diagnostic Trouble Code (DTC).>
B2277	Submerging Circuit Abnormal	When the water-submersion detection circuit integrated into the keyless access CM detects the water submersion.	<Ref. to KPS(diag)-51, DTC B2277 SUBMERGING CIRCUIT ABNORMAL, Diagnostic Procedure with Diagnostic Trouble Code (DTC).>
B2282	Vehicle Speed Signal Abnormal	When the vehicle speed signal transmitted from the combination meter via solid line and the vehicle speed signal transmitted via CAN communication line do not match.)	<Ref. to KPS(diag)-52, DTC B2282 VEHICLE SPEED SIGNAL ABNORMAL, Diagnostic Procedure with Diagnostic Trouble Code (DTC).>
B2283	Vehicle Speed Sensor Fault Detection	Either of the following malfunctions is detected. (Vehicle speed sensor failure is detected.) • Vehicle speed signal failure detection 1: Excessive deceleration detection • Vehicle speed signal failure detection 2: Engine speed interlock detection	<Ref. to KPS(diag)-54, DTC B2283 VEHICLE SPEED SENSOR FAULT DETECTION, Diagnostic Procedure with Diagnostic Trouble Code (DTC).>
B2284	Brake Signal (Cable-Information Does Not Match to Bean-Information)	When the brake signal transmitted via solid line and the brake signal transmitted via CAN communication line do not match.	<Ref. to KPS(diag)-56, DTC B2284 BRAKE SIGNAL (CABLE-INFORMATION DOES NOT MATCH TO BEAN-INFORMATION), Diagnostic Procedure with Diagnostic Trouble Code (DTC).>
B2285	Steering Lock Position Signal Abnormal	When the steering lock position signal transmitted from the steering lock CM via solid line and the steering lock position signal transmitted via LIN communication system do not match.	<Ref. to KPS(diag)-58, DTC B2285 STEERING LOCK POSITION SIGNAL ABNORMAL, Diagnostic Procedure with Diagnostic Trouble Code (DTC).>
B2286	Driving Possible Signal Abnormal	When the engine speed signal transmitted from the ECM via solid line and the engine speed signal transmitted via CAN communication line do not match.	<Ref. to KPS(diag)-61, DTC B2286 DRIVING POSSIBLE SIGNAL ABNORMAL, Diagnostic Procedure with Diagnostic Trouble Code (DTC).>
B228A	Sub-Travel Possible Signal Abnormal	When the engine speed signal transmitted from the ECM via solid line and the engine speed signal transmitted via CAN communication line do not match.	<Ref. to KPS(diag)-63, DTC B228A SUB-TRAVEL POSSIBLE SIGNAL ABNORMAL, Diagnostic Procedure with Diagnostic Trouble Code (DTC).>
B2779	Remote Control Engine Starter Communication Collation NG	When the keyless access CM does not respond to engine start even when the remote control engine starter is ON, or when there is a code mismatch.	<Ref. to KPS(diag)-65, DTC B2779 REMOTE CONTROL ENGINE STARTER COMMUNICATION COLLATION NG, Diagnostic Procedure with Diagnostic Trouble Code (DTC).>

DTC	Item	Content of diagnosis	Note
B2781	Steering Lock ECU Open/ Short	• When malfunction is detected in lock/unlock position detection sensor. • When the open or short circuit in the steering lock motor drive circuit is detected.	<Ref. to KPS(diag)-65, DTC B2781 STEERING LOCK ECU OPEN/SHORT, Diagnostic Procedure with Diagnostic Trouble Code (DTC).>
B2782	Steering Lock Power Supply Circuit Abnormal (Smart ECU-Side Abnormal)	When the open or short circuit in the steering lock motor power supply circuit is detected.	<Ref. to KPS(diag)-66, DTC B2782 STEERING LOCK POWER SUPPLY CIRCUIT ABNORMAL (SMART ECU-SIDE ABNORMAL), Diagnostic Procedure with Diagnostic Trouble Code (DTC).>
B2784	Antenna Coil Fault	When open or short circuit occurs in the antenna coil.	<Ref. to KPS(diag)-68, DTC B2784 ANTENNA COIL FAULT, Diagnostic Procedure with Diagnostic Trouble Code (DTC).>
B2785	LIN Communication Error	When the keyless access CM detects the collation system LIN bus communication error three times in a row.	<Ref. to KPS(diag)-69, DTC B2785 LIN COMMUNICATION ERROR, Diagnostic Procedure with Diagnostic Trouble Code (DTC).>
B2786	No Response From Steering Lock ECU	When communication between keyless access CM and steering lock CM is interrupted for a set amount of time.	<Ref. to KPS(diag)-71, DTC B2786 NO RESPONSE FROM STEERING LOCK ECU, Diagnostic Procedure with Diagnostic Trouble Code (DTC).>
B2788	IGN1 Input Abnormal	When mismatch occurs in the IG1 input of the steering lock CM between LIN communication line input and solid line input.	<Ref. to KPS(diag)-73, DTC B2788 IGN1 INPUT ABNORMAL, Diagnostic Procedure with Diagnostic Trouble Code (DTC).>
B2789	ID Code Box No Response	• When communication between keyless access CM and ID code box is interrupted for a set amount of time. • Open or short circuit in the wiring harness between keyless access CM and ID code box	<Ref. to KPS(diag)-75, DTC B2789 ID CODE BOX NO RESPONSE, Diagnostic Procedure with Diagnostic Trouble Code (DTC).>
B278A	Abnormal Immobilizer Power Supply	When the power supply circuit of the push button ignition switch is shorted to ground.	<Ref. to KPS(diag)-77, DTC B278A ABNORMAL IMMOBILIZER POWER SUPPLY, Diagnostic Procedure with Diagnostic Trouble Code (DTC).>
B278D	ID Code Box Recognition Judgment Abnormal	• When ID code box ON input is detected while the ID code box setting is set to OFF. • When ID code box LIN signal is received while the ID code box setting is set to OFF.	<Ref. to KPS(diag)-79, DTC B278D ID CODE BOX RECOGNITION JUDGMENT ABNORMAL, Diagnostic Procedure with Diagnostic Trouble Code (DTC).>
B2790	ID Code Box Abnormal (EEPROM Abnormal)	An error has occurred inside the ID code box.	<Ref. to KPS(diag)-80, DTC B2790 ID CODE BOX ABNORMAL (EEPROM ABNORMAL), Diagnostic Procedure with Diagnostic Trouble Code (DTC).>
B27A1	Driver Side External Antenna Output Stage Open	When open circuit occurs in the harness between keyless access CM and driver's side front door outer handle.	<Ref. to KPS(diag)-81, DTC B27A1 DRIVER SIDE EXTERNAL ANTENNA OUTPUT STAGE OPEN, Diagnostic Procedure with Diagnostic Trouble Code (DTC).>
B27A2	Passenger Side External Antenna Output Stage Open	When open circuit occurs in the harness between keyless access CM and passenger's side front door outer handle.	<Ref. to KPS(diag)-83, DTC B27A2 PASSENGER SIDE EXTERNAL ANTENNA OUTPUT STAGE OPEN, Diagnostic Procedure with Diagnostic Trouble Code (DTC).>
B27A5	Front Internal Antenna Output Stage Open	When open circuit occurs in the harness between keyless access CM and front interior antenna.	<Ref. to KPS(diag)-85, DTC B27A5 FRONT INTERNAL ANTENNA OUTPUT STAGE OPEN, Diagnostic Procedure with Diagnostic Trouble Code (DTC).>

DTC	Item	Content of diagnosis	Note
B27A6	Rear Internal Antenna Output Stage Open	When open circuit occurs in the harness between keyless access CM and rear interior antenna.	<Ref. to KPS(diag)-87, DTC B27A6 REAR INTERNAL ANTENNA OUTPUT STAGE OPEN, Diagnostic Procedure with Diagnostic Trouble Code (DTC).>
B27A7	Trunk/Rear Gate Internal Antenna Output Stage Open	When open circuit occurs in the harness between keyless access CM and rear interior antenna.	<Ref. to KPS(diag)-89, DTC B27A7 TRUNK/ REAR GATE INTERNAL ANTENNA OUTPUT STAGE OPEN, Diagnostic Procedure with Diagnostic Trouble Code (DTC).>
B27A8	Trunk/Rear Gate External Antenna Output Stage Open	When open circuit occurs in the harness between keyless access CM and rear exterior antenna.	<Ref. to KPS(diag)-91, DTC B27A8 TRUNK/ REAR GATE EXTERNAL ANTENNA OUTPUT STAGE OPEN, Diagnostic Procedure with Diagnostic Trouble Code (DTC).>

2. Immobilizer (ECM)

DTC	Item	Content of diagnosis	Note
B1571	Reference Code Incompatibility	Reference code incompatibility between keyless access CM (models without ID code box) or ID code box (models with ID code box) and ECM	<Ref. to KPS(diag)-93, DTC B1571 REFERENCE CODE INCOMPATIBILITY, Diagnostic Procedure with Diagnostic Trouble Code (DTC).>
B1572	IMM Circuit Failure (Except Antenna Circuit)	Communication error between keyless access CM (models without ID code box) or ID code box (models with ID code box) and ECM	<Ref. to KPS(diag)-94, DTC B1572 IMM CIRCUIT FAILURE (EXCEPT ANTENNA CIRCUIT), Diagnostic Procedure with Diagnostic Trouble Code (DTC).>
B1576	EGI Control Module EEPROM	ECM malfunctioning	<Ref. to KPS(diag)-97, DTC B1576 EGI CONTROL MODULE EEPROM, Diagnostic Procedure with Diagnostic Trouble Code (DTC).>
B1577	IMM Control Module EEPROM	Malfunction in keyless access CM (models without ID code box) or ID code box (models with ID code box)	<Ref. to KPS(diag)-97, DTC B1577 IMM CONTROL MODULE EEPROM, Diagnostic Procedure with Diagnostic Trouble Code (DTC).>

13.Diagnostic Procedure with Diagnostic Trouble Code (DTC)

A: DTC U0073 CONTROL MODULE COMMUNICATION BUS OFF

Detected when CAN line abnormality is detected.

NOTE:
Perform the diagnosis for LAN system. <Ref. to LAN(HEV)(diag)-2, PROCEDURE, Basic Diagnostic Procedure.>

B: DTC U0100 LOST COMMUNICATION WITH ECM/PCM “A”

Detected when CAN data from the engine control module (ECM) does not arrive.

NOTE:
Perform the diagnosis for LAN system. <Ref. to LAN(HEV)(diag)-2, PROCEDURE, Basic Diagnostic Procedure.>

C: DTC U0101 LOST COMMUNICATION WITH TCM

Detected when CAN data from TCM does not arrive.

NOTE:
Perform the diagnosis for LAN system. <Ref. to LAN(HEV)(diag)-2, PROCEDURE, Basic Diagnostic Procedure.>

D: DTC U0122 LOST COMMUNICATION WITH VEHICLE DYNAMICS CONTROL MODULE

Detected when CAN data from VDC does not arrive.

NOTE:
Perform the diagnosis for LAN system. <Ref. to LAN(HEV)(diag)-2, PROCEDURE, Basic Diagnostic Procedure.>

E: DTC U0140 LOST COMMUNICATION WITH BODY CONTROL MODULE

Detected when CAN data from BIU does not arrive.

NOTE:
Perform the diagnosis for LAN system. <Ref. to LAN(HEV)(diag)-2, PROCEDURE, Basic Diagnostic Procedure.>

F: DTC U0155 LOST COMMUNICATION WITH INSTRUMENT PANEL CLUSTER (IPC) CONTROL MODULE

Detected when CAN data from meter does not arrive.

NOTE:
Perform the diagnosis for LAN system. <Ref. to LAN(HEV)(diag)-2, PROCEDURE, Basic Diagnostic Procedure.>

G: DTC U0401 INVALID DATA RECEIVED FROM ECM/PCM “A”

Detected when there is malfunction in CAN data from the engine control module (ECM).

NOTE:
Perform the diagnosis for LAN system. <Ref. to LAN(HEV)(diag)-2, PROCEDURE, Basic Diagnostic Procedure.>

H: DTC U0422 INVALID DATA RECEIVED FROM BODY CONTROL MODULE

Detected when CAN data from BIU is abnormal.

NOTE:
Perform the diagnosis for LAN system. <Ref. to LAN(HEV)(diag)-2, PROCEDURE, Basic Diagnostic Procedure.>

I: DTC U1120 LOST COMMUNICATION WITH AUTOSTART STOP CONTROL MODULE

This is detected when CAN data from hybrid system is abnormal.

NOTE:
Perform the diagnosis for LAN system. <Ref. to LAN(HEV)(diag)-2, PROCEDURE, Basic Diagnostic Procedure.>

J: DTC B1242 WIRELESS TUNER ABNORMAL

DTC DETECTING CONDITION:
When short circuit occurs in harness between keyless access CM and receiver.
TROUBLE SYMPTOM:
- The keyless access with push button start function (except for emergency function) does not operate properly.
- Operation by the access key button does not function.

CAUTION:
- **For replacement procedure of keyless access CM, refer to the "REGISTRATION MANUAL FOR IMMOBILIZER".**
- **When the harness comes close to the receiver, the performance of keyless access system operation and wireless operation may reduce. So, when replacing or inspecting the receiver and harness, do not change the route and length of the surrounding harnesses.**

WIRING DIAGRAM:
Push button start system <Ref. to WI(HEV)-180, WIRING DIAGRAM, Push Button Start System.>

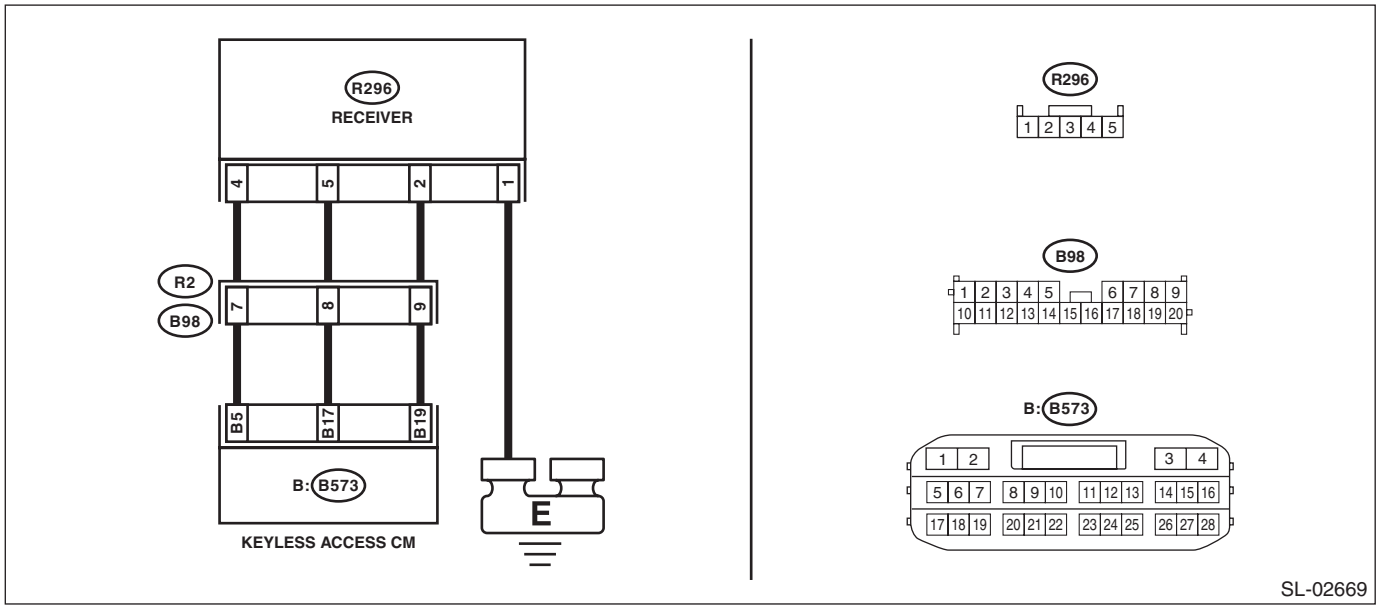

Step		Check	Yes	No
1	**CHECK LAN SYSTEM.** Inspect LAN system. <Ref. to LAN(HEV)(diag)-2, PROCEDURE, Basic Diagnostic Procedure.>	Is LAN system normal?	Go to step **2**.	Perform the inspection according to the diagnosis for LAN system.
2	**CHECK HARNESS.** 1) Disconnect the keyless access CM connector. 2) Disconnect the receiver connector. 3) Using the tester, measure the resistance between terminals of keyless access CM connector and receiver connector, and keyless access CM and chassis ground. ***Connector & terminal*** ***(B573) No. 19 — (R296) No. 2:*** ***(B573) No. 17 — (R296) No. 5:*** ***(B573) No. 5 — (R296) No. 4:*** ***(R296) No. 1 — Chassis ground:***	Is the resistance less than 1 Ω?	Go to step **3**.	Repair or replace the open circuit of harness.

	Step	Check	Yes	No
3	**CHECK HARNESS.** Using a tester, measure the resistance between the keyless access CM connector and chassis ground. ***Connector & terminal*** ***(B573) No. 19 — Chassis ground:*** ***(B573) No. 17 — Chassis ground:*** ***(B573) No. 5 — Chassis ground:***	Is the resistance 10 kΩ or more?	Go to step **4**.	Repair or replace the short circuit of the harness.
4	**CHECK RECEIVER.** 1) Replace the receiver, and then connect it. <Ref. to SL-101, Receiver.> 2) Using the Subaru Select Monitor, clear the memory. 3) Use the Subaru Select Monitor and read DTCs.	Is B1242 displayed?	Replace the keyless access CM. <Ref. to SL-102, Keyless Access CM.>	Receiver has a malfunction.

K: DTC B2271 IGN FUSE BLOWN OR IGN CIRCUIT ABNORMAL

DTC DETECTING CONDITION:

- When malfunction is detected in IG1 and IG2 drive circuits in the keyless access CM.
- When malfunction is detected in IG hold circuit in the keyless access CM.

TROUBLE SYMPTOM:

Not all functions operate at IGN ON.

CAUTION:

For replacement procedure of keyless access CM, refer to the "REGISTRATION MANUAL FOR IMMOBILIZER".

WIRING DIAGRAM:

Push button start system <Ref. to WI(HEV)-180, WIRING DIAGRAM, Push Button Start System.>

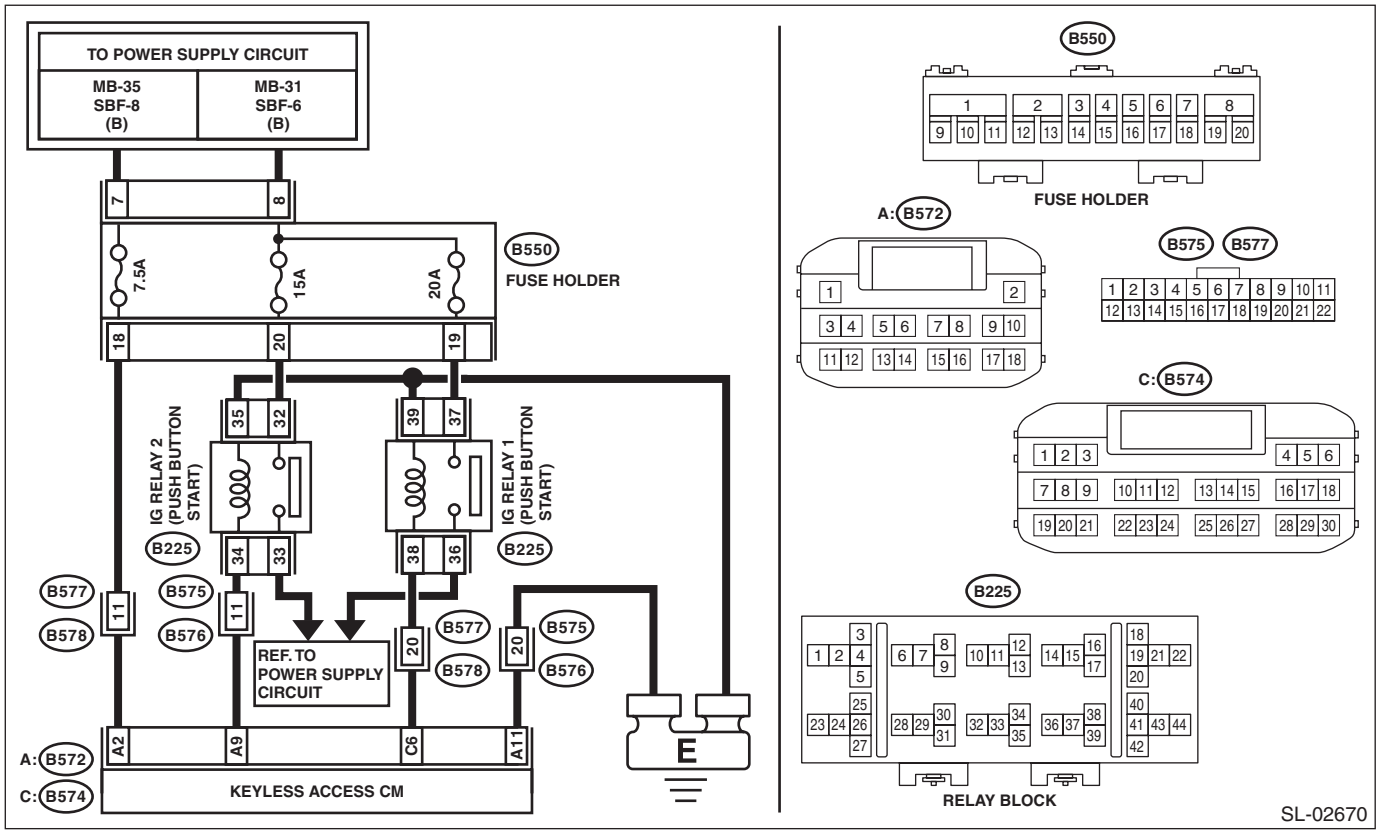

Step		Check	Yes	No
1	**CHECK LAN SYSTEM.** Inspect LAN system. <Ref. to LAN(HEV)(diag)-2, PROCEDURE, Basic Diagnostic Procedure.>	Is LAN system normal?	Go to step **2**.	Perform the inspection according to the diagnosis for LAN system.
2	**CHECK FUSE.** Check the fuse.	Is the fuse OK?	Go to step **3**.	Replace the fuse. When the replaced fuse is blown immediately, check the power supply circuit for short-circuited.

	Step	Check	Yes	No
3	**CHECK HARNESS.** 1) Disconnect the keyless access CM connector. 2) Using a tester, measure the voltage between the keyless access CM connector and chassis ground. ***Connector & terminal*** ***(B572) No. 2 (+) — Chassis ground (–):***	Is the voltage 9.5 — 16 V?	Go to step **4**.	Check the power supply circuit.
4	**CHECK HARNESS.** Using a tester, measure the resistance between the keyless access CM connector and chassis ground. ***Connector & terminal*** ***(B572) No. 11 — Chassis ground:***	Is the resistance less than 1 Ω?	Go to step **5**.	Repair or replace the open circuit of harness.
5	**CHECK HARNESS.** 1) Disconnect the keyless access CM connector. 2) Using a tester, measure the resistance between the keyless access CM connector and chassis ground. ***Connector & terminal*** ***(B572) No. 9 — Chassis ground:***	Is resistance 128 — 157 Ω? (20°C)	Go to step **6**.	Check IG relay 2. Go to step **7**.
6	**CHECK HARNESS.** 1) Disconnect the keyless access CM connector. 2) Using a tester, measure the resistance between the keyless access CM connector and chassis ground. ***Connector & terminal*** ***(B574) No. 6 — Chassis ground:***	Is resistance 128 — 157 Ω? (20°C)	Go to step **8**.	Check IG relay 1. Go to step **7**.
7	**CHECK RELAY.** Perform unit inspection of IG relay 1 and IG relay 2. <Ref. to SL-11, CHECK RELAY, INSPECTION, Relay and Fuse.>	Is the relay OK?	Go to step **8**.	Replace the relay. <Ref. to SL-111, REMOVAL, IG Relay1 (Push Button Start).> <Ref. to SL-113, REMOVAL, IG Relay2 (Push Button Start).>
8	**CHECK KEYLESS ACCESS CM.** 1) Connect the keyless access CM connector. 2) Using a tester, measure the voltage between the terminals of keyless access CM connector. ***Connector & terminal*** ***(B574) No. 6 (+) — Chassis ground (–):*** ***(B572) No. 9 (+) — Chassis ground (–):***	Is the voltage 1 V or less → 9.5 — 16 V when ACC → IGN ON?	System is normal. It is possible that temporary poor contact occurs.	Replace the keyless access CM. <Ref. to SL-102, REMOVAL, Keyless Access CM.>

L: DTC B2274 ACC MONITOR

DTC DETECTING CONDITION:
When malfunction is detected in ACC relay drive circuit in the keyless access CM or external circuit.
TROUBLE SYMPTOM:
Each function does not operate at the ACC position.

CAUTION:
For replacement procedure of keyless access CM, refer to the "REGISTRATION MANUAL FOR IMMOBILIZER".
WIRING DIAGRAM:
Push button start system <Ref. to WI(HEV)-180, WIRING DIAGRAM, Push Button Start System.>

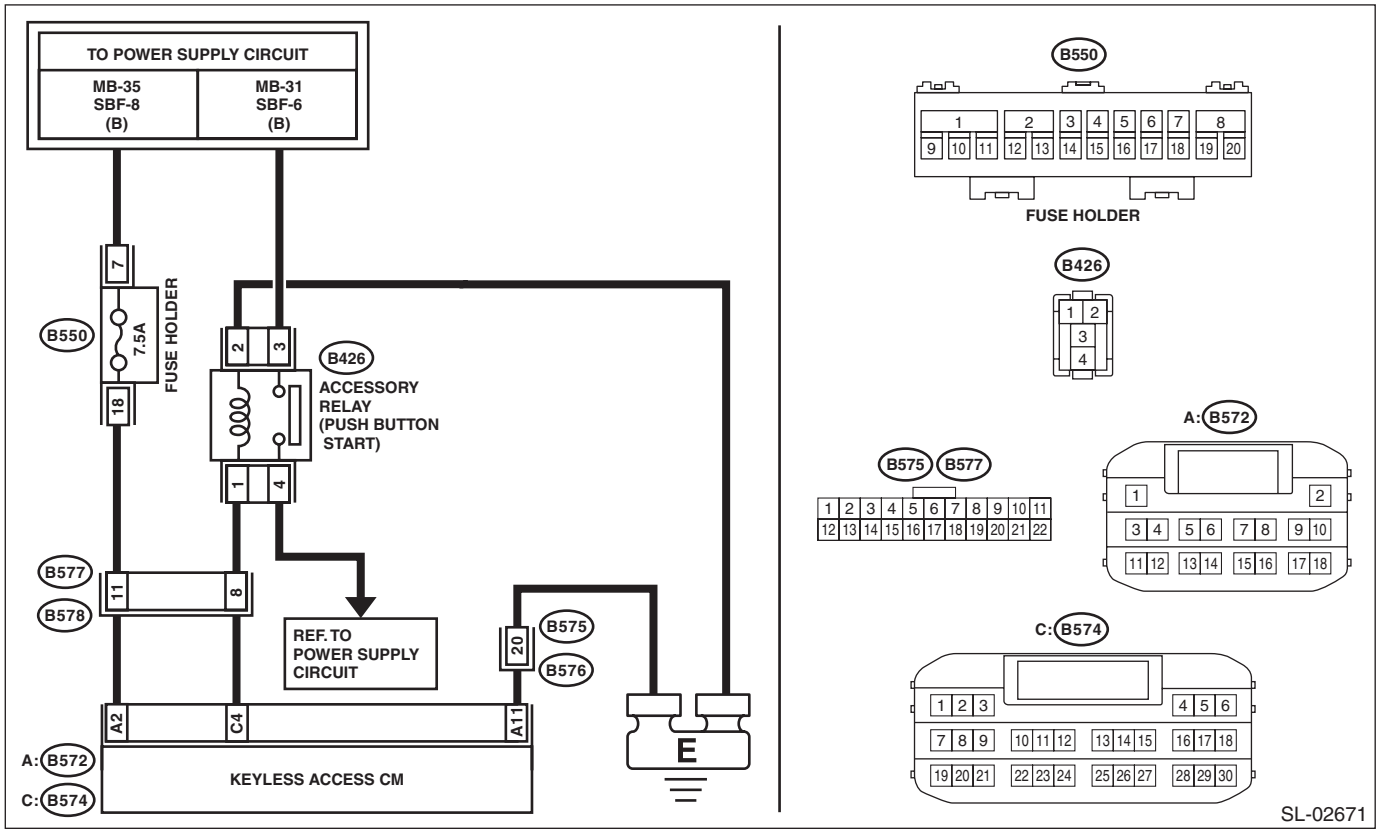

Step		Check	Yes	No
1	**CHECK LAN SYSTEM.** Inspect LAN system. <Ref. to LAN(HEV)(diag)-2, PROCEDURE, Basic Diagnostic Procedure.>	Is LAN system normal?	Go to step **2**.	Perform the inspection according to the diagnosis for LAN system.
2	**CHECK FUSE.** Remove the fuse.	Is the fuse OK?	Go to step **3**.	Replace the fuse. When the replaced fuse is blown immediately, check the power supply circuit for short-circuited.
3	**CHECK HARNESS.** 1) Disconnect the keyless access CM connector. 2) Using a tester, measure the resistance between the keyless access CM connector and chassis ground. ***Connector & terminal*** ***(B572) No. 2 (+) — Chassis ground (–):***	Is the voltage 9.5 — 16 V?	Go to step **4**.	Check the power supply circuit.

	Step	Check	Yes	No
4	**CHECK HARNESS.** Using a tester, measure the resistance between the keyless access CM connector and chassis ground. ***Connector & terminal*** ***(B572) No. 11 — Chassis ground:***	Is the resistance less than 1 Ω?	Go to step **5**.	Repair or replace the open circuit of harness.
5	**CHECK HARNESS.** 1) Disconnect the keyless access CM connector. 2) Using a tester, measure the resistance between the keyless access CM connector and chassis ground. ***Connector & terminal*** ***(B574) No. 4 — Chassis ground:***	Is resistance 128 — 157 Ω? (20°C)	Go to step **7**.	Go to step **6**.
6	**CHECK RELAY.** Perform inspection of ACC relay unit. <Ref. to SL-115, Accessory Relay (Push Button Start).>	Is the relay OK?	Go to step **7**.	Replace the relay.
7	**CHECK HARNESS.** Using a tester, measure the resistance between keyless access CM connectors. ***Connector & terminal*** ***(B574) No. 4 — (B426) No. 2:*** ***(B426) No. 3 — Chassis ground:***	Is the resistance less than 1 Ω?	Go to step **8**.	Repair or replace the open circuit of harness.
8	**CHECK KEYLESS ACCESS CM.** 1) Connect the keyless access CM connector. 2) Using a tester, measure the voltage between keyless access CM connectors. ***Connector & terminal*** ***(B573) No. 4 (+) — Chassis ground (–):***	Is the voltage 1 V or less → 9.5 — 16 V when OFF → ACC ON?	System is normal. It is possible that temporary poor contact occurs.	Replace the keyless access CM. <Ref. to SL-102, Keyless Access CM.>

M: DTC B2275 STSW CIRCUIT ABNORMAL

DTC DETECTING CONDITION:

- When malfunction is detected in engine start permission signal output circuit in the keyless access CM.
- When malfunction is detected in external engine start permission signal circuit.

TROUBLE SYMPTOM:

Engine will not start.

CAUTION:

For replacement procedure of keyless access CM, refer to the "REGISTRATION MANUAL FOR IMMOBILIZER".

WIRING DIAGRAM:

Push button start system <Ref. to WI(HEV)-180, WIRING DIAGRAM, Push Button Start System.>

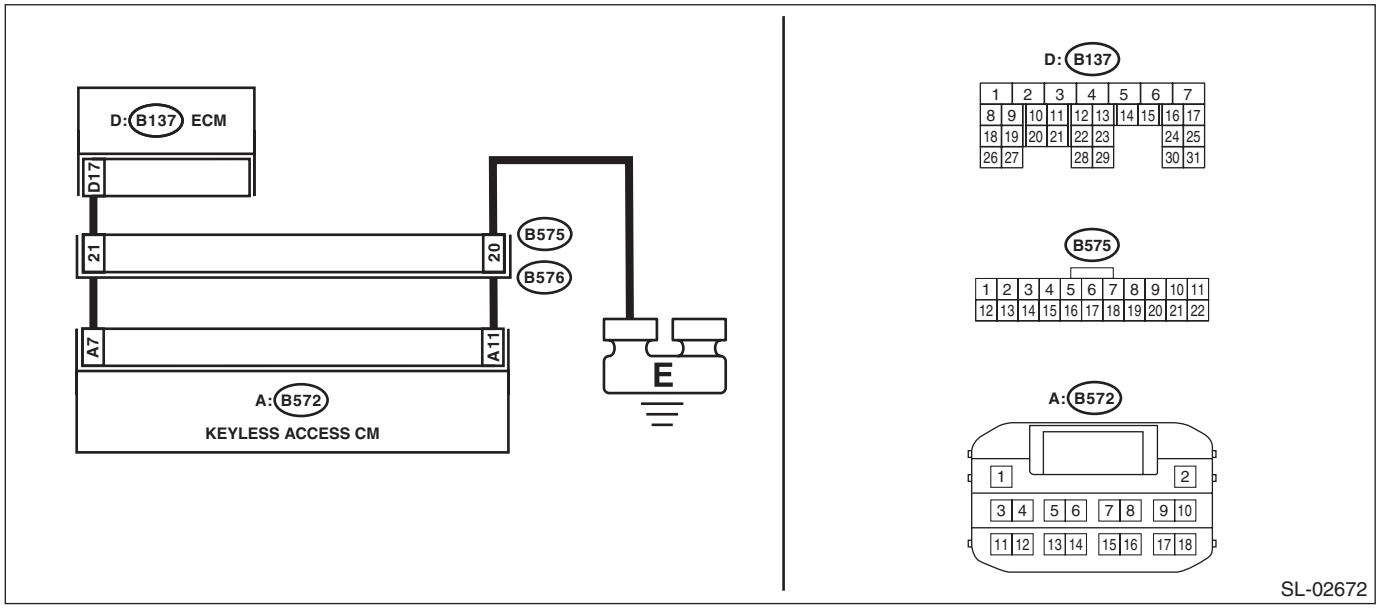

	Step	Check	Yes	No
1	**CHECK LAN SYSTEM.** Inspect LAN system. <Ref. to LAN(HEV)(diag)-2, PROCEDURE, Basic Diagnostic Procedure.>	Is LAN system normal?	Go to step **2**.	Perform the inspection according to the diagnosis for LAN system.
2	**CHECK FUSE.** Remove the fuse.	Is the fuse OK?	Go to step **3**.	Replace the fuse. When the replaced fuse is blown immediately, check the power supply circuit for short-circuited.
3	**CHECK HARNESS.** 1) Disconnect the keyless access CM connector and ECM connector. 2) Using a tester, measure the resistance between the keyless access CM connector and ECM. ***Connector & terminal*** ***(B572) No. 7 — (B137) No. 17:***	Is the resistance less than 1 Ω?	Go to step **4**.	Repair or replace the open circuit of harness.
4	**CHECK HARNESS.** Using a tester, measure the resistance between the keyless access CM connector and chassis ground. ***Connector & terminal*** ***(B572) No. 11 — Chassis ground:***	Is the resistance less than 1 Ω?	Go to step **5**.	Repair or replace the open circuit of harness.

	Step	Check	Yes	No
5	**CHECK HARNESS.** Using a tester, measure the resistance between the keyless access CM connector and chassis ground. ***Connector & terminal*** ***(B572) No. 7 — Chassis ground:***	Is the resistance 10 kΩ or more?	Go to step **6**.	Repair or replace the short circuit of the harness.
6	**CHECK KEYLESS ACCESS CM.** 1) Connect the keyless access CM connector and ECM connector. 2) Using a tester, measure the voltage between the terminals of keyless access CM connector. ***Connector & terminal*** ***(B572) No. 7 (+) — (B572) No. 11 (–):***	Is the voltage 2 V or less → 9 V or more when the push button ignition switch is turned on while depressing the brake pedal with the shift position in P or N?	Perform inspection according to the diagnosis of engine. <Ref. to EN(H4DO HEV)(diag)-2, PROCEDURE, Basic Diagnostic Procedure.>	Replace the keyless access CM. <Ref. to SL-102, Keyless Access CM.>

N: DTC B2276 ACCR SIGNAL ABNORMAL

DTC DETECTING CONDITION:
When input error occurs in accessory relay cut input signal of keyless access CM.
TROUBLE SYMPTOM:
- The accessory power supply is not cut during engine start.
- Starter rotation is slow.

CAUTION:
For replacement procedure of keyless access CM, refer to the "REGISTRATION MANUAL FOR IMMOBILIZER".
WIRING DIAGRAM:
Push button start system <Ref. to WI(HEV)-180, WIRING DIAGRAM, Push Button Start System.>

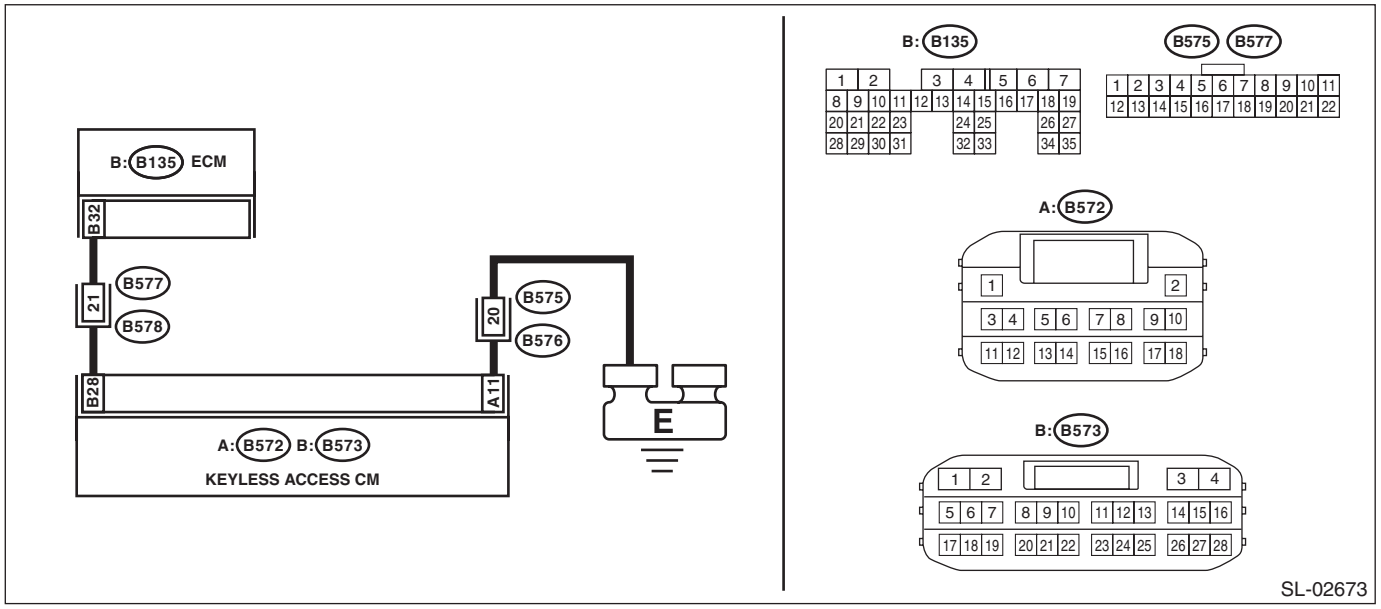

	Step	Check	Yes	No
1	**CHECK LAN SYSTEM.** Inspect LAN system. <Ref. to LAN(HEV)(diag)-2, PROCEDURE, Basic Diagnostic Procedure.>	Is LAN system normal?	Go to step **2**.	Perform the inspection according to the diagnosis for LAN system.
2	**CHECK HARNESS.** 1) Disconnect the keyless access CM connector and ECM connector. 2) Using a tester, measure the resistance between the keyless access CM connector and ECM. ***Connector & terminal*** ***(B573) No. 28 — (B135) No. 32:***	Is the resistance less than 1 Ω?	Go to step **3**.	Repair or replace the open circuit of harness.
3	**CHECK HARNESS.** Using a tester, measure the resistance between the keyless access CM connector and chassis ground. ***Connector & terminal*** ***(B573) No. 28 — Chassis ground:***	Is the resistance 10 kΩ or more?	Go to step **4**.	Repair or replace the short circuit of the harness.
4	**CHECK HARNESS.** Using a tester, measure the resistance between the keyless access CM connector and chassis ground. ***Connector & terminal*** ***(B572) No. 11 — Chassis ground:***	Is the resistance less than 1 Ω?	Go to step **5**.	Repair or replace the open circuit of harness.

	Step	Check	Yes	No
5	**CHECK KEYLESS ACCESS CM.** 1) Connect the keyless access CM connector and ECM connector. 2) Using a tester, measure the voltage between terminals of the keyless access CM connector when the push button ignition switch is pressed, while depressing the brake pedal with the shift lever in the “P” range. ***Connector & terminal*** ***(B573) No. 28 (+) — (B572) No. 11 (–):***	Is the voltage 9.5 — 16 V → 1 V or less?	Replace the keyless access CM. <Ref. to SL-102, Keyless Access CM.>	Replace the ECM. <Ref. to FU(H4DO(HEV))-85, REMOVAL, Engine Control Module (ECM).>

O: DTC B2277 SUBMERGING CIRCUIT ABNORMAL

DTC DETECTING CONDITION:

When the water-submersion detection circuit integrated into the keyless access CM detects the water submersion.

TROUBLE SYMPTOM:

- The ignition can be turned ON, but cannot be turned OFF.
- Engine will not start.

CAUTION:

For replacement procedure of keyless access CM, refer to the "REGISTRATION MANUAL FOR IMMOBILIZER".

	Step	Check	Yes	No
1	**CHECK LAN SYSTEM.** Inspect LAN system. <Ref. to LAN(HEV)(diag)-2, PROCEDURE, Basic Diagnostic Procedure.>	Is LAN system normal?	Go to step **2**.	Perform the inspection according to the diagnosis for LAN system.
2	**CHECK SUBMERSION CONDITION.** Check the keyless access CM and environment of equipment, and check the harness for any trace of water submersion.	Is there any trace of water submersion?	Take necessary measures against water submersion and replace the keyless access CM. <Ref. to SL-102, Keyless Access CM.>	Replace the keyless access CM. <Ref. to SL-102, Keyless Access CM.>

P: DTC B2282 VEHICLE SPEED SIGNAL ABNORMAL

DTC DETECTING CONDITION:

When the vehicle speed signal transmitted from VDC via solid line and the vehicle speed signal transmitted via CAN communication line do not match.

CAUTION:

For replacement procedure of keyless access CM, refer to the "REGISTRATION MANUAL FOR IMMOBILIZER".

WIRING DIAGRAM:

Push button start system <Ref. to WI(HEV)-180, WIRING DIAGRAM, Push Button Start System.>

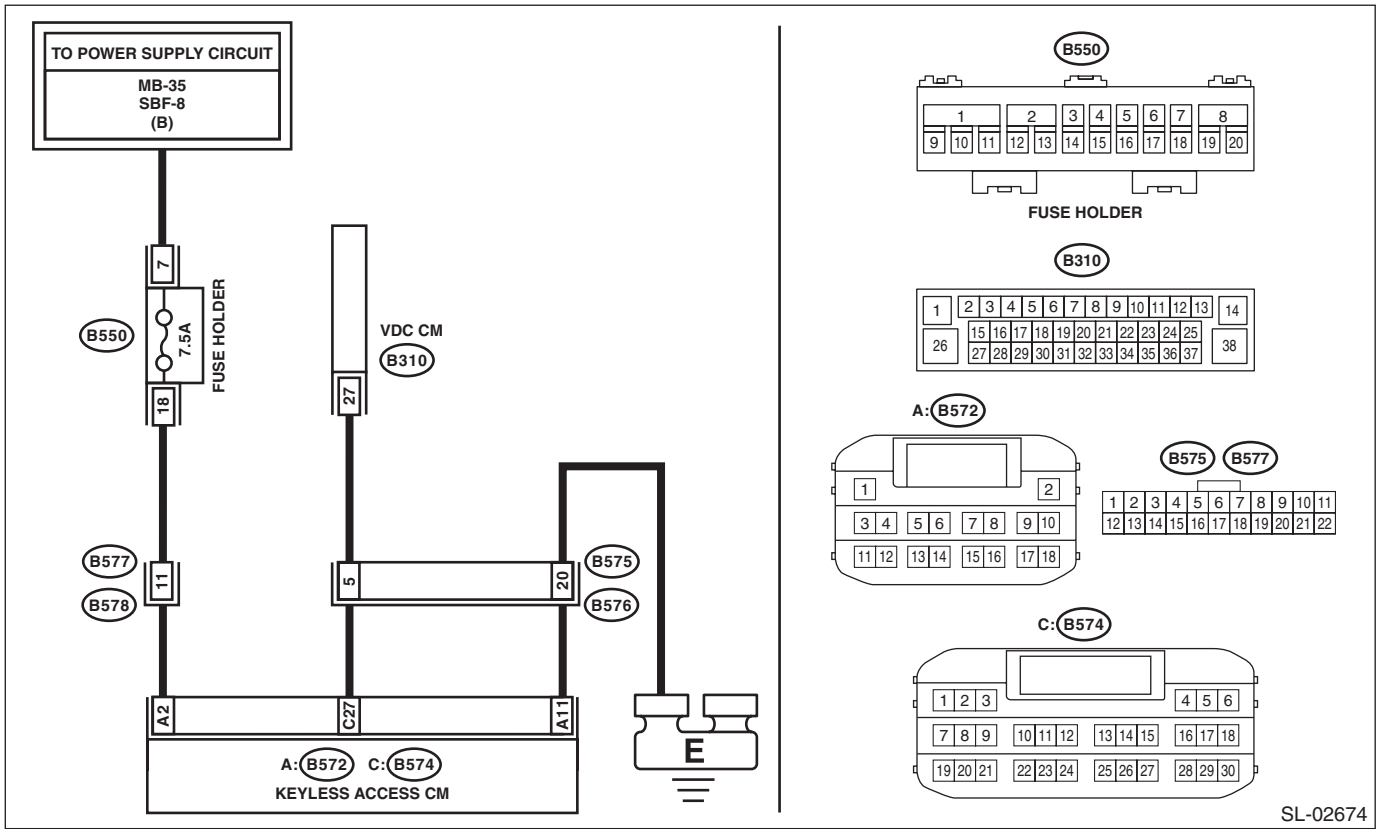

Step		Check	Yes	No
1	**CHECK LAN SYSTEM.** Inspect LAN system. <Ref. to LAN(HEV)(diag)-2, PROCEDURE, Basic Diagnostic Procedure.>	Is LAN system normal?	Go to step **2**.	Perform the inspection according to the diagnosis for LAN system.
2	**CHECK COMBINATION METER.** Check that the speedometer is displayed normally.	Is the meter display normal?	Go to step **3**.	Check the VDC. <Ref. to VDC(diag)-2, PROCEDURE, Basic Diagnostic Procedure.>
3	**CHECK CURRENT DATA.** Confirm the current data display of keyless access system using Subaru Select Monitor. • Vehicle speed signal	Is the parked state or driving state displayed normally?	Go to step **4**.	Check the VDC. <Ref. to VDC(diag)-2, PROCEDURE, Basic Diagnostic Procedure.>

	Step	Check	Yes	No
4	**CHECK FUSE.** Remove the fuse.	Is the fuse OK?	Go to step **5**.	Replace the fuse. When the replaced fuse is blown immediately, check the power supply circuit for short-circuited.
5	**CHECK HARNESS.** 1) Disconnect the keyless access CM connector. 2) Using a tester, measure the voltage between keyless access CM connectors. ***Connector & terminal*** ***(B572) No. 2 (+) — Chassis ground (–):***	Is the voltage 9.5 — 16 V?	Go to step **6**.	Check the power supply circuit.
6	**CHECK HARNESS.** Using a tester, measure the resistance between the keyless access CM connector and chassis ground. ***Connector & terminal*** ***(B572) No. 11 — Chassis ground:***	Is the resistance less than 1 Ω?	Go to step **7**.	Repair or replace the open circuit of harness.
7	**CHECK HARNESS.** 1) Disconnect the keyless access CM connector. 2) Disconnect the combination meter connector. 3) Using a tester, measure the resistance between the keyless access CM connector and VDC CM connector. ***Connector & terminal*** ***(B574) No. 27 — (B310) No. 27:***	Is the resistance less than 1 Ω?	Go to step **8**.	Repair or replace the open circuit of harness.
8	**CHECK HARNESS.** Using a tester, measure the resistance between the keyless access CM connector and chassis ground. ***Connector & terminal*** ***(B574) No. 27 — Chassis ground:***	Is the resistance 10 kΩ or more?	Go to step **9**.	Repair or replace the short circuit of the harness.
9	**CHECK KEYLESS ACCESS CM.** 1) Connect each connector. 2) Using the Subaru Select Monitor, measure the waveform between the terminals of keyless access CM. ***Connector & terminal*** ***(B574) No. 27 — Chassis ground:***	Is 3.54 Hz displayed when the vehicle is driven approx. at 5 km/h?	Replace the keyless access CM. <Ref. to SL-102, Keyless Access CM.>	Check the VDC. <Ref. to VDC(diag)-2, PROCEDURE, Basic Diagnostic Procedure.>

Q: DTC B2283 VEHICLE SPEED SENSOR FAULT DETECTION

DTC DETECTING CONDITION:

Either of the following malfunctions is detected (Vehicle speed sensor failure is detected.).

- Vehicle speed signal failure detection 1: Excessive deceleration detection
- Vehicle speed signal failure detection 2: Engine speed interlock detection

TROUBLE SYMPTOM:

The steering lock cannot be released.

CAUTION:

For replacement procedure of keyless access CM, refer to the "REGISTRATION MANUAL FOR IMMOBILIZER".

WIRING DIAGRAM:

Push button start system <Ref. to WI(HEV)-180, WIRING DIAGRAM, Push Button Start System.>

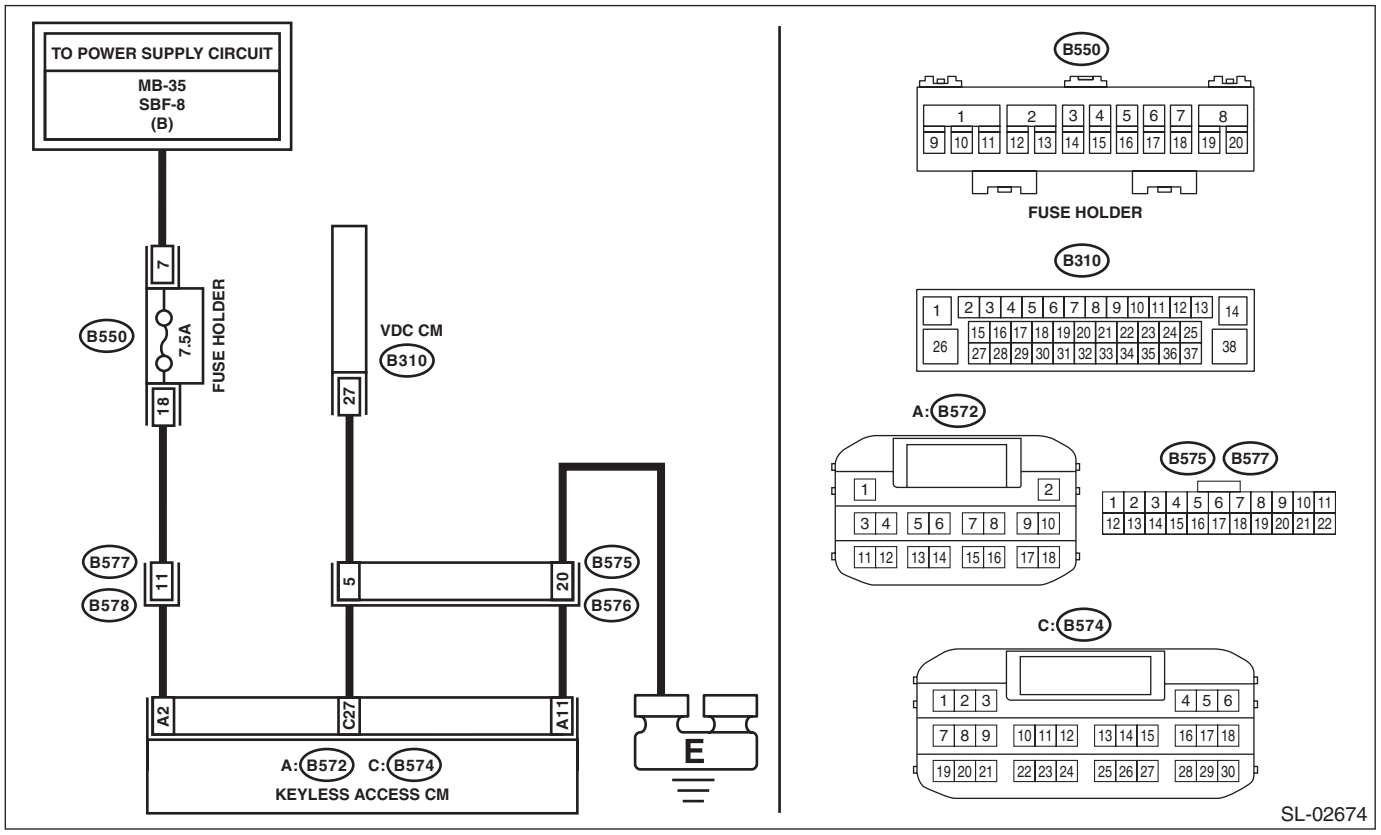

Step		Check	Yes	No
1	**CHECK LAN SYSTEM.** Inspect LAN system. <Ref. to LAN(HEV)(diag)-2, PROCEDURE, Basic Diagnostic Procedure.>	Is LAN system normal?	Go to step **2**.	Perform the inspection according to the diagnosis for LAN system.
2	**CHECK COMBINATION METER.** Check that the speedometer is displayed normally. • Vehicle speed signal	Is the meter display normal?	Go to step **3**.	Check the VDC. <Ref. to VDC(diag)-2, PROCEDURE, Basic Diagnostic Procedure.>
3	**CHECK CURRENT DATA.** Confirm the current data display of keyless access system using Subaru Select Monitor. • Vehicle speed signal	Is the parked state or driving state displayed normally?	Go to step **4**.	Check the VDC. <Ref. to VDC(diag)-2, PROCEDURE, Basic Diagnostic Procedure.>

	Step	Check	Yes	No
4	**CHECK FUSE.** Remove the fuse.	Is the fuse OK?	Go to step **5**.	Replace the fuse. When the replaced fuse is blown immediately, check the power supply circuit for short-circuited.
5	**CHECK HARNESS.** 1) Disconnect the keyless access CM connector. 2) Using a tester, measure the voltage between keyless access CM connectors. ***Connector & terminal*** ***(B572) No. 2 (+) — Chassis ground (–):***	Is the voltage 9.5 — 16 V?	Go to step **6**.	Check the power supply circuit.
6	**CHECK HARNESS.** Using a tester, measure the resistance between the keyless access CM connector and chassis ground. ***Connector & terminal*** ***(B572) No. 11 — Chassis ground:***	Is the resistance less than 1 Ω?	Go to step **7**.	Repair or replace the open circuit of harness.
7	**CHECK HARNESS.** 1) Disconnect the keyless access CM connector. 2) Disconnect the combination meter connector. 3) Using a tester, measure the resistance between the keyless access CM connector and VDC CM connector. ***Connector & terminal*** ***(B574) No. 27 — (B310) No. 27:***	Is the resistance less than 1 Ω?	Go to step **8**.	Repair or replace the open circuit of harness.
8	**CHECK HARNESS.** Using a tester, measure the resistance between the keyless access CM connector and chassis ground. ***Connector & terminal*** ***(B574) No. 27 — Chassis ground:***	Is the resistance 10 kΩ or more?	Go to step **9**.	Repair or replace the short circuit of the harness.
9	**CHECK KEYLESS ACCESS CM.** 1) Connect each connector. 2) Using the Subaru Select Monitor, measure the waveform between the terminals of keyless access CM. ***Connector & terminal*** ***(B574) No. 27 — Chassis ground:***	Is 3.54 Hz displayed when the vehicle is driven approx. at 5 km/h?	Replace the keyless access CM. <Ref. to SL-102, Keyless Access CM.>	Check the VDC. <Ref. to VDC(diag)-2, PROCEDURE, Basic Diagnostic Procedure.>

R: DTC B2284 BRAKE SIGNAL (CABLE-INFORMATION DOES NOT MATCH TO BEAN-INFORMATION)

DTC DETECTING CONDITION:

When the brake signal transmitted via solid line and the brake signal transmitted via CAN communication line do not match.

TROUBLE SYMPTOM:

CAUTION:

For replacement procedure of keyless access CM, refer to the "REGISTRATION MANUAL FOR IMMOBILIZER".

WIRING DIAGRAM:

Stop light system <Ref. to WI(HEV)-208, WIRING DIAGRAM, Stop Light System.>

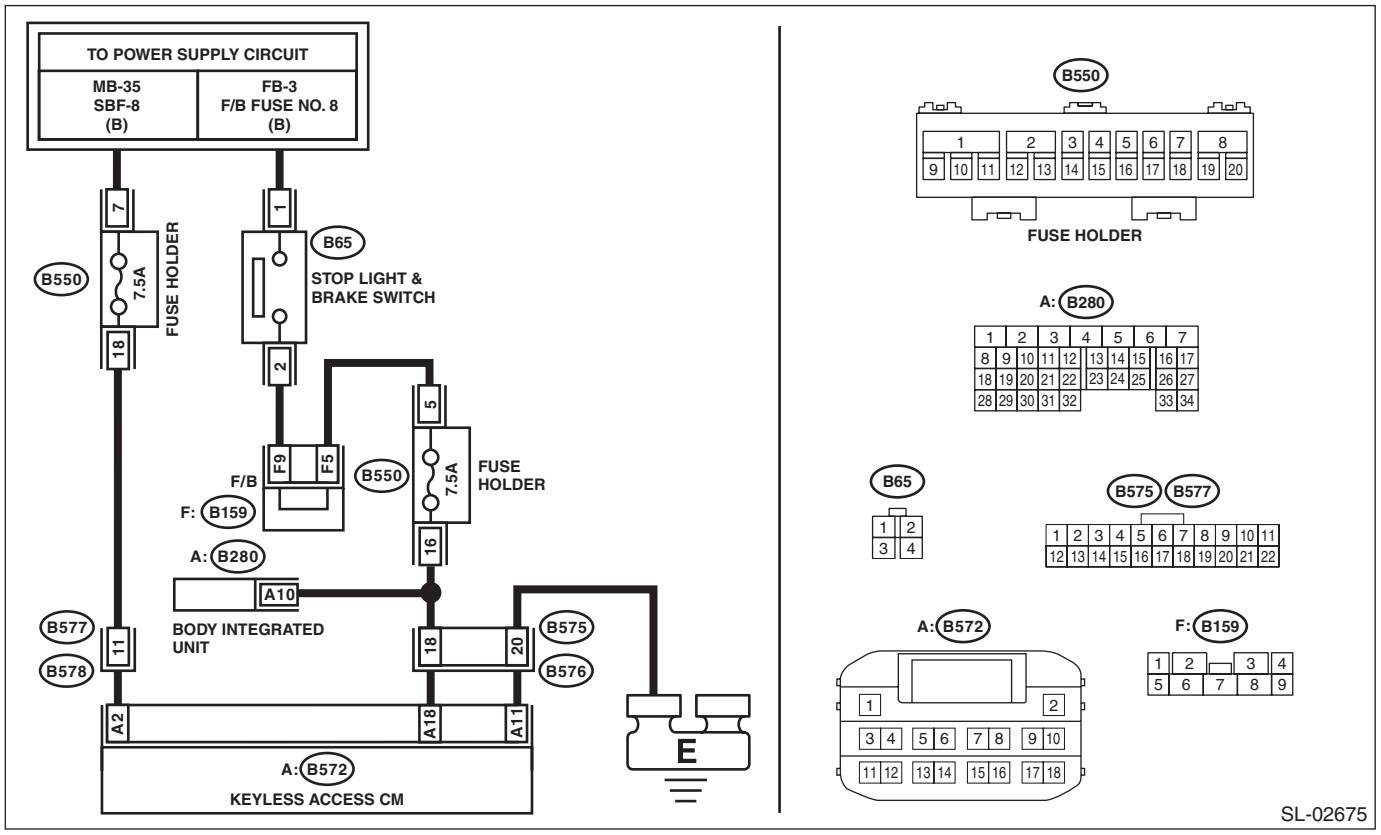

Step		Check	Yes	No
1	**CHECK LAN SYSTEM.** Inspect LAN system. <Ref. to LAN(HEV)(diag)-2, PROCEDURE, Basic Diagnostic Procedure.>	Is LAN system normal?	Go to step **2**.	Perform the inspection according to the diagnosis for LAN system.
2	**CHECK CURRENT DATA.** Confirm the current data display of keyless access system using Subaru Select Monitor. • Stop light SW	Is DTC displayed normally according to the brake pedal operation?	Go to step **3**.	Check the stop light system.
3	**CHECK CURRENT DATA.** Check the current data display of body integrated unit using Subaru Select Monitor. • Stop light SW	Is DTC displayed normally according to the brake pedal operation?	Go to step **4**.	Check body integrated unit <Ref. to BC(diag)-2, PROCEDURE, Basic Diagnostic Procedure.> and the stop light switch circuit.

	Step	Check	Yes	No
4	**CHECK FUSE.** Check the fuse.	Is the fuse OK?	Go to step **5**.	Replace the fuse. When the replaced fuse is blown immediately, check the power supply circuit for short-circuited.
5	**CHECK HARNESS.** 1) Disconnect the keyless access CM connector. 2) Using a tester, measure the voltage between keyless access CM connectors. ***Connector & terminal*** ***(B572) No. 2 (+) — Chassis ground (–):***	Is the voltage 9.5 — 16 V?	Go to step **6**.	Check the power supply circuit.
6	**CHECK HARNESS.** Using a tester, measure the resistance between the keyless access CM connector and chassis ground. ***Connector & terminal*** ***(B572) No. 11 — Chassis ground:***	Is the resistance less than 1 Ω?	Go to step **7**.	Repair or replace the open circuit of harness.
7	**CHECK HARNESS.** 1) Disconnect the stop light switch connector. 2) Using a tester, measure the resistance between the keyless access CM connector and stop light switch connector. ***Connector & terminal*** ***(B572) No. 18 — (B65) No. 2:***	Is the resistance less than 1 Ω?	Go to step **8**.	Repair or replace the open circuit of harness.
8	**CHECK HARNESS.** Using a tester, measure the resistance between the keyless access CM connector and chassis ground. ***Connector & terminal*** ***(B572) No. 18 — Chassis ground:***	Is the resistance 10 kΩ or more?	Go to step **9**.	Repair or replace the short circuit of the harness.
9	**CHECK HARNESS.** Using a tester, measure the voltage between the keyless access CM connector and chassis ground when the brake pedal is depressed. ***Connector & terminal*** ***(B572) No. 18 (+) — Chassis ground (–):***	Does the voltage change as follows? Brake pedal not depressed: 1 V or less → Brake pedal depressed: 11 — 14 V	Replace the keyless access CM. <Ref. to SL-102, REMOVAL, Keyless Access CM.>	Check the power supply circuit of stop light switch.

S: DTC B2285 STEERING LOCK POSITION SIGNAL ABNORMAL

DTC DETECTING CONDITION:

When the steering lock position signal transmitted from the steering lock CM via solid line and the steering lock position signal transmitted via LIN communication system do not match.

TROUBLE SYMPTOM:

- There are conditions when the steering lock is not released.
- Engine will not start.

CAUTION:

For replacement procedure of keyless access CM, refer to the "REGISTRATION MANUAL FOR IMMOBILIZER".

WIRING DIAGRAM:

Push button start system <Ref. to WI(HEV)-180, WIRING DIAGRAM, Push Button Start System.>

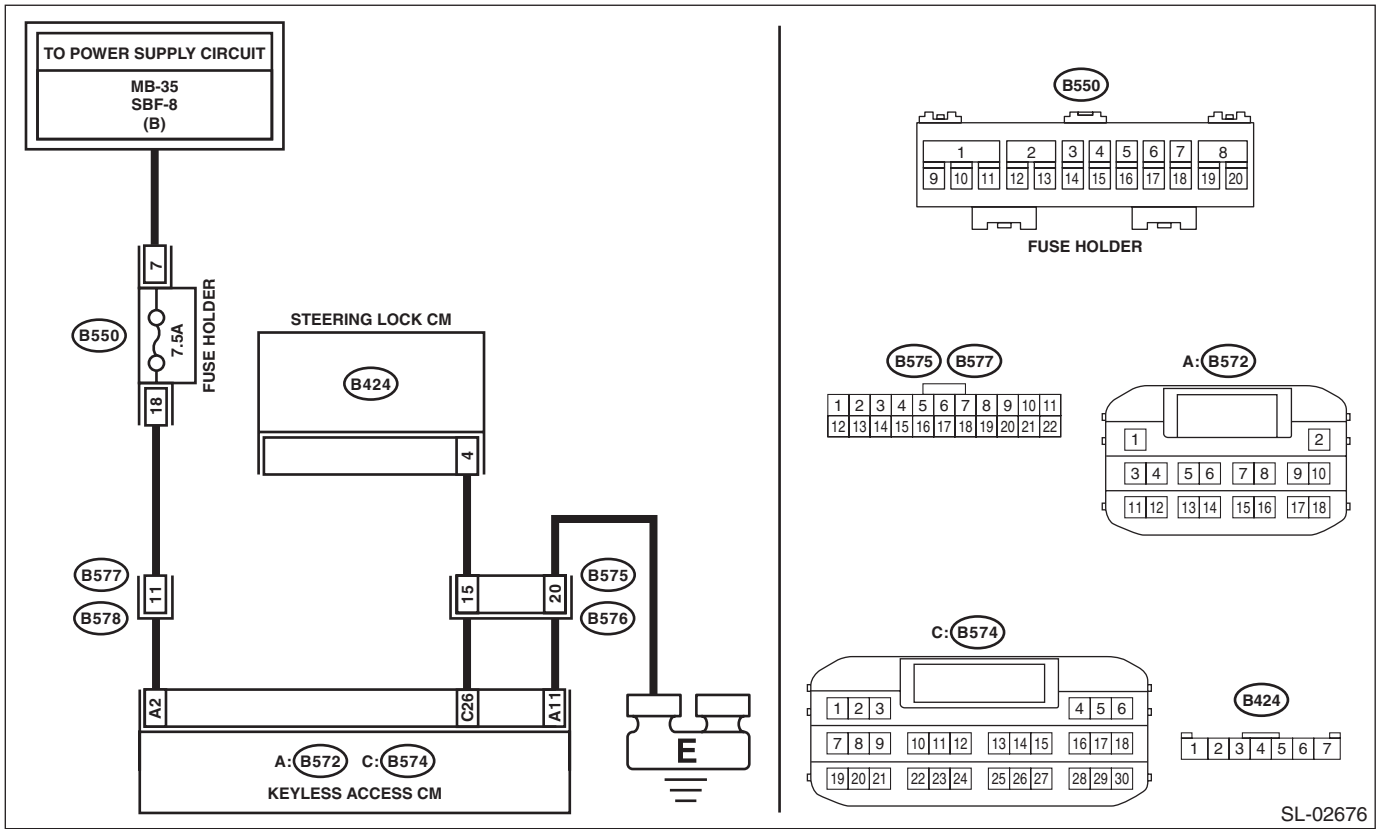

Step		Check	Yes	No
1	**CHECK LAN SYSTEM.** Inspect LAN system. <Ref. to LAN(HEV)(diag)-2, PROCEDURE, Basic Diagnostic Procedure.>	Is LAN system normal?	Go to step **2**.	Perform the inspection according to the diagnosis for LAN system.
2	**CHECK DTC.** Use the Subaru Select Monitor and read DTCs.	Is B2785 displayed?	Perform the inspection according to B2785. <Ref. to KPS(diag)-69, DTC B2785 LIN COMMUNICATION ERROR, Diagnostic Procedure with Diagnostic Trouble Code (DTC).>	Go to step **3**.

	Step	Check	Yes	No
3	**CHECK CURRENT DATA.** Confirm the current data display of keyless access system using Subaru Select Monitor. When locked: • Lock side sensor status: ON • Unlock side sensor status: OFF • Lock confirmation: Confirmed • Unlock confirmation: Not confirmed When unlocked: • Lock side sensor status: OFF • Unlock side sensor status: ON • Lock confirmation: Not confirmed • Unlock confirmation: Confirmed NOTE: To lock the steering lock, turn off the power, and open → close, or close → open the driver's door. To unlock the steering lock, turn the ignition switch to ACC ON or IGN ON.	Are the readings as shown on the left according to the steering lock status?	Go to step **4**.	Replace the steering lock CM. <Ref. to SL-105, REMOVAL, Steering Lock CM.>
4	**CHECK CURRENT DATA.** Confirm the current data display of keyless access system using Subaru Select Monitor. When locked: • Steering unlock switch: OFF When unlocked: • Steering unlock switch: ON NOTE: To lock the steering lock, turn off the power, and open → close, or close → open the driver's door. To unlock the steering lock, turn the ignition switch to ACC ON or IGN ON.	Are the readings as shown on the left according to the steering lock status?	Replace the keyless access CM. <Ref. to SL-102, REMOVAL, Keyless Access CM.>	Go to step **5**.
5	**CHECK FUSE.** Check the fuse.	Is the fuse OK?	Go to step **6**.	Replace the fuse. When the replaced fuse is blown immediately, check the power supply circuit for short-circuited.
6	**CHECK HARNESS.** 1) Disconnect the keyless access CM connector. 2) Using a tester, measure the voltage between keyless access CM connectors. ***Connector & terminal*** ***(B572) No. 2 (+) — Chassis ground (–):***	Is the voltage 9.5 — 16 V?	Go to step **7**.	Check the power supply circuit.
7	**CHECK HARNESS.** Using a tester, measure the resistance between the keyless access CM connector and chassis ground. ***Connector & terminal*** ***(B572) No. 11 — Chassis ground:***	Is the resistance less than 1 Ω?	Go to step **8**.	Repair or replace the open circuit of harness.
8	**CHECK HARNESS.** Using a tester, measure the resistance between the steering lock CM connector and chassis ground. ***Connector & terminal*** ***(B424) No. 4 — Chassis ground:***	Does the following occur? Steering lock: 10 kΩ or more → Steering unlock: less than 1 Ω	Go to step **9**.	Replace the steering lock CM. <Ref. to SL-105, REMOVAL, Steering Lock CM.>

	Step	Check	Yes	No
9	**CHECK HARNESS.** 1) Disconnect the keyless access CM connector. 2) Disconnect the steering lock CM connector. 3) Using a tester, measure the resistance between the keyless access CM connector and steering lock CM. ***Connector & terminal*** ***(B574) No. 26 — (B424) No. 4:***	Is the resistance less than 1 Ω?	Go to step **10**.	Repair or replace the open circuit of harness.
10	**CHECK HARNESS.** Using a tester, measure the resistance between the keyless access CM connector and chassis ground. ***Connector & terminal*** ***(B574) No. 26 — Chassis ground:***	Is the resistance 10 kΩ or more?	Replace the keyless access CM. <Ref. to SL-102, REMOVAL, Keyless Access CM.>	Repair or replace the short circuit of the harness.

T: DTC B2286 DRIVING POSSIBLE SIGNAL ABNORMAL

DTC DETECTING CONDITION:

When the engine speed signal transmitted from the ECM via solid line and the engine speed signal transmitted via CAN communication line do not match.

TROUBLE SYMPTOM:

Cannot start the engine, or the engine stops after starting.

CAUTION:

For replacement procedure of keyless access CM, refer to the "REGISTRATION MANUAL FOR IMMOBILIZER".

WIRING DIAGRAM:

Push button start system <Ref. to WI(HEV)-180, WIRING DIAGRAM, Push Button Start System.>

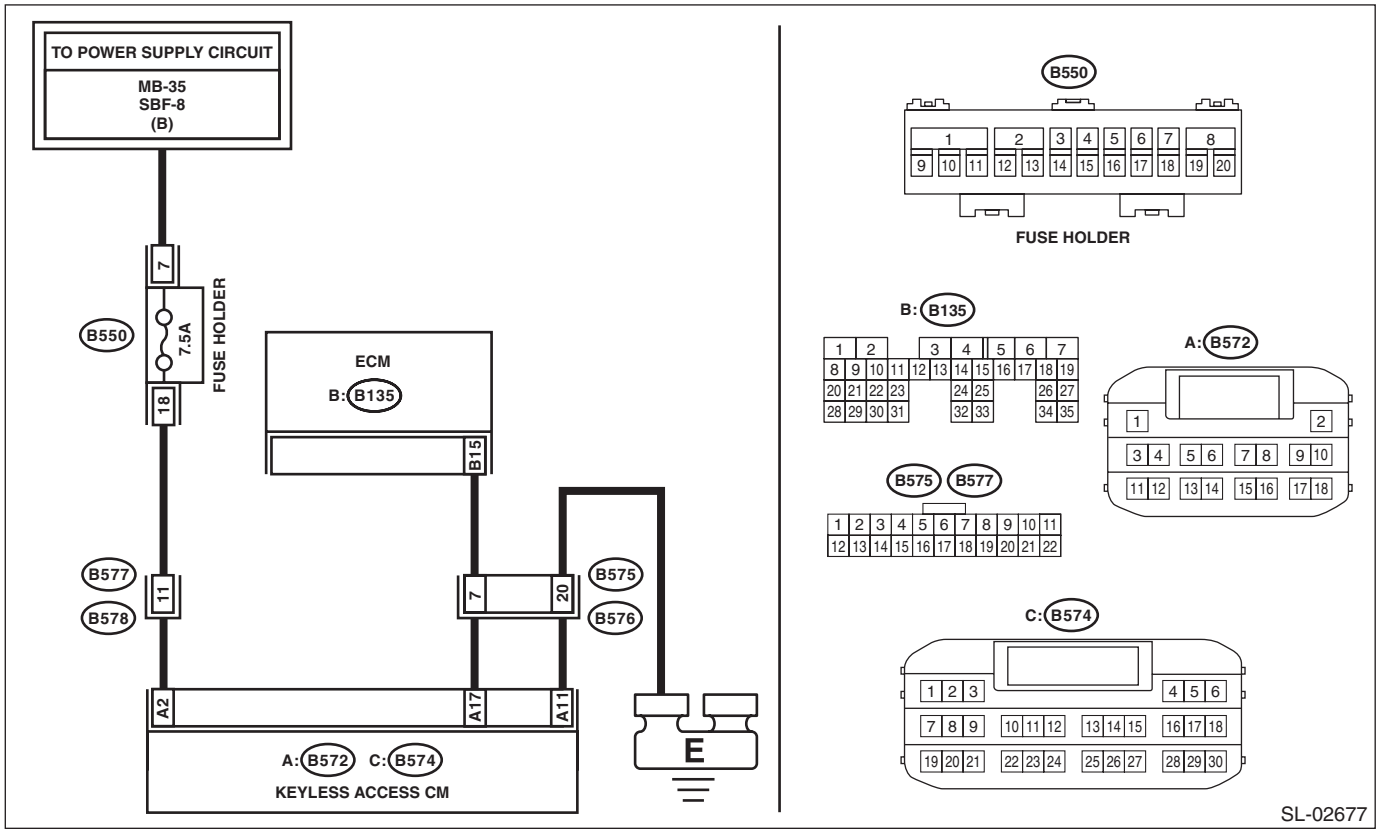

Step		Check	Yes	No
1	**CHECK LAN SYSTEM.** Inspect LAN system. <Ref. to LAN(HEV)(diag)-2, PROCEDURE, Basic Diagnostic Procedure.>	Is LAN system normal?	Go to step **2**.	Perform the inspection according to the diagnosis for LAN system.
2	**CHECK CURRENT DATA.** Confirm the current data display of keyless access system using Subaru Select Monitor. • Engine speed	Can the data be read normally?	Perform the diagnosis for the engine. <Ref. to EN(H4DO HEV)(diag)-2, PROCEDURE, Basic Diagnostic Procedure.>	Go to step **3**.

	Step	Check	Yes	No
3	**CHECK FUSE.** Remove the fuse.	Is the fuse OK?	Go to step **4**.	Replace the fuse. When the replaced fuse is blown immediately, check the power supply circuit for short-circuited.
4	**CHECK HARNESS.** 1) Disconnect the keyless access CM connector. 2) Using a tester, measure the voltage between keyless access CM connectors. ***Connector & terminal*** ***(B572) No. 2 (+) — Chassis ground (–):***	Is the voltage 9.5 — 16 V?	Go to step **5**.	Check the power supply circuit.
5	**CHECK HARNESS.** Using a tester, measure the resistance between the keyless access CM connector and chassis ground. ***Connector & terminal*** ***(B572) No. 11 — Chassis ground:***	Is the resistance less than 1 Ω?	Go to step **6**.	Repair or replace the open circuit of harness.
6	**CHECK HARNESS.** 1) Disconnect the keyless access CM connector. 2) Disconnect the ECM connector. 3) Using a tester, measure the resistance between the keyless access CM connector and ECM connector. ***Connector & terminal*** ***(B572) No. 17 — (B135) No. 15:***	Is the resistance less than 1 Ω?	Go to step **7**.	Repair or replace the open circuit of harness.
7	**CHECK HARNESS.** Using a tester, measure the resistance between the keyless access CM connector and chassis ground. ***Connector & terminal*** ***(B572) No. 17 — Chassis ground:***	Is the resistance 10 kΩ or more?	Go to step **8**.	Repair or replace the open circuit of harness.
8	**CHECK HARNESS.** 1) Connect the keyless access CM connector and ECM connector. 2) Using the Subaru Select Monitor, measure the waveform between the keyless access CM connector and chassis ground. ***Connector & terminal*** ***(B572) No. 17 — Chassis ground:***	Does the pulse stop when the engine is stopped, and does the pulse generate when the engine is started?	Replace the keyless access CM. <Ref. to SL-102, Keyless Access CM.>	Perform the diagnosis for the engine. <Ref. to EN(H4DO HEV)(diag)-2, PROCEDURE, Basic Diagnostic Procedure.>

U: DTC B228A SUB-TRAVEL POSSIBLE SIGNAL ABNORMAL

DTC DETECTING CONDITION:

When the engine speed signal transmitted from the ECM via solid line and the engine speed signal transmitted via CAN communication line do not match.

TROUBLE SYMPTOM:

Cannot start the engine, or the engine stops after starting.

CAUTION:

For replacement procedure of keyless access CM, refer to the "REGISTRATION MANUAL FOR IMMOBILIZER".

WIRING DIAGRAM:

Push button start system <Ref. to WI(HEV)-180, WIRING DIAGRAM, Push Button Start System.>

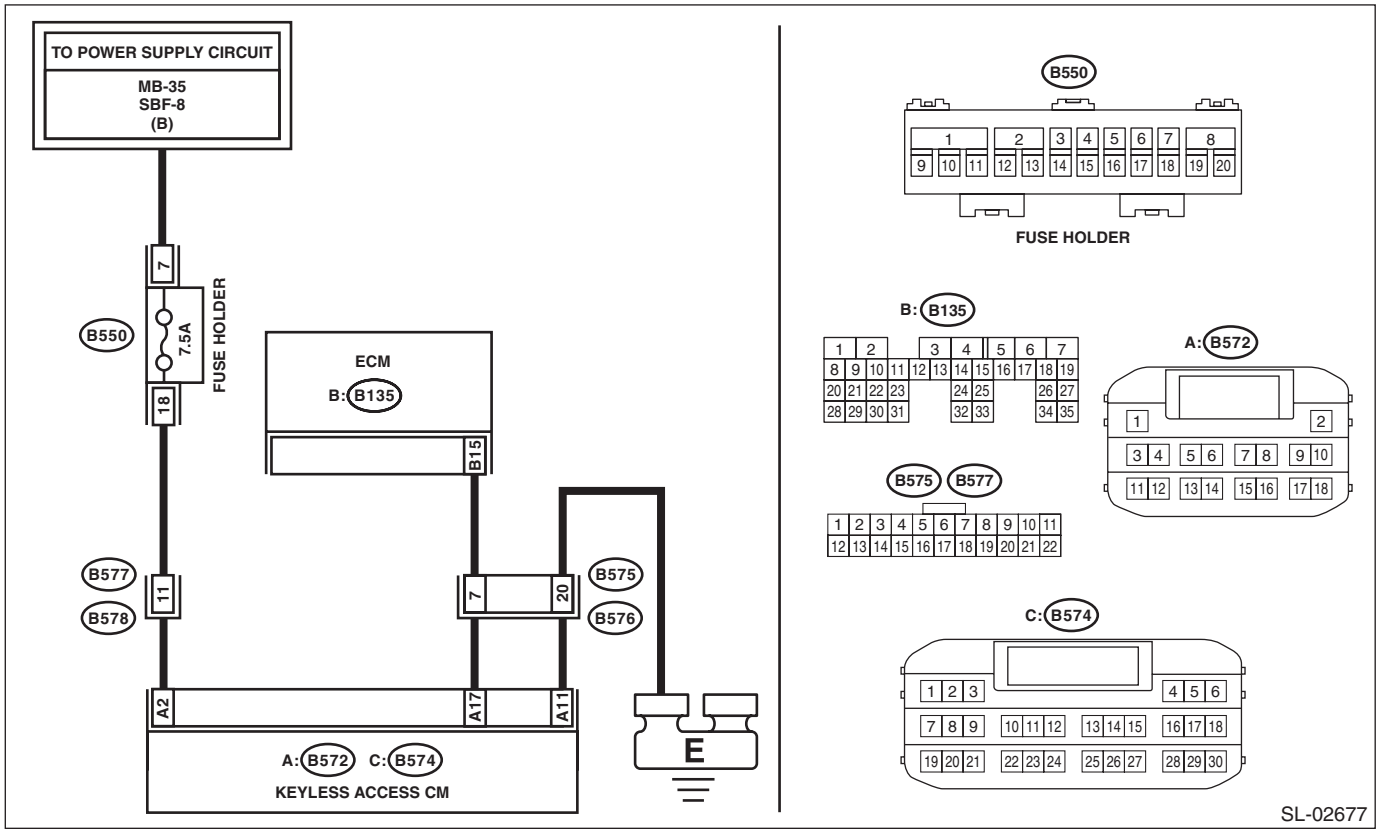

Step		Check	Yes	No
1	**CHECK LAN SYSTEM.** Inspect LAN system. <Ref. to LAN(HEV)(diag)-2, PROCEDURE, Basic Diagnostic Procedure.>	Is LAN system normal?	Go to step **2**.	Perform the inspection according to the diagnosis for LAN system.
2	**CHECK CURRENT DATA.** Confirm the current data display of keyless access system using Subaru Select Monitor. • Engine speed	Can the data be read normally?	Perform the diagnosis for the engine. <Ref. to EN(H4DO HEV)(diag)-2, PROCEDURE, Basic Diagnostic Procedure.>	Go to step **3**.

	Step	Check	Yes	No
3	**CHECK FUSE.** Remove the fuse.	Is the fuse OK?	Go to step **4**.	Replace the fuse. When the replaced fuse is blown immediately, check the power supply circuit for short-circuited.
4	**CHECK HARNESS.** 1) Disconnect the keyless access CM connector. 2) Using a tester, measure the voltage between keyless access CM connectors. ***Connector & terminal*** ***(B572) No. 2 (+) — Chassis ground (–):***	Is the voltage 9.5 — 16 V?	Go to step **5**.	Check the power supply circuit.
5	**CHECK HARNESS.** Using a tester, measure the resistance between the keyless access CM connector and chassis ground. ***Connector & terminal*** ***(B572) No. 11 — Chassis ground:***	Is the resistance less than 1 Ω?	Go to step **6**.	Repair or replace the open circuit of harness.
6	**CHECK HARNESS.** 1) Disconnect the keyless access CM connector. 2) Disconnect the ECM connector. 3) Using a tester, measure the resistance between the keyless access CM connector and ECM connector. ***Connector & terminal*** ***(B572) No. 17 — (B135) No. 15:***	Is the resistance less than 1 Ω?	Go to step **7**.	Repair or replace the open circuit of harness.
7	**CHECK HARNESS.** Using a tester, measure the resistance between the keyless access CM connector and chassis ground. ***Connector & terminal*** ***(B572) No. 17 — Chassis ground:***	Is the resistance 10 kΩ or more?	Go to step **8**.	Repair or replace the open circuit of harness.
8	**CHECK HARNESS.** 1) Connect the keyless access CM connector and ECM connector. 2) Using the Subaru Select Monitor, measure the waveform between the keyless access CM connector and chassis ground. ***Connector & terminal*** ***(B572) No. 17 — Chassis ground:***	Does the pulse stop when the engine is stopped, and does the pulse generate when the engine is started?	Replace the keyless access CM. <Ref. to SL-102, Keyless Access CM.>	Perform the diagnosis for the engine. <Ref. to EN(H4DO HEV)(diag)-2, PROCEDURE, Basic Diagnostic Procedure.>

V: DTC B2779 REMOTE CONTROL ENGINE STARTER COMMUNICATION COLLATION NG

DTC DETECTING CONDITION:
When the keyless access CM does not respond to engine start even when the remote control engine starter is ON, or when there is a code mismatch.
TROUBLE SYMPTOM:
Remote engine starter does not function.

	Step	Check	Yes	No
1	**REGISTER THE REMOTE ENGINE STARTER.** 1) Clear the DTC. 2) Register the remote engine starter using the Subaru Select Monitor. (Refer to the "REGISTRATION MANUAL FOR IMMOBILIZER".) 3) Read the DTC again.	Is DTC B2779 detected?	Replace the remote engine starter.	System is normal. It is possible that temporary poor contact occurs.

W: DTC B2781 STEERING LOCK ECU OPEN/SHORT

DTC DETECTING CONDITION:
- When malfunction is detected in lock/unlock position detection sensor.
- When the open or short circuit in the steering lock motor drive circuit is detected.

TROUBLE SYMPTOM:
- The steering lock cannot be released.
- Engine will not start.

CAUTION:
For replacement procedure of steering lock CM, refer to the "REGISTRATION MANUAL FOR IMMOBILIZER".

NOTE:
When all ECMs connected to collation system LIN bus cannot communicate with the keyless access CM, DTC B2785 is output.

	Step	Check	Yes	No
1	**CHECK DTC.** Use the Subaru Select Monitor and read DTCs.	Is B2785 displayed?	Perform the diagnosis according to DTC.	Replace the steering lock CM. <Ref. to SL-105, Steering Lock CM.>

X: DTC B2782 STEERING LOCK POWER SUPPLY CIRCUIT ABNORMAL (SMART ECU-SIDE ABNORMAL)

DTC DETECTING CONDITION:
When the open or short circuit in the steering lock motor power supply circuit is detected.
TROUBLE SYMPTOM:
- The steering lock cannot be released.
- Engine will not start.

CAUTION:
For replacement procedure of keyless access CM and steering lock CM, refer to the "REGISTRATION MANUAL FOR IMMOBILIZER".
WIRING DIAGRAM:
Push button start system <Ref. to WI(HEV)-180, WIRING DIAGRAM, Push Button Start System.>

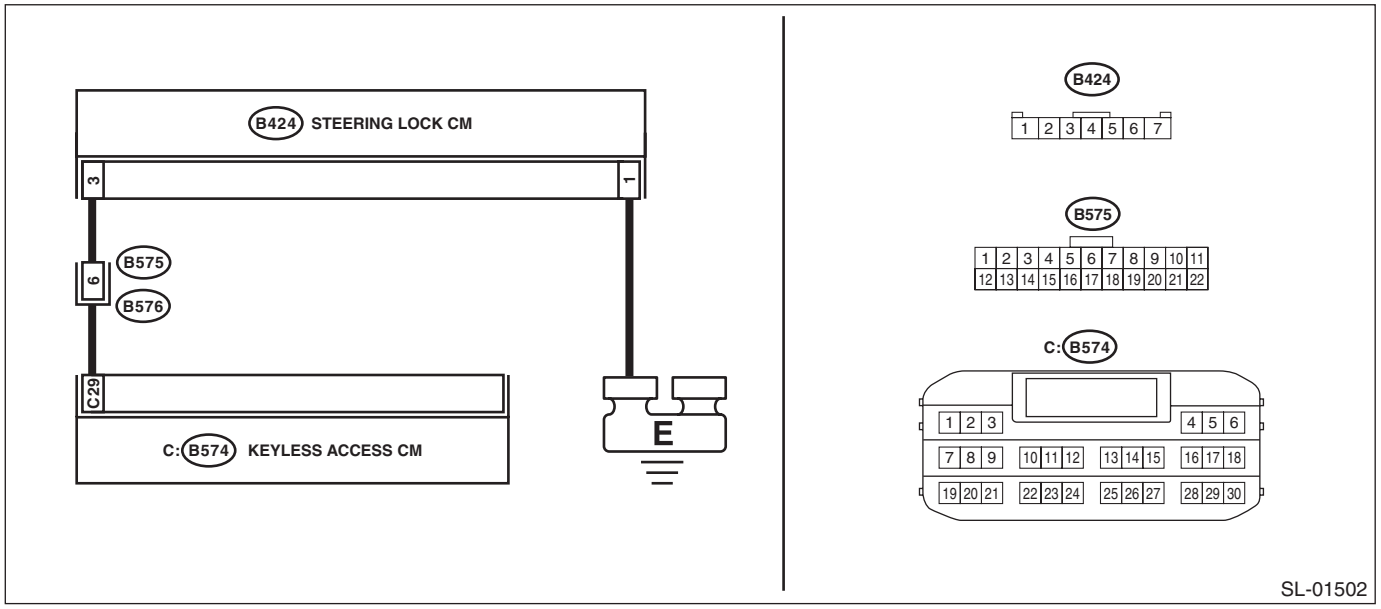

	Step	Check	Yes	No
1	**CHECK STEERING LOCK CM.** 1) Disconnect the steering lock CM connector. 2) Using a tester, measure the resistance between the steering lock CM connector and chassis ground. ***Connector & terminal*** ***(B424) No. 1 — Chassis ground:***	Is the resistance less than 1 Ω?	Go to step **2**.	Repair or replace the open circuit of harness.
2	**CHECK CURRENT DATA.** 1) Connect the steering lock CM connector. 2) Set to ACC OFF, IGN OFF, and the shift position P. 3) Using a tester, open the door, and measure the voltage between terminals of steering CM connector when the steering lock motor is driven. ***Connector & terminal*** ***(B424) No. 3 (+) — (B424) No. 1 (–):***	Does the voltage change as follows? Steering lock motor in operation: 1 V or less → Steering lock motor is stopped: 11 — 14 V	Go to step **3**.	Go to step **4**.

	Step	Check	Yes	No
3	**CHECK DTC.** 1) Turn the ignition switch to ON. 2) Using the Subaru Select Monitor, clear the memory. 3) Turn the ignition switch to OFF. 4) Disconnect the battery ground cable and reconnect it, and then clear the abnormal information displayed on the data monitor. 5) Turn the ignition switch to ON. 6) Use the Subaru Select Monitor and read DTCs.	Is B2782 displayed?	Replace the steering lock CM. <Ref. to SL-105, Steering Lock CM.>	System is normal. It is possible that temporary poor contact occurs.
4	**CHECK CONNECTOR.** 1) Disconnect the steering lock CM connector. 2) Disconnect the keyless access CM connector.	Are connectors normal?	Go to step **5**.	Repair or replace the connector.
5	**CHECK HARNESS.** Using a tester, measure the resistance between steering lock CM connector and keyless access CM connector. ***Connector & terminal*** ***(B574) No. 29 — (B424) No. 3:***	Is the resistance less than 1 Ω?	Go to step **6**.	Repair or replace the open circuit of harness.
6	**CHECK HARNESS.** Using a tester, measure the resistance between steering lock CM connector and chassis ground, and between keyless access CM connector and chassis ground. ***Connector & terminal*** ***(B424) No. 3 — Chassis ground:*** ***(B574) No. 29 — Chassis ground:***	Is the resistance 10 kΩ or more?	Replace the keyless access CM. <Ref. to SL-102, Keyless Access CM.>	Repair or replace the short circuit of the harness.

Y: DTC B2784 ANTENNA COIL FAULT

DTC DETECTING CONDITION:
When open or short circuit occurs in the antenna coil.
TROUBLE SYMPTOM:
The keyless access function may not be operable.

CAUTION:
For replacement procedure of keyless access CM and steering lock CM, refer to the "REGISTRATION MANUAL FOR IMMOBILIZER".
WIRING DIAGRAM:
Immobilizer system <Ref. to WI(HEV)-150, WIRING DIAGRAM, Immobilizer System.>

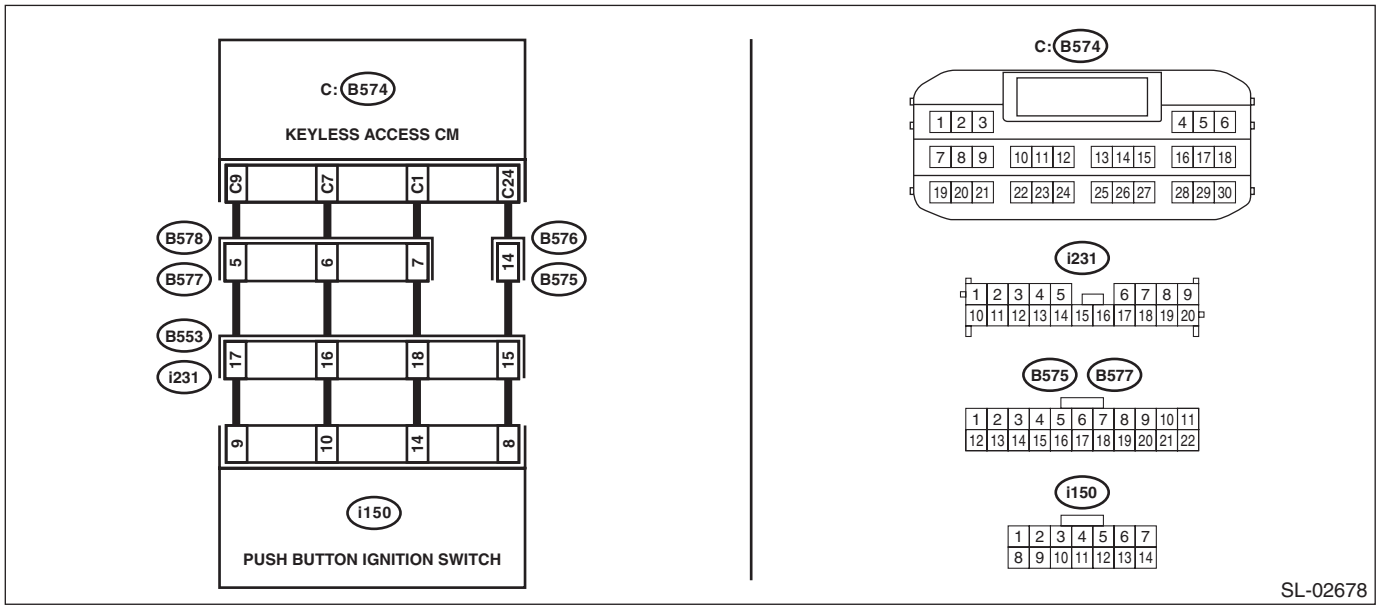

Step		Check	Yes	No
1	**CHECK STEERING LOCK CM.** 1) Disconnect the push button ignition switch connector. 2) Disconnect the keyless access CM connector. 3) Using the tester, measure the resistance between terminals. ***Connector & terminal*** ***(i150) No. 14 — (B574) No. 1:*** ***(i150) No. 9 — (B574) No. 9:*** ***(i150) No. 10 — (B574) No. 7:*** ***(i150) No. 8 — (B574) No. 24:***	Is the resistance less than 1 Ω?	Go to step **2**.	Repair or replace the open circuit of harness.
2	**CHECK HARNESS.** Using the tester, measure the resistance between terminals. ***Connector & terminal*** ***(i150) No. 14 — Chassis ground:*** ***(i150) No. 9 — Chassis ground:*** ***(i150) No. 10 — Chassis ground:***	Is the resistance 10 kΩ or more?	Go to step **3**.	Repair or replace the short circuit of the harness.
3	**CHECK PUSH BUTTON IGNITION SWITCH.** 1) Replace the push button ignition switch. <Ref. to SL-106, Push Button Ignition Switch.> 2) Using the Subaru Select Monitor, clear the memory. 3) Use the Subaru Select Monitor and read DTCs.	Is B2784 displayed?	Replace the keyless access CM. <Ref. to SL-102, Keyless Access CM.>	Malfunction occurred in the push button ignition switch.

Z: DTC B2785 LIN COMMUNICATION ERROR

DTC DETECTING CONDITION:
When the keyless access CM detected the collation system LIN bus communication error three times in a row.

TROUBLE SYMPTOM:
The keyless access function may not be operable.

CAUTION:
For replacement procedure of keyless access CM and steering lock CM, refer to the "REGISTRATION MANUAL FOR IMMOBILIZER".

WIRING DIAGRAM:
Push button start system <Ref. to WI(HEV)-180, WIRING DIAGRAM, Push Button Start System.>

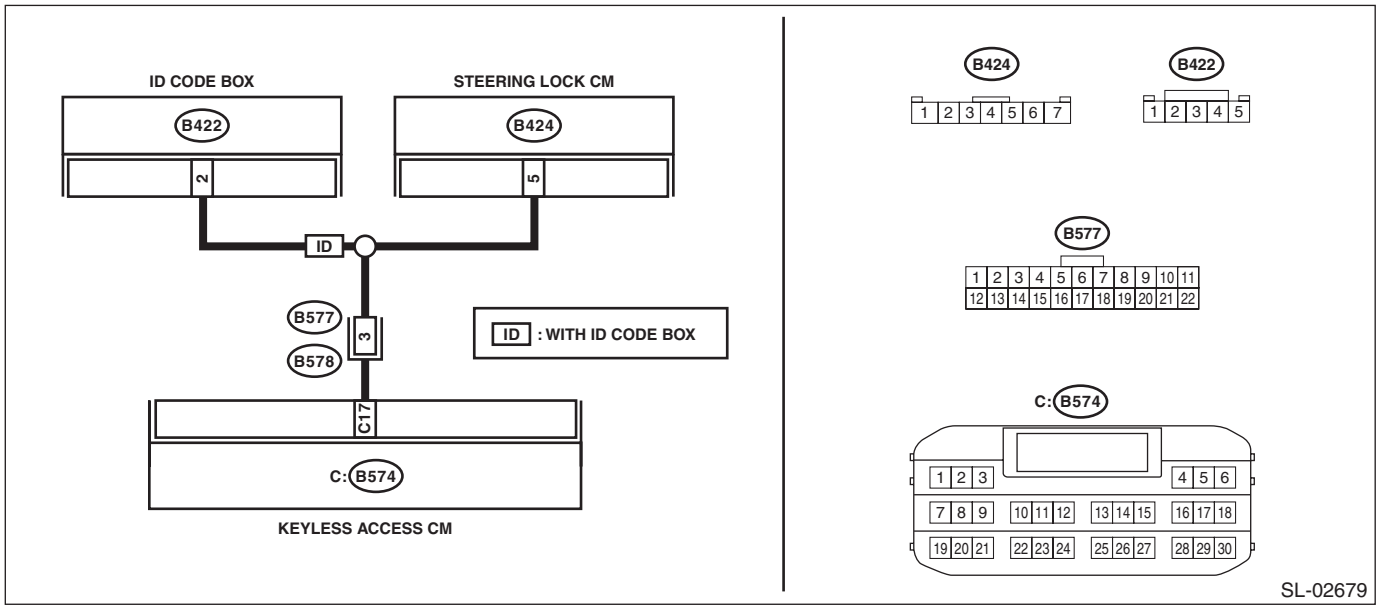

Step		Check	Yes	No
1	**CHECK DTC.** Use the Subaru Select Monitor and read DTCs.	Is B2785 displayed?	Go to step **2**.	Check the connector.
2	**CHECK HARNESS.** 1) Disconnect the keyless access CM connector. 2) Disconnect the steering lock CM connector. 3) Disconnect the ID code box connector. (with ID code box) 4) Using the tester, measure the resistance between terminals. ***Connector & terminal*** ***(B574) No. 17 — (B424) No. 5:*** ***(B574) No. 17 — (B422) No. 2: (with ID code box)***	Is the resistance less than 1 Ω?	Go to step **3**.	Repair or replace the open circuit of harness.
3	**CHECK HARNESS.** Using the tester, measure the resistance between terminals. ***Connector & terminal*** ***(B424) No. 5 — Chassis ground:*** ***(B574) No. 17 — Chassis ground:*** ***(B422) No. 5 — Chassis ground: (with ID code box)***	Is the resistance 10 kΩ or more?	Go to step **4**.	Repair or replace the short circuit of the harness.

	Step	Check	Yes	No
4	**CHECK HARNESS.** 1) Connect the keyless access CM connector only. 2) Use the Subaru Select Monitor and read DTCs.	Is B2785 displayed?	Replace the keyless access CM. <Ref. to SL-102, Keyless Access CM.>	Go to step **5**.
5	**CHECK ID CODE BOX.** NOTE: For model without ID code box, go to the next step. 1) Connect only the ID code box. 2) Use the Subaru Select Monitor and read DTCs.	Is B2785 displayed?	Replace the ID code box.	Go to step **6**.
6	**CHECK STEERING LOCK CM.** 1) Replace the steering lock CM, and then connect it. <Ref. to SL-105, Steering Lock CM.> 2) Using the Subaru Select Monitor, clear the memory. 3) Use the Subaru Select Monitor and read DTCs.	Is B2785 displayed?	Replace the keyless access CM. <Ref. to SL-102, Keyless Access CM.>	Malfunction occurred in the steering lock CM.

AA:DTC B2786 NO RESPONSE FROM STEERING LOCK ECU

DTC DETECTING CONDITION:

When communication between keyless access CM and steering lock CM is interrupted for a set amount of time.

TROUBLE SYMPTOM:

The steering lock cannot be released.

CAUTION:

For replacement procedure of keyless access CM and steering lock CM, refer to the "REGISTRATION MANUAL FOR IMMOBILIZER".

WIRING DIAGRAM:

Push button start system <Ref. to WI(HEV)-180, WIRING DIAGRAM, Push Button Start System.>

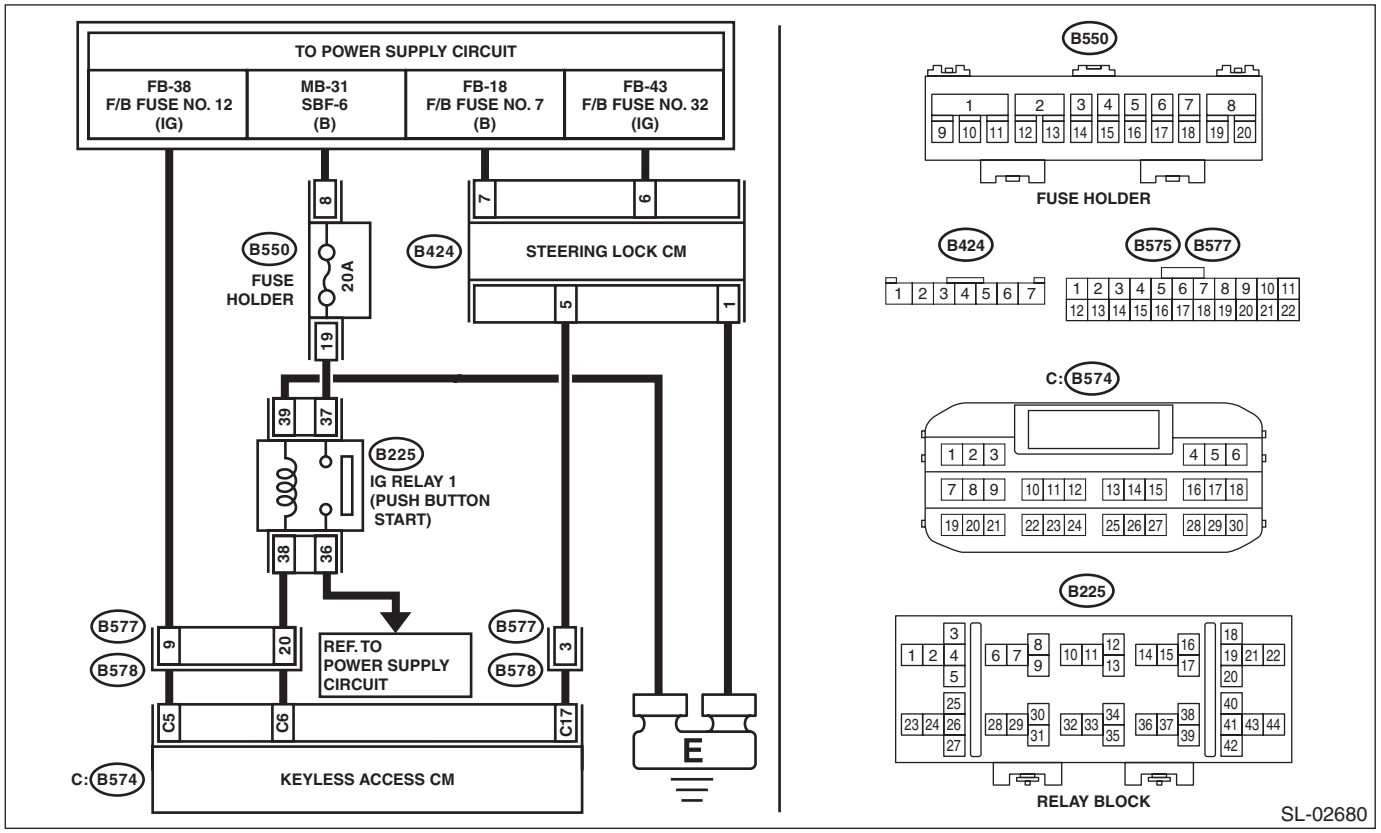

Step		Check	Yes	No
1	**CHECK DTC.** Use the Subaru Select Monitor and read DTCs.	Is a DTC other than B2786 displayed?	Perform the diagnosis according to DTC.	Go to step **2**.
2	**CHECK HARNESS.** 1) Disconnect the keyless access CM connector. 2) Disconnect the steering lock CM connector. 3) Using the tester, measure the resistance between terminals. ***Connector & terminal*** ***(B574) No. 17 — (B424) No. 5:***	Is the resistance less than 1 Ω?	Go to step **3**.	Repair or replace the open circuit of harness.
3	**CHECK HARNESS.** Using the tester, measure the resistance between terminals. ***Connector & terminal*** ***(B424) No. 5 — Chassis ground:*** ***(B574) No. 17 — Chassis ground:***	Is the resistance 10 kΩ or more?	Go to step **4**.	Repair or replace the short circuit of the harness.

	Step	Check	Yes	No
4	**CHECK HARNESS.** Using a tester, measure the resistance between the steering lock CM connector and chassis ground. ***Connector & terminal*** ***(B424) No. 1 — Chassis ground:***	Is the resistance less than 1 Ω?	Go to step **5**.	Repair or replace the open circuit of harness.
5	**CHECK HARNESS.** 1) Turn the ignition switch to ON. 2) Using a tester, measure the voltage between the steering lock CM connector and chassis ground. ***Connector & terminal*** ***(B424) No. 6 (+) — Chassis ground (–):*** ***(B424) No. 7 (+) — Chassis ground (–):***	Is the voltage 11 — 14 V?	Go to step **6**.	Repair or replace the open circuit of harness.
6	**CHECK STEERING LOCK CM.** 1) Turn the ignition switch to ON. 2) Replace the steering lock CM. <Ref. to SL-105, Steering Lock CM.> 3) Using the Subaru Select Monitor, clear the memory. 4) Use the Subaru Select Monitor and read DTCs.	Is B2786 displayed?	Replace the keyless access CM. <Ref. to SL-102, Keyless Access CM.>	Malfunction occurred in the steering lock CM.

AB:DTC B2788 IGN1 INPUT ABNORMAL

DTC DETECTING CONDITION:

When mismatch occurs in the IG1 input of the steering lock CM for both LIN communication line input (IG1 input value of keyless access CM) and solid line input.

TROUBLE SYMPTOM:

The steering lock cannot be released.

CAUTION:

For replacement procedure of steering lock CM, refer to the "REGISTRATION MANUAL FOR IMMOBILIZER".

WIRING DIAGRAM:

Push button start system <Ref. to WI(HEV)-180, WIRING DIAGRAM, Push Button Start System.>

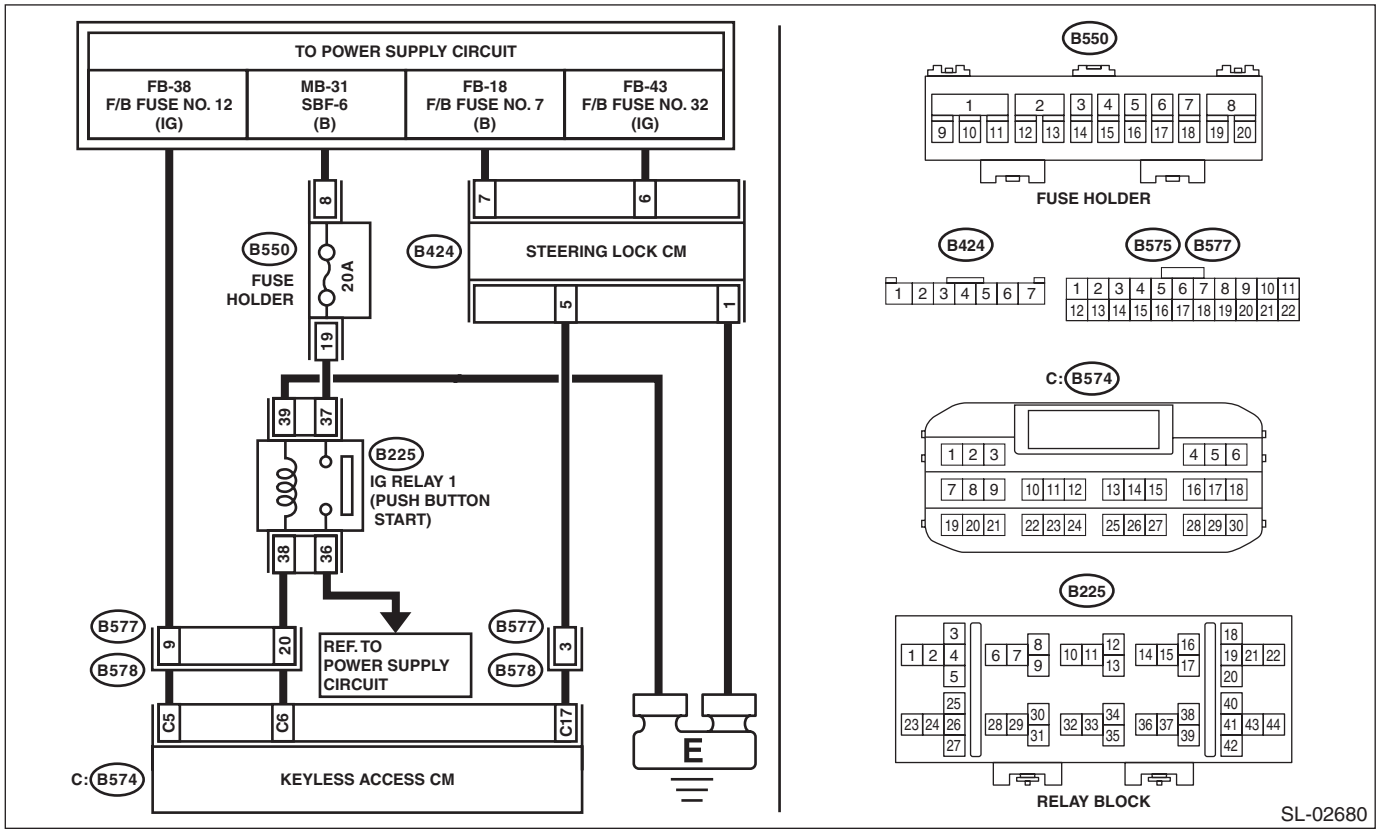

	Step	Check	Yes	No
1	**CHECK FUSE.** Check the fuse.	Is the fuse OK?	Go to step **2**.	Replace the fuse. When the replaced fuse is blown immediately, check the power supply circuit for short-circuited.
2	**CHECK CURRENT DATA.** Check the current data display of keyless access CM using the Subaru Select Monitor. • IGN SW	Is the display normal according to the ignition switch operation?	Go to step **3**.	Go to step **5**.
3	**CHECK HARNESS.** 1) Disconnect the steering lock CM connector. 2) Using a tester, measure the resistance between the steering lock CM connector and chassis ground. ***Connector & terminal*** ***(B424) No. 1 — Chassis ground:***	Is the resistance less than 1 Ω?	Go to step **4**.	Repair or replace the open circuit of harness.

	Step	Check	Yes	No
4	**CHECK HARNESS.** 1) Connect the steering lock CM connector. 2) Using the tester, measure the voltage between terminals. ***Connector & terminal*** ***(B424) No. 6 (+) — (B424) No. 1 (–):***	Is the voltage 11 — 14 V with IG ON? Is the voltage less than 1 V with IG OFF?	Replace the steering lock CM. <Ref. to SL-105, REMOVAL, Steering Lock CM.>	Check the DC power supply circuit.
5	**CHECK HARNESS.** Using a tester, measure the voltage between the keyless access CM connector and chassis ground. ***Connector & terminal*** ***(B574) No. 5 (+) — Chassis ground (–):***	Is the voltage 11 — 14 V with IG ON? Is the voltage less than 1 V with IG OFF?	Replace the keyless access CM. <Ref. to SL-102, REMOVAL, Keyless Access CM.>	Check the DC power supply circuit.

AC:DTC B2789 ID CODE BOX NO RESPONSE

DTC DETECTING CONDITION:

- When communication between keyless access CM and ID code box is interrupted for a set amount of time.
- Open or short circuit in the wiring harness between keyless access CM and ID code box

TROUBLE SYMPTOM:

Engine will not start.

CAUTION:

For replacement procedure of keyless access CM and ID code box, refer to the "REGISTRATION MANUAL FOR IMMOBILIZER".

WIRING DIAGRAM:

Push button start system <Ref. to WI(HEV)-180, WIRING DIAGRAM, Push Button Start System.>

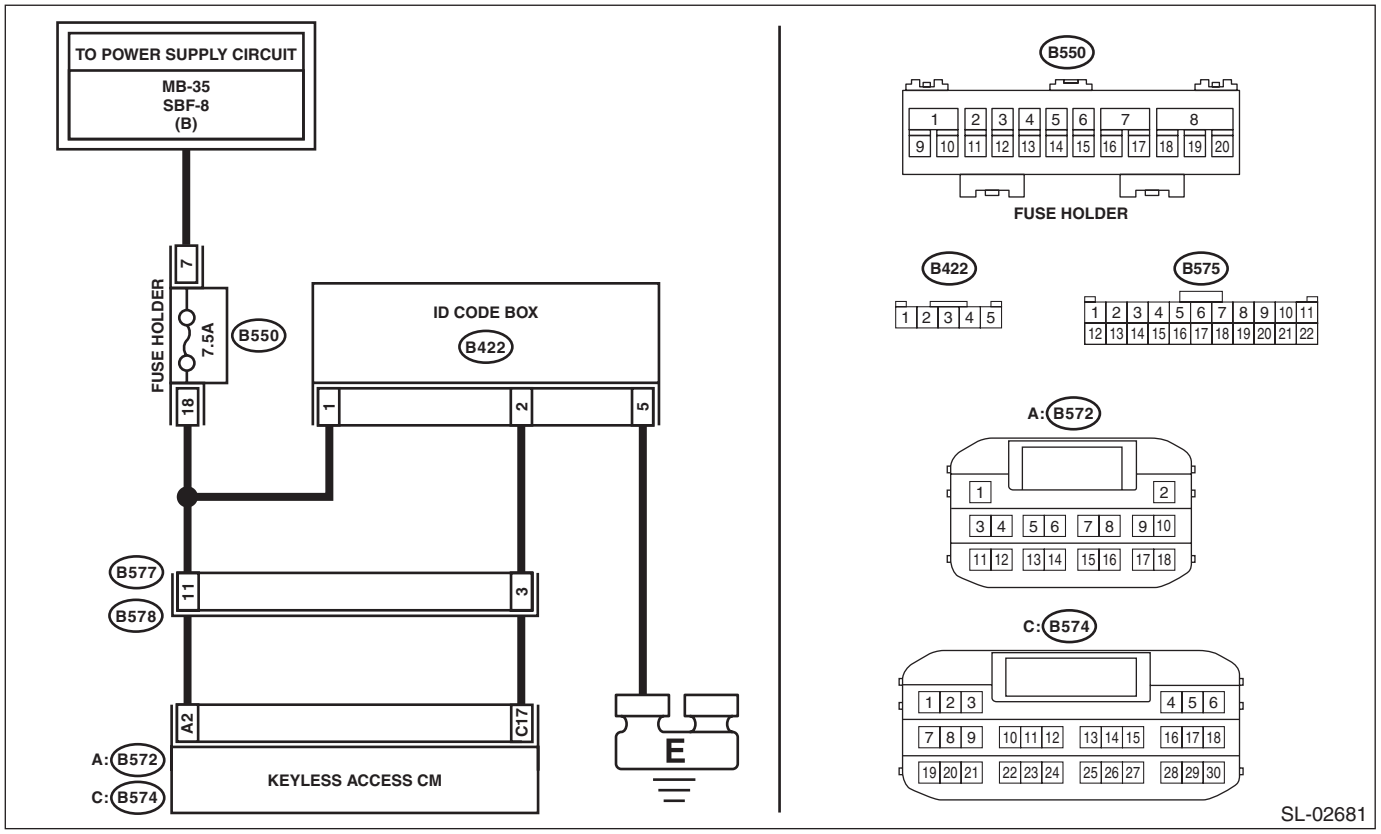

Step		Check	Yes	No
1	**CHECK DTC.** Use the Subaru Select Monitor and read DTCs.	Is B2789 displayed?	Go to step **2**.	Check the connector.
2	**CHECK HARNESS.** 1) Disconnect the keyless access CM connector. 2) Disconnect the ID code box connector. 3) Using the tester, measure the resistance between terminals. ***Connector & terminal*** ***(B574) No. 17 — (B422) No. 2:***	Is the resistance less than 1 Ω?	Go to step **3**.	Repair or replace the open circuit of harness.
3	**CHECK HARNESS.** Using a tester, measure the resistance between the keyless access CM connector and chassis ground, and between ID code box connector and chassis ground. ***Connector & terminal*** ***(B574) No. 17 — Chassis ground:*** ***(B422) No. 2 — Chassis ground:***	Is the resistance 10 kΩ or more?	Go to step **4**.	Repair or replace the short circuit of the harness.

	Step	Check	Yes	No
4	**CHECK HARNESS.** Using a tester, measure the resistance between ID code box connector and chassis ground. ***Connector & terminal*** ***(B422) No. 5 — Chassis ground:***	Is the resistance less than 1 Ω?	Go to step **5**.	Repair or replace the open circuit of harness.
5	**CHECK HARNESS.** Using a tester, measure the voltage between ID code box connector and chassis ground. ***Connector & terminal*** ***(B422) No. 1 (+) — Chassis ground (–):***	Is the voltage 11 — 14 V?	Go to step **6**.	Repair or replace the open circuit of harness.
6	**CHECK ID CODE BOX.** 1) Replace the ID code box. <Ref. to SL-104, ID Code Box.> 2) Using the Subaru Select Monitor, clear the memory. 3) Use the Subaru Select Monitor and read DTCs.	Is B2789 displayed?	Replace the keyless access CM. <Ref. to SL-102, Keyless Access CM.>	ID code box has an error.

AD:DTC B278A ABNORMAL IMMOBILIZER POWER SUPPLY

DTC DETECTING CONDITION:
When the power supply circuit of the push button ignition switch is shorted to ground.
TROUBLE SYMPTOM:
- Engine will not start.
- The keyless access system function does not operate.

CAUTION:
For replacement procedure of keyless access CM, refer to the "REGISTRATION MANUAL FOR IMMOBILIZER".
WIRING DIAGRAM:
Immobilizer system <Ref. to WI(HEV)-150, WIRING DIAGRAM, Immobilizer System.>

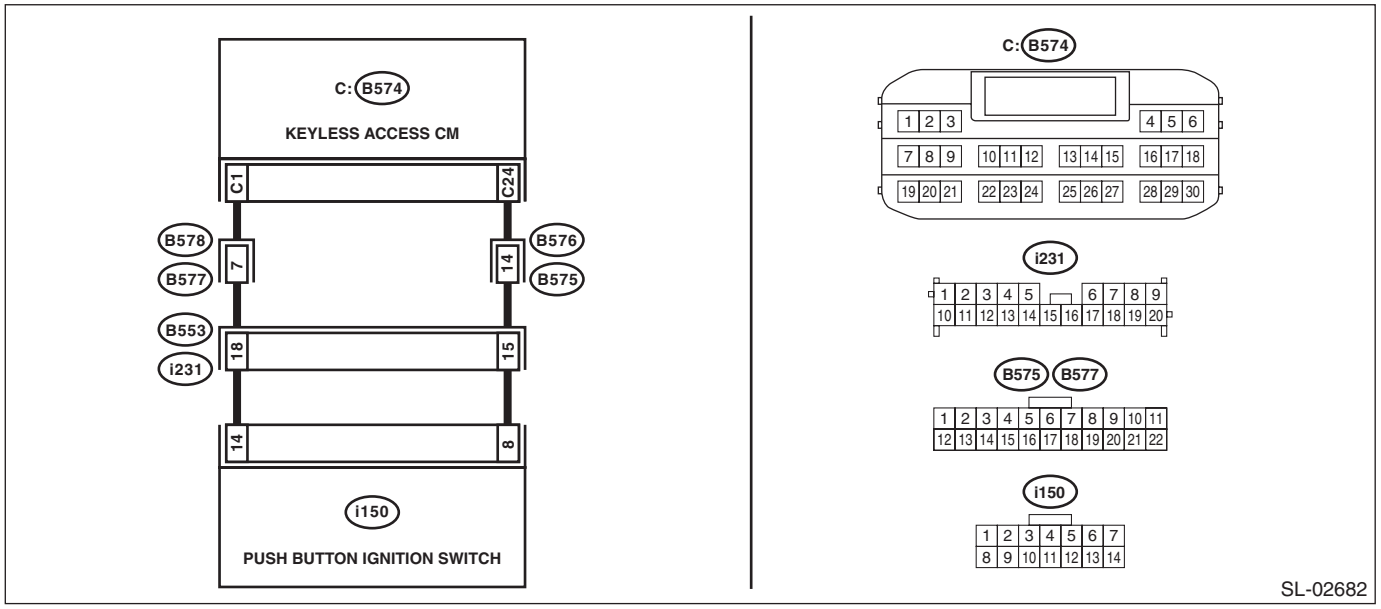

Step		Check	Yes	No
1	**CHECK KEYLESS ACCESS CM.** 1) Turn the ignition switch to OFF. 2) Take the access key out of the passenger room. 3) Push the push button ignition switch. Within 30 seconds, use oscilloscope to measure the waveform between connectors. ***Connector & terminal*** ***(i150) No. 14 — (i150) No. 8:*** 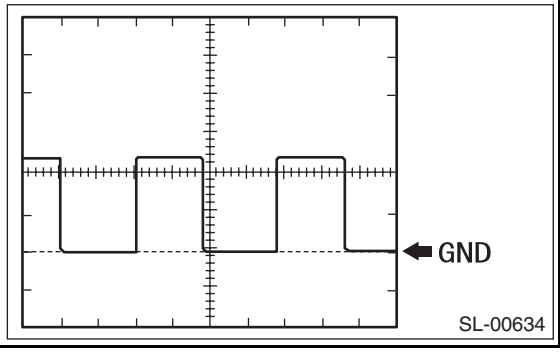	Is the waveform shown in the left column displayed?	Replace the push button ignition switch. <Ref. to SL-106, Push Button Ignition Switch.>	Go to step **2**.

	Step	Check	Yes	No
2	**CHECK HARNESS.** 1) Disconnect the keyless access CM connector. 2) Disconnect the push button ignition switch connector. 3) Using the tester, measure the resistance between terminals. ***Connector & terminal*** ***(i150) No. 14 — (B574) No. 1:*** ***(i150) No. 8 — (B574) No. 24:***	Is the resistance less than 1 Ω?	Go to step **3**.	Repair or replace the open circuit of harness.
3	**CHECK HARNESS.** Using a tester, measure the resistance between the keyless access CM connector and chassis ground. ***Connector & terminal*** ***(B574) No. 1 — Chassis ground:***	Is the resistance 10 kΩ or more?	Go to step **4**.	Repair or replace the short circuit of the harness.
4	**CHECK HARNESS.** Using a tester, measure the resistance between the keyless access CM connector and chassis ground. ***Connector & terminal*** ***(B574) No. 24 — Chassis ground:***	Is the resistance 1 Ω or less?	Replace the keyless access CM. <Ref. to SL-102, Keyless Access CM.>	Repair or replace the harness.

AE:DTC B278D ID CODE BOX RECOGNITION JUDGMENT ABNORMAL

DTC DETECTING CONDITION:

- When ID code box setting is set to OFF, ID code box ON input is detected.
- When ID code box setting is set to OFF, ID code box LIN signal is received.

TROUBLE SYMPTOM:

Engine will not start.

CAUTION:

For replacement procedure of keyless access CM, refer to the "REGISTRATION MANUAL FOR IMMOBILIZER".

WIRING DIAGRAM:

Push button start system <Ref. to WI(HEV)-180, WIRING DIAGRAM, Push Button Start System.>

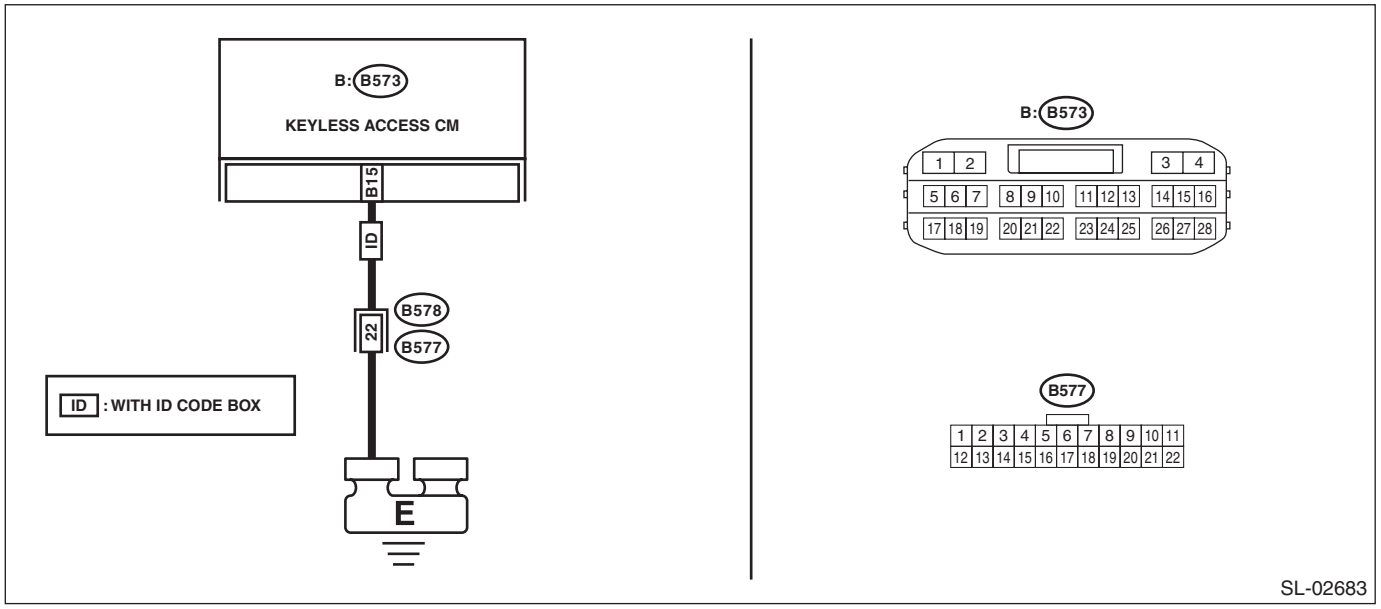

Step		Check	Yes	No
1	**CHECK DTC.** 1) Turn the ignition switch to OFF. 2) Using the Subaru Select Monitor, clear the keyless access system memory. 3) Turn the ignition switch to OFF → ON. 4) Use the Subaru Select Monitor and read DTCs.	Is B278D displayed?	Go to step **2**.	System is normal. It is possible that temporary poor contact occurs.
2	**CHECK HARNESS.** 1) Disconnect the keyless access CM connector. 2) Measure the resistance between keyless access CM connector and chassis ground. ***Connector & terminal*** ***(B573) No. 15 — Chassis ground:***	Is the resistance 10 kΩ or more?	Replace the keyless access CM. <Ref. to SL-102, Keyless Access CM.>	Repair or replace the short circuit of the harness.

AF:DTC B2790 ID CODE BOX ABNORMAL (EEPROM ABNORMAL)

DTC DETECTING CONDITION:
An error has occurred inside the ID code box.
TROUBLE SYMPTOM:
Engine will not start.

CAUTION:
For replacement procedure of ID code box, refer to the "REGISTRATION MANUAL FOR IMMOBILIZER".

	Step	Check	Yes	No
1	**CHECK DTC.** 1) Turn the ignition switch to OFF. 2) Using the Subaru Select Monitor, clear the keyless access system memory. 3) Turn the ignition switch to OFF → ON. 4) Register the ID code box. 5) Use the Subaru Select Monitor and read DTCs.	Is B2790 displayed?	Replace the ID code box. <Ref. to SL-104, ID Code Box.>	System is normal. It is possible that temporary poor contact occurs.

AG:DTC B27A1 DRIVER SIDE EXTERNAL ANTENNA OUTPUT STAGE OPEN

DTC DETECTING CONDITION:

When open circuit occurs in the harness between keyless access CM and driver's side front door outer handle.

TROUBLE SYMPTOM:

Keyless access system does not function.

CAUTION:

For replacement procedure of keyless access CM, refer to the "REGISTRATION MANUAL FOR IMMOBILIZER".

WIRING DIAGRAM:

Keyless access system <Ref. to WI(HEV)-157, WIRING DIAGRAM, Keyless Access System.>

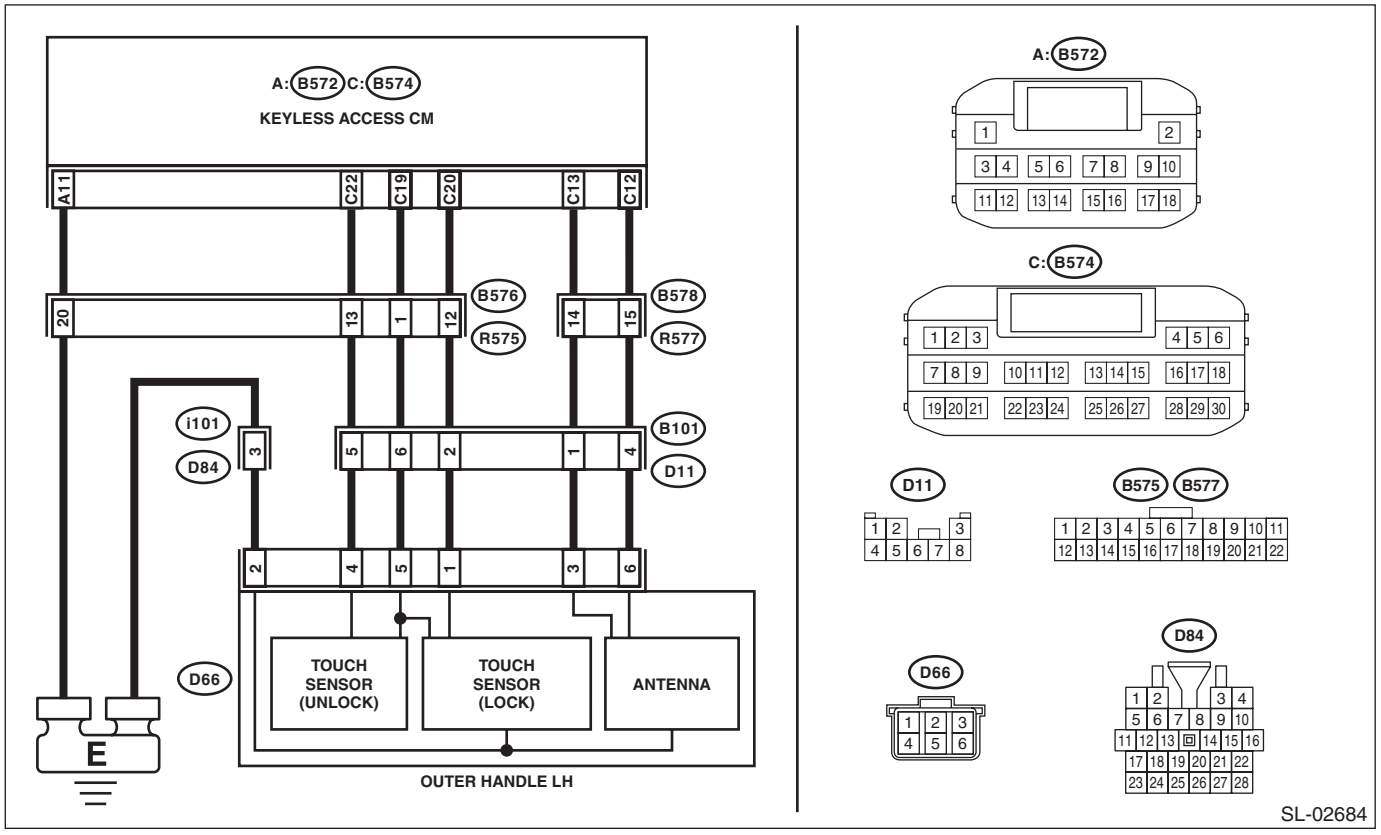

Step		Check	Yes	No
1	**CHECK LAN SYSTEM.** Inspect LAN system. <Ref. to LAN(HEV)(diag)-2, PROCEDURE, Basic Diagnostic Procedure.>	Is LAN system normal?	Go to step **2**.	Perform the inspection according to the diagnosis for LAN system.
2	**CHECK CONNECTOR.** 1) Disconnect the keyless access CM connector. 2) Disconnect the front door outer handle connector.	Is the connector OK?	Go to step **3**.	Repair or replace the connector.

	Step	Check	Yes	No
3	**CHECK HARNESS.** Using a tester, measure the resistance between the keyless access CM connector and front door outer handle connector, and between front door outer handle connector and chassis ground. ***Connector & terminal*** ***(B574) No. 12 — (D66) No. 6:*** ***(B574) No. 13 — (D66) No. 3:*** ***(D66) No. 2 — Chassis ground:*** ***(B572) No. 11 — Chassis ground:***	Is the resistance less than 1 Ω?	Go to step **4**.	Repair or replace the open circuit of harness.
4	**CHECK HARNESS.** Using a tester, measure the resistance between the keyless access CM connector and chassis ground, and between front door outer handle connector and chassis ground. ***Connector & terminal*** ***(B574) No. 12 — Chassis ground:*** ***(B574) No. 13 — Chassis ground:*** ***(D66) No. 6 — Chassis ground:*** ***(D66) No. 3 — Chassis ground:***	Is the resistance 10 kΩ or more?	Go to step **5**.	Repair or replace the short circuit of the harness.
5	**CHECK KEYLESS ACCESS CM.** 1) Connect the keyless access CM connector. 2) Use an oscilloscope, measure the waveform between terminals with ignition switch OFF, all doors closed and access key not in passenger room. ***Connector & terminal*** ***(B574) No. 12 — (B572) No. 11:*** ***(B574) No. 13 — (B572) No. 11:***	Does pulse output change from pulse output OFF → pulse output ON by the lock operation using access key?	Go to step **6**.	Replace the keyless access CM. <Ref. to SL-102, Keyless Access CM.>
6	**CHECK FRONT DOOR OUTER HANDLE.** 1) Replace the driver's front door outer handle with the passenger's front door outer handle. 2) Read DTC using the Subaru Select Monitor.	Is B27A1 displayed?	Replace the keyless access CM. <Ref. to SL-102, Keyless Access CM.>	Replace the driver's front door outer handle. <Ref. to SL-35, Front Outer Handle.>

AH:DTC B27A2 PASSENGER SIDE EXTERNAL ANTENNA OUTPUT STAGE OPEN

DTC DETECTING CONDITION:

When open circuit occurs in the harness between keyless access CM and passenger's side front door outer handle.

TROUBLE SYMPTOM:

Keyless access system does not function.

CAUTION:

For replacement procedure of keyless access CM, refer to the "REGISTRATION MANUAL FOR IMMOBILIZER".

WIRING DIAGRAM:

Keyless access system <Ref. to WI(HEV)-157, WIRING DIAGRAM, Keyless Access System.>

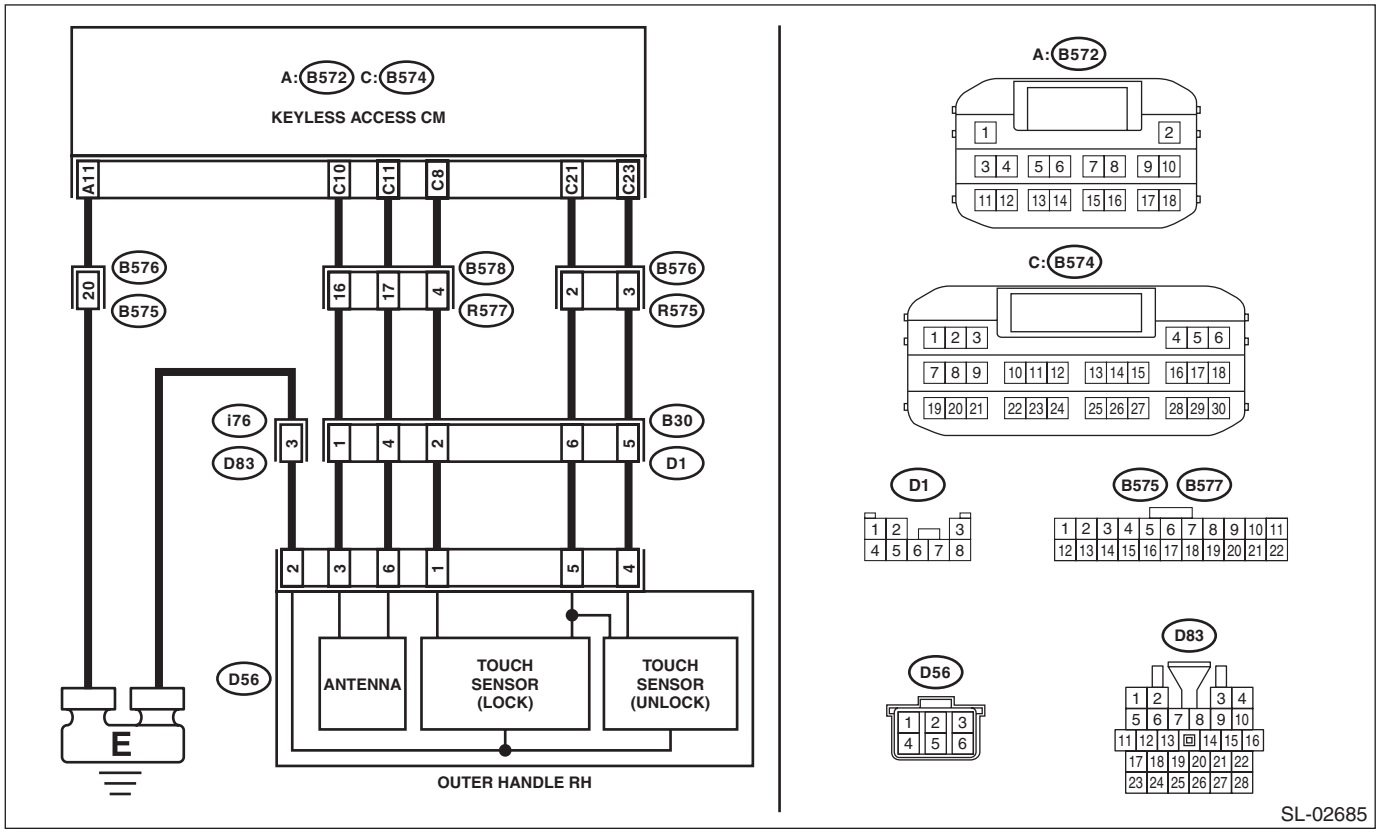

Step		Check	Yes	No
1	**CHECK LAN SYSTEM.** Inspect LAN system. <Ref. to LAN(HEV)(diag)-2, PROCEDURE, Basic Diagnostic Procedure.>	Is LAN system normal?	Go to step **2**.	Perform the inspection according to the diagnosis for LAN system.
2	**CHECK CONNECTOR.** 1) Disconnect the keyless access CM connector. 2) Disconnect the front door outer handle connector.	Is the connector OK?	Go to step **3**.	Repair or replace the connector.

	Step	Check	Yes	No
3	**CHECK HARNESS.** Using a tester, measure the resistance between the keyless access CM connector and front door outer handle connector, and between front door outer handle connector and chassis ground. ***Connector & terminal*** ***(B574) No. 11 — (D56) No. 6:*** ***(B574) No. 10 — (D56) No. 3:*** ***(D56) No. 2 — Chassis ground:*** ***(B572) No. 11 — Chassis ground:***	Is the resistance less than 1 Ω?	Go to step **4**.	Repair or replace the open circuit of harness.
4	**CHECK HARNESS.** Using a tester, measure the resistance between the keyless access CM connector and chassis ground, and between front door outer handle connector and chassis ground. ***Connector & terminal*** ***(B574) No. 11 — Chassis ground:*** ***(B574) No. 10 — Chassis ground:*** ***(D56) No. 6 — Chassis ground:*** ***(D56) No. 3 — Chassis ground:***	Is the resistance 10 kΩ or more?	Go to step **5**.	Repair or replace the short circuit of the harness.
5	**CHECK KEYLESS ACCESS CM.** 1) Connect the keyless access CM connector. 2) Use an oscilloscope, measure the waveform between terminals with ignition switch OFF, all doors closed and access key not in passenger room. ***Connector & terminal*** ***(B574) No. 12 — (B572) No. 11:*** ***(B574) No. 13 — (B572) No. 11:***	Does pulse output change from pulse output OFF → pulse output ON by the lock operation using access key?	Go to step **6**.	Replace the keyless access CM. <Ref. to SL-102, Keyless Access CM.>
6	**CHECK FRONT DOOR OUTER HANDLE.** 1) Replace the passenger's front door outer handle with the driver's front door outer handle. 2) Read DTC using the Subaru Select Monitor.	Is B27A2 displayed?	Replace the keyless access CM. <Ref. to SL-102, Keyless Access CM.>	Replace the passenger's front door outer handle. <Ref. to SL-35, Front Outer Handle.>

AI: DTC B27A5 FRONT INTERNAL ANTENNA OUTPUT STAGE OPEN

DTC DETECTING CONDITION:
When open circuit occurs in the harness between keyless access CM and front interior antenna.
TROUBLE SYMPTOM:
Keyless access system does not function. (When the access key is in the front area of the passenger room)

CAUTION:
For replacement procedure of keyless access CM, refer to the "REGISTRATION MANUAL FOR IMMOBILIZER".
WIRING DIAGRAM:
Keyless access system <Ref. to WI(HEV)-157, WIRING DIAGRAM, Keyless Access System.>

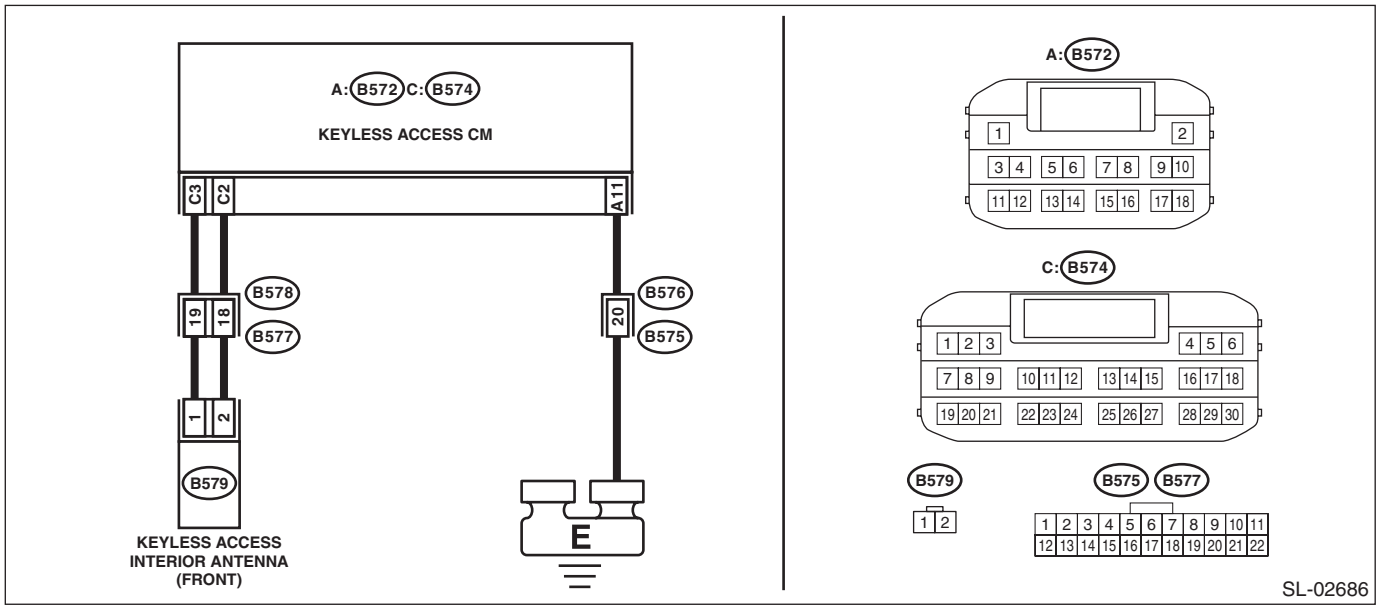

Step		Check	Yes	No
1	**CHECK LAN SYSTEM.** Inspect LAN system. <Ref. to LAN(HEV)(diag)-2, PROCEDURE, Basic Diagnostic Procedure.>	Is LAN system normal?	Go to step **2**.	Perform the inspection according to the diagnosis for LAN system.
2	**CHECK CONNECTOR.** 1) Disconnect the keyless access CM connector. 2) Disconnect the front interior antenna connector.	Is the connector OK?	Go to step **3**.	Repair or replace the connector.
3	**CHECK HARNESS.** Using a tester, measure the resistance between the keyless access CM connector and front interior antenna connector, and between front interior antenna connector and chassis ground. ***Connector & terminal*** ***(B574) No. 3 — (B579) No. 1:*** ***(B574) No. 2 — (B579) No. 2:*** ***(B572) No. 11 — Chassis ground:***	Is the resistance less than 1 Ω?	Go to step **4**.	Repair or replace the open circuit of harness.

	Step	Check	Yes	No
4	**CHECK HARNESS.** Using a tester, measure the resistance between the keyless access CM connector and chassis ground, and between front interior antenna connector and chassis ground. ***Connector & terminal*** ***(B574) No. 3 — Chassis ground:*** ***(B579) No. 1 — Chassis ground:*** ***(B574) No. 2 — Chassis ground:*** ***(B579) No. 2 — Chassis ground:***	Is the resistance 10 kΩ or more?	Go to step **5**.	Repair or replace the short circuit of the harness.
5	**CHECK KEYLESS ACCESS CM.** 1) Connect the keyless access CM connector. 2) Use an oscilloscope, measure the waveform between terminals with ignition switch OFF, all doors closed and access key not in passenger room. ***Connector & terminal*** ***(B574) No. 3 — (B572) No. 11:*** ***(B574) No. 2 — (B572) No. 11:***	Does pulse output change from pulse output OFF → pulse output ON by operating the touch sensor (lock)?	Go to step **6**.	Replace the keyless access CM. <Ref. to SL-102, Keyless Access CM.>
6	**CHECK FRONT INTERIOR ANTENNA.** 1) Replace the front interior antenna. <Ref. to SL-94, Keyless Access Indoor Antenna.> 2) Read DTC using the Subaru Select Monitor.	Is B27A5 displayed?	Replace the keyless access CM. <Ref. to SL-102, Keyless Access CM.>	Malfunction occurred in the front interior antenna.

AJ:DTC B27A6 REAR INTERNAL ANTENNA OUTPUT STAGE OPEN

DTC DETECTING CONDITION:
When open circuit occurs in the harness between keyless access CM and center interior antenna.
TROUBLE SYMPTOM:
Keyless access system does not function. (When the access key is in the rear area of the passenger room (near the seat))

CAUTION:
For replacement procedure of keyless access CM, refer to the "REGISTRATION MANUAL FOR IMMOBILIZER".
WIRING DIAGRAM:
Keyless access system <Ref. to WI(HEV)-157, WIRING DIAGRAM, Keyless Access System.>

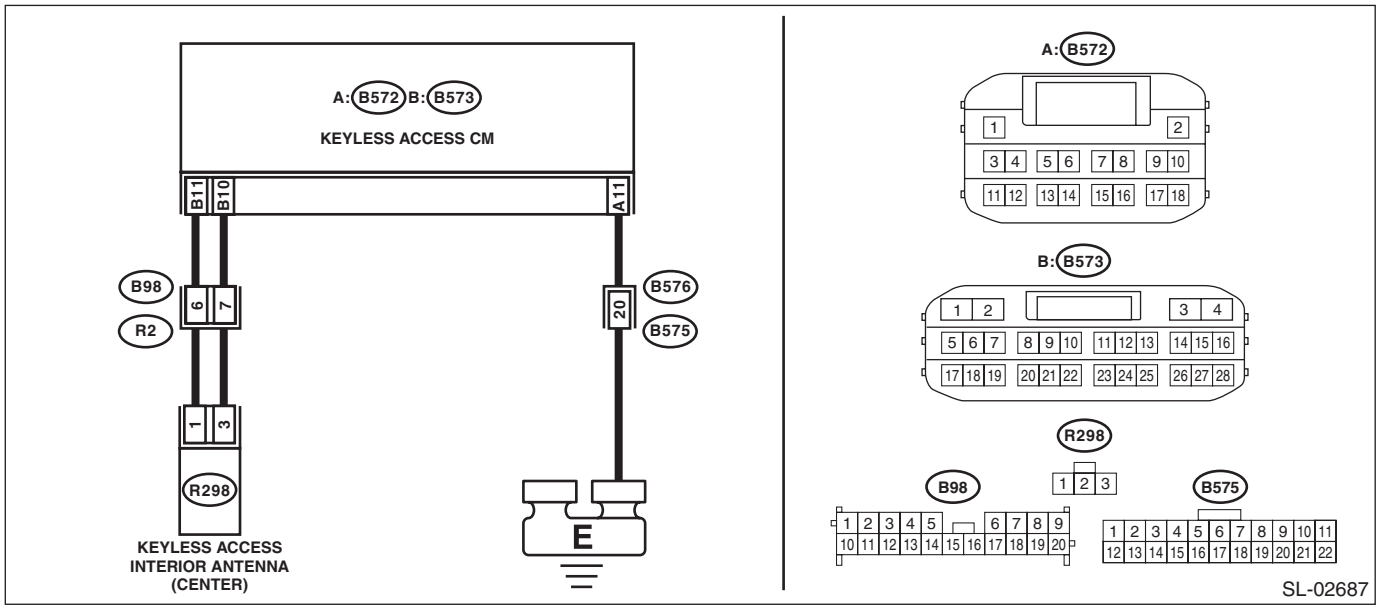

	Step	Check	Yes	No
1	**CHECK LAN SYSTEM.** Inspect LAN system. <Ref. to LAN(HEV)(diag)-2, PROCEDURE, Basic Diagnostic Procedure.>	Is LAN system normal?	Go to step **2**.	Perform the inspection according to the diagnosis for LAN system.
2	**CHECK CONNECTOR.** 1) Disconnect the keyless access CM connector. 2) Disconnect the center interior antenna connector.	Is the connector OK?	Go to step **3**.	Repair or replace the connector.
3	**CHECK HARNESS.** Using a tester, measure the resistance between the keyless access CM connector and center interior antenna connector, and between center interior antenna connector and chassis ground. ***Connector & terminal*** ***(B573) No. 10 — (R298) No. 3:*** ***(B573) No. 11 — (R298) No. 1:*** ***(B572) No. 11 — Chassis ground:***	Is the resistance less than 1 Ω?	Go to step **4**.	Repair or replace the open circuit of harness.

	Step	Check	Yes	No
4	**CHECK HARNESS.** Using a tester, measure the resistance between the keyless access CM connector and chassis ground, and between center interior antenna connector and chassis ground. ***Connector & terminal*** ***(B573) No. 10 — Chassis ground:*** ***(B573) No. 11 — Chassis ground:*** ***(R298) No. 1 — Chassis ground:*** ***(R298) No. 3 — Chassis ground:***	Is the resistance 10 kΩ or more?	Go to step **5**.	Repair or replace the short circuit of the harness.
5	**CHECK KEYLESS ACCESS CM.** 1) Connect the keyless access CM connector. 2) Use an oscilloscope, measure the waveform between terminals with ignition switch OFF, all doors closed and access key not in passenger room. ***Connector & terminal*** ***(B573) No. 10 — (B572) No. 11:*** ***(B573) No. 11 — (B572) No. 11:***	Does pulse output change from pulse output OFF → pulse output ON by operating the touch sensor (lock)?	Go to step **6**.	Replace the keyless access CM. <Ref. to SL-102, Keyless Access CM.>
6	**CHECK CENTER INTERIOR ANTENNA.** 1) Replace the center interior antenna. <Ref. to SL-94, Keyless Access Indoor Antenna.> 2) Read DTC using the Subaru Select Monitor.	Is B27A6 displayed?	Replace the keyless access CM. <Ref. to SL-102, Keyless Access CM.>	Malfunction occurred in the center interior antenna.

AK:DTC B27A7 TRUNK/REAR GATE INTERNAL ANTENNA OUTPUT STAGE OPEN

DTC DETECTING CONDITION:
When open circuit occurs in the harness between keyless access CM and rear interior antenna.
TROUBLE SYMPTOM:
Keyless access system does not function. (When the access key is in the rear area of the passenger room (in the luggage room or the trunk))

CAUTION:
For replacement procedure of keyless access CM, refer to the "REGISTRATION MANUAL FOR IMMOBILIZER".
WIRING DIAGRAM:
Keyless access system <Ref. to WI(HEV)-157, WIRING DIAGRAM, Keyless Access System.>

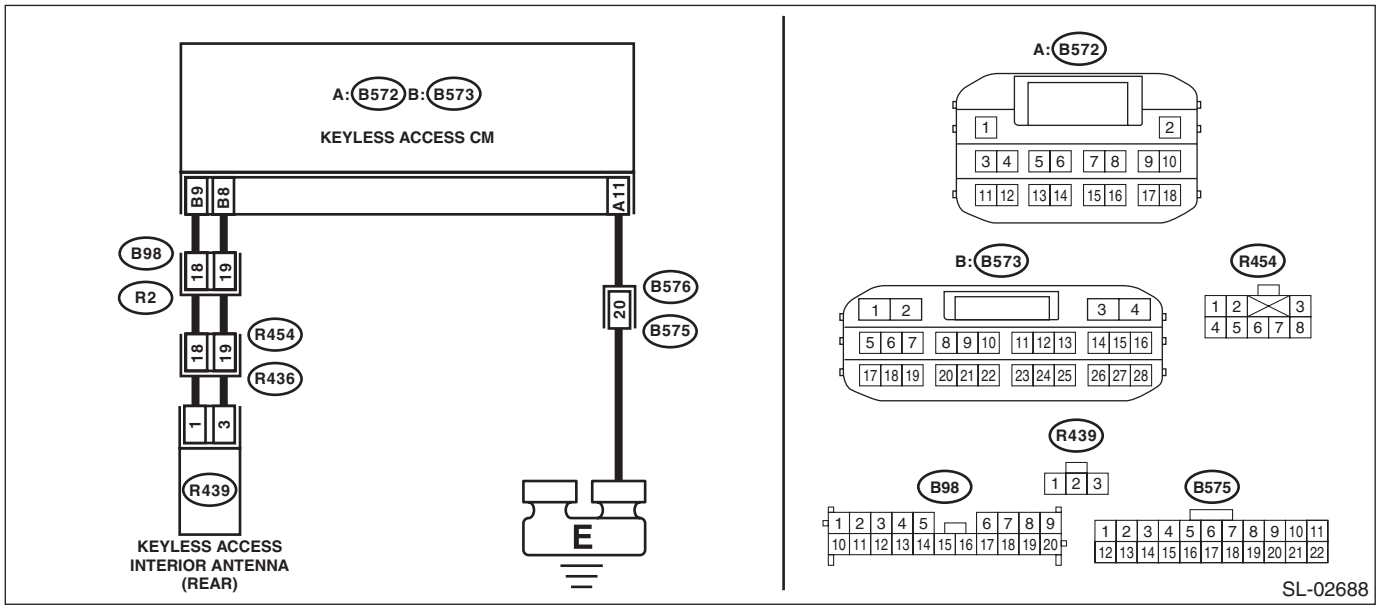

Step		Check	Yes	No
1	**CHECK LAN SYSTEM.** Inspect LAN system. <Ref. to LAN(HEV)(diag)-2, PROCEDURE, Basic Diagnostic Procedure.>	Is LAN system normal?	Go to step **2**.	Perform the inspection according to the diagnosis for LAN system.
2	**CHECK CONNECTOR.** 1) Disconnect the keyless access CM connector. 2) Disconnect the rear interior antenna connector.	Is the connector OK?	Go to step **3**.	Repair or replace the connector.
3	**CHECK HARNESS.** Using a tester, measure the resistance between the keyless access CM connector and rear interior antenna connector, and between rear interior antenna connector and chassis ground. ***Connector & terminal*** ***(B573) No. 9 — (R439) No. 1:*** ***(B573) No. 8 — (R439) No. 3:*** ***(B572) No. 11 — Chassis ground:***	Is the resistance less than 1 Ω?	Go to step **4**.	Repair or replace the open circuit of harness.

	Step	Check	Yes	No
4	**CHECK HARNESS.** Using a tester, measure the resistance between the keyless access CM connector and chassis ground, and between rear interior antenna connector and chassis ground. ***Connector & terminal*** ***(B573) No. 9 — Chassis ground:*** ***(B579) No. 8 — Chassis ground:*** ***(R439) No. 1 — Chassis ground:*** ***(R439) No. 3 — Chassis ground:***	Is the resistance 10 kΩ or more?	Go to step **5**.	Repair or replace the short circuit of the harness.
5	**CHECK KEYLESS ACCESS CM.** 1) Connect the keyless access CM connector. 2) Use an oscilloscope, measure the waveform between terminals with ignition switch OFF, all doors closed and access key not in passenger room. ***Connector & terminal*** ***(B573) No. 9 — (B572) No. 11:*** ***(B573) No. 8 — (B572) No. 11:***	Does pulse output change from pulse output OFF → pulse output ON by operating the touch sensor (lock)?	Go to step **6**.	Replace the keyless access CM. <Ref. to SL-102, Keyless Access CM.>
6	**CHECK REAR INTERIOR ANTENNA.** 1) Replace the rear interior antenna. <Ref. to SL-94, Keyless Access Indoor Antenna.> 2) Read DTC using the Subaru Select Monitor.	Is B27A7 displayed?	Replace the keyless access CM. <Ref. to SL-102, Keyless Access CM.>	Malfunction occurred in the rear interior antenna.

AL:DTC B27A8 TRUNK/REAR GATE EXTERNAL ANTENNA OUTPUT STAGE OPEN

DTC DETECTING CONDITION:
When open circuit occurs in the harness between keyless access CM and rear exterior antenna.
TROUBLE SYMPTOM:
Keyless access system does not function.
(Unable to unlock with the rear gate opener button, or unable to lock with the rear lock button.)

CAUTION:
For replacement procedure of keyless access CM, refer to the "REGISTRATION MANUAL FOR IMMOBILIZER".
WIRING DIAGRAM:
Keyless access system <Ref. to WI(HEV)-157, WIRING DIAGRAM, Keyless Access System.>

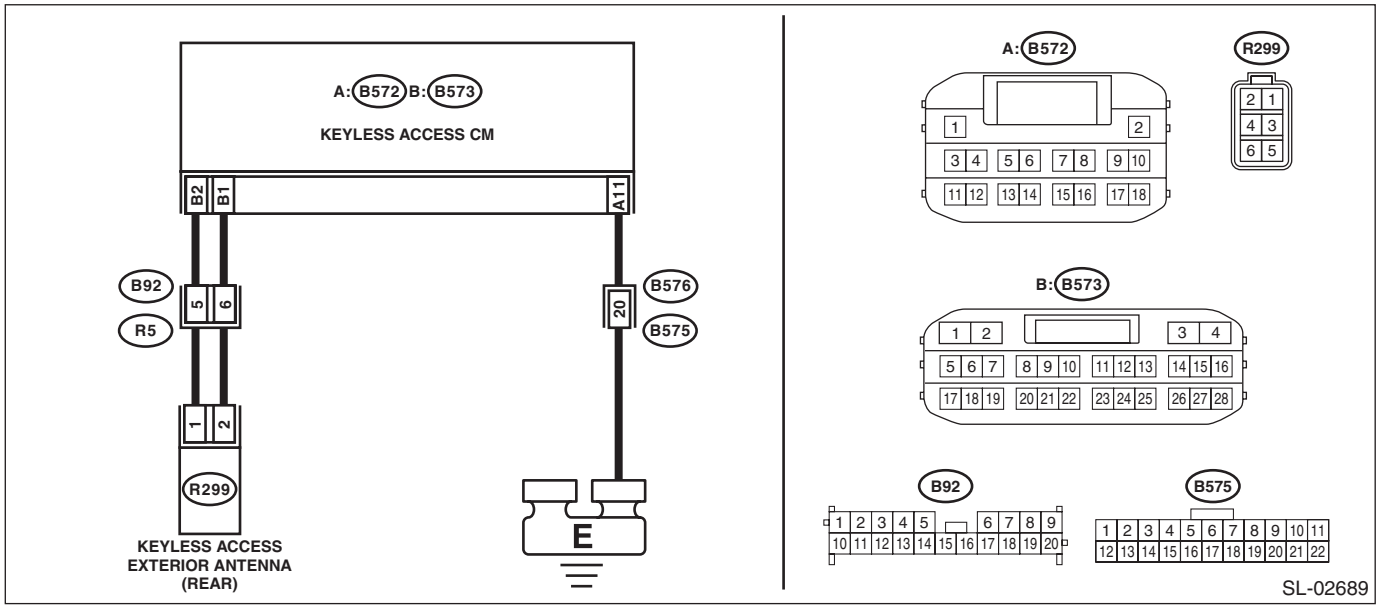

Step		Check	Yes	No
1	**CHECK LAN SYSTEM.** Inspect LAN system. <Ref. to LAN(HEV)(diag)-2, PROCEDURE, Basic Diagnostic Procedure.>	Is LAN system normal?	Go to step **2**.	Perform the inspection according to the diagnosis for LAN system.
2	**CHECK CONNECTOR.** 1) Disconnect the keyless access CM connector. 2) Disconnect the rear exterior antenna connector.	Is the connector OK?	Go to step **3**.	Repair or replace the connector.
3	**CHECK HARNESS.** Using a tester, measure the resistance between the keyless access CM connector and rear exterior antenna connector, and between rear exterior antenna connector and chassis ground. ***Connector & terminal*** ***(B573) No. 2 — (R299) No. 1:*** ***(B573) No. 1 — (R299) No. 2:***	Is the resistance less than 1 Ω?	Go to step **4**.	Repair or replace the open circuit of harness.

	Step	Check	Yes	No
4	**CHECK HARNESS.** Using a tester, measure the resistance between the keyless access CM connector and chassis ground, and between rear exterior antenna connector and chassis ground. ***Connector & terminal*** ***(B573) No. 2 — Chassis ground:*** ***(B573) No. 1 — Chassis ground:*** ***(R299) No. 1 — Chassis ground:*** ***(R299) No. 2 — Chassis ground:***	Is the resistance 10 kΩ or more?	Go to step **5**.	Repair or replace the short circuit of the harness.
5	**CHECK REAR EXTERIOR ANTENNA.** 1) Remove the rear exterior antenna. 2) Using a tester, measure the resistance between rear exterior antenna connectors. ***Connector & terminal*** ***(R299) No. 1 — No. 2:***	Is the resistance less than 1 Ω?	Go to step **6**.	Replace the rear exterior antenna. <Ref. to SL-97, Keyless Access Outdoor Antenna.>
6	**CHECK KEYLESS ACCESS CM.** 1) Replace the keyless access CM. <Ref. to SL-102, Keyless Access CM.> 2) Read DTC using the Subaru Select Monitor.	Is B27A8 displayed?	Replace the rear exterior antenna. <Ref. to SL-97, Keyless Access Outdoor Antenna.>	Malfunction occurred in the keyless access CM.

AM:DTC B1571 REFERENCE CODE INCOMPATIBILITY

DTC DETECTING CONDITION:

Incompatibility of reference code between keyless access CM (model without ID code box) or ID code box (model with ID code box) and ECM occurs.

TROUBLE SYMPTOM:

Engine will not start.

	Step	Check	Yes	No
1	**CHECK ECM.** Perform ECM registration. Refer to the "REGISTRATION MANUAL FOR IMMOBILIZER".	Is ECM registration finished? And does the engine start?	System is normal.	Go to step **2**.
2	**REPLACE ECM.** 1) Install the ECM from other normal operating vehicle (with push button start) which use same ECM to the vehicle to be diagnosed. 2) Perform ECM registration. Refer to the "REGISTRATION MANUAL FOR IMMOBILIZER".	Is ECM registration finished? And does the engine start?	Replace the ECM. <Ref. to FU(H4DO(HEV))-85, REMOVAL, Engine Control Module (ECM).> Install the ECM from other vehicle to the original vehicle.	Replace Keyless access CM (model without ID code box), <Ref. to SL-102, Keyless Access CM.> or replace ID code box (model with ID code box). <Ref. to SL-104, REMOVAL, ID Code Box.>

AN:DTC B1572 IMM CIRCUIT FAILURE (EXCEPT ANTENNA CIRCUIT)

1. EXCEPT FOR C0 AND C5 MODELS

DTC DETECTING CONDITION:
Communication error between keyless access CM and ECM
TROUBLE SYMPTOM:
Engine will not start.
WIRING DIAGRAM:
Push button start system <Ref. to WI(HEV)-180, WIRING DIAGRAM, Push Button Start System.>

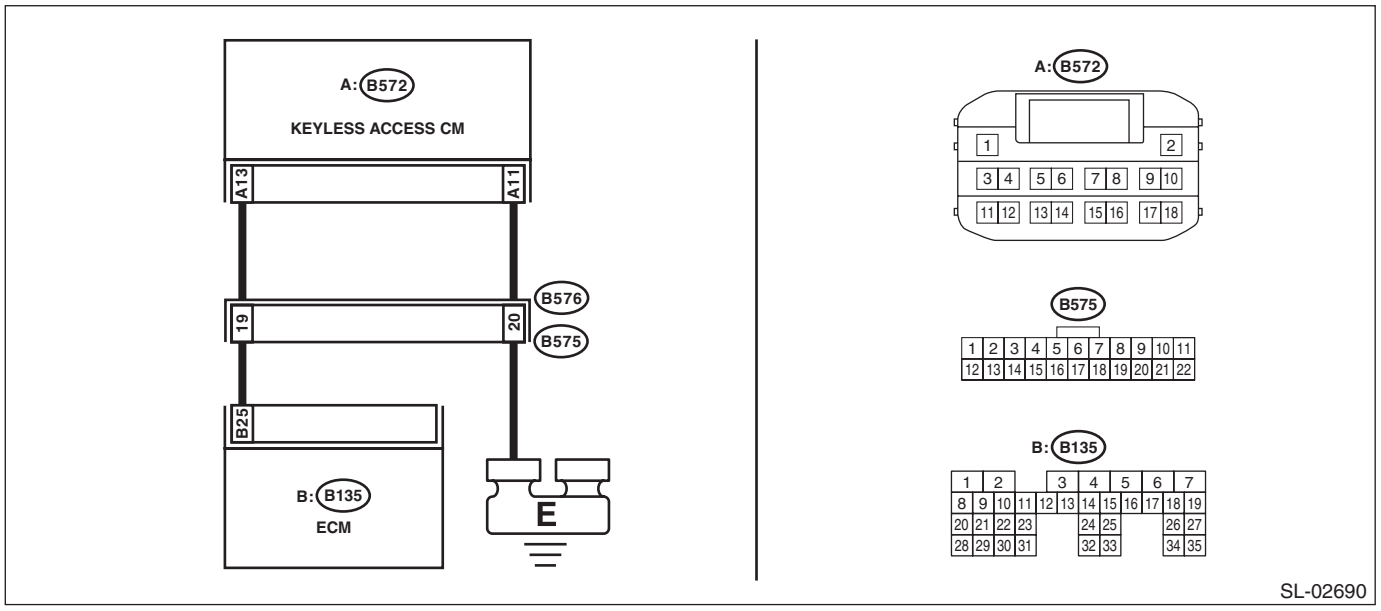

Step		Check	Yes	No
1	**CHECK CURRENT DATA.** 1) Turn the ignition switch to ON. 2) Check the keyless access CM data using the Subaru Select Monitor. 3) Display the next data. “Immobilizer” “Engine start” “Unlock confirmation” ***Data*** ***Immobilizer = Unset:*** ***Engine start = Engine start permission:*** ***Unlock confirmation = Confirmed:***	Is the data displayed as described above?	Go to step **2**.	Perform diagnostics with phenomenon. <Ref. to KPS(diag)-123, ENGINE DOES NOT START, INSPECTION, Diagnostics with Phenomenon.>
2	**CHECK CURRENT DATA.** Use the Subaru Select Monitor to check the keyless access CM data when holding down the push button ignition switch while depressing on the brake pedal. ***Data*** ***EGI code reception status = Reception:*** NOTE: If “Reception” is displayed, the status changes to “Not yet received” in 10 seconds. When performing the check again, perform the check after turning the ignition to OFF.	Is the data displayed as described above?	Go to step **3**.	Repair or replace the harness between keyless access CM and ECM.

	Step	Check	Yes	No
3	**CHECK WIRING HARNESS.** 1) Turn the ignition switch to OFF. 2) Disconnect the keyless access CM connector and ECM connector. 3) Using a tester, measure the resistance between the keyless access CM connector and ECM. ***Connector & terminal*** ***(B572) No. 13 — (B135) No. 25:***	Is the resistance less than 10 Ω?	Go to step **4**.	Repair or replace the open circuit of harness.
4	**CHECK WIRING HARNESS.** Using a tester, measure the resistance between the keyless access CM connector and chassis ground. ***Connector & terminal*** ***(B572) No. 11 — Chassis ground:***	Is the resistance less than 10 Ω?	Go to step **5**.	Repair or replace the open circuit of harness.
5	**CHECK ECM.** 1) Install the ECM from other normal operating vehicle (with push button start) which use same ECM to the vehicle to be diagnosed. 2) Perform ECM registration. Refer to the "REGISTRATION MANUAL FOR IMMOBILIZER".	Is ECM registration finished? And does the engine start?	Replace the ECM. <Ref. to FU(H4DO(HEV))-85, REMOVAL, Engine Control Module (ECM).> Install the ECM from other vehicle to the original vehicle.	Replace the keyless access CM. <Ref. to SL-102, Keyless Access CM.>

2. FOR C0 AND C5 MODELS

DTC DETECTING CONDITION:

Communication error between ID code box and ECM

TROUBLE SYMPTOM:

Engine will not start.

WIRING DIAGRAM:

Push button start system <Ref. to WI(HEV)-180, WIRING DIAGRAM, Push Button Start System.>

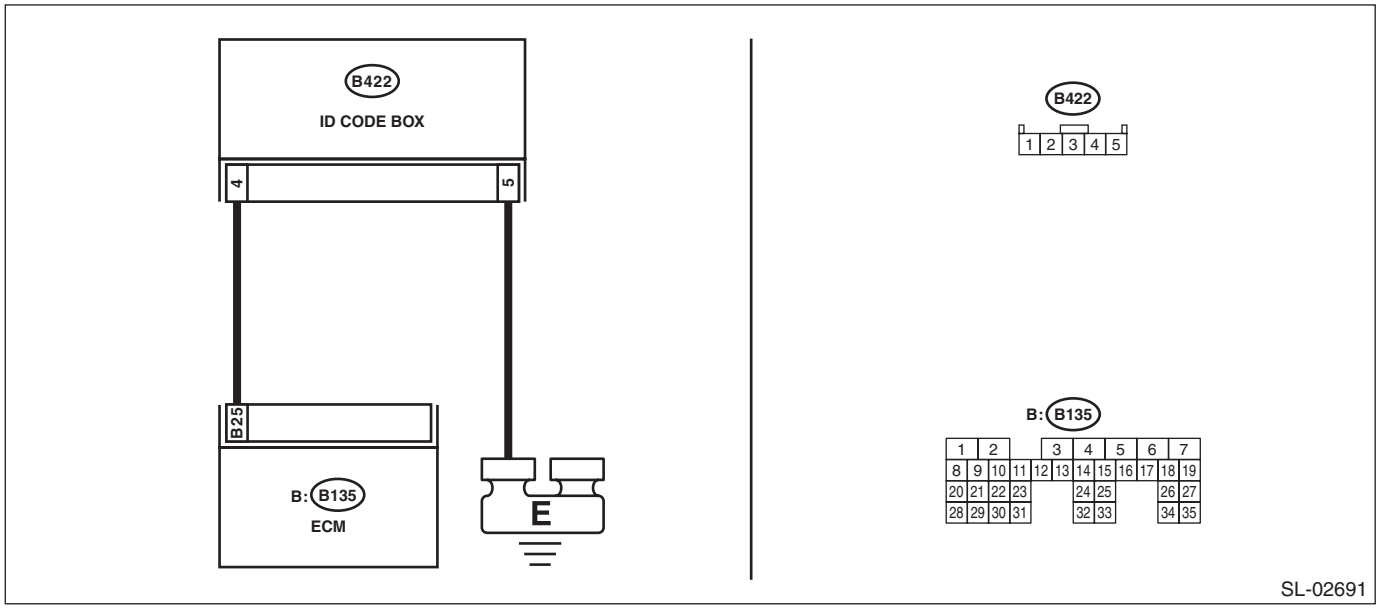

	Step	Check	Yes	No
1	**CHECK CURRENT DATA.** 1) Turn the ignition switch to ON. 2) Check the keyless access CM data using the Subaru Select Monitor. 3) Display the next data. “Immobilizer” “Engine start” “Unlock confirmation” ***Data*** ***Immobilizer = Unset:*** ***Engine start = Engine start permission:*** ***Unlock confirmation = Confirmed:***	Is the data displayed as described above?	Go to step **2**.	Perform diagnostics with phenomenon. <Ref. to KPS(diag)-123, ENGINE DOES NOT START, INSPECTION, Diagnostics with Phenomenon.>
2	**CHECK CURRENT DATA.** Use the Subaru Select Monitor to check the keyless access CM data when holding down the push button ignition switch while depressing on the brake pedal. ***Data*** ***EGI code reception status = Reception:*** NOTE: If “Reception” is displayed, the status changes to “Not yet received” in 10 seconds. When performing the check again, perform the check after turning the ignition to OFF.	Is the data displayed as described above?	Go to step **3**.	Repair or replace the harness between ID code box and ECM.
3	**CHECK WIRING HARNESS.** 1) Turn the ignition switch to OFF. 2) Disconnect the ID code box connector and the ECM connector. 3) Using a tester, measure the resistance between ID code box connector and ECM. ***Connector & terminal*** ***(B422) No. 4 — (B135) No. 25:***	Is the resistance less than 10 Ω?	Go to step **4**.	Repair or replace the open circuit of harness.
4	**CHECK WIRING HARNESS.** Using a tester, measure the resistance between ID code box connector and chassis ground. ***Connector & terminal*** ***(B422) No. 5 — Chassis ground:***	Is the resistance less than 10 Ω?	Go to step **5**.	Repair or replace the open circuit of harness.
5	**CHECK ECM.** 1) Install the ECM from other normal operating vehicle (with push button start) which use same ECM to the vehicle to be diagnosed. 2) Perform ECM registration. Refer to the “REGISTRATION MANUAL FOR IMMOBILIZER”.	Is ECM registration finished? And does the engine start?	Replace the ECM. <Ref. to FU(H4DO(HEV))-85, REMOVAL, Engine Control Module (ECM).> Install the ECM from other vehicle to the original vehicle.	Replace the ID code box. <Ref. to SL-104, REMOVAL, ID Code Box.>

AO:DTC B1576 EGI CONTROL MODULE EEPROM

DTC DETECTING CONDITION:

- ECM malfunctioning
- When inaccessible to ROM in ECM during registration.

	Step	Check	Yes	No
1	**PERFORM ECM REGISTRATION.** Perform ECM registration. Refer to the "REGISTRATION MANUAL FOR IMMOBILIZER".	Is ECM registration complete?	Make sure that the engine can start. This completes the work.	Go to step **2**.
2	**PERFORM ECM REGISTRATION.** Perform ECM registration. Refer to the "REGISTRATION MANUAL FOR IMMOBILIZER".	Is ECM registration complete?	Make sure that the engine can start. This completes the work.	Go to step **3**.
3	**PERFORM ECM REGISTRATION.** Perform ECM registration. Refer to the "REGISTRATION MANUAL FOR IMMOBILIZER".	Is ECM registration complete?	Make sure that the engine can start. This completes the work.	Replace the ECM. <Ref. to FU(H4DO(HEV))-85, REMOVAL, Engine Control Module (ECM).>

AP:DTC B1577 IMM CONTROL MODULE EEPROM

1. EXCEPT FOR C0 AND C5 MODELS

DTC DETECTING CONDITION:

- Defective keyless access CM
- When inaccessible to ROM in keyless access CM.

	Step	Check	Yes	No
1	**CHECK DTC.** 1) Turn the ignition switch to ON. 2) Perform the clear memory operation of ECM. 3) Turn the ignition switch to OFF. 4) Remove and install the battery. 5) Turn the ignition switch to ON. 6) After 5 seconds or more, read DTC.	Is B1577 displayed?	Replace the keyless access CM. <Ref. to SL-102, Keyless Access CM.>	System is normal.

2. FOR C0 AND C5 MODELS

DTC DETECTING CONDITION:

- ID code box malfunction
- When inaccessible to ROM in ID code box.

	Step	Check	Yes	No
1	**CHECK DTC.** 1) Turn the ignition switch to ON. 2) Perform the clear memory operation of ECM. 3) Turn the ignition switch to OFF. 4) Register the ID code box. 5) Read the DTC again.	Is B1577 displayed?	Replace the ID code box. <Ref. to SL-104, ID Code Box.>	System is normal.

14.General Diagnostic Table

A: INSPECTION

1. IMMOBILIZER SYSTEM

Symptoms	Note
Engine does not start	<Ref. to KPS(diag)-123, ENGINE DOES NOT START, INSPECTION, Diagnostics with Phenomenon.>
	<Ref. to KPS(diag)-68, DTC B2784 ANTENNA COIL FAULT, Diagnostic Procedure with Diagnostic Trouble Code (DTC).>
	<Ref. to KPS(diag)-77, DTC B278A ABNORMAL IMMOBILIZER POWER SUPPLY, Diagnostic Procedure with Diagnostic Trouble Code (DTC).>
	<Ref. to KPS(diag)-69, DTC B2785 LIN COMMUNICATION ERROR, Diagnostic Procedure with Diagnostic Trouble Code (DTC).>
	<Ref. to KPS(diag)-75, DTC B2789 ID CODE BOX NO RESPONSE, Diagnostic Procedure with Diagnostic Trouble Code (DTC).>
	<Ref. to KPS(diag)-80, DTC B2790 ID CODE BOX ABNORMAL (EEPROM ABNORMAL), Diagnostic Procedure with Diagnostic Trouble Code (DTC).>
	Check the brake switch. <Ref. to BR-74, INSPECTION, Stop Light Switch.>
	Check the parking switch signal. <Ref. to CS-57, INSPECTION, AT Shift Lock Solenoid and “P” Range Switch.>
	Check the DTC of the ECM.
Cannot register the immobilizer.	Refer to the “REGISTRATION MANUAL FOR IMMOBILIZER”.
Engine does not start with the remote engine starter.	<Ref. to KPS(diag)-65, DTC B2779 REMOTE CONTROL ENGINE STARTER COMMUNICATION COLLATION NG, Diagnostic Procedure with Diagnostic Trouble Code (DTC).>

2. KEYLESS ACCESS SYSTEM

Symptoms	Reference
All doors cannot be locked/unlocked with keyless access.	<Ref. to KPS(diag)-100, KEYLESS ACCESS LOCK/UNLOCK CANNOT BE PERFORMED FROM ANY OF THE DOORS, INSPECTION, Diagnostics with Phenomenon.>
Cannot lock with keyless access from the driver’s door.	<Ref. to KPS(diag)-101, CANNOT LOCK WITH KEYLESS ACCESS FROM THE DRIVER’S DOOR, INSPECTION, Diagnostics with Phenomenon.>
Cannot lock/unlock from the driver’s door with keyless access.	<Ref. to KPS(diag)-102, CANNOT LOCK/UNLOCK WITH KEYLESS ACCESS FROM THE DRIVER’S DOOR, INSPECTION, Diagnostics with Phenomenon.>
Cannot unlock from the driver’s door with keyless access.	<Ref. to KPS(diag)-103, CANNOT UNLOCK WITH KEYLESS ACCESS FROM THE DRIVER’S DOOR, INSPECTION, Diagnostics with Phenomenon.>
Cannot unlock from the passenger’s door with keyless access.	<Ref. to KPS(diag)-106, CANNOT UNLOCK WITH KEYLESS ACCESS FROM THE PASSENGER’S DOOR, INSPECTION, Diagnostics with Phenomenon.>
Cannot lock/unlock from the passenger’s door with keyless access.	<Ref. to KPS(diag)-105, CANNOT LOCK/UNLOCK WITH KEYLESS ACCESS FROM THE PASSENGER’S DOOR, INSPECTION, Diagnostics with Phenomenon.>
Cannot lock from the passenger’s door with keyless access.	<Ref. to KPS(diag)-104, CANNOT LOCK WITH KEYLESS ACCESS FROM THE PASSENGER’S DOOR, INSPECTION, Diagnostics with Phenomenon.>
Keyless access passenger room buzzer does not sound.	<Ref. to KPS(diag)-107, THE KEYLESS ACCESS PASSENGER ROOM BUZZER DOES NOT SOUND, INSPECTION, Diagnostics with Phenomenon.>
Keyless access external buzzer does not beep.	<Ref. to KPS(diag)-107, THE KEYLESS ACCESS EXTERNAL BUZZER DOES NOT BEEP, INSPECTION, Diagnostics with Phenomenon.>
Interior collation does not function.	<Ref. to KPS(diag)-108, INTERNAL COLLATION DOES NOT FUNCTION, INSPECTION, Diagnostics with Phenomenon.>
Rear gate cannot be unlocked with the rear gate opener button.	<Ref. to KPS(diag)-111, CAN NOT UNLOCK WHEN USING THE REAR GATE OPENER BUTTON, INSPECTION, Diagnostics with Phenomenon.>
Rear gate can not be locked when using the rear lock button.	<Ref. to KPS(diag)-112, CAN NOT LOCK WHEN USING THE REAR LOCK BUTTON, INSPECTION, Diagnostics with Phenomenon.>

3. STEERING LOCK SYSTEM

Symptoms	Index
The steering lock cannot be released (cannot start the engine)	<Ref. to KPS(diag)-114, THE STEERING LOCK IS NOT RELEASED, INSPECTION, Diagnostics with Phenomenon.>
The steering lock does not operate	<Ref. to KPS(diag)-115, THE STEERING LOCK DOES NOT OPERATE, INSPECTION, Diagnostics with Phenomenon.>

4. POWER SUPPLY SWITCHING SYSTEM

Symptoms	Index
Power will not turn ON (both accessory and ignition)	<Ref. to KPS(diag)-116, POWER WILL NOT TURN ON (BOTH ACCESSORY AND IGNITION), INSPECTION, Diagnostics with Phenomenon.>
Power will not turn ON (accessory only)	<Ref. to KPS(diag)-119, POWER WILL NOT TURN ON (ACCESSORY DOES NOT TURN ON, BUT IGNITION TURNS ON), INSPECTION, Diagnostics with Phenomenon.>
Power will not turn ON (ignition only)	<Ref. to KPS(diag)-121, POWER WILL NOT TURN ON (ACCESSORY TURNS ON, BUT IGNITION DOES NOT TURN ON), INSPECTION, Diagnostics with Phenomenon.>

15.Diagnostics with Phenomenon

A: INSPECTION

1. KEYLESS ACCESS LOCK/UNLOCK CANNOT BE PERFORMED FROM ANY OF THE DOORS

CAUTION:
• Check that there are no other registered access keys inside the vehicle.
• Inspect LAN system according to the basic diagnostic procedure, and make sure that there is no fault.
• Check that the keyless access function is not stopped.
• When the access key or keyless access CM is replaced, registration of the immobilizer is required. For the relevant procedures, refer to the "REGISTRATION MANUAL FOR IMMOBILIZER".

	Step	Check	Yes	No
1	**CHECK OPERATION OF KEYLESS DOOR LOCK.** Using the keyless function of the access key, check the operation of the door lock.	Does it lock/unlock normally?	Check the exterior antenna, oscillator, touch sensor, lock/unlock buttons.	Go to step **2**.
2	**CHECK ACCESS KEY.** Check for whether lock and unlock is possible with the registered access key.	Is there any access key which can lock/unlock when the touch sensor is operated?	Check the access key that does not operate. Go to step **3**.	Go to step **4**.
3	**CHECK ACCESS KEY.** Measure the battery voltage of the access key that does not operate.	Is the voltage 2.5 — 3.2 V?	Replace the access key.	Replace the battery.
4	**CHECK DOOR LOCK.** Operate the driver's center door lock switch.	Does the door lock operate?	Go to step **5**.	Check the door lock control system. <Ref. to SL-12, INSPECTION, Door Lock Control System.>
5	**CHECK HARNESS.** 1) Disconnect the receiver connector (R296). 2) Using a tester, measure the resistance between receiver and chassis ground. ***Connector & terminal*** ***(R296) No. 1 — Chassis ground:***	Is the resistance less than 10 Ω?	Go to step **6**.	Repair or replace the open circuit of harness.
6	**CHECK HARNESS.** 1) Disconnect the keyless access CM connector. 2) Using a tester, measure the resistance between receiver and keyless access CM. ***Connector & terminal*** ***(R296) No. 4 — (B573) No. 5:*** ***(R296) No. 5 — (B573) No. 17:*** ***(R296) No. 2 — (B573) No. 19:***	Is the resistance less than 10 Ω?	Go to step **7**.	Repair or replace the open circuit of harness.
7	**CHECK RECEIVER.** Replace with a receiver that is operating normally. <Ref. to SL-101, REMOVAL, Receiver.>	When the front unlock sensor and the rear gate opener button are operated, does it lock/unlock?	Malfunction occurred in receiver.	Go to step **8**.
8	**CHECK HARNESS.** Using a tester, measure the voltage between the keyless access CM connector and chassis ground. ***Connector & terminal*** ***(B572) No. 2 (+) — Chassis ground (–):***	Is the voltage 10 V or more when the ignition switch is turned to ON?	Go to step **9**.	Check the keyless access CM power supply circuit.

	Step	Check	Yes	No
9	**CHECK HARNESS.** Using a tester, measure the resistance between the keyless access CM connector and chassis ground. ***Connector & terminal*** ***(B572) No. 11 — Chassis ground:***	Is the resistance less than 10 Ω?	Replace the keyless access CM. <Ref. to SL-102, REMOVAL, Keyless Access CM.>	Repair or replace the open circuit of harness.

2. CANNOT LOCK WITH KEYLESS ACCESS FROM THE DRIVER'S DOOR

CAUTION:
• Check that there are no other registered access keys inside the vehicle.
• Inspect LAN system according to the basic diagnostic procedure, and make sure that there is no fault.
• Check that the keyless access function is not stopped.
• When the access key or keyless access CM is replaced, registration of the immobilizer is required. For the relevant procedures, refer to the "REGISTRATION MANUAL FOR IMMOBILIZER".

	Step	Check	Yes	No
1	**CHECK DOOR LOCK SWITCH.** Check that the lock/unlock operates with the driver's door lock switch.	Does it lock/unlock normally?	Go to step **2**.	Check the door lock circuit. <Ref. to SL-12, SYMPTOM CHART, INSPECTION, Door Lock Control System.>
2	**CHECK CURRENT DATA.** 1) Display the current data «Driver's seat lock status SW input» of body integrated unit using Subaru Select Monitor. 2) Read the data when locking/unlocking the driver's side lock actuator.	Does the data change from ON/OFF?	Go to step **3**.	Check the door lock switch circuit.
3	**CHECK CURRENT DATA.** 1) Display the current data «Driver's lock touch sensor SW» of Keyless access system check for keyless access system using Subaru Select Monitor. 2) Read the data when operating the touch sensor (lock) of the door outer handle.	Does the data change from ON/OFF according to the sensor operation?	Replace the keyless access CM. <Ref. to SL-102, Keyless Access CM.>	Go to step **4**.
4	**CHECK HARNESS.** 1) Disconnect the keyless access CM connector. 2) Disconnect the front outer handle connector. 3) Using a tester, measure the resistance between the keyless access CM connector and front outer handle connector. ***Connector & terminal*** ***(B574) No. 20 — (D66) No. 1:***	Is the resistance less than 1 Ω?	Go to step **5**.	Repair or replace the open circuit of harness.
5	**CHECK HARNESS.** Using a tester, measure the resistance between the keyless access CM connector and chassis ground, and between front outer handle connector and chassis ground. ***Connector & terminal*** ***(B574) No. 20 — Chassis ground:*** ***(D66) No. 1 — Chassis ground:***	Is the resistance 10 kΩ or more?	Go to step **6**.	Repair or replace the short circuit of the harness.

	Step	Check	Yes	No
6	**REPLACE FRONT DOOR OUTER HANDLE.** Replace the driver's side front outer handle with the passenger's side front outer handle.	Does it operate properly?	Replace the driver's front outer handle. <Ref. to SL-35, REMOVAL, Front Outer Handle.>	Replace the keyless access CM. <Ref. to SL-102, Keyless Access CM.>

3. CANNOT LOCK/UNLOCK WITH KEYLESS ACCESS FROM THE DRIVER'S DOOR

CAUTION:
• Check that there are no other registered access keys inside the vehicle.
• Inspect LAN system according to the basic diagnostic procedure, and make sure that there is no fault.
• Check that the keyless access function is not stopped.
• When the access key or keyless access CM is replaced, registration of the immobilizer is required. For the relevant procedures, refer to the "REGISTRATION MANUAL FOR IMMOBILIZER".

	Step	Check	Yes	No
1	**CHECK DOOR LOCK SWITCH.** Check that the lock/unlock operates with the driver's door lock switch.	Does it lock/unlock normally?	Go to step **2**.	Check the door lock circuit. <Ref. to SL-12, SYMPTOM CHART, INSPECTION, Door Lock Control System.>
2	**CHECK FUSE.** Check the fuse.	Is the fuse OK?	Go to step **3**.	Replace the fuse.
3	**CHECK HARNESS.** 1) Disconnect the keyless access CM connector. 2) Disconnect the front outer handle connector. 3) Using a tester, measure the resistance between the keyless access CM connector and front outer handle connector, and between front outer handle connector and chassis ground. ***Connector & terminal*** ***(B574) No. 12 — (D66) No. 6:*** ***(B574) No. 13 — (D66) No. 3:*** ***(B574) No. 19 — (D66) No. 5:*** ***(D66) No. 2 — Chassis ground:***	Is the resistance less than 1 Ω?	Go to step **4**.	Repair or replace the open circuit of harness.
4	**CHECK HARNESS.** Using a tester, measure the resistance between the keyless access CM connector and chassis ground, and between front outer handle connector and chassis ground. ***Connector & terminal*** ***(B574) No. 12 — Chassis ground:*** ***(D66) No. 6 — Chassis ground:*** ***(B574) No. 13 — Chassis ground:*** ***(D66) No. 3 — Chassis ground:***	Is the resistance 10 kΩ or more?	Go to step **5**.	Repair or replace the short circuit of the harness.

	Step	Check	Yes	No
5	**CHECK KEYLESS ACCESS CM.** 1) Connect the keyless access CM connector. 2) Turn the ignition switch to OFF, close all doors and take the access key out of passenger room. 3) Use the Subaru Select Monitor, measure the waveform between the keyless access CM connectors. ***Connector & terminal*** ***(D66) No. 6 — (D66) No. 3:***	Does pulse output change from pulse output OFF → pulse output ON by the lock operation using access key?	Go to step **6**.	Replace the keyless access CM. <Ref. to SL-102, Keyless Access CM.>
6	**REPLACE FRONT DOOR OUTER HANDLE.** Replace the driver's side front outer handle with the passenger's side front outer handle.	Does it operate properly?	Replace the driver's front outer handle. <Ref. to SL-35, Front Outer Handle.>	Replace the keyless access CM. <Ref. to SL-102, Keyless Access CM.>

4. CANNOT UNLOCK WITH KEYLESS ACCESS FROM THE DRIVER'S DOOR

CAUTION:
- **Check that there are no other registered access keys inside the vehicle.**
- **Inspect LAN system according to the basic diagnostic procedure, and make sure that there is no fault.**
- **Check that the keyless access function is not stopped.**
- **When the access key or keyless access CM is replaced, registration of the immobilizer is required. For the relevant procedures, refer to the "REGISTRATION MANUAL FOR IMMOBILIZER".**

	Step	Check	Yes	No
1	**CHECK DOOR LOCK SWITCH.** Check that the lock/unlock operates with the driver's door lock switch.	Does it lock/unlock normally?	Go to step **2**.	Check the door lock circuit. <Ref. to SL-12, SYMPTOM CHART, INSPECTION, Door Lock Control System.>
2	**CHECK CURRENT DATA.** 1) Display the current data «Driver's seat lock status SW input» of body integrated unit using Subaru Select Monitor. 2) Read the data when locking/unlocking the driver's side lock actuator.	Does the data change from ON/OFF?	Go to step **3**.	Check the door lock switch circuit.
3	**CHECK CURRENT DATA.** 1) Display the current data «Driver's unlock touch sensor switch» of Keyless access system check for keyless access system using Subaru Select Monitor. 2) Read the data when operating the touch sensor (unlock) of the door outer handle.	Does the data change from ON/OFF according to the sensor operation?	Replace the keyless access CM. <Ref. to SL-102, Keyless Access CM.>	Go to step **4**.
4	**CHECK HARNESS.** 1) Disconnect the keyless access CM connector. 2) Disconnect the front outer handle connector. 3) Using a tester, measure the resistance between the keyless access CM connector and front outer handle connector. ***Connector & terminal*** ***(B574) No. 22 — (D66) No. 4:***	Is the resistance less than 1 Ω?	Go to step **5**.	Repair or replace the open circuit of harness.

	Step	Check	Yes	No
5	**CHECK HARNESS.** Using a tester, measure the resistance between the keyless access CM connector and chassis ground, and between front outer handle connector and chassis ground. ***Connector & terminal*** ***(B574) No. 22 — Chassis ground:*** ***(D66) No. 4 — Chassis ground:***	Is the resistance 10 kΩ or more?	Go to step **6**.	Repair or replace the short circuit of the harness.
6	**REPLACE FRONT DOOR OUTER HANDLE.** Replace the driver's side front outer handle with the passenger's side front outer handle.	Does it operate properly?	Replace the driver's front outer handle. <Ref. to SL-35, REMOVAL, Front Outer Handle.>	Replace the keyless access CM. <Ref. to SL-102, Keyless Access CM.>

5. CANNOT LOCK WITH KEYLESS ACCESS FROM THE PASSENGER'S DOOR

CAUTION:
• Check that there are no other registered access keys inside the vehicle.
• Inspect LAN system according to the basic diagnostic procedure, and make sure that there is no fault.
• Check that the keyless access function is not stopped.
• When the access key or keyless access CM is replaced, registration of the immobilizer is required. For the relevant procedures, refer to the "REGISTRATION MANUAL FOR IMMOBILIZER".

	Step	Check	Yes	No
1	**CHECK DOOR LOCK SWITCH.** Check that the lock/unlock operates with the driver's door lock switch.	Does it lock/unlock normally?	Go to step **2**.	Check the door lock circuit. <Ref. to SL-12, SYMPTOM CHART, INSPECTION, Door Lock Control System.>
2	**CHECK CURRENT DATA.** 1) Display the current data «Passenger's seat lock status SW input» of body integrated unit using Subaru Select Monitor. 2) Read the data when locking/unlocking the passenger's side lock actuator.	Does the data change from ON/OFF?	Go to step **3**.	Check the door lock switch circuit.
3	**CHECK CURRENT DATA.** 1) Display the current data «Passenger's lock touch sensor SW» of Keyless access system check for keyless access system using Subaru Select Monitor. 2) Read the data when operating the touch sensor (lock) of the door outer handle.	Does the data change from ON/OFF according to the sensor operation?	Replace the keyless access CM. <Ref. to SL-102, Keyless Access CM.>	Go to step **4**.
4	**CHECK HARNESS.** 1) Disconnect the keyless access CM connector. 2) Disconnect the front outer handle connector. 3) Using a tester, measure the resistance between the keyless access CM connector and front outer handle connector. ***Connector & terminal*** ***(B574) No. 8 — (D56) No. 1:***	Is the resistance less than 1 Ω?	Go to step **5**.	Repair or replace the open circuit of harness.

	Step	Check	Yes	No
5	**CHECK HARNESS.** Using a tester, measure the resistance between the keyless access CM connector and chassis ground, and between front outer handle connector and chassis ground. ***Connector & terminal*** ***(B574) No. 8 — Chassis ground:*** ***(D56) No. 1 — Chassis ground:***	Is the resistance 10 kΩ or more?	Go to step **6**.	Repair or replace the short circuit of the harness.
6	**REPLACE FRONT DOOR OUTER HANDLE.** Replace the passenger's side front outer handle with the driver's side front outer handle.	Does it operate properly?	Replace the passenger's front outer handle. <Ref. to SL-35, REMOVAL, Front Outer Handle.>	Replace the keyless access CM. <Ref. to SL-102, Keyless Access CM.>

6. CANNOT LOCK/UNLOCK WITH KEYLESS ACCESS FROM THE PASSENGER'S DOOR

CAUTION:
• Check that there are no other registered access keys inside the vehicle.
• Inspect LAN system according to the basic diagnostic procedure, and make sure that there is no fault.
• Check that the keyless access function is not stopped.
• When the access key or keyless access CM is replaced, registration of the immobilizer is required. For the relevant procedures, refer to the "REGISTRATION MANUAL FOR IMMOBILIZER".

	Step	Check	Yes	No
1	**CHECK DOOR LOCK SWITCH.** Check that the lock/unlock operates with the driver's door lock switch.	Does it lock/unlock normally?	Go to step **2**.	Check the door lock circuit. <Ref. to SL-12, SYMPTOM CHART, INSPECTION, Door Lock Control System.>
2	**CHECK FUSE.** Check the fuse.	Is the fuse OK?	Go to step **3**.	Replace the fuse.
3	**CHECK HARNESS.** 1) Disconnect the keyless access CM connector. 2) Disconnect the front outer handle connector. 3) Using a tester, measure the resistance between the keyless access CM connector and front outer handle connector, and between front outer handle connector and chassis ground. ***Connector & terminal*** ***(B574) No. 11 — (D56) No. 6:*** ***(B574) No. 10 — (D56) No. 3:*** ***(B574) No. 21 — (D56) No. 5:*** ***(D56) No. 2 — Chassis ground:***	Is the resistance less than 1 Ω?	Go to step **4**.	Repair or replace the open circuit of harness.
4	**CHECK HARNESS.** Using a tester, measure the resistance between the keyless access CM connector and chassis ground, and between front outer handle connector and chassis ground. ***Connector & terminal*** ***(B574) No. 11 — Chassis ground:*** ***(D56) No. 6 — Chassis ground:*** ***(B574) No. 10 — Chassis ground:*** ***(D56) No. 3 — Chassis ground:***	Is the resistance 10 kΩ or more?	Go to step **5**.	Repair or replace the short circuit of the harness.

	Step	Check	Yes	No
5	**CHECK KEYLESS ACCESS CM.** 1) Connect the keyless access CM connector. 2) Turn the ignition switch to OFF, close all doors and take the access key out of passenger room. 3) Use the Subaru Select Monitor, measure the waveform between the keyless access CM connectors. ***Connector & terminal*** ***(D56) No. 6 — (D66) No. 3:***	Does pulse output change from pulse output OFF → pulse output ON by the lock operation using access key?	Go to step **6**.	Replace the keyless access CM. <Ref. to SL-102, Keyless Access CM.>
6	**REPLACE FRONT DOOR OUTER HANDLE.** Replace the passenger's side front outer handle with the driver's side front outer handle.	Does it operate properly?	Replace the passenger's front outer handle. <Ref. to SL-35, Front Outer Handle.>	Replace the keyless access CM. <Ref. to SL-102, Keyless Access CM.>

7. CANNOT UNLOCK WITH KEYLESS ACCESS FROM THE PASSENGER'S DOOR

CAUTION:
• Check that there are no other registered access keys inside the vehicle.
• Inspect LAN system according to the basic diagnostic procedure, and make sure that there is no fault.
• Check that the keyless access function is not stopped.
• When the access key or keyless access CM is replaced, registration of the immobilizer is required. For the relevant procedures, refer to the "REGISTRATION MANUAL FOR IMMOBILIZER".

	Step	Check	Yes	No
1	**CHECK DOOR LOCK SWITCH.** Check that the lock/unlock operates with the driver's door lock switch.	Does it lock/unlock normally?	Go to step **2**.	Check the door lock circuit. <Ref. to SL-12, SYMPTOM CHART, INSPECTION, Door Lock Control System.>
2	**CHECK CURRENT DATA.** 1) Display the current data «Passenger's seat lock status SW input» of body integrated unit using Subaru Select Monitor. 2) Read the data when locking/unlocking the passenger's side lock actuator.	Does the data change from ON/OFF?	Go to step **3**.	Check the door lock switch circuit.
3	**CHECK CURRENT DATA.** 1) Display the current data «Passenger's unlock touch sensor switch» of Keyless access system check for keyless access system using Subaru Select Monitor. 2) Read the data when operating the touch sensor (unlock) of the door outer handle.	Does the data change from ON/OFF according to the sensor operation?	Replace the keyless access CM. <Ref. to SL-102, Keyless Access CM.>	Go to step **4**.
4	**CHECK HARNESS.** 1) Disconnect the keyless access CM connector. 2) Disconnect the front outer handle connector. 3) Using a tester, measure the resistance between the keyless access CM connector and front outer handle connector. ***Connector & terminal*** ***(B574) No. 23 — (D56) No. 4:***	Is the resistance less than 1 Ω?	Go to step **5**.	Repair or replace the open circuit of harness.

	Step	Check	Yes	No
5	**CHECK HARNESS.** Using a tester, measure the resistance between the keyless access CM connector and chassis ground, and between front outer handle connector and chassis ground. ***Connector & terminal*** ***(B574) No. 23 — Chassis ground:*** ***(D56) No. 4 — Chassis ground:***	Is the resistance 10 kΩ or more?	Go to step **6**.	Repair or replace the short circuit of the harness.
6	**REPLACE FRONT DOOR OUTER HANDLE.** Replace the passenger's side front outer handle with the driver's side front outer handle.	Does it operate properly?	Replace the passenger's front outer handle. <Ref. to SL-35, REMOVAL, Front Outer Handle.>	Replace the keyless access CM. <Ref. to SL-102, Keyless Access CM.>

8. THE KEYLESS ACCESS PASSENGER ROOM BUZZER DOES NOT SOUND

CAUTION:
• Inspect LAN system according to the basic diagnostic procedure, and make sure that there is no fault.
• Check that the keyless access function is not stopped.
• When the access key or keyless access CM is replaced, registration of the immobilizer is required. For the relevant procedures, refer to the "REGISTRATION MANUAL FOR IMMOBILIZER".

	Step	Check	Yes	No
1	**CHECK COMBINATION METER.** Check the combination meter.	Is combination meter OK?	Replace the keyless access CM. <Ref. to SL-102, Keyless Access CM.>	Replace the combination meter. <Ref. to IDI-16, REMOVAL, Combination Meter.>

9. THE KEYLESS ACCESS EXTERNAL BUZZER DOES NOT BEEP

	Step	Check	Yes	No
1	**CHECK BODY INTEGRATED UNIT SETTING.** Using the Subaru Select Monitor, check the «Ans.-back Buzzer» data of body integrated unit.	Is the setting "ON"?	Go to step **2**.	Change the setting to "ON".
2	**CHECK BUZZER OPERATION.** Use the Subaru Select Monitor to perform the body integrated unit function check «Keyless Buzzer Output». <Ref. to BC(diag)-21, OPERATION, Function Check.>	Does the buzzer sound?	Go to step **3**.	Go to step **5**.
3	**CHECK KEYLESS ACCESS SYSTEM.** 1) Turn to IGN ON. 2) With all doors closed and the access key carried, touch the touch sensor (lock) on the driver's door handle.	Does the door lock?	Go to step **4**.	Refer to "CANNOT LOCK WITH KEYLESS ACCESS FROM THE DRIVER'S DOOR" and perform inspection. <Ref. to KPS(diag)-101, CANNOT LOCK WITH KEYLESS ACCESS FROM THE DRIVER'S DOOR, INSPECTION, Diagnostics with Phenomenon.>

	Step	Check	Yes	No
4	**CHECK KEYLESS ACCESS SYSTEM.** 1) Open the door glass. 2) Place the access key on the driver's seat, and close the door. 3) Touch the touch sensor (lock) on the driver's door handle.	Does the buzzer sound? (Lock-out protection warning)	System is normal.	Replace the keyless access CM. <Ref. to SL-102, REMOVAL, Keyless Access CM.>
5	**CHECK HARNESS.** 1) Turn to IGN OFF. 2) Disconnect the connectors of the body integrated unit and keyless buzzer. 3) Measure the resistance between body integrated unit connector and keyless buzzer connector. ***Connector & terminal*** ***(B280) No. 20 — (B164) No. 1:***	Is the resistance less than 10 Ω?	Go to step **6**.	Repair or replace the open circuit of harness.
6	**CHECK HARNESS.** Measure the resistance between keyless buzzer connector and chassis ground. ***Connector & terminal*** ***(B164) No. 1 — Chassis ground:***	Is the resistance 10 kΩ or more?	Go to step **7**.	Repair or replace the short circuit of the harness.
7	**CHECK HARNESS.** Measure the resistance between keyless buzzer connector and chassis ground. ***Connector & terminal*** ***(B164) No. 2 — Chassis ground:***	Is the resistance less than 10 Ω?	Go to step **8**.	Repair or replace the open circuit of harness.
8	**CHECK BODY INTEGRATED UNIT.** 1) Connect the connector of body integrated unit. 2) Use the Subaru Select Monitor to perform the body integrated unit function check «Keyless Buzzer Output». <Ref. to BC(diag)-21, OPERATION, Function Check.> 3) Measure the voltage between body integrated unit connector and chassis ground using an oscilloscope. ***Connector & terminal*** ***(B280) No. 20 (+) — Chassis ground (–):***	Is the frequency 2kHz, voltage 9 V or more?	Replace the keyless buzzer. <Ref. to SL-80, REMOVAL, Keyless Buzzer.>	Replace the body integrated unit. <Ref. to SL-82, Body Integrated Unit.>

10.INTERNAL COLLATION DOES NOT FUNCTION

CAUTION:
When the access key or keyless access CM is replaced, registration of the immobilizer is required. For the relevant procedures, refer to the "REGISTRATION MANUAL FOR IMMOBILIZER".

	Step	Check	Yes	No
1	**CHECK ACCESS KEY.** Check the access key. <Ref. to SL-89, INSPECTION, Access Key.>	Is the battery OK?	Go to step **2**.	Replace the battery.
2	**CHECK INTERIOR ANTENNA.** 1) Using the Subaru Select Monitor, select System check of the keyless access CM «Front interior transmitter + interior tuner». <Ref. to KPS(diag)-33, Keyless Access System Check.> 2) Using a tester, check the output between keyless access CM connector terminals while performing the Keyless access system check. ***Connector & terminal*** ***(B57) No. 2 — No. 3:***	Is a pulse output?	Go to step **3**.	Replace the keyless access CM. <Ref. to SL-102, Keyless Access CM.>

	Step	Check	Yes	No
3	**CHECK INTERIOR ANTENNA.** 1) Using the Subaru Select Monitor, select System check of the keyless access CM «Rear interior transmitter + interior tuner». <Ref. to KPS(diag)-33, Keyless Access System Check.> 2) Using a tester, check the output between keyless access CM connector terminals while performing the Keyless access system check. ***Connector & terminal*** ***(B573) No. 10 — No. 11:***	Is a pulse output?	Go to step **4**.	Replace the keyless access CM. <Ref. to SL-102, Keyless Access CM.>
4	**CHECK INTERIOR ANTENNA.** 1) Using the Subaru Select Monitor, select System check of the keyless access CM «Trunk internal transmitter + interior tuner» or «Rear gate internal transmitter + interior tuner». <Ref. to KPS(diag)-33, Keyless Access System Check.> 2) Using a tester, check the output between keyless access CM connector terminals while performing the Keyless access system check. ***Connector & terminal*** ***(B573) No. 8 — No. 9:***	Is a pulse output?	Go to step **5**.	Replace the keyless access CM. <Ref. to SL-102, Keyless Access CM.>
5	**CHECK WIRING HARNESS.** 1) Disconnect the front interior antenna connector and the keyless access CM connector. 2) Using a tester, check continuity between the front interior antenna connector and the keyless access CM connector. ***Connector & terminal*** ***(B579) No. 1 — (B574) No. 3:*** ***(B579) No. 2 — (B574) No. 2:***	Is there continuity?	Go to step **6**.	Repair or replace the open circuit of harness.
6	**CHECK WIRING HARNESS.** 1) Disconnect the center interior antenna connector and the keyless access CM connector. 2) Using a tester, check continuity between the center interior antenna connector and the keyless access CM connector. ***Connector & terminal*** ***(R298) No. 1 — (B573) No. 11:*** ***(R298) No. 3 — (B573) No. 10:***	Is there continuity?	Go to step **7**.	Repair or replace the open circuit of harness.
7	**CHECK WIRING HARNESS.** 1) Disconnect the rear interior antenna connector and the keyless access CM connector. 2) Using a tester, check continuity between the rear interior antenna connector and the keyless access CM connector. ***Connector & terminal*** ***(R439) No. 1 — (B573) No. 9:*** ***(R439) No. 3 — (B573) No. 8:***	Is there continuity?	Go to step **8**.	Repair or replace the open circuit of harness.
8	**CHECK ANTENNA.** Replace the front interior antenna with a new or properly functioning part.	Does it operate properly?	Replace the front interior antenna. <Ref. to SL-94, REMOVAL, Keyless Access Indoor Antenna.>	Go to step **9**.

	Step	Check	Yes	No
9	**CHECK ANTENNA.** Replace the center interior antenna with a new or properly functioning part.	Does it operate properly?	Replace the center interior antenna. <Ref. to SL-94, REMOVAL, Keyless Access Indoor Antenna.>	Go to step **10**.
10	**CHECK ANTENNA.** Replace the rear interior antenna with a new or properly functioning part.	Does it operate properly?	Replace the rear interior antenna. <Ref. to SL-94, REMOVAL, Keyless Access Indoor Antenna.>	Go to step **11**.
11	**CHECK WIRING HARNESS.** 1) Disconnect the receiver connector and the keyless access CM connector. 2) Using a tester, check continuity between the receiver connector and keyless access CM connector. ***Connector & terminal*** ***(R296) No. 4 — (B573) No. 5:*** ***(R296) No. 5 — (B573) No. 17:*** ***(R296) No. 2 — (B573) No. 19:***	Is there continuity?	Go to step **12**.	Repair or replace the open circuit of harness.
12	**CHECK RECEIVER.** Replace the receiver with a new or properly functioning part.	Does it operate properly?	Replace the receiver. <Ref. to SL-101, REMOVAL, Receiver.>	Go to step **13**.
13	**CHECK KEYLESS ACCESS SYSTEM CHECK.** 1) Using the Subaru Select Monitor, select System check of the keyless access CM «Front interior transmitter + interior tuner». <Ref. to KPS(diag)-33, Keyless Access System Check.> 2) Hold the access key 1 m or more away from the audio panel, then come closer to within 0.8 m.	Does the buzzer sound?	Go to step **14**.	Replace the keyless access CM. <Ref. to SL-102, Keyless Access CM.>
14	**CHECK KEYLESS ACCESS SYSTEM CHECK.** NOTE: For 5 door model, go to the next step. 1) Using the Subaru Select Monitor, select System check of the keyless access CM «Rear interior transmitter + interior tuner». <Ref. to KPS(diag)-33, Keyless Access System Check.> 2) Hold the access key 1 m or more away from the center of the second row seats, then come closer to within 0.8 m.	Does the buzzer sound?	Go to step **15**.	Replace the keyless access CM. <Ref. to SL-102, Keyless Access CM.>
15	**CHECK KEYLESS ACCESS SYSTEM CHECK.** 1) Using the Subaru Select Monitor, select System check of the keyless access CM «Trunk internal transmitter + interior tuner» or «Rear gate internal transmitter + interior tuner». <Ref. to KPS(diag)-33, Keyless Access System Check.> 2) Hold the access key 1 m or more away from the back of the rear seat, then come closer to within 0.8 m.	Does the buzzer sound?	System is normal.	Replace the keyless access CM. <Ref. to SL-102, Keyless Access CM.>

11.CAN NOT UNLOCK WHEN USING THE REAR GATE OPENER BUTTON

CAUTION:
• Check that there are no other registered access keys inside the rear gate.
• Inspect LAN system according to the basic diagnostic procedure, and make sure that there is no fault.
• Check that the keyless access function is not stopped.
• When the access key or keyless access CM is replaced, registration of the immobilizer is required. For the relevant procedures, refer to the "REGISTRATION MANUAL FOR IMMOBILIZER".

	Step	Check	Yes	No
1	**CHECK KEYLESS OPERATION.** Check that the rear gate unlocks when the rear gate unlock button of the access key is pressed.	Does it operate properly?	Go to step **6**.	Go to step **2**.
2	**CHECK REAR GATE UNLOCK OPERATION.** 1) Using the Subaru Select Monitor, select the function check «R gate/trunk UNLK output» of the body integrated unit. 2) Check that the rear gate unlocks when the R gate/trunk UNLK signal is output.	Does it operate properly?	Go to step **6**.	Go to step **3**.
3	**CHECK HARNESS.** 1) Disconnect the body integrated unit connector and rear gate lock actuator connector. 2) Check the continuity between body integrated unit connector and rear gate lock actuator connector. ***Connector & terminal*** ***(i171) No. 7 — (D46) No. 1:***	Is there continuity?	Go to step **4**.	Repair or replace the open circuit of harness.
4	**CHECK HARNESS.** 1) Check the continuity between the rear gate lock actuator connector and chassis ground. ***Connector & terminal*** ***(D47) No. 2 — Chassis ground:***	Is there continuity?	Go to step **5**.	Repair or replace the open circuit of harness.
5	**CHECK REAR GATE LOCK ACTUATOR.** 1) Check the rear gate lock actuator. <Ref. to SL-52, INSPECTION, Rear Gate Latch and Actuator Assembly.>	Is the rear gate lock actuator normal?	Replace the body integrated unit. <Ref. to SL-82, Body Integrated Unit.>	Replace the rear gate latch and actuator assembly. <Ref. to SL-51, Rear Gate Latch and Actuator Assembly.>
6	**CHECK ACCESS KEY.** 1) Prepare all access keys registered to the vehicle. 2) Check that the rear gate lock can be unlocked with each access key.	Does it operate properly?	Go to step **7**.	Replace the access key. <Ref. to SL-89, REPLACEMENT, Access Key.>
7	**CHECK CURRENT DATA.** 1) Display the current data «R Gate Release SW input» of body integrated unit using Subaru Select Monitor. 2) Read the data when pressing the rear gate opener button.	Does the data display ON?	Go to step **14**.	Go to step **8**.
8	**CHECK WIRING HARNESS.** 1) Disconnect the rear gate opener button connector and body integrated unit connector. 2) Using a tester, check the continuity between the rear gate opener button connector and body integrated unit connector. ***Connector & terminal*** ***(D77) No. 1 — (i84) No. 10:***	Is there continuity?	Go to step **9**.	Repair or replace the open circuit of harness.

	Step	Check	Yes	No
9	**CHECK WIRING HARNESS.** 1) Using a tester, check the continuity between the rear gate opener button connector and chassis ground. ***Connector & terminal*** ***(D77) No. 2 — Chassis ground:***	Is there continuity?	Go to step **10**.	Repair or replace the open circuit of harness.
10	**CHECK REAR GATE OPENER BUTTON.** Using a tester, check the continuity between rear gate opener button switch terminals. ***Connector & terminal*** ***(D77) No. 1 — (D77) No. 2:***	Is there continuity when pressing the switch?	Go to step **11**.	Replace the rear gate opener button. <Ref. to SL-49, Rear Gate Opener Button.>
11	**CHECK WIRING HARNESS.** 1) Disconnect the exterior rear antenna connector and the keyless access CM connector. 2) Using a tester, check continuity between the exterior rear antenna connector and keyless access CM connector. ***Connector & terminal*** ***(R299) No. 1 — (B573) No. 2:*** ***(R299) No. 2 — (B573) No. 1:***	Is there continuity?	Go to step **12**.	Repair or replace the open circuit of harness.
12	**CHECK OUTSIDE REAR ANTENNA.** Replace the outside rear antenna with new or properly working parts.	Does it operate properly?	The outside rear antenna has a failure.	Go to step **13**.
13	**CHECK CURRENT DATA.** 1) Display the current data «R gate lock status SW input» of body integrated unit using Subaru Select Monitor. 2) Read the data when locking/unlocking the rear gate lock actuator.	Does the data change from ON ←→ OFF?	Go to step **14**.	Check body integrated unit. <Ref. to SL-82, REMOVAL, Body Integrated Unit.>
14	**CHECK KEYLESS ACCESS SYSTEM CHECK.** 1) Using the Subaru Select Monitor, select System check of the keyless access CM «Rear gate external transmitter + interior tuner». <Ref. to KPS(diag)-33, Keyless Access System Check.> 2) Hold the access key 1 m or more away from the trunk, then come closer to within 0.8 m.	Does the outside buzzer sound?	System is normal.	Replace the keyless access CM. <Ref. to SL-102, Keyless Access CM.>

12.CAN NOT LOCK WHEN USING THE REAR LOCK BUTTON

CAUTION:
• Check that there are no other registered access keys inside the vehicle.
• Check that the keyless access function is not stopped.
• Inspect LAN system or keyless access system according to the basic diagnostic procedure, and make sure that DTC is not input.
• When the access key or keyless access CM is replaced, registration of the immobilizer is required. For the relevant procedures, refer to the "REGISTRATION MANUAL FOR IMMOBILIZER".

	Step	Check	Yes	No
1	**CHECK REAR GATE ACTUATOR.** While carrying the access key, operate the touch sensor (lock) and touch sensor (unlock).	When the switch is operated, does the rear gate lock/unlock?	Go to step **2**.	Go to step **10**.
2	**CHECK REAR LOCK BUTTON.** 1) Display the «Rear Gate Request SW» of the keyless access CM using the Subaru Select Monitor. 2) Read the data when operating the rear lock button.	Does the data change between ON/OFF?	Go to step **8**.	Go to step **3**.

	Step	Check	Yes	No
3	**CHECK HARNESS.** 1) Disconnect the rear lock button connector and the keyless access CM connector. 2) Using a tester, measure the resistance between harness. ***Connector & terminal*** ***(D77) No. 3 — (B573) No. 27:***	Is the resistance less than 10 Ω?	Go to step **4**.	Repair or replace the open circuit of the harness.
4	**CHECK HARNESS.** Using a tester, measure the resistance between harness and chassis ground. ***Connector & terminal*** ***(D77) No. 3 — Chassis ground:***	Is the resistance 10 MΩ or more?	Go to step **5**.	Repair or replace the short of harness.
5	**CHECK HARNESS.** Using a tester, measure the resistance between harness and chassis ground. ***Connector & terminal*** ***(D77) No. 4 — Chassis ground:***	Is the resistance less than 10 Ω?	Go to step **6**.	Repair or replace the open circuit of the harness.
6	**CHECK REAR LOCK BUTTON.** Measure the resistance when the rear lock button is operated using the tester. ***Connector & terminal*** ***(D77) No. 3 — No. 4:***	Did the resistance change from 1 MΩ or more to less than 10 Ω?	Go to step **7**.	Replace the rear lock button. <Ref. to SL-99, REMOVAL, Rear Lock Button.>
7	**CHECK REAR LOCK BUTTON.** 1) Display the «Rear Gate Request SW» of the keyless access CM using the Subaru Select Monitor. 2) Read the data when operating the rear lock button.	Does the data change between ON/OFF?	Go to step **8**.	Replace the keyless access CM. <Ref. to SL-102, REMOVAL, Keyless Access CM.>
8	**CHECK WIRING HARNESS.** 1) Disconnect the exterior rear antenna connector and the keyless access CM connector. 2) Using a tester, check continuity between the exterior rear antenna connector and keyless access CM connector. ***Connector & terminal*** ***(R299) No. 1 — (B573) No. 2:*** ***(R299) No. 2 — (B573) No. 1:***	Is there continuity?	Go to step **9**.	Repair or replace the open circuit of harness.
9	**CHECK OUTSIDE REAR ANTENNA.** Replace the outside rear antenna with new or properly working parts. <Ref. to SL-97, REMOVAL, Keyless Access Outdoor Antenna.>	Does it operate properly?	The outside rear antenna has a failure.	Go to step **10**.
10	**CHECK BODY INTEGRATED UNIT.** 1) Connect the disconnected connectors. 2) Use the Subaru Select Monitor to perform the body integrated unit function check. 3) Actuate the door lock actuator LOCK output.	Does the rear gate lock actuator lock?	It is possible that temporary poor communication occurs.	Go to step **11**.
11	**CHECK HARNESS.** 1) Disconnect the body integrated unit connector and rear gate lock actuator connector. 2) Check the continuity between body integrated unit connector and rear gate lock actuator connector. ***Connector & terminal*** ***(i171) No. 7 — (D46) No. 1:***	Is there continuity?	Go to step **12**.	Repair or replace the open circuit of harness.
12	**CHECK HARNESS.** 1) Check the continuity between the rear gate lock actuator connector and chassis ground. ***Connector & terminal*** ***(D46) No. 2 — Chassis ground:***	Is there continuity?	Go to step **13**.	Repair or replace the open circuit of harness.

Step		Check	Yes	No
13	**CHECK REAR GATE LOCK ACTUATOR.** 1) Check the rear gate lock actuator. <Ref. to SL-52, INSPECTION, Rear Gate Latch and Actuator Assembly.>	Is the rear gate lock actuator normal?	Replace the body integrated unit. <Ref. to SL-82, Body Integrated Unit.>	Replace the rear gate latch and actuator assembly. <Ref. to SL-51, Rear Gate Latch and Actuator Assembly.>

13.THE STEERING LOCK IS NOT RELEASED

CAUTION:
When the steering lock CM is replaced, registration of the immobilizer is required. For the relevant procedures, refer to the "REGISTRATION MANUAL FOR IMMOBILIZER".

Step		Check	Yes	No
1	**CHECK OPERATION.** 1) Depress the brake pedal. 2) While turning the steering wheel lightly to the left and right, press the push button ignition switch. 3) Confirm that the steering lock is released and the engine start.	Does the engine fail to start with the steering lock released?	Perform the diagnosis for engine system. <Ref. to EN(H4DO HEV)(diag)-67, Diagnostics for Engine Starting Failure.>	Go to step **2**.
2	**CHECK DTC.** Read keyless access CM DTCs using the Subaru Select Monitor.	Is a DTC displayed?	Perform the diagnosis according to the corresponding procedures of DTC.	Go to step **3**.
3	**CHECK CURRENT DATA.** 1) Using the Subaru Select Monitor, display the current data of the keyless access CM «Steering lock unlock request reception status» and «Steering lock lock/unlock command reception history». 2) Read the data when the push button ignition switch is pressed while in possession of the access key. (Maintain for 10 seconds after switch operation)	Does the data change from «Not yet received» to «Reception», and from «OFF» to «ON»?	Go to step **4**.	Go to step **7**.
4	**CHECK STEERING LOCK CM.** 1) Disconnect the steering lock CM connector. 2) Using a tester, measure the voltage between the steering lock CM connector and chassis ground. ***Connector & terminal*** ***(B424) No. 7 (+) — Chassis ground (–):***	Is the voltage 10 V or more?	Go to step **5**.	Repair or replace the open circuit of harness.
5	**CHECK STEERING LOCK CM.** Using a tester, check continuity between the steering lock CM connector and chassis ground. ***Connector & terminal*** ***(B424) No. 1 — Chassis ground:***	Is there continuity?	Go to step **6**.	Repair or replace the open circuit of harness.
6	**CHECK STEERING LOCK CM.** 1) Connect the disconnected connectors. 2) Using a tester, measure the voltage between steering lock CM terminals right after the ignition switch is turned to ON. ***Connector & terminal*** ***(B424) No. 3 (+) — (B424) No. 1 (–):***	Is the voltage 1 V or less right after the ignition ON?	Replace the steering lock CM. <Ref. to SL-105, REMOVAL, Steering Lock CM.>	Repair or replace the open circuit of harness.

	Step	Check	Yes	No
7	**CHECK CURRENT DATA.** Using the Subaru Select Monitor, display the current data of the keyless access CM «Code collation result between smart ECM and ID code box».	Is data displayed as being normal?	Go to step **9**.	Go to step **8**.
8	**CHECK CURRENT DATA.** 1) Replace with a properly functioning or new ID code box. <Ref. to SL-104, REMOVAL, ID Code Box.> 2) Using the Subaru Select Monitor, display the current data of the keyless access CM «Code collation result between smart ECM and ID code box».	Is data displayed as being normal?	System is normal.	Replace the keyless access CM. <Ref. to SL-102, Keyless Access CM.>
9	**CHECK CURRENT DATA.** Using the Subaru Select Monitor, display the current data of the keyless access CM «Code collation result between steering locked ECM and ID code box».	Is data displayed as being normal?	System is normal.	Go to step **10**.
10	**CHECK ID CODE BOX.** 1) Replace with a properly functioning or new ID code box. <Ref. to SL-104, REMOVAL, ID Code Box.> 2) Using the Subaru Select Monitor, display the current data of the keyless access CM «Code collation result between steering locked ECM and ID code box».	Is data displayed as being normal?	System is normal.	Go to step **11**.
11	**CHECK STEERING LOCK CM.** 1) Replace with a properly functioning or new steering lock CM. <Ref. to SL-105, REMOVAL, Steering Lock CM.> 2) After registering, the steering lock operates when the ignition is turned to OFF and the driver's door is opened and closed. 3) Turn the ignition to ON. 4) Operate the steering and check for whether the steering lock is released.	Is the steering lock released, and does the engine start?	Replace the steering lock CM. <Ref. to SL-105, REMOVAL, Steering Lock CM.>	Replace the keyless access CM. <Ref. to SL-102, Keyless Access CM.>

14.THE STEERING LOCK DOES NOT OPERATE

CAUTION:
When the keyless access CM or steering lock CM is replaced, registration of the immobilizer is required. For the relevant procedures, refer to the "REGISTRATION MANUAL FOR IMMOBILIZER".

	Step	Check	Yes	No
1	**CHECK DTC.** Read keyless access system DTCs using the Subaru Select Monitor.	Is a DTC displayed?	Perform the diagnosis according to the corresponding DTC.	Go to step **2**.
2	**CHECK CURRENT DATA.** 1) Display the current data «Driver's door SW input» of body integrated unit using Subaru Select Monitor. 2) Read the data when opening and closing the driver's door.	Does the data change from ON to OFF according to the opening and closing?	Go to step **3**.	Inspect door switch circuit.
3	**CHECK CURRENT DATA.** Display the current data «Shift P Signal» of keyless access system using Subaru Select Monitor.	Is the status displayed correctly when the shift lever is shifted from P to other than P?	Go to step **4**.	Check the P range switch and harness.

	Step	Check	Yes	No
4	**CHECK CURRENT DATA.** Using the Subaru Select Monitor, display the current data «Code collation result between smart ECM and ID code box» of keyless access system.	Is the status normal?	Go to step **5**.	Replace the keyless access CM. <Ref. to SL-102, REMOVAL, Keyless Access CM.>
5	**CHECK CURRENT DATA.** Using the Subaru Select Monitor, display the current data «Code collation result between steering locked ECM and ID code box» of keyless access system.	Is the status normal?	Go to step **6**.	Replace the steering lock CM. <Ref. to SL-105, REMOVAL, Steering Lock CM.>
6	**CHECK CURRENT DATA.** 1) Using Subaru Select Monitor, display the current data «Steering lock lock/unlock command reception history» of keyless access system. 2) While in possession of the access key, perform engine start operations, and read data within 10 seconds after starting.	Is data displayed as ON?	Go to step **7**.	Replace the keyless access CM. <Ref. to SL-102, REMOVAL, Keyless Access CM.>
7	**CHECK STEERING LOCK CM.** Using a tester, measure the waveform between steering lock CM terminals immediately after the following operations. Perform ignition ON, driver's side door close → shift lever "P" range, ignition OFF, and close → open the driver's side door. ***Connector & terminal*** ***(B424) No. 3 — No. 1:***	Is the waveform immediately after opening the driver's side door abnormal?	Replace the steering lock CM. <Ref. to SL-105, REMOVAL, Steering Lock CM.>	Go to step **8**.
8	**CHECK WIRING HARNESS.** 1) Disconnect the keyless access CM connector and the steering lock CM connector. 2) Using a tester, check continuity between the keyless access CM connector and steering lock CM connector. ***Connector & terminal*** ***(B424) No. 3 — (B574) No. 29:***	Is there continuity?	Go to step **9**.	Repair or replace the open circuit of harness.
9	**CHECK WIRING HARNESS.** Using a tester, check continuity between the keyless access CM connector and chassis ground. ***Connector & terminal*** ***(B572) No. 11 — Chassis ground:***	Is there continuity?	Replace the keyless access CM. <Ref. to SL-102, REMOVAL, Keyless Access CM.>	Repair or replace the open circuit of harness.

15.POWER WILL NOT TURN ON (BOTH ACCESSORY AND IGNITION)

CAUTION:
• When the keyless access CM is replaced with a new unit, and the battery ground terminal is connected, it will become ignition ON. Also, if the battery is disconnected, it will resume to a condition with the battery cut off.
• When the keyless access CM is replaced, registration of the immobilizer is required. For the relevant procedures, refer to the "REGISTRATION MANUAL FOR IMMOBILIZER".

	Step	Check	Yes	No
1	**CHECK FUSE.** Check the fuse.	Is the fuse OK?	Go to step **2**.	Replace the fuse.

	Step	Check	Yes	No
2	**CHECK POWER SUPPLY.** 1) Remove IG relay 1 (push button start), IG relay 2 (push button start) and accessory relay (push button start). 2) Using a tester, measure the voltage between the relay block connector and chassis ground.	Is the voltage 10 V or more?	Go to step **3**.	Check the DC power supply circuit.
3	**CHECK CONNECTOR.** Check the engagement of each connector and for any deformation or looseness.	Are the connectors and terminals normal?	Go to step **4**.	Repair the connector, or replace harness.
4	**CHECK WIRING HARNESS.** 1) Disconnect the keyless access CM connector. 2) Using a tester, measure the voltage between the keyless access CM connector and chassis ground. ***Connector & terminal*** ***(B572) No. 2 (+) — Chassis ground (–):***	Is the voltage between 8 V and 16 V?	Go to step **5**.	Repair or replace the open circuit of harness.
5	**CHECK WIRING HARNESS.** Using a tester, check continuity between the keyless access CM connector and chassis ground. ***Connector & terminal*** ***(B572) No. 11 — Chassis ground:***	Is there continuity?	Go to step **6**.	Repair or replace the open circuit of harness.
6	**CHECK DTC.** 1) Connect the keyless access CM connector. 2) Carrying the access key, depress the brake pedal (except for MT model) or clutch pedal (MT model), and push the push button ignition switch. 3) Read keyless access CM DTCs using the Subaru Select Monitor.	Is a DTC output?	Perform diagnosis according to the DTC.	Go to step **7**.
7	**CHECK CURRENT DATA.** 1) Display the current data «Push start SW 1» and «Push start SW 2» of the keyless access CM using the Subaru Select Monitor. 2) Read the data when pressing the push button ignition switch.	Does it change from OFF to ON along with the operation?	Go to step **8**.	Go to step **15**.
8	**CHECK RELAY (PUSH BUTTON START).** Check IG relay 1 and 2 (push button start), and accessory relay (push button start). <Ref. to SL-112, INSPECTION, IG Relay1 (Push Button Start).>	Is each relay normal?	Go to step **9**.	Replace the faulty relay.
9	**CHECK WIRING HARNESS.** 1) Disconnect the keyless access CM connector, IG relay 1 (push button start), IG relay 2 (push button start) and accessory relay (push button start). 2) Using a tester, check continuity between terminals of keyless access CM connector, IG relay 1 (push button start), IG relay 2 (push button start) and accessory relay (push button start). ***Connector & terminal*** ***(B574) No. 6 — (B225) No. 38:*** ***(B572) No. 9 — (B225) No. 34:*** ***(B574) No. 4 — (B426) No. 1:***	Is there continuity?	Go to step **10**.	Repair or replace the open circuit of harness.

	Step	Check	Yes	No
10	**CHECK WIRING HARNESS.** Using a tester, check continuity between the keyless access CM connector and chassis ground. ***Connector & terminal*** ***(B572) No. 9 — Chassis ground:*** ***(B574) No. 4 — Chassis ground:*** ***(B574) No. 6 — Chassis ground:***	Is there continuity?	Repair or replace the short circuit of the harness.	Go to step **11**.
11	**CHECK WIRING HARNESS.** Using a tester, check the continuity between the IG relay 2 (push button start) connector and chassis ground. ***Connector & terminal*** ***(B225) No. 39 — Chassis ground:***	Is there continuity?	Go to step **12**.	Repair or replace the open circuit of harness.
12	**CHECK WIRING HARNESS.** Using a tester, check the continuity between the IG relay 1 connector and chassis ground. ***Connector & terminal*** ***(B225) No. 35 — Chassis ground:***	Is there continuity?	Go to step **13**.	Repair or replace the open circuit of harness.
13	**CHECK WIRING HARNESS.** Using a tester, check the continuity between the accessory relay connector and chassis ground. ***Connector & terminal*** ***(B426) No. 2 — Chassis ground:***	Is there continuity?	Go to step **14**.	Repair or replace the open circuit of harness.
14	**CHECK KEYLESS ACCESS CM.** 1) Connect all the disconnected connectors. 2) Using a tester, measure the voltage between the keyless access CM connector and chassis ground when the ignition is turned from OFF to ON. ***Connector & terminal*** ***(B572) No. 9 (+) — Chassis ground (–):*** ***(B574) No. 4 (+) — Chassis ground (–):*** ***(B574) No. 6 (+) — Chassis ground (–):***	Did the voltage change from 1 V or less to +B-2 V or more?	Go to step **15**.	Replace the keyless access CM. <Ref. to SL-102, Keyless Access CM.>
15	**CHECK PUSH BUTTON IGNITION SWITCH.** 1) Disconnect the push button ignition switch. 2) Using a tester, check the continuity between terminals. ***Connector & terminal*** ***(i150) No. 7 — No. 5:*** ***(i150) No. 2 — No. 5:***	When the button was pressed, did it change to continuity exists? (No continuity when button is released)	Go to step **16**.	Replace the push button ignition switch. <Ref. to SL-106, REMOVAL, Push Button Ignition Switch.>
16	**CHECK WIRING HARNESS.** Using a tester, check the continuity between the push button ignition switch connector and chassis ground. ***Connector & terminal*** ***(i150) No. 4 — Chassis ground:*** ***(i150) No. 5 — Chassis ground:***	Is there continuity?	Go to step **17**.	Repair or replace the open circuit of harness.
17	**CHECK WIRING HARNESS.** 1) Disconnect the keyless access CM connector. 2) Using a tester, check continuity between the keyless access CM connector and push button ignition switch. ***Connector & terminal*** ***(i150) No. 7 — (B574) No. 28:*** ***(i150) No. 2 — (B574) No. 30:***	Is there continuity?	System is normal.	Repair or replace the open circuit of harness.

16.POWER WILL NOT TURN ON (ACCESSORY DOES NOT TURN ON, BUT IGNITION TURNS ON)

CAUTION:

- **When the keyless access CM is replaced with a new unit, and the battery ground terminal is connected, it will become ignition ON. Also, if the battery is disconnected, it will resume to a condition with the battery cut off.**
- **When the keyless access CM is replaced, registration of the immobilizer is required. For the relevant procedures, refer to the "REGISTRATION MANUAL FOR IMMOBILIZER".**

WIRING DIAGRAM:

Push button start system <Ref. to WI(HEV)-180, WIRING DIAGRAM, Push Button Start System.>

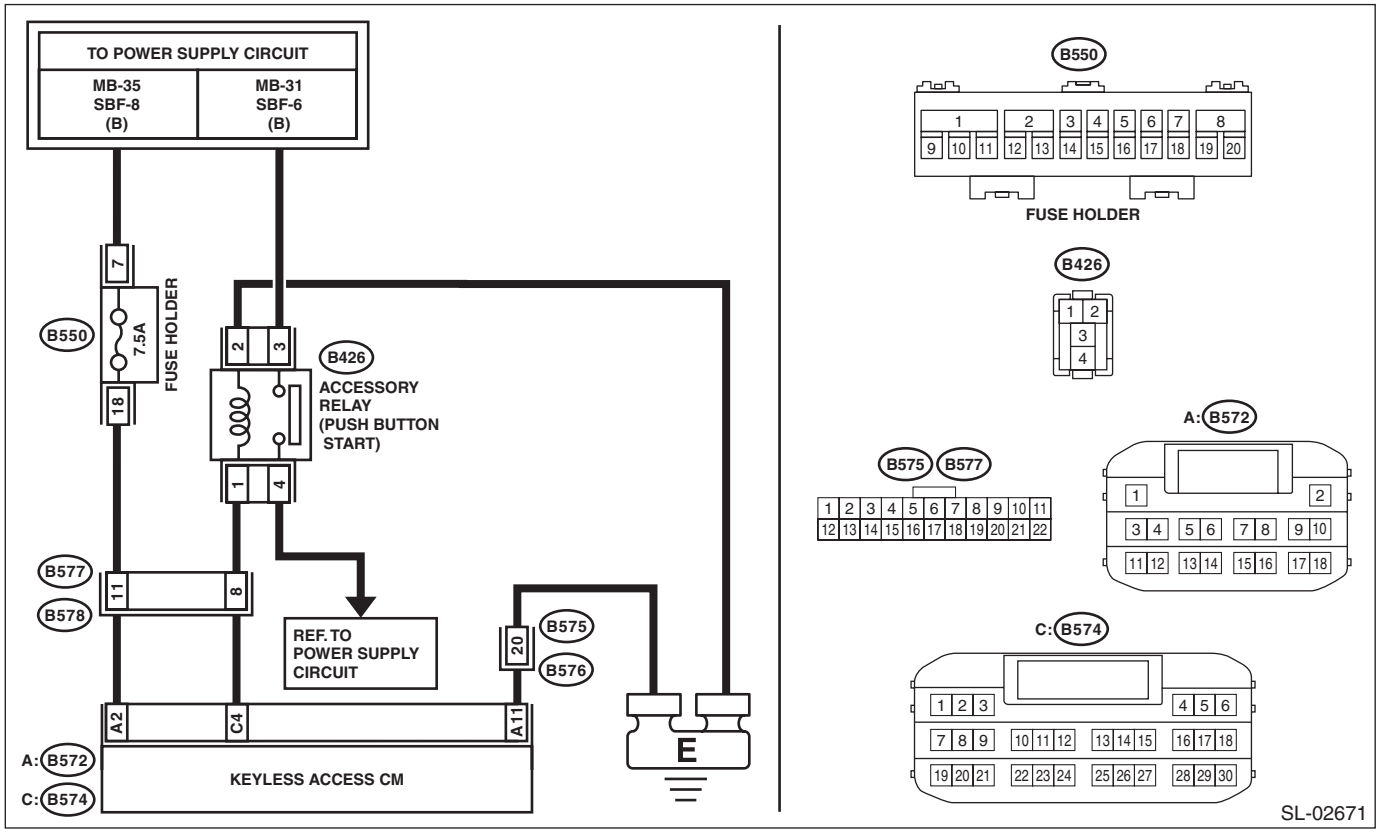

Step		Check	Yes	No
1	**CHECK FUSE.** Check the fuse.	Is the fuse OK?	Go to step **2**.	Replace the fuse.
2	**CHECK CONNECTOR.** Check the engagement of each connector and for any deformation or looseness.	Are the connectors and terminals normal?	Go to step **3**.	Repair the connector, or replace harness.
3	**CHECK WIRING HARNESS.** 1) Disconnect the keyless access CM connector. 2) Using a tester, measure the voltage between the keyless access CM connector and chassis ground. ***Connector & terminal*** ***(B572) No. 2 (+) — Chassis ground (–):***	Is the voltage between 8 V and 16 V?	Go to step **4**.	Repair or replace the open circuit of harness.
4	**CHECK WIRING HARNESS.** Using a tester, check continuity between the keyless access CM connector and chassis ground. ***Connector & terminal*** ***(B572) No. 11 — Chassis ground:***	Is there continuity?	Go to step **5**.	Repair or replace the open circuit of harness.

	Step	Check	Yes	No
5	**CHECK ACCESSORY RELAY (PUSH BUTTON START).** Check the accessory relay (push button start). <Ref. to SL-115, INSPECTION, Accessory Relay (Push Button Start).>	Is the relay OK?	Go to step **6**.	Replace the relay.
6	**CHECK WIRING HARNESS.** 1) Disconnect the keyless access CM connector and the accessory relay (push button start). 2) Using a tester, check continuity between the keyless access CM connector and accessory relay (push button start). ***Connector & terminal*** ***(B574) No. 4 — (B426) No. 1:***	Is there continuity?	Go to step **7**.	Repair or replace the open circuit of harness.
7	**CHECK WIRING HARNESS.** Using a tester, check continuity between the keyless access CM connector and chassis ground. ***Connector & terminal*** ***(B574) No. 4 — Chassis ground:***	Is there continuity?	Repair or replace the short circuit of the harness.	Go to step **8**.
8	**CHECK KEYLESS ACCESS CM.** 1) Connect the keyless access CM connector. 2) Using a tester, measure the voltage between the keyless access CM connector and chassis ground when the ignition is turned from OFF to ON. ***Connector & terminal*** ***(B574) No. 4 (+) — Chassis ground (–):***	Did the voltage change from 1 V or less → +B-2 V or more?	System is normal.	Replace the keyless access CM. <Ref. to SL-102, Keyless Access CM.>

17.POWER WILL NOT TURN ON (ACCESSORY TURNS ON, BUT IGNITION DOES NOT TURN ON)

CAUTION:
When the keyless access CM is replaced with a new unit, and the battery ground terminal is connected, it will become ignition ON. Also, if the battery is disconnected, it will resume to a condition with the battery cut off.

WIRING DIAGRAM:
Push button start system <Ref. to WI(HEV)-180, WIRING DIAGRAM, Push Button Start System.>

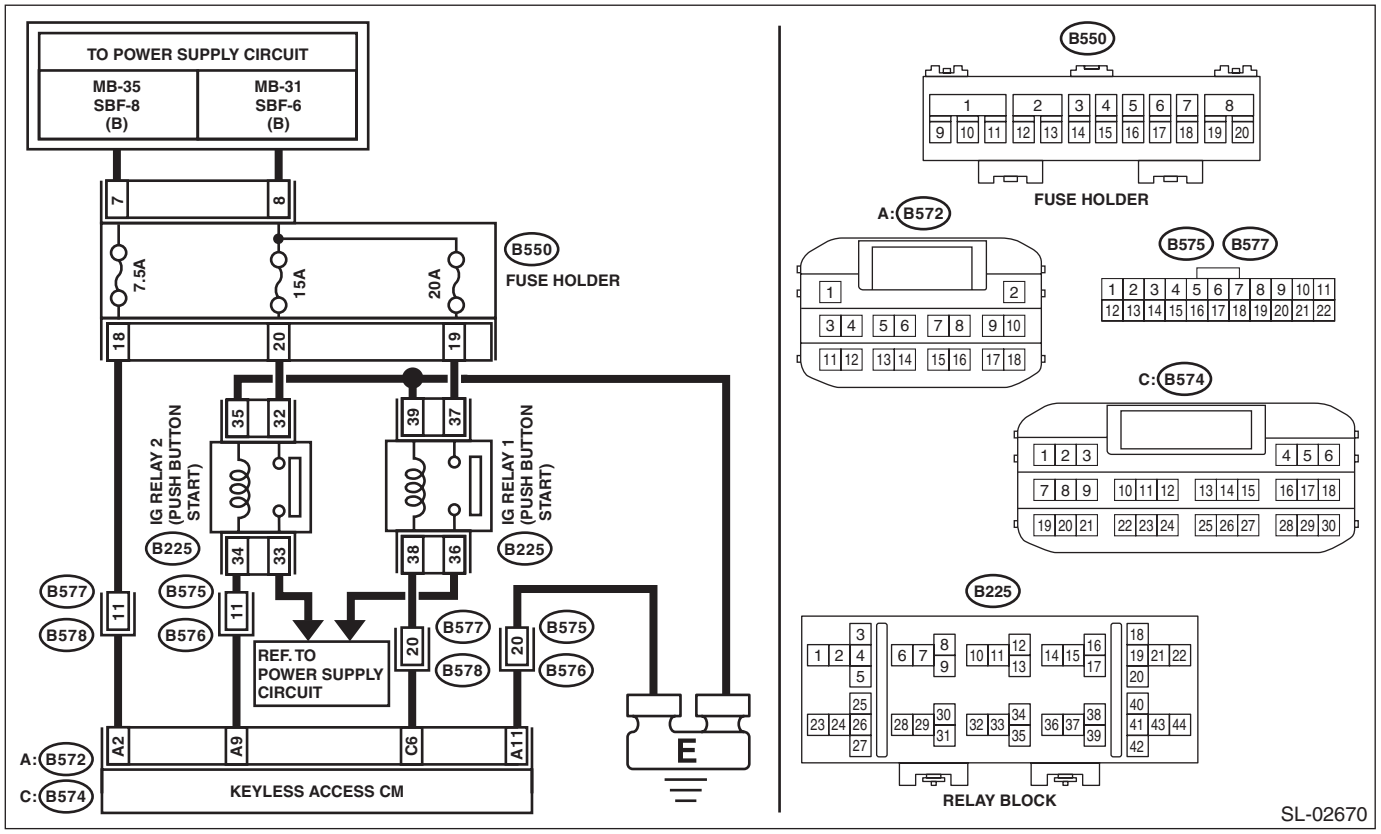

Step		Check	Yes	No
1	**CHECK FUSE.** Check the fuse.	Is the fuse OK?	Go to step **2**.	Replace the fuse.
2	**CHECK CONNECTOR.** Check the engagement of each connector and for any deformation or looseness.	Are the connectors and terminals normal?	Go to step **3**.	Repair the connector, or replace harness.
3	**CHECK WIRING HARNESS.** 1) Disconnect the keyless access CM connector. 2) Using a tester, measure the voltage between the keyless access CM connector and chassis ground. ***Connector & terminal*** ***(B572) No. 2 (+) — Chassis ground (–):***	Is the voltage between 8 V and 16 V?	Go to step **4**.	Repair or replace the open circuit of harness.
4	**CHECK WIRING HARNESS.** Using a tester, check continuity between the keyless access CM connector and chassis ground. ***Connector & terminal*** ***(B572) No. 11 — Chassis ground:***	Is there continuity?	Go to step **5**.	Repair or replace the open circuit of harness.

	Step	Check	Yes	No
5	**CHECK IG RELAY 1 AND 2 (PUSH BUTTON START).** Check IG relay 1 (push button start) and IG relay 2 (push button start). <Ref. to SL-112, INSPECTION, IG Relay1 (Push Button Start).>	Is the relay OK?	Go to step **6**.	Replace the relay.
6	**CHECK WIRING HARNESS.** 1) Disconnect the keyless access CM connector and the IG relay 1 and 2 (push button start). 2) Using a tester, check continuity between keyless access CM connector and IG relay 1 (push button start) or IG relay 2 (push button start). ***Connector & terminal*** ***(B572) No. 9 — (B225) No. 34:*** ***(B574) No. 6 — (B225) No. 38:***	Is there continuity?	Go to step **7**.	Repair or replace the open circuit of harness.
7	**CHECK WIRING HARNESS.** Using a tester, check continuity between the keyless access CM connector and chassis ground. ***Connector & terminal*** ***(B572) No. 9 — Chassis ground:*** ***(B574) No. 6 — Chassis ground:***	Is there continuity?	Repair or replace the short circuit of the harness.	Go to step **8**.
8	**CHECK KEYLESS ACCESS CM.** 1) Connect the keyless access CM connector. 2) Using a tester, measure the voltage between the keyless access CM connector and chassis ground when the ignition is turned from OFF to ON. ***Connector & terminal*** ***(B572) No. 9 (+) — Chassis ground (–):*** ***(B574) No. 6 (+) — Chassis ground (–):***	Did the voltage change from 1 V or less → +B-2 V or more?	System is normal.	Replace the keyless access CM. <Ref. to SL-102, Keyless Access CM.>

18.ENGINE DOES NOT START

CAUTION:
• When the keyless access CM is replaced with a new unit, and the battery ground terminal is connected, it will become ignition ON. Also, if the battery is disconnected, it will resume to a condition with the battery cut off.
• When the keyless access CM or ID code box is replaced, registration of the immobilizer is required. For the relevant procedures, refer to the "REGISTRATION MANUAL FOR IMMOBILIZER".

	Step	Check	Yes	No
1	**INITIALIZE STEERING LOCK.** 1) Place the shift lever in the Parking range. 2) Operate the driver's door switch ON/OFF with the ignition switch OFF. 3) Wait for 10 seconds. 4) Place the access key on the driver's seat. 5) Press the push button ignition switch while depressing the brake pedal.	Can the engine start?	System is normal.	Go to step **2**.
2	**CHECK DTC.** Read the DTC of the keyless access system using Subaru Select Monitor.	Is DTC detected?	Perform the diagnosis according to the DTC. <Ref. to KPS(diag)-35, LIST, List of Diagnostic Trouble Code (DTC).>	Go to step **3**.
3	**CHECK POWER SUPPLY SWITCHING.** 1) Place the access key on the driver's seat. 2) Press the push button ignition switch without depressing the brake pedal.	When the switch is operated, does the <IG-OFF> → <ACC-ON> → <IG-ON> → <IG-OFF> change occur?	Go to step **4**.	Perform the diagnostics according to the symptom for power supply switching system in General Diagnostic Table. <Ref. to KPS(diag)-99, POWER SUPPLY SWITCHING SYSTEM, INSPECTION, General Diagnostic Table.>
4	**CHECK CURRENT DATA.** 1) Place the access key on the driver's seat. 2) Press the push button ignition switch while depressing the brake pedal. 3) Using the Subaru Select Monitor, confirm the keyless access CM, the current data «STSW signal monitor» when pressing the push button ignition switch. NOTE: If it is difficult to confirm, press and hold the push button ignition switch for approximately five seconds.	Does the data change from OFF → ON?	Go to step **10**.	Go to step **5**.
5	**CHECK CURRENT DATA.** Check the keyless access CM, current data «Shift P Signal» using the Subaru Select Monitor.	Is ON displayed in parking position, and OFF displayed in other positions?	Go to step **6**.	Go to step **11**.
6	**CHECK CURRENT DATA.** Confirm the keyless access CM, current data «Stop Light Switch» using the Subaru Select Monitor.	Is ON displayed when brake pedal depressed, and OFF displayed when brake pedal not depressed?	Go to step **7**.	Go to step **13**.

	Step	Check	Yes	No
7	**CHECK CURRENT DATA.** Confirm the keyless access CM, current data «Neutral SW/Clutch SW» using the Subaru Select Monitor.	Is ON displayed in parking and neutral positions, and OFF displayed in other positions?	Go to step **8**.	Go to step **15**.
8	**CHECK STEERING LOCK.** Operate the push button ignition switch to perform the power supply switching and check steering lock condition during ACC-ON condition.	Is the steering lock in unlocked condition?	Go to step **9**.	Perform the diagnostics according to the symptom for steering lock system in General Diagnostic Table. <Ref. to KPS(diag)-99, STEERING LOCK SYSTEM, INSPECTION, General Diagnostic Table.>
9	**CHECK KEYLESS ACCESS CM.** 1) Turn the ignition switch to OFF. 2) Disconnect the ECM connector. 3) Using a tester, measure the battery voltage in following procedures. 1. Press the push button ignition switch with the brake pedal depressed. (Measure within 10 seconds.) 2. Release the push button ignition switch from the condition of step 1. above. ***Connector & terminal*** ***(B572) No. 13 (+) — Chassis ground (–):***	Does the value change from 1 V or less to +B-2 V or more in the step 1, and return to 1 V or less in the step 2?	Perform the diagnosis for engine system. <Ref. to EN(H4DO HEV)(diag)-67, Diagnostics for Engine Starting Failure.>	Replace the keyless access CM. <Ref. to SL-102, Keyless Access CM.>
10	**CHECK CURRENT DATA.** 1) Connect the disconnected connectors. 2) Confirm the keyless access CM, current data «Engine start permission request reception status» using the Subaru Select Monitor.	Is “Reception” displayed with ignition switch ON, and “Not yet received” displayed in other positions?	Perform the diagnosis for engine system.	Replace the keyless access CM. <Ref. to SL-102, Keyless Access CM.>
11	**CHECK “P” RANGE SWITCH.** 1) Turn the ignition switch to OFF. 2) Disconnect the AT shift lever connector. 3) Using a tester, check the continuity of “P” range switch. ***Connector & terminal*** ***(B116) No. 1 — 2:***	Does it change from Continuity ←→ No continuity according to shift lever operation?	Go to step **12**.	Replace the “P” range switch. <Ref. to CS-55, REMOVAL, AT Shift Lock Solenoid and “P” Range Switch.>
12	**CHECK HARNESS.** 1) Turn the ignition switch to OFF. 2) Disconnect the keyless access CM connector. 3) Using a tester, check continuity between the keyless access CM and AT select lever. ***Connector & terminal*** ***(B116) No. 1 — (B574) No. 25:*** ***(B116) No. 2 — Chassis ground:***	Is there continuity?	Replace the keyless access CM. <Ref. to SL-102, Keyless Access CM.>	Repair or replace the harness.
13	**CHECK STOP LIGHT SWITCH.** 1) Turn the ignition switch to OFF. 2) Disconnect the stop light switch connector. 3) Using a tester, check the continuity of the stop light switch. ***Connector & terminal*** ***(B65) No. 3 — No. 4:***	Does it change from Continuity ←→ No continuity according to brake pedal operation?	Go to step **14**.	Replace the stop light switch. <Ref. to BR-72, REMOVAL, Stop Light Switch.>

	Step	Check	Yes	No
14	**CHECK HARNESS.** 1) Turn the ignition switch to OFF. 2) Using a tester, check continuity between the keyless access CM and stop light switch. ***Connector & terminal*** ***(B572) No. 18 — (B65) No. 2:*** ***(B65) No. 1 — F/B fuse No. 8:***	Is there continuity?	Replace the keyless access CM. <Ref. to SL-102, Keyless Access CM.>	Repair or replace the harness.
15	**CHECK INHIBITOR SWITCH.** Check the inhibitor switch. <Ref. to CVT(TH58A)-96, INSPECTION, Inhibitor Switch.>	Is the inhibitor switch working normal?	Go to step **16**.	Replace the inhibitor switch. <Ref. to CVT(TH58A)-99, REMOVAL, Inhibitor Switch.>
16	**CHECK HARNESS.** 1) Turn the ignition switch to OFF. 2) Disconnect the inhibitor switch connector. 3) Using a tester, check continuity between the keyless access CM connector and inhibitor switch connector. ***Connector & terminal*** ***(B572) No. 5 — (B12) No. 16:*** ***(B12) No. 15 — Starter motor:***	Is there continuity?	Replace the keyless access CM. <Ref. to SL-102, Keyless Access CM.>	Repair or replace the harness.

BODY CONTROL SYSTEM (DIAGNOSTICS)

BC(diag)

		Page
1.	Basic Diagnostic Procedure	2
2.	Check List for Interview	3
3.	General Description	4
4.	Electrical Component Location	5
5.	Control Module I/O Signal	6
6.	Read Diagnostic Trouble Code (DTC)	9
7.	Clear Memory Mode	10
8.	Read Current Data	11
9.	User Customizing	15
10.	Registration Body Integrated Unit	17
11.	Function Check	21
12.	List of Diagnostic Trouble Code (DTC)	22
13.	Diagnostic Procedure with Diagnostic Trouble Code (DTC)	23
14.	General Diagnostic Table	42

1. Basic Diagnostic Procedure

A: PROCEDURE

CAUTION:
• Subaru Select Monitor is required for reading DTC, performing diagnosis and reading current data.
• Remove foreign matter (dust, water, oil, etc.) from the body integrated unit connector during removal and installation.
• For model with immobilizer or model with keyless access, registration of immobilizer may be needed after the replacement of controller etc. For detailed procedure, refer to the "REGISTRATION MANUAL FOR IMMOBILIZER".

NOTE:
• To check harness for open or short circuits, shake the suspected trouble spot or connector.
• Check List for Interview <Ref. to BC(diag)-3, Check List for Interview.>

	Step	Check	Yes	No
1	**CHECK PRE-INSPECTION.** Ask the customer when and how the trouble occurred using the interview check list. <Ref. to BC(diag)-3, Check List for Interview.>	Did you interview the customer?	Go to step **2**.	Interview the customer.
2	**BASIC INSPECTION.** Check components which might affect body control. <Ref. to BC(diag)-4, INSPECTION, General Description.>	Is the component that might influence the body control problem normal?	Go to step **3**.	Repair or replace each component.
3	**CHECK DTC.** 1) Read the DTC. <Ref. to BC(diag)-9, OPERATION, Read Diagnostic Trouble Code (DTC).> NOTE: If the communication function of the Subaru Select Monitor cannot be executed properly, check the communication circuit. <Ref. to LAN(w/o HEV)(diag)-11, COMMUNICATION FOR INITIALIZING IMPOSSIBLE, Subaru Select Monitor.> <Ref. to LAN(HEV)(diag)-11, COMMUNICATION FOR INITIALIZING IMPOSSIBLE, Subaru Select Monitor.> 2) Record all DTCs, time stamp and freeze frame data. NOTE: For time stamp, refer to "LAN SYSTEM". <Ref. to LAN(w/o HEV)(diag)-6, TIME STAMP, CAUTION, General Description.> <Ref. to LAN(HEV)(diag)-6, TIME STAMP, CAUTION, General Description.>	Is DTC displayed on Subaru Select Monitor?	Go to step **5**.	Go to step **4**.
4	**PERFORM GENERAL DIAGNOSTICS.** Inspect using the "General Diagnostic Table". <Ref. to BC(diag)-42, General Diagnostic Table.>	Is result of inspection OK?	The body control system is normal.	Go to step **5**.
5	**PERFORM DIAGNOSIS.** 1) Correct the cause of trouble. 2) Perform the Clear Memory Mode. <Ref. to BC(diag)-10, OPERATION, Clear Memory Mode.> 3) Read the DTC. <Ref. to BC(diag)-9, OPERATION, Read Diagnostic Trouble Code (DTC).>	Is DTC displayed on Subaru Select Monitor?	Repeat step 5 until DTC is not shown.	Finish the diagnosis.

2. Check List for Interview

A: CHECK

Inspect the following items regarding the vehicle's state.

Body Control System Check List for Interview		Date of Vehicle Bring-in Year Month Day	
Customer's name		Registration No.	Initial year of registration Year Month Date
		Vehicle model	Frame number
Interviewer	Inspector	Engine type	Odometer reading
Customer specified content			
Date and time when the trouble occurred		Frequency of trouble occurrence	
Condition of trouble occurrence		Weather	
Road conditions		Occurrence location	
Accessory installation condition			
Trouble condition			
❑ Diagnostic code		❑ ( )	

3. General Description

A: CAUTION

1. SRS AIRBAG SYSTEM

Airbag system wiring harness is routed near the body integrated unit and body control circuits.

CAUTION:
- **Do not use the electrical test equipment on all airbag system wiring harnesses and connectors.**
- **Be careful not to damage the airbag system wiring harness, when servicing the body control system.**

B: INSPECTION

Before performing diagnosis, check the following items which might affect body control system problems.
1) Measure the battery voltage and check electrolyte.

NOTE:
For HEV model, check the 12 volt auxiliary battery.

Standard voltage: 12 V or more

Specific gravity: 1.260 or more
2) Check the fuse condition.
Make sure that ampere of the fuse is setting value, and it is not blown out.
3) Check the connecting condition of harness and harness connector.
4) Confirm settings of body integrated unit are corresponded to vehicle equipment. <Ref. to BC(diag)-17, OPERATION, Registration Body Integrated Unit.>
5) Make sure that the User Customizing of the body integrated unit matches the vehicle equipment. <Ref. to BC(diag)-15, OPERATION, User Customizing.>
6) Confirm “Factory initial setting” of body integrated unit registrations is “Market”.

C: PREPARATION TOOL

1. SPECIAL TOOL

ILLUSTRATION	TOOL NUMBER	DESCRIPTION	REMARKS
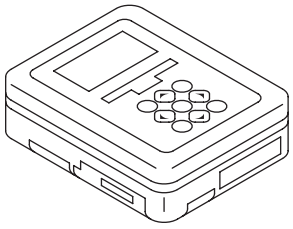 ST1B022XU0	1B022XU0	SUBARU SELECT MONITOR III KIT	Used for troubleshooting the electrical system.

2. GENERAL TOOL

TOOL NAME	REMARKS
Circuit tester	Used for measuring resistance, voltage and current.

4. Electrical Component Location

A: LOCATION

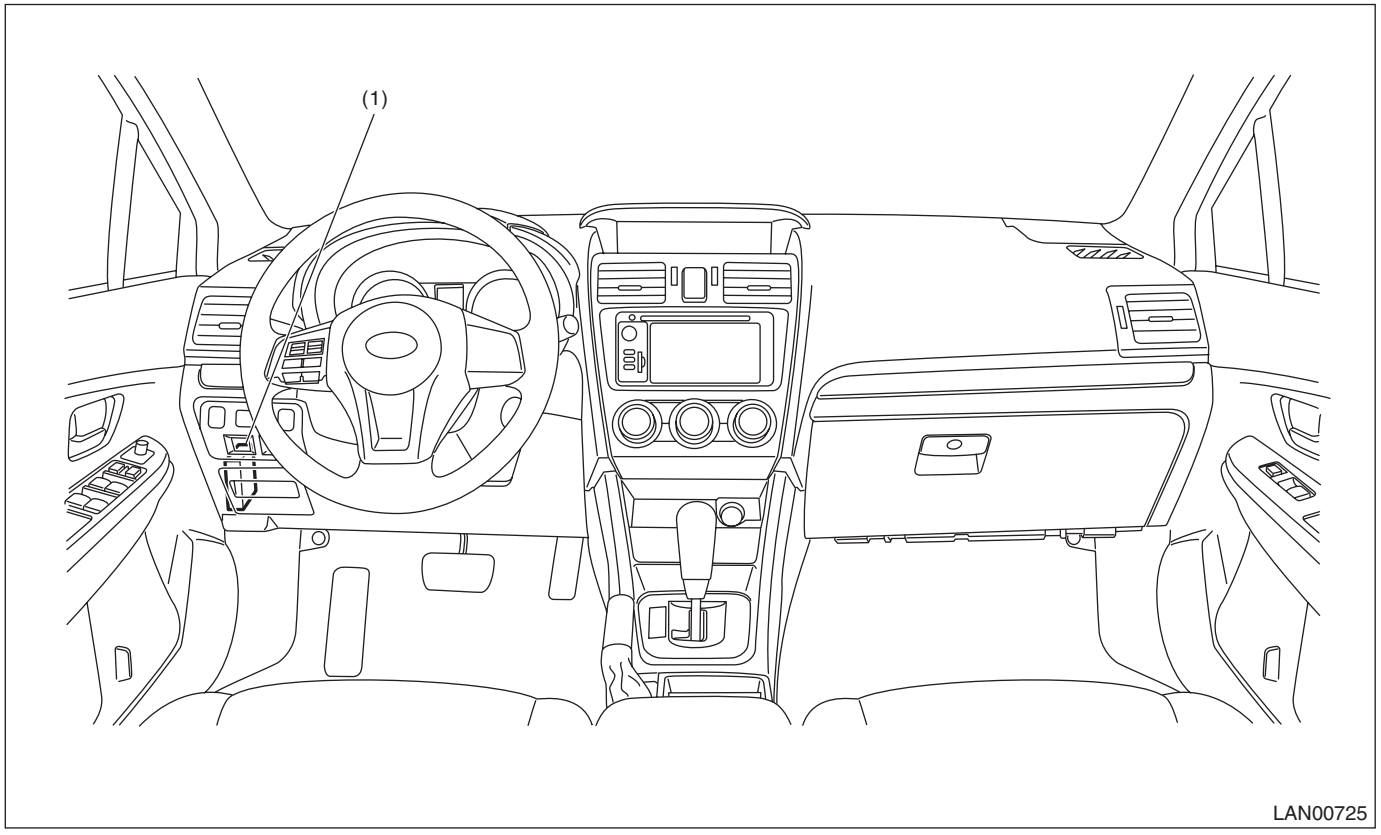

(1) Body integrated unit

5. Control Module I/O Signal

A: ELECTRICAL SPECIFICATION

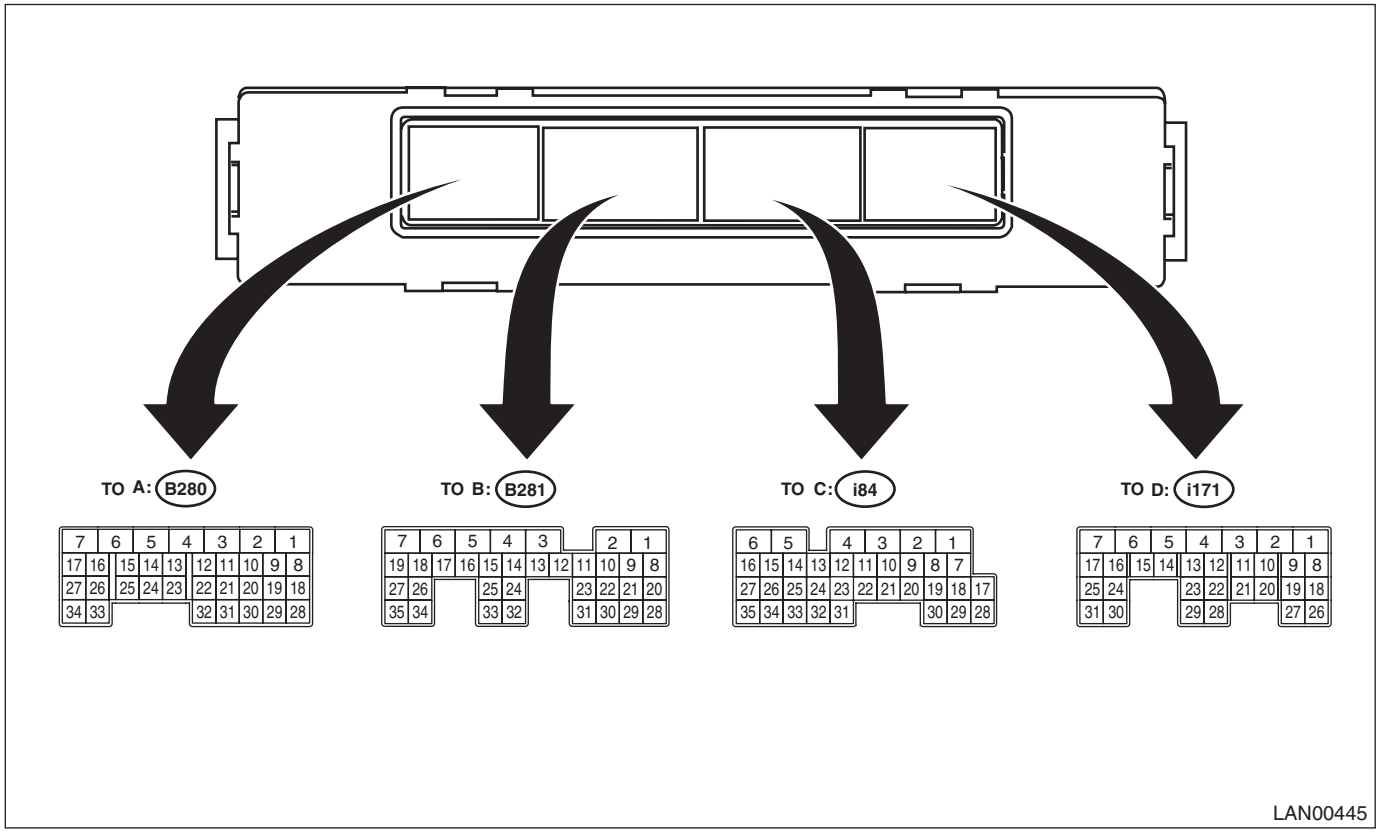

Description	Terminal No.	Signal (V or Ω)	Note
		Ignition switch ON (engine OFF)	
Ignition power supply (rear wiper)	A5 ←→ Chassis ground	Less than 1.5 V → 10 — 13 V	Ignition switch OFF → ON
Battery power supply (shift lock/ key lock)	B6 ←→ Chassis ground	10 — 13 V	Always
Battery power supply (door lock)	D1 ←→ Chassis ground	10 — 13 V	Always
Battery power supply (control)	C6 ←→ Chassis ground	10 — 13 V	Always
Ground	A1 ←→ Chassis ground	Less than 1.5 V	Always
	B31 ←→ Chassis ground		
	C1 ←→ Chassis ground		
	D29 ←→ Chassis ground		
Battery power supply (back-up)	B7 ←→ Chassis ground	10 — 13 V	Always
Ignition power supply	B3 ←→ Chassis ground	Less than 1.5 V → 10 — 13 V	Ignition switch OFF → ON
ACC power supply	A32 ←→ Chassis ground	Less than 1.5 V → 10 — 13 V	Ignition switch OFF → Accessory ON
Key-in switch	A4 ←→ Chassis ground	Less than 1.5 V → 10 — 13 V	Key inserted (models without keyless access)
ACC input	A4 ←→ Chassis ground	Less than 1.5 V → 10 — 13 V	ACC ON (model with keyless access)
P range SW	B18 ←→ Chassis ground	8 V or more → less than 1.5 V	P range to other than P range
Stop light SW	A10 ←→ Chassis ground	Less than 1.5 V → 8 V	Stop light switch OFF → ON
Door SW (driver's)	C14 ←→ Chassis ground	8 V or more → less than 1.5 V	Front right door closed → open
Door SW (passenger's)	C13 ←→ Chassis ground	8 V or more → less than 1.5 V	Front left door closed → open

Description	Terminal No.	Signal (V or Ω)	Note
		Ignition switch ON (engine OFF)	
Door SW (rear right)	C25 ←→ Chassis ground	8 V or more → less than 1.5 V	Rear right door closed → open
Door SW (rear left)	C24 ←→ Chassis ground	8 V or more → less than 1.5 V	Rear left door closed → open
Rear gate SW/trunk SW	C33 ←→ Chassis ground	8 V or more → less than 1.5 V	Rear gate/trunk closed → open
Opener SW (trunk/rear gate)	C10 ←→ Chassis ground	8 V or more → less than 1.5 V	Rear gate/trunk opener switch ON
Manual switch (LOCK)	C9 ←→ Chassis ground	8 V or more → less than 1.5 V	Door lock switch ON
Manual switch (UNLOCK)	C20 ←→ Chassis ground	8 V or more → less than 1.5 V	Door unlock switch ON
Lighting AUTO	B16 ←→ Chassis ground	8 V or more → less than 1.5 V	Switch at AUTO position
Lighting II	A34 ←→ Chassis ground	8 V or more → less than 1.5 V	Switch at II position
	B34 ←→ Chassis ground		
Lighting I	B17 ←→ Chassis ground	8 V or more → less than 1.5 V	Switch at I position
Dimmer passing	B25 ←→ Chassis ground	8 V or more → less than 1.5 V	Switch at passing position
Dimmer Hi beam	B15 ←→ Chassis ground	8 V or more → less than 1.5 V	Switch at Hi beam position
Front fog light SW	B26 ←→ Chassis ground	8 V or more → less than 1.5 V	Front fog light switch ON
Illumination sensor power supply	B1 ←→ A29	Less than 1.5 V → 4.5 V or more	Ignition switch OFF → ON
Illumination sensor signal	A19	0.2 — 4.5 V	Ignition switch OFF → ON
Ground (illumination sensor)	A29 ←→ Chassis ground	Less than 1.5 V	Always
Rear wiper SW ON	A12 ←→ Chassis ground	8 V or more → less than 1.5 V	Switch at ON position
Rear wiper SW INT	A22 ←→ Chassis ground	8 V or more → less than 1.5 V	Switch at INT position
Rear washer SW	A30 ←→ Chassis ground	8 V or more → less than 1.5 V	Switch at ON position
Illumination SW (Vi1)	D12 ←→ Chassis ground	Approx. 5 V	While clearance light illuminates
Illumination SW (Vi2)	D22 ←→ Chassis ground	0.5 — 4.8 V	
Illumination SW (Vi3)	D28 ←→ Chassis ground	Less than 1.5 V	Always
Bright SW	C21 ←→ Chassis ground	8 V or more → less than 1.5 V	Switch at ON position
Reverse SW (MT)	B12 ←→ Chassis ground	Less than 1.5 V → 8 V or more	Reverse SW ON
Impact sensor	A11 ←→ Chassis ground	8 V or more	Apply an impact
Hi-speed CAN communication circuit 1 (Hi)	B20	Serial communication	Except for sleep status*1
Hi-speed CAN communication circuit 1 (Lo)	B28		
Hi-speed CAN communication circuit 2 (Hi)	C27	Serial communication	Except for sleep status*1
Hi-speed CAN communication circuit 2 (Lo)	C35		
Immobilizer antenna (B)	B22	Serial communication	Communication with ignition key in progress
Immobilizer antenna (A)	B10		
Immobilizer antenna amplifier GND	B30 ←→ Chassis ground	Less than 1.5 V	Always
Immobilizer antenna amplifier power supply	B2 ←→ B30	4.5 — 5.5 V	Communication with ignition key in progress
Security UART	A21	Serial communication	Always
Front wiper return	A2 ←→ Chassis ground	8 V	When front wiper is operated
Rear washer switch	A30 ←→ Chassis ground	8 V or more → less than 1.5 V	When rear washer switch is ON
Door UNLOCK (driver's seat) output	D4 ←→ Chassis ground	Less than 0.5 V → 8 V or more	When driver's side door unlock is output

Description	Terminal No.	Signal (V or Ω)	Note
		Ignition switch ON (engine OFF)	
Keyless entry communication line	D11	Serial communication	When door lock/unlock is operated with the keyless transmitter, or when TPMS is operated
Rear defogger switch	C18 ←→ Chassis ground	Less than 1.5 V → 8 V or more	When the rear defogger switch is ON
Parking brake switch	C32 ←→ Chassis ground	8 V or more → less than 1.5 V	When parking brake is ON
Shift lock solenoid	B5 ←→ Chassis ground	Less than 1.5 V → 8 V or more	When shift lock is operating (AT models)
Key lock solenoid	B4 ←→ Chassis ground	Less than 1.5 V → 8 V or more	LOCK status ON (AT models without keyless access)
Rear wiper ON output	A7 ←→ Chassis ground	Less than 0.5 V → 8 V or more	Rear wiper operation in progress
Rear wiper return	A6 ←→ Chassis ground	Less than 0.5 V → 8 V or more	Rear wiper operation in progress
Door LOCK output	D2 ←→ Chassis ground	Less than 0.5 V → 8 V or more	When LOCK signal is output
Door UNLOCK output	D3 ←→ Chassis ground	Less than 0.5 V → 8 V or more	When UNLOCK signal is output
Rear gate/trunk UNLOCK output	D7 ←→ Chassis ground	Less than 0.5 V → 8 V or more	When UNLOCK signal is output
Lighting relay power supply	A3 ←→ Chassis ground	10 — 13 V	ACC or key-in SW ON
	B19 ←→ Chassis ground	10 — 13 V	ACC or key-in SW ON
Lighting relay Hi output	A17 ←→ Chassis ground	8 V or more → less than 1.0 V	Dimmer SW at Hi position
Lighting relay Lo output	B35 ←→ Chassis ground	8 V or more → less than 1.0 V	Lighting II SW at ON position
Lighting Lo relay output 2	A27 ←→ Chassis ground	8 V or more → less than 1.0 V	Lighting II SW at ON position
Lighting relay I output	A16 ←→ Chassis ground	8 V or more → less than 1.0 V	Lighting I SW at ON position
Front fog light output	A15 ←→ Chassis ground	8 V or more → less than 1.0 V	Front fog light SW at ON position
DRL cancel output	D10 ←→ Chassis ground	8 V or more → less than 1.0 V	Headlight switch ON or Hi beam ON, passing switch ON
Illumination output	B8	Pulse output	Illumination ON
	C16	Pulse output	Illumination ON
Key ring illumination	A25	Pulse output	Illumination ON
Room light output	C4	Pulse output	Room light ON (doors interlocked)
Map light output	D8	Pulse output	Map light ON (keyless answer-back, etc.)
Luggage/trunk light output	C3	Pulse output	Luggage/trunk at open state
Rear defogger relay output	A26 ←→ Chassis ground	8 V or more → less than 1.0 V	Rear defogger SW ON
Wiper deicer relay output	D9 ←→ Chassis ground	8 V or more → less than 1.0 V	Wiper deicer SW ON
Turn/hazard output	D18 ←→ Chassis ground	8 V or more → less than 1.0 V	When answer-back is output
Security horn output	A24 ←→ Chassis ground	8 V or more → less than 1.0 V	When security is operating
Security light	D26	Pulse control	When security light is illuminating
Answer-back buzzer output	A20 ←→ Chassis ground	8 V or more → less than 1.0 V	When answer-back operates
Immobilizer communication	A31	Serial communication	(Model without keyless access)

*1: For CAN sleep state, hold on for approx. one minute with ignition OFF and the doors, trunk, and rear gate all closed.

6. Read Diagnostic Trouble Code (DTC)

A: OPERATION

For details concerning the work procedure, refer to the “PC application help for Subaru Select Monitor”.

NOTE:
For details concerning DTC, refer to List of Diagnostic Trouble Code (DTC). <Ref. to BC(diag)-22, List of Diagnostic Trouble Code (DTC).>

7. Clear Memory Mode

A: OPERATION

For details concerning the work procedure, refer to the “PC application help for Subaru Select Monitor”.

8. Read Current Data

A: OPERATION

For details concerning the work procedure, refer to the “PC application help for Subaru Select Monitor”.

B: LIST

Items to be displayed	Unit of measure	Remarks	Note
BATT voltage (control)	10 — 15 V	Body integrated unit input value	Always
BATT voltage (BACKUP)	10 — 15 V	Body integrated unit input value	Always
IG power supply voltage	10 — 15 V	Body integrated unit input value	Ignition switch ON
ACC voltage	10 — 15 V	Body integrated unit input value	Ignition switch ACC
Illumination VR Voltage	0 — 5 V	Body integrated unit input value	Input value from illumination volume
Illumi. output d-ratio	0 — 100%	Body integrated unit output value	Small light ON Illumination volume is other than bright.
number of regist.	0 — 4	Number of keyless key registered	
Front Wheel Speed	km/h	CAN data input value	Reception from VDC module
Fuel consumption	cc/s	CAN data input value	Reception from ECM
Coolant Temperature	–40 — 215°C	CAN data input value	Reception from ECM
Shift Position	1 — 3, D — S, D, N, R, P	CAN data input value	Reception from TCM
Buzzer beeping request	Status for ’beeping deactivated’ Reverse warning Key warning buzzer Light Remained Buzzer Customize 1 Customize 2 Registration completed 1 Registration completed 2 registered Registration NG	CAN data output value	Reception from body integrated unit
Destination	JPN U4, U5, U6 C0 EC, EA, E2, EL K4, C4, C6 KS EK ER, EN KA, KC EH C6	CAN data input value	—
Illumination Sensor Output	0 — 5 V	CAN data input value	—
Off delay time	OFF 10 Sec 20 Sec 30s	Body integrated unit setting value	Customize setting
Auto Light Sensitivity Adjustment	Dull Normal Sensitive Very sensitive	Body integrated unit setting value	Customize setting
key-lock warning SW	ON/OFF	Body integrated unit input value	ON when ignition key inserted
Stop light SW	ON/OFF	Body integrated unit input value	ON when brake pedal is depressed

Items to be displayed	Unit of measure	Remarks	Note
Front fog lamp SW input	ON/OFF	Body integrated unit input value	When front fog light switch is ON
Driver's door SW input	ON/OFF	Body integrated unit input value	ON when driver's door is open
P-door SW input	ON/OFF	Body integrated unit input value	ON when passenger's door is open
Rear right door SW input	ON/OFF	Body integrated unit input value	ON when rear right door is open
Rear left door SW input	ON/OFF	Body integrated unit input value	ON when rear left door is open
R Gate SW input	ON/OFF	Body integrated unit input value	ON when rear gate/trunk is open
Manual lock SW input	ON/OFF	Body integrated unit input value	Manual lock switch ON
Manual unlock SW input	ON/OFF	Body integrated unit input value	Manual unlock switch ON
Bright SW input	ON/OFF	Body integrated unit input value	Bright switch ON
P SW	ON/OFF	Body integrated unit input value	ON when shift range is in parking Shift lever P switch signal
MT Reverse Switch	ON/OFF	Body integrated unit input value	Reverse switch ON (for MT vehicle only)
R wiper ON SW input	ON/OFF	Body integrated unit input value	Rear wiper switch ON
R wiper INT SW input	ON/OFF	Body integrated unit input value	Rear wiper switch (INT ON)
R washer SW input	ON/OFF	Body integrated unit input value	Rear washer switch ON
Rr Defogger SW	ON/OFF	Body integrated unit input value	Rear defogger switch ON
Fr wiper input	ON/OFF	Body integrated unit input value	ON when front wiper is operating
Parking Brake SW	ON/OFF	Body integrated unit input value	Parking brake ON
Driver's seat lock status SW input	ON/OFF	Body integrated unit input value	Displays latch state, ON when locked
Passenger's seat lock status SW input	ON/OFF	Body integrated unit input value	Displays latch state, ON when locked
R gate lock status SW input	ON/OFF	Body integrated unit input value	Displays latch state, ON when locked
R Gate Release SW input	ON/OFF	Body integrated unit input value	Rear gate release switch ON
Rr Defogger output	ON/OFF	Body integrated unit output value	ON when rear defogger relay is operating
lock actuat. LOCK output	ON/OFF	Body integrated unit output value	ON when LOCK signal is output
All seat UNLOCK output	ON/OFF	Body integrated unit output value	ON when unlock signal is output
D-seat UNLOCK output	ON/OFF	Body integrated unit output value	ON when unlock signal is output
R gate/trunk UNLK output	ON/OFF	Body integrated unit output value	ON when rear gate/trunk unlock signal is output
Rear Wiper Output	ON/OFF	Body integrated unit output value	ON when rear wiper motor is operating
Shift Lock Solenoid	ON/OFF	Body integrated unit output value	ON when shift lock solenoid is operating (only AT)
Key lock solenoid output	Lock/Unlock	Body integrated unit output value	LOCK when the key is locked
wiper deicer output	ON/OFF	Body integrated unit output value	ON when wiper deicer relay is operating
Hazard Output	ON/OFF	Body integrated unit output value	ON when answer-back signal is received or when hazard is operating
Keyless Buzzer Output	ON/OFF	Body integrated unit output value	ON when lock/unlock signal is received
Horn Output	ON/OFF	Body integrated unit output value	ON when security warning is operating
Illumination lamp O/P	ON/OFF	Body integrated unit output value	ON when illumination is illuminated

Items to be displayed	Unit of measure	Remarks	Note
Room lamp output	ON/OFF	Body integrated unit output value	ON when keyless lock/unlock signal is received, or when opening or closing the door
key illumi. lamp o/p	ON/OFF	Body integrated unit output value	ON when key illumination light is illuminated
Immobilizer lamp output	ON/OFF	Body integrated unit output value	ON when immobilizer pilot light blinks
Keyless operation 1	Regist./Normal	Body integrated unit input value	When keyless ID is registered
Keyless operation 2	Deletion/Normal	Body integrated unit input value	When keyless ID is deleted
Small Lamp SW	ON/OFF	Body integrated unit input value	ON when small light is illuminated
Headlamp	ON/OFF	Body integrated unit input value	ON when headlight Lo is illuminated
High Beam	ON/OFF	Body integrated unit input value	ON when headlight Hi is illuminated
Blower fan information	ON/OFF	CAN data input value	Reception from ECM
Power rear gate setting	ON/OFF	Body integrated unit setting value	Not applicable (OFF fixed)
Back auto rear wiper setting	ON/OFF	Body integrated unit setting value	Not applicable (OFF fixed)
XmodeSW setting	ON/OFF	Body integrated unit setting value	Not applicable (OFF fixed)
XmodeSW input	ON/OFF	Body integrated unit input value	Not applicable (OFF fixed)
XmodeSW output	ON/OFF	Body integrated unit output value	Not applicable (OFF fixed)
TPMS Setting	TPMS/No TPMS	Body integrated unit setting value	Customize item
Driver's door select unlock	Selection/ALL	Body integrated unit setting value	ALL fixed
R gate select unlock	Selection/ALL	Body integrated unit setting value	ALL fixed
Lighting I Switch Input	ON/OFF	Body integrated unit input value	Small light switch ON
Lighting II Switch Input	ON/OFF	Body integrated unit input value	Headlight switch ON
Lighting AUTO input	ON/OFF	Body integrated unit input value	Headlight AUTO switch ON
Dimmer Hi Switch Input	ON/OFF	Body integrated unit input value	Dimmer Hi switch ON
Dimmer Pass Switch Input	ON/OFF	Body integrated unit input value	Dimmer Pass switch ON
Illumination sensor flag	ON/OFF	Body integrated unit setting value	Shows the existence of illumination sensor
Lighting I Lamp Output	ON/OFF	Relay drive	ON when small light is illuminated
Lighting II Lamp Output	ON/OFF	Relay drive	ON when headlight is illuminated
Lighting Hi Lamp Output	ON/OFF	Relay drive	ON when headlight Hi is illuminated
Front Fog Lamp Output	ON/OFF	Relay drive	When front fog light relay ON output
DRL Cancel Output	ON/OFF	Relay drive	When DRL cancel relay ON output
Power Supply Tr	ON/OFF	Inner Tr drive	Headlight auxiliary power supply ON
Map lamp output	ON/OFF	Body integrated unit output value	ON when map light is illuminated
Luggage/Trunk lamp output	ON/OFF	Body integrated unit output value	ON when luggage/trunk light is illuminated
Rear defogger operation mode	Continuous/Normal	Body integrated unit setting value	Customize setting
Security Alarm Setup	ON/OFF	Body integrated unit setting value	Customize setting
Impact Sensor Setup	ON/OFF	Body integrated unit setting value	Customize setting

Items to be displayed	Unit of measure	Remarks	Note
Alarm delay setup	ON/OFF	Body integrated unit setting value	Customize setting
Lockout prevention	ON/OFF	Body integrated unit setting value	Customize setting
Impact sensor	ON/OFF	Body integrated unit setting value	Customize setting
Buzzer sounding setting	ON/OFF	Body integrated unit setting value	Customize setting
Abnormal warning lamp flashing setting	ON/OFF	Body integrated unit setting value	Customize setting
Ans.-back Buzzer	ON/OFF	Body integrated unit setting value	Customize setting
Passive Alarm	ON/OFF	Body integrated unit setting value	Customize setting
Door open warning	ON/OFF	Body integrated unit setting value	Customize setting
Dome Light Alarm Setting	ON/OFF	Body integrated unit setting value	Customize setting
Auto A/C ECU Setting	ON/OFF	Body integrated unit setting value	Customize setting
wiperdeicer	ON/OFF	Body integrated unit setting value	Customize setting
Illumination Control On/Off	ON/OFF	Body integrated unit setting value	Customize setting
Sedan/Wagon Setting	Sedan/Wagon	Body integrated unit setting value	Customize setting
MT/AT Setting	MT/AT	Body integrated unit setting value	Customize setting
6MT Setting	6MT/Other than 6MT	Body integrated unit setting value	Customize setting
Destination Setting	JPN KA, KC KS For Europe LHD other than KS C0,C5 U4, U5, U6, C6 EK, ER	Body integrated unit setting value	Displays body integrated unit customizing
Illumination Sensor Setting	ON/OFF	Body integrated unit setting value	Customize setting
Factory initial setting	Market/Factory	Body integrated unit setting value	Displays body integrated unit customizing

NOTE:
For detailed operation procedures, refer to “PC application help for Subaru Select Monitor”.

9. User Customizing

A: OPERATION

1) On «Main Menu» display, select {Each System Check}.
2) On «System Selection Menu» display, select {Integ. unit mode}.
3) On «Integ. unit mode failure diag.» display, select {Work Support}.
4) On «Work Support» display, select {Unit customizing}.
5) Change the setting with UP/DOWN key and set with the [OK] key.

List of User Customizing item

Data	Initial setting value	Customize setting	Remarks
Off delay time	30s	OFF	Room light off delay time can be selected.
		10 Sec	
		20 Sec	
		30s	
Auto Light Sensitivity Adjustment	Normal	Dull	Slow response
		Normal	Standard
		Sensitive	Quick response
		Very sensitive	Fairly quick response
Power rear gate setting	— (*1)	ON	Fixed at OFF because this is not applicable.
		OFF	
Back auto rear wiper setting	OFF	ON	Fixed at OFF because this is not applicable.
		OFF	
TPMS Setting	— (*1)	TPMS	Set to “ON” for model with TPMS.
		No TPMS	
Driver’s door select unlock	ALL	Select	ALL fixed (impossible to change)
		ALL	
R gate select unlock	ALL	Select	ALL fixed (impossible to change)
		ALL	
Rear defogger operation mode	Normal	Normal	Automatically stops in 15 minutes after switch is turned to ON.
		Continuous	Repeats active condition for 15 minutes and inactive condition for 2 minutes until switch is turned to OFF.
Security Alarm Setup	ON	ON	Security alarm (hazard, horn or siren) in active condition
		OFF	Security alarm in inactive condition
Impact Sensor Setup	OFF	ON	Workable when the “Impact sensor” is set to “ON”. Impact sensor function becomes activated.
		OFF	Impact sensor in inactive condition (Set to “OFF” in models without sensors.)
Alarm delay setup	ON		After the keyless lock operation, the alarm monitor starts after the following delay time has passed.
		ON	Delay time is 30 seconds.
		OFF	Delay time is 0 seconds.
Lockout prevention	ON	ON	key lockout prevention function is activated. (The function does not operate if safety knob is locked by hand.)
		OFF	Key lockout prevention function is deactivated.
Impact sensor (OP)	OFF	ON	Vehicle is controlled in impact sensor equipped mode. (Make sure to set to “OFF” for models without the impact sensor. When “ON”, hazard, horn or siren become activated by keyless lock (alarm monitor start).)
		OFF	Vehicle is controlled in no impact sensor mode.

Data	Initial setting value	Customize setting	Remarks
Buzzer sounding setting	ON	ON	When lock/unlock is selected by keyless entry system operation, buzzer operates.
		OFF	When lock/unlock is selected by keyless entry system operation, buzzer does not operate.
Abnormal warning lamp flashing setting	ON	ON	When lock/unlock is selected by keyless entry system operation, hazard blinks.
		OFF	When lock/unlock is selected by keyless entry system operation, hazard does not interlock.
Passive Alarm	OFF	ON	
		OFF	
Door open warning	ON	ON	
		OFF	
Dome Light Alarm Setting	OFF	ON	Room light illuminates interlocking with alarm.
		OFF	Room light does not illuminate interlocking with alarm.
Auto A/C ECU Setting	—	ON	Diagnoses with auto A/C CM.
		OFF	Diagnoses without auto A/C CM.
wiperdeicer	—	ON	Wiper deicer control is performed.
		OFF	Wiper deicer control is not performed.
Illumination Control On/Off	ON	ON	
		OFF	
Sedan/Wagon Setting	—	Sedan	Body control is performed by Sedan.
		Wagon	Body control is performed by Wagon.
MT/AT Setting	—	MT	Body control is performed by MT.
		AT	Body control is performed by AT.
6MT Setting	—	6MT	Body control is performed by 6MT.
		Other than 6MT	Body control is performed by other than 6MT.
Illumination Sensor Setting	— (*1)	ON	Set to “ON” for model with auto light.
		OFF	
Factory initial setting	Market	Market	Customize setting is reset when mode is switched from Market to Factory.
		Factory	

*1: Customization item according to the actual vehicle equipment

6) After setting, make sure that the setting changed in the {Current Data Display & Save} is same as vehicle equipment.

CAUTION:
- **The above settings must match the actual vehicle equipment.**
- **Do not change settings except for setting above while setting the functions.**
- **Be sure not to change Factory initial setting except when installing a new body integrated unit.**

NOTE:
For detailed operation procedures, refer to “PC application help for Subaru Select Monitor”.

10.Registration Body Integrated Unit

A: OPERATION

1. CONFIRM CURRENT SETTING

1) On «Main Menu» display, select {Others}.
2) On «Others» display, select {Customized Setting}.
3) Save the setting.
Required items for new registration. (Except for system not equipped)

Item	Item to confirm				Remarks
number of regist.	1	2	3	4	Number of registered ID
Off delay time	OFF	10 Sec	20 Sec	30s	Setting for lighting off time
Auto Light Sensitivity Adjustment	Dull	Normal (Standard)	Sensitive	Very sensitive	1st (slow) — 4th (fairly quick)
Power rear gate setting	ON		OFF		N/A
Back auto rear wiper setting	ON		OFF		N/A
TPMS Setting	TPMS		No TPMS		
Driver's door select unlock	ALL		Select		N/A
R gate select unlock	ALL		Select		N/A
Rear defogger operation mode	Normal		Continuous		
Security Alarm Setup	ON		OFF		
Impact Sensor Setup	ON		OFF		Option setting
Alarm delay setup	ON		OFF		
Lockout prevention	ON		OFF		
Impact sensor	ON		OFF		Option setting
Buzzer sounding setting	ON		OFF		
Abnormal warning lamp flashing setting	ON		OFF		
Passive Alarm	ON		OFF		
Door open warning	ON		OFF		
Dome Light Alarm Setting	ON		OFF		
Auto A/C ECU Setting	ON		OFF		
wiperdeicer	ON		OFF		Option setting
Illumination Control On/Off	ON		OFF		
Sedan/Wagon Setting	Wagon		Sedan		
MT/AT Setting	MT		AT		
6MT Setting	6MT		Other than 6MT		
Illumination Sensor Setting	ON		OFF		
Factory initial setting	Factory		Market		Do not change to factory mode.

2. REGISTRATION BODY INTEGRATED UNIT (FUNCTION SETTING)

CAUTION:
For the body integrated unit, function selection is available to control the entire vehicle systems. It is possible to control the original functions of vehicle when registrations of body integrated unit and function setting are corresponded to vehicle equipment.
If registrations and function setting are different from vehicle equipment, vehicle system does not operate normally and diagnosis cannot be performed correctly. Pay attention to following item.

- **Be sure to correspond registrations, or User Customizing settings to vehicle equipment.**
- **Do not change the settings of vehicle improperly.**
- **Make sure that the key illumination does not blink with ignition switch ON, or that the body integrated unit registration item, "Factory initial setting", is set as "Market". If "Factory initial setting" is set to "Factory", key illumination blinks when the ignition switch is turned ON, to notify that the settings are not confirmed. (Except for model with keyless access)**

• Key illumination does not blink with ignition switch turned to ON and go off with door closed. (Except for model with keyless access)
• Be sure to register immobilizer if body integrated unit is replaced with a new part. (Except for model with keyless access)
• Make a registration of immobilizer when the parts related to immobilizer have been replaced. Refer to the "REGISTRATION MANUAL FOR IMMOBILIZER". (Except for model with keyless access)
1) On «Main Menu» display, select {Each System Check}.
2) On «System Selection Menu» display, select {Integ. unit mode}.
3) Click the [OK] button after the control module name (integrated unit) is displayed.
4) On «Integ. unit mode failure diag.» display, select {Work Support}.
5) On «Work Support» display, select {Unit customizing}.

NOTE:
For the vehicle requiring the destination setting, if the destination setting is not finished, display can not be shifted into customizing screen. <Ref. to BC(diag)-19, DESTINATION SETTING, OPERATION, Registration Body Integrated Unit.>
6) Change the setting to the contents saved at confirmation of current setting.

CAUTION:
• To perform normal operation of vehicle and diagnosis, the above settings must match the actual vehicle equipment.
• When the body integrated unit is new or in Factory mode, the key illumination blinks, and user customizing is incomplete. Check the user customizing settings. (If the vehicle is a model with keyless access, check by the current data display function of Subaru Select Monitor because no key illumination is available.)
• Be sure not to change Factory initial setting except when installing a new body integrated unit.

NOTE:
"Factory" mode:
• Body integrated unit has not been set yet. It can be recognized by key illumination blinking with ignition switch turned to ON. (Except for model with keyless access)
• All replacement body integrated units are set to "Factory" mode. When replacing a body integrated unit, be sure to perform the registration operation.
"Market" mode:
• Each settings have been set. It can be recognized by key ring illumination coming on in concocting with room light and going off with ignition switch turned to ON.
7) Perform the Factory initial setting. On the «Unit customizing» display screen of Subaru Select Monitor, select the {Factory initial setting}.
8) Change the mode from Factory to Market.
9) Turn the ignition switch to OFF to settle the setting.
10) Change the Subaru Select Monitor system selection to «Immobilizer» to register the immobilizer key. (Except for model with keyless access)
11) Perform the registration according to the procedures of the "REGISTRATION MANUAL FOR IMMOBILIZER". (Except for model with keyless access)
12) For a vehicle equipped with remote engine starter, register the remote engine starter according to "REGISTRATION MANUAL FOR IMMOBILIZER". (Except for model with keyless access)
13) Perform the User Customizing. <Ref. to BC(diag)-15, OPERATION, User Customizing.>

NOTE:
For detailed operation procedures, refer to "PC application help for Subaru Select Monitor".

3. DESTINATION SETTING

NOTE:
For the vehicle requiring the destination setting, if the destination setting is not finished, display can not be shifted into customizing screen.

	Step	Check	Yes	No
1	**CONFIRM CURRENT SETTING.** Always perform confirmation of current setting before replacing the module. Record the contents of the “Destination Setting”. NOTE: Refer to the “Read Current Data” and “CONFIRMATION OF CURRENT SETTING” to confirm the current setting. <Ref. to BC(diag)-17, CONFIRM CURRENT SETTING, OPERATION, Registration Body Integrated Unit.> <Ref. to BC(diag)-11, OPERATION, Read Current Data.>	Is the current setting recorded?	Go to step **2**.	Confirm the current setting. Go to step **1**.
2	**CONFIRM DESTINATION SETTING.** 1) Connect the Subaru Select Monitor, and run the application. 2) On «Main Menu» display, select {Each System Check}. 3) On the «System Selection Menu» display, select {Integ. unit mode}. 4) On «Integ. unit mode» display, select {Work Support}. 5) On «Work Support» display, select {Unit customizing}. 6) The vehicle destination screen is displayed.	Is the vehicle destination setting screen displayed?	Go to step **3**.	Go to step **4**.
3	**CONFIRM DESTINATION SETTING.** Confirm the screen displayed on Subaru Select Monitor and the actual vehicle destination.	Is it necessary to change the destination setting?	Select [Yes]. Go to step **4**.	Select [No]. Go to step **5**.
4	**ENTER DESTINATION CODE.** Enter the appropriate code in the screen. JPN: JP00 KA, KC: KA00 KS: KS00 U4, U5, U6, C6 and C0, C5 (with keyless access): U400 C0, C5 (without keyless access): C000 EK, ER: EK00 Other than above: EC00	Is the appropriate code entered?	Select [Yes]. Go to step **5**.	Enter the destination code. Go to step **5**.
5	**REGISTER VEHICLE EQUIPMENTS.** Customizing screen is displayed. NOTE: Match the each item setting of body integrated unit registration item list with the vehicle equipments.	Do all setting contents match with the vehicle equipment specification?	Go to step **6**.	Change the items until each content setting match with the vehicle equipments specification. Go to step **6**.

	Step	Check	Yes	No
6	**CONFIRM MARKET MODE.** 1) Customizing screen, select the {Factory initial setting} to change the setting from "Factory" mode to "Market" mode. 2) Turn the ignition switch to OFF. NOTE: When the setting is changed from "Factory" mode to "Market" mode, turning the ignition switch from ON → OFF confirms the setting. 3) Turn the ignition switch to ON, and check the contents of settings.	Is the mode changed to "Market" mode?	Go to step **7**.	Perform the destination setting from the first step. Go to step **1**.
7	**CONFIRM MARKET MODE.** Check the following. Make sure that the "Destination Setting" in the current data display is the same as the one you confirmed in step 1.	Is the display the same as indicated?	Registration of body integrated unit is finished.	It is possible that harness malfunction may occur. Perform the diagnosis.

11.Function Check

A: OPERATION

NOTE:
In order to check the body integrated unit function, inspect the body integrated unit and actuator using Subaru Select Monitor without operating switches.
1) On «Main Menu» display, select {Each System Check}.
2) On «System Selection Menu» display, select {Integ. unit mode}.
3) On «Integ. unit mode failure diag.» display, select {Work Support}.
4) On «Work Support» display, select {Active Test}.
5) Select an item to be operated on «Active Test» display, and press the [OK] button.
6) Pressing [Next] starts, [End] cancels the operation and [OK] returns to the System Operation Check Mode display screen.

NOTE:
• If not equipped (based on area or condition), process will not go on.
• Because the model with keyless access is not equipped with key lock solenoid, the operation is disabled.
• For detailed operation procedures, refer to “PC application help for Subaru Select Monitor”.

12.List of Diagnostic Trouble Code (DTC)

A: LIST

DTC	Item	Content of diagnosis	Note
None	Communication for Initializing Impossible	Subaru Select Monitor communication is open or shorted.	<Ref. to LAN(w/o HEV)(diag)-11, COMMUNICATION FOR INITIALIZING IMPOSSIBLE, Subaru Select Monitor.>
B1100	Integ. Unit System Error	Body integrated unit internal error	<Ref. to BC(diag)-23, DTC B1100 INTEG. UNIT SYSTEM ERROR, Diagnostic Procedure with Diagnostic Trouble Code (DTC).>
B1101	BATT P/Supply Malfunction Cont	Voltage malfunction caused by poor contact of battery power supply control circuits	<Ref. to BC(diag)-24, DTC B1101 BATT P/SUPPLY MALFUNCTION CONT, Diagnostic Procedure with Diagnostic Trouble Code (DTC).>
B1102	BATT P/Supply Malfunction Backup	Voltage malfunction caused by poor contact of battery power supply backup circuits	<Ref. to BC(diag)-26, DTC B1102 BATT P/SUPPLY MALFUNCTION BACKUP, Diagnostic Procedure with Diagnostic Trouble Code (DTC).>
B1103	Ignition Power Failure	Voltage malfunction caused by poor contact of IGN power supply circuits	<Ref. to BC(diag)-28, DTC B1103 IGNITION POWER FAILURE, Diagnostic Procedure with Diagnostic Trouble Code (DTC).>
B1104	ACC Power Failure	Voltage malfunction caused by poor contact of ACC power supply circuits	<Ref. to BC(diag)-31, DTC B1104 ACC POWER FAILURE, Diagnostic Procedure with Diagnostic Trouble Code (DTC).>
B1105	Key Interlock Circuit Abnormal	GND-output short of key interlock circuit	<Ref. to BC(diag)-33, DTC B1105 KEY INTERLOCK CIRCUIT ABNORMAL, Diagnostic Procedure with Diagnostic Trouble Code (DTC).>
B1106	Shift Lock Circuit Failure	Voltage malfunction caused by poor contact of shift lock circuits	<Ref. to BC(diag)-35, DTC B1106 SHIFT LOCK CIRCUIT FAILURE, Diagnostic Procedure with Diagnostic Trouble Code (DTC).>
B1401	M Collation NG	Malfunction related immobilizer	<Ref. to BC(diag)-37, DTC B1401 M COLLATION NG, Diagnostic Procedure with Diagnostic Trouble Code (DTC).>
B1402	Immobilizer Key Collation NG	Malfunction related immobilizer	<Ref. to BC(diag)-37, DTC B1402 IMMOBILIZER KEY COLLATION NG, Diagnostic Procedure with Diagnostic Trouble Code (DTC).>
B1405	SCU Collation NG	Malfunction related immobilizer	<Ref. to BC(diag)-37, DTC B1405 SCU COLLATION NG, Diagnostic Procedure with Diagnostic Trouble Code (DTC).>
B1406	SCU_EEPROM_NG	Malfunction of security control module	<Ref. to BC(diag)-37, DTC B1406 SCU_EEPROM_NG, Diagnostic Procedure with Diagnostic Trouble Code (DTC).>
B1407	M Communication Abnormal	Communication failure between body integrated unit and combination meter	<Ref. to BC(diag)-37, DTC B1407 M COMMUNICATION ABNORMAL, Diagnostic Procedure with Diagnostic Trouble Code (DTC).>
B1408	Meter EEPROM Abnormal	Combination meter malfunction	<Ref. to BC(diag)-37, DTC B1408 METER EEPROM ABNORMAL, Diagnostic Procedure with Diagnostic Trouble Code (DTC).>
B1409	SCU Communication Abnormal	Communication failure between body integrated unit and security control module	<Ref. to BC(diag)-37, DTC B1409 SCU COMMUNICATION ABNORMAL, Diagnostic Procedure with Diagnostic Trouble Code (DTC).>
B1410	Transponder Communication Abnormal	Communication failure between key and body integrated unit	<Ref. to BC(diag)-37, DTC B1410 TRANSPONDER COMMUNICATION ABNORMAL, Diagnostic Procedure with Diagnostic Trouble Code (DTC).>
B1411	Immobilizer Antenna Abnormal	Faulty antenna	<Ref. to BC(diag)-37, DTC B1411 IMMOBILIZER ANTENNA ABNORMAL, Diagnostic Procedure with Diagnostic Trouble Code (DTC).>
B1500	Keyless UART Com. Malfunction	Open or short circuit in keyless UART circuit	<Ref. to BC(diag)-38, DTC B1500 KEYLESS UART COM. MALFUNCTION, Diagnostic Procedure with Diagnostic Trouble Code (DTC).>

13.Diagnostic Procedure with Diagnostic Trouble Code (DTC)

A: DTC B1100 INTEG. UNIT SYSTEM ERROR

DTC DETECTING CONDITION:
System error in body integrated unit
TROUBLE SYMPTOM:
LAN communication immobilizer function may not be executed normally.

	Step	Check	Yes	No
1	**CHECK DTC.** Check DTC indicated by body integrated unit.	Is B1100 current malfunction?	Go to step **2**.	Temporary EEPROM access error occurred.
2	**CHECK CONNECTOR.** 1) Turn the ignition switch to OFF. 2) Disconnect the body integrated unit connector. 3) Connect the disconnected connectors. 4) Read the DTC of body integrated unit using Subaru Select Monitor.	Is B1100 current malfunction?	Replace the body integrated unit. <Ref. to SL-82, REMOVAL, Body Integrated Unit.>	Temporary EEPROM access error occurred.

B: DTC B1101 BATT P/SUPPLY MALFUNCTION CONT

DTC DETECTING CONDITION:

- Voltage malfunction caused by poor contact of battery power supply control circuit
- Battery voltage of body integrated unit is not within the 8.5 — 16.5 V range.

TROUBLE SYMPTOM:

Functions of body integrated unit stop.

NOTE:

When B1102 BATT P/SUPPLY MALFUNCTION BACKUP is output at the same time, all the function of body integrated unit may not operate.

WIRING DIAGRAM:

- Gasoline engine model

Immobilizer system <Ref. to WI(w/o HEV)-100, WIRING DIAGRAM, Immobilizer System.>

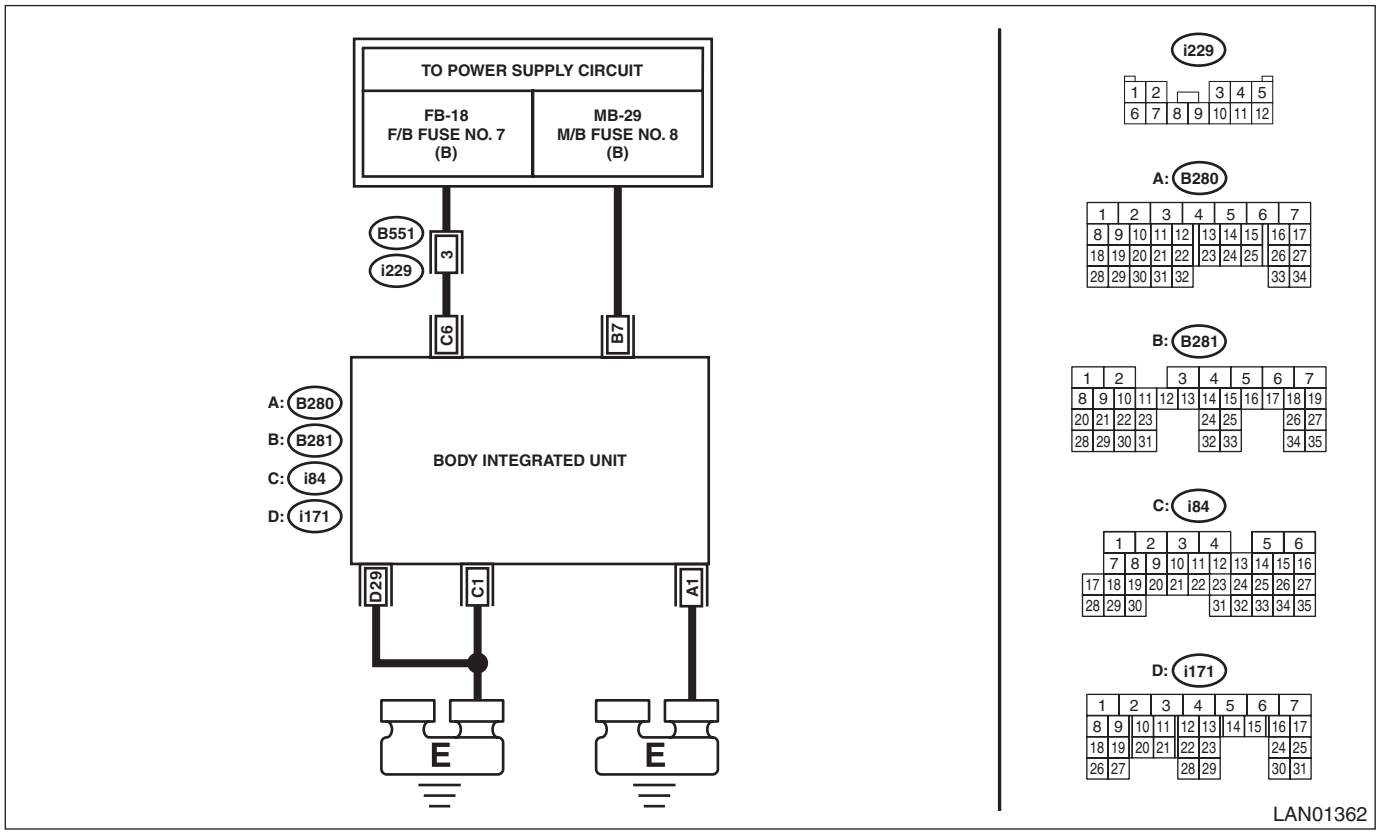

• HEV model

Immobilizer system <Ref. to WI(HEV)-150, WIRING DIAGRAM, Immobilizer System.>

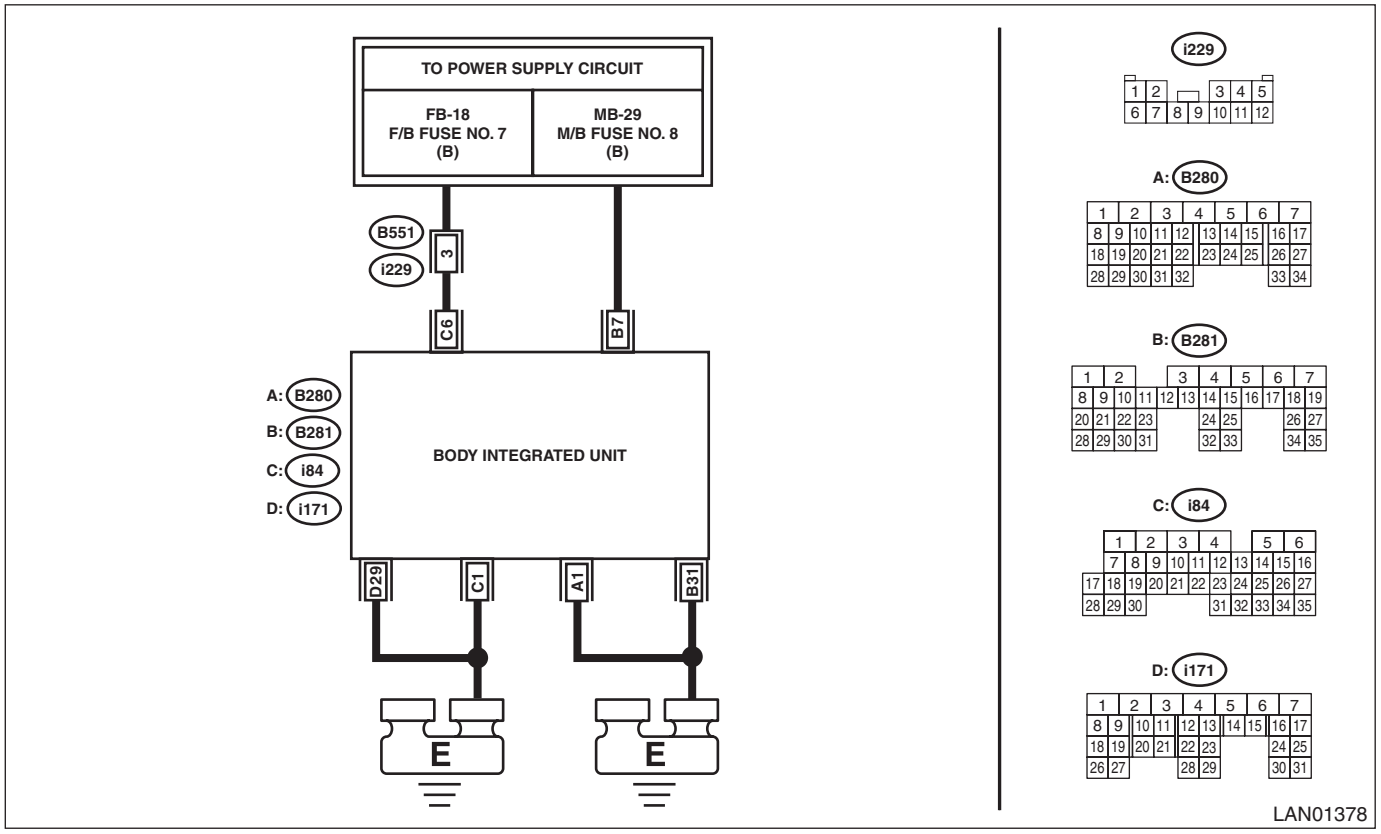

Step		Check	Yes	No
1	**CHECK DTC.** Read the DTC of body integrated unit using Subaru Select Monitor.	Is B1101 current malfunction?	Go to step **2**.	Go to step **5**.
2	**CHECK DTC.** 1) Turn the ignition switch to OFF. 2) Disconnect and then connect the body integrated unit connector. 3) Wait approx. 2 minutes. 4) Turn the ignition switch to ON. 5) Read the DTC of body integrated unit using Subaru Select Monitor.	Is B1101 current malfunction?	Go to step **3**.	Go to step **5**.
3	**CHECK FUSE.** 1) Turn the ignition switch to OFF. 2) Check the fuse.	Is the fuse OK?	Go to step **4**.	Replace the defective fuse.
4	**CHECK HARNESS.** 1) Disconnect the body integrated unit connector. 2) Using the tester, measure the voltage between terminals. ***Connector & terminal*** ***(i84) No. 6 (+) — Chassis ground (–):***	Is the voltage 8.5 — 16.5 V?	Replace the body integrated unit. <Ref. to SL-82, REMOVAL, Body Integrated Unit.>	Repair the harness between body integrated unit and fuse.
5	**CHECK CONNECTOR.** 1) Turn the ignition switch to OFF. 2) Disconnect the body integrated unit connector.	Is there poor contact of connector?	Repair or replace the poor contact of connector.	A temporary change of voltage occurred.

C: DTC B1102 BATT P/SUPPLY MALFUNCTION BACKUP

DTC DETECTING CONDITION:
Voltage malfunction caused by poor contact of battery power supply backup circuits

TROUBLE SYMPTOM:
Illuminations for the keyless entry, map light, luggage light, trunk light, room light, and ignition switch do not turn on.

NOTE:
When B1101 BATT P/SUPPLY MALFUNCTION CONT. is output at the same time, all function of body integrated unit may not operate.

WIRING DIAGRAM:
- Gasoline engine model

Immobilizer system <Ref. to WI(w/o HEV)-100, WIRING DIAGRAM, Immobilizer System.>

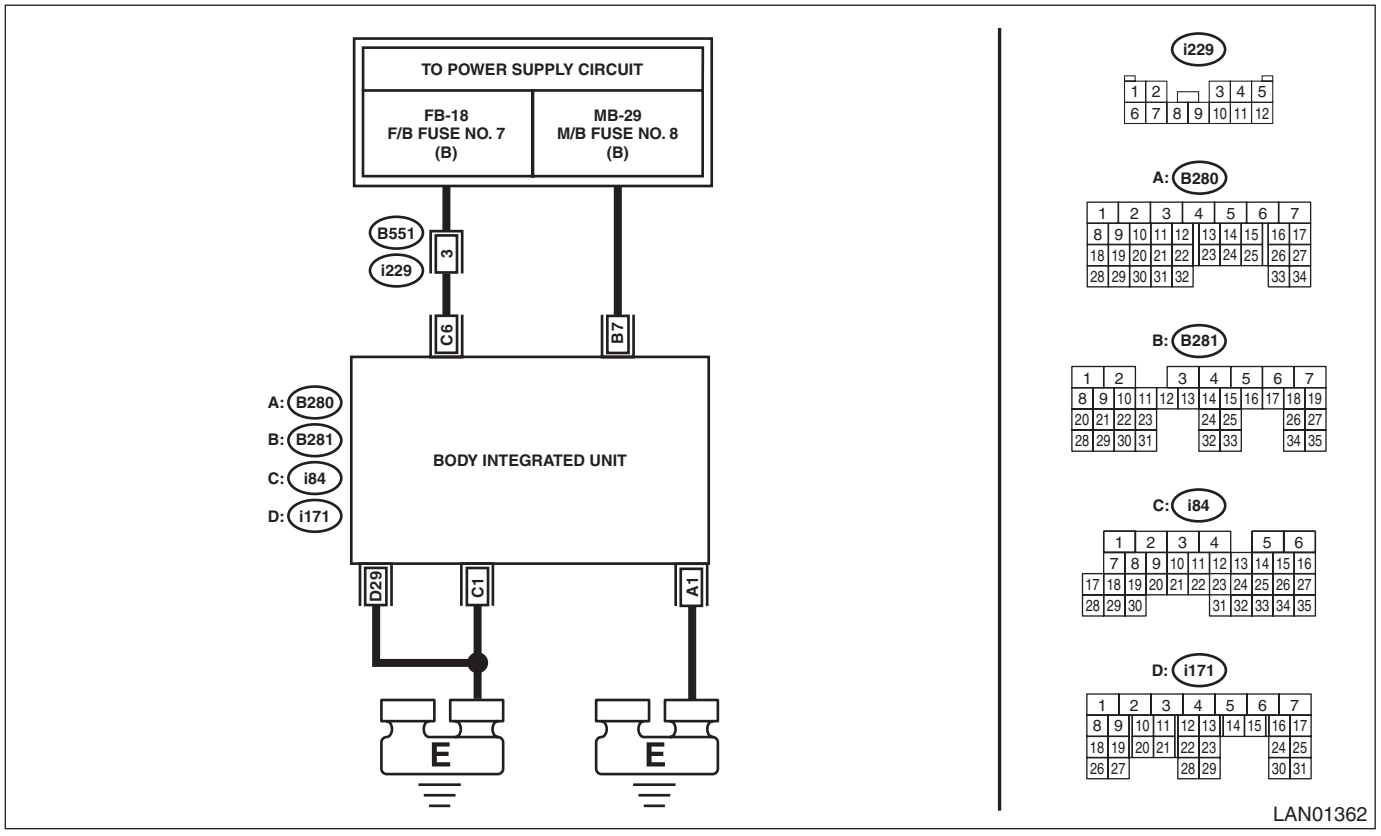

• HEV model

Immobilizer system <Ref. to WI(HEV)-150, WIRING DIAGRAM, Immobilizer System.>

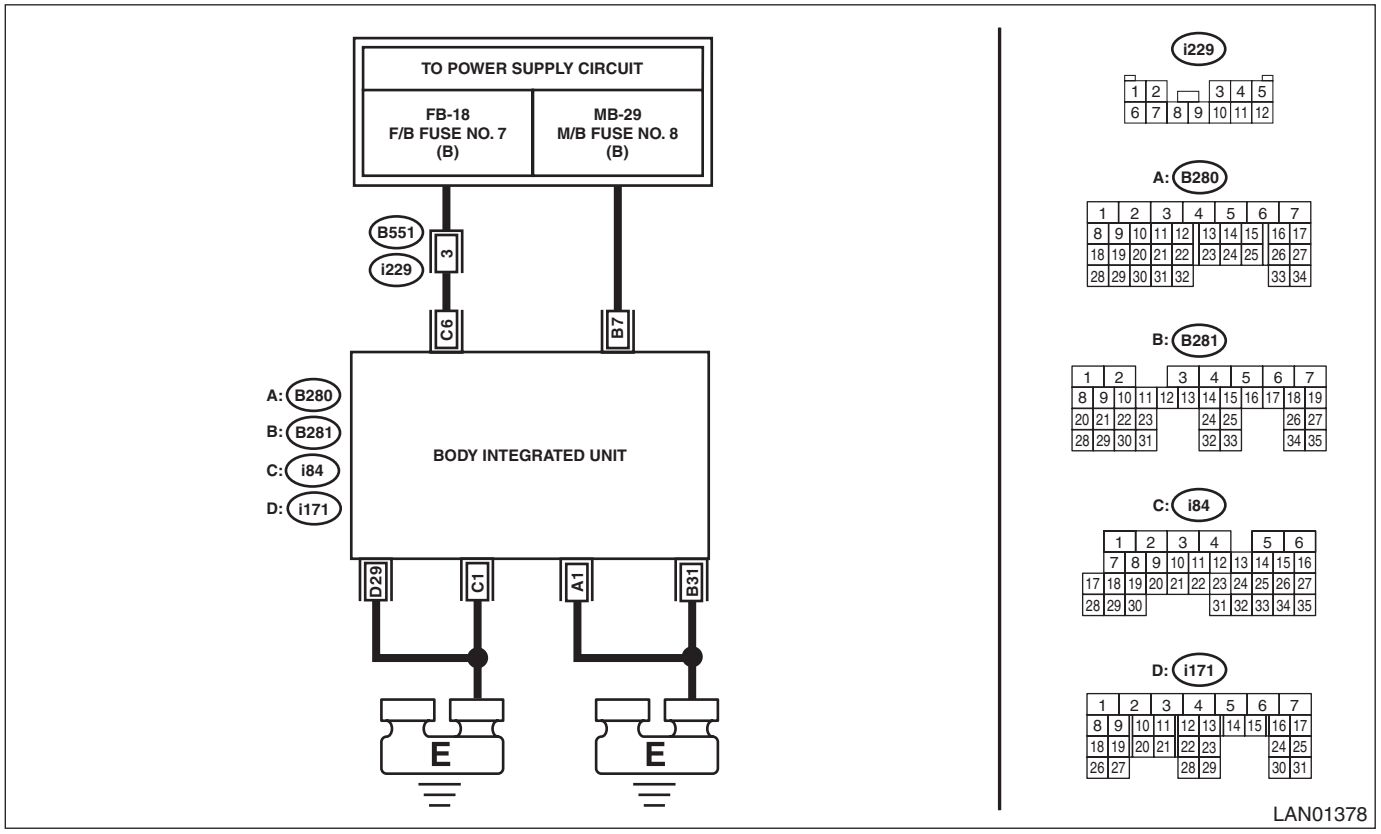

Step		Check	Yes	No
1	**CHECK DTC.** Read the DTC of body integrated unit using Subaru Select Monitor.	Is B1102 current malfunction?	Go to step **2**.	Go to step **5**.
2	**CHECK DTC.** 1) Turn the ignition switch to OFF. 2) Disconnect and then connect the body integrated unit connector. 3) Wait approx. 2 minutes. 4) Turn the ignition switch to ON. 5) Read the DTC of body integrated unit using Subaru Select Monitor.	Is B1102 current malfunction?	Go to step **3**.	Go to step **5**.
3	**CHECK FUSE.** 1) Turn the ignition switch to OFF. 2) Check the fuse.	Is the fuse OK?	Go to step **4**.	Replace the defective fuse.
4	**CHECK HARNESS.** 1) Disconnect the body integrated unit connector. 2) Using the tester, measure the voltage between terminals. ***Connector & terminal*** ***(B281) No. 7 (+) — Chassis ground (–):***	Is the voltage 8.5 — 16.5 V?	Replace the body integrated unit. <Ref. to SL-82, REMOVAL, Body Integrated Unit.>	Repair the harness between body integrated unit and fuse.
5	**CHECK CONNECTOR.** 1) Turn the ignition switch to OFF. 2) Disconnect the body integrated unit connector.	Is there poor contact of connector?	Repair or replace the poor contact of connector.	A temporary change of voltage occurred.

D: DTC B1103 IGNITION POWER FAILURE

DTC DETECTING CONDITION:
Voltage malfunction caused by poor contact of IGN power supply circuits
TROUBLE SYMPTOM:
Symptoms such as shift lock or wiper not operating may occur.
WIRING DIAGRAM:
- Gasoline engine model

Shift lock control system <Ref. to WI(w/o HEV)-142, WIRING DIAGRAM, Shift Lock Control System.>

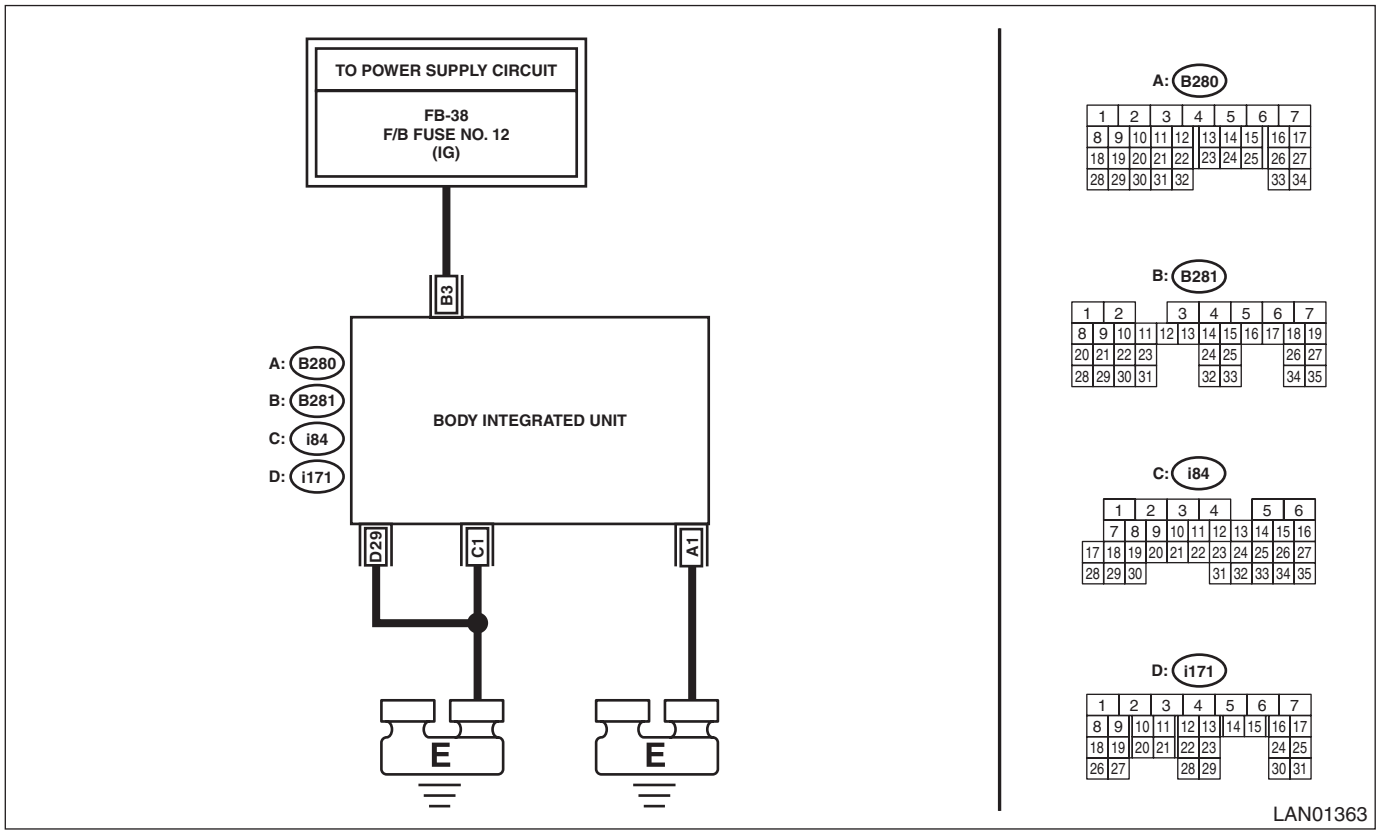

- HEV model

Shift lock control system <Ref. to WI(HEV)-205, WIRING DIAGRAM, Shift Lock Control System.>

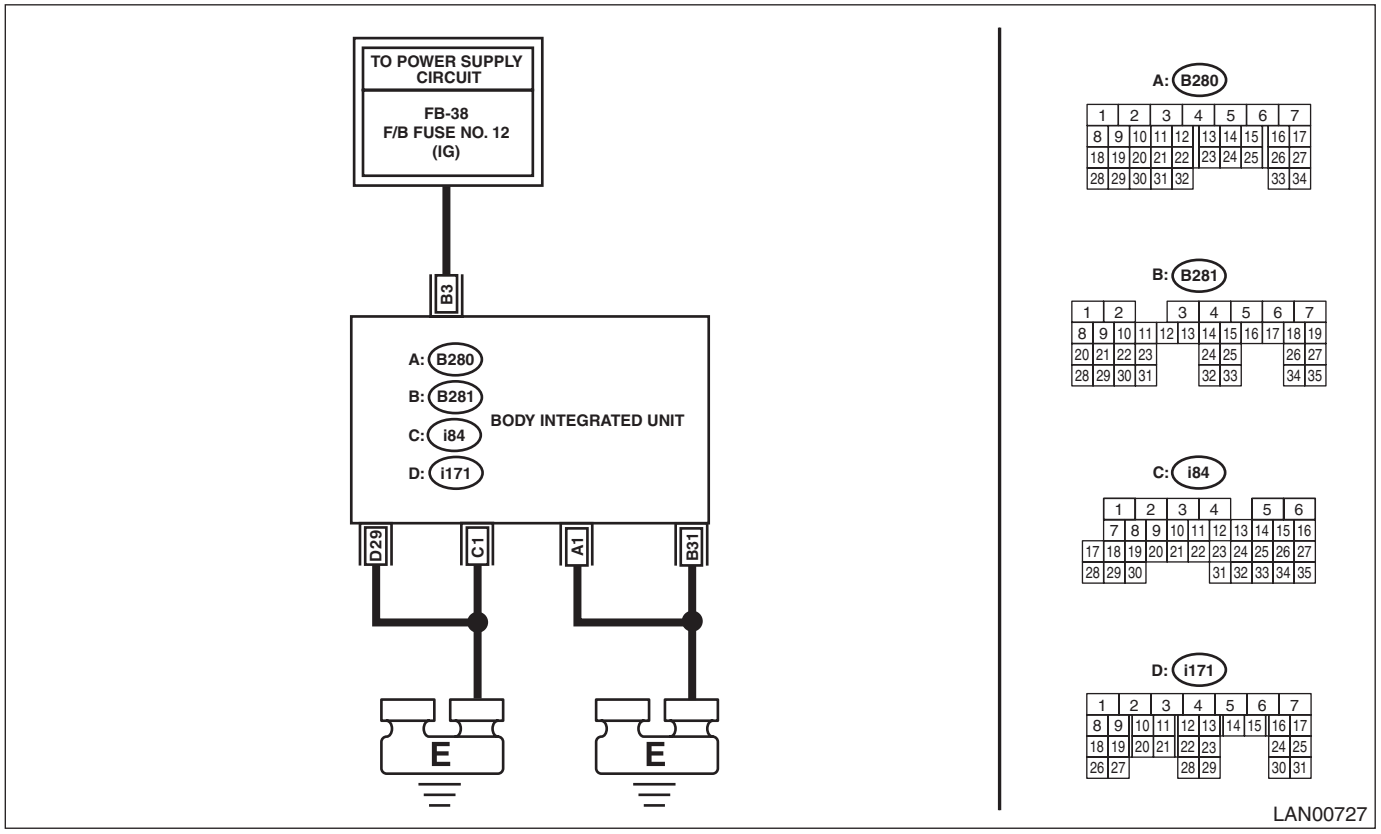

	Step	Check	Yes	No
1	**CHECK DTC.** Read the DTC of body integrated unit using Subaru Select Monitor.	Is B1103 current malfunction?	Go to step **2**.	Go to step **5**.
2	**CHECK DTC.** 1) Turn the ignition switch to OFF. 2) Disconnect and then connect the body integrated unit connector. 3) Wait approx. 2 minutes. 4) Turn the ignition switch to ON. 5) Read the DTC of body integrated unit using Subaru Select Monitor.	Is B1103 current malfunction?	Go to step **3**.	Go to step **5**.
3	**CHECK FUSE.** 1) Turn the ignition switch to OFF. 2) Check the fuse.	Is the fuse OK?	Go to step **4**.	Replace the defective fuse.
4	**CHECK HARNESS.** 1) Disconnect the body integrated unit connector. 2) Using the tester, measure the voltage between terminals. ***Connector & terminal*** ***(B281) No. 3 (+) — Chassis ground (–):***	Is the voltage 8.5 — 16.5 V?	Replace the body integrated unit. <Ref. to SL-82, REMOVAL, Body Integrated Unit.>	Repair the harness between body integrated unit and fuse.
5	**CHECK CONNECTOR.** 1) Turn the ignition switch to OFF. 2) Disconnect the body integrated unit connector.	Is there poor contact of connector?	Repair or replace the poor contact of connector.	A temporary change of voltage occurred.

E: DTC B1104 ACC POWER FAILURE

DTC DETECTING CONDITION:

Voltage malfunction caused by poor contact of ACC power supply circuit

TROUBLE SYMPTOM:

DRL may not illuminate.

WIRING DIAGRAM:

- Gasoline engine model

Shift lock control system <Ref. to WI(w/o HEV)-142, WIRING DIAGRAM, Shift Lock Control System.>

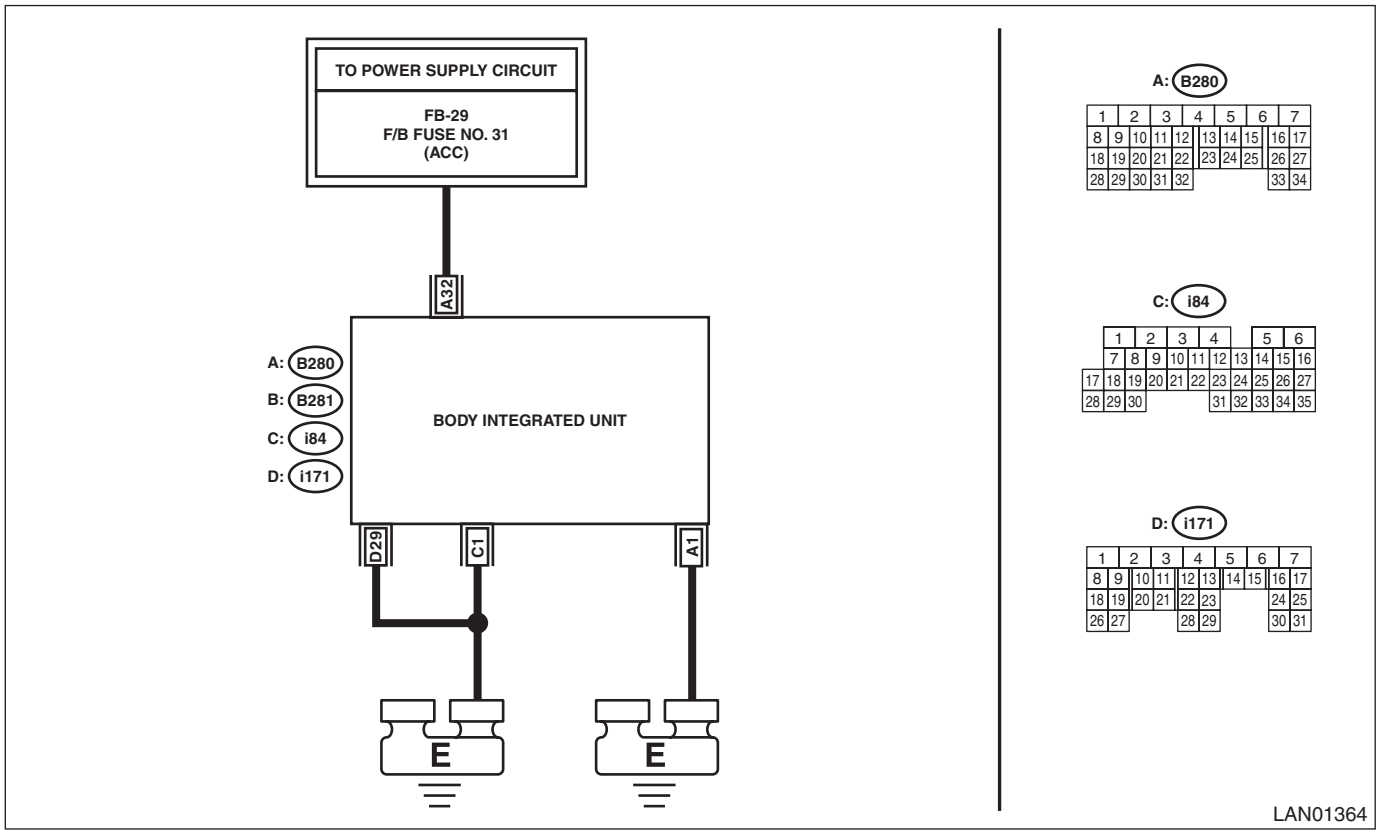

• HEV model

Shift lock control system <Ref. to WI(HEV)-205, WIRING DIAGRAM, Shift Lock Control System.>

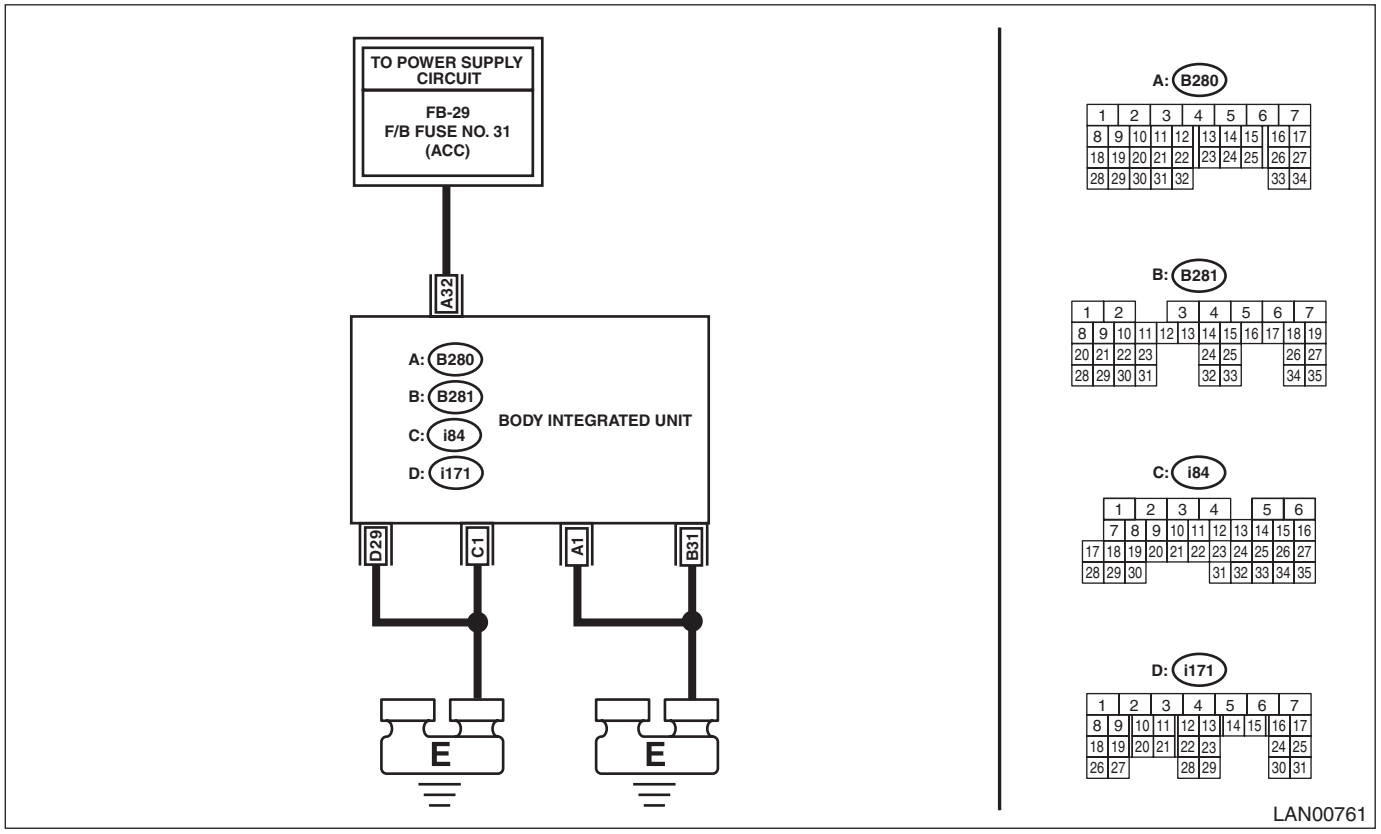

Step		Check	Yes	No
1	**CHECK DTC.** Read the DTC of body integrated unit using Subaru Select Monitor.	Is B1104 current malfunction?	Go to step **2**.	Go to step **5**.
2	**CHECK DTC.** 1) Turn the ignition switch to OFF. 2) Disconnect and then connect the body integrated unit connector. 3) Wait approx. 2 minutes. 4) Turn the ignition switch to ON. 5) Read the DTC of body integrated unit using Subaru Select Monitor.	Is B1104 current malfunction?	Go to step **3**.	Go to step **5**.
3	**CHECK FUSE.** 1) Turn the ignition switch to OFF. 2) Check the fuse.	Is the fuse OK?	Go to step **4**.	Replace the defective fuse.
4	**CHECK HARNESS.** 1) Disconnect the body integrated unit connector. 2) Using the tester, measure the voltage between terminals. ***Connector & terminal*** ***(B280) No. 32 (+) — Chassis ground (–):***	Is the voltage 8.5 — 16.5 V?	Replace the body integrated unit. <Ref. to SL-82, REMOVAL, Body Integrated Unit.>	Repair the harness between body integrated unit and fuse.
5	**CHECK CONNECTOR.** 1) Turn the ignition switch to OFF. 2) Disconnect the body integrated unit connector.	Is there poor contact of connector?	Repair or replace the poor contact of connector.	A temporary change of voltage occurred.

F: DTC B1105 KEY INTERLOCK CIRCUIT ABNORMAL

DTC DETECTING CONDITION:
Ground short of key interlock circuit
TROUBLE SYMPTOM:
Key interlock does not keep lock condition.
WIRING DIAGRAM:
Shift lock control system <Ref. to WI(w/o HEV)-142, WIRING DIAGRAM, Shift Lock Control System.> <Ref. to WI(HEV)-205, WIRING DIAGRAM, Shift Lock Control System.>

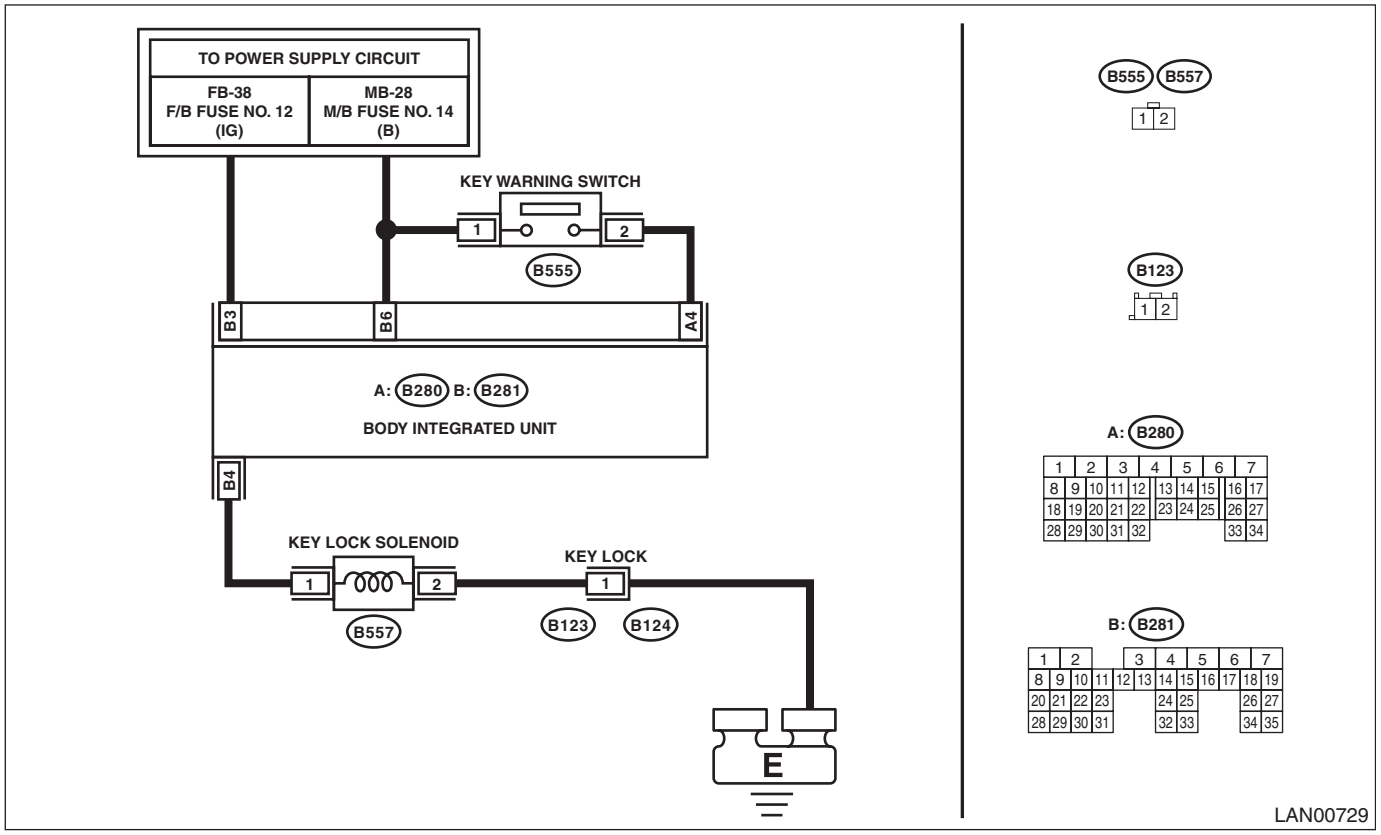

Step		Check	Yes	No
1	**CHECK DTC.** 1) Insert the ignition key. 2) Turn the ignition switch to ON. 3) Shift to the Neutral range. 4) Read the DTC of body integrated unit using Subaru Select Monitor.	Is B1105 current malfunction?	Go to step **2**.	Go to step **8**.
2	**CHECK DTC.** 1) Shift the select lever to P range. 2) Remove the ignition key. 3) Disconnect the key actuator connector (B557) and body integrated unit connector (B281). 4) Connect the disconnected connectors. 5) Insert the ignition key. 6) Turn the ignition switch to ON and shift into Neutral. 7) Read the DTC of body integrated unit using Subaru Select Monitor.	Is B1105 current malfunction?	Go to step **3**.	Go to step **8**.

	Step	Check	Yes	No
3	**CHECK KEY ACTUATOR.** 1) Turn the ignition switch to OFF. 2) Disconnect the key actuator connector (B557). 3) Measure the resistance between key actuator connectors. ***Connector & terminal*** ***(B557) No. 1 — No. 2:***	Is the resistance 103 — 115 Ω?	Go to step **4**.	Replace the key actuator.
4	**CHECK KEY ACTUATOR.** Connect the battery terminals to the key actuator. ***Terminals*** ***(B557) No. 2 — positive terminal:*** ***(B557) No. 1 — ground terminal:***	Is the actuator activated and then key locked?	Go to step **5**.	Replace the key actuator.
5	**CHECK HARNESS.** 1) Disconnect the body integrated unit connector (B281). 2) Measure the resistance between body integrated unit and key actuator using tester. ***Connector & terminal*** ***(B557) No. 1 — (B281) No. 4:***	Is the resistance less than 10 Ω?	Go to step **6**.	Repair or replace the open circuit of harness.
6	**CHECK HARNESS.** Measure the resistance between body integrated unit and chassis ground using tester. ***Connector & terminal*** ***(B281) No. 4 — Chassis ground:***	Is the resistance 1 MΩ or more?	Go to step **7**.	Repair or replace the short circuit of the harness.
7	**CHECK HARNESS.** 1) Connect the body integrated unit. 2) Turn the ignition switch to ON. 3) Measure the voltage between body integrated unit and chassis ground using tester. ***Connector & terminal*** ***(B281) No. 4 (+) — Chassis ground (–):***	Is the voltage 6 V or more?	Repair or replace the short circuit of the harness.	Replace the body integrated unit. <Ref. to SL-82, REMOVAL, Body Integrated Unit.>
8	**CHECK CONNECTOR.** 1) Turn the ignition switch to OFF. 2) Disconnect the body integrated unit connector (B281) and key actuator connector (B557).	Is there poor contact at disconnected connector terminal?	Repair the terminal where poor contact exists, or replace harness.	It is possible that temporary poor contact occurs.

G: DTC B1106 SHIFT LOCK CIRCUIT FAILURE

DTC DETECTING CONDITION:
Open or power supply-output short, GND-output short in shift lock circuit.
TROUBLE SYMPTOM:
Shift lock does not be released or remain locked.
WIRING DIAGRAM:
Shift lock control system <Ref. to WI(w/o HEV)-142, WIRING DIAGRAM, Shift Lock Control System.> <Ref. to WI(HEV)-205, WIRING DIAGRAM, Shift Lock Control System.>

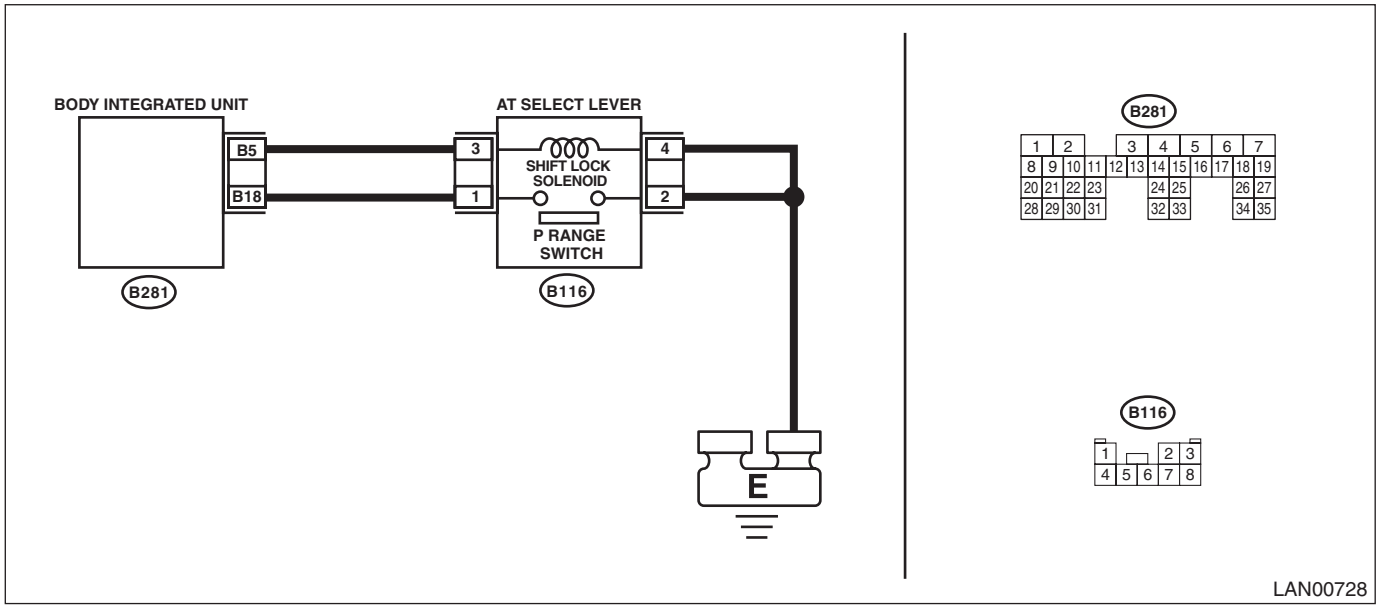

Step		Check	Yes	No
1	**CHECK DTC.** 1) Turn the ignition switch to ON. 2) Keep the Parking range for approx. 5 seconds. 3) Read the DTC of body integrated unit using Subaru Select Monitor.	Is B1106 current malfunction?	Go to step **6**.	Go to step **2**.
2	**CHECK DTC.** 1) Turn the ignition switch to OFF. 2) Disconnect the shift lock solenoid connector. 3) Connect the disconnected connectors. 4) Turn the ignition switch to ON, then keep the Parking range for approx. 5 seconds. 5) Read the DTC of body integrated unit using Subaru Select Monitor.	Is B1106 current malfunction?	Go to step **3**.	Go to step **7**.
3	**CHECK HARNESS.** 1) Turn the ignition switch to OFF. 2) Disconnect the shift lock solenoid connector. 3) Using the tester, measure the resistance between terminals. ***Connector & terminal*** ***(B116) No. 4 — Chassis ground:***	Is the resistance less than 10 Ω?	Go to step **4**.	Repair or replace the open circuit of harness.
4	**CHECK SHIFT LOCK SOLENOID.** Using a tester, measure the resistance between shift lock solenoid terminals. ***Connector & terminal*** ***(B116) No. 4 — No. 3:***	Is the resistance less than 27 — 31 Ω?	Go to step **5**.	Replace the shift lock solenoid. <Ref. to CS-37, DISASSEMBLY, Select Lever.>

	Step	Check	Yes	No
5	**CHECK SHIFT LOCK SOLENOID.** Connect the battery terminal to shift lock solenoid. ***Connector & terminal*** ***(B116) No. 3 — positive terminal:*** ***(B116) No. 4 — ground terminal:***	Does the shift lock solenoid operate and then release the lock?	Go to step **6**.	Replace the shift lock solenoid. <Ref. to CS-37, DISASSEMBLY, Select Lever.>
6	**CHECK HARNESS.** Use a tester to measure the resistance between harness terminals. ***Connector & terminal*** ***(B116) No. 3 — (B281) No. 5:*** NOTE: If body integrated unit and shift lock connector are not disconnected, disconnect them first and then perform measurement.	Is the resistance less than 10 Ω?	Replace the body integrated unit. <Ref. to SL-82, Body Integrated Unit.>	Repair or replace the open circuit of harness.
7	**CHECK DTC.** 1) Depress the brake pedal at the parking range. 2) Read the DTC of body integrated unit using Subaru Select Monitor.	Is B1106 current malfunction?	Go to step **8**.	Go to step **9**.
8	**CHECK DTC.** 1) Turn the ignition switch to OFF. 2) Disconnect the body integrated unit connector and shift lock connector. 3) Connect the disconnected connectors. 4) Turn the ignition switch to ON. 5) Depress the brake pedal at the parking range. 6) Read the DTC of body integrated unit using Subaru Select Monitor.	Is B1106 current malfunction?	Go to step **4**.	Go to step **9**.
9	**CHECK CONNECTOR.** 1) Turn the ignition switch to OFF. 2) Disconnect the body integrated unit connector and shift lock connector.	Is there poor contact of connector terminal?	Repair or replace the poor contact of terminal.	It is possible that temporary poor contact occurs.

H: DTC B1401 M COLLATION NG

For detailed diagnosis procedure, refer to IMMOBILIZER (DIAG). <Ref. to IM(diag)-27, DTC B1401 M COLLATION NG, Diagnostic Procedure with Diagnostic Trouble Code (DTC).>

I: DTC B1402 IMMOBILIZER KEY COLLATION NG

For detailed diagnosis procedure, refer to IMMOBILIZER (DIAG). <Ref. to IM(diag)-28, DTC B1402 IMMOBILIZER KEY COLLATION NG, Diagnostic Procedure with Diagnostic Trouble Code (DTC).>

J: DTC B1405 SCU COLLATION NG

For detailed diagnosis procedure, refer to IMMOBILIZER (DIAG). <Ref. to IM(diag)-28, DTC B1405 SCU COLLATION NG, Diagnostic Procedure with Diagnostic Trouble Code (DTC).>

K: DTC B1406 SCU_EEPROM_NG

For detailed diagnosis procedure, refer to IMMOBILIZER (DIAG). <Ref. to IM(diag)-28, DTC B1406 SCU_EEPROM_NG, Diagnostic Procedure with Diagnostic Trouble Code (DTC).>

L: DTC B1407 M COMMUNICATION ABNORMAL

For detailed diagnosis procedure, refer to IMMOBILIZER (DIAGNOSTICS). <Ref. to IM(diag)-29, DTC B1407 M COMMUNICATION ABNORMAL, Diagnostic Procedure with Diagnostic Trouble Code (DTC).>

M: DTC B1408 METER EEPROM ABNORMAL

For detailed diagnosis procedure, refer to IMMOBILIZER (DIAGNOSTICS). <Ref. to IM(diag)-29, DTC B1408 METER EEPROM ABNORMAL, Diagnostic Procedure with Diagnostic Trouble Code (DTC).>

N: DTC B1409 SCU COMMUNICATION ABNORMAL

For detailed diagnosis procedure, refer to IMMOBILIZER (DIAGNOSTICS). <Ref. to IM(diag)-30, DTC B1409 SCU COMMUNICATION ABNORMAL, Diagnostic Procedure with Diagnostic Trouble Code (DTC).>

O: DTC B1410 TRANSPONDER COMMUNICATION ABNORMAL

For detailed diagnosis procedure, refer to IMMOBILIZER (DIAGNOSTICS). <Ref. to IM(diag)-33, DTC B1410 TRANSPONDER COMMUNICATION ABNORMAL, Diagnostic Procedure with Diagnostic Trouble Code (DTC).>

P: DTC B1411 IMMOBILIZER ANTENNA ABNORMAL

For detailed diagnosis procedure, refer to IMMOBILIZER (DIAGNOSTICS). <Ref. to IM(diag)-33, DTC B1411 IMMOBILIZER ANTENNA ABNORMAL, Diagnostic Procedure with Diagnostic Trouble Code (DTC).>

Q: DTC B1500 KEYLESS UART COM. MALFUNCTION

1. MODELS WITHOUT KEYLESS ACCESS

DTC DETECTING CONDITION:

UART between the TPMS & keyless entry CM or keyless entry CM and body integrated unit is open or shorted, or has communication failure.

TROUBLE SYMPTOM:

- Door lock does not operate with keyless.
- TPMS does not operate. (The indicator blinks.)

WIRING DIAGRAM:

Keyless entry system <Ref. to WI(w/o HEV)-104, WIRING DIAGRAM, Keyless Entry System.>

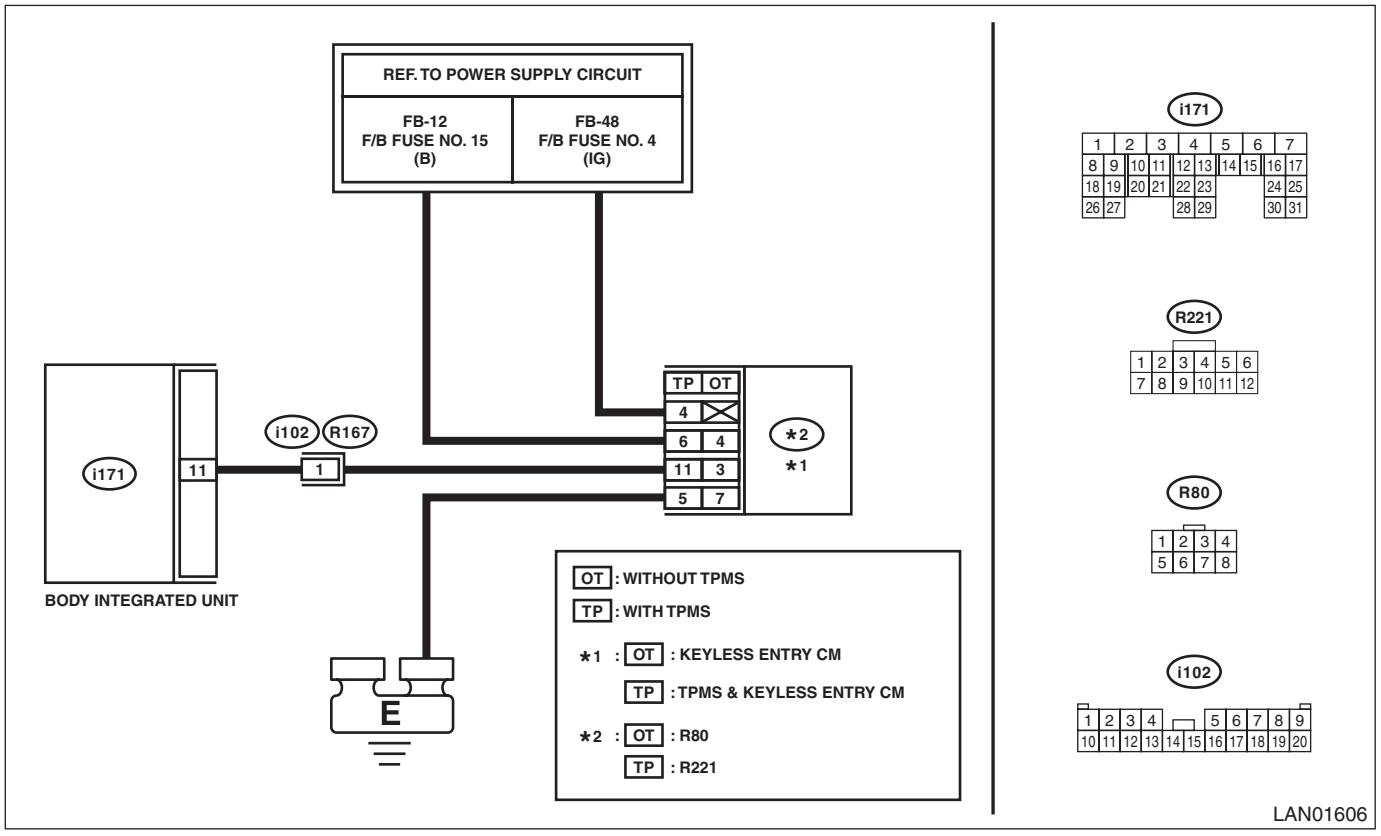

Step		Check	Yes	No
1	**CHECK DTC.** 1) Insert the ignition key to the ignition key cylinder and remove. 2) Read the DTC of body integrated unit using Subaru Select Monitor.	Is B1500 current malfunction?	Go to step **2**.	Go to step **7**.
2	**CHECK DTC.** 1) Turn the ignition switch to OFF. 2) Disconnect the connectors from the body integrated unit and the TPMS & keyless entry CM or the keyless entry CM. 3) Connect the disconnected connectors. 4) Insert the ignition key to the ignition key cylinder and remove. 5) Read the DTC of body integrated unit using Subaru Select Monitor.	Is B1500 current malfunction?	Go to step **3**.	Go to step **7**.

	Step	Check	Yes	No
3	**CHECK HARNESS.** 1) Turn the ignition switch to OFF. 2) Disconnect the connectors from the body integrated unit and the TPMS & keyless entry CM or the keyless entry CM. 3) Using the tester, measure the resistance between terminals. ***Connector & terminal*** ***With TPMS*** ***(i171) No. 11 — (R221) No. 11:*** ***Without TPMS*** ***(i171) No. 11 — (R80) No. 3:***	Is the resistance 10 Ω or less?	Go to step **4**.	Repair the open circuit of harness or replace harness.
4	**CHECK HARNESS.** 1) Turn the ignition switch to ON. 2) Use a tester to measure the voltage between the terminals. ***Connector & terminal*** ***With TPMS*** ***(R221) No. 6 (+) — Chassis ground (–):*** ***(R221) No. 4 (+) — Chassis ground (–):*** ***Without TPMS*** ***(R80) No. 4 (+) — Chassis ground (–):***	Is the voltage 10 V or more?	Go to step **5**.	Repair the power supply circuit.
5	**CHECK HARNESS.** Using the tester, measure the resistance between terminals. ***Connector & terminal*** ***With TPMS*** ***(R221) No. 5 — Chassis ground:*** ***Without TPMS*** ***(R80) No. 7 — Chassis ground:***	Is the resistance 10 Ω or less?	Go to step **6**.	Repair the ground circuit.
6	**CHECK CONTROL MODULE.** 1) Turn the ignition switch to OFF. 2) Remove the TPMS & keyless entry CM or the keyless entry CM. 3) Install the TPMS & keyless entry CM or the keyless entry CM that was working properly on another vehicle.	Does it operate with the remote control key of another vehicle?	Replace the TPMS & keyless entry CM or the keyless entry CM. <Ref. to SL-78, REMOVAL, Keyless Entry Control Module.> <Ref. to WT-8, REMOVAL, Tire Pressure Monitoring System.>	Replace the body integrated unit. <Ref. to SL-82, Body Integrated Unit.>
7	**CHECK CONNECTOR.** Check the connector used for keyless communication for poor contact.	Is there poor contact of connector?	Repair the connector that has poor contact, or replace harness.	It is possible that temporary poor communication occurs. Delete the DTC.

2. MODELS WITH KEYLESS ACCESS

DTC DETECTING CONDITION:

UART between the TPMS CM and the body integrated unit is open or shorted, or has communication failure.

TROUBLE SYMPTOM:

TPMS does not operate. (The indicator blinks.)

WIRING DIAGRAM:

Tire Pressure Monitoring System <Ref. to WI(w/o HEV)-148, WIRING DIAGRAM, Tire Pressure Monitoring System.>

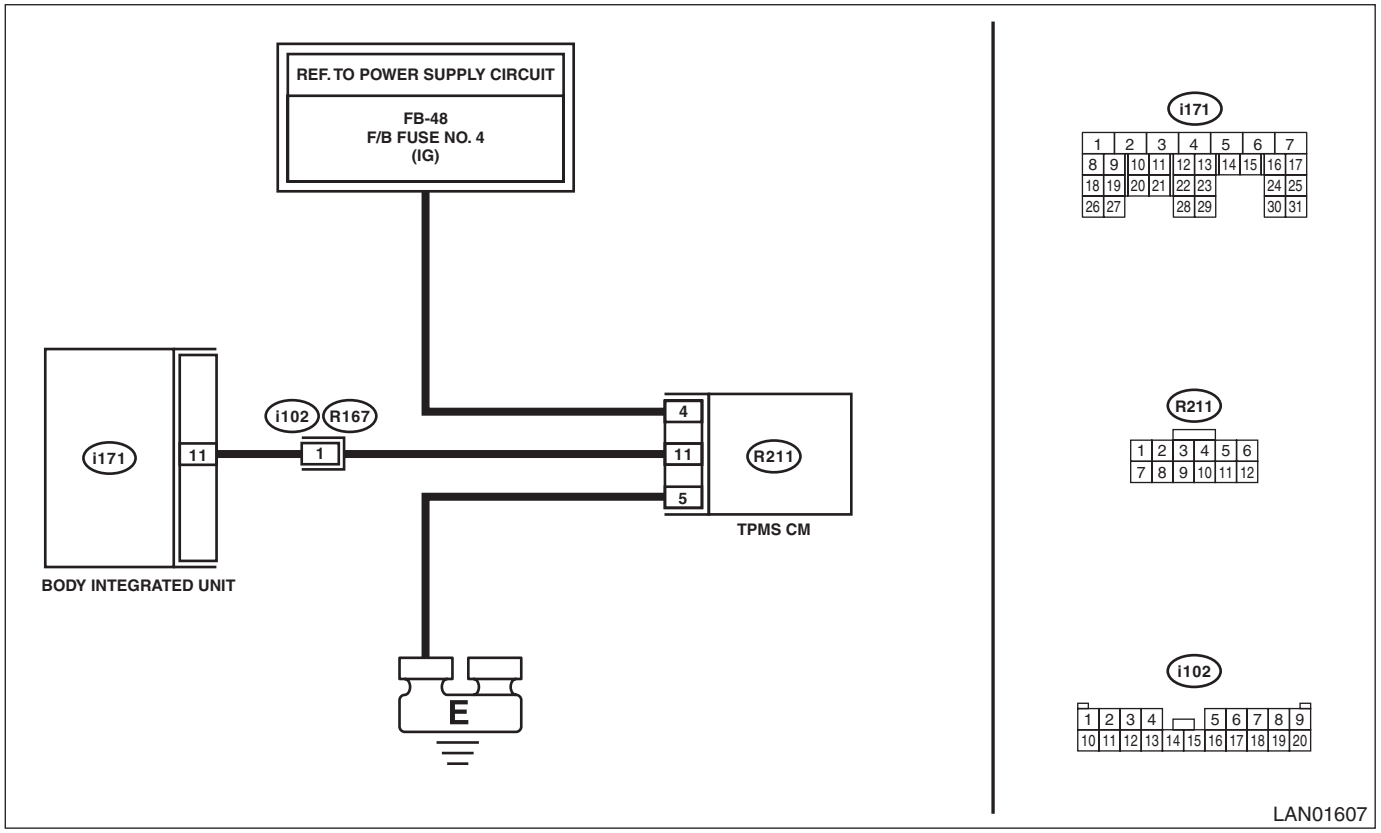

Step		Check	Yes	No
1	**CHECK DTC.** 1) With the access key in the vehicle, press the push button ignition switch twice without depressing the brake to turn the ignition switch to ON. 2) Read the DTC of body integrated unit using Subaru Select Monitor.	Is B1500 current malfunction?	Go to step **2**.	Go to step **7**.
2	**CHECK DTC.** 1) Turn the ignition switch to OFF. 2) Disconnect the body integrated unit and the TPMS CM connector. 3) Connect the disconnected connectors. 4) With the access key in the vehicle, press the push button ignition switch twice without depressing the brake to turn the ignition switch to ON. 5) Read the DTC of body integrated unit using Subaru Select Monitor.	Is B1500 current malfunction?	Go to step **3**.	Go to step **7**.

	Step	Check	Yes	No
3	**CHECK HARNESS.** 1) Turn the ignition switch to OFF. 2) Disconnect the body integrated unit and the TPMS CM connector. 3) Using the tester, measure the resistance between terminals. ***Connector & terminal*** ***(i171) No. 11 — (R211) No. 11:***	Is the resistance 10 Ω or less?	Go to step **4**.	Repair the open circuit of harness or replace harness.
4	**CHECK HARNESS.** 1) Turn the ignition switch to ON. 2) Use a tester to measure the voltage between the terminals. ***Connector & terminal*** ***(R211) No. 4 (+) — Chassis ground (–):***	Is the voltage 10 V or more?	Go to step **5**.	Repair the power supply circuit.
5	**CHECK HARNESS.** Using the tester, measure the resistance between terminals. ***Connector & terminal*** ***(R211) No. 5 — Chassis ground:***	Is the resistance 10 Ω or less?	Go to step **6**.	Repair the ground circuit.
6	**CHECK CONTROL MODULE.** 1) Turn the ignition switch to OFF. 2) Remove the TPMS CM. 3) Install a TPMS CM that was operating normally on another vehicle.	Does it operate with the remote control key of another vehicle?	Replace the TPMS CM. <Ref. to WT-10, TPMS CM, REMOVAL, Tire Pressure Monitoring System.>	Replace the body integrated unit. <Ref. to SL-82, Body Integrated Unit.>
7	**CHECK CONNECTOR.** Check the connector used for keyless communication for poor contact.	Is there poor contact of connector?	Repair the connector that has poor contact, or replace harness.	It is possible that temporary poor communication occurs. Delete the DTC.

14.General Diagnostic Table

A: INSPECTION

Using the Subaru Select Monitor, read DTC, or check the following data on the current data display to make judgments.

Item	Operation	Specifications		Note
		YES	NO	
Diagnostic code	DTC is not displayed when inspecting all DTCs.	DTC is not displayed.	Perform the diagnosis according to DTC.	—
Clearance light (Low beam) (High beam)	Clearance light and low/high beams illuminate normally when the switch is operated. Indicator in the meter illuminates at the same time.	System is normal.	Check the lighting system, combination meter system and LAN system.	—
Auto light	When the area around the light control sensor is darkened after the ignition switch and the lighting switch (AUTO) are turned to ON, the clearance light and the low beam illuminate after 5 seconds. Indicator in the combination meter illuminates at the same time.	System is normal.	Check the lighting system, combination meter system and LAN system.	—
	When the ignition switch and the lighting switch (AUTO) are turned to ON after the area around the light control sensor is darkened, the clearance light and the low beam illuminate immediately. Indicator in the combination meter illuminates at the same time.			—
Fog light	Front and rear fog lights illuminate when the switch is operated. Indicator in the meter illuminates at the same time.	System is normal.	Check the lighting system, combination meter system and LAN system.	Rear fog light operates when “Rear fog light setting” of the body integrated unit is set to on.
Rear defogger	Rear defogger operates when the switch is operated. The indicator illuminates at the same time.	System is normal.	Check the rear window defogger system and A/C system.	—
Wiper deicer	Wiper deicer operates by operating the switch. The indicator illuminates at the same time. When the ambient temperature is 5°C (41°F) or higher, press the switch 3 seconds or more to forcibly activate the system.	System is normal.	Check the wiper deicer system and A/C system.	Wiper deicer operates when “Wiper deicer setting” of the body integrated unit is set to on.
DRL	After starting the engine and releasing the parking brake, the DRL illuminates.	System is normal.	Check the lighting system and LAN system.	—
Rear wiper	Rear wiper operates when the switch is operated.	System is normal.	Check wiper or washer system.	Depending on user customizing “Sedan/Wagon Setting” of the body integrated unit, vehicle sensory time varies.
Key interlock	• Key cannot be removed in other than P range. • Key can be removed in other than P range.	System is normal.	Check the body control system.	—

Item	Operation	Specifications		Note
		YES	NO	
Shift lock	The select lever can be moved from the P range to other ranges only when the brake pedal is depressed with IG ON.	System is normal.	Check the body control system.	—
Key warning switch alarm	When the driver's door is open without the key removed, the buzzer sounds.	System is normal.	Check the combination meter and body control system.	—
Door lock	The doors lock/unlock when the door switch is operated. Rear gate/trunk opens when the rear gate/trunk release switch is operated.	System is normal.	Check the security & lock and body control system.	If user customizing "Sedan/Wagon Setting" is different, trunk and rear gate do not open.
Keyless entry	The lock locks/unlocks when the keyless transmitter is operated. Trunk/rear gate unlocks when trunk/rear gate unlock button is operated.	System is normal.	Check the keyless entry and body control system.	—
Keyless access	The lock locks/unlocks when the access key is operated. With the access key held, the touch sensor (lock) operation locks/touch sensor (unlock) operation unlocks. Rear gate unlocks when the rear gate unlock button is operated.	System is normal.	Check the keyless access and body control system.	—
Answer back	Answer-back operates when the keyless entry/keyless access locks/unlocks.	System is normal.	Check the security & lock, keyless access with push button start system, and LAN system.	—
Room light	ON/OFF according to the door open/close operation, the lock/unlock operation with the keyless entry/keyless access, and the ignition operation.	System is normal.	Check the room light system, security & lock, keyless access with push button start system, and LAN system.	For vehicles with the keyless access, the room light blinks when "Factory" mode is selected. For vehicles with the keyless entry, the room light blinks when the keyless registration mode connector is connected.
Map light	ON/OFF according to the door open/close operation, the lock/unlock operation with the keyless entry/keyless access, and the ignition operation. (Except for rear gate)	System is normal.	Check the spot map light, security & lock, keyless access with push button start system, and LAN system.	For vehicles with the keyless access, the map light blinks when "Factory" mode is selected. For vehicles with the keyless entry, the map light blinks when the keyless registration mode connector is connected.
Luggage/trunk light	The light illuminates/goes off according to the rear gate open/close. The light goes off when the doors are locked with the keyless entry/keyless access and the ignition is turned ON while the luggage light is dimming after the rear gate is closed.	System is normal.	Check the luggage/trunk light, security & lock, keyless access with push button start system, and LAN system.	For vehicles with the keyless access, the luggage/trunk light blinks when "Factory" mode is selected. For vehicles with the keyless entry, the luggage/trunk light blinks when the keyless registration mode connector is connected.

General Diagnostic Table

Item	Operation	Specifications		Note
		YES	NO	
Key illumination	The light illuminates/goes off according to the driver's door open/close. The light goes off when the doors are locked with the keyless entry/keyless access and the ignition is turned ON while illuminating.	System is normal.	Check the ignition switch illumination, security & lock, and LAN system.	For vehicles with keyless entry, the key illumination blinks when "Factory" mode is selected.
Illumination control	Illumination volume control is available.	System is normal.	Check the illumination control switch, combination meter, and body control system.	Illumination volume control is not available when user customizing "Illumination Control On/Off" of the body integrated unit is set to off.
Engine start	Engine starts.	System is normal.	Check the engine system, immobilizer, and LAN system.	—
Vehicle security	Security monitoring/security canceling can be performed by operating the keyless entry/keyless access.	System is normal.	Check the security & lock, keyless access with push button start system, and LAN system.	Security monitoring starts and at the same time the warning buzzer sounds, when impact sensor is not connected and user customizing "Impact Sensor" of the body integrated unit is set to on.

WIRING SYSTEM SECTION

WIRING SYSTEM WI(w/o HEV)

WIRING SYSTEM WI(HEV)

This service manual has been prepared to provide SUBARU service personnel with the necessary information and data for the correct maintenance and repair of SUBARU vehicles.
This manual includes the procedures for maintenance, disassembling, reassembling, inspection and adjustment of components and diagnostics for guidance of experienced mechanics.
Please peruse and utilize this manual fully to ensure complete repair work for satisfying our customers by keeping their vehicle in optimum condition. When replacement of parts during repair work is needed, be sure to use SUBARU genuine parts.

All information, illustration and specifications contained in this manual are based on the latest product information available at the time of publication approval.

FUJI HEAVY INDUSTRIES LTD. G1171BE8

WIRING SYSTEM

WI(w/o HEV)

		Page
1.	Basic Diagnostic Procedure	3
2.	Working Precautions	14
3.	Power Supply Circuit	15
4.	Ground Circuit	23
5.	Airbag System	30
6.	Air Conditioning System	35
7.	Audio System	42
8.	Back-up Light System	45
9.	CAN Communication System	46
10.	Charging System	48
11.	Clearance Light and Illumination Light System	49
12.	Combination Meter System	54
13.	Coolant Temperature System	59
14.	Cruise Control System	61
15.	CVT Control System	66
16.	Electric Power Steering System	73
17.	Engine Electrical System	74
18.	Front Accessory Power Supply Socket System	88
19.	Front Fog Light System	89
20.	Front Wiper and Washer System	90
21.	Fuel Gauge System	92
22.	Headlight Beam Leveler System	93
23.	Headlight System	95
24.	Horn System	99
25.	Immobilizer System	100
26.	Interior Light System	101
27.	Keyless Entry System	104
28.	Multi-function Display (MFD) System	108
29.	Navigation System	110
30.	Occupant Detection System	113
31.	Oil Pressure Warning Light System	114
32.	Parking Brake / Brake Fluid Level Warning Light System	115
33.	Power Window System	116
34.	Radiator Fan System	120
35.	Rear Accessory Power Supply Socket System	121
36.	Rear Defogger System	122
37.	Rearview Camera System	123
38.	Rearview Mirror System	129
39.	Rear Wiper and Washer System	130
40.	Remote Control Mirror System	132
41.	Remote Engine Start System	133
42.	Seat Belt Warning System	136
43.	Seat Heater System	137
44.	Security System	138
45.	Shift Lock Control System	142

46. Speedometer System 143
47. Starter System 144
48. Stop Light System 145
49. Sunroof Control System 147
50. Tire Pressure Monitoring System 148
51. Turn Signal Light and Hazard Light System 149
52. Vehicle Dynamics Control System 152
53. Wiper Deicer System 157
54. Harness Components Location 158
55. Front Wiring Harness 160
56. Bulkhead Wiring Harness (In Engine Compartment) 162
57. Bulkhead Wiring Harness (In Compartment) 164
58. Engine Wiring Harness and Transmission Cord 167
59. Instrument Panel Wiring Harness 170
60. Rear Wiring Harness 172
61. Door Cord 174
62. Rear Wiring Harness and Trunk Lid Cord 176
63. Rear Wiring Harness and Rear Gate Cord 178

1. Basic Diagnostic Procedure

A: BASIC PROCEDURES

1. GENERAL DESCRIPTION

The most important purpose of diagnostics is to quickly determine which part is malfunctioning, to save time and labor.

2. IDENTIFICATION OF TROUBLE SYMPTOM

Determine what the problem is based on the symptom.

3. PROBABLE CAUSE OF TROUBLE

Look at the wiring diagram and check the system's circuit. Then check the switch, relay, fuse, ground, etc.

4. LOCATION AND REPAIR OF TROUBLE

1) Using the diagnostics, narrow down the causes.
2) If necessary, use a voltmeter, ohmmeter, etc.
3) Before replacing certain component parts (switch, relay, etc.), check the power supply, ground, for open wiring harness, poor connectors, etc. If no problem is encountered, check the component parts.

5. SYSTEM OPERATION CHECK

After repairing, ensure that the system operates properly.

B: BASIC INSPECTION

1. VOLTAGE MEASUREMENT

1) Using a voltmeter, connect the negative lead to a good ground point or negative battery terminal and the positive lead to the connector or component terminal.
2) Contact the positive lead of the voltmeter on connector (A). The voltmeter will indicate a voltage.
3) Touch connector (B) with the positive probe. The voltmeter will indicate no voltage.

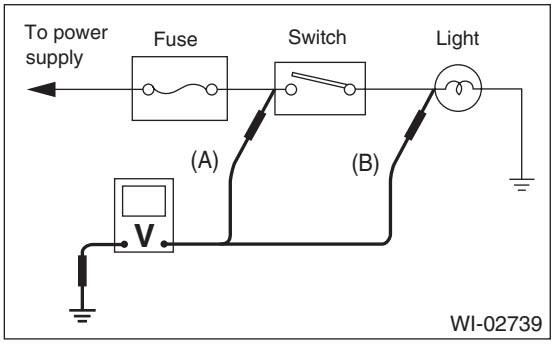

4) With the test set-up held as it is, turn the switch to ON. The voltmeter will indicate a voltage and, at the same time, the light will illuminate.
5) The circuit is in good order. If a problem such as a light failing to illuminate occurs, use the procedures outlined above to track down the malfunction.

2. CIRCUIT CONTINUITY CHECKS

1) Disconnect the battery terminal or connector so there is no voltage between the check points.
Contact the two leads of an ohmmeter to each of the check points.
If the circuit has diodes, reverse the two leads and check again.
2) Use an ohmmeter to check for diode continuity.
When contacting the negative lead to the diode positive side and the positive lead to the negative side, there should be continuity.
When contacting the two leads in reverse, there should be no continuity.

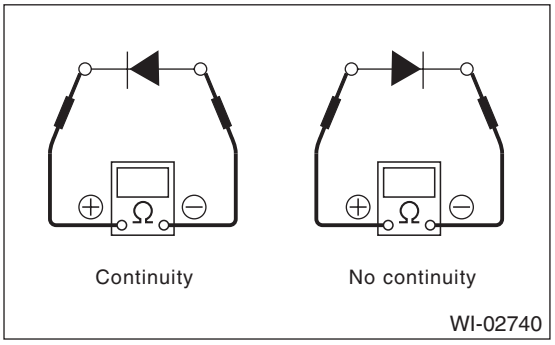

3) The symbol "❍ — ❍" indicates that continuity exists between two points or terminals. For example, when a switch position is at "3", continuity exists among terminals 1, 3 and 6, as shown in the table below.

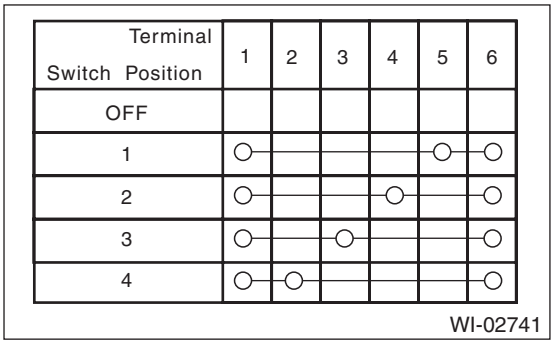

Terminal / Switch Position	1	2	3	4	5	6
OFF						
1	○				○	○
2	○			○		○
3	○		○			○
4	○	○				○

3. HOW TO DETERMINE AN OPEN CIRCUIT

1) WITH VOLTMETER:
An open circuit is determined by measuring the voltage between respective connectors and ground using a voltmeter, starting with the connector closest to the power supply. The power supply must be turned ON so that current flows in the circuit. If voltage is not present between a particular connector and ground, the circuit between that connector and the previous connector is open.

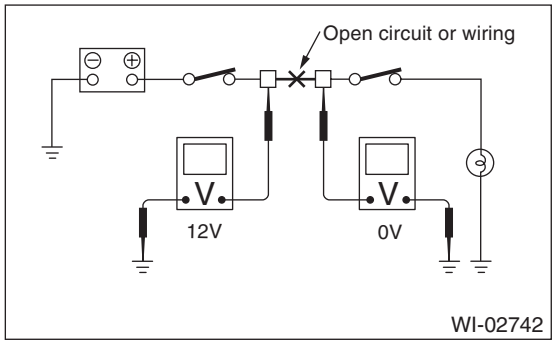

2) WITH OHMMETER:
Disconnect all connectors affected, and check continuity in the wiring between adjacent connectors. When the ohmmeter indicates “infinite”, the wiring is open.

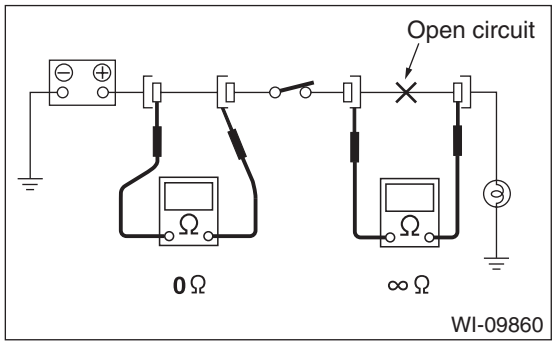

4. HOW TO DETERMINE A SHORT CIRCUIT

1) WITH TEST LIGHT:
Connect a test light (rated at approx. 3 watts) in place of the blown fuse and allow current to flow through the circuit. Disconnect one connector at a time from the circuit. Starting with the one located farthest from the power supply. If the test light goes out when a connector is disconnected, the wiring between that connector and the next connector (farther from the power supply) is shorted.

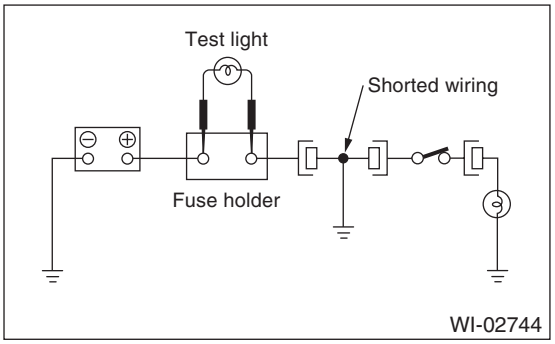

2) WITH OHMMETER:
Disconnect all affected connectors, and check continuity between each connector and ground. When the ohmmeter indicates continuity between a particular connector and a ground, that connector is shorted.

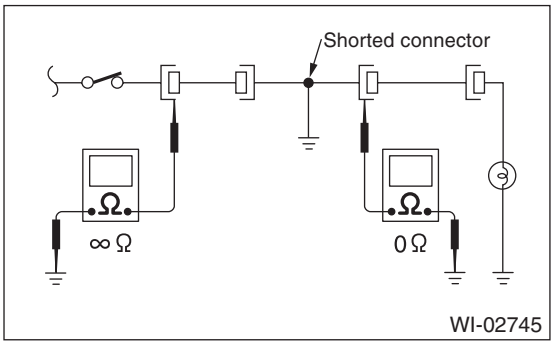

C: HOW TO READ WIRING DIAGRAMS

1. WIRING DIAGRAM

The wiring diagram of each system is illustrated so that you can understand the path through which the electric current flows from the battery.
Sketches and codes are used in the diagrams. They should read as follows:

- Each connector and its terminal position are indicated by a sketch of the connector in a disconnected state which is viewed from the front.

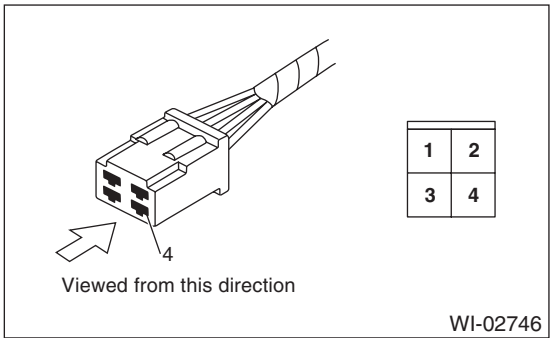

- The number of poles or pins, presence of a lock are indicated in the sketch of each connector. In the sketch, the highest pole number refers to the number of poles which the connector has. For example, the sketch of the connector shown in figure indicates the connector has 9 poles.

Connector used in vehicle	Connector shown in wiring diagram		
	Sketch	Symbol	Number of poles
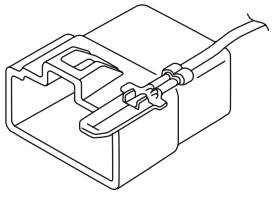	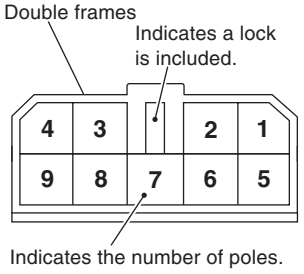	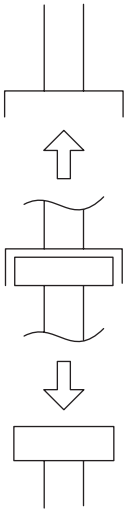	Numbered in order from upper right to lower left.
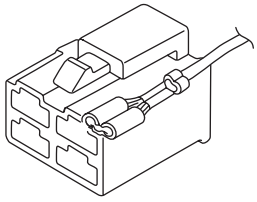	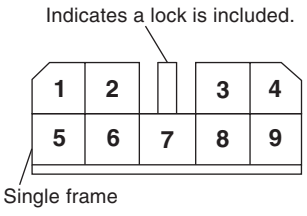		Numbered in order from upper left to lower right.

WI-02747

• When one set of connectors is viewed from the front side, the pole numbers of one connector are symmetrical to those of the other. When these two connectors are connected as a unit, the poles which have the same number are joined.

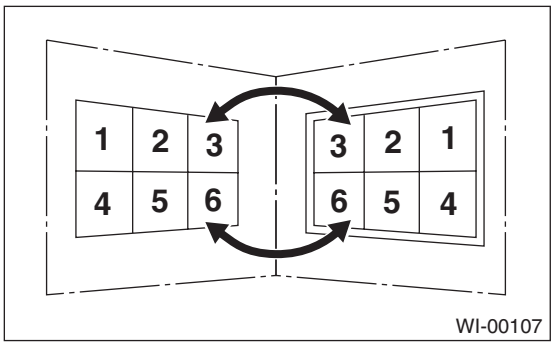

• WIRING DIAGRAM:
The connectors are numbered along with the number of poles, external colors, and mating connections in the accompanying list.
• The sketch of each connector in the wiring diagram usually shows the (A) side of the connector. The relationship between the wire color, terminal number and connector is described in the figure.

NOTE:
A wire which runs in one direction from a connector terminal sometimes may have a different color from that which runs in the other direction from that terminal.

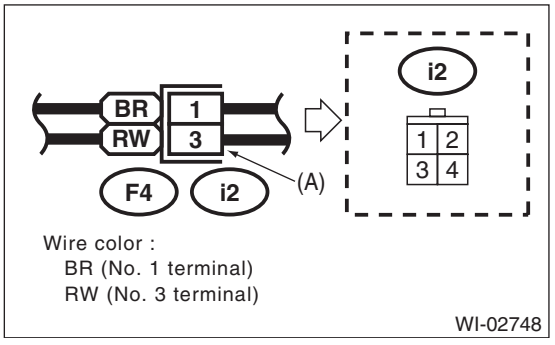

• In the wiring diagram, connectors which have no terminal number refer to one-pole types. Sketches of these connectors are omitted intentionally.

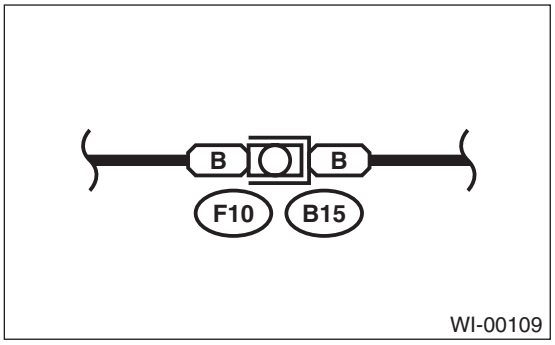

• The following color codes are used to indicate the colors of the wires.

Color code	Color
L	Blue
B	Black
Y	Yellow
G	Green
R	Red
W	White
Br	Brown
Lg	Light green
Gr	Gray
P	Pink
Or	Orange
Sb	Light blue
V	Violet
SA	Sealed (inner)
SB	Sealed (outer)

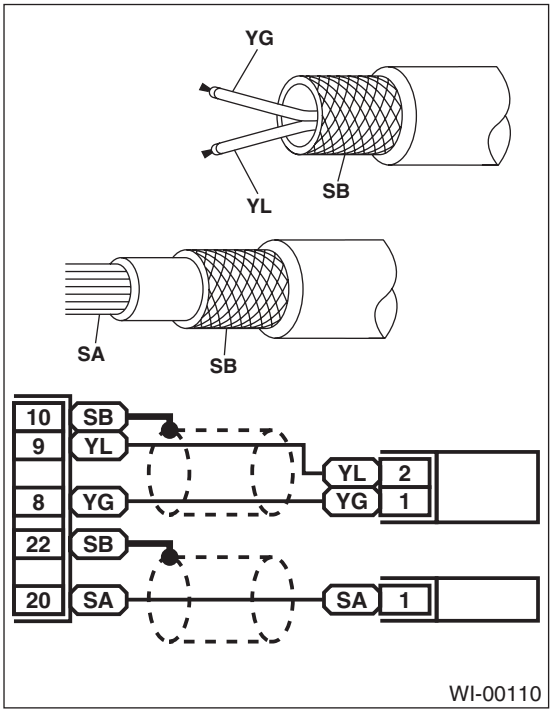

• The wire color code, which consists of two letters (or three letters including Br or Lg), indicates the standard color (base color of the wire covering) by its first letter and the stripe marking by its second letter.

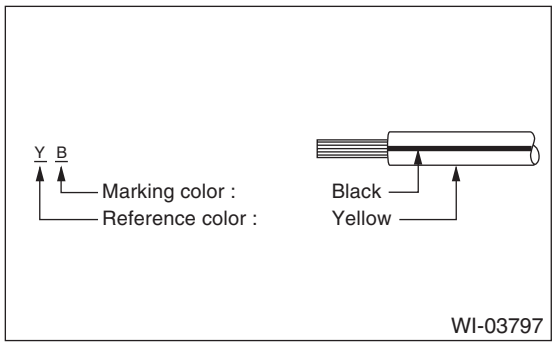

• The table lists the nominal sectional areas and allowable currents of the wires.

CAUTION:
When replacing or repairing a wire, be sure to use the same size and type of the wire which was originally used.

NOTE:
• The allowable current in the table indicates the tolerable amperage of each wire at an ambient temperature of 40°C (104°F).
• The allowable current changes with ambient temperature. Also, it changes if a bundle of more than two wires is used.

Nominal sectional area mm^2	No. of strands/ strand diameter	Outside diameter of wiring mm	Allowable current Amps/ 40°C (104°F)
0.3	7/0.26	1.8	7
0.5	7/0.32	2.2 (or 2.0)	12
0.75	30/0.18	2.6 (or 2.4)	16
0.85	11/0.32	2.4 (or 2.2)	16
1.25	16/0.32	2.7 (or 2.5)	21
2	26/0.32	3.1 (or 2.9)	28
3	41/0.32	3.8 (or 3.6)	38
5	65/0.32	4.6 (or 4.4)	51
8	50/0.45	5.5	67

• Each unit is either directly grounded to the body or indirectly grounds through a harness ground terminal. Different symbols are used in the wiring diagram to identify the two grounding systems.

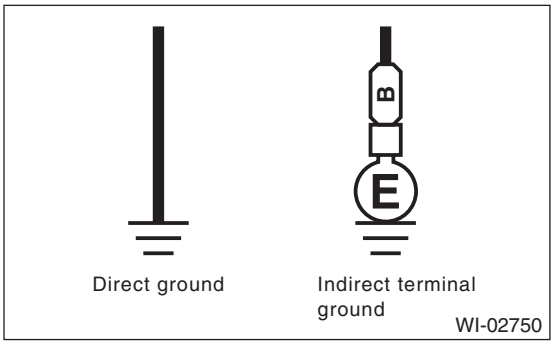

• The ground points shown in the wiring diagram refer to the following:

NOTE:
All wiring harnesses are provided with a ground point which must be securely connected.

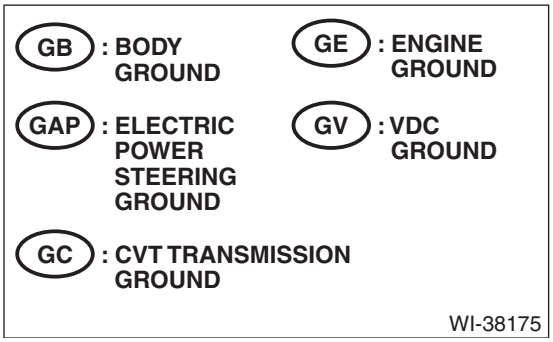

- Relays are classified as normally-open or normally-closed.

The normally-closed relay has one or more contacts. The wiring diagram shows the relay mode when the energizing circuit is OFF.

Relay type		Energizing circuit OFF	Energizing circuit ON
Normally-open type	4-pole	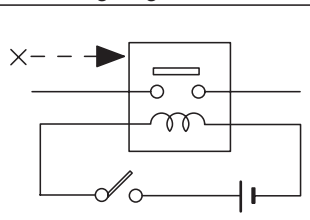	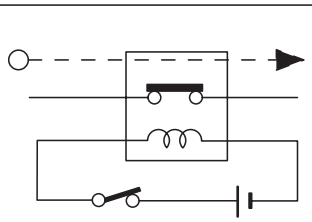
	6-pole	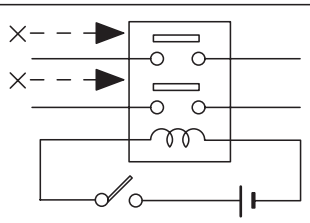	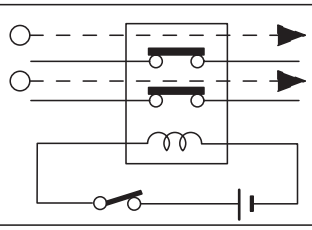
Normally-closed type	4-pole	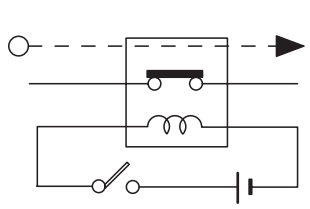	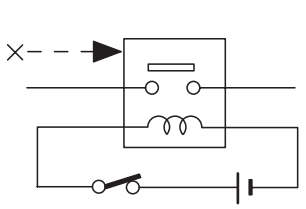
Mixed type	6-pole	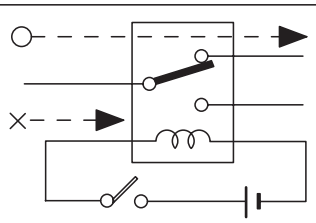	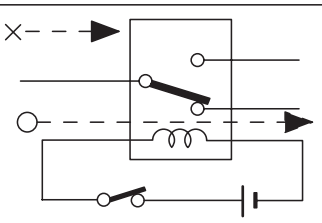

Key to symbols:

○ ⟶ : Current flows.

× ⟶ : Current does not flow.

WI-16724

• Each connector number shown in the wiring diagram corresponds to that in the wiring harness. The location of each connector in the actual vehicle is determined by reading the first character of the connector (for example, a “F” for F8, “i” for i16, etc.) and the type of wiring harness. The first character of each connector number corresponds to the area or system of the vehicle.

Symbol	Wiring harness and cord
F	Front wiring harness
B	Bulkhead wiring harness
E	Engine wiring harness
T	Transmission cord
D	Door cord LH & RH, Rear gate cord Rear door cord LH & RH, Rear defogger cord
i	Instrument panel wiring harness
R	Rear wiring harness, Fuel tank cord, Roof cord, Rear gate cord
AB	Airbag wiring harness

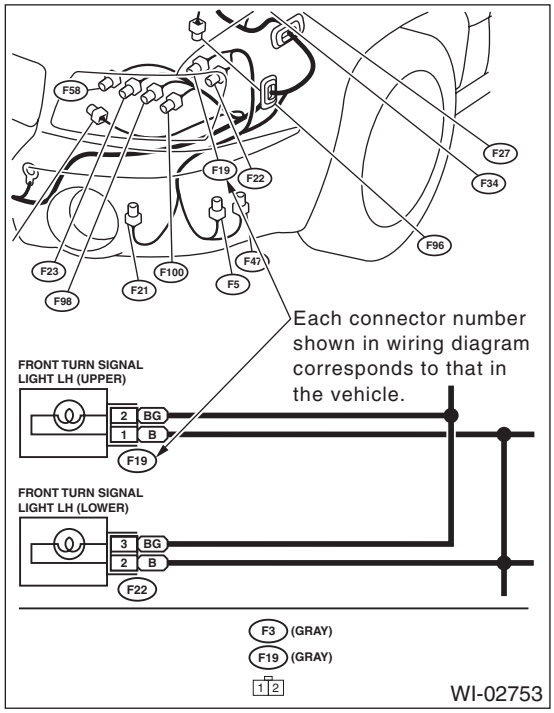

D: SYMBOLS IN WIRING DIAGRAMS

A number of symbols are used in each wiring diagram to easily identify parts or circuits.

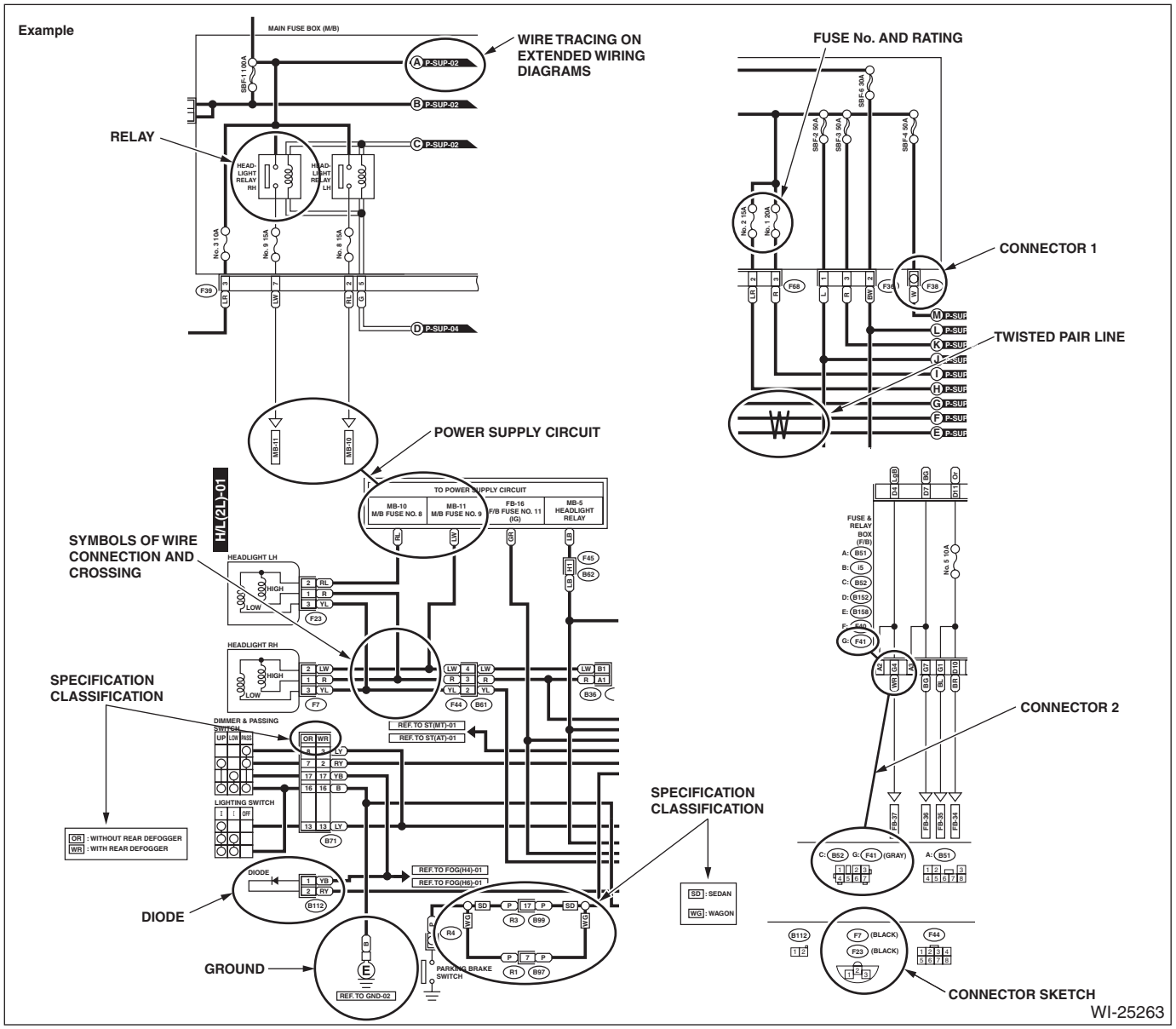

1. RELAY

A symbol used to indicate a relay.

2. CONNECTOR 1

The sketch of the connector indicates the one-pole types.

3. WIRING CONNECTION

Some wiring diagrams are indicated in foldouts for convenience. Wiring destinations are indicated where necessary by corresponding symbols. (When two pages are needed for clear indication)

4. FUSE NO. & RATING

The “FUSE No. & RATING” corresponds with that used in the fuse box (main fuse box, fuse and joint box).

5. CONNECTOR 2

- Each connector is indicated by a symbol.
- Each terminal number is indicated in the corresponding wiring diagram in an abbreviated form.
- For example, terminal number “G4” refers to No. 4 terminal of connector (G: F41) shown in the connector sketch.

6. CONNECTOR SKETCH

- Each connector sketch clearly identifies the shape and color of a connector as well as terminal locations. Non-colored connectors are indicated in natural color.
- When more than two types of connector number are indicated in a connector sketch, it means that the same type connectors are used.

7. GROUND

Each grounding point can be located easily by referring to the corresponding wiring harness.

8. DIODE

A symbol is used to indicate a diode.

9. WIRE TRACING ON EXTENDED WIRING DIAGRAMS

For a wiring diagram extending over at least two pages, a symbol (consisting of the same characters with arrows), facilitates wire tracing from one page to the next.

A ←→ A, B ←→ B

10.SYMBOLS OF WIRE CONNECTION AND CROSSING

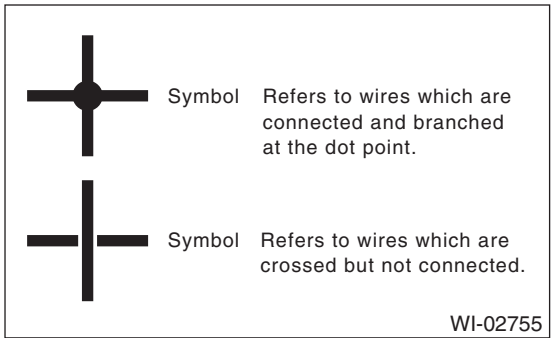

11.POWER SUPPLY CIRCUIT

A symbol is used to indicate the power supply in each wiring diagram.

“MB – 5”, “MB – 6”, etc., which are used as power-supply symbols throughout the text, correspond with those shown in the “DC POWER SUPPLY CIRCUIT” in the wiring diagram.

Accordingly, using the “DC POWER SUPPLY CIRCUIT” and wiring diagrams permits service personnel to understand the entire electrical arrangement of a system.

12.CLASSIFICATION BY SPECIFICATION

When the wiring diagram differ according to vehicle specifications, the specification difference is described by using abbreviations.

13.TWISTED PAIR LINE

The twisted pair line is indicated by a symbol in the wiring diagrams.

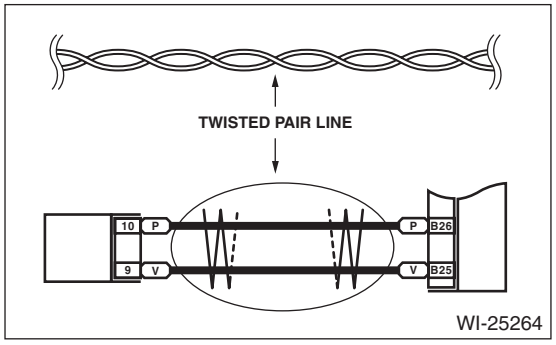

E: CONNECTOR SYMBOL IN WIRING HARNESS

A number of connector symbols are used in each wiring diagram to easily identify the wiring harness connectors.

Standard type: Female		
Pole: From 1 to 8	Pole: From 9 to 20	Pole: More than 21
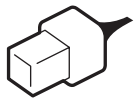	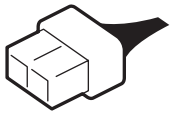	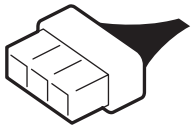
		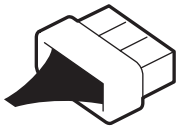
Standard type: Male		
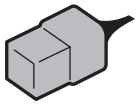	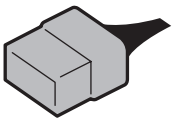	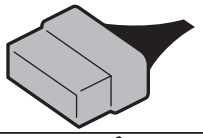
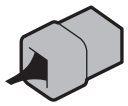	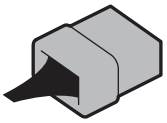	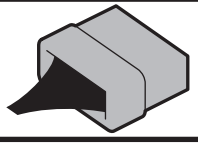

Water proof type: Female		
Pole: From 1 to 8	Pole: From 9 to 20	Pole: More than 21
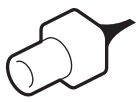		
		
Water proof type: Male		
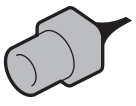	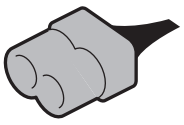	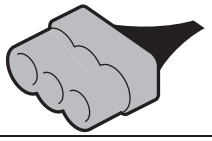
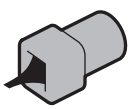	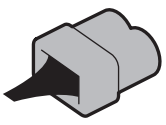	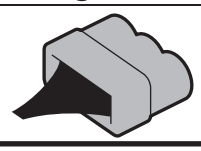

WI-02756

F: ABBREVIATION IN WIRING DIAGRAMS

Abbr.	Full name
ABS	Anti-lock Brake System
ACC	Accessory
A/C	Air Conditioner
ASSY	Assembly
AT	Automatic Transmission
A/F	Air/Fuel (Air fuel ratio sensor)
ATF	Automatic Transmission Fluid
AUX	Auxiliary Audio Input Terminal
AWD	All Wheel Drive
B	Battery
CAN	Controller Area Network
CM	Control Module
CVT	Continuously Variable Transmission
D	Drive range or Down
DN	Down
E	Ground
ELCM	Evaporative Leak Check Module
ECO	Economy
ECM	Engine Control Module
EEPROM	Electrically Erasable Programmable Read-Only Memory
EGR	Exhaust Gas Recirculation
F/B	Fuse & Relay Box
FL	Front Left
FR	Front Right
G	Gravity (G sensor)
H/L	Headlight
HI	High
I/F	Interface
IG	Ignition
INT	Intermittent
ISO	International Organization for Standardization
J/C	Joint Connector
LCD	Liquid Crystal Display
LH	Left Hand
LO	Low
LWR	Lower
M	Motor
M/B	Main Fuse Box
MFD	Multi Function Display
MT	Manual Transmission
N	Neutral Range
NAVI	Navigation
OP	Open or Optional Parts
P	Parking or Parking range
PASS	Passing
PCV	Positive Crankcase Ventilation Valve
R	Reverse Range

Abbr.	Full name
RH	Right Hand
RL	Rear Left
RR	Rear Right
SBF	Slow Blow Fuse
ST	Starter
SW	Switch
TCM	Transmission Control Module
TFT	Thin Film Transistor
TPMS	Tire Pressure Monitor System
UPR	Upper
VDC	Vehicle Dynamics Control
WASH	Washer

2. Working Precautions

A: PRECAUTIONS WHEN WORKING WITH THE PARTS MOUNTED ON THE VEHICLE

1) When working under a vehicle which is jacked-up, always be sure to use rigid rack.
2) The parking brake must always be applied during working. Also, in automatic transmission vehicles, keep the select lever set to the P (Parking) range.
3) Be sure the workshop is properly ventilated when running the engine. Further, be careful not to touch the belt or fan while the engine is operating.
4) Be careful not to touch hot metal parts, especially the radiator and exhaust system immediately after the engine has been turned off.

B: PRECAUTIONS IN TROUBLE DIAGNOSIS AND REPAIR OF ELECTRIC PARTS

1) The battery cable must be disconnected from the battery's (–) terminal, and the ignition switch must be set to the OFF position, unless otherwise required by the diagnostics.
2) Securely fasten the wiring harness with clamps and clips so that the harness does not interfere with the body end parts, edges, bolts or screws.
3) When installing parts, be careful not to catch them on the wiring harness.
4) When disconnecting a connector, do not pull the wires, but pull while holding the connector body.

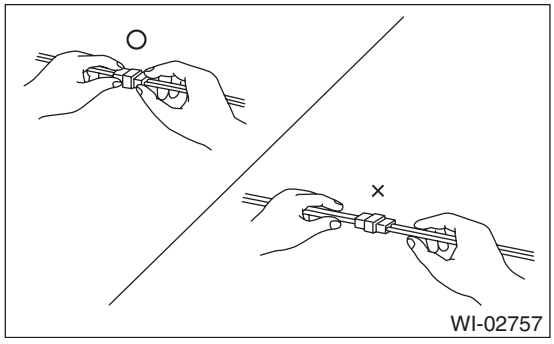

5) Some connectors are provided with a lock. One type of such a connector is disconnected by pushing the lock, and the other, by moving the lock up. In either type the lock shape must be identified before attempting to disconnect the connector.
To connect, insert the connector until it snaps and confirm that it is connected securely.

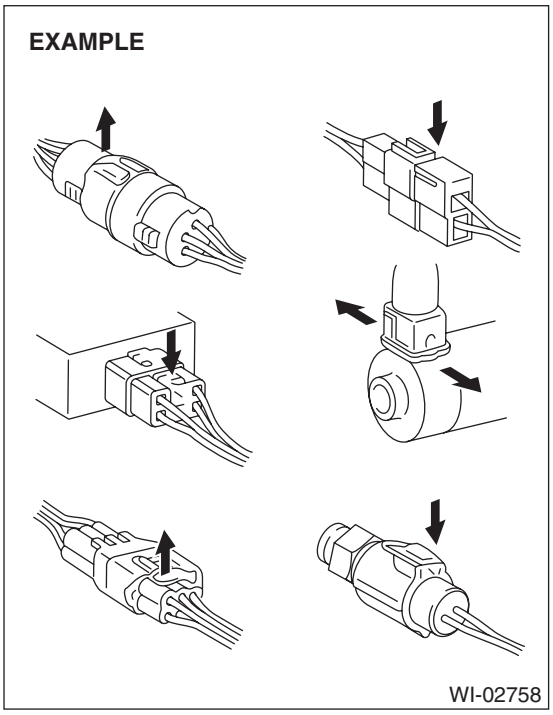

6) When checking continuity between connector terminals, or measuring voltage across the terminal and ground, always touch tester probe(s) to terminals from the wiring connection side. If the probe is too thick to gain access to the terminal, use "mini" test leads.
To check water-proof connectors (which are not measurable from the wiring side), touch test probes on the terminal side and be careful not to bend or damage the terminals.

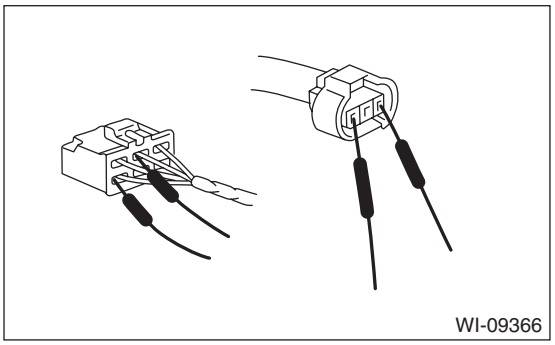

7) Sensors, relays, electrical unit, etc., are sensitive to strong impacts.
Handle them with care so that they are not dropped or mishandled.

3. Power Supply Circuit

A: WIRING DIAGRAM

- **Engine room side**

P-SUP-01

P-SUP-01

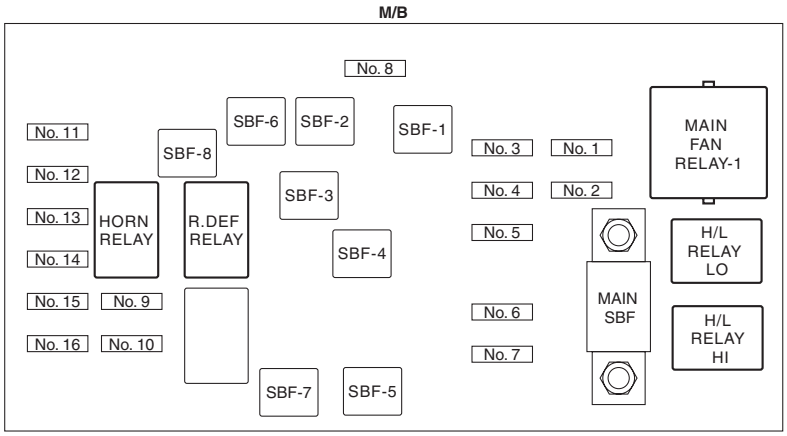

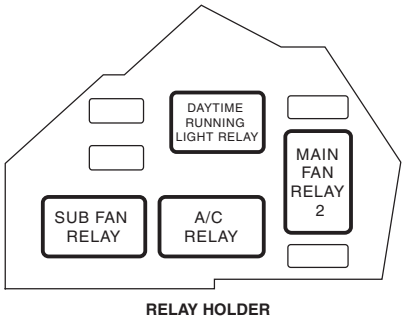

WI-34134

- **Passenger room side**

P-SUP-02

P-SUP-02

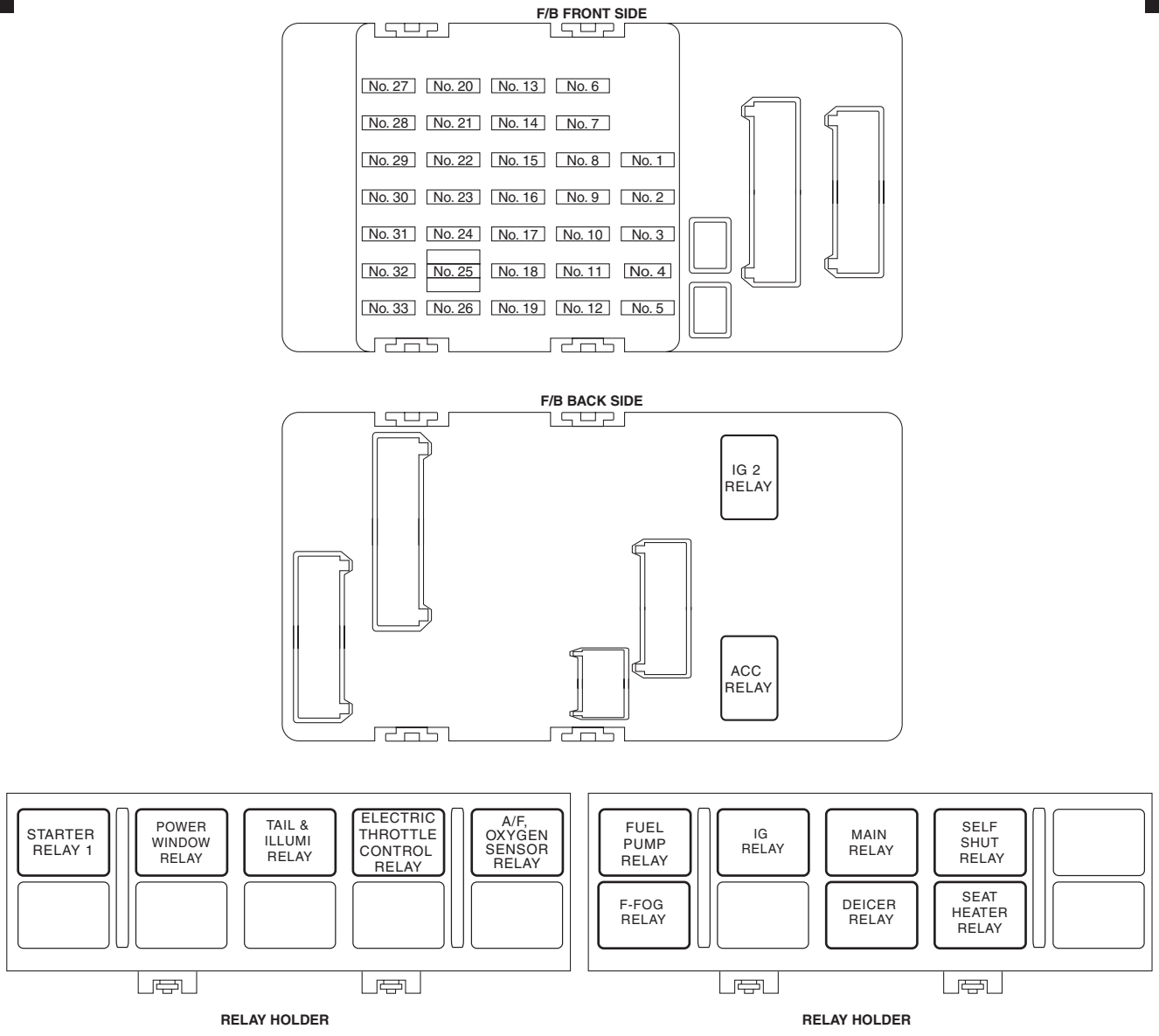

WI-34135

Power Supply Circuit

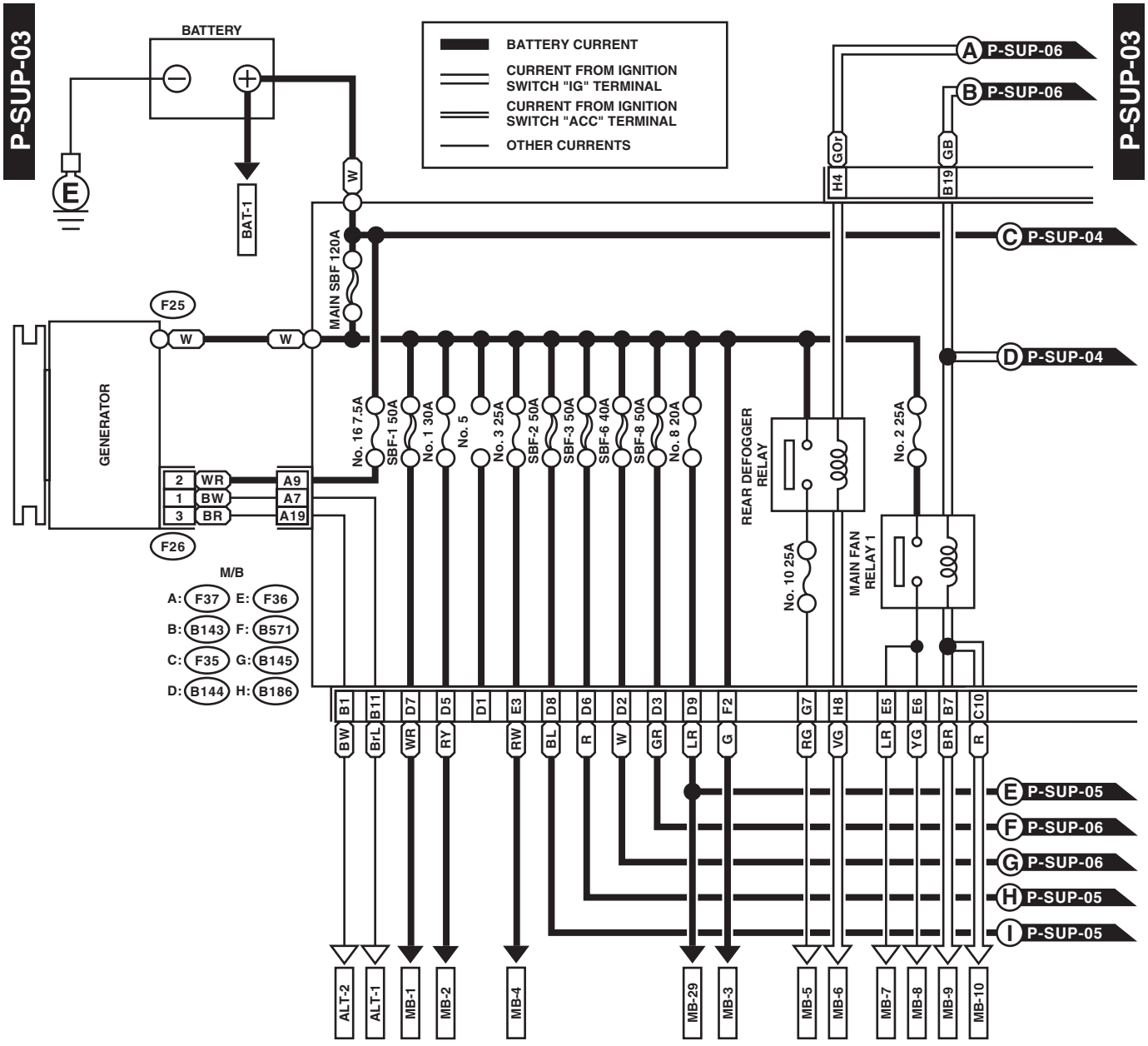

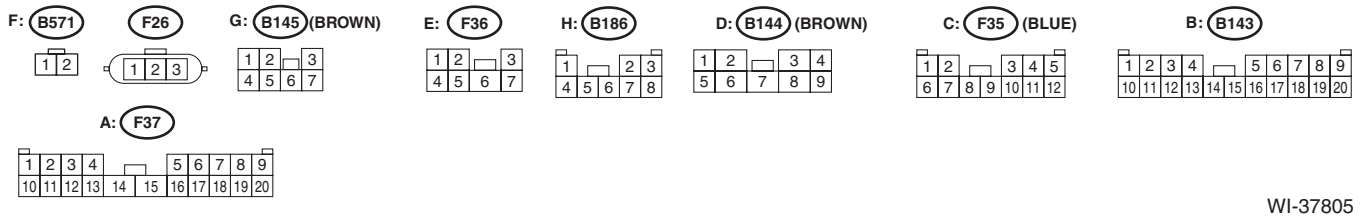

WI-37805

P-SUP-04

P-SUP-04

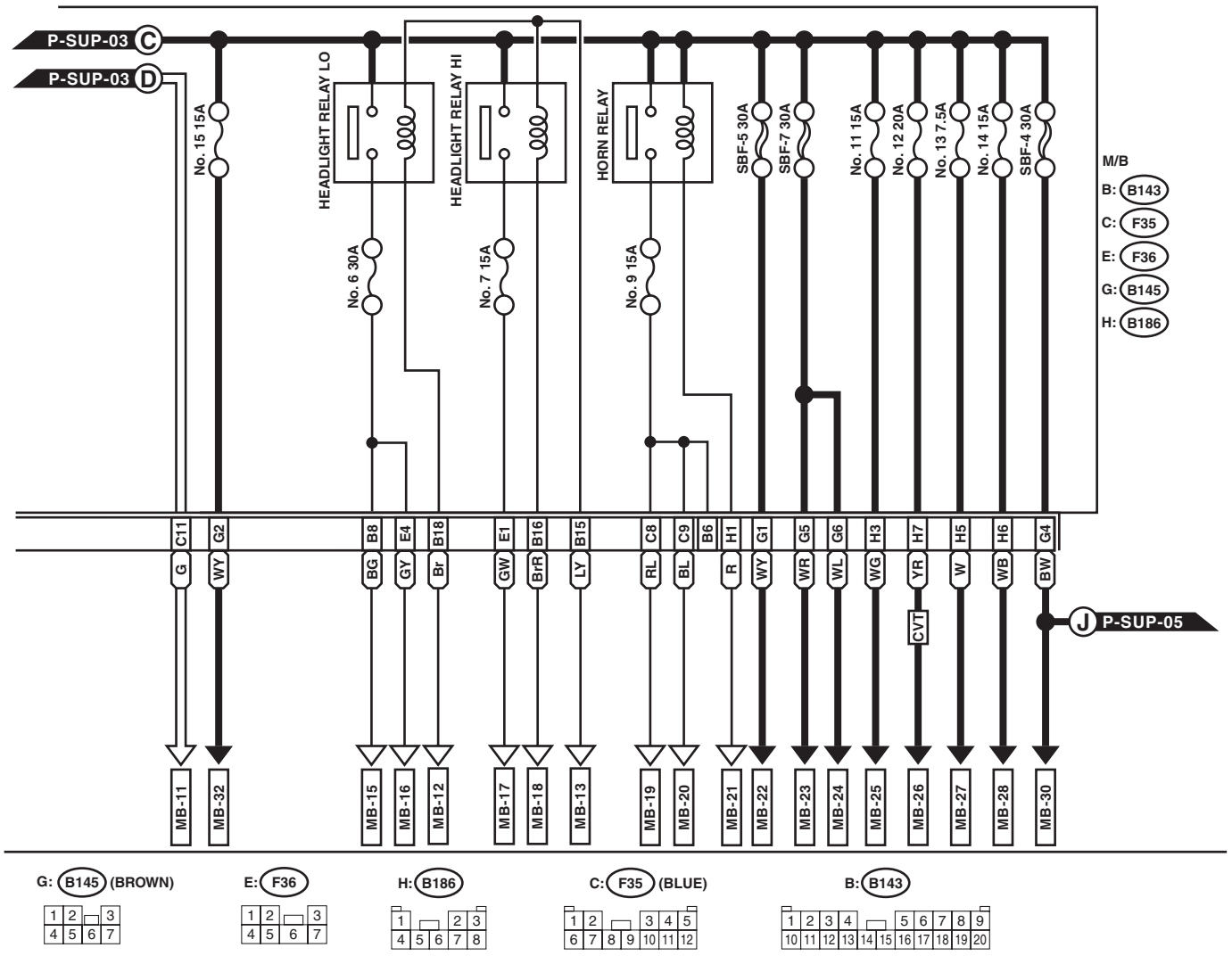

G: B145 (BROWN)

1	2		3			
4	5	6	7			

E: F36

1	2		3			
4	5	6	7			

H: B186

1			2	3		
4	5	6	7	8		

C: F35 (BLUE)

1	2			3	4	5					
6	7	8	9	10	11	12					

B: B143

1	2	3	4					5	6	7	8	9							
10	11	12	13	14	15			16	17	18	19	20							

WI-34137

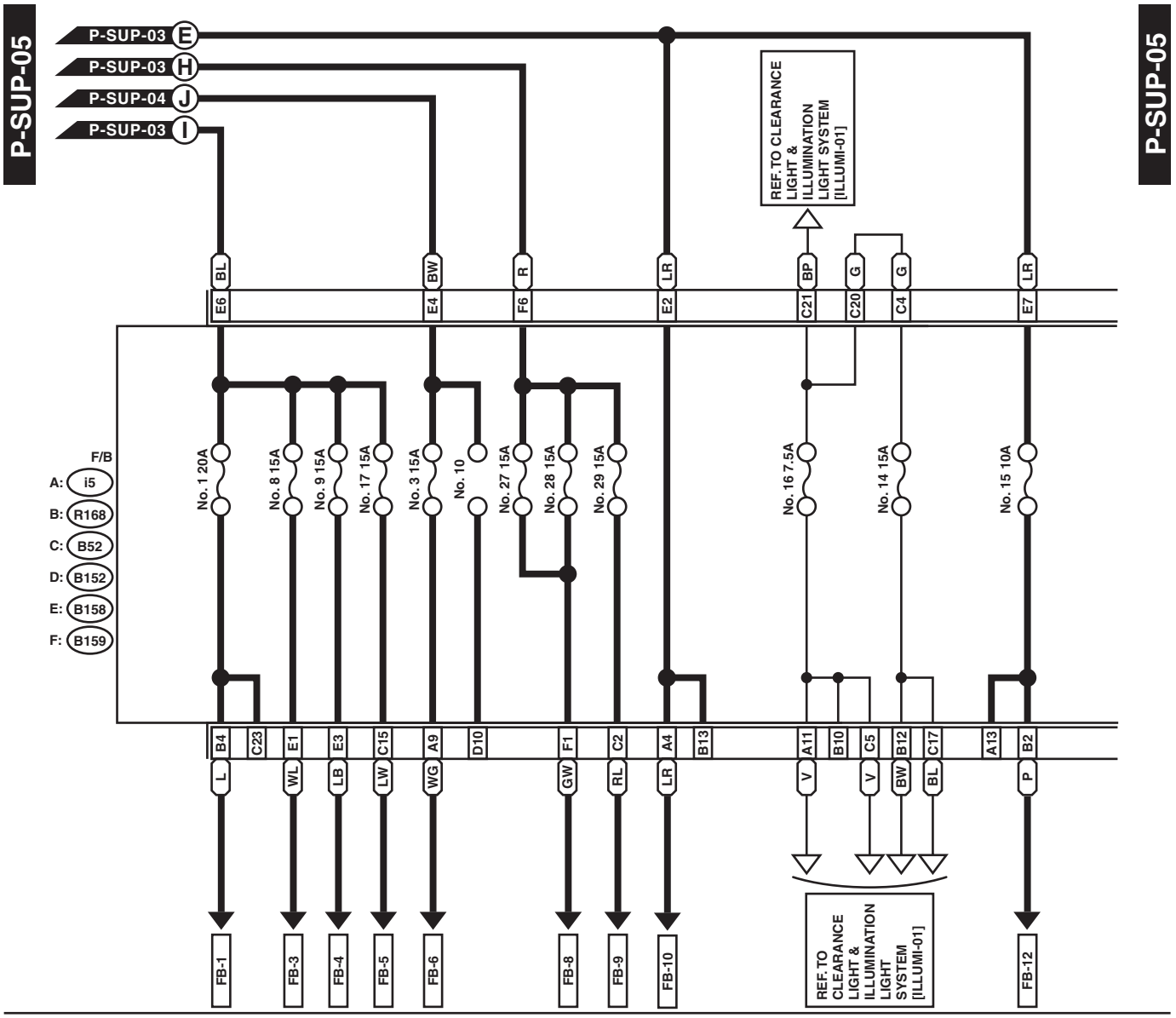
P-SUP-05
P-SUP-03 E
P-SUP-03 H
P-SUP-04 J
P-SUP-03 I
REF.TO CLEARANCE LIGHT & ILLUMINATION LIGHT SYSTEM [ILLUMI-01]
BL
BW
R
LR
BP
G
G
LR
E6
E4
F6
E2
C21
C20
C4
E7
F/B
A: i5
B: R168
C: B52
D: B152
E: B158
F: B159
No. 1 20A
No. 8 15A
No. 9 15A
No. 17 15A
No. 3 15A
No. 10
No. 27 15A
No. 28 15A
No. 29 15A
No. 16 7.5A
No. 14 15A
No. 15 10A
B4
C23
E1
E3
C15
A9
D10
F1
C2
A4
B13
A11
B10
C5
B12
C17
A13
B2
L
WL
LB
LW
WG
GW
RL
LR
V
V
BW
BL
P
FB-1
FB-3
FB-4
FB-5
FB-6
FB-8
FB-9
FB-10
REF.TO CLEARANCE LIGHT & ILLUMINATION LIGHT SYSTEM [ILLUMI-01]
FB-12
P-SUP-05

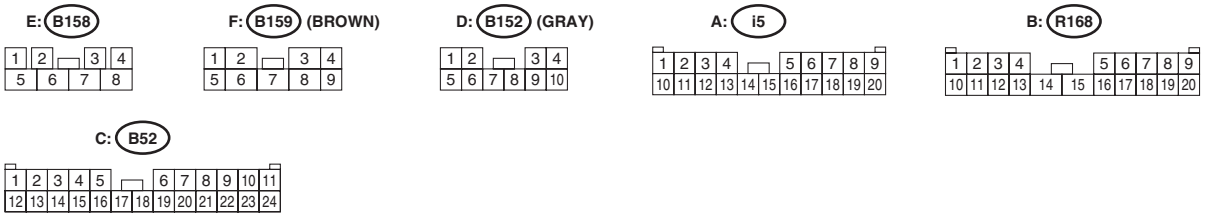
E: B158
F: B159 (BROWN)
D: B152 (GRAY)
A: i5
B: R168
C: B52

WI-37806

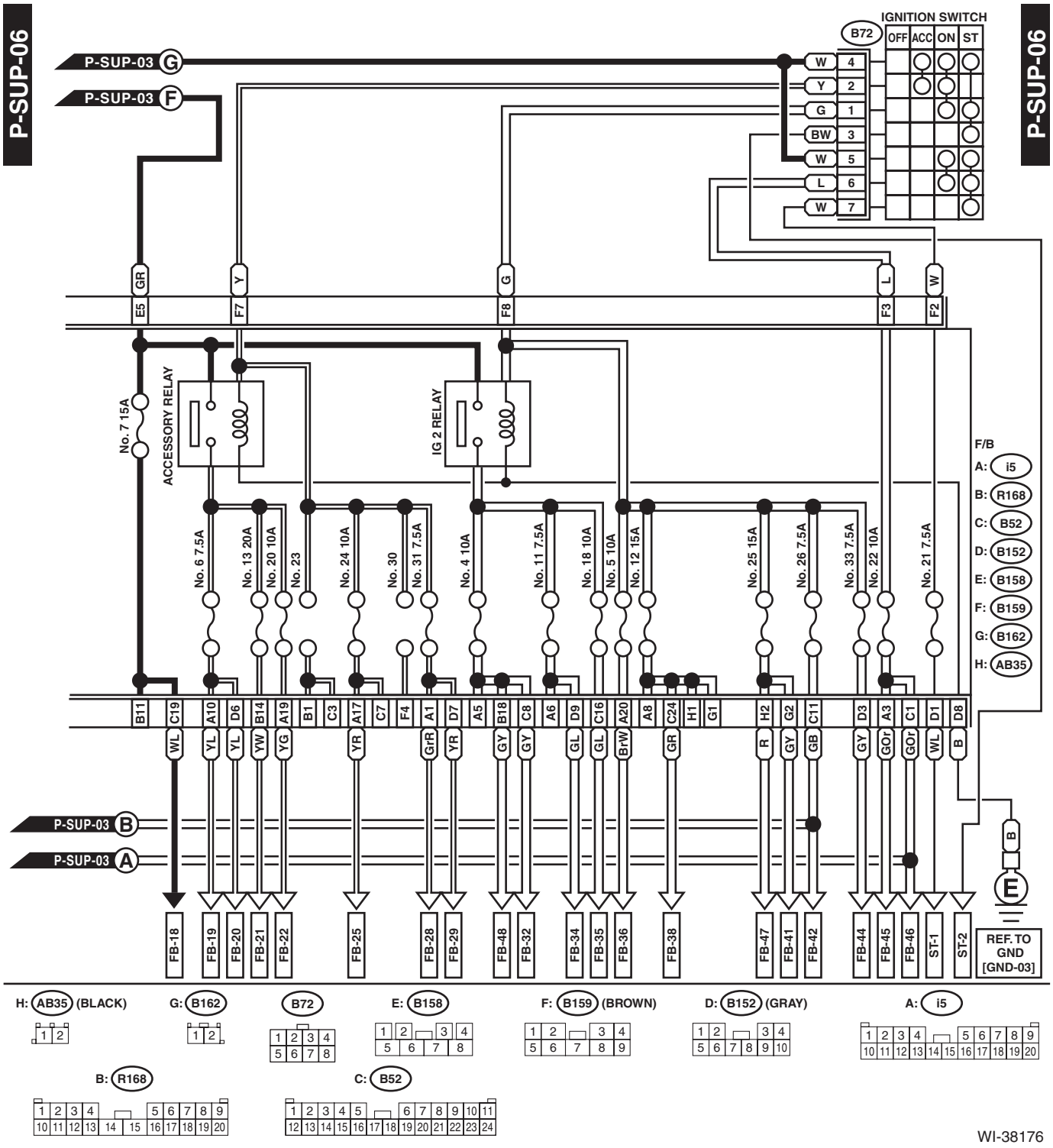
P-SUP-06
P-SUP-06
IGNITION SWITCH
B72
OFF ACC ON ST
P-SUP-03 G
P-SUP-03 F
W 4
Y 2
G 1
BW 3
W 5
L 6
W 7
GR E5
Y F7
G F8
L F3
W F2
No. 7 15A
ACCESSORY RELAY
IG 2 RELAY
No. 6 7.5A
No. 13 20A
No. 20 10A
No. 23
No. 24 10A
No. 30
No. 31 7.5A
No. 4 10A
No. 11 7.5A
No. 18 10A
No. 5 10A
No. 12 15A
No. 25 15A
No. 26 7.5A
No. 33 7.5A
No. 22 10A
No. 21 7.5A
F/B
A: i5
B: R168
C: B52
D: B152
E: B158
F: B159
G: B162
H: AB35
B11 C19 A10 D6 B14 A19 B1 C3 A17 C7 F4 A1 D7 A5 B18 C8 A6 D9 C16 A20 A8 C24 H1 G1 H2 G2 C11 D3 A3 C1 D1 D8
WL YL YL YW YG YR GrR YR GY GY GL GL BrW GR R GY GB GY GOr GOr WL B
P-SUP-03 B
P-SUP-03 A
B
E
FB-18 FB-19 FB-20 FB-21 FB-22 FB-25 FB-28 FB-29 FB-48 FB-32 FB-34 FB-35 FB-36 FB-38 FB-47 FB-41 FB-42 FB-44 FB-45 FB-46 ST-1 ST-2
REF. TO GND [GND-03]
H: AB35 (BLACK)
G: B162
B72
E: B158
F: B159 (BROWN)
D: B152 (GRAY)
A: i5
B: R168
C: B52

WI-38176

No.	Load
MB-1	VDC CM
MB-2	VDC CM
MB-3	Wiper relay
MB-4	Sub fan relay
MB-5	Mirror heater LH
	Mirror heater RH
	Rear defogger
	A/C control panel
MB-6	Body integrated unit
MB-7	Main fan relay 2
MB-8	Main fan motor
MB-9	ECM
MB-10	Main fan relay 2
MB-11	Main fan relay 2
MB-12	Body integrated unit
MB-13	Body integrated unit
MB-15	Front fog light relay
MB-16	Front combination light LH
	Front combination light RH
MB-17	Daytime running light relay
MB-18	Body integrated unit
MB-19	Horn
MB-20	Horn
MB-21	Horn switch
	Body integrated unit
MB-22	A/F, oxygen sensor relay
MB-23	Main relay
	IG relay
MB-24	Electronic throttle control relay
MB-25	Fuel pump relay
MB-26	TCM
	Self shut relay
MB-27	ECM
	Data link connector
MB-28	Key warning switch
	Turn signal and hazard unit
	Body integrated unit
MB-29	Spot map light
	Room light
	Body integrated unit
	Immobilizer antenna
MB-30	Power window circuit breaker
MB-32	Tail & Illumination relay
	Daytime running light relay
ALT-1	Combination meter
ALT-2	ECM
ST-1	Starter relay 1
	Clutch start switch
ST-2	Starter relay 1
FB-1	Trailer connector

No.	Load
FB-3	Stop light and brake switch
FB-4	Wiper deicer relay
FB-5	Seat heater relay
FB-6	Body integrated unit
FB-8	Blower motor relay
FB-9	Front fog light relay
FB-10	Audio
	MFD
	Navigation unit
FB-12	Keyless entry CM
	TPMS & keyless entry CM
	Trunk room light (4 door model)
	Luggage room light (5 door model/XV model)
FB-18	Combination meter
	Body integrated unit
	Impact sensor
	Air mix door actuator LH (with left/right independent air conditioner)
	Air mix door actuator RH (with left/right independent air conditioner)
	Mode door actuator
	Air mix door actuator (without left/right independent air conditioner)
	Security CM
	A/C control panel
FB-19	Remote control mirror switch
FB-20	Seat heater relay
	Rear view mirror
FB-21	Rear accessory power supply socket
FB-22	Front accessory power supply socket
FB-25	Audio
	Navigation unit
FB-28	A/C control panel
FB-29	Body integrated unit
FB-32	Clutch switch
	Impact sensor
	Data link connector
	Stop light and brake switch
	Wiper deicer relay
	Sunroof motor assembly
	Sunroof switch
	Sunroof switch (tilt)
FB-34	Turn signal and hazard unit
FB-35	Inhibitor switch
	Back-up light switch
	Auto headlight beam leveler CM
FB-36	Combination meter
	MFD

No.	Load
FB-38	ECM
	TCM
	Body integrated unit
	Fuel pump relay
FB-41	Airbag CM
FB-42	Power window relay
	Wiper relay
FB-44	VDC CM
	Steering angle sensor
	Power steering CM
FB-45	A/C control panel
FB-46	A/C relay
	Sub fan relay
	Pressure switch
	Blower motor relay
FB-47	Occupant detection control module
FB-48	TPMS & keyless entry CM
BAT-1	Power steering CM

4. Ground Circuit

A: WIRING DIAGRAM

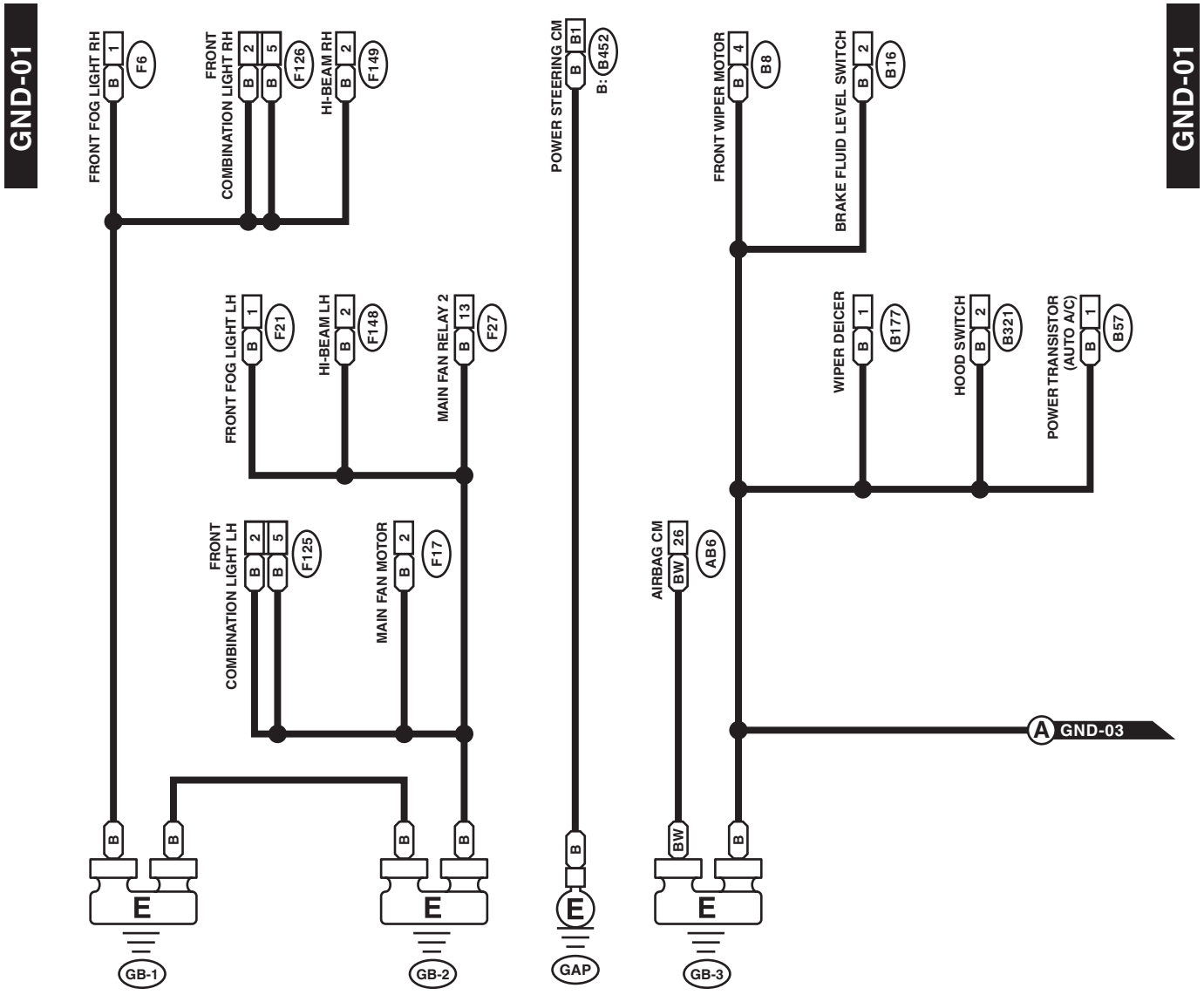

WI-34140

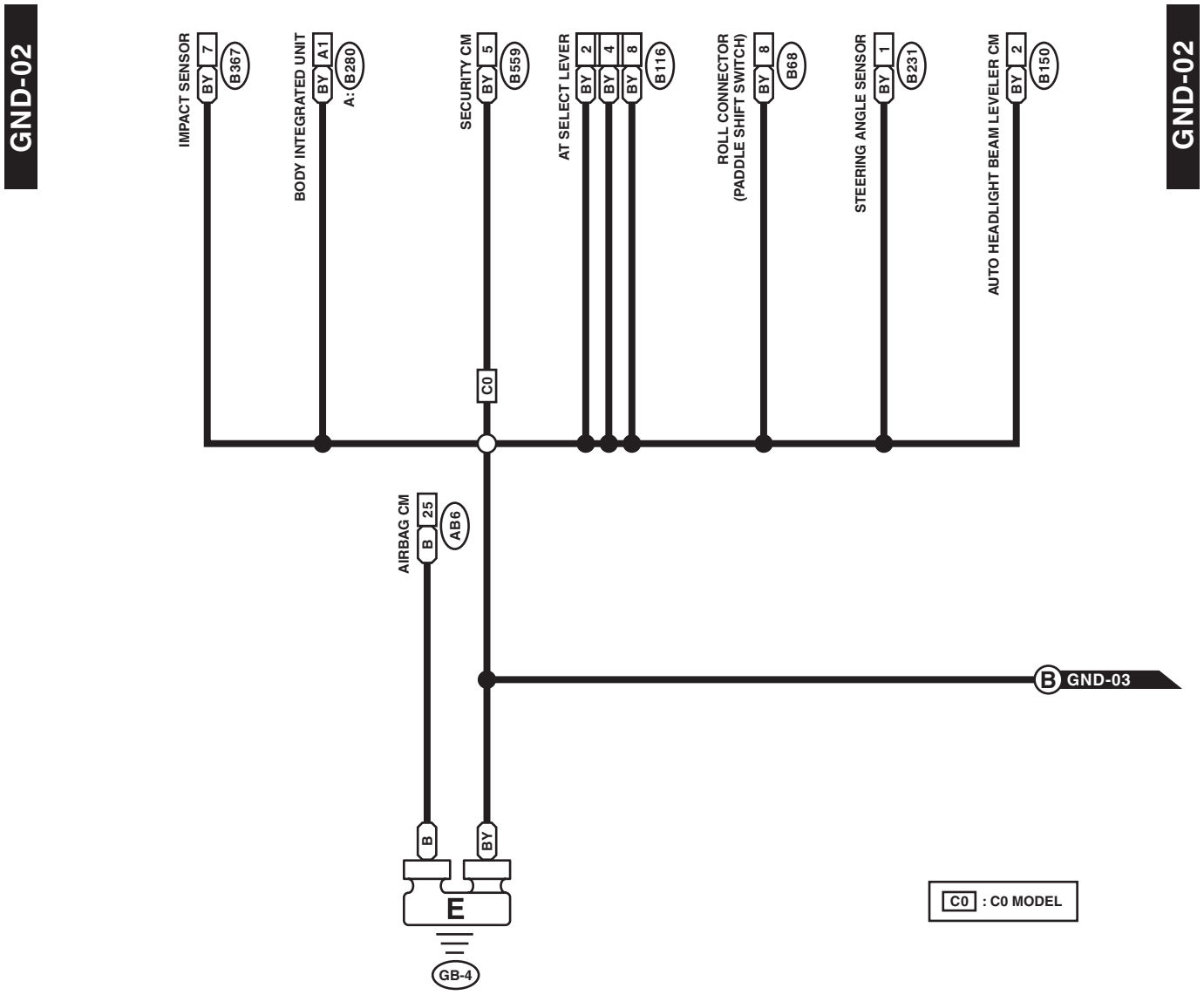
GND-02
GND-02
IMPACT SENSOR
BY 7
B367
BODY INTEGRATED UNIT
BY A1
A: B280
SECURITY CM
BY 5
B559
AT SELECT LEVER
BY 2
BY 4
BY 8
B116
ROLL CONNECTOR (PADDLE SHIFT SWITCH)
BY 8
B68
STEERING ANGLE SENSOR
BY 1
B231
AUTO HEADLIGHT BEAM LEVELER CM
BY 2
B150
C0
AIRBAG CM
B 25
AB6
B GND-03
B
BY
E
GB-4
C0 : C0 MODEL

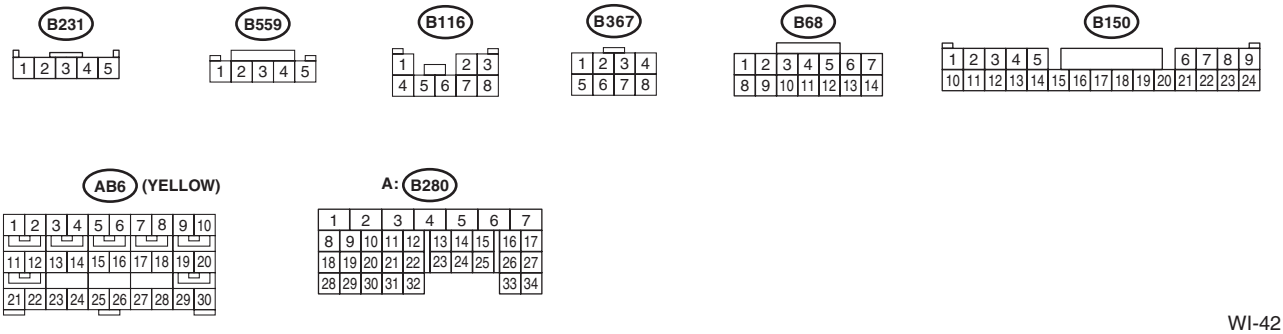
B231
1 2 3 4 5
B559
1 2 3 4 5
B116
1 2 3
4 5 6 7 8
B367
1 2 3 4
5 6 7 8
B68
1 2 3 4 5 6 7
8 9 10 11 12 13 14
B150
1 2 3 4 5 6 7 8 9
10 11 12 13 14 15 16 17 18 19 20 21 22 23 24
AB6 (YELLOW)
1 2 3 4 5 6 7 8 9 10
11 12 13 14 15 16 17 18 19 20
21 22 23 24 25 26 27 28 29 30
A: B280
1 2 3 4 5 6 7
8 9 10 11 12 13 14 15 16 17
18 19 20 21 22 23 24 25 26 27
28 29 30 31 32 33 34

WI-42137

Ground Circuit

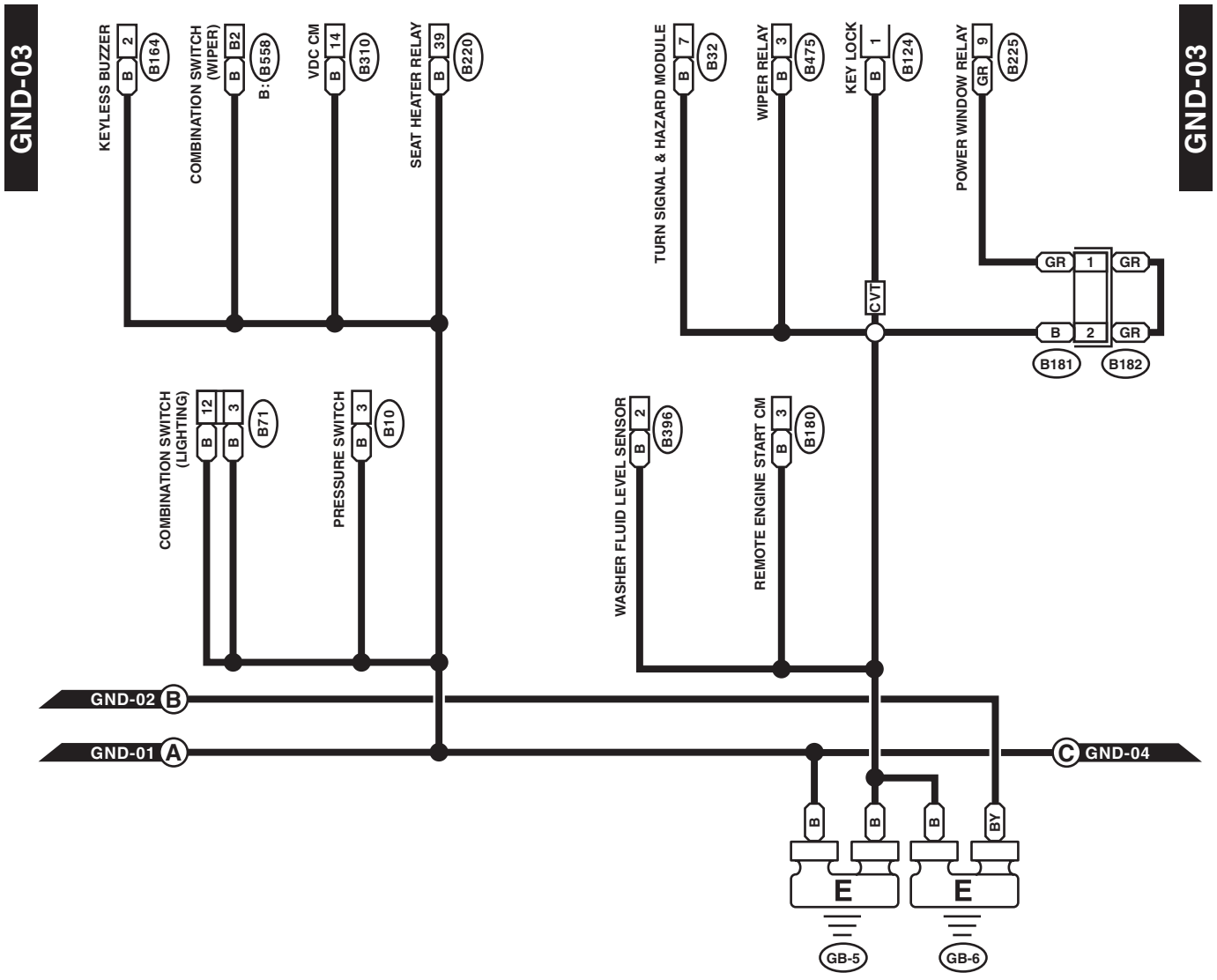

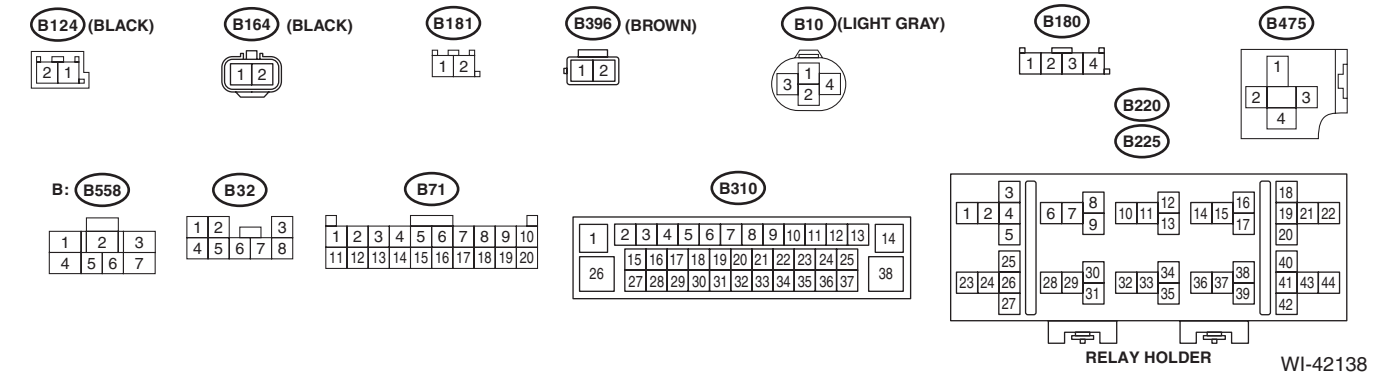

WI-42138

Ground Circuit

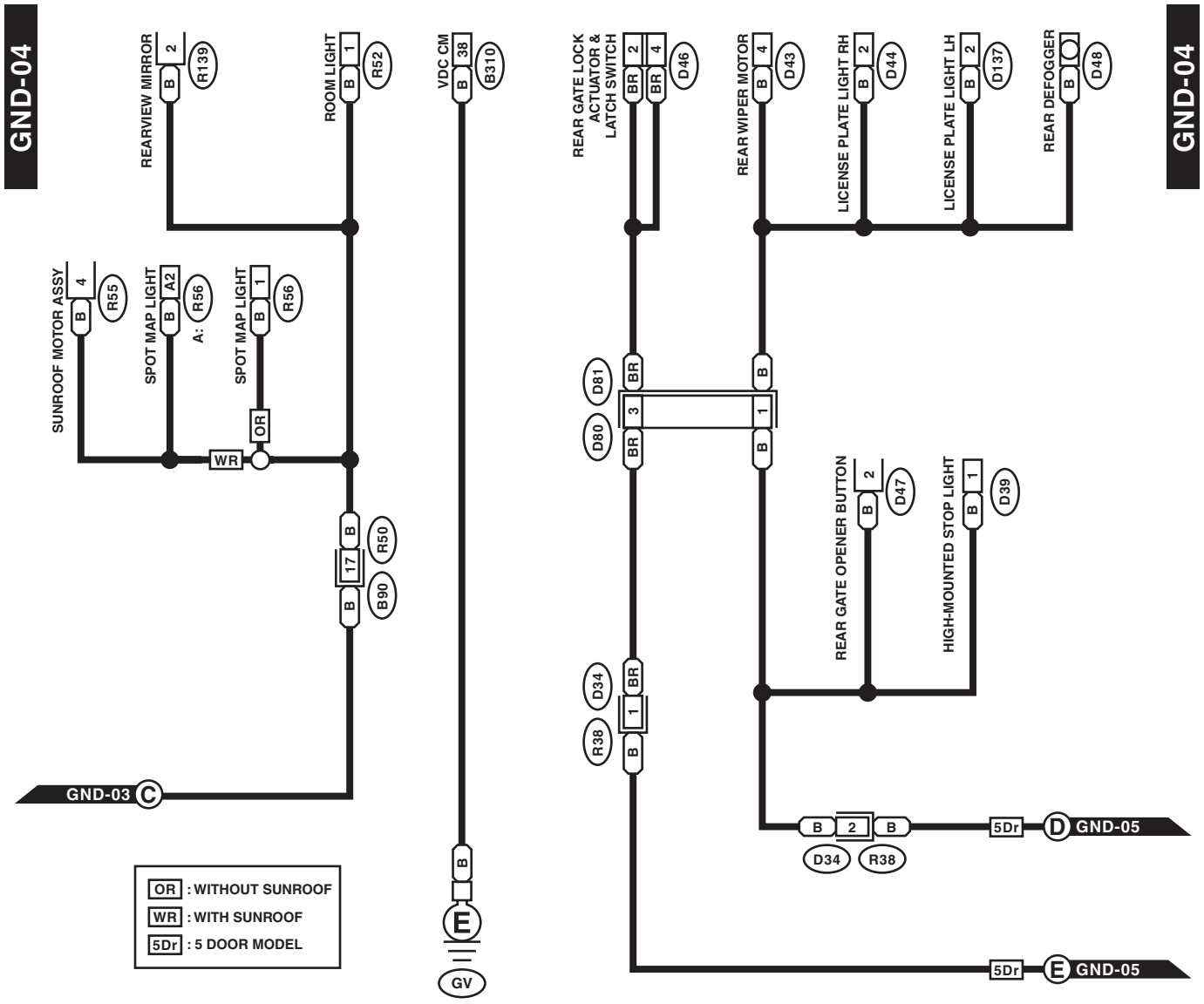

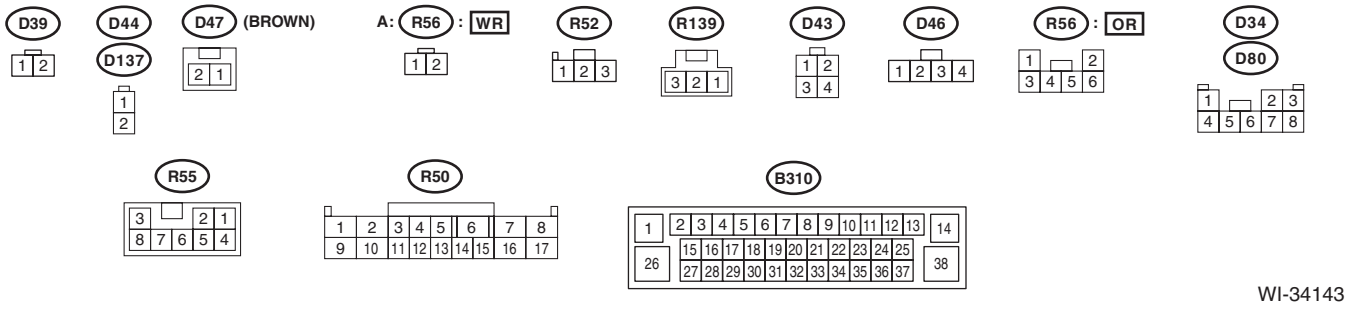

WI-34143

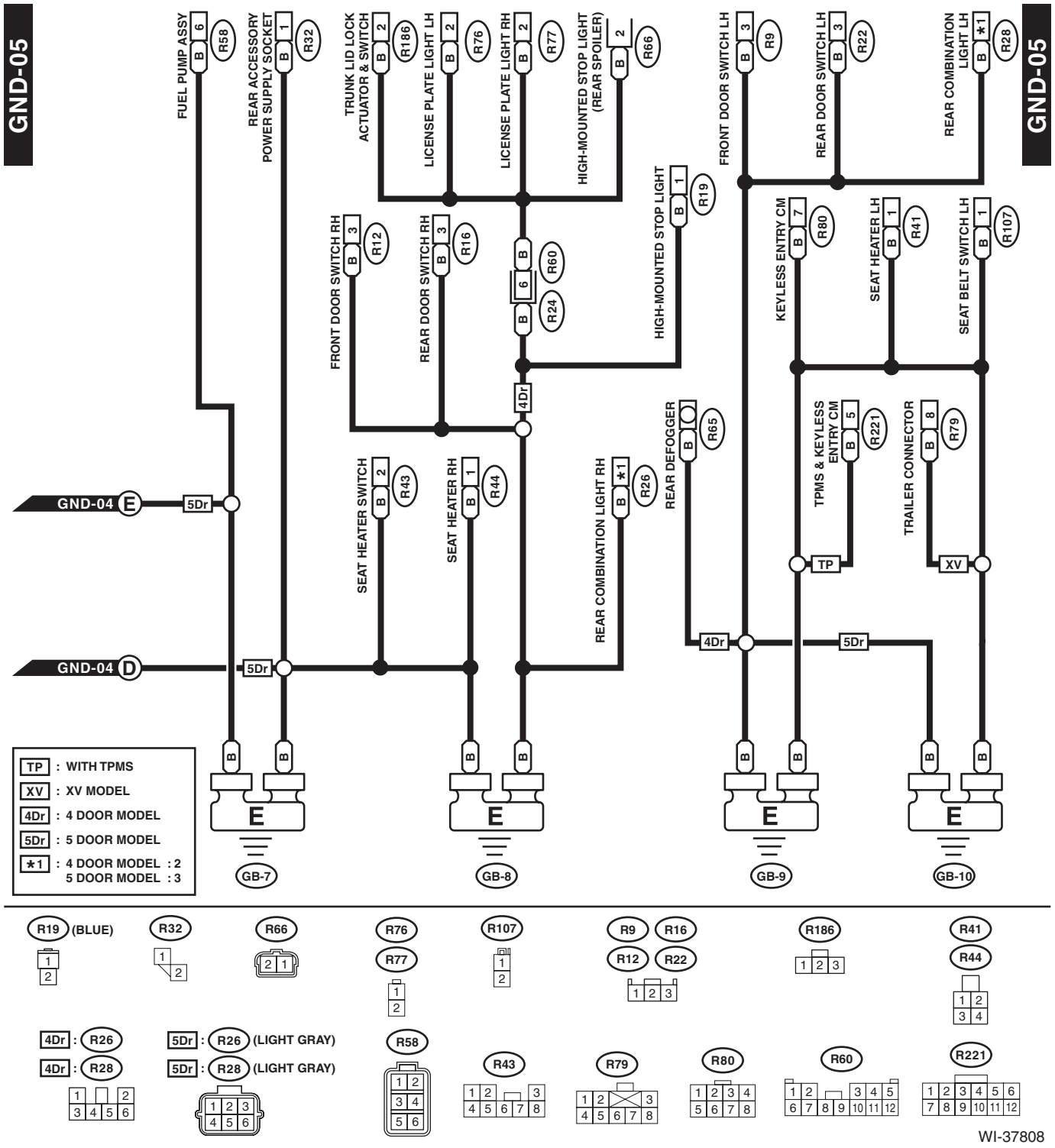
GND-05
GND-05
FUEL PUMP ASSY
REAR ACCESSORY POWER SUPPLY SOCKET
TRUNK LID LOCK ACTUATOR & SWITCH
LICENSE PLATE LIGHT LH
LICENSE PLATE LIGHT RH
HIGH-MOUNTED STOP LIGHT (REAR SPOILER)
HIGH-MOUNTED STOP LIGHT
FRONT DOOR SWITCH LH
REAR DOOR SWITCH LH
REAR COMBINATION LIGHT LH
FRONT DOOR SWITCH RH
REAR DOOR SWITCH RH
KEYLESS ENTRY CM
SEAT HEATER LH
SEAT BELT SWITCH LH
SEAT HEATER SWITCH
SEAT HEATER RH
REAR COMBINATION LIGHT RH
REAR DEFOGGER
TPMS & KEYLESS ENTRY CM
TRAILER CONNECTOR
GND-04 E
GND-04 D
4Dr
5Dr
TP
XV
TP : WITH TPMS
XV : XV MODEL
4Dr : 4 DOOR MODEL
5Dr : 5 DOOR MODEL
*1 : 4 DOOR MODEL : 2
5 DOOR MODEL : 3
GB-7
GB-8
GB-9
GB-10
R19 (BLUE)
R32
R66
R76
R77
R107
R9
R16
R12
R22
R186
R41
R44
4Dr : R26
4Dr : R28
5Dr : R26 (LIGHT GRAY)
5Dr : R28 (LIGHT GRAY)
R58
R43
R79
R80
R60
R221

WI-37808

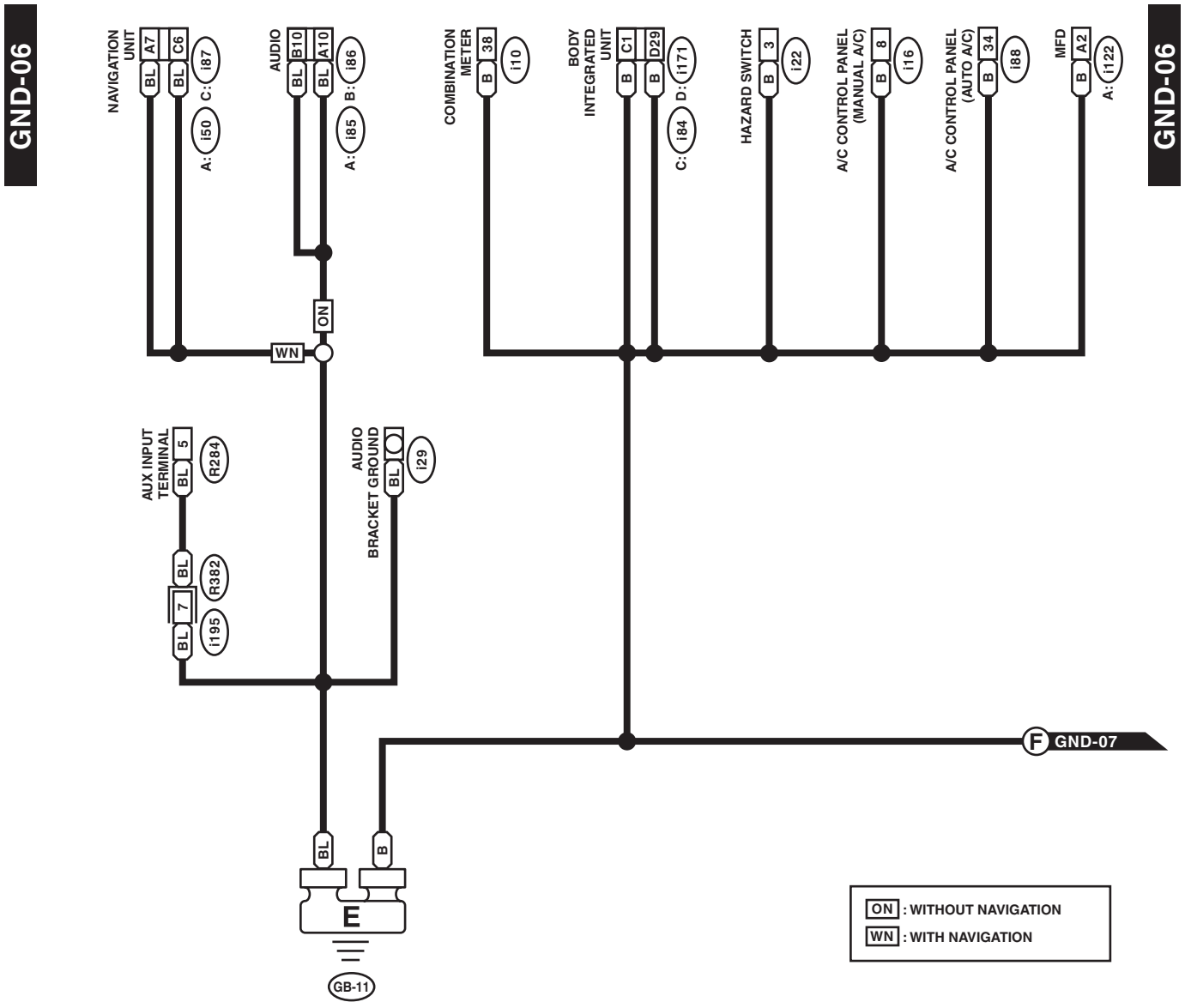
GND-06
GND-06
NAVIGATION UNIT
A7
C6
BL
BL
C: i87
A: i50
AUDIO
B10
A10
BL
BL
B: i86
A: i85
COMBINATION METER
38
B
i10
BODY INTEGRATED UNIT
C1
D29
B
B
D: i171
C: i84
HAZARD SWITCH
3
B
i22
A/C CONTROL PANEL (MANUAL A/C)
8
B
i16
A/C CONTROL PANEL (AUTO A/C)
34
B
i88
MFD
A2
B
A: i122
ON
WN
AUX INPUT TERMINAL
5
BL
R284
BL
R382
7
BL
i195
AUDIO BRACKET GROUND
BL
i29
F GND-07
BL
B
E
GB-11
ON : WITHOUT NAVIGATION
WN : WITH NAVIGATION

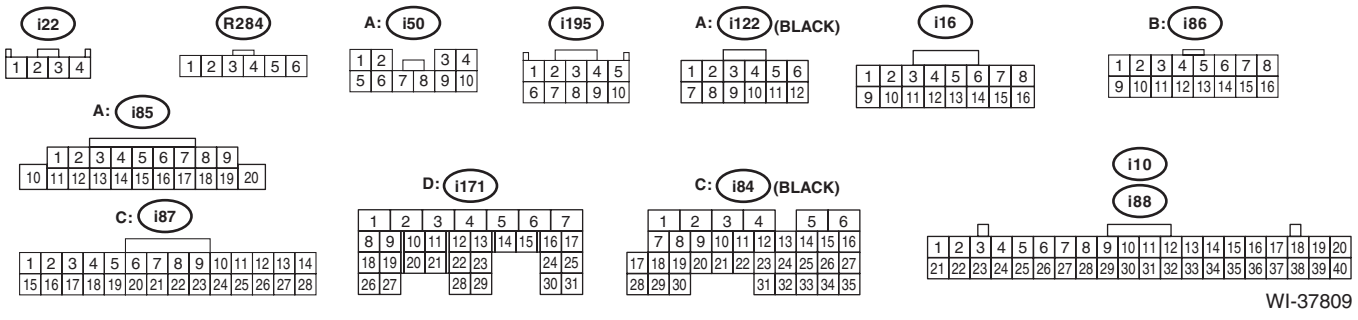
i22
R284
A: i50
i195
A: i122 (BLACK)
i16
B: i86
A: i85
C: i87
D: i171
C: i84 (BLACK)
i10
i88

WI-37809

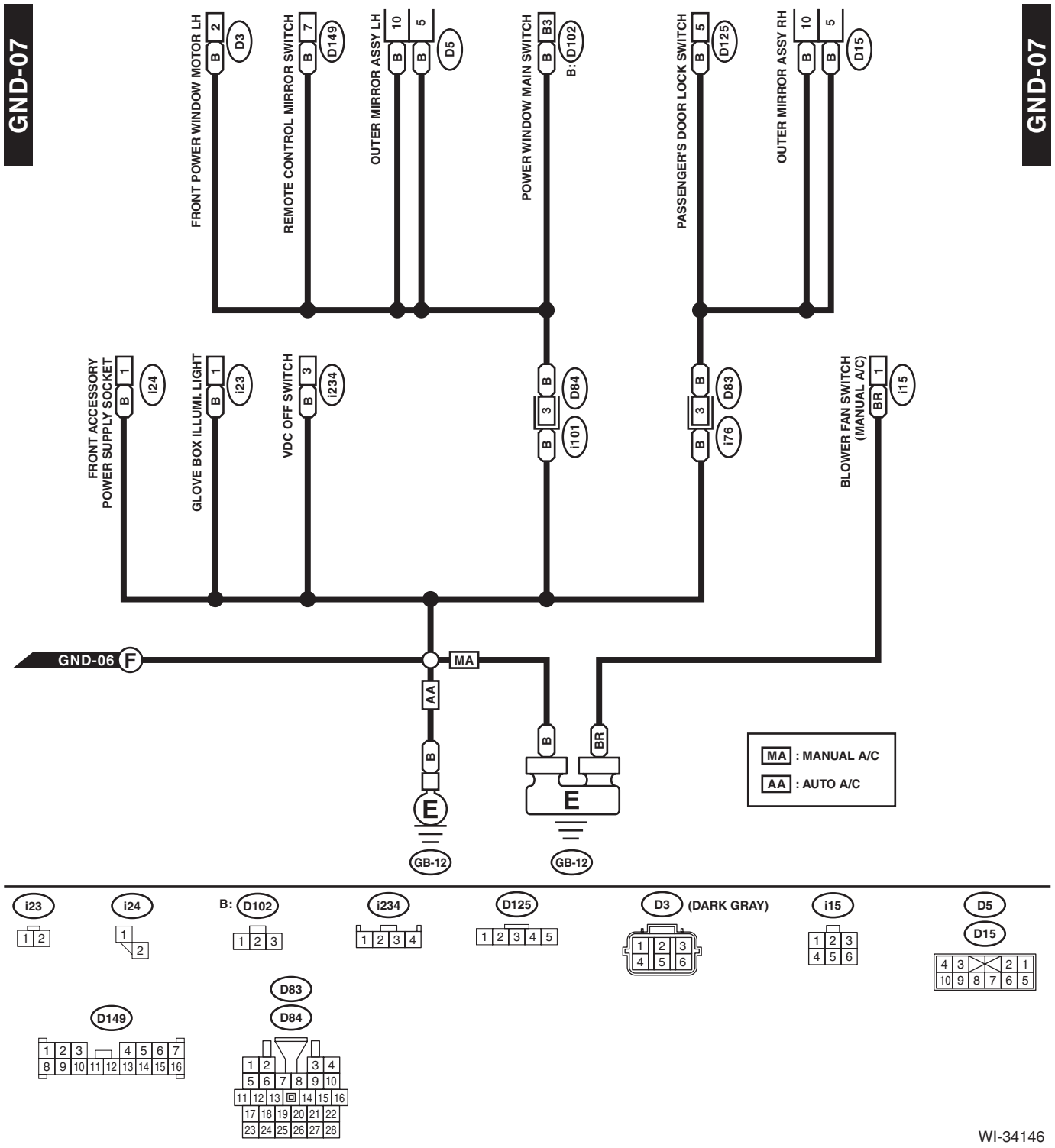
GND-07
GND-07
FRONT POWER WINDOW MOTOR LH
REMOTE CONTROL MIRROR SWITCH
OUTER MIRROR ASSY LH
POWER WINDOW MAIN SWITCH
PASSENGER'S DOOR LOCK SWITCH
OUTER MIRROR ASSY RH
FRONT ACCESSORY POWER SUPPLY SOCKET
GLOVE BOX ILLUMI. LIGHT
VDC OFF SWITCH
BLOWER FAN SWITCH (MANUAL A/C)
GND-06 F
MA
AA
E
GB-12
MA : MANUAL A/C
AA : AUTO A/C
i23
i24
B: D102
i234
D125
D3 (DARK GRAY)
i15
D5
D15
D149
D83
D84

WI-34146

5. Airbag System

A: WIRING DIAGRAM

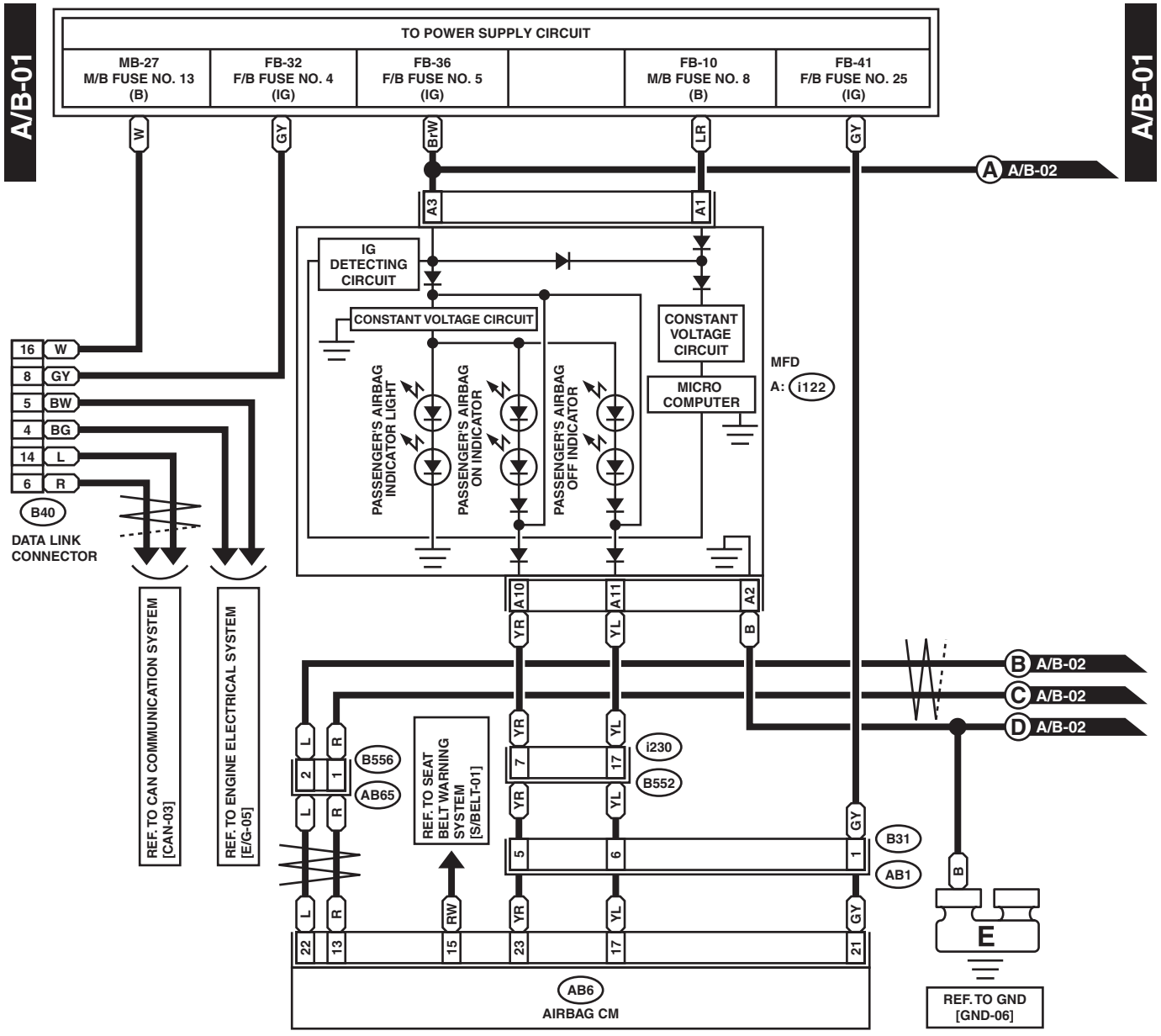

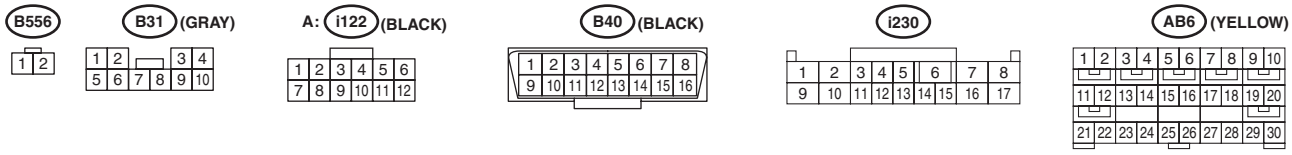

WI-37810

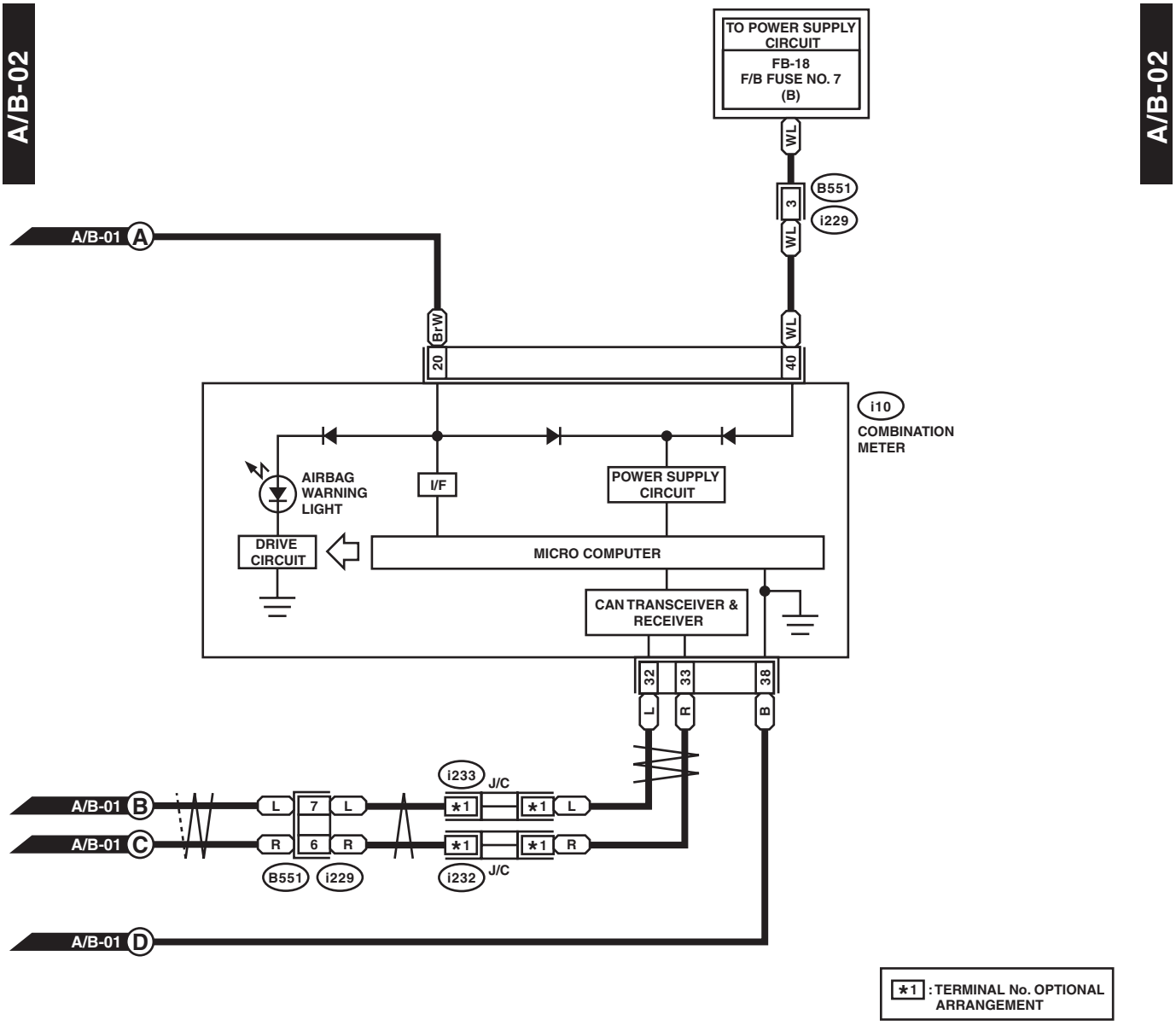
A/B-02
A/B-02
TO POWER SUPPLY CIRCUIT
FB-18
F/B FUSE NO. 7
(B)
WL
B551
3
i229
WL
A/B-01 A
BrW
WL
20
40
i10
COMBINATION METER
AIRBAG WARNING LIGHT
I/F
POWER SUPPLY CIRCUIT
DRIVE CIRCUIT
MICRO COMPUTER
CAN TRANSCEIVER & RECEIVER
32
33
38
L
R
B
i233
J/C
A/B-01 B
L
7
L
*1
*1
L
A/B-01 C
R
6
R
*1
*1
R
B551
i229
i232
J/C
A/B-01 D
*1 : TERMINAL No. OPTIONAL ARRANGEMENT

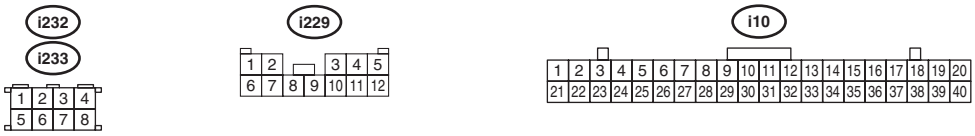
i232
i233
1 2 3 4
5 6 7 8
i229
1 2
3 4 5
6 7 8 9 10 11 12
i10
1 2 3 4 5 6 7 8 9 10 11 12 13 14 15 16 17 18 19 20
21 22 23 24 25 26 27 28 29 30 31 32 33 34 35 36 37 38 39 40

WI-34148

WIRING SYSTEM

A/B-03

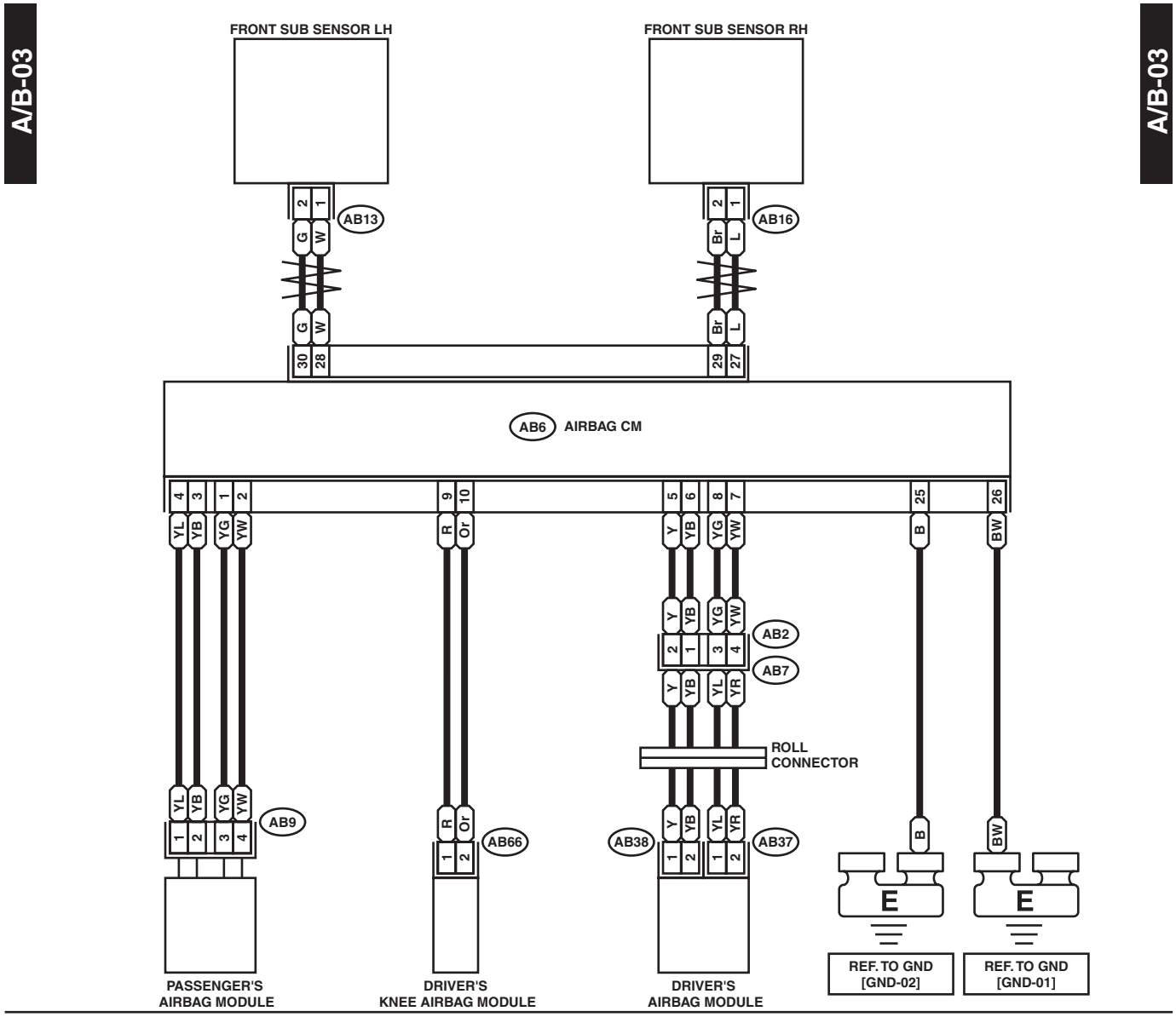

WI-34149

A/B-04

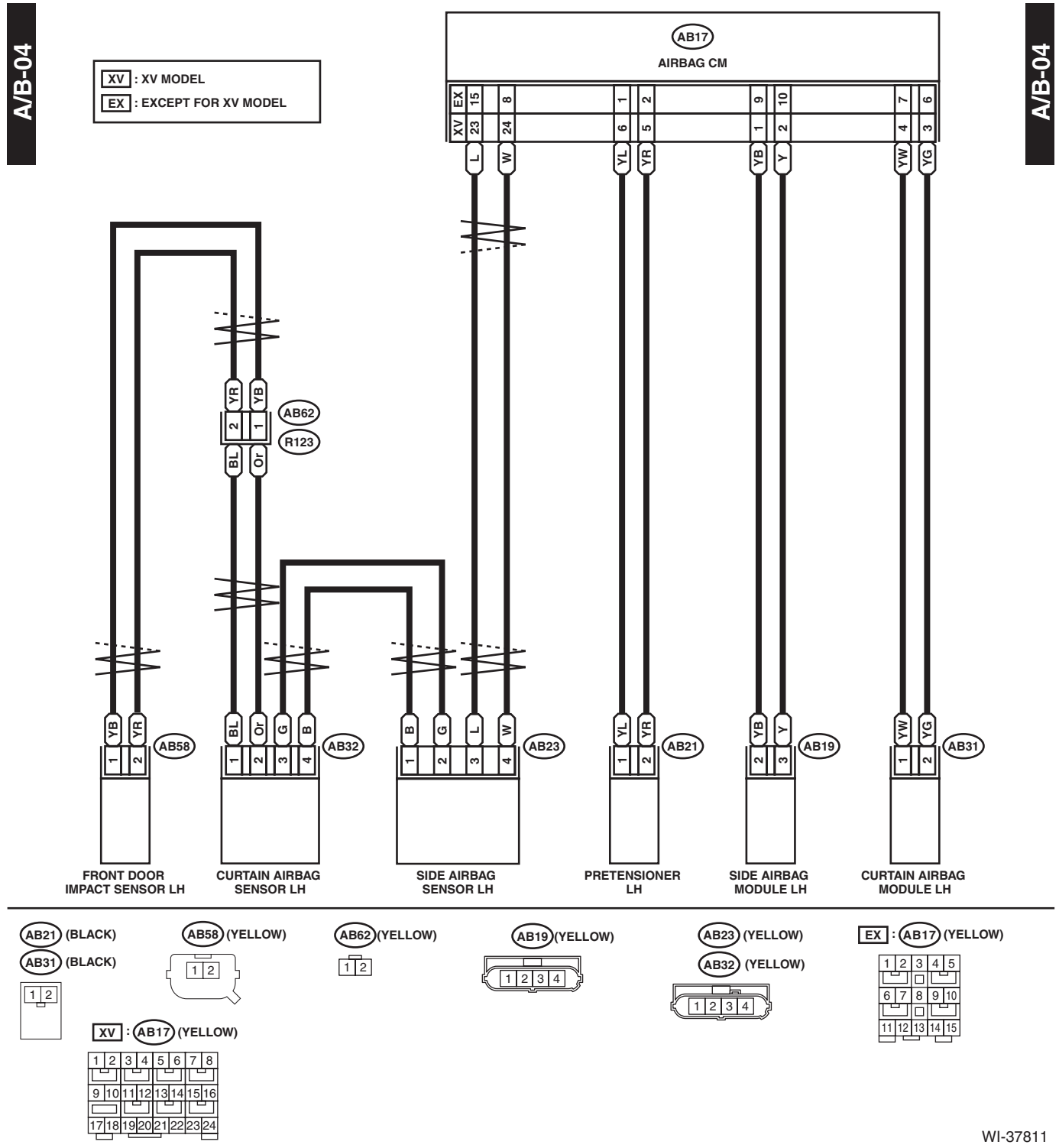

WI-37811

WIRING SYSTEM

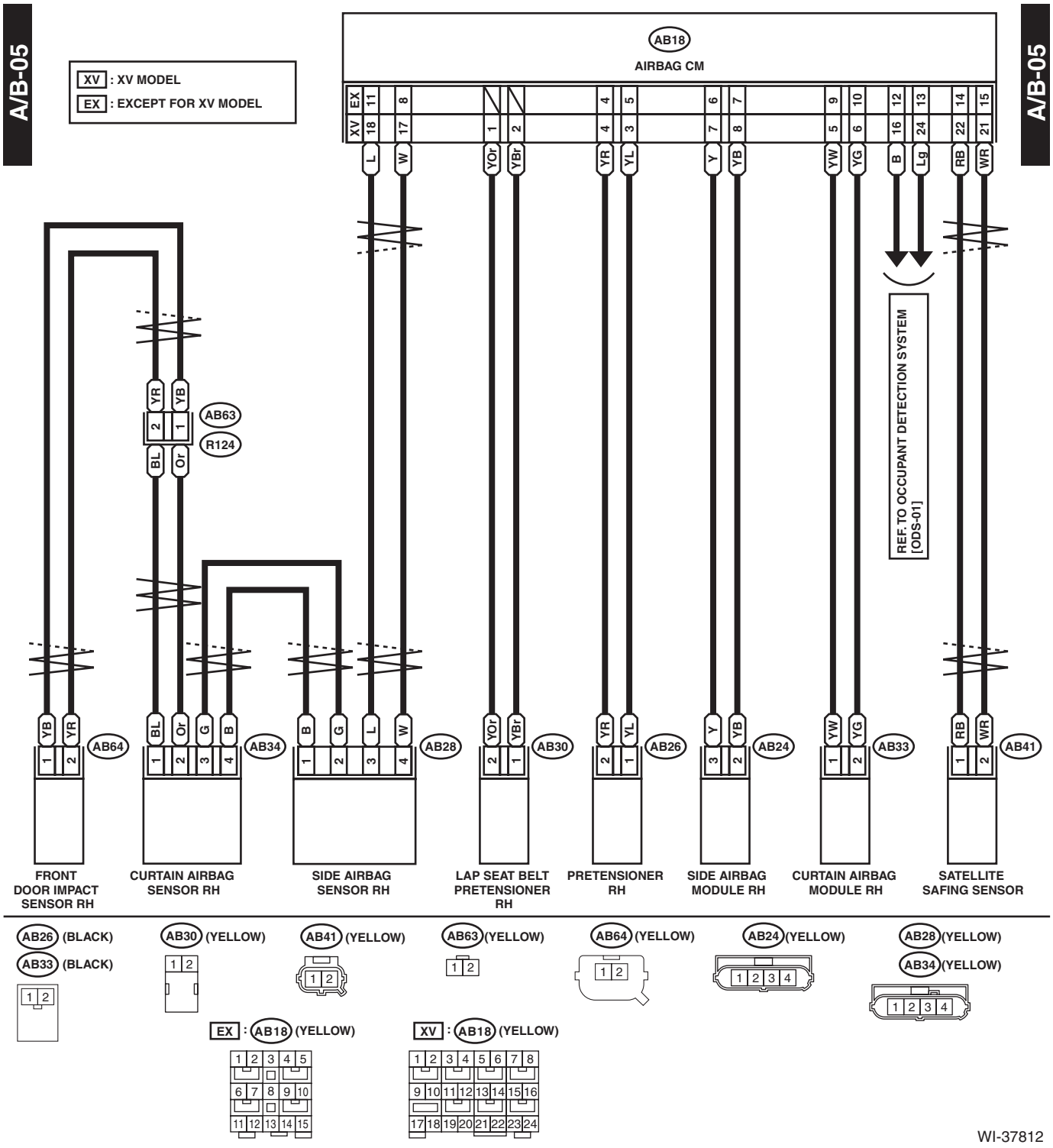

6. Air Conditioning System

A: WIRING DIAGRAM

1. MANUAL A/C MODEL

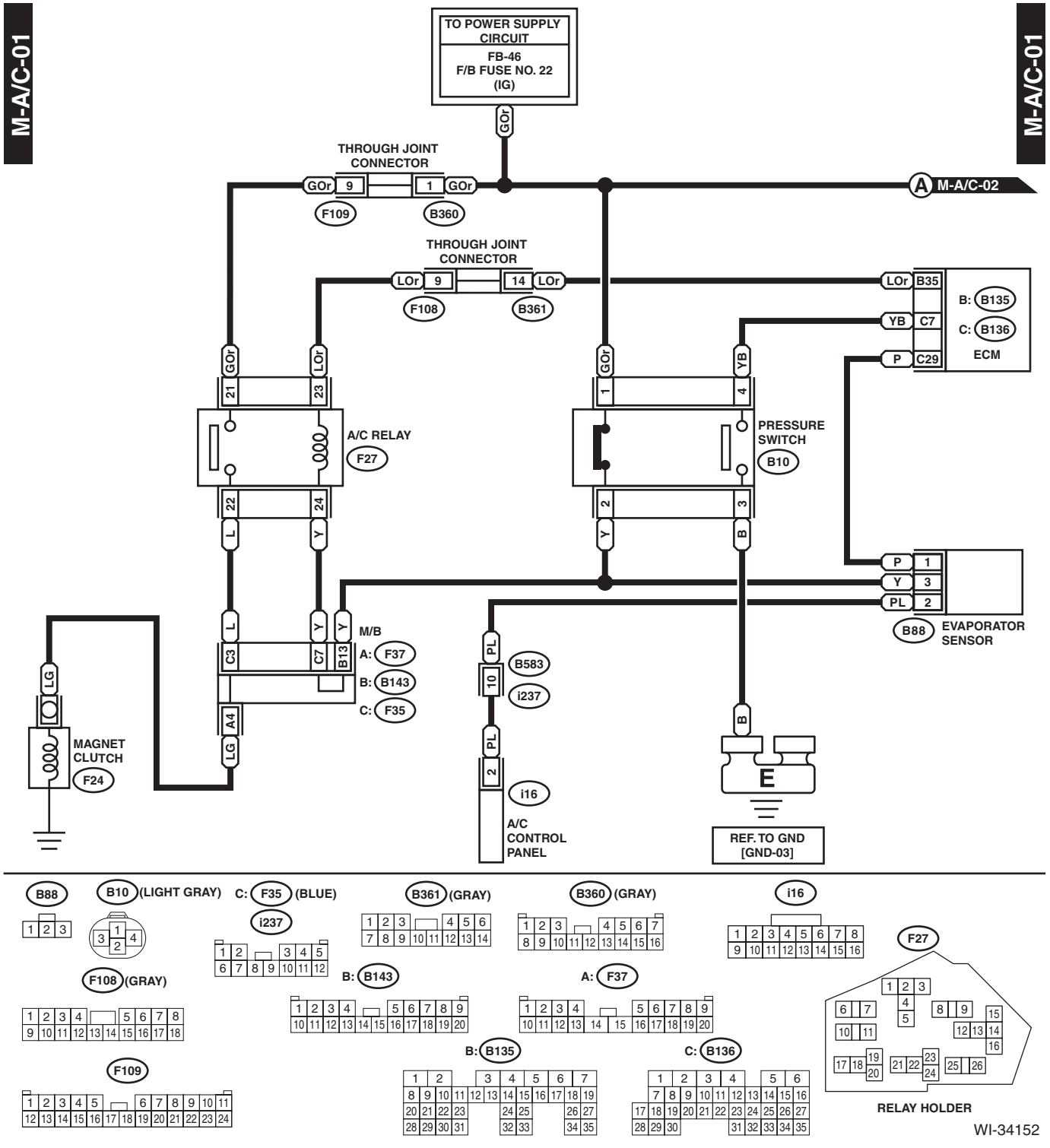

WIRING SYSTEM

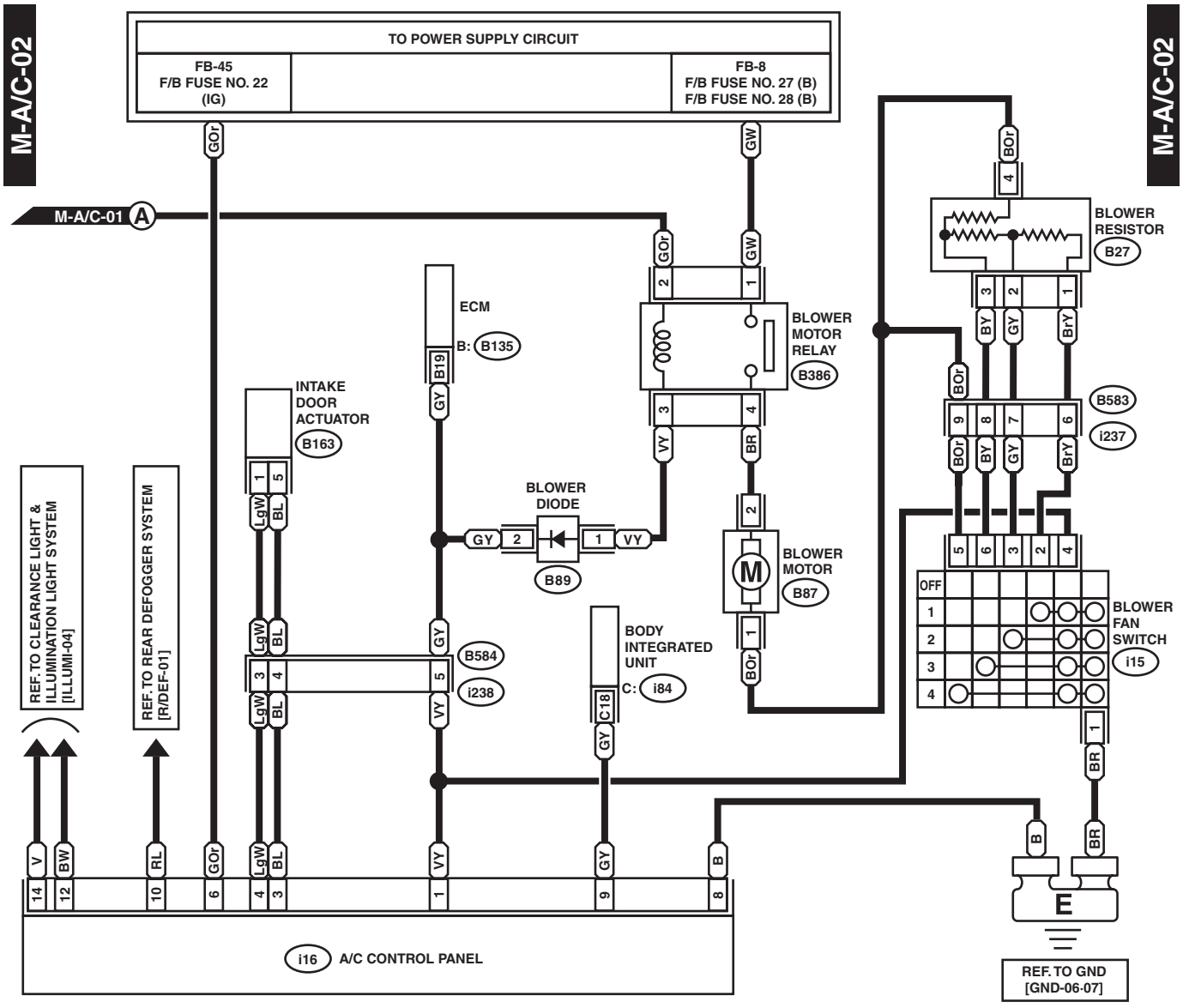

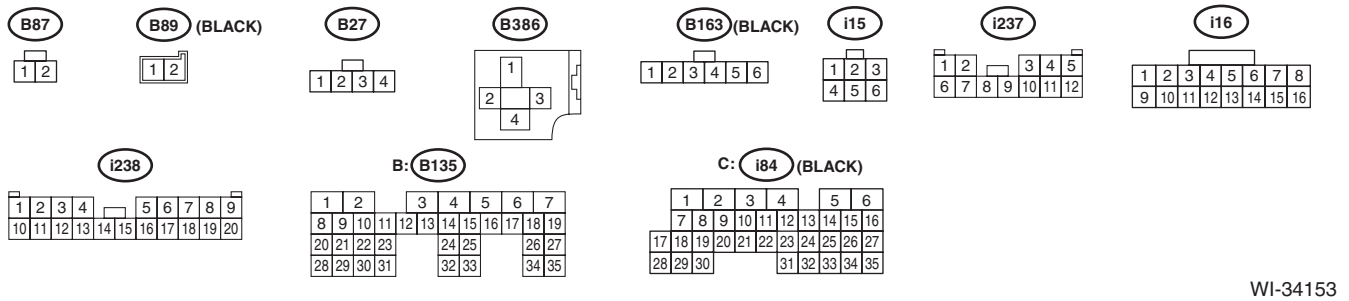

WI-34153

2. AUTO A/C MODEL

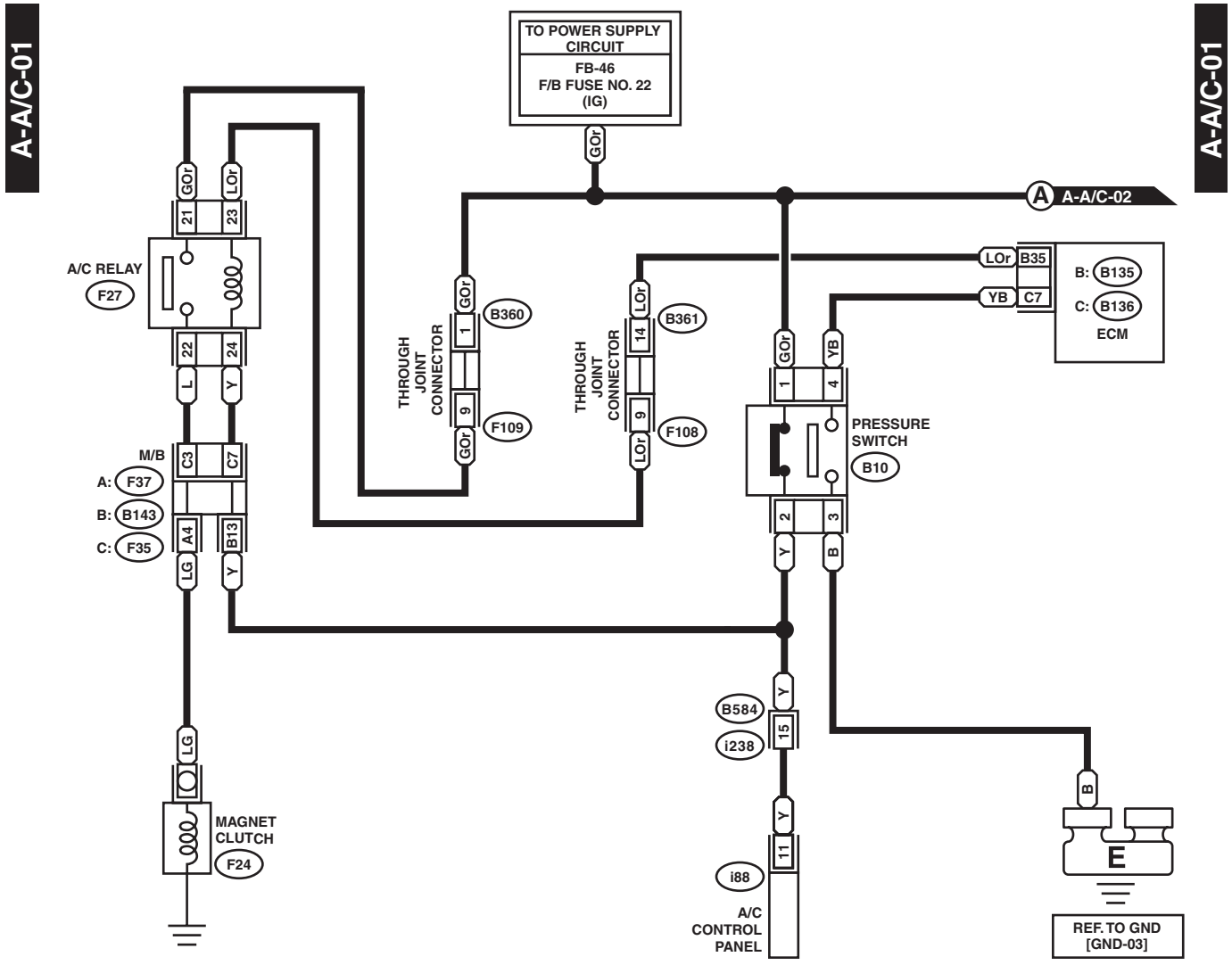

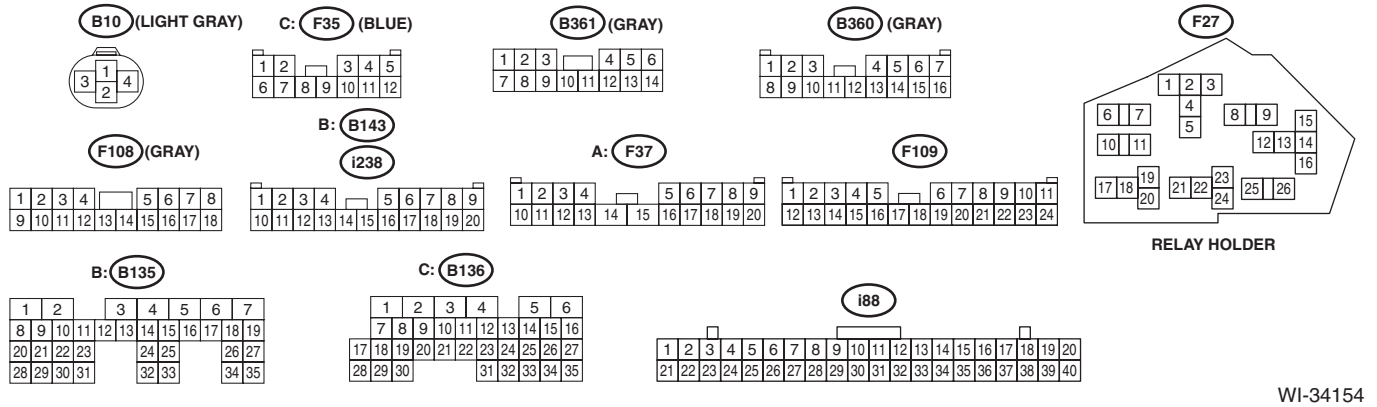

WI-34154

WIRING SYSTEM

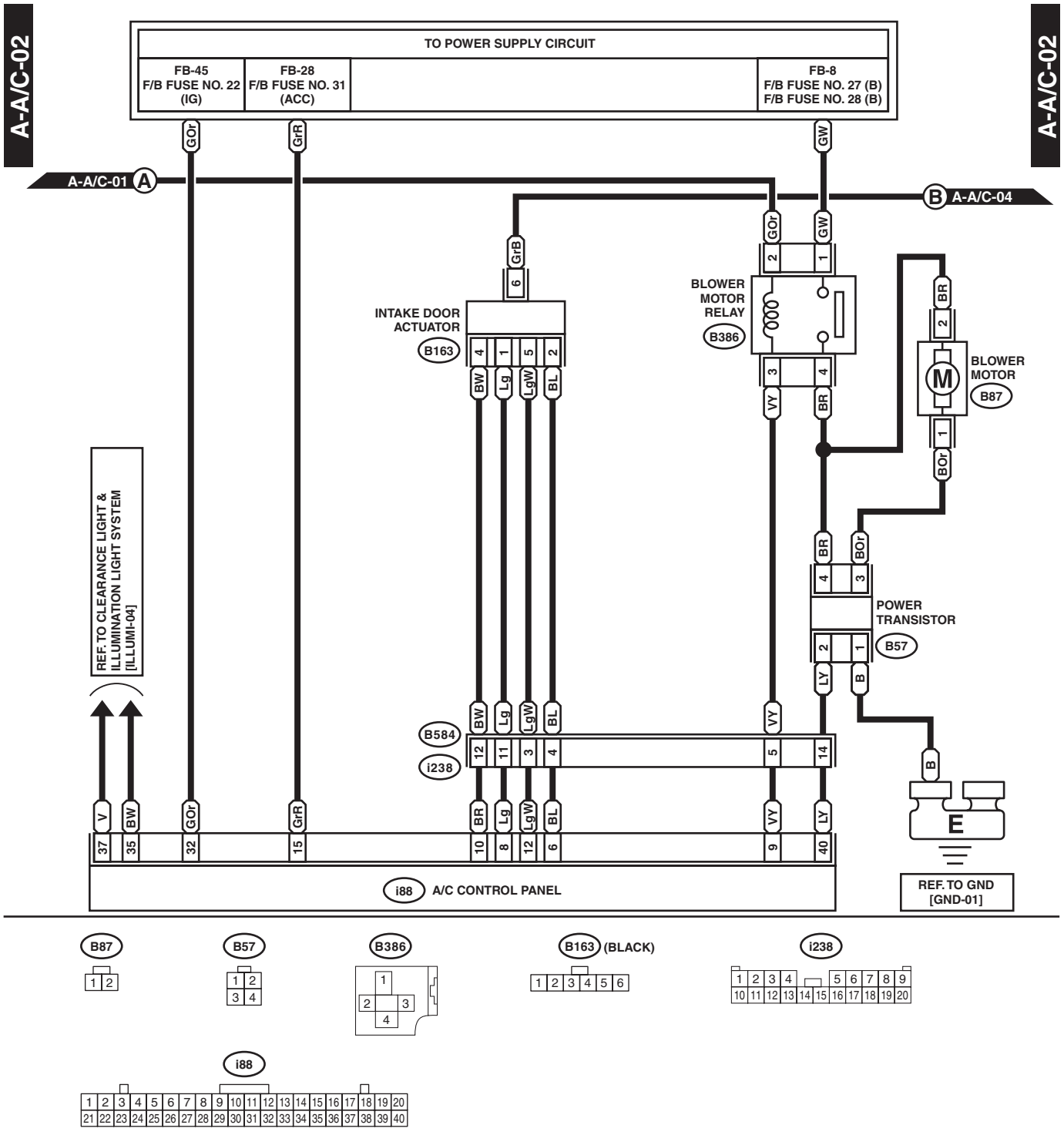

WI-34155

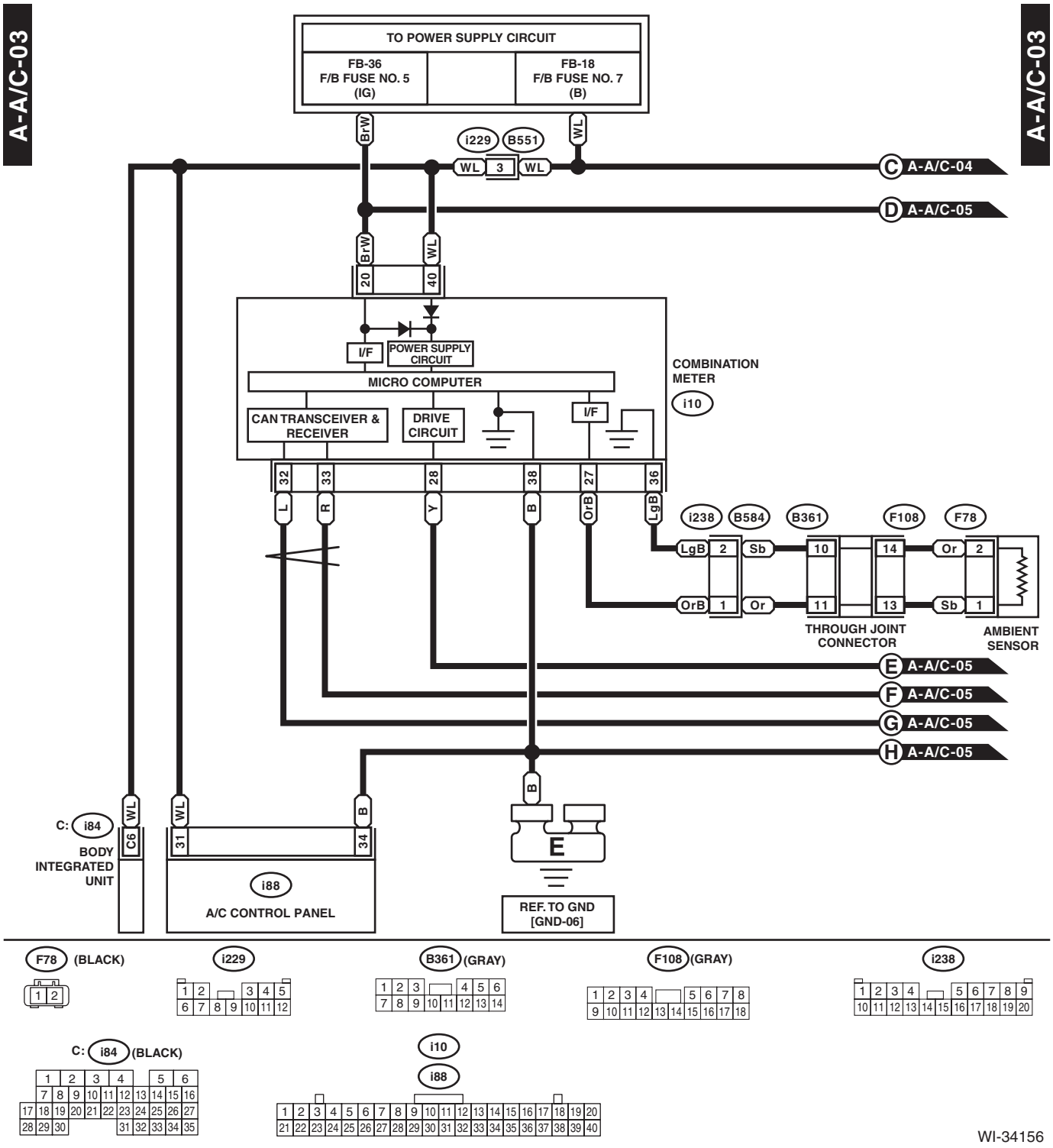
A-A/C-03
A-A/C-03
TO POWER SUPPLY CIRCUIT
FB-36
F/B FUSE NO. 5
(IG)
FB-18
F/B FUSE NO. 7
(B)
BrW
WL
i229
B551
WL
3
WL
C A-A/C-04
D A-A/C-05
BrW
WL
20
40
I/F
POWER SUPPLY CIRCUIT
MICRO COMPUTER
CAN TRANSCEIVER & RECEIVER
DRIVE CIRCUIT
I/F
COMBINATION METER
i10
32
33
28
38
27
36
L
R
Y
B
OrB
LgB
i238
B584
B361
F108
F78
LgB
2
Sb
10
14
Or
2
OrB
1
Or
11
13
Sb
1
THROUGH JOINT CONNECTOR
AMBIENT SENSOR
E A-A/C-05
F A-A/C-05
G A-A/C-05
H A-A/C-05
B
C: i84
WL
C6
BODY INTEGRATED UNIT
WL
B
31
34
i88
A/C CONTROL PANEL
E
REF. TO GND [GND-06]

F78 (BLACK)
i229
B361 (GRAY)
F108 (GRAY)
i238
C: i84 (BLACK)
i10
i88

WI-34156

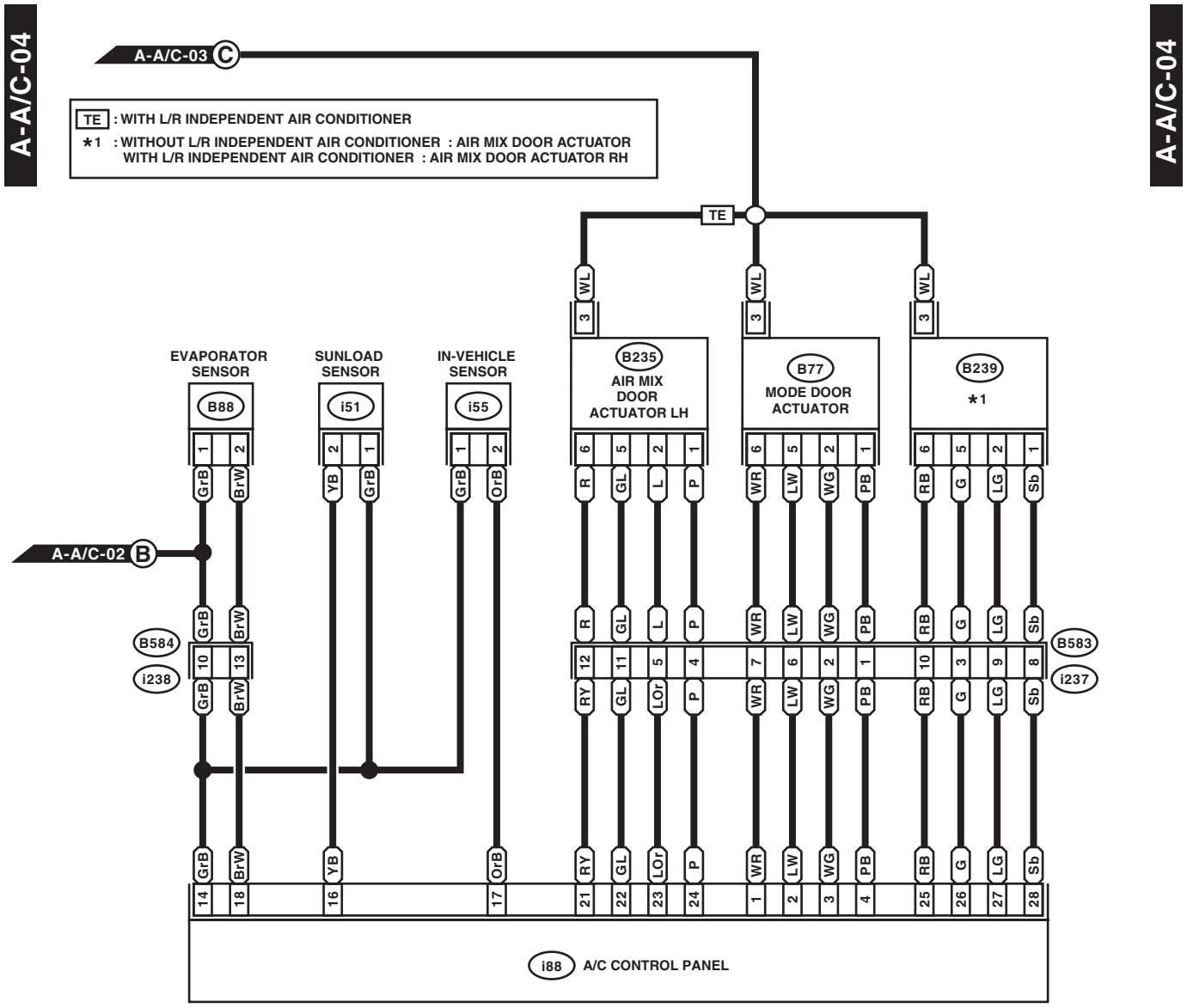
A-A/C-04
A-A/C-04
A-A/C-03 C
TE : WITH L/R INDEPENDENT AIR CONDITIONER
*1 : WITHOUT L/R INDEPENDENT AIR CONDITIONER : AIR MIX DOOR ACTUATOR
WITH L/R INDEPENDENT AIR CONDITIONER : AIR MIX DOOR ACTUATOR RH
TE
EVAPORATOR SENSOR
B88
SUNLOAD SENSOR
i51
IN-VEHICLE SENSOR
i55
B235
AIR MIX DOOR ACTUATOR LH
B77
MODE DOOR ACTUATOR
B239
*1
A-A/C-02 B
B584
i238
B583
i237
i88 A/C CONTROL PANEL

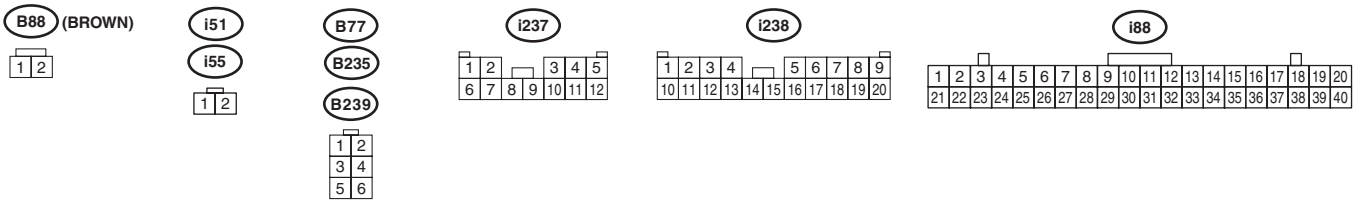
B88 (BROWN)
i51
i55
B77
B235
B239
i237
i238
i88

WI-34157

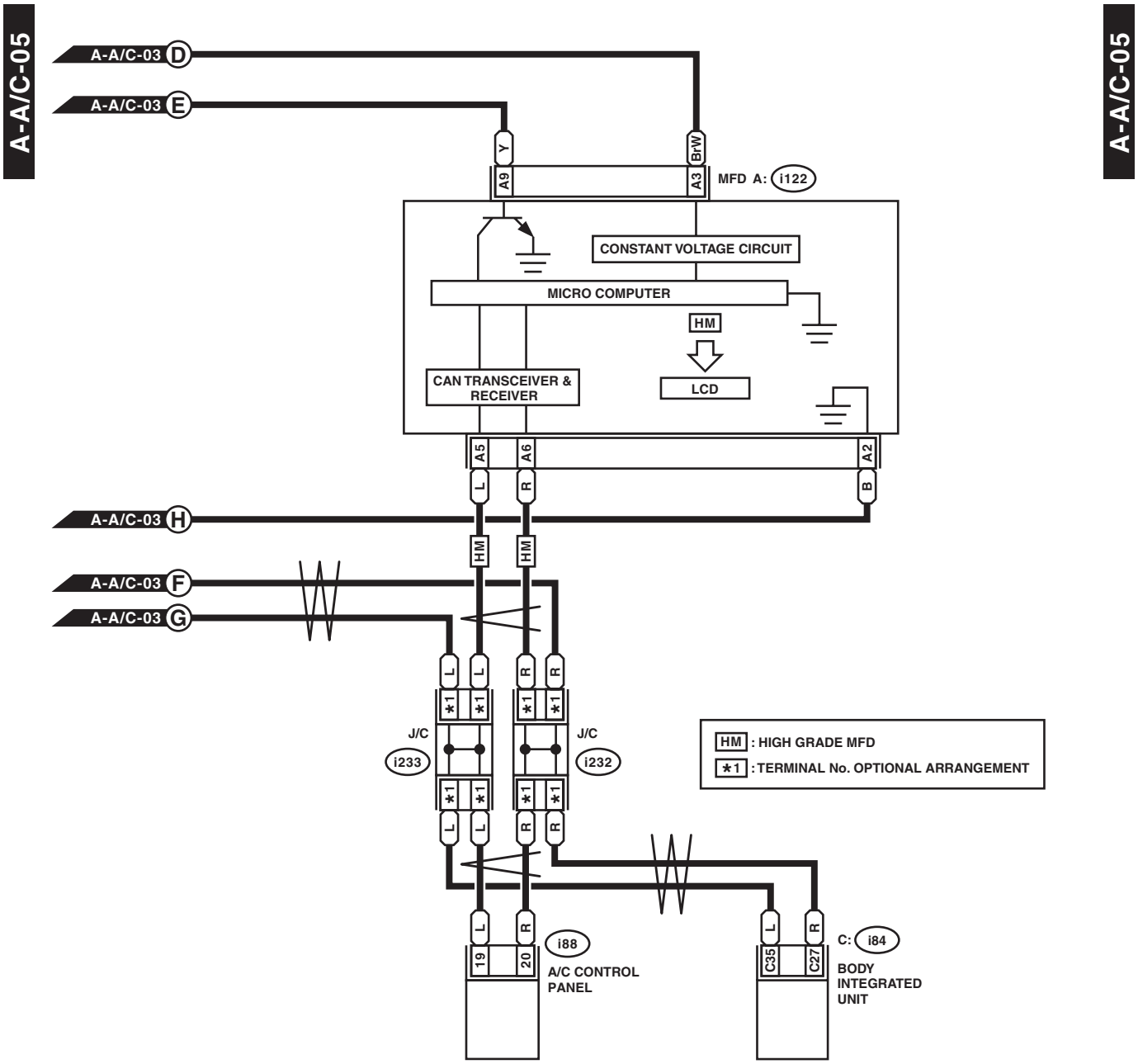
A-A/C-05
A-A/C-05
A-A/C-03 D
A-A/C-03 E
Y
Br/W
A9
A3
MFD A: i122
CONSTANT VOLTAGE CIRCUIT
MICRO COMPUTER
HM
LCD
CAN TRANSCEIVER & RECEIVER
A5
A6
A2
L
R
B
A-A/C-03 H
HM
HM
A-A/C-03 F
A-A/C-03 G
L
R
*1
J/C
i233
J/C
i232
HM : HIGH GRADE MFD
*1 : TERMINAL No. OPTIONAL ARRANGEMENT
19
20
i88
A/C CONTROL PANEL
C35
C27
C: i84
BODY INTEGRATED UNIT
i232
i233
A: i122 (BLACK)
C: i84 (BLACK)
i88
WI-37813

7. Audio System

A: WIRING DIAGRAM

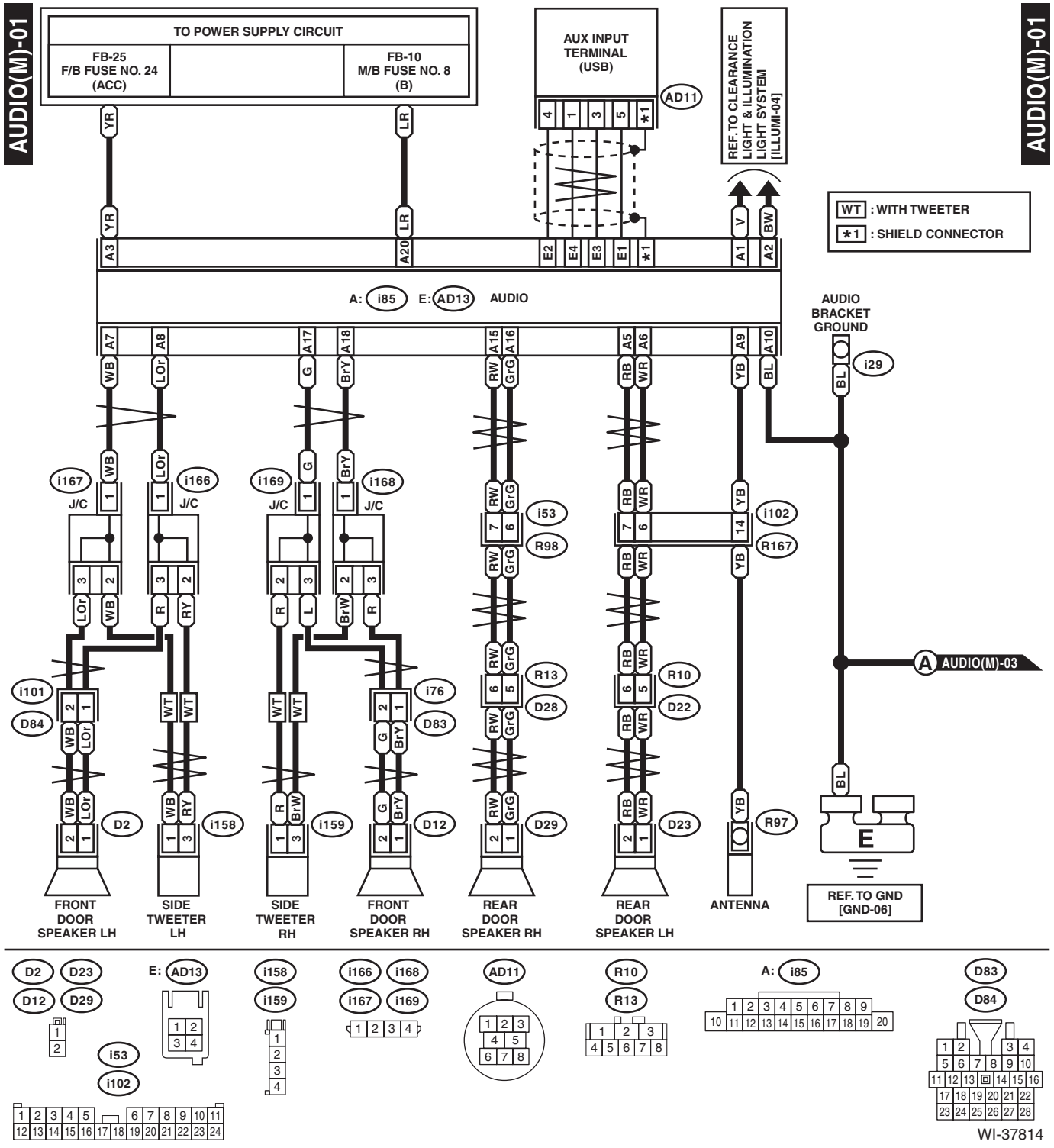

WI-37814

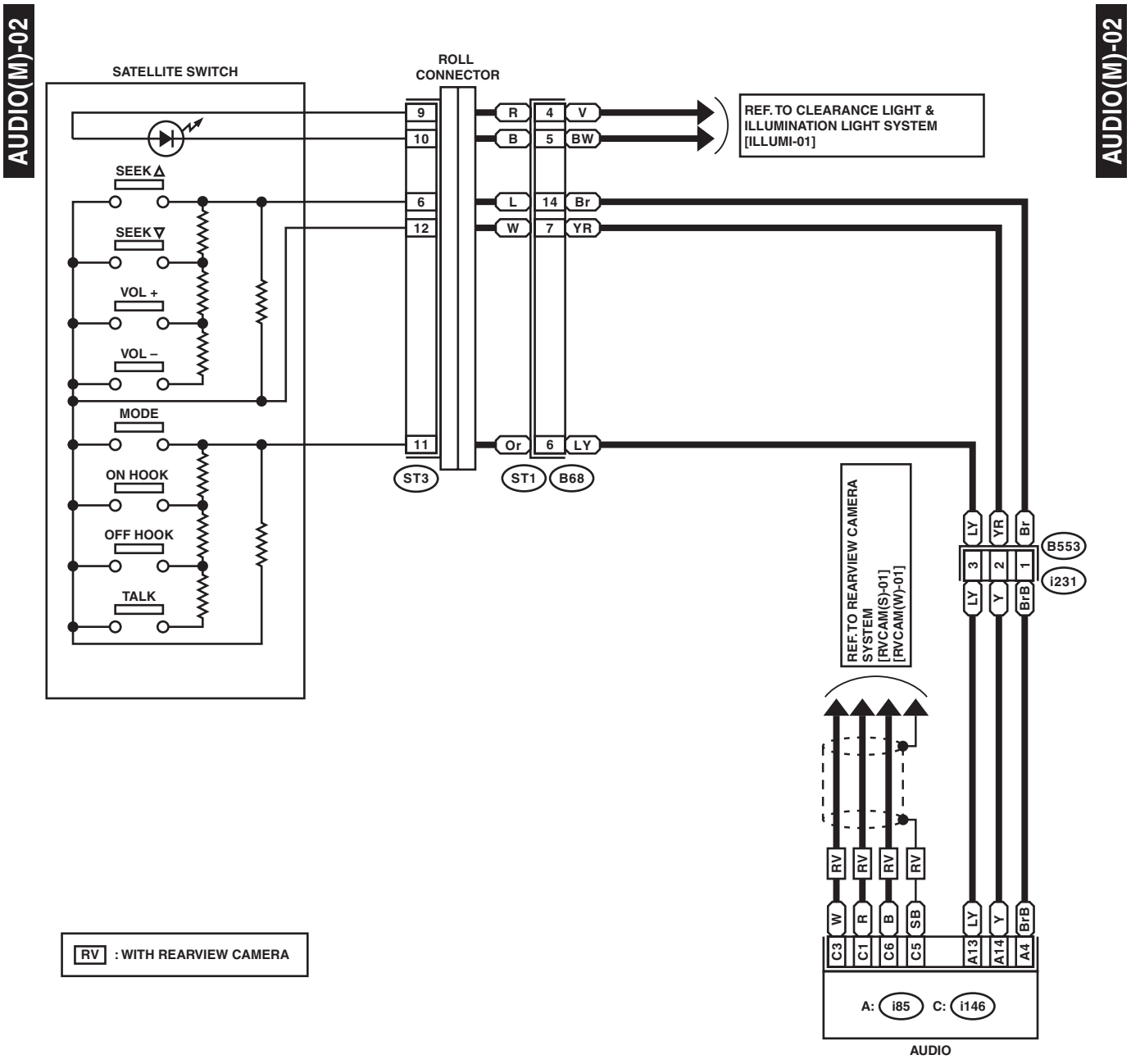
AUDIO(M)-02
AUDIO(M)-02
SATELLITE SWITCH
ROLL CONNECTOR
SEEK △
SEEK ▽
VOL +
VOL –
MODE
ON HOOK
OFF HOOK
TALK
9
10
6
12
11
R
B
L
W
Or
4
5
14
7
6
V
BW
Br
YR
LY
ST3
ST1
B68
REF. TO CLEARANCE LIGHT & ILLUMINATION LIGHT SYSTEM [ILLUMI-01]
REF. TO REARVIEW CAMERA SYSTEM [RVCAM(S)-01] [RVCAM(W)-01]
LY
YR
Br
3
2
1
LY
Y
BrB
B553
i231
RV
RV
RV
RV
W
R
B
SB
LY
Y
BrB
C3
C1
C6
C5
A13
A14
A4
A: i85
C: i146
AUDIO
RV : WITH REARVIEW CAMERA

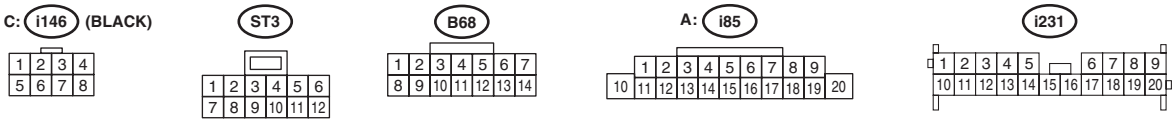
C: i146 (BLACK)
ST3
B68
A: i85
i231

WI-42732

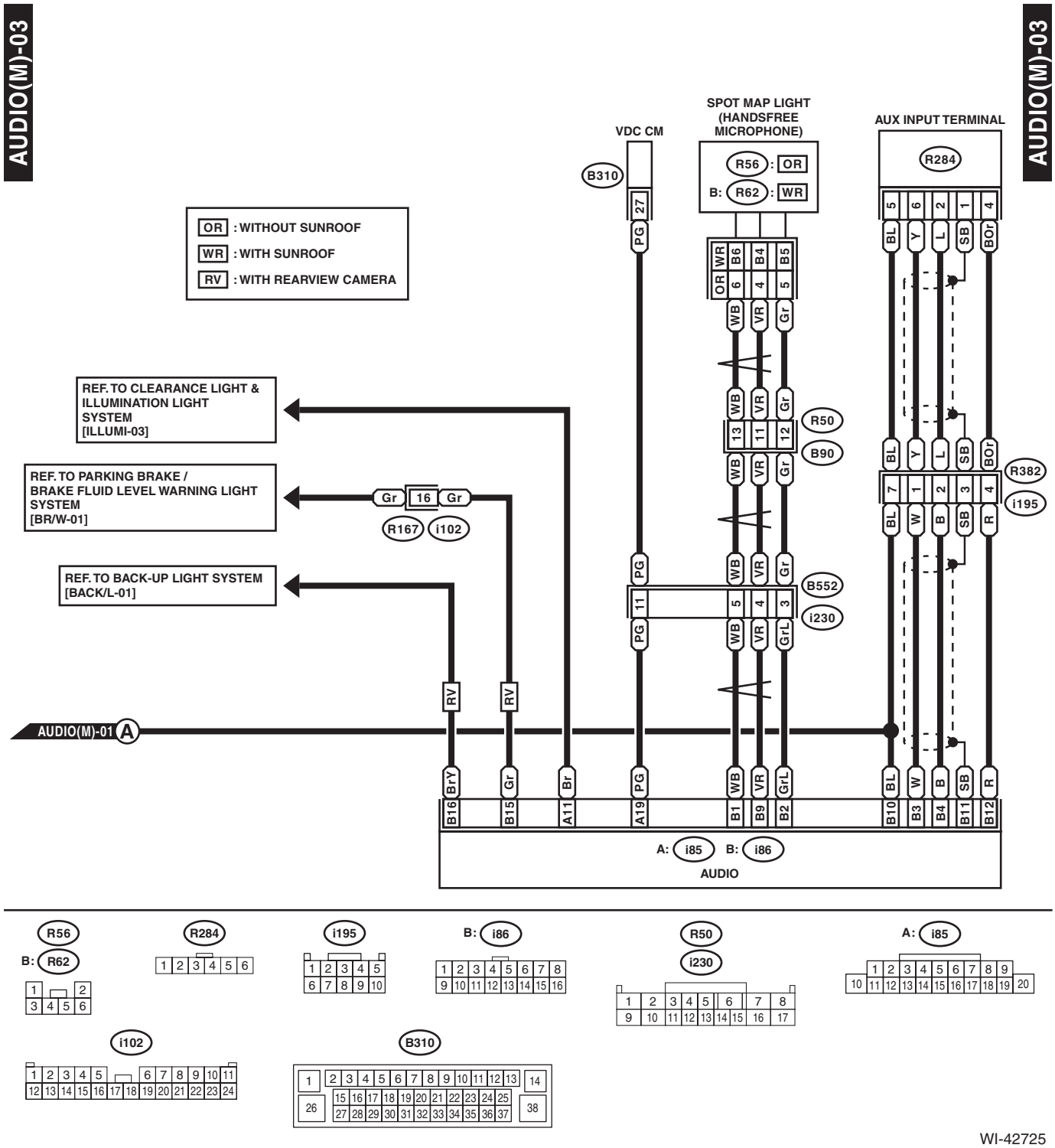
AUDIO(M)-03
AUDIO(M)-03
OR : WITHOUT SUNROOF
WR : WITH SUNROOF
RV : WITH REARVIEW CAMERA
VDC CM
B310
SPOT MAP LIGHT (HANDSFREE MICROPHONE)
R56 : OR
B: R62 : WR
AUX INPUT TERMINAL
R284
REF. TO CLEARANCE LIGHT & ILLUMINATION LIGHT SYSTEM [ILLUMI-03]
REF. TO PARKING BRAKE / BRAKE FLUID LEVEL WARNING LIGHT SYSTEM [BR/W-01]
REF. TO BACK-UP LIGHT SYSTEM [BACK/L-01]
R167
i102
R50
B90
B552
i230
R382
i195
AUDIO(M)-01 A
A: i85
B: i86
AUDIO
WI-42725

8. Back-up Light System

A: WIRING DIAGRAM

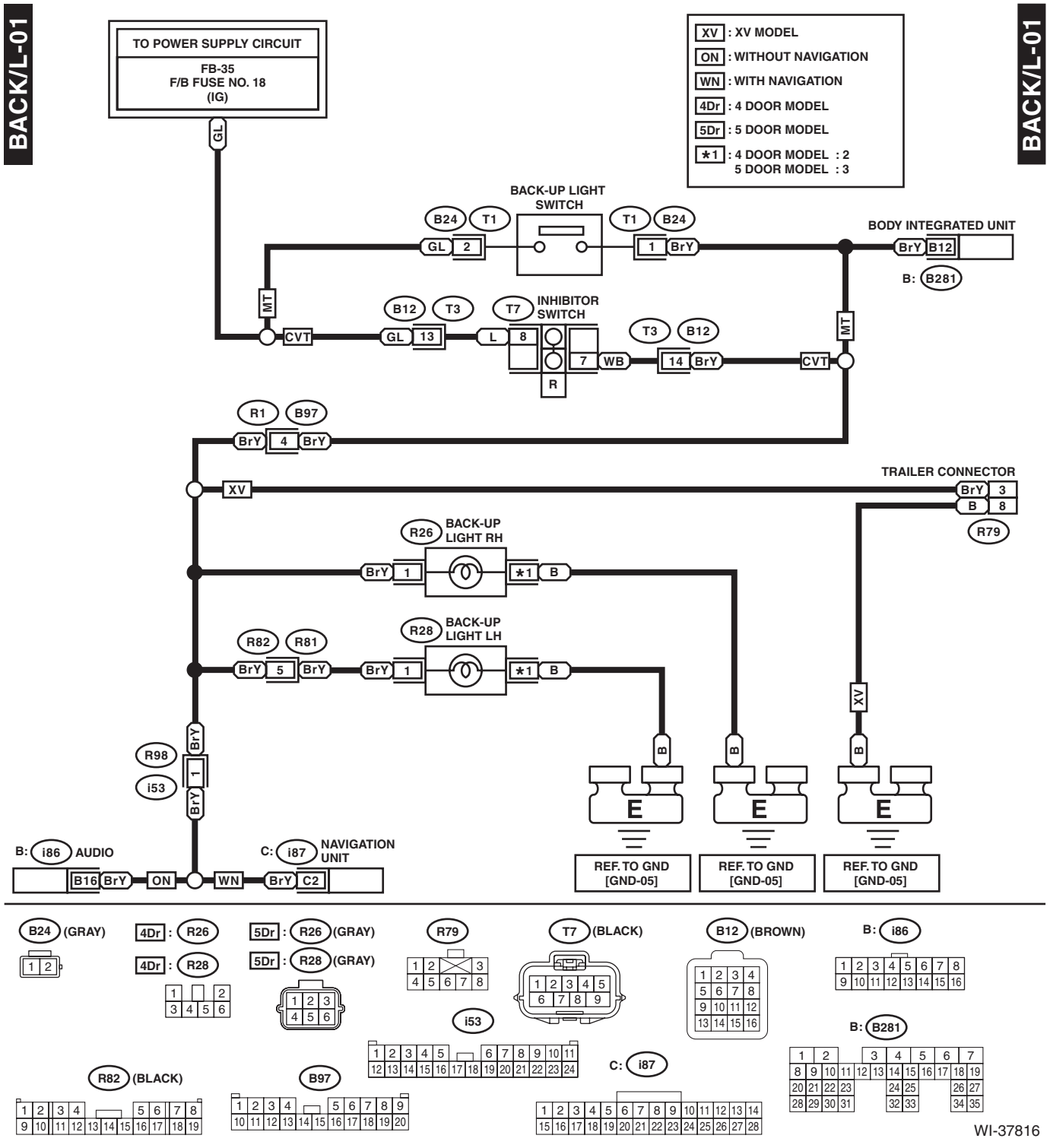

9. CAN Communication System

A: WIRING DIAGRAM

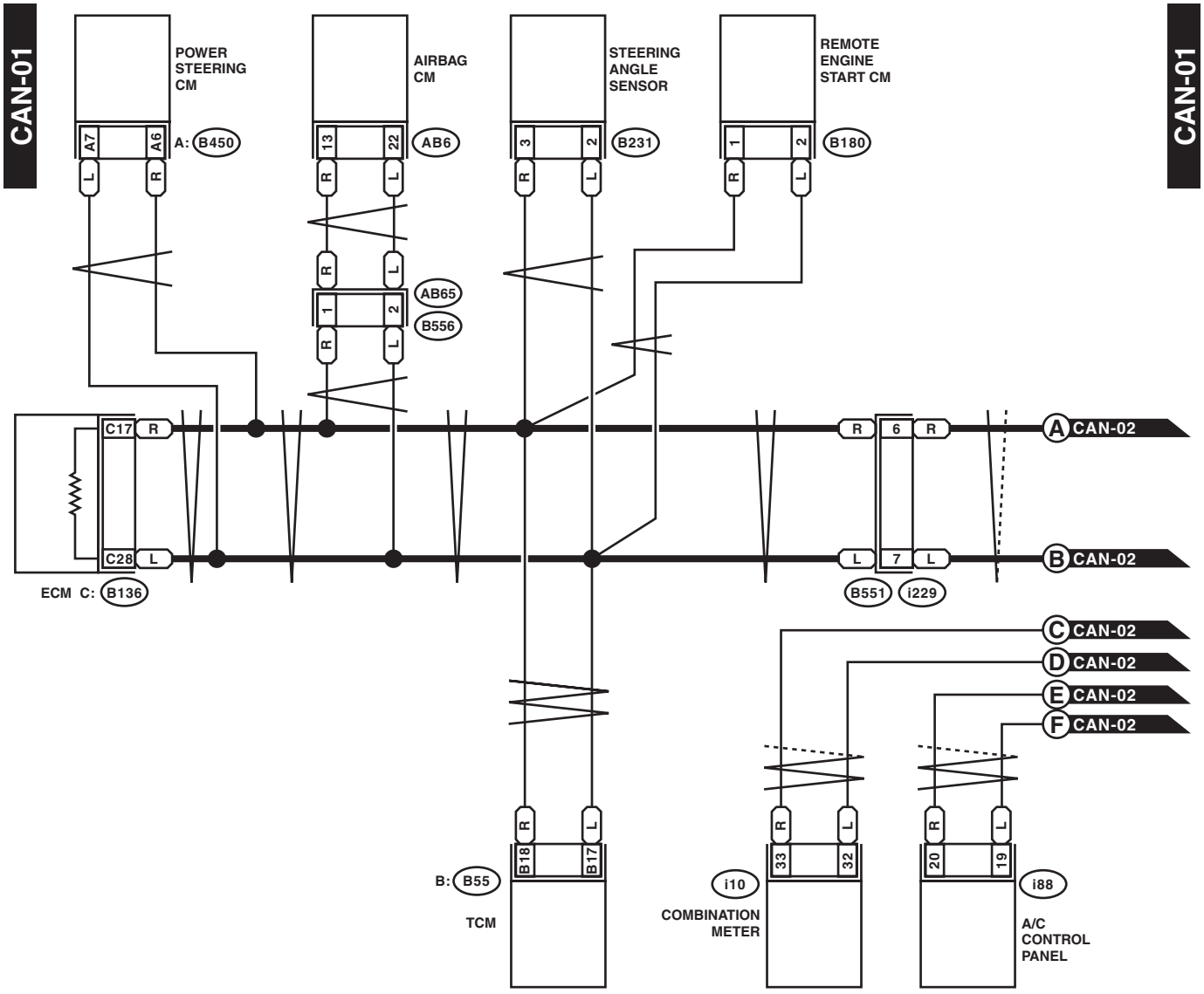

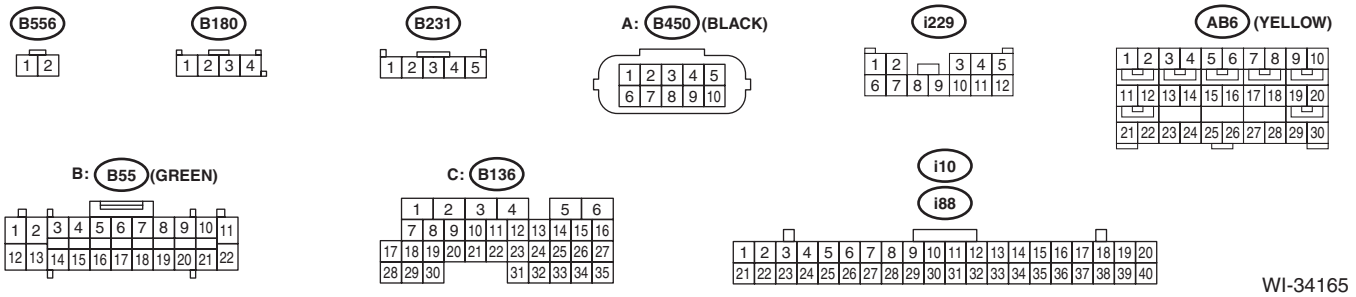

WI-34165

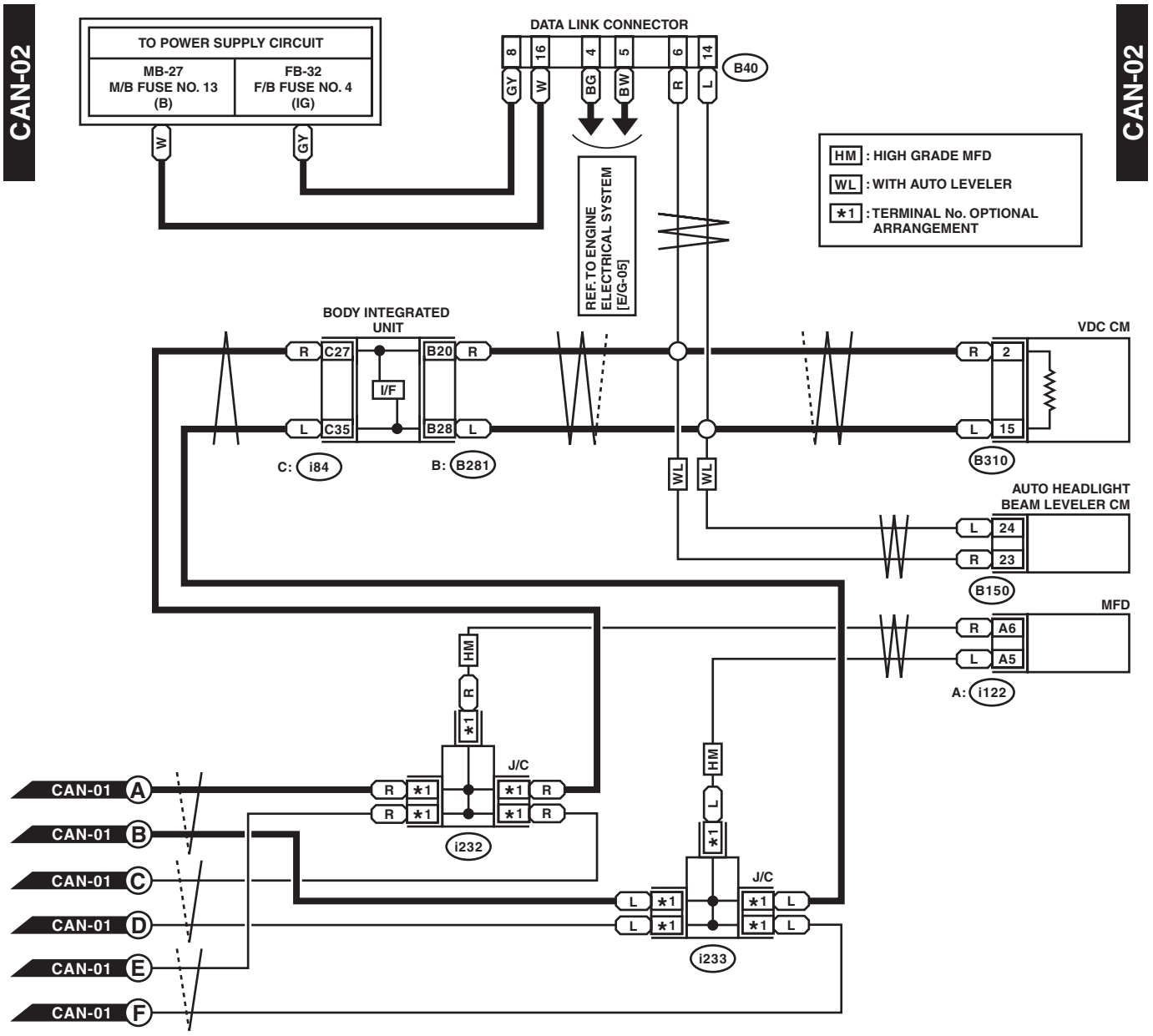
CAN-02
CAN-02
TO POWER SUPPLY CIRCUIT
MB-27
M/B FUSE NO. 13
(B)
FB-32
F/B FUSE NO. 4
(IG)
DATA LINK CONNECTOR
B40
REF. TO ENGINE ELECTRICAL SYSTEM [E/G-05]
HM : HIGH GRADE MFD
WL : WITH AUTO LEVELER
*1 : TERMINAL No. OPTIONAL ARRANGEMENT
BODY INTEGRATED UNIT
I/F
C: i84
B: B281
VDC CM
B310
AUTO HEADLIGHT BEAM LEVELER CM
B150
MFD
A: i122
J/C
i232
i233
CAN-01 A
CAN-01 B
CAN-01 C
CAN-01 D
CAN-01 E
CAN-01 F

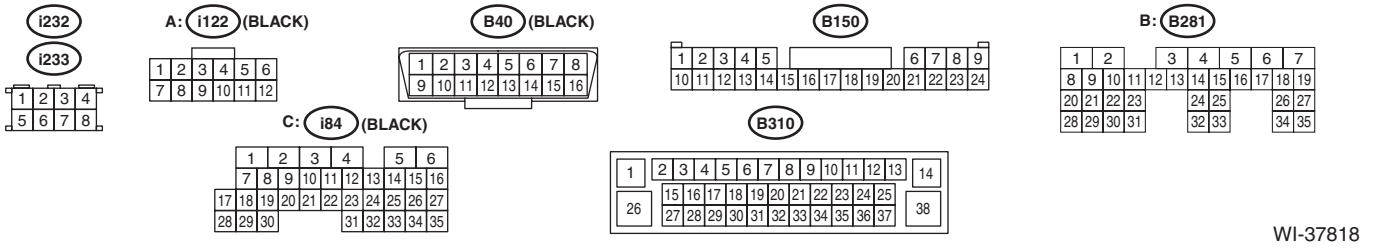
i232
i233
A: i122 (BLACK)
B40 (BLACK)
B150
B: B281
C: i84 (BLACK)
B310

WI-37818

10.Charging System

A: WIRING DIAGRAM

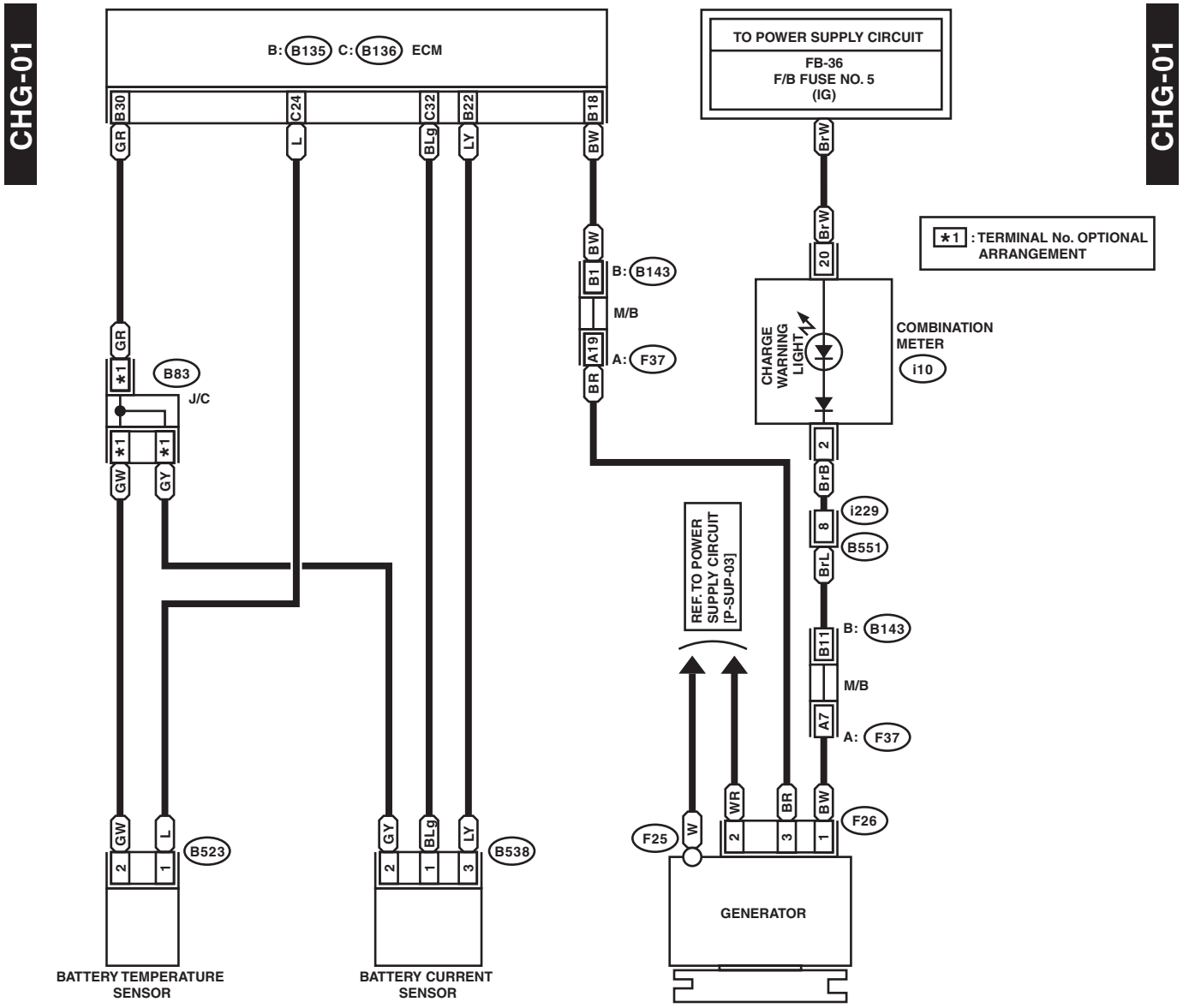

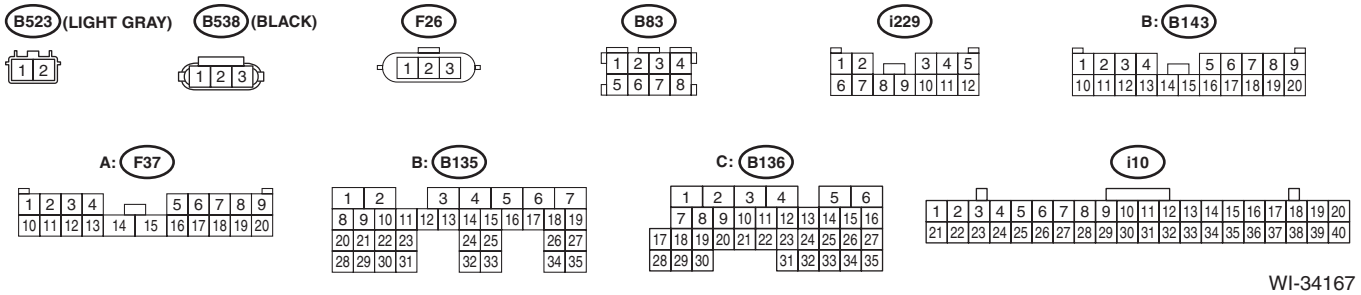

WI-34167

11.Clearance Light and Illumination Light System

A: WIRING DIAGRAM

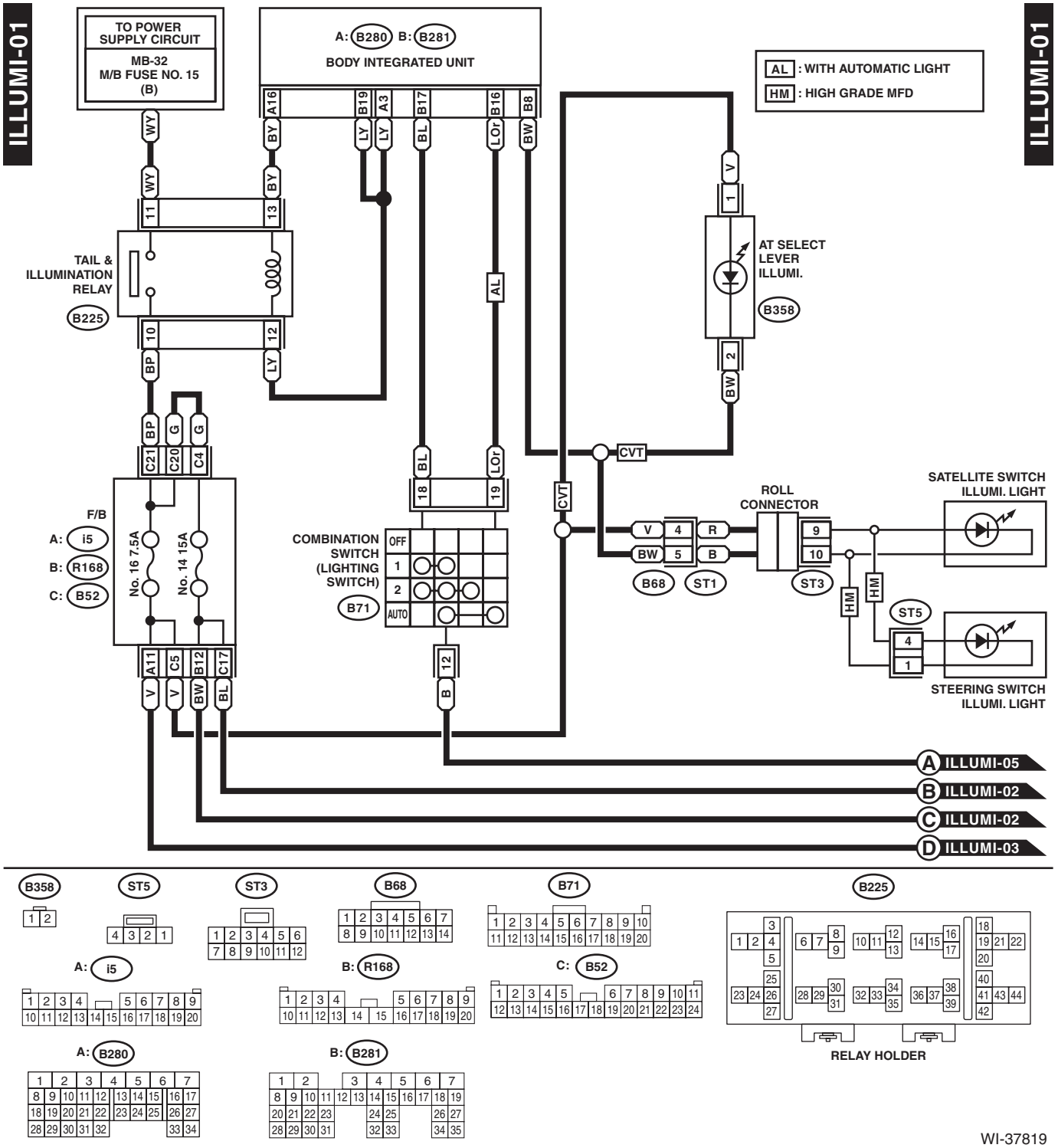

WI-37819

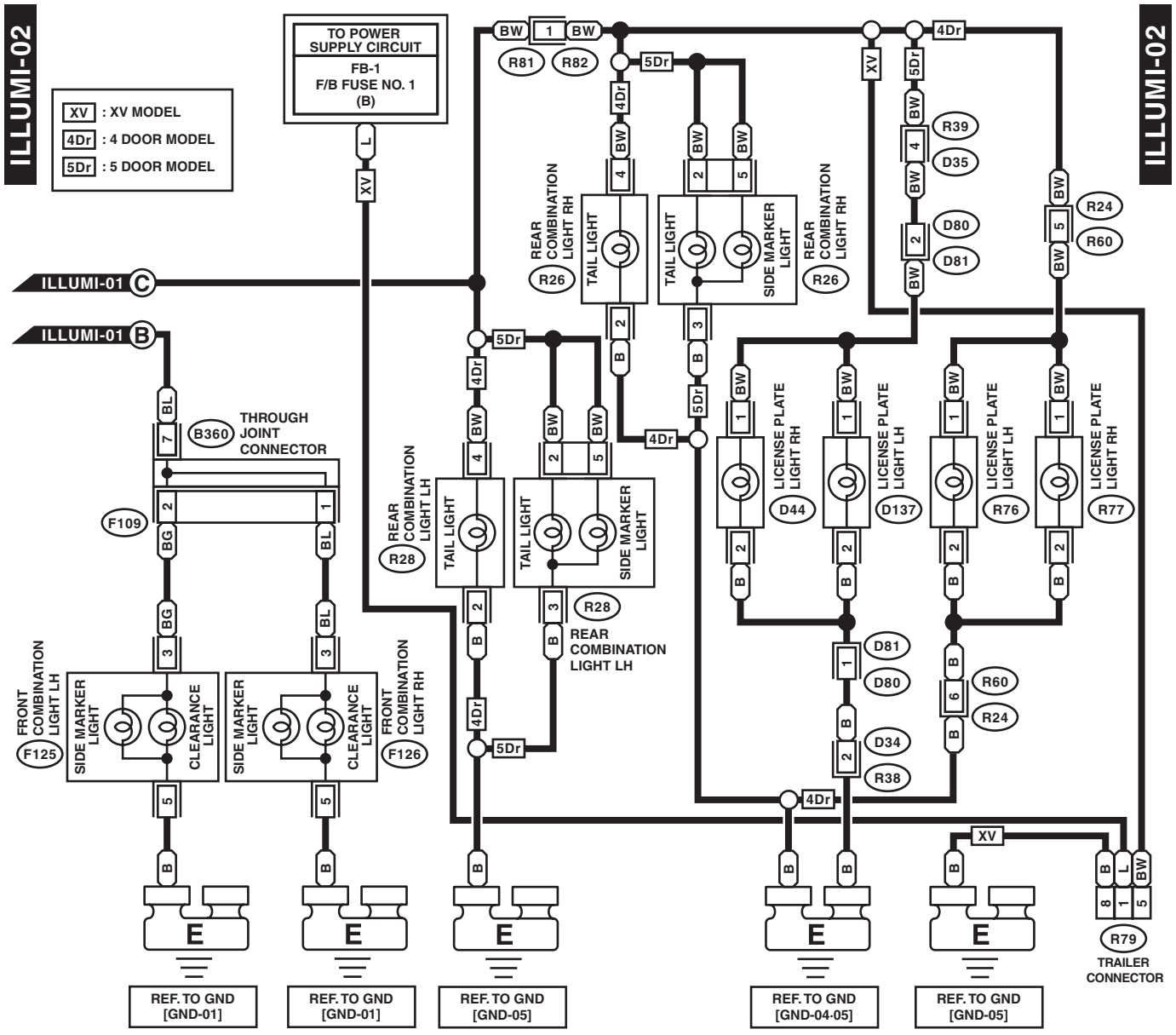
ILLUMI-02
XV : XV MODEL
4Dr : 4 DOOR MODEL
5Dr : 5 DOOR MODEL
TO POWER SUPPLY CIRCUIT
FB-1
F/B FUSE NO. 1
(B)
ILLUMI-01 C
ILLUMI-01 B
THROUGH JOINT CONNECTOR
B360
F109
REAR COMBINATION LIGHT RH
R26
REAR COMBINATION LIGHT LH
R28
TAIL LIGHT
SIDE MARKER LIGHT
LICENSE PLATE LIGHT RH
D44
LICENSE PLATE LIGHT LH
D137
R76
R77
D81
D80
D34
R38
R39
D35
R24
R60
FRONT COMBINATION LIGHT LH
F125
FRONT COMBINATION LIGHT RH
F126
SIDE MARKER LIGHT
CLEARANCE LIGHT
R79
TRAILER CONNECTOR
REF. TO GND [GND-01]
REF. TO GND [GND-01]
REF. TO GND [GND-05]
REF. TO GND [GND-04-05]
REF. TO GND [GND-05]

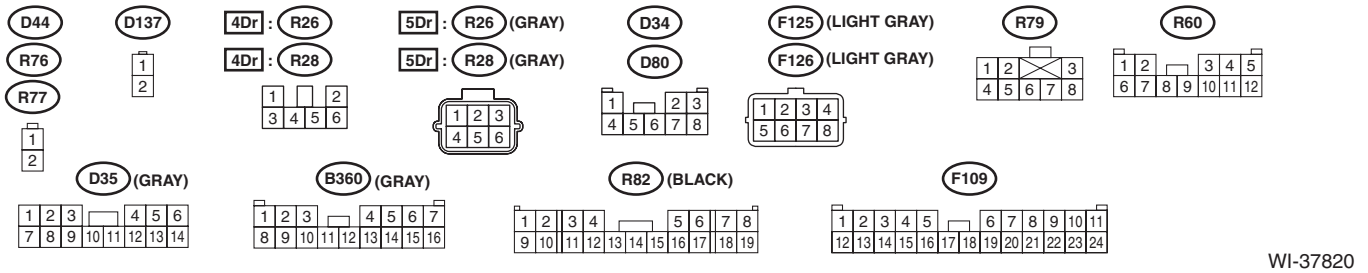
D44
R76
R77
D137
4Dr : R26
4Dr : R28
5Dr : R26 (GRAY)
5Dr : R28 (GRAY)
D34
D80
F125 (LIGHT GRAY)
F126 (LIGHT GRAY)
R79
R60
D35 (GRAY)
B360 (GRAY)
R82 (BLACK)
F109

WI-37820

ILLUMI-03

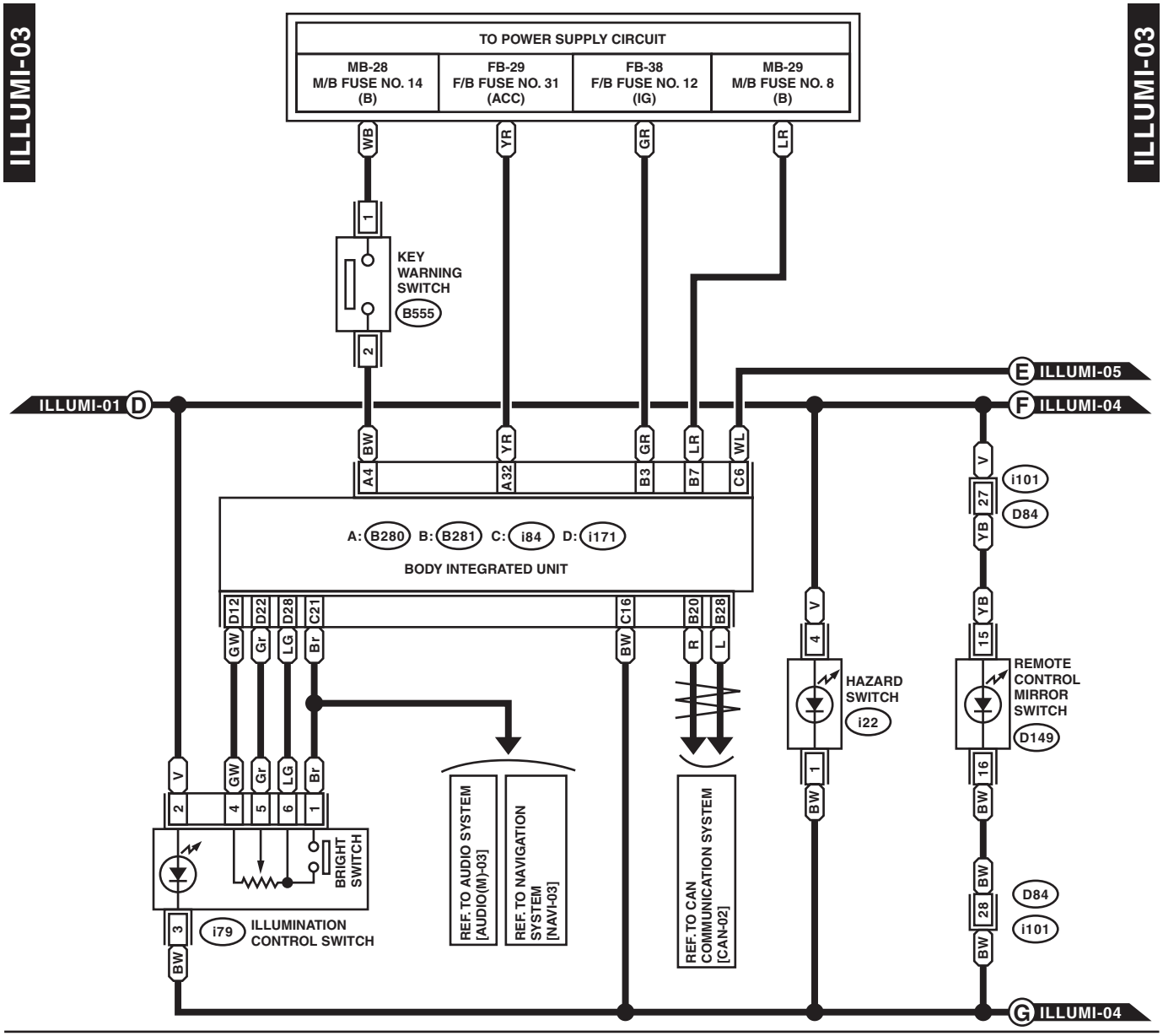

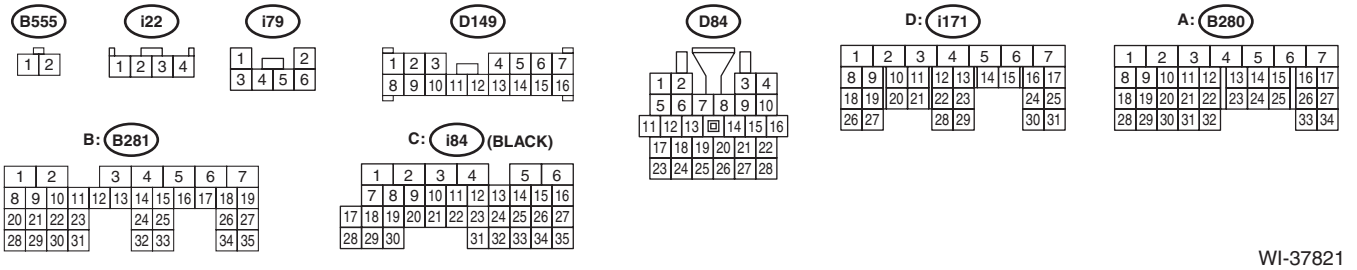

WI-37821

ILLUMI-04

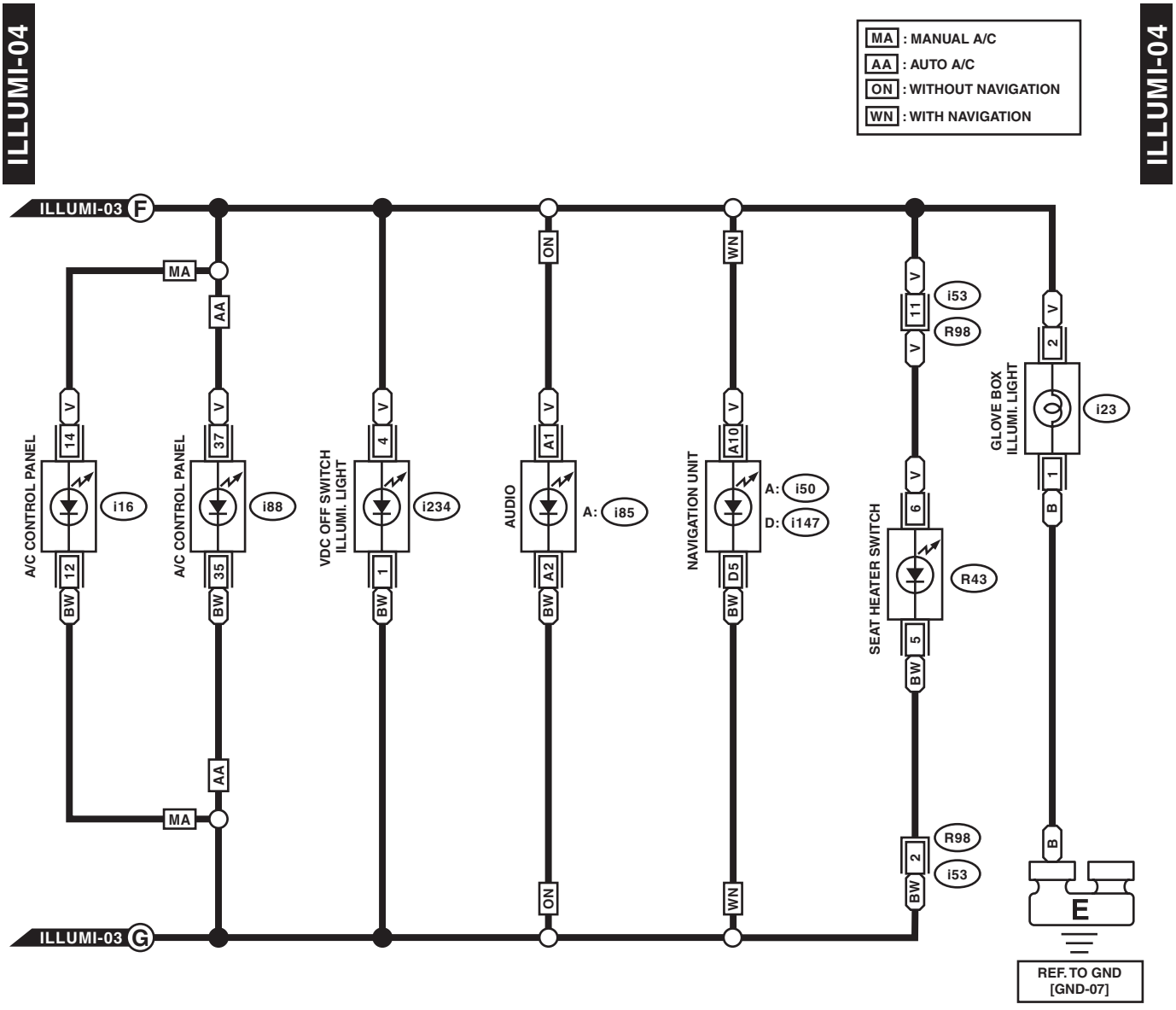

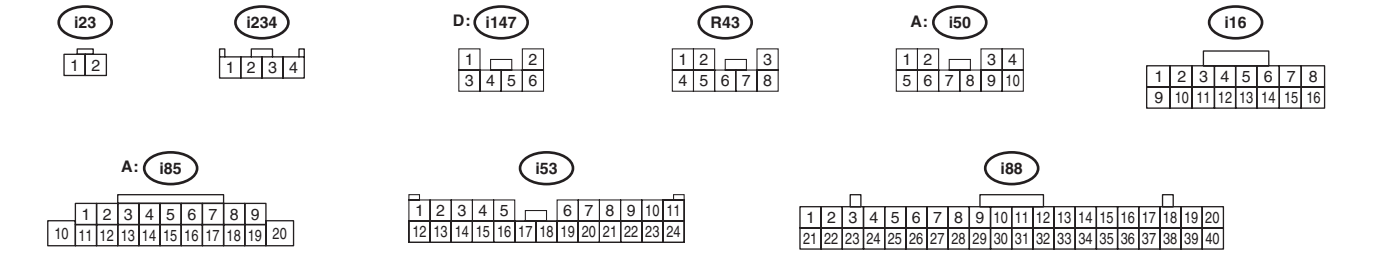

WI-34171

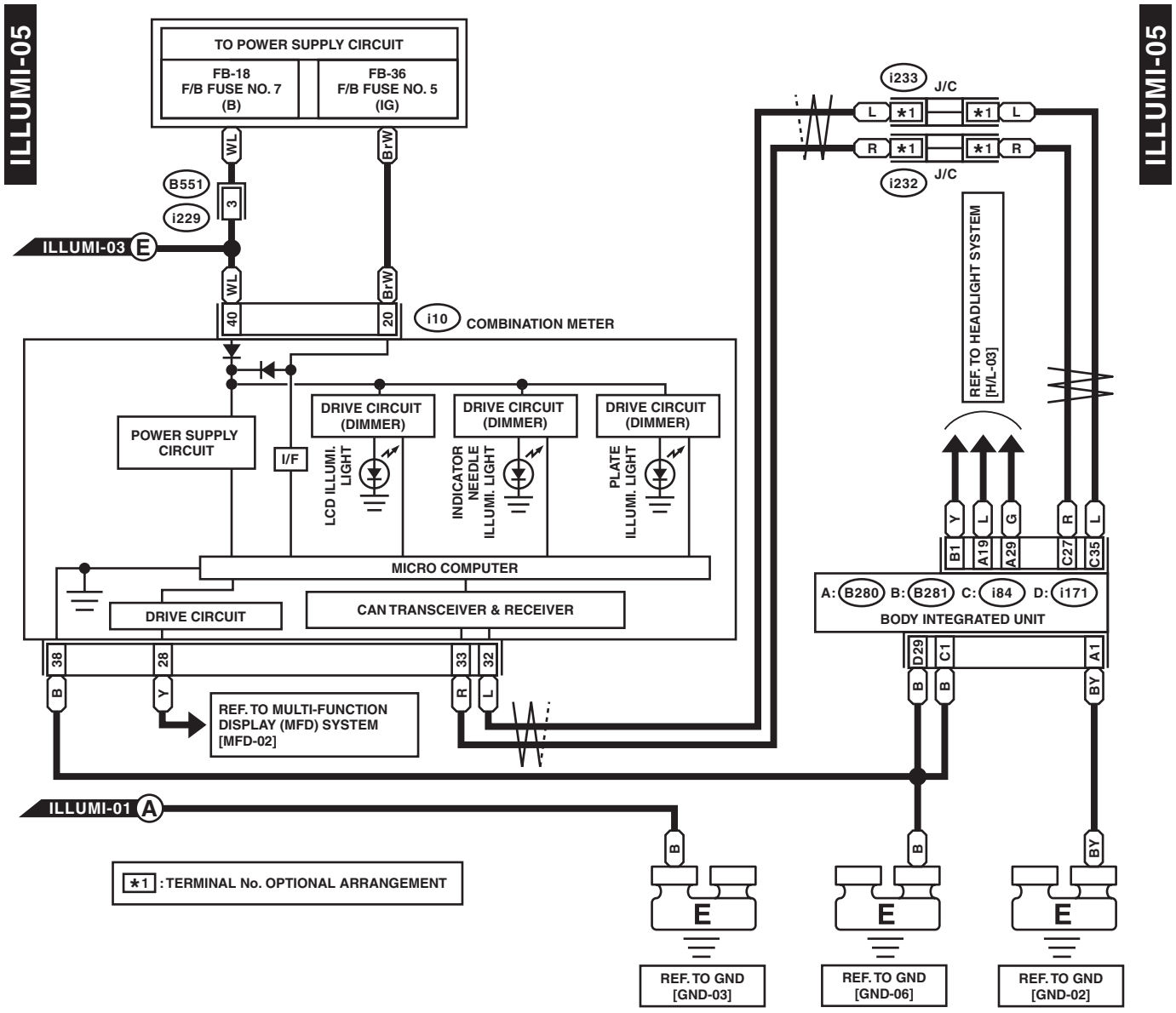
ILLUMI-05
ILLUMI-05
TO POWER SUPPLY CIRCUIT
FB-18 F/B FUSE NO. 7 (B)
FB-36 F/B FUSE NO. 5 (IG)
WL
BrW
B551
i229
3
ILLUMI-03 E
WL
BrW
40
20
i10 COMBINATION METER
POWER SUPPLY CIRCUIT
I/F
DRIVE CIRCUIT (DIMMER)
DRIVE CIRCUIT (DIMMER)
DRIVE CIRCUIT (DIMMER)
LCD ILLUMI. LIGHT
INDICATOR NEEDLE ILLUMI. LIGHT
PLATE ILLUMI. LIGHT
MICRO COMPUTER
DRIVE CIRCUIT
CAN TRANSCEIVER & RECEIVER
38
28
33
32
B
Y
R
L
REF. TO MULTI-FUNCTION DISPLAY (MFD) SYSTEM [MFD-02]
i233 J/C
L *1 *1 L
R *1 *1 R
i232 J/C
REF. TO HEADLIGHT SYSTEM [H/L-03]
Y L G R L
B1 A19 A29 C27 C35
A: B280 B: B281 C: i84 D: i171
BODY INTEGRATED UNIT
D29 C1 A1
B B BY
ILLUMI-01 A
*1 : TERMINAL No. OPTIONAL ARRANGEMENT
B B BY
E E E
REF. TO GND [GND-03]
REF. TO GND [GND-06]
REF. TO GND [GND-02]
i232
i233
i229
D: i171
A: B280
B: B281
C: i84 (BLACK)
i10

WI-42139

12.Combination Meter System

A: WIRING DIAGRAM

C/M-01

C/M-01

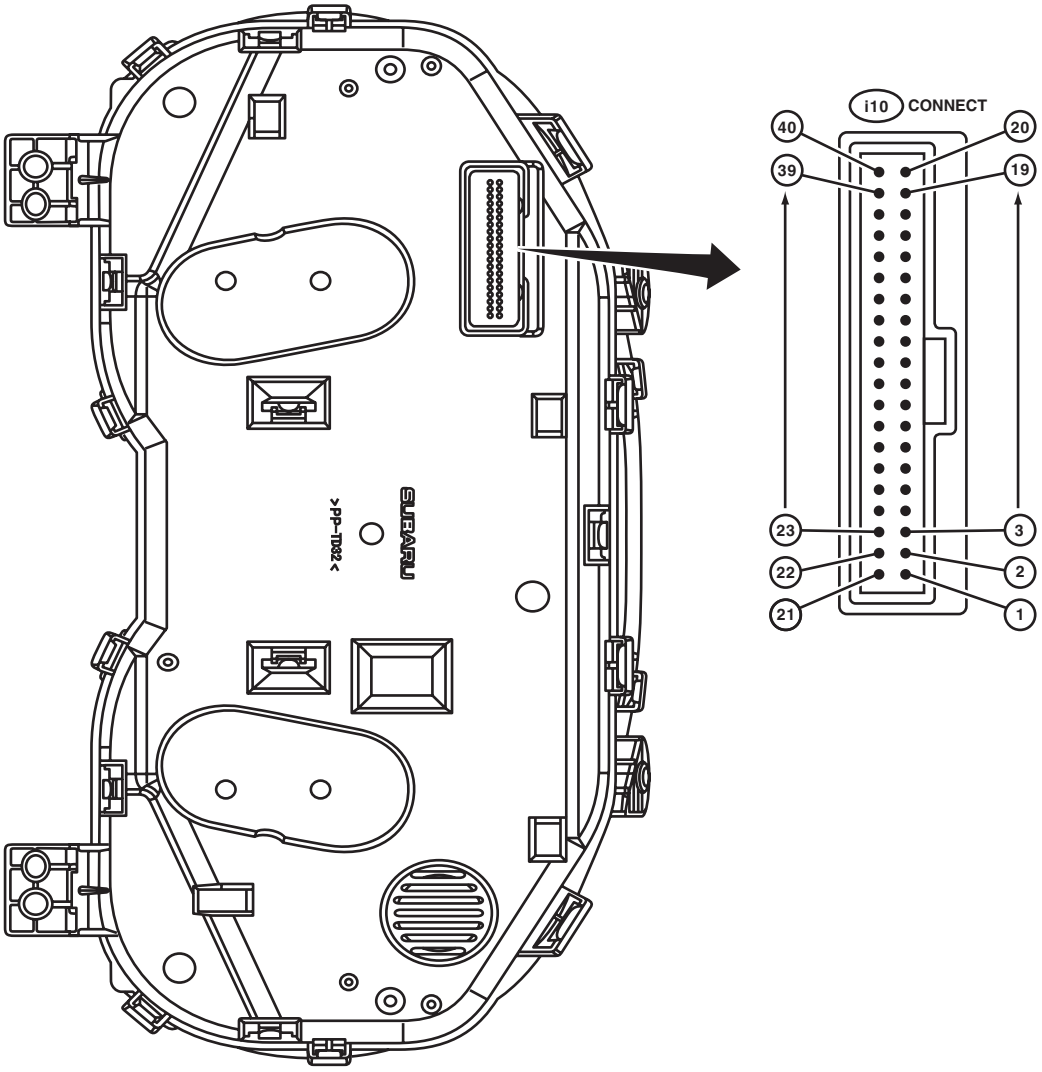

WI-34175

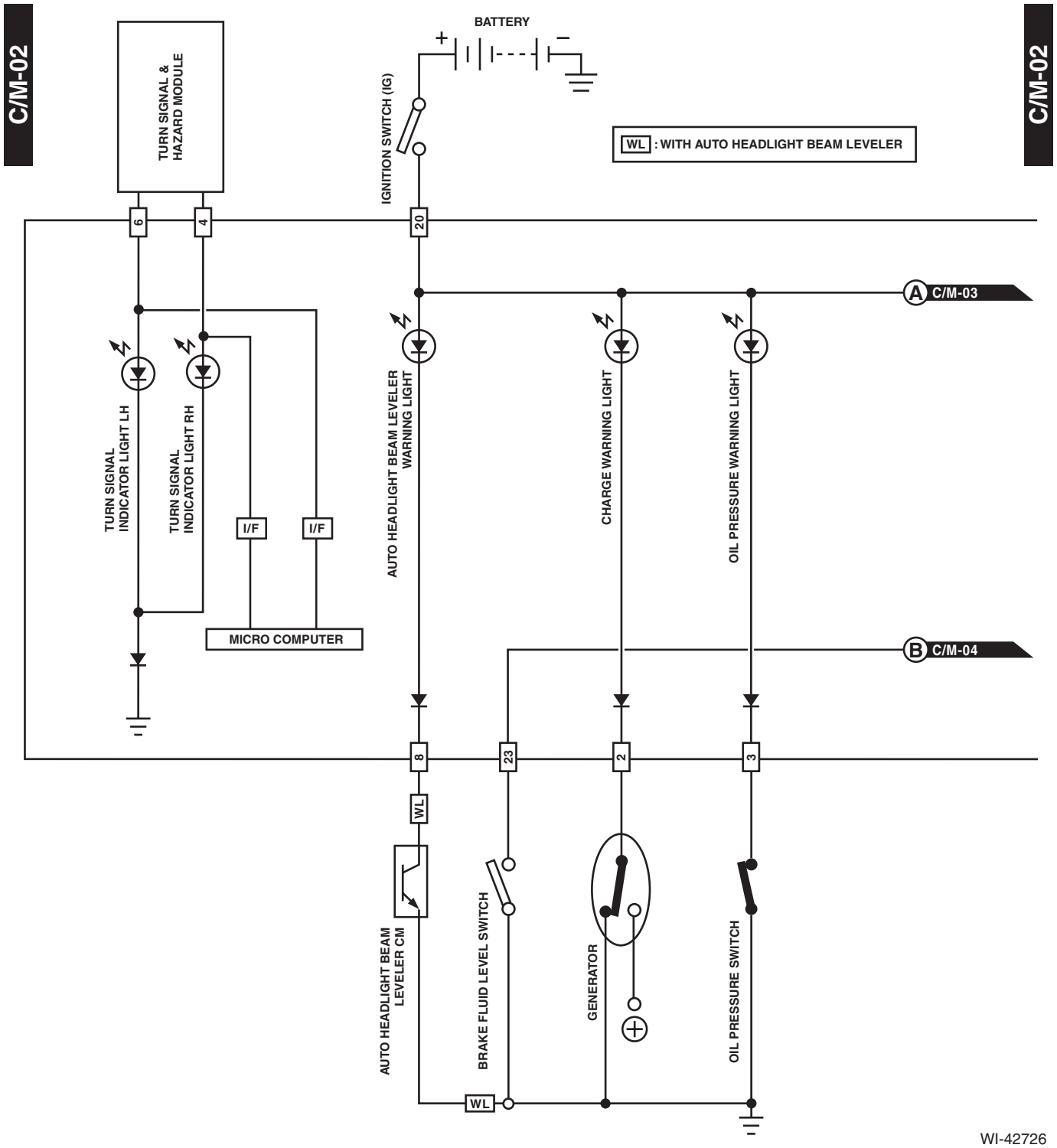
C/M-02
C/M-02
TURN SIGNAL & HAZARD MODULE
BATTERY
IGNITION SWITCH (IG)
WL : WITH AUTO HEADLIGHT BEAM LEVELER
6
4
20
A C/M-03
TURN SIGNAL INDICATOR LIGHT LH
TURN SIGNAL INDICATOR LIGHT RH
I/F
I/F
MICRO COMPUTER
AUTO HEADLIGHT BEAM LEVELER WARNING LIGHT
CHARGE WARNING LIGHT
OIL PRESSURE WARNING LIGHT
B C/M-04
8
23
2
3
WL
AUTO HEADLIGHT BEAM LEVELER CM
BRAKE FLUID LEVEL SWITCH
GENERATOR
OIL PRESSURE SWITCH
WL

WI-42726

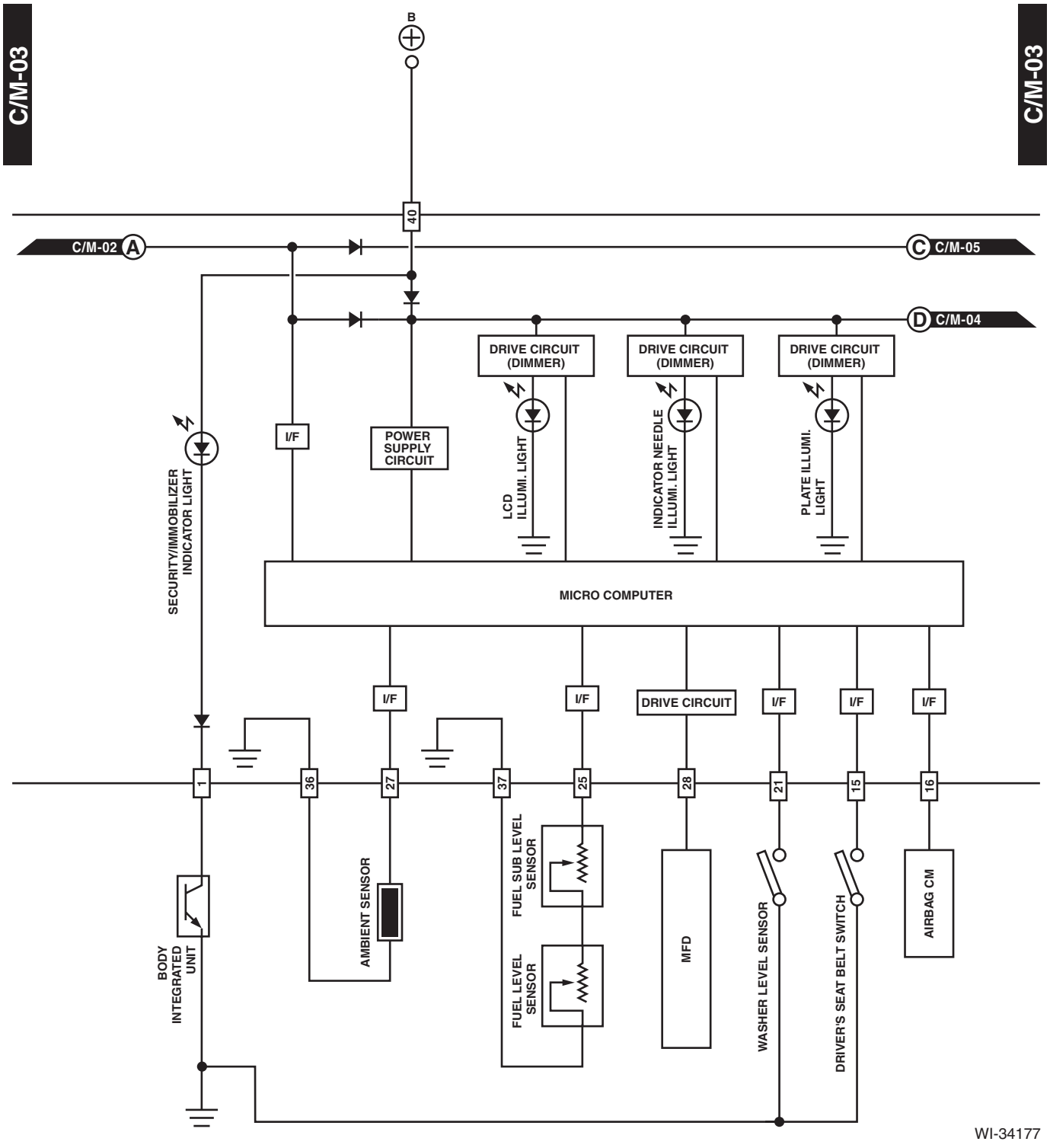
C/M-03
C/M-03
B
40
C/M-02 A
C C/M-05
D C/M-04
DRIVE CIRCUIT (DIMMER)
DRIVE CIRCUIT (DIMMER)
DRIVE CIRCUIT (DIMMER)
I/F
POWER SUPPLY CIRCUIT
SECURITY/IMMOBILIZER INDICATOR LIGHT
LCD ILLUMI. LIGHT
INDICATOR NEEDLE ILLUMI. LIGHT
PLATE ILLUMI. LIGHT
MICRO COMPUTER
I/F
I/F
DRIVE CIRCUIT
I/F
I/F
I/F
1
36
27
37
25
28
21
15
16
BODY INTEGRATED UNIT
AMBIENT SENSOR
FUEL SUB LEVEL SENSOR
FUEL LEVEL SENSOR
MFD
WASHER LEVEL SENSOR
DRIVER'S SEAT BELT SWITCH
AIRBAG CM

WI-34177

C/M-04

AA : AUTO A/C
HM : HIGH GRADE MFD
EC : WITH ECO GAUGE
WL : WITH AUTO LEVELER
*1 : SEAT BELT
KEY WARNING
HEADLIGHT ON WARNING
CUSTOMIZED
MANUAL SHIFT

C/M-04

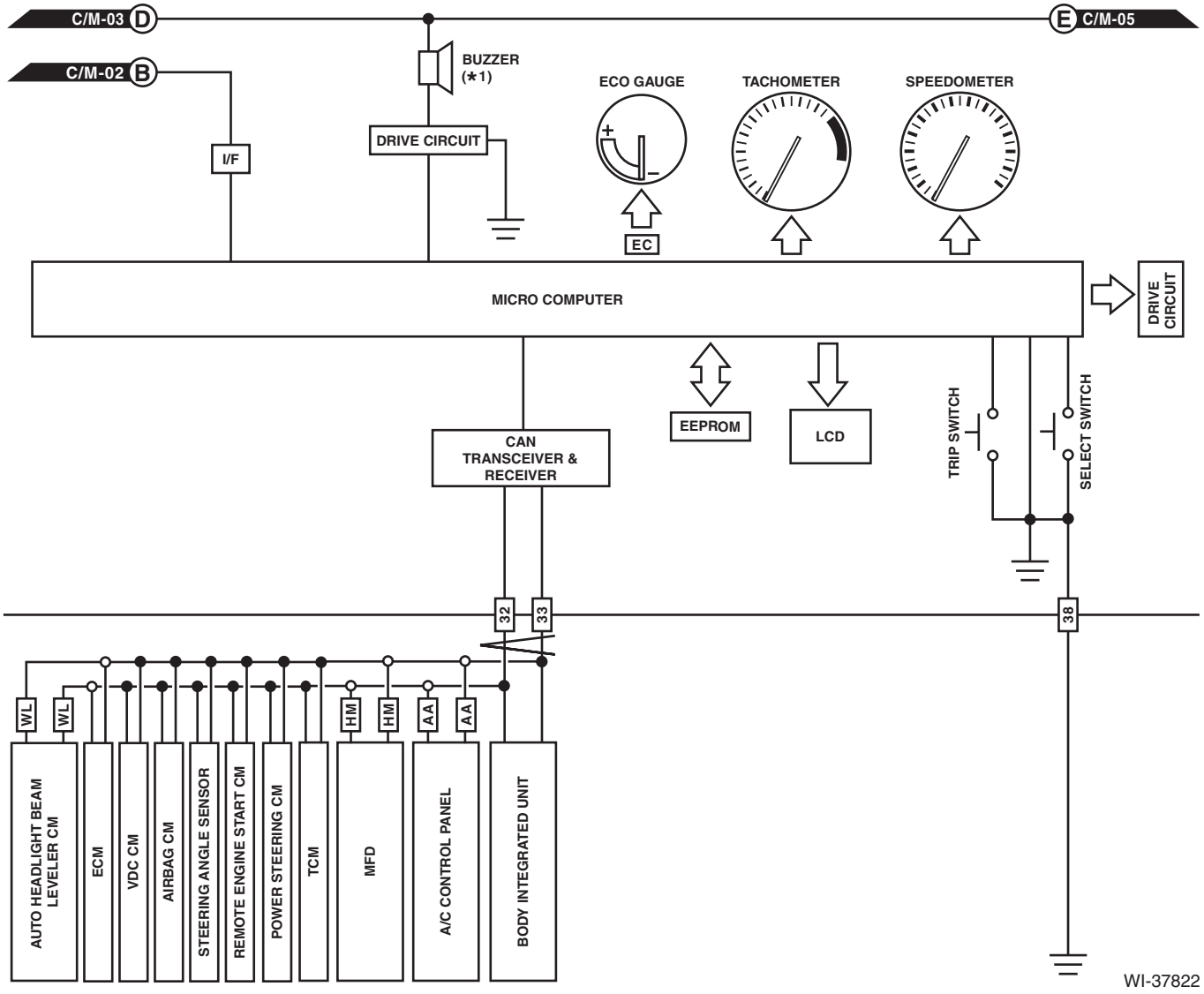

C/M-05

C/M-05

C0 : C0 MODEL
E0 : EXCEPT FOR C0 MODEL

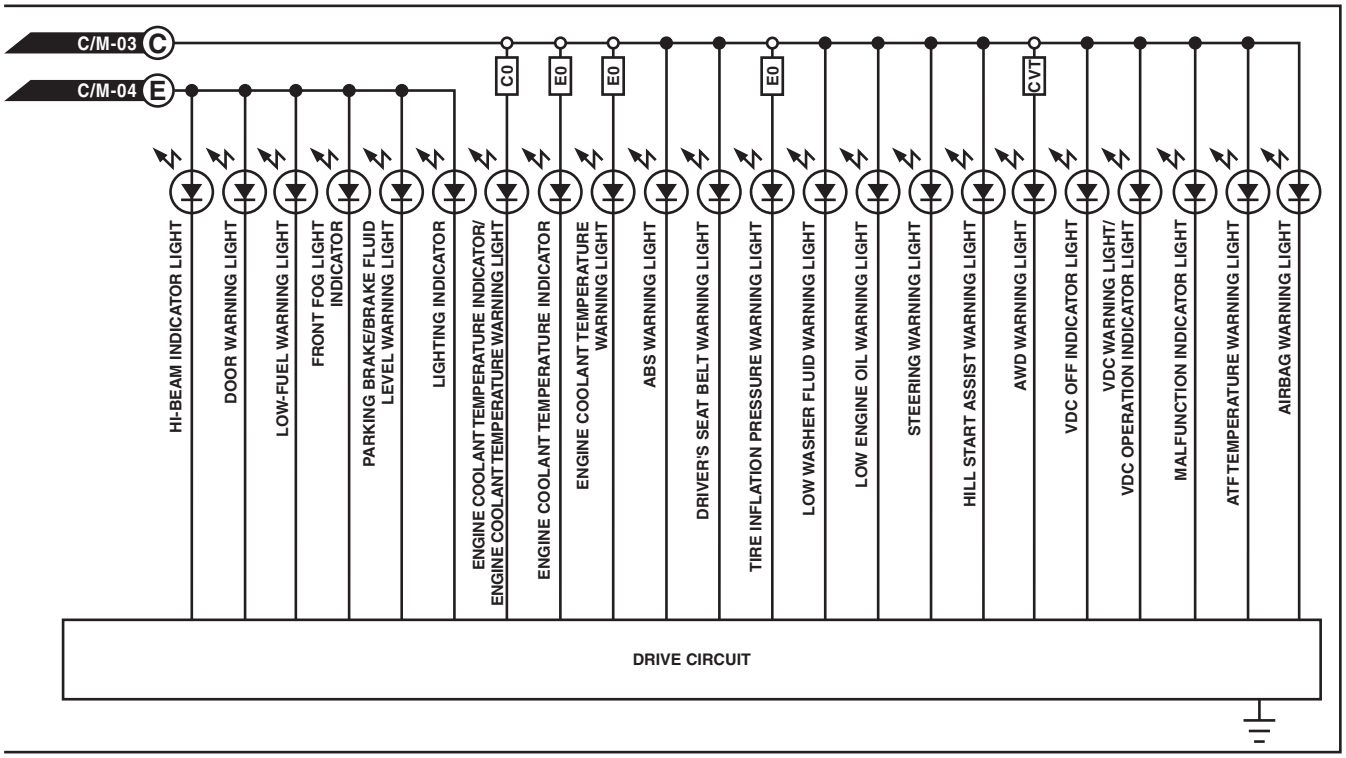

WI-37823

13.Coolant Temperature System

A: WIRING DIAGRAM

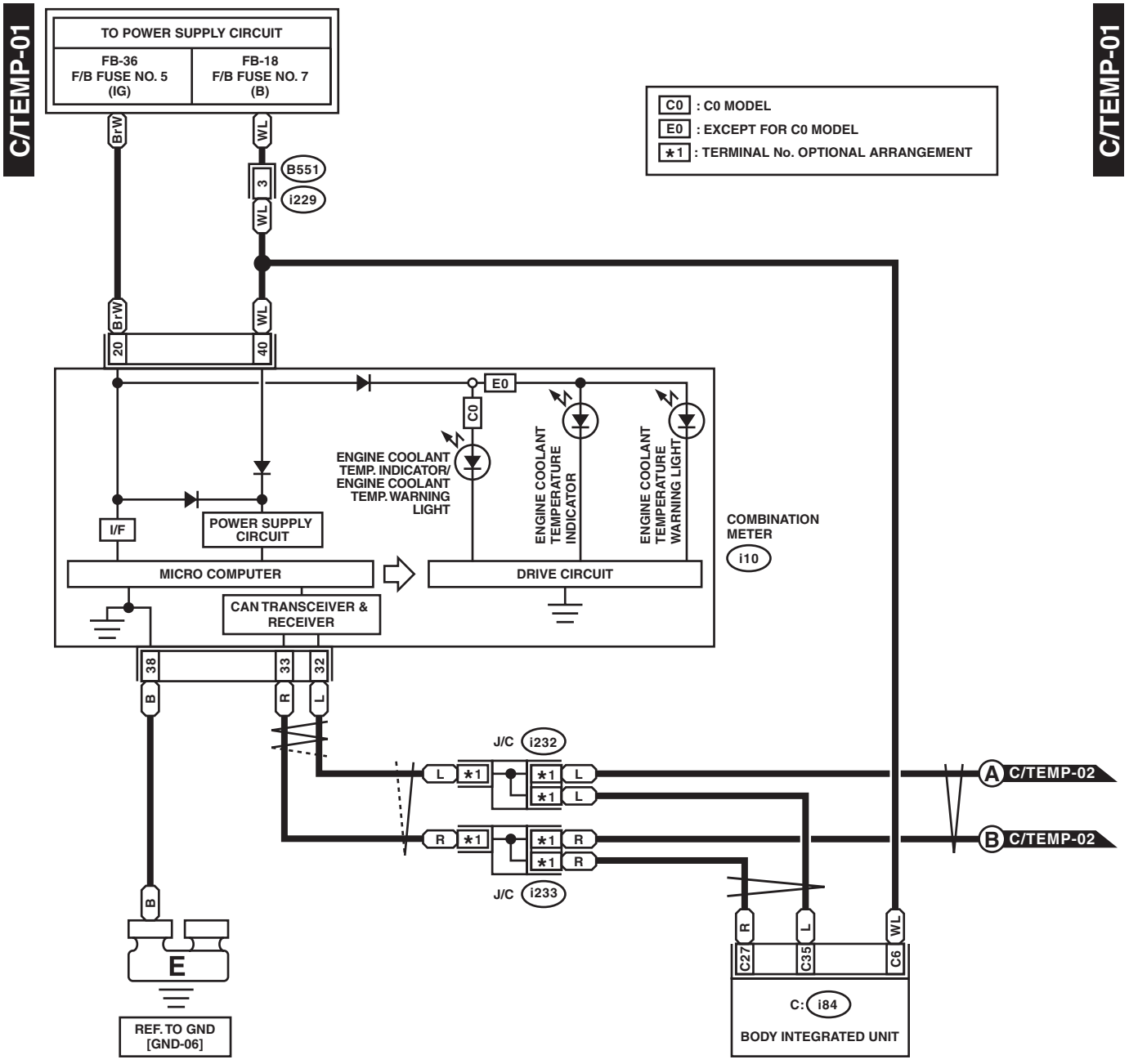

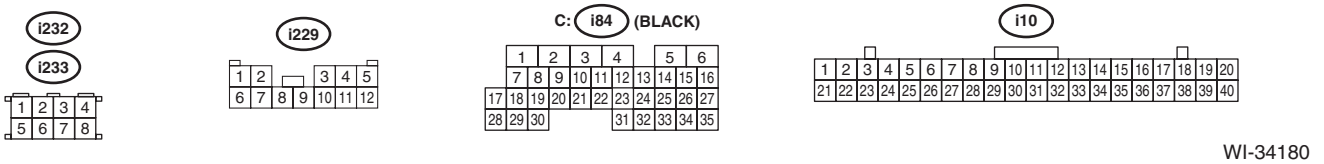

WI-34180

C/TEMP-02

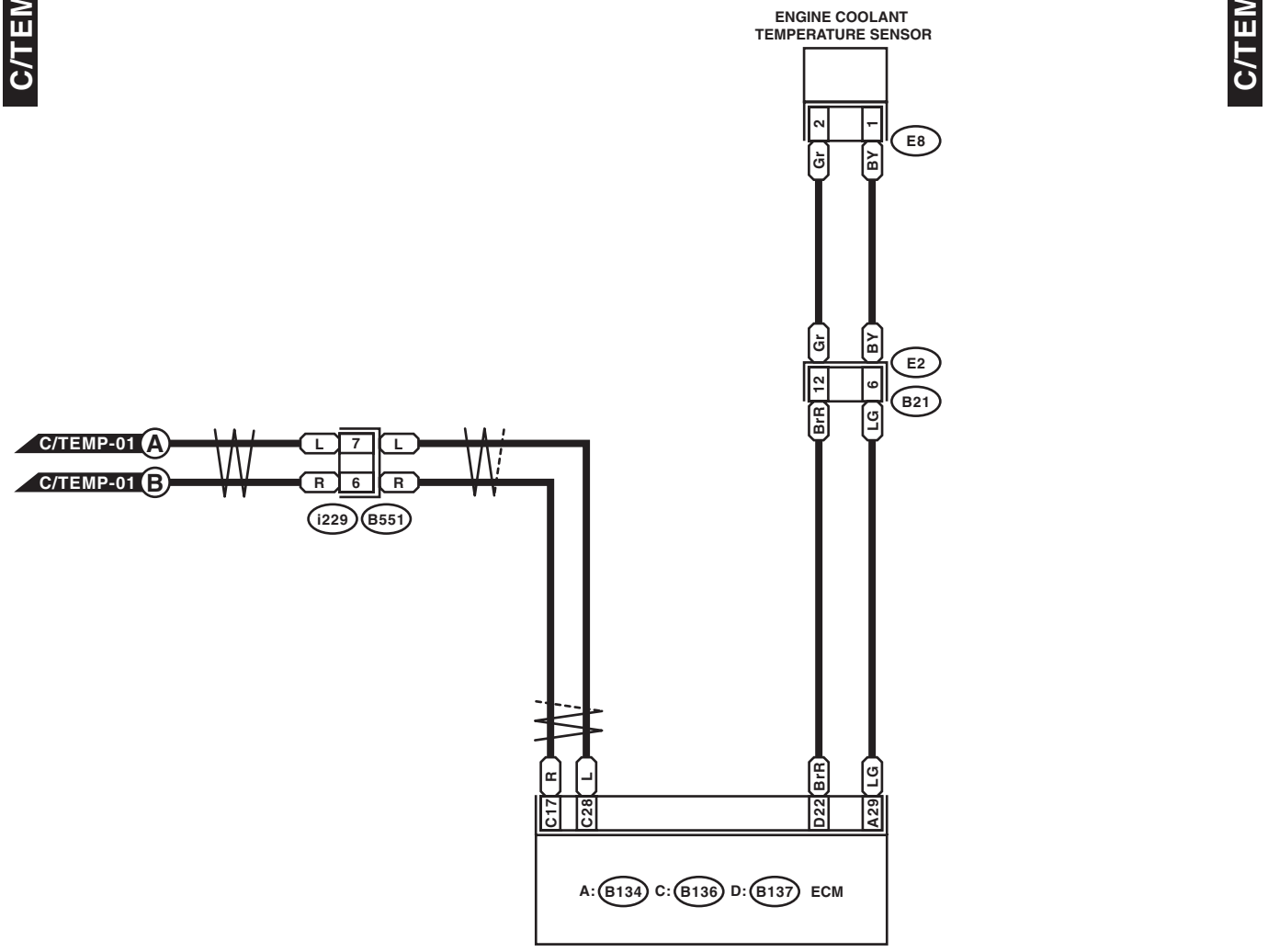

C/TEMP-02

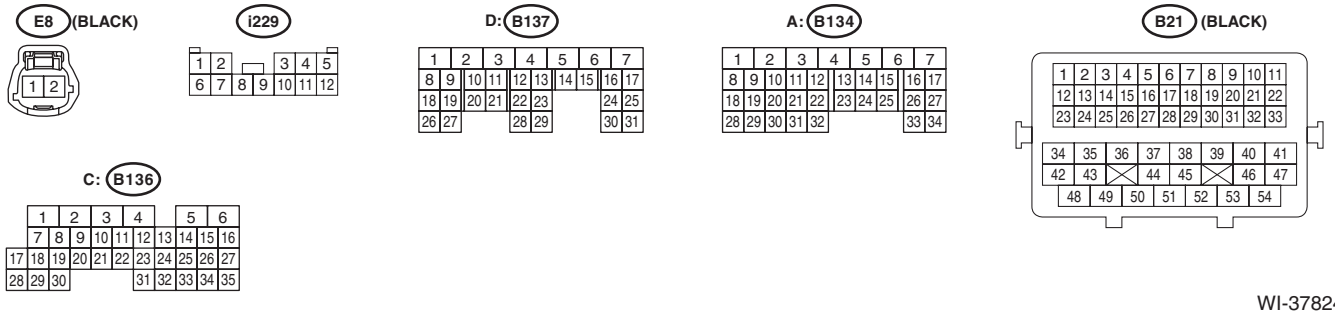

WI-37824

14.Cruise Control System

A: WIRING DIAGRAM

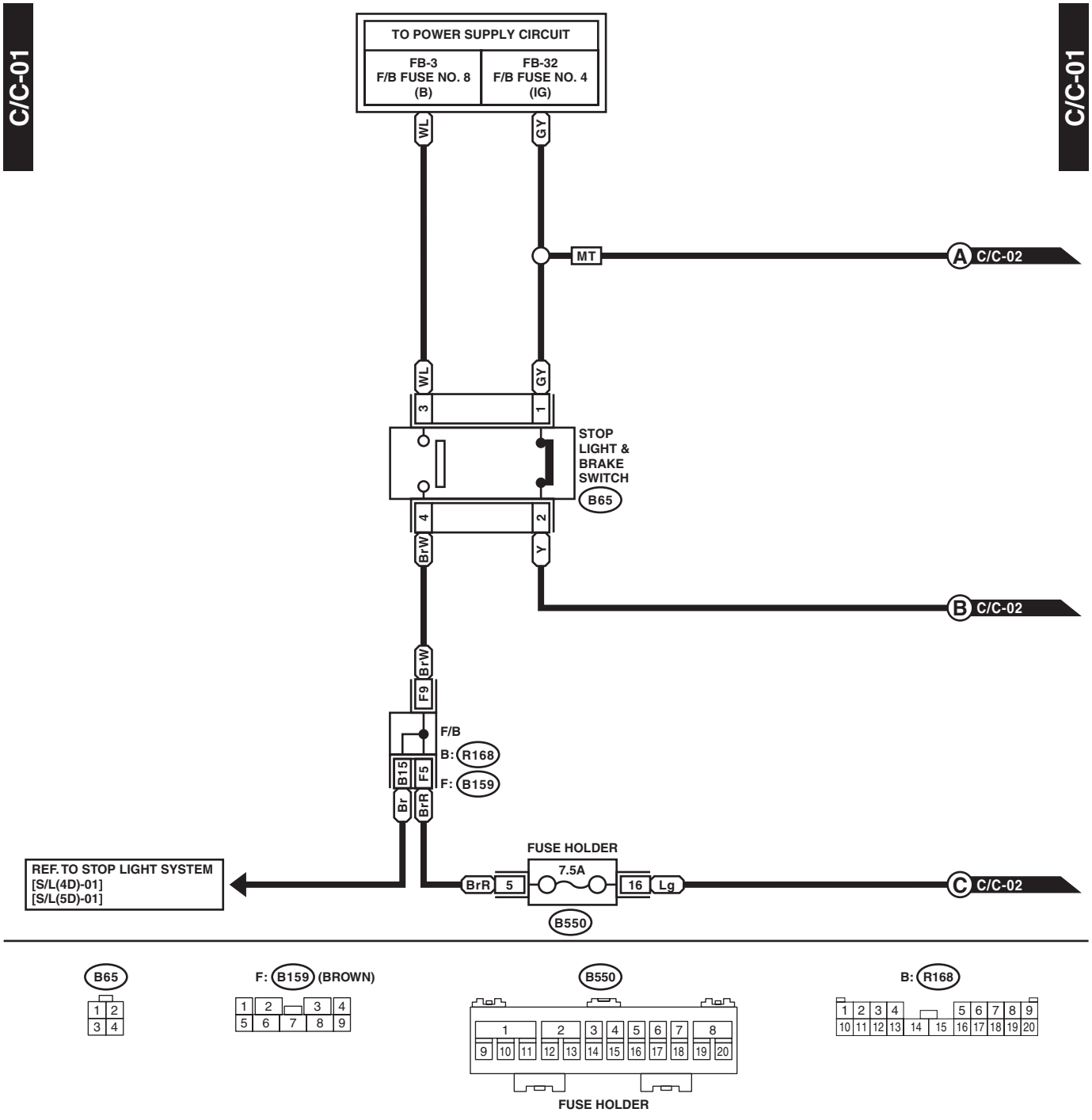

WI-37825

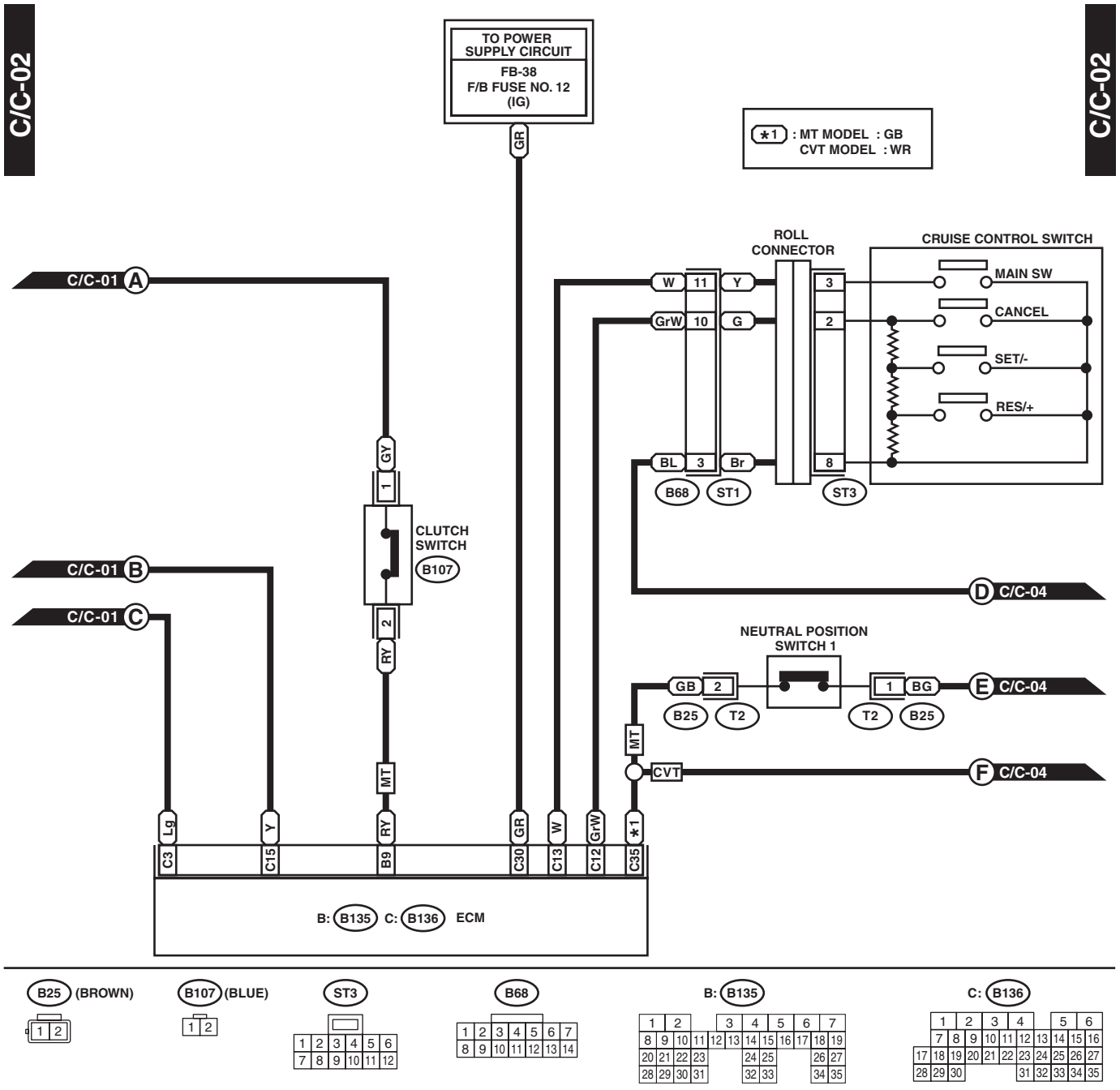
C/C-02
C/C-02
TO POWER SUPPLY CIRCUIT
FB-38
F/B FUSE NO. 12
(IG)
GR
*1 : MT MODEL : GB
CVT MODEL : WR
ROLL CONNECTOR
CRUISE CONTROL SWITCH
MAIN SW
CANCEL
SET/-
RES/+
C/C-01 A
C/C-01 B
C/C-01 C
W 11 Y 3
GrW 10 G 2
BL 3 Br 8
B68 ST1 ST3
GY 1
CLUTCH SWITCH
B107
RY 2
D C/C-04
NEUTRAL POSITION SWITCH 1
GB 2 1 BG
B25 T2 T2 B25
E C/C-04
MT
CVT
F C/C-04
Lg Y RY GR W GrW *1
C3 C15 B9 C30 C13 C12 C35
B: B135 C: B136 ECM
B25 (BROWN)
B107 (BLUE)
ST3
B68
B: B135
C: B136

WI-37826

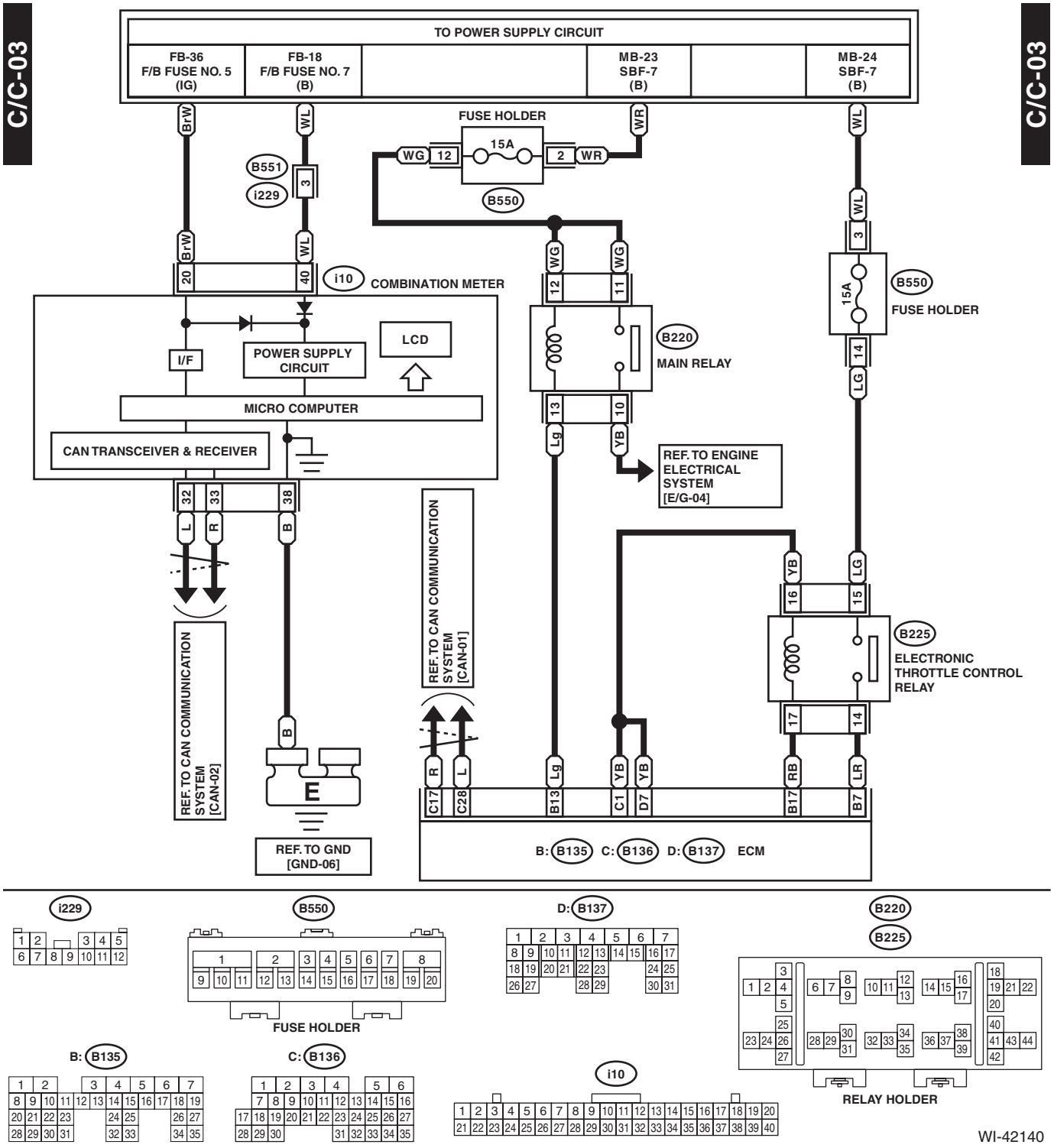
C/C-03
C/C-03
TO POWER SUPPLY CIRCUIT
FB-36 F/B FUSE NO. 5 (IG)
FB-18 F/B FUSE NO. 7 (B)
MB-23 SBF-7 (B)
MB-24 SBF-7 (B)
FUSE HOLDER
15A
B551
i229
B550
i10
COMBINATION METER
I/F
POWER SUPPLY CIRCUIT
LCD
MICRO COMPUTER
CAN TRANSCEIVER & RECEIVER
B220
MAIN RELAY
REF. TO ENGINE ELECTRICAL SYSTEM [E/G-04]
B225
ELECTRONIC THROTTLE CONTROL RELAY
REF. TO CAN COMMUNICATION SYSTEM [CAN-02]
REF. TO CAN COMMUNICATION SYSTEM [CAN-01]
REF. TO GND [GND-06]
B: B135 C: B136 D: B137 ECM
i229
B550
FUSE HOLDER
D: B137
B220
B225
RELAY HOLDER
B: B135
C: B136
i10
WI-42140

WIRING SYSTEM

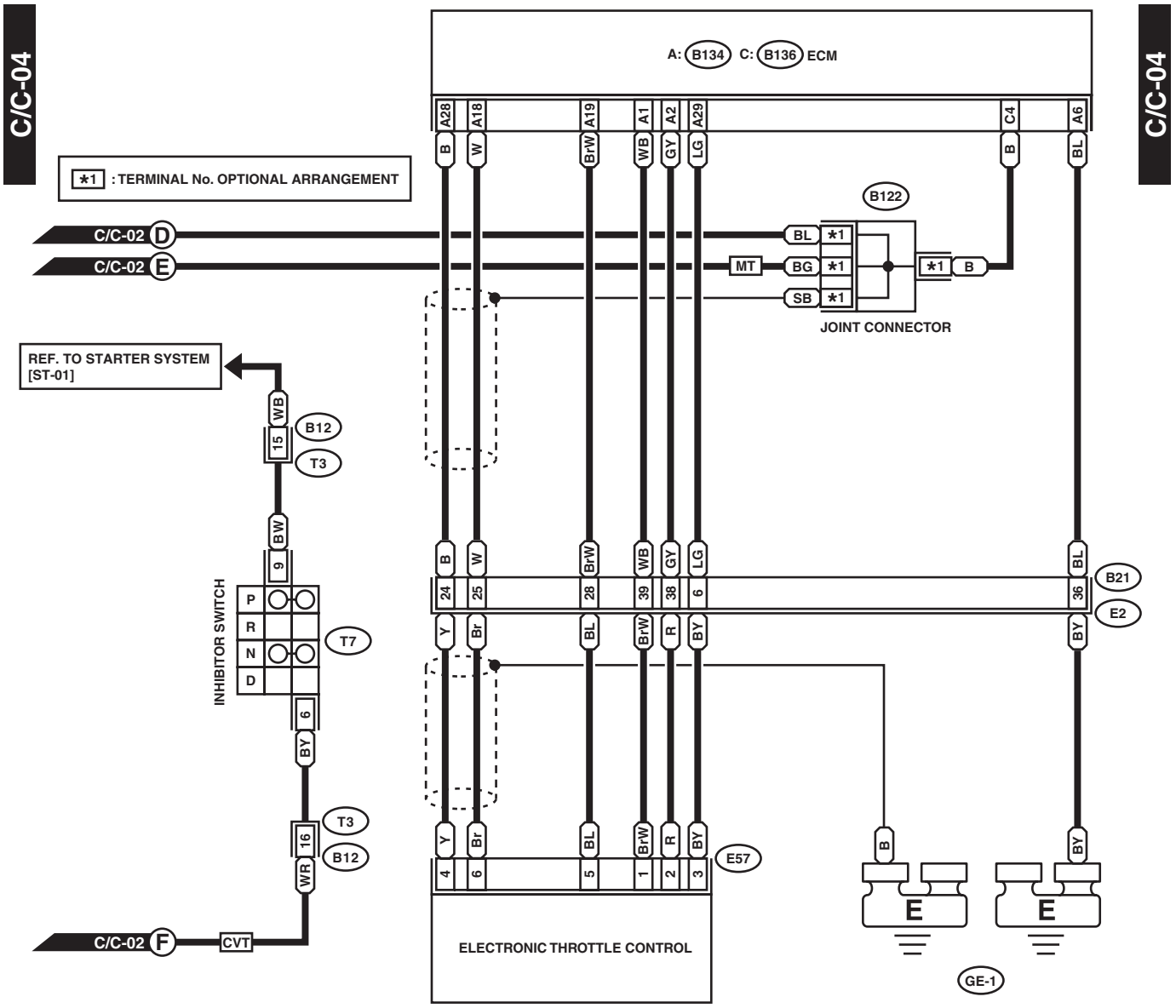

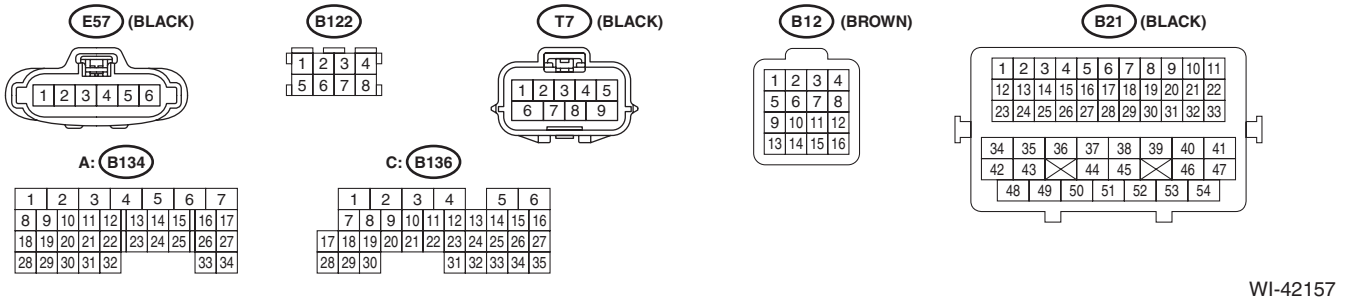

WI-42157

15.CVT Control System

A: WIRING DIAGRAM

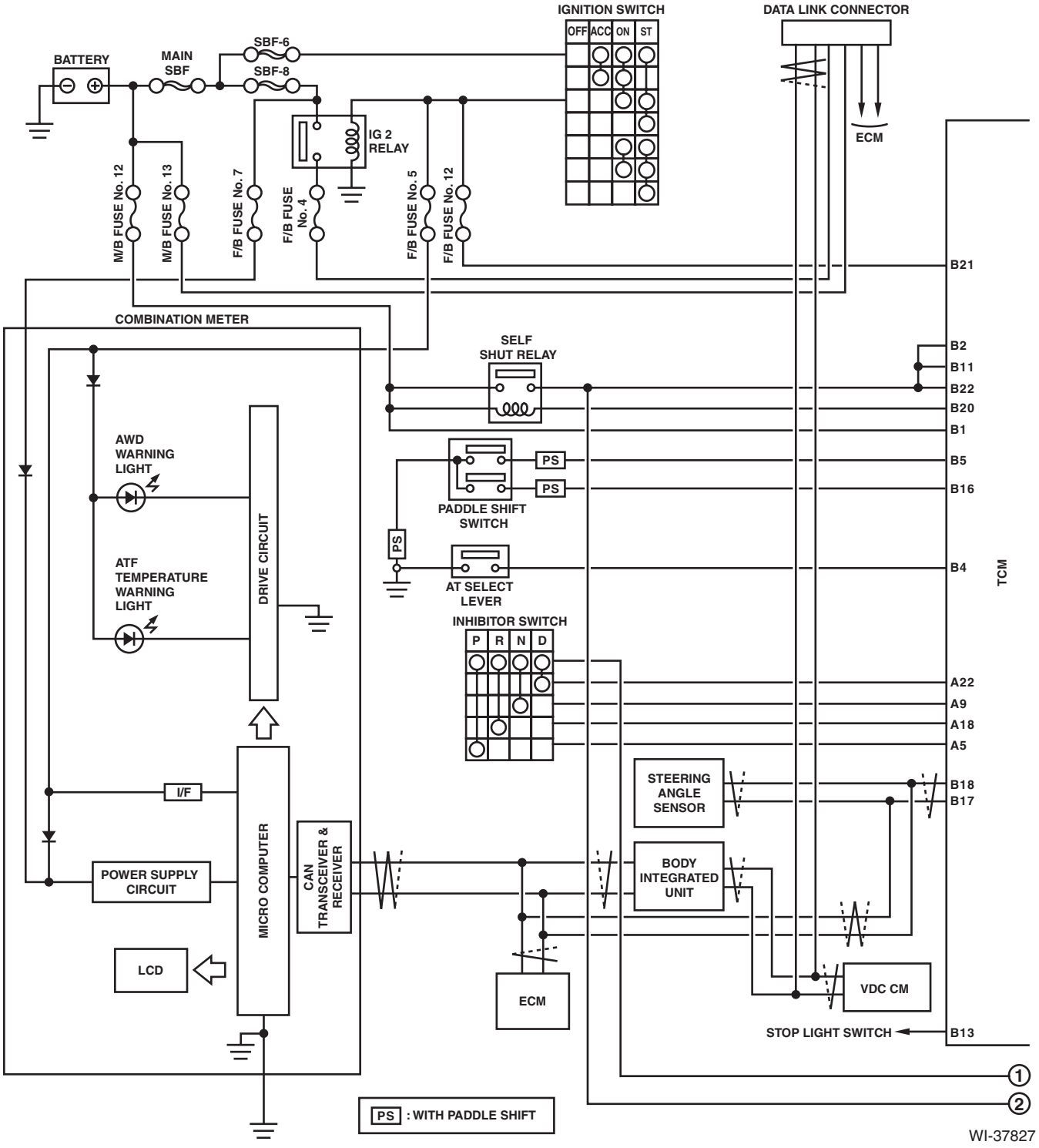

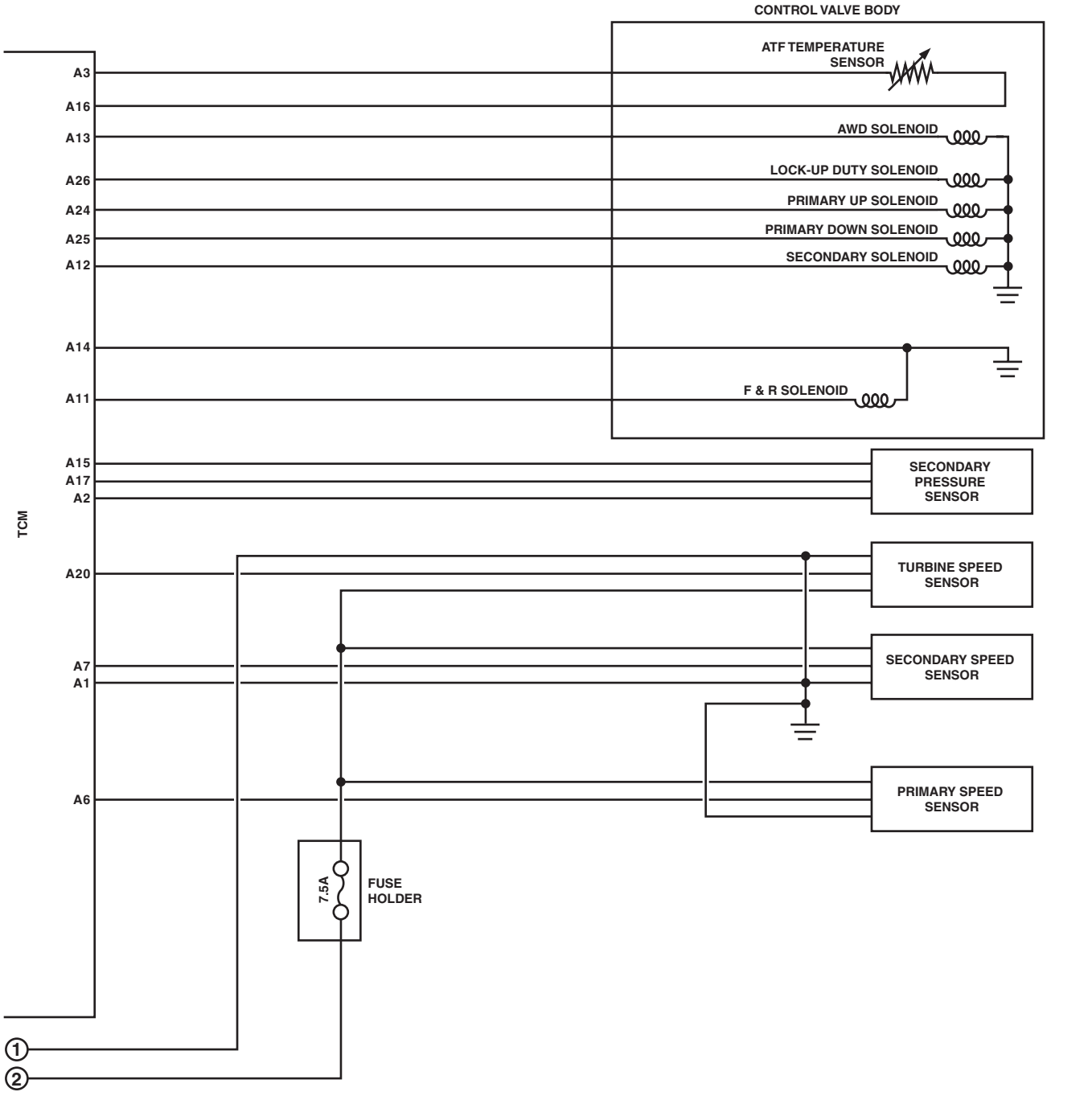
CONTROL VALVE BODY
ATF TEMPERATURE SENSOR
AWD SOLENOID
LOCK-UP DUTY SOLENOID
PRIMARY UP SOLENOID
PRIMARY DOWN SOLENOID
SECONDARY SOLENOID
F & R SOLENOID
TCM
A3
A16
A13
A26
A24
A25
A12
A14
A11
A15
A17
A2
A20
A7
A1
A6
SECONDARY PRESSURE SENSOR
TURBINE SPEED SENSOR
SECONDARY SPEED SENSOR
PRIMARY SPEED SENSOR
7.5A
FUSE HOLDER
1
2

WI-34187

CVT-01

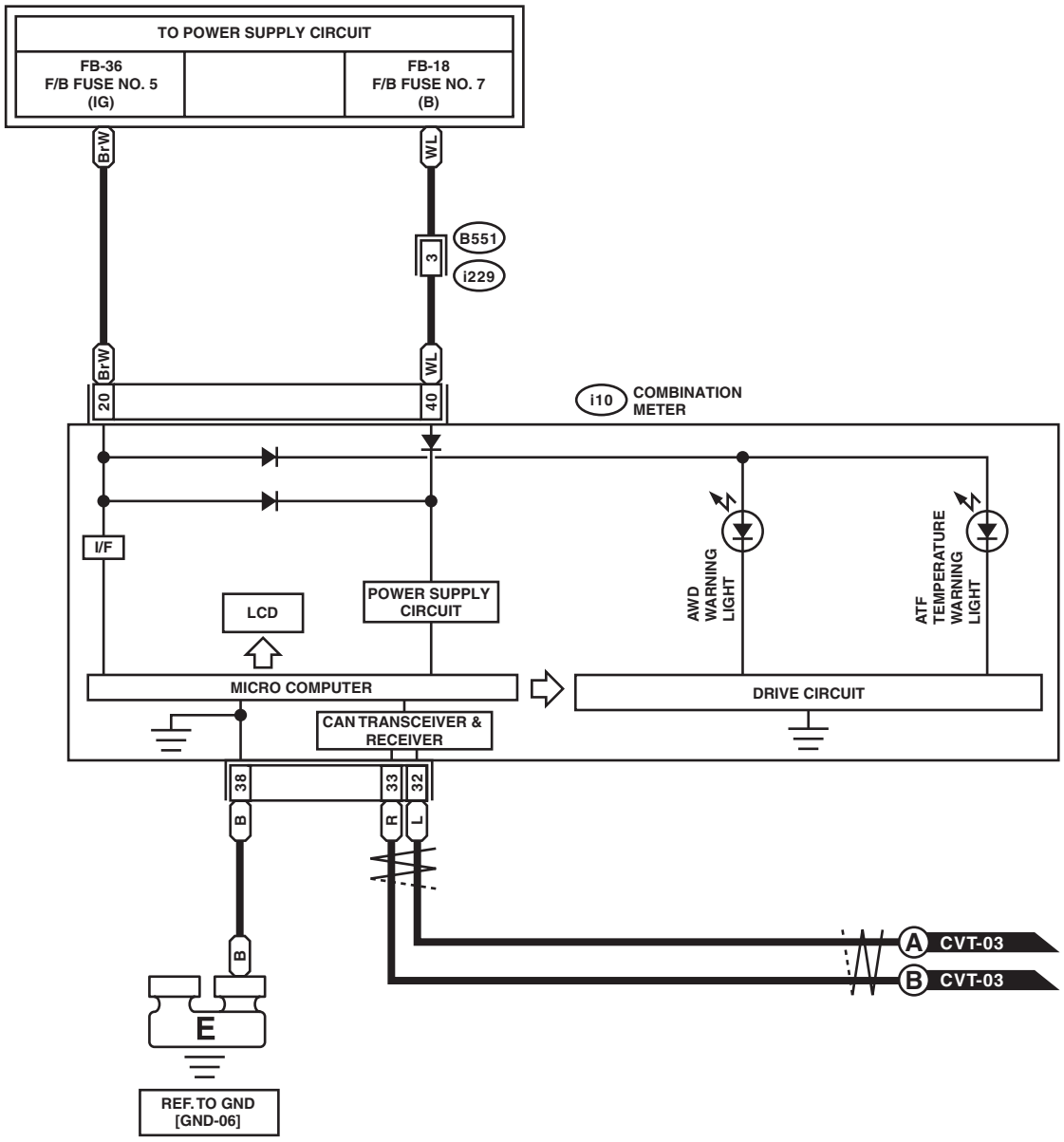

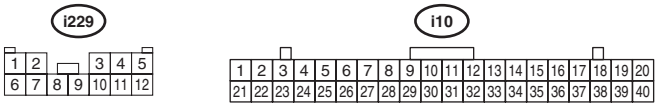

WI-34188

CVT-02

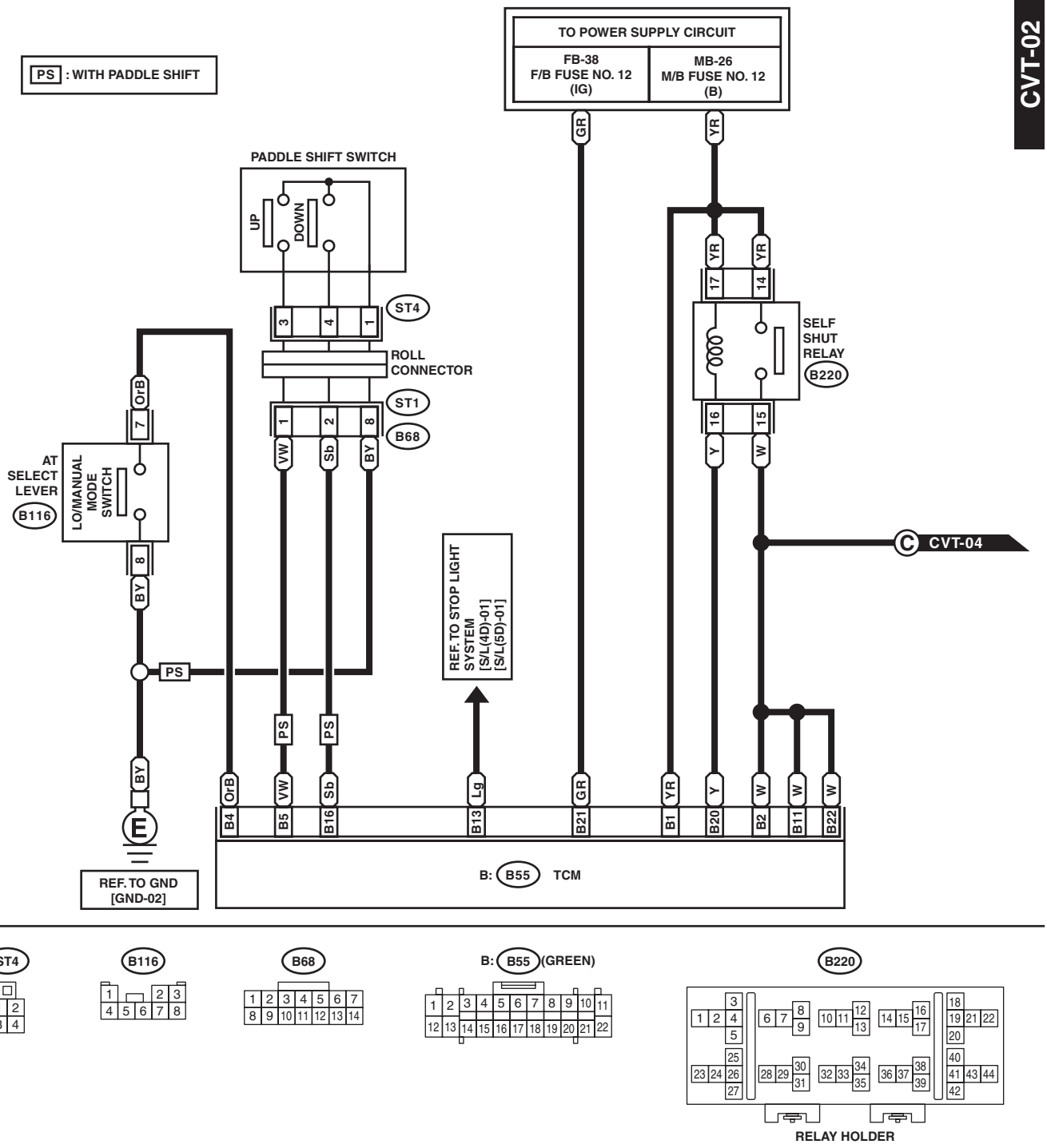

WI-37828

WIRING SYSTEM

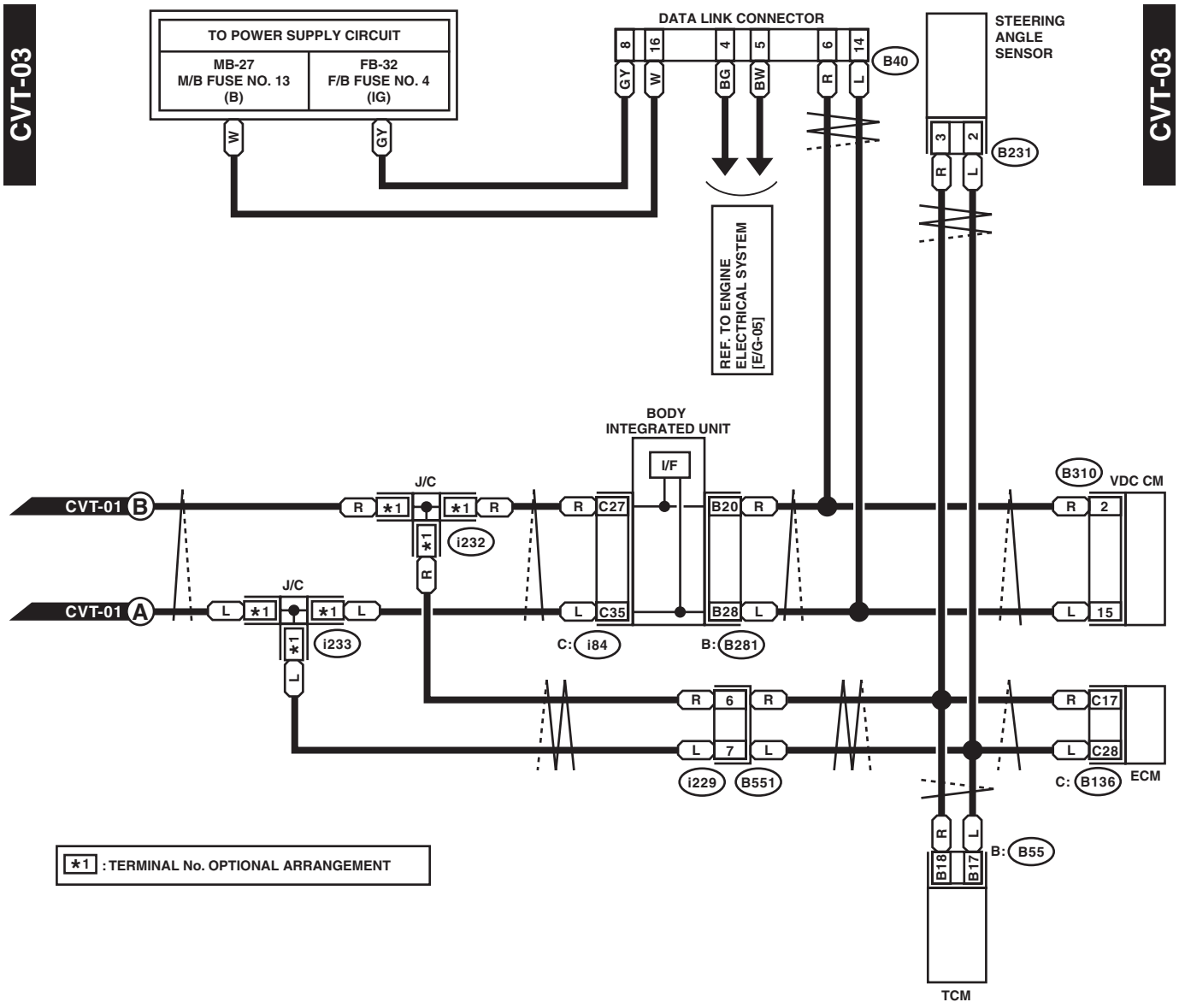

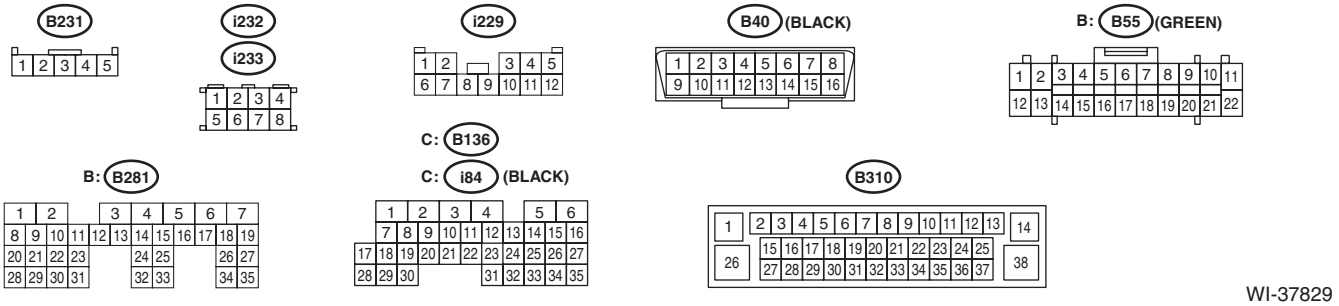

WI-37829

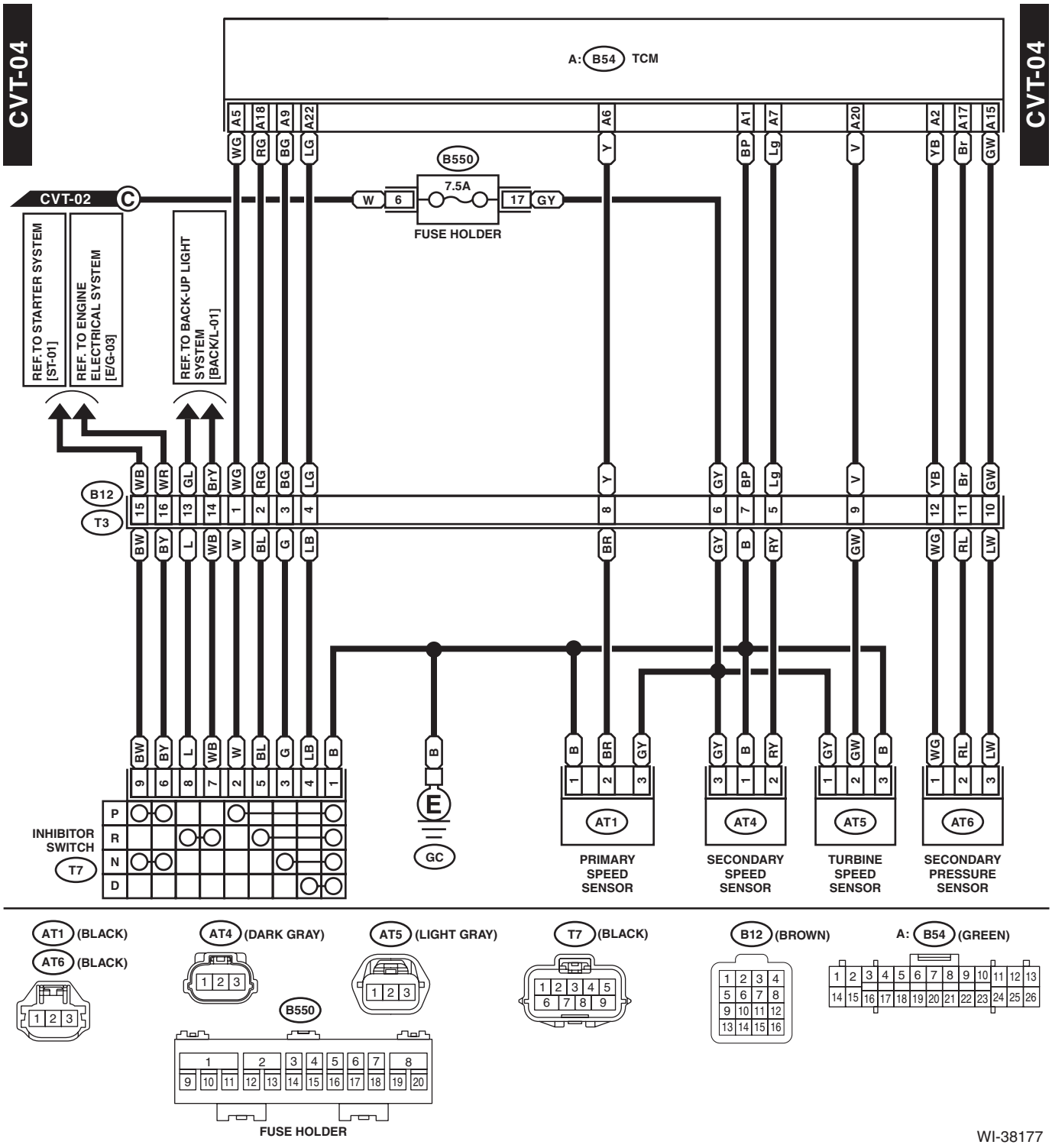
CVT-04
CVT-04
A: B54 TCM
A5 A18 A9 A22 A6 A1 A7 A20 A2 A17 A15
WG RG BG LG Y BP Lg V YB Br GW
B550
7.5A
W 6 17 GY
FUSE HOLDER
CVT-02 C
REF. TO STARTER SYSTEM [ST-01]
REF. TO ENGINE ELECTRICAL SYSTEM [E/G-03]
REF. TO BACK-UP LIGHT SYSTEM [BACK/L-01]
B12
T3
WB WR GL BrY WG RG BG LG Y GY BP Lg V YB Br GW
15 16 13 14 1 2 3 4 8 6 7 5 9 12 11 10
BW BY L WB W BL G LB BR GY B RY GW WG RL LW
9 6 8 7 2 5 3 4 1
B
E
GC
INHIBITOR SWITCH
T7
P
R
N
D
B BR GY
1 2 3
AT1
PRIMARY SPEED SENSOR
GY B RY
3 1 2
AT4
SECONDARY SPEED SENSOR
GY GW B
1 2 3
AT5
TURBINE SPEED SENSOR
WG RL LW
1 2 3
AT6
SECONDARY PRESSURE SENSOR
AT1 (BLACK)
AT6 (BLACK)
1 2 3
AT4 (DARK GRAY)
1 2 3
AT5 (LIGHT GRAY)
1 2 3
B550
1 2 3 4 5 6 7 8
9 10 11 12 13 14 15 16 17 18 19 20
FUSE HOLDER
T7 (BLACK)
1 2 3 4 5
6 7 8 9
B12 (BROWN)
1 2 3 4
5 6 7 8
9 10 11 12
13 14 15 16
A: B54 (GREEN)
1 2 3 4 5 6 7 8 9 10 11 12 13
14 15 16 17 18 19 20 21 22 23 24 25 26

WI-38177

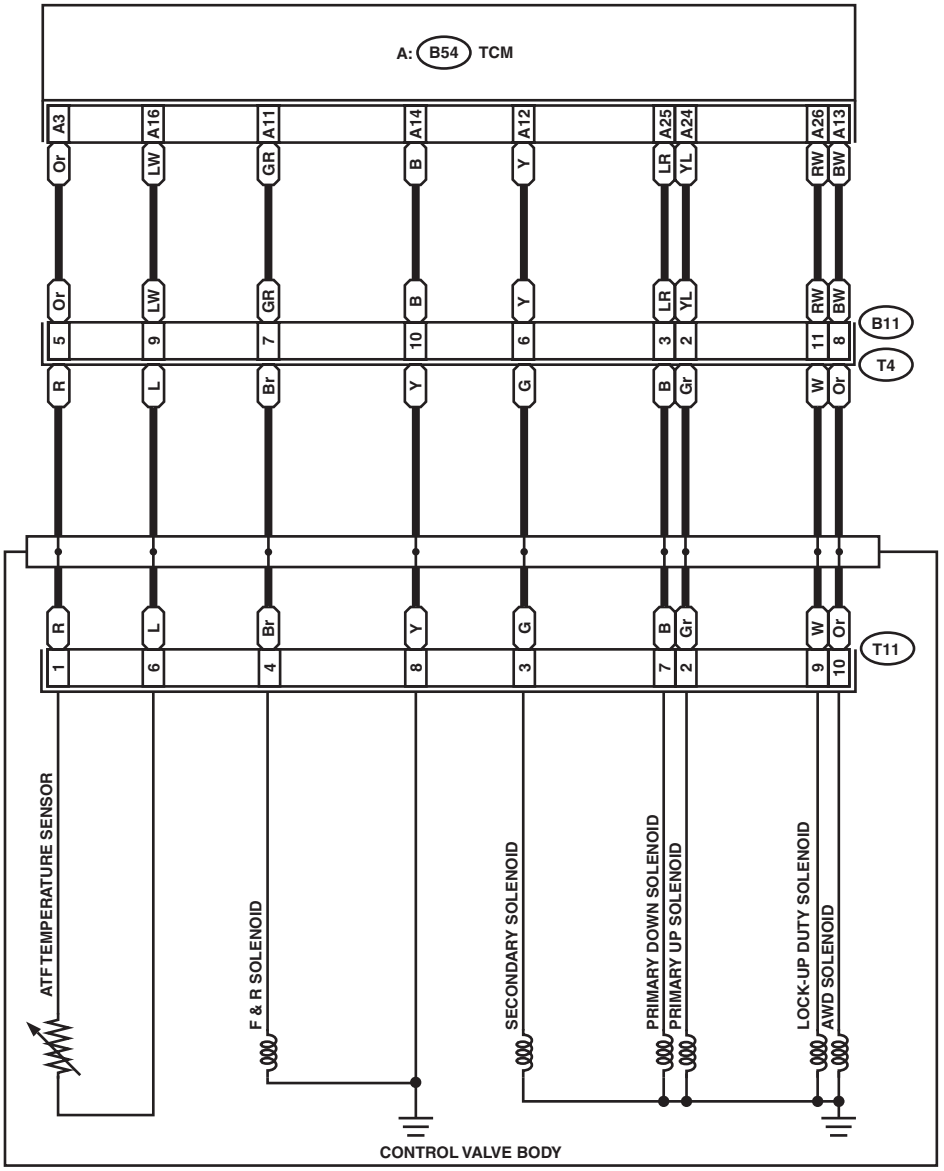
A: B54 TCM
A3 A16 A11 A14 A12 A25 A24 A26 A13
Or LW GR B Y LR YL RW BW
5 9 7 10 6 3 2 11 8
B11
T4
R L Br Y G B Gr W Or
1 6 4 8 3 7 2 9 10
T11
ATF TEMPERATURE SENSOR
F & R SOLENOID
SECONDARY SOLENOID
PRIMARY DOWN SOLENOID
PRIMARY UP SOLENOID
LOCK-UP DUTY SOLENOID
AWD SOLENOID
CONTROL VALVE BODY

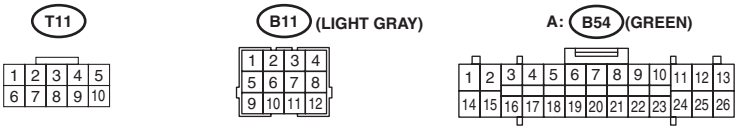
T11
1 2 3 4 5
6 7 8 9 10
B11 (LIGHT GRAY)
1 2 3 4
5 6 7 8
9 10 11 12
A: B54 (GREEN)
1 2 3 4 5 6 7 8 9 10 11 12 13
14 15 16 17 18 19 20 21 22 23 24 25 26

WI-42160

16.Electric Power Steering System

A: WIRING DIAGRAM

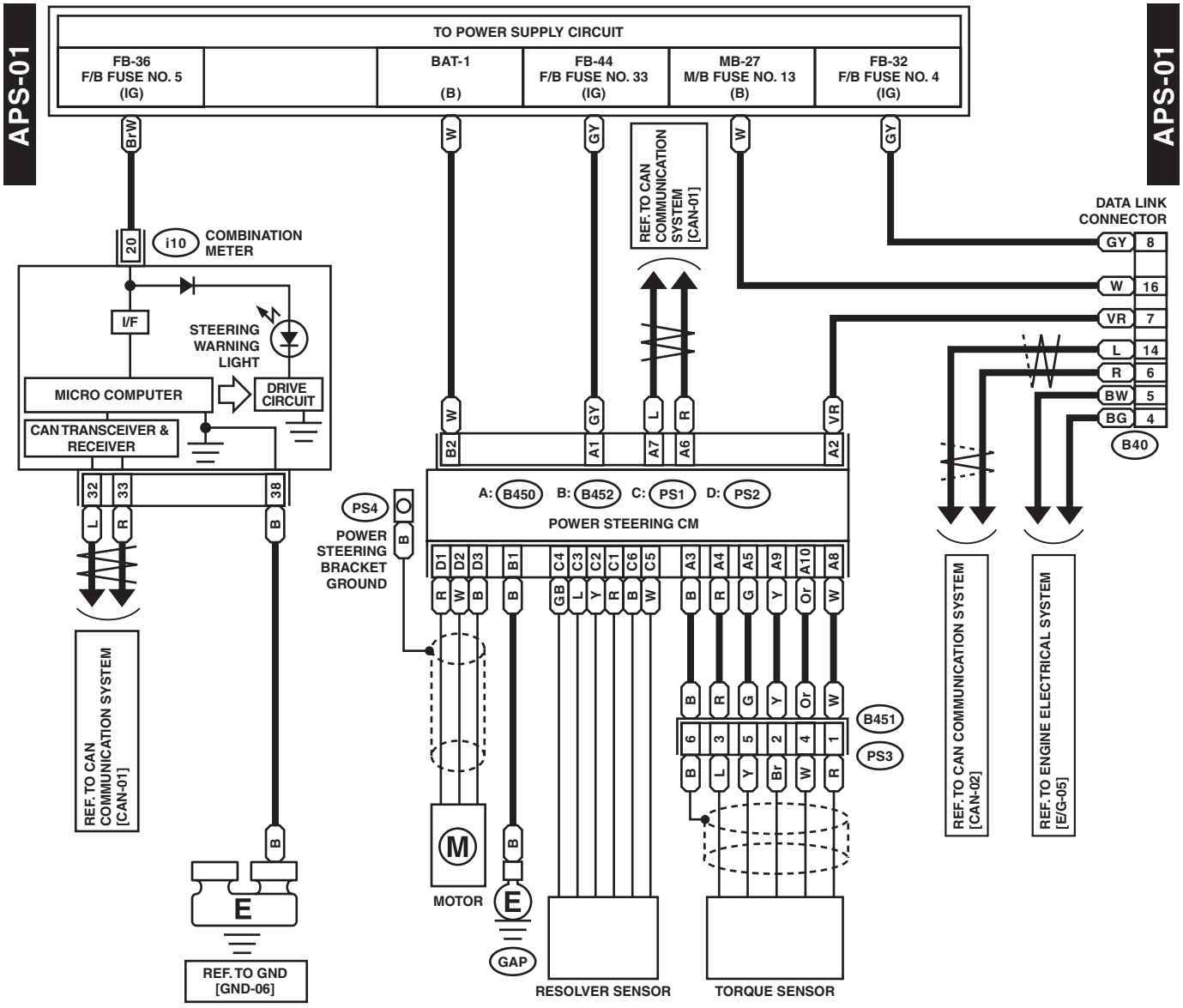

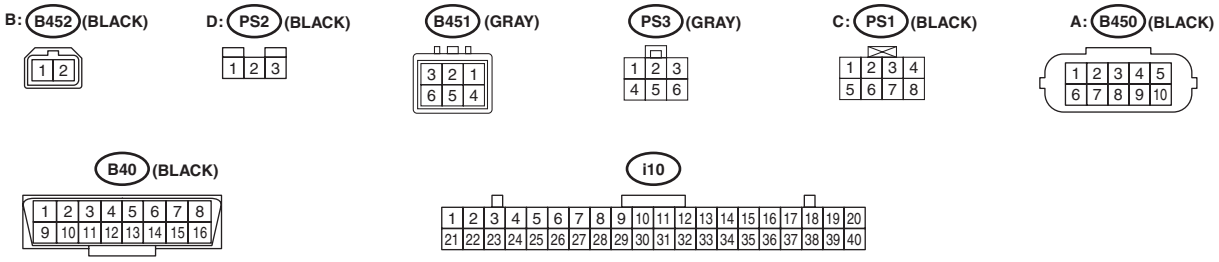

WI-34193

17.Engine Electrical System

A: WIRING DIAGRAM

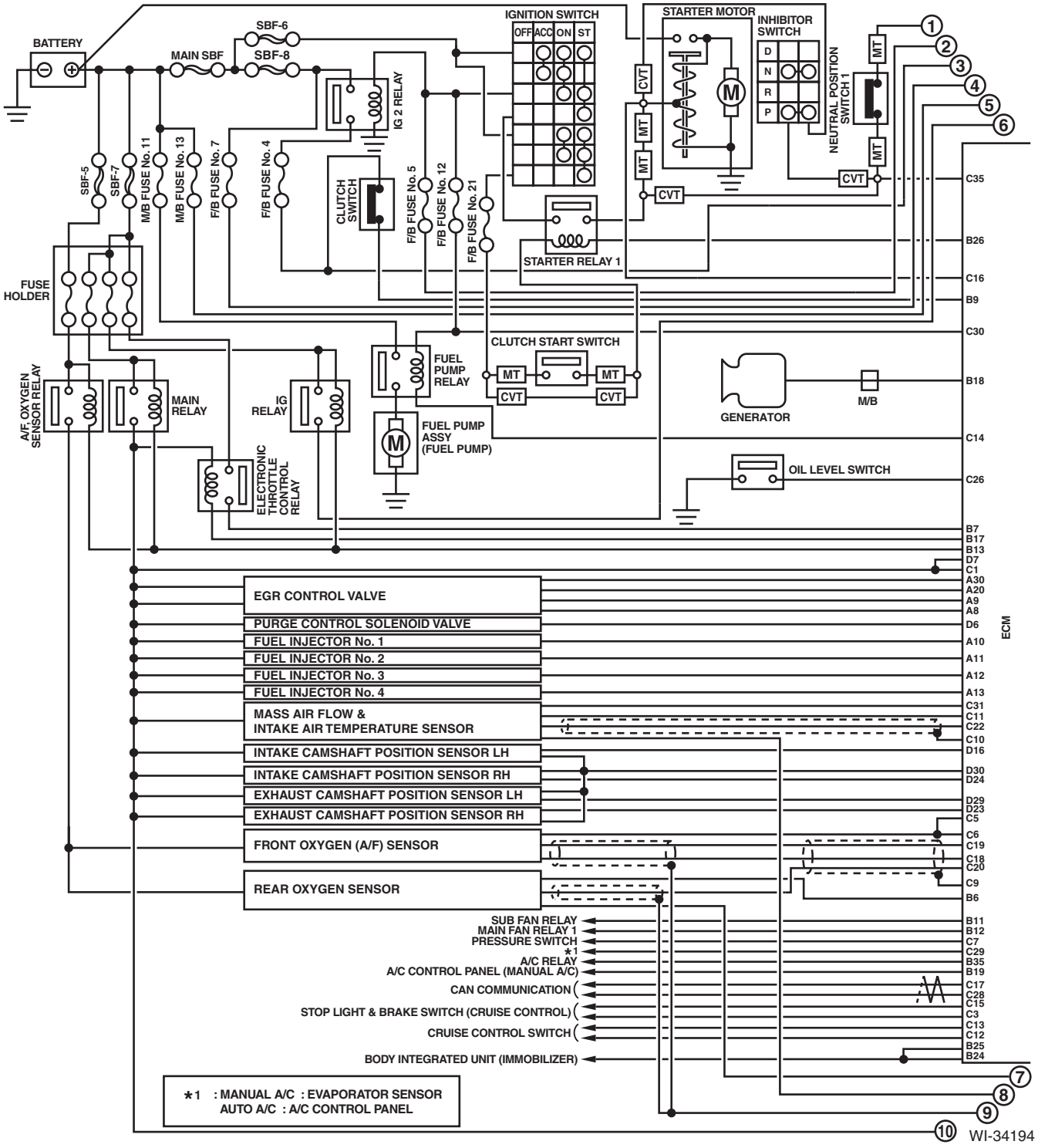

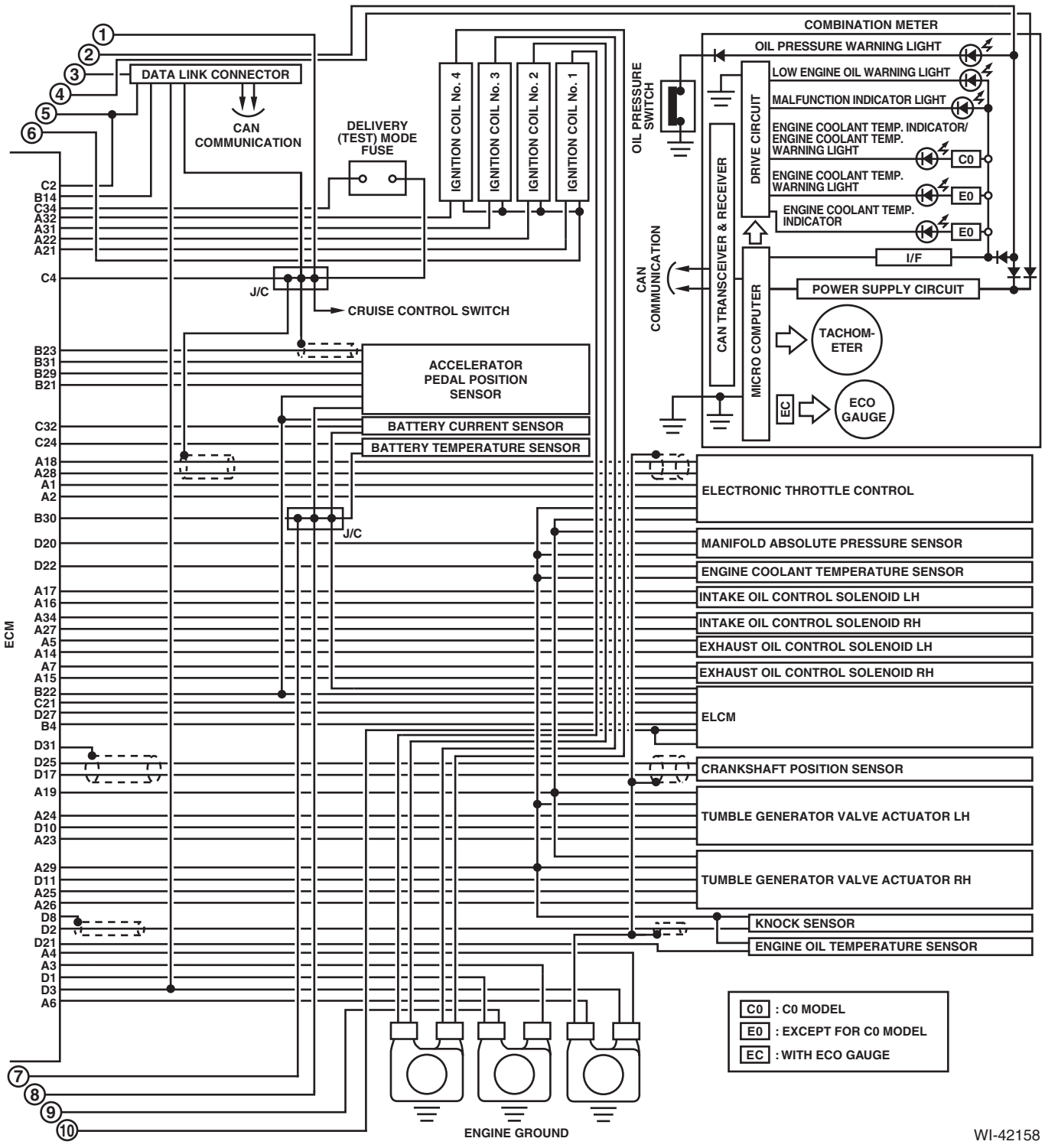
COMBINATION METER
OIL PRESSURE WARNING LIGHT
LOW ENGINE OIL WARNING LIGHT
MALFUNCTION INDICATOR LIGHT
ENGINE COOLANT TEMP. INDICATOR/ ENGINE COOLANT TEMP. WARNING LIGHT
ENGINE COOLANT TEMP. WARNING LIGHT
ENGINE COOLANT TEMP. INDICATOR
C0
E0
E0
I/F
POWER SUPPLY CIRCUIT
TACHOM-ETER
ECO GAUGE
EC
DRIVE CIRCUIT
CAN TRANSCEIVER & RECEIVER
MICRO COMPUTER
CAN COMMUNICATION
OIL PRESSURE SWITCH
DATA LINK CONNECTOR
CAN COMMUNICATION
DELIVERY (TEST) MODE FUSE
IGNITION COIL No. 4
IGNITION COIL No. 3
IGNITION COIL No. 2
IGNITION COIL No. 1
J/C
CRUISE CONTROL SWITCH
ACCELERATOR PEDAL POSITION SENSOR
BATTERY CURRENT SENSOR
BATTERY TEMPERATURE SENSOR
J/C
ELECTRONIC THROTTLE CONTROL
MANIFOLD ABSOLUTE PRESSURE SENSOR
ENGINE COOLANT TEMPERATURE SENSOR
INTAKE OIL CONTROL SOLENOID LH
INTAKE OIL CONTROL SOLENOID RH
EXHAUST OIL CONTROL SOLENOID LH
EXHAUST OIL CONTROL SOLENOID RH
ELCM
CRANKSHAFT POSITION SENSOR
TUMBLE GENERATOR VALVE ACTUATOR LH
TUMBLE GENERATOR VALVE ACTUATOR RH
KNOCK SENSOR
ENGINE OIL TEMPERATURE SENSOR
ECM
C2
B14
C34
A32
A31
A22
A21
C4
B23
B31
B29
B21
C32
C24
A18
A28
A1
A2
B30
D20
D22
A17
A16
A34
A27
A5
A14
A7
A15
B22
C21
D27
B4
D31
D25
D17
A19
A24
D10
A23
A29
D11
A25
A26
D8
D2
D21
A4
A3
D1
D3
A6
1
2
3
4
5
6
7
8
9
10
C0 : C0 MODEL
E0 : EXCEPT FOR C0 MODEL
EC : WITH ECO GAUGE
ENGINE GROUND
WI-42158

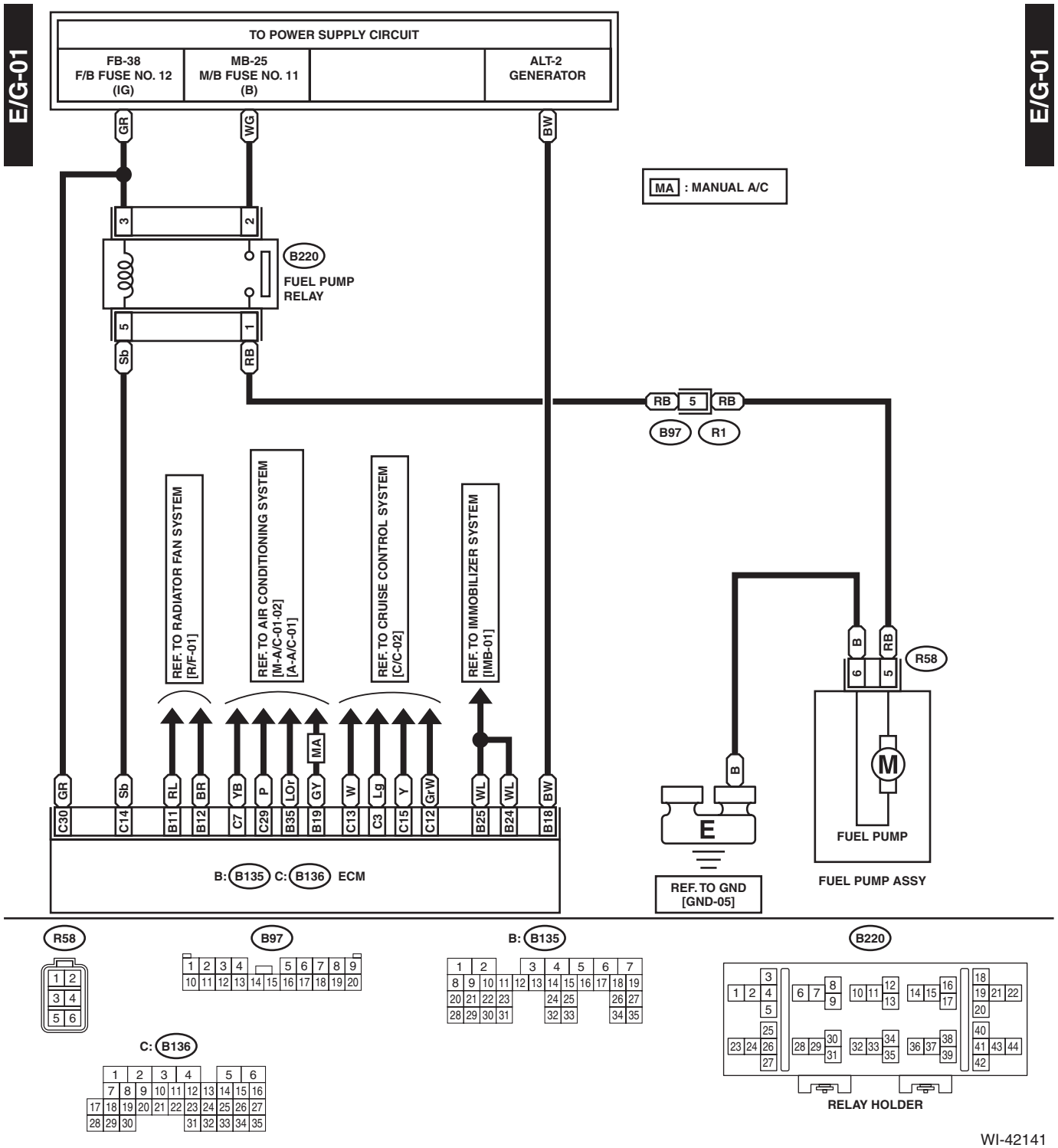
E/G-01
E/G-01
TO POWER SUPPLY CIRCUIT
FB-38
F/B FUSE NO. 12
(IG)
MB-25
M/B FUSE NO. 11
(B)
ALT-2
GENERATOR
GR
WG
BW
MA : MANUAL A/C
B220
FUEL PUMP
RELAY
Sb
RB
RB
5
RB
B97
R1
REF. TO RADIATOR FAN SYSTEM
[R/F-01]
REF. TO AIR CONDITIONING SYSTEM
[M-A/C-01-02]
[A-A/C-01]
REF. TO CRUISE CONTROL SYSTEM
[C/C-02]
REF. TO IMMOBILIZER SYSTEM
[IMB-01]
B
RB
R58
6
5
M
FUEL PUMP
FUEL PUMP ASSY
B
E
REF. TO GND
[GND-05]
GR
Sb
RL
BR
YB
P
LOr
GY
MA
W
Lg
Y
GrW
WL
WL
BW
C30
C14
B11
B12
C7
C29
B35
B19
C13
C3
C15
C12
B25
B24
B18
B: B135 C: B136 ECM
R58
B97
B: B135
B220
C: B136
RELAY HOLDER

WI-42141

E/G-02

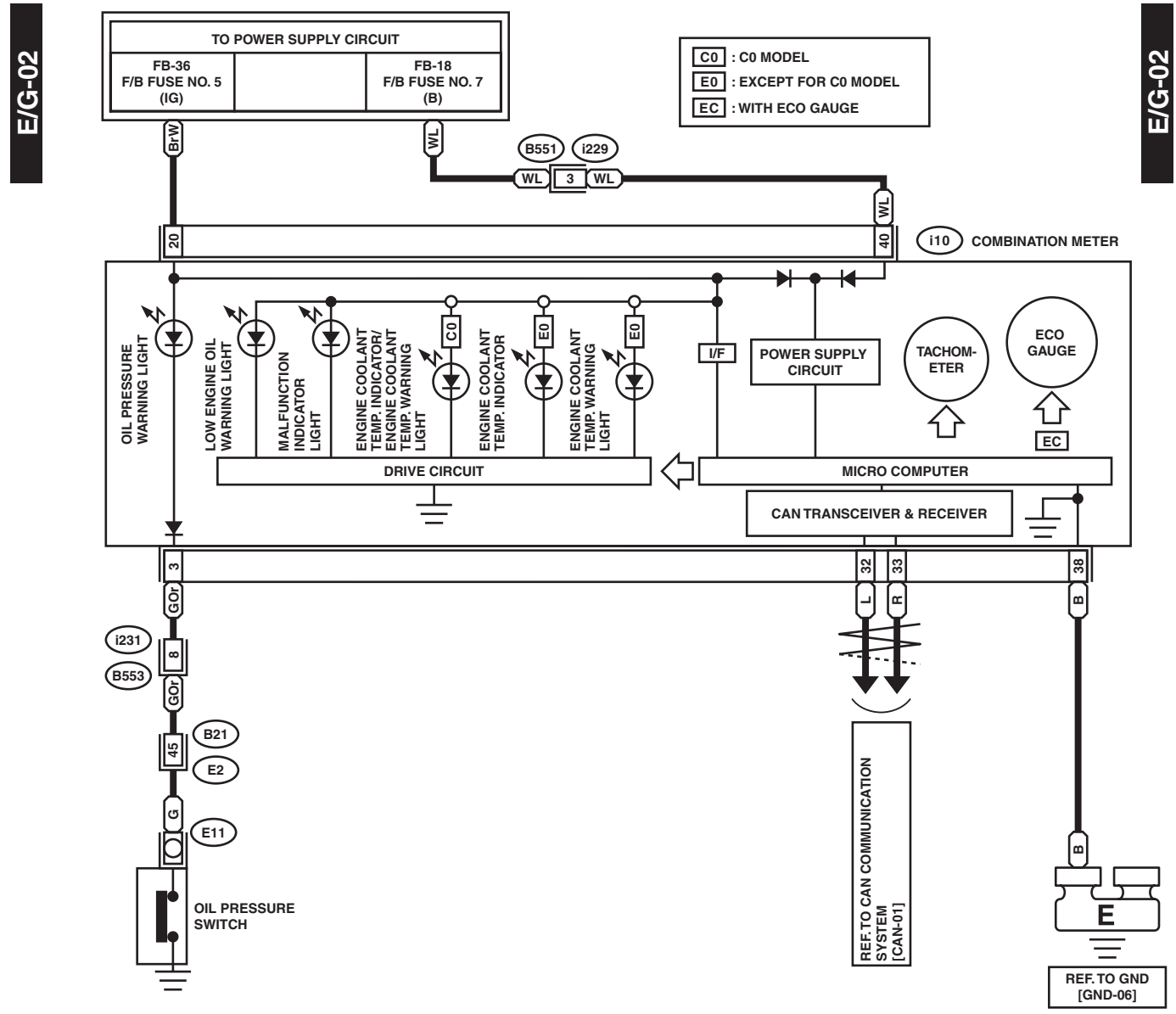



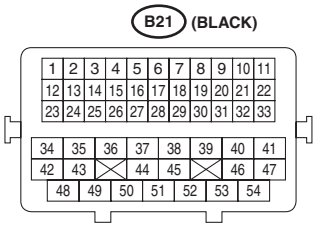

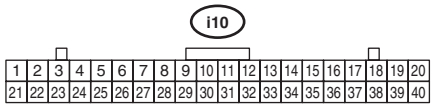

WI-42727

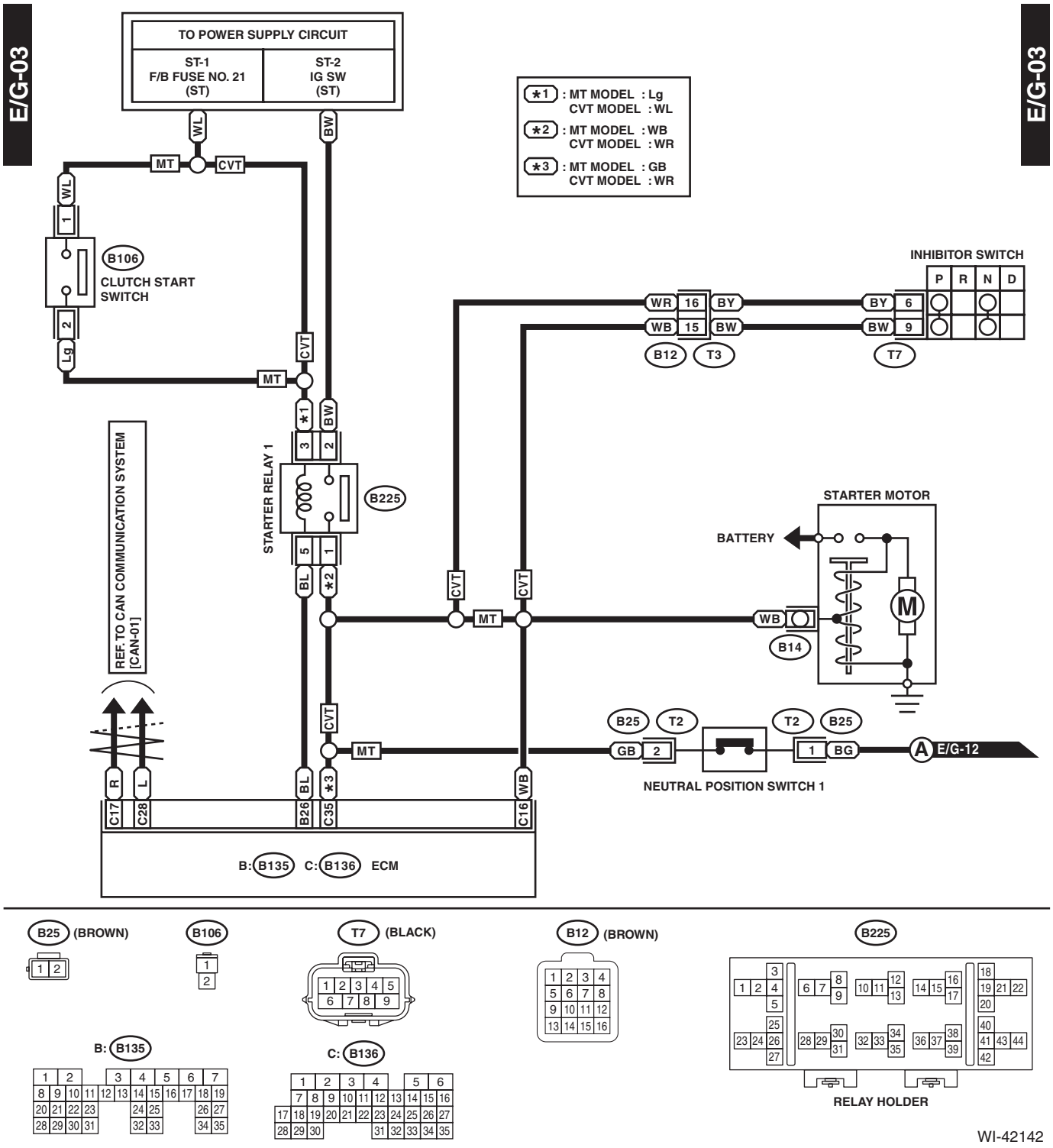
E/G-03
E/G-03
TO POWER SUPPLY CIRCUIT
ST-1
F/B FUSE NO. 21
(ST)
ST-2
IG SW
(ST)
*1 : MT MODEL : Lg
CVT MODEL : WL
*2 : MT MODEL : WB
CVT MODEL : WR
*3 : MT MODEL : GB
CVT MODEL : WR
WL
BW
MT
CVT
B106
CLUTCH START SWITCH
Lg
INHIBITOR SWITCH
P
R
N
D
WR
16
BY
WB
15
BW
B12
T3
BY
6
BW
9
T7
REF. TO CAN COMMUNICATION SYSTEM [CAN-01]
STARTER RELAY 1
B225
BL
STARTER MOTOR
BATTERY
M
WB
B14
B25
T2
GB
2
T2
B25
1
BG
A
E/G-12
NEUTRAL POSITION SWITCH 1
R
L
C17
C28
B26
C35
C16
B: B135
C: B136
ECM

B25 (BROWN)
B106
T7 (BLACK)
B12 (BROWN)
B225
B: B135
C: B136
RELAY HOLDER

WI-42142

E/G-04

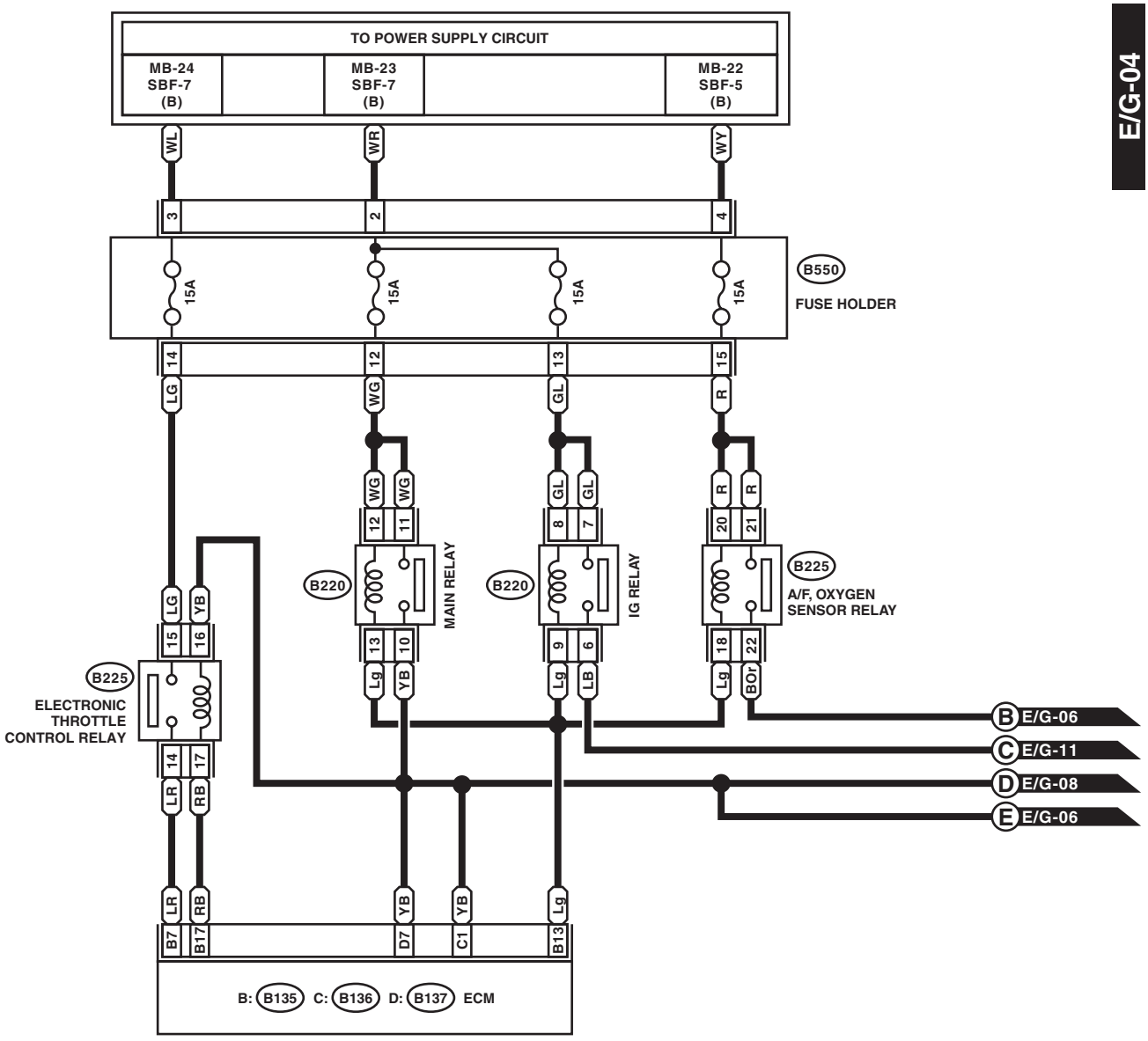

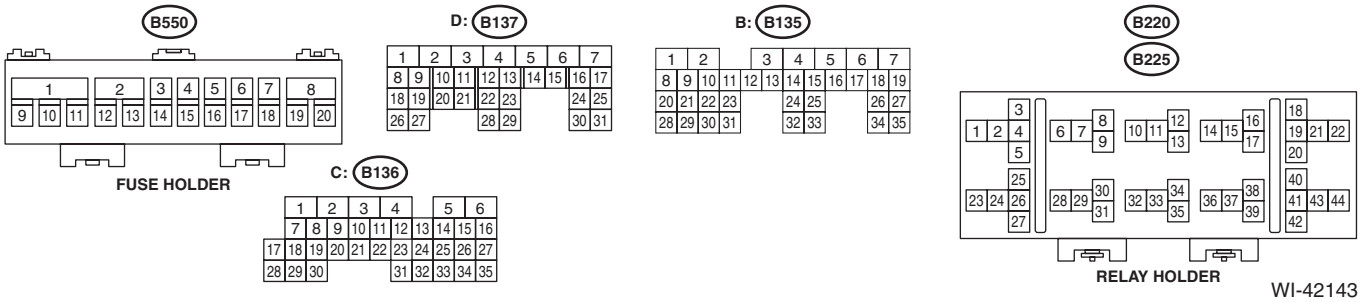

WI-42143

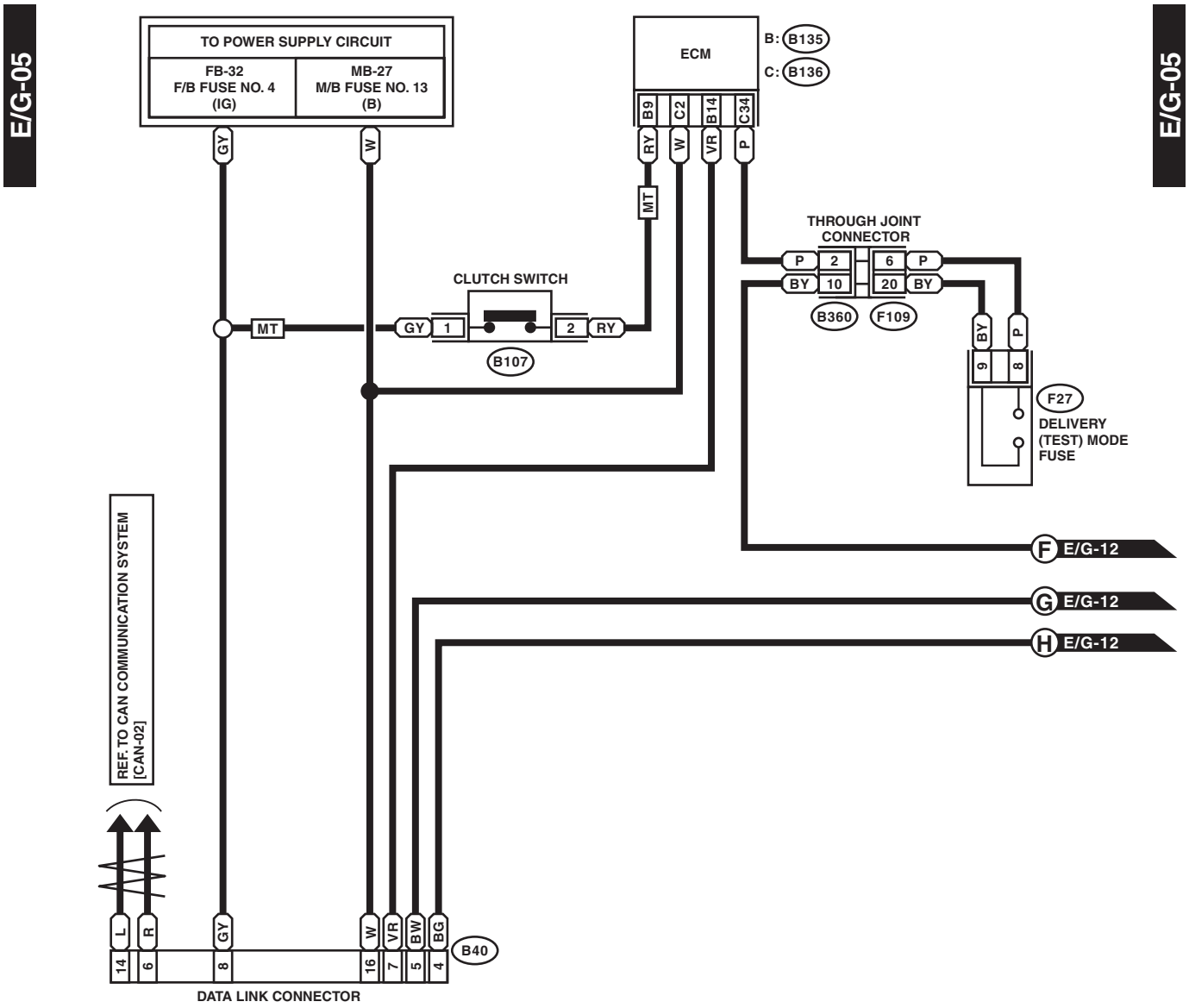
E/G-05
E/G-05
TO POWER SUPPLY CIRCUIT
FB-32
F/B FUSE NO. 4
(IG)
MB-27
M/B FUSE NO. 13
(B)
ECM
B: B135
C: B136
B9
C2
B14
C34
GY
W
RY
W
VR
P
MT
THROUGH JOINT CONNECTOR
P 2
BY 10
6 P
20 BY
B360
F109
CLUTCH SWITCH
MT
GY 1
2 RY
B107
BY
P
9
8
F27
DELIVERY (TEST) MODE FUSE
F E/G-12
G E/G-12
H E/G-12
REF. TO CAN COMMUNICATION SYSTEM [CAN-02]
L
R
GY
W
VR
BW
BG
B40
14
6
8
16
7
5
4
DATA LINK CONNECTOR

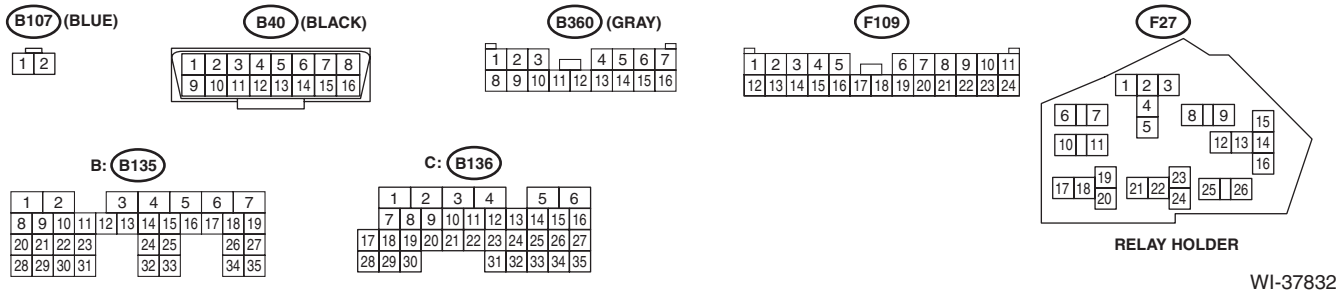
B107 (BLUE)
B40 (BLACK)
B360 (GRAY)
F109
F27
B: B135
C: B136
RELAY HOLDER

WI-37832

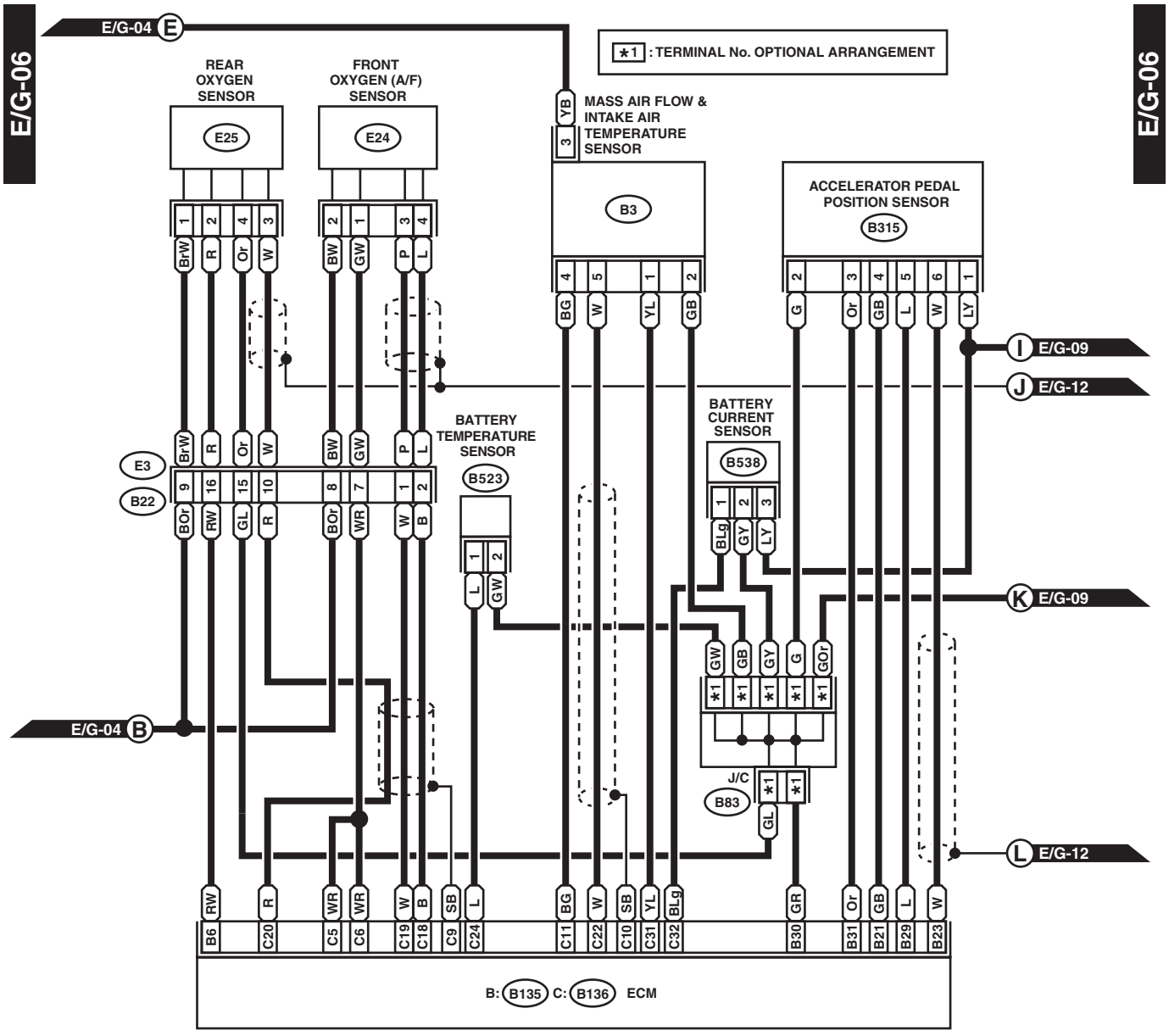
E/G-06
E/G-04 E
*1 : TERMINAL No. OPTIONAL ARRANGEMENT
REAR OXYGEN SENSOR
E25
FRONT OXYGEN (A/F) SENSOR
E24
MASS AIR FLOW & INTAKE AIR TEMPERATURE SENSOR
B3
ACCELERATOR PEDAL POSITION SENSOR
B315
BATTERY TEMPERATURE SENSOR
B523
BATTERY CURRENT SENSOR
B538
E3
B22
J/C
B83
I E/G-09
J E/G-12
K E/G-09
L E/G-12
E/G-04 B
B: B135 C: B136 ECM

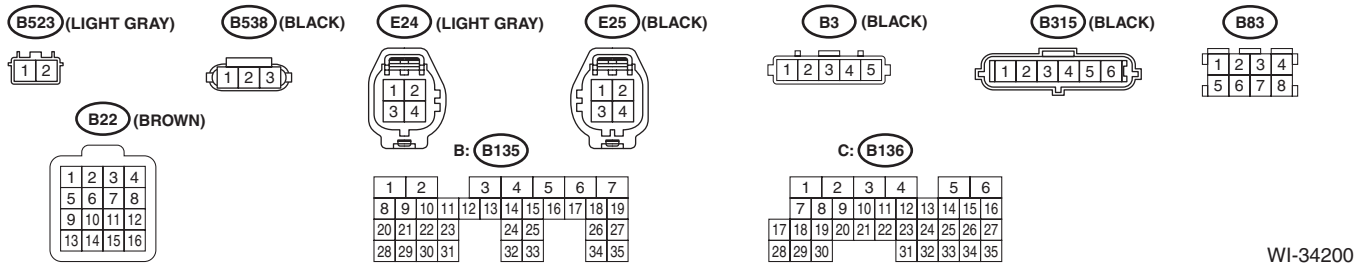
B523 (LIGHT GRAY)
B538 (BLACK)
E24 (LIGHT GRAY)
E25 (BLACK)
B3 (BLACK)
B315 (BLACK)
B83
B22 (BROWN)
B: B135
C: B136

WI-34200

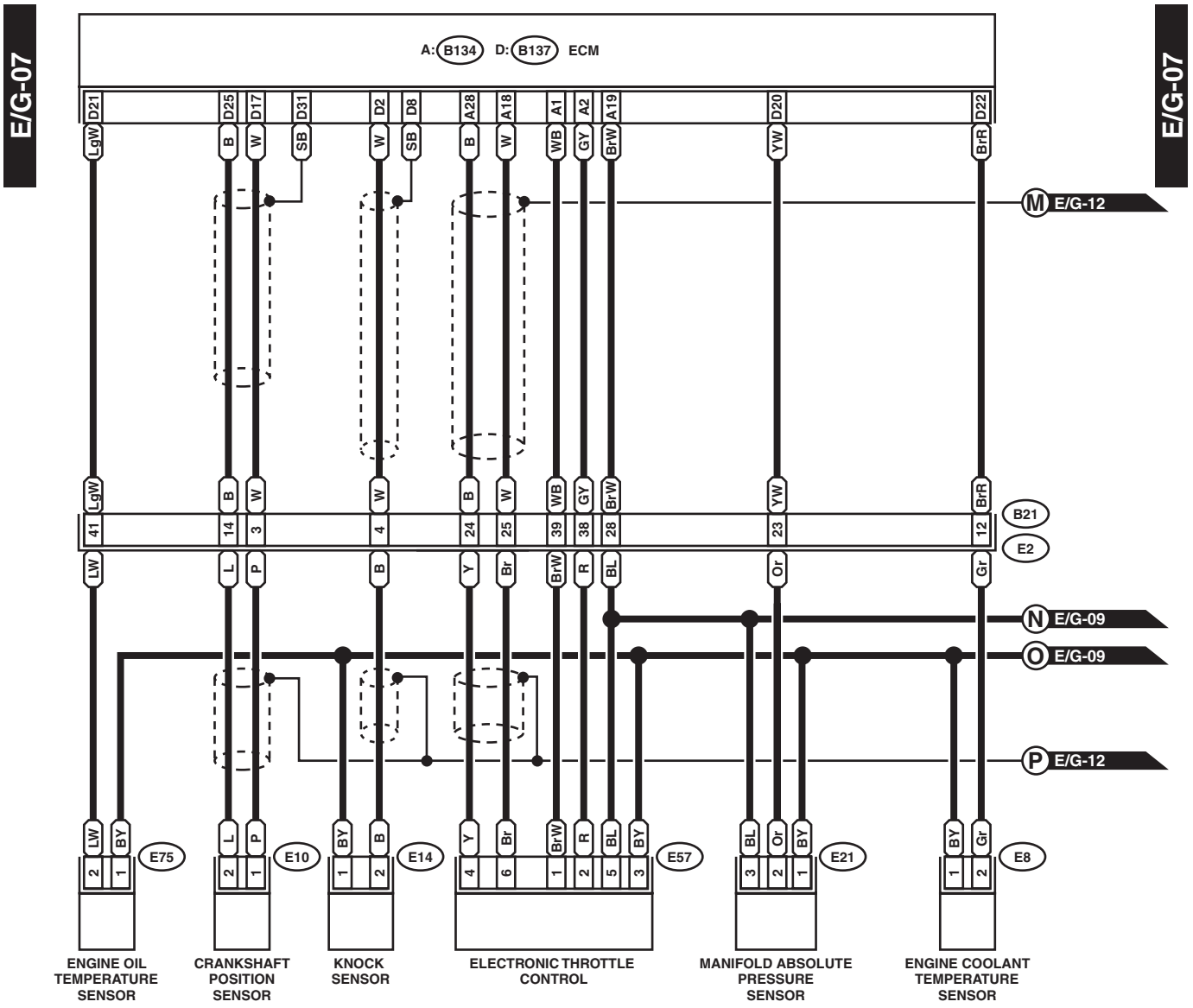
E/G-07
E/G-07
A: B134 D: B137 ECM
D21 D25 D17 D31 D2 D8 A28 A18 A1 A2 A19 D20 D22
LgW B W SB W SB B W WB GY BrW YW BrR
M E/G-12
41 14 3 4 24 25 39 38 28 23 12
B21
E2
LW L P B Y Br BrW R BL Or Gr
N E/G-09
O E/G-09
P E/G-12
LW BY L P BY B Y Br BrW R BL BY BL Or BY BY Gr
2 1 2 1 1 2 4 6 1 2 5 3 3 2 1 1 2
E75 E10 E14 E57 E21 E8
ENGINE OIL TEMPERATURE SENSOR
CRANKSHAFT POSITION SENSOR
KNOCK SENSOR
ELECTRONIC THROTTLE CONTROL
MANIFOLD ABSOLUTE PRESSURE SENSOR
ENGINE COOLANT TEMPERATURE SENSOR

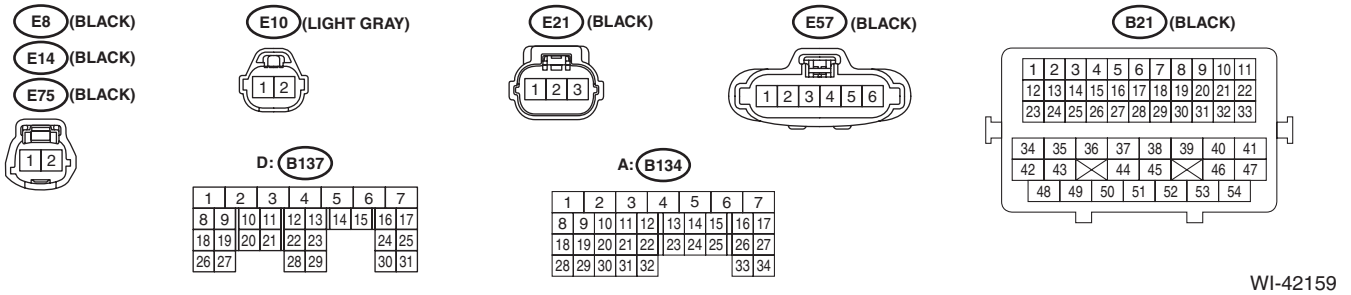
E8 (BLACK)
E14 (BLACK)
E75 (BLACK)
E10 (LIGHT GRAY)
E21 (BLACK)
E57 (BLACK)
B21 (BLACK)
D: B137
A: B134

WI-42159

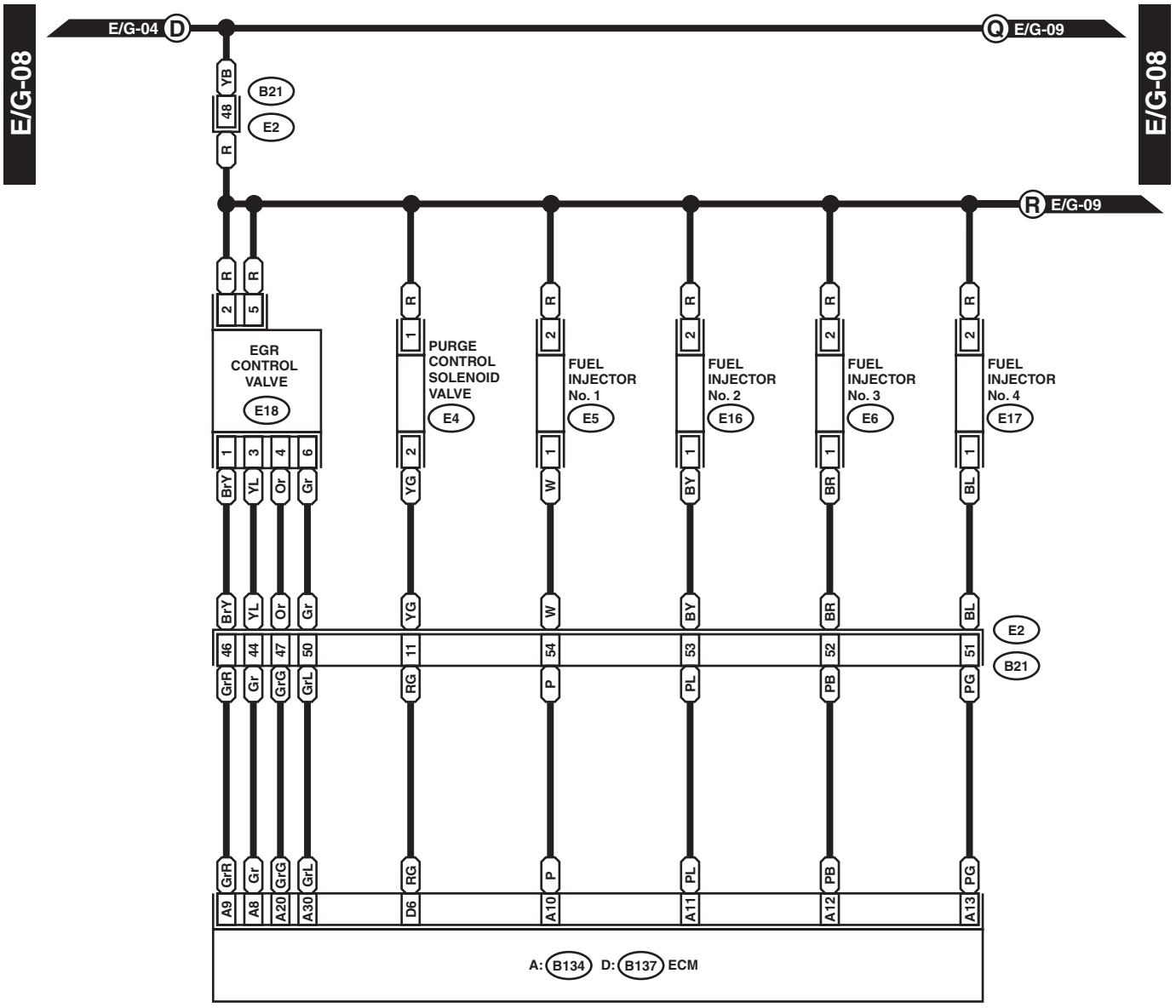

E4 (BLUE)



(DARK GRAY) E5 E16 (DARK GRAY)

(DARK GRAY) E6 E17 (DARK GRAY)



E18 (DARK GRAY)



D: B137

1	2	3	4	5	6	7										
8	9	10	11	12	13	14	15	16	17							
18	19	20	21	22	23			24	25							
26	27			28	29			30	31							

B21 (BLACK)

1	2	3	4	5	6	7	8	9	10	11						
12	13	14	15	16	17	18	19	20	21	22						
23	24	25	26	27	28	29	30	31	32	33						
34	35	36	37	38	39	40	41									
42	43			44	45		46	47								
48	49	50	51	52	53	54										

A: B134

1	2	3	4	5	6	7										
8	9	10	11	12	13	14	15	16	17							
18	19	20	21	22	23	24	25	26	27							
28	29	30	31	32				33	34							

WI-34202

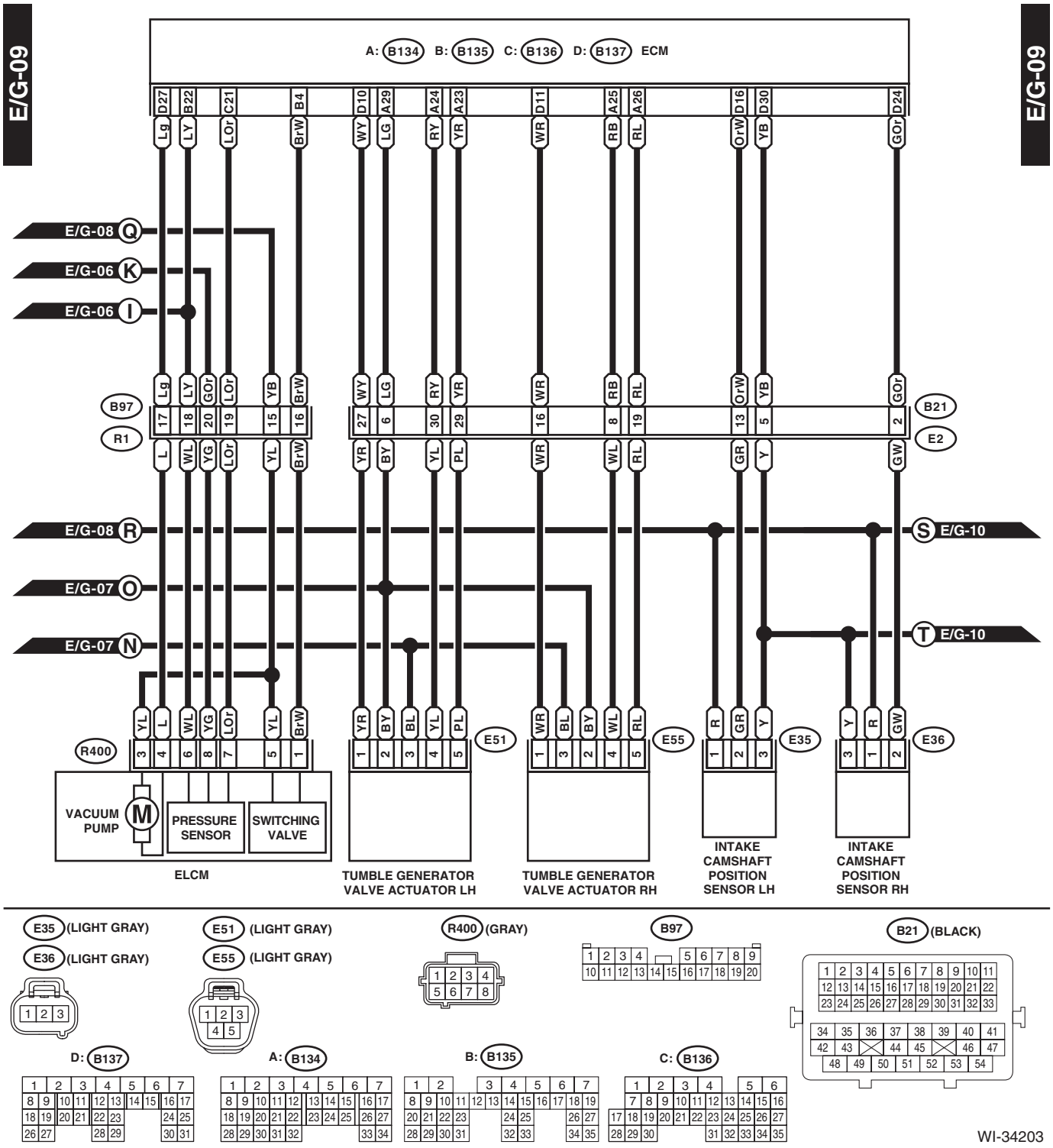
E/G-09
E/G-09
A: B134 B: B135 C: B136 D: B137 ECM
D27 B22 C21 B4 D10 A29 A24 A23 D11 A25 A26 D16 D30 D24
Lg LY LOr BrW WY LG RY YR WR RB RL OrW YB GOr
E/G-08 Q
E/G-06 K
E/G-06 I
B97
R1
B21
E2
E/G-08 R
E/G-10 S
E/G-07 O
E/G-07 N
E/G-10 T
R400
E51
E55
E35
E36
VACUUM PUMP
M
PRESSURE SENSOR
SWITCHING VALVE
ELCM
TUMBLE GENERATOR VALVE ACTUATOR LH
TUMBLE GENERATOR VALVE ACTUATOR RH
INTAKE CAMSHAFT POSITION SENSOR LH
INTAKE CAMSHAFT POSITION SENSOR RH
E35 (LIGHT GRAY)
E36 (LIGHT GRAY)
E51 (LIGHT GRAY)
E55 (LIGHT GRAY)
R400 (GRAY)
B97
B21 (BLACK)
D: B137
A: B134
B: B135
C: B136
WI-34203

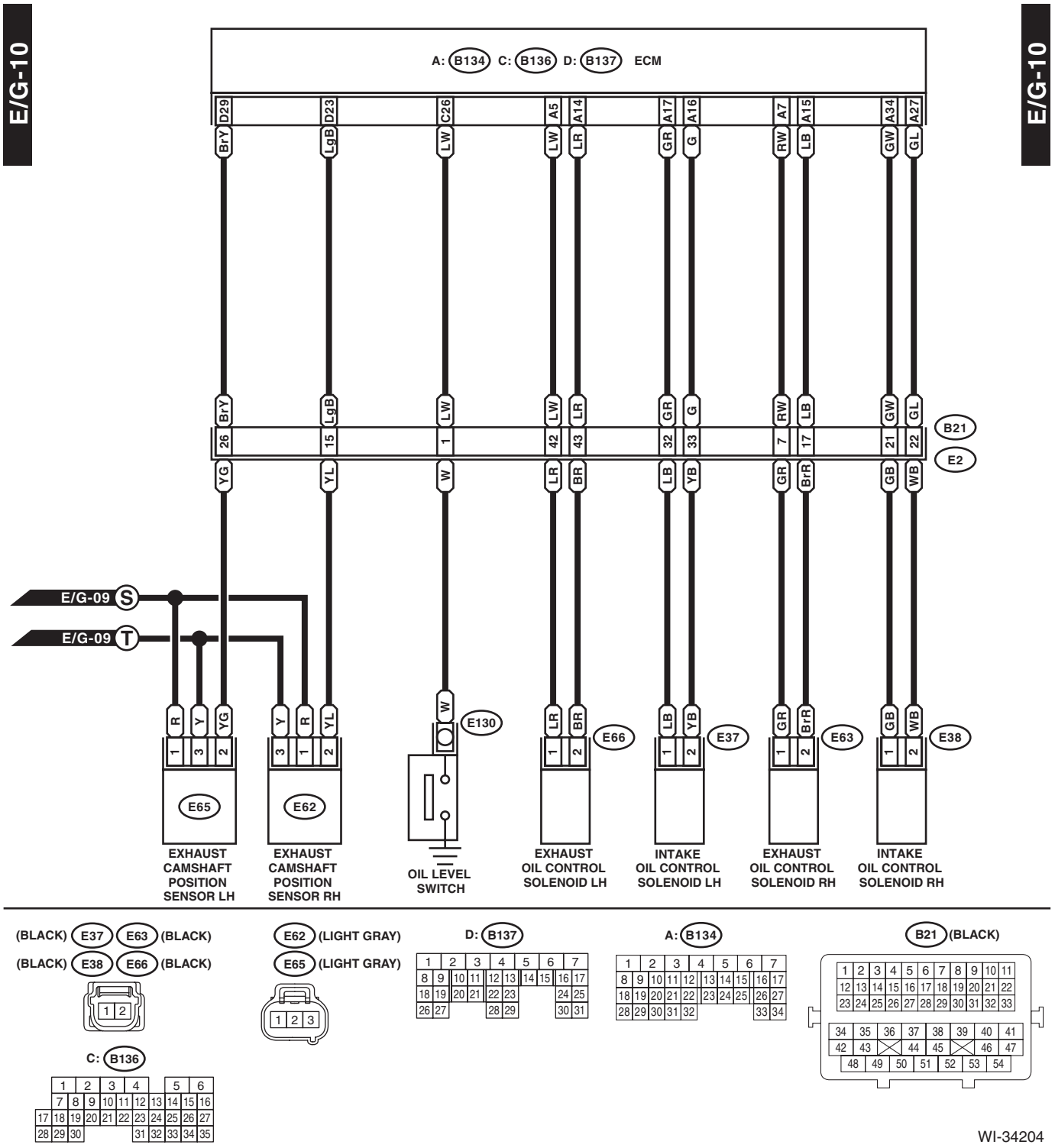
E/G-10
E/G-10
A: B134 C: B136 D: B137 ECM
D29 D23 C26 A5 A14 A17 A16 A7 A15 A34 A27
BrY LgB LW LW LR GR G RW LB GW GL
26 15 1 42 43 32 33 7 17 21 22
B21
E2
YG YL W LR BR LB YB GR BrR GB WB
E/G-09 S
E/G-09 T
R Y YG Y R YL W LR BR LB YB GR BrR GB WB
1 3 2 3 1 2 1 2 1 2 1 2 1 2 1 2
E130
E66
E37
E63
E38
E65
E62
EXHAUST CAMSHAFT POSITION SENSOR LH
EXHAUST CAMSHAFT POSITION SENSOR RH
OIL LEVEL SWITCH
EXHAUST OIL CONTROL SOLENOID LH
INTAKE OIL CONTROL SOLENOID LH
EXHAUST OIL CONTROL SOLENOID RH
INTAKE OIL CONTROL SOLENOID RH
(BLACK) E37 E63 (BLACK)
(BLACK) E38 E66 (BLACK)
E62 (LIGHT GRAY)
E65 (LIGHT GRAY)
D: B137
A: B134
B21 (BLACK)
C: B136

WI-34204

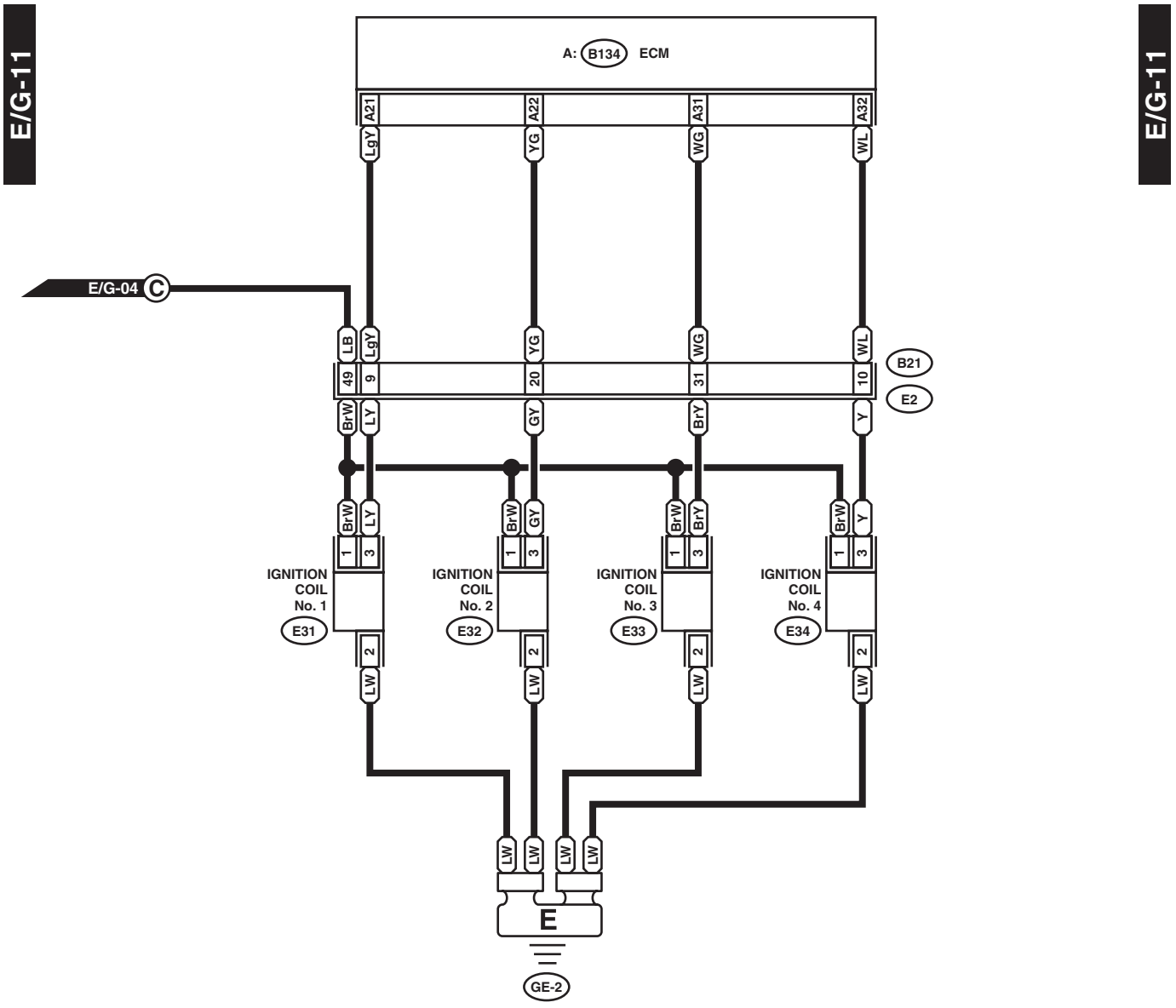
E/G-11
E/G-11
A: B134 ECM
A21
A22
A31
A32
LgY
YG
WG
WL
E/G-04 C
LB
LgY
YG
WG
WL
49
9
20
31
10
B21
E2
BrW
LY
GY
BrY
Y
IGNITION COIL No. 1
E31
IGNITION COIL No. 2
E32
IGNITION COIL No. 3
E33
IGNITION COIL No. 4
E34
1
3
2
LW
E
GE-2

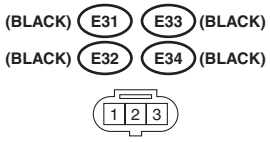
(BLACK) E31 E33 (BLACK)
(BLACK) E32 E34 (BLACK)
1 2 3

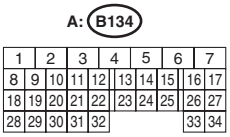
A: B134
1 2 3 4 5 6 7
8 9 10 11 12 13 14 15 16 17
18 19 20 21 22 23 24 25 26 27
28 29 30 31 32 33 34

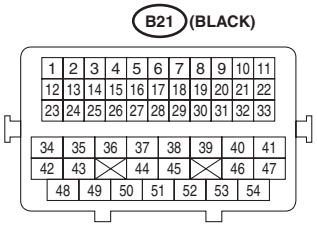
B21 (BLACK)
1 2 3 4 5 6 7 8 9 10 11
12 13 14 15 16 17 18 19 20 21 22
23 24 25 26 27 28 29 30 31 32 33
34 35 36 37 38 39 40 41
42 43 44 45 46 47
48 49 50 51 52 53 54

WI-37834

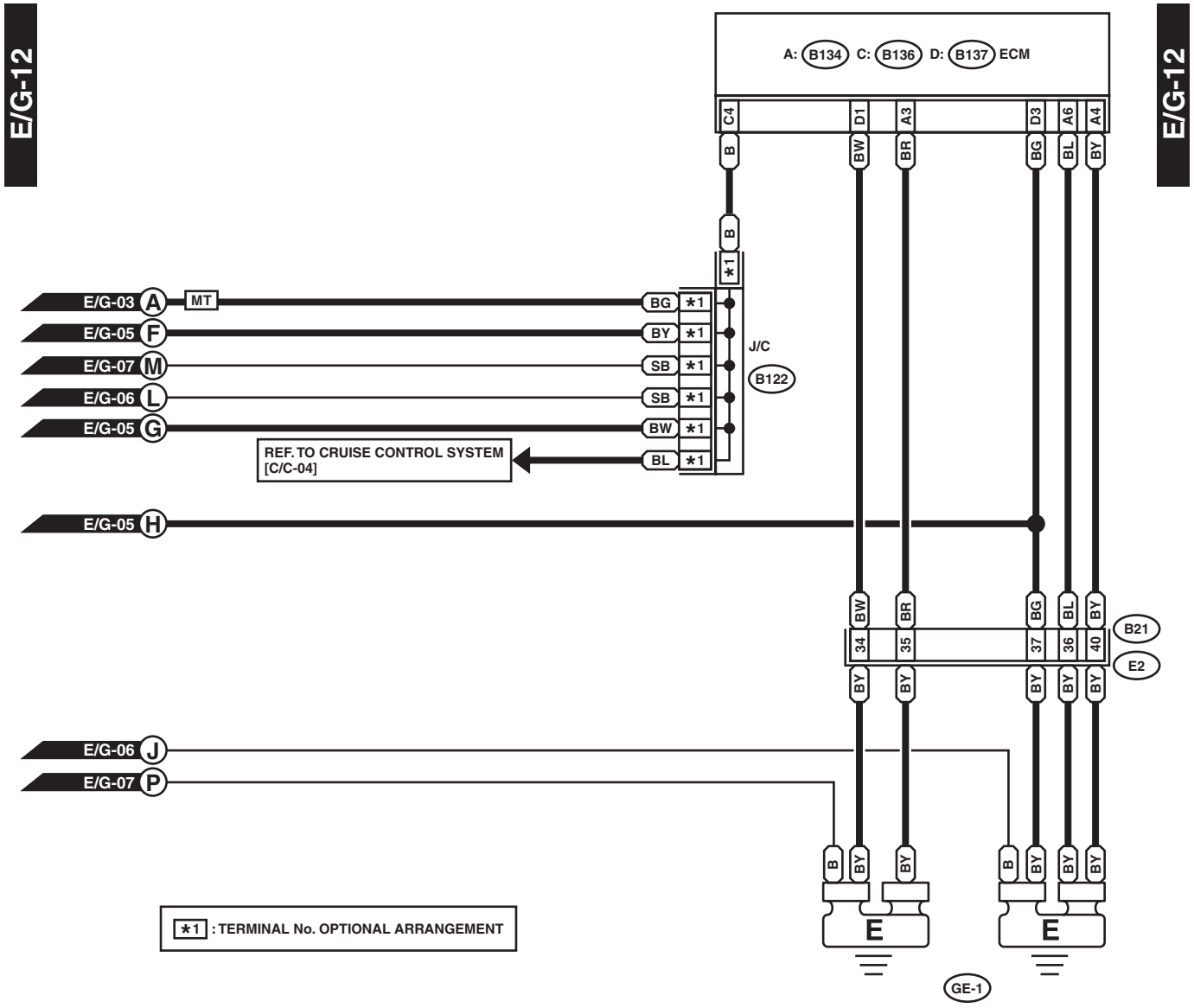
E/G-12
E/G-12
A: B134 C: B136 D: B137 ECM
C4
D1
A3
D3
A6
A4
B
BW
BR
BG
BL
BY
*1
E/G-03 A
MT
E/G-05 F
E/G-07 M
E/G-06 L
E/G-05 G
J/C
B122
REF. TO CRUISE CONTROL SYSTEM [C/C-04]
E/G-05 H
34
35
37
36
40
B21
E2
E/G-06 J
E/G-07 P
E
GE-1
*1 : TERMINAL No. OPTIONAL ARRANGEMENT

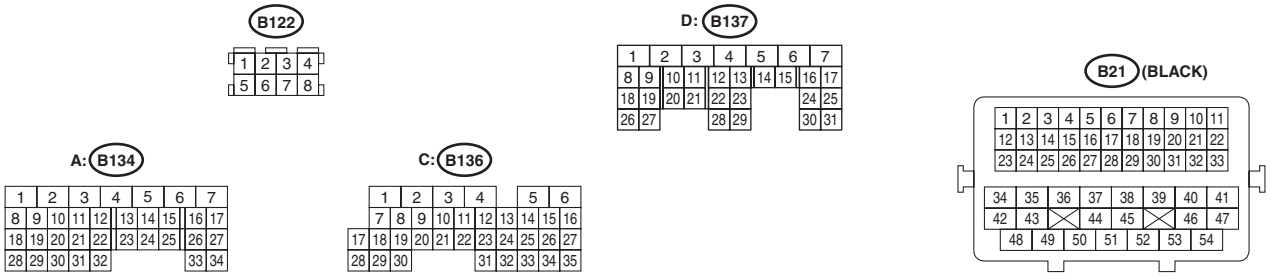
B122
D: B137
A: B134
C: B136
B21 (BLACK)

WI-34206

18.Front Accessory Power Supply Socket System

A: WIRING DIAGRAM

FAPS-01

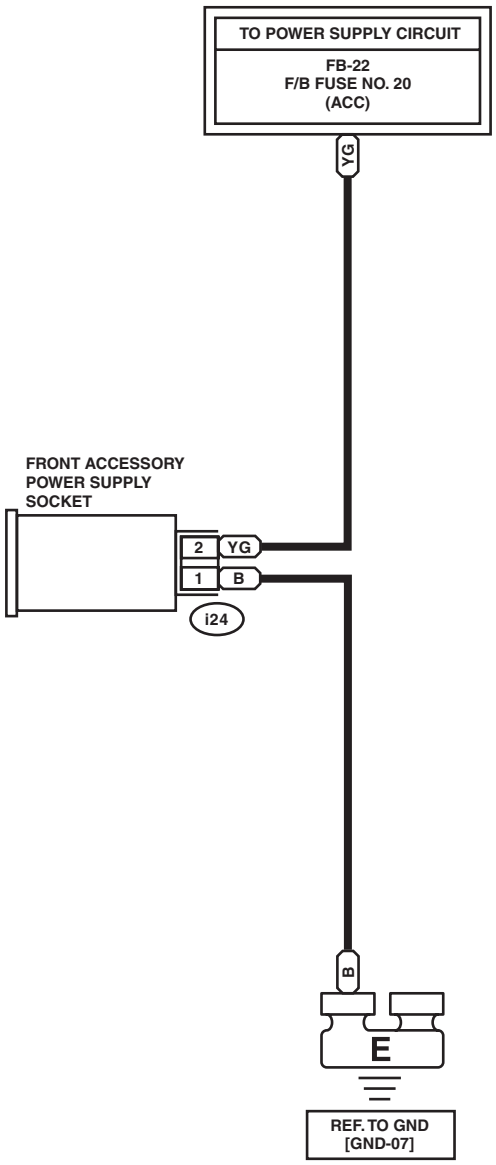

FAPS-01



WI-34207

19.Front Fog Light System

A: WIRING DIAGRAM

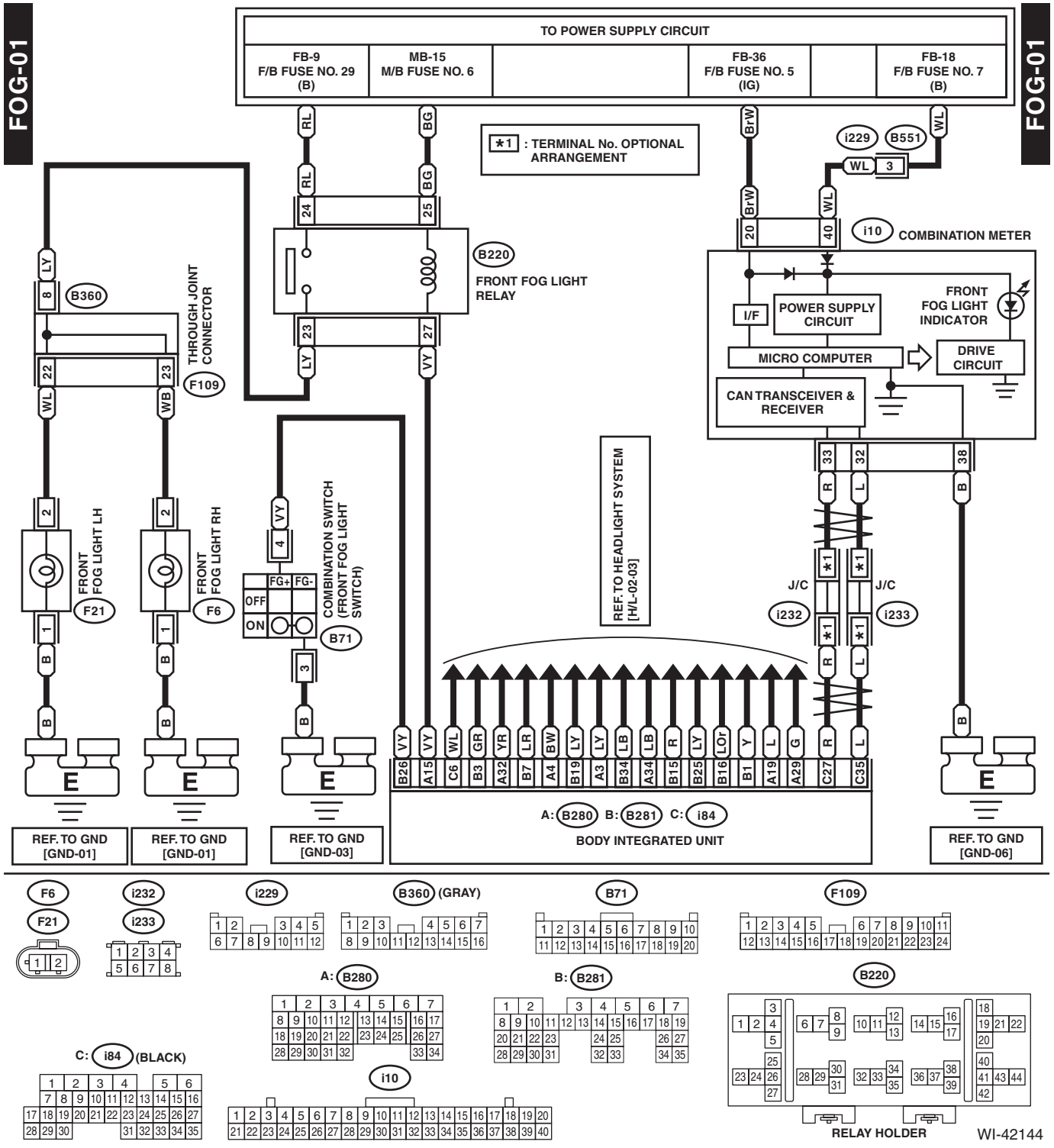

20.Front Wiper and Washer System

A: WIRING DIAGRAM

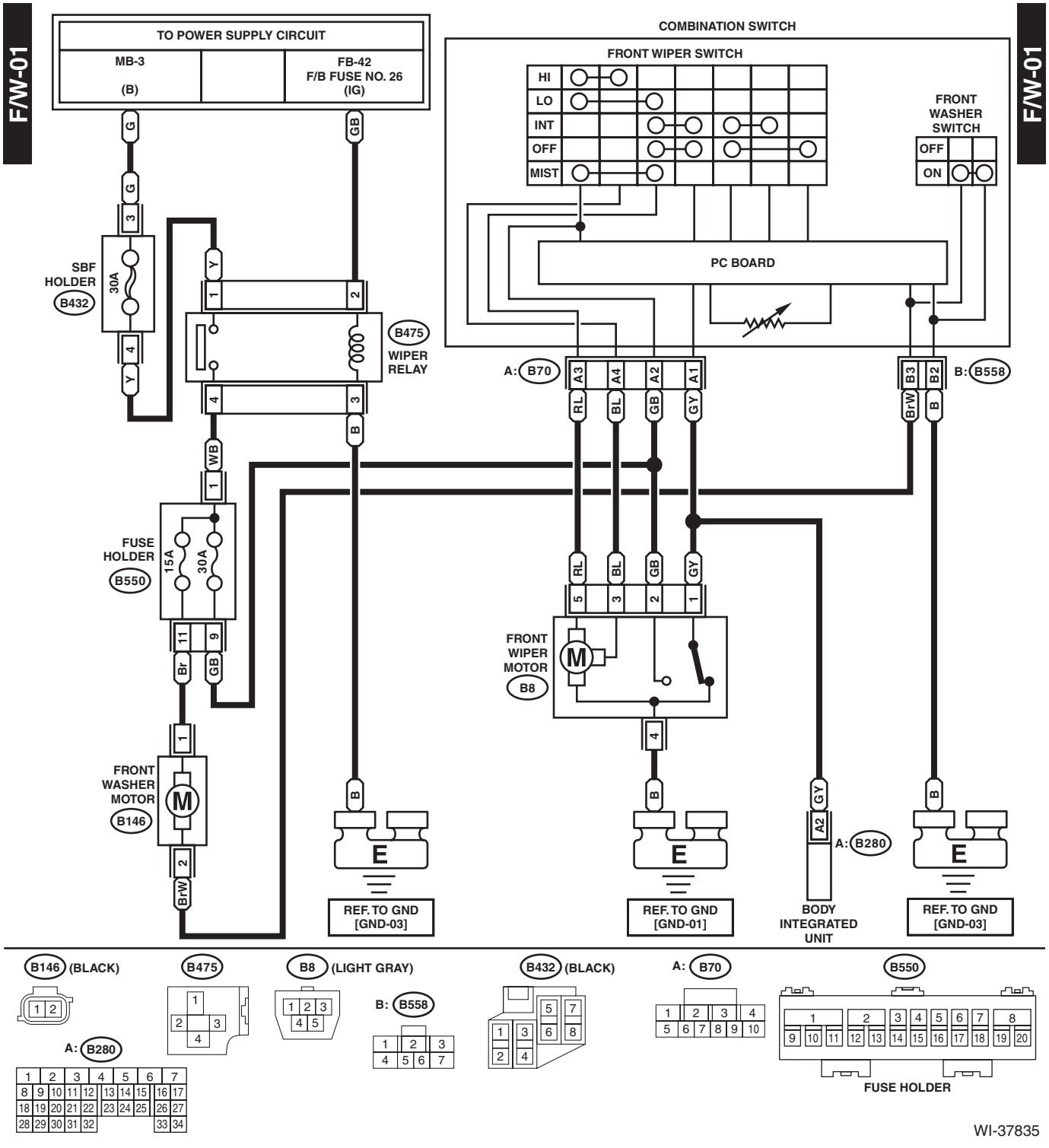

F/W-02

F/W-02

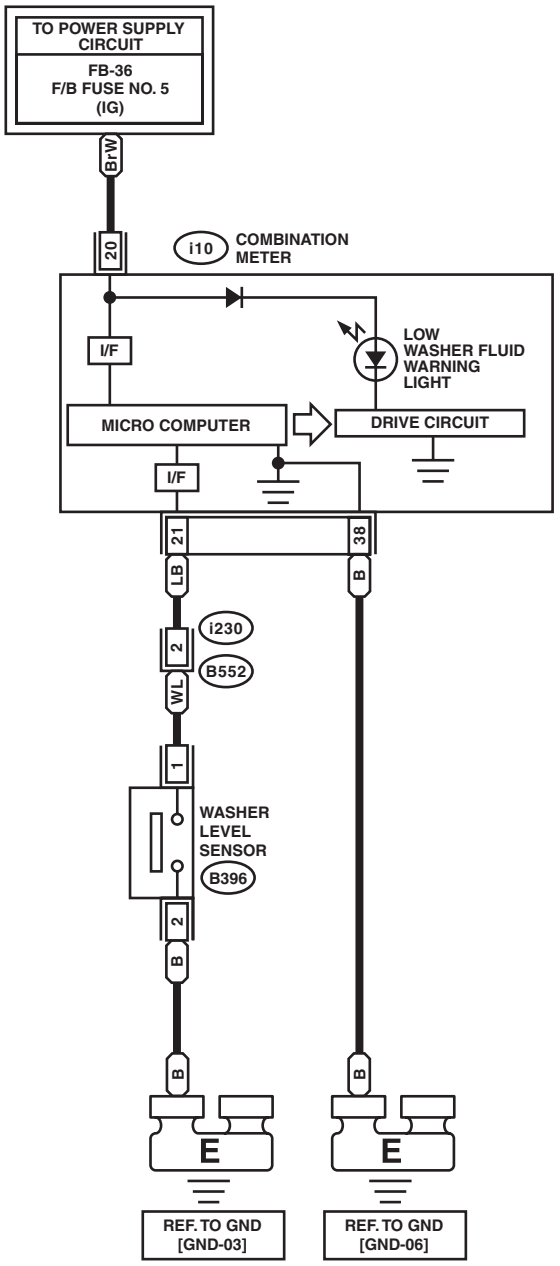

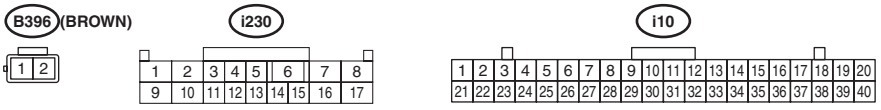

WI-34210

21.Fuel Gauge System

A: WIRING DIAGRAM

F/G-01

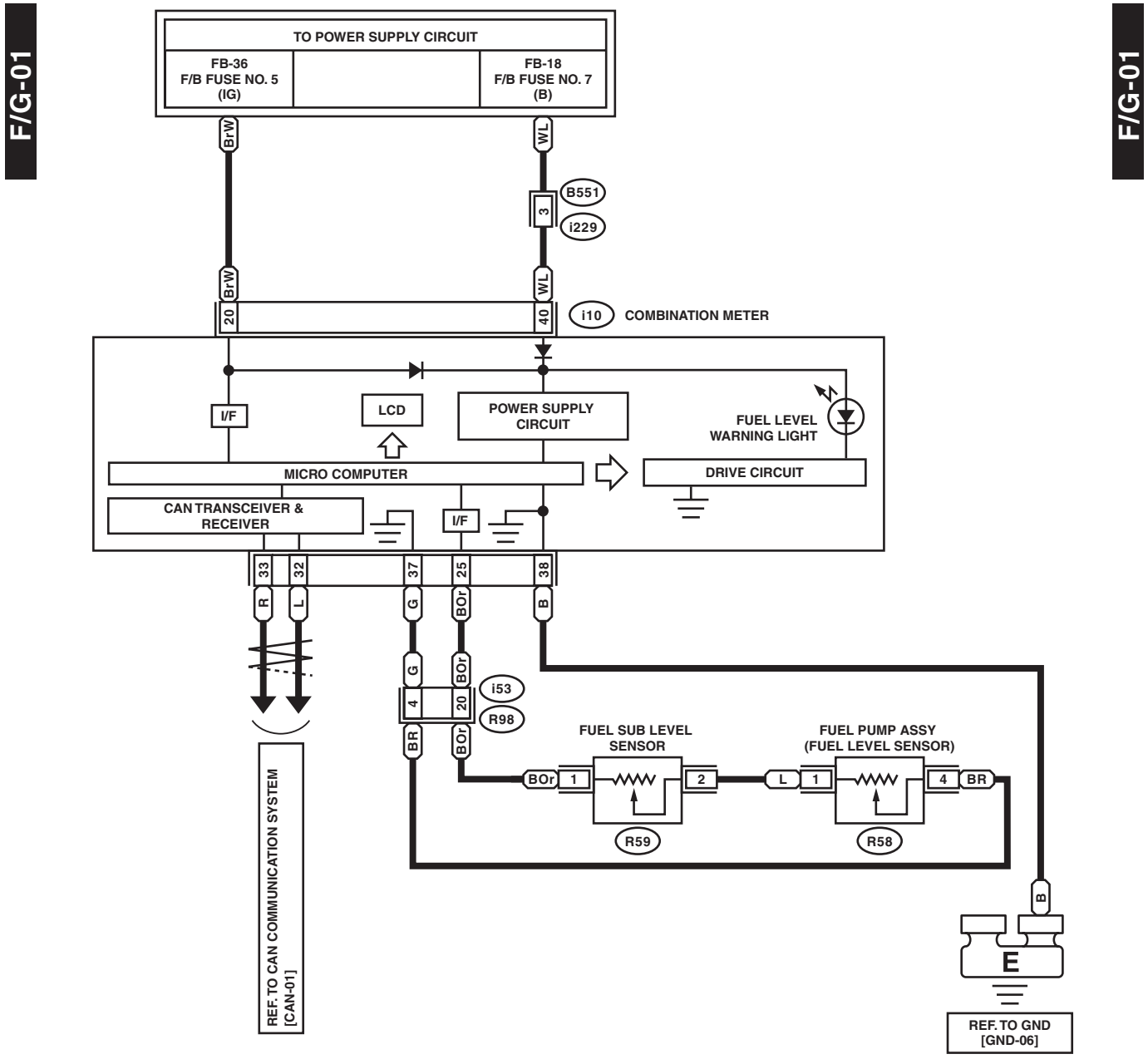

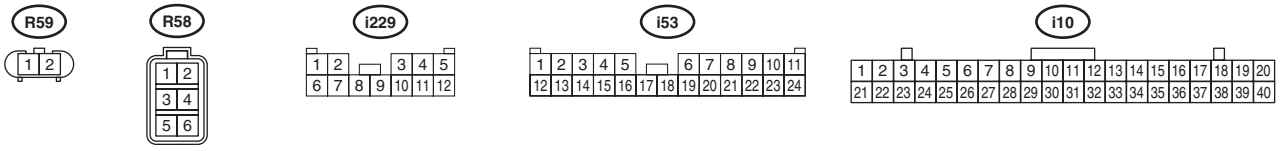

WI-42728

22.Headlight Beam Leveler System

A: WIRING DIAGRAM

HLBL-01

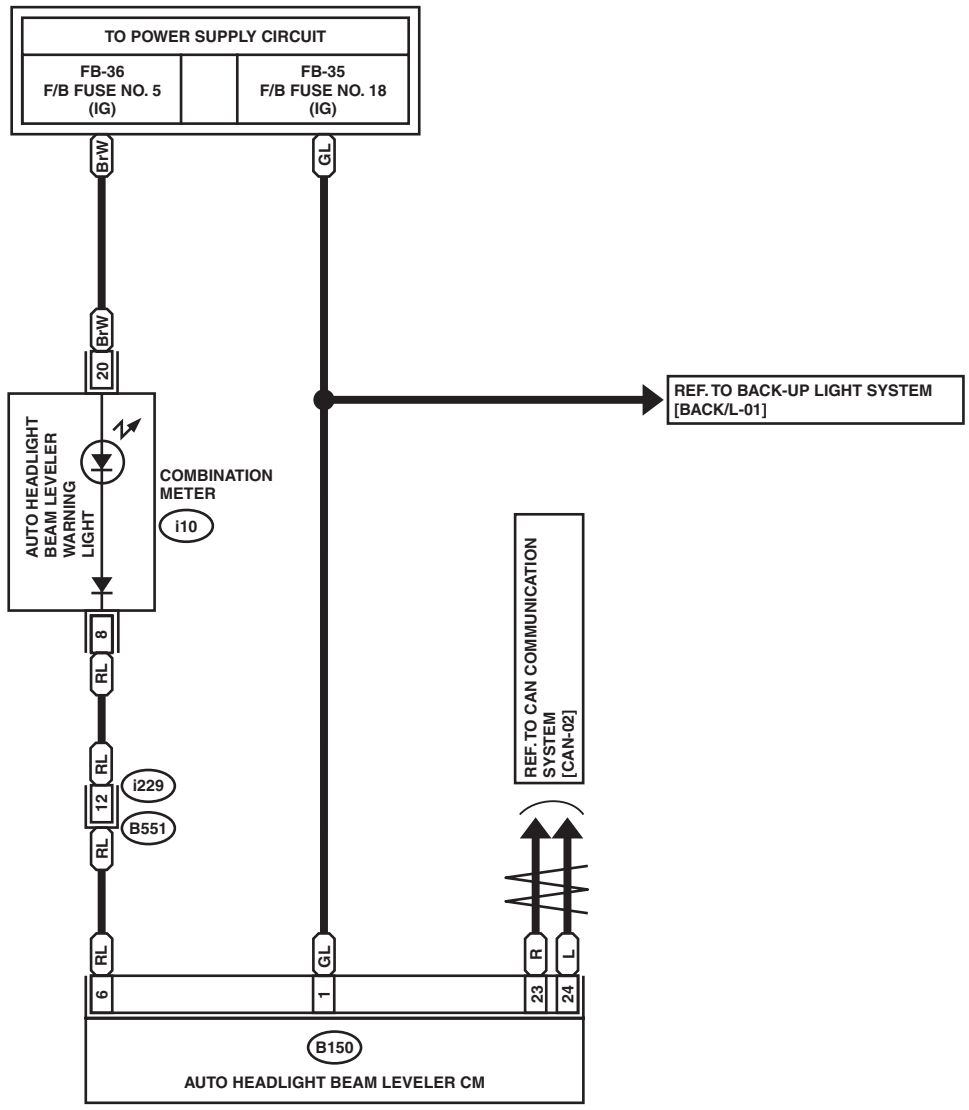

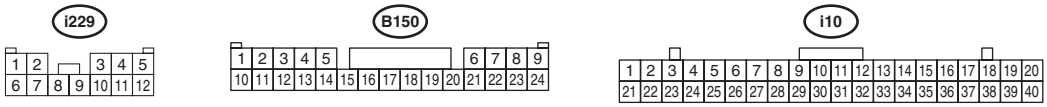

WI-37836

WIRING SYSTEM

HLBL-02

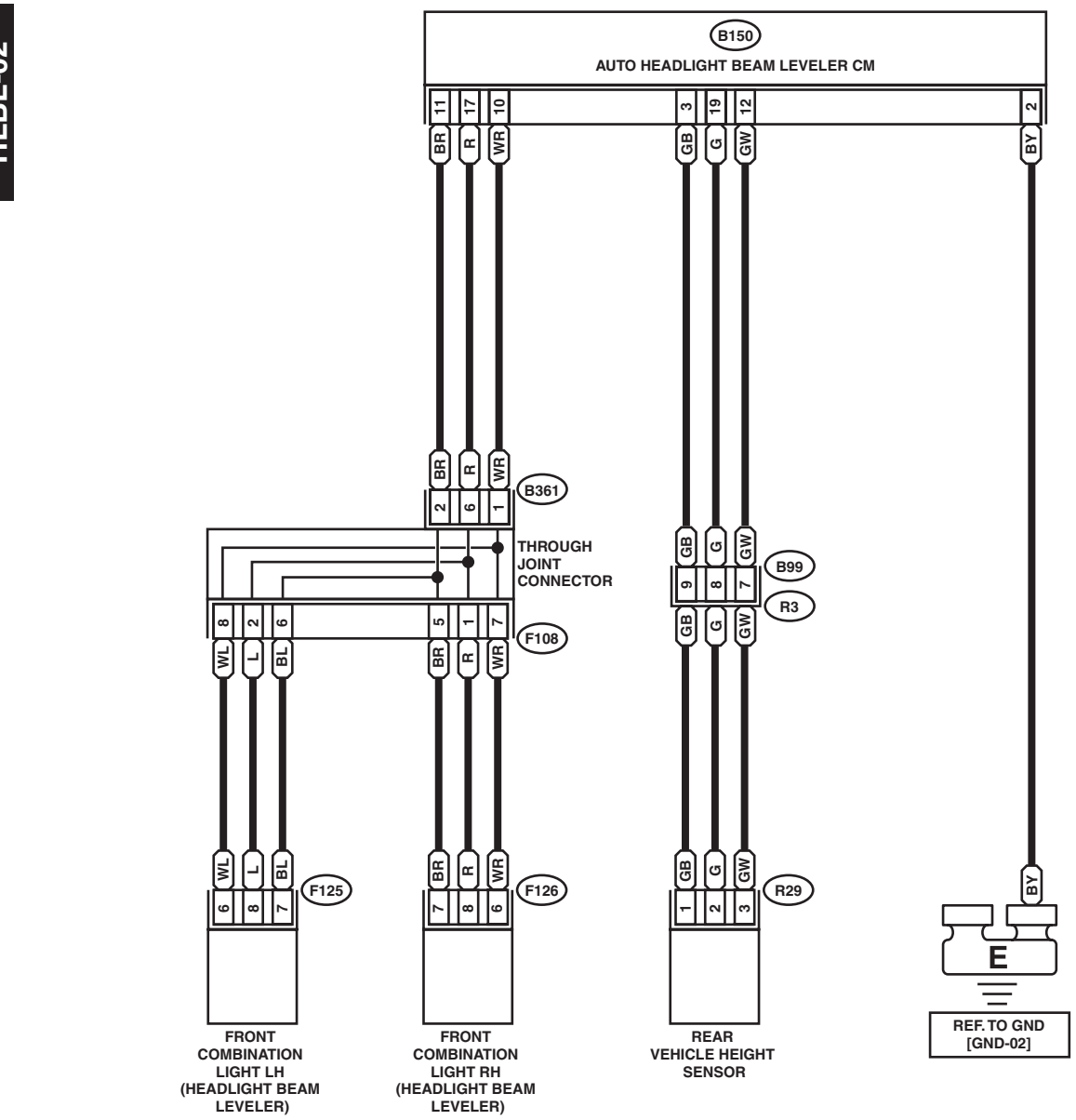

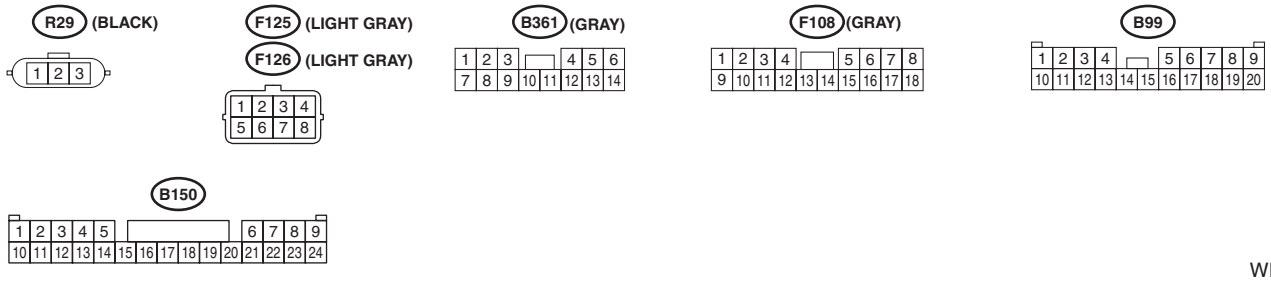

WI-37837

23.Headlight System

A: WIRING DIAGRAM

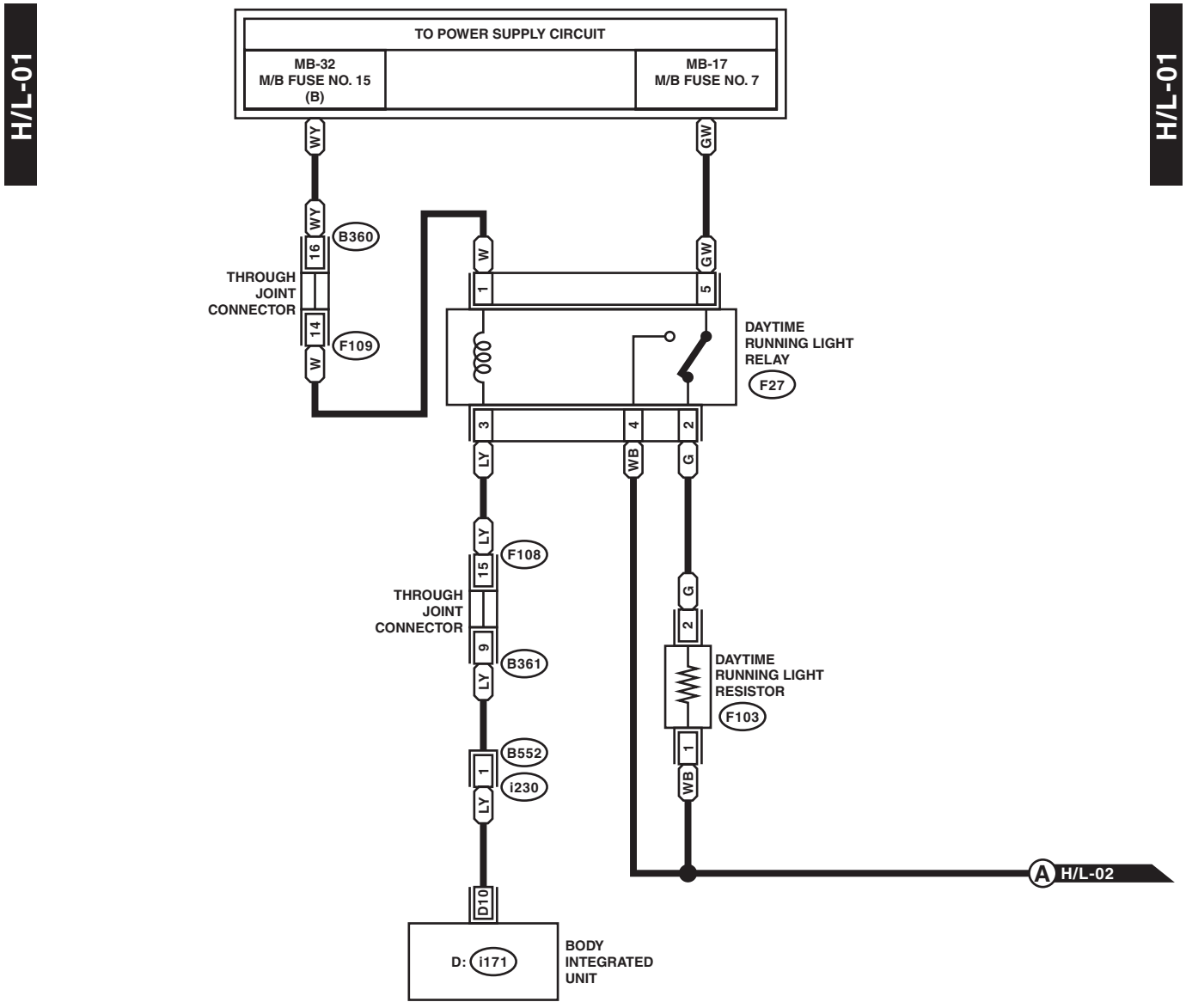

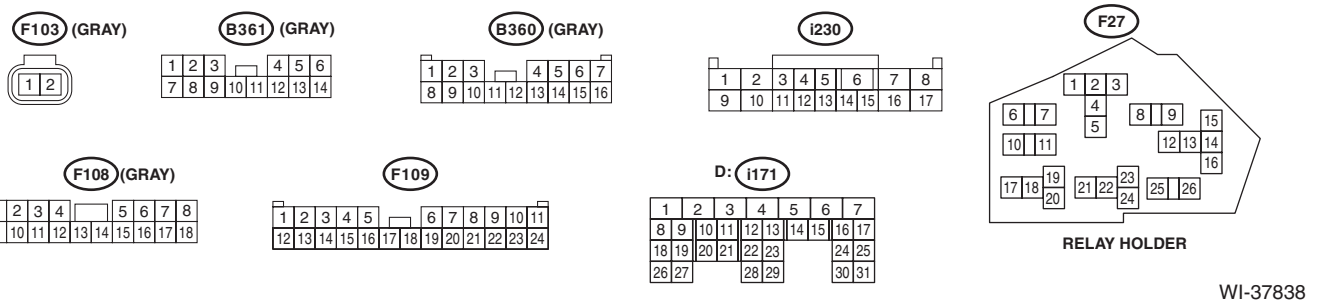

WI-37838

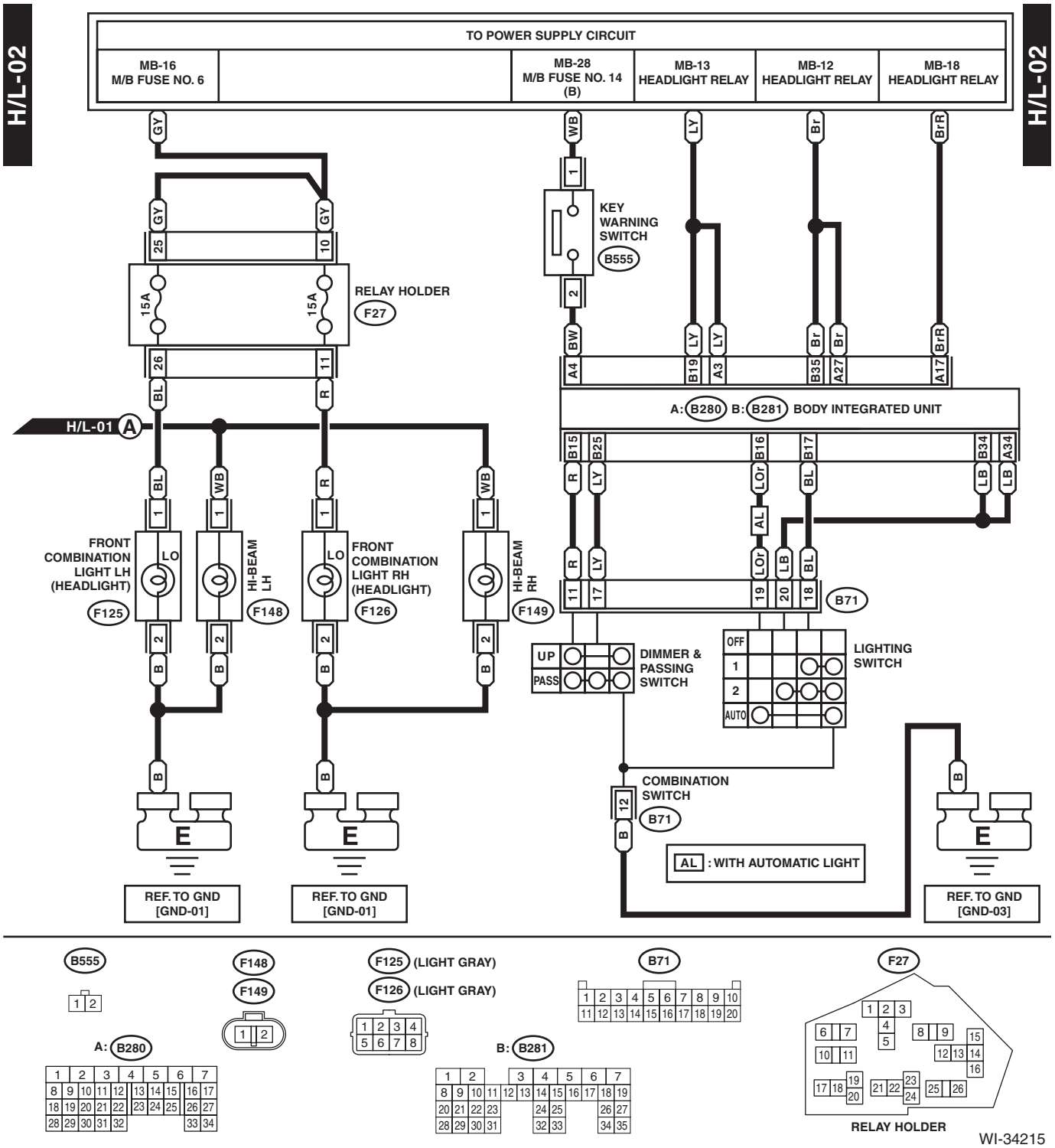
H/L-02
H/L-02
TO POWER SUPPLY CIRCUIT
MB-16 M/B FUSE NO. 6
MB-28 M/B FUSE NO. 14 (B)
MB-13 HEADLIGHT RELAY
MB-12 HEADLIGHT RELAY
MB-18 HEADLIGHT RELAY
RELAY HOLDER F27
15A
15A
KEY WARNING SWITCH B555
A: B280 B: B281 BODY INTEGRATED UNIT
H/L-01 A
FRONT COMBINATION LIGHT LH (HEADLIGHT) F125
HI-BEAM LH F148
FRONT COMBINATION LIGHT RH (HEADLIGHT) F126
HI-BEAM RH F149
LO
DIMMER & PASSING SWITCH
LIGHTING SWITCH
COMBINATION SWITCH B71
AL : WITH AUTOMATIC LIGHT
REF. TO GND [GND-01]
REF. TO GND [GND-01]
REF. TO GND [GND-03]

B555
F148
F149
F125 (LIGHT GRAY)
F126 (LIGHT GRAY)
B71
F27
A: B280
B: B281
RELAY HOLDER

WI-34215

H/L-03

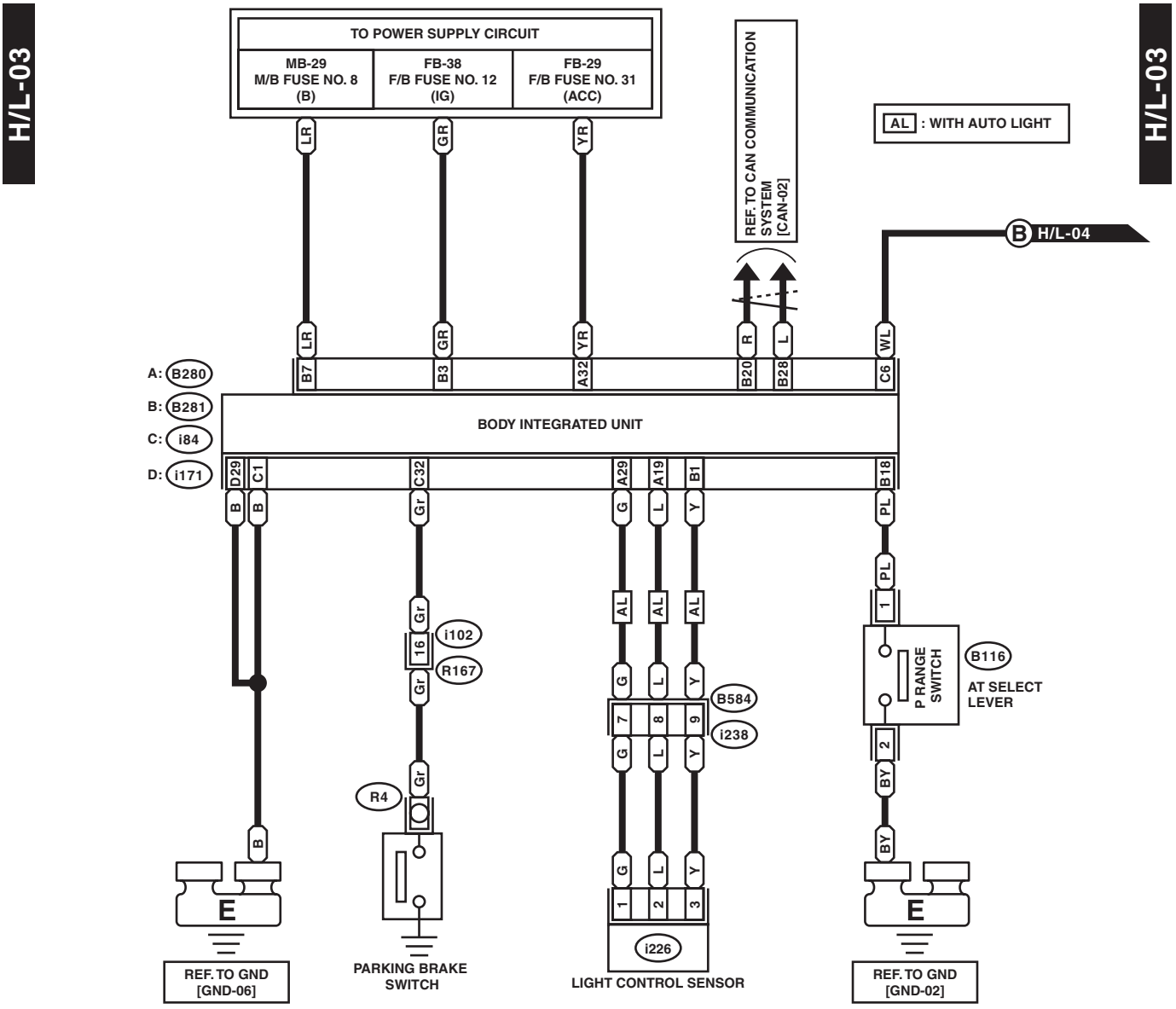

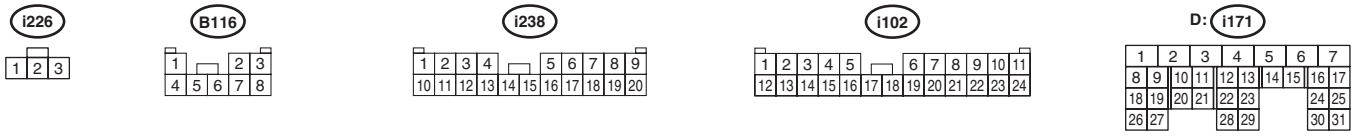

WI-42145

WIRING SYSTEM

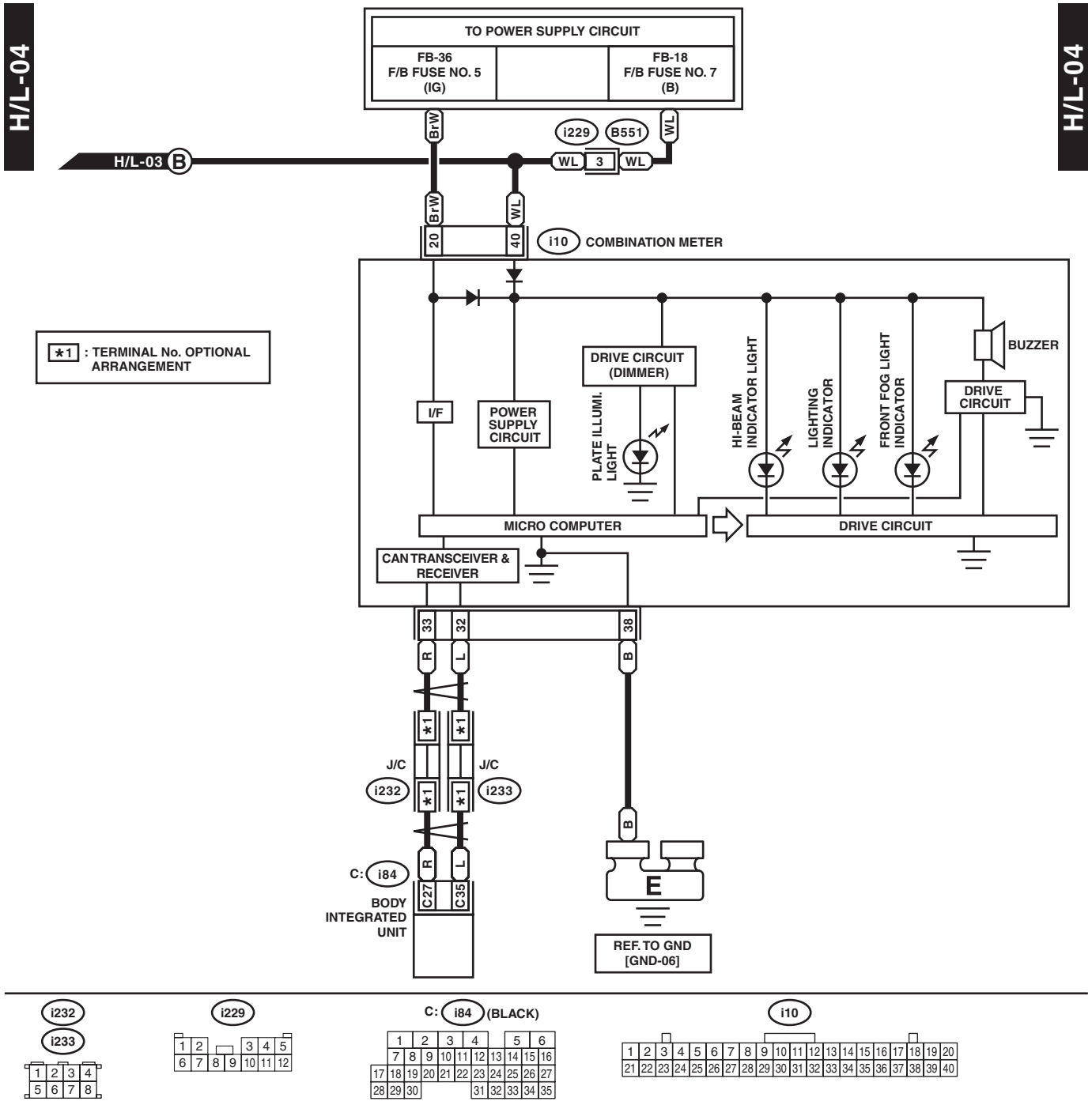

WI-35319

24.Horn System

A: WIRING DIAGRAM

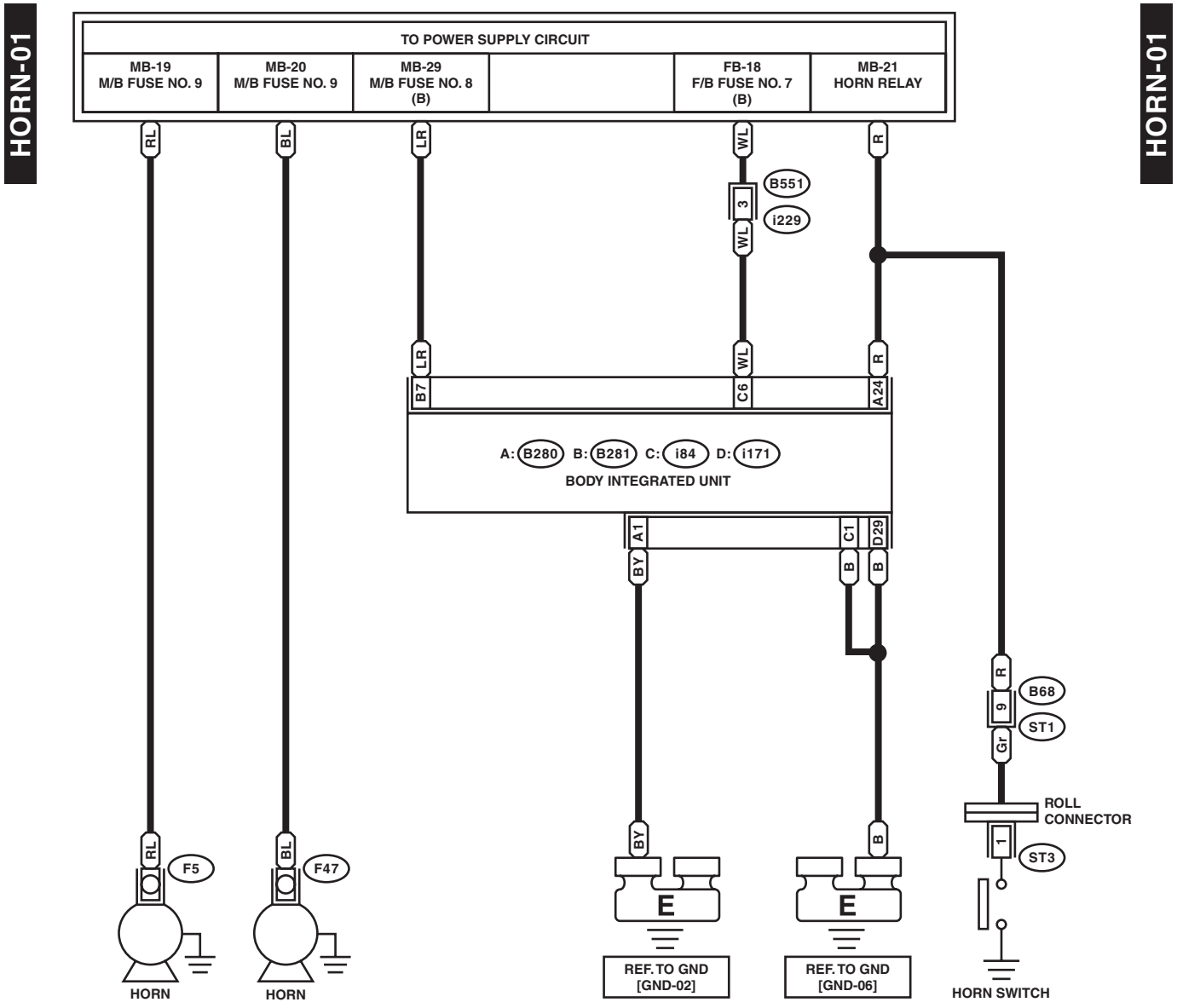

25.Immobilizer System

A: WIRING DIAGRAM

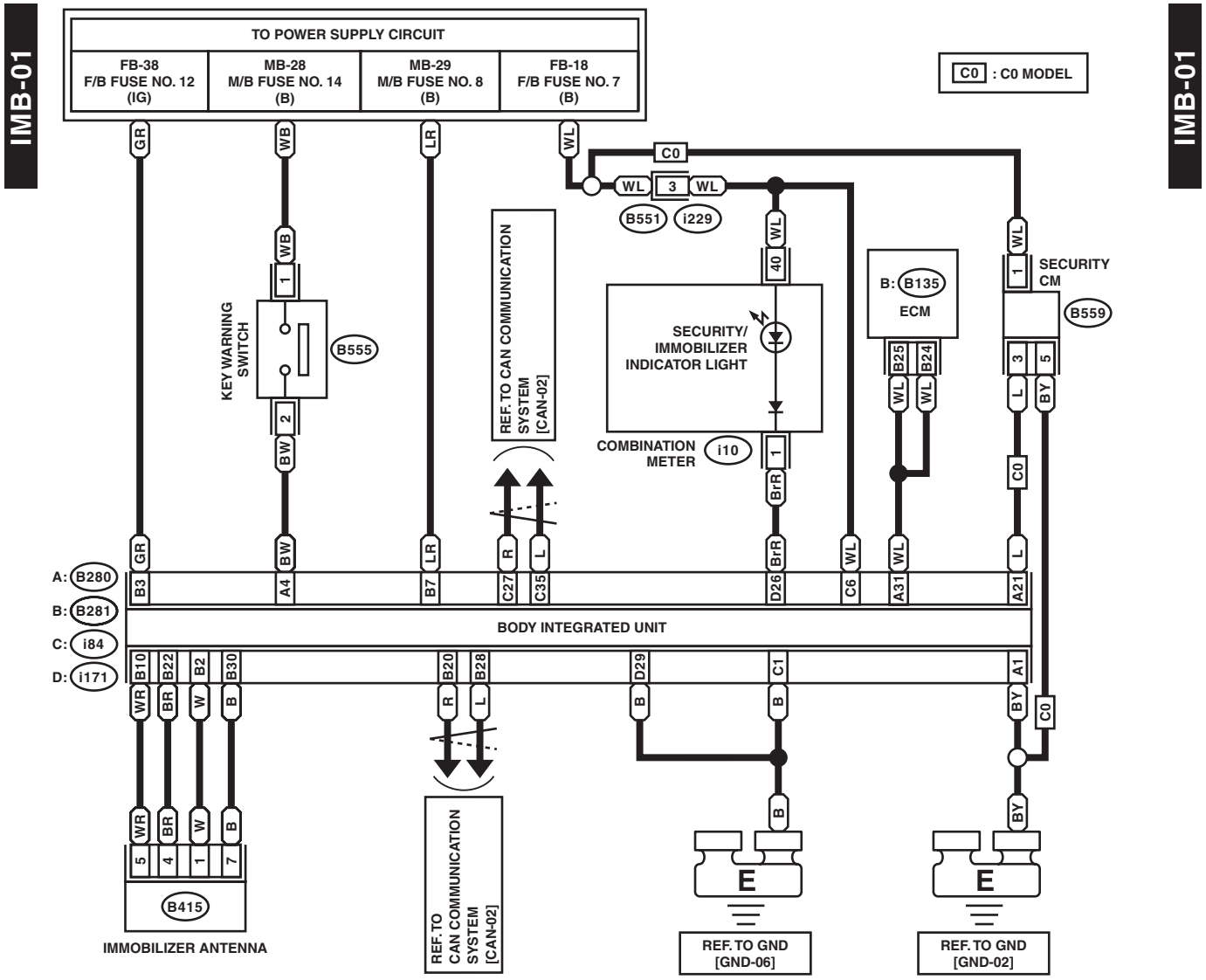

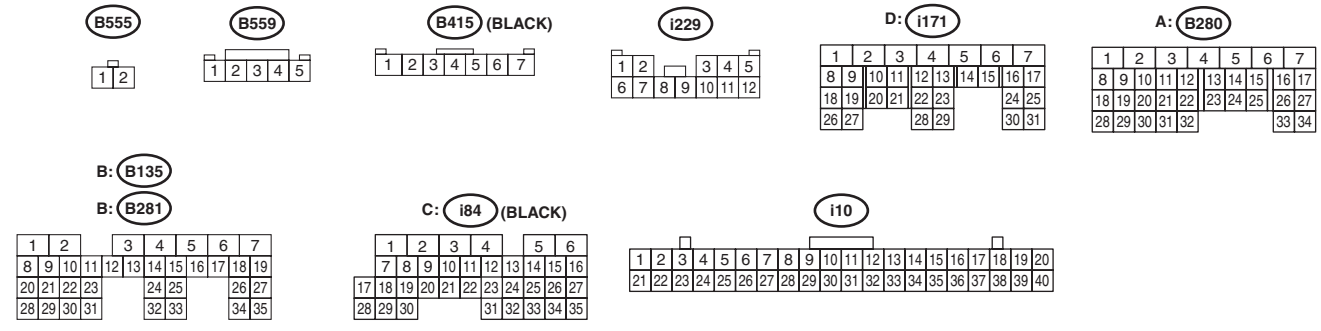

WI-42147

26.Interior Light System

A: WIRING DIAGRAM

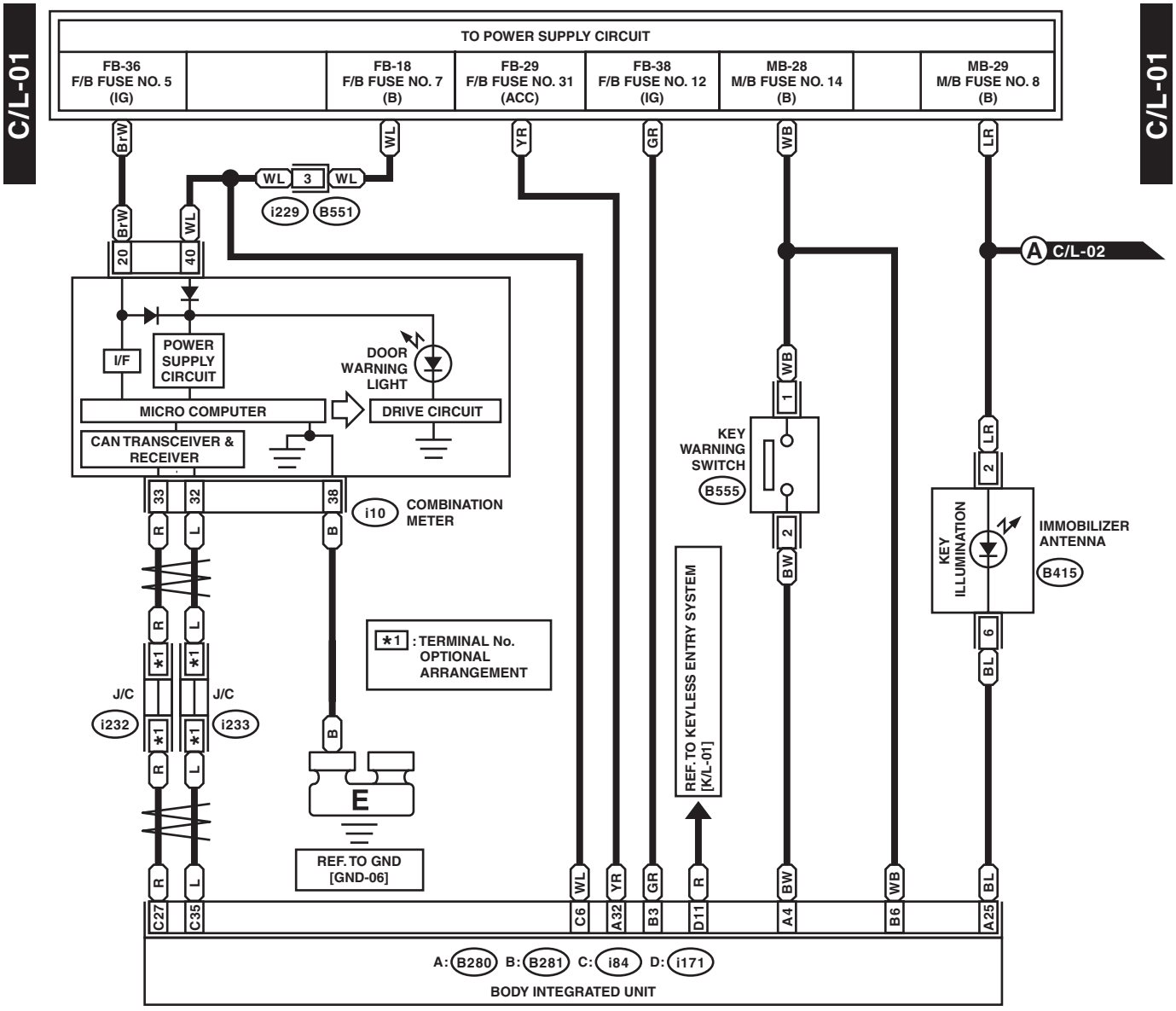

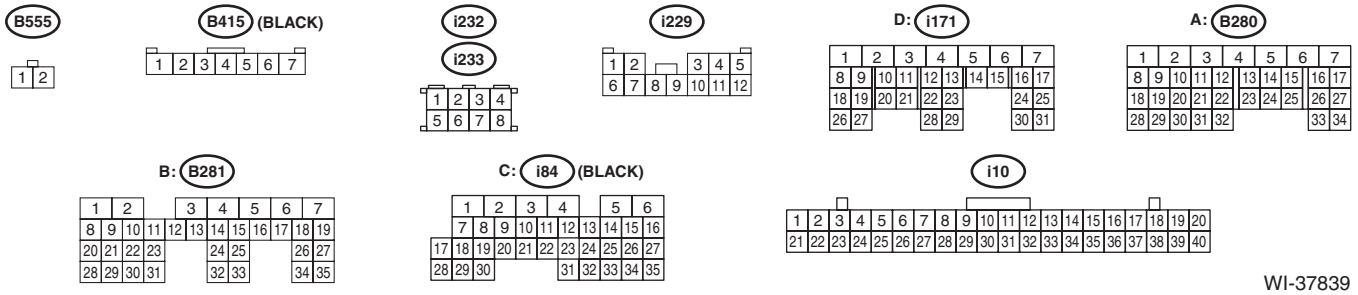

WI-37839

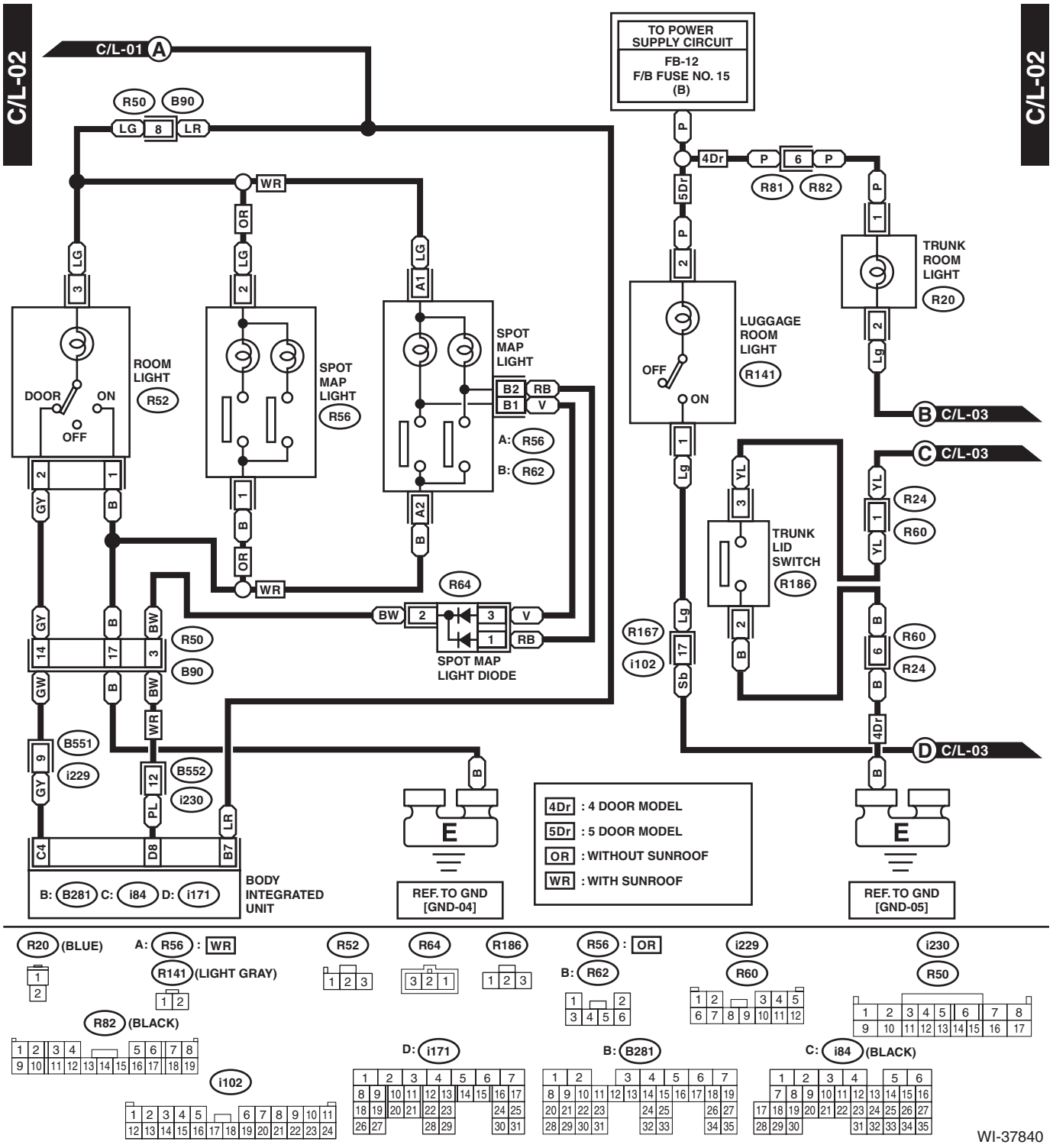
C/L-02
C/L-01 A
TO POWER SUPPLY CIRCUIT
FB-12
F/B FUSE NO. 15
(B)
C/L-02
R50
B90
LG
8
LR
WR
OR
LG
P
4Dr
6
R81
R82
5Dr
2
TRUNK ROOM LIGHT
R20
LUGGAGE ROOM LIGHT
R141
OFF
ON
B C/L-03
ROOM LIGHT
R52
DOOR
ON
OFF
SPOT MAP LIGHT
R56
SPOT MAP LIGHT
B2
B1
RB
V
A: R56
B: R62
A2
A1
R64
BW
SPOT MAP LIGHT DIODE
C C/L-03
YL
R24
R60
TRUNK LID SWITCH
R186
R167
i102
Lg
Sb
17
14
3
GW
WR
B551
i229
B552
i230
PL
C4
D8
B7
B: B281 C: i84 D: i171
BODY INTEGRATED UNIT
REF. TO GND [GND-04]
REF. TO GND [GND-05]
D C/L-03
4Dr : 4 DOOR MODEL
5Dr : 5 DOOR MODEL
OR : WITHOUT SUNROOF
WR : WITH SUNROOF
R20 (BLUE)
A: R56 : WR
R141 (LIGHT GRAY)
R82 (BLACK)
i102
R52
R64
R186
R56 : OR
B: R62
i229
R60
i230
R50
D: i171
B: B281
C: i84 (BLACK)

WI-37840

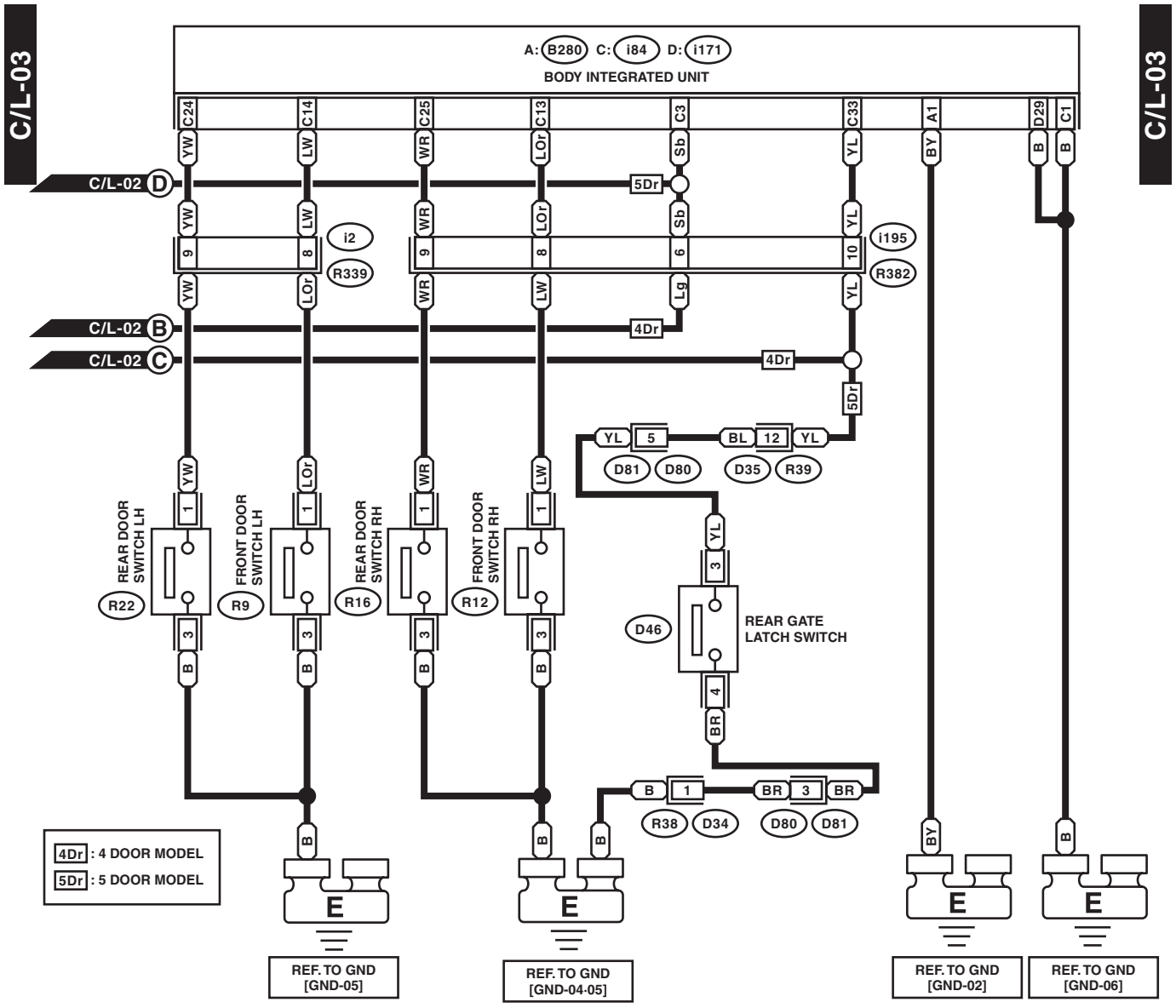
C/L-03
C/L-03
A: B280 C: i84 D: i171
BODY INTEGRATED UNIT
C24
C14
C25
C13
C3
C33
A1
D29
C1
YW
LW
WR
LOr
Sb
YL
BY
B
C/L-02 D
C/L-02 B
C/L-02 C
5Dr
4Dr
i2
R339
i195
R382
Lg
YL 5 BL 12 YL
D81 D80 D35 R39
REAR DOOR SWITCH LH
FRONT DOOR SWITCH LH
REAR DOOR SWITCH RH
FRONT DOOR SWITCH RH
R22
R9
R16
R12
D46
REAR GATE LATCH SWITCH
BR
B 1 BR 3 BR
R38 D34 D80 D81
4Dr : 4 DOOR MODEL
5Dr : 5 DOOR MODEL
E
REF. TO GND [GND-05]
REF. TO GND [GND-04·05]
REF. TO GND [GND-02]
REF. TO GND [GND-06]

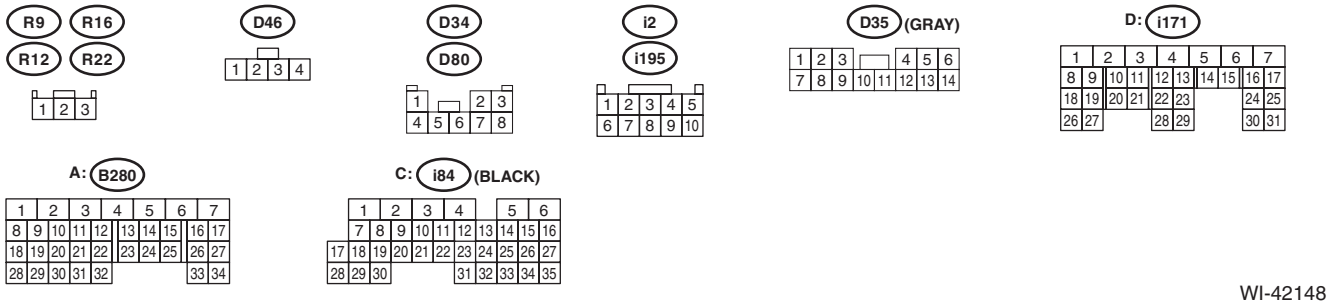
R9 R16 R12 R22
D46
D34 D80
i2 i195
D35 (GRAY)
D: i171
A: B280
C: i84 (BLACK)

WI-42148

27.Keyless Entry System

A: WIRING DIAGRAM

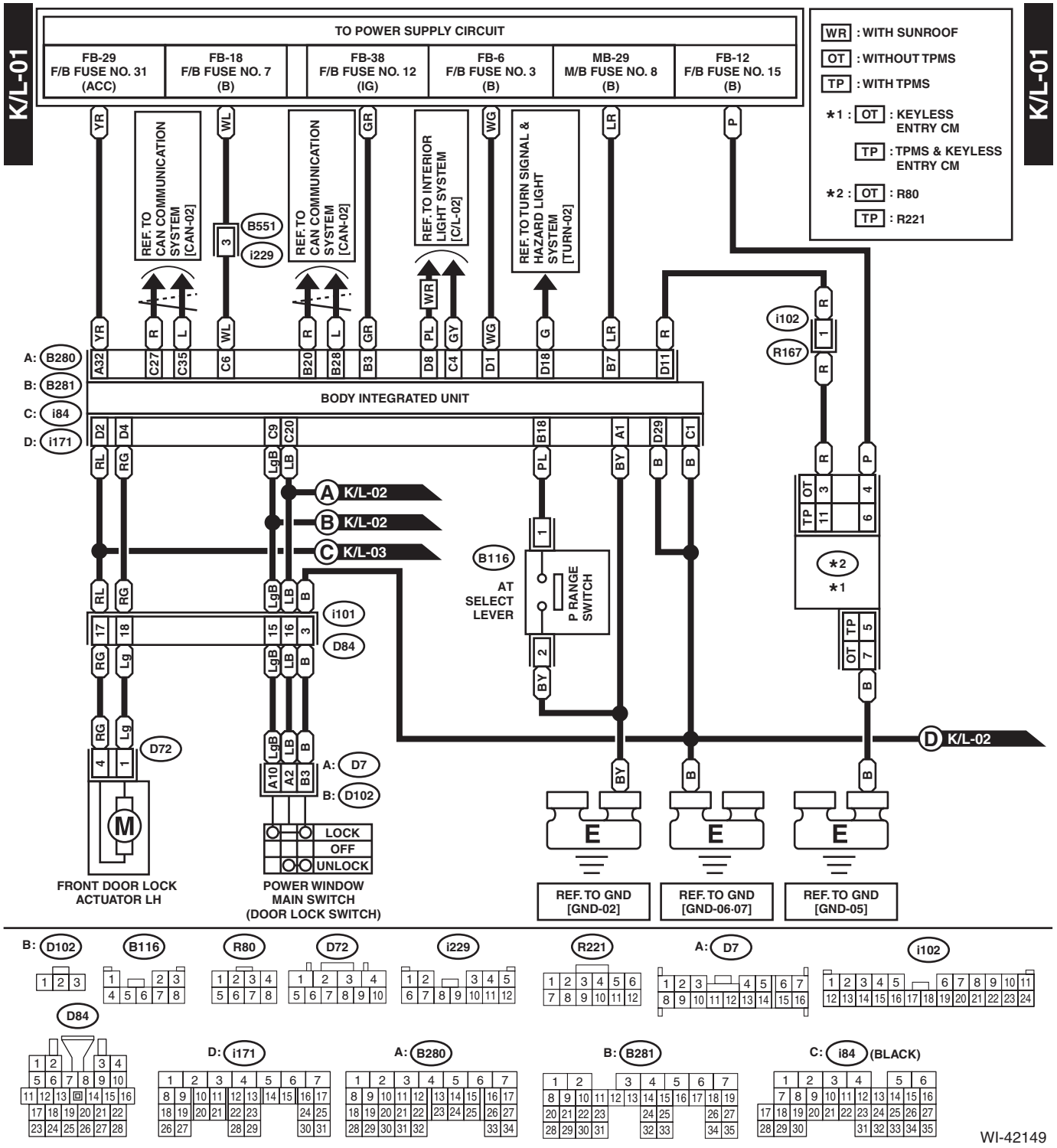

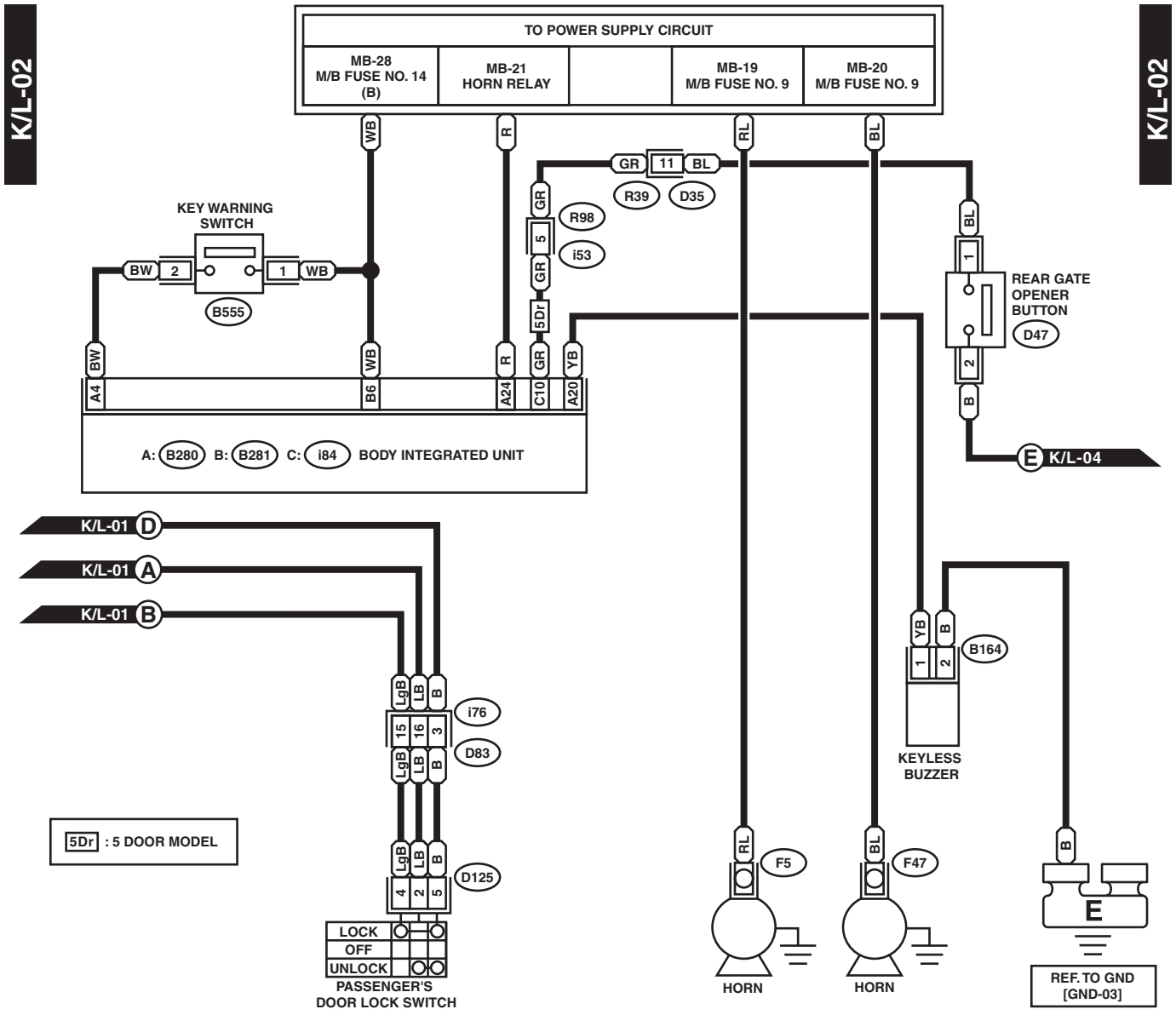
K/L-02
K/L-02
TO POWER SUPPLY CIRCUIT
MB-28 M/B FUSE NO. 14 (B)
MB-21 HORN RELAY
MB-19 M/B FUSE NO. 9
MB-20 M/B FUSE NO. 9
KEY WARNING SWITCH
B555
R98
i53
5Dr
REAR GATE OPENER BUTTON
D47
A: B280 B: B281 C: i84 BODY INTEGRATED UNIT
E K/L-04
K/L-01 D
K/L-01 A
K/L-01 B
i76
D83
D125
LOCK
OFF
UNLOCK
PASSENGER'S DOOR LOCK SWITCH
5Dr : 5 DOOR MODEL
B164
KEYLESS BUZZER
F5
F47
HORN
HORN
REF. TO GND [GND-03]

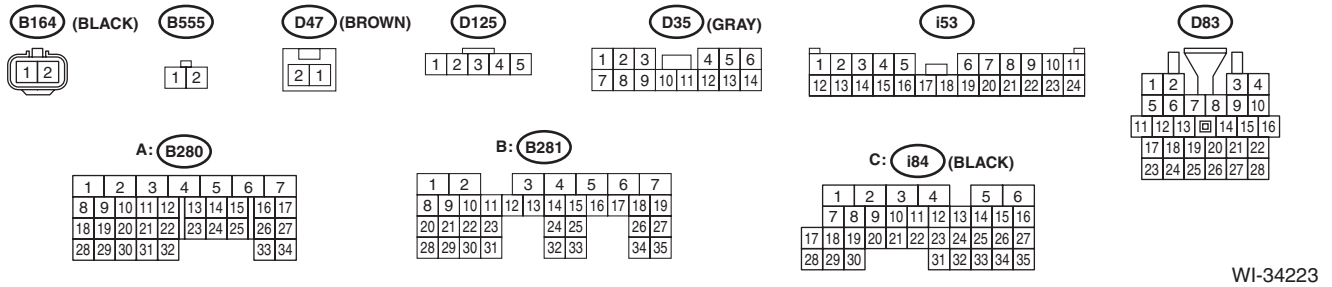
B164 (BLACK)
B555
D47 (BROWN)
D125
D35 (GRAY)
i53
D83
A: B280
B: B281
C: i84 (BLACK)

WI-34223

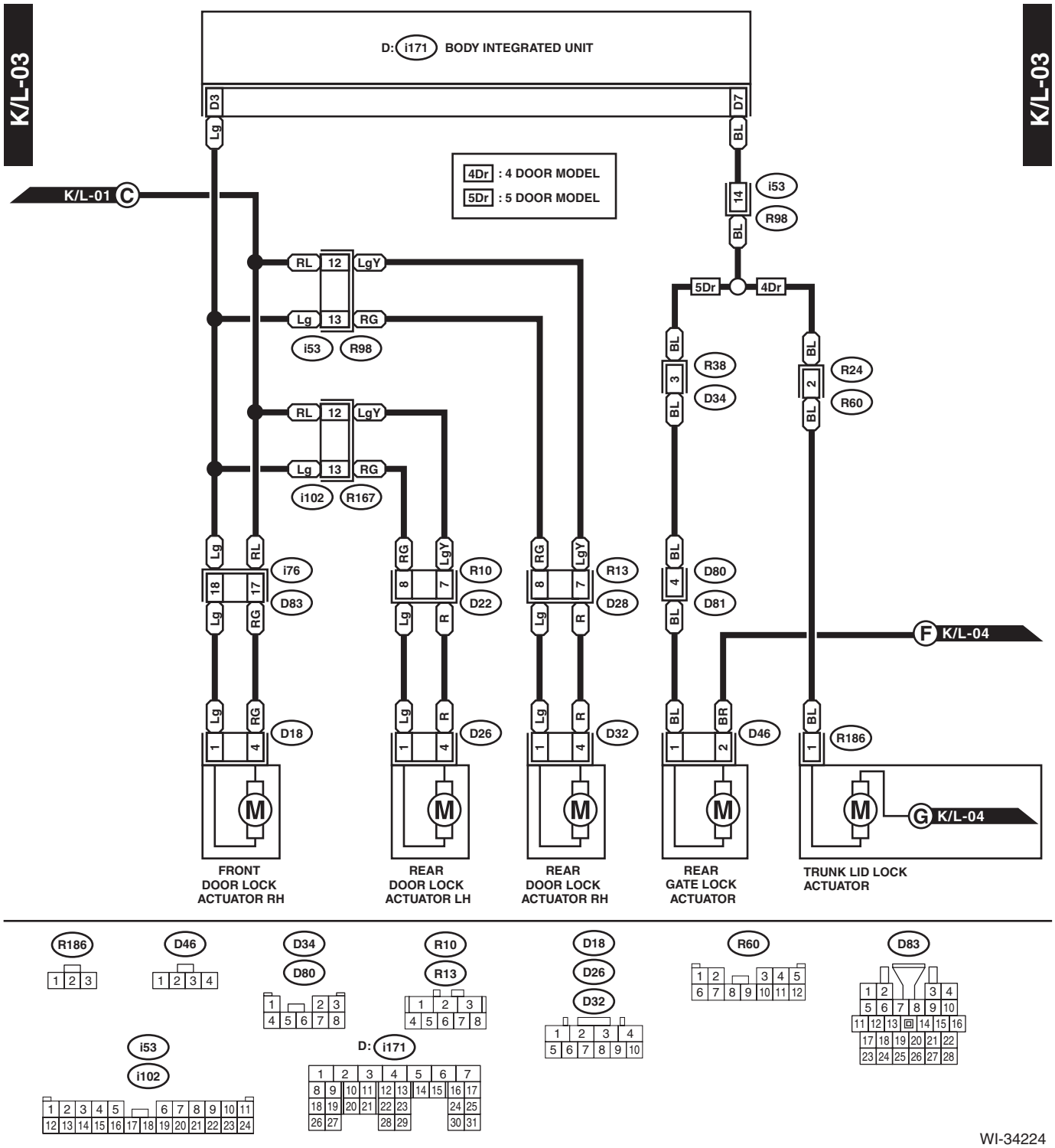
K/L-03
K/L-03
D: i171 BODY INTEGRATED UNIT
D3
D7
Lg
BL
4Dr : 4 DOOR MODEL
5Dr : 5 DOOR MODEL
K/L-01 C
14
i53
R98
BL
5Dr
4Dr
RL 12 LgY
Lg 13 RG
i53 R98
RL 12 LgY
Lg 13 RG
i102 R167
BL 3 R38 D34 BL
BL 2 R24 R60 BL
Lg RL 18 17 i76 D83 Lg RG
RG LgY 8 7 R10 D22 Lg R
RG LgY 8 7 R13 D28 Lg R
BL 4 D80 D81 BL
F K/L-04
Lg RG 1 4 D18
Lg R 1 4 D26
Lg R 1 4 D32
BL BR 1 2 D46
BL 1 R186
M
G K/L-04
FRONT DOOR LOCK ACTUATOR RH
REAR DOOR LOCK ACTUATOR LH
REAR DOOR LOCK ACTUATOR RH
REAR GATE LOCK ACTUATOR
TRUNK LID LOCK ACTUATOR

R186
D46
D34
D80
R10
R13
D18
D26
D32
R60
D83
i53
i102
D: i171

WI-34224

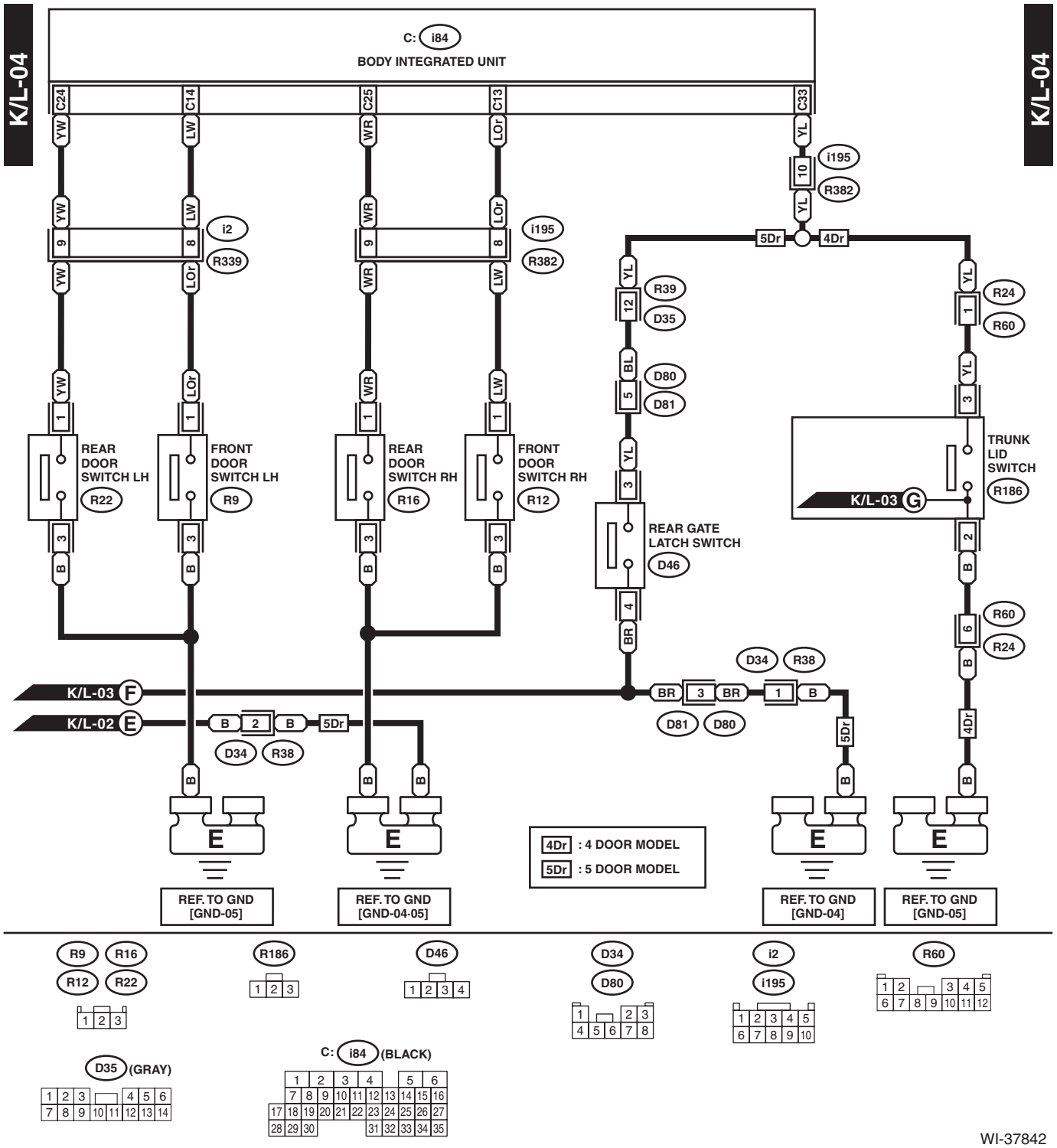
K/L-04
C: i84
BODY INTEGRATED UNIT
C24
C14
C25
C13
C33
YW
LW
WR
LOr
YL
i195
R382
i2
R339
5Dr
4Dr
R39
D35
R24
R60
BL
D80
D81
REAR DOOR SWITCH LH
R22
FRONT DOOR SWITCH LH
R9
REAR DOOR SWITCH RH
R16
FRONT DOOR SWITCH RH
R12
TRUNK LID SWITCH
R186
K/L-03 G
REAR GATE LATCH SWITCH
D46
BR
D34
R38
K/L-03 F
K/L-02 E
B
E
4Dr : 4 DOOR MODEL
5Dr : 5 DOOR MODEL
REF. TO GND [GND-05]
REF. TO GND [GND-04-05]
REF. TO GND [GND-04]
REF. TO GND [GND-05]
R9
R16
R12
R22
R186
D46
D34
D80
i2
i195
R60
D35 (GRAY)
C: i84 (BLACK)
WI-37842

28.Multi-function Display (MFD) System

A: WIRING DIAGRAM

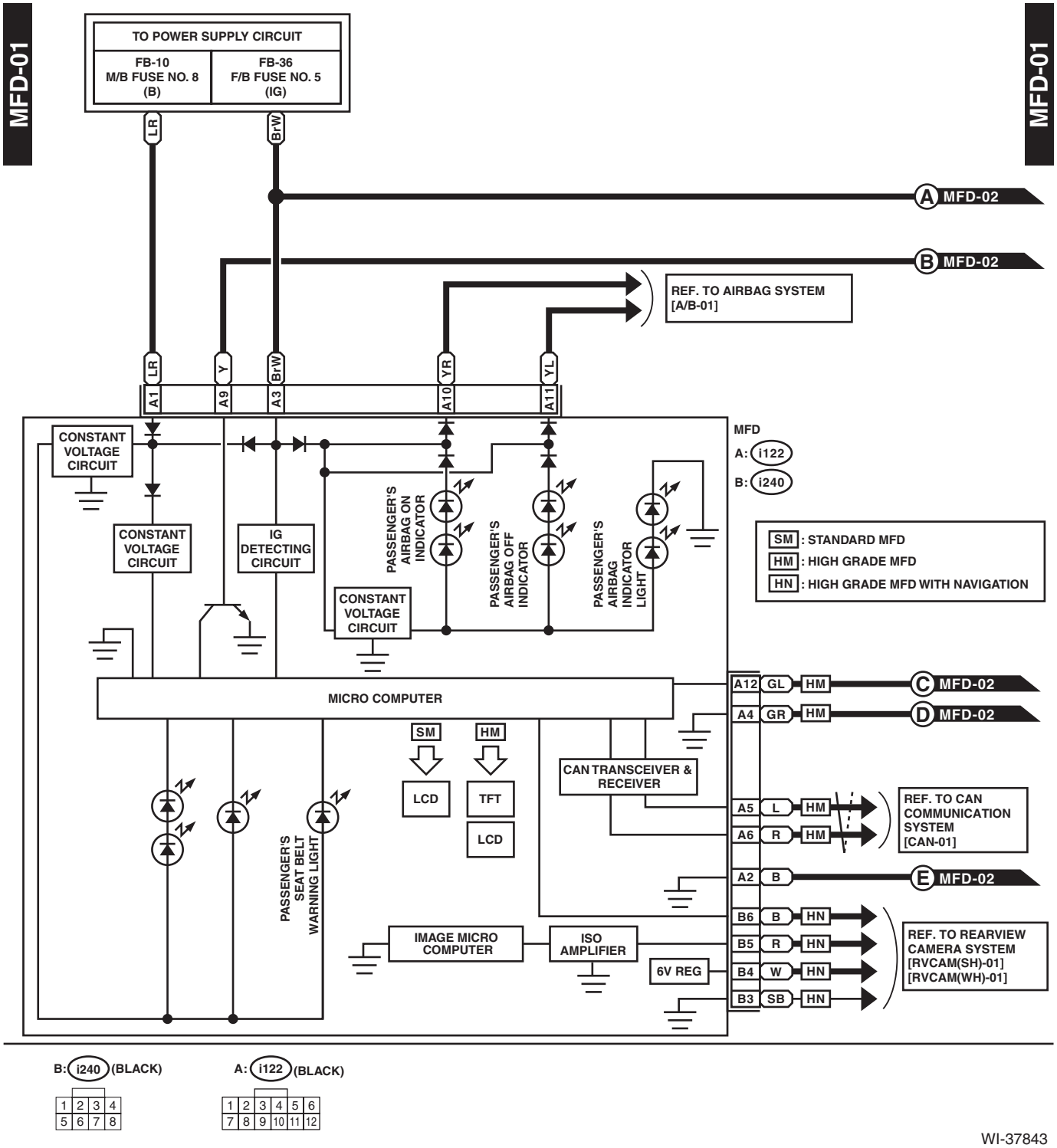

WI-37843

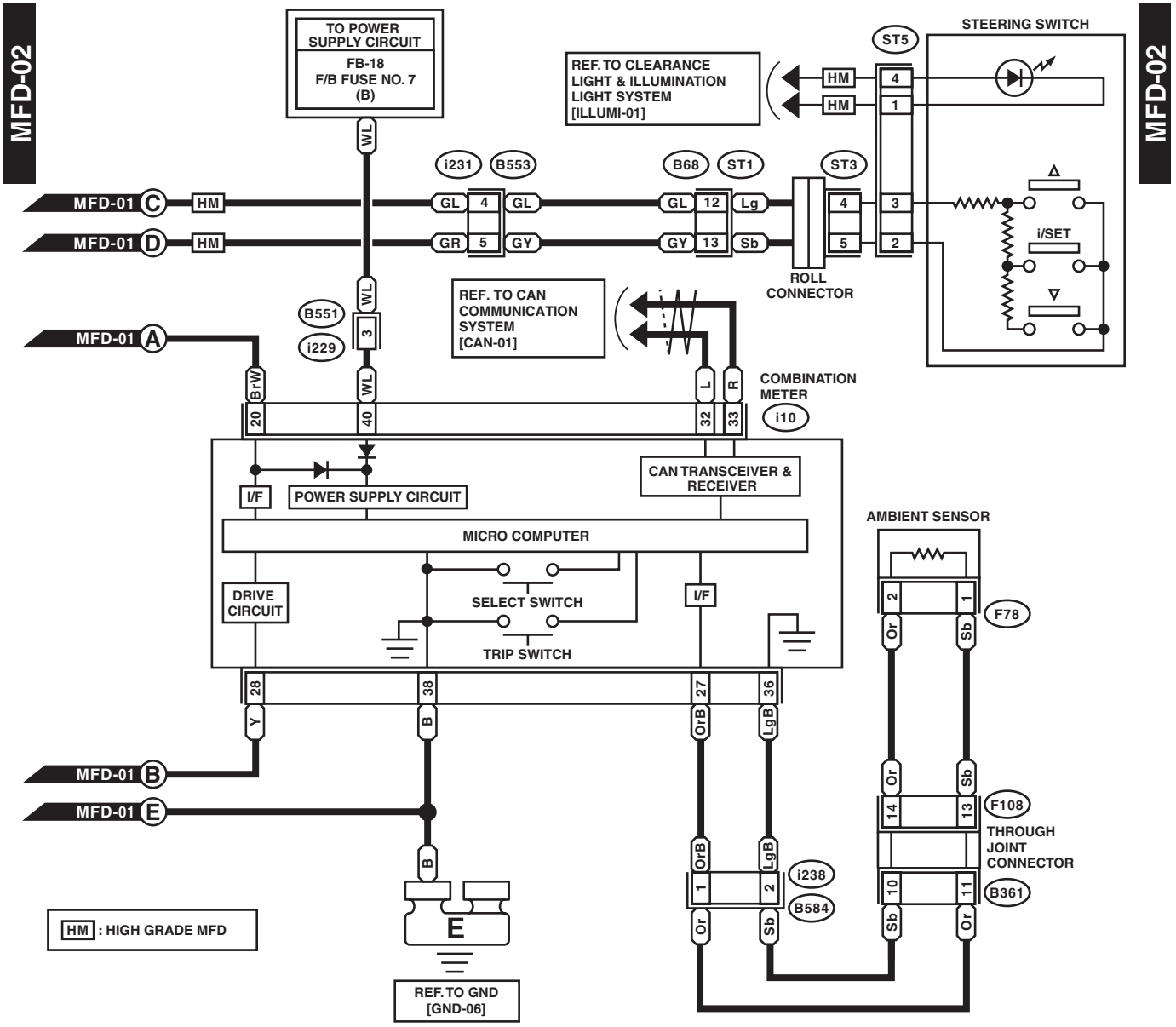
MFD-02
MFD-02
TO POWER SUPPLY CIRCUIT
FB-18
F/B FUSE NO. 7
(B)
REF. TO CLEARANCE LIGHT & ILLUMINATION LIGHT SYSTEM [ILLUMI-01]
STEERING SWITCH
ST5
HM
HM
4
1
WL
i231
B553
B68
ST1
ST3
MFD-01 C
MFD-01 D
GL
GR
GY
GL
GY
12
13
Lg
Sb
4
5
3
2
ROLL CONNECTOR
i/SET
B551
i229
3
WL
REF. TO CAN COMMUNICATION SYSTEM [CAN-01]
MFD-01 A
BrW
WL
L
R
COMBINATION METER
i10
20
40
32
33
I/F
POWER SUPPLY CIRCUIT
CAN TRANSCEIVER & RECEIVER
MICRO COMPUTER
AMBIENT SENSOR
DRIVE CIRCUIT
SELECT SWITCH
TRIP SWITCH
I/F
2
1
F78
Or
Sb
28
38
27
36
Y
B
OrB
LgB
MFD-01 B
MFD-01 E
Or
Sb
14
13
F108
THROUGH JOINT CONNECTOR
B
OrB
LgB
i238
B584
1
2
10
11
B361
HM : HIGH GRADE MFD
E
Or
Sb
Sb
Or
REF. TO GND [GND-06]

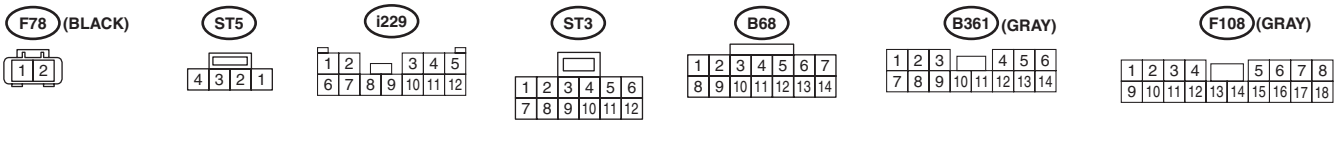
F78 (BLACK)
ST5
i229
ST3
B68
B361 (GRAY)
F108 (GRAY)

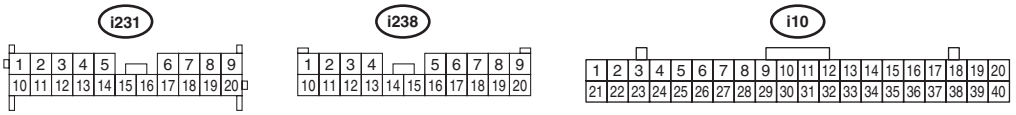
i231
i238
i10

WI-37844

29.Navigation System

A: WIRING DIAGRAM

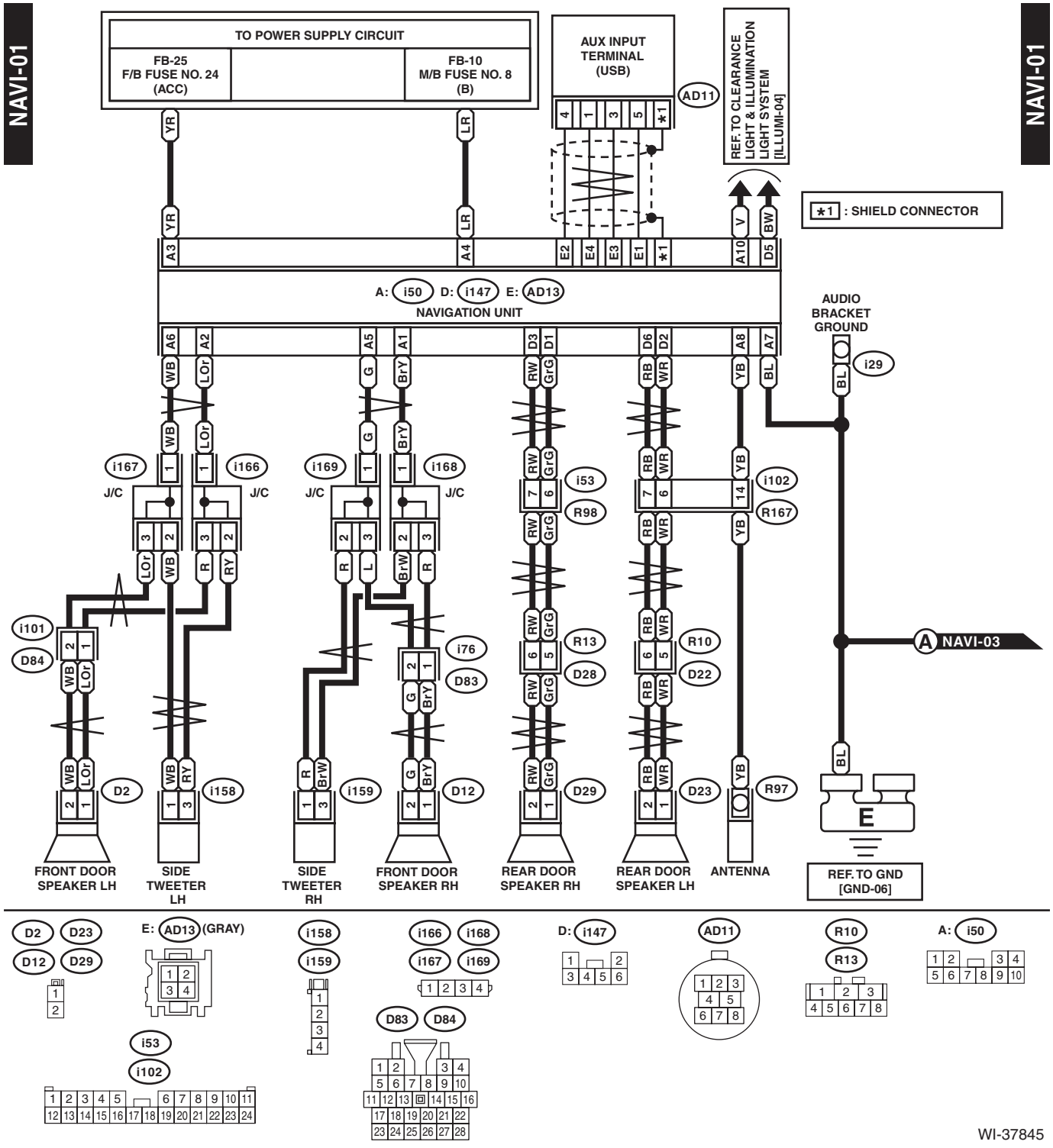

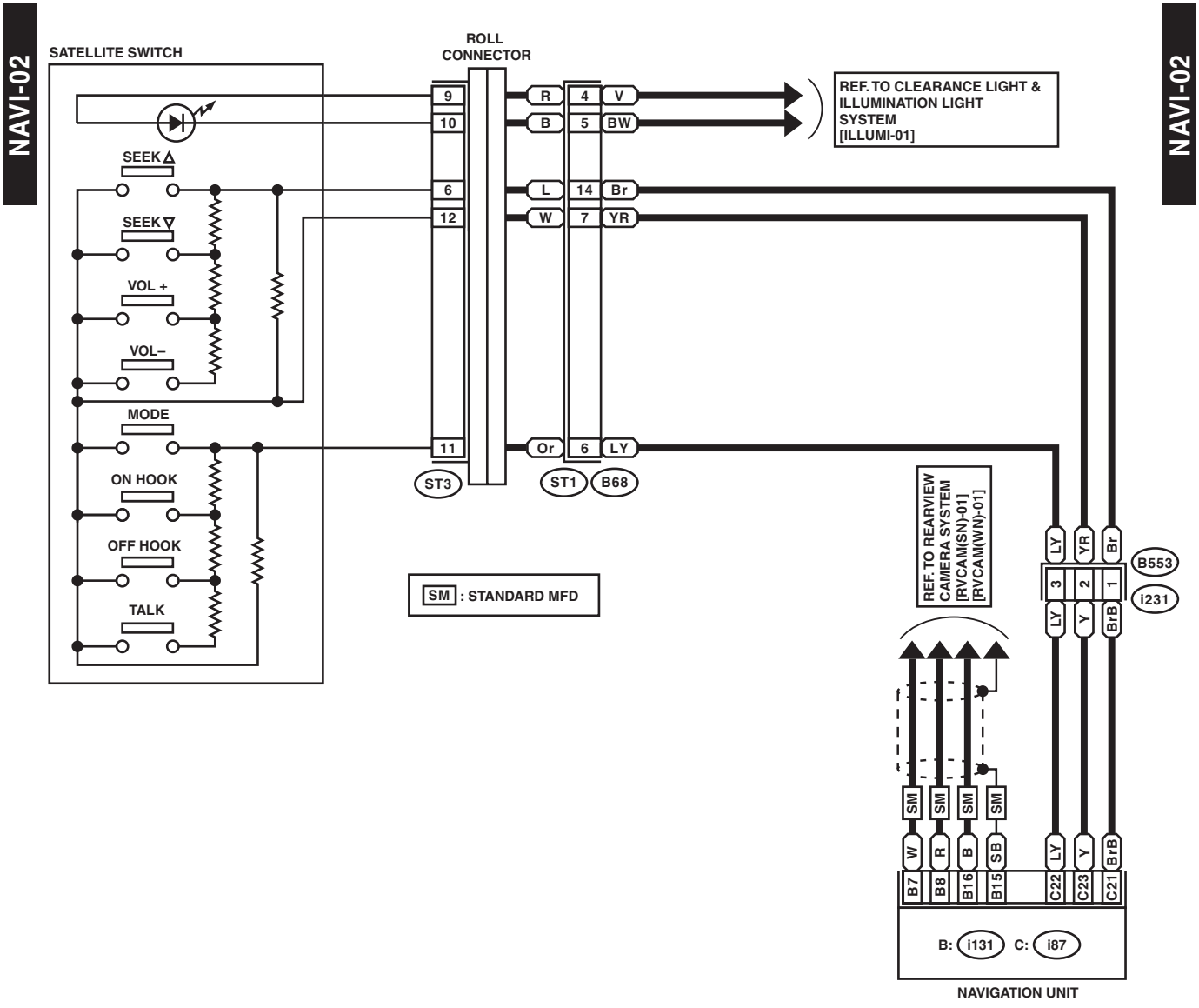
NAVI-02
NAVI-02
SATELLITE SWITCH
SEEK
SEEK
VOL +
VOL–
MODE
ON HOOK
OFF HOOK
TALK
ROLL CONNECTOR
9
10
6
12
11
R
B
L
W
Or
4
5
14
7
6
V
BW
Br
YR
LY
ST3
ST1
B68
REF. TO CLEARANCE LIGHT & ILLUMINATION LIGHT SYSTEM [ILLUMI-01]
SM : STANDARD MFD
REF. TO REARVIEW CAMERA SYSTEM [RVCAM(SN)-01] [RVCAM(WN)-01]
LY
YR
Br
3
2
1
B553
i231
LY
Y
BrB
SM
W
R
B
SB
B7
B8
B16
B15
C22
C23
C21
B: i131
C: i87
NAVIGATION UNIT

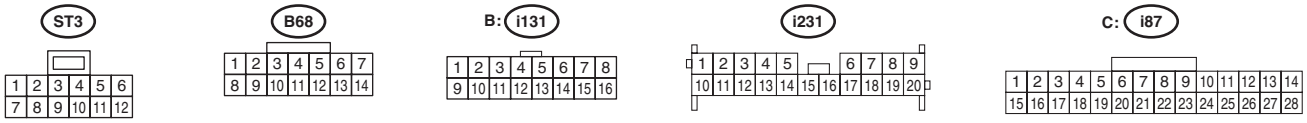
ST3
1 2 3 4 5 6
7 8 9 10 11 12
B68
1 2 3 4 5 6 7
8 9 10 11 12 13 14
B: i131
1 2 3 4 5 6 7 8
9 10 11 12 13 14 15 16
i231
1 2 3 4 5 6 7 8 9
10 11 12 13 14 15 16 17 18 19 20
C: i87
1 2 3 4 5 6 7 8 9 10 11 12 13 14
15 16 17 18 19 20 21 22 23 24 25 26 27 28

WI-37846

NAVI-03

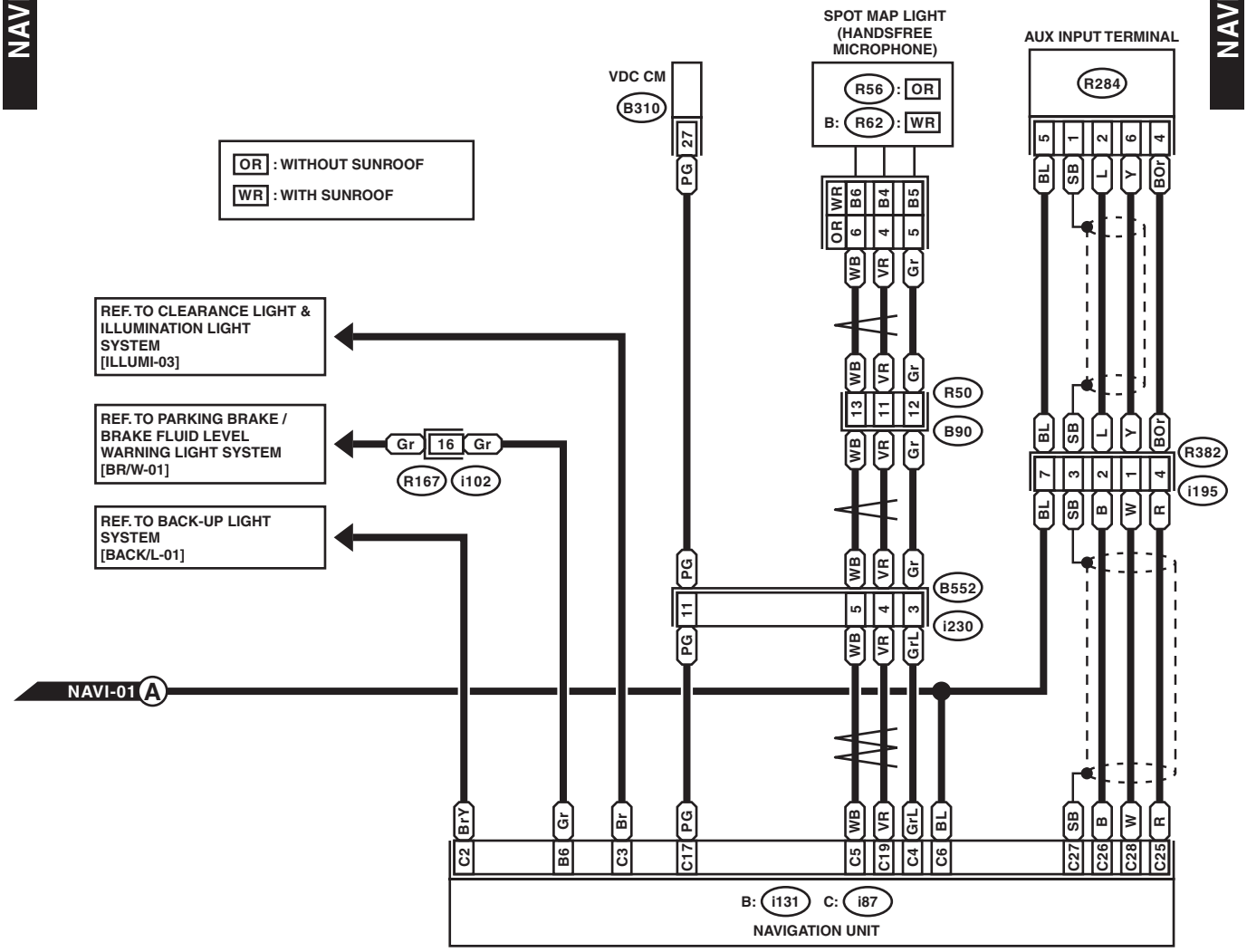

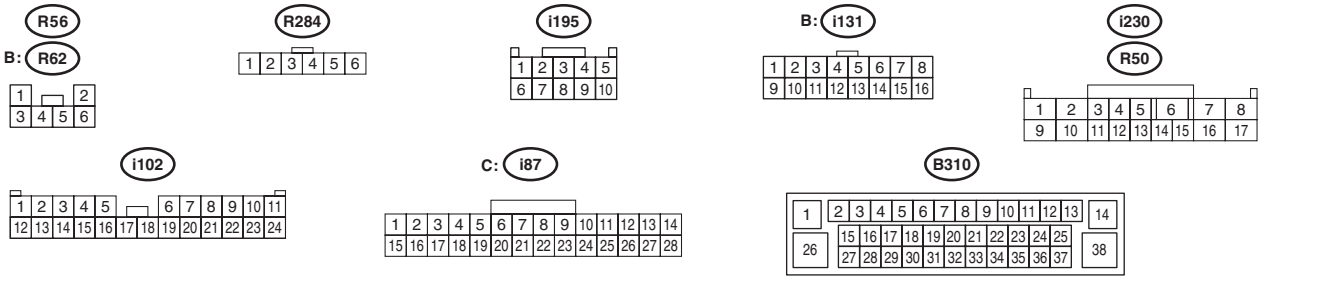

WI-37847

30.Occupant Detection System

A: WIRING DIAGRAM

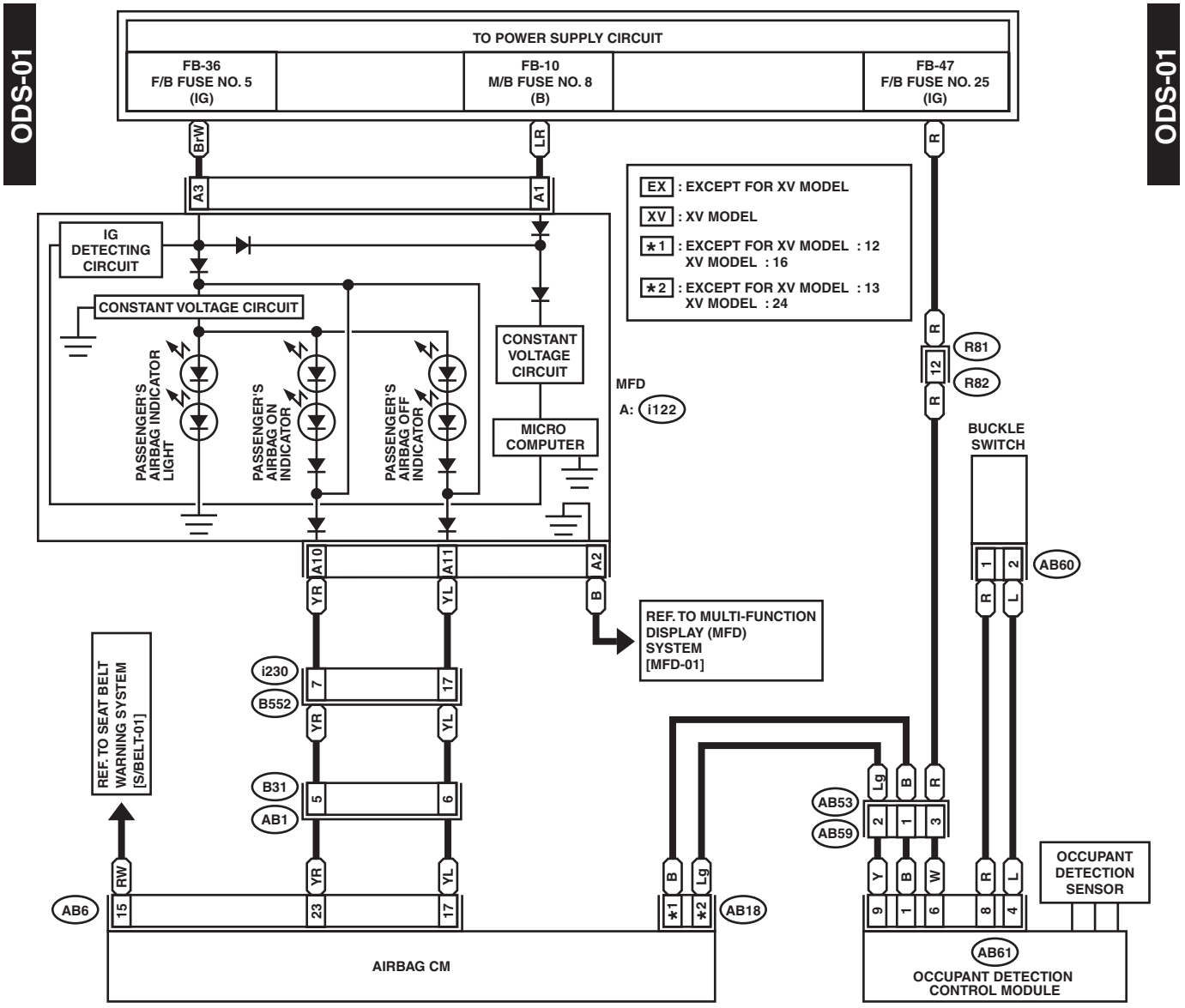

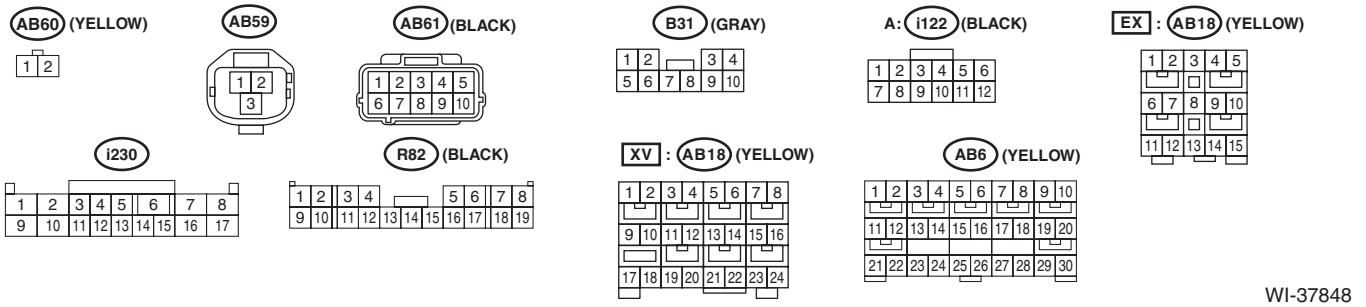

WI-37848

31.Oil Pressure Warning Light System

A: WIRING DIAGRAM

OIL/P-01

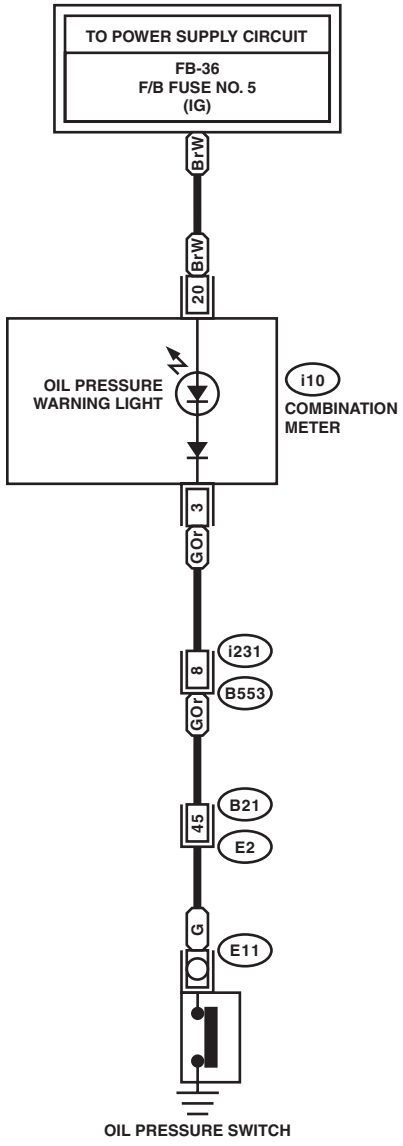

OIL/P-01

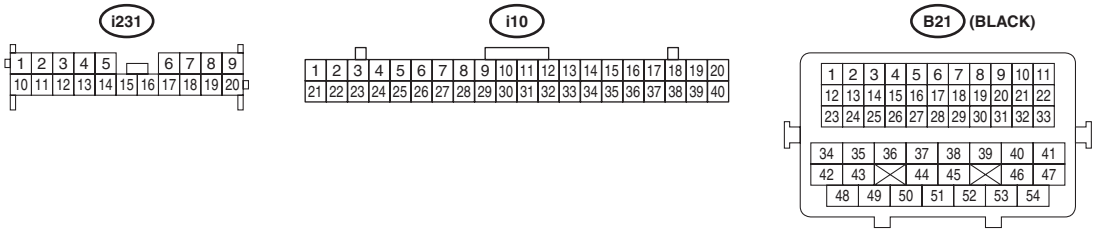

WI-42729

32.Parking Brake / Brake Fluid Level Warning Light System

A: WIRING DIAGRAM

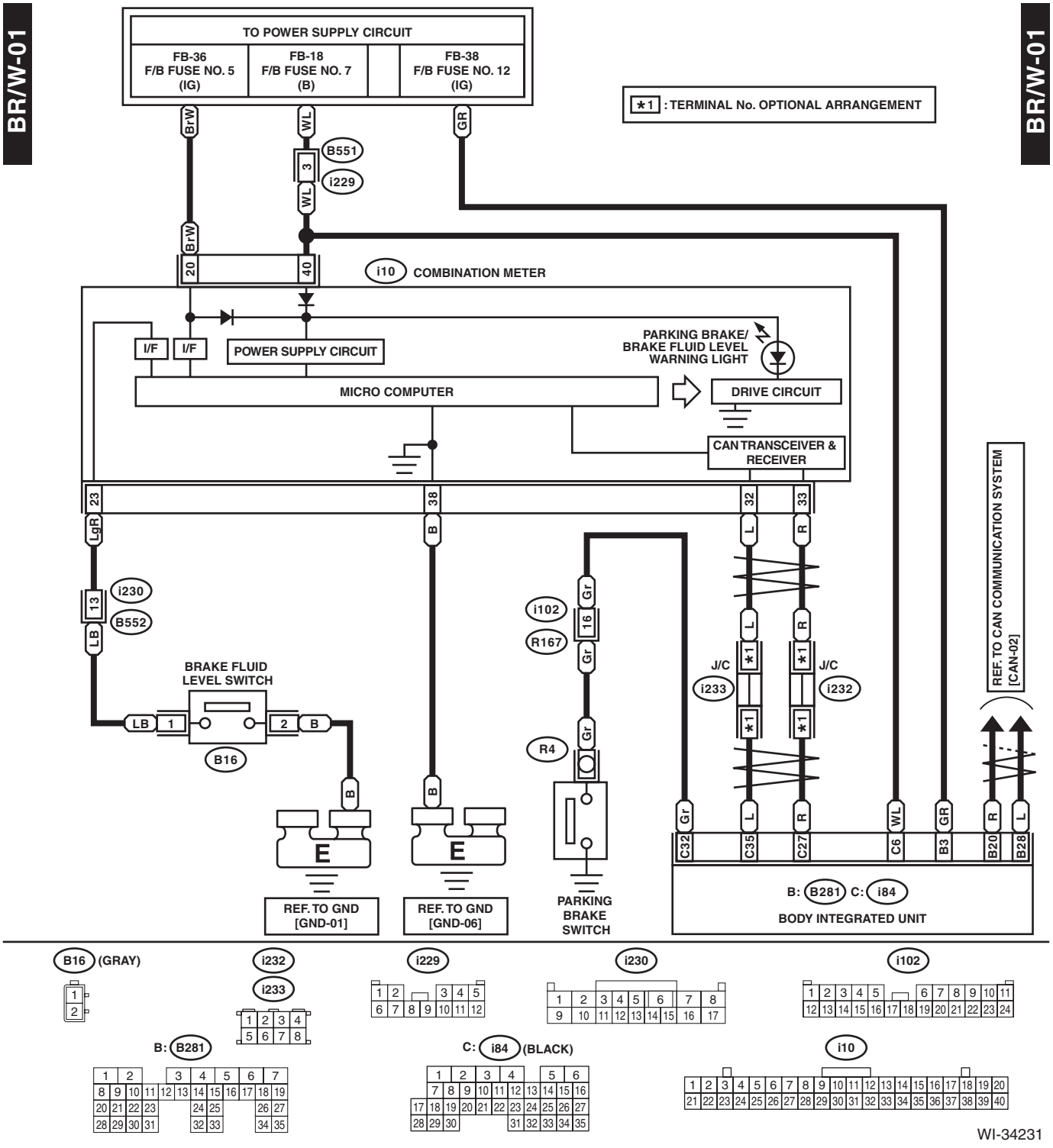

33.Power Window System

A: WIRING DIAGRAM

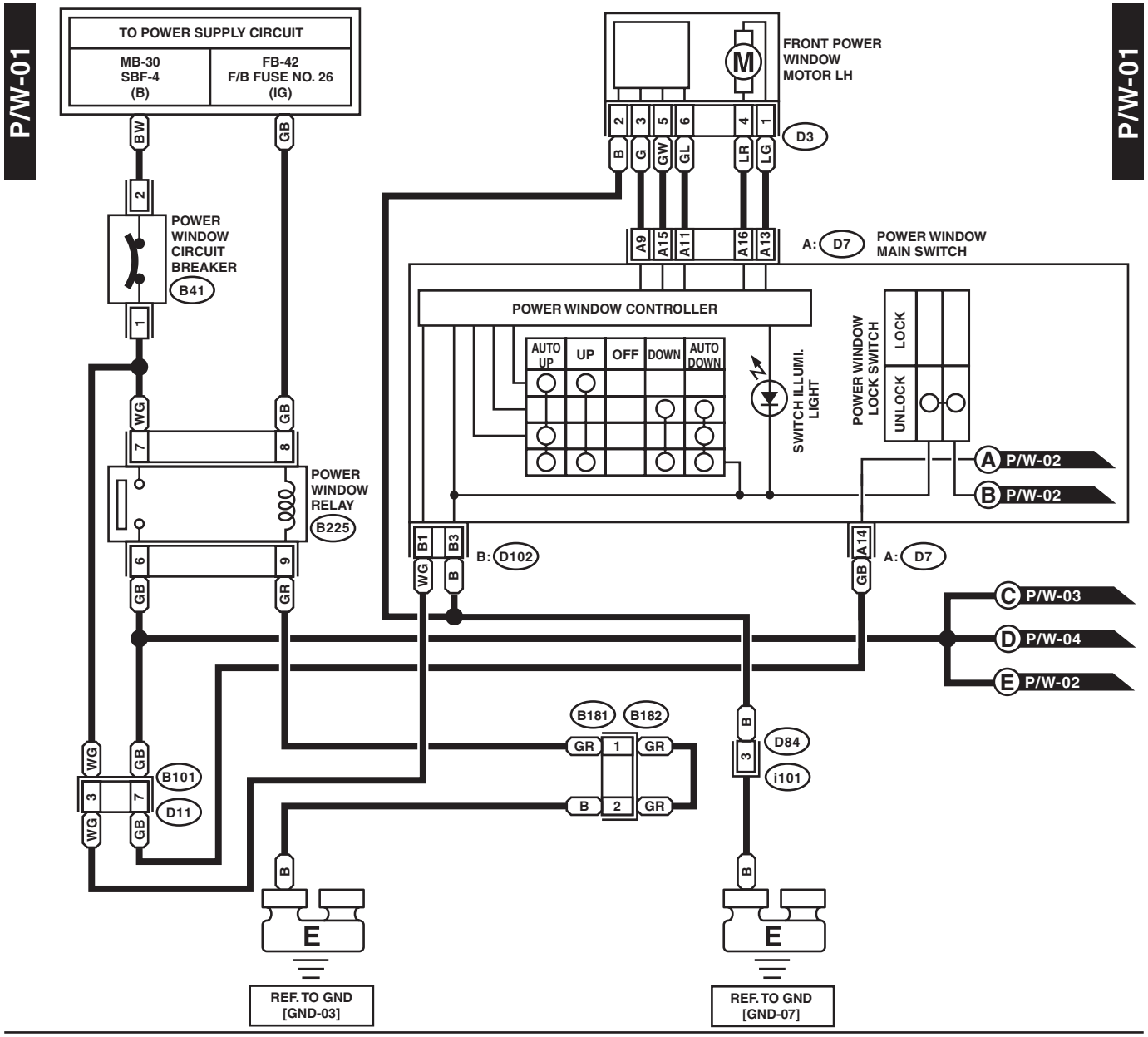

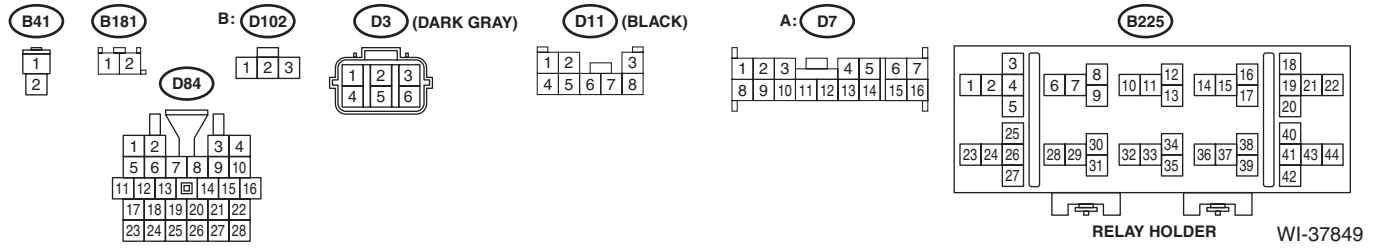

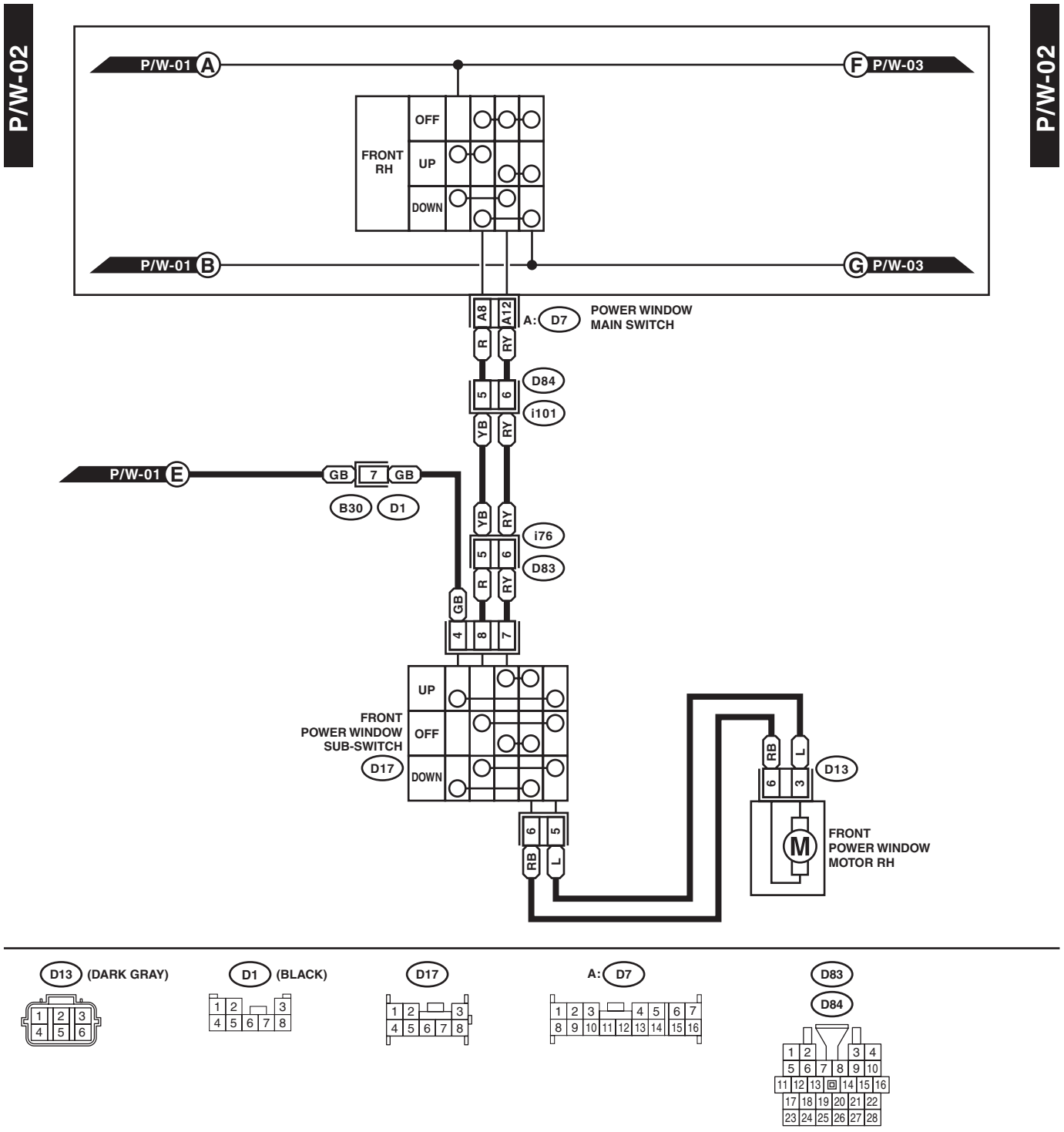
P/W-02
P/W-02
P/W-01 A
F P/W-03
FRONT RH
OFF
UP
DOWN
P/W-01 B
G P/W-03
A8
A12
A: D7
POWER WINDOW MAIN SWITCH
R
RY
D84
5
6
i101
YB
RY
P/W-01 E
GB
7
GB
B30
D1
YB
RY
i76
5
6
D83
R
RY
GB
4
8
7
UP
FRONT POWER WINDOW SUB-SWITCH
OFF
D17
DOWN
RB
L
D13
6
3
M
FRONT POWER WINDOW MOTOR RH
6
5
RB
L
D13 (DARK GRAY)
D1 (BLACK)
D17
A: D7
D83
D84

WI-37850

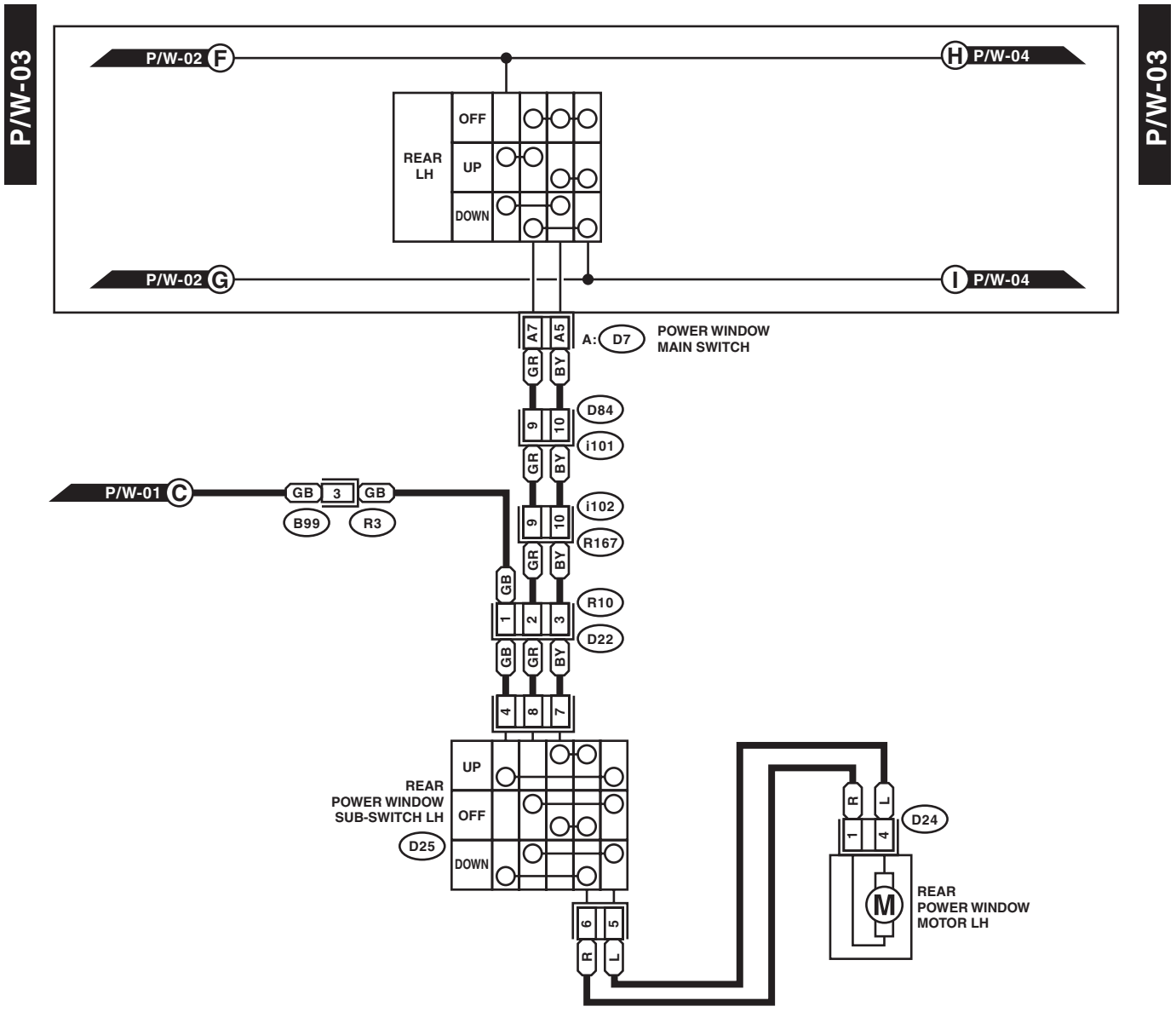
P/W-03
P/W-03
P/W-02 F
H P/W-04
REAR LH
OFF
UP
DOWN
P/W-02 G
I P/W-04
A7
A5
A: D7
POWER WINDOW MAIN SWITCH
GR
BY
D84
9
10
i101
P/W-01 C
GB
3
GB
B99
R3
i102
R167
R10
1
2
3
D22
4
8
7
UP
OFF
DOWN
REAR POWER WINDOW SUB-SWITCH LH
D25
6
5
R
L
R
L
D24
1
4
M
REAR POWER WINDOW MOTOR LH

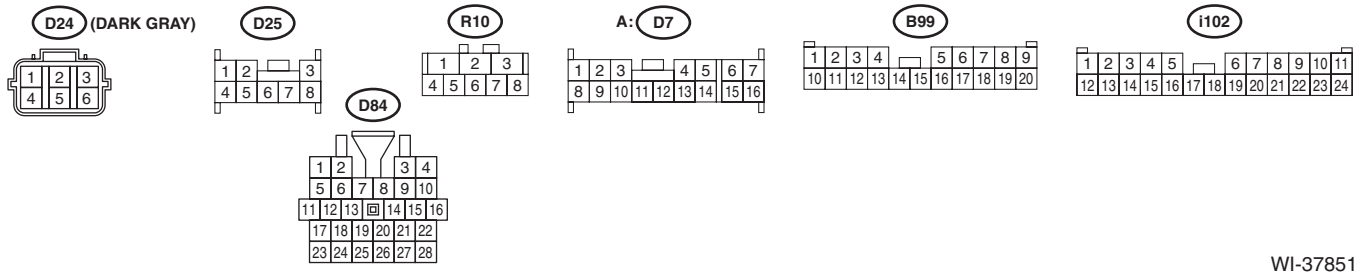
D24 (DARK GRAY)
D25
R10
A: D7
B99
i102
D84

WI-37851

P/W-04

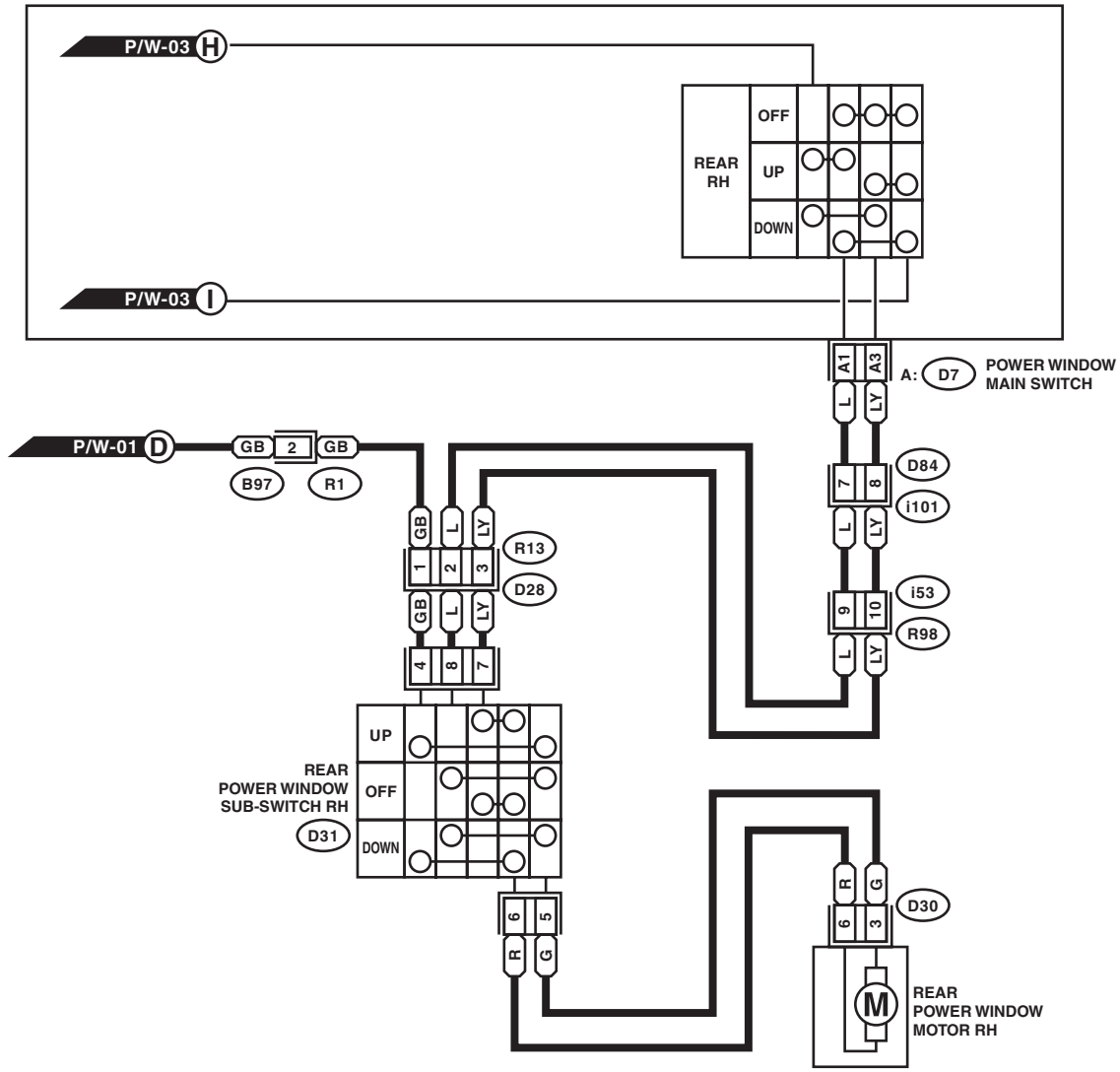

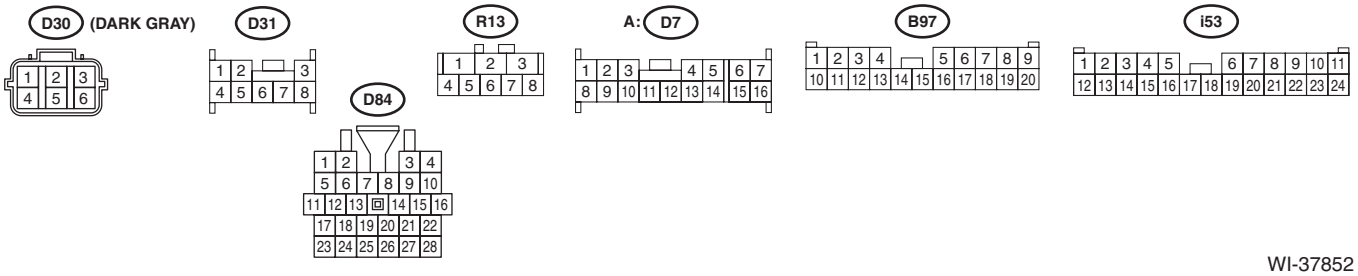

WI-37852

34.Radiator Fan System

A: WIRING DIAGRAM

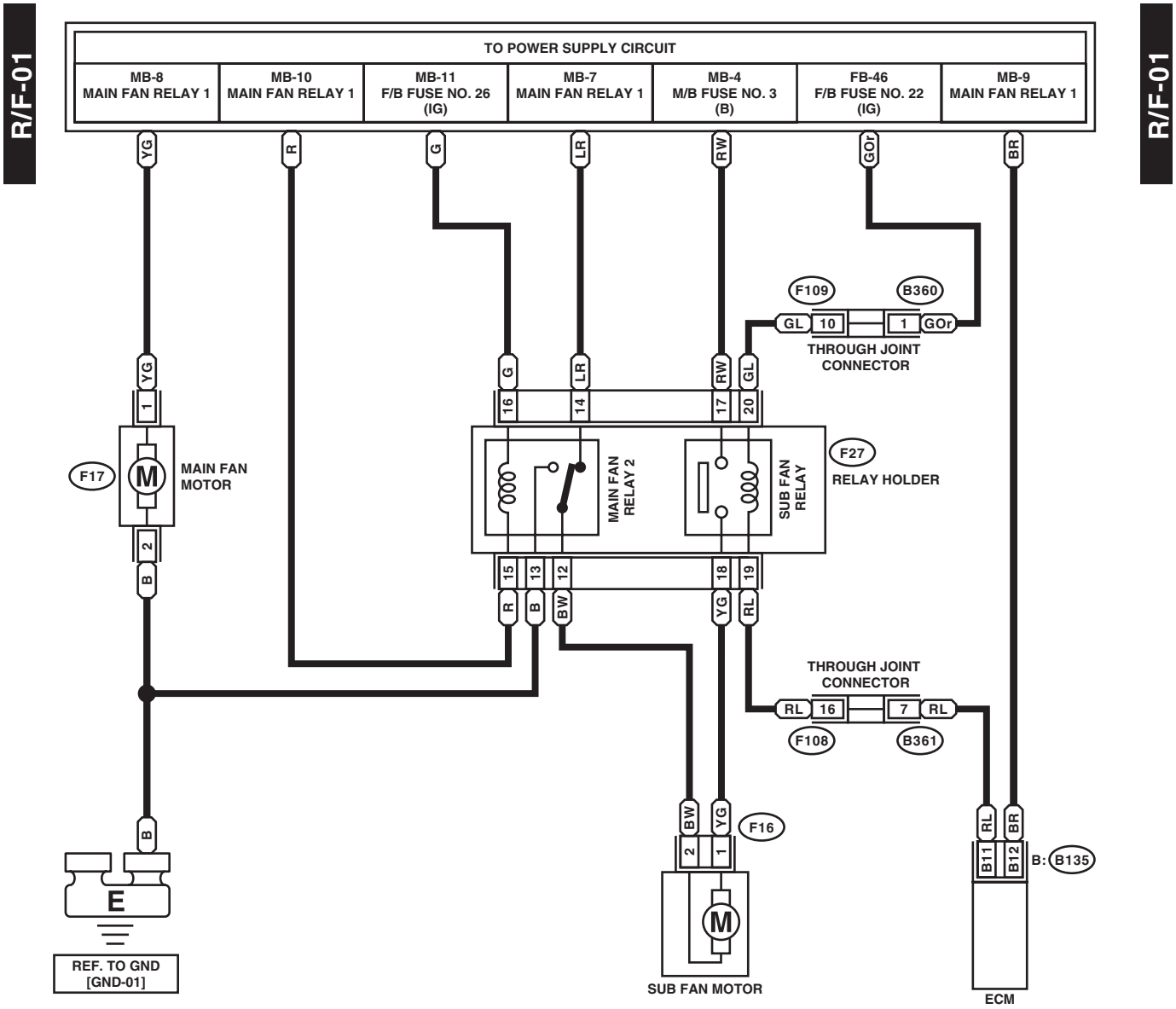

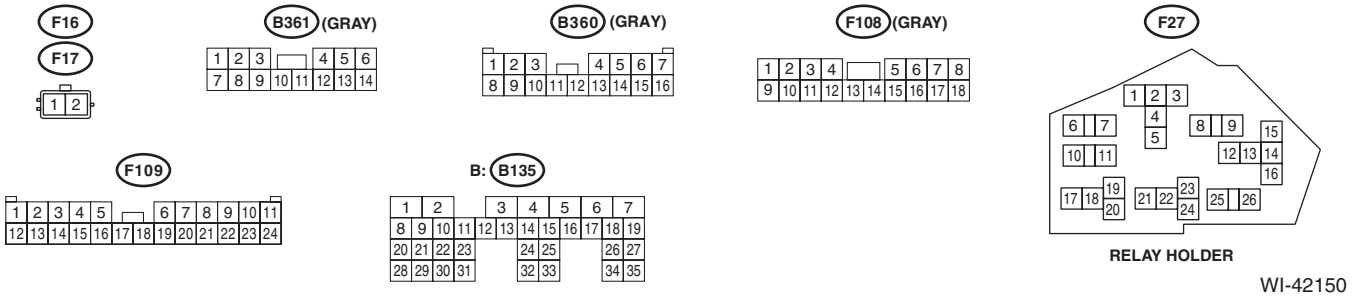

WI-42150

35.Rear Accessory Power Supply Socket System

A: WIRING DIAGRAM

RAPS-01

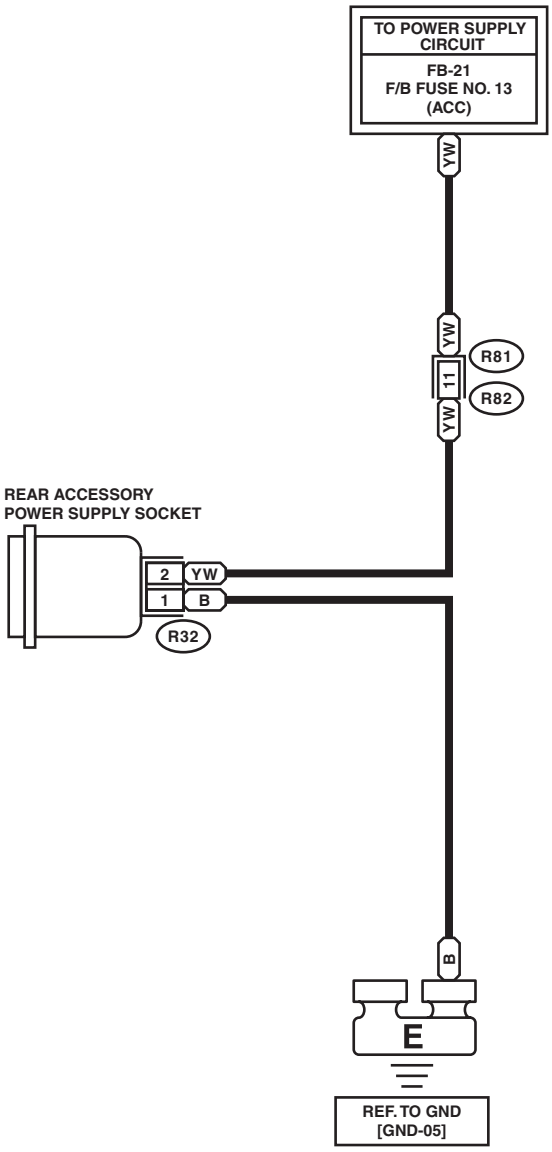

RAPS-01

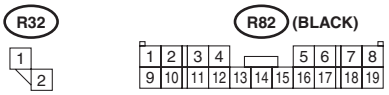

WI-34237

36.Rear Defogger System

A: WIRING DIAGRAM

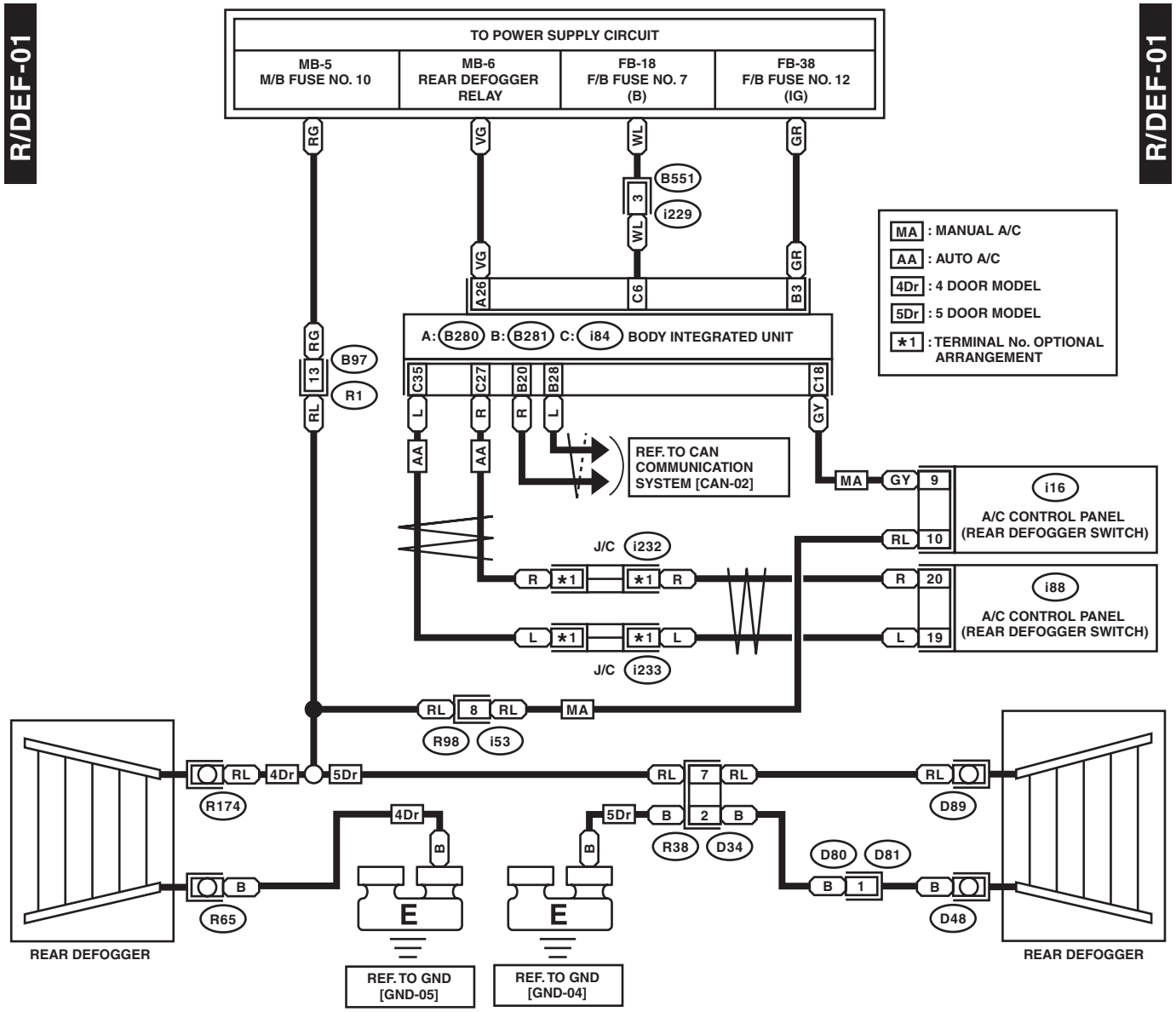

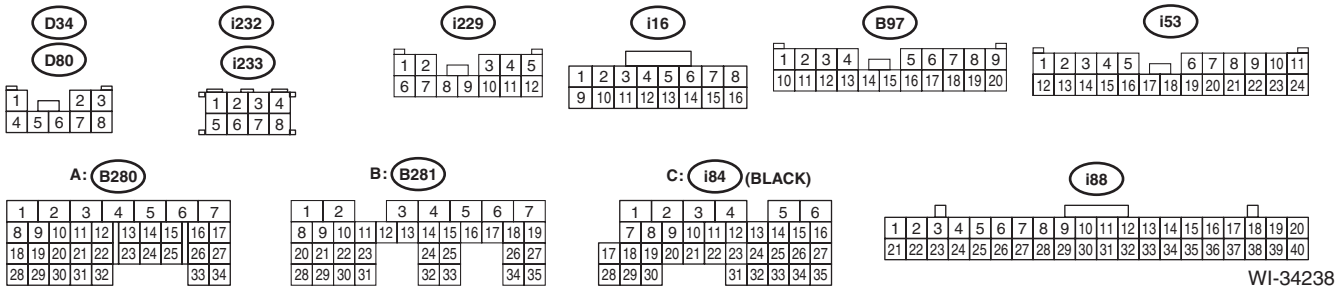

WI-34238

37.Rearview Camera System

A: WIRING DIAGRAM

1. SEDAN MODEL (WITHOUT NAVIGATION SYSTEM)

RVCAM(S)-01

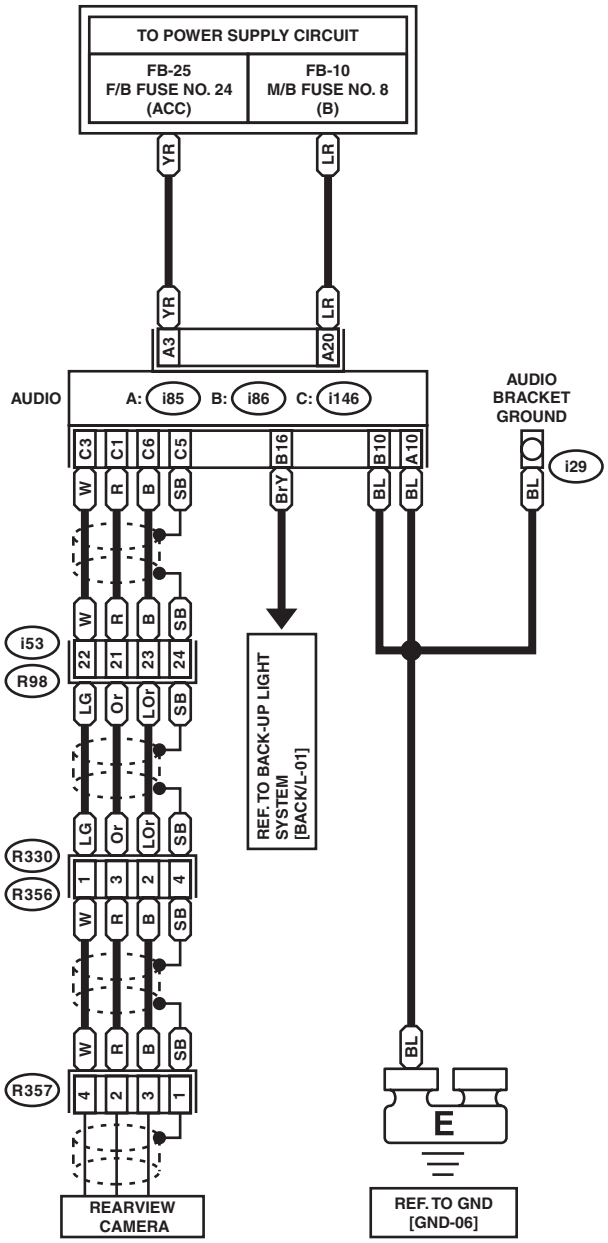

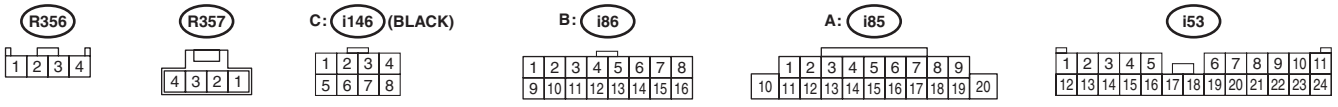

WI-37853

2. SEDAN MODEL (WITH NAVIGATION SYSTEM)

- **Standard MFD**

RVCAM(SN)-01

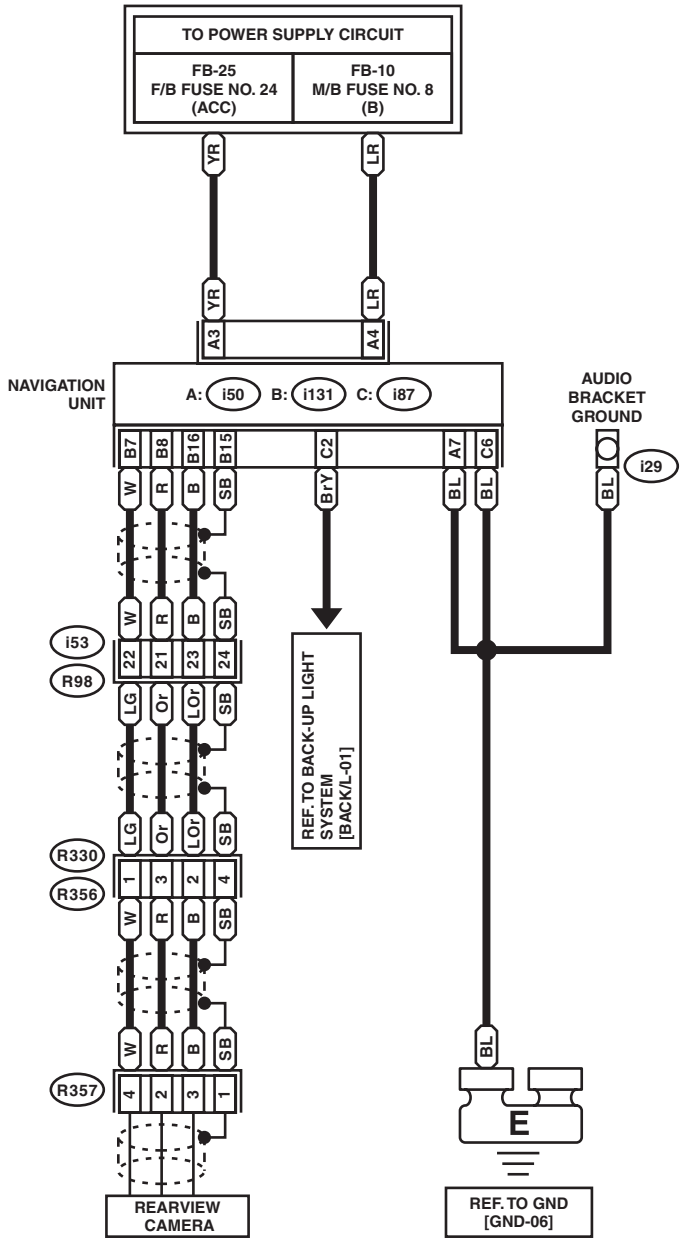

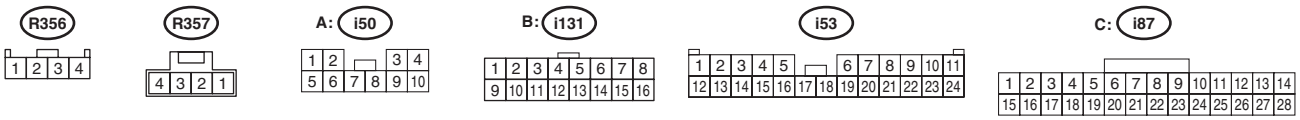

WI-37854

- **High grade MFD**

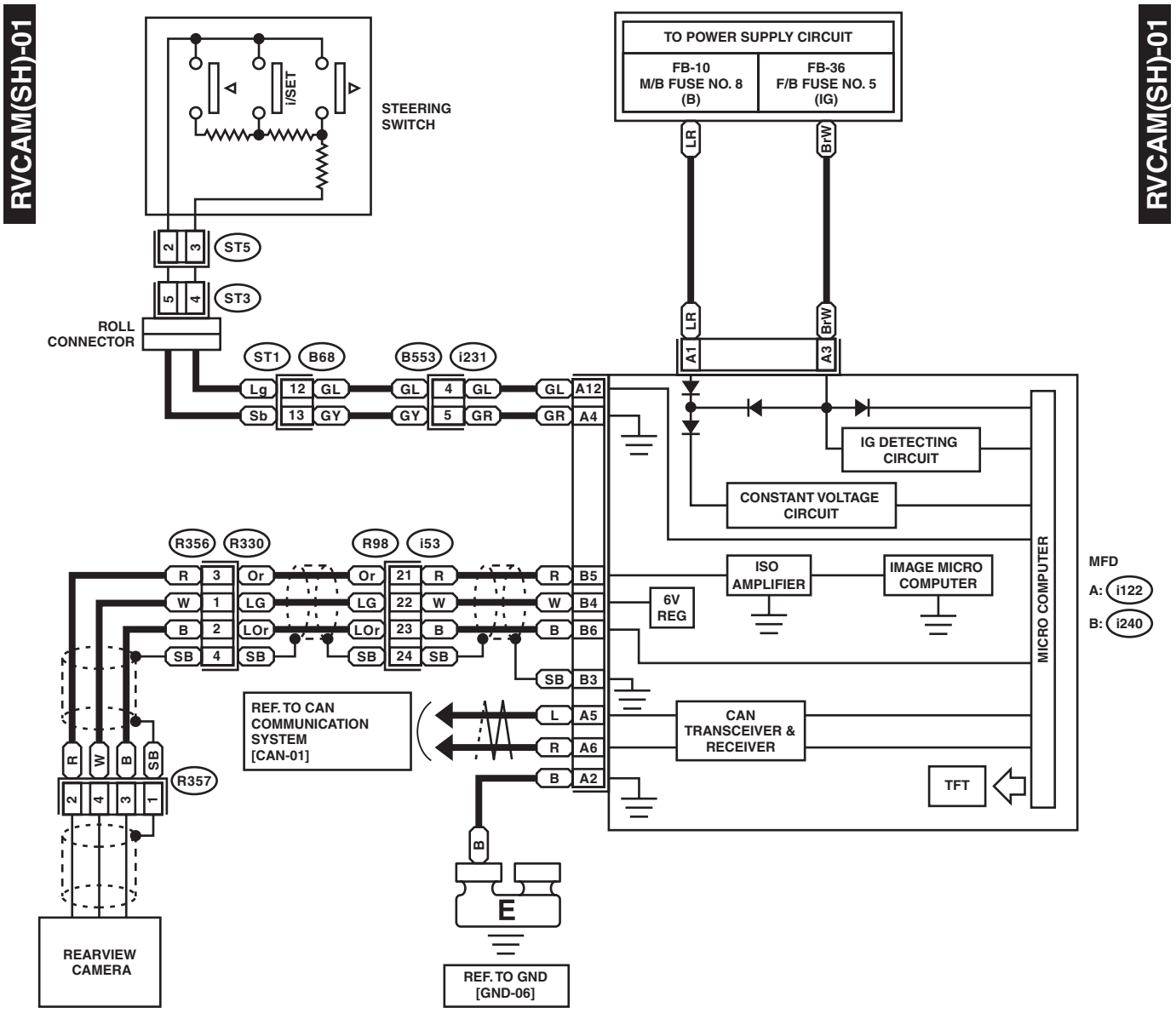

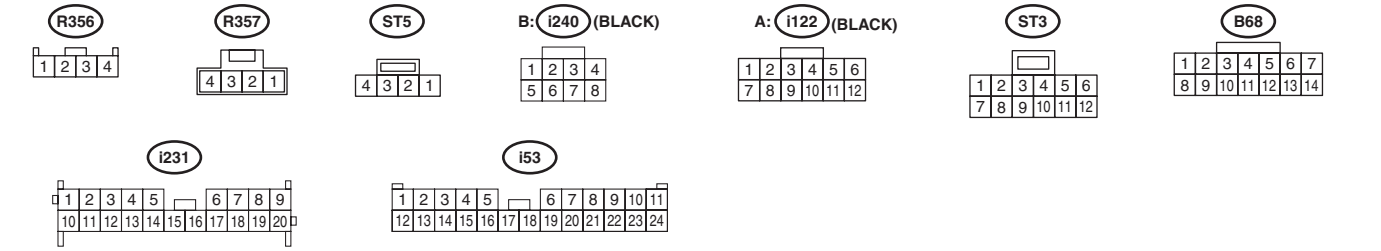

WI-37855

3. WAGON MODEL (WITHOUT NAVIGATION SYSTEM)

RVCAM(W)-01

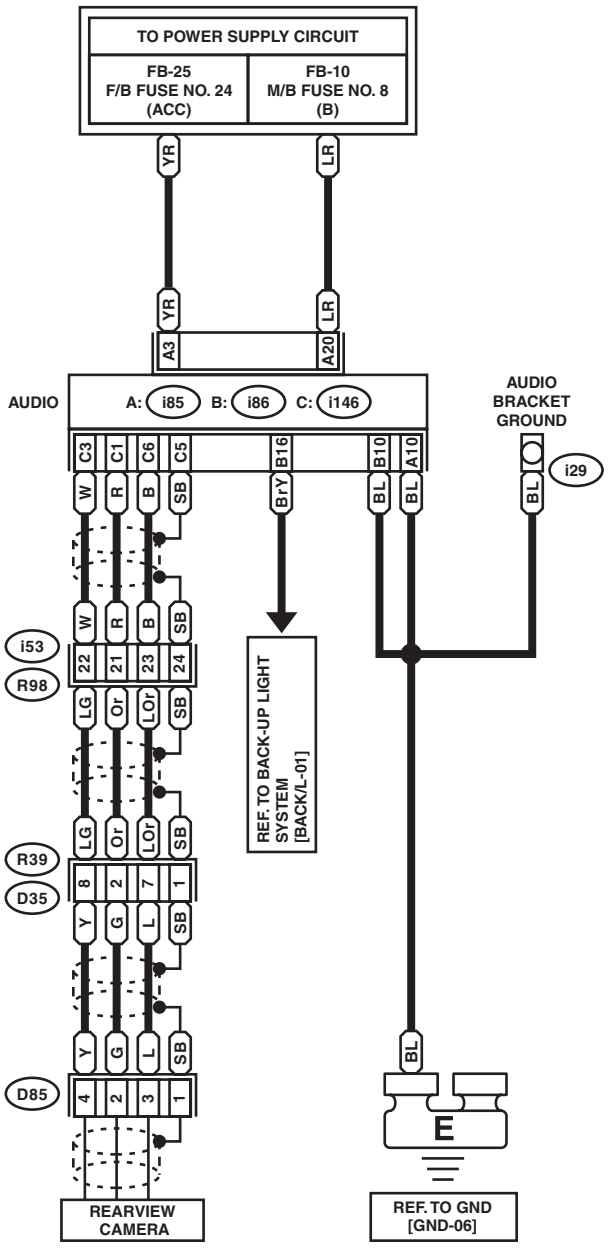

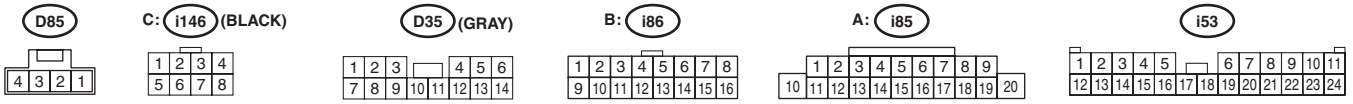

WI-37856

4. WAGON MODEL (WITH NAVIGATION SYSTEM)

- **Standard MFD**

RVCAM(WN)-01

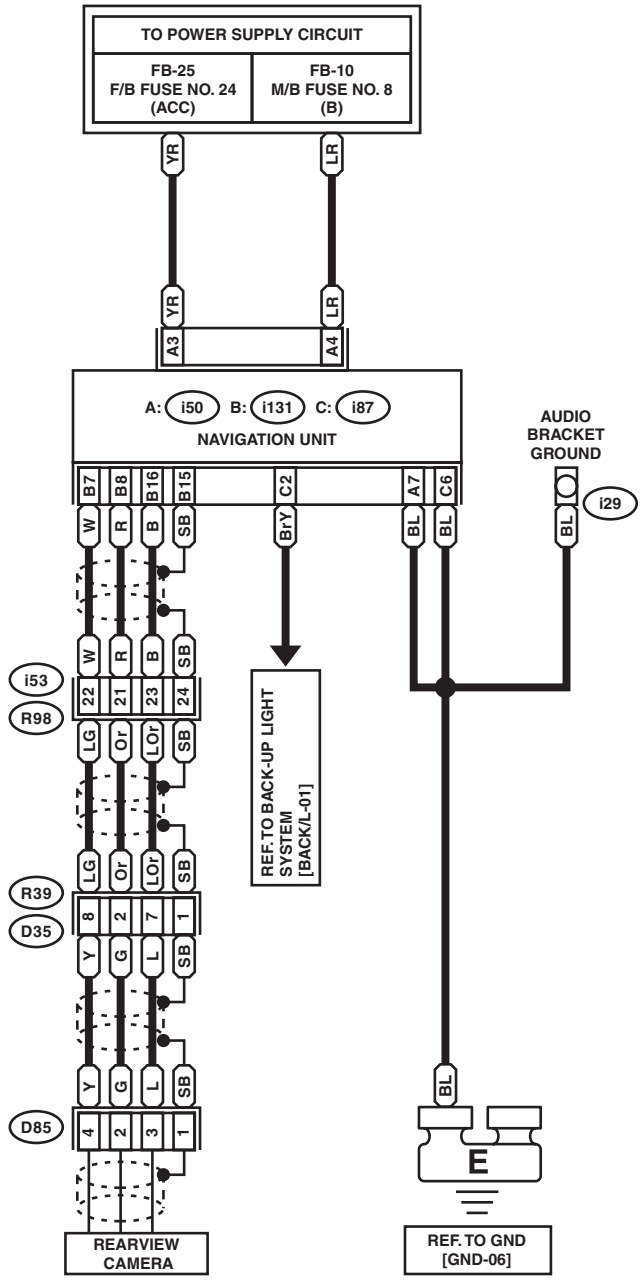

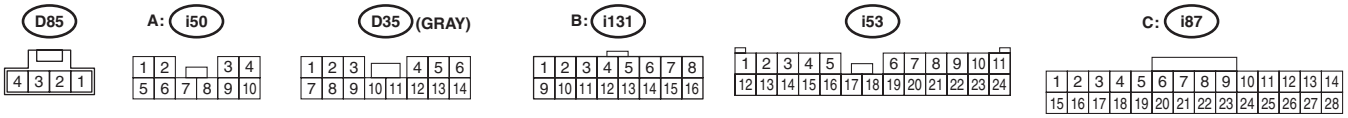

WI-37857

- **High grade MFD**

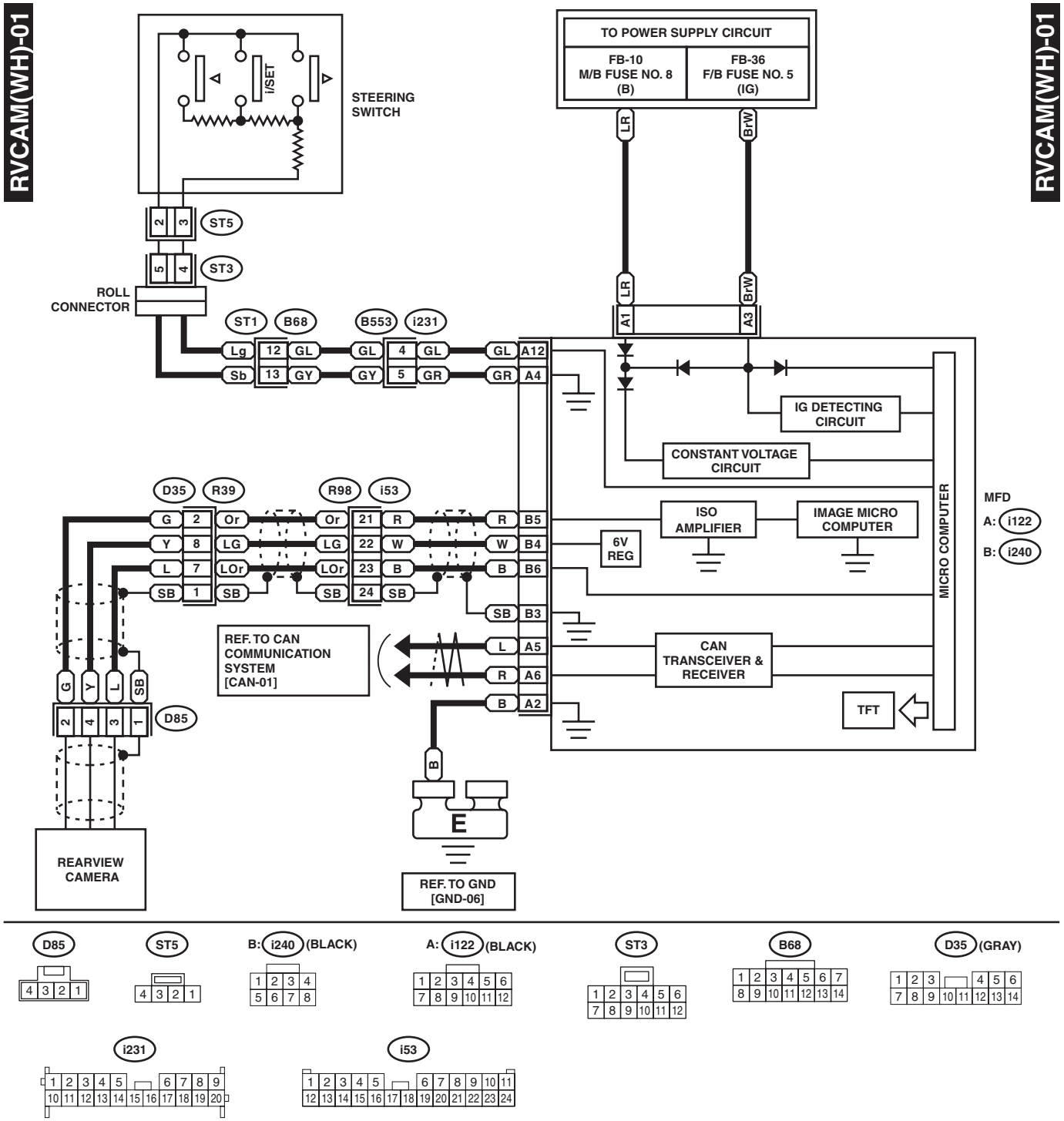

WI-37858

38.Rearview Mirror System

A: WIRING DIAGRAM

RVM-01

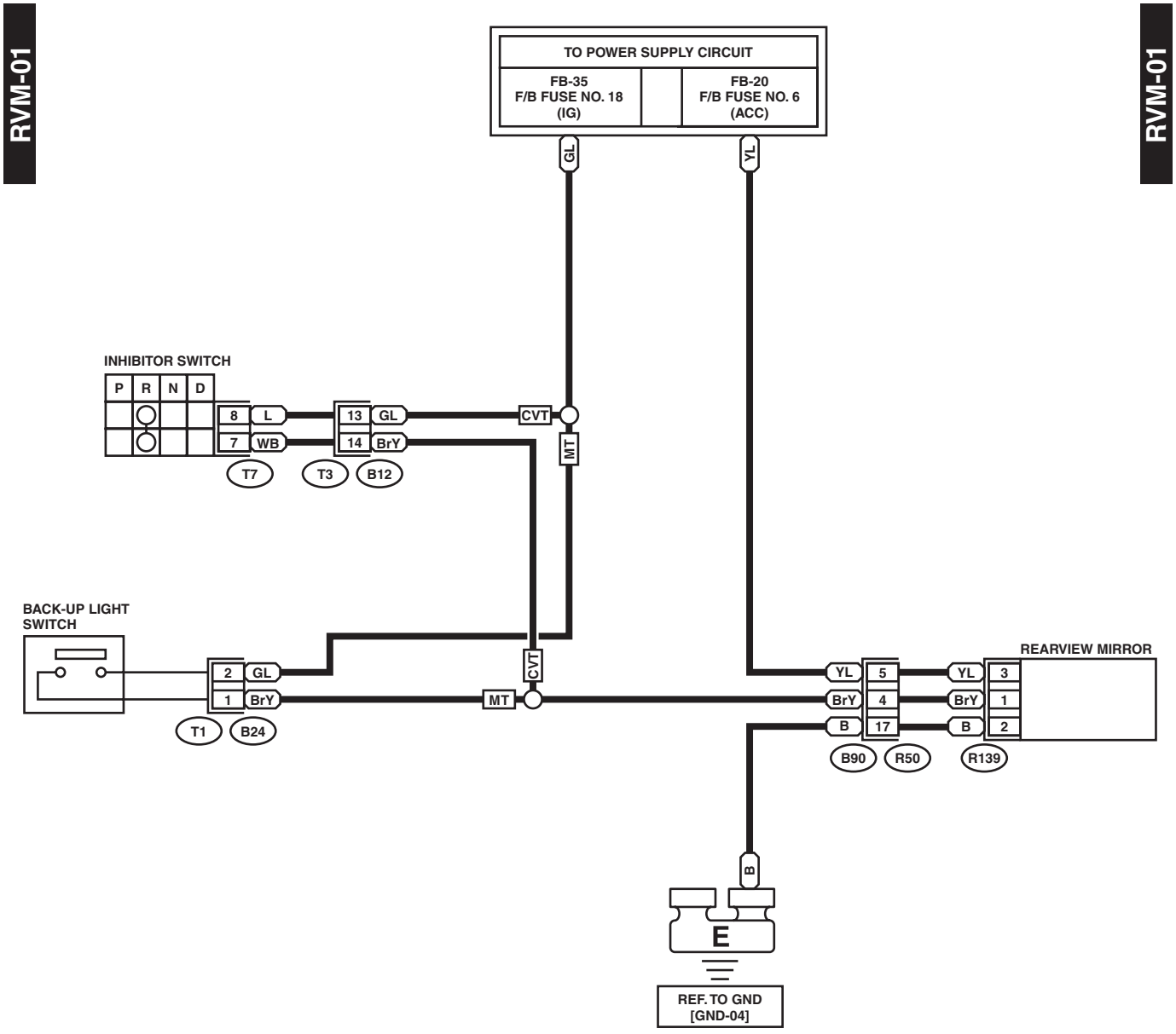

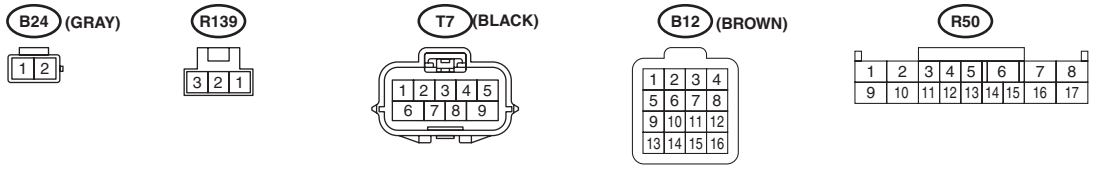

WI-34239

39.Rear Wiper and Washer System

A: WIRING DIAGRAM

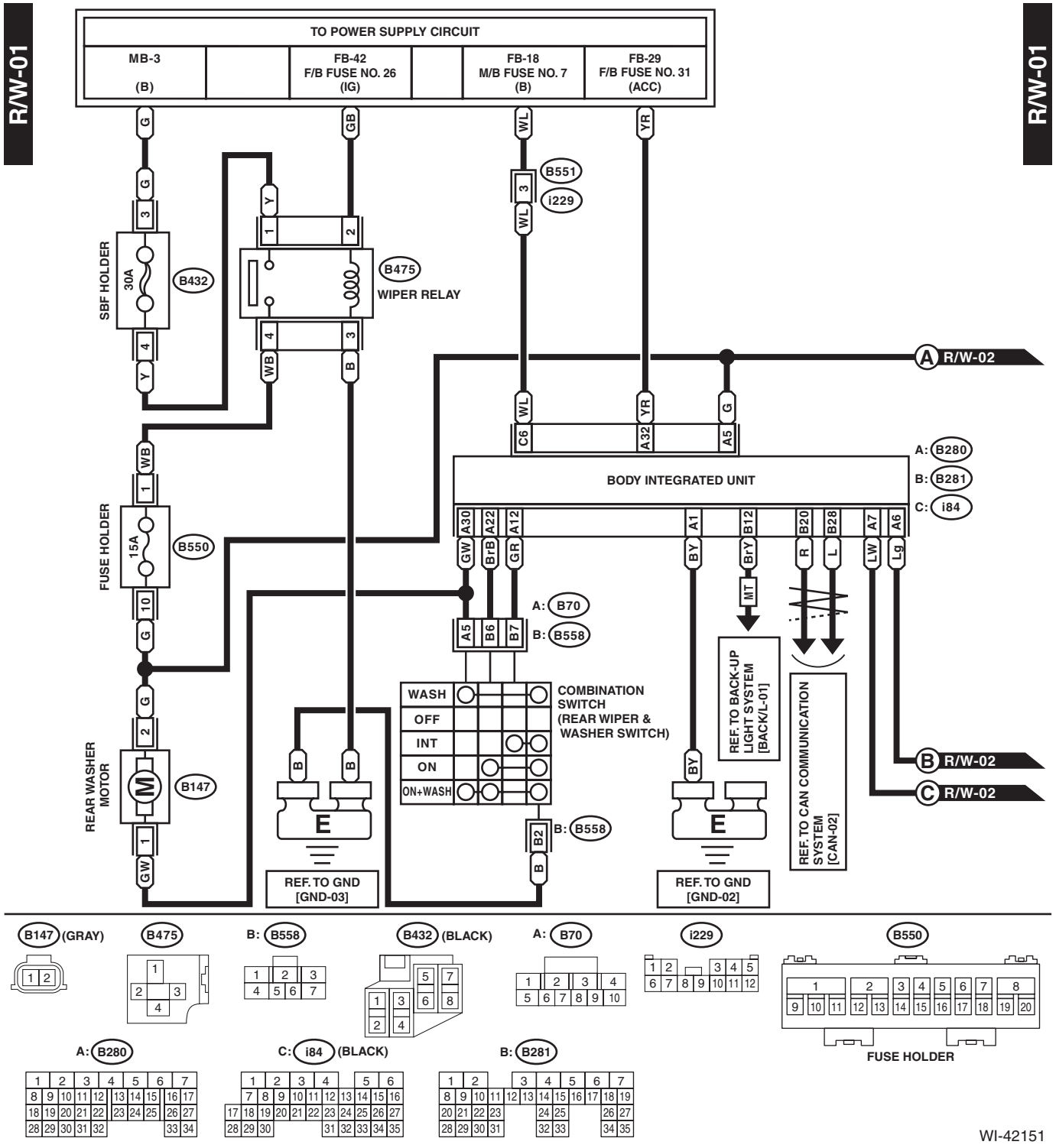

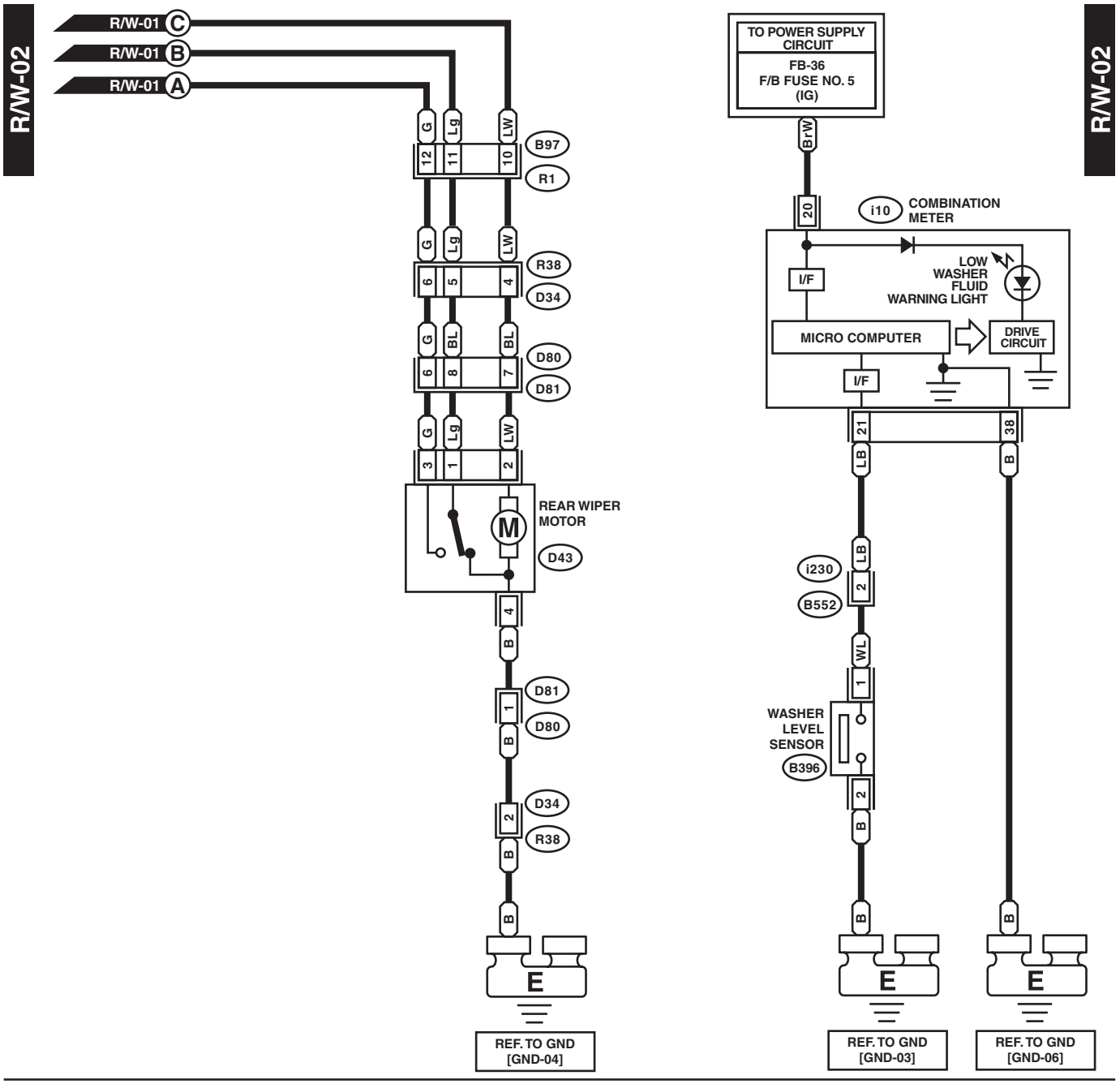
R/W-02
R/W-01 C
R/W-01 B
R/W-01 A
G
Lg
LW
12
11
10
B97
R1
R38
D34
BL
D80
D81
3
1
2
REAR WIPER MOTOR
M
D43
4
B
E
REF. TO GND [GND-04]
TO POWER SUPPLY CIRCUIT
FB-36 F/B FUSE NO. 5 (IG)
BrW
20
i10 COMBINATION METER
I/F
LOW WASHER FLUID WARNING LIGHT
MICRO COMPUTER
DRIVE CIRCUIT
21
38
LB
i230
B552
WL
WASHER LEVEL SENSOR
B396
REF. TO GND [GND-03]
REF. TO GND [GND-06]

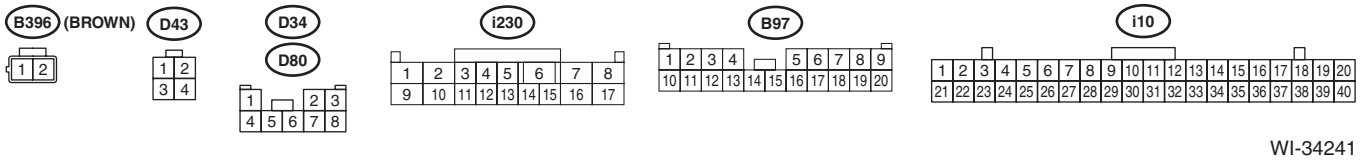
B396 (BROWN)
D43
D34
D80
i230
B97
i10

WI-34241

40.Remote Control Mirror System

A: WIRING DIAGRAM

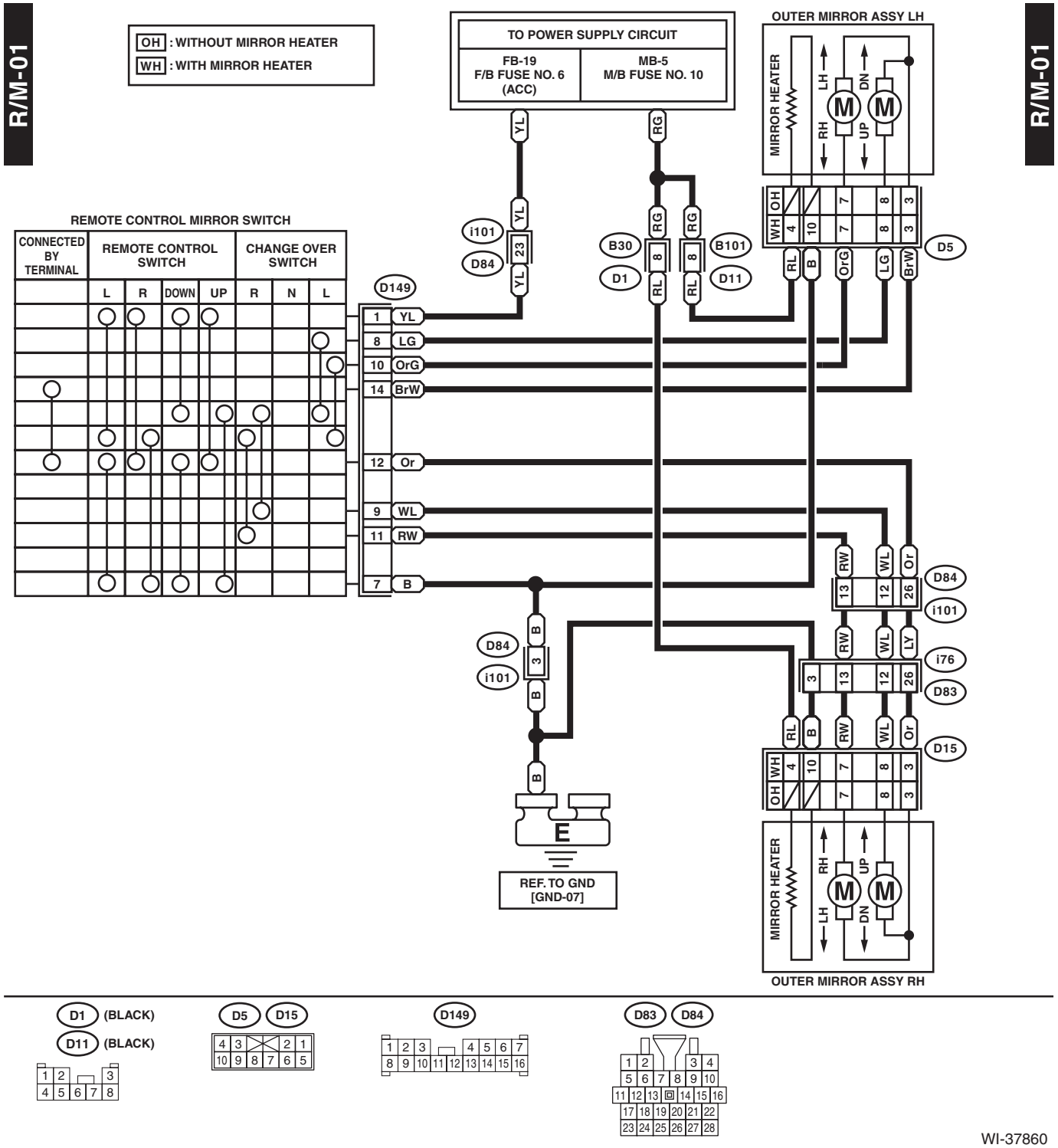

WI-37860

41.Remote Engine Start System

A: WIRING DIAGRAM

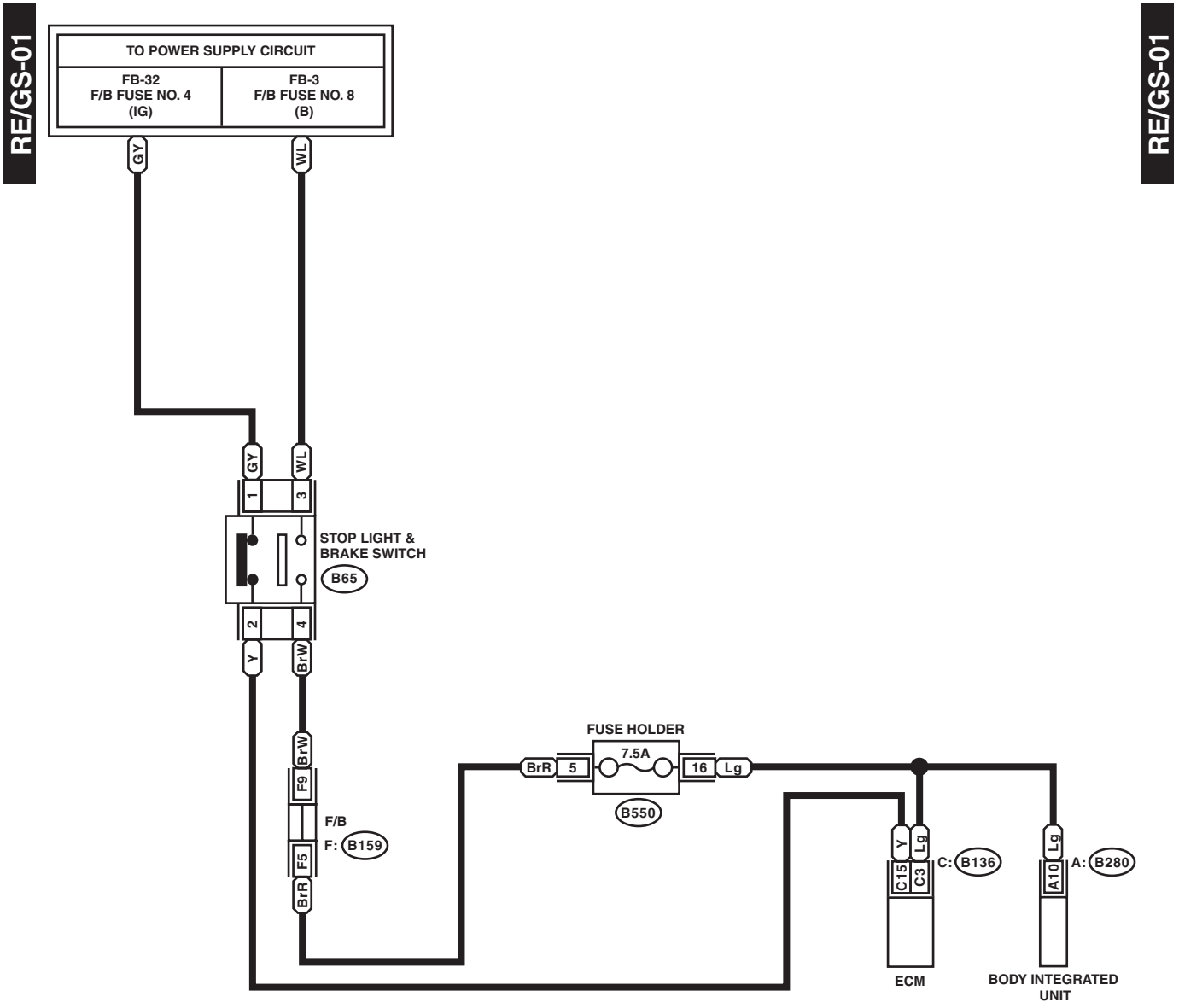

WI-34243

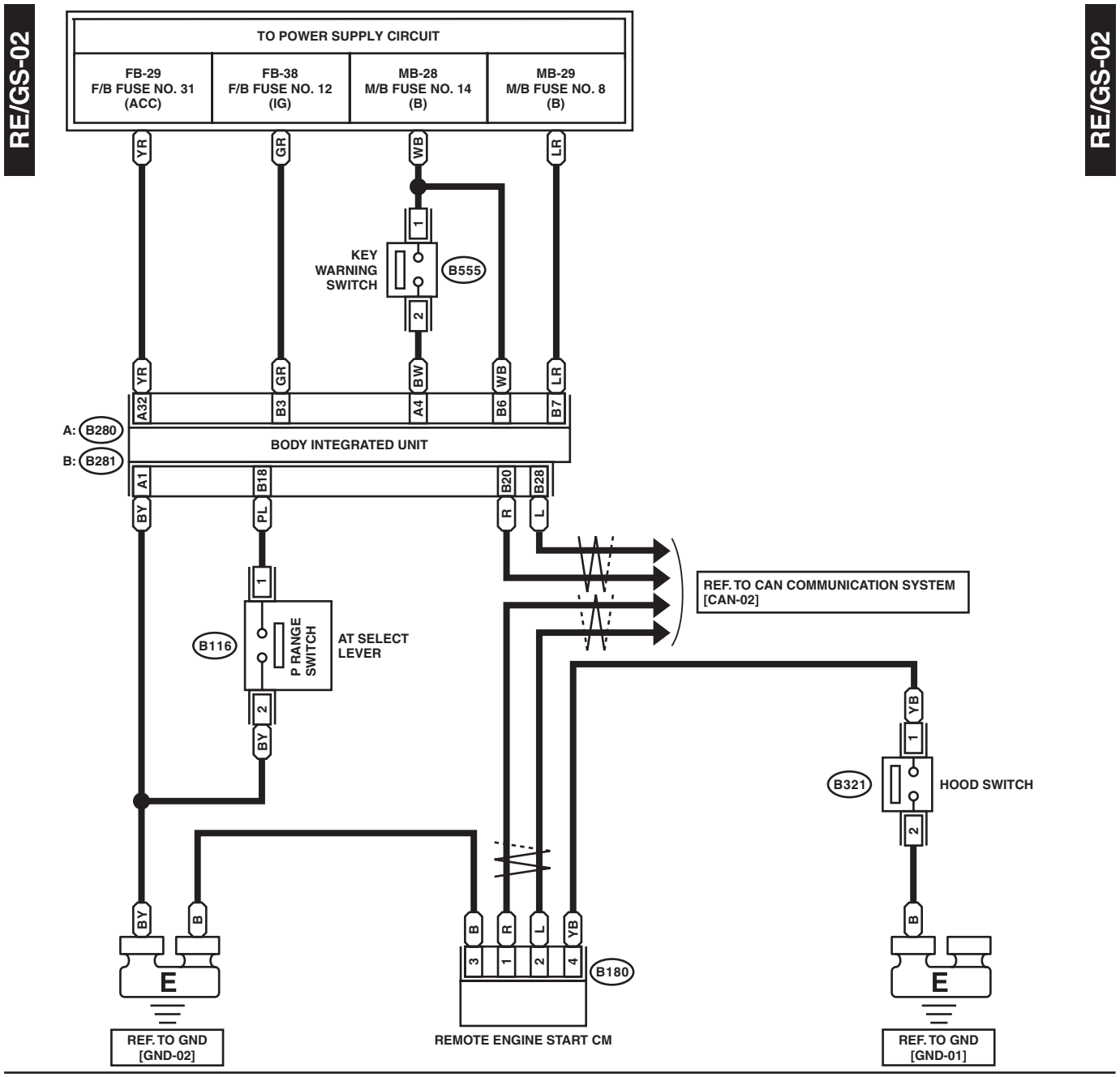
RE/GS-02
RE/GS-02
TO POWER SUPPLY CIRCUIT
FB-29 F/B FUSE NO. 31 (ACC)
FB-38 F/B FUSE NO. 12 (IG)
MB-28 M/B FUSE NO. 14 (B)
MB-29 M/B FUSE NO. 8 (B)
YR
GR
WB
LR
KEY WARNING SWITCH
B555
BW
A: B280
B: B281
A32
B3
A4
B6
B7
BODY INTEGRATED UNIT
A1
B18
B20
B28
BY
PL
R
L
REF. TO CAN COMMUNICATION SYSTEM [CAN-02]
B116
P RANGE SWITCH
AT SELECT LEVER
YB
B321
HOOD SWITCH
B
E
REF. TO GND [GND-02]
REMOTE ENGINE START CM
B180
REF. TO GND [GND-01]
B321 (BLACK)
B555
B180
B116
A: B280
B: B281

WI-42152

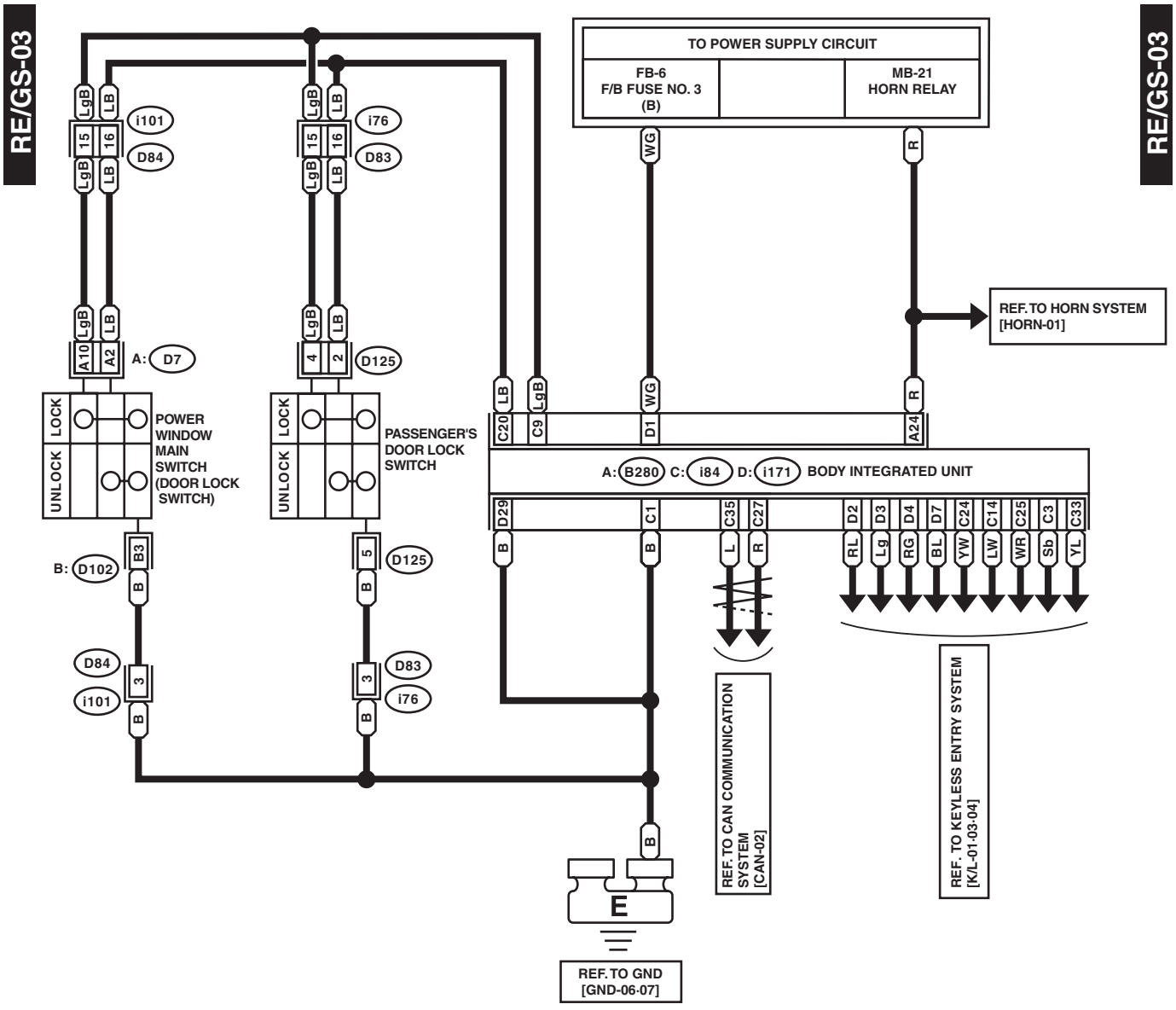
RE/GS-03
RE/GS-03
TO POWER SUPPLY CIRCUIT
FB-6
F/B FUSE NO. 3
(B)
MB-21
HORN RELAY
WG
R
REF. TO HORN SYSTEM
[HORN-01]
i101
D84
i76
D83
LgB
LB
A: D7
D125
POWER
WINDOW
MAIN
SWITCH
(DOOR LOCK
SWITCH)
PASSENGER'S
DOOR LOCK
SWITCH
LOCK
UNLOCK
C20
C9
D1
A24
A: B280 C: i84 D: i171 BODY INTEGRATED UNIT
D29
C1
C35
C27
D2
D3
D4
D7
C24
C14
C25
C3
C33
B
L
R
RL
Lg
RG
BL
YW
LW
WR
Sb
YL
B: D102
B3
5
D125
D84
i101
3
D83
i76
REF. TO CAN COMMUNICATION
SYSTEM
[CAN-02]
REF. TO KEYLESS ENTRY SYSTEM
[K/L-01-03-04]
E
REF. TO GND
[GND-06-07]

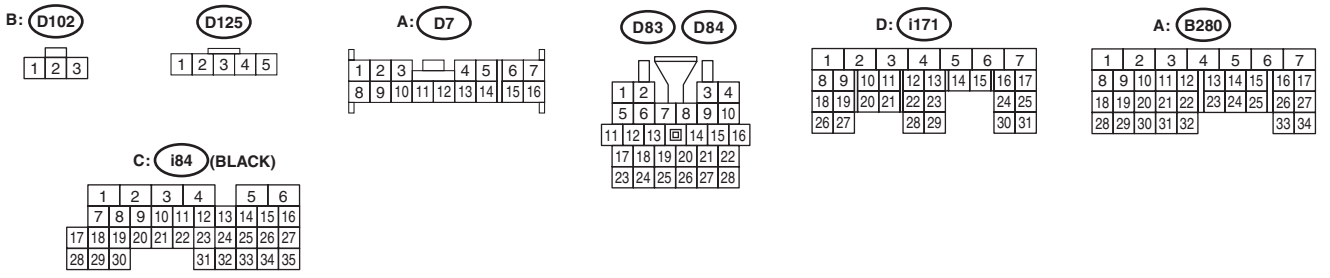
B: D102
D125
A: D7
D83
D84
D: i171
A: B280
C: i84 (BLACK)

WI-34245

42.Seat Belt Warning System

A: WIRING DIAGRAM

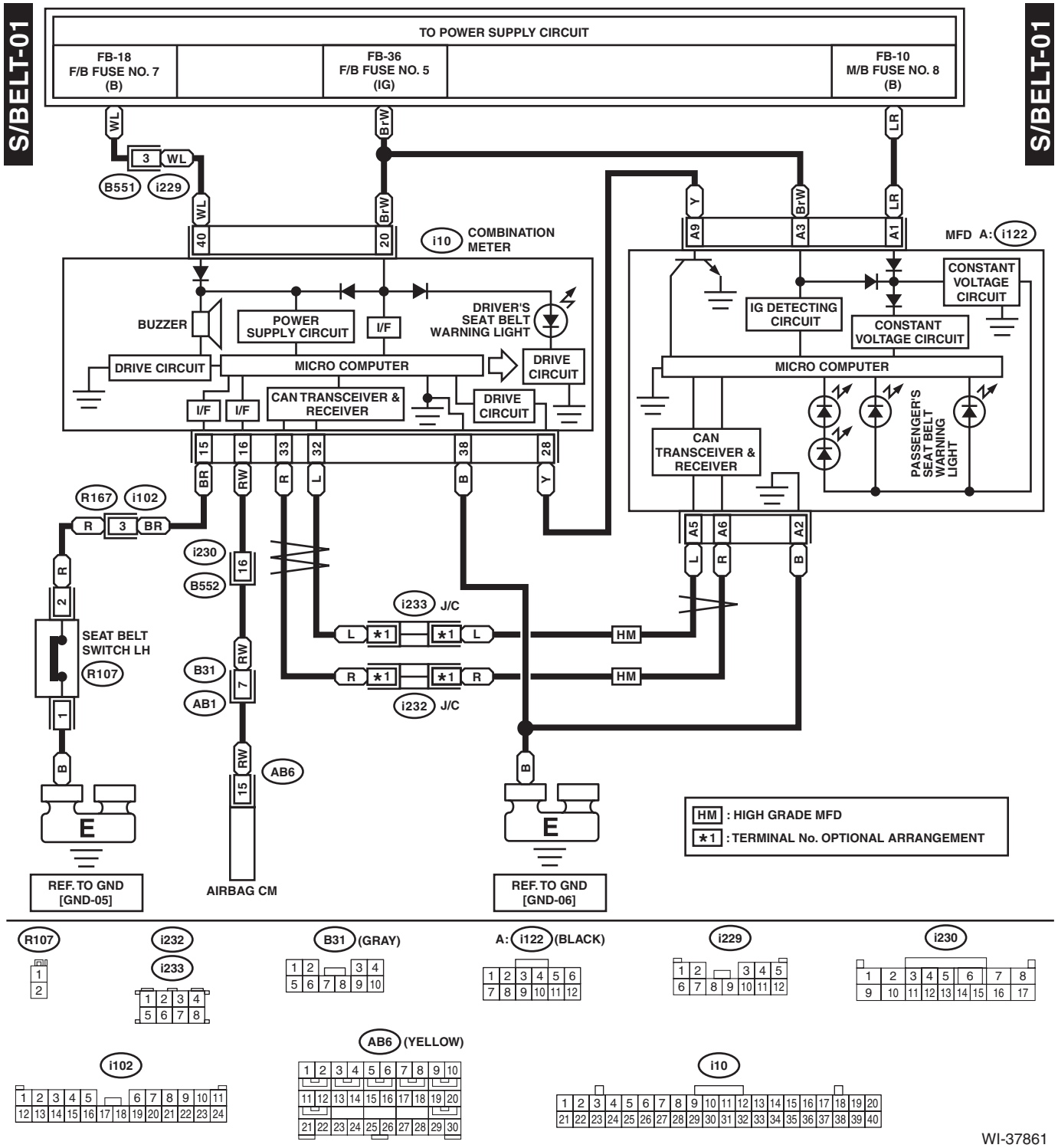

43.Seat Heater System

A: WIRING DIAGRAM

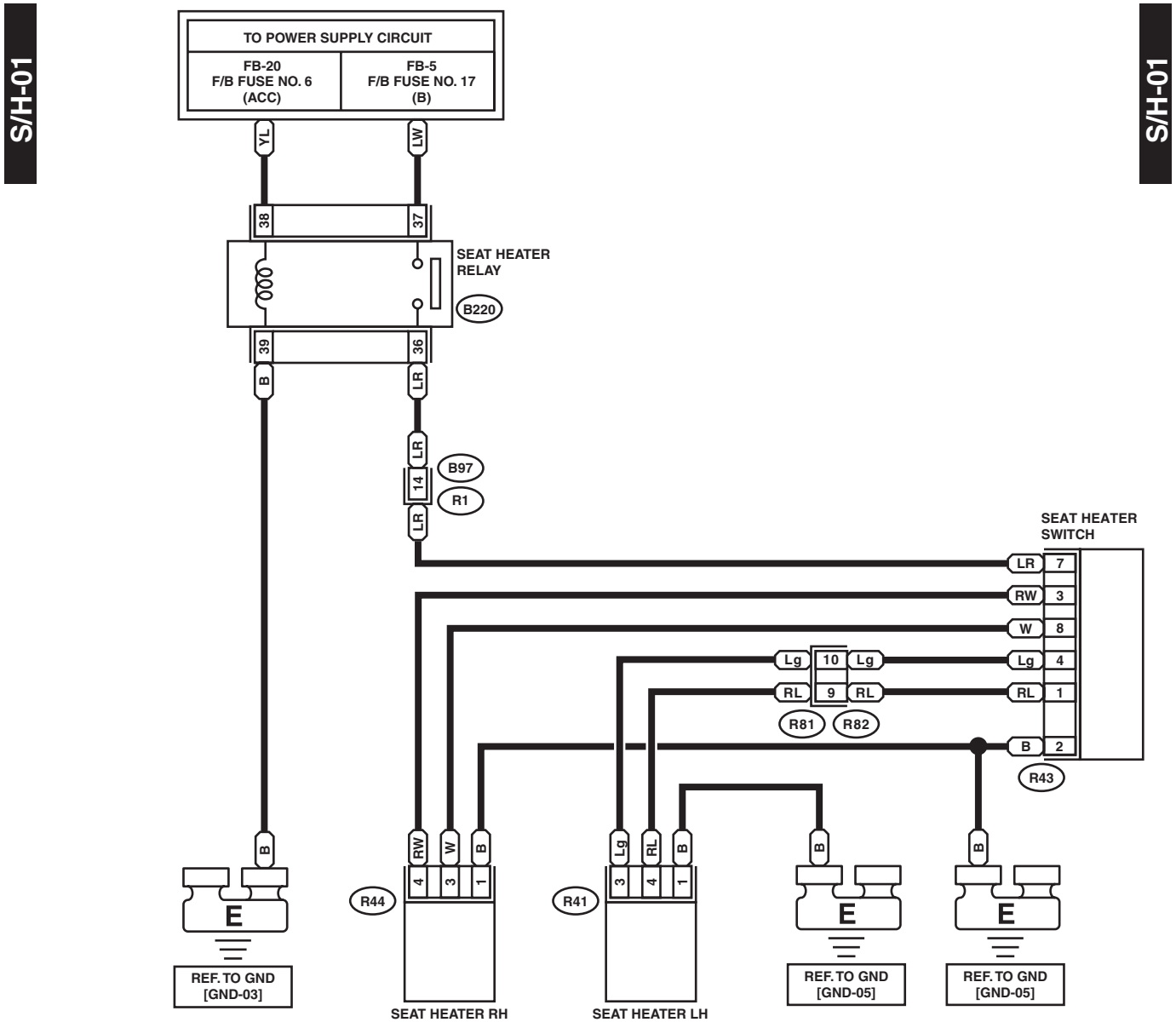

44.Security System

A: WIRING DIAGRAM

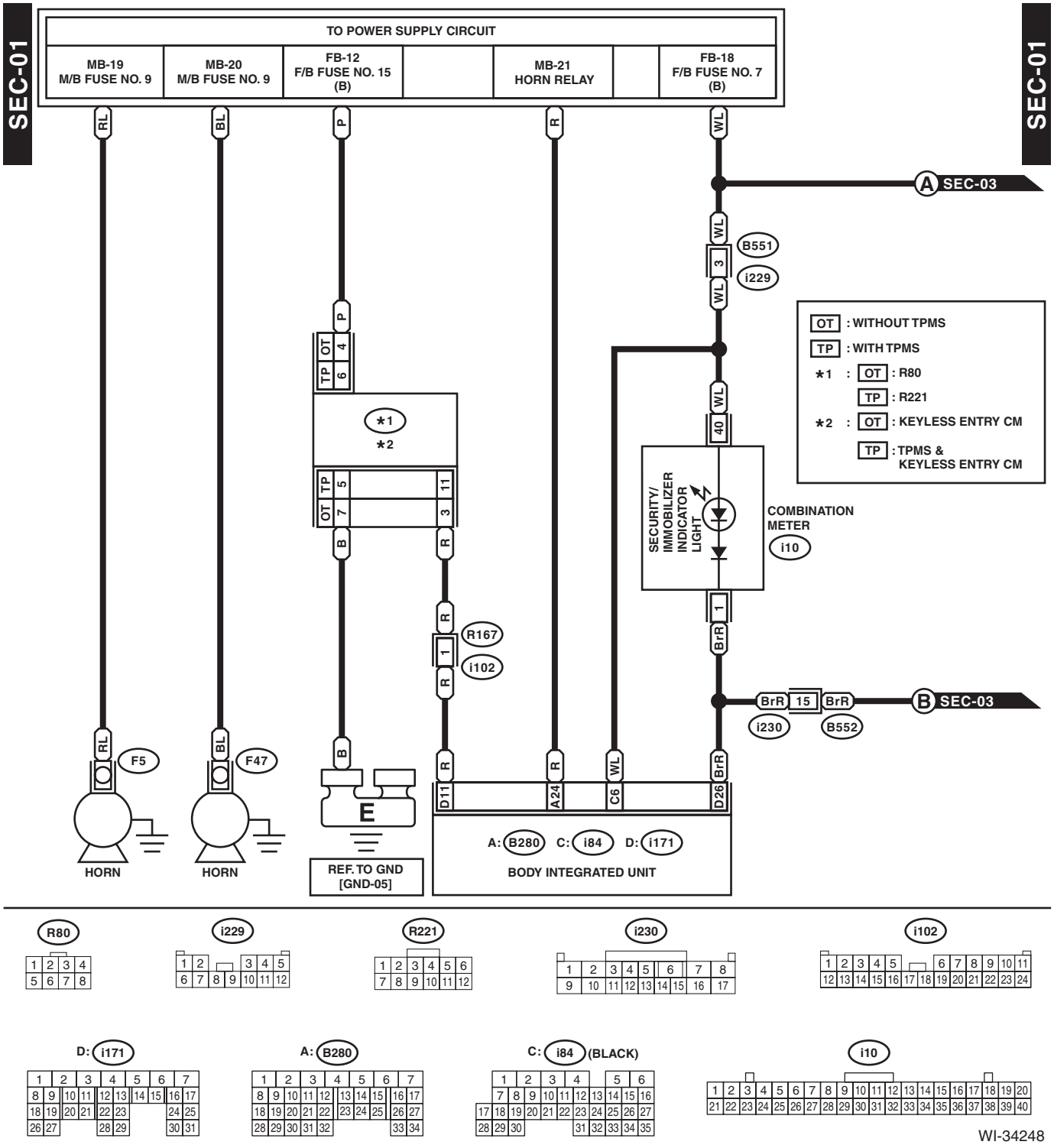

SEC-02

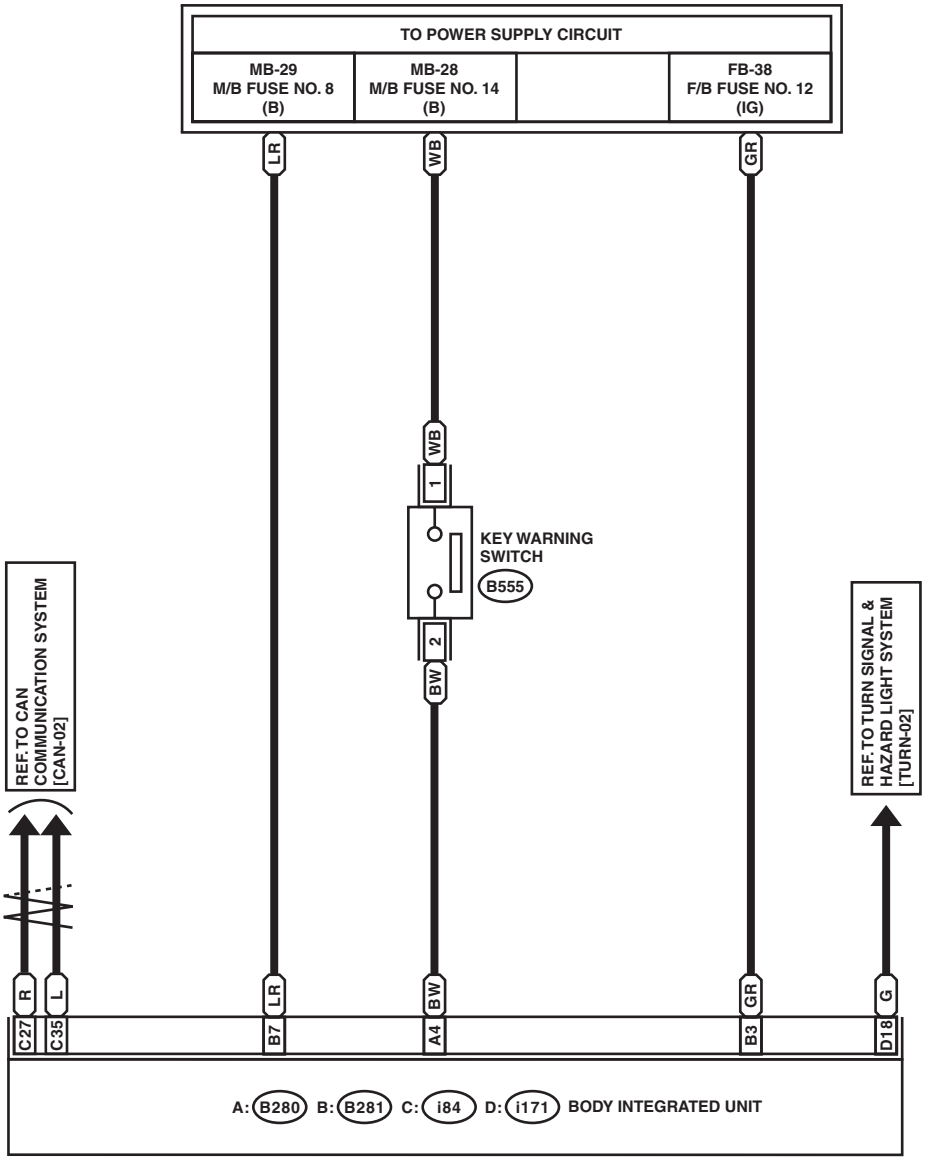

SEC-02

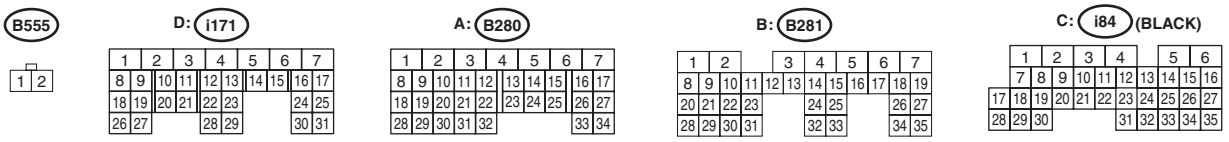

WI-34249

WIRING SYSTEM

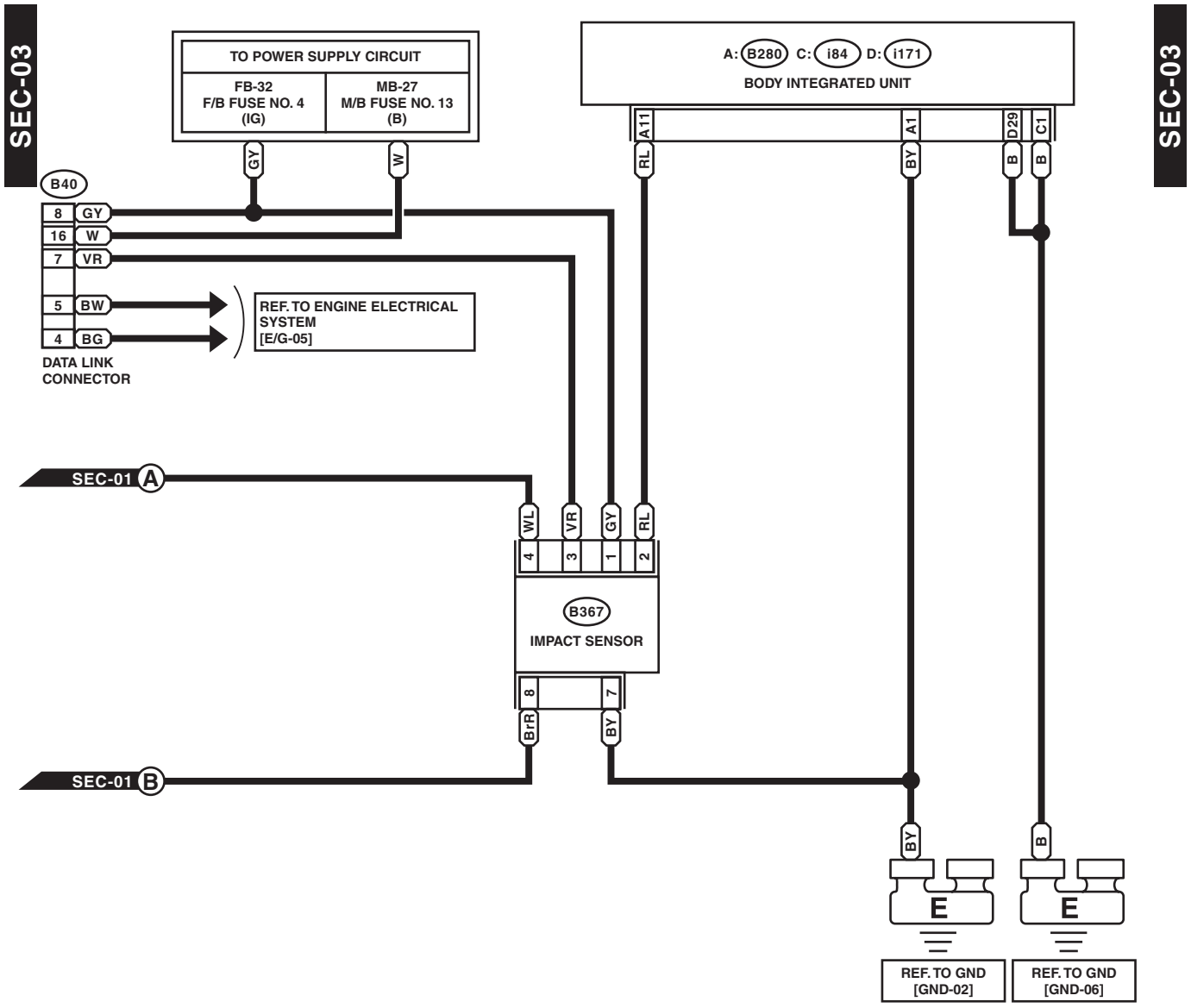



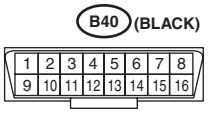

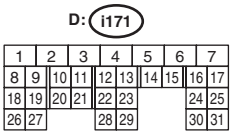

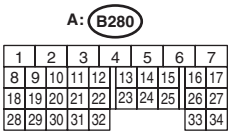

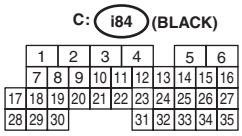

WI-42153

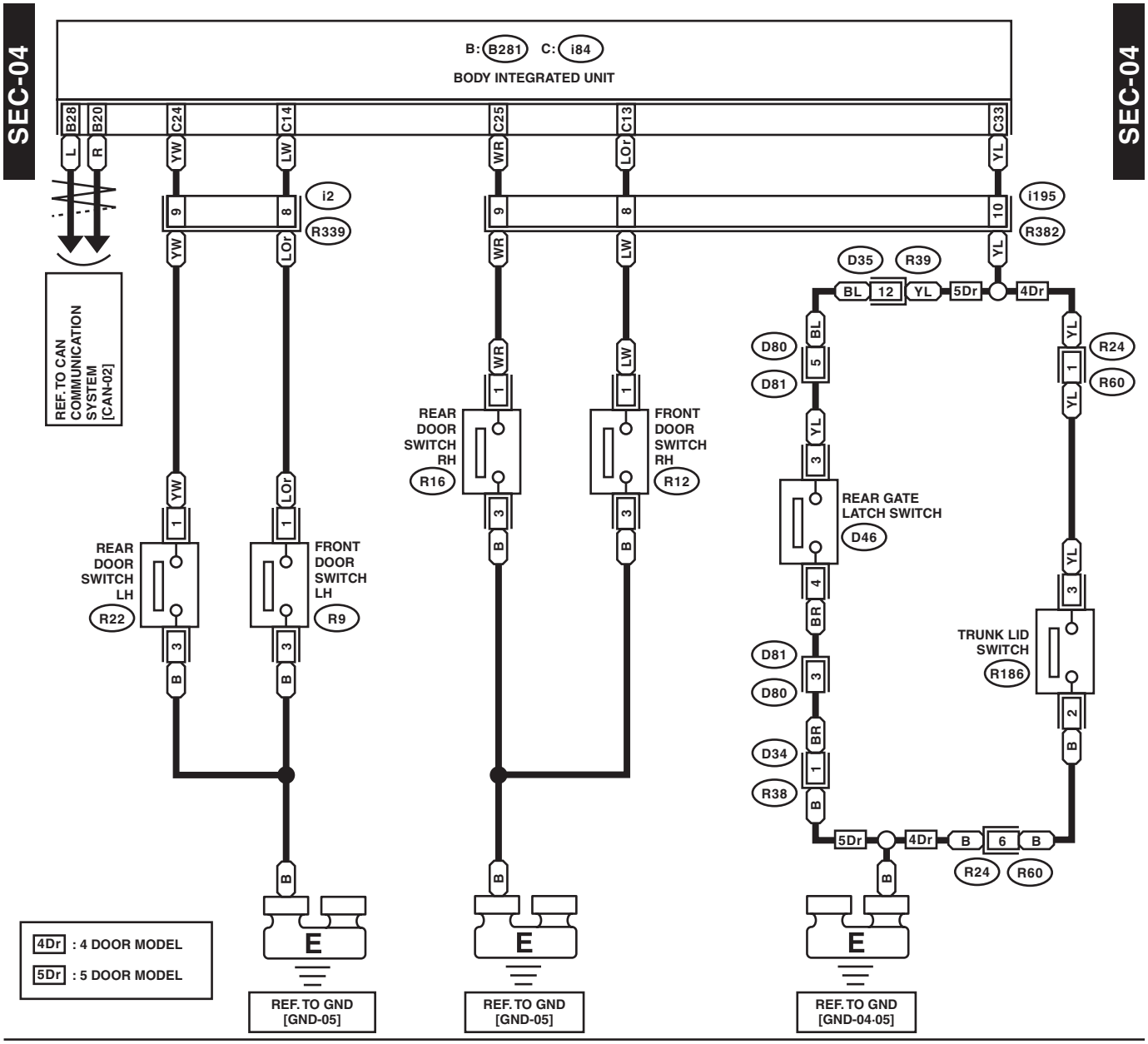
SEC-04
SEC-04
B: B281 C: i84
BODY INTEGRATED UNIT
B28
B20
C24
C14
C25
C13
C33
L
R
YW
LW
WR
LOr
YL
i2
R339
i195
R382
REF. TO CAN COMMUNICATION SYSTEM [CAN-02]
REAR DOOR SWITCH LH
R22
FRONT DOOR SWITCH LH
R9
REAR DOOR SWITCH RH
R16
FRONT DOOR SWITCH RH
R12
D35
R39
BL
12
5Dr
4Dr
D80
D81
R24
R60
REAR GATE LATCH SWITCH
D46
TRUNK LID SWITCH
R186
D34
R38
R24
R60
4Dr : 4 DOOR MODEL
5Dr : 5 DOOR MODEL
E
REF. TO GND [GND-05]
REF. TO GND [GND-05]
REF. TO GND [GND-04·05]

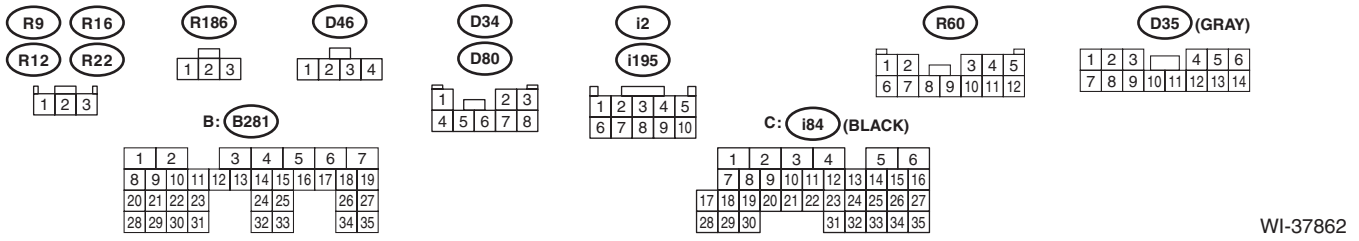
R9
R16
R12
R22
R186
D46
D34
D80
i2
i195
R60
D35 (GRAY)
B: B281
C: i84 (BLACK)

WI-37862

45.Shift Lock Control System

A: WIRING DIAGRAM

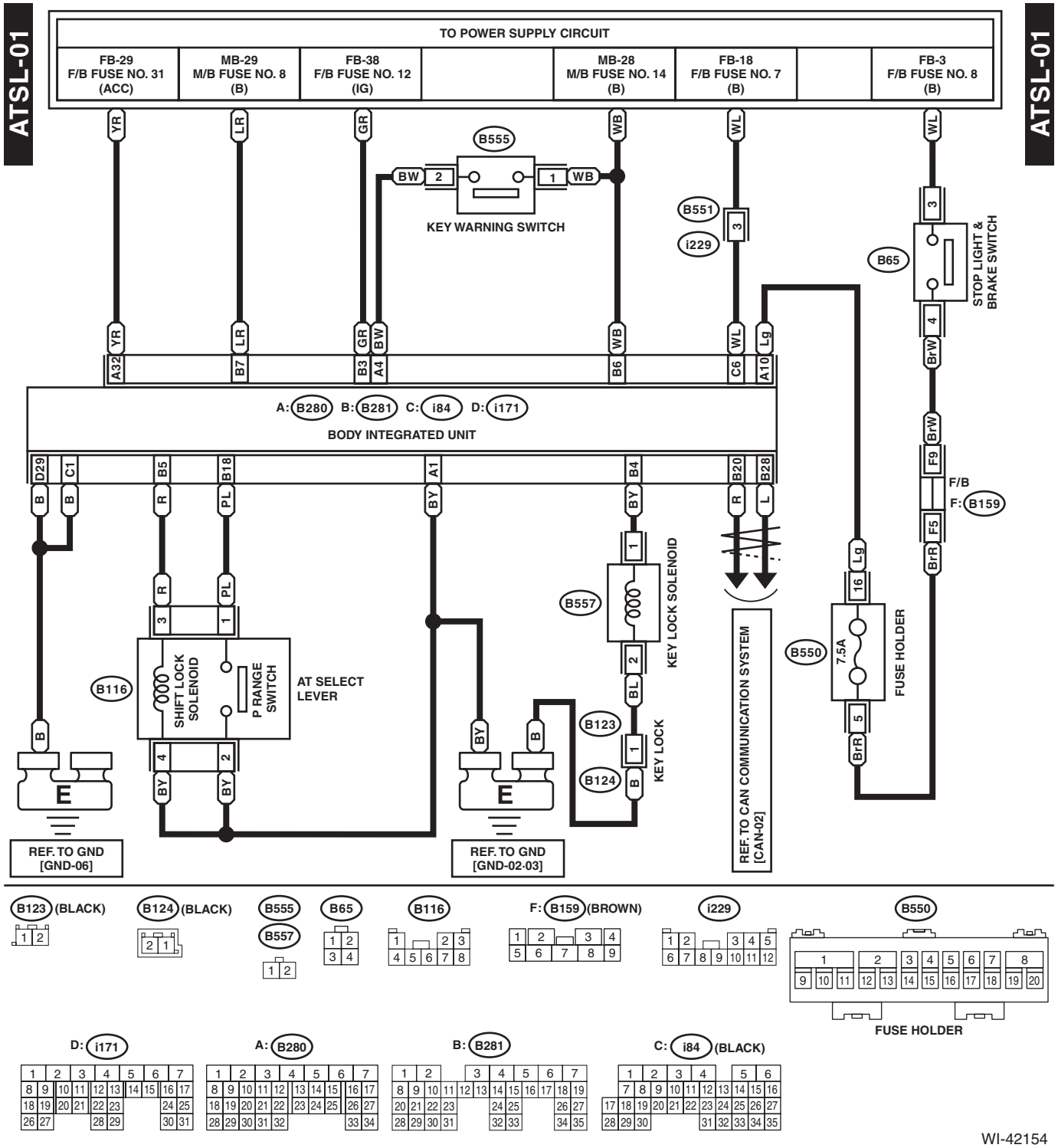

WI-42154

46.Speedometer System

A: WIRING DIAGRAM

SP-01

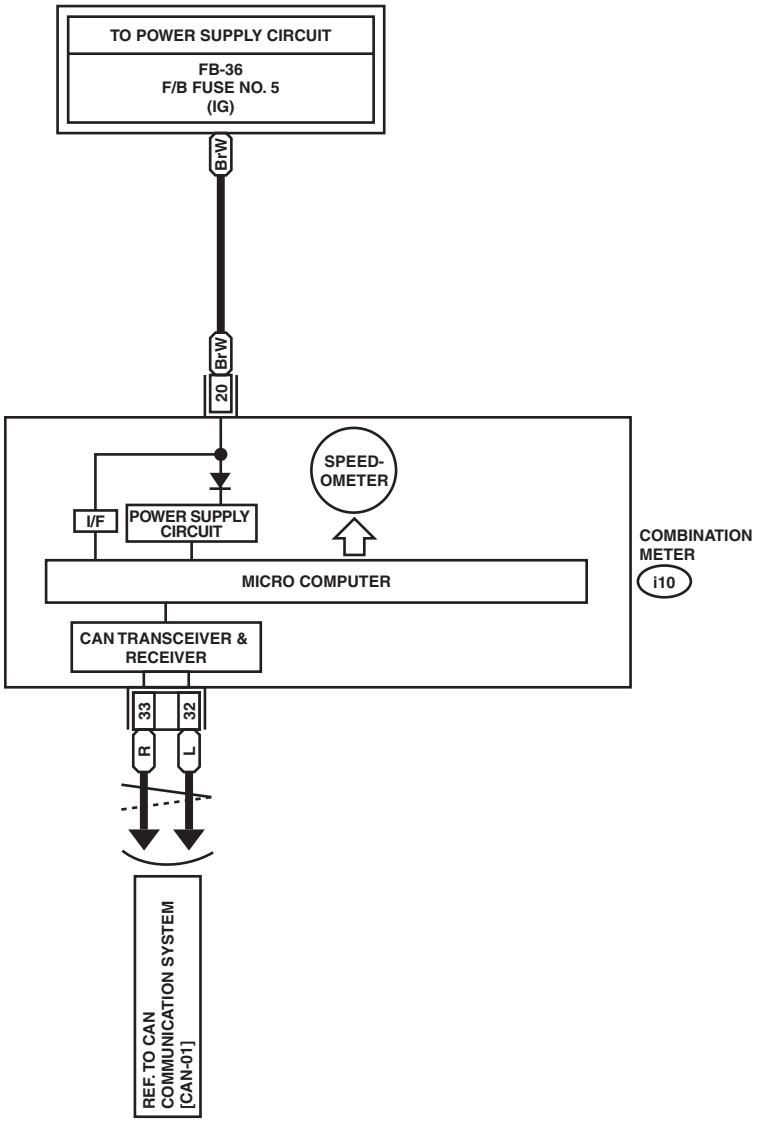

SP-01

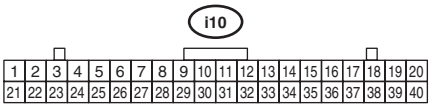

WI-34252

47.Starter System

A: WIRING DIAGRAM

ST-01

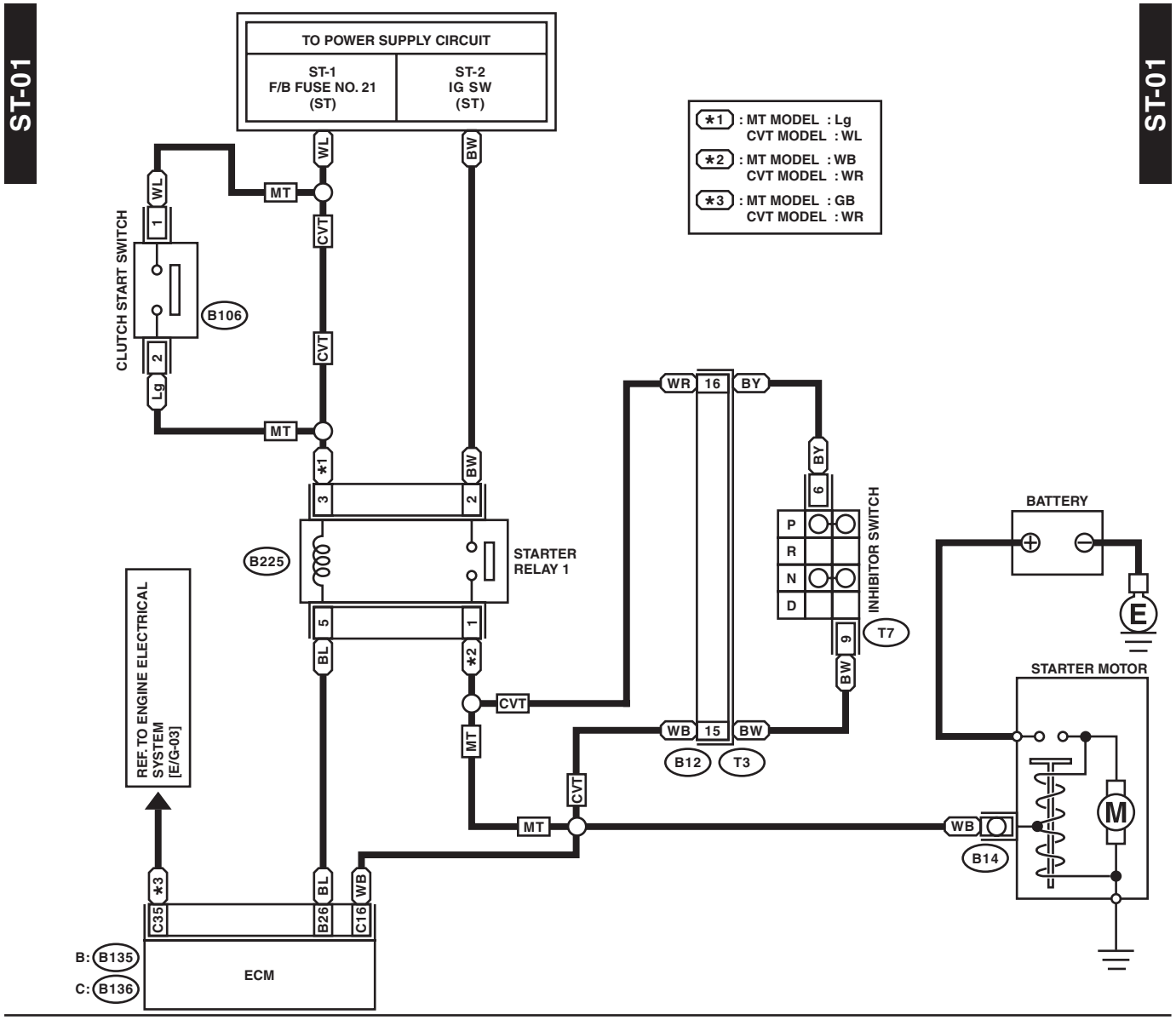

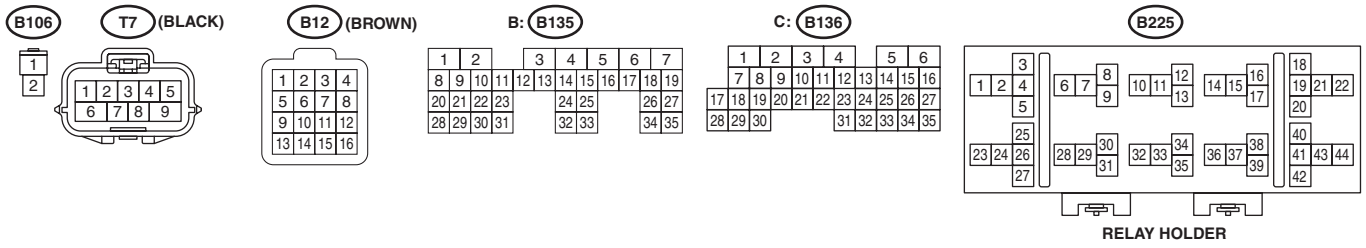

WI-42155

48.Stop Light System

A: WIRING DIAGRAM

1. 4 DOOR MODEL

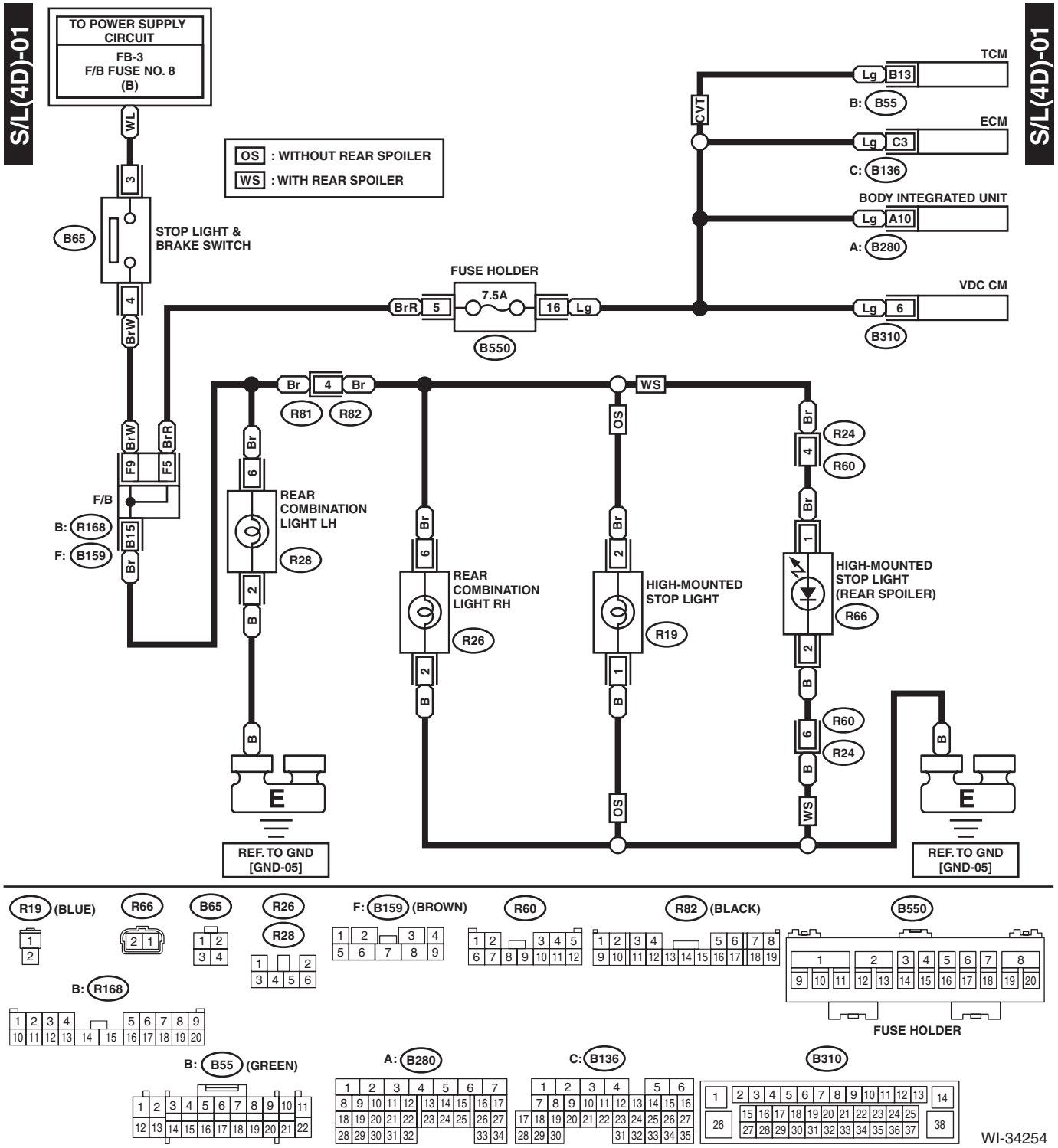

2. 5 DOOR MODEL/XV MODEL

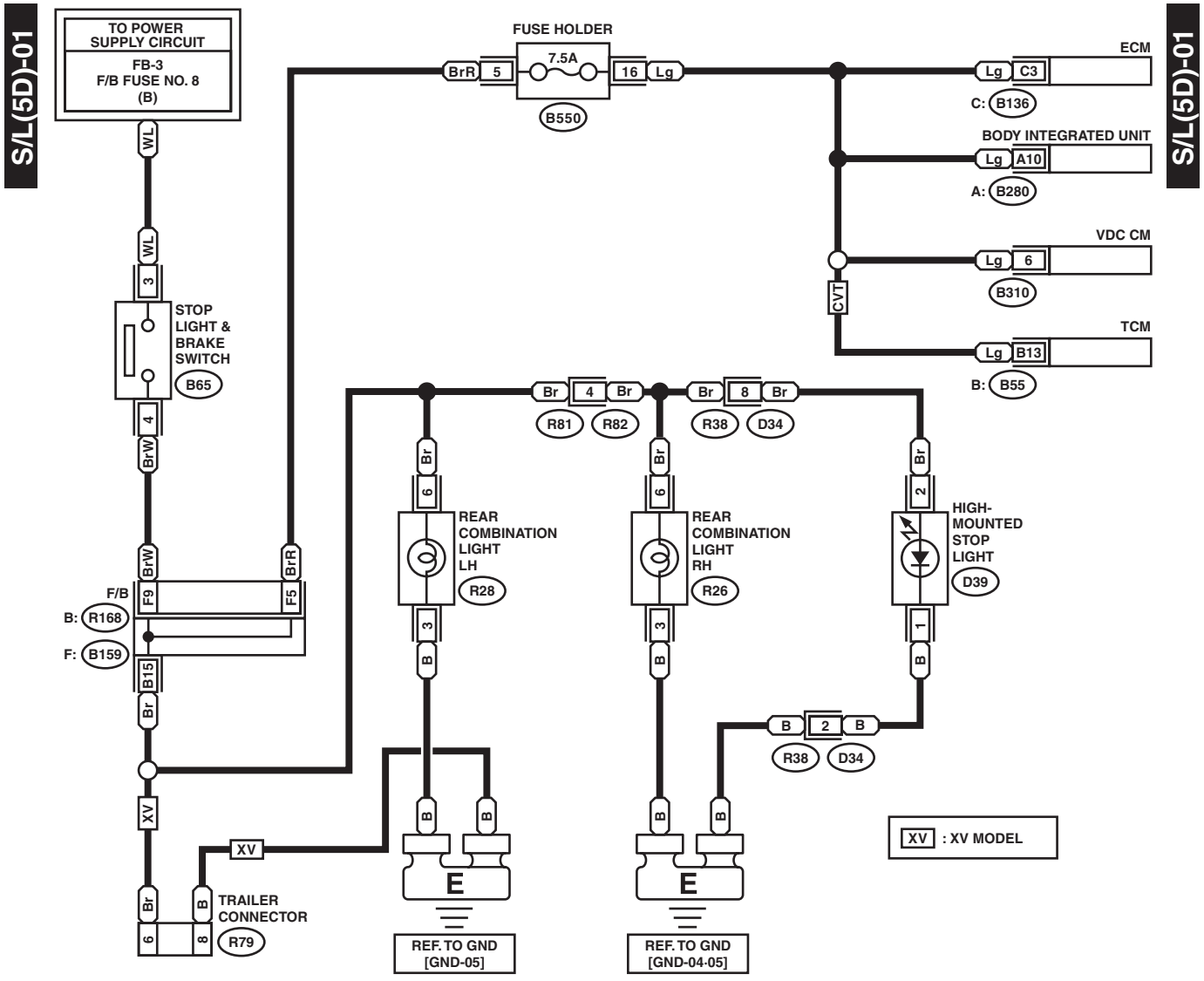

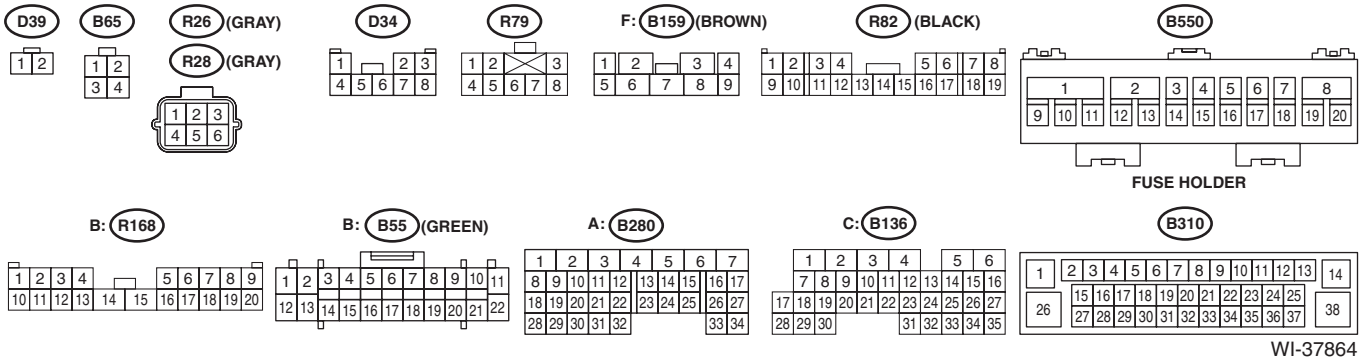

WI-37864

49.Sunroof Control System

A: WIRING DIAGRAM

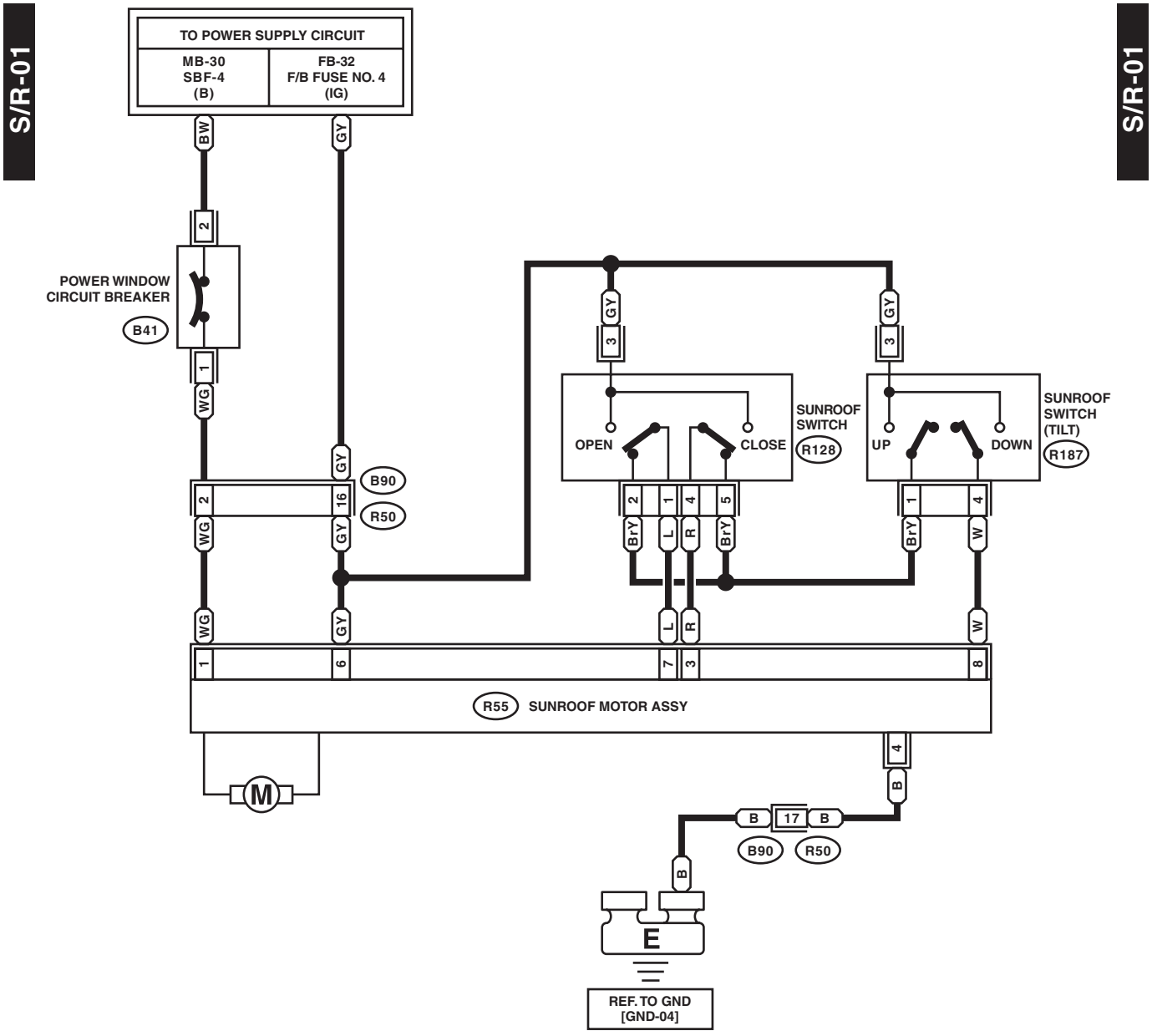

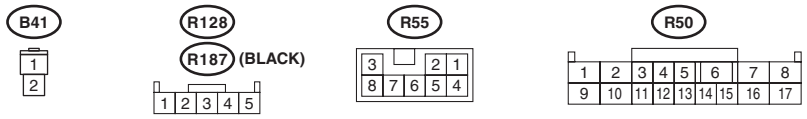

WI-34256

50.Tire Pressure Monitoring System

A: WIRING DIAGRAM

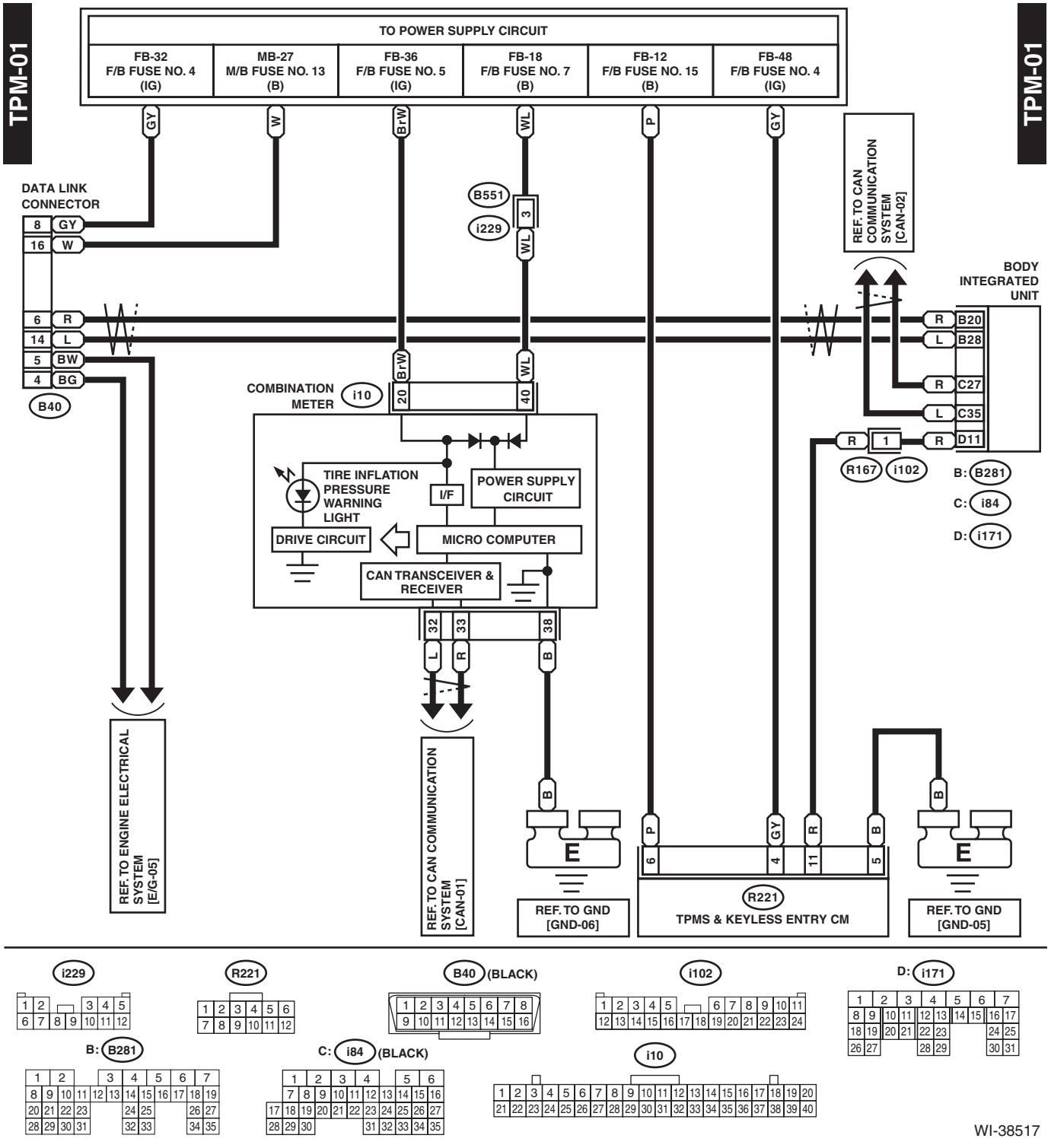

WI-38517

51.Turn Signal Light and Hazard Light System

A: WIRING DIAGRAM

TURN-01

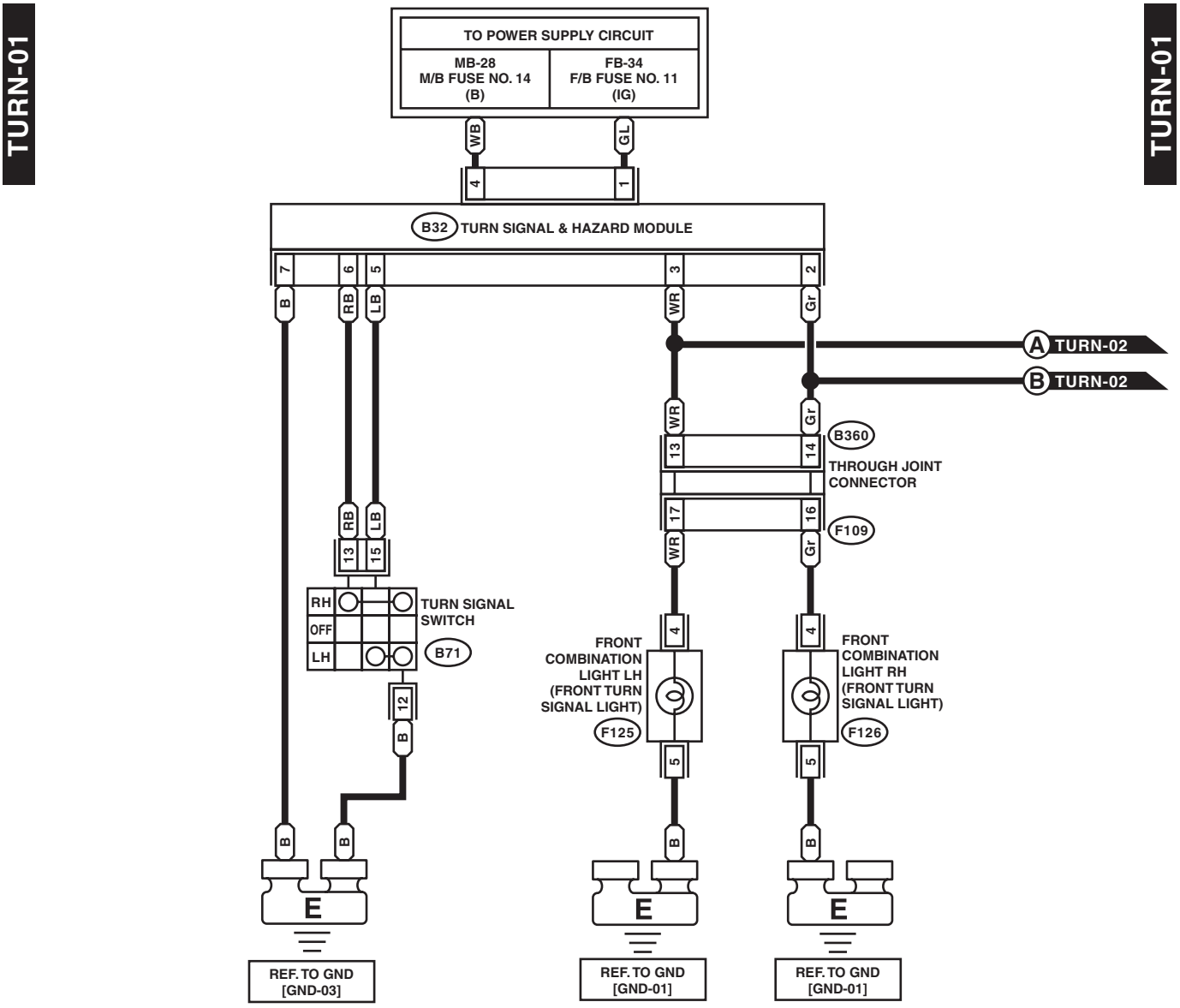

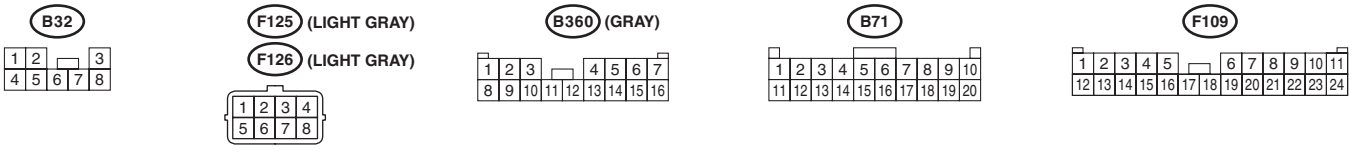

TURN-01

WI-34258

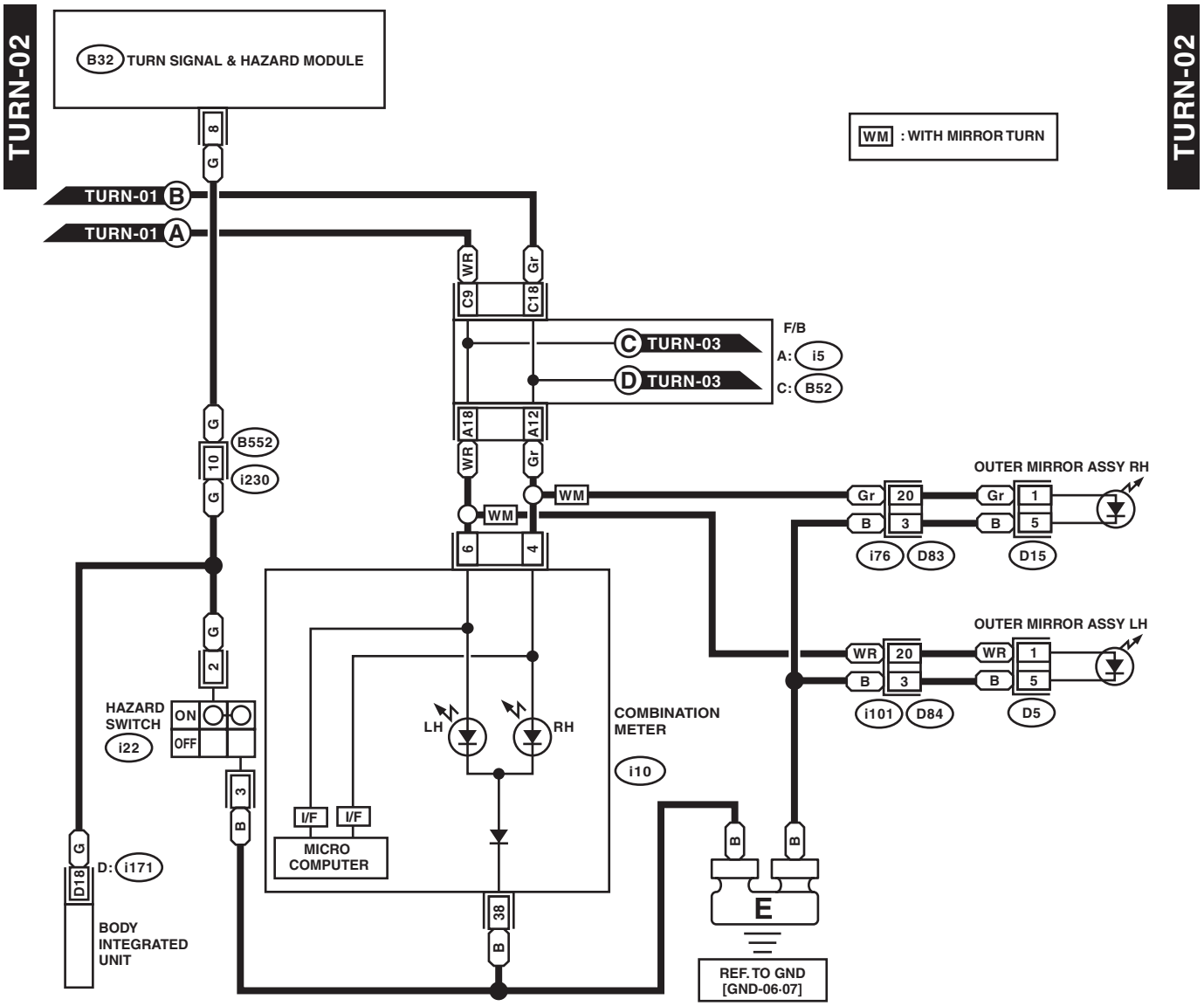
TURN-02
TURN-02
B32 TURN SIGNAL & HAZARD MODULE
WM : WITH MIRROR TURN
TURN-01 B
TURN-01 A
C9
C18
WR
Gr
C TURN-03
D TURN-03
F/B
A: i5
C: B52
A18
A12
B552
i230
10
OUTER MIRROR ASSY RH
OUTER MIRROR ASSY LH
WM
20
3
1
5
i76
D83
D15
i101
D84
D5
HAZARD SWITCH
ON
OFF
i22
LH
RH
COMBINATION METER
i10
I/F
MICRO COMPUTER
D18
D: i171
BODY INTEGRATED UNIT
38
E
REF. TO GND [GND-06·07]

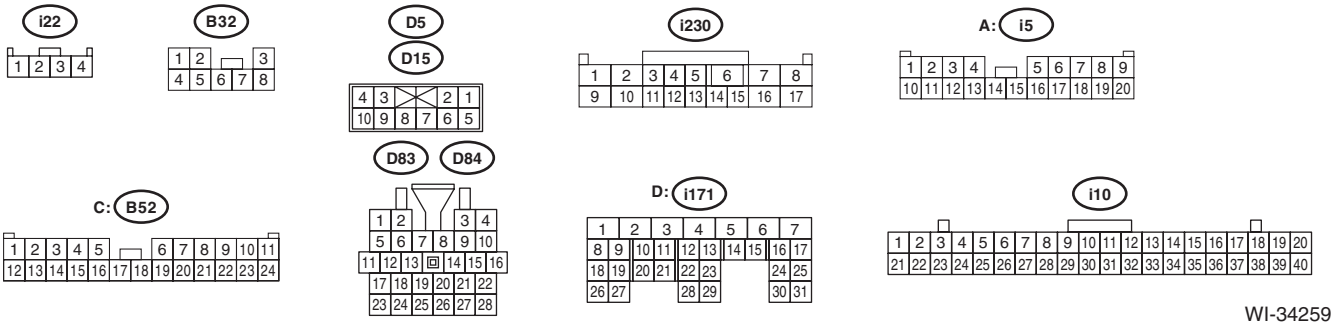
i22
B32
D5
D15
i230
A: i5
D83
D84
C: B52
D: i171
i10

WI-34259

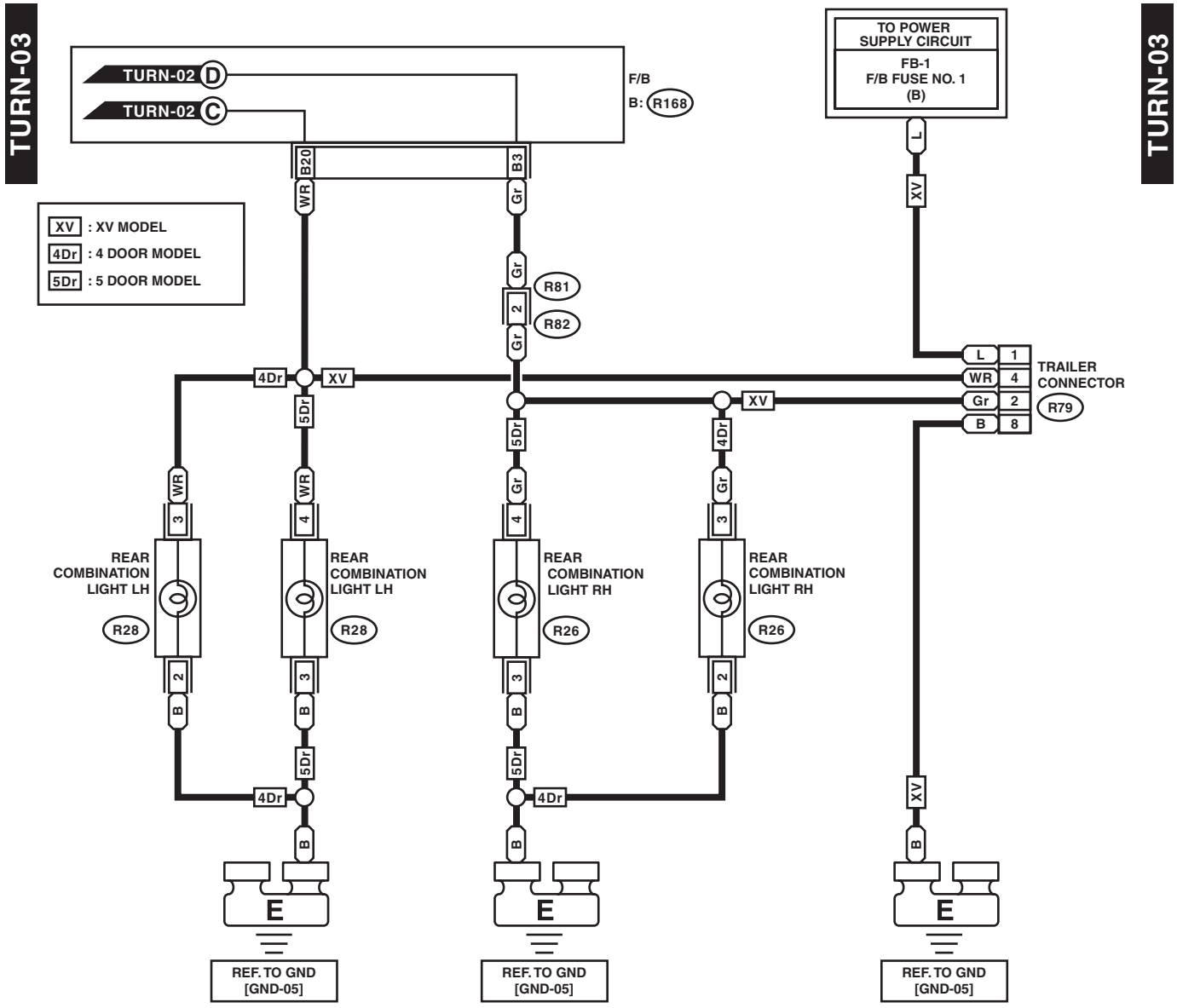
TURN-03
TURN-03
TURN-02 D
TURN-02 C
F/B
B: R168
TO POWER SUPPLY CIRCUIT
FB-1
F/B FUSE NO. 1
(B)
XV : XV MODEL
4Dr : 4 DOOR MODEL
5Dr : 5 DOOR MODEL
B20
B3
WR
Gr
L
XV
R81
R82
4Dr
XV
5Dr
TRAILER CONNECTOR
R79
REAR COMBINATION LIGHT LH
R28
REAR COMBINATION LIGHT LH
R28
REAR COMBINATION LIGHT RH
R26
REAR COMBINATION LIGHT RH
R26
E
REF. TO GND [GND-05]
REF. TO GND [GND-05]
REF. TO GND [GND-05]

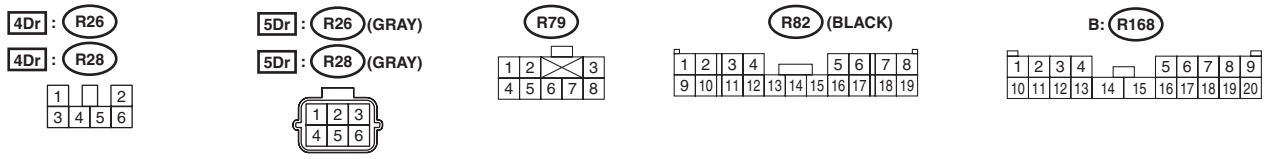
4Dr : R26
4Dr : R28
5Dr : R26 (GRAY)
5Dr : R28 (GRAY)
R79
R82 (BLACK)
B: R168

WI-37865

52.Vehicle Dynamics Control System

A: WIRING DIAGRAM

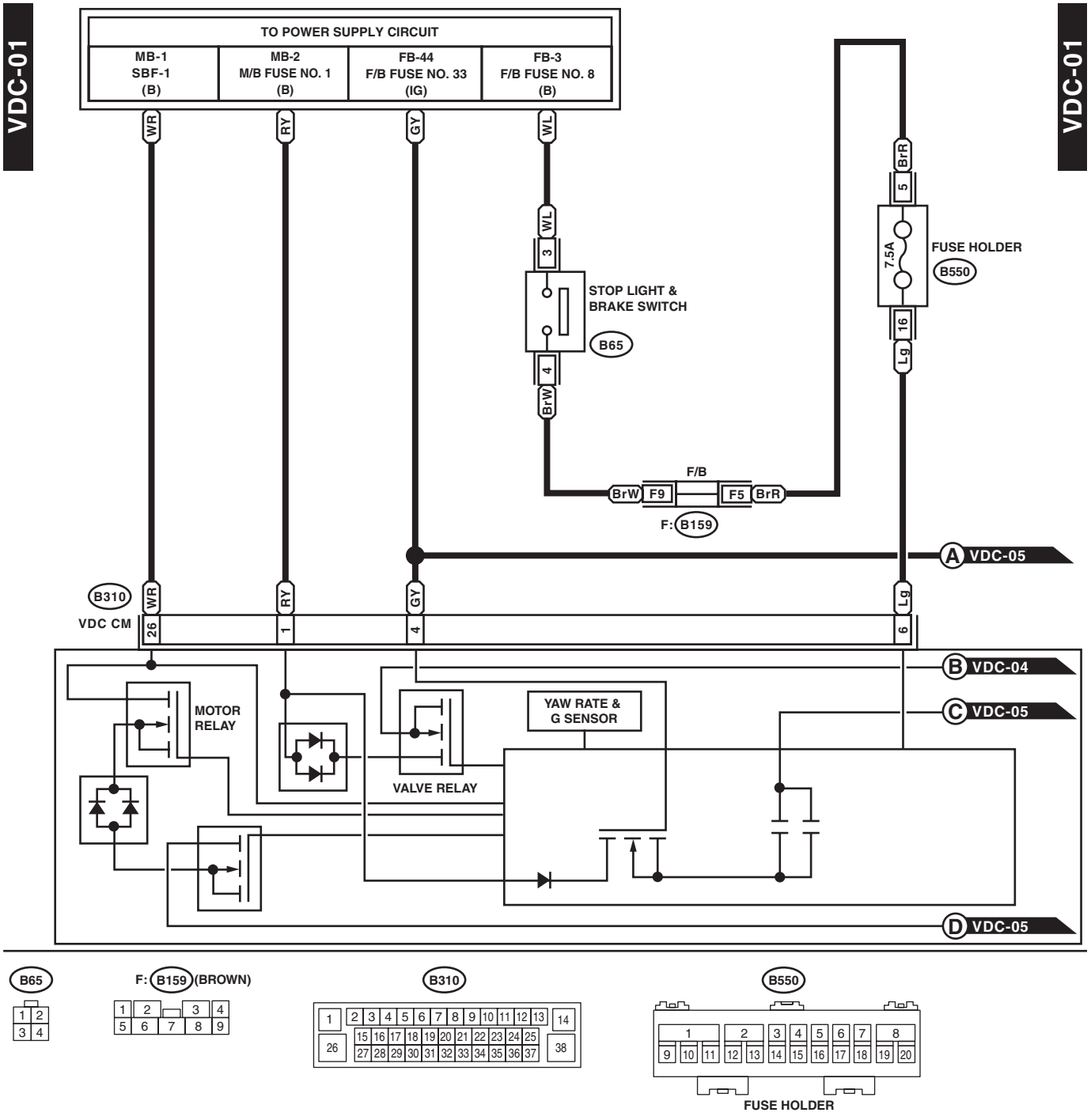

WI-34261

VDC-02

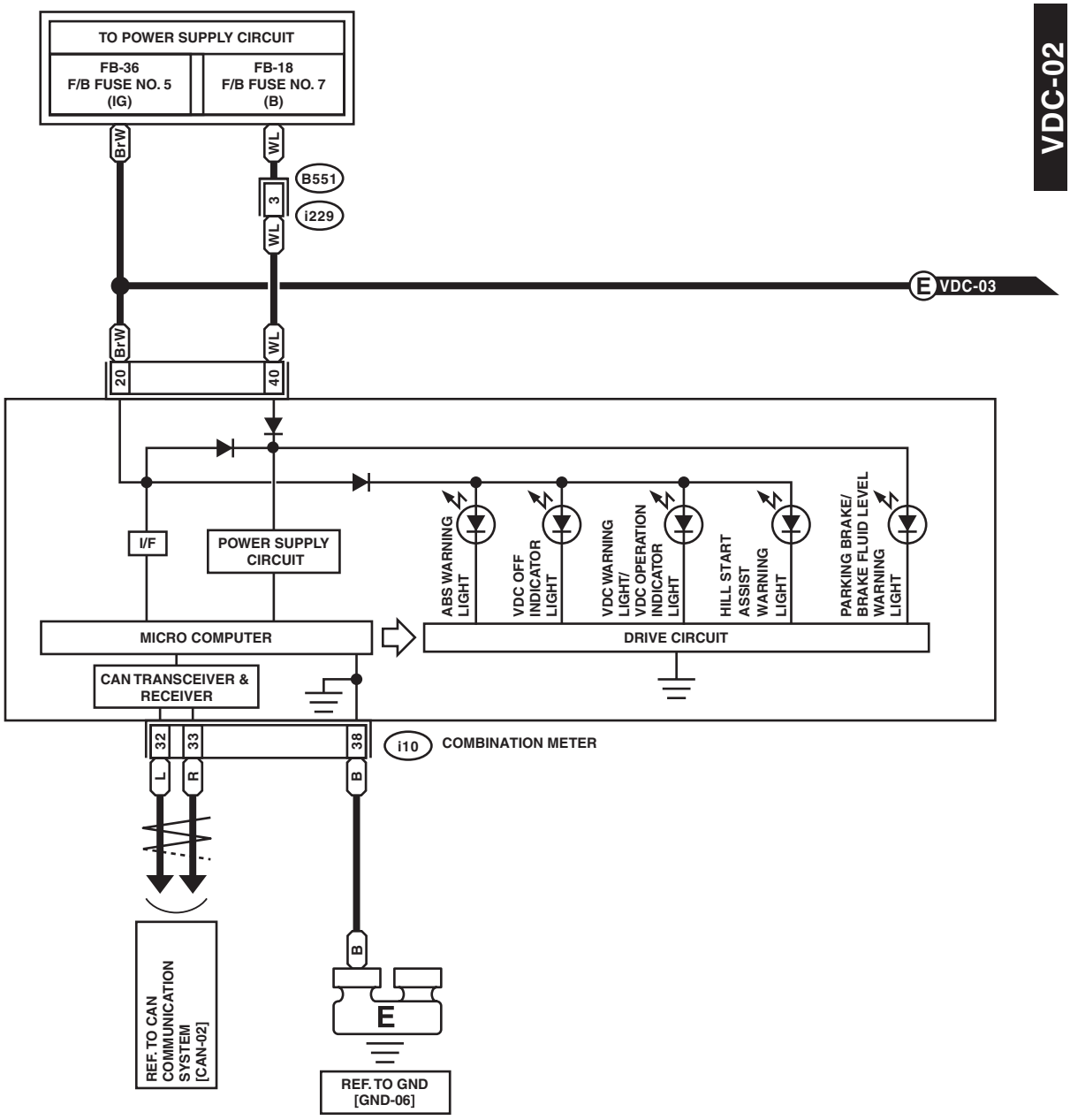

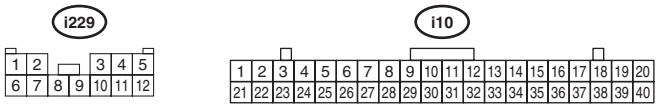

WI-37866

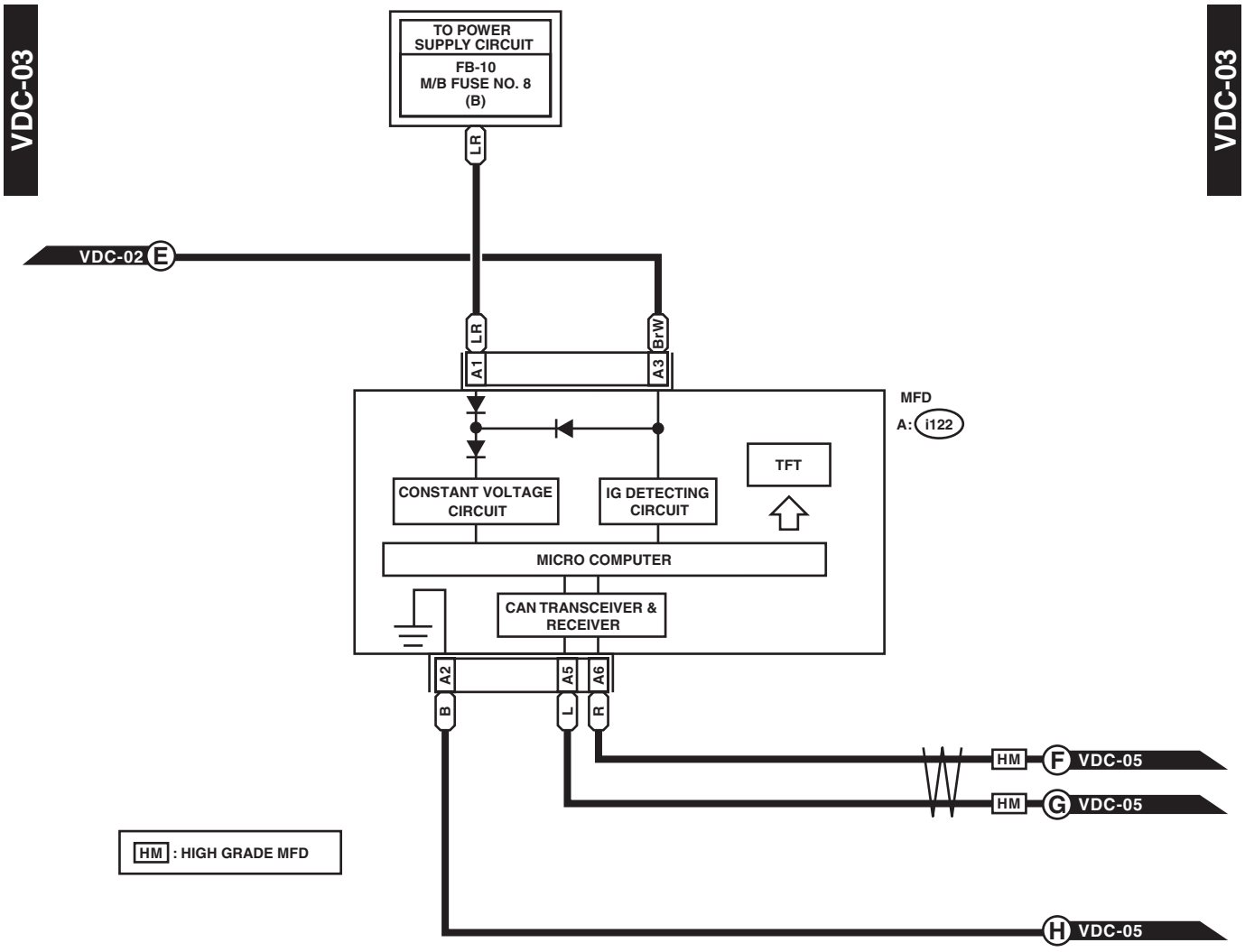

A: i122 (BLACK)

1	2	3	4	5	6
7	8	9	10	11	12

WI-37867

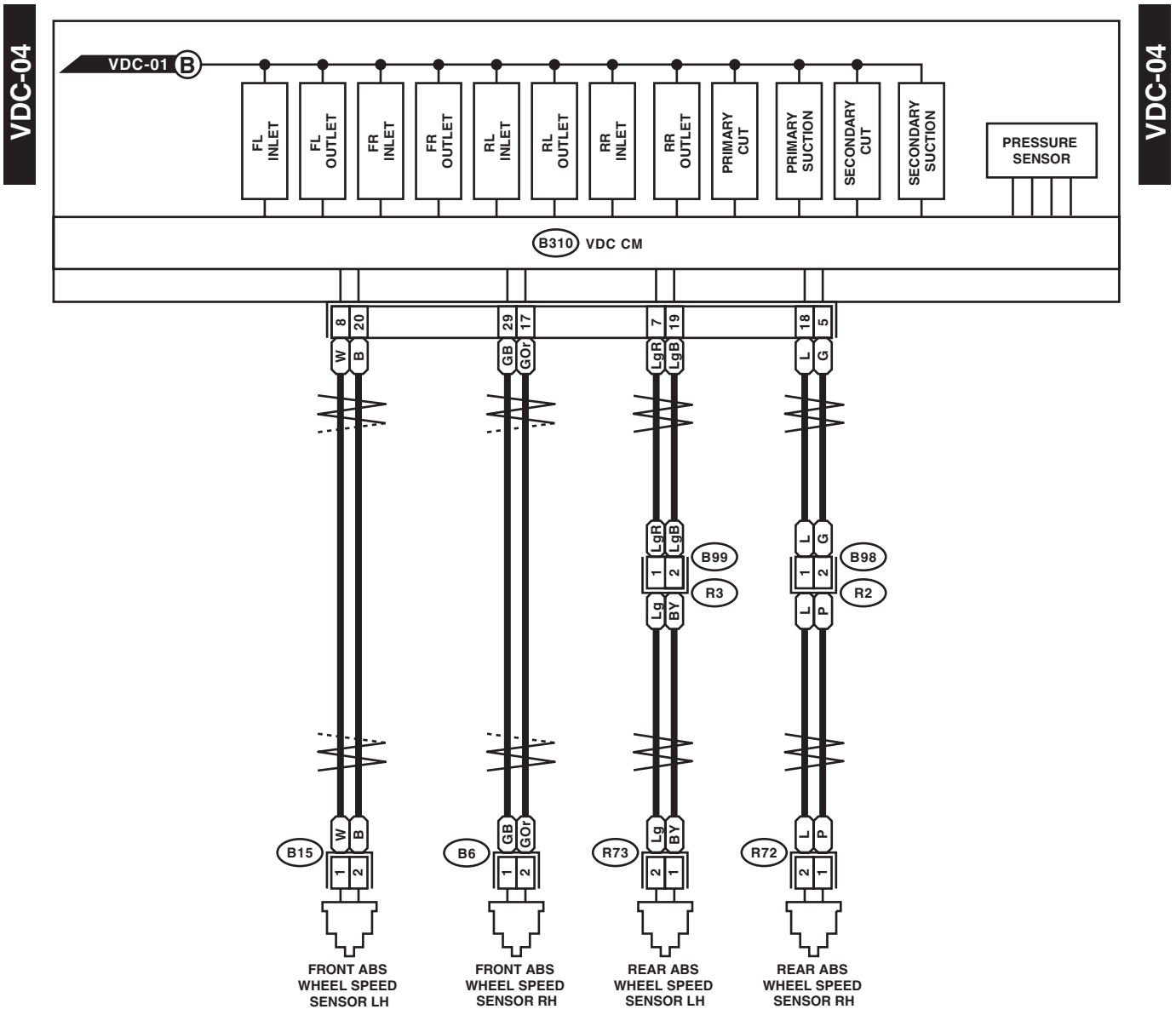

(LIGHT GRAY) B6 R72 (LIGHT GRAY)

(LIGHT GRAY) B15 R73 (LIGHT GRAY)



B99

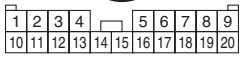

B98

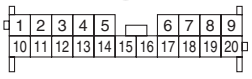

B310

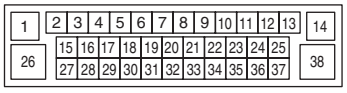

WI-34264

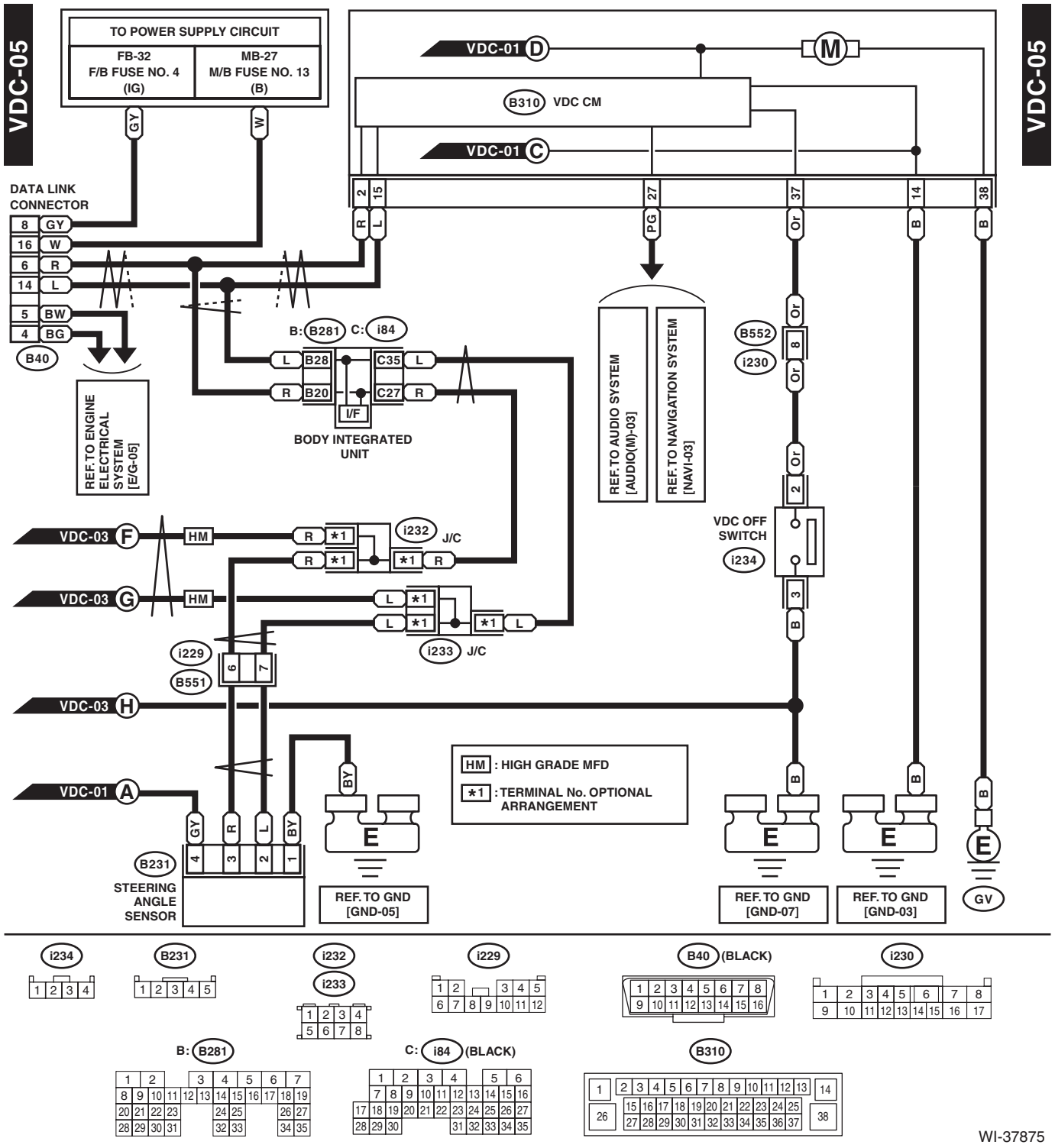
VDC-05
TO POWER SUPPLY CIRCUIT
FB-32
F/B FUSE NO. 4
(IG)
MB-27
M/B FUSE NO. 13
(B)
VDC-01 D
M
B310 VDC CM
VDC-01 C
DATA LINK CONNECTOR
8 GY
16 W
6 R
14 L
5 BW
4 BG
B40
REF. TO ENGINE ELECTRICAL SYSTEM [E/G-05]
B: B281 C: i84
L B28 C35 L
R B20 C27 R
I/F
BODY INTEGRATED UNIT
REF. TO AUDIO SYSTEM [AUDIO(M)-03]
REF. TO NAVIGATION SYSTEM [NAVI-03]
B552
i230
VDC OFF SWITCH
i234
VDC-03 F
VDC-03 G
VDC-03 H
VDC-01 A
HM
i232 J/C
i233 J/C
i229
B551
B231
STEERING ANGLE SENSOR
HM : HIGH GRADE MFD
*1 : TERMINAL No. OPTIONAL ARRANGEMENT
REF. TO GND [GND-05]
REF. TO GND [GND-07]
REF. TO GND [GND-03]
GV
VDC-05

i234
B231
i232
i233
i229
B40 (BLACK)
i230
B: B281
C: i84 (BLACK)
B310

WI-37875

53.Wiper Deicer System

A: WIRING DIAGRAM

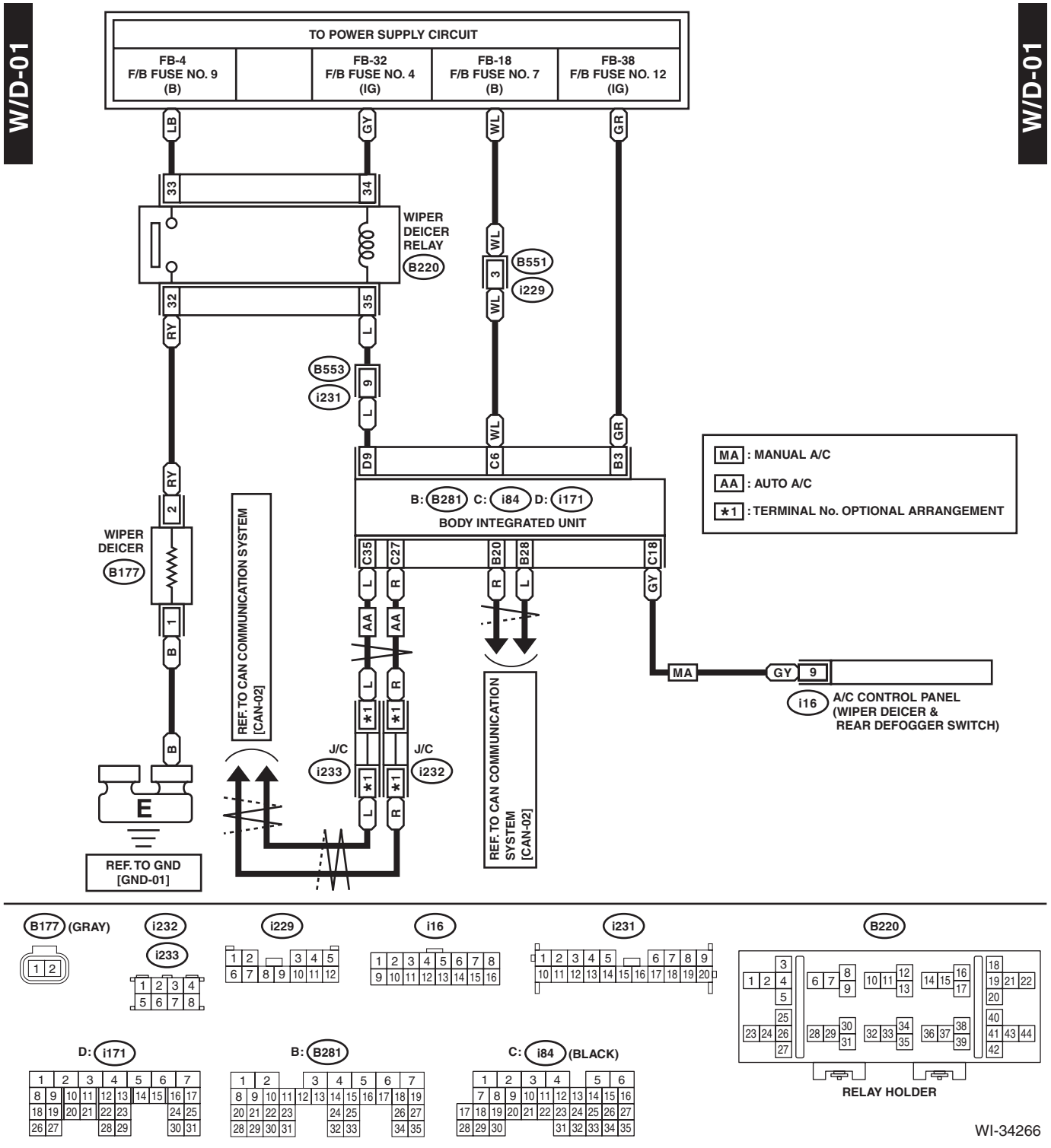

54.Harness Components Location

A: LOCATION

1. 4 DOOR MODEL

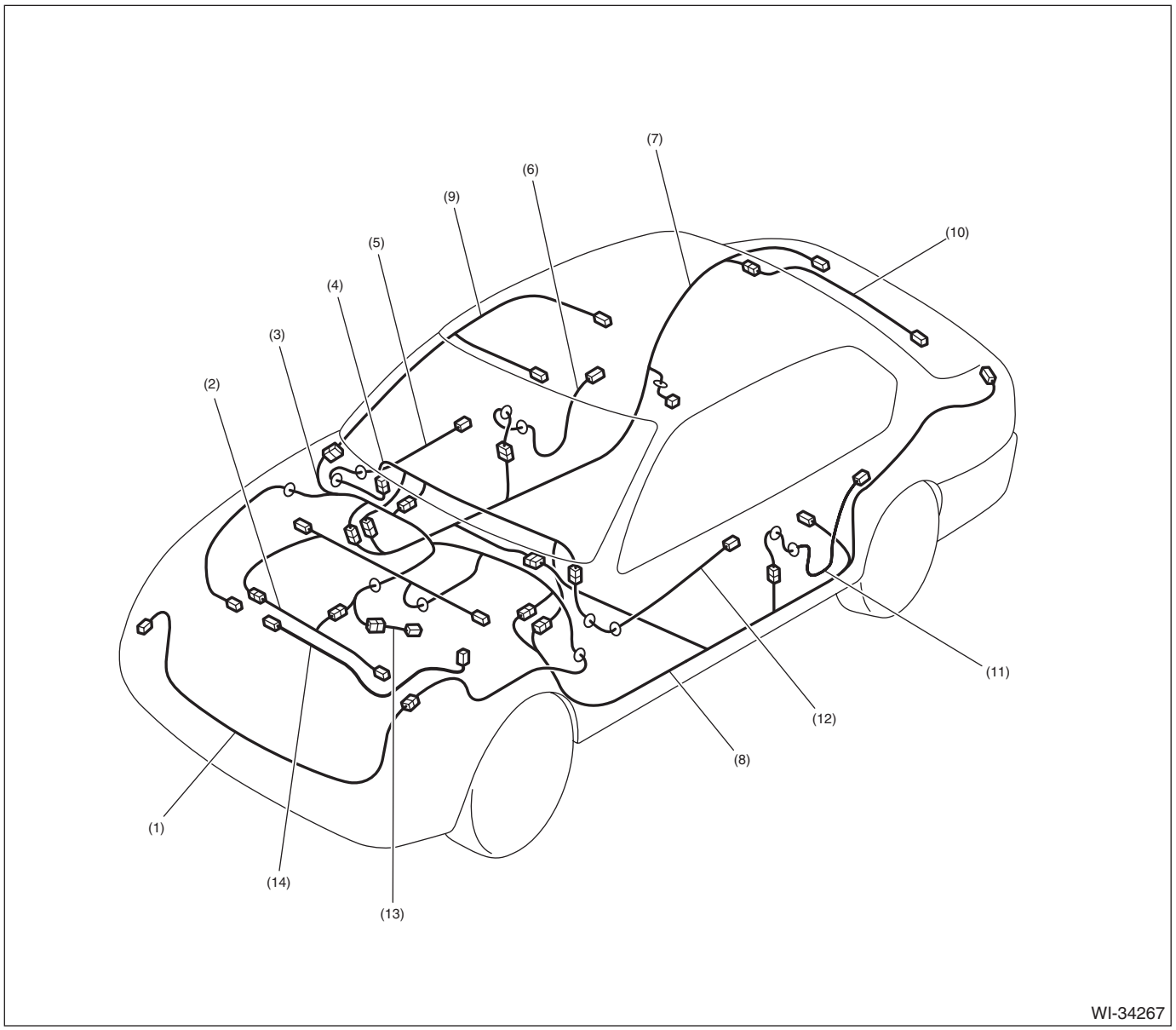

(1) Front wiring harness
(2) Engine wiring harness
(3) Bulkhead wiring harness
(4) Instrument panel wiring harness
(5) Front door cord RH
(6) Rear door cord RH
(7) Rear wiring harness RH
(8) Rear wiring harness LH
(9) Roof cord
(10) Trunk lid cord
(11) Rear door cord LH
(12) Front door cord LH
(13) Transmission cord
(14) Generator cord

2. 5 DOOR MODEL/XV MODEL

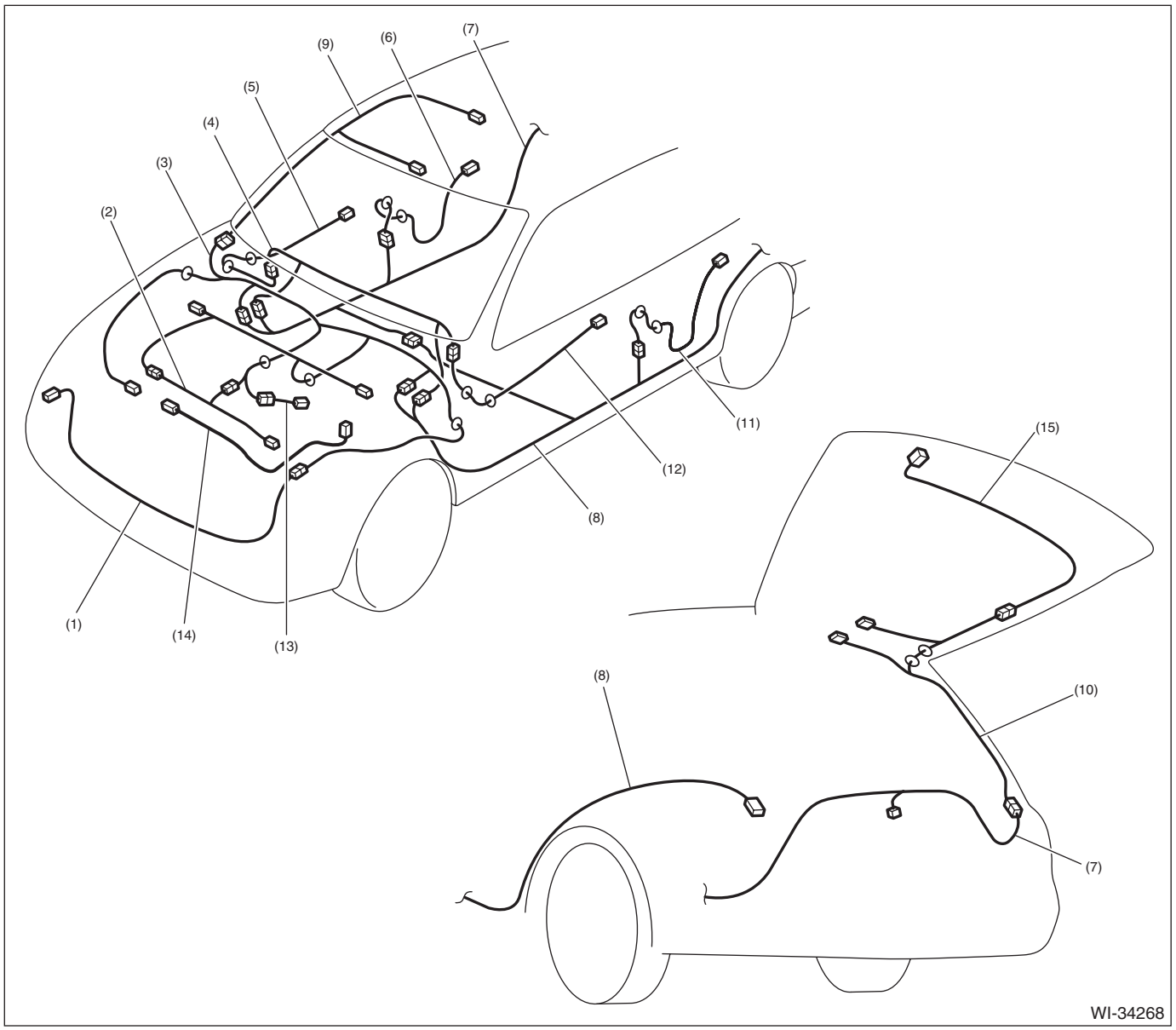

(1) Front wiring harness
(2) Engine wiring harness
(3) Bulkhead wiring harness
(4) Instrument panel wiring harness
(5) Front door cord RH
(6) Rear door cord RH
(7) Rear wiring harness RH
(8) Rear wiring harness LH
(9) Roof cord
(10) Rear gate cord
(11) Rear door cord LH
(12) Front door cord LH
(13) Transmission cord
(14) Generator cord
(15) Rear gate cord

55.Front Wiring Harness

A: LOCATION

Connector				Connecting to	
No.	Pole	Color	Area	No.	Description
F5	1	Black	C-1		Horn
F6	2	★	C-1		Front fog light RH
F16	2	★	C-1		Sub fan motor
F17	2	★	D-2		Main fan motor
F21	2	★	D-4		Front fog light LH
F24	1	★	C-3		Magnet clutch
F25	1	★	B-2		Generator terminal B
F26	3	★	B-2		Generator
F27	26	★	C-4		Relay holder
F35	12	Blue	B-5		M/B
F36	7	★	C-5		
F37	20	★	B-5		
F47	1	Black	C-2		Horn
F78	2	Black	D-2		Ambient sensor
F103	2	Gray	C-1		Daytime running light resistor
F108	18	Gray	B-4	B361	Through joint connector
F109	24	★	B-4	B360	
F125	8	Light gray	C-3		Front combination light LH
F126	8	Light gray	C-1		Front combination light RH
F148	2	★	C-3		High beam LH
F149	2	★	B-1		High beam RH
★: White or natural color					

Front Wiring Harness

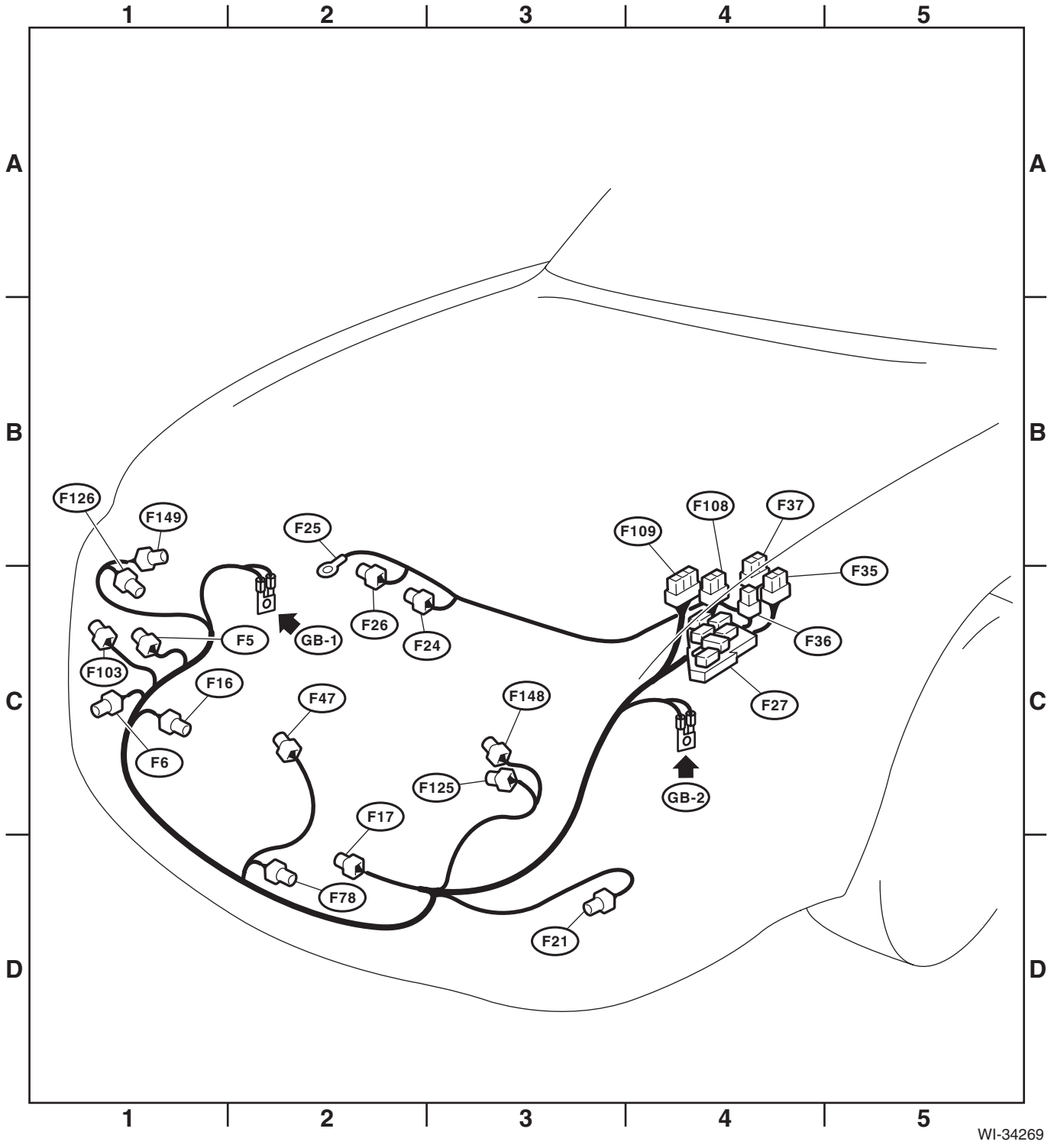

56.Bulkhead Wiring Harness (In Engine Compartment)

A: LOCATION

Connector				Connecting to	
No.	Pole	Color	Area	No.	Description
B3	5	Black	B-2		Mass air flow and intake air temperature sensor
B6	2	Light gray	C-3		Front ABS wheel speed sensor RH
B8	5	Light gray	B-5		Front wiper motor
B10	4	Light gray	C-4		Pressure switch
B11	12	Light gray	B-4	T4	Transmission cord (CVT model)
B12	16	Brown	B-4	T3	
B14	1	Black	C-4		Starter motor
B15	2	Light gray	C-4		Front ABS wheel speed sensor LH
B16	2	Gray	B-4		Brake fluid level switch
B21	54	Black	B-3	E2	Engine wiring harness
B22	16	Brown	B-3		
B24	2	Gray	B-3	T1	Back-up light switch (MT model)
B25	2	Brown	B-3	T2	Neutral position switch 1
B143	20	★	B-5		M/B
B144	9	Brown	B-5		
B145	7	Brown	B-5		
B146	2	Black	C-4		Front washer motor
B147	2	Gray	C-4		Rear washer motor
B164	2	Black	B-2		Keyless buzzer
B177	2	Gray	B-4		Wiper deicer
B186	8	★	B-5		M/B
B310	38	★	B-2		VDC CM
B321	2	Black	B-3		Hood switch
B360	16	Gray	B-4	F109	Through joint connector
B361	14	★	B-4	F108	
B396	2	Brown	D-3		Washer fluid level sensor
B432	8	Black	C-4		SBF holder
B450	10	Black	C-3		Power steering CM
B451	6	Gray	B-3		Torque sensor
B452	2	Black	B-3		Power steering CM
B523	2	Light gray	C-5		Battery temperature sensor
B538	3	Black	C-4		Battery current sensor
B571	2	★	B-5		M/B
★: White or natural color					

Connector				Connecting to	
No.	Pole	Color	Area	No.	Description
AB13	2	Yellow	C-3		Front sub sensor LH
AB16	2	Yellow	B-1		Front sub sensor RH

Bulkhead Wiring Harness (In Engine Compartment)

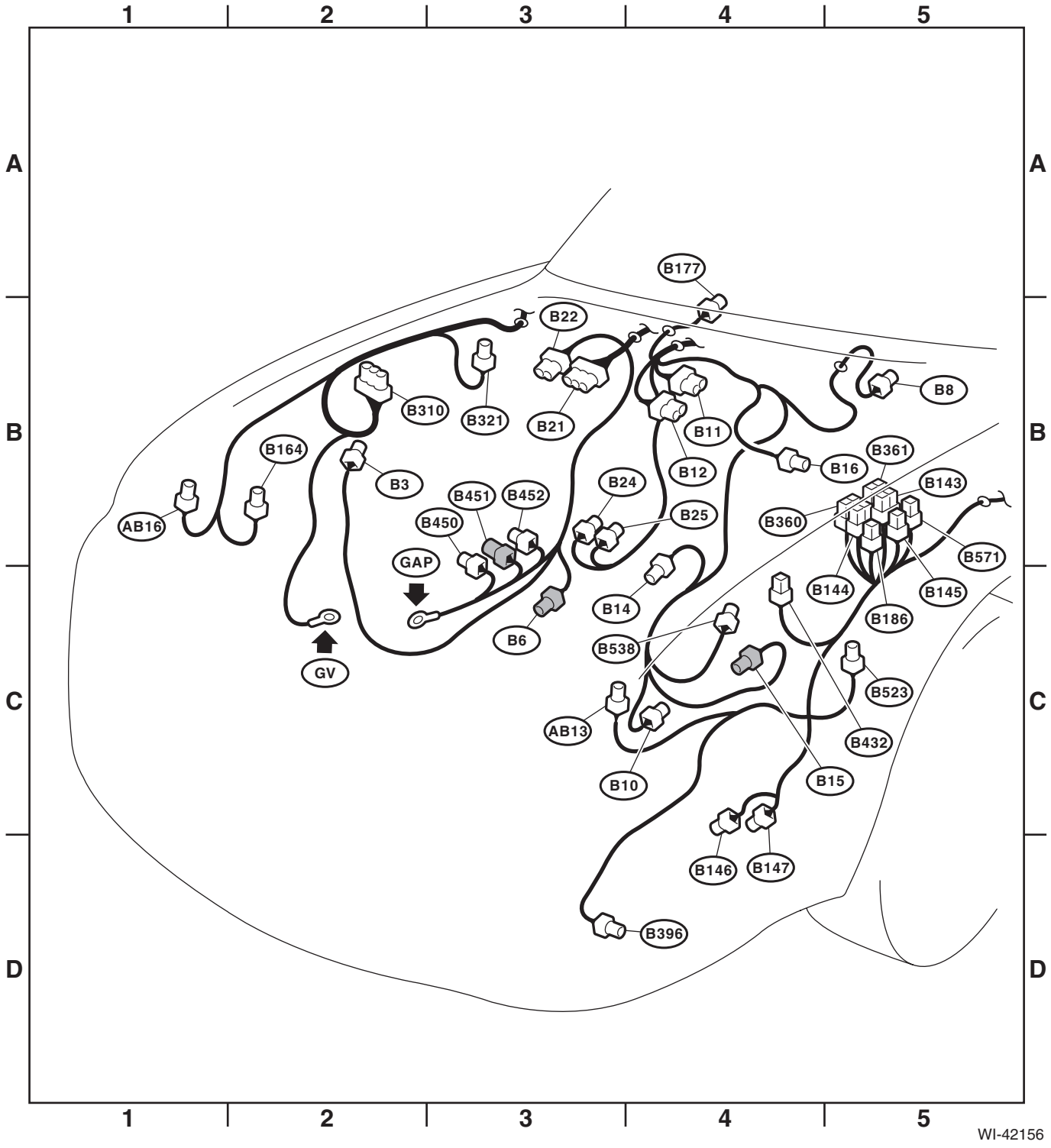

57.Bulkhead Wiring Harness (In Compartment)

A: LOCATION

Connector				Connecting to	
No.	Pole	Color	Area	No.	Description
B27	4	★	B-4		Blower Resistor (manual A/C)
B30	8	Black	C-5		Front door cord RH
B31	10	Gray	C-1	AB1	Airbag wiring harness
B32	8	★	B-2		Turn signal and hazard unit
B40	16	Black	C-1		Data link connector
B41	2	★	C-2		Power window circuit breaker
B52	24	★	D-1		F/B
B54	26	Green	B-2		TCM
B55	22	Green	B-2		
B57	4	★	B-4		Power transistor (auto A/C)
B65	4	★	B-2		Stop light and brake switch
B68	14	★	B-3		Roll connector
B70	10	★	B-3		Combination switch
B71	20	★	B-3		
B72	6	★	C-3		Ignition switch
B77	6	★	C-4		Mode door actuator (auto A/C)
B83	8	★	B-4		J/C
B87	2	★	B-5		Blower motor
B88	2	Brown	C-4		Evaporator sensor (auto A/C)
	3	★	C-4		Evaporator sensor (manual A/C)
B89	2	Black	B-5		Blower diode
B90	17	★	B-5	R50	Roof cord
B97	20	★	C-5	R1	Rear wiring harness RH
B98	20	★	C-5	R2	
B99	20	★	D-1	R3	Rear wiring harness LH
B101	8	Black	C-1		Front door cord LH
B106	2	★	C-3		Clutch start switch
B107	2	Blue	C-3		Clutch switch
B116	8	★	C-4		AT select lever
B122	8	★	B-5		J/C
B123	2	Black	C-1	B124	Key lock
B124	2	Black	C-1	B123	
B134	34	★	C-4		ECM
B135	35	★	C-5		
B136	35	★	C-5		
B137	31	★	C-5		
B150	24	★	C-1		Auto headlight beam leveler CM
B152	10	Gray	D-1		F/B
B158	8	★	D-1		
B159	9	Brown	D-2		
B162	2	★	D-2		
B163	6	Black	B-5		Intake door actuator
B180	4	★	C-2		Remote engine start CM
B181	2	★	C-2	B182	Bulkhead wiring harness
B182	2	★	C-2	B181	

Connector				Connecting to	
No.	Pole	Color	Area	No.	Description
B220	44	★	B-5		Relay holder
B225	44	★	C-2		
B231	5	★	B-3		Steering angle sensor
B235	6	★	C-4		Air mix door actuator LH (with left/right independent air conditioner)
B239	6	★	B-4		Air mix door actuator (without left/right independent air conditioner)
					Air mix door actuator RH (with left/right independent air conditioner)
B280	34	★	C-1		Body integrated unit
B281	35	★	C-2		
B315	6	Black	C-4		Accelerator pedal position sensor
B358	2	★	C-4		AT select lever illumination
B367	8	★	C-2		Impact sensor
B386	4	★	B-5		Blower motor relay
B415	7	Black	C-3		Immobilizer antenna
B475	4	★	D-1		Wiper relay unit
B550	20	★	D-2		Fuse holder
B551	12	★	C-2	i229	Instrument panel wiring harness LH
B552	17	★	C-2	i230	
B553	20	★	D-2	i231	
B555	2	★	C-3		Key warning switch
B556	2	★	C-4	AB65	Airbag wiring harness
B557	2	★	C-3		Key lock solenoid
B558	7	★	B-3		Combination switch
B559	5	★	B-3		Security CM
B583	12	★	B-5	i237	Instrument panel wiring harness RH
B584	20	★	B-5	i238	
★: White or natural color					

Connector				Connecting to	
No.	Pole	Color	Area	No.	Description
AB1	10	Gray	C-1	B31	Bulkhead wiring harness
AB2	4	Yellow	B-3	AB7	Driver's airbag module
AB6	30	Yellow	C-4		Airbag CM
AB9	4	Yellow	C-4		Passenger's airbag module
AB65	2	★	C-4	B556	Bulkhead wiring harness
AB66	2	Black	D-2		Driver's knee airbag module
★: White or natural color					

Bulkhead Wiring Harness (In Compartment)

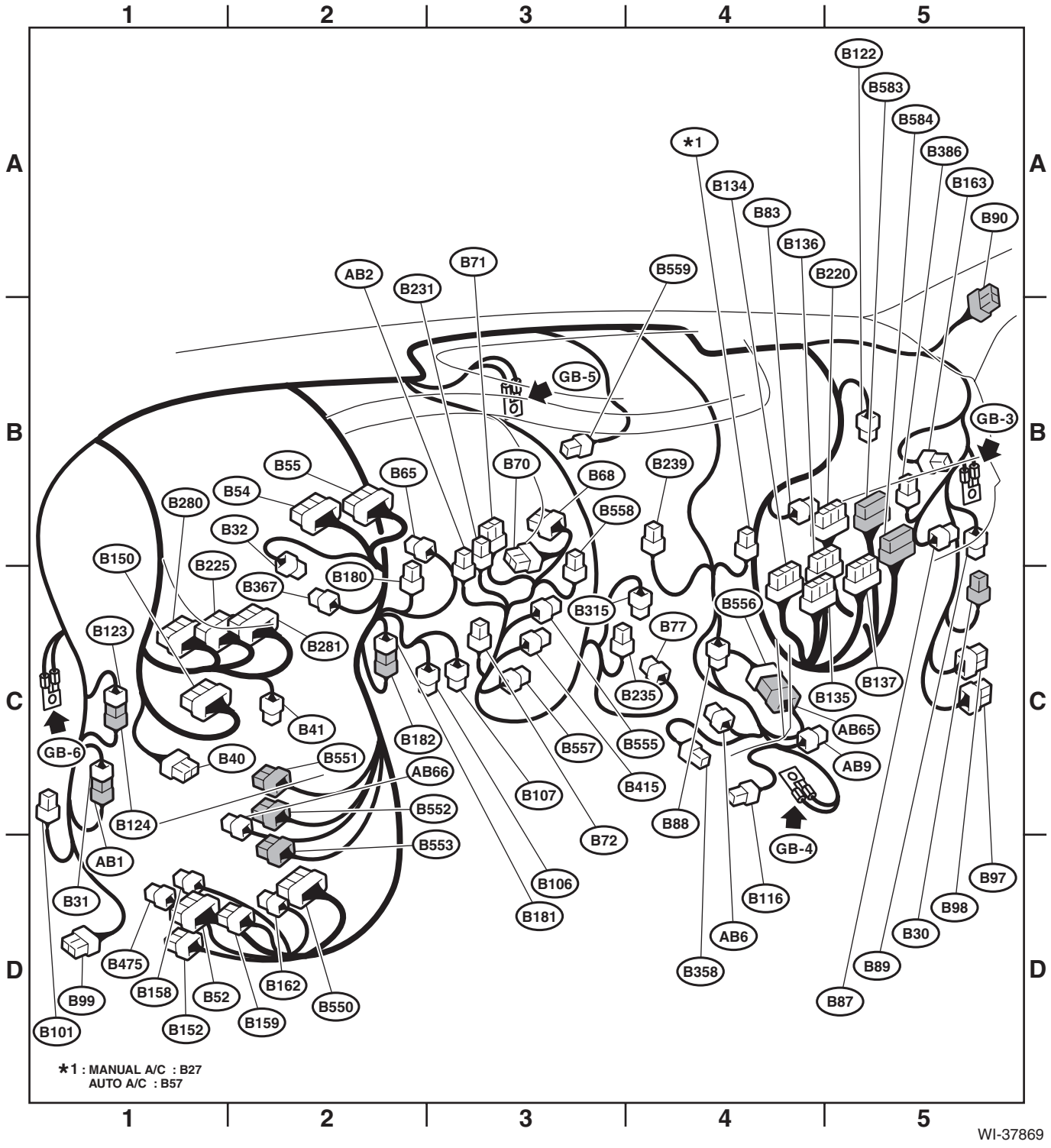

58.Engine Wiring Harness and Transmission Cord

A: LOCATION

Connector				Connecting to	
No.	Pole	Color	Area	No.	Description
E2	54	Black	A-3	B21	Bulkhead wiring harness
E3	16	Brown	A-3	B22	
E4	2	Blue	B-4		Purge control solenoid valve
E5	2	Dark gray	B-2		Fuel injector No. 1
E6	2	Dark gray	A-2		Fuel injector No. 3
E8	2	Black	B-2		Engine coolant temperature sensor
E10	2	Light gray	B-3		Crankshaft position sensor
E11	1	—	B-3		Oil pressure switch
E14	2	Black	B-3		Knock sensor
E16	2	Dark gray	B-4		Fuel injector No. 2
E17	2	Dark gray	B-4		Fuel injector No. 4
E18	6	Dark gray	A-3		EGR control valve
E21	3	Black	A-3		Manifold absolute pressure sensor
E24	4	Light gray	B-1		Front oxygen (A/F) sensor
E25	4	Black	B-1		Rear oxygen sensor
E31	3	Black	B-2		Ignition coil No. 1
E32	3	Black	B-4		Ignition coil No. 2
E33	3	Black	A-2		Ignition coil No. 3
E34	3	Black	B-4		Ignition coil No. 4
E35	3	Light gray	C-3		Intake camshaft position sensor LH
E36	3	Light gray	B-1		Intake camshaft position sensor RH
E37	2	Black	C-3		Intake oil control solenoid LH
E38	2	Black	B-1		Intake oil control solenoid RH
E51	5	Light gray	B-4		Tumble generator valve actuator LH
E55	5	Light gray	A-2		Tumble generator valve actuator RH
E57	6	Black	A-3		Electronic throttle control
E62	3	Light gray	B-1		Exhaust camshaft position sensor RH
E63	3	Black	B-1		Exhaust oil control solenoid RH
E65	3	Light gray	B-3		Exhaust camshaft position sensor LH
E66	3	Black	C-3		Exhaust oil control solenoid LH
E75	2	Black	B-3		Engine oil temperature sensor
E130	1	★	B-3		Oil level switch
★: White or natural color					

- **MT model**

Connector				Connecting to	
No.	Pole	Color	Area	No.	Description
T1	2	Gray	C-1	B24	Bulkhead wiring harness
T2	2	Brown	C-1	B25	

- **CVT model**

Connector				Connecting to	
No.	Pole	Color	Area	No.	Description
T3	16	Brown	D-4	B12	Bulkhead wiring harness
T4	12	Light gray	D-4	B11	
T7	9	Black	D-4		Inhibitor switch
AT1	3	Black	D-4		Primary speed sensor
AT4	3	Dark gray	D-5		Secondary speed sensor
AT5	3	Light gray	D-5		Turbine speed sensor
AT6	3	Black	D-4		Secondary pressure sensor

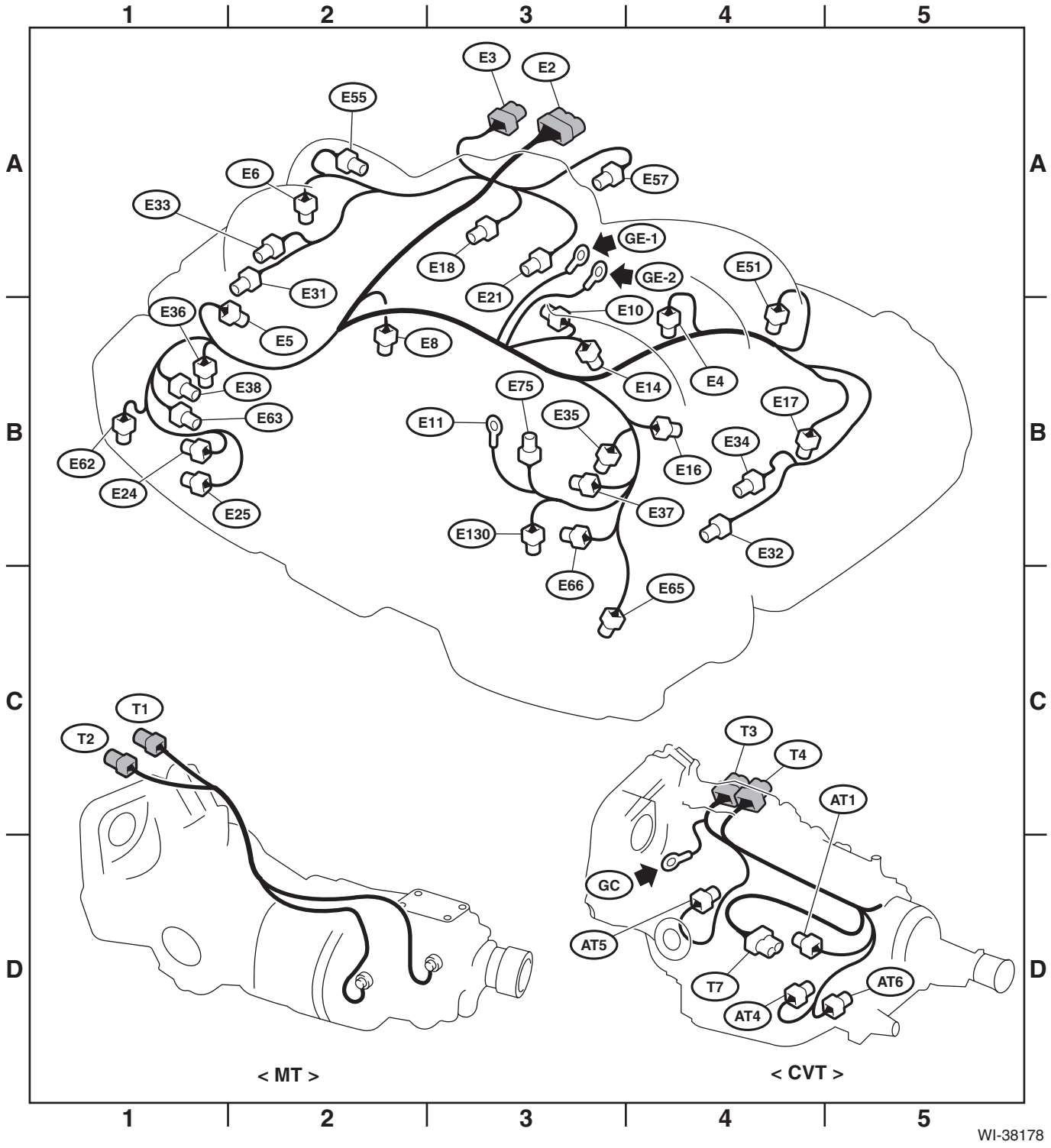
1
2
3
4
5
A
B
C
D
E3
E2
E55
E6
E57
E33
GE-1
E18
GE-2
E51
E21
E31
E10
E36
E5
E8
E4
E14
E38
E75
E17
E63
E35
E11
E34
E16
E62
E24
E37
E25
E130
E32
E66
E65
T1
T2
T3
T4
AT1
GC
AT5
T7
AT6
AT4
< MT >
< CVT >
WI-38178

59.Instrument Panel Wiring Harness

A: LOCATION

Connector				Connecting to	
No.	Pole	Color	Area	No.	Description
i2	10	★	D-1	R339	Rear wiring harness LH
i5	20	★	C-1		F/B
i10	40	★	B-3		Combination meter
i15	6	★	C-4		Blower fan switch (manual A/C)
i16	16	★	B-4		A/C control panel (manual A/C)
i22	4	★	B-4		Hazard switch
i23	2	★	B-5		Glove box light
i24	2	★	C-4		Front accessory power supply socket
i29	1	★	B-4		Audio bracket ground
i50	10	★	B-4		Navigation unit
i51	2	★	B-3		Sunload sensor
i53	24	★	B-5	R98	Rear wiring harness RH
i55	2	★	C-3		In-vehicle sensor
i76	28	★	B-5	D83	Front door cord RH
i79	6	★	C-1		Illumination control switch
i84	35	Black	C-1		Body integrated unit
i85	20	★	C-4		Audio
i86	16	★	B-4		Audio
i87	28	★	B-4		Navigation unit
i88	40	★	C-4		A/C control panel (auto A/C)
i101	28	★	C-1	D84	Front door cord LH
i102	24	★	D-1	R167	Rear wiring harness LH
i122	12	Black	B-4		MFD
i131	16	★	B-4		Navigation unit
i147	6	★	B-4		
i158	4	★	B-1		Side tweeter LH
i159	4	★	A-5		Side tweeter RH
i166	4	★	B-1		J/C
i167	4	★	B-1		
i168	4	★	B-5		
i169	4	★	B-5		
i171	31	★	C-1		Body integrated unit
i195	10	★	C-5	R382	Rear wiring harness RH
i226	3	★	A-4		Light control sensor
i229	12	★	C-2	B551	Bulkhead wiring harness LH
i230	17	★	C-2	B552	
i231	20	★	C-2	B553	
i232	8	★	B-3		J/C
i233	8	★	B-4		
i234	4	★	C-2		VDC OFF switch
i237	12	★	B-4	B583	Bulkhead wiring harness RH
i238	20	★	B-4	B584	
i240	8	Black	B-4		MFD

★ White or natural color

Instrument Panel Wiring Harness

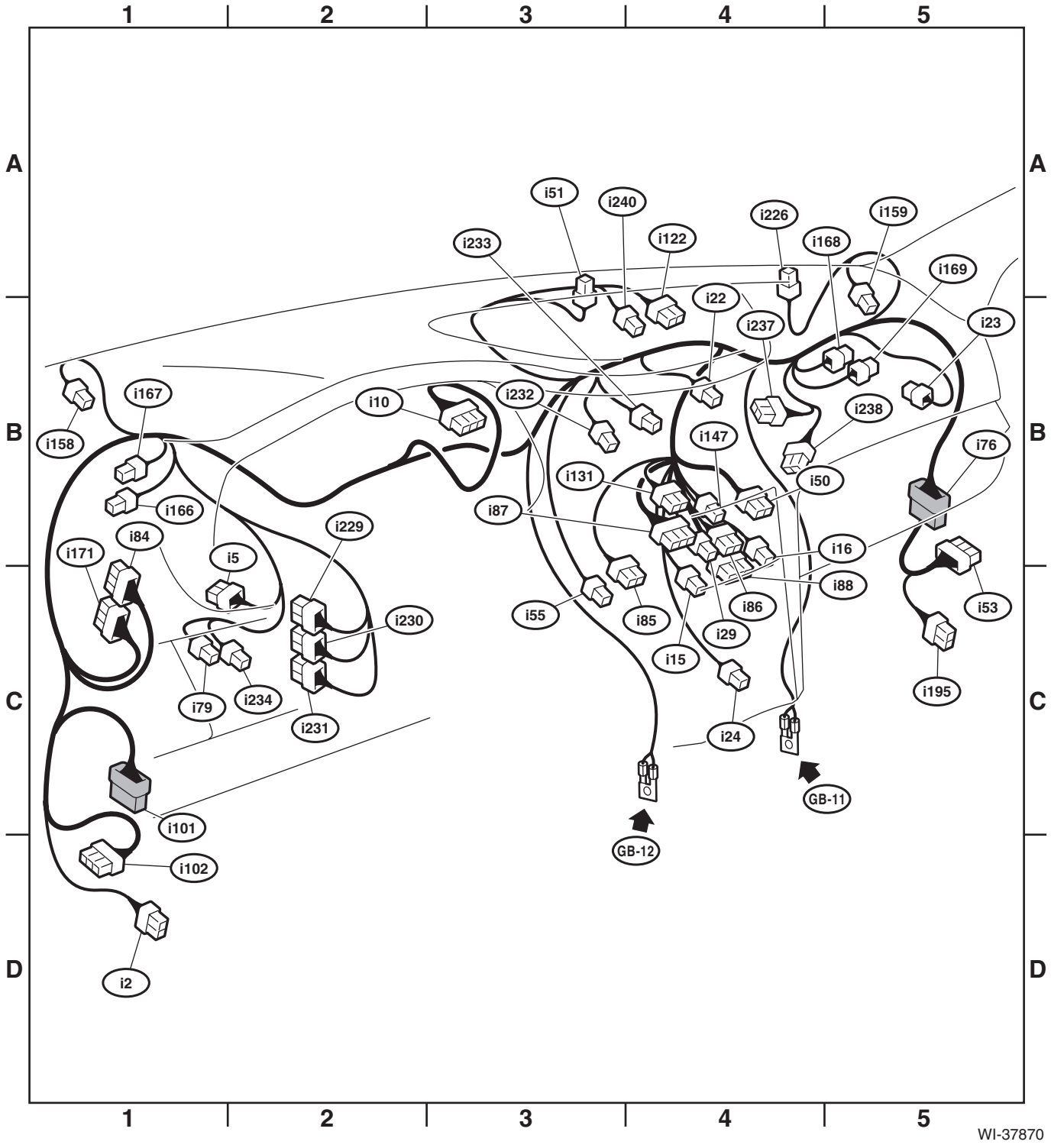

60.Rear Wiring Harness

A: LOCATION

Connector				Connecting to	
No.	Pole	Color	Area	No.	Description
R1	20	★	B-2	B97	Bulkhead wiring harness
R2	20	★	B-2	B98	
R3	20	★	C-3	B99	
R4	1	Black	B-4		Parking brake switch
R9	3	★	C-4		Front door switch LH
R10	8	★	B-4	D22	Rear door cord LH
R12	3	★	B-3		Front door switch RH
R13	8	★	B-3	D28	Rear door cord RH
R32	2	★	B-4		Rear accessory power supply socket
R41	4	★	C-4		Seat heater LH
R43	8	★	B-4		Seat heater switch
R44	4	★	B-3		Seat heater RH
R50	17	★	B-2	B90	Bulkhead wiring harness
R52	3	★	A-4		Room light
R55	8	★	B-4		Sunroof motor assembly
R56	2	★	B-3		Spot map light (with sunroof)
	6	★	B-3		Spot map light (without sunroof)
R62	6	★	B-3		Spot map light (with sunroof)
R64	3	★	A-3		Spot map light diode (with sunroof)
R81	19	Black	C-3	R82	Rear wiring harness RH
R82	19	Black	B-3	R81	Rear wiring harness LH
R98	24	★	B-2	i53	Instrument panel wiring harness
R107	2	★	C-4		Seat belt switch LH
R123	2	Yellow	C-3	AB62	Front door cord LH
R124	2	Yellow	B-2	AB63	Front door cord RH
R128	5	★	B-4		Sunroof switch
R139	3	★	A-3		Rear view mirror
R167	24	★	C-3	i102	Instrument panel wiring harness
R168	20	★	C-3		F/B
R187	5	Black	A-3		Sunroof switch (tilt)
R284	6	★	B-4		AUX input terminal
R382	10	★	B-2	i195	Instrument panel wiring harness
★: White or natural color					

Connector				Connecting to	
No.	Pole	Color	Area	No.	Description
AB17	15	Yellow	C-2		Airbag CM (except for XV model)
	24	Yellow	C-2		Airbag CM (XV model)
AB18	15	Yellow	C-2		Airbag CM (except for XV model)
	24	Yellow	C-2		Airbag CM (XV model)
AB19	4	Yellow	C-3		Side airbag module LH
AB21	2	Black	C-4		Pretensioner LH
AB23	4	Yellow	C-4		Side airbag sensor LH
AB24	4	Yellow	B-2		Side airbag module RH
AB26	2	Black	B-2		Pretensioner RH
AB28	4	Yellow	B-2		Side airbag sensor RH

Connector				Connecting to	
No.	Pole	Color	Area	No.	Description
AB30	2	Yellow	B-3		Lap seat belt pretensioner RH (XV model)
AB35	2	Black	C-3		F/B
AB53	3	Dark gray	B-2		Occupant detection control module

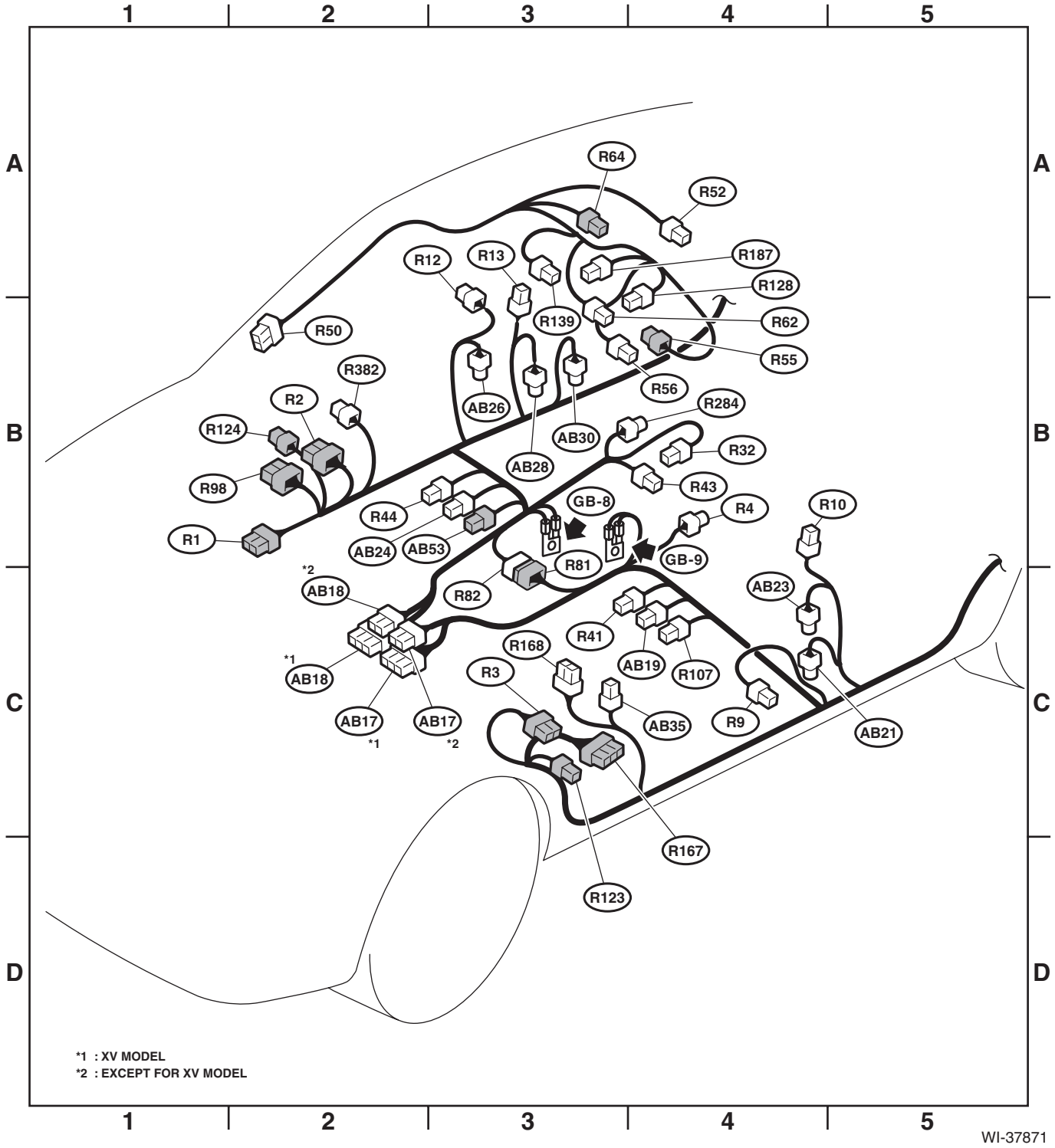

61.Door Cord

A: LOCATION

Connector				Connecting to	
No.	Pole	Color	Area	No.	Description
D1	8	Black	C-2	B30	Bulkhead wiring harness
D2	2	★	C-4		Front door speaker LH
D3	6	Dark gray	C-4		Front power window motor LH
D5	10	★	B-3		Outer mirror assembly LH
D7	16	★	B-4		Power window main switch
D11	8	Black	C-3	B101	Bulkhead wiring harness
D12	2	★	B-2		Front door speaker RH
D13	6	Dark gray	B-3		Front power window motor RH
D15	10	★	B-2		Outer mirror assembly RH
D17	8	★	B-2		Front power window sub-switch
D18	10	★	B-3		Front door lock actuator RH
D22	8	★	B-4	R10	Rear wiring harness LH
D23	2	★	C-4		Rear door speaker LH
D24	6	Dark gray	B-5		Rear power window motor LH
D25	8	★	B-5		Rear power window sub-switch LH
D26	10	★	B-5		Rear door lock actuator LH
D28	8	★	B-3	R13	Rear wiring harness RH
D29	2	★	B-3		Rear door speaker RH
D30	6	Dark gray	B-3		Rear power window motor RH
D31	8	★	B-3		Rear power window sub-switch RH
D32	10	★	A-3		Rear door lock actuator RH
D72	10	★	B-4		Front door lock actuator LH
D83	28	★	B-1	i76	Instrument panel wiring harness
D84	28	★	C-3	i101	
D102	3	★	B-4		Power window main switch
D125	5	★	B-2		Passenger's seat door lock switch
D149	16	★	B-4		Remote control mirror switch
★: White or natural color					

Connector				Connecting to	
No.	Pole	Color	Area	No.	Description
AB58	2	Yellow	C-4		Front door impact sensor LH
AB62	2	Yellow	C-3	R123	Rear wiring harness LH
AB63	2	Yellow	C-1	R124	Rear wiring harness RH
AB64	2	Yellow	B-3		Front door impact sensor RH

Door Cord

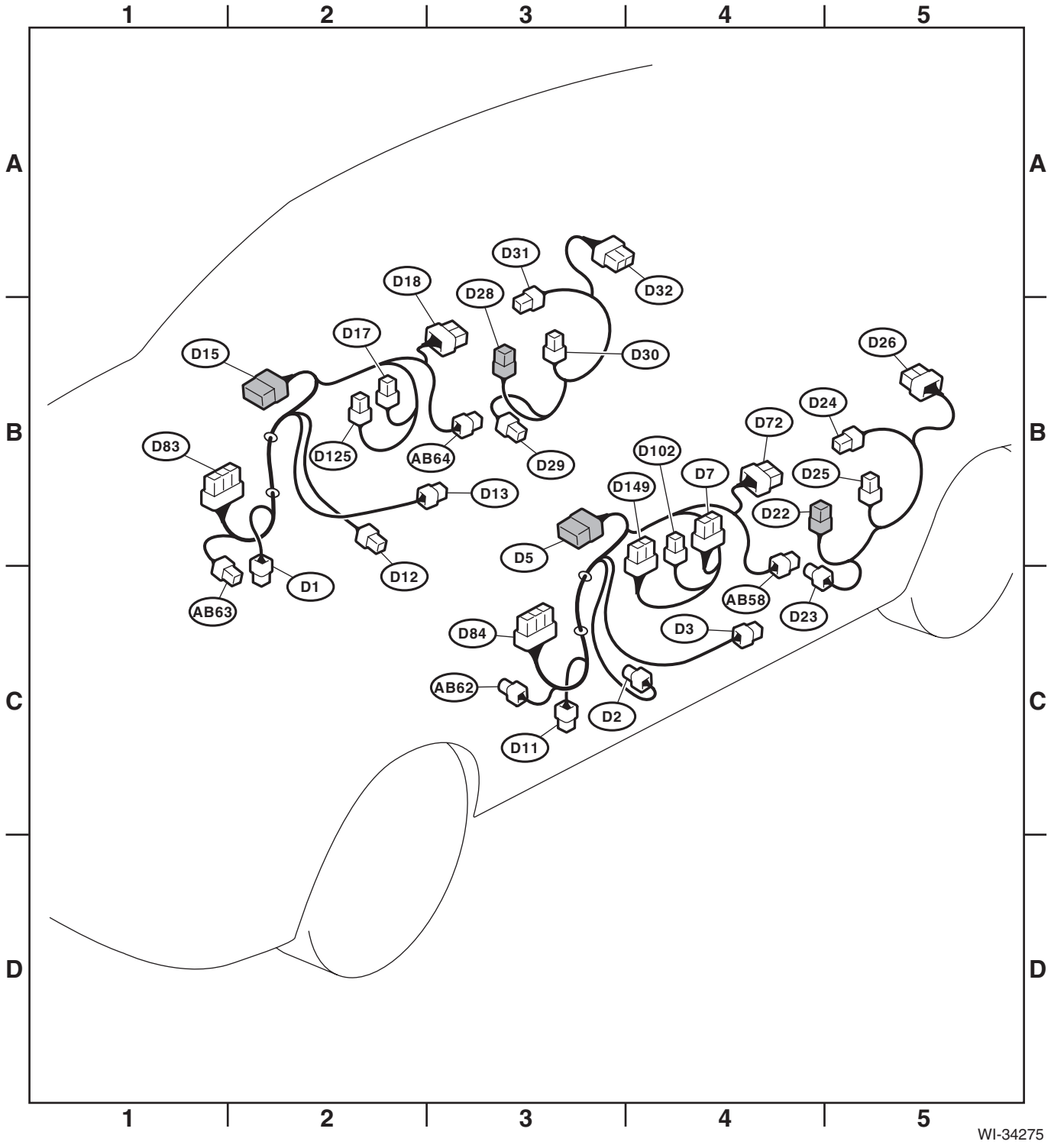
1
2
3
4
5
A
B
C
D
D31
D32
D18
D28
D17
D15
D30
D26
D24
D72
D83
D125
AB64
D29
D102
D7
D25
D13
D149
D22
D5
D12
D1
AB58
AB63
D23
D84
D3
AB62
D2
D11
WI-34275

62.Rear Wiring Harness and Trunk Lid Cord

A: LOCATION

Connector				Connecting to	
No.	Pole	Color	Area	No.	Description
R16	3	★	B-3		Rear door switch RH
R19	2	Blue	B-3		High-mounted stop light
R20	2	Black	B-4		Trunk room light
R22	3	★	B-1		Rear door switch LH
R24	12	★	B-5	R60	Trunk lid cord
R26	6	★	B-5		Rear combination light RH (4 door model)
		Gray			Rear combination light RH (5 door model/XV model)
R28	6	★	C-3		Rear combination light LH (4 door model)
		Gray			Rear combination light LH (5 door model/XV model)
R29	3	Black	C-3		Rear vehicle height sensor
R58	6	★	C-4		Fuel pump assembly
R59	2	★	C-3		Fuel sub level sensor
R60	12	★	B-5	R24	Rear wiring harness RH
R65	1	Black	B-2		Rear defogger
R66	2	★	B-5		High-mounted stop light (rear spoiler)
R72	2	Light gray	B-2		Rear ABS wheel speed sensor RH
R73	2	Light gray	C-2		Rear ABS wheel speed sensor LH
R76	2	★	C-4		License plate light LH
R77	2	★	C-4		License plate light RH
R80	8	★	C-3		Keyless entry CM
R97	1	★	B-2		Antenna feeder cord
R174	1	★	B-4		Rear defogger
R186	3	★	C-4		Trunk lid lock actuator & switch
R221	12	★	C-3		TPMS & keyless entry CM
R400	8	Gray	C-3		ELCM
★: White or natural color					

Connector				Connecting to	
No.	Pole	Color	Area	No.	Description
AB31	2	Black	B-2		Curtain airbag module LH
AB32	4	Yellow	B-1		Curtain airbag sensor LH
AB33	2	Black	B-4		Curtain airbag module RH
AB34	4	Yellow	B-3		Curtain airbag sensor RH
AB41	2	Yellow	C-3		Satellite safing sensor

Rear Wiring Harness and Trunk Lid Cord

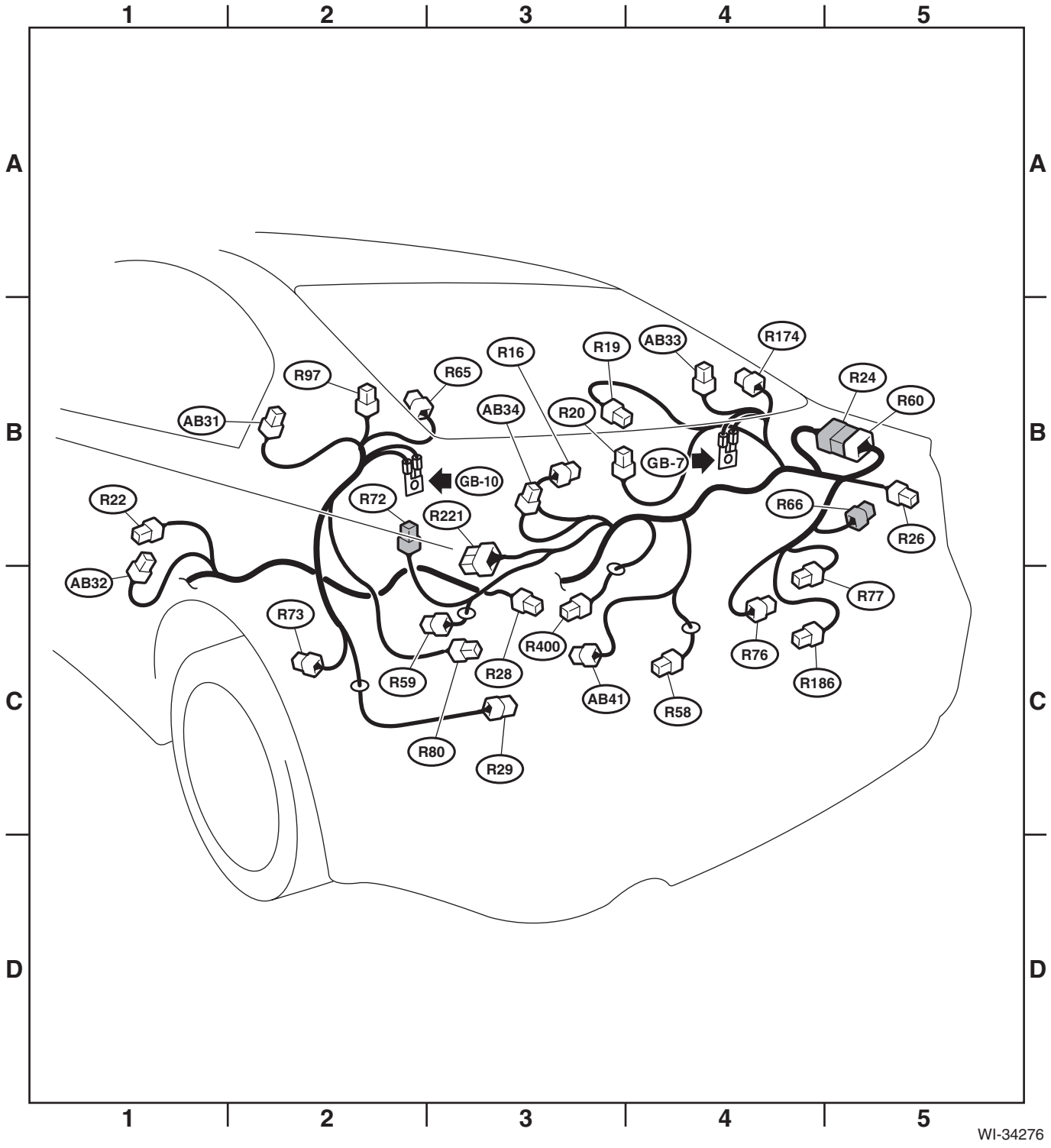

63.Rear Wiring Harness and Rear Gate Cord

A: LOCATION

Connector				Connecting to	
No.	Pole	Color	Area	No.	Description
R16	3	★	C-3		Rear door switch RH
R22	3	★	C-1		Rear door switch LH
R26	6	Gray	C-4		Rear combination light RH
R28	6	Gray	C-3		Rear combination light LH
R29	3	Black	D-2		Rear vehicle height sensor
R38	8	★	C-4	D34	Rear gate cord
R39	14	Gray	C-4	D35	
R58	6	★	C-3		Fuel pump assembly
R59	2	★	C-3		Fuel sub level sensor
R72	2	Light gray	C-3		Rear ABS wheel speed sensor RH
R73	2	Light gray	C-2		Rear ABS wheel speed sensor LH
R79	8	★	C-3		Trailer connector
R80	8	★	C-2		Keyless entry CM
R97	1	★	C-3		Antenna feeder cord
R141	2	Light gray	C-2		Luggage room light
R221	12	★	C-2		TPMS & keyless entry CM
R400	8	Gray	C-3		ELCM
★: White or natural color					

Connector				Connecting to	
No.	Pole	Color	Area	No.	Description
D34	8	★	B-4	R38	Rear wiring harness RH
D35	14	Gray	B-4	R39	
D39	2	★	B-4		High-mounted stop light
D43	4	★	A-4		Rear wiper motor
D44	2	★	B-4		License plate light RH
D46	4	★	A-4		Rear gate lock actuator & latch switch
D47	2	Brown	A-4		Rear gate opener button
D48	1	Black	B-3		Rear defogger
D80	8	★	B-5	D81	Rear gate cord
D81	8	★	B-5	D80	
D89	1	Black	B-4		Rear defogger
D137	2	★	B-4		License plate light LH
★: White or natural color					

Connector				Connecting to	
No.	Pole	Color	Area	No.	Description
AB31	2	Black	C-2		Curtain airbag module LH
AB32	4	Yellow	C-1		Curtain airbag sensor LH
AB33	2	Black	C-4		Curtain airbag module RH
AB34	4	Yellow	C-3		Curtain airbag sensor RH
AB41	2	Yellow	C-2		Satellite safing sensor

Rear Wiring Harness and Rear Gate Cord

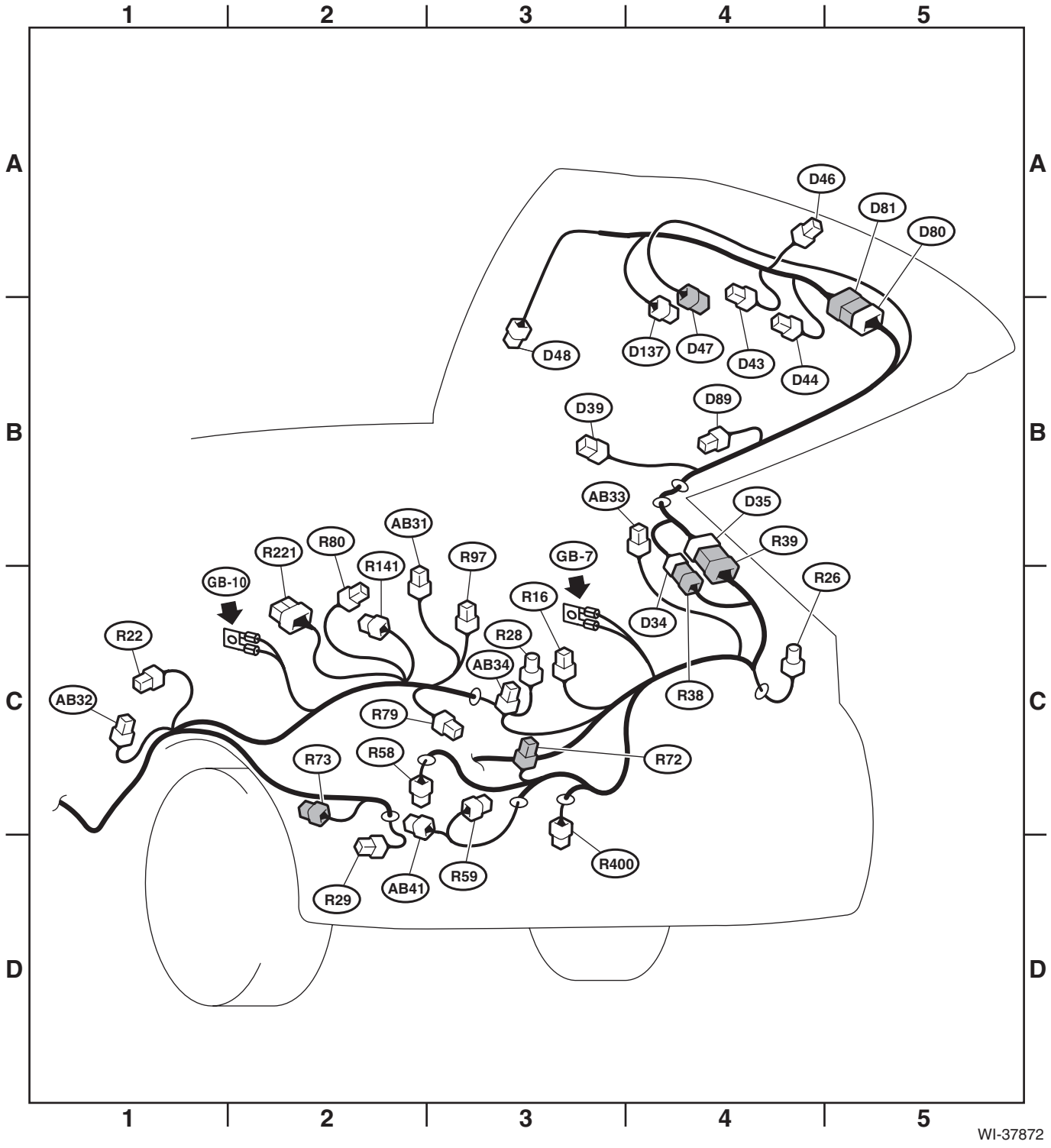

WIRING SYSTEM

WI(HEV)

		Page
1.	Basic Diagnostic Procedure	3
2.	Working Precautions	15
3.	Power Supply Circuit	20
4.	Ground Circuit	39
5.	Active Grille Shutter	49
6.	Airbag System	50
7.	Air Conditioning System	55
8.	Audio System	60
9.	Back-up Light System	63
10.	CAN Communication System	64
11.	Charging System	67
12.	Clearance Light and Illumination Light System	69
13.	Combination Meter System	74
14.	Coolant Temperature System	79
15.	Cruise Control System	81
16.	CVT Control System	86
17.	Electric Power Steering System	98
18.	Engine Electrical System	100
19.	Front Accessory Power Supply Socket System	128
20.	Front Fog Light System	129
21.	Front Wiper and Washer System	130
22.	Fuel Gauge System	132
23.	Headlight Beam Leveler System	133
24.	Headlight System	135
25.	Hybrid Electric Vehicle System	139
26.	Horn System	149
27.	Immobilizer System	150
28.	Interior Light System	154
29.	Keyless Access System	157
30.	Keyless Entry System	164
31.	Multi-function Display (MFD) System	168
32.	Navigation System	170
33.	Occupant Detection System	173
34.	Oil Pressure Warning Light System	174
35.	Parking Brake / Brake Fluid Level Warning Light System	175
36.	Power Window System	176
37.	Push Button Start System	180
38.	Radiator Fan System	184
39.	Rear Accessory Power Supply Socket System	185
40.	Rear Defogger System	186
41.	Rearview Camera System	187
42.	Rearview Mirror System	188
43.	Rear Wiper and Washer System	189
44.	Remote Control Mirror System	191
45.	Remote Engine Start System	192

46. Seat Belt Warning System 199
47. Seat Heater System 200
48. Security System 201
49. Shift Lock Control System 205
50. Speedometer System 206
51. Starter System 207
52. Stop Light System 208
53. Sunroof Control System 209
54. Tire Pressure Monitoring System 210
55. Turn Signal Light and Hazard Light System 211
56. Pedestrian Alert System 214
57. Vehicle Dynamics Control System 216
58. Wiper Deicer System 221
59. Harness Components Location 222
60. Front Wiring Harness 224
61. Bulkhead Wiring Harness (In Engine Compartment) RH 226
62. Bulkhead Wiring Harness (In Engine Compartment) LH 228
63. Bulkhead Wiring Harness (In Compartment) RH 230
64. Bulkhead Wiring Harness (In Compartment) LH 232
65. Engine Wiring Harness and Transmission Cord 235
66. Instrument Panel Wiring Harness RH 237
67. Instrument Panel Wiring Harness LH 239
68. Roof Cord 241
69. Rear Wiring Harness RH 243
70. Rear Wiring Harness LH 245
71. Rear Wiring Harness (HEV) 247
72. Door Cord RH 249
73. Door Cord LH 251
74. Rear Wiring Harness and Rear Gate Cord 253

1. Basic Diagnostic Procedure

A: BASIC PROCEDURES

1. GENERAL DESCRIPTION

The most important purpose of diagnostics is to quickly determine which part is malfunctioning, to save time and labor.

2. IDENTIFICATION OF TROUBLE SYMPTOM

Determine what the problem is based on the symptom.

3. PROBABLE CAUSE OF TROUBLE

Look at the wiring diagram and check the system's circuit. Then check the switch, relay, fuse, ground, etc.

4. LOCATION AND REPAIR OF TROUBLE

1) Using the diagnostics, narrow down the causes.
2) If necessary, use a voltmeter, ohmmeter, etc.
3) Before replacing certain component parts (switch, relay, etc.), check the power supply, ground, for open wiring harness, poor connectors, etc. If no problem is encountered, check the component parts.

5. SYSTEM OPERATION CHECK

After repairing, ensure that the system operates properly.

B: BASIC INSPECTION

1. VOLTAGE MEASUREMENT

1) Using a voltmeter, connect the negative lead to a good ground point or negative battery terminal and the positive lead to the connector or component terminal.
2) Contact the positive lead of the voltmeter on connector (A). The voltmeter will indicate a voltage.
3) Touch connector (B) with the positive probe. The voltmeter will indicate no voltage.

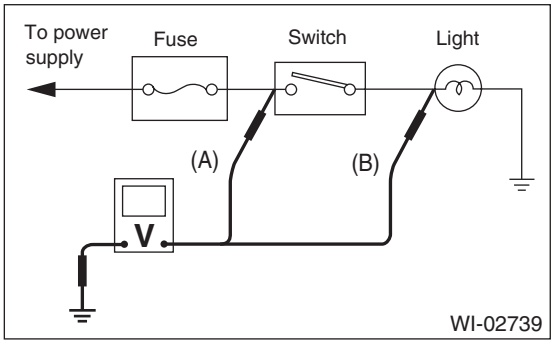

4) With the test set-up held as it is, turn the switch to ON. The voltmeter will indicate a voltage and, at the same time, the light will illuminate.
5) The circuit is in good order. If a problem such as a light failing to illuminate occurs, use the procedures outlined above to track down the malfunction.

2. CIRCUIT CONTINUITY CHECKS

1) Disconnect the battery terminal or connector so there is no voltage between the check points.
Contact the two leads of an ohmmeter to each of the check points.
If the circuit has diodes, reverse the two leads and check again.
2) Use an ohmmeter to check for diode continuity.
When contacting the negative lead to the diode positive side and the positive lead to the negative side, there should be continuity.
When contacting the two leads in reverse, there should be no continuity.

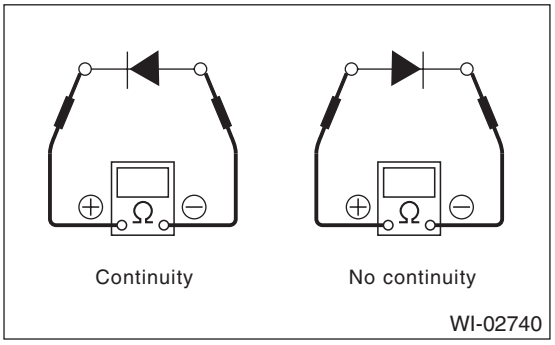

3) The symbol "❍ — ❍" indicates that continuity exists between two points or terminals. For example, when a switch position is at "3", continuity exists among terminals 1, 3 and 6, as shown in the table below.

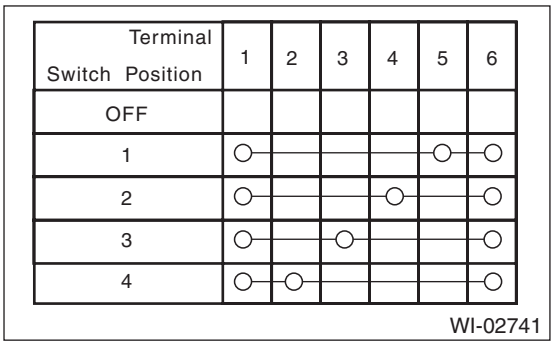

Terminal / Switch Position	1	2	3	4	5	6
OFF						
1	○				○	○
2	○			○		○
3	○		○			○
4	○	○				○

WI-02741

3. HOW TO DETERMINE AN OPEN CIRCUIT

1) With voltmeter:
An open circuit is determined by measuring the voltage between respective connectors and ground using a voltmeter, starting with the connector closest to the power supply. The power supply must be turned ON so that current flows in the circuit. If voltage is not present between a particular connector and ground, the circuit between that connector and the previous connector is open.

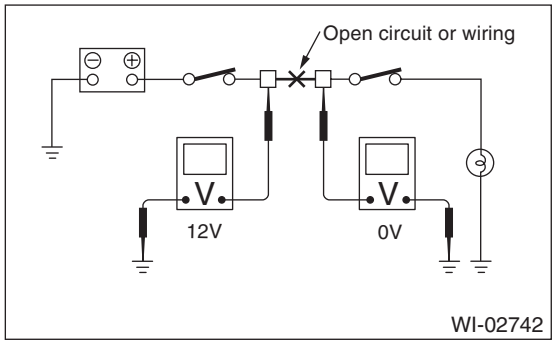

2) With ohmmeter:
Disconnect all connectors affected, and check continuity in the wiring between adjacent connectors. When the ohmmeter indicates “infinite”, the wiring is open.

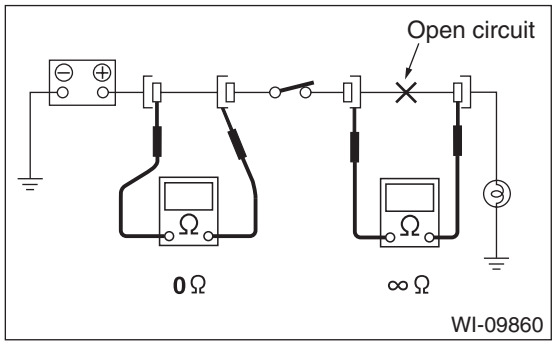

4. HOW TO DETERMINE A SHORT CIRCUIT

1) With test light:
Connect a test light (rated at approx. 3 watts) in place of the blown fuse and allow current to flow through the circuit. Disconnect one connector at a time from the circuit. Starting with the one located farthest from the power supply. If the test light goes out when a connector is disconnected, the wiring between that connector and the next connector (farther from the power supply) is shorted.

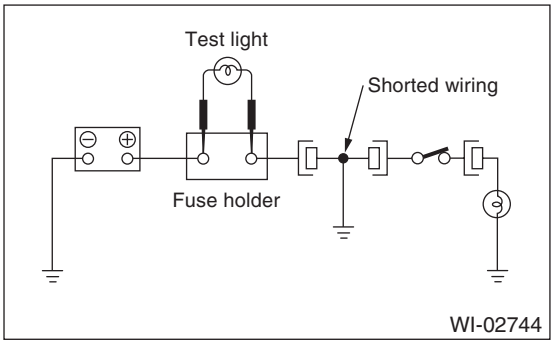

2) With ohmmeter:
Disconnect all affected connectors, and check continuity between each connector and ground. When the ohmmeter indicates continuity between a particular connector and a ground, that connector is shorted.

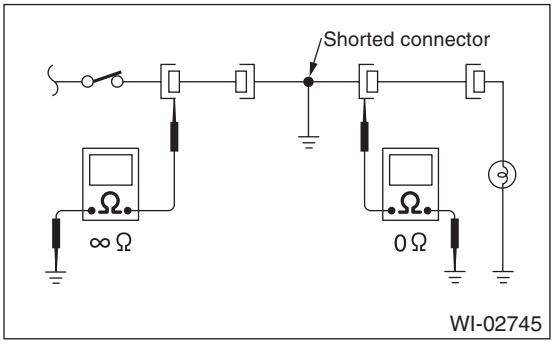

C: HOW TO READ WIRING DIAGRAMS

1. WIRING DIAGRAM

The wiring diagram of each system is illustrated so that you can understand the path through which the electric current flows from the battery.
Sketches and codes are used in the diagrams. They should read as follows:

- Each connector and its terminal position are indicated by a sketch of the connector in a disconnected state which is viewed from the front.

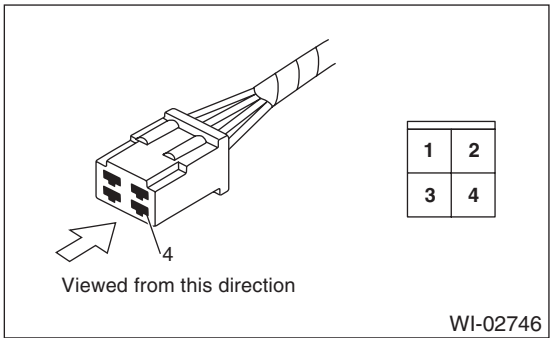

- The number of poles or pins, presence of a lock are indicated in the sketch of each connector. In the sketch, the highest pole number refers to the number of poles which the connector has. For example, the sketch of the connector shown in figure indicates the connector has 9 poles.

Connector used in vehicle	Connector shown in wiring diagram		
	Sketch	Symbol	Number of poles
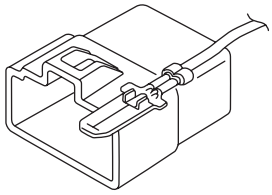	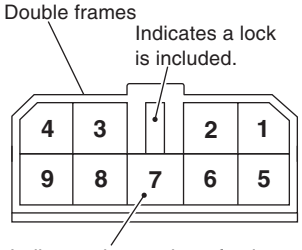	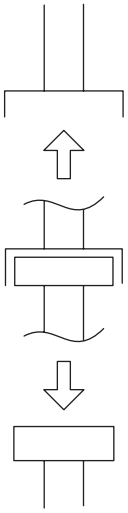	Numbered in order from upper right to lower left.
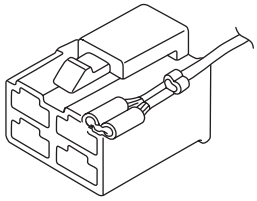	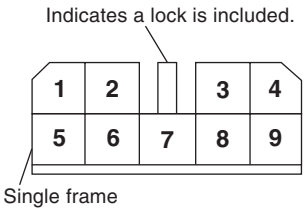		Numbered in order from upper left to lower right.

WI-02747

• When one set of connectors is viewed from the front side, the pole numbers of one connector are symmetrical to those of the other. When these two connectors are connected as a unit, the poles which have the same number are joined.

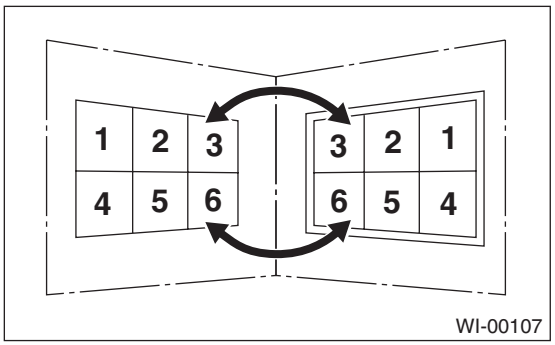

• WIRING DIAGRAM:
The connectors are numbered along with the number of poles, external colors, and mating connections in the accompanying list.
• The sketch of each connector in the wiring diagram usually shows the (A) side of the connector. The relationship between the wire color, terminal number and connector is described in the figure.

NOTE:
A wire which runs in one direction from a connector terminal sometimes may have a different color from that which runs in the other direction from that terminal.

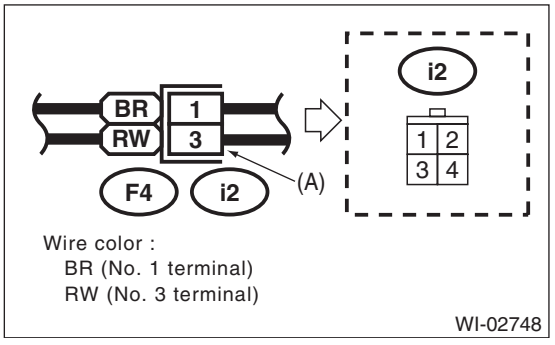

• In the wiring diagram, connectors which have no terminal number refer to one-pole types. Sketches of these connectors are omitted intentionally.

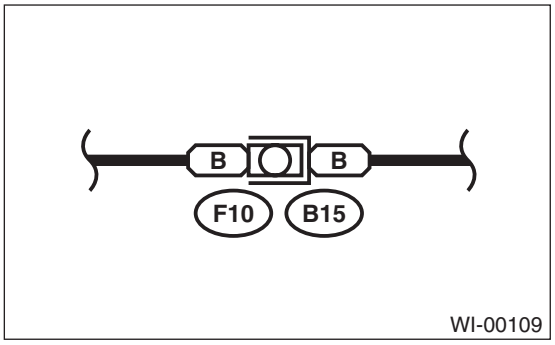

• The following color codes are used to indicate the colors of the wires.

Color code	Color
L	Blue
B	Black
Y	Yellow
G	Green
R	Red
W	White
Br	Brown
Lg	Light green
Gr	Gray
P	Pink
Or	Orange
Sb	Light blue
V	Violet
SA	Sealed (inner)
SB	Sealed (outer)

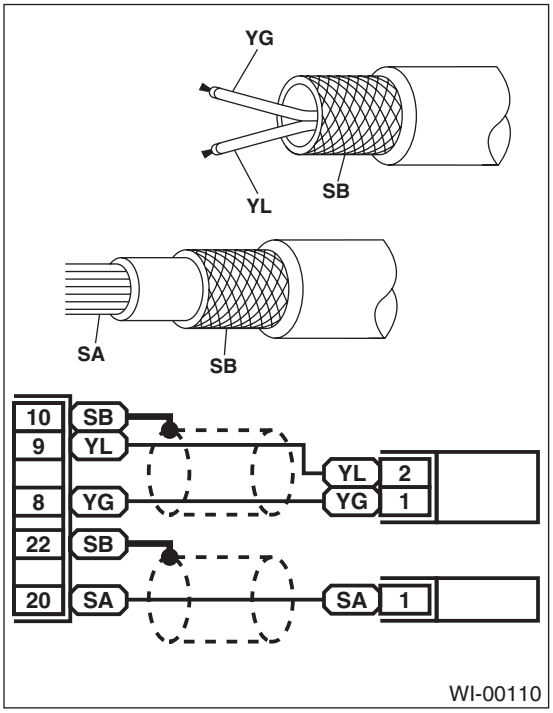

• The wire color code, which consists of two letters (or three letters including Br or Lg), indicates the standard color (base color of the wire covering) by its first letter and the stripe marking by its second letter.

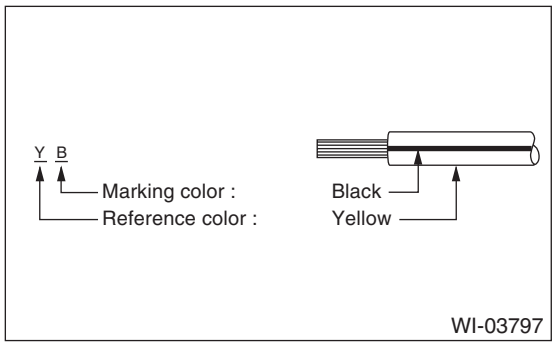

• The table lists the nominal sectional areas and allowable currents of the wires.

CAUTION:
When replacing or repairing a wire, be sure to use the same size and type of the wire which was originally used.

NOTE:
• The allowable current in the table indicates the tolerable amperage of each wire at an ambient temperature of 40°C (104°F).
• The allowable current changes with ambient temperature. Also, it changes if a bundle of more than two wires is used.

Nominal sectional area mm^2	No. of strands/ strand diameter	Outside diameter of wiring mm	Allowable current Amps/ 40°C (104°F)
0.3	7/0.26	1.8	7
0.5	7/0.32	2.2 (or 2.0)	12
0.75	30/0.18	2.6 (or 2.4)	16
0.85	11/0.32	2.4 (or 2.2)	16
1.25	16/0.32	2.7 (or 2.5)	21
2	26/0.32	3.1 (or 2.9)	28
3	41/0.32	3.8 (or 3.6)	38
5	65/0.32	4.6 (or 4.4)	51
8	50/0.45	5.5	67

• Each unit is either directly grounded to the body or indirectly grounds through a harness ground terminal. Different symbols are used in the wiring diagram to identify the two grounding systems.

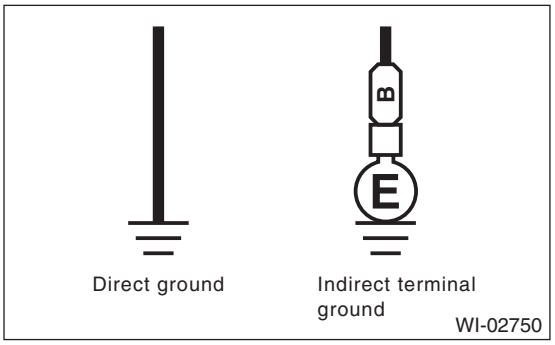

• The ground points shown in the wiring diagram refer to the following:

NOTE:
All wiring harnesses are provided with a ground point which must be securely connected.

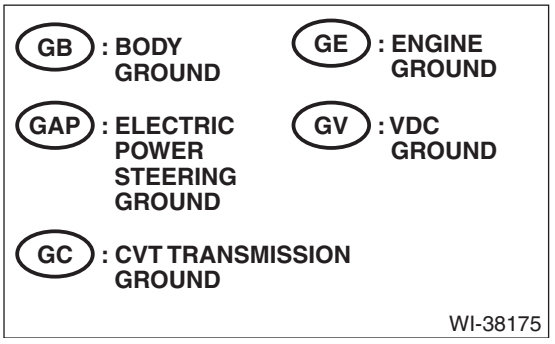

- Relays are classified as normally-open or normally-closed.

The normally-closed relay has one or more contacts. The wiring diagram shows the relay mode when the energizing circuit is OFF.

Relay type		Energizing circuit OFF	Energizing circuit ON
Normally-open type	4-pole	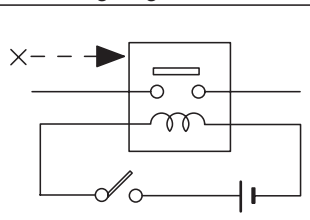	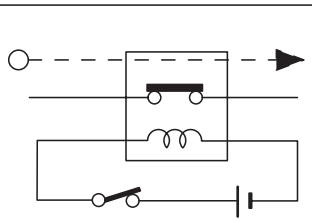
	6-pole	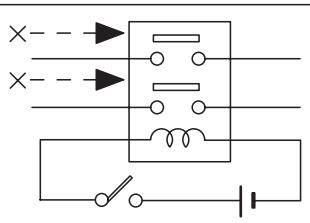	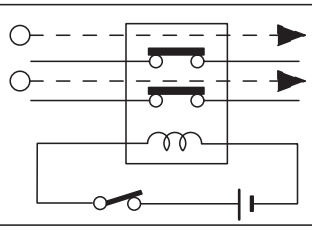
Normally-closed type	4-pole	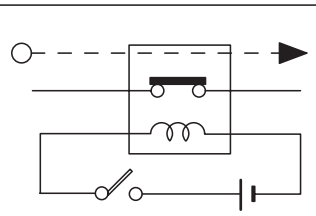	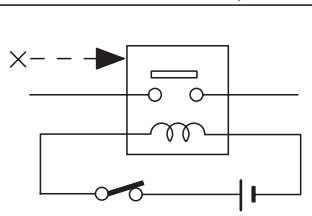
Mixed type	6-pole	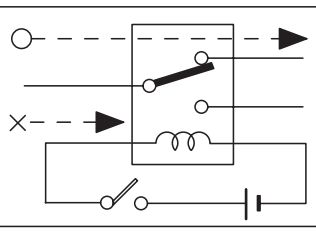	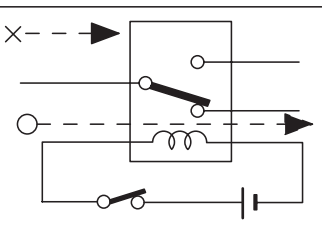

Key to symbols:

○ ⟶ : Current flows.

× ⟶ : Current does not flow.

WI-16724

• Each connector number shown in the wiring diagram corresponds to that in the wiring harness. The location of each connector in the actual vehicle is determined by reading the first character of the connector (for example, a “F” for F8, “i” for i16, etc.) and the type of wiring harness. The first character of each connector number corresponds to the area or system of the vehicle.

Symbol	Wiring harness and cord
F	Front wiring harness
B	Bulkhead wiring harness
E	Engine wiring harness
T	Transmission cord
D	Door cord LH & RH, Rear gate cord Rear door cord LH & RH, Rear defogger cord
i	Instrument panel wiring harness
R	Rear wiring harness, Fuel tank cord, Roof cord, Rear gate cord
AB	Airbag wiring harness

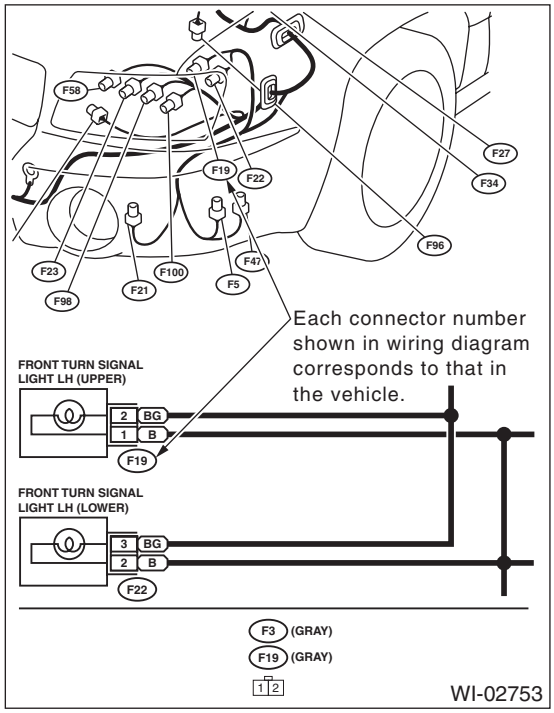

D: SYMBOLS IN WIRING DIAGRAMS

A number of symbols are used in each wiring diagram to easily identify parts or circuits.

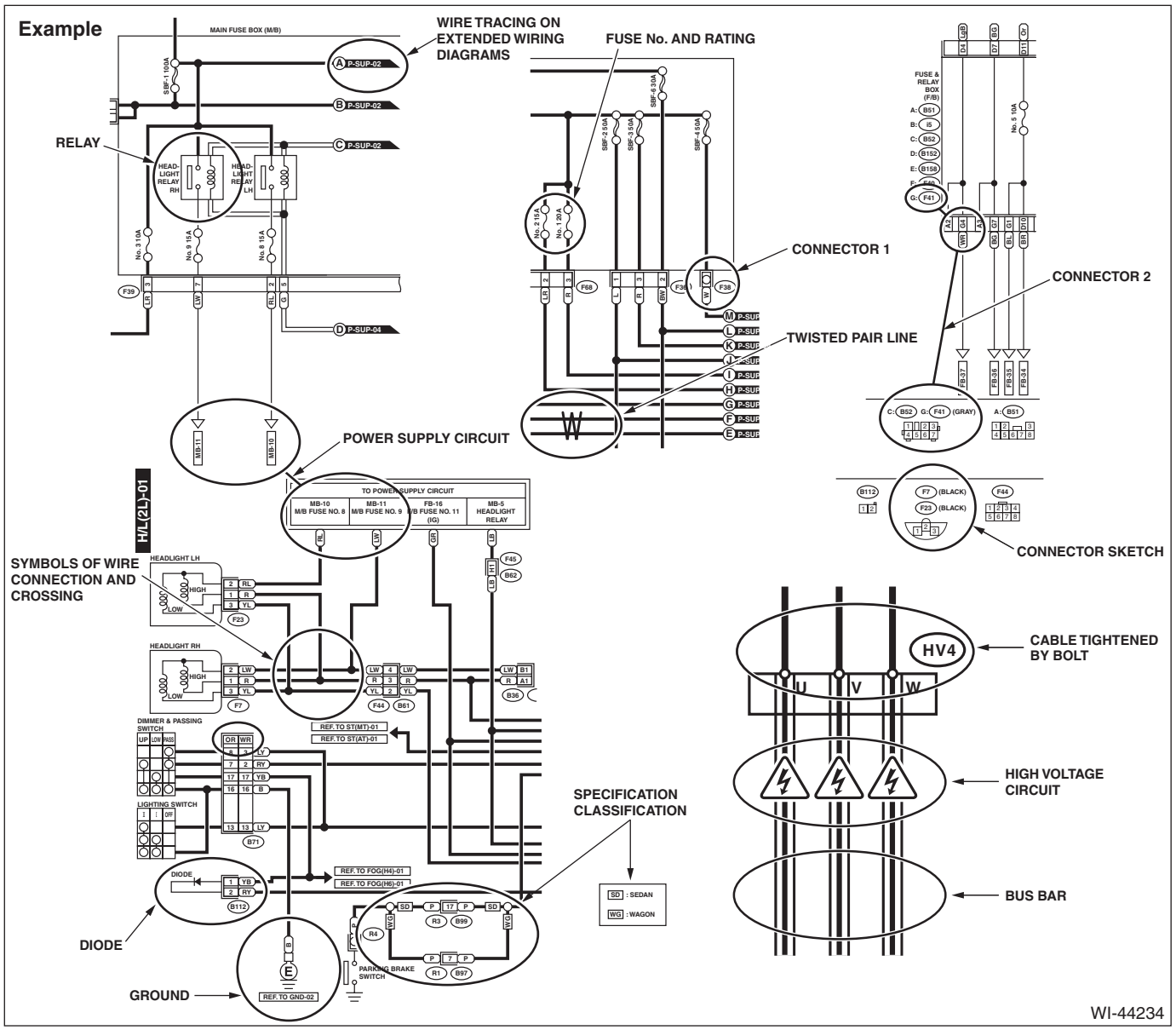

1. RELAY

A symbol used to indicate a relay.

2. CONNECTOR 1

The sketch of the connector indicates the one-pole types.

3. WIRING CONNECTION

Some wiring diagrams are indicated in foldouts for convenience. Wiring destinations are indicated where necessary by corresponding symbols. (When two pages are needed for clear indication)

4. FUSE NO. & RATING

The “FUSE No. & RATING” corresponds with that used in the fuse box (main fuse box, fuse and joint box).

5. CONNECTOR 2

- Each connector is indicated by a symbol.
- Each terminal number is indicated in the corresponding wiring diagram in an abbreviated form.
- For example, terminal number “G4” refers to No. 4 terminal of connector (G: F41) shown in the connector sketch.

6. CONNECTOR SKETCH

- Each connector sketch clearly identifies the shape and color of a connector as well as terminal locations. Non-colored connectors are indicated in natural color.
- When more than two types of connector number are indicated in a connector sketch, it means that the same type connectors are used.

7. GROUND

Each grounding point can be located easily by referring to the corresponding wiring harness.

8. DIODE

A symbol is used to indicate a diode.

9. WIRE TRACING ON EXTENDED WIRING DIAGRAMS

For a wiring diagram extending over at least two pages, a symbol (consisting of the same characters with arrows), facilitates wire tracing from one page to the next.

A ←→ A, B ←→ B

10.SYMBOLS OF WIRE CONNECTION AND CROSSING

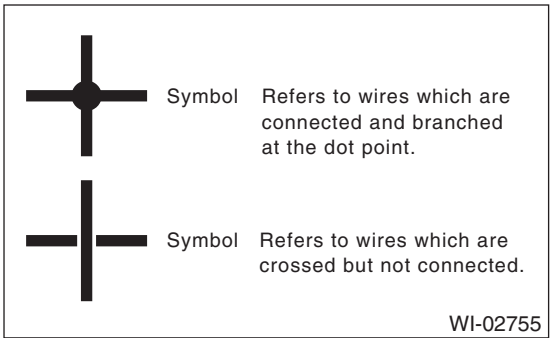

11.POWER SUPPLY CIRCUIT

A symbol is used to indicate the power supply in each wiring diagram.

“MB – 5”, “MB – 6”, etc., which are used as power-supply symbols throughout the text, correspond with those shown in the “DC POWER SUPPLY CIRCUIT” in the wiring diagram.

Accordingly, using the “DC POWER SUPPLY CIRCUIT” and wiring diagrams permits service personnel to understand the entire electrical arrangement of a system.

12.CLASSIFICATION BY SPECIFICATION

When the wiring diagram differ according to vehicle specifications, the specification difference is described by using abbreviations.

13.TWISTED PAIR LINE

The twisted pair line is indicated by a symbol in the wiring diagrams.

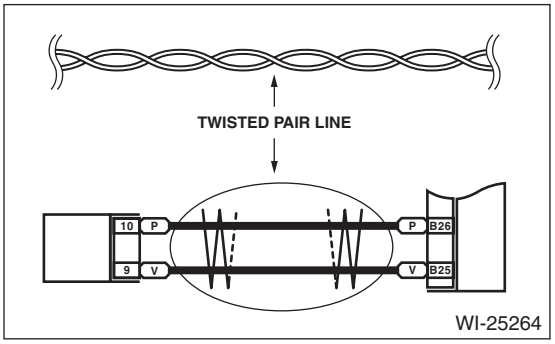

14.HIGH VOLTAGE CIRCUIT

The following signs denote high voltage circuit.

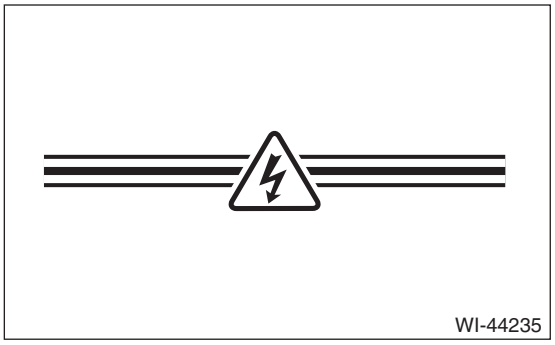

15.CABLE WITH BOLT CONNECTION

Cable connections with bolt (HV**) are denoted by (A) below. Signs for connection (HV**) are also used in location section.

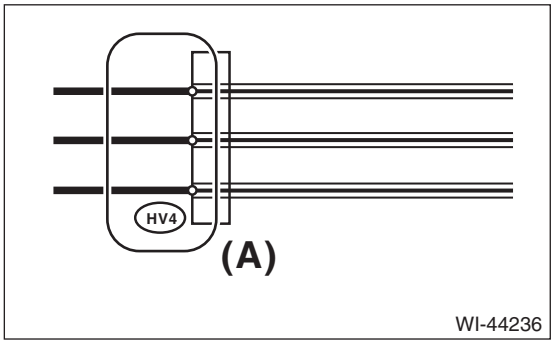

16.BUS BAR

The following signs denote bus bar.

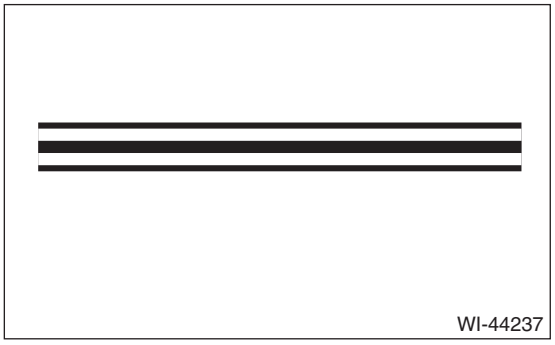

E: CONNECTOR SYMBOL IN WIRING HARNESS

A number of connector symbols are used in each wiring diagram to easily identify the wiring harness connectors.

Standard type: Female		
Pole: From 1 to 8	Pole: From 9 to 20	Pole: More than 21
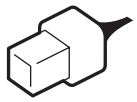	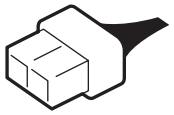	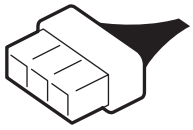
		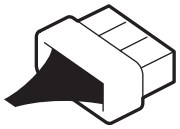
Standard type: Male		
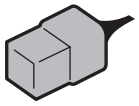	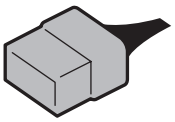	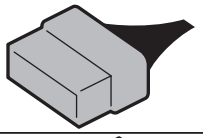
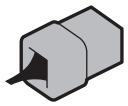	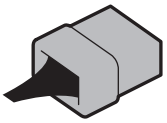	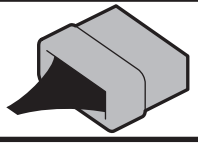

Water proof type: Female		
Pole: From 1 to 8	Pole: From 9 to 20	Pole: More than 21
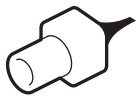		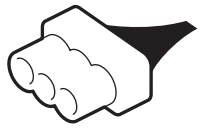
		
Water proof type: Male		
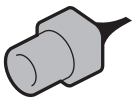	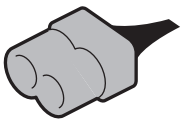	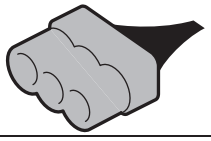
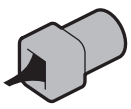	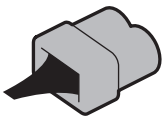	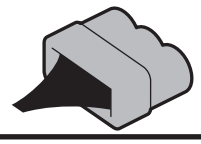

WI-02756

F: ABBREVIATION IN WIRING DIAGRAMS

Abbr.	Full name
ABS	Anti-lock Brake System
ACC	Accessory
A/C	Air Conditioner
ASSY	Assembly
AT	Automatic Transmission
A/F	Air/Fuel (air fuel ratio sensor)
ATF	Automatic Transmission Fluid
AUX	Auxiliary Audio Input Terminal
AWD	All Wheel Drive
B	Battery
BECM	Battery Energy Control Module
CAN	Controller Area Network
CM	Control Module
CVT	Continuously Variable Transmission
D	Drive range or Down
DMCM	Drive Motor Control Module
DN	Down
E	Ground
ELCM	Evaporative Leak Check Module
ECO	Economy
ECM	Engine Control Module
EEPROM	Electrically Erasable Programmable Read-Only Memory
EGR	Exhaust Gas Recirculation
F/B	Fuse & Relay Box
FL	Front Left
FR	Front Right
G	Gravity (G sensor)
H/L	Headlight
HI	High
HPCM	Hybrid Powertrain Control Module
I/F	Interface
IG	Ignition
INT	Intermittent
ISG	Integrated Starter Generator
ISO	International Organization for Standardization
J/C	Joint Connector
LCD	Liquid Crystal Display
LH	Left Hand
LO	Low
LWR	Lower
M	Motor
M/B	Main Fuse Box
MFD	Multi Function Display
MT	Manual Transmission
N	Neutral Range
NAVI	Navigation
OP	Open or Optional Parts

Abbr.	Full name
P	Parking or Parking range
PASS	Passing
PCV	Positive Crankcase Ventilation Valve
R	Reverse Range
RH	Right Hand
RL	Rear Left
RR	Rear Right
SBF	Slow Blow Fuse
ST	Starter
SW	Switch
TCM	Transmission Control Module
TFT	Thin Film Transistor
TPMS	Tire Pressure Monitor System
UPR	Upper
VDC	Vehicle Dynamics Control
WASH	Washer

2. Working Precautions

A: PRECAUTIONS WHEN WORKING WITH THE PARTS MOUNTED ON THE VEHICLE

1) When working under a vehicle which is jacked-up, always be sure to use rigid rack.
2) The parking brake must always be applied during working. Also, in automatic transmission vehicles, keep the select lever set to the P (Parking) range.
3) Be sure the workshop is properly ventilated when running the engine. Further, be careful not to touch the belt or fan while the engine is operating.
4) Be careful not to touch hot metal parts, especially the radiator and exhaust system immediately after the engine has been turned off.

B: PRECAUTIONS IN TROUBLE DIAGNOSIS AND REPAIR OF ELECTRIC PARTS

1) The battery cable must be disconnected from the battery's (–) terminal, and the ignition switch must be set to the OFF position, unless otherwise required by the diagnostics.
2) Securely fasten the wiring harness with clamps and clips so that the harness does not interfere with the body end parts, edges, bolts or screws.
3) When installing parts, be careful not to catch them on the wiring harness.
4) When disconnecting a connector, do not pull the wires, but pull while holding the connector body.

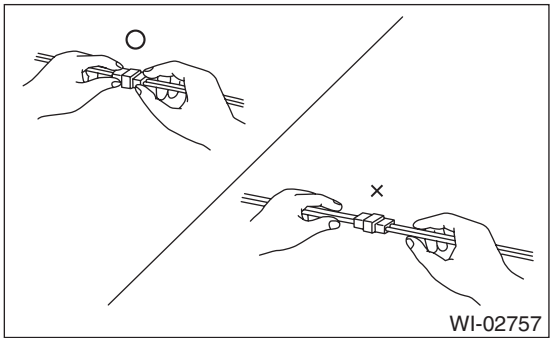

5) Some connectors are provided with a lock. One type of such a connector is disconnected by pushing the lock, and the other, by moving the lock up. In either type the lock shape must be identified before attempting to disconnect the connector.
To connect, insert the connector until it snaps and confirm that it is connected securely.

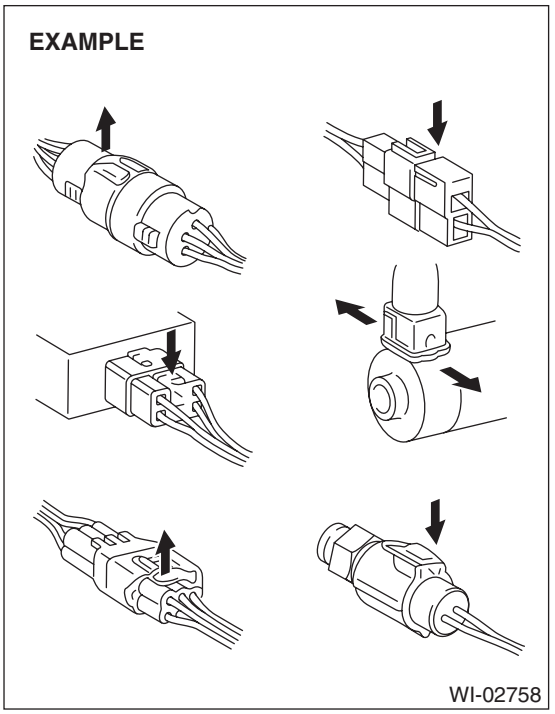

6) When checking continuity between connector terminals, or measuring voltage across the terminal and ground, always touch tester probe(s) to terminals from the wiring connection side. If the probe is too thick to gain access to the terminal, use "mini" test leads.
To check water-proof connectors (which are not measurable from the wiring side), touch test probes on the terminal side and be careful not to bend or damage the terminals.

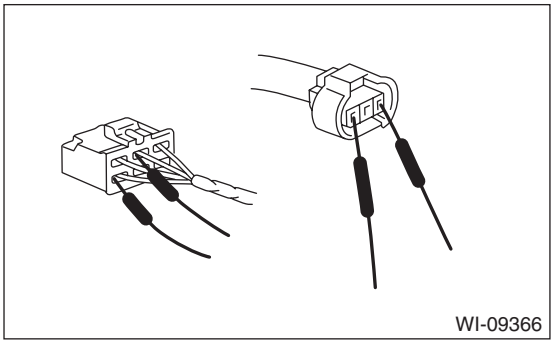

7) Sensors, relays, electrical unit, etc., are sensitive to strong impacts.
Handle them with care so that they are not dropped or mishandled.
8) For inspection of airbag system, always refer to "CAUTION" of "General Description" under AIRBAG SYSTEM in the service manual for the same model to prevent malfunctioning.

C: PRECAUTIONS REGARDING THE HYBRID SYSTEM

1. PRECAUTIONS FOR MAINTENANCE

The hybrid system includes a high voltage circuit. Mishandling may cause electric shocks and leakage. Therefore, perform proper operations by following procedures in this manual.

- Engineers are required to receive a special training in order to perform maintenance of high voltage system.
- All the harnesses and connectors for power cables are orange in color. In addition, caution labels indicating [High Voltage] are attached on the High voltage battery and its battery cover. Do not touch the wires and parts related to high voltage carelessly.
- Use great care, when handling the power supply circuits for high voltage system shown in the figure.

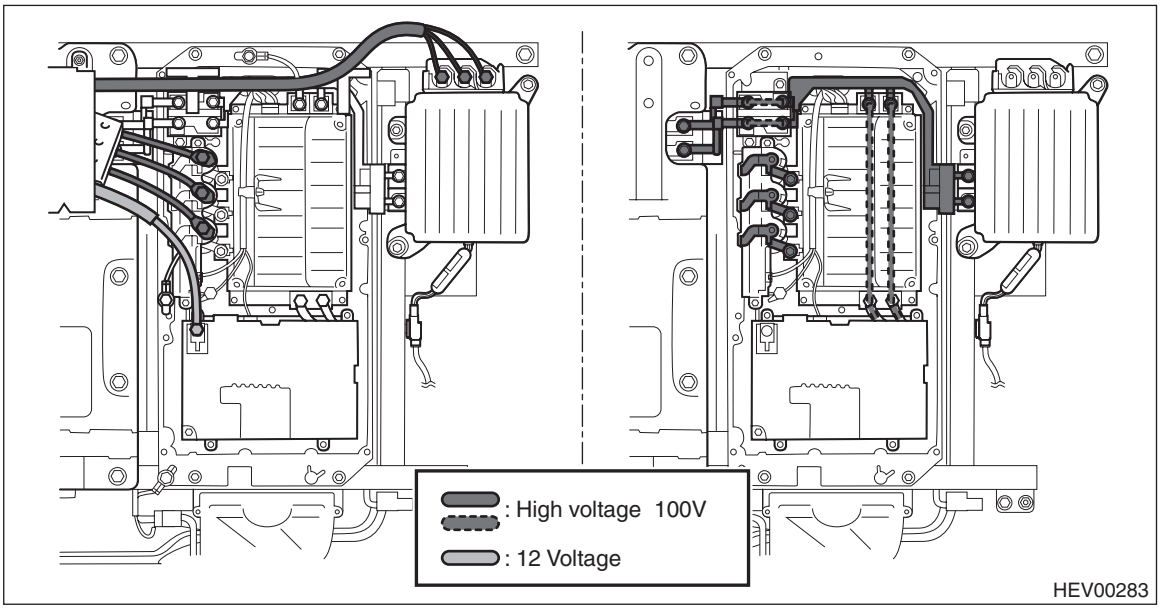

- When performing maintenance of the high voltage system, make sure to take measures for preventing electrocution, by wearing insulated gloves, removing the service disconnect plug, etc. In addition, carry the removed service disconnect plug in your pocket in order to prevent other servicemen from accidentally installing during work.

NOTE:
Do not turn the ignition to ON with the service disconnect plug removed in order to prevent malfunctions.

- After removing the service disconnect plug, be sure to wait for ten minutes before touching the high voltage connectors and terminals.

NOTE:
This time allows the high voltage condenser in the inverter to discharge.

- When wearing insulated gloves for work, make sure there is no holes or damages on the gloves.
- During the work, do not carry any metallic products, such as mechanical pencils and scales, which may be dropped and may cause short.
- Parts with high voltage and strong magnetic force are used. Therefore, during the work, do not carry any metallic products that may cause short, or magnetic recording media (such as cash cards and prepaid cards) whose magnetic record may get destroyed.
- When touching the high voltage terminals without insulation covering, make sure, in advance, to wear insulated gloves and to confirm that the voltage is 0 V using an insulation multimeter.
- Insulate the high voltage connectors and terminals with insulating tape immediately after removing.
- Be sure to tighten the high voltage screw terminals firmly to the specified torque. Lack of and excess of torque cause failures.
- Be careful not to allow foreign matter to enter the battery.
- Make sure to insulate the power cable terminals by wrapping insulating tape around.
- To work on the high voltage wire connections, use insulated tools, or wrap tools with vinyl tape for insulation before use.

• When using tools wrapped with vinyl tape as alternatives to insulated tools, cover tools with the standardized product, pressure-sensitive polyvinyl chloride tapes for electrical purposes (JIS C2336), and confirm the insulated condition before working, using an insulation multimeter.
• When inspecting insulated gloves, make sure there is no cracks, breakage, other damages, or air leakage by rolling insulated gloves from the opening side up to the wrist area and pressing the inflated portion. Do not use wet insulated gloves.

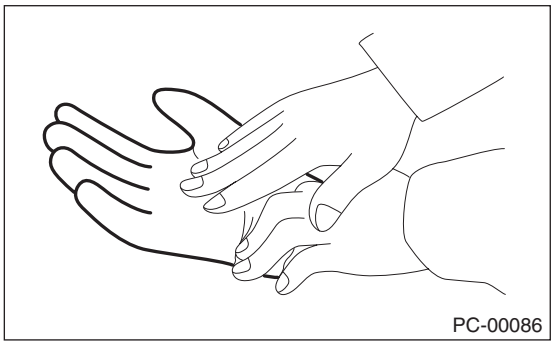

• When performing work, wear or use insulated gloves, protective goggles, and rubber boots for electrical purposes, insulated protective shoes or insulating rubber sheet.
• Even after the service disconnect plug is removed, make sure to wear insulated gloves during maintenance of all the parts inside the cover including the battery cover, and of underfloor power cable. (Maintenance of the high voltage battery cooling fan and cooling duct parts outside the battery cover, and the drive motor control module parts does not require to wear insulated gloves even in the compartment, because the voltage is 12 V only.)
• For maintenance of engine compartment and of CVT unit except for the power cable, insulated gloves are not required.

• During the work for the high voltage system, make sure to alert other servicemen to take precautions, for instance by displaying [HIGH VOLTAGE. DO NOT TOUCH DURING OPERATION] on the vehicle. (An example is shown. Make a photocopy for use.)

HIGH VOLTAGE CAUTION LABEL

Person in charge: _____

CAUTION:
HIGH VOLTAGE.
DO NOT TOUCH
DURING OPERATION

CAUTION:
HIGH VOLTAGE.
DO NOT TOUCH
DURING OPERATION

Person in charge: _____

Copy this page and put it after folding on the roof of the vehicle in service.

HEV00088

• After performing work for the high voltage system, make sure to check again for misplaced parts and tools, tightening conditions of high voltage terminals, and connector connections, before connecting the service disconnect plug.

CAUTION:
Make sure the connectors are connected completely without insecurity.

• Make sure to check the positive and negative terminal connections during the battery removal and installation procedures.
• Never connect the battery in reverse polarity. Otherwise, the control module will be broken instantly, and other parts will also be damaged.
• Do not disconnect the battery cables while the engine is running. A large counter electromotive force will be generated, and this voltage may damage electronic parts such as control modules.
• When disconnecting the connectors of the electrical components, always be sure to turn the ignition switch to OFF.
• When measuring the voltage or resistance of individual sensors or all control modules, use a tapered pin with a diameter of less than 0.6 mm (0.024 in). Do not insert the pin 4 mm (0.16 in) or more into the part.
• Take care not to allow water to get into the connectors when servicing or washing the vehicle in rainy weather. Avoid exposure to water even if the connectors are waterproof.
• Use the engine ground terminal or engine assembly for the grounding point when measuring the voltage and resistance in engine compartment.
• All parts related to the hybrid system are precision parts. Do not drop or otherwise apply impact. Do not reuse the parts that are dropped accidentally.
• Use the body ground bolt on the inverter frame as the grounding point, when measuring voltage and resistance in rear of the vehicle.

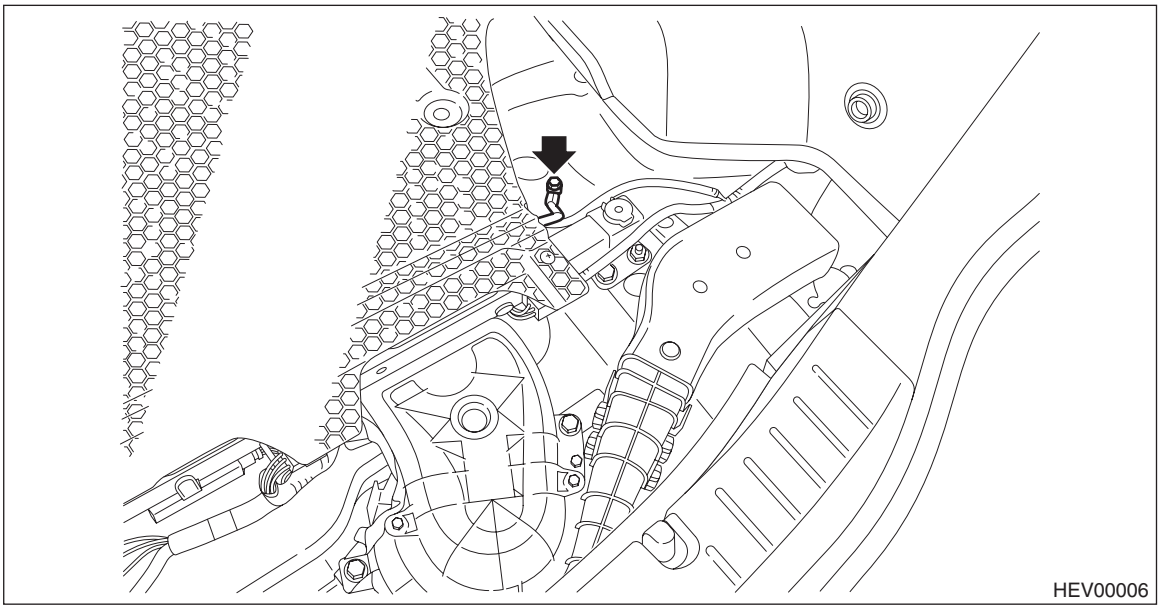
HEV00006

• Take the ignition key or access key out of the vehicle, except when the key is needed inside.
• When the part is replaced or the label is detached, make sure to attach a new label in the original position and direction.

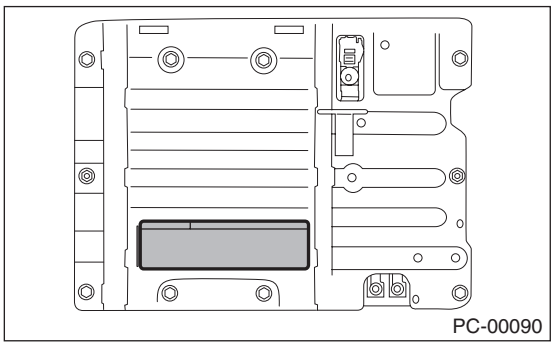
PC-00090

• This vehicle starts and stops the engine automatically, when the Hybrid READY indicator light in the meter illuminates. Make sure to turn the ignition to OFF before performing maintenance.
• When the state of battery charge is in a good condition while the engine is warmed-up, the engine will be stopped automatically while the vehicle is stopped. Therefore, when continuous running of the engine is necessary during vehicle stoppage in the cases such as ignition timing inspection, set to «Auto Start Stop Cancel Drive Mode (Engine only or Engine + Motor)».

3. Power Supply Circuit

A: WIRING DIAGRAM

1. WITHOUT PUSH BUTTON START

- **Engine room side**

P-SUP-01

P-SUP-01

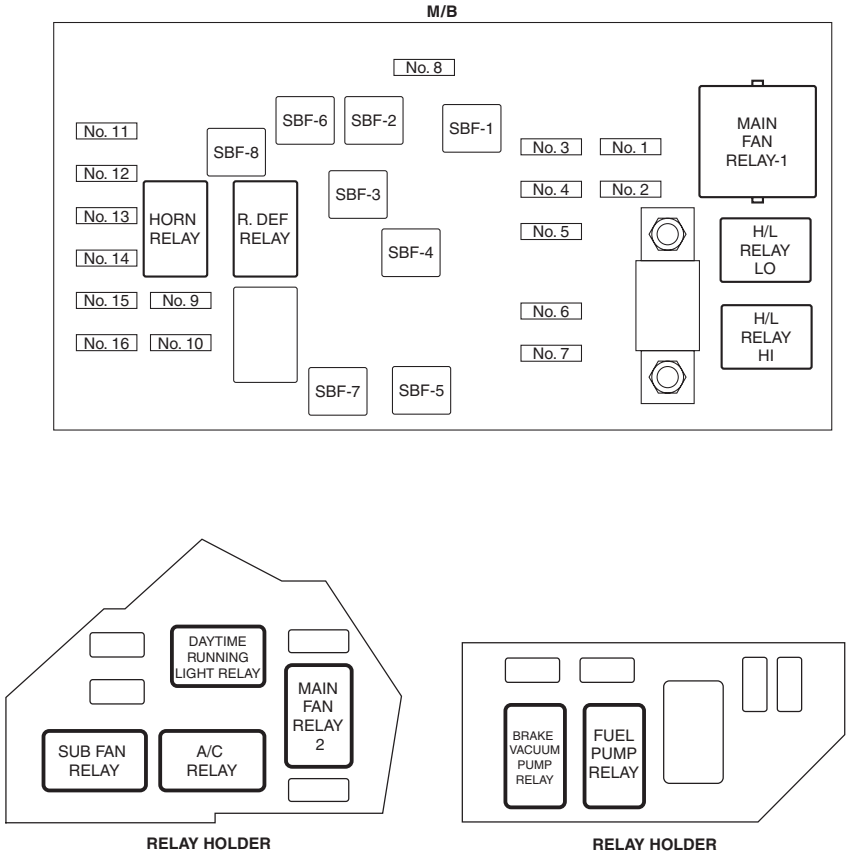

WI-41775

- **Passenger room side**

P-SUP-02

P-SUP-02

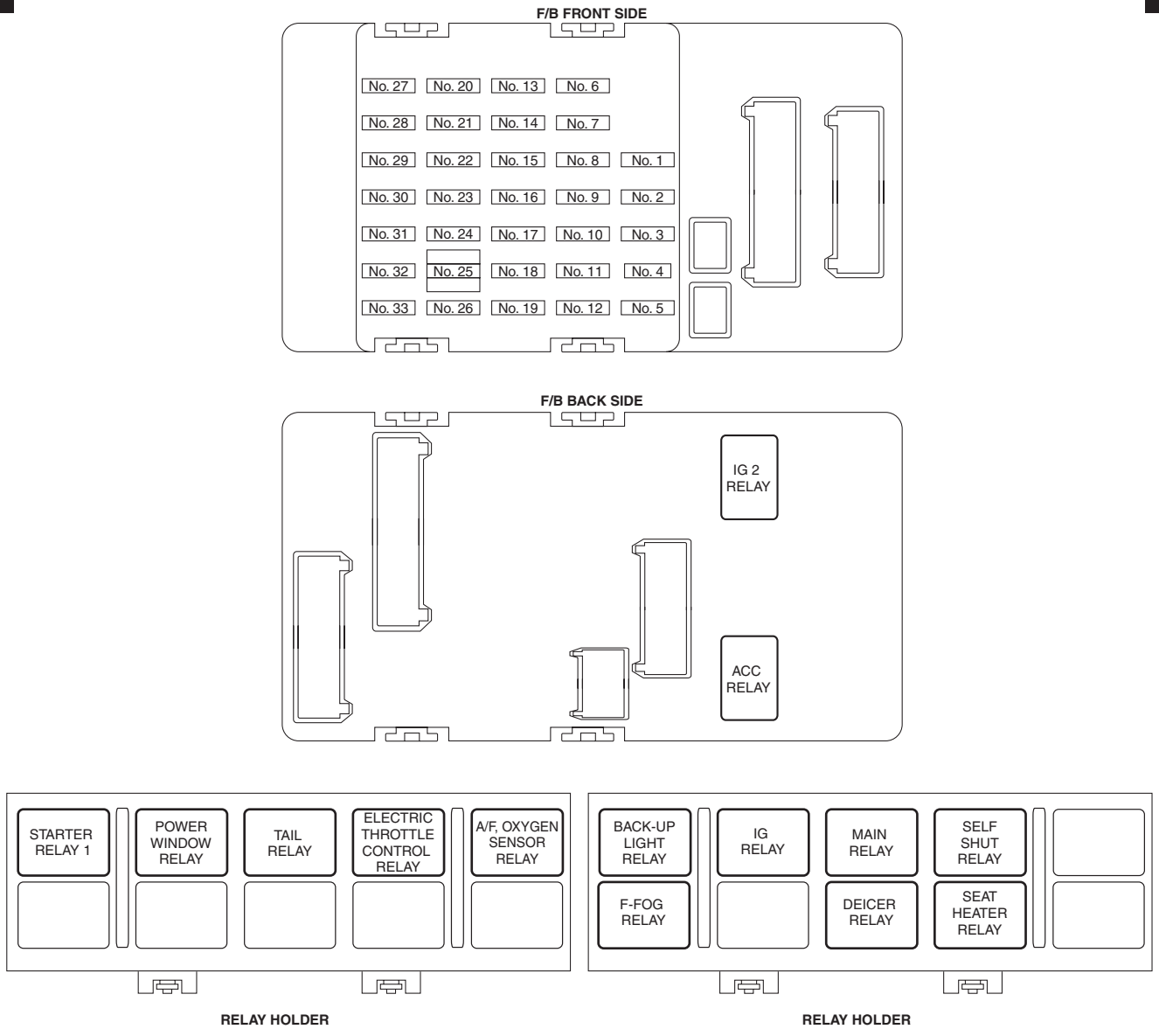

WI-41776

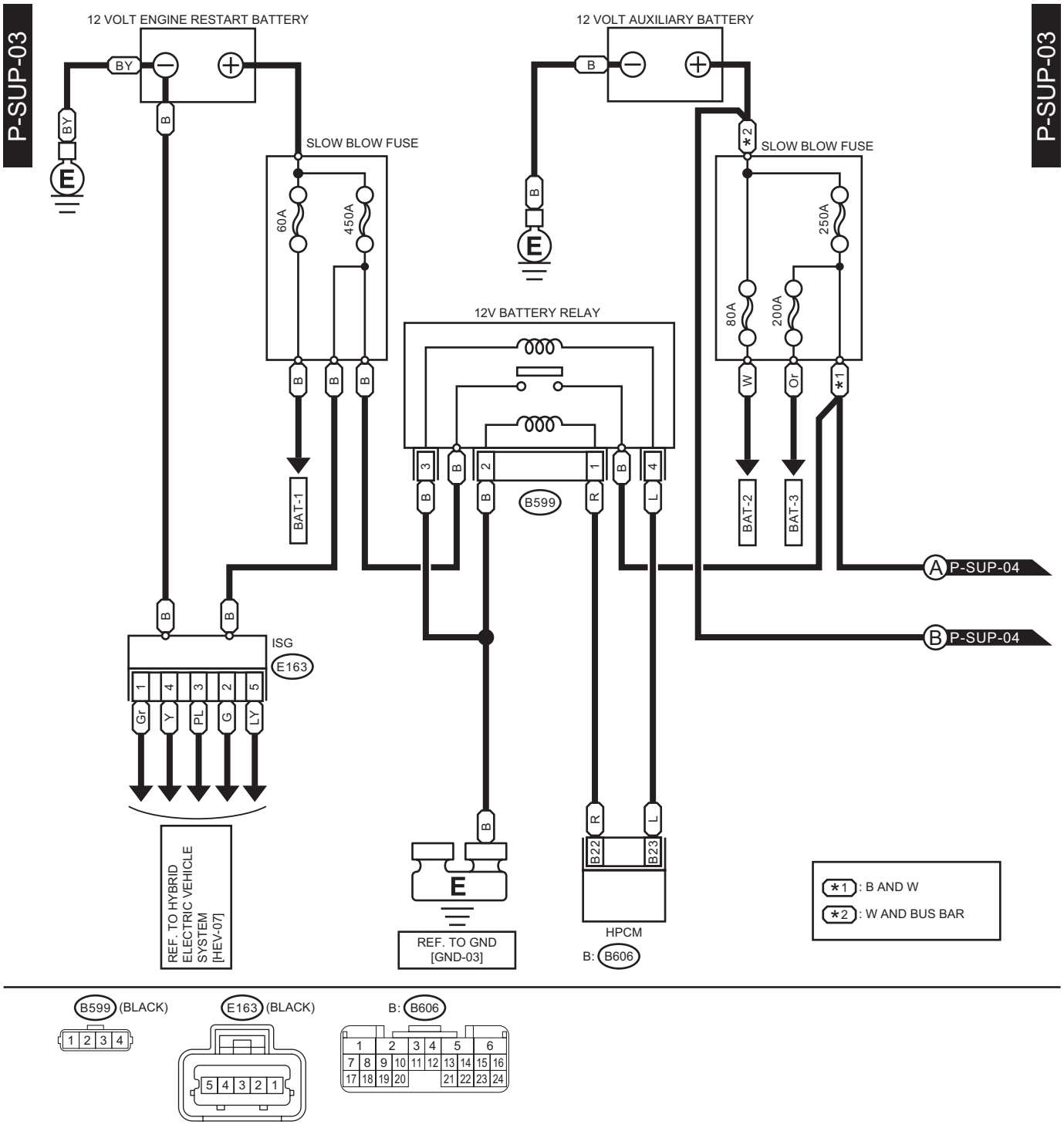
P-SUP-03
P-SUP-03
12 VOLT ENGINE RESTART BATTERY
12 VOLT AUXILIARY BATTERY
SLOW BLOW FUSE
SLOW BLOW FUSE
60A
450A
80A
200A
250A
12V BATTERY RELAY
BAT-1
BAT-2
BAT-3
B599
ISG
E163
Gr
Y
PL
G
LY
REF. TO HYBRID ELECTRIC VEHICLE SYSTEM [HEV-07]
REF. TO GND [GND-03]
HPCM
B: B606
B22
B23
A P-SUP-04
B P-SUP-04
*1 : B AND W
*2 : W AND BUS BAR
B599 (BLACK)
E163 (BLACK)
B: B606

WI-65090

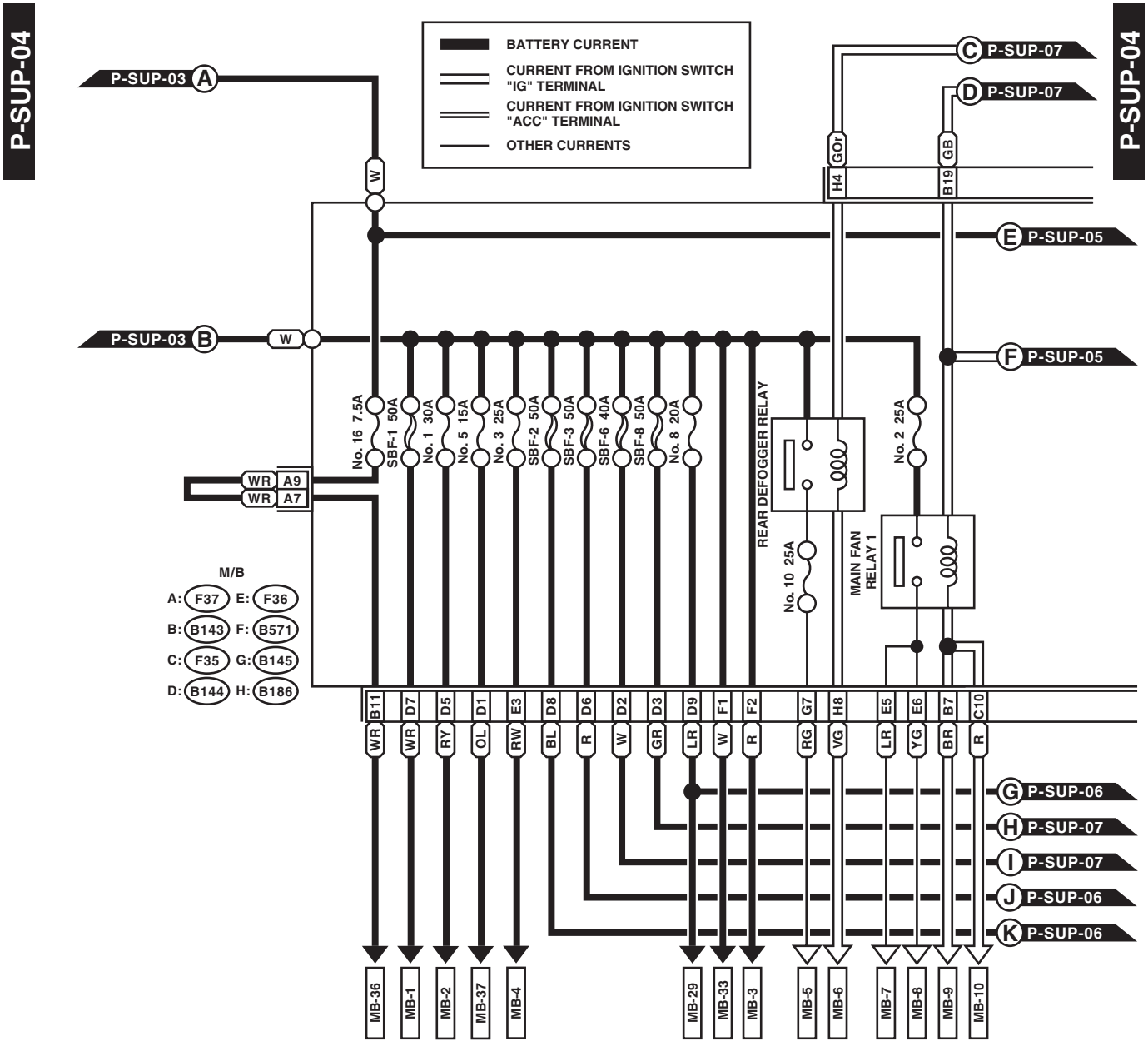
P-SUP-04
P-SUP-04
BATTERY CURRENT
CURRENT FROM IGNITION SWITCH "IG" TERMINAL
CURRENT FROM IGNITION SWITCH "ACC" TERMINAL
OTHER CURRENTS
P-SUP-03 A
P-SUP-03 B
C P-SUP-07
D P-SUP-07
E P-SUP-05
F P-SUP-05
G P-SUP-06
H P-SUP-07
I P-SUP-07
J P-SUP-06
K P-SUP-06
W
GOr
GB
H4
B19
No. 16 7.5A
SBF-1 50A
No. 1 30A
No. 5 15A
No. 3 25A
SBF-2 50A
SBF-3 50A
SBF-6 40A
SBF-8 50A
No. 8 20A
No. 2 25A
No. 10 25A
REAR DEFOGGER RELAY
MAIN FAN RELAY 1
WR A9
WR A7
M/B
A: F37 E: F36
B: B143 F: B571
C: F35 G: B145
D: B144 H: B186
B11 D7 D5 D1 E3 D8 D6 D2 D3 D9 F1 F2 G7 H8 E5 E6 B7 C10
WR WR RY OL RW BL R W GR LR W R RG VG LR YG BR R
MB-36 MB-1 MB-2 MB-37 MB-4 MB-29 MB-33 MB-3 MB-5 MB-6 MB-7 MB-8 MB-9 MB-10

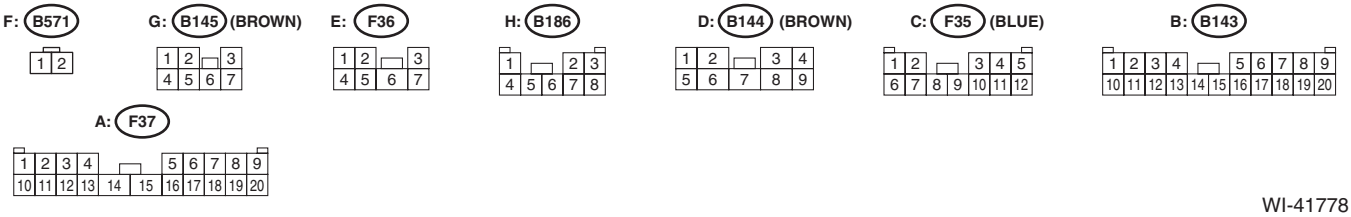
F: B571
G: B145 (BROWN)
E: F36
H: B186
D: B144 (BROWN)
C: F35 (BLUE)
B: B143
A: F37

WI-41778

P-SUP-05

P-SUP-05

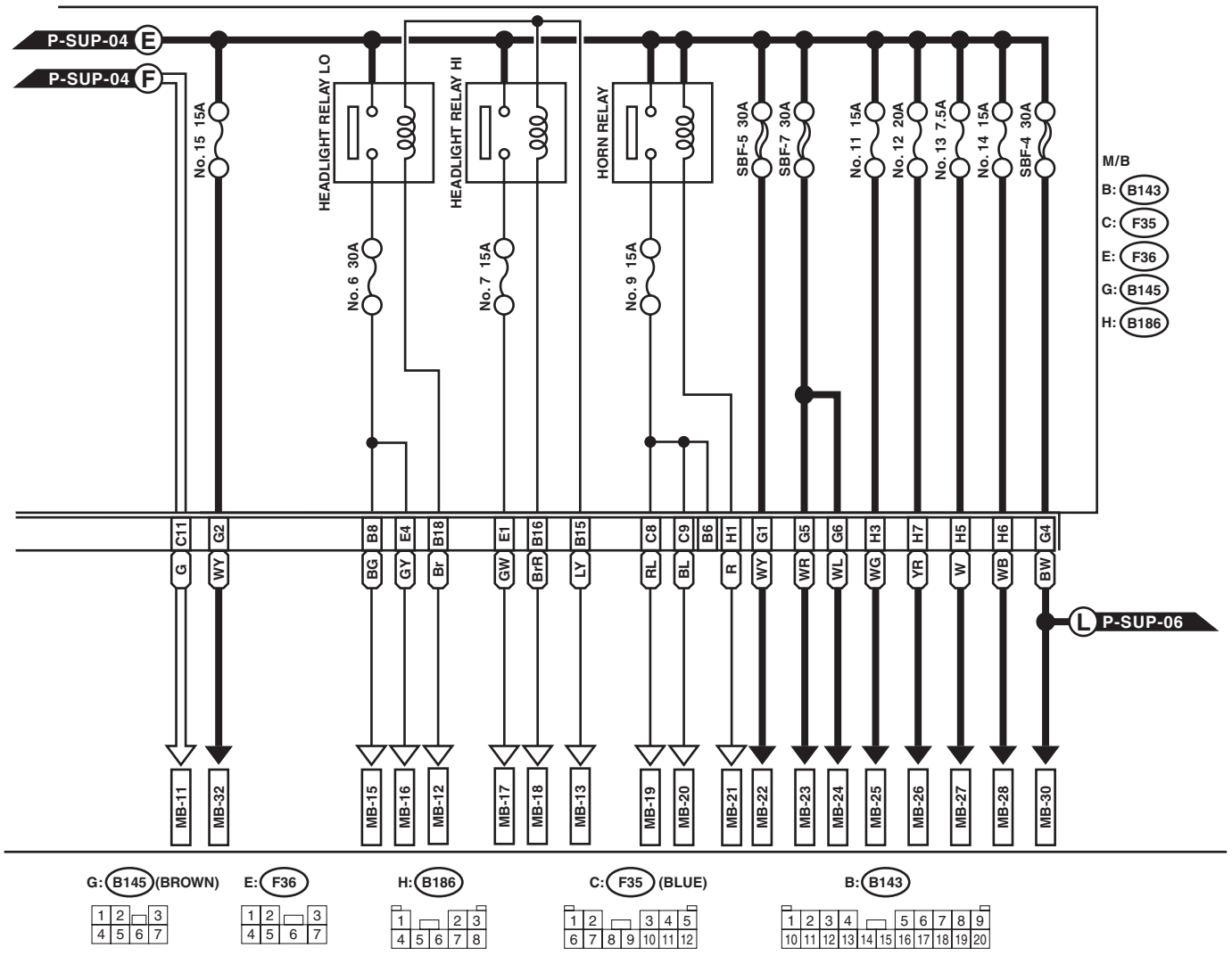

WI-41779

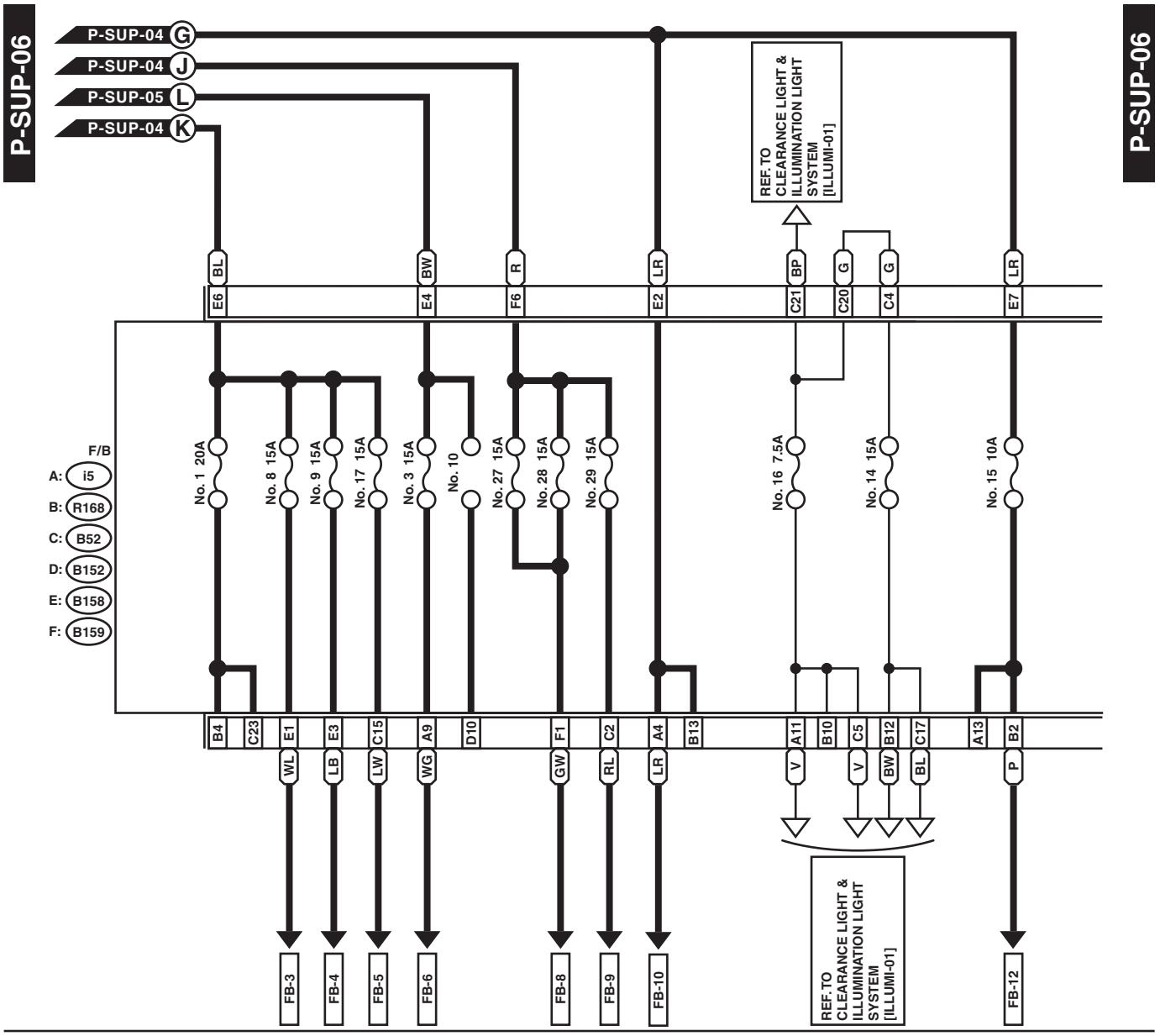
P-SUP-06
P-SUP-04 G
P-SUP-04 J
P-SUP-05 L
P-SUP-04 K
REF. TO CLEARANCE LIGHT & ILLUMINATION LIGHT SYSTEM [ILLUMI-01]
BL
BW
R
LR
BP
G
G
LR
E6
E4
F6
E2
C21
C20
C4
E7
F/B
A: i5
B: R168
C: B52
D: B152
E: B158
F: B159
No. 1 20A
No. 8 15A
No. 9 15A
No. 17 15A
No. 3 15A
No. 10
No. 27 15A
No. 28 15A
No. 29 15A
No. 16 7.5A
No. 14 15A
No. 15 10A
B4
C23
E1
E3
C15
A9
D10
F1
C2
A4
B13
A11
B10
C5
B12
C17
A13
B2
WL
LB
LW
WG
GW
RL
LR
V
V
BW
BL
P
FB-3
FB-4
FB-5
FB-6
FB-8
FB-9
FB-10
REF. TO CLEARANCE LIGHT & ILLUMINATION LIGHT SYSTEM [ILLUMI-01]
FB-12
P-SUP-06

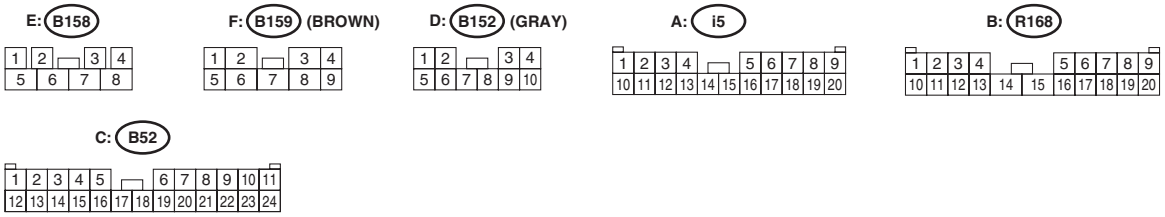
E: B158
F: B159 (BROWN)
D: B152 (GRAY)
A: i5
B: R168
C: B52

WI-41780

Power Supply Circuit

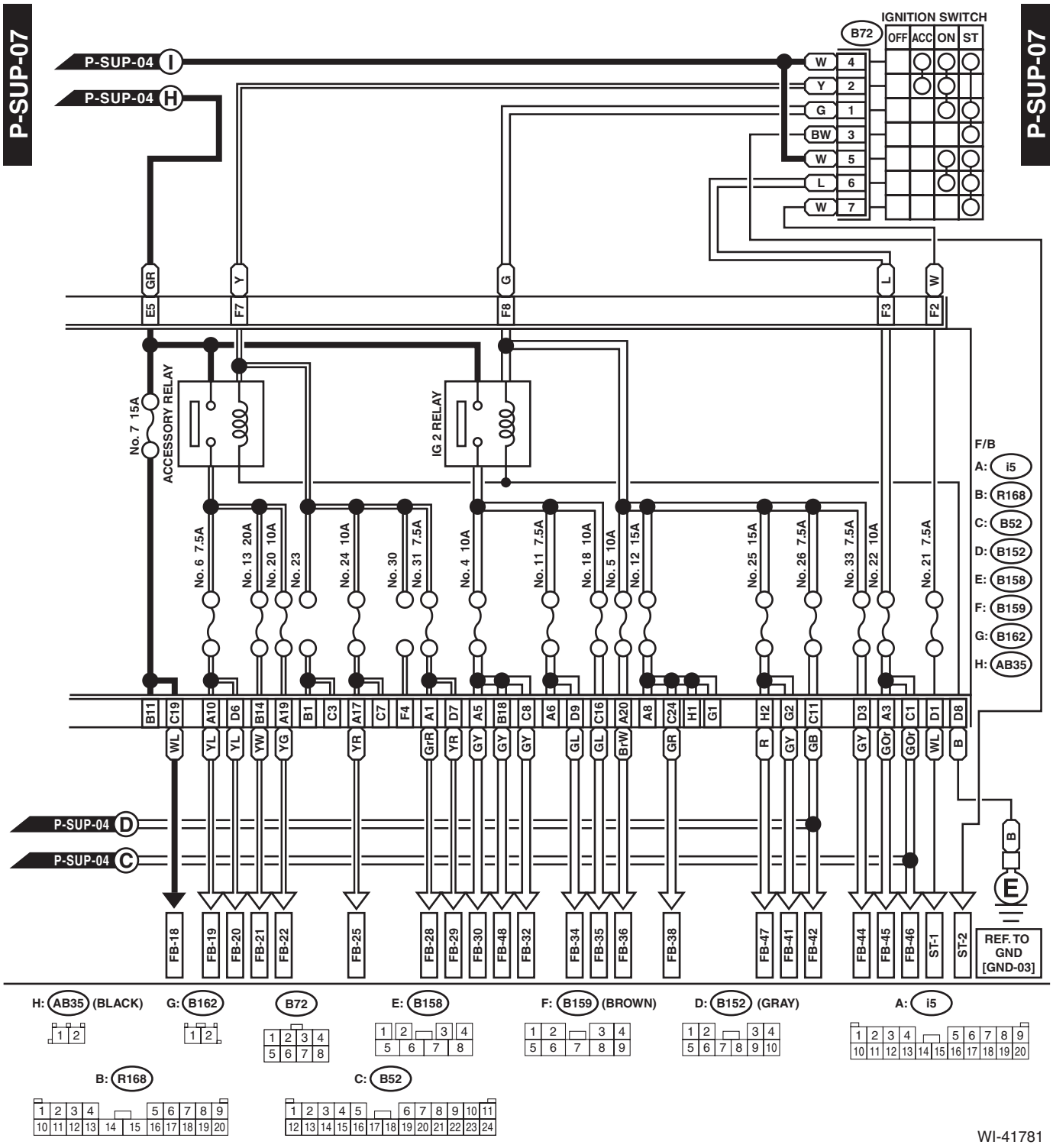

No.	Load
MB-1	VDC CM
MB-2	VDC CM
MB-3	Wiper relay
	Brake vacuum pump relay
MB-4	Sub fan relay
MB-5	Mirror heater LH
	Mirror heater RH
	Rear defogger
MB-6	Body integrated unit
MB-7	Main fan relay 2
MB-8	Main fan motor
MB-9	ECM
MB-10	Main fan relay 2
MB-11	Main fan relay 2
MB-12	Body integrated unit
MB-13	Body integrated unit
MB-15	Front fog light relay
MB-16	Front combination light LH
	Front combination light RH
MB-17	Daytime running light relay
MB-18	Body integrated unit
MB-19	Horn
MB-20	Horn
MB-21	Horn switch
	Body integrated unit
MB-22	A/F, oxygen sensor relay
MB-23	Main relay
	IG relay
MB-24	Electronic throttle control relay
MB-25	Fuel pump relay
MB-26	TCM
	Self shut relay
MB-27	ECM
	Data link connector
MB-28	Key warning switch
	Turn signal and hazard unit
	Body integrated unit
MB-29	Spot map light
	Room light
	Body integrated unit
	Immobilizer antenna
MB-30	Power window circuit breaker
MB-32	Tail relay
	Daytime running light relay
MB-33	DMCM relay
	High voltage battery cooling fan / drive motor inverter relay
	High voltage battery
	HPCM
	ISG

No.	Load
MB-36	HPCM
MB-37	Brake vacuum pump relay
ST-1	Starter relay 1
ST-2	Starter relay 1
	HPCM
FB-3	Stop light and brake switch
FB-4	Wiper deicer relay
FB-5	Seat heater relay
FB-6	Body integrated unit
FB-8	Blower motor relay
FB-9	Front fog light relay
FB-10	Audio
	MFD
	Navigation unit
FB-12	Keyless entry CM
	TPMS & keyless entry CM
	Luggage room light
FB-18	Combination meter
	Body integrated unit
	Impact sensor
	Air mix door actuator LH (with left/right independent air conditioner)
	Air mix door actuator RH (with left/right independent air conditioner)
	Mode door actuator
	Air mix door actuator (without left/right independent air conditioner)
	Security CM
	A/C control panel
	Active grille shutter
FB-19	Remote control mirror switch
FB-20	Seat heater relay
	Rear view mirror
FB-21	Rear accessory power supply socket
FB-22	Front accessory power supply socket
FB-25	Audio
	Navigation unit
FB-28	A/C control panel
FB-29	Body integrated unit
FB-30	Pedestrian alert CM
FB-32	Impact sensor
	Data link connector
	Stop light and brake switch
	Wiper deicer relay
	Sunroof motor assembly
	Sunroof switch
	Sunroof switch (tilt)
FB-34	Turn signal and hazard unit
FB-35	Back-up light relay
	Auto headlight beam leveler CM

No.	Load
FB-36	Combination meter
	MFD
	HPCM
FB-38	HPCM
	DMCM
	High voltage battery
	Electric oil pump inverter
	ECM
	TCM
	Body integrated unit
	Fuel pump relay
FB-41	Airbag CM
FB-42	Power window relay
	Wiper relay
FB-44	VDC CM
	Steering angle sensor
	Power steering CM
FB-45	A/C control panel
FB-46	A/C relay
	Sub fan relay
	Pressure switch
	Blower motor relay
FB-47	Occupant detection control module
FB-48	TPMS & keyless entry CM
BAT-1	12V engine restart battery sensor
BAT-2	Power steering CM
BAT-3	DC/DC converter

2. WITH PUSH BUTTON START

- **Engine room side**

P-SUP(P)-01

P-SUP(P)-01

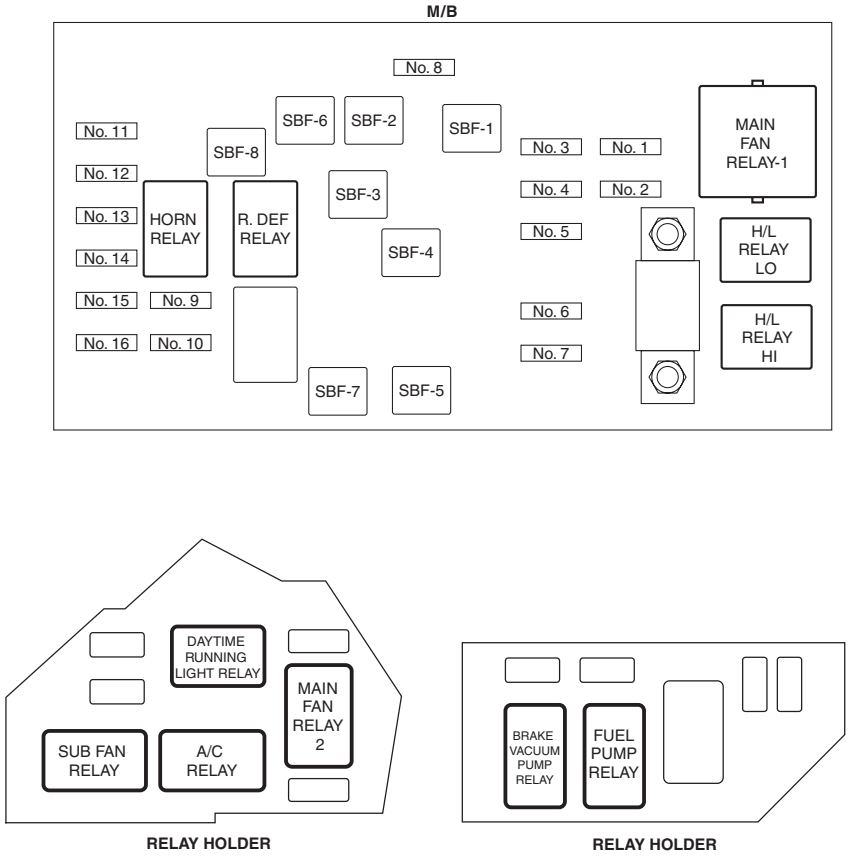

WI-41782

- **Passenger room side**

P-SUP(P)-02

P-SUP(P)-02

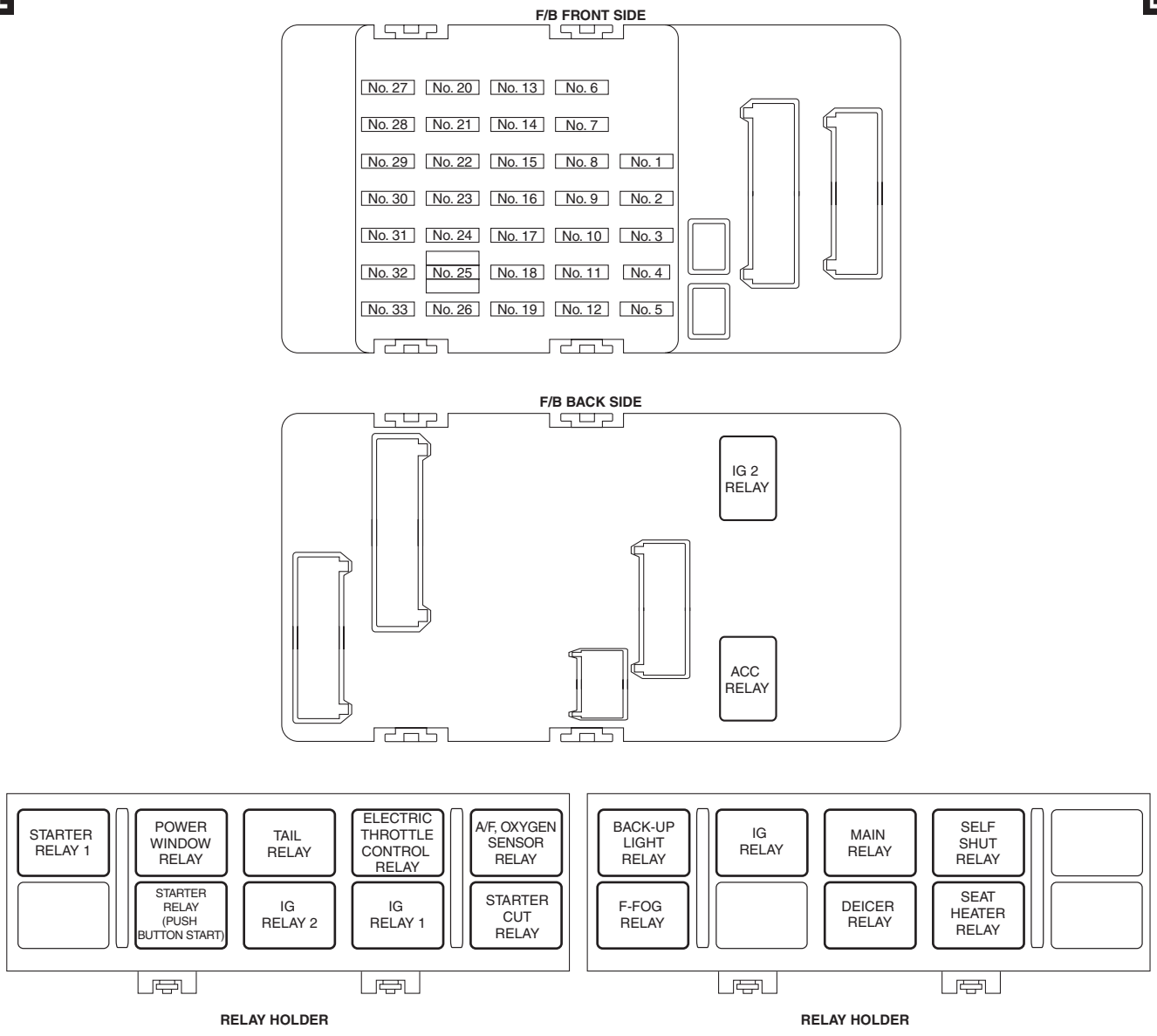

WI-41783

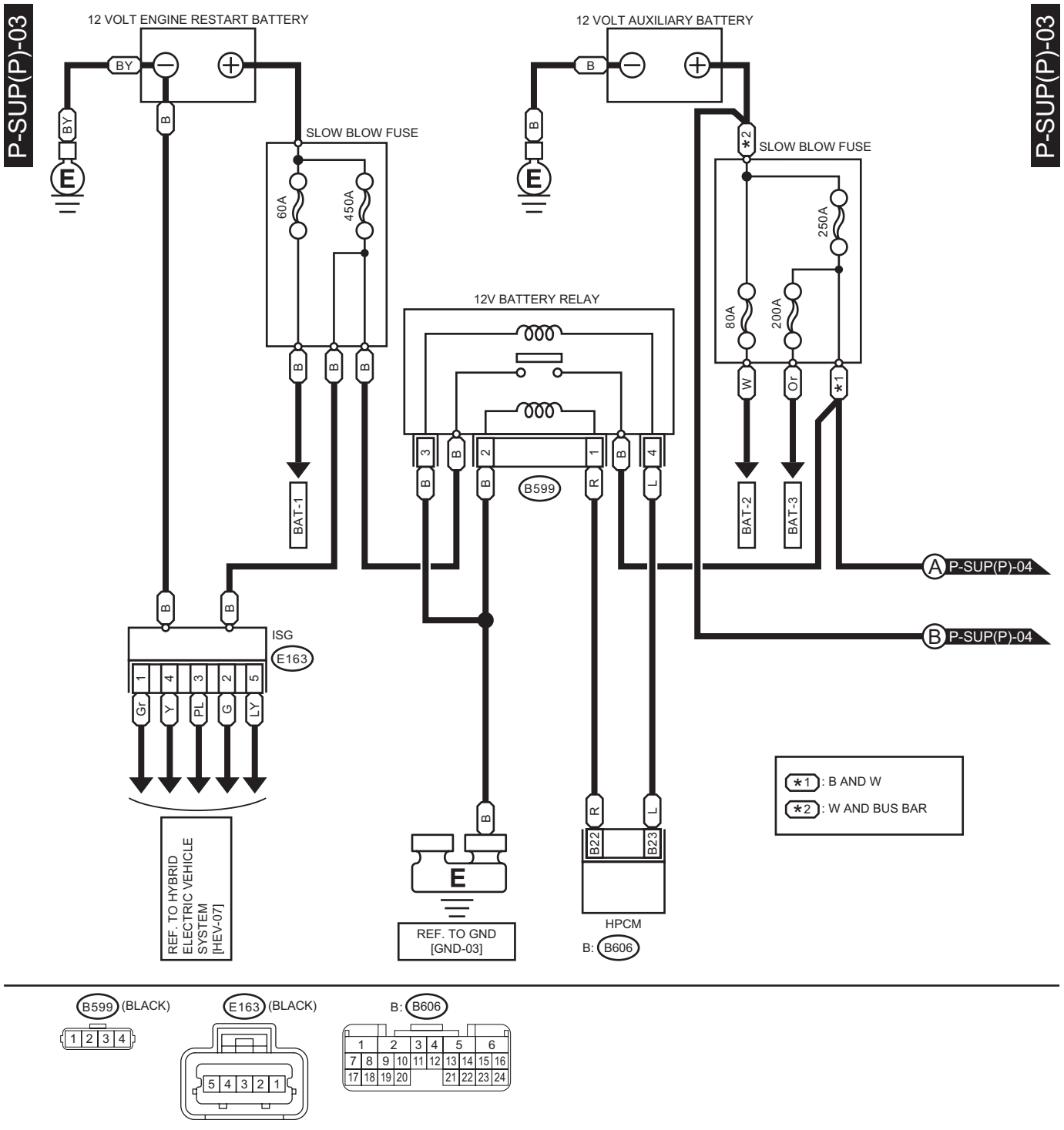
P-SUP(P)-03
P-SUP(P)-03
12 VOLT ENGINE RESTART BATTERY
12 VOLT AUXILIARY BATTERY
BY
B
SLOW BLOW FUSE
60A
450A
12V BATTERY RELAY
SLOW BLOW FUSE
250A
80A
200A
BAT-1
BAT-2
BAT-3
B599
A P-SUP(P)-04
B P-SUP(P)-04
ISG
E163
Gr
Y
PL
G
LY
REF. TO HYBRID ELECTRIC VEHICLE SYSTEM [HEV-07]
REF. TO GND [GND-03]
HPCM
B: B606
B22
B23
*1 : B AND W
*2 : W AND BUS BAR

B599 (BLACK)
E163 (BLACK)
B: B606

WI-61949

Power Supply Circuit

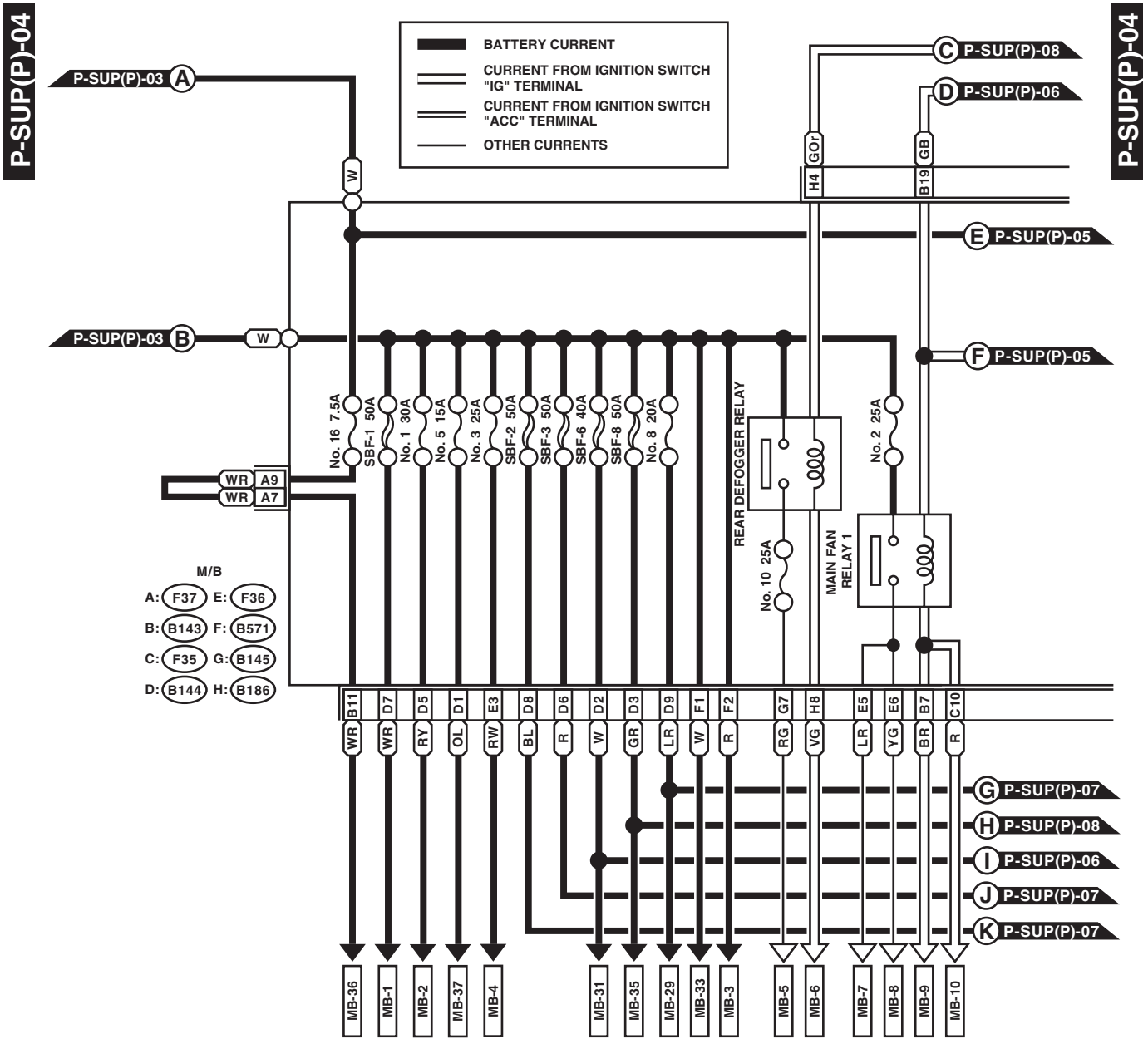

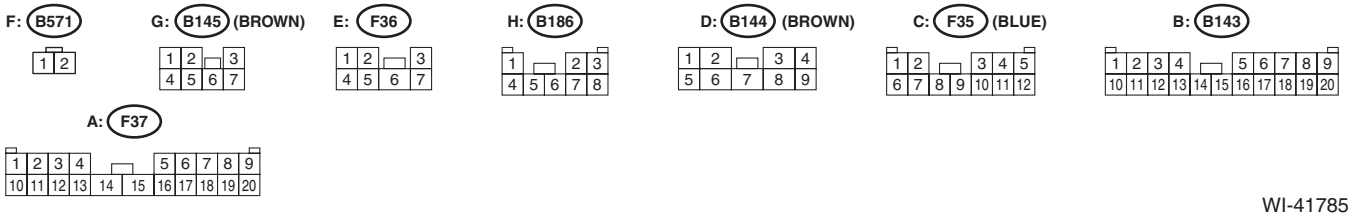

WI-41785

P-SUP(P)-05

P-SUP(P)-05

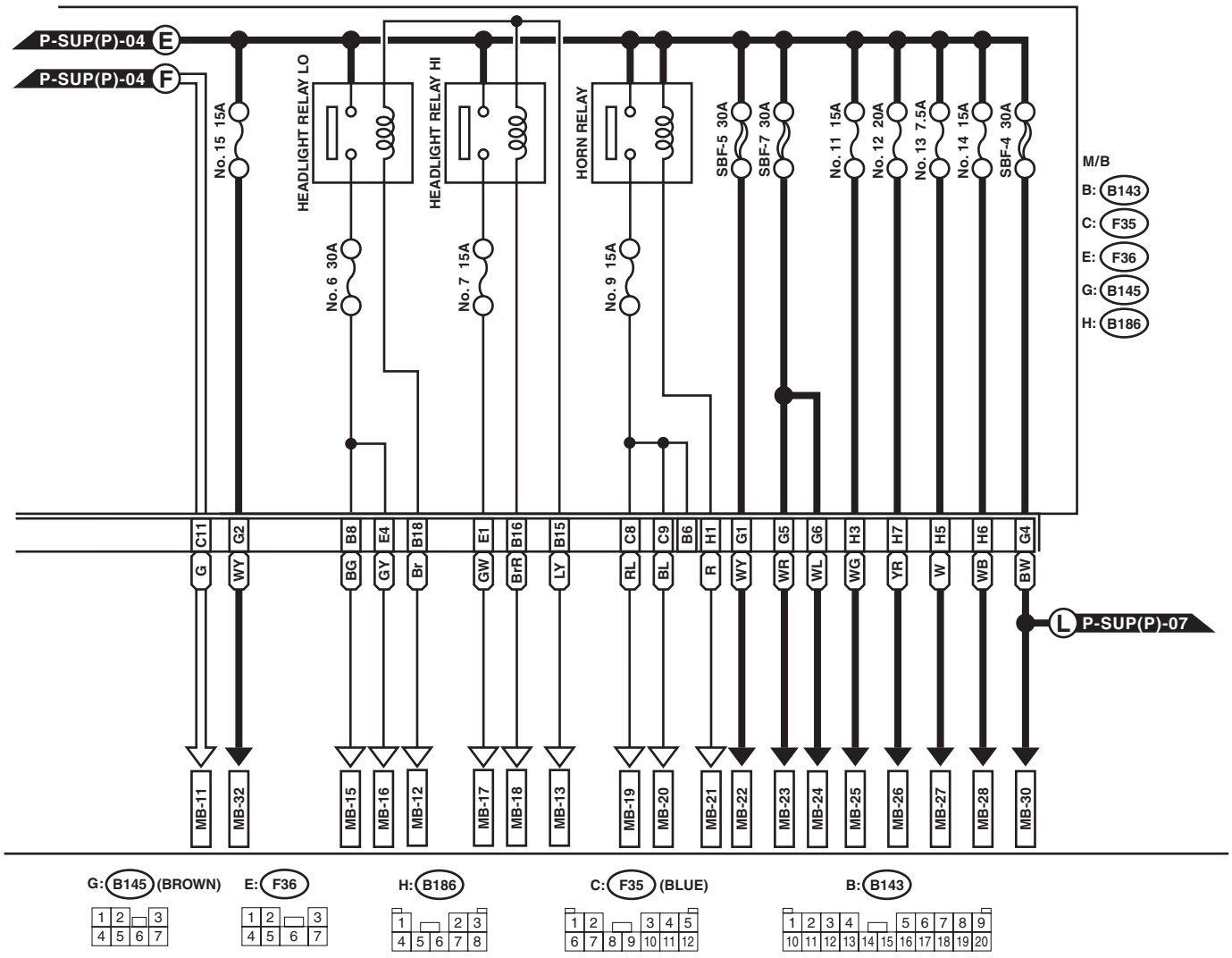

WI-41786

Power Supply Circuit

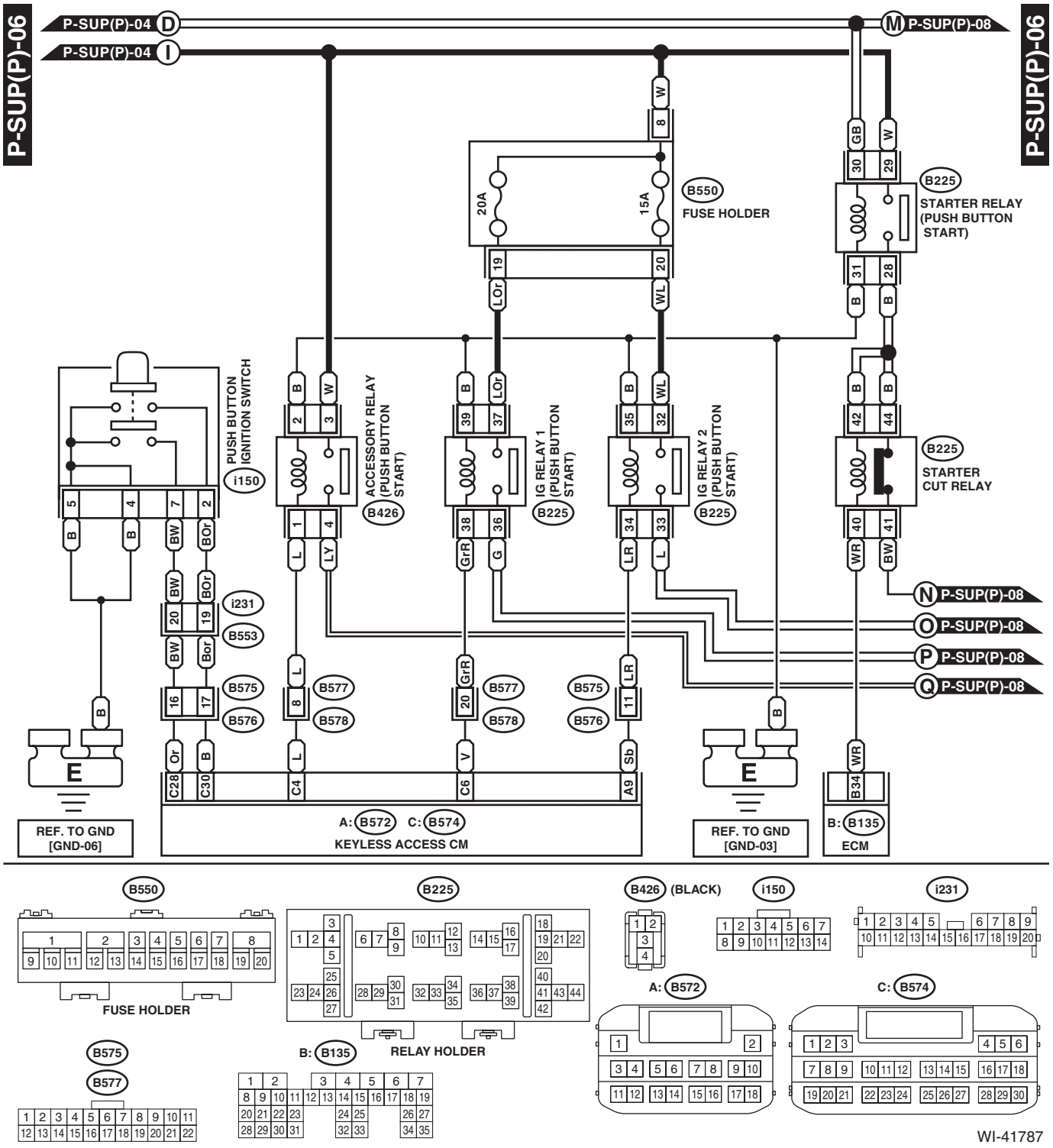

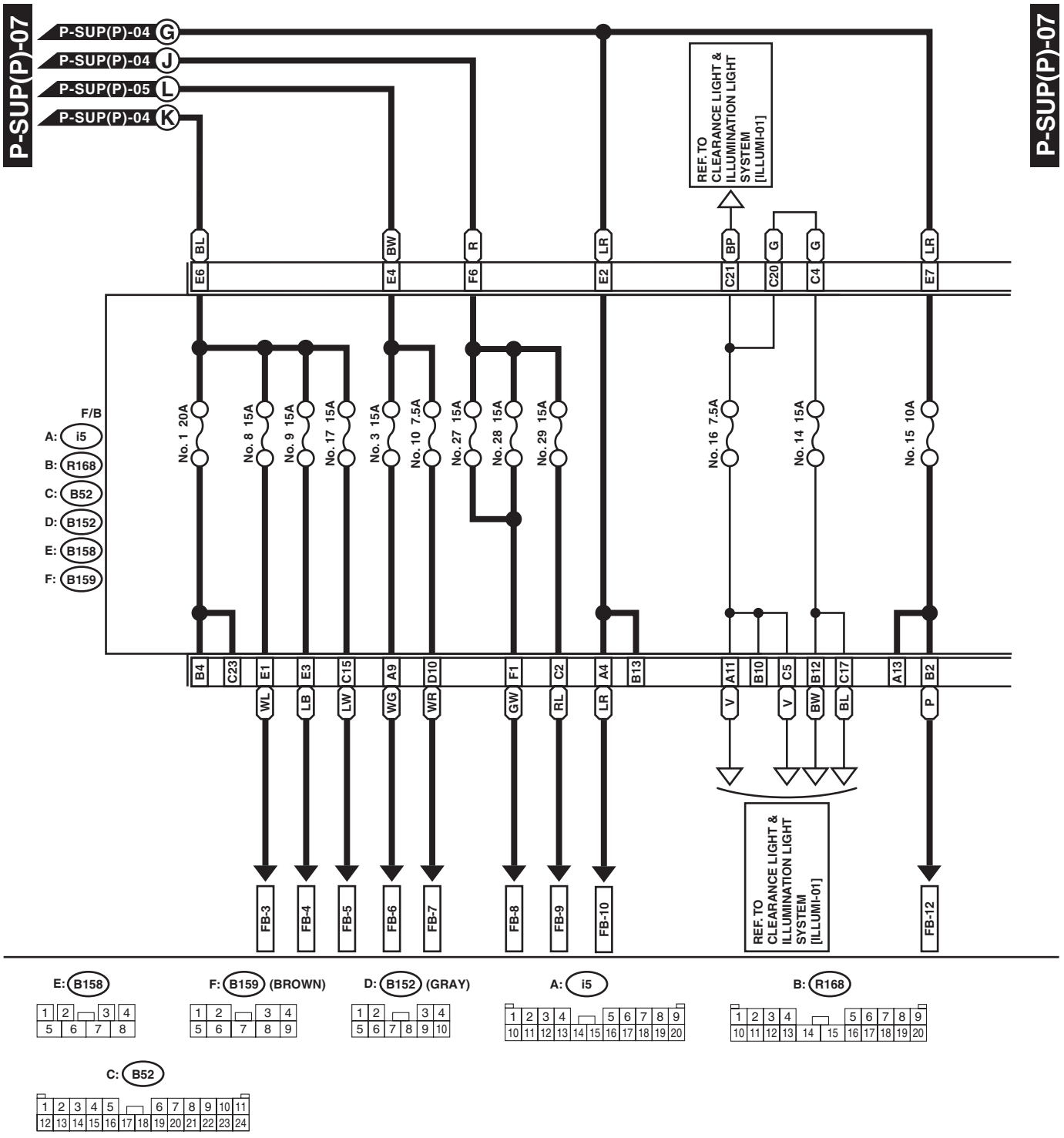
P-SUP(P)-07
P-SUP(P)-04 G
P-SUP(P)-04 J
P-SUP(P)-05 L
P-SUP(P)-04 K
REF. TO CLEARANCE LIGHT & ILLUMINATION LIGHT SYSTEM [ILLUMI-01]
BL
BW
R
LR
BP
G
G
LR
E6
E4
F6
E2
C21
C20
C4
E7
F/B
A: i5
B: R168
C: B52
D: B152
E: B158
F: B159
No. 1 20A
No. 8 15A
No. 9 15A
No. 17 15A
No. 3 15A
No. 10 7.5A
No. 27 15A
No. 28 15A
No. 29 15A
No. 16 7.5A
No. 14 15A
No. 15 10A
B4
C23
E1
E3
C15
A9
D10
F1
C2
A4
B13
A11
B10
C5
B12
C17
A13
B2
WL
LB
LW
WG
WR
GW
RL
LR
V
V
BW
BL
P
FB-3
FB-4
FB-5
FB-6
FB-7
FB-8
FB-9
FB-10
FB-12
REF. TO CLEARANCE LIGHT & ILLUMINATION LIGHT SYSTEM [ILLUMI-01]

E: B158
F: B159 (BROWN)
D: B152 (GRAY)
A: i5
B: R168
C: B52

WI-41788

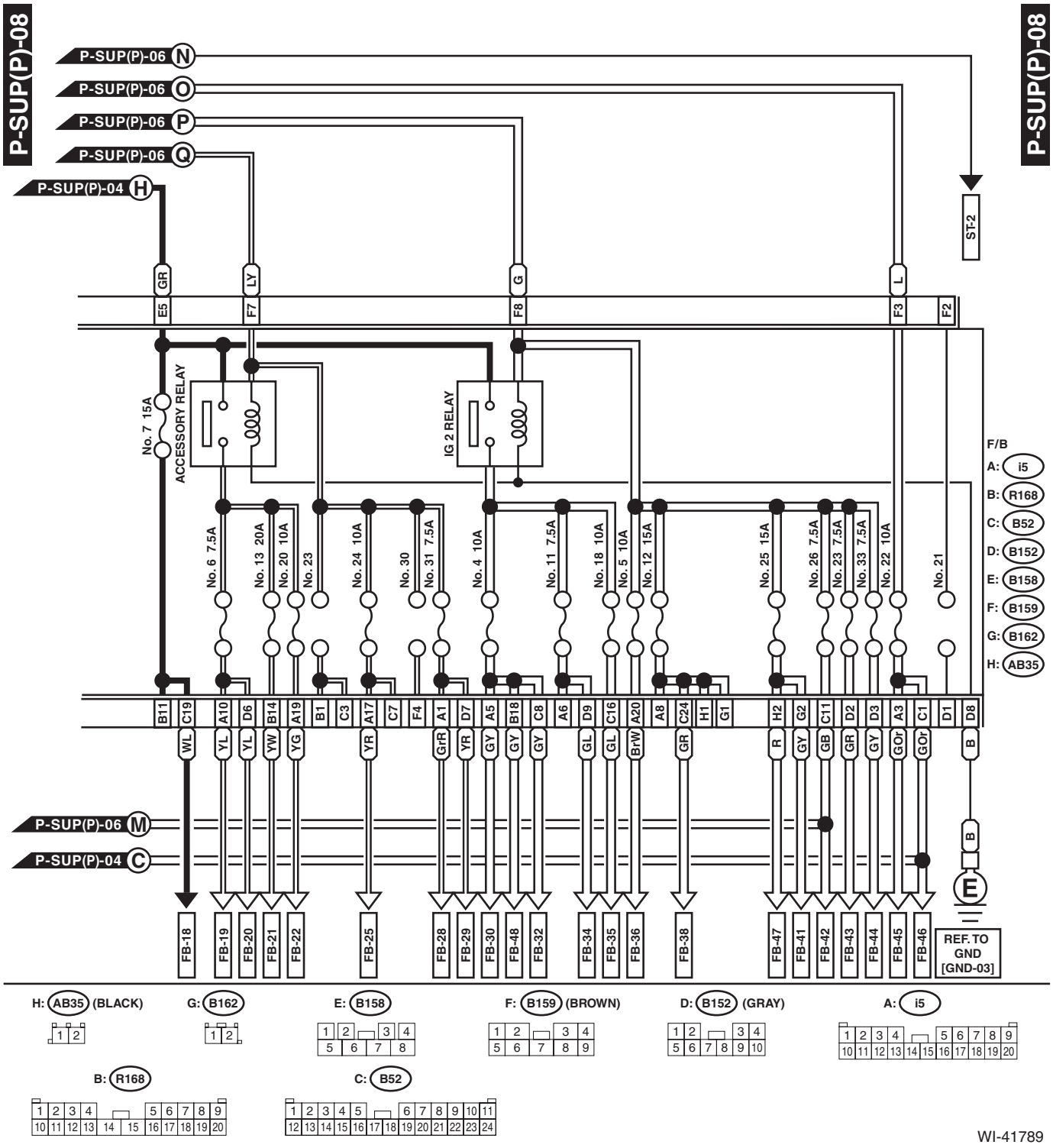
P-SUP(P)-08
P-SUP(P)-06 N
P-SUP(P)-06 O
P-SUP(P)-06 P
P-SUP(P)-06 Q
P-SUP(P)-04 H
ST-2
GR
LY
G
L
E5
F7
F8
F3
F2
No. 7 15A
ACCESSORY RELAY
IG 2 RELAY
No. 6 7.5A
No. 13 20A
No. 20 10A
No. 23
No. 24 10A
No. 30
No. 31 7.5A
No. 4 10A
No. 11 7.5A
No. 18 10A
No. 5 10A
No. 12 15A
No. 25 15A
No. 26 7.5A
No. 23 7.5A
No. 33 7.5A
No. 22 10A
No. 21
F/B
A: i5
B: R168
C: B52
D: B152
E: B158
F: B159
G: B162
H: AB35
B11 C19 A10 D6 B14 A19 B1 C3 A17 C7 F4 A1 D7 A5 B18 C8 A6 D9 C16 A20 A8 C24 H1 G1 H2 G2 C11 D2 D3 A3 C1 D1 D8
WL YL YL YW YG YR GrR YR GY GY GY GL GL BrW GR R GY GB GR GY GOr GOr B
P-SUP(P)-06 M
P-SUP(P)-04 C
B
E
FB-18 FB-19 FB-20 FB-21 FB-22 FB-25 FB-28 FB-29 FB-30 FB-48 FB-32 FB-34 FB-35 FB-36 FB-38 FB-47 FB-41 FB-42 FB-43 FB-44 FB-45 FB-46
REF. TO GND [GND-03]
H: AB35 (BLACK)
G: B162
E: B158
F: B159 (BROWN)
D: B152 (GRAY)
A: i5
B: R168
C: B52

WI-41789

No.	Load
MB-1	VDC CM
MB-2	VDC CM
MB-3	Wiper relay
	Brake vacuum pump relay
MB-4	Sub fan relay
MB-5	Mirror heater LH
	Mirror heater RH
	Rear defogger
MB-6	Body integrated unit
MB-7	Main fan relay 2
MB-8	Main fan motor
MB-9	ECM
MB-10	Main fan relay 2
MB-11	Main fan relay 2
MB-12	Body integrated unit
MB-13	Body integrated unit
MB-15	Front fog light relay
MB-16	Front combination light LH
	Front combination light RH
MB-17	Daytime running light relay
MB-18	Body integrated unit
MB-19	Horn
MB-20	Horn
MB-21	Horn switch
	Body integrated unit
MB-22	A/F, oxygen sensor relay
MB-23	Main relay
	IG relay
MB-24	Electronic throttle control relay
MB-25	Fuel pump relay
MB-26	TCM
	Self shut relay
MB-27	ECM
	Data link connector
MB-28	Turn signal and hazard unit
	Body integrated unit
MB-29	Spot map light
	Room light
	Body integrated unit
	Immobilizer antenna
MB-30	Power window circuit breaker
MB-31	IG relay 1 (push button start)
	IG relay 2 (push button start)
	Accessory relay (push button start)
MB-32	Tail relay
	Daytime running light relay

No.	Load
MB-33	DMCM relay
	High voltage battery cooling fan / drive motor inverter relay
	High voltage battery
	HPCM
	ISG
MB-35	ID code box
	Keyless access CM
MB-36	HPCM
MB-37	Brake vacuum pump relay
ST-2	Starter relay 1
FB-3	Stop light and brake switch
FB-4	Wiper deicer relay
FB-5	Seat heater relay
FB-6	Body integrated unit
FB-7	Remote engine start CM
FB-8	Blower motor relay
FB-9	Front fog light relay
FB-10	Audio
	MFD
	Navigation unit
FB-12	Keyless entry CM
	Luggage room light
FB-18	Combination meter
	Body integrated unit
	Impact sensor
	Air mix door actuator LH (with left/right independent air conditioner)
	Air mix door actuator RH (with left/right independent air conditioner)
	Mode door actuator
	Air mix door actuator (without left/right independent air conditioner)
	Steering lock CM
	A/C control panel
	Active grille shutter
FB-19	Remote control mirror switch
FB-20	Seat heater relay
	Rear view mirror
FB-21	Rear accessory power supply socket
FB-22	Front accessory power supply socket
FB-25	Audio
	Navigation unit
FB-28	A/C control panel
FB-29	Body integrated unit
FB-30	Pedestrian alert CM

No.	Load
FB-32	Remote engine start CM
	Impact sensor
	Data link connector
	Stop light and brake switch
	Wiper deicer relay
	Sunroof motor assembly
	Sunroof switch
	Sunroof switch (tilt)
FB-34	Turn signal and hazard unit
FB-35	Back-up light relay
	Auto headlight beam leveler CM
FB-36	Combination meter
	MFD
	HPCM
FB-38	HPCM
	DMCM
	High voltage battery
	Electric oil pump inverter
	Keyless access CM
	ECM
	TCM
	Body integrated unit
	Fuel pump relay
FB-41	Airbag CM
FB-42	Power window relay
	Wiper relay
FB-43	Steering lock CM
FB-44	VDC CM
	Steering angle sensor
	Power steering CM
FB-45	A/C control panel
FB-46	A/C relay
	Sub fan relay
	Pressure switch
	Blower motor relay
FB-47	Occupant detection control module
FB-48	TPMS CM
BAT-1	12V engine restart battery sensor
BAT-2	Power steering CM
BAT-3	DC/DC converter

4. Ground Circuit

A: WIRING DIAGRAM

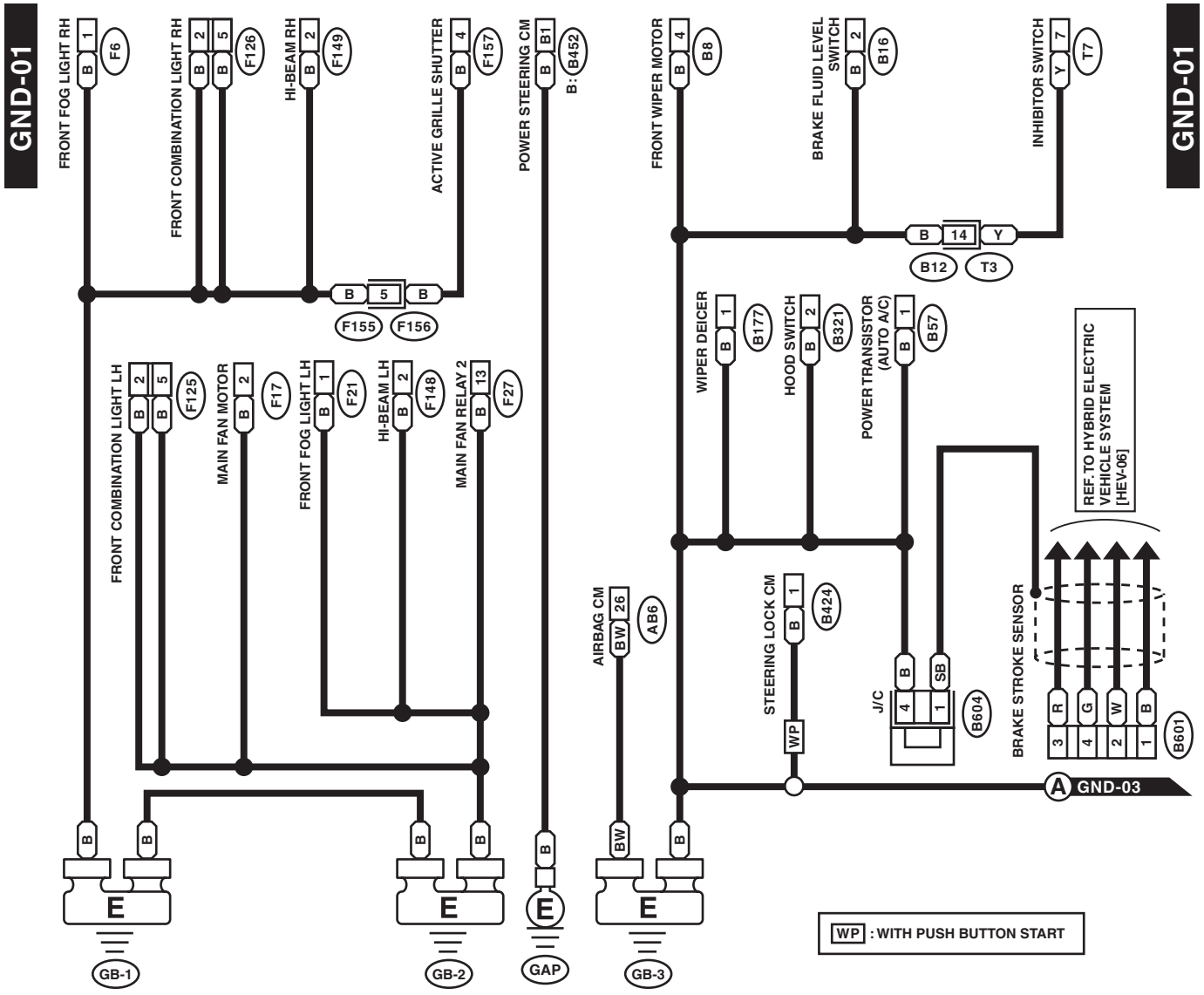

WI-41790

Ground Circuit

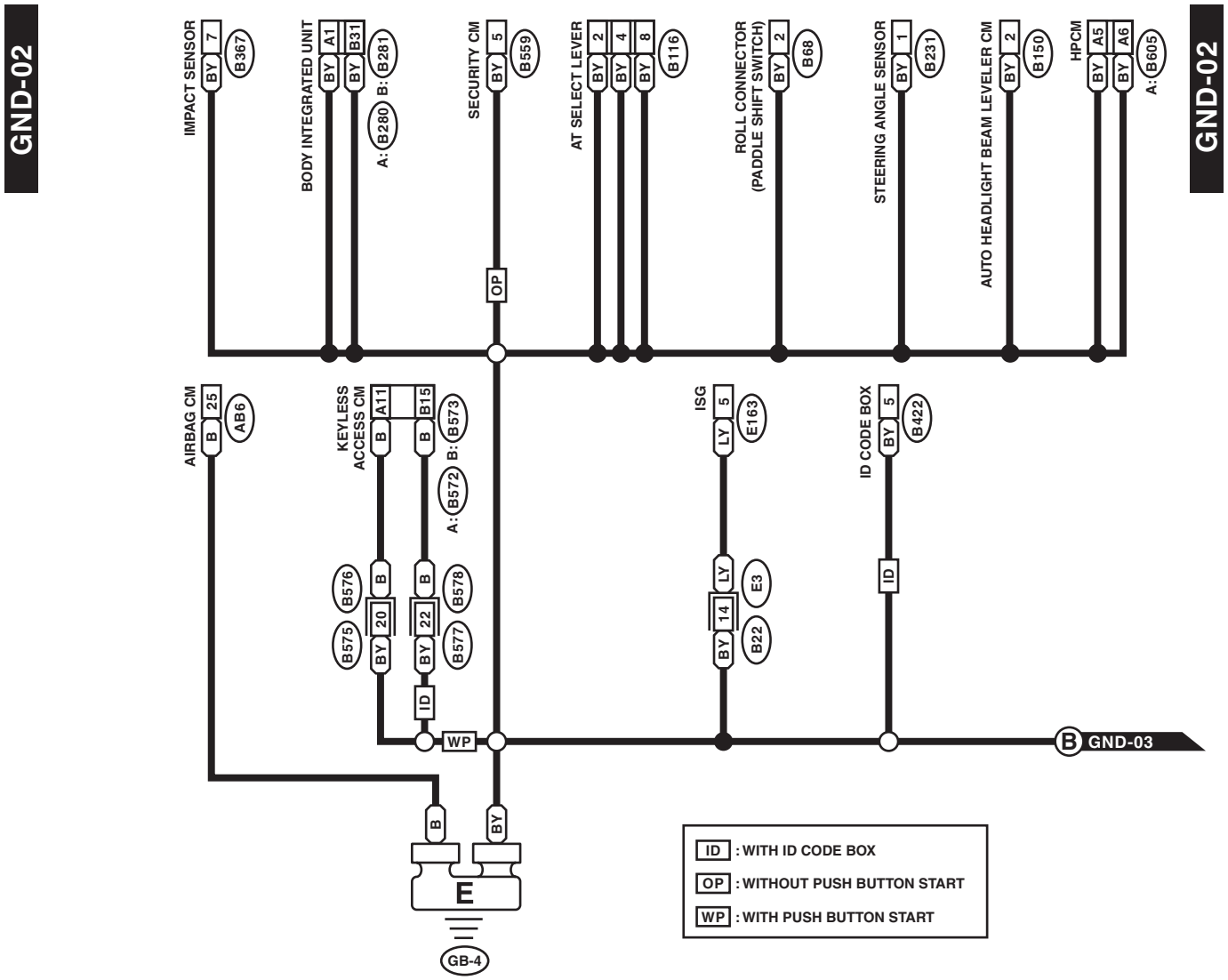

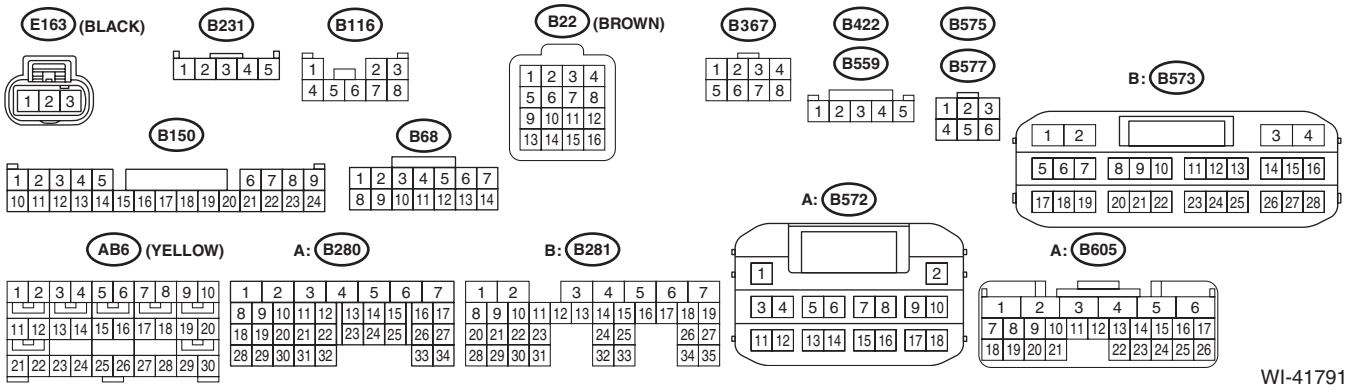

Ground Circuit

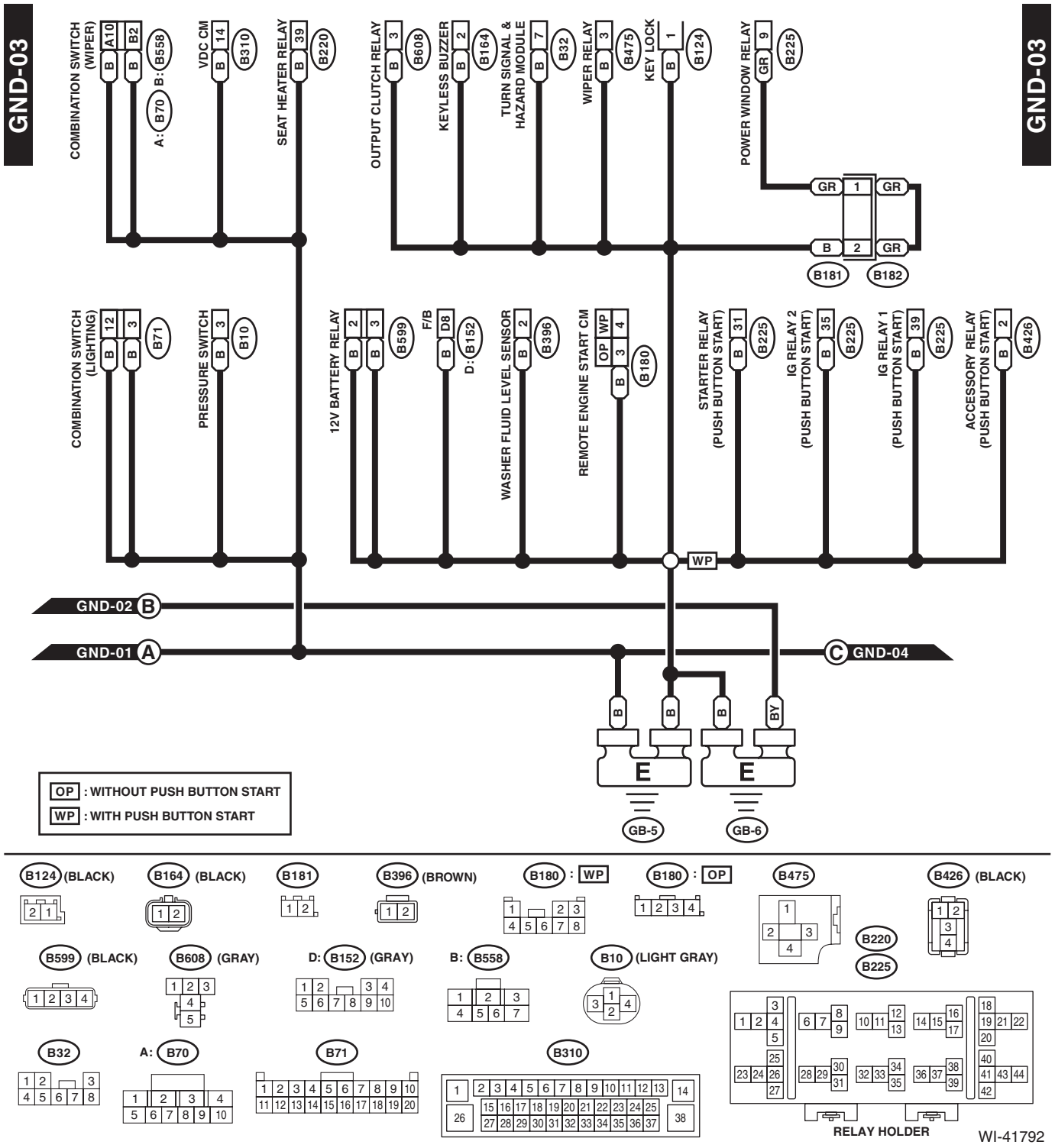

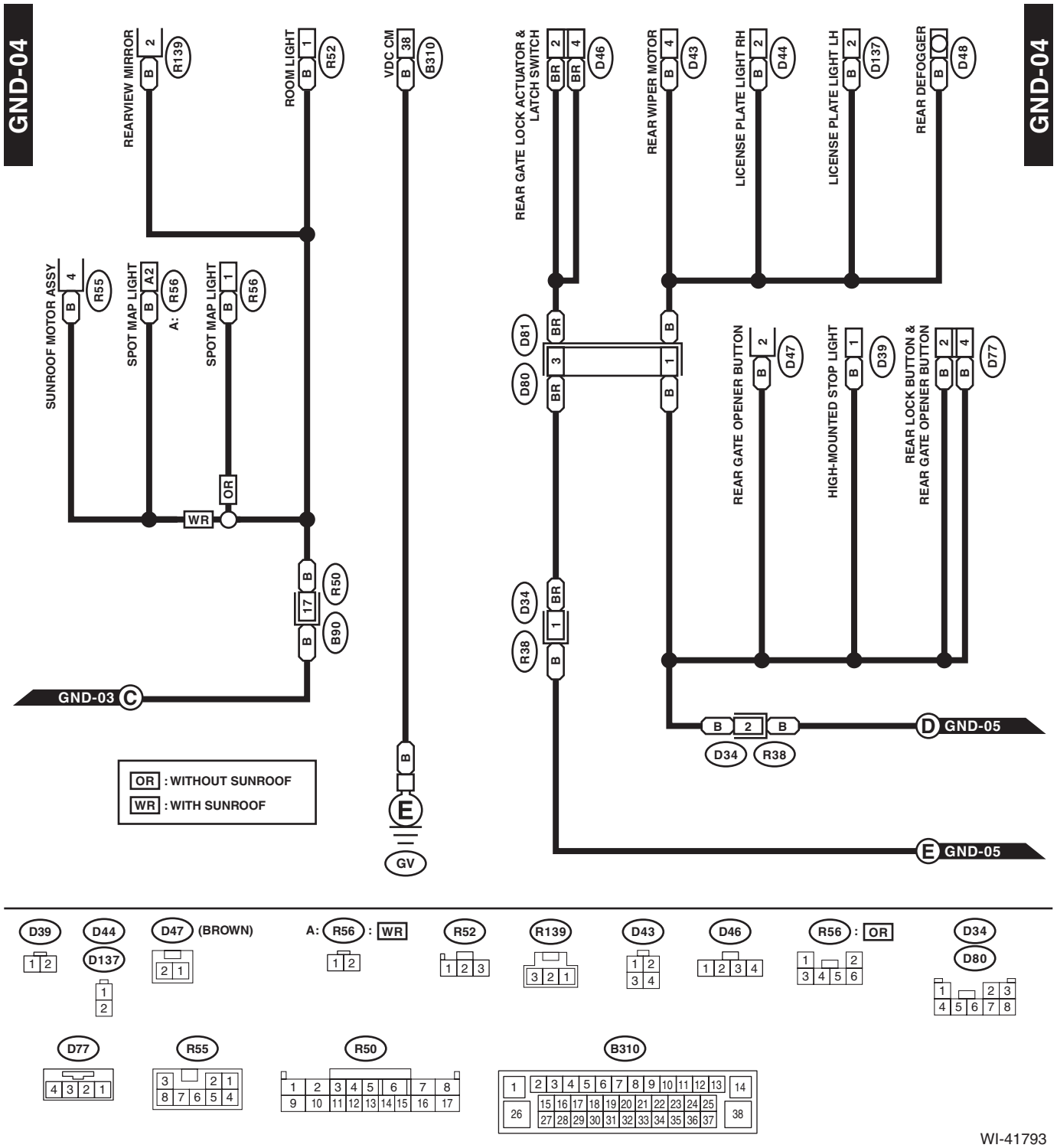
GND-04
GND-04
REARVIEW MIRROR
R139
ROOM LIGHT
R52
VDC CM
B310
REAR GATE LOCK ACTUATOR & LATCH SWITCH
D46
REAR WIPER MOTOR
D43
LICENSE PLATE LIGHT RH
D44
LICENSE PLATE LIGHT LH
D137
REAR DEFOGGER
D48
SUNROOF MOTOR ASSY
R55
SPOT MAP LIGHT
R56
A:
SPOT MAP LIGHT
R56
D81
D80
REAR GATE OPENER BUTTON
D47
HIGH-MOUNTED STOP LIGHT
D39
REAR LOCK BUTTON & REAR GATE OPENER BUTTON
D77
OR
WR
R50
B90
GND-03 C
D34
R38
D GND-05
E GND-05
E
GV
OR : WITHOUT SUNROOF
WR : WITH SUNROOF

D39
D44
D137
D47 (BROWN)
A: R56 : WR
R52
R139
D43
D46
R56 : OR
D34
D80
D77
R55
R50
B310

WI-41793

Ground Circuit

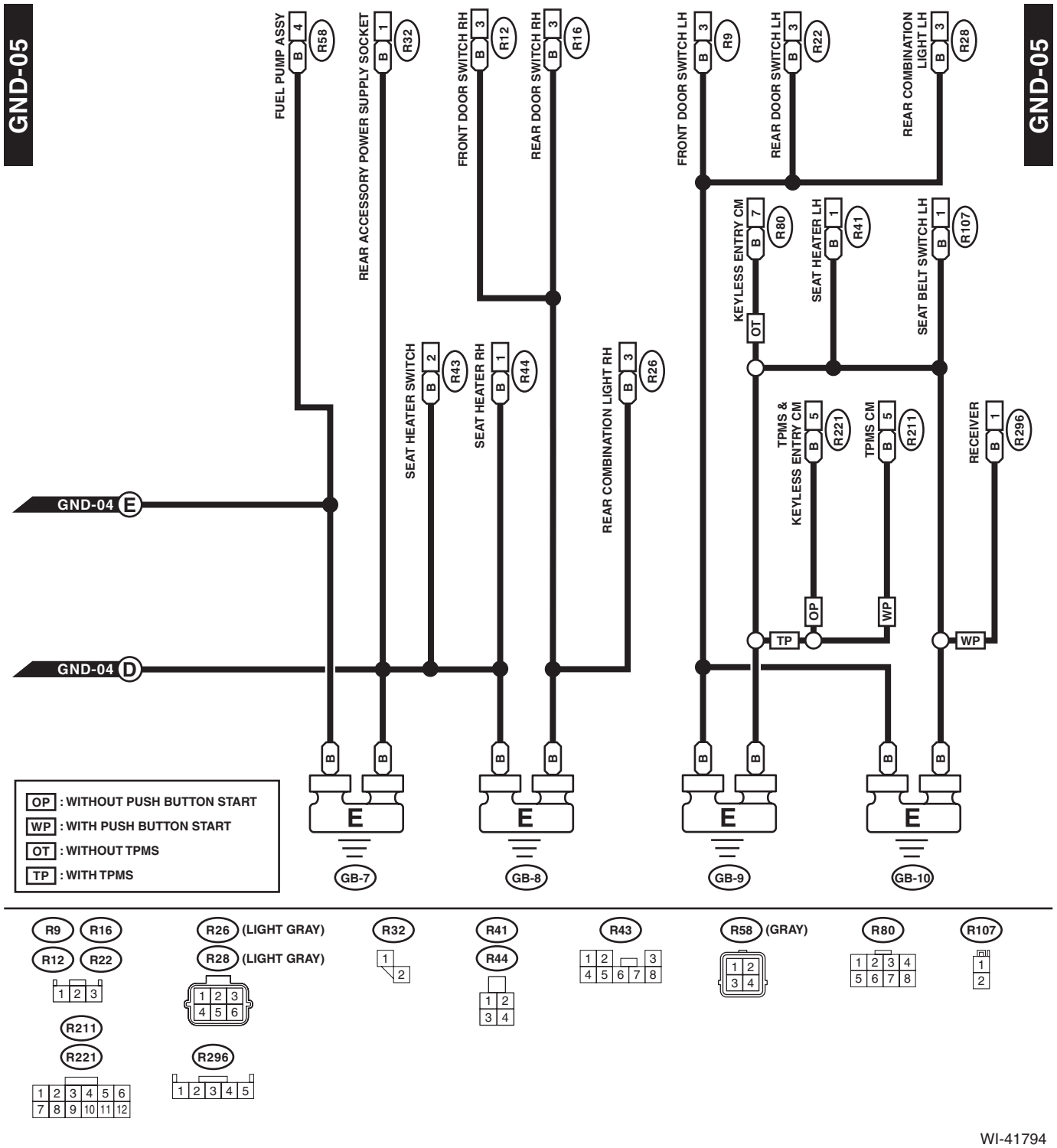

WI-41794

Ground Circuit

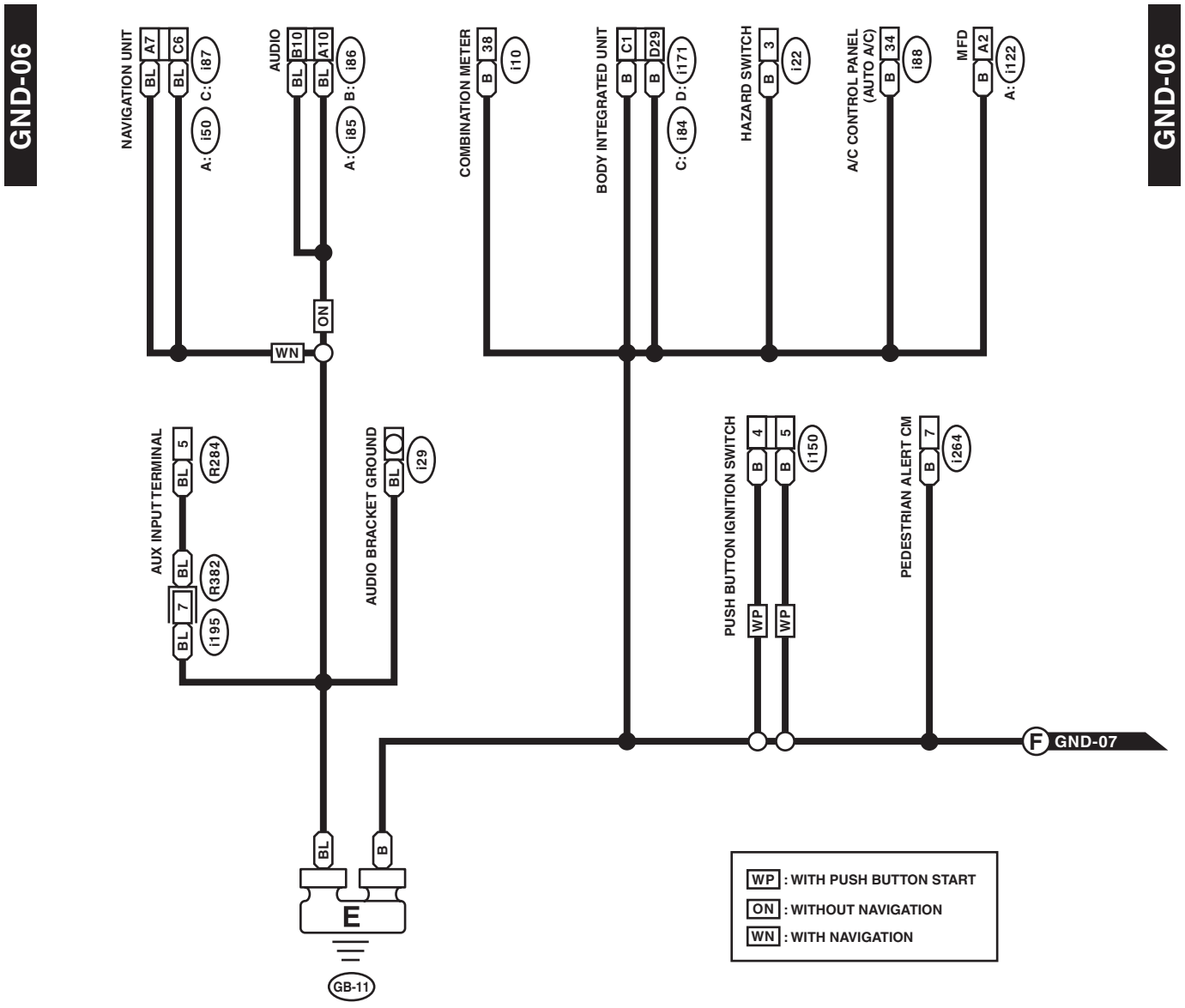

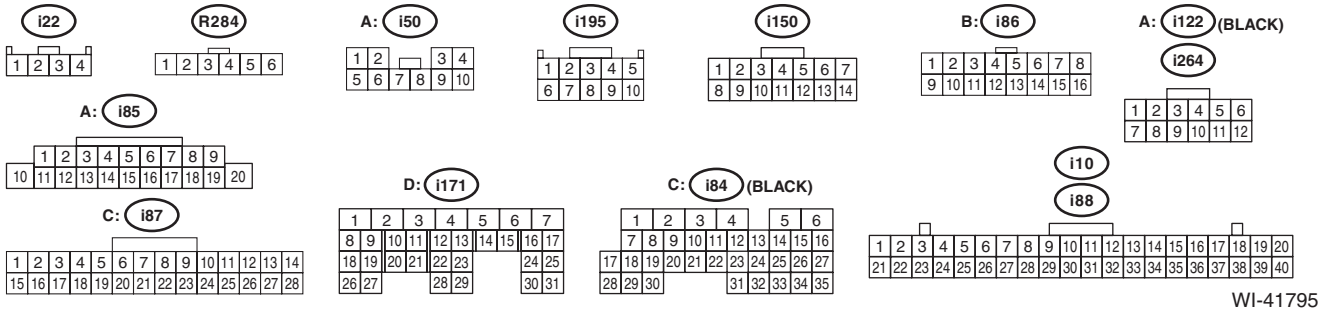

WI-41795

Ground Circuit

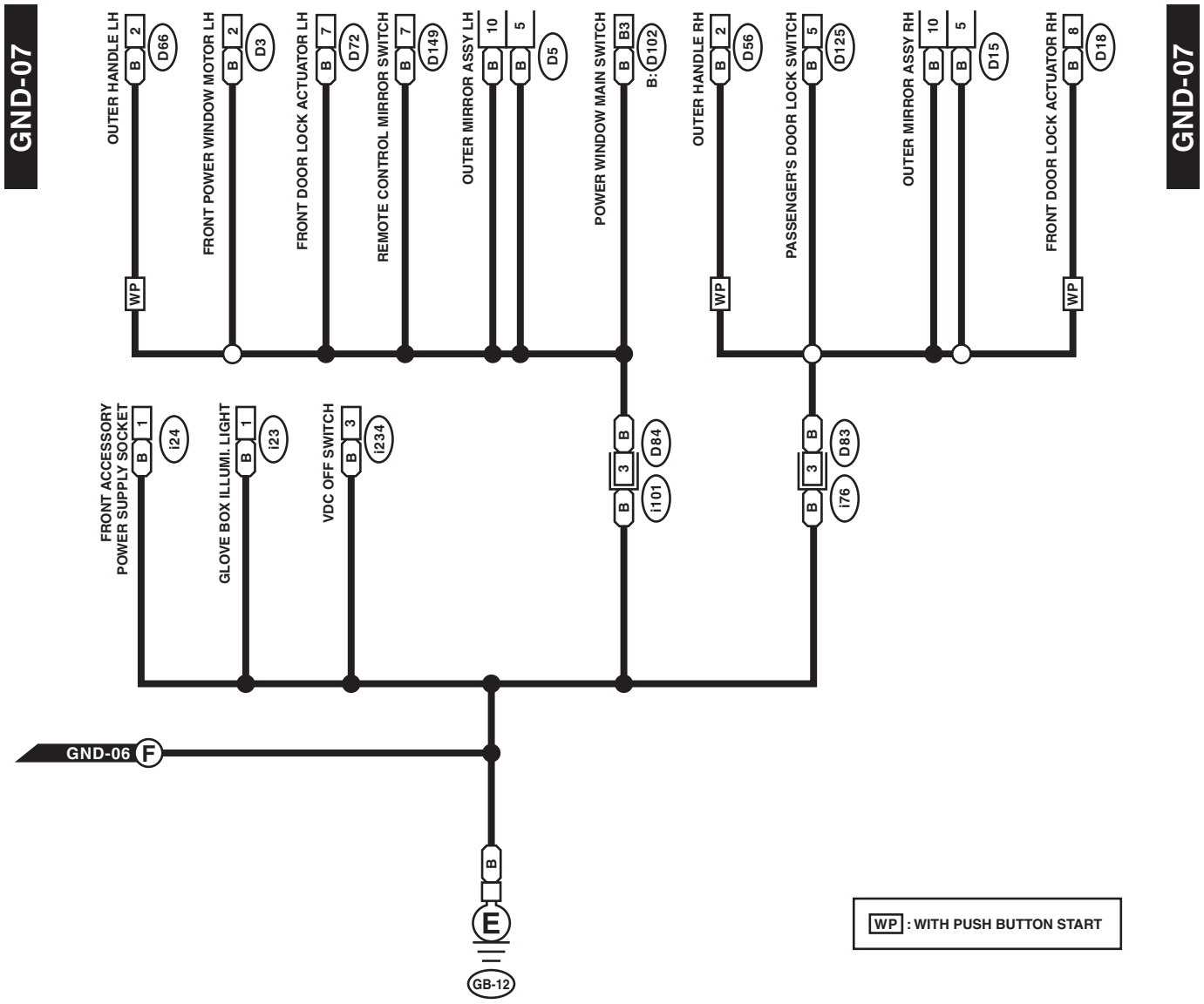

GND-08

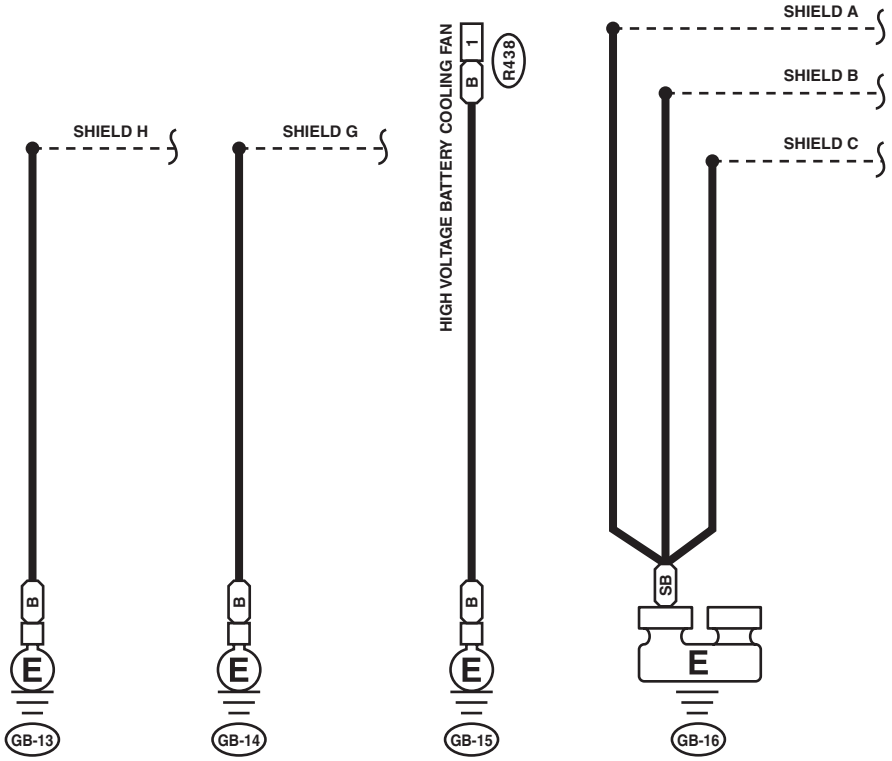



WI-41797

GND-09

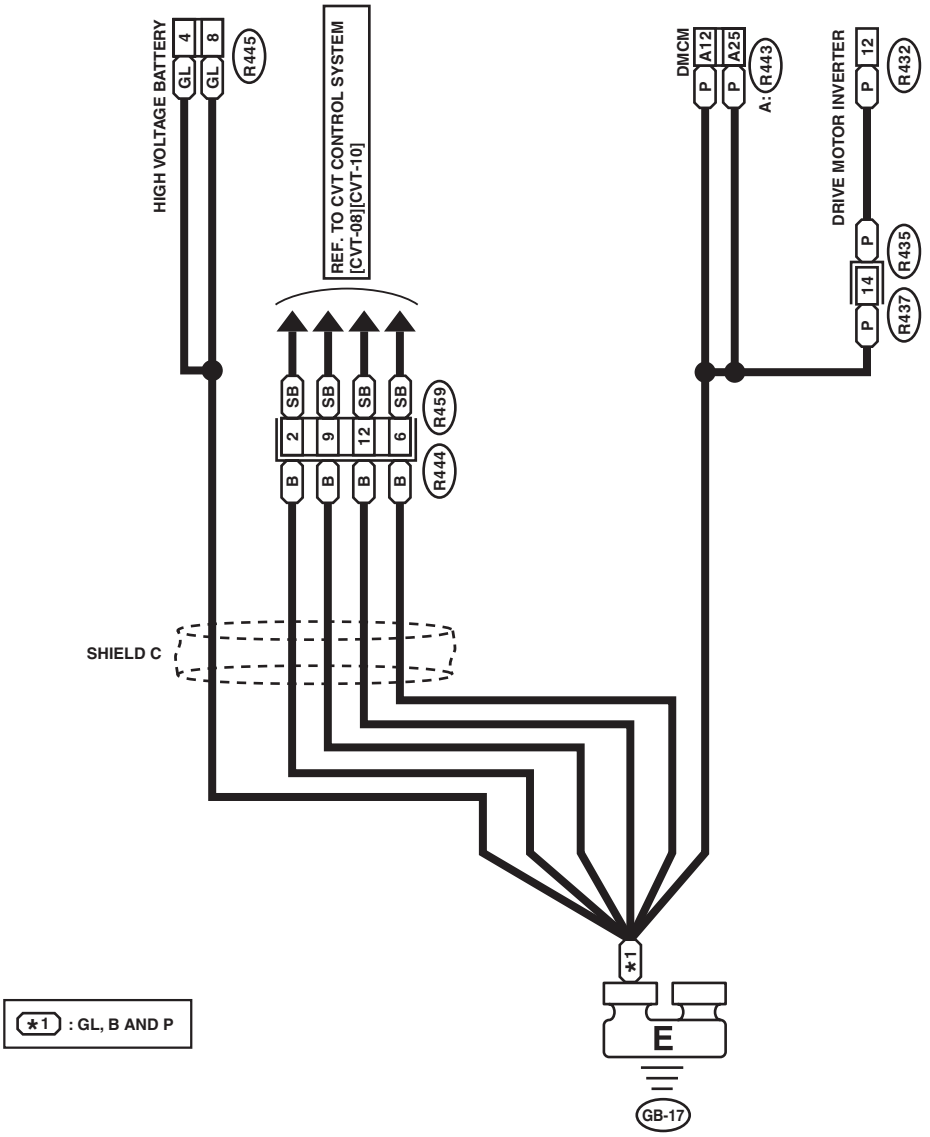

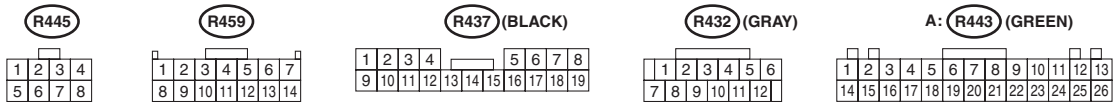

WI-41798

GND-10

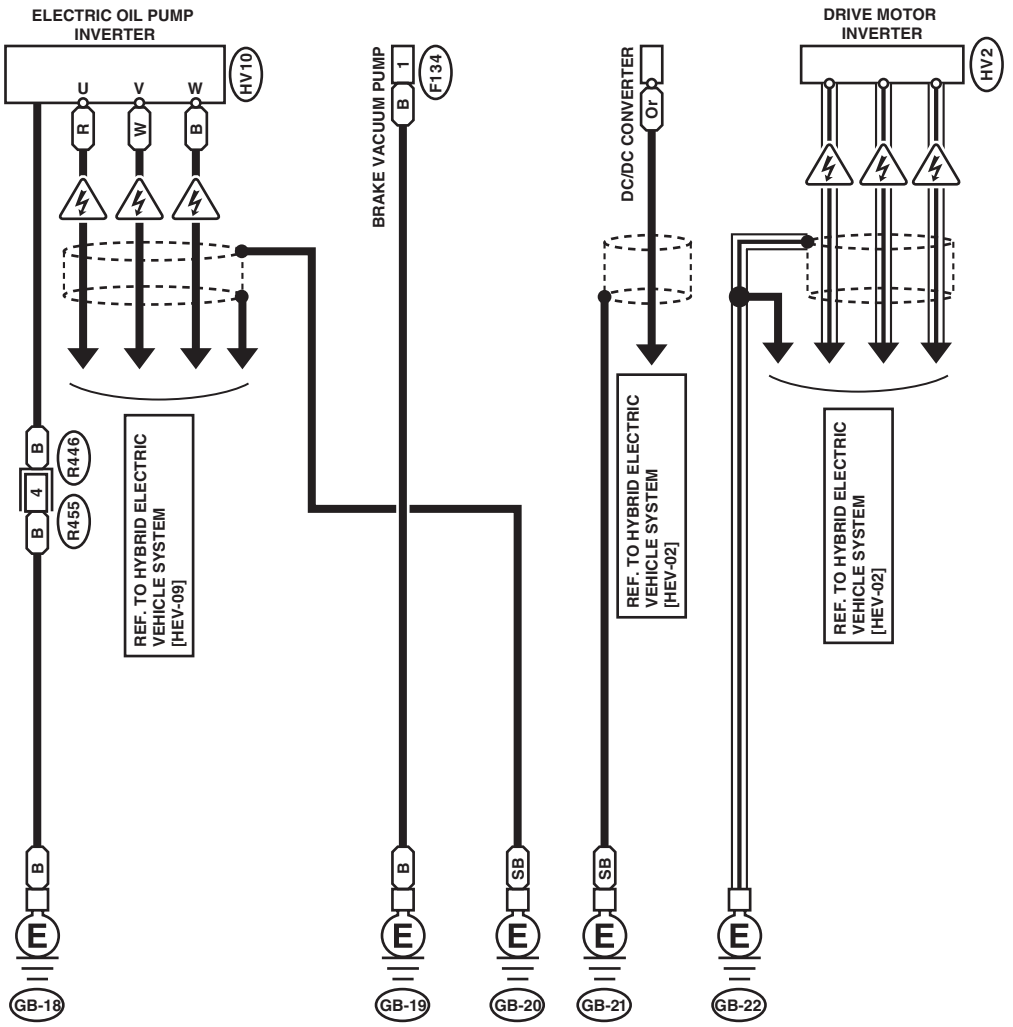



WI-41799

5. Active Grille Shutter

A: WIRING DIAGRAM

ACTGS-01

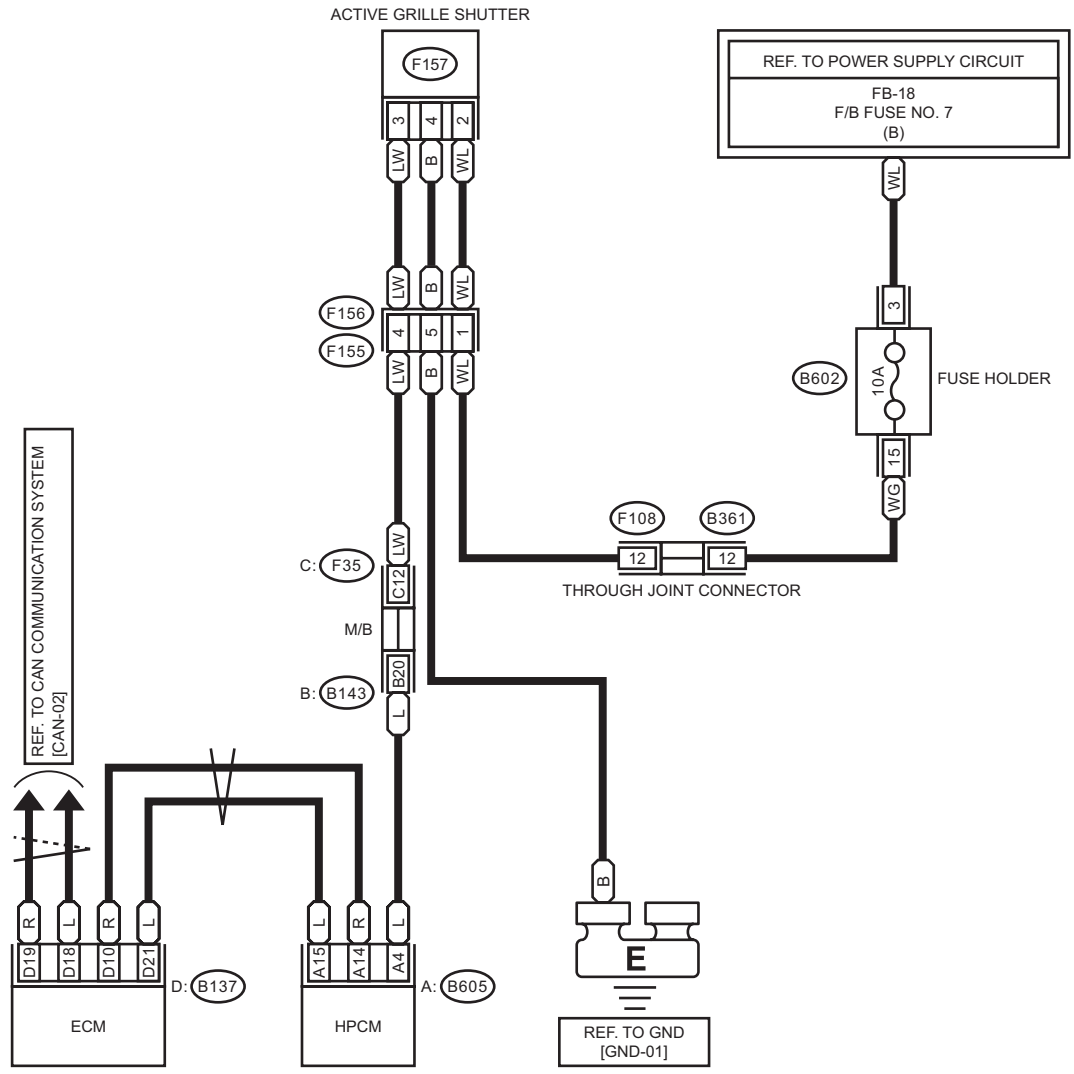

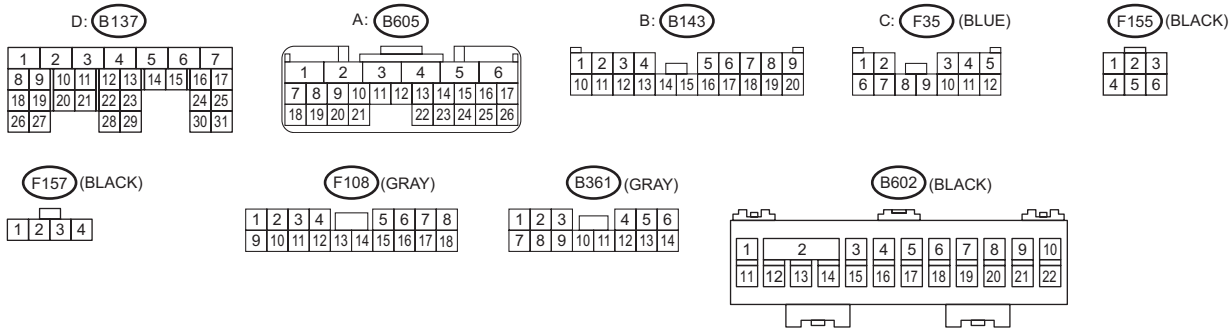

WI-64621

6. Airbag System

A: WIRING DIAGRAM

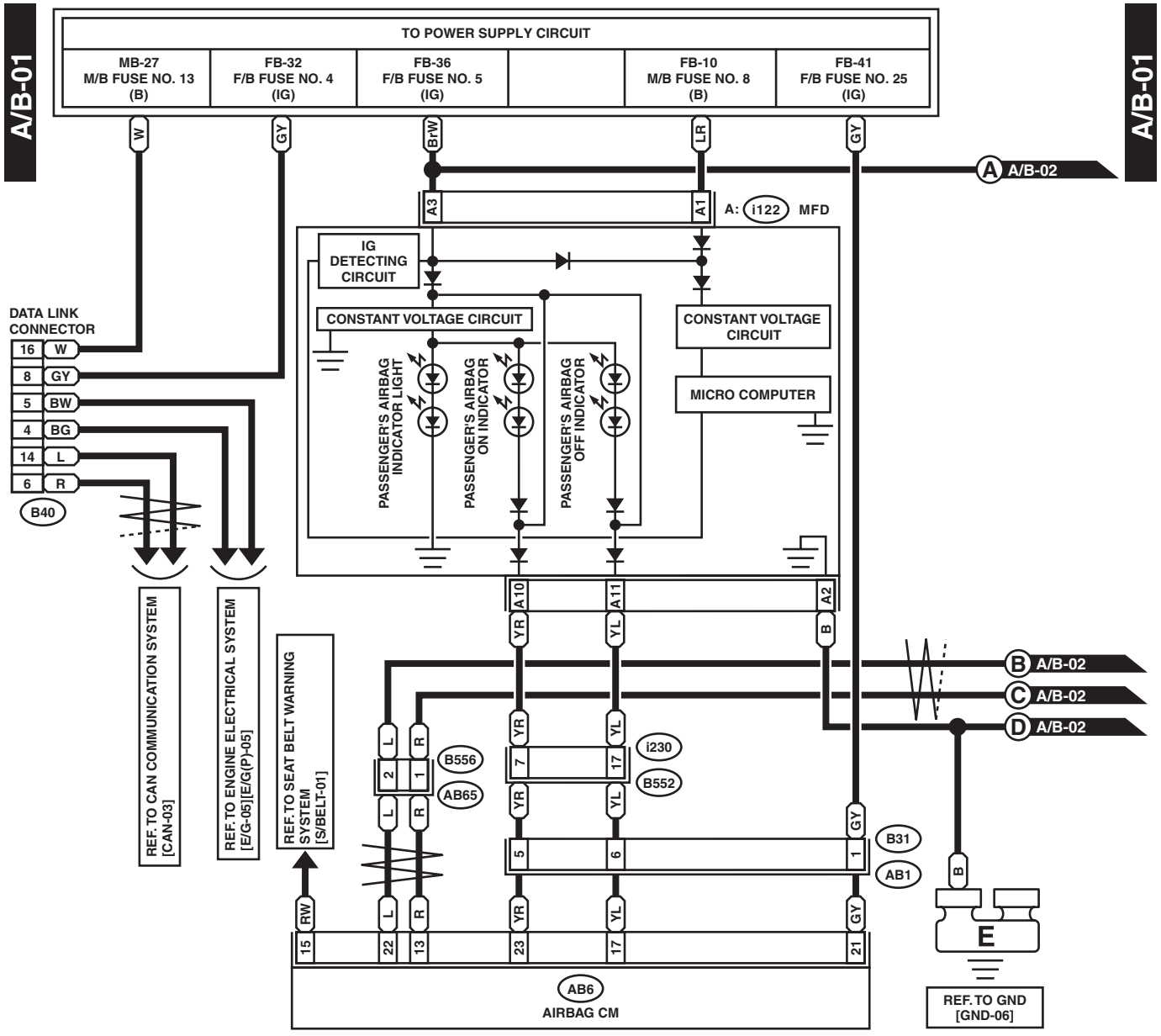

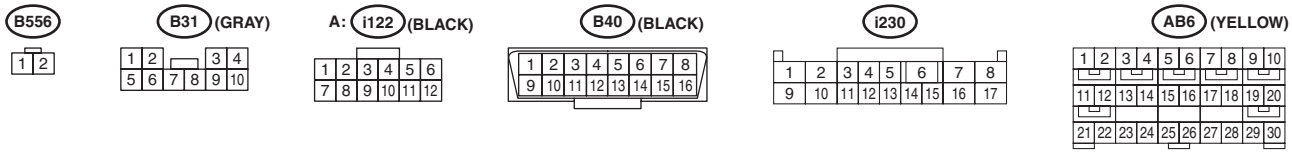

WI-41800

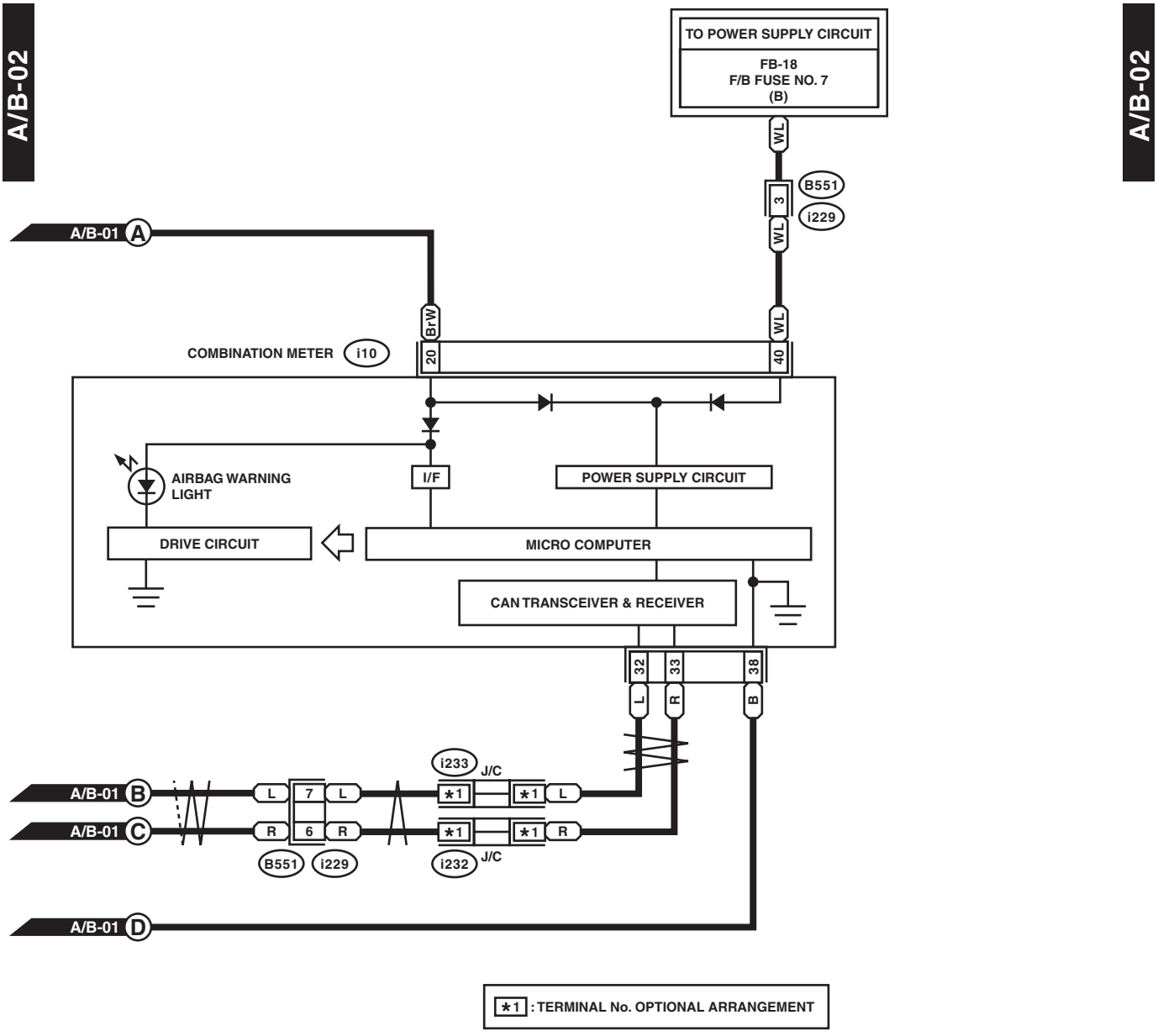
A/B-02
A/B-02
TO POWER SUPPLY CIRCUIT
FB-18
F/B FUSE NO. 7
(B)
WL
B551
3
i229
WL
A/B-01 A
BrW
WL
COMBINATION METER i10
20
40
AIRBAG WARNING LIGHT
I/F
POWER SUPPLY CIRCUIT
DRIVE CIRCUIT
MICRO COMPUTER
CAN TRANSCEIVER & RECEIVER
32
33
38
L
R
B
i233 J/C
A/B-01 B
L
7
L
*1
*1
L
A/B-01 C
R
6
R
*1
*1
R
B551
i229
i232 J/C
A/B-01 D
*1 : TERMINAL No. OPTIONAL ARRANGEMENT

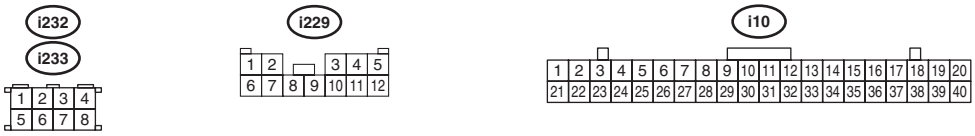
i232
i233
1 2 3 4
5 6 7 8
i229
1 2
3 4 5
6 7 8 9 10 11 12
i10
1 2 3 4 5 6 7 8 9 10 11 12 13 14 15 16 17 18 19 20
21 22 23 24 25 26 27 28 29 30 31 32 33 34 35 36 37 38 39 40

WI-41801

A/B-03

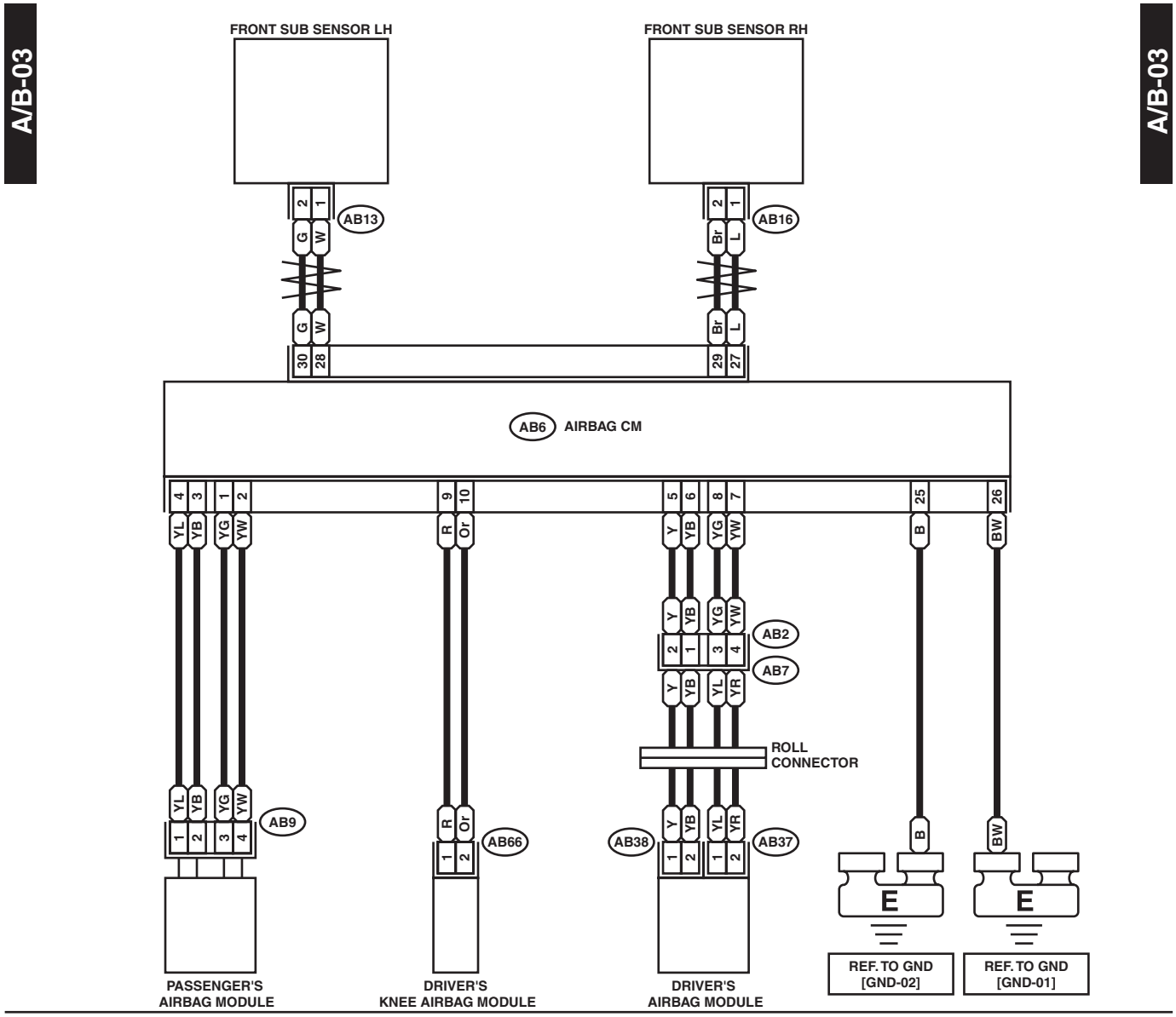

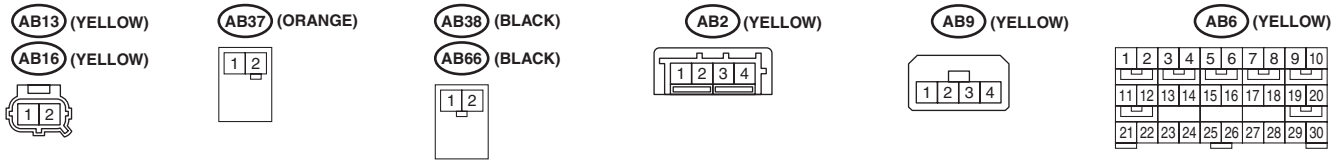

WI-34149

A/B-04

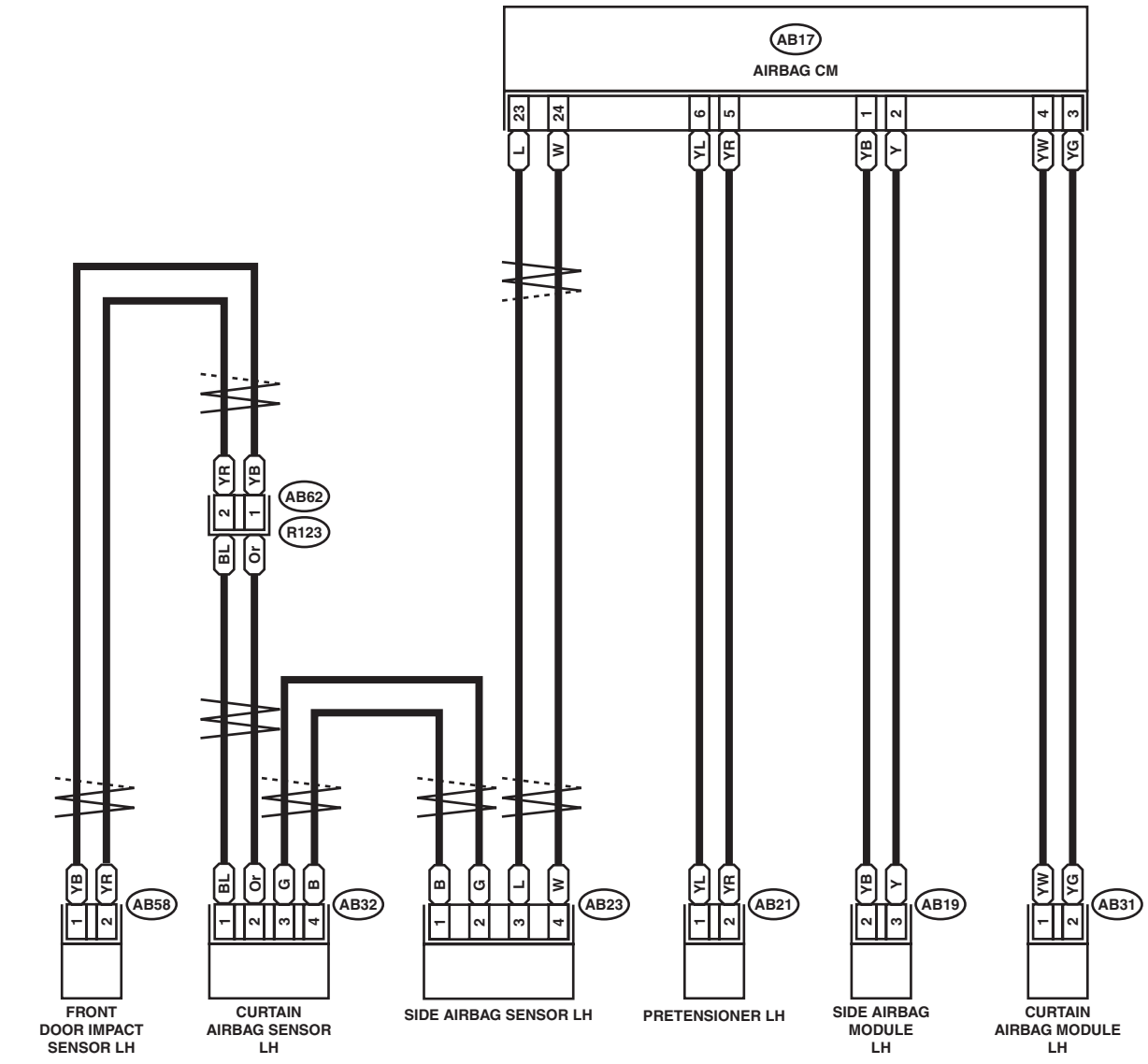

A/B-04

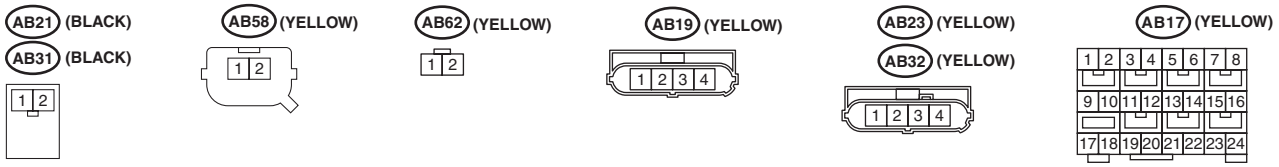

WI-41802

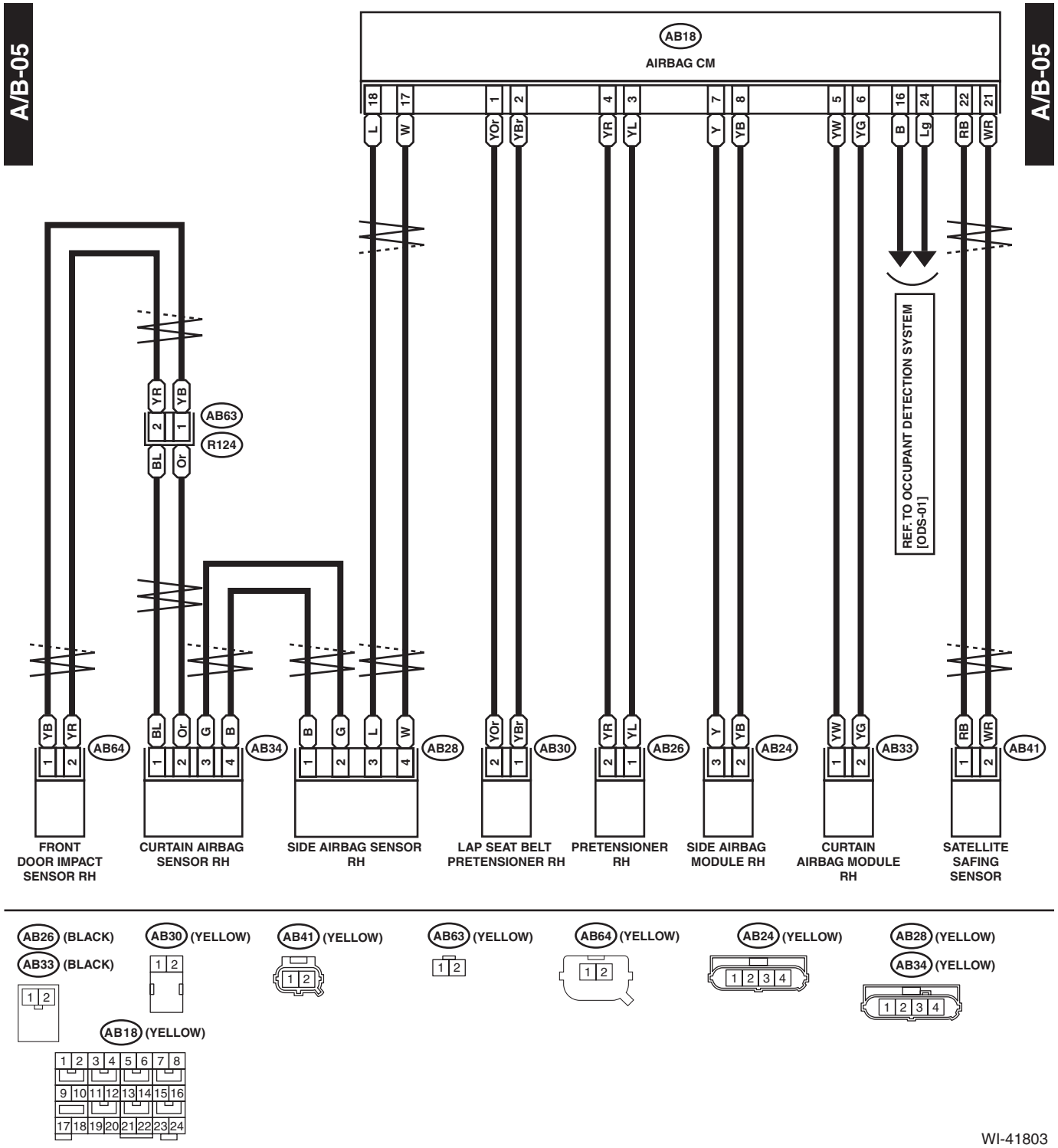
A/B-05
A/B-05
AB18
AIRBAG CM
18 17 1 2 4 3 7 8 5 6 16 24 22 21
L W YOr YBr YR YL Y YB YW YG B Lg RB WR
REF. TO OCCUPANT DETECTION SYSTEM [ODS-01]
YR YB
AB63
R124
2 1
BL Or
YB YR AB64 1 2
BL Or G B AB34 1 2 3 4
B G L W AB28 1 2 3 4
YOr YBr AB30 2 1
YR YL AB26 2 1
Y YB AB24 3 2
YW YG AB33 1 2
RB WR AB41 1 2
FRONT DOOR IMPACT SENSOR RH
CURTAIN AIRBAG SENSOR RH
SIDE AIRBAG SENSOR RH
LAP SEAT BELT PRETENSIONER RH
PRETENSIONER RH
SIDE AIRBAG MODULE RH
CURTAIN AIRBAG MODULE RH
SATELLITE SAFING SENSOR
AB26 (BLACK)
AB33 (BLACK)
1 2
AB30 (YELLOW)
1 2
AB41 (YELLOW)
1 2
AB63 (YELLOW)
1 2
AB64 (YELLOW)
1 2
AB24 (YELLOW)
1 2 3 4
AB28 (YELLOW)
AB34 (YELLOW)
1 2 3 4
AB18 (YELLOW)
1 2 3 4 5 6 7 8
9 10 11 12 13 14 15 16
17 18 19 20 21 22 23 24

WI-41803

7. Air Conditioning System

A: WIRING DIAGRAM

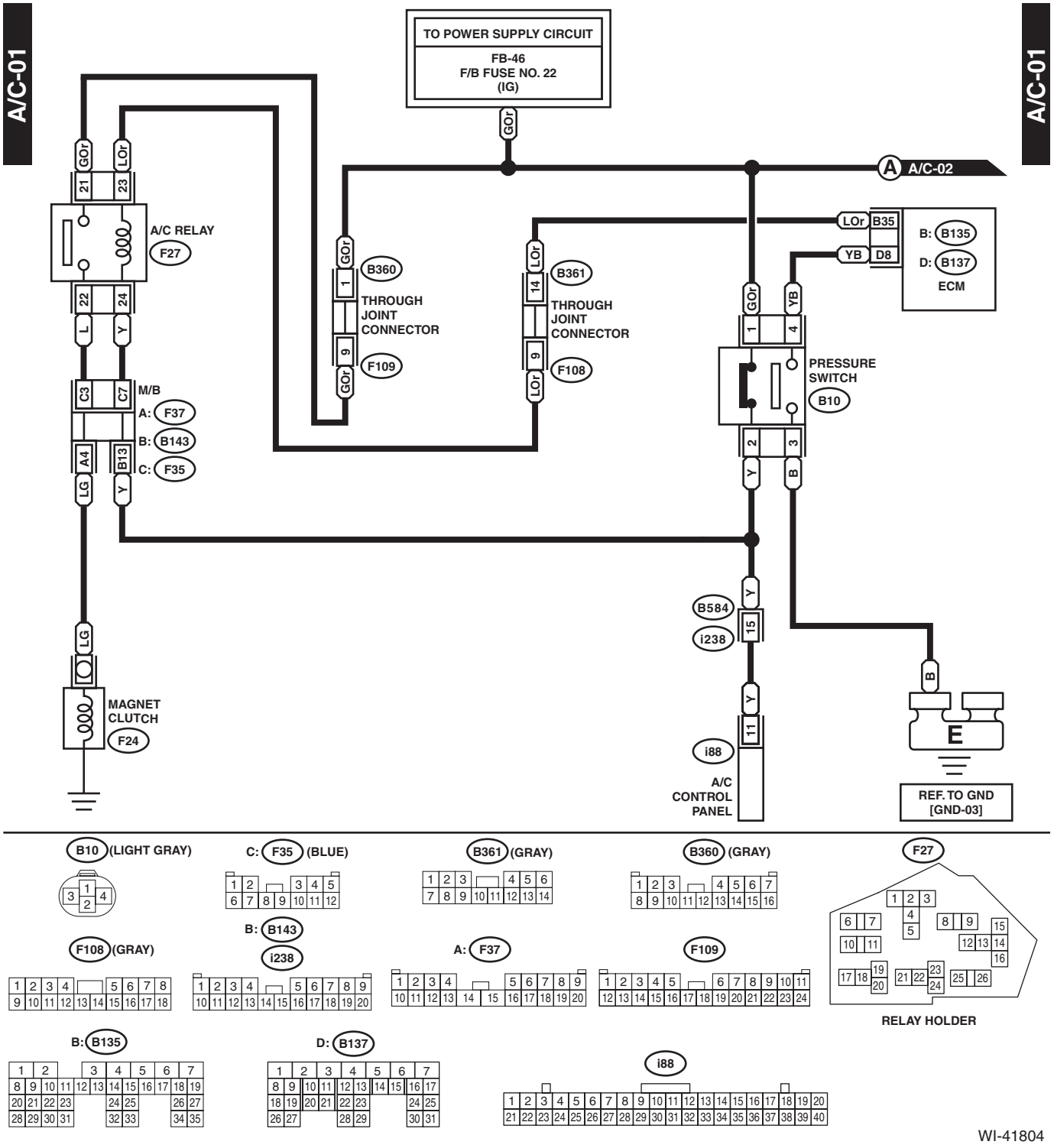

WIRING SYSTEM

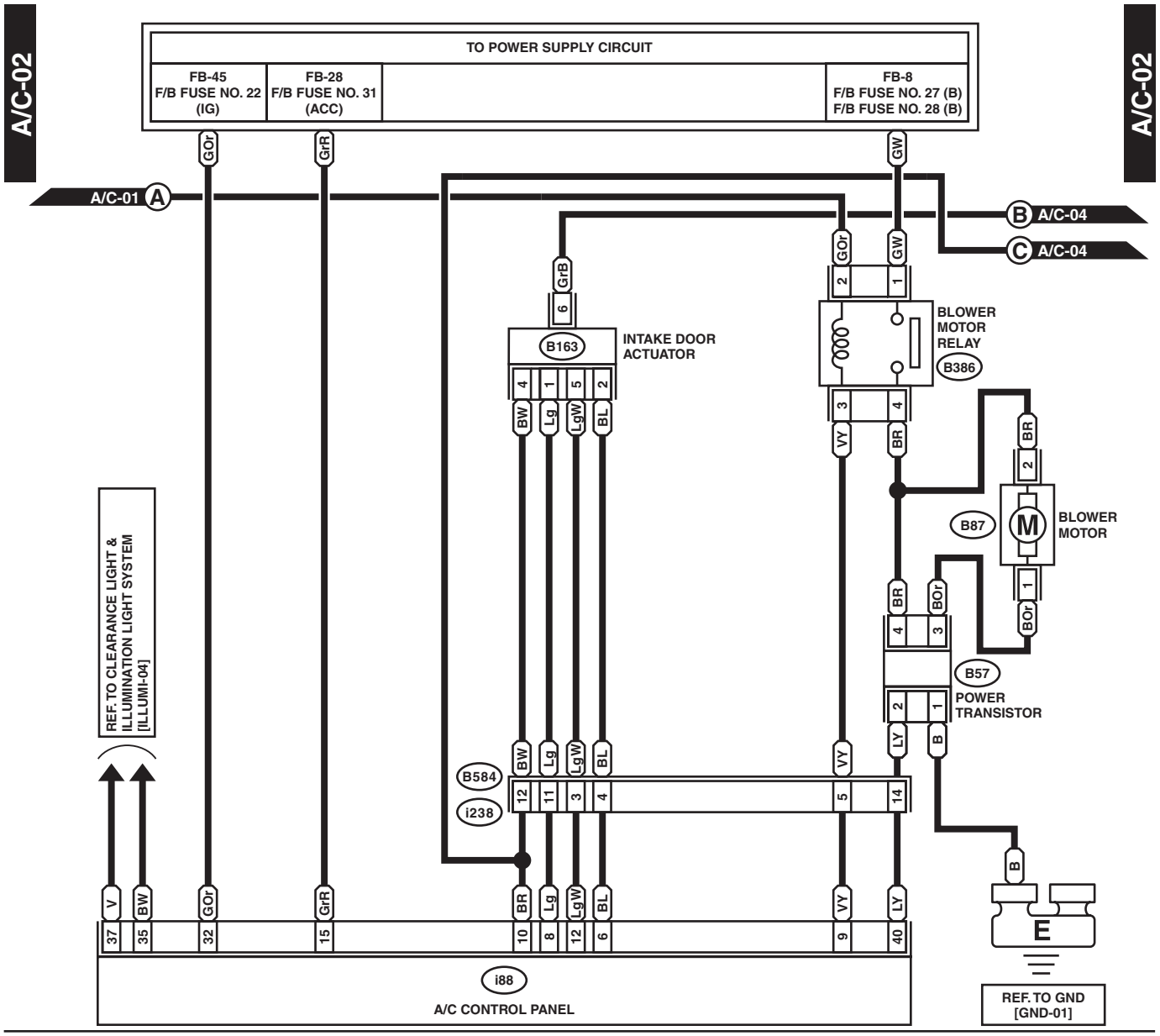

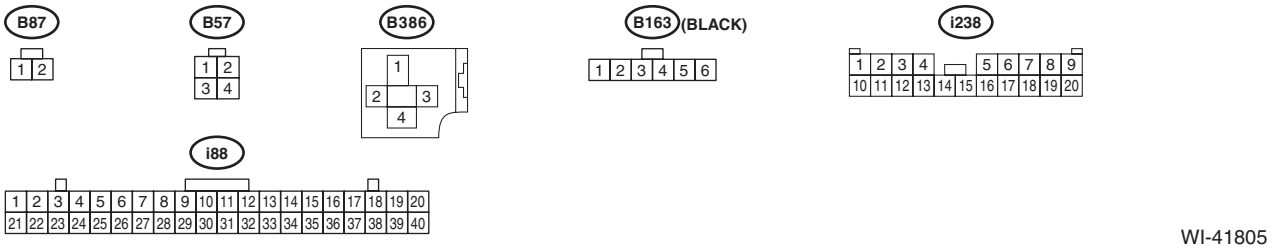

WI-41805

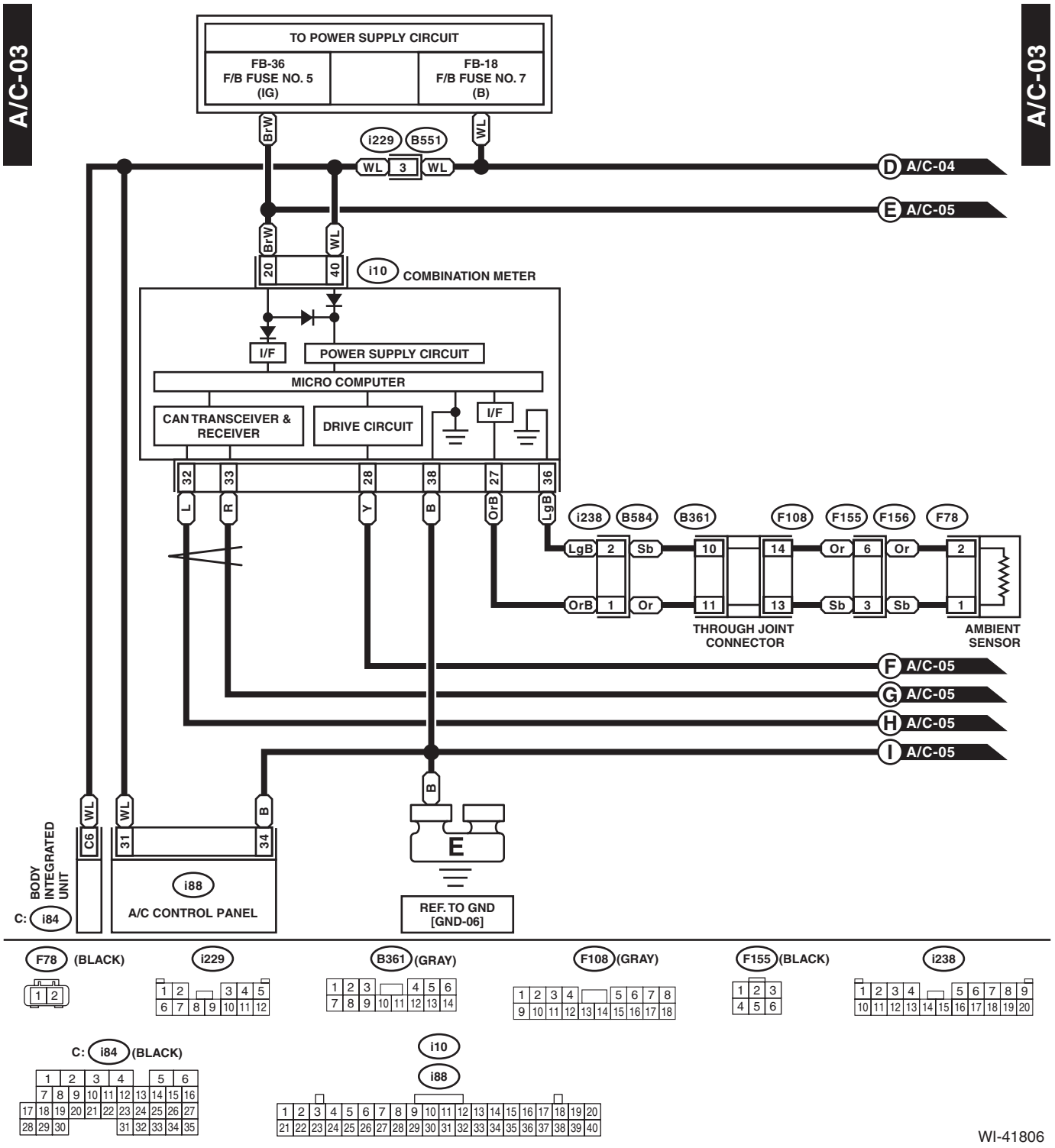
A/C-03
A/C-03
TO POWER SUPPLY CIRCUIT
FB-36
F/B FUSE NO. 5
(IG)
FB-18
F/B FUSE NO. 7
(B)
BrW
WL
i229
B551
WL 3 WL
D A/C-04
E A/C-05
20 BrW
40 WL
i10 COMBINATION METER
I/F
POWER SUPPLY CIRCUIT
MICRO COMPUTER
CAN TRANSCEIVER & RECEIVER
DRIVE CIRCUIT
I/F
32 33 28 38 27 36
L R Y B OrB LgB
i238 B584 B361 F108 F155 F156 F78
LgB 2 Sb 10 14 Or 6 Or 2
OrB 1 Or 11 13 Sb 3 Sb 1
THROUGH JOINT CONNECTOR
AMBIENT SENSOR
F A/C-05
G A/C-05
H A/C-05
I A/C-05
WL WL B
C6 31 34
BODY INTEGRATED UNIT
C: i84
i88
A/C CONTROL PANEL
B
E
REF. TO GND [GND-06]
F78 (BLACK)
i229
B361 (GRAY)
F108 (GRAY)
F155 (BLACK)
i238
C: i84 (BLACK)
i10
i88

WI-41806

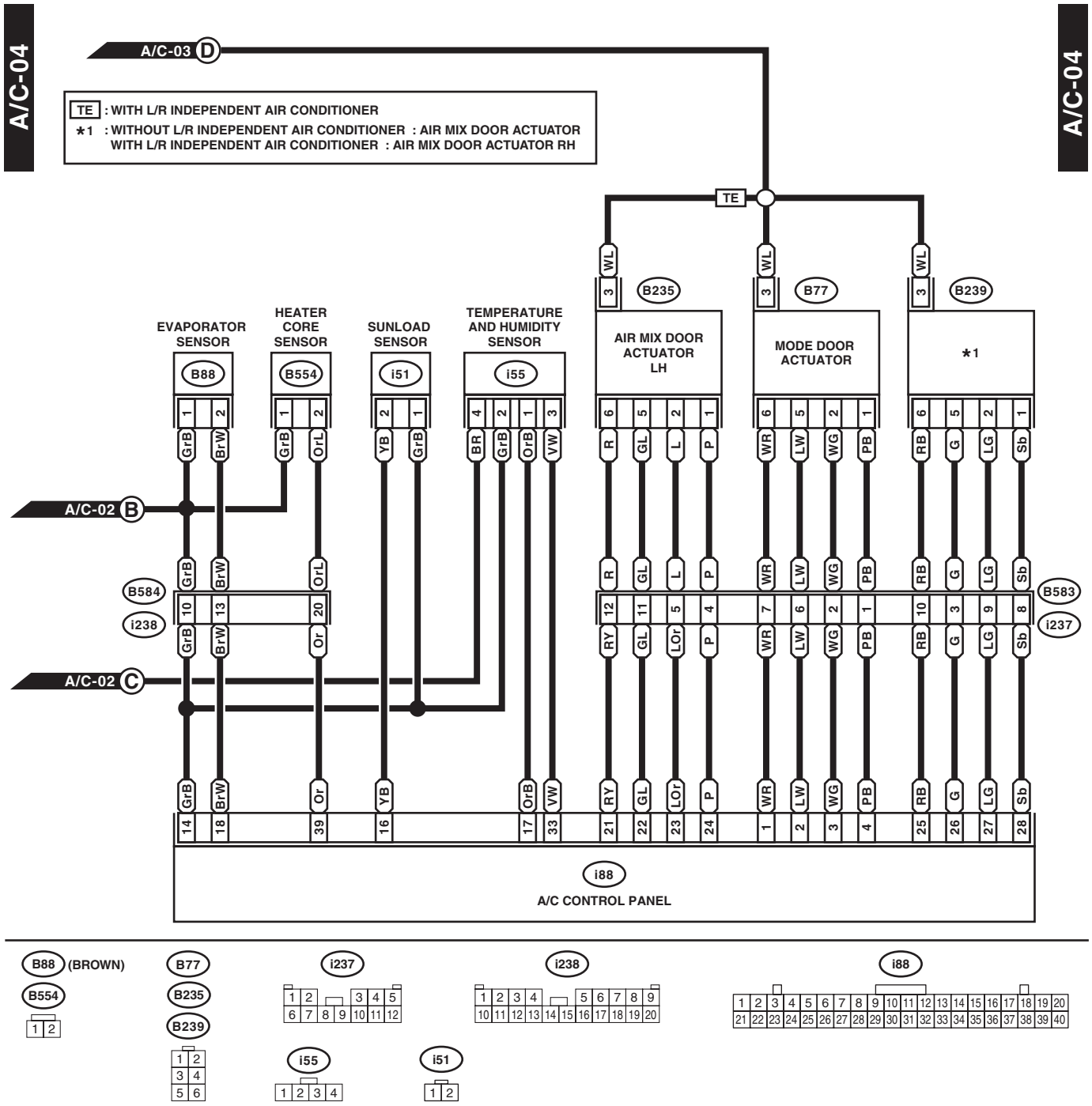
A/C-04
A/C-04
A/C-03 D
TE : WITH L/R INDEPENDENT AIR CONDITIONER
*1 : WITHOUT L/R INDEPENDENT AIR CONDITIONER : AIR MIX DOOR ACTUATOR
WITH L/R INDEPENDENT AIR CONDITIONER : AIR MIX DOOR ACTUATOR RH
TE
B235
B77
B239
EVAPORATOR SENSOR
HEATER CORE SENSOR
SUNLOAD SENSOR
TEMPERATURE AND HUMIDITY SENSOR
AIR MIX DOOR ACTUATOR LH
MODE DOOR ACTUATOR
*1
B88
B554
i51
i55
A/C-02 B
A/C-02 C
B584
i238
B583
i237
i88
A/C CONTROL PANEL

B88 (BROWN)
B554
B77
B235
B239
i237
i55
i51
i238
i88

WI-41807

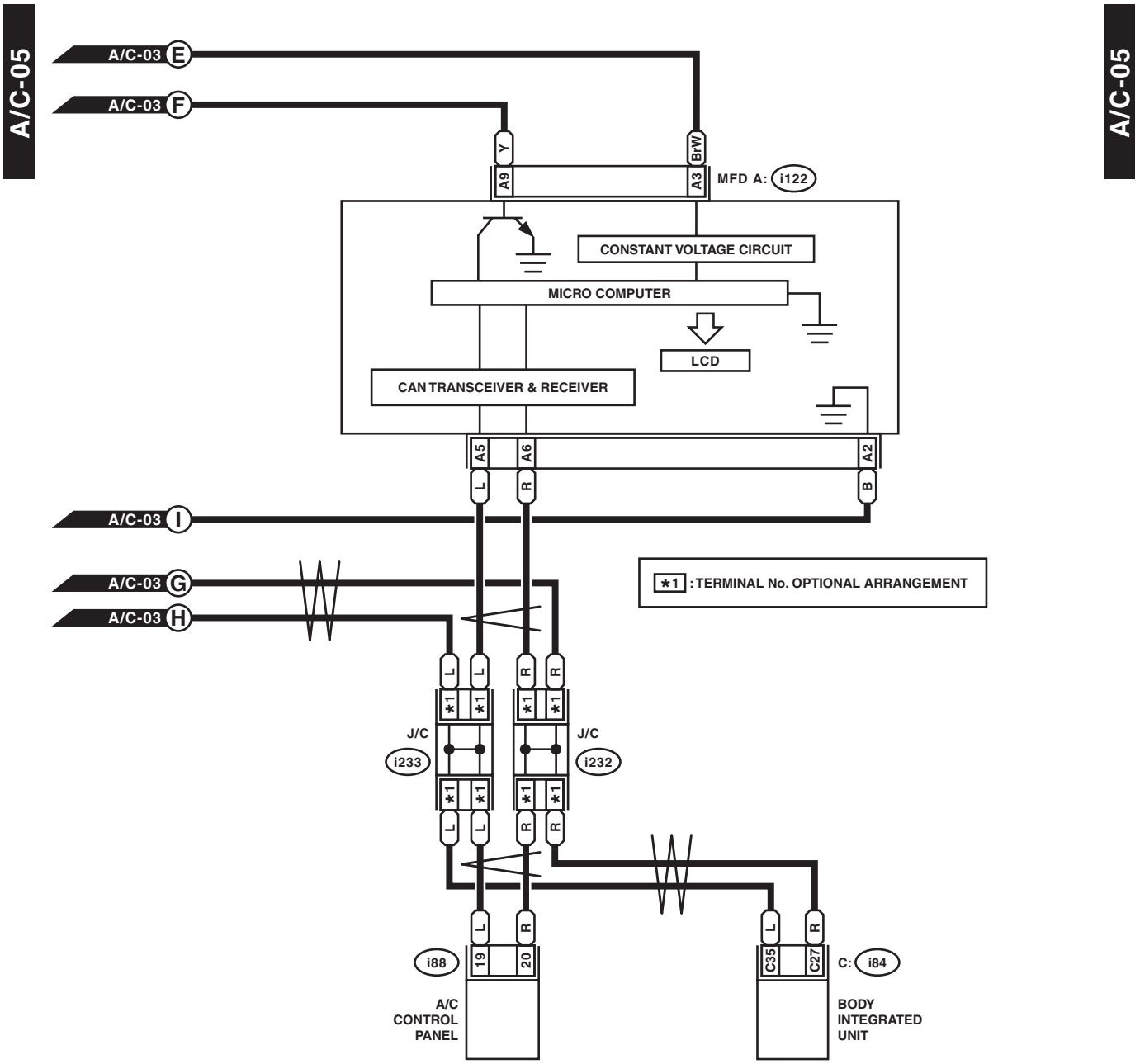
A/C-05
A/C-05
A/C-03 E
A/C-03 F
A/C-03 I
A/C-03 G
A/C-03 H
Y
Br-W
A9
A3
MFD A: i122
CONSTANT VOLTAGE CIRCUIT
MICRO COMPUTER
LCD
CAN TRANSCEIVER & RECEIVER
A5
A6
A2
L
R
B
*1 : TERMINAL No. OPTIONAL ARRANGEMENT
J/C i233
J/C i232
i88
19
20
A/C CONTROL PANEL
C35
C27
C: i84
BODY INTEGRATED UNIT

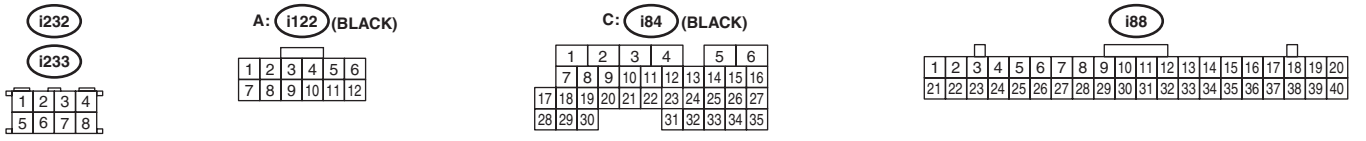
i232
i233
A: i122 (BLACK)
C: i84 (BLACK)
i88

WI-41808

8. Audio System

A: WIRING DIAGRAM

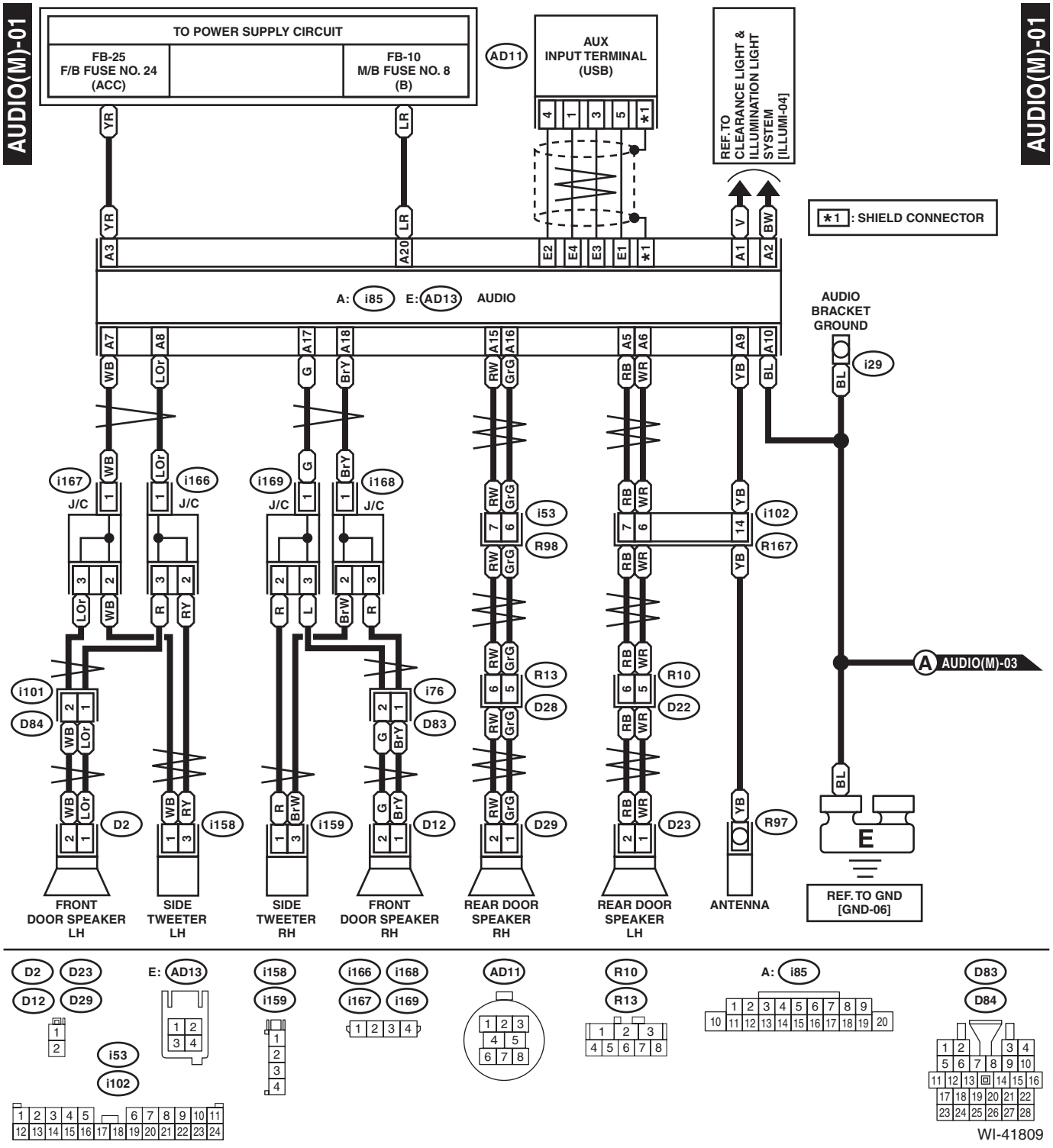

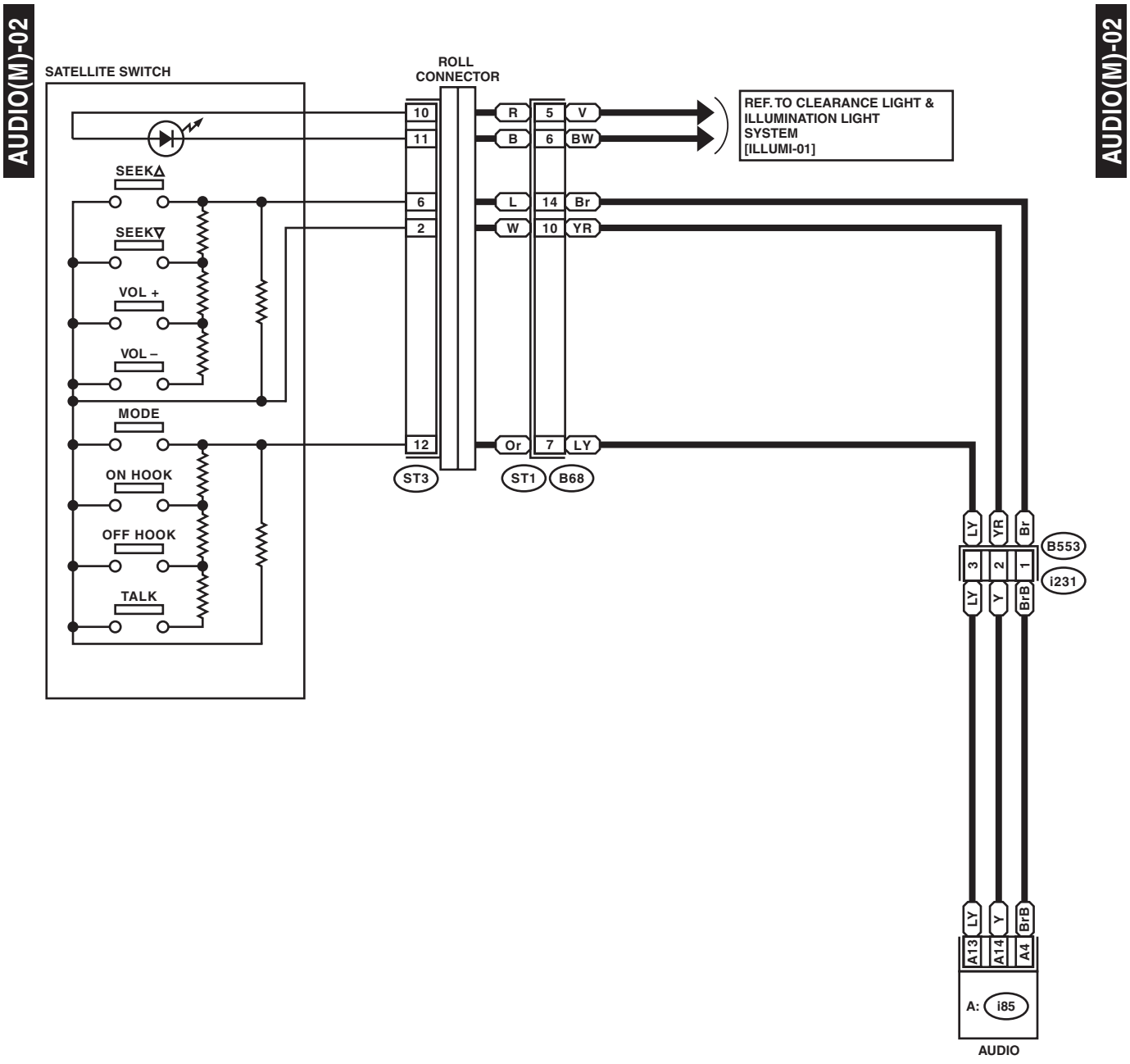
AUDIO(M)-02
AUDIO(M)-02
SATELLITE SWITCH
ROLL CONNECTOR
SEEK△
SEEK▽
VOL +
VOL –
MODE
ON HOOK
OFF HOOK
TALK
10
11
6
2
12
R
B
L
W
Or
5
6
14
10
7
V
BW
Br
YR
LY
REF. TO CLEARANCE LIGHT & ILLUMINATION LIGHT SYSTEM [ILLUMI-01]
ST3
ST1
B68
LY
YR
Br
3
2
1
B553
i231
LY
Y
BrB
A13
A14
A4
A: i85
AUDIO

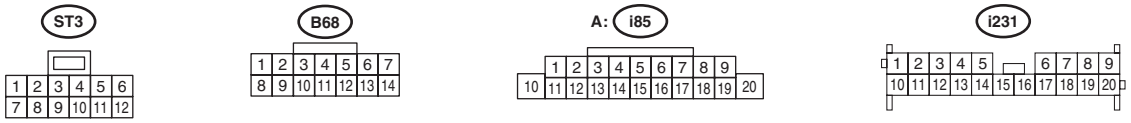
ST3
1 2 3 4 5 6
7 8 9 10 11 12
B68
1 2 3 4 5 6 7
8 9 10 11 12 13 14
A: i85
1 2 3 4 5 6 7 8 9
10 11 12 13 14 15 16 17 18 19 20
i231
1 2 3 4 5 6 7 8 9
10 11 12 13 14 15 16 17 18 19 20

WI-41810

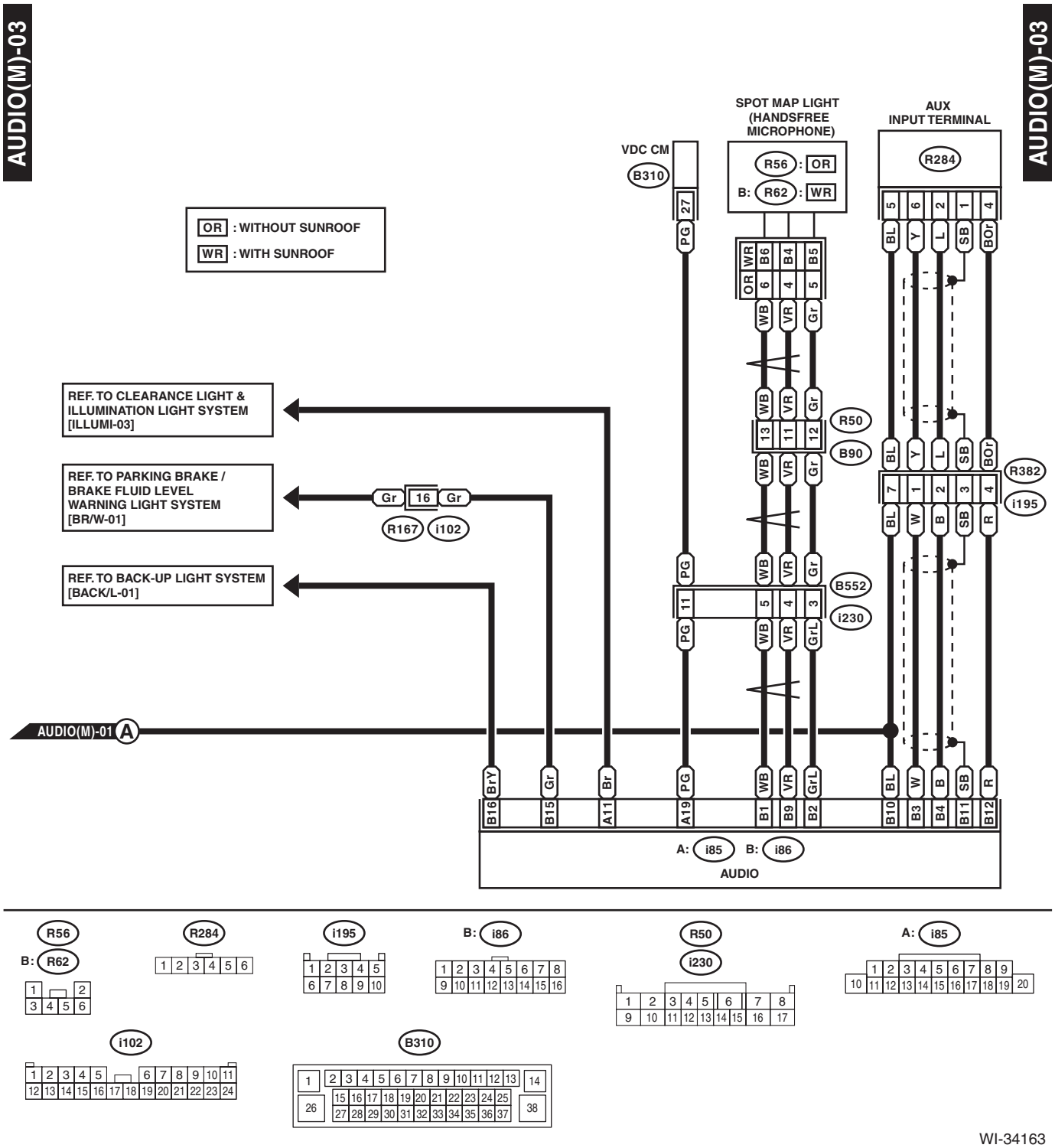
AUDIO(M)-03
AUDIO(M)-03
OR : WITHOUT SUNROOF
WR : WITH SUNROOF
SPOT MAP LIGHT (HANDSFREE MICROPHONE)
AUX INPUT TERMINAL
VDC CM
B310
R56 : OR
B: R62 : WR
R284
R50
B90
R382
i195
B552
i230
REF. TO CLEARANCE LIGHT & ILLUMINATION LIGHT SYSTEM [ILLUMI-03]
REF. TO PARKING BRAKE / BRAKE FLUID LEVEL WARNING LIGHT SYSTEM [BR/W-01]
REF. TO BACK-UP LIGHT SYSTEM [BACK/L-01]
Gr 16 Gr
R167 i102
AUDIO(M)-01 A
A: i85 B: i86
AUDIO

R56
B: R62
R284
i195
B: i86
R50
i230
A: i85
i102
B310

WI-34163

9. Back-up Light System

A: WIRING DIAGRAM

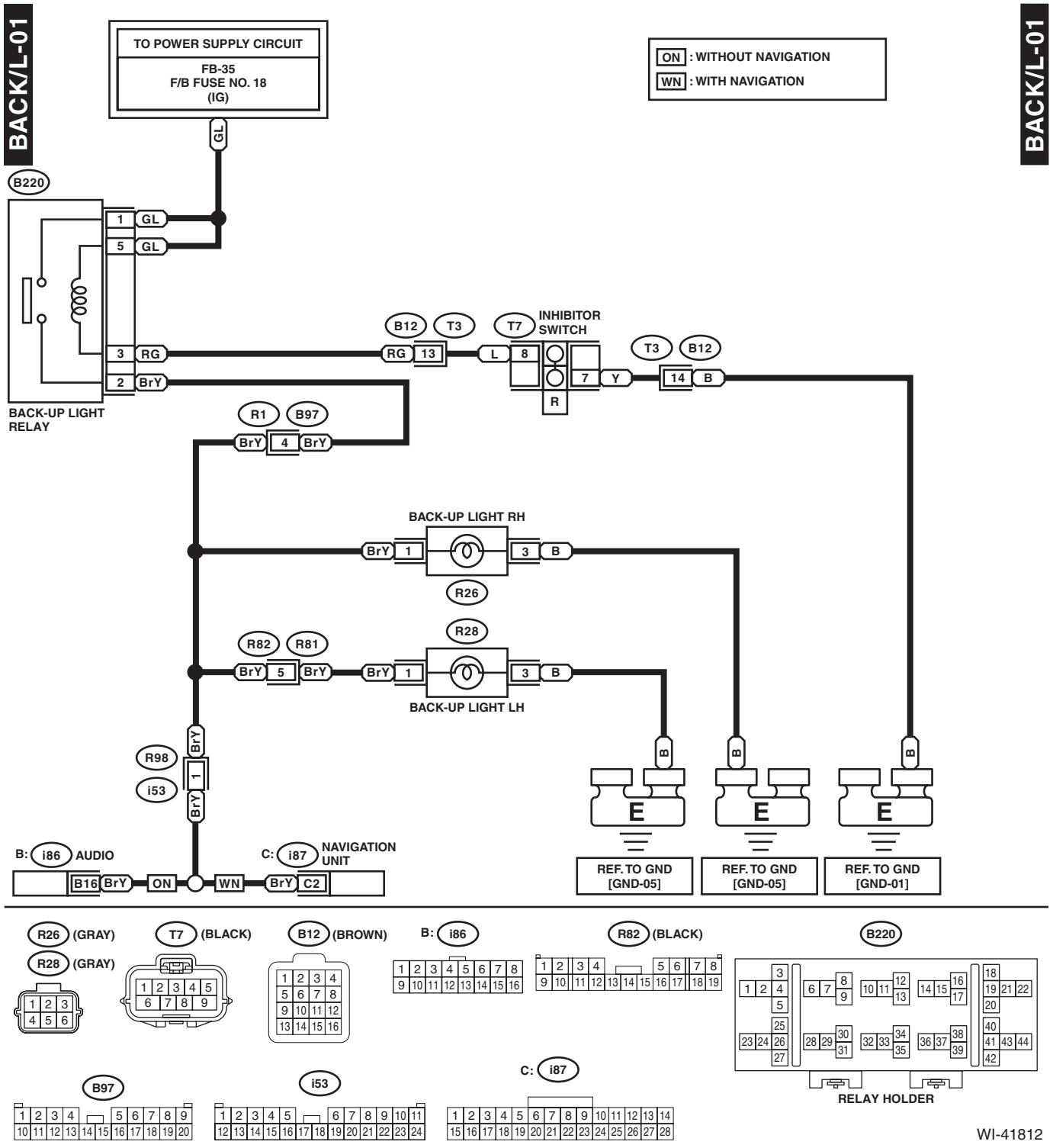

10.CAN Communication System

A: WIRING DIAGRAM

CAN-01

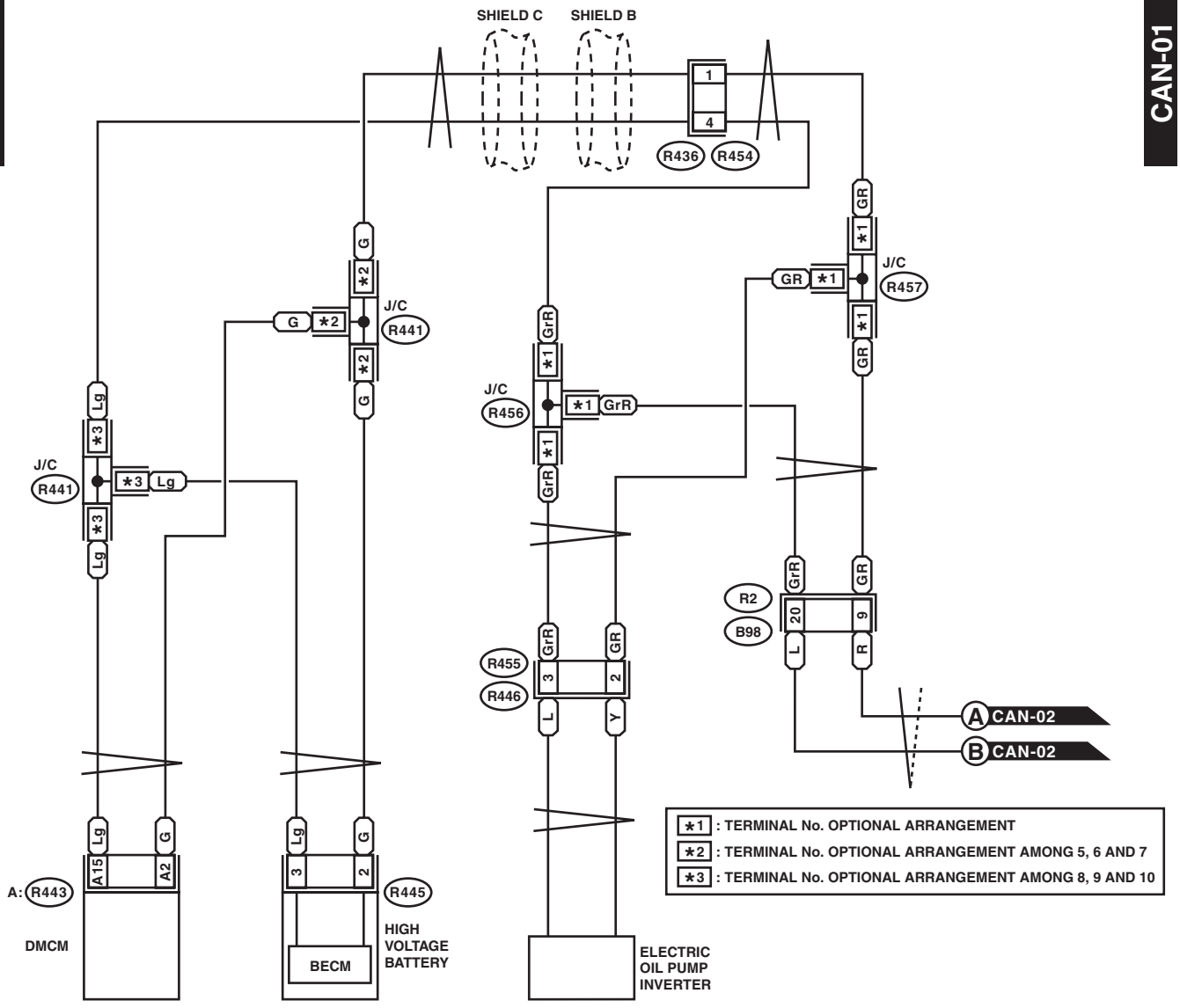

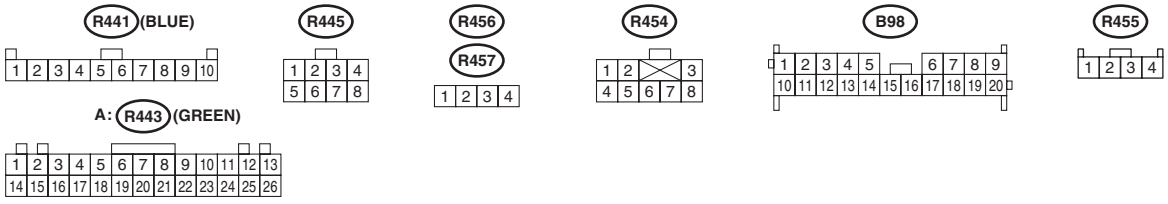

WI-41813

CAN-01

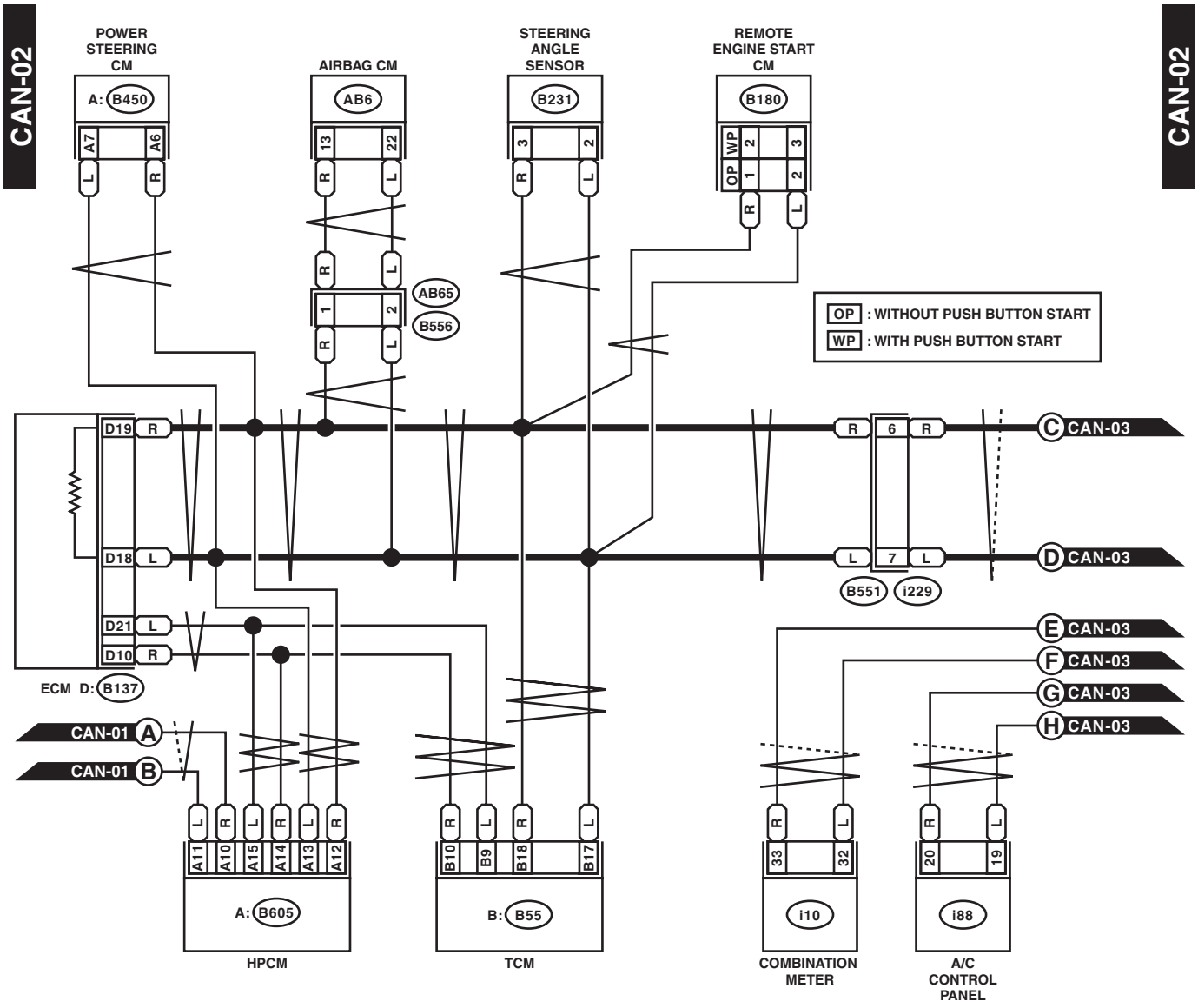
CAN-02
CAN-02
POWER STEERING CM
A: B450
A7
A6
AIRBAG CM
AB6
13
22
STEERING ANGLE SENSOR
B231
3
2
REMOTE ENGINE START CM
B180
OP
WP
1
2
3
AB65
B556
OP : WITHOUT PUSH BUTTON START
WP : WITH PUSH BUTTON START
D19
D18
D21
D10
R
L
6
7
B551
i229
C CAN-03
D CAN-03
E CAN-03
F CAN-03
G CAN-03
H CAN-03
ECM D: B137
CAN-01 A
CAN-01 B
A11
A10
A15
A14
A13
A12
B10
B9
B18
B17
33
32
20
19
A: B605
B: B55
i10
i88
HPCM
TCM
COMBINATION METER
A/C CONTROL PANEL

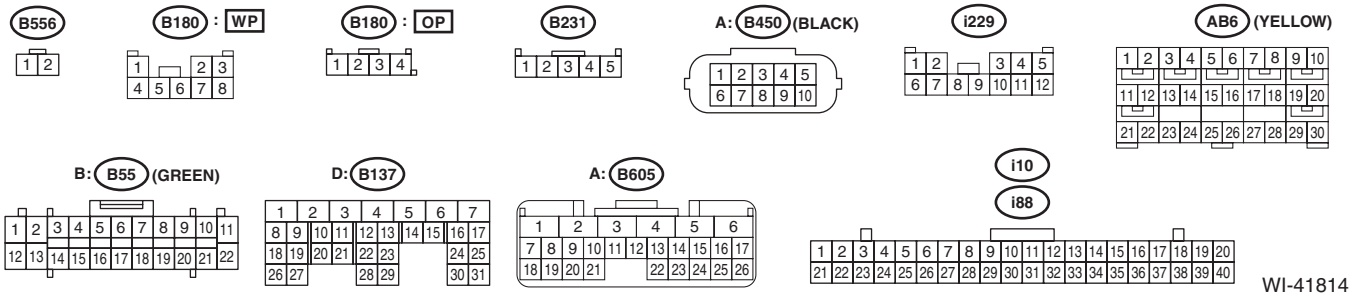
B556
B180 : WP
B180 : OP
B231
A: B450 (BLACK)
i229
AB6 (YELLOW)
B: B55 (GREEN)
D: B137
A: B605
i10
i88

WI-41814

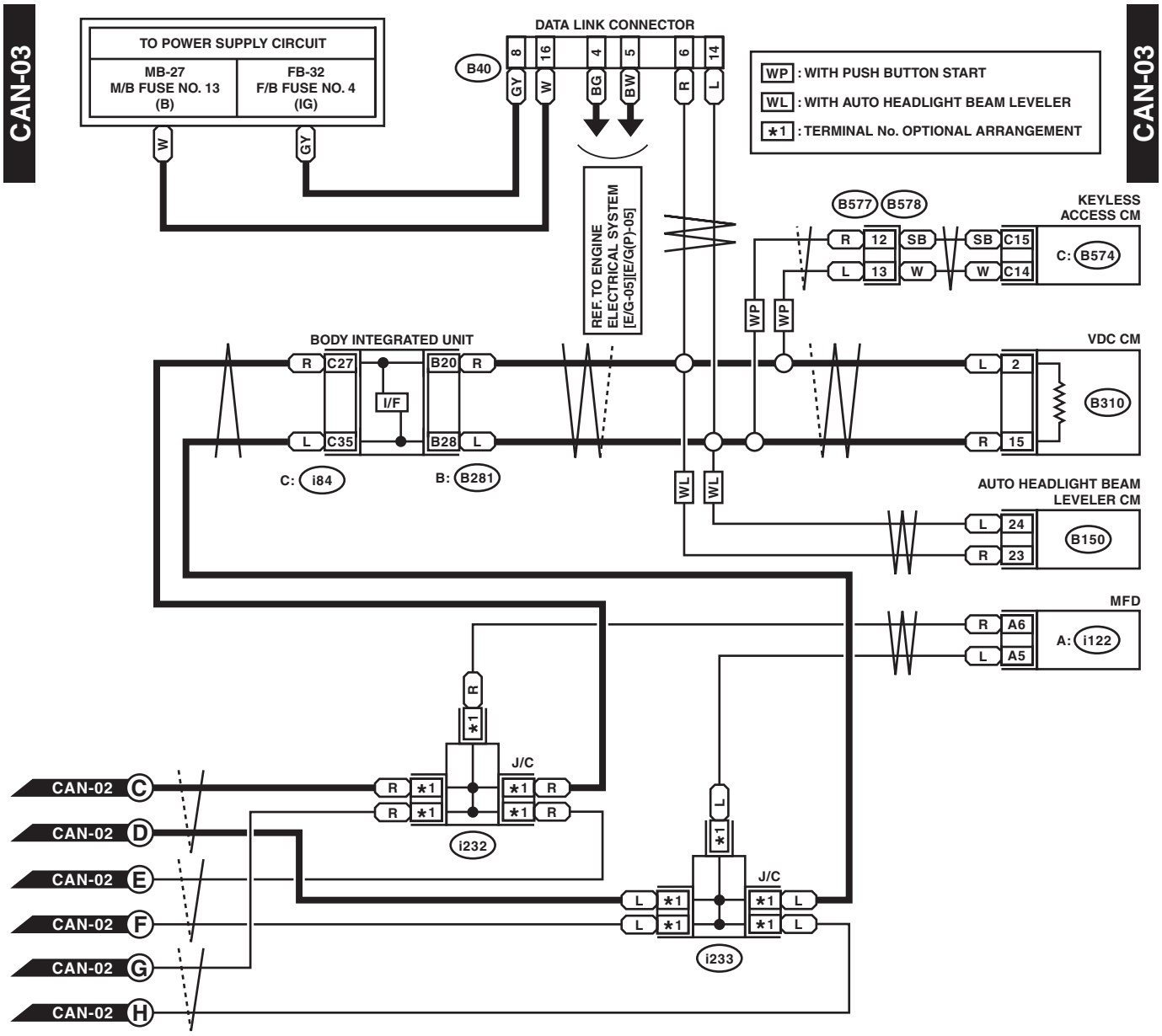
CAN-03
CAN-03
TO POWER SUPPLY CIRCUIT
MB-27
M/B FUSE NO. 13
(B)
FB-32
F/B FUSE NO. 4
(IG)
DATA LINK CONNECTOR
B40
WP : WITH PUSH BUTTON START
WL : WITH AUTO HEADLIGHT BEAM LEVELER
*1 : TERMINAL No. OPTIONAL ARRANGEMENT
REF. TO ENGINE ELECTRICAL SYSTEM [E/G-05][E/G(P)-05]
KEYLESS ACCESS CM
B577
B578
C: B574
BODY INTEGRATED UNIT
I/F
C: i84
B: B281
VDC CM
B310
AUTO HEADLIGHT BEAM LEVELER CM
B150
MFD
A: i122
J/C
i232
J/C
i233
CAN-02 C
CAN-02 D
CAN-02 E
CAN-02 F
CAN-02 G
CAN-02 H

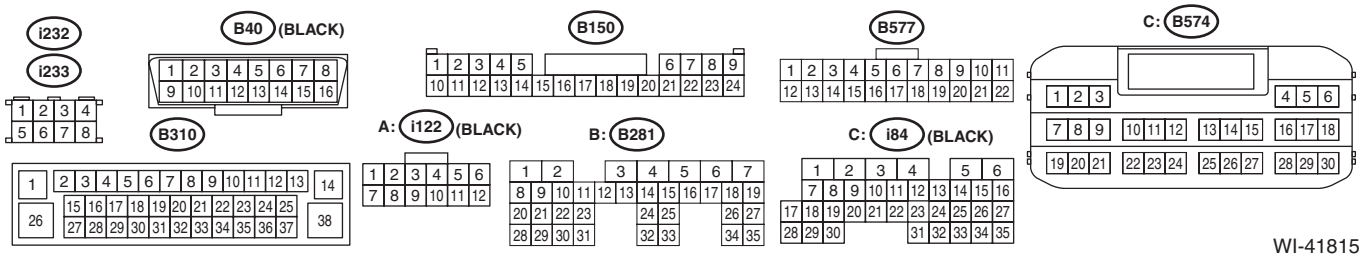
i232
i233
B40 (BLACK)
B310
B150
A: i122 (BLACK)
B: B281
B577
C: i84 (BLACK)
C: B574

WI-41815

11.Charging System

A: WIRING DIAGRAM

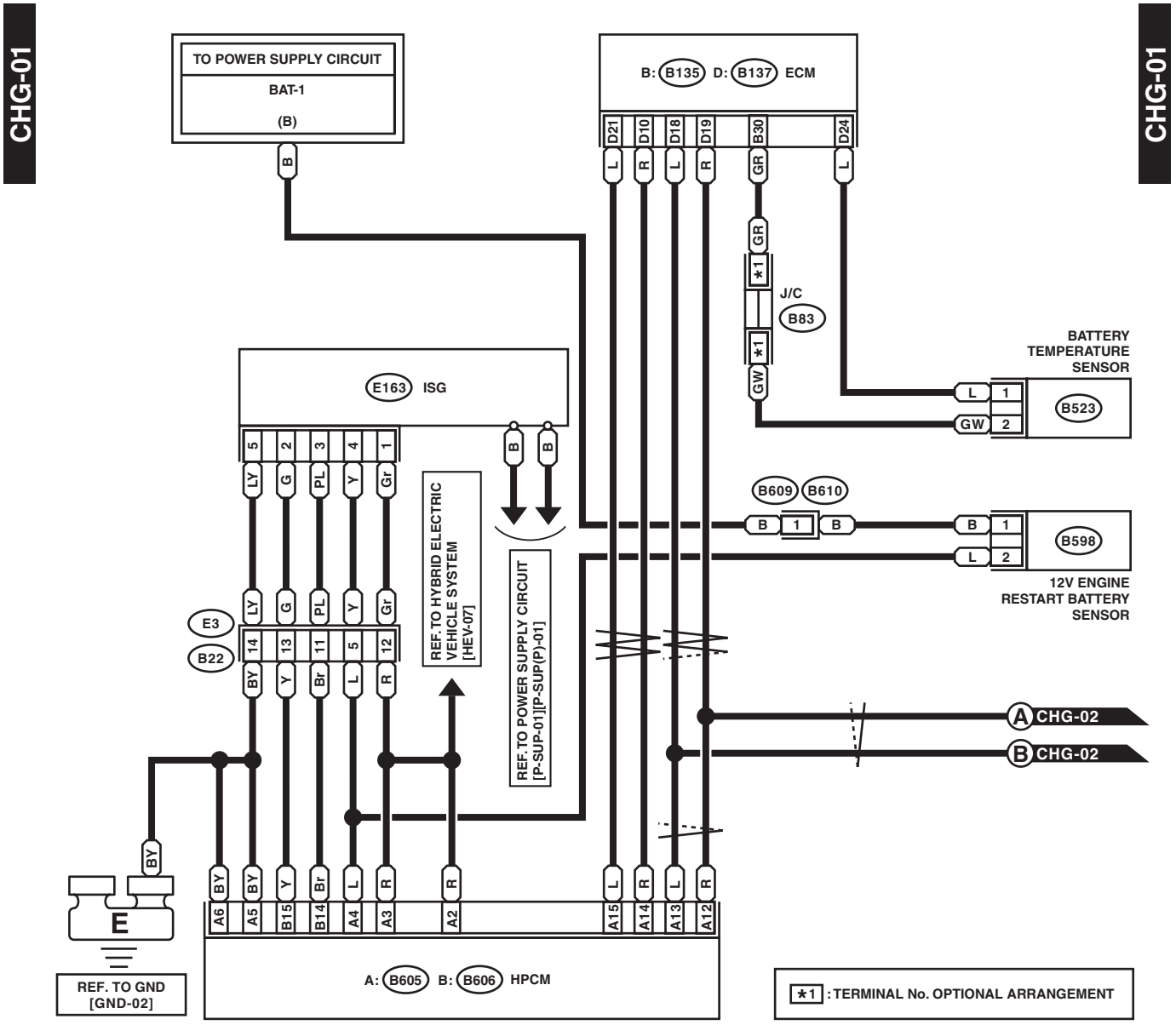

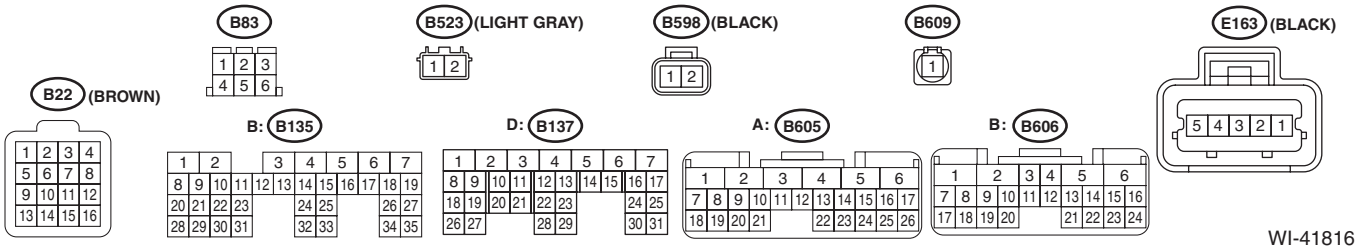

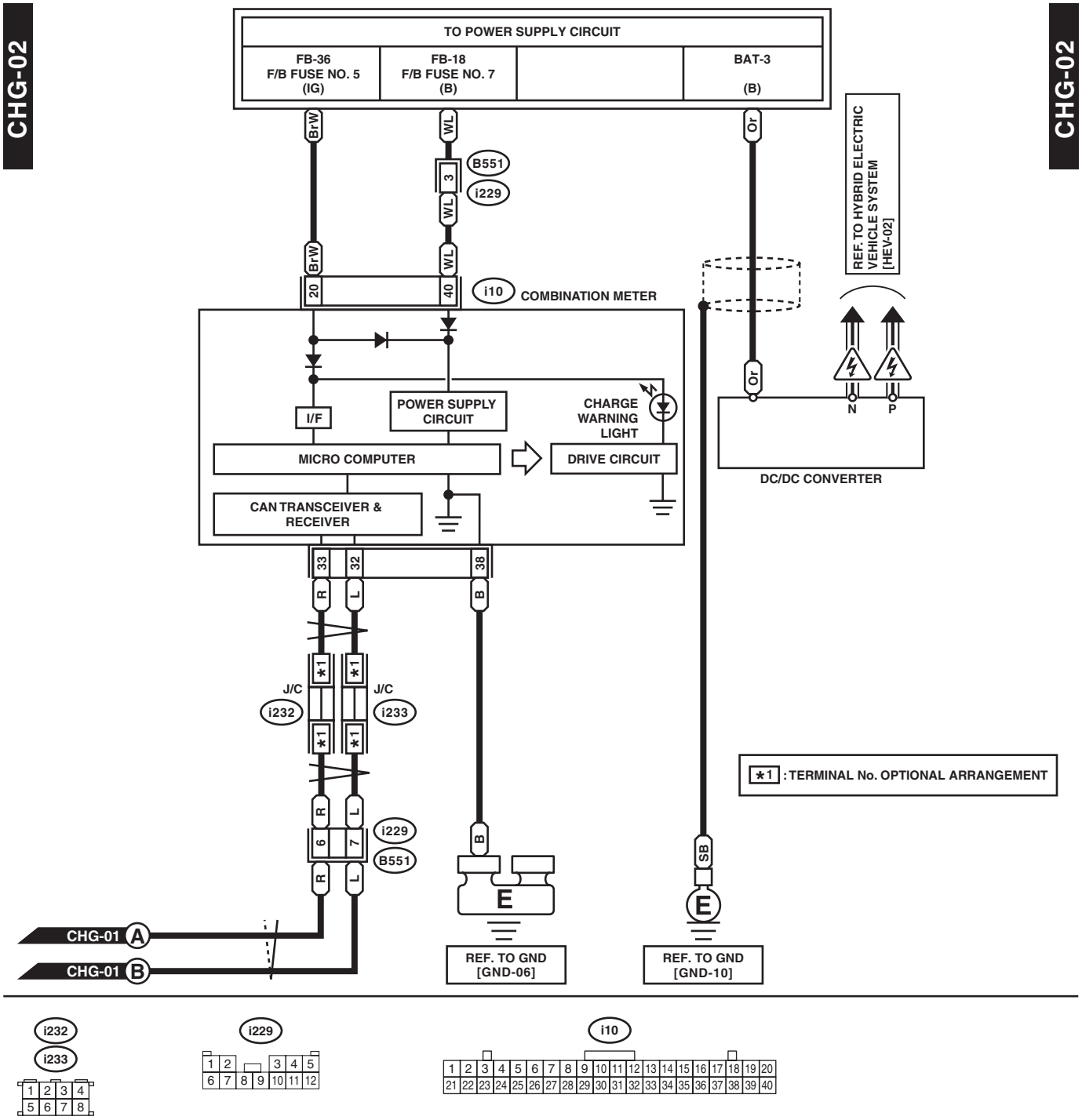
CHG-02
CHG-02
TO POWER SUPPLY CIRCUIT
FB-36
F/B FUSE NO. 5
(IG)
FB-18
F/B FUSE NO. 7
(B)
BAT-3
(B)
BrW
WL
Or
B551
3
i229
WL
BrW
WL
20
40
i10
COMBINATION METER
REF. TO HYBRID ELECTRIC VEHICLE SYSTEM [HEV-02]
I/F
POWER SUPPLY CIRCUIT
CHARGE WARNING LIGHT
MICRO COMPUTER
DRIVE CIRCUIT
CAN TRANSCEIVER & RECEIVER
Or
N
P
DC/DC CONVERTER
33
32
38
R
L
B
*1
J/C
i232
J/C
i233
*1 : TERMINAL No. OPTIONAL ARRANGEMENT
R
L
6
7
i229
B551
B
SB
E
E
CHG-01 A
CHG-01 B
REF. TO GND [GND-06]
REF. TO GND [GND-10]

i232
i233
1 2 3 4
5 6 7 8
i229
1 2
6 7 8 9
3 4 5
10 11 12
i10
1 2 3 4 5 6 7 8 9 10 11 12 13 14 15 16 17 18 19 20
21 22 23 24 25 26 27 28 29 30 31 32 33 34 35 36 37 38 39 40

WI-41817

12.Clearance Light and Illumination Light System

A: WIRING DIAGRAM

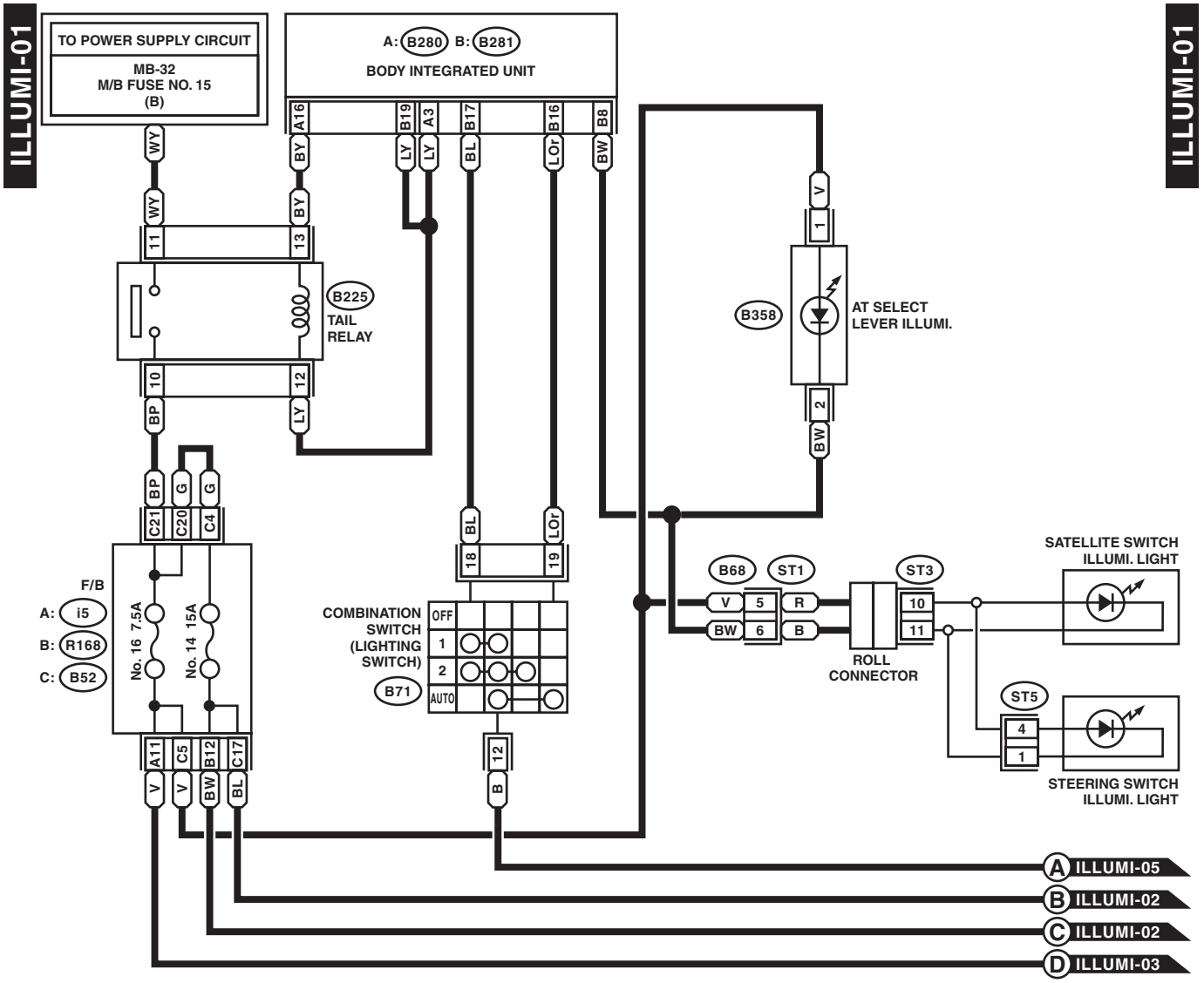

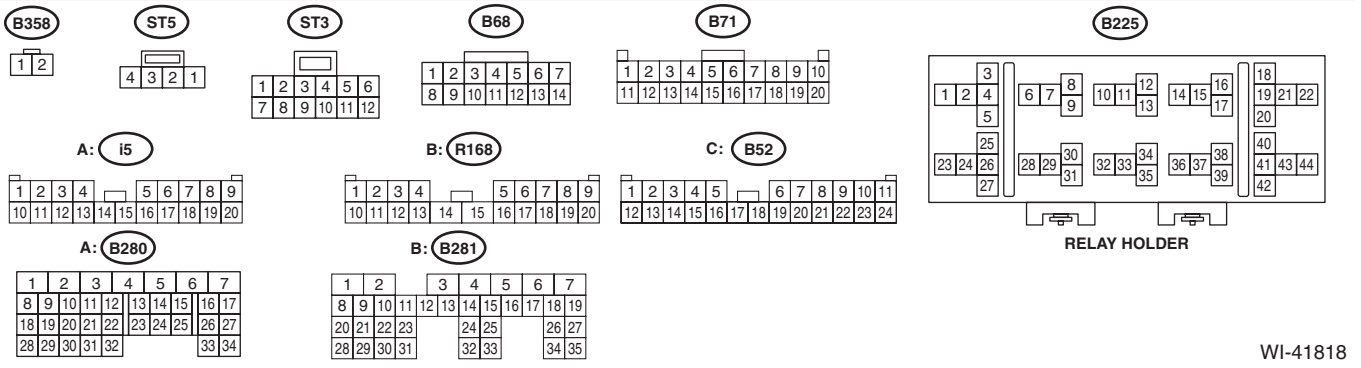

WI-41818

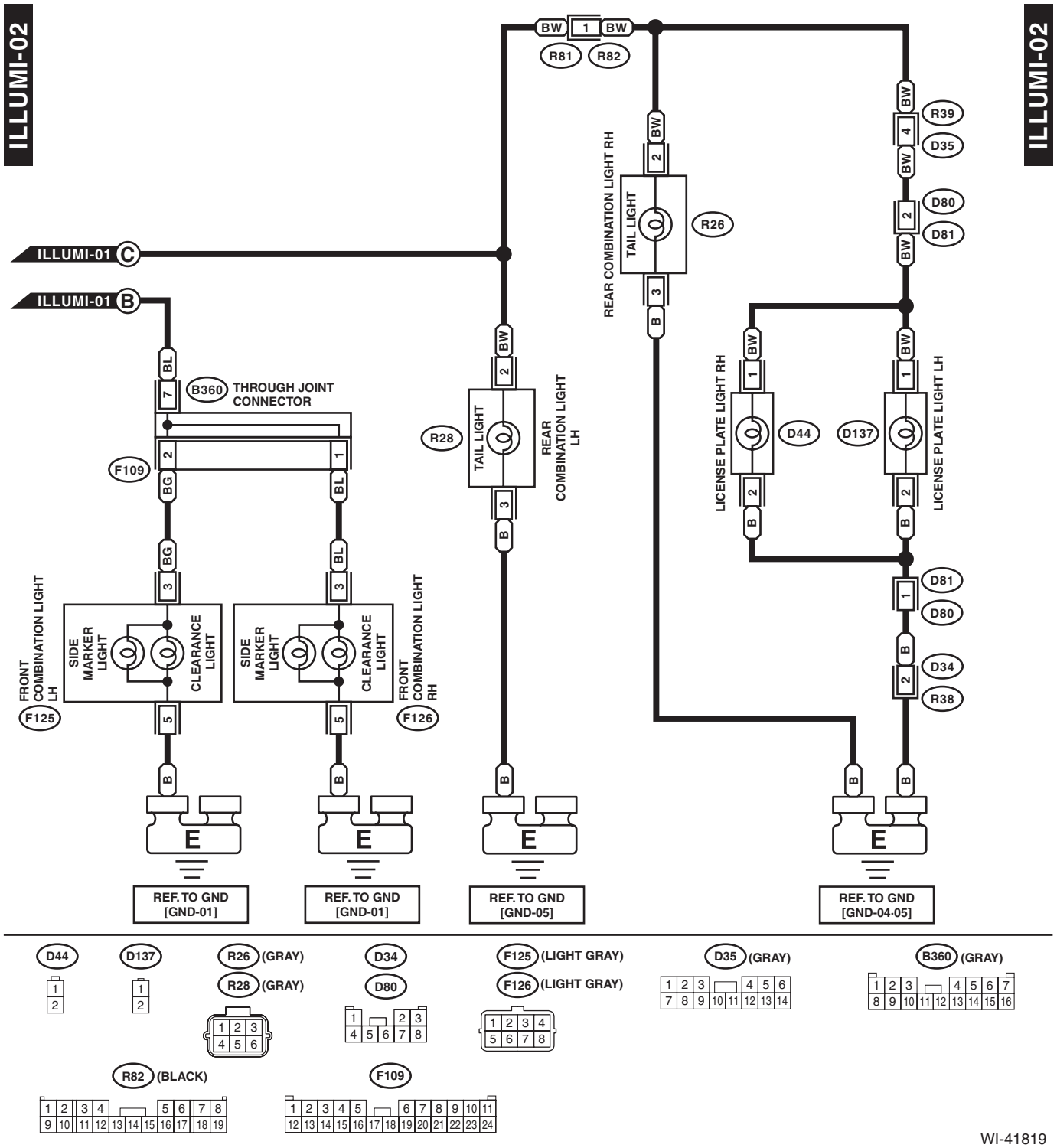
ILLUMI-02
ILLUMI-02
BW
1
R81
R82
REAR COMBINATION LIGHT RH
TAIL LIGHT
R26
R39
D35
D80
D81
ILLUMI-01 C
ILLUMI-01 B
B360 THROUGH JOINT CONNECTOR
F109
R28
TAIL LIGHT
REAR COMBINATION LIGHT LH
LICENSE PLATE LIGHT RH
D44
D137
LICENSE PLATE LIGHT LH
FRONT COMBINATION LIGHT LH
SIDE MARKER LIGHT
CLEARANCE LIGHT
FRONT COMBINATION LIGHT RH
F125
F126
D34
R38
REF. TO GND [GND-01]
REF. TO GND [GND-01]
REF. TO GND [GND-05]
REF. TO GND [GND-04·05]
D44
D137
R26 (GRAY)
R28 (GRAY)
D34
D80
F125 (LIGHT GRAY)
F126 (LIGHT GRAY)
D35 (GRAY)
B360 (GRAY)
R82 (BLACK)
F109

WI-41819

ILLUMI-03

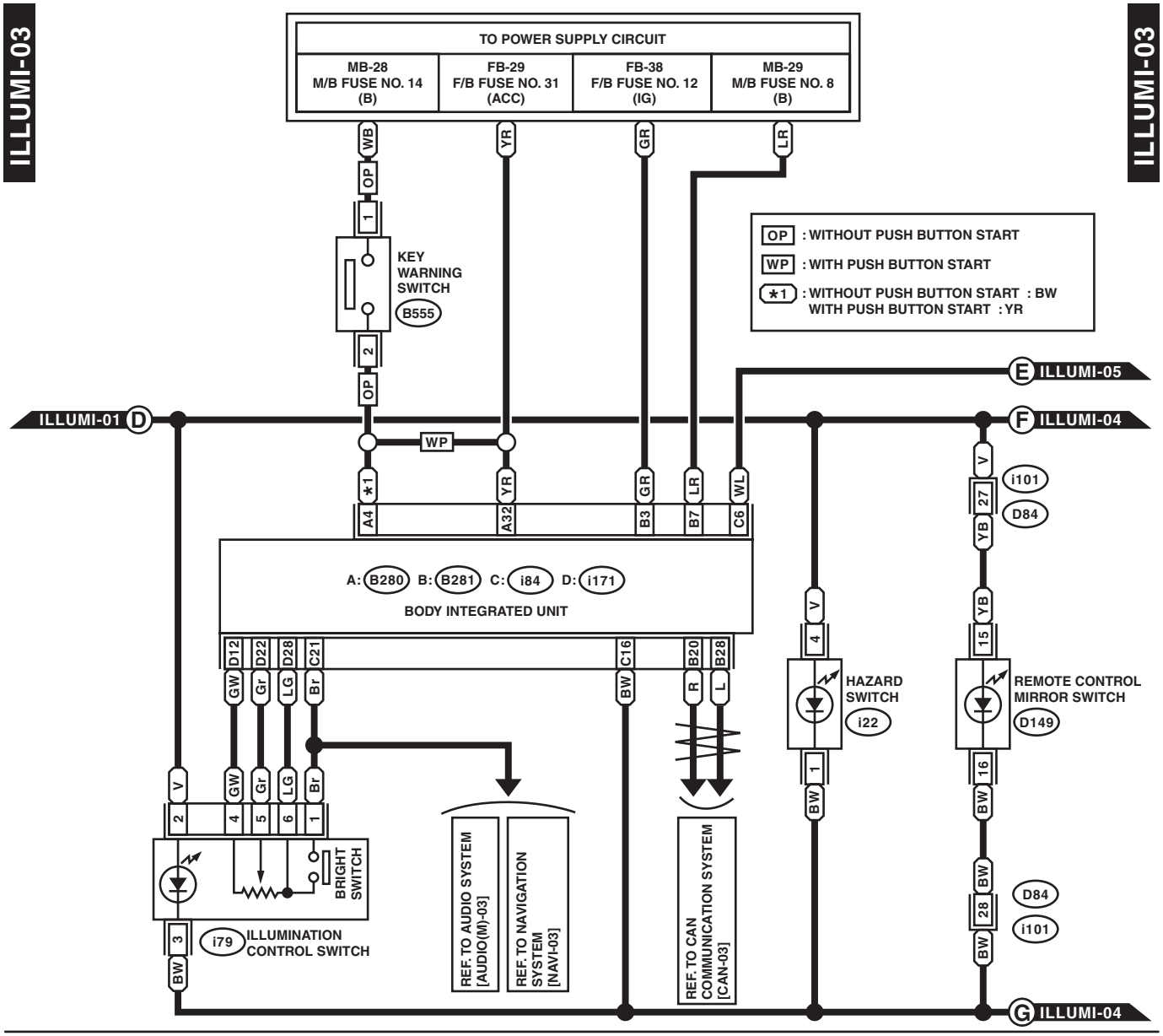

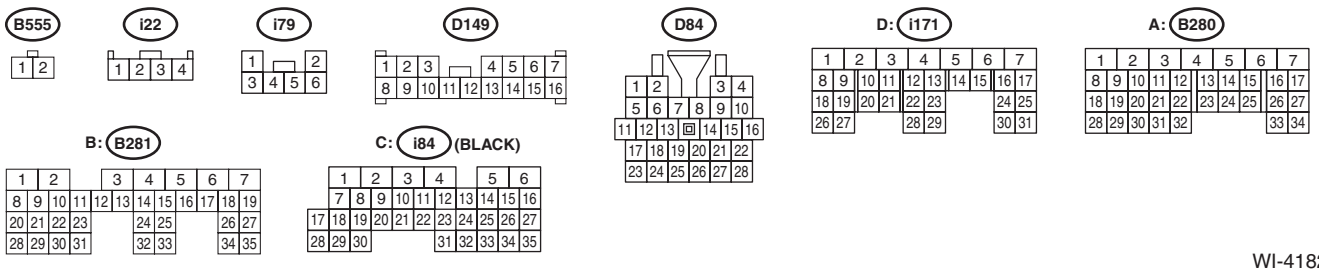

WI-41820

ILLUMI-04

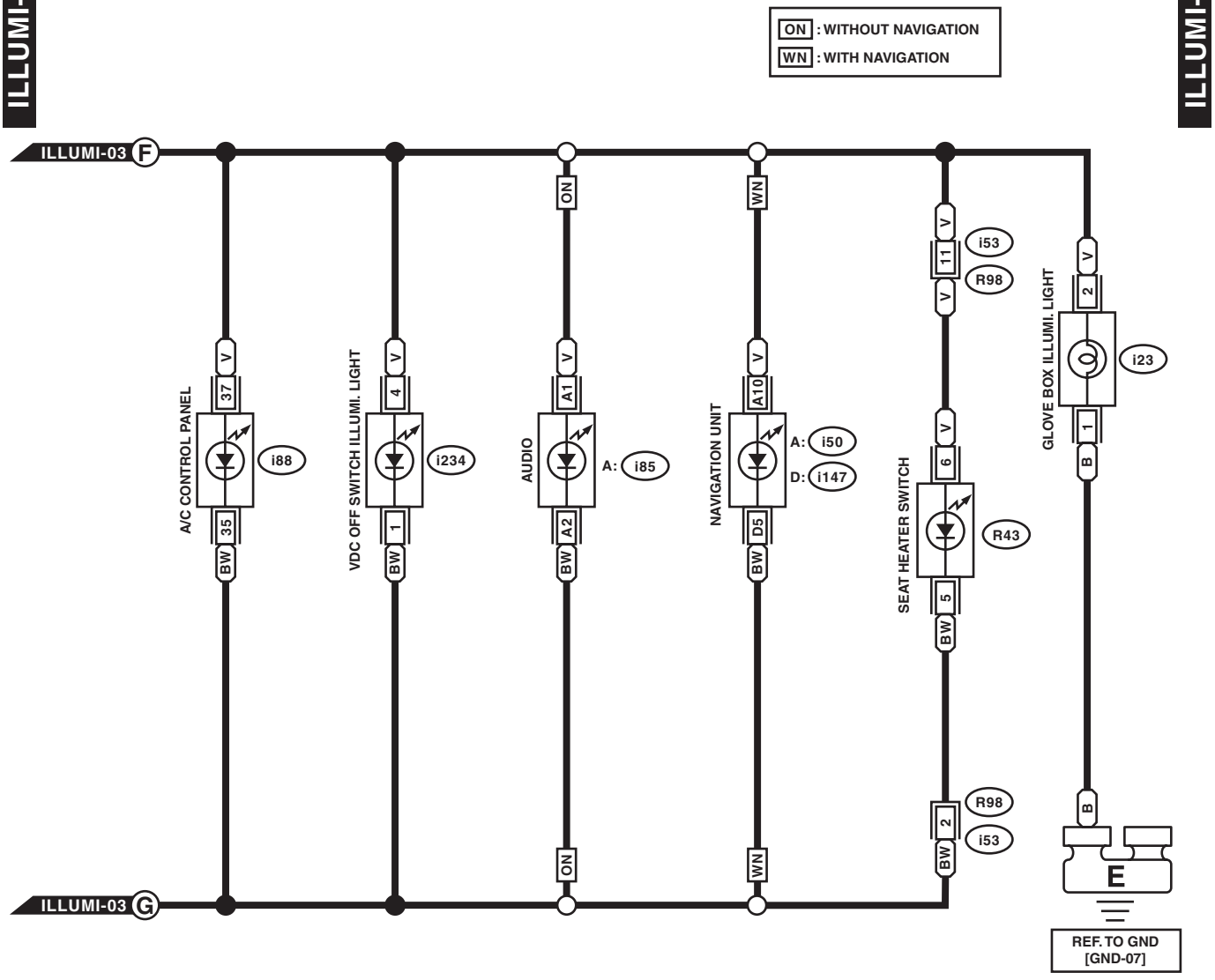

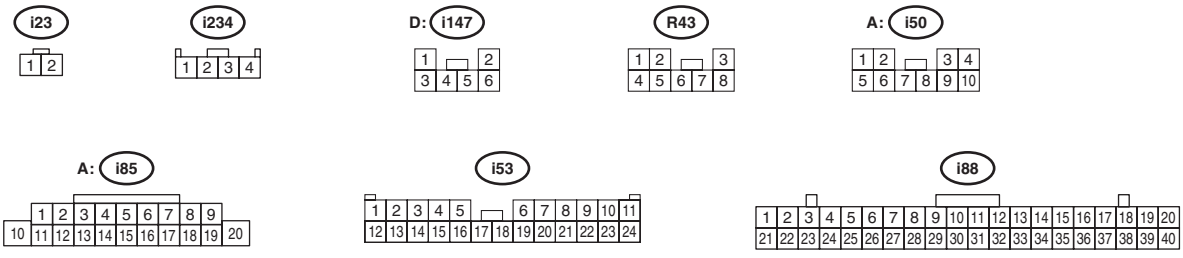

WI-41821

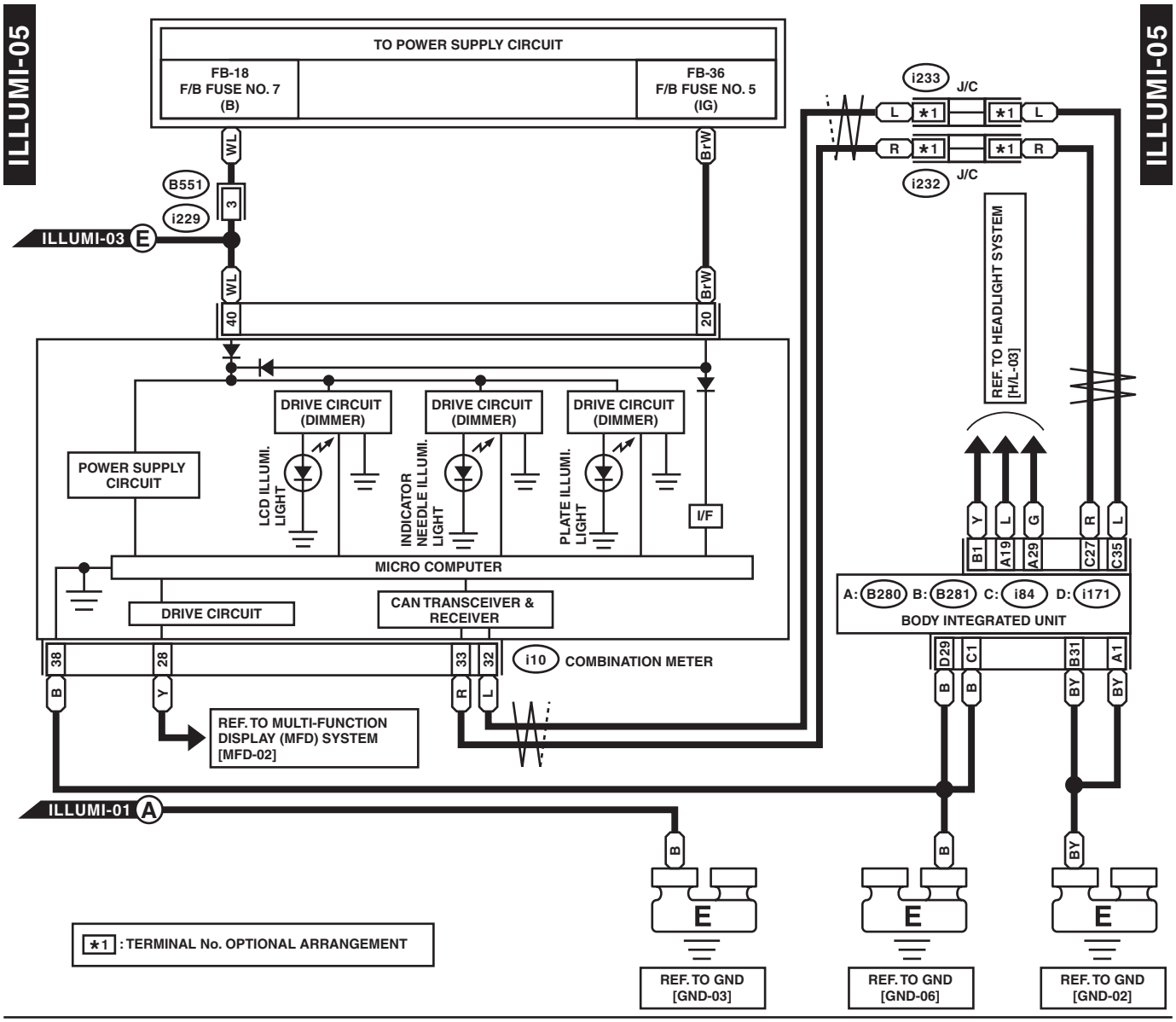
ILLUMI-05
ILLUMI-05
TO POWER SUPPLY CIRCUIT
FB-18
F/B FUSE NO. 7
(B)
FB-36
F/B FUSE NO. 5
(IG)
i233
J/C
i232
J/C
B551
i229
ILLUMI-03 E
REF. TO HEADLIGHT SYSTEM [H/L-03]
DRIVE CIRCUIT (DIMMER)
DRIVE CIRCUIT (DIMMER)
DRIVE CIRCUIT (DIMMER)
POWER SUPPLY CIRCUIT
LCD ILLUMI. LIGHT
INDICATOR NEEDLE ILLUMI. LIGHT
PLATE ILLUMI. LIGHT
I/F
MICRO COMPUTER
DRIVE CIRCUIT
CAN TRANSCEIVER & RECEIVER
A: B280 B: B281 C: i84 D: i171
BODY INTEGRATED UNIT
i10 COMBINATION METER
REF. TO MULTI-FUNCTION DISPLAY (MFD) SYSTEM [MFD-02]
ILLUMI-01 A
*1 : TERMINAL No. OPTIONAL ARRANGEMENT
REF. TO GND [GND-03]
REF. TO GND [GND-06]
REF. TO GND [GND-02]

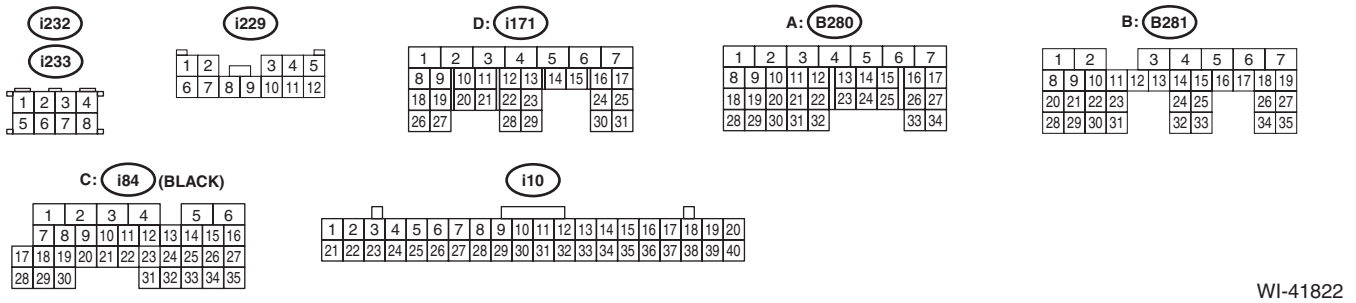
i232
i233
i229
D: i171
A: B280
B: B281
C: i84 (BLACK)
i10

WI-41822

13.Combination Meter System

A: WIRING DIAGRAM

C/M-01

C/M-01

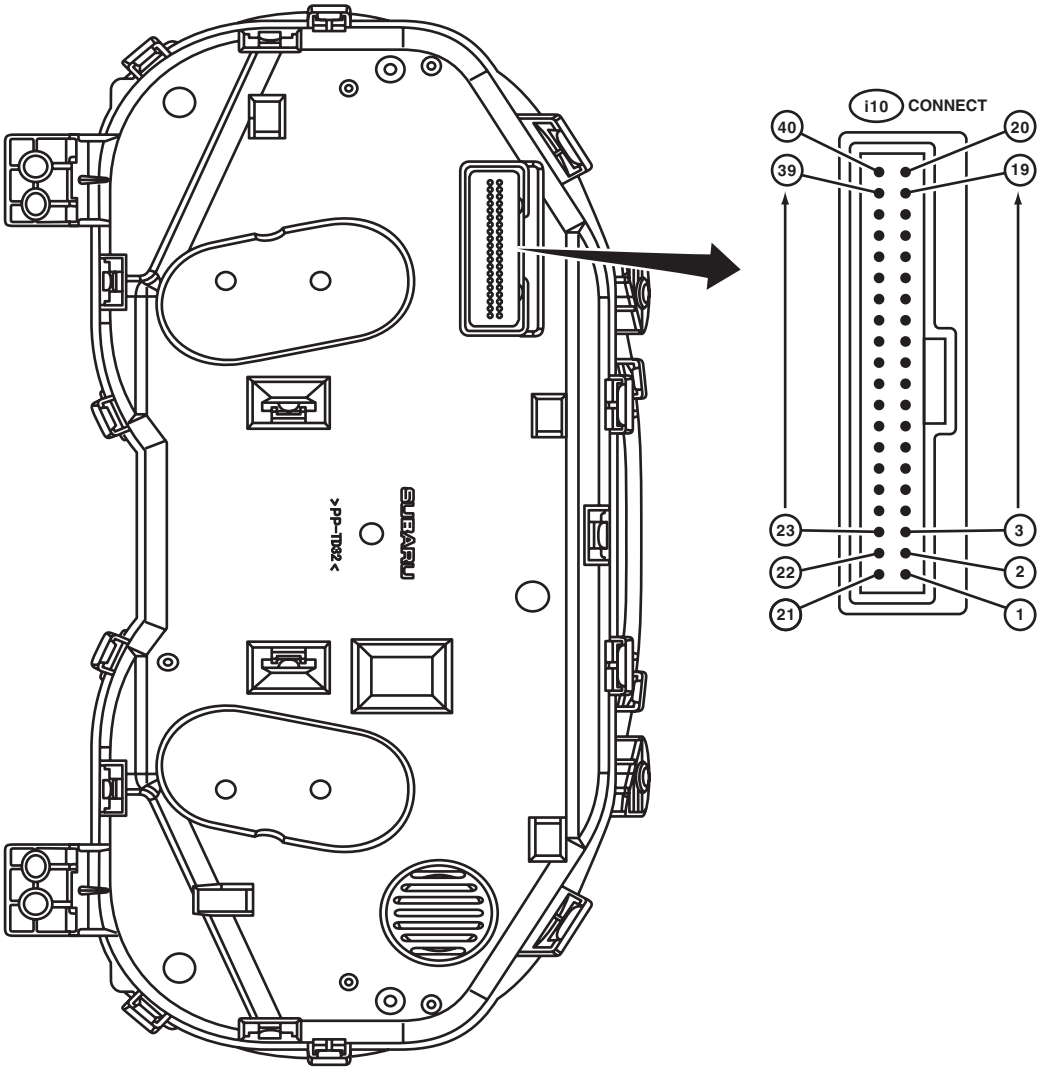

WI-34175

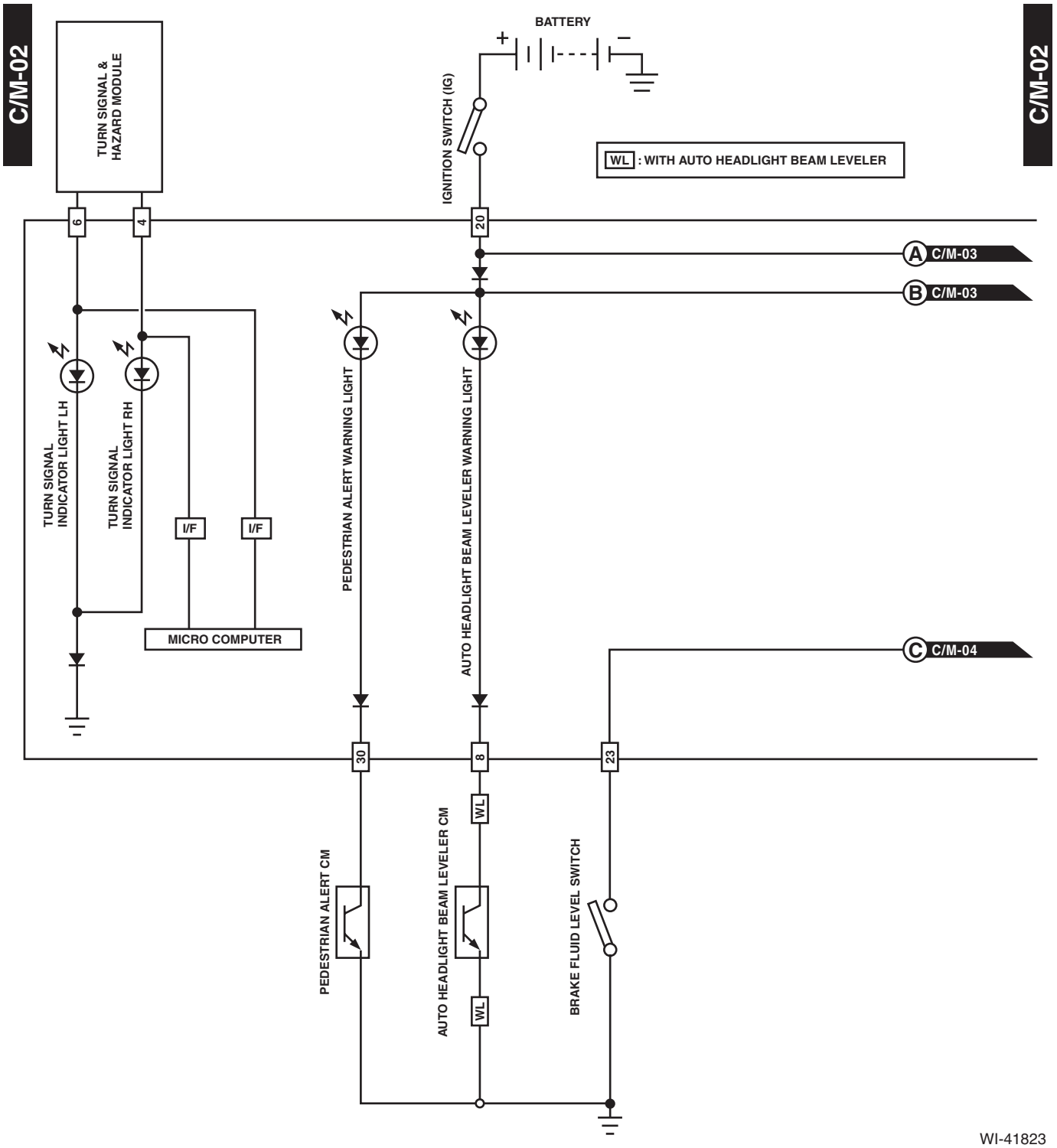
C/M-02
TURN SIGNAL & HAZARD MODULE
BATTERY
IGNITION SWITCH (IG)
WL : WITH AUTO HEADLIGHT BEAM LEVELER
C/M-02
6
4
20
A C/M-03
B C/M-03
TURN SIGNAL INDICATOR LIGHT LH
TURN SIGNAL INDICATOR LIGHT RH
I/F
I/F
MICRO COMPUTER
PEDESTRIAN ALERT WARNING LIGHT
AUTO HEADLIGHT BEAM LEVELER WARNING LIGHT
C C/M-04
30
8
23
WL
WL
PEDESTRIAN ALERT CM
AUTO HEADLIGHT BEAM LEVELER CM
BRAKE FLUID LEVEL SWITCH

WI-41823

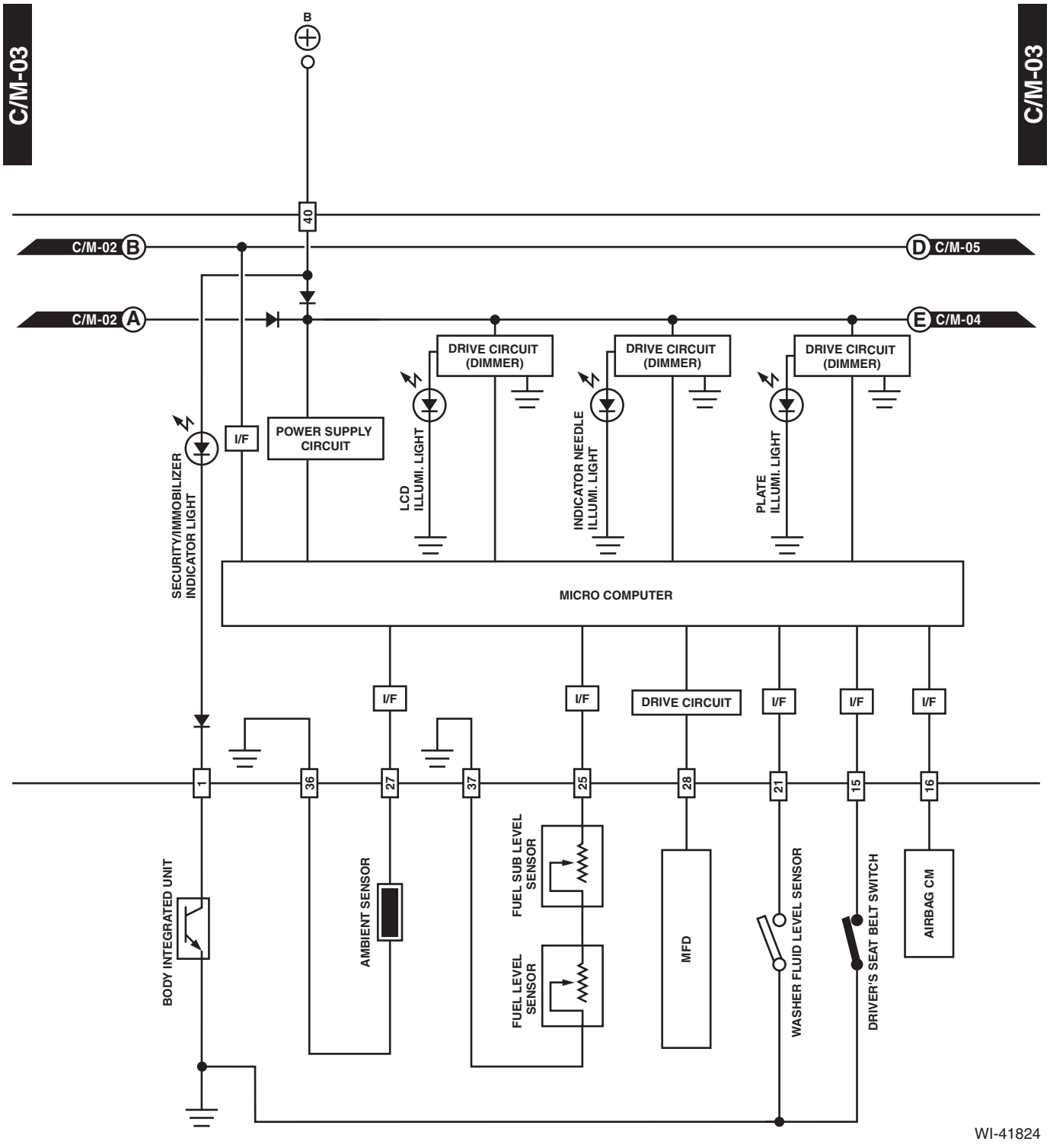
C/M-03
C/M-03
B
40
C/M-02 B
D C/M-05
C/M-02 A
E C/M-04
DRIVE CIRCUIT (DIMMER)
DRIVE CIRCUIT (DIMMER)
DRIVE CIRCUIT (DIMMER)
I/F
POWER SUPPLY CIRCUIT
SECURITY/IMMOBILIZER INDICATOR LIGHT
LCD ILLUMI. LIGHT
INDICATOR NEEDLE ILLUMI. LIGHT
PLATE ILLUMI. LIGHT
MICRO COMPUTER
I/F
I/F
DRIVE CIRCUIT
I/F
I/F
I/F
1
36
27
37
25
28
21
15
16
BODY INTEGRATED UNIT
AMBIENT SENSOR
FUEL SUB LEVEL SENSOR
FUEL LEVEL SENSOR
MFD
WASHER FLUID LEVEL SENSOR
DRIVER'S SEAT BELT SWITCH
AIRBAG CM

WI-41824

C/M-04

C/M-04

WL : WITH AUTO HEADLIGHT BEAM LEVELER
*1 : SEAT BELT
KEY WARNING
HEADLIGHT ON WARNING
CUSTOMIZED
MANUAL SHIFT
KEYLESS ACCESS

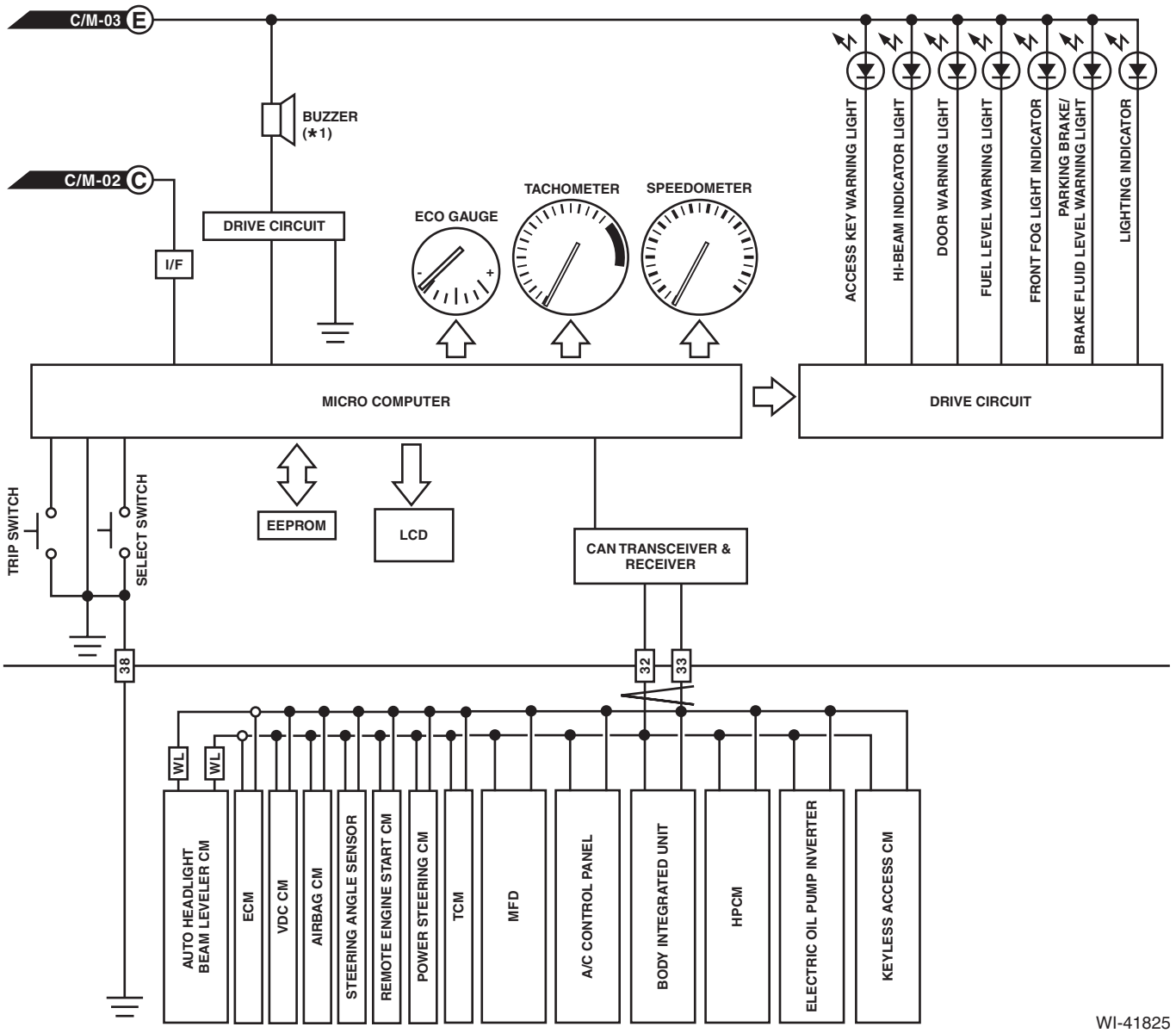

WI-41825

C/M-05

C/M-05

E5 : EXCEPT FOR C5 MODEL

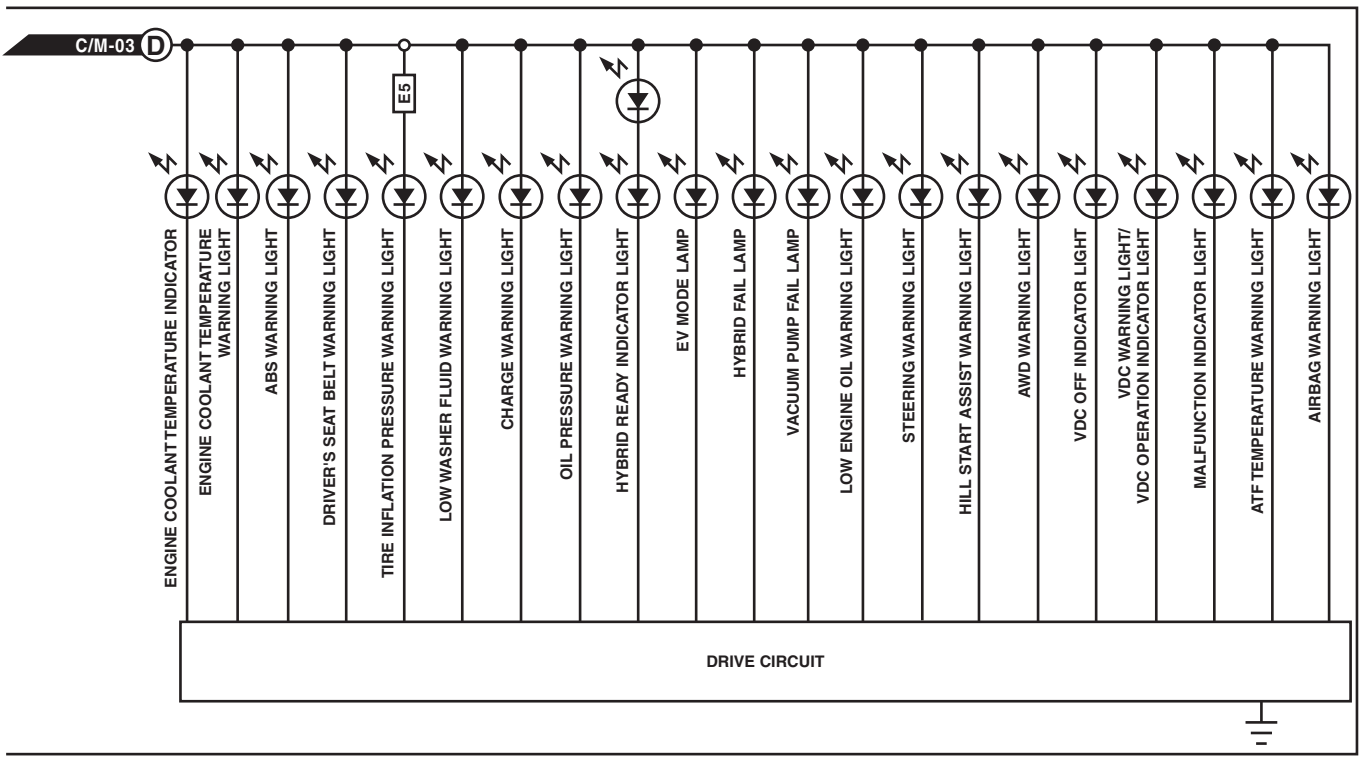

WI-41826

14.Coolant Temperature System

A: WIRING DIAGRAM

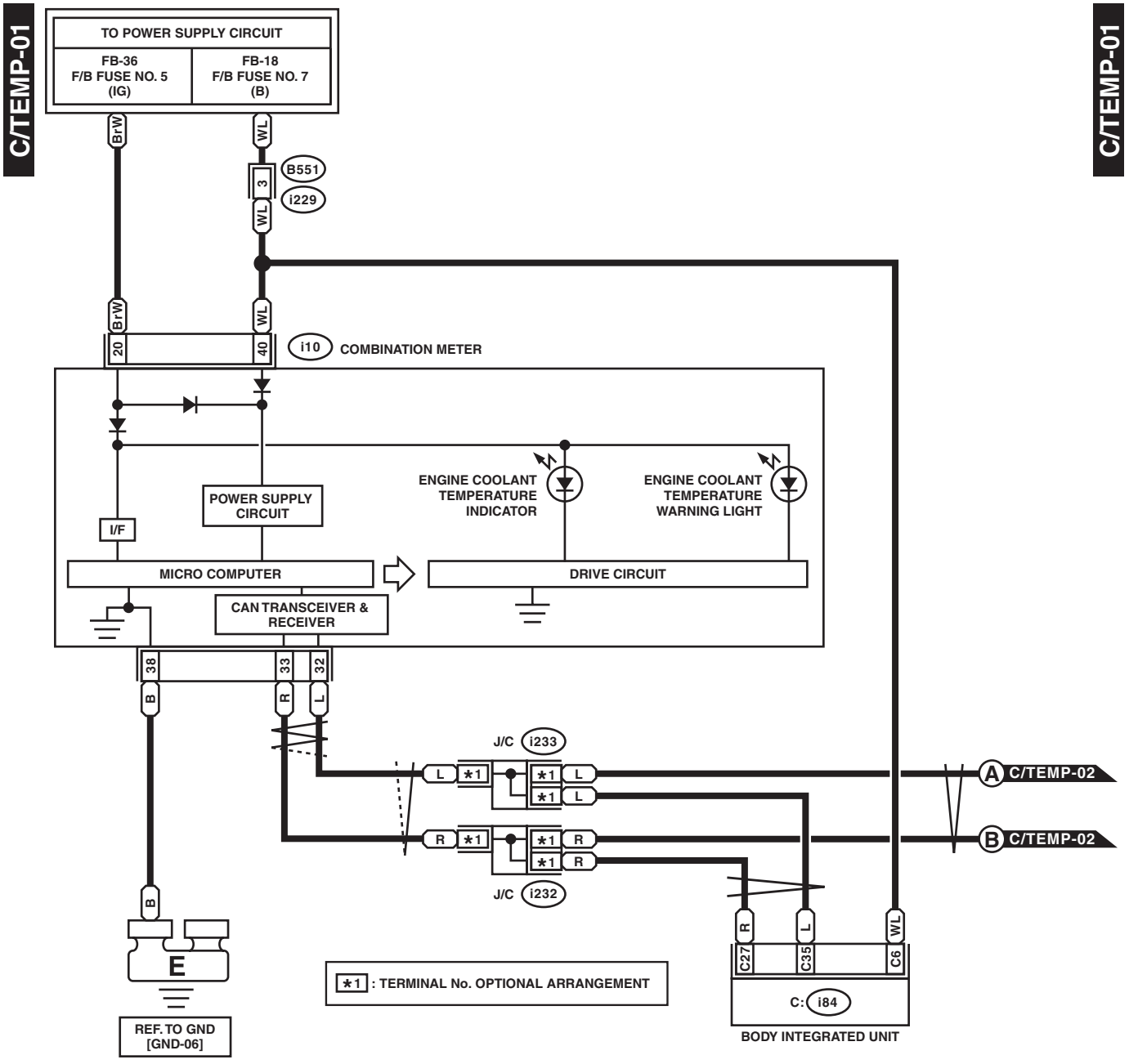

WI-41827

C/TEMP-02

C/TEMP-02

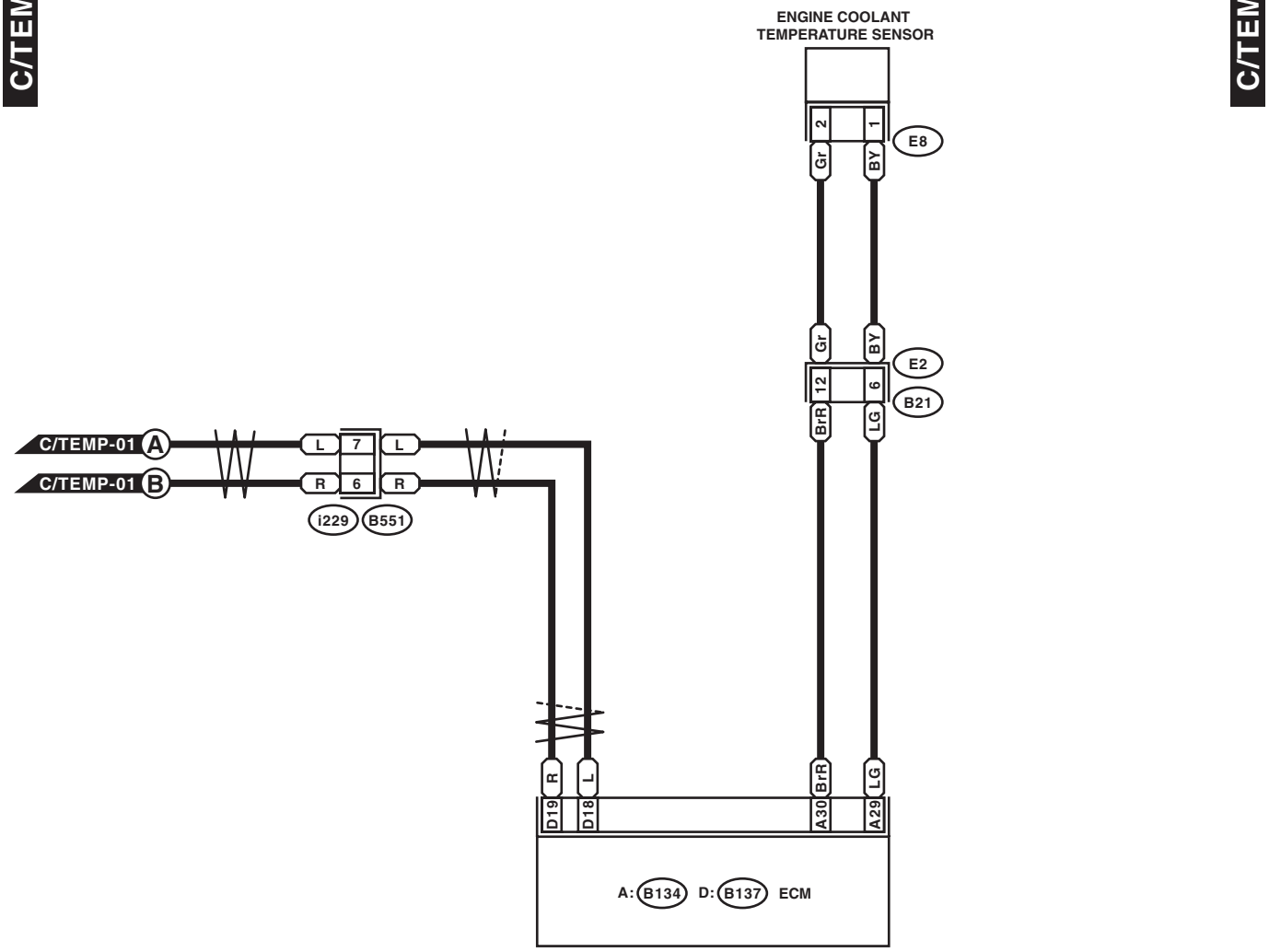

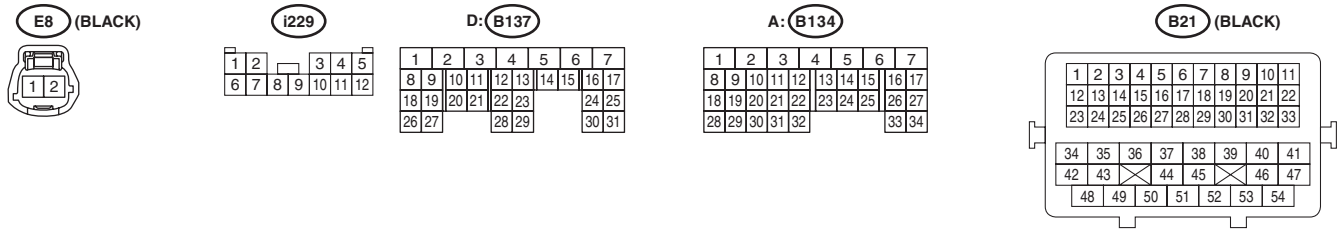

WI-41828

15.Cruise Control System

A: WIRING DIAGRAM

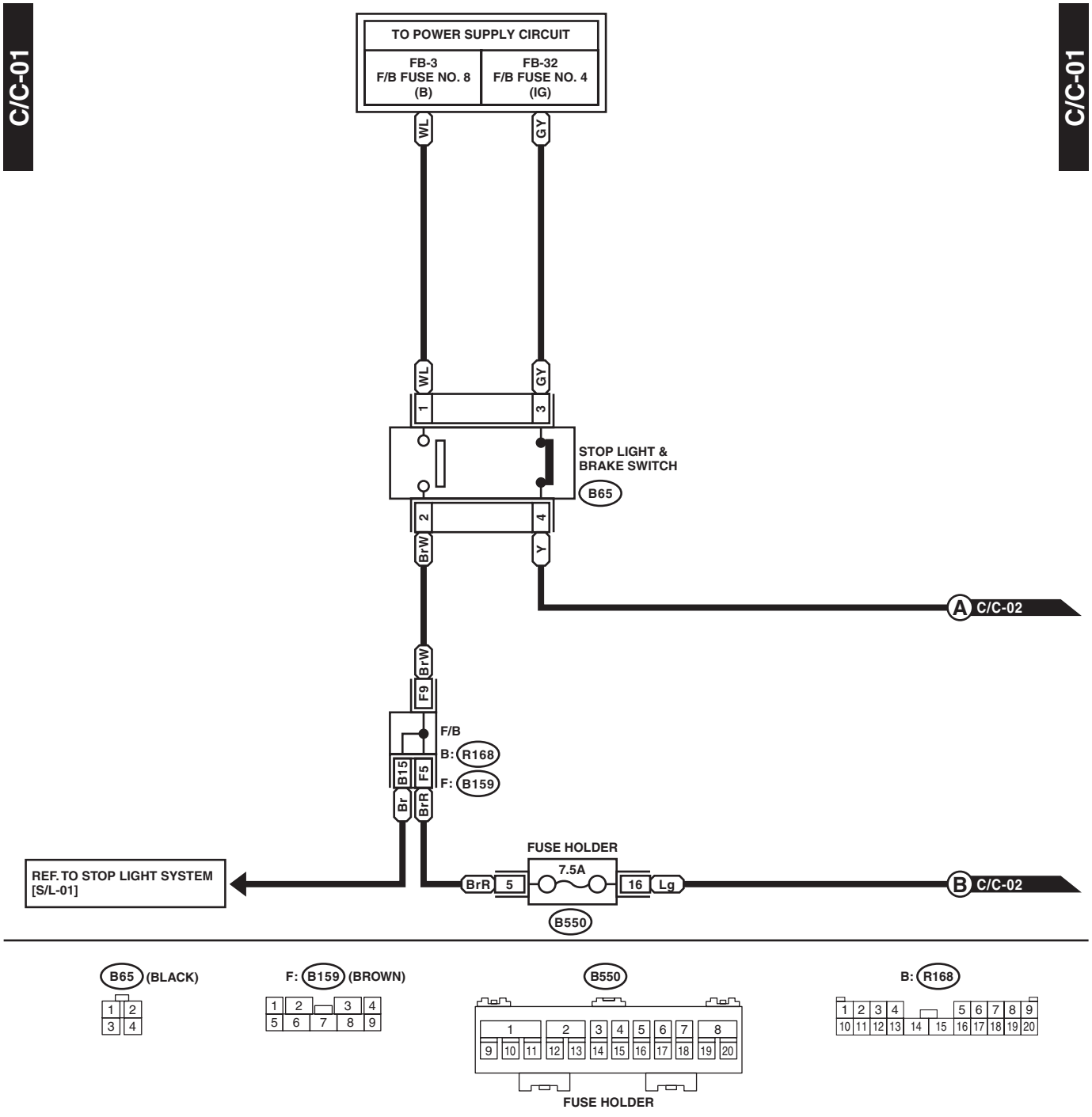

WI-41829

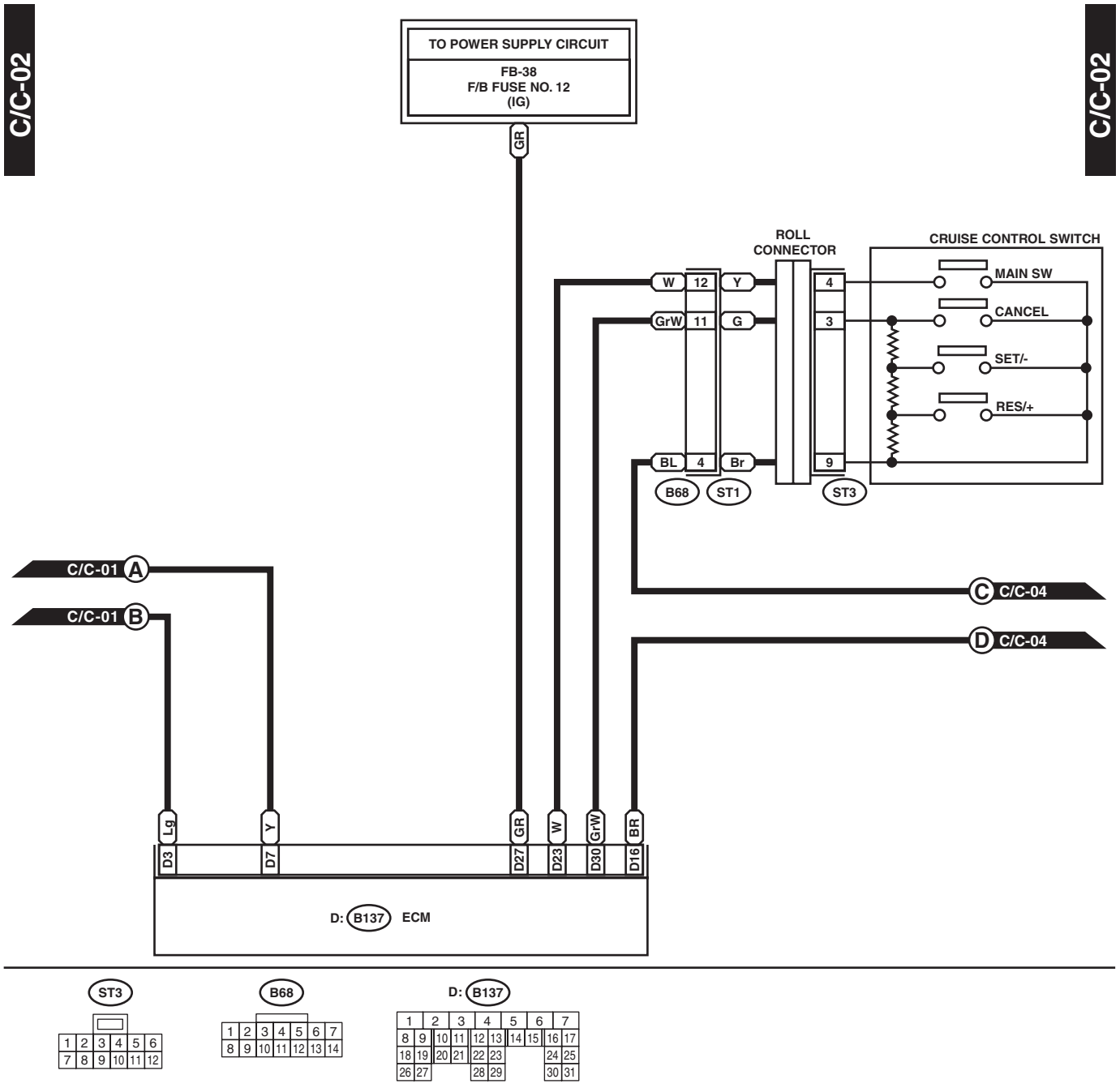
C/C-02
C/C-02
TO POWER SUPPLY CIRCUIT
FB-38
F/B FUSE NO. 12
(IG)
GR
ROLL CONNECTOR
CRUISE CONTROL SWITCH
MAIN SW
CANCEL
SET/-
RES/+
W 12 Y
GrW 11 G
BL 4 Br
4
3
9
B68
ST1
ST3
C/C-01 A
C/C-01 B
C C/C-04
D C/C-04
Lg
Y
GR
W
GrW
BR
D3
D7
D27
D23
D30
D16
D: B137 ECM
ST3
B68
D: B137

WI-41830

C/C-03

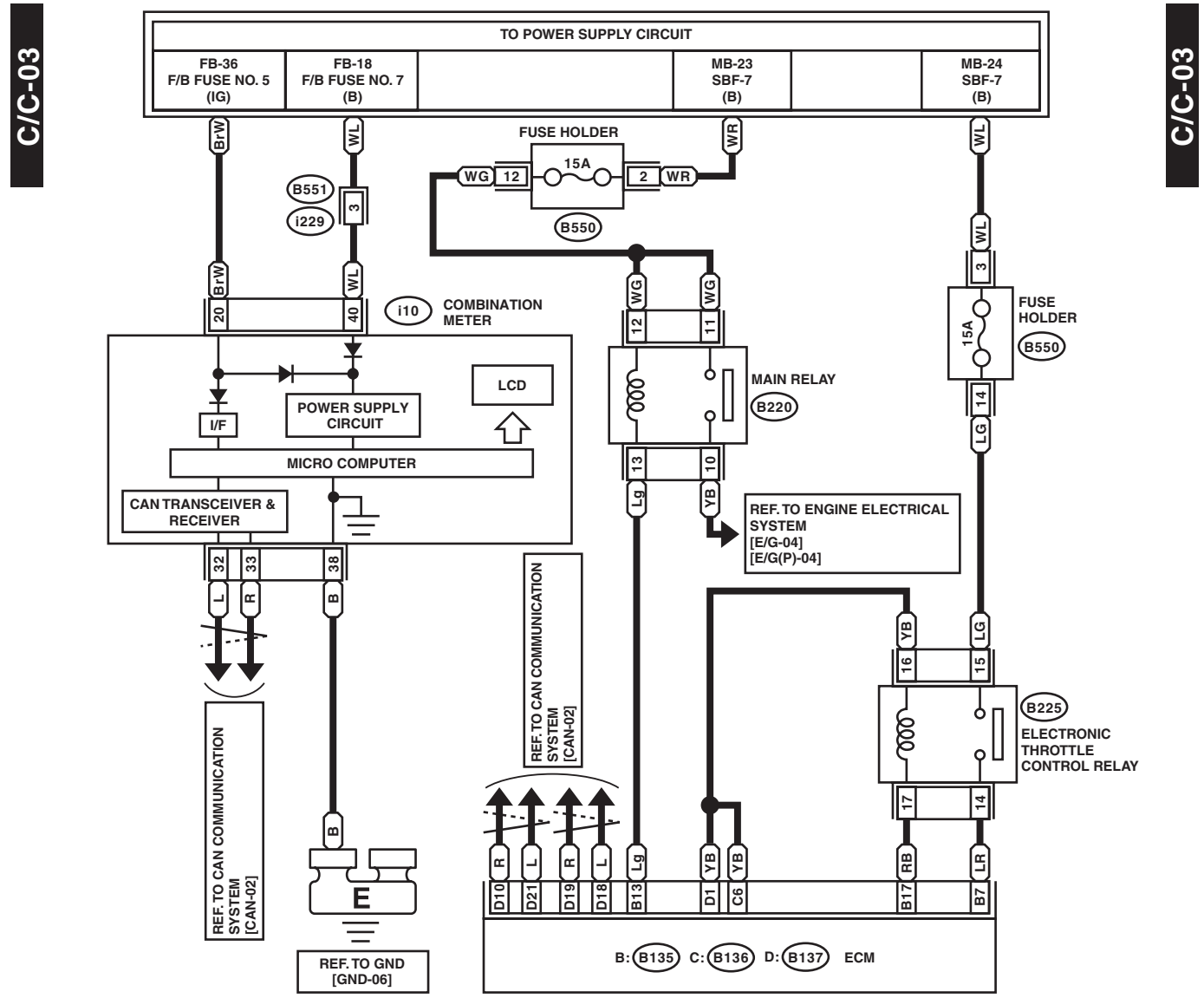

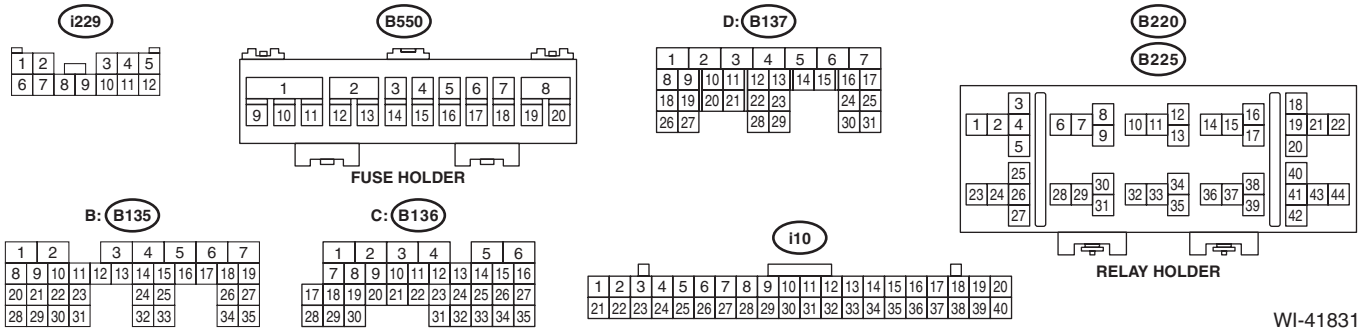

WI-41831

WIRING SYSTEM

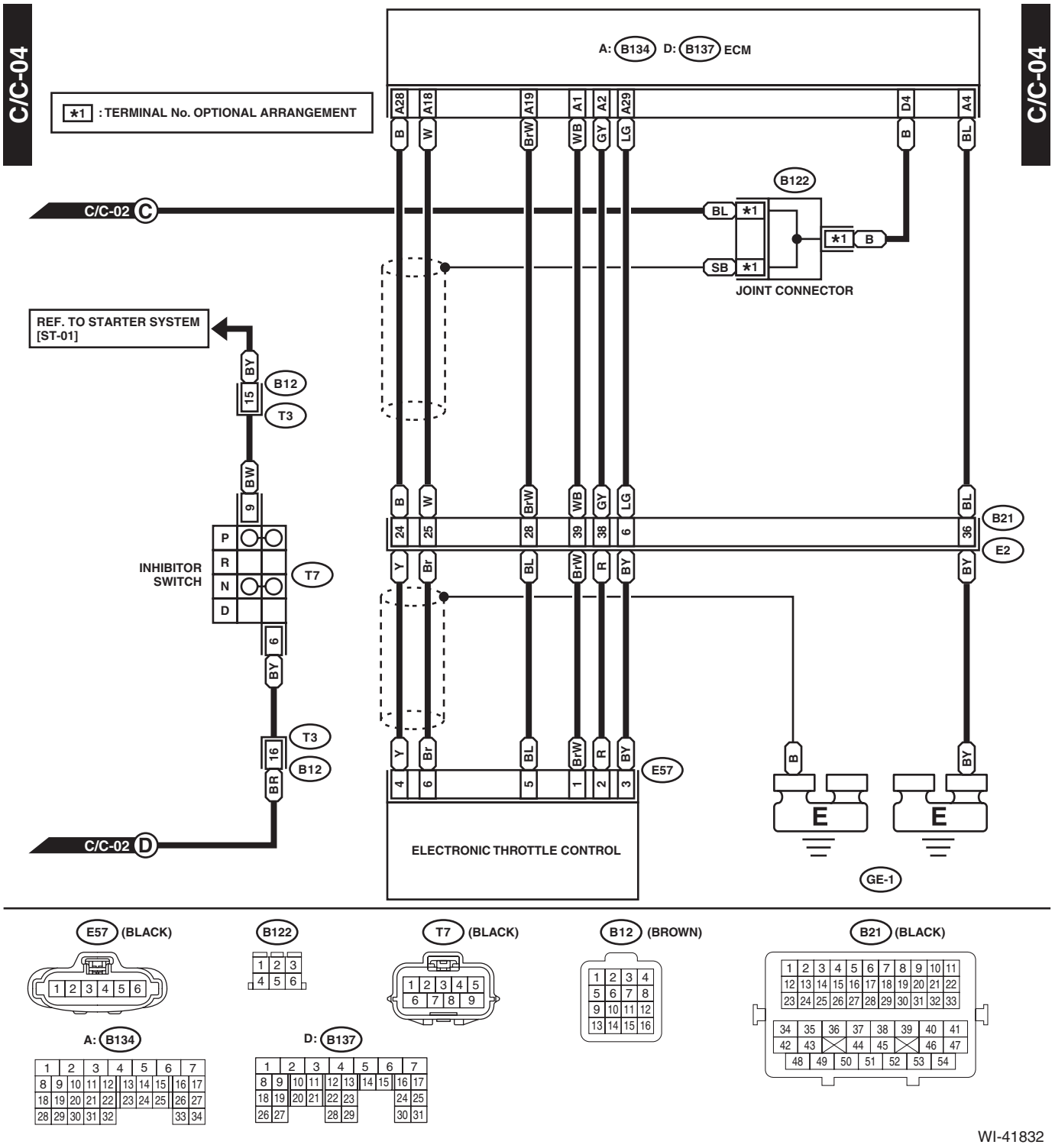

WI-41832

16.CVT Control System

A: WIRING DIAGRAM

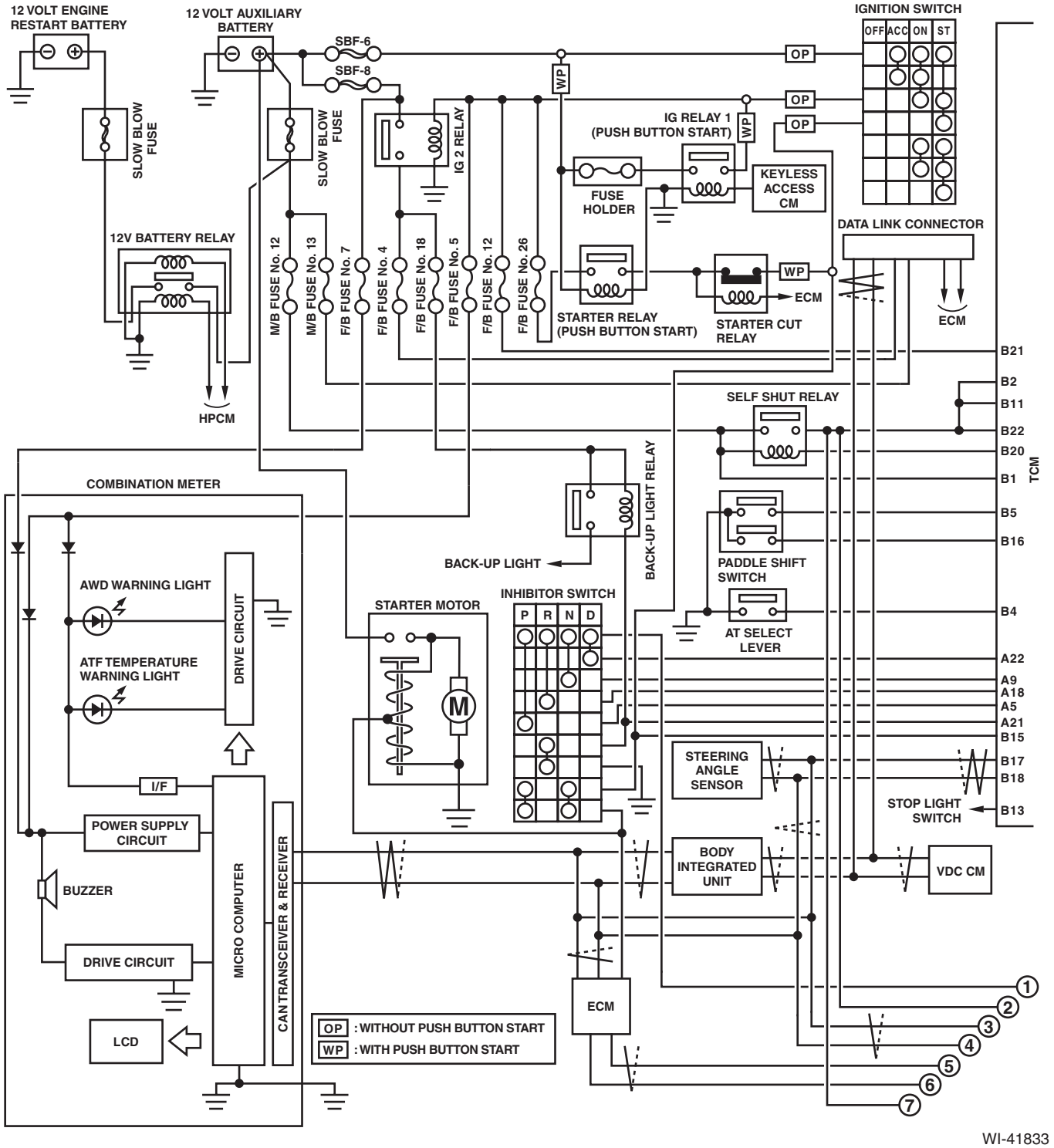

WI-41833

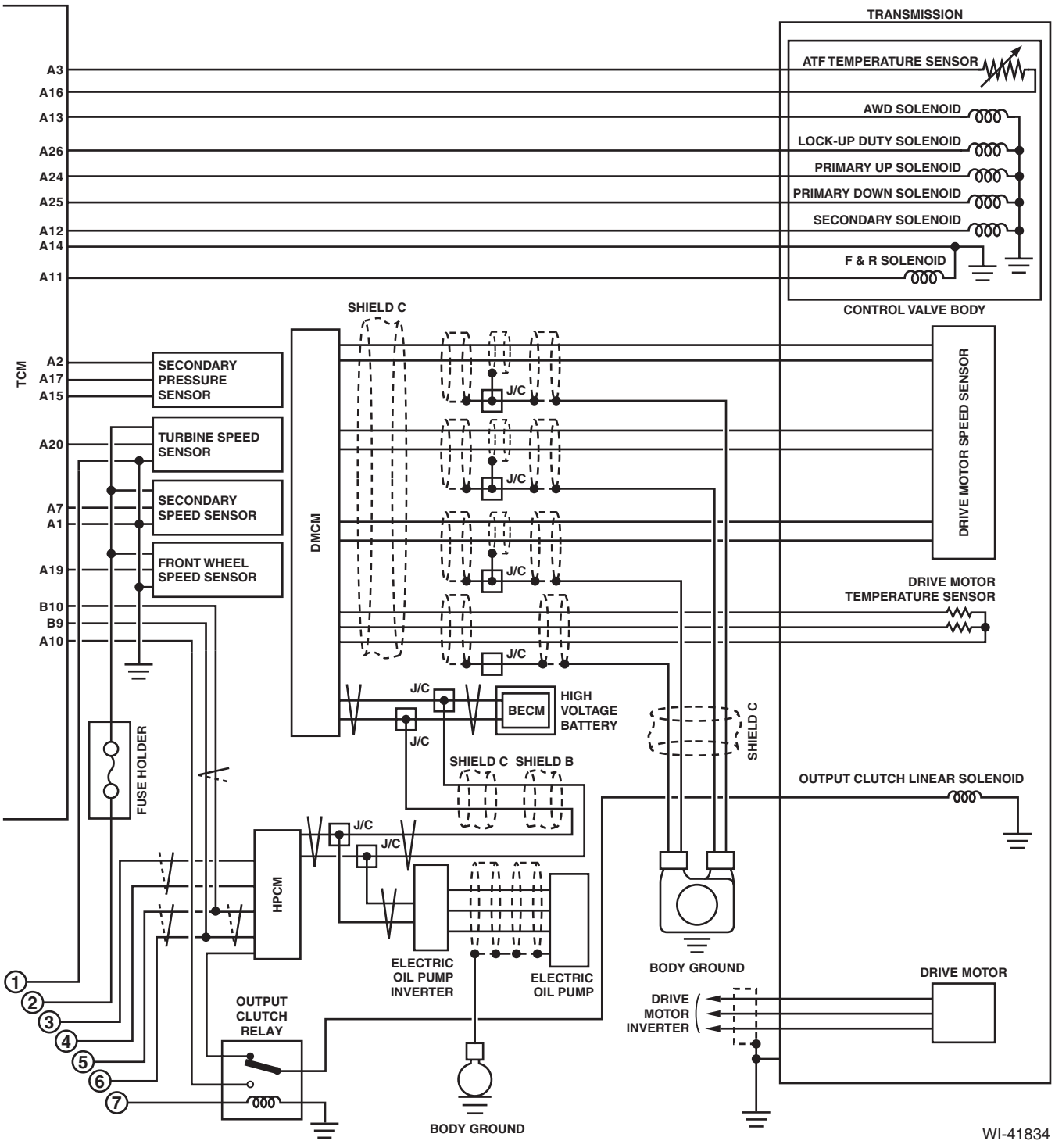
TRANSMISSION
ATF TEMPERATURE SENSOR
AWD SOLENOID
LOCK-UP DUTY SOLENOID
PRIMARY UP SOLENOID
PRIMARY DOWN SOLENOID
SECONDARY SOLENOID
F & R SOLENOID
CONTROL VALVE BODY
A3
A16
A13
A26
A24
A25
A12
A14
A11
TCM
A2
A17
A15
SECONDARY PRESSURE SENSOR
A20
TURBINE SPEED SENSOR
A7
A1
SECONDARY SPEED SENSOR
A19
FRONT WHEEL SPEED SENSOR
B10
B9
A10
SHIELD C
DMCM
J/C
DRIVE MOTOR SPEED SENSOR
DRIVE MOTOR TEMPERATURE SENSOR
BECM
HIGH VOLTAGE BATTERY
SHIELD C
SHIELD B
FUSE HOLDER
OUTPUT CLUTCH LINEAR SOLENOID
HPCM
ELECTRIC OIL PUMP INVERTER
ELECTRIC OIL PUMP
BODY GROUND
DRIVE MOTOR
DRIVE MOTOR INVERTER
OUTPUT CLUTCH RELAY
1
2
3
4
5
6
7
BODY GROUND
WI-41834

CVT-01

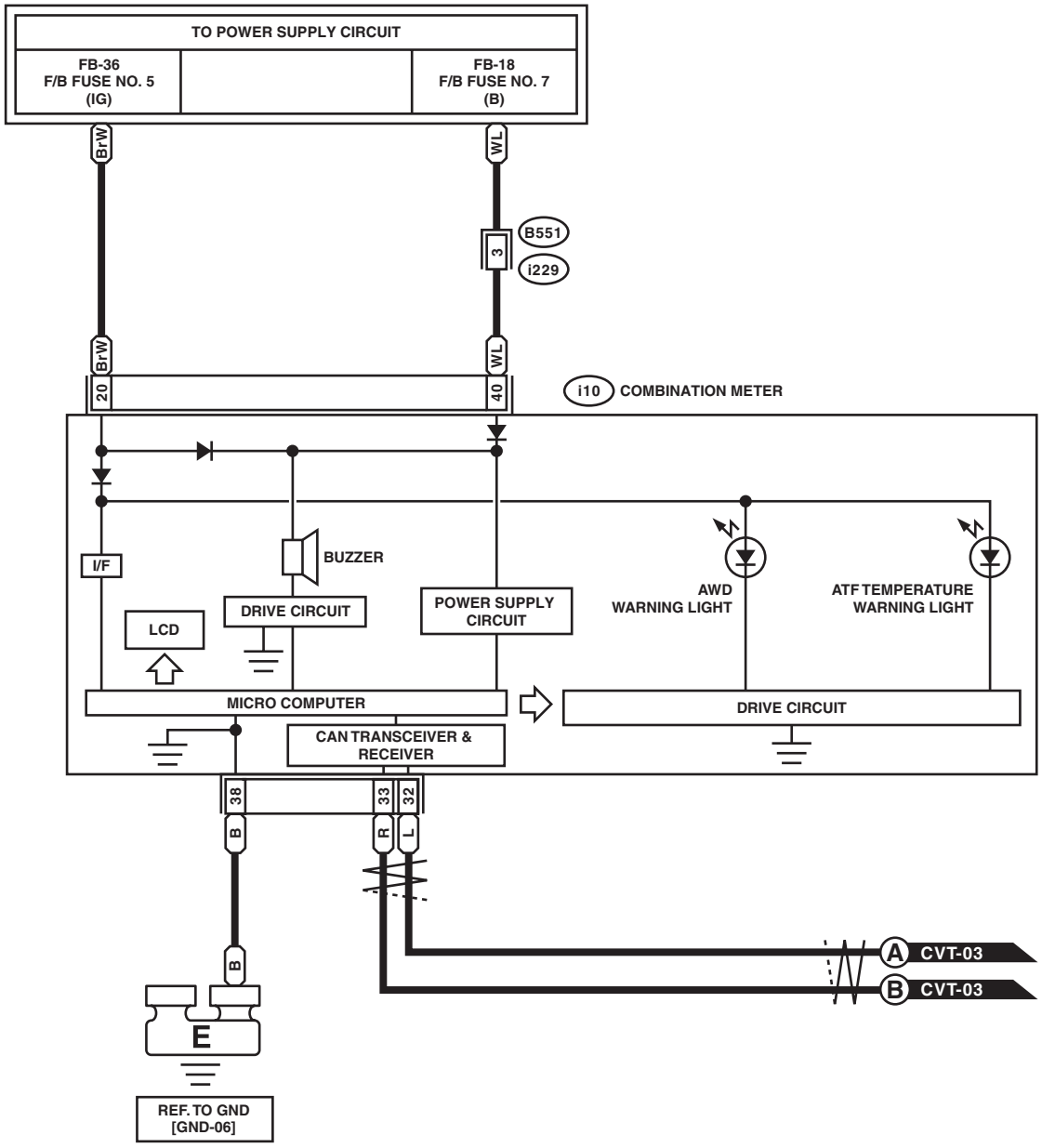

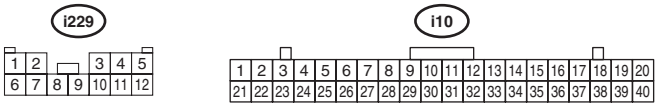

WI-41835

CVT-02

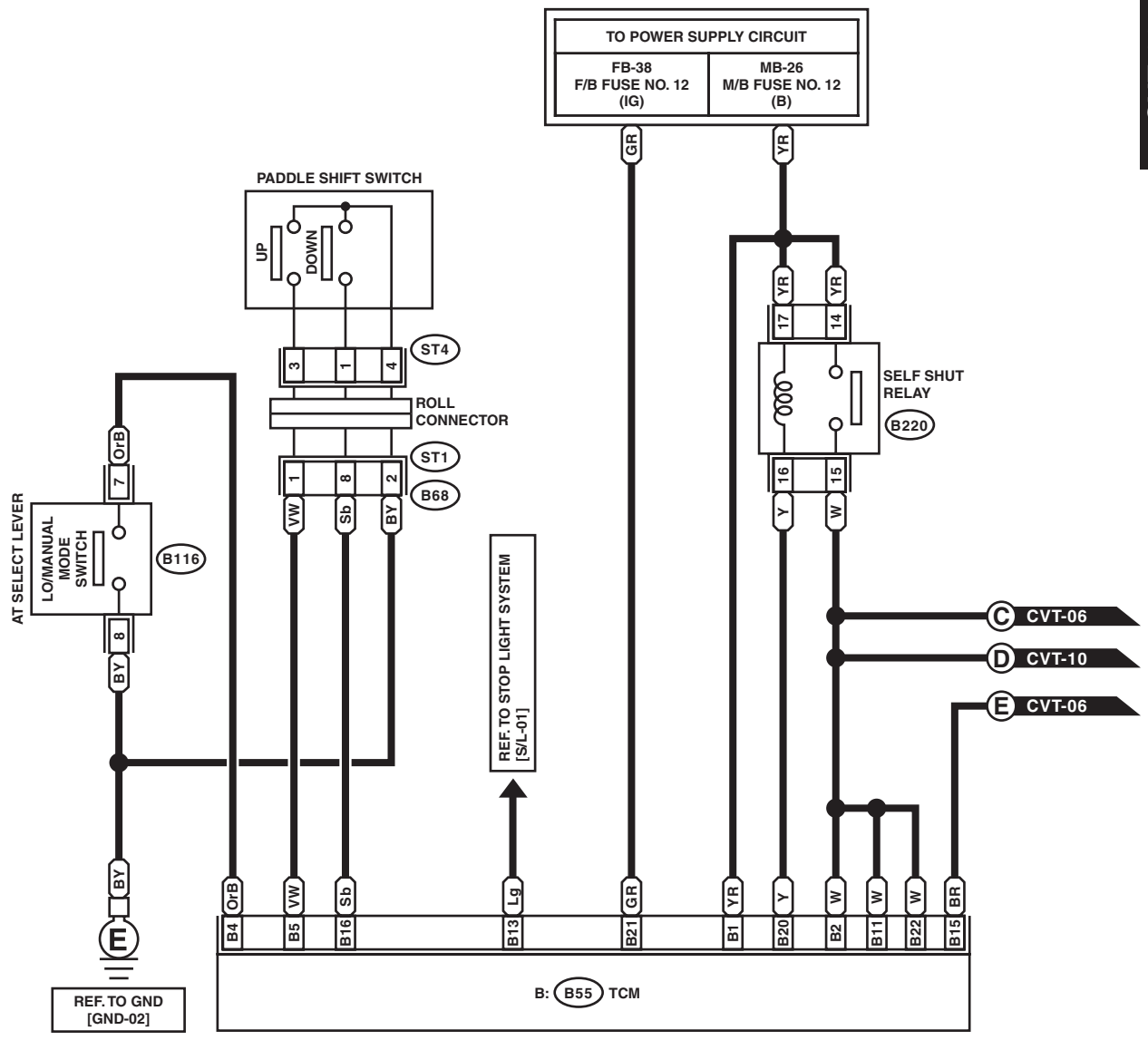

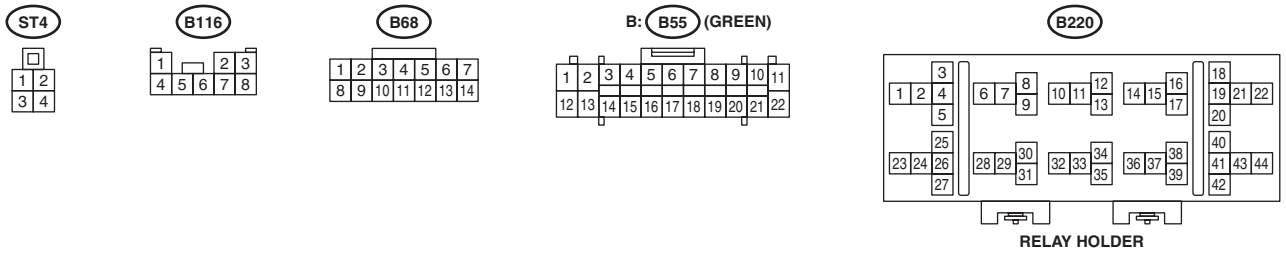

WI-41836

WIRING SYSTEM

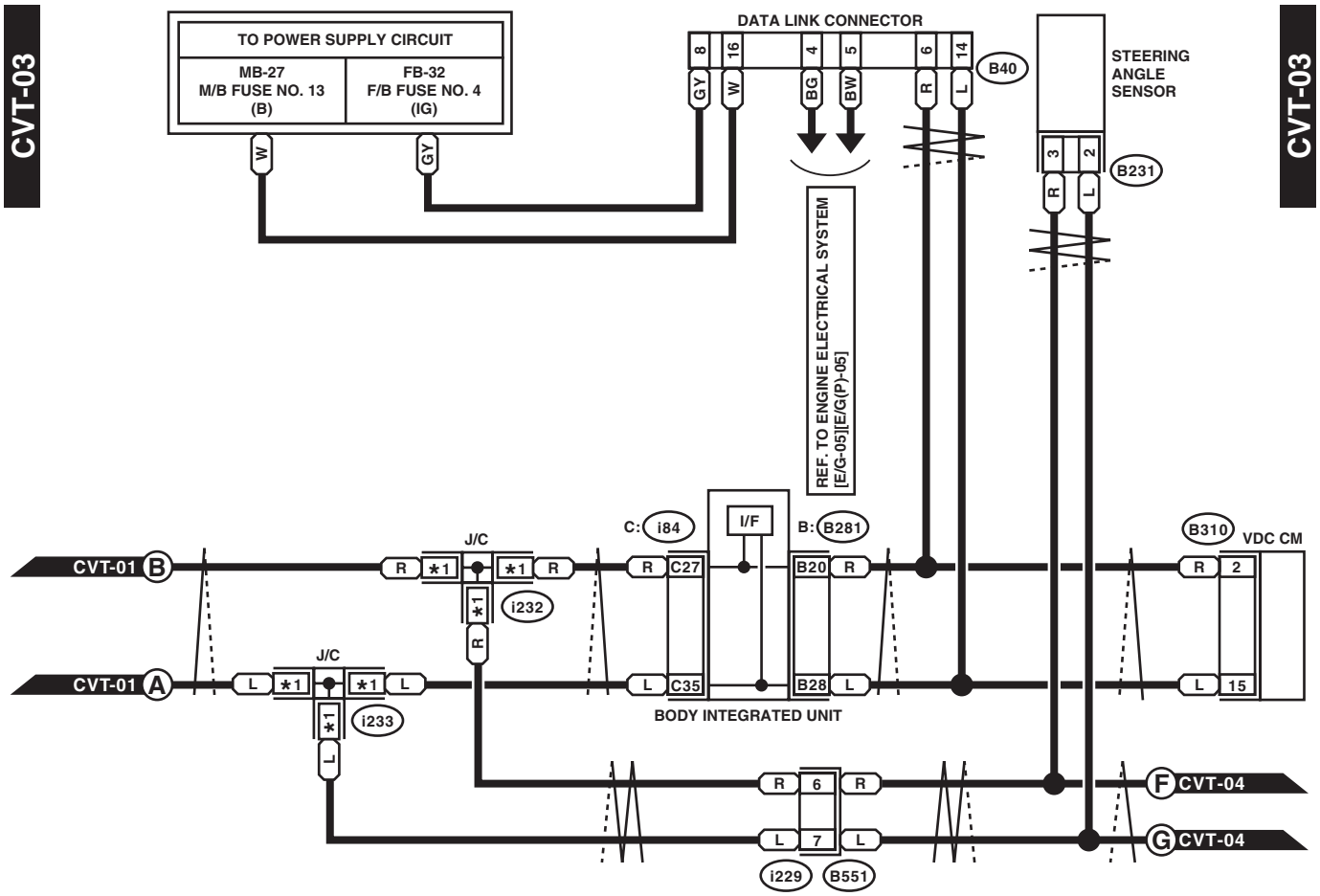

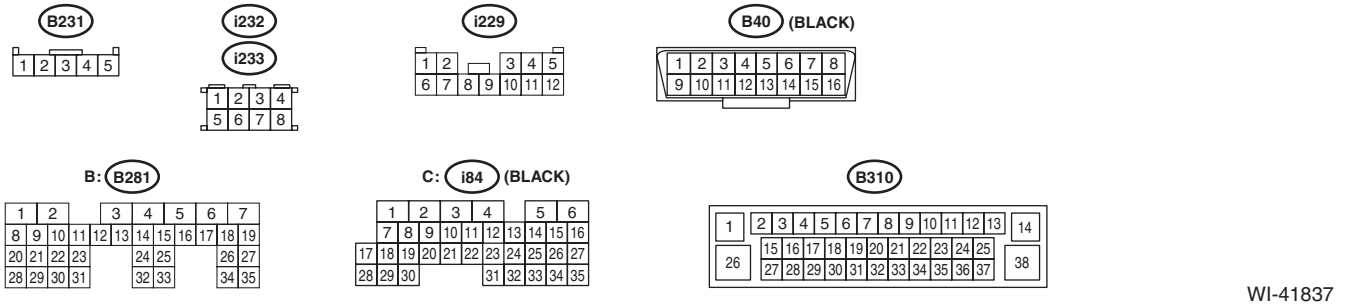

WI-41837

CVT-04

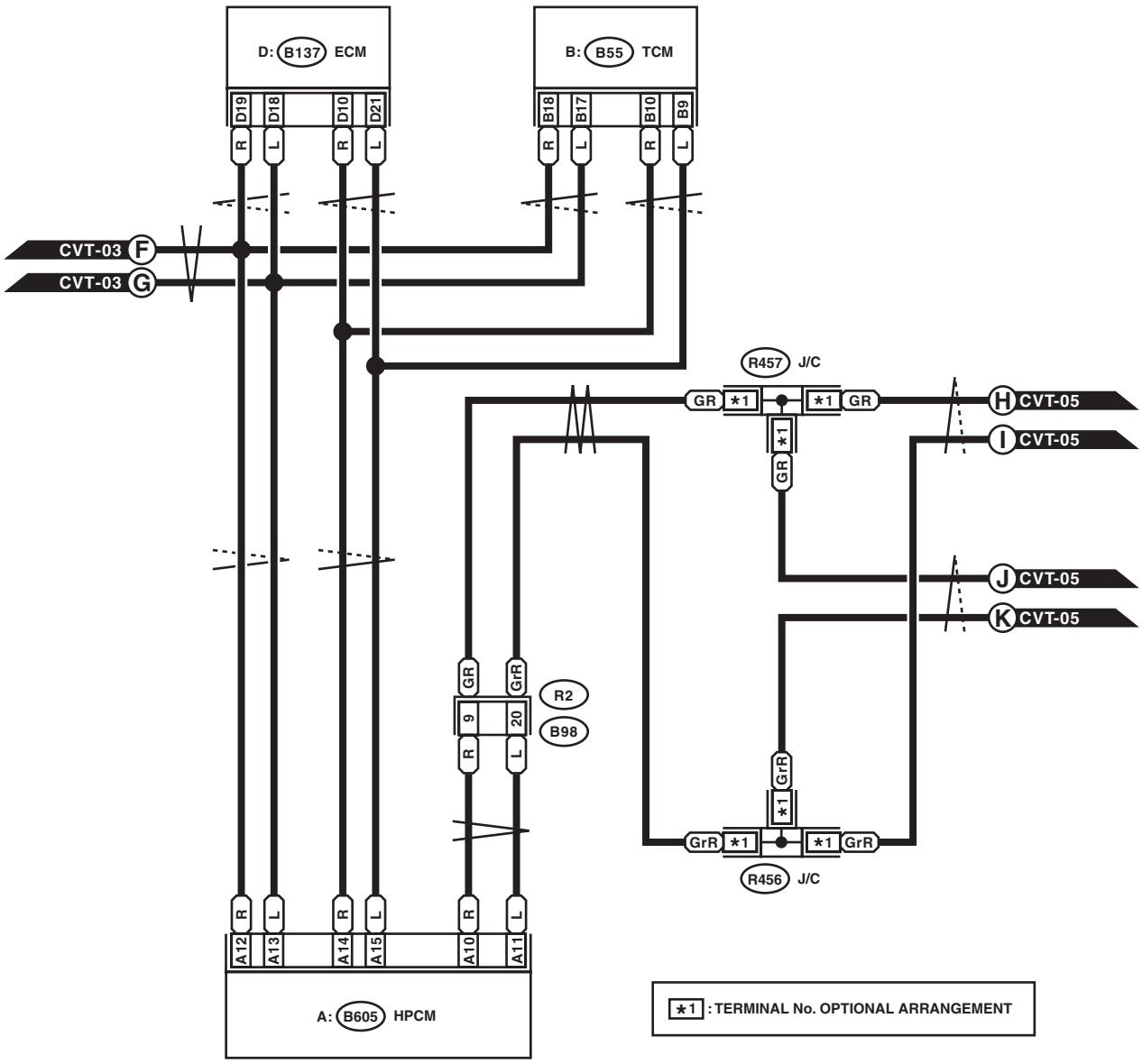

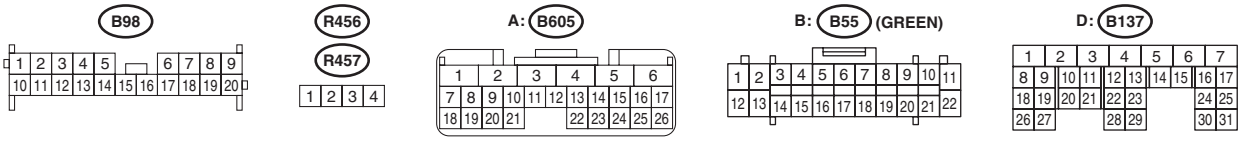

WI-41838

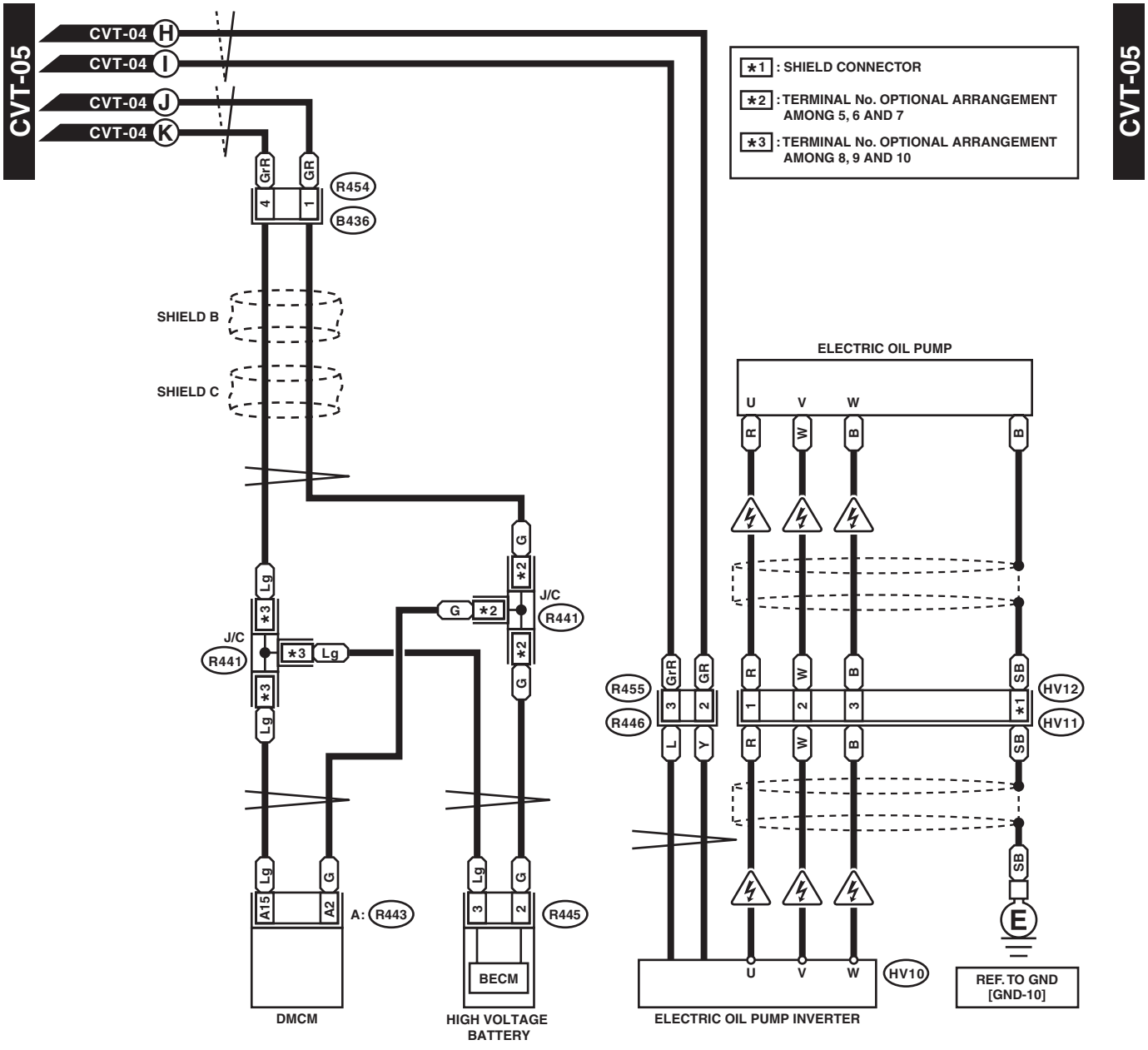
CVT-05
CVT-04 H
CVT-04 I
CVT-04 J
CVT-04 K
*1 : SHIELD CONNECTOR
*2 : TERMINAL No. OPTIONAL ARRANGEMENT AMONG 5, 6 AND 7
*3 : TERMINAL No. OPTIONAL ARRANGEMENT AMONG 8, 9 AND 10
R454
B436
SHIELD B
SHIELD C
J/C
R441
R455
R446
ELECTRIC OIL PUMP
HV12
HV11
HV10
A: R443
R445
DMCM
HIGH VOLTAGE BATTERY
BECM
ELECTRIC OIL PUMP INVERTER
REF. TO GND [GND-10]

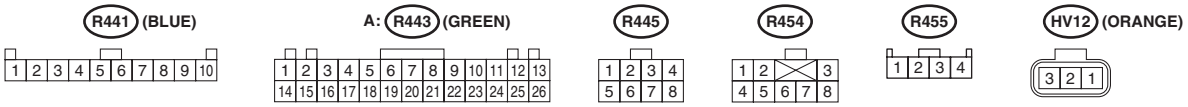
R441 (BLUE)
A: R443 (GREEN)
R445
R454
R455
HV12 (ORANGE)

WI-41839

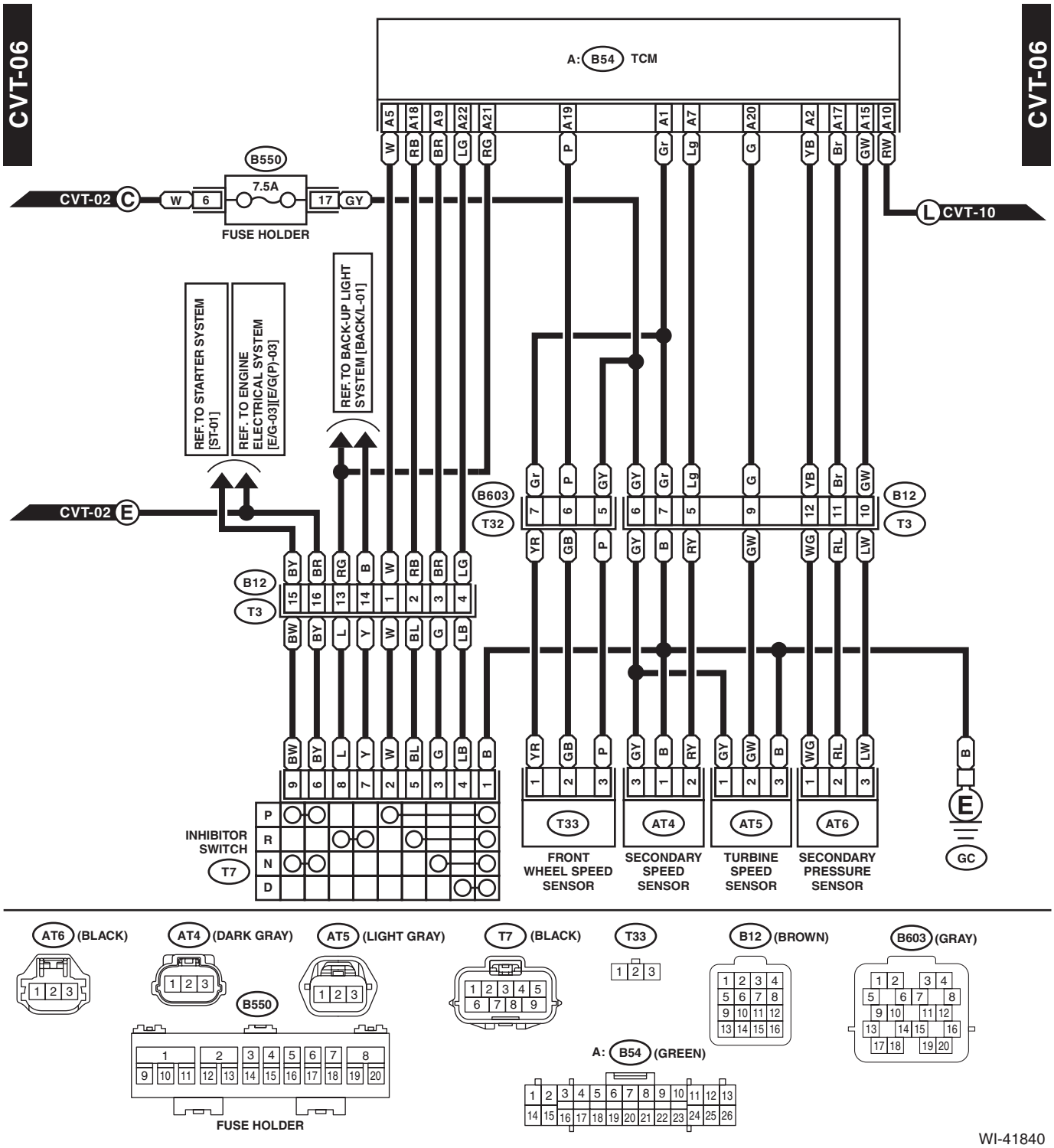
CVT-06
CVT-06
A: B54 TCM
A5 A18 A9 A22 A21 A19 A1 A7 A20 A2 A17 A15 A10
W RB BR LG RG P Gr Lg G YB Br GW RW
B550
7.5A
CVT-02 C
W 6 17 GY
FUSE HOLDER
L CVT-10
REF. TO STARTER SYSTEM [ST-01]
REF. TO ENGINE ELECTRICAL SYSTEM [E/G-03][E/G(P)-03]
REF. TO BACK-UP LIGHT SYSTEM [BACK/L-01]
CVT-02 E
B603
T32
B12
T3
Gr P GY GY Gr Lg G YB Br GW
7 6 5 6 7 5 9 12 11 10
YR GB P GY B RY GW WG RL LW
BY BR RG B W RB BR LG
15 16 13 14 1 2 3 4
BW BY L Y W BL G LB
BW BY L Y W BL G LB B
9 6 8 7 2 5 3 4 1
YR GB P GY B RY GY GW B WG RL LW B
1 2 3 3 1 2 1 2 3 1 2 3
P R N D
INHIBITOR SWITCH
T7
T33
AT4
AT5
AT6
E
GC
FRONT WHEEL SPEED SENSOR
SECONDARY SPEED SENSOR
TURBINE SPEED SENSOR
SECONDARY PRESSURE SENSOR
AT6 (BLACK)
AT4 (DARK GRAY)
AT5 (LIGHT GRAY)
T7 (BLACK)
T33
B12 (BROWN)
B603 (GRAY)
B550
FUSE HOLDER
A: B54 (GREEN)

WI-41840

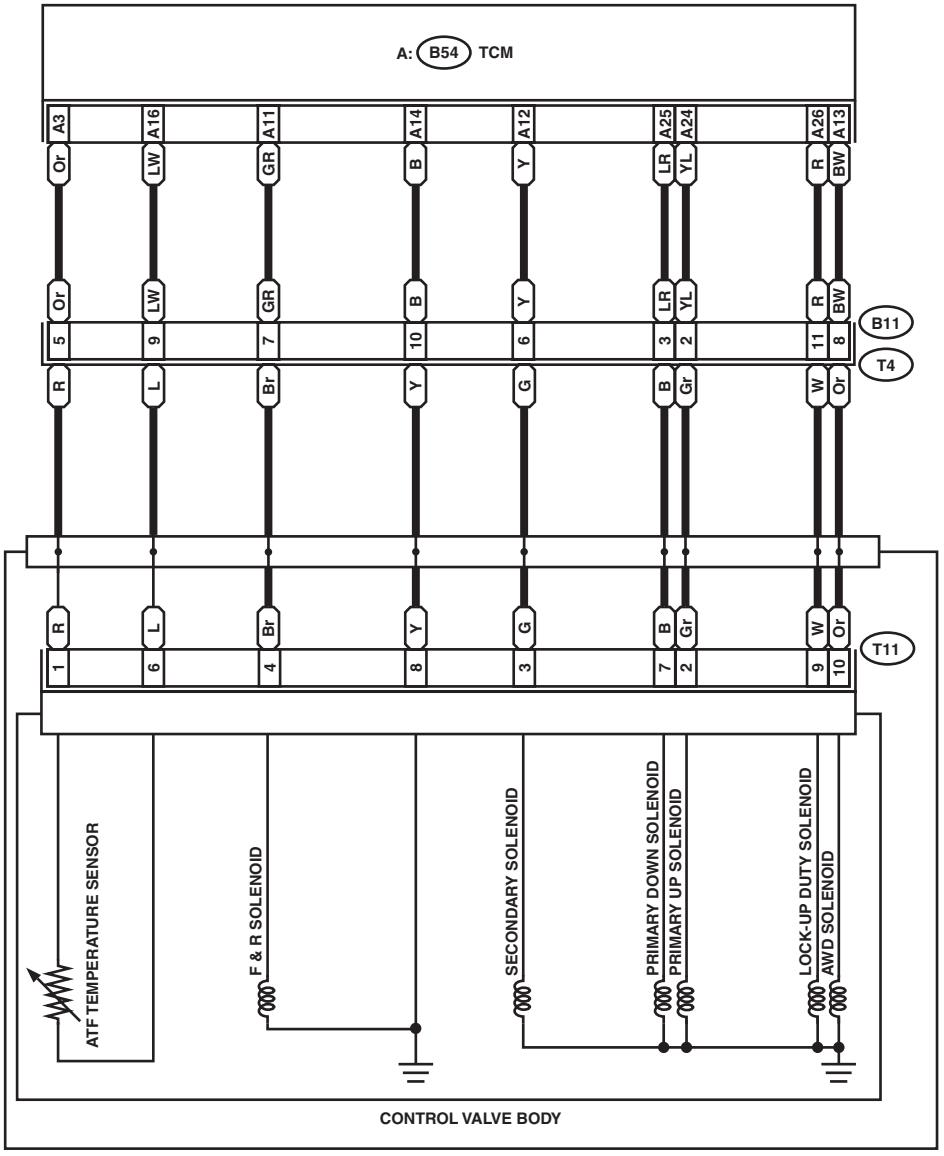
A: B54 TCM
A3
A16
A11
A14
A12
A25
A24
A26
A13
Or
LW
GR
B
Y
LR
YL
R
BW
5
9
7
10
6
3
2
11
8
B11
T4
R
L
Br
Y
G
B
Gr
W
Or
1
6
4
8
3
7
2
9
10
T11
ATF TEMPERATURE SENSOR
F & R SOLENOID
SECONDARY SOLENOID
PRIMARY DOWN SOLENOID
PRIMARY UP SOLENOID
LOCK-UP DUTY SOLENOID
AWD SOLENOID
CONTROL VALVE BODY
TRANSMISSION

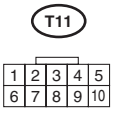
T11
1 2 3 4 5
6 7 8 9 10

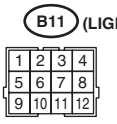
B11 (LIGHT GRAY)
1 2 3 4
5 6 7 8
9 10 11 12

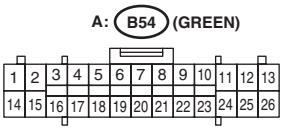
A: B54 (GREEN)
1 2 3 4 5 6 7 8 9 10 11 12 13
14 15 16 17 18 19 20 21 22 23 24 25 26

WI-41841

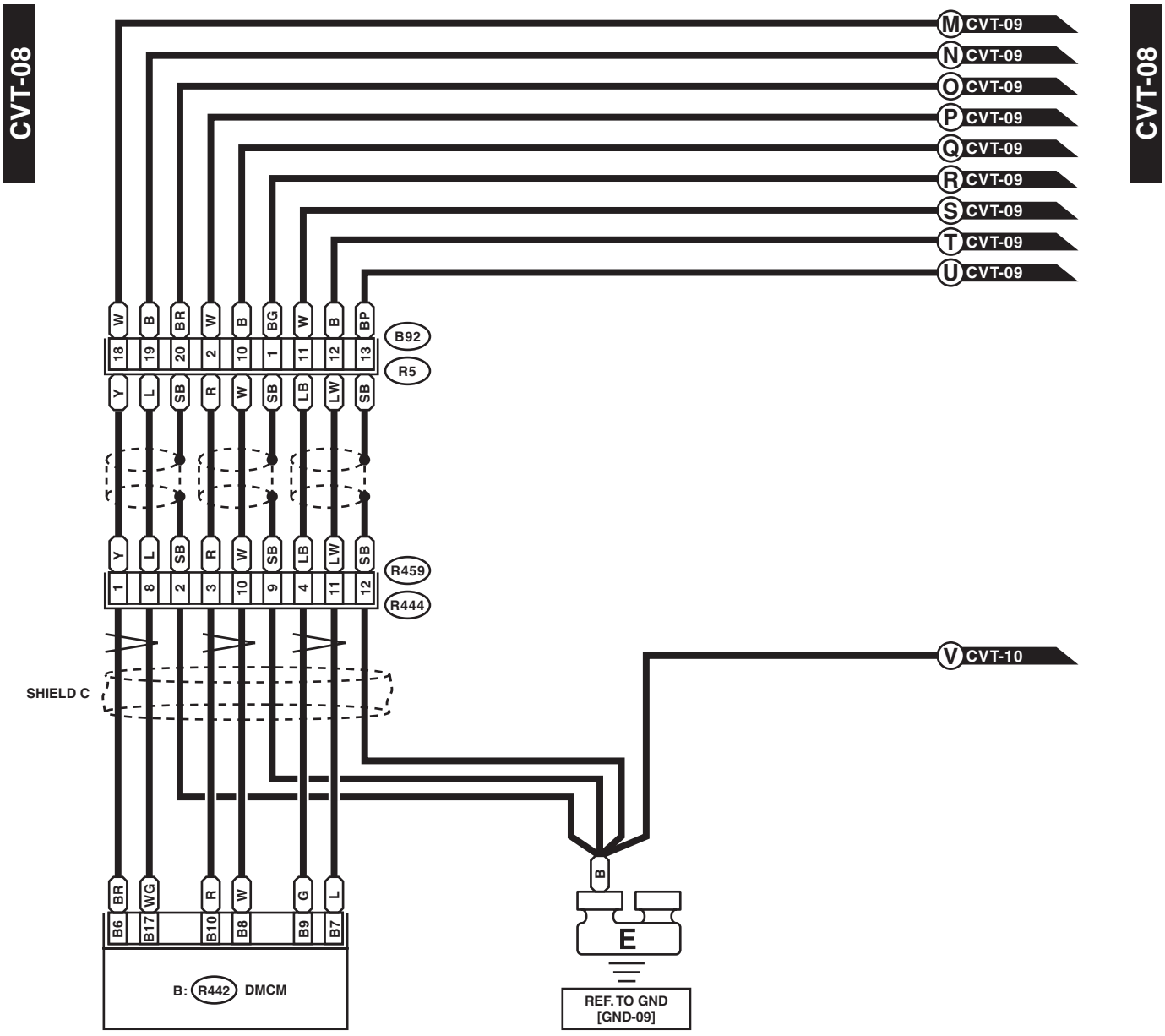
CVT-08
CVT-08
M CVT-09
N CVT-09
O CVT-09
P CVT-09
Q CVT-09
R CVT-09
S CVT-09
T CVT-09
U CVT-09
B92
R5
R459
R444
V CVT-10
SHIELD C
B
E
REF. TO GND
[GND-09]
B: R442 DMCM

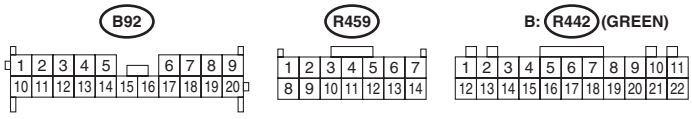
B92
R459
B: R442 (GREEN)

WI-41842

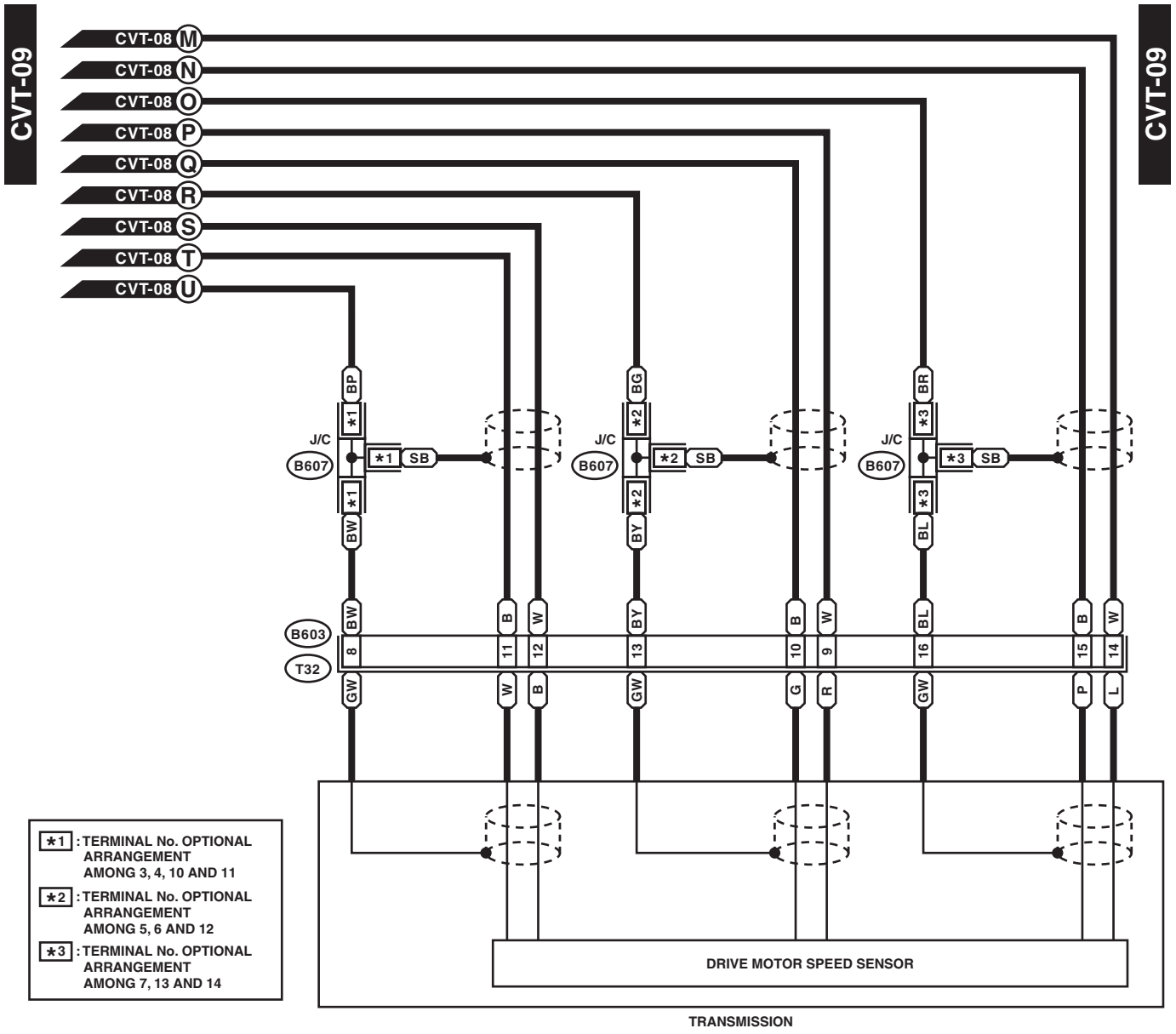
CVT-09
CVT-09
CVT-08 M
CVT-08 N
CVT-08 O
CVT-08 P
CVT-08 Q
CVT-08 R
CVT-08 S
CVT-08 T
CVT-08 U
J/C
B607
J/C
B607
J/C
B607
B603
T32
DRIVE MOTOR SPEED SENSOR
TRANSMISSION
*1 : TERMINAL No. OPTIONAL ARRANGEMENT AMONG 3, 4, 10 AND 11
*2 : TERMINAL No. OPTIONAL ARRANGEMENT AMONG 5, 6 AND 12
*3 : TERMINAL No. OPTIONAL ARRANGEMENT AMONG 7, 13 AND 14

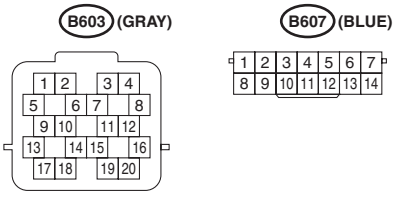
B603 (GRAY)
B607 (BLUE)

WI-41843

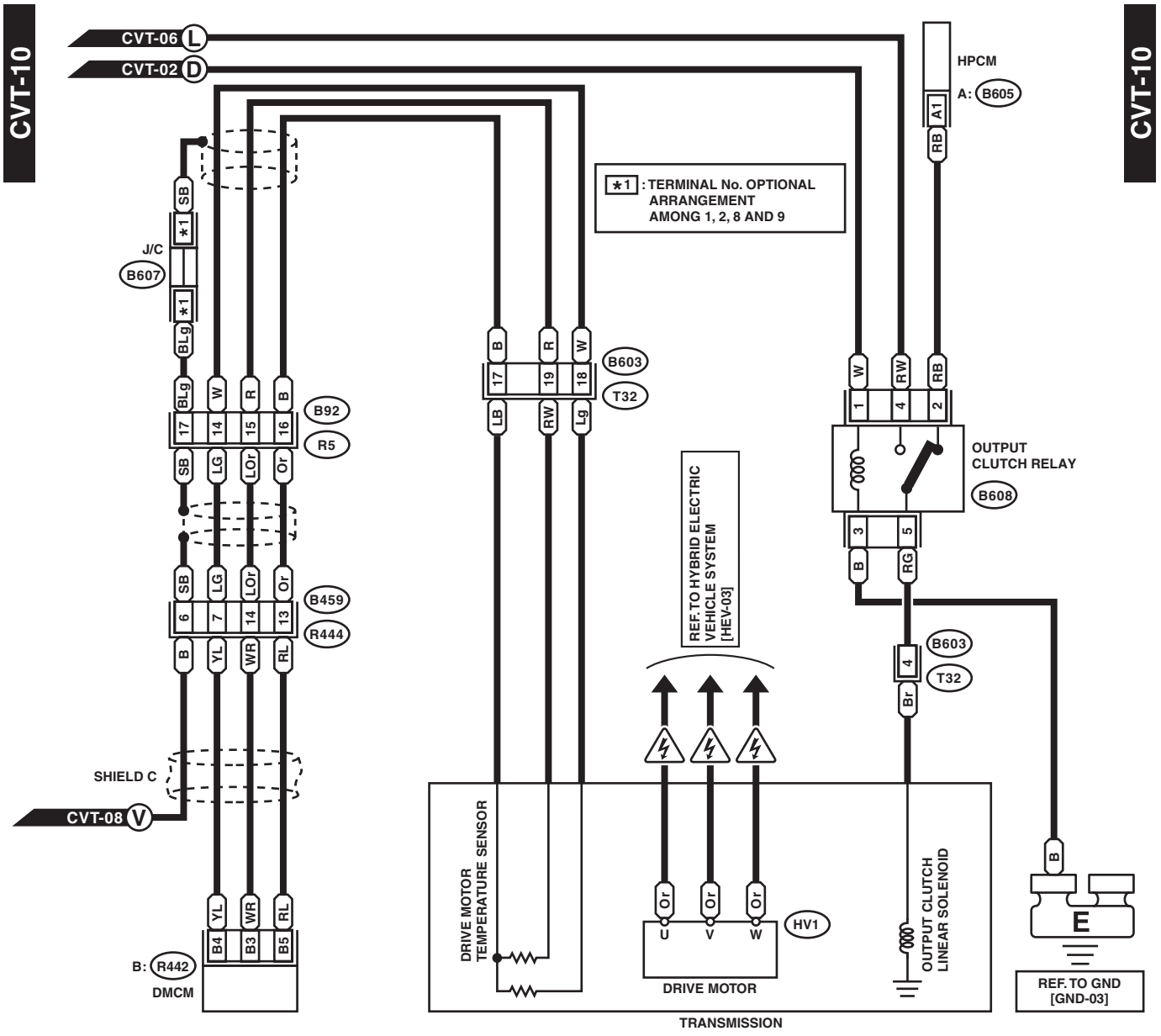
CVT-10
CVT-06 L
CVT-02 D
HPCM
A: B605
A1
RB
*1 : TERMINAL No. OPTIONAL ARRANGEMENT AMONG 1, 2, 8 AND 9
J/C
B607
SB
BLg
W
R
B
B92
R5
17
14
15
16
LG
LOr
Or
6
7
13
B459
R444
YL
WR
RL
B4
B3
B5
B: R442
DMCM
SHIELD C
CVT-08 V
B603
T32
LB
RW
Lg
19
18
REF. TO HYBRID ELECTRIC VEHICLE SYSTEM [HEV-03]
OUTPUT CLUTCH RELAY
B608
RG
Br
DRIVE MOTOR TEMPERATURE SENSOR
U
V
W
HV1
DRIVE MOTOR
OUTPUT CLUTCH LINEAR SOLENOID
E
REF. TO GND [GND-03]
TRANSMISSION

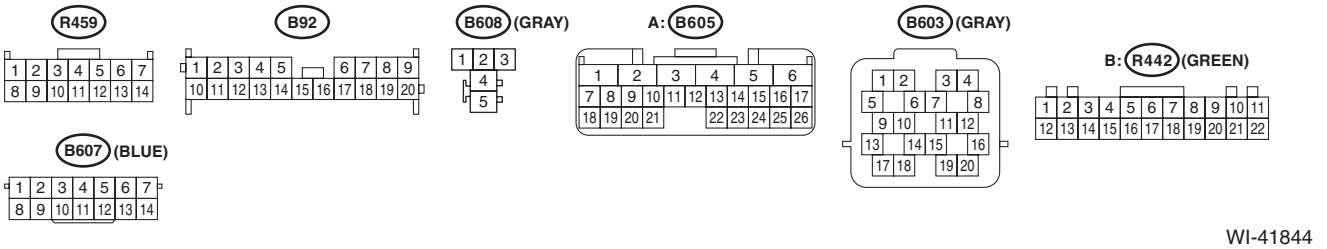
R459
B92
B608 (GRAY)
A: B605
B603 (GRAY)
B: R442 (GREEN)
B607 (BLUE)

WI-41844

17.Electric Power Steering System

A: WIRING DIAGRAM

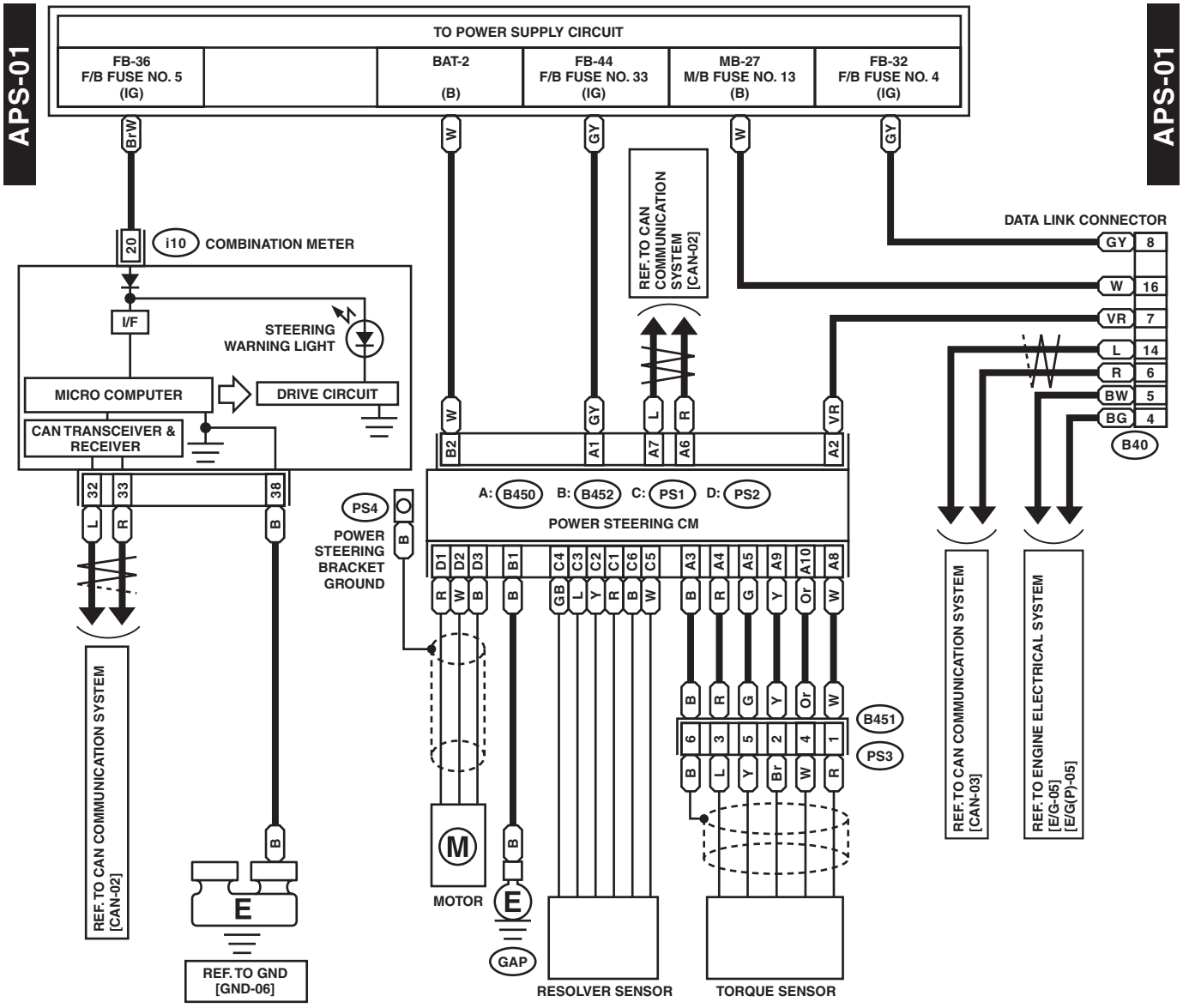

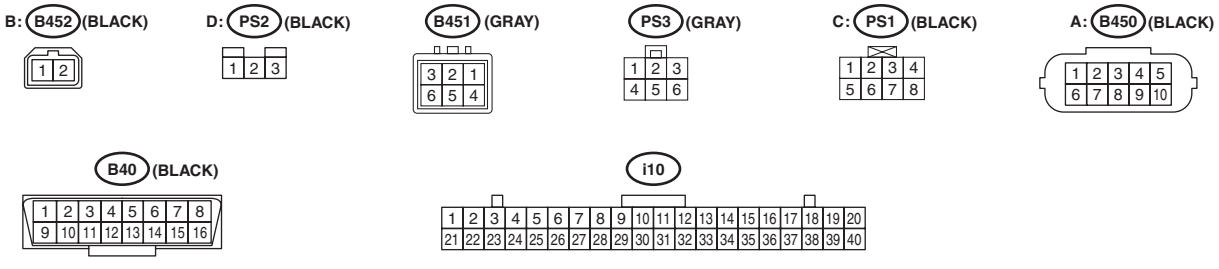

WI-41845

18.Engine Electrical System

A: WIRING DIAGRAM

1. WITHOUT PUSH BUTTON START

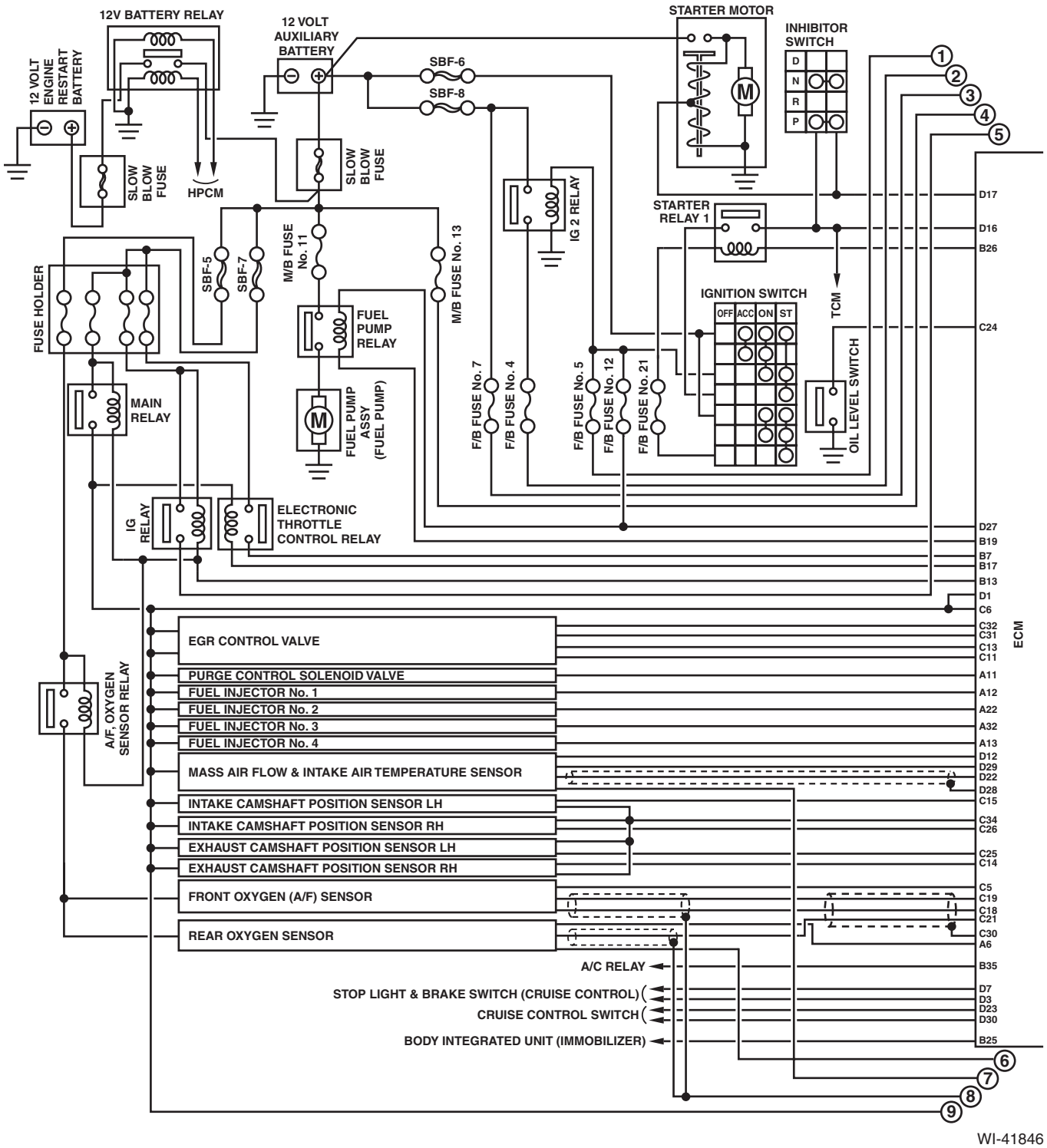

WI-41846

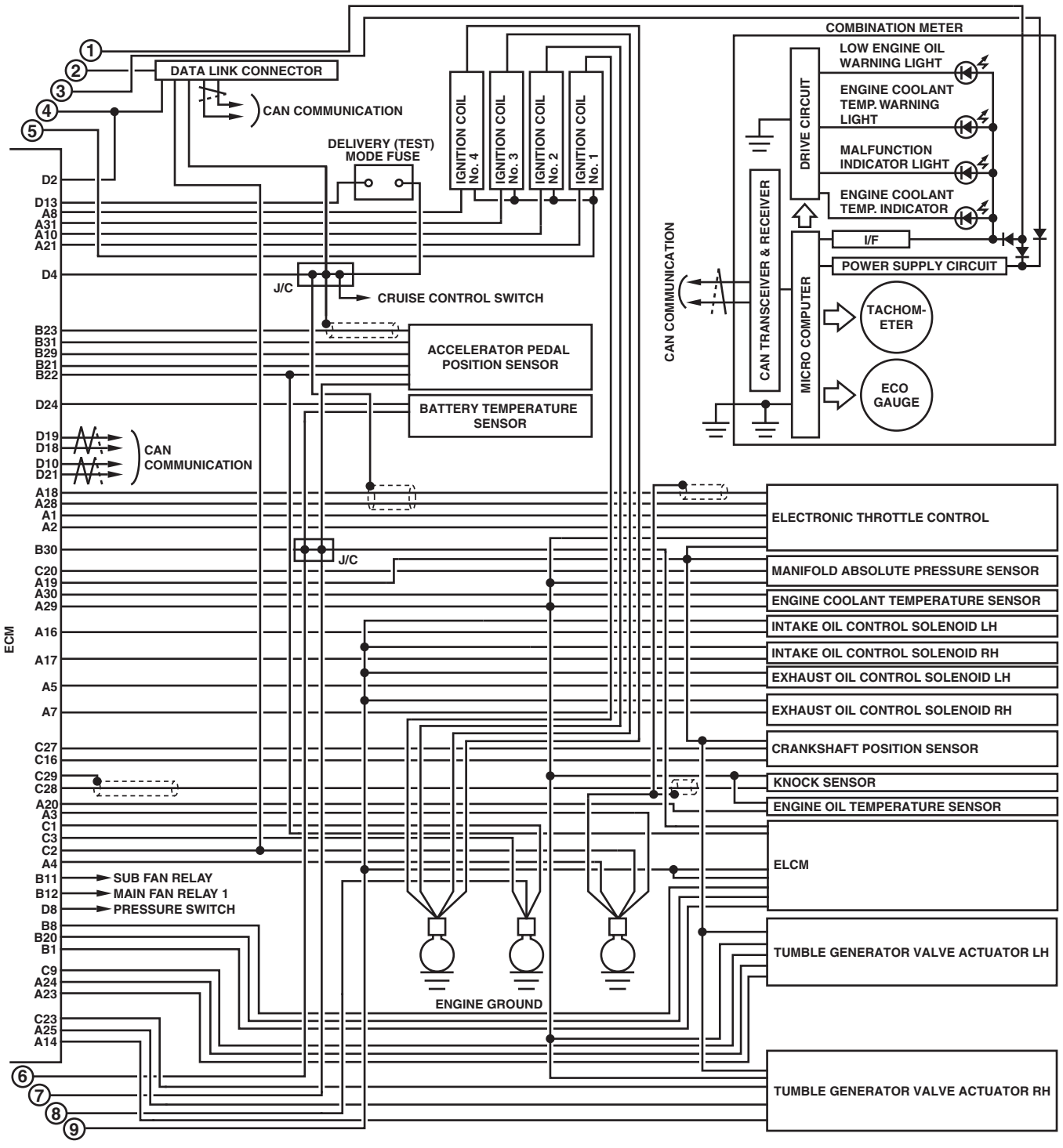
COMBINATION METER
LOW ENGINE OIL WARNING LIGHT
ENGINE COOLANT TEMP. WARNING LIGHT
MALFUNCTION INDICATOR LIGHT
ENGINE COOLANT TEMP. INDICATOR
DRIVE CIRCUIT
I/F
POWER SUPPLY CIRCUIT
CAN TRANSCEIVER & RECEIVER
MICRO COMPUTER
TACHOM-ETER
ECO GAUGE
CAN COMMUNICATION
DATA LINK CONNECTOR
CAN COMMUNICATION
DELIVERY (TEST) MODE FUSE
IGNITION COIL No. 4
IGNITION COIL No. 3
IGNITION COIL No. 2
IGNITION COIL No. 1
J/C
CRUISE CONTROL SWITCH
ACCELERATOR PEDAL POSITION SENSOR
BATTERY TEMPERATURE SENSOR
CAN COMMUNICATION
J/C
ECM
SUB FAN RELAY
MAIN FAN RELAY 1
PRESSURE SWITCH
ENGINE GROUND
ELECTRONIC THROTTLE CONTROL
MANIFOLD ABSOLUTE PRESSURE SENSOR
ENGINE COOLANT TEMPERATURE SENSOR
INTAKE OIL CONTROL SOLENOID LH
INTAKE OIL CONTROL SOLENOID RH
EXHAUST OIL CONTROL SOLENOID LH
EXHAUST OIL CONTROL SOLENOID RH
CRANKSHAFT POSITION SENSOR
KNOCK SENSOR
ENGINE OIL TEMPERATURE SENSOR
ELCM
TUMBLE GENERATOR VALVE ACTUATOR LH
TUMBLE GENERATOR VALVE ACTUATOR RH

WI-41847

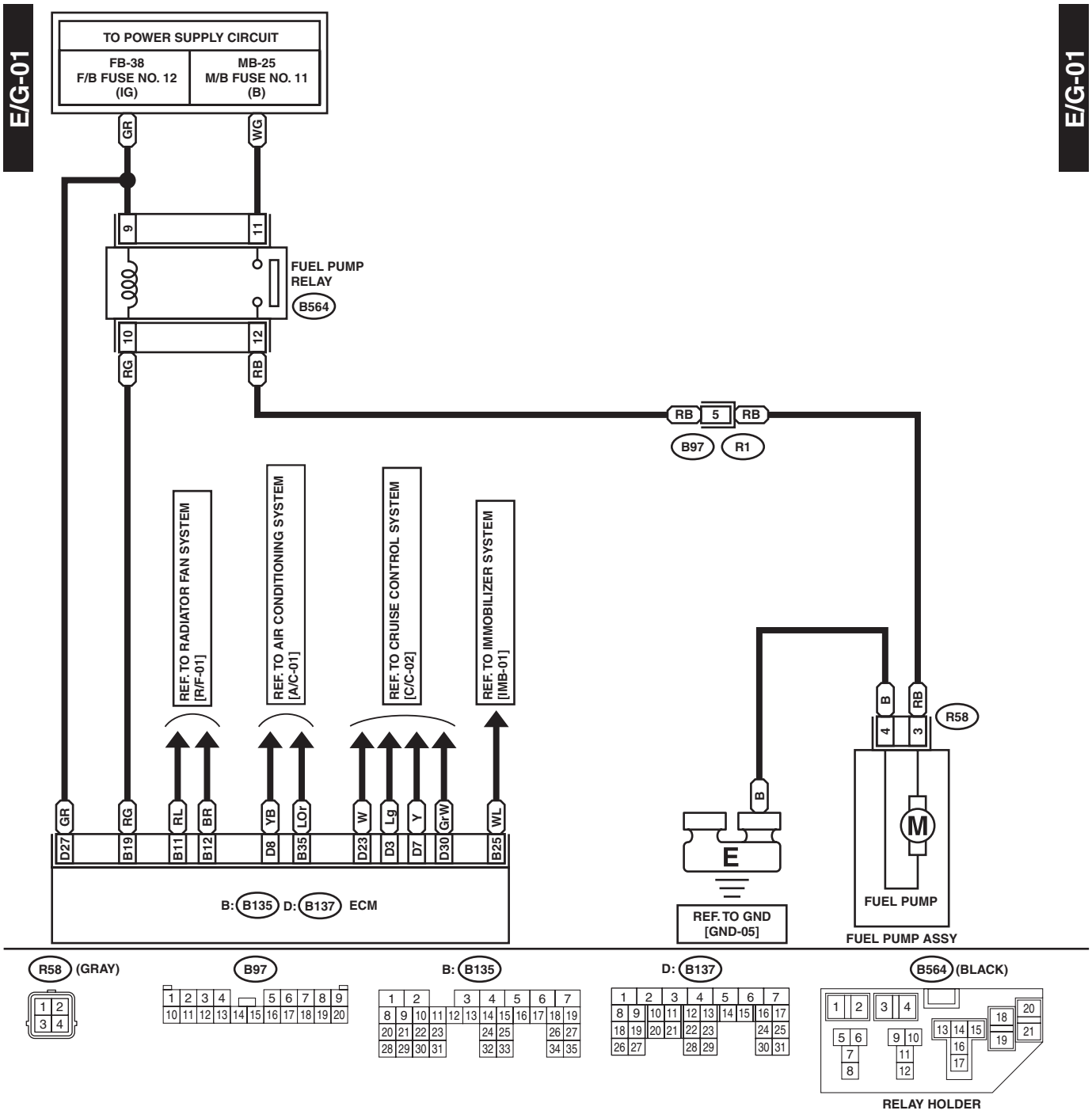
E/G-01
E/G-01
TO POWER SUPPLY CIRCUIT
FB-38
F/B FUSE NO. 12
(IG)
MB-25
M/B FUSE NO. 11
(B)
GR
WG
9
11
FUEL PUMP
RELAY
B564
10
12
RG
RB
RB
5
RB
B97
R1
REF. TO RADIATOR FAN SYSTEM
[R/F-01]
REF. TO AIR CONDITIONING SYSTEM
[A/C-01]
REF. TO CRUISE CONTROL SYSTEM
[C/C-02]
REF. TO IMMOBILIZER SYSTEM
[IMB-01]
B
RB
4
3
R58
GR
RG
RL
BR
YB
LOr
W
Lg
Y
GrW
WL
D27
B19
B11
B12
D8
B35
D23
D3
D7
D30
B25
B
E
M
B: B135 D: B137 ECM
REF. TO GND
[GND-05]
FUEL PUMP
FUEL PUMP ASSY
R58 (GRAY)
B97
B: B135
D: B137
B564 (BLACK)
RELAY HOLDER

WI-41848

E/G-02

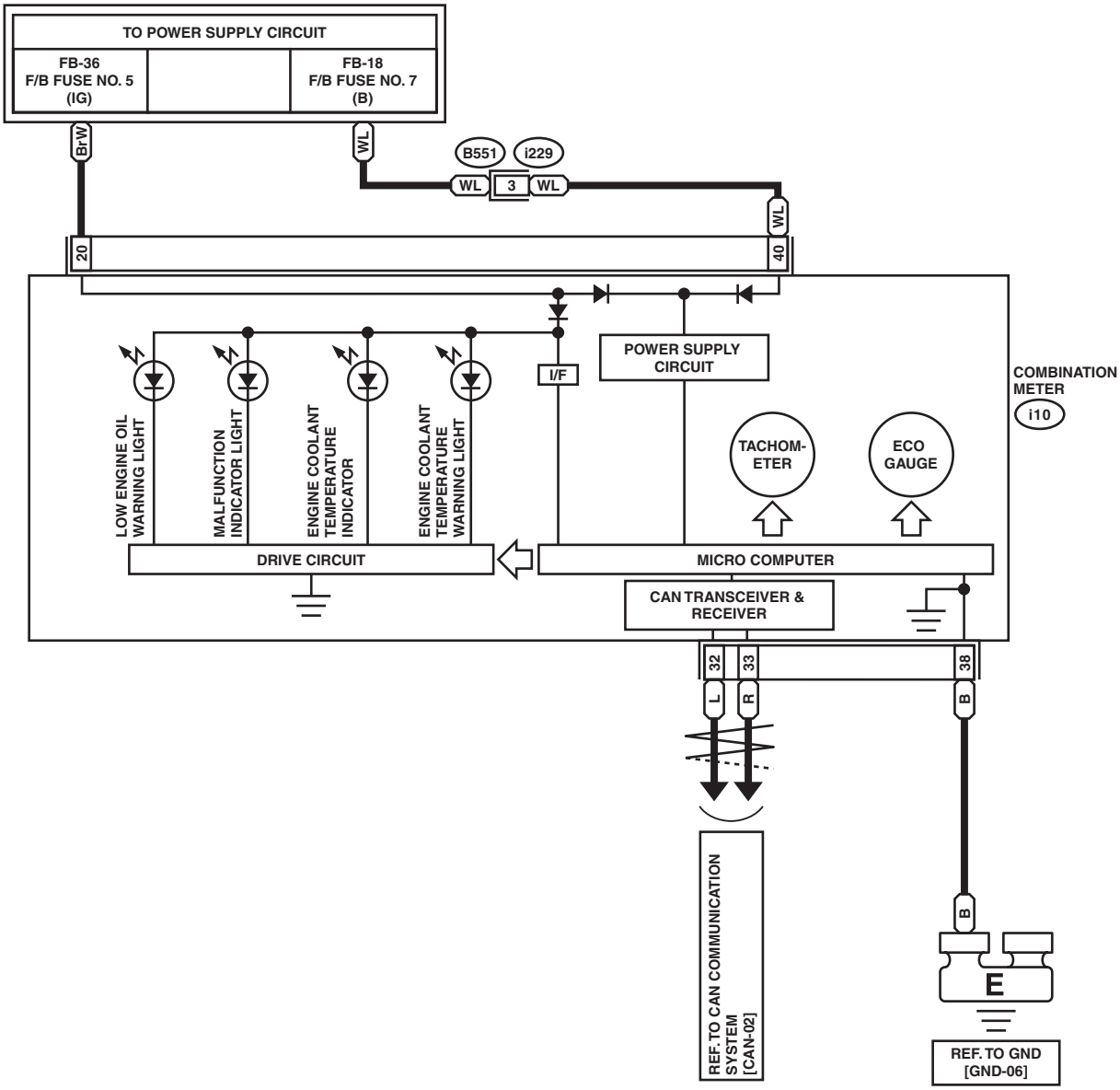

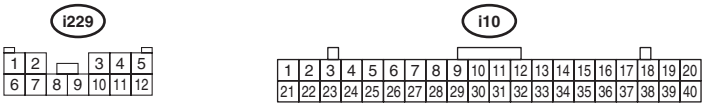

WI-41849

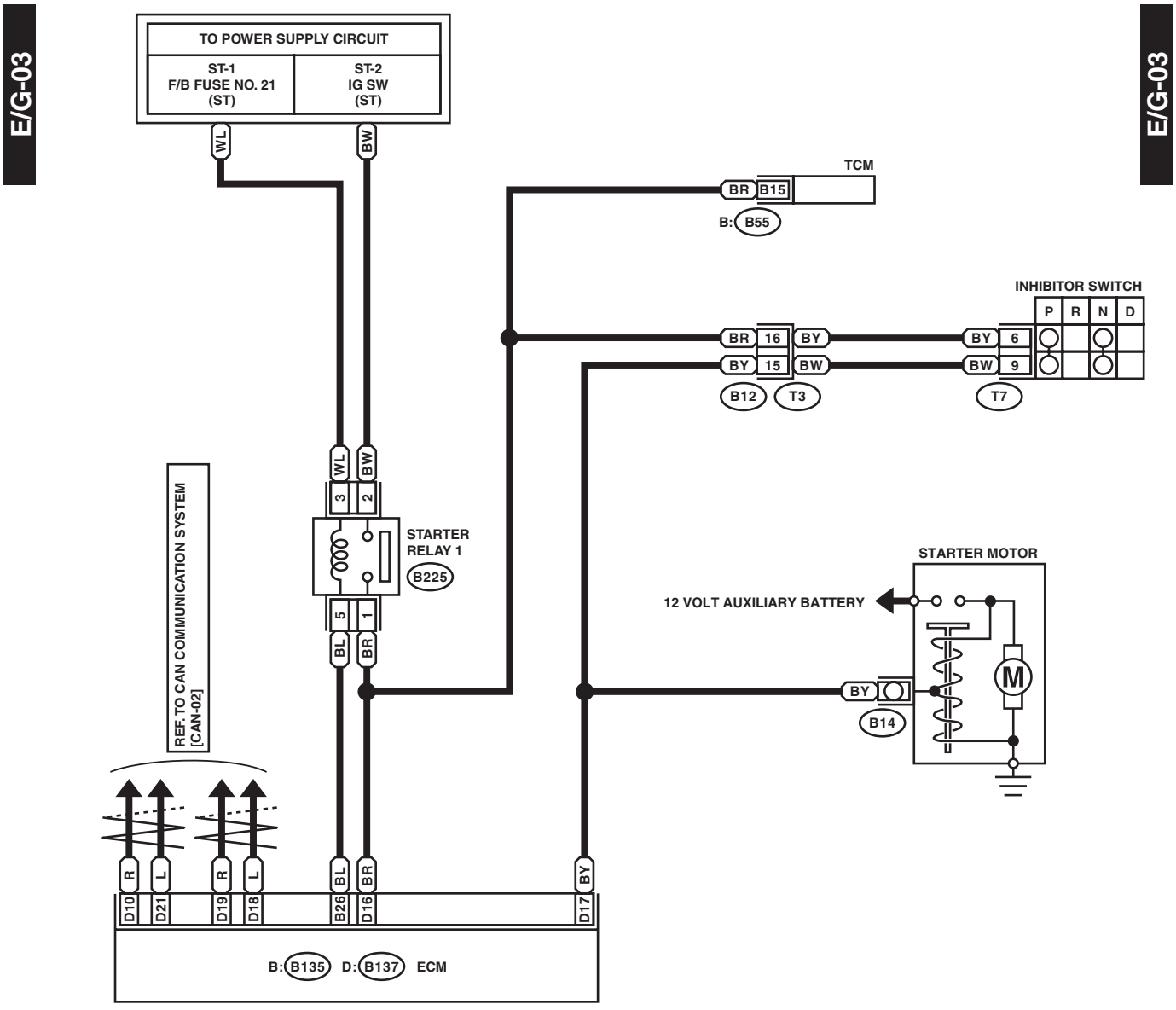
E/G-03
E/G-03
TO POWER SUPPLY CIRCUIT
ST-1
F/B FUSE NO. 21
(ST)
ST-2
IG SW
(ST)
WL
BW
TCM
BR
B15
B: B55
INHIBITOR SWITCH
P
R
N
D
BR
16
BY
BY
6
BY
15
BW
BW
9
B12
T3
T7
REF. TO CAN COMMUNICATION SYSTEM
[CAN-02]
STARTER
RELAY 1
B225
3
2
5
1
BL
BR
STARTER MOTOR
12 VOLT AUXILIARY BATTERY
M
BY
B14
R
L
R
L
BL
BR
BY
D10
D21
D19
D18
B26
D16
D17
B: B135
D: B137
ECM

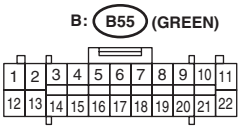
B: B55 (GREEN)

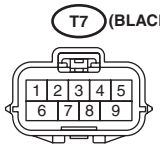
T7 (BLACK)

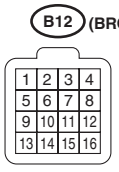
B12 (BROWN)

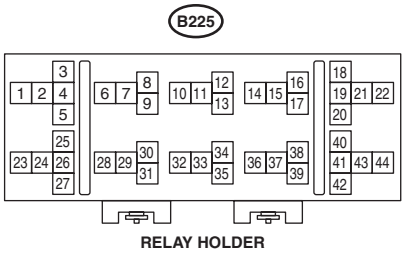
B225
RELAY HOLDER

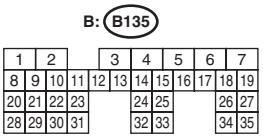
B: B135

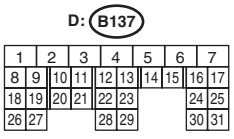
D: B137

WI-41850

E/G-04

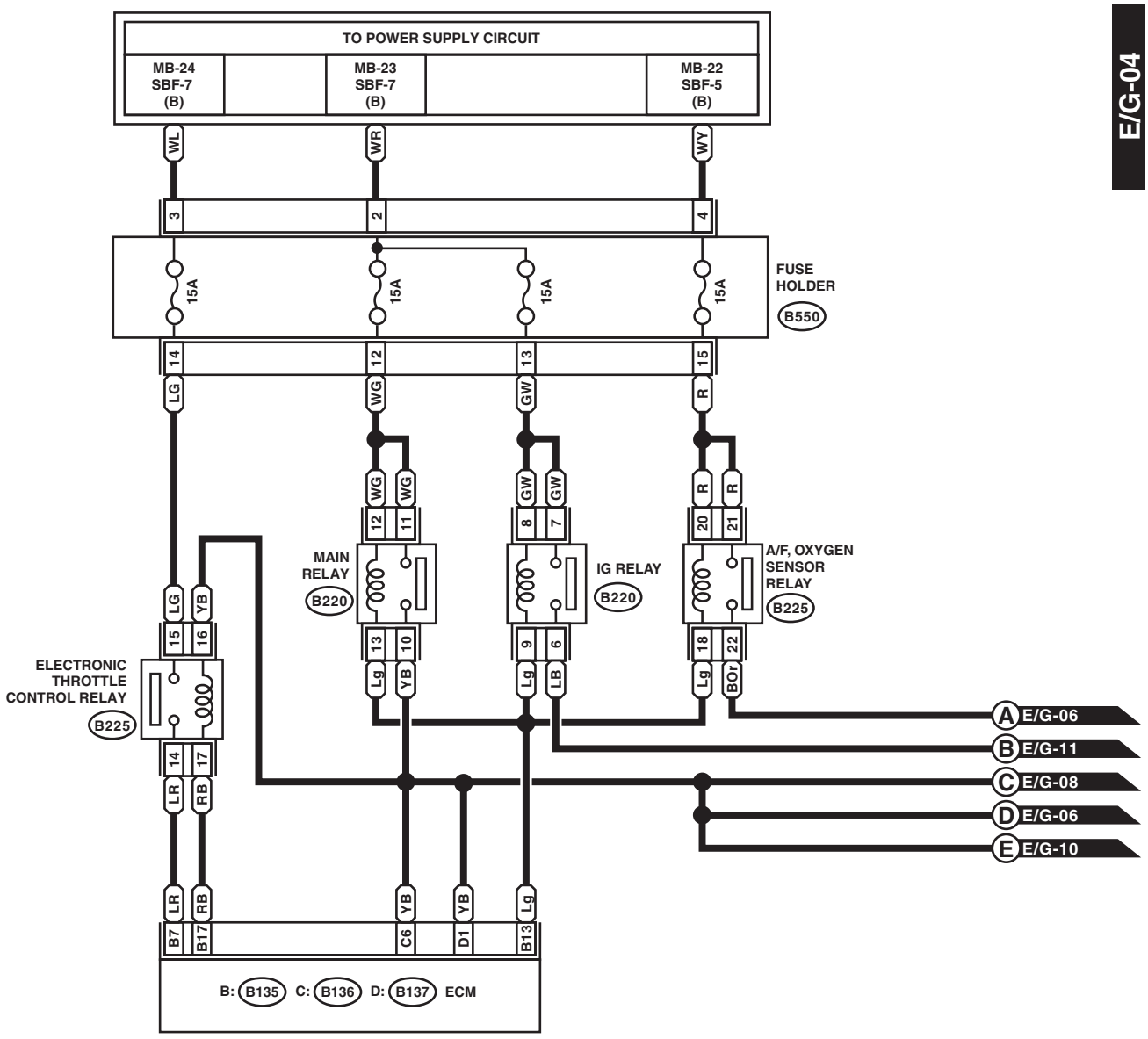

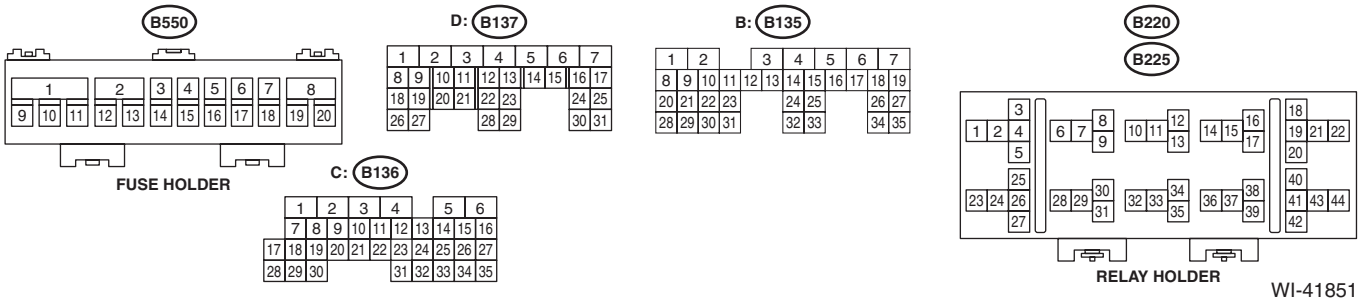

WI-41851

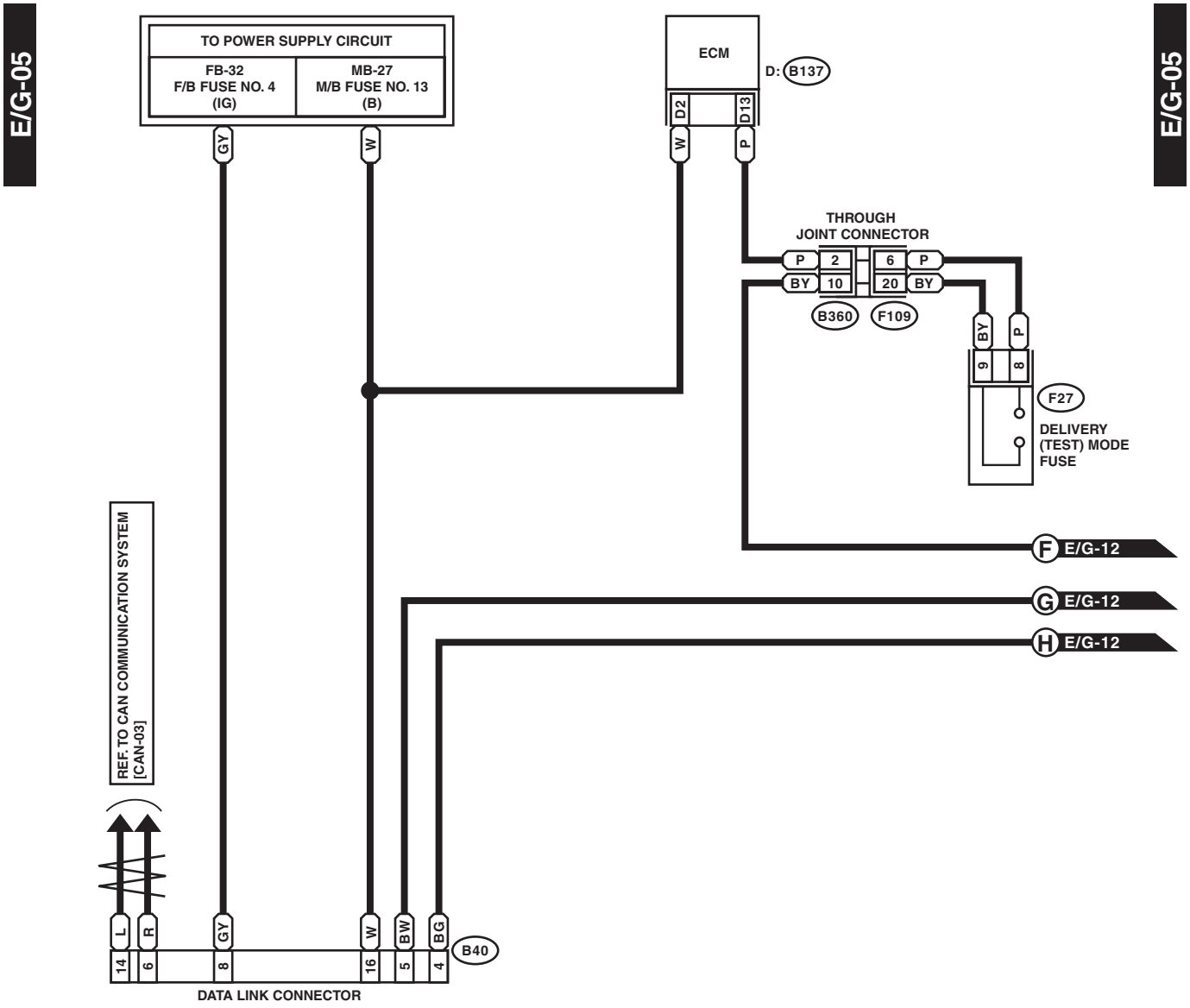
E/G-05
E/G-05
TO POWER SUPPLY CIRCUIT
FB-32
F/B FUSE NO. 4
(IG)
MB-27
M/B FUSE NO. 13
(B)
ECM
D: B137
D2
D13
GY
W
W
P
THROUGH
JOINT CONNECTOR
P 2
BY 10
6 P
20 BY
B360
F109
BY
P
9
8
F27
DELIVERY
(TEST) MODE
FUSE
F E/G-12
G E/G-12
H E/G-12
REF. TO CAN COMMUNICATION SYSTEM
[CAN-03]
L
R
GY
W
BW
BG
B40
14
6
8
16
5
4
DATA LINK CONNECTOR

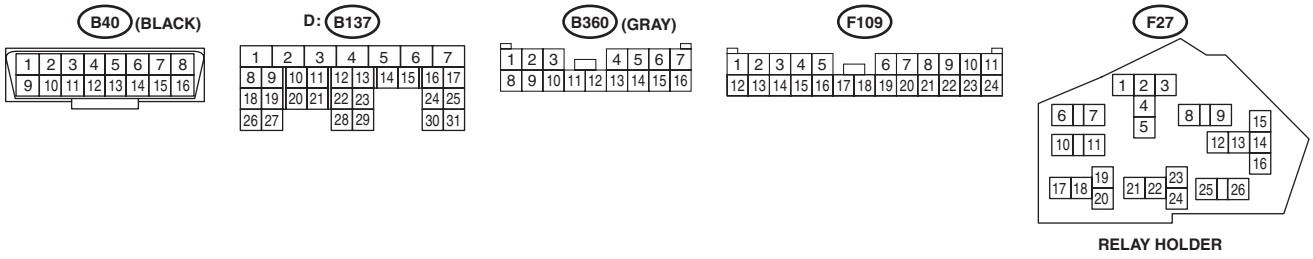
B40 (BLACK)
1 2 3 4 5 6 7 8
9 10 11 12 13 14 15 16
D: B137
1 2 3 4 5 6 7
8 9 10 11 12 13 14 15 16 17
18 19 20 21 22 23 24 25
26 27 28 29 30 31
B360 (GRAY)
1 2 3 4 5 6 7
8 9 10 11 12 13 14 15 16
F109
1 2 3 4 5 6 7 8 9 10 11
12 13 14 15 16 17 18 19 20 21 22 23 24
F27
1 2 3 4 5
6 7 8 9 10 11 12 13 14 15 16 17 18 19 20 21 22 23 24 25 26
RELAY HOLDER

WI-41852

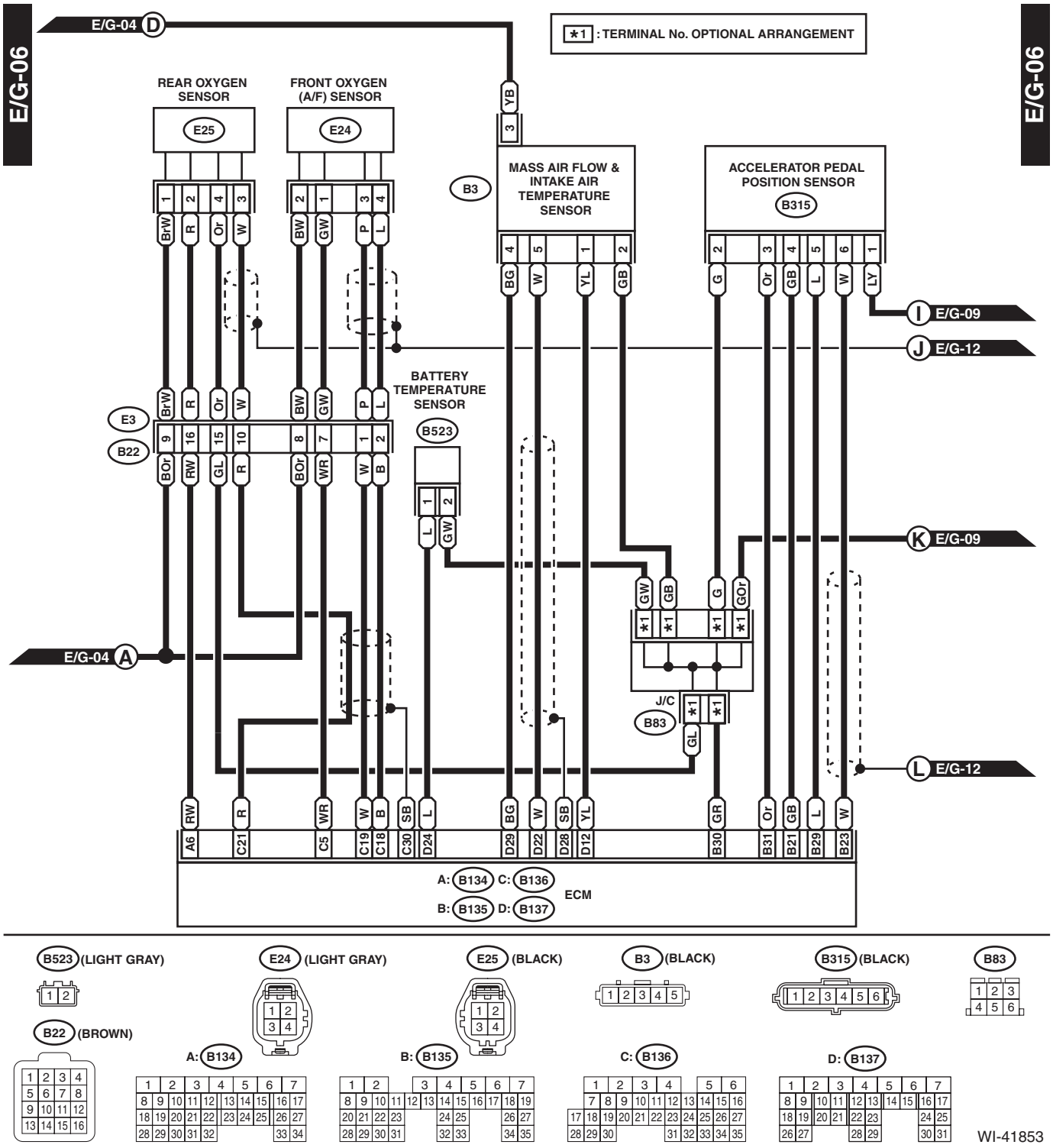
E/G-06
E/G-06
E/G-04 D
*1 : TERMINAL No. OPTIONAL ARRANGEMENT
REAR OXYGEN SENSOR
E25
FRONT OXYGEN (A/F) SENSOR
E24
MASS AIR FLOW & INTAKE AIR TEMPERATURE SENSOR
B3
ACCELERATOR PEDAL POSITION SENSOR
B315
BATTERY TEMPERATURE SENSOR
B523
E3
B22
J/C
B83
I E/G-09
J E/G-12
K E/G-09
L E/G-12
E/G-04 A
A: B134 C: B136
B: B135 D: B137
ECM

B523 (LIGHT GRAY)
E24 (LIGHT GRAY)
E25 (BLACK)
B3 (BLACK)
B315 (BLACK)
B83
B22 (BROWN)
A: B134
B: B135
C: B136
D: B137
WI-41853

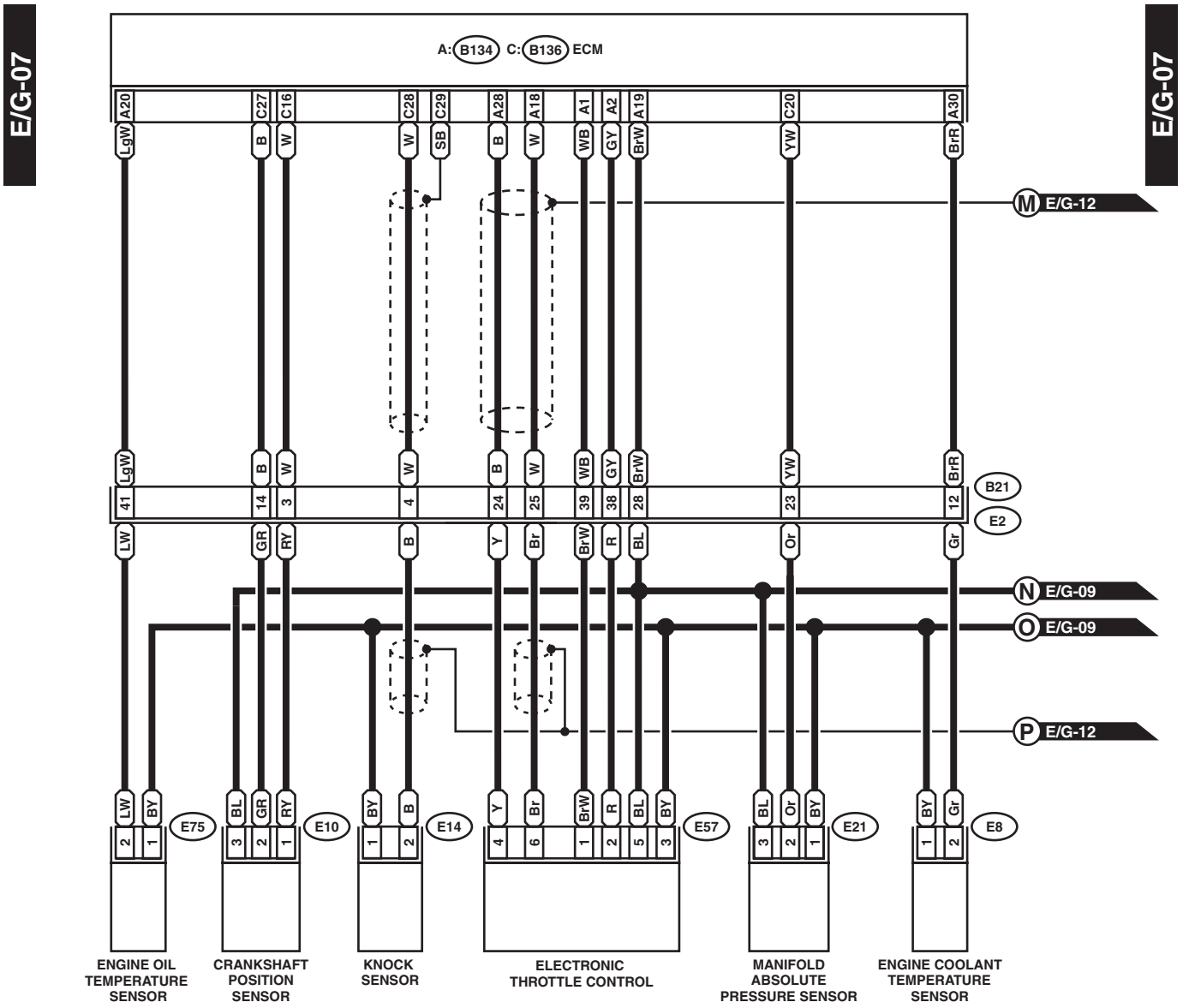
E/G-07
E/G-07
A: B134 C: B136 ECM
A20 C27 C16 C28 C29 A28 A18 A1 A2 A19 C20 A30
LgW B W W SB B W WB GY BrW YW BrR
M E/G-12
41 14 3 4 24 25 39 38 28 23 12
B21
E2
LW GR RY B Y Br BrW R BL Or Gr
N E/G-09
O E/G-09
P E/G-12
LW BY BL GR RY BY B Y Br BrW R BL BY BL Or BY BY Gr
E75 E10 E14 E57 E21 E8
2 1 3 2 1 1 2 4 6 1 2 5 3 3 2 1 1 2
ENGINE OIL TEMPERATURE SENSOR
CRANKSHAFT POSITION SENSOR
KNOCK SENSOR
ELECTRONIC THROTTLE CONTROL
MANIFOLD ABSOLUTE PRESSURE SENSOR
ENGINE COOLANT TEMPERATURE SENSOR

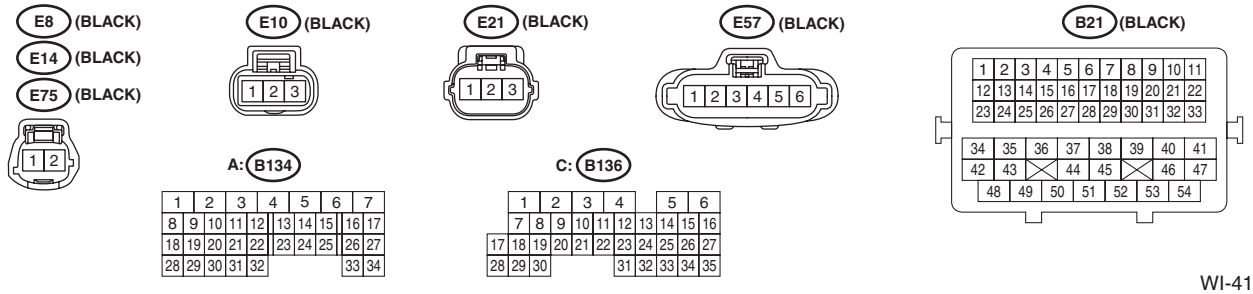
E8 (BLACK)
E14 (BLACK)
E75 (BLACK)
1 2
E10 (BLACK)
1 2 3
E21 (BLACK)
1 2 3
E57 (BLACK)
1 2 3 4 5 6
B21 (BLACK)
1 2 3 4 5 6 7 8 9 10 11
12 13 14 15 16 17 18 19 20 21 22
23 24 25 26 27 28 29 30 31 32 33
34 35 36 37 38 39 40 41
42 43 44 45 46 47
48 49 50 51 52 53 54
A: B134
1 2 3 4 5 6 7
8 9 10 11 12 13 14 15 16 17
18 19 20 21 22 23 24 25 26 27
28 29 30 31 32 33 34
C: B136
1 2 3 4 5 6
7 8 9 10 11 12 13 14 15 16
17 18 19 20 21 22 23 24 25 26 27
28 29 30 31 32 33 34 35

WI-41854

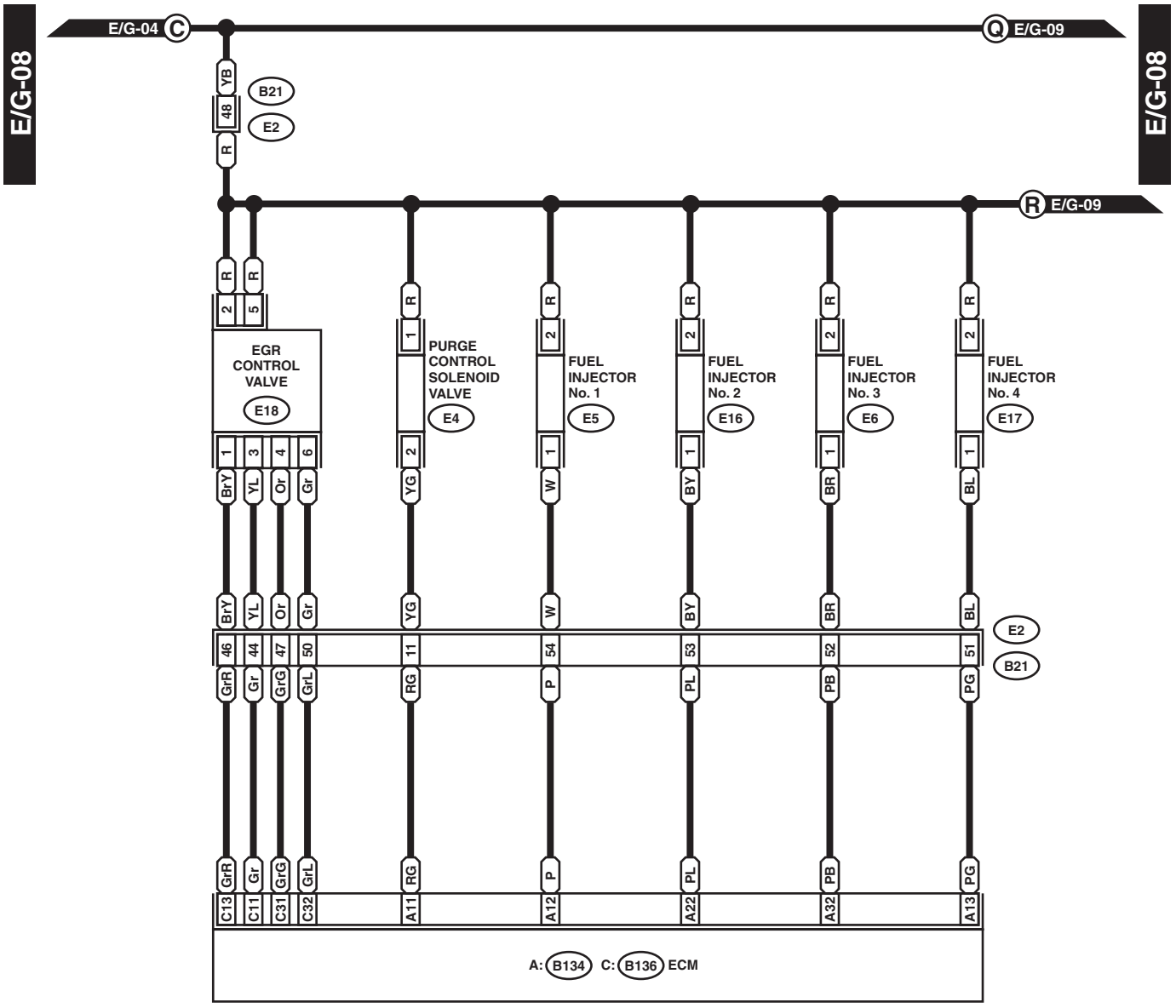

E4 (BLUE)



(DARK GRAY) E5 E16 (DARK GRAY)

(DARK GRAY) E6 E17 (DARK GRAY)



E18 (DARK GRAY)



B21 (BLACK)

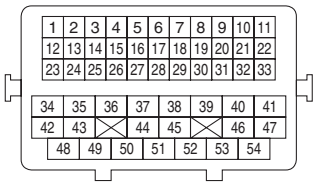

A: B134

1	2	3	4	5	6	7
8	9	10	11	12	13	14	15	16	17
18	19	20	21	22	23	24	25	26	27
28	29	30	31	32				33	34

C: B136

1	2	3	4					5	6					
	7	8	9	10	11	12	13	14	15	16				
17	18	19	20	21	22	23	24	25	26	27				
28	29	30				31	32	33	34	35				

WI-41855

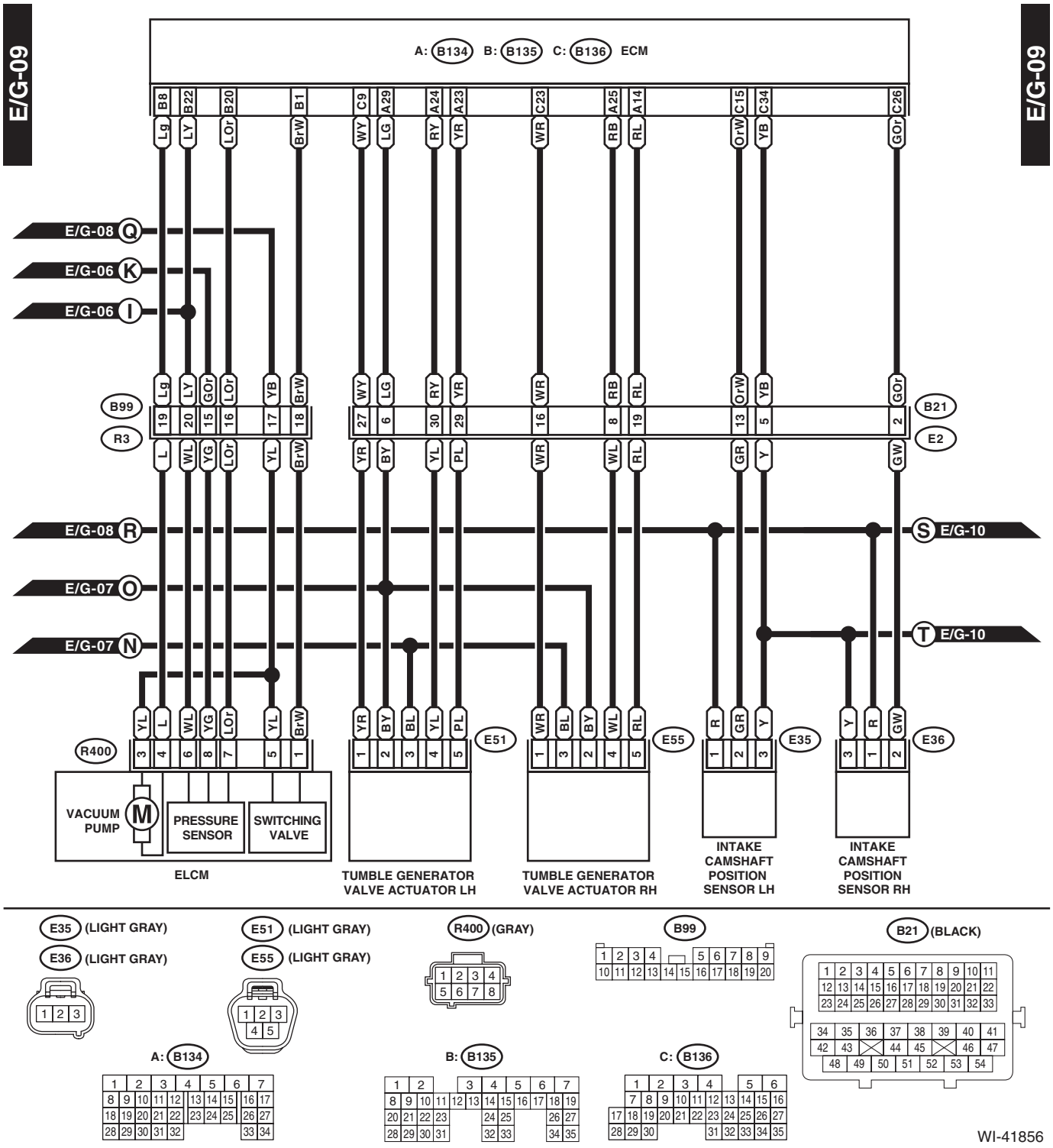
E/G-09
E/G-09
A: B134 B: B135 C: B136 ECM
B8 B22 B20 B1 C9 A29 A24 A23 C23 A25 A14 C15 C34 C26
Lg LY LOr BrW WY LG RY YR WR RB RL OrW YB GOr
E/G-08 Q
E/G-06 K
E/G-06 I
B99
R3
19 20 15 16 17 18
27 6 30 29 16 8 19 13 5 2
B21
E2
L WL YG LOr YL BrW YR BY YL PL WR WL RL GR Y GW
E/G-08 R
E/G-07 O
E/G-07 N
S E/G-10
T E/G-10
R400
3 4 6 8 7 5 1
1 2 3 4 5
E51
1 3 2 4 5
E55
1 2 3
E35
3 1 2
E36
VACUUM PUMP
M
PRESSURE SENSOR
SWITCHING VALVE
ELCM
TUMBLE GENERATOR VALVE ACTUATOR LH
TUMBLE GENERATOR VALVE ACTUATOR RH
INTAKE CAMSHAFT POSITION SENSOR LH
INTAKE CAMSHAFT POSITION SENSOR RH

E35 (LIGHT GRAY)
E36 (LIGHT GRAY)
E51 (LIGHT GRAY)
E55 (LIGHT GRAY)
R400 (GRAY)
B99
B21 (BLACK)
A: B134
B: B135
C: B136
WI-41856

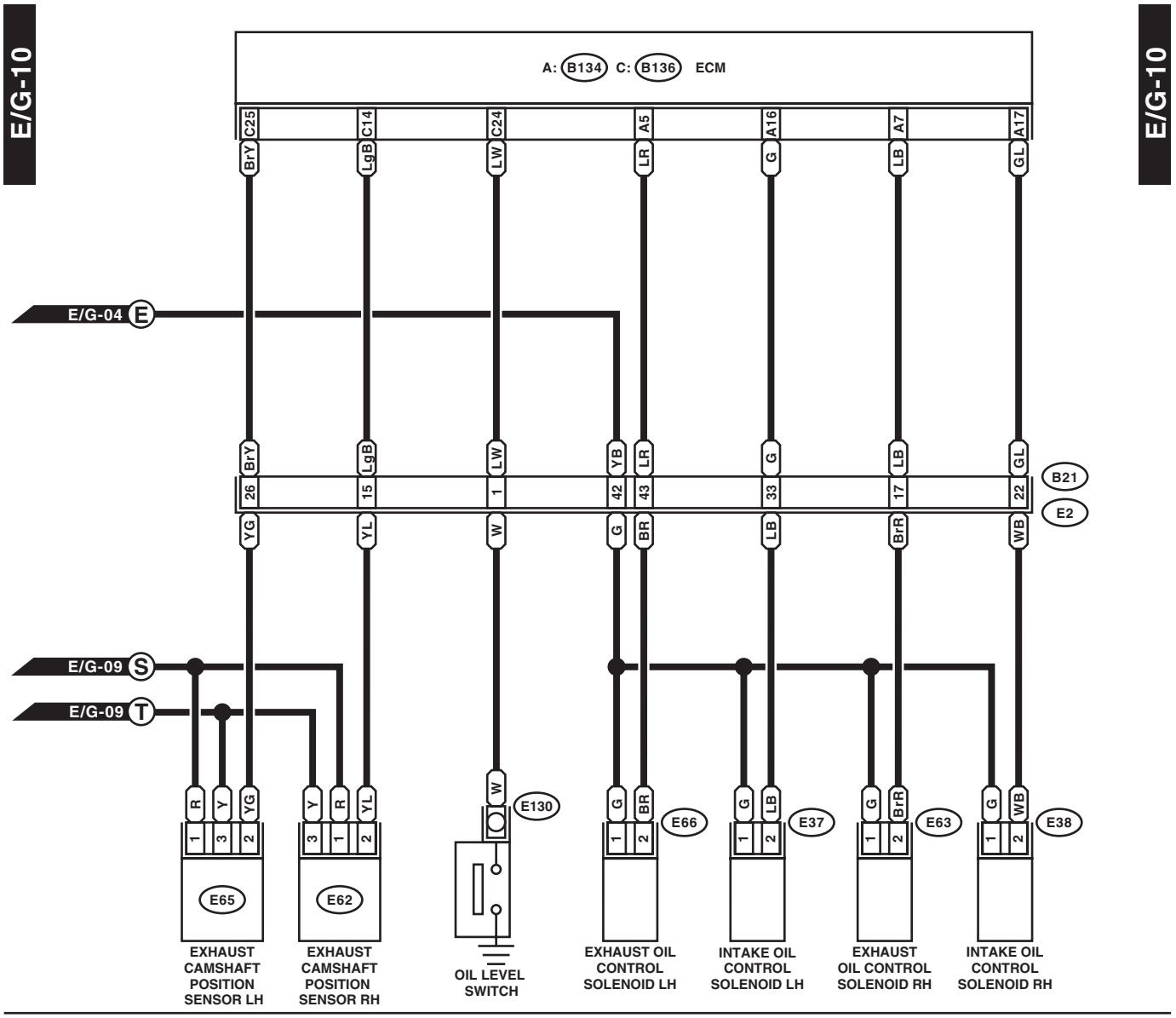
E/G-10
E/G-10
A: B134 C: B136 ECM
C25
C14
C24
A5
A16
A7
A17
BrY
LgB
LW
LR
G
LB
GL
E/G-04 E
BrY
LgB
LW
YB
LR
G
LB
GL
26
15
1
42
43
33
17
22
B21
E2
YG
YL
W
G
BR
LB
BrR
WB
E/G-09 S
E/G-09 T
R
Y
YG
Y
R
YL
W
G
BR
G
LB
G
BrR
G
WB
1
3
2
3
1
2
E130
1
2
E66
1
2
E37
1
2
E63
1
2
E38
E65
E62
EXHAUST CAMSHAFT POSITION SENSOR LH
EXHAUST CAMSHAFT POSITION SENSOR RH
OIL LEVEL SWITCH
EXHAUST OIL CONTROL SOLENOID LH
INTAKE OIL CONTROL SOLENOID LH
EXHAUST OIL CONTROL SOLENOID RH
INTAKE OIL CONTROL SOLENOID RH

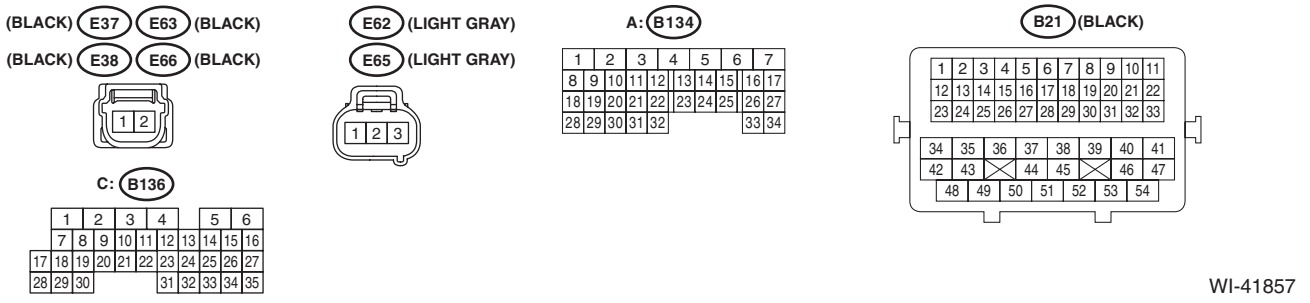
(BLACK) E37 E63 (BLACK)
(BLACK) E38 E66 (BLACK)
1 2
C: B136
1 2 3 4 5 6
7 8 9 10 11 12 13 14 15 16
17 18 19 20 21 22 23 24 25 26 27
28 29 30 31 32 33 34 35
E62 (LIGHT GRAY)
E65 (LIGHT GRAY)
1 2 3
A: B134
1 2 3 4 5 6 7
8 9 10 11 12 13 14 15 16 17
18 19 20 21 22 23 24 25 26 27
28 29 30 31 32 33 34
B21 (BLACK)
1 2 3 4 5 6 7 8 9 10 11
12 13 14 15 16 17 18 19 20 21 22
23 24 25 26 27 28 29 30 31 32 33
34 35 36 37 38 39 40 41
42 43 44 45 46 47
48 49 50 51 52 53 54

WI-41857

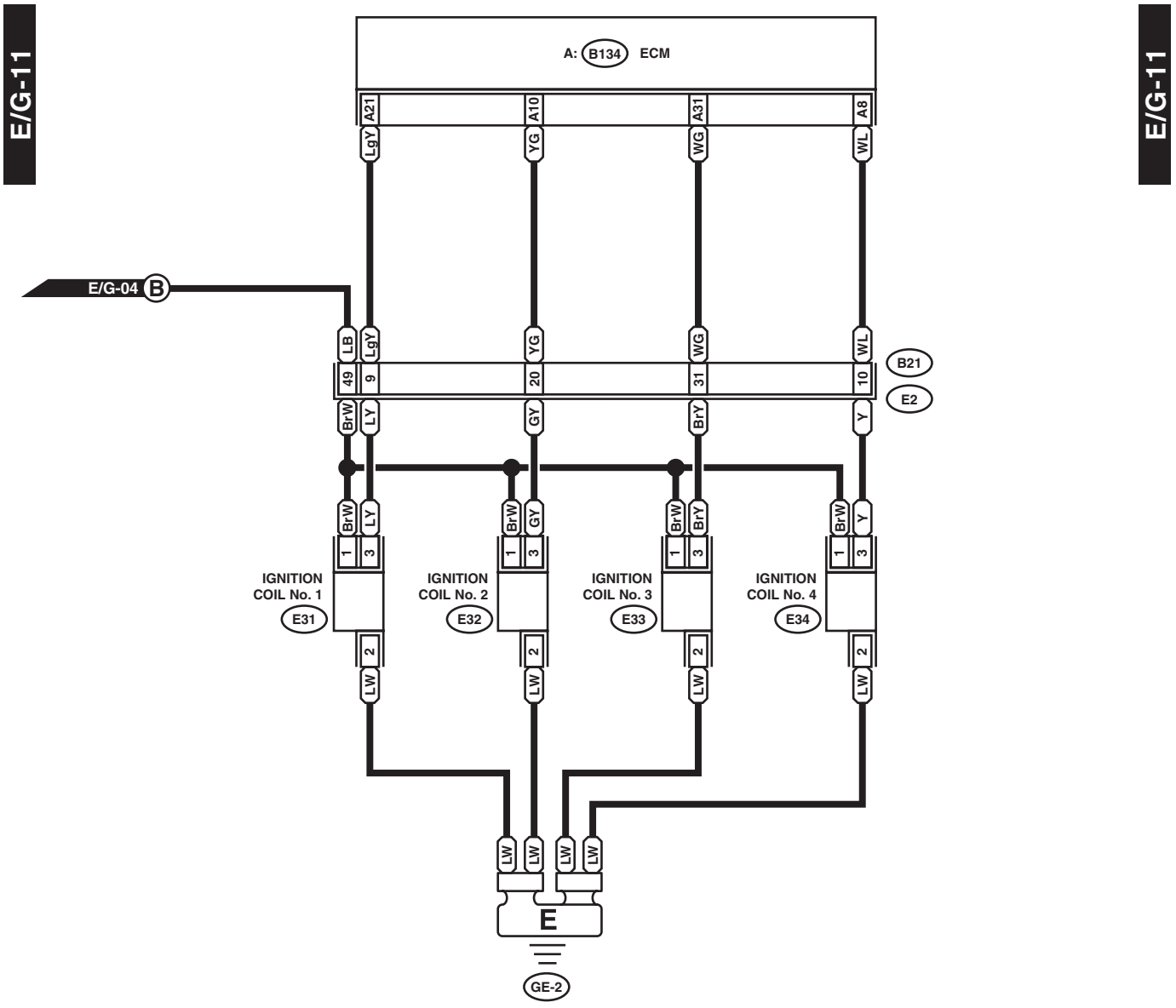
E/G-11
E/G-11
A: B134 ECM
A21
A10
A31
A8
LgY
YG
WG
WL
E/G-04 B
LB
LgY
YG
WG
WL
49
9
20
31
10
B21
E2
BrW
LY
GY
BrY
Y
BrW
LY
BrW
GY
BrW
BrY
BrW
Y
1
3
1
3
1
3
1
3
IGNITION COIL No. 1
E31
IGNITION COIL No. 2
E32
IGNITION COIL No. 3
E33
IGNITION COIL No. 4
E34
2
2
2
2
LW
LW
LW
LW
LW
LW
LW
LW
E
GE-2

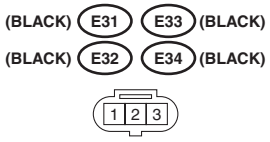
(BLACK) E31 E33 (BLACK)
(BLACK) E32 E34 (BLACK)
1 2 3

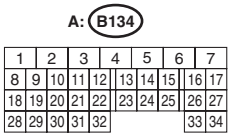
A: B134
1 2 3 4 5 6 7
8 9 10 11 12 13 14 15 16 17
18 19 20 21 22 23 24 25 26 27
28 29 30 31 32 33 34

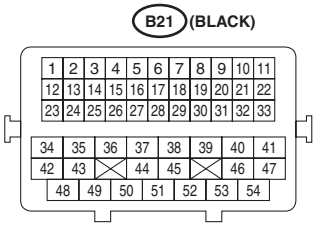
B21 (BLACK)
1 2 3 4 5 6 7 8 9 10 11
12 13 14 15 16 17 18 19 20 21 22
23 24 25 26 27 28 29 30 31 32 33
34 35 36 37 38 39 40 41
42 43 44 45 46 47
48 49 50 51 52 53 54

WI-41858

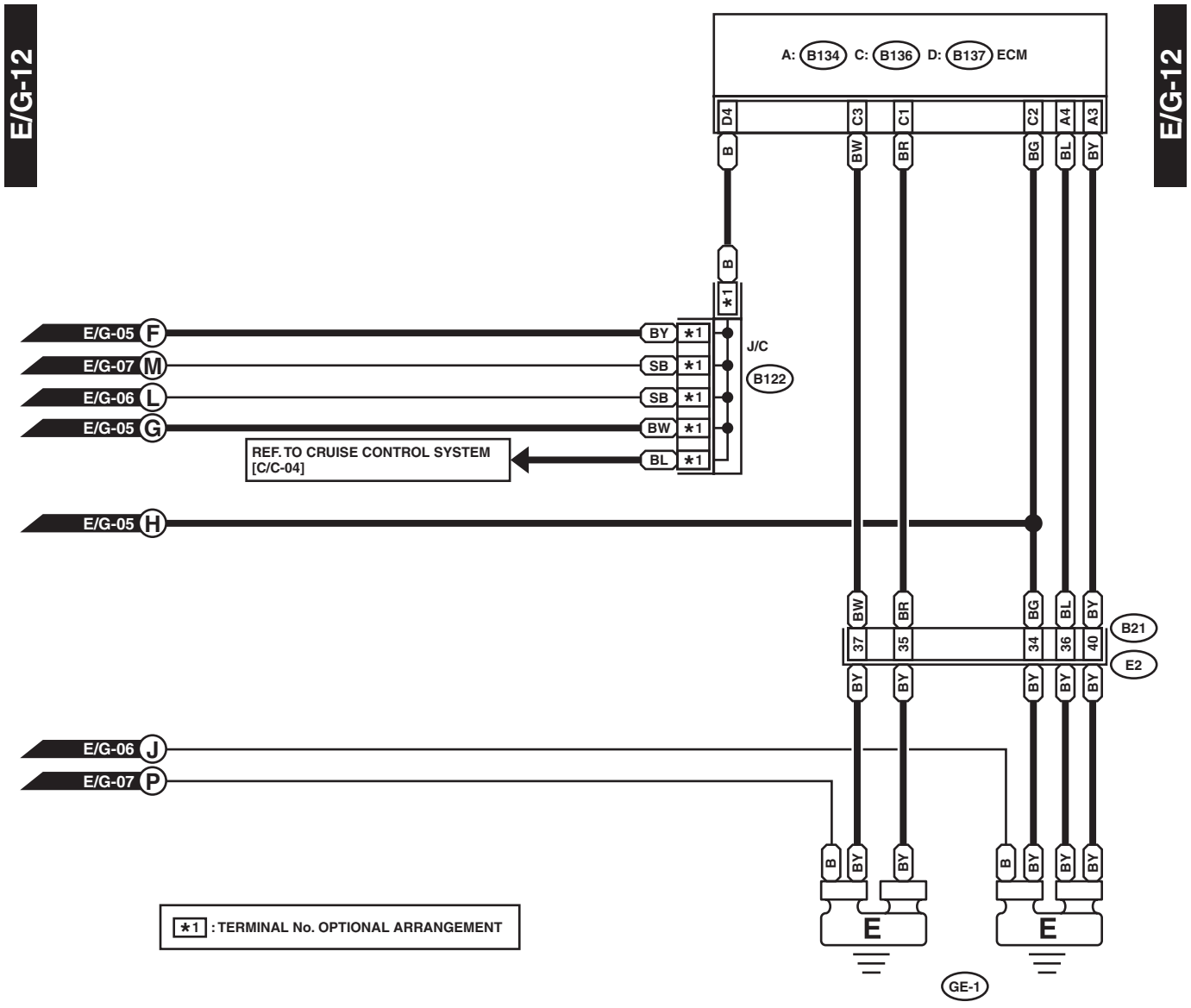
E/G-12
E/G-12
A: B134 C: B136 D: B137 ECM
D4
C3
C1
C2
A4
A3
B
BW
BR
BG
BL
BY
*1
J/C
B122
E/G-05 F
E/G-07 M
E/G-06 L
E/G-05 G
E/G-05 H
E/G-06 J
E/G-07 P
SB
REF. TO CRUISE CONTROL SYSTEM [C/C-04]
37
35
34
36
40
B21
E2
*1 : TERMINAL No. OPTIONAL ARRANGEMENT
E
GE-1

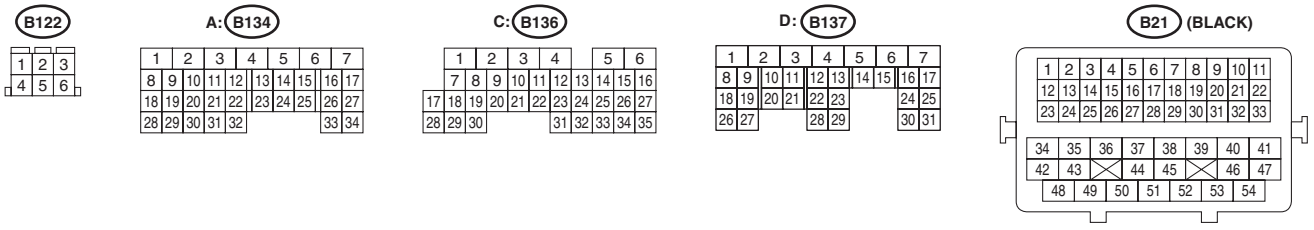
B122
A: B134
C: B136
D: B137
B21 (BLACK)

WI-41859

2. WITH PUSH BUTTON START

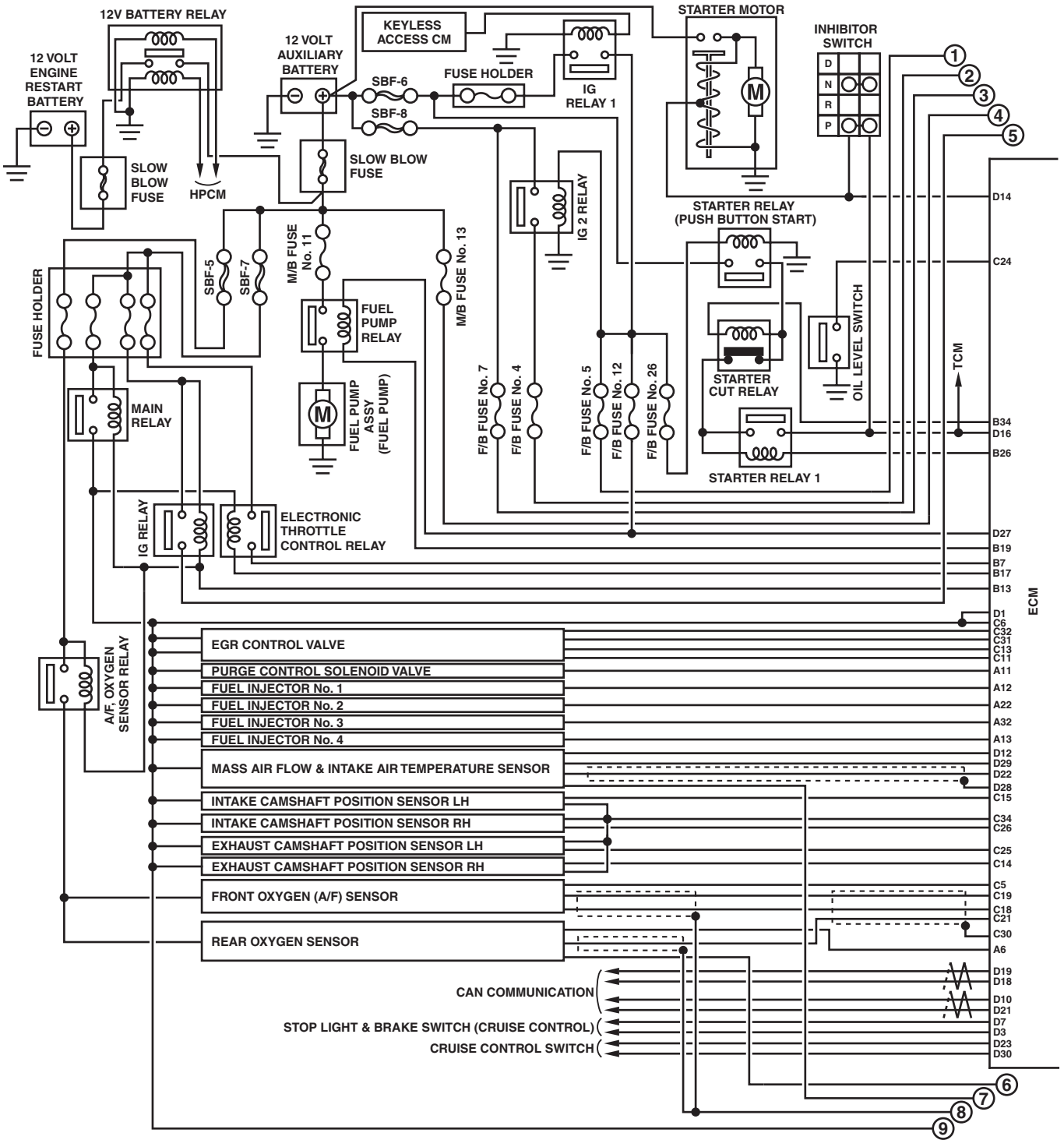

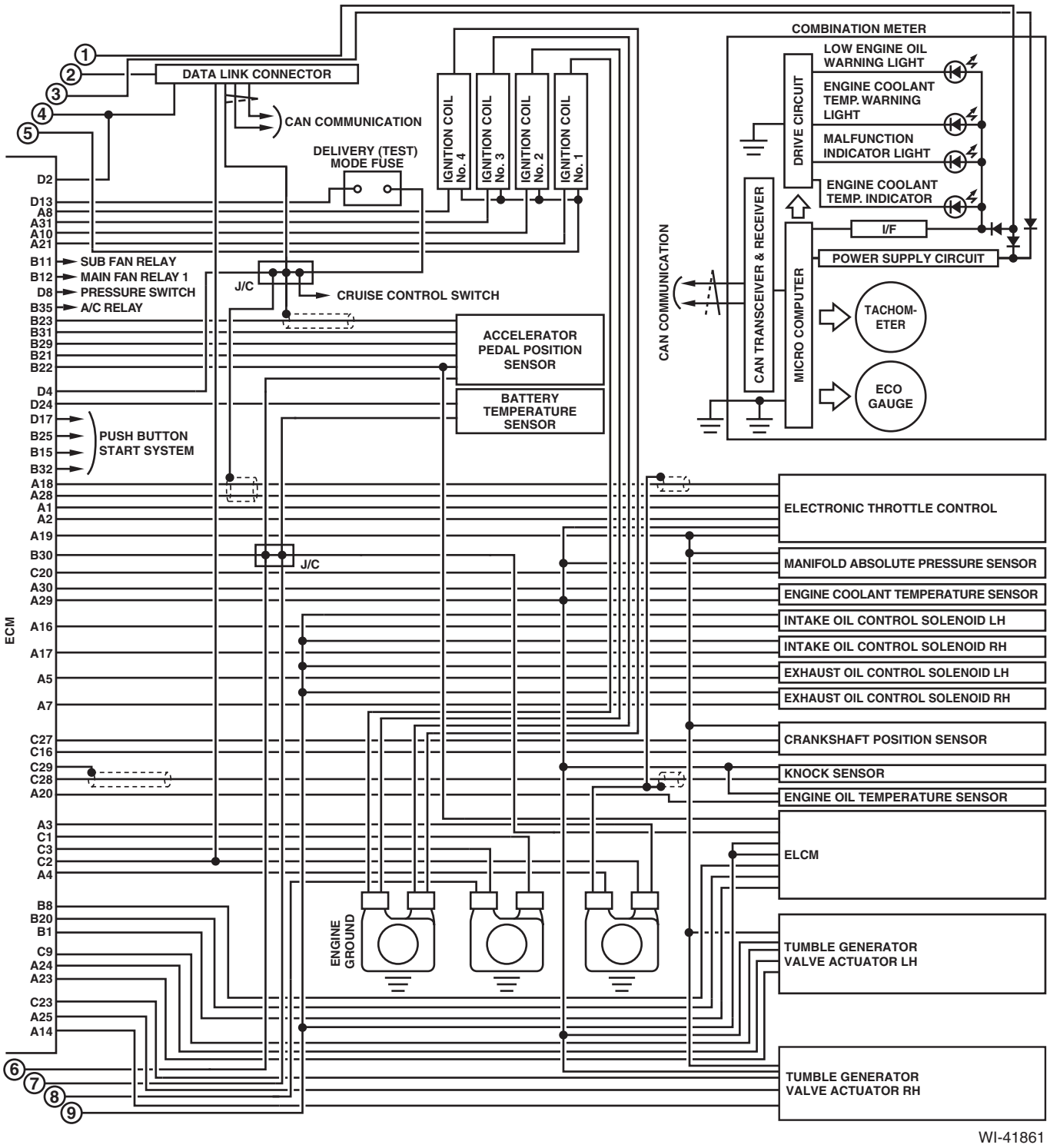
COMBINATION METER
LOW ENGINE OIL WARNING LIGHT
ENGINE COOLANT TEMP. WARNING LIGHT
MALFUNCTION INDICATOR LIGHT
ENGINE COOLANT TEMP. INDICATOR
DRIVE CIRCUIT
I/F
POWER SUPPLY CIRCUIT
TACHOM-ETER
ECO GAUGE
CAN TRANSCEIVER & RECEIVER
MICRO COMPUTER
CAN COMMUNICATION
DATA LINK CONNECTOR
CAN COMMUNICATION
DELIVERY (TEST) MODE FUSE
IGNITION COIL No. 4
IGNITION COIL No. 3
IGNITION COIL No. 2
IGNITION COIL No. 1
ECM
D2
D13
A8
A31
A10
A21
B11 SUB FAN RELAY
B12 MAIN FAN RELAY 1
D8 PRESSURE SWITCH
B35 A/C RELAY
J/C
CRUISE CONTROL SWITCH
B23
B31
B29
B21
B22
ACCELERATOR PEDAL POSITION SENSOR
D4
D24
BATTERY TEMPERATURE SENSOR
D17
B25
B15
B32
PUSH BUTTON START SYSTEM
A18
A28
A1
A2
A19
B30
J/C
C20
A30
A29
A16
A17
A5
A7
C27
C16
C29
C28
A20
A3
C1
C3
C2
A4
B8
B20
B1
C9
A24
A23
C23
A25
A14
ENGINE GROUND
ELECTRONIC THROTTLE CONTROL
MANIFOLD ABSOLUTE PRESSURE SENSOR
ENGINE COOLANT TEMPERATURE SENSOR
INTAKE OIL CONTROL SOLENOID LH
INTAKE OIL CONTROL SOLENOID RH
EXHAUST OIL CONTROL SOLENOID LH
EXHAUST OIL CONTROL SOLENOID RH
CRANKSHAFT POSITION SENSOR
KNOCK SENSOR
ENGINE OIL TEMPERATURE SENSOR
ELCM
TUMBLE GENERATOR VALVE ACTUATOR LH
TUMBLE GENERATOR VALVE ACTUATOR RH
1
2
3
4
5
6
7
8
9

WI-41861

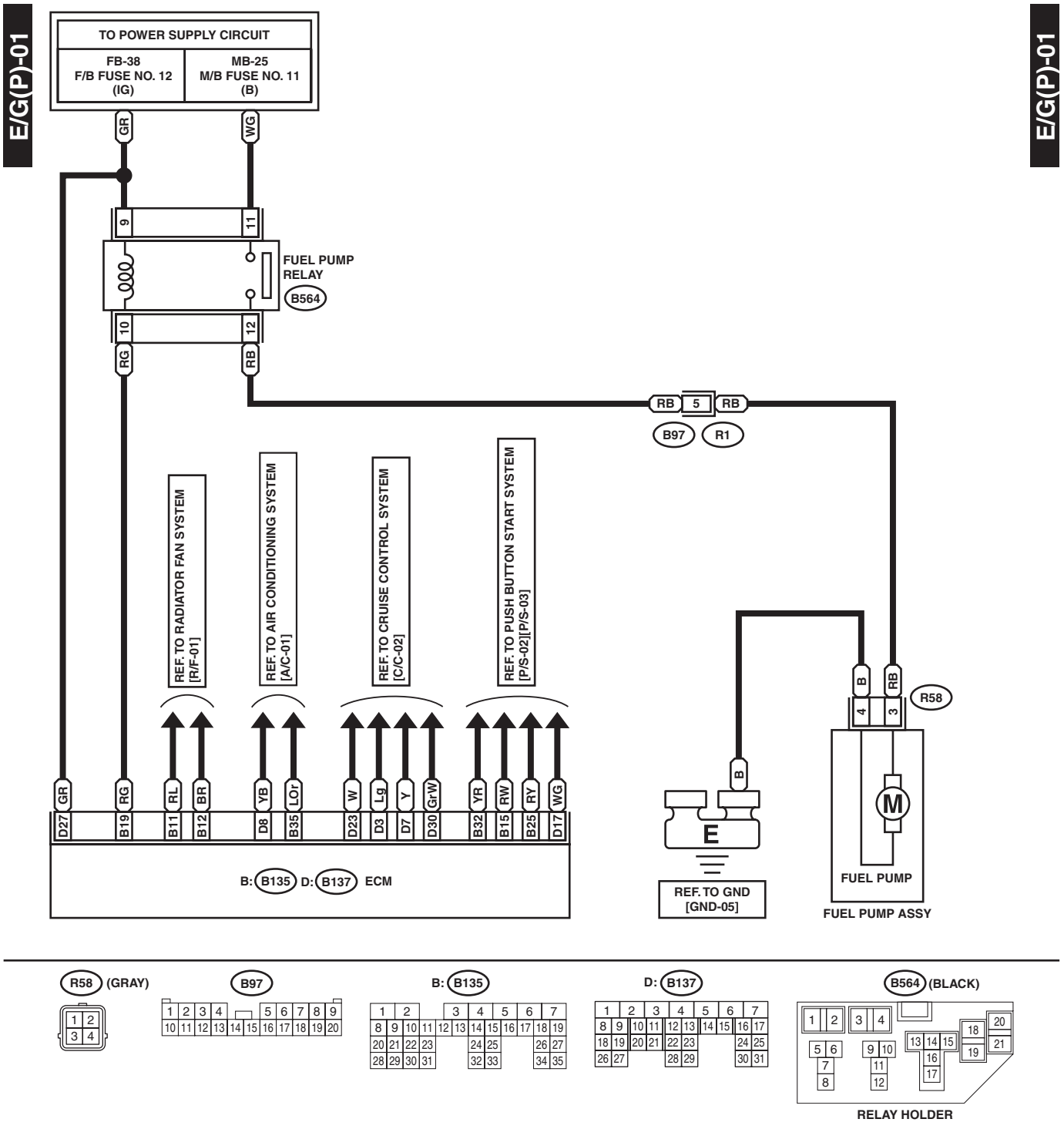
E/G(P)-01
E/G(P)-01
TO POWER SUPPLY CIRCUIT
FB-38
F/B FUSE NO. 12
(IG)
MB-25
M/B FUSE NO. 11
(B)
GR
WG
9
11
FUEL PUMP
RELAY
B564
10
12
RG
RB
RB
5
RB
B97
R1
REF. TO RADIATOR FAN SYSTEM
[R/F-01]
REF. TO AIR CONDITIONING SYSTEM
[A/C-01]
REF. TO CRUISE CONTROL SYSTEM
[C/C-02]
REF. TO PUSH BUTTON START SYSTEM
[P/S-02][P/S-03]
B
RB
4
3
R58
GR
RG
RL
BR
YB
LOr
W
Lg
Y
GrW
YR
RW
RY
WG
D27
B19
B11
B12
D8
B35
D23
D3
D7
D30
B32
B15
B25
D17
B
E
M
B: B135 D: B137 ECM
REF. TO GND
[GND-05]
FUEL PUMP
FUEL PUMP ASSY

R58 (GRAY)
B97
B: B135
D: B137
B564 (BLACK)
RELAY HOLDER

WI-41862

E/G(P)-02

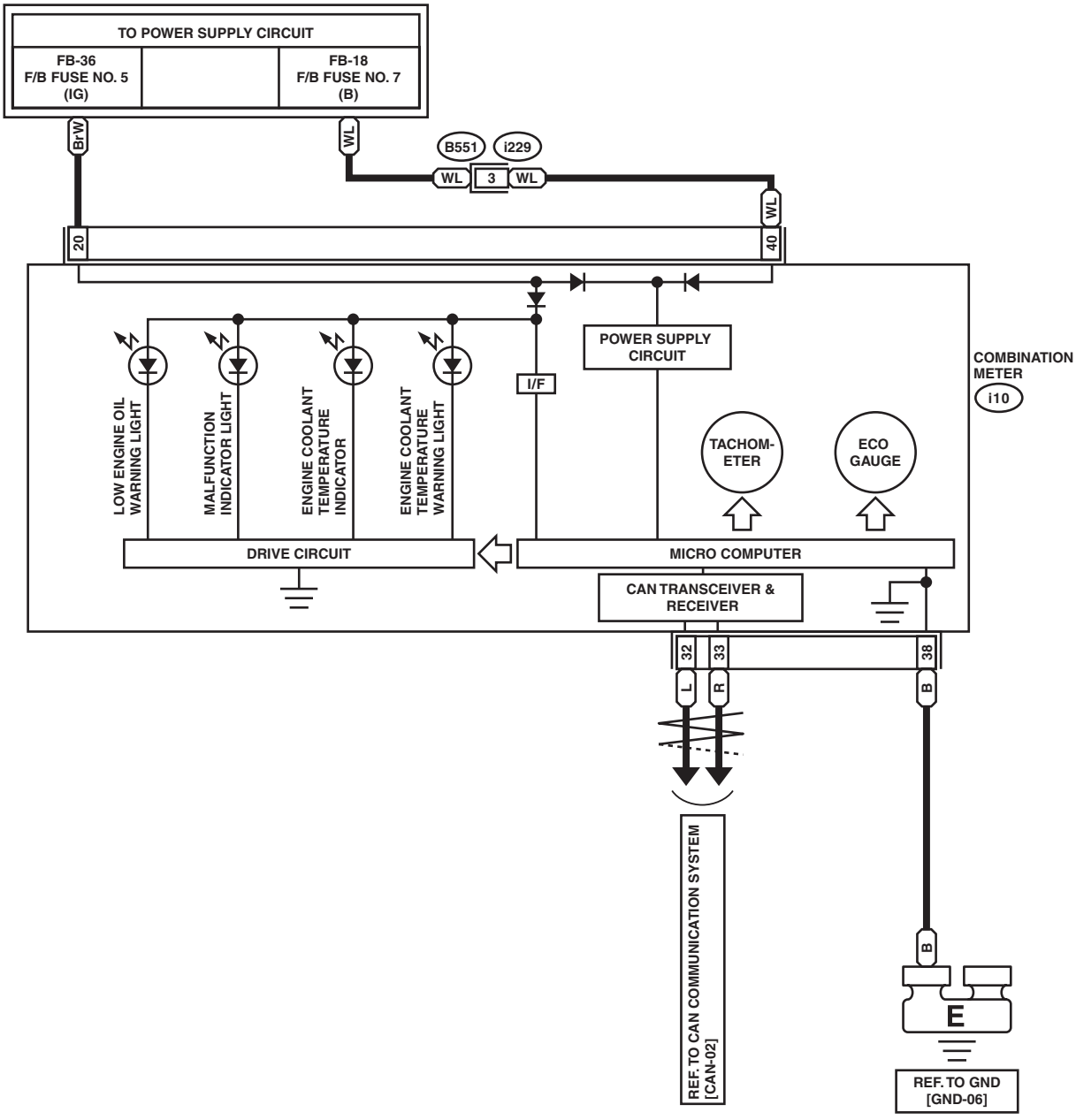

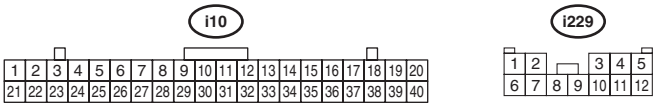

WI-41863

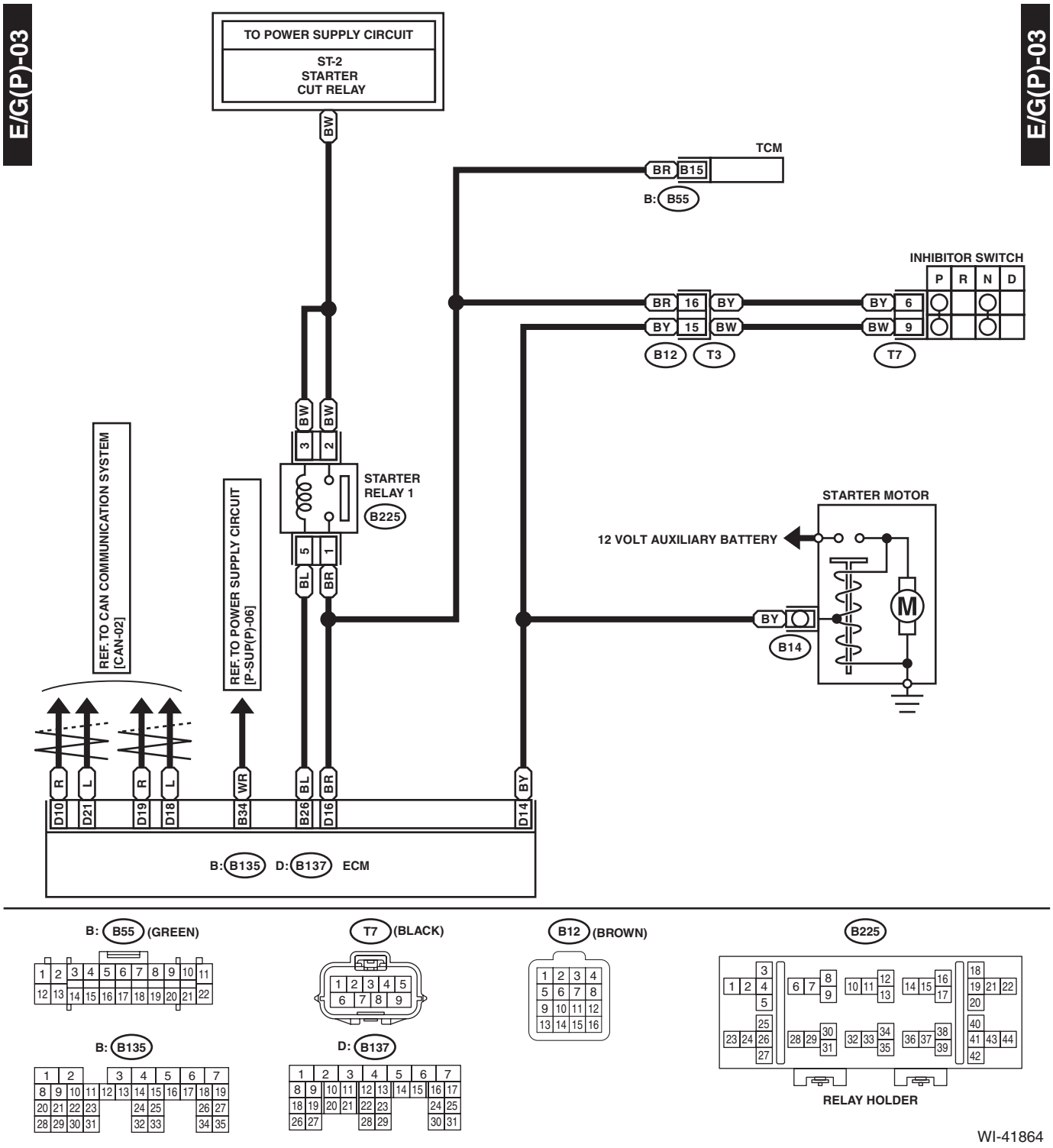
E/G(P)-03
E/G(P)-03
TO POWER SUPPLY CIRCUIT
ST-2
STARTER
CUT RELAY
BW
TCM
BR B15
B: B55
INHIBITOR SWITCH
P R N D
BR 16 BY
BY 15 BW
BY 6
BW 9
B12 T3
T7
BW BW
3 2
STARTER
RELAY 1
B225
5 1
BL BR
STARTER MOTOR
12 VOLT AUXILIARY BATTERY
BY
B14
M
REF. TO CAN COMMUNICATION SYSTEM
[CAN-02]
REF. TO POWER SUPPLY CIRCUIT
[P-SUP(P)-06]
R L R L WR BL BR BY
D10 D21 D19 D18 B34 B26 D16 D14
B: B135 D: B137 ECM

B: B55 (GREEN)
T7 (BLACK)
B12 (BROWN)
B225
B: B135
D: B137
RELAY HOLDER

WI-41864

E/G(P)-04

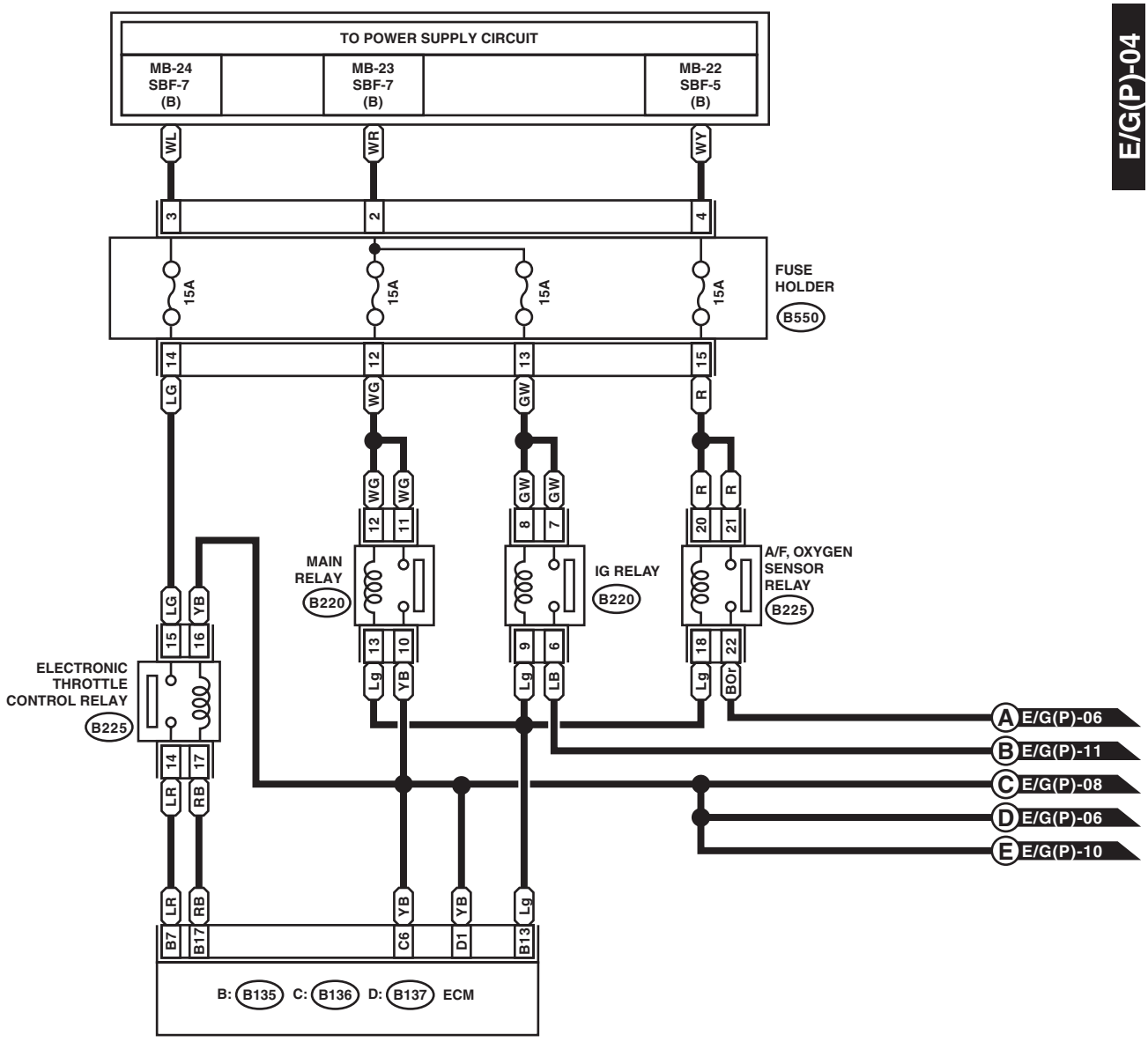

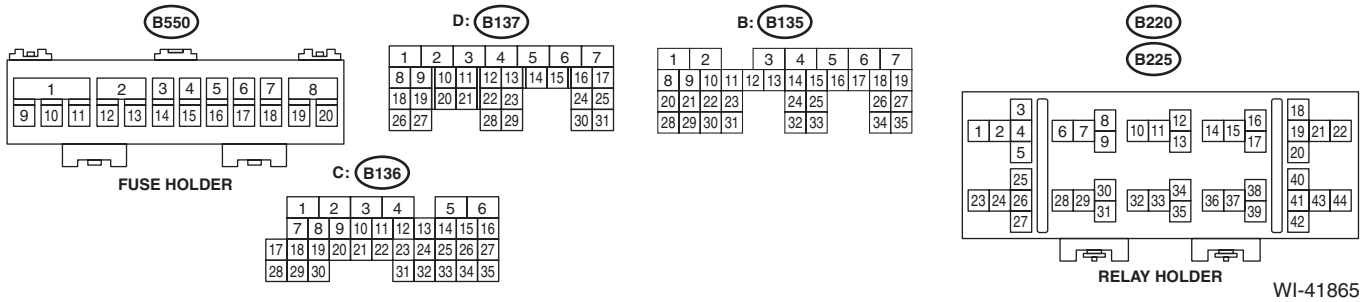

WI-41865

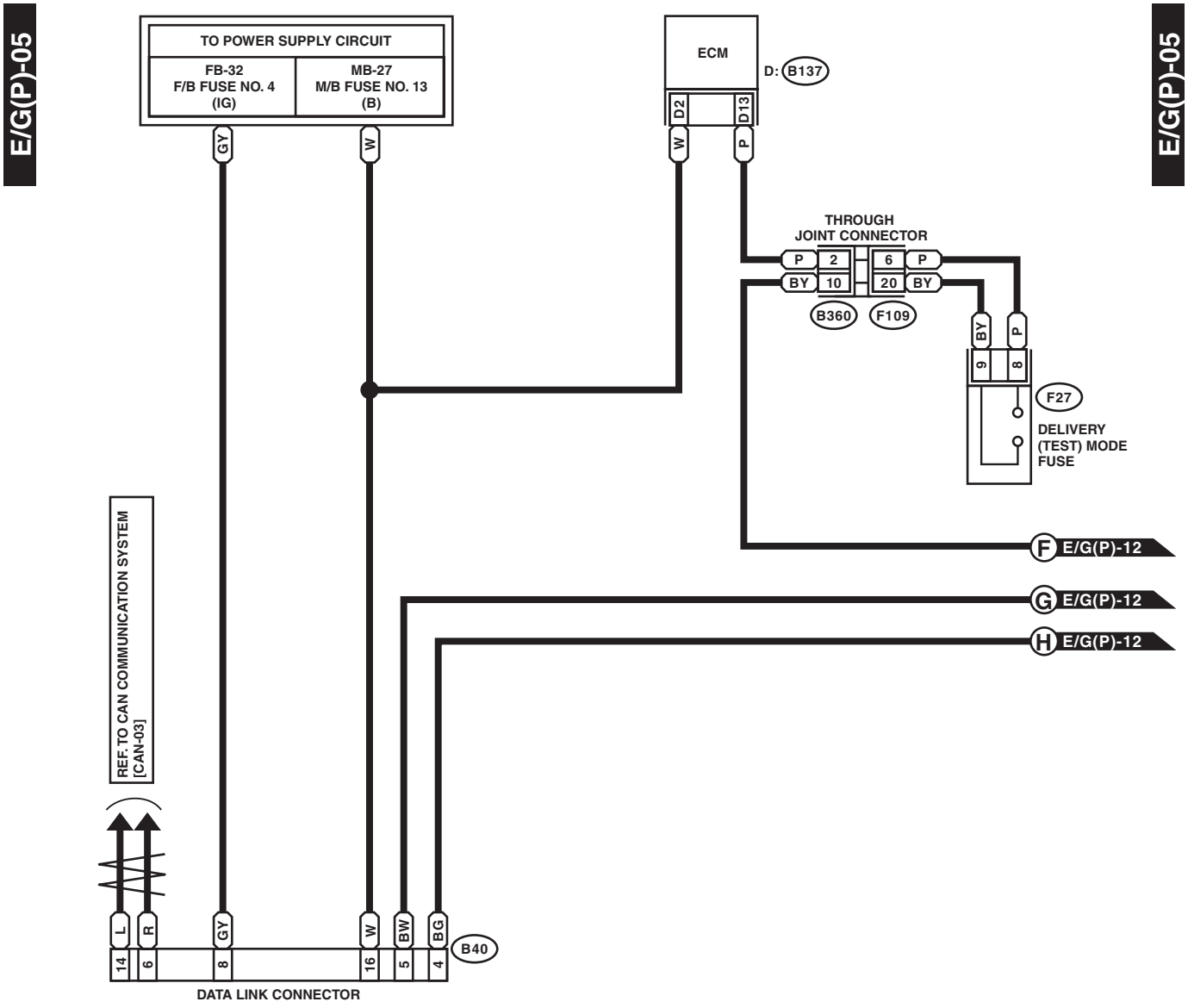
E/G(P)-05
E/G(P)-05
TO POWER SUPPLY CIRCUIT
FB-32
F/B FUSE NO. 4
(IG)
MB-27
M/B FUSE NO. 13
(B)
ECM
D: B137
D2
D13
GY
W
W
P
THROUGH
JOINT CONNECTOR
P
2
6
P
BY
10
20
BY
B360
F109
BY
P
9
8
F27
DELIVERY
(TEST) MODE
FUSE
F E/G(P)-12
G E/G(P)-12
H E/G(P)-12
REF. TO CAN COMMUNICATION SYSTEM
[CAN-03]
L
R
GY
W
BW
BG
B40
14
6
8
16
5
4
DATA LINK CONNECTOR

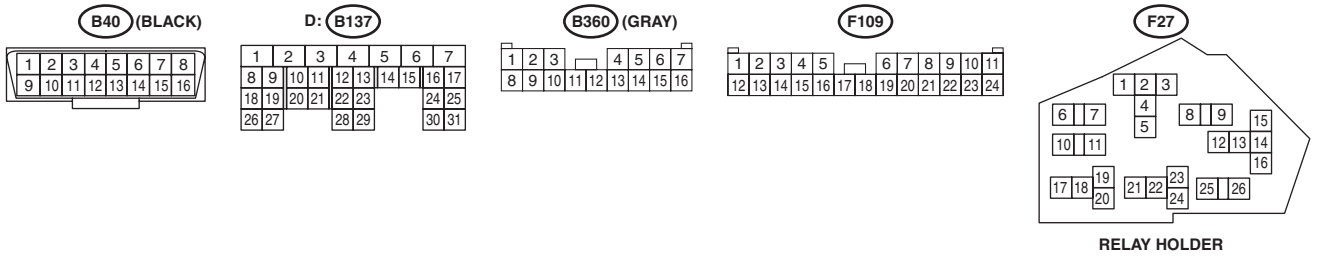
B40 (BLACK)
D: B137
B360 (GRAY)
F109
F27
RELAY HOLDER

WI-41866

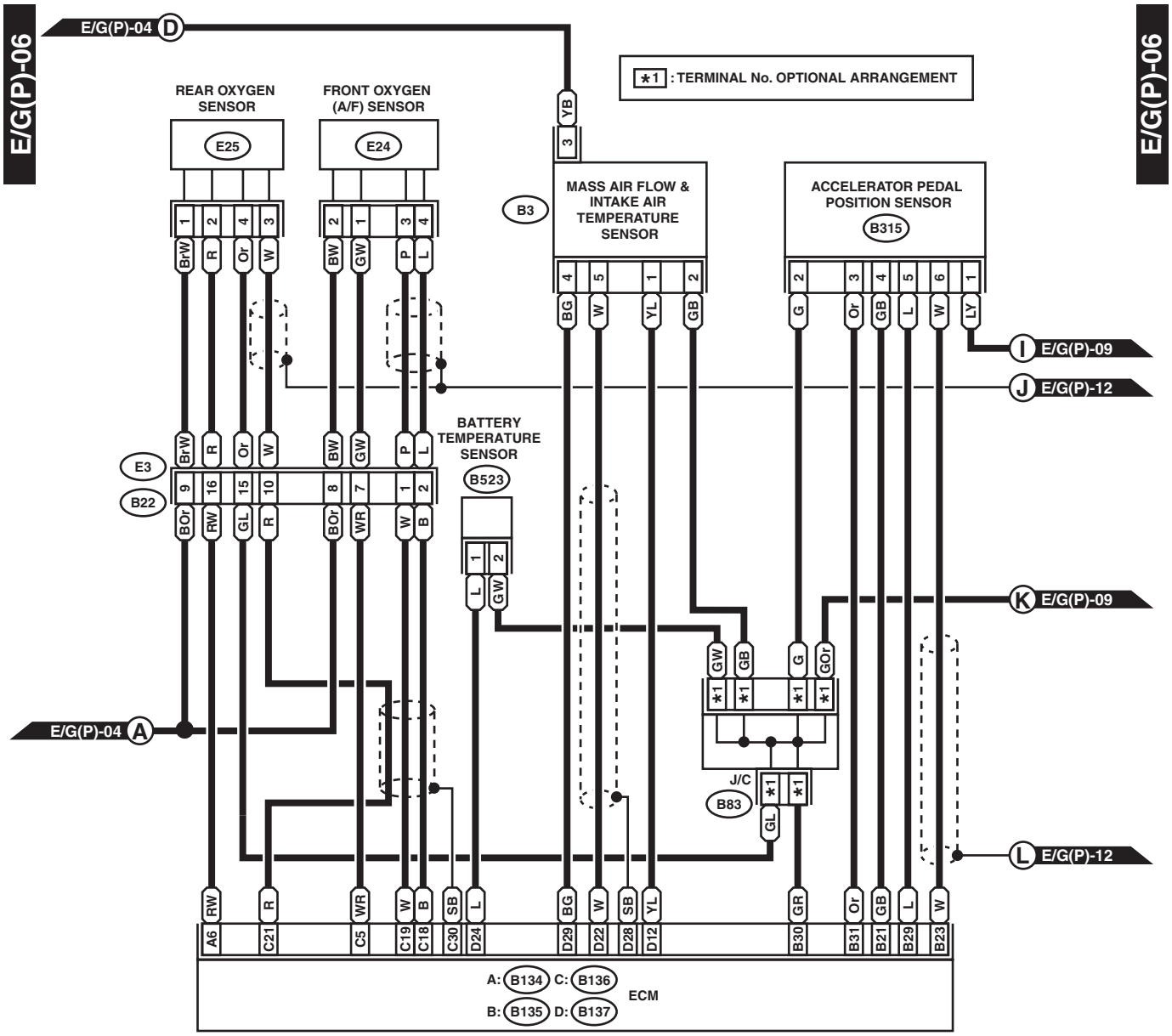
E/G(P)-06
E/G(P)-04 D
*1 : TERMINAL No. OPTIONAL ARRANGEMENT
REAR OXYGEN SENSOR
E25
FRONT OXYGEN (A/F) SENSOR
E24
B3
MASS AIR FLOW & INTAKE AIR TEMPERATURE SENSOR
ACCELERATOR PEDAL POSITION SENSOR
B315
I E/G(P)-09
J E/G(P)-12
BATTERY TEMPERATURE SENSOR
B523
E3
B22
K E/G(P)-09
J/C
B83
L E/G(P)-12
E/G(P)-04 A
A: B134 C: B136
B: B135 D: B137
ECM

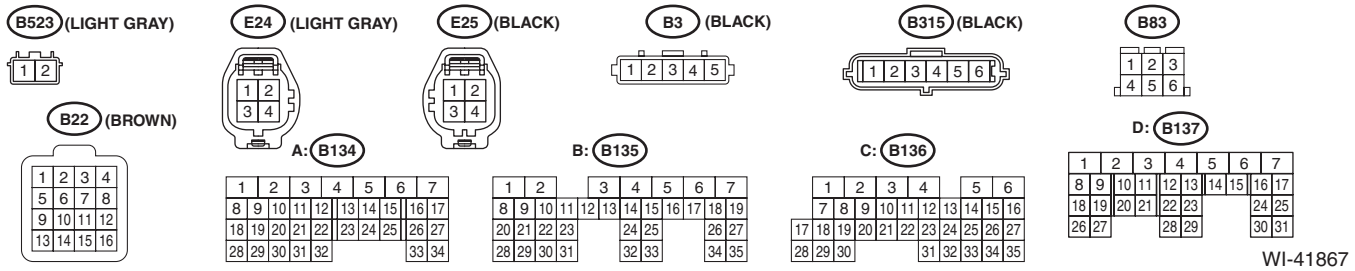
B523 (LIGHT GRAY)
B22 (BROWN)
E24 (LIGHT GRAY)
A: B134
E25 (BLACK)
B3 (BLACK)
B: B135
B315 (BLACK)
C: B136
B83
D: B137

WI-41867

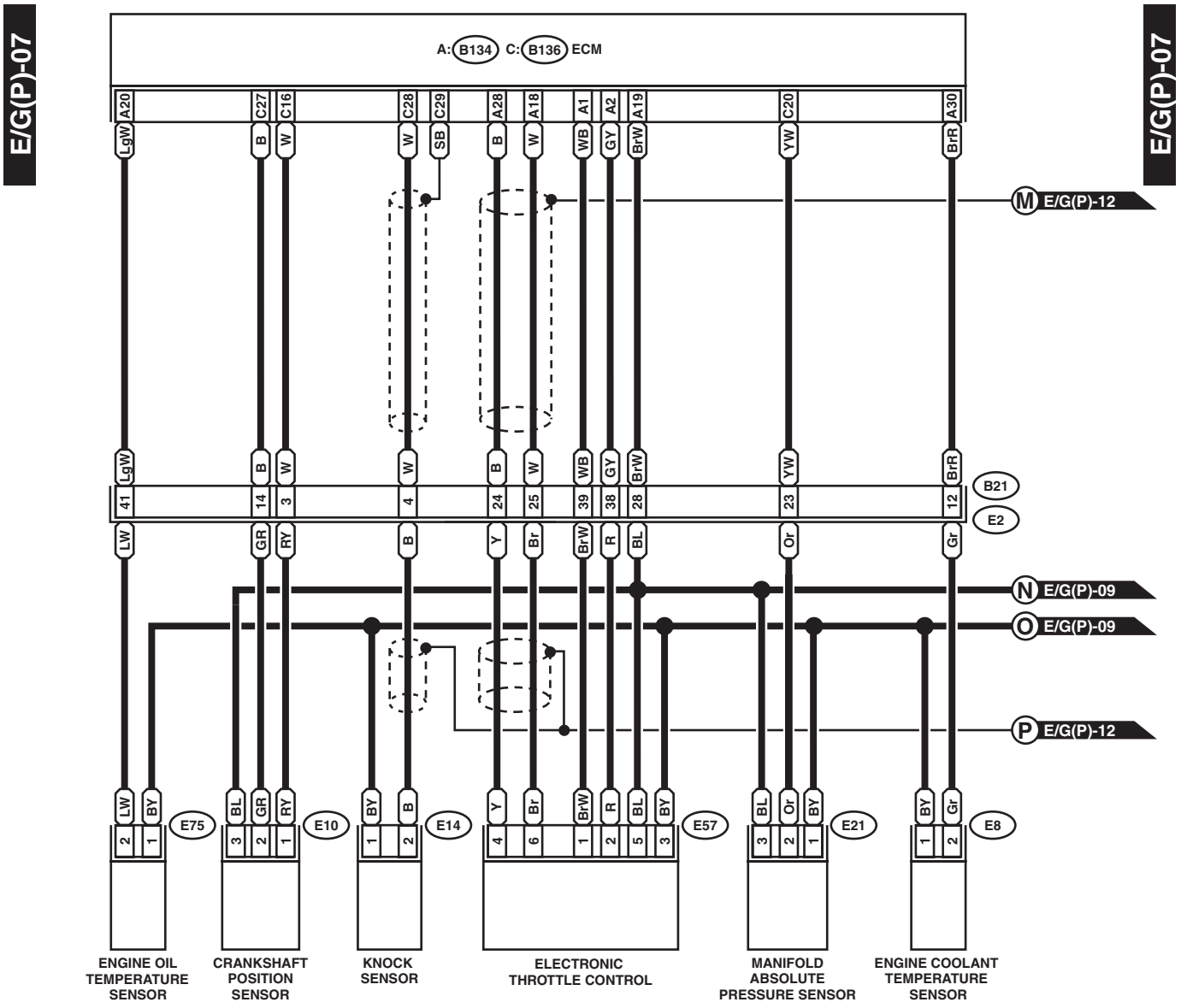
E/G(P)-07
E/G(P)-07
A: B134 C: B136 ECM
A20 C27 C16 C28 C29 A28 A18 A1 A2 A19 C20 A30
LgW B W W SB B W WB GY BrW YW BrR
M E/G(P)-12
41 14 3 4 24 25 39 38 28 23 12
B21
E2
LW GR RY B Y Br BrW R BL Or Gr
N E/G(P)-09
O E/G(P)-09
P E/G(P)-12
LW BY E75
BL GR RY E10
BY B E14
Y Br BrW R BL BY E57
BL Or BY E21
BY Gr E8
ENGINE OIL TEMPERATURE SENSOR
CRANKSHAFT POSITION SENSOR
KNOCK SENSOR
ELECTRONIC THROTTLE CONTROL
MANIFOLD ABSOLUTE PRESSURE SENSOR
ENGINE COOLANT TEMPERATURE SENSOR

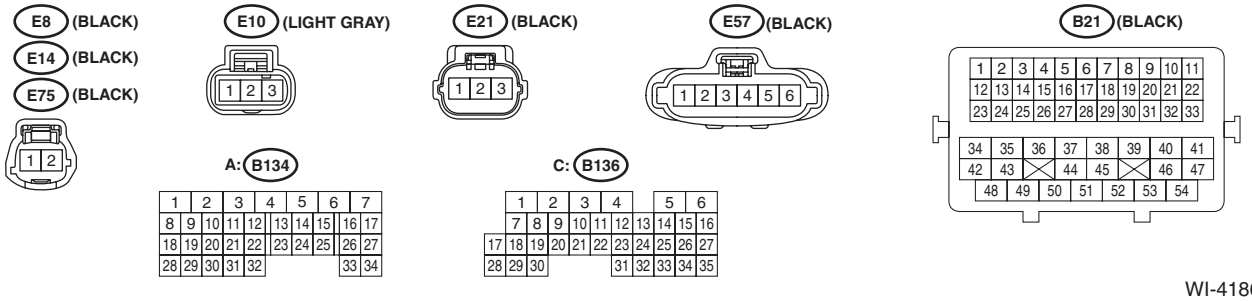
E8 (BLACK)
E14 (BLACK)
E75 (BLACK)
E10 (LIGHT GRAY)
E21 (BLACK)
E57 (BLACK)
B21 (BLACK)
A: B134
C: B136

WI-41868

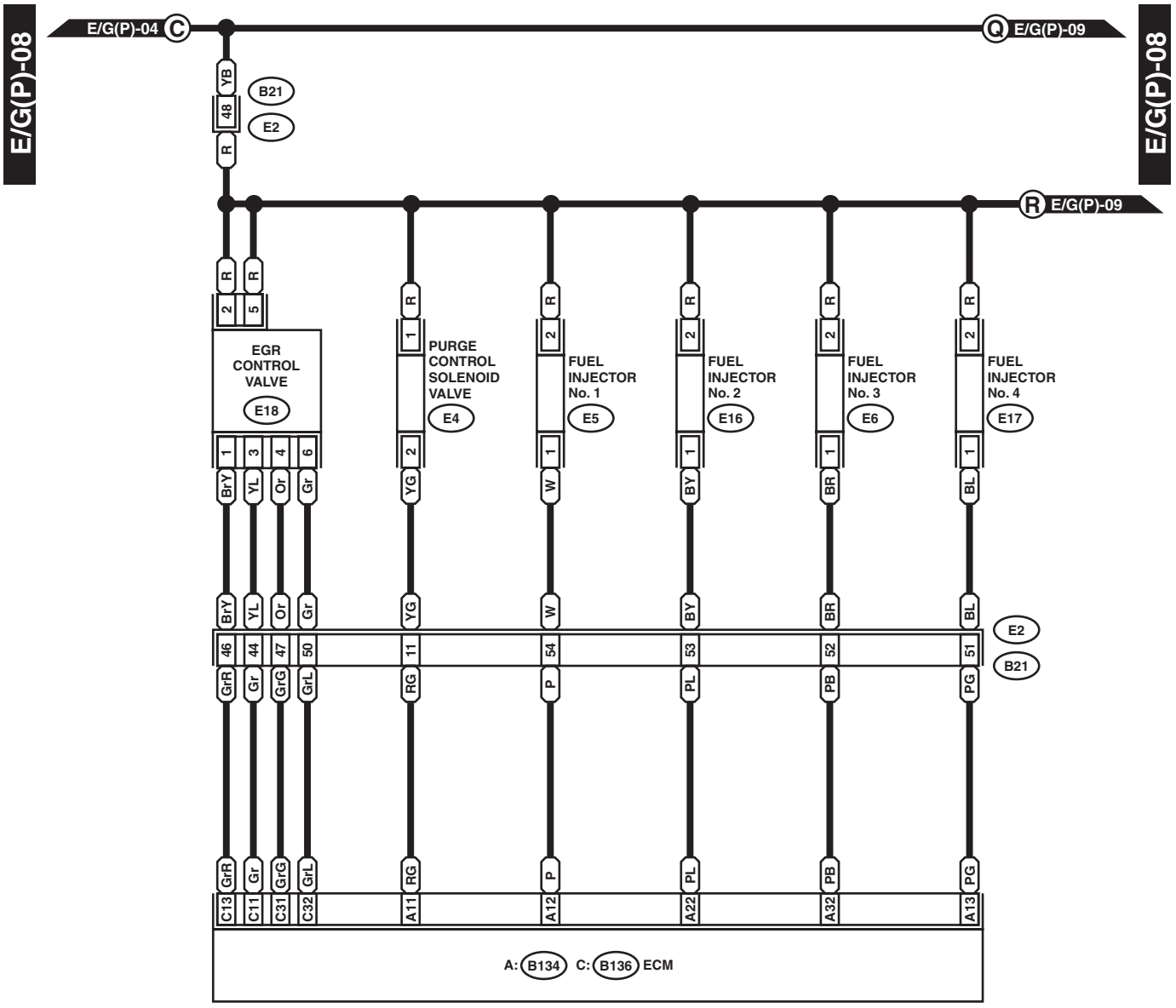
E/G(P)-08
E/G(P)-04 C
Q E/G(P)-09
E/G(P)-08
YB
48
B21
E2
R
R E/G(P)-09
R
2
5
EGR CONTROL VALVE
E18
1
3
4
6
BrY
YL
Or
Gr
PURGE CONTROL SOLENOID VALVE
E4
FUEL INJECTOR No. 1
E5
FUEL INJECTOR No. 2
E16
FUEL INJECTOR No. 3
E6
FUEL INJECTOR No. 4
E17
YG
W
BY
BR
BL
E2
B21
46
44
47
50
11
54
53
52
51
GrR
Gr
GrG
GrL
RG
P
PL
PB
PG
C13
C11
C31
C32
A11
A12
A22
A32
A13
A: B134 C: B136 ECM

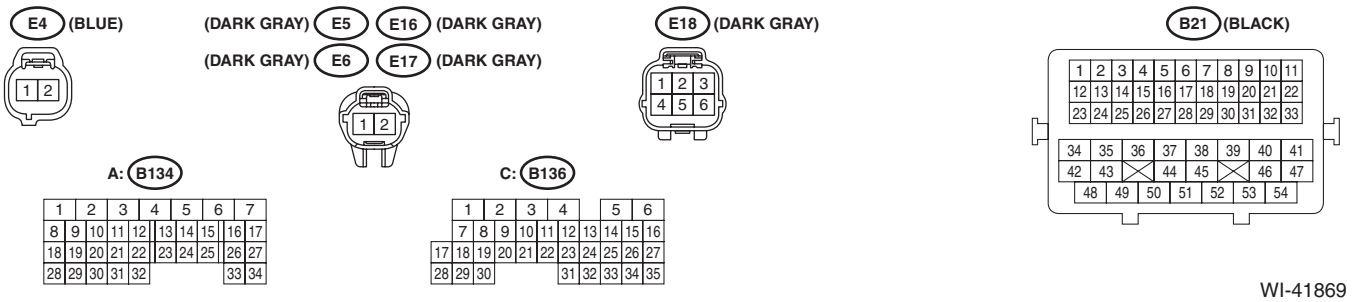
E4 (BLUE)
(DARK GRAY) E5 E16 (DARK GRAY)
(DARK GRAY) E6 E17 (DARK GRAY)
E18 (DARK GRAY)
B21 (BLACK)
A: B134
C: B136

WI-41869

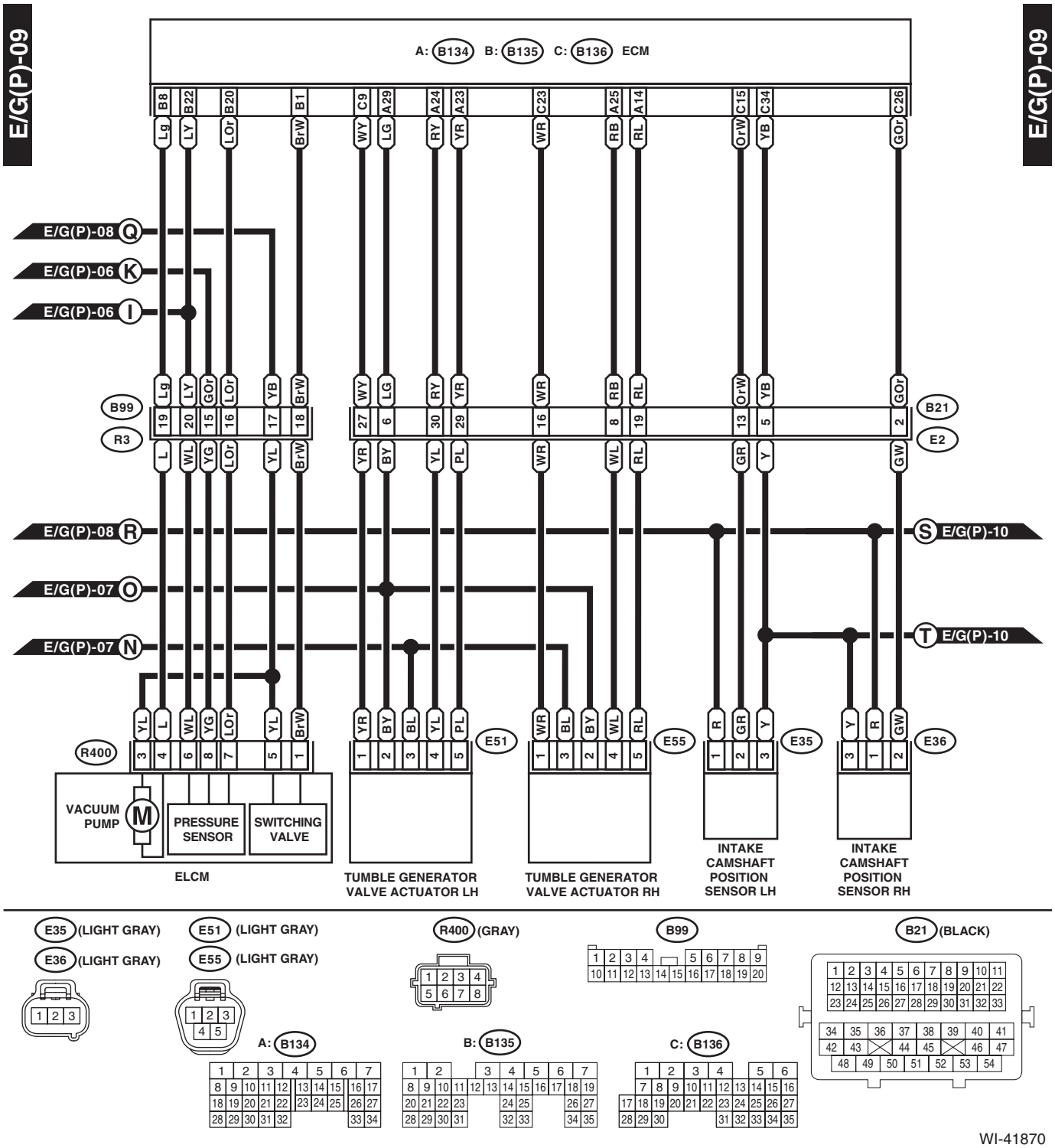
E/G(P)-09
E/G(P)-09
A: B134 B: B135 C: B136 ECM
B8 B22 B20 B1 C9 A29 A24 A23 C23 A25 A14 C15 C34 C26
Lg LY LOr BrW WY LG RY YR WR RB RL OrW YB GOr
E/G(P)-08 Q
E/G(P)-06 K
E/G(P)-06 I
B99
R3
B21
E2
E/G(P)-08 R
E/G(P)-07 O
E/G(P)-07 N
S E/G(P)-10
T E/G(P)-10
R400
E51
E55
E35
E36
VACUUM PUMP
PRESSURE SENSOR
SWITCHING VALVE
ELCM
TUMBLE GENERATOR VALVE ACTUATOR LH
TUMBLE GENERATOR VALVE ACTUATOR RH
INTAKE CAMSHAFT POSITION SENSOR LH
INTAKE CAMSHAFT POSITION SENSOR RH

E35 (LIGHT GRAY)
E36 (LIGHT GRAY)
E51 (LIGHT GRAY)
E55 (LIGHT GRAY)
R400 (GRAY)
B99
B21 (BLACK)
A: B134
B: B135
C: B136

WI-41870

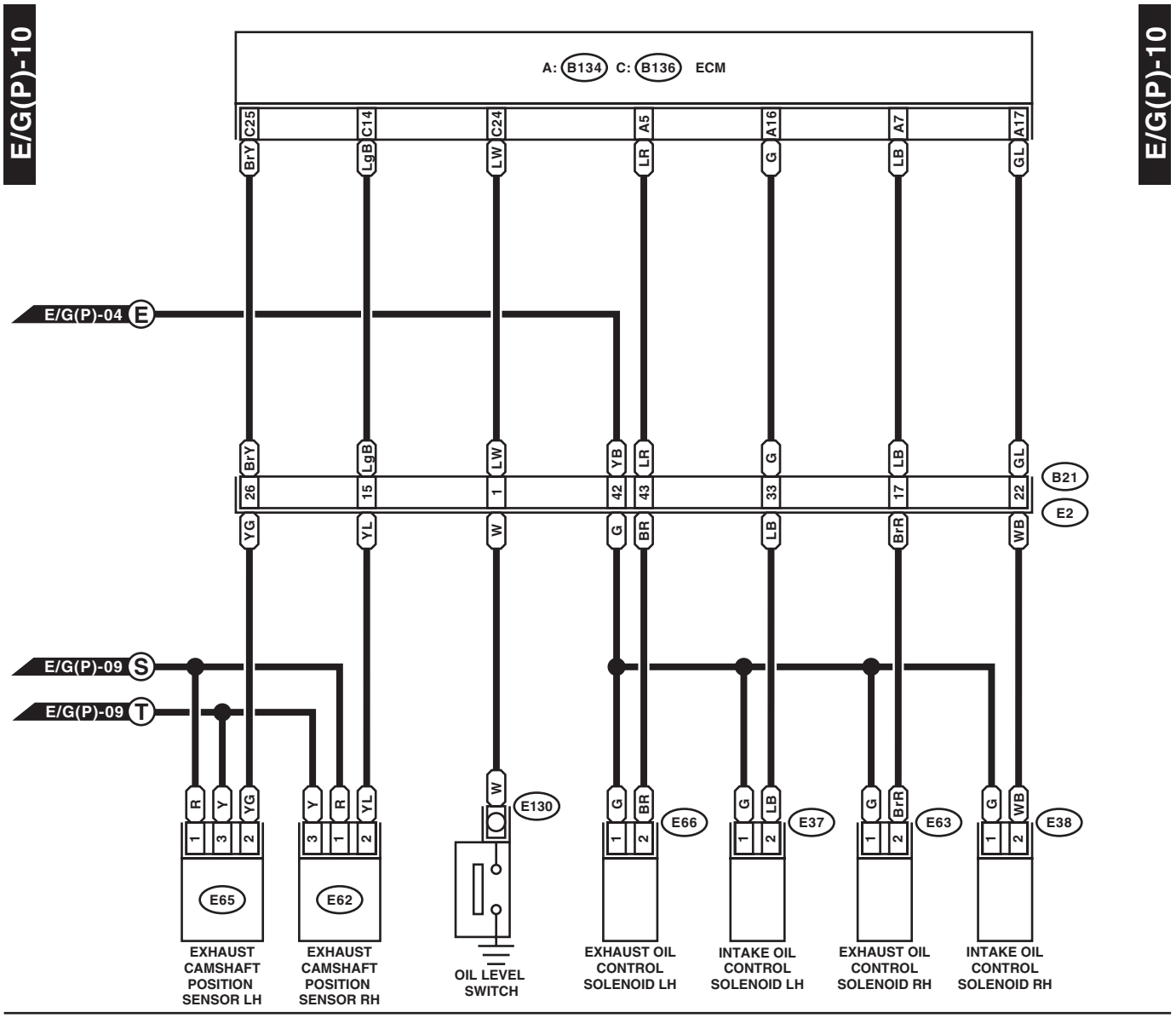
E/G(P)-10
E/G(P)-10
A: B134 C: B136 ECM
C25
C14
C24
A5
A16
A7
A17
BrY
LgB
LW
LR
G
LB
GL
E/G(P)-04 E
BrY
LgB
LW
YB
LR
G
LB
GL
26
15
1
42
43
33
17
22
B21
E2
YG
YL
W
G
BR
LB
BrR
WB
E/G(P)-09 S
E/G(P)-09 T
R
Y
YG
Y
R
YL
W
G
BR
G
LB
G
BrR
G
WB
1
3
2
3
1
2
E130
1
2
E66
1
2
E37
1
2
E63
1
2
E38
E65
E62
EXHAUST CAMSHAFT POSITION SENSOR LH
EXHAUST CAMSHAFT POSITION SENSOR RH
OIL LEVEL SWITCH
EXHAUST OIL CONTROL SOLENOID LH
INTAKE OIL CONTROL SOLENOID LH
EXHAUST OIL CONTROL SOLENOID RH
INTAKE OIL CONTROL SOLENOID RH

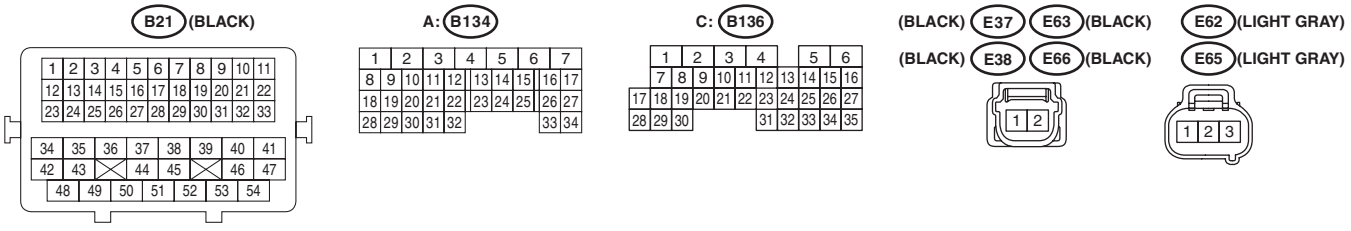
B21 (BLACK)
A: B134
C: B136
(BLACK) E37 E63 (BLACK)
(BLACK) E38 E66 (BLACK)
E62 (LIGHT GRAY)
E65 (LIGHT GRAY)

WI-41871

E/G(P)-11

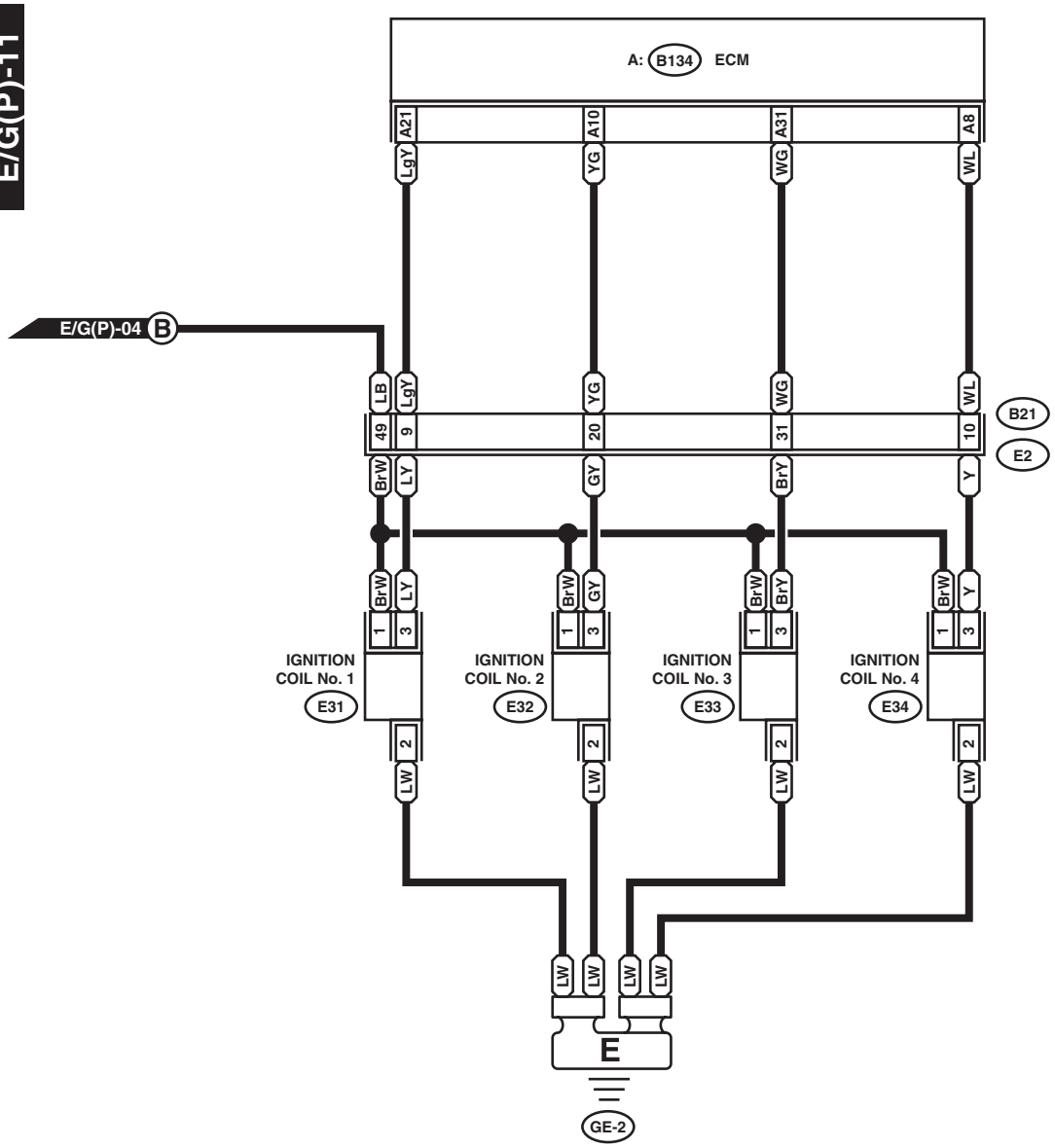

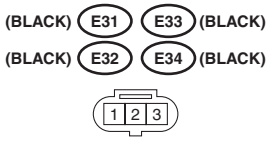

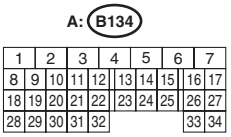

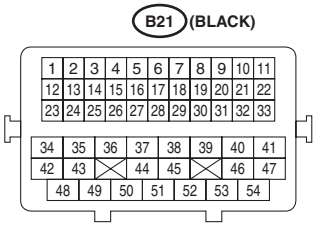

WI-41872

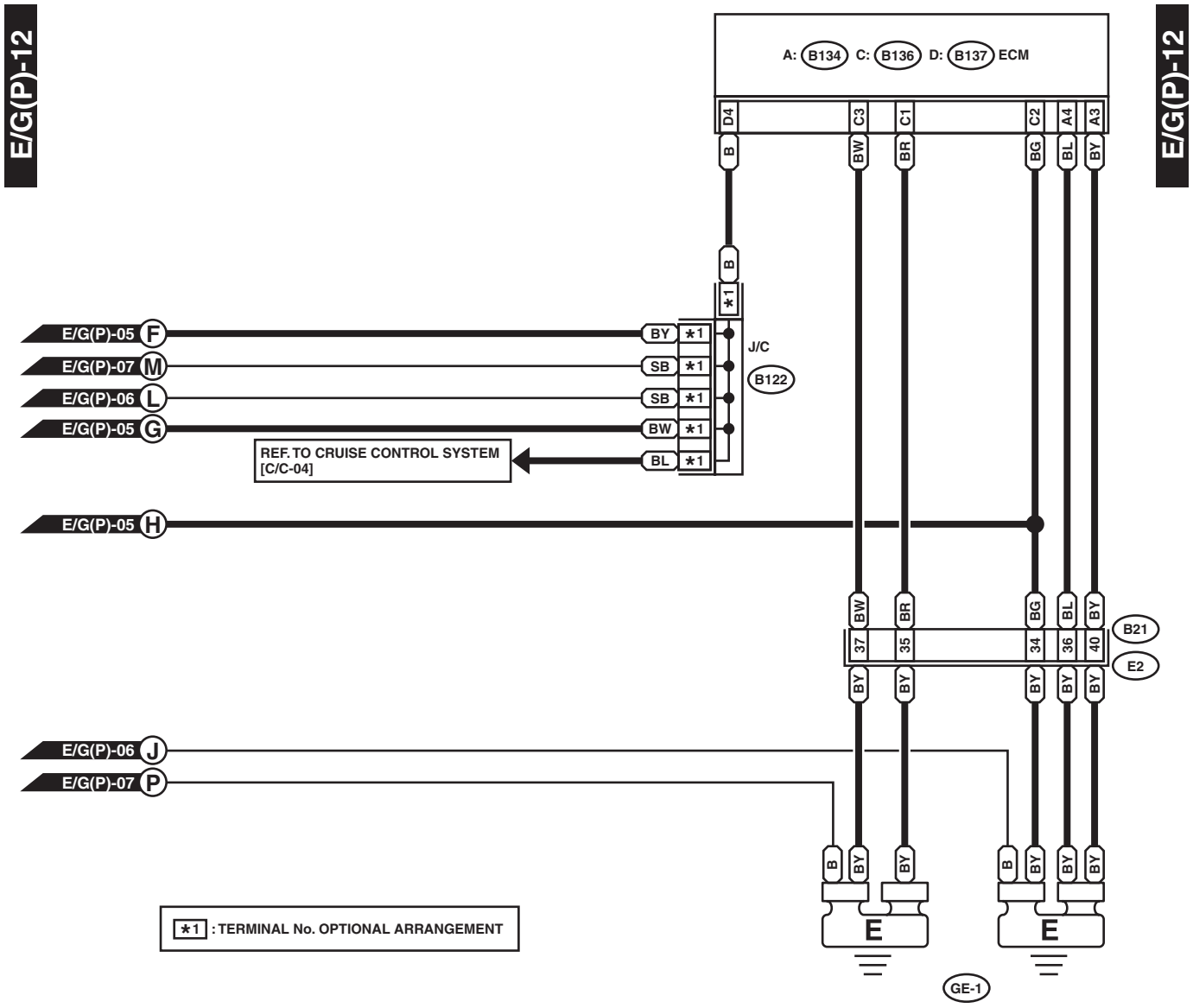
E/G(P)-12
E/G(P)-12
A: B134 C: B136 D: B137 ECM
D4
C3
C1
C2
A4
A3
B
BW
BR
BG
BL
BY
*1
J/C
B122
E/G(P)-05 F
E/G(P)-07 M
E/G(P)-06 L
E/G(P)-05 G
E/G(P)-05 H
E/G(P)-06 J
E/G(P)-07 P
SB
REF. TO CRUISE CONTROL SYSTEM [C/C-04]
37
35
34
36
40
B21
E2
E
GE-1
*1 : TERMINAL No. OPTIONAL ARRANGEMENT

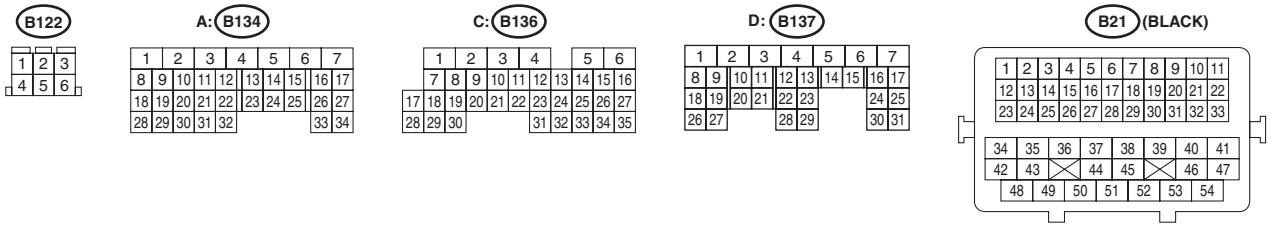
B122
A: B134
C: B136
D: B137
B21 (BLACK)

WI-41873

19.Front Accessory Power Supply Socket System

A: WIRING DIAGRAM

FAPS-01

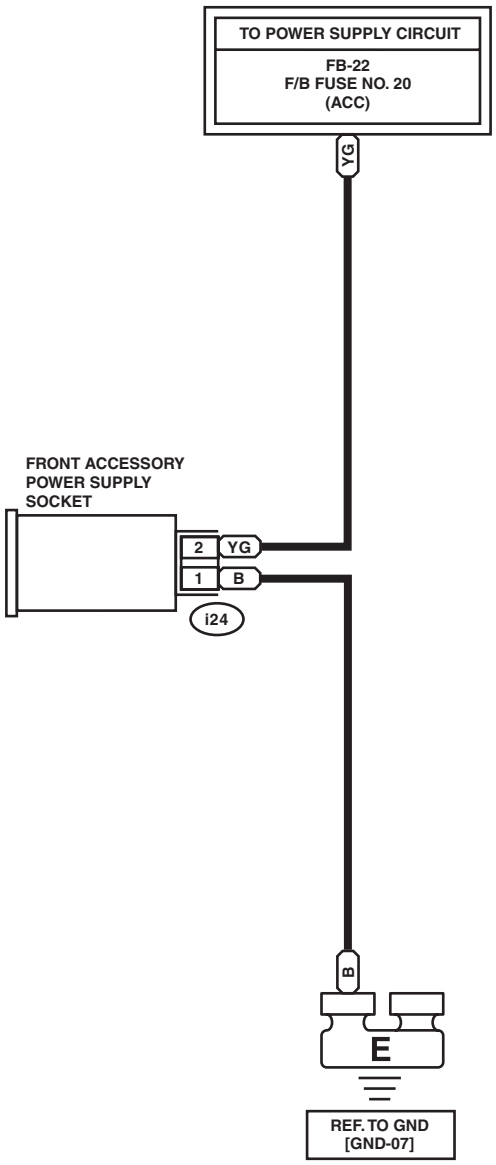

FAPS-01



WI-34207

20.Front Fog Light System

A: WIRING DIAGRAM

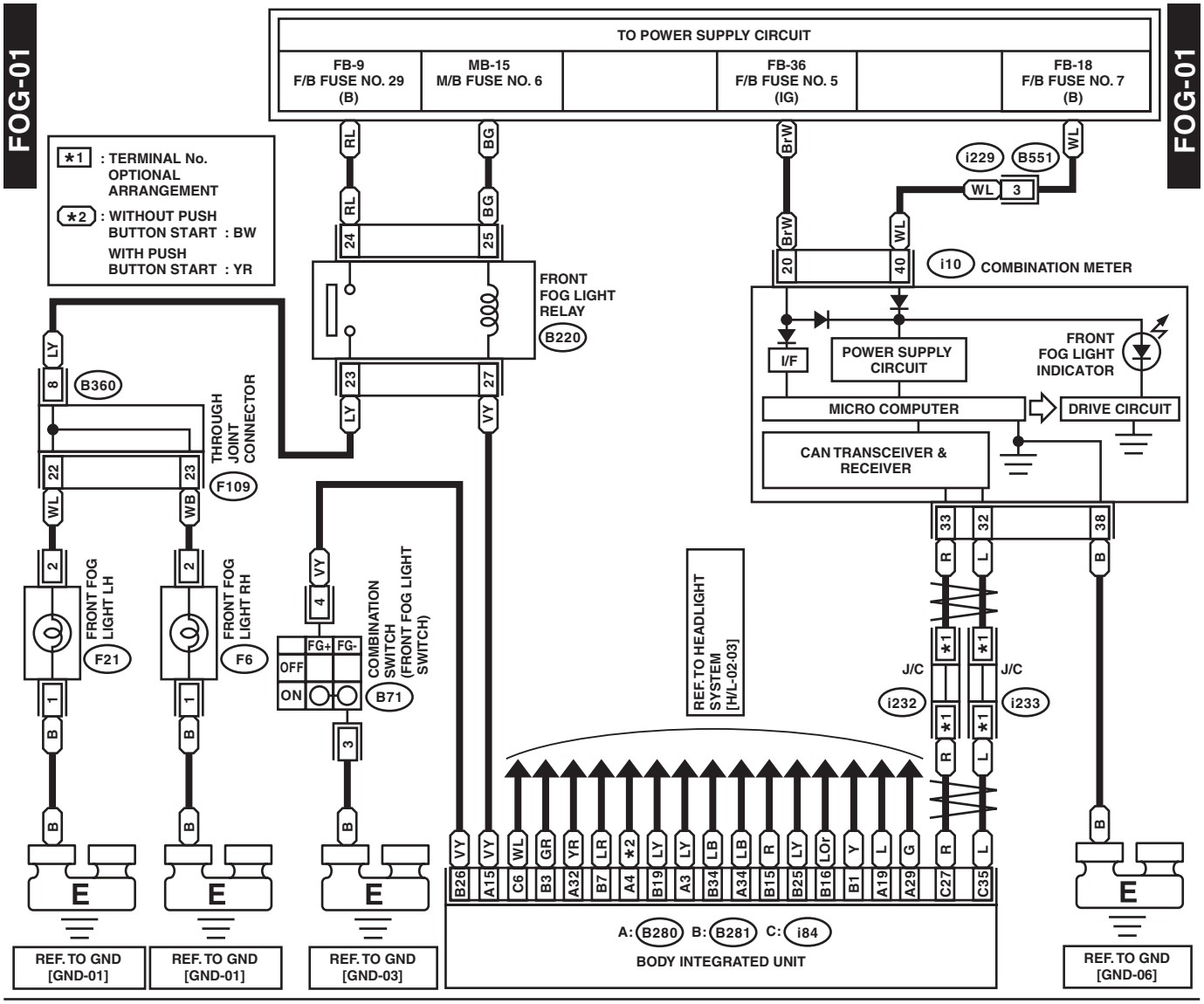

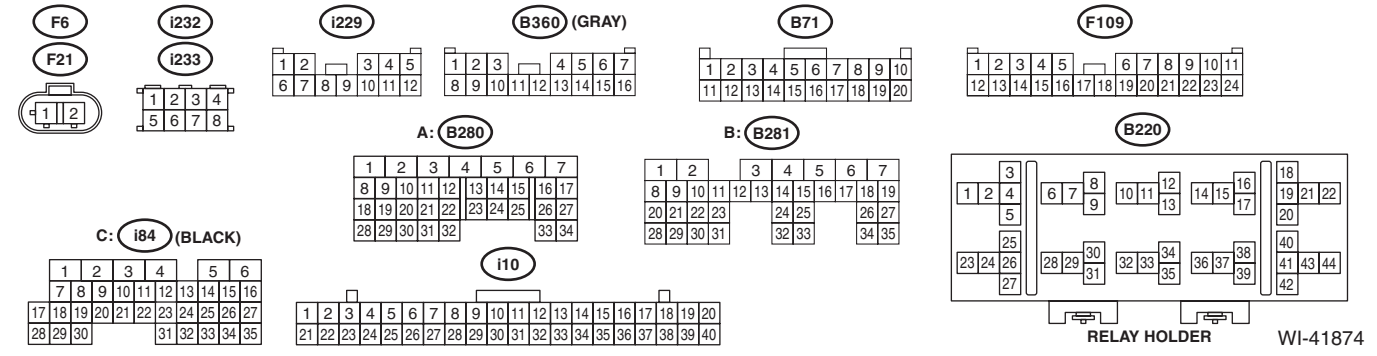

21.Front Wiper and Washer System

A: WIRING DIAGRAM

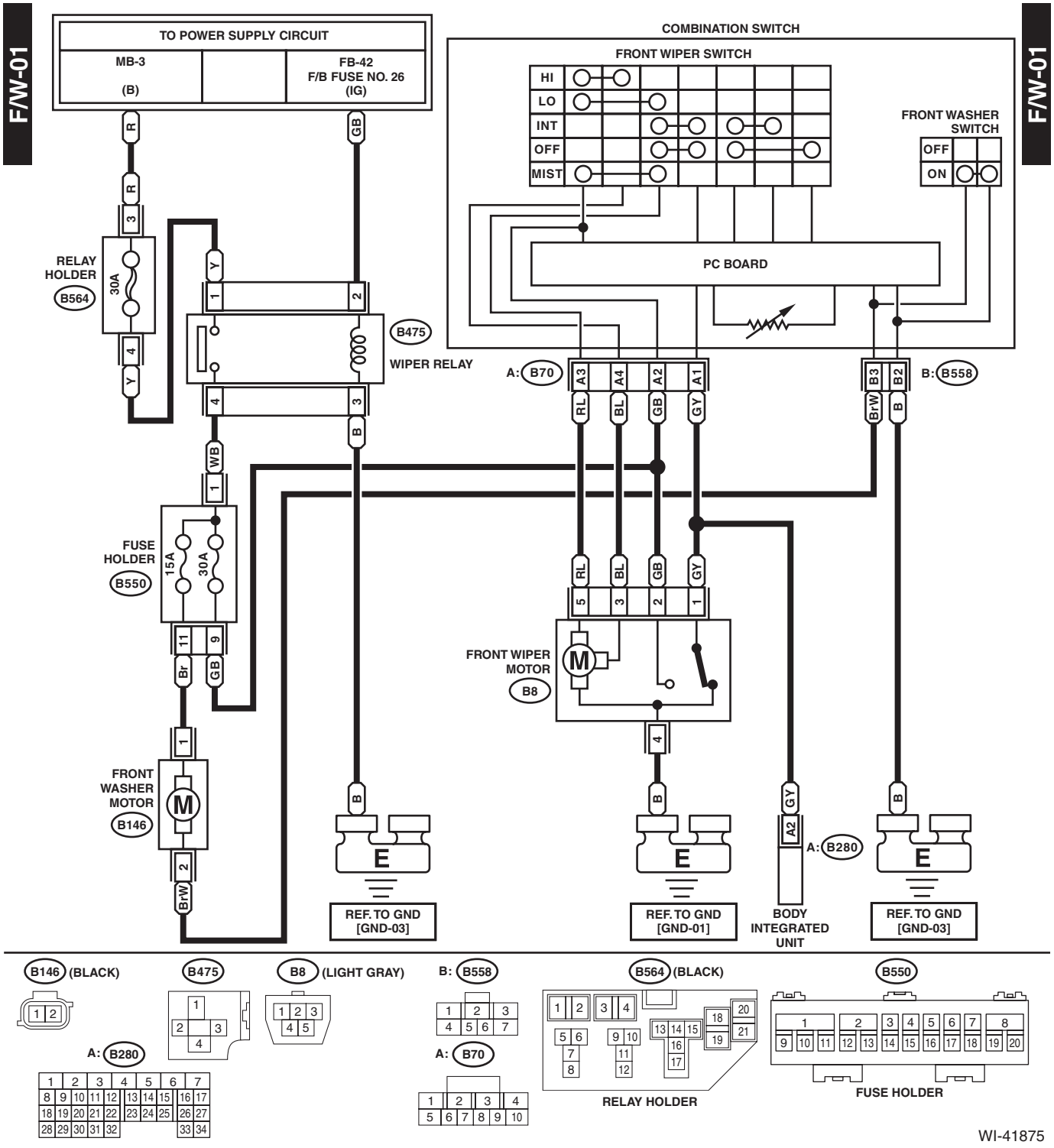

F/W-02

F/W-02

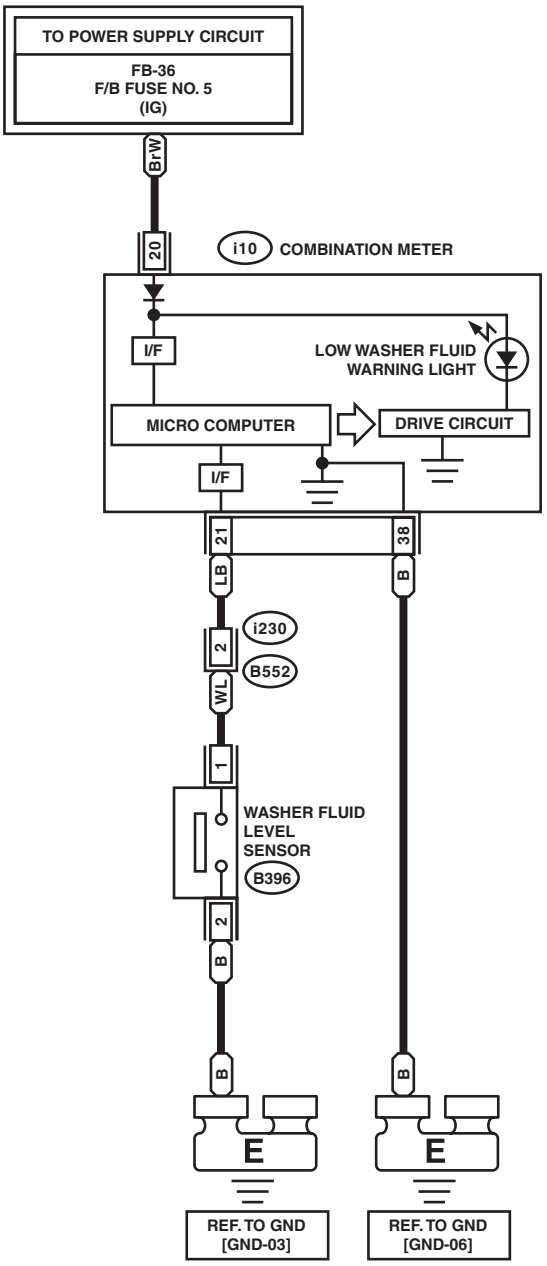

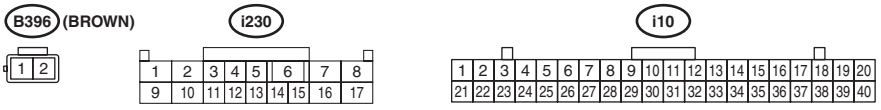

WI-41876

22.Fuel Gauge System

A: WIRING DIAGRAM

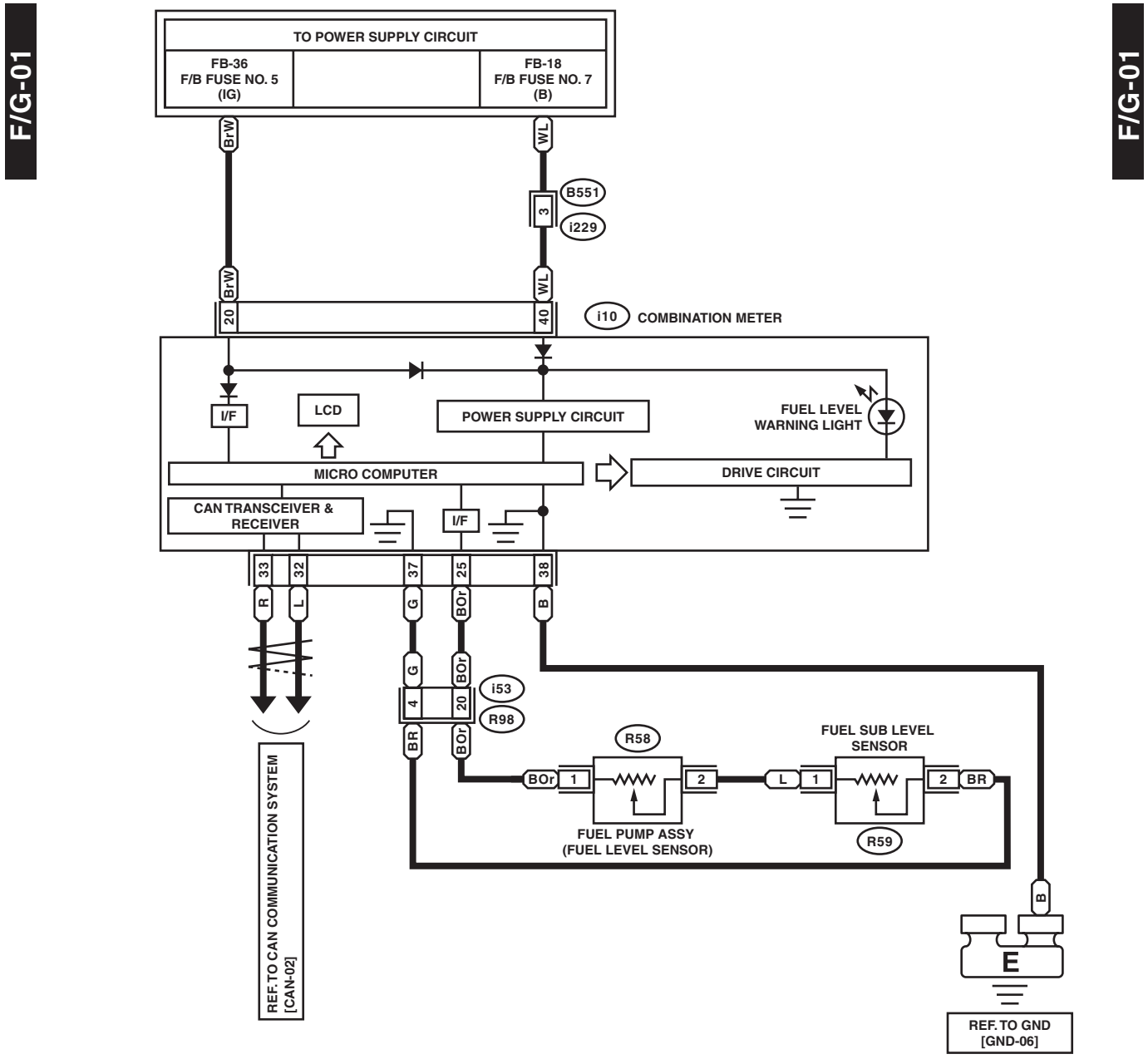

WI-41877

23.Headlight Beam Leveler System

A: WIRING DIAGRAM

HLBL-01

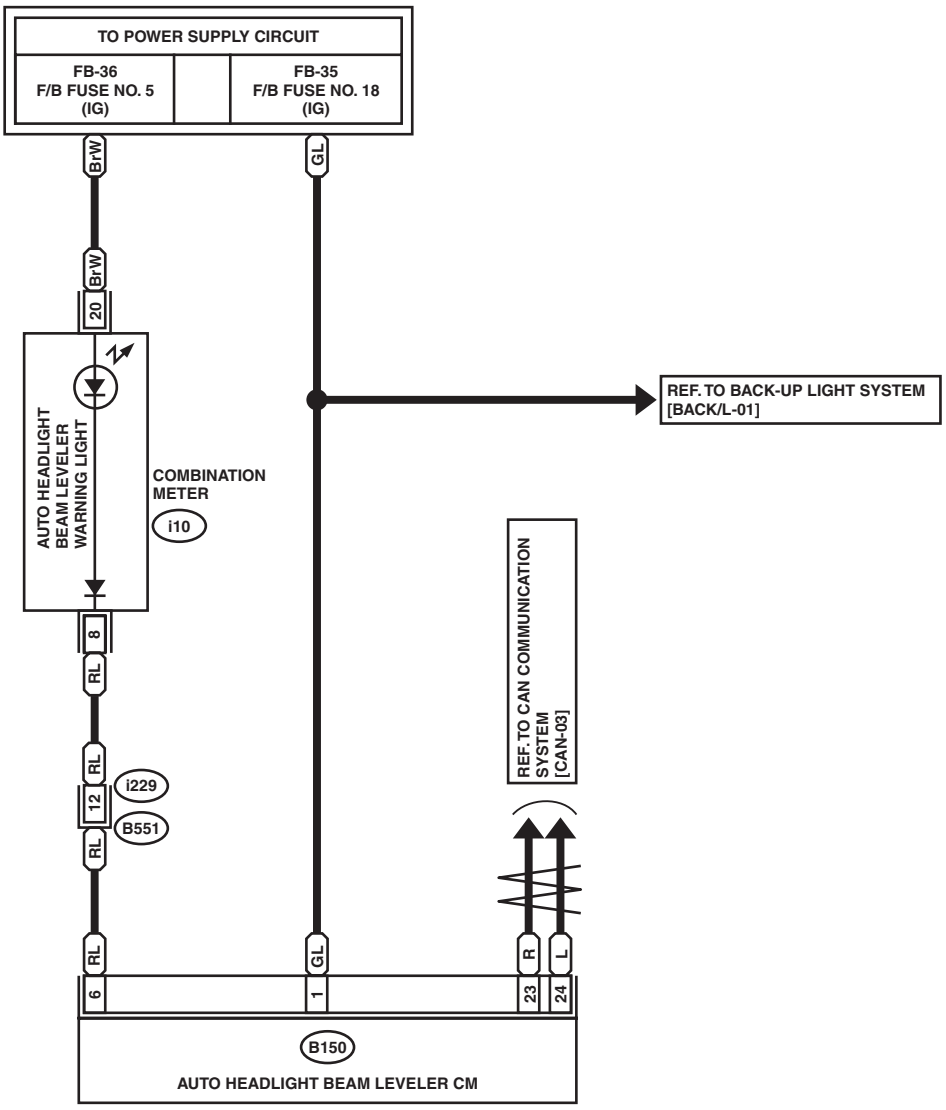

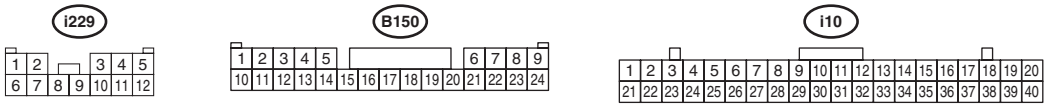

WI-41878

HLBL-02

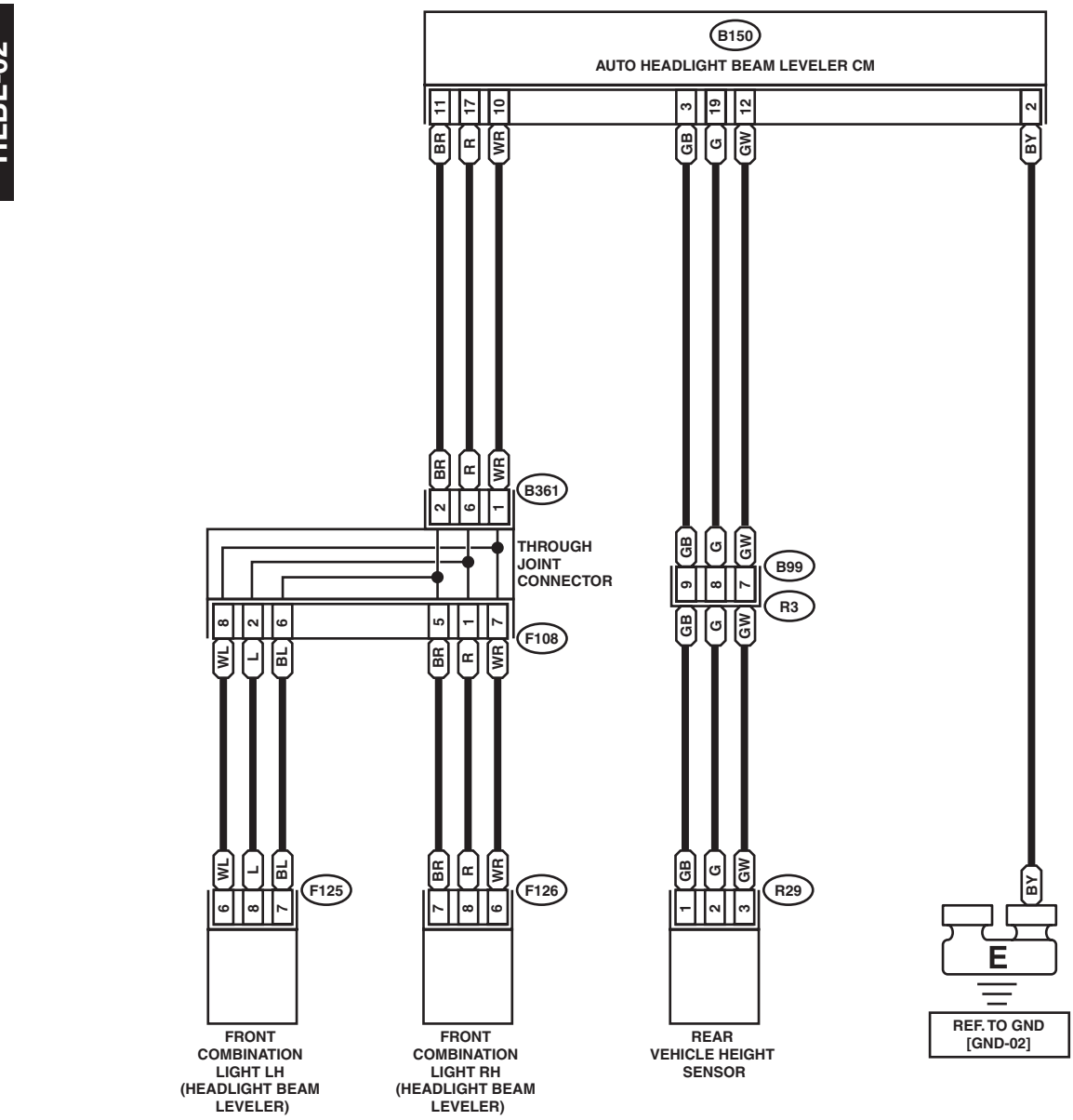

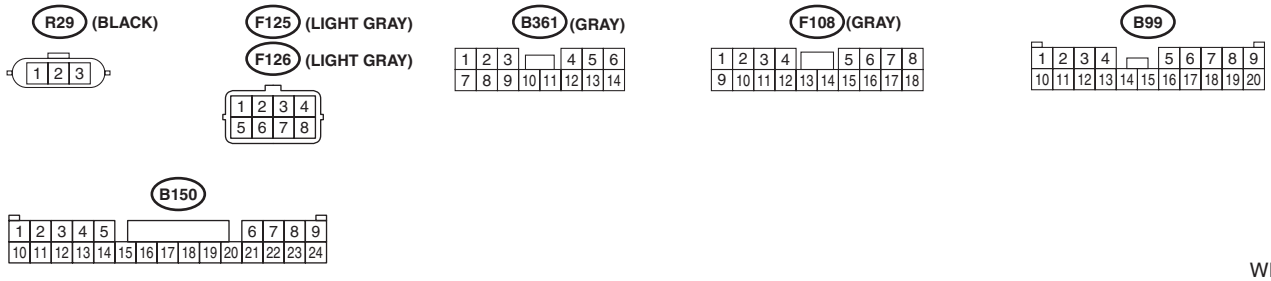

WI-37837

24.Headlight System

A: WIRING DIAGRAM

H/L-01

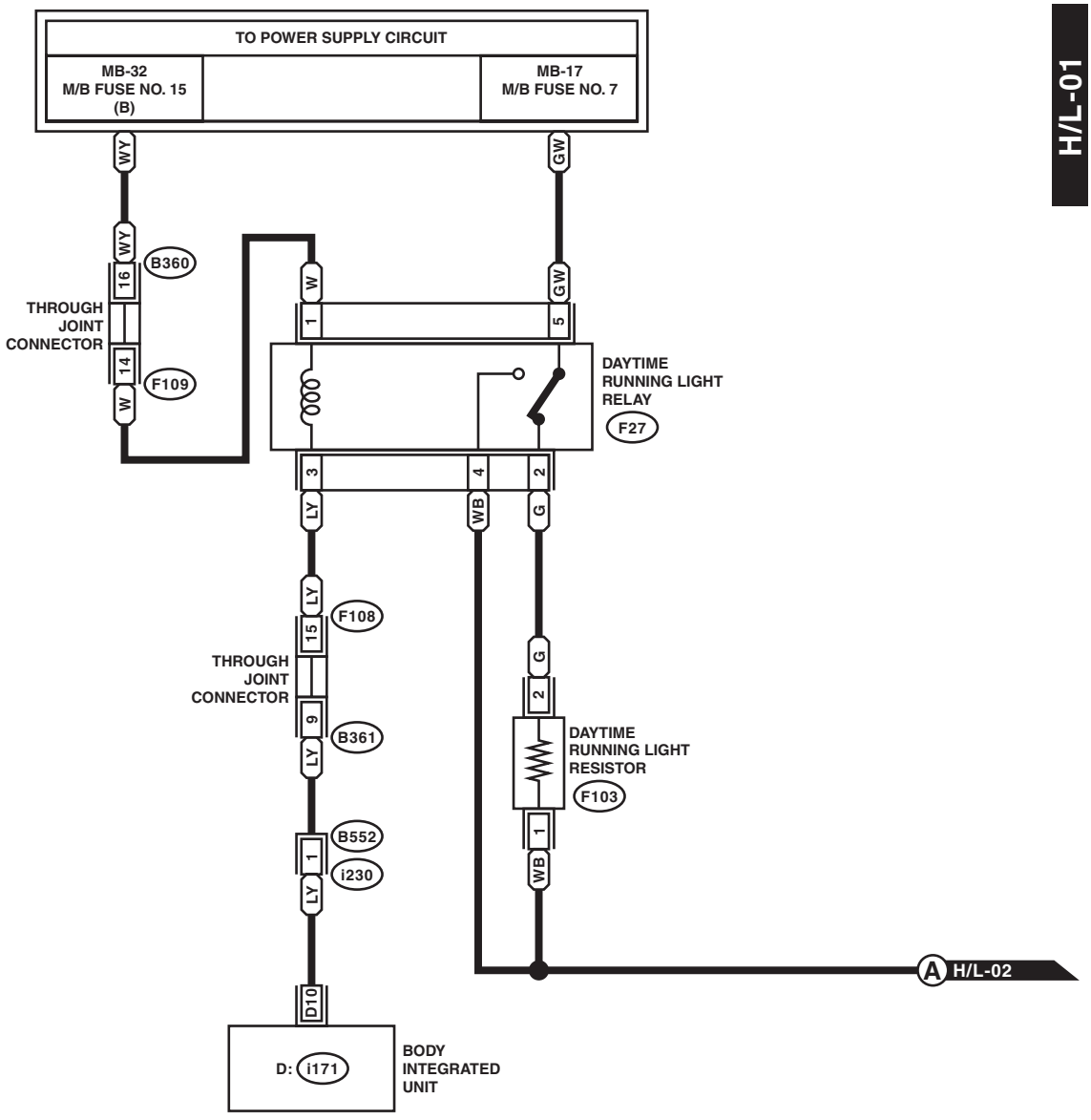

H/L-01

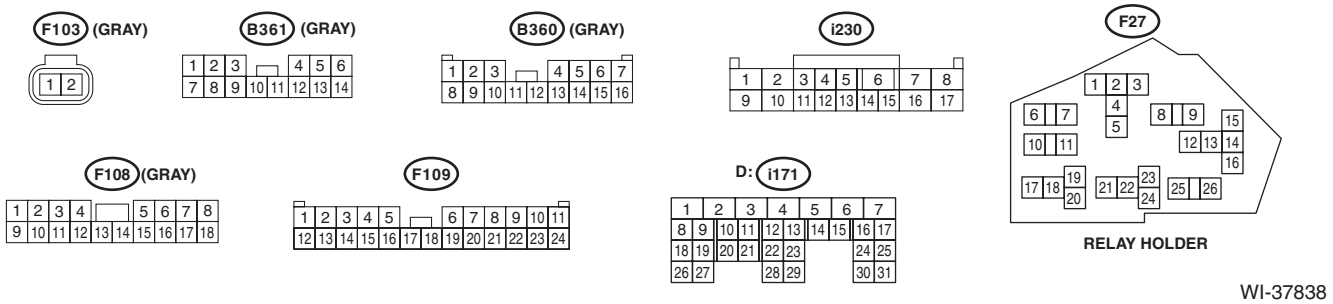

WI-37838

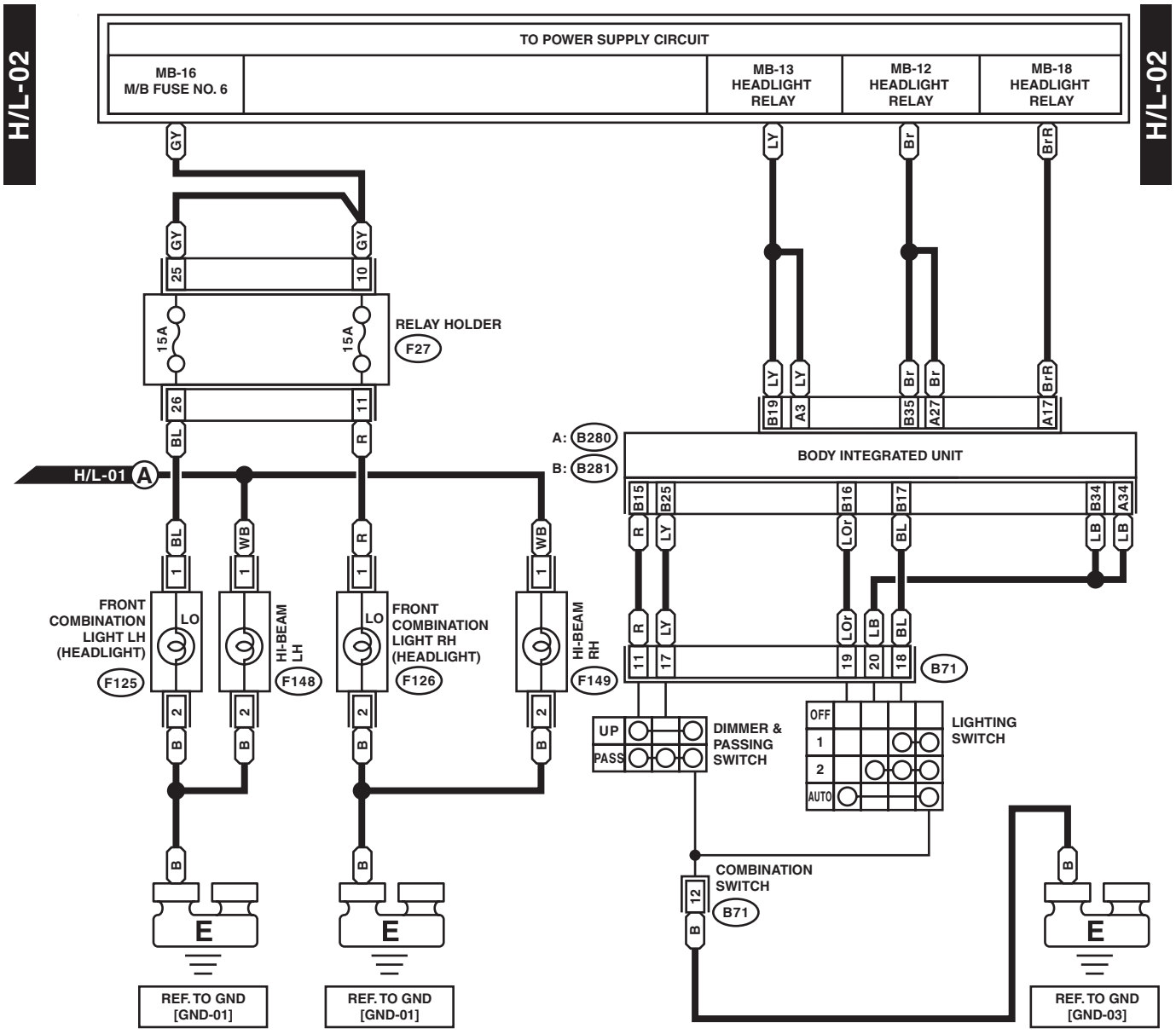
H/L-02
H/L-02
TO POWER SUPPLY CIRCUIT
MB-16
M/B FUSE NO. 6
MB-13
HEADLIGHT
RELAY
MB-12
HEADLIGHT
RELAY
MB-18
HEADLIGHT
RELAY
RELAY HOLDER
F27
15A
15A
H/L-01 A
A: B280
B: B281
BODY INTEGRATED UNIT
FRONT
COMBINATION
LIGHT LH
(HEADLIGHT)
F125
LO
HI-BEAM
LH
F148
LO
FRONT
COMBINATION
LIGHT RH
(HEADLIGHT)
F126
HI-BEAM
RH
F149
B71
DIMMER &
PASSING
SWITCH
UP
PASS
LIGHTING
SWITCH
OFF
1
2
AUTO
COMBINATION
SWITCH
B71
REF. TO GND
[GND-01]
REF. TO GND
[GND-01]
REF. TO GND
[GND-03]

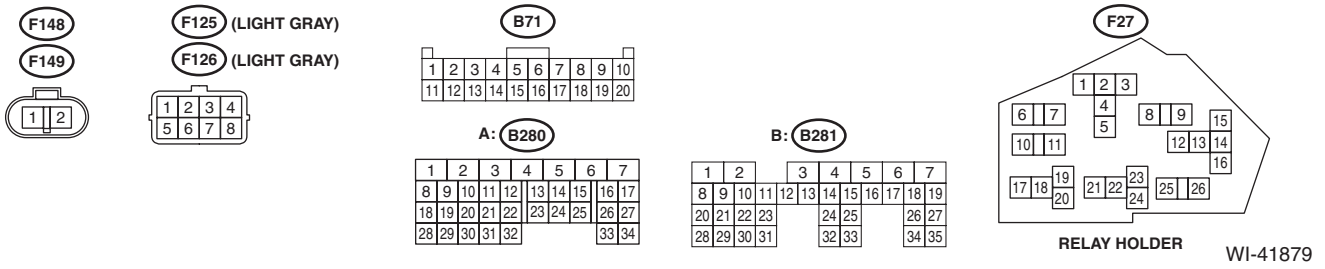
F148
F149
F125 (LIGHT GRAY)
F126 (LIGHT GRAY)
B71
A: B280
B: B281
F27
RELAY HOLDER

WI-41879

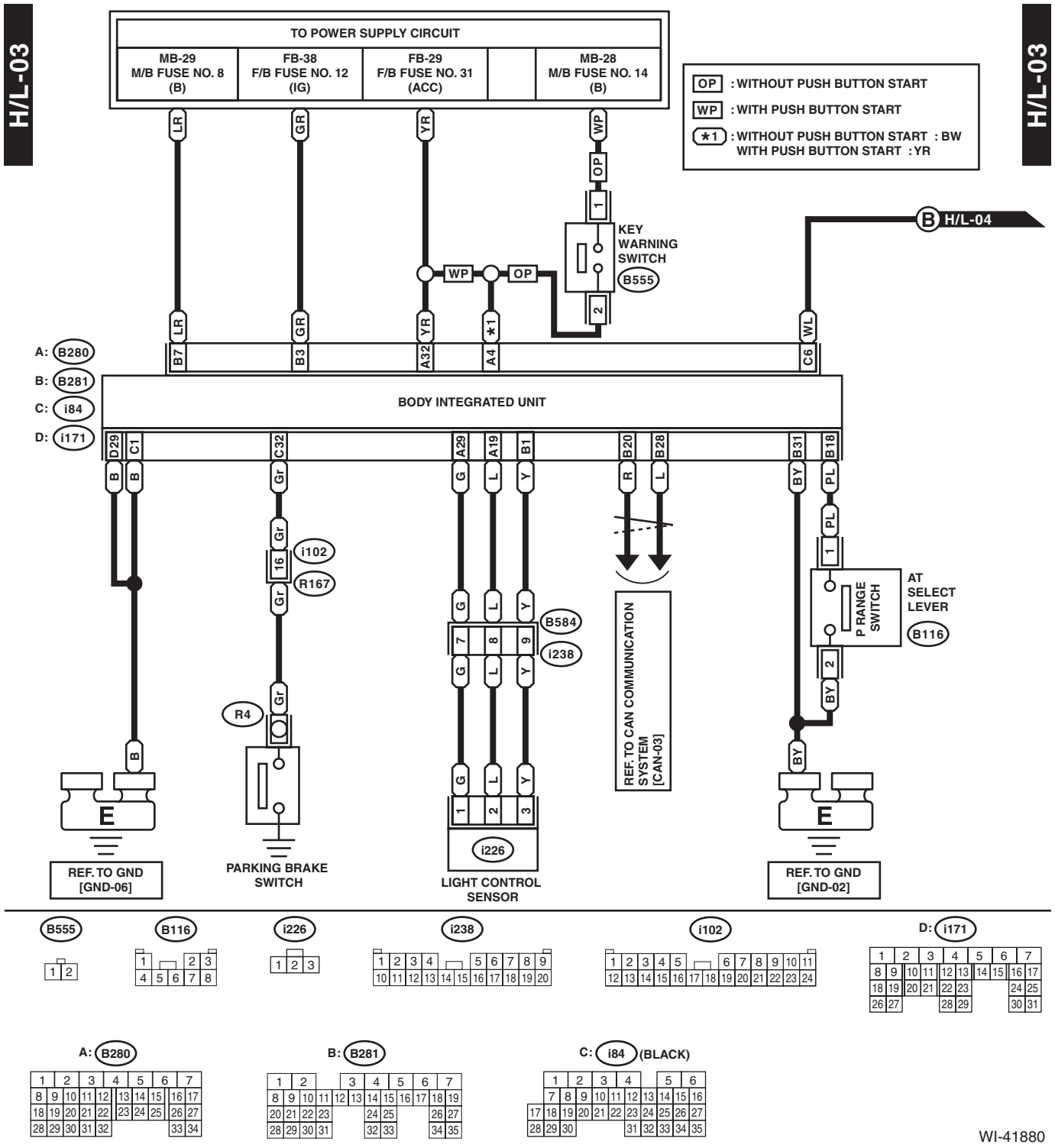
H/L-03
H/L-03
TO POWER SUPPLY CIRCUIT
MB-29 M/B FUSE NO. 8 (B)
FB-38 F/B FUSE NO. 12 (IG)
FB-29 F/B FUSE NO. 31 (ACC)
MB-28 M/B FUSE NO. 14 (B)
OP : WITHOUT PUSH BUTTON START
WP : WITH PUSH BUTTON START
*1 : WITHOUT PUSH BUTTON START : BW
WITH PUSH BUTTON START : YR
B H/L-04
KEY WARNING SWITCH
B555
A: B280
B: B281
C: i84
D: i171
BODY INTEGRATED UNIT
i102
R167
R4
PARKING BRAKE SWITCH
B584
i238
i226
LIGHT CONTROL SENSOR
REF. TO CAN COMMUNICATION SYSTEM [CAN-03]
AT SELECT LEVER
P RANGE SWITCH
B116
REF. TO GND [GND-06]
REF. TO GND [GND-02]
B555
B116
i226
i238
i102
D: i171
A: B280
B: B281
C: i84 (BLACK)

WI-41880

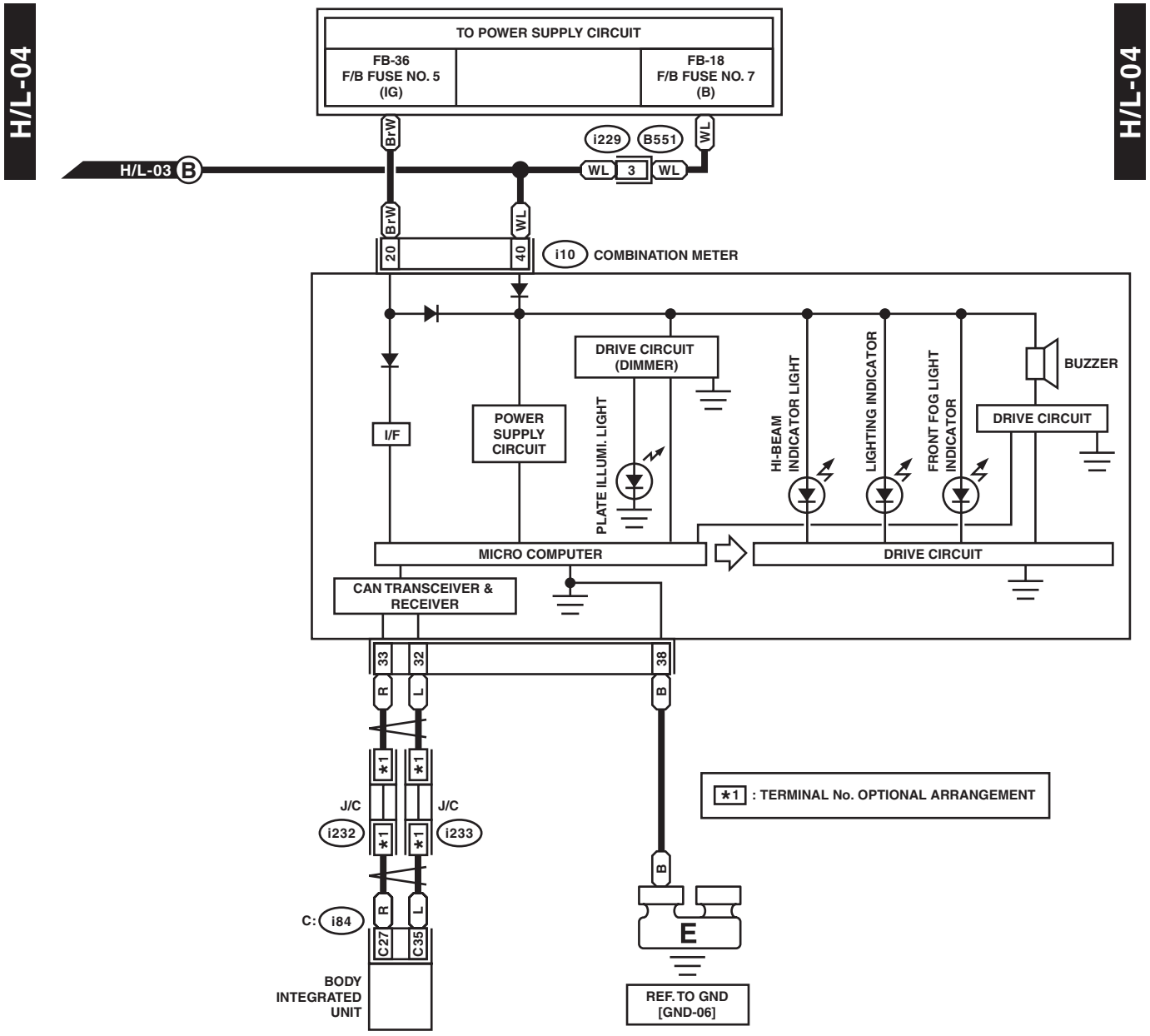
H/L-04
H/L-04
TO POWER SUPPLY CIRCUIT
FB-36
F/B FUSE NO. 5
(IG)
FB-18
F/B FUSE NO. 7
(B)
H/L-03 B
BrW
WL
i229
B551
WL
3
WL
BrW
WL
20
40
i10
COMBINATION METER
DRIVE CIRCUIT
(DIMMER)
BUZZER
I/F
POWER
SUPPLY
CIRCUIT
PLATE ILLUMI. LIGHT
HI-BEAM
INDICATOR LIGHT
LIGHTING INDICATOR
FRONT FOG LIGHT
INDICATOR
DRIVE CIRCUIT
MICRO COMPUTER
DRIVE CIRCUIT
CAN TRANSCEIVER &
RECEIVER
33
32
38
R
L
B
*1
*1
J/C
i232
J/C
i233
*1
*1
*1 : TERMINAL No. OPTIONAL ARRANGEMENT
B
C:
i84
R
L
C27
C35
E
BODY
INTEGRATED
UNIT
REF. TO GND
[GND-06]

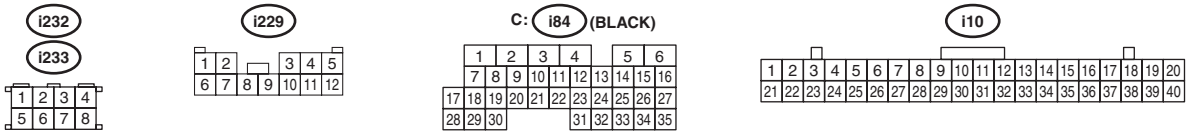
i232
i233
i229
C:
i84
(BLACK)
i10

WI-41881

25.Hybrid Electric Vehicle System

A: WIRING DIAGRAM

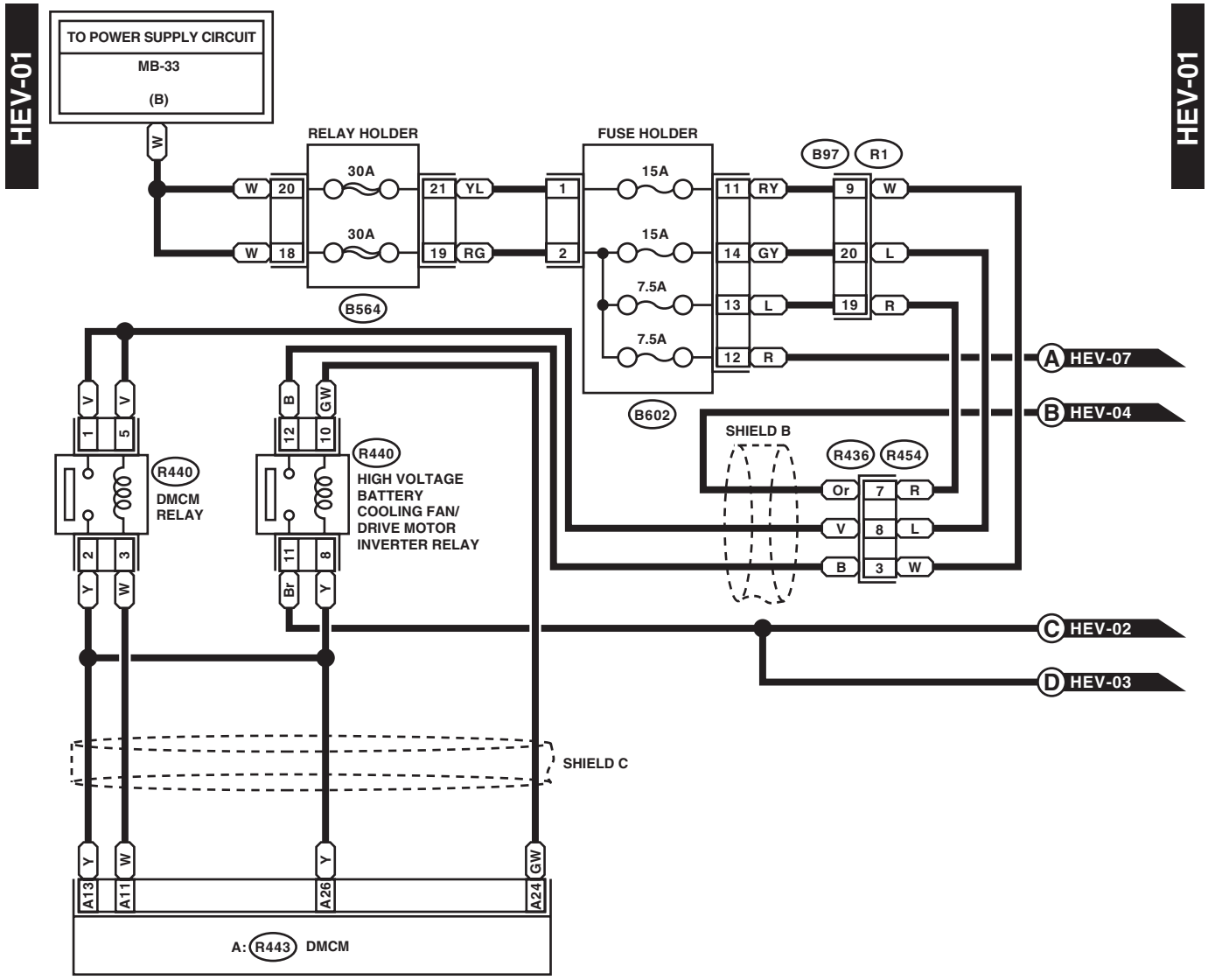

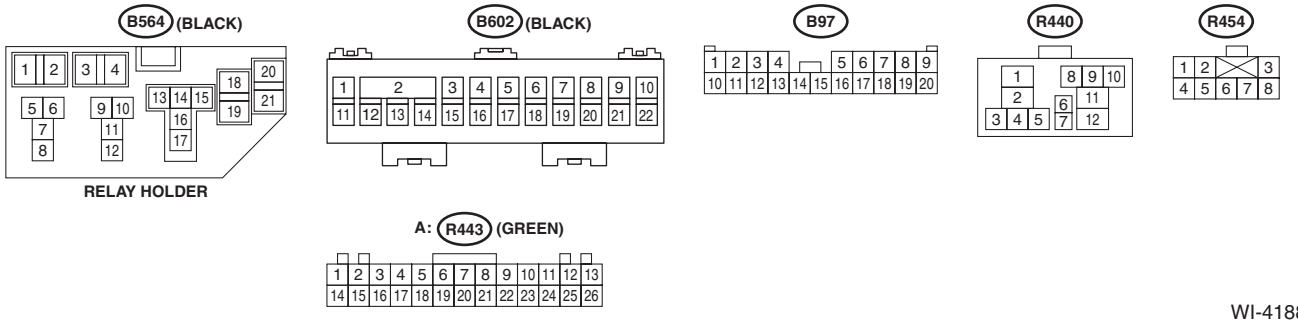

WI-41882

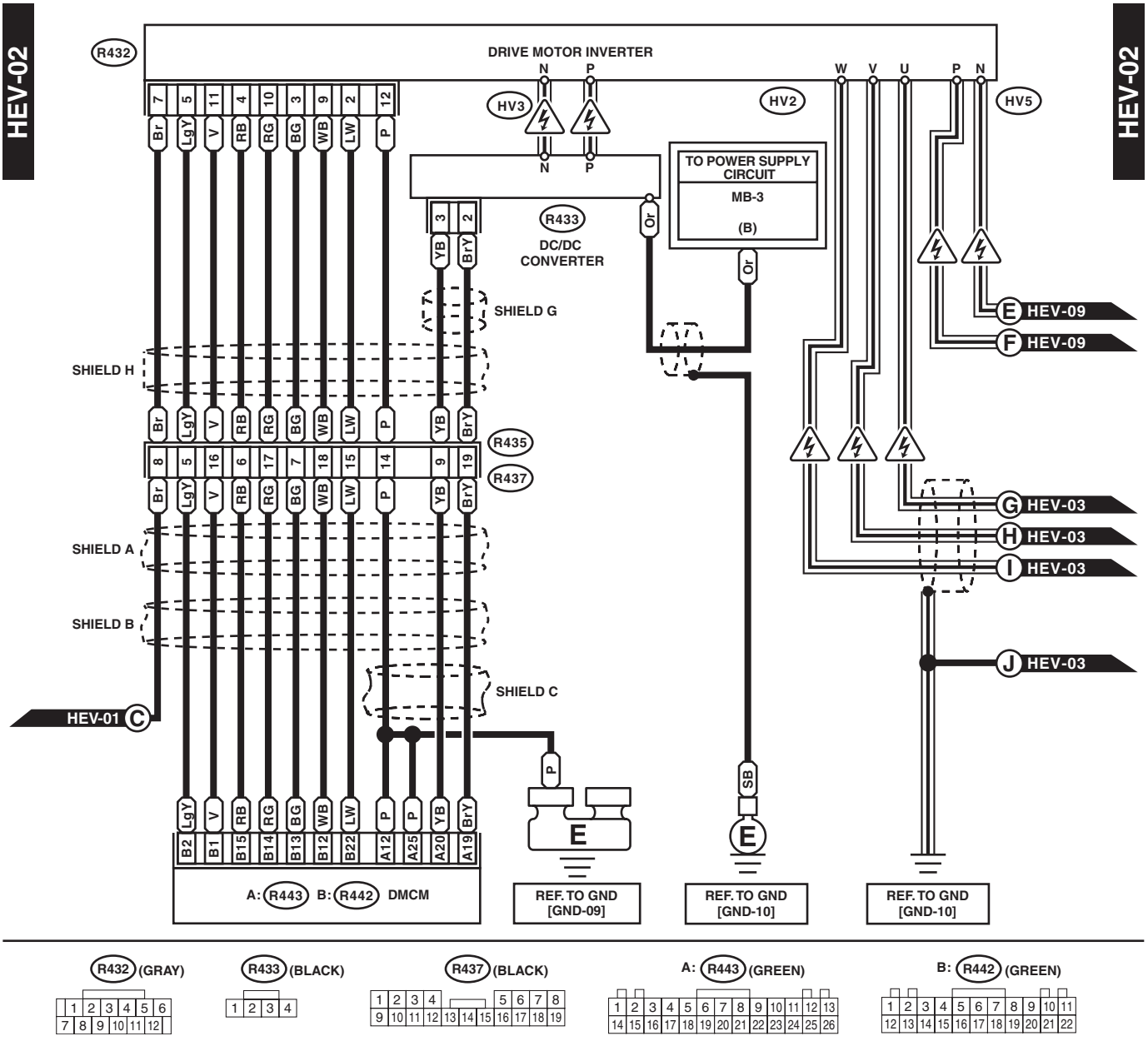
HEV-02
HEV-02
R432
DRIVE MOTOR INVERTER
N
P
W
V
U
P
N
HV3
HV2
HV5
TO POWER SUPPLY CIRCUIT
MB-3
(B)
R433
DC/DC CONVERTER
SHIELD G
SHIELD H
SHIELD A
SHIELD B
SHIELD C
R435
R437
E HEV-09
F HEV-09
G HEV-03
H HEV-03
I HEV-03
J HEV-03
HEV-01 C
A: R443 B: R442 DMCM
REF. TO GND [GND-09]
REF. TO GND [GND-10]
REF. TO GND [GND-10]

R432 (GRAY)
R433 (BLACK)
R437 (BLACK)
A: R443 (GREEN)
B: R442 (GREEN)

WI-41883

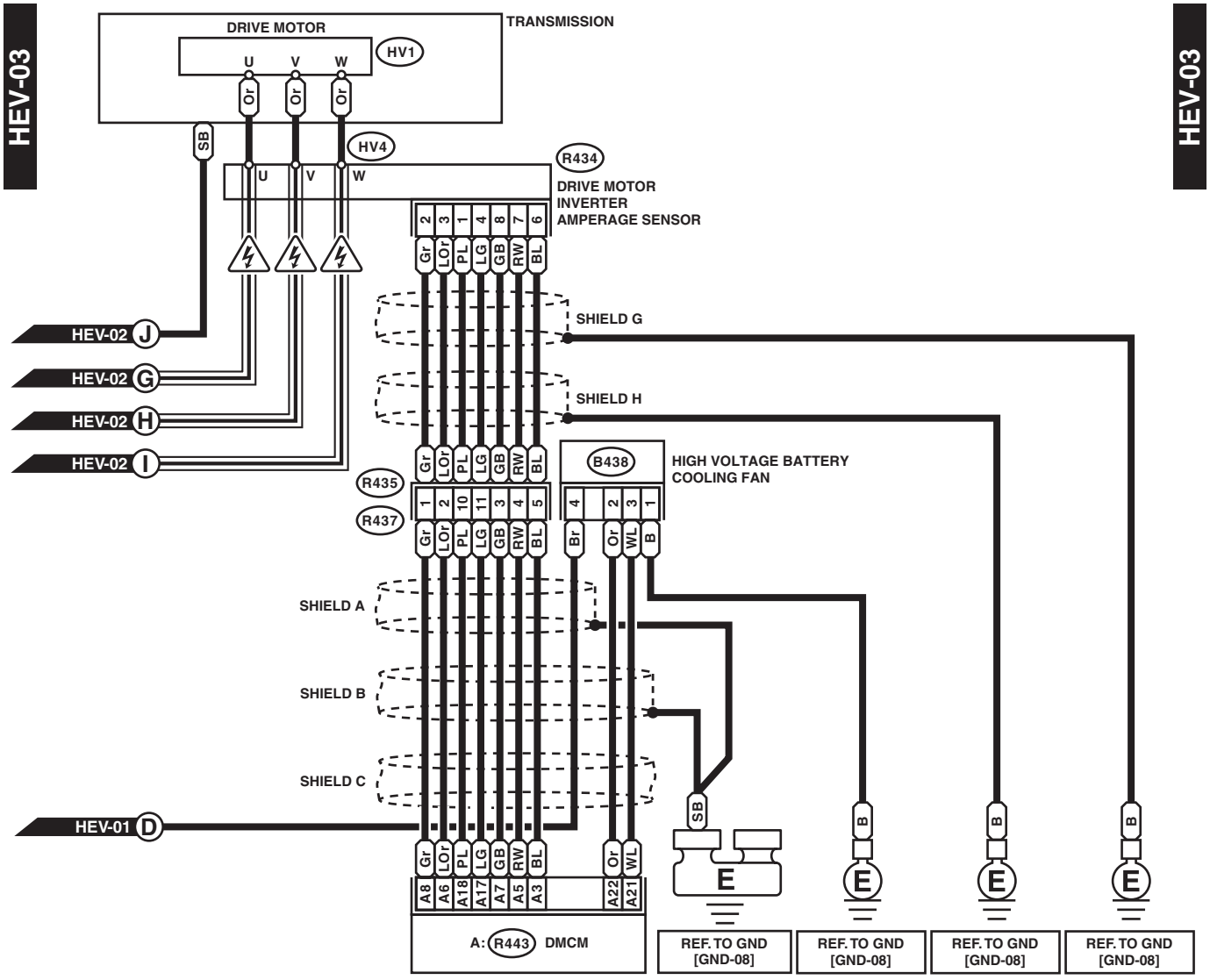

R434 (BLACK)

1	2	3	4
5	6	7	8

R437 (BLACK)

1	2	3	4		5	6	7	8
9	10	11	12	13	14	15	16	17	18	19

R438

1	2	3	4

A: R443 (GREEN)

1	2	3	4	5	6	7	8	9	10	11	12	13
14	15	16	17	18	19	20	21	22	23	24	25	26

WI-42220

HEV-04

HEV-04

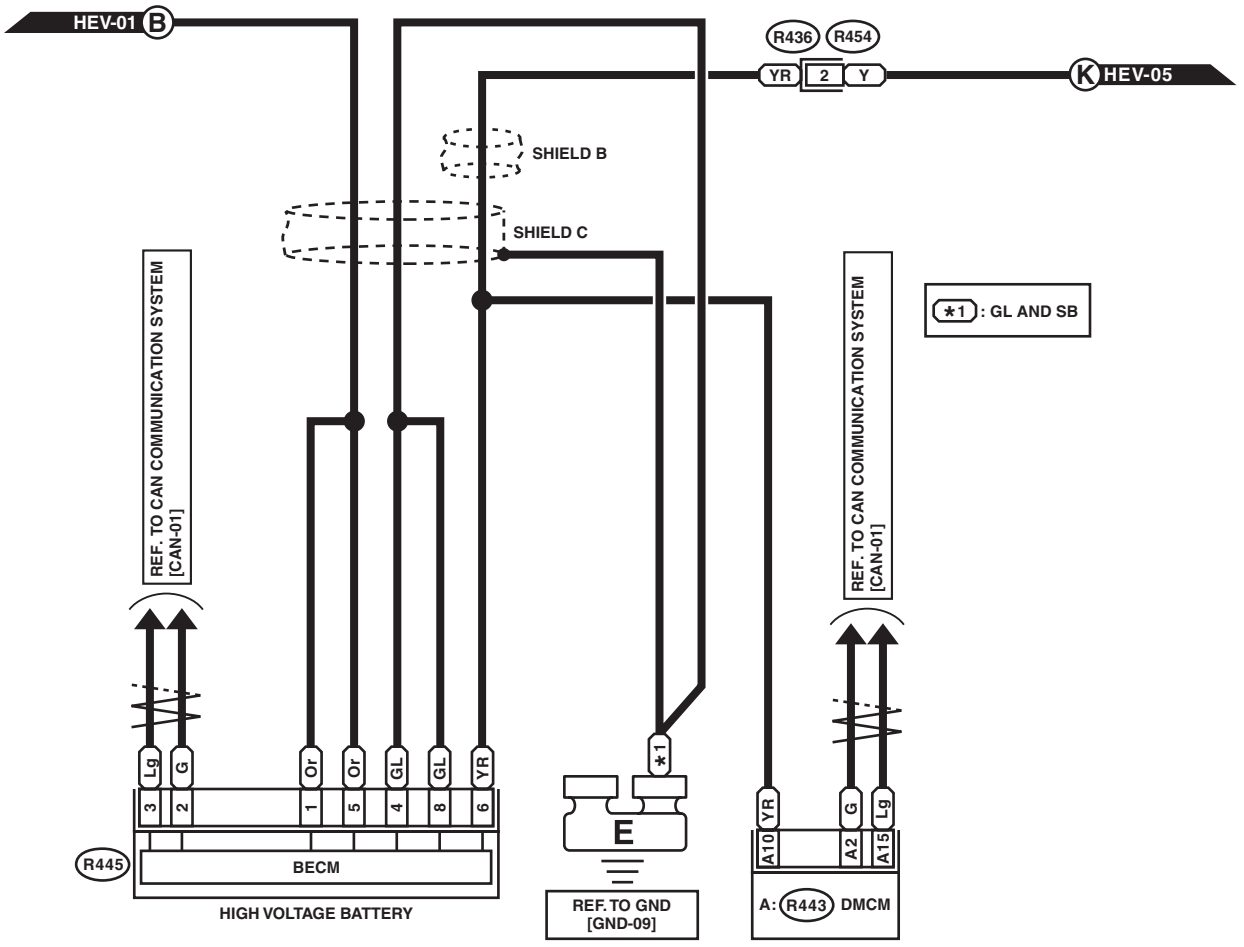

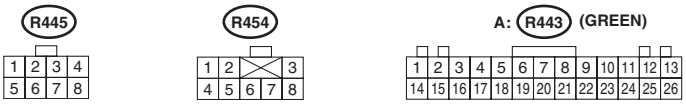

WI-42221

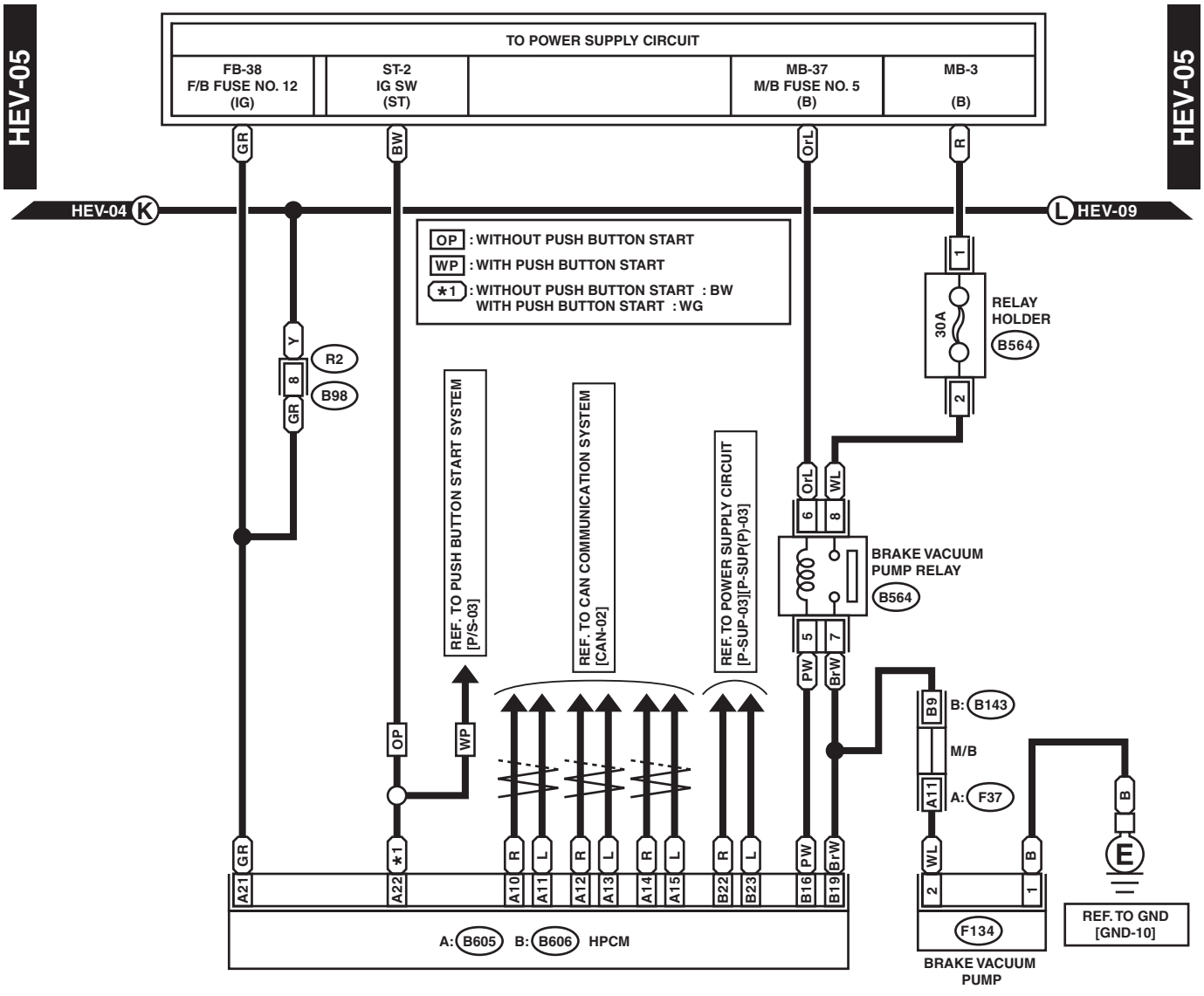
HEV-05
HEV-05
TO POWER SUPPLY CIRCUIT
FB-38
F/B FUSE NO. 12
(IG)
ST-2
IG SW
(ST)
MB-37
M/B FUSE NO. 5
(B)
MB-3
(B)
GR
BW
OrL
R
HEV-04 K
L HEV-09
OP : WITHOUT PUSH BUTTON START
WP : WITH PUSH BUTTON START
*1 : WITHOUT PUSH BUTTON START : BW
WITH PUSH BUTTON START : WG
RELAY HOLDER
B564
30A
R2
B98
REF. TO PUSH BUTTON START SYSTEM [P/S-03]
REF. TO CAN COMMUNICATION SYSTEM [CAN-02]
REF. TO POWER SUPPLY CIRCUIT [P-SUP-03][P-SUP(P)-03]
BRAKE VACUUM PUMP RELAY
B564
M/B
A: F37
B: B143
A: B605 B: B606 HPCM
F134
BRAKE VACUUM PUMP
REF. TO GND [GND-10]

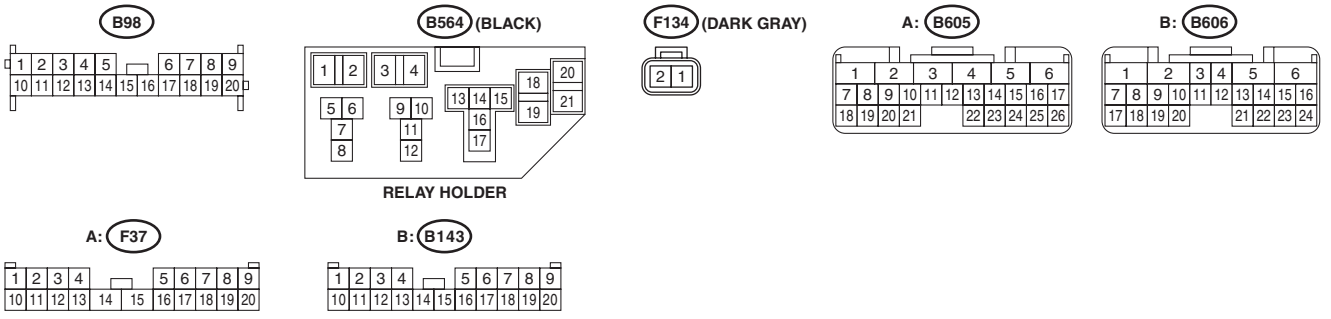
B98
B564 (BLACK)
F134 (DARK GRAY)
A: B605
B: B606
RELAY HOLDER
A: F37
B: B143

WI-42222

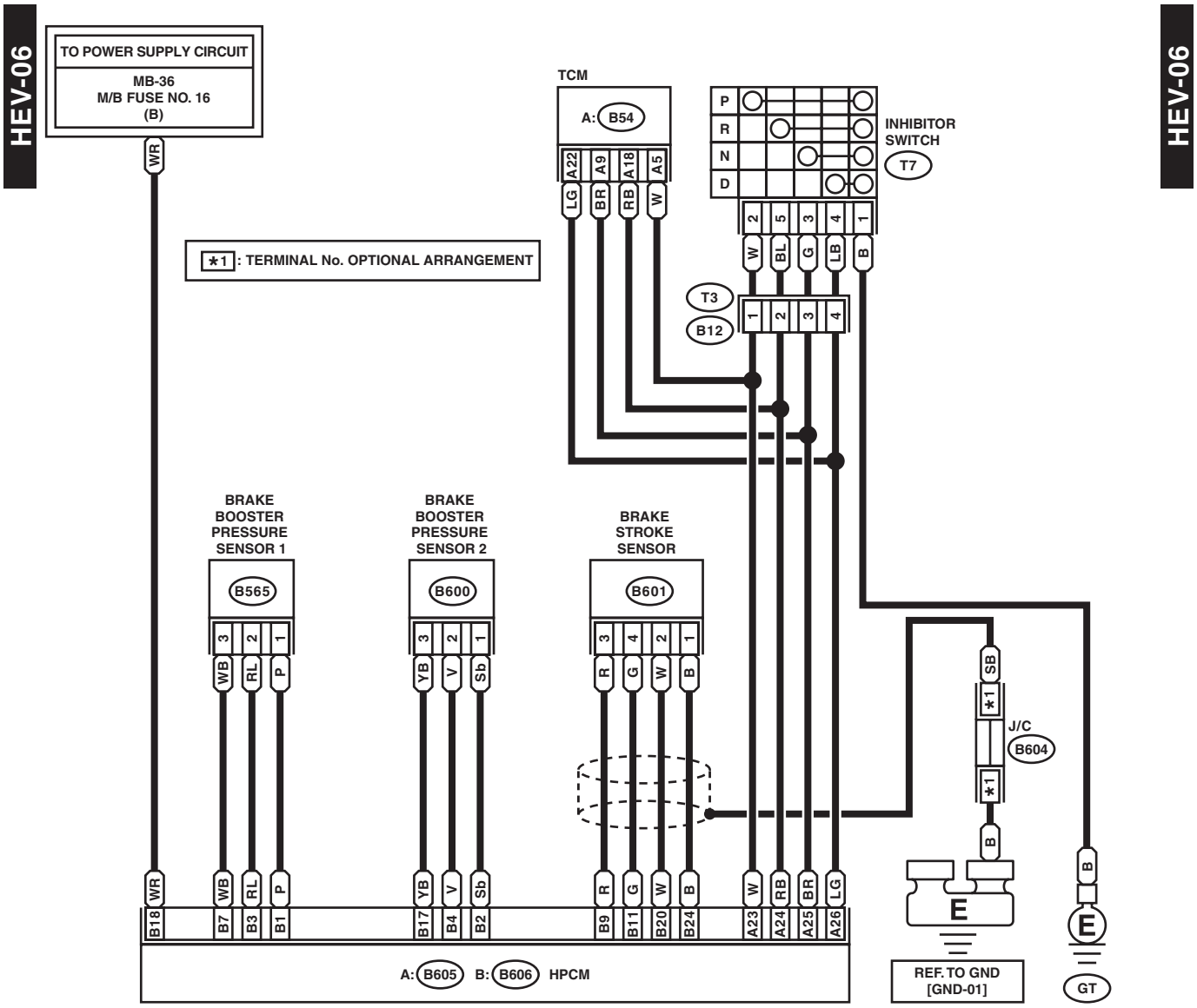
HEV-06
HEV-06
TO POWER SUPPLY CIRCUIT
MB-36
M/B FUSE NO. 16
(B)
WR
TCM
A: B54
A22
A9
A18
A5
LG
BR
RB
W
P
R
N
D
INHIBITOR SWITCH
T7
2
5
3
4
1
W
BL
G
LB
B
T3
B12
1
2
3
4
*1: TERMINAL No. OPTIONAL ARRANGEMENT
BRAKE BOOSTER PRESSURE SENSOR 1
B565
3
2
1
WB
RL
P
BRAKE BOOSTER PRESSURE SENSOR 2
B600
3
2
1
YB
V
Sb
BRAKE STROKE SENSOR
B601
3
4
2
1
R
G
W
B
SB
*1
J/C
B604
*1
B
E
B
E
GT
REF. TO GND [GND-01]
WR
WB
RL
P
YB
V
Sb
R
G
W
B
W
RB
BR
LG
B18
B7
B3
B1
B17
B4
B2
B9
B11
B20
B24
A23
A24
A25
A26
A: B605
B: B606
HPCM

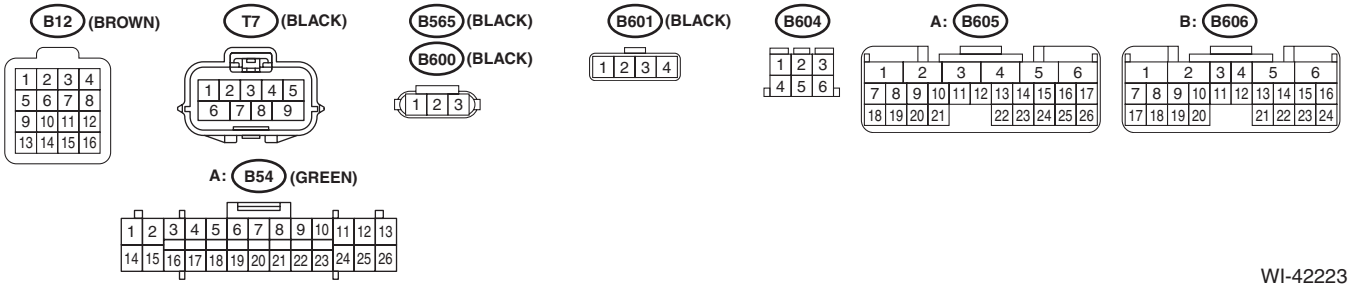
B12 (BROWN)
T7 (BLACK)
B565 (BLACK)
B600 (BLACK)
B601 (BLACK)
B604
A: B605
B: B606
A: B54 (GREEN)

WI-42223

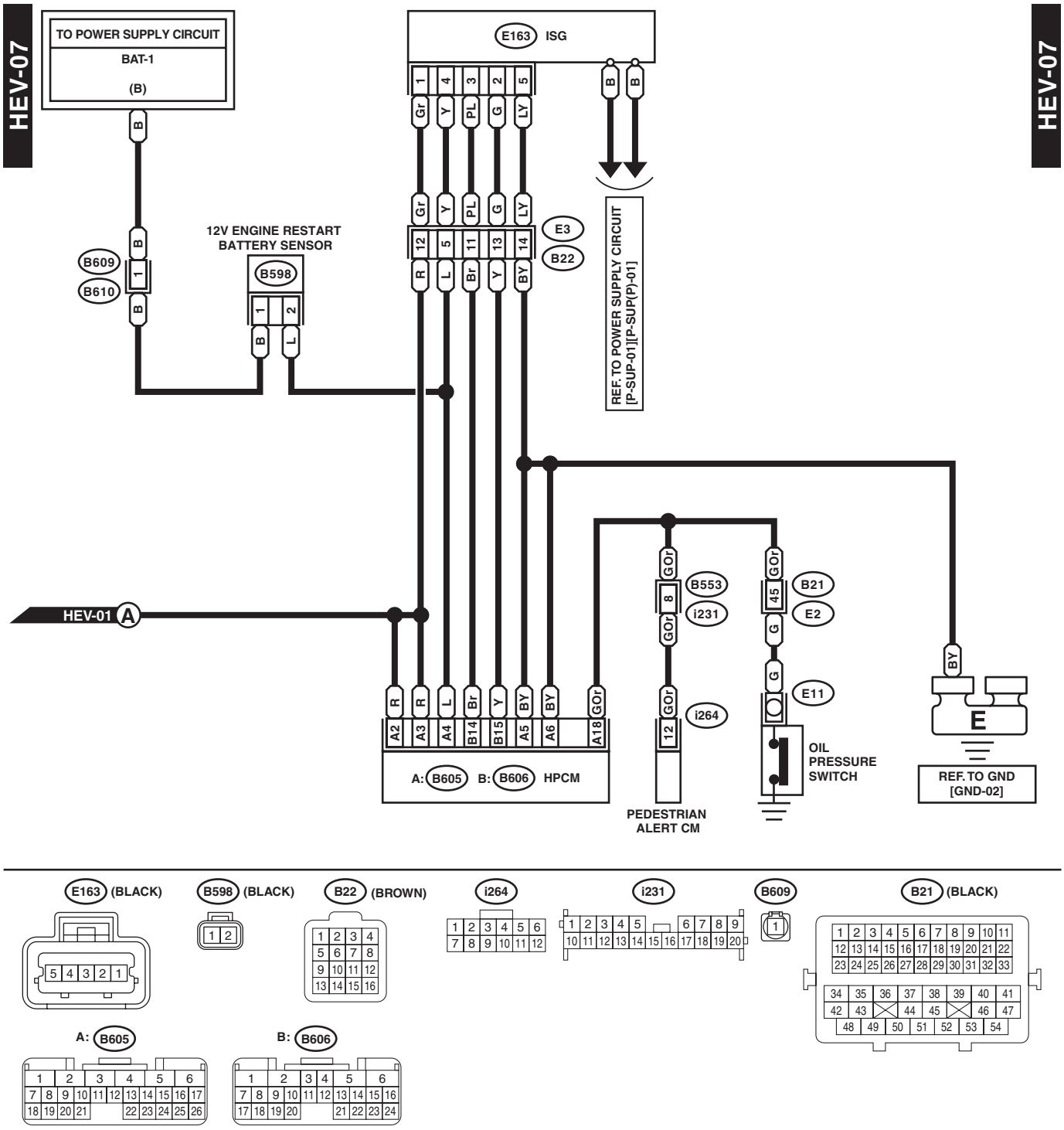
HEV-07
HEV-07
TO POWER SUPPLY CIRCUIT
BAT-1
(B)
E163 ISG
B
B
1 4 3 2 5
Gr Y PL G LY
REF. TO POWER SUPPLY CIRCUIT [P-SUP-01][P-SUP(P)-01]
12V ENGINE RESTART BATTERY SENSOR
B609
B610
B598
E3
B22
12 5 11 13 14
R L Br Y BY
HEV-01 A
GOr
B553
i231
B21
E2
45
G
E11
i264
12
OIL PRESSURE SWITCH
BY
E
REF. TO GND [GND-02]
A2 A3 A4 B14 B15 A5 A6 A18
A: B605 B: B606 HPCM
PEDESTRIAN ALERT CM
E163 (BLACK)
B598 (BLACK)
B22 (BROWN)
i264
i231
B609
B21 (BLACK)
A: B605
B: B606

WI-42224

HEV-08

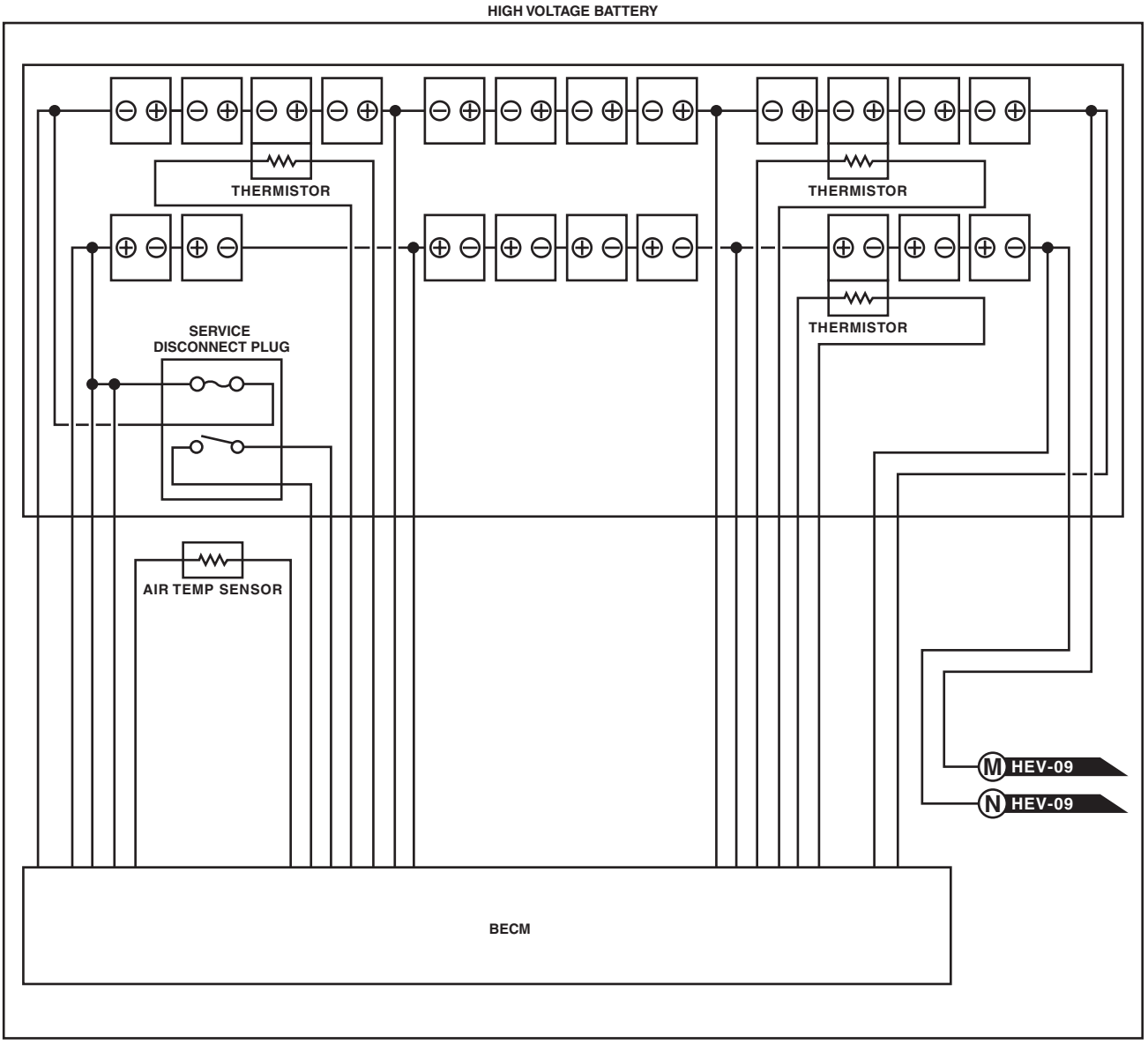

WI-42225

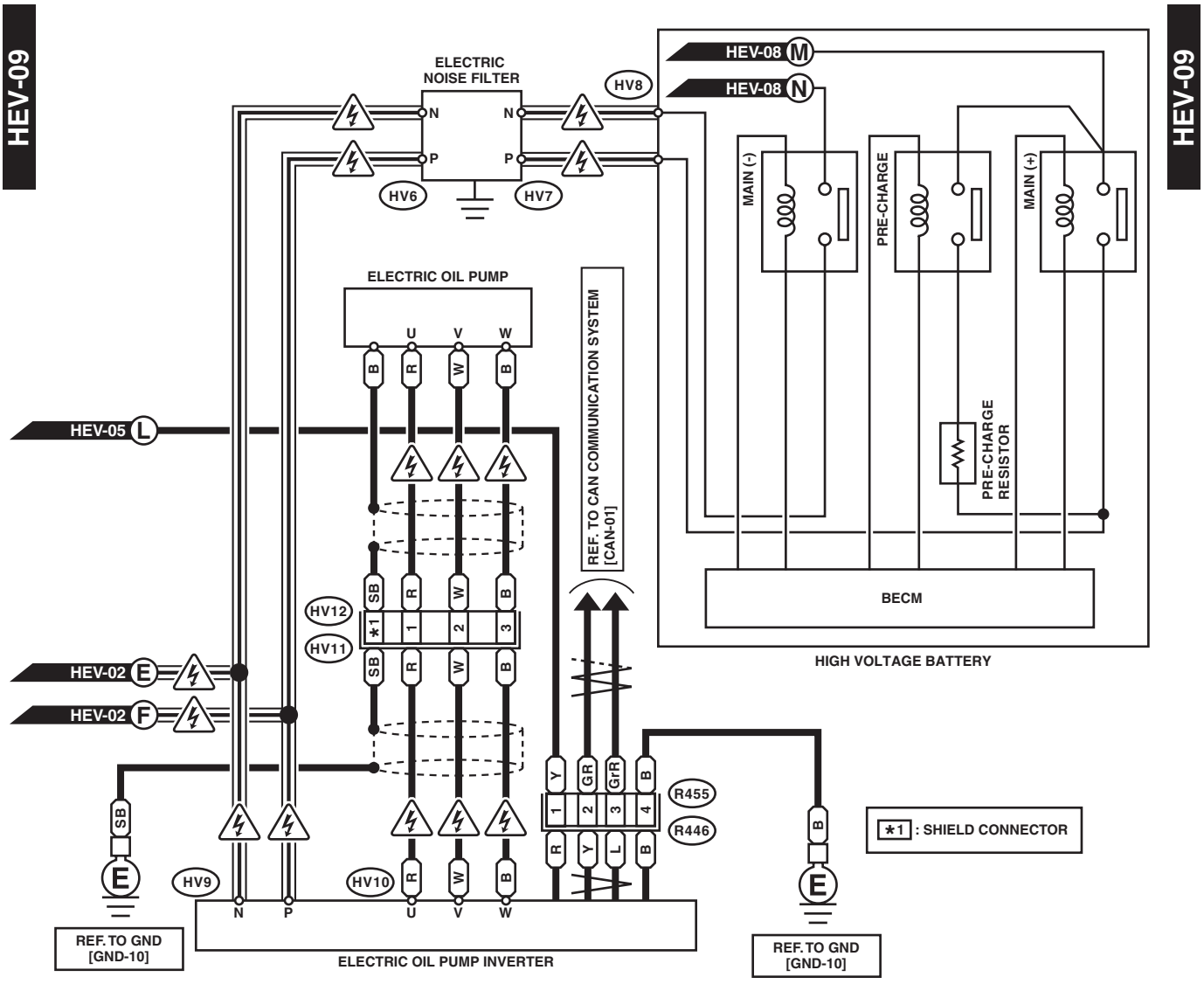
HEV-09
HEV-09
ELECTRIC NOISE FILTER
HV8
HV6
HV7
N
P
HEV-08 M
HEV-08 N
MAIN (-)
PRE-CHARGE
MAIN (+)
PRE-CHARGE RESISTOR
BECM
HIGH VOLTAGE BATTERY
ELECTRIC OIL PUMP
U V W
REF. TO CAN COMMUNICATION SYSTEM [CAN-01]
HEV-05 L
HV12
HV11
HEV-02 E
HEV-02 F
R455
R446
HV9
HV10
REF. TO GND [GND-10]
ELECTRIC OIL PUMP INVERTER
REF. TO GND [GND-10]
*1 : SHIELD CONNECTOR

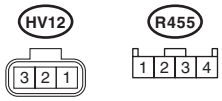
HV12
R455
3 2 1
1 2 3 4

WI-42226

HEV-10

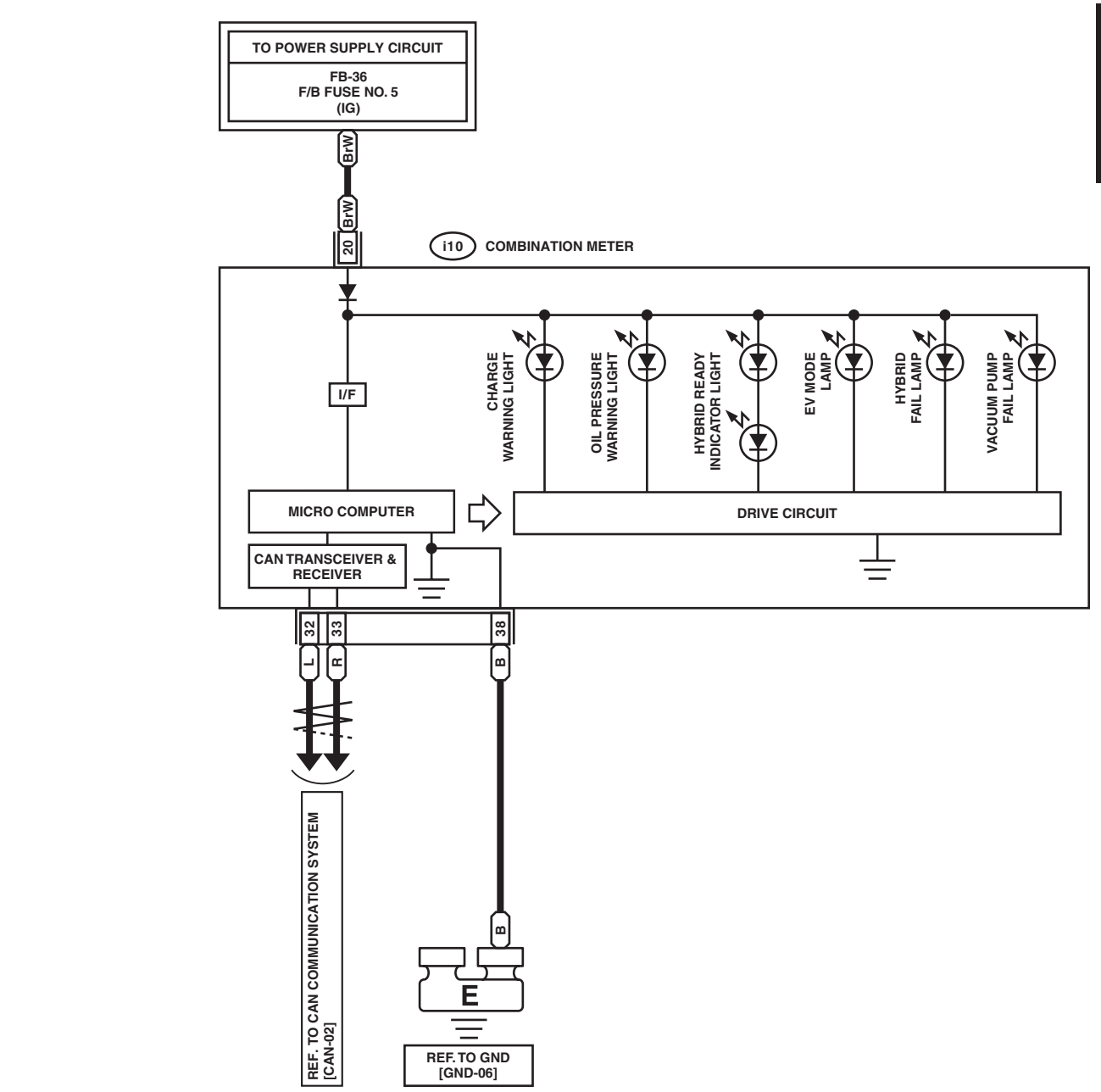

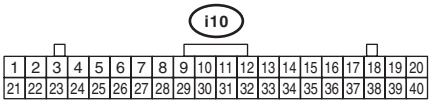

WI-42227

26.Horn System

A: WIRING DIAGRAM

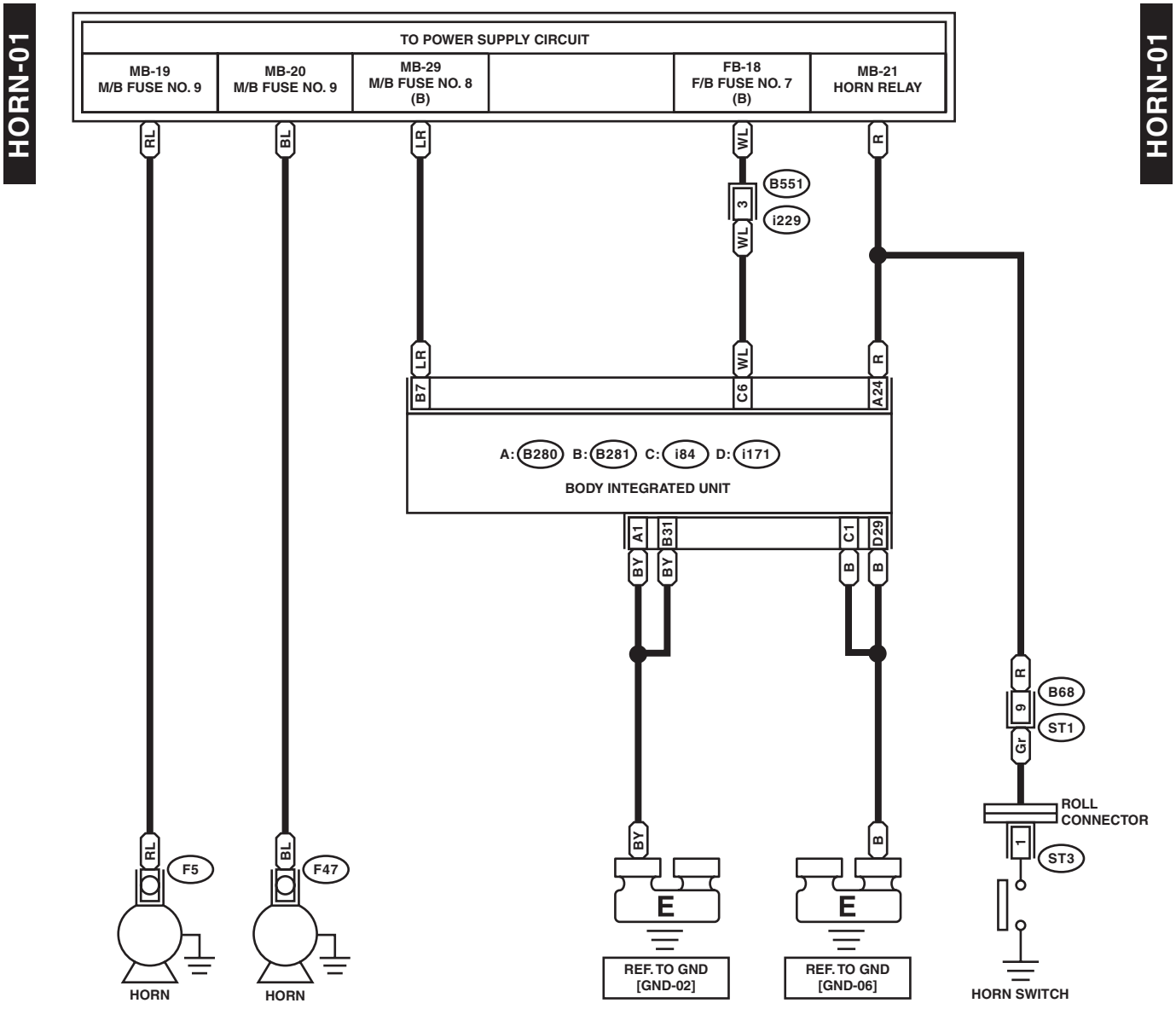

WI-34217

27.Immobilizer System

A: WIRING DIAGRAM

1. WITHOUT PUSH BUTTON START

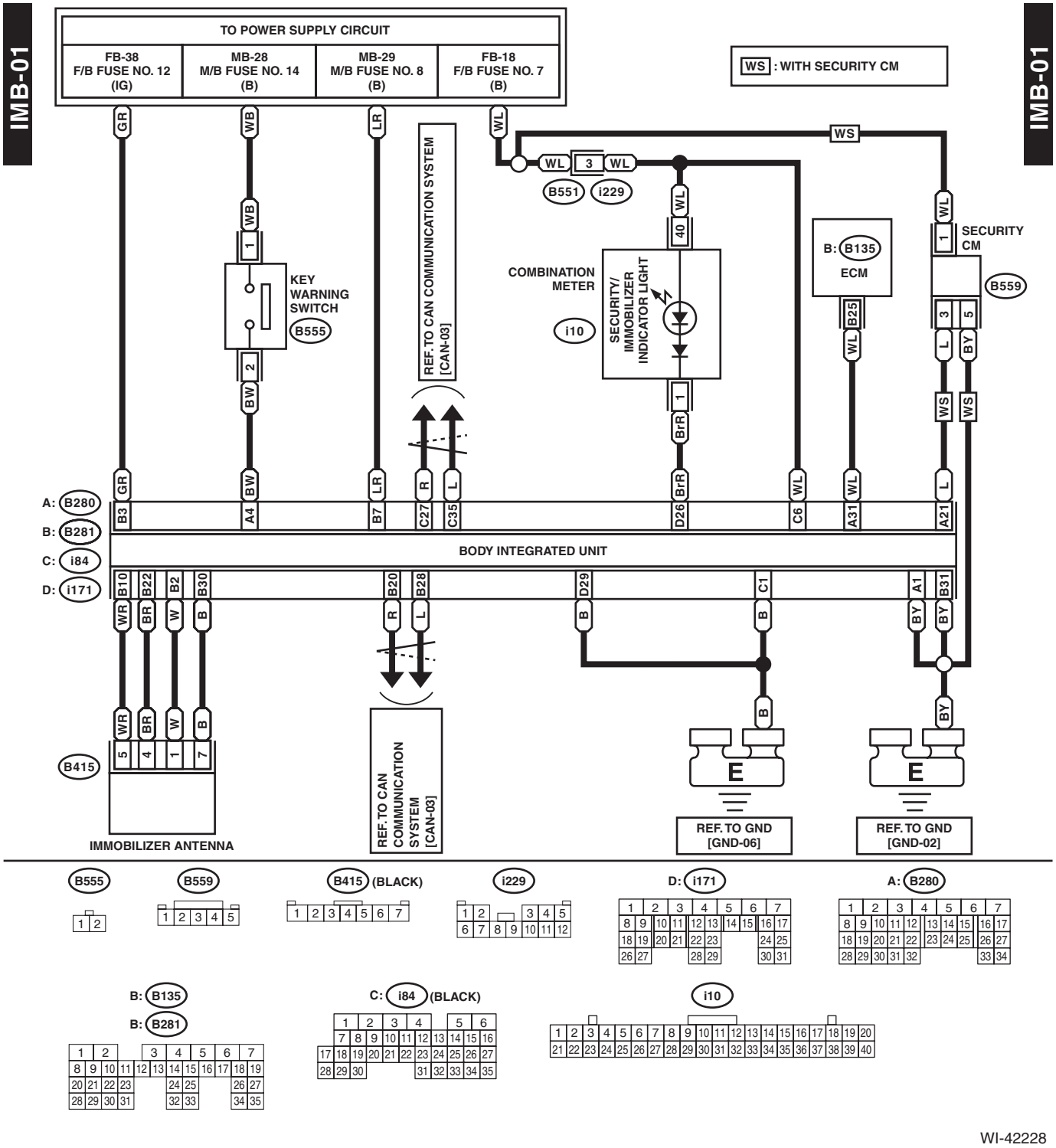

WI-42228

2. WITH PUSH BUTTON START

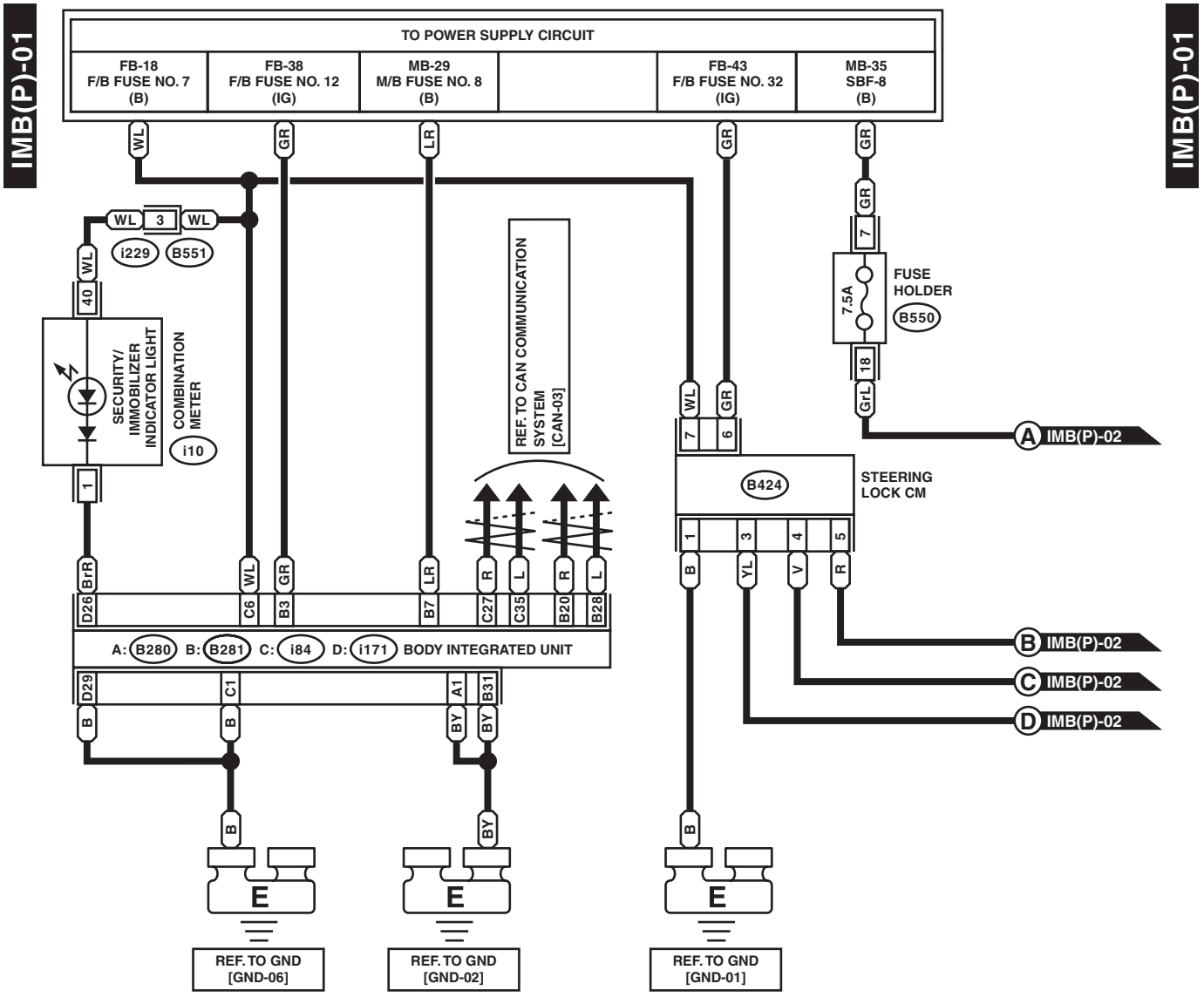

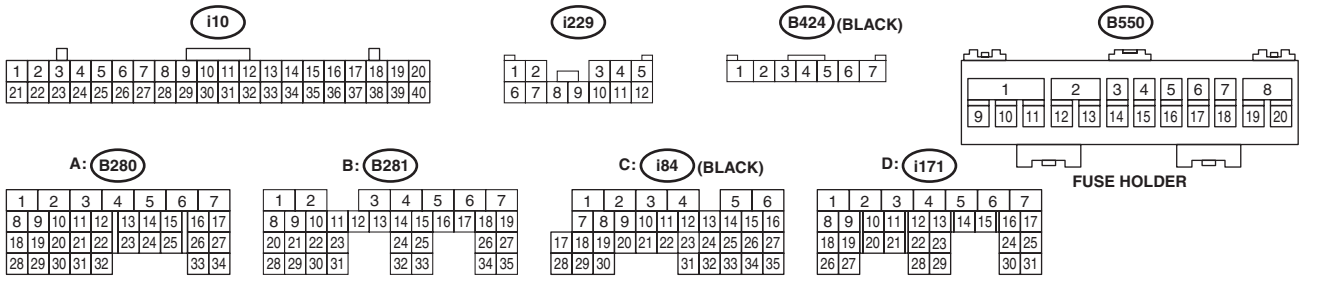

WI-42229

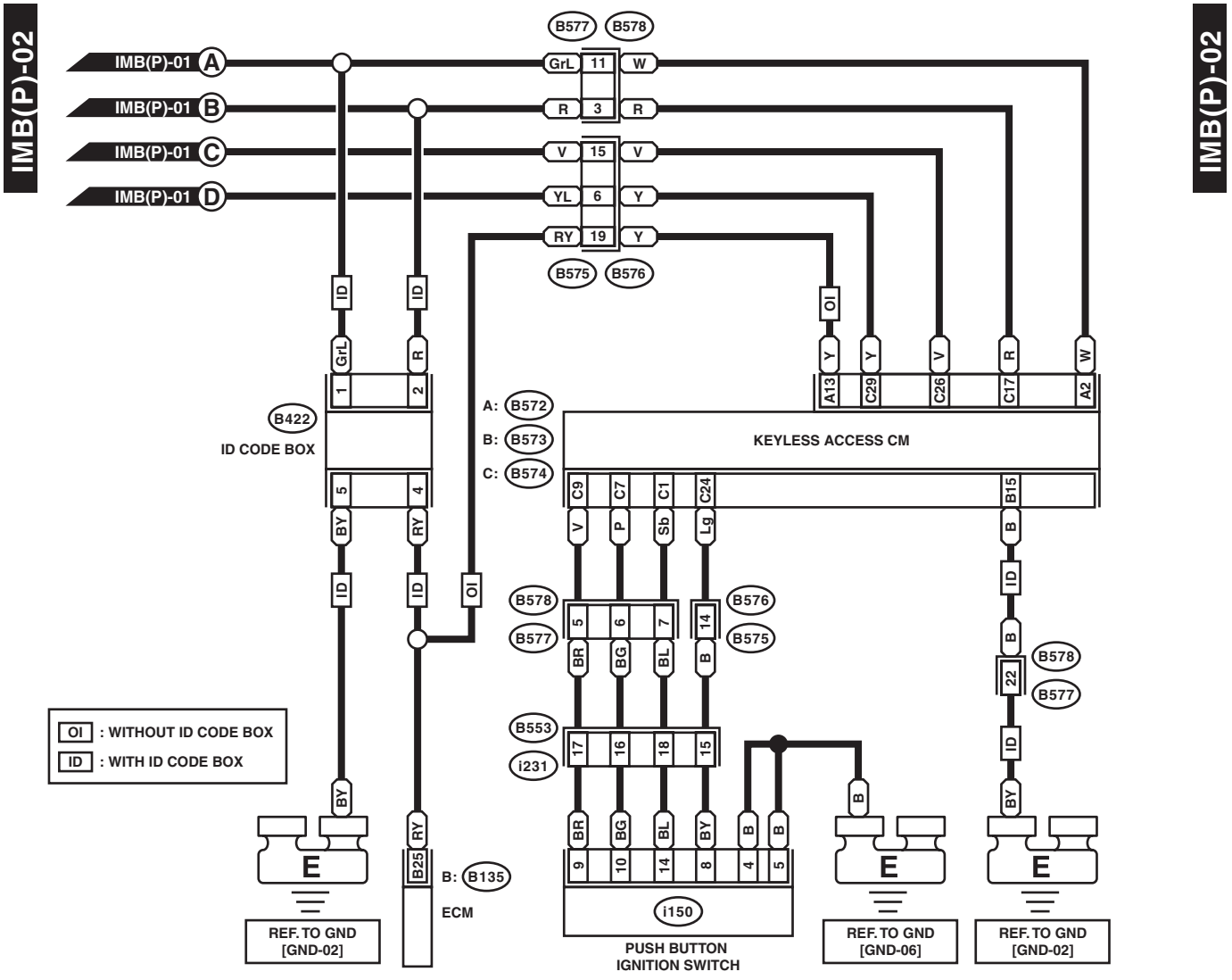
IMB(P)-02
IMB(P)-01 A
IMB(P)-01 B
IMB(P)-01 C
IMB(P)-01 D
B577
B578
GrL 11 W
R 3 R
V 15 V
YL 6 Y
RY 19 Y
B575
B576
ID
OI
B422
ID CODE BOX
A: B572
B: B573
C: B574
KEYLESS ACCESS CM
A13
C29
C26
C17
A2
C9
C7
C1
C24
B15
BY
RY
V
P
Sb
Lg
B
B578
B577
B576
B575
BR
BG
BL
B553
i231
17
16
18
15
22
OI : WITHOUT ID CODE BOX
ID : WITH ID CODE BOX
E
B25
B: B135
ECM
i150
PUSH BUTTON IGNITION SWITCH
REF. TO GND [GND-02]
REF. TO GND [GND-06]
REF. TO GND [GND-02]

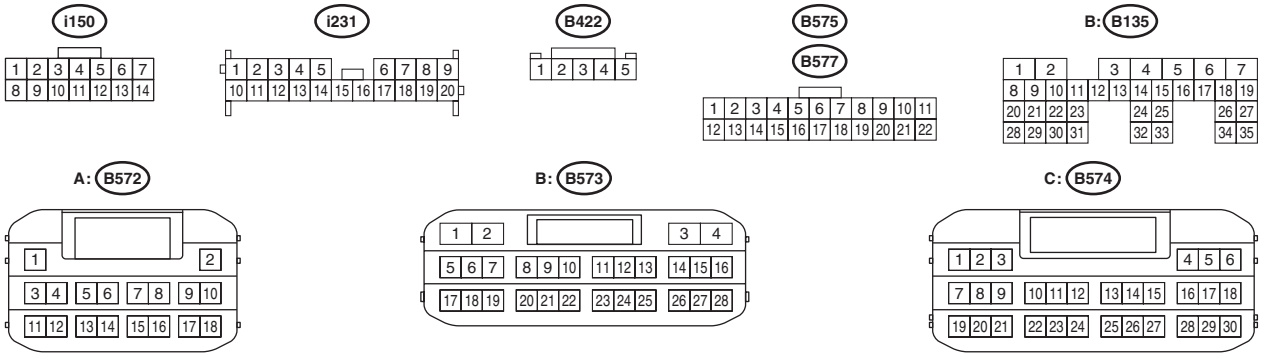
i150
i231
B422
B575
B577
B: B135
A: B572
B: B573
C: B574

WI-42230

IMB(P)-03

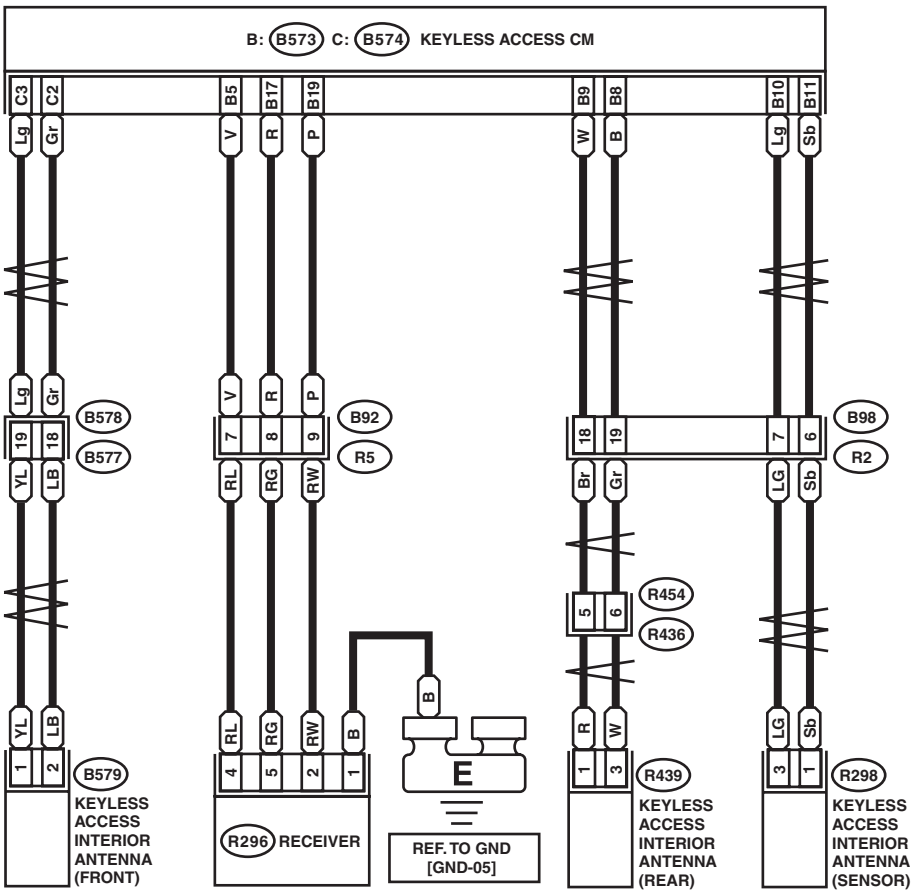

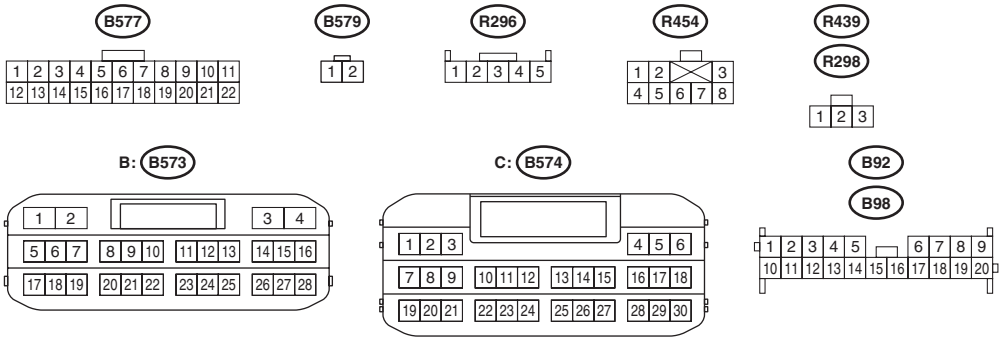

WI-42231

28.Interior Light System

A: WIRING DIAGRAM

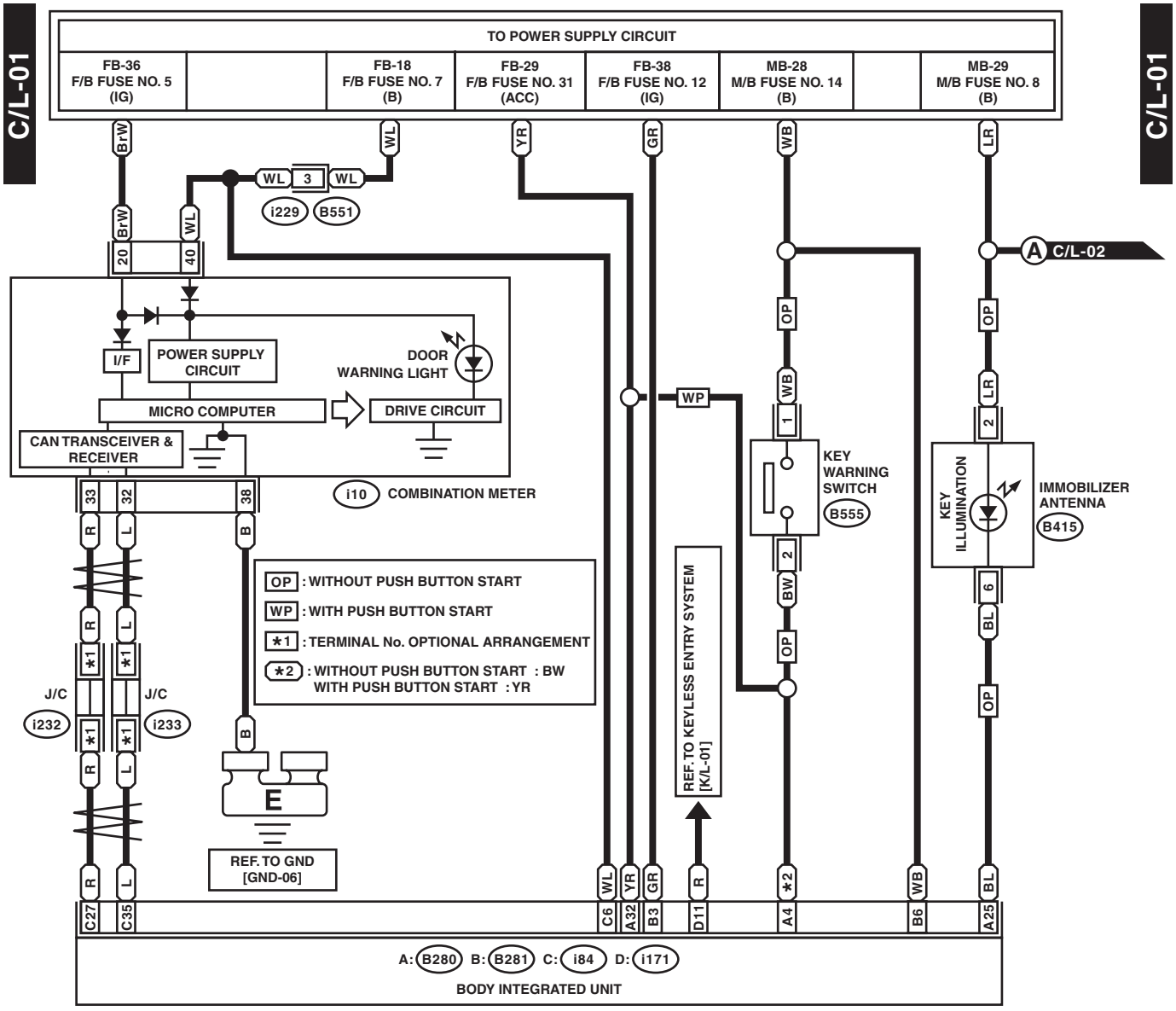

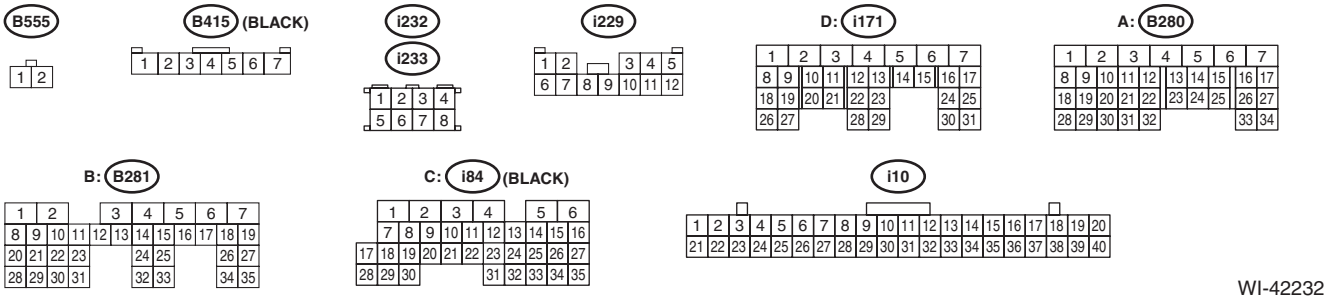

WI-42232

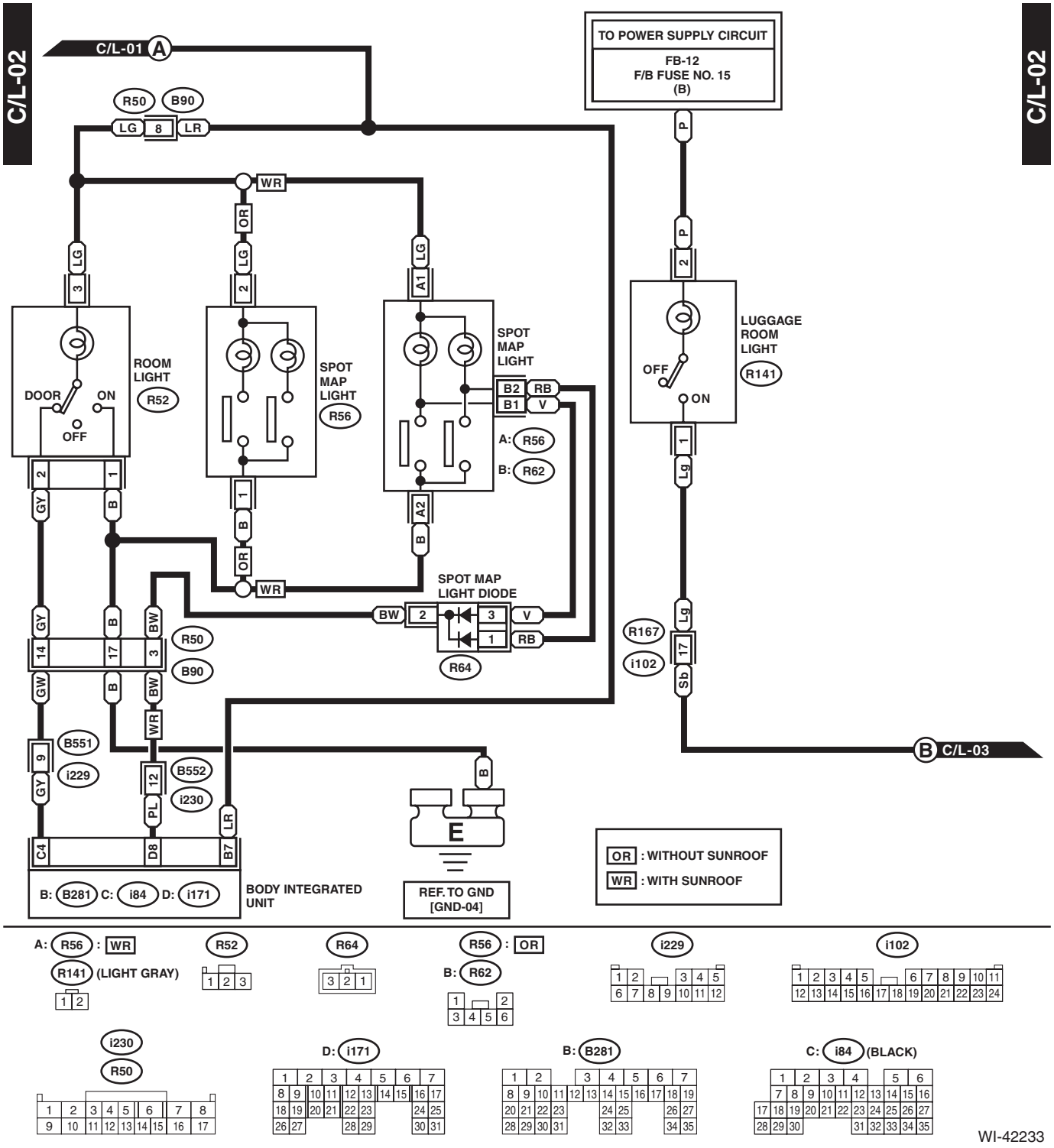
C/L-02
C/L-01 A
TO POWER SUPPLY CIRCUIT
FB-12
F/B FUSE NO. 15
(B)
R50
B90
LG
8
LR
WR
OR
LG
3
2
A1
P
2
ROOM LIGHT
R52
DOOR
ON
OFF
SPOT MAP LIGHT
R56
SPOT MAP LIGHT
B2
RB
B1
V
A: R56
B: R62
LUGGAGE ROOM LIGHT
R141
OFF
ON
1
Lg
GY
B
A2
SPOT MAP LIGHT DIODE
BW
V
RB
R64
R167
i102
Sb
14
17
3
GW
WR
B551
i229
9
B552
i230
12
PL
LR
C4
D8
B7
B
E
B: B281 C: i84 D: i171
BODY INTEGRATED UNIT
REF. TO GND [GND-04]
OR : WITHOUT SUNROOF
WR : WITH SUNROOF
B C/L-03
A: R56 : WR
R141 (LIGHT GRAY)
R52
R64
R56 : OR
B: R62
i229
i102
i230
R50
D: i171
B: B281
C: i84 (BLACK)
WI-42233

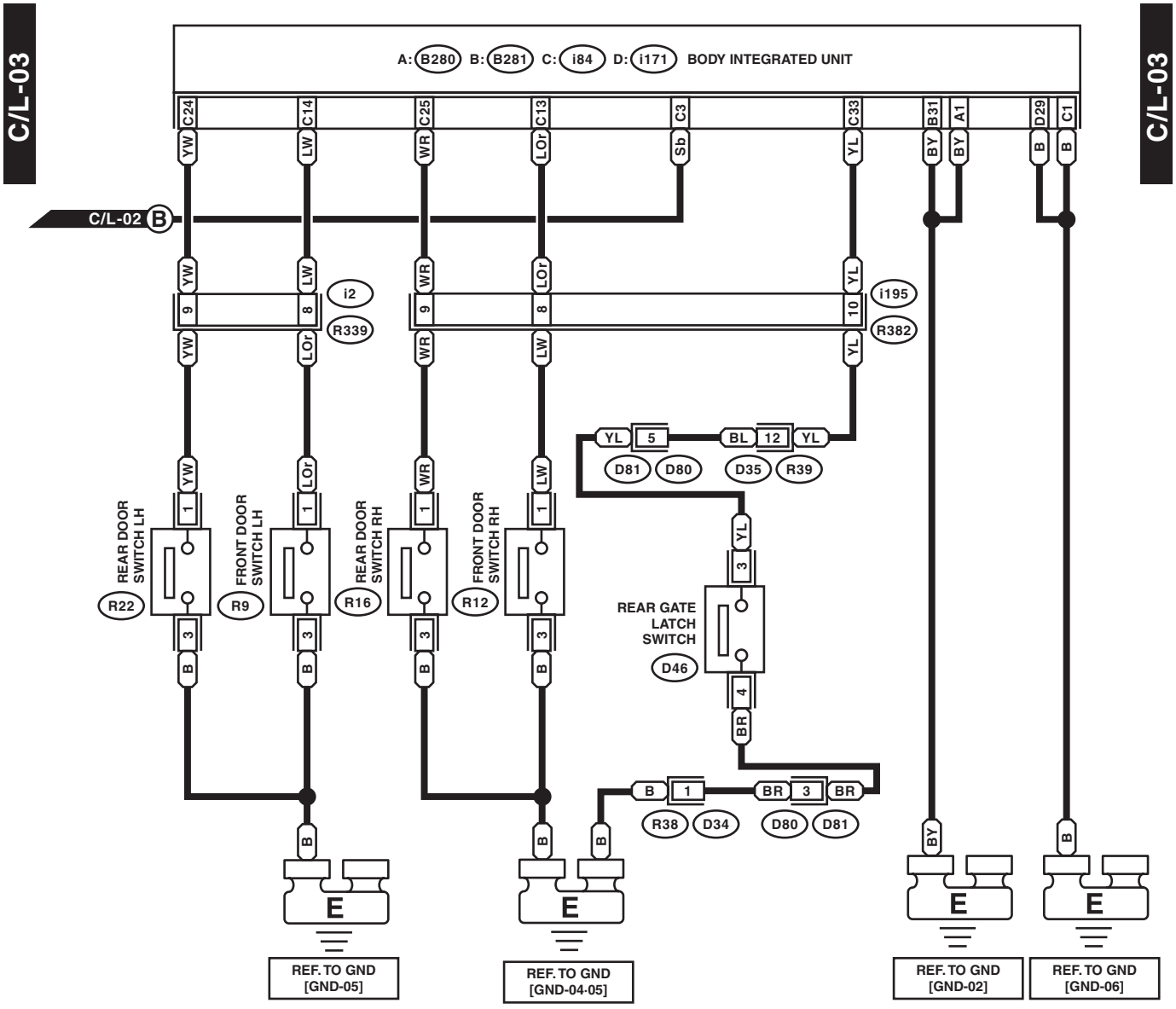
C/L-03
C/L-03
A: B280 B: B281 C: i84 D: i171 BODY INTEGRATED UNIT
C24
C14
C25
C13
C3
C33
B31
A1
D29
C1
YW
LW
WR
LOr
Sb
YL
BY
BY
B
B
C/L-02 B
i2
R339
i195
R382
REAR DOOR SWITCH LH
R22
FRONT DOOR SWITCH LH
R9
REAR DOOR SWITCH RH
R16
FRONT DOOR SWITCH RH
R12
REAR GATE LATCH SWITCH
D46
YL 5 BL 12 YL
D81 D80 D35 R39
B 1 BR 3 BR
R38 D34 D80 D81
REF. TO GND [GND-05]
REF. TO GND [GND-04·05]
REF. TO GND [GND-02]
REF. TO GND [GND-06]
R9 R16 R12 R22
D46
D34 D80
i2 i195
D35 (GRAY)
D: i171
A: B280
B: B281
C: i84 (BLACK)
WI-42234

29.Keyless Access System

A: WIRING DIAGRAM

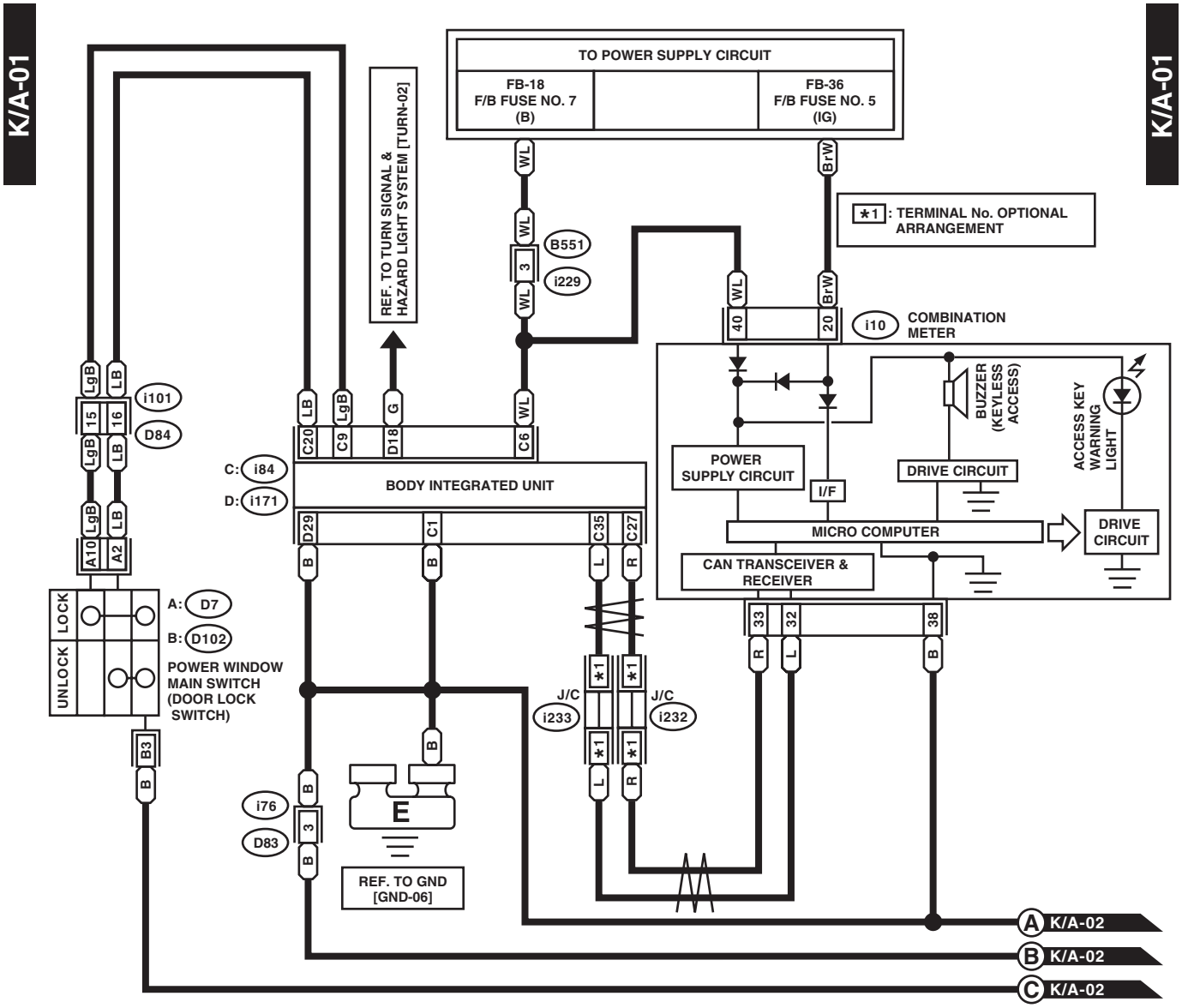

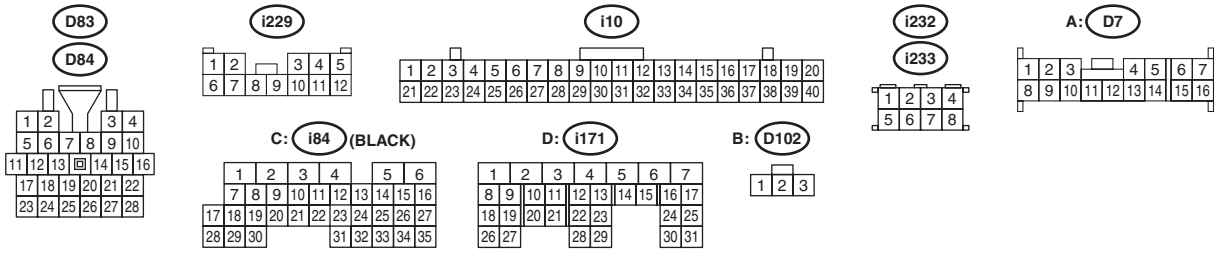

WI-42235

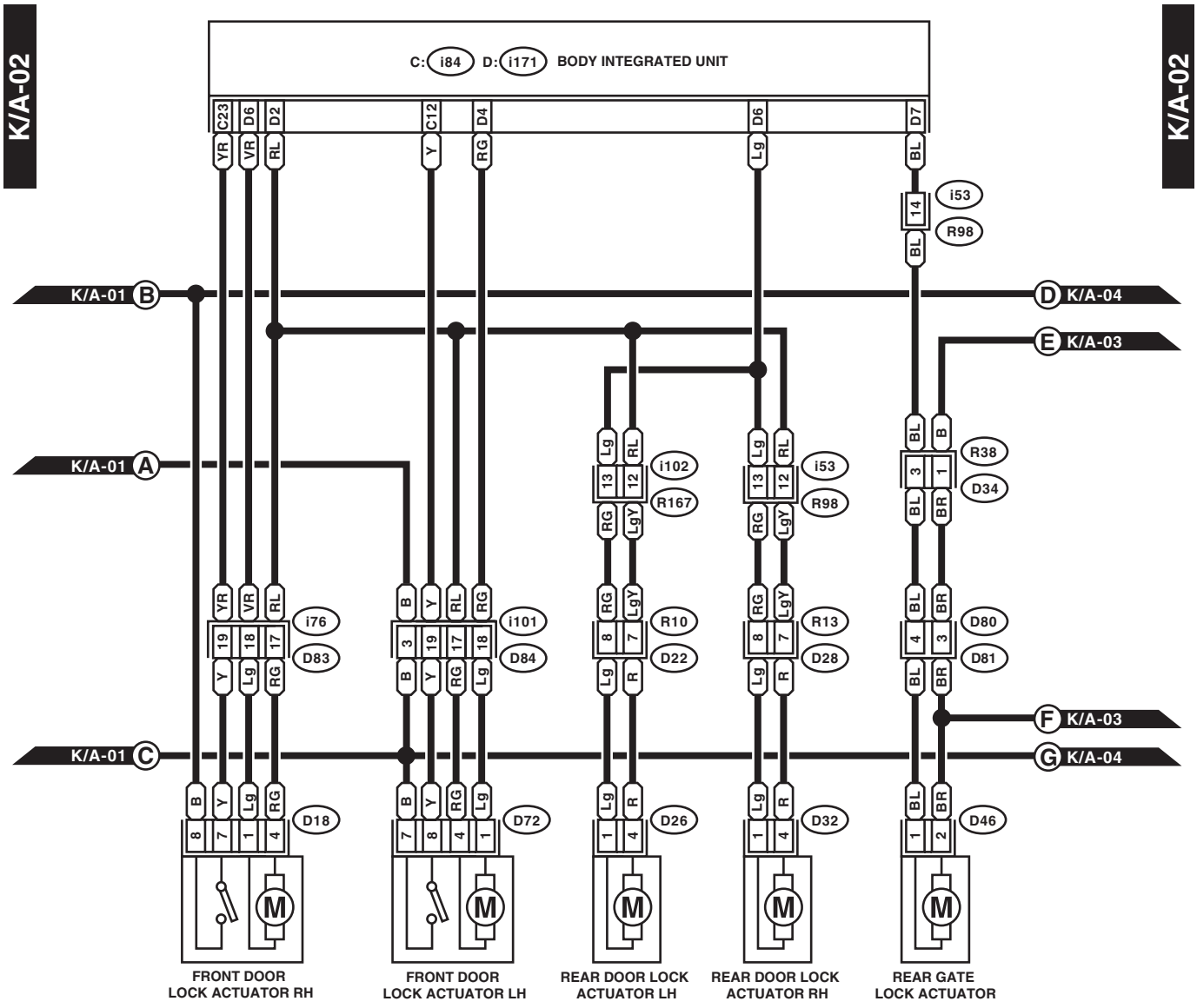
K/A-02
K/A-02
C: i84 D: i171 BODY INTEGRATED UNIT
C23 D6 D2 C12 D4 D6 D7
YR VR RL Y RG Lg BL
i53
14
R98
BL
K/A-01 B
D K/A-04
E K/A-03
K/A-01 A
i102
R167
i53
R98
R38
D34
i76
D83
i101
D84
R10
D22
R13
D28
D80
D81
F K/A-03
K/A-01 C
G K/A-04
D18
D72
D26
D32
D46
M
FRONT DOOR LOCK ACTUATOR RH
FRONT DOOR LOCK ACTUATOR LH
REAR DOOR LOCK ACTUATOR LH
REAR DOOR LOCK ACTUATOR RH
REAR GATE LOCK ACTUATOR

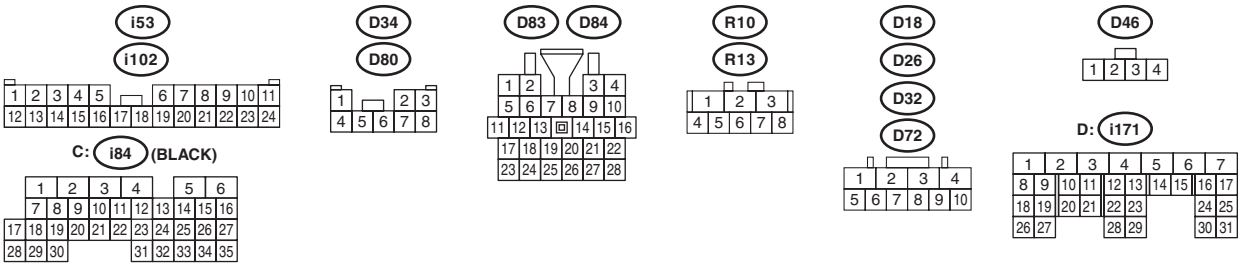
i53
i102
C: i84 (BLACK)
D34
D80
D83
D84
R10
R13
D18
D26
D32
D72
D46
D: i171

WI-42236

K/A-03

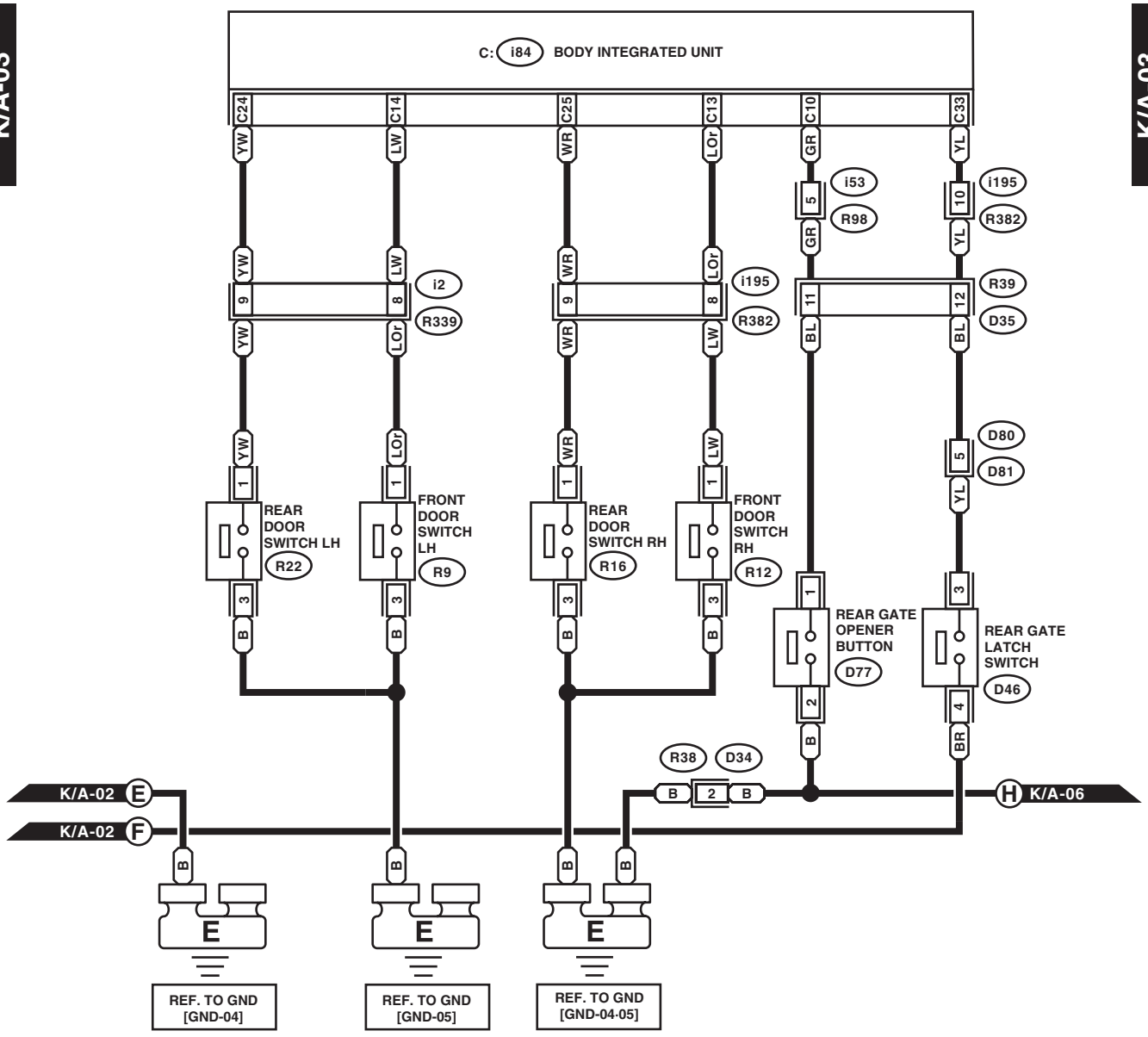

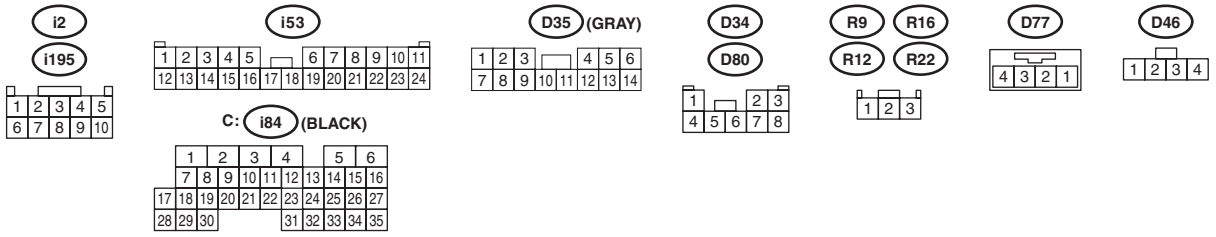

WI-42237

K/A-04

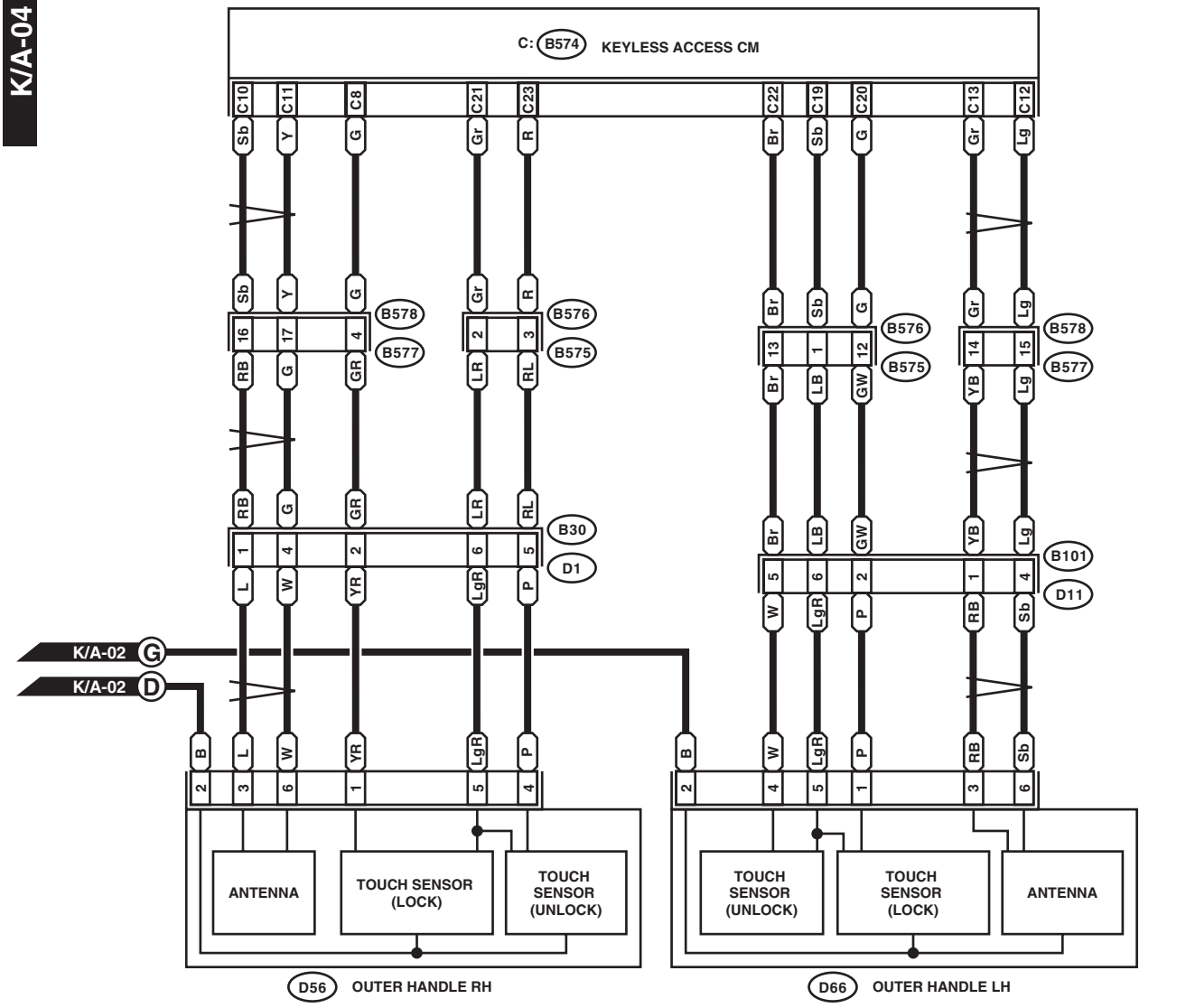

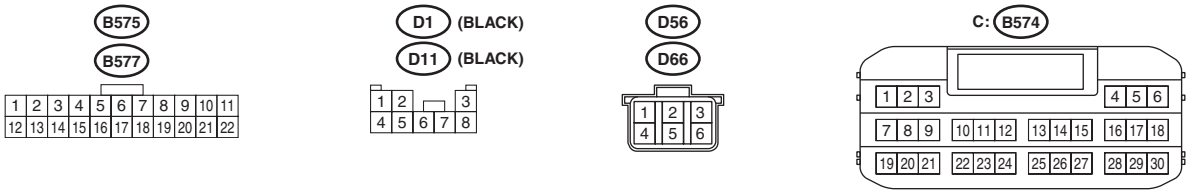

WI-42238

K/A-05

K/A-05

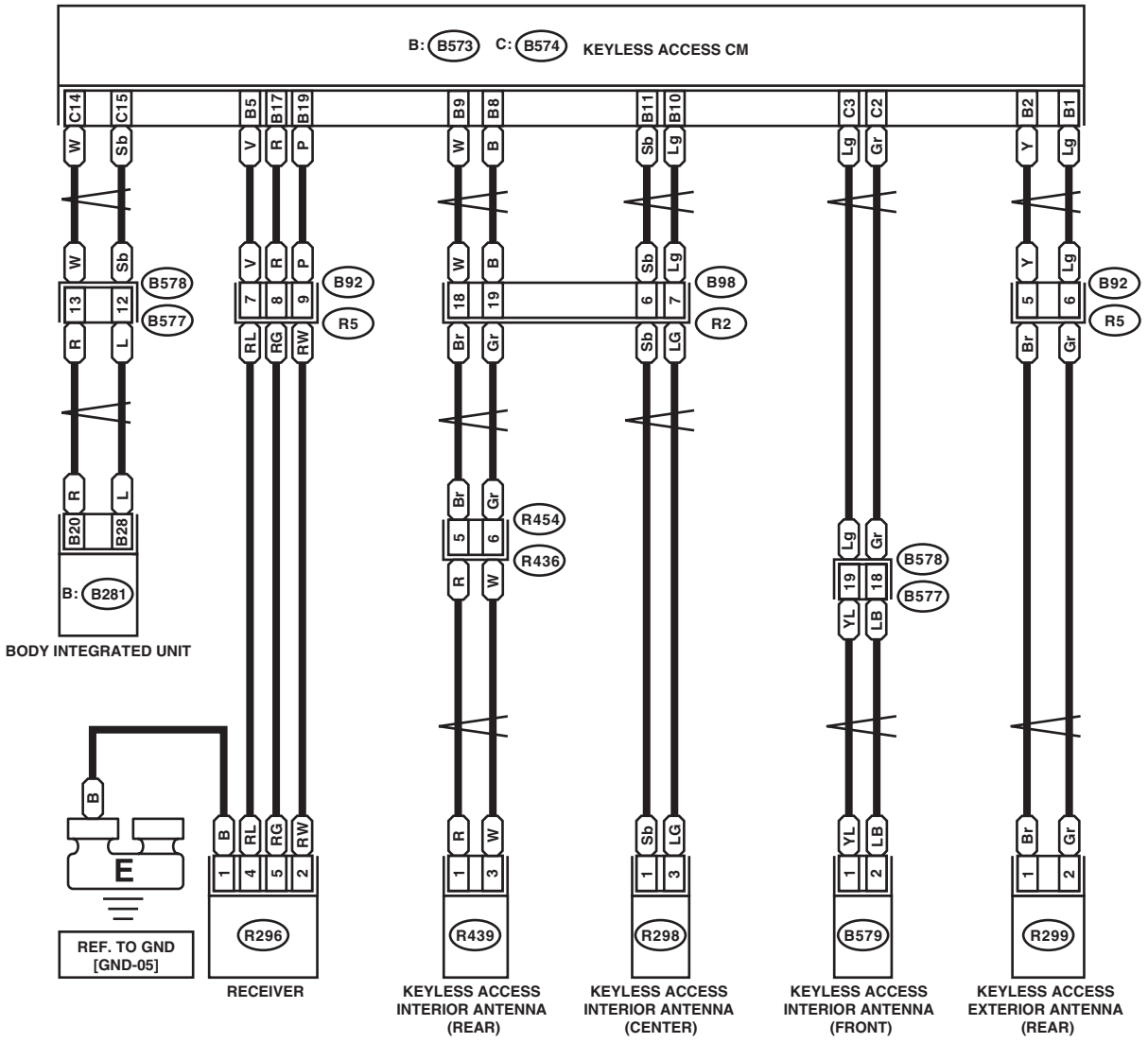

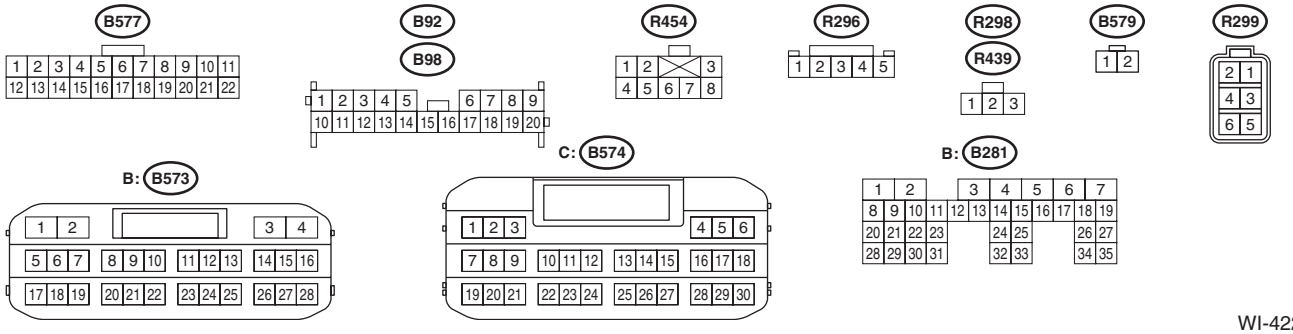

WI-42239

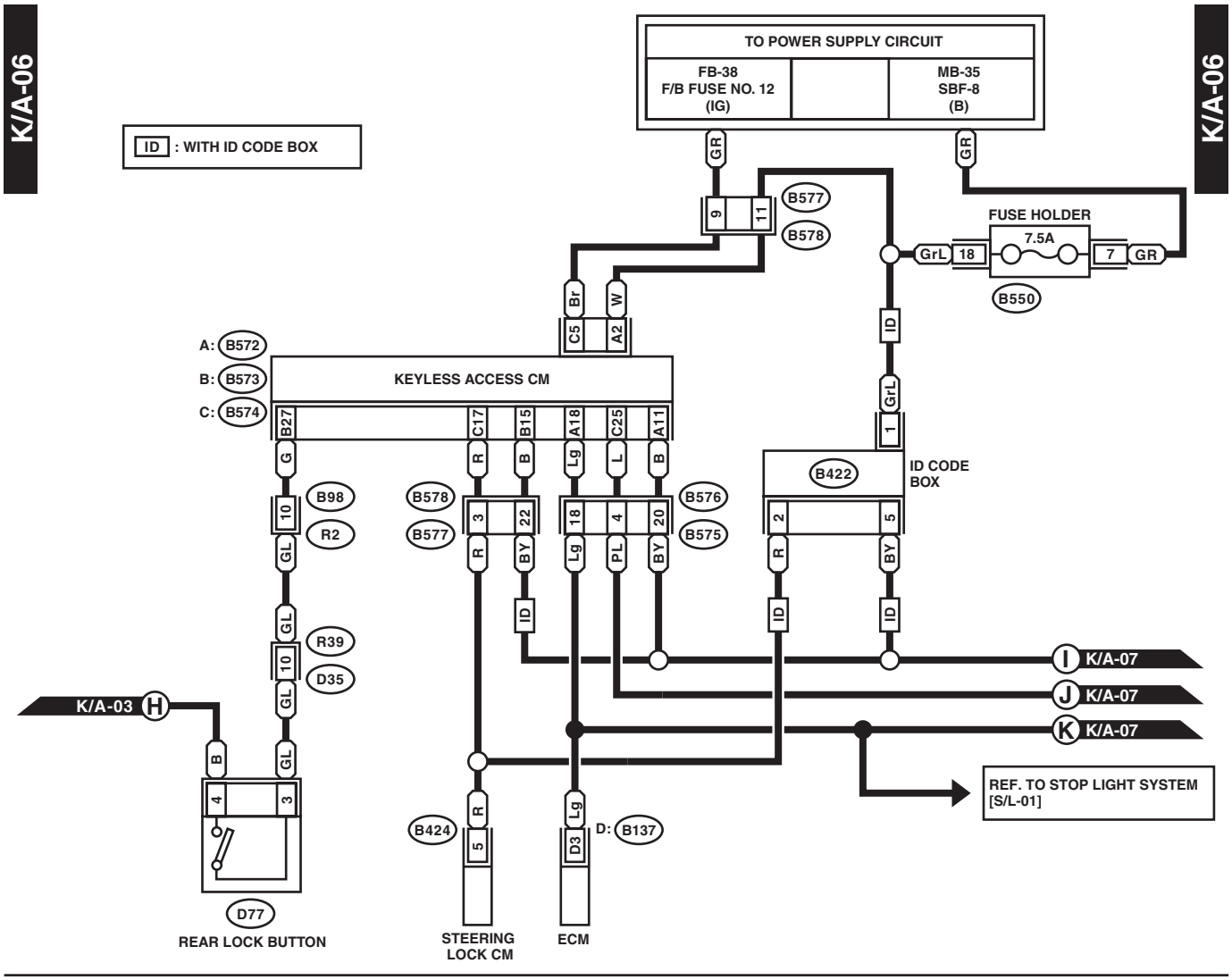
K/A-06
K/A-06
TO POWER SUPPLY CIRCUIT
FB-38
F/B FUSE NO. 12
(IG)
MB-35
SBF-8
(B)
ID : WITH ID CODE BOX
GR
GR
B577
B578
FUSE HOLDER
7.5A
GrL
18
7
GR
B550
Br
W
C5
A2
ID
A: B572
B: B573
C: B574
KEYLESS ACCESS CM
GrL
1
B27
C17
B15
A18
C25
A11
B422
ID CODE
BOX
G
R
B
Lg
L
B
B98
B578
B576
10
3
22
18
4
20
2
5
R2
B577
B575
GL
R
BY
Lg
PL
BY
R
BY
ID
ID
ID
R39
D35
I K/A-07
J K/A-07
K K/A-07
K/A-03 H
B
GL
4
3
REF. TO STOP LIGHT SYSTEM
[S/L-01]
B424
R
5
Lg
D3
D: B137
D77
REAR LOCK BUTTON
STEERING
LOCK CM
ECM

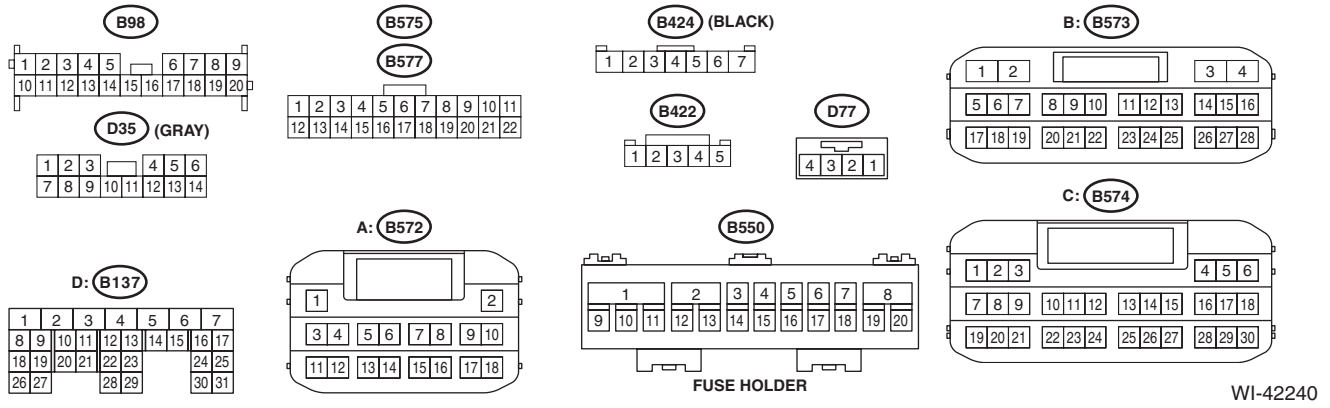
B98
B575
B577
B424 (BLACK)
B: B573
D35 (GRAY)
B422
D77
A: B572
B550
D: B137
C: B574
FUSE HOLDER

WI-42240

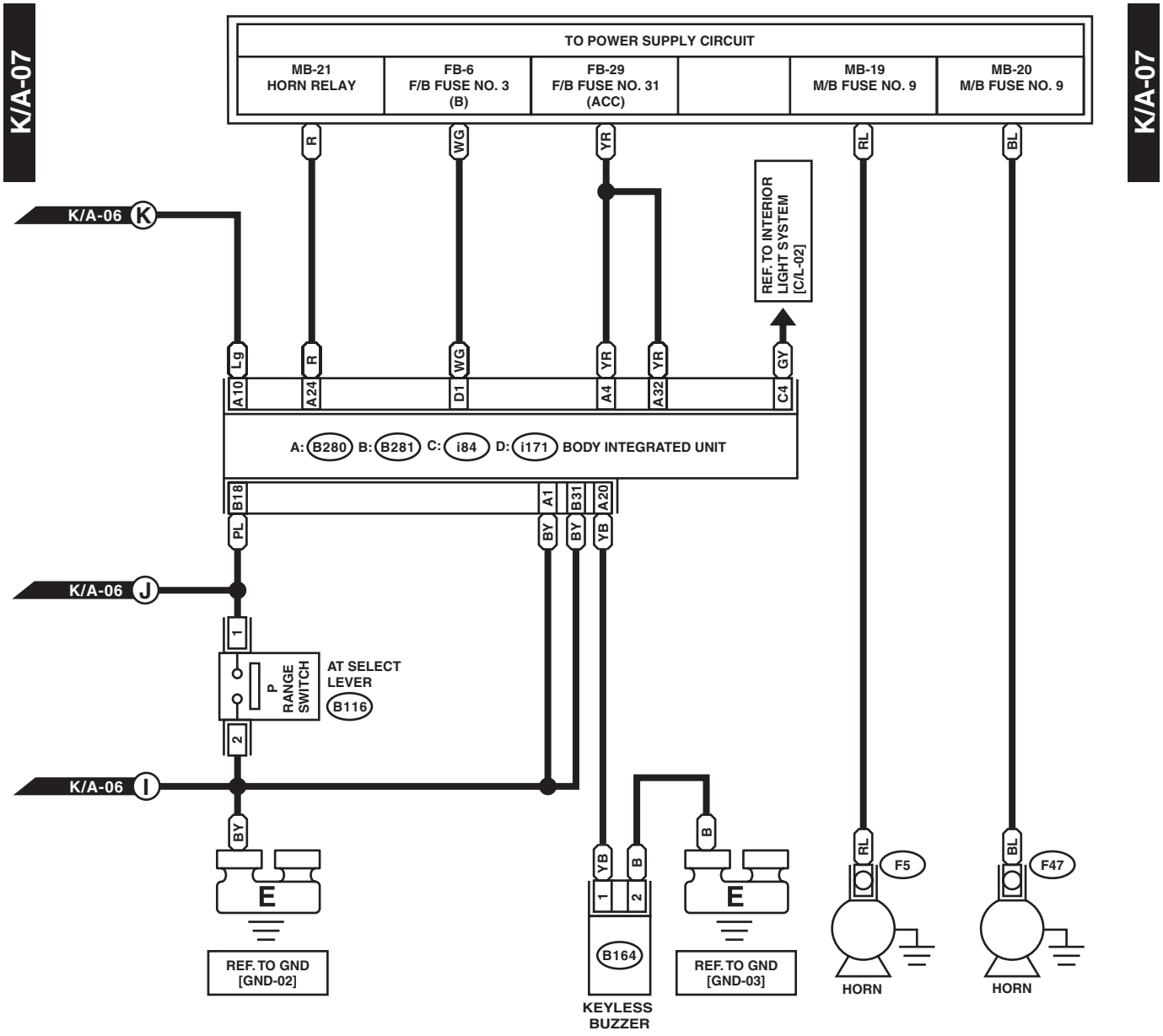
K/A-07
K/A-07
TO POWER SUPPLY CIRCUIT
MB-21 HORN RELAY
FB-6 F/B FUSE NO. 3 (B)
FB-29 F/B FUSE NO. 31 (ACC)
MB-19 M/B FUSE NO. 9
MB-20 M/B FUSE NO. 9
R
WG
YR
RL
BL
REF. TO INTERIOR LIGHT SYSTEM [C/L-02]
K/A-06 K
L9
A10
A24
D1
A4
A32
GY
C4
A: B280 B: B281 C: i84 D: i171 BODY INTEGRATED UNIT
B18
A1
B31
A20
PL
BY
YB
K/A-06 J
1
2
P RANGE SWITCH
AT SELECT LEVER
B116
K/A-06 I
E
REF. TO GND [GND-02]
B164
KEYLESS BUZZER
REF. TO GND [GND-03]
F5
F47
HORN
HORN

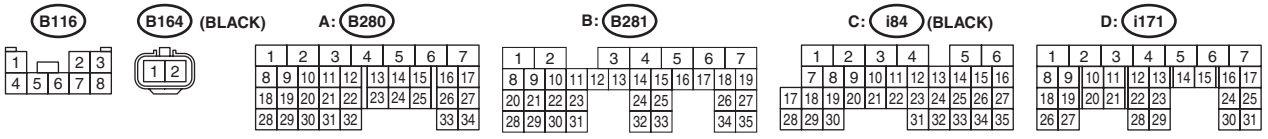
B116
B164 (BLACK)
A: B280
B: B281
C: i84 (BLACK)
D: i171

WI-42241

30.Keyless Entry System

A: WIRING DIAGRAM

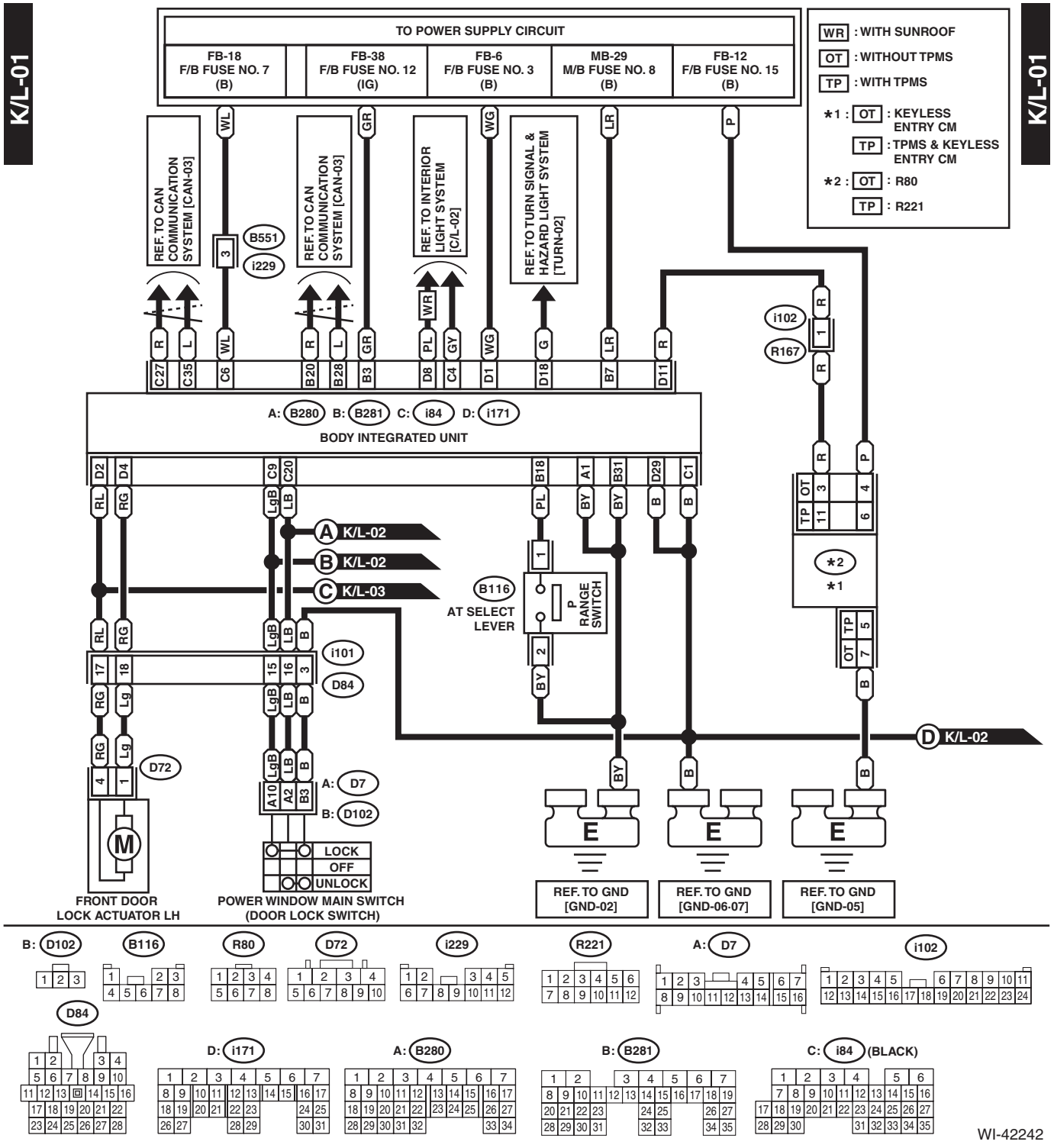

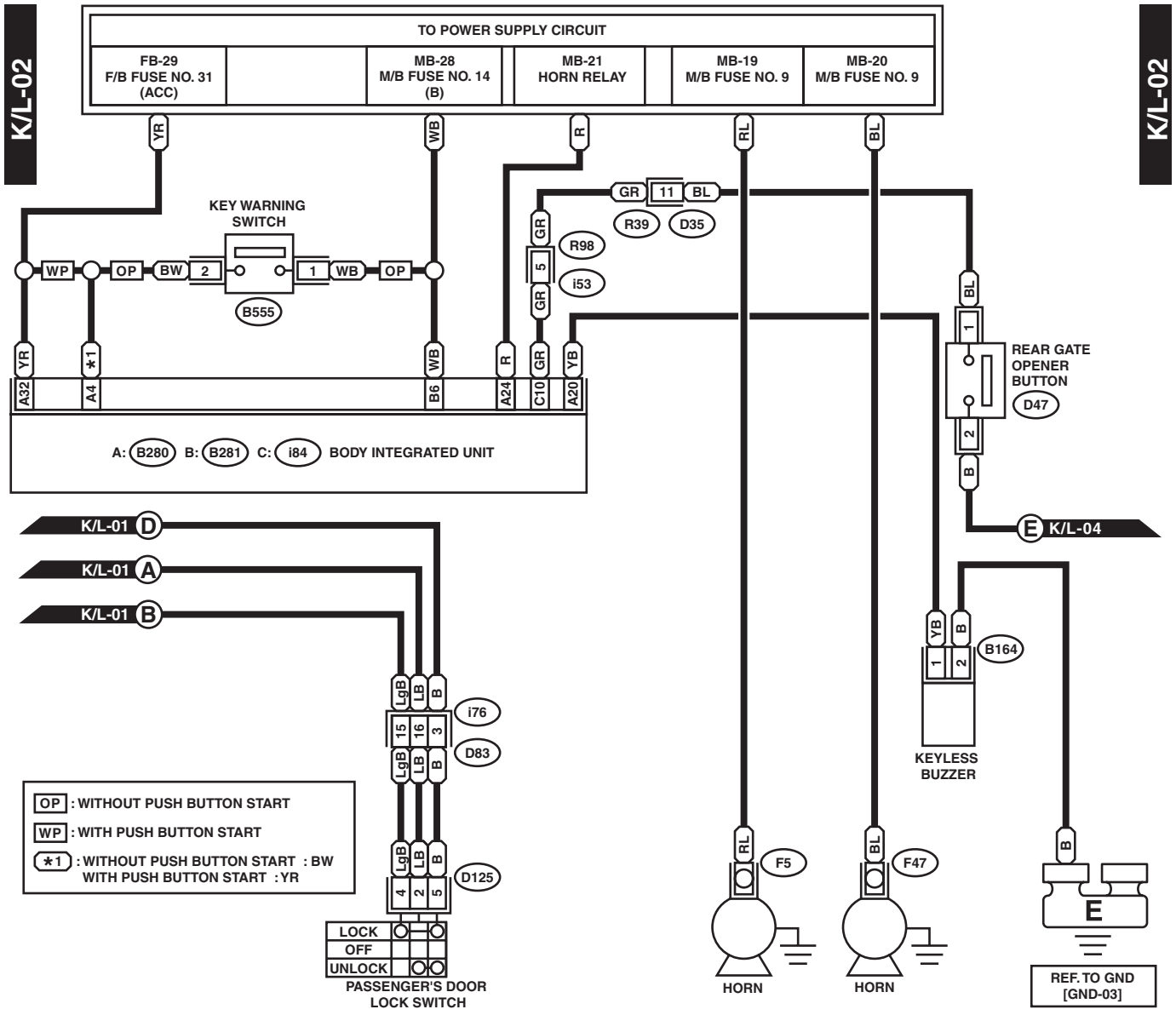
K/L-02
K/L-02
TO POWER SUPPLY CIRCUIT
FB-29 F/B FUSE NO. 31 (ACC)
MB-28 M/B FUSE NO. 14 (B)
MB-21 HORN RELAY
MB-19 M/B FUSE NO. 9
MB-20 M/B FUSE NO. 9
YR
WB
R
RL
BL
GR
11
BL
R39
D35
KEY WARNING SWITCH
WP
OP
BW
2
1
WB
OP
B555
GR
5
GR
R98
i53
YR
*1
WB
R
GR
YB
A32
A4
B6
A24
C10
A20
A: B280 B: B281 C: i84 BODY INTEGRATED UNIT
BL
1
2
B
REAR GATE OPENER BUTTON
D47
E K/L-04
K/L-01 D
K/L-01 A
K/L-01 B
LgB
LB
B
15
16
3
i76
D83
LgB
LB
B
4
2
5
D125
LOCK
OFF
UNLOCK
PASSENGER'S DOOR LOCK SWITCH
YB
B
1
2
B164
KEYLESS BUZZER
RL
F5
HORN
BL
F47
HORN
B
E
REF. TO GND [GND-03]
OP : WITHOUT PUSH BUTTON START
WP : WITH PUSH BUTTON START
*1 : WITHOUT PUSH BUTTON START : BW
WITH PUSH BUTTON START : YR

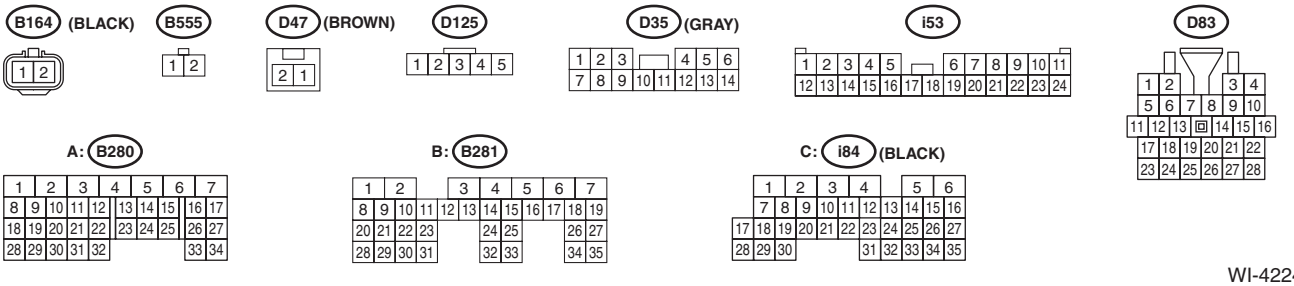
B164 (BLACK)
B555
D47 (BROWN)
D125
D35 (GRAY)
i53
D83
A: B280
B: B281
C: i84 (BLACK)

WI-42243

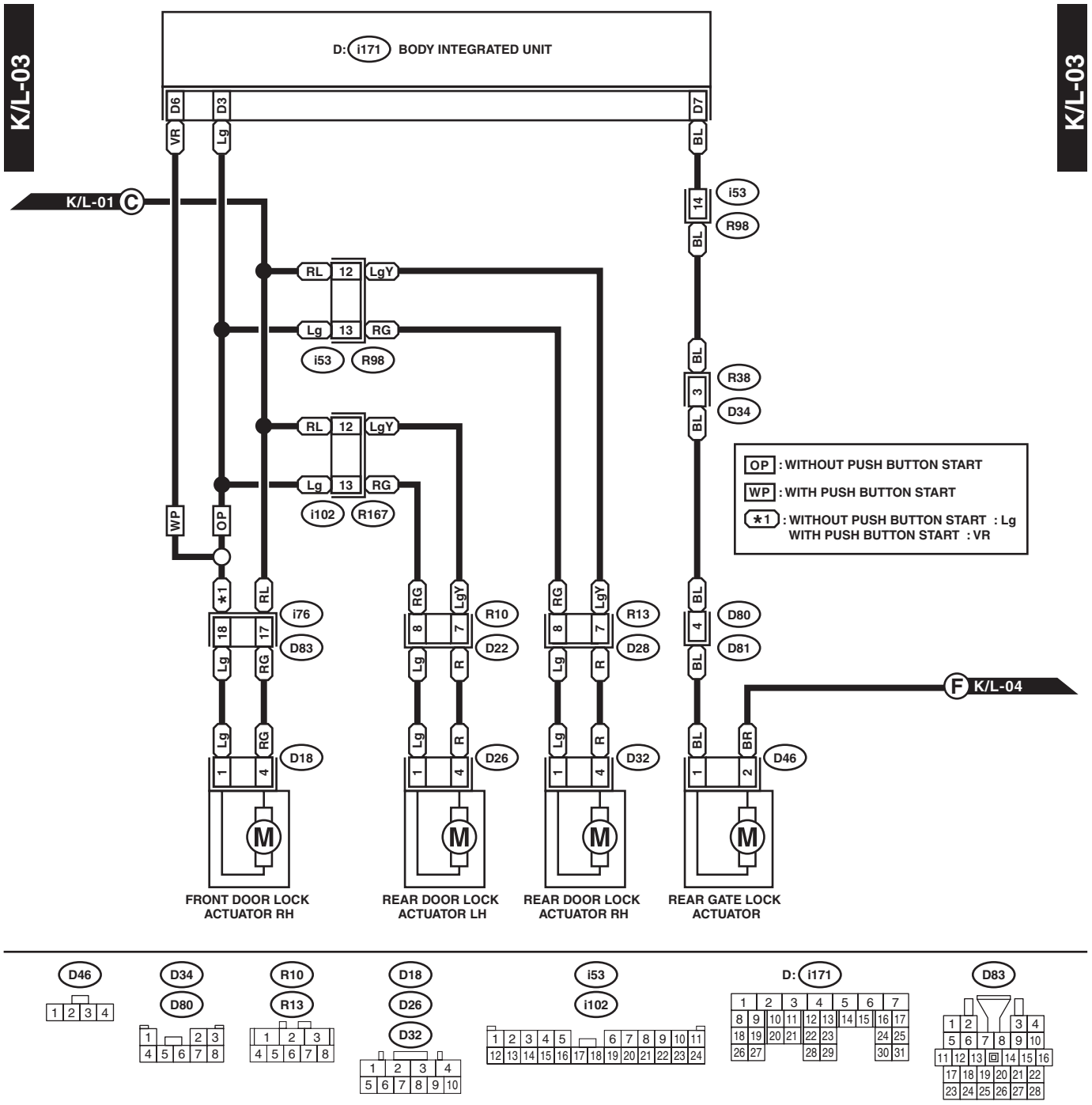
K/L-03
K/L-03
D: i171 BODY INTEGRATED UNIT
D6
D3
D7
VR
Lg
BL
K/L-01 C
i53
14
R98
BL
RL
12
LgY
Lg
13
RG
i53
R98
BL
R38
3
D34
BL
RL
12
LgY
Lg
13
RG
i102
R167
OP : WITHOUT PUSH BUTTON START
WP : WITH PUSH BUTTON START
*1 : WITHOUT PUSH BUTTON START : Lg
WITH PUSH BUTTON START : VR
WP
OP
*1
RL
RG
LgY
BL
i76
D83
R10
D22
R13
D28
D80
D81
F K/L-04
Lg
RG
R
BR
D18
D26
D32
D46
M
FRONT DOOR LOCK ACTUATOR RH
REAR DOOR LOCK ACTUATOR LH
REAR DOOR LOCK ACTUATOR RH
REAR GATE LOCK ACTUATOR

D46
D34
D80
R10
R13
D18
D26
D32
i53
i102
D: i171
D83

WI-42244

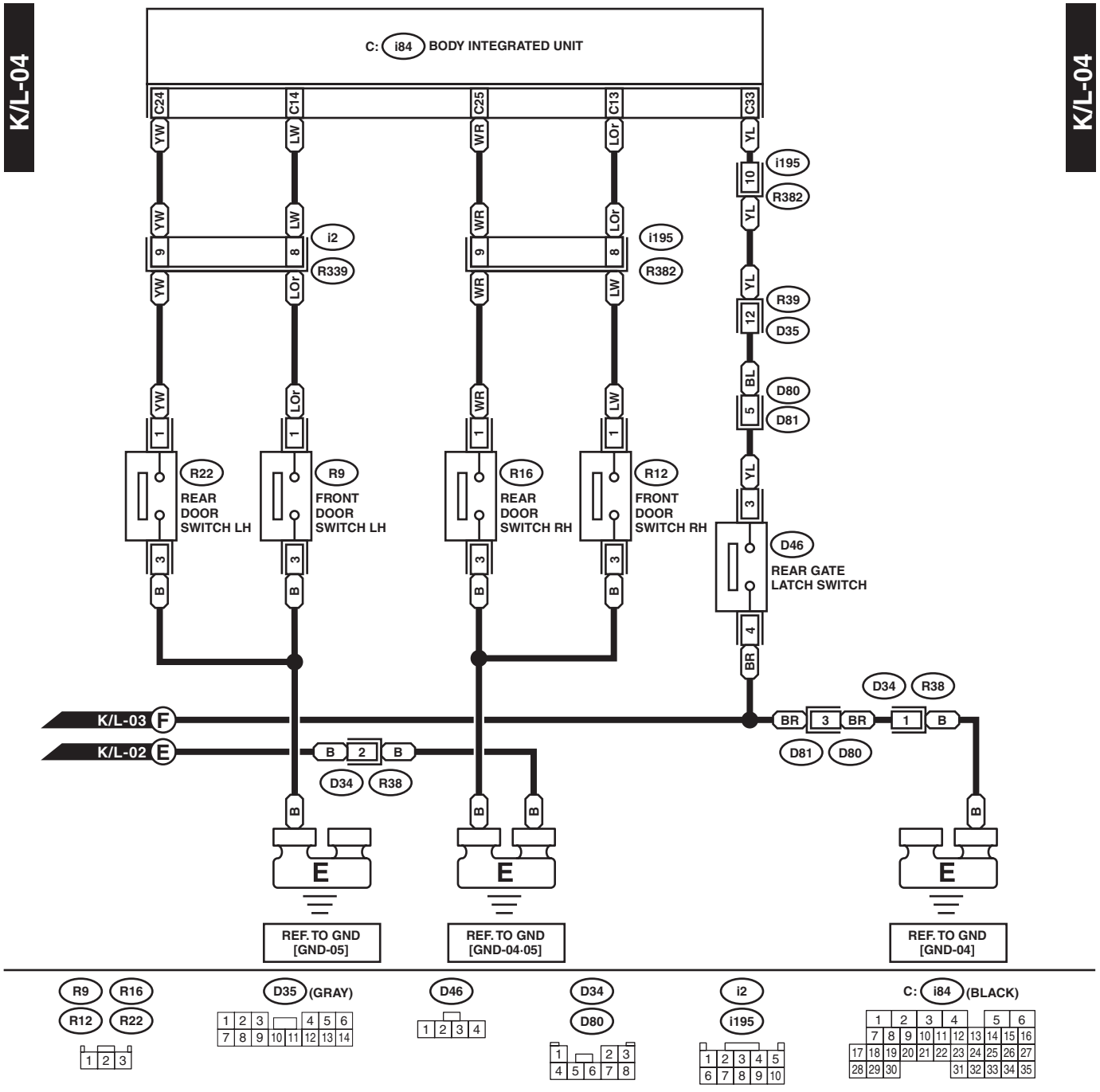
K/L-04
K/L-04
C: i84 BODY INTEGRATED UNIT
C24
C14
C25
C13
C33
YW
LW
WR
LOr
YL
i195
R382
i2
R339
i195
R382
R39
D35
BL
D80
D81
R22
REAR DOOR SWITCH LH
R9
FRONT DOOR SWITCH LH
R16
REAR DOOR SWITCH RH
R12
FRONT DOOR SWITCH RH
D46
REAR GATE LATCH SWITCH
BR
D34
R38
K/L-03 F
K/L-02 E
D81
D80
D34
R38
E
REF. TO GND [GND-05]
REF. TO GND [GND-04·05]
REF. TO GND [GND-04]
R9
R16
R12
R22
D35 (GRAY)
D46
D34
D80
i2
i195
C: i84 (BLACK)

WI-42245

31.Multi-function Display (MFD) System

A: WIRING DIAGRAM

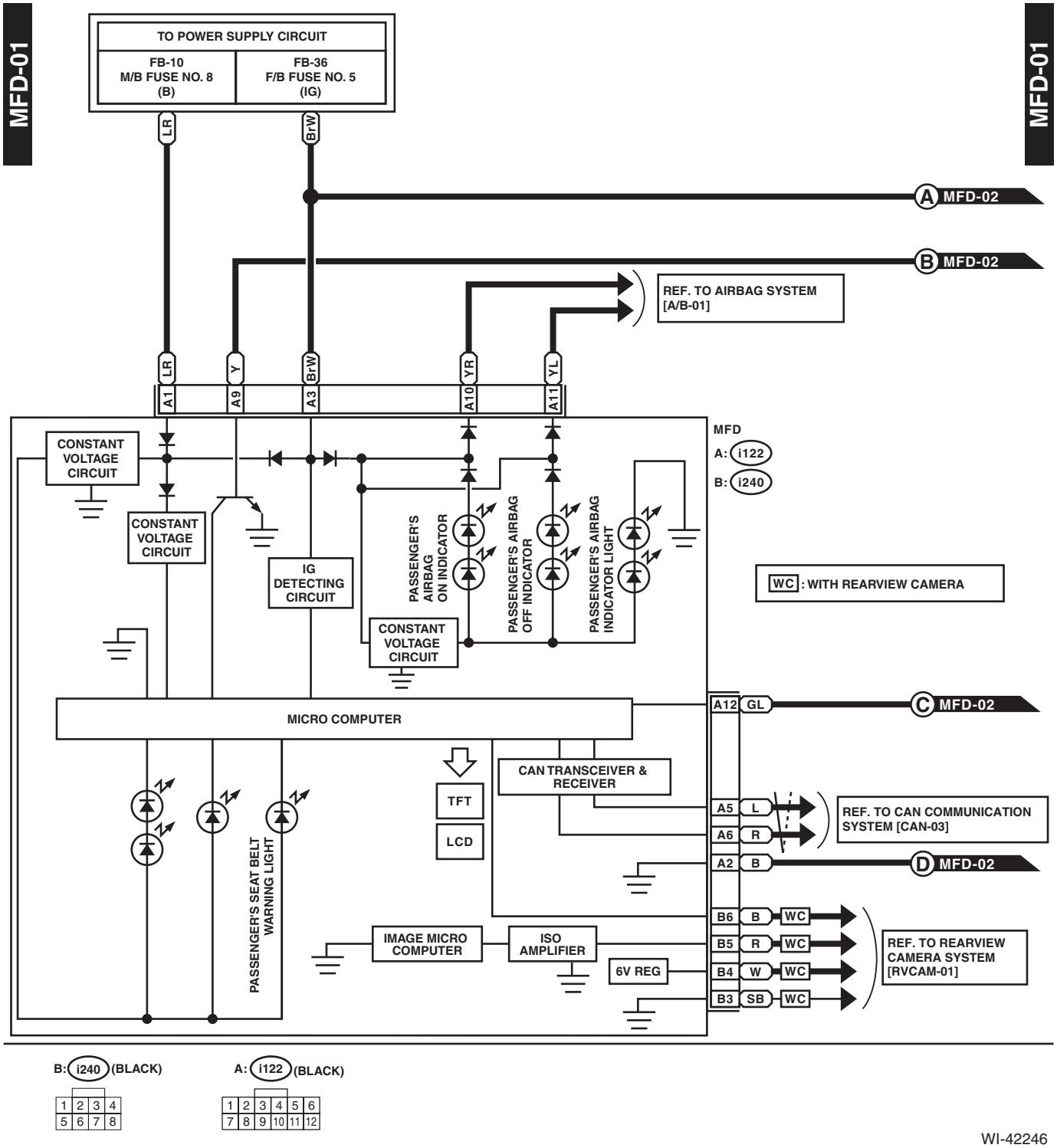

WI-42246

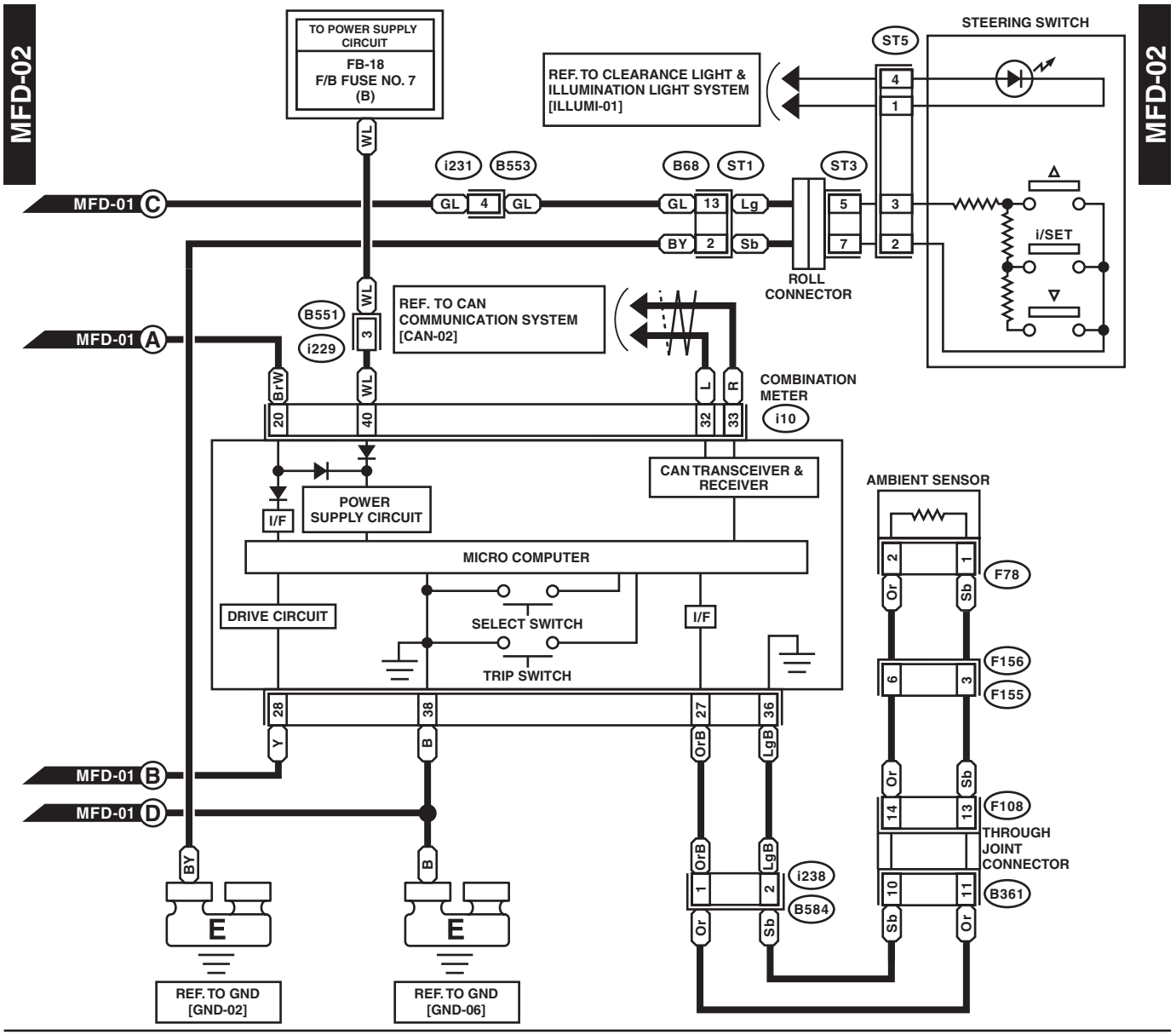
MFD-02
MFD-02
TO POWER SUPPLY CIRCUIT
FB-18
F/B FUSE NO. 7
(B)
REF. TO CLEARANCE LIGHT & ILLUMINATION LIGHT SYSTEM [ILLUMI-01]
STEERING SWITCH
ST5
MFD-01 C
i231
B553
B68
ST1
ST3
ROLL CONNECTOR
i/SET
MFD-01 A
B551
i229
REF. TO CAN COMMUNICATION SYSTEM [CAN-02]
COMBINATION METER
i10
CAN TRANSCEIVER & RECEIVER
POWER SUPPLY CIRCUIT
I/F
MICRO COMPUTER
DRIVE CIRCUIT
SELECT SWITCH
TRIP SWITCH
AMBIENT SENSOR
F78
F156
F155
F108
THROUGH JOINT CONNECTOR
B361
i238
B584
MFD-01 B
MFD-01 D
REF. TO GND [GND-02]
REF. TO GND [GND-06]

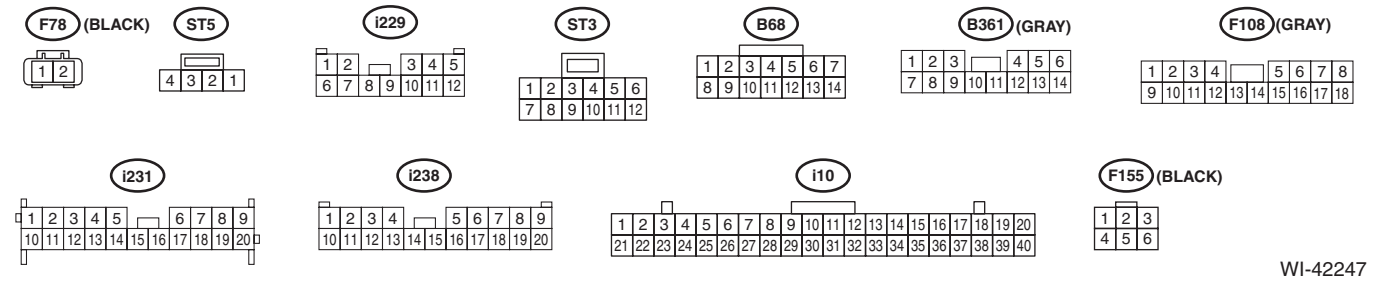
F78 (BLACK)
ST5
i229
ST3
B68
B361 (GRAY)
F108 (GRAY)
i231
i238
i10
F155 (BLACK)

WI-42247

32.Navigation System

A: WIRING DIAGRAM

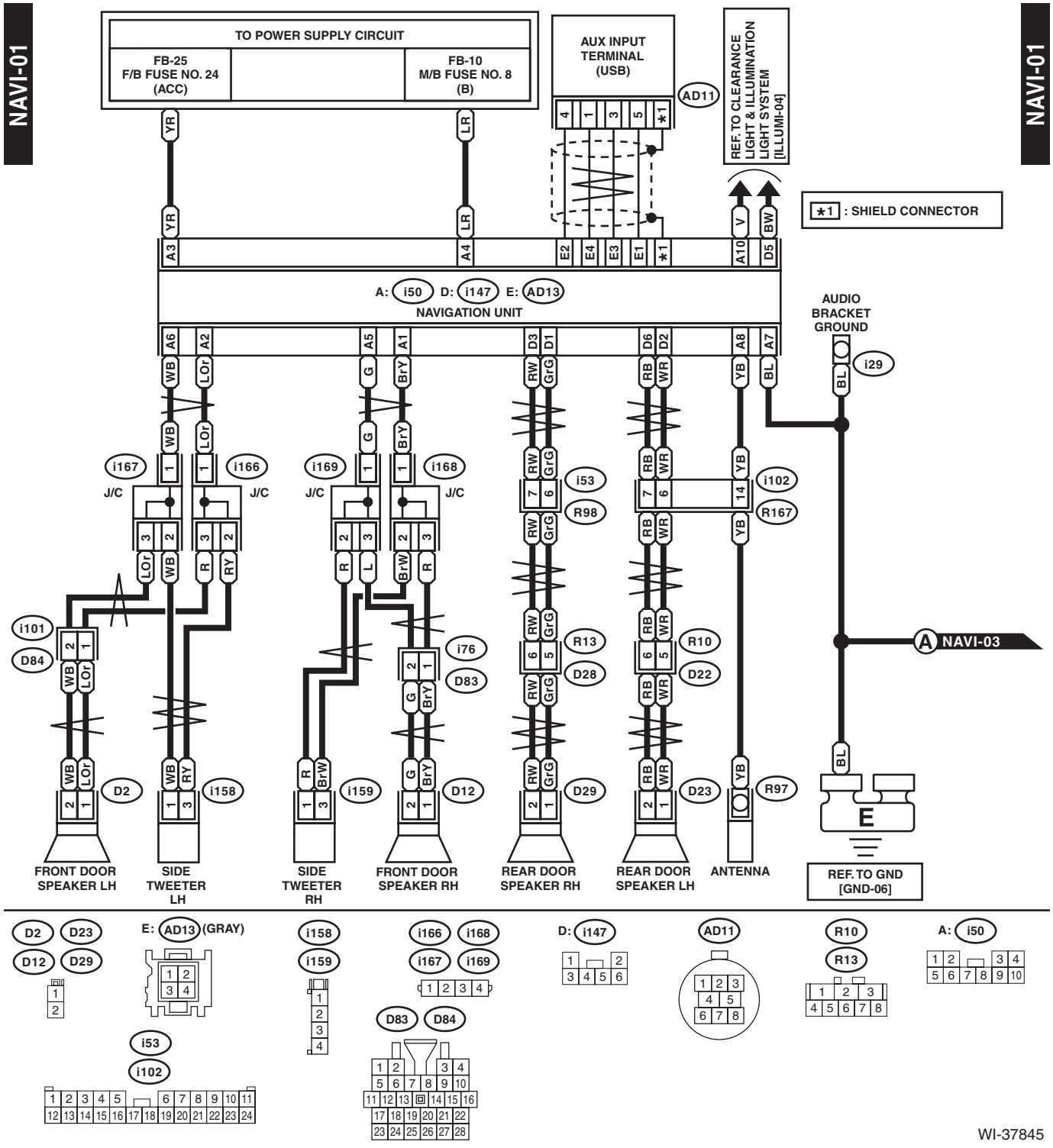

NAVI-02

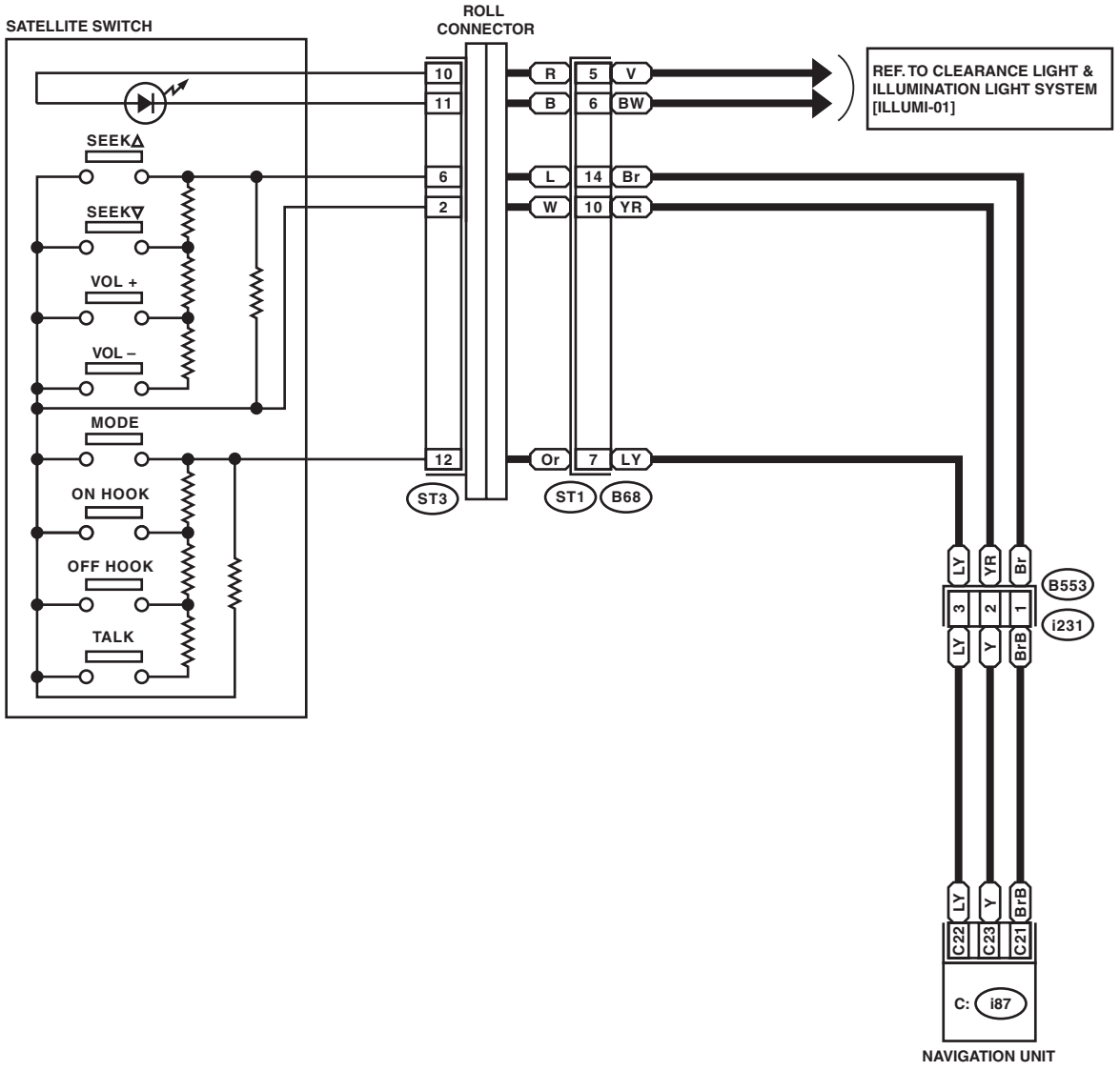

NAVI-02

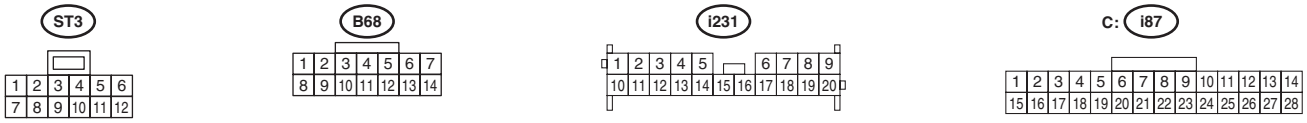

WI-42248

NAVI-03

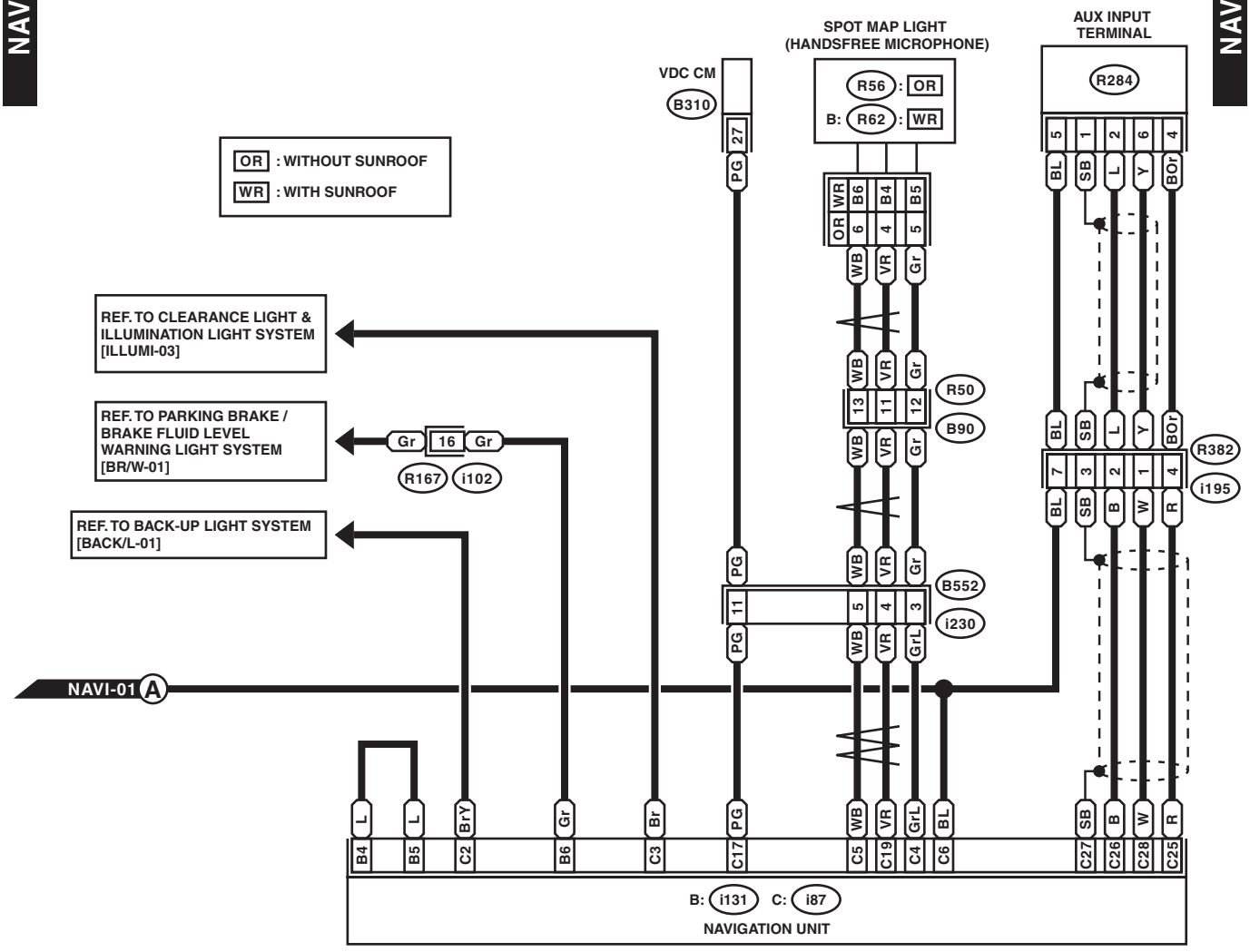

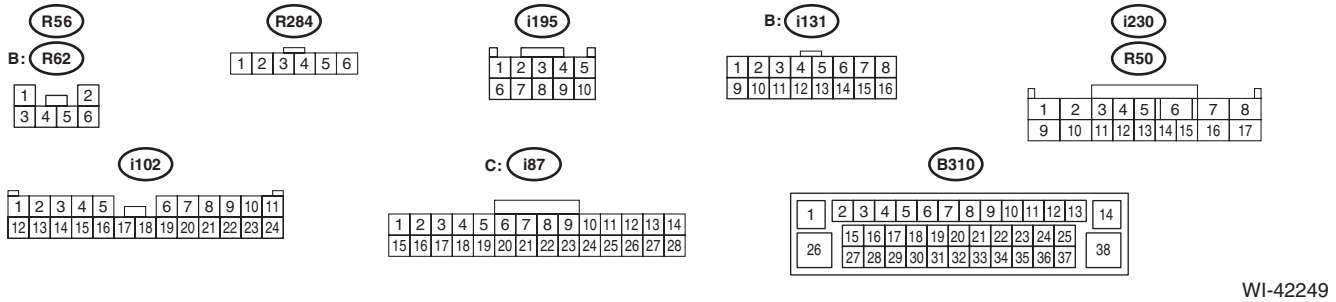

WI-42249

33.Occupant Detection System

A: WIRING DIAGRAM

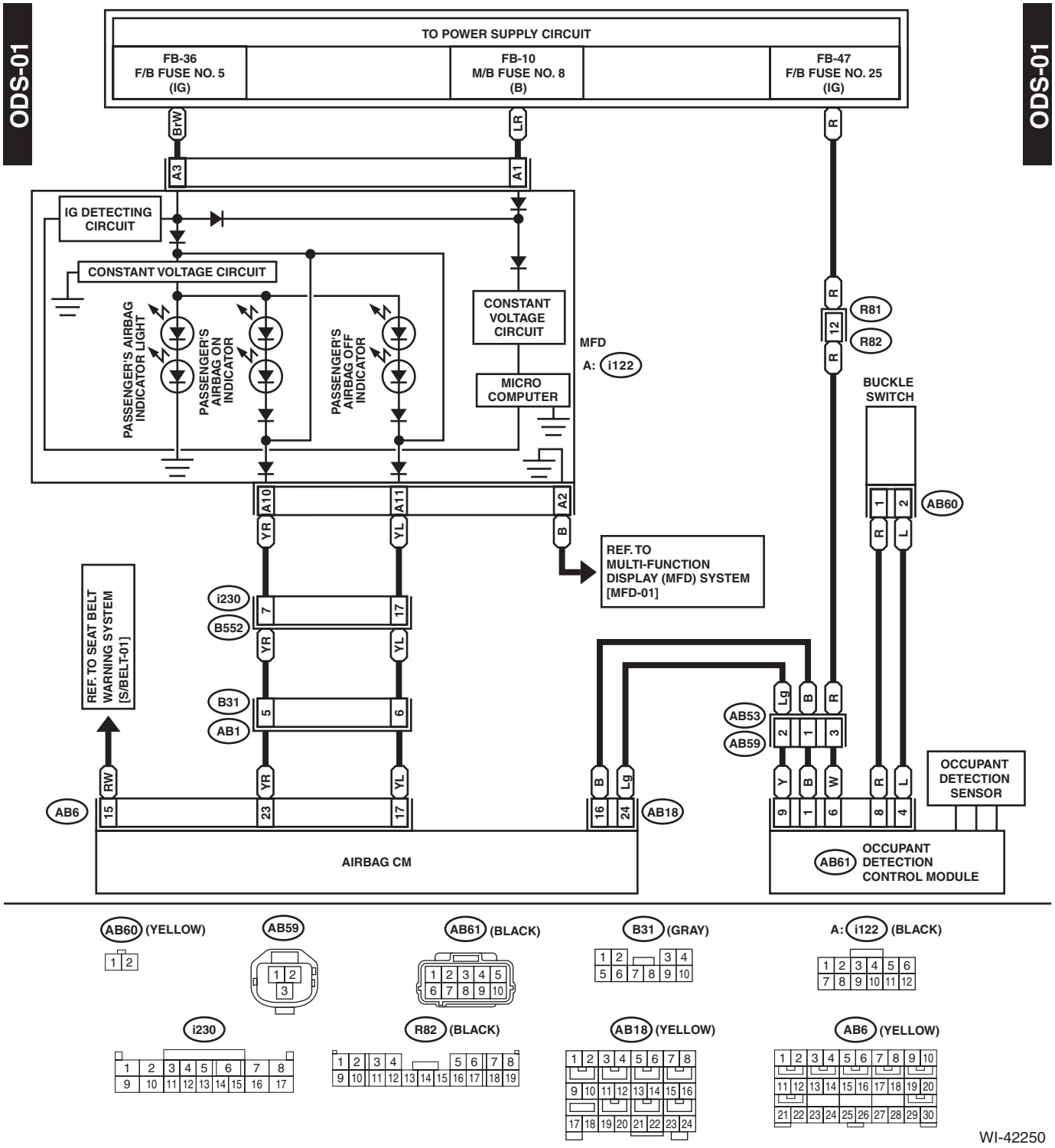

WI-42250

34.Oil Pressure Warning Light System

A: WIRING DIAGRAM

OIL/P-01

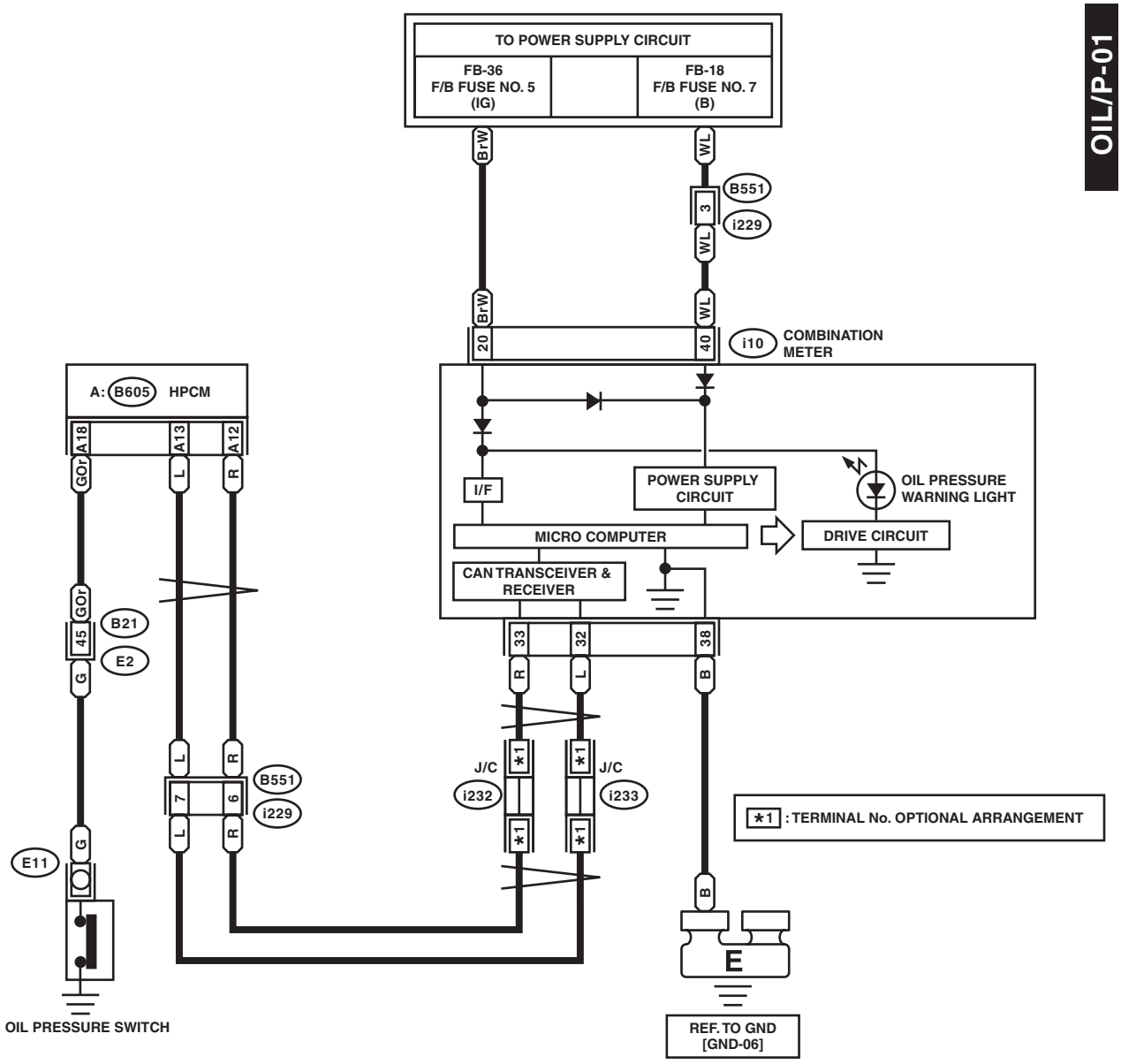

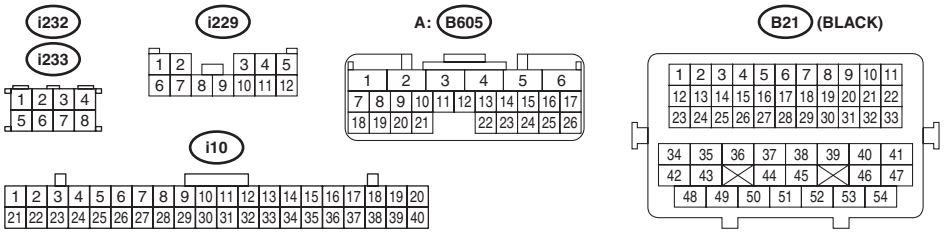

WI-42251

OIL/P-01

35.Parking Brake / Brake Fluid Level Warning Light System

A: WIRING DIAGRAM

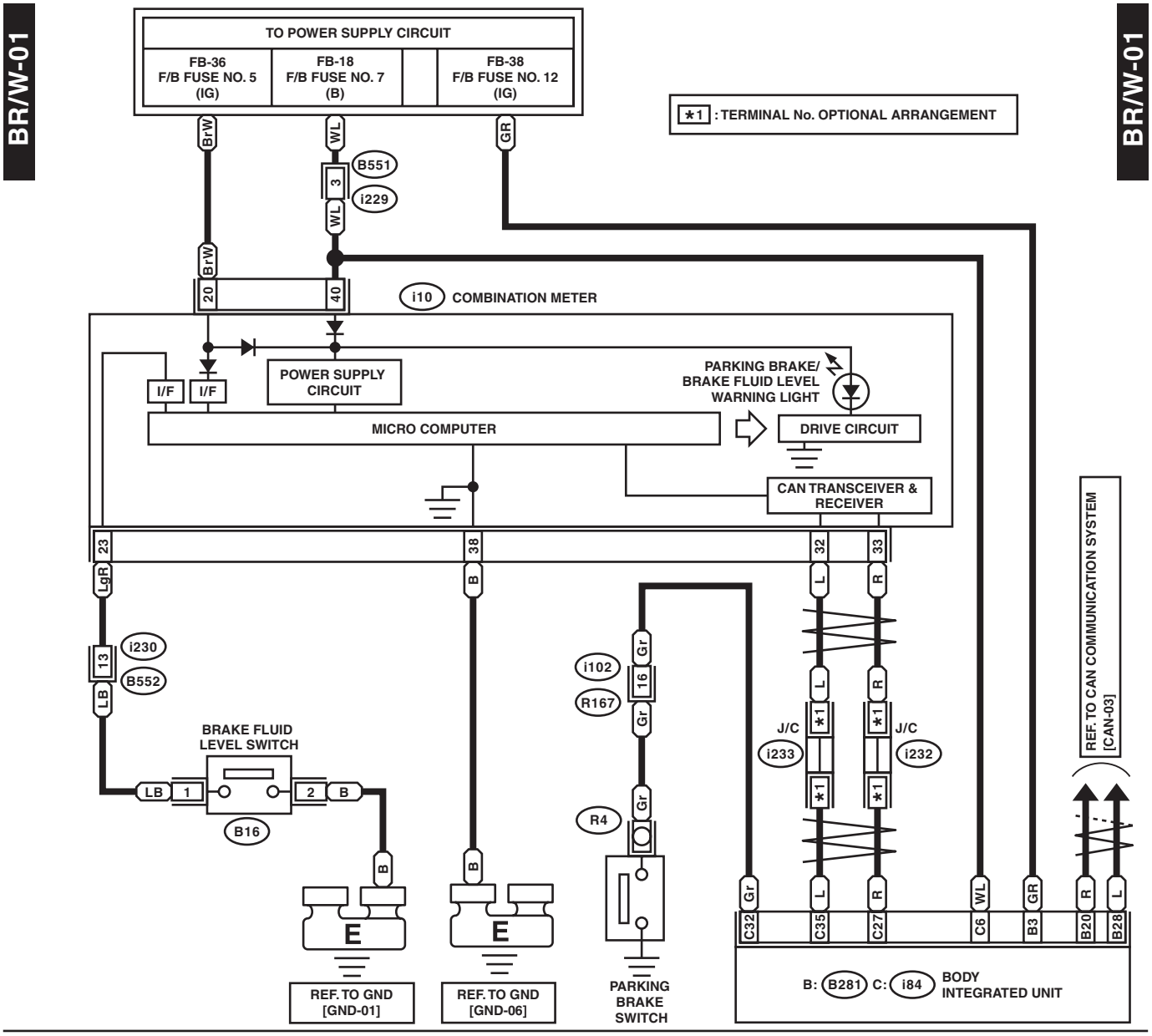

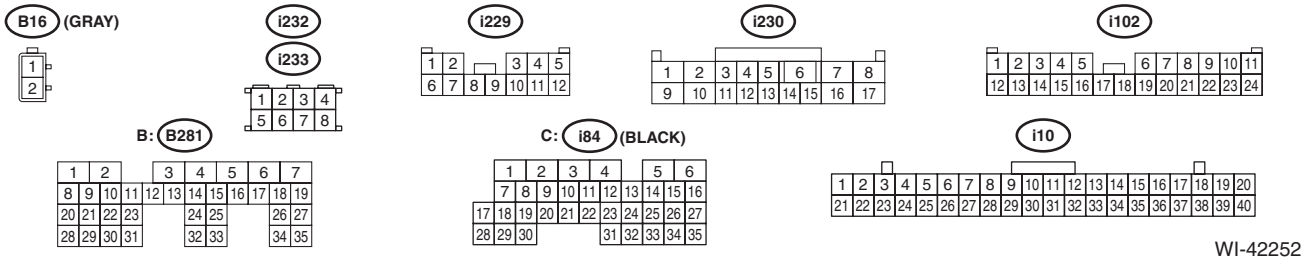

WI-42252

36.Power Window System

A: WIRING DIAGRAM

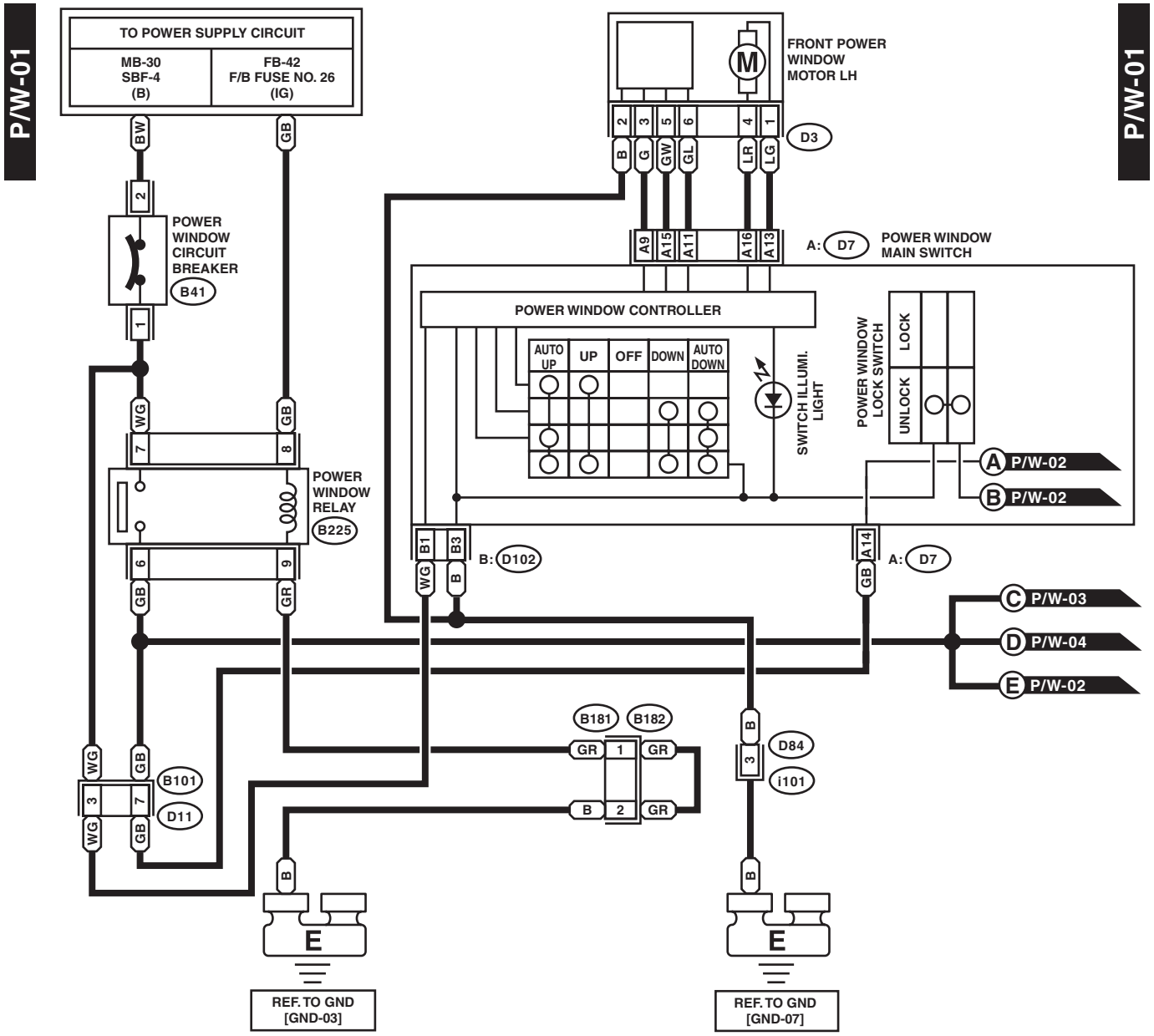

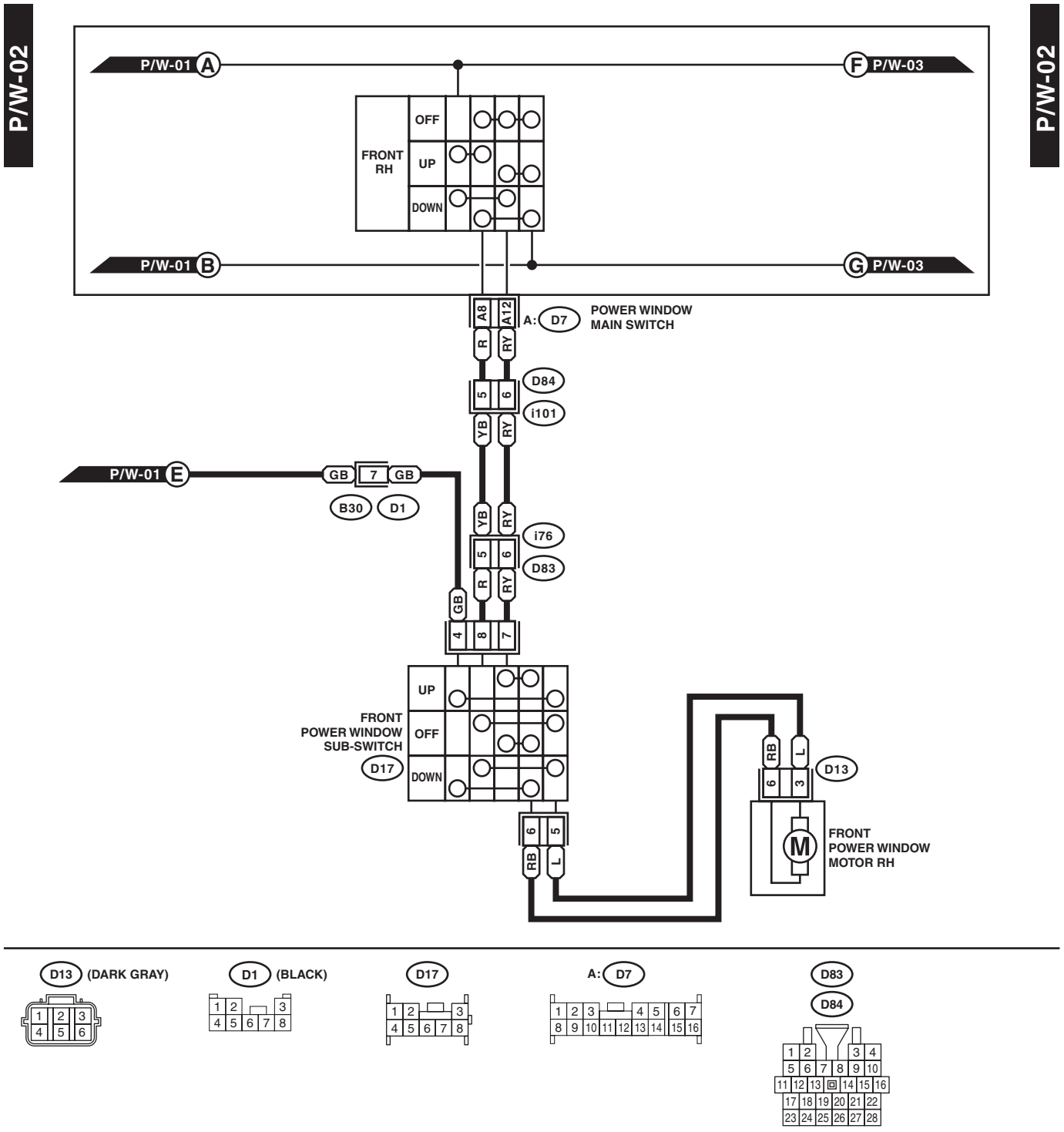
P/W-02
P/W-02
P/W-01 A
F P/W-03
FRONT RH
OFF
UP
DOWN
P/W-01 B
G P/W-03
A8
A12
A: D7
POWER WINDOW MAIN SWITCH
R
RY
D84
5
6
i101
YB
RY
P/W-01 E
GB
7
GB
B30
D1
YB
RY
i76
5
6
D83
R
RY
GB
4
8
7
UP
FRONT POWER WINDOW SUB-SWITCH
OFF
D17
DOWN
RB
L
D13
6
3
M
FRONT POWER WINDOW MOTOR RH
6
5
RB
L

D13 (DARK GRAY)
D1 (BLACK)
D17
A: D7
D83
D84

WI-37850

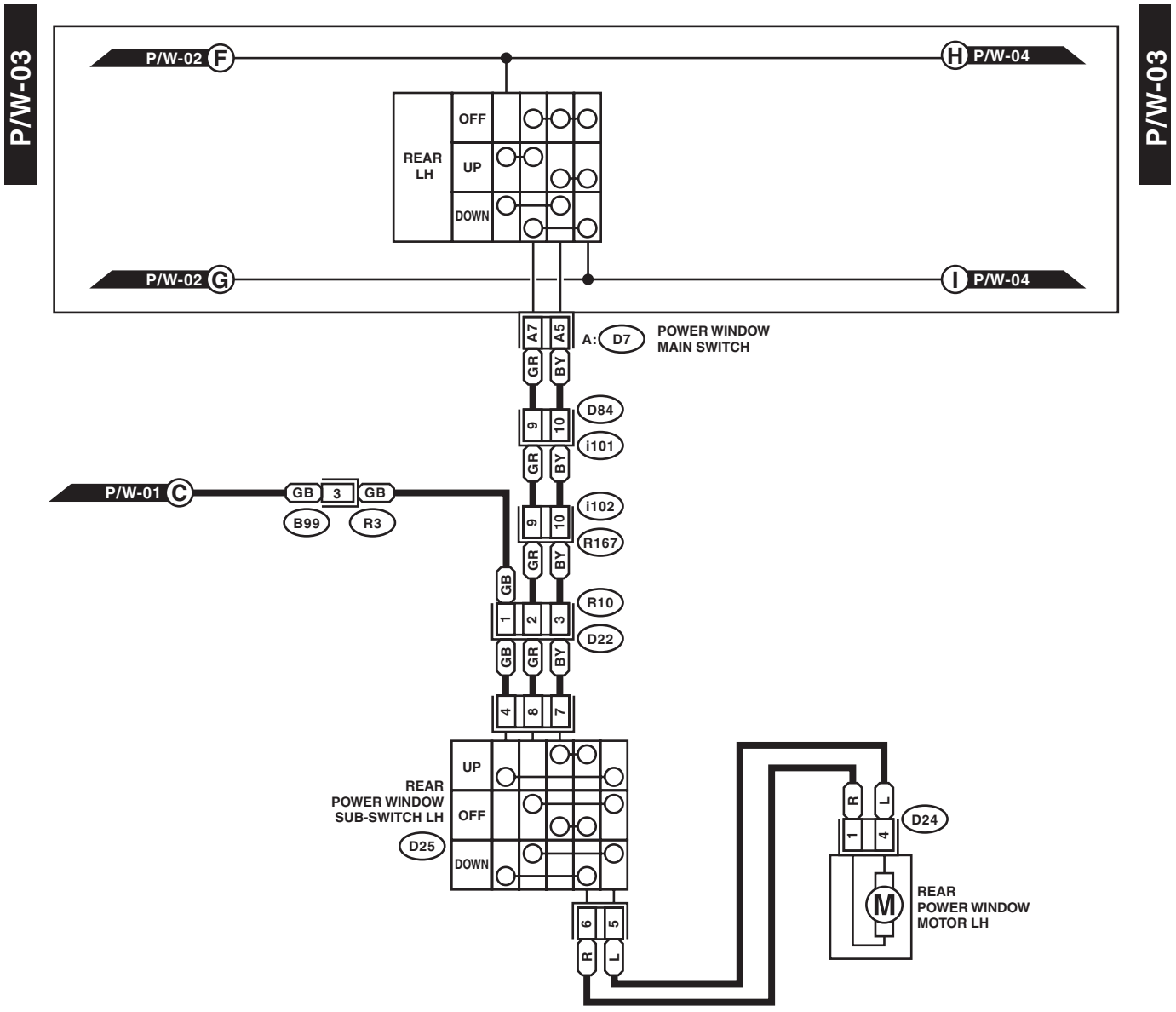
P/W-03
P/W-03
P/W-02 F
H P/W-04
REAR LH
OFF
UP
DOWN
P/W-02 G
I P/W-04
A7
A5
A: D7
POWER WINDOW MAIN SWITCH
GR
BY
D84
9
10
i101
P/W-01 C
GB
3
GB
B99
R3
i102
R167
R10
1
2
3
D22
4
8
7
UP
OFF
DOWN
REAR POWER WINDOW SUB-SWITCH LH
D25
6
5
R
L
R
L
D24
1
4
M
REAR POWER WINDOW MOTOR LH

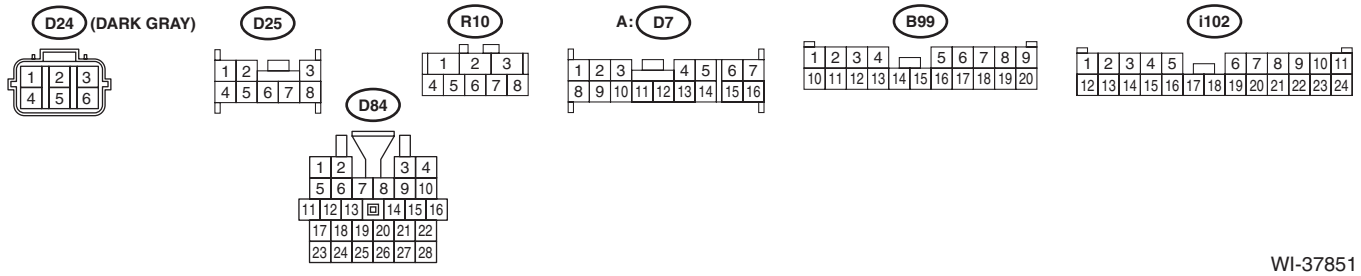
D24 (DARK GRAY)
D25
R10
A: D7
B99
i102
D84

WI-37851

P/W-04

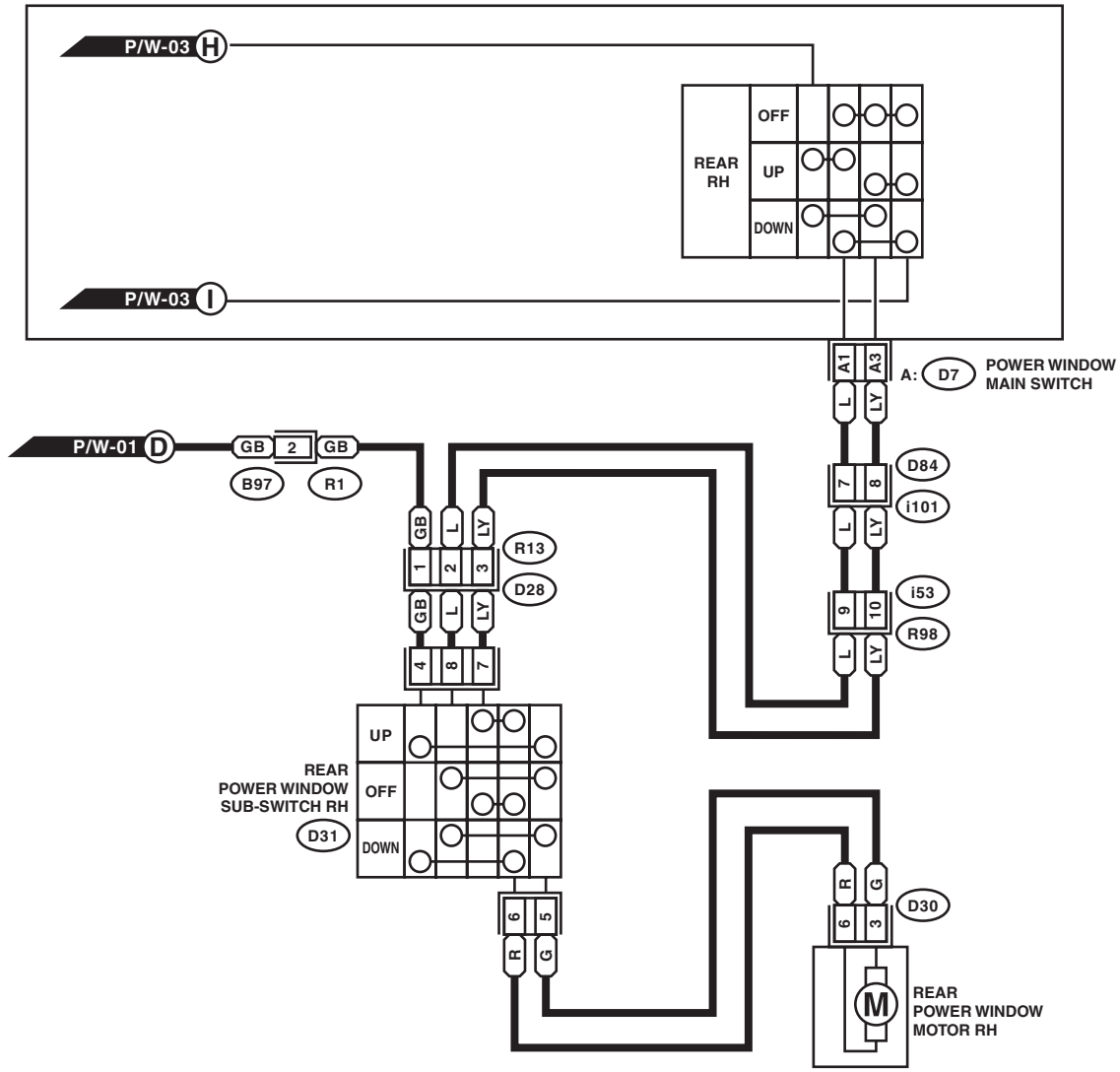

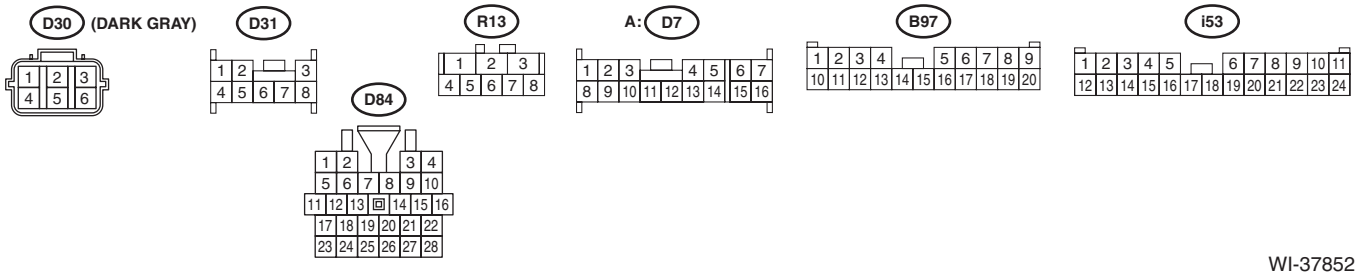

WI-37852

37.Push Button Start System

A: WIRING DIAGRAM

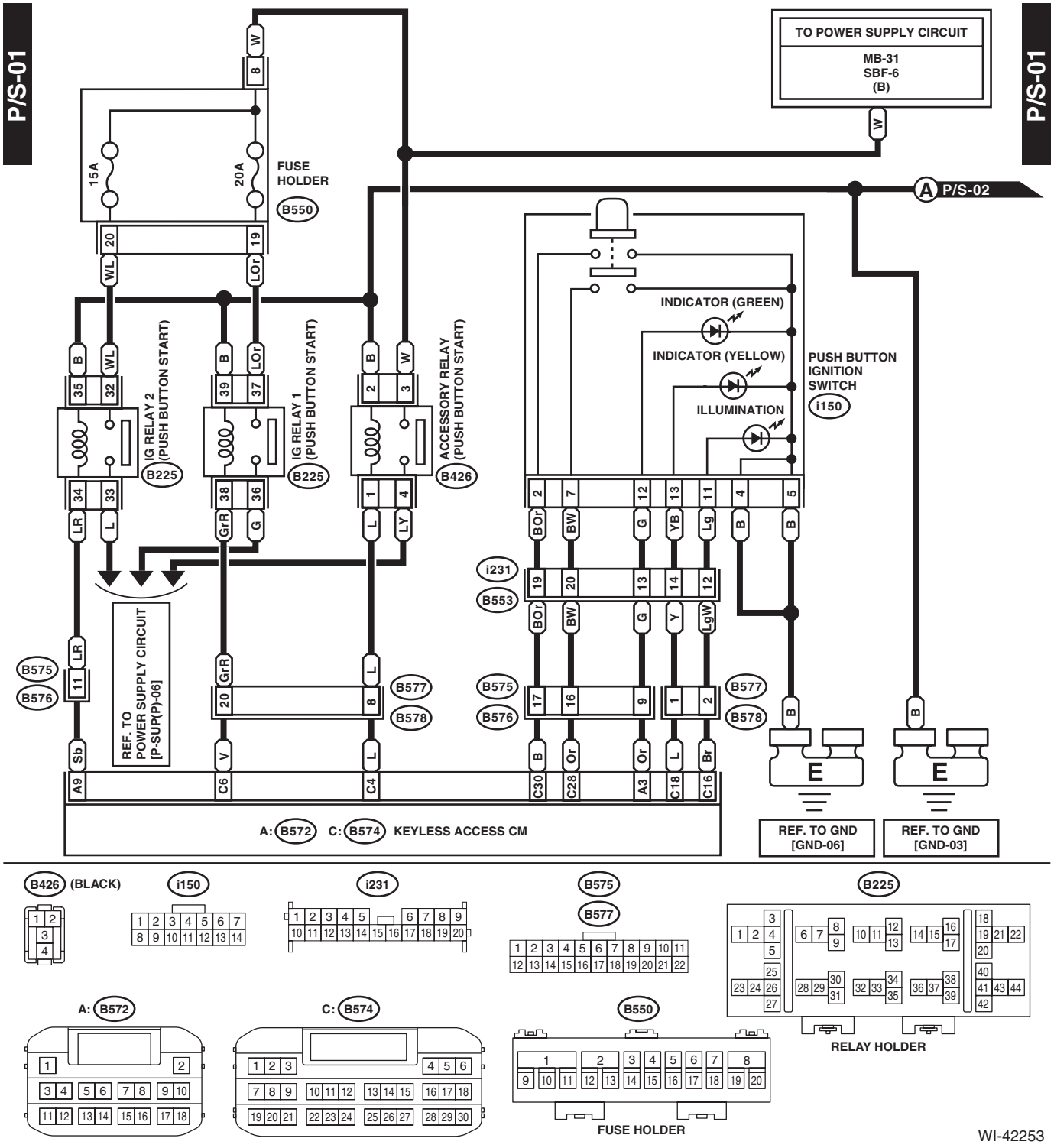

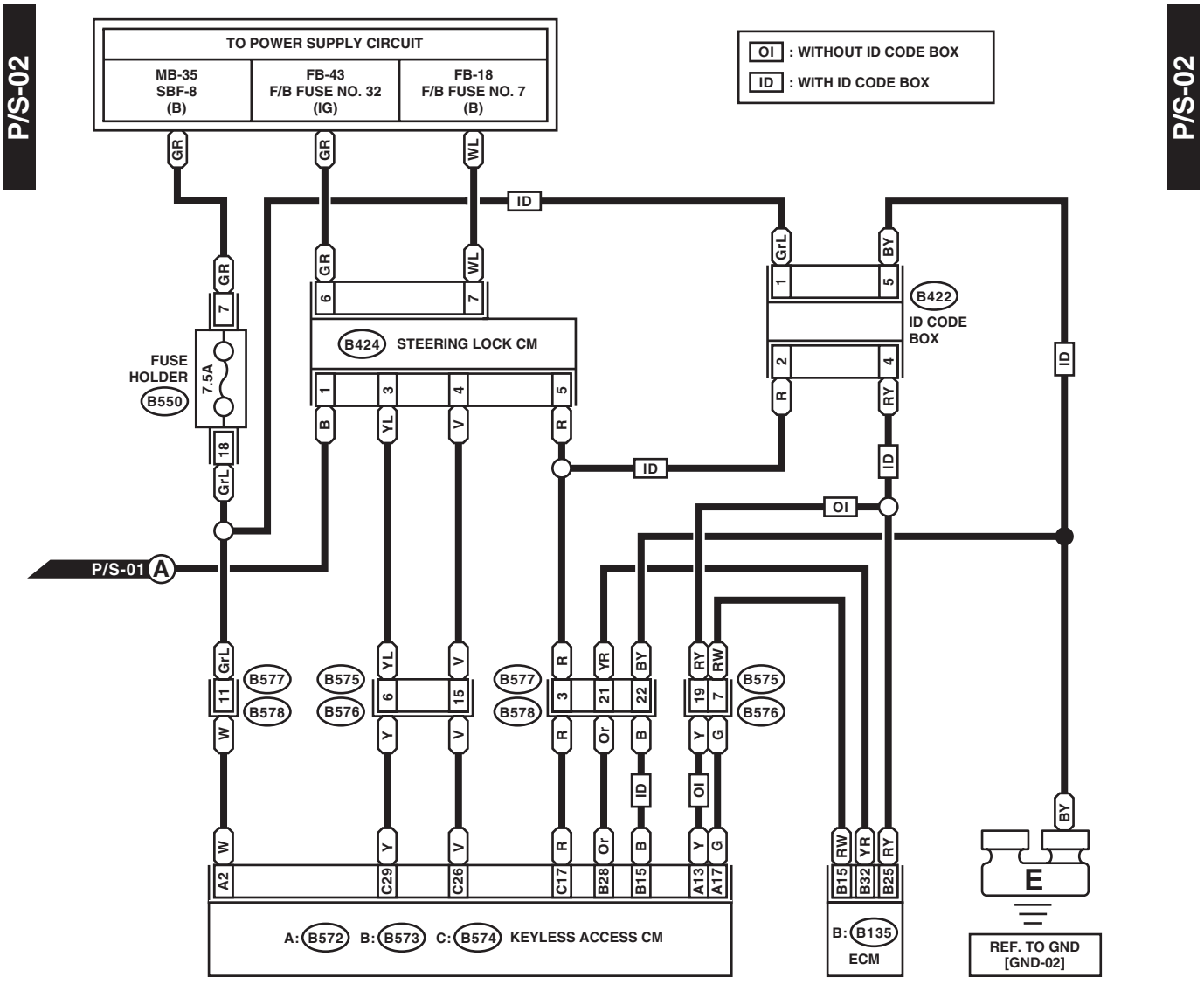
P/S-02
P/S-02
TO POWER SUPPLY CIRCUIT
MB-35 SBF-8 (B)
FB-43 F/B FUSE NO. 32 (IG)
FB-18 F/B FUSE NO. 7 (B)
OI : WITHOUT ID CODE BOX
ID : WITH ID CODE BOX
FUSE HOLDER B550
7.5A
B424 STEERING LOCK CM
B422 ID CODE BOX
P/S-01 A
B577
B578
B575
B576
A: B572 B: B573 C: B574 KEYLESS ACCESS CM
B: B135 ECM
E
REF. TO GND [GND-02]

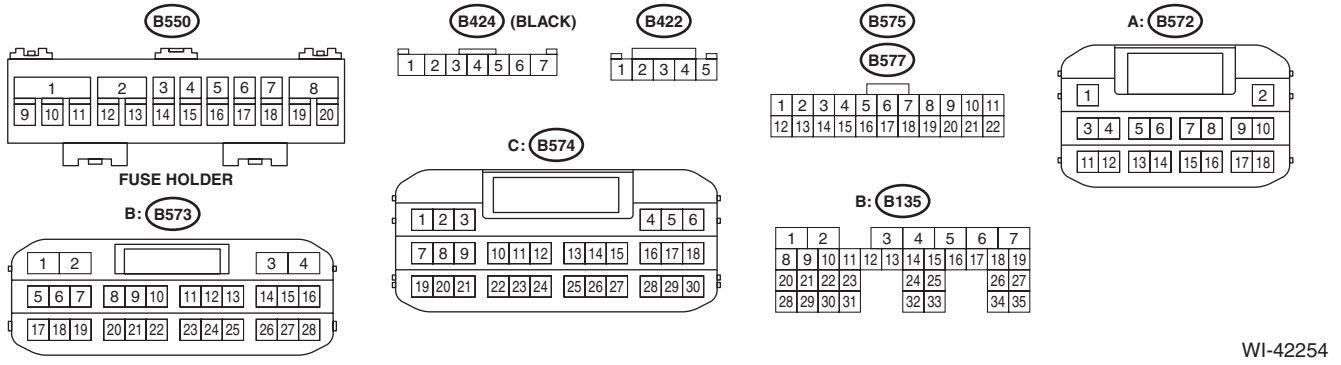
B550
FUSE HOLDER
B424 (BLACK)
B422
B575
B577
A: B572
B: B573
C: B574
B: B135

WI-42254

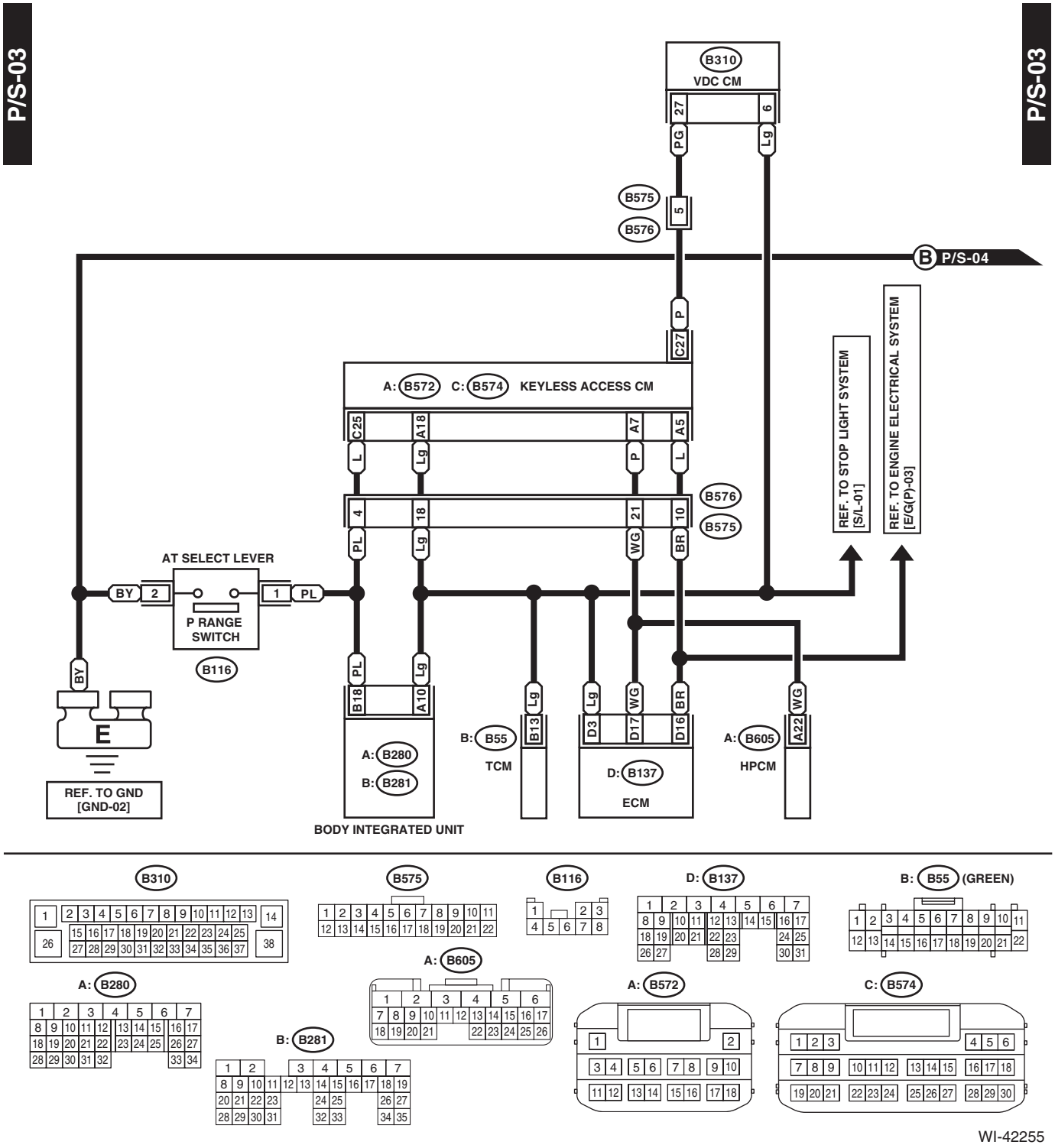
P/S-03
P/S-03
B310
VDC CM
27
6
PG
Lg
B575
B576
5
B P/S-04
P
C27
A: B572 C: B574 KEYLESS ACCESS CM
C25
A18
A7
A5
L
Lg
P
L
4
18
21
10
B576
B575
PL
Lg
WG
BR
REF. TO STOP LIGHT SYSTEM [S/L-01]
REF. TO ENGINE ELECTRICAL SYSTEM [E/G(P)-03]
AT SELECT LEVER
BY
2
1
PL
P RANGE SWITCH
B116
BY
E
REF. TO GND [GND-02]
PL
Lg
B18
A10
A: B280
B: B281
BODY INTEGRATED UNIT
B: B55
TCM
B13
Lg
D3
Lg
WG
BR
D17
D16
D: B137
ECM
A: B605
HPCM
A22
WG

B310
B575
B116
D: B137
B: B55 (GREEN)
A: B605
A: B280
B: B281
A: B572
C: B574

WI-42255

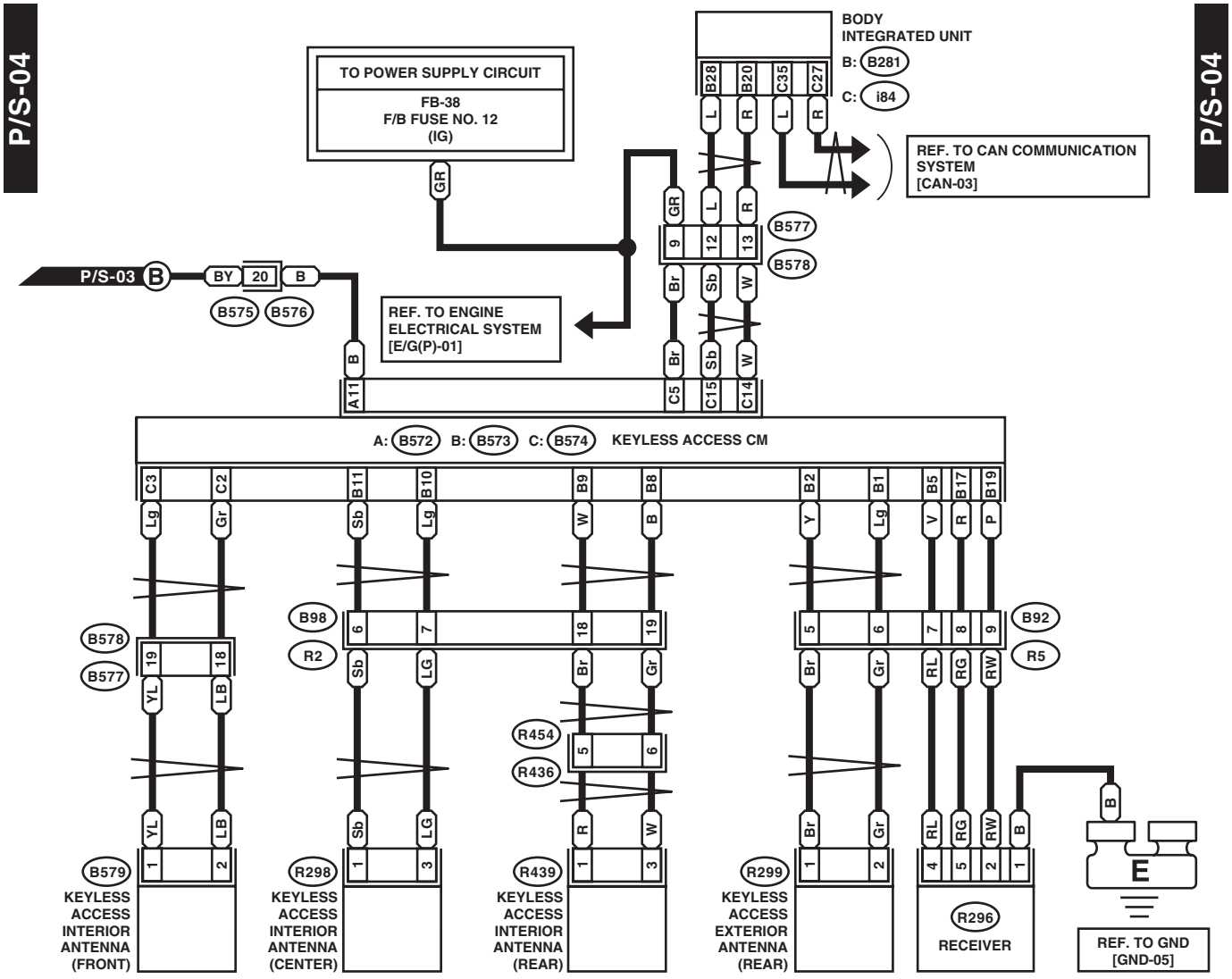
P/S-04
P/S-04
TO POWER SUPPLY CIRCUIT
FB-38
F/B FUSE NO. 12
(IG)
BODY
INTEGRATED UNIT
B: B281
C: i84
REF. TO CAN COMMUNICATION SYSTEM [CAN-03]
P/S-03
REF. TO ENGINE ELECTRICAL SYSTEM [E/G(P)-01]
A: B572 B: B573 C: B574 KEYLESS ACCESS CM
B579 KEYLESS ACCESS INTERIOR ANTENNA (FRONT)
R298 KEYLESS ACCESS INTERIOR ANTENNA (CENTER)
R439 KEYLESS ACCESS INTERIOR ANTENNA (REAR)
R299 KEYLESS ACCESS EXTERIOR ANTENNA (REAR)
R296 RECEIVER
REF. TO GND [GND-05]

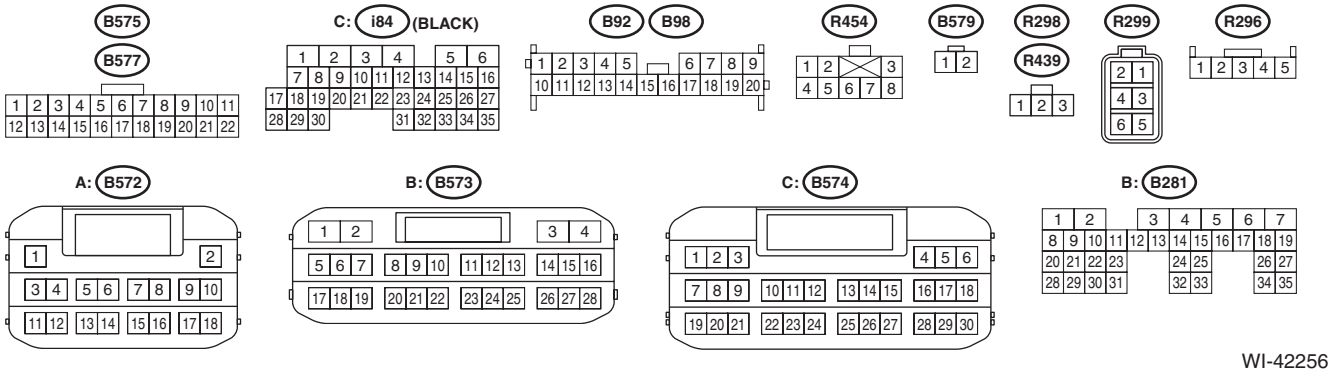
A: B572
B: B573
C: i84 (BLACK)
B: B281

WI-42256

38.Radiator Fan System

A: WIRING DIAGRAM

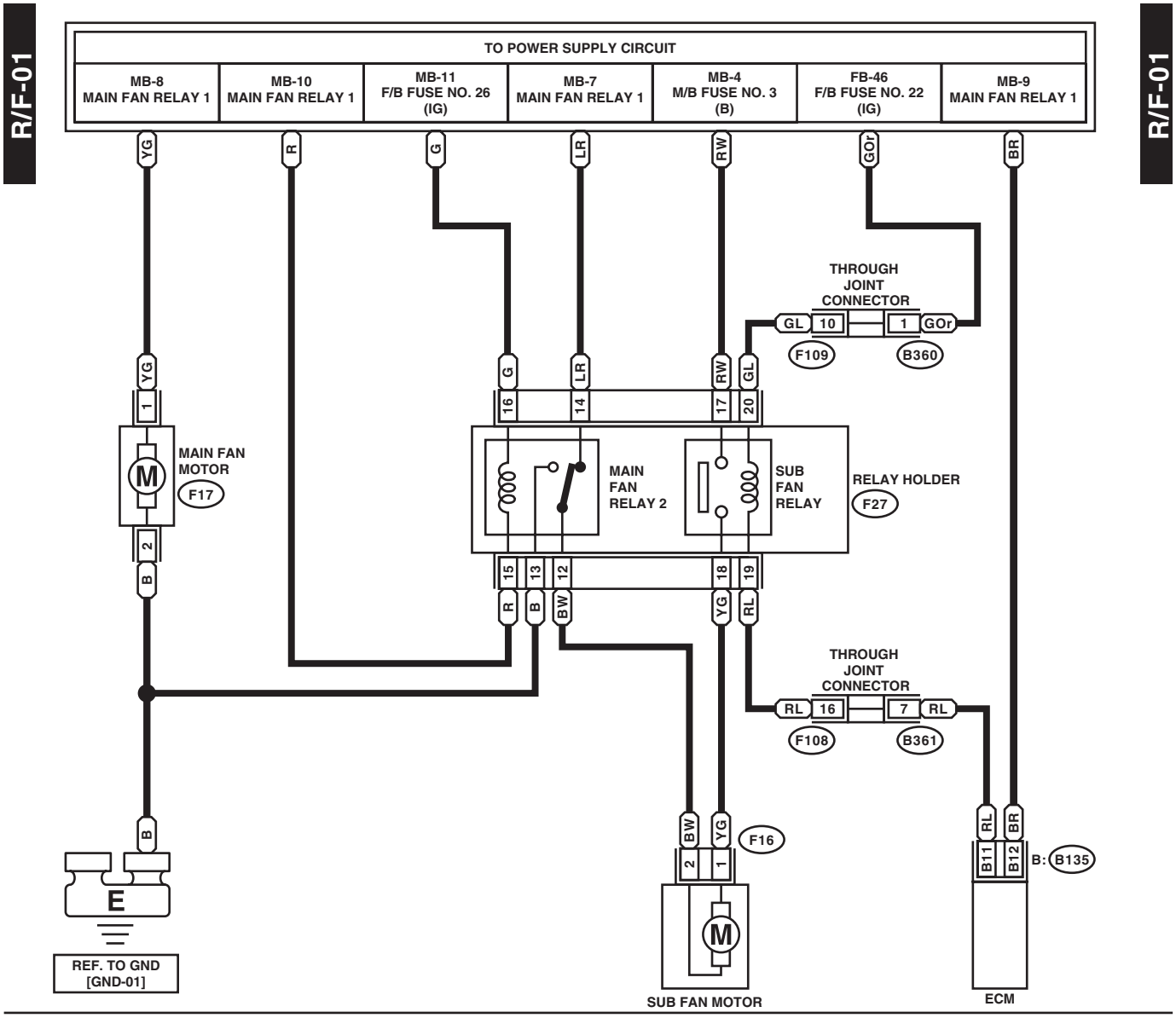

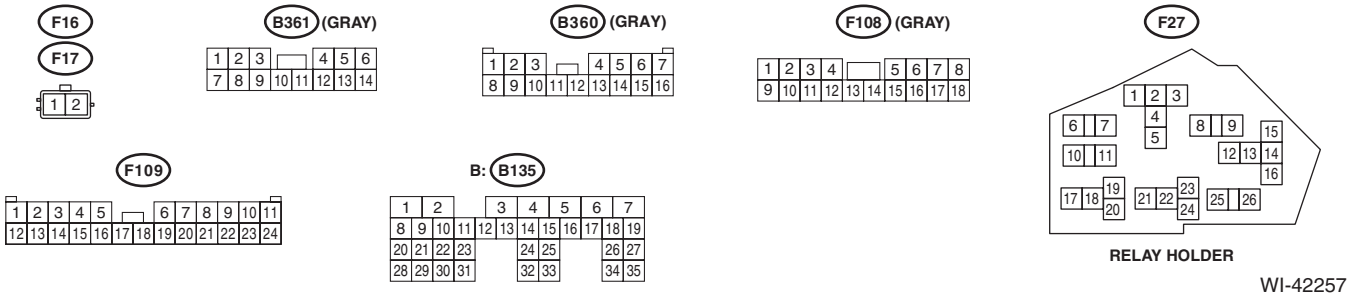

WI-42257

39.Rear Accessory Power Supply Socket System

A: WIRING DIAGRAM

RAPS-01

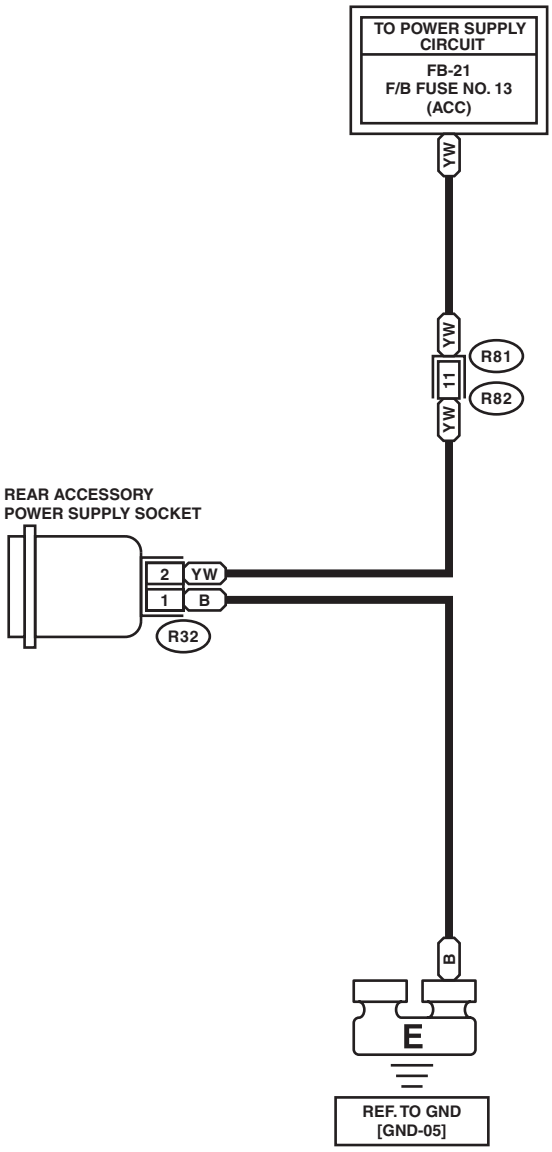

RAPS-01

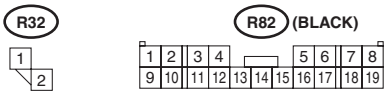

WI-34237

40.Rear Defogger System

A: WIRING DIAGRAM

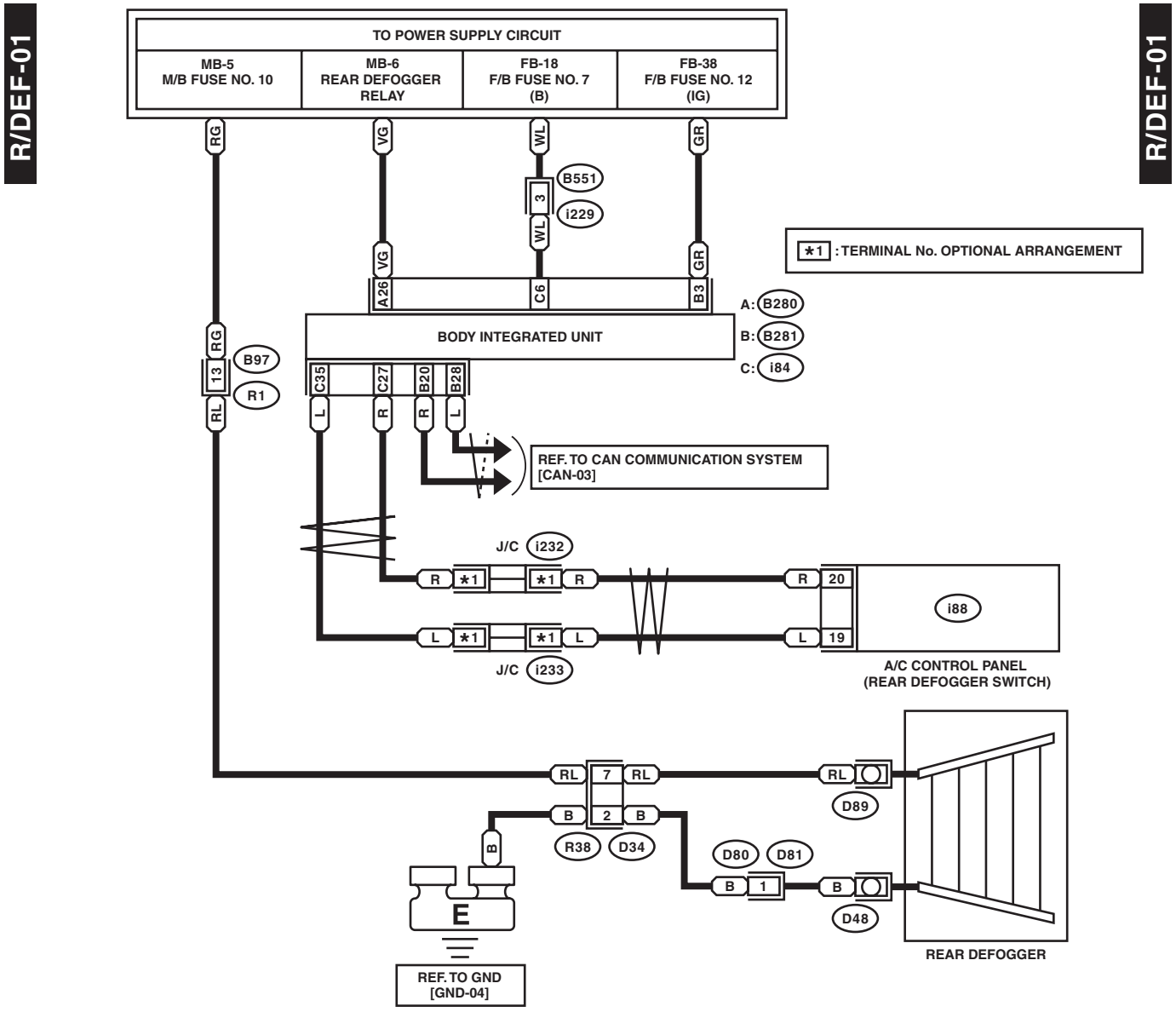

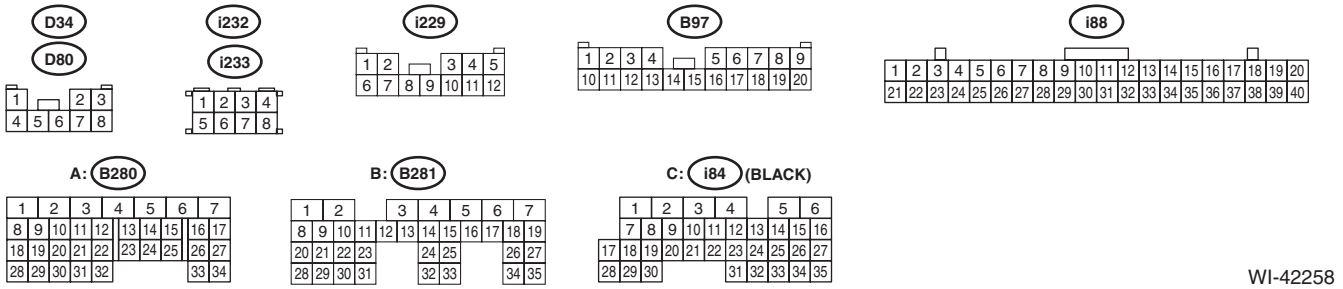

WI-42258

41.Rearview Camera System

A: WIRING DIAGRAM

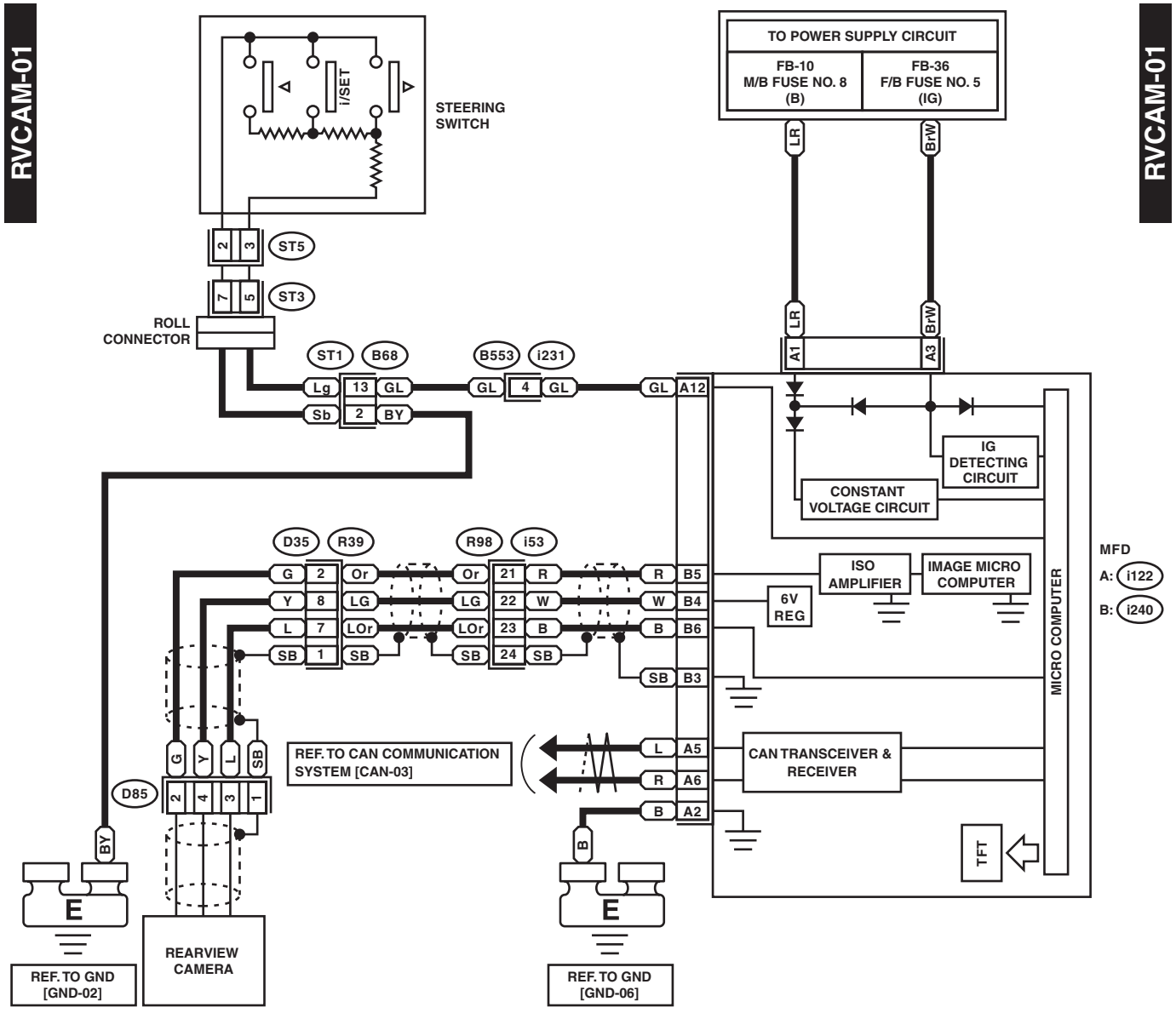

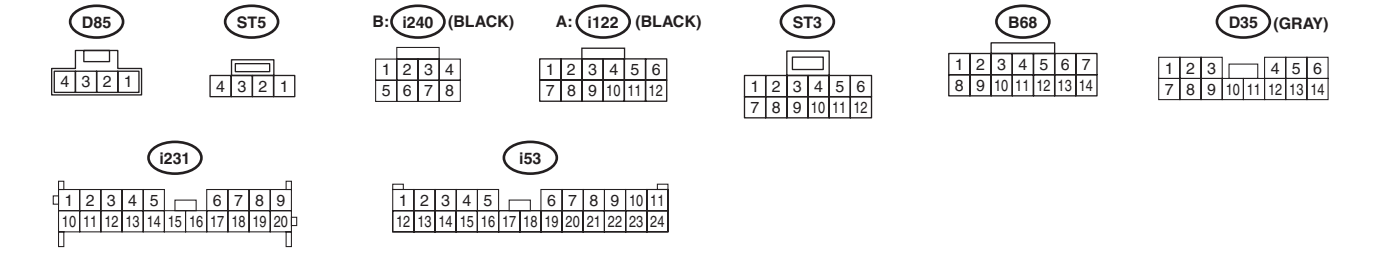

WI-42259

42.Rearview Mirror System

A: WIRING DIAGRAM

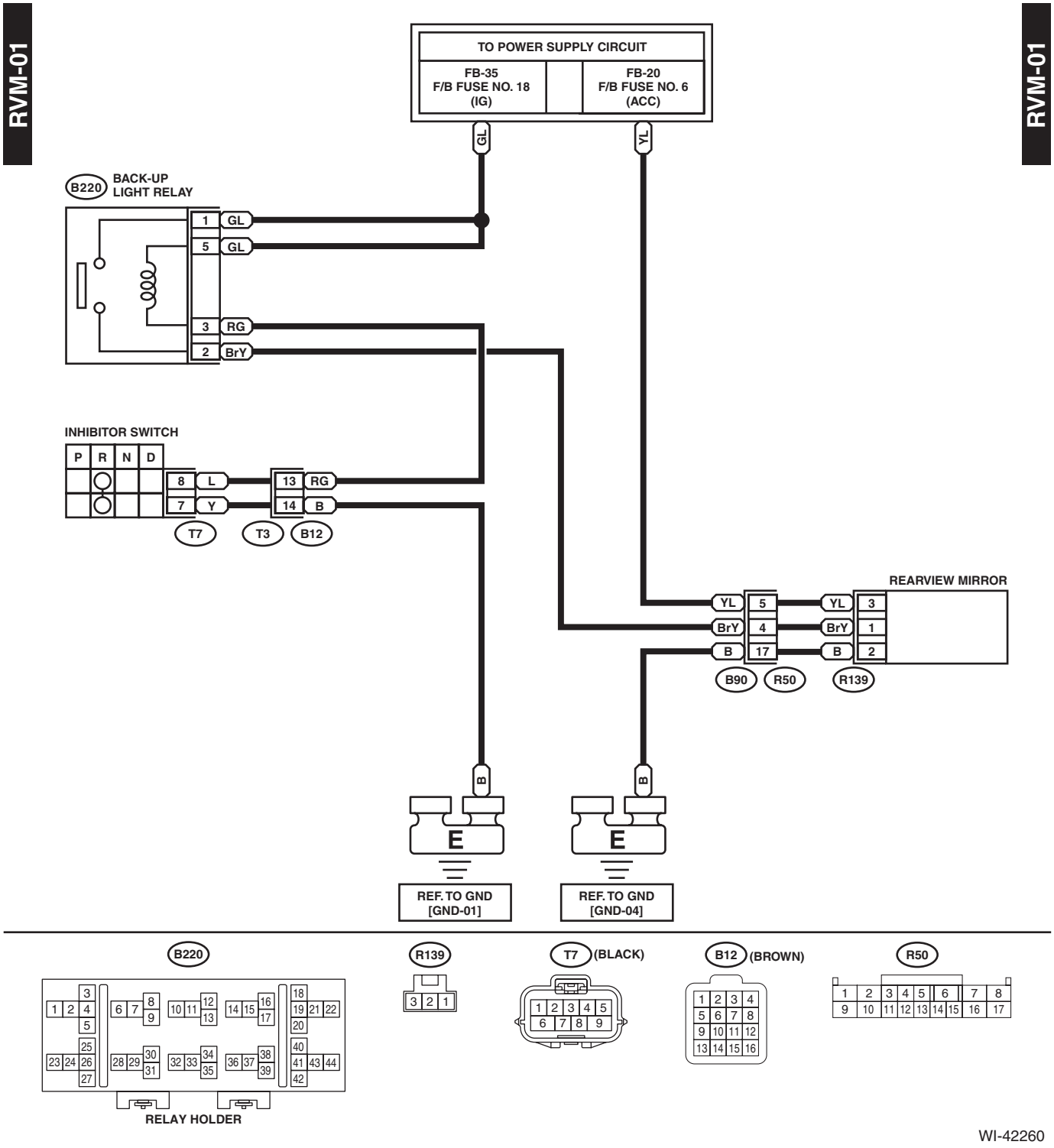

WI-42260

43.Rear Wiper and Washer System

A: WIRING DIAGRAM

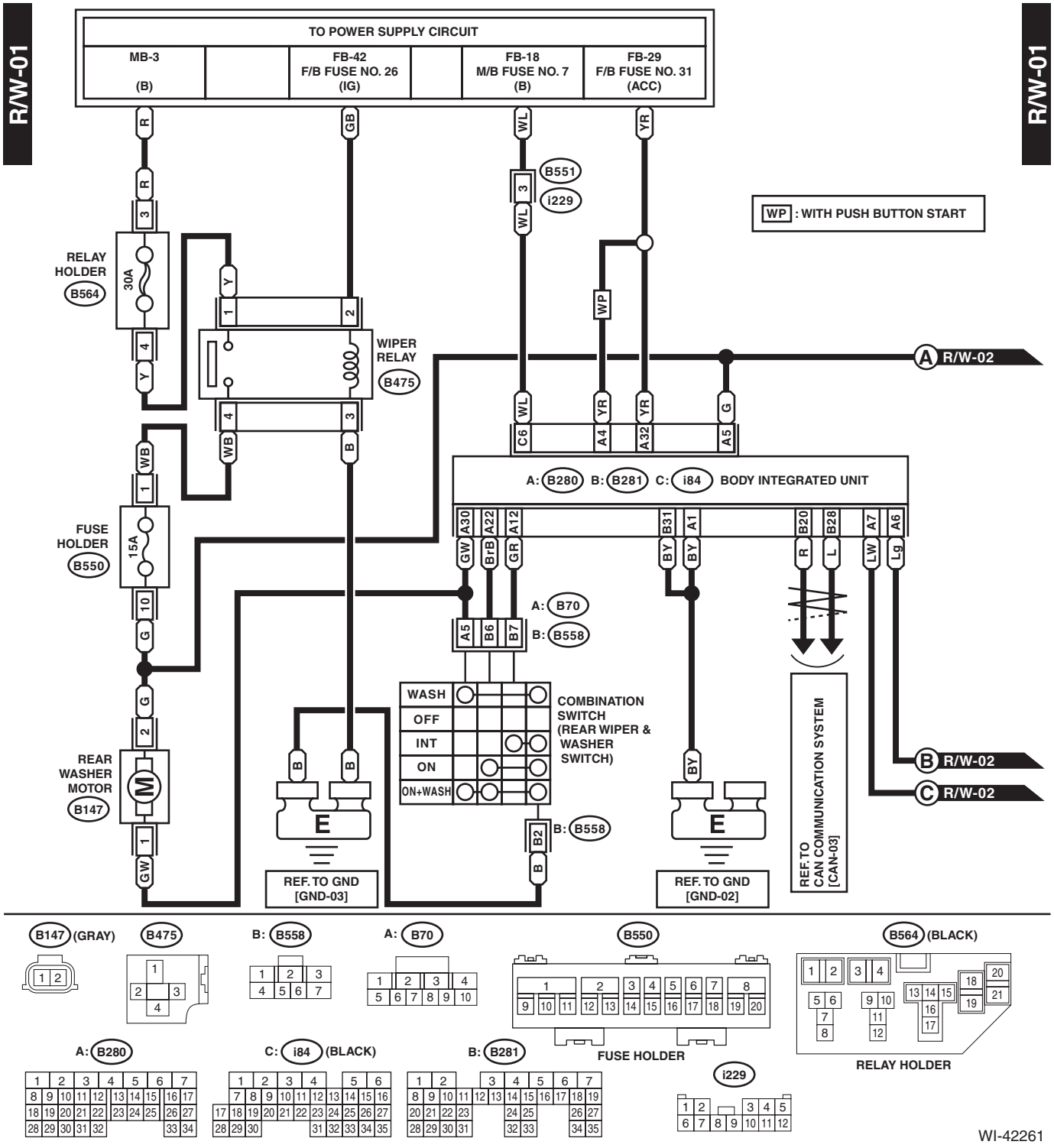

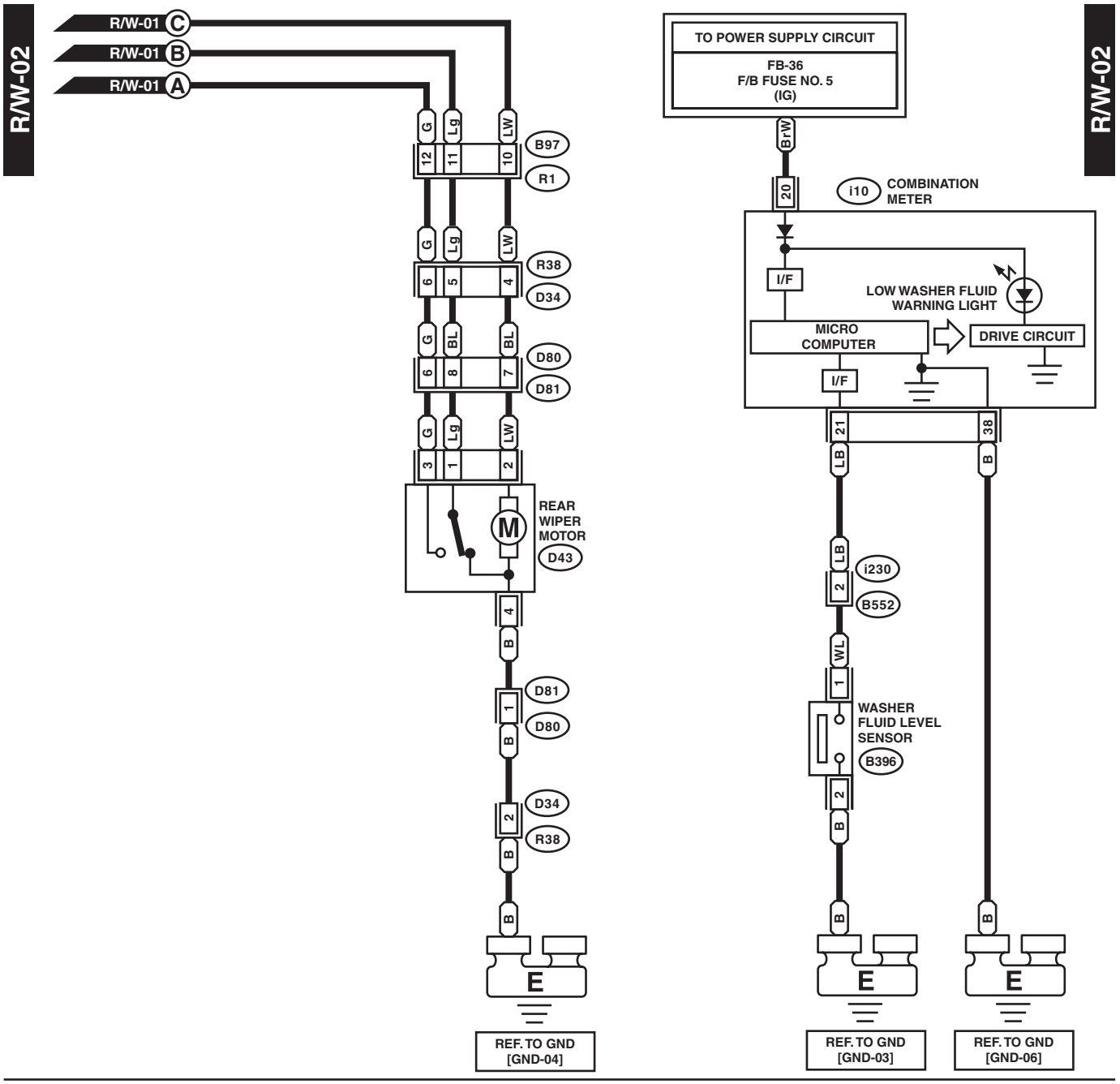
R/W-02
R/W-01 C
R/W-01 B
R/W-01 A
G
Lg
LW
12
11
10
B97
R1
R38
D34
BL
D80
D81
3
1
2
REAR WIPER MOTOR
M
D43
4
B
E
REF. TO GND [GND-04]
TO POWER SUPPLY CIRCUIT
FB-36
F/B FUSE NO. 5
(IG)
BrW
20
i10
COMBINATION METER
I/F
LOW WASHER FLUID WARNING LIGHT
MICRO COMPUTER
DRIVE CIRCUIT
21
38
LB
i230
B552
WL
WASHER FLUID LEVEL SENSOR
B396
REF. TO GND [GND-03]
REF. TO GND [GND-06]

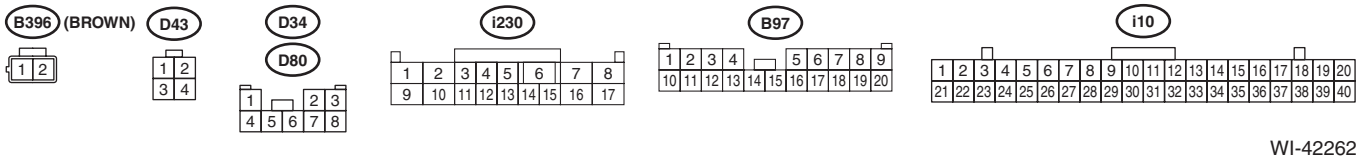
B396 (BROWN)
D43
D34
D80
i230
B97
i10

WI-42262

44.Remote Control Mirror System

A: WIRING DIAGRAM

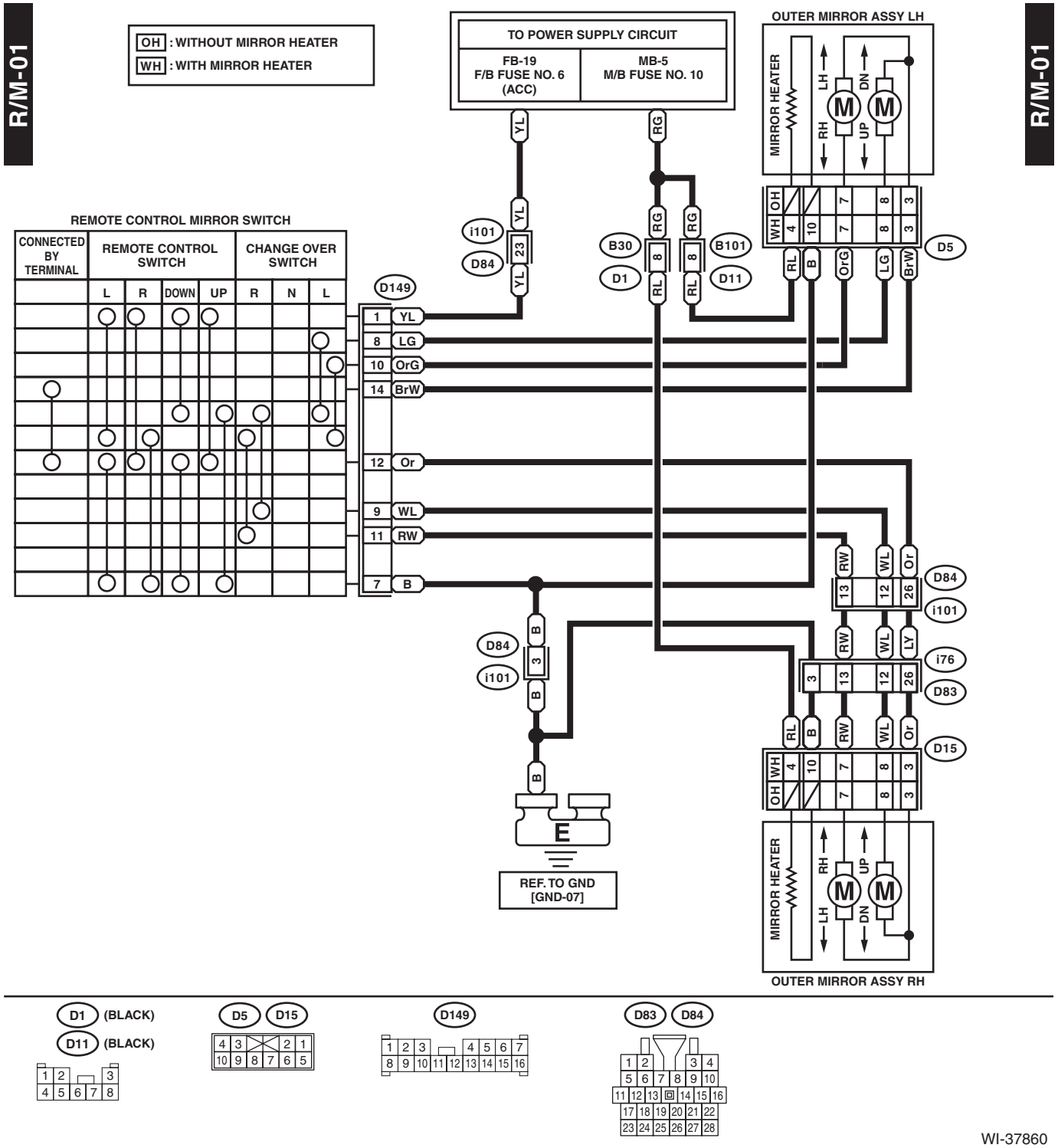

WI-37860

45.Remote Engine Start System

A: WIRING DIAGRAM

1. WITHOUT PUSH BUTTON START

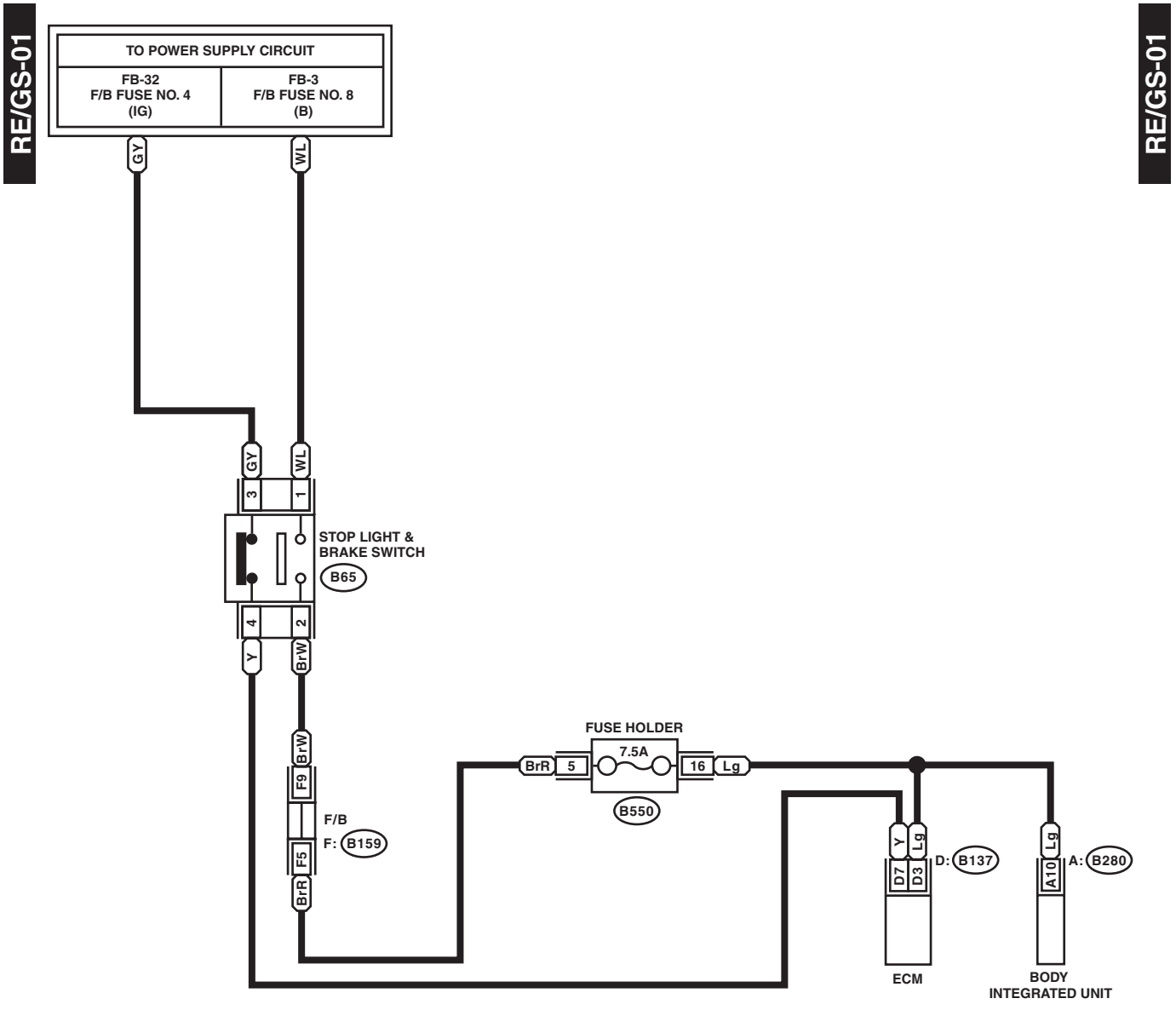

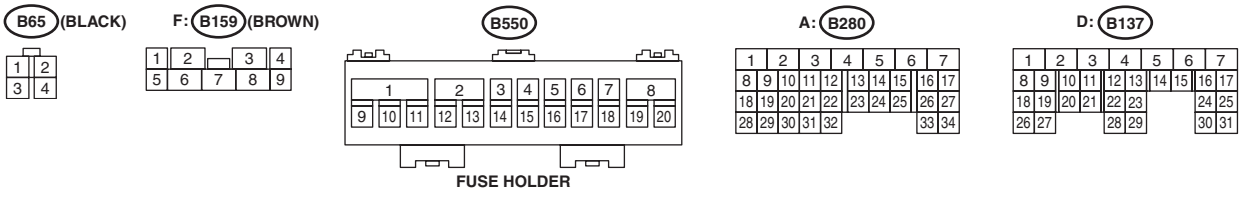

WI-42263

RE/GS-02

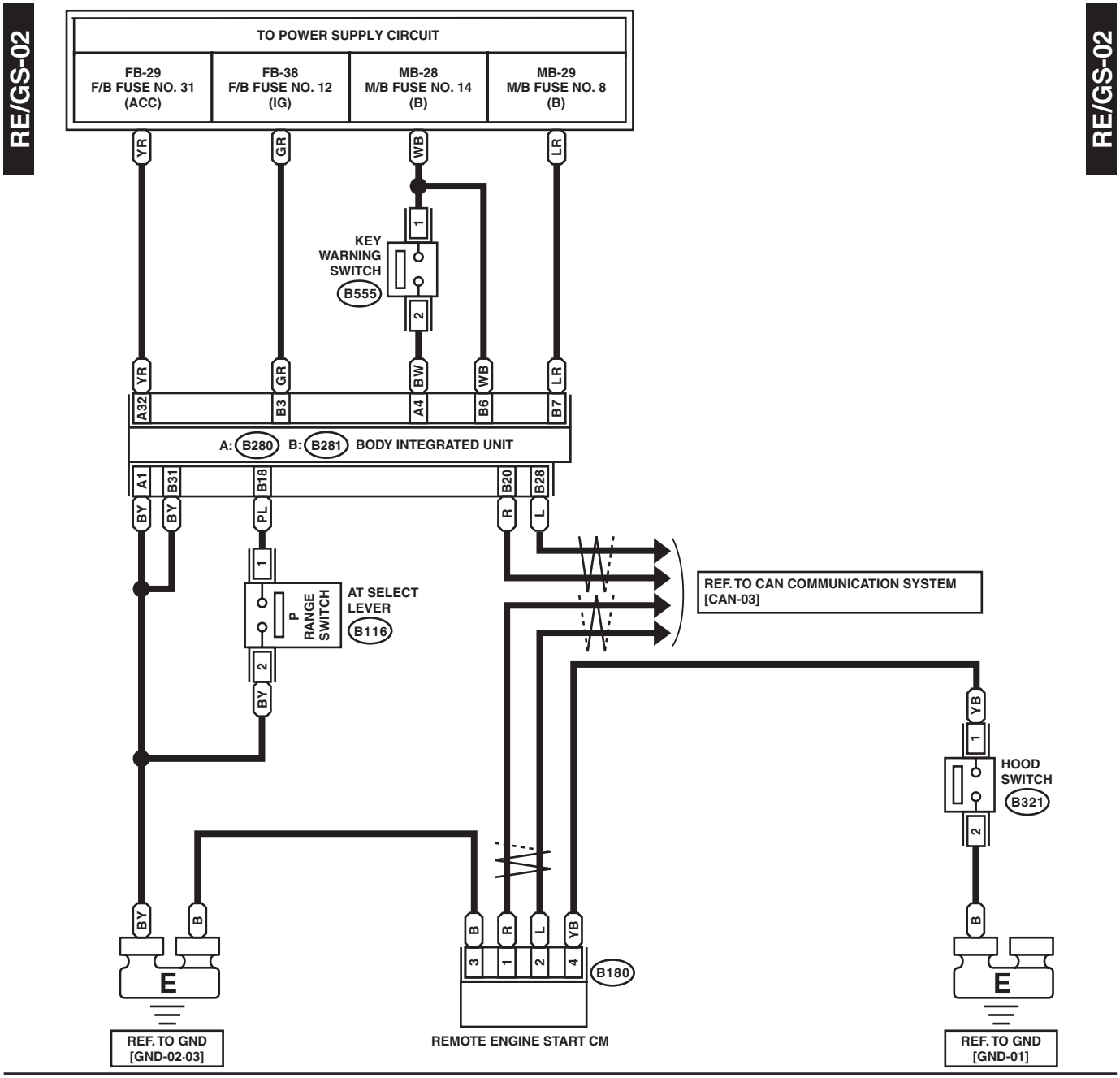

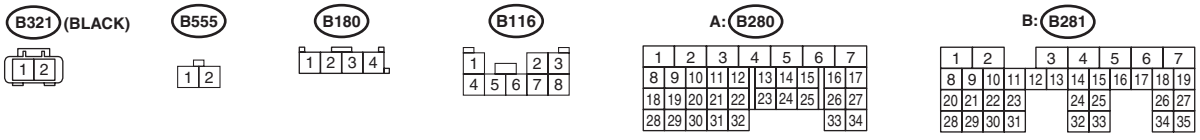

WI-42264

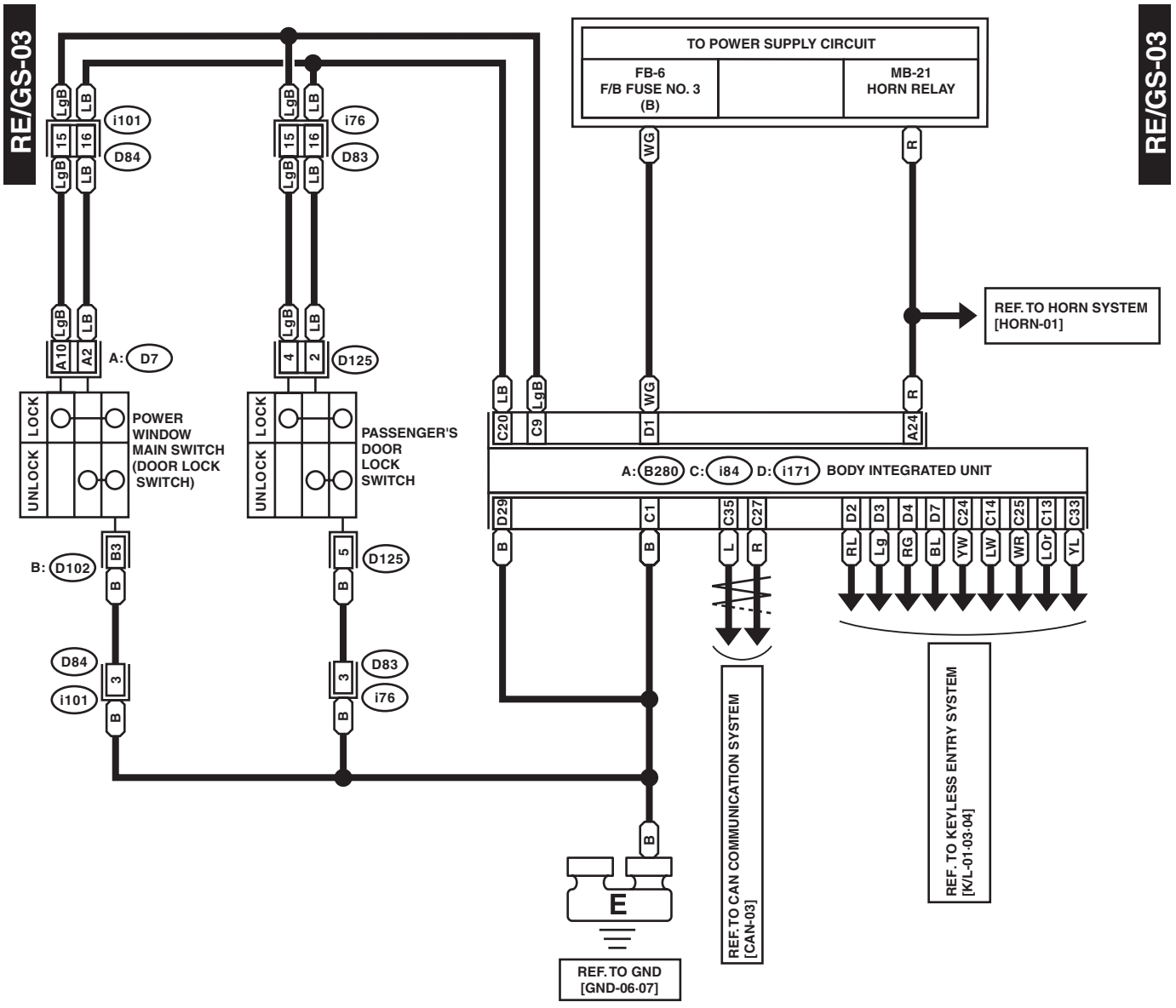
RE/GS-03
RE/GS-03
TO POWER SUPPLY CIRCUIT
FB-6
F/B FUSE NO. 3
(B)
MB-21
HORN RELAY
REF. TO HORN SYSTEM
[HORN-01]
i101
D84
i76
D83
A: D7
D125
POWER
WINDOW
MAIN SWITCH
(DOOR LOCK
SWITCH)
PASSENGER'S
DOOR
LOCK
SWITCH
LOCK
UNLOCK
A: B280 C: i84 D: i171 BODY INTEGRATED UNIT
B: D102
REF. TO CAN COMMUNICATION SYSTEM
[CAN-03]
REF. TO KEYLESS ENTRY SYSTEM
[K/L-01-03-04]
REF. TO GND
[GND-06-07]

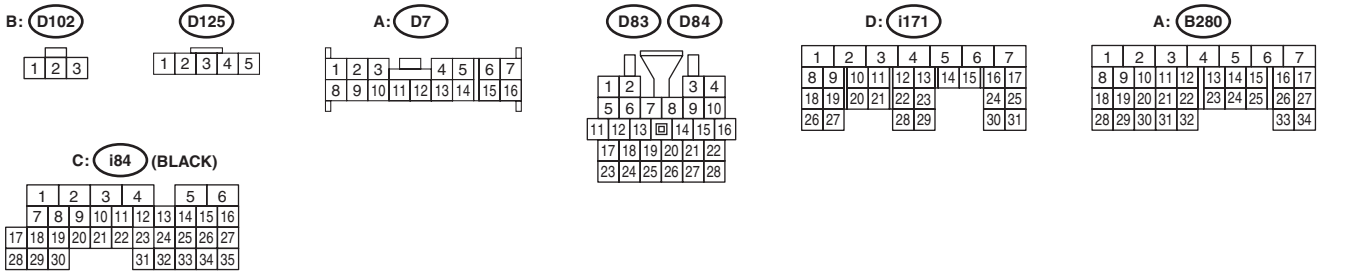
B: D102
D125
A: D7
D83 D84
D: i171
A: B280
C: i84 (BLACK)

WI-42265

2. WITH PUSH BUTTON START

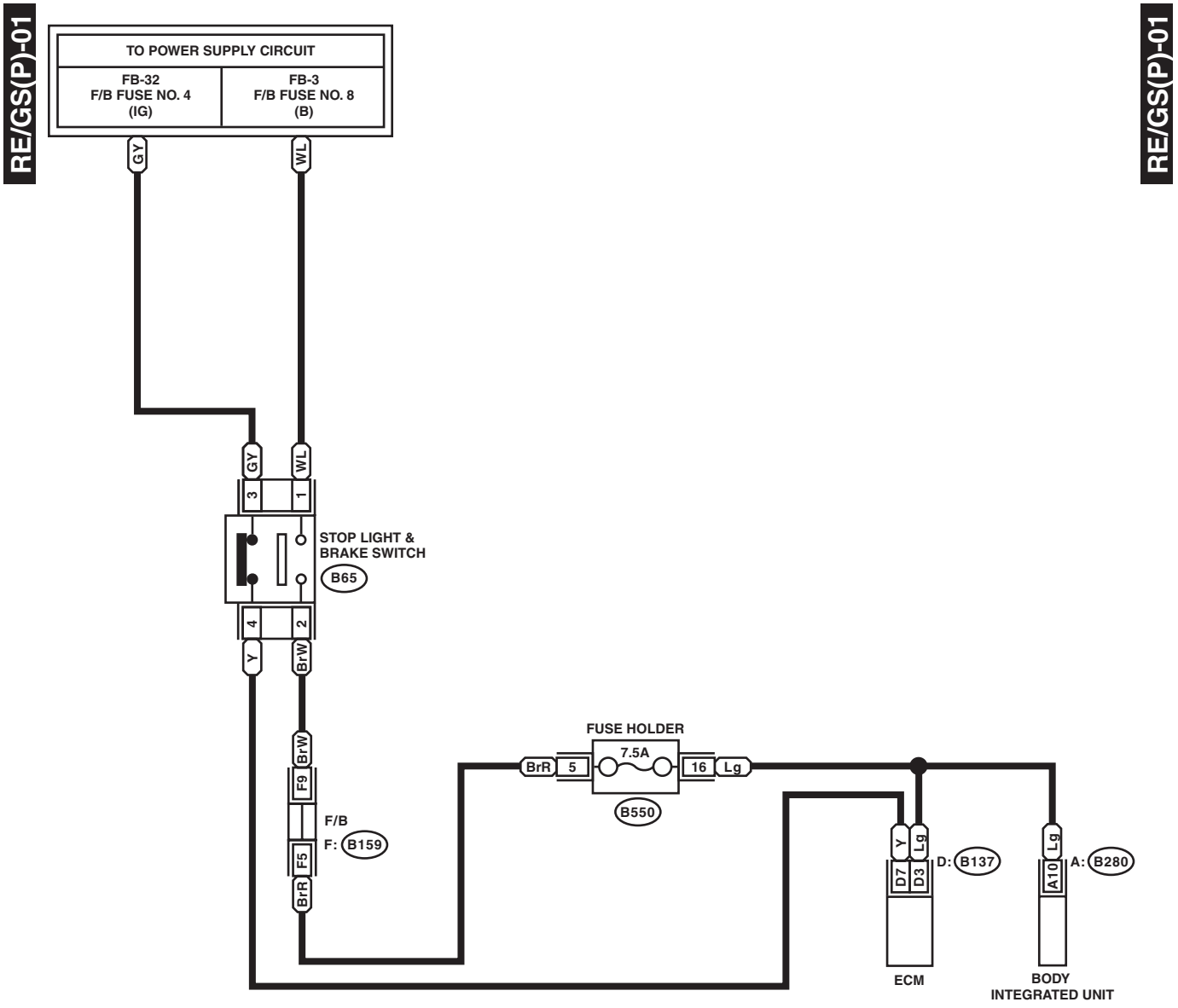

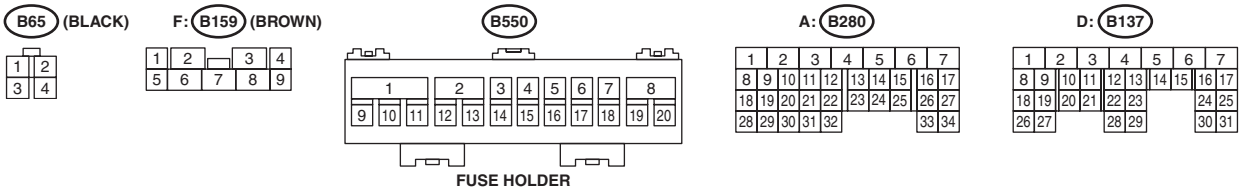

WI-42266

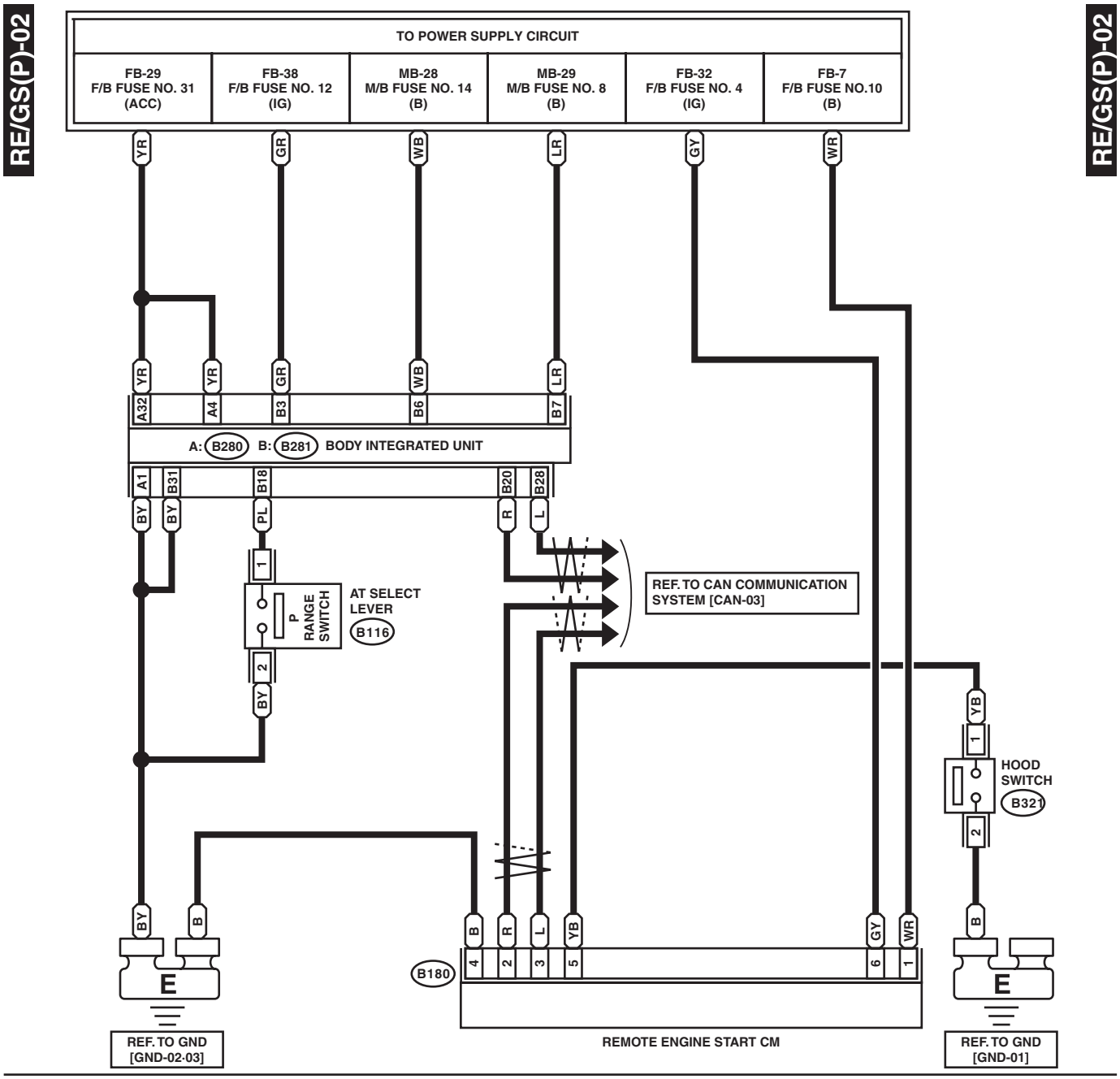
RE/GS(P)-02
RE/GS(P)-02
TO POWER SUPPLY CIRCUIT
FB-29 F/B FUSE NO. 31 (ACC)
FB-38 F/B FUSE NO. 12 (IG)
MB-28 M/B FUSE NO. 14 (B)
MB-29 M/B FUSE NO. 8 (B)
FB-32 F/B FUSE NO. 4 (IG)
FB-7 F/B FUSE NO.10 (B)
YR
GR
WB
LR
GY
WR
A32
A4
B3
B6
B7
A: B280 B: B281 BODY INTEGRATED UNIT
A1
B31
B18
B20
B28
BY
PL
R
L
AT SELECT LEVER
P RANGE SWITCH
B116
REF. TO CAN COMMUNICATION SYSTEM [CAN-03]
YB
HOOD SWITCH
B321
B
B180
REMOTE ENGINE START CM
REF. TO GND [GND-02·03]
REF. TO GND [GND-01]
B321 (BLACK)
B116
B180
A: B280
B: B281

WI-42267

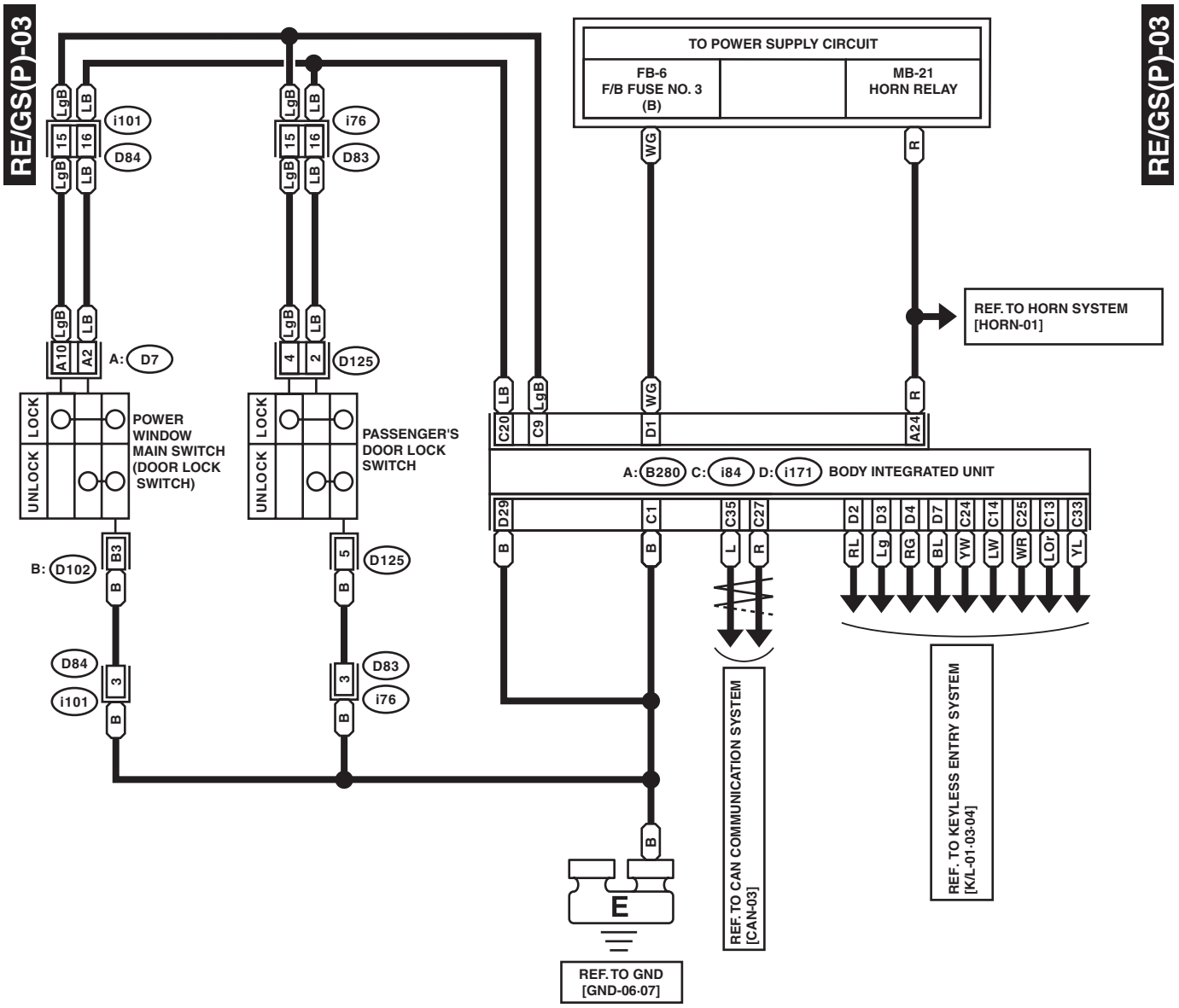
RE/GS(P)-03
RE/GS(P)-03
TO POWER SUPPLY CIRCUIT
FB-6
F/B FUSE NO. 3
(B)
MB-21
HORN RELAY
WG
R
REF. TO HORN SYSTEM
[HORN-01]
i101
D84
i76
D83
LgB
LB
A10
A2
A: D7
4
2
D125
POWER
WINDOW
MAIN SWITCH
(DOOR LOCK
SWITCH)
PASSENGER'S
DOOR LOCK
SWITCH
LOCK
UNLOCK
C20
C9
D1
A24
A: B280 C: i84 D: i171 BODY INTEGRATED UNIT
D29
C1
C35
C27
D2
D3
D4
D7
C24
C14
C25
C13
C33
B
L
R
RL
Lg
RG
BL
YW
LW
WR
LOr
YL
B: D102
B3
5
D125
3
D84
i101
D83
i76
E
REF. TO GND
[GND-06-07]
REF. TO CAN COMMUNICATION SYSTEM
[CAN-03]
REF. TO KEYLESS ENTRY SYSTEM
[K/L-01-03-04]

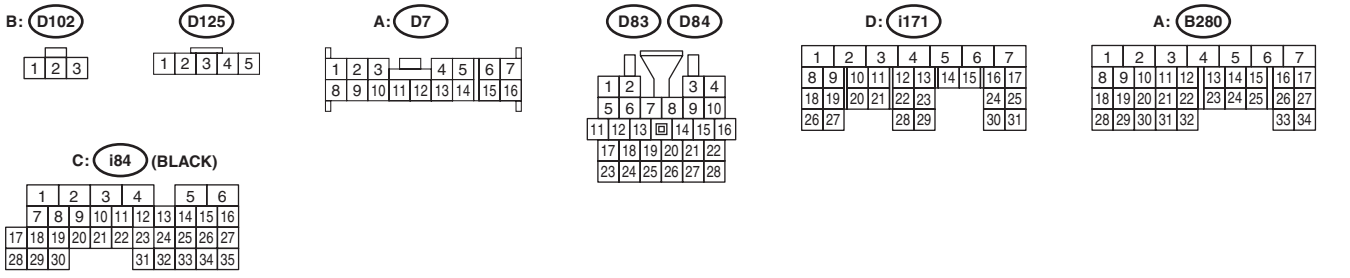
B: D102
D125
A: D7
D83 D84
D: i171
A: B280
C: i84 (BLACK)

WI-42268

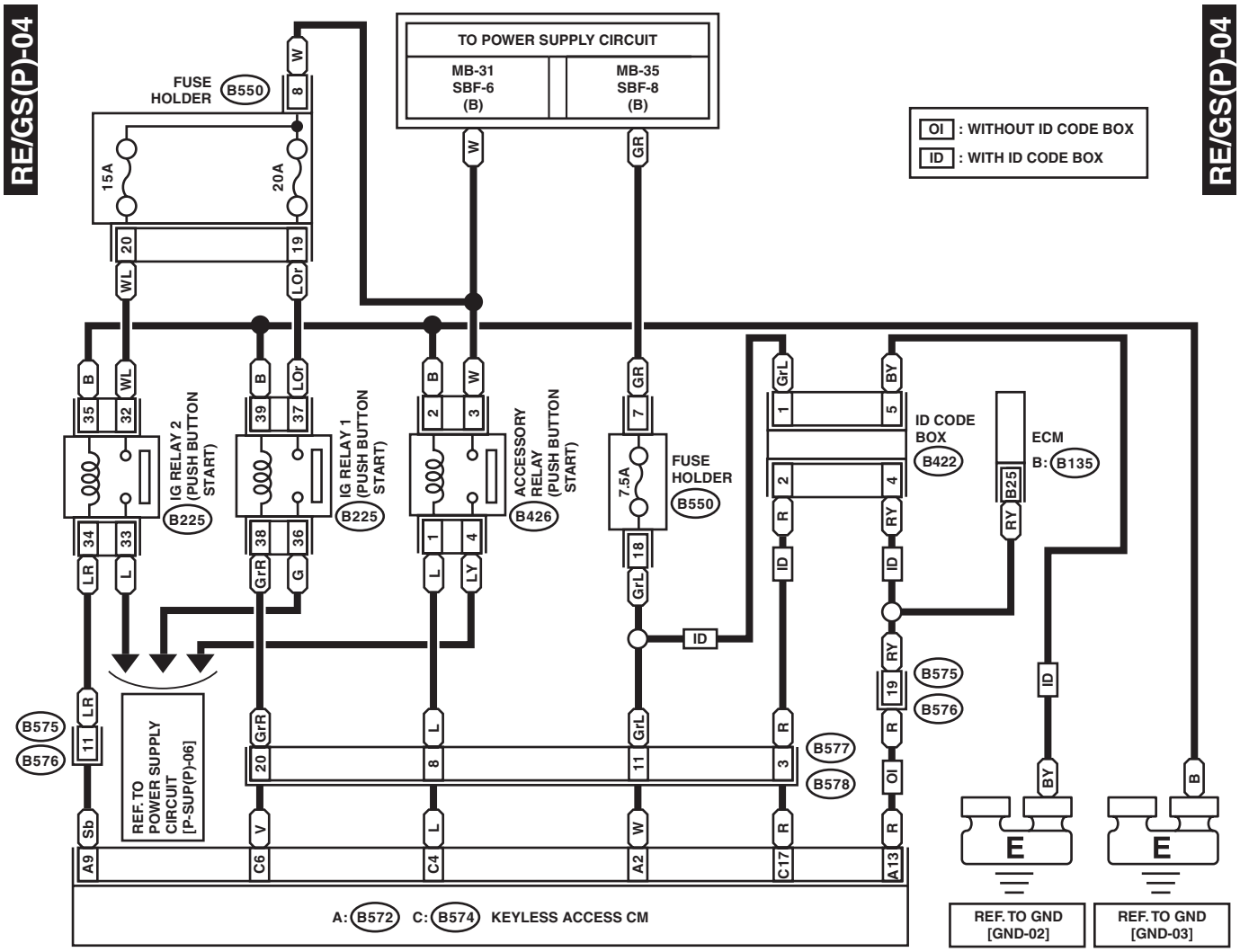
RE/GS(P)-04
RE/GS(P)-04
TO POWER SUPPLY CIRCUIT
MB-31 SBF-6 (B)
MB-35 SBF-8 (B)
OI : WITHOUT ID CODE BOX
ID : WITH ID CODE BOX
FUSE HOLDER B550
15A
20A
IG RELAY 2 (PUSH BUTTON START) B225
IG RELAY 1 (PUSH BUTTON START) B225
ACCESSORY RELAY (PUSH BUTTON START) B426
7.5A
FUSE HOLDER B550
ID CODE BOX B422
ECM B: B135
B575
B576
B577
B578
REF. TO POWER SUPPLY CIRCUIT [P-SUP(P)-06]
A: B572 C: B574 KEYLESS ACCESS CM
REF. TO GND [GND-02]
REF. TO GND [GND-03]

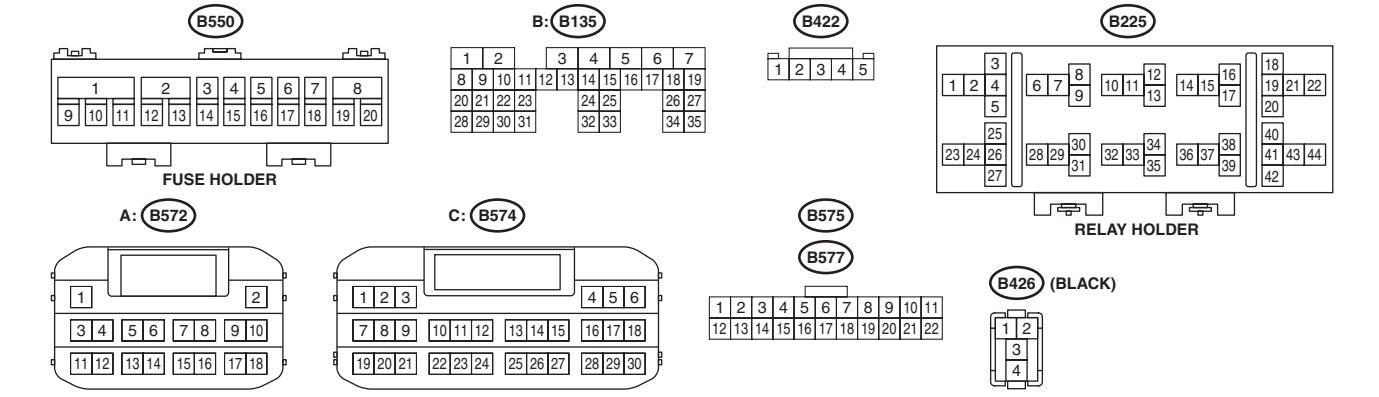
B550
FUSE HOLDER
B: B135
B422
B225
RELAY HOLDER
A: B572
C: B574
B575
B577
B426 (BLACK)

WI-42269

46.Seat Belt Warning System

A: WIRING DIAGRAM

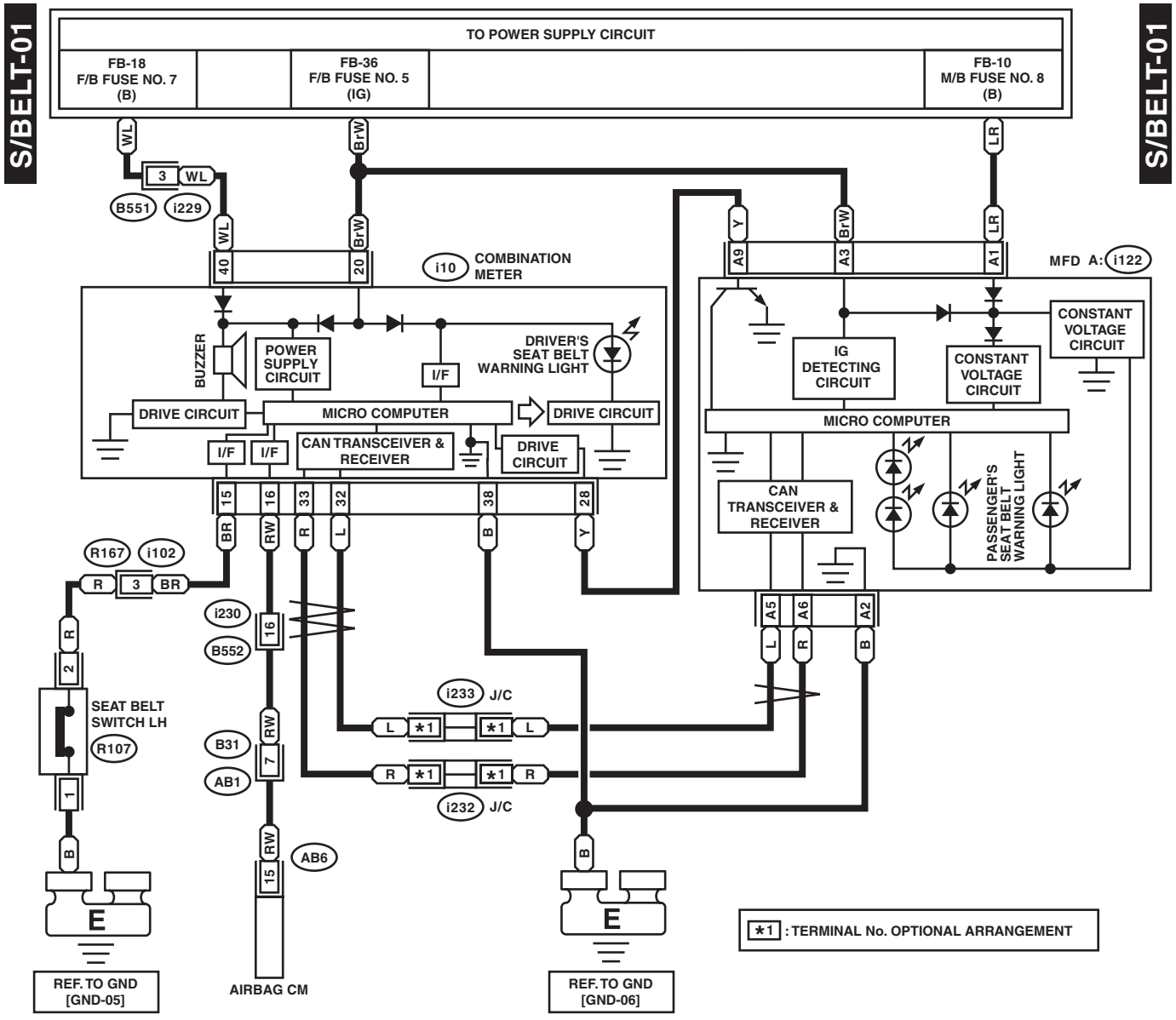

47.Seat Heater System

A: WIRING DIAGRAM

S/H-01

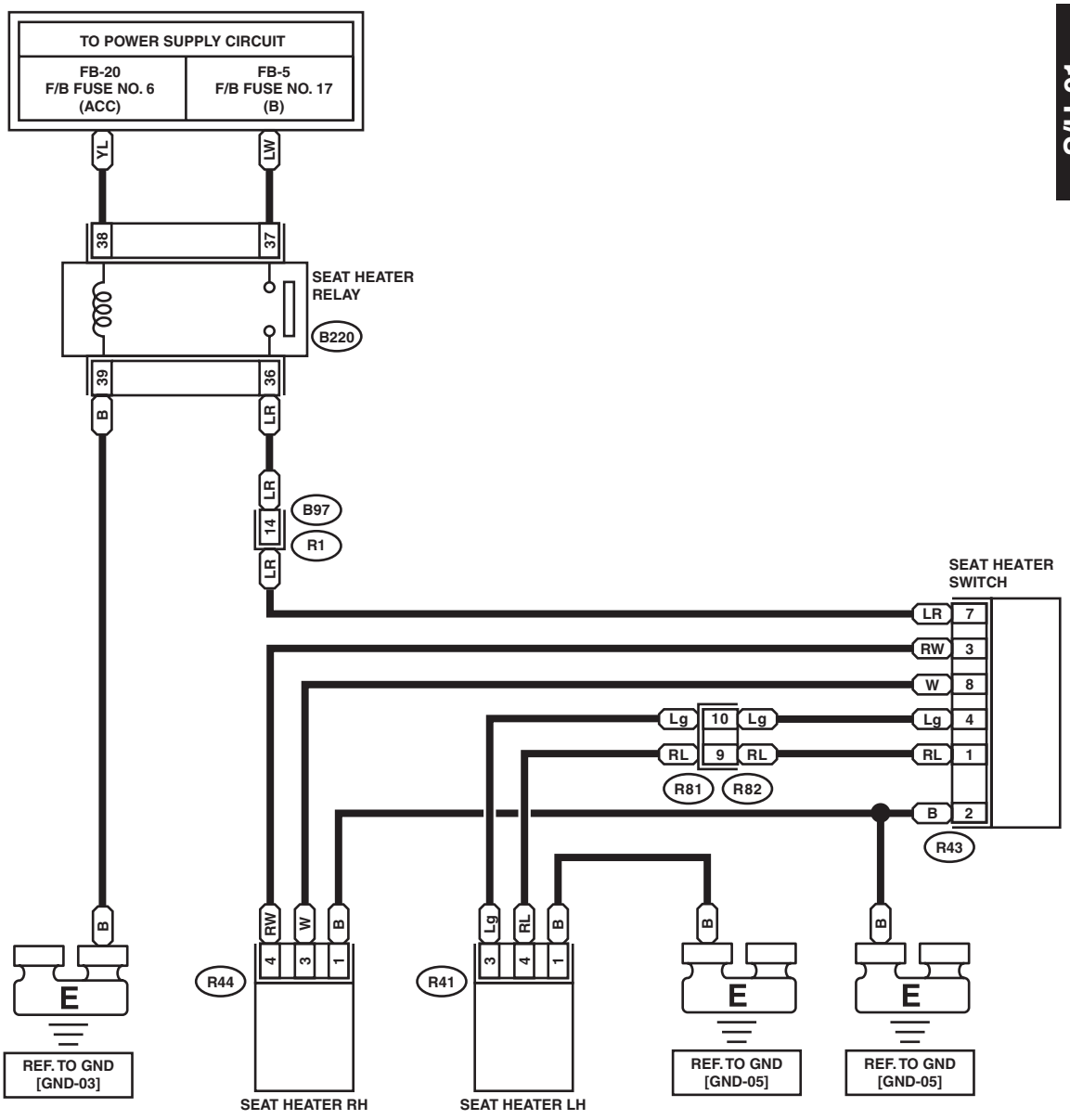

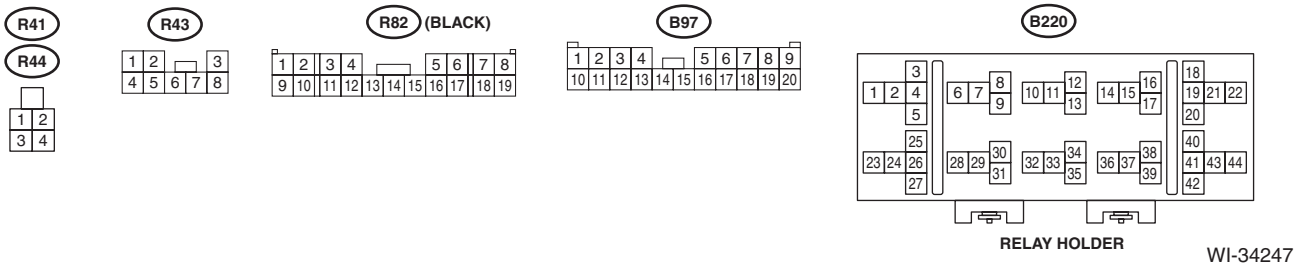

WI-34247

48.Security System

A: WIRING DIAGRAM

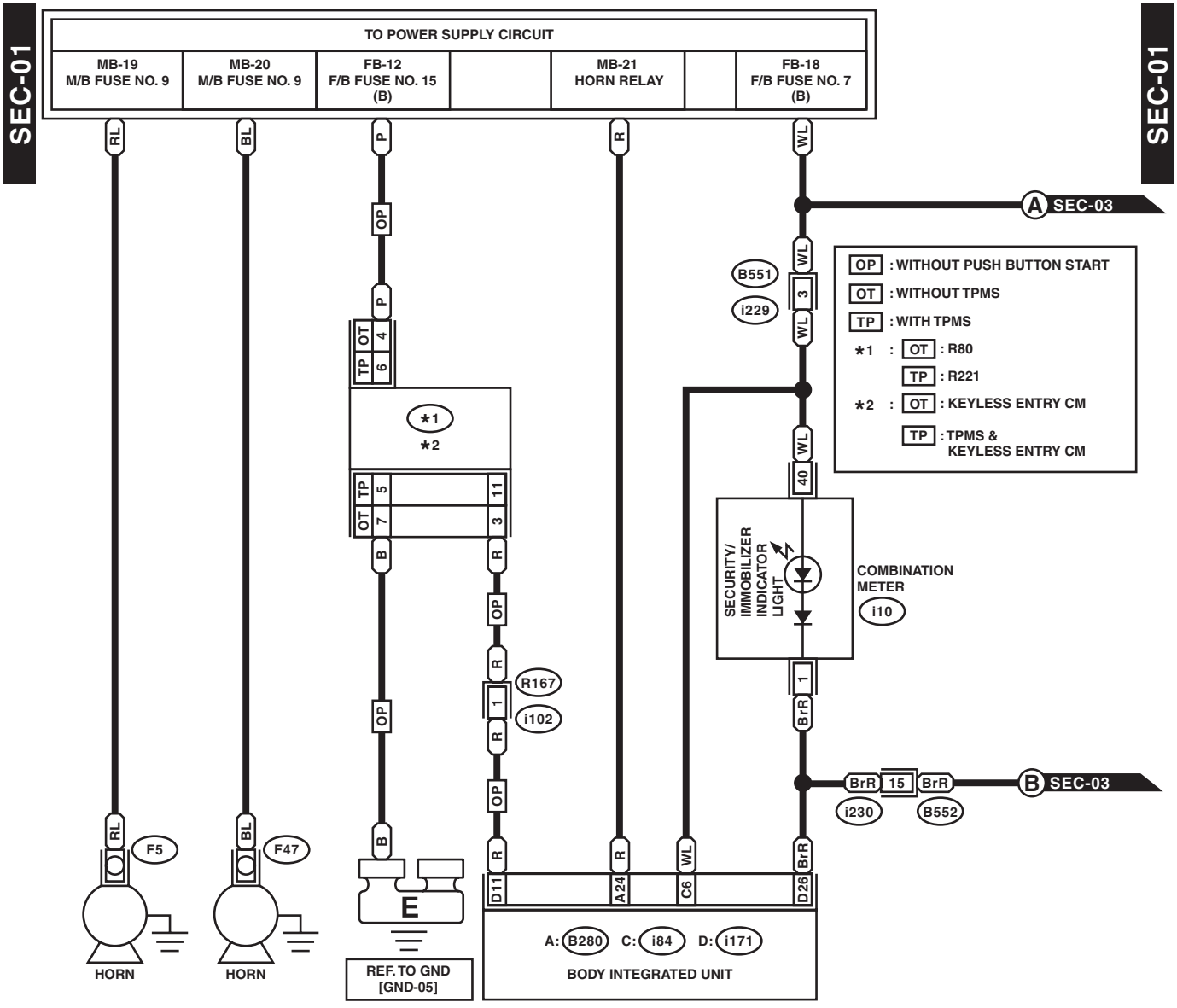

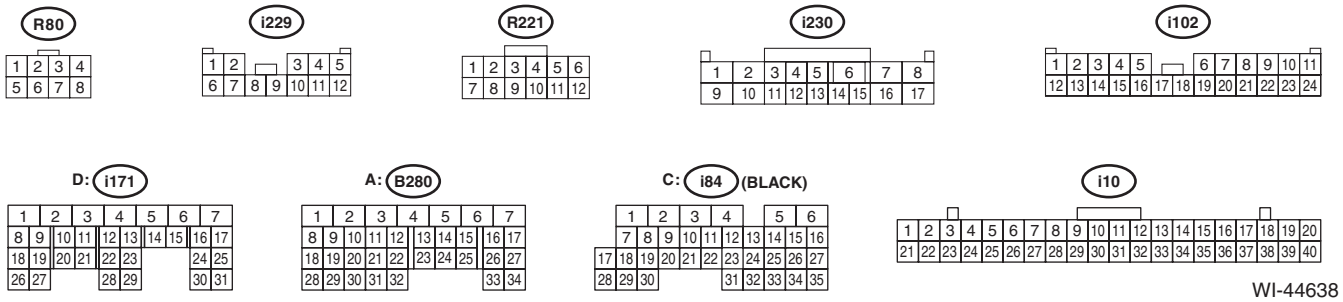

WI-44638

SEC-02

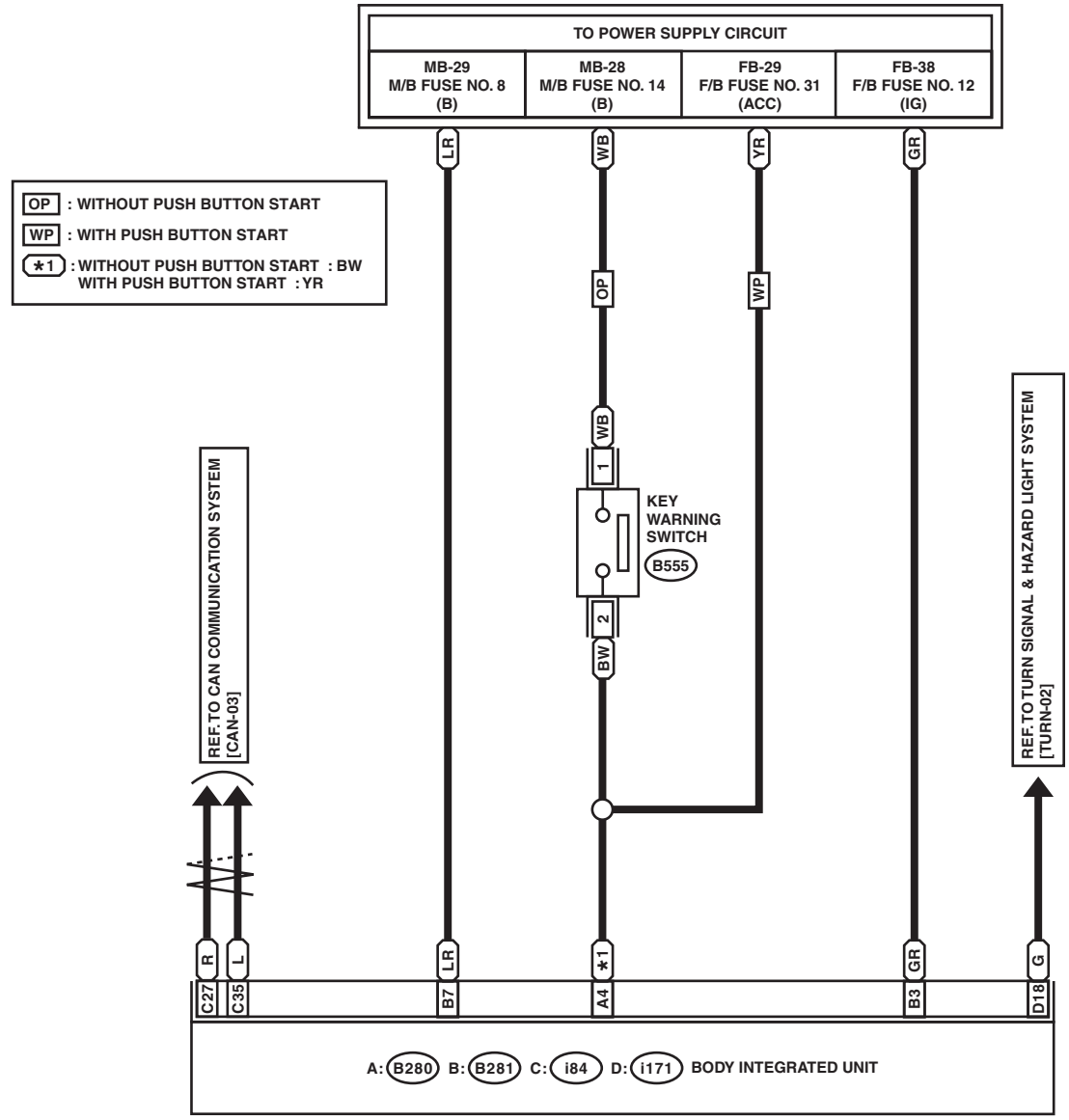

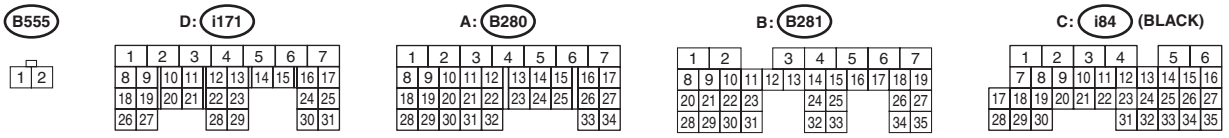

WI-42271

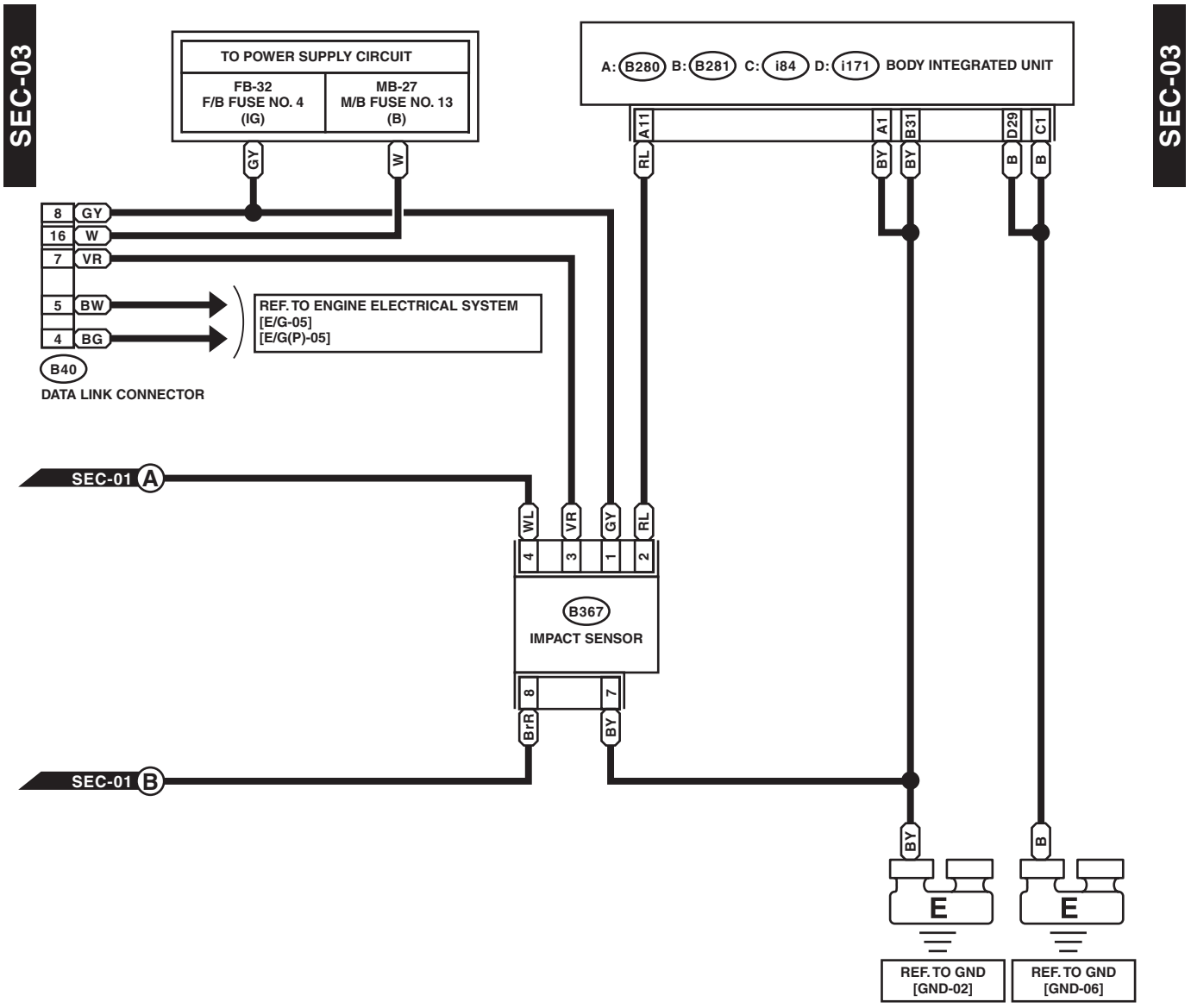
SEC-03
SEC-03
TO POWER SUPPLY CIRCUIT
FB-32
F/B FUSE NO. 4
(IG)
MB-27
M/B FUSE NO. 13
(B)
A: B280 B: B281 C: i84 D: i171 BODY INTEGRATED UNIT
A11
A1
B31
D29
C1
RL
BY
BY
B
B
GY
W
8 GY
16 W
7 VR
5 BW
4 BG
REF. TO ENGINE ELECTRICAL SYSTEM
[E/G-05]
[E/G(P)-05]
B40
DATA LINK CONNECTOR
SEC-01 A
WL
VR
GY
RL
4
3
1
2
B367
IMPACT SENSOR
8
7
BrR
BY
SEC-01 B
BY
B
E
E
REF. TO GND
[GND-02]
REF. TO GND
[GND-06]

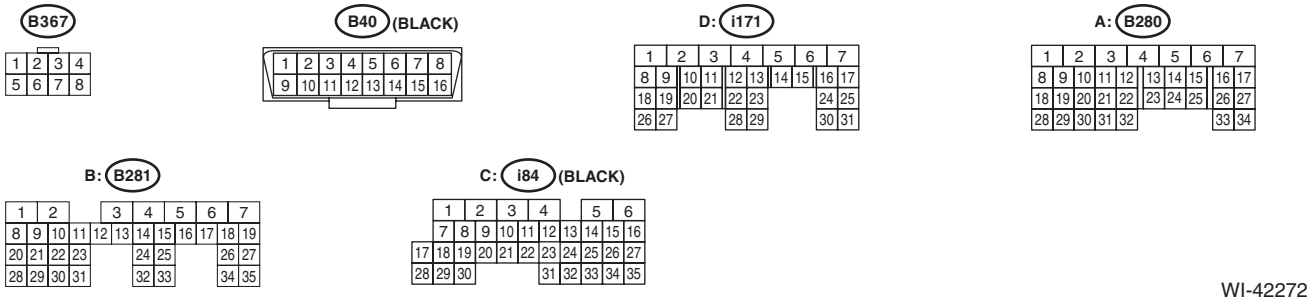
B367
B40 (BLACK)
D: i171
A: B280
B: B281
C: i84 (BLACK)

WI-42272

SEC-04

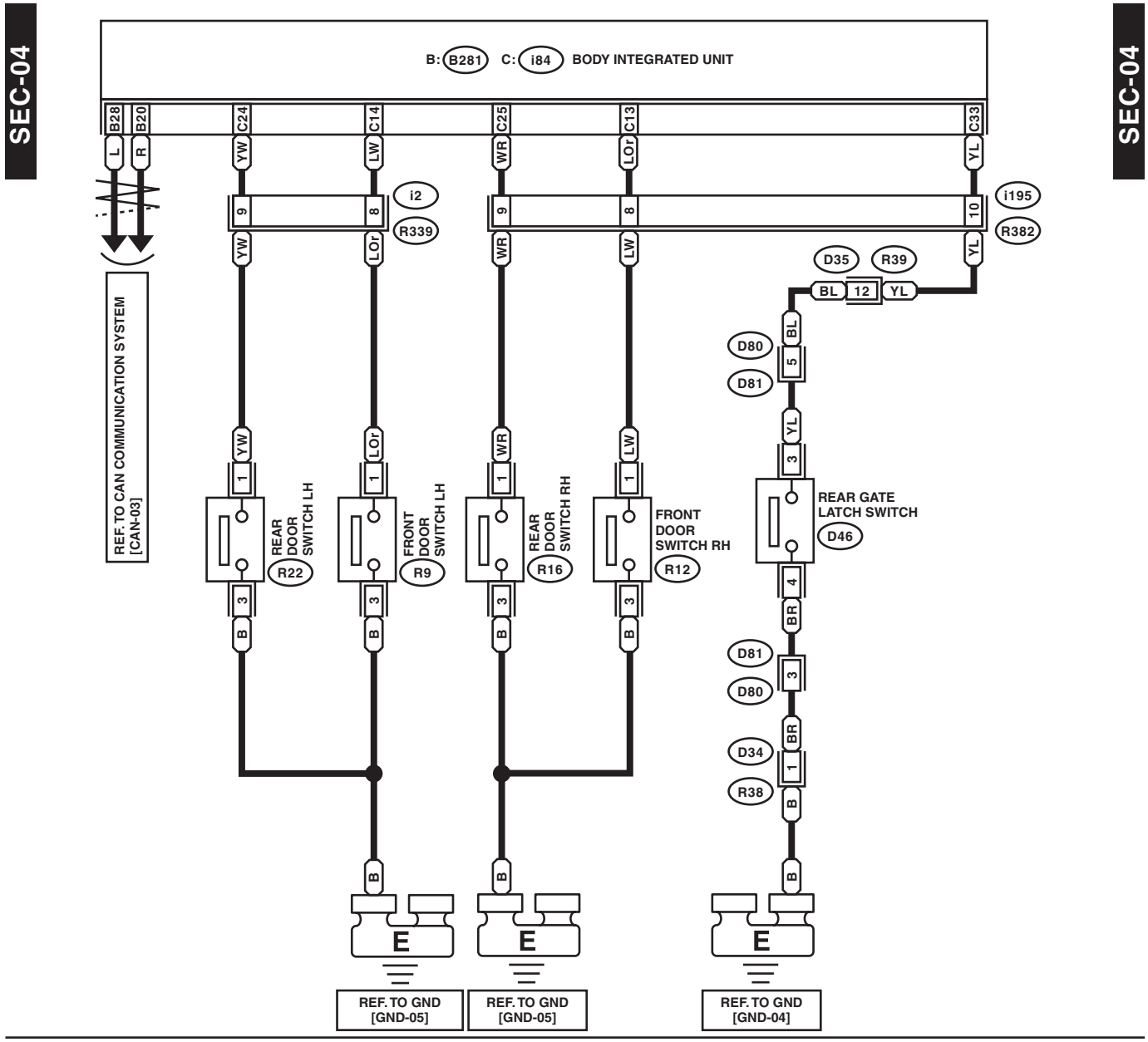

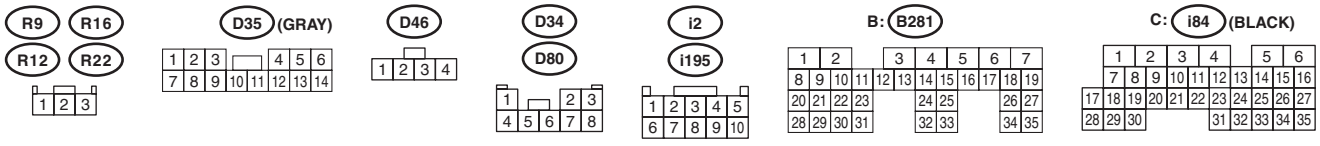

WI-42273

49.Shift Lock Control System

A: WIRING DIAGRAM

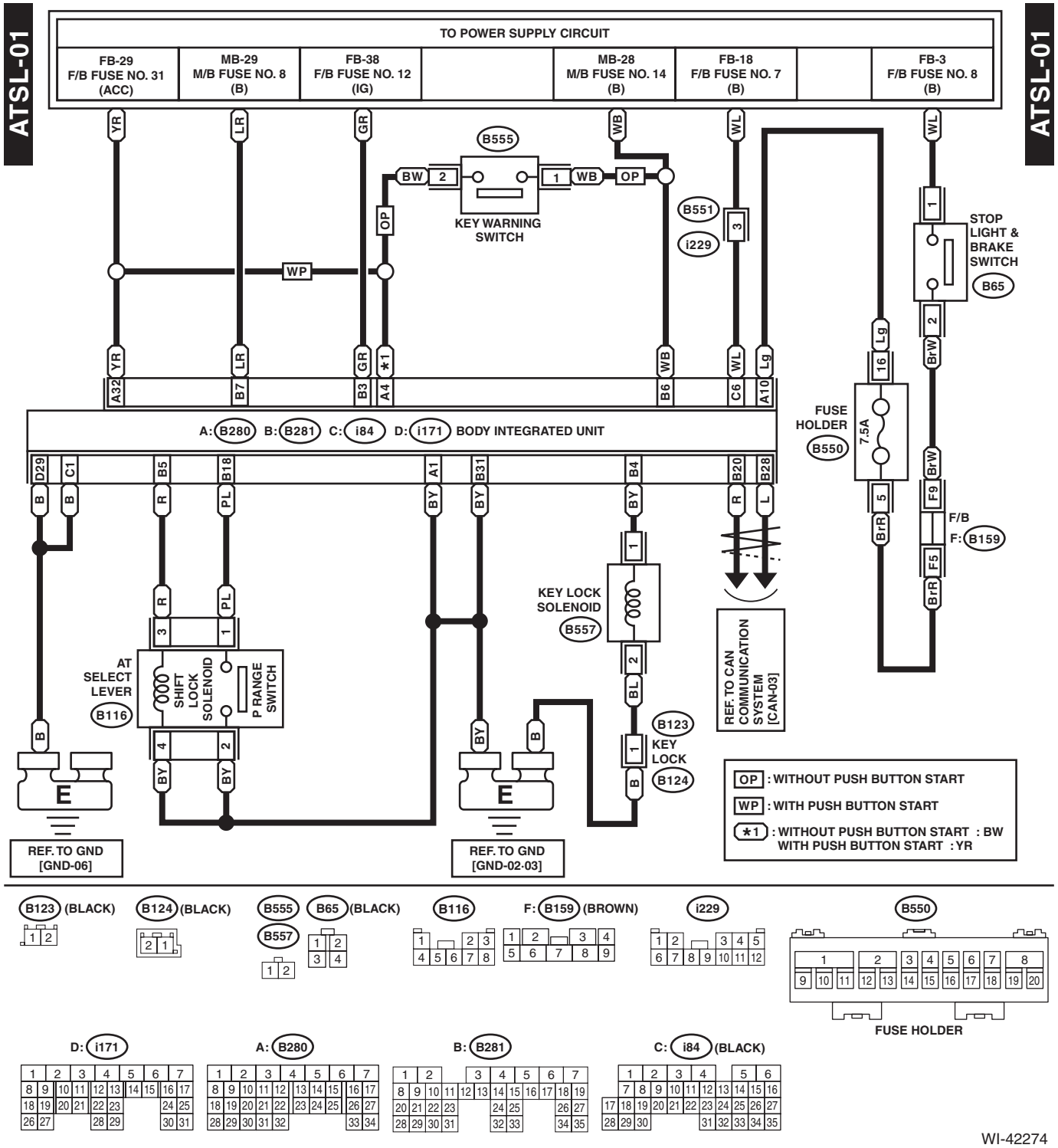

WI-42274

50.Speedometer System

A: WIRING DIAGRAM

SP-01

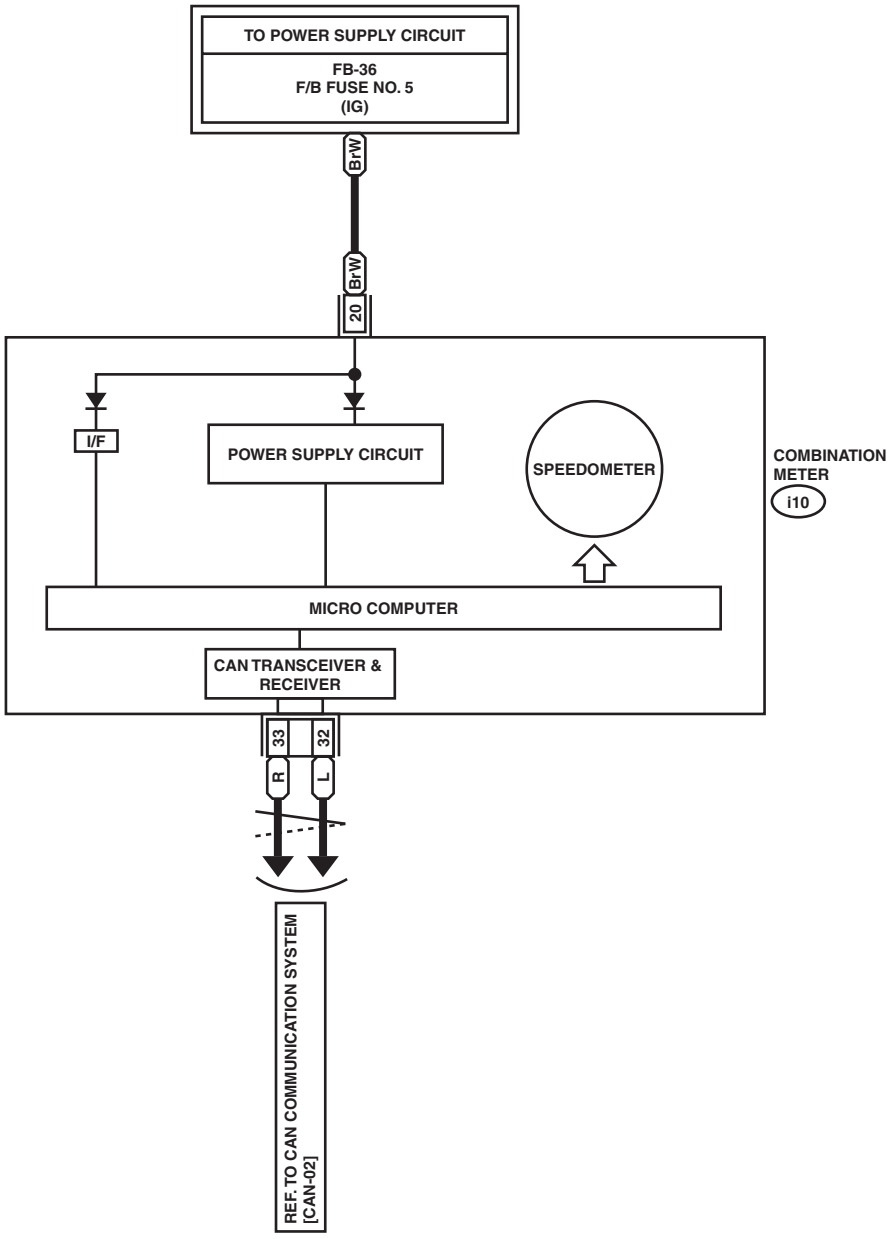

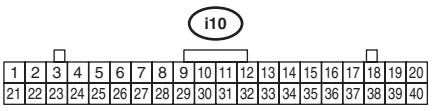

WI-42275

51.Starter System

A: WIRING DIAGRAM

ST-01

ST-01

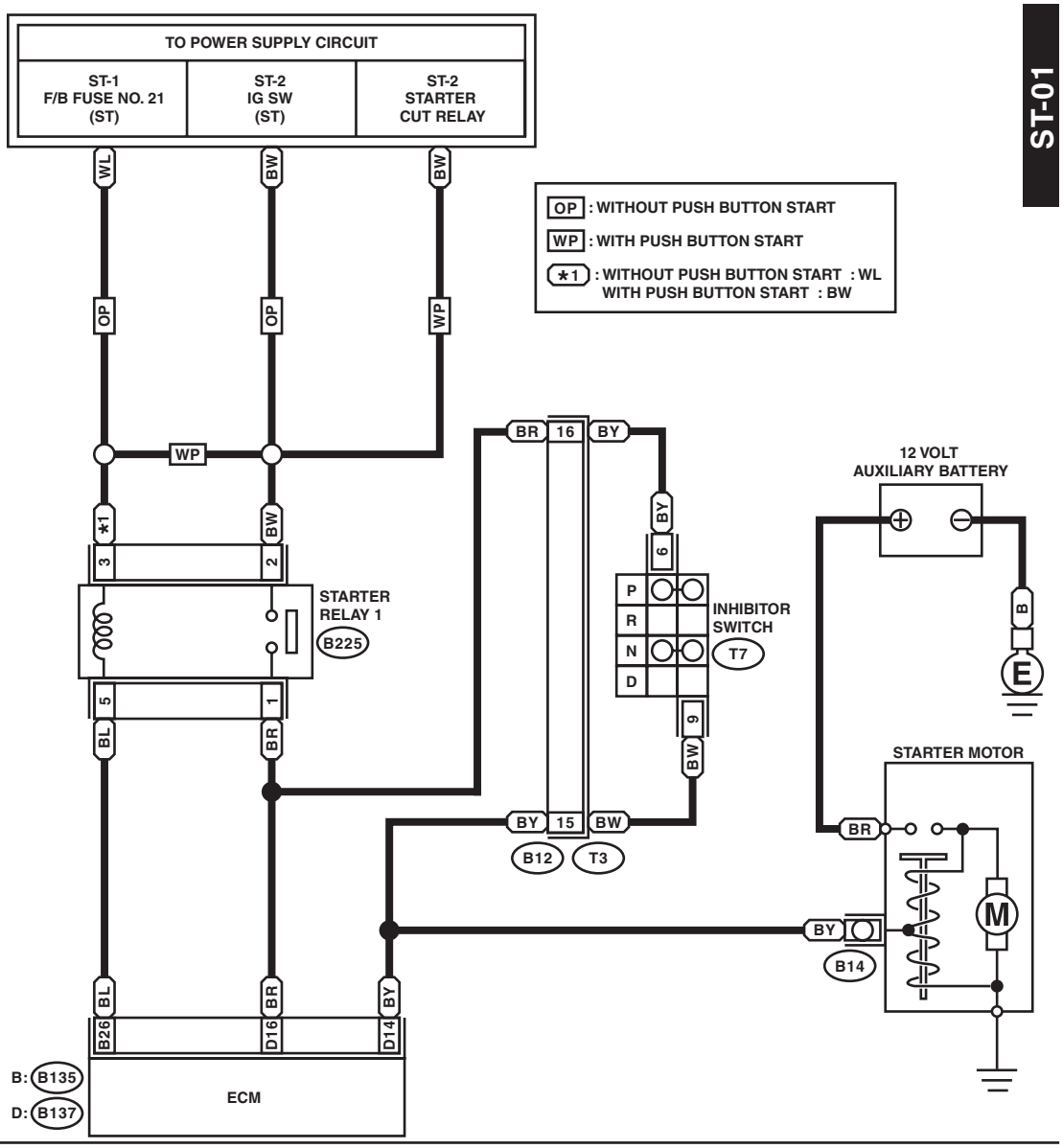

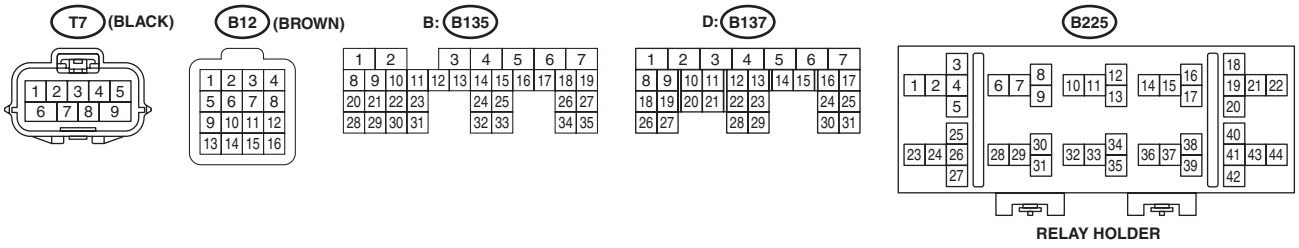

WI-42276

52.Stop Light System

A: WIRING DIAGRAM

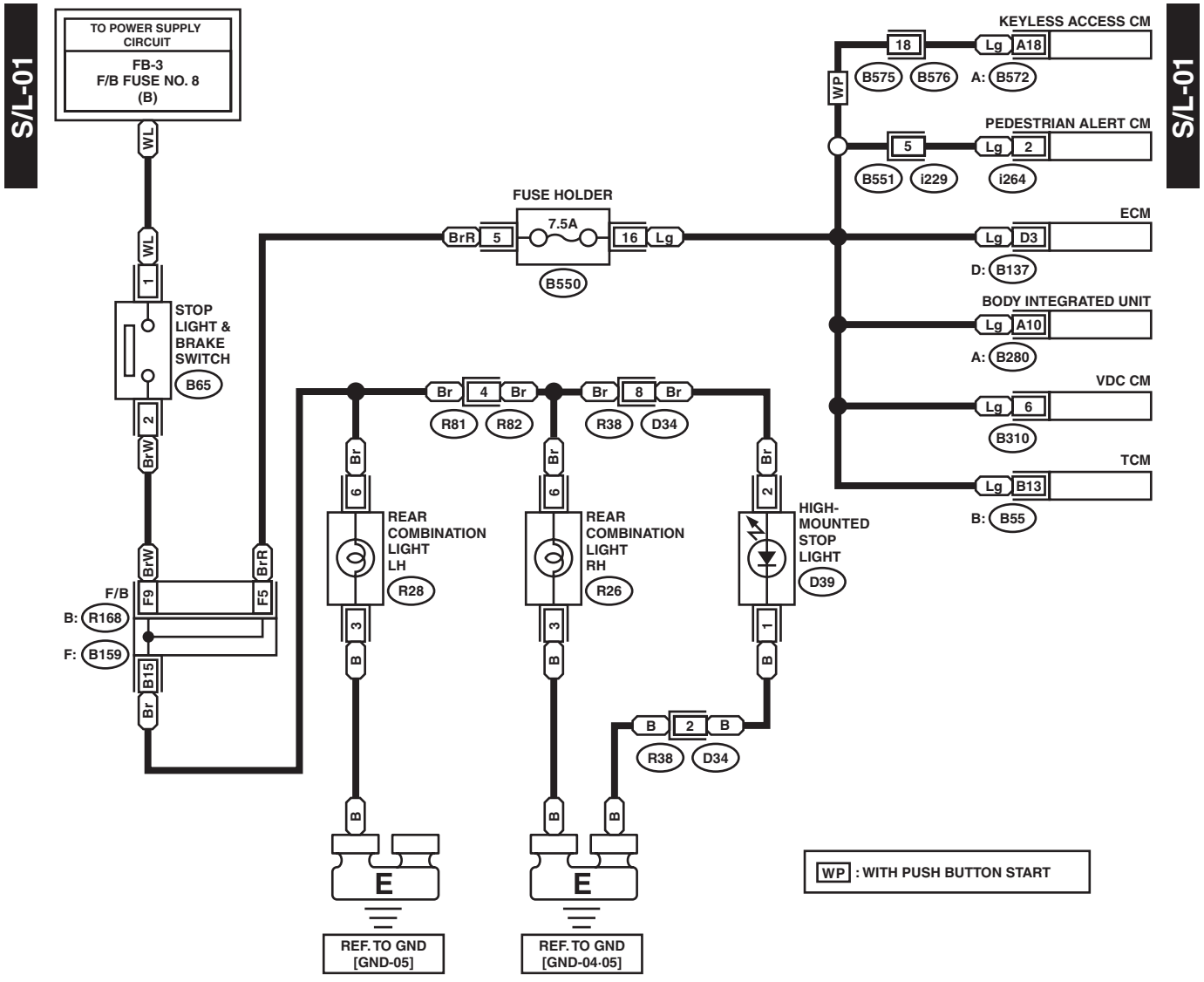

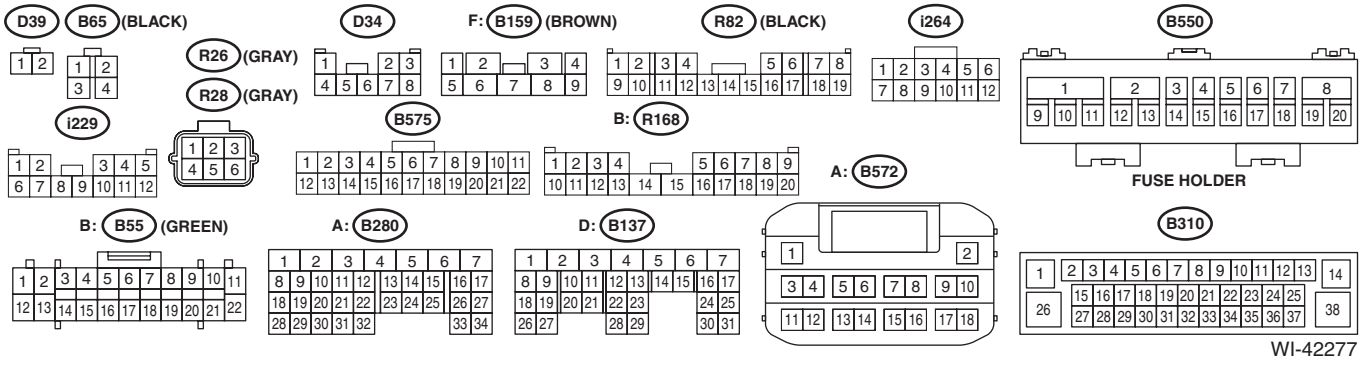

WI-42277

53.Sunroof Control System

A: WIRING DIAGRAM

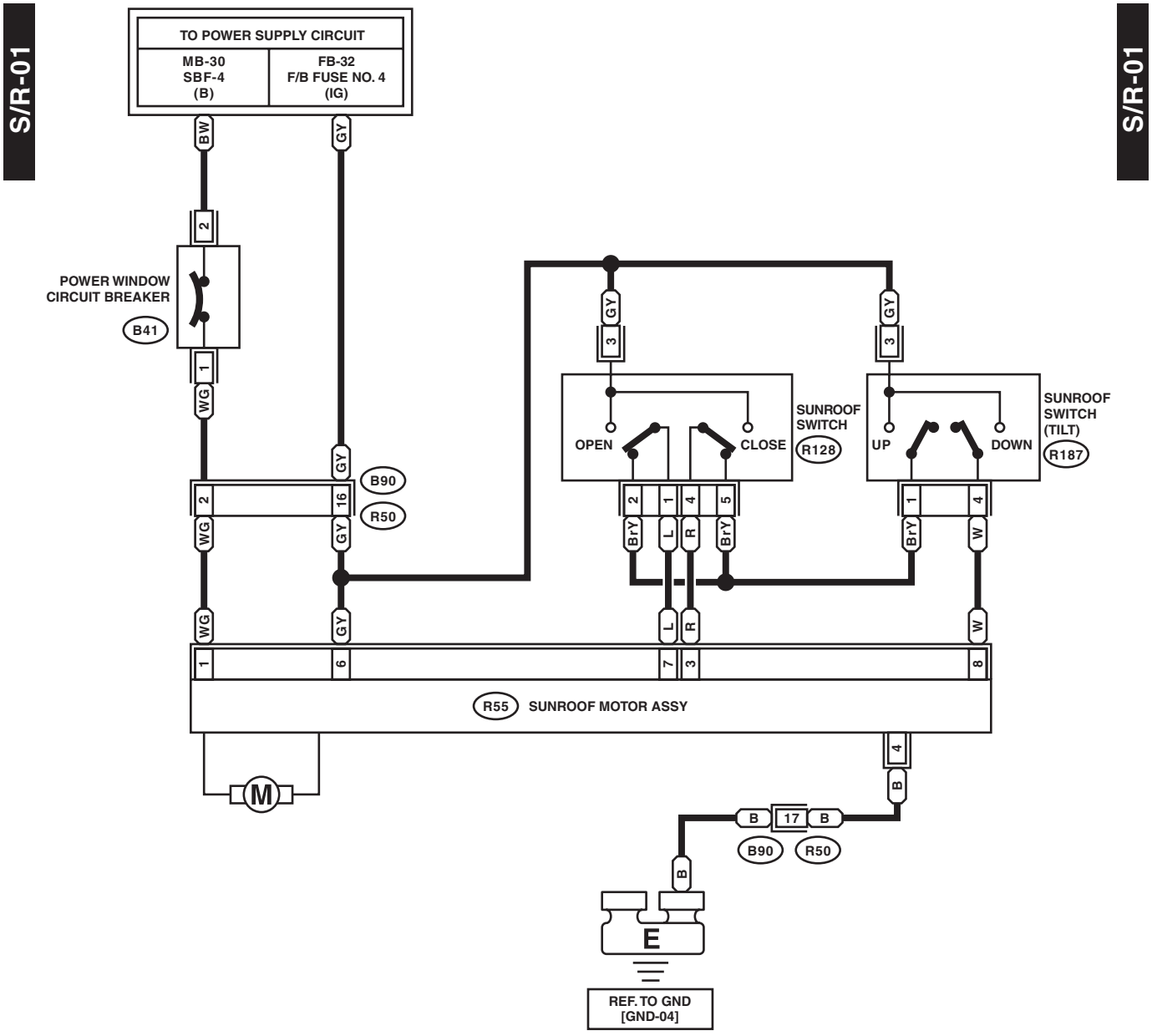

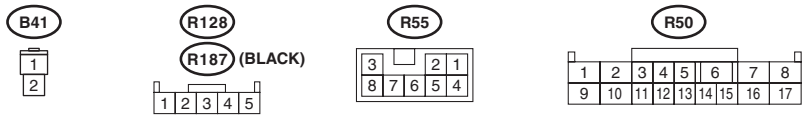

WI-34256

54.Tire Pressure Monitoring System

A: WIRING DIAGRAM

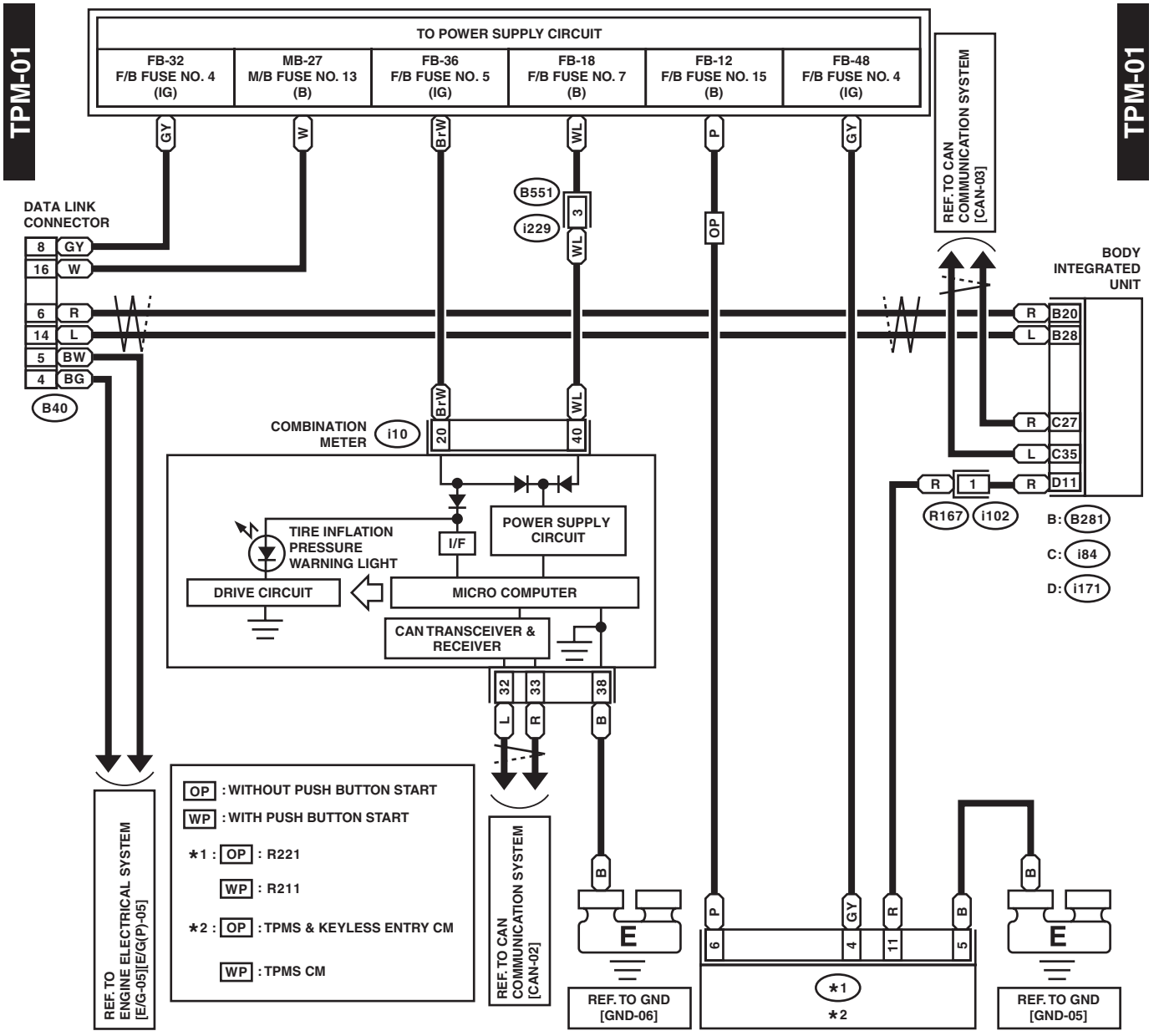

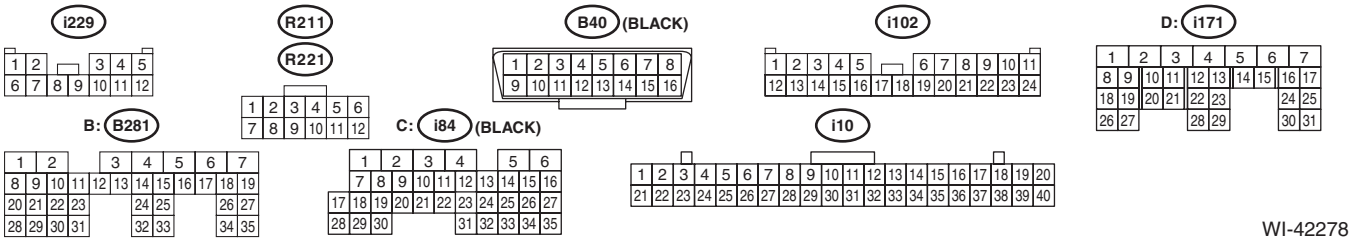

WI-42278

55.Turn Signal Light and Hazard Light System

A: WIRING DIAGRAM

TURN-01

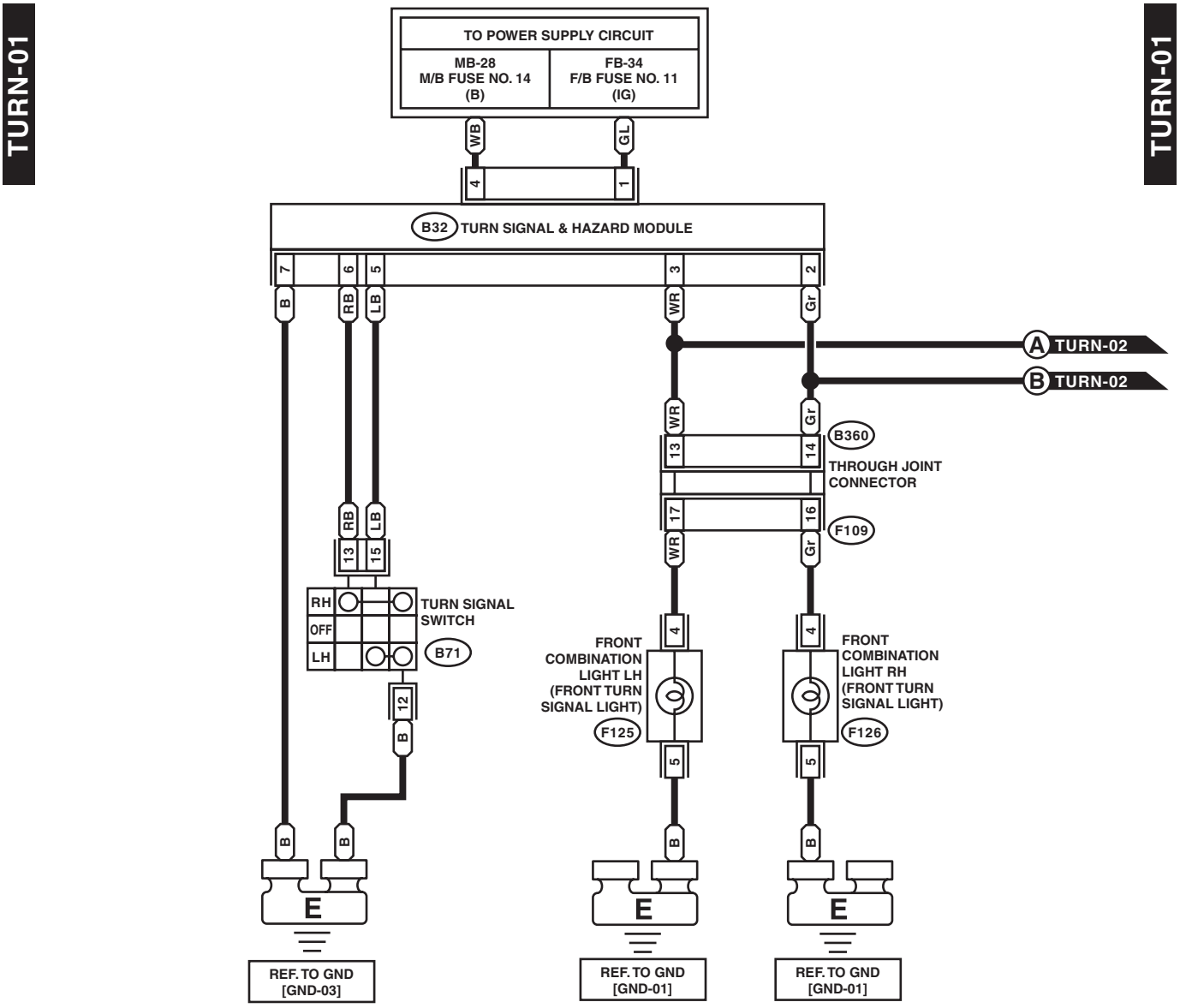

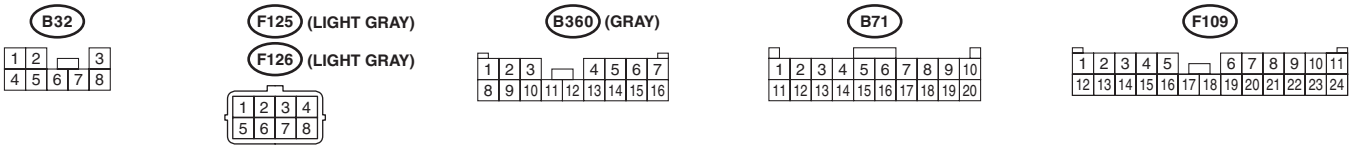

WI-34258

TURN-01

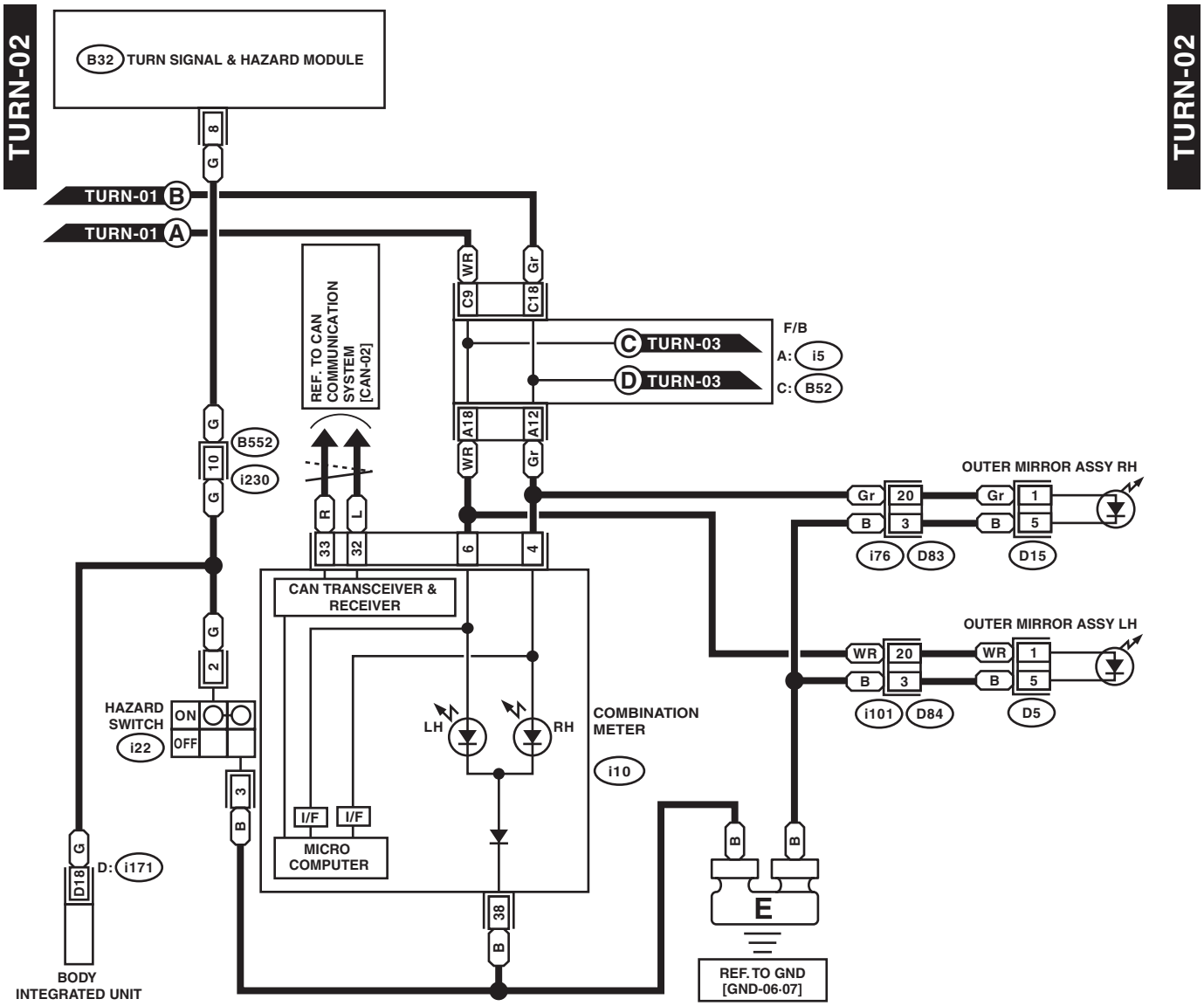
TURN-02
TURN-02
B32 TURN SIGNAL & HAZARD MODULE
TURN-01 B
TURN-01 A
REF. TO CAN COMMUNICATION SYSTEM [CAN-02]
C TURN-03
D TURN-03
F/B
A: i5
C: B52
B552
i230
OUTER MIRROR ASSY RH
i76
D83
D15
OUTER MIRROR ASSY LH
i101
D84
D5
CAN TRANSCEIVER & RECEIVER
HAZARD SWITCH
ON
OFF
i22
LH
RH
COMBINATION METER
i10
I/F
I/F
MICRO COMPUTER
D: i171
BODY INTEGRATED UNIT
REF. TO GND [GND-06·07]

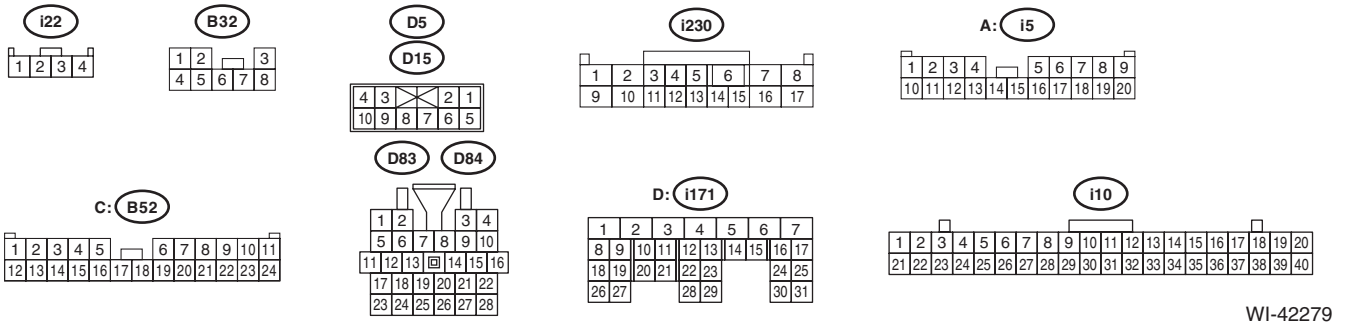
i22
B32
D5
D15
i230
A: i5
C: B52
D83
D84
D: i171
i10

WI-42279

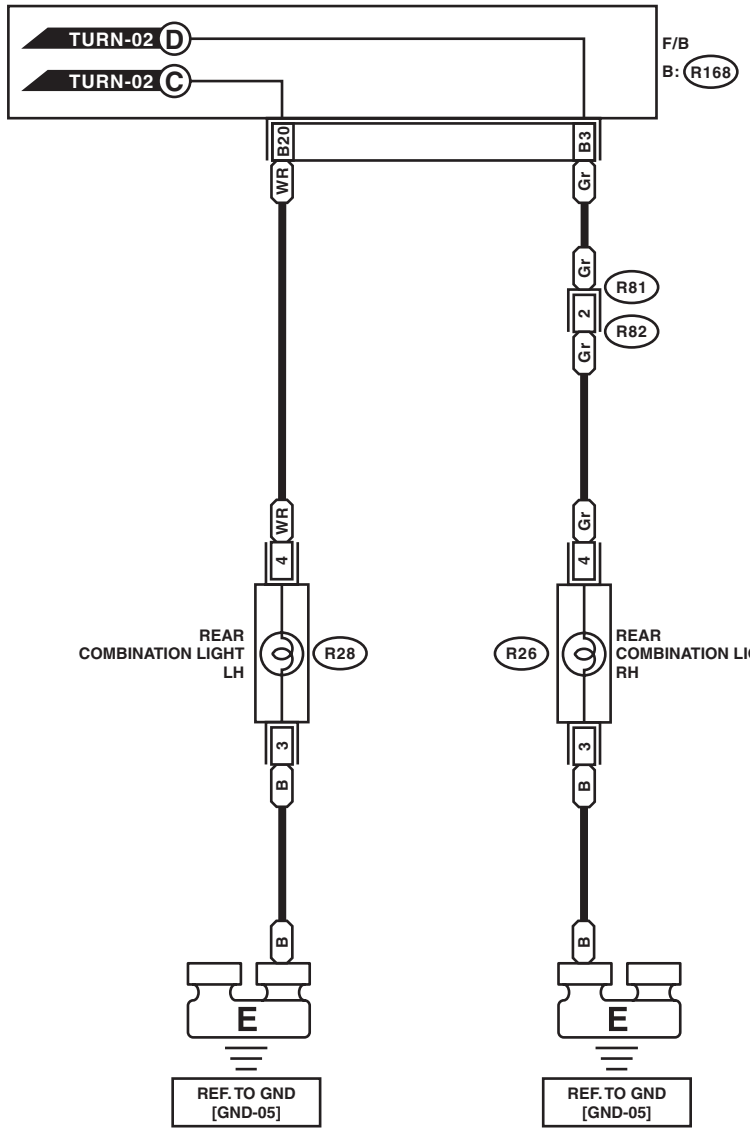
TURN-02 D
TURN-02 C
F/B
B: R168
B20
B3
WR
Gr
Gr
R81
2
R82
Gr
WR
Gr
4
4
REAR COMBINATION LIGHT LH
R28
R26
REAR COMBINATION LIGHT RH
3
B
3
B
B
B
E
E
REF. TO GND [GND-05]
REF. TO GND [GND-05]

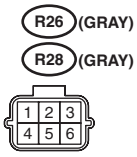
R26 (GRAY)
R28 (GRAY)
1 2 3
4 5 6

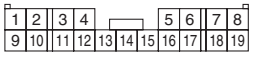
R82 (BLACK)
1 2 3 4 5 6 7 8
9 10 11 12 13 14 15 16 17 18 19

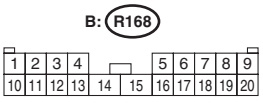
B: R168
1 2 3 4 5 6 7 8 9
10 11 12 13 14 15 16 17 18 19 20

WI-42280

56.Pedestrian Alert System

A: WIRING DIAGRAM

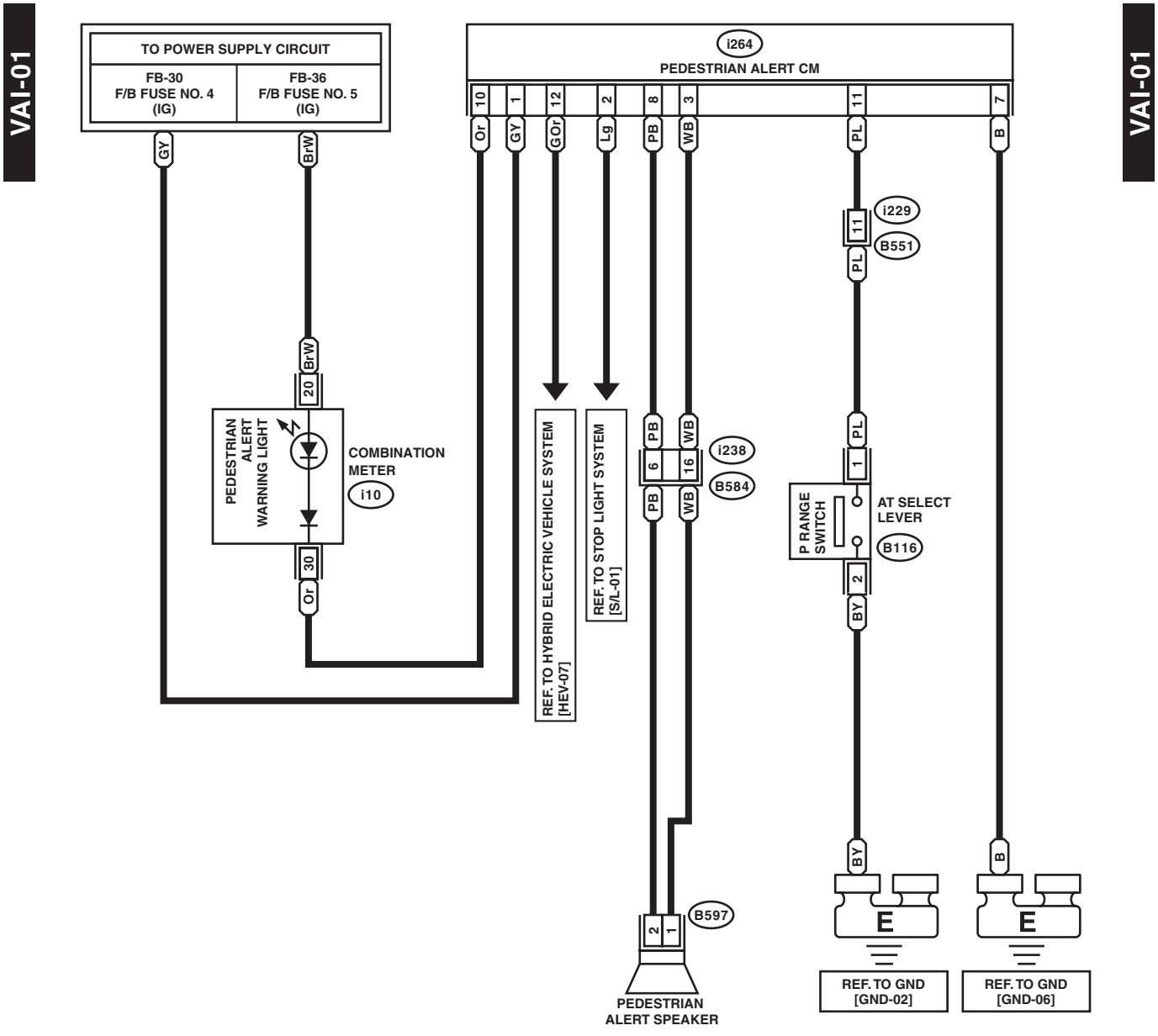

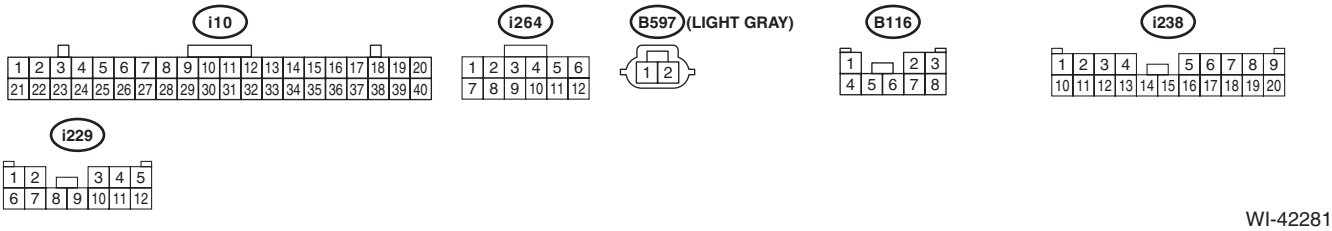

WI-42281

VAI-02

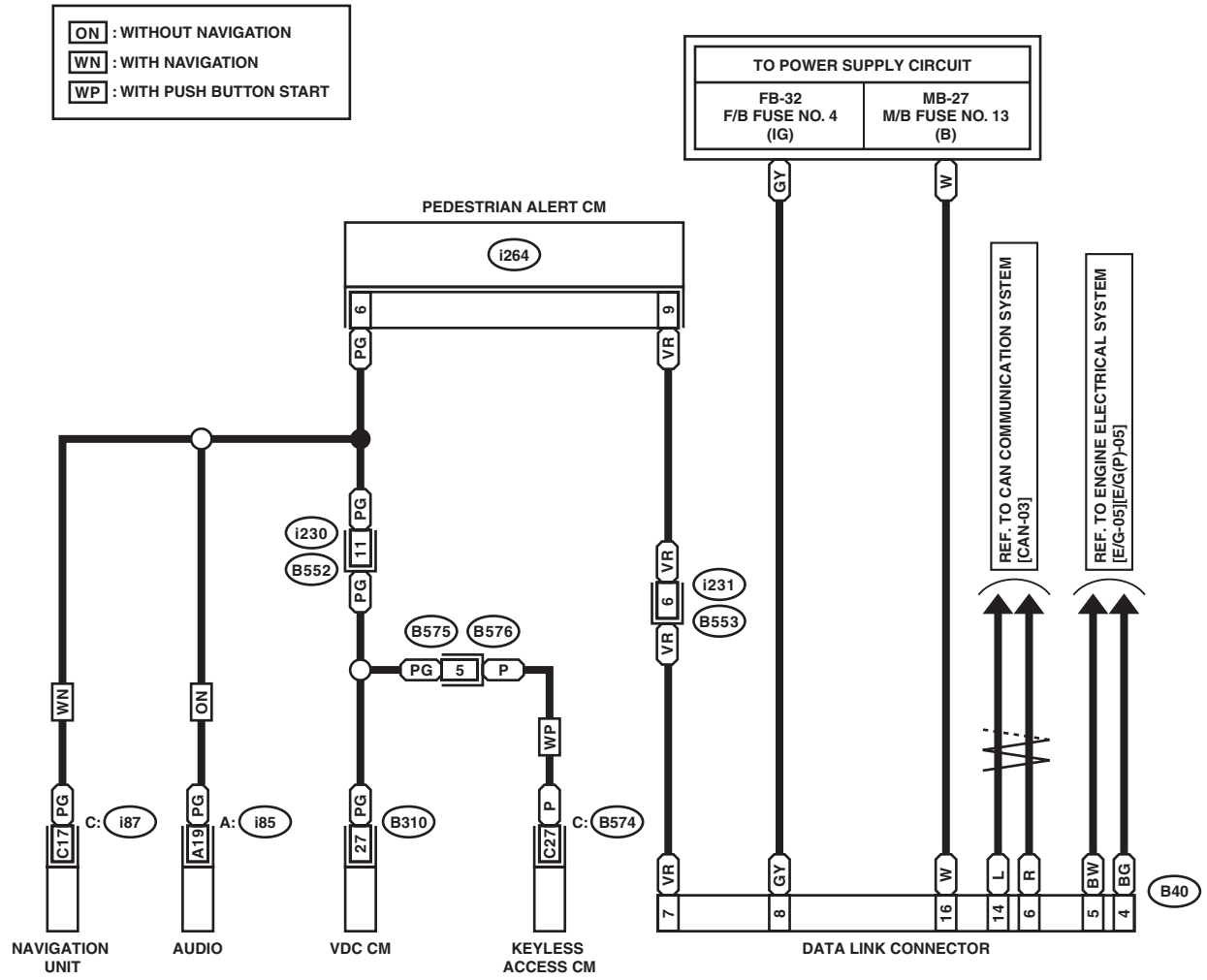

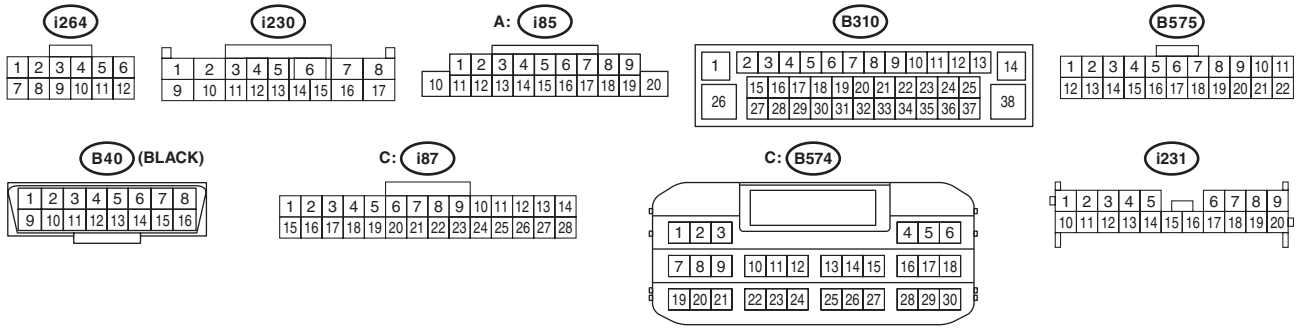

WI-42282

57.Vehicle Dynamics Control System

A: WIRING DIAGRAM

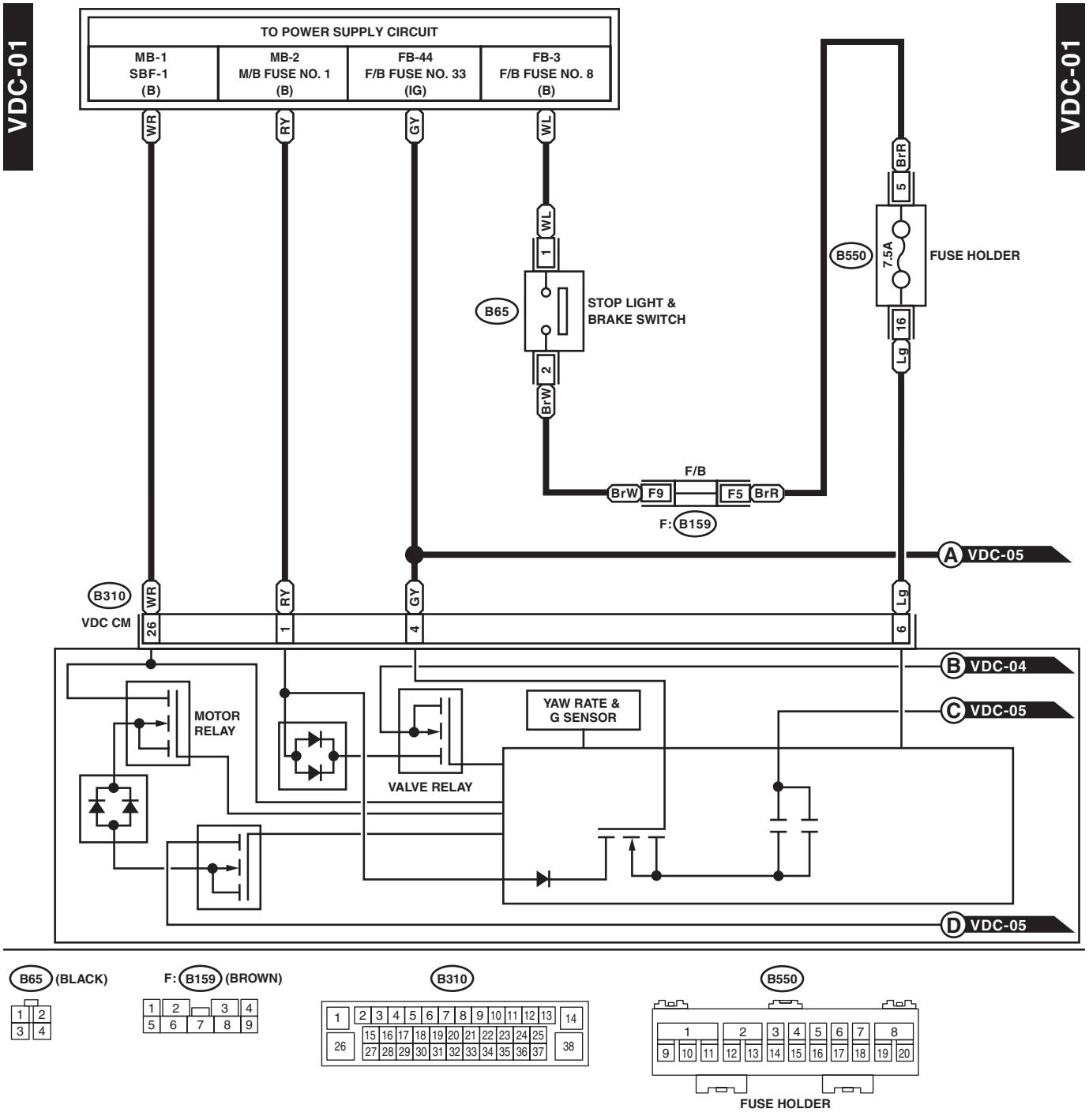

WI-42283

VDC-02

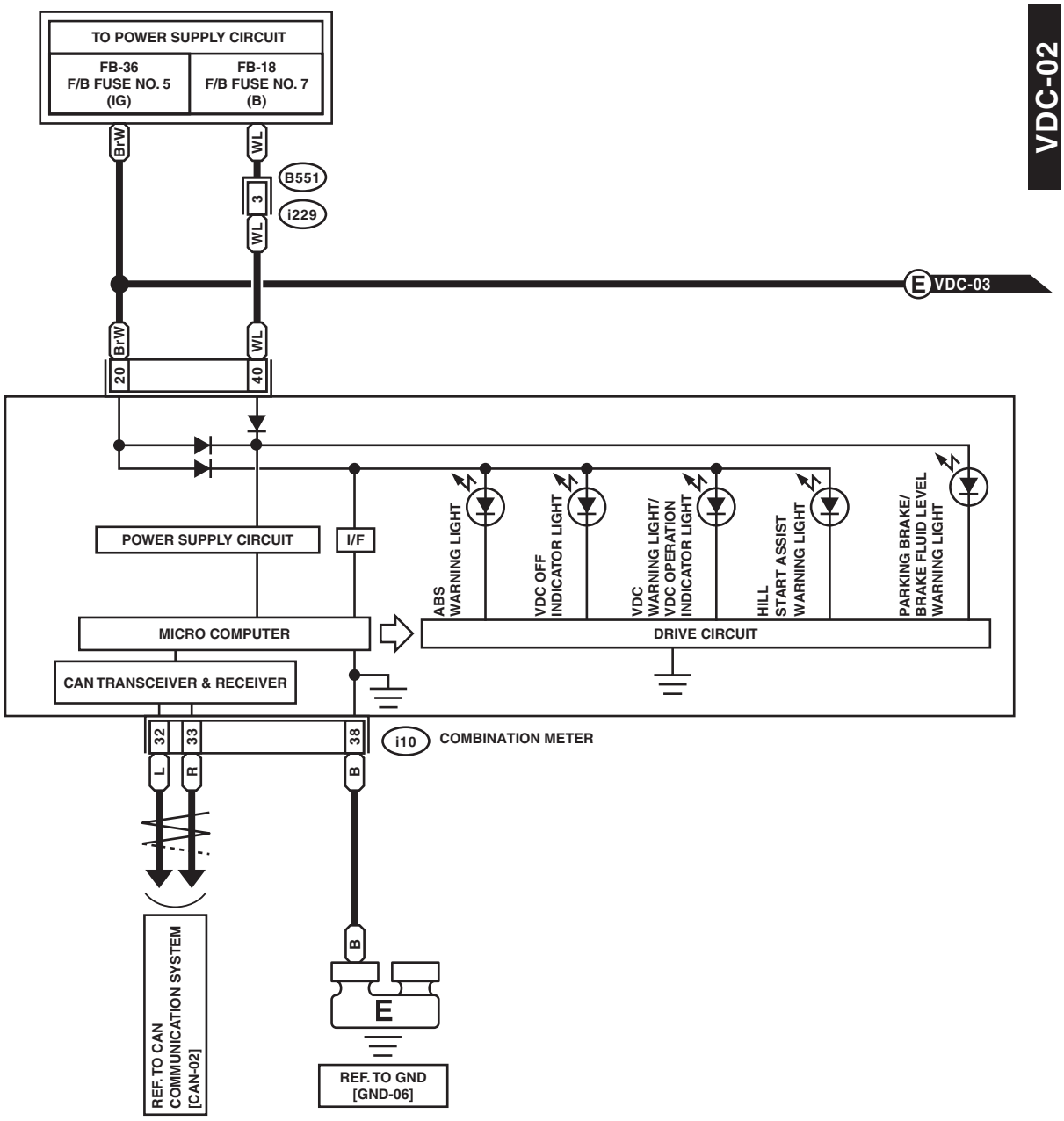

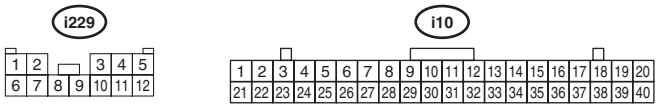

WI-42284

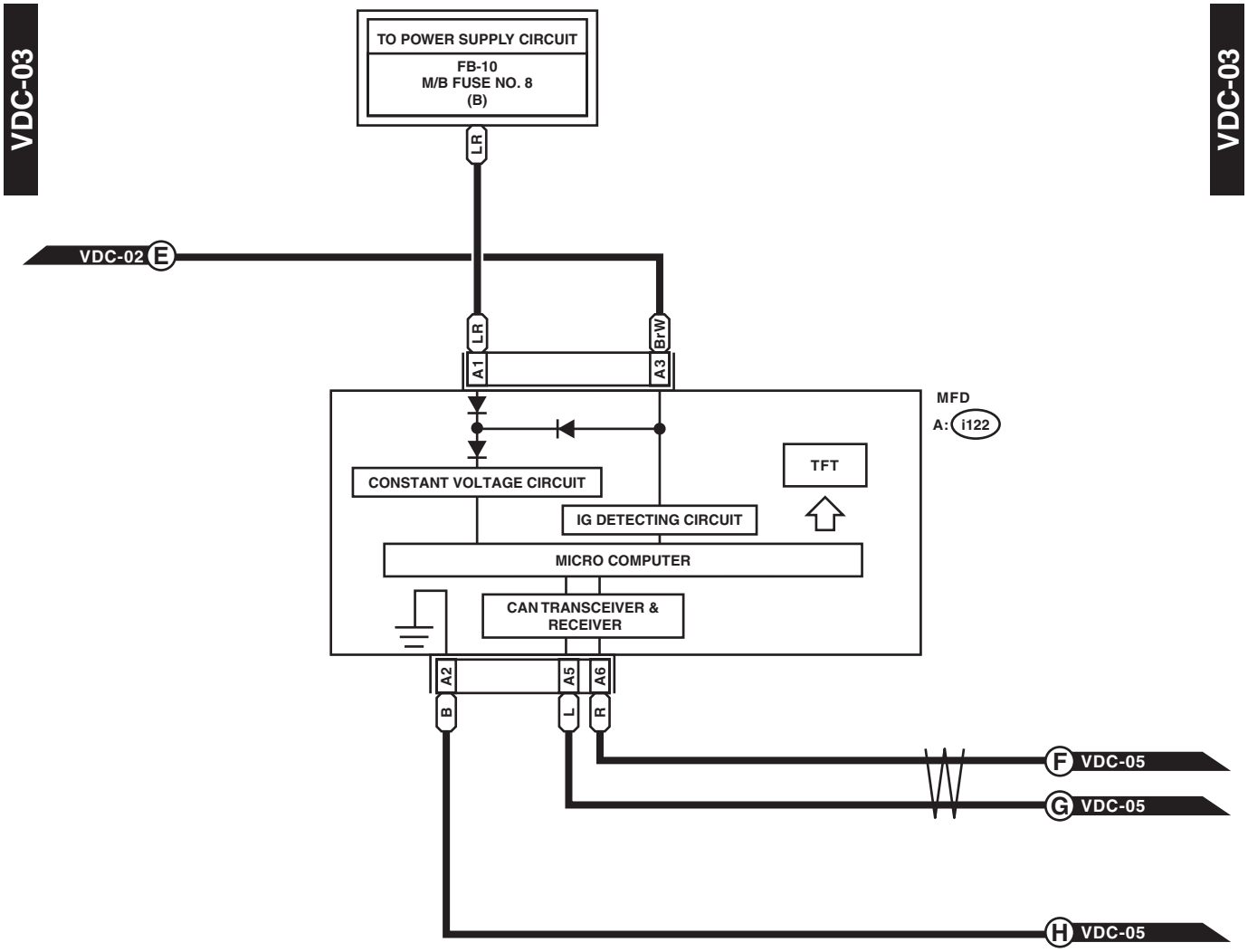

A: i122 (BLACK)

1	2	3	4	5	6
7	8	9	10	11	12

WI-42285

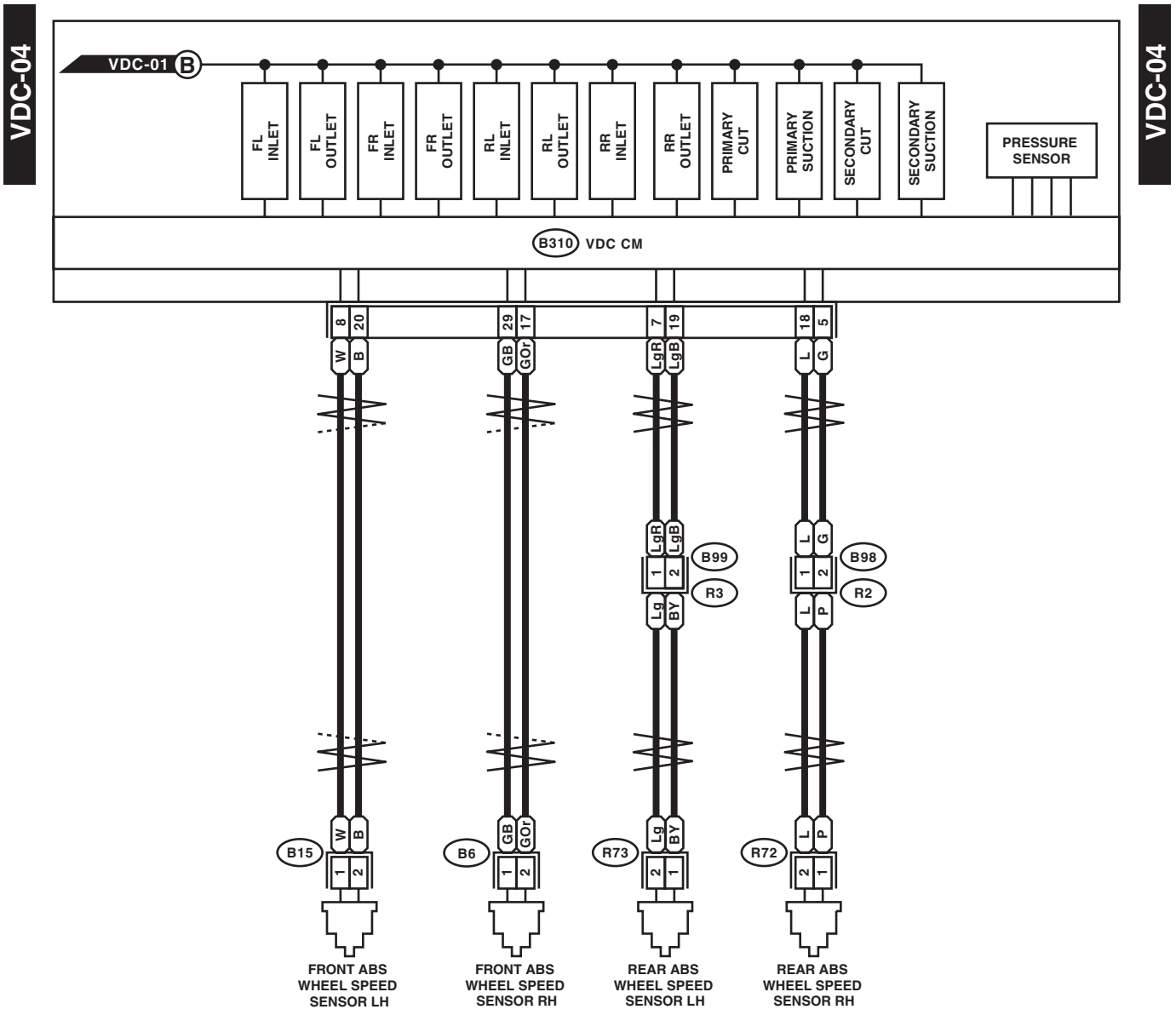

(LIGHT GRAY) B6 R72 (LIGHT GRAY)

(LIGHT GRAY) B15 R73 (LIGHT GRAY)



B99

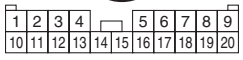

B98

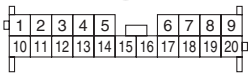

B310

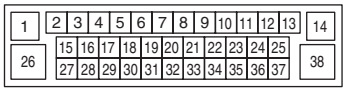

WI-34264

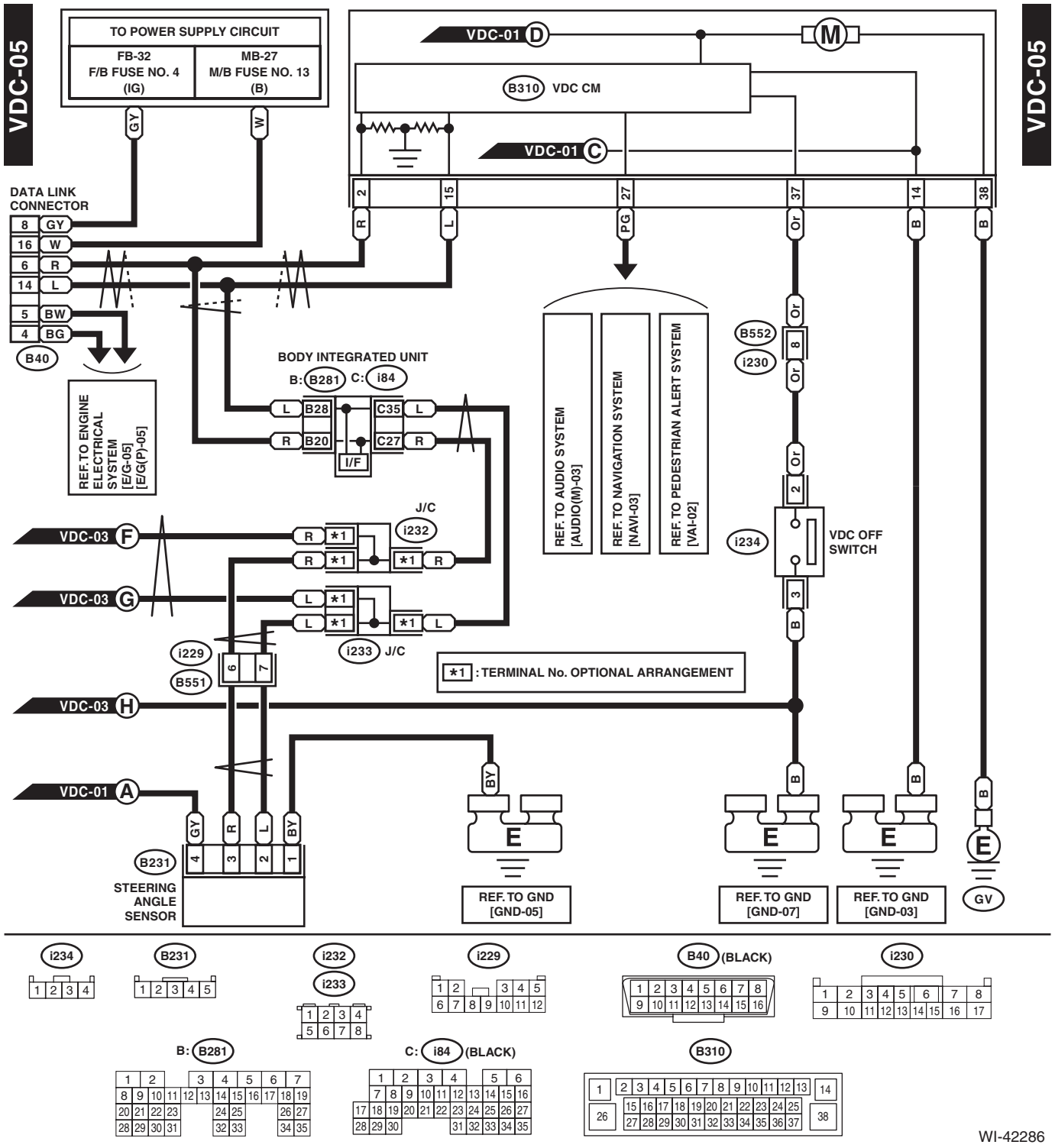
VDC-05
TO POWER SUPPLY CIRCUIT
FB-32
F/B FUSE NO. 4
(IG)
MB-27
M/B FUSE NO. 13
(B)
VDC-01 D
M
B310 VDC CM
VDC-01 C
DATA LINK CONNECTOR
8 GY
16 W
6 R
14 L
5 BW
4 BG
B40
2 15 27 37 14 38
R L PG Or B B
REF. TO ENGINE ELECTRICAL SYSTEM [E/G-05] [E/G(P)-05]
BODY INTEGRATED UNIT
B: B281 C: i84
L B28 C35 L
R B20 C27 R
I/F
REF. TO AUDIO SYSTEM [AUDIO(M)-03]
REF. TO NAVIGATION SYSTEM [NAVI-03]
REF. TO PEDESTRIAN ALERT SYSTEM [VAI-02]
B552
i230
Or 8
Or 2
i234
VDC OFF SWITCH
3
B
J/C
i232
VDC-03 F
R *1
VDC-03 G
L *1
i233 J/C
i229
B551
6 7
*1 : TERMINAL No. OPTIONAL ARRANGEMENT
VDC-03 H
VDC-01 A
GY R L BY
B231
4 3 2 1
STEERING ANGLE SENSOR
BY
E
REF. TO GND [GND-05]
REF. TO GND [GND-07]
REF. TO GND [GND-03]
GV
i234
1 2 3 4
B231
1 2 3 4 5
i232
i233
1 2 3 4
5 6 7 8
i229
1 2 3 4 5
6 7 8 9 10 11 12
B40 (BLACK)
1 2 3 4 5 6 7 8
9 10 11 12 13 14 15 16
i230
1 2 3 4 5 6 7 8
9 10 11 12 13 14 15 16 17
B: B281
1 2 3 4 5 6 7
8 9 10 11 12 13 14 15 16 17 18 19
20 21 22 23 24 25 26 27
28 29 30 31 32 33 34 35
C: i84 (BLACK)
1 2 3 4 5 6
7 8 9 10 11 12 13 14 15 16
17 18 19 20 21 22 23 24 25 26 27
28 29 30 31 32 33 34 35
B310
1 2 3 4 5 6 7 8 9 10 11 12 13 14
15 16 17 18 19 20 21 22 23 24 25
26 27 28 29 30 31 32 33 34 35 36 37 38
WI-42286

58.Wiper Deicer System

A: WIRING DIAGRAM

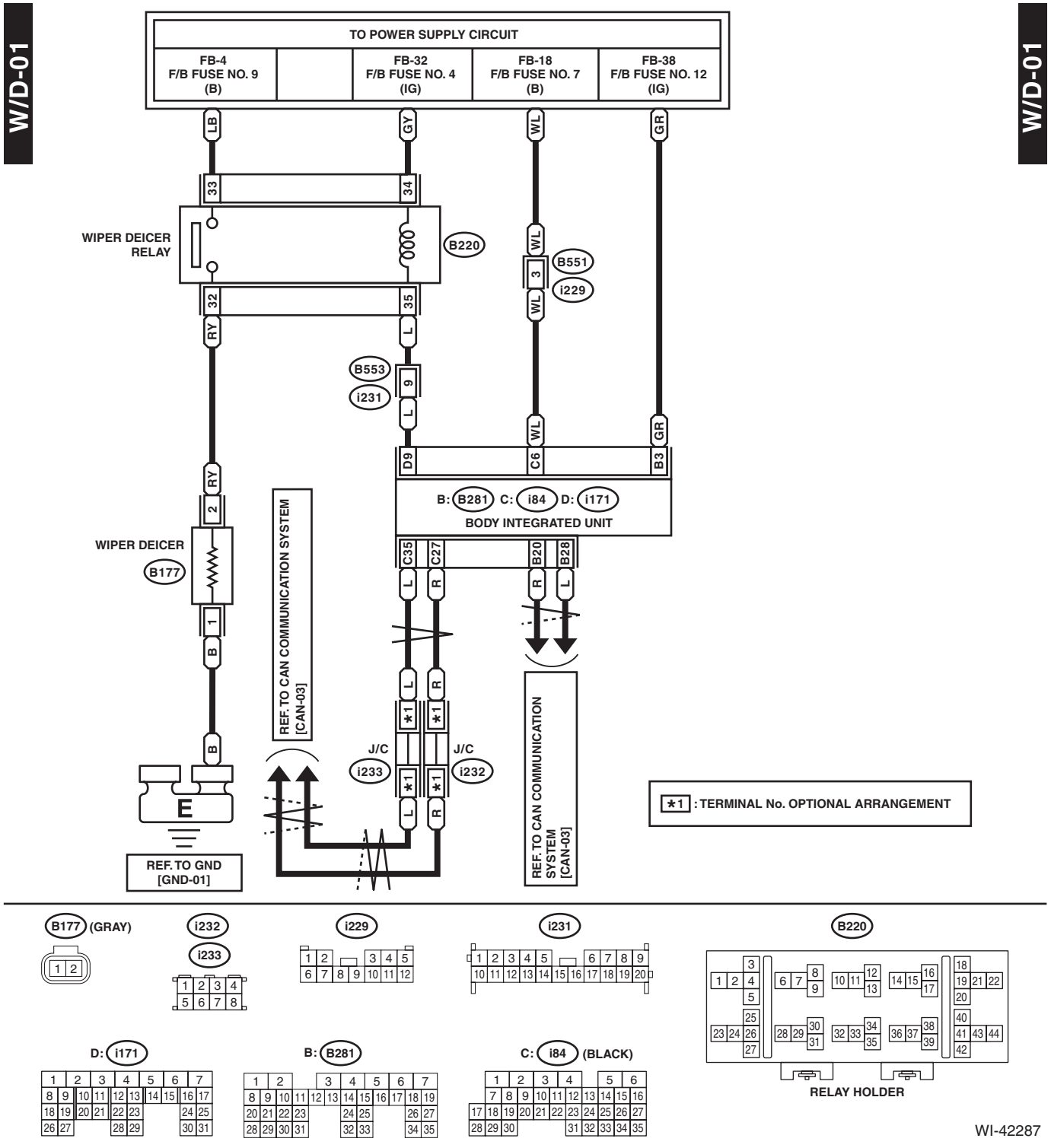

WI-42287

59.Harness Components Location

A: LOCATION

1. BODY HARNESS

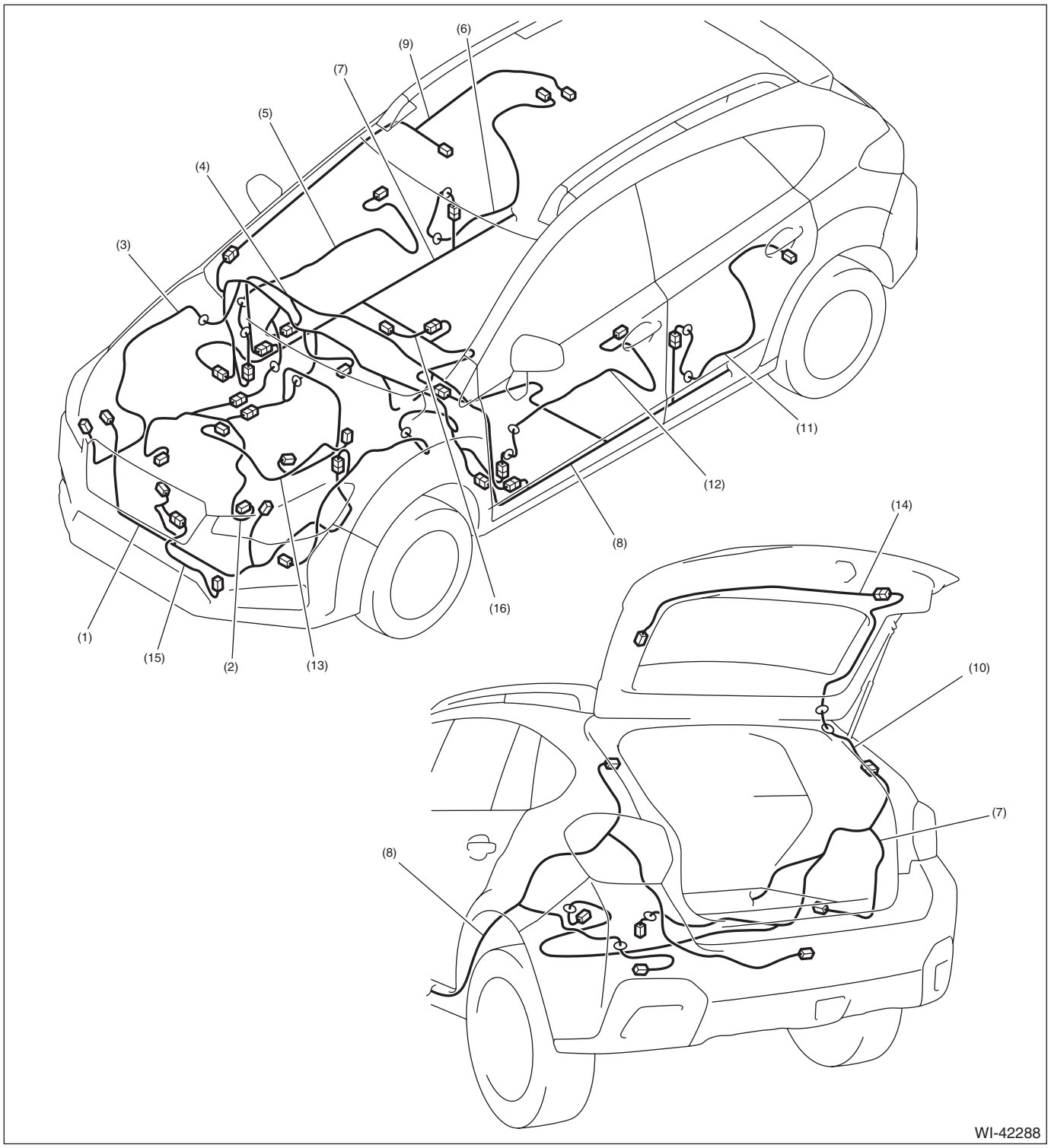

(1) Front wiring harness
(2) Engine wiring harness
(3) Bulkhead wiring harness
(4) Instrument panel wiring harness
(5) Front door cord RH
(6) Rear door cord RH
(7) Rear wiring harness RH
(8) Rear wiring harness LH
(9) Roof cord
(10) Rear gate cord (UPR)
(11) Rear door cord LH
(12) Front door cord LH
(13) Generator cord
(14) Rear gate cord (LWR)
(15) Active grille shutter adapter cord
(16) Occupant detection harness

2. HYBRID HARNESS

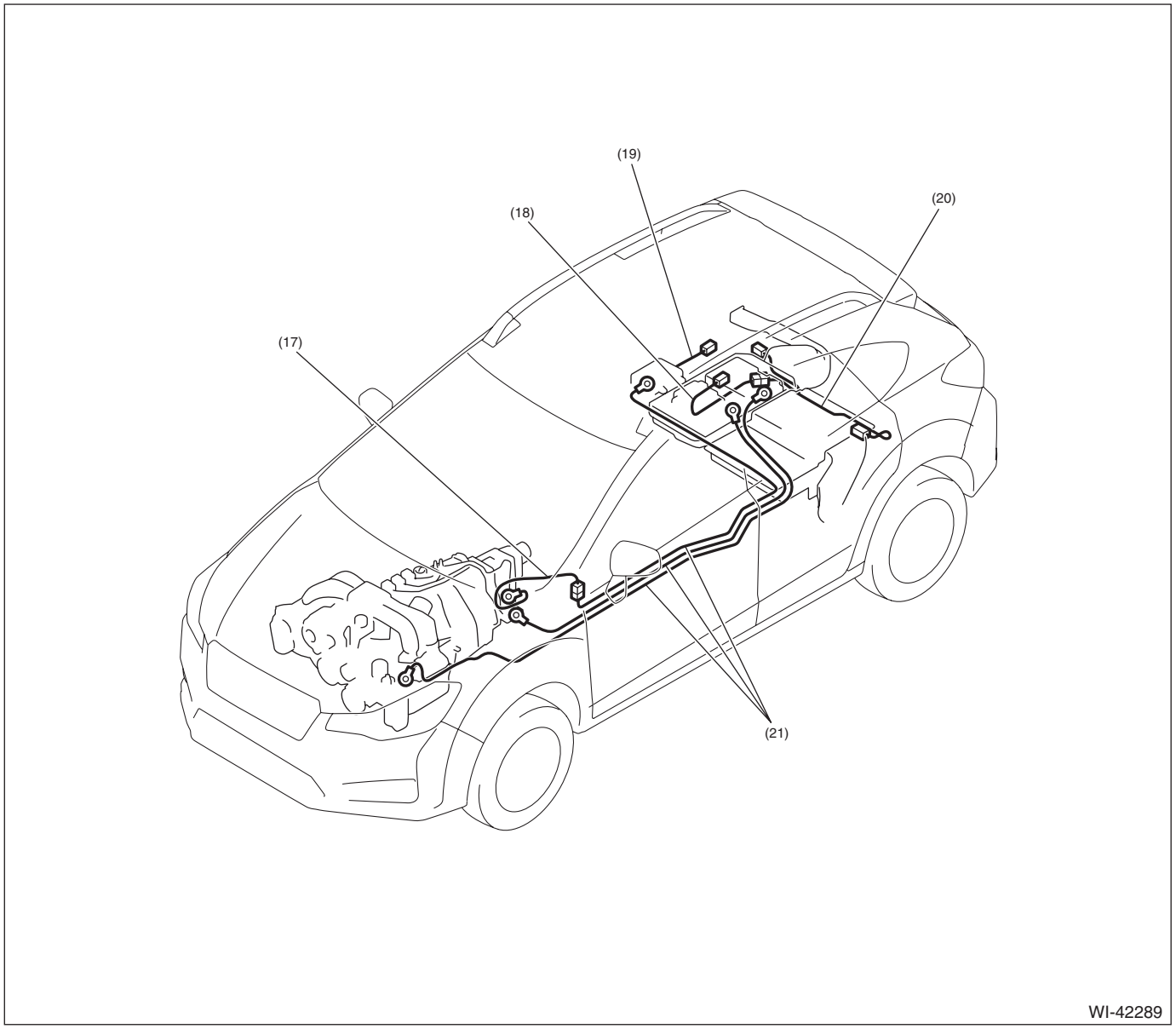

(17) Electric oil pump harness
(18) Inverter harness
(19) Inverter harness
(20) Inverter harness
(21) Power cable

60.Front Wiring Harness

A: LOCATION

Connector				Connecting to	
No.	Pole	Color	Area	No.	Description
F5	1	Black	C-1		Horn
F6	2	★	C-1		Front fog light RH
F16	2	★	C-2		Sub fan motor
F17	2	★	C-3		Main fan motor
F21	2	★	D-4		Front fog light LH
F24	1	★	C-3		Magnet clutch
F27	26	★	C-4		Relay holder
F35	12	Blue	C-4		M/B
F36	7	★	C-4		
F37	20	★	B-4		
F47	1	Black	C-2		Horn
F78	2	Black	D-3		Ambient sensor
F103	2	Gray	C-1		Daytime running light resistor
F108	18	Gray	C-4	B361	Through joint connector
F109	24	★	B-4	B360	
F125	8	Light gray	C-3		Front combination light LH
F126	8	Light gray	B-1		Front combination light RH
F134	2	Dark gray	B-3		Brake vacuum pump
F148	2	★	C-3		High beam LH
F149	2	★	B-1		High beam RH
F155	6	Black	C-2	F156	Active grille shutter adapter cord
F156	6	Black	C-2	F155	Front wiring harness
F157	4	Black	D-3		Active grille shutter
★: White or natural color					

Front Wiring Harness

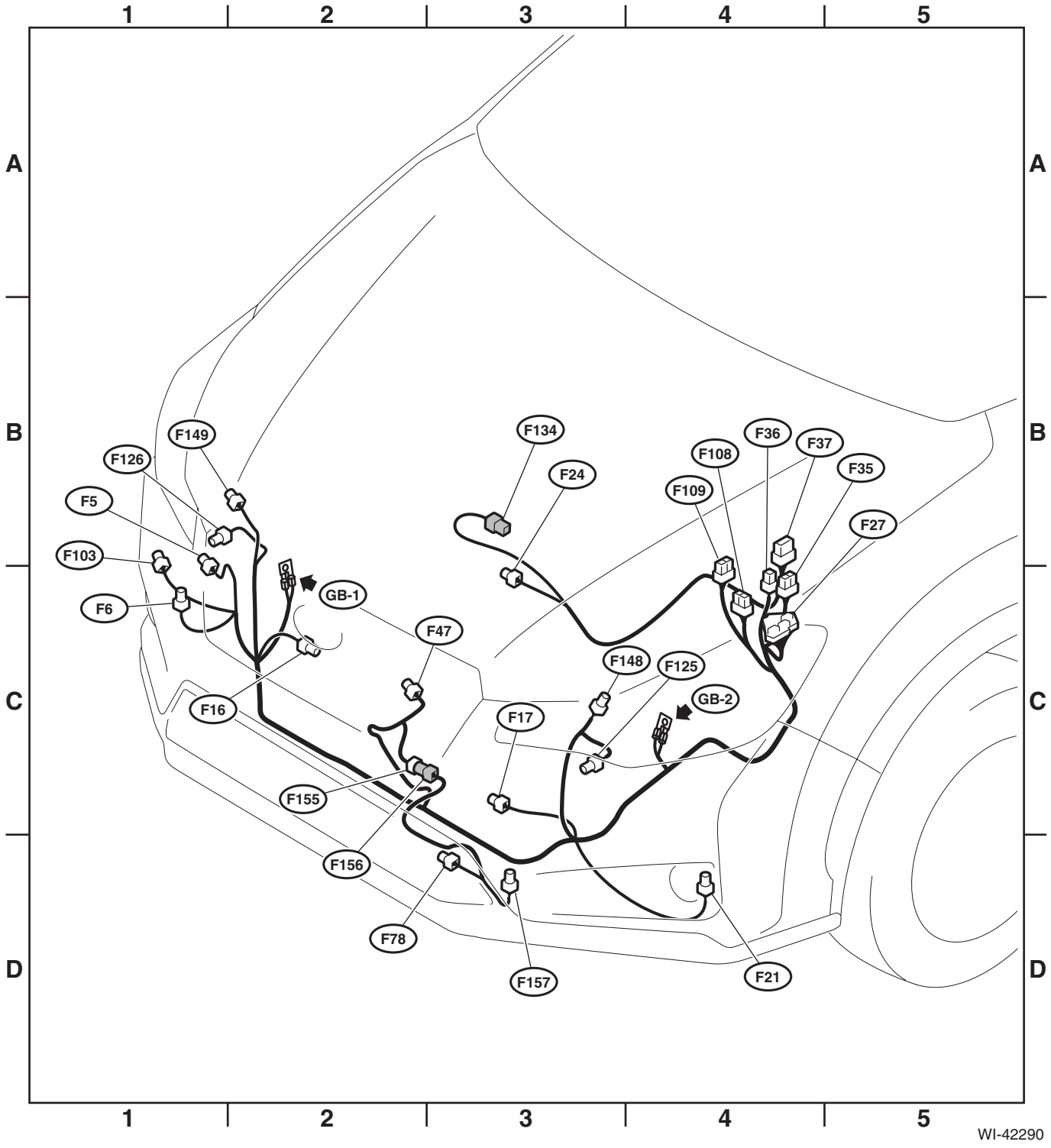

61.Bulkhead Wiring Harness (In Engine Compartment) RH

A: LOCATION

Connector				Connecting to	
No.	Pole	Color	Area	No.	Description
B3	5	Black	C-4		Mass air flow and intake air temperature sensor
B6	2	Light gray	C-3		Front ABS wheel speed sensor RH
B11	12	Light gray	C-4	T4	Transmission cord
B12	16	Brown	C-4	T3	
B14	1	Black	C-5		Starter motor
B21	54	Black	C-4	E2	Engine wiring harness
B22	16	Brown	C-3	E3	
B164	2	Black	D-1		Keyless buzzer
B177	2	Gray	B-4		Wiper deicer
B310	38	★	B-2		VDC CM
B321	2	Black	C-2		Hood switch
B450	10	Black	C-3		Power steering CM
B451	6	Gray	C-3		Torque sensor
B452	2	Black	B-3		Power steering CM
B597	2	Light gray	D-1		Pedestrian alert speaker
B598	2	Black	C-2		12V engine restart battery sensor
B599	4	Black	C-2		12V battery relay
B603	20	Gray	C-4	T32	Transmission cord
B609	1	Gray	C-2	B610	Generator cord
B610	1	Gray	C-2	B609	Bulkhead wiring harness
★: White or natural color					

Connector				Connecting to	
No.	Pole	Color	Area	No.	Description
AB16	2	Yellow	D-1		Front sub sensor RH

Bulkhead Wiring Harness (In Engine Compartment) RH

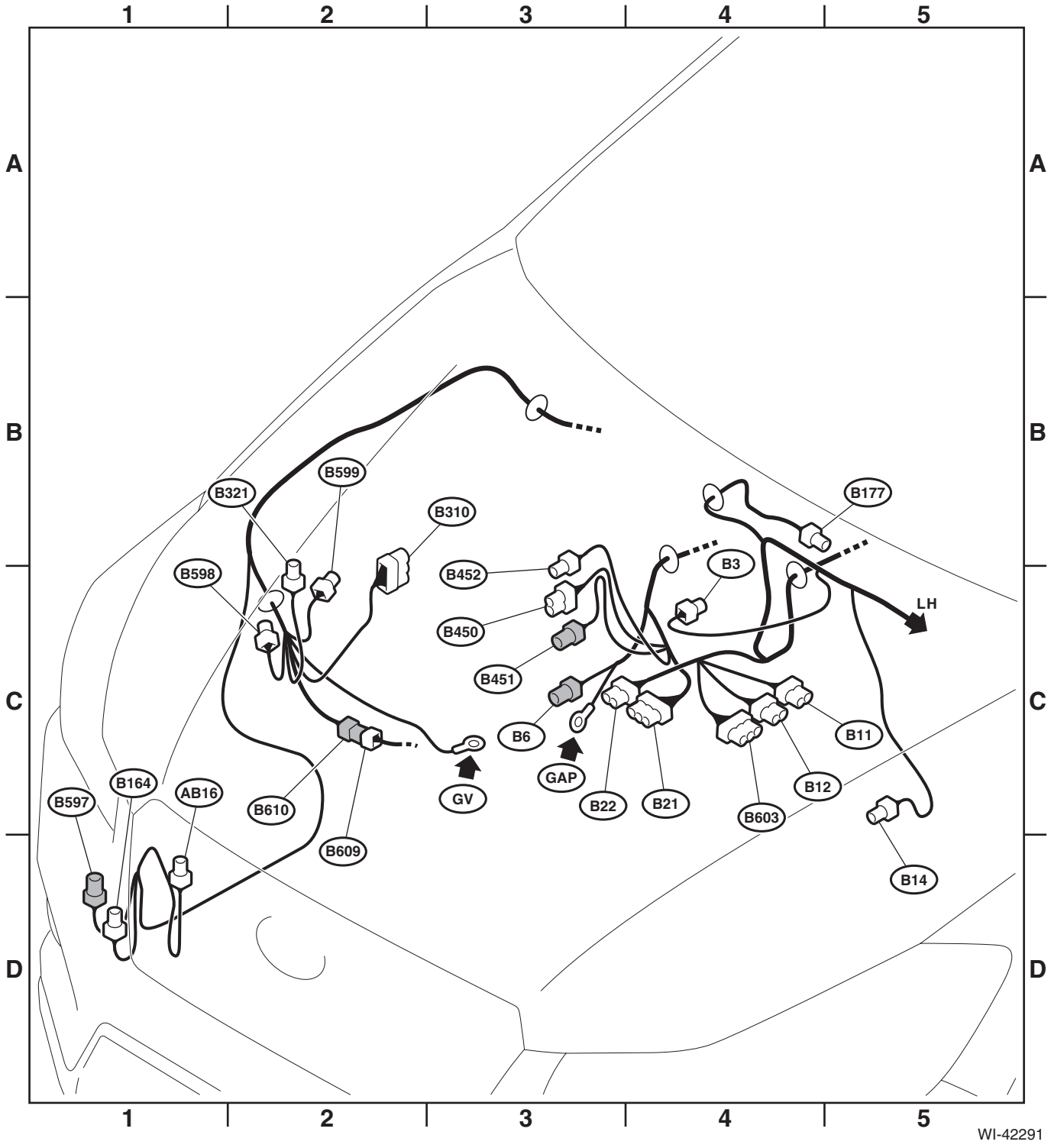

62.Bulkhead Wiring Harness (In Engine Compartment) LH

A: LOCATION

Connector				Connecting to	
No.	Pole	Color	Area	No.	Description
B8	5	Light gray	B-4		Front wiper motor
B10	4	Light gray	C-3		Pressure switch
B15	2	Light gray	B-3		Front ABS wheel speed sensor LH
B16	2	Gray	B-3		Brake fluid level switch
B143	20	★	B-3		M/B
B144	9	Brown	B-2		
B145	7	Brown	B-3		
B146	2	Black	C-2		Front washer motor
B147	2	Gray	D-3		Rear washer motor
B186	8	★	B-3		M/B
B360	16	Gray	B-3	F109	Through joint connector
B361	14	Gray	B-3	F108	
B396	2	Brown	D-2		Washer fluid level sensor
B523	2	Light gray	C-3		Battery temperature sensor
B564	21	Black	B-3		Relay holder
B565	3	Black	B-3		Brake booster pressure sensor 1
B571	2	★	B-3		M/B
B600	3	Black	B-3		Brake booster pressure sensor 2
★: White or natural color					

Connector				Connecting to	
No.	Pole	Color	Area	No.	Description
AB13	2	Yellow	C-1		Front sub sensor LH

Bulkhead Wiring Harness (In Engine Compartment) LH

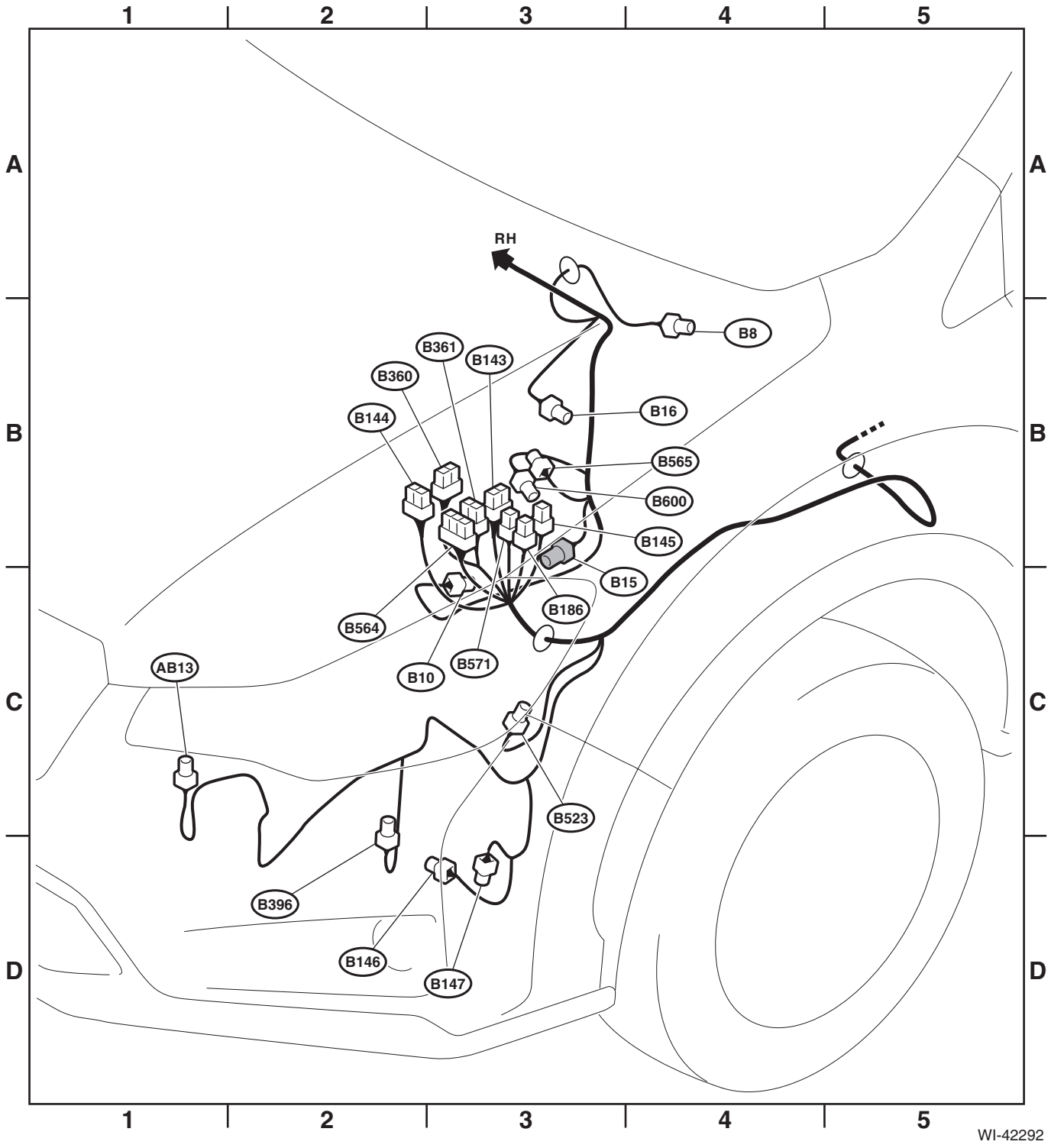

63.Bulkhead Wiring Harness (In Compartment) RH

A: LOCATION

Connector				Connecting to	
No.	Pole	Color	Area	No.	Description
B30	8	Black	C-5	D1	Front door cord RH
B57	4	★	B-2		Power transistor
B83	6	★	B-3		J/C
B87	2	★	B-4		Blower motor
B88	2	Brown	B-2		Evaporator sensor
B90	17	★	A-5	R50	Roof cord
B97	20	★	C-5	R1	Rear wiring harness RH
B98	20	★	C-5	R2	
B116	8	★	D-2		AT select lever
B122	6	★	B-3		J/C
B134	34	★	B-3		ECM
B135	35	★	B-3		
B136	35	★	B-3		
B137	31	★	B-2		
B163	6	Black	B-4		Intake door actuator
B220	44	★	B-3		Relay holder
B239	6	★	B-2		Air mix door actuator (without left/right independent air conditioner)
					Air mix door actuator RH (with left/right independent air conditioner)
B358	2	★	D-2		AT select lever illumination
B386	4	★	B-4		Blower motor relay
B554	2	★	C-2		Heater core sensor
B556	2	★	D-2	AB65	Airbag wiring harness
B579	2	★	D-2		Keyless access interior antenna (front)
B583	12	★	C-3	i237	Instrument panel wiring harness RH
B584	20	★	C-3	i238	
B604	6	★	B-2		J/C
B605	26	★	B-2		HPCM
B606	24	★	B-2		HPCM
B608	5	Gray	B-2		Output clutch relay
★: White or natural color					

Connector				Connecting to	
No.	Pole	Color	Area	No.	Description
AB6	30	Yellow	D-2		Airbag CM
AB9	4	Yellow	D-2		Passenger's airbag module
AB65	2	★	D-2	B556	Bulkhead wiring harness
★: White or natural color					

Bulkhead Wiring Harness (In Compartment) RH

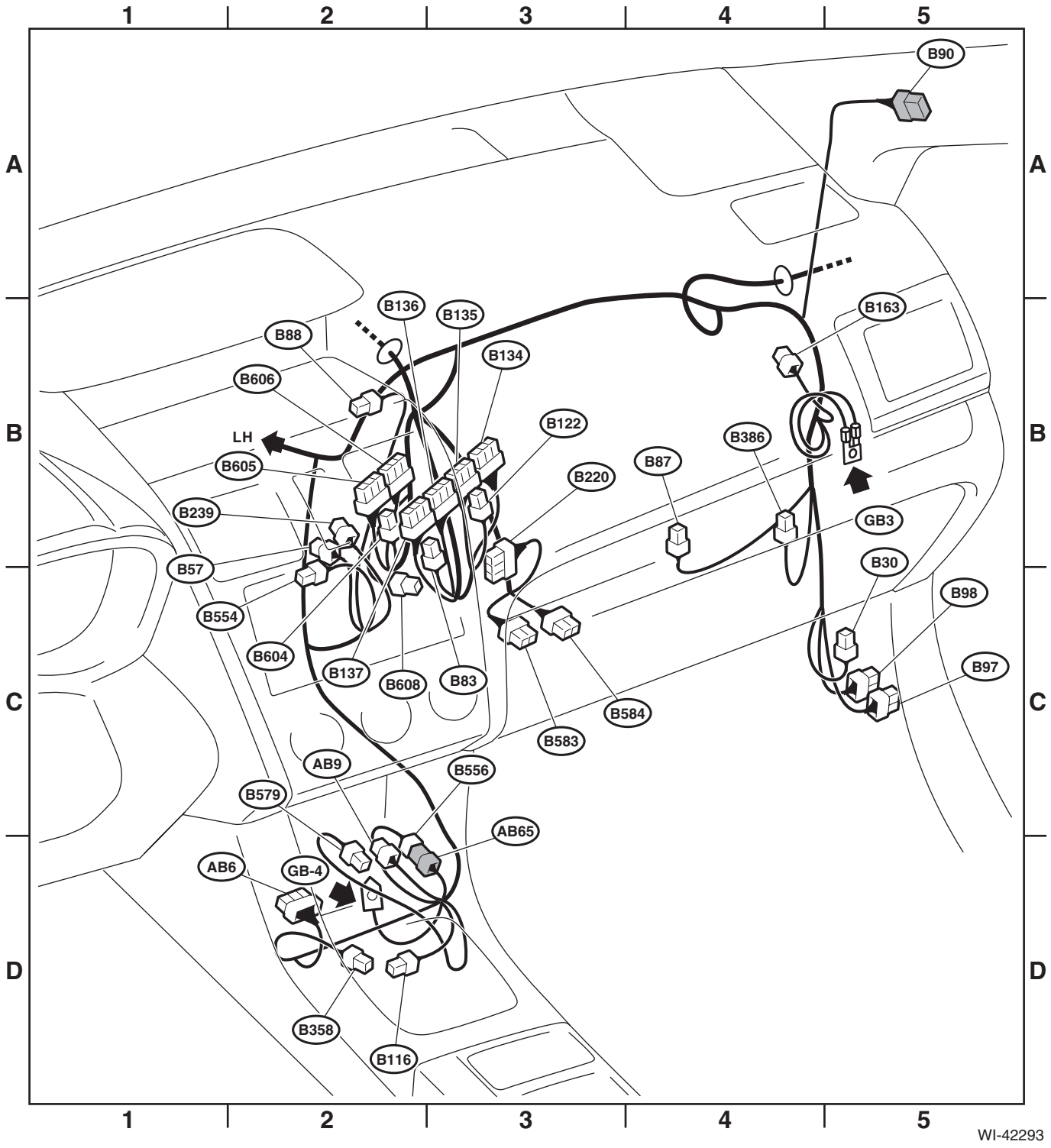

64.Bulkhead Wiring Harness (In Compartment) LH

A: LOCATION

Connector				Connecting to	
No.	Pole	Color	Area	No.	Description
B31	10	Gray	D-1	AB1	Airbag wiring harness
B32	8	★	B-3		Turn signal and hazard unit
B40	16	Black	C-1		Data link connector
B41	2	★	C-1		Power window circuit breaker
B52	24	★	C-2		F/B
B54	26	Green	B-2		TCM
B55	22	Green	B-2		
B65	4	Black	B-2		Stop light and brake switch
B68	14	★	C-4		Roll connector
B70	10	★	B-4		Combination switch
B71	20	★	C-4		
B72	8	★	B-3		Ignition switch
B77	6	★	B-4		Mode door actuator
B92	20	★	D-1	R5	Rear wiring harness
B99	20	★	D-1	R3	Rear wiring harness LH
B101	8	Black	C-1	D11	Front door cord LH
B123	2	Black	D-1	B124	Key lock
B124	2	Black	C-1	B123	
B150	24	★	B-2		Auto headlight beam leveler CM
B152	10	Gray	C-2		F/B
B158	8	★	C-2		
B159	9	Brown	C-2		
B162	2	★	C-2		
B180	4	★	B-3		Remote engine start CM (without push button start)
	8	★	B-3		Remote engine start CM (with push button start)
B181	2	★	B-2	B182	Bulkhead wiring harness
B182	2	★	B-2	B181	
B225	44	★	B-1		Relay holder
B231	5	★	B-4		Steering angle sensor
B235	6	★	B-3		Air mix door actuator LH (with left/right independent air conditioner)
B280	34	★	B-1		Body integrated unit
B281	35	★	B-1		
B315	6	Black	B-3		Accelerator pedal position sensor
B367	8	★	C-2		Impact sensor
B415	7	Black	C-3		Immobilizer antenna
B422	5	★	A-5		ID code box
B424	7	Black	C-3		Steering lock CM
B426	4	Black	B-2		Accessory relay (with push button start)
B475	4	★	C-2		Wiper relay unit
B550	20	★	C-2		Fuse holder
B551	12	★	B-3	i229	Instrument panel wiring harness LH
B552	17	★	C-3	i230	
B553	20	★	C-3	i231	
B555	2	★	B-4		Key warning switch
B557	2	★	C-3		Key lock solenoid

Bulkhead Wiring Harness (In Compartment) LH

Connector				Connecting to	
No.	Pole	Color	Area	No.	Description
B558	7	★	B-4		Combination switch
B559	5	★	A-5		Security CM
B572	18	★	C-2		Keyless access CM
B573	28	★	B-2		
B574	30	★	B-2		
B575	22	★	B-1	B576	Bulkhead wiring harness
B576	22	★	B-1	B575	
B577	22	★	B-1	B578	
B578	22	★	B-1	B577	
B601	4	Black	B-2		Brake stroke sensor
B602	22	Black	B-2		Fuse holder
B607	14	Blue	C-1		J/C
★: White or natural color					

Connector				Connecting to	
No.	Pole	Color	Area	No.	Description
AB1	10	Gray	D-1	B31	Bulkhead wiring harness
AB2	4	Yellow	C-4	AB7	Driver's airbag module
AB66	2	Black	C-3		Driver's knee airbag module

Bulkhead Wiring Harness (In Compartment) LH

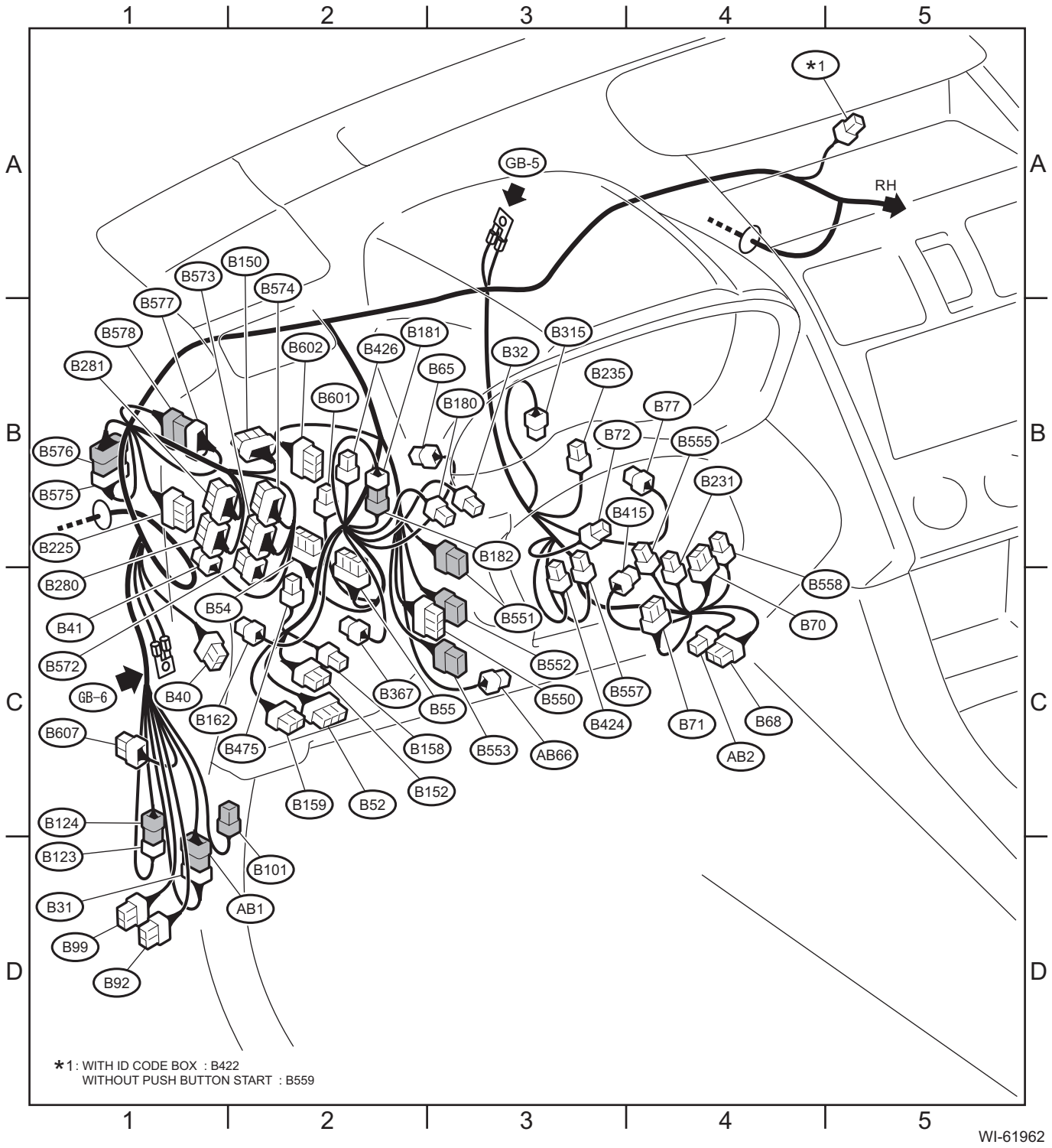

65.Engine Wiring Harness and Transmission Cord

A: LOCATION

Connector				Connecting to	
No.	Pole	Color	Area	No.	Description
E2	54	Black	A-3	B21	Bulkhead wiring harness
E3	16	Brown	A-4	B22	
E4	2	Blue	A-3		Purge control solenoid valve
E5	2	Dark gray	B-2		Fuel injector No. 1
E6	2	Dark gray	A-2		Fuel injector No. 3
E8	2	Black	A-3		Engine coolant temperature sensor
E10	3	Black	B-4		Crankshaft position sensor
E11	1	—	B-3		Oil pressure switch
E14	2	Black	B-4		Knock sensor
E16	2	Dark gray	B-4		Fuel injector No. 2
E17	2	Dark gray	B-4		Fuel injector No. 4
E18	6	Dark gray	A-3		EGR control valve
E21	3	Black	A-3		Manifold absolute pressure sensor
E24	4	Light gray	B-2		Front oxygen (A/F) sensor
E25	4	Black	B-2		Rear oxygen sensor
E31	3	Black	B-2		Ignition coil No. 1
E32	3	Black	C-4		Ignition coil No. 2
E33	3	Black	A-2		Ignition coil No. 3
E34	3	Black	B-4		Ignition coil No. 4
E35	3	Light gray	C-4		Intake camshaft position sensor LH
E36	3	Light gray	B-1		Intake camshaft position sensor RH
E37	2	Black	C-4		Intake oil control solenoid LH
E38	2	Black	B-1		Intake oil control solenoid RH
E51	5	Light gray	B-4		Tumble generator valve actuator LH
E55	5	Light gray	A-3		Tumble generator valve actuator RH
E57	6	Black	B-4		Electronic throttle control
E62	3	Light gray	B-2		Exhaust camshaft position sensor RH
E63	2	Black	B-1		Exhaust oil control solenoid RH
E65	3	Light gray	C-4		Exhaust camshaft position sensor LH
E66	2	Black	C-4		Exhaust oil control solenoid LH
E75	2	Black	B-3		Engine oil temperature sensor
E130	1	★	C-3		Oil level switch
E163	5	Black	A-3		ISG
★: White or natural color					

Connector				Connecting to	
No.	Pole	Color	Area	No.	Description
T3	16	Brown	C-3	B12	Bulkhead wiring harness
T4	12	Light gray	C-3	B11	
T7	9	Black	D-3		Inhibitor switch
T11	10	★	D-3		Control valve body
T32	20	Gray	C-2	B603	Bulkhead wiring harness
T33	3	Black	D-3		Front wheel speed sensor
AT4	3	Dark gray	D-4		Secondary speed sensor
AT5	3	Light gray	D-3		Turbine speed sensor
AT6	3	Black	D-4		Secondary pressure sensor

Connector				Connecting to	
No.	Pole	Color	Area	No.	Description
HV1	—	—	D-4		Drive motor
HV11	3	Orange	D-4	HV12	Electric oil pump harness
HV12	3	Orange	D-4	HV11	Power cable
★: White or natural color					

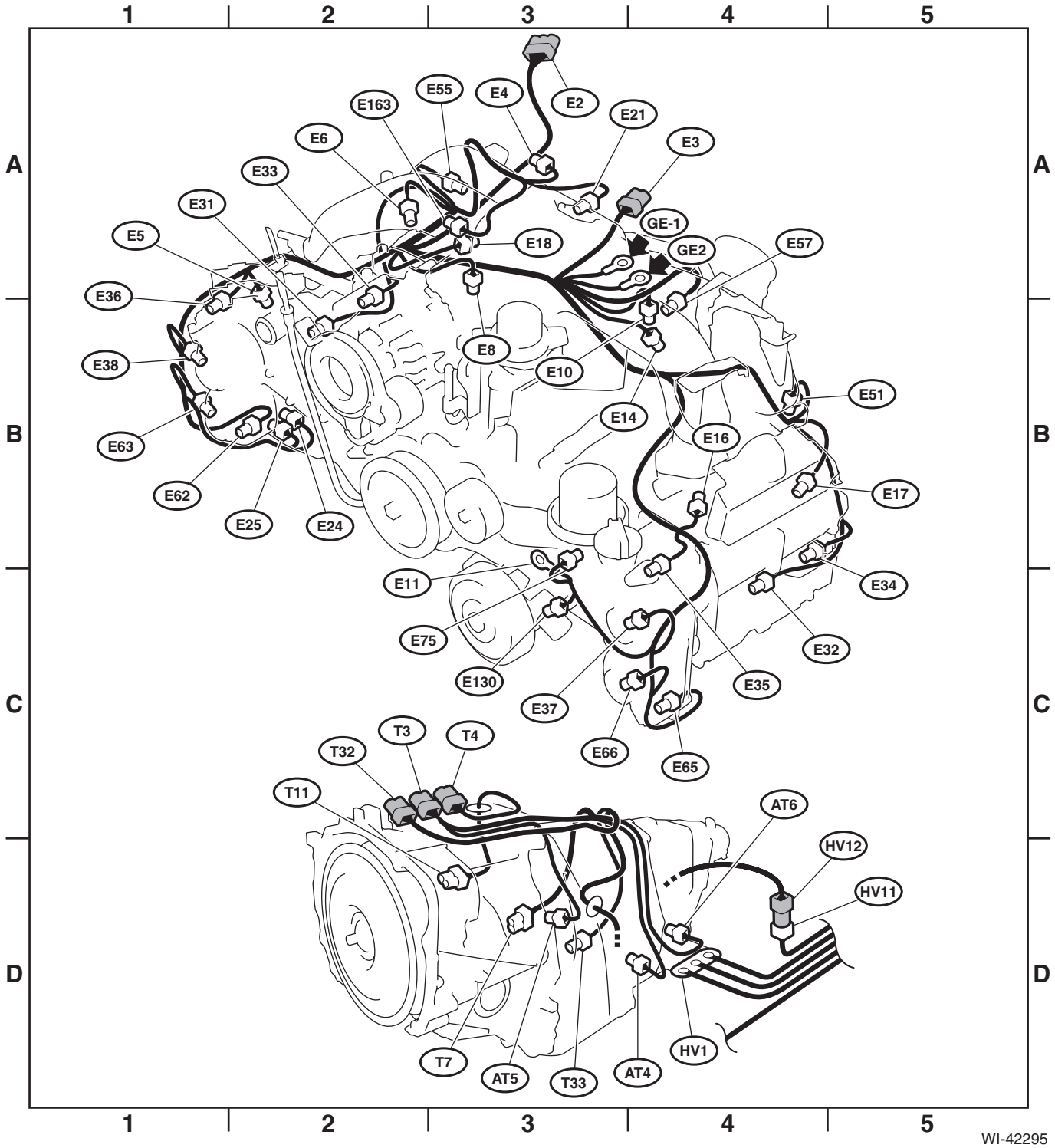

66.Instrument Panel Wiring Harness RH

A: LOCATION

Connector				Connecting to	
No.	Pole	Color	Area	No.	Description
i22	4	★	C-2		Hazard switch
i23	2	★	B-4		Glove box light
i24	2	★	D-2		Front accessory power supply socket
i29	1	★	C-2		Audio bracket ground
i50	10	★	C-3		Navigation unit
i53	24	★	C-5	R98	Rear wiring harness RH
i76	28	★	C-5	D83	Front door cord RH
i85	20	★	C-2		Audio
i86	16	★	C-2		Audio
i87	28	★	C-2		Navigation unit
i88	40	★	D-2		A/C control panel
i131	16	★	C-2		Navigation unit
i147	6	★	C-2		
i159	4	★	A-4		Side tweeter RH
i168	4	★	B-4		J/C
i169	4	★	B-4		
i195	10	★	D-5	R382	Rear wiring harness RH
i226	3	★	A-3		Light control sensor
i237	12	★	C-3	B583	Bulkhead wiring harness RH
i238	20	★	C-3	B584	
★ White or natural color					

Instrument Panel Wiring Harness RH

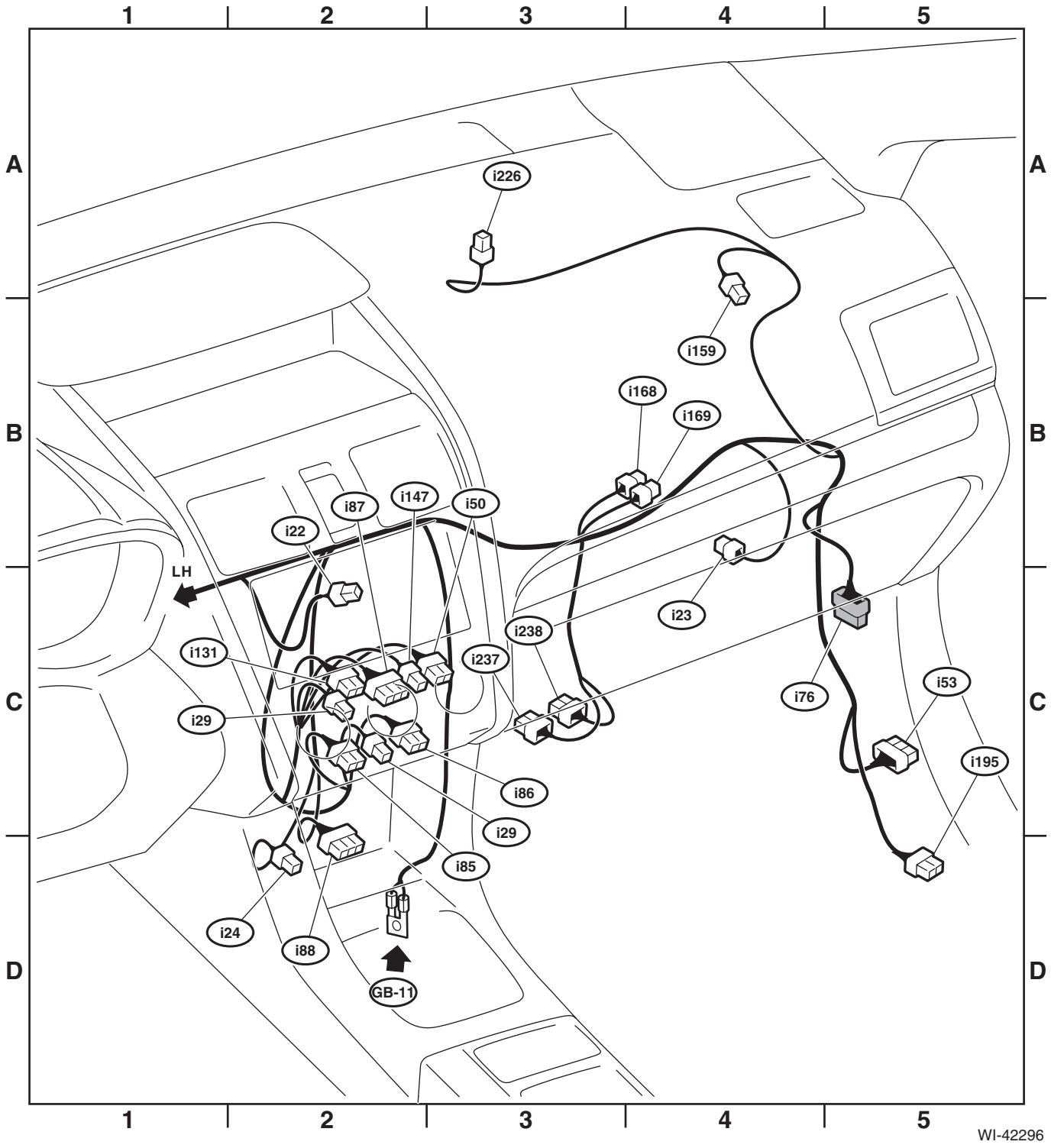

67.Instrument Panel Wiring Harness LH

A: LOCATION

Connector				Connecting to	
No.	Pole	Color	Area	No.	Description
i2	10	★	D-1	R339	Rear wiring harness LH
i5	20	★	C-2		F/B
i10	40	★	B-3		Combination meter
i51	2	★	A-4		Sunload sensor
i55	2	★	C-4		Temperature and humidity sensor
i79	6	★	C-2		Illumination control switch
i84	35	Black	C-1		Body integrated unit
i101	28	★	C-1	D84	Front door cord LH
i102	24	★	D-1	R167	Rear wiring harness LH
i122	12	Black	A-4		MFD
i150	14	★	B-4		Push button ignition switch (with push button start)
i158	4	★	B-1		Side tweeter LH
i166	4	★	B-2		J/C
i167	4	★	B-2		
i171	31	★	C-1		Body integrated unit
i229	12	★	C-2	B551	Bulkhead wiring harness LH
i230	17	★	C-2	B552	
i231	20	★	C-2	B553	
i232	8	★	B-3		J/C
i233	8	★	B-4		
i234	4	★	C-2		VDC OFF switch
i240	8	Black	A-4		MFD
i264	12	★	C-5		Pedestrian alert CM
★ White or natural color					

Instrument Panel Wiring Harness LH

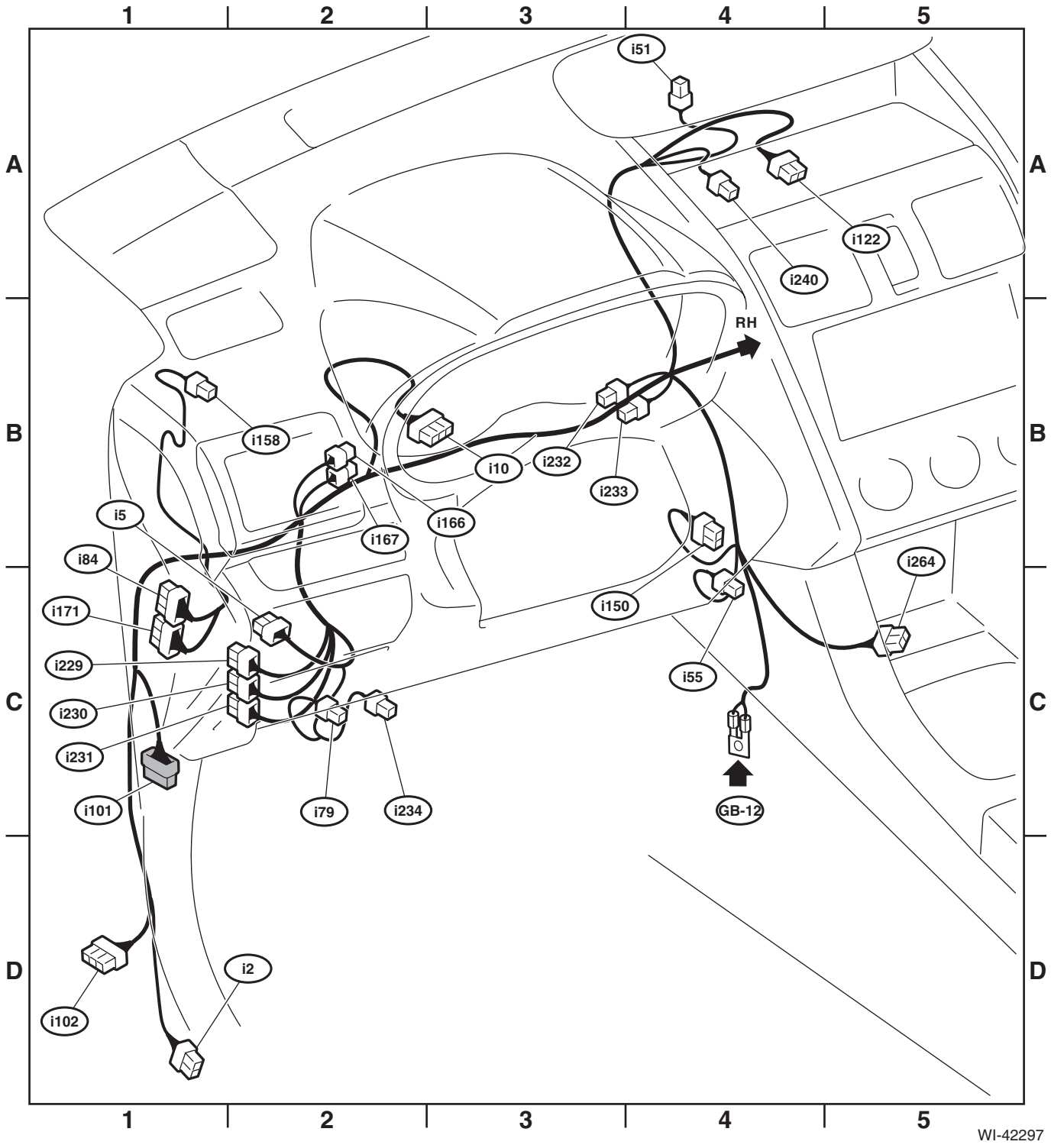

68.Roof Cord

A: LOCATION

Connector				Connecting to	
No.	Pole	Color	Area	No.	Description
R50	17	★	B-1	B90	Bulkhead wiring harness
R52	3	★	A-5		Room light
R55	8	★	B-4		Sunroof motor assembly
R56	2	★	B-4		Spot map light (with sunroof)
	6	★	B-4		Spot map light (without sunroof)
R62	6	★	B-4		Spot map light (with sunroof)
R64	3	★	B-3		Spot map light diode (with sunroof)
R128	5	★	B-4		Sunroof switch
R139	3	★	B-4		Rear view mirror
R187	5	Black	B-4		Sunroof switch (tilt)
★: White or natural color					

Roof Cord

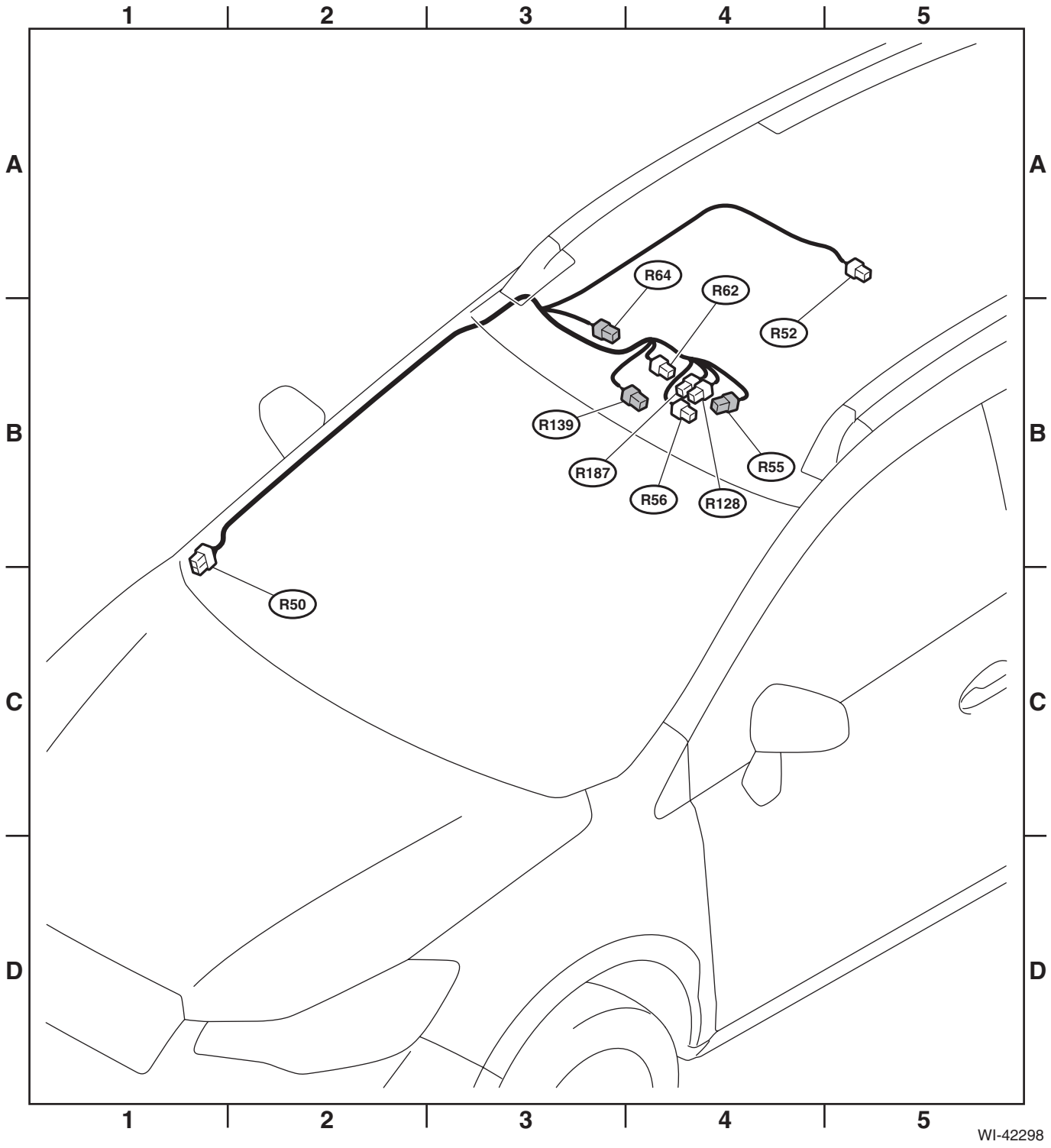

69.Rear Wiring Harness RH

A: LOCATION

Connector				Connecting to	
No.	Pole	Color	Area	No.	Description
R1	20	★	C-1	B97	Bulkhead wiring harness
R2	20	★	C-2	B98	
R12	3	★	B-3		Front door switch RH
R13	8	★	B-3	D28	Rear door cord RH
R32	2	★	C-5		Rear accessory power supply socket
R43	8	★	C-4		Seat heater switch
R44	4	★	C-3		Seat heater RH
R82	19	Black	C-3	R81	Rear wiring harness LH
R98	24	★	C-1	i53	Instrument panel wiring harness
R124	2	Yellow	C-1	AB63	Front door cord RH
R284	6	★	C-5		AUX input terminal
R382	10	★	C-2	i195	Instrument panel wiring harness
★: White or natural color					

Connector				Connecting to	
No.	Pole	Color	Area	No.	Description
AB18	24	Yellow	D-3		Airbag CM
AB24	4	Yellow	C-3		Side airbag module RH
AB26	2	Black	B-3		Pretensioner RH
AB28	4	Yellow	B-3		Side airbag sensor RH
AB30	2	Yellow	B-3		Lap seat belt pretensioner RH
AB53	3	Dark gray	C-4	AB59	Occupant detection harness
AB59	3	★	C-3	AB53	Rear wiring harness
AB60	2	Yellow	C-3		Buckle switch
AB61	10	Black	C-3		Occupant detection control module
★: White or natural color					

Rear Wiring Harness RH

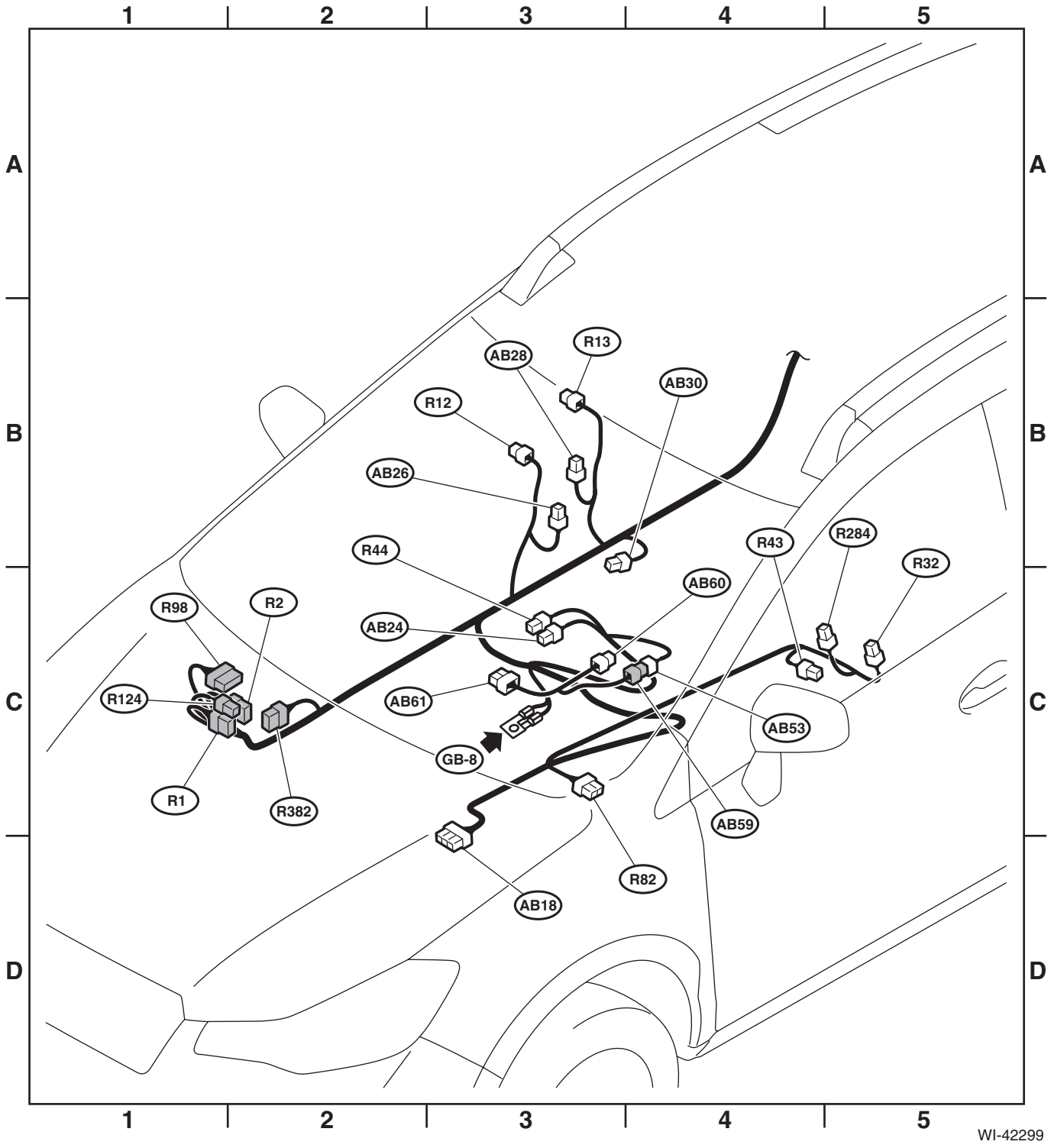

70.Rear Wiring Harness LH

A: LOCATION

Connector				Connecting to	
No.	Pole	Color	Area	No.	Description
R3	20	★	D-2	B99	Bulkhead wiring harness
R4	1	Black	C-2		Parking brake switch
R5	20	★	D-2	B92	Bulkhead wiring harness
R9	3	★	C-4		Front door switch LH
R10	8	★	C-4	D22	Rear door cord LH
R41	4	★	C-3		Seat heater LH
R81	19	Black	C-2	R82	Rear wiring harness RH
R107	2	★	C-3		Seat belt switch LH
R123	2	Yellow	D-2	AB62	Front door cord LH
R167	24	★	D-2	i102	Instrument panel wiring harness
R168	20	★	C-2		F/B
R339	10	★	D-3	i2	Instrument panel wiring harness
★: White or natural color					

Connector				Connecting to	
No.	Pole	Color	Area	No.	Description
AB17	24	Yellow	D-1		Airbag CM
AB19	4	Yellow	C-3		Side airbag module LH
AB21	2	Black	C-4		Pretensioner LH
AB23	4	Yellow	C-4		Side airbag sensor LH
AB35	2	Black	C-2		F/B

Rear Wiring Harness LH

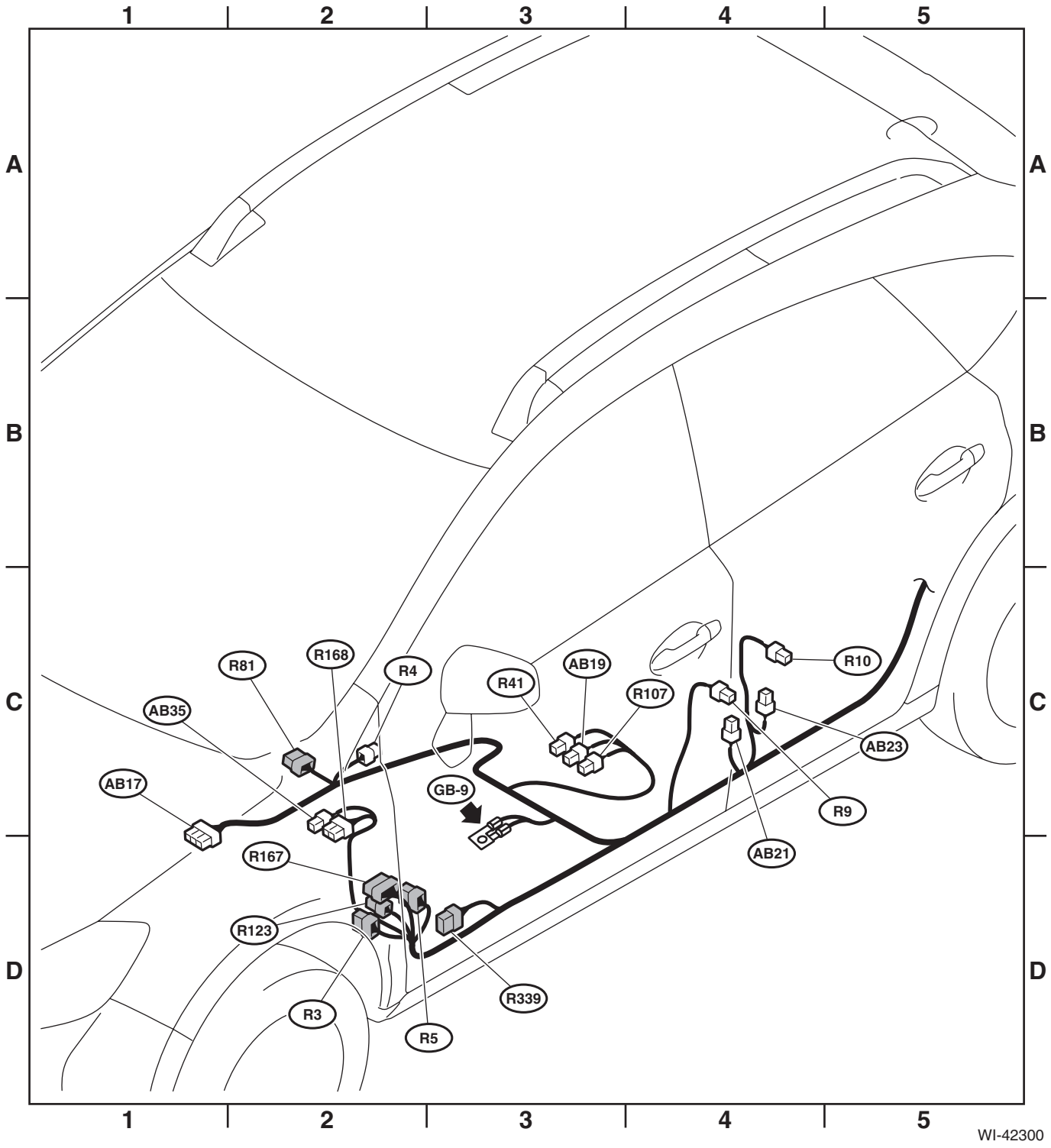

71.Rear Wiring Harness (HEV)

A: LOCATION

Connector				Connecting to	
No.	Pole	Color	Area	No.	Description
R432	12	Gray	C-4		Drive motor inverter
R433	4	Black	C-3		DC/DC converter
R434	8	Black	C-3		Drive motor inverter amperage sensor
R435	19	Black	C-3	R437	Inverter harness
R436	8	★	C-3	R454	Rear wiring harness
R437	19	Black	C-3	R435	Inverter harness
R438	4	★	C-3		High voltage battery cooling fan
R439	3	★	C-2		Keyless access interior antenna (rear)
R440	12	★	C-2		Relay holder
R441	10	Blue	C-2		J/C
R442	22	Green	C-2		DMCM
R443	26	Green	C-2		
R444	14	★	C-2	R459	Rear wiring harness
R445	8	★	B-2		High voltage battery
R446	4	★	C-4	R455	Rear wiring harness
★: White or natural color					

Connector				Connecting to	
No.	Pole	Color	Area	No.	Description
HV2	—	—	C-3		Drive motor inverter
HV3	—	—	C-3		
HV4	—	—	C-3		Drive motor inverter amperage sensor
HV5	—	—	C-4		Drive motor inverter
HV6	—	—	C-4		Electric noise filter
HV7	—	—	B-4		
HV8	—	—	B-3		High voltage battery
HV9	—	—	C-4		Electric oil pump inverter
HV10	—	—	C-4		

Rear Wiring Harness (HEV)

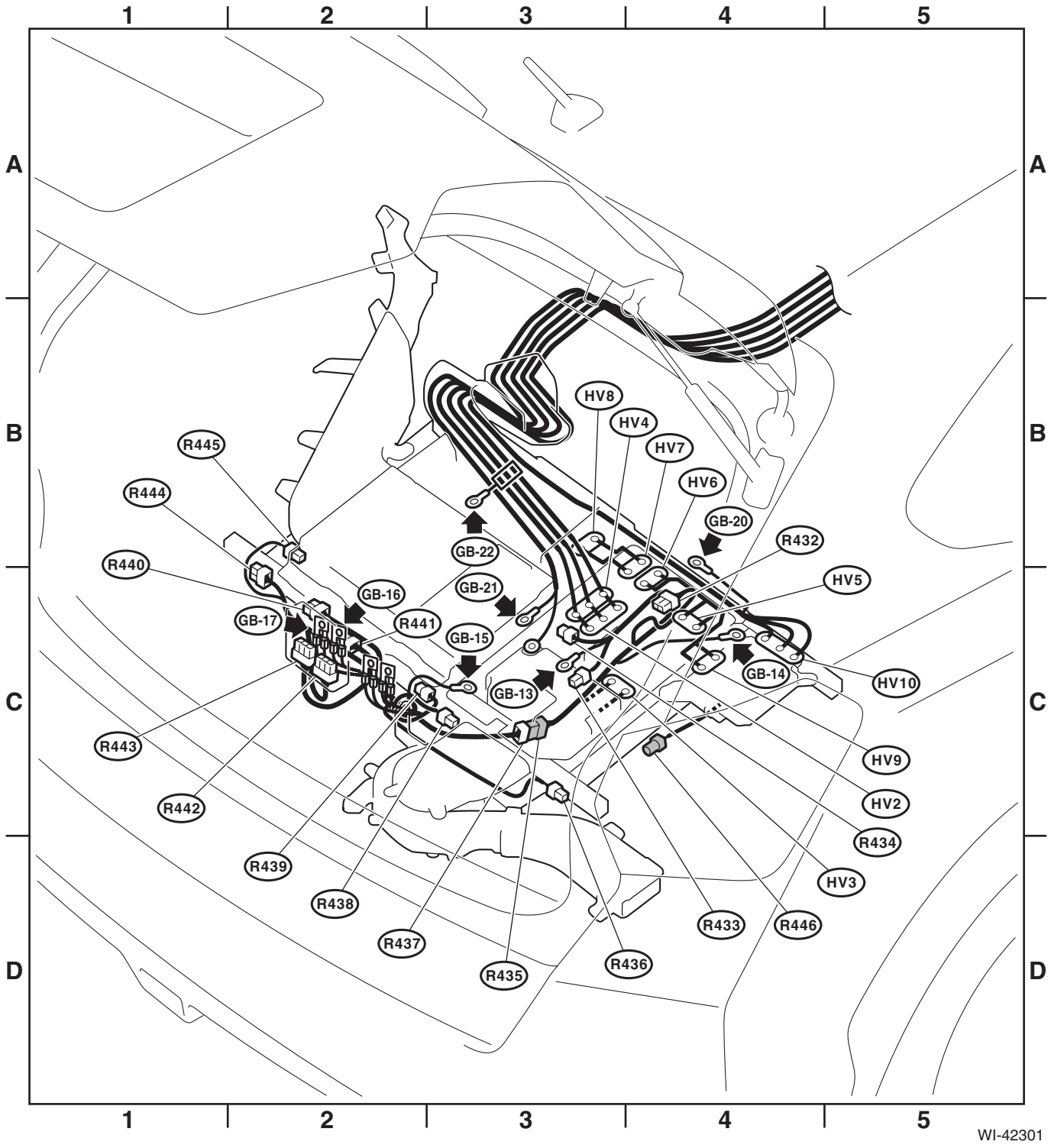

72.Door Cord RH

A: LOCATION

Connector				Connecting to	
No.	Pole	Color	Area	No.	Description
D1	8	Black	C-2	B30	Bulkhead wiring harness
D12	2	★	C-2		Front door speaker RH
D13	6	Dark gray	C-2		Front power window motor RH
D15	10	★	B-2		Outer mirror assembly RH
D17	8	★	B-2		Front power window sub-switch
D18	10	★	B-3		Front door lock actuator RH
D28	8	★	B-4	R13	Rear wiring harness RH
D29	2	★	B-4		Rear door speaker RH
D30	6	Dark gray	B-4		Rear power window motor RH
D31	8	★	B-4		Rear power window sub-switch RH
D32	10	★	A-4		Rear door lock actuator RH
D56	6	★	B-3		Outer handle RH
D83	28	★	C-2	i76	Instrument panel wiring harness
D125	5	★	B-2		Passenger's seat door lock switch
★: White or natural color					

Connector				Connecting to	
No.	Pole	Color	Area	No.	Description
AB63	2	Yellow	C-1	R124	Rear wiring harness RH
AB64	2	Yellow	B-3		Front door impact sensor RH

Door Cord RH

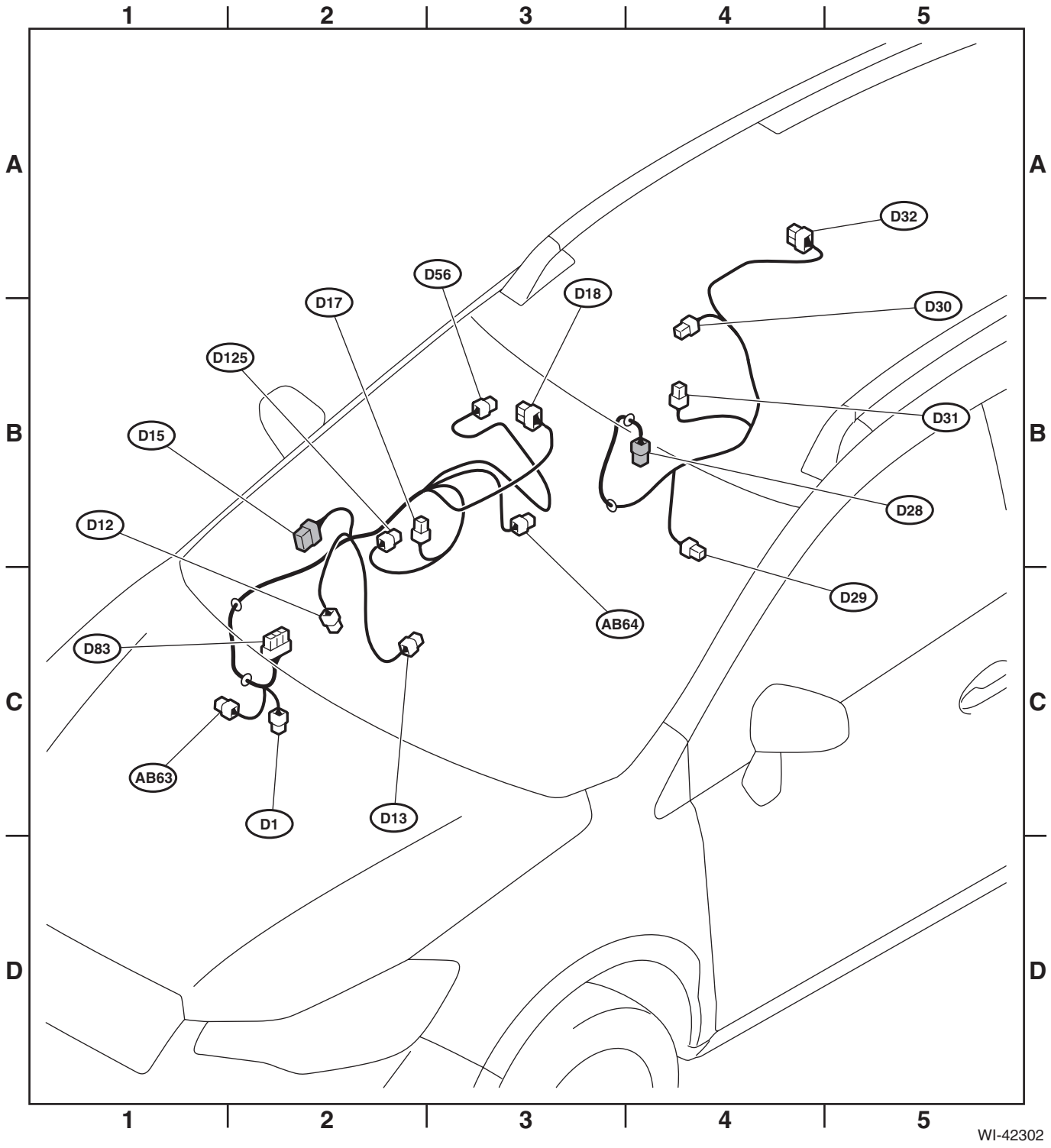
1
2
3
4
5
A
B
C
D
D32
D30
D31
D28
D29
D56
D18
D17
D125
D15
D12
D83
AB64
AB63
D1
D13
WI-42302

73.Door Cord LH

A: LOCATION

Connector				Connecting to	
No.	Pole	Color	Area	No.	Description
D2	2	★	D-3		Front door speaker LH
D3	6	Dark gray	D-3		Front power window motor LH
D5	10	★	C-3		Outer mirror assembly LH
D7	16	★	C-3		Power window main switch
D11	8	Black	D-2	B101	Bulkhead wiring harness
D22	8	★	C-4	R10	Rear wiring harness LH
D23	2	★	C-4		Rear door speaker LH
D24	6	Dark gray	B-5		Rear power window motor LH
D25	8	★	C-4		Rear power window sub-switch LH
D26	10	★	B-5		Rear door lock actuator LH
D66	6	★	C-4		Outer handle LH
D72	10	★	C-4		Front door lock actuator LH
D84	28	★	D-2	i101	Instrument panel wiring harness
D102	3	★	C-3		Power window main switch
D149	16	★	C-3		Remote control mirror switch
★: White or natural color					

Connector				Connecting to	
No.	Pole	Color	Area	No.	Description
AB58	2	Yellow	C-4		Front door impact sensor LH
AB62	2	Yellow	D-2	R123	Rear wiring harness LH

Door Cord LH

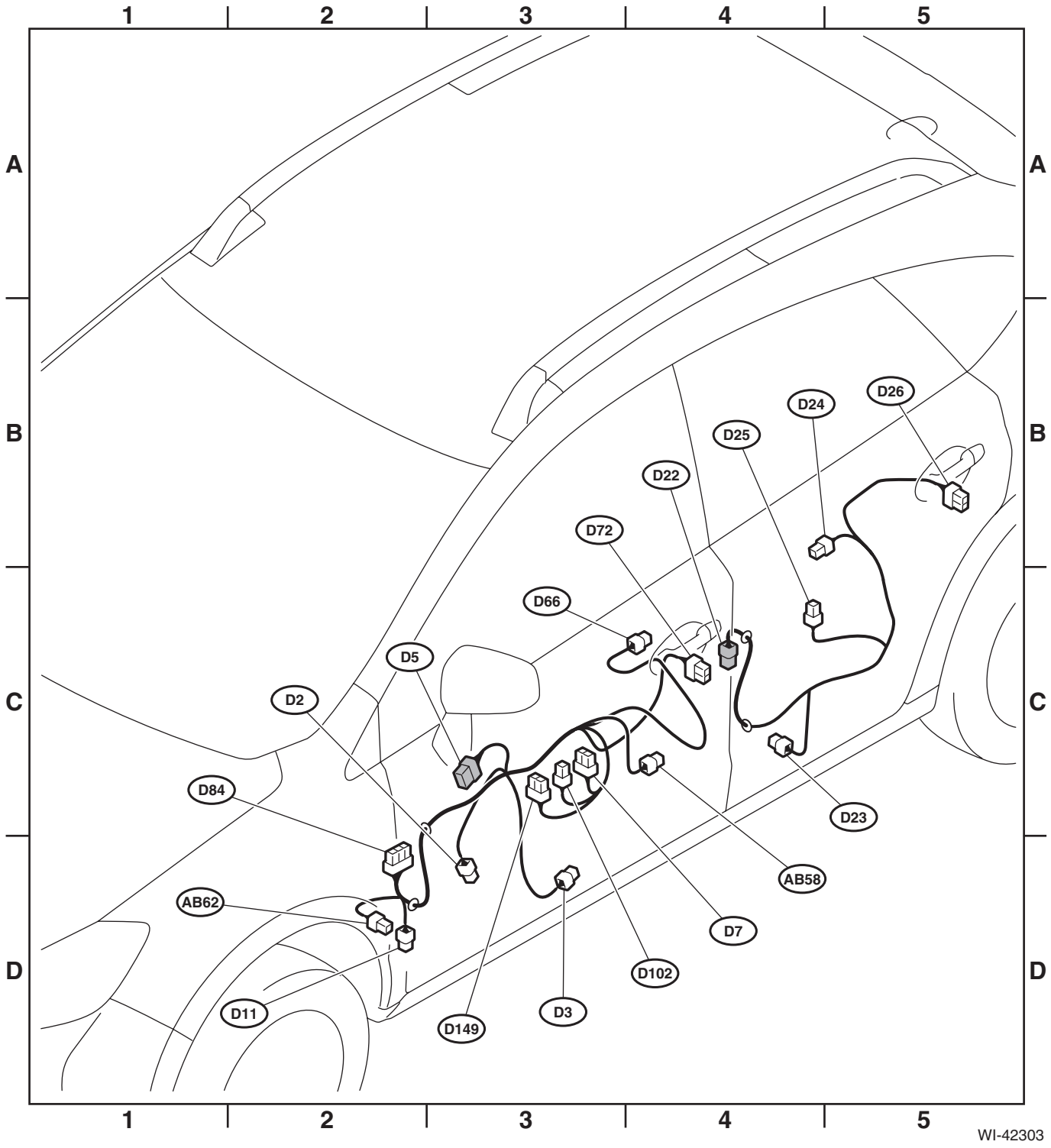
1
2
3
4
5
A
B
C
D
D26
D24
D25
D22
D72
D66
D5
D2
D84
AB62
D11
D149
D3
D102
D7
AB58
D23
WI-42303

74.Rear Wiring Harness and Rear Gate Cord

A: LOCATION

Connector				Connecting to	
No.	Pole	Color	Area	No.	Description
R16	3	★	C-4		Rear door switch RH
R22	3	★	C-1		Rear door switch LH
R26	6	Gray	C-4		Rear combination light RH
R28	6	Gray	C-2		Rear combination light LH
R29	3	Black	C-2		Rear vehicle height sensor
R38	8	★	B-4	D34	Rear gate cord
R39	14	Gray	B-4	D35	
R58	4	Gray	C-2		Fuel pump assembly
R59	2	★	C-2		Fuel sub level sensor
R72	2	Light gray	C-3		Rear ABS wheel speed sensor RH
R73	2	Light gray	C-2		Rear ABS wheel speed sensor LH
R80	8	★	B-2		Keyless entry CM
R97	1	★	B-2		Antenna feeder cord
R141	2	Light gray	C-2		Luggage room light
R211	12	★	B-2		TPMS CM
R221	12	★	B-2		TPMS & keyless entry CM
R296	5	★	B-2		Receiver (with push button start)
R298	3	★	C-3		Keyless access interior antenna (center)
R299	6	★	C-4		Keyless access exterior antenna (rear)
R400	8	Gray	C-2		ELCM
R454	8	★	C-4	R436	Inverter harness
R455	4	★	C-4	R446	Electric oil pump inverter
R456	4	★	C-4		J/C
R457	4	★	C-4		
R459	14	★	C-2	R444	Inverter harness
★: White or natural color					

Connector				Connecting to	
No.	Pole	Color	Area	No.	Description
D34	8	★	B-4	R38	Rear wiring harness RH
D35	14	Gray	B-4	R39	
D39	2	★	B-3		High-mounted stop light
D43	4	★	A-4		Rear wiper motor
D44	2	★	A-4		License plate light RH
D46	4	★	A-4		Rear gate lock actuator & latch switch
D47	2	Brown	A-4		Rear gate opener button
D48	1	Black	B-2		Rear defogger
D77	4	★	A-4		Rear lock button & rear gate opener button
D80	8	★	A-4	D81	Rear gate cord
D81	8	★	A-4	D80	
D85	4	★	A-3		Rearview camera
D89	1	Black	B-4		Rear defogger
D137	2	★	A-4		License plate light LH
★: White or natural color					

Rear Wiring Harness and Rear Gate Cord

Connector				Connecting to	
No.	Pole	Color	Area	No.	Description
AB31	2	Black	B-2		Curtain airbag module LH
AB32	4	Yellow	C-1		Curtain airbag sensor LH
AB33	2	Black	B-4		Curtain airbag module RH
AB34	4	Yellow	C-3		Curtain airbag sensor RH
AB41	2	Yellow	C-2		Satellite safing sensor

